GENERAL INFORMATION

Commonly Used Abbreviations

* PLEASE READ THIS FIRST *

NOTE: **This article is intended for general information purposes only. This information may not apply to all makes and models. Not all abbreviations are covered as manufacturers add new ones every day.**

"A"

A

Amperes

ABS

Anti-Lock Brakes

ABRS

Air Bag Restraint System

AC

Alternating Current

A/C

Air Conditioning

ACCS

A/C Cycling Switch

ACCUM

Accumulator

ACCY

Accessory

ACT

GETtheMANUALS.org

Air Charge Temperature Sensor

ADJ

Adjust or Adjustable

ADV

Advance

AFS

Airflow Sensor

AI

Air Injection

AIR or A.I.R.

Air Injection Reactor

AIS

Air Injection System

Alt.

Alternator or Altitude

Amp./amp/amps

Ampere

ASCS

Air Suction Control Solenoid

ASD

Auto Shutdown

ASDM

Air Bag System Diagnostic Module

ASV

GETtheMANUALS.org

Air Suction Valve

A/T

Automatic Transmission/Transaxle

ATC

Automatic Temperature Control

ATDC

After Top Dead Center

ATF

Automatic Transmission Fluid

ATS

Air Temperature Sensor

Aux.

Auxiliary

Avg.

Average

AXOD

Automatic Transaxle Overdrive (Ford Models Only)

"B"

BAC

By-Pass Air Control

BAP

Barometric Absolute Pressure Sensor

BARO

Barometric

GETtheMANUALS.org

Batt.

Battery

Bbl.

Barrel (Example: 4-Bbl.)

BCM

Body Control Module

BHP

Brake Horsepower

BMAP

Barometric and Manifold Absolute Pressure Sensor

BOO

Brake On-Off Switch

B/P

Backpressure

BPS

Barometric Pressure Sensor

BPT

Backpressure Transducer

BTDC

Before Top Dead Center

BTSI

Brake Transmission Shift Interlock

BTU

British Thermal Unit

GETtheMANUALS.org

BVSV

Bimetallic Vacuum Switching Valve

"C"

° C

Celsius (Degrees)

Calif.

California

CANP

Canister Purge

CARB

California Air Resources Board

CAT

Catalytic Converter

CB

Circuit Breaker

CBD

Closed Bowl Distributor

cc

cubic centimeter

CCC

Close Coupled Catalyst

CCC

Computer Command Control

CCD

GETtheMANUALS.org

Computer Controlled Dwell

CCOT

Cycling Clutch Orifice Tube

CCW

Counterclockwise

CDI

Capacitor Discharge Ignition

CEC

Computerized Engine Control

CID

Cubic Inch Displacement

cm

Centimeter

CMP

Camshaft Position Sensor

CO

Carbon Monoxide

CO_2

Carbon Dioxide

Cont.

Continued

CONV

Convertible

CP

GETtheMANUALS.org

Canister Purge

CKP

Crankshaft Position Sensor

CTS

Coolant Temperature Sensor

Cu. In.

Cubic Inch

CVC

Constant Vacuum Control

CV

Check Valve or Constant Velocity

CW

Clockwise

CYL or Cyl.

Cylinder

C^3 I

Computer Controlled Coil Ignition

C^4

Computer Controlled Catalytic Converter

"D"

"D"

Drive

DC

GETtheMANUALS.org

Direct Current Or Discharge

DDD

Dual Diaphragm Distributor

Def.

Defrost

Defog.

Defogger

DERM

Diagnostic Energy Reserve Module

DFI

Digital Fuel Injection

Diag.

Diagnostic

DTC

Diagnostic Trouble Code

DIC

Driver Information Center

DIS

Distributorless Ignition System

DIST

Distribution

DLC

Data Link Connector

DOC

GETtheMANUALS.org

Diesel Oxidation Catalyst

DOHC

Double Overhead Cam

DOT

Department of Transportation

DPF

Diesel Particulate Filter

DRB-II

Diagnostic Readout Box

DVOM

Digital Volt-Ohmmeter

"E"

EACV

Electric Air Control Valve

EATX

Electronic Automatic Transaxle

EBCM

Electronic Brake Control Module

EBL

Electronic Back Light

ECM

Engine Control Module

ECT

Engine Coolant Temperature Sensor

GETtheMANUALS.org

EDIS

Electronic Distributorless Ignition System

EEC

Electronic Engine Control

EECS

Evaporative Emission Control System

EEPROM

Electronically Erasable PROM

EFE

Early Fuel Evaporation

EGO

Exhaust Gas Oxygen Sensor

EGR

Exhaust Gas Recirculation

EOT

Engine Oil Temperature

ESA

Electronic Spark Advance

ESC

Electronic Spark Control

EST

Electronic Spark Timing

EVAP

Fuel Evaporative System

GETtheMANUALS.org

EVIC

Electronic Vehicle Information Center

EVP

EGR Valve Position Sensor

EWMA

Exponentially Weighted Moving Average (MODE 6)

Exc.

Except

"F"

° F

Fahrenheit (Degrees)

F/B

Fuse Block

Fed.

Federal

FI

Fuel Injection

FICU

Fuel Injection Control Unit

FIPL

Fuel Injector Pump Lever

FLI

Fuel Level Indicator

FPR-VSV

GETtheMANUALS.org

Fuel Pressure Regulator Vacuum Switching Valve

Ft. Lbs.

Foot Pounds

FWD

Front Wheel Drive

"G"

g

grams

Gals.

gallons

GND or GRND

Ground

"H"

HAC

High Altitude Compensation

HC

Hydrocarbons

H/D

Heavy Duty

HO2S

Heated Exhaust Gas Oxygen Sensor

Hg

Mercury

Hgt.

GETtheMANUALS.org

Height

HLDT

Headlight

HO

High Output

HO2S

Heated Oxygen Sensor

HP

High Performance

HSC

High Swirl Combustion

HSO

High Specific Output

HTR

Heater

Hz

Hertz (Cycles Per Second)

"I"

IAC

Idle Air Control

IACV

Idle Air Control Valve

IAT

Intake Air Temperature

GETtheMANUALS.org

IC

Integrated Circuit

ID

Identification

I.D.

Inside Diameter

IFS

Independant Front Suspension

IFS

Inertia Fuel Shutoff (Ford)

Ign.

Ignition

IMRC

Intake Manifold Runner Control

In.

Inches

INCH Lbs.

Inch Pounds

in. Hg

Inches of Mercury

Inj.

Injector

IP

Instrument Panel

GETtheMANUALS.org

IRS

Independant Rear Suspension

ISC

Idle Speed Control

IVD

Interactive Vehicle Dynamics (Ford)

IVSV

Idle Vacuum Switching Valve

"J"

J/B

Junction Block

"K"

KAPWR

Keep Alive Power

k/ohms

kilo-ohms (1000 ohms)

kg

Kilograms (weight)

kg/cm^2

Kilograms Per Square Centimeter

KM/H

Kilometers Per Hour

KOEO

GETtheMANUALS.org

Key On, Engine Off

KOER

Key On, Engine Running

KS

Knock Sensor

kW

Kilowatt

kV

Kilovolt

"L"

L

Liter

lbs. (Lbs. when used in table)

Pounds

LCD

Liquid Crystal Display

L/D

Light Duty

LDP

Leak Detection Pump (Part of EVAP system.)

LED

Light Emitting Diode

LH

Left Hand

GETtheMANUALS.org

"M"

mA

Milliamps

MA or MAF

Mass Airflow

MAFS

Mass Airflow Sensor

MAP

Manifold Absolute Pressure

MAT

Manifold Air Temperature

Mem.

Memory

MEM-CAL

Memory Calibration Chip

mfd.

Microfarads

MFI

Multiport Fuel Injection

MICU

Multiplex Integrated Control Unit (Acura/Honda)

MIL

Malfunction Indicator Light

MPI

GETtheMANUALS.org

Multi-Point (Fuel) Injection

mm

Millimeters

MPH

Miles Per Hour

mV

Millivolts

"N"

NA

Not Available

NAC

NOx Adsorber Catalyst

NCA

No Color Available (Wiring Diagrams)

NGS

New Generation Star

N.m

Newton Meter

No.

Number

Nos.

Numbers

NOx

Oxides of Nitrogen

GETtheMANUALS.org

"O"

O_2

Oxygen

OBD

On-Board Diagnostics

OC

Oxidation Catalyst

OD

Overdrive

O.D.

Outside Diameter

OHC

Overhead Camshaft

OSS

Output Speed Sensor

O/S

Oversize

oz.

Ounce

ozs.

Ounces

"P"

"P"

GETtheMANUALS.org

Park

P/C

Printed Circuit

PCM

Powertrain Control Module

PCS

Purge Control Solenoid

PC-SOL

Purge Control Solenoid

PCV

Positive Crankcase Ventilation

PFI

Port Fuel Injection

PGM-FI

Programmed Fuel Injection

PID

Parameter Identification

PIP

Profile Ignition Pick-up

PNP

Park Neutral Position Switch

P/N

Park/Neutral

PRNDL

GETtheMANUALS.org

Park Reverse Neutral Drive Low

PROM

Programmable Read-Only Memory

psi

Pounds Per Square Inch

P/S

Power Steering

PSPS

Power Steering Pressure Switch

PTC

Positive Temperature Coefficient

PTO

Power Take-Off

Pts.

Pints

Pwr.

Power

"Q"

Qts.

Quarts

"R"

RABS

Rear Anti-Lock Brake System

RECIRC

GETtheMANUALS.org

Recirculation

RH

Right Hand

RPM

Revolutions Per Minute

RWAL

Rear Wheel Anti-Lock Brake

RWD

Rear Wheel Drive

"S"

SAS

Steering Angle Sensor

SBC

Single Bed Converter

SBEC

Single Board Engine Controller

SDARS

Satellite Digital Audio Radio Service

SES

Service Engine Soon

SFI

Sequential (Port) Fuel Injection

SIL

Shift Indicator Light

GETtheMANUALS.org

SIR

Supplemental Inflatable Restraint

SOHC

Single Overhead Cam

SOL or Sol.

Solenoid

SPFI

Sequential Port Fuel Injection

SPK

Spark Control

SPOUT

Spark Output

SRI

Service Reminder Indicator

SRS

Supplemental Restraint System (Air Bag)

STAR

Self-Test Automatic Readout

STO

Self-Test Output

SUB-O_2

Sub Oxygen Sensor

Sw.

Switch

GETtheMANUALS.org

Sys.

System

"T"

TAB

Thermactor Air By-Pass

TAC

Throttle Actuator Module

TAD

Thermactor Air Diverter

TBC

Body Control Module (General Motors)

TBI

Throttle Body Injection

TCC

Torque Converter Clutch

TDC

Top Dead Center

Temp.

Temperature

TFI

Thick Film Ignition

THERMAC

Thermostatic Air Cleaner

TPM

GETtheMANUALS.org

Tire Pressure Monitor

TPMS

Tire Pressure Monitor System

TPS

Throttle Position Sensor/Switch

TS

Temperature Sensor

TV

Thermovalve

TWC

Three-Way Catalyst

"V"

V

Valve

Vac.

Vacuum

VAF

Vane Airflow

VAPS

Variable Assist Power Steering

VCC

Viscous Converter Clutch

VCRM

Variable Control Relay Module

GETtheMANUALS.org

VIN

Vehicle Identification Number

VM

Vacuum Modulator

Volt.

Voltage

VOM

Volt-Ohmmeter (Analog)

VRV

Vacuum Regulator Valve

VSS

Vehicle Speed Sensor

VSV

Vacuum Switching Valve

"W"

W/

With

W/O

Without

WAC

Wide Open Throttle A/C Switch

WOT

Wide Open Throttle

GETtheMANUALS.org

EMISSION CONTROL ABBREVIATIONS

Gasoline & Diesel

"A"

A/C

Air Conditioning

A/C-ISUS

A/C Idle Speed-Up Solenoid

A/F

Air/Fuel

AAI

Air Assist Injector

ACL

Air Cleaner (Thermostatic Air Cleaner)

ACL-BMS

ACL Bimetallic Sensor

ACL-CKV

ACL Check Valve

ACL-DV

ACL Delay Valve

ACL-PVS

ACL Ported Vacuum Switch

ACL-RDV

ACL Reverse Delay Valve

ACL-RDVS

GETtheMANUALS.org

ACL Reverse Delay Valve (Single)

ACL-TCV

ACL Thermal Control Valve

ACL-TS

ACL Temperature Sensor

ACL-TSOV

ACL Temperature Sensor Override Valve

ACL-TVS

ACL Thermal Vacuum Switch

ACL-TVV

ACL Thermal Vacuum Valve

ACL-VCDV

ACL Vacuum Control Delay Valve

ACL-VCV

ACL Vacuum Control Valve

ACL-VM

ACL Vacuum Motor

ACL-WP

ACL Wax Pellet Type Motor

ADS

Anti-Dieseling Solenoid

AFR

Air/Fuel Ratio Sensor

AFS

GETtheMANUALS.org

Air/Fuel Ratio Sensor

AIH

Air Intake Heaters

AIH-TS

AIH Temperature Sensor

AIR

Air Injection System

AIS

Air Injection System

AIS-ACV

AIS Air Control Valve

AIS-AMV

AIS Air Management Valve

AIS-ASV

AIS Air Switching Valve

AIS-BPV

AIS By-Pass Valve

AIS-CC

AIS Computer Controlled

AIS-CKV

AIS Check Valve

AIS-CSV

AIS Control Solenoid Valve

GETtheMANUALS.org

AIS-CV

AIS Combination Valve

AIS-DV

AIS Diverter Valve

AIS-IMCV

AIS Intake Manifold Change-Over Valve

AIS-MCV

AIS Manifold Change-Over Valve

AIS-PAF

AIS Pulse Air Feeder

AIS-PM

AIS Pump Motor

AIS-PV

AIS Pneumatic Valve

AIS-RV

AIS Relief Valve

AIS-SAV

AIS Secondary Air Valve

AIS-SOL

AIS Solenoid

AIS-SV

AIS Solenoid Valve

AIS-VCV

AIS Vacuum Control Valve

GETtheMANUALS.org

AIS-VSV

AIS Vacuum Switching Valve

AIS-VT

AIS Vacuum Tank

AIS-VCV

AIS Vacuum Control Valve

AIS-VSV

AIS Vacuum Switching Valve

AIV

Air Injection Valve

AIV-SOL

Air Injection Valve Solenoid

ALVW

Adjusted Loaded Vehicle Weight

AMV

Air Management Valve

AP

Air Pump Injection System

AP-ACV

AP Air Control Valve

AP-AMV

AP Air Management Valve

AP-ASRV

AP Air Switching Relief Valve

GETtheMANUALS.org

AP-ASS

AP Air Switching Solenoid

AP-ASV

AP Air Switching Valve

AP-BPV

AP By-Pass Valve

AP-CKV

AP Check Valve

AP-CS

AP Control Solenoid

AP-DCTO

AP Dual Coolant Temperature Override

AP-DLY

AP Delay Valve

AP-DV

AP Diverter Valve

AP-EADV

AP Electric Air Control Diverter Valve

AP-EAMR

AP Electric Air Management Relay

AP-EAMS

AP Electric Air Management Solenoid

AP-EAP

AP Electric Air Pump

GETtheMANUALS.org

AP-EC

AP Electromagnetic Clutch

AP-ERLY

AP Electric Air Pump Relay

AP-RDV

AP Reed Valve

AP-RV

AP Relief Valve

AP-SOL

AP Solenoid

AP-SOV

AP Shut-Off Valve

AP-SV

AP Solenoid Valve

AP-SWV

AP Switchover Valve

AP-TV

AP Transmitting Valve

AP-VCS

AP Vacuum Control Solenoid

AP-VCSV

AP Vacuum Controlled Air Shut-Off Valve

AP-VCV

AP Vacuum Control Valve

GETtheMANUALS.org

AP-VSV

AP Vacuum Switching Valve

A/T

Automatic Transmission

ATCV

Air Temperature Control Valve

"B"

BP/EGR

Backpressure EGR System

BP/EGR-BPS

BP/EGR Backpressure Sensor

BP/EGR-BPT

BP/EGR Backpressure Transducer

BP/EGR-BPV

BP/EGR Backpressure Valve

BP/EGR-BS

BP/EGR Bleed Solenoid

BP/EGR-BVSV

BP/EGR Bimetallic Vacuum Switching Valve

BP/EGR-C

BP/EGR Controller

BP/EGR-CLR

BP/EGR Cooler

BP/EGR-CS

GETtheMANUALS.org

BP/EGR Control Solenoid

BP/EGR-CTO

BP/EGR Coolant Temperature Override

BP/EGR-CV

BP/EGR Control Valve

BP/EGR-DCTO

BP/EGR Dual Coolant Temperature Override

BP/EGR-DS

BP/EGR Diagnostic Solenoid

BP/EGR-DSOL

BP/EGR Duty Solenoid

BP/EGR-DTVSW

BP/EGR Distributor Thermal Vacuum Switch

BP/EGR-DV

BP/EGR Delay Valve

BP/EGR-EET

BP/EGR Electric Transducer

BP/EGR-EPV

BP/EGR External Pressure Valve

BP/EGR-FDV

BP/EGR Forward Delay Valve

BP/EGR-LC

BP/EGR Load Control Valve

BP/EGR-PS

GETtheMANUALS.org

BP/EGR Position Sensor

BP/EGR-PT

BP/EGR Pressure Tranducer

BP/EGR-PVS

BP/EGR Ported Vacuum Switch

BP/EGR-RES

BP/EGR Reservoir

BP/EGR-RST

BP/EGR Restrictor

BP/EGR-SOL

BP/EGR Solenoid

BP/EGR-TCTVS

BP/EGR Torque Converter Thermal Vacuum Switch

BP/EGR-TCV

BP/EGR Thermal Control Valve

BP/EGR-TCVLV

BP/EGR Temperature Control Valve

BP/EGR-TS

BP/EGR Temperature Sensor

BP/EGR-TVS

BP/EGR Thermal Vacuum Switch

BP/EGR-TVV

BP/EGR Thermal Vacuum Valve

BP/EGR-VCV

GETtheMANUALS.org

BP/EGR Vacuum Control Valve

BP/EGR-VM

BP/EGR Vacuum Modulator

BP/EGR-VRV

BP/EGR Vacuum Regulator Valve

BP/EGR-VS

BP/EGR Vacuum Switch

BP/EGR-VSOL

BP/EGR Vent Solenoid

BP/EGR-VSV

BP/EGR Vacuum Switching Valve

"C"

C-4

Computer Controlled Catalytic Converter

CAC

Charge Air Cooler

CAS

Clean Air System

CB

Crankcase Breather

CB-VC

Crankcase Breather-Vapor Canister

CBPS

Coasting By-Pass System

GETtheMANUALS.org

CBVC

Crankcase Breather Vapor Canister

CCIEV

Coolant Controlled Idle Enrichment Valve

CCS

Controlled Combustion System

CCV

Closed Crankcase Ventilation

CD-REGVLV

Crankcase Depression Regulator Valve

CDRV

Crankcase Depression Relief Valve

CEAB

Cold Engine Air Bleed

CEAB-TVS

CEAB Thermal Vacuum Switch

CEAB-TVV

CEAB Thermal Vacuum Valve

CEC

Computerized Engine Controls

CESS

Cold Engine Sensor Switch

CETS

Cold Engine Temperature Switch

GETtheMANUALS.org

CFI

Continuous Fuel Injection

CMH

Cold Mixture Heater

CNG

Compressed Natural Gas

CO

Carbon Monoxide

CO2

Carbon Dioxide

CPI

Central Port Injection

CRV

Coasting Richer Valve

CSI

Central Sequential Injection

CTAVS

Cold Temperature Activated Vacuum System

CTOX

Continous Trap Oxidizer

"D"

DCLV

Deceleration Valve

DCS

GETtheMANUALS.org

Deceleration Control System

DDI

Direct Diesel Injection

DFI

Direct Diesel Injection

DI

Direct Injection

DKV

Deceleration Kick Valve

DMCV

Deceleration Mixture Control Valve

DMS

Dual Manifold System

DOC

Diesel Oxidation Catalyst

DOHC

Dual Overhead Cam

DPF

Diesel Particulate Filter

DPFE

Differential Pressure Feedback EGR Valve

DPFEGR

Differential Pressure Feedback EGR Valve

DTM

GETtheMANUALS.org

Deceleration Throttle Modulator

"E"

EAIR

Electric Air Injection System

EAIR-DV

EAIR Diverter Valve

ECM

Electronic Control Module

ECU

Electronic Control Unit

EDC

Electronic Diesel Control

EDS

Electronic Diesel System

EEC

Electronic Engine Control

EFE

Early Fuel Evaporation

EFE-CKV

EFE Check Valve

EFE-CV

EFE Control Valve

EFE-DTVS

EFE Delay Thermal Vacuum Switch

GETtheMANUALS.org

EFE-HTR

EFE Heater

EFE-HCV

EFE Heat Control Valve

EFE-OTS

EFE Oil Temperature Switch

EFE-PTC

EFE Positive Temperature Coefficient (Intake Heater Grid)

EFE-PVS

EFE Ported Vacuum Switch

EFE-SOL

EFE Solenoid

EFE-TVS

EFE Thermal Vacuum Switch

EFE-TVV

EFE Thermal Vacuum Valve

EFE-VSV

EFE Vacuum Switching Valve

EFI

Electronic Fuel Injection

EFI-MA

EFI Mass Airflow Sensor

EFI-MAF

EFI Mass Airflow Sensor

GETtheMANUALS.org

EGR

Exhaust Gas Recirculation System

EGR-BCS

EGR Boost Check Solenoid

EGR-BPBV

EGR By-Pass Backpressure Valve

EGR-BPT

EGR Backpressure Transducer

EGR-BPV

EGR By-Pass Valve

EGR-BS

EGR Bleed Solenoid

EGR-BSSV

EGR Boost Sensor Solenoid Valve

EGR-BVSV

EGR Bimetallic Vacuum Switching Valve

EGR-C

EGR Controller

EGR-CC

EGR Coolant Controlled

EGR-CLR

EGR Cooler

EGR-VSOL

EGR Vacuum Solenoid

GETtheMANUALS.org

EGR-CKV

EGR Check Valve

EGR-CS

EGR Control Solenoid

EGR-CSOL

EGR Cut-Off Solenoid

EGR-CSV

EGR Control Solenoid

EGR-CTO

EGR Coolant Temperature Override

EGR-CTS

EGR Charge Temperature Sensor

EGR-CTSW

EGR Charge Temperature Switch

EGR-CTTS

EGR Coolant Temperature Thermoswitch

EGR-CV

EGR Control Valve

EGR-CVCV

EGR Constant Vacuum Control Valve

EGR-CVS

EGR Control Vent Solenoid

EGR-DC

EGR Digital Control

GETtheMANUALS.org

EGR-DCTO

EGR Dual Coolant Temperature Override

EGR-DPFE

Differential Pressure Feedback EGR Sensor

EGR-DPFS

EGR Differential Pressure Feedback Sensor

EGR-DS

EGR Diagnostic Solenoid

EGR-DSOL

EGR Duty Solenoid

EGR-DTVS

EGR Delay Thermal Vacuum Switch

EGR-DTVSW

EGR Distributor Thermal Vacuum Switch

EGR-DV

EGR Delay Valve

EGR-EPRS

EGR Exhaust Pressure Regulator Solenoid

EGR-EPRV

EGR Exhaust Pressure Regulator Valve

EGR-EPV

EGR External Pressure Valve

EGR/EVAP-CSV

EGR/EVAP Control Solenoid Valve

GETtheMANUALS.org

EGR-EVR

EGR Vacuum Regulator

EGR-EVRV

EGR Electronic Vacuum Regulator Valve

EGR-FDV

EGR Forward Delay Valve

EGR-FJS

EGR Floor Jet System

EGR-FPS

EGR Feedback Pressure Sensor

EGR-LCV

EGR Load Control Valve

EGR-MAP

EGR Manifold Absolute Pressure Sensor

EGR-PFE

EGR-PFE Sensor

EGR-PS

EGR Position Sensor

EGR-PSW

EGR Pulse Switch

EGR-PVS

EGR Ported Vacuum Switch

EGR-REG

EGR Regulator

GETtheMANUALS.org

EGR-RES

EGR Reservoir

EGR-RST

EGR Restrictor

EGR-SC

EGR Signal Converter

EGR-SEC

EGR, Secondary

EGR-SEN

EGR Sensor

EGR-SOL

EGR Solenoid

EGR-SU

EGR Switchover Valve

EGR-SUB

Sub-EGR Valve

EGR-SVV

EGR Solenoid Vacuum Valve

EGR-T

EGR Temperature Sensor

EGR-TC

EGR Transmission Controlled

EGR-TCTVS

EGR Torque Converter Thermal Vacuum Switch

GETtheMANUALS.org

EGR-TCV

EGR Thermal Control Valve

EGR-TCVLV

EGR Temperature Control Valve

EGR-TRANS

EGR Transducer

EGR-TS

EGR Temperature Sensor

EGR-TSW

EGR Temperature Switch

EGR-TVD

EGR Throttle Valve Diaphragm

EGR-TVS

EGR Thermal Vacuum Switch

EGR-TVSOL

EGR Throttle Valve Solenoid

EGR-TVV

EGR Thermal Vacuum Valve

EGR-VA

EGR Vacuum Amplifier

EGR-VCV

EGR Vacuum Control Valve

EGR-VM

EGR Vacuum Modulator

GETtheMANUALS.org

EGR-VR

EGR Vacuum Regulator

EGR-VRS

EGR Vacuum Regulator Solenoid

EGR-VRSV

EGR Vacuum Regulator Solenoid Valve

EGR-VRV

EGR Vacuum Regulator Valve

EGR-VS

EGR Vacuum Switch

EGR-VSDV

EGR Vacuum Switch Dump Valve

EGR-VSEN

EGR Vacuum Sensor

EGR-VSOL

EGR Vent Solenoid

EGR-VSS

EGR Vacuum Switching Solenoid

EGR-VST

EGR Vacuum Surge Tank

EGR-VSV

EGR Vacuum Switching Valve

EGR-VVCS

EGR Venturi Vacuum Control System

GETtheMANUALS.org

EGRB

EGR Boost Sensor

EGRC

EGR Control Solenoid

EGRC-BPT

EGR Control Backpressure Transducer

EGRC-SV

EGR Control Solenoid Valve

EHOC

Electronically Heated Oxidation Catalyst

EHTWC

Electronically Heated Three-Way Catalyst

EI

Electronic Ignition System

EIS

Electronic Ignition System

ELB

Electronic Lean Burn

EPR

Exhaust Pressure Regulator

EPR-SOL

EPR Solenoid

ESA

Electronic Spark Advance

GETtheMANUALS.org

EVAP

Fuel Evaporative System

EVAP-AAC

EVAP Auxiliary Air Control

EVAP-BPSV

EVAP By-Pass Solenoid Valve

EVAP-BVSV

EVAP Bimetallic Vacuum Switching Valve

EVAP-CAV

EVAP Canister Air Valve

EVAP-CCV

EVAP Control Canister Close Valve

EVAP-CCVSV

EVAP Control Canister Vent Shut Valve

EVAP-CCVVSV

EVAP Closed Canister Valve Vacuum Switching Valve

EVAP-CDCV

EVAP Canister Drain Cut Valve

EVAP-CKV

EVAP Check Valve

EVAP-CPCS

EVAP Canister Purge Control Solenoid

EVAP-CPCSV

EVAP Canister Purge Control Solenoid Valve

GETtheMANUALS.org

EVAP-CPCV

EVAP Canister Purge Control Valve

EVAP-CPRV

EVAP Canister Purge Regulator Valve

EVAP-CPSV

EVAP Canister Vent Shut Valve

EVAP-CPT

EVAP Canister Purge Timer

EVAP-CPTVS

EVAP Canister Purge Thermal Vacuum Switch

EVAP-CPV

EVAP Canister Vent Valve

EVAP-CPVCSV

EVAP Canister Purge Volume Control

EVAP-CPVCV

EVAP Canister Purge Volume Control Valve

EVAP-CPVDV

EVAP Canister Purge Vacuum Delay Valve

EVAP-CPVR

EVAP Canister Purge Valve Resonator

EVAP-CS

EVAP Control Solenoid

EVAP-CSPS

EVAP Control System Pressure Sensor

GETtheMANUALS.org

EVAP-CST

EVAP Canister Surge Tank

EVAP-CT

EVAP Catch Tank

EVAP-CVCS

EVAP Canister Vent Control Solenoid

EVAP-CVCV

EVAP Canister Vent Control Valve

EVAP-CVS

EVAP Canister Vent Solenoid

EVAP-CVSV

EVAP Carburetor Vent Switching Valve

EVAP-CVV

EVAP Canister Vent Valve

EVAP-DCTO

EVAP Dual Coolant Temperature Override

EVAP-DF

EVAP Drain Filter

EVAP-DPS

EVAP Differential Pressure Sensor

EVAP-DV

EVAP-Drain Valve

EVAP-EV

EVAP Emission Valve

GETtheMANUALS.org

EVAP-FBVV

EVAP Fuel Bowl Vent Valve

EVAP-FBVS

EVAP Fuel Bowl Vent Solenoid

EVAP-FCV

EVAP Fuel Cut Valve

EVAP-FLS

EVAP Fuel Level Sensor

EVAP-FOLV

EVAP Fuel Overflow Limiter Valve

EVAP-FS

EVAP Flow Switch

EVAP-FSV

EVAP Flow Switchover Valve<

EVAP-FTEV

EVAP Fuel Tank EVAP Valve

EVAP-FTPCSV

EVAP Fuel Tank Pressure Control Solenoid Valve

EVAP-FTPS

EVAP Fuel Tank Pressure Sensor

EVAP-FTS

EVAP Fuel Temperature Sensor

EVAP-FVCV

EVAP Fuel Vapor Control Valve

GETtheMANUALS.org

EVAP-FVS

EVAP Fuel Vapor Separator

EVAP-FVTS

EVAP Fuel Vapor Temperature Sensor

EVAP-FVV

EVAP Fuel Vent Valve

EVAP-FVVV

EVAP Fuel Vapor Vent Valve

EVAP-IVS

EVAP Inner Vent Solenoid

EVAP-LDP

EVAP Leak Detection Pump

EVAP-LDPAF

EVAP Leak Detection Pump Air Filter

EVAP-LDPF

EVAP Leak Detection Pump Filter

EVAP-LDPVV

EVAP Leak Detection Pump Vent Valve

EVAP-LSEP

EVAP Liquid Separator

EVAP-NVLD

EVAP Natural Vacuum Leak Detection

EVAP-ORVR

Evaporative On-Board Refueling Vapor Recovery System

GETtheMANUALS.org

EVAP-ORVRCV

Evaporative On-Board Refueling Vapor Recovery Check Valve

EVAP-ORVRFTVRV

EVAP-ORVR Fuel Tank Vapor Recirculation

EVAP-OVCV

EVAP Outer Vent Control Valve

EVAP-OWV

EVAP One-Way Valve

EVAP-PCDV

EVAP Purge Control Diaphram Valve

EVAP-PCSV

EVAP Purge Cut-Off Solenoid Valve

EVAP-PFS

EVAP Purge Flow Sensor

EVAP-PFSVVSV

EVAP Purge Flow Switching Valve Vacuum Switching Valve

EVAP-PRRV

EVAP Pressure Relief Rollover Valve

EVAP-PSVVSV

EVAP Pressure Switching Valve Vacuum Switching Valve

EVAP-PSOL

EVAP Purge Solenoid

EVAP-PSSV

EVAP Pressure Switching Solenoid

GETtheMANUALS.org

EVAP-PSVVSV

EVAP Pressure Switching Valve Vacuum Switching Valve

EVAP-PV

EVAP Purge (Frequency) Valve

EVAP-PVS

EVAP Ported Vacuum Switch

EVAP-RV

EVAP Rollover Valve

EVAP-RV/FTPS

EVAP Rollover Valve/Fuel Tank

EVAP-RVSV

EVAP Rollover Vapor Separator Valve

EVAP-SNR

EVAP Canister Sensor

EVAP-SOL

EVAP Solenoid

EVAP-SOV

EVAP Shutoff Valve

EVAP-SSV

EVAP Shut-Off Solenoid Valve

EVAP-SV

EVAP Solenoid Valve

EVAP-TC

EVAP Trap Canister

GETtheMANUALS.org

EVAP-TS

EVAP Temperature Switch

EVAP-TPBPV

EVAP Tank Pressure By-Pass Valve

EVAP-TPCS

EVAP Tank Pressure Control Solenoid

EVAP-TPCV

EVAP Tank Pressure Control Valve

EVAP-TRWV

EVAP Tree-Way Valve

EVAP-TV

EVAP Thermal Valve

EVAP-TVS

EVAP Thermal Vacuum Switch

EVAP-TVV

EVAP Thermal Vacuum Valve

EVAP-TWV

EVAP Two-Way Valve

EVAP-VC

EVAP Vapor Canister

EVAP-VCAT

EVAP Vapor Canister Air Tank

EVAP-VCF

EVAP Vapor Canister Filter

GETtheMANUALS.org

EVAP-VCSV

EVAP Vapor Canister Shut-off Valve

EVAP-VCTV

EVAP Vacuum Control Valve

EVAP-VCV

EVAP Vacuum Canister Valve

EVAP-VCVS

EVAP Vapor Canister Vent Solenoid

EVAP-VM

EVAP Vacuum Motor

EVAP-VPS

EVAP Vapor Pressure Sensor

EVAP-VPSVSV

EVAP Vapor Pressure Sensor Vacuum Switching Valve

EVAP-VS

EVAP Vacuum Sensor

EVAP-VSOL

EVAP Ventilation Solenoid

EVAP-VSOL/LDP

EVAP Ventilation Solenoid/Leak Detection Pump

EVAP-VST

EVAP Vacuum Surge Tank

EVAP-VSV

EVAP Vacuum Switching Valve

GETtheMANUALS.org

EVAP-VV

EVAP Ventilation Valve

EVRS

EGR Vacuum Regulator Solenoid

"F"

FBC

Feedback Carburetor

FCOV

Fuel Change Over Valve

FF

Flex Fuel

FF-CKV

Fuel Fill Check Valve

FF-FCV

Fuel Tank Fuel Cut-Off Valve

FF-FLVV

Fuel Tank Fill Limit Vent Valve

FGOV

Fuel Gravity/Overflow Valve

FGVV

Fuel Gravity Vent Valve

FI

Fuel Injected

FICD

GETtheMANUALS.org

Fast Idle Control Device

FISR

Fast Idle Solenoid Relay

FLV

Fill Limit Valve

FLVV

Fill Limiting Vent Valve

FP-CKV

Fill Pipe Check Valve

FP-RV

Fill Pipe Rollover Valve

FR

Fill Pipe Restrictor

FT-FLVV

Fuel Tank Fill Limit Vent Valve

FT-GVV

Fuel Tank Grade Vent Valve

FT-OPRV

Fuel Tank Over Pressure Vent Valve

FT-PCV

Fuel Tank Pressure Control Valve

FT-VCV

Fuel Tank Vapor Control Valve

FT-VRV

GETtheMANUALS.org

Fuel Tank Vapor Recirculation Valve

FTCV

Fuel Tank Check Valve

FTDPS

Fuel Tank Differential Pressure Sensor

FTEV

Fuel Tank EVAP Valve

FTPS

Fuel Tank Pressure Sensor

FTT

Fuel Tank Temperature Sensor

FTTS

Fuel Tank Temperature Sensor

FTV/LSV

Fuel Tank Vapor/Liquid Seperation Valve

FTVCV

Fuel Tank Vapor Control Valve

FTVPRV

Fuel Tank Ventilation Pressure Retention Valve

FVPS

Fuel Vapor Pressure Sensor

FTVV

Fuel Tank Vent Valve

FVV

GETtheMANUALS.org

Fuel Vapor Valve

"G"

GVWR

Gross Vehicle Weight Rating

"H"

HAC

High Altitude Compensator

HAFS

Heated Air Fuel Ratio Sensor

HAI

Hot Air Intake

HAS

High Altitude System

HC

Hydrocarbons

HCAC-VSV

Hydrocarbon Absorber Catalyst Vacuum Switching Valve

HDC

Heavy Duty Cooling

HDC-CTO

HDC Coolant Temperature Override

HFM-SFI

Hot Film Engine Management SFI

HIC

GETtheMANUALS.org

Hot Idle Compensator

HIM

Heated Intake Manifold

HO

High Output

HO2S

Heated Oxygen Sensor

HP

High Performance

HP

Horsepower

HPCA

Housing Pressure Cold Advance

HSC

High Swirl Combustion

"I"

IAC

Idle Air Control Valve

IACV-SW

IACV Switch

ICOM

Idle Compensator

IDI

Indirect Diesel Injection

GETtheMANUALS.org

IES

Idle Enrichment System

IMCO

Improved Combustion System

"K"

KS

Knock Sensor

"L"

LH-SFI

Hot Wire Sequential Multiport Fuel Injection

LVFD

Liquid/Vapor Fuel Discriminator

LVW

Loaded Vehicle Weight

"M"

MD-TICS

Timing & Injection rate Control System

MDP

Manifold Differential Pressure sensor

ME-SFI

Motor Electronics Sequential Fuel Injection

MFI

Multiport Fuel Injection

GETtheMANUALS.org

MFI-MAF

MFI Mass Airflow Sensor

MFLS

Main Fuel Level Sensor

MI

Mechanical Fuel Injection

MIL

Malfunction Indicator Light

M/T

Manual Transmission

"N"

NAC

Nitrogen Oxides (NOx) Adsorbing Catalyst

NLV

Non-Linear Valve

NOS

NOx Sensor

NOx

NOx Emission Control

NOxC

Nitrogen Oxide Catalyst

NOxS

Nitrogen Oxide Sensor

NOxTWC

GETtheMANUALS.org

NOx adsorptive TWC

NSC

Nitrogen Oxides (NOx) Storage Catalyst

"O"

OBD

On-Board Diagnostic System

PBD (F)/(P)

Full/Partial On-Board Diagnostic

OC

Oxidation Catalytic Converter

OHC

Overhead Cam

ORVR

On-Board Refueling Vapor Recovery

ORVR-COV

ORVR Cut-Off Valve

ORVR-CV

ORVR Control Valve

ORVR-FMV

ORVR Flow Management Valve

ORVR-FTVCV

ORVR Fuel Tank Vapor Control Valve

ORVR-FTVRV

ORVR Fuel Tank Vapor Recirculation Valve

GETtheMANUALS.org

ORVR-LV

ORVR Leveling Valve

ORVR-OCKV

ORVR Overfill Check Valve

ORVR-RCV

ORVR Refueling Control Valve

ORVR-VCV

ORVR Vapor Cut Valve

ORVR-VRV

ORVR Vapor Recirculating Valve

ORVR-VSV

ORVR Vent Shut Valve

ORVR-VV

ORVR Vent Valve

OVCV

Outer Vent Control Valve

O2S

Oxygen Sensor

"P"

PAIR

Pulsed Secondary Air Injection

PAIR-ABV

PAIR Anti-Backfire Valve

PAIR-ACOV

GETtheMANUALS.org

PAIR Air Cut-Off Valve

PAIR-ACS

PAIR Air Control Solenoid

PAIR-ACV

PAIR Air Control Valve

PAIR-AIV

PAIR Air Injection Valve

PAIR-ASCS

PAIR Air Suction Control Solenoid

PAIR-ASOV

PAIR Air Shutoff Valve

PAIR-ASS

PAIR Air Switching Solenoid

PAIR-ASV

PAIR Air Switching Valve

PAIR-ASVL

PAIR Air Suction Valve

PAIR-AVCS

PAIR Air Valve Control Solenoid

PAIR-CSV

PAIR Control Solenoid Valve

PAIR-CKV

PAIR Check Valve

PAIR-DV

GETtheMANUALS.org

PAIR Diverter Valve

PAIR-PAF

PAIR Pulse Air Feeder

PAIR-PAV

PAIR Pulse Air Valve

PAIR-RES

PAIR Resonator

PAIR-RV

PAIR Reed Valve

PAIR-SCSV

PAIR Swirl Control Solenoid Valve

PAIR-SCV

PAIR Swirl Control Valve

PAIR-SOL

PAIR Solenoid

PAIR-VSV

PAIR Vacuum Switching Valve

PCM

Powertrain Control Module

PCV

Positive Crankcase Ventilation

PCV-DOV

PCV Dual Orifice Valve

PCV-HCB

GETtheMANUALS.org

PCV Heated Crankcase Breather

PCV-HE

PCV Heating Element

PCV-PRV

PCV Pressure Regulator Valve

PCV-SOL

PCV Solenoid

PEVR

Power Enrichment Vacuum Regulator

PPM

Parts Per Million

PTOX

Periodic Trap Oxidizer

PURCV

Purge Crankcase Ventilation

PVCS

Ported Valve Control System

PVCS-A

PVCS Actuator

PVCS-CS

PVCS Control Solenoid

PVLCS

Power Valve Control System

"R"

GETtheMANUALS.org

ROV

Rollover Valve

"S"

SAI-SV

Secondary Air Injection Shutoff Valve

SAIR-CV

Secondary Air Injection Control Valve

SC

Supercharged or Super Charger

SC MFI

Supercharged Multiport Fuel Injection

SCR

Selective Catalytic Reduction

SCSV

Swirl Control Solenoid Valve

SCV

Swirl Control Valve

SCV-A

SCV Actuator

SFI

Sequential Multiport Fuel Injection

SFI-MAF

SFI Mass Airflow Sensor

SFLS

GETtheMANUALS.org

Sub-Fuel Level Sensor

SOHC

Single Overhead Cam

SPK

Spark Controls

SPK-AVM

SPK Advance Vacuum Modulator

SPK-BVSV

SPK Bimetal Vacuum Switching Valve

SPK-CC

SPK Computer Controlled

SPK-CKV

SPK Check Valve

SPK-CSSA

SPK Cold Start Spark Advance System

SPK-CSSH

SPK Cold Start Spark Hold System

SPK-CTO

SPK Coolant Temperature Override

SPK-DAVS

SPK Distributor Vacuum Advance Solenoid

SPK-DCKV

SPK Distributor Check Valve

SPK-DCTO

GETtheMANUALS.org

SPK Dual Coolant Temperature Override

SPK-DDD

SPK Dual Diaphragm Distributor

SPK-DMV

SPK Distributor Modulator Valve

SPK-DPD

SPK Dual Point Distributor

SPK-DPVS

SPK Distributor Ported Vacuum Switch

SPK-DRCV

SPK Distributor Retard Control Valve

SPK-DRS

SPK Distributor Retard Solenoid

SPK-DSVMV

SPK Distributor Spark Vacuum Modulator Valve

SPK-DTVS

SPK Distributor Thermal Vacuum Switch

SPK-DTVV

SPK Distributor Thermal Vacuum Valve

SPK-DV

SPK Delay Valve

SPK-DVA

SPK Distributor Vacuum Advance

SPK-DVAS

GETtheMANUALS.org

SPK Distributor Vacuum Advance Solenoid

SPK-DVCS

SPK Distributor Vacuum Control Solenoid

SPK-DVCSW

SPK Distributor Vacuum Controlled Switch

SPK-DVCV

SPK Distributor Vacuum Control Valve

SPK-DVDV

SPK Distributor Vacuum Delay Valve

SPK-DVRS

SPK Distributor Vacuum Retard Switch

SPK-DVRV

SPK Distributor Vacuum Regulating Valve

SPK-DVVV

SPK Distributor Vacuum Vent Valve

SPK-EAVS

SPK Electronically Actuated Vacuum Switch

SPK-EDM

SPK Electronic Distributor Modulator

SPK-EI

SPK Electronic Ignition

SPK-ESA

SPK Electronic Spark Advance

SPK-ESC

GETtheMANUALS.org

SPK Electronic Spark Control (Retard)

SPK-ESS

SPK Electronic Spark Selection

SPK-EST

SPK Electronic Spark Timing

SPK-FDV

SPK Forward Delay Valve

SPK-HPCA

SPK Housing Pressure Cold Advance

SPK-ITCS

SPK Ignition Timing Control System

SPK-ITVS

SPK Ignition Timing Vacuum Switch

SPK-NLVR

SPK Non-Linear Vacuum Regulator

SPK-OSAC

SPK Orifice Spark Advance Control

SPK-PVA

SPK Ported Vacuum Advance

SPK-PVS

SPK Ported Vacuum Switch

SPK-RDO

SPK Retard Delay Orifice

SPK-RDV

GETtheMANUALS.org

SPK Reverse Delay Valve

SPK-RDVD

SPK Reverse Delay Valve (Dual)

SPK-RDVLV

SPK Retard Delay Valve

SPK-RDVS

SPK Reverse Delay Valve (Single)

SPK-RETS

SPK Retard Switch

SPK-SC

SPK Speed Controlled

SPK-SOL

SPK Solenoid

SPK-SRRV

SPK Spark Relay Regulator Valve

SPK-TAVIA

SPK Temperature Activated Vacuum Ignition Advance

SPK-TCS

SPK Transmission Controlled Spark

SPK-TCSYS

SPK Timing Control System

SPK-TIDC

SPK Thermostatic Ignition Distributor Control

SPK-TV

GETtheMANUALS.org

SPK Thermal Valve

SPK-TVS

SPK Thermal Vacuum Switch

SPK-VACTO

SPK Vacuum Advance Coolant Temperature Override

SPK-VAS

SPK Vacuum Advance Solenoid

SPK-VAV

SPK Vacuum Advance Valve

SPK-VR

SPK Vacuum Retard

SPK-VRSW

SPK Vacuum Retard Switch

SPK-VSV

SPK Vacuum Switching Valve

SPK-VTCS

SPK Vacuum Timing Control System

SPL

Smoke Puff Limiter

SRI

Service Reminder Indicator

SSCA

Stepped Speed Control Actuator

SSCS

GETtheMANUALS.org

Stepped Speed Control Solenoid

STS

Service Throttle Soon Light

STVS

Secondary Throttle Valve System

SUB-HO2S

Sub-Heated Oxygen Sensor (after CAT)

SUB-O2S

Sub-Oxygen Sensor

SUB-TWC

Sub Three-Way Catalytic Converter

"T"

TAA

Turbo Air-To-Air

TAA

Throttle Actuator Assembly

TAB

Thermactor Air By-Pass

TAD

Thermactor Air Diverter

TAC

Thermostatic Air Cleaner

TBI

Throttle Body Injection

GETtheMANUALS.org

TBPCS

Throttle By-Pass Control System

TC

Turbo Charger

TCC

Torque Converter Clutch

TCCL

Torque Converter Control

TCD

Throttle Closing Dashpot

TC-DV

TC Delay Valve

TC-TVC

TC Thermal Vacuum Switch

TC-VS

TC Vacuum Switch

TD

Thermactor Diverter

TFT

Tank Fuel Temperature Sensor

THOS2

Third Heated Oxygen Sensor

TICV

Thermal Ignition Control Valve

GETtheMANUALS.org

TIV

Thermal Idle Valve

TK

Throttle Kicker

TLUC

Transmission Lock-Up Converter

TLUC-TVS

TLUC Thermal Vacuum Switch

TLUC-VS

TLUC Vacuum Switch

TM

Throttle Modulator

TOS

Throttle Opener System

TP

Throttle Positioner

TPI

Tuned Port Fuel Injection

TPV

Throttle Poppet Valve

TR

Thermal Reactor

TRC

Throttle Return Control

GETtheMANUALS.org

TRCS

Throttle Return Control Solenoid

TRCTL

Throttle Return Control Throttle Lever Actuator

TRSCV

Throttle Return Solenoid Control Valve

TRTVV

Temperature Regulator Thermal Vacuum Valve

TRVV

Transmission Vacuum Valve

TSOL

Throttle Solenoid

TVISD

Throttle Vacuum Idle Speed Diaphragm

TVM

Transmission Vacuum Modulator

TWC

Three-Way Catalytic Converter

TWC+OC

Three-Way + Oxidation Catalytic Converter

"V"

VA

Vacuum Advance Unit

VAC-AMP

GETtheMANUALS.org

Vacuum Amplifier

VA-CTO

VA Coolant Temperature Override

VCV

Vacuum Cut Valve

VCV-BV

VCV By-Pass Valve

VLFR

Vent Line Flow Restrictor/Anti-Trickle Fill Valve

"W"

WU

Warm-Up Catalyst

WU-OC

Warm-Up Oxidation Converter

WU-TWC

Warm-Up Three-Way Catalytic Converter

GETtheMANUALS.org

ACCESSORY POWER SOCKETS COMPONENT LOCATION INDEX

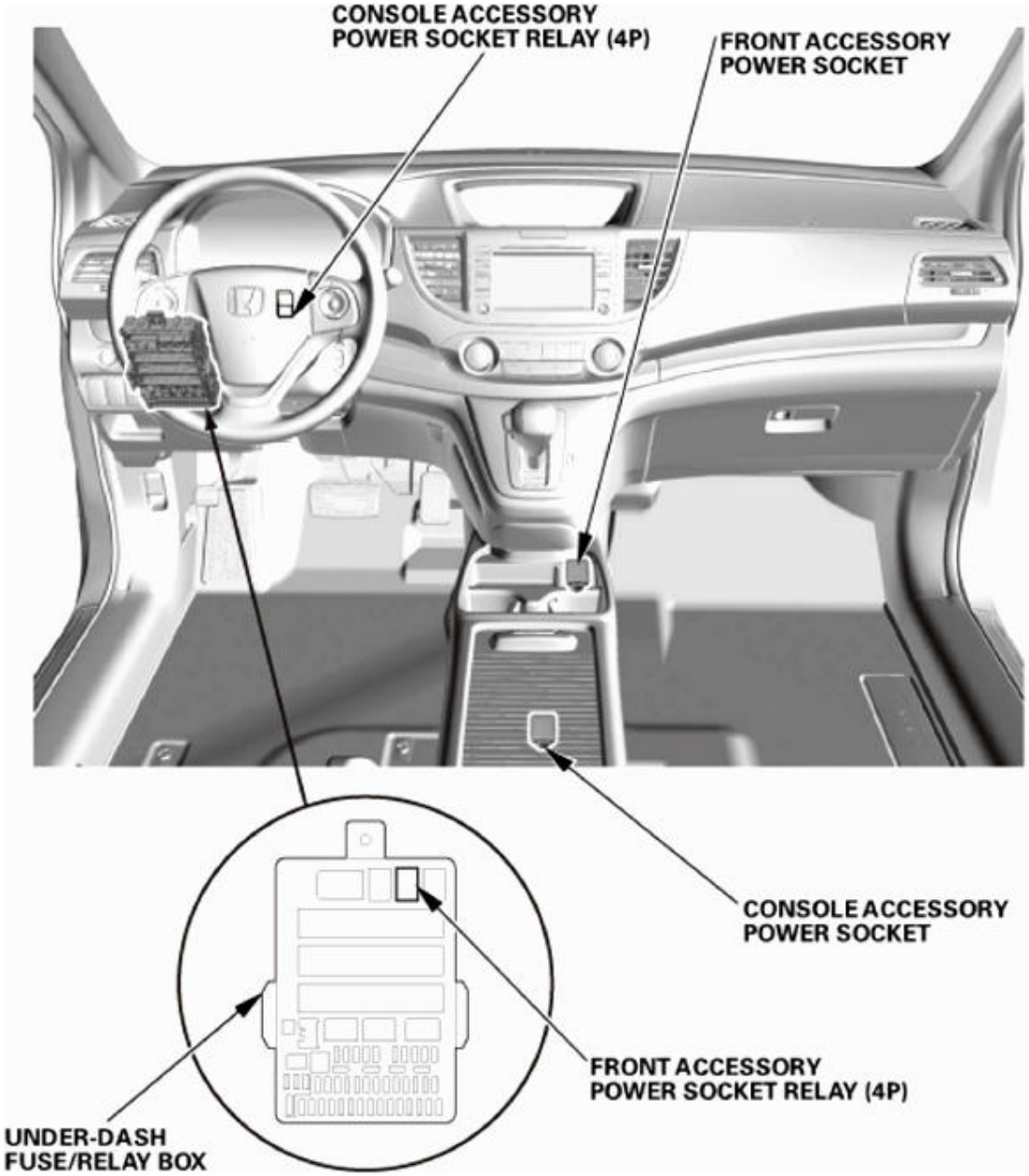

Fig. 1: Identifying Accessory Power Sockets Component Location
Courtesy of AMERICAN HONDA MOTOR CO., INC.

	Removal and Installation See **CONSOLE ACCESSORY POWER SOCKET REMOVAL AND INSTALLATION** or **FRONT**

GETtheMANUALS.org

CONSOLE ACCESSORY POWER SOCKET	**ACCESSORY POWER SOCKET REMOVAL AND INSTALLATION**
	Test See **CONSOLE ACCESSORY POWER SOCKET TEST** or **FRONT ACCESSORY POWER SOCKET TEST**
CONSOLE ACCESSORY POWER SOCKET RELAY (4P)	**TEST**
FRONT ACCESSORY POWER SOCKET	**Removal and Installation** See **CONSOLE ACCESSORY POWER SOCKET REMOVAL AND INSTALLATION** or **FRONT ACCESSORY POWER SOCKET REMOVAL AND INSTALLATION**
	Test See **CONSOLE ACCESSORY POWER SOCKET TEST** or **FRONT ACCESSORY POWER SOCKET TEST**
FRONT ACCESSORY POWER SOCKET RELAY (4P)	**TEST**

CONSOLE ACCESSORY POWER SOCKET TEST

NOTE: **If the front and console accessory power sockets do not work, check the No. B19 (7.5 A) fuse in the under-dash fuse/relay box first.**

1. Disconnect the 2P connector from the console accessory power socket.

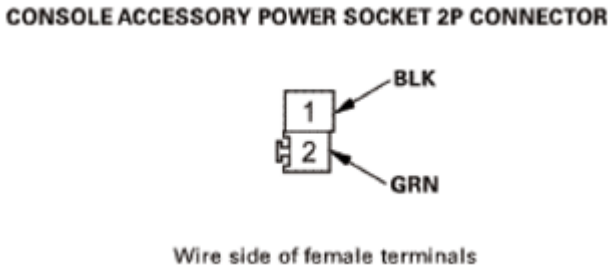

Fig. 2: Identifying Console Accessory Power Socket 2P Connector Terminal
Courtesy of AMERICAN HONDA MOTOR CO., INC.

2. Inspect the connector terminals to be sure they are making good contact.
   - If the terminals are bent, loose, or corroded, repair them as necessary and recheck the system.
   - If the terminals are OK, go to step 4.
3. Turn the ignition switch to ACCESSORY (I).
4. Measure the voltage between under-dash relay holder A terminal No. 8 and body ground. There should be less than 0.2 V.
   - If there is less than 0.2 V, go to step **5** .
   - If there is more than 0.2 V, check for:
   - An open or high resistance in the ground wire between under-dash relay holder A terminal No. 8 and ground (G501).

GETtheMANUALS.org

- Poor ground (G501).

5. Measure the voltage between console accessory power socket 2P connector terminal No. 2 and body ground. There should be battery voltage.
   - If there is battery voltage, go to step **6** .
   - If there is no voltage, check for:
   - Blown No. B12 (15 A) fuse in the under-dash fuse/relay box.
   - Faulty console accessory power socket relay.
   - Faulty under-dash fuse/relay box.
   - An open or high resistance in the wire between console accessory power socket 2P connector terminal No. 2 and under-dash fuse/relay box connector S (10P) terminal No. 7.
6. Check for continuity between console accessory power socket 2P connector No. 1 and body ground. There should be continuity.

- If there is continuity, replace the console accessory power socket.
- If there is no continuity, check for:

- Poor ground (G503).
- An open or high resistance in the ground wire between console accessory power socket 2P connector terminal No. 1 and ground (G503).

FRONT ACCESSORY POWER SOCKET TEST

NOTE: If the front and console accessory power sockets do not work, check the No. B19 (7.5 A) fuse in the under-dash fuse/relay box first.

1. Disconnect the 2P connector from the front accessory power socket.

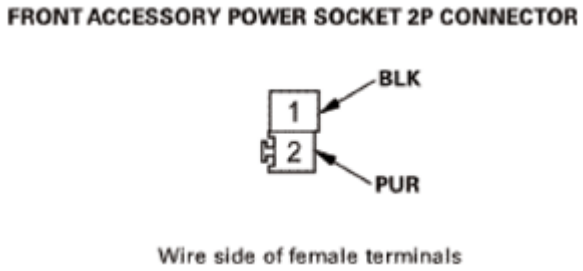

Fig. 3: Identifying Front Accessory Power Socket 2P Connector Terminal
Courtesy of AMERICAN HONDA MOTOR CO., INC.

2. Inspect the connector terminals to be sure they are making good contact.
   - If the terminals are bent, loose, or corroded, repair them as necessary and recheck the system.
   - If the terminals are OK, go to step 4.
3. Turn the ignition switch to ACCESSORY (I).
4. Measure the voltage between under-dash fuse/relay box connector R (8P) terminal No. 7 and body

GETtheMANUALS.org

ground. There should be less than 0.2 V.

- If there is less than 0.2 V, go to step **5** .
- If there is more than 0.2 V, check for:
  - An open or high resistance in the ground wire between under-dash fuse/relay box connector R (8P) No. 7 and ground (G501).
  - Poor ground (G501).

5. Measure the voltage between front accessory power socket 2P connector terminal No. 2 and body ground. There should be battery voltage.
   - If there is battery voltage, go to step **6** .
   - If there is no voltage, check for:
     - Blown No. B27 (15 A) fuse in the under-dash fuse/relay box.
     - Faulty front accessory power socket relay.
     - Faulty under-dash fuse/relay box.
     - An open or high resistance in the wire between front accessory power socket 2P connector terminal No. 2 and under-dash fuse/relay box connector N (13P) terminal No. 2.
6. Check for continuity between front accessory power socket 2P connector terminal No. 1 and body ground. There should be continuity.
   - If there is continuity, replace the front accessory power socket.
   - If there is no continuity, check for:
     - Poor ground (G503).
     - An open or high resistance in the ground wire between front accessory power socket 2P connector terminal No. 1 and ground (G503).

ACCESSORY POWER SOCKET TRIM REMOVAL AND INSTALLATION

REMOVAL

1. Front Console Cover - Both Sides

   Left side

GETtheMANUALS.org

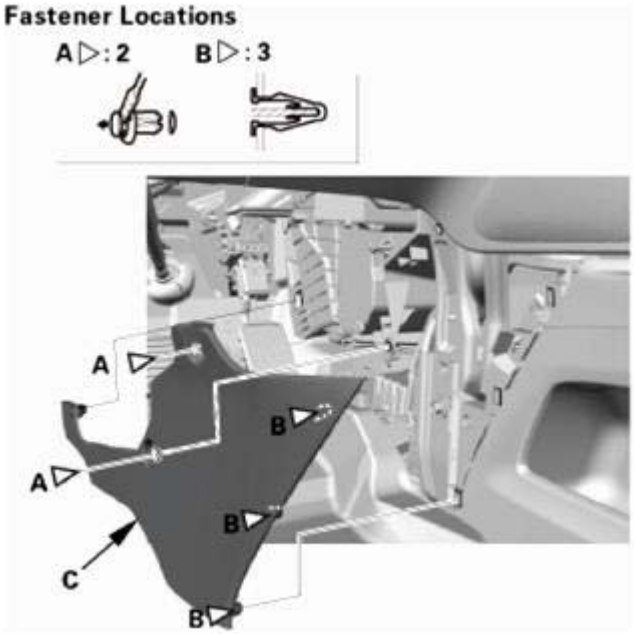

Fig. 4: Identifying Front Console Covers And Clips (Left Side)
Courtesy of AMERICAN HONDA MOTOR CO., INC.

Right side

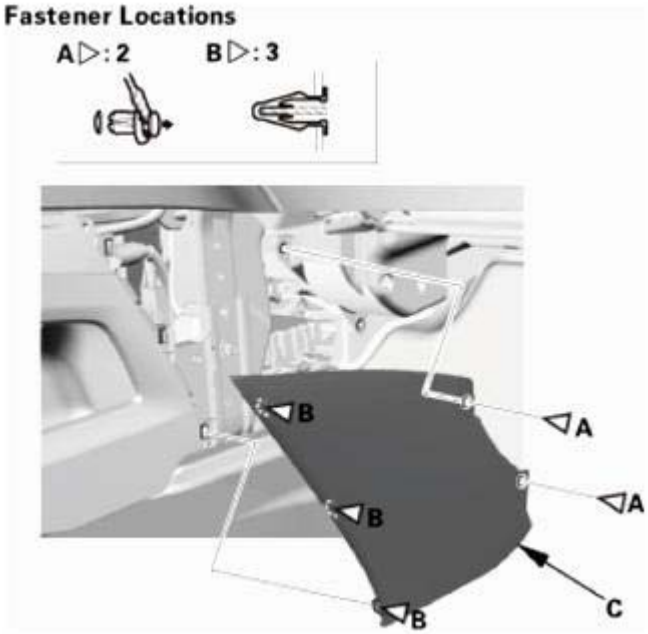

Fig. 5: Identifying Front Console Covers And Clips (Right Side)
Courtesy of AMERICAN HONDA MOTOR CO., INC.

1. Remove the clips (A).
2. Detach the clips (B), then remove the front console covers (C).

GETtheMANUALS.org

2. Center Console Rear Trim
    1. Carefully pry out the center console rear trim (A) with the appropriate trim tool to detach the clips (B) and the hooks (C), then remove the center console rear trim.

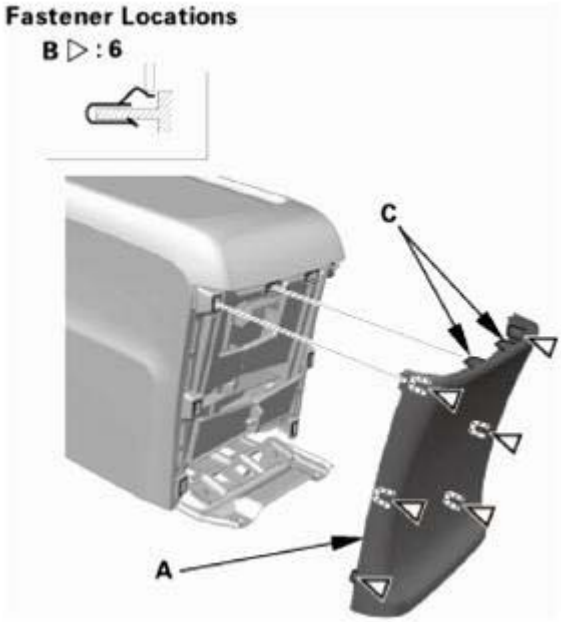

<u>Fig. 6: Identifying Console Rear Trim, Clips And Hooks</u>
Courtesy of AMERICAN HONDA MOTOR CO., INC.

3. Center Console
    1. Carefully pry out the center lower cover (A) with the appropriate trim tool to detach the clips (B), then remove the center lower cover.
    2. Remove the bolt (C).

GETtheMANUALS.org

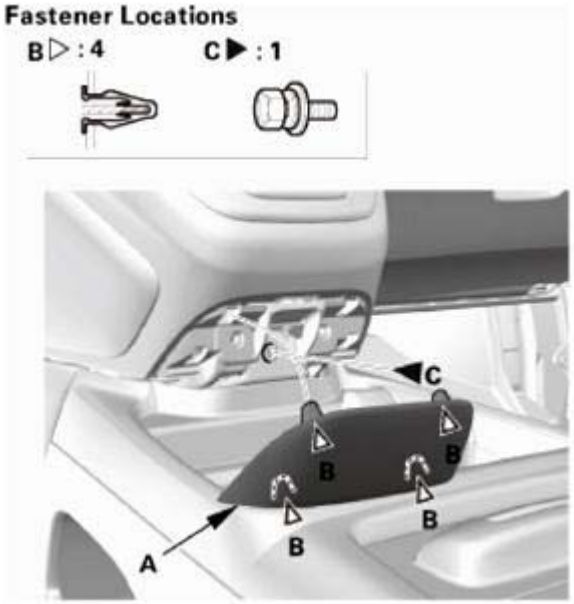

Fig. 7: Identifying Center Lower Cover, Clips And Bolt
Courtesy of AMERICAN HONDA MOTOR CO., INC.

3. Remove the bolts (A).

Fig. 8: Identifying Center Console Bolts
Courtesy of AMERICAN HONDA MOTOR CO., INC.

4. Remove the console box mat (A), then remove the bolts (B).

GETtheMANUALS.org

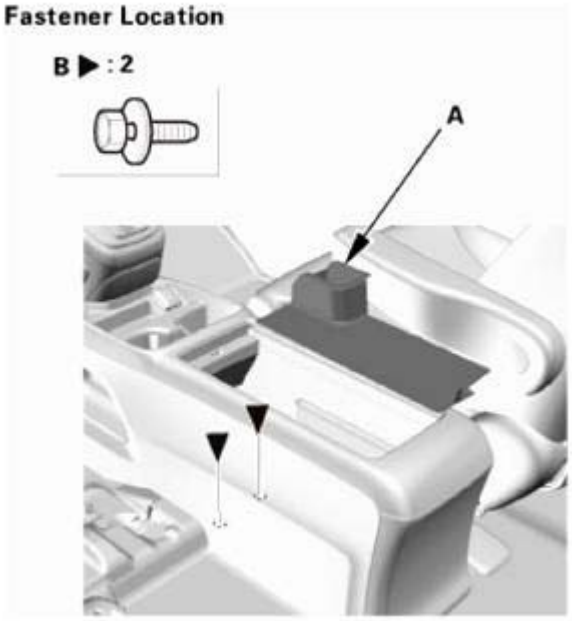

Fig. 9: Identifying Console Box Mat And Bolts
Courtesy of AMERICAN HONDA MOTOR CO., INC.

5. Disconnect the connectors (A), and remove the clips (B).

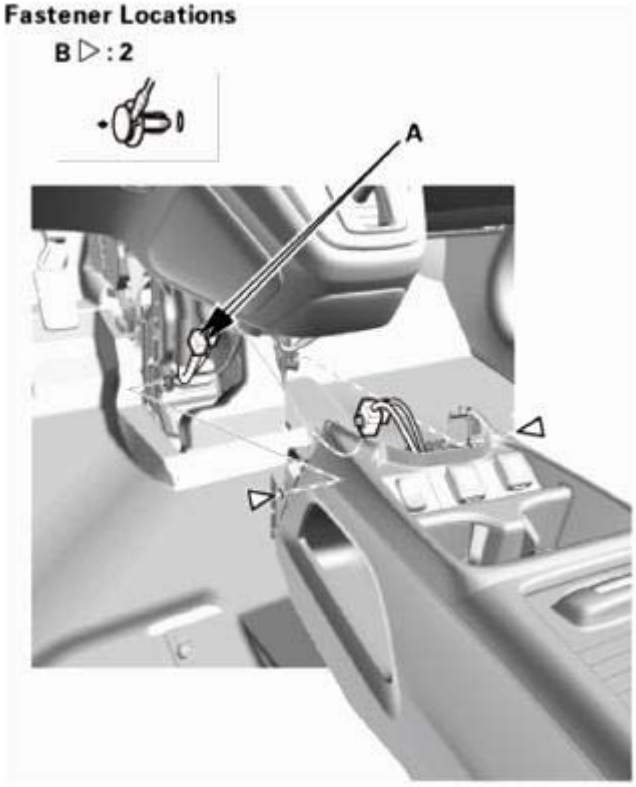

Fig. 10: Identifying Connectors And Clips

GETtheMANUALS.org

Courtesy of AMERICAN HONDA MOTOR CO., INC.

6. Slide both front seats fully rearward, and recline the seat-backs around two thirds to the rear.
7. Remove the center console (A).

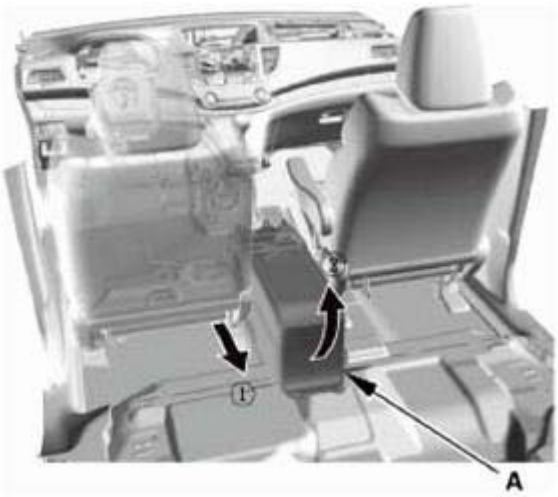

Fig. 11: Identifying Center Console
Courtesy of AMERICAN HONDA MOTOR CO., INC.

4. Auxiliary Jack Assembly
   1. Carefully pull out the auxiliary jack assembly (A).

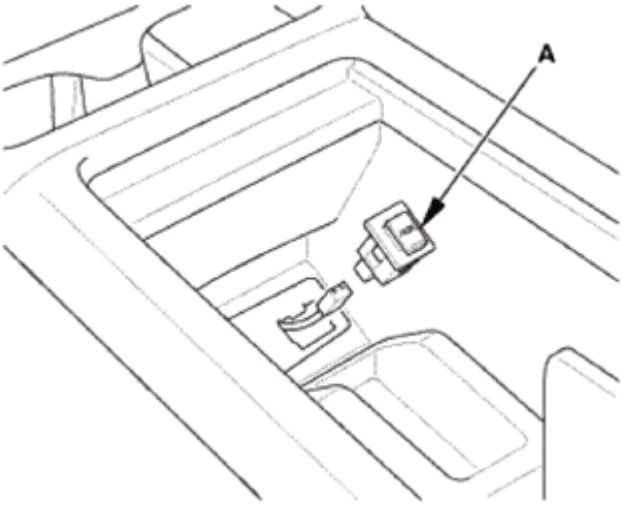

Fig. 12: Identifying Auxiliary Jack Assembly
Courtesy of AMERICAN HONDA MOTOR CO., INC.

5. Accessory Power Socket Trim
   1. Disconnect the connectors (A), then remove the screws (B).

GETtheMANUALS.org

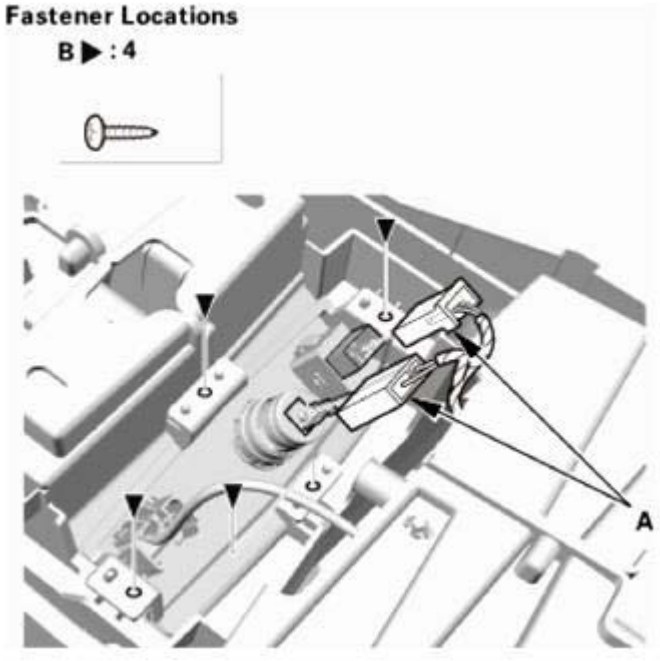

Fig. 13: Identifying Accessory Power Socket Trim Connectors And Screws
Courtesy of AMERICAN HONDA MOTOR CO., INC.

2. Remove the accessory power socket trim (A).

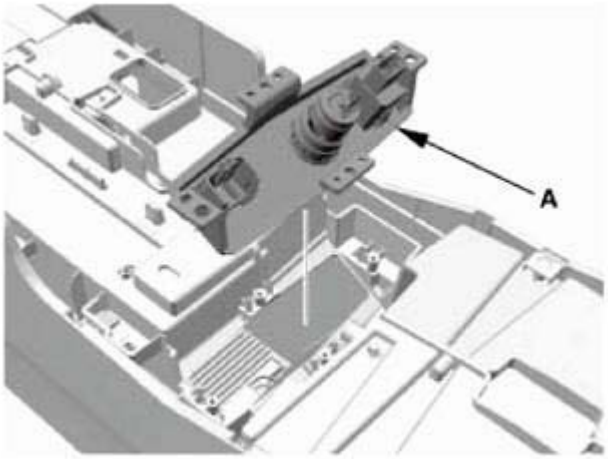

Fig. 14: Identifying Accessory Power Socket Trim
Courtesy of AMERICAN HONDA MOTOR CO., INC.

INSTALLATION

1. Accessory Power Socket Trim
    1. Install the accessory power socket trim (A).

GETtheMANUALS.org

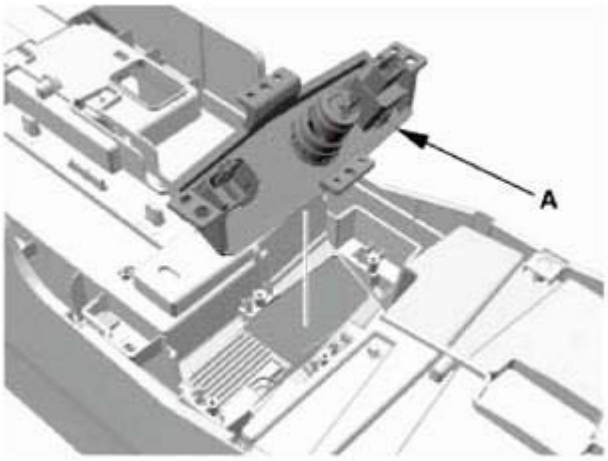

Fig. 15: Identifying Accessory Power Socket Trim
Courtesy of AMERICAN HONDA MOTOR CO., INC.

2. Install the screws (A), then connect the connectors (B).

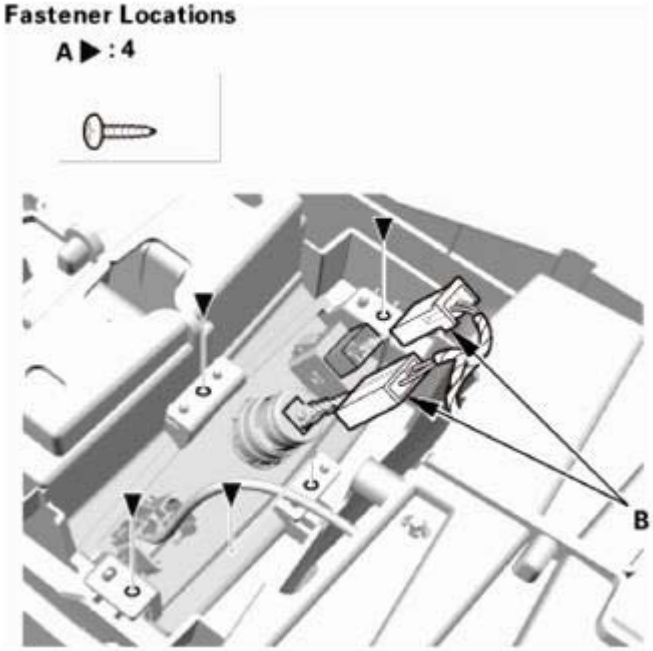

Fig. 16: Identifying Accessory Power Socket Trim Connectors And Screws
Courtesy of AMERICAN HONDA MOTOR CO., INC.

2. Auxiliary Jack Assembly
    1. Install the auxiliary jack assembly (A).

GETtheMANUALS.org

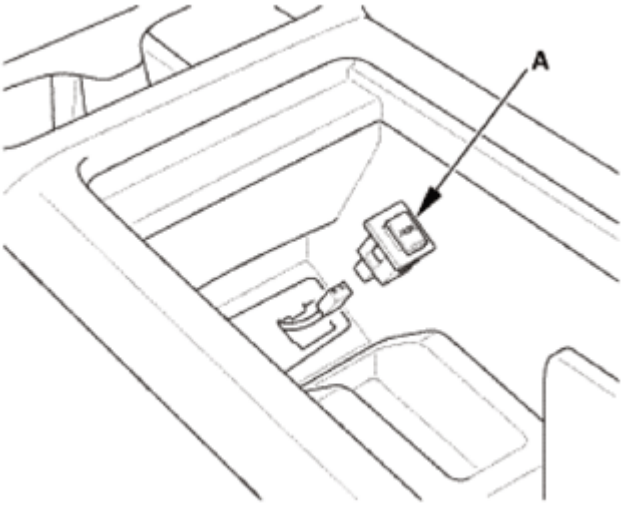

Fig. 17: Identifying Auxiliary Jack Assembly
Courtesy of AMERICAN HONDA MOTOR CO., INC.

3. Center Console
    1. Install the center console (A).

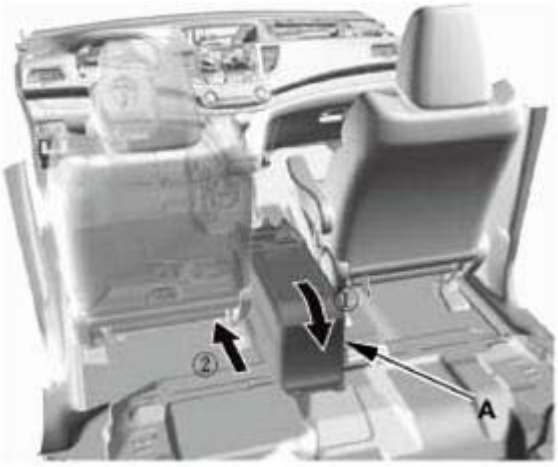

Fig. 18: Identifying Center Console
Courtesy of AMERICAN HONDA MOTOR CO., INC.

    2. Connect the connectors (A), and install the clips (B).

GETtheMANUALS.org

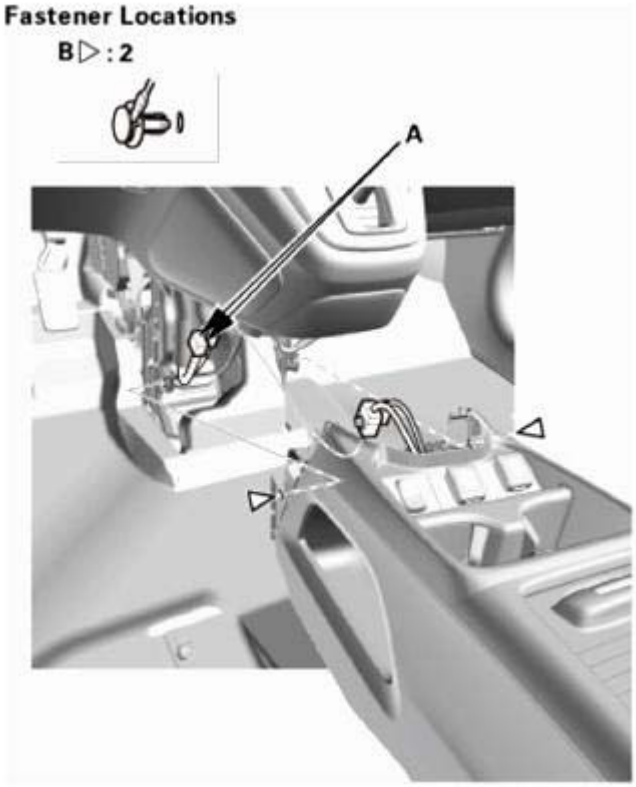

Fig. 19: Identifying Connectors And Clips
Courtesy of AMERICAN HONDA MOTOR CO., INC.

3. Install the bolts (A), then install the console box mat (B).

GETtheMANUALS.org

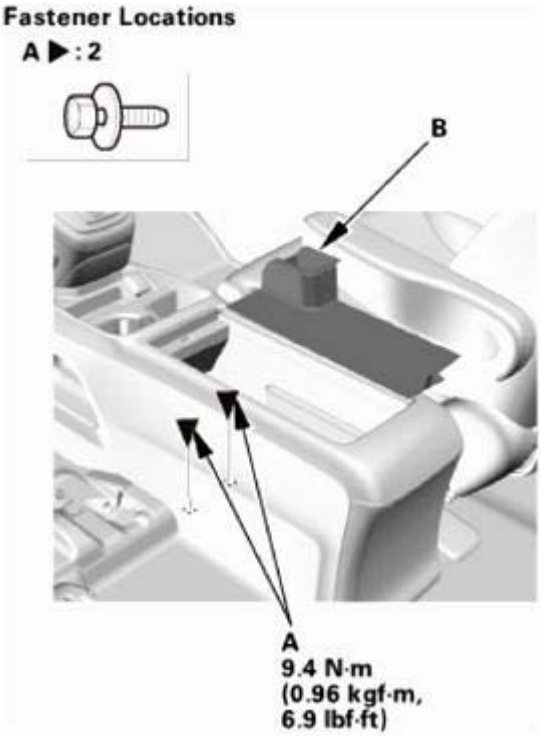

Fig. 20: Identifying Console Box Mat And Bolts With Torque Specification
Courtesy of AMERICAN HONDA MOTOR CO., INC.

4. Install the bolts (A).

Fig. 21: Identifying Center Console Bolts With Torque Specification
Courtesy of AMERICAN HONDA MOTOR CO., INC.

GETtheMANUALS.org

5. Install the bolt (A), then install the center lower cover (B). Make sure the clips (C) snap into place securely.

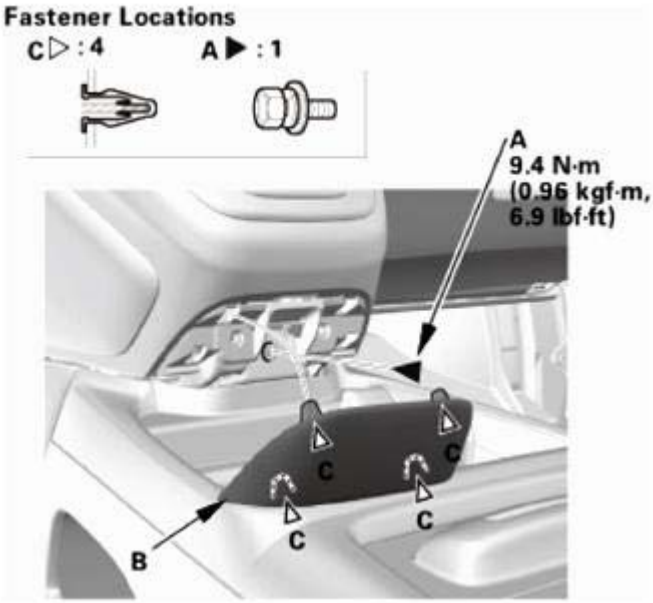

Fig. 22: Identifying Center Lower Cover, Clips And Bolt With Torque Specification
Courtesy of AMERICAN HONDA MOTOR CO., INC.

4. Center Console Rear Trim
    1. Install the center console rear trim (A). Make sure the clips (B) and the hooks (C) snap into place securely.

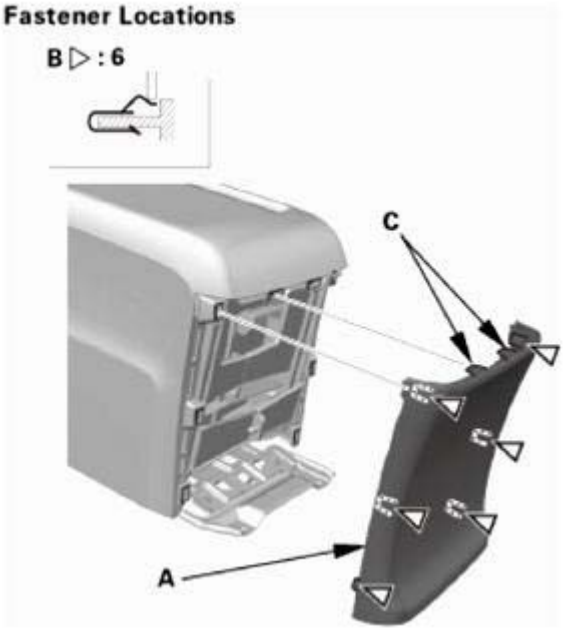

Fig. 23: Identifying Center Console Rear Trim, Clips And Hooks

GETtheMANUALS.org

Courtesy of AMERICAN HONDA MOTOR CO., INC.

5. Front Console Cover - Both Sides

Left side

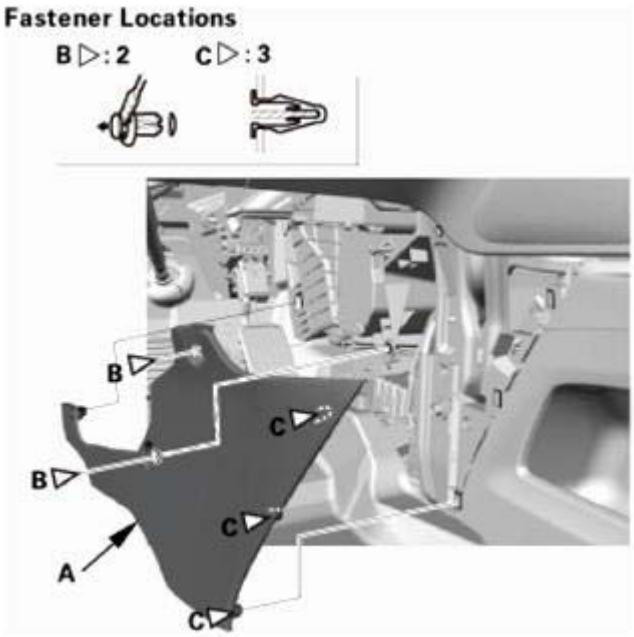

Fig. 24: Identifying Front Console Covers And Clips (Left Side)
Courtesy of AMERICAN HONDA MOTOR CO., INC.

Right side

1. Install the front console covers (A). Make sure the clips (B, C) snap into place securely.

GETtheMANUALS.org

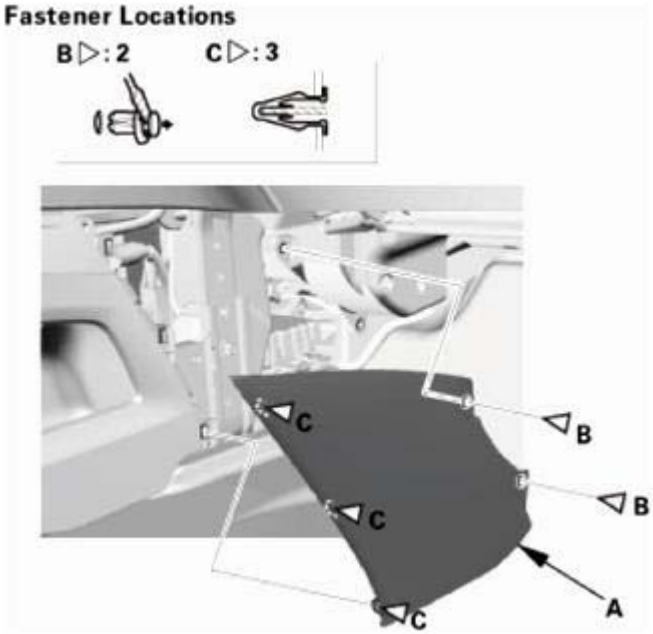

Fig. 25: Identifying Front Console Covers And Clips (Right Side)
Courtesy of AMERICAN HONDA MOTOR CO., INC.

CONSOLE ACCESSORY POWER SOCKET REMOVAL AND INSTALLATION

REMOVAL

1. Console Accessory Power Socket
    1. Gently press the tabs (A) and remove the front accessory power socket (B).
    2. Disconnect the connector.

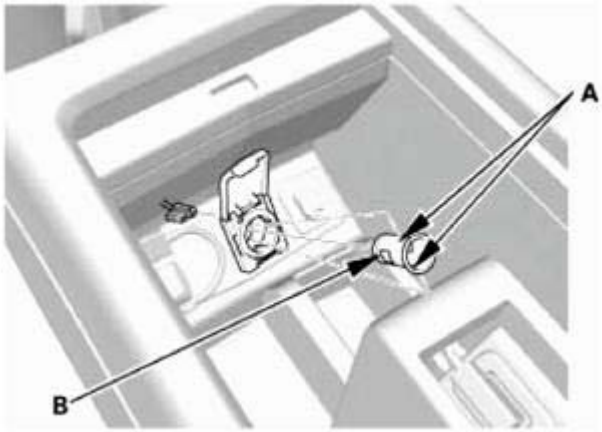

Fig. 26: Identifying Front Accessory Power Socket And Tabs
Courtesy of AMERICAN HONDA MOTOR CO., INC.

3. Gently press the tabs (A), then remove the housing (B) from the cover. Note the location of the

GETtheMANUALS.org

indexing tabs (C).

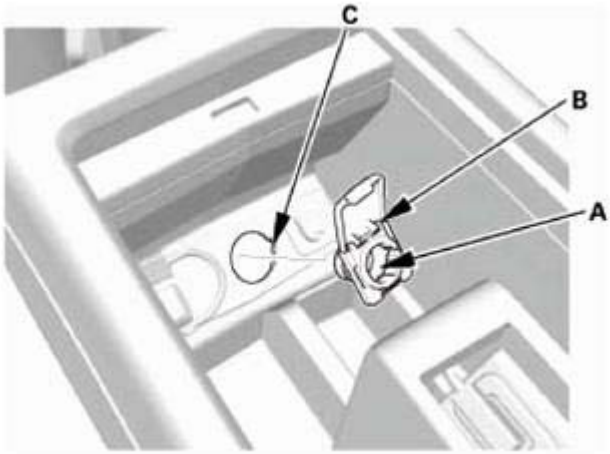

Fig. 27: Identifying Housing And Tabs
Courtesy of AMERICAN HONDA MOTOR CO., INC.

INSTALLATION

1. Console Accessory Power Socket
    1. Install the housing (A) in position on the cover.

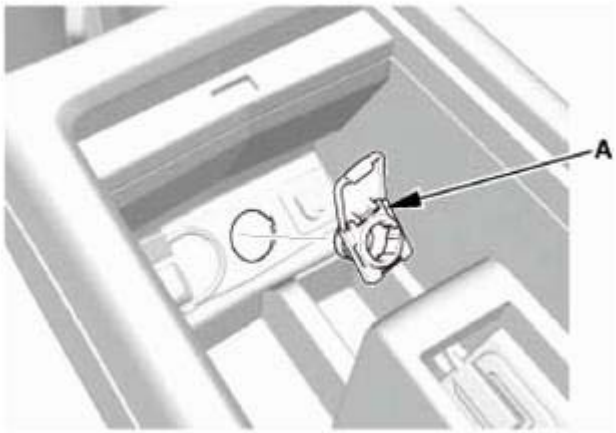

Fig. 28: Identifying Console Accessory Power Socket Housing
Courtesy of AMERICAN HONDA MOTOR CO., INC.

    2. Connect the connector.
    3. Install the front accessory power socket (A) to the housing (B).

GETtheMANUALS.org

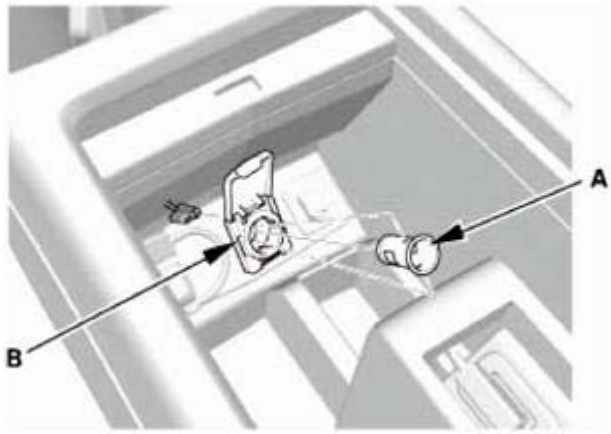

Fig. 29: Identifying Front Accessory Power Socket And Housing
Courtesy of AMERICAN HONDA MOTOR CO., INC.

FRONT ACCESSORY POWER SOCKET REMOVAL AND INSTALLATION

REMOVAL

1. Front Accessory Power Socket
    1. Gently press the tabs (A) and remove the front accessory power socket (B).
    2. Disconnect the connector.

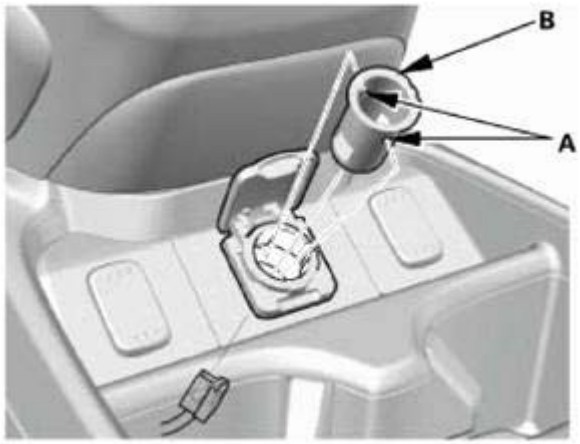

Fig. 30: Identifying Front Accessory Power Socket And Tabs
Courtesy of AMERICAN HONDA MOTOR CO., INC.

3. Gently press the tabs (A), then remove the housing (B) from the cover. Note the location of the indexing tabs (C).

GETtheMANUALS.org

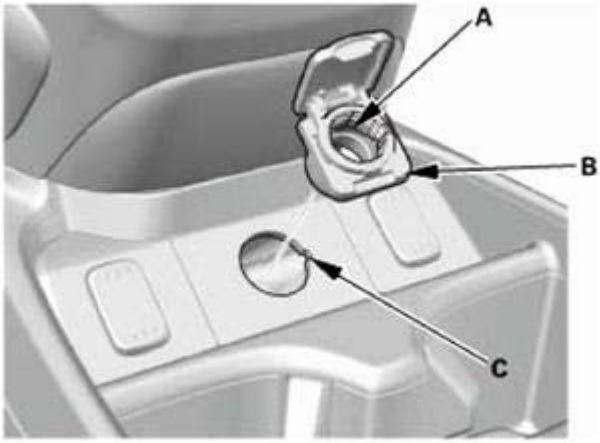

Fig. 31: Identifying Housing And Tabs
Courtesy of AMERICAN HONDA MOTOR CO., INC.

INSTALLATION

1. Front Accessory Power Socket
    1. Install the housing (A) in position on the cover.

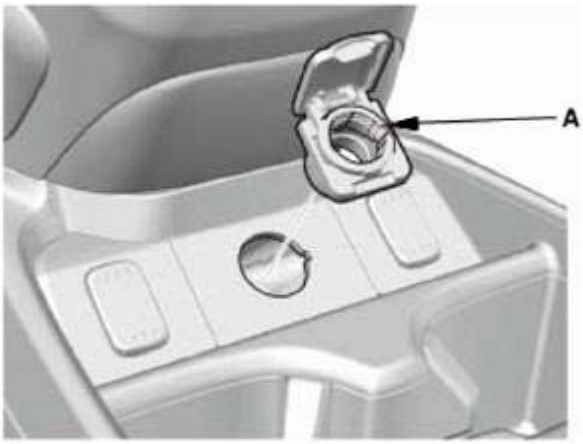

Fig. 32: Identifying Front Accessory Power Socket Housing
Courtesy of AMERICAN HONDA MOTOR CO., INC.

    2. Connect the connector.
    3. Install the front accessory power socket (A) to the housing (B).

GETtheMANUALS.org

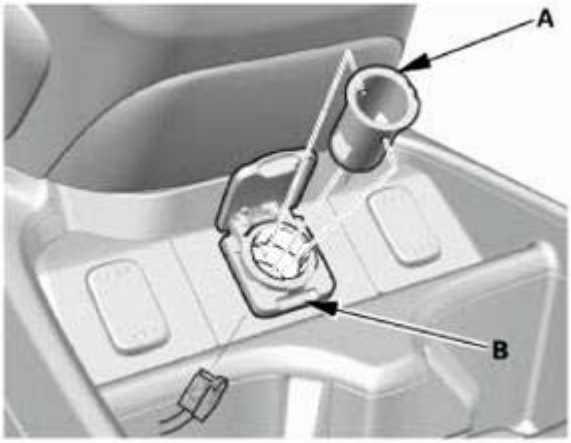

Fig. 33: Identifying Front Accessory Power Socket And Housing
Courtesy of AMERICAN HONDA MOTOR CO., INC.

GETtheMANUALS.org

DTC P0705: TRANSMISSION RANGE SWITCH (MULTIPLE SHIFT - POSITION INPUT)

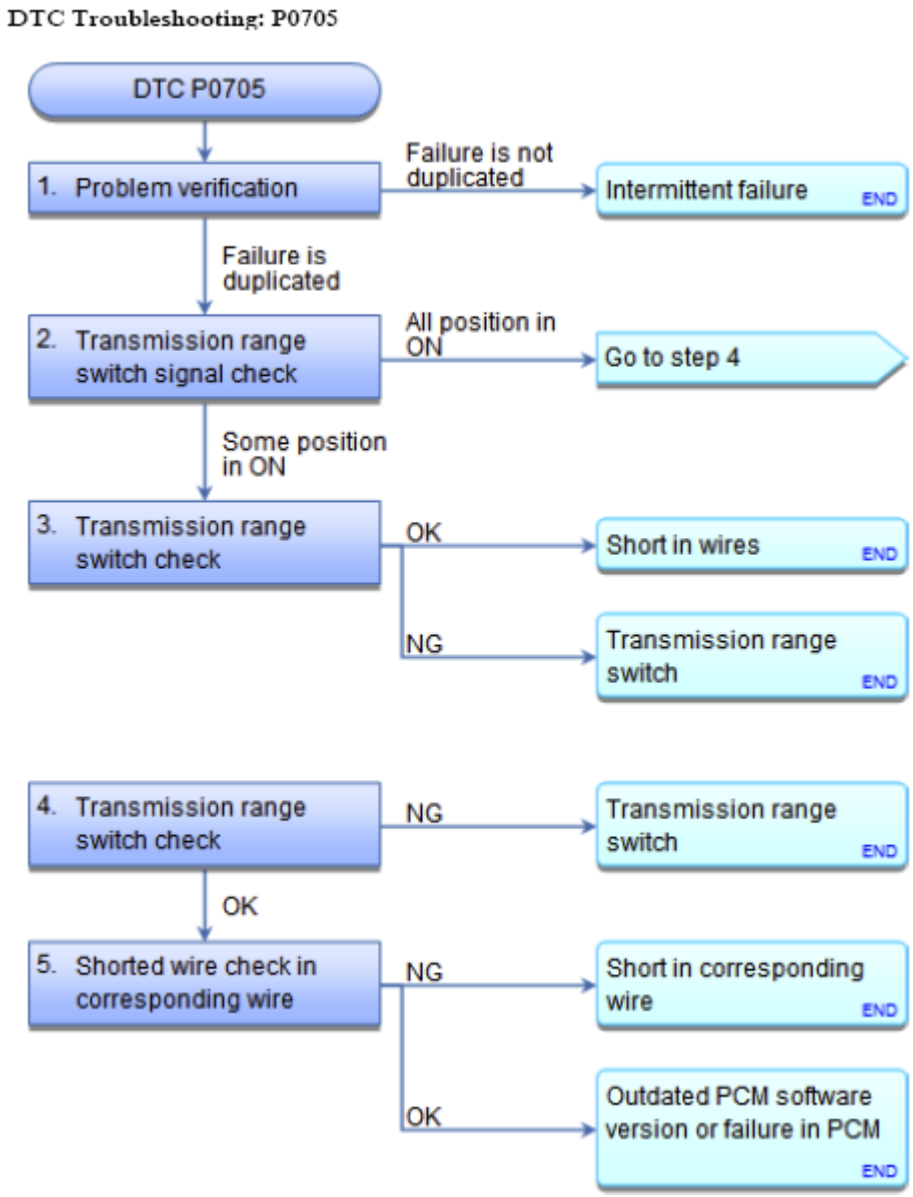

Fig. 1: DTC Troubleshooting Flow Chart (P0705)
Courtesy of AMERICAN HONDA MOTOR CO., INC.

NOTE:

- **Before you troubleshoot, record all freeze data and any on-board snapshot with the HDS, and review the General Troubleshooting Information See**

GETtheMANUALS.org

HOW TO TROUBLESHOOT THE A/T SYSTEM or HOW TO TROUBLESHOOT THE FUEL AND EMISSIONS SYSTEMS .

- **This code is caused by an electrical circuit problem and cannot be caused by a mechanical problem in the transmission.**

DTC Description	Confirmed DTC	Pending DTC	Freeze Frame
P0705 Transmission Range Switch (Multiple Shift - Position Input)			

1. Problem verification:
   - 1. Turn the ignition switch to ON (II).
   - 2. Compare the A/T P Switch, A/T R Switch, A/T N Switch, A/T D Switch, A/T 2 Switch, A/T 1 Switch, Forward Switch(ATPFWD), and Reverse Switch(ATPRVS) inputs with the HDS to the following table, in each shift lever position.

	A/T P Switch	A/T R Switch	A/T N Switch	A/T D Switch	A/T 2 Switch	A/T 1 Switch	Forward Switch (ATPFW	Reverse Switch (ATPRV
P	o	x	x	x	x	x	x	x
R	x	o	x	x	x	x	x	o
N	x	x	o	x	x	x	x	x
D	x	x	x	o	x	x	o	x
2	x	x	x	x	o	x	o	x
1	x	x	x	x	x	o	o	x
o: ON/x: OFF								

Signal	Current conditions	
	Values	Unit
A/T P Switch		
A/T R Switch		
A/T N Switch		
A/T D Switch		
A/T 2 Switch		
A/T 1 Switch		
Forward Switch(ATPFWD)		
Reverse Switch(ATPRVS)		

Do the transmission range switch signals match?

YES : Intermittent failure, the system is OK at this time.

NO : The failure is duplicated. Go to step 2.

GETtheMANUALS.org

2. Transmission range switch signal check:
   - 1. Compare the A/T P Switch, A/T R Switch, A/T N Switch, A/T D Switch, A/T 2 Switch, A/T 1 Switch, Forward Switch(ATPFWD), and Reverse Switch(ATPRVS) inputs with the HDS to the following table, in each shift lever position.

	A/T P Switch	A/T R Switch	A/T N Switch	A/T D Switch	A/T 2 Switch	A/T 1 Switch	Forward Switch (ATPFW	Reverse Switch (ATPRV
P	o	x	x	x	x	x	x	x
R	x	o	x	x	x	x	x	o
N	x	x	o	x	x	x	x	x
D	x	x	x	o	x	x	o	x
2	x	x	x	x	o	x	o	x
1	x	x	x	x	x	o	o	x
o: ON/x: OFF								

Signal	Current conditions	
	Values	Unit
A/T P Switch		
A/T R Switch		
A/T N Switch		
A/T D Switch		
A/T 2 Switch		
A/T 1 Switch		
Forward Switch(ATPFWD)		
Reverse Switch(ATPRVS)		

Are any transmission range switch signals ON in all shift lever positions?

YES : Go to step 4.

NO : Record the abnormal circuit, then go to step 3.

3. Transmission range switch check:
   - 1. Turn the ignition switch to LOCK (0).
   - 2. Disconnect the following connector.

     Transmission range switch 10P connector

   - 3. Connect the transmission range switch connector terminal that incorrectly indicates ON in step 2 to ground with a jumper wire.
   - 4. Turn the ignition switch to ON (II).
   - 5. Compare the A/T P Switch, A/T R Switch, A/T N Switch, A/T D Switch, A/T 2 Switch, A/T 1

GETtheMANUALS.org

Switch, Forward Switch(ATPFWD), and Reverse Switch(ATPRVS) inputs with the HDS to the following table.

	A/T P Switch	A/T R Switch	A/T N Switch	A/T D Switch	A/T 2 Switch	A/T 1 Switch	Forward Switch (ATPFW	Reverse Switch (ATPRV
P	o	x	x	x	x	x	x	x
R	x	o	x	x	x	x	x	o
N	x	x	o	x	x	x	x	x
D	x	x	x	o	x	x	o	x
2	x	x	x	x	o	x	o	x
1	x	x	x	x	x	o	o	x
o: ON/x: OFF								

Signal	Current conditions	
	Values	Unit
A/T P Switch		
A/T R Switch		
A/T N Switch		
A/T D Switch		
A/T 2 Switch		
A/T 1 Switch		
Forward Switch(ATPFWD)		
Reverse Switch(ATPRVS)		

Do multiple transmission range switch signals indicate ON?

YES : The transmission range switch is OK. Repair a short in the wires between the corresponding transmission range switch connector terminal and the PCM. Refer to the following table.

	ATP-P	ATP-R	ATP-N	ATP-D	ATP-D3	ATP-1	ATPFWD	ATPRVS
PCM	B24	B25	B23	B35	B27	B26	B39	B45
Transmission range switch	10	9	4	8	3	7	1	5

NO : **<u>REPLACE THE TRANSMISSION RANGE SWITCH</u>** .

4. Transmission range switch check:
   - 1. Turn the ignition switch to LOCK (0).
   - 2. Disconnect the following connector.

     Transmission range switch 10P connector

   - 3. Turn the ignition switch to ON (II).

GETtheMANUALS.org

- 4. Check the transmission range switch signal input that remained ON with the HDS to the following table.

	A/T P Switch	A/T R Switch	A/T N Switch	A/T D Switch	A/T 2 Switch	A/T 1 Switch	Forward Switch (ATPFW	Reverse Switch (ATPRV
P	o	x	x	x	x	x	x	x
R	x	o	x	x	x	x	x	o
N	x	x	o	x	x	x	x	x
D	x	x	x	o	x	x	o	x
2	x	x	x	x	o	x	o	x
1	x	x	x	x	x	o	o	x
o: ON/x: OFF								

Signal	Current conditions	
	Values	Unit
A/T P Switch		
A/T R Switch		
A/T N Switch		
A/T D Switch		
A/T 2 Switch		
A/T 1 Switch		
Forward Switch(ATPFWD)		
Reverse Switch(ATPRVS)		

Do any transmission range switch signals remain ON?

YES : The transmission range switch is OK. Go to step 5.

NO : **REPLACE THE TRANSMISSION RANGE SWITCH** .

5. Shorted wire check (ATP-P, ATP-R, ATP-N, ATP-D, ATP-D3, ATP-1, ATP-FWD, ATP-RVS line):
   - 1. Check for continuity to ground in the circuit that remained ON in step 4.

Does the circuit that indicated ON have continuity to ground?

YES : Repair a short to ground in the wire between the corresponding transmission range switch connector terminal and the PCM.

NO : The wires are OK. **Update the PCM if it does not have the latest software** See **PCM REMOVAL AND INSTALLATION** or **PCM UPDATE** . If the PCM was updated, **replace the PCM** See **PCM REMOVAL AND INSTALLATION** or **PCM UPDATE** .

DTC P0706: TRANSMISSION RANGE SWITCH (OPEN)

GETtheMANUALS.org

DTC Troubleshooting: P0706

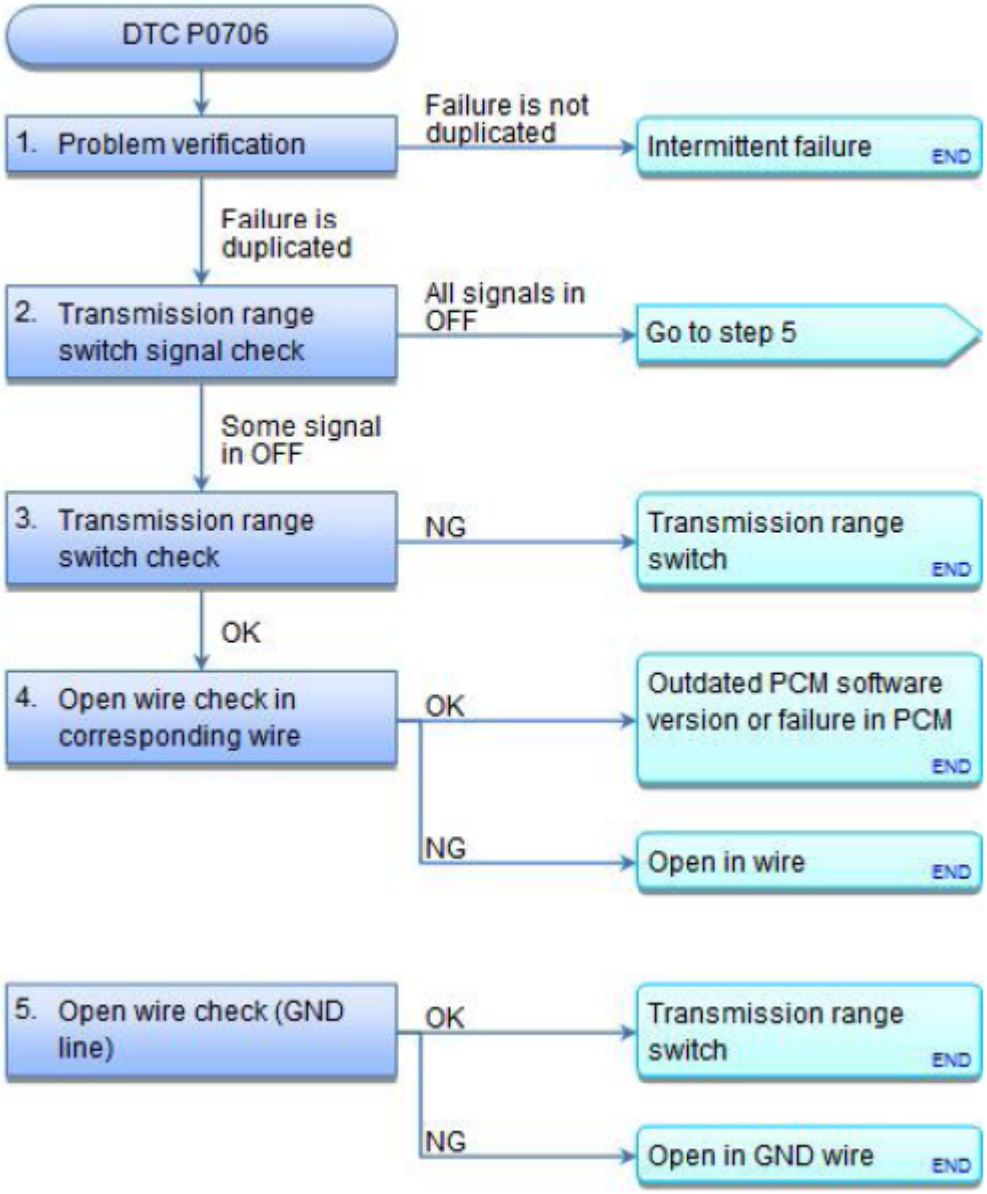

Fig. 2: DTC Troubleshooting Flow Chart (P0706)
Courtesy of AMERICAN HONDA MOTOR CO., INC.

NOTE:

- **Before you troubleshoot, record all freeze data and any on-board snapshot with the HDS, and review the General Troubleshooting Information See HOW TO TROUBLESHOOT THE A/T SYSTEM or HOW TO TROUBLESHOOT THE FUEL AND EMISSIONS SYSTEMS .**
- **This code is caused by an electrical circuit problem and cannot be caused by a mechanical problem in the transmission.**

GETtheMANUALS.org

DTC Description	Confirmed DTC	Pending DTC	Freeze Frame
P0706 Transmission Range Switch (Open)			

1. Problem verification:
   - 1. Make sure the shift cable is properly adjusted.
   - 2. Turn the ignition switch to ON (II).
   - 3. Compare the A/T P Switch, A/T R Switch, A/T N Switch, A/T D Switch, A/T 2 Switch, A/T 1 Switch, Forward Switch(ATPFWD), and Reverse Switch(ATPRVS) inputs with the HDS to the following table, in each shift lever position.

	A/T P Switch	A/T R Switch	A/T N Switch	A/T D Switch	A/T 2 Switch	A/T 1 Switch	Forward Switch (ATPFWD)	Reverse Switch (ATPRVS)
P	o	x	x	x	x	x	x	x
R	x	o	x	x	x	x	x	o
N	x	x	o	x	x	x	x	x
D	x	x	x	o	x	x	o	x
2	x	x	x	x	o	x	o	x
1	x	x	x	x	x	o	o	x
o: ON/x: OFF								

Signal	Current conditions	
	Values	Unit
A/T P Switch		
A/T R Switch		
A/T N Switch		
A/T D Switch		
A/T 2 Switch		
A/T 1 Switch		
Forward Switch(ATPFWD)		
Reverse Switch(ATPRVS)		

Do the transmission range switch signals match?

YES : Intermittent failure, the system is OK at this time.

NO : The failure is duplicated. Go to step 2.

2. Transmission range switch signal check:
   - 1. Compare the A/T P Switch, A/T R Switch, A/T N Switch, A/T D Switch, A/T 2 Switch, A/T 1 Switch, Forward Switch(ATPFWD), and Reverse Switch(ATPRVS) inputs with the HDS to the following table, in each shift lever position.

GETtheMANUALS.org

	A/T P Switch	A/T R Switch	A/T N Switch	A/T D Switch	A/T 2 Switch	A/T 1 Switch	Forward Switch (ATPFWD)	Reverse Switch (ATPRVS)
P	o	x	x	x	x	x	x	x
R	x	o	x	x	x	x	x	o
N	x	x	o	x	x	x	x	x
D	x	x	x	o	x	x	o	x
2	x	x	x	x	o	x	o	x
1	x	x	x	x	x	o	o	x
o: ON/x: OFF								

Signal	Current conditions	
	Values	Unit
A/T P Switch		
A/T R Switch		
A/T N Switch		
A/T D Switch		
A/T 2 Switch		
A/T 1 Switch		
Forward Switch(ATPFWD)		
Reverse Switch(ATPRVS)		

Do all signals remain OFF?

YES : Go to step 5.

NO : Record the abnormal circuit, then go to step 3.

3. Transmission range switch check:
   - 1. Turn the ignition switch to LOCK (0).
   - 2. Disconnect the following connector.

     Transmission range switch 10P connector

   - 3. Connect the transmission range switch connector terminal that did not indicate ON in step 2 to ground with a jumper wire.
   - 4. Turn the ignition switch to ON (II).
   - 5. Check the transmission range switch signal that did not indicate ON with the HDS.

Does the transmission range switch indicate ON?

YES : **REPLACE THE TRANSMISSION RANGE SWITCH** .

NO : The transmission range switch is OK. Go to step 4.

GETtheMANUALS.org

4. Open wire check (ATP-P, ATP-R, ATP-N, ATP-D, ATP-D3, ATP-1, ATP-FWD, ATP-RVS line):
   - 1. Turn the ignition switch to LOCK (0).
   - 2. Jump the SCS line with the HDS.
   - 3. Disconnect the following connector.

     PCM connector B (49P)

   - 4. Check for continuity between the transmission range switch connector terminal and the PCM terminal of the input which indicated OFF. Refer to the following table.

	ATP-P	**ATP-R**	**ATP-N**	**ATP-D**	**ATP-D3**	**ATP-1**	**ATPFWD**	**ATPRVS**
PCM	B24	B25	B23	B35	B27	B26	B39	B45
Transmission range switch	10	9	4	8	3	7	1	5

Is there continuity?

YES : The wire(s) is OK. **Update the PCM if it does not have the latest software** See **PCM REMOVAL AND INSTALLATION** or **PCM UPDATE** . If the PCM was updated, **replace the PCM** See **PCM REMOVAL AND INSTALLATION** or **PCM UPDATE** .

NO : Repair an open in the wire between the corresponding transmission range switch connector terminal and the PCM.

5. Open wire check (GND line):
   - 1. Turn the ignition switch to LOCK (0).
   - 2. Disconnect the following connector.

     Transmission range switch 10P connector

   - 3. Check for continuity between test points 1 and 2.

     Test condition IG LOCK (0)

     Transmission range switch 10P connector: disconnected

     Test circuit GND

     Test point 1 Transmission range switch 10P connector No. 6 (BLK)

     Test point 2 Body ground

GETtheMANUALS.org

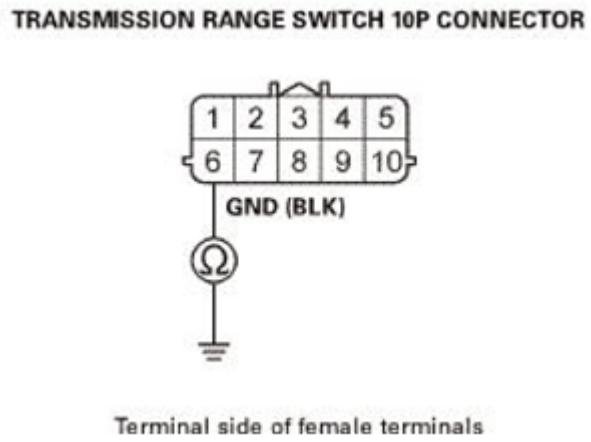

Fig. 3: Checking Continuity Between Transmission Range Switch 10P Connector No. 6 (BLK) And Body Ground
Courtesy of AMERICAN HONDA MOTOR CO., INC.

Is there continuity?

YES : The GND wire is OK, **REPLACE THE TRANSMISSION RANGE SWITCH** .

NO : Repair an open in the GND wire between the transmission range switch and ground (G101), or repair poor ground (G101).

DTC P0711: ATF TEMPERATURE SENSOR (RANGE/PERFORMANCE)

GETtheMANUALS.org

DTC Troubleshooting: P0711

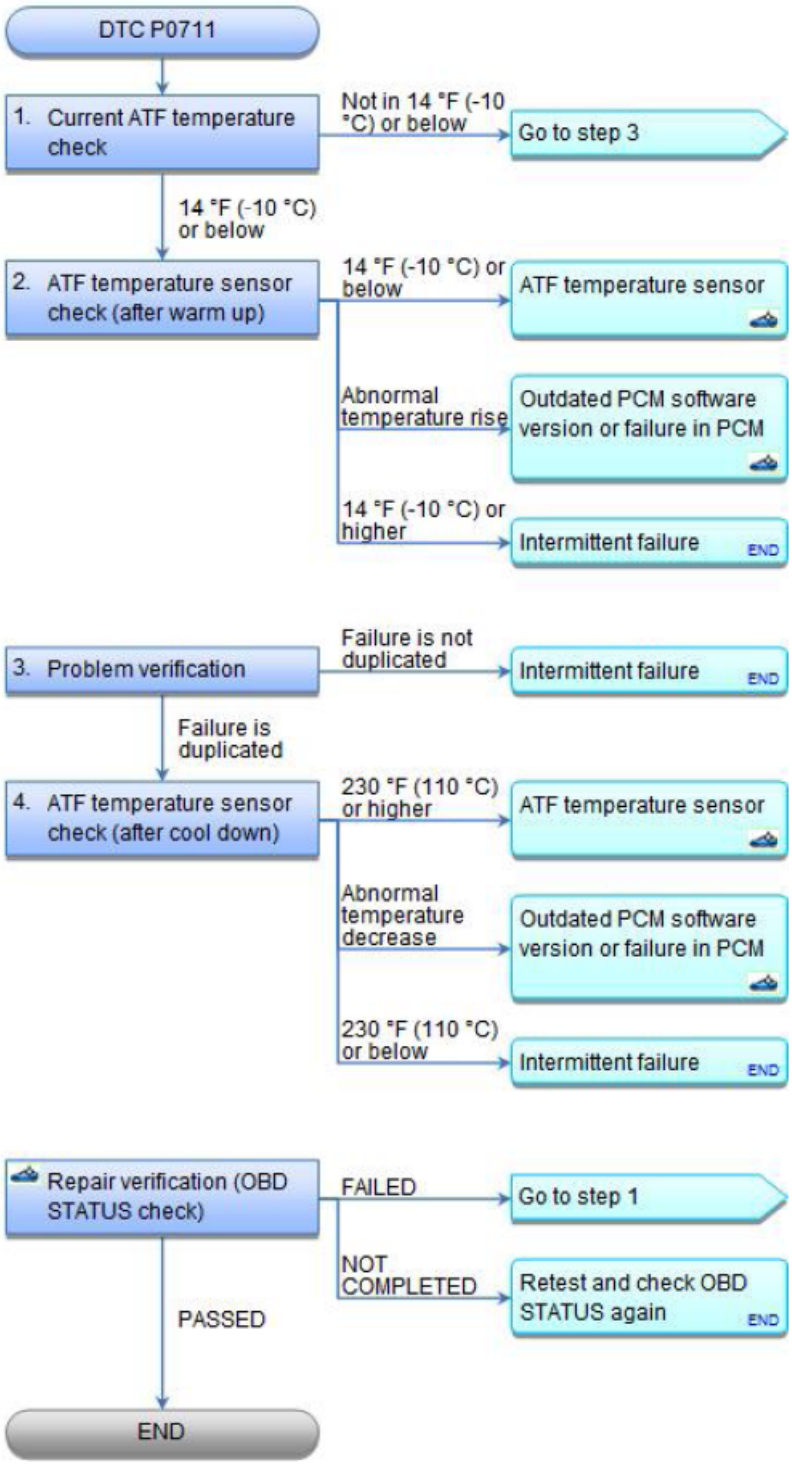

Fig. 4: DTC Troubleshooting Flow Chart (P0711)
Courtesy of AMERICAN HONDA MOTOR CO., INC.

NOTE:

- **Before you troubleshoot, record all freeze data and any on-board snapshot**

GETtheMANUALS.org

with the HDS, and review the General Troubleshooting Information See HOW TO TROUBLESHOOT THE A/T SYSTEM or HOW TO TROUBLESHOOT THE FUEL AND EMISSIONS SYSTEMS .

- **This code is caused by an electrical circuit problem and cannot be caused by a mechanical problem in the transmission.**

DTC Description	Confirmed DTC	Pending DTC	Freeze Frame
P0711 ATF Temperature Sensor (Range/Performance)			

1. Current ATF temperature check:
   - 1. Turn the ignition switch to ON (II).
   - 2. Check the parameter(s) below with the HDS.

Signal	Threshold		Current conditions	
	Values	Unit	Values	Unit
ATF Temperature	Less than 14	°F		
	Less than - 10	°C		

Do the current condition(s) match the threshold?

YES : Go to step 2.

NO : Go to step 3.

2. ATF temperature sensor check (after warm up):
   - 1. Start the engine, and warm it up to normal operating temperature (the radiator fan comes on).
   - 2. Check the parameter(s) below with the HDS.

Signal	Threshold		Current conditions	
	Values	Unit	Values	Unit
ATF Temperature	Less than 14	°F		
	Less than - 10	°C		

Do the current condition(s) match the threshold?

14 °F (-10 °C) or below **REPLACE THE ATF TEMPERATURE SENSOR** , then **do the repair verification** .

Abnormal temperature rise If there is an abnormal temperature rise in temperature of the ATF temperature sensor, **update the PCM if it does not have the latest software** See **PCM REMOVAL AND INSTALLATION** or **PCM UPDATE** , or **substitute a known-good PCM** See **PCM REMOVAL AND INSTALLATION** or **PCM UPDATE** , then do the **do the repair verification** .

14 °F (-10 °C) or higher The ATF temperature sensor is OK. Intermittent failure, the system is OK at this

GETtheMANUALS.org

time.

3. Problem verification:
   - 1. Check the parameter(s) below with the HDS.

Signal	Threshold		Current conditions	
	Values	Unit	Values	Unit
ATF Temperature	More than 230	°F		
	More than 110	°C		

Do the current condition(s) match the threshold?

YES : The failure is duplicated. Go to step 4.

NO : Intermittent failure, the system is OK at this time.

4. ATF temperature sensor check (after cool down):
   - 1. Let the engine cool until the Engine Coolant Temperature reads 122 °F (50 °C) or below with the HDS in the A/T Data List.

Signal	Current conditions	
	Values	Unit
Engine Coolant Temperature		

   - 2. Check the parameter(s) below with the HDS.

Signal	Threshold		Current conditions	
	Values	Unit	Values	Unit
ATF Temperature	More than 230	°F		
	More than 110	°C		

Do the current condition(s) match the threshold?

230 °F (110 °C) or higher **Replace the ATF temperature sensor** See **ATF TEMPERATURE SENSOR REMOVAL AND INSTALLATION** , then do the **do the repair verification** .

Abnormal temperature decrease If there is an abnormal temperature decrease in temperature of the ATF temperature sensor, **update the PCM if it does not have the latest software** See **PCM REMOVAL AND INSTALLATION** or **PCM UPDATE** , or **substitute a known-good PCM** See **PCM REMOVAL AND INSTALLATION** or **PCM UPDATE** , then do the **do the repair verification** .

230 °F (110 °C) or below The ATF temperature sensor is OK. Intermittent failure, the system is OK at this time.

REPAIR VERIFICATION (OBD STATUS CHECK)

GETtheMANUALS.org

- 1. Turn the ignition switch to ON (II).
- 2. Clear the DTC with the HDS.
- 3.

  Start the engine, and warm the engine up to normal operating temperature (the radiator fan comes on).

- 4. Turn the ignition switch to LOCK (0), and allow the engine coolant to cool down to the outside air temperature.
- 5. Raise the vehicle on a lift. Make sure it is securely supported, and allow the front wheels to rotate freely.
- 6. Turn the ignition switch to ON (II), and wait for 20 seconds, then start the engine. Warm the engine up to normal operating temperature (the radiator fan comes on). Start off in D, accelerate with the throttle opened at least 4 degrees, and run the vehicle at speeds over 19 mph (30 km/h) for at least 5 minutes. Or test-drive the vehicle for at least 20 seconds while the ATF temperature reads 14 °F to 230 °F (-10 °C to 110 °C) by monitoring with the HDS. Slow down, and stop the wheels.

PGM-FI SYSTEM

Signal	Current conditions	
	Values	Unit
REL TP SENSOR		

A/T SYSTEM

Signal	Current conditions	
	Values	Unit
ATF Temperature		

- 7. Monitor the OBD STATUS for P0711 in the DTCs MENU with the HDS.

DTC Description	OBD Status
P0711 ATF Temperature Sensor (Range/Performance)	

Does the HDS indicate PASSED, FAILED, or NOT COMPLETED?

PASSED Troubleshooting is complete. If the PCM was substituted, **replace the original PCM** See **PCM REMOVAL AND INSTALLATION** or **PCM UPDATE** . Check for other DTC after this troubleshooting. If any other Pending or Confirmed DTCs were indicated, go to the indicated DTC's troubleshooting.

FAILED Go to step 1 and recheck. If the PCM was updated, **substitute a known-good PCM** See **PCM REMOVAL AND INSTALLATION** or **PCM UPDATE** , and check the OBD STATUS again.

NOT COMPLETED Repair verification is incomplete. Meet the test condition, and check the OBD STATUS again.

DTC P0712: ATF TEMPERATURE SENSOR (SHORT)

GETtheMANUALS.org

DTC Troubleshooting: P0712

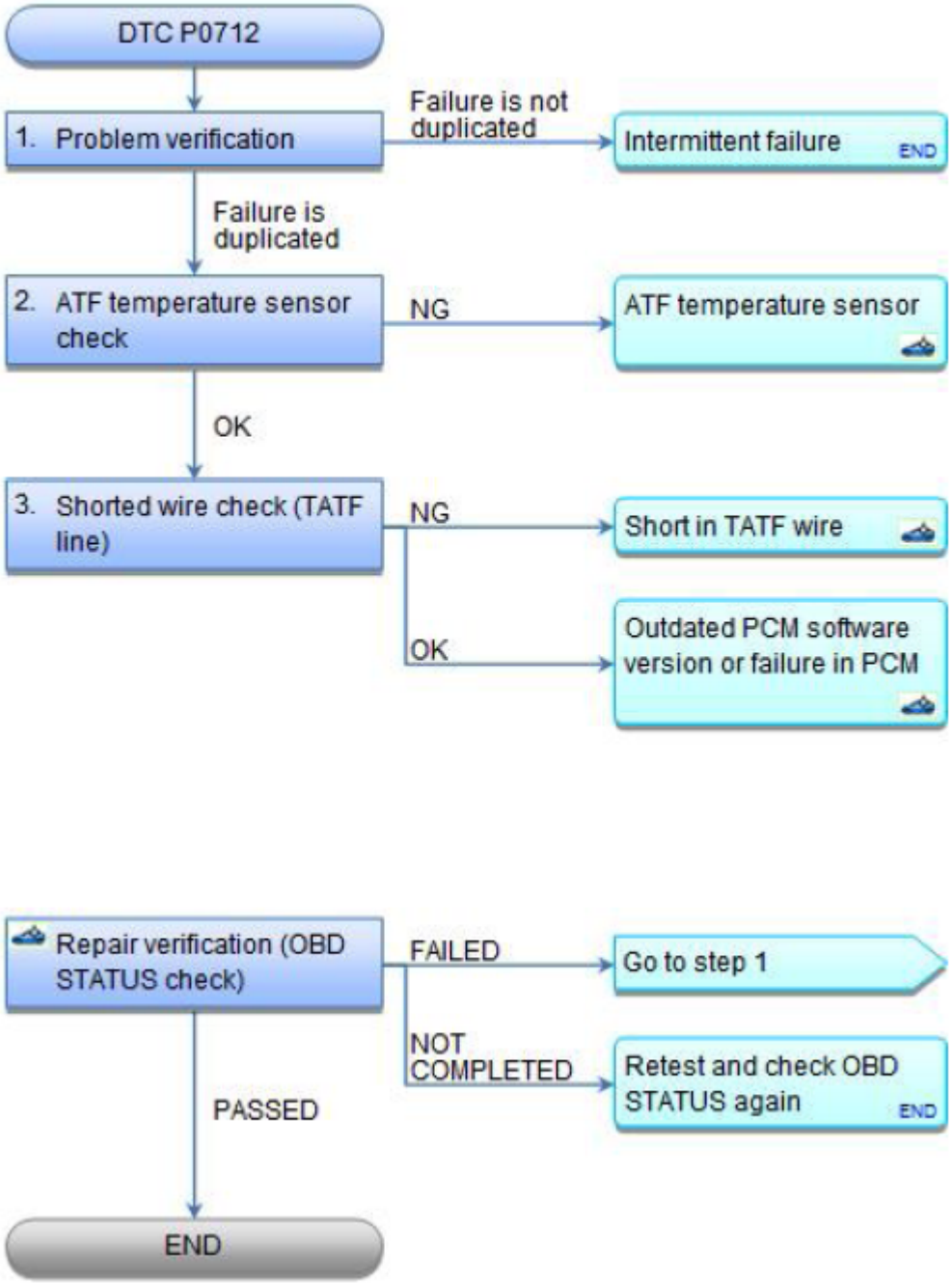

Fig. 5: DTC Troubleshooting Flow Chart (P0712)
Courtesy of AMERICAN HONDA MOTOR CO., INC.

NOTE:

- **Before you troubleshoot, record all freeze data and any on-board snapshot with the HDS, and review the General Troubleshooting Information See HOW TO TROUBLESHOOT THE A/T SYSTEM or HOW TO TROUBLESHOOT THE FUEL AND EMISSIONS SYSTEMS .**

GETtheMANUALS.org

- **This code is caused by an electrical circuit problem and cannot be caused by a mechanical problem in the transmission.**

DTC Description	Confirmed DTC	Pending DTC	Freeze Frame
P0712 ATF Temperature Sensor (Short)			

1. Problem verification:
   - 1. Turn the ignition switch to ON (II).
   - 2. Check the parameter(s) below with the HDS.

Signal	Threshold		Current conditions	
	Values	Unit	Values	Unit
ATF Temp Sensor (V)	Less than 0.07	V		

Do the current condition(s) match the threshold?

YES : The failure is duplicated. Go to step 2.

NO : Intermittent failure, the system is OK at this time. Check for an intermittent short to ground in the TATF wire between the ATF temperature sensor and the PCM.

2. ATF temperature sensor check:
   - 1. Turn the ignition switch to LOCK (0).
   - 2. Disconnect the following connector.

     Shift solenoid wire harness 8P connector

   - 3. Turn the ignition switch to ON (II).
   - 4. Check the parameter(s) below with the HDS.

Signal	Threshold		Current conditions	
	Values	Unit	Values	Unit
ATF Temp Sensor (V)	Less than 0.07	V		

Do the current condition(s) match the threshold?

YES : The ATF temperature sensor is OK. Go to step 3.

NO : **REPLACE THE ATF TEMPERATURE SENSOR** , then do the **do the repair verification** .

3. Shorted wire check (TATF line):
   - 1. Turn the ignition switch to LOCK (0).
   - 2. Jump the SCS line with the HDS.

GETtheMANUALS.org

- 3. Disconnect the following connector.

  PCM connector B (49P)

- 4. Check for continuity between test points 1 and 2.

  Test condition IG LOCK (0)

  Shift solenoid wire harness 8P connector: disconnected

  PCM connector B (49P): disconnected

  Test circuit TATF

  Test point 1 Shift solenoid wire harness 8P connector No. 7 (RED)

  Test point 2 Body ground

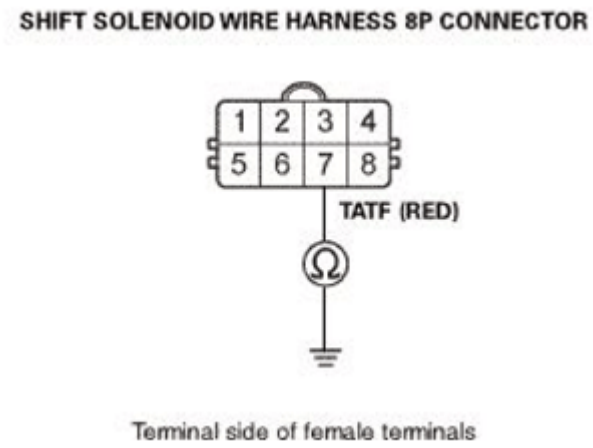

Fig. 6: Checking For Continuity Between Shift Solenoid Wire Harness 8P Connector No. 7 (RED) And Body Ground
Courtesy of AMERICAN HONDA MOTOR CO., INC.

Is there continuity?

YES : Repair a short to ground in the TATF wire between the shift solenoid wire harness and the PCM, then do the **do the repair verification** .

NO : The TATF wire is OK. **Update the PCM if it does not have the latest software** See **PCM REMOVAL AND INSTALLATION** or **PCM UPDATE** , or **substitute a known-good PCM** See **PCM REMOVAL AND INSTALLATION** or **PCM UPDATE** , then do the **do the repair verification** .

REPAIR VERIFICATION (OBD STATUS CHECK)

GETtheMANUALS.org

- 1. Reconnect all connectors.
- 2. Turn the ignition switch to ON (II).
- 3. Clear the DTC with the HDS.
- 4. Start the engine with the shift lever in P, and wait for at least 20 seconds.
- 5. Monitor the OBD STATUS for P0712 in the DTCs MENU with the HDS.

DTC Description	OBD Status
P0712 ATF Temperature Sensor (Short)	

Does the HDS indicate PASSED, FAILED, or NOT COMPLETED?

PASSED Troubleshooting is complete. If the PCM was substituted, **replace the original PCM** See **PCM REMOVAL AND INSTALLATION** or **PCM UPDATE** . Check for other DTC after this troubleshooting. If any other Pending or Confirmed DTCs were indicated, go to the indicated DTC's troubleshooting.

FAILED Troubleshooting is incomplete. Check for poor connections or loose terminals between the ATF temperature sensor and the PCM, then go to step 1 and recheck. If the PCM was updated, **substitute a known-good PCM** See **PCM REMOVAL AND INSTALLATION** or **PCM UPDATE** , and check the OBD STATUS again.

NOT COMPLETED Repair verification is incomplete. Meet the test condition, and check the OBD STATUS again.

DTC P0713: ATF TEMPERATURE SENSOR (OPEN)

GETtheMANUALS.org

DTC Troubleshooting: P0713

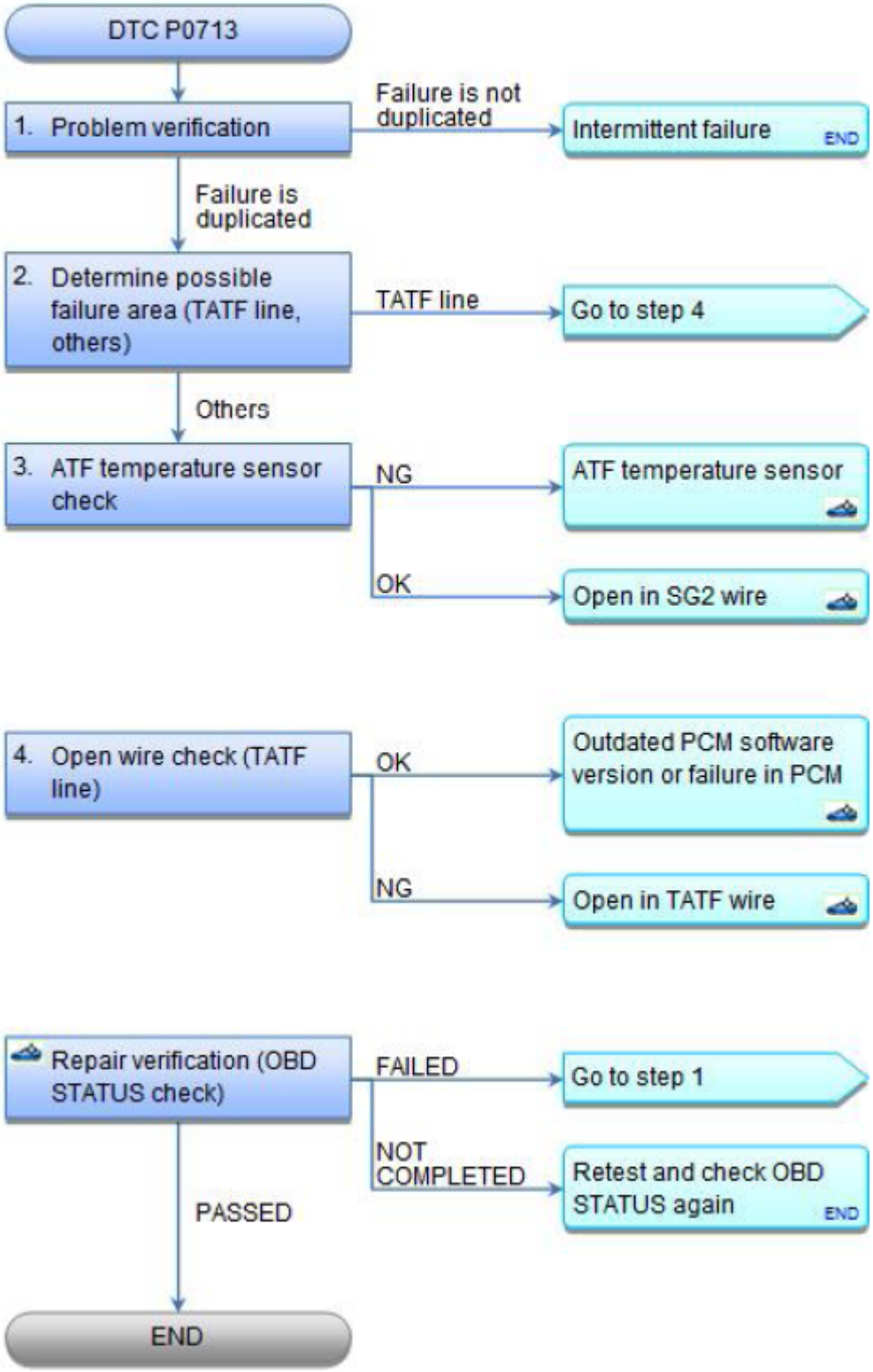

Fig. 7: DTC Troubleshooting Flow Chart (P0713)
Courtesy of AMERICAN HONDA MOTOR CO., INC.

GETtheMANUALS.org

NOTE:

- **Before you troubleshoot, record all freeze data and any on-board snapshot with the HDS, and review the General Troubleshooting Information See HOW TO TROUBLESHOOT THE A/T SYSTEM or HOW TO TROUBLESHOOT THE FUEL AND EMISSIONS SYSTEMS .**
- **This code is caused by an electrical circuit problem and cannot be caused by a mechanical problem in the transmission.**

DTC Description	Confirmed DTC	Pending DTC	Freeze Frame
P0713 ATF Temperature Sensor (Open)			

1. Problem verification:
   - 1. Turn the ignition switch to ON (II).
   - 2. Check the parameter(s) below with the HDS.

Signal	Threshold		Current conditions	
	Values	Unit	Values	Unit
ATF Temp Sensor (V)	More than 4.93	V		

Do the current condition(s) match the threshold?

YES : The failure is duplicated. Go to step 2.

NO : Intermittent failure, the system is OK at this time. Check for poor connections or loose terminals between the ATF temperature sensor and the PCM.

2. Determine possible failure area (TATF line, others):
   - 1. Turn the ignition switch to LOCK (0).
   - 2. Disconnect the following connector.

     Shift solenoid wire harness 8P connector

   - 3. Connect terminals A and B with a jumper wire.

     Terminal A Shift solenoid wire harness 8P connector No. 7 (RED)

     Terminal B Body ground

GETtheMANUALS.org

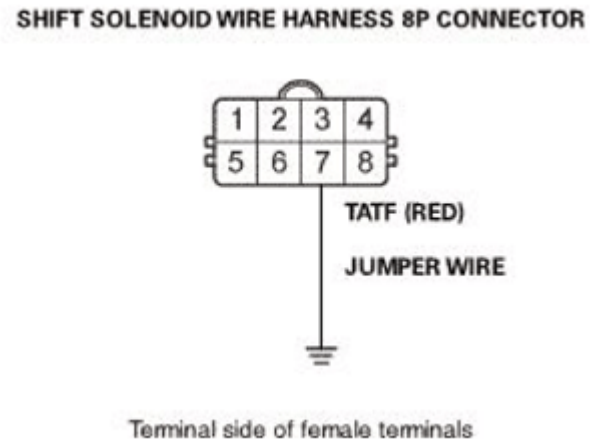

Fig. 8: Identifying Shift Solenoid Wire Harness 8P Connector Terminals
Courtesy of AMERICAN HONDA MOTOR CO., INC.

- 4. Turn the ignition switch to ON (II).
- 5. Check the parameter(s) below with the HDS.

Signal	Threshold		Current conditions	
	Values	Unit	Values	Unit
ATF Temp Sensor (V)	Less than 0.07	V		

Do the current condition(s) match the threshold?

YES : Go to step 3.

NO : Go to step 4.

3. ATF temperature sensor check:
   - 1. Turn the ignition switch to LOCK (0).
   - 2. Remove the jumper wire.
   - 3. Connect terminals A and B with a jumper wire.

     Terminal A Shift solenoid wire harness 8P connector No. 6 (GRY)

     Terminal B Shift solenoid wire harness 8P connector No. 7 (RED)

GETtheMANUALS.org

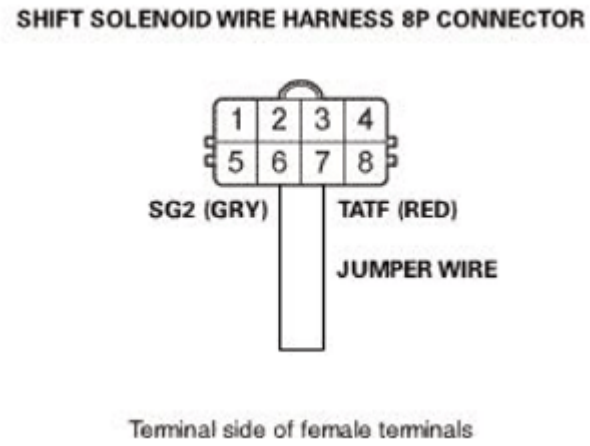

Fig. 9: Identifying Identifying Shift Solenoid Wire Harness 8P Connector Terminals
Courtesy of AMERICAN HONDA MOTOR CO., INC.

- 4. Turn the ignition switch to ON (II).
- 5. Check the parameter(s) below with the HDS.

Signal	Threshold		Current conditions	
	Values	Unit	Values	Unit
ATF Temp Sensor (V)	Less than 0.07	V		

Does the ATF Temp Sensor (V) remain 0.07 V or below?

YES : **Replace the ATF temperature sensor** See **ATF TEMPERATURE SENSOR REMOVAL AND INSTALLATION** , then **do the repair verification** .

NO : The ATF temperature sensor is OK. Repair an open in the SG2 wire between the shift solenoid wire harness and the PCM, then **do the repair verification** .

4. Open wire check (TATF line):
   - 1. Turn the ignition switch to LOCK (0).
   - 2. Remove the jumper wire.
   - 3. Jump the SCS line with the HDS.
   - 4. Disconnect the following connector.

     PCM connector B (49P)

   - 5. Check for continuity between test points 1 and 2.

     Test condition IG LOCK (0)

     Shift solenoid wire harness 8P connector: disconnected

GETtheMANUALS.org

PCM connector B (49P): disconnected

Test circuit TATF

Test point 1 Shift solenoid wire harness 8P connector No. 7 (RED)

Test point 2 PCM connector B (49P) No. 38 (RED)

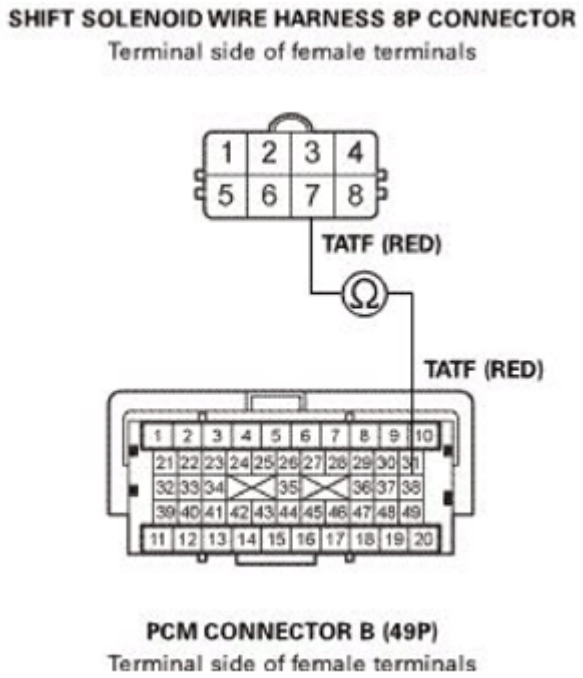

Fig. 10: Checking Continuity Between Shift Solenoid Wire Harness 8P Connector No. 7 (RED) And PCM Connector B (49P) No. 38 (RED)
Courtesy of AMERICAN HONDA MOTOR CO., INC.

Is there continuity?

YES : The TATF wire is OK. **Update the PCM if it does not have the latest software** See **PCM REMOVAL AND INSTALLATION** or **PCM UPDATE** , or **substitute a known-good PCM** See **PCM REMOVAL AND INSTALLATION** or **PCM UPDATE** , then **do the repair verification** .

NO : Repair an open in the TATF wire between the shift solenoid wire harness and the PCM, then **do the repair verification** .

REPAIR VERIFICATION (OBD STATUS CHECK)

- 1. Reconnect all connectors.
- 2. Turn the ignition switch to ON (II).
- 3. Clear the DTC with the HDS.
- 4. Start the engine with the shift lever in P, and wait for at least 20 seconds.

GETtheMANUALS.org

- 5. Monitor the OBD STATUS for P0713 in the DTCs MENU with the HDS.

DTC Description	OBD Status
P0713 ATF Temperature Sensor (Open)	

Does the HDS indicate PASSED, FAILED, or NOT COMPLETED?

PASSED Troubleshooting is complete. If the PCM was substituted, **replace the original PCM** See **PCM REMOVAL AND INSTALLATION** or **PCM UPDATE** . Check for other DTC after this troubleshooting. If any other Pending or Confirmed DTCs were indicated, go to the indicated DTC's troubleshooting.

FAILED Troubleshooting is incomplete. Check for poor connections or loose terminals between the ATF temperature sensor and the PCM, then go to step 1 and recheck. If the PCM was updated, **substitute a known-good PCM** See **PCM REMOVAL AND INSTALLATION** or **PCM UPDATE** , and check the OBD STATUS again.

NOT COMPLETED Repair verification is incomplete. Meet the test condition, and check the OBD STATUS again.

DTC P0714: ATF TEMPERATURE SENSOR (INTERMITTENT FAILURE)

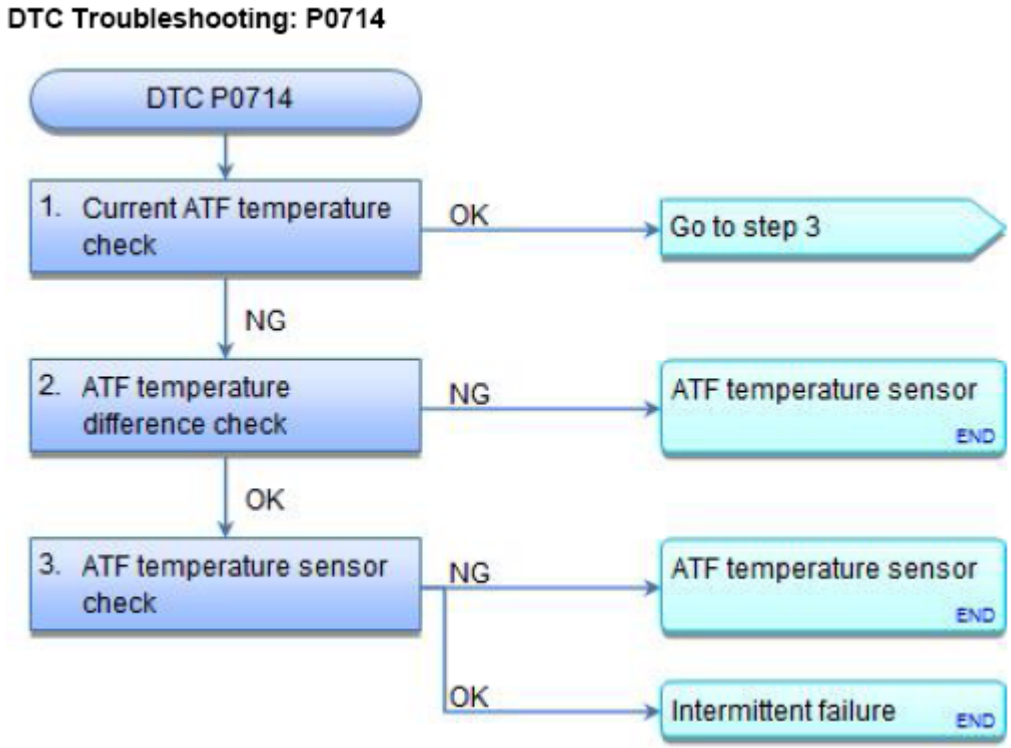

Fig. 11: DTC Troubleshooting Flow Chart (P0714)
Courtesy of AMERICAN HONDA MOTOR CO., INC.

GETtheMANUALS.org

NOTE:

- **Before you troubleshoot, record all freeze data and any on-board snapshot with the HDS, and review the General Troubleshooting Information See HOW TO TROUBLESHOOT THE A/T SYSTEM or HOW TO TROUBLESHOOT THE FUEL AND EMISSIONS SYSTEMS .**
- **This code is caused by an electrical circuit problem and cannot be caused by a mechanical problem in the transmission.**
- **An engine block heater must not be used.**

DTC Description	Confirmed DTC	Pending DTC	Freeze Frame
P0714 ATF Temperature Sensor (Intermittent Failure)			

1. Current ATF temperature check:
   - 1. Turn the ignition switch to ON (II).
   - 2. Check the parameter(s) below with the HDS.

A/T SYSTEM

Signal	Current conditions	
	Values	Unit
ATF Temperature		

PGM-FI SYSTEM

Signal	Current conditions	
	Values	Unit
ECT SENSOR 2		

Are the ATF Temperature and ECT SENSOR 2 equal to the ambient air temperature?

YES : Record the values of the ATF Temperature and ECT SENSOR 2 with the HDS, then go to step 3.

NO : Record the value of the ATF Temperature with the HDS, then go to step 2.

2. ATF temperature difference check:
   - 1. Turn the ignition switch to LOCK (0), and wait for at least 30 minutes.
   - 2. Turn the ignition switch to ON (II).
   - 3. Compare the current ATF Temperature to the ATF Temperature recorded in step 1.

Signal	Current conditions	
	Values	Unit
ATF Temperature		

Does the ATF Temperature change?

GETtheMANUALS.org

YES : Leave the engine off for at least 6 hours, then go to step 3.

NO : **REPLACE THE ATF TEMPERATURE SENSOR** .

3. ATF temperature sensor check:
   - 1. Compare the values of the ATF Temperature Sensor and ECT SENSOR 2.

A/T SYSTEM

Signal	Current conditions	
	Values	Unit
ATF Temperature		

PGM-FI SYSTEM

Signal	Current conditions	
	Values	Unit
ECT SENSOR 2		

Is the value of the ATF Temperature Sensor higher than the value of ECT SENSOR 2 by 58 °F (32 °C), or is the value of the ATF Temperature Sensor lower than the value of ECT SENSOR 2 by 43 °F (24 °C)?

YES : **REPLACE THE ATF TEMPERATURE SENSOR** .

NO : The ATF temperature sensor is OK. Intermittent failure, the system is OK at this time.

DTC P0716: INPUT SHAFT (MAINSHAFT) SPEED SENSOR (RANGE/PERFORMANCE)

GETtheMANUALS.org

DTC Troubleshooting: P0716

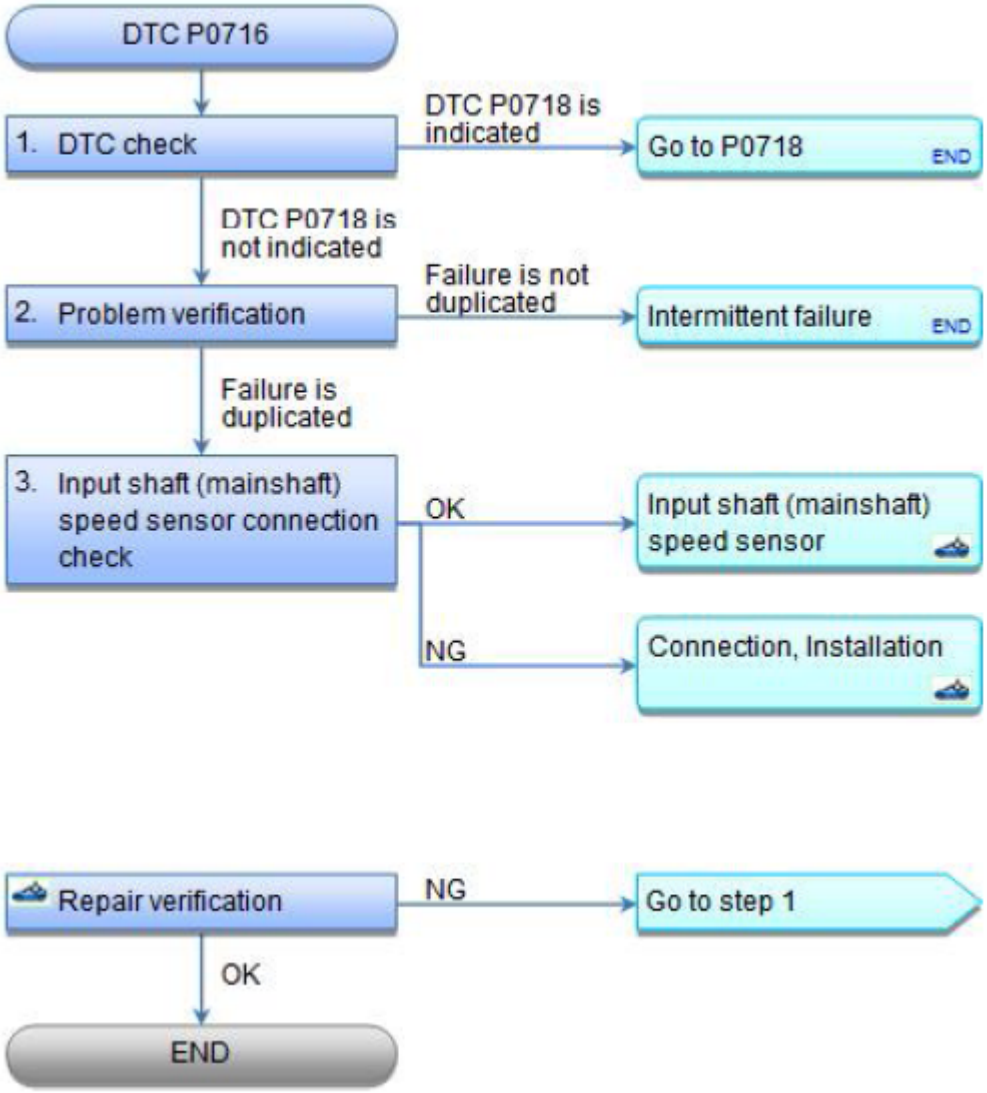

Fig. 12: DTC Troubleshooting Flow Chart (P0716)
Courtesy of AMERICAN HONDA MOTOR CO., INC.

NOTE:

- **Before you troubleshoot, record all freeze data and any on-board snapshot with the HDS, and review the General Troubleshooting Information See HOW TO TROUBLESHOOT THE A/T SYSTEM or HOW TO TROUBLESHOOT THE FUEL AND EMISSIONS SYSTEMS .**
- **This code is caused by an electrical circuit problem and cannot be caused by a mechanical problem in the transmission.**

DTC Description	Confirmed DTC	Pending DTC	Freeze Frame
P0716 Input Shaft (Mainshaft) Speed Sensor			

GETtheMANUALS.org

(Range/Performance)			

1. DTC check:
   - 1. Turn the ignition switch to ON (II).
   - 2. Clear the DTC with the HDS.
   - 3. Raise the vehicle on a lift. Make sure it is securely supported, and allow the front wheels to rotate freely.
   - 4. Start the engine, disable the VSA by pressing the VSA OFF button, run the vehicle with the shift lever in D, and keep the vehicle speed at speeds over 12 mph (20 km/h) for at least 10 seconds. Slow down, and stop the wheels.
   - 5. Check for Pending or Confirmed DTCs with the HDS.

DTC Description	Confirmed DTC	Pending DTC	Freeze Frame
P0718 Input Shaft (Mainshaft) Speed Sensor (Intermittent Failure)			

Is DTC P0718 indicated?

YES : **DO THE TROUBLESHOOTING FOR DTC P0718**.

NO : Go to step 2.

2. Problem verification:
   - 1. Check for Pending or Confirmed DTCs with the HDS.

DTC Description	Confirmed DTC	Pending DTC	Freeze Frame
P0716 Input Shaft (Mainshaft) Speed Sensor (Range/Performance)			

Is DTC P0716 indicated?

YES : The failure is duplicated. Go to step 3.

NO : Intermittent failure, the system is OK at this time.

3. Input shaft (mainshaft) speed sensor connection check:

Are the connection and installation OK?

YES : The connection and installation are OK. **REPLACE THE INPUT SHAFT (MAINSHAFT) SPEED SENSOR** , then **do the repair verification** .

GETtheMANUALS.org

NO : Repair faulty connection or installation, then **do the repair verification** .

REPAIR VERIFICATION

- 1. Turn the ignition switch to ON (II).
- 2. Clear the DTC with the HDS.
- 3. Start the engine, disable the VSA by pressing the VSA OFF button, run the vehicle with the shift lever in D, and keep the vehicle speed at speeds over 12 mph (20 km/h) for at least 10 seconds. Slow down, and stop the wheels.
- 4. Check for Pending or Confirmed DTCs with the HDS.

DTC Description	Confirmed DTC	Pending DTC	Freeze Frame
P0716 Input Shaft (Mainshaft) Speed Sensor (Range/Performance)			

Is DTC P0716 indicated?

YES : Troubleshooting is incomplete. Go to step 1.

NO : Troubleshooting is complete.

DTC P0717: INPUT SHAFT (MAINSHAFT) SPEED SENSOR (NO SIGNAL INPUT)

GETtheMANUALS.org

DTC Troubleshooting: P0717

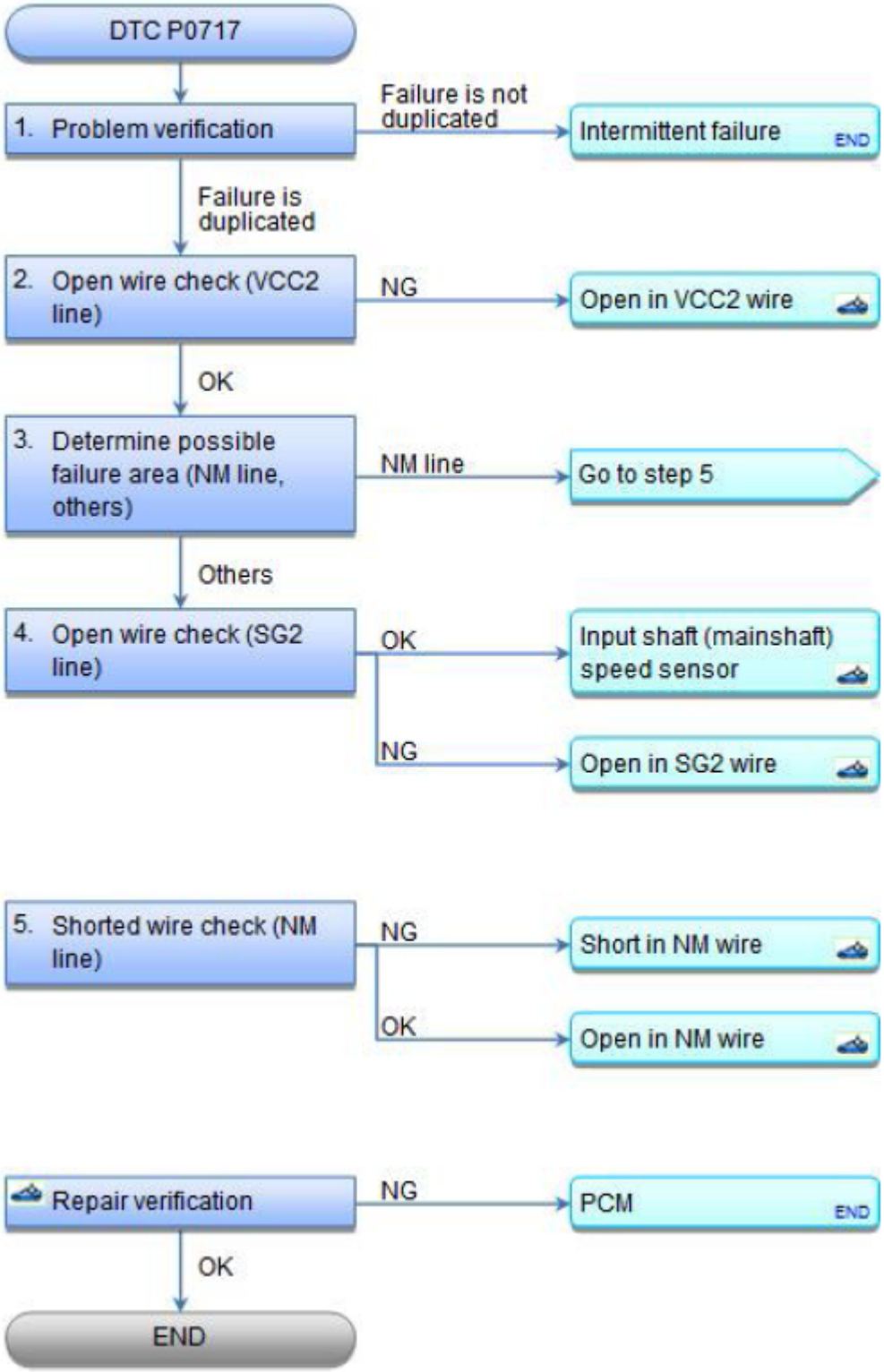

Fig. 13: DTC Troubleshooting Flow Chart (P0717)
Courtesy of AMERICAN HONDA MOTOR CO., INC.

GETtheMANUALS.org

NOTE:

- **Before you troubleshoot, record all freeze data and any on-board snapshot with the HDS, and review the General Troubleshooting Information See HOW TO TROUBLESHOOT THE A/T SYSTEM or HOW TO TROUBLESHOOT THE FUEL AND EMISSIONS SYSTEMS .**
- **This code is caused by an electrical circuit problem and cannot be caused by a mechanical problem in the transmission.**

DTC Description	Confirmed DTC	Pending DTC	Freeze Frame
P0717 Input Shaft (Mainshaft) Speed Sensor (No Signal Input)			

1. Problem verification:
   - 1. Turn the ignition switch to ON (II).
   - 2. Clear the DTC with the HDS.
   - 3. Raise the vehicle on a lift. Make sure it is securely supported, and allow the front wheels to rotate freely.
   - 4. Start the engine, disable the VSA by pressing the VSA OFF button, run the vehicle with the shift lever in D, and keep the vehicle at speeds over 12 mph (20 km/h). Compare the Input Shaft (Mainshaft) Speed (rpm) and the Output Shaft (Countershaft) Speed (rpm) with the HDS in the A/T Data List. Slow down, and stop the wheels.

Signal	Current conditions	
	Values	Unit
Input Shaft (Mainshaft) Speed (rpm)		
Output Shaft (Countershaft) Speed (rpm)		

Are the speeds about the same?

YES : Intermittent failure, the system is OK at this time.

NO : The failure is duplicated. Go to step 2.

2. Open wire check (VCC2 line):
   - 1. Turn the ignition switch to LOCK (0).
   - 2. Disconnect the following connector.

     Input shaft (mainshaft) speed sensor 3P connector

   - 3. Turn the ignition switch to ON (II).
   - 4. Measure the voltage between test points 1 and 2.

     Test condition IG ON (II)

GETtheMANUALS.org

Input shaft (mainshaft) speed sensor 3P connector: disconnected

Test circuit VCC2

Test point 1 Input shaft (mainshaft) speed sensor 3P connector No. 3 (PNK)

Test point 2 Body ground

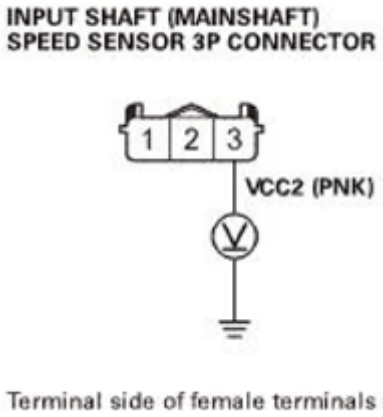

Fig. 14: Measuring Voltage Between Input Shaft (Mainshaft) Speed Sensor 3P Connector No. 3 (PNK) And Body Ground
Courtesy of AMERICAN HONDA MOTOR CO., INC.

Is there about 5 V?

YES : The VCC2 wire is OK. Go to step 3.

NO : Repair an open in the VCC2 wire between the input shaft (mainshaft) speed sensor and the PCM, then **do the repair verification** .

3. Determine possible failure area (NM line, others):
   - 1. Measure the voltage between test points 1 and 2.

     Test condition IG ON (II)

     Input shaft (mainshaft) speed sensor 3P connector: disconnected

     Test circuit NM

     Test point 1 Input shaft (mainshaft) speed sensor 3P connector No. 2 (WHT)

     Test point 2 Body ground

GETtheMANUALS.org

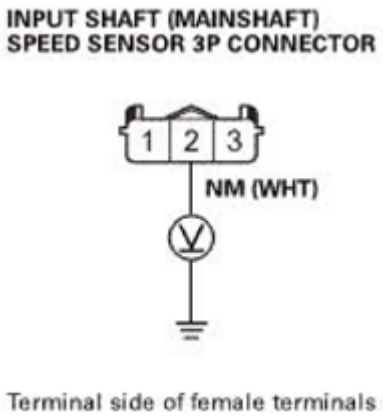

Fig. 15: Measuring Voltage Between Input Shaft (Mainshaft) Speed Sensor 3P Connector No. 2 (WHT) And Body Ground
Courtesy of AMERICAN HONDA MOTOR CO., INC.

Is there about 5 V?

YES : Go to step 4.

NO : Go to step 5.

4. Open wire check (SG2 line):
   - 1. Turn the ignition switch to LOCK (0).
   - 2. Check for continuity between test points 1 and 2.

   Test condition IG LOCK (0)

   Input shaft (mainshaft) speed sensor 3P connector: disconnected

   Test circuit SG2

   Test point 1 Input shaft (mainshaft) speed sensor 3P connector No. 1 (GRY)

   Test point 2 Body ground

GETtheMANUALS.org

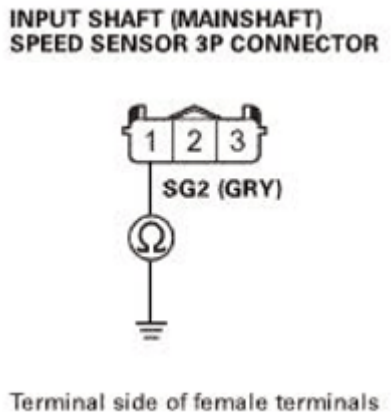

Fig. 16: Checking Continuity Between Input Shaft (Mainshaft) Speed Sensor 3P Connector No. 1 (GRY) And Body Ground
Courtesy of AMERICAN HONDA MOTOR CO., INC.

Is there continuity?

YES : The SG2 wire is OK. **REPLACE THE INPUT SHAFT (MAINSHAFT) SPEED SENSOR** , then **do the repair verification** .

NO : Repair an open in the SG2 wire between the input shaft (mainshaft) speed sensor and the PCM, then **do the repair verification** .

5. Shorted wire check (NM line):
   - 1. Turn the ignition switch to LOCK (0).
   - 2. Jump the SCS line with the HDS.
   - 3. Disconnect the following connector.

     PCM connector B (49P)

   - 4. Check for continuity between test points 1 and 2.

     Test condition IG LOCK (0)

     Input shaft (mainshaft) speed sensor 3P connector: disconnected

     PCM connector B (49P): disconnected

     Test circuit NM

     Test point 1 Input shaft (mainshaft) speed sensor 3P connector No. 2 (WHT)

     Test point 2 Body ground

GETtheMANUALS.org

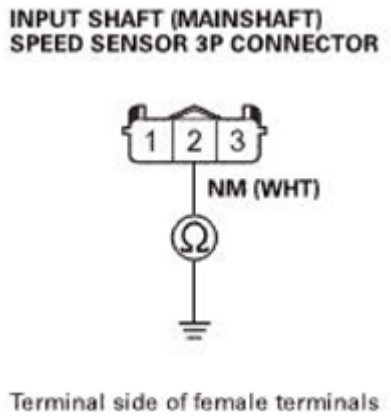

Fig. 17: Checking Continuity Between Input Shaft (Mainshaft) Speed Sensor 3P Connector No. 2 (WHT) And Body Ground
Courtesy of AMERICAN HONDA MOTOR CO., INC.

Is there continuity?

YES : Repair a short to ground in the NM wire between the input shaft (mainshaft) speed sensor and the PCM, then **do the repair verification** .

NO : The NM wire is not shorted. Repair an open in the NM wire between the input shaft (mainshaft) speed sensor and the PCM, then **do the repair verification** .

REPAIR VERIFICATION

- 1. Reconnect all connectors.
- 2. Turn the ignition switch to ON (II).
- 3. Clear the DTC with the HDS.
- 4. Start the engine, disable the VSA by pressing the VSA OFF button, run the vehicle with the shift lever in D, and keep the vehicle at speeds over 12 mph (20 km/h). Compare the Input Shaft (Mainshaft) Speed (rpm) and the Output Shaft (Countershaft) Speed (rpm) with the HDS in the A/T Data List. Slow down, and stop the wheels.

Signal	Current conditions	
	Values	Unit
Input Shaft (Mainshaft) Speed (rpm)		
Output Shaft (Countershaft) Speed (rpm)		

Are the speeds about the same?

YES : Troubleshooting is complete.

NO : **Replace the PCM** See **PCM REMOVAL AND INSTALLATION** or **PCM UPDATE** .

GETtheMANUALS.org

DTC P0718: INPUT SHAFT (MAINSHAFT) SPEED SENSOR (INTERMITTENT FAILURE)

GETtheMANUALS.org

DTC Troubleshooting: P0718

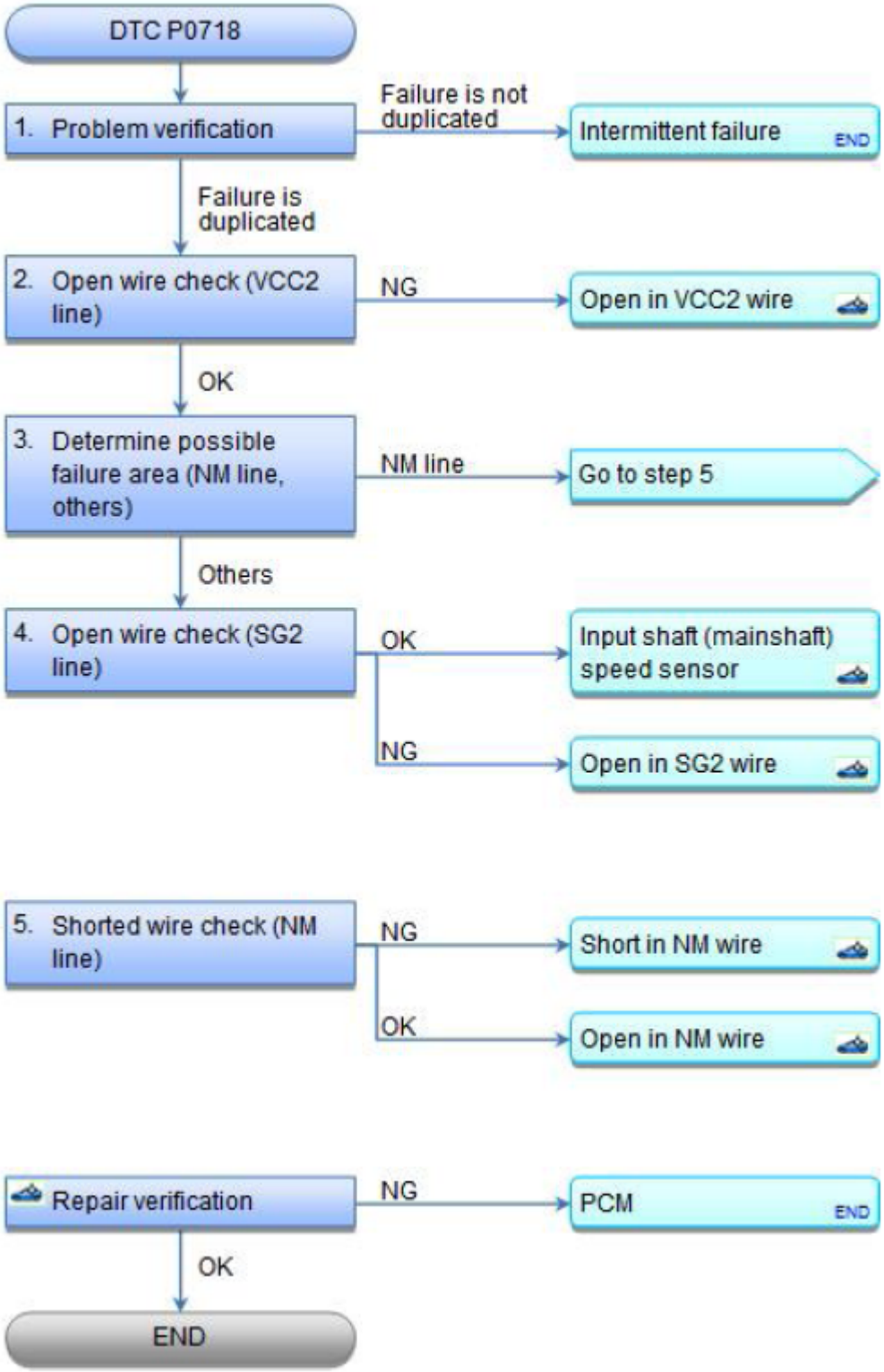

Fig. 18: DTC Troubleshooting Flow Chart (P0718)
Courtesy of AMERICAN HONDA MOTOR CO., INC.

GETtheMANUALS.org

NOTE:

- **Before you troubleshoot, record all freeze data and any on-board snapshot with the HDS, and review the General Troubleshooting Information See HOW TO TROUBLESHOOT THE A/T SYSTEM or HOW TO TROUBLESHOOT THE FUEL AND EMISSIONS SYSTEMS .**
- **This code is caused by an electrical circuit problem and cannot be caused by a mechanical problem in the transmission.**

DTC Description	Confirmed DTC	Pending DTC	Freeze Frame
P0718 Input Shaft (Mainshaft) Speed Sensor (Intermittent Failure)			

1. Problem verification:
   - 1. Turn the ignition switch to ON (II).
   - 2. Clear the DTC with the HDS.
   - 3. Raise the vehicle on a lift. Make sure it is securely supported, and allow the front wheels to rotate freely.
   - 4. Start the engine, disable the VSA by pressing the VSA OFF button, run the vehicle with the shift lever in D, and keep the vehicle at speeds over 12 mph (20 km/h). Compare the Input Shaft (Mainshaft) Speed (rpm) and the Output Shaft (Countershaft) Speed (rpm) with the HDS in the A/T Data List. Slow down, and stop the wheels.

Signal	Current conditions	
	Values	Unit
Input Shaft (Mainshaft) Speed (rpm)		
Output Shaft (Countershaft) Speed (rpm)		

Are the speeds about the same?

YES : Intermittent failure, the system is OK at this time. Check for poor connection or loose terminals in the imput shaft (mainshaft) speed sensor circuit.

NO : The failure is duplicated. Go to step 2.

2. Open wire check (VCC2 line):
   - 1. Turn the ignition switch to LOCK (0).
   - 2. Disconnect the following connector.

     Input shaft (mainshaft) speed sensor 3P connector

   - 3. Turn the ignition switch to ON (II).
   - 4. Measure the voltage between test points 1 and 2.

GETtheMANUALS.org

Test condition IG ON (II)

Input shaft (mainshaft) speed sensor 3P connector: disconnected

Test circuit VCC2

Test point 1 Input shaft (mainshaft) speed sensor 3P connector No. 3 (PNK)

Test point 2 Body ground

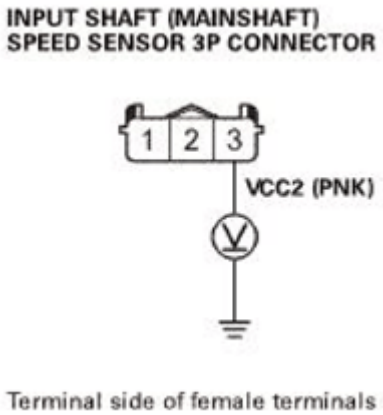

Fig. 19: Measuring Voltage Between Input Shaft (Mainshaft) Speed Sensor 3P Connector No. 3 (PNK) And Body Ground
Courtesy of AMERICAN HONDA MOTOR CO., INC.

Is there about 5 V?

YES : The VCC2 wire is OK. Go to step 3.

NO : Repair an open in the VCC2 wire between the input shaft (mainshaft) speed sensor and the PCM, then **do the repair verification** .

3. Determine possible failure area (NM line, others):
   - 1. Measure the voltage between test points 1 and 2.

     Test condition IG ON (II)

     Input shaft (mainshaft) speed sensor 3P connector: disconnected

     Test circuit NM

     Test point 1 Input shaft (mainshaft) speed sensor 3P connector No. 2 (WHT)

     Test point 2 Body ground

GETtheMANUALS.org

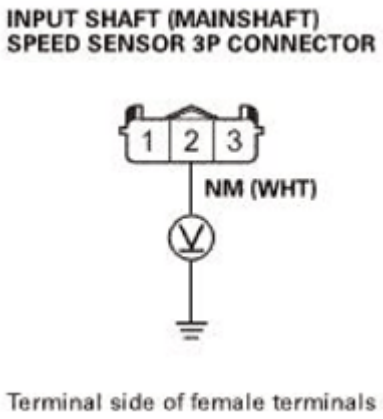

Fig. 20: Measuring Voltage Between Input Shaft (Mainshaft) Speed Sensor 3P Connector No. 2 (WHT) And Body Ground
Courtesy of AMERICAN HONDA MOTOR CO., INC.

Is there about 5 V?

YES : Go to step 4.

NO : Go to step 5.

4. Open wire check (SG2 line):
   - 1. Turn the ignition switch to LOCK (0).
   - 2. Check for continuity between test points 1 and 2.

   Test condition IG LOCK (0)

   Input shaft (mainshaft) speed sensor 3P connector: disconnected

   Test circuit SG2

   Test point 1 Input shaft (mainshaft) speed sensor 3P connector No. 1 (GRY)

   Test point 2 Body ground

GETtheMANUALS.org

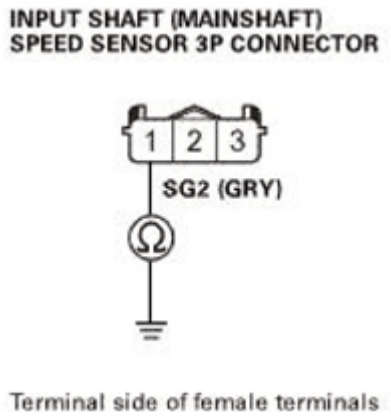

Fig. 21: Checking Continuity Between Input Shaft (Mainshaft) Speed Sensor 3P Connector No. 1 (GRY) And Body Ground
Courtesy of AMERICAN HONDA MOTOR CO., INC.

Is there continuity?

YES : The SG2 wire is OK. **REPLACE THE INPUT SHAFT (MAINSHAFT) SPEED SENSOR** , then **do the repair verification** .

NO : Repair an open in the SG2 wire between the input shaft (mainshaft) speed sensor and the PCM, then **do the repair verification** .

5. Shorted wire check (NM line):
   - 1. Turn the ignition switch to LOCK (0).
   - 2. Jump the SCS line with the HDS.
   - 3. Disconnect the following connector.

     PCM connector B (49P)

   - 4. Check for continuity between test points 1 and 2.

     Test condition IG LOCK (0)

     Input shaft (mainshaft) speed sensor 3P connector: disconnected

     PCM connector B (49P): disconnected

     Test circuit NM

     Test point 1 Input shaft (mainshaft) speed sensor 3P connector No. 2 (WHT)

     Test point 2 Body ground

GETtheMANUALS.org

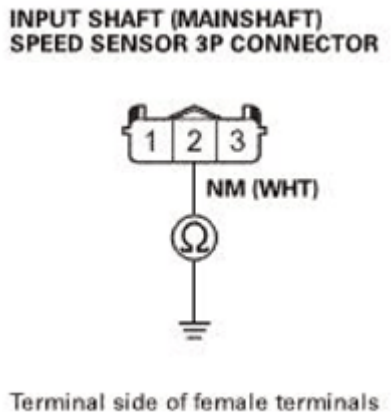

Fig. 22: Checking Continuity Between Input Shaft (Mainshaft) Speed Sensor 3P Connector No. 2 (WHT) And Body Ground
Courtesy of AMERICAN HONDA MOTOR CO., INC.

Is there continuity?

YES : Repair a short to ground in the NM wire between the input shaft (mainshaft) speed sensor and the PCM, then **do the repair verification** .

NO : The NM wire is not shorted. Repair an open in the NM wire between the input shaft (mainshaft) speed sensor and the PCM, then **do the repair verification** .

REPAIR VERIFICATION

- 1. Reconnect all connectors.
- 2. Turn the ignition switch to ON (II).
- 3. Clear the DTC with the HDS.
- 4. Start the engine, disable the VSA by pressing the VSA OFF button, run the vehicle with the shift lever in D, and keep the vehicle at speeds over 12 mph (20 km/h). Compare the Input Shaft (Mainshaft) Speed (rpm) and the Output Shaft (Countershaft) Speed (rpm) with the HDS in the A/T Data List. Slow down, and stop the wheels.

Signal	Current conditions	
	Values	Unit
Input Shaft (Mainshaft) Speed (rpm)		
Output Shaft (Countershaft) Speed (rpm)		

Are the speeds about the same?

YES : Troubleshooting is complete.

NO : **Replace the PCM** See **PCM REMOVAL AND INSTALLATION** or **PCM UPDATE** .

GETtheMANUALS.org

DTC P0721: OUTPUT SHAFT (COUNTERSHAFT) SPEED SENSOR (RANGE/PERFORMANCE)

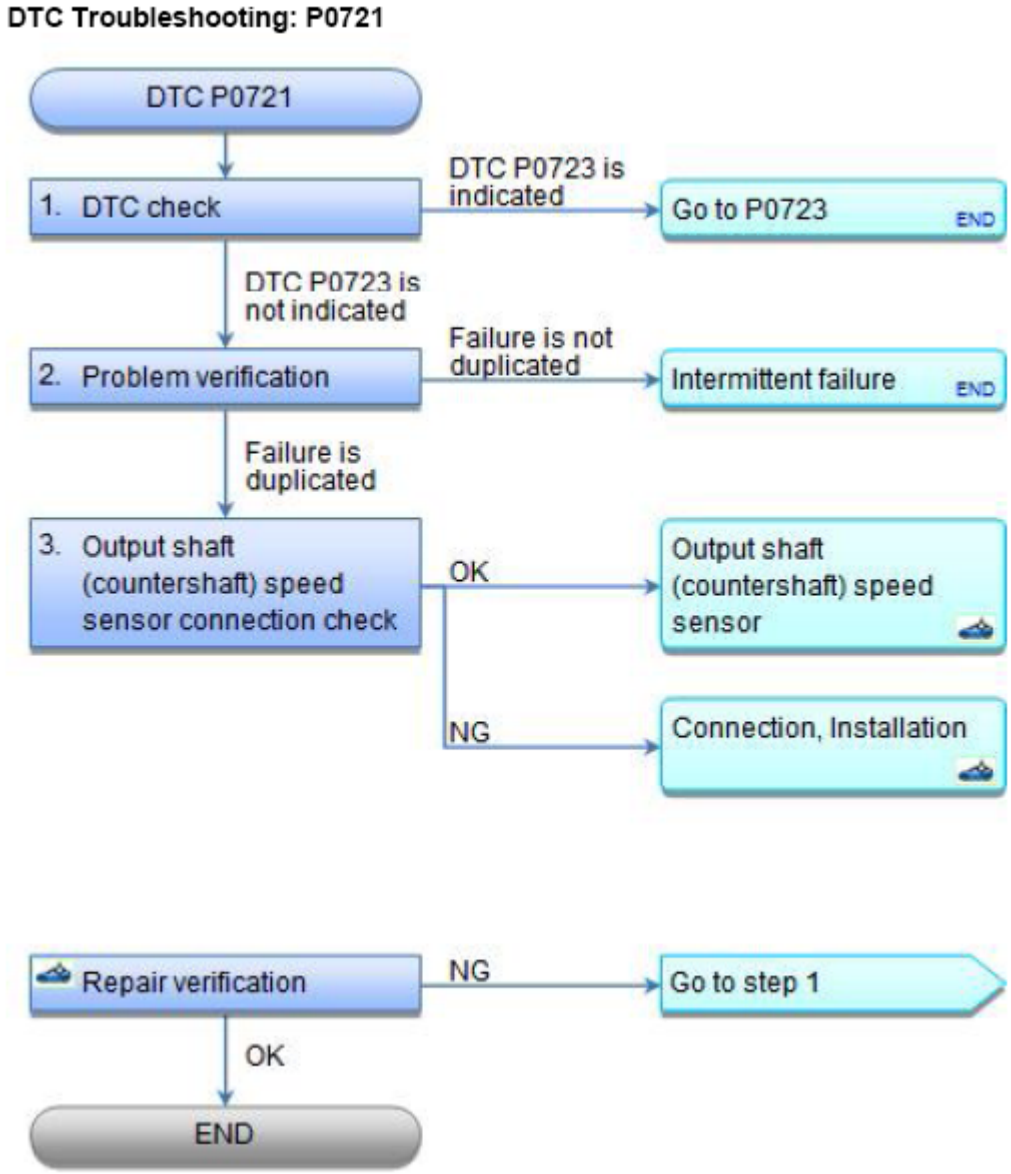

Fig. 23: DTC Troubleshooting Flow Chart (P0721)
Courtesy of AMERICAN HONDA MOTOR CO., INC.

NOTE:

- **Before you troubleshoot, record all freeze data and any on-board snapshot with the HDS, and review the General Troubleshooting Information See HOW TO TROUBLESHOOT THE A/T SYSTEM or HOW TO TROUBLESHOOT THE FUEL AND EMISSIONS SYSTEMS .**
- **This code is caused by an electrical circuit problem and cannot be caused by a mechanical problem in the transmission.**

GETtheMANUALS.org

DTC Description	Confirmed DTC	Pending DTC	Freeze Frame
P0721 Output Shaft (Countershaft) Speed Sensor (Range/Performance)			

1. DTC check:
   - 1. Turn the ignition switch to ON (II).
   - 2. Clear the DTC with the HDS.
   - 3. Raise the vehicle on a lift. Make sure it is securely supported, and allow the front wheels to rotate freely.
   - 4. Start the engine, disable the VSA by pressing the VSA OFF button, run the vehicle with the shift lever in D, and keep the vehicle speed at speeds over 12 mph (20 km/h) for at least 10 seconds. Slow down, and stop the wheels.
   - 5. Check for Pending or Confirmed DTCs with the HDS.

DTC Description	Confirmed DTC	Pending DTC	Freeze Frame
P0723 Output Shaft (Countershaft) Speed Sensor (Intermittent Failure)			

Is DTC P0723 indicated?

YES : **DO THE TROUBLESHOOTING FOR DTC P0723**.

NO : Go to step 2.

2. Problem verification:
   - 1. Check for Pending or Confirmed DTCs with the HDS.

DTC Description	Confirmed DTC	Pending DTC	Freeze Frame
P0721 Output Shaft (Countershaft) Speed Sensor (Range/Performance)			

Is DTC P0721 indicated?

YES : The failure is duplicated. Go to step 3.

NO : Intermittent failure, the system is OK at this time.

3. Output shaft (countershaft) speed sensor connection check:

Are the connection and installation OK?

GETtheMANUALS.org

YES : The connection and installation are OK. **REPLACE THE OUTPUT SHAFT (COUNTERSHAFT) SPEED SENSOR** , then **do the repair verification** .

NO : Repair faulty connection or installation, then **do the repair verification** .

REPAIR VERIFICATION

- 1. Turn the ignition switch to ON (II).
- 2. Clear the DTC with the HDS.
- 3. Start the engine, disable the VSA by pressing the VSA OFF button, run the vehicle with the shift lever in D, and keep the vehicle speed at speeds over 12 mph (20 km/h) for at least 10 seconds. Slow down, and stop the wheels.
- 4. Check for Pending or Confirmed DTCs with the HDS.

DTC Description	Confirmed DTC	Pending DTC	Freeze Frame
P0721 Output Shaft (Countershaft) Speed Sensor (Range/Performance)			

Is DTC P0721 indicated?

YES : Troubleshooting is incomplete. Go to step 1.

NO : Troubleshooting is complete.

DTC P0722: OUTPUT SHAFT (COUNTERSHAFT) SPEED SENSOR (NO SIGNAL INPUT)

GETtheMANUALS.org

DTC Troubleshooting: P0722

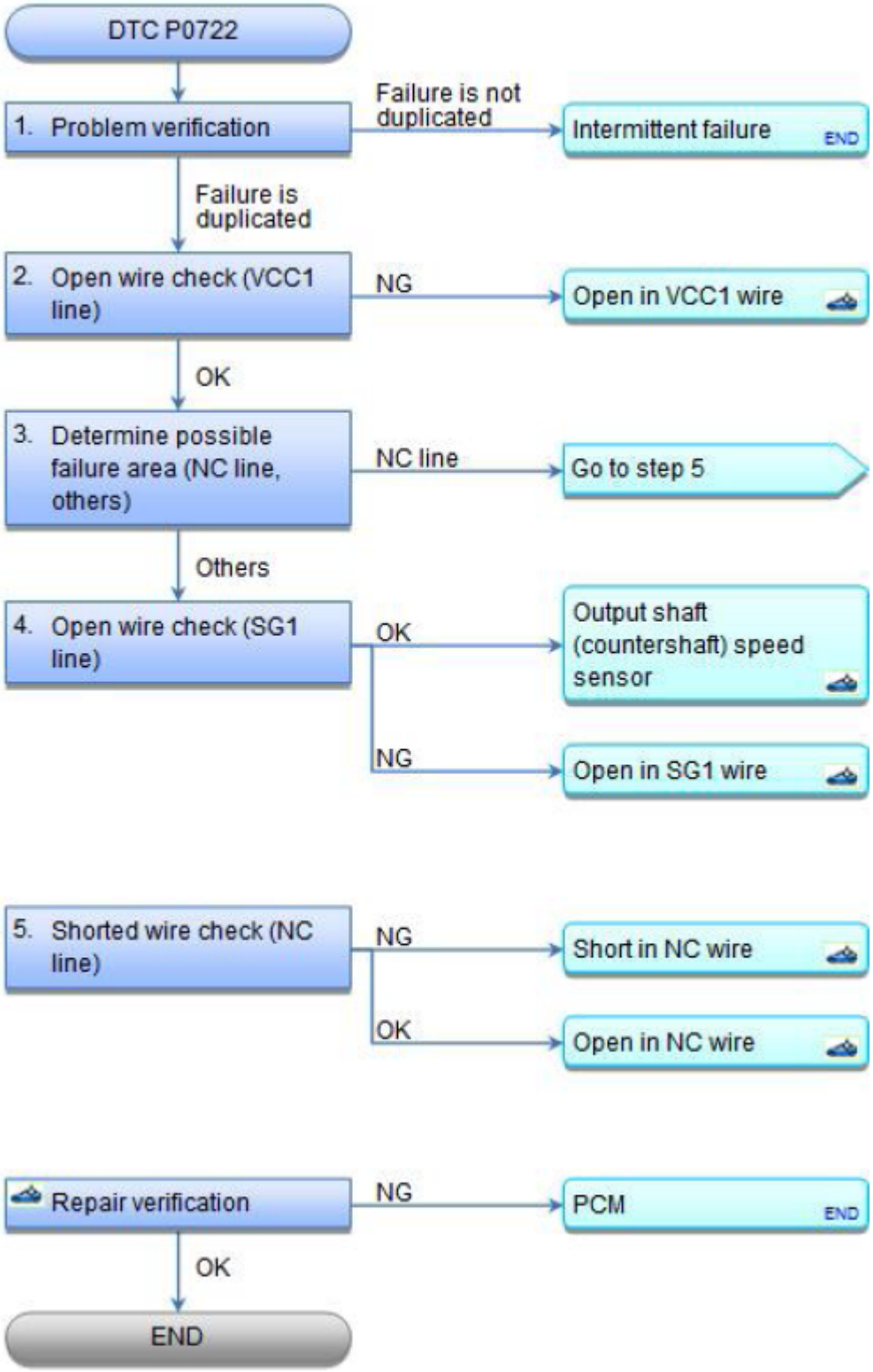

Fig. 24: DTC Troubleshooting Flow Chart (P0722)
Courtesy of AMERICAN HONDA MOTOR CO., INC.

GETtheMANUALS.org

NOTE:

- **Before you troubleshoot, record all freeze data and any on-board snapshot with the HDS, and review the General Troubleshooting Information See HOW TO TROUBLESHOOT THE A/T SYSTEM or HOW TO TROUBLESHOOT THE FUEL AND EMISSIONS SYSTEMS .**
- **This code is caused by an electrical circuit problem and cannot be caused by a mechanical problem in the transmission.**

DTC Description	Confirmed DTC	Pending DTC	Freeze Frame
P0722 Output Shaft (Countershaft) Speed Sensor (No Signal Input)			

1. Problem verification:
   - 1. Turn the ignition switch to ON (II).
   - 2. Clear the DTC with the HDS.
   - 3. Raise the vehicle on a lift. Make sure it is securely supported, and allow the front wheels to rotate freely.
   - 4. Start the engine, disable the VSA by pressing the VSA OFF button, run the vehicle with the shift lever in D, and keep the vehicle at speeds over 12 mph (20 km/h). Compare the Input Shaft (Mainshaft) Speed (rpm) and the Output Shaft (Countershaft) Speed (rpm) with the HDS in the A/T Data List. Slow down, and stop the wheels.

Signal	Current conditions	
	Values	Unit
Input Shaft (Mainshaft) Speed (rpm)		
Output Shaft (Countershaft) Speed (rpm)		

Are the speeds about the same?

YES : Intermittent failure, the system is OK at this time.

NO : The failure is duplicated. Go to step 2.

2. Open wire check (VCC1 line):
   - 1. Turn the ignition switch to LOCK (0).
   - 2. Disconnect the following connector.

     Output shaft (countershaft) speed sensor 3P connector

   - 3. Turn the ignition switch to ON (II).
   - 4. Measure the voltage between test points 1 and 2.

     Test condition IG ON (II)

GETtheMANUALS.org

Output shaft (countershaft) speed sensor 3P connector: disconnected

Test circuit VCC1

Test point 1 Output shaft (countershaft) speed sensor 3P connector No. 3 (PNK)

Test point 2 Body ground

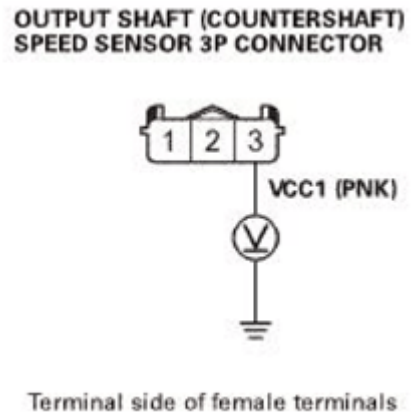

Fig. 25: Measuring Voltage Between Output Shaft (Countershaft) Speed Sensor 3P Connector No. 3 (PNK) And Body Ground
Courtesy of AMERICAN HONDA MOTOR CO., INC.

Is there about 5 V?

YES : The VCC1 wire is OK. Go to step 3.

NO : Repair an open in the VCC1 wire between the output shaft (countershaft) speed sensor and the PCM, then **do the repair verification** .

3. Determine possible failure area (NC line, others):
   - 1. Measure the voltage between test points 1 and 2.

     Test condition IG ON (II)

     Output shaft (countershaft) speed sensor 3P connector: disconnected

     Test circuit NC

     Test point 1 Output shaft (countershaft) speed sensor 3P connector No. 2 (LT GRN)

     Test point 2 Body ground

GETtheMANUALS.org

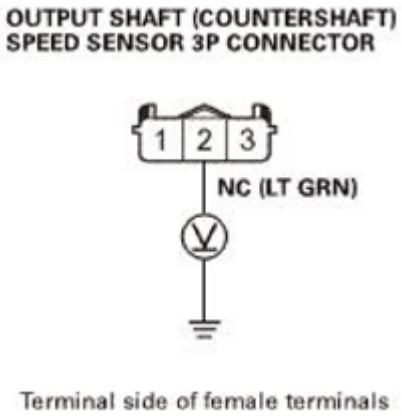

Fig. 26: Measuring Voltage Between Output Shaft (Countershaft) Speed Sensor 3P Connector No. 2 (LT GRN) And Body Ground
Courtesy of AMERICAN HONDA MOTOR CO., INC.

Is there about 5 V?

YES : Go to step 4.

NO : Go to step 5.

4. Open wire check (SG1 line):
   - 1. Turn the ignition switch to LOCK (0).
   - 2. Check for continuity between test points 1 and 2.

   Test condition IG LOCK (0)

   Output shaft (countershaft) speed sensor 3P connector: disconnected

   Test circuit SG1

   Test point 1 Output shaft (countershaft) speed sensor 3P connector No. 1 (GRY)

   Test point 2 Body ground

GETtheMANUALS.org

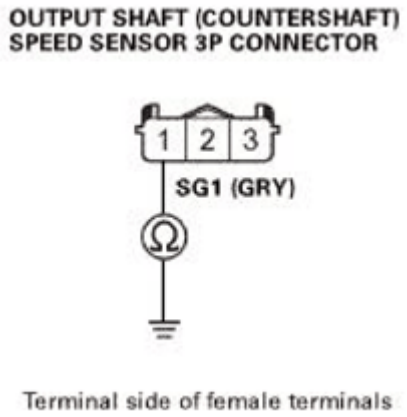

Fig. 27: Checking Continuity Between Output Shaft (Countershaft) Speed Sensor 3P Connector No. 1 (GRY) And Body Ground
Courtesy of AMERICAN HONDA MOTOR CO., INC.

Is there continuity?

YES : The SG1 wire is OK. **REPLACE THE OUTPUT SHAFT (COUNTERSHAFT) SPEED SENSOR** , then **do the repair verification** .

NO : Repair an open in the SG1 wire between the output shaft (countershaft) speed sensor and the PCM, then **do the repair verification** .

5. Shorted wire check (NC line):
   - 1. Turn the ignition switch to LOCK (0).
   - 2. Jump the SCS line with the HDS.
   - 3. Disconnect the following connector.

     PCM connector B (49P)

   - 4. Check for continuity between test points 1 and 2.

     Test condition IG LOCK (0)

     Output shaft (countershaft) speed sensor 3P connector: disconnected

     PCM connector B (49P): disconnected

     Test circuit NC

     Test point 1 Output shaft (countershaft) speed sensor 3P connector No. 2 (LT GRN)

     Test point 2 Body ground

GETtheMANUALS.org

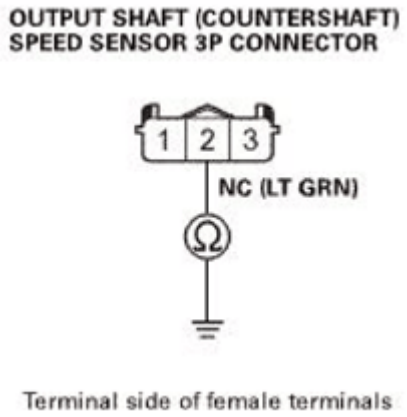

Fig. 28: Checking Continuity Between Output Shaft (Countershaft) Speed Sensor 3P Connector No. 1 (GRY) And Body Ground
Courtesy of AMERICAN HONDA MOTOR CO., INC.

Is there continuity?

YES : Repair a short to ground in the NC wire between the output shaft (countershaft) speed sensor and the PCM, then **do the repair verification** .

NO : The NC wire is not shorted. Repair an open in the NC wire between the output shaft (countershaft) speed sensor and the PCM, then **do the repair verification** .

REPAIR VERIFICATION

- 1. Reconnect all connectors.
- 2. Turn the ignition switch to ON (II).
- 3. Clear the DTC with the HDS.
- 4. Start the engine, disable the VSA by pressing the VSA OFF button, run the vehicle with the shift lever in D, and keep the vehicle at speeds over 12 mph (20 km/h). Compare the Input Shaft (Mainshaft) Speed (rpm) and the Output Shaft (Countershaft) Speed (rpm) with the HDS in the A/T Data List. Slow down, and stop the wheels.

Signal	Current conditions	
	Values	Unit
Input Shaft (Mainshaft) Speed (rpm)		
Output Shaft (Countershaft) Speed (rpm)		

Are the speeds about the same?

YES : Troubleshooting is complete.

NO : **Replace the PCM** See **PCM REMOVAL AND INSTALLATION** or **PCM UPDATE** .

GETtheMANUALS.org

DTC P0723: OUTPUT SHAFT (COUNTERSHAFT) SPEED SENSOR (INTERMITTENT FAILURE)

GETtheMANUALS.org

DTC Troubleshooting: P0723

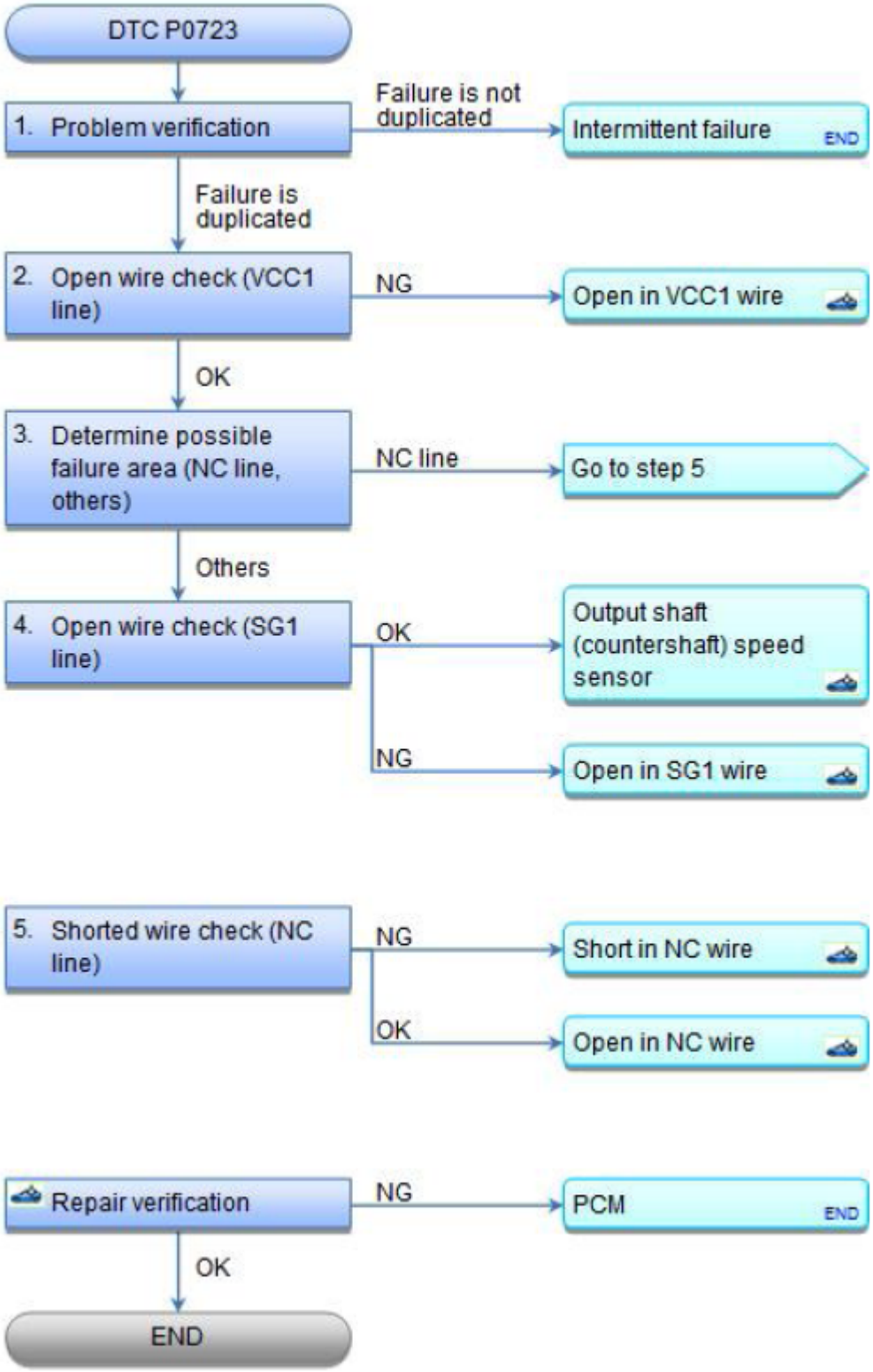

Fig. 29: DTC Troubleshooting Flow Chart (P0723)
Courtesy of AMERICAN HONDA MOTOR CO., INC.

GETtheMANUALS.org

NOTE:

- **Before you troubleshoot, record all freeze data and any on-board snapshot with the HDS, and review the General Troubleshooting Information See HOW TO TROUBLESHOOT THE A/T SYSTEM or HOW TO TROUBLESHOOT THE FUEL AND EMISSIONS SYSTEMS .**
- **This code is caused by an electrical circuit problem and cannot be caused by a mechanical problem in the transmission.**

DTC Description	Confirmed DTC	Pending DTC	Freeze Frame
P0723 Output Shaft (Countershaft) Speed Sensor (Intermittent Failure)			

1. Problem verification:
   - 1. Turn the ignition switch to ON (II).
   - 2. Clear the DTC with the HDS.
   - 3. Raise the vehicle on a lift. Make sure it is securely supported, and allow the front wheels to rotate freely.
   - 4. Start the engine, disable the VSA by pressing the VSA OFF button, run the vehicle with the shift lever in D, and keep the vehicle at speeds over 12 mph (20 km/h). Compare the Input Shaft (Mainshaft) Speed (rpm) and the Output Shaft (Countershaft) Speed (rpm) with the HDS in the A/T Data List. Slow down, and stop the wheels.

Signal	Current conditions	
	Values	Unit
Input Shaft (Mainshaft) Speed (rpm)		
Output Shaft (Countershaft) Speed (rpm)		

Are the speeds about the same?

YES : Intermittent failure, the system is OK at this time. Check for poor connection or loose terminals in the input shaft (mainshaft) speed sensor circuit.

NO : The failure is duplicated. Go to step 2.

2. Open wire check (VCC1 line):
   - 1. Turn the ignition switch to LOCK (0).
   - 2. Disconnect the following connector.

     Output shaft (countershaft) speed sensor 3P connector

   - 3. Turn the ignition switch to ON (II).
   - 4. Measure the voltage between test points 1 and 2.

GETtheMANUALS.org

Test condition IG ON (II)

Output shaft (countershaft) speed sensor 3P connector: disconnected

Test circuit VCC1

Test point 1 Output shaft (countershaft) speed sensor 3P connector No. 3 (PNK)

Test point 2 Body ground

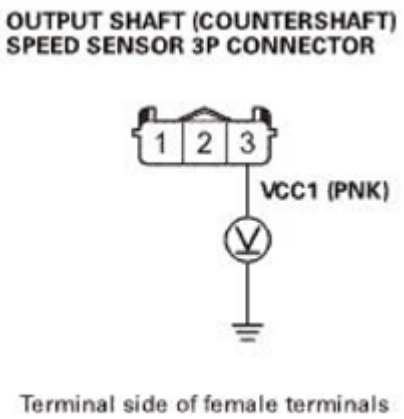

Fig. 30: Measuring Voltage Between Output Shaft (Countershaft) Speed Sensor 3P Connector No. 3 (PNK) And Body Ground
Courtesy of AMERICAN HONDA MOTOR CO., INC.

Is there about 5 V?

YES : The VCC1 wire is OK. Go to step 3.

NO : Repair an open in the VCC1 wire between the output shaft (countershaft) speed sensor and the PCM, then **do the repair verification** .

3. Determine possible failure area (NC line, others):
   - 1. Measure the voltage between test points 1 and 2.

     Test condition IG ON (II)

     Output shaft (countershaft) speed sensor 3P connector: disconnected

     Test circuit NC

     Test point 1 Output shaft (countershaft) speed sensor 3P connector No. 2 (LT GRN)

     Test point 2 Body ground

GETtheMANUALS.org

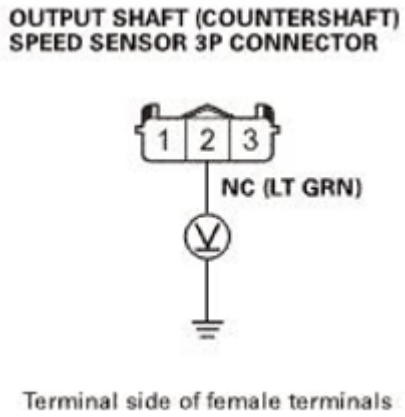

Fig. 31: Measuring Voltage Between Output Shaft (Countershaft) Speed Sensor 3P Connector No. 2 (LT GRN) And Body Ground
Courtesy of AMERICAN HONDA MOTOR CO., INC.

Is there about 5 V?

YES : Go to step 4.

NO : Go to step 5.

4. Open wire check (SG1 line):
   - 1. Turn the ignition switch to LOCK (0).
   - 2. Check for continuity between test points 1 and 2.

   Test condition IG LOCK (0)

   Output shaft (countershaft) speed sensor 3P connector: disconnected

   Test circuit SG1

   Test point 1 Output shaft (countershaft) speed sensor 3P connector No. 1 (GRY)

   Test point 2 Body ground

GETtheMANUALS.org

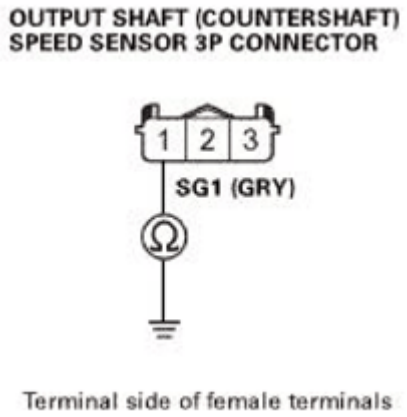

Fig. 32: Checking Continuity Between Output Shaft (Countershaft) Speed Sensor 3P Connector No. 1 (GRY) And Body Ground
Courtesy of AMERICAN HONDA MOTOR CO., INC.

Is there continuity?

YES : The SG1 wire is OK. **REPLACE THE OUTPUT SHAFT (COUNTERSHAFT) SPEED SENSOR** , then **do the repair verification** .

NO : Repair an open in the SG1 wire between the output shaft (countershaft) speed sensor and the PCM, then **do the repair verification** .

5. Shorted wire check (NC line):
   - 1. Turn the ignition switch to LOCK (0).
   - 2. Jump the SCS line with the HDS.
   - 3. Disconnect the following connector.

     PCM connector B (49P)

   - 4. Check for continuity between test points 1 and 2.

     Test condition IG LOCK (0)

     Output shaft (countershaft) speed sensor 3P connector: disconnected

     PCM connector B (49P): disconnected

     Test circuit NC

     Test point 1 Output shaft (countershaft) speed sensor 3P connector No. 2 (LT GRN)

     Test point 2 Body ground

GETtheMANUALS.org

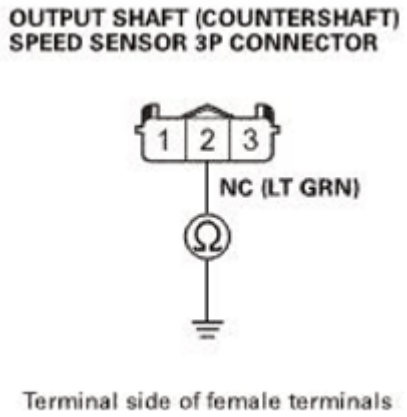

Fig. 33: Checking Continuity Between Output Shaft (Countershaft) Speed Sensor 3P Connector No. 2 (LT GRN) And Body Ground
Courtesy of AMERICAN HONDA MOTOR CO., INC.

Is there continuity?

YES : Repair a short to ground in the NC wire between the output shaft (countershaft) speed sensor and the PCM, then **do the repair verification** .

NO : The NC wire is not shorted. Repair an open in the NC wire between the output shaft (countershaft) speed sensor and the PCM, then **do the repair verification** .

REPAIR VERIFICATION

- 1. Reconnect all connectors.
- 2. Turn the ignition switch to ON (II).
- 3. Clear the DTC with the HDS.
- 4. Start the engine, disable the VSA by pressing the VSA OFF button, run the vehicle with the shift lever in D, and keep the vehicle at speeds over 12 mph (20 km/h). Compare the Input Shaft (Mainshaft) Speed (rpm) and the Output Shaft (Countershaft) Speed (rpm) with the HDS in the A/T Data List. Slow down, and stop the wheels.

Signal	Current conditions	
	Values	Unit
Input Shaft (Mainshaft) Speed (rpm)		
Output Shaft (Countershaft) Speed (rpm)		

Are the speeds about the same?

YES : Troubleshooting is complete.

NO : **Replace the PCM** See **PCM REMOVAL AND INSTALLATION** or **PCM UPDATE** .

GETtheMANUALS.org

DTC P0731: 1ST GEAR INCORRECT RATIO

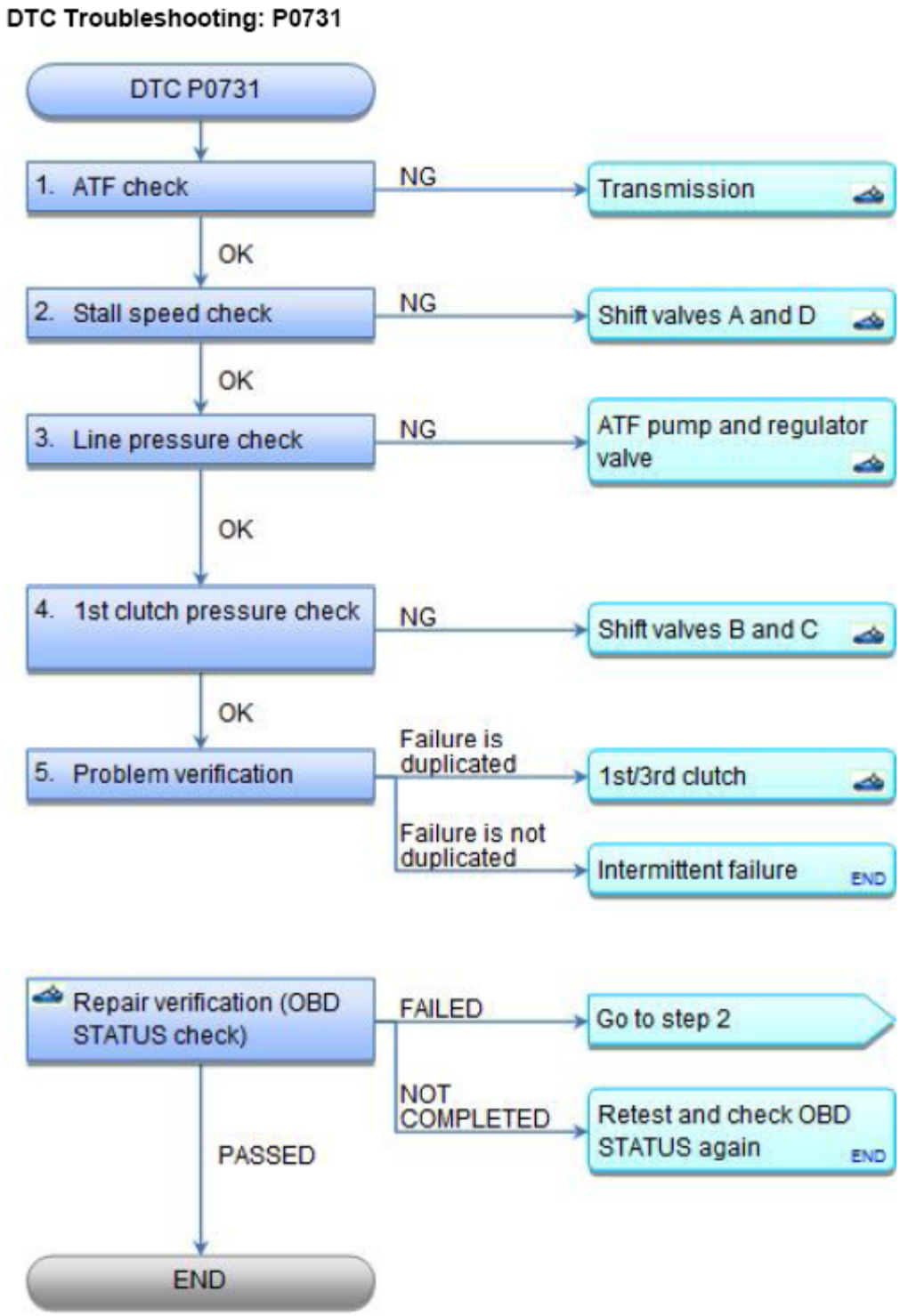

Fig. 34: DTC Troubleshooting Flow Chart (P0731)
Courtesy of AMERICAN HONDA MOTOR CO., INC.

GETtheMANUALS.org

NOTE: **Before you troubleshoot, record all freeze data and any on-board snapshot with the HDS, and review the General Troubleshooting Information See HOW TO TROUBLESHOOT THE A/T SYSTEM or HOW TO TROUBLESHOOT THE FUEL AND EMISSIONS SYSTEMS .**

DTC Description	Confirmed DTC	Pending DTC	Freeze Frame
P0731 1st Gear Incorrect Ratio			

1. ATF check:
   - 1. Warm up the engine to normal operating temperature (the radiator fan comes on).
   - 2. Make sure that the transmission is filled to the proper level, and check for fluid leaks.
   - 3. **DRAIN THE ATF** through a strainer. Inspect the strainer for metal debris or excessive clutch material.

   Does the strainer have metal debris or excessive clutch material?

   YES : **Replace the transmission** See **AUTOMATIC TRANSMISSION DISASSEMBLY AND REASSEMBLY** or **AUTOMATIC TRANSMISSION REMOVAL AND INSTALLATION** , then **do the repair verification** .

   NO : **REPLACE THE ATF** , then go to step 2.

2. Stall speed check:
   - 1. **TEST THE STALL SPEED IN D** .

   Is the stall speed rpm within the service limits?

   YES : The stall speed rpm is OK. Go to step 3.

   NO : Shift valves A and D are stuck. Repair the hydraulic system related with shift valves A and D, or replace the main valve body (shift valve A), the servo body (shift valve D), or **the transmission** See **AUTOMATIC TRANSMISSION DISASSEMBLY AND REASSEMBLY** or **AUTOMATIC TRANSMISSION REMOVAL AND INSTALLATION** , then **do the repair verification** .

3. Line pressure check:
   - 1. **MEASURE THE LINE PRESSURE** .

   Is the line pressure within the service limit?

   YES : The line pressure is OK. Go to step 4.

   NO : Faulty ATF pump and regulator valve. Replace the main valve body (ATF pump), the regulator valve body (regulator valve), or **the transmission** See **AUTOMATIC TRANSMISSION DISASSEMBLY AND REASSEMBLY** or **AUTOMATIC TRANSMISSION REMOVAL AND INSTALLATION** , then **do the repair verification** .

GETtheMANUALS.org

4. 1st clutch pressure check:
   - 1. **MEASURE THE 1ST CLUTCH PRESSURE** .

   Is the 1st clutch pressure within the service limits?

   YES : The 1st clutch pressure is OK. Go to step 5.

   NO : Shift valves B and C are stuck. Repair the hydraulic system related with shift valves B and C, or replace the main valve body (shift valves B and C) or **the transmission** See **AUTOMATIC TRANSMISSION DISASSEMBLY AND REASSEMBLY** or **AUTOMATIC TRANSMISSION REMOVAL AND INSTALLATION** , then **do the repair verification** .

5. Problem verification:
   - 1. Turn the ignition switch to ON (II).
   - 2. Clear the DTC with the HDS.
   - 3. Test-drive the vehicle in 1st gear, with the shift lever in D, at speeds over 7 mph (12 km/h), and with the engine speed above 1, 000 rpm for at least 12 seconds.
   - 4. Monitor the OBD STATUS for P0731 in the DTCs MENU with the HDS.

DTC Description	OBD Status
P0731 1st Gear Incorrect Ratio	

   Does the HDS indicate FAILED?

   YES : The failure is duplicated. Replace the 1st/3rd clutch or **the transmission** See **AUTOMATIC TRANSMISSION DISASSEMBLY AND REASSEMBLY** or **AUTOMATIC TRANSMISSION REMOVAL AND INSTALLATION** , then **do the repair verification** .

   NO : If the HDS indicates PASSED, intermittent failure, the system is OK at this time. If the HDS indicates NOT COMPLETED, test-drive again.

REPAIR VERIFICATION (OBD STATUS CHECK)

- 1. Turn the ignition switch to ON (II).
- 2. Clear the DTC with the HDS.
- 3. Test-drive the vehicle in 1st gear, with the shift lever in D, at speeds over 7 mph (12 km/h), and with the engine speed above 1, 000 rpm for at least 12 seconds.
- 4. Monitor the OBD STATUS for P0731 in the DTCs MENU with the HDS.

DTC Description	OBD Status
P0731 1st Gear Incorrect Ratio	

Does the HDS indicate PASSED, FAILED, or NOT COMPLETED?

GETtheMANUALS.org

PASSED Troubleshooting is complete. Check for other DTC after this troubleshooting. If any other Pending or Confirmed DTCs were indicated, go to the indicated DTC's troubleshooting.

FAILED Troubleshooting is incomplete. Check for poor connections or loose terminals between the input shaft (mainshaft) speed sensor, the output shaft (countershaft) speed sensor, and the PCM, then go to step 2 and recheck.

NOT COMPLETED Repair verification is incomplete. Meet the test condition, and check the OBD STATUS again.

DTC P0732: 2ND GEAR INCORRECT RATIO

GETtheMANUALS.org

DTC Troubleshooting: P0732

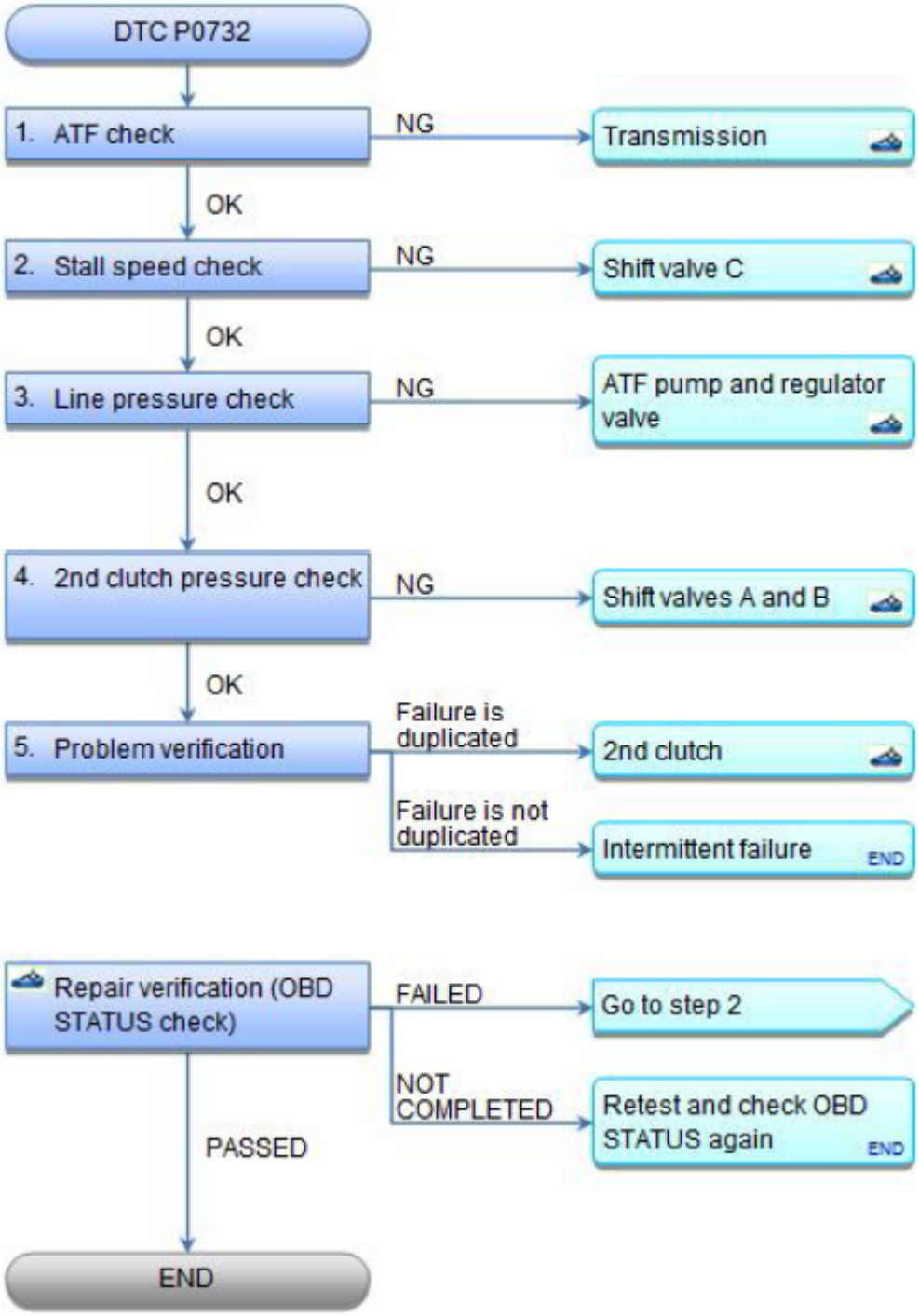

Fig. 35: DTC Troubleshooting Flow Chart (P0732)
Courtesy of AMERICAN HONDA MOTOR CO., INC.

NOTE: **Before you troubleshoot, record all freeze data and any on-board snapshot with the HDS, and review the General Troubleshooting Information See HOW TO**

GETtheMANUALS.org

TROUBLESHOOT THE A/T SYSTEM or HOW TO TROUBLESHOOT THE FUEL AND EMISSIONS SYSTEMS .

DTC Description	Confirmed DTC	Pending DTC	Freeze Frame
P0732 2nd Gear Incorrect Ratio			

1. ATF check:
   - 1. Warm up the engine to normal operating temperature (the radiator fan comes on).
   - 2. Make sure that the transmission is filled to the proper level, and check for fluid leaks.
   - 3. **DRAIN THE ATF** through a strainer. Inspect the strainer for metal debris or excessive clutch material.

   Does the strainer have metal debris or excessive clutch material?

   YES : **Replace the transmission** See **AUTOMATIC TRANSMISSION DISASSEMBLY AND REASSEMBLY** or **AUTOMATIC TRANSMISSION REMOVAL AND INSTALLATION** , then **do the repair verification** .

   NO : **REPLACE THE ATF** , then go to step 2.

2. Stall speed check:
   - 1. **TEST THE STALL SPEED IN D** .

   Is the stall speed rpm within the service limits?

   YES : The stall speed rpm is OK. Go to step 3.

   NO : Shift valve C is stuck. Repair the hydraulic system related with shift valve C, or replace the main valve body (shift valve C) or **the transmission** See **AUTOMATIC TRANSMISSION DISASSEMBLY AND REASSEMBLY** or **AUTOMATIC TRANSMISSION REMOVAL AND INSTALLATION** , then **do the repair verification** .

3. Line pressure check:
   - 1. **MEASURE THE LINE PRESSURE** .

   Is the line pressure within the service limit?

   YES : The line pressure is OK. Go to step 4.

   NO : Faulty ATF pump and regulator valve. Replace the main valve body (ATF pump), the regulator valve body (regulator valve), or **the transmission** See **AUTOMATIC TRANSMISSION DISASSEMBLY AND REASSEMBLY** or **AUTOMATIC TRANSMISSION REMOVAL AND INSTALLATION** , then **do the repair verification** .

4. 2nd clutch pressure check:

GETtheMANUALS.org

- 1. **MEASURE THE 2ND CLUTCH PRESSURE** .

Is the 2nd clutch pressure within the service limits?

YES : The 2nd clutch pressure is OK. Go to step 5.

NO : Shift valves A and B are stuck. Repair the hydraulic system related with shift valves A and B, or replace the main valve body (shift valves A and B) or **the transmission** See **AUTOMATIC TRANSMISSION DISASSEMBLY AND REASSEMBLY** or **AUTOMATIC TRANSMISSION REMOVAL AND INSTALLATION** , then **do the repair verification** .

5. Problem verification:
   - 1. Turn the ignition switch to ON (II).
   - 2. Clear the DTC with the HDS.
   - 3. Test-drive the vehicle in 2nd gear, with the shift lever in D, at speeds over 7 mph (12 km/h), and with the engine speed above 1, 000 rpm for at least 12 seconds.
   - 4. Monitor the OBD STATUS for P0732 in the DTCs MENU with the HDS.

DTC Description	OBD Status
P0732 2nd Gear Incorrect Ratio	

Does the HDS indicate FAILED?

YES : The failure is duplicated. Replace the 2nd clutch or **the transmission** See **AUTOMATIC TRANSMISSION DISASSEMBLY AND REASSEMBLY** or **AUTOMATIC TRANSMISSION REMOVAL AND INSTALLATION** , then **do the repair verification** .

NO : If the HDS indicates PASSED, intermittent failure, the system is OK at this time. If the HDS indicates NOT COMPLETED, test-drive again.

REPAIR VERIFICATION (OBD STATUS CHECK)

- 1. Turn the ignition switch to ON (II).
- 2. Clear the DTC with the HDS.
- 3. Test-drive the vehicle in 2nd gear, with the shift lever in D, at speeds over 7 mph (12 km/h), and with the engine speed above 1, 000 rpm for at least 12 seconds.
- 4. Monitor the OBD STATUS for P0732 in the DTCs MENU with the HDS.

DTC Description	OBD Status
P0732 2nd Gear Incorrect Ratio	

Does the HDS indicate PASSED, FAILED, or NOT COMPLETED?

PASSED Troubleshooting is complete. Check for other DTC after this troubleshooting. If any other Pending or

GETtheMANUALS.org

Confirmed DTCs were indicated, go to the indicated DTC's troubleshooting.

FAILED Troubleshooting is incomplete. Check for poor connections or loose terminals between the input shaft (mainshaft) speed sensor, the output shaft (countershaft) speed sensor, and the PCM, then go to step 2 and recheck.

NOT COMPLETED Repair verification is incomplete. Meet the test condition, and check the OBD STATUS again.

DTC P0733: 3RD GEAR INCORRECT RATIO

GETtheMANUALS.org

DTC Troubleshooting: P0733

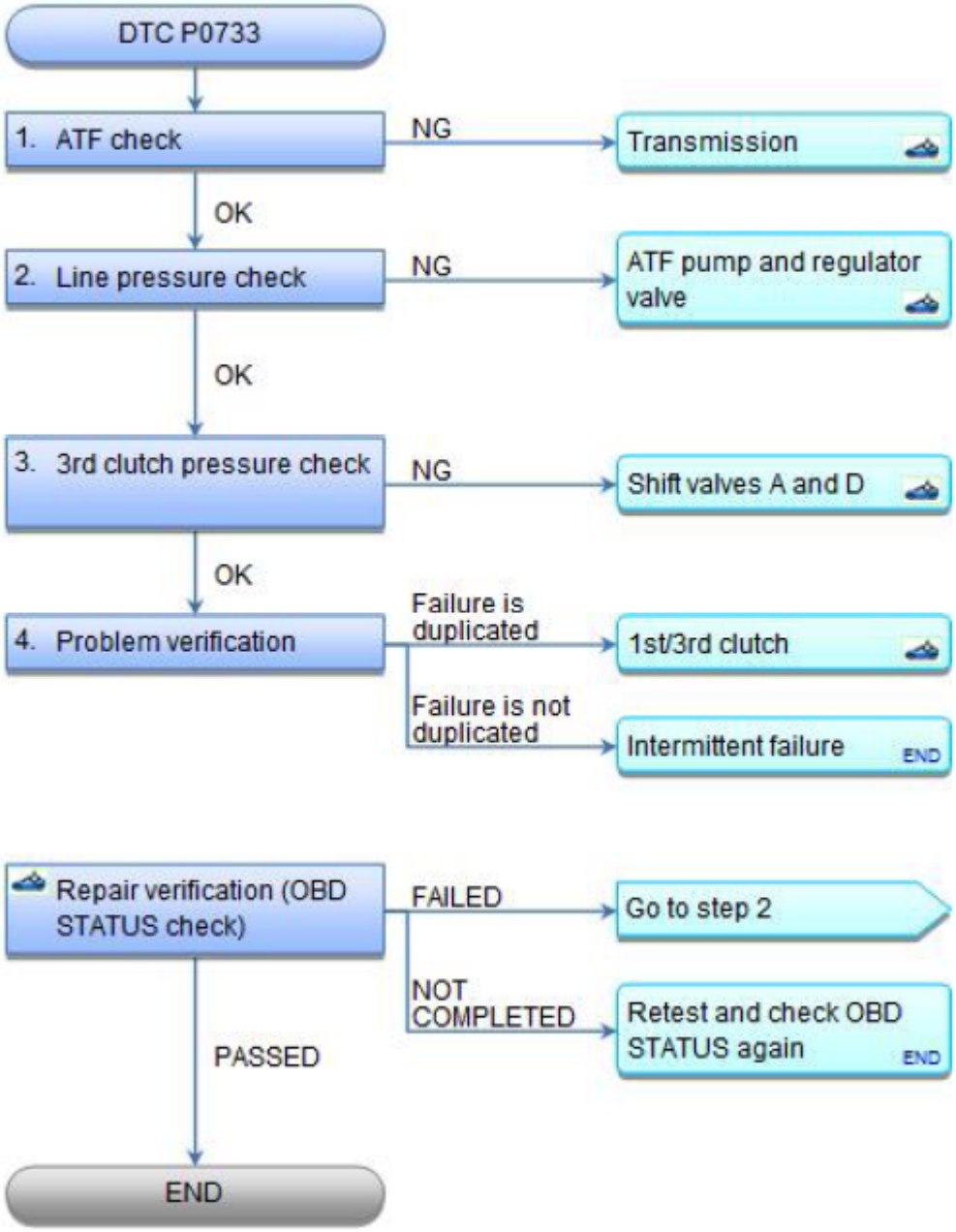

Fig. 36: DTC Troubleshooting Flow Chart (P0733)
Courtesy of AMERICAN HONDA MOTOR CO., INC.

NOTE: **Before you troubleshoot, record all freeze data and any on-board snapshot with the HDS, and review the General Troubleshooting Information See HOW TO TROUBLESHOOT THE A/T SYSTEM or HOW TO TROUBLESHOOT THE FUEL AND EMISSIONS SYSTEMS .**

DTC Description	Confirmed DTC	Pending DTC	Freeze Frame

GETtheMANUALS.org

P0733 3rd Gear Incorrect Ratio			

1. ATF check:
   - 1. Warm up the engine to normal operating temperature (the radiator fan comes on).
   - 2. Make sure that the transmission is filled to the proper level, and check for fluid leaks.
   - 3. **DRAIN THE ATF** through a strainer. Inspect the strainer for metal debris or excessive clutch material.

   Does the strainer have metal debris or excessive clutch material?

   YES : **Replace the transmission** See **AUTOMATIC TRANSMISSION DISASSEMBLY AND REASSEMBLY** or **AUTOMATIC TRANSMISSION REMOVAL AND INSTALLATION** , then **do the repair verification** .

   NO : **REPLACE THE ATF** , then go to step 2.

2. Line pressure check:
   - 1. **MEASURE THE LINE PRESSURE** .

   Is the line pressure within the service limit?

   YES : The line pressure is OK. Go to step 3.

   NO : Faulty ATF pump and regulator valve. Replace the main valve body (ATF pump), the regulator valve body (regulator valve), or **the transmission** See **AUTOMATIC TRANSMISSION DISASSEMBLY AND REASSEMBLY** or **AUTOMATIC TRANSMISSION REMOVAL AND INSTALLATION** , then **do the repair verification** .

3. 3rd clutch pressure check:
   - 1. **MEASURE THE 3RD CLUTCH PRESSURE** .

   Is the 3rd clutch pressure within the service limits?

   YES : The 3rd clutch pressure is OK. Go to step 4.

   NO : Shift valves A and D are stuck. Repair the hydraulic system related with shift valves A and D, or replace the main valve body (shift valve A), the servo body (shift valve D), or **the transmission** See **AUTOMATIC TRANSMISSION DISASSEMBLY AND REASSEMBLY** or **AUTOMATIC TRANSMISSION REMOVAL AND INSTALLATION** , then **do the repair verification** .

4. Problem verification:
   - 1. Turn the ignition switch to ON (II).
   - 2. Clear the DTC with the HDS.
   - 3. Test-drive the vehicle in 3rd gear, with the shift lever in D, at speeds over 7 mph (12 km/h), and with the engine speed above 1, 000 rpm for at least 12 seconds.

GETtheMANUALS.org

- 4. Monitor the OBD STATUS for P0733 in the DTCs MENU with the HDS.

DTC Description	OBD Status
P0733 3rd Gear Incorrect Ratio	

Does the HDS indicate FAILED?

YES : The failure is duplicated. Replace the 1st/3rd clutch or **the transmission** See **AUTOMATIC TRANSMISSION DISASSEMBLY AND REASSEMBLY** or **AUTOMATIC TRANSMISSION REMOVAL AND INSTALLATION** , then **do the repair verification** .

NO : If the HDS indicates PASSED, intermittent failure, the system is OK at this time. If the HDS indicates NOT COMPLETED, test-drive again.

REPAIR VERIFICATION (OBD STATUS CHECK)

- 1. Turn the ignition switch to ON (II).
- 2. Clear the DTC with the HDS.
- 3. Test-drive the vehicle in 3rd gear, with the shift lever in D, at speeds over 7 mph (12 km/h), and with the engine speed above 1, 000 rpm for at least 12 seconds.
- 4. Monitor the OBD STATUS for P0733 in the DTCs MENU with the HDS.

DTC Description	OBD Status
P0733 3rd Gear Incorrect Ratio	

Does the HDS indicate PASSED, FAILED, or NOT COMPLETED?

PASSED Troubleshooting is complete. Check for other DTC after this troubleshooting. If any other Pending or Confirmed DTCs were indicated, go to the indicated DTC's troubleshooting.

FAILED Troubleshooting is incomplete. Check for poor connections or loose terminals between the input shaft (mainshaft) speed sensor, the output shaft (countershaft) speed sensor, and the PCM, then go to step 2 and recheck.

NOT COMPLETED Repair verification is incomplete. Meet the test condition, and check the OBD STATUS again.

DTC P0734: 4TH GEAR INCORRECT RATIO

GETtheMANUALS.org

DTC Troubleshooting: P0734

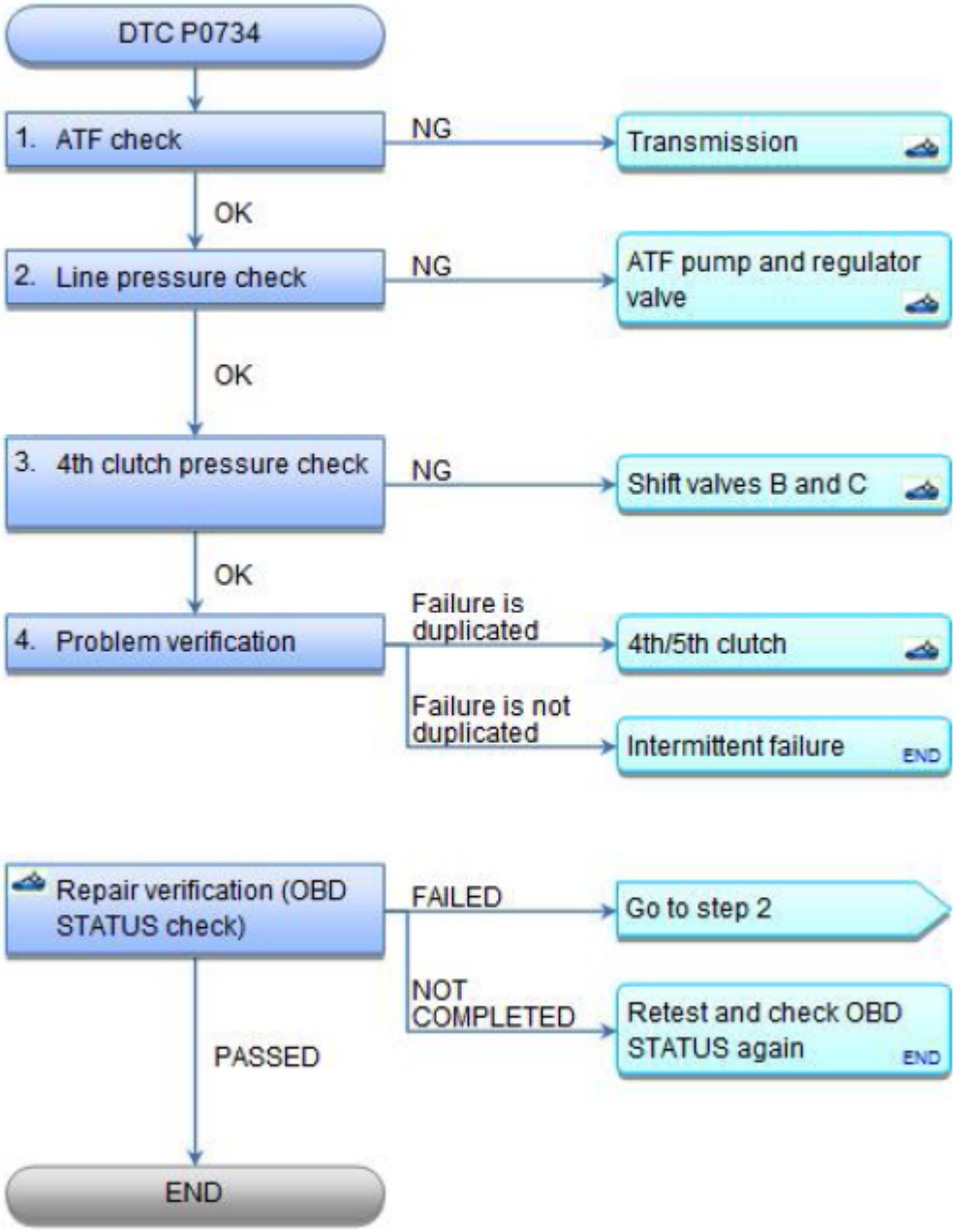

Fig. 37: DTC Troubleshooting Flow Chart (P0734)
Courtesy of AMERICAN HONDA MOTOR CO., INC.

NOTE: **Before you troubleshoot, record all freeze data and any on-board snapshot with the HDS, and review the General Troubleshooting Information See HOW TO TROUBLESHOOT THE A/T SYSTEM or HOW TO TROUBLESHOOT THE FUEL AND EMISSIONS SYSTEMS .**

DTC Description	Confirmed DTC	Pending DTC	Freeze Frame

GETtheMANUALS.org

P0734 4th Gear Incorrect Ratio			

1. ATF check:
   - 1. Warm up the engine to normal operating temperature (the radiator fan comes on).
   - 2. Make sure that the transmission is filled to the proper level, and check for fluid leaks.
   - 3. **DRAIN THE ATF** through a strainer. Inspect the strainer for metal debris or excessive clutch material.

   Does the strainer have metal debris or excessive clutch material?

   YES : **Replace the transmission** See **AUTOMATIC TRANSMISSION DISASSEMBLY AND REASSEMBLY** or **AUTOMATIC TRANSMISSION REMOVAL AND INSTALLATION** , then **do the repair verification** .

   NO : **REPLACE THE ATF** , then go to step 2.

2. Line pressure check:
   - 1. **MEASURE THE LINE PRESSURE** .

   Is the line pressure within the service limit?

   YES : The line pressure is OK. Go to step 3.

   NO : Faulty ATF pump and regulator valve. Replace the main valve body (ATF pump), the regulator valve body (regulator valve), or **the transmission** See **AUTOMATIC TRANSMISSION DISASSEMBLY AND REASSEMBLY** or **AUTOMATIC TRANSMISSION REMOVAL AND INSTALLATION** , then **do the repair verification** .

3. 4th clutch pressure check:
   - 1. **MEASURE THE 4TH CLUTCH PRESSURE** .

   Is the 4th clutch pressure within the service limits?

   YES : The 4th clutch pressure is OK. Go to step 4.

   NO : Shift valves B and C are stuck. Repair the hydraulic system related with shift valves B and C, or replace the main valve body (shift valves B and C) or **the transmission** See **AUTOMATIC TRANSMISSION DISASSEMBLY AND REASSEMBLY** or **AUTOMATIC TRANSMISSION REMOVAL AND INSTALLATION** , then **do the repair verification** .

4. Problem verification:
   - 1. Turn the ignition switch to ON (II).
   - 2. Clear the DTC with the HDS.
   - 3. Test-drive the vehicle in 4th gear, with the shift lever in D, at speeds over 7 mph (12 km/h), and with the engine speed above 1, 000 rpm for at least 12 seconds.

GETtheMANUALS.org

- 4. Monitor the OBD STATUS for P0734 in the DTCs MENU with the HDS.

DTC Description	OBD Status
P0734 4th Gear Incorrect Ratio	

Does the HDS indicate FAILED?

YES : The failure is duplicated. Replace the 4th/5th clutch or **the transmission** See **AUTOMATIC TRANSMISSION DISASSEMBLY AND REASSEMBLY** or **AUTOMATIC TRANSMISSION REMOVAL AND INSTALLATION** , then **do the repair verification** .

NO : If the HDS indicates PASSED, intermittent failure, the system is OK at this time. If the HDS indicates NOT COMPLETED, test-drive again.

REPAIR VERIFICATION (OBD STATUS CHECK)

- 1. Turn the ignition switch to ON (II).
- 2. Clear the DTC with the HDS.
- 3. Test-drive the vehicle in 4th gear, with the shift lever in D, at speeds over 7 mph (12 km/h), and with the engine speed above 1, 000 rpm for at least 12 seconds.
- 4. Monitor the OBD STATUS for P0734 in the DTCs MENU with the HDS.

DTC Description	OBD Status
P0734 4th Gear Incorrect Ratio	

Does the HDS indicate PASSED, FAILED, or NOT COMPLETED?

PASSED Troubleshooting is complete. Check for other DTC after this troubleshooting. If any other Pending or Confirmed DTCs were indicated, go to the indicated DTC's troubleshooting.

FAILED Troubleshooting is incomplete. Check for poor connections or loose terminals between the input shaft (mainshaft) speed sensor, the output shaft (countershaft) speed sensor, and the PCM, then go to step 2 and recheck.

NOT COMPLETED Repair verification is incomplete. Meet the test condition, and check the OBD STATUS again.

DTC P0735: 5TH GEAR INCORRECT RATIO

GETtheMANUALS.org

DTC Troubleshooting: P0735

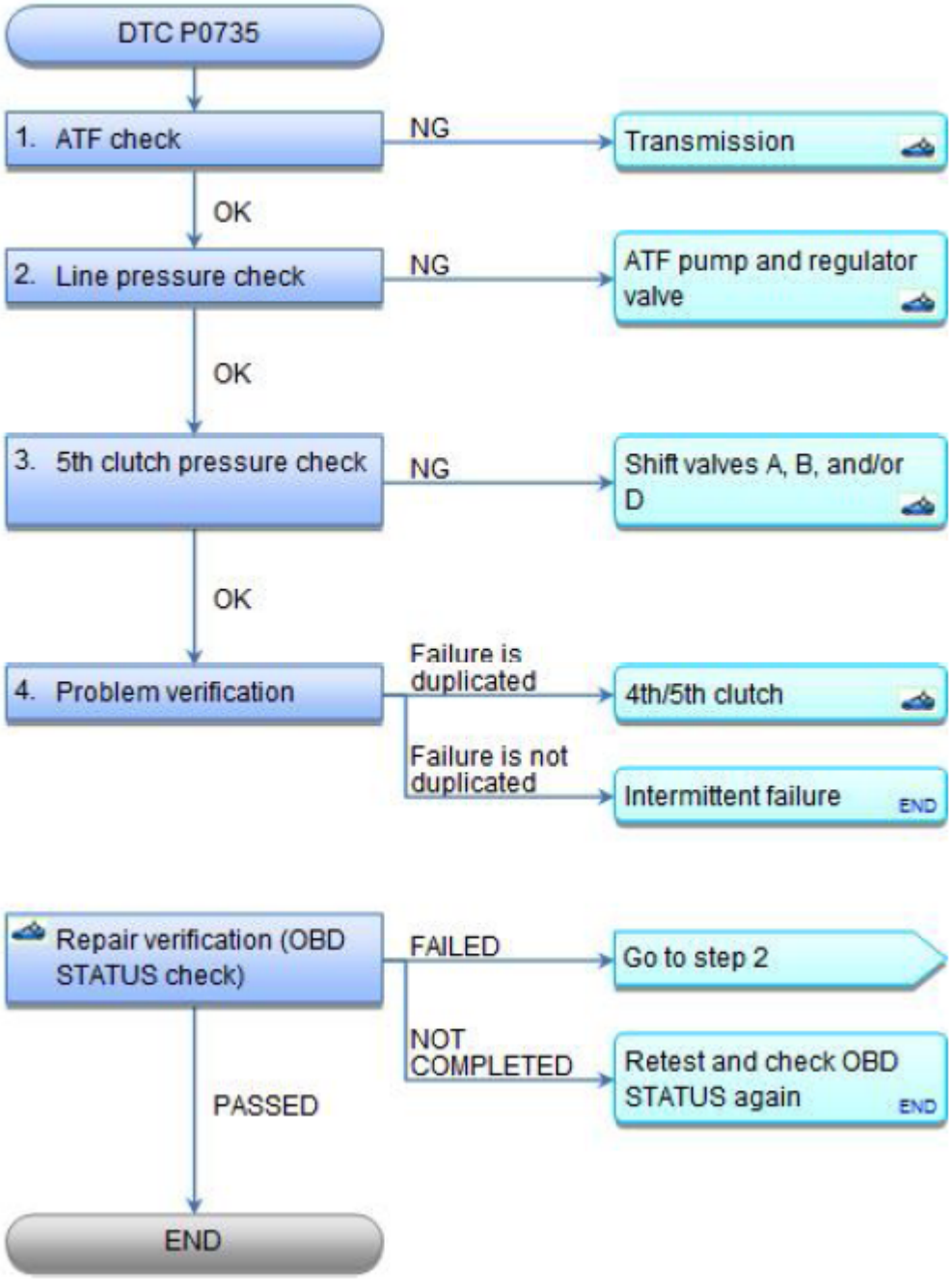

Fig. 38: DTC Troubleshooting Flow Chart (P0735)
Courtesy of AMERICAN HONDA MOTOR CO., INC.

NOTE: **Before you troubleshoot, record all freeze data and any on-board snapshot with the HDS, and review the General Troubleshooting Information See HOW TO TROUBLESHOOT THE A/T SYSTEM or HOW TO TROUBLESHOOT THE FUEL AND EMISSIONS SYSTEMS .**

GETtheMANUALS.org

DTC Description	Confirmed DTC	Pending DTC	Freeze Frame
P0735 5th Gear Incorrect Ratio			

1. ATF check:
   - 1. Warm up the engine to normal operating temperature (the radiator fan comes on).
   - 2. Make sure that the transmission is filled to the proper level, and check for fluid leaks.
   - 3. **DRAIN THE ATF** through a strainer. Inspect the strainer for metal debris or excessive clutch material.

   Does the strainer have metal debris or excessive clutch material?

   YES : **Replace the transmission** See **AUTOMATIC TRANSMISSION DISASSEMBLY AND REASSEMBLY** or **AUTOMATIC TRANSMISSION REMOVAL AND INSTALLATION** , then **do the repair verification** .

   NO : **REPLACE THE ATF** , then go to step 2.

2. Line pressure check:
   - 1. **MEASURE THE LINE PRESSURE** .

   Is the line pressure within the service limit?

   YES : The line pressure is OK. Go to step 3.

   NO : Faulty ATF pump and regulator valve. Replace the main valve body (ATF pump), the regulator valve body (regulator valve), or **the transmission** See **AUTOMATIC TRANSMISSION DISASSEMBLY AND REASSEMBLY** or **AUTOMATIC TRANSMISSION REMOVAL AND INSTALLATION** , then **do the repair verification** .

3. 5th clutch pressure check:
   - 1. **MEASURE THE 5TH CLUTCH PRESSURE** .

   Is the 5th clutch pressure within the service limits?

   YES : The 5th clutch pressure is OK. Go to step 4.

   NO : Shift valves A, B, and/or D are stuck. Repair the hydraulic system related with shift valves A, B, and D, or replace the main valve body (shift valves A and B), the servo body (shift valve D), or **the transmission** See **AUTOMATIC TRANSMISSION DISASSEMBLY AND REASSEMBLY** or **AUTOMATIC TRANSMISSION REMOVAL AND INSTALLATION** , then **do the repair verification** .

4. Problem verification:
   - 1. Turn the ignition switch to ON (II).
   - 2. Clear the DTC with the HDS.

GETtheMANUALS.org

- 3. Test-drive the vehicle in 5th gear, with the shift lever in D, at speeds over 7 mph (12 km/h), and with the engine speed above 1, 000 rpm for at least 12 seconds.
- 4. Monitor the OBD STATUS for P0735 in the DTCs MENU with the HDS.

DTC Description	OBD Status
P0735 5th Gear Incorrect Ratio	

Does the HDS indicate FAILED?

YES : The failure is duplicated. Replace the 4th/5th clutch or **the transmission** See **AUTOMATIC TRANSMISSION DISASSEMBLY AND REASSEMBLY** or **AUTOMATIC TRANSMISSION REMOVAL AND INSTALLATION** , then **do the repair verification** .

NO : If the HDS indicates PASSED, intermittent failure, the system is OK at this time. If the HDS indicates NOT COMPLETED, test-drive again.

REPAIR VERIFICATION (OBD STATUS CHECK)

- 1. Turn the ignition switch to ON (II).
- 2. Clear the DTC with the HDS.
- 3. Test-drive the vehicle in 5th gear, with the shift lever in D, at speeds over 7 mph (12 km/h), and with the engine speed above 1, 000 rpm for at least 12 seconds.
- 4. Monitor the OBD STATUS for P0735 in the DTCs MENU with the HDS.

DTC Description	OBD Status
P0735 5th Gear Incorrect Ratio	

Does the HDS indicate PASSED, FAILED, or NOT COMPLETED?

PASSED Troubleshooting is complete. Check for other DTC after this troubleshooting. If any other Pending or Confirmed DTCs were indicated, go to the indicated DTC's troubleshooting.

FAILED Troubleshooting is incomplete. Check for poor connections or loose terminals between the input shaft (mainshaft) speed sensor, the output shaft (countershaft) speed sensor, and the PCM, then go to step 2 and recheck.

NOT COMPLETED Repair verification is incomplete. Meet the test condition, and check the OBD STATUS again.

DTC P0741: TORQUE CONVERTER CLUTCH CIRCUIT PERFORMANCE OR STUCK OFF

GETtheMANUALS.org

DTC Troubleshooting: P0741

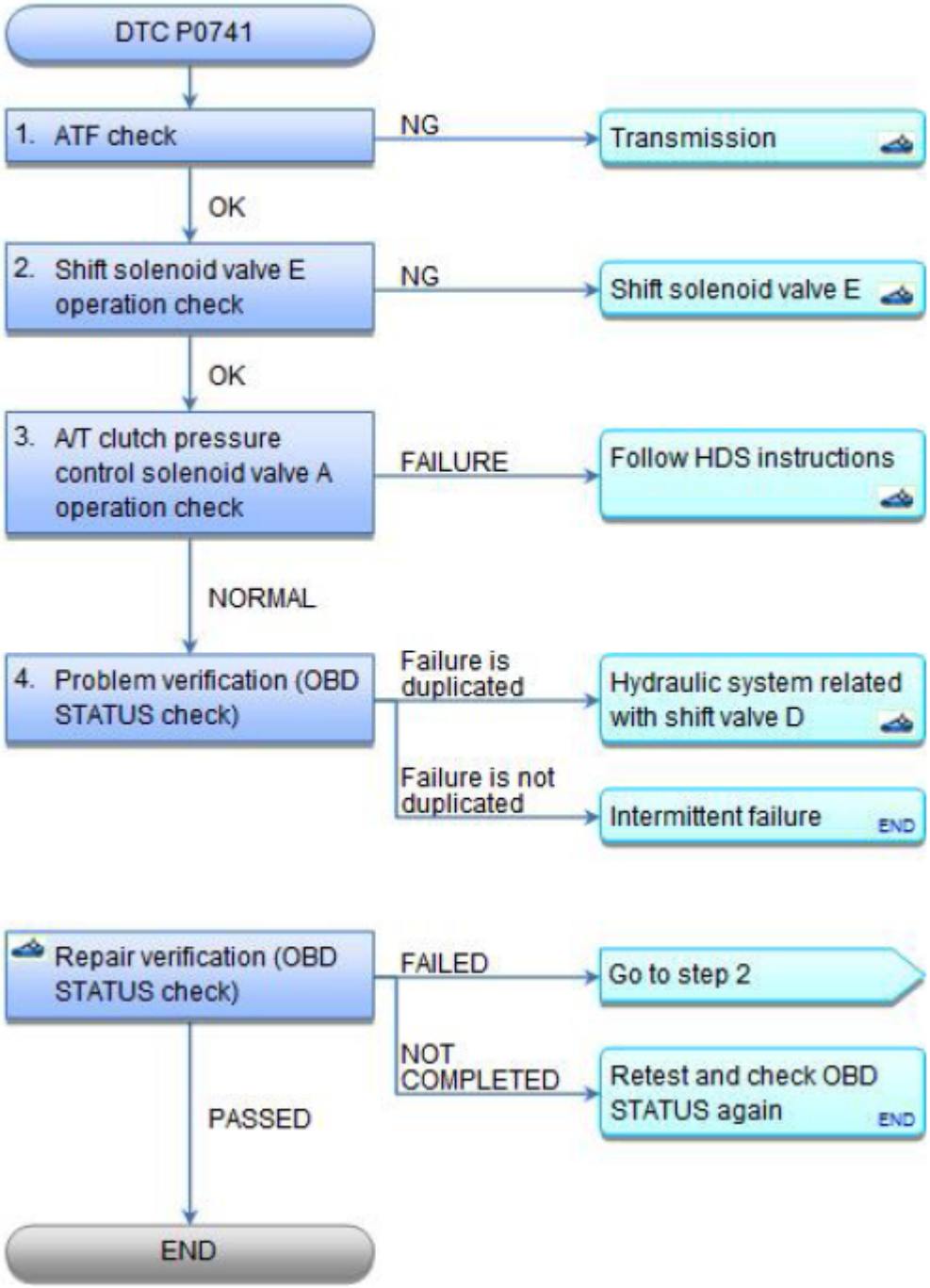

Fig. 39: DTC Troubleshooting Flow Chart (P0741)
Courtesy of AMERICAN HONDA MOTOR CO., INC.

NOTE: **Before you troubleshoot, record all freeze data and any on-board snapshot with the HDS, and review the General Troubleshooting Information See HOW TO TROUBLESHOOT THE A/T SYSTEM or HOW TO TROUBLESHOOT THE FUEL AND EMISSIONS SYSTEMS .**

GETtheMANUALS.org

DTC Description	Confirmed DTC	Pending DTC	Freeze Frame
P0741 Torque Converter Clutch Circuit Performance or Stuck OFF			

1. ATF check:
   - 1. Warm up the engine to normal operating temperature (the radiator fan comes on).
   - 2. Make sure that the transmission is filled to the proper level, and check for fluid leaks.
   - 3. **DRAIN THE ATF** through a strainer. Inspect the strainer for metal debris or excessive clutch material.

   Does the strainer have metal debris or excessive clutch material?

   YES : **Replace the transmission** See **AUTOMATIC TRANSMISSION DISASSEMBLY AND REASSEMBLY** or **AUTOMATIC TRANSMISSION REMOVAL AND INSTALLATION** , then **do the repair verification** .

   NO : **REPLACE THE ATF** , then go to step 2.

2. Shift solenoid valve E operation check:
   - 1. Turn the ignition switch to ON (II).
   - 2. Clear the DTC with the HDS.
   - 3. Select Shift Solenoid Valve E in the Miscellaneous Test Menu, and check that shift solenoid valve E operates with the HDS.

   Is a clicking sound heard?

   YES : Shift solenoid valve E is OK. Go to step 3.

   NO : **REPLACE SHIFT SOLENOID VALVE E** , then **do the repair verification** .

3. A/T clutch pressure control solenoid valve A operation check:
   - 1. Run the engine until the Engine Coolant Temperature reaches 176 °F (80 °C) with the HDS in the A/T Data List.

Signal	Current conditions	
	Values	Unit
Engine Coolant Temperature		

   - 2. Select Clutch Pressure Control (Linear) Solenoid Valve A in the Miscellaneous Test Menu, and test A/T clutch pressure control solenoid valve A with the HDS.

   Does the HDS indicate NORMAL?

GETtheMANUALS.org

NORMAL A/T clutch pressure control solenoid valve A is OK. Go to step 4.

FAILURE Follow the instructions indicated on the HDS according to the test result. If a part is replaced, **do the repair verification** .

4. Problem verification (OBD STATUS check):
   - 1. Turn the ignition switch to ON (II).
   - 2. Clear the DTC with the HDS.
   - 3. Test-drive the vehicle on a level road with a steady speed at 60 mph (96 km/h) for at least 20 seconds.
   - 4. Monitor the OBD STATUS for P0741 in the DTCs MENU with the HDS.

DTC Description	OBD Status
P0741 Torque Converter Clutch Circuit Performance or Stuck OFF	

Does the HDS indicate FAILED?

YES : The failure is duplicated. Faulty torque converter clutch mechanism, lock-up control valve, or lock-up shift valve. Repair the hydraulic system related with these parts, or replace the torque converter, the main valve body (lock-up control valve), the regulator valve body (lock-up shift valve), or **the transmission** See **AUTOMATIC TRANSMISSION DISASSEMBLY AND REASSEMBLY** or **AUTOMATIC TRANSMISSION REMOVAL AND INSTALLATION** , then **do the repair verification** .

NO : If the HDS indicates PASSED, intermittent failure, the system is OK at this time. If the HDS indicates NOT COMPLETED, test-drive again.

REPAIR VERIFICATION (OBD STATUS CHECK)

- 1. Turn the ignition switch to ON (II).
- 2. Clear the DTC with the HDS.
- 3. Test-drive the vehicle on a level road with a steady speed at 60 mph (96 km/h) for at least 20 seconds, or test-drive the vehicle for several minutes under the same conditions as those indicated by the freeze data.
- 4. Monitor the OBD STATUS for P0741 in the DTCs MENU with the HDS.

DTC Description	OBD Status
P0741 Torque Converter Clutch Circuit Performance or Stuck OFF	

Does the HDS indicate PASSED, FAILED, or NOT COMPLETED?

PASSED Troubleshooting is complete. Check for other DTC after this troubleshooting. If any other Pending or Confirmed DTCs were indicated, go to the indicated DTC's troubleshooting.

FAILED Troubleshooting is incomplete. Go to step 2 and recheck.

GETtheMANUALS.org

NOT COMPLETED Repair verification is incomplete. Meet the test condition, and check the OBD STATUS again.

DTC P0747: A/T CLUTCH PRESSURE CONTROL SOLENOID VALVE A STUCK ON

GETtheMANUALS.org

DTC Troubleshooting: P0747

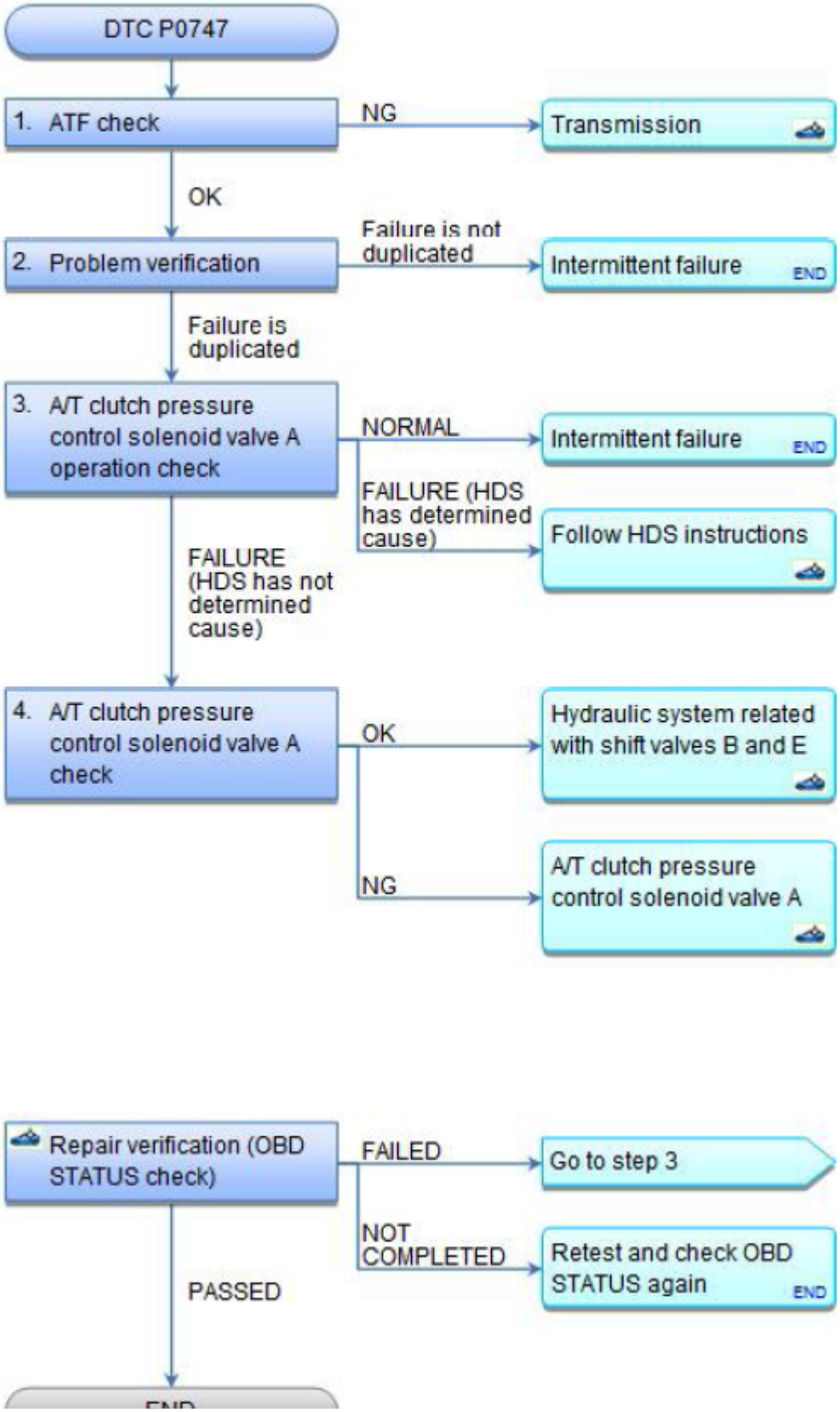

GETtheMANUALS.org

Fig. 40: DTC Troubleshooting Flow Chart (P0747)
Courtesy of AMERICAN HONDA MOTOR CO., INC.

NOTE: **Before you troubleshoot, record all freeze data and any on-board snapshot with the HDS, and review the General Troubleshooting Information See HOW TO TROUBLESHOOT THE A/T SYSTEM or HOW TO TROUBLESHOOT THE FUEL AND EMISSIONS SYSTEMS .**

DTC Description	Confirmed DTC	Pending DTC	Freeze Frame
P0747 A/T Clutch Pressure Control Solenoid Valve A Stuck ON			

1. ATF check:
   - 1. Warm up the engine to normal operating temperature (the radiator fan comes on).
   - 2. Make sure that the transmission is filled to the proper level, and check for fluid leaks.
   - 3. **DRAIN THE ATF** through a strainer. Inspect the strainer for metal debris or excessive clutch material.

   Does the strainer have metal debris or excessive clutch material?

   YES : **Replace the transmission** See **AUTOMATIC TRANSMISSION DISASSEMBLY AND REASSEMBLY** or **AUTOMATIC TRANSMISSION REMOVAL AND INSTALLATION** , then **do the repair verification** .

   NO : **REPLACE THE ATF** , then go to step 2.

2. Problem verification:
   - 1. Turn the ignition switch to ON (II).
   - 2. Clear the DTC with the HDS.
   - 3. Test-drive the vehicle with the shift lever in D, and let the transmission shift through all five gears.
   - 4. Monitor the OBD STATUS for P0747 in the DTCs MENU with the HDS.

DTC Description	OBD Status
P0747 A/T Clutch Pressure Control Solenoid Valve A Stuck ON	

   Does the HDS indicate FAILED?

   YES : The failure is duplicated. Go to step 3.

   NO : If the HDS indicates PASSED, intermittent failure, the system is OK at this time. If the HDS indicates NOT COMPLETED, test-drive again.

GETtheMANUALS.org

3. A/T clutch pressure control solenoid valve A operation check:
   - 1. Clear the DTC with the HDS.
   - 2. Select Clutch Pressure Control (Linear) Solenoid Valve A in the Miscellaneous Test Menu, and test A/T clutch pressure control solenoid valve A with the HDS.

   Does the HDS indicate NORMAL?

   NORMAL Intermittent failure, the system is OK at this time.

   FAILURE (HDS has not determined cause) Follow the instructions indicated on the HDS according to the test result. If the HDS has not determined the cause of the failure, go to step 4.

   FAILURE (HDS has determined cause) Follow the instructions indicated on the HDS according to the test result. If a part is replaced, **do the repair verification** .

4. A/T clutch pressure control solenoid valve A check:
   - 1. **Inspect A/T clutch pressure control solenoid valve A** See **A/T CLUTCH PRESSURE CONTROL SOLENOID VALVE A TEST** or **A/T CLUTCH PRESSURE CONTROL SOLENOID VALVE B AND C TEST** .

   Does A/T clutch pressure control solenoid valve A work properly?

   YES : A/T clutch pressure control solenoid valve A is OK. Repair the hydraulic system related with shift valves B and E, or **replace the transmission** See **AUTOMATIC TRANSMISSION DISASSEMBLY AND REASSEMBLY** or **AUTOMATIC TRANSMISSION REMOVAL AND INSTALLATION** , then **do the repair verification** .

   NO : **REPLACE A/T CLUTCH PRESSURE CONTROL SOLENOID VALVE A** , then **do the repair verification** .

REPAIR VERIFICATION (OBD STATUS CHECK)

- 1. Turn the ignition switch to ON (II).
- 2. Clear the DTC with the HDS.
- 3. Test-drive the vehicle with the shift lever in D, and let the transmission shift through all five gears.
- 4. Monitor the OBD STATUS for P0747 in the DTCs MENU with the HDS.

DTC Description	OBD Status
P0747 A/T Clutch Pressure Control Solenoid Valve A Stuck ON	

Does the HDS indicate PASSED, FAILED, or NOT COMPLETED?

PASSED Troubleshooting is complete. Check for other DTC after this troubleshooting. If any other Pending or Confirmed DTCs were indicated, go to the indicated DTC's troubleshooting.

GETtheMANUALS.org

FAILED Troubleshooting is incomplete. Go to step 3 and recheck.

NOT COMPLETED Repair verification is incomplete. Meet the test condition, and check the OBD STATUS again.

DTC P0752: SHIFT SOLENOID VALVE A STUCK ON

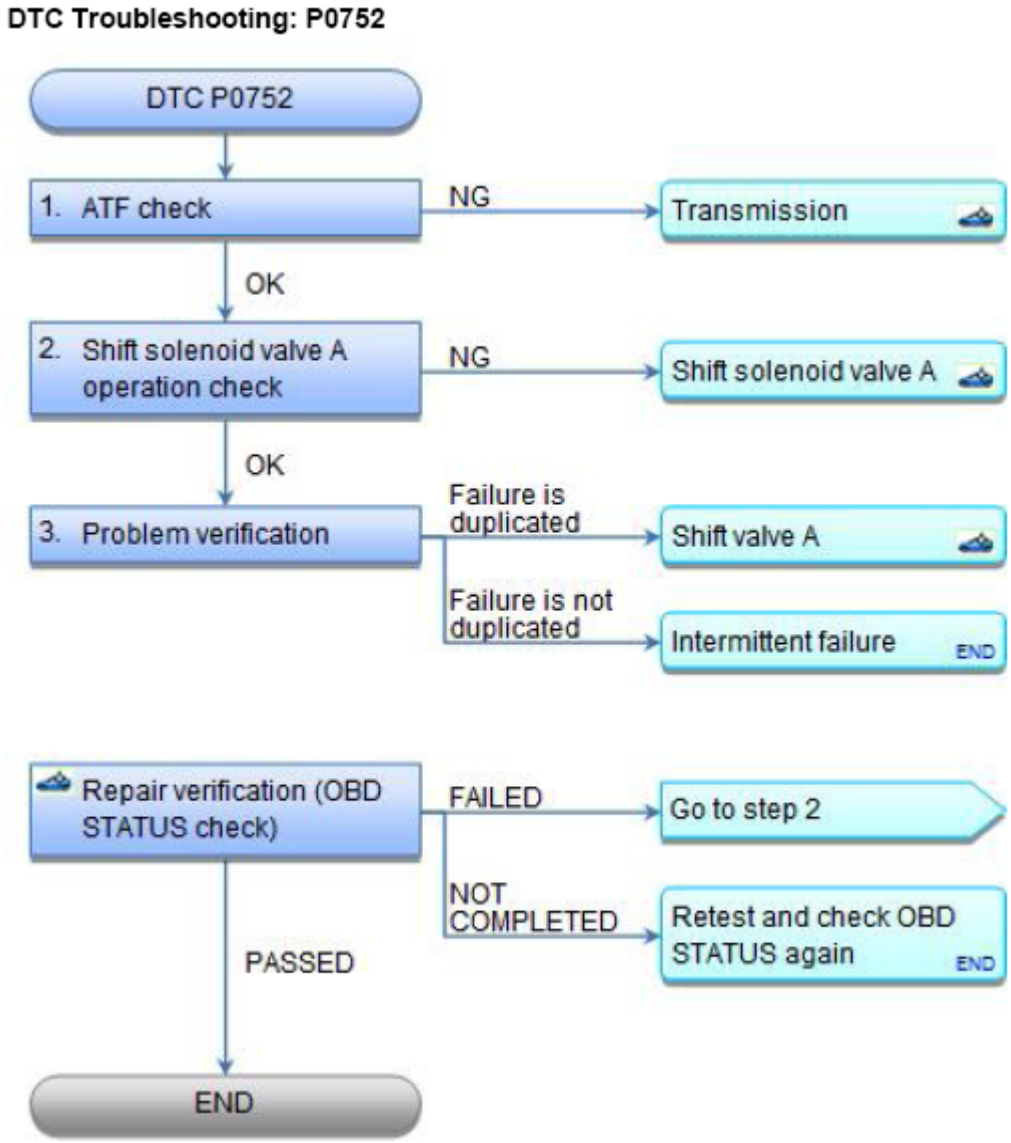

Fig. 41: DTC Troubleshooting Flow Chart (P0752)
Courtesy of AMERICAN HONDA MOTOR CO., INC.

NOTE: **Before you troubleshoot, record all freeze data and any on-board snapshot with the HDS, and review the General Troubleshooting Information See HOW TO TROUBLESHOOT THE A/T SYSTEM or HOW TO TROUBLESHOOT THE FUEL AND EMISSIONS SYSTEMS .**

GETtheMANUALS.org

DTC Description	Confirmed DTC	Pending DTC	Freeze Frame
P0752 Shift Solenoid Valve A Stuck ON			

1. ATF check:
   - 1. Warm up the engine to normal operating temperature (the radiator fan comes on).
   - 2. Make sure that the transmission is filled to the proper level, and check for fluid leaks.
   - 3. **DRAIN THE ATF** through a strainer. Inspect the strainer for metal debris or excessive clutch material.

   Does the strainer have metal debris or excessive clutch material?

   YES : **Replace the transmission** See **AUTOMATIC TRANSMISSION DISASSEMBLY AND REASSEMBLY** or **AUTOMATIC TRANSMISSION REMOVAL AND INSTALLATION** , then **do the repair verification** .

   NO : **REPLACE THE ATF** , then go to step 2.

2. Shift solenoid valve A operation check:
   - 1. Turn the ignition switch to ON (II).
   - 2. Clear the DTC with the HDS.
   - 3. Select Shift Solenoid Valve A in the Miscellaneous Test Menu, and check it operates with the HDS.

   Is a clicking sound heard?

   YES : Shift solenoid valve A is OK. Go to step 3.

   NO : **REPLACE SHIFT SOLENOID VALVE A** , then **do the repair verification** .

3. Problem verification:
   - 1. Test-drive the vehicle with the shift lever in D, and let the transmission shift through all five gears.
   - 2. Monitor the OBD STATUS for P0752 in the DTCs MENU with the HDS.

DTC Description	OBD Status
P0752 Shift Solenoid Valve A Stuck ON	

   Does the HDS indicate FAILED?

   YES : The failure is duplicated. Faulty shift valve A, replace the main valve body (shift valve A) or **the transmission** See **AUTOMATIC TRANSMISSION DISASSEMBLY AND REASSEMBLY** or **AUTOMATIC TRANSMISSION REMOVAL AND INSTALLATION** , then **do the repair verification** .

GETtheMANUALS.org

NO : If the HDS indicates PASSED, intermittent failure, the system is OK at this time. If the HDS indicates NOT COMPLETED, test-drive again.

REPAIR VERIFICATION (OBD STATUS CHECK)

- 1. Turn the ignition switch to ON (II).
- 2. Clear the DTC with the HDS.
- 3. Test-drive the vehicle with the shift lever in D, and let the transmission shift through all five gears.
- 4. Monitor the OBD STATUS for P0752 in the DTCs MENU with the HDS.

DTC Description	OBD Status
P0752 Shift Solenoid Valve A Stuck ON	

Does the HDS indicate PASSED, FAILED, or NOT COMPLETED?

PASSED Troubleshooting is complete. Check for other DTC after this troubleshooting. If any other Pending or Confirmed DTCs were indicated, go to the indicated DTC's troubleshooting.

FAILED Troubleshooting is incomplete. Go to step 2 and recheck.

NOT COMPLETED Repair verification is incomplete. Meet the test condition, and check the OBD STATUS again.

DTC P0756: SHIFT SOLENOID VALVE B STUCK OFF

GETtheMANUALS.org

DTC Troubleshooting: P0756

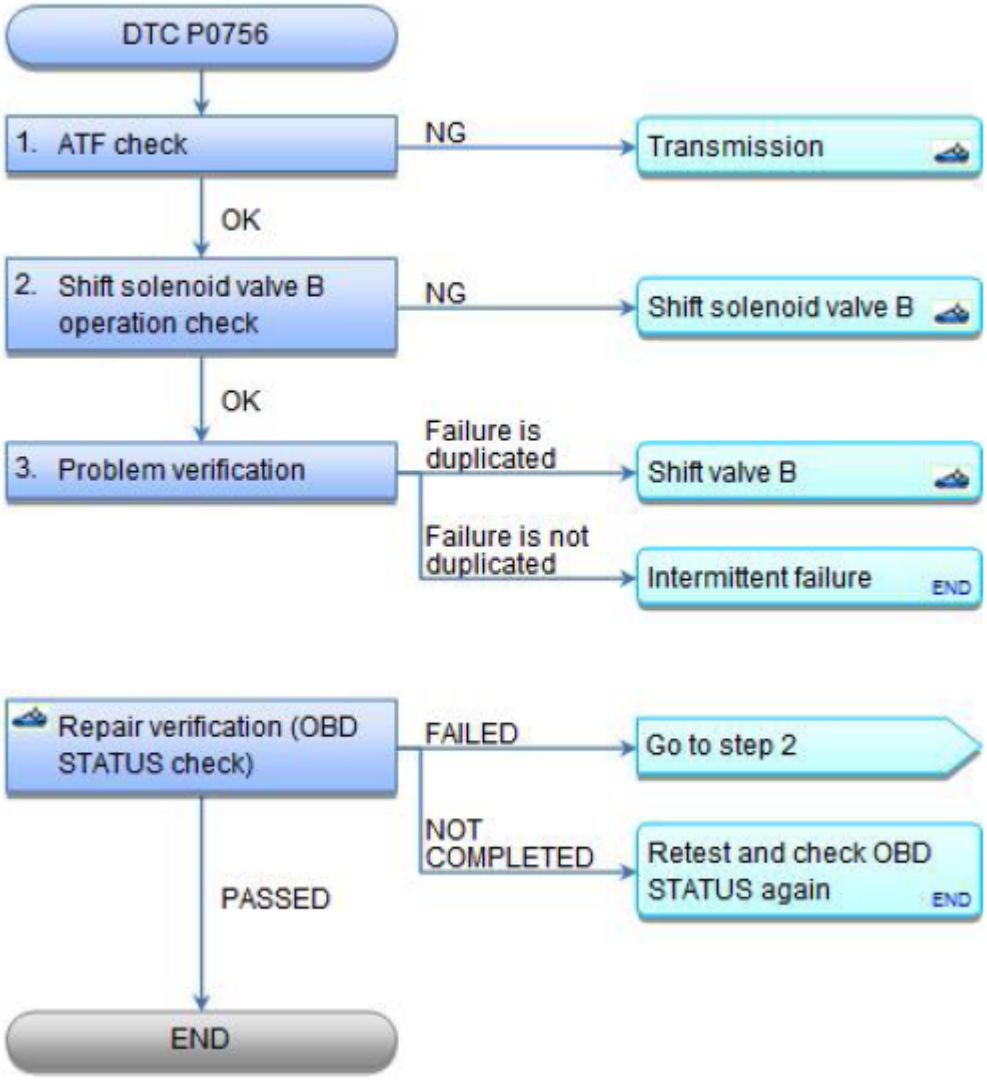

Fig. 42: DTC Troubleshooting Flow Chart (P0756)
Courtesy of AMERICAN HONDA MOTOR CO., INC.

NOTE: **Before you troubleshoot, record all freeze data and any on-board snapshot with the HDS, and review the General Troubleshooting Information See HOW TO TROUBLESHOOT THE A/T SYSTEM or HOW TO TROUBLESHOOT THE FUEL AND EMISSIONS SYSTEMS .**

DTC Description	Confirmed DTC	Pending DTC	Freeze Frame
P0756 Shift Solenoid Valve B Stuck OFF			

1. ATF check:
   - 1. Warm up the engine to normal operating temperature (the radiator fan comes on).

GETtheMANUALS.org

- 2. Make sure that the transmission is filled to the proper level, and check for fluid leaks.
- 3. **DRAIN THE ATF** through a strainer. Inspect the strainer for metal debris or excessive clutch material.

Does the strainer have metal debris or excessive clutch material?

YES : **Replace the transmission** See **AUTOMATIC TRANSMISSION DISASSEMBLY AND REASSEMBLY** or **AUTOMATIC TRANSMISSION REMOVAL AND INSTALLATION** , then **do the repair verification** .

NO : **REPLACE THE ATF** , then go to step 2.

2. Shift solenoid valve B operation check:
   - 1. Turn the ignition switch to ON (II).
   - 2. Clear the DTC with the HDS.
   - 3. Select Shift Solenoid Valve B in the Miscellaneous Test Menu, and check it operates with the HDS.

Is a clicking sound heard?

YES : Shift solenoid valve B is OK. Go to step 3.

NO : **REPLACE SHIFT SOLENOID VALVE B** , then **do the repair verification** .

3. Problem verification:
   - 1. Test-drive the vehicle with the shift lever in D, and let the transmission shift through all five gears.
   - 2. Monitor the OBD STATUS for P0756 in the DTCs MENU with the HDS.

DTC Description	OBD Status
P0756 Shift Solenoid Valve B Stuck OFF	

Does the HDS indicate FAILED?

YES : The failure is duplicated. Faulty shift valve B, replace the main valve body (shift valve B) or **the transmission** See **AUTOMATIC TRANSMISSION DISASSEMBLY AND REASSEMBLY** or **AUTOMATIC TRANSMISSION REMOVAL AND INSTALLATION** , then **do the repair verification** .

NO : If the HDS indicates PASSED, intermittent failure, the system is OK at this time. If the HDS indicates NOT COMPLETED, test-drive again.

REPAIR VERIFICATION (OBD STATUS CHECK)

- 1. Turn the ignition switch to ON (II).

GETtheMANUALS.org

- 2. Clear the DTC with the HDS.
- 3. Test-drive the vehicle with the shift lever in D, and let the transmission shift through all five gears.
- 4. Monitor the OBD STATUS for P0756 in the DTCs MENU with the HDS.

DTC Description	OBD Status
P0756 Shift Solenoid Valve B Stuck OFF	

Does the HDS indicate PASSED, FAILED, or NOT COMPLETED?

PASSED Troubleshooting is complete. Check for other DTC after this troubleshooting. If any other Pending or Confirmed DTCs were indicated, go to the indicated DTC's troubleshooting.

FAILED Troubleshooting is incomplete. Go to step 2 and recheck.

NOT COMPLETED Repair verification is incomplete. Meet the test condition, and check the OBD STATUS again.

DTC P0757: SHIFT SOLENOID VALVE B STUCK ON

GETtheMANUALS.org

DTC Troubleshooting: P0757

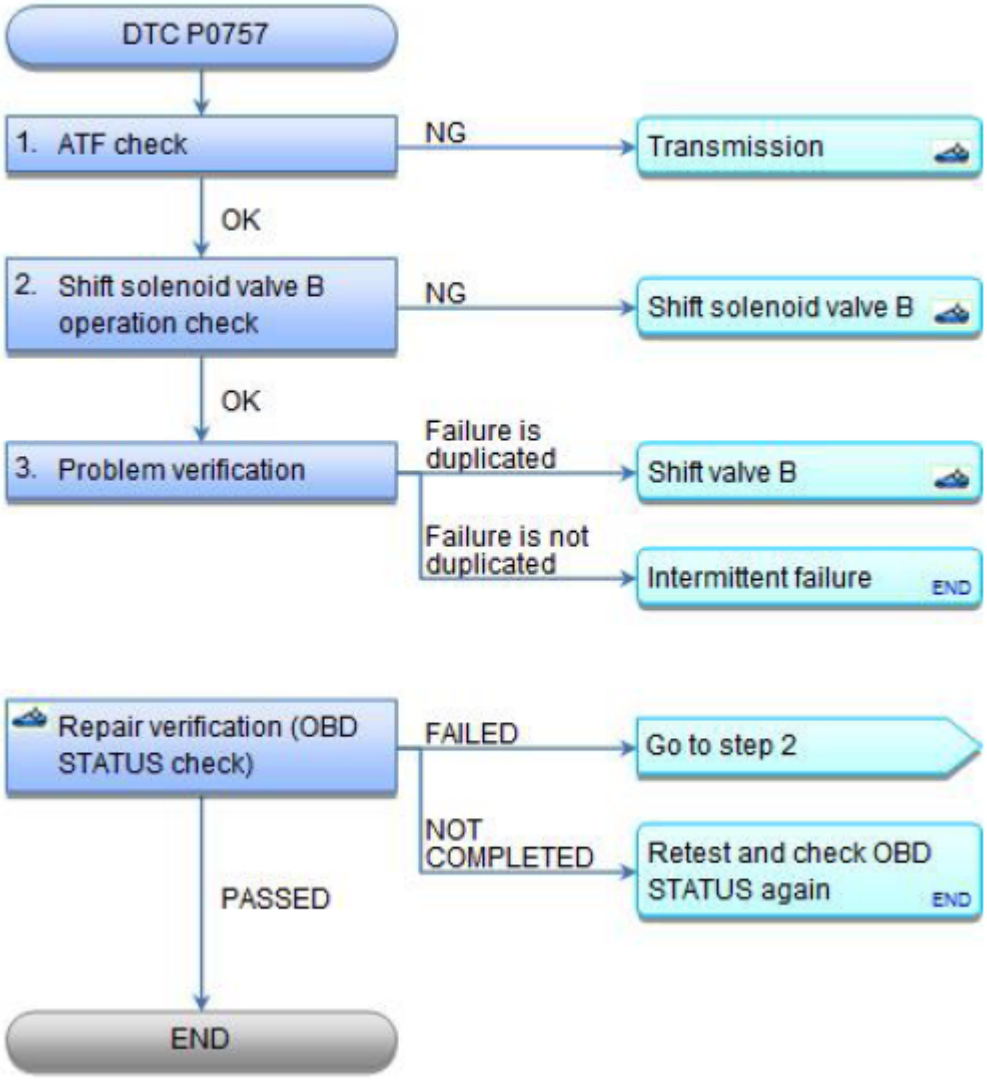

Fig. 43: DTC Troubleshooting Flow Chart (P0757)
Courtesy of AMERICAN HONDA MOTOR CO., INC.

NOTE: **Before you troubleshoot, record all freeze data and any on-board snapshot with the HDS, and review the General Troubleshooting Information See HOW TO TROUBLESHOOT THE A/T SYSTEM or HOW TO TROUBLESHOOT THE FUEL AND EMISSIONS SYSTEMS .**

DTC Description	Confirmed DTC	Pending DTC	Freeze Frame
P0757 Shift Solenoid Valve B Stuck ON			

1. ATF check:
   - 1. Warm up the engine to normal operating temperature (the radiator fan comes on).

GETtheMANUALS.org

- 2. Make sure that the transmission is filled to the proper level, and check for fluid leaks.
- 3. **DRAIN THE ATF** through a strainer. Inspect the strainer for metal debris or excessive clutch material.

Does the strainer have metal debris or excessive clutch material?

YES : **Replace the transmission** See **AUTOMATIC TRANSMISSION DISASSEMBLY AND REASSEMBLY** or **AUTOMATIC TRANSMISSION REMOVAL AND INSTALLATION** , then **do the repair verification** .

NO : **REPLACE THE ATF** , then go to step 2.

2. Shift solenoid valve B operation check:
   - 1. Turn the ignition switch to ON (II).
   - 2. Clear the DTC with the HDS.
   - 3. Select Shift Solenoid Valve B in the Miscellaneous Test Menu, and check it operates with the HDS.

Is a clicking sound heard?

YES : Shift solenoid valve B is OK. Go to step 3.

NO : **REPLACE SHIFT SOLENOID VALVE B** , then **do the repair verification** .

3. Problem verification:
   - 1. Test-drive the vehicle with the shift lever in D, and let the transmission shift through all five gears.
   - 2. Monitor the OBD STATUS for P0757 in the DTCs MENU with the HDS.

DTC Description	OBD Status
P0757 Shift Solenoid Valve B Stuck ON	

Does the HDS indicate FAILED?

YES : The failure is duplicated. Faulty shift valve B, replace the main valve body (shift valve B) or **the transmission** See **AUTOMATIC TRANSMISSION DISASSEMBLY AND REASSEMBLY** or **AUTOMATIC TRANSMISSION REMOVAL AND INSTALLATION** , then **do the repair verification** .

NO : If the HDS indicates PASSED, intermittent failure, the system is OK at this time. If the HDS indicates NOT COMPLETED, test-drive again.

REPAIR VERIFICATION (OBD STATUS CHECK)

- 1. Turn the ignition switch to ON (II).

GETtheMANUALS.org

- 2. Clear the DTC with the HDS.
- 3. Test-drive the vehicle with the shift lever in D, and let the transmission shift through all five gears.
- 4. Monitor the OBD STATUS for P0757 in the DTCs MENU with the HDS.

DTC Description	OBD Status
P0757 Shift Solenoid Valve B Stuck ON	

Does the HDS indicate PASSED, FAILED, or NOT COMPLETED?

PASSED Troubleshooting is complete. Check for other DTC after this troubleshooting. If any other Pending or Confirmed DTCs were indicated, go to the indicated DTC's troubleshooting.

FAILED Troubleshooting is incomplete. Go to step 2 and recheck.

NOT COMPLETED Repair verification is incomplete. Meet the test condition, and check the OBD STATUS again.

DTC P0761: SHIFT SOLENOID VALVE C STUCK OFF

GETtheMANUALS.org

DTC Troubleshooting: P0761

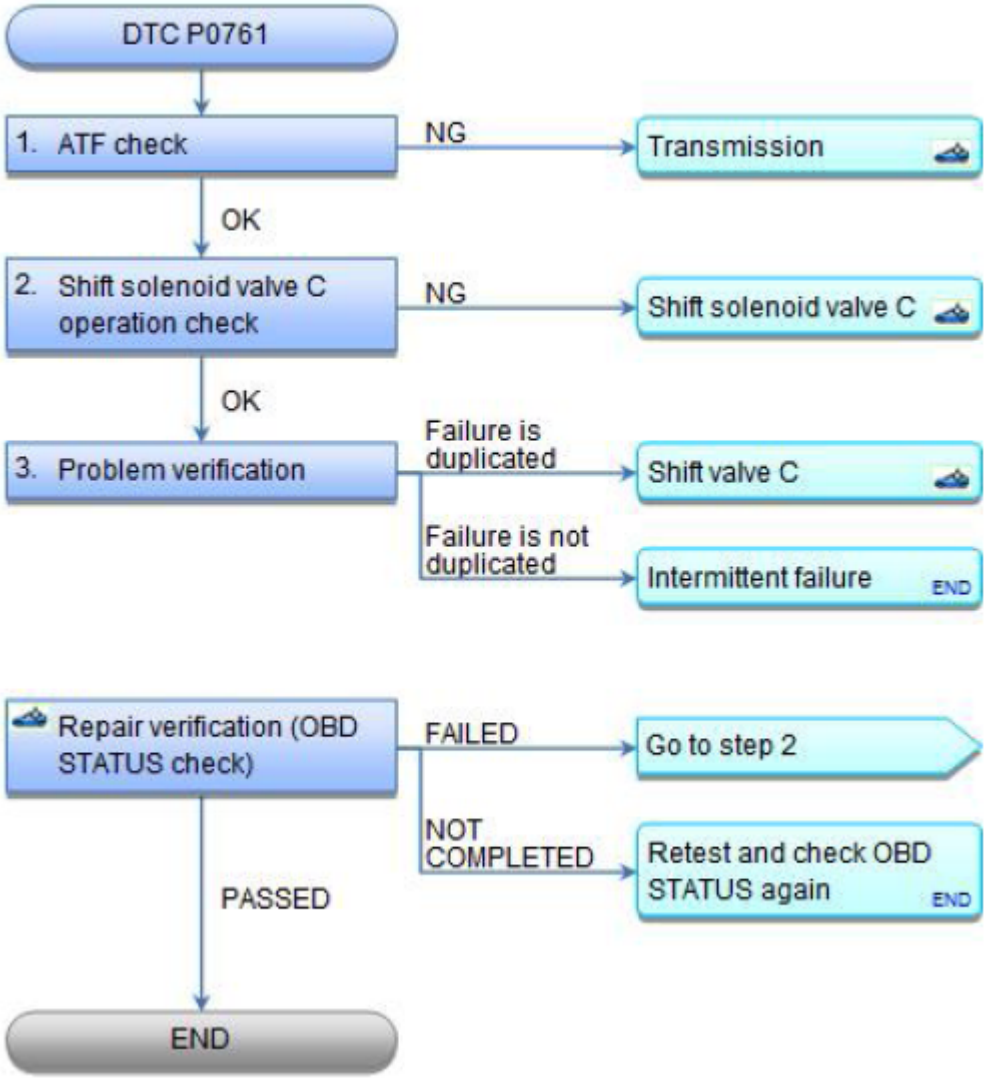

Fig. 44: DTC Troubleshooting Flow Chart (P0761)
Courtesy of AMERICAN HONDA MOTOR CO., INC.

NOTE: **Before you troubleshoot, record all freeze data and any on-board snapshot with the HDS, and review the General Troubleshooting Information See HOW TO TROUBLESHOOT THE A/T SYSTEM or HOW TO TROUBLESHOOT THE FUEL AND EMISSIONS SYSTEMS .**

DTC Description	Confirmed DTC	Pending DTC	Freeze Frame
P0761 Shift Solenoid Valve C Stuck OFF			

1. ATF check:
   - 1. Warm up the engine to normal operating temperature (the radiator fan comes on).

GETtheMANUALS.org

- 2. Make sure that the transmission is filled to the proper level, and check for fluid leaks.
- 3. **DRAIN THE ATF** through a strainer. Inspect the strainer for metal debris or excessive clutch material.

Does the strainer have metal debris or excessive clutch material?

YES : **Replace the transmission** See **AUTOMATIC TRANSMISSION DISASSEMBLY AND REASSEMBLY** or **AUTOMATIC TRANSMISSION REMOVAL AND INSTALLATION** , then **do the repair verification** .

NO : **REPLACE THE ATF** , then go to step 2.

2. Shift solenoid valve C operation check:
   - 1. Turn the ignition switch to ON (II).
   - 2. Clear the DTC with the HDS.
   - 3. Select Shift Solenoid Valve C in the Miscellaneous Test Menu, and check it operates with the HDS.

Is a clicking sound heard?

YES : Shift solenoid valve C is OK. Go to step 3.

NO : **REPLACE SHIFT SOLENOID VALVE C** , then **do the repair verification** .

3. Problem verification:
   - 1. Test-drive the vehicle with the shift lever in D, and let the transmission shift through all five gears.
   - 2. Monitor the OBD STATUS for P0761 in the DTCs MENU with the HDS.

DTC Description	OBD Status
P0761 Shift Solenoid Valve C Stuck OFF	

Does the HDS indicate FAILED?

YES : The failure is duplicated. Faulty shift valve C, replace the main valve body (shift valve C) or **the transmission** See **AUTOMATIC TRANSMISSION DISASSEMBLY AND REASSEMBLY** or **AUTOMATIC TRANSMISSION REMOVAL AND INSTALLATION** , then **do the repair verification** .

NO : If the HDS indicates PASSED, intermittent failure, the system is OK at this time. If the HDS indicates NOT COMPLETED, test-drive again.

REPAIR VERIFICATION (OBD STATUS CHECK)

- 1. Turn the ignition switch to ON (II).

GETtheMANUALS.org

- 2. Clear the DTC with the HDS.
- 3. Test-drive the vehicle with the shift lever in D, and let the transmission shift through all five gears.
- 4. Monitor the OBD STATUS for P0761 in the DTCs MENU with the HDS.

DTC Description	OBD Status
P0761 Shift Solenoid Valve C Stuck OFF	

Does the HDS indicate PASSED, FAILED, or NOT COMPLETED?

PASSED Troubleshooting is complete. Check for other DTC after this troubleshooting. If any other Pending or Confirmed DTCs were indicated, go to the indicated DTC's troubleshooting.

FAILED Troubleshooting is incomplete. Go to step 2 and recheck.

NOT COMPLETED Repair verification is incomplete. Meet the test condition, and check the OBD STATUS again.

DTC P0771: SHIFT SOLENOID VALVE E STUCK OFF

GETtheMANUALS.org

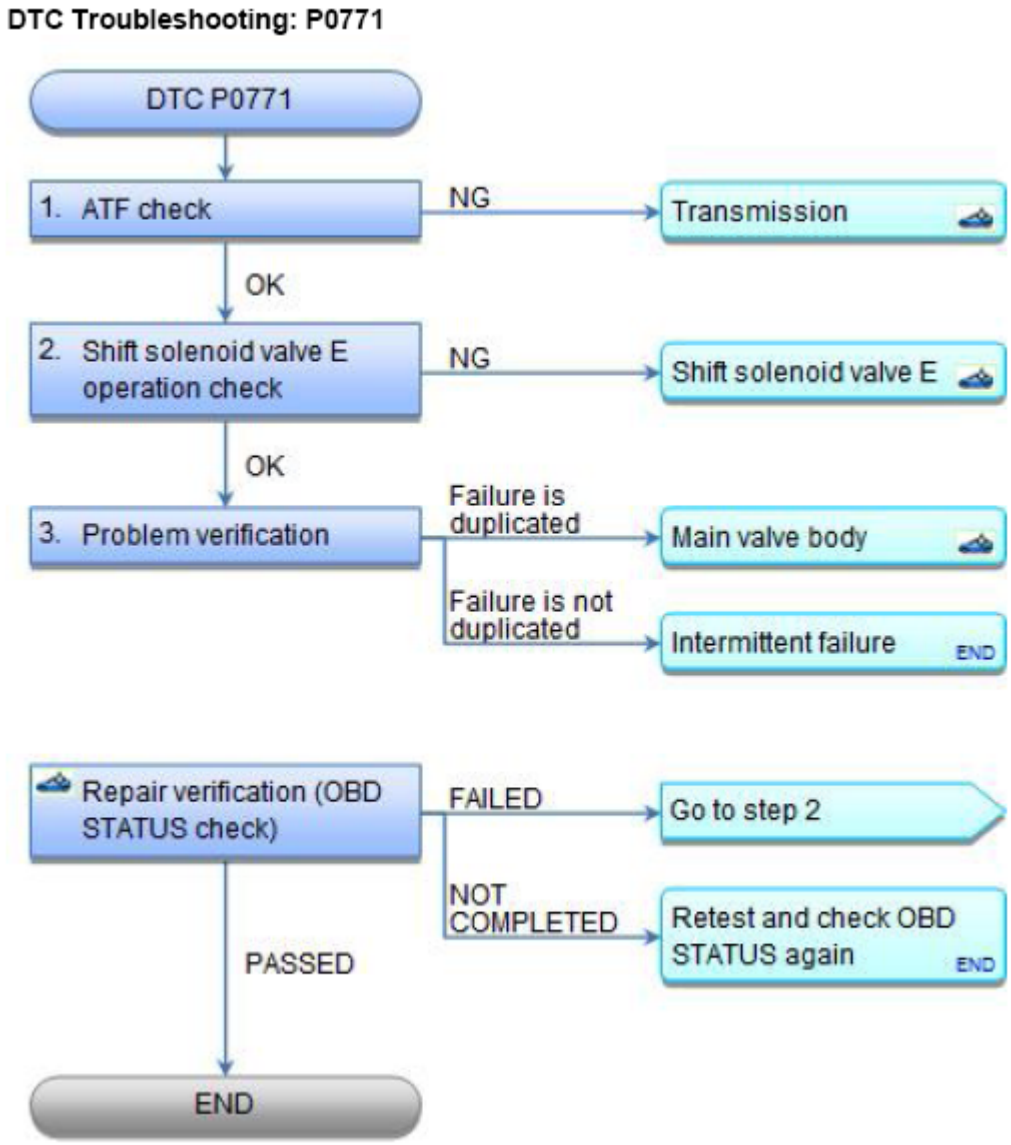

Fig. 45: DTC Troubleshooting Flow Chart (P0771)
Courtesy of AMERICAN HONDA MOTOR CO., INC.

NOTE: **Before you troubleshoot, record all freeze data and any on-board snapshot with the HDS, and REVIEW THE GENERAL TROUBLESHOOTING INFORMATION or HOW TO TROUBLESHOOT THE FUEL AND EMISSIONS SYSTEMS .**

DTC Description	Confirmed DTC	Pending DTC	Freeze Frame
P0771 Shift Solenoid Valve E Stuck OFF			

1. ATF check:
   - 1. Warm up the engine to normal operating temperature (the radiator fan comes on).
   - 2. Make sure that the transmission is filled to the proper level, and check for fluid leaks.

GETtheMANUALS.org

- 3. **DRAIN THE ATF** through a strainer. Inspect the strainer for metal debris or excessive clutch material.

Does the strainer have metal debris or excessive clutch material?

YES : **Replace the transmission** See **AUTOMATIC TRANSMISSION DISASSEMBLY AND REASSEMBLY** or **AUTOMATIC TRANSMISSION REMOVAL AND INSTALLATION** , then **do the repair verification** .

NO : **REPLACE THE ATF** , then go to step 2.

2. Shift solenoid valve E operation check:
   - 1. Turn the ignition switch to ON (II).
   - 2. Clear the DTC with the HDS.
   - 3. Select Shift Solenoid Valve E in the Miscellaneous Test Menu, and check it operates with the HDS.

Is a clicking sound heard?

YES : Shift solenoid valve E is OK. Go to step 3.

NO : **REPLACE SHIFT SOLENOID VALVE E** , then **do the repair verification** .

3. Problem verification:
   - 1. Test-drive the vehicle with the shift lever in D, and let the transmission shift through all five gears.
   - 2. Monitor the OBD STATUS for P0771 in the DTCs MENU with the HDS.

DTC Description	OBD Status
P0771 Shift Solenoid Valve E Stuck OFF	

Does the HDS indicate FAILED?

YES : The failure is duplicated. Faulty shift valve E, replace the main valve body (shift valve E) or **the transmission** See **AUTOMATIC TRANSMISSION DISASSEMBLY AND REASSEMBLY** or **AUTOMATIC TRANSMISSION REMOVAL AND INSTALLATION** , then **do the repair verification** .

NO : If the HDS indicates PASSED, intermittent failure, the system is OK at this time. If the HDS indicates NOT COMPLETED, test-drive again.

REPAIR VERIFICATION (OBD STATUS CHECK)

- 1. Turn the ignition switch to ON (II).
- 2. Clear the DTC with the HDS.

GETtheMANUALS.org

- 3. Test-drive the vehicle with the shift lever in D, and let the transmission shift through all five gears at speeds over 19 mph (30 km/h) for at least 20 seconds.
- 4. Monitor the OBD STATUS for P0771 in the DTCs MENU with the HDS.

DTC Description	OBD Status
P0771 Shift Solenoid Valve E Stuck OFF	

Does the HDS indicate PASSED, FAILED, or NOT COMPLETED?

PASSED Troubleshooting is complete. Check for other DTC after this troubleshooting. If any other Pending or Confirmed DTCs were indicated, go to the indicated DTC's troubleshooting.

FAILED Troubleshooting is incomplete. Go to step 2 and recheck.

NOT COMPLETED Repair verification is incomplete. Meet the test condition, and check the OBD STATUS again.

DTC P0776: A/T CLUTCH PRESSURE CONTROL SOLENOID VALVE B STUCK OFF

GETtheMANUALS.org

DTC Troubleshooting: P0776

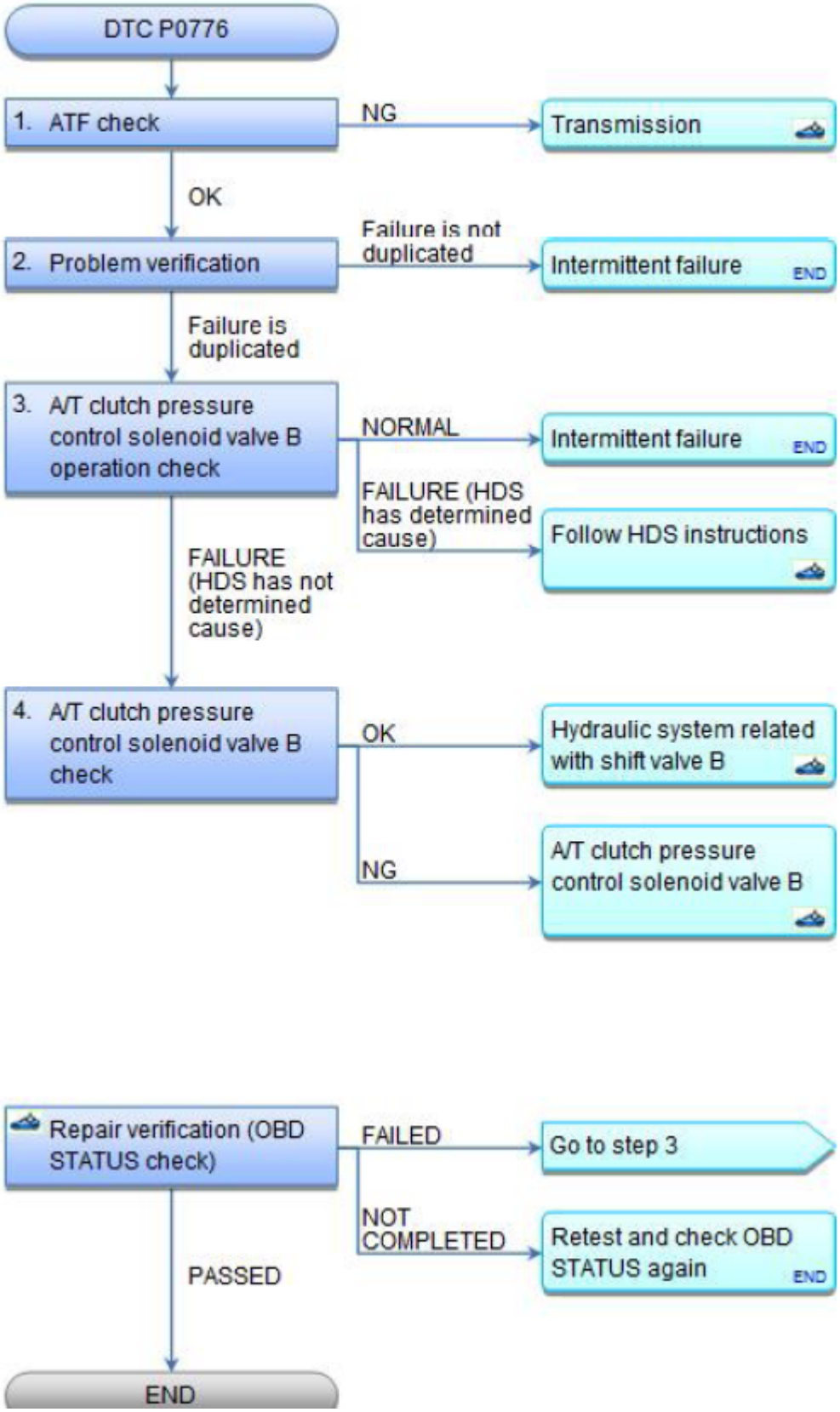

GETtheMANUALS.org

Fig. 46: DTC Troubleshooting Flow Chart (P0776)
Courtesy of AMERICAN HONDA MOTOR CO., INC.

NOTE: **Before you troubleshoot, record all freeze data and any on-board snapshot with the HDS, and review the General Troubleshooting Information See HOW TO TROUBLESHOOT THE A/T SYSTEM or HOW TO TROUBLESHOOT THE FUEL AND EMISSIONS SYSTEMS .**

DTC Description	Confirmed DTC	Pending DTC	Freeze Frame
P0776 A/T Clutch Pressure Control Solenoid Valve B Stuck OFF			

1. ATF check:
   - 1. Warm up the engine to normal operating temperature (the radiator fan comes on).
   - 2. Make sure that the transmission is filled to the proper level, and check for fluid leaks.
   - 3. **DRAIN THE ATF** through a strainer. Inspect the strainer for metal debris or excessive clutch material.

   Does the strainer have metal debris or excessive clutch material?

   YES : **Replace the transmission** See **AUTOMATIC TRANSMISSION DISASSEMBLY AND REASSEMBLY** or **AUTOMATIC TRANSMISSION REMOVAL AND INSTALLATION** , then **do the repair verification** .

   NO : **REPLACE THE ATF** , then go to step 2.

2. Problem verification:
   - 1. Turn the ignition switch to ON (II).
   - 2. Clear the DTC with the HDS.
   - 3. Test-drive the vehicle with the shift lever in D, and let the transmission shift through all five gears.
   - 4. Monitor the OBD STATUS for P0776 in the DTCs MENU with the HDS.

DTC Description	OBD Status
P0776 A/T Clutch Pressure Control Solenoid Valve B Stuck OFF	

   Does the HDS indicate FAILED?

   YES : The failure is duplicated. Go to step 3.

   NO : If the HDS indicates PASSED, intermittent failure, the system is OK at this time. If the HDS indicates NOT COMPLETED, test-drive again.

GETtheMANUALS.org

3. A/T clutch pressure control solenoid valve B operation check:
   - 1. Clear the DTC with the HDS.
   - 2. Select Clutch Pressure Control (Linear) Solenoid Valve B in the Miscellaneous Test Menu, and test A/T clutch pressure control solenoid valve B with the HDS.

   Does the HDS indicate NORMAL?

   NORMAL A/T clutch pressure control solenoid valve B is OK. Intermittent failure, the system is OK at this time.

   FAILURE (HDS has not determined cause) Follow the instructions indicated on the HDS according to the test result. If the HDS has not determined the cause of the failure, go to step 4.

   FAILURE (HDS has determined cause) Follow the instructions indicated on the HDS according to the test result. If a part is replaced, **do the repair verification** .

4. A/T clutch pressure control solenoid valve B check:
   - 1. **Inspect A/T clutch pressure control solenoid valve B** See **A/T CLUTCH PRESSURE CONTROL SOLENOID VALVE A TEST** or **A/T CLUTCH PRESSURE CONTROL SOLENOID VALVE B AND C TEST** .

   Does A/T clutch pressure control solenoid valve B work properly?

   YES : A/T clutch pressure control solenoid valve B is OK. Repair the hydraulic system related with shift valve B, or **replace the transmission** See **AUTOMATIC TRANSMISSION DISASSEMBLY AND REASSEMBLY** or **AUTOMATIC TRANSMISSION REMOVAL AND INSTALLATION** , then **do the repair verification** .

   NO : **REPLACE A/T CLUTCH PRESSURE CONTROL SOLENOID VALVE B** , then **do the repair verification** .

REPAIR VERIFICATION (OBD STATUS CHECK)

- 1. Turn the ignition switch to ON (II).
- 2. Clear the DTC with the HDS.
- 3. Test-drive the vehicle with the shift lever in D, and let the transmission shift through all five gears.
- 4. Monitor the OBD STATUS for P0776 in the DTCs MENU with the HDS.

DTC Description	OBD Status
P0776 A/T Clutch Pressure Control Solenoid Valve B Stuck OFF	

Does the HDS indicate PASSED, FAILED, or NOT COMPLETED?

PASSED Troubleshooting is complete. Check for other DTC after this troubleshooting. If any other Pending or Confirmed DTCs were indicated, go to the indicated DTC's troubleshooting.

GETtheMANUALS.org

FAILED Troubleshooting is incomplete. Go to step 3 and recheck.

NOT COMPLETED Repair verification is incomplete. Meet the test condition, and check the OBD STATUS again.

DTC P0777: A/T CLUTCH PRESSURE CONTROL SOLENOID VALVE B STUCK ON

GETtheMANUALS.org

DTC Troubleshooting: P0777

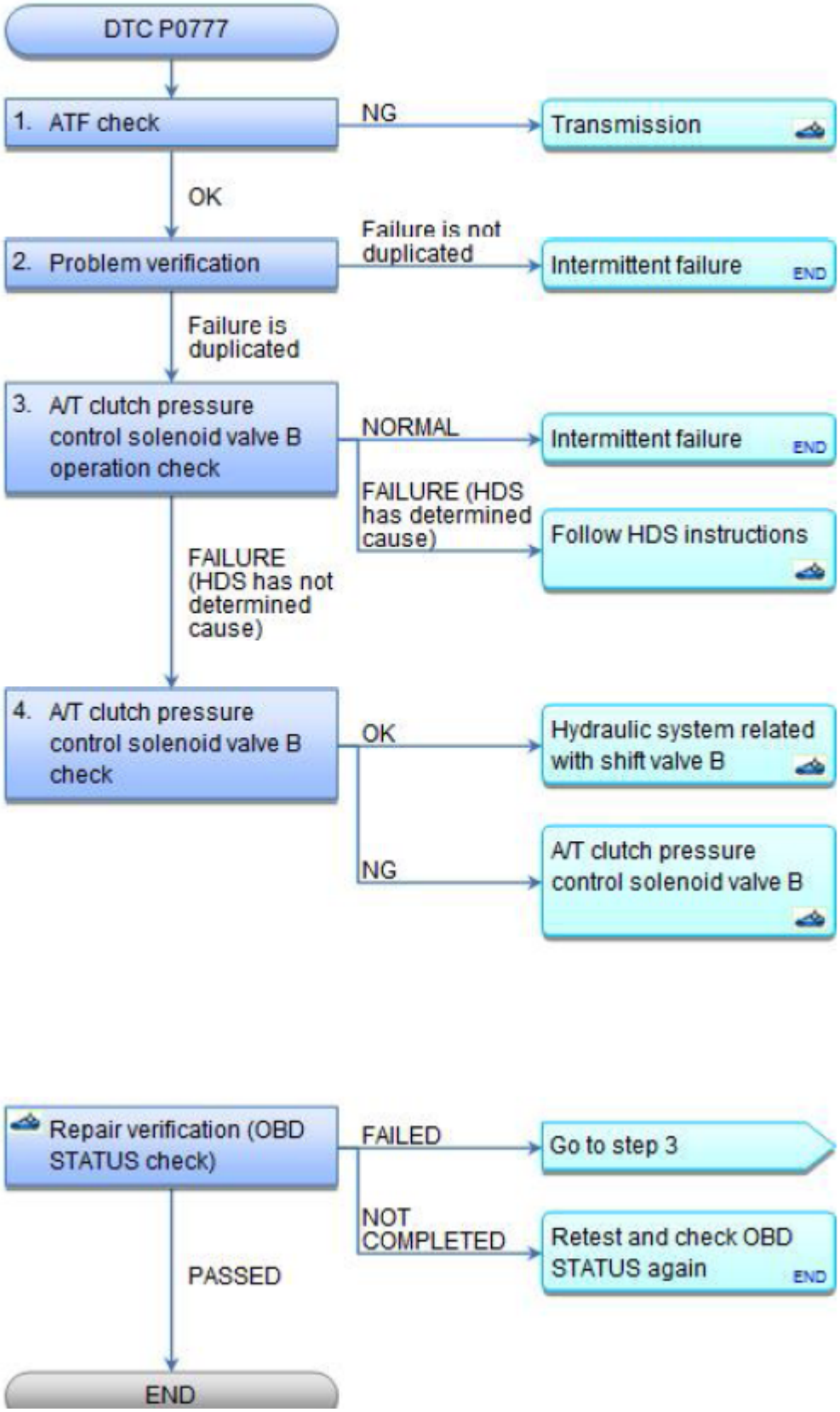

GETtheMANUALS.org

Fig. 47: DTC Troubleshooting Flow Chart (P0777)
Courtesy of AMERICAN HONDA MOTOR CO., INC.

NOTE: **Before you troubleshoot, record all freeze data and any on-board snapshot with the HDS, and review the General Troubleshooting Information See HOW TO TROUBLESHOOT THE A/T SYSTEM or HOW TO TROUBLESHOOT THE FUEL AND EMISSIONS SYSTEMS .**

DTC Description	Confirmed DTC	Pending DTC	Freeze Frame
P0777 A/T Clutch Pressure Control Solenoid Valve B Stuck ON			

1. ATF check:
   - 1. Warm up the engine to normal operating temperature (the radiator fan comes on).
   - 2. Make sure that the transmission is filled to the proper level, and check for fluid leaks.
   - 3. **DRAIN THE ATF** through a strainer. Inspect the strainer for metal debris or excessive clutch material.

   Does the strainer have metal debris or excessive clutch material?

   YES : **Replace the transmission** See **AUTOMATIC TRANSMISSION DISASSEMBLY AND REASSEMBLY** or **AUTOMATIC TRANSMISSION REMOVAL AND INSTALLATION** , then **do the repair verification** .

   NO : **REPLACE THE ATF** , then go to step 2.

2. Problem verification:
   - 1. Turn the ignition switch to ON (II).
   - 2. Clear the DTC with the HDS.
   - 3. Test-drive the vehicle with the shift lever in D, and let the transmission shift through all five gears.
   - 4. Monitor the OBD STATUS for P0777 in the DTCs MENU with the HDS.

DTC Description	OBD Status
P0777 A/T Clutch Pressure Control Solenoid Valve B Stuck ON	

   Does the HDS indicate FAILED?

   YES : The failure is duplicated. Go to step 3.

   NO : If the HDS indicates PASSED, intermittent failure, the system is OK at this time. If the HDS indicates NOT COMPLETED, test-drive again.

GETtheMANUALS.org

3. A/T clutch pressure control solenoid valve B operation check:
   - 1. Clear the DTC with the HDS.
   - 2. Select Clutch Pressure Control (Linear) Solenoid Valve B in the Miscellaneous Test Menu, and test A/T clutch pressure control solenoid valve B with the HDS.

   Does the HDS indicate NORMAL?

   NORMAL A/T clutch pressure control solenoid valve B is OK. Intermittent failure, the system is OK at this time.

   FAILURE (HDS has not determined cause) Follow the instructions indicated on the HDS according to the test result. If the HDS has not determined the cause of the failure, go to step 4.

   FAILURE (HDS has determined cause) Follow the instructions indicated on the HDS according to the test result. If a part is replaced, **do the repair verification** .

4. A/T clutch pressure control solenoid valve B check:
   - 1. **Inspect A/T clutch pressure control solenoid valve B** See **A/T CLUTCH PRESSURE CONTROL SOLENOID VALVE A TEST** or **A/T CLUTCH PRESSURE CONTROL SOLENOID VALVE B AND C TEST** .

   Does A/T clutch pressure control solenoid valve B work properly?

   YES : A/T clutch pressure control solenoid valve B is OK. Repair the hydraulic system related with shift valve B, or **replace the transmission** See **AUTOMATIC TRANSMISSION DISASSEMBLY AND REASSEMBLY** or **AUTOMATIC TRANSMISSION REMOVAL AND INSTALLATION** , then **do the repair verification** .

   NO : **REPLACE A/T CLUTCH PRESSURE CONTROL SOLENOID VALVE B** , then **do the repair verification** .

REPAIR VERIFICATION (OBD STATUS CHECK)

- 1. Turn the ignition switch to ON (II).
- 2. Clear the DTC with the HDS.
- 3. Test-drive the vehicle with the shift lever in D, and let the transmission shift through all five gears.
- 4. Monitor the OBD STATUS for P0777 in the DTCs MENU with the HDS.

DTC Description	OBD Status
P0777 A/T Clutch Pressure Control Solenoid Valve B Stuck ON	

Does the HDS indicate PASSED, FAILED, or NOT COMPLETED?

PASSED Troubleshooting is complete. Check for other DTC after this troubleshooting. If any other Pending or Confirmed DTCs were indicated, go to the indicated DTC's troubleshooting.

GETtheMANUALS.org

FAILED Troubleshooting is incomplete. Go to step 3 and recheck.

NOT COMPLETED Repair verification is incomplete. Meet the test condition, and check the OBD STATUS again.

DTC P0780: SHIFT ERROR

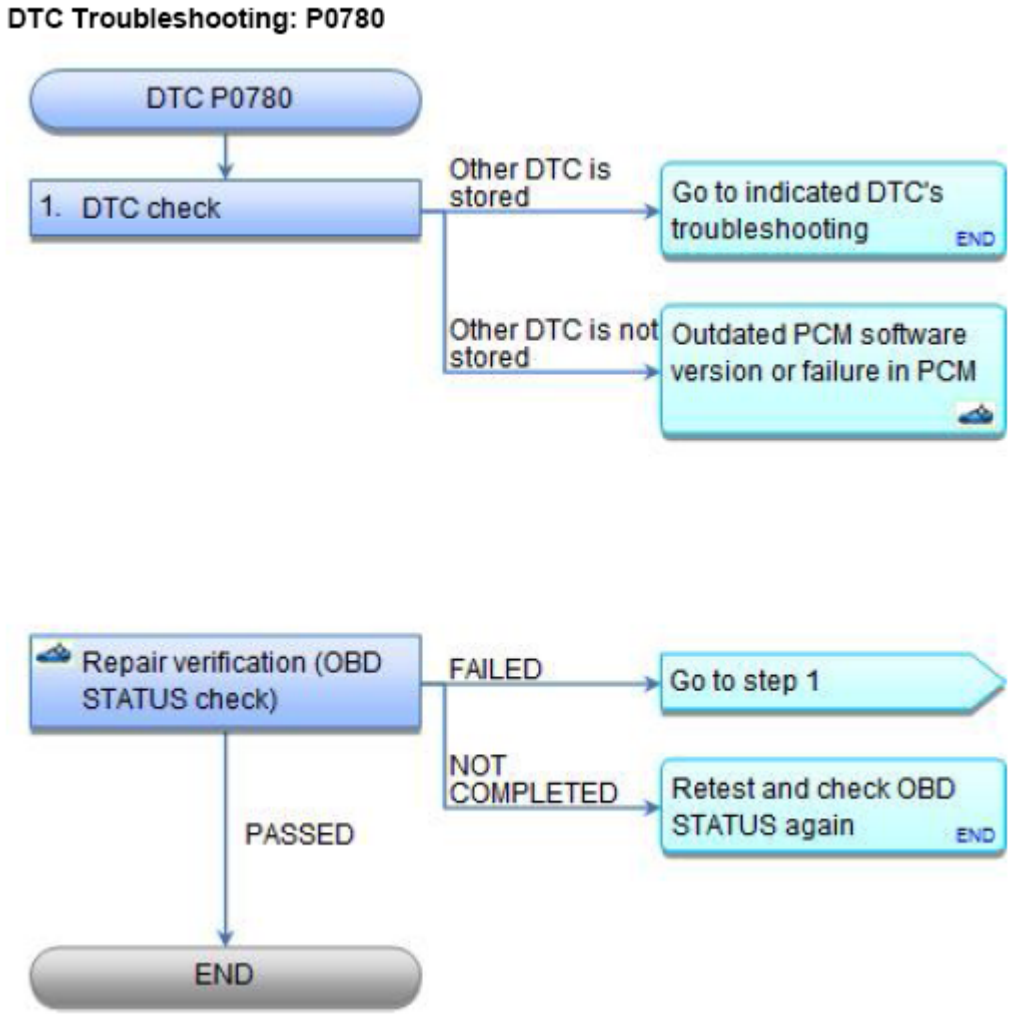

Fig. 48: DTC Troubleshooting Flow Chart (P0780)
Courtesy of AMERICAN HONDA MOTOR CO., INC.

NOTE:

- **Before you troubleshoot, record all freeze data and any on-board snapshot with the HDS, and review the General Troubleshooting Information See HOW TO TROUBLESHOOT THE A/T SYSTEM or HOW TO TROUBLESHOOT THE FUEL AND EMISSIONS SYSTEMS .**
- **This code is stored whenever DTCs P1730, P1731, P1732, P1733, and P1734 are detected.**

GETtheMANUALS.org

DTC Description	Confirmed DTC	Pending DTC	Freeze Frame
P0780 Shift Error			

1. DTC check:
   - 1. Turn the ignition switch to ON (II).
   - 2. Clear the DTC with the HDS.
   - 3. Test-drive the vehicle with the shift lever in D, and let the transmission shift through all five gears.
   - 4. Check for other Pending or Confirmed DTCs indicated along with DTC P0780.

NOTE: **DTC P0780 means there is one or more A/T DTCs regarding the shiftcontrol system.**

DTC Description	Confirmed DTC	Pending DTC	Freeze Frame

Are there other DTCs?

YES : Go to the indicated DTC's troubleshooting.

NO : There are no DTCs along with DTC P0780. **Update the PCM if it does not have the latest software** See **PCM REMOVAL AND INSTALLATION** or **PCM UPDATE** , or **substitute a known-good PCM** See **PCM REMOVAL AND INSTALLATION** or **PCM UPDATE** , then **do the repair verification** .

REPAIR VERIFICATION (OBD STATUS CHECK)

- 1. Test-drive the vehicle with the shift lever in D, and let the transmission shift through all five gears.
- 2. Monitor the OBD STATUS for P0780 in the DTCs MENU with the HDS.

DTC Description	OBD Status
P0780 Shift Error	

Does the HDS indicate PASSED, FAILED, or NOT COMPLETED?

PASSED Troubleshooting is complete. If the PCM was substituted, **replace the original PCM** See **PCM REMOVAL AND INSTALLATION** or **PCM UPDATE** . Check for other DTC after this troubleshooting. If any other Pending or Confirmed DTCs were indicated, go to the indicated DTC's troubleshooting.

FAILED Troubleshooting is incomplete. Go to step 1 and recheck. If the PCM was updated, **substitute a known-good PCM** See **PCM REMOVAL AND INSTALLATION** or **PCM UPDATE** , and check the OBD STATUS again.

NOT COMPLETED Repair verification is incomplete. Meet the test condition, and check the OBD STATUS

GETtheMANUALS.org

again.

DTC P0796: A/T CLUTCH PRESSURE CONTROL SOLENOID VALVE C STUCK OFF

GETtheMANUALS.org

DTC Troubleshooting: P0796

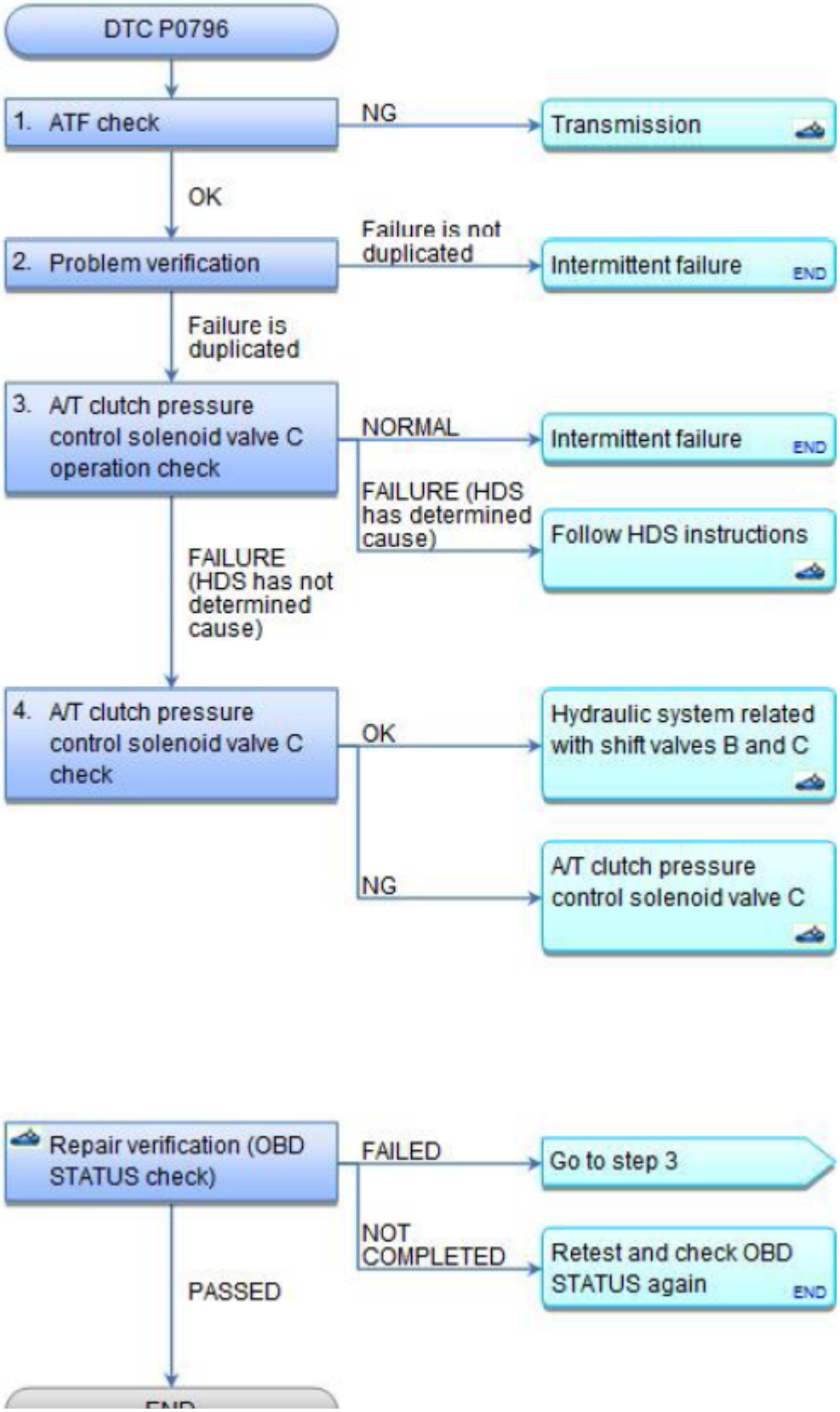

GETtheMANUALS.org

Fig. 49: DTC Troubleshooting Flow Chart (P0796)
Courtesy of AMERICAN HONDA MOTOR CO., INC.

NOTE: **Before you troubleshoot, record all freeze data and any on-board snapshot with the HDS, and review the General Troubleshooting Information See HOW TO TROUBLESHOOT THE A/T SYSTEM or HOW TO TROUBLESHOOT THE FUEL AND EMISSIONS SYSTEMS .**

DTC Description	Confirmed DTC	Pending DTC	Freeze Frame
P0796 A/T Clutch Pressure Control Solenoid Valve C Stuck OFF			

1. ATF check:
   - 1. Warm up the engine to normal operating temperature (the radiator fan comes on).
   - 2. Make sure that the transmission is filled to the proper level, and check for fluid leaks.
   - 3. **DRAIN THE ATF** through a strainer. Inspect the strainer for metal debris or excessive clutch material.

   Does the strainer have metal debris or excessive clutch material?

   YES : **Replace the transmission** See **AUTOMATIC TRANSMISSION DISASSEMBLY AND REASSEMBLY** or **AUTOMATIC TRANSMISSION REMOVAL AND INSTALLATION** , then **do the repair verification** .

   NO : **REPLACE THE ATF** , then go to step 2.

2. Problem verification:
   - 1. Turn the ignition switch to ON (II).
   - 2. Clear the DTC with the HDS.
   - 3. Test-drive the vehicle with the shift lever in D, and let the transmission shift through all five gears.
   - 4. Monitor the OBD STATUS for P0796 in the DTCs MENU with the HDS.

DTC Description	OBD Status
P0796 A/T Clutch Pressure Control Solenoid Valve C Stuck OFF	

   Does the HDS indicate FAILED?

   YES : The failure is duplicated. Go to step 3.

   NO : If the HDS indicates PASSED, intermittent failure, the system is OK at this time. If the HDS indicates NOT COMPLETED, test-drive again.

GETtheMANUALS.org

3. A/T clutch pressure control solenoid valve C operation check:
   - 1. Clear the DTC with the HDS.
   - 2. Select Clutch Pressure Control (Linear) Solenoid Valve C in the Miscellaneous Test Menu, and test A/T clutch pressure control solenoid valve C with the HDS.

   Does the HDS indicate NORMAL?

   NORMAL A/T clutch pressure control solenoid valve C is OK. Intermittent failure, the system is OK at this time.

   FAILURE (HDS has not determined cause) Follow the instructions indicated on the HDS according to the test result. If the HDS has not determined the cause of the failure, go to step 4.

   FAILURE (HDS has determined cause) Follow the instructions indicated on the HDS according to the test result. If a part is replaced, **do the repair verification** .

4. A/T clutch pressure control solenoid valve C check:
   - 1. **Inspect A/T clutch pressure control solenoid valve C** See **A/T CLUTCH PRESSURE CONTROL SOLENOID VALVE A TEST** or **A/T CLUTCH PRESSURE CONTROL SOLENOID VALVE B AND C TEST** .

   Does A/T clutch pressure control solenoid valve C work properly?

   YES : A/T clutch pressure control solenoid valve C is OK. Repair the hydraulic system related with shift valves B and C, or **replace the transmission** See **AUTOMATIC TRANSMISSION DISASSEMBLY AND REASSEMBLY** or **AUTOMATIC TRANSMISSION REMOVAL AND INSTALLATION** , then **do the repair verification** .

   NO : **REPLACE A/T CLUTCH PRESSURE CONTROL SOLENOID VALVE C** , then **do the repair verification** .

REPAIR VERIFICATION (OBD STATUS CHECK)

- 1. Turn the ignition switch to ON (II).
- 2. Clear the DTC with the HDS.
- 3. Test-drive the vehicle with the shift lever in D, and let the transmission shift through all five gears.
- 4. Monitor the OBD STATUS for P0796 in the DTCs MENU with the HDS.

DTC Description	OBD Status
P0796 A/T Clutch Pressure Control Solenoid Valve C Stuck OFF	

Does the HDS indicate PASSED, FAILED, or NOT COMPLETED?

PASSED Troubleshooting is complete. Check for other DTC after this troubleshooting. If any other Pending or Confirmed DTCs were indicated, go to the indicated DTC's troubleshooting.

GETtheMANUALS.org

FAILED Troubleshooting is incomplete. Go to step 3 and recheck.

NOT COMPLETED Repair verification is incomplete. Meet the test condition, and check the OBD STATUS again.

DTC P0797: A/T CLUTCH PRESSURE CONTROL SOLENOID VALVE C STUCK ON

GETtheMANUALS.org

DTC Troubleshooting: P0797

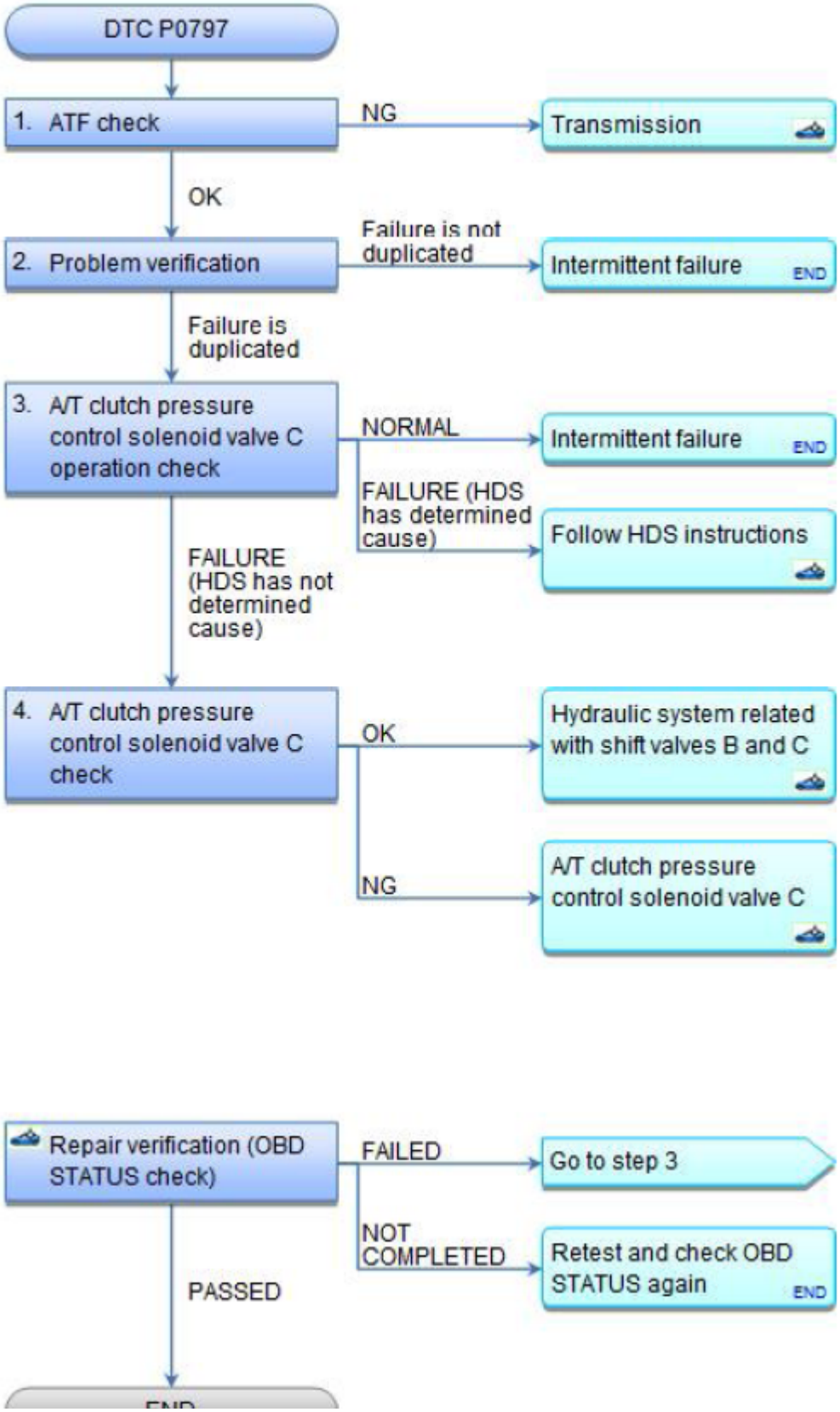

GETtheMANUALS.org

Fig. 50: DTC Troubleshooting Flow Chart (P0797)
Courtesy of AMERICAN HONDA MOTOR CO., INC.

NOTE: **Before you troubleshoot, record all freeze data and any on-board snapshot with the HDS, and review the General Troubleshooting Information See HOW TO TROUBLESHOOT THE A/T SYSTEM or HOW TO TROUBLESHOOT THE FUEL AND EMISSIONS SYSTEMS .**

DTC Description	Confirmed DTC	Pending DTC	Freeze Frame
P0797 A/T Clutch Pressure Control Solenoid Valve C Stuck ON			

1. ATF check:
   - 1. Warm up the engine to normal operating temperature (the radiator fan comes on).
   - 2. Make sure that the transmission is filled to the proper level, and check for fluid leaks.
   - 3. **DRAIN THE ATF** through a strainer. Inspect the strainer for metal debris or excessive clutch material.

   Does the strainer have metal debris or excessive clutch material?

   YES : **Replace the transmission** See **AUTOMATIC TRANSMISSION DISASSEMBLY AND REASSEMBLY** or **AUTOMATIC TRANSMISSION REMOVAL AND INSTALLATION** , then **do the repair verification** .

   NO : **REPLACE THE ATF** , then go to step 2.

2. Problem verification:
   - 1. Turn the ignition switch to ON (II).
   - 2. Clear the DTC with the HDS.
   - 3. Test-drive the vehicle with the shift lever in D, and let the transmission shift through all five gears.
   - 4. Monitor the OBD STATUS for P0797 in the DTCs MENU with the HDS.

DTC Description	OBD Status
P0797 A/T Clutch Pressure Control Solenoid Valve C Stuck ON	

   Does the HDS indicate FAILED?

   YES : The failure is duplicated. Go to step 3.

   NO : If the HDS indicates PASSED, intermittent failure, the system is OK at this time. If the HDS indicates NOT COMPLETED, test-drive again.

GETtheMANUALS.org

3. A/T clutch pressure control solenoid valve C operation check:
   - 1. Clear the DTC with the HDS.
   - 2. Select Clutch Pressure Control (Linear) Solenoid Valve C in the Miscellaneous Test Menu, and test A/T clutch pressure control solenoid valve C with the HDS.

   Does the HDS indicate NORMAL?

   NORMAL A/T clutch pressure control solenoid valve C is OK. Intermittent failure, the system is OK at this time.

   FAILURE (HDS has not determined cause) Follow the instructions indicated on the HDS according to the test result. If the HDS has not determined the cause of the failure, go to step 4.

   FAILURE (HDS has determined cause) Follow the instructions indicated on the HDS according to the test result. If a part is replaced, **do the repair verification** .

4. A/T clutch pressure control solenoid valve C check:
   - 1. **Inspect A/T clutch pressure control solenoid valve C** See **A/T CLUTCH PRESSURE CONTROL SOLENOID VALVE A TEST** or **A/T CLUTCH PRESSURE CONTROL SOLENOID VALVE B AND C TEST** .

   Does A/T clutch pressure control solenoid valve C work properly?

   YES : A/T clutch pressure control solenoid valve C is OK. Repair the hydraulic system related with shift valves B and C, or **replace the transmission** See **AUTOMATIC TRANSMISSION DISASSEMBLY AND REASSEMBLY** or **AUTOMATIC TRANSMISSION REMOVAL AND INSTALLATION** , then **do the repair verification** .

   NO : **REPLACE A/T CLUTCH PRESSURE CONTROL SOLENOID VALVE C** , then **do the repair verification** .

REPAIR VERIFICATION (OBD STATUS CHECK)

- 1. Turn the ignition switch to ON (II).
- 2. Clear the DTC with the HDS.
- 3. Test-drive the vehicle with the shift lever in D, and let the transmission shift through all five gears.
- 4. Monitor the OBD STATUS for P0797 in the DTCs MENU with the HDS.

DTC Description	OBD Status
P0797 A/T Clutch Pressure Control Solenoid Valve C Stuck ON	

Does the HDS indicate PASSED, FAILED, or NOT COMPLETED?

PASSED Troubleshooting is complete. Check for other DTC after this troubleshooting. If any other Pending or Confirmed DTCs were indicated, go to the indicated DTC's troubleshooting.

GETtheMANUALS.org

FAILED Troubleshooting is incomplete. Go to step 3 and recheck.

NOT COMPLETED Repair verification is incomplete. Meet the test condition, and check the OBD STATUS again.

DTC P0842: TRANSMISSION FLUID PRESSURE SWITCH A (2ND CLUTCH) CIRCUIT LOW

GETtheMANUALS.org

DTC Troubleshooting: P0842

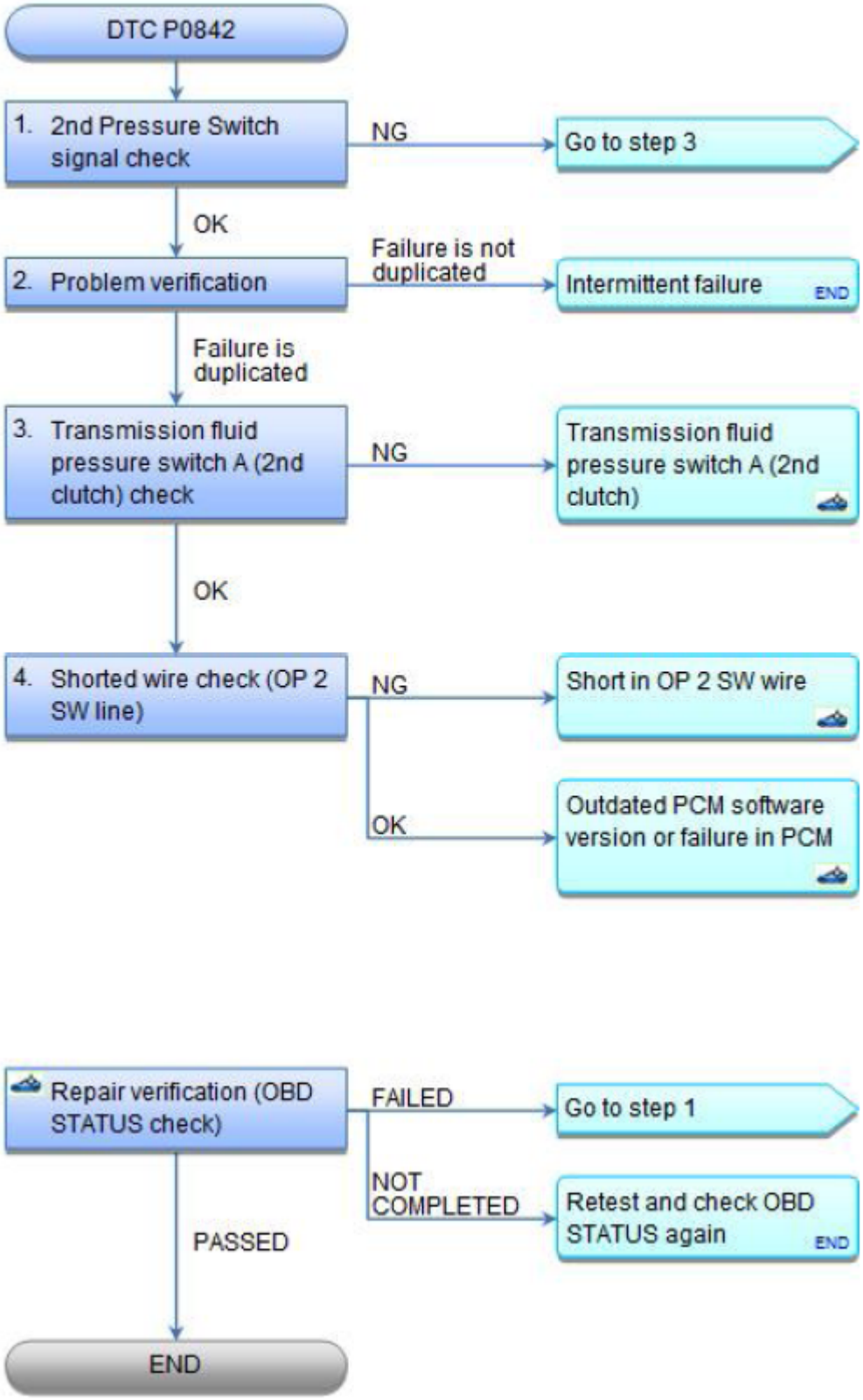

GETtheMANUALS.org

Fig. 51: DTC Troubleshooting Flow Chart (P0842)
Courtesy of AMERICAN HONDA MOTOR CO., INC.

NOTE:

- **Before you troubleshoot, record all freeze data and any on-board snapshot with the HDS, and review the General Troubleshooting Information See HOW TO TROUBLESHOOT THE A/T SYSTEM or HOW TO TROUBLESHOOT THE FUEL AND EMISSIONS SYSTEMS .**
- **This code is caused by an electrical circuit problem and cannot be caused by a mechanical problem in the transmission.**

DTC Description	Confirmed DTC	Pending DTC	Freeze Frame
P0842 Transmission Fluid Pressure Switch A (2nd Clutch) Circuit Low			

1. 2nd Pressure Switch signal check:
   - 1. Turn the ignition switch to ON (II).
   - 2. Clear the DTC with the HDS.
   - 3. Check the parameter(s) below with the HDS when the transmission is not in 2nd gear.

Signal	Threshold		Current conditions	
	Values	Unit	Values	Unit
2nd Pressure Switch	OFF			

Do the current condition(s) match the threshold?

YES : The 2nd Pressure Switch signal is OK. Go to step 2.

NO : Go to step 3.

2. Problem verification:
   - 1. Start the engine, and warm it up to normal operating temperature (the radiator fan comes on).
   - 2. Test-drive the vehicle in 4th gear for at least 2 seconds.
   - 3. Monitor the OBD STATUS for P0842 in the DTCs MENU with the HDS.

DTC Description	OBD Status
P0842 Transmission Fluid Pressure Switch A (2nd Clutch) Circuit Low	

Does the HDS indicate FAILED?

YES : The failure is duplicated. Go to step 3.

NO : If the HDS indicates PASSED, intermittent failure, the system is OK at this time. Check for an

GETtheMANUALS.org

intermittent short to ground in the wire between transmission fluid pressure switch A (2nd clutch) and the PCM. If the HDS indicates NOT COMPLETED, test-drive again.

3. Transmission fluid pressure switch A (2nd clutch) check:
   - 1. Turn the ignition switch to LOCK (0).
   - 2. Disconnect the following connector.

     Transmission fluid pressure switch A (2nd clutch) 1P connector

   - 3. Turn the ignition switch to ON (II).
   - 4. Check the parameter(s) below with the HDS.

Signal	Threshold		Current conditions	
	Values	Unit	Values	Unit
2nd Pressure Switch	OFF			

Do the current condition(s) match the threshold?

YES : **REPLACE TRANSMISSION FLUID PRESSURE SWITCH A (2ND CLUTCH)** , then **do the repair verification** .

NO : Transmission fluid pressure switch A (2nd clutch) is OK. Go to step 4.

4. Shorted wire check (OP 2 SW line):
   - 1. Turn the ignition switch to LOCK (0).
   - 2. Jump the SCS line with the HDS.
   - 3. Disconnect the following connector.

     PCM connector B (49P)

   - 4. Check for continuity between test points 1 and 2.

     Test condition IG LOCK (0)

     Transmission fluid pressure switch A (2nd clutch) 1P connector: disconnected

     PCM connector B (49P): disconnected

     Test circuit OP 2 SW

     Test point 1 Transmission fluid pressure switch A (2nd clutch) 1P connector No. 1 (RED)

     Test point 2 Body ground

GETtheMANUALS.org

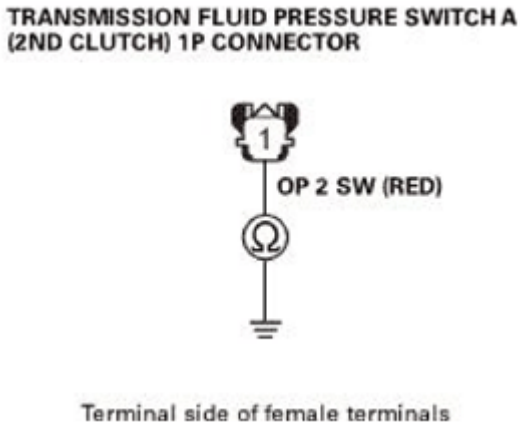

Fig. 52: Checking Continuity Between Transmission Fluid Pressure Switch A (2nd Clutch) 1P Connector No. 1 (RED) And Body Ground
Courtesy of AMERICAN HONDA MOTOR CO., INC.

Is there continuity?

YES : Repair a short to ground in the OP 2 SW wire between transmission fluid pressure switch A (2nd clutch) and the PCM, then **do the repair verification** .

NO : The OP 2 SW wire is OK. **Update the PCM if it does not have the latest software** See **PCM REMOVAL AND INSTALLATION** or **PCM UPDATE** , or **substitute a known-good PCM** See **PCM REMOVAL AND INSTALLATION** or **PCM UPDATE** , then **do the repair verification** .

REPAIR VERIFICATION (OBD STATUS CHECK)

- 1. Reconnect all connectors.
- 2. Turn the ignition switch to ON (II).
- 3. Clear the DTC with the HDS.
- 4. Start the engine, and warm it up to normal operating temperature (the radiator fan comes on).
- 5. Test-drive the vehicle in 2nd gear for at least 2 seconds, then drive in 4th gear for at least 2 seconds.
- 6. Monitor the OBD STATUS for P0842 in the DTCs MENU with the HDS.

DTC Description	OBD Status
P0842 Transmission Fluid Pressure Switch A (2nd Clutch) Circuit Low	

Does the HDS indicate PASSED, FAILED, or NOT COMPLETED?

PASSED Troubleshooting is complete. If the PCM was substituted, **replace the original PCM** See **PCM REMOVAL AND INSTALLATION** or **PCM UPDATE** . Check for other DTC after this troubleshooting. If any other Pending or Confirmed DTCs were indicated, go to the indicated DTC's troubleshooting.

FAILED Troubleshooting is incomplete. Check for poor connections or loose terminals between transmission

GETtheMANUALS.org

fluid pressure switch A (2nd clutch) and the PCM, then go to step 1 and recheck. If the PCM was updated, **substitute a known-good PCM** See **PCM REMOVAL AND INSTALLATION** or **PCM UPDATE** , and check the OBD STATUS again.

NOT COMPLETED Repair verification is incomplete. Meet the test condition, and check the OBD STATUS again.

DTC P0843: TRANSMISSION FLUID PRESSURE SWITCH A (2ND CLUTCH) CIRCUIT HIGH

GETtheMANUALS.org

DTC Troubleshooting: P0843

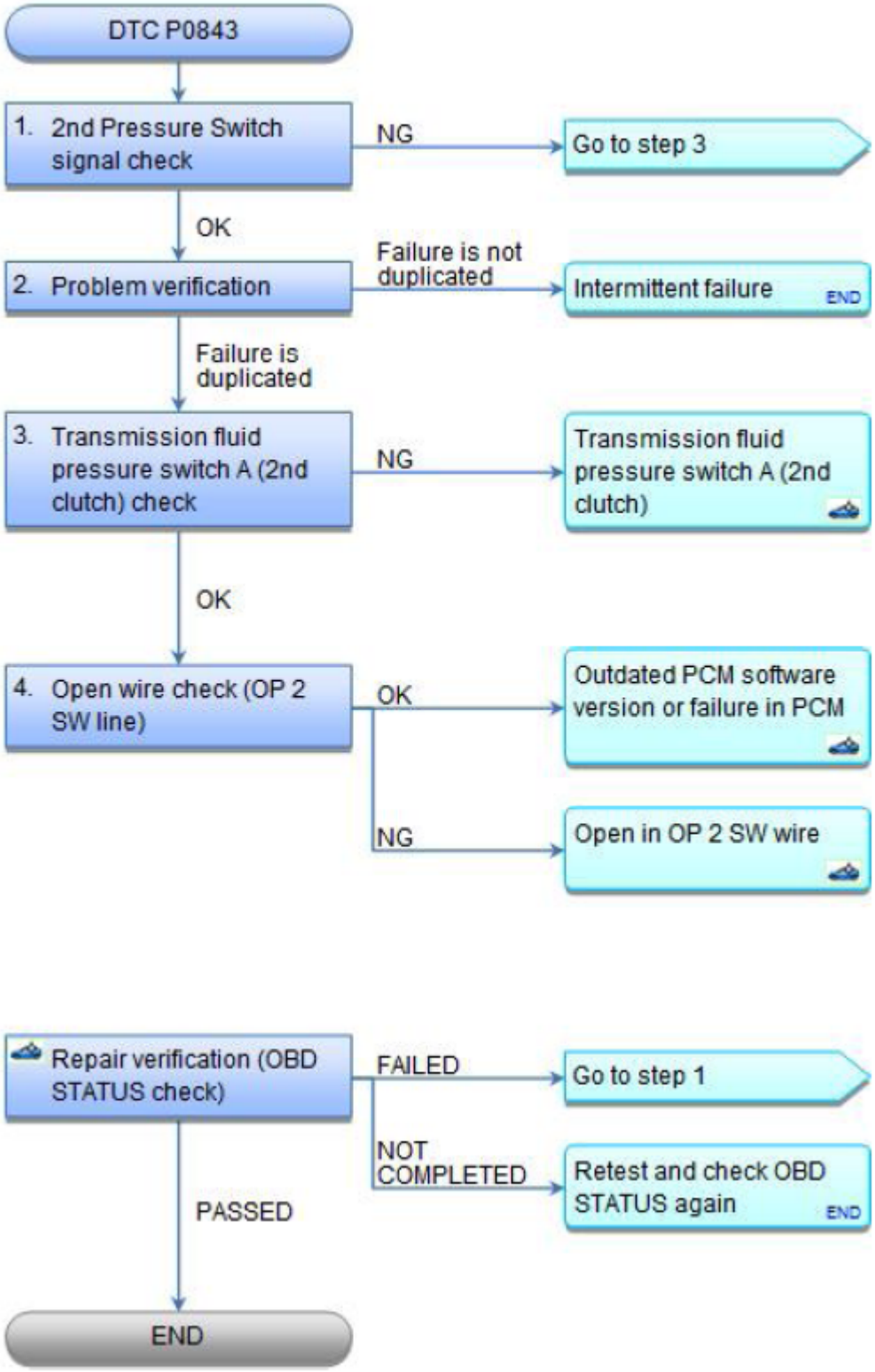

Fig. 53: DTC Troubleshooting Flow Chart (P0843)
Courtesy of AMERICAN HONDA MOTOR CO., INC.

GETtheMANUALS.org

NOTE: **Before you troubleshoot, record all freeze data and any on-board snapshot with the HDS, and review the General Troubleshooting Information See HOW TO TROUBLESHOOT THE A/T SYSTEM or HOW TO TROUBLESHOOT THE FUEL AND EMISSIONS SYSTEMS .**

DTC Description	Confirmed DTC	Pending DTC	Freeze Frame
P0843 Transmission Fluid Pressure Switch A (2nd Clutch) Circuit High			

1. 2nd Pressure Switch signal check:
   - 1. Turn the ignition switch to ON (II).
   - 2. Clear the DTC with the HDS.
   - 3. Start the engine, and warm it up to normal operating temperature (the radiator fan comes on).
   - 4. Shift the transmission to 2nd gear while pressing the brake pedal, and check if the Shift Control indicates 2 with the HDS in the A/T Data List.

Signal	Current conditions	
	Values	Unit
Shift Control		

   - 5. Check the parameter(s) below with the HDS.

Signal	Threshold		Current conditions	
	Values	Unit	Values	Unit
2nd Pressure Switch	ON			

Do the current condition(s) match the threshold?

YES : The 2nd Pressure Switch signal is OK. Go to step 2.

NO : Go to step 3.

2. Problem verification:
   - 1. Test-drive the vehicle in 2nd gear for at least 2 seconds.
   - 2. Monitor the OBD STATUS for P0843 in the DTCs MENU with the HDS.

DTC Description	OBD Status
P0843 Transmission Fluid Pressure Switch A (2nd Clutch) Circuit High	

Does the HDS indicate FAILED?

YES : The failure is duplicated. Go to step 3.

GETtheMANUALS.org

NO : If the HDS indicates PASSED, intermittent failure, the system is OK at this time. Check for poor connections or loose terminals between transmission fluid pressure switch A (2nd clutch) and the PCM. If the HDS indicates NOT COMPLETED, test-drive again.

3. Transmission fluid pressure switch A (2nd clutch) check:
   - 1. Turn the ignition switch to LOCK (0).
   - 2. Disconnect the following connector.

     Transmission fluid pressure switch A (2nd clutch) 1P connector

   - 3. Turn the ignition switch to ON (II).
   - 4. Measure the voltage between test points 1 and 2.

     Test condition IG ON (II)

     Transmission fluid pressure switch A (2nd clutch) 1P connector: disconnected

     Test circuit OP 2 SW

     Test point 1 Transmission fluid pressure switch A (2nd clutch) 1P connector No. 1 (RED)

     Test point 2 Body ground

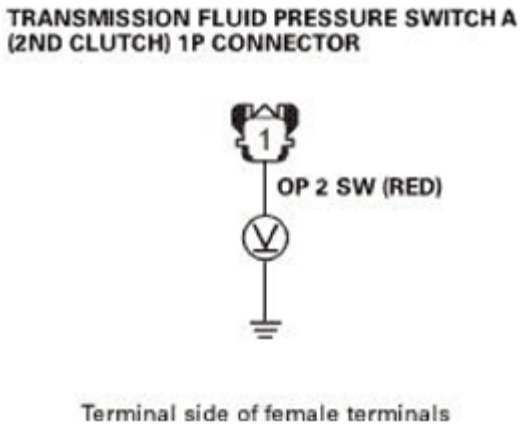

Fig. 54: Measuring Voltage Between Transmission Fluid Pressure Switch A (2nd Clutch) 1P Connector No. 1 (RED) And Body Ground
Courtesy of AMERICAN HONDA MOTOR CO., INC.

Is there about 5 V?

YES : **Replace transmission fluid pressure switch A (2nd clutch)** , then **do the repair verification** .

NO : Go to step 4.

GETtheMANUALS.org

4. Open wire check (OP 2 SW line):
    - 1. Turn the ignition switch to LOCK (0).
    - 2. Jump the SCS line with the HDS.
    - 3. Disconnect the following connector.

      PCM connector B (49P)

    - 4. Check for continuity between test points 1 and 2.

      Test condition IG LOCK (0)

      Transmission fluid pressure switch A (2nd clutch) 1P connector: disconnected

      PCM connector B (49P): disconnected

      Test circuit OP 2 SW

      Test point 1 Transmission fluid pressure switch A (2nd clutch) 1P connector No. 1 (RED)

      Test point 2 PCM connector B (49P) No. 19 (RED)

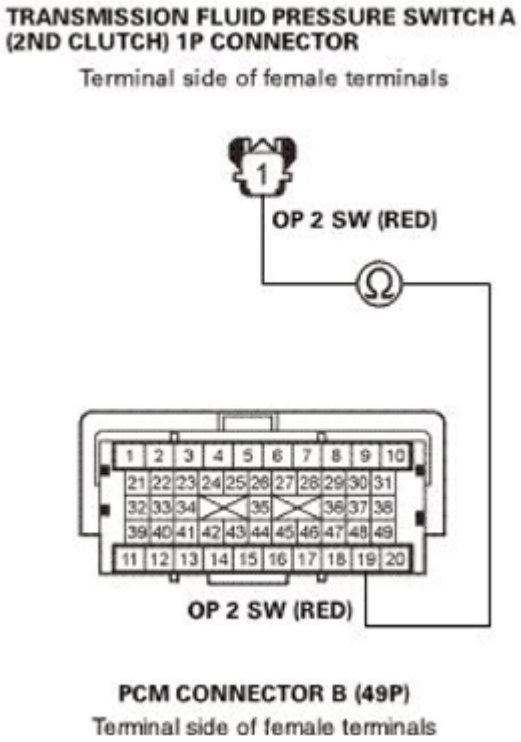

Fig. 55: Checking Continuity Between Transmission Fluid Pressure Switch A (2nd Clutch) 1P Connector No. 1 (RED) And Body Ground
Courtesy of AMERICAN HONDA MOTOR CO., INC.

GETtheMANUALS.org

Is there continuity?

YES : The OP 2 SW wire is OK. **Update the PCM if it does not have the latest software** See **PCM REMOVAL AND INSTALLATION** or **PCM UPDATE** , or **substitute a known-good PCM** See **PCM REMOVAL AND INSTALLATION** or **PCM UPDATE** , then **do the repair verification** .

NO : Repair an open in the OP 2 SW wire between transmission fluid pressure switch A (2nd clutch) and the PCM, then **do the repair verification** .

REPAIR VERIFICATION (OBD STATUS CHECK)

- 1. Reconnect all connectors.
- 2. Turn the ignition switch to ON (II).
- 3. Clear the DTC with the HDS.
- 4. Start the engine, and warm it up to normal operating temperature (the radiator fan comes on).
- 5. Test-drive the vehicle in 2nd gear for at least 2 seconds, then drive in 4th gear for at least 2 seconds.
- 6. Monitor the OBD STATUS for P0843 in the DTCs MENU with the HDS.

DTC Description	OBD Status
P0843 Transmission Fluid Pressure Switch A (2nd Clutch) Circuit High	

Does the HDS indicate PASSED, FAILED, or NOT COMPLETED?

PASSED Troubleshooting is complete. If the PCM was substituted, **replace the original PCM** See **PCM REMOVAL AND INSTALLATION** or **PCM UPDATE** . Check for other DTC after this troubleshooting. If any other Pending or Confirmed DTCs were indicated, go to the indicated DTC's troubleshooting.

FAILED Troubleshooting is incomplete. Check for poor connections or loose terminals between transmission fluid pressure switch A (2nd clutch) and the PCM, then go to step 1 and recheck. If the PCM was updated, **substitute a known-good PCM** See **PCM REMOVAL AND INSTALLATION** or **PCM UPDATE** , and check the OBD STATUS again.

NOT COMPLETED Repair verification is incomplete. Meet the test condition, and check the OBD STATUS again.

DTC P0847: TRANSMISSION FLUID PRESSURE SWITCH B (3RD CLUTCH) CIRCUIT LOW

GETtheMANUALS.org

DTC Troubleshooting: P0847

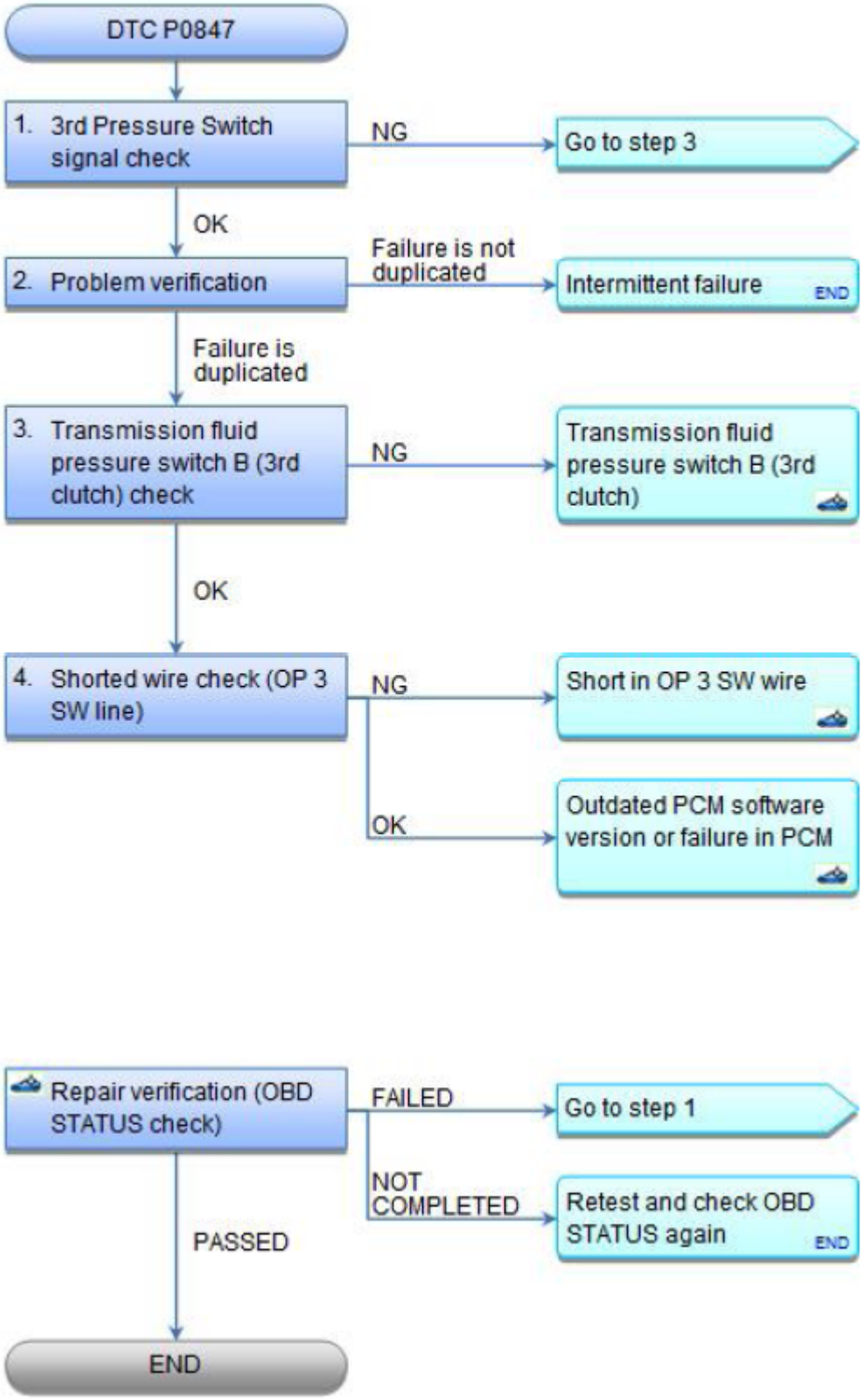

GETtheMANUALS.org

Fig. 56: DTC Troubleshooting Flow Chart (P0847)
Courtesy of AMERICAN HONDA MOTOR CO., INC.

NOTE:

- **Before you troubleshoot, record all freeze data and any on-board snapshot with the HDS, and review the General Troubleshooting Information See HOW TO TROUBLESHOOT THE A/T SYSTEM or HOW TO TROUBLESHOOT THE FUEL AND EMISSIONS SYSTEMS .**
- **This code is caused by an electrical circuit problem and cannot be caused by a mechanical problem in the transmission.**

DTC Description	Confirmed DTC	Pending DTC	Freeze Frame
P0847 Transmission Fluid Pressure Switch B (3rd Clutch) Circuit Low			

1. 3rd Pressure Switch signal check:
   - 1. Turn the ignition switch to ON (II).
   - 2. Clear the DTC with the HDS.
   - 3. Check the parameter(s) below with the HDS when the transmission is not in 3rd gear.

Signal	Threshold		Current conditions	
	Values	Unit	Values	Unit
3rd Pressure Switch	OFF			

Do the current condition(s) match the threshold?

YES : The 3rd Pressure Switch signal is OK. Go to step 2.

NO : Go to step 3.

2. Problem verification:
   - 1. Start the engine, and warm it up to normal operating temperature (the radiator fan comes on).
   - 2. Test-drive the vehicle in 4th gear for at least 2 seconds.
   - 3. Monitor the OBD STATUS for P0847 in the DTCs MENU with the HDS.

DTC Description	OBD Status
P0847 Transmission Fluid Pressure Switch B (3rd Clutch) Circuit Low	

Does the HDS indicate FAILED?

YES : The failure is duplicated. Go to step 3.

NO : If the HDS indicates PASSED, intermittent failure, the system is OK at this time. Check for an

GETtheMANUALS.org

intermittent short to ground in the wire between transmission fluid pressure switch B (3rd clutch) and the PCM. If the HDS indicates NOT COMPLETED, test-drive again.

3. Transmission fluid pressure switch B (3rd clutch) check:
   - 1. Turn the ignition switch to LOCK (0).
   - 2. Disconnect the following connector.

     Transmission fluid pressure switch B (3rd clutch) 1P connector

   - 3. Turn the ignition switch to ON (II).
   - 4. Check the parameter(s) below with the HDS.

Signal	Threshold		Current conditions	
	Values	Unit	Values	Unit
3rd Pressure Switch	OFF			

Do the current condition(s) match the threshold?

YES : **<u>REPLACE TRANSMISSION FLUID PRESSURE SWITCH B (3RD CLUTCH)</u>** , then **do the repair verification** .

NO : Transmission fluid pressure switch B (3rd clutch) is OK. Go to step 4.

4. Shorted wire check (OP 3 SW line):
   - 1. Turn the ignition switch to LOCK (0).
   - 2. Jump the SCS line with the HDS.
   - 3. Disconnect the following connector.

     PCM connector B (49P)

   - 4. Check for continuity between test points 1 and 2.

     Test condition IG LOCK (0)

     Transmission fluid pressure switch B (3rd clutch) 1P connector: disconnected

     PCM connector B (49P): disconnected

     Test circuit OP 3 SW

     Test point 1 Transmission fluid pressure switch B (3rd clutch) 1P connector terminal

     No. 1 (BLU)

     Test point 2 Body ground

GETtheMANUALS.org

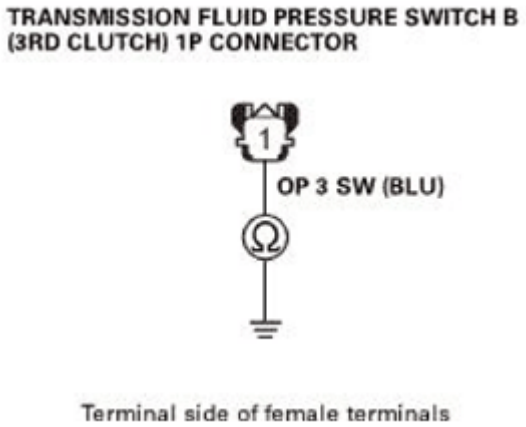

Fig. 57: Checking Continuity Between Transmission Fluid Pressure Switch B (3rd Clutch) 1P Connector Terminal No. 1 (BLU) And Body Ground
Courtesy of AMERICAN HONDA MOTOR CO., INC.

Is there continuity?

YES : Repair a short to ground in the OP 3 SW wire between transmission fluid pressure switch B (3rd clutch) and the PCM, then **do the repair verification** .

NO : The OP 3 SW wire is OK. **Update the PCM if it does not have the latest software** See **PCM REMOVAL AND INSTALLATION** or **PCM UPDATE** , or **substitute a known-good PCM** See **PCM REMOVAL AND INSTALLATION** or **PCM UPDATE** , then **do the repair verification** .

REPAIR VERIFICATION (OBD STATUS CHECK)

- 1. Reconnect all connectors.
- 2. Turn the ignition switch to ON (II).
- 3. Clear the DTC with the HDS.
- 4. Start the engine, and warm it up to normal operating temperature (the radiator fan comes on).
- 5. Test-drive the vehicle in 3rd gear for at least 2 seconds, then drive in 4th gear for at least 2 seconds.
- 6. Monitor the OBD STATUS for P0847 in the DTCs MENU with the HDS.

DTC Description	OBD Status
P0847 Transmission Fluid Pressure Switch B (3rd Clutch) Circuit Low	

Does the HDS indicate PASSED, FAILED, or NOT COMPLETED?

PASSED Troubleshooting is complete. If the PCM was substituted, **replace the original PCM** See **PCM REMOVAL AND INSTALLATION** or **PCM UPDATE** . Check for other DTC after this troubleshooting. If any other Pending or Confirmed DTCs were indicated, go to the indicated DTC's troubleshooting.

FAILED Troubleshooting is incomplete. Check for poor connections or loose terminals between transmission

GETtheMANUALS.org

fluid pressure switch B (3rd clutch) and the PCM, then go to step 1 and recheck. If the PCM was updated, **substitute a known-good PCM** See **PCM REMOVAL AND INSTALLATION** or **PCM UPDATE** , and check the OBD STATUS again.

NOT COMPLETED Repair verification is incomplete. Meet the test condition, and check the OBD STATUS again.

DTC P0848: TRANSMISSION FLUID PRESSURE SWITCH B (3RD CLUTCH) CIRCUIT HIGH

GETtheMANUALS.org

DTC Troubleshooting: P0848

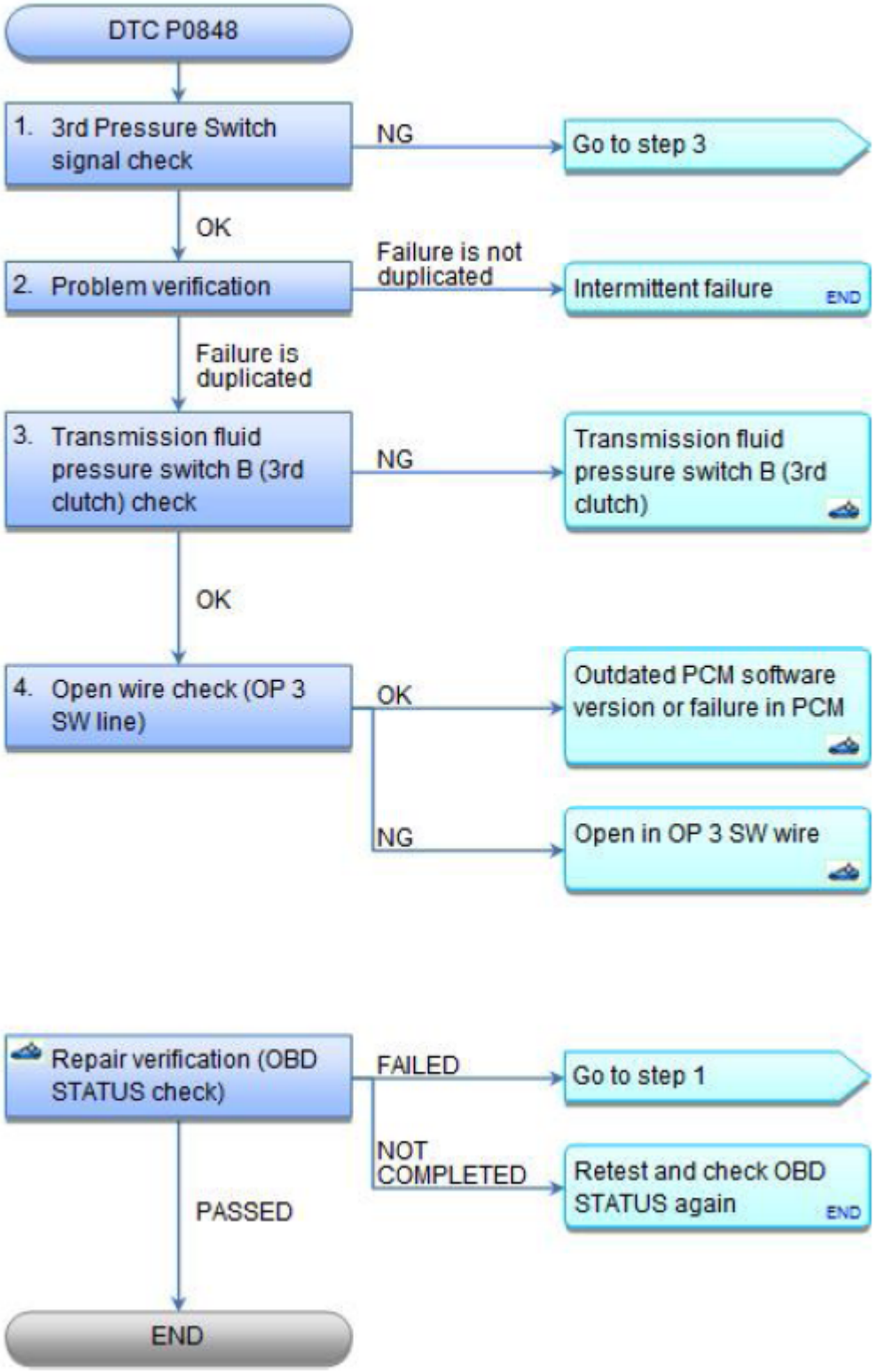

Fig. 58: DTC Troubleshooting Flow Chart (P0848)
Courtesy of AMERICAN HONDA MOTOR CO., INC.

GETtheMANUALS.org

NOTE: **Before you troubleshoot, record all freeze data and any on-board snapshot with the HDS, and review the General Troubleshooting Information See HOW TO TROUBLESHOOT THE A/T SYSTEM or HOW TO TROUBLESHOOT THE FUEL AND EMISSIONS SYSTEMS .**

DTC Description	Confirmed DTC	Pending DTC	Freeze Frame
P0848 Transmission Fluid Pressure Switch B (3rd Clutch) Circuit High			

1. 3rd Pressure Switch signal check:
   - 1. Turn the ignition switch to ON (II).
   - 2. Clear the DTC with the HDS.
   - 3. Raise the vehicle on a lift. Make sure it is securely supported, and allow the front wheels to rotate freely.
   - 4. Start the engine, and warm it up to normal operating temperature (the radiator fan comes on).
   - 5. Start the engine, disable the VSA by pressing the VSA OFF button (if equipped). Run the vehicle in 3rd gear, and check the parameter(s) below with the HDS.

Signal	Threshold		Current conditions	
	Values	Unit	Values	Unit
3rd Pressure Switch	OFF			

Is the 3rd Pressure Switch ON in 3rd gear?

YES : The 3rd Pressure Switch signal is OK. Go to step 2.

NO : Go to step 3.

2. Problem verification:
   - 1. Test-drive the vehicle in 3rd gear for at least 2 seconds.
   - 2. Monitor the OBD STATUS for P0848 in the DTCs MENU with the HDS.

DTC Description	OBD Status
P0848 Transmission Fluid Pressure Switch B (3rd Clutch) Circuit High	

Does the HDS indicate FAILED?

YES : The failure is duplicated. Go to step 3.

NO : If the HDS indicates PASSED, intermittent failure, the system is OK at this time. Check for poor connections or loose terminals between transmission fluid pressure switch B (3rd clutch) and the PCM. If the HDS indicates NOT COMPLETED, test-drive again.

GETtheMANUALS.org

3. Transmission fluid pressure switch B (3rd clutch) check:
   - 1. Turn the ignition switch to LOCK (0).
   - 2. Disconnect the following connector.

     Transmission fluid pressure switch B (3rd clutch) 1P connector

   - 3. Turn the ignition switch to ON (II).
   - 4. Measure the voltage between test points 1 and 2.

     Test condition IG ON (II)

     Transmission fluid pressure switch B (3rd clutch) 1P connector: disconnected

     Test circuit OP 3 SW

     Test point 1 Transmission fluid pressure switch B (3rd clutch) 1P connector No. 1 (BLU)

     Test point 2 Body ground

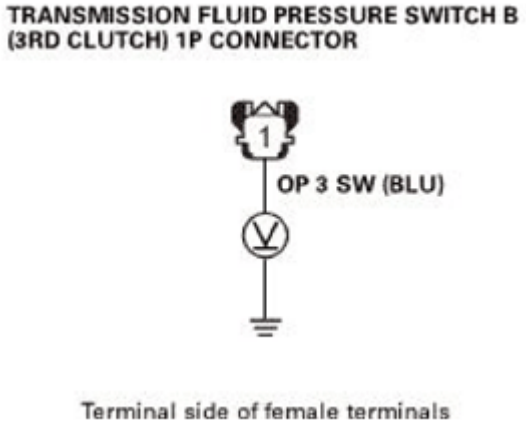

Fig. 59: Measuring Voltage Between Transmission Fluid Pressure Switch B (3rd Clutch) 1P Connector No. 1 (BLU) And Body Ground
Courtesy of AMERICAN HONDA MOTOR CO., INC.

Is there about 5 V?

YES : **REPLACE TRANSMISSION FLUID PRESSURE SWITCH B (3RD CLUTCH)** , then **do the repair verification** .

NO : Go to step 4.

4. Open wire check (OP 3 SW line):
   - 1. Turn the ignition switch to LOCK (0).

GETtheMANUALS.org

- 2. Jump the SCS line with the HDS.
- 3. Disconnect the following connector.

  PCM connector B (49P)

- 4. Check for continuity between test points 1 and 2.

  Test condition IG LOCK (0)

  Transmission fluid pressure switch B (3rd clutch) 1P connector: disconnected

  PCM connector B (49P): disconnected

  Test circuit OP 3 SW

  Test point 1 Transmission fluid pressure switch B (3rd clutch) 1P connector No. 1 (BLU)

  Test point 2 PCM connector B (49P) No. 9 (BLU)

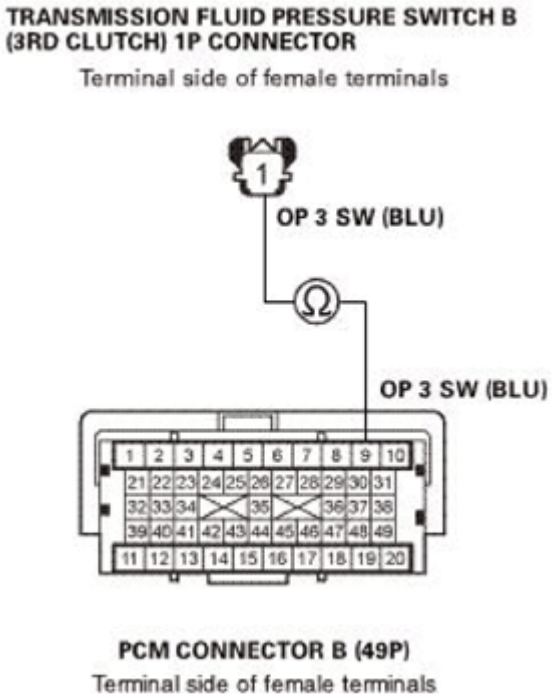

Fig. 60: Checking Continuity Between Transmission Fluid Pressure Switch B (3rd Clutch) 1P Connector No. 1 (BLU) And PCM Connector B (49P) No. 9 (BLU)
Courtesy of AMERICAN HONDA MOTOR CO., INC.

Is there continuity?

YES : The OP 3 SW wire is OK. **Update the PCM if it does not have the latest software** See **PCM**

GETtheMANUALS.org

REMOVAL AND INSTALLATION or **PCM UPDATE** , or **substitute a known-good PCM** See **PCM REMOVAL AND INSTALLATION** or **PCM UPDATE** , then **do the repair verification** .

NO : Repair an open in the OP 3 SW wire between transmission fluid pressure switch B (3rd clutch) and the PCM, then **do the repair verification** .

REPAIR VERIFICATION (OBD STATUS CHECK)

- 1. Reconnect all connectors.
- 2. Turn the ignition switch to ON (II).
- 3. Clear the DTC with the HDS.
- 4. Start the engine, and warm it up to normal operating temperature (the radiator fan comes on).
- 5. Test-drive the vehicle in 3rd gear for at least 2 seconds, then drive in 4th gear for at least 2 seconds.
- 6. Monitor the OBD STATUS for P0848 in the DTCs MENU with the HDS.

DTC Description	OBD Status
P0848 Transmission Fluid Pressure Switch B (3rd Clutch) Circuit High	

Does the HDS indicate PASSED, FAILED, or NOT COMPLETED?

PASSED Troubleshooting is complete. If the PCM was substituted, **replace the original PCM** See **PCM REMOVAL AND INSTALLATION** or **PCM UPDATE** . Check for other DTC after this troubleshooting. If any other Pending or Confirmed DTCs were indicated, go to the indicated DTC's troubleshooting.

FAILED Troubleshooting is incomplete. Check for poor connections or loose terminals between transmission fluid pressure switch B (3rd clutch) and the PCM, then go to step 1 and recheck. If the PCM was updated, **substitute a known-good PCM** See **PCM REMOVAL AND INSTALLATION** or **PCM UPDATE** , and check the OBD STATUS again.

NOT COMPLETED Repair verification is incomplete. Meet the test condition, and check the OBD STATUS again.

GETtheMANUALS.org

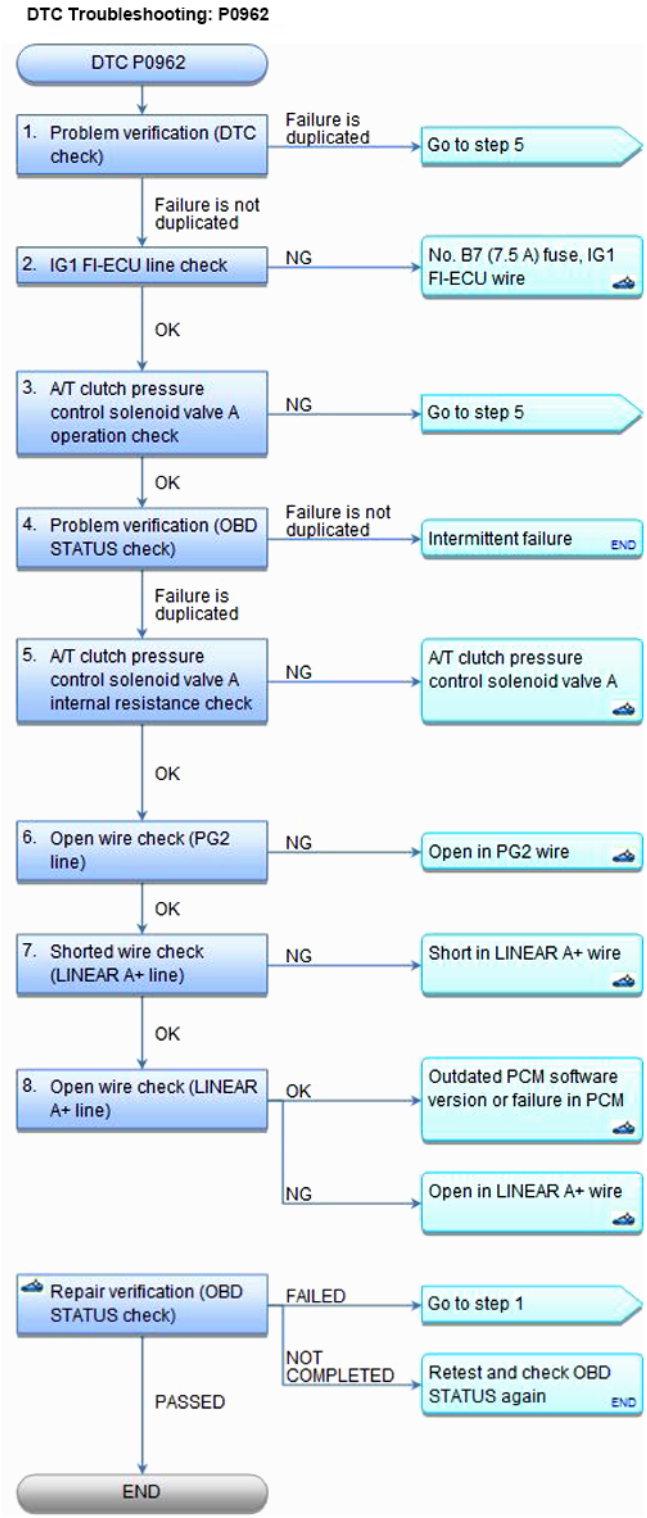

Fig. 61: DTC Troubleshooting Flow Chart (P0962)
Courtesy of AMERICAN HONDA MOTOR CO., INC.

DTC P0962: A/T CLUTCH PRESSURE CONTROL SOLENOID VALVE A

GETtheMANUALS.org

(OPEN OR SHORT)

NOTE:

- **Before you troubleshoot, record all freeze data and any on-board snapshot with the HDS, and review the General Troubleshooting Information See HOW TO TROUBLESHOOT THE A/T SYSTEM or HOW TO TROUBLESHOOT THE FUEL AND EMISSIONS SYSTEMS .**
- **This code is caused by an electrical circuit problem and cannot be caused by a mechanical problem in the transmission.**

DTC Description	Confirmed DTC	Pending DTC	Freeze Frame
P0962 A/T Clutch Pressure Control Solenoid Valve A (Open or Short)			

1. Problem verification (DTC check):
   - 1. Turn the ignition switch to ON (II).
   - 2. Clear the DTC with the HDS.
   - 3. Start the engine, and wait for at least 1 second.
   - 4. Check for Pending or Confirmed DTCs with the HDS.

DTC Description	Confirmed DTC	Pending DTC	Freeze Frame
P0962 A/T Clutch Pressure Control Solenoid Valve A (Open or Short)			

Is DTC P0962 indicated?

YES : The failure is duplicated. Go to step 5.

NO : Go to step 2.

2. IG1 FI-ECU line check:
   - 1. Turn the ignition switch to LOCK (0).
   - 2. Jump the SCS line with the HDS.
   - 3. Disconnect the following connector.

     PCM connector A (49P)

   - 4. Turn the ignition switch to ON (II).
   - 5. Measure the voltage between test points 1 and 2.

     Test condition IG ON (II)

GETtheMANUALS.org

PCM connector A (49P): disconnected

Test circuit IG1 FI-ECU

Test point 1 PCM connector A (49P) No. 1 (BLU)

Test point 2 Body ground

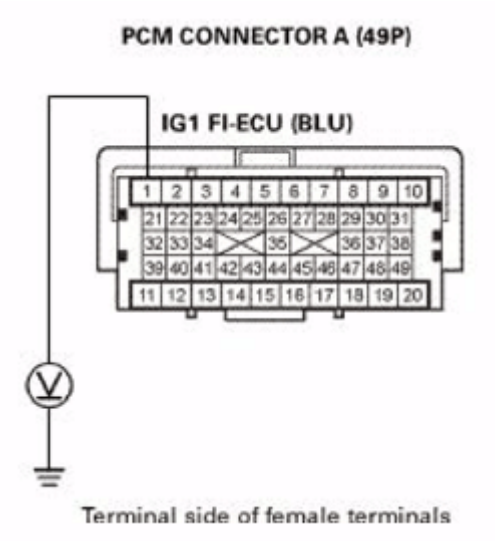

Fig. 62: Measuring Voltage Between PCM Connector A (49P) No. 1 (BLU) And Body Ground
Courtesy of AMERICAN HONDA MOTOR CO., INC.

Is there battery voltage?

YES : The IG1 FI-ECU wire is OK. Go to step 3.

NO : Check for a blown No. B7 (7.5 A) fuse in the under-dash fuse/relay box. If the fuse is blown, replace it. If the fuse blows again, repair a short in the No. B7 (7.5 A) fuse circuit. If the fuse is OK, repair an open in the IG1 FI-ECU wire between the PCM and the under-dash fuse/relay box. Then **do the repair verification** .

3. A/T clutch pressure control solenoid valve A operation check:
   - 1. Turn the ignition switch to LOCK (0).
   - 2. Reconnect PCM connector A (49P).
   - 3. Turn the ignition switch to ON (II).
   - 4. Select Clutch Pressure Control (Linear) Solenoid Valve A in the Miscellaneous Test Menu, and test A/T clutch pressure control solenoid valve A with the HDS.

Does the HDS indicate NORMAL?

YES : The A/T clutch pressure control solenoid valve A operation is OK. Go to step 4.

GETtheMANUALS.org

NO : Go to step 5.

4. Problem verification (OBD STATUS check):
   - 1. In the Clutch Pressure Control Solenoid Valve Control MENU, set A/T clutch pressure control solenoid valve A at 1.0 A with the HDS.
   - 2. Monitor the OBD STATUS for P0962 in the DTCs MENU with the HDS.

DTC Description	OBD Status
P0962 A/T Clutch Pressure Control Solenoid Valve A (Open or Short)	

Does the HDS indicate FAILED?

YES : The failure is duplicated. Go to step 5.

NO : If the HDS indicates PASSED, intermittent failure, the system is OK at this time. Check for poor connections or loose terminals between A/T clutch pressure control solenoid valve A and the PCM. If the HDS indicates NOT COMPLETED, do the function test again.

5. A/T clutch pressure control solenoid valve A internal resistance check:
   - 1. Turn the ignition switch to LOCK (0).
   - 2. Disconnect the following connector.

     A/T clutch pressure control solenoid valve A 2P connector

   - 3. Measure the resistance between test points 1 and 2.

     Test condition IG LOCK (0)

     A/T clutch pressure control solenoid valve A 2P connector: disconnected

     Test circuit LINEAR A+, PG2

     Test point 1 A/T clutch pressure control solenoid valve A 2P connector No. 1

     Test point 2 A/T clutch pressure control solenoid valve A 2P connector No. 2

GETtheMANUALS.org

Fig. 63: Measuring Resistance Between A/T Clutch Pressure Control Solenoid Valve A 2P Connector No. 1 And No. 2
Courtesy of AMERICAN HONDA MOTOR CO., INC.

Is there 4.8-6.0 ohms?

YES : A/T clutch pressure control solenoid valve A is OK. Go to step 6.

NO : **REPLACE A/T CLUTCH PRESSURE CONTROL SOLENOID VALVE A** , then **do the repair verification** .

6. Open wire check (PG2 line):
   - 1. Check for continuity between test points 1 and 2.

     Test condition IG LOCK (0)

     A/T clutch pressure control solenoid valve A 2P connector: disconnected

     Test circuit PG2

     Test point 1 A/T clutch pressure control solenoid valve A 2P connector No. 1 (BLK)

     Test point 2 Body ground

GETtheMANUALS.org

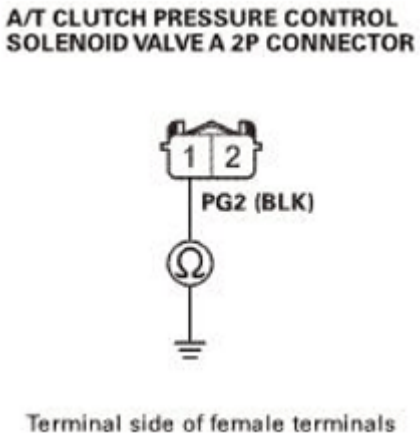

Fig. 64: Checking Continuity Between A/T Clutch Pressure Control Solenoid Valve A 2P Connector No. 1 (BLK) And Body Ground
Courtesy of AMERICAN HONDA MOTOR CO., INC.

Is there continuity?

YES : The PG2 wire is OK. Go to step 7.

NO : Repair an open in the PG2 wire between A/T clutch pressure control solenoid valve A and ground (G101) or repair poor ground (G101), then **do the repair verification** .

7. Shorted wire check (LINEAR A+ line):
   - 1. Turn the ignition switch to LOCK (0).
   - 2. Jump the SCS line with the HDS.
   - 3. Disconnect the following connector.

     PCM connector B (49P)

   - 4. Check for continuity between test points 1 and 2.

     Test condition IG LOCK (0)

     A/T clutch pressure control solenoid valve A 2P connector: disconnected

     PCM connector B (49P): disconnected

     Test circuit LINEAR A+

     Test point 1 A/T clutch pressure control solenoid valve A 2P connector No. 2 (LT BLU)

     Test point 2 Body ground

GETtheMANUALS.org

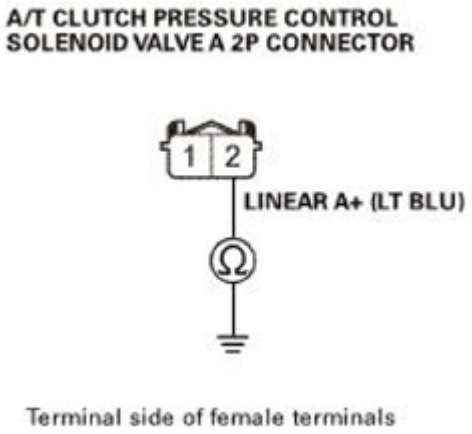

Fig. 65: Checking Continuity Between A/T Clutch Pressure Control Solenoid Valve A 2P Connector No. 2 (LT BLU) And Body Ground
Courtesy of AMERICAN HONDA MOTOR CO., INC.

Is there continuity?

YES : Repair a short to ground in the LINEAR A+ wire between A/T clutch pressure control solenoid valve A and the PCM, then **do the repair verification** .

NO : The LINEAR A+ wire is not shorted. Go to step 8.

8. Open wire check (LINEAR A+ line):
   - 1. Check for continuity between test points 1 and 2.

     Test condition IG LOCK (0)

     A/T clutch pressure control solenoid valve A 2P connector: disconnected

     PCM connector B (49P): disconnected

     Test circuit LINEAR A+

     Test point 1 A/T clutch pressure control solenoid valve A 2P connector No. 2 (LT BLU)

     Test point 2 PCM connector B (49P) No. 8 (LT BLU)

GETtheMANUALS.org

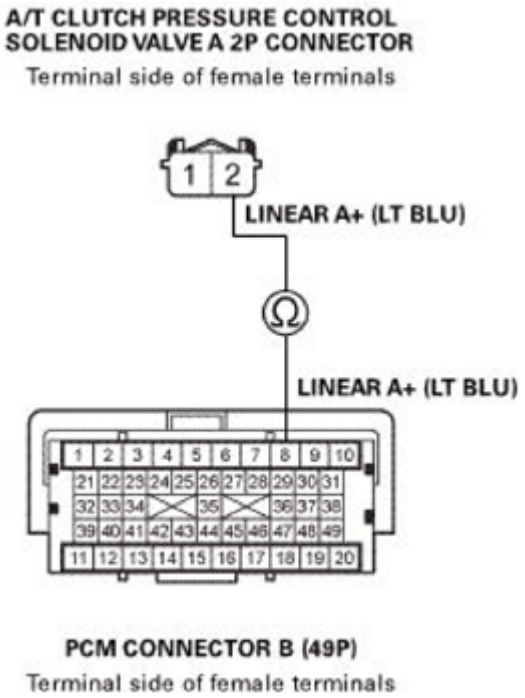

Fig. 66: Checking Continuity Between A/T Clutch Pressure Control Solenoid Valve A 2P Connector No. 1 (BLK) And PCM Connector B (49P) No. 8 (LT BLU)
Courtesy of AMERICAN HONDA MOTOR CO., INC.

Is there continuity?

YES : The LINEAR A+ wire is OK. **Update the PCM if it does not have the latest software** See **PCM REMOVAL AND INSTALLATION** or **PCM UPDATE** , or **substitute a known-good PCM** See **PCM REMOVAL AND INSTALLATION** or **PCM UPDATE** , then **do the repair verification** .

NO : Repair an open in the LINEAR A+ wire between A/T clutch pressure control solenoid valve A and the PCM, then **do the repair verification** .

REPAIR VERIFICATION (OBD STATUS CHECK)

- 1. Reconnect all connectors.
- 2. Turn the ignition switch to ON (II).
- 3. Clear the DTC with the HDS.
- 4. Start the engine, and wait for at least 1 second.
- 5. Monitor the OBD STATUS for P0962 in the DTCs MENU with the HDS.

DTC Description	OBD Status
P0962 A/T Clutch Pressure Control Solenoid Valve A (Open or Short)	

Does the HDS indicate PASSED, FAILED, or NOT COMPLETED?

GETtheMANUALS.org

PASSED Troubleshooting is complete. If the PCM was substituted, **replace the original PCM** See **PCM REMOVAL AND INSTALLATION** or **PCM UPDATE** . Check for other DTC after this troubleshooting. If any other Pending or Confirmed DTCs were indicated, go to the indicated DTC's troubleshooting.

FAILED Troubleshooting is incomplete. Check for poor connections or loose terminals between A/T clutch pressure control solenoid valve A and the PCM, then go to step 1 and recheck. If the PCM was updated, **substitute a known-good PCM** See **PCM REMOVAL AND INSTALLATION** or **PCM UPDATE** , and check the OBD STATUS again.

NOT COMPLETED Repair verification is incomplete. Meet the test condition, and check the OBD STATUS again.

DTC P0963: A/T CLUTCH PRESSURE CONTROL SOLENOID VALVE A

GETtheMANUALS.org

DTC Troubleshooting: P0963

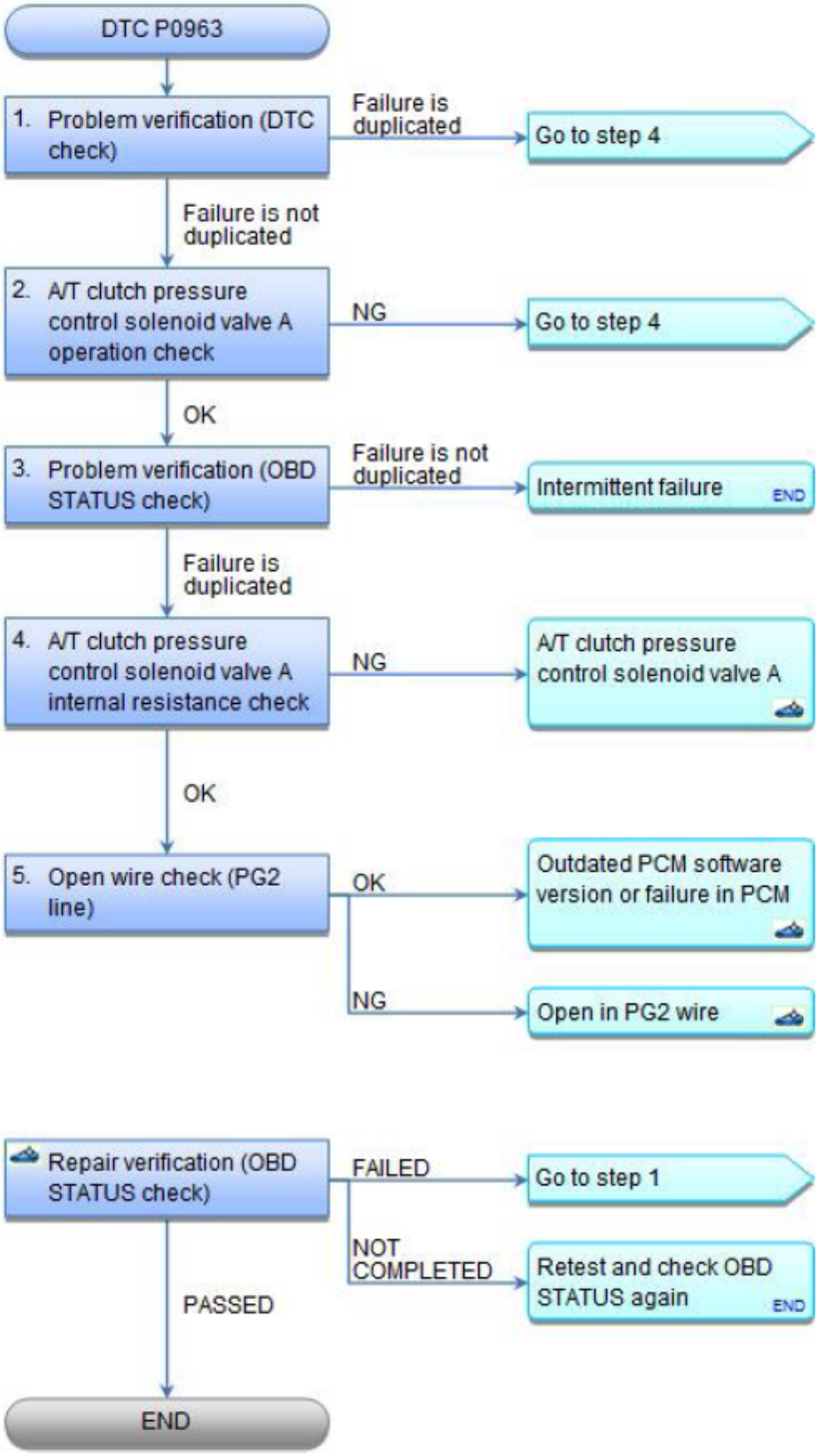

Fig. 67: DTC Troubleshooting Flow Chart (P0963)
Courtesy of AMERICAN HONDA MOTOR CO., INC.

NOTE:

- **Before you troubleshoot, record all freeze data and any on-board snapshot**

GETtheMANUALS.org

with the HDS, and review the General Troubleshooting Information See HOW TO TROUBLESHOOT THE A/T SYSTEM or HOW TO TROUBLESHOOT THE FUEL AND EMISSIONS SYSTEMS .

- **This code is caused by an electrical circuit problem and cannot be caused by a mechanical problem in the transmission.**

DTC Description	Confirmed DTC	Pending DTC	Freeze Frame
P0963 A/T Clutch Pressure Control Solenoid Valve A			

1. Problem verification (DTC check):
   - 1. Turn the ignition switch to ON (II).
   - 2. Clear the DTC with the HDS.
   - 3. Start the engine, and wait for at least 1 second.
   - 4. Check for Pending or Confirmed DTCs with the HDS.

DTC Description	Confirmed DTC	Pending DTC	Freeze Frame
P0963 A/T Clutch Pressure Control Solenoid Valve A			

Is DTC P0963 indicated?

YES : The failure is duplicated. Go to step 4.

NO : Go to step 2.

2. A/T clutch pressure control solenoid valve A operation check:
   - 1. Select Clutch Pressure Control (Linear) Solenoid Valve A in the Miscellaneous Test Menu, and test A/T clutch pressure control solenoid valve A with the HDS.

Does the HDS indicate NORMAL?

YES : The A/T clutch pressure control solenoid valve A operation is OK. Go to step 3.

NO : Go to step 4.

3. Problem verification (OBD STATUS check):
   - 1. In the Clutch Pressure Control Solenoid Valve Control MENU, set A/T clutch pressure control solenoid valve A at 0.2 A with the HDS.
   - 2. Monitor the OBD STATUS for P0963 in the DTCs MENU with the HDS.

DTC Description	OBD Status
P0963 A/T Clutch Pressure Control Solenoid Valve A	

GETtheMANUALS.org

Does the HDS indicate FAILED?

YES : The failure is duplicated. Go to step 4.

NO : If the HDS indicates PASSED, intermittent failure, the system is OK at this time. Check for poor connections or loose terminals between A/T clutch pressure control solenoid valve A and the PCM. If the HDS indicates NOT COMPLETED, do the function test again.

4. A/T clutch pressure control solenoid valve A internal resistance check:
   - 1. Turn the ignition switch to LOCK (0).
   - 2. Disconnect the following connector.

     A/T clutch pressure control solenoid valve A 2P connector

   - 3. Measure the resistance between test points 1 and 2.

     Test condition IG LOCK (0)

     A/T clutch pressure control solenoid valve A 2P connector: disconnected

     Test circuit LINEAR A+, PG2

     Test point 1 A/T clutch pressure control solenoid valve A 2P connector No. 1

     Test point 2 A/T clutch pressure control solenoid valve A 2P connector No. 2

Fig. 68: Measuring Resistance Between A/T Clutch Pressure Control Solenoid Valve A 2P Connector No. 1 And No. 2
Courtesy of AMERICAN HONDA MOTOR CO., INC.

Is there 4.8-6.0 ohms?

YES : A/T clutch pressure control solenoid valve A is OK. Go to step 5.

GETtheMANUALS.org

NO : **REPLACE A/T CLUTCH PRESSURE CONTROL SOLENOID VALVE A** , then **do the repair verification** .

5. Open wire check (PG2 line):
   - 1. Check for continuity between test points 1 and 2.

     Test condition IG LOCK (0)

     A/T clutch pressure control solenoid valve A 2P connector: disconnected

     Test circuit PG2

     Test point 1 A/T clutch pressure control solenoid valve A 2P connector No. 1 (BLK)

     Test point 2 Body ground

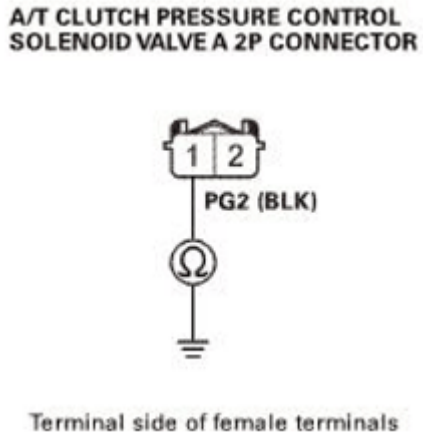

Fig. 69: Checking Continuity Between A/T Clutch Pressure Control Solenoid Valve A 2P Connector No. 1 (BLK) And Body Ground
Courtesy of AMERICAN HONDA MOTOR CO., INC.

Is there continuity?

YES : The PG2 wire is OK. **Update the PCM if it does not have the latest software** See **PCM REMOVAL AND INSTALLATION** or **PCM UPDATE** , or **substitute a known-good PCM** See **PCM REMOVAL AND INSTALLATION** or **PCM UPDATE** , then **do the repair verification** .

NO : Repair an open in the PG2 wire between A/T clutch pressure control solenoid valve A and ground (G101) or repair poor ground (G101), then **do the repair verification** .

REPAIR VERIFICATION (OBD STATUS CHECK)

- 1. Reconnect all connectors.
- 2. Turn the ignition switch to ON (II).

GETtheMANUALS.org

- 3. Clear the DTC with the HDS.
- 4. Start the engine, and wait for at least 1 second.
- 5. Monitor the OBD STATUS for P0963 in the DTCs MENU with the HDS.

DTC Description	OBD Status
P0963 A/T Clutch Pressure Control Solenoid Valve A	

Does the HDS indicate PASSED, FAILED, or NOT COMPLETED?

PASSED Troubleshooting is complete. If the PCM was substituted, **replace the original PCM** See **PCM REMOVAL AND INSTALLATION** or **PCM UPDATE** . Check for other DTC after this troubleshooting. If any other Pending or Confirmed DTCs were indicated, go to the indicated DTC's troubleshooting.

FAILED Troubleshooting is incomplete. Check for poor connections or loose terminals between A/T clutch pressure control solenoid valve A and the PCM, then go to step 1 and recheck. If the PCM was updated, **substitute a known-good PCM** See **PCM REMOVAL AND INSTALLATION** or **PCM UPDATE** , and check the OBD STATUS again.

NOT COMPLETED Repair verification is incomplete. Meet the test condition, and check the OBD STATUS again.

DTC P0966: A/T CLUTCH PRESSURE CONTROL SOLENOID VALVE B (OPEN OR SHORT)

GETtheMANUALS.org

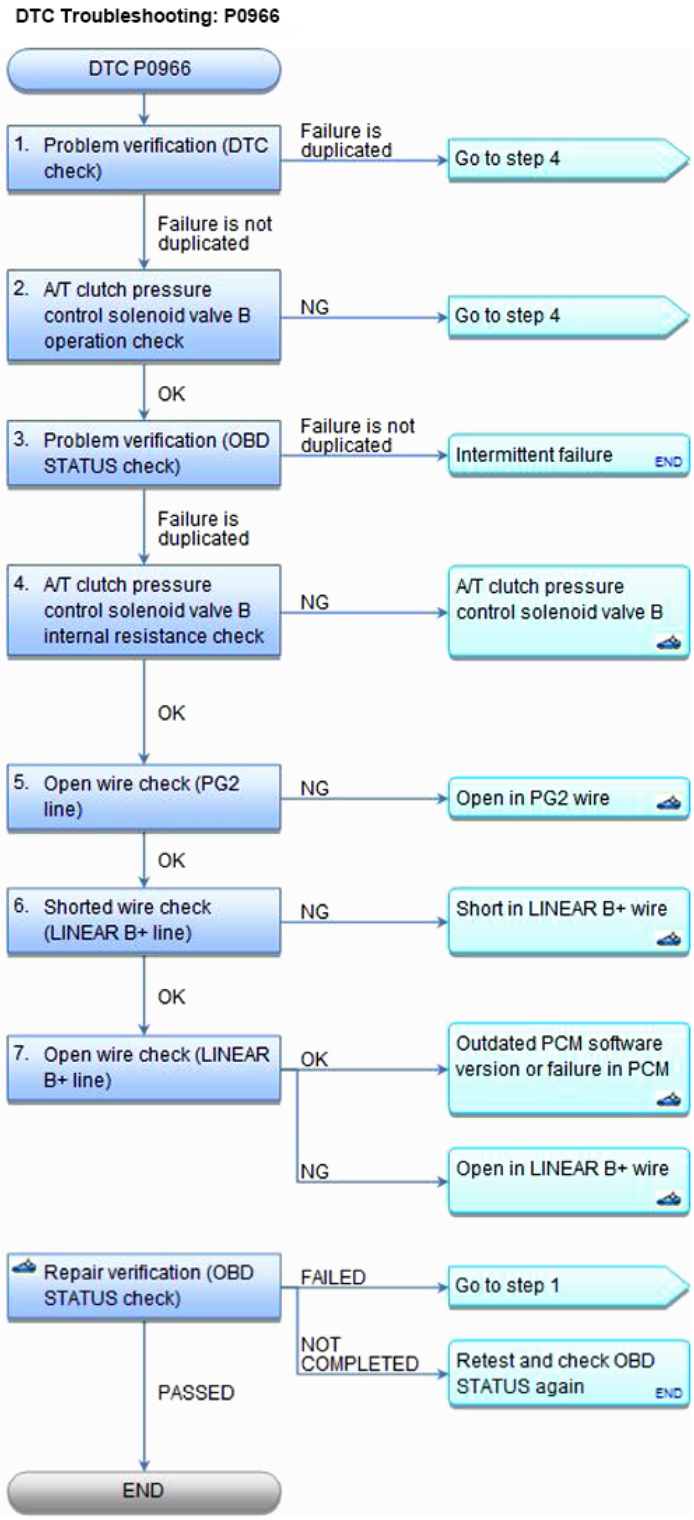

Fig. 70: DTC Troubleshooting Flow Chart (P0966)
Courtesy of AMERICAN HONDA MOTOR CO., INC.

NOTE:

- **Before you troubleshoot, record all freeze data and any on-board snapshot**

GETtheMANUALS.org

with the HDS, and review the General Troubleshooting Information See HOW TO TROUBLESHOOT THE FUEL AND EMISSIONS SYSTEMS or HOW TO TROUBLESHOOT THE A/T SYSTEM .

- **This code is caused by an electrical circuit problem and cannot be caused by a mechanical problem in the transmission.**

DTC Description	Confirmed DTC	Pending DTC	Freeze Frame
P0966 A/T Clutch Pressure Control Solenoid Valve B (Open or Short)			

1. Problem verification (DTC check):
   - 1. Turn the ignition switch to ON (II).
   - 2. Clear the DTC with the HDS.
   - 3. Start the engine, and wait for at least 1 second.
   - 4. Check for Pending or Confirmed DTCs with the HDS.

DTC Description	Confirmed DTC	Pending DTC	Freeze Frame
P0966 A/T Clutch Pressure Control Solenoid Valve B (Open or Short)			

Is DTC P0966 indicated?

YES : The failure is duplicated. Go to step 4.

NO : Go to step 2.

2. A/T clutch pressure control solenoid valve B operation check:
   - 1. Select Clutch Pressure Control (Linear) Solenoid Valve B in the Miscellaneous Test Menu, and test A/T clutch pressure control solenoid valve B with the HDS.

Does the HDS indicate NORMAL?

YES : The A/T clutch pressure control solenoid valve B operation is OK. Go to step 3.

NO : Go to step 4.

3. Problem verification (OBD STATUS check):
   - 1. In the Clutch Pressure Control Solenoid Valve Control MENU, set A/T clutch pressure control solenoid valve B at 1.0 A with the HDS.
   - 2. Monitor the OBD STATUS for P0966 in the DTCs MENU with the HDS.

DTC Description	OBD Status

GETtheMANUALS.org

P0966 A/T Clutch Pressure Control Solenoid Valve B (Open or Short)

Does the HDS indicate FAILED?

YES : The failure is duplicated. Go to step 4.

NO : If the HDS indicates PASSED, intermittent failure, the system is OK at this time. Check for poor connections or loose terminals between A/T clutch pressure control solenoid valve B and the PCM. If the HDS indicates NOT COMPLETED, do the function test again.

4. A/T clutch pressure control solenoid valve B internal resistance check:
   - 1. Turn the ignition switch to LOCK (0).
   - 2. Disconnect the following connector.

     A/T clutch pressure control solenoid valve B 2P connector

   - 3. Measure the resistance between test points 1 and 2.

     Test condition IG LOCK (0)

     A/T clutch pressure control solenoid valve B 2P connector: disconnected

     Test circuit LINEAR B+, PG2

     Test point 1 A/T clutch pressure control solenoid valve B 2P connector No. 1

     Test point 2 A/T clutch pressure control solenoid valve B 2P connector No. 2

Fig. 71: Measuring Resistance Between A/T Clutch Pressure Control Solenoid Valve B 2P Connector No. 1 And No. 2
Courtesy of AMERICAN HONDA MOTOR CO., INC.

Is there 4.9-6.4 ohms?

GETtheMANUALS.org

YES : A/T clutch pressure control solenoid valve B is OK. Go to step 5.

NO : **REPLACE A/T CLUTCH PRESSURE CONTROL SOLENOID VALVE B** , then **do the repair verification** .

5. Open wire check (PG2 line):
   - 1. Check for continuity between test points 1 and 2.

     Test condition IG LOCK (0)

     A/T clutch pressure control solenoid valve B 2P connector: disconnected

     Test circuit PG2

     Test point 1 A/T clutch pressure control solenoid valve B 2P connector No. 1 (BLK)

     Test point 2 Body ground

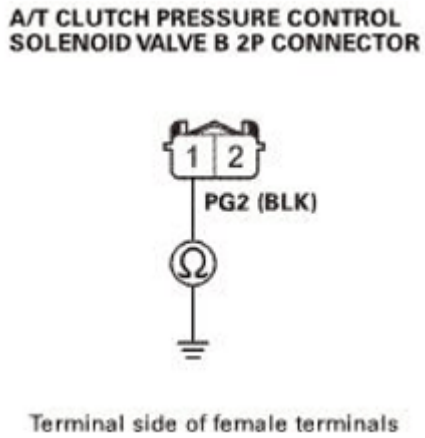

Fig. 72: Checking Continuity Between A/T Clutch Pressure Control Solenoid Valve B 2P Connector No. 1 (BLK) And Body Ground
Courtesy of AMERICAN HONDA MOTOR CO., INC.

Is there continuity?

YES : The PG2 wire is OK. Go to step 6.

NO : Repair an open in the PG2 wire between A/T clutch pressure control solenoid valve B and ground (G101) or repair poor ground (G101), then **do the repair verification** .

6. Shorted wire check (LINEAR B+ line):
   - 1. Turn the ignition switch to LOCK (0).
   - 2. Jump the SCS line with the HDS.
   - 3. Disconnect the following connector.

GETtheMANUALS.org

PCM connector B (49P)

- 4. Check for continuity between test points 1 and 2.

  Test condition IG LOCK (0)

  A/T clutch pressure control solenoid valve B 2P connector: disconnected

  PCM connector B (49P): disconnected

  Test circuit LINEAR B+

  Test point 1 A/T clutch pressure control solenoid valve B 2P connector No. 2 (PUR)

  Test point 2 Body ground

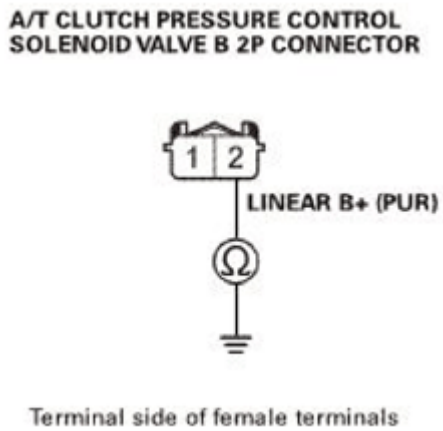

Fig. 73: Checking Continuity Between A/T Clutch Pressure Control Solenoid Valve A 2P Connector No. 2 (PUR) And Body Ground
Courtesy of AMERICAN HONDA MOTOR CO., INC.

Is there continuity?

YES : Repair a short to ground in the LINEAR B+ wire between A/T clutch pressure control solenoid valve B and the PCM, then **do the repair verification** .

NO : The LINEAR B+ wire is not shorted. Go to step 7.

7. Open wire check (LINEAR B+ line):
   - 1. Check for continuity between test points 1 and 2.

     Test condition IG LOCK (0)

     A/T clutch pressure control solenoid valve B 2P connector: disconnected

GETtheMANUALS.org

PCM connector B (49P): disconnected

Test circuit LINEAR B+

Test point 1 A/T clutch pressure control solenoid valve B 2P connector No. 2 (PUR)

Test point 2 PCM connector B (49P) No. 11 (PUR)

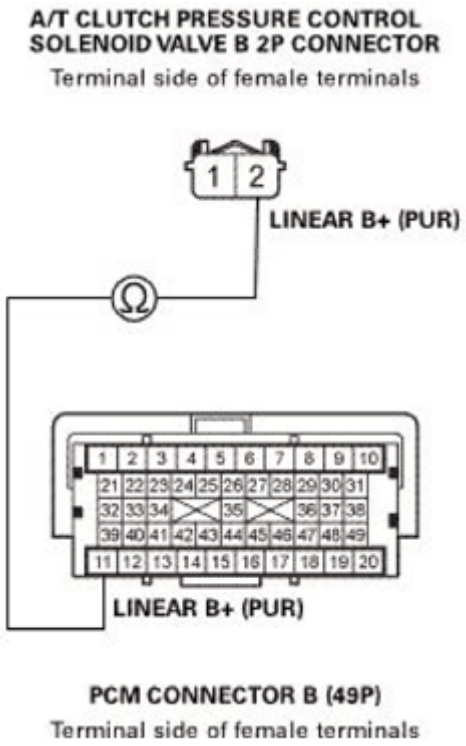

Fig. 74: Checking Continuity Between A/T Clutch Pressure Control Solenoid Valve B 2P Connector No. 2 (PUR) And PCM Connector B (49P) No. 11 (PUR)
Courtesy of AMERICAN HONDA MOTOR CO., INC.

Is there continuity?

YES : The LINEAR B+ wire is OK. **Update the PCM if it does not have the latest software** See **PCM REMOVAL AND INSTALLATION** or **PCM UPDATE** , or **substitute a known-good PCM** See **PCM REMOVAL AND INSTALLATION** or **PCM UPDATE** , then **do the repair verification** .

NO : Repair an open in the LINEAR B+ wire between A/T clutch pressure control solenoid valve B and the PCM, then **do the repair verification** .

REPAIR VERIFICATION (OBD STATUS CHECK)

- 1. Reconnect all connectors.
- 2. Turn the ignition switch to ON (II).

GETtheMANUALS.org

- 3. Clear the DTC with the HDS.
- 4. Start the engine, and wait for at least 1 second.
- 5. Monitor the OBD STATUS for P0966 in the DTCs MENU with the HDS.

DTC Description	OBD Status
P0966 A/T Clutch Pressure Control Solenoid Valve B (Open or Short)	

Does the HDS indicate PASSED, FAILED, or NOT COMPLETED?

PASSED Troubleshooting is complete. If the PCM was substituted, **replace the original PCM** See **PCM REMOVAL AND INSTALLATION** or **PCM UPDATE** . Check for other DTC after this troubleshooting. If any other Pending or Confirmed DTCs were indicated, go to the indicated DTC's troubleshooting.

FAILED Troubleshooting is incomplete. Check for poor connections or loose terminals between A/T clutch pressure control solenoid valve B and the PCM, then go to step 1 and recheck. If the PCM was updated, **substitute a known-good PCM** See **PCM REMOVAL AND INSTALLATION** or **PCM UPDATE** , and check the OBD STATUS again.

NOT COMPLETED Repair verification is incomplete. Meet the test condition, and check the OBD STATUS again.

DTC P0967: A/T CLUTCH PRESSURE CONTROL SOLENOID VALVE B

GETtheMANUALS.org

DTC Troubleshooting: P0967

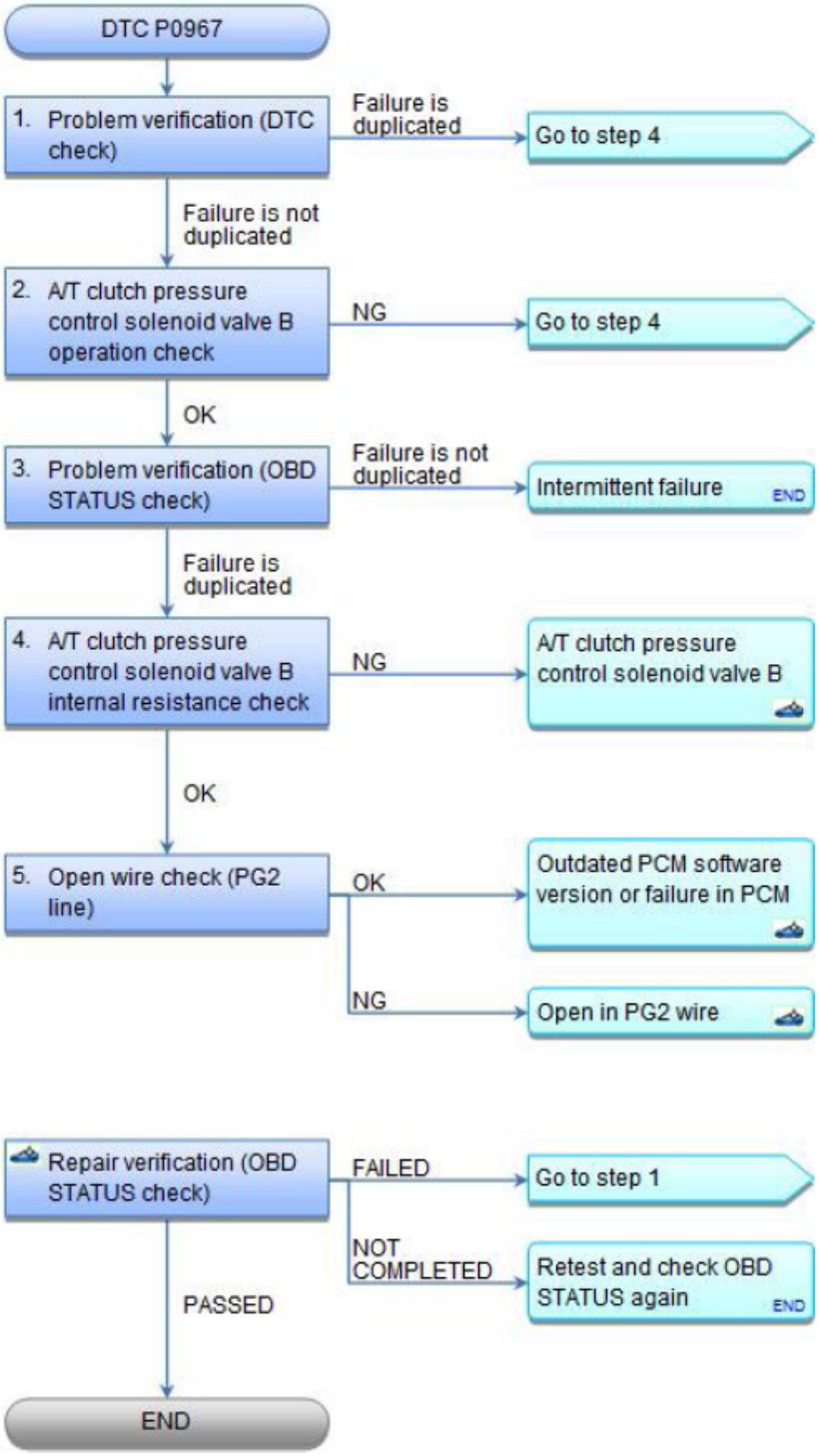

Fig. 75: DTC Troubleshooting Flow Chart (P0967)
Courtesy of AMERICAN HONDA MOTOR CO., INC.

NOTE:

- **Before you troubleshoot, record all freeze data and any on-board snapshot**

GETtheMANUALS.org

with the HDS, and review the General Troubleshooting Information See HOW TO TROUBLESHOOT THE A/T SYSTEM or HOW TO TROUBLESHOOT THE FUEL AND EMISSIONS SYSTEMS .

- **This code is caused by an electrical circuit problem and cannot be caused by a mechanical problem in the transmission.**

DTC Description	Confirmed DTC	Pending DTC	Freeze Frame
P0967 A/T Clutch Pressure Control Solenoid Valve B			

1. Problem verification (DTC check):
   - 1. Turn the ignition switch to ON (II).
   - 2. Clear the DTC with the HDS.
   - 3. Start the engine, and wait for at least 1 second.
   - 4. Check for Pending or Confirmed DTCs with the HDS.

DTC Description	Confirmed DTC	Pending DTC	Freeze Frame
P0967 A/T Clutch Pressure Control Solenoid Valve B			

Is DTC P0967 indicated?

YES : The failure is duplicated. Go to step 4.

NO : Go to step 2.

2. A/T clutch pressure control solenoid valve B operation check:
   - 1. Select Clutch Pressure Control (Linear) Solenoid Valve B in the Miscellaneous Test Menu, and test A/T clutch pressure control solenoid valve B with the HDS.

Does the HDS indicate NORMAL?

YES : The A/T clutch pressure control solenoid valve B operation is OK. Go to step 3.

NO : Go to step 4.

3. Problem verification (OBD STATUS check):
   - 1. In the Clutch Pressure Control Solenoid Valve Control MENU, set A/T clutch pressure control solenoid valve B at 0.2 A with the HDS.
   - 2. Monitor the OBD STATUS for P0967 in the DTCs MENU with the HDS.

DTC Description	OBD Status
P0967 A/T Clutch Pressure Control Solenoid Valve B	

GETtheMANUALS.org

Does the HDS indicate FAILED?

YES : The failure is duplicated. Go to step 4.

NO : If the HDS indicates PASSED, intermittent failure, the system is OK at this time. Check for poor connections or loose terminals between A/T clutch pressure control solenoid valve B and the PCM. If the HDS indicates NOT COMPLETED, do the function test again.

4. A/T clutch pressure control solenoid valve B internal resistance check:
   - 1. Turn the ignition switch to LOCK (0).
   - 2. Disconnect the following connector.

     A/T clutch pressure control solenoid valve B 2P connector

   - 3. Measure the resistance between test points 1 and 2.

     Test condition IG LOCK (0)

     A/T clutch pressure control solenoid valve B 2P connector: disconnected

     Test circuit LINEAR B+, PG2

     Test point 1 A/T clutch pressure control solenoid valve B 2P connector No. 1

     Test point 2 A/T clutch pressure control solenoid valve B 2P connector No. 2

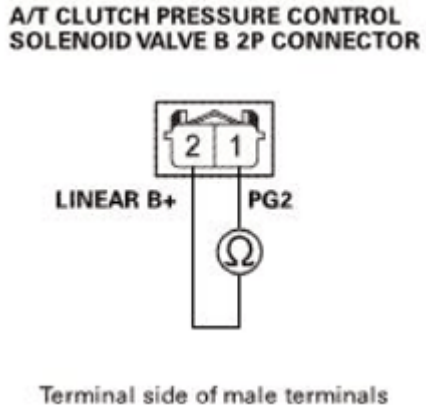

Fig. 76: Measuring Resistance Between A/T Clutch Pressure Control Solenoid Valve B 2P Connector No. 1 And No. 2
Courtesy of AMERICAN HONDA MOTOR CO., INC.

Is there 4.9-6.4 ohms?

YES : A/T clutch pressure control solenoid valve B is OK. Go to step 5.

GETtheMANUALS.org

NO : **REPLACE A/T CLUTCH PRESSURE CONTROL SOLENOID VALVE B** , then **do the repair verification** .

5. Open wire check (PG2 line):
   - 1. Check for continuity between test points 1 and 2.

     Test condition IG LOCK (0)

     A/T clutch pressure control solenoid valve B 2P connector: disconnected

     Test circuit PG2

     Test point 1 A/T clutch pressure control solenoid valve B 2P connector No. 1 (BLK)

     Test point 2 Body ground

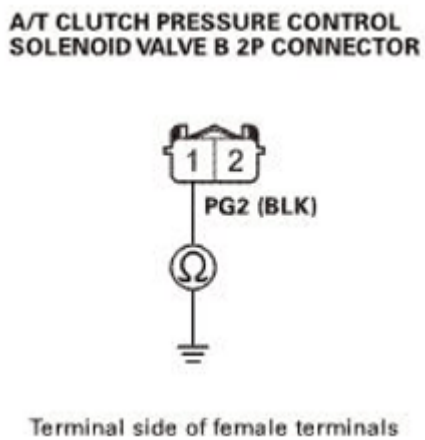

Fig. 77: Checking Continuity Between A/T Clutch Pressure Control Solenoid Valve B 2P Connector No. 1 (BLK) And Body Ground
Courtesy of AMERICAN HONDA MOTOR CO., INC.

Is there continuity?

YES : The PG2 wire is OK. **Update the PCM if it does not have the latest software** See **PCM REMOVAL AND INSTALLATION** or **PCM UPDATE** , or **substitute a known-good PCM** See **PCM REMOVAL AND INSTALLATION** or **PCM UPDATE** , then **do the repair verification** .

NO : Repair an open in the PG2 wire between A/T clutch pressure control solenoid valve B and ground (G101) or repair poor ground (G101), then **do the repair verification** .

REPAIR VERIFICATION (OBD STATUS CHECK)

- 1. Reconnect all connectors.
- 2. Turn the ignition switch to ON (II).

GETtheMANUALS.org

- 3. Clear the DTC with the HDS.
- 4. Start the engine, and wait for at least 1 second.
- 5. Monitor the OBD STATUS for P0967 in the DTCs MENU with the HDS.

DTC Description	OBD Status
P0967 A/T Clutch Pressure Control Solenoid Valve B	

Does the HDS indicate PASSED, FAILED, or NOT COMPLETED?

PASSED Troubleshooting is complete. If the PCM was substituted, **replace the original PCM** See **PCM REMOVAL AND INSTALLATION** or **PCM UPDATE** . Check for other DTC after this troubleshooting. If any other Pending or Confirmed DTCs were indicated, go to the indicated DTC's troubleshooting.

FAILED Troubleshooting is incomplete. Check for poor connections or loose terminals between A/T clutch pressure control solenoid valve B and the PCM, then go to step 1 and recheck. If the PCM was updated, **substitute a known-good PCM** See **PCM REMOVAL AND INSTALLATION** or **PCM UPDATE** , and check the OBD STATUS again.

NOT COMPLETED Repair verification is incomplete. Meet the test condition, and check the OBD STATUS again.

DTC P0970: A/T CLUTCH PRESSURE CONTROL SOLENOID VALVE C (OPEN OR SHORT)

GETtheMANUALS.org

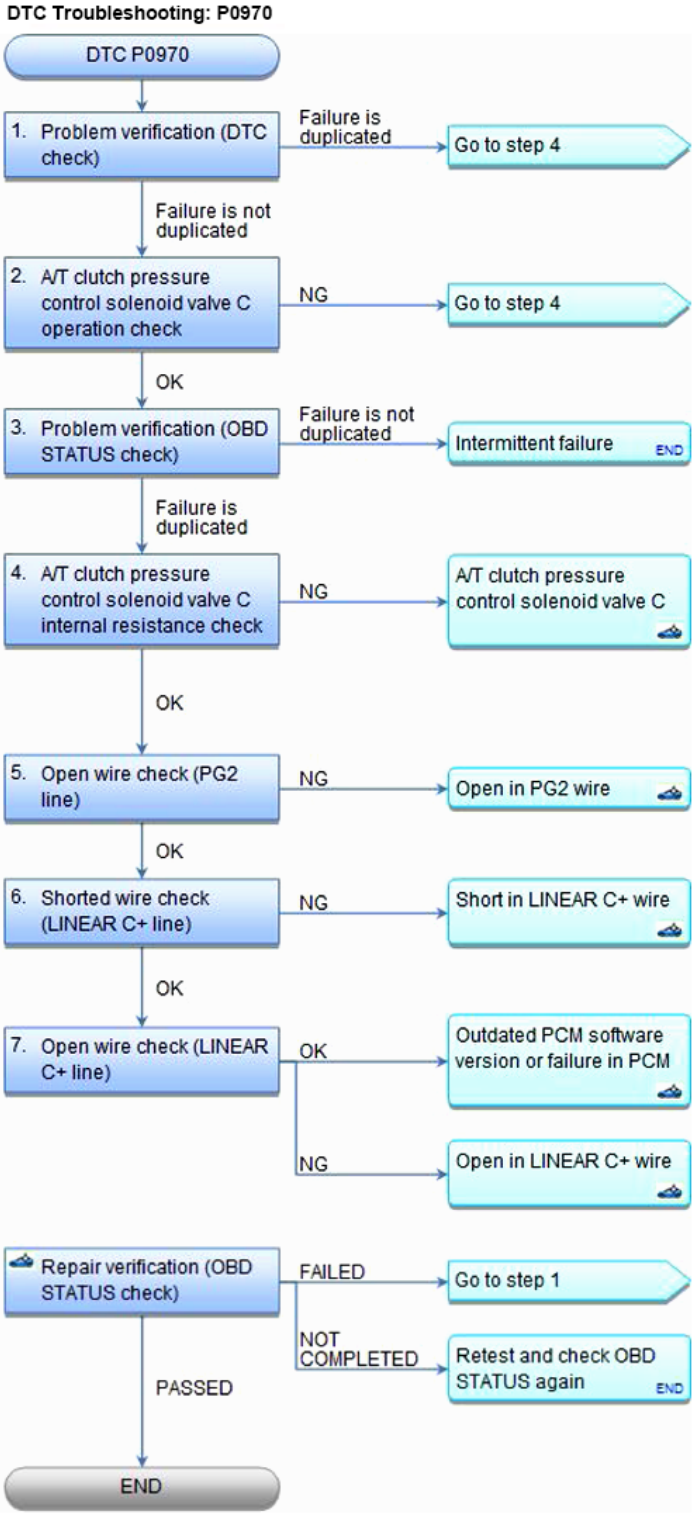

Fig. 78: DTC Troubleshooting Flow Chart (P0970)
Courtesy of AMERICAN HONDA MOTOR CO., INC.

NOTE:

- **Before you troubleshoot, record all freeze data and any on-board snapshot**

GETtheMANUALS.org

with the HDS, and review the General Troubleshooting Information See HOW TO TROUBLESHOOT THE A/T SYSTEM or HOW TO TROUBLESHOOT THE FUEL AND EMISSIONS SYSTEMS .

- **This code is caused by an electrical circuit problem and cannot be caused by a mechanical problem in the transmission.**

DTC Description	Confirmed DTC	Pending DTC	Freeze Frame
P0970 A/T Clutch Pressure Control Solenoid Valve C (Open or Short)			

1. Problem verification (DTC check):
   - 1. Turn the ignition switch to ON (II).
   - 2. Clear the DTC with the HDS.
   - 3. Start the engine, and wait for at least 1 second.
   - 4. Check for Pending or Confirmed DTCs with the HDS.

DTC Description	Confirmed DTC	Pending DTC	Freeze Frame
P0970 A/T Clutch Pressure Control Solenoid Valve C (Open or Short)			

Is DTC P0970 indicated?

YES : The failure is duplicated. Go to step 4.

NO : Go to step 2.

2. A/T clutch pressure control solenoid valve C operation check:
   - 1. Select Clutch Pressure (Linear) Control Solenoid Valve C in the Miscellaneous Test Menu, and test A/T clutch pressure control solenoid valve C with the HDS.

Does the HDS indicate NORMAL?

YES : The A/T clutch pressure control solenoid valve C operation is OK. Go to step 3.

NO : Go to step 4.

3. Problem verification (OBD STATUS check):
   - 1. In the Clutch Pressure Control Solenoid Valve Control MENU, set A/T clutch pressure control solenoid valve C at 1.0 A with the HDS.
   - 2. Monitor the OBD STATUS for P0970 in the DTCs MENU with the HDS.

DTC Description	OBD Status

GETtheMANUALS.org

P0970 A/T Clutch Pressure Control Solenoid Valve C (Open or Short)

Does the HDS indicate FAILED?

YES : The failure is duplicated. Go to step 4.

NO : If the HDS indicates PASSED, intermittent failure, the system is OK at this time. Check for poor connections or loose terminals between A/T clutch pressure control solenoid valve C and the PCM. If the HDS indicates NOT COMPLETED, do the function test again.

4. A/T clutch pressure control solenoid valve C internal resistance check:
   - 1. Turn the ignition switch to LOCK (0).
   - 2. Disconnect the following connector.

     A/T clutch pressure control solenoid valve C 2P connector

   - 3. Measure the resistance between test points 1 and 2.

     Test condition IG LOCK (0)

     A/T clutch pressure control solenoid valve C 2P connector: disconnected

     Test circuit LINEAR C+, PG2

     Test point 1 A/T clutch pressure control solenoid valve C 2P connector No. 1

     Test point 2 A/T clutch pressure control solenoid valve C 2P connector No. 2

Fig. 79: Measuring Resistance Between A/T Clutch Pressure Control Solenoid Valve C 2P Connector No. 1 And No. 2
Courtesy of AMERICAN HONDA MOTOR CO., INC.

Is there 4.9-6.4 ohms?

GETtheMANUALS.org

YES : A/T clutch pressure control solenoid valve C is OK. Go to step 5.

NO : **REPLACE A/T CLUTCH PRESSURE CONTROL SOLENOID VALVE C** , then **do the repair verification** .

5. Open wire check (PG2 line):
   - 1. Check for continuity between test points 1 and 2.

     Test condition IG LOCK (0)

     A/T clutch pressure control solenoid valve C 2P connector: disconnected

     Test circuit PG2

     Test point 1 A/T clutch pressure control solenoid valve C 2P connector No. 1 (BLK)

     Test point 2 Body ground

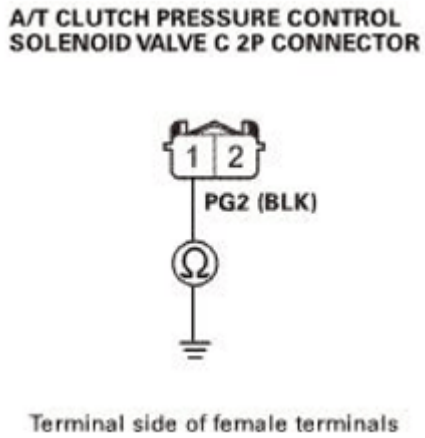

Fig. 80: Checking Continuity Between A/T Clutch Pressure Control Solenoid Valve C 2P Connector No. 1 (BLK) And Body Ground
Courtesy of AMERICAN HONDA MOTOR CO., INC.

Is there continuity?

YES : The PG2 wire is OK. Go to step 6.

NO : Repair an open in the PG2 wire between A/T clutch pressure control solenoid valve C and ground (G101) or repair poor ground (G101), then **do the repair verification** .

6. Shorted wire check (LINEAR C+ line):
   - 1. Turn the ignition switch to LOCK (0).
   - 2. Jump the SCS line with the HDS.
   - 3. Disconnect the following connector.

GETtheMANUALS.org

PCM connector B (49P)

- 4. Check for continuity between test points 1 and 2.

  Test condition IG LOCK (0)

  A/T clutch pressure control solenoid valve C 2P connector: disconnected

  PCM connector B (49P): disconnected

  Test circuit LINEAR C+

  Test point 1 A/T clutch pressure control solenoid valve C 2P connector No. 2 (BLU)

  Test point 2 Body ground

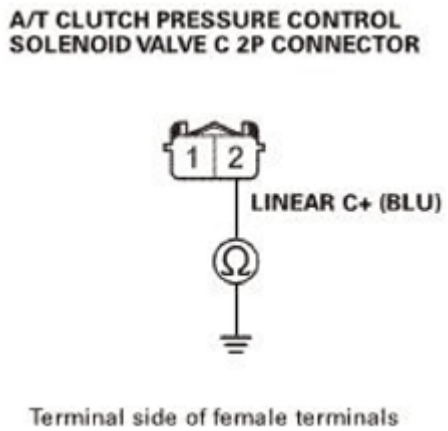

Fig. 81: Checking Continuity Between A/T Clutch Pressure Control Solenoid Valve C 2P Connector No. 2 (BLU) And Body Ground
Courtesy of AMERICAN HONDA MOTOR CO., INC.

Is there continuity?

YES : Repair a short to ground in the LINEAR C+ wire between A/T clutch pressure control solenoid valve C and the PCM, then **do the repair verification** .

NO : The LINEAR C+ wire is not shorted. Go to step 7.

7. Open wire check (LINEAR C+ line):
   - 1. Check for continuity between test points 1 and 2.

     Test condition IG LOCK (0)

     A/T clutch pressure control solenoid valve C 2P connector: disconnected

GETtheMANUALS.org

PCM connector B (49P): disconnected

Test circuit LINEAR C+

Test point 1 A/T clutch pressure control solenoid valve C 2P connector No. 2 (BLU)

Test point 2 PCM connector B (49P) No. 36 (BLU)

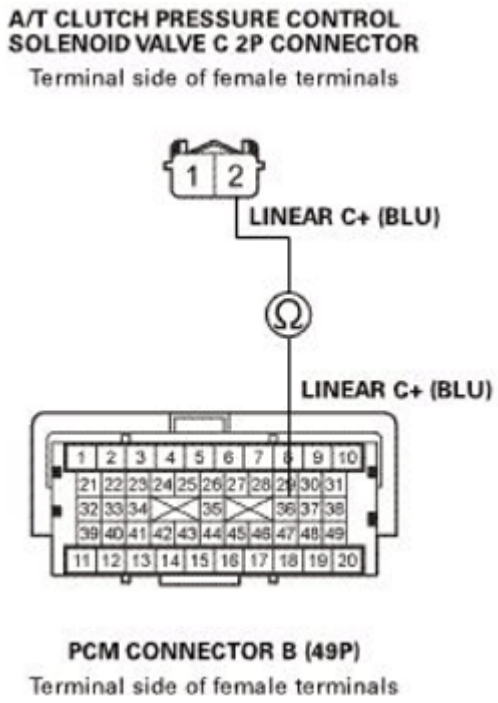

Fig. 82: Checking Continuity Between A/T Clutch Pressure Control Solenoid Valve A 2P Connector No. 2 (BLK) And PCM Connector B (49P) No. 36 (BLU)
Courtesy of AMERICAN HONDA MOTOR CO., INC.

Is there continuity?

YES : The LINEAR C+ wire is OK. **Update the PCM if it does not have the latest software** See **PCM REMOVAL AND INSTALLATION** or **PCM UPDATE** , or **substitute a known-good PCM** See **PCM REMOVAL AND INSTALLATION** or **PCM UPDATE** , then **do the repair verification** .

NO : Repair an open in the LINEAR C+ wire between A/T clutch pressure control solenoid valve C and the PCM, then **do the repair verification** .

REPAIR VERIFICATION (OBD STATUS CHECK)

- 1. Reconnect all connectors.
- 2. Turn the ignition switch to ON (II).
- 3. Clear the DTC with the HDS.

GETtheMANUALS.org

- 4. Start the engine, and wait for at least 1 second.
- 5. Monitor the OBD STATUS for P0970 in the DTCs MENU with the HDS.

DTC Description	OBD Status
P0970 A/T Clutch Pressure Control Solenoid Valve C (Open or Short)	

Does the HDS indicate PASSED, FAILED, or NOT COMPLETED?

PASSED Troubleshooting is complete. If the PCM was substituted, **replace the original PCM** See **PCM REMOVAL AND INSTALLATION** or **PCM UPDATE** . Check for other DTC after this troubleshooting. If any other Pending or Confirmed DTCs were indicated, go to the indicated DTC's troubleshooting.

FAILED Troubleshooting is incomplete. Check for poor connections or loose terminals between A/T clutch pressure control solenoid valve C and the PCM, then go to step 1 and recheck. If the PCM was updated, **substitute a known-good PCM** See **PCM REMOVAL AND INSTALLATION** or **PCM UPDATE** , and check the OBD STATUS again.

NOT COMPLETED Repair verification is incomplete. Meet the test condition, and check the OBD STATUS again.

DTC P0971: A/T CLUTCH PRESSURE CONTROL SOLENOID VALVE C

GETtheMANUALS.org

DTC Troubleshooting: P0971

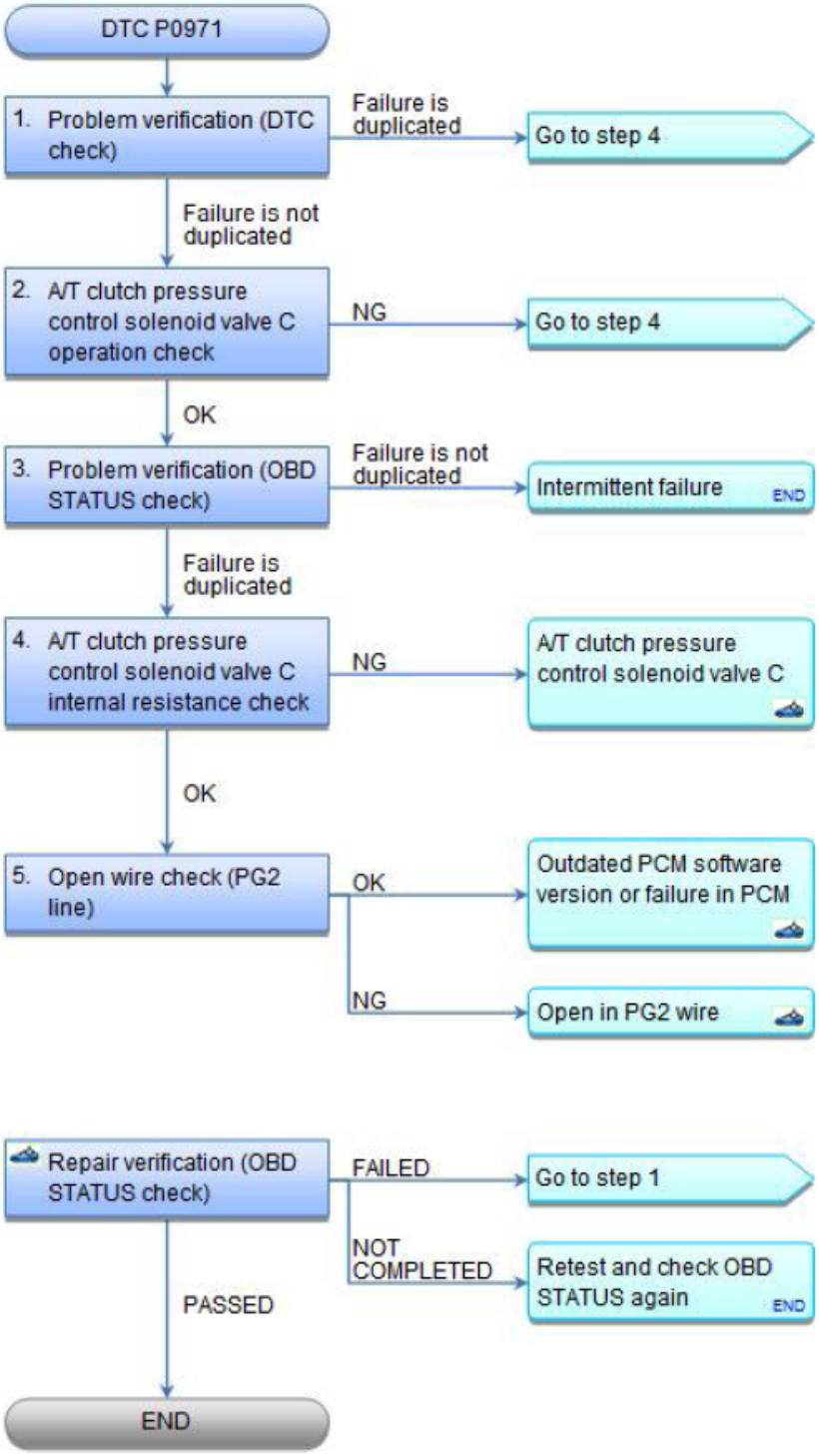

Fig. 83: DTC Troubleshooting Flow Chart (P0971)
Courtesy of AMERICAN HONDA MOTOR CO., INC.

NOTE:

- **Before you troubleshoot, record all freeze data and any on-board snapshot**

GETtheMANUALS.org

with the HDS, and review the General Troubleshooting Information See HOW TO TROUBLESHOOT THE A/T SYSTEM or HOW TO TROUBLESHOOT THE FUEL AND EMISSIONS SYSTEMS .

- **This code is caused by an electrical circuit problem and cannot be caused by a mechanical problem in the transmission.**

DTC Description	Confirmed DTC	Pending DTC	Freeze Frame
P0971 A/T Clutch Pressure Control Solenoid Valve C			

1. Problem verification (DTC check):
   - 1. Turn the ignition switch to ON (II).
   - 2. Clear the DTC with the HDS.
   - 3. Start the engine, and wait for at least 1 second.
   - 4. Check for Pending or Confirmed DTCs with the HDS.

DTC Description	Confirmed DTC	Pending DTC	Freeze Frame
P0971 A/T Clutch Pressure Control Solenoid Valve C			

Is DTC P0971 indicated?

YES : The failure is duplicated. Go to step 4.

NO : Go to step 2.

2. A/T clutch pressure control solenoid valve C operation check:
   - 1. Select Clutch Pressure Control (Linear) Solenoid Valve C in the Miscellaneous Test Menu, and test A/T clutch pressure control solenoid valve C with the HDS.

Does the HDS indicate NORMAL?

YES : The A/T clutch pressure control solenoid valve C operation is OK. Go to step 3.

NO : Go to step 4.

3. Problem verification (OBD STATUS check):
   - 1. In the Clutch Pressure Control Solenoid Valve Control MENU, set A/T clutch pressure control solenoid valve C at 0.2 A with the HDS.
   - 2. Monitor the OBD STATUS for P0971 in the DTCs MENU with the HDS.

DTC Description	OBD Status
P0971 A/T Clutch Pressure Control Solenoid Valve C	

GETtheMANUALS.org

Does the HDS indicate FAILED?

YES : The failure is duplicated. Go to step 4.

NO : If the HDS indicates PASSED, intermittent failure, the system is OK at this time. Check for poor connections or loose terminals between A/T clutch pressure control solenoid valve C and the PCM. If the HDS indicates NOT COMPLETED, do the function test again.

4. A/T clutch pressure control solenoid valve C internal resistance check:
   - 1. Turn the ignition switch to LOCK (0).
   - 2. Disconnect the following connector.

     A/T clutch pressure control solenoid valve C 2P connector

   - 3. Measure the resistance between test points 1 and 2.

     Test condition IG LOCK (0)

     A/T clutch pressure control solenoid valve C 2P connector: disconnected

     Test circuit LINEAR C+, PG2

     Test point 1 A/T clutch pressure control solenoid valve C 2P connector No. 1

     Test point 2 A/T clutch pressure control solenoid valve C 2P connector No. 2

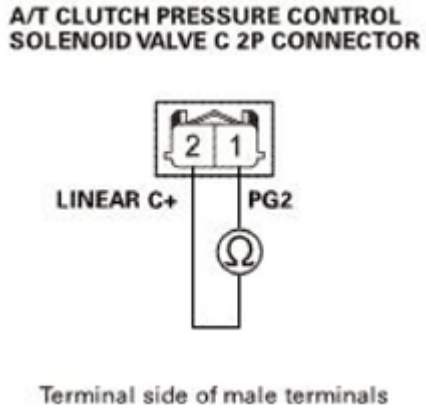

Fig. 84: Measuring Resistance Between A/T Clutch Pressure Control Solenoid Valve C 2P Connector No. 1 And No. 2
Courtesy of AMERICAN HONDA MOTOR CO., INC.

Is there 4.9-6.4 ohms?

YES : A/T clutch pressure control solenoid valve C is OK. Go to step 5.

GETtheMANUALS.org

NO : **REPLACE A/T CLUTCH PRESSURE CONTROL SOLENOID VALVE C** , then **do the repair verification** .

5. Open wire check (PG2 line):
   - 1. Check for continuity between test points 1 and 2.

     Test condition IG LOCK (0)

     A/T clutch pressure control solenoid valve C 2P connector: disconnected

     Test circuit PG2

     Test point 1 A/T clutch pressure control solenoid valve C 2P connector No. 1 (BLK)

     Test point 2 Body ground

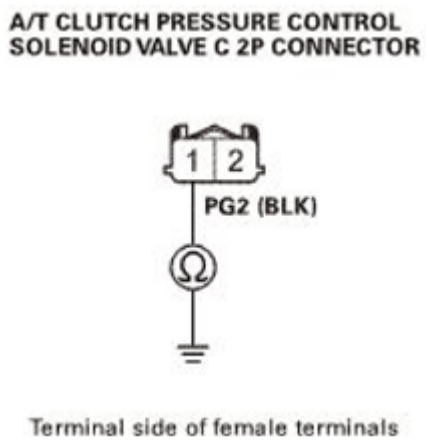

Fig. 85: Checking Continuity Between A/T Clutch Pressure Control Solenoid Valve C 2P Connector No. 1 (BLK) And Body Ground
Courtesy of AMERICAN HONDA MOTOR CO., INC.

Is there continuity?

YES : The PG2 wire is OK. **Update the PCM if it does not have the latest software** See **PCM REMOVAL AND INSTALLATION** or **PCM UPDATE** , or **substitute a known-good PCM** See **PCM REMOVAL AND INSTALLATION** or **PCM UPDATE** , then **do the repair verification** .

NO : Repair an open in the PG2 wire between A/T clutch pressure control solenoid valve C and ground (G101) or repair poor ground (G101), then **do the repair verification** .

REPAIR VERIFICATION (OBD STATUS CHECK)

- 1. Reconnect all connectors.
- 2. Turn the ignition switch to ON (II).

GETtheMANUALS.org

- 3. Clear the DTC with the HDS.
- 4. Start the engine, and wait for at least 1 second.
- 5. Monitor the OBD STATUS for P0971 in the DTCs MENU with the HDS.

DTC Description	OBD Status
P0971 A/T Clutch Pressure Control Solenoid Valve C	

Does the HDS indicate PASSED, FAILED, or NOT COMPLETED?

PASSED Troubleshooting is complete. If the PCM was substituted, **replace the original PCM** See **PCM REMOVAL AND INSTALLATION** or **PCM UPDATE** . Check for other DTC after this troubleshooting. If any other Pending or Confirmed DTCs were indicated, go to the indicated DTC's troubleshooting.

FAILED Troubleshooting is incomplete. Check for poor connections or loose terminals between A/T clutch pressure control solenoid valve C and the PCM, then go to step 1 and recheck. If the PCM was updated, **substitute a known-good PCM** See **PCM REMOVAL AND INSTALLATION** or **PCM UPDATE** , and check the OBD STATUS again.

NOT COMPLETED Repair verification is incomplete. Meet the test condition, and check the OBD STATUS again.

DTC P0973: SHIFT SOLENOID VALVE A (SHORT)

GETtheMANUALS.org

DTC Troubleshooting: P0973

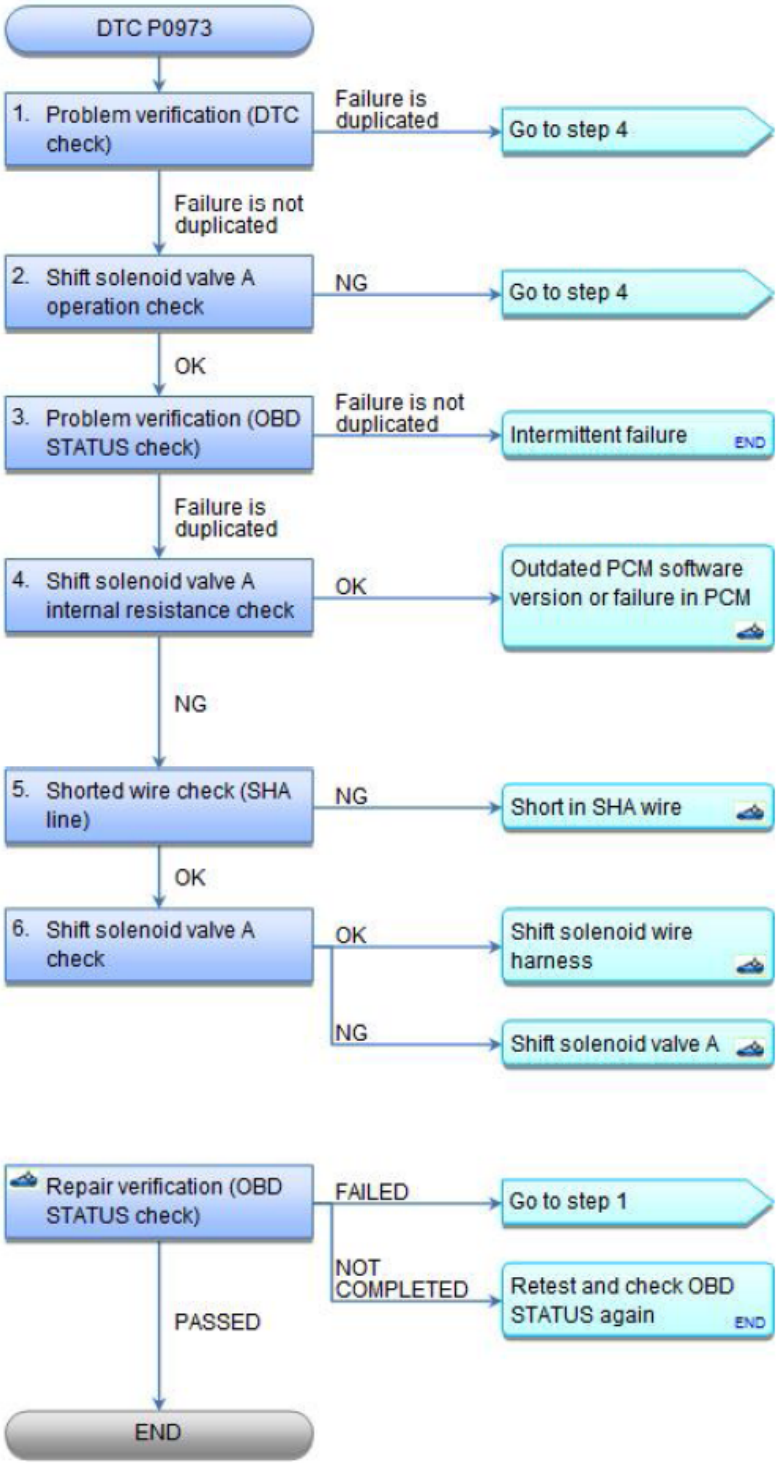

Fig. 86: DTC Troubleshooting Flow Chart (P0973)
Courtesy of AMERICAN HONDA MOTOR CO., INC.

NOTE:

- **Before you troubleshoot, record all freeze data and any on-board snapshot**

GETtheMANUALS.org

with the HDS, and review the General Troubleshooting Information See HOW TO TROUBLESHOOT THE A/T SYSTEM or HOW TO TROUBLESHOOT THE FUEL AND EMISSIONS SYSTEMS .

- **This code is caused by an electrical circuit problem and cannot be caused by a mechanical problem in the transmission.**

DTC Description	Confirmed DTC	Pending DTC	Freeze Frame
P0973 Shift Solenoid Valve A (Short)			

1. Problem verification (DTC check):
   - 1. Turn the ignition switch to ON (II).
   - 2. Clear the DTC with the HDS.
   - 3. Test-drive the vehicle in 1st gear for at least 1 second.
   - 4. Check for Pending or Confirmed DTCs with the HDS.

DTC Description	Confirmed DTC	Pending DTC	Freeze Frame
P0973 Shift Solenoid Valve A (Short)			

Is DTC P0973 indicated?

YES : The failure is duplicated. Go to step 4.

NO : Go to step 2.

2. Shift solenoid valve A operation check:
   - 1. Select Shift Solenoid Valve A in the Miscellaneous Test Menu, and test shift solenoid valve A with the HDS.

Is a clicking sound heard?

YES : The shift solenoid valve A operation is OK. Go to step 3.

NO : Go to step 4.

3. Problem verification (OBD STATUS check):
   - 1. Test-drive the vehicle in 1st gear for at least 1 second.
   - 2. Monitor the OBD STATUS for P0973 in the DTCs MENU with the HDS.

DTC Description	OBD Status
P0973 Shift Solenoid Valve A (Short)	

Does the HDS indicate FAILED?

GETtheMANUALS.org

YES : The failure is duplicated. Go to step 4.

NO : If the HDS indicates PASSED, intermittent failure, the system is OK at this time. Check for an intermittent short to ground in the wire between shift solenoid valve A and the PCM. If the HDS indicates NOT COMPLETED, test-drive again.

4. Shift solenoid valve A internal resistance check:
   - 1. Turn the ignition switch to LOCK (0).
   - 2. Jump the SCS line with the HDS.
   - 3. Disconnect the following connector.

     PCM connector B (49P)

   - 4. Measure the resistance between test points 1 and 2.

     Test condition IG LOCK (0)

     PCM connector B (49P): disconnected

     Test circuit SHA

     Test point 1 PCM connector B (49P) No. 21 (PUR)

     Test point 2 Body ground

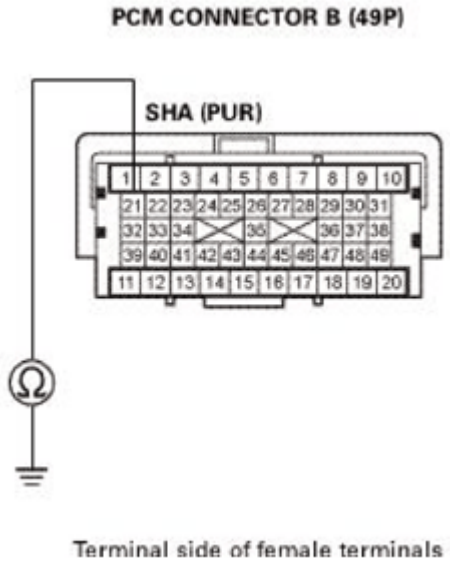

Fig. 87: Measuring Resistance Between PCM Connector B (49P) No. 21 (PUR) And Body Ground
Courtesy of AMERICAN HONDA MOTOR CO., INC.

Is there less than 13.8 ohms?

GETtheMANUALS.org

YES : Go to step 5.

NO : Shift solenoid valve A is OK. **Update the PCM if it does not have the latest software** See **PCM REMOVAL AND INSTALLATION** or **PCM UPDATE** , or **substitute a known-good PCM** See **PCM REMOVAL AND INSTALLATION** or **PCM UPDATE** , then **do the repair verification** .

5. Shorted wire check (SHA line):
   - 1. Disconnect the following connector.

     Shift solenoid wire harness 8P connector

   - 2. Check for continuity between test points 1 and 2.

     Test condition IG LOCK (0)

     PCM connector B (49P): disconnected

     Shift solenoid wire harness 8P connector: disconnected

     Test circuit SHA

     Test point 1 PCM connector B (49P) No. 21 (PUR)

     Test point 2 Body ground

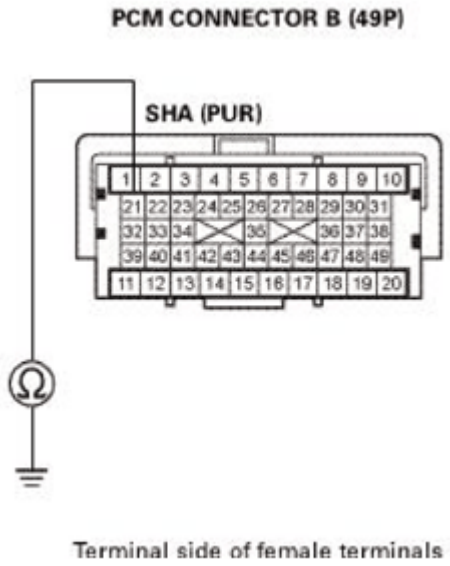

Fig. 88: Checking Continuity Between PCM Connector B (49P) No. 21 (PUR) And Body Ground
Courtesy of AMERICAN HONDA MOTOR CO., INC.

Is there continuity?

GETtheMANUALS.org

YES : Repair a short to ground in the SHA wire between the shift solenoid wire harness and the PCM, then **do the repair verification** .

NO : The SHA wire is OK. Go to step 6.

6. Shift solenoid valve A check:
   - 1. **TEST SHIFT SOLENOID VALVE A** .

Is shift solenoid valve A OK?

YES : Shift solenoid valve A is OK. **REPLACE THE SHIFT SOLENOID WIRE HARNESS** , then **do the repair verification** .

NO : **REPLACE SHIFT SOLENOID VALVE A** , then **do the repair verification** .

REPAIR VERIFICATION (OBD STATUS CHECK)

- 1. Reconnect all connectors.
- 2. Turn the ignition switch to ON (II).
- 3. Clear the DTC with the HDS.
- 4. Start the engine with the shift lever in P, and wait for at least 1 second. Then test-drive the vehicle in 1st gear for at least 1 second.
- 5. Monitor the OBD STATUS for P0973 in the DTCs MENU with the HDS.

DTC Description	OBD Status
P0973 Shift Solenoid Valve A (Short)	

Does the HDS indicate PASSED, FAILED, or NOT COMPLETED?

PASSED Troubleshooting is complete. If the PCM was substituted, **replace the original PCM** See **PCM REMOVAL AND INSTALLATION** or **PCM UPDATE** . Check for other DTC after this troubleshooting. If any other Pending or Confirmed DTCs were indicated, go to the indicated DTC's troubleshooting.

FAILED Troubleshooting is incomplete. Check for poor connections or loose terminals between shift solenoid valve A and the PCM, then go to step 1 and recheck. If the PCM was updated, **substitute a known-good PCM** See **PCM REMOVAL AND INSTALLATION** or **PCM UPDATE** , and check the OBD STATUS again.

NOT COMPLETED Repair verification is incomplete. Meet the test condition, and check the OBD STATUS again.

DTC P0974: SHIFT SOLENOID VALVE A (OPEN)

GETtheMANUALS.org

DTC Troubleshooting: P0974

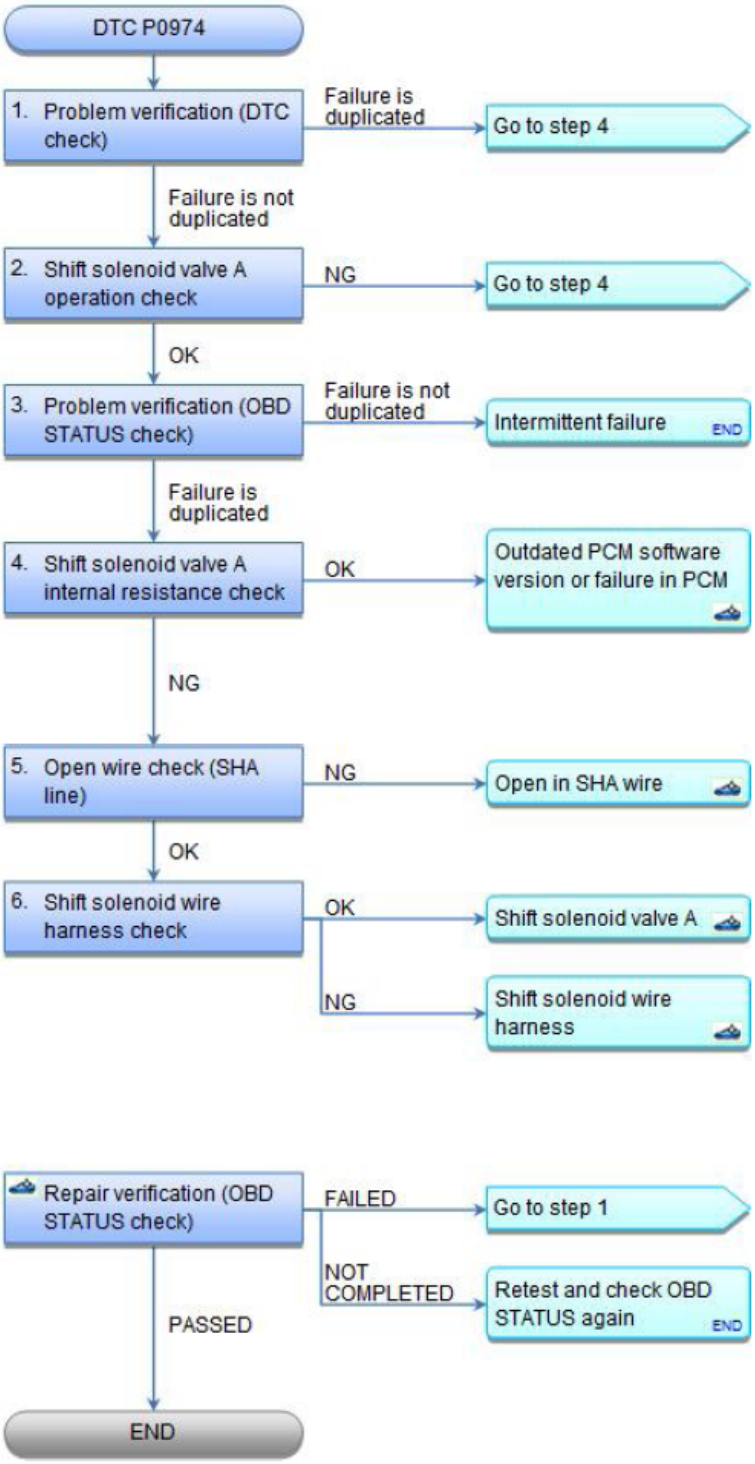

Fig. 89: DTC Troubleshooting Flow Chart (P0974)
Courtesy of AMERICAN HONDA MOTOR CO., INC.

NOTE:

- **Before you troubleshoot, record all freeze data and any on-board snapshot**

GETtheMANUALS.org

with the HDS, and review the General Troubleshooting Information See HOW TO TROUBLESHOOT THE A/T SYSTEM or HOW TO TROUBLESHOOT THE FUEL AND EMISSIONS SYSTEMS .

- **This code is caused by an electrical circuit problem and cannot be caused by a mechanical problem in the transmission.**

DTC Description	Confirmed DTC	Pending DTC	Freeze Frame
P0974 Shift Solenoid Valve A (Open)			

1. Problem verification (DTC check):
   - 1. Turn the ignition switch to ON (II).
   - 2. Clear the DTC with the HDS.
   - 3. Start the engine with the shift lever in P, and wait for at least 1 second.
   - 4. Check for Pending or Confirmed DTCs with the HDS.

DTC Description	Confirmed DTC	Pending DTC	Freeze Frame
P0974 Shift Solenoid Valve A (Open)			

Is DTC P0974 indicated?

YES : The failure is duplicated. Go to step 4.

NO : Go to step 2.

2. Shift solenoid valve A operation check:
   - 1. Select Shift Solenoid Valve A in the Miscellaneous Test Menu, and test shift solenoid valve A with the HDS.

Is a clicking sound heard?

YES : The shift solenoid valve A operation is OK. Go to step 3.

NO : Go to step 4.

3. Problem verification (OBD STATUS check):
   - 1. Start the engine with the shift lever in P, and wait for at least 1 second.
   - 2. Monitor the OBD STATUS for P0974 in the DTCs MENU with the HDS.

DTC Description	OBD Status
P0974 Shift Solenoid Valve A (Open)	

Does the HDS indicate FAILED?

GETtheMANUALS.org

YES : The failure is duplicated. Go to step 4.

NO : If the HDS indicates PASSED, intermittent failure, the system is OK at this time. Check for poor connections or loose terminals between shift solenoid valve A and the PCM. If the HDS indicates NOT COMPLETED, test-drive again.

4. Shift solenoid valve A internal resistance check:
   - 1. Turn the ignition switch to LOCK (0).
   - 2. Jump the SCS line with the HDS.
   - 3. Disconnect the following connector.

     PCM connector B (49P)

   - 4. Measure the resistance between test points 1 and 2.

     Test condition IG LOCK (0)

     PCM connector B (49P): disconnected

     Test circuit SHA

     Test point 1 PCM connector B (49P) No. 21 (PUR)

     Test point 2 Body ground

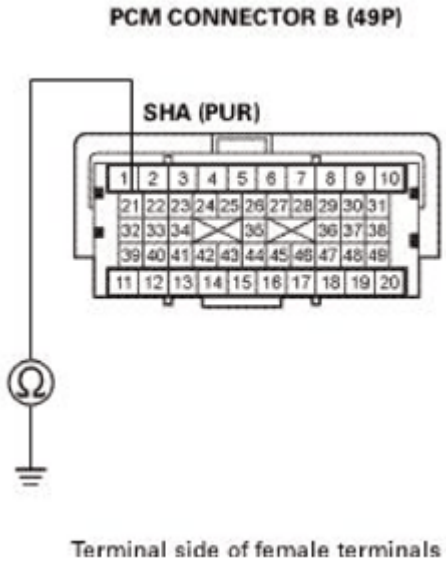

Fig. 90: Measuring Resistance Between PCM Connector B (49P) No. 21 (PUR) And Body Ground
Courtesy of AMERICAN HONDA MOTOR CO., INC.

Is there 13.8-17.1 ohms?

GETtheMANUALS.org

YES : Shift solenoid valve A is OK. **Update the PCM if it does not have the latest software** See **PCM REMOVAL AND INSTALLATION** or **PCM UPDATE** , or **substitute a known-good PCM** See **PCM REMOVAL AND INSTALLATION** or **PCM UPDATE** , then **do the repair verification** .

NO : Go to step 5.

5. Open wire check (SHA line):
   - 1. Disconnect the following connector.

     Shift solenoid wire harness 8P connector

   - 2. Check for continuity between test points 1 and 2.

     Test condition IG LOCK (0)

     PCM connector B (49P): disconnected

     Shift solenoid wire harness 8P connector: disconnected

     Test circuit SHA

     Test point 1 Shift solenoid wire harness 8P connector No. 8 (PUR)

     Test point 2 PCM connector B (49P) No. 21 (PUR)

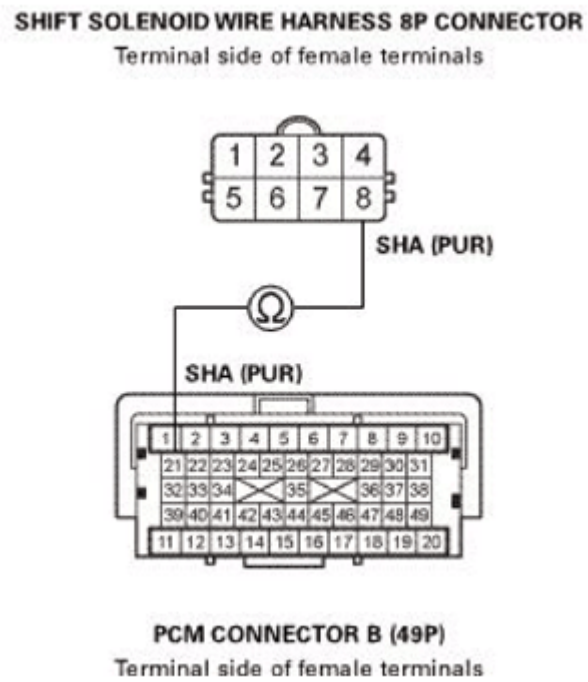

Fig. 91: Checking Continuity Between PCM Connector B (49P) No. 21 (PUR) And Body Ground

GETtheMANUALS.org

Courtesy of AMERICAN HONDA MOTOR CO., INC.

Is there continuity?

YES : The SHA wire is OK. Go to step 6.

NO : Repair an open in the SHA wire between the shift solenoid wire harness and the PCM, then **do the repair verification** .

6. Shift solenoid wire harness check:
   - 1. **REMOVE THE SHIFT SOLENOID WIRE HARNESS** .
   - 2. Check for continuity between test points 1 and 2.

     Test condition IG LOCK (0)

     PCM connector B (49P): disconnected

     Shift solenoid wire harness 8P connector: disconnected

     Shift solenoid valve A 1P connector: disconnected

     Test circuit SHA

     Test point 1 Shift solenoid valve A 1P connector No. 1 (BLU)

     Test point 2 Shift solenoid wire harness 7P connector No. 7 (BLU)

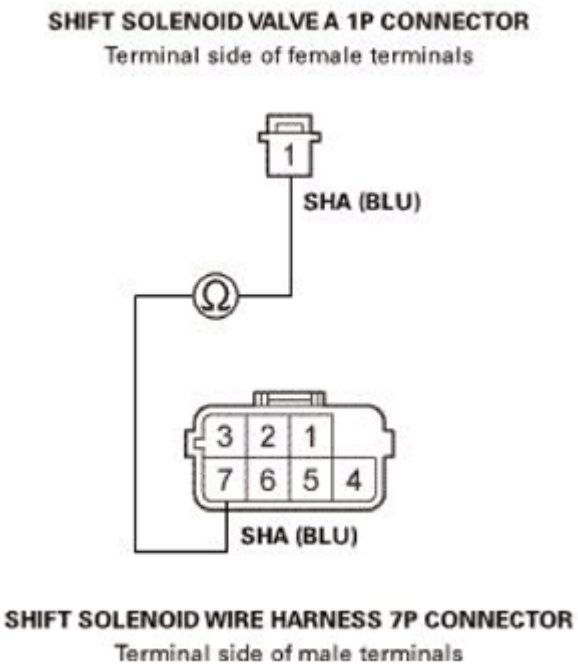

GETtheMANUALS.org

Fig. 92: Checking Continuity Between Shift Solenoid Valve A 1P Connector No. 1 (BLU) And Shift Solenoid Wire Harness 7P Connector No. 7 (BLU)
Courtesy of AMERICAN HONDA MOTOR CO., INC.

Is there continuity?

YES : The shift solenoid wire harness is OK. **REPLACE SHIFT SOLENOID VALVE A** , then **do the repair verification** .

NO : **REPLACE THE SHIFT SOLENOID WIRE HARNESS** , then **do the repair verification** .

REPAIR VERIFICATION (OBD STATUS CHECK)

- 1. Reconnect all connectors.
- 2. Turn the ignition switch to ON (II).
- 3. Clear the DTC with the HDS.
- 4. Start the engine with the shift lever in P, and wait for at least 1 second. Then test-drive the vehicle in 1st gear for at least 1 second.
- 5. Monitor the OBD STATUS for P0974 in the DTCs MENU with the HDS.

DTC Description	OBD Status
P0974 Shift Solenoid Valve A (Open)	

Does the HDS indicate PASSED, FAILED, or NOT COMPLETED?

PASSED Troubleshooting is complete. If the PCM was substituted, **replace the original PCM** See **PCM REMOVAL AND INSTALLATION** or **PCM UPDATE** . Check for other DTC after this troubleshooting. If any other Pending or Confirmed DTCs were indicated, go to the indicated DTC's troubleshooting.

FAILED Troubleshooting is incomplete. Check for poor connections or loose terminals between shift solenoid valve A and the PCM, then go to step 1 and recheck. If the PCM was updated, **substitute a known-good PCM** See **PCM REMOVAL AND INSTALLATION** or **PCM UPDATE** , and check the OBD STATUS again.

NOT COMPLETED Repair verification is incomplete. Meet the test condition, and check the OBD STATUS again.

DTC P0976: SHIFT SOLENOID VALVE B (SHORT)

GETtheMANUALS.org

DTC Troubleshooting: P0976

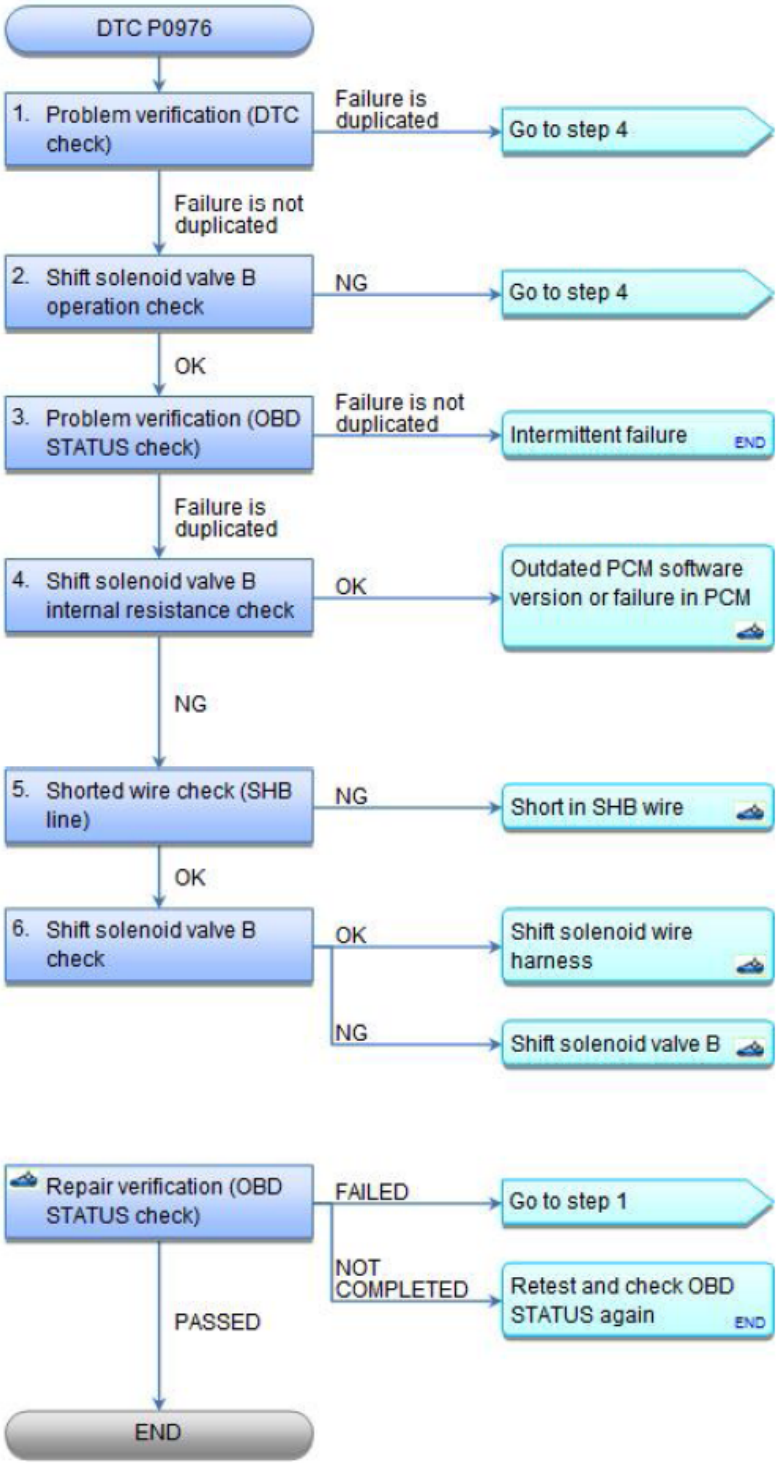

Fig. 93: DTC Troubleshooting Flow Chart (P0976)
Courtesy of AMERICAN HONDA MOTOR CO., INC.

NOTE:

- **Before you troubleshoot, record all freeze data and any on-board snapshot**

GETtheMANUALS.org

with the HDS, and review the General Troubleshooting Information See HOW TO TROUBLESHOOT THE A/T SYSTEM or HOW TO TROUBLESHOOT THE FUEL AND EMISSIONS SYSTEMS .

- **This code is caused by an electrical circuit problem and cannot be caused by a mechanical problem in the transmission.**

DTC Description	Confirmed DTC	Pending DTC	Freeze Frame
P0976 Shift Solenoid Valve B (Short)			

1. Problem verification (DTC check):
   - 1. Turn the ignition switch to ON (II).
   - 2. Clear the DTC with the HDS.
   - 3. Start the engine with the shift lever in P, and wait for at least 1 second.
   - 4. Check for Pending or Confirmed DTCs with the HDS.

DTC Description	Confirmed DTC	Pending DTC	Freeze Frame
P0976 Shift Solenoid Valve B (Short)			

Is DTC P0976 indicated?

YES : The failure is duplicated. Go to step 4.

NO : Go to step 2.

2. Shift solenoid valve B operation check:
   - 1. Select Shift Solenoid Valve B in the Miscellaneous Test Menu, and test shift solenoid valve B with the HDS.

Is a clicking sound heard?

YES : The shift solenoid valve B operation is OK. Go to step 3.

NO : Go to step 4.

3. Problem verification (OBD STATUS check):
   - 1. Start the engine with the shift lever in P, and wait for at least 1 second.
   - 2. Monitor the OBD STATUS for P0976 in the DTCs MENU with the HDS.

DTC Description	OBD Status
P0976 Shift Solenoid Valve B (Short)	

Does the HDS indicate FAILED?

GETtheMANUALS.org

YES : The failure is duplicated. Go to step 4.

NO : If the HDS indicates PASSED, intermittent failure, the system is OK at this time. Check for an intermittent short to ground in the wire between shift solenoid valve B and the PCM. If the HDS indicates NOT COMPLETED, test-drive again.

4. Shift solenoid valve B internal resistance check:
   - 1. Turn the ignition switch to LOCK (0).
   - 2. Jump the SCS line with the HDS.
   - 3. Disconnect the following connector.

     PCM connector B (49P)

   - 4. Measure the resistance between test points 1 and 2.

     Test condition IG LOCK (0)

     PCM connector B (49P): disconnected

     Test circuit SHB

     Test point 1 PCM connector B (49P) No. 32 (WHT)

     Test point 2 Body ground

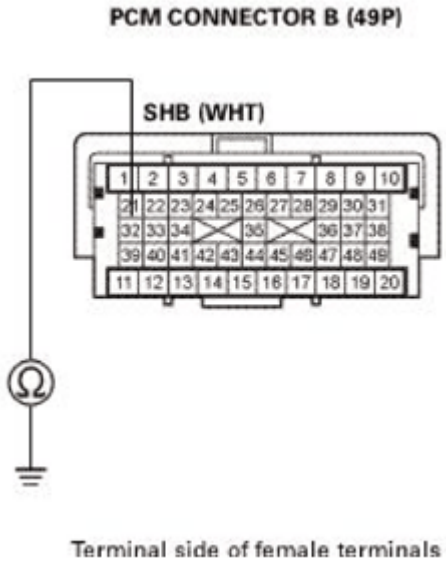

Fig. 94: Measuring Resistance Between PCM Connector B (49P) No. 32 (WHT) And Body Ground
Courtesy of AMERICAN HONDA MOTOR CO., INC.

Is there less than 13.8 ohms?

GETtheMANUALS.org

YES : Go to step 5.

NO : Shift solenoid valve B is OK. **Update the PCM if it does not have the latest software** See **PCM REMOVAL AND INSTALLATION** or **PCM UPDATE** , or **substitute a known-good PCM** See **PCM REMOVAL AND INSTALLATION** or **PCM UPDATE** , then **do the repair verification** .

5. Shorted wire check (SHB line):
   - 1. Disconnect the following connector.

     Shift solenoid wire harness 8P connector

   - 2. Check for continuity between test points 1 and 2.

     Test condition IG LOCK (0)

     PCM connector B (49P): disconnected

     Shift solenoid wire harness 8P connector: disconnected

     Test circuit SHB

     Test point 1 PCM connector B (49P) No. 32 (WHT)

     Test point 2 Body ground

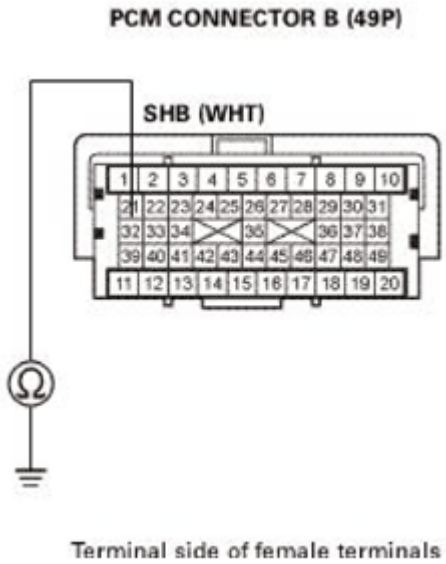

Fig. 95: Checking Continuity Between PCM Connector B (49P) No. 32 (WHT) And Body Ground
Courtesy of AMERICAN HONDA MOTOR CO., INC.

Is there continuity?

GETtheMANUALS.org

YES : Repair a short to ground in the SHB wire between the shift solenoid wire harness and the PCM, then **do the repair verification** .

NO : The SHB wire is OK. Go to step 6.

6. Shift solenoid valve B check:
   - 1. **TEST SHIFT SOLENOID VALVE B** .

Is shift solenoid valve B OK?

YES : Shift solenoid valve B is OK. **REPLACE THE SHIFT SOLENOID WIRE HARNESS** , then **do the repair verification** .

NO : **REPLACE SHIFT SOLENOID VALVE B** , then **do the repair verification** .

REPAIR VERIFICATION (OBD STATUS CHECK)

- 1. Reconnect all connectors.
- 2. Turn the ignition switch to ON (II).
- 3. Clear the DTC with the HDS.
- 4. Start the engine with the shift lever in P, and wait for at least 1 second. Test-drive the vehicle through 1st to 3rd gears, then drive in 3rd gear for at least 1 second.
- 5. Monitor the OBD STATUS for P0976 in the DTCs MENU with the HDS.

DTC Description	OBD Status
P0976 Shift Solenoid Valve B (Short)	

Does the HDS indicate PASSED, FAILED, or NOT COMPLETED?

PASSED Troubleshooting is complete. If the PCM was substituted, **replace the original PCM** See **PCM REMOVAL AND INSTALLATION** or **PCM UPDATE** . Check for other DTC after this troubleshooting. If any other Pending or Confirmed DTCs were indicated, go to the indicated DTC's troubleshooting.

FAILED Troubleshooting is incomplete. Check for poor connections or loose terminals between shift solenoid valve B and the PCM, then go to step 1 and recheck. If the PCM was updated, **substitute a known-good PCM** See **PCM REMOVAL AND INSTALLATION** or **PCM UPDATE** , and check the OBD STATUS again.

NOT COMPLETED Repair verification is incomplete. Meet the test condition, and check the OBD STATUS again.

DTC P0977: SHIFT SOLENOID VALVE B (OPEN)

GETtheMANUALS.org

DTC Troubleshooting: P0977

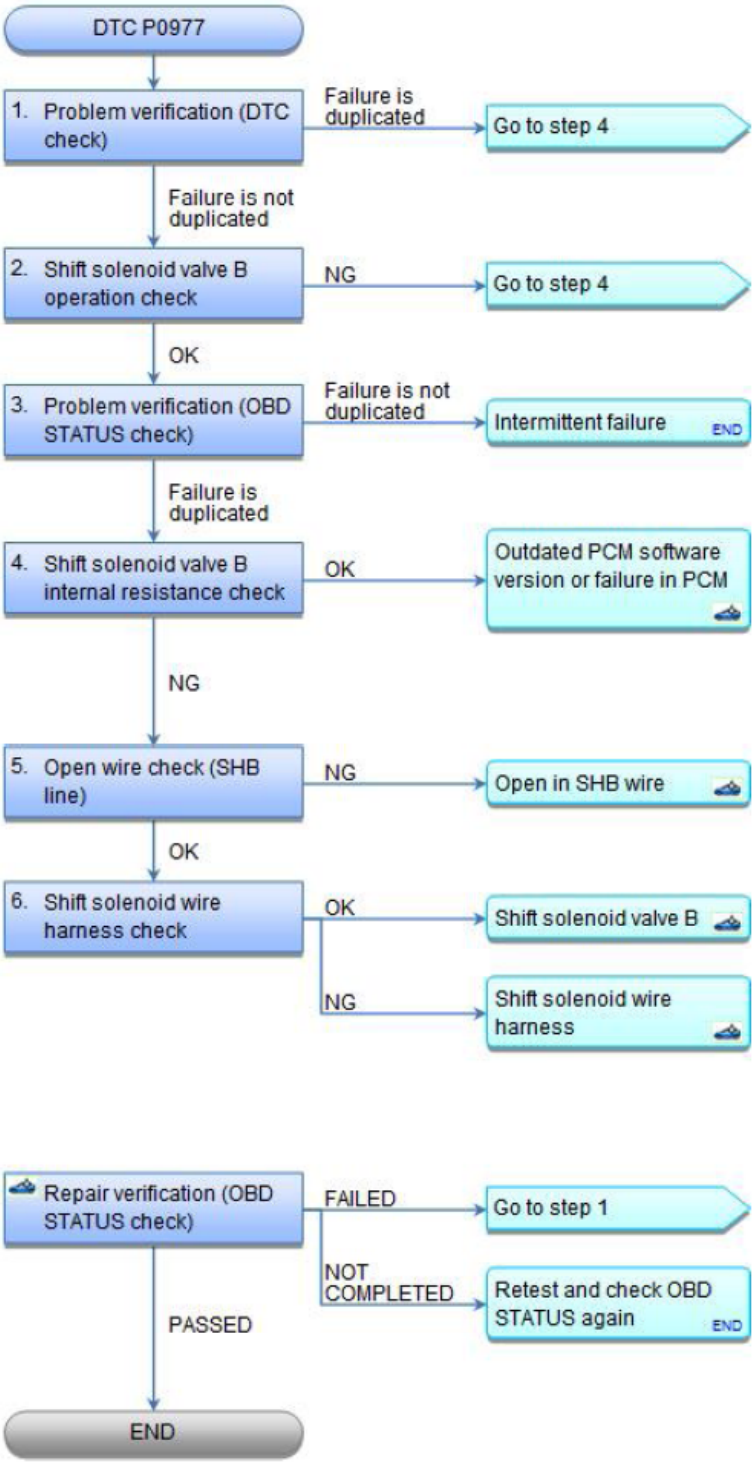

Fig. 96: DTC Troubleshooting Flow Chart (P0977)
Courtesy of AMERICAN HONDA MOTOR CO., INC.

NOTE:

- **Before you troubleshoot, record all freeze data and any on-board snapshot**

GETtheMANUALS.org

with the HDS, and review the General Troubleshooting Information See HOW TO TROUBLESHOOT THE A/T SYSTEM or HOW TO TROUBLESHOOT THE FUEL AND EMISSIONS SYSTEMS .

- **This code is caused by an electrical circuit problem and cannot be caused by a mechanical problem in the transmission.**

DTC Description	Confirmed DTC	Pending DTC	Freeze Frame
P0977 Shift Solenoid Valve B (Open)			

1. Problem verification (DTC check):
   - 1. Turn the ignition switch to ON (II).
   - 2. Clear the DTC with the HDS.
   - 3. Test-drive the vehicle through 1st to 3rd gears, then drive in 3rd gear for at least 1 second.
   - 4. Check for Pending or Confirmed DTCs with the HDS.

DTC Description	Confirmed DTC	Pending DTC	Freeze Frame
P0977 Shift Solenoid Valve B (Open)			

Is DTC P0977 indicated?

YES : The failure is duplicated. Go to step 4.

NO : Go to step 2.

2. Shift solenoid valve B operation check:
   - 1. Select Shift Solenoid Valve B in the Miscellaneous Test Menu, and test shift solenoid valve B with the HDS.

Is a clicking sound heard?

YES : The shift solenoid valve B operation is OK. Go to step 3.

NO : Go to step 4.

3. Problem verification (OBD STATUS check):
   - 1. Test-drive the vehicle through 1st to 3rd gears, then drive in 3rd gear for at least 1 second.
   - 2. Monitor the OBD STATUS for P0977 in the DTCs MENU with the HDS.

DTC Description	OBD Status
P0977 Shift Solenoid Valve B (Open)	

Does the HDS indicate FAILED?

GETtheMANUALS.org

YES : The failure is duplicated. Go to step 4.

NO : If the HDS indicates PASSED, intermittent failure, the system is OK at this time. Check for poor connections or loose terminals between shift solenoid valve B and the PCM. If the HDS indicates NOT COMPLETED, test-drive again.

4. Shift solenoid valve B internal resistance check:
   - 1. Turn the ignition switch to LOCK (0).
   - 2. Jump the SCS line with the HDS.
   - 3. Disconnect the following connector.

     PCM connector B (49P)

   - 4. Measure the resistance between test points 1 and 2.

     Test condition IG LOCK (0)

     PCM connector B (49P): disconnected

     Test circuit SHB

     Test point 1 PCM connector B (49P) No. 32 (WHT)

     Test point 2 Body ground

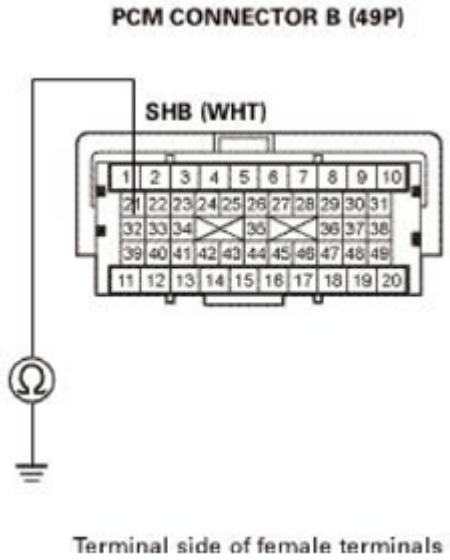

Fig. 97: Measuring Resistance Between PCM Connector B (49P) No. 32 (WHT) And Body Ground
Courtesy of AMERICAN HONDA MOTOR CO., INC.

Is there 13.8-17.1 ohms?

GETtheMANUALS.org

YES : Shift solenoid valve B is OK. **Update the PCM if it does not have the latest software** See **PCM REMOVAL AND INSTALLATION** or **PCM UPDATE** , or **substitute a known-good PCM** See **PCM REMOVAL AND INSTALLATION** or **PCM UPDATE** , then **do the repair verification** .

NO : Go to step 5.

5. Open wire check (SHB line):
   - 1. Disconnect the following connector.

     Shift solenoid wire harness 8P connector

   - 2. Check for continuity between test points 1 and 2.

     Test condition IG LOCK (0)

     PCM connector B (49P): disconnected

     Shift solenoid wire harness 8P connector: disconnected

     Test circuit SHB

     Test point 1 Shift solenoid wire harness 8P connector No. 3 (WHT)

     Test point 2 PCM connector B (49P) No. 32 (WHT)

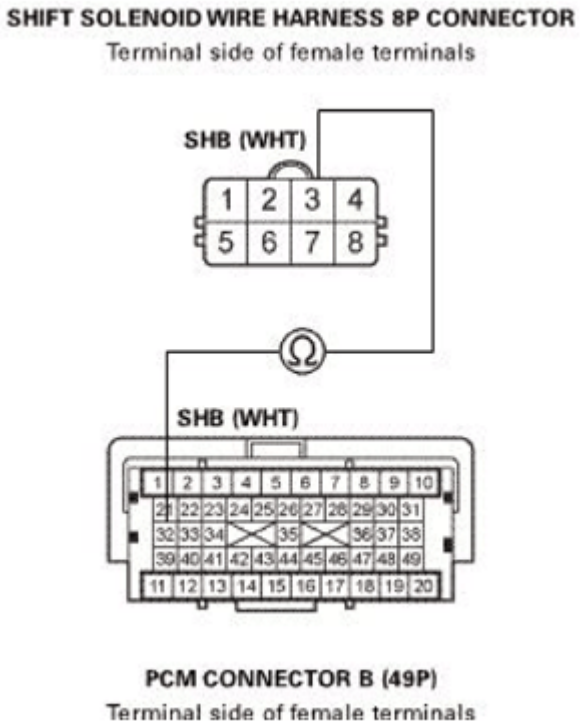

Fig. 98: Checking Continuity Between Shift Solenoid Wire Harness 8P Connector No. 3

GETtheMANUALS.org

(WHT) And PCM Connector B (49P) No. 32 (WHT)
Courtesy of AMERICAN HONDA MOTOR CO., INC.

Is there continuity?

YES : The SHB wire is OK. Go to step 6.

NO : Repair an open in the SHB wire between the shift solenoid wire harness and the PCM, then **do the repair verification** .

6. Shift solenoid wire harness check:
   - 1. **REMOVE THE SHIFT SOLENOID WIRE HARNESS** .
   - 2. Check for continuity between test points 1 and 2.

     Test condition IG LOCK (0)

     PCM connector B (49P): disconnected

     Shift solenoid wire harness 8P connector: disconnected

     Shift solenoid valve B 1P connector: disconnected

     Test circuit SHB

     Test point 1 Shift solenoid valve B 1P connector No. 1 (ORN)

     Test point 2 Shift solenoid wire harness 7P connector No. 2 (ORN)

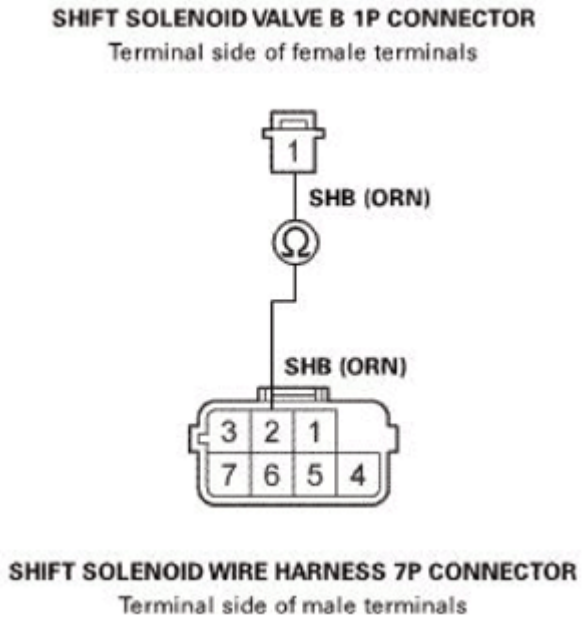

GETtheMANUALS.org

Fig. 99: Checking Continuity Between Shift Solenoid Valve B 1P Connector No. 1 (ORN) And No. 2 (ORN)
Courtesy of AMERICAN HONDA MOTOR CO., INC.

Is there continuity?

YES : The shift solenoid wire harness is OK. **REPLACE SHIFT SOLENOID VALVE B** , then **do the repair verification** .

NO : **REPLACE THE SHIFT SOLENOID WIRE HARNESS** , then **do the repair verification** .

REPAIR VERIFICATION (OBD STATUS CHECK)

- 1. Reconnect all connectors.
- 2. Turn the ignition switch to ON (II).
- 3. Clear the DTC with the HDS.
- 4. Start the engine with the shift lever in P, and wait for at least 1 second. Test-drive the vehicle through 1st to 3rd gears, then drive in 3rd gear for at least 1 second.
- 5. Monitor the OBD STATUS for P0977 in the DTCs MENU with the HDS.

DTC Description	OBD Status
P0977 Shift Solenoid Valve B (Open)	

Does the HDS indicate PASSED, FAILED, or NOT COMPLETED?

PASSED Troubleshooting is complete. If the PCM was substituted, **replace the original PCM** See **PCM REMOVAL AND INSTALLATION** or **PCM UPDATE** . Check for other DTC after this troubleshooting. If any other Pending or Confirmed DTCs were indicated, go to the indicated DTC's troubleshooting.

FAILED Troubleshooting is incomplete. Check for poor connections or loose terminals between shift solenoid valve B and the PCM, then go to step 1 and recheck. If the PCM was updated, **substitute a known-good PCM** See **PCM REMOVAL AND INSTALLATION** or **PCM UPDATE** , and check the OBD STATUS again.

NOT COMPLETED Repair verification is incomplete. Meet the test condition, and check the OBD STATUS again.

DTC P0979: SHIFT SOLENOID VALVE C (SHORT)

GETtheMANUALS.org

DTC Troubleshooting: P0979

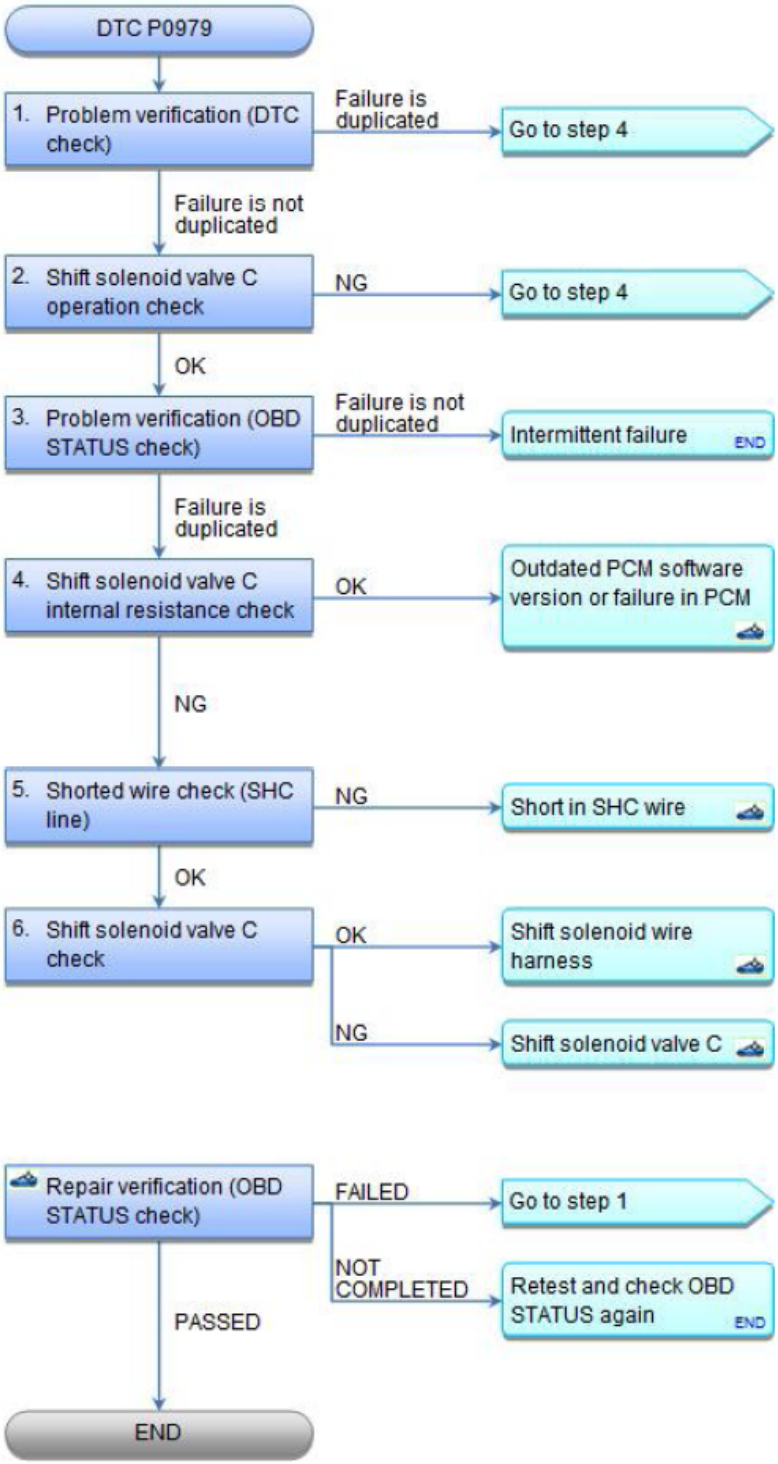

Fig. 100: DTC Troubleshooting Flow Chart (P0979)
Courtesy of AMERICAN HONDA MOTOR CO., INC.

NOTE:

- **Before you troubleshoot, record all freeze data and any on-board snapshot**

GETtheMANUALS.org

with the HDS, and review the General Troubleshooting Information See HOW TO TROUBLESHOOT THE A/T SYSTEM or HOW TO TROUBLESHOOT THE FUEL AND EMISSIONS SYSTEMS .

- **This code is caused by an electrical circuit problem and cannot be caused by a mechanical problem in the transmission.**

DTC Description	Confirmed DTC	Pending DTC	Freeze Frame
P0979 Shift Solenoid Valve C (Short)			

1. Problem verification (DTC check):
   - 1. Turn the ignition switch to ON (II).
   - 2. Clear the DTC with the HDS.
   - 3. Test-drive the vehicle in 1st gear for at least 1 second.
   - 4. Check for Pending or Confirmed DTCs with the HDS.

DTC Description	Confirmed DTC	Pending DTC	Freeze Frame
P0979 Shift Solenoid Valve C (Short)			

Is DTC P0979 indicated?

YES : The failure is duplicated. Go to step 4

NO : Go to step 2.

2. Shift solenoid valve C operation check:
   - 1. Select Shift Solenoid Valve C in the Miscellaneous Test Menu, and test shift solenoid valve C with the HDS.

Is a clicking sound heard?

YES : The shift solenoid valve C operation is OK. Go to step 3.

NO : Go to step 4.

3. Problem verification (OBD STATUS check):
   - 1. Test-drive the vehicle in 1st gear for at least 1 second.
   - 2. Monitor the OBD STATUS for P0979 in the DTCs MENU with the HDS.

DTC Description	OBD Status
P0979 Shift Solenoid Valve C (Short)	

Does the HDS indicate FAILED?

GETtheMANUALS.org

YES : The failure is duplicated. Go to step 4.

NO : If the HDS indicates PASSED, intermittent failure, the system is OK at this time. Check for an intermittent short to ground in the wire between shift solenoid valve C and the PCM. If the HDS indicates NOT COMPLETED, test-drive again.

4. Shift solenoid valve C internal resistance check:
   - 1. Turn the ignition switch to LOCK (0).
   - 2. Jump the SCS line with the HDS.
   - 3. Disconnect the following connector.

     PCM connector C (49P)

   - 4. Measure the resistance between test points 1 and 2.

     Test condition IG LOCK (0)

     PCM connector C (49P): disconnected

     Test circuit SHC

     Test point 1 PCM connector C (49P) No. 21 (GRN)

     Test point 2 Body ground

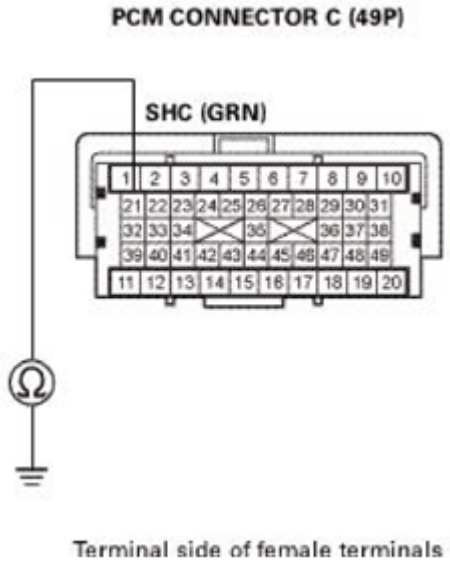

Fig. 101: Measuring Resistance Between PCM Connector C (49P) No. 21 (GRN) And Body Ground
Courtesy of AMERICAN HONDA MOTOR CO., INC.

Is there less than 13.8 ohms?

GETtheMANUALS.org

YES : Go to step 5.

NO : Shift solenoid valve C is OK. **Update the PCM if it does not have the latest software** See **PCM REMOVAL AND INSTALLATION** or **PCM UPDATE** , or **substitute a known-good PCM** See **PCM REMOVAL AND INSTALLATION** or **PCM UPDATE** , then **do the repair verification** .

5. Shorted wire check (SHC line):
   - 1. Disconnect the following connector.

     Shift solenoid wire harness 8P connector

   - 2. Check for continuity between test points 1 and 2.

     Test condition IG LOCK (0)

     PCM connector C (49P): disconnected

     Shift solenoid wire harness 8P connector: disconnected

     Test circuit SHC

     Test point 1 PCM connector C (49P) No. 21 (GRN)

     Test point 2 Body ground

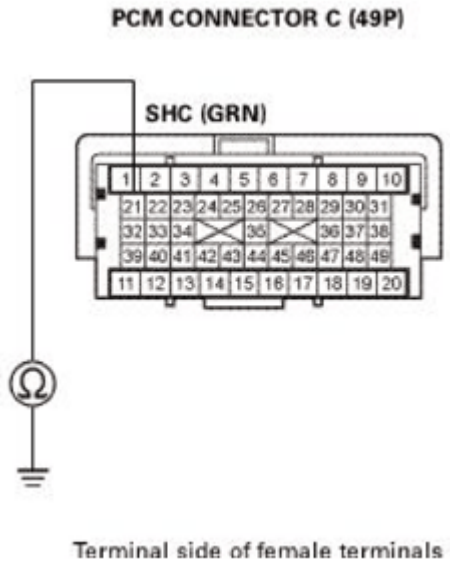

Fig. 102: Checking Continuity Between PCM Connector C (49P) No. 21 (GRN) And Body Ground
Courtesy of AMERICAN HONDA MOTOR CO., INC.

Is there continuity?

GETtheMANUALS.org

YES : Repair a short to ground in the SHC wire between the shift solenoid wire harness and the PCM, then **do the repair verification** .

NO : The SHC wire is OK. Go to step 6.

6. Shift solenoid valve C check:
   - 1. **TEST SHIFT SOLENOID VALVE C** .

Is shift solenoid valve C OK?

YES : Shift solenoid valve C is OK. **REPLACE THE SHIFT SOLENOID WIRE HARNESS** , then **do the repair verification** .

NO : **REPLACE SHIFT SOLENOID VALVE C** , then **do the repair verification** .

REPAIR VERIFICATION (OBD STATUS CHECK)

- 1. Reconnect all connectors.
- 2. Turn the ignition switch to ON (II).
- 3. Clear the DTC with the HDS.
- 4. Start the engine with the shift lever in P, and wait for at least 1 second. Then test-drive the vehicle in 1st gear for at least 1 second.
- 5. Monitor the OBD STATUS for P0979 in the DTCs MENU with the HDS.

DTC Description	OBD Status
P0979 Shift Solenoid Valve C (Short)	

Does the HDS indicate PASSED, FAILED, or NOT COMPLETED?

PASSED Troubleshooting is complete. If the PCM was substituted, **replace the original PCM** See **PCM REMOVAL AND INSTALLATION** or **PCM UPDATE** . Check for other DTC after this troubleshooting. If any other Pending or Confirmed DTCs were indicated, go to the indicated DTC's troubleshooting.

FAILED Troubleshooting is incomplete. Check for poor connections or loose terminals between shift solenoid valve C and the PCM, then go to step 1 and recheck. If the PCM was updated, **substitute a known-good PCM** See **PCM REMOVAL AND INSTALLATION** or **PCM UPDATE** , and check the OBD STATUS again.

NOT COMPLETED Repair verification is incomplete. Meet the test condition, and check the OBD STATUS again.

DTC P0980: SHIFT SOLENOID VALVE C (OPEN)

GETtheMANUALS.org

DTC Troubleshooting: P0980

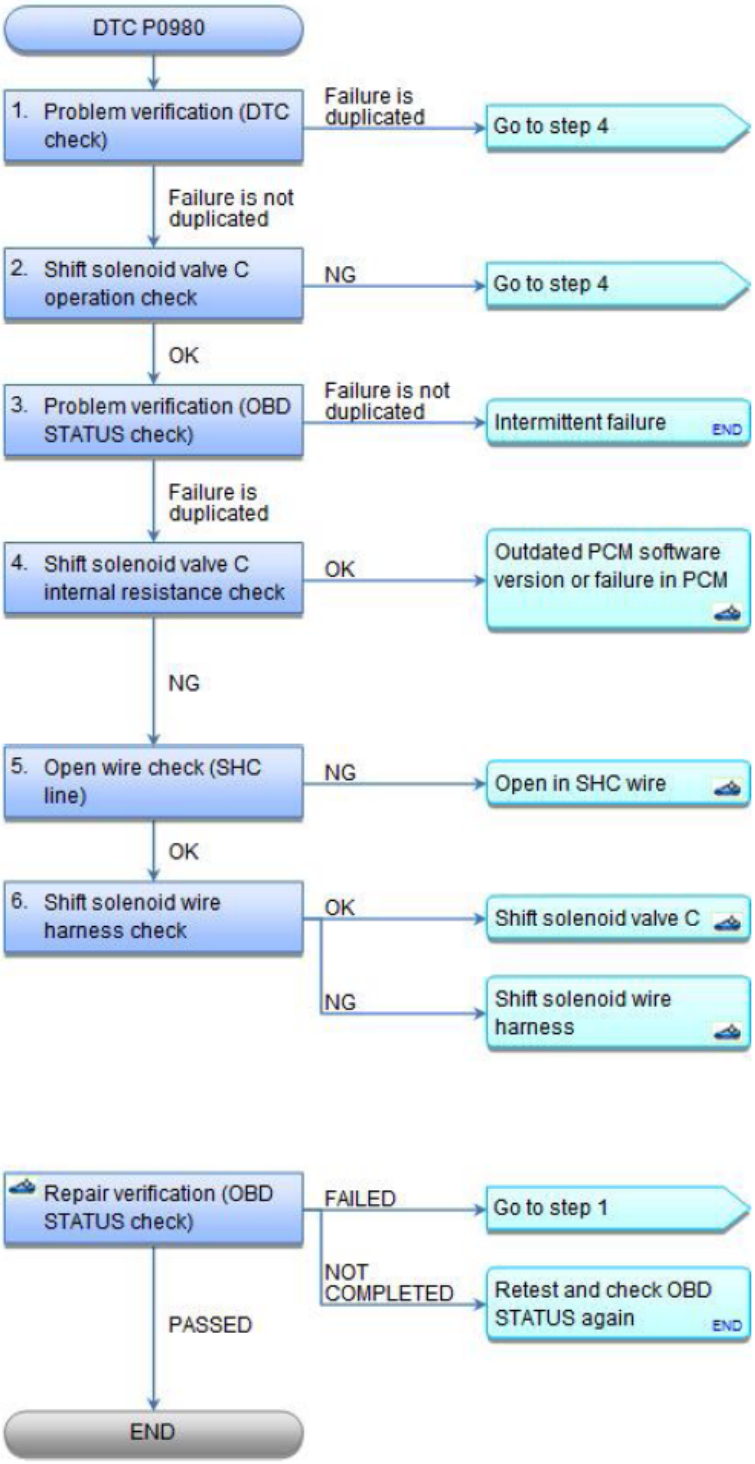

Fig. 103: DTC Troubleshooting Flow Chart (P0980)
Courtesy of AMERICAN HONDA MOTOR CO., INC.

NOTE:

- **Before you troubleshoot, record all freeze data and any on-board snapshot**

GETtheMANUALS.org

with the HDS, and review the General Troubleshooting Information See HOW TO TROUBLESHOOT THE A/T SYSTEM or HOW TO TROUBLESHOOT THE FUEL AND EMISSIONS SYSTEMS .

- **This code is caused by an electrical circuit problem and cannot be caused by a mechanical problem in the transmission.**

DTC Description	Confirmed DTC	Pending DTC	Freeze Frame
P0980 Shift Solenoid Valve C (Open)			

1. Problem verification (DTC check):
   - 1. Turn the ignition switch to ON (II).
   - 2. Clear the DTC with the HDS.
   - 3. Start the engine with the shift lever in P, and wait for at least 1 second.
   - 4. Check for Pending or Confirmed DTCs with the HDS.

DTC Description	Confirmed DTC	Pending DTC	Freeze Frame
P0980 Shift Solenoid Valve C (Open)			

Is DTC P0980 indicated?

YES : The failure is duplicated. Go to step 4.

NO : Go to step 2.

2. Shift solenoid valve C operation check:
   - 1. Select Shift Solenoid Valve C in the Miscellaneous Test Menu, and test shift solenoid valve C with the HDS.

Is a clicking sound heard?

YES : The shift solenoid valve C operation is OK. Go to step 3.

NO : Go to step 4.

3. Problem verification (OBD STATUS check):
   - 1. Start the engine with the shift lever in P, and wait for at least 1 second.
   - 2. Monitor the OBD STATUS for P0980 in the DTCs MENU with the HDS.

DTC Description	OBD Status
P0980 Shift Solenoid Valve C (Open)	

Does the HDS indicate FAILED?

GETtheMANUALS.org

YES : The failure is duplicated. Go to step 4.

NO : If the HDS indicates PASSED, intermittent failure, the system is OK at this time. Check for poor connections or loose terminals between shift solenoid valve C and the PCM. If the HDS indicates NOT COMPLETED, test-drive again.

4. Shift solenoid valve C internal resistance check:
   - 1. Turn the ignition switch to LOCK (0).
   - 2. Jump the SCS line with the HDS.
   - 3. Disconnect the following connector.

     PCM connector C (49P)

   - 4. Measure the resistance between test points 1 and 2.

     Test condition IG LOCK (0)

     PCM connector C (49P): disconnected

     Test circuit SHC

     Test point 1 PCM connector C (49P) No. 21 (GRN)

     Test point 2 Body ground

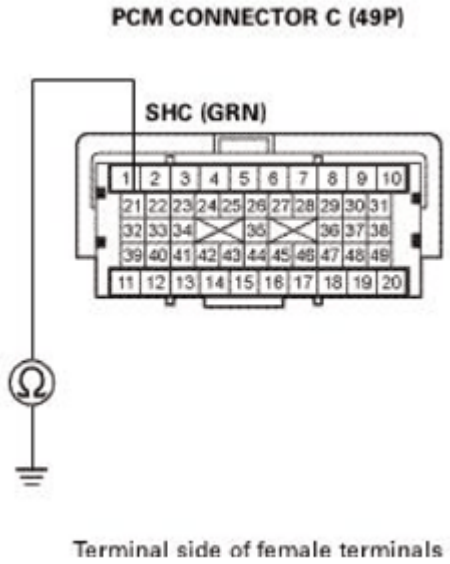

Fig. 104: Measuring Resistance Between PCM Connector C (49P) No. 21 (GRN) And Body Ground
Courtesy of AMERICAN HONDA MOTOR CO., INC.

Is there 13.8-17.1 ohms?

GETtheMANUALS.org

YES : Shift solenoid valve C is OK. **Update the PCM if it does not have the latest software** See **PCM REMOVAL AND INSTALLATION** or **PCM UPDATE** , or **substitute a known-good PCM** See **PCM REMOVAL AND INSTALLATION** or **PCM UPDATE** , then **do the repair verification** .

NO : Go to step 5.

5. Open wire check (SHC line):
   - 1. Disconnect the following connector.

     Shift solenoid wire harness 8P connector

   - 2. Check for continuity between test points 1 and 2.

     Test condition IG LOCK (0)

     PCM connector C (49P): disconnected

     Shift solenoid wire harness 8P connector: disconnected

     Test circuit SHC

     Test point 1 Shift solenoid wire harness 8P connector No. 4 (GRN)

     Test point 2 PCM connector C (49P) No. 21 (GRN)

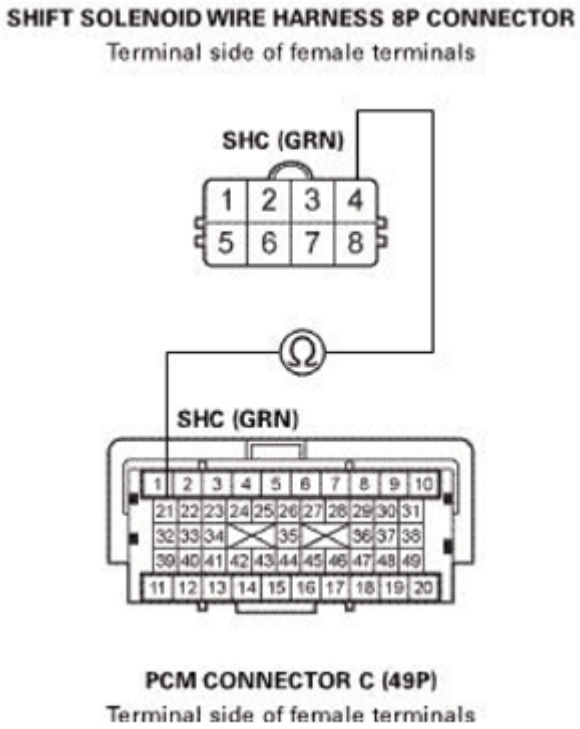

Fig. 105: Checking Continuity Between Shift Solenoid Wire Harness 8P Connector No. 4

GETtheMANUALS.org

(GRN) And PCM Connector C (49P) No. 21 (GRN)
Courtesy of AMERICAN HONDA MOTOR CO., INC.

Is there continuity?

YES : The SHC wire is OK. Go to step 6.

NO : Repair an open in the SHC wire between the shift solenoid wire harness and the PCM, then **do the repair verification** .

6. Shift solenoid wire harness check:
   - 1. **REMOVE THE SHIFT SOLENOID WIRE HARNESS** .
   - 2. Check for continuity between test points 1 and 2.

     Test condition IG LOCK (0)

     PCM connector C (49P): disconnected

     Shift solenoid wire harness 8P connector: disconnected

     Shift solenoid valve C 1P connector: disconnected

     Test circuit SHC

     Test point 1 Shift solenoid valve C 1P connector No. 1 (GRN)

     Test point 2 Shift solenoid wire harness 7P connector No. 3 (GRN)

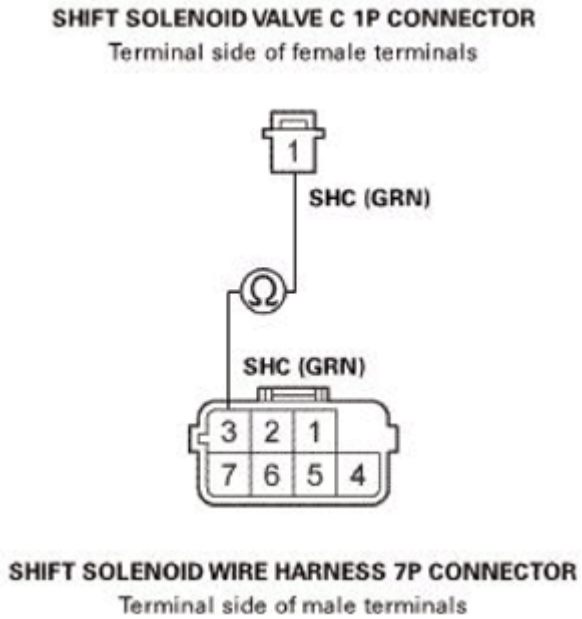

GETtheMANUALS.org

Fig. 106: Checking Continuity Between Shift Solenoid Valve C 1P Connector No. 1 (GRN) And Shift Solenoid Wire Harness 7P Connector No. 3 (GRN)
Courtesy of AMERICAN HONDA MOTOR CO., INC.

Is there continuity?

YES : The shift solenoid wire harness is OK. **REPLACE SHIFT SOLENOID VALVE C** , then **do the repair verification** .

NO : **REPLACE THE SHIFT SOLENOID WIRE HARNESS** , then **do the repair verification** .

REPAIR VERIFICATION (OBD STATUS CHECK)

- 1. Reconnect all connectors.
- 2. Turn the ignition switch to ON (II).
- 3. Clear the DTC with the HDS.
- 4. Start the engine with the shift lever in P, and wait for at least 1 second. Then test-drive the vehicle in 1st gear for at least 1 second.
- 5. Monitor the OBD STATUS for P0980 in the DTCs MENU with the HDS.

DTC Description	OBD Status
P0980 Shift Solenoid Valve C (Open)	

Does the HDS indicate PASSED, FAILED, or NOT COMPLETED?

PASSED Troubleshooting is complete. If the PCM was substituted, **replace the original PCM** See **PCM REMOVAL AND INSTALLATION** or **PCM UPDATE** . Check for other DTC after this troubleshooting. If any other Pending or Confirmed DTCs were indicated, go to the indicated DTC's troubleshooting.

FAILED Troubleshooting is incomplete. Check for poor connections or loose terminals between shift solenoid valve C and the PCM, then go to step 1 and recheck. If the PCM was updated, **substitute a known-good PCM** See **PCM REMOVAL AND INSTALLATION** or **PCM UPDATE** , and check the OBD STATUS again.

NOT COMPLETED Repair verification is incomplete. Meet the test condition, and check the OBD STATUS again.

DTC P0982: SHIFT SOLENOID VALVE D (SHORT)

GETtheMANUALS.org

DTC Troubleshooting: P0982

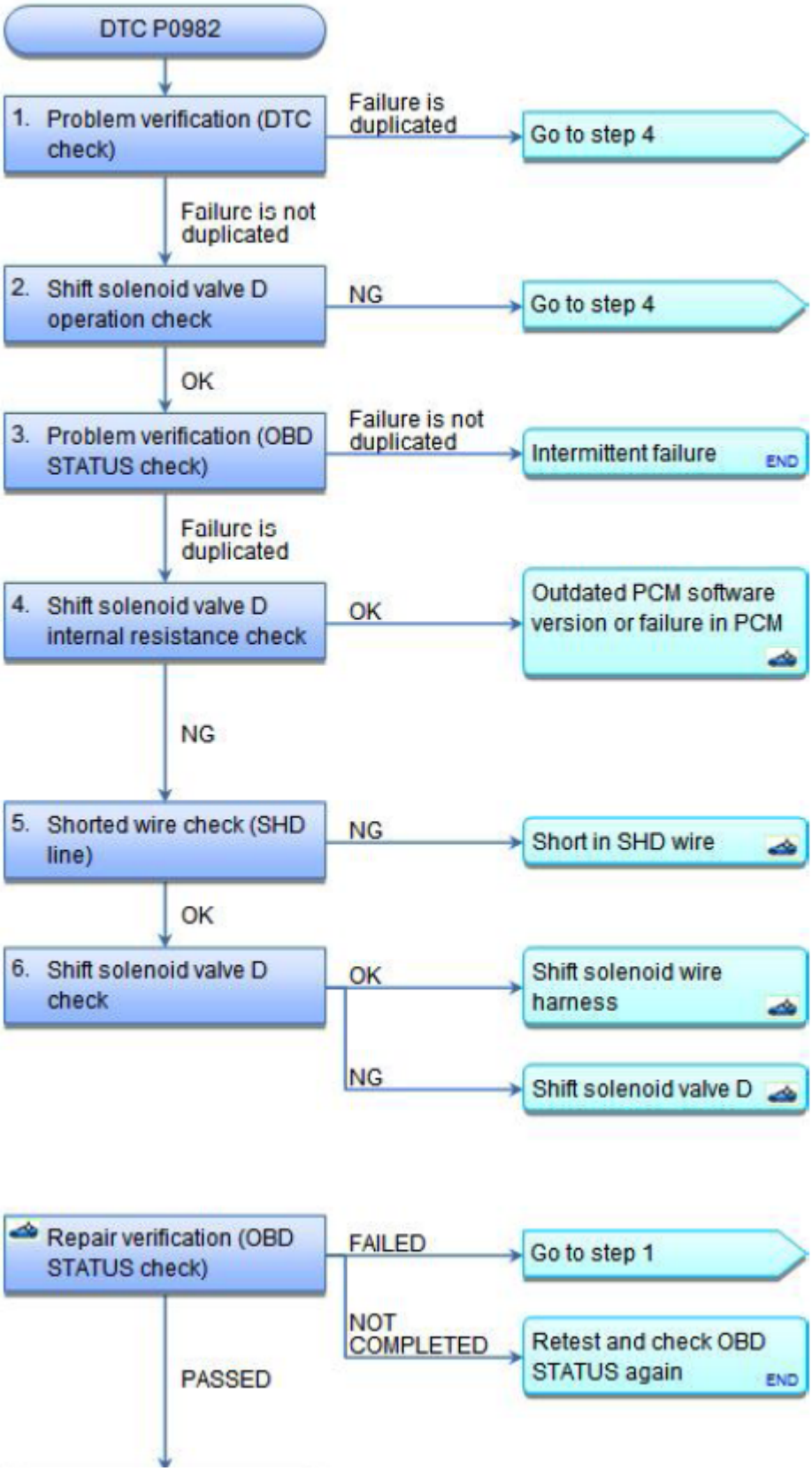

GETtheMANUALS.org

Fig. 107: DTC Troubleshooting Flow Chart (P0982)
Courtesy of AMERICAN HONDA MOTOR CO., INC.

NOTE:

- **Before you troubleshoot, record all freeze data and any on-board snapshot with the HDS, and review the General Troubleshooting Information See HOW TO TROUBLESHOOT THE A/T SYSTEM or HOW TO TROUBLESHOOT THE FUEL AND EMISSIONS SYSTEMS .**
- **This code is caused by an electrical circuit problem and cannot be caused by a mechanical problem in the transmission.**

DTC Description	Confirmed DTC	Pending DTC	Freeze Frame
P0982 Shift Solenoid Valve D (Short)			

1. Problem verification (DTC check):
   - 1. Turn the ignition switch to ON (II).
   - 2. Clear the DTC with the HDS.
   - 3. Test-drive the vehicle in 2nd gear for at least 1 second.
   - 4. Check for Pending or Confirmed DTCs with the HDS.

DTC Description	Confirmed DTC	Pending DTC	Freeze Frame
P0982 Shift Solenoid Valve D (Short)			

Is DTC P0982 indicated?

YES : The failure is duplicated. Go to step 4.

NO : Go to step 2.

2. Shift solenoid valve D operation check:
   - 1. Select Shift Solenoid Valve D in the Miscellaneous Test Menu, and test shift solenoid valve D with the HDS.

Is a clicking sound heard?

YES : The shift solenoid valve D operation is OK. Go to step 3.

NO : Go to step 4.

3. Problem verification (OBD STATUS check):
   - 1. Test-drive the vehicle in 2nd gear for at least 1 second.
   - 2. Monitor the OBD STATUS for P0982 in the DTCs MENU with the HDS.

DTC Description	OBD Status

GETtheMANUALS.org

P0982 Shift Solenoid Valve D (Short)

Does the HDS indicate FAILED?

YES : The failure is duplicated. Go to step 4.

NO : If the HDS indicates PASSED, intermittent failure, the system is OK at this time. Check for an intermittent short to ground in the wire between shift solenoid valve D and the PCM. If the HDS indicates NOT COMPLETED, test-drive again.

4. Shift solenoid valve D internal resistance check:

   Turn the ignition switch to LOCK (0).

   - 1.
   - 2. Jump the SCS line with the HDS.
   - 3. Disconnect the following connector.

     PCM connector C (49P)

   - 4. Measure the resistance between test points 1 and 2.

     Test condition IG LOCK (0)

     PCM connector C (49P): disconnected

     Test circuit SHD

     Test point 1 PCM connector C (49P) No. 32 (PNK)

     Test point 2 Body ground

GETtheMANUALS.org

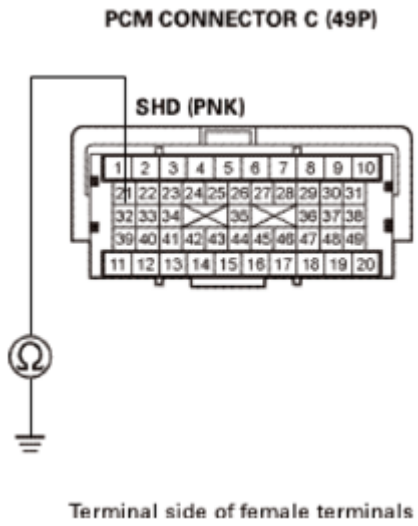

Fig. 108: Measuring Resistance Between PCM Connector C (49P) No. 32 (PNK) And Body Ground
Courtesy of AMERICAN HONDA MOTOR CO., INC.

Is there less than 13.8 ohms?

YES : Go to step 5.

NO : Shift solenoid valve D is OK. **Update the PCM if it does not have the latest software** See **PCM REMOVAL AND INSTALLATION** or **PCM UPDATE** , or **substitute a known-good PCM** See **PCM REMOVAL AND INSTALLATION** or **PCM UPDATE** , then **do the repair verification** .

5. Shorted wire check (SHD line):
   - 1. Disconnect the following connector.

     Shift solenoid wire harness 8P connector

   - 2. Check for continuity between test points 1 and 2.

     Test condition IG LOCK (0)

     PCM connector C (49P): disconnected

     Shift solenoid wire harness 8P connector: disconnected

     Test circuit SHD

     Test point 1 PCM connector C (49P) No. 32 (PNK)

     Test point 2 Body ground

GETtheMANUALS.org

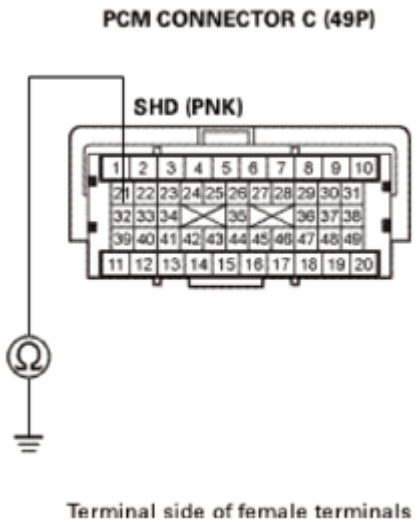

Fig. 109: Checking Continuity Between PCM Connector C (49P) No. 32 (PNK) And Body Ground
Courtesy of AMERICAN HONDA MOTOR CO., INC.

Is there continuity?

YES : Repair a short to ground in the SHD wire between the shift solenoid wire harness and the PCM, then **do the repair verification** .

NO : The SHD wire is OK. Go to step 6.

6. Shift solenoid valve D check:
   - 1. **TEST SHIFT SOLENOID VALVE D** .

Is shift solenoid valve D OK?

YES : Shift solenoid valve D is OK. **REPLACE THE SHIFT SOLENOID WIRE HARNESS** , then **do the repair verification** .

NO : **REPLACE SHIFT SOLENOID VALVE D** , then **do the repair verification** .

REPAIR VERIFICATION (OBD STATUS CHECK)

- 1. Reconnect all connectors.
- 2. Turn the ignition switch to ON (II).
- 3. Clear the DTC with the HDS.
- 4. Start the engine with the shift lever in P, and wait for at least 1 second. Then test-drive the vehicle in 2nd gear for at least 1 second.
- 5. Monitor the OBD STATUS for P0982 in the DTCs MENU with the HDS.

GETtheMANUALS.org

DTC Description	OBD Status
P0982 Shift Solenoid Valve D (Short)	

Does the HDS indicate PASSED, FAILED, or NOT COMPLETED?

PASSED Troubleshooting is complete. If the PCM was substituted, **replace the original PCM** See **PCM REMOVAL AND INSTALLATION** or **PCM UPDATE** . Check for other DTC after this troubleshooting. If any other Pending or Confirmed DTCs were indicated, go to the indicated DTC's troubleshooting.

FAILED Troubleshooting is incomplete. Check for poor connections or loose terminals between shift solenoid valve D and the PCM, then go to step 1 and recheck. If the PCM was updated, **substitute a known-good PCM** See **PCM REMOVAL AND INSTALLATION** or **PCM UPDATE** , and check the OBD STATUS again.

NOT COMPLETED Repair verification is incomplete. Meet the test condition, and check the OBD STATUS again.

DTC P0983: SHIFT SOLENOID VALVE D (OPEN)

GETtheMANUALS.org

DTC Troubleshooting: P0983

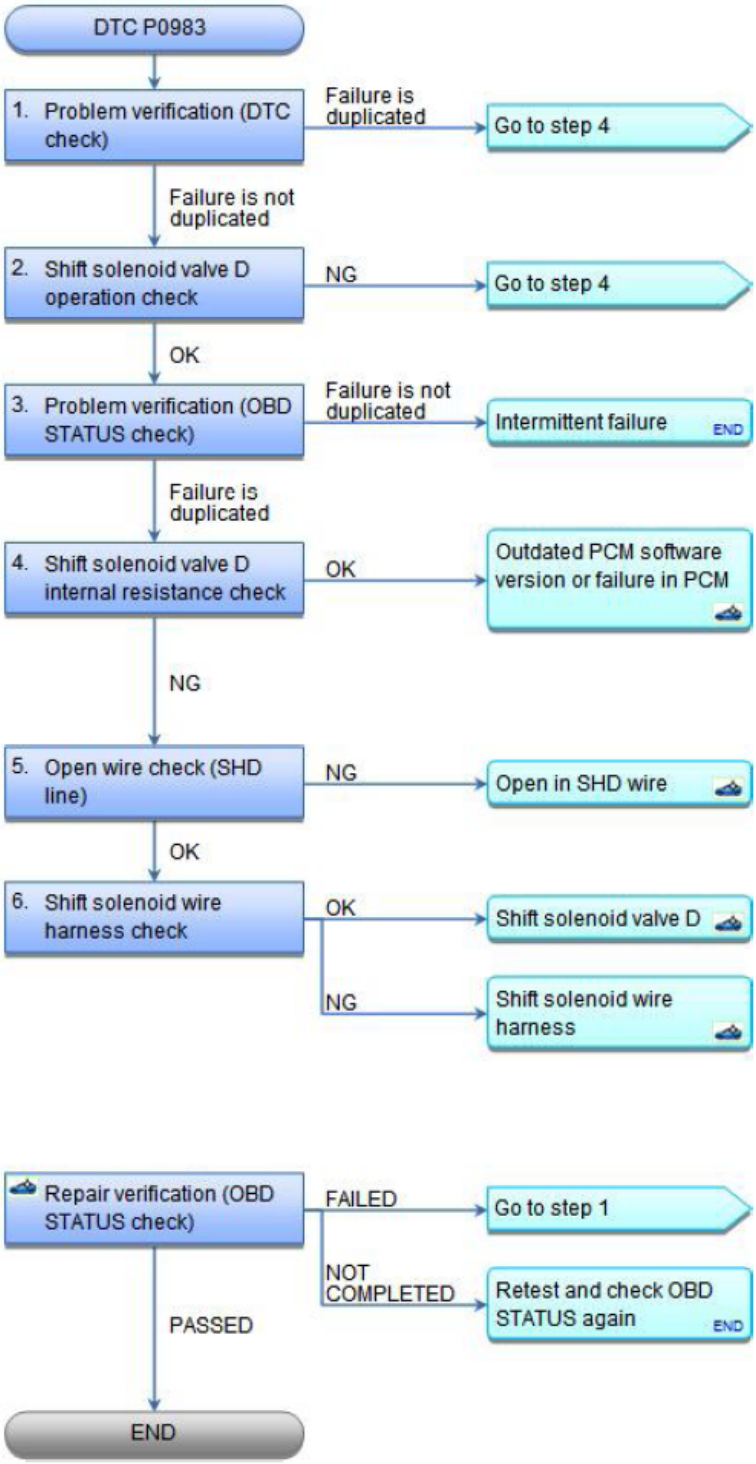

Fig. 110: DTC Troubleshooting Flow Chart (P0983)
Courtesy of AMERICAN HONDA MOTOR CO., INC.

NOTE:

- **Before you troubleshoot, record all freeze data and any on-board snapshot**

GETtheMANUALS.org

with the HDS, and review the General Troubleshooting Information See HOW TO TROUBLESHOOT THE A/T SYSTEM or HOW TO TROUBLESHOOT THE FUEL AND EMISSIONS SYSTEMS .

- **This code is caused by an electrical circuit problem and cannot be caused by a mechanical problem in the transmission.**

DTC Description	Confirmed DTC	Pending DTC	Freeze Frame
P0983 Shift Solenoid Valve D (Open)			

1. Problem verification (DTC check):
   - 1. Turn the ignition switch to ON (II).
   - 2. Clear the DTC with the HDS.
   - 3. Start the engine with the shift lever in P, and wait for at least 1 second.
   - 4. Check for Pending or Confirmed DTCs with the HDS.

DTC Description	Confirmed DTC	Pending DTC	Freeze Frame
P0983 Shift Solenoid Valve D (Open)			

Is DTC P0983 indicated?

YES : The failure is duplicated. Go to step 4.

NO : Go to step 2.

2. Shift solenoid valve D operation check:
   - 1. Select Shift Solenoid Valve D in the Miscellaneous Test Menu, and test shift solenoid valve D with the HDS.

Is a clicking sound heard?

YES : The shift solenoid valve D operation is OK. Go to step 3.

NO : Go to step 4.

3. Problem verification (OBD STATUS check):
   - 1. Start the engine with the shift lever in P, and wait for at least 1 second.
   - 2. Monitor the OBD STATUS for P0983 in the DTCs MENU with the HDS.

DTC Description	OBD Status
P0983 Shift Solenoid Valve D (Open)	

Does the HDS indicate FAILED?

GETtheMANUALS.org

YES : The failure is duplicated. Go to step 4.

NO : If the HDS indicates PASSED, intermittent failure, the system is OK at this time. Check for poor connections or loose terminals between shift solenoid valve D and the PCM. If the HDS indicates NOT COMPLETED, test-drive again.

4. Shift solenoid valve D internal resistance check:
   - 1. Turn the ignition switch to LOCK (0).
   - 2. Jump the SCS line with the HDS.
   - 3. Disconnect the following connector.

     PCM connector C (49P)

   - 4. Measure the resistance between test points 1 and 2.

     Test condition IG LOCK (0)

     PCM connector C (49P): disconnected

     Test circuit SHD

     Test point 1 PCM connector C (49P) No. 32 (PNK)

     Test point 2 Body ground

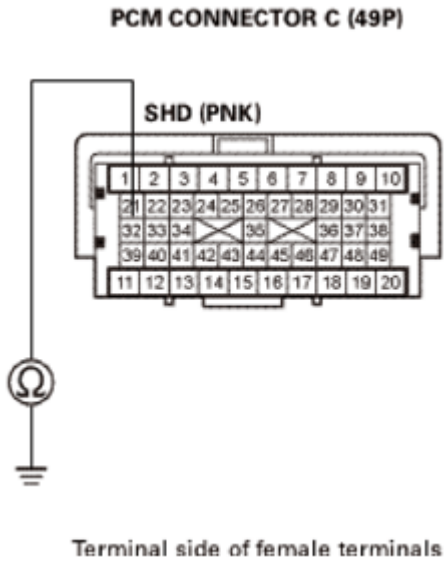

Fig. 111: Measuring Resistance Between PCM Connector C (49P) No. 32 (PNK) And Body Ground
Courtesy of AMERICAN HONDA MOTOR CO., INC.

Is there 13.8-17.1 ohms?

GETtheMANUALS.org

YES : Shift solenoid valve D is OK. **Update the PCM if it does not have the latest software** See **PCM REMOVAL AND INSTALLATION** or **PCM UPDATE** , or **substitute a known-good PCM** See **PCM REMOVAL AND INSTALLATION** or **PCM UPDATE** , then **do the repair verification** .

NO : Go to step 5.

5. Open wire check (SHD line):
   - 1. Disconnect the following connector.

     Shift solenoid wire harness 8P connector

   - 2. Check for continuity between test points 1 and 2.

     Test condition IG LOCK (0)

     PCM connector C (49P): disconnected

     Shift solenoid wire harness 8P connector: disconnected

     Test circuit SHD

     Test point 1 Shift solenoid wire harness 8P connector No. 5 (PNK)

     Test point 2 PCM connector C (49P) No. 32 (PNK)

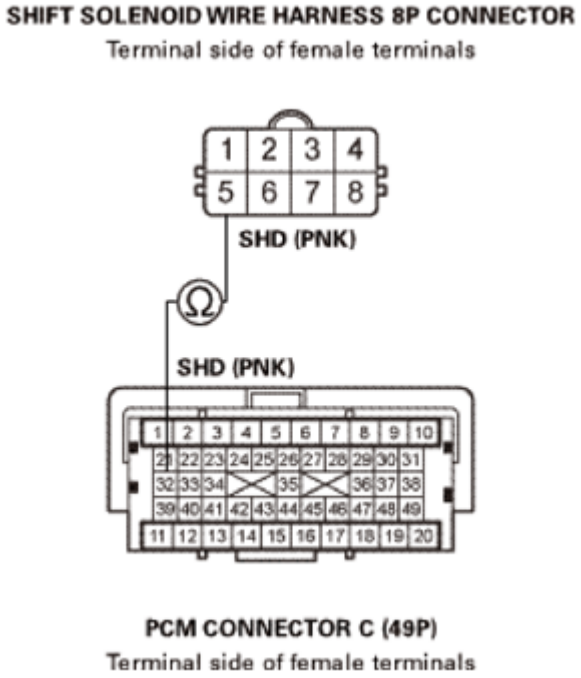

Fig. 112: Checking Continuity Between Shift Solenoid Wire Harness 8P Connector No. 5 (PNK) And PCM Connector C (49P) No. 32 (PNK)

GETtheMANUALS.org

Courtesy of AMERICAN HONDA MOTOR CO., INC.

Is there continuity?

YES : The SHD wire is OK. Go to step 6.

NO : Repair an open in the SHD wire between the shift solenoid wire harness and the PCM, then **do the repair verification** .

6. Shift solenoid wire harness check:
   - 1. **REMOVE THE SHIFT SOLENOID WIRE HARNESS** .
   - 2. Check for continuity between test points 1 and 2.

     Test condition IG LOCK (0)

     PCM connector C (49P): disconnected

     Shift solenoid wire harness 8P connector: disconnected

     Shift solenoid valve D 1P connector: disconnected

     Test circuit SHD

     Test point 1 Shift solenoid valve D 1P connector No. 1 (YEL)

     Test point 2 Shift solenoid wire harness 7P connector No. 4 (YEL)

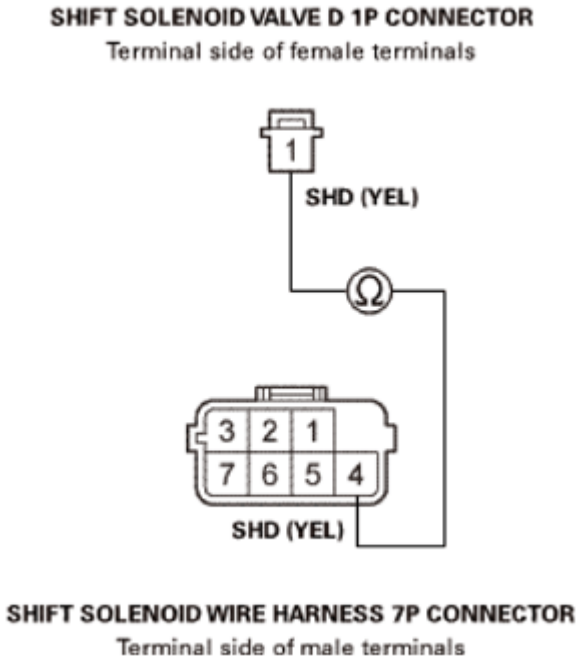

Fig. 113: Checking Continuity Between Shift Solenoid Valve D 1P Connector No. 1 (YEL)

GETtheMANUALS.org

And Wire Harness 7P Connector No. 4 (YEL)
Courtesy of AMERICAN HONDA MOTOR CO., INC.

Is there continuity?

YES : The shift solenoid wire harness is OK. **REPLACE SHIFT SOLENOID VALVE D** , then **do the repair verification** .

NO : **REPLACE THE SHIFT SOLENOID WIRE HARNESS** , then **do the repair verification** .

REPAIR VERIFICATION (OBD STATUS CHECK)

- 1. Reconnect all connectors.
- 2. Turn the ignition switch to ON (II).
- 3. Clear the DTC with the HDS.
- 4. Start the engine with the shift lever in P, and wait for at least 1 second. Then test-drive the vehicle in 2nd gear for at least 1 second.
- 5. Monitor the OBD STATUS for P0983 in the DTCs MENU with the HDS.

DTC Description	OBD Status
P0983 Shift Solenoid Valve D (Open)	

Does the HDS indicate PASSED, FAILED, or NOT COMPLETED?

PASSED Troubleshooting is complete. If the PCM was substituted, **replace the original PCM** See **PCM REMOVAL AND INSTALLATION** or **PCM UPDATE** . Check for other DTC after this troubleshooting. If any other Pending or Confirmed DTCs were indicated, go to the indicated DTC's troubleshooting.

FAILED Troubleshooting is incomplete. Check for poor connections or loose terminals between shift solenoid valve D and the PCM, then go to step 1 and recheck. If the PCM was updated, **substitute a known-good PCM** See **PCM REMOVAL AND INSTALLATION** or **PCM UPDATE** , and check the OBD STATUS again.

NOT COMPLETED Repair verification is incomplete. Meet the test condition, and check the OBD STATUS again.

DTC P0985: SHIFT SOLENOID VALVE E (SHORT)

GETtheMANUALS.org

DTC Troubleshooting: P0985

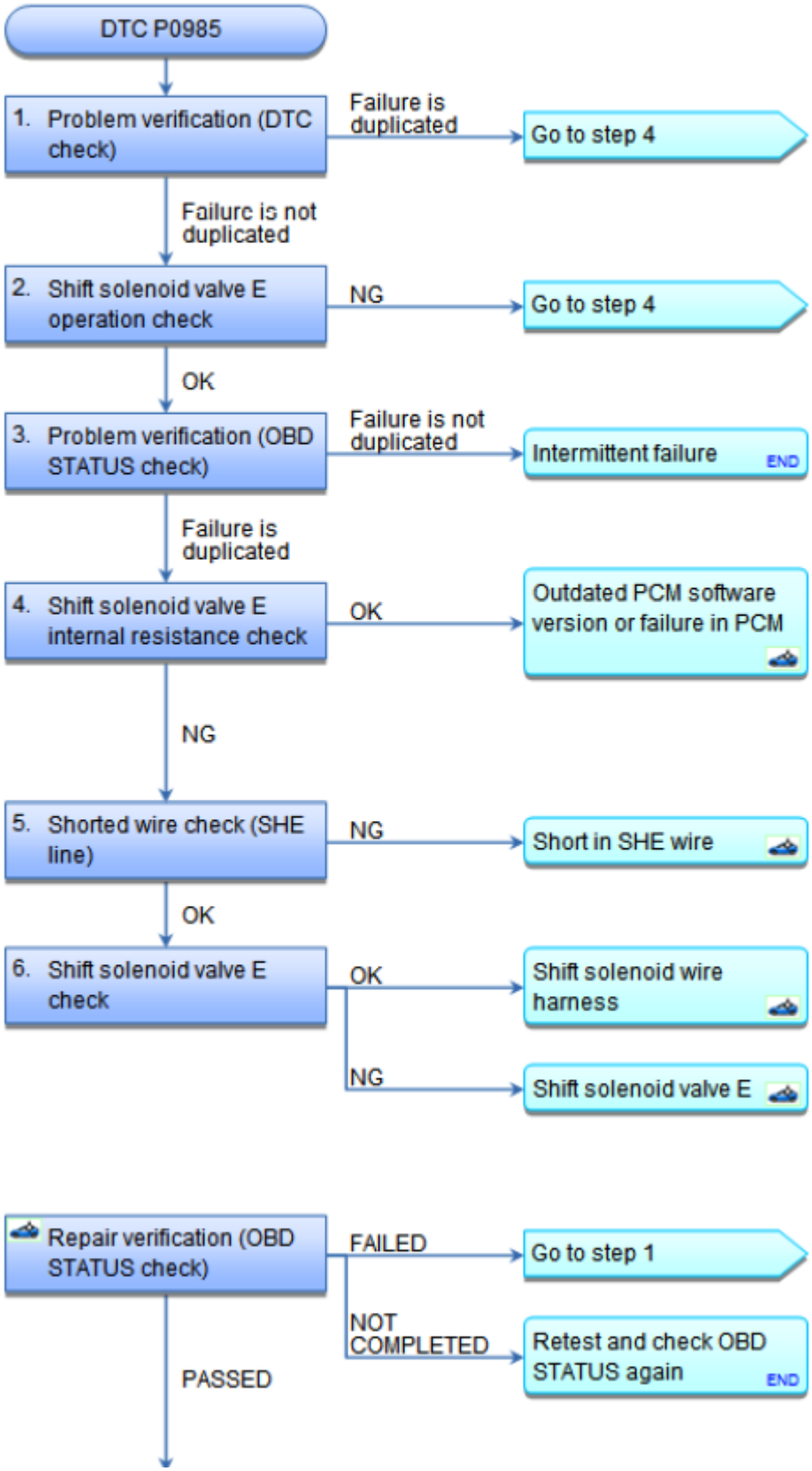

GETtheMANUALS.org

Fig. 114: DTC Troubleshooting Flow Chart (P0985)
Courtesy of AMERICAN HONDA MOTOR CO., INC.

NOTE:

- **Before you troubleshoot, record all freeze data and any on-board snapshot with the HDS, and review the General Troubleshooting Information See HOW TO TROUBLESHOOT THE A/T SYSTEM or HOW TO TROUBLESHOOT THE FUEL AND EMISSIONS SYSTEMS .**
- **This code is caused by an electrical circuit problem and cannot be caused by a mechanical problem in the transmission.**

DTC Description	Confirmed DTC	Pending DTC	Freeze Frame
P0985 Shift Solenoid Valve E (Short)			

1. Problem verification (DTC check):
   - 1. Turn the ignition switch to ON (II).
   - 2. Clear the DTC with the HDS.
   - 3. Start the engine with the shift lever in P, and wait for at least 1 second.
   - 4. Check for Pending or Confirmed DTCs with the HDS.

DTC Description	Confirmed DTC	Pending DTC	Freeze Frame
P0985 Shift Solenoid Valve E (Short)			

Is DTC P0985 indicated?

YES : The failure is duplicated. Go to step 4.

NO : Go to step 2.

2. Shift solenoid valve E operation check:
   - 1. Select Shift Solenoid Valve E in the Miscellaneous Test Menu, and test shift solenoid valve E with the HDS.

Is a clicking sound heard?

YES : The shift solenoid valve E operation is OK. Go to step 3.

NO : Go to step 4.

3. Problem verification (OBD STATUS check):
   - 1. Start the engine with the shift lever in P, and wait for at least 1 second.
   - 2. Monitor the OBD STATUS for P0985 in the DTCs MENU with the HDS.

DTC Description	OBD Status

GETtheMANUALS.org

P0985 Shift Solenoid Valve E (Short)

Does the HDS indicate FAILED?

YES : The failure is duplicated. Go to step 4.

NO : If the HDS indicates PASSED, intermittent failure, the system is OK at this time. Check for an intermittent short to ground in the wire between shift solenoid valve E and the PCM. If the HDS indicates NOT COMPLETED, test-drive again.

4. Shift solenoid valve E internal resistance check:

Turn the ignition switch to LOCK (0).

- 1.
- 2. Jump the SCS line with the HDS.
- 3. Disconnect the following connector.

  PCM connector B (49P)

- 4. Measure the resistance between test points 1 and 2.

  Test condition IG LOCK (0)

  PCM connector B (49P): disconnected

  Test circuit SHE

  Test point 1 PCM connector B (49P) No. 40 (YEL)

  Test point 2 Body ground

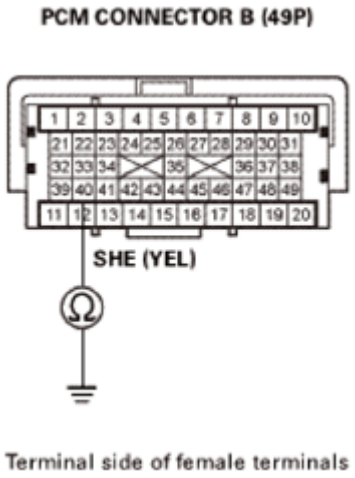

GETtheMANUALS.org

Fig. 115: Measuring Resistance Between PCM Connector B (49P) No. 40 (YEL) And Body Ground
Courtesy of AMERICAN HONDA MOTOR CO., INC.

Is there less than 13.8 ohms?

YES : Go to step 5.

NO : Shift solenoid valve E is OK. **Update the PCM if it does not have the latest software** See **PCM REMOVAL AND INSTALLATION** or **PCM UPDATE** , or **substitute a known-good PCM** See **PCM REMOVAL AND INSTALLATION** or **PCM UPDATE** , then **do the repair verification** .

5. Shorted wire check (SHE line):
   - 1. Disconnect the following connector.

     Shift solenoid wire harness 8P connector

   - 2. Check for continuity between test points 1 and 2.

     Test condition IG LOCK (0)

     PCM connector B (49P): disconnected

     Shift solenoid wire harness 8P connector: disconnected

     Test circuit SHE

     Test point 1 PCM connector B (49P) No. 40 (YEL)

     Test point 2 Body ground

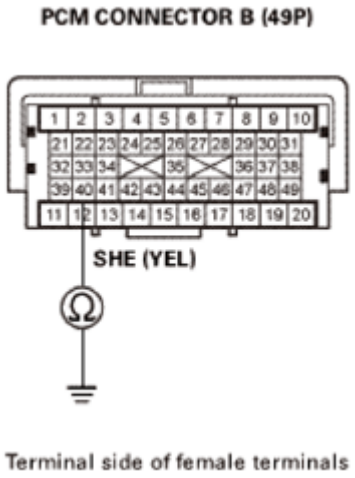

Fig. 116: Checking Continuity Between PCM Connector B (49P) No. 40 (YEL) And Body Ground

GETtheMANUALS.org

Is there continuity?

YES : Repair a short to ground in the SHE wire between the shift solenoid wire harness and the PCM, then **do the repair verification** .

NO : The SHE wire is OK. Go to step 6.

6. Shift solenoid valve E check:
   - 1. **TEST SHIFT SOLENOID VALVE E** .

Is shift solenoid valve E OK?

YES : Shift solenoid valve E is OK. **REPLACE THE SHIFT SOLENOID WIRE HARNESS** , then **do the repair verification** .

NO : **REPLACE SHIFT SOLENOID VALVE E** , then **do the repair verification** .

REPAIR VERIFICATION (OBD STATUS CHECK)

- 1. Reconnect all connectors.
- 2. Turn the ignition switch to ON (II).
- 3. Clear the DTC with the HDS.
- 4. Start the engine with the shift lever in P, and wait for at least 1 second. Then shift to N, and wait for at least 1 second.
- 5. Monitor the OBD STATUS for P0985 in the DTCs MENU with the HDS.

DTC Description	OBD Status
P0985 Shift Solenoid Valve E (Short)	

Does the HDS indicate PASSED, FAILED, or NOT COMPLETED?

PASSED Troubleshooting is complete. If the PCM was substituted, **replace the original PCM** See **PCM REMOVAL AND INSTALLATION** or **PCM UPDATE** . Check for other DTC after this troubleshooting. If any other Pending or Confirmed DTCs were indicated, go to the indicated DTC's troubleshooting.

FAILED Troubleshooting is incomplete. Check for poor connections or loose terminals between shift solenoid valve E and the PCM, then go to step 1 and recheck. If the PCM was updated, **substitute a known-good PCM** See **PCM REMOVAL AND INSTALLATION** or **PCM UPDATE** , and check the OBD STATUS again.

NOT COMPLETED Repair verification is incomplete. Meet the test condition, and check the OBD STATUS again.

DTC P0986: SHIFT SOLENOID VALVE E (OPEN)

GETtheMANUALS.org

DTC Troubleshooting: P0986

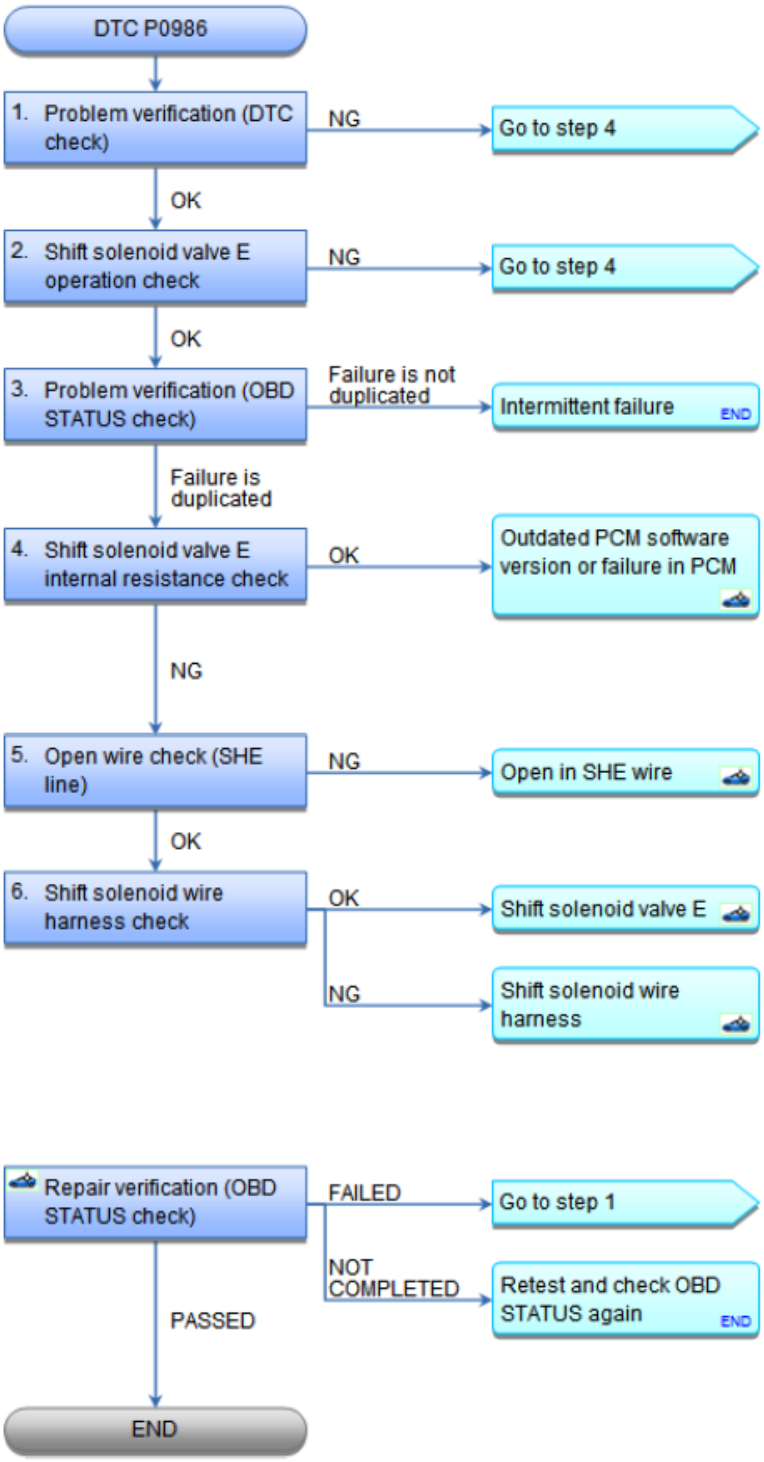

Fig. 117: DTC Troubleshooting Flow Chart (P0986)
Courtesy of AMERICAN HONDA MOTOR CO., INC.

NOTE:

- **Before you troubleshoot, record all freeze data and any on-board snapshot**

GETtheMANUALS.org

with the HDS, and review the General Troubleshooting Information See HOW TO TROUBLESHOOT THE A/T SYSTEM or HOW TO TROUBLESHOOT THE FUEL AND EMISSIONS SYSTEMS .

- **This code is caused by an electrical circuit problem and cannot be caused by a mechanical problem in the transmission.**

DTC Description	Confirmed DTC	Pending DTC	Freeze Frame
P0986 Shift Solenoid Valve E (Open)			

1. Problem verification (DTC check):
   - 1. Turn the ignition switch to ON (II).
   - 2. Clear the DTC with the HDS.
   - 3. Start the engine with the shift lever in N, and wait for at least 1 second.
   - 4. Check for Pending or Confirmed DTCs with the HDS.

DTC Description	Confirmed DTC	Pending DTC	Freeze Frame
P0986 Shift Solenoid Valve E (Open)			

Is DTC P0986 indicated?

YES : The failure is duplicated. Go to step 4.

NO : Go to step 2.

2. Shift solenoid valve E operation check:
   - 1. Select Shift Solenoid Valve E in the Miscellaneous Test Menu, and test shift solenoid valve E with the HDS.

Is a clicking sound heard?

YES : The shift solenoid valve E operation is OK. Go to step 3.

NO : Go to step 4.

3. Problem verification (OBD STATUS check):
   - 1. Start the engine with the shift lever in N, and wait for at least 1 second.
   - 2. Monitor the OBD STATUS for P0986 in the DTCs MENU with the HDS.

DTC Description	OBD Status
P0986 Shift Solenoid Valve E (Open)	

Does the HDS indicate FAILED?

GETtheMANUALS.org

YES : The failure is duplicated. Go to step 4.

NO : If the HDS indicates PASSED, intermittent failure, the system is OK at this time. Check for poor connections or loose terminals between shift solenoid valve E and the PCM. If the HDS indicates NOT COMPLETED, test-drive again.

4. Shift solenoid valve E internal resistance check:
   - 1. Turn the ignition switch to LOCK (0).
   - 2. Jump the SCS line with the HDS.
   - 3. Disconnect the following connector.

     PCM connector B (49P)

   - 4. Measure the resistance between test points 1 and 2.

     Test condition IG LOCK (0)

     PCM connector B (49P): disconnected

     Test circuit SHE

     Test point 1 PCM connector B (49P) No. 40 (YEL)

     Test point 2 Body ground

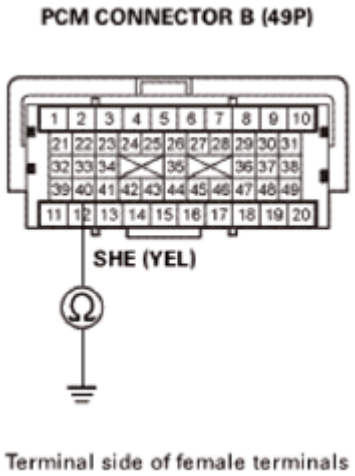

Fig. 118: Measuring Resistance Between PCM Connector B (49P) No. 40 (YEL) And Body Ground
Courtesy of AMERICAN HONDA MOTOR CO., INC.

Is there 13.8-17.1 ohms?

YES : Shift solenoid valve E is OK. **Update the PCM if it does not have the latest software** See **PCM**

GETtheMANUALS.org

REMOVAL AND INSTALLATION or **PCM UPDATE** , or **substitute a known-good PCM** See **PCM REMOVAL AND INSTALLATION** or **PCM UPDATE** , then **do the repair verification** .

NO : Go to step 5.

5. Open wire check (SHE line):
   - 1. Disconnect the following connector.

     Shift solenoid wire harness 8P connector

   - 2. Check for continuity between test points 1 and 2.

     Test condition IG LOCK (0)

     PCM connector B (49P): disconnected

     Shift solenoid wire harness 8P connector: disconnected

     Test circuit SHE

     Test point 1 Shift solenoid wire harness 8P connector No. 2 (YEL)

     Test point 2 PCM connector B (49P) No. 40 (YEL)

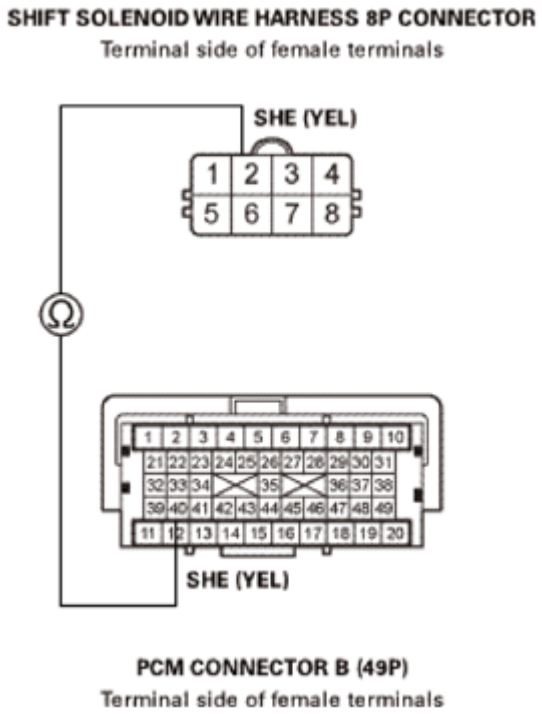

Fig. 119: Checking Continuity Between Shift Solenoid Wire Harness 8P Connector No. 2 (YEL) And PCM Connector B (49P) No. 40 (YEL)

GETtheMANUALS.org

Courtesy of AMERICAN HONDA MOTOR CO., INC.

Is there continuity?

YES : The SHE wire is OK. Go to step 6.

NO : Repair an open in the SHE wire between the shift solenoid wire harness and the PCM, then **do the repair verification** .

6. Shift solenoid wire harness check:
   - 1. **REMOVE THE SHIFT SOLENOID WIRE HARNESS** .
   - 2. Check for continuity between test points 1 and 2.

     Test condition IG LOCK (0)

     PCM connector B (49P): disconnected

     Shift solenoid wire harness 8P connector: disconnected

     Shift solenoid valve E 1P connector: disconnected

     Test circuit SHE

     Test point 1 Shift solenoid valve E 1P connector No. 1 (RED)

     Test point 2 Shift solenoid wire harness 7P connector No. 1 (RED)

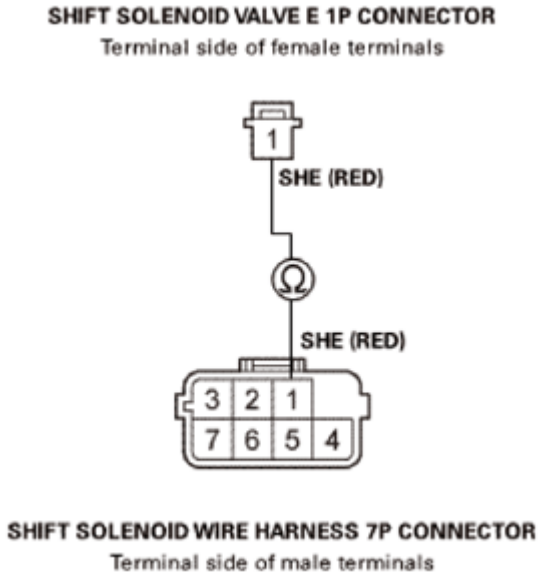

Fig. 120: Checking Continuity Between Shift Solenoid Valve E 1P Connector No. 1 (RED) And Shift Solenoid Wire Harness 7P Connector No. 1 (RED)
Courtesy of AMERICAN HONDA MOTOR CO., INC.

GETtheMANUALS.org

Is there continuity?

YES : The shift solenoid wire harness is OK. **REPLACE SHIFT SOLENOID VALVE E** , then **do the repair verification** .

NO : **REPLACE THE SHIFT SOLENOID WIRE HARNESS** , then **do the repair verification** .

REPAIR VERIFICATION (OBD STATUS CHECK)

- 1. Reconnect all connectors.
- 2. Turn the ignition switch to ON (II).
- 3. Clear the DTC with the HDS.
- 4. Start the engine with the shift lever in P, and wait for at least 1 second. Then shift to N, and wait for at least 1 second.
- 5. Monitor the OBD STATUS for P0986 in the DTCs MENU with the HDS.

DTC Description	OBD Status
P0986 Shift Solenoid Valve E (Open)	

Does the HDS indicate PASSED, FAILED, or NOT COMPLETED?

PASSED Troubleshooting is complete. If the PCM was substituted, **replace the original PCM** See **PCM REMOVAL AND INSTALLATION** or **PCM UPDATE** . Check for other DTC after this troubleshooting. If any other Pending or Confirmed DTCs were indicated, go to the indicated DTC's troubleshooting.

FAILED Troubleshooting is incomplete. Check for poor connections or loose terminals between shift solenoid valve E and the PCM, then go to step 1 and recheck. If the PCM was updated, **substitute a known-good PCM** See **PCM REMOVAL AND INSTALLATION** or **PCM UPDATE** , and check the OBD STATUS again.

NOT COMPLETED Repair verification is incomplete. Meet the test condition, and check the OBD STATUS again.

DTC P1717: TRANSMISSION RANGE SWITCH ATP RVS SWITCH (OPEN OR SHORT)

GETtheMANUALS.org

DTC Troubleshooting: P1717

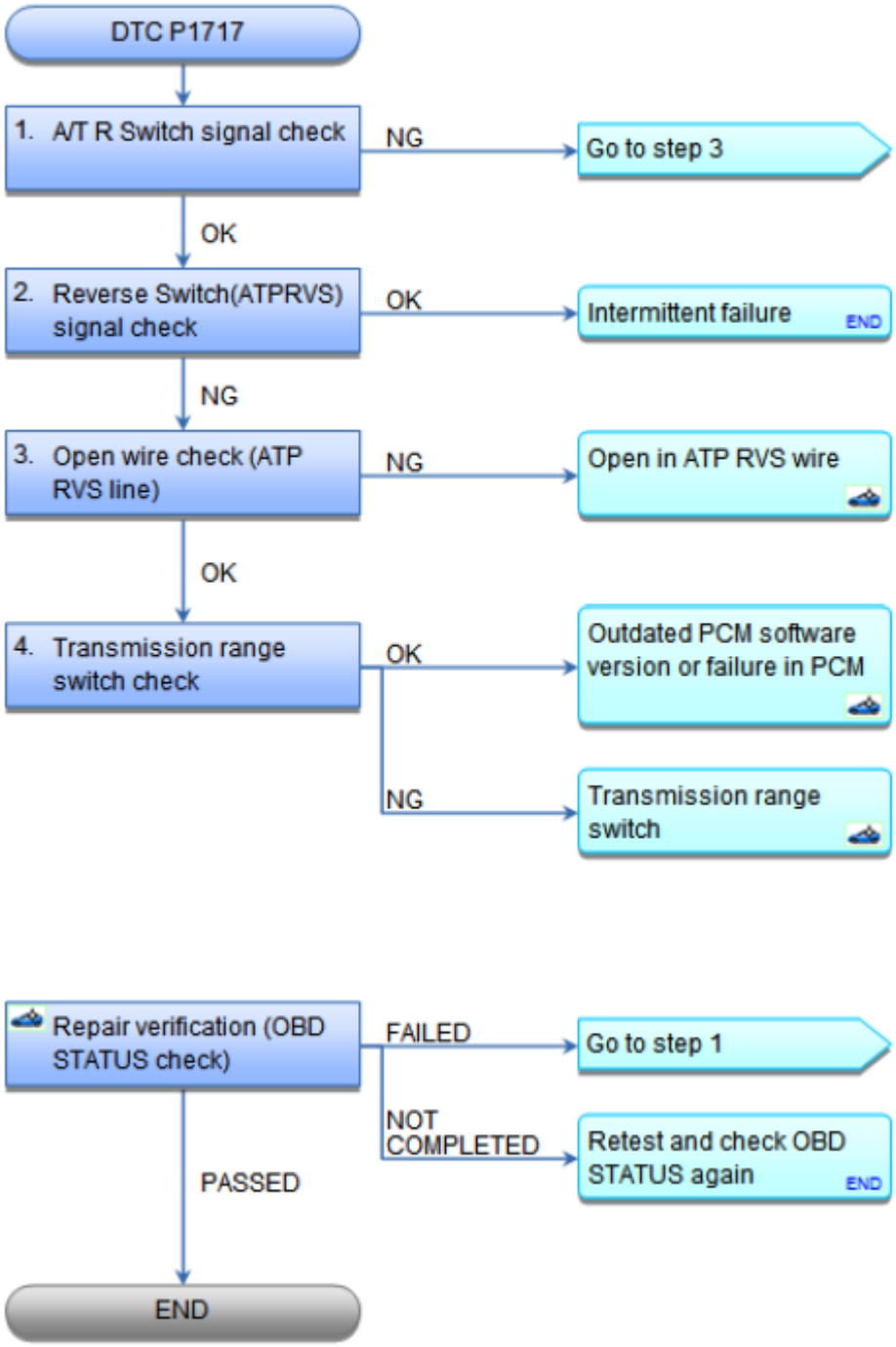

Fig. 121: DTC Troubleshooting Flow Chart (P1717)
Courtesy of AMERICAN HONDA MOTOR CO., INC.

NOTE:

- **Before you troubleshoot, record all freeze data and any on-board snapshot with the HDS, and review the General Troubleshooting Information See HOW TO TROUBLESHOOT THE A/T SYSTEM or HOW TO**

GETtheMANUALS.org

TROUBLESHOOT THE FUEL AND EMISSIONS SYSTEMS .

- **This code is caused by an electrical circuit problem and cannot be caused by a mechanical problem in the transmission.**

DTC Description	Confirmed DTC	Pending DTC	Freeze Frame
P1717 Transmission Range Switch ATP RVS Switch (Open or Short)			

1. A/T R Switch signal check:
   - 1. Turn the ignition switch to ON (II).
   - 2. Check the parameter(s) below with the HDS with the shift lever in R.

Signal	Threshold		Current conditions	
	Values	Unit	Values	Unit
A/T R Switch	ON			

Do the current condition(s) match the threshold?

YES : The A/T R Switch signal is OK. Go to step 2.

NO : Check for proper transmission range switch installation, **adjust the shift cable** See **A/T SHIFT CABLE ADJUSTMENT** or **A/T SHIFT CABLE REMOVAL AND INSTALLATION** , then recheck. If the transmission range switch and the shift cable are OK, go to step 3.

2. Reverse Switch(ATPRVS) signal check:
   - 1. Check the parameter(s) below with the HDS with the shift lever in R.

Signal	Threshold		Current conditions	
	Values	Unit	Values	Unit
Reverse Switch(ATPRVS)	ON			

Do the current condition(s) match the threshold?

YES : The Reverse Switch(ATPRVS) signal is OK. Intermittent failure, the system is OK at this time.

NO : Go to step 3.

3. Open wire check (ATP RVS line):
   - 1. Turn the ignition switch to LOCK (0).
   - 2. Disconnect the following connector.

   Transmission range switch 10P connector

GETtheMANUALS.org

- 3. Turn the ignition switch to ON (II).
- 4. Measure the voltage between test points 1 and 2.

  Test condition IG ON (II)

  Transmission range switch 10P connector: disconnected

  Test circuit ATP RVS

  Test point 1 Transmission range switch 10P connector No. 5 (WHT/RED)

  Test point 2 Body ground

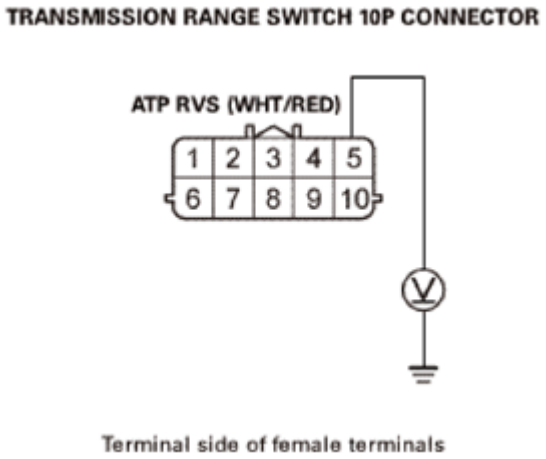

Fig. 122: Measuring Voltage Between Transmission Range Switch 10P Connector No. 5 (WHT/RED) And Body Ground
Courtesy of AMERICAN HONDA MOTOR CO., INC.

Is there battery voltage?

YES : The ATP RVS wire is OK. Go to step 4.

NO : Repair an open in the ATP RVS wire between the transmission range switch and the PCM, then **do the repair verification** .

4. Transmission range switch check:
   - 1. Check for continuity between test points 1 and 2.

     Test condition IG LOCK (0)

     Transmission range switch 10P connector: disconnected

     Test circuit ATP RVS, GND

GETtheMANUALS.org

Test point 1 Transmission range switch 10P connector No. 5

Test point 2 Transmission range switch 10P connector No. 6

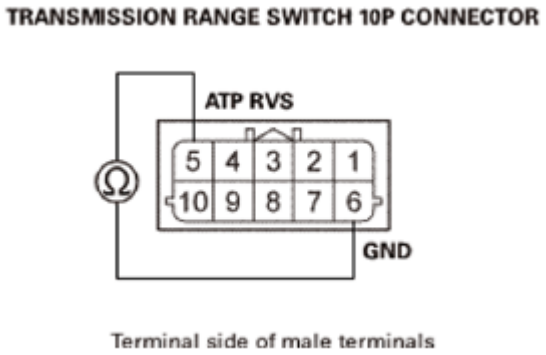

Fig. 123: Checking Continuity Between Transmission Range Switch 10P Connector No. 5 And No. 6
Courtesy of AMERICAN HONDA MOTOR CO., INC.

Is there continuity when the shift lever is in R, and no continuity when the shift lever is shifted to any other position?

YES : The transmission range switch is OK. **Update the PCM if it does not have the latest software** See **PCM REMOVAL AND INSTALLATION** or **PCM UPDATE** , or **substitute a known-good PCM** See **PCM REMOVAL AND INSTALLATION** or **PCM UPDATE** , then **do the repair verification** .

NO : **REPLACE THE TRANSMISSION RANGE SWITCH** , then **do the repair verification** .

REPAIR VERIFICATION (OBD STATUS CHECK)

- 1. Reconnect all connectors.
- 2. Turn the ignition switch to ON (II).
- 3. Clear the DTC with the HDS.
- 4. Start the engine with the shift lever in P. With the brake pedal pressed, shift the shift lever to R, shift to N, then shift to R and wait for at least 2 seconds.
- 5. Monitor the OBD STATUS for P1717 in the DTCs MENU with the HDS.

DTC Description	OBD Status
P1717 Transmission Range Switch ATP RVS Switch (Open or Short)	

Does the HDS indicate PASSED, FAILED, or NOT COMPLETED?

PASSED Troubleshooting is complete. If the PCM was substituted, **replace the original PCM** See **PCM REMOVAL AND INSTALLATION** or **PCM UPDATE** . Check for other DTC after this troubleshooting. If any other Pending or Confirmed DTCs were indicated, go to the indicated DTC's troubleshooting.

GETtheMANUALS.org

FAILED Troubleshooting is incomplete. Check for poor connections or loose terminals between the transmission range switch and the PCM, then go to step 1 and recheck. If the PCM was updated, **substitute a known-good PCM** See **PCM REMOVAL AND INSTALLATION** or **PCM UPDATE** , and check the OBD STATUS again.

NOT COMPLETED Repair verification is incomplete. Meet the test condition, and check the OBD STATUS again.

DTC P1730: SHIFT ERROR B

GETtheMANUALS.org

DTC Troubleshooting: P1730

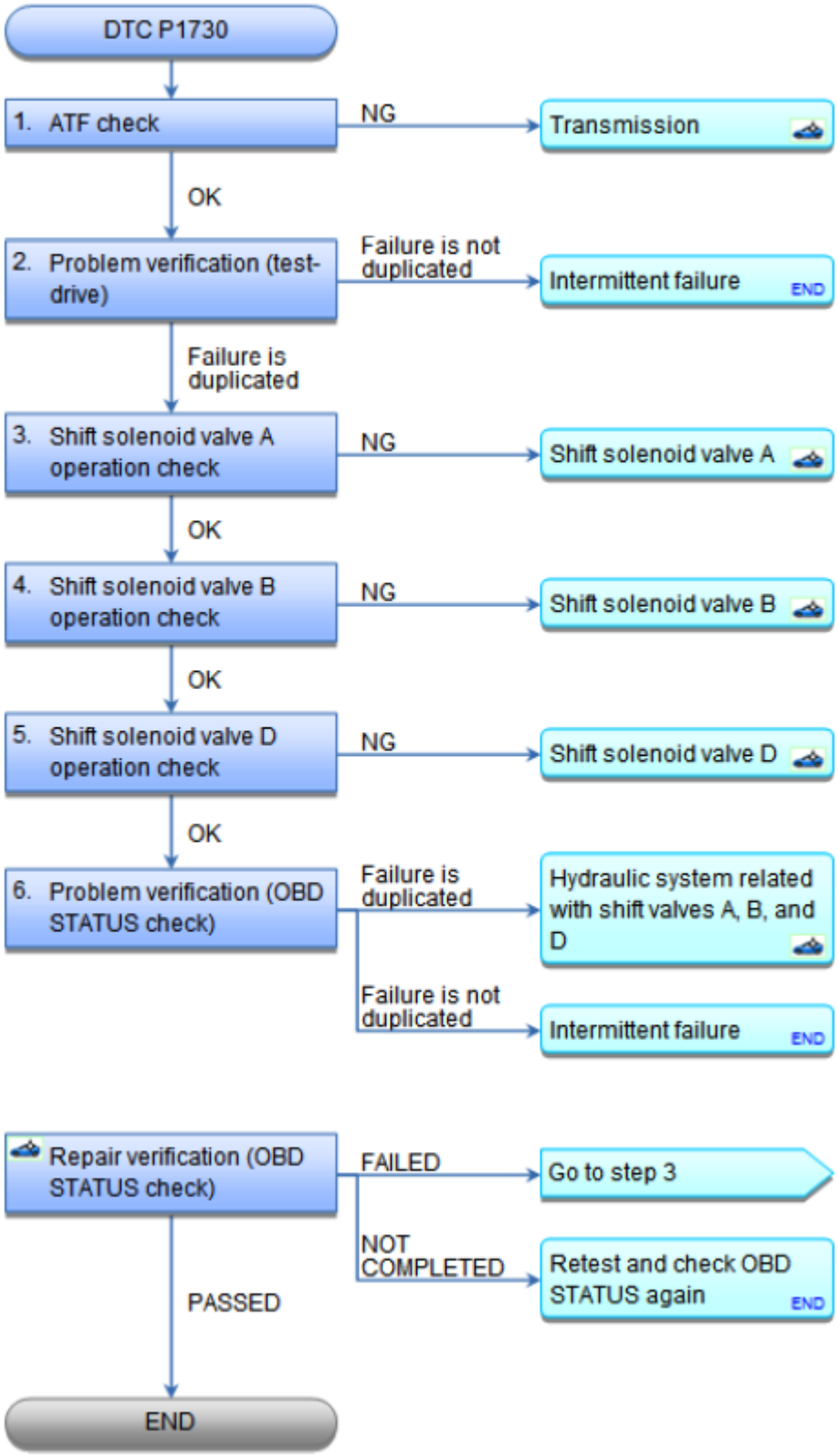

Fig. 124: DTC Troubleshooting Flow Chart (P1730)

GETtheMANUALS.org

Courtesy of AMERICAN HONDA MOTOR CO., INC.

NOTE: **Before you troubleshoot, record all freeze data and any on-board snapshot with the HDS, and review the General Troubleshooting Information See HOW TO TROUBLESHOOT THE A/T SYSTEM or HOW TO TROUBLESHOOT THE FUEL AND EMISSIONS SYSTEMS .**

DTC Description	Confirmed DTC	Pending DTC	Freeze Frame
P1730 Shift Error B			

1. ATF check:
   - 1. Warm up the engine to normal operating temperature (the radiator fan comes on).
   - 2. Make sure that the transmission is filled to the proper level, and check for fluid leaks.
   - 3. **DRAIN THE ATF** through a strainer. Inspect the strainer for metal debris or excessive clutch material.

   Does the strainer have metal debris or excessive clutch material?

   YES : **Replace the transmission** See **AUTOMATIC TRANSMISSION DISASSEMBLY AND REASSEMBLY** or **AUTOMATIC TRANSMISSION REMOVAL AND INSTALLATION** , then **do the repair verification** .

   NO : **REPLACE THE ATF** , then go to step 2.

2. Problem verification (test-drive):
   - 1. Turn the ignition switch to ON (II).
   - 2. Clear the DTC with the HDS.
   - 3. Test-drive the vehicle with the shift lever in D, and let the transmission shift through all five gears.
   - 4. Monitor the OBD STATUS for P1730 in the DTCs MENU with the HDS.

DTC Description	OBD Status
P1730 Shift Error B	

   Does the HDS indicate FAILED?

   YES : The failure is duplicated. Go to step 3.

   NO : If the HDS indicates PASSED, intermittent failure, the system is OK at this time. If the HDS indicates NOT COMPLETED, test-drive again.

3. Shift solenoid valve A operation check:
   - 1. Clear the DTC with the HDS.
   - 2. Select Shift Solenoid Valve A in the Miscellaneous Test Menu, and check that shift solenoid

GETtheMANUALS.org

valve A operates with the HDS.

Is a clicking sound heard?

YES : Shift solenoid valve A is OK. Go to step 4.

NO : **REPLACE SHIFT SOLENOID VALVE A** , then **do the repair verification** .

4. Shift solenoid valve B operation check:
   - 1. Select Shift Solenoid Valve B in the Miscellaneous Test Menu, and check that shift solenoid valve B operates with the HDS.

Is a clicking sound heard?

YES : Shift solenoid valve B is OK. Go to step 5.

NO : **REPLACE SHIFT SOLENOID VALVE B** , then **do the repair verification** .

5. Shift solenoid valve D operation check:
   - 1. Select Shift Solenoid Valve D in the Miscellaneous Test Menu, and check that shift solenoid valve D operates with the HDS.

Is a clicking sound heard?

YES : Shift solenoid valve D is OK. Go to step 6.

NO : **REPLACE SHIFT SOLENOID VALVE D** , then **do the repair verification** .

6. Problem verification (OBD STATUS check):
   - 1. Turn the ignition switch to ON (II).
   - 2. Clear the DTC with the HDS.
   - 3. Test-drive the vehicle with the shift lever in D, and let the transmission shift through all five gears.
   - 4. Monitor the OBD STATUS for P1730 in the DTCs MENU with the HDS.

DTC Description	OBD Status
P1730 Shift Error B	

Does the HDS indicate FAILED?

YES : The failure is duplicated. Repair the hydraulic system related with shift valves A, B, and D, or **replace the transmission** See **AUTOMATIC TRANSMISSION DISASSEMBLY AND REASSEMBLY** or **AUTOMATIC TRANSMISSION REMOVAL AND INSTALLATION** , then **do the repair verification** .

GETtheMANUALS.org

NO : If the HDS indicates PASSED, intermittent failure, the system is OK at this time. If the HDS indicates NOT COMPLETED, test-drive again.

REPAIR VERIFICATION (OBD STATUS CHECK)

- 1. Turn the ignition switch to ON (II).
- 2. Clear the DTC with the HDS.
- 3. Test-drive the vehicle with the shift lever in D, and let the transmission shift through all five gears.
- 4. Monitor the OBD STATUS for P1730 in the DTCs MENU with the HDS.

DTC Description	OBD Status
P1730 Shift Error B	

Does the HDS indicate PASSED, FAILED, or NOT COMPLETED?

PASSED Troubleshooting is complete. Check for other DTC after this troubleshooting. If any other Pending or Confirmed DTCs were indicated, go to the indicated DTC's troubleshooting.

FAILED Troubleshooting is incomplete. Go to step 3 and recheck.

NOT COMPLETED Repair verification is incomplete. Meet the test condition, and check the OBD STATUS again.

DTC P1731: SHIFT ERROR C

GETtheMANUALS.org

DTC Troubleshooting: P1731

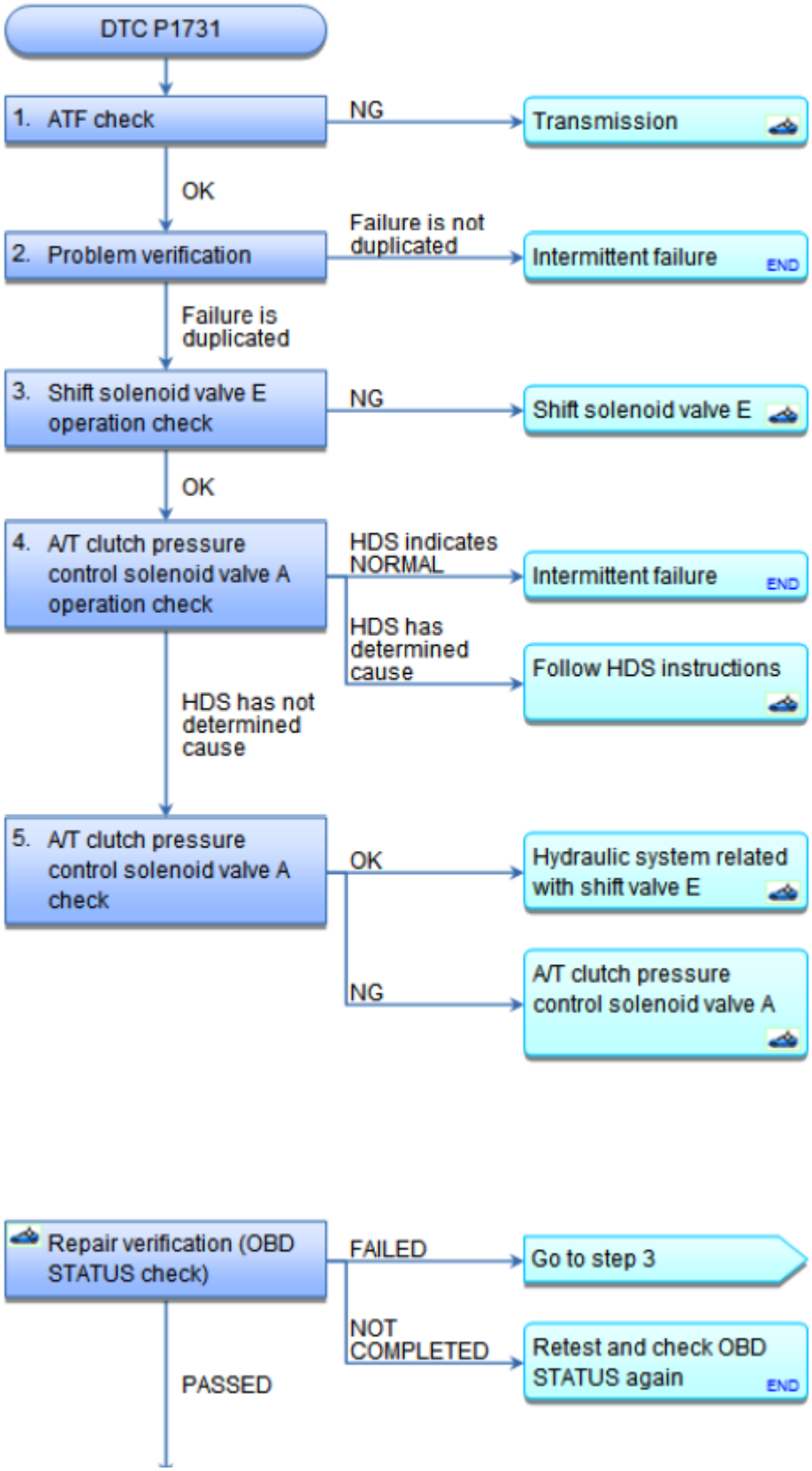

GETtheMANUALS.org

Fig. 125: DTC Troubleshooting Flow Chart (P1731)
Courtesy of AMERICAN HONDA MOTOR CO., INC.

NOTE: **Before you troubleshoot, record all freeze data and any on-board snapshot with the HDS, and review the General Troubleshooting Information See HOW TO TROUBLESHOOT THE A/T SYSTEM or HOW TO TROUBLESHOOT THE FUEL AND EMISSIONS SYSTEMS .**

DTC Description	Confirmed DTC	Pending DTC	Freeze Frame
P1731 Shift Error C			

1. ATF check:
   - 1. Warm up the engine to normal operating temperature (the radiator fan comes on).
   - 2. Make sure that the transmission is filled to the proper level, and check for fluid leaks.
   - 3. **DRAIN THE ATF** through a strainer. Inspect the strainer for metal debris or excessive clutch material.

   Does the strainer have metal debris or excessive clutch material?

   YES : **Replace the transmission** See **AUTOMATIC TRANSMISSION DISASSEMBLY AND REASSEMBLY** or **AUTOMATIC TRANSMISSION REMOVAL AND INSTALLATION** , then **do the repair verification** .

   NO : **REPLACE THE ATF** , then go to step 2.

2. Problem verification:
   - 1. Turn the ignition switch to ON (II).
   - 2. Clear the DTC with the HDS.
   - 3. Test-drive the vehicle with the shift lever in D, and let the transmission shift through all five gears.
   - 4. Monitor the OBD STATUS for P1731 in the DTCs MENU with the HDS.

DTC Description	OBD Status
P1731 Shift Error C	

   Does the HDS indicate FAILED?

   YES : The failure is duplicated. Go to step 3.

   NO : If the HDS indicates PASSED, intermittent failure, the system is OK at this time. If the HDS indicates NOT COMPLETED, test-drive again.

3. Shift solenoid valve E operation check:
   - 1. Clear the DTC with the HDS.

GETtheMANUALS.org

- 2. Select Shift Solenoid Valve E in the Miscellaneous Test Menu, and check that shift solenoid valve E operates with the HDS.

Is a clicking sound heard?

YES : Shift solenoid valve E is OK. Go to step 4.

NO : **REPLACE SHIFT SOLENOID VALVE E** , then **do the repair verification** .

4. A/T clutch pressure control solenoid valve A operation check:
   - 1. Select Clutch Pressure Control (Linear) Solenoid Valve A in the Miscellaneous Test Menu, and test A/T clutch pressure control solenoid valve A with the HDS.

Does the HDS indicate NORMAL?

NORMAL A/T clutch pressure control solenoid valve A is OK. Intermittent failure, the system is OK at this time.

FAILURE Follow the instructions indicated on the HDS according to the test result. If the HDS has not determined the cause of the failure, go to step 5.

FAILURE Follow the instructions indicated on the HDS according to the test result. If a part is replaced, **do the repair verification** .

5. A/T clutch pressure control solenoid valve A check:
   - 1. **Inspect A/T clutch pressure control solenoid valve A** See **A/T CLUTCH PRESSURE CONTROL SOLENOID VALVE A TEST** or **A/T CLUTCH PRESSURE CONTROL SOLENOID VALVE B AND C TEST** .

Does A/T clutch pressure control solenoid valve A work properly?

YES : A/T clutch pressure control solenoid valve A is OK. Repair the hydraulic system related with shift valve E, or **replace the transmission** See **AUTOMATIC TRANSMISSION DISASSEMBLY AND REASSEMBLY** or **AUTOMATIC TRANSMISSION REMOVAL AND INSTALLATION** , then **do the repair verification** .

NO : **Replace A/T clutch pressure control solenoid valve A** See **A/T CLUTCH PRESSURE CONTROL SOLENOID VALVE A REMOVAL AND INSTALLATION** or **A/T CLUTCH PRESSURE CONTROL SOLENOID VALVE B AND C REMOVAL AND INSTALLATION** , then **do the repair verification** .

REPAIR VERIFICATION (OBD STATUS CHECK)

- 1. Turn the ignition switch to ON (II).
- 2. Clear the DTC with the HDS.
- 3. Test-drive the vehicle with the shift lever in D, and let the transmission shift through all five gears.

GETtheMANUALS.org

- 4. Monitor the OBD STATUS for P1731 in the DTCs MENU with the HDS.

DTC Description	OBD Status
P1731 Shift Error C	

Does the HDS indicate PASSED, FAILED, or NOT COMPLETED?

PASSED Troubleshooting is complete. Check for other DTC after this troubleshooting. If any other Pending or Confirmed DTCs were indicated, go to the indicated DTC's troubleshooting.

FAILED Troubleshooting is incomplete. Go to step 3 and recheck.

NOT COMPLETED Repair verification is incomplete. Meet the test condition, and check the OBD STATUS again.

DTC P1732: SHIFT ERROR D

GETtheMANUALS.org

DTC Troubleshooting: P1732

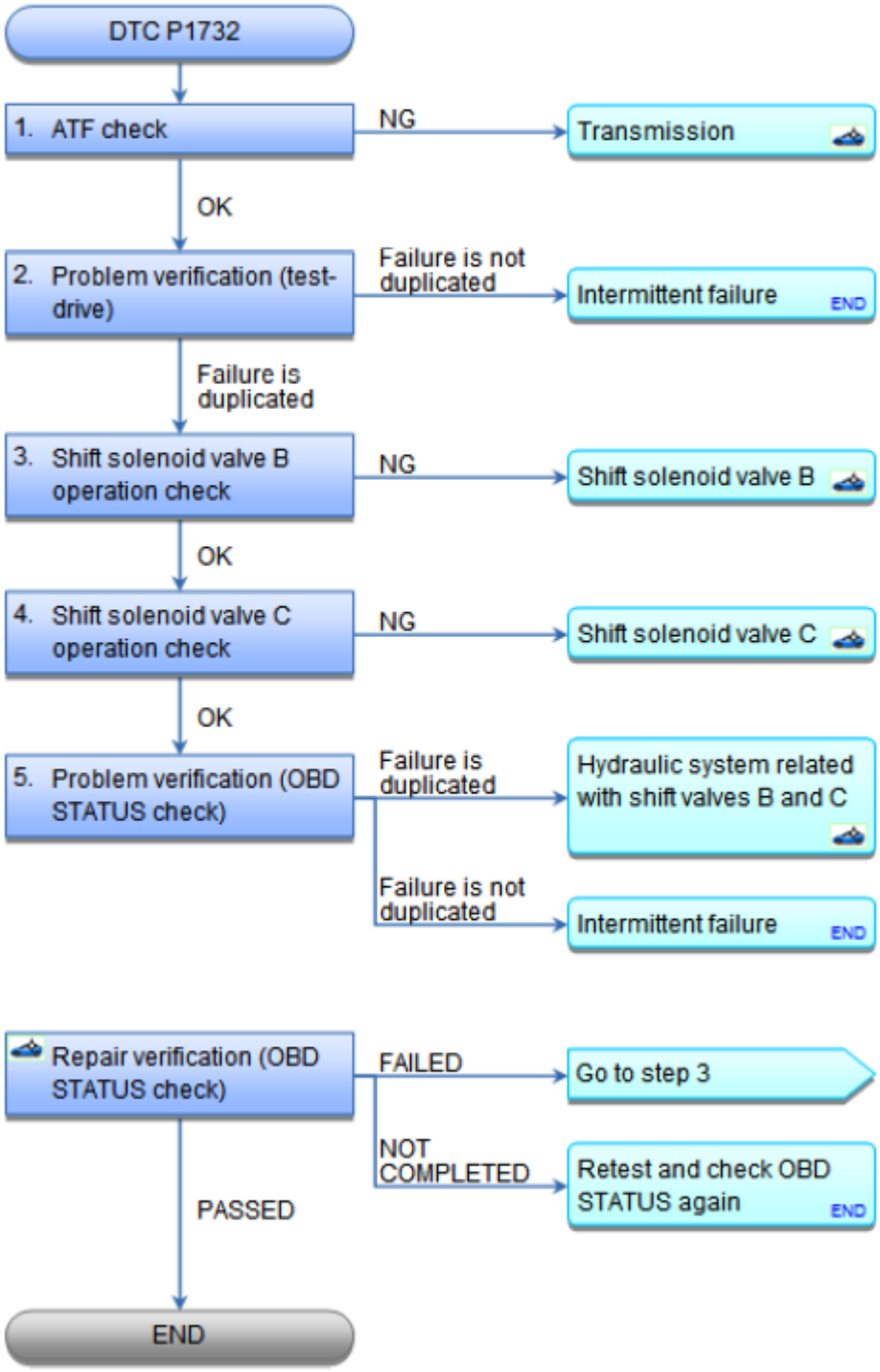

Fig. 126: DTC Troubleshooting Flow Chart (P1732)
Courtesy of AMERICAN HONDA MOTOR CO., INC.

NOTE: **Before you troubleshoot, record all freeze data and any on-board snapshot with the HDS, and review the General Troubleshooting Information See HOW TO**

GETtheMANUALS.org

TROUBLESHOOT THE A/T SYSTEM or HOW TO TROUBLESHOOT THE FUEL AND EMISSIONS SYSTEMS .

DTC Description	Confirmed DTC	Pending DTC	Freeze Frame
P1732 Shift Error D			

1. ATF check:
   - 1. Warm up the engine to normal operating temperature (the radiator fan comes on).
   - 2. Make sure that the transmission is filled to the proper level, and check for fluid leaks.
   - 3. **DRAIN THE ATF** through a strainer. Inspect the strainer for metal debris or excessive clutch material.

   Does the strainer have metal debris or excessive clutch material?

   YES : **Replace the transmission** See **AUTOMATIC TRANSMISSION DISASSEMBLY AND REASSEMBLY** or **AUTOMATIC TRANSMISSION REMOVAL AND INSTALLATION** , then **do the repair verification** .

   NO : **REPLACE THE ATF** , then go to step 2.

2. Problem verification (test-drive):
   - 1. Turn the ignition switch to ON (II).
   - 2. Clear the DTC with the HDS.
   - 3. Test-drive the vehicle with the shift lever in D, and let the transmission shift through all five gears.
   - 4. Monitor the OBD STATUS for P1732 in the DTCs MENU with the HDS.

DTC Description	OBD Status
P1732 Shift Error D	

   Does the HDS indicate FAILED?

   YES : The failure is duplicated. Go to step 3.

   NO : If the HDS indicates PASSED, intermittent failure, the system is OK at this time. If the HDS indicates NOT COMPLETED, test-drive again.

3. Shift solenoid valve B operation check:
   - 1. Clear the DTC with the HDS.
   - 2. Select Shift Solenoid Valve B in the Miscellaneous Test Menu, and check that shift solenoid valve B operates with the HDS.

   Is a clicking sound heard?

GETtheMANUALS.org

YES : Shift solenoid valve B is OK. Go to step 4.

NO : **REPLACE SHIFT SOLENOID VALVE B** , then **do the repair verification** .

4. Shift solenoid valve C operation check:
   - 1. Select Shift Solenoid Valve C in the Miscellaneous Test Menu, and check that shift solenoid valve C operates with the HDS.

Is a clicking sound heard?

YES : Shift solenoid valve C is OK. Go to step 5.

NO : **REPLACE SHIFT SOLENOID VALVE C** , then **do the repair verification** .

5. Problem verification (OBD STATUS check):
   - 1. Turn the ignition switch to ON (II).
   - 2. Clear the DTC with the HDS.
   - 3. Test-drive the vehicle with the shift lever in D, and let the transmission shift through all five gears.
   - 4. Monitor the OBD STATUS for P1732 in the DTCs MENU with the HDS.

DTC Description	OBD Status
P1732 Shift Error D	

Does the HDS indicate FAILED?

YES : The failure is duplicated. Repair the hydraulic system related with shift valves B and C, or **replace the transmission** See **AUTOMATIC TRANSMISSION DISASSEMBLY AND REASSEMBLY** or **AUTOMATIC TRANSMISSION REMOVAL AND INSTALLATION** , then **do the repair verification** .

NO : If the HDS indicates PASSED, intermittent failure, the system is OK at this time. If the HDS indicates NOT COMPLETED, test-drive again.

REPAIR VERIFICATION (OBD STATUS CHECK)

- 1. Turn the ignition switch to ON (II).
- 2. Clear the DTC with the HDS.
- 3. Test-drive the vehicle with the shift lever in D, and let the transmission shift through all five gears.
- 4. Monitor the OBD STATUS for P1732 in the DTCs MENU with the HDS.

DTC Description	OBD Status
P1732 Shift Error D	

GETtheMANUALS.org

Does the HDS indicate PASSED, FAILED, or NOT COMPLETED?

PASSED Troubleshooting is complete. Check for other DTC after this troubleshooting. If any other Pending or Confirmed DTCs were indicated, go to the indicated DTC's troubleshooting.

FAILED Troubleshooting is incomplete. Go to step 3 and recheck.

NOT COMPLETED Repair verification is incomplete. Meet the test condition, and check the OBD STATUS again.

DTC P1733: SHIFT ERROR E

GETtheMANUALS.org

DTC Troubleshooting: P1733

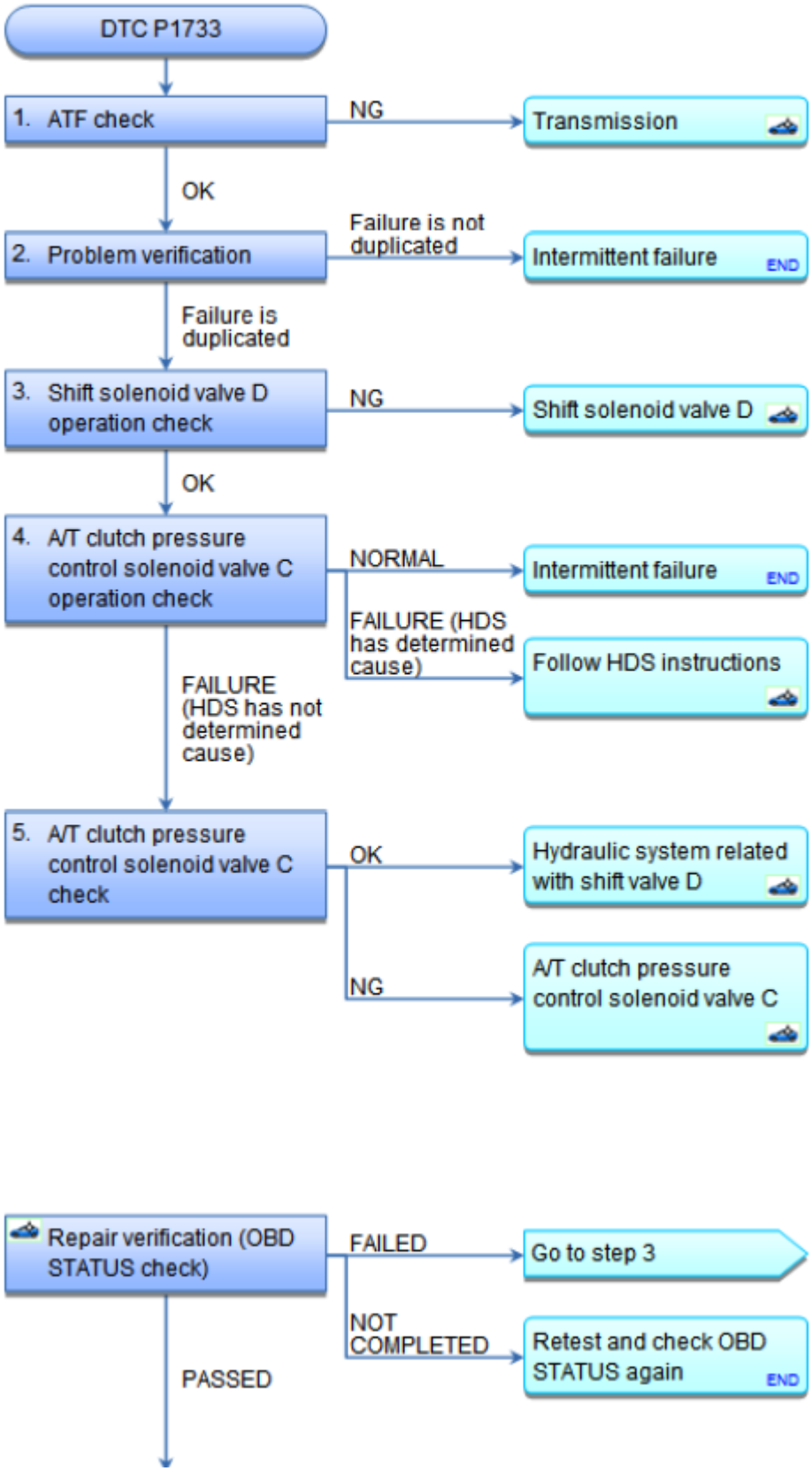

GETtheMANUALS.org

Fig. 127: DTC Troubleshooting Flow Chart (P1733)
Courtesy of AMERICAN HONDA MOTOR CO., INC.

NOTE: **Before you troubleshoot, record all freeze data and any on-board snapshot with the HDS, and review the General Troubleshooting Information See HOW TO TROUBLESHOOT THE A/T SYSTEM or HOW TO TROUBLESHOOT THE FUEL AND EMISSIONS SYSTEMS .**

DTC Description	Confirmed DTC	Pending DTC	Freeze Frame
P1733 Shift Error E			

1. ATF check:
   - 1. Warm up the engine to normal operating temperature (the radiator fan comes on).
   - 2. Make sure that the transmission is filled to the proper level, and check for fluid leaks.
   - 3. **DRAIN THE ATF** through a strainer. Inspect the strainer for metal debris or excessive clutch material.

   Does the strainer have metal debris or excessive clutch material?

   YES : **Replace the transmission** See **AUTOMATIC TRANSMISSION DISASSEMBLY AND REASSEMBLY** or **AUTOMATIC TRANSMISSION REMOVAL AND INSTALLATION** , then **do the repair verification** .

   NO : **REPLACE THE ATF** , then go to step 2.

2. Problem verification:
   - 1. Turn the ignition switch to ON (II).
   - 2. Clear the DTC with the HDS.
   - 3. Test-drive the vehicle with the shift lever in D, and let the transmission shift through all five gears.
   - 4. Monitor the OBD STATUS for P1733 in the DTCs MENU with the HDS.

DTC Description	OBD Status
P1733 Shift Error E	

   Does the HDS indicate FAILED?

   YES : The failure is duplicated. Go to step 3.

   NO : If the HDS indicates PASSED, intermittent failure, the system is OK at this time. If the HDS indicates NOT COMPLETED, test-drive again.

3. Shift solenoid valve D operation check:
   - 1. Clear the DTC with the HDS.

GETtheMANUALS.org

- 2. Select Shift Solenoid Valve D in the Miscellaneous Test Menu, and check that shift solenoid valve D operates with the HDS.

Is a clicking sound heard?

YES : Shift solenoid valve D is OK. Go to step 4.

NO : **REPLACE SHIFT SOLENOID VALVE D** , then **do the repair verification** .

4. A/T clutch pressure control solenoid valve C operation check:
   - 1. Select Clutch Pressure Control (Linear) Solenoid Valve C in the Miscellaneous Test Menu, and test A/T clutch pressure control solenoid valve C with the HDS.

Does the HDS indicate NORMAL?

NORMAL A/T clutch pressure control solenoid valve C is OK. Intermittent failure, the system is OK at this time.

FAILURE (HDS has not determined cause) Follow the instructions indicated on the HDS according to the test result. If the HDS has not determined the cause of the failure, go to step 5.

FAILURE (HDS has determined cause) Follow the instructions indicated on the HDS according to the test result. If a part is replaced, **do the repair verification** .

5. A/T clutch pressure control solenoid valve C check:
   - 1. **Inspect A/T clutch pressure control solenoid valve C** See **A/T CLUTCH PRESSURE CONTROL SOLENOID VALVE A TEST** or **A/T CLUTCH PRESSURE CONTROL SOLENOID VALVE B AND C TEST** .

Does A/T clutch pressure control solenoid valve C work properly?

YES : A/T clutch pressure control solenoid valve C is OK. Repair the hydraulic system related with shift valve D, or **replace the transmission** See **AUTOMATIC TRANSMISSION DISASSEMBLY AND REASSEMBLY** or **AUTOMATIC TRANSMISSION REMOVAL AND INSTALLATION** , then **do the repair verification** .

NO : **Replace A/T clutch pressure control solenoid valve C** See **A/T CLUTCH PRESSURE CONTROL SOLENOID VALVE A REMOVAL AND INSTALLATION** or **A/T CLUTCH PRESSURE CONTROL SOLENOID VALVE B AND C REMOVAL AND INSTALLATION** , then **do the repair verification** .

REPAIR VERIFICATION (OBD STATUS CHECK)

- 1. Turn the ignition switch to ON (II).
- 2. Clear the DTC with the HDS.
- 3. Test-drive the vehicle with the shift lever in D, and let the transmission shift through all five gears.

GETtheMANUALS.org

- 4. Monitor the OBD STATUS for P1733 in the DTCs MENU with the HDS.

DTC Description	OBD Status
P1733 Shift Error E	

Does the HDS indicate PASSED, FAILED, or NOT COMPLETED?

PASSED Troubleshooting is complete. Check for other DTC after this troubleshooting. If any other Pending or Confirmed DTCs were indicated, go to the indicated DTC's troubleshooting.

FAILED Troubleshooting is incomplete. Go to step 3 and recheck.

NOT COMPLETED Repair verification is incomplete. Meet the test condition, and check the OBD STATUS again.

DTC P1734: SHIFT ERROR F

GETtheMANUALS.org

DTC Troubleshooting: P1734

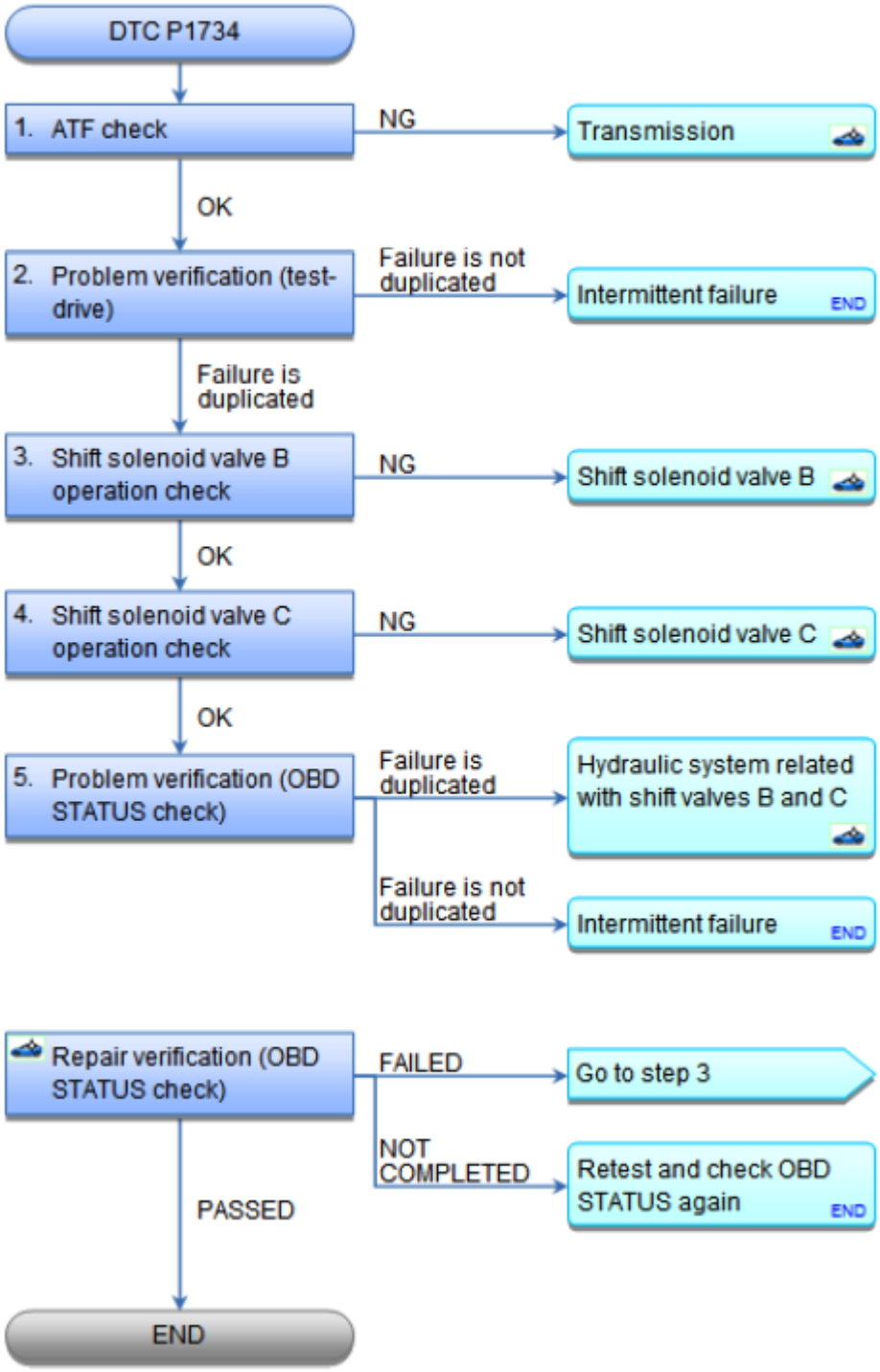

Fig. 128: DTC Troubleshooting Flow Chart (P1734)
Courtesy of AMERICAN HONDA MOTOR CO., INC.

NOTE: **Before you troubleshoot, record all freeze data and any on-board snapshot with the HDS, and review the General Troubleshooting Information See HOW TO**

GETtheMANUALS.org

TROUBLESHOOT THE A/T SYSTEM or HOW TO TROUBLESHOOT THE FUEL AND EMISSIONS SYSTEMS .

DTC Description	Confirmed DTC	Pending DTC	Freeze Frame
P1734 Shift Error F			

1. ATF check:
   - 1. Warm up the engine to normal operating temperature (the radiator fan comes on).
   - 2. Make sure that the transmission is filled to the proper level, and check for fluid leaks.
   - 3. **DRAIN THE ATF** through a strainer. Inspect the strainer for metal debris or excessive clutch material.

   Does the strainer have metal debris or excessive clutch material?

   YES : **Replace the transmission** See **AUTOMATIC TRANSMISSION DISASSEMBLY AND REASSEMBLY** or **AUTOMATIC TRANSMISSION REMOVAL AND INSTALLATION** , then **do the repair verification** .

   NO : **REPLACE THE ATF** , then go to step 2.

2. Problem verification (test-drive):
   - 1. Turn the ignition switch to ON (II).
   - 2. Clear the DTC with the HDS.
   - 3. Test-drive the vehicle with the shift lever in D, and let the transmission shift through all five gears.
   - 4. Monitor the OBD STATUS for P1734 in the DTCs MENU with the HDS.

DTC Description	OBD Status
P1734 Shift Error F	

   Does the HDS indicate FAILED?

   YES : The failure is duplicated. Go to step 3.

   NO : If the HDS indicates PASSED, intermittent failure, the system is OK at this time. If the HDS indicates NOT COMPLETED, test-drive again.

3. Shift solenoid valve B operation check:
   - 1. Clear the DTC with the HDS.
   - 2. Select Shift Solenoid Valve B in the Miscellaneous Test Menu, and check that shift solenoid valve B operates with the HDS.

   Is a clicking sound heard?

GETtheMANUALS.org

YES : Shift solenoid valve B is OK. Go to step 4.

NO : **REPLACE SHIFT SOLENOID VALVE B** , then **do the repair verification** .

4. Shift solenoid valve C operation check:
   - 1. Select Shift Solenoid Valve C in the Miscellaneous Test Menu, and check that shift solenoid valve C operates with the HDS.

Is a clicking sound heard?

YES : Shift solenoid valve C is OK. Go to step 5.

NO : **REPLACE SHIFT SOLENOID VALVE C** , then **do the repair verification** .

5. Problem verification (OBD STATUS check):
   - 1. Turn the ignition switch to ON (II).
   - 2. Clear the DTC with the HDS.
   - 3. Test-drive the vehicle with the shift lever in D, and let the transmission shift through all five gears.
   - 4. Monitor the OBD STATUS for P1734 in the DTCs MENU with the HDS.

DTC Description	OBD Status
P1734 Shift Error F	

Does the HDS indicate FAILED?

YES : The failure is duplicated. Repair the hydraulic system related with shift valves B and C, or **replace the transmission** See **AUTOMATIC TRANSMISSION DISASSEMBLY AND REASSEMBLY** or **AUTOMATIC TRANSMISSION REMOVAL AND INSTALLATION** , then **do the repair verification** .

NO : If the HDS indicates PASSED, intermittent failure, the system is OK at this time. If the HDS indicates NOT COMPLETED, test-drive again.

REPAIR VERIFICATION (OBD STATUS CHECK)

- 1. Turn the ignition switch to ON (II).
- 2. Clear the DTC with the HDS.
- 3. Test-drive the vehicle with the shift lever in D, and let the transmission shift through all five gears.
- 4. Monitor the OBD STATUS for P1734 in the DTCs MENU with the HDS.

DTC Description	OBD Status
P1734 Shift Error F	

GETtheMANUALS.org

Does the HDS indicate PASSED, FAILED, or NOT COMPLETED?

PASSED Troubleshooting is complete. Check for other DTC after this troubleshooting. If any other Pending or Confirmed DTCs were indicated, go to the indicated DTC's troubleshooting.

FAILED Troubleshooting is incomplete. Go to step 3 and recheck.

NOT COMPLETED Repair verification is incomplete. Meet the test condition, and check the OBD STATUS again.

GETtheMANUALS.org

A/T GEAR POSITION INDICATOR COMPONENT LOCATION INDEX

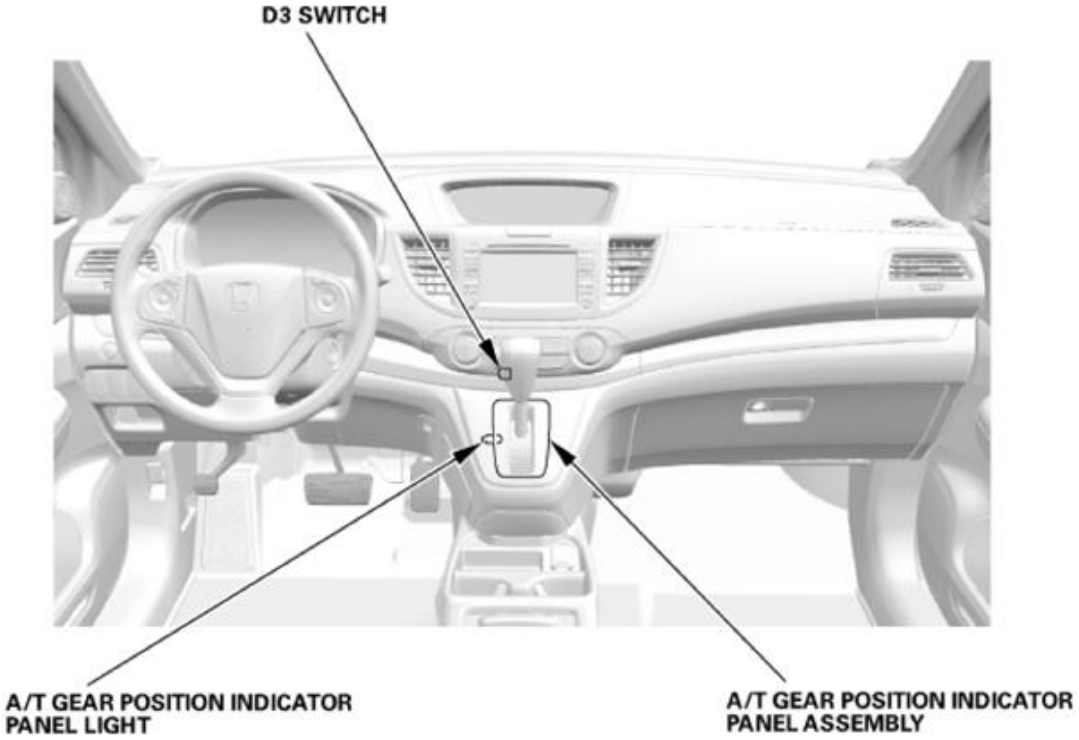

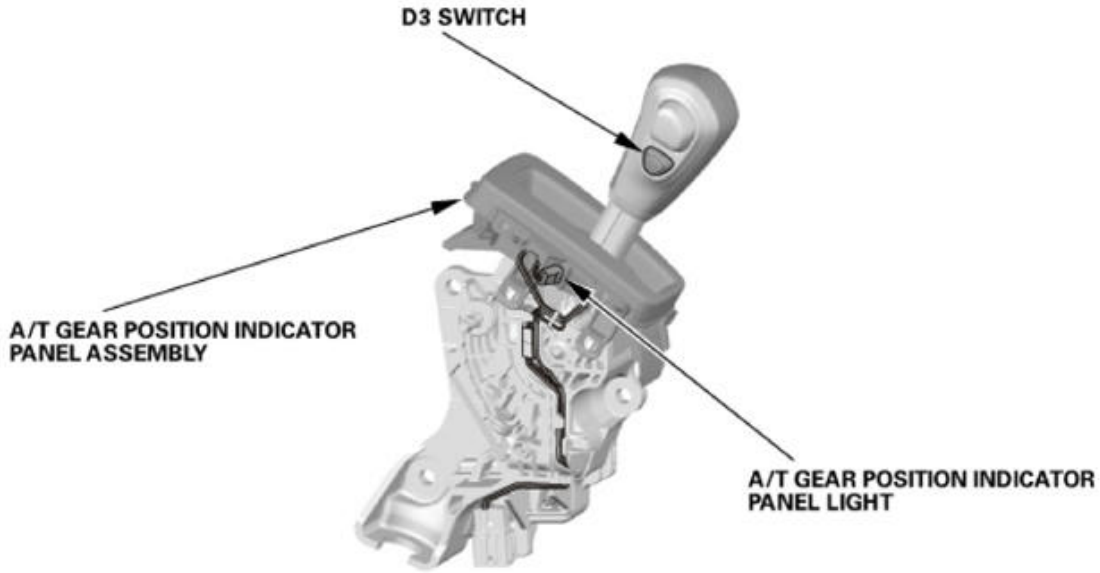

Fig. 1: Identifying A/T Gear Position Indicator Component

GETtheMANUALS.org

Courtesy of AMERICAN HONDA MOTOR CO., INC.

D3 SWITCH	**TEST**
	CIRCUIT TROUBLESHOOTING
	REMOVAL AND INSTALLATION
A/T GEAR POSITION INDICATOR PANEL ASSEMBLY	**REMOVAL AND INSTALLATION**
A/T GEAR POSITION INDICATOR PANEL LIGHT	**REMOVAL AND INSTALLATION**

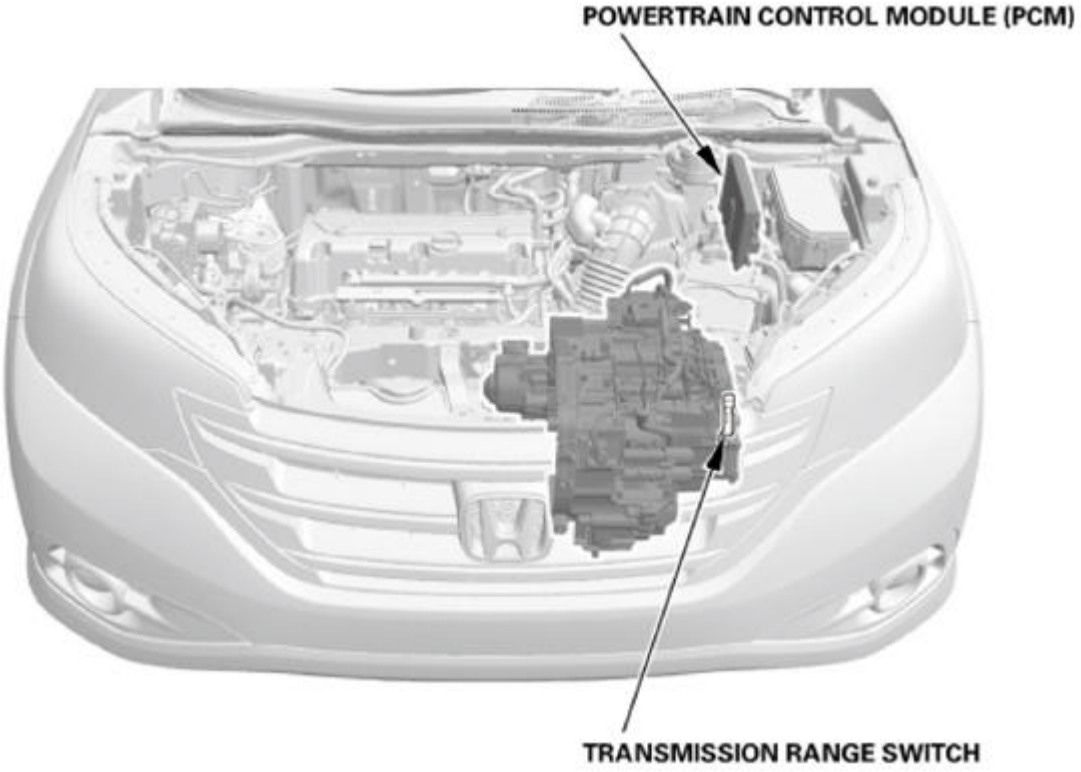

Fig. 2: Identifying Transmission Range Switch And Powertrain Control Module
Courtesy of AMERICAN HONDA MOTOR CO., INC.

TRANSMISSION RANGE SWITCH	**TEST**
	REMOVAL AND INSTALLATION
POWERTRAIN CONTROL MODULE (PCM)	**Update** See **PCM REMOVAL AND INSTALLATION** or **PCM UPDATE**
	Removal and Installation See **PCM REMOVAL AND INSTALLATION** or **PCM UPDATE**

A/T GEAR POSITION INDICATOR PANEL ASSEMBLY REMOVAL AND INSTALLATION

REMOVAL

GETtheMANUALS.org

1. Shift Lever Panel (AT)
    1. Carefully pry out the shift lever panel (A) with the appropriate trim tool to detach the clips (B, C) and the hooks (D), then remove the shift lever panel.

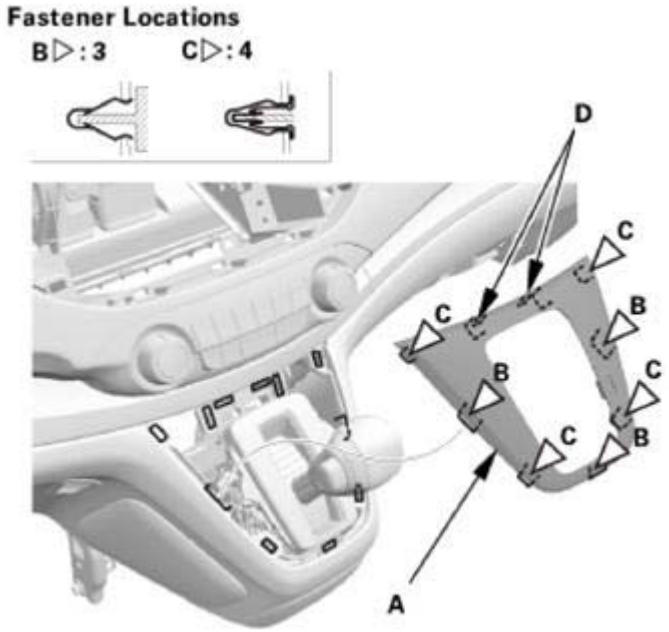

Fig. 3: Identifying Shift Lever Panel, Clips And Hooks
Courtesy of AMERICAN HONDA MOTOR CO., INC.

2. Center Maintenance Cover
    1. Remove the maintenance cover (A).

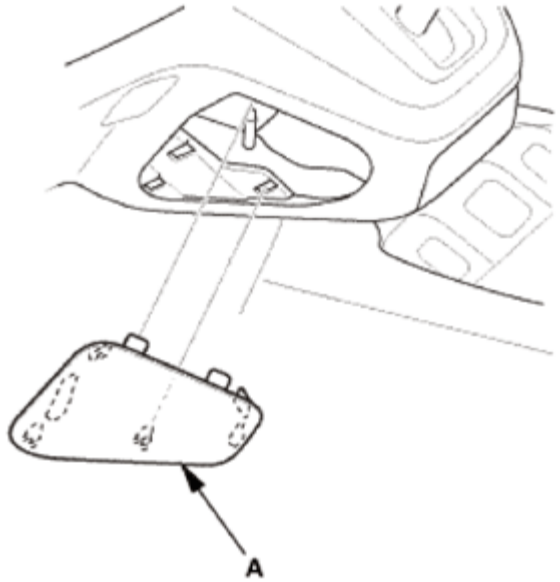

Fig. 4: Identifying Center Maintenance Cover

GETtheMANUALS.org

Courtesy of AMERICAN HONDA MOTOR CO., INC.

3. D3 Switch Harness - Disconnection
    1. Remove the harness wire tie (A).
    2. Disconnect the D3 switch connector (B).

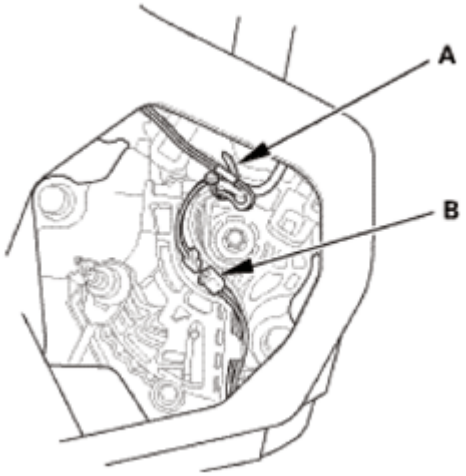

Fig. 5: Identifying D3 Switch Connector And Harness Wire Tie
Courtesy of AMERICAN HONDA MOTOR CO., INC.

4. Shift Lever Knob/Shift Lever Knob Ring Assembly

NOTE: **Do not wipe off the special grease applied to the area of the shift lever marked with an asterisk (*) when you disassemble or assemble it.**

1. Unhook the D3 switch harness (A) from the harness guide (B).
2. Remove the shift lever knob/shift lever knob ring assembly (C).

GETtheMANUALS.org

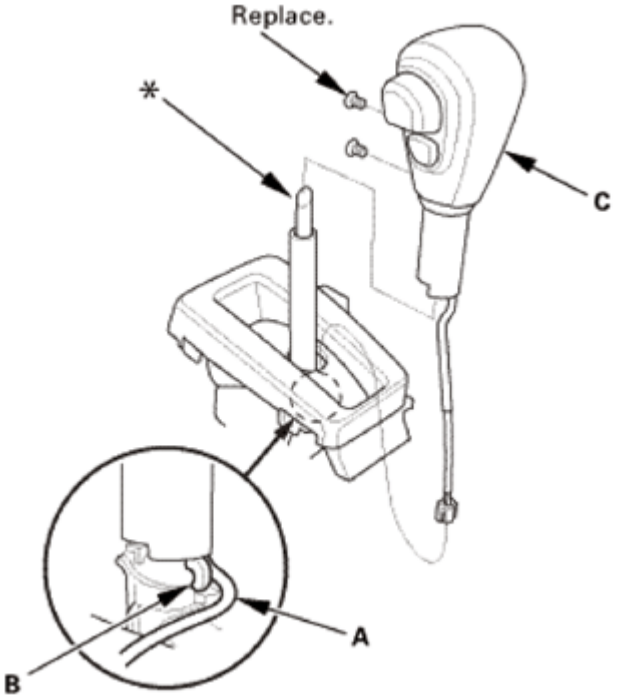

Fig. 6: Identifying D3 Switch Harness, Harness Guide And Shift Lever Knob/Shift Lever Knob Ring Assembly
Courtesy of AMERICAN HONDA MOTOR CO., INC.

5. A/T Gear Position Indicator Panel Assembly
    1. Remove the A/T gear position indicator panel light socket (A) from the A/T gear position indicator panel assembly (B).
    2. Unhook the A/T gear position indicator panel light harness (C) from the harness guide (D).
    3. Remove the A/T gear position indicator panel assembly by expanding the four lock tabs (E).

GETtheMANUALS.org

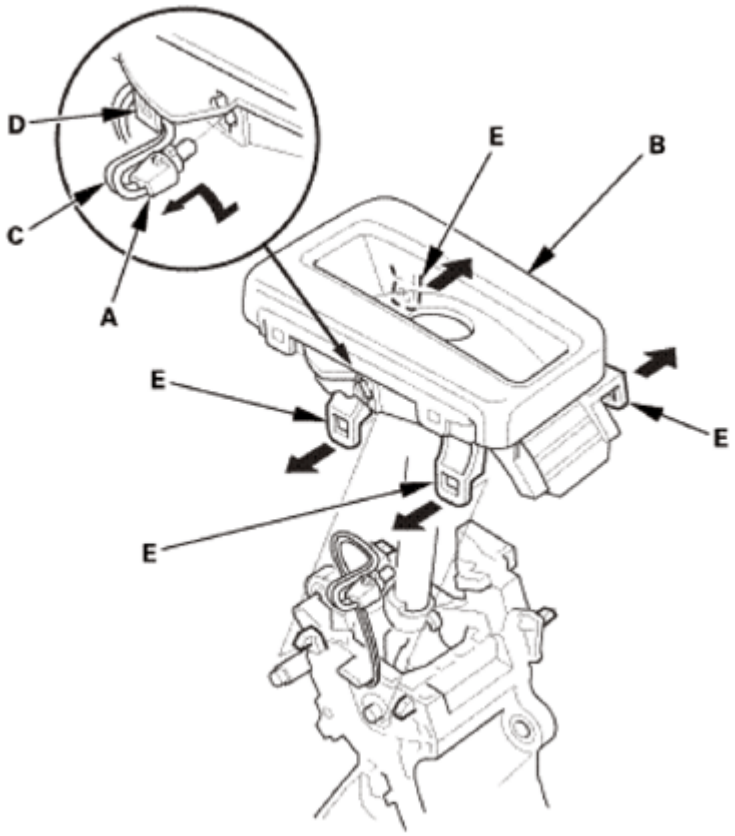

Fig. 7: Removing A/T Gear Position Indicator Panel Assembly
Courtesy of AMERICAN HONDA MOTOR CO., INC.

4. Remove the lever cover (A) from the A/T gear position indicator panel (B).
5. Check the lever cover for wear and damage, and replace it if necessary.

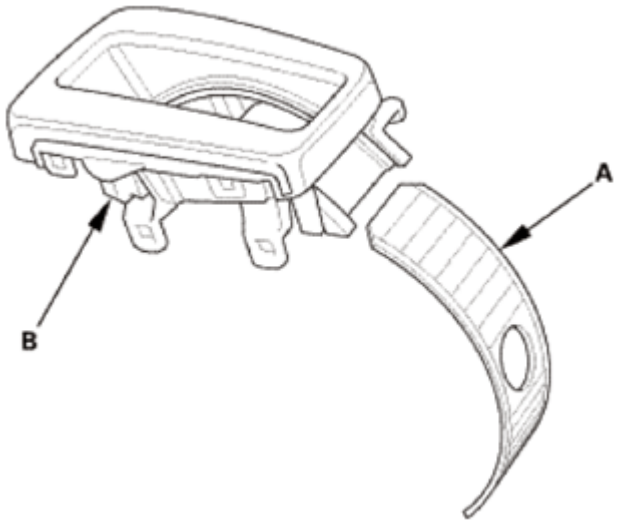

Fig. 8: Identifying Lever Cover And A/T Gear Position Indicator Panel
Courtesy of AMERICAN HONDA MOTOR CO., INC.

GETtheMANUALS.org

INSTALLATION

1. A/T Gear Position Indicator Panel Assembly
    1. Install the lever cover (A) to the A/T gear position indicator panel (B).

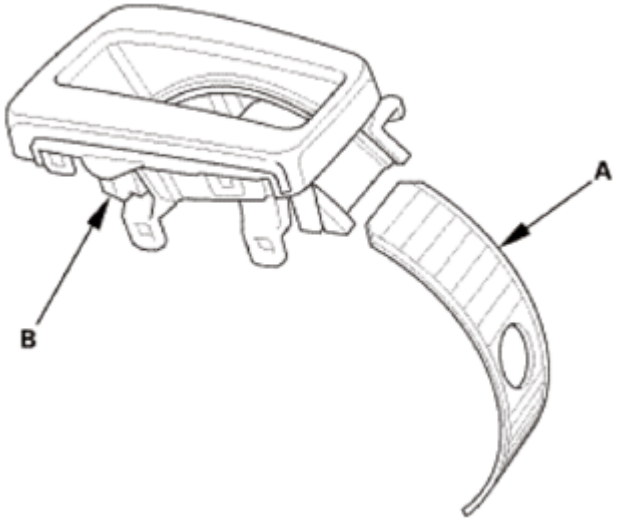

Fig. 9: Identifying Lever Cover And A/T Gear Position Indicator Panel
Courtesy of AMERICAN HONDA MOTOR CO., INC.

2. Install the A/T gear position indicator panel assembly (A) by aligning the four lock tabs (B).
3. Hook the A/T gear position indicator panel light harness (C) to the harness guide (D).
4. Install the A/T gear position indicator panel light socket (E).

GETtheMANUALS.org

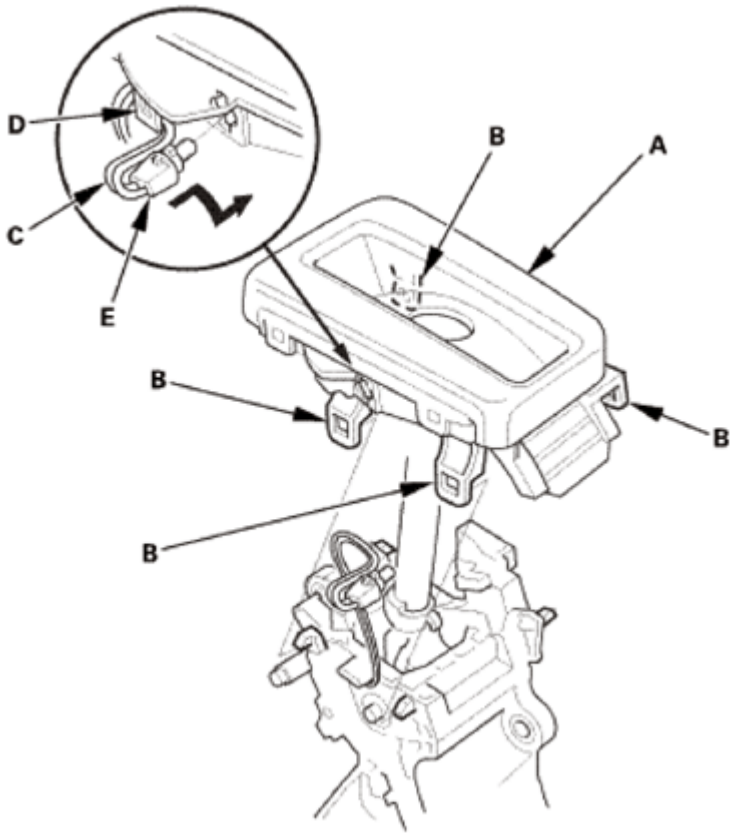

Fig. 10: Installing A/T Gear Position Indicator Panel Light Socket
Courtesy of AMERICAN HONDA MOTOR CO., INC.

2. Shift Lever Knob/Shift Lever Knob Ring Assembly

NOTE: Do not wipe off the special grease applied to the area of the shift lever marked with an asterisk (*) when you disassemble or assemble it.

1. Install the shift lever knob/shift lever knob ring assembly (A).
2. Hook the D3 switch harness (B) to the harness guide (C).

GETtheMANUALS.org

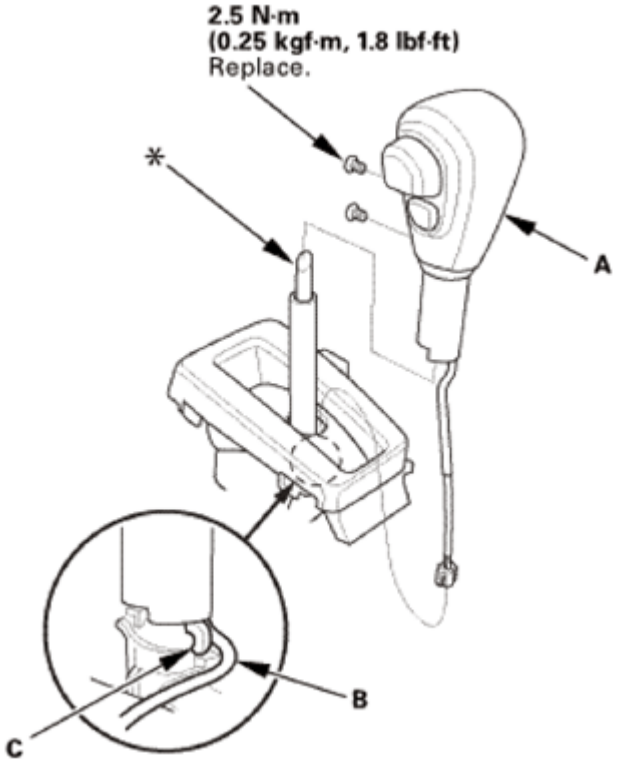

Fig. 11: Identifying D3 Switch Harness, Shift Lever Knob/Shift Lever Knob Ring Assembly, Harness Guide And Bolts With Torque Specification
Courtesy of AMERICAN HONDA MOTOR CO., INC.

3. D3 Switch Harness - Reconnection
    1. Connect the D3 switch connector (A).
    2. Route the D3 switch harness (B) along with the shift lever assembly, and tie the harnesses at the guide (C) with the harness wire tie (D).

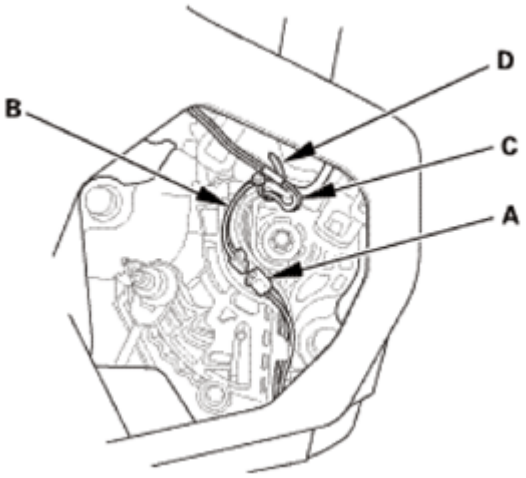

Fig. 12: Identifying D3 Switch Harness, D3 Switch Connector, Harness Wire Tie And Guide
Courtesy of AMERICAN HONDA MOTOR CO., INC.

GETtheMANUALS.org

4. Center Maintenance Cover
    1. Install the maintenance cover (A).

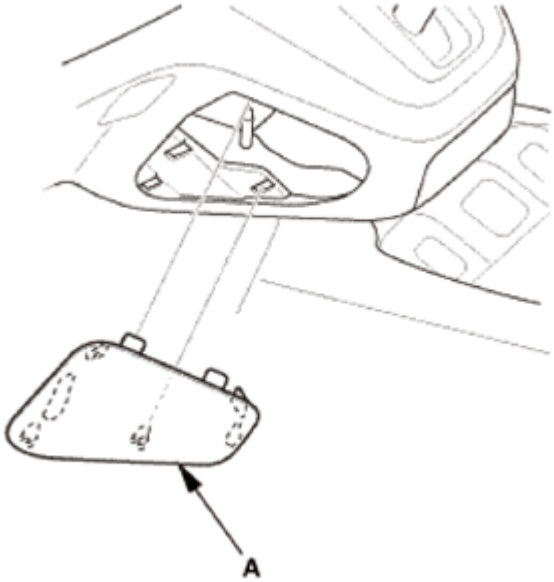

Fig. 13: Identifying Center Maintenance Cover
Courtesy of AMERICAN HONDA MOTOR CO., INC.

5. Shift Lever Panel (AT)
    1. Install the shift lever panel (A). Make sure the clips (B, C) and the hooks (D) snap into place securely.

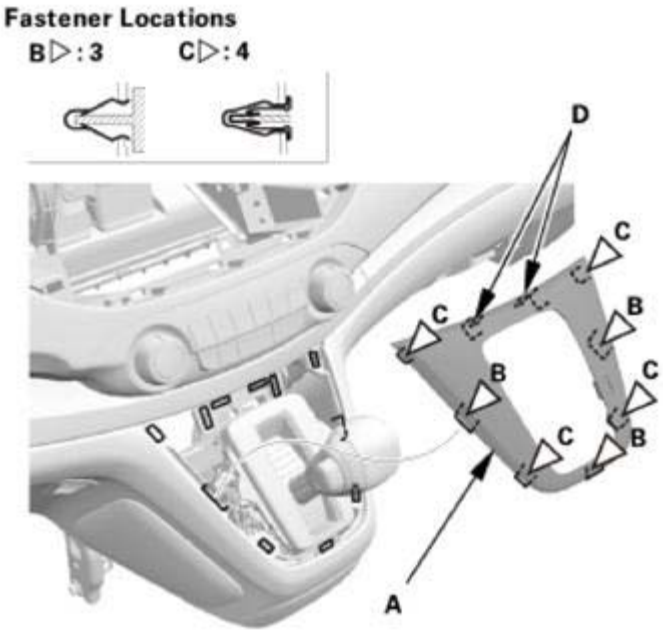

Fig. 14: Identifying Shift Lever Panel, Clips And Hooks

GETtheMANUALS.org

Courtesy of AMERICAN HONDA MOTOR CO., INC.

A/T GEAR POSITION INDICATOR PANEL LIGHT REMOVAL AND INSTALLATION

REMOVAL

1. Shift Lever Panel (AT)
    1. Carefully pry out the shift lever panel (A) with the appropriate trim tool to detach the clips (B, C) and the hooks (D), then remove the shift lever panel.

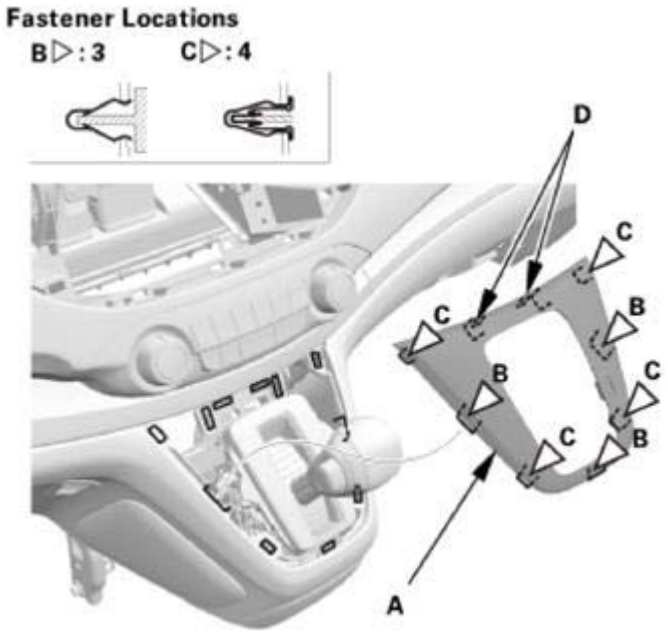

Fig. 15: Identifying Shift Lever Panel, Clips And Hooks
Courtesy of AMERICAN HONDA MOTOR CO., INC.

2. A/T Gear Position Indicator Panel Light
    1. Remove the A/T gear position indicator panel light socket (A).
    2. Remove the A/T gear position indicator panel light bulb (B).

GETtheMANUALS.org

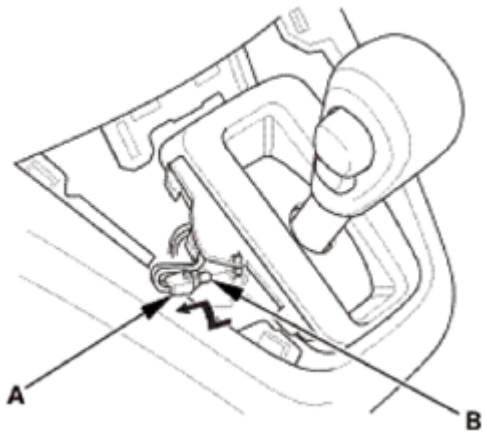

Fig. 16: Identifying A/T Gear Position Indicator Panel Light Bulb And Socket
Courtesy of AMERICAN HONDA MOTOR CO., INC.

INSTALLATION

1. A/T Gear Position Indicator Panel Light
    1. Install the A/T gear position indicator panel light bulb (A).
    2. Install the A/T gear position indicator panel light socket (B).

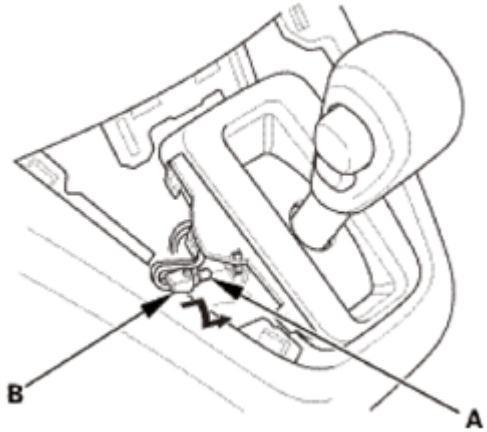

Fig. 17: Identifying A/T Gear Position Indicator Panel Light Socket And Bulb
Courtesy of AMERICAN HONDA MOTOR CO., INC.

2. Shift Lever Panel (AT)
    1. Install the shift lever panel (A). Make sure the clips (B, C) and the hooks (D) snap into place securely.

GETtheMANUALS.org

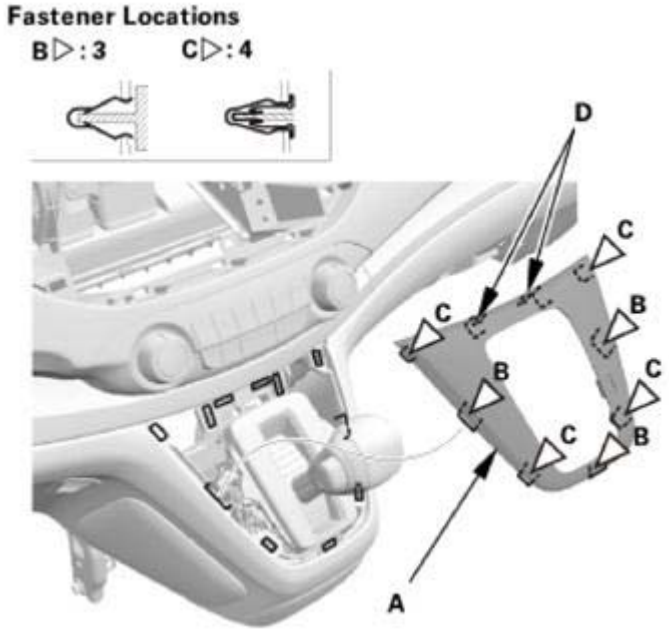

Fig. 18: Identifying Shift Lever Panel, Clips And Hooks
Courtesy of AMERICAN HONDA MOTOR CO., INC.

GETtheMANUALS.org

A/T INTERLOCK SYSTEM - SHIFT LOCK SYSTEM CIRCUIT TROUBLESHOOTING

GETtheMANUALS.org

A/T Interlock System - Shift Lock System Circuit Troubleshooting

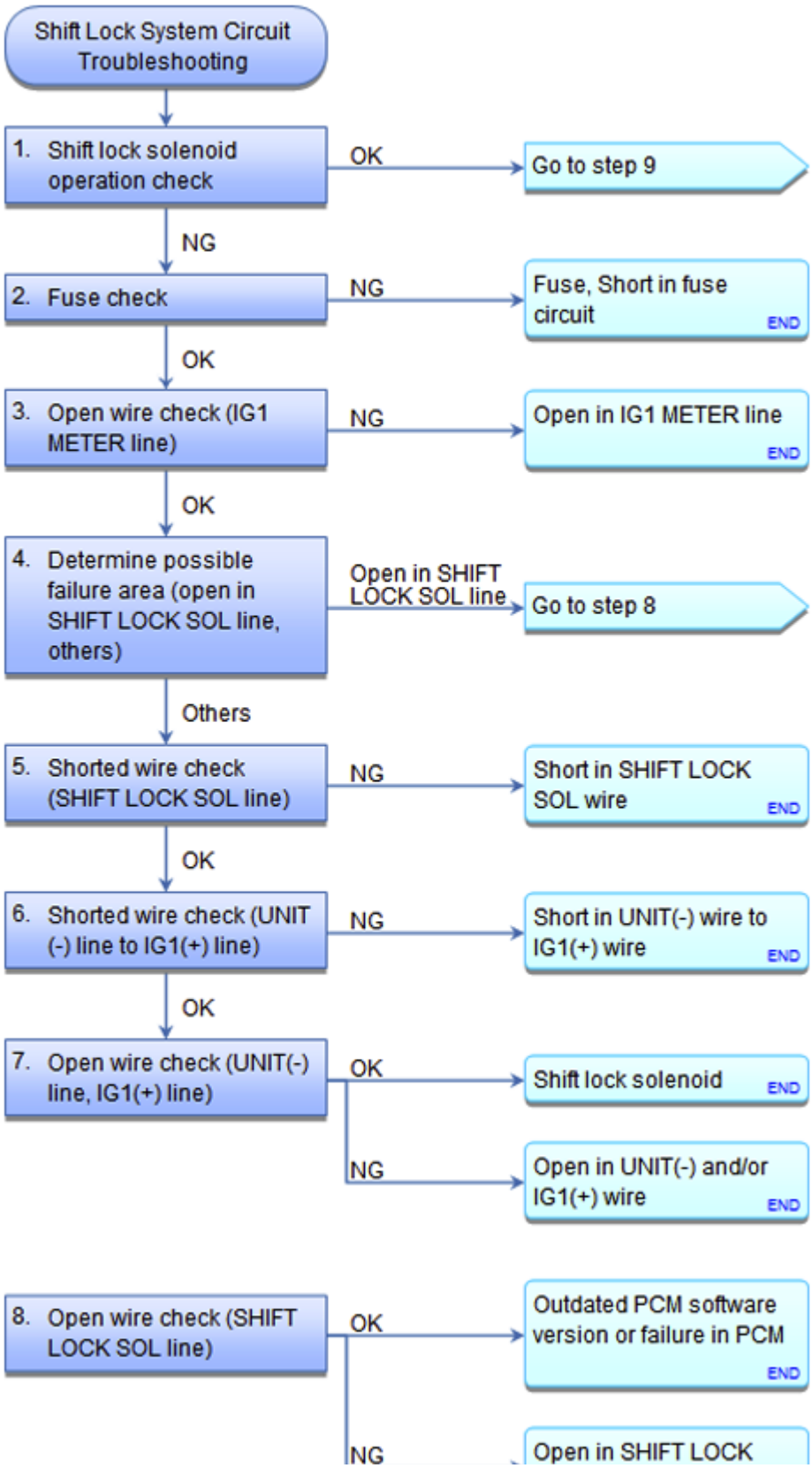

GETtheMANUALS.org

Fig. 1: A/T Interlock System - Shift Lock System Circuit Troubleshooting Flow Chart (1 Of 2)
Courtesy of AMERICAN HONDA MOTOR CO., INC.

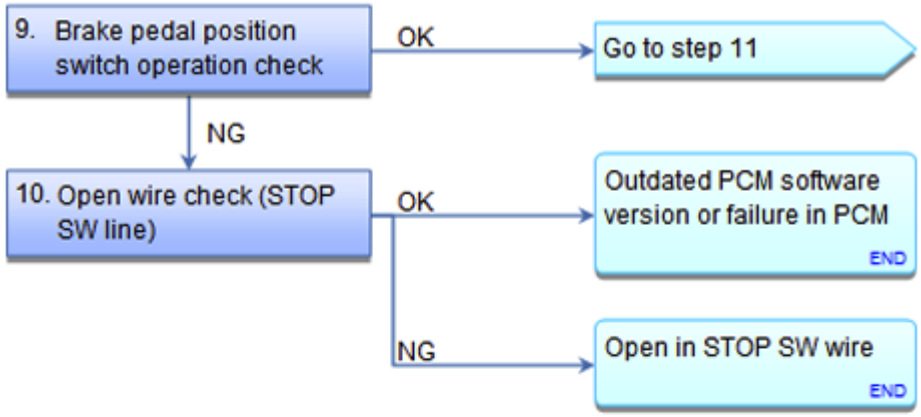

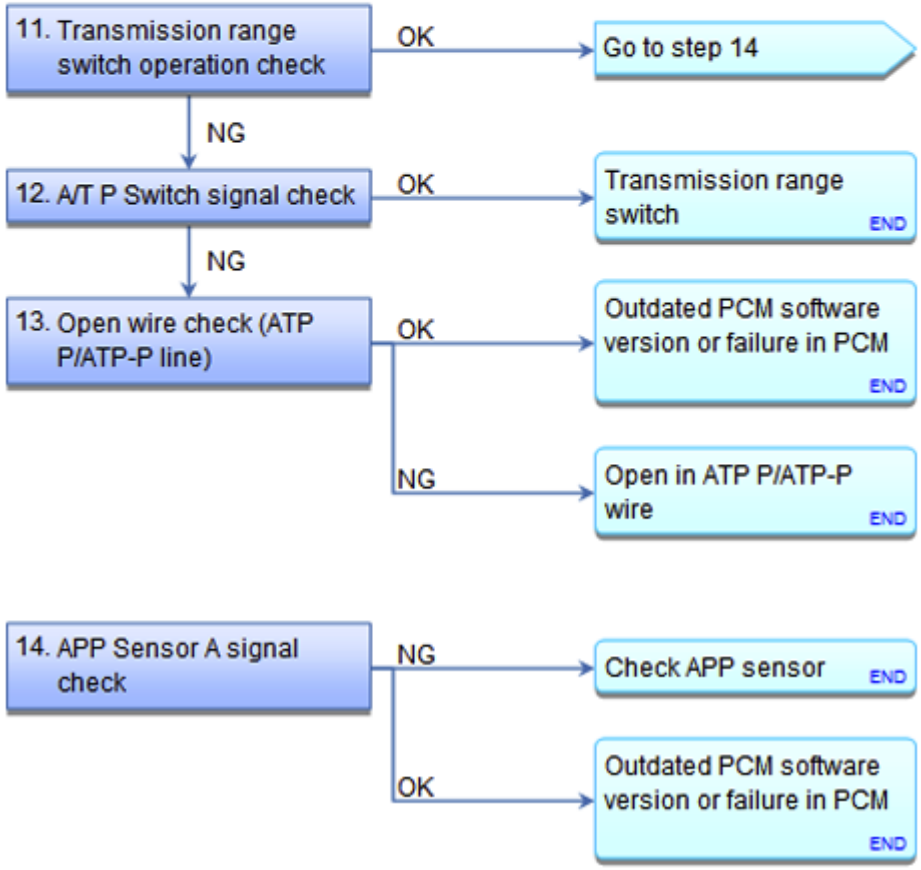

Fig. 2: A/T Interlock System - Shift Lock System Circuit Troubleshooting Flow Chart (2 Of 2)
Courtesy of AMERICAN HONDA MOTOR CO., INC.

SHIFT LOCK SYSTEM CIRCUIT TROUBLESHOOTING

GETtheMANUALS.org

NOTE: **Check for PGM-FI DTCs and A/T DTCs. If any DTCs are present, troubleshoot those first.**

DTC DESCRIPTION - PGM-FI SYSTEM

DTC Description	Confirmed DTC	Pending DTC	Freeze Frame

DTC DESCRIPTION - A/T SYSTEM

DTC Description	Confirmed DTC	Pending DTC	Freeze Frame

1. Shift lock solenoid operation check:
   - 1. Connect the HDS to the DLC (A) located under the driver's side of the dashboard.

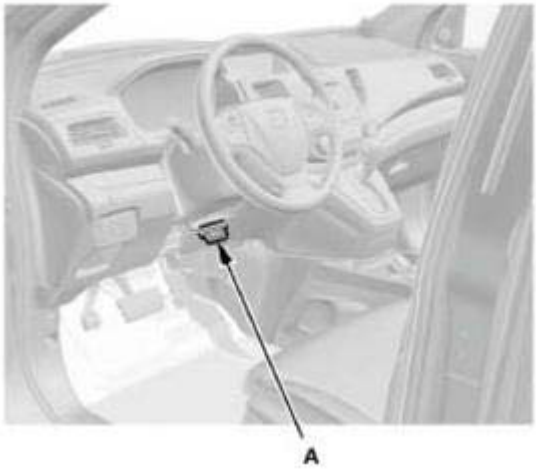

Fig. 3: Identifying DLC Located Under Driver's Side Of Dashboard
Courtesy of AMERICAN HONDA MOTOR CO., INC.

   - 2. Turn the ignition switch to ON (II).
   - 3. Make sure the HDS communicates with the PCM. If it does not, **GO TO THE DLC CIRCUIT TROUBLESHOOTING** .
   - 4. Select Shift Lock Solenoid Test in the Miscellaneous Test Menu, and check that the shift lock solenoid operates with the HDS.

Does the shift lock solenoid work properly?

YES : The shift lock solenoid is OK. Go to step 9.

NO : Go to step 2.

2. Fuse check:
   - 1. Check the following fuse.

GETtheMANUALS.org

Fuse No. B5 (10 A)

Location Under-dash fuse/relay box

Is the fuse OK?

YES : The fuse is OK. Go to step 3.

NO : Replace the No. B5 (10 A) fuse, and recheck. If the fuse blows again, repair a short to ground in the No. B5 (10 A) fuse circuit.

3. Open wire check (IG1 METER line):
   - 1. Turn the ignition switch to LOCK (0).
   - 2. **Remove the center console** See **CENTER CONSOLE DISASSEMBLY AND REASSEMBLY** or **CENTER CONSOLE REMOVAL AND INSTALLATION** .
   - 3. Disconnect the following connector.

     Shift lever 12P connector

   - 4. Turn the ignition switch to ON (II).
   - 5. Measure the voltage between test points 1 and 2.

     Test condition IG ON (II)

     Shift lever 12P connector: disconnected

     Test circuit IG1 METER

     Test point 1 Shift lever 12P connector No. 12 (LT GRN)

     Test point 2 Body ground

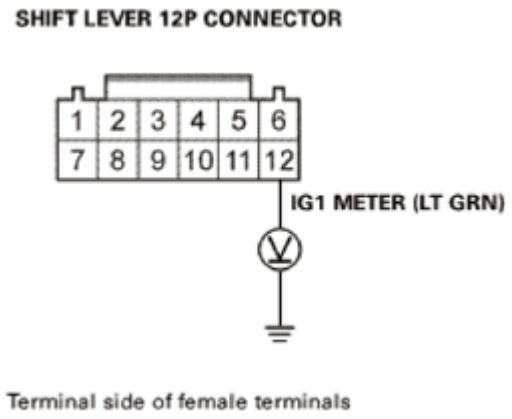

Fig. 4: Measuring Voltage Between Shift Lever 12P Connector No. 12 (LT GRN) And Body Ground

GETtheMANUALS.org

Courtesy of AMERICAN HONDA MOTOR CO., INC.

Is there battery voltage?

YES : The IG1 METER wire is OK. Go to step 4.

NO : Repair an open in the IG1 METER wire between the shift lever 12P connector and the under-dash fuse/relay box.

4. Determine possible failure area (open in SHIFT LOCK SOL line, others):
   - 1. With the shift lever in P, press the brake pedal.

     NOTE: Do not press the accelerator pedal.

   - 2. Measure the voltage between test points 1 and 2.

     Test condition IG ON (II)

     Shift lever 12P connector: disconnected

     Test circuit SHIFT LOCK SOL, IG1 METER

     Test point 1 Shift lever 12P connector No. 11 (WHT)

     Test point 2 Shift lever 12P connector No. 12 (LT GRN)

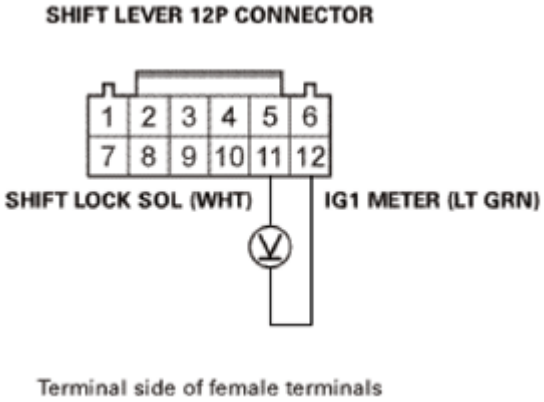

Fig. 5: Measuring Voltage Between Shift Lever 12P Connector No. 11 (WHT) And Shift Lever 12P Connector No. 12 (LT GRN)
Courtesy of AMERICAN HONDA MOTOR CO., INC.

Is there battery voltage?

YES : Go to step 5.

NO : Go to step 8.

GETtheMANUALS.org

5. Shorted wire check (SHIFT LOCK SOL line):
    - 1. Release the brake pedal.

      NOTE: The shift lever must be in P.

    - 2. Measure the voltage between test points 1 and 2.

      Test condition IG ON (II)

      Shift lever 12P connector: disconnected

      Test circuit SHIFT LOCK SOL, IG1 METER

      Test point 1 Shift lever 12P connector No. 11 (WHT)

      Test point 2 Shift lever 12P connector No. 12 (LT GRN)

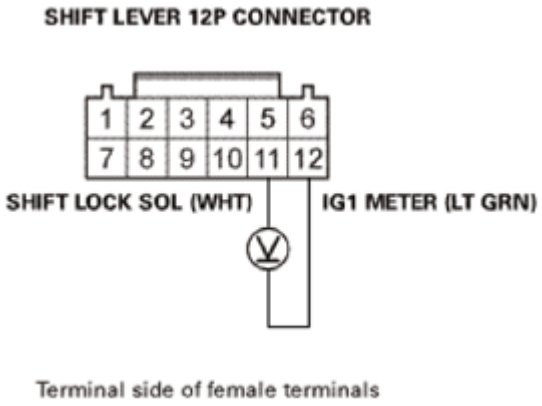

Fig. 6: Measuring Voltage Between Shift Lever 12P Connector No. 11 (WHT) And Shift Lever 12P Connector No. 12 (LT GRN)
Courtesy of AMERICAN HONDA MOTOR CO., INC.

Is there battery voltage?

YES : Repair a short to ground in the SHIFT LOCK SOL wire between the shift lock solenoid and the PCM.

NO : The SHIFT LOCK SOL wire is OK. Go to step 6.

6. Shorted wire check (UNIT(-) line to IG1(+) line):
    - 1. Turn the ignition switch to LOCK (0).
    - 2. **REMOVE THE SHIFT LEVER ASSEMBLY** .
    - 3. **DISCONNECT THE SHIFT LOCK SOLENOID 2P CONNECTOR**.
    - 4. Check for continuity between test points 1 and 2.

GETtheMANUALS.org

Test condition IG LOCK (0)

Shift lever 12P connector: disconnected

Shift lock solenoid 2P connector: disconnected

Test circuit UNIT(-), IG1(+)

Test point 1 Shift lever 12P connector No. 11 (BLK)

Test point 2 Shift lever 12P connector No. 12 (RED)

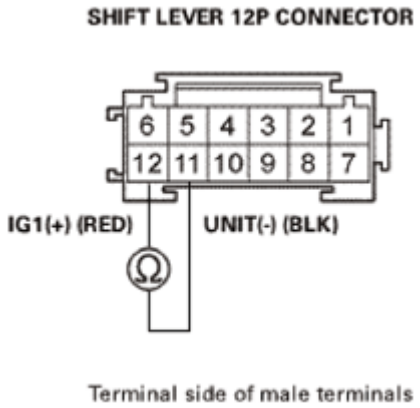

Fig. 7: Checking For Continuity Between Shift Lever 12P Connector No. 11 (BLK) And Shift Lever 12P Connector No. 12 (RED)
Courtesy of AMERICAN HONDA MOTOR CO., INC.

Is there continuity?

YES : Repair a short in the UNIT(-) wire to the IG1(+) wire between the shift lock solenoid 2P connector and the shift lever 12P connector.

NO : The UNIT(-) and IG1(+) wires are not shorted. Go to step 7.

7. Open wire check (UNIT(-) line, IG1(+) line):
   - 1. Check for continuity between test points 1 and 2.

     Test condition IG LOCK (0)

     Shift lever 12P connector: disconnected

     Shift lock solenoid 2P connector: disconnected

     Test circuit UNIT(-)

     Test point 1 Shift lock solenoid 2P connector No. 1 (BLK)

GETtheMANUALS.org

Test point 2 Shift lever 12P connector No. 11 (BLK)

Test circuit IG1(+)

Test point 1 Shift lock solenoid 2P connector No. 2 (RED)

Test point 2 Shift lever 12P connector No. 12 (RED)

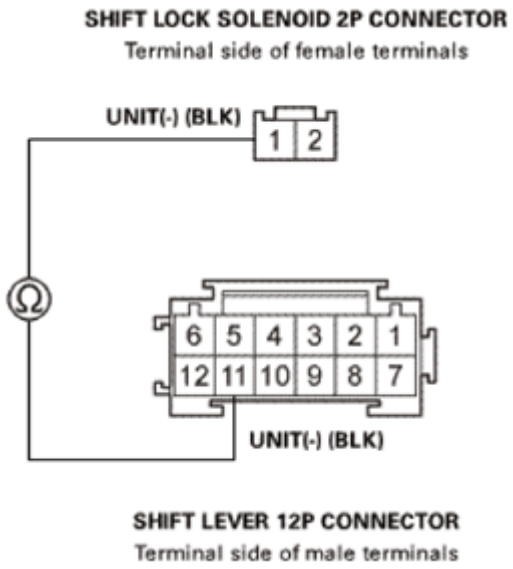

Fig. 8: Checking For Continuity Between Shift Lock Solenoid 2P Connector No. 1 (BLK) And Shift Lever 12P Connector No. 11 (BLK)
Courtesy of AMERICAN HONDA MOTOR CO., INC.

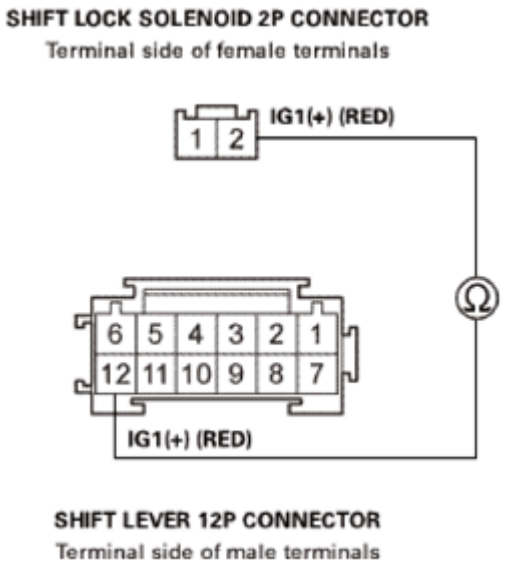

Fig. 9: Checking For Continuity Between Shift Lock Solenoid 2P Connector No. 2 (RED) And Shift Lever 12P Connector No. 12 (RED)

GETtheMANUALS.org

Courtesy of AMERICAN HONDA MOTOR CO., INC.

Is there continuity?

YES : The UNIT(-) and IG1(+) wires are OK. Check the shift lock mechanism. If the mechanism is OK, **REPLACE THE SHIFT LOCK SOLENOID**.

NO Repair an open in the UNIT(-) and/or IG1(+) wire between the shift lock solenoid 2P **connector** : and the shift lever 12P connector.

8. Open wire check (SHIFT LOCK SOL line):
   - 1. Turn the ignition switch to LOCK (0).
   - 2. Jump the SCS line with the HDS.
   - 3. Disconnect the following connector.

     PCM connector A (49P)

   - 4. Check for continuity between test points 1 and 2.

     Test condition IG LOCK (0)

     Shift lever 12P connector: disconnected

     PCM connector A (49P): disconnected

     Test circuit SHIFT LOCK SOL

     Test point 1 Shift lever 12P connector No. 11 (WHT)

     Test point 2 PCM connector A (49P) No. 21 (WHT)

GETtheMANUALS.org

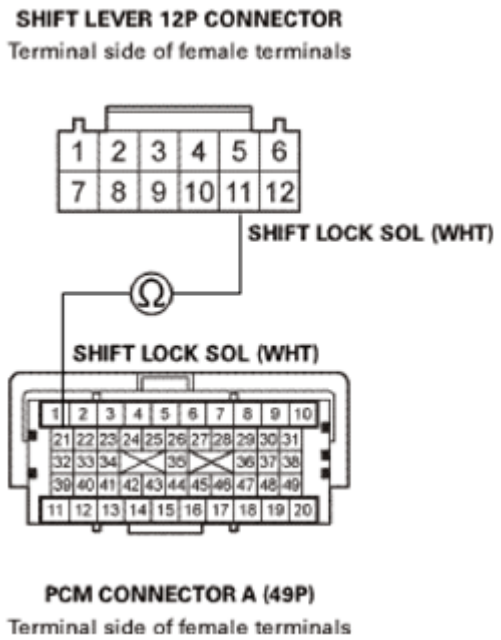

Fig. 10: Checking For Continuity Between Shift Lever 12P Connector No. 11 (WHT) And PCM Connector A (49P) No. 21 (WHT)
Courtesy of AMERICAN HONDA MOTOR CO., INC.

Is there continuity?

YES : The SHIFT LOCK SOL wire is OK. **Update the PCM if it does not have the latest software** See **PCM REMOVAL AND INSTALLATION** or **PCM UPDATE** , or **substitute a known-good PCM** See **PCM REMOVAL AND INSTALLATION** or **PCM UPDATE** , and recheck. If the symptom goes away with a known-good PCM, **replace the original PCM** See **PCM REMOVAL AND INSTALLATION** or **PCM UPDATE** .

NO : Repair an open in the SHIFT LOCK SOL wire between the shift lever 12P connector and the PCM.

9. Brake pedal position switch operation check:
   - 1. Check the parameter(s) below with the HDS while pressing the brake pedal.

Signal	Threshold		Current conditions	
	Values	Unit	Values	Unit
Brake Switch	ON			unit

Do the current condition(s) match the threshold?

YES : The brake pedal position switch is OK. Go to step 11.

NO : If the brake lights come on, go to step 10. If the brake lights do not work, repair faulty brake light circuit.

GETtheMANUALS.org

10. Open wire check (STOP SW line):
    - 1. Turn the ignition switch to LOCK (0).
    - 2. Jump the SCS line with the HDS.
    - 3. Disconnect the following connector.

      PCM connector A (49P)

    - 4. Measure the voltage between test points 1 and 2.

      Test condition IG LOCK (0)

      PCM connector A (49P): disconnected

      Test circuit STOP SW

      Test point 1 PCM connector A (49P) No. 13 (BLU)

      Test point 2 Body ground

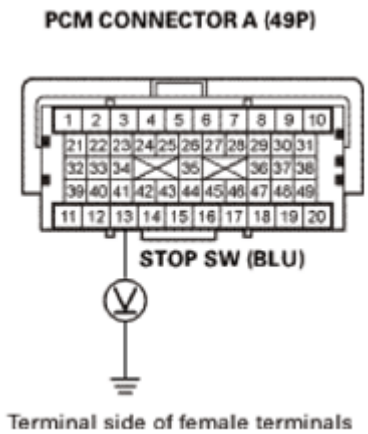

Fig. 11: Measuring Voltage Between PCM Connector A (49P) No. 13 (BLU) And Body Ground
Courtesy of AMERICAN HONDA MOTOR CO., INC.

Is there battery voltage while pressing the brake pedal and about 0 V when the pedal is released?

YES : The STOP SW wire is OK. **Update the PCM if it does not have the latest software** See **PCM REMOVAL AND INSTALLATION** or **PCM UPDATE** , or **substitute a known-good PCM** See **PCM REMOVAL AND INSTALLATION** or **PCM UPDATE** , and recheck. If the symptom goes away with a known-good PCM, **replace the original PCM** See **PCM REMOVAL AND INSTALLATION** or **PCM UPDATE** .

NO : Repair an open in the STOP SW wire between the PCM and the brake pedal position switch.

GETtheMANUALS.org

11. Transmission range switch operation check:
    - 1. Check the parameter(s) below with the HDS with the shift lever in P.

Signal	Threshold		Current conditions	
	Values	Unit	Values	Unit
A/T P Switch	ON			

Do the current condition(s) match the threshold?

YES : The transmission range switch is OK. Go to step 14.

NO : Go to step 12.

12. A/T P Switch signal check:
    - 1. Turn the ignition switch to LOCK (0).
    - 2. Disconnect the following connector.

      Transmission range switch 10P connector

    - 3. Connect terminals A and B with a jumper wire.

      Terminal A Transmission range switch 10P connector No. 10 (BLK/BLU)

      Terminal B Body ground

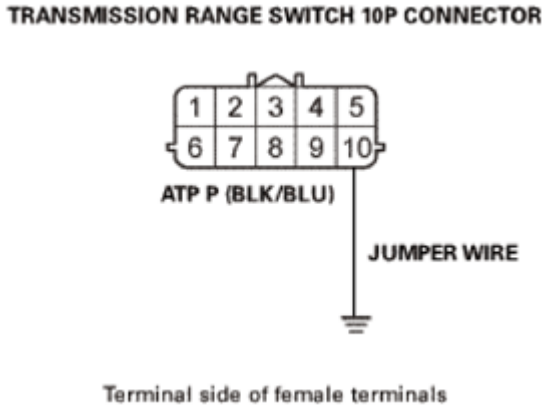

Fig. 12: Connecting Terminal Transmission Range Switch 10P Connector No. 10 (BLK/BLU) And Body Ground With Jumper Wire
Courtesy of AMERICAN HONDA MOTOR CO., INC.

    - 4. Turn the ignition switch to ON (II).
    - 5. Check the parameter(s) below with the HDS.

	Threshold		Current conditions	

GETtheMANUALS.org

Signal	Values	Unit	Values	Unit
A/T P Switch	ON			

Do the current condition(s) match the threshold?

YES : The A/T P Switch signal is OK. **REPLACE THE TRANSMISSION RANGE SWITCH** .

NO : Go to step 13.

13. Open wire check (ATP P/ATP-P line):
    - 1. Turn the ignition switch to LOCK (0).
    - 2. Jump the SCS line with the HDS.
    - 3. Disconnect the following connector.

      PCM connector B (49P)

    - 4. Check for continuity between test points 1 and 2.

      Test condition IG LOCK (0)

      Transmission range switch 10P connector: disconnected PCM connector B (49P): disconnected

      Test circuit ATP P/ATP-P

      Test point 1 Transmission range switch 10P connector No. 10 (BLK/BLU)

      Test point 2 PCM connector B (49P) No. 24 (PUR)

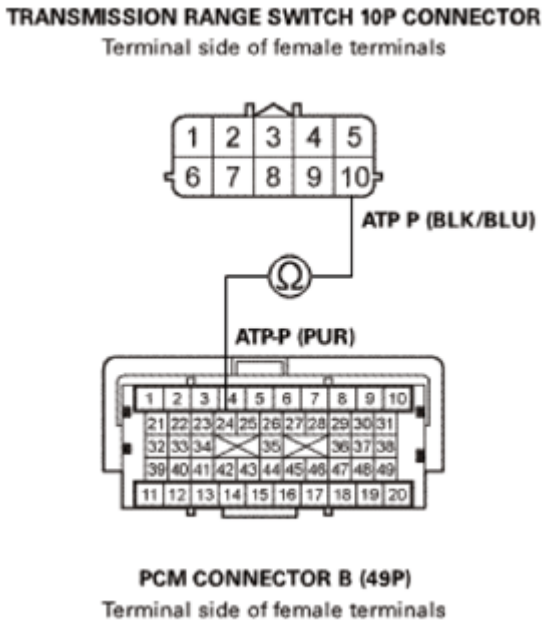

GETtheMANUALS.org

Fig. 13: Checking Continuity Between Transmission Range Switch 10P Connector No. 10 (BLK/BLU) And PCM Connector B (49P) No. 24 (PUR)
Courtesy of AMERICAN HONDA MOTOR CO., INC.

Is there continuity?

YES : The ATP P/ATP-P wire is OK. **Update the PCM if it does not have the latest software** See **PCM REMOVAL AND INSTALLATION** or **PCM UPDATE** , or **substitute a known-good PCM** See **PCM REMOVAL AND INSTALLATION** or **PCM UPDATE** , and recheck. If the symptom goes away with a known-good PCM, **replace the original PCM** See **PCM REMOVAL AND INSTALLATION** or **PCM UPDATE** .

NO : Repair an open in the ATP P/ATP-P wire between the transmission range switch and the PCM.

14. APP Sensor A signal check:
    - 1. Check the parameter(s) below with the HDS.

NOTE: Do not press the accelerator pedal.

Signal	Threshold		Current conditions	
	Values	Unit	Values	Unit
APP Sensor	More than 5	%		
APP Sensor A	Higher than 1.16	V		

Do the current condition(s) match the threshold?

YES : **CHECK THE APP SENSOR** .

NO : The APP Sensor A signal is OK. **Update the PCM if it does not have the latest software** See **PCM REMOVAL AND INSTALLATION** or **PCM UPDATE** , or **substitute a known-good PCM** See **PCM REMOVAL AND INSTALLATION** or **PCM UPDATE** , and recheck. If the symptom goes away with a known-good PCM, **replace the original PCM** See **PCM REMOVAL AND INSTALLATION** or **PCM UPDATE** .

A/T INTERLOCK SYSTEM COMPONENT LOCATION INDEX

GETtheMANUALS.org

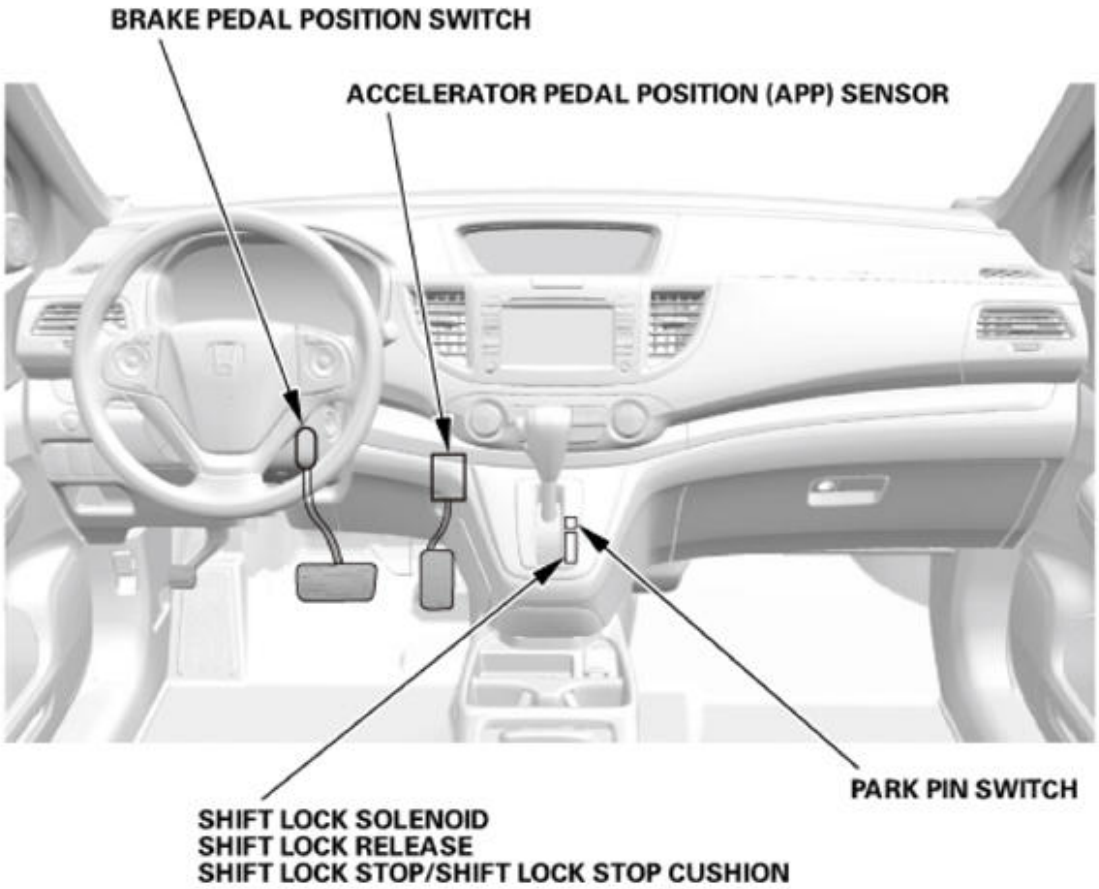

Fig. 14: Identifying A/T Interlock System Component Location (1 Of 2)
Courtesy of AMERICAN HONDA MOTOR CO., INC.

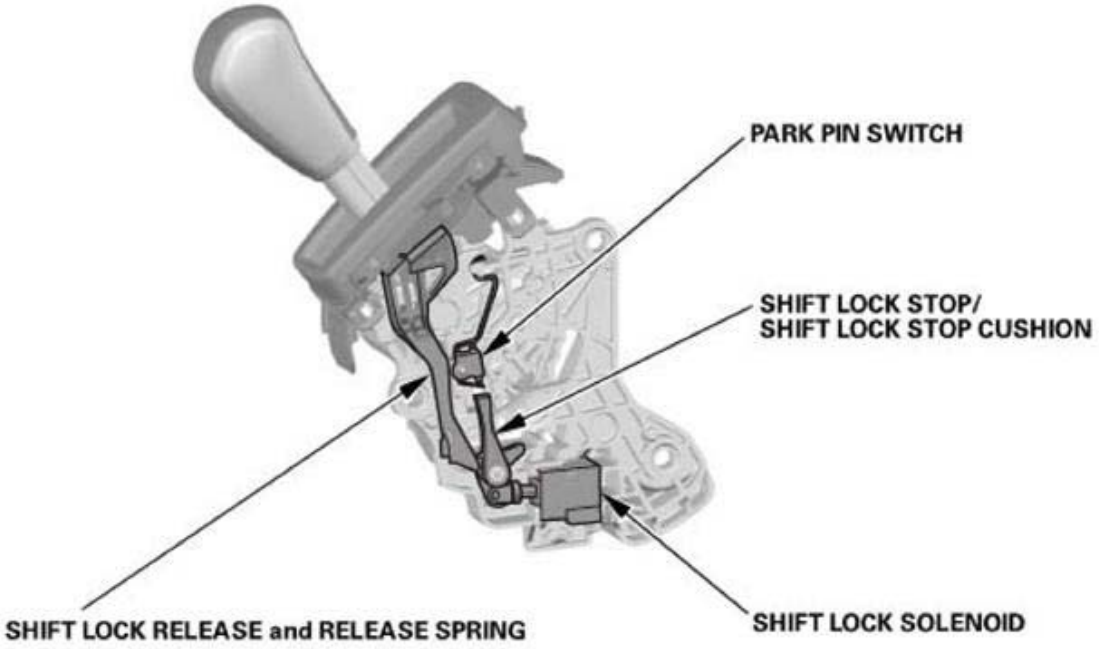

GETtheMANUALS.org

Fig. 15: Identifying A/T Interlock System Component Location (2 Of 2)
Courtesy of AMERICAN HONDA MOTOR CO., INC.

SHIFT LOCK SOLENOID	**TEST**
	SHIFT LOCK SYSTEM CIRCUIT TROUBLESHOOTING
	REMOVAL AND INSTALLATION
SHIFT LOCK STOP/SHIFT LOCK STOP CUSHION	**REMOVAL AND INSTALLATION**
SHIFT LOCK RELEASE and RELEASE SPRING	**REMOVAL AND INSTALLATION**
PARK PIN SWITCH	**TEST**
	REMOVAL AND INSTALLATION
ACCELERATOR PEDAL POSITION (APP) SENSOR	**SIGNAL INSPECTION**
BRAKE PEDAL POSITION SWITCH	**Adjustment** See **BRAKE PEDAL AND BRAKE PEDAL POSITION SWITCH ADJUSTMENT** or **BRAKE PEDAL REMOVAL AND INSTALLATION**
	SIGNAL CIRCUIT TROUBLESHOOTING

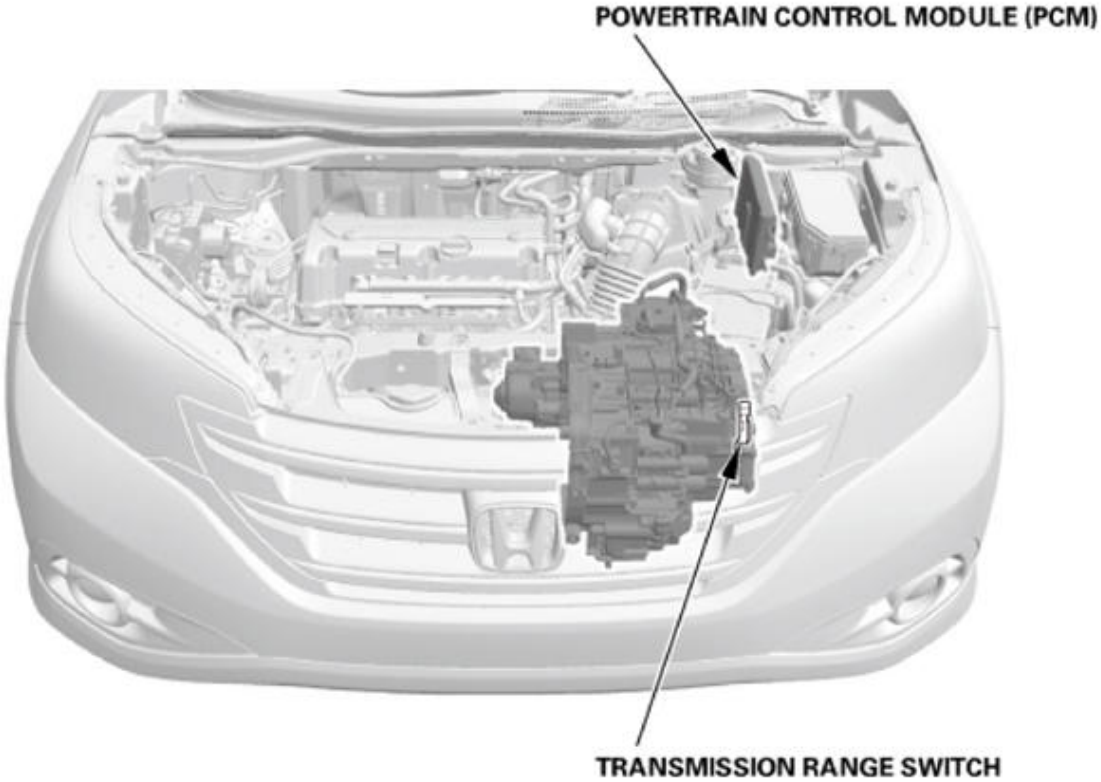

Fig. 16: Identifying Powertrain Control Module And Transmission Range Switch
Courtesy of AMERICAN HONDA MOTOR CO., INC.

TRANSMISSION RANGE	**TEST**

GETtheMANUALS.org

SWITCH	**REMOVAL AND INSTALLATION**
POWERTRAIN CONTROL MODULE (PCM)	**Update** See **PCM REMOVAL AND INSTALLATION** or **PCM UPDATE**
	Removal and Installation See **PCM REMOVAL AND INSTALLATION** or **PCM UPDATE**

SHIFT LOCK RELEASE AND RELEASE SPRING REMOVAL AND INSTALLATION

REMOVAL

1. Shift Lever Panel (AT)
    1. Carefully pry out the shift lever panel (A) with the appropriate trim tool to detach the clips (B, C) and the hooks (D), then remove the shift lever panel.

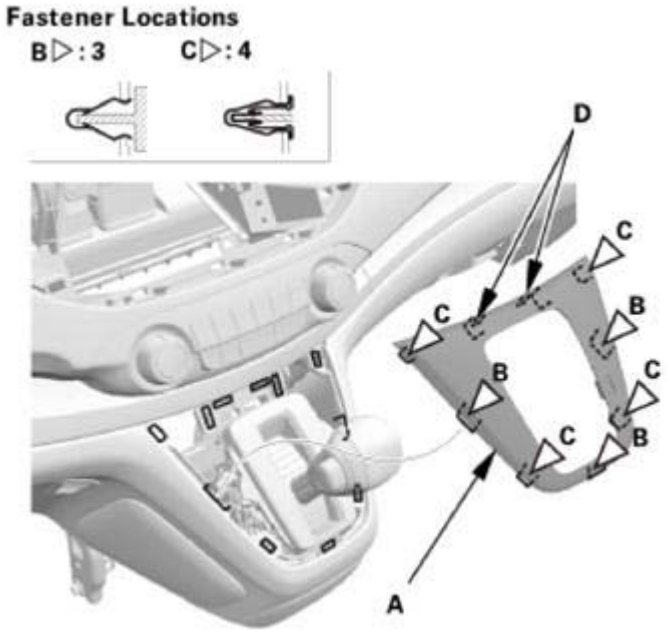

Fig. 17: Identifying Shift Lever Panel Clips And Hooks
Courtesy of AMERICAN HONDA MOTOR CO., INC.

2. Front Console Cover - Both Sides
    1. Remove the clips (A).
    2. Detach the clips (B), then remove the front console covers (C).

Left side

GETtheMANUALS.org

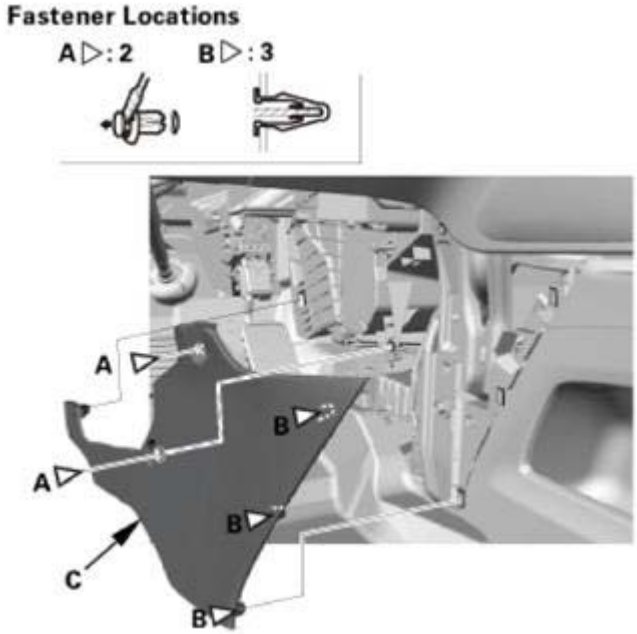

Fig. 18: Identifying Front Console Covers And Clips (Left Side)
Courtesy of AMERICAN HONDA MOTOR CO., INC.

Right side

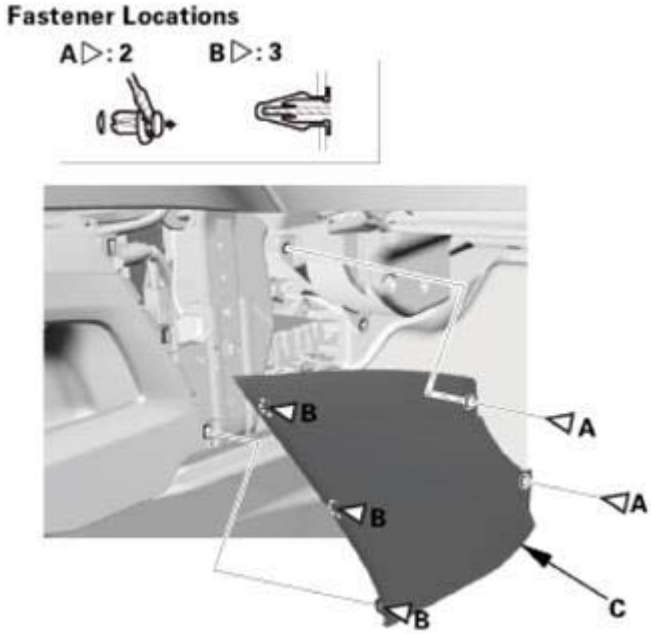

Fig. 19: Identifying Front Console Covers And Clips (Right Side)
Courtesy of AMERICAN HONDA MOTOR CO., INC.

3. Center Console Rear Trim
    1. Carefully pry out the center console rear trim (A) with the appropriate trim tool to detach the clips

GETtheMANUALS.org

(B) and the hooks (C), then remove the center console rear trim.

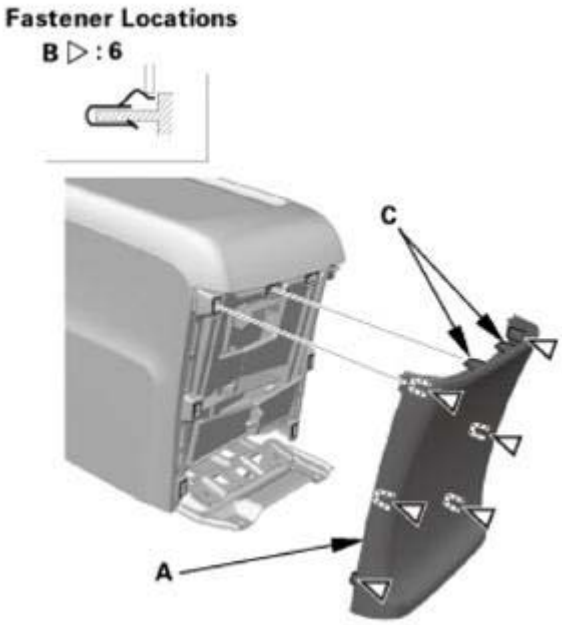

Fig. 20: Identifying Center Console Rear Trim, Clips And Hooks
Courtesy of AMERICAN HONDA MOTOR CO., INC.

4. Center Console
    1. Carefully pry out the center lower cover (A) with the appropriate trim tool to detach the clips (B), then remove the center lower cover.
    2. Remove the bolt (C).

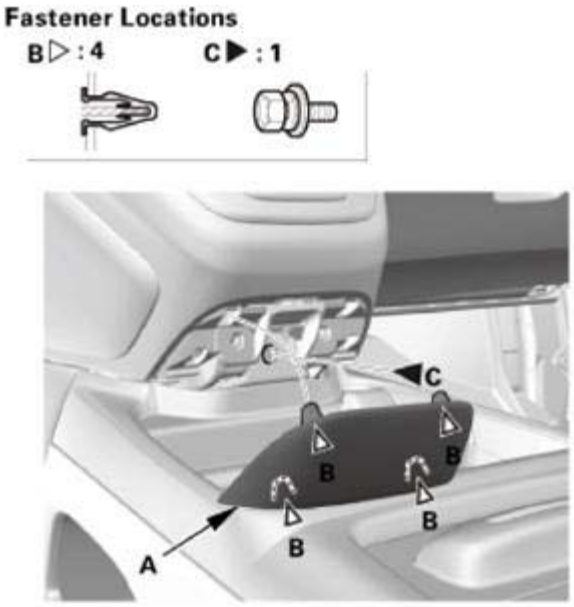

Fig. 21: Identifying Center Lower Cover, Clips And Bolts

GETtheMANUALS.org

Courtesy of AMERICAN HONDA MOTOR CO., INC.

3. Remove the bolts (A).

Fig. 22: Identifying Center Console Bolts
Courtesy of AMERICAN HONDA MOTOR CO., INC.

4. Remove the console box mat (A), then remove the bolts (B).

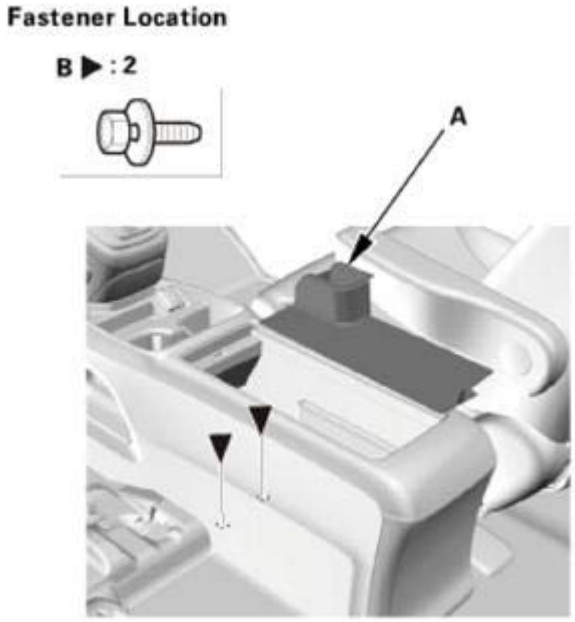

Fig. 23: Identifying Console Box Mat And Bolts
Courtesy of AMERICAN HONDA MOTOR CO., INC.

GETtheMANUALS.org

5. Disconnect the connectors (A), and remove the clips (B).

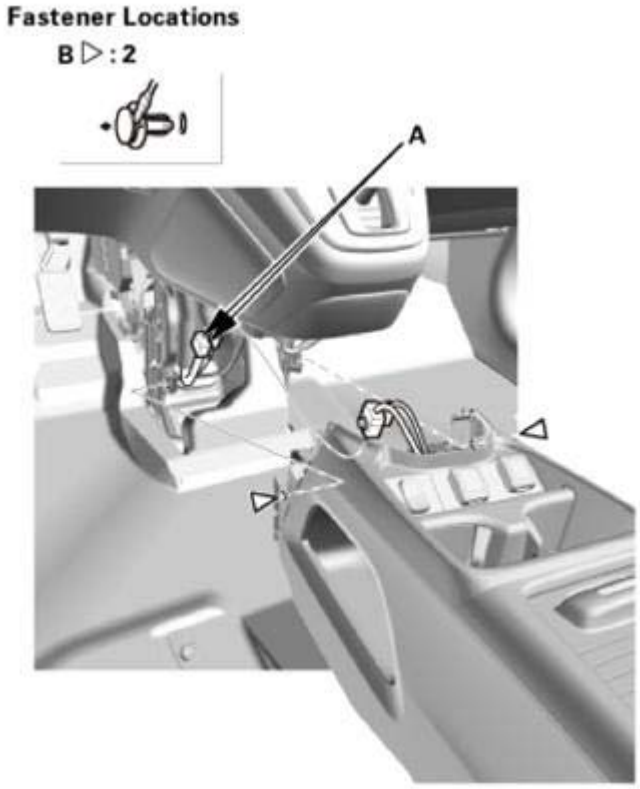

Fig. 24: Identifying Connectors And Clips
Courtesy of AMERICAN HONDA MOTOR CO., INC.

6. Slide both front seats fully rearward, and recline the seat-backs around two thirds to the rear.
7. Remove the center console (A).

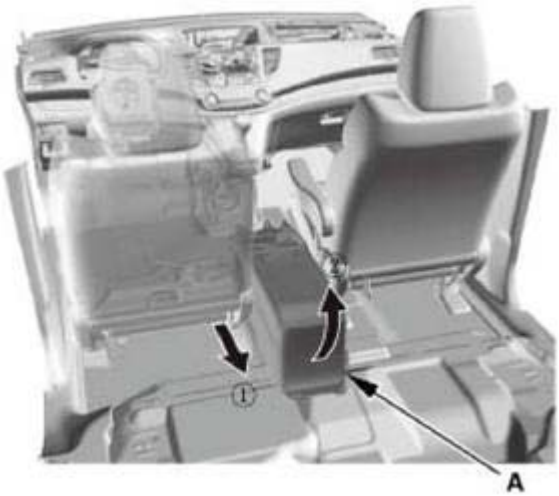

Fig. 25: Removing Center Console

GETtheMANUALS.org

Courtesy of AMERICAN HONDA MOTOR CO., INC.

5. Center Maintenance Cover
    1. Remove the maintenance cover (A).

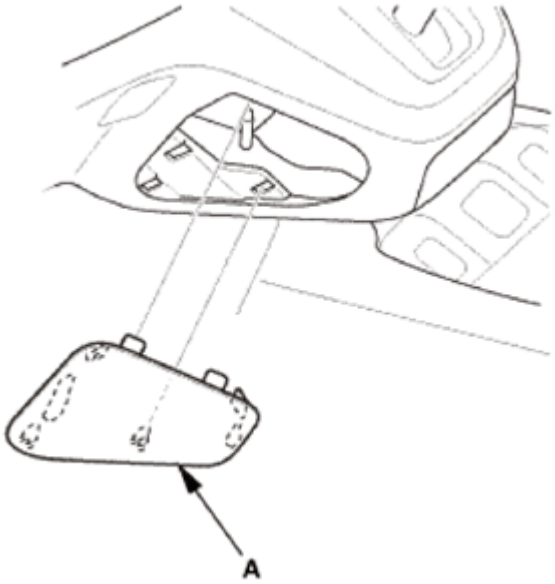

Fig. 26: Identifying Center Maintenance Cover
Courtesy of AMERICAN HONDA MOTOR CO., INC.

6. Shift Cable - Disconnection Lever Side
    1. Shift the shift lever to R.
    2. Insert a 6.0 mm (0.236 in) pin (A) into the positioning holes (B).

    NOTE: Use only a 6.0 mm (0.236 in) pin with no burrs.

    3. Remove the nut (C) securing the shift cable end (D).

GETtheMANUALS.org

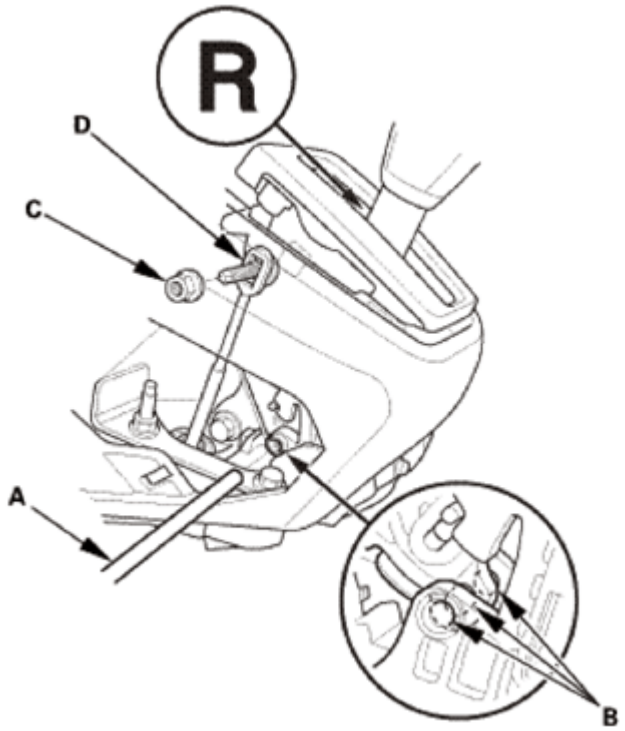

Fig. 27: Inserting Pin Into Positioning Holes
Courtesy of AMERICAN HONDA MOTOR CO., INC.

4. Unlock the retainer lock (A).

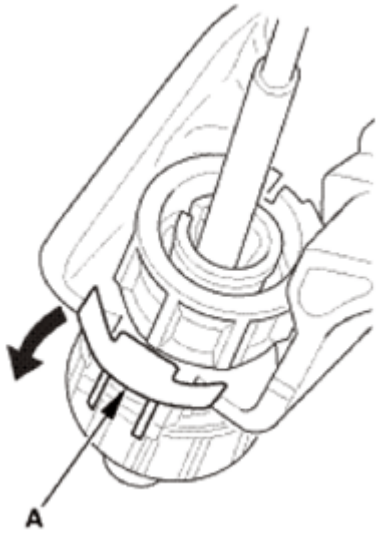

Fig. 28: Unlocking Retainer Lock
Courtesy of AMERICAN HONDA MOTOR CO., INC.

5. Rotate the socket holder retainer (A) counterclockwise (B) until it stops, and push the retainer lock (C) into the socket holder retainer to lock the retainer.

GETtheMANUALS.org

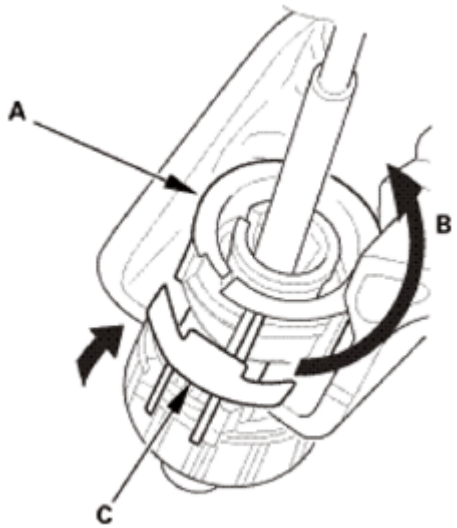

Fig. 29: Rotating Socket Holder Retainer Counterclockwise
Courtesy of AMERICAN HONDA MOTOR CO., INC.

6. Slide the socket holder (A) away from the bracket as shown to remove the shift cable (B) from the shift cable bracket (C).

NOTE: Do not remove the shift cable by pulling the shift cable guide (D).

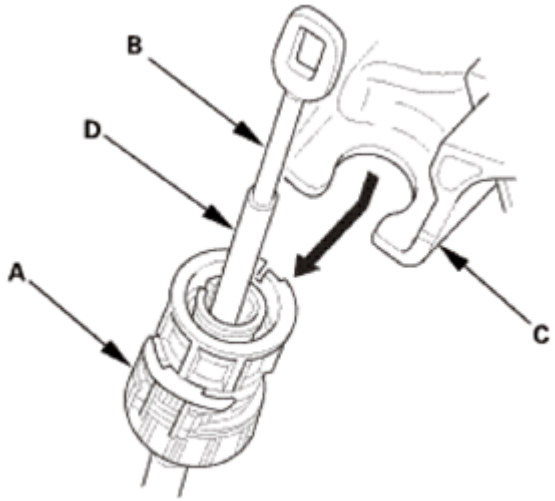

Fig. 30: Removing Shift Cable From Shift Cable Bracket
Courtesy of AMERICAN HONDA MOTOR CO., INC.

7. A/T Shift Lever Assembly
    1. Disconnect the shift lever connector.

GETtheMANUALS.org

Fig. 31: Identifying Shift Lever Connector
Courtesy of AMERICAN HONDA MOTOR CO., INC.

2. Remove the shift lever assembly.

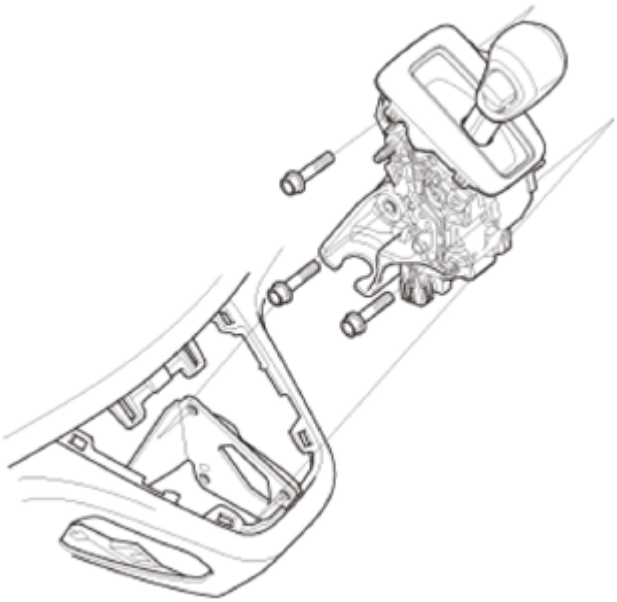

Fig. 32: Identifying Shift Lever Assembly
Courtesy of AMERICAN HONDA MOTOR CO., INC.

8. D3 Switch Harness - Disconnection
    1. Remove the harness wire tie (A).
    2. Disconnect the D3 switch connector (B).

GETtheMANUALS.org

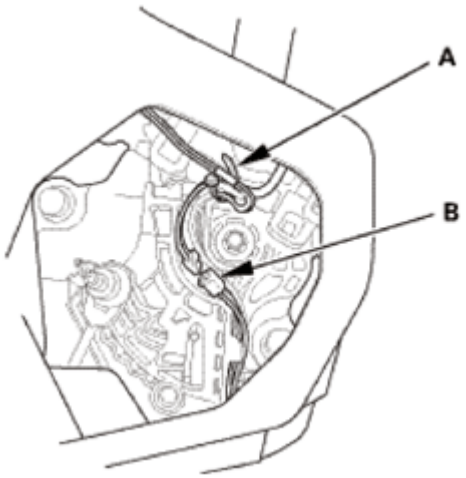

Fig. 33: Identifying D3 Switch Connector And Harness Wire Tie
Courtesy of AMERICAN HONDA MOTOR CO., INC.

9. Shift Lever Knob/Shift Lever Knob Ring Assembly

NOTE: **Do not wipe off the special grease applied to the area of the shift lever marked with an asterisk (*) when you disassemble or assemble it.**

1. Unhook the D3 switch harness (A) from the harness guide (B).
2. Remove the shift lever knob/shift lever knob ring assembly (C).

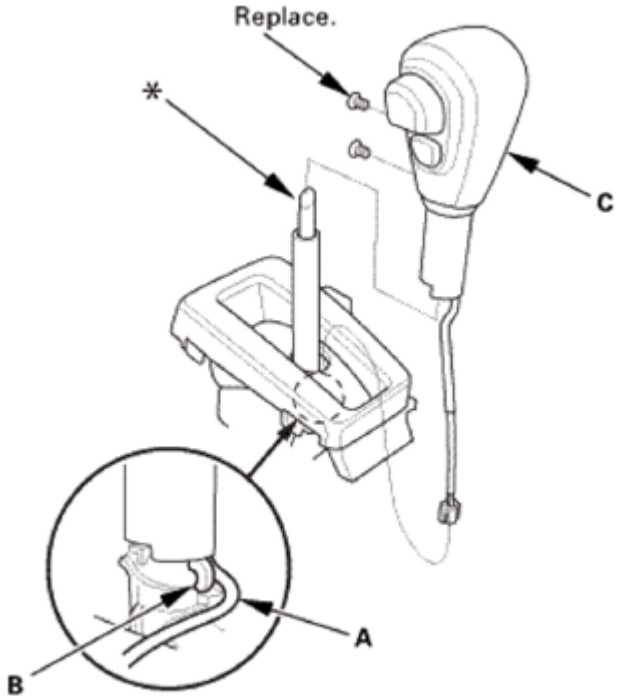

Fig. 34: Identifying D3 Switch Harness, Harness Guide And Shift Lever Knob/Shift Lever

GETtheMANUALS.org

Knob Ring Assembly
Courtesy of AMERICAN HONDA MOTOR CO., INC.

10. A/T Gear Position Indicator Panel Assembly
    1. Remove the A/T gear position indicator panel light socket (A) from the A/T gear position indicator panel assembly (B).
    2. Unhook the A/T gear position indicator panel light harness (C) from the harness guide (D).
    3. Remove the A/T gear position indicator panel assembly by expanding the four lock tabs (E).

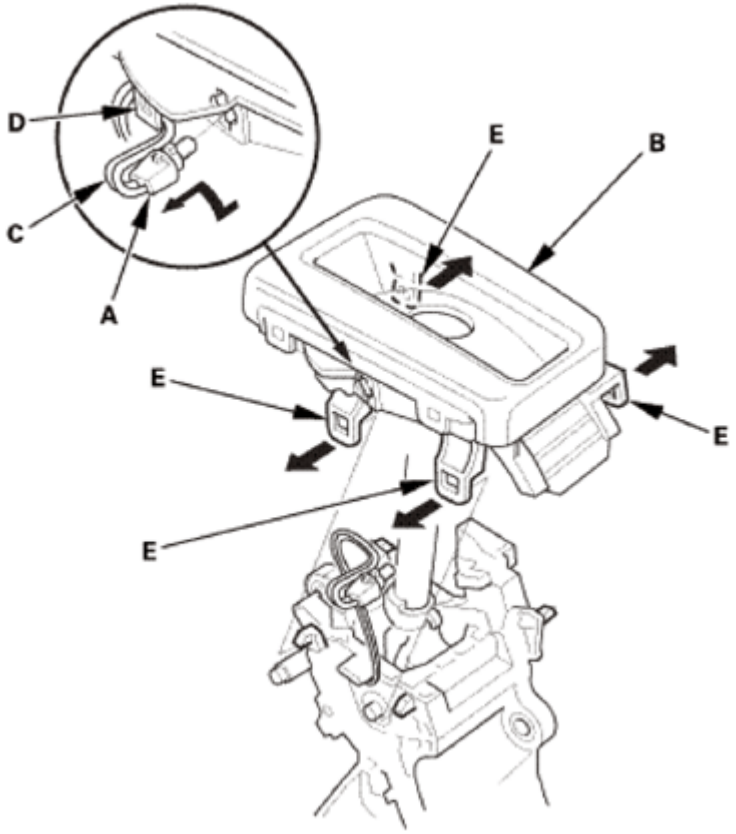

Fig. 35: Removing A/T Gear Position Indicator Panel Assembly
Courtesy of AMERICAN HONDA MOTOR CO., INC.

11. Shift Lock Release
    1. Remove the shift lock release (A) and the release spring (B) by pressing the lock tab (C).

GETtheMANUALS.org

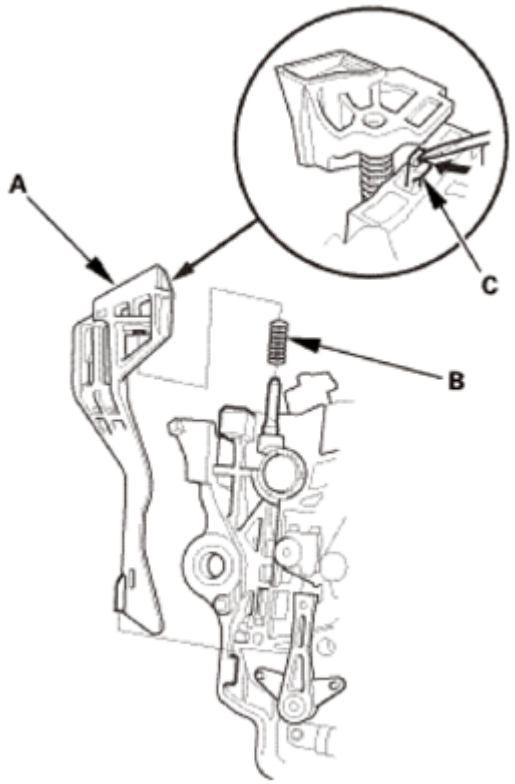

Fig. 36: Pressing Lock Tab
Courtesy of AMERICAN HONDA MOTOR CO., INC.

INSTALLATION

1. Shift Lock Release
    1. Install the shift lock release (A) and the release spring (B).

GETtheMANUALS.org

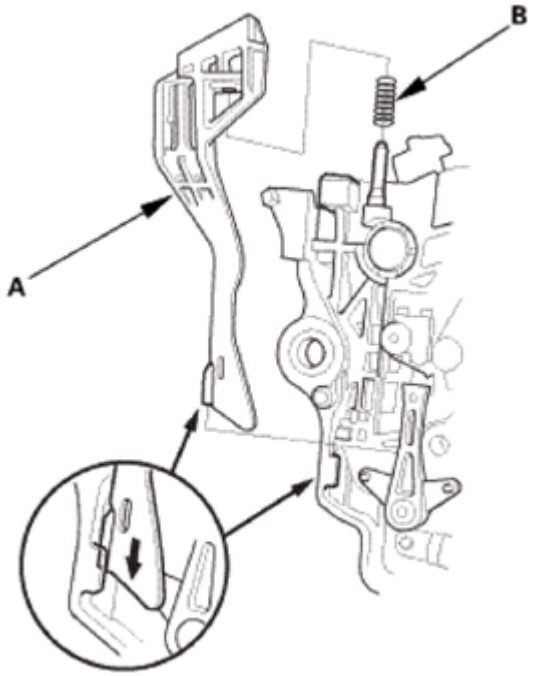

Fig. 37: Installing Shift Lock Release And Release Spring
Courtesy of AMERICAN HONDA MOTOR CO., INC.

2. A/T Gear Position Indicator Panel Assembly
    1. Install the A/T gear position indicator panel assembly (A) by aligning the four lock tabs (B).
    2. Hook the A/T gear position indicator panel light harness (C) to the harness guide (D).

GETtheMANUALS.org

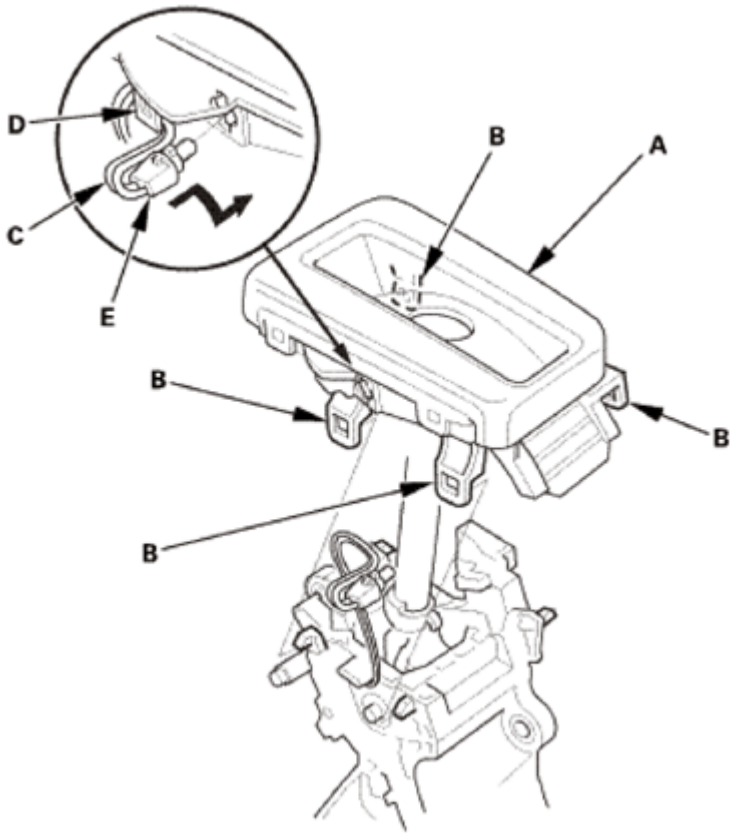

Fig. 38: Installing A/T Gear Position Indicator Panel Light Socket
Courtesy of AMERICAN HONDA MOTOR CO., INC.

3. Install the A/T gear position indicator panel light socket (E).

3. Shift Lever Knob/Shift Lever Knob Ring Assembly

NOTE: **Do not wipe off the special grease applied to the area of the shift lever marked with an asterisk (*) when you disassemble or assemble it.**

1. Install the shift lever knob/shift lever knob ring assembly (A).
2. Hook the D3 switch harness (B) to the harness guide (C).

GETtheMANUALS.org

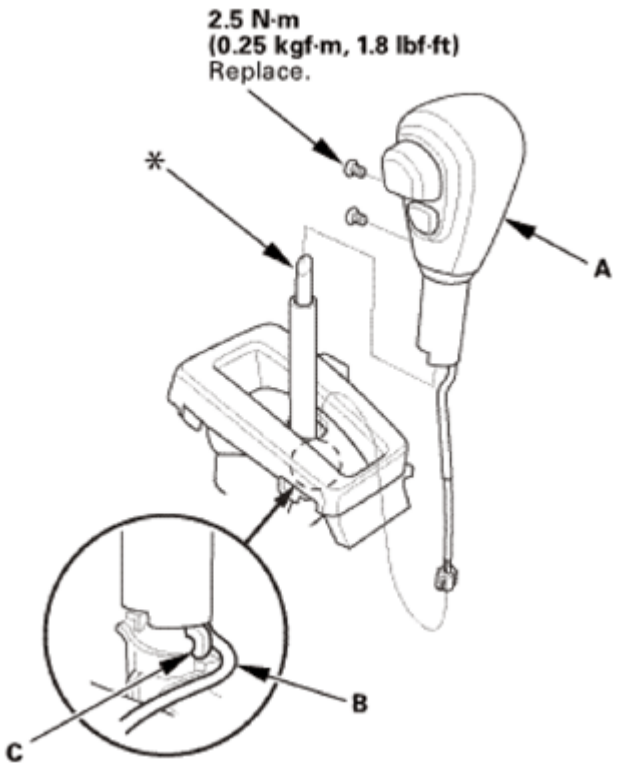

Fig. 39: Identifying Shift Lever Knob/Shift Lever Knob Ring Assembly, D3 Switch Harness, Harness Guide And Bolts With Torque Specification
Courtesy of AMERICAN HONDA MOTOR CO., INC.

4. D3 Switch Harness - Reconnection
    1. Connect the D3 switch connector (A).
    2. Route the D3 switch harness (B) along with the shift lever assembly, and tie the harnesses at the guide (C) with the harness wire tie (D).

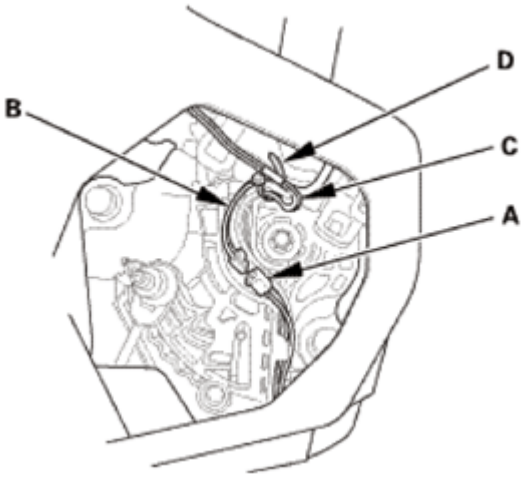

Fig. 40: Identifying D3 Switch Connector, D3 Switch Harness, Guide (C) And Harness Wire Tie

GETtheMANUALS.org

Courtesy of AMERICAN HONDA MOTOR CO., INC.

5. A/T Shift Lever Assembly
    1. Install the shift lever assembly.

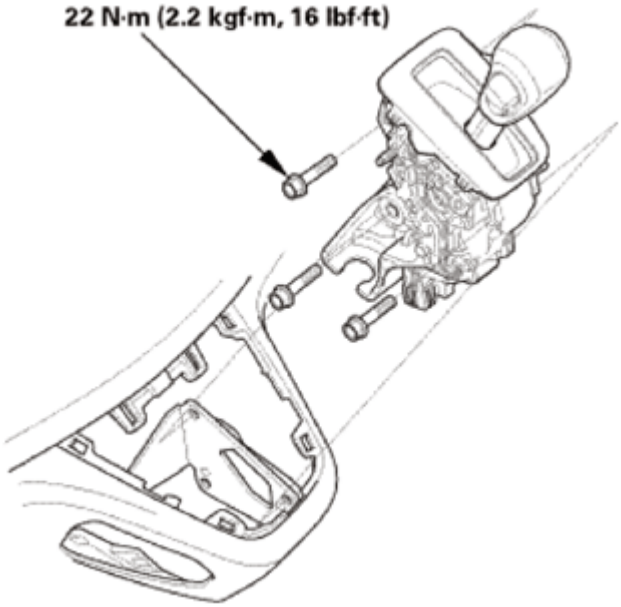

Fig. 41: Identifying Shift Lever Assembly And Bolts With Torque Specification
Courtesy of AMERICAN HONDA MOTOR CO., INC.

    2. Connect the shift lever connector.

Fig. 42: Identifying Shift Lever Connector
Courtesy of AMERICAN HONDA MOTOR CO., INC.

6. Shift Cable - Adjustment
    1. Push the shift cable (A) until it stops, then release it. Pull the shift cable back one step so that the

GETtheMANUALS.org

shift position is in R.

NOTE: Do not hold the shift cable guide (B) to adjust the shift cable.

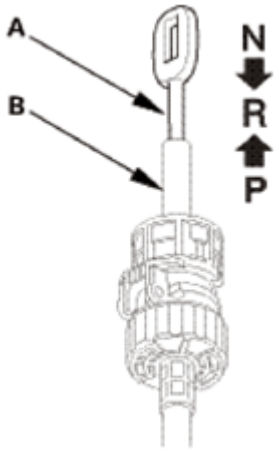

Fig. 43: Identifying Shift Cable And Shift Cable Guide
Courtesy of AMERICAN HONDA MOTOR CO., INC.

2. Turn the ignition switch to ON (II).
3. Check that the R position indicator comes on.
4. Turn the ignition switch to LOCK (0).

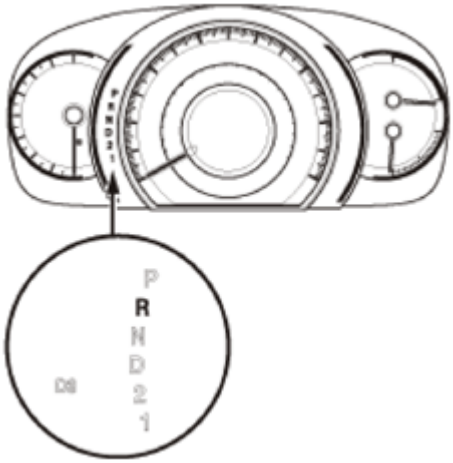

Fig. 44: Identifying R Position Indicator
Courtesy of AMERICAN HONDA MOTOR CO., INC.

5. Shift the shift lever to R.
6. Insert a 6.0 mm (0.236 in) pin (A) into the positioning holes (B).

NOTE: Use only a 6.0 mm (0.236 in) pin with no burrs.

GETtheMANUALS.org

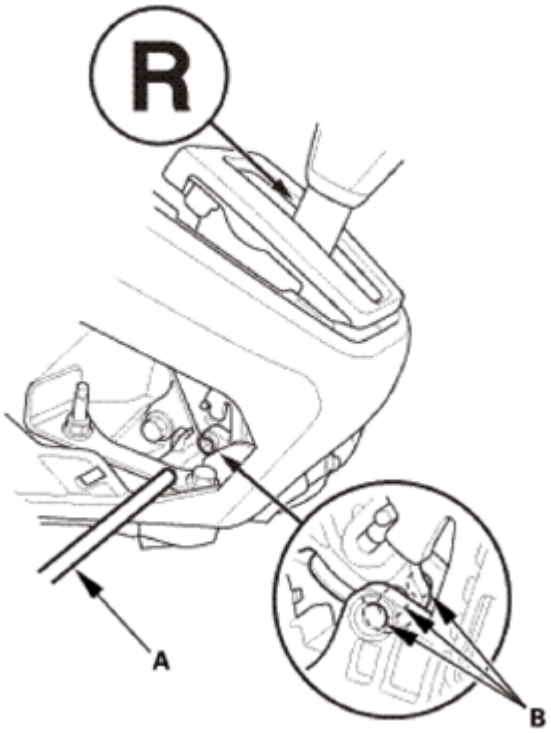

Fig. 45: Inserting Pin Into Positioning Holes
Courtesy of AMERICAN HONDA MOTOR CO., INC.

7. Unlock the retainer lock (A).

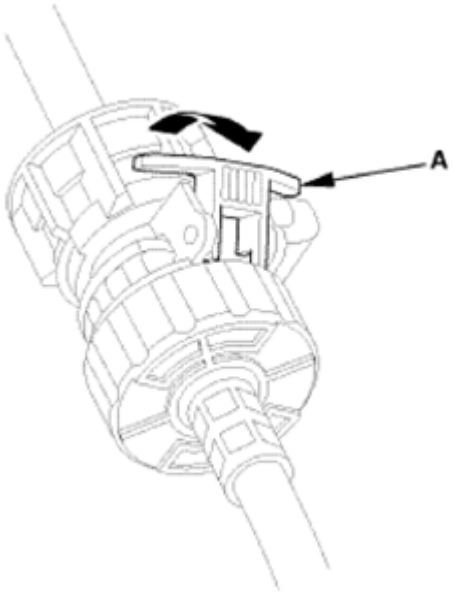

Fig. 46: Unlocking Retainer Lock
Courtesy of AMERICAN HONDA MOTOR CO., INC.

8. Rotate the socket holder retainer (A) in arrow direction (B) until it stops to create clearance (C)

GETtheMANUALS.org

between the socket holder (D) and holder retainer, and push the retainer lock (E) into the socket holder retainer to lock the retainer.

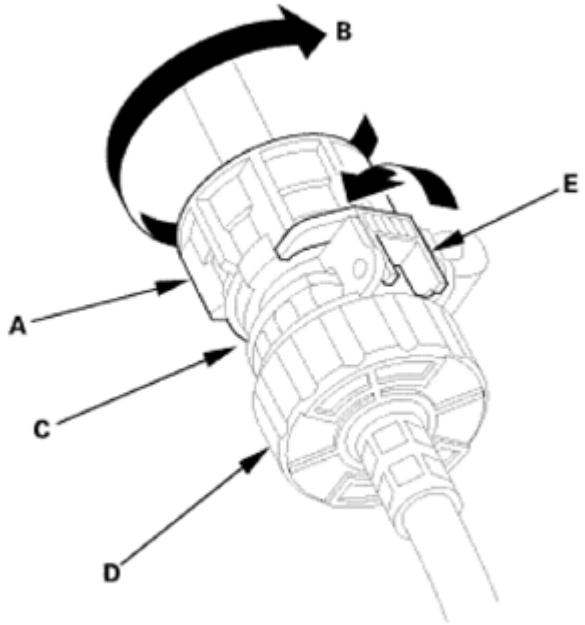

Fig. 47: Rotating Socket Holder Retainer
Courtesy of AMERICAN HONDA MOTOR CO., INC.

9. Align the shift cable slot (A) between the socket holder (B) and the socket holder retainer (C) with the opening (D) in the shift cable bracket (E), then slide the holder into the bracket while installing the shift cable end (F) over the mounting stud (G) by aligning its square hole (H) with the square fitting (I) at the bottom of the stud.

NOTE:

- **Do not install the shift cable by holding the shift cable guide (J).**
- **When the socket holder is installed in the shift cable bracket, the retainer lock is unhinged and releases the holder retainer lock, then the holder retainer returns under spring force to secure the shift cable.**

GETtheMANUALS.org

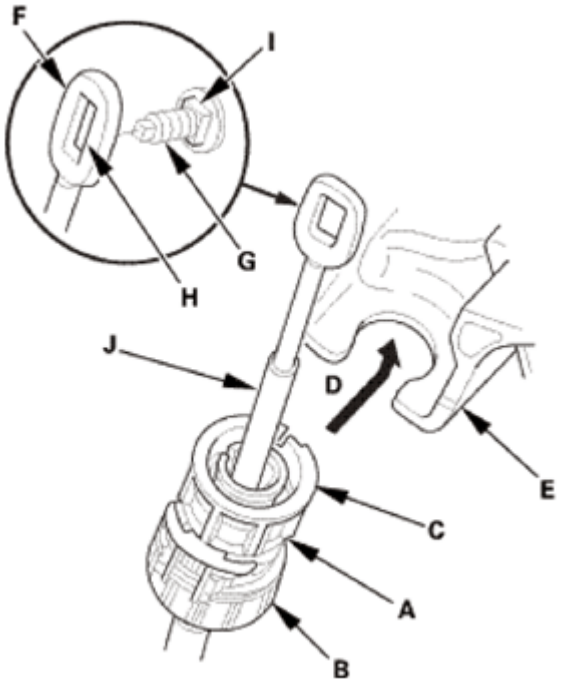

Fig. 48: Aligning Shift Cable Slot Between Socket Holder And Socket Holder Retainer With Opening In Shift Cable Bracket
Courtesy of AMERICAN HONDA MOTOR CO., INC.

10. Push the retainer lock (A) fully to lock the socket holder retainer (B), and make sure that the retainer lock fits into the hinged-joint (C). If the retainer lock does not fit with the edge of the hinged-joint, rotate the holder retainer counterclockwise while pushing the retainer lock until it locks.

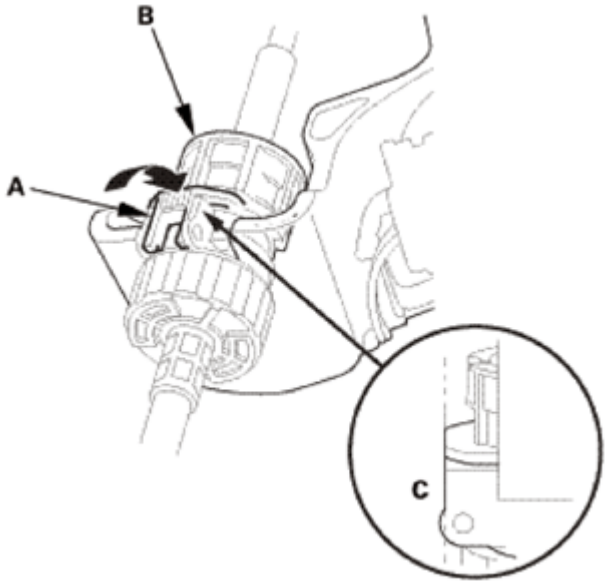

Fig. 49: Pushing Retainer Lock
Courtesy of AMERICAN HONDA MOTOR CO., INC.

GETtheMANUALS.org

11. Make sure that the shift cable end (A) is properly installed on the mounting stud (B).
    - If the shift cable end is out of position with the mounting stud, remove the shift cable from the shift cable bracket, then reinstall the cable end over the mounting stud before reinstalling the shift cable to the shift cable bracket. Do not install the shift cable end on the mounting stud with the shift cable install on the shift cable bracket.
    - If the shift cable end does not ride at the bottom of the mounting stud, rotate the stud to align the square fitting with the hole.

    Properly installed:

    Cable end rides on the bottom of the mounting stud.

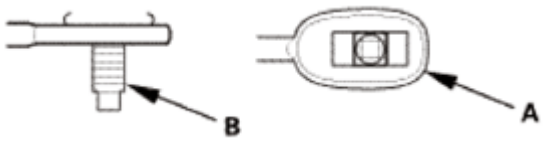

Fig. 50: Identifying Shift Cable End Proper And Improper Installation
Courtesy of AMERICAN HONDA MOTOR CO., INC.

Improperly installed:

Cable end out of position with the mounting stud.

Improperly installed:

Cable end out of alignment with the mounting stud.

12. Install the shift cable end nut (A).
13. Remove the 6.0 mm (0.236 in) pin (B) that was installed to hold the shift lever.
14. Turn the ignition switch to ON (II).
15. Move the shift lever to each position, and check that the A/T gear position indicator follows the transmission range switch.
16. Shift the shift lever to P.
17. Check that the shift lock works properly.
18. Push the shift lock release, and check that the shift lever releases. Also check that the shift lever locks when it is shifted back to P.
19. Turn the ignition switch to LOCK (0).

GETtheMANUALS.org

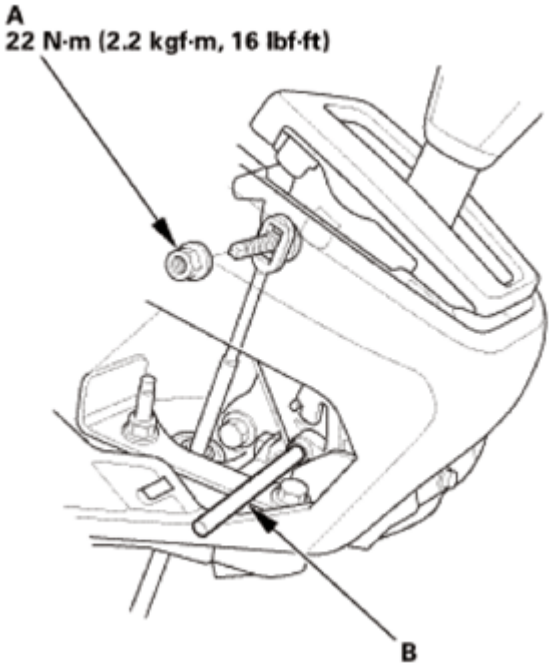

Fig. 51: Identifying Pin And Shift Cable End Nut With Torque Specification
Courtesy of AMERICAN HONDA MOTOR CO., INC.

7. Center Maintenance Cover
    1. Install the maintenance cover (A).

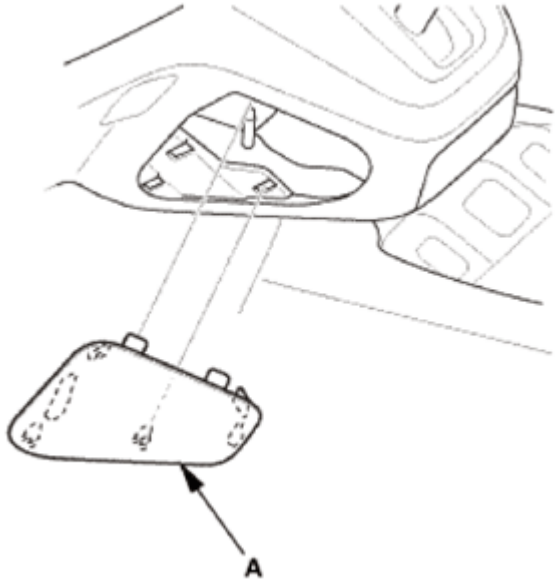

Fig. 52: Identifying Maintenance Cover
Courtesy of AMERICAN HONDA MOTOR CO., INC.

8. Center Console

GETtheMANUALS.org

1. Install the center console (A).

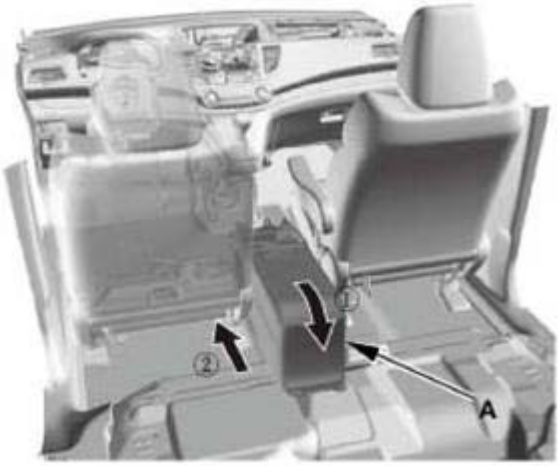

Fig. 53: Installing Center Console
Courtesy of AMERICAN HONDA MOTOR CO., INC.

2. Connect the connectors (A), and install the clips (B).

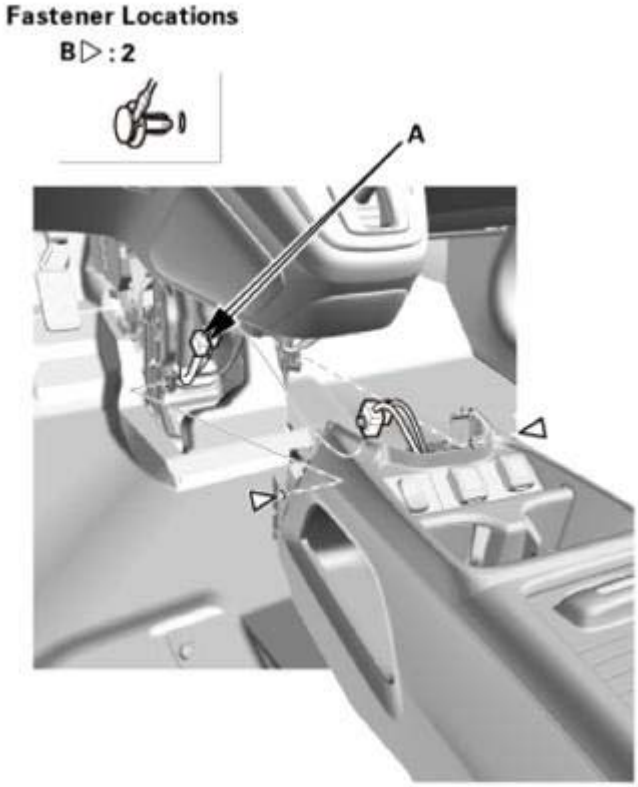

Fig. 54: Identifying Center Console Connectors And Clips
Courtesy of AMERICAN HONDA MOTOR CO., INC.

GETtheMANUALS.org

3. Install the bolts (A), then install the console box mat (B).

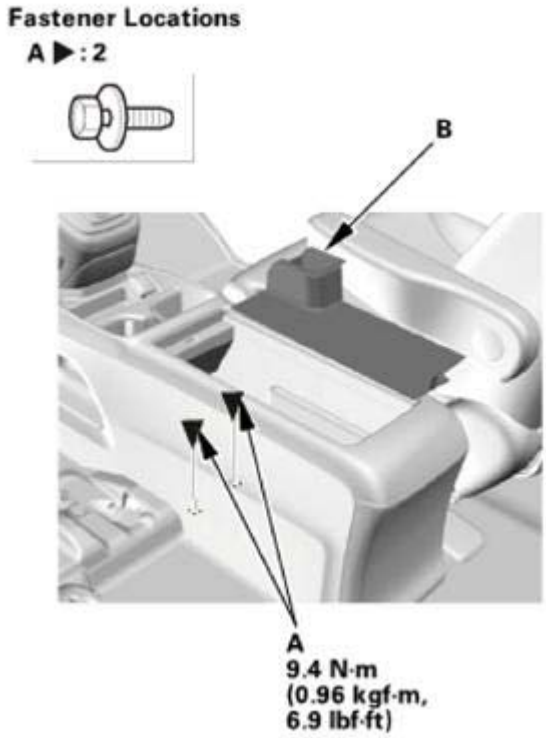

Fig. 55: Identifying Console Box Mat And Bolts With Torque Specification
Courtesy of AMERICAN HONDA MOTOR CO., INC.

4. Install the bolts (A).

GETtheMANUALS.org

Fig. 56: Identifying Center Console Bolts With Torque Specification
Courtesy of AMERICAN HONDA MOTOR CO., INC.

5. Install the bolt (A), then install the center lower cover (B). Make sure the clips (C) snap into place securely.

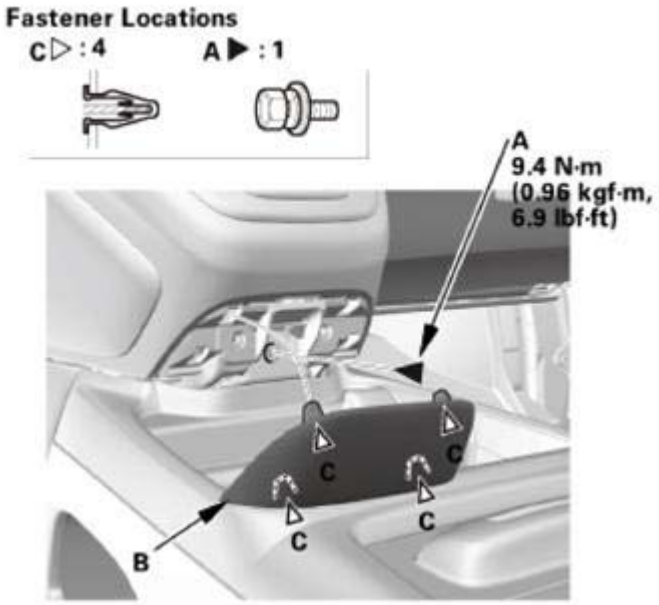

Fig. 57: Identifying Center Lower Cover, Clips And Bolt With Torque Specification
Courtesy of AMERICAN HONDA MOTOR CO., INC.

9. Center Console Rear Trim
    1. Install the center console rear trim (A). Make sure the clips (B) and the hooks (C) snap into place securely.

GETtheMANUALS.org

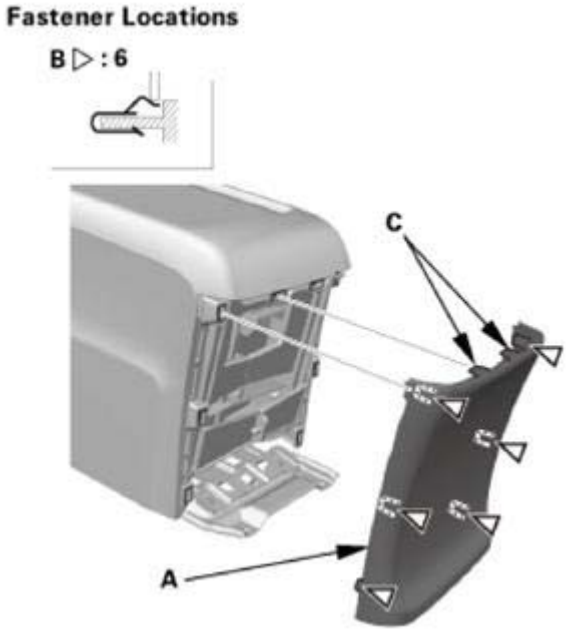

Fig. 58: Identifying Center Console Rear Trim, Clips And Hooks
Courtesy of AMERICAN HONDA MOTOR CO., INC.

10. Front Console Cover - Both Sides
    1. Install the front console covers (A). Make sure the clips (B, C) snap into place securely.

Left side

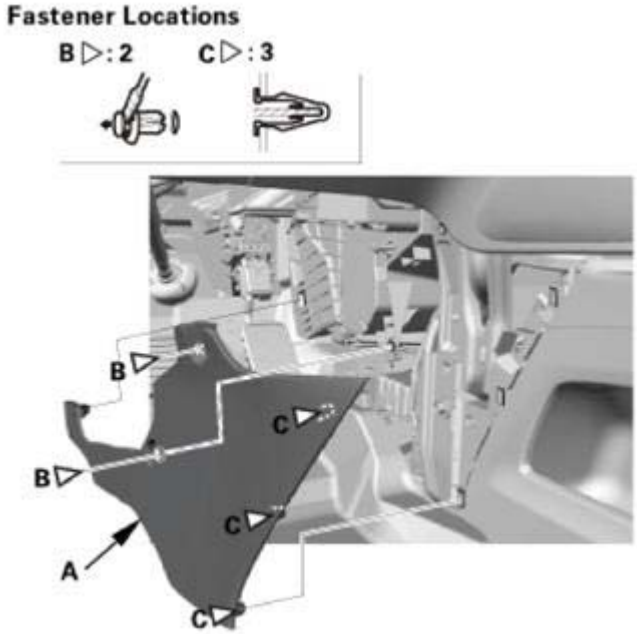

Fig. 59: Identifying Front Console Covers And Clips (Left Side)
Courtesy of AMERICAN HONDA MOTOR CO., INC.

GETtheMANUALS.org

Right side

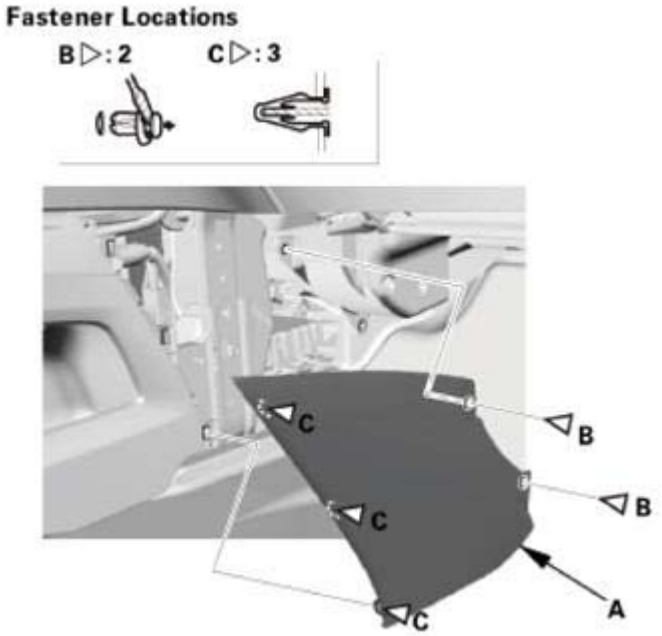

Fig. 60: Identifying Front Console Covers And Clips (Right Side)
Courtesy of AMERICAN HONDA MOTOR CO., INC.

11. Shift Lever Panel (AT)
    1. Install the shift lever panel (A). Make sure the clips (B, C) and the hooks (D) snap into place securely.

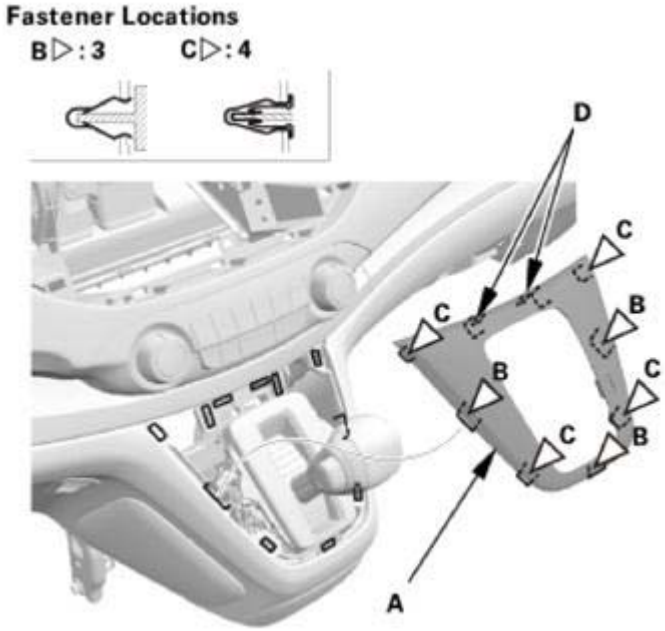

Fig. 61: Identifying Shift Lever Panel, Clips And Hooks

GETtheMANUALS.org

Courtesy of AMERICAN HONDA MOTOR CO., INC.

SHIFT LOCK SOLENOID REMOVAL AND INSTALLATION

REMOVAL

1. Shift Lever Panel (AT)
    1. Carefully pry out the shift lever panel (A) with the appropriate trim tool to detach the clips (B, C) and the hooks (D), then remove the shift lever panel.

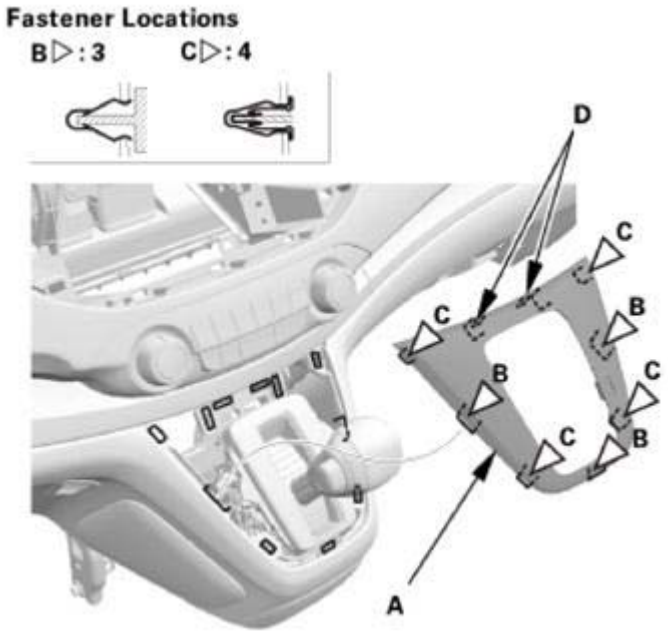

Fig. 62: Identifying Shift Lever Panel Clips And Hooks
Courtesy of AMERICAN HONDA MOTOR CO., INC.

2. Front Console Cover - Both Sides
    1. Remove the clips (A).
    2. Detach the clips (B), then remove the front console covers (C).

Left side

GETtheMANUALS.org

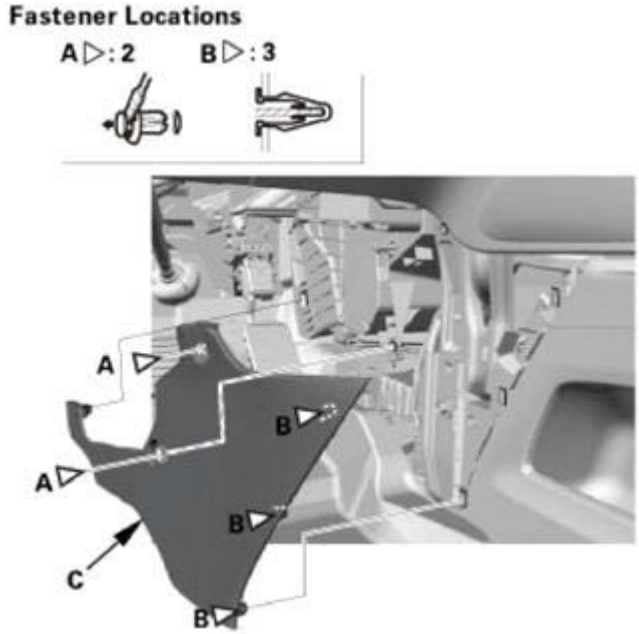

Fig. 63: Identifying Front Console Covers And Clips (Left Side)
Courtesy of AMERICAN HONDA MOTOR CO., INC.

Right side

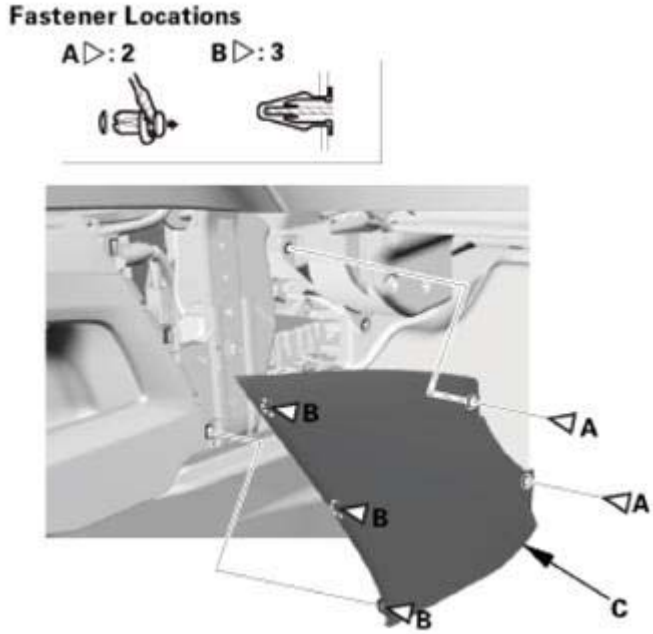

Fig. 64: Identifying Front Console Covers And Clips (Right Side)
Courtesy of AMERICAN HONDA MOTOR CO., INC.

3. Center Console Rear Trim
    1. Carefully pry out the center console rear trim (A) with the appropriate trim tool to detach the clips

GETtheMANUALS.org

(B) and the hooks (C), then remove the center console rear trim.

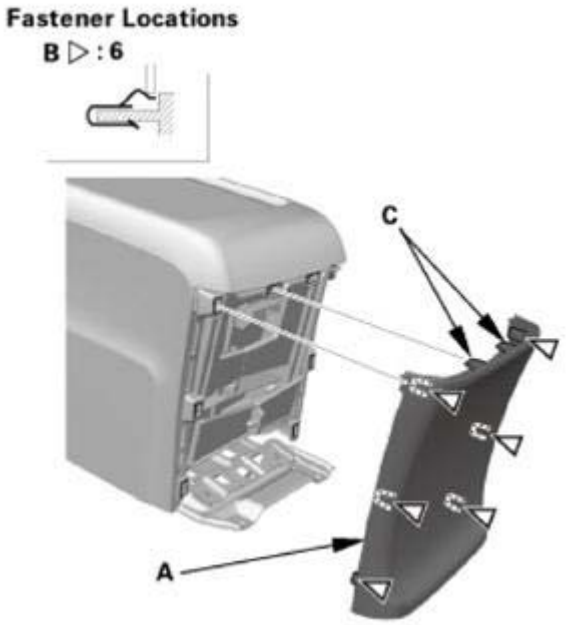

Fig. 65: Identifying Center Console Rear Trim, Clips And Hooks
Courtesy of AMERICAN HONDA MOTOR CO., INC.

4. Center Console
    1. Carefully pry out the center lower cover (A) with the appropriate trim tool to detach the clips (B), then remove the center lower cover.
    2. Remove the bolt (C).

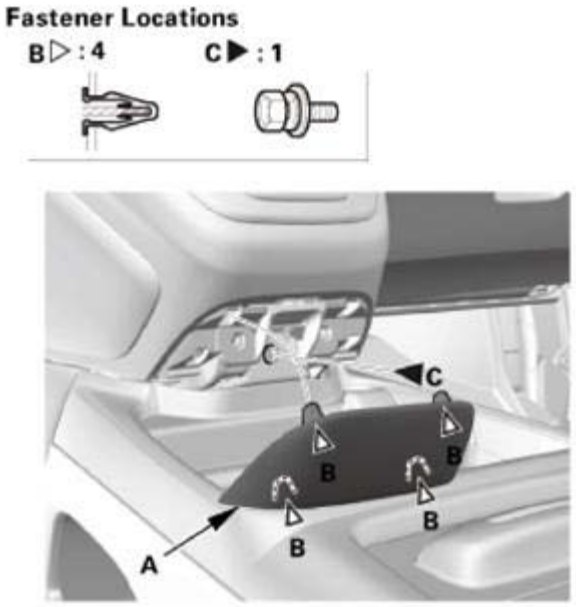

Fig. 66: Identifying Center Lower Cover, Clips And Bolts

GETtheMANUALS.org

Courtesy of AMERICAN HONDA MOTOR CO., INC.

3. Remove the bolts (A).

Fig. 67: Identifying Center Console Bolts
Courtesy of AMERICAN HONDA MOTOR CO., INC.

4. Remove the console box mat (A), then remove the bolts (B).

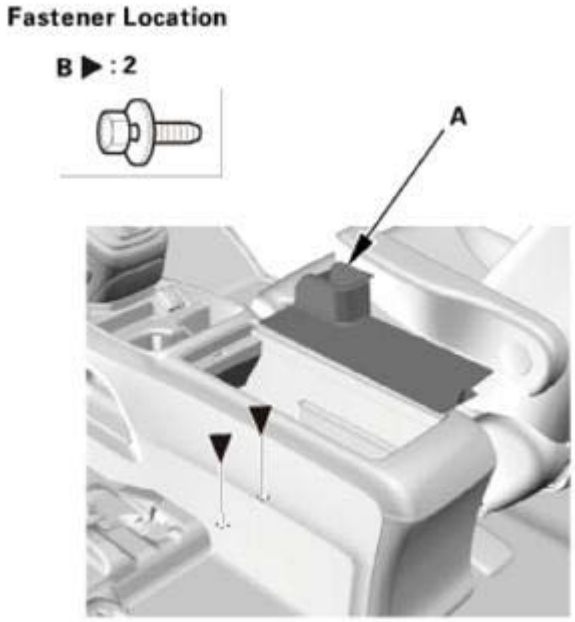

Fig. 68: Identifying Console Box Mat And Bolts
Courtesy of AMERICAN HONDA MOTOR CO., INC.

GETtheMANUALS.org

5. Disconnect the connectors (A), and remove the clips (B).

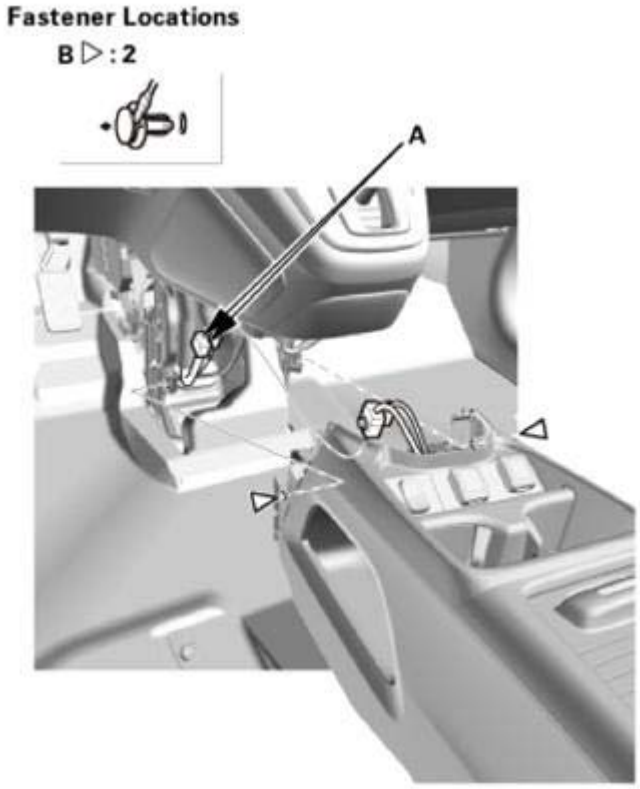

Fig. 69: Identifying Connectors And Clips
Courtesy of AMERICAN HONDA MOTOR CO., INC.

6. Slide both front seats fully rearward, and recline the seat-backs around two thirds to the rear.
7. Remove the center console (A).

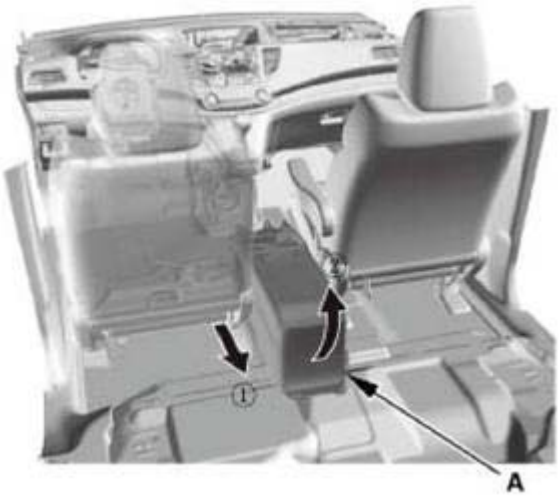

Fig. 70: Removing Center Console

GETtheMANUALS.org

Courtesy of AMERICAN HONDA MOTOR CO., INC.

5. Center Maintenance Cover
    1. Remove the maintenance cover (A).

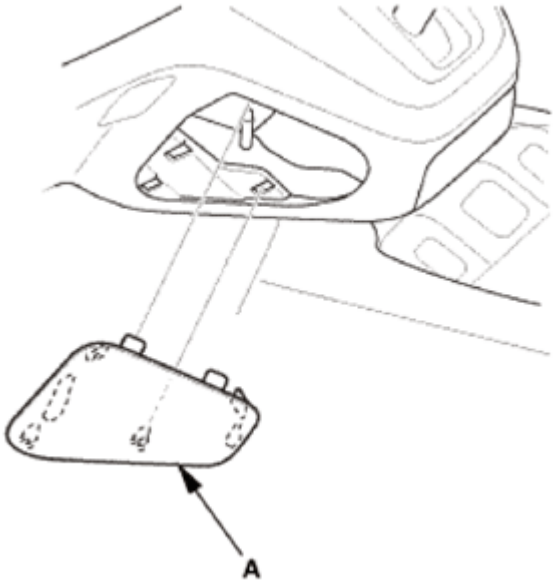

Fig. 71: Identifying Center Maintenance Cover
Courtesy of AMERICAN HONDA MOTOR CO., INC.

6. Shift Cable - Disconnection Lever Side
    1. Shift the shift lever to R.
    2. Insert a 6.0 mm (0.236 in) pin (A) into the positioning holes (B).

    NOTE: Use only a 6.0 mm (0.236 in) pin with no burrs.

    3. Remove the nut (C) securing the shift cable end (D).

GETtheMANUALS.org

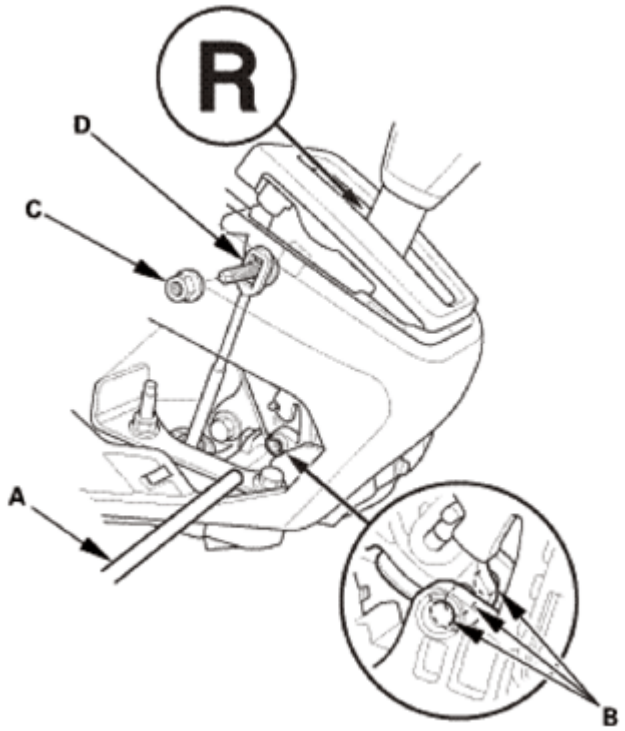

Fig. 72: Inserting Pin Into Positioning Holes
Courtesy of AMERICAN HONDA MOTOR CO., INC.

4. Unlock the retainer lock (A).

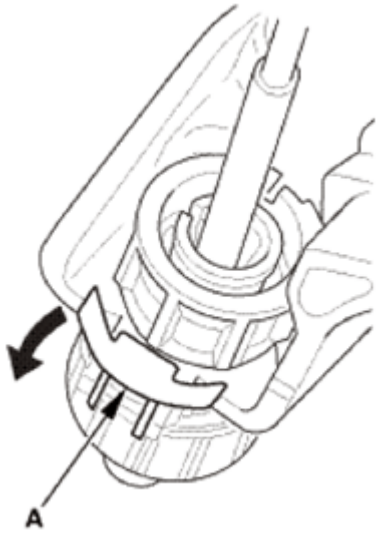

Fig. 73: Unlocking Retainer Lock
Courtesy of AMERICAN HONDA MOTOR CO., INC.

5. Rotate the socket holder retainer (A) counterclockwise (B) until it stops, and push the retainer lock (C) into the socket holder retainer to lock the retainer.

GETtheMANUALS.org

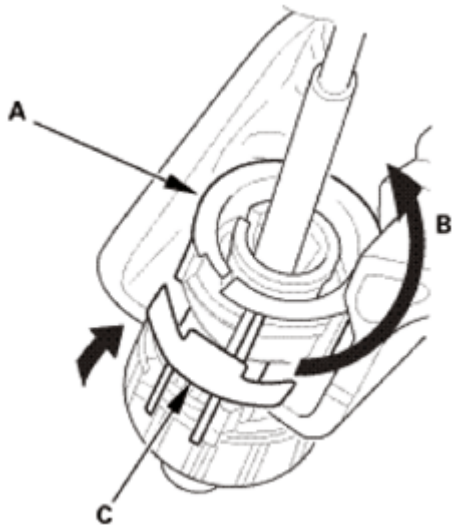

Fig. 74: Rotating Socket Holder Retainer Counterclockwise
Courtesy of AMERICAN HONDA MOTOR CO., INC.

6. Slide the socket holder (A) away from the bracket as shown to remove the shift cable (B) from the shift cable bracket (C).

NOTE: Do not remove the shift cable by pulling the shift cable guide (D).

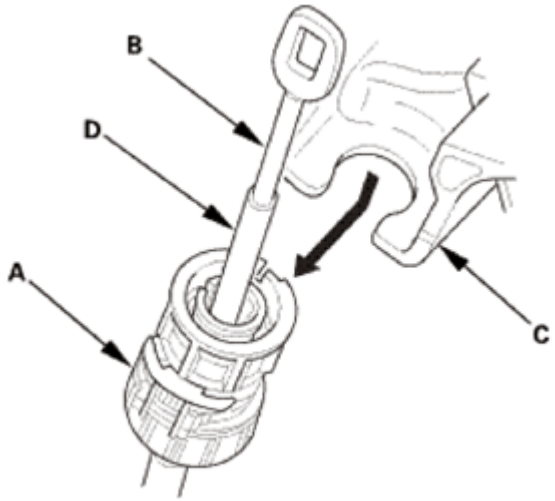

Fig. 75: Removing Shift Cable From Shift Cable Bracket
Courtesy of AMERICAN HONDA MOTOR CO., INC.

7. A/T Shift Lever Assembly
    1. Disconnect the shift lever connector.

GETtheMANUALS.org

Fig. 76: Identifying Shift Lever Connector
Courtesy of AMERICAN HONDA MOTOR CO., INC.

2. Remove the shift lever assembly.

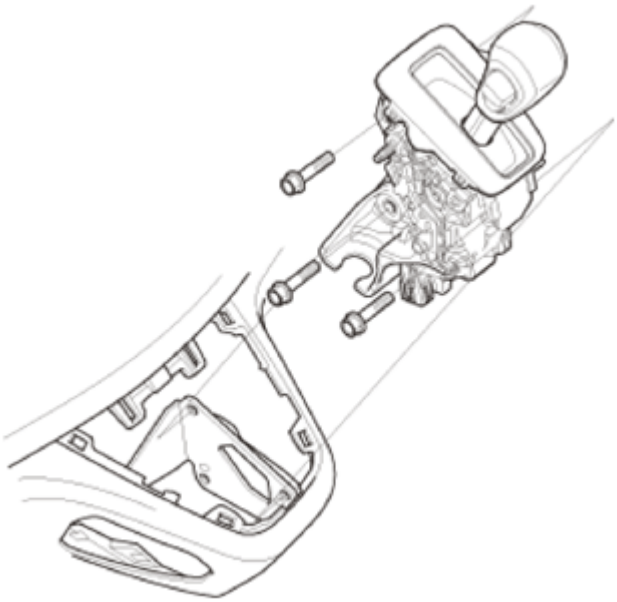

Fig. 77: Identifying Shift Lever Assembly
Courtesy of AMERICAN HONDA MOTOR CO., INC.

8. Shift Lock Solenoid

NOTE: Do not wipe off the special grease applied to the area of the shift lever marked with an asterisk (*) when you disassemble or assemble it.

1. Pull the shift lock solenoid (A) out by releasing the lock tab (B) using a screwdriver.

GETtheMANUALS.org

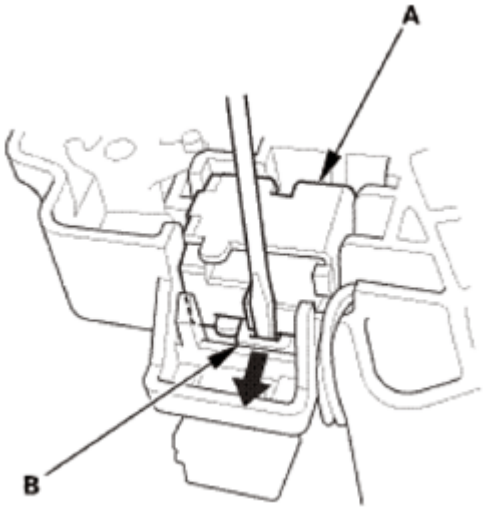

Fig. 78: Releasing Lock Tab Using Screwdriver
Courtesy of AMERICAN HONDA MOTOR CO., INC.

2. Remove the shift lock solenoid (A).

NOTE: **The shift lock solenoid consists of the solenoid (B), the solenoid plunger (C), and the plunger spring (D).**

3. Disconnect the shift lock solenoid connector (E).

GETtheMANUALS.org

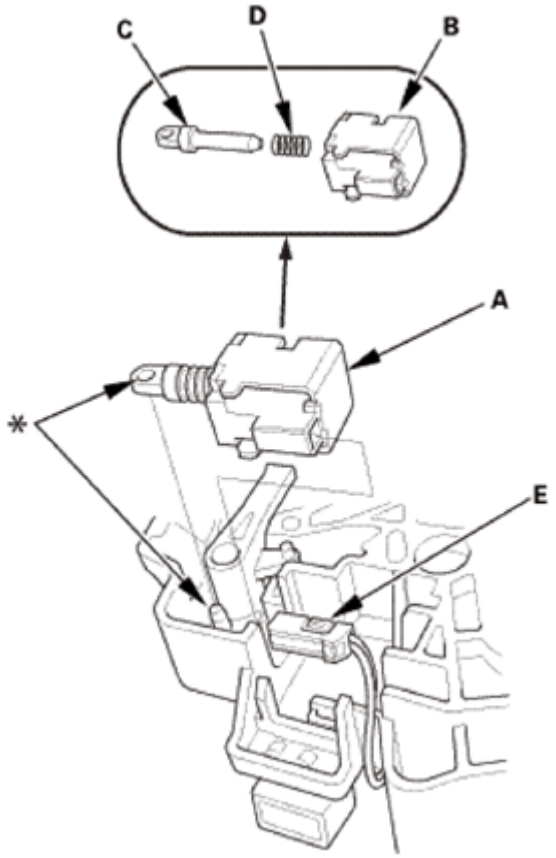

Fig. 79: Identifying Solenoid, Shift Lock Solenoid, Plunger Spring And Shift Lock Solenoid Connector
Courtesy of AMERICAN HONDA MOTOR CO., INC.

INSTALLATION

1. Shift Lock Solenoid

NOTE: Do not wipe off the special grease applied to the area of the shift lever marked with an asterisk (*) when you disassemble or assemble it.

1. Connect the shift lock solenoid connector (A).
2. Install the shift lock solenoid (B) by aligning the joint of the shift lock solenoid plunger (C) with the tip of the shift lock stop (D).

NOTE: The shift lock solenoid consists of the solenoid (E), the solenoid plunger (F), and the plunger spring (G).

GETtheMANUALS.org

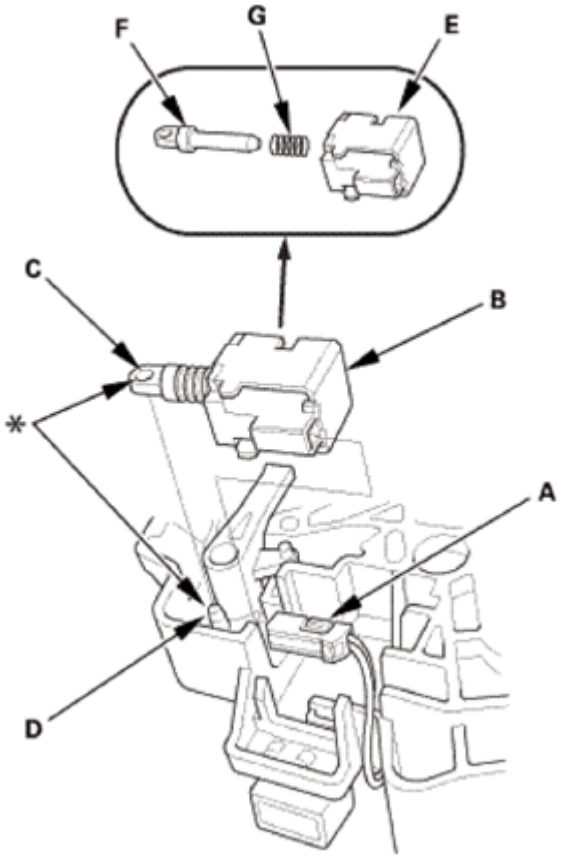

Fig. 80: Identifying Shift Lock Solenoid, Shift Lock Solenoid Connector, Solenoid, Solenoid Plunger And Plunger Spring
Courtesy of AMERICAN HONDA MOTOR CO., INC.

2. A/T Shift Lever Assembly
    1. Install the shift lever assembly.

GETtheMANUALS.org

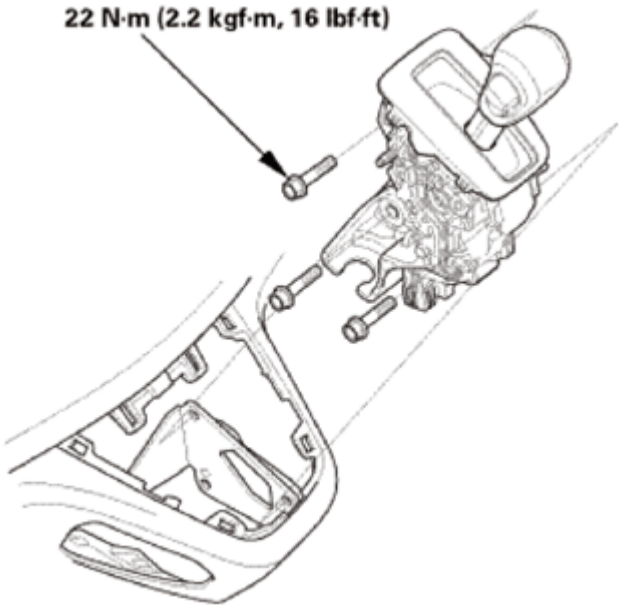

Fig. 81: Identifying Shift Lever Assembly And Bolts With Torque Specification
Courtesy of AMERICAN HONDA MOTOR CO., INC.

2. Connect the shift lever connector.

Fig. 82: Identifying Shift Lever Connector
Courtesy of AMERICAN HONDA MOTOR CO., INC.

3. Shift Cable - Adjustment
    1. Push the shift cable (A) until it stops, then release it. Pull the shift cable back one step so that the shift position is in R.

NOTE: **Do not hold the shift cable guide (B) to adjust the shift cable.**

GETtheMANUALS.org

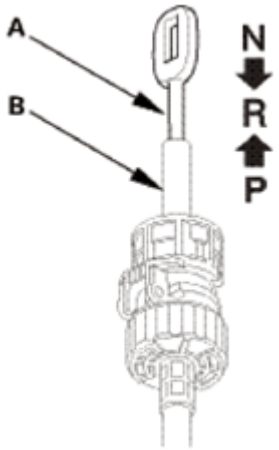

Fig. 83: Identifying Shift Cable And Shift Cable Guide
Courtesy of AMERICAN HONDA MOTOR CO., INC.

2. Turn the ignition switch to ON (II).
3. Check that the R position indicator comes on.
4. Turn the ignition switch to LOCK (0).

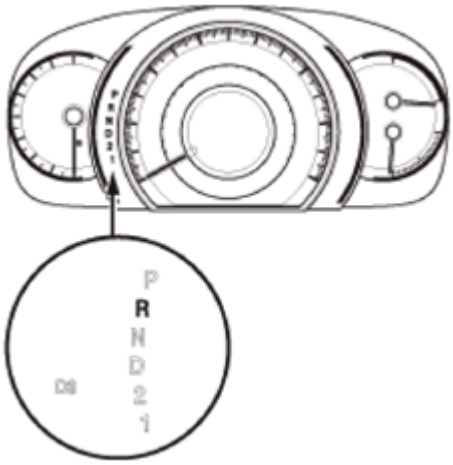

Fig. 84: Identifying R Position Indicator
Courtesy of AMERICAN HONDA MOTOR CO., INC.

5. Shift the shift lever to R.
6. Insert a 6.0 mm (0.236 in) pin (A) into the positioning holes (B).

NOTE: Use only a 6.0 mm (0.236 in) pin with no burrs.

GETtheMANUALS.org

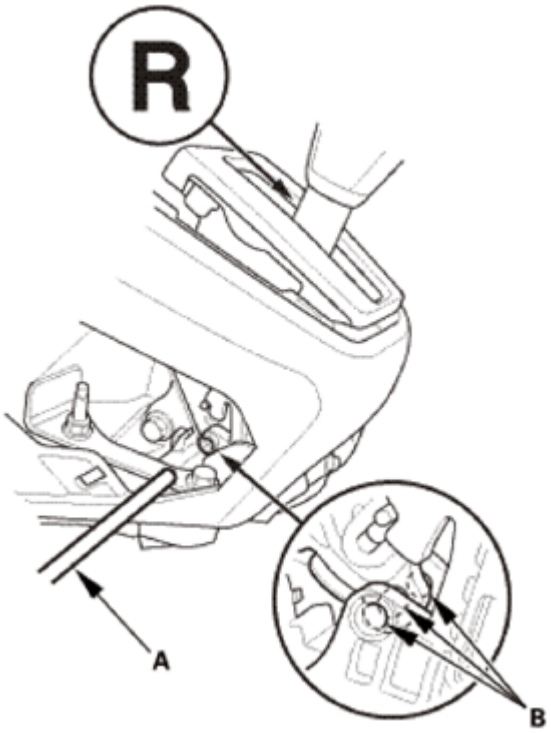

Fig. 85: Inserting Pin Into Positioning Holes
Courtesy of AMERICAN HONDA MOTOR CO., INC.

7. Unlock the retainer lock (A).

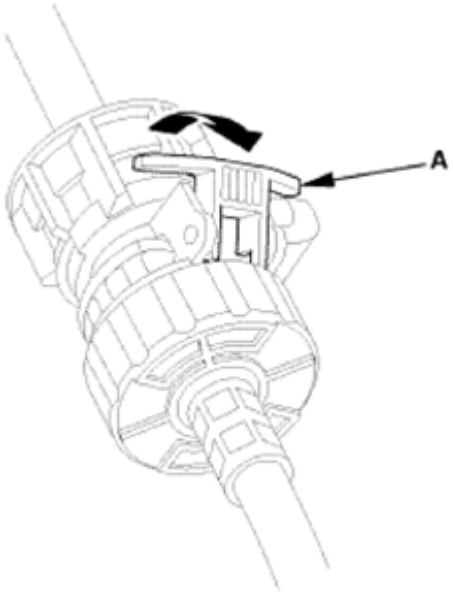

Fig. 86: Unlocking Retainer Lock
Courtesy of AMERICAN HONDA MOTOR CO., INC.

8. Rotate the socket holder retainer (A) in arrow direction (B) until it stops to create clearance (C)

GETtheMANUALS.org

between the socket holder (D) and holder retainer, and push the retainer lock (E) into the socket holder retainer to lock the retainer.

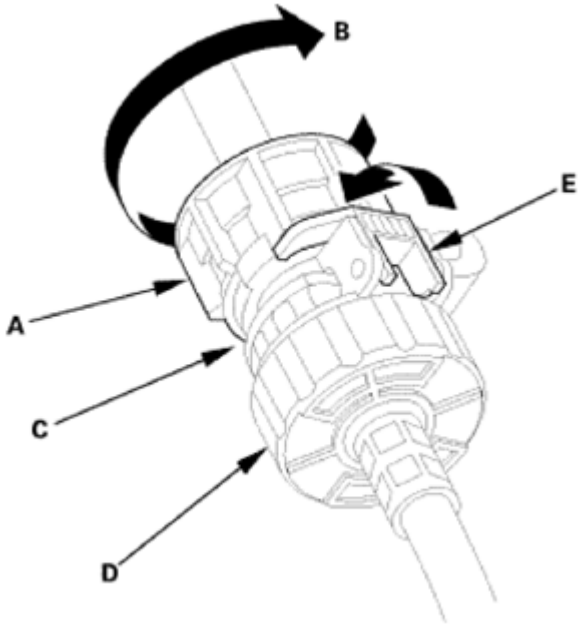

Fig. 87: Rotating Socket Holder Retainer
Courtesy of AMERICAN HONDA MOTOR CO., INC.

9. Align the shift cable slot (A) between the socket holder (B) and the socket holder retainer (C) with the opening (D) in the shift cable bracket (E), then slide the holder into the bracket while installing the shift cable end (F) over the mounting stud (G) by aligning its square hole (H) with the square fitting (I) at the bottom of the stud.

NOTE:

- **Do not install the shift cable by holding the shift cable guide (J).**
- **When the socket holder is installed in the shift cable bracket, the retainer lock is unhinged and releases the holder retainer lock, then the holder retainer returns under spring force to secure the shift cable.**

GETtheMANUALS.org

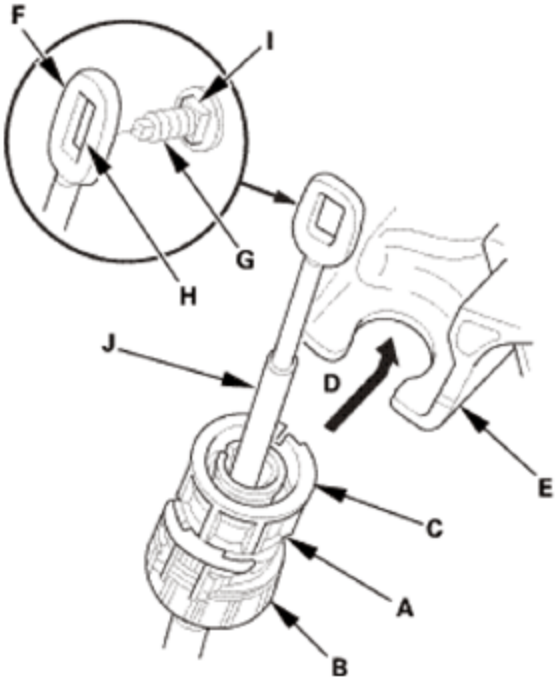

Fig. 88: Aligning Shift Cable Slot Between Socket Holder And Socket Holder Retainer With Opening In Shift Cable Bracket
Courtesy of AMERICAN HONDA MOTOR CO., INC.

10. Push the retainer lock (A) fully to lock the socket holder retainer (B), and make sure that the retainer lock fits into the hinged-joint (C). If the retainer lock does not fit with the edge of the hinged-joint, rotate the holder retainer counterclockwise while pushing the retainer lock until it locks.

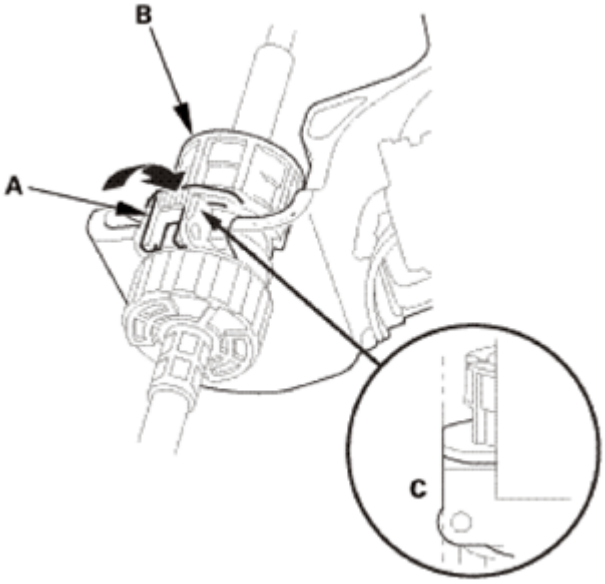

Fig. 89: Pushing Retainer Lock

GETtheMANUALS.org

Courtesy of AMERICAN HONDA MOTOR CO., INC.

11. Make sure that the shift cable end (A) is properly installed on the mounting stud (B).
    - If the shift cable end is out of position with the mounting stud, remove the shift cable from the shift cable bracket, then reinstall the cable end over the mounting stud before reinstalling the shift cable to the shift cable bracket. Do not install the shift cable end on the mounting stud with the shift cable install on the shift cable bracket.
    - If the shift cable end does not ride at the bottom of the mounting stud, rotate the stud to align the square fitting with the hole.

    Properly installed:

    Cable end rides on the bottom of the mounting stud.

    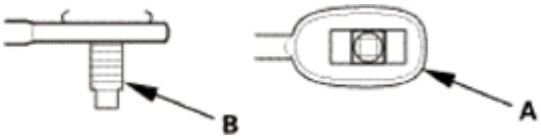

    Fig. 90: Identifying Shift Cable End Proper And Improper Installation
    Courtesy of AMERICAN HONDA MOTOR CO., INC.

    Improperly installed:

    Cable end out of position with the mounting stud.

    Improperly installed:

    Cable end out of alignment with the mounting stud.

12. Install the shift cable end nut (A).
13. Remove the 6.0 mm (0.236 in) pin (B) that was installed to hold the shift lever.
14. Turn the ignition switch to ON (II).
15. Move the shift lever to each position, and check that the A/T gear position indicator follows the transmission range switch.

GETtheMANUALS.org

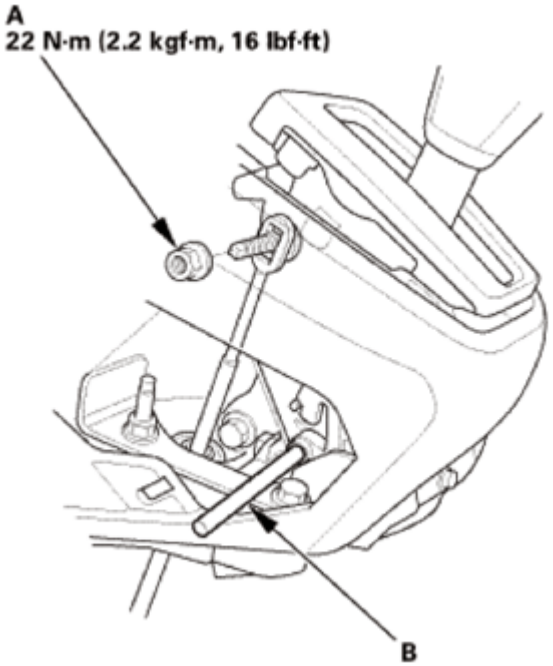

Fig. 91: Identifying Pin And Shift Cable End Nut With Torque Specification
Courtesy of AMERICAN HONDA MOTOR CO., INC.

16. Shift the shift lever to P.
17. Check that the shift lock works properly.
18. Push the shift lock release, and check that the shift lever releases. Also check that the shift lever locks when it is shifted back to P.
19. Turn the ignition switch to LOCK (0).

4. Center Maintenance Cover
    1. Install the maintenance cover (A).

GETtheMANUALS.org

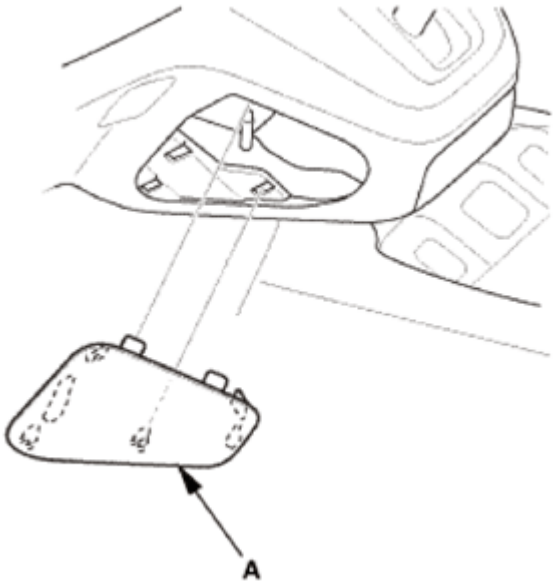

Fig. 92: Identifying Maintenance Cover
Courtesy of AMERICAN HONDA MOTOR CO., INC.

5. Center Console
    1. Install the center console (A).

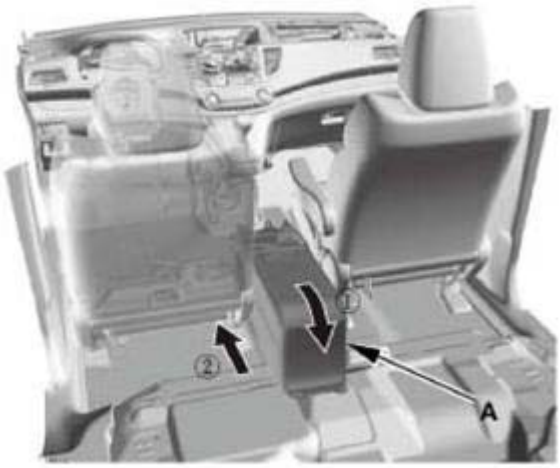

Fig. 93: Installing Center Console
Courtesy of AMERICAN HONDA MOTOR CO., INC.

    2. Connect the connectors (A), and install the clips (B).

GETtheMANUALS.org

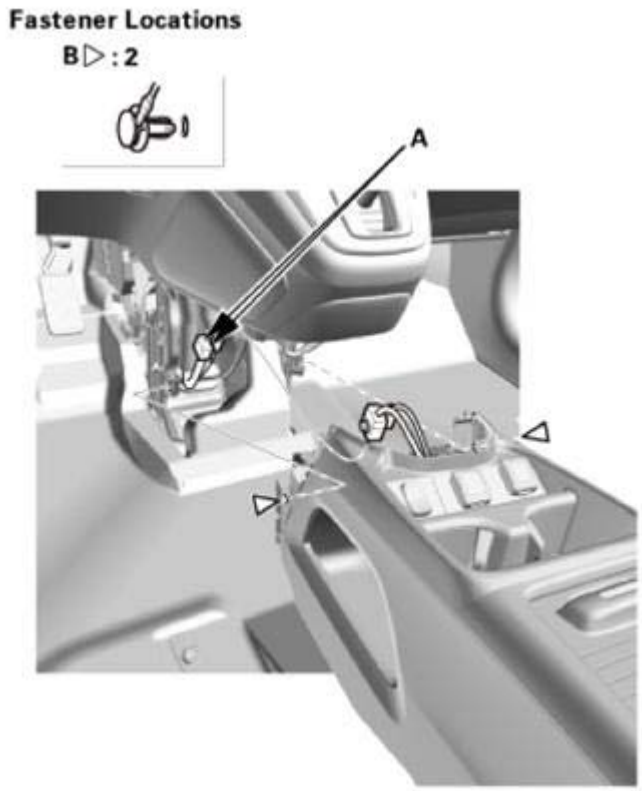

Fig. 94: Identifying Center Console Connectors And Clips
Courtesy of AMERICAN HONDA MOTOR CO., INC.

3. Install the bolts (A), then install the console box mat (B).

GETtheMANUALS.org

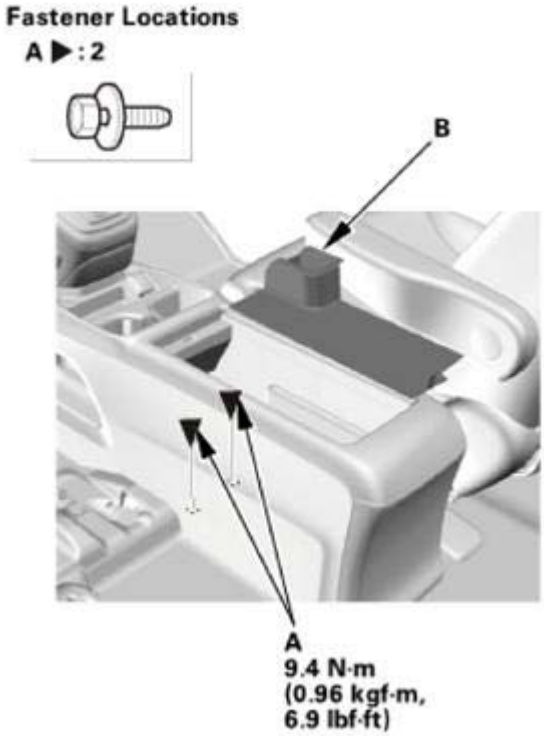

Fig. 95: Identifying Console Box Mat And Bolts With Torque Specification
Courtesy of AMERICAN HONDA MOTOR CO., INC.

4. Install the bolts (A).

Fig. 96: Identifying Center Console Bolts With Torque Specification
Courtesy of AMERICAN HONDA MOTOR CO., INC.

GETtheMANUALS.org

5. Install the bolt (A), then install the center lower cover (B). Make sure the clips (C) snap into place securely.

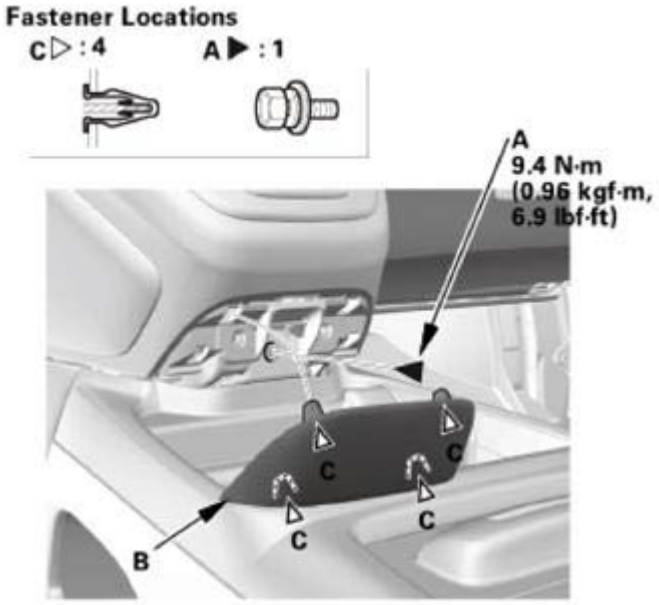

Fig. 97: Identifying Center Lower Cover, Clips And Bolt With Torque Specification
Courtesy of AMERICAN HONDA MOTOR CO., INC.

6. Center Console Rear Trim
   1. Install the center console rear trim (A). Make sure the clips (B) and the hooks (C) snap into place securely.

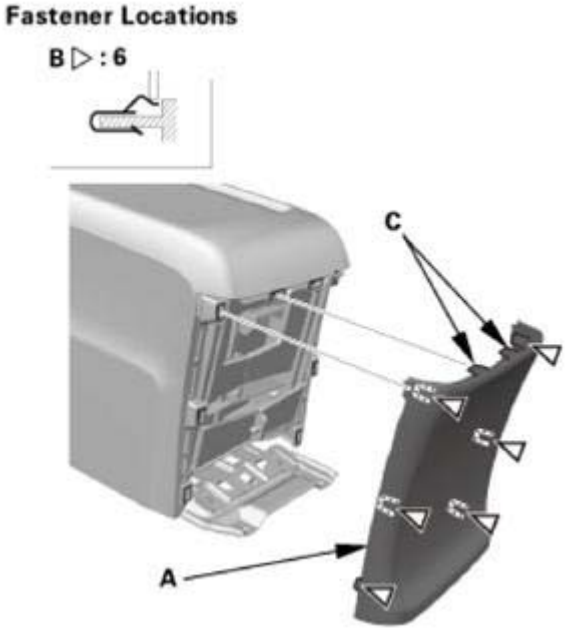

Fig. 98: Identifying Center Console Rear Trim, Clips And Hooks

GETtheMANUALS.org

Courtesy of AMERICAN HONDA MOTOR CO., INC.

7. Front Console Cover - Both Sides
    1. Install the front console covers (A). Make sure the clips (B, C) snap into place securely.

Left side

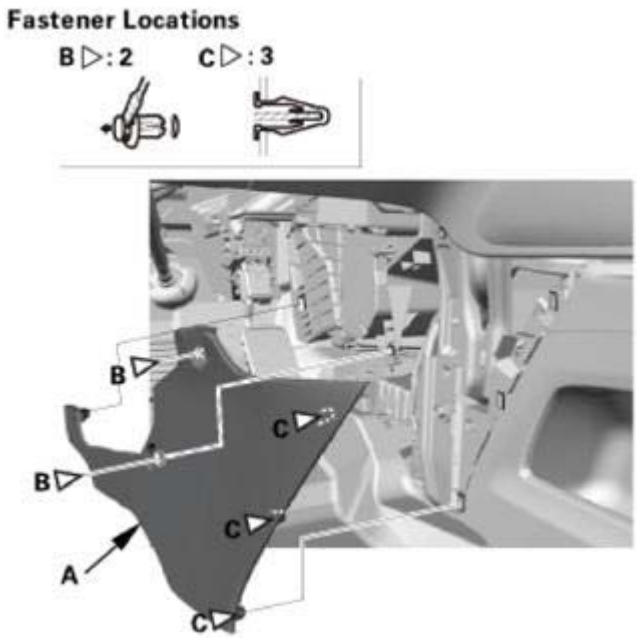

Fig. 99: Identifying Front Console Covers And Clips (Left Side)
Courtesy of AMERICAN HONDA MOTOR CO., INC.

Right side

GETtheMANUALS.org

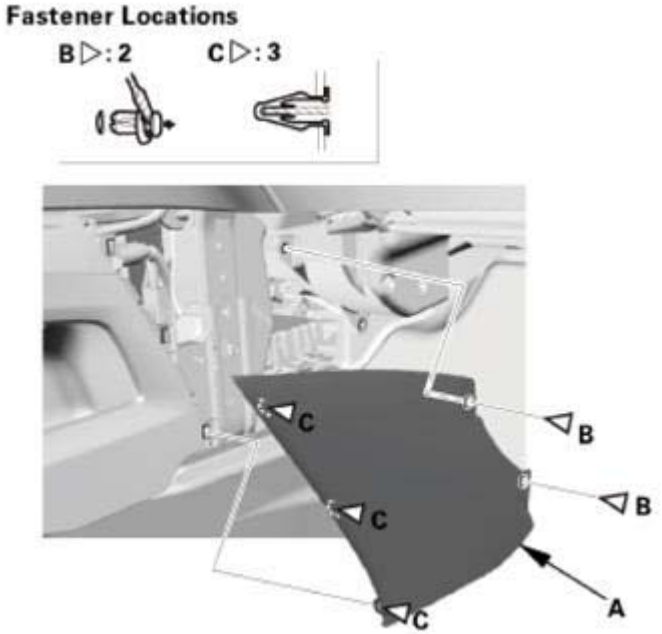

Fig. 100: Identifying Front Console Covers And Clips (Right Side)
Courtesy of AMERICAN HONDA MOTOR CO., INC.

8. Shift Lever Panel (AT)
    1. Install the shift lever panel (A). Make sure the clips (B, C) and the hooks (D) snap into place securely.

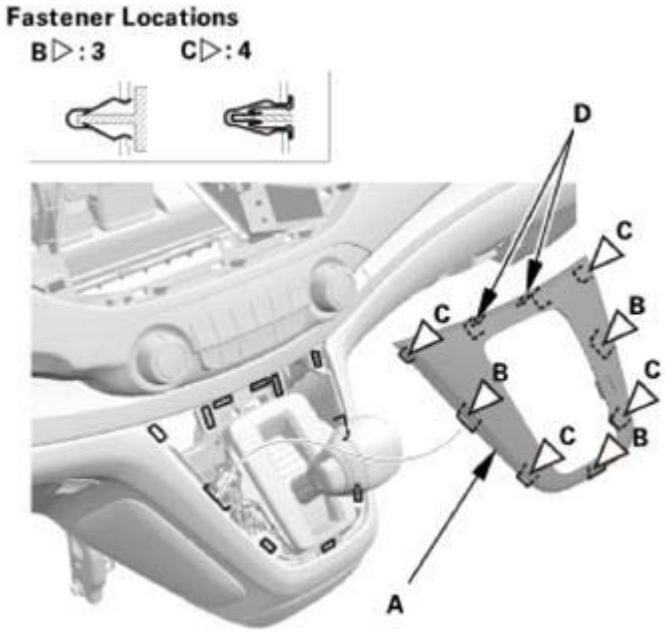

Fig. 101: Identifying Shift Lever Panel, Clips And Hooks
Courtesy of AMERICAN HONDA MOTOR CO., INC.

GETtheMANUALS.org

SHIFT LOCK SOLENOID TEST

TEST

1. HDS DLC - Connection
    1. Connect the HDS to the data link connector (DLC) (A) located under the driver's side of the dashboard.
    2. Turn the ignition switch to ON (II).
    3. Make sure the HDS communicates with the vehicle. If it does not communicate, go to the DLC circuit troubleshooting.

Fig. 102: Identifying Data Link Connector Located Under Driver's Side Of Dashboard
Courtesy of AMERICAN HONDA MOTOR CO., INC.

2. Shift Lock Solenoid - Test
    1. Select the Shift Lock Solenoid Test in the Miscellaneous Test Menu, and check that the shift lock solenoid operates with the HDS.
    2. Check that the shift lever can be moved out of P when the Shift Lock Solenoid is ON. Move the shift lever back to P, and check that it locks when the Shift Lock Solenoid is OFF.
    3. Check that the shift lock releases when the shift lock release is pushed, and check that it locks when the shift lock release is released.
    4. If the shift lock solenoid does not work properly, troubleshoot the shift lock system circuit.

SHIFT LOCK STOP/SHIFT LOCK STOP CUSHION REMOVAL AND INSTALLATION

REMOVAL

1. Shift Lever Panel (AT)

GETtheMANUALS.org

1. Carefully pry out the shift lever panel (A) with the appropriate trim tool to detach the clips (B, C) and the hooks (D), then remove the shift lever panel.

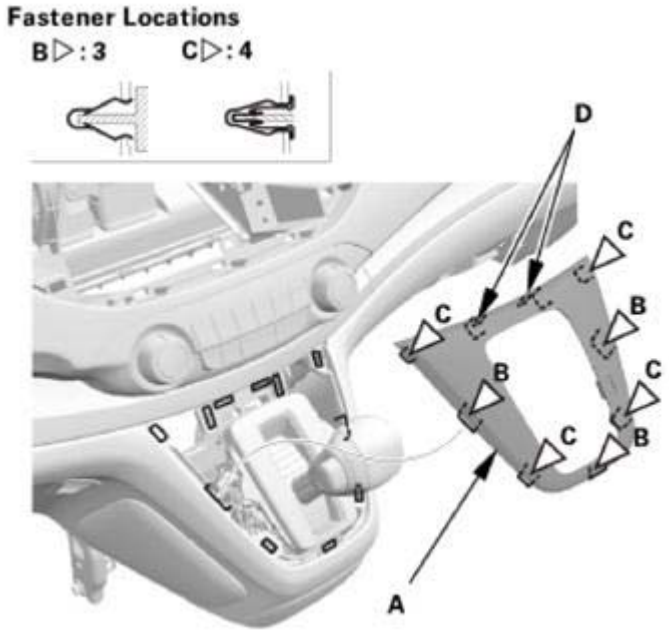

Fig. 103: Identifying Shift Lever Panel Clips And Hooks
Courtesy of AMERICAN HONDA MOTOR CO., INC.

2. Front Console Cover - Both Sides
    1. Remove the clips (A).
    2. Detach the clips (B), then remove the front console covers (C).

    Left side

GETtheMANUALS.org

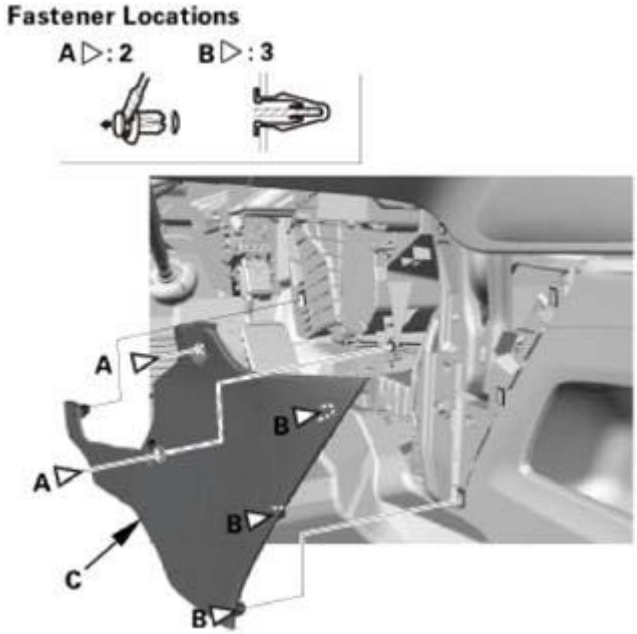

Fig. 104: Identifying Front Console Covers And Clips (Left Side)
Courtesy of AMERICAN HONDA MOTOR CO., INC.

Right side

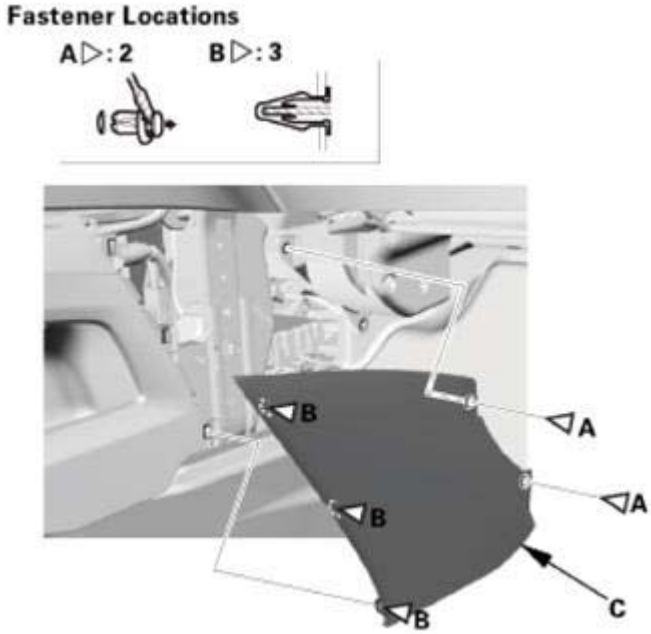

Fig. 105: Identifying Front Console Covers And Clips (Right Side)
Courtesy of AMERICAN HONDA MOTOR CO., INC.

3. Center Console Rear Trim
    1. Carefully pry out the center console rear trim (A) with the appropriate trim tool to detach the clips

GETtheMANUALS.org

(B) and the hooks (C), then remove the center console rear trim.

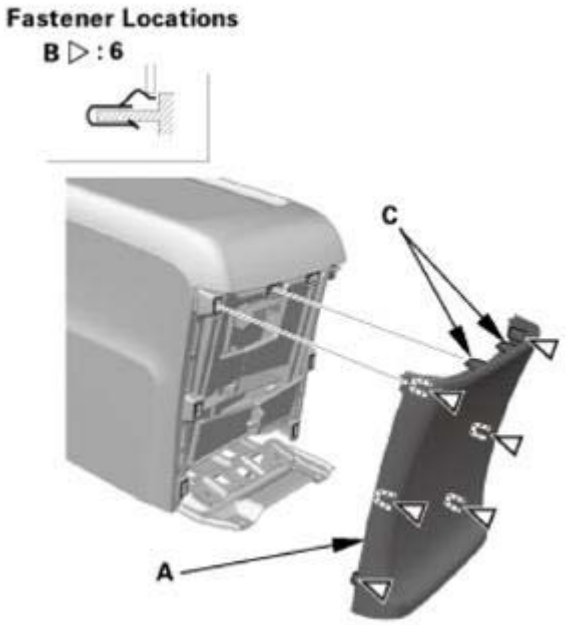

Fig. 106: Identifying Center Console Rear Trim, Clips And Hooks
Courtesy of AMERICAN HONDA MOTOR CO., INC.

4. Center Console
    1. Carefully pry out the center lower cover (A) with the appropriate trim tool to detach the clips (B), then remove the center lower cover.
    2. Remove the bolt (C).

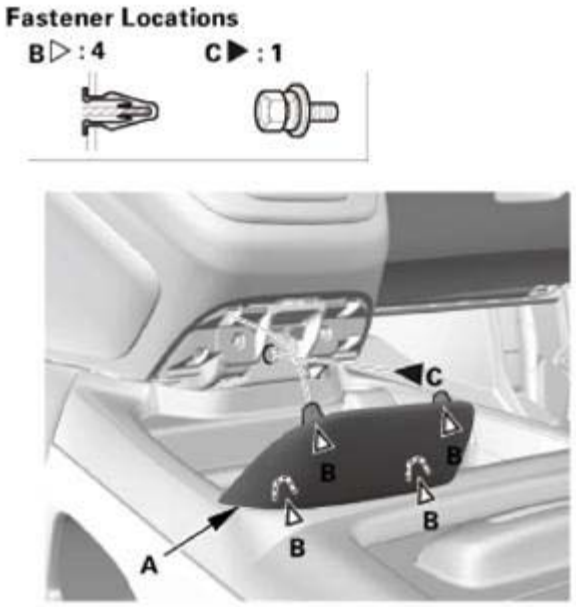

Fig. 107: Identifying Center Lower Cover, Clips And Bolts

GETtheMANUALS.org

Courtesy of AMERICAN HONDA MOTOR CO., INC.

3. Remove the bolts (A).

Fig. 108: Identifying Center Console Bolts
Courtesy of AMERICAN HONDA MOTOR CO., INC.

4. Remove the console box mat (A), then remove the bolts (B).

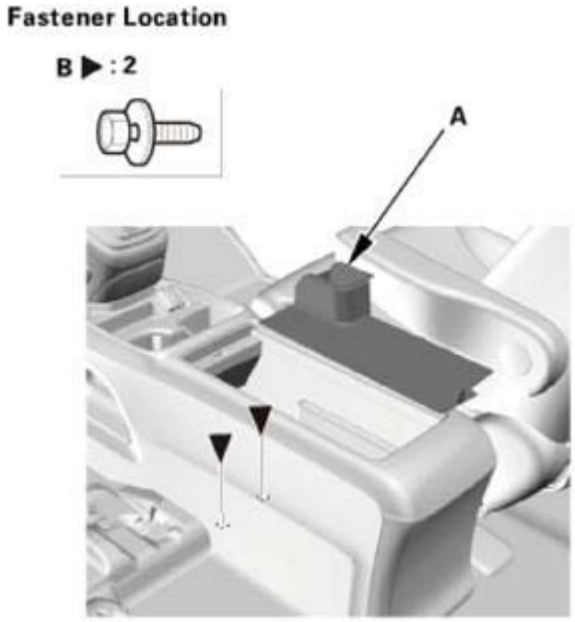

Fig. 109: Identifying Console Box Mat And Bolts
Courtesy of AMERICAN HONDA MOTOR CO., INC.

GETtheMANUALS.org

5. Disconnect the connectors (A), and remove the clips (B).

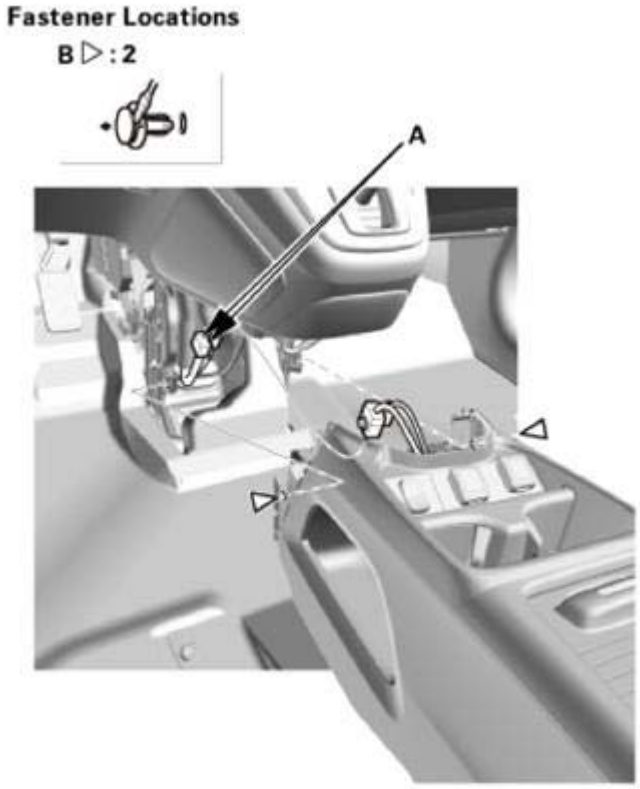

Fig. 110: Identifying Connectors And Clips
Courtesy of AMERICAN HONDA MOTOR CO., INC.

6. Slide both front seats fully rearward, and recline the seat-backs around two thirds to the rear.
7. Remove the center console (A).

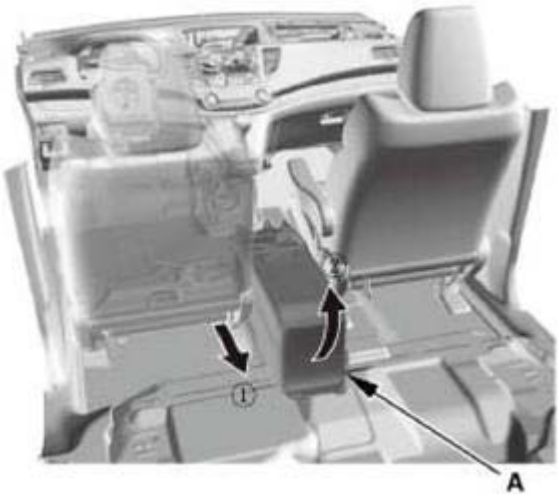

Fig. 111: Removing Center Console

GETtheMANUALS.org

Courtesy of AMERICAN HONDA MOTOR CO., INC.

5. Center Maintenance Cover
    1. Remove the maintenance cover (A).

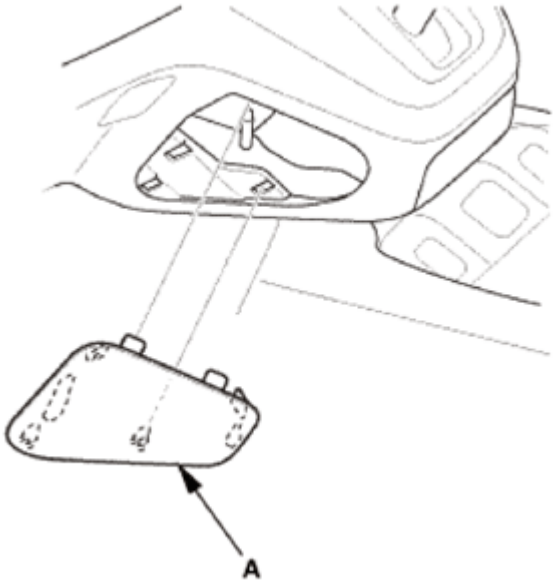

Fig. 112: Identifying Center Maintenance Cover
Courtesy of AMERICAN HONDA MOTOR CO., INC.

6. Shift Cable - Disconnection Lever Side
    1. Shift the shift lever to R.
    2. Insert a 6.0 mm (0.236 in) pin (A) into the positioning holes (B).

    NOTE: Use only a 6.0 mm (0.236 in) pin with no burrs.

    3. Remove the nut (C) securing the shift cable end (D).

GETtheMANUALS.org

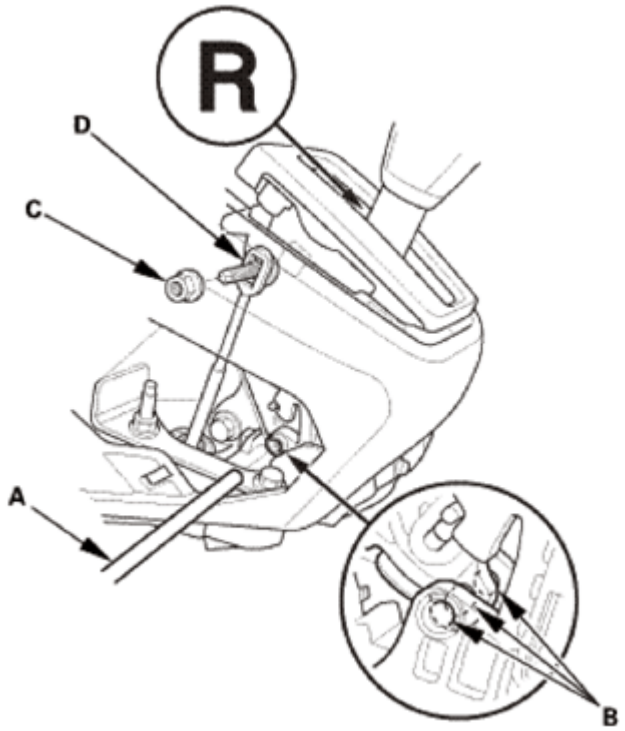

Fig. 113: Inserting Pin Into Positioning Holes
Courtesy of AMERICAN HONDA MOTOR CO., INC.

4. Unlock the retainer lock (A).

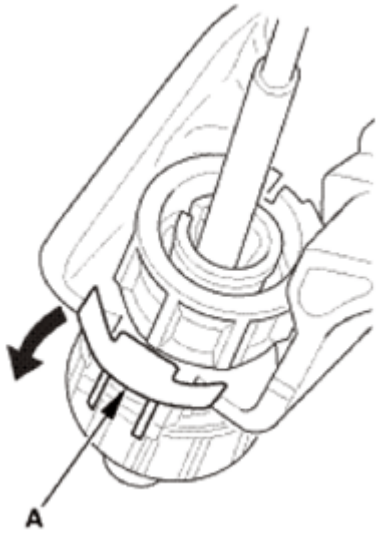

Fig. 114: Unlocking Retainer Lock
Courtesy of AMERICAN HONDA MOTOR CO., INC.

5. Rotate the socket holder retainer (A) counterclockwise (B) until it stops, and push the retainer lock (C) into the socket holder retainer to lock the retainer.

GETtheMANUALS.org

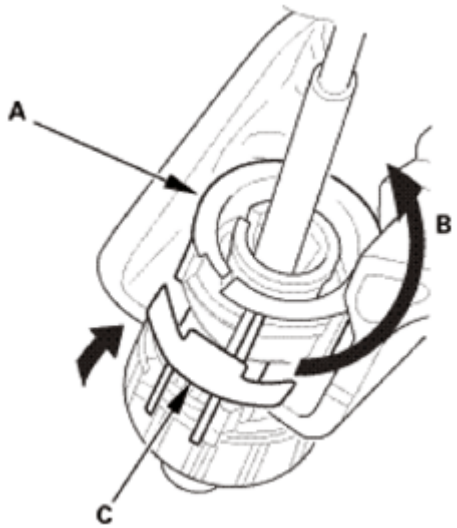

Fig. 115: Rotating Socket Holder Retainer Counterclockwise
Courtesy of AMERICAN HONDA MOTOR CO., INC.

6. Slide the socket holder (A) away from the bracket as shown to remove the shift cable (B) from the shift cable bracket (C).

NOTE: Do not remove the shift cable by pulling the shift cable guide (D).

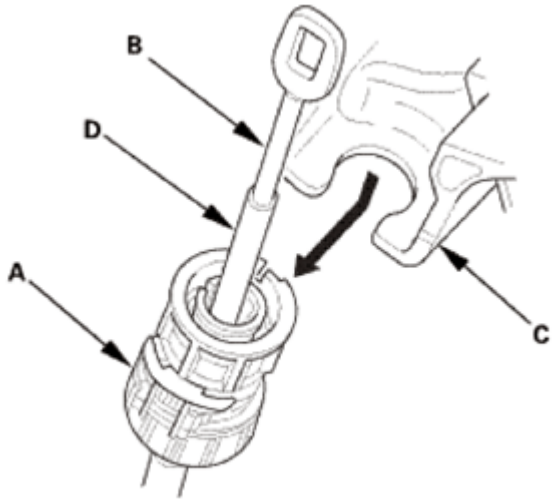

Fig. 116: Removing Shift Cable From Shift Cable Bracket
Courtesy of AMERICAN HONDA MOTOR CO., INC.

7. A/T Shift Lever Assembly
    1. Disconnect the shift lever connector.

GETtheMANUALS.org

Fig. 117: Identifying Shift Lever Connector
Courtesy of AMERICAN HONDA MOTOR CO., INC.

2. Remove the shift lever assembly.

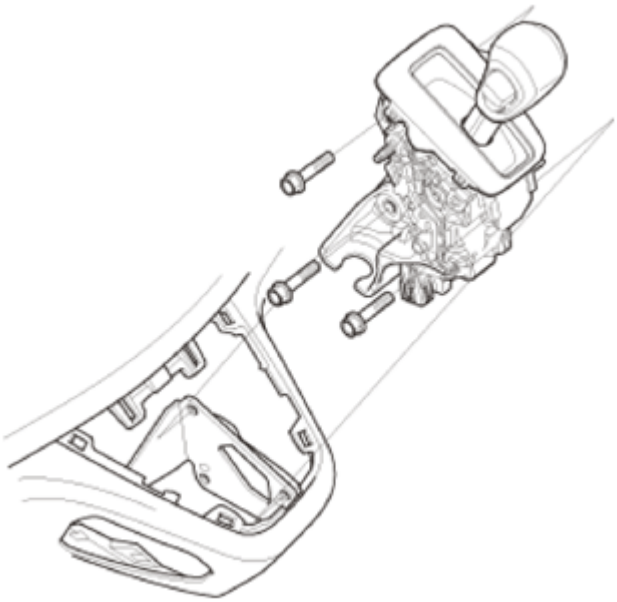

Fig. 118: Identifying Shift Lever Assembly
Courtesy of AMERICAN HONDA MOTOR CO., INC.

8. D3 Switch Harness - Disconnection
    1. Remove the harness wire tie (A).
    2. Disconnect the D3 switch connector (B).

GETtheMANUALS.org

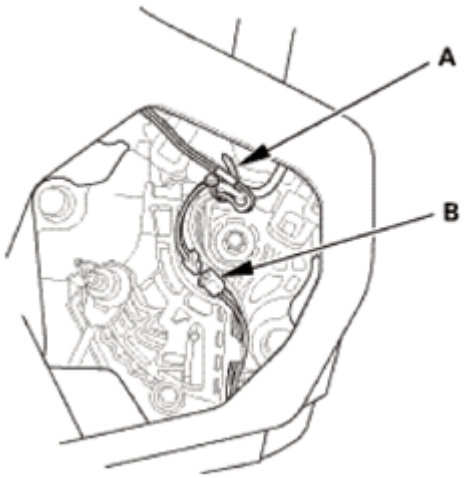

Fig. 119: Identifying D3 Switch Connector And Harness Wire Tie
Courtesy of AMERICAN HONDA MOTOR CO., INC.

9. Shift Lever Knob/Shift Lever Knob Ring Assembly

NOTE: **Do not wipe off the special grease applied to the area of the shift lever marked with an asterisk (*) when you disassemble or assemble it.**

1. Unhook the D3 switch harness (A) from the harness guide (B).
2. Remove the shift lever knob/shift lever knob ring assembly (C).

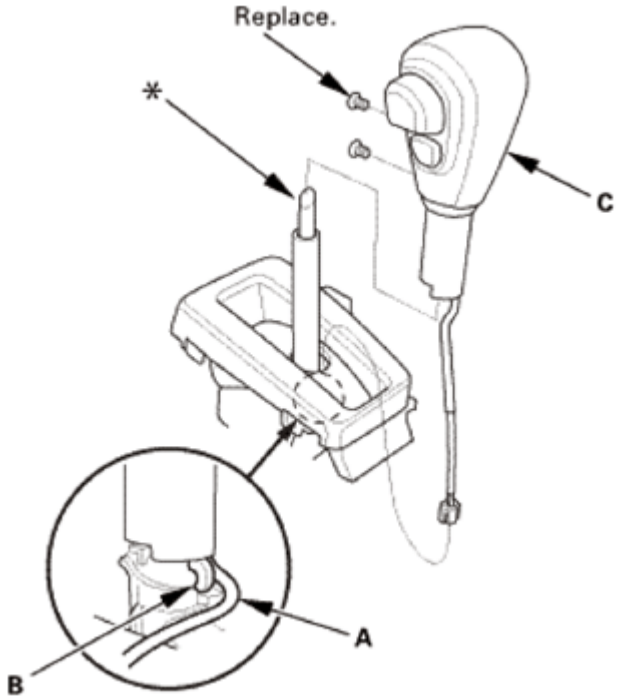

Fig. 120: Identifying D3 Switch Harness, Harness Guide And Shift Lever Knob/Shift Lever

GETtheMANUALS.org

Knob Ring Assembly
Courtesy of AMERICAN HONDA MOTOR CO., INC.

10. A/T Gear Position Indicator Panel Assembly
    1. Remove the A/T gear position indicator panel light socket (A) from the A/T gear position indicator panel assembly (B).
    2. Unhook the A/T gear position indicator panel light harness (C) from the harness guide (D).
    3. Remove the A/T gear position indicator panel assembly by expanding the four lock tabs (E).

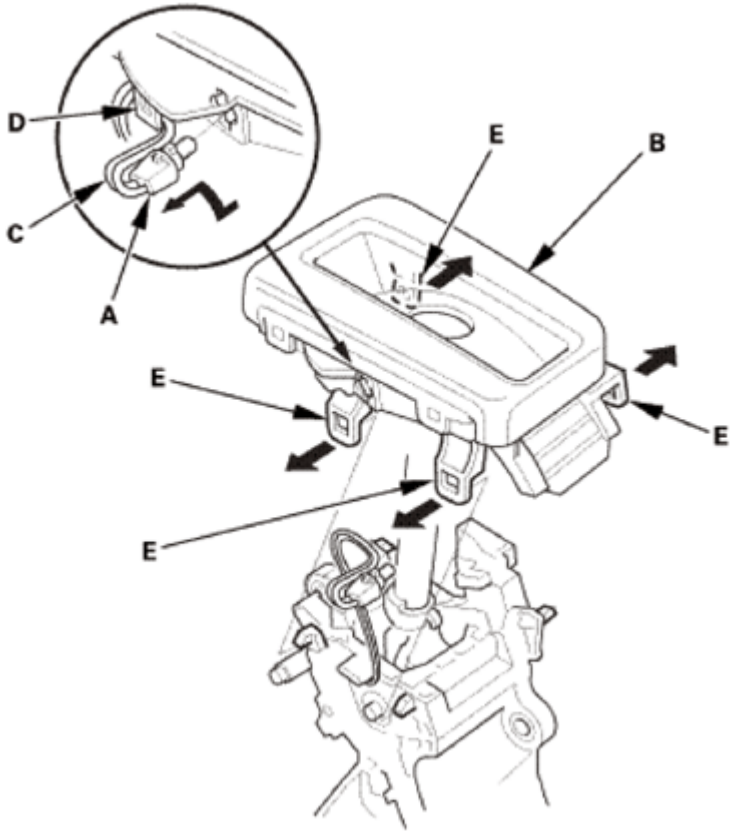

Fig. 121: Removing A/T Gear Position Indicator Panel Assembly
Courtesy of AMERICAN HONDA MOTOR CO., INC.

11. Shift Lock Release
    1. Remove the shift lock release (A) and the release spring (B) by pressing the lock tab (C).

GETtheMANUALS.org

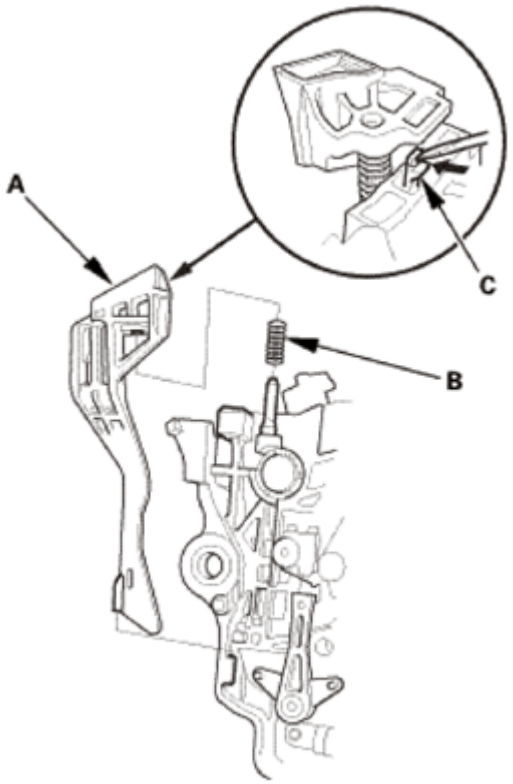

Fig. 122: Pressing Lock Tab
Courtesy of AMERICAN HONDA MOTOR CO., INC.

12. Shift Lock Solenoid

NOTE: **Do not wipe off the special grease applied to the area of the shift lever marked with an asterisk (*) when you disassemble or assemble it.**

1. Pull the shift lock solenoid (A) out by releasing the lock tab (B) using a screwdriver.

GETtheMANUALS.org

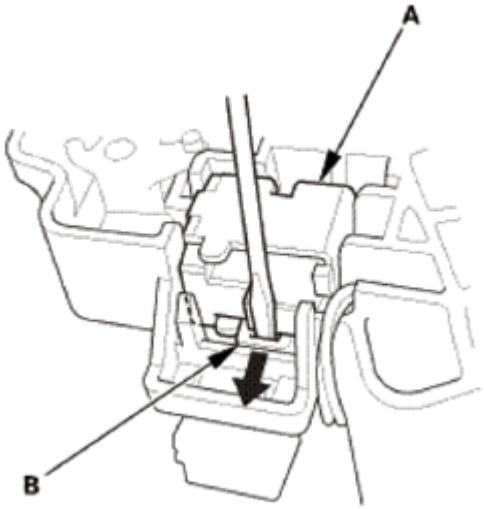

Fig. 123: Releasing Lock Tab Using Screwdriver
Courtesy of AMERICAN HONDA MOTOR CO., INC.

2. Remove the shift lock solenoid (A).

NOTE: **The shift lock solenoid consists of the solenoid (B), the solenoid plunger (C), and the plunger spring (D).**

3. Disconnect the shift lock solenoid connector (E).

GETtheMANUALS.org

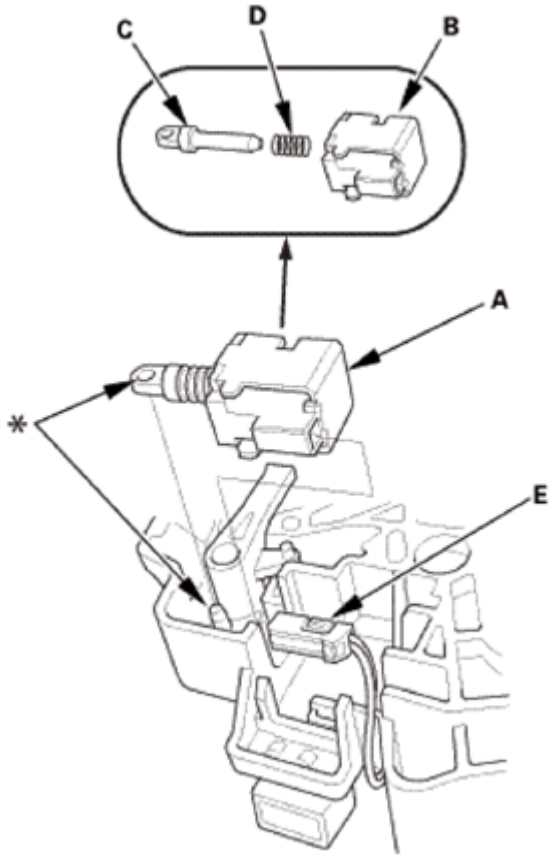

Fig. 124: Identifying Solenoid, Shift Lock Solenoid, Plunger Spring And Shift Lock Solenoid Connector
Courtesy of AMERICAN HONDA MOTOR CO., INC.

13. Shift Lock Stop

NOTE: **Do not wipe off the special grease applied to the area of the shift lever marked with an asterisk (*) when you disassemble or assemble it.**

1. Remove the shift lock stop/shift lock stop cushion (A).

GETtheMANUALS.org

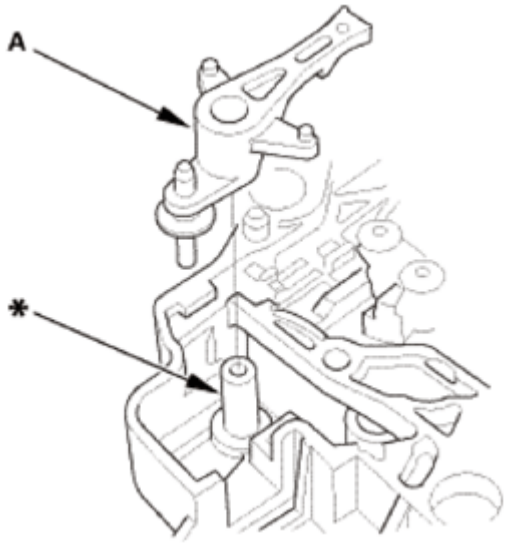

Fig. 125: Identifying Shift Lock Stop/Shift Lock Stop Cushion
Courtesy of AMERICAN HONDA MOTOR CO., INC.

INSTALLATION

1. Shift Lock Stop

NOTE: **Do not wipe off the special grease applied to the area of the shift lever marked with an asterisk (*) when you disassemble or assemble it.**

1. Install the shift lock stop/shift lock stop cushion (A).

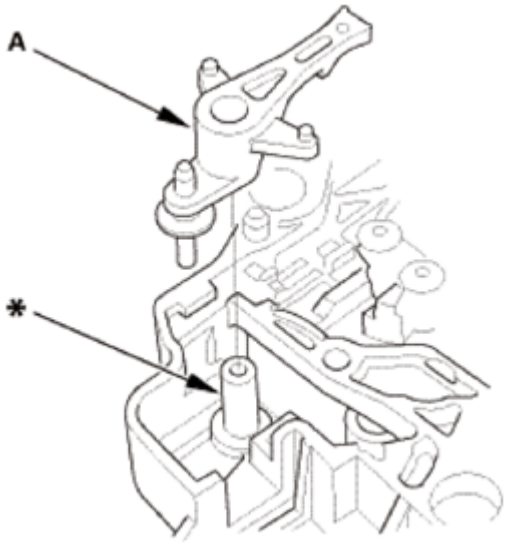

Fig. 126: Identifying Shift Lock Stop/Shift Lock Stop Cushion
Courtesy of AMERICAN HONDA MOTOR CO., INC.

GETtheMANUALS.org

2. Shift Lock Solenoid

NOTE: Do not wipe off the special grease applied to the area of the shift lever marked with an asterisk (*) when you disassemble or assemble it.

1. Connect the shift lock solenoid connector (A).
2. Install the shift lock solenoid (B) by aligning the joint of the shift lock solenoid plunger (C) with the tip of the shift lock stop (D).

NOTE: The shift lock solenoid consists of the solenoid (E), the solenoid plunger (F), and the plunger spring (G).

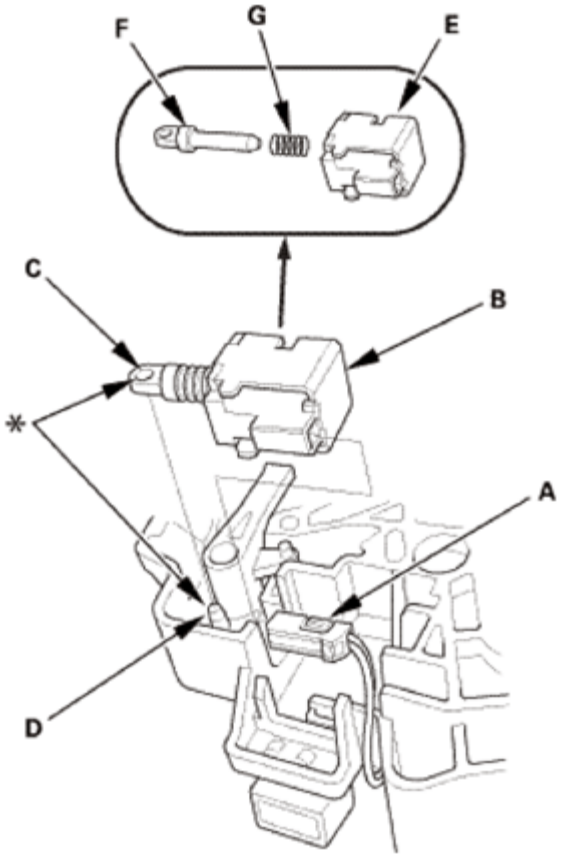

Fig. 127: Identifying Shift Lock Solenoid, Shift Lock Solenoid Connector, Solenoid, Solenoid Plunger And Plunger Spring
Courtesy of AMERICAN HONDA MOTOR CO., INC.

3. Shift Lock Release
   1. Install the shift lock release (A) and the release spring (B).

GETtheMANUALS.org

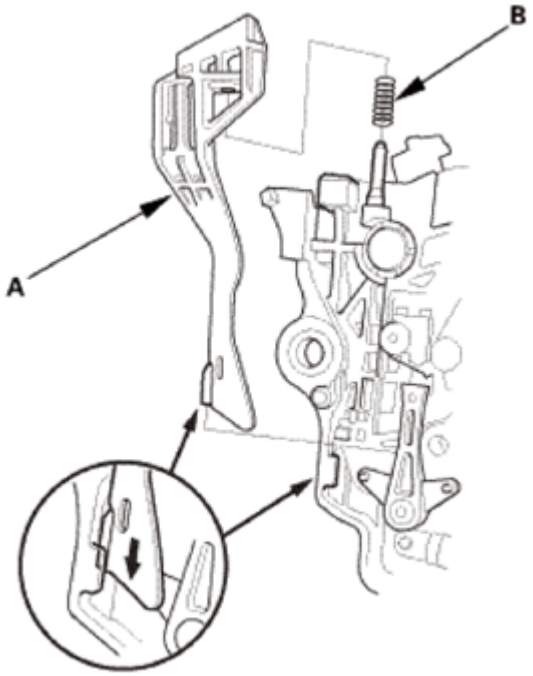

Fig. 128: Installing Shift Lock Release And Release Spring
Courtesy of AMERICAN HONDA MOTOR CO., INC.

4. A/T Gear Position Indicator Panel Assembly
    1. Install the A/T gear position indicator panel assembly (A) by aligning the four lock tabs (B).
    2. Hook the A/T gear position indicator panel light harness (C) to the harness guide (D).
    3. Install the A/T gear position indicator panel light socket (E).

GETtheMANUALS.org

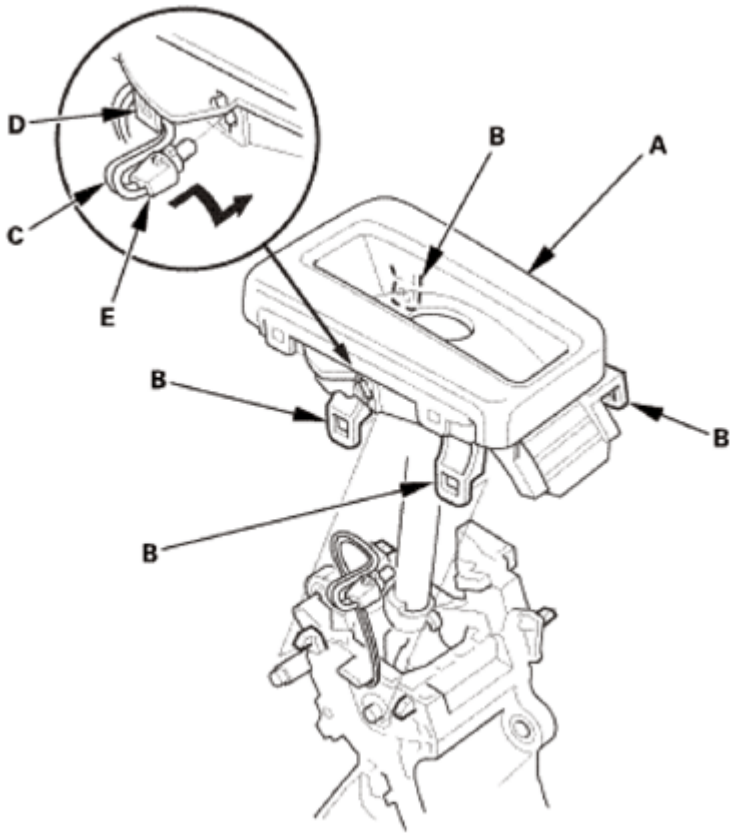

Fig. 129: Identifying A/T Gear Position Indicator Panel Assembly, Light Socket, Harness And Lock Tabs
Courtesy of AMERICAN HONDA MOTOR CO., INC.

5. Shift Lever Knob/Shift Lever Knob Ring Assembly

NOTE: **Do not wipe off the special grease applied to the area of the shift lever marked with an asterisk (*) when you disassemble or assemble it.**

1. Install the shift lever knob/shift lever knob ring assembly (A).
2. Hook the D3 switch harness (B) to the harness guide (C).

GETtheMANUALS.org

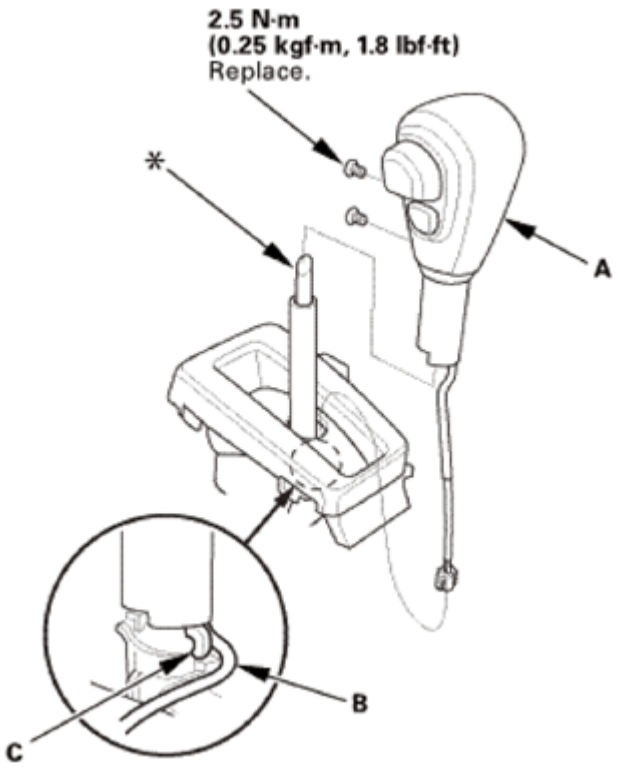

Fig. 130: Identifying Shift Lever Knob/Shift Lever Knob Ring Assembly, D3 Switch Harness, Harness Guide And Bolts With Torque Specification
Courtesy of AMERICAN HONDA MOTOR CO., INC.

6. D3 Switch Harness - Reconnection
    1. Connect the D3 switch connector (A).
    2. Route the D3 switch harness (B) along with the shift lever assembly, and tie the harnesses at the guide (C) with the harness wire tie (D).

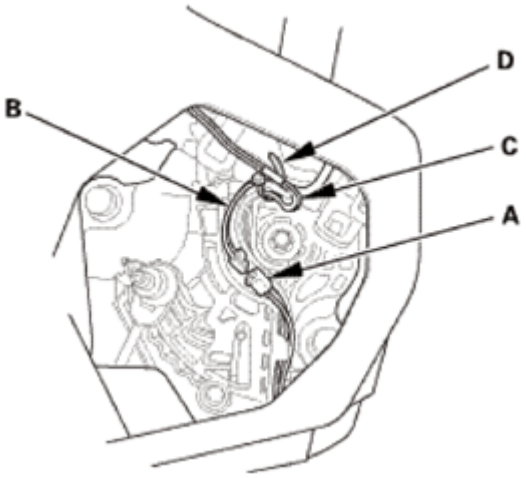

Fig. 131: Identifying D3 Switch Connector, D3 Switch Harness, Guide (C) And Harness Wire Tie

GETtheMANUALS.org

Courtesy of AMERICAN HONDA MOTOR CO., INC.

7. A/T Shift Lever Assembly
    1. Install the shift lever assembly.

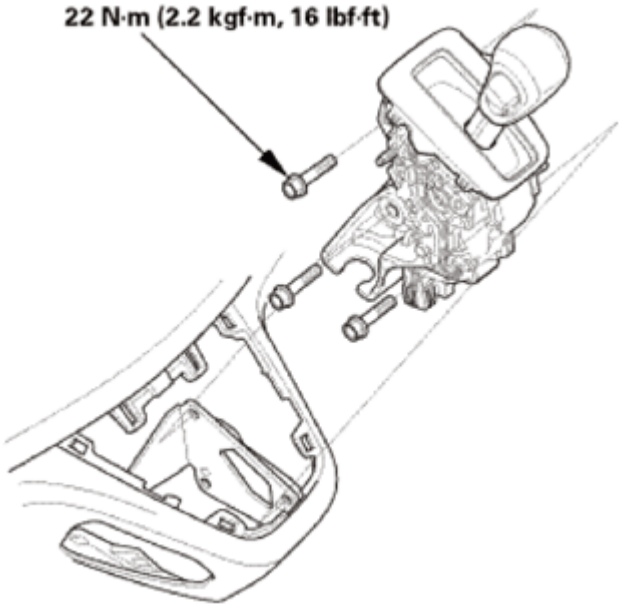

Fig. 132: Identifying Shift Lever Assembly And Bolts With Torque Specification
Courtesy of AMERICAN HONDA MOTOR CO., INC.

    2. Connect the shift lever connector.

Fig. 133: Identifying Shift Lever Connector
Courtesy of AMERICAN HONDA MOTOR CO., INC.

8. Shift Cable - Adjustment
    1. Push the shift cable (A) until it stops, then release it. Pull the shift cable back one step so that the

GETtheMANUALS.org

shift position is in R.

NOTE: Do not hold the shift cable guide (B) to adjust the shift cable.

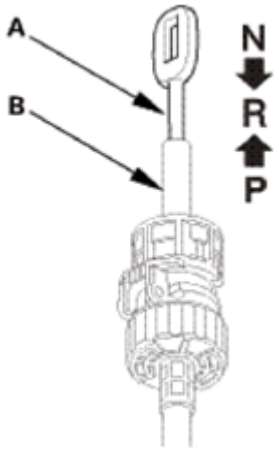

Fig. 134: Identifying Shift Cable And Shift Cable Guide
Courtesy of AMERICAN HONDA MOTOR CO., INC.

2. Turn the ignition switch to ON (II).
3. Check that the R position indicator comes on.
4. Turn the ignition switch to LOCK (0).

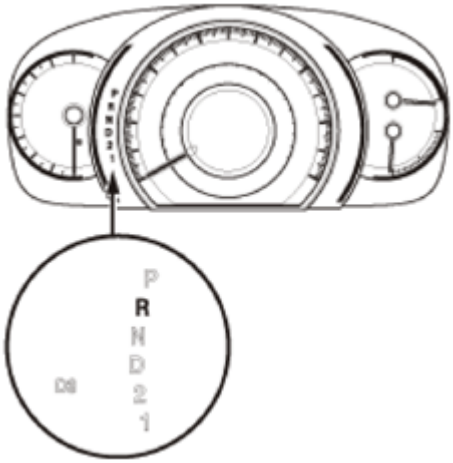

Fig. 135: Identifying R Position Indicator
Courtesy of AMERICAN HONDA MOTOR CO., INC.

5. Shift the shift lever to R.
6. Insert a 6.0 mm (0.236 in) pin (A) into the positioning holes (B).

NOTE: Use only a 6.0 mm (0.236 in) pin with no burrs.

GETtheMANUALS.org

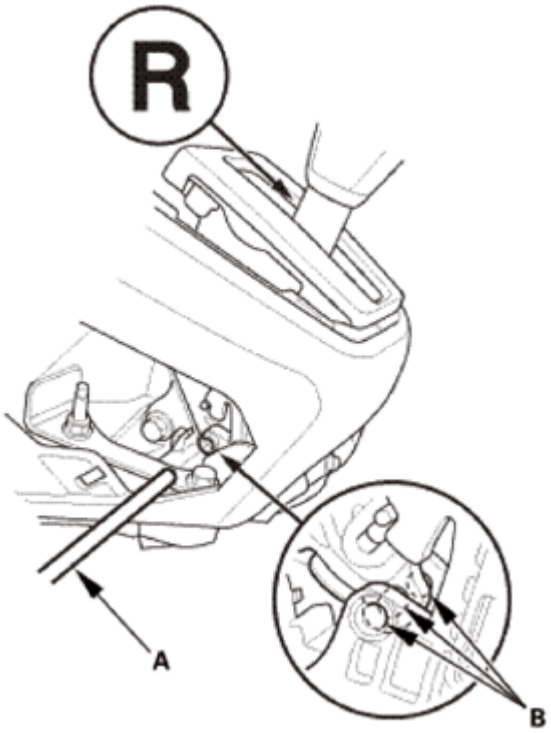

Fig. 136: Inserting Pin Into Positioning Holes
Courtesy of AMERICAN HONDA MOTOR CO., INC.

7. Unlock the retainer lock (A).

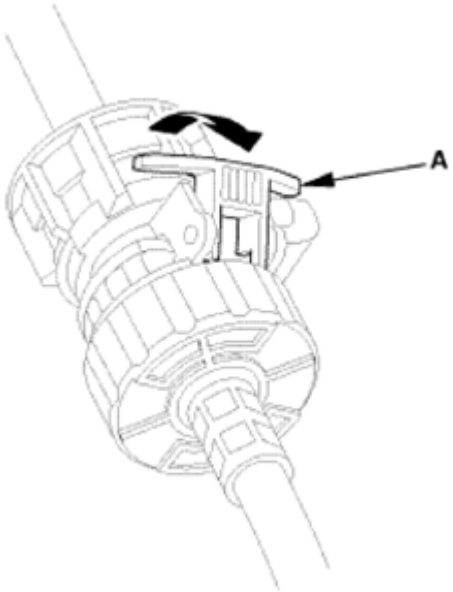

Fig. 137: Unlocking Retainer Lock
Courtesy of AMERICAN HONDA MOTOR CO., INC.

8. Rotate the socket holder retainer (A) in arrow direction (B) until it stops to create clearance (C)

GETtheMANUALS.org

between the socket holder (D) and holder retainer, and push the retainer lock (E) into the socket holder retainer to lock the retainer.

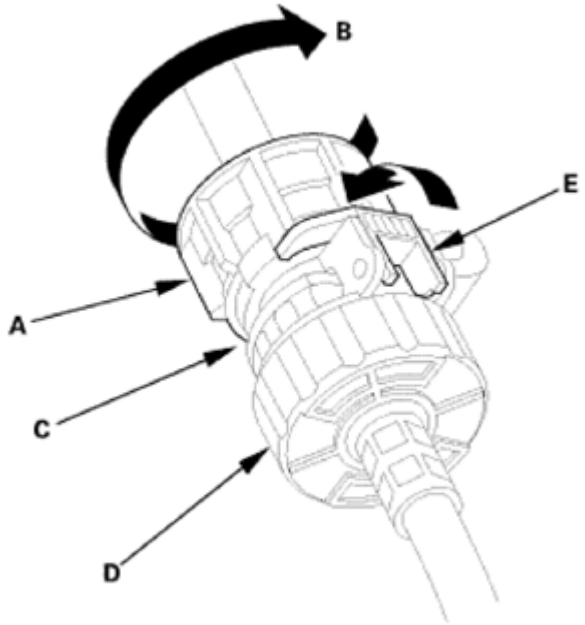

Fig. 138: Rotating Socket Holder Retainer
Courtesy of AMERICAN HONDA MOTOR CO., INC.

9. Align the shift cable slot (A) between the socket holder (B) and the socket holder retainer (C) with the opening (D) in the shift cable bracket (E), then slide the holder into the bracket while installing the shift cable end (F) over the mounting stud (G) by aligning its square hole (H) with the square fitting (I) at the bottom of the stud.

NOTE:

- **Do not install the shift cable by holding the shift cable guide (J).**
- **When the socket holder is installed in the shift cable bracket, the retainer lock is unhinged and releases the holder retainer lock, then the holder retainer returns under spring force to secure the shift cable.**

GETtheMANUALS.org

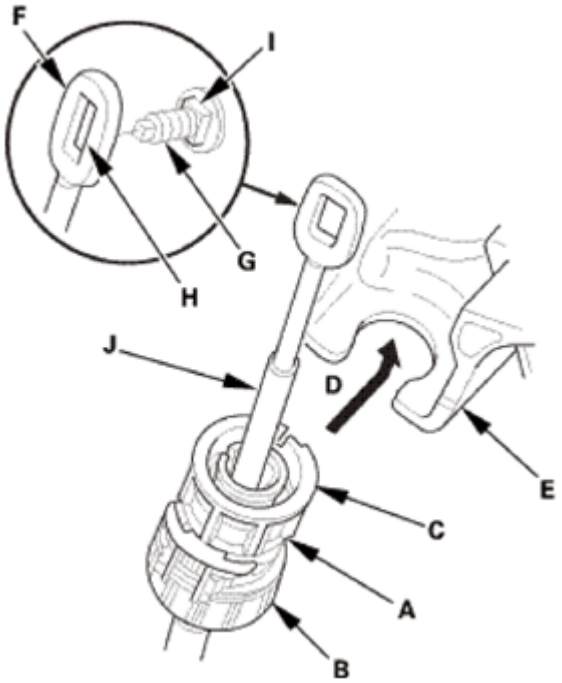

Fig. 139: Aligning Shift Cable Slot Between Socket Holder And Socket Holder Retainer With Opening In Shift Cable Bracket
Courtesy of AMERICAN HONDA MOTOR CO., INC.

10. Push the retainer lock (A) fully to lock the socket holder retainer (B), and make sure that the retainer lock fits into the hinged-joint (C). If the retainer lock does not fit with the edge of the hinged-joint, rotate the holder retainer counterclockwise while pushing the retainer lock until it locks.

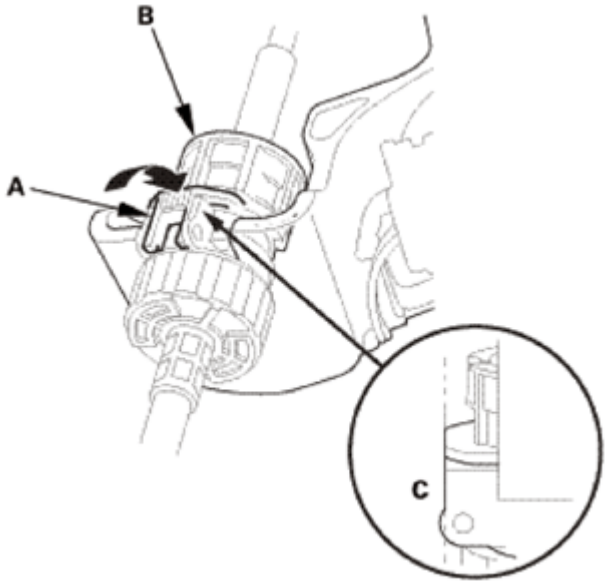

Fig. 140: Pushing Retainer Lock
Courtesy of AMERICAN HONDA MOTOR CO., INC.

GETtheMANUALS.org

11. Make sure that the shift cable end (A) is properly installed on the mounting stud (B).
    - If the shift cable end is out of position with the mounting stud, remove the shift cable from the shift cable bracket, then reinstall the cable end over the mounting stud before reinstalling the shift cable to the shift cable bracket. Do not install the shift cable end on the mounting stud with the shift cable install on the shift cable bracket.
    - If the shift cable end does not ride at the bottom of the mounting stud, rotate the stud to align the square fitting with the hole.

    Properly installed:

    Cable end rides on the bottom of the mounting stud.

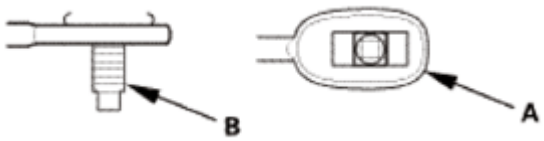

Fig. 141: Identifying Shift Cable End Proper And Improper Installation
Courtesy of AMERICAN HONDA MOTOR CO., INC.

Improperly installed:

Cable end out of position with the mounting stud.

Improperly installed:

Cable end out of alignment with the mounting stud.

12. Install the shift cable end nut (A).
13. Remove the 6.0 mm (0.236 in) pin (B) that was installed to hold the shift lever.
14. Turn the ignition switch to ON (II).
15. Move the shift lever to each position, and check that the A/T gear position indicator follows the transmission range switch.

GETtheMANUALS.org

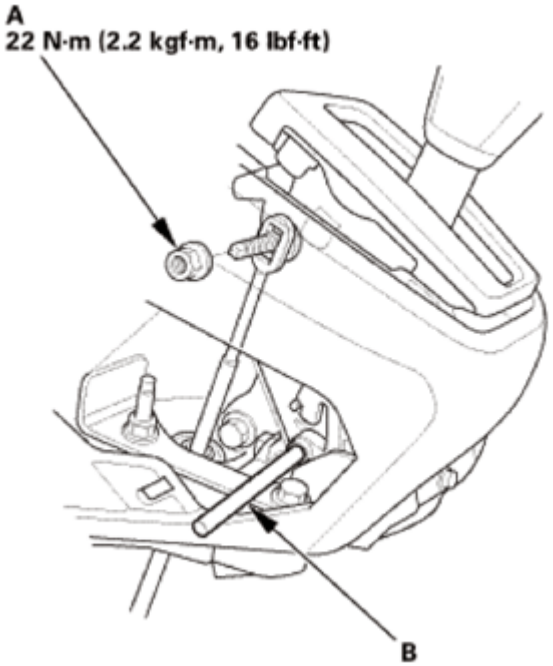

Fig. 142: Identifying Pin And Shift Cable End Nut With Torque Specification
Courtesy of AMERICAN HONDA MOTOR CO., INC.

16. Shift the shift lever to P.
17. Check that the shift lock works properly.
18. Push the shift lock release, and check that the shift lever releases. Also check that the shift lever locks when it is shifted back to P.
19. Turn the ignition switch to LOCK (0).

9. Center Maintenance Cover
    1. Install the maintenance cover (A).

GETtheMANUALS.org

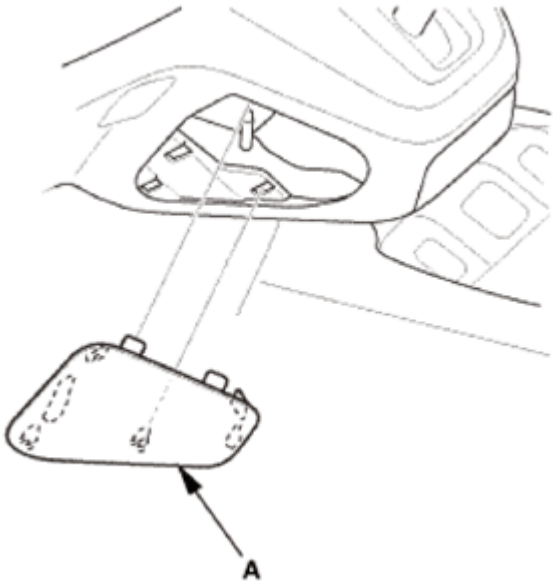

Fig. 143: Identifying Maintenance Cover
Courtesy of AMERICAN HONDA MOTOR CO., INC.

10. Center Console
    1. Install the center console (A).

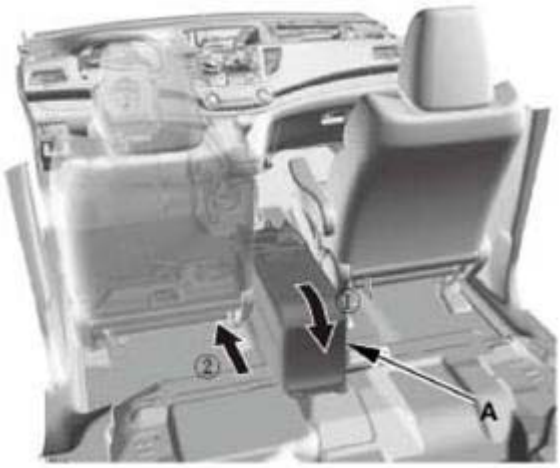

Fig. 144: Installing Center Console
Courtesy of AMERICAN HONDA MOTOR CO., INC.

    2. Connect the connectors (A), and install the clips (B).

GETtheMANUALS.org

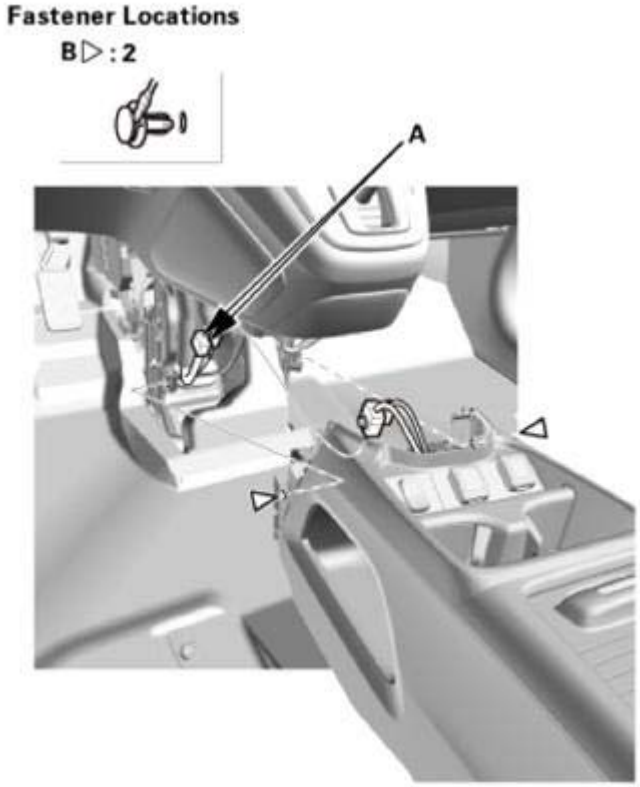

Fig. 145: Identifying Center Console Connectors And Clips
Courtesy of AMERICAN HONDA MOTOR CO., INC.

3. Install the bolts (A), then install the console box mat (B).

GETtheMANUALS.org

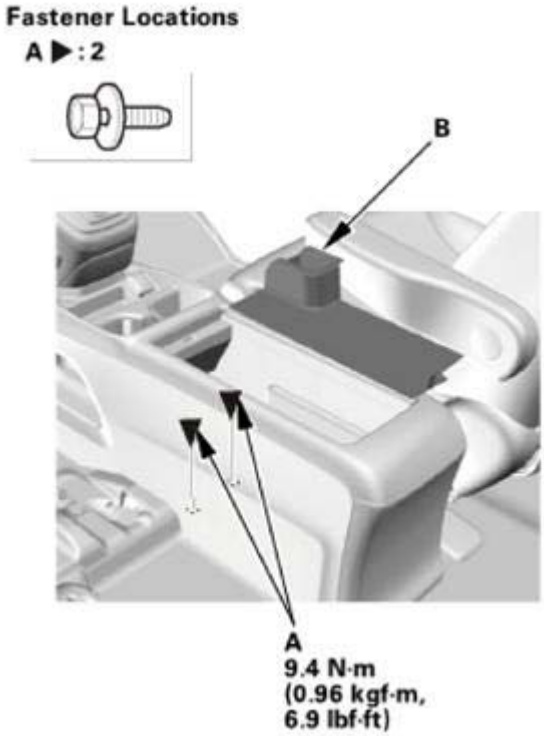

Fig. 146: Identifying Console Box Mat And Bolts With Torque Specification
Courtesy of AMERICAN HONDA MOTOR CO., INC.

4. Install the bolts (A).

Fig. 147: Identifying Center Console Bolts With Torque Specification
Courtesy of AMERICAN HONDA MOTOR CO., INC.

GETtheMANUALS.org

5. Install the bolt (A), then install the center lower cover (B). Make sure the clips (C) snap into place securely.

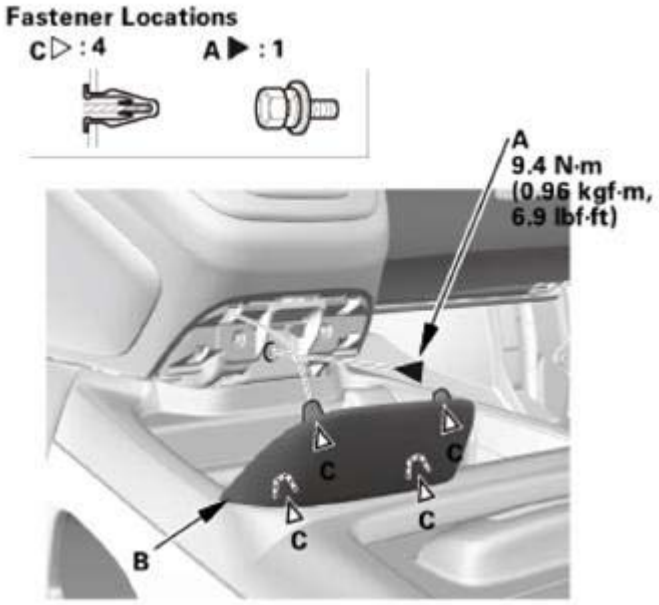

Fig. 148: Identifying Center Lower Cover, Clips And Bolt With Torque Specification
Courtesy of AMERICAN HONDA MOTOR CO., INC.

11. Center Console Rear Trim
    1. Install the center console rear trim (A). Make sure the clips (B) and the hooks (C) snap into place securely.

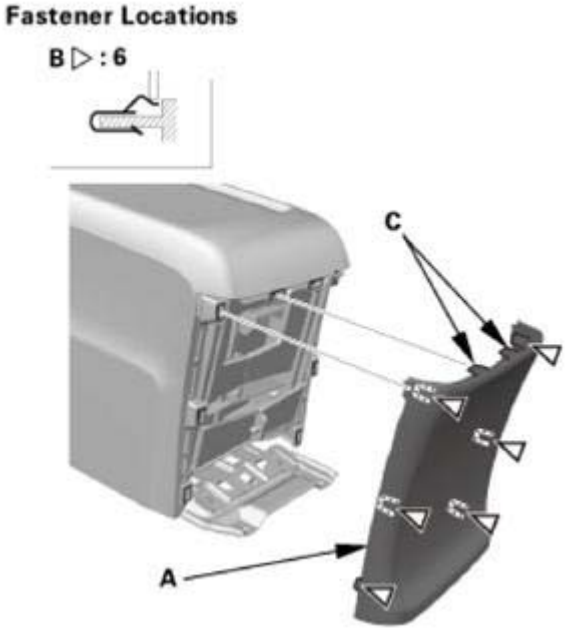

Fig. 149: Identifying Center Console Rear Trim, Clips And Hooks

GETtheMANUALS.org

Courtesy of AMERICAN HONDA MOTOR CO., INC.

12. Front Console Cover - Both Sides
    1. Install the front console covers (A). Make sure the clips (B, C) snap into place securely.

Left side

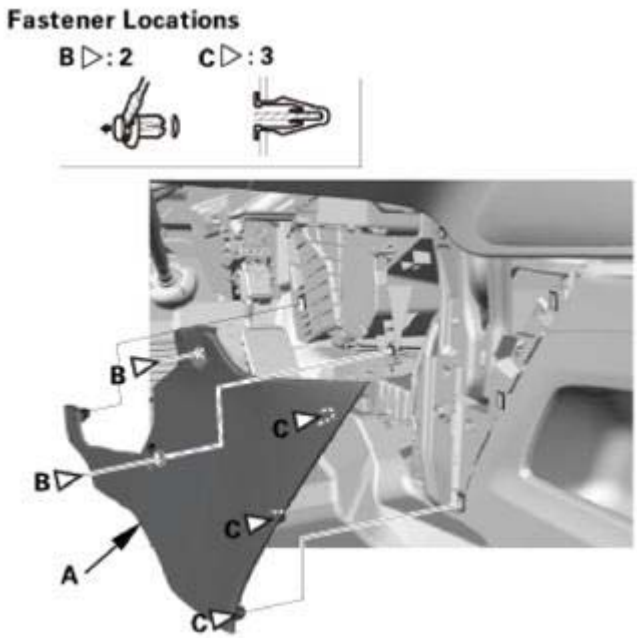

Fig. 150: Identifying Front Console Covers And Clips (Left Side)
Courtesy of AMERICAN HONDA MOTOR CO., INC.

Right side

GETtheMANUALS.org

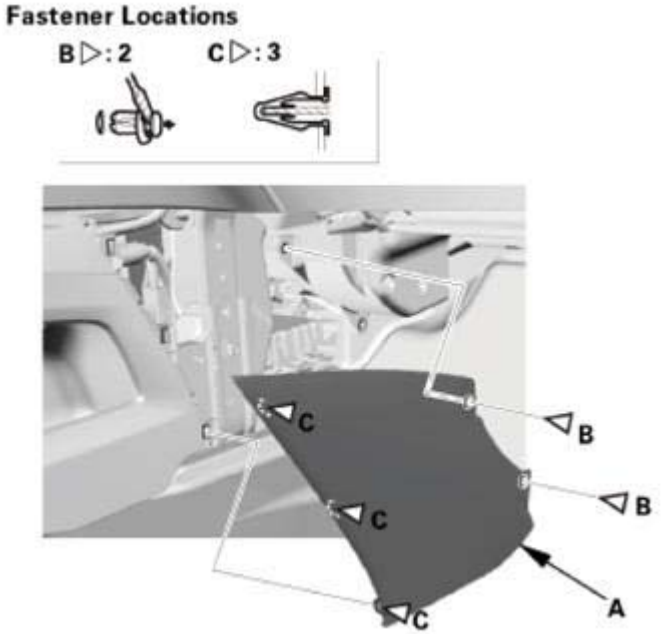

Fig. 151: Identifying Front Console Covers And Clips (Right Side)
Courtesy of AMERICAN HONDA MOTOR CO., INC.

13. Shift Lever Panel (AT)
    1. Install the shift lever panel (A). Make sure the clips (B, C) and the hooks (D) snap into place securely.

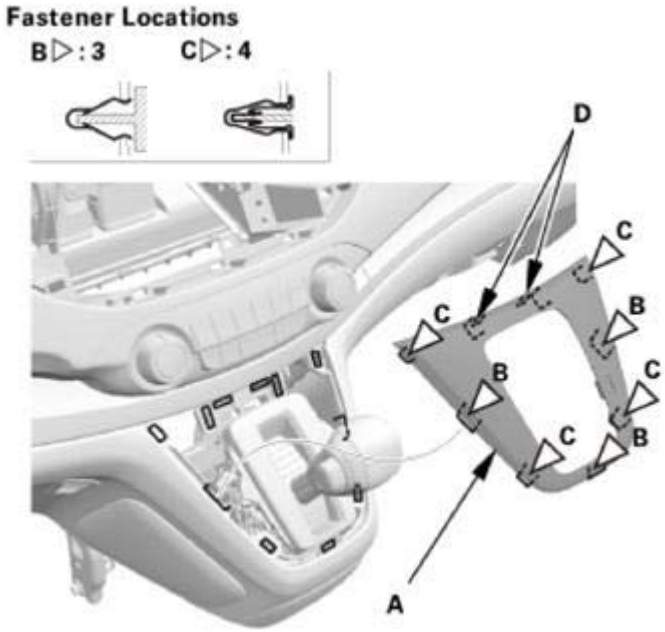

Fig. 152: Identifying Shift Lever Panel, Clips And Hooks
Courtesy of AMERICAN HONDA MOTOR CO., INC.

GETtheMANUALS.org

A/T CLUTCH CLEARANCE INSPECTION

SPECIAL TOOL REQUIRED

Image	Description/Tool Number
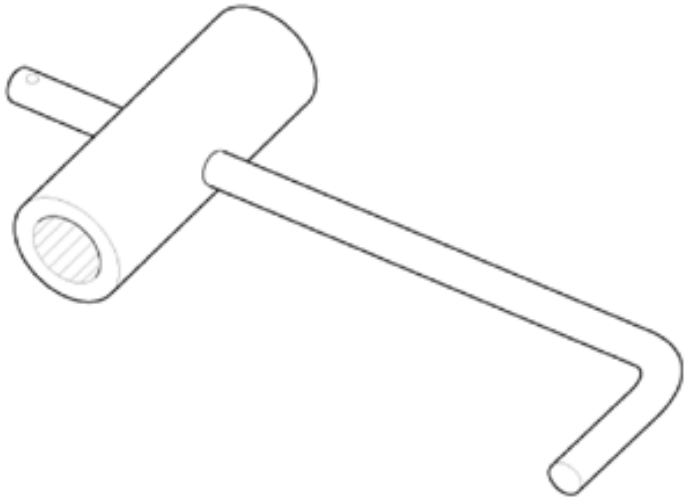	Mainshaft Holder 07GAB-PF50101
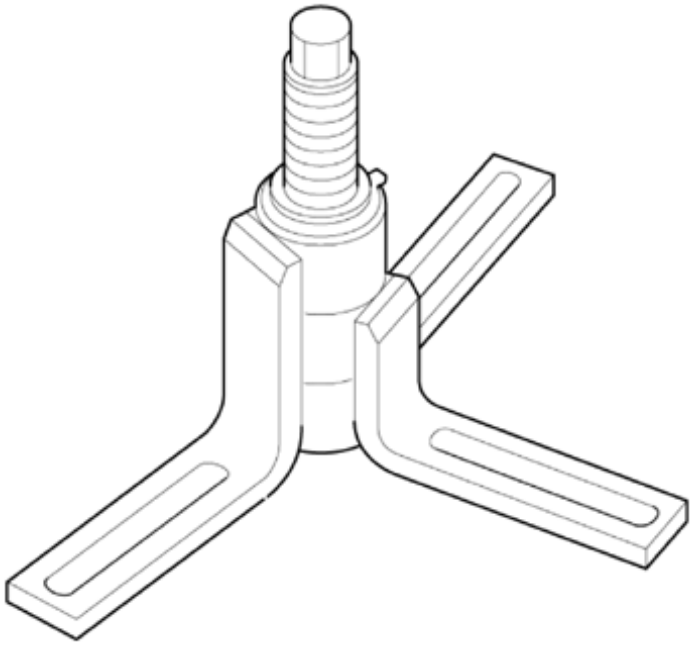	Housing Puller 07HAC-PK40102

GETtheMANUALS.org

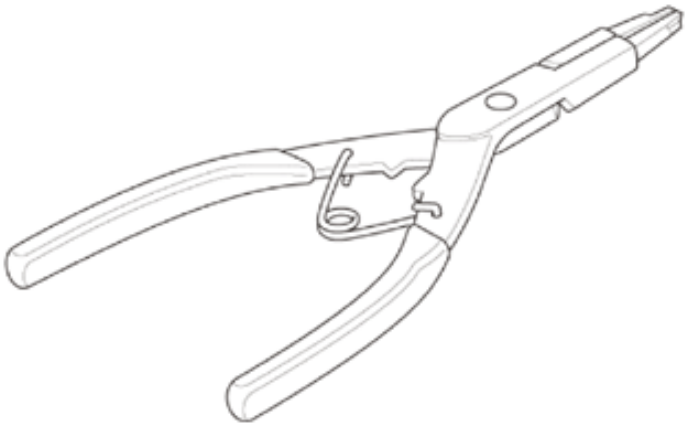	Snap Ring Pliers 07LGC-0010100
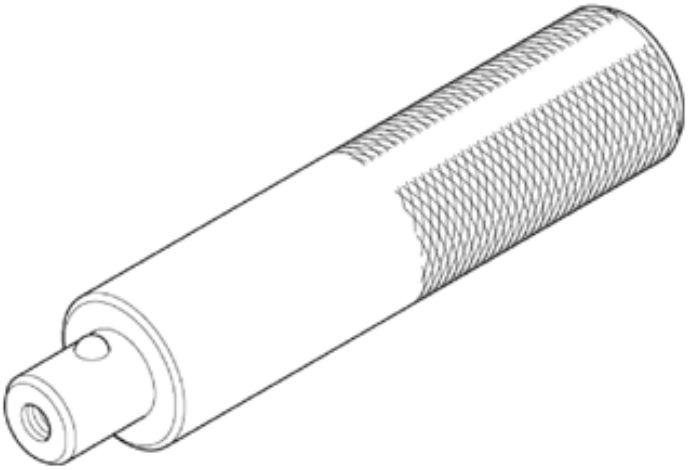	Driver Handle, 15 x 135L 07749-0010000
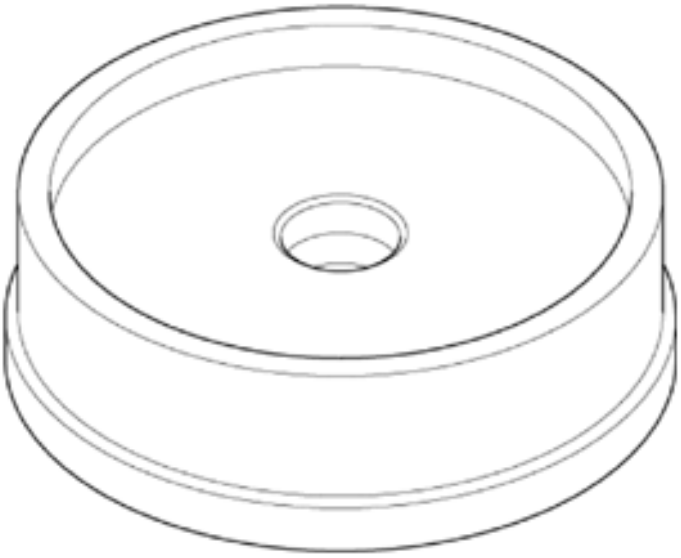	Bearing Driver Attachment, 78 x 80 mm 07NAD-PX40100

GETtheMANUALS.org

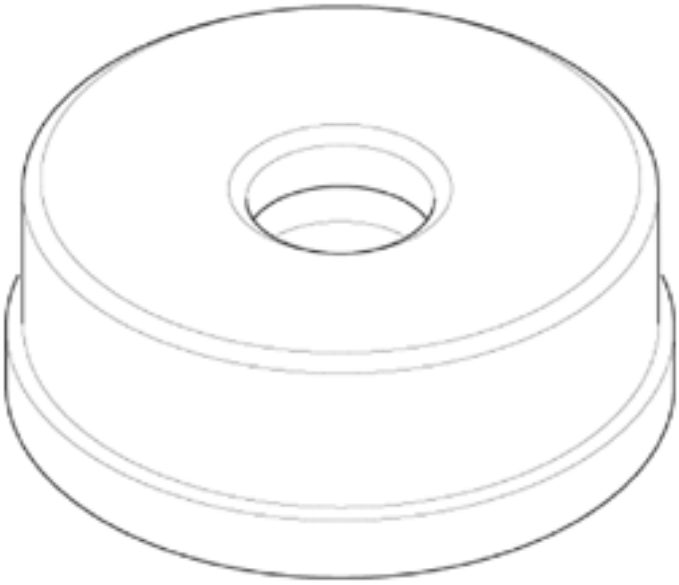	Bearing Driver Attachment, 52 x 55 mm 07746-0010400
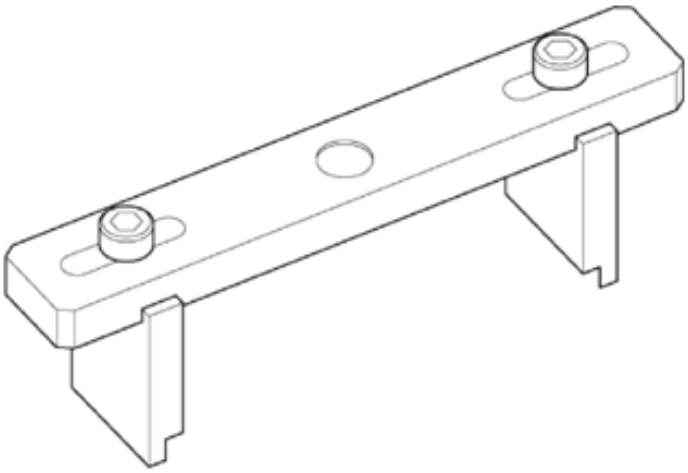	Clutch Compressor Attachment 07ZAE-PRP0100
	Bearing Driver Attachment, 42 mm 07QAD-P0A0100

GETtheMANUALS.org

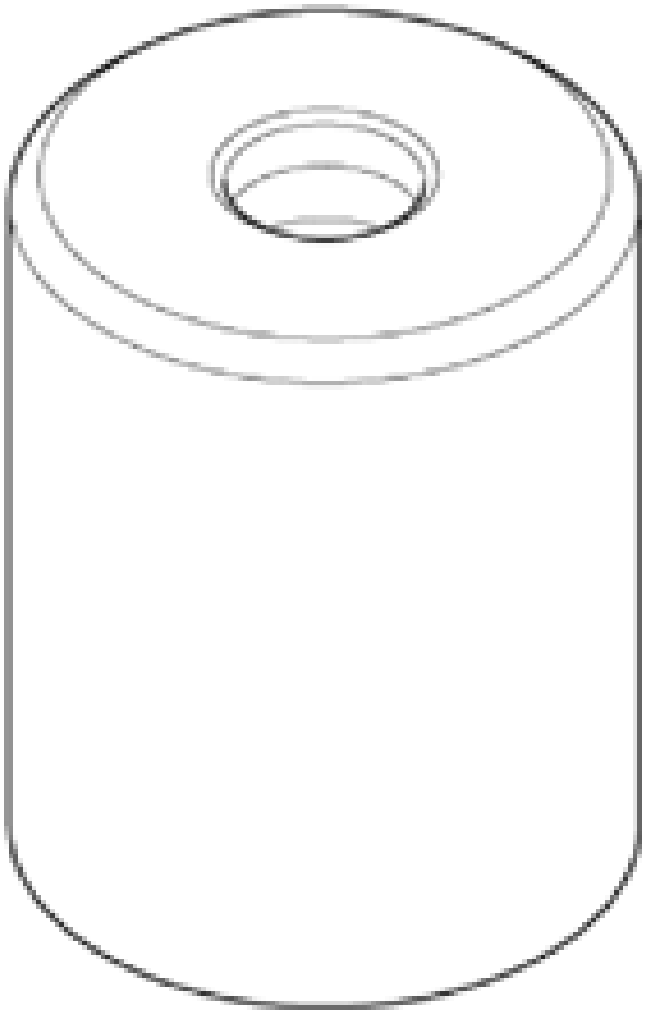	
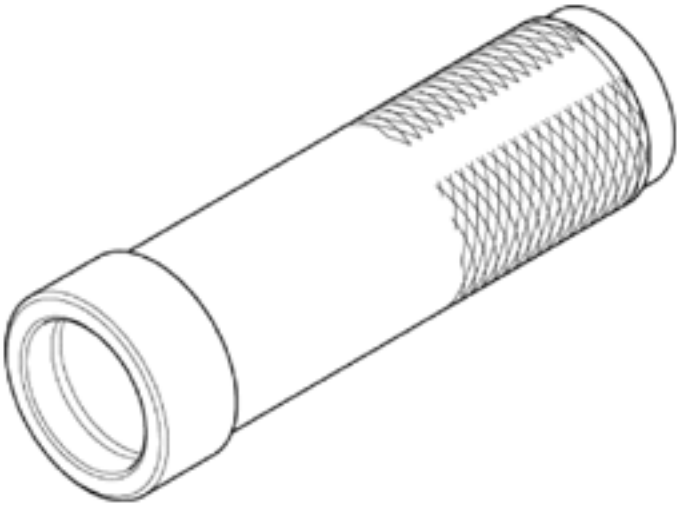	Driver Handle, 40 mm I.D. 07746-0030100

GETtheMANUALS.org

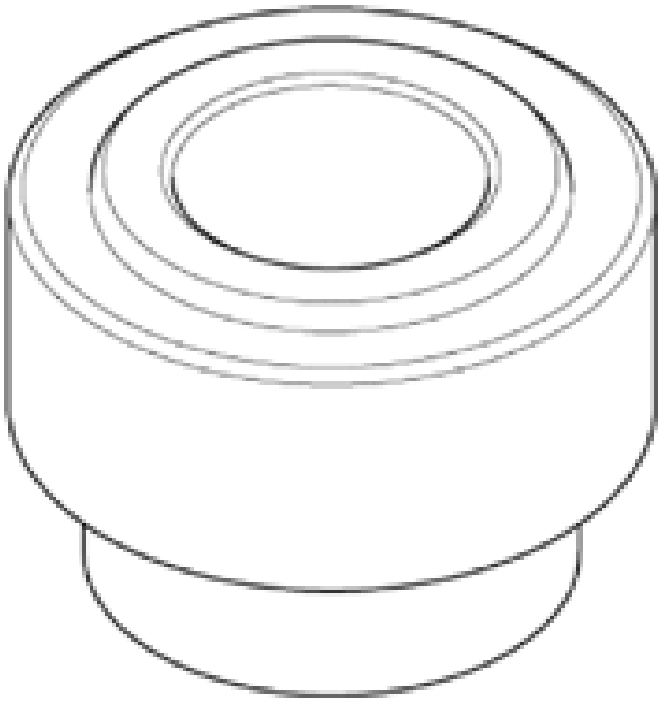	Bearing Driver Attachment, 30 mm I.D. 07746-0030300

REMOVAL

NOTE: The illustration shows AWD/4WD transmission.

1. Transmission Range Switch Cover
    1. Remove the transmission range switch cover (A).

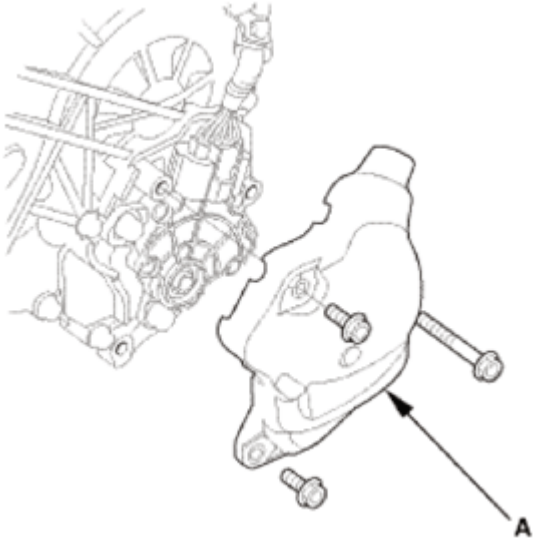

Fig. 1: Identifying Transmission Range Switch Cover With Bolts

GETtheMANUALS.org

Courtesy of AMERICAN HONDA MOTOR CO., INC.

2. Transmission Range Switch
    1. Remove the transmission range switch (A).

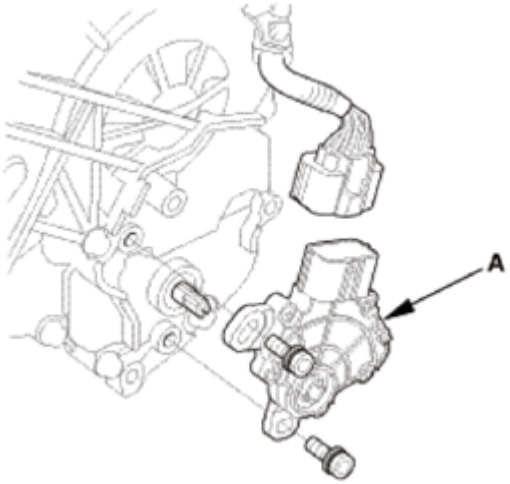

Fig. 2: Identifying Transmission Range Switch With Bolts
Courtesy of AMERICAN HONDA MOTOR CO., INC.

3. Transmission Range Switch Subharness
    1. Remove the transmission range switch subharness (A).
    2. Remove the clamp brackets (B).

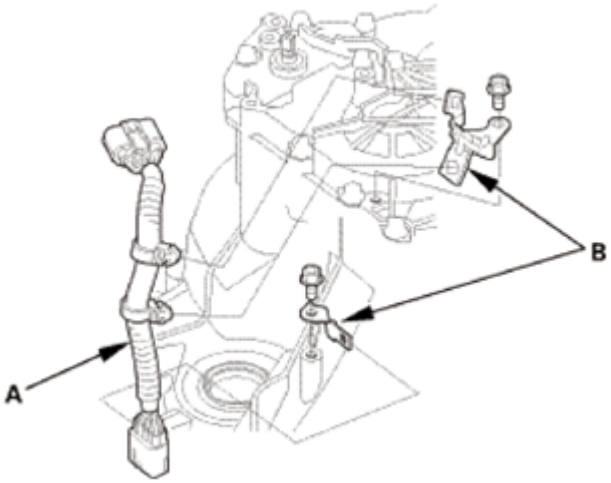

Fig. 3: Identifying Transmission Range Switch Subharness And Clamp Brackets
Courtesy of AMERICAN HONDA MOTOR CO., INC.

4. Transmission End Cover
    1. Remove the end cover (A), the dowel pins (B), the O-rings (C), and the gasket (D).

GETtheMANUALS.org

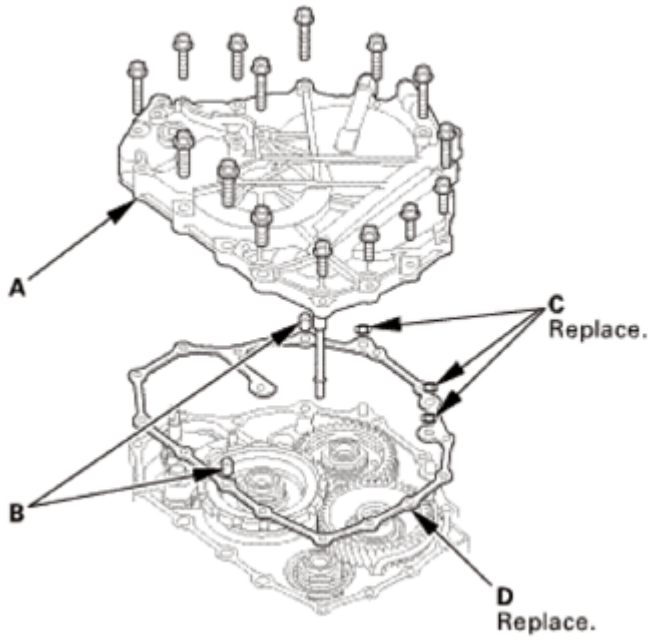

Fig. 4: Identifying Transmission End Cover, Dowel Pins, O-Rings And Gasket With Bolts
Courtesy of AMERICAN HONDA MOTOR CO., INC.

5. Input Shaft (Mainshaft) Speed Sensor
    1. Remove the input shaft (mainshaft) speed sensor (A).
    2. Remove the O-ring (B) from the input shaft (mainshaft) speed sensor.

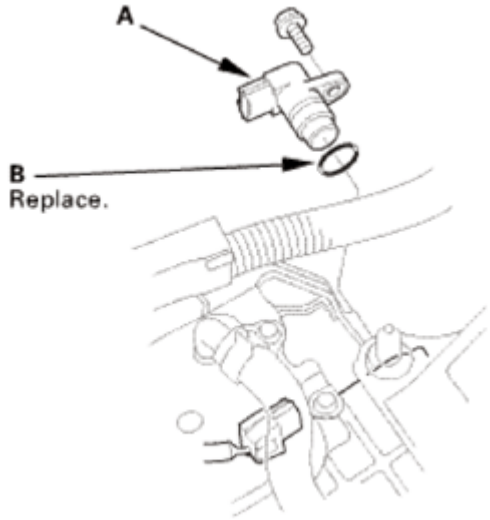

Fig. 5: Identifying Input Shaft (Mainshaft) Speed Sensor And O-Ring
Courtesy of AMERICAN HONDA MOTOR CO., INC.

6. Output Shaft (Countershaft) Speed Sensor
    1. Remove the output shaft (countershaft) speed sensor (A) and the sensor washer (B).

GETtheMANUALS.org

2. Remove the O-ring (C) from the output shaft (countershaft) speed sensor.

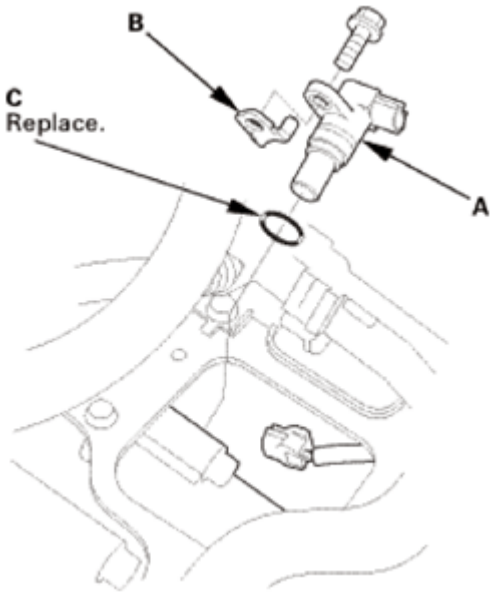

Fig. 6: Identifying Output Shaft (Countershaft) Speed Sensor, Sensor Washer And O-Ring
Courtesy of AMERICAN HONDA MOTOR CO., INC.

7. A/T Clutch Pressure Control Solenoid Valve A
    1. Remove A/T clutch pressure control solenoid valve A.
    2. Remove the 35 mm ATF pipe (B), the ATF joint pipes (C), the O-rings (D), and the gasket (E).

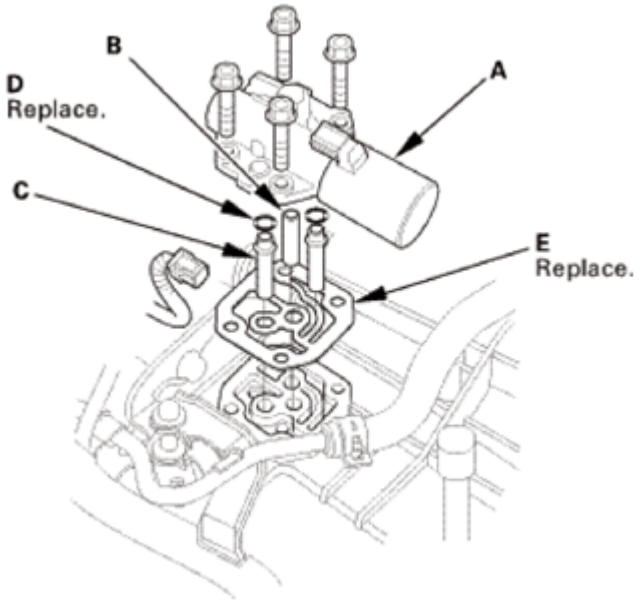

Fig. 7: Identifying A/T Clutch Pressure Control Solenoid Valve, ATF Pipe, ATF Joint Pipes, O-Rings And Gasket With Bolts
Courtesy of AMERICAN HONDA MOTOR CO., INC.

GETtheMANUALS.org

8. A/T Clutch Pressure Control Solenoid Valve B and C
    1. Remove the clamp bracket (A) and A/T clutch pressure control solenoid valves B and C.
    2. Remove the ATF joint pipes (D), the O-rings (E), and the gasket (F).

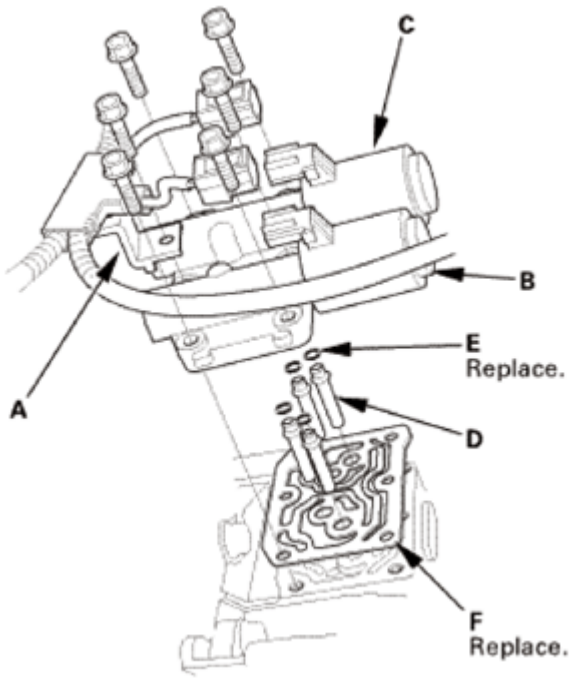

Fig. 8: Identifying A/T Clutch Pressure Control Solenoid Valves, Clamp Bracket, ATF Joint Pipes, O-Rings And Gasket
Courtesy of AMERICAN HONDA MOTOR CO., INC.

9. ATF Inlet Line
    1. Remove the banjo bolt (A) and the sealing washers (B).
    2. Remove the ATF inlet line (C).

GETtheMANUALS.org

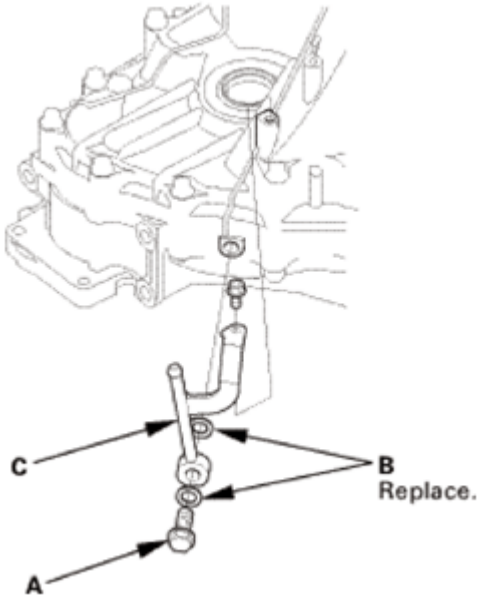

Fig. 9: Identifying ATF Inlet Line, Banjo Bolt And Sealing Washers
Courtesy of AMERICAN HONDA MOTOR CO., INC.

10. ATF Outlet Line
    1. Remove the banjo bolt (A) and the sealing washers (B).
    2. Remove the ATF outlet line (C).

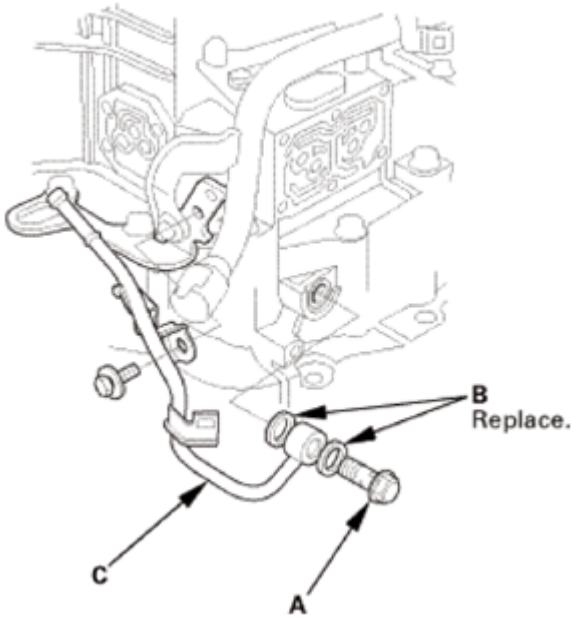

Fig. 10: Identifying ATF Outlet Line, Banjo Bolt And Sealing Washers
Courtesy of AMERICAN HONDA MOTOR CO., INC.

11. Dipstick Guide Tube

GETtheMANUALS.org

1. Remove the ATF dipstick guide tube (A).
2. Remove the O-ring (B) from the ATF dipstick guide tube.

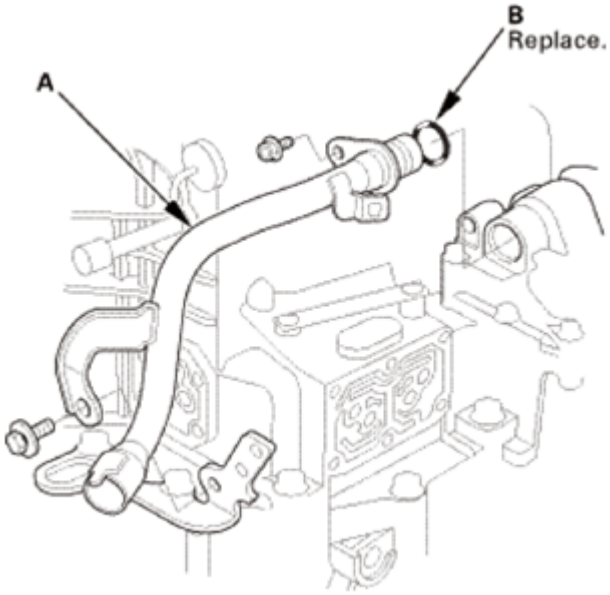

Fig. 11: Identifying ATF Dipstick Guide Tube And O-Ring
Courtesy of AMERICAN HONDA MOTOR CO., INC.

12. A/T Shift Solenoid Cover
    1. Remove the shift solenoid valve cover (A), the dowel pins (B), and the gasket (C).

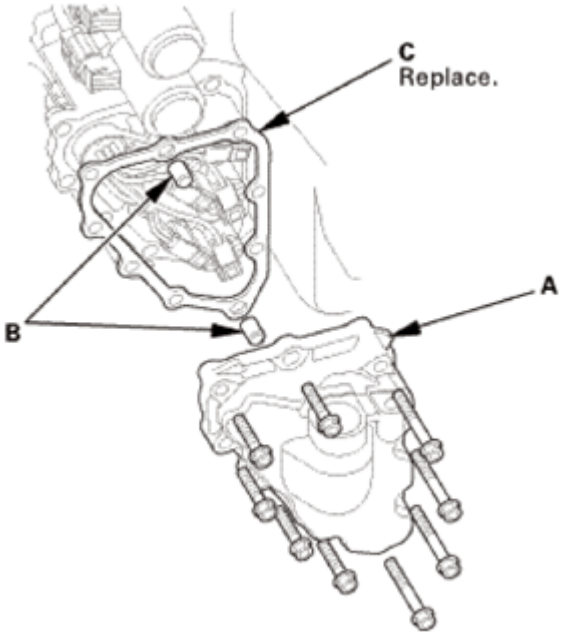

Fig. 12: Identifying Shift Solenoid Valve Cover, Dowel Pins And Gasket
Courtesy of AMERICAN HONDA MOTOR CO., INC.

GETtheMANUALS.org

13. A/T Shift Solenoid Wire Harness - Disconnection
    1. Disconnect the connectors.

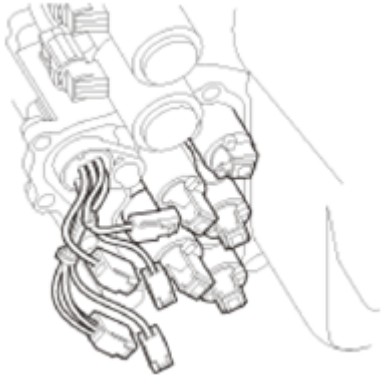

Fig. 13: Identifying A/T Shift Solenoid Wire Harness Connectors
Courtesy of AMERICAN HONDA MOTOR CO., INC.

14. ATF Feed Pipe/Lubrication Pipe
    1. Remove the 6 x 201 mm ATF pipe (A).
    2. Remove the ATF lubrication pipe (B).
    3. Remove the 8 x 220 mm ATF pipe (C).
    4. Remove the 8 x 198 mm ATF pipes (D).

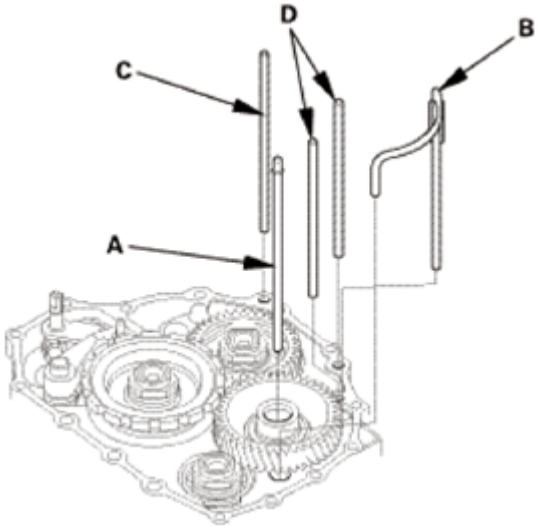

Fig. 14: Identifying ATF Feed Pipes And Lubrication Pipe
Courtesy of AMERICAN HONDA MOTOR CO., INC.

15. End Cover Idler Gear Assembly
    1. Install the mainshaft holder onto the mainshaft.
    2. Engage the park pawl with the park gear.

GETtheMANUALS.org

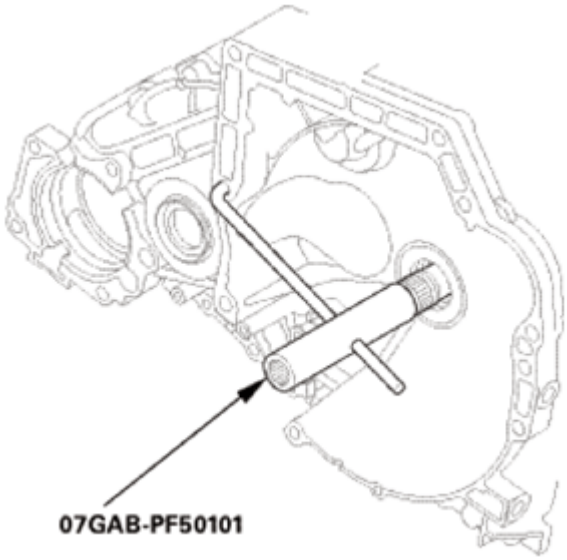

Fig. 15: Installing Mainshaft Holder Onto Mainshaft
Courtesy of AMERICAN HONDA MOTOR CO., INC.

3. Using a chisel, cut the lock tab (A) of the locknut (B).

NOTE: **Keep all of the chiseled particles out of the transmission.**

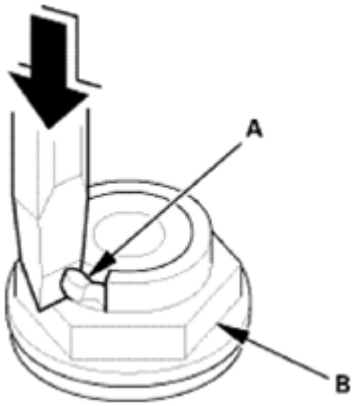

Fig. 16: Cutting Lock Tab Of Locknut Using Chisel
Courtesy of AMERICAN HONDA MOTOR CO., INC.

4. Remove the locknuts (A) and the conical spring washers (B) from each shaft.

NOTE:

- **The countershaft and secondary shaft locknuts have left-hand threads.**
- **Keep all of the chiseled particles out of the transmission.**
- **Clean the old locknuts; they are used to install the press fit idler gears and park gear.**

GETtheMANUALS.org

5. Remove the mainshaft holder.

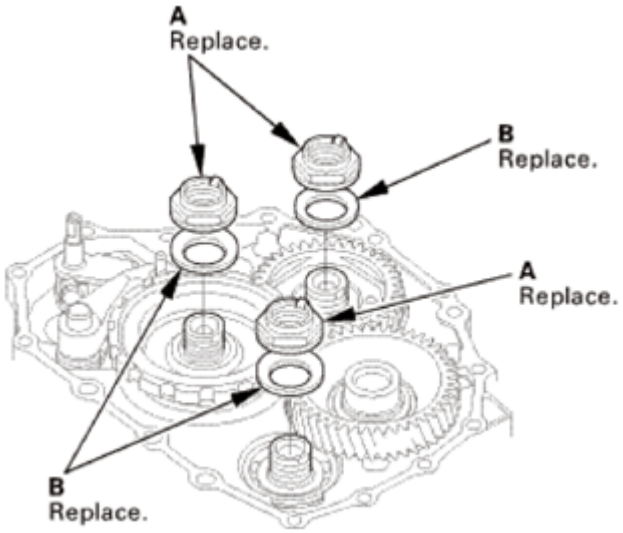

Fig. 17: Identifying Locknuts And Conical Spring Washers
Courtesy of AMERICAN HONDA MOTOR CO., INC.

6. Remove the park pawl (A), the park pawl spring (B), the park pawl shaft (C), and the stop shaft (D).
7. Pry down the lock tab (E) of the lock washer (F).
8. Remove the lock bolt (G) and the lock washer.
9. Remove the park lever (H), the park lever stop (I), and the park lever spring (J).

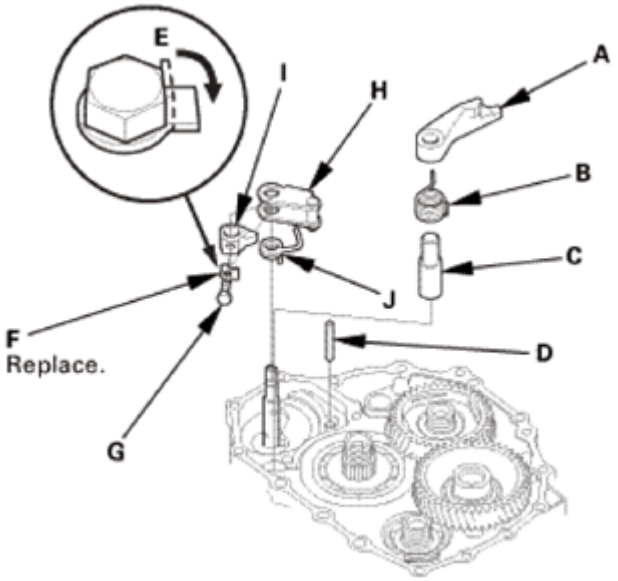

Fig. 18: Prying Down Lock Tab Of Lock Washer
Courtesy of AMERICAN HONDA MOTOR CO., INC.

GETtheMANUALS.org

10. Place a spacer (A) on the countershaft (B).
11. Set a commercially available bearing puller (C) on the park gear (D).
12. Remove the park gear.

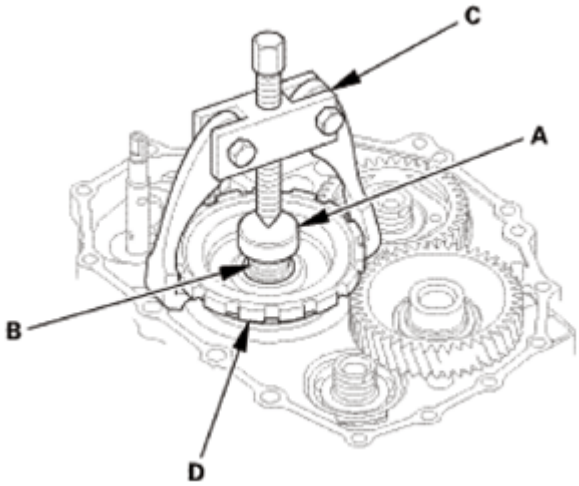

Fig. 19: Setting Commercially Available Bearing Puller On Park Gear
Courtesy of AMERICAN HONDA MOTOR CO., INC.

13. Install a puller (A) with two 6 x 1.0 mm bolts (B) on the mainshaft idler gear (C).
14. Set a spacer (D) between the puller and the mainshaft (E).
15. Remove the mainshaft idler gear.

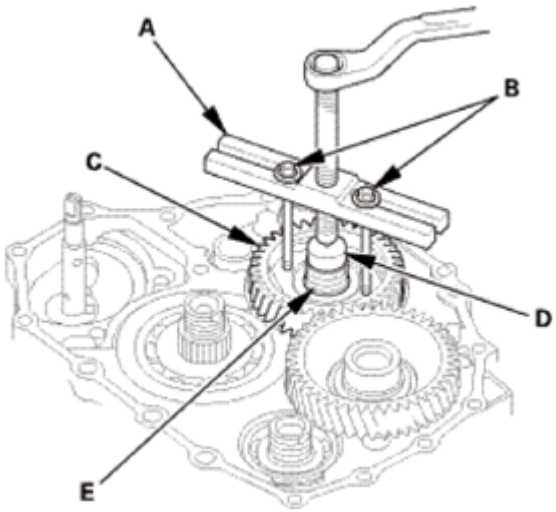

Fig. 20: Installing Puller With 6 X 1.0 mm Bolts On Mainshaft Idler Gear
Courtesy of AMERICAN HONDA MOTOR CO., INC.

16. Automatic Transmission Housing
    1. Align the spring pin (A) on the selector control shaft (B) with the transmission housing groove (C).

GETtheMANUALS.org

NOTE: **Do not squeeze the end of the selector control shaft tips together when turning the control shaft. If the tips are squeezed together, it will cause a faulty shift position signal or position due to the play between the selector control shaft and the transmission range switch.**

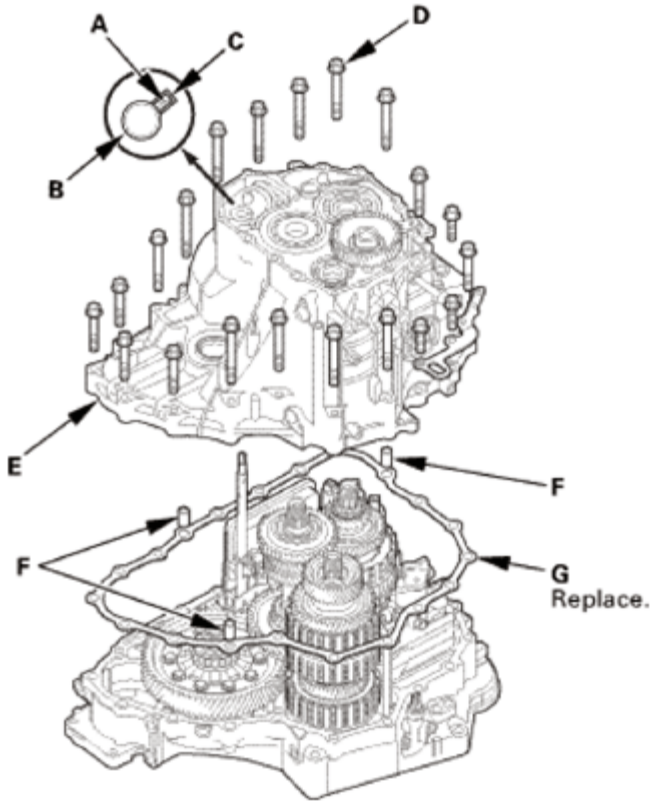

Fig. 21: Identifying Spring Pin, Selector Control Shaft, Transmission Housing Groove, Transmission Housing, Mounting Bolts And Gasket
Courtesy of AMERICAN HONDA MOTOR CO., INC.

2. Remove the transmission housing mounting bolts (D) (2WD: 19 bolts, AWD/4WD: 20 bolts).
3. Install the housing puller over the mainshaft.
4. Remove the transmission housing (E) using the housing puller.
5. Remove the dowel pins (F) and the gasket (G).

GETtheMANUALS.org

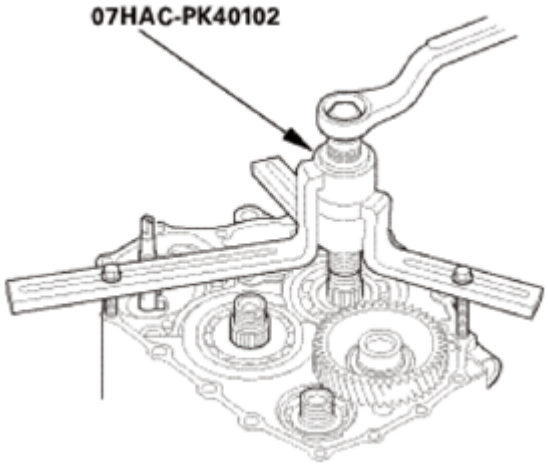

Fig. 22: Installing Housing Puller Over Mainshaft
Courtesy of AMERICAN HONDA MOTOR CO., INC.

17. Reverse Idler Gear
    1. Remove the bolt (A) securing the reverse idler gear shaft holder (B).
    2. Install a 5 x 0.8 mm bolt (C) in the reverse gear shaft, and pull it to remove the reverse idler gear shaft (D) and the reverse idler gear shaft holder together.

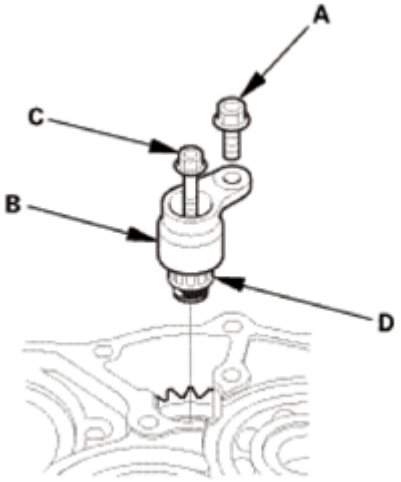

Fig. 23: Identifying Reverse Idler Gear Shaft, Holder And Bolts
Courtesy of AMERICAN HONDA MOTOR CO., INC.

    3. Remove the reverse idler gear (A).

GETtheMANUALS.org

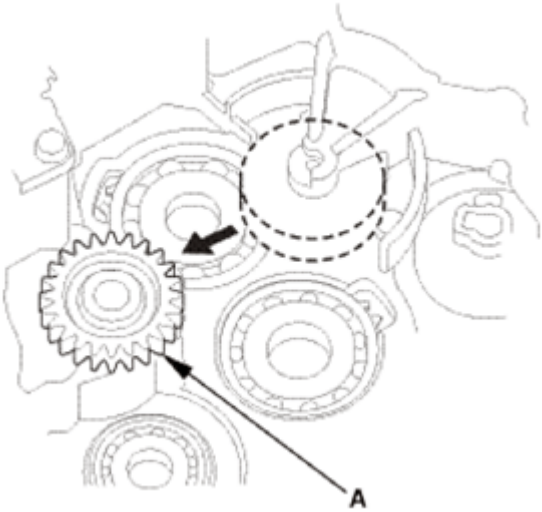

Fig. 24: Removing Reverse Idler Gear
Courtesy of AMERICAN HONDA MOTOR CO., INC.

18. A/T Idler Gear/Idler Gear Shaft Assembly
    1. Remove the snap ring (A), the cotter retainer (B), and the cotters (C).
    2. Remove the idler gear shaft/idler gear assembly (D).

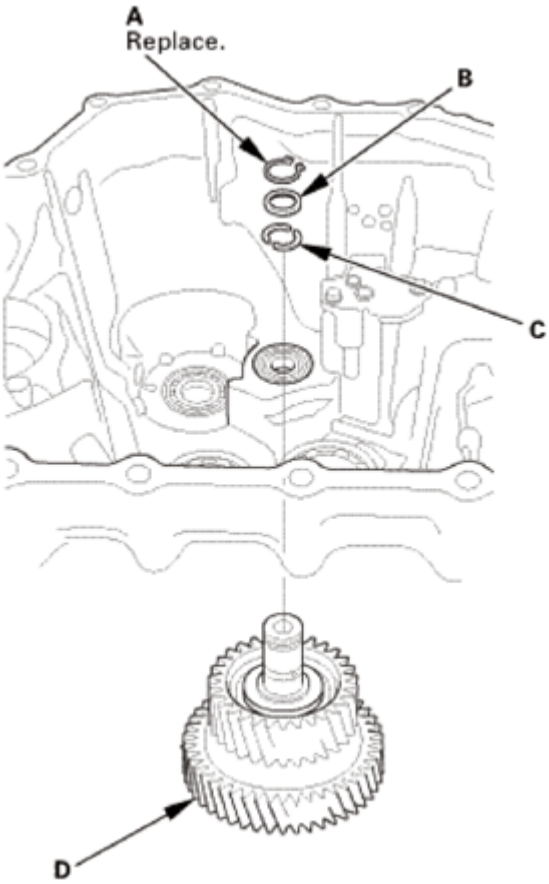

GETtheMANUALS.org

Fig. 25: Identifying Idler Gear Shaft/Idler Gear Assembly, Snap Ring, Cotter Retainer And Cotters
Courtesy of AMERICAN HONDA MOTOR CO., INC.

19. Transmission Housing Mainshaft Bearing
    1. Expand the snap ring using the snap ring pliers.
    2. Drive the mainshaft bearing out using the driver handle and the 78 x 80 mm bearing driver attachment.

NOTE: **Do not remove the snap ring unless it is necessary to clean the grooves in the transmission housing.**

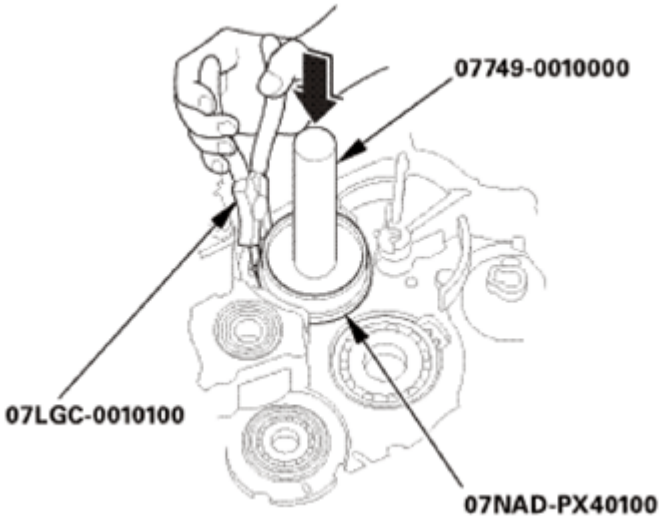

Fig. 26: Removing Snap Ring Using Snap Ring Pliers
Courtesy of AMERICAN HONDA MOTOR CO., INC.

20. Transmission Housing Secondary Shaft Bearing
    1. Expand the snap ring using the snap ring pliers.
    2. Drive the secondary shaft bearing out using the driver handle and the 52 x 55 mm bearing driver attachment.

NOTE: **Do not remove the snap ring unless it is necessary to clean the groove in the transmission housing.**

GETtheMANUALS.org

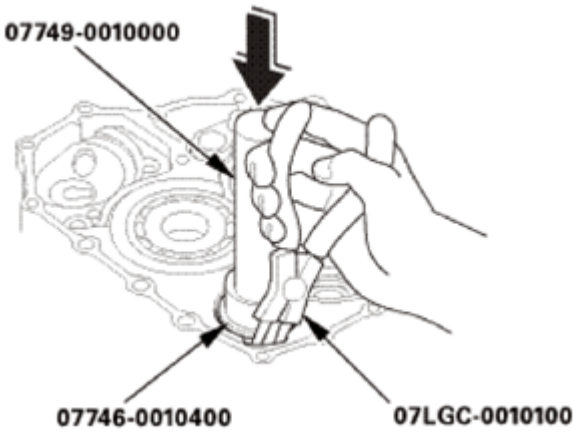

Fig. 27: Driving Secondary Shaft Bearing Out Using Driver Handle And 52 X 55 mm Bearing Driver Attachment
Courtesy of AMERICAN HONDA MOTOR CO., INC.

21. A/T Countershaft Reverse Gear
    1. Remove the countershaft reverse gear (A).
    2. Remove the needle bearing (B).

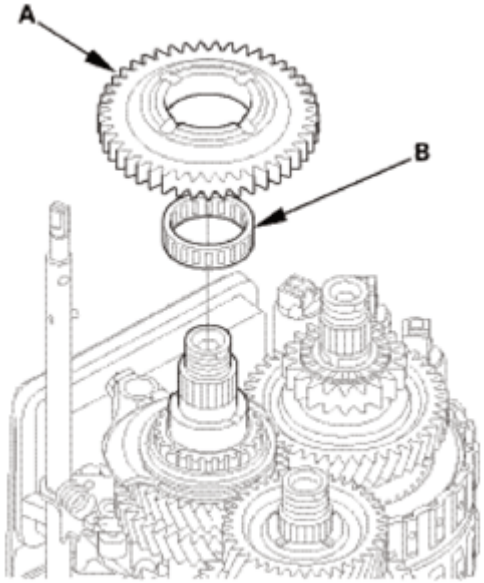

Fig. 28: Identifying Countershaft Reverse Gear And Needle Bearing
Courtesy of AMERICAN HONDA MOTOR CO., INC.

22. Reverse Shift fork
    1. Pry down the lock tab (A) of the lock washer (B).
    2. Remove the lock bolt (C) and the lock washer.
    3. Remove the reverse shift fork (D) and the reverse selector (E) together.

GETtheMANUALS.org

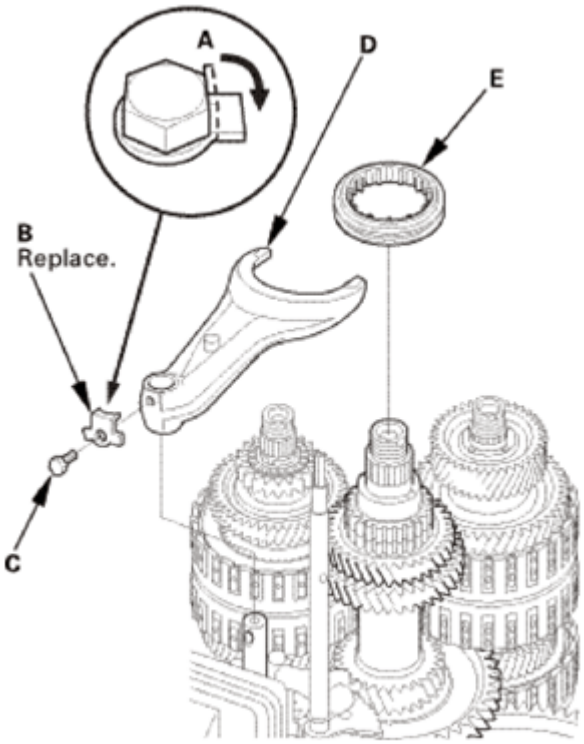

Fig. 29: Prying Down Lock Tab Of Lock Washer
Courtesy of AMERICAN HONDA MOTOR CO., INC.

23. Selector Control Lever (Except 2WD of USA Produced Models)

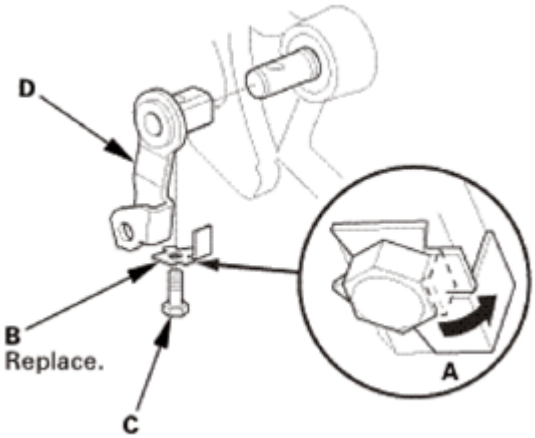

Fig. 30: Prying Down Lock Tab Of Lock Washer (Except 2WD Of USA Produced Models)
Courtesy of AMERICAN HONDA MOTOR CO., INC.

1. Pry down the lock tab (A) of the lock washer (B).
2. Remove the lock bolt (C) and the lock washer.
3. Remove the selector control lever (D).

24. Selector Control Shaft

GETtheMANUALS.org

1. Unhook the detent arm spring (A).

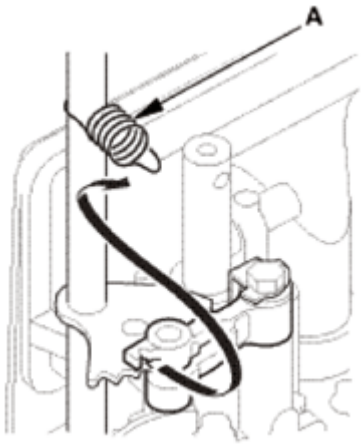

Fig. 31: Unhooking Detent Arm Spring
Courtesy of AMERICAN HONDA MOTOR CO., INC.

2. Separate the manual valve lever pin (A) on the selector control shaft (B) from the guide of the manual valve (C).

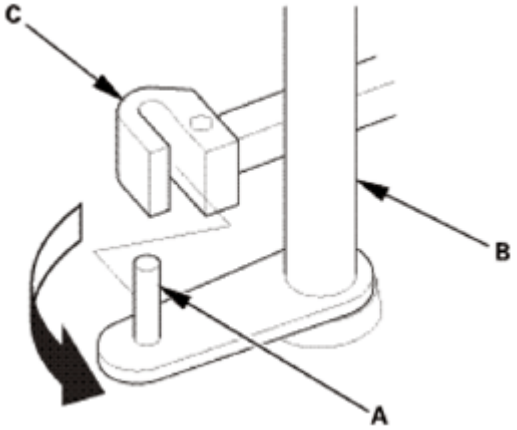

Fig. 32: Separating Manual Valve Lever Pin On Selector Control Shaft From Guide Of Manual Valve
Courtesy of AMERICAN HONDA MOTOR CO., INC.

3. Remove the selector control shaft (A).

GETtheMANUALS.org

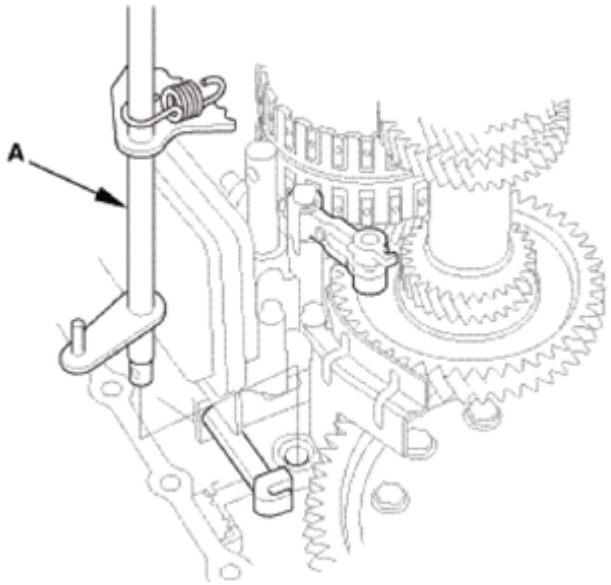

Fig. 33: Identifying Selector Control Shaft
Courtesy of AMERICAN HONDA MOTOR CO., INC.

25. Mainshaft and Countershaft and Secondary Shaft Assembly
    1. Turn the detent arm (A) away from the countershaft (B).

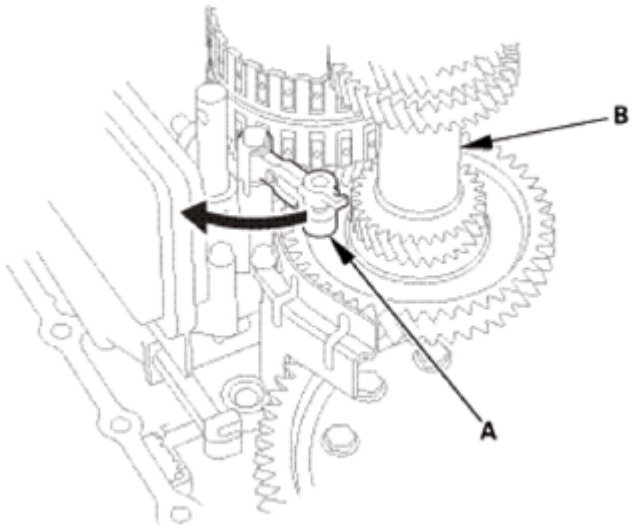

Fig. 34: Turning Detent Arm From Countershaft
Courtesy of AMERICAN HONDA MOTOR CO., INC.

    2. Remove the mainshaft subassembly (A), the countershaft subassembly (B), and the secondary shaft subassembly (C) together.

NOTE: Do not bump the countershaft on the baffle plate (D).

GETtheMANUALS.org

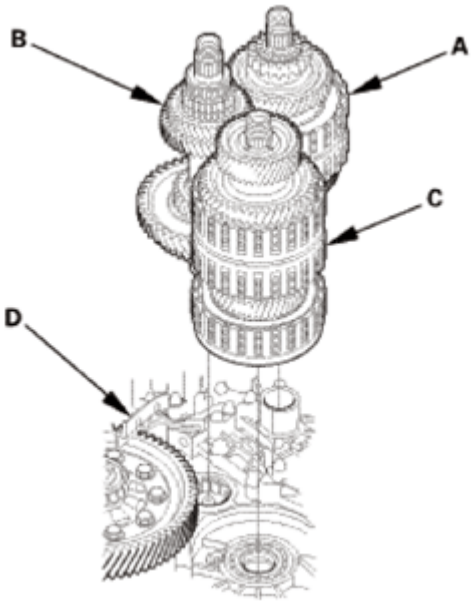

Fig. 35: Identifying Mainshaft Subassembly, Countershaft Subassembly, Secondary Shaft Subassembly And Baffle Plate
Courtesy of AMERICAN HONDA MOTOR CO., INC.

26. A/T Mainshaft
    1. Remove the thrust needle bearing (A), 4th gear (B), the needle bearing (C), the thrust needle bearing (D), the 4th gear collar (E), and the 4th/5th clutch (F).

NOTE: **The needle bearing contains the no-roller cavities (G); this is normal.**

GETtheMANUALS.org

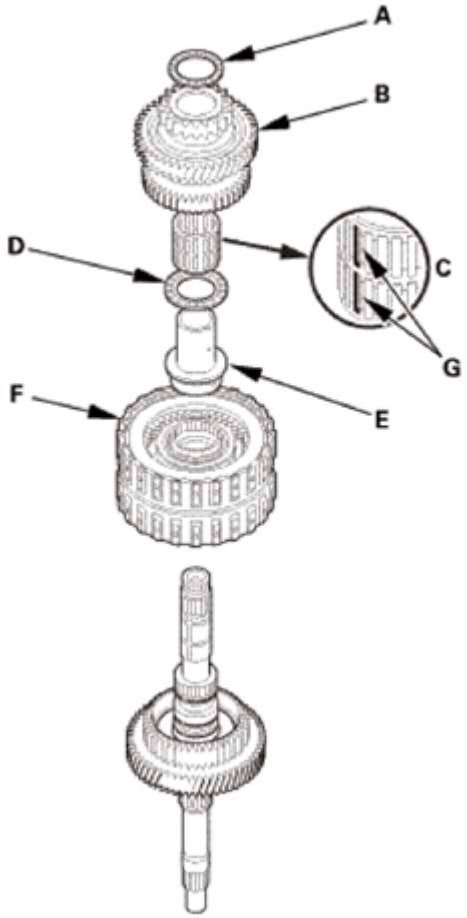

Fig. 36: Identifying No-Roller Cavities, Thrust Needle Bearing, 4th Gear, Needle Bearing And 4th Gear Collar
Courtesy of AMERICAN HONDA MOTOR CO., INC.

2. Remove the O-rings (A), the 41 x 68 mm thrust washer (B), the thrust needle bearing (C), the needle bearing (D), 5th gear (E), and the thrust needle bearing (F).

NOTE: The needle bearing contains the no-roller cavity (G); this is normal.

GETtheMANUALS.org

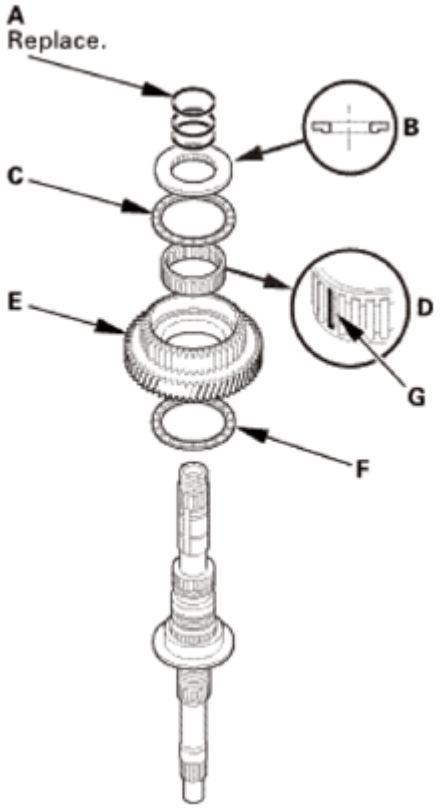

Fig. 37: Identifying O-Rings, Thrust Washer, Thrust Needle Bearing, Needle Bearing, 5th Gear, Thrust Needle Bearing And No-Roller Cavity
Courtesy of AMERICAN HONDA MOTOR CO., INC.

3. Remove the set ring (A), the needle bearing (B), and the sealing rings (C).

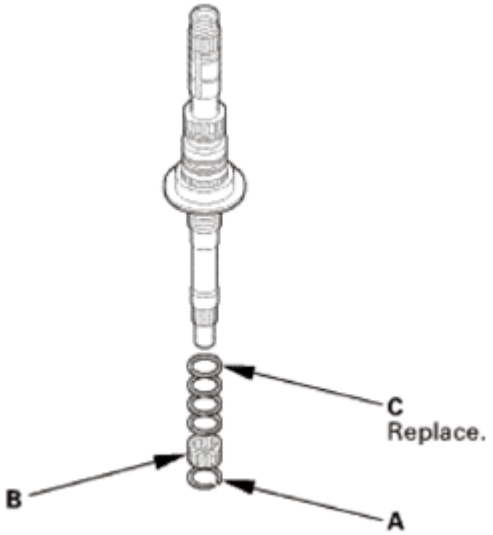

Fig. 38: Identifying Set Ring, Needle Bearing And Sealing Rings
Courtesy of AMERICAN HONDA MOTOR CO., INC.

GETtheMANUALS.org

27. A/T Secondary Shaft
    1. Place a spacer (A) on the secondary shaft (B), and set a puller (C) under the idler gear (D).
    2. Remove the idler gear.

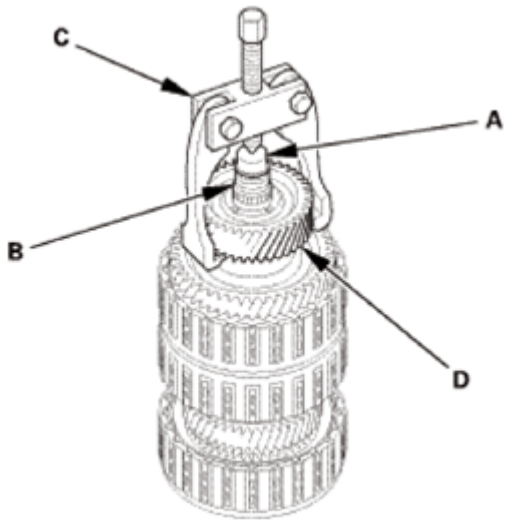

Fig. 39: Identifying Spacer, Secondary Shaft, Puller And Idler Gear
Courtesy of AMERICAN HONDA MOTOR CO., INC.

    3. Remove the thrust needle bearing (A), 3rd gear (B), the needle bearing (C), the thrust needle bearing (D), the 3rd gear collar (E), and the 1st/3rd clutch (F).

GETtheMANUALS.org

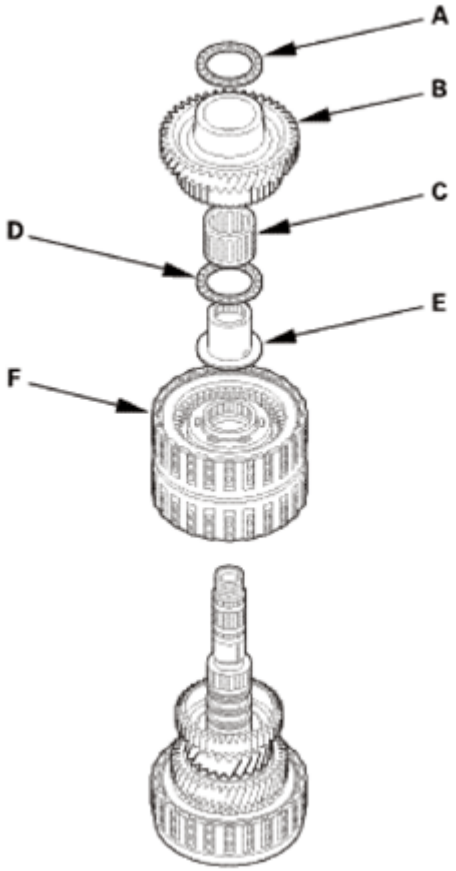

Fig. 40: Identifying Thrust Needle Bearing, 3rd Gear, Needle Bearing, Thrust Needle Bearing, 3rd Gear Collar And 1st/3rd Clutch
Courtesy of AMERICAN HONDA MOTOR CO., INC.

4. Remove the O-rings (A), the 40 x 51.5 mm thrust washer (B), the thrust needle bearing (C), 1st gear (D), the needle bearing (E), and the thrust needle bearing (F).

GETtheMANUALS.org

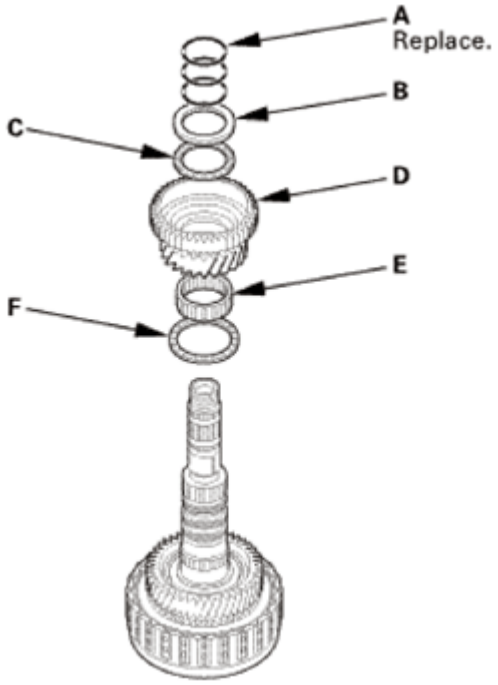

Fig. 41: Identifying O-Rings, Thrust Washer, Thrust Needle Bearing, 1st Gear, Needle Bearing And Thrust Needle Bearing
Courtesy of AMERICAN HONDA MOTOR CO., INC.

5. Remove the sealing rings (A), the snap ring (B), the 2nd clutch (C), the O-rings (D), the 37 x 58 mm thrust washer (E), the thrust needle bearing (F), 2nd gear (G), the needle bearing (H), and the thrust needle bearing (I).

GETtheMANUALS.org

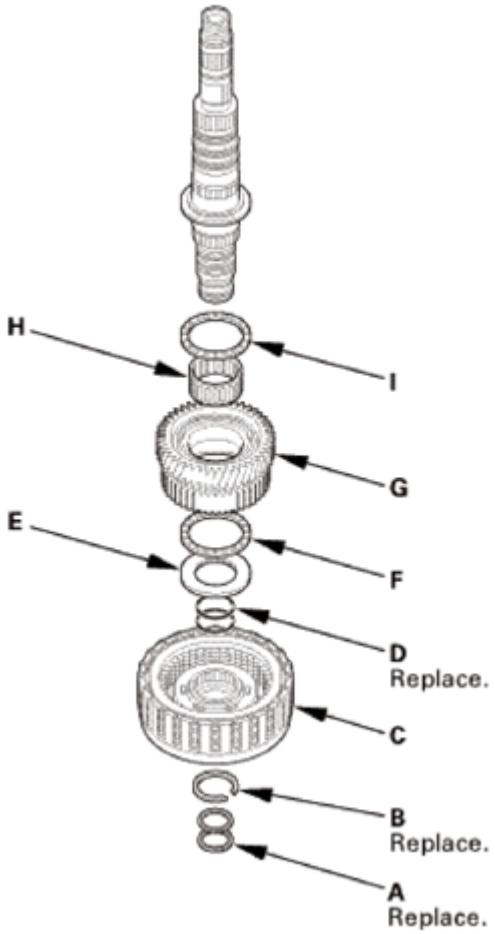

Fig. 42: Identifying Sealing Rings, Snap Ring, 2nd Clutch, O-Rings, Thrust Washer, Thrust Needle Bearing And 2nd Gear
Courtesy of AMERICAN HONDA MOTOR CO., INC.

INSPECTION

1. Clutch Clearance - Inspection
    1. Set a dial indicator (A) on the clutch end-plate (B).
    2. Zero the dial indicator with the clutch end-plate lifted up to the snap ring (C).

GETtheMANUALS.org

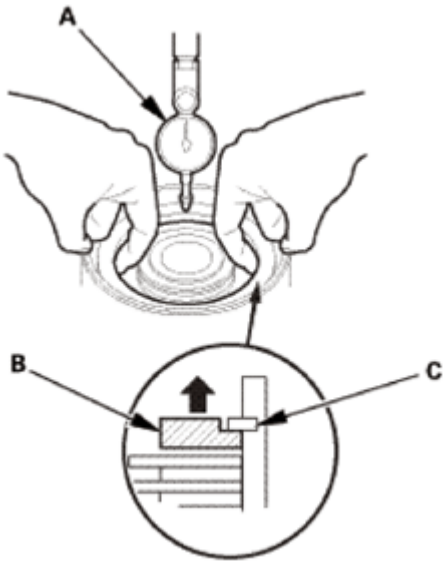

Fig. 43: Setting Dial Indicator On Clutch End-Plate
Courtesy of AMERICAN HONDA MOTOR CO., INC.

3. Release the clutch end-plate to lower it, then put the clutch compressor attachment on the end-plate (A).

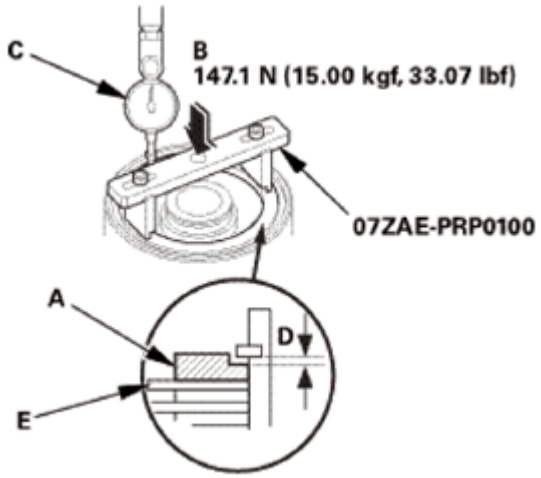

Fig. 44: Putting Clutch Compressor Attachment On End-Plate
Courtesy of AMERICAN HONDA MOTOR CO., INC.

4. Press the clutch compressor attachment down with 147.1 N (15.00 kgf, 33.07 lbf) (B) using a force gauge or equivalent, and read the dial indicator (C).
5. The dial indicator reads the clearance (D) between the clutch end-plate and the top disc (E). Take measurements in at least three places, and use the average as the actual clearance.

Clearance Between Clutch End-Plate and Top Disc

GETtheMANUALS.org

Standard:

1st Clutch: 1.38-1.58 mm (0.0543-0.0622 in)

2nd Clutch: 1.50-1.70 mm (0.0591-0.0669 in)

3rd Clutch: 1.54-1.74 mm (0.0606-0.0685 in)

4th Clutch: 0.93-1.13 mm (0.0366-0.0445 in)

5th Clutch: 0.93-1.13 mm (0.0366-0.0445 in)

6. If the measurement is out of the standard, replace faulty clutch assembly.

INSTALLATION

NOTE:

- **Apply a light coat of clean ATF on all moving parts before installation.**
- **The illustration shows AWD/4WD transmission.**

1. Secondary Shaft - Inspection
   1. Inspect the thrust needle bearings and the needle bearings for galling and rough movement.
   2. Inspect the splines for excessive wear and damage.
   3. Check the shaft bearing surface for scoring and excessive wear.
2. Secondary Shaft 1st Gear Axial Clearance - Inspection
   1. Install the thrust needle bearing (A), the needle bearing (B), 1st gear (C), the thrust needle bearing (D), the 40 x 51.5 mm thrust washer (E), the 1st/3rd clutch (F), and the 3rd gear collar (G).

      NOTE: Do not install the O-rings during inspection.

   2. Install the idler gear (H), then install the transmission housing bearing (I) using the 42 mm bearing driver attachment and a press.
   3. Install the conical spring washer (J) and the locknut (K).

GETtheMANUALS.org

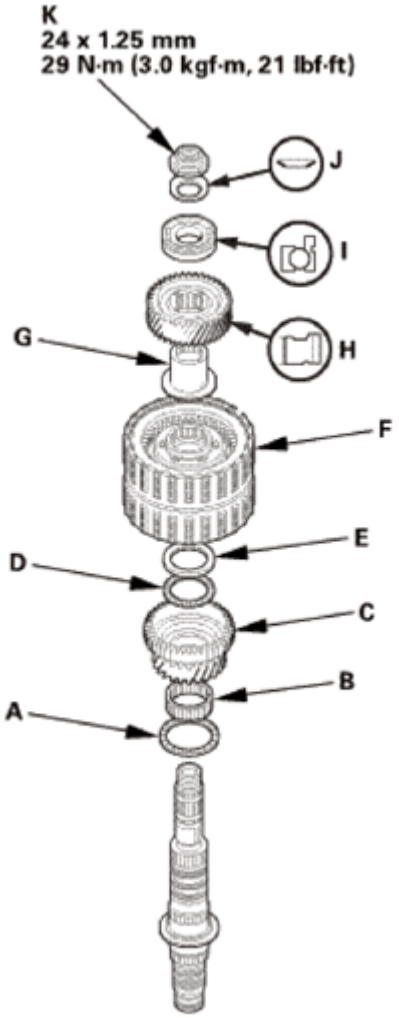

Fig. 45: Identifying Secondary Shaft 1st Gear Axial Related Components With Torque Specification
Courtesy of AMERICAN HONDA MOTOR CO., INC.

GETtheMANUALS.org

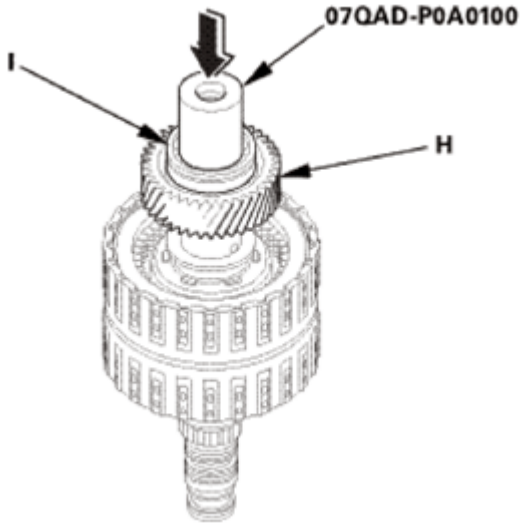

Fig. 46: Installing Idler Gear And Transmission Housing Bearing Using Bearing Driver Attachment
Courtesy of AMERICAN HONDA MOTOR CO., INC.

4. Turn the secondary shaft assembly upside down, and set a dial indicator (A) on 1st gear (B).

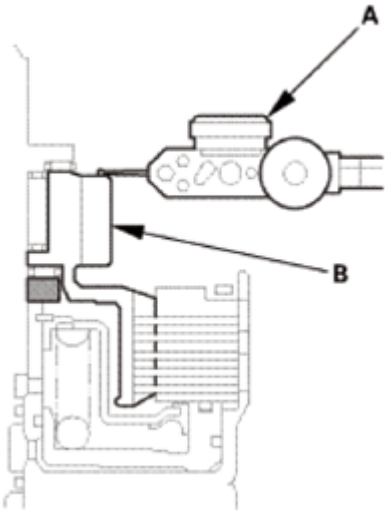

Fig. 47: Setting Dial Indicator On 1st Gear
Courtesy of AMERICAN HONDA MOTOR CO., INC.

5. Lift 1st gear (A) up while holding the secondary shaft, and use the dial indicator (B) to read the 1st gear axial clearance.
6. Measure the 1st gear axial clearance in at least three places while moving 1st gear. Use the average as the actual clearance.

Standard: 0.04-0.12 mm (0.0016-0.0047 in)

GETtheMANUALS.org

7. If the clearance is out of the standard, remove the 40 x 51.5 mm thrust washer and measure its thickness.
8. Select and install a new thrust washer, then recheck.

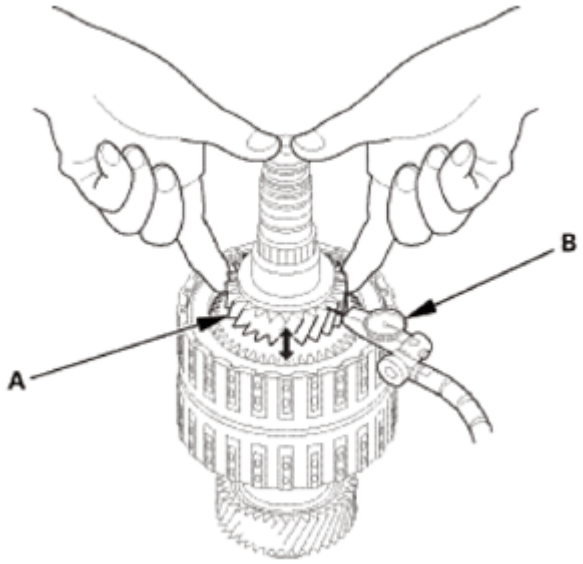

Fig. 48: Measuring 1st Gear Axial Clearance
Courtesy of AMERICAN HONDA MOTOR CO., INC.

THRUST WASHER SPECIFICATION (40 X 51.5 MM)

No.	Thickness
1	4.80 mm (0.1890 in)
2	4.85 mm (0.1909 in)
3	4.90 mm (0.1929 in)
4	4.95 mm (0.1949 in)
5	5.00 mm (0.1969 in)
6	5.05 mm (0.1988 in)

9. After replacing the thrust washer, make sure the clearance is within the standard.
10. Disassemble the installed parts from the secondary shaft.

3. Secondary Shaft 2nd Gear Axial Clearance - Inspection
   1. Install the thrust needle bearing (A), the needle bearing (B), 2nd gear (C), the thrust needle bearing (D), the 37 x 58 mm thrust washer (E), and the 2nd clutch (F), then secure them with the set ring (G).

NOTE: **Do not install the O-rings during inspection.**

GETtheMANUALS.org

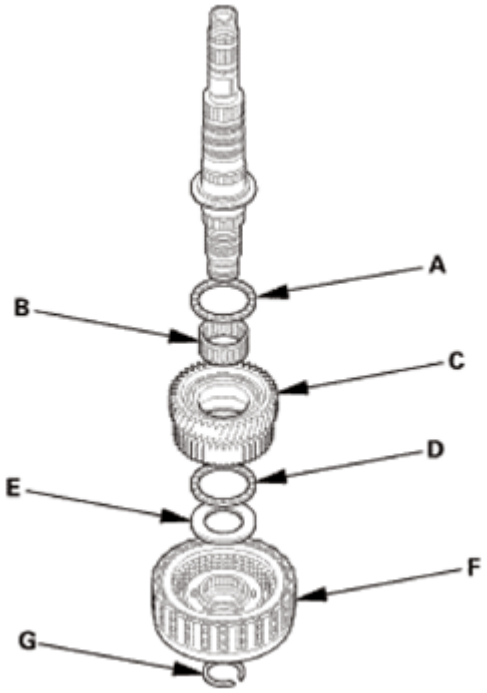

Fig. 49: Identifying Thrust Needle Bearing, 2nd Gear, Thrust Washer, 2nd Clutch And Set Ring
Courtesy of AMERICAN HONDA MOTOR CO., INC.

2. Measure the clearance between the set ring (A) and the 2nd clutch guide (B) using a feeler gauge (C), in at least three places. Use the average as the actual clearance.

   Standard: 0.04-0.12 mm (0.002-0.004 in)

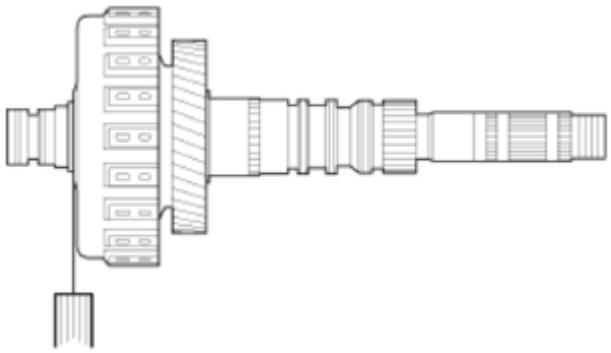

Fig. 50: Measuring Clearance Between Set Ring And 2nd Clutch Guide Using Feeler Gauge
Courtesy of AMERICAN HONDA MOTOR CO., INC.

3. If the clearance is out of the standard, remove the 37 x 58 mm thrust washer, and measure its thickness.
4. Select and install a new thrust washer, then recheck.

GETtheMANUALS.org

No.	Thickness
1	3.900 mm (0.15354 in)
2	3.925 mm (0.15453 in)
3	3.950 mm (0.15551 in)
4	3.975 mm (0.15650 in)
5	4.000 mm (0.15748 in)
6	4.025 mm (0.15846 in)
7	4.050 mm (0.15944 in)
8	4.075 mm (0.16043 in)
9	4.100 mm (0.16142 in)
10	4.125 mm (0.16240 in)
11	4.150 mm (0.16339 in)
12	4.175 mm (0.16437 in)
13	4.200 mm (0.16535 in)
14	4.225 mm (0.16634 in)
15	4.250 mm (0.16732 in)
16	4.275 mm (0.16831 in)
17	4.300 mm (0.16929 in)
18	4.325 mm (0.17028 in)
19	4.350 mm (0.17126 in)
20	4.375 mm (0.17224 in)

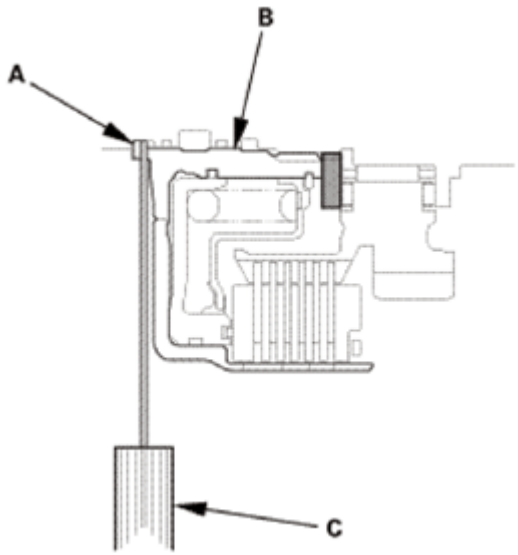

Fig. 51: Measuring Clearance Between Set Ring And 2nd Clutch Guide Using Feeler Gauge
Courtesy of AMERICAN HONDA MOTOR CO., INC.

5. After replacing the thrust washer, make sure the clearance is within the standard.
6. Disassemble the installed parts from the secondary shaft.

GETtheMANUALS.org

4. A/T Secondary Shaft
    1. Install the thrust needle bearing (A), the needle bearing (B), 2nd gear (C), the thrust needle bearing (D), the selected 37 x 58 mm thrust washer (E), new O-rings (F), the 2nd clutch (G), a new snap ring (H), and new 29 mm sealing rings (I).

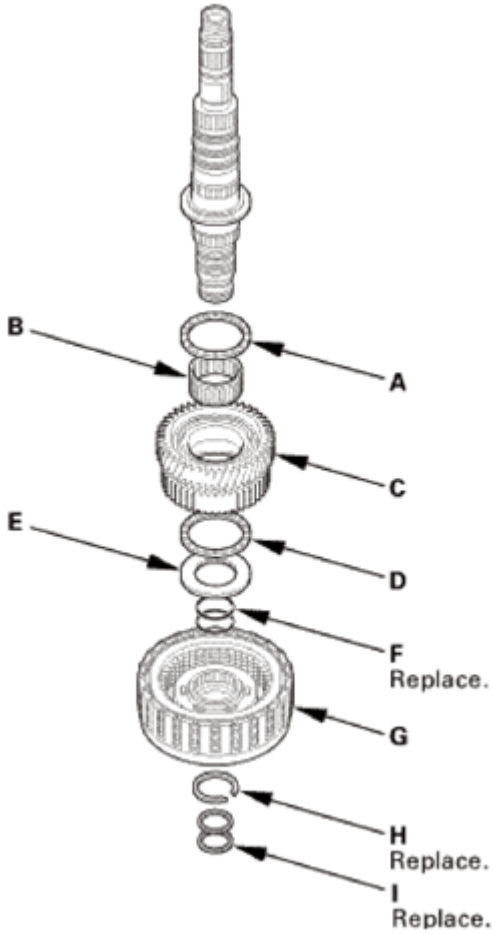

Fig. 52: Identifying Thrust Needle Bearing, 2nd Gear, Thrust Washer, O-Rings, 2nd Clutch, Snap Ring And Sealing Rings
Courtesy of AMERICAN HONDA MOTOR CO., INC.

    2. Install the thrust needle bearing (A), the needle bearing (B), 1st gear (C), the thrust needle bearing (D), the selected 40 x 51.5 mm thrust washer (E), and new O-rings (F).

GETtheMANUALS.org

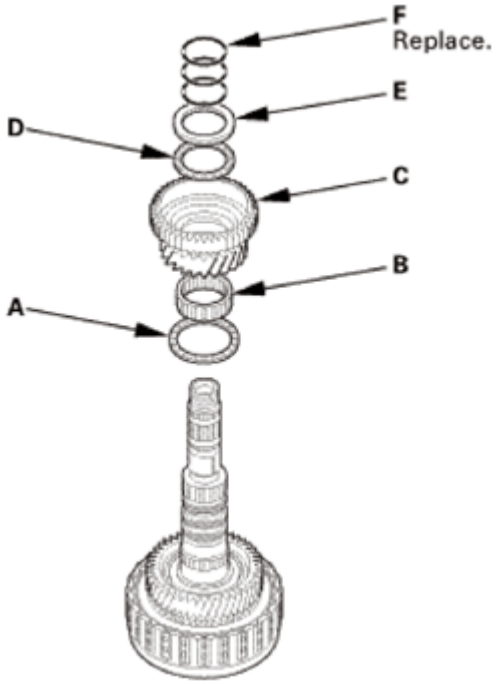

Fig. 53: Identifying Thrust Needle Bearing, 1st Gear, Thrust Washer And O-Rings
Courtesy of AMERICAN HONDA MOTOR CO., INC.

3. Install the 1st/3rd clutch (A), the 3rd gear collar (B), the thrust needle bearing (C), the needle bearing (D), 3rd gear (E), and the thrust needle bearing (F).

GETtheMANUALS.org

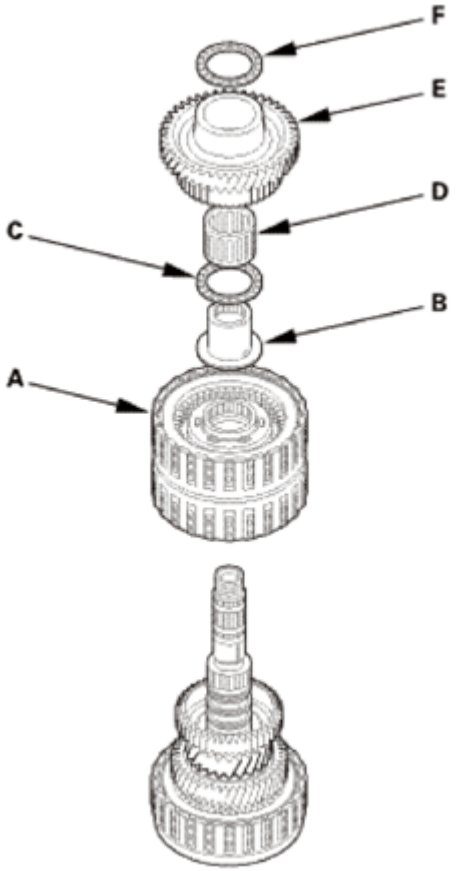

Fig. 54: Identifying 1st/3rd Clutch, 3rd Gear Collar, Thrust Needle Bearing, 3rd Gear And Thrust Needle Bearing
Courtesy of AMERICAN HONDA MOTOR CO., INC.

4. Install the idler gear (A) in the direction shown on the secondary shaft (B) using the 40 mm I.D. driver handle, the 30 mm I.D. bearing driver attachment, and the press.

GETtheMANUALS.org

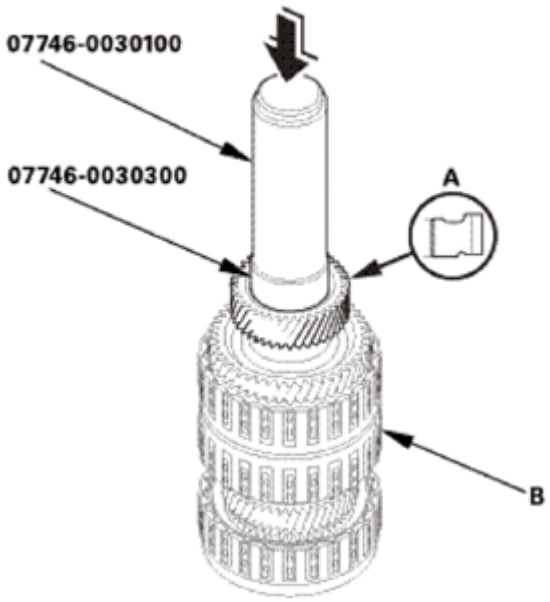

Fig. 55: Installing Idler Gear On Secondary Shaft Using. Driver Handle And I.D. Bearing Driver Attachment
Courtesy of AMERICAN HONDA MOTOR CO., INC.

5. Mainshaft - Inspection
    1. Inspect the thrust needle bearings and the needle bearings for galling and rough movement.
    2. Inspect the splines for excessive wear and damage.
    3. Check the shaft bearing surface for scoring and excessive wear.
6. 5th Gear Axial Clearance - Inspection
    1. Install the thrust needle bearing (A), 5th gear (B), the needle bearing (C), the thrust needle bearing (D), the 41 x 68 mm thrust washer (E), the 4th/5th clutch (F), the 4th gear collar (G), and the transmission housing bearing (H).

NOTE:

- **Do not install the O-rings during inspection.**
- **The needle bearing contains the no-roller cavity (I); this is normal.**

    2. Install the idler gear (J) on the mainshaft using a press, then install the conical spring washer (K) and the locknut (L).

GETtheMANUALS.org

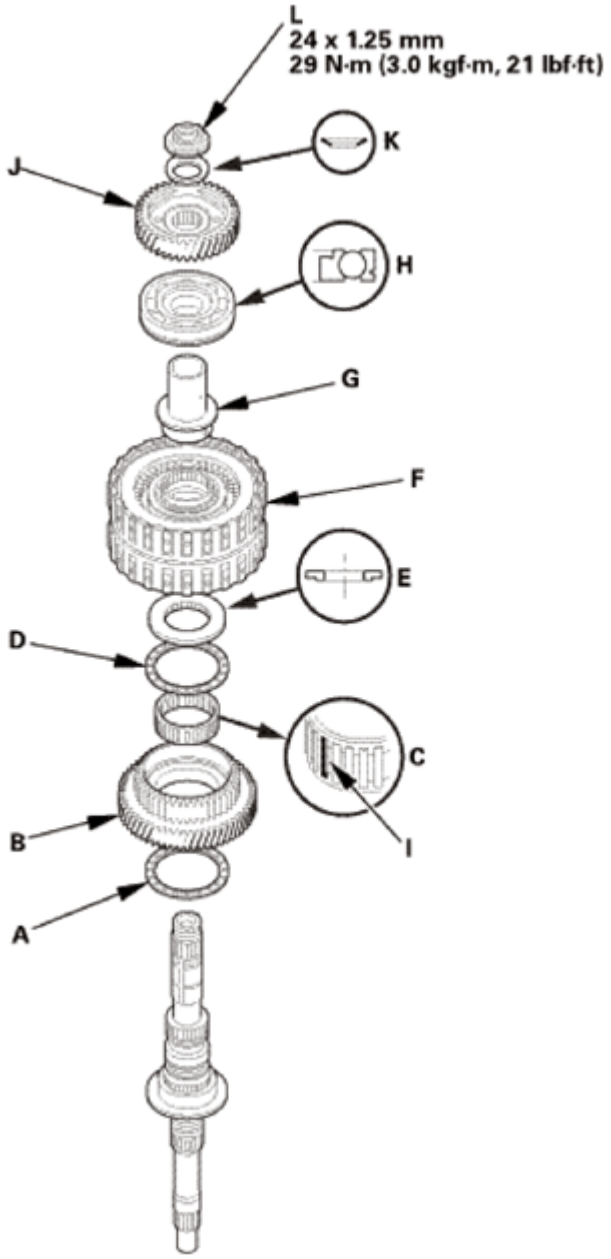

Fig. 56: Identifying 5th Gear Axial Related Components With Torque Specification
Courtesy of AMERICAN HONDA MOTOR CO., INC.

3. Set a dial indicator (A) on 5th gear (B).

GETtheMANUALS.org

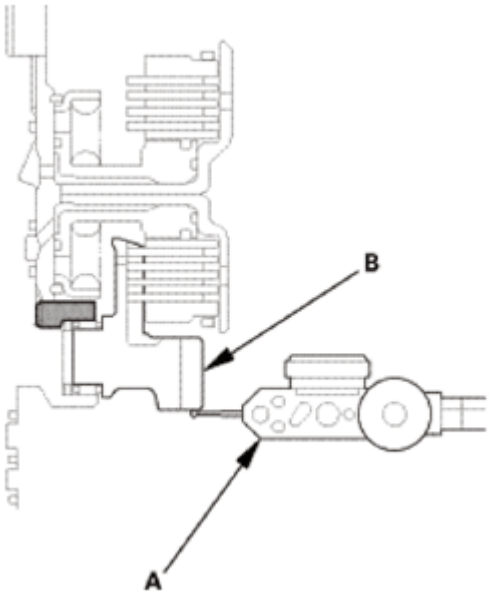

Fig. 57: Setting Dial Indicator On 5th Gear
Courtesy of AMERICAN HONDA MOTOR CO., INC.

4. Lift 5th gear (A) up while holding the mainshaft, and use the dial indicator (B) to read the 5th gear axial clearance.
5. Measure the 5th gear axial clearance in at least three places while moving 5th gear. Use the average as the actual clearance.

Standard: 0.04-0.10 mm (0.0016-0.0039 in)

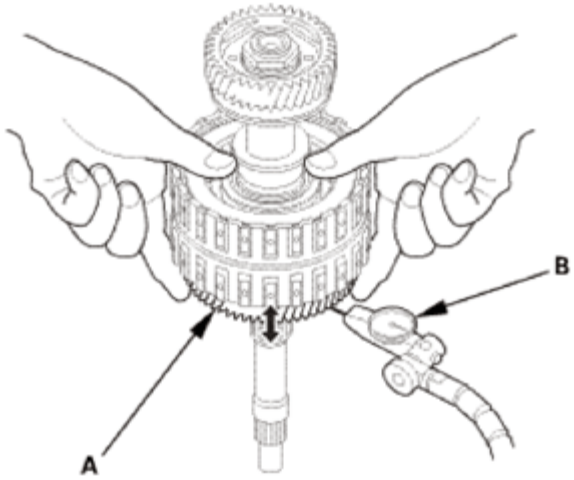

Fig. 58: Measuring 5th Gear Axial Clearance
Courtesy of AMERICAN HONDA MOTOR CO., INC.

6. If the clearance is out of the standard, remove the 41 x 68 mm thrust washer and measure its height.
7. Select and install a new thrust washer, then recheck.

GETtheMANUALS.org

THRUST WASHER SPECIFICATION (41 x 68 MM)

No.	Height
1	4.450 mm (0.17520 in)
2	4.475 mm (0.17618 in)
3	4.500 mm (0.17717 in)
4	4.525 mm (0.17815 in)
5	4.550 mm (0.17913 in)
6	4.575 mm (0.18012 in)
7	4.600 mm (0.18110 in)
8	4.625 mm (0.18209 in)
9	4.650 mm (0.18307 in)
10	4.675 mm (0.18405 in)
11	4.700 mm (0.18504 in)
12	4.725 mm (0.18602 in)
13	4.750 mm (0.18701 in)
14	4.775 mm (0.18799 in)
15	4.800 mm (0.18900 in)

8. After replacing the thrust washer, make sure the clearance is within the standard.
9. Disassemble the installed parts from the mainshaft.

Fig. 59: Identifying Thrust Washer Dimension
Courtesy of AMERICAN HONDA MOTOR CO., INC.

7. A/T Mainshaft
    1. Install new sealing rings (A), the needle bearing (B), and the set ring (C).

GETtheMANUALS.org

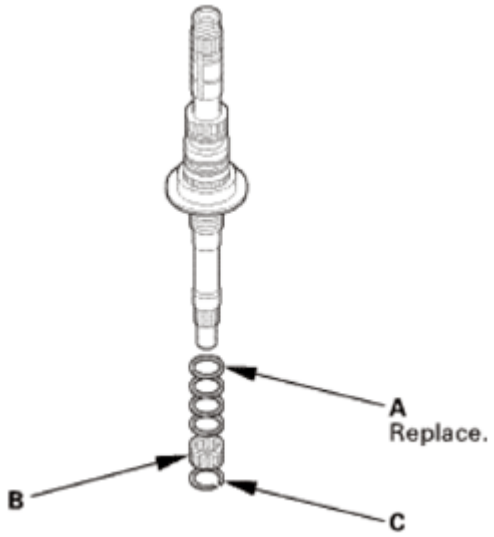

Fig. 60: Identifying Sealing Rings, Needle Bearing And Set Ring
Courtesy of AMERICAN HONDA MOTOR CO., INC.

2. Install the thrust needle bearing (A), 5th gear (B), the needle bearing (C), the thrust needle bearing (D), the selected 41 x 68 mm thrust washer (E), and new O-rings (F).

NOTE: The needle bearing contains the no-roller cavity (G); this is normal.

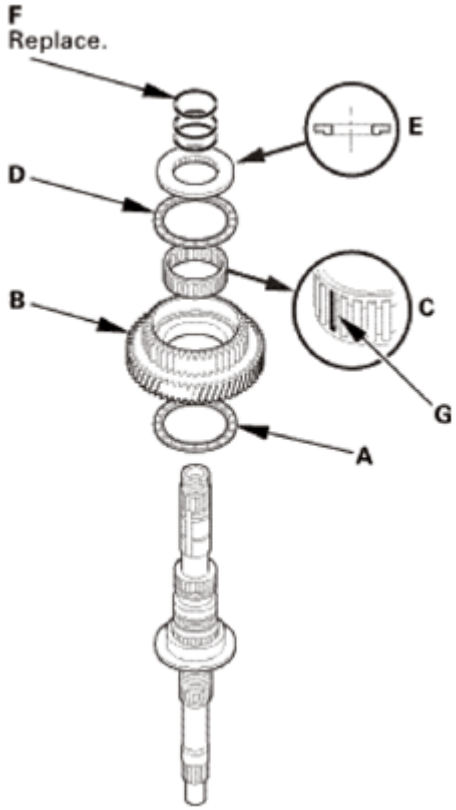

GETtheMANUALS.org

Fig. 61: Identifying Thrust Needle Bearing, 5th Gear, Needle Bearing, Thrust Washer And O-Rings
Courtesy of AMERICAN HONDA MOTOR CO., INC.

3. Install the 4th/5th clutch (A), the 4th gear collar (B), the thrust needle bearing (C), the needle bearing (D), 4th gear (E), and the thrust needle bearing (F).

NOTE: The needle bearing contains the no-roller cavities (G); this is normal.

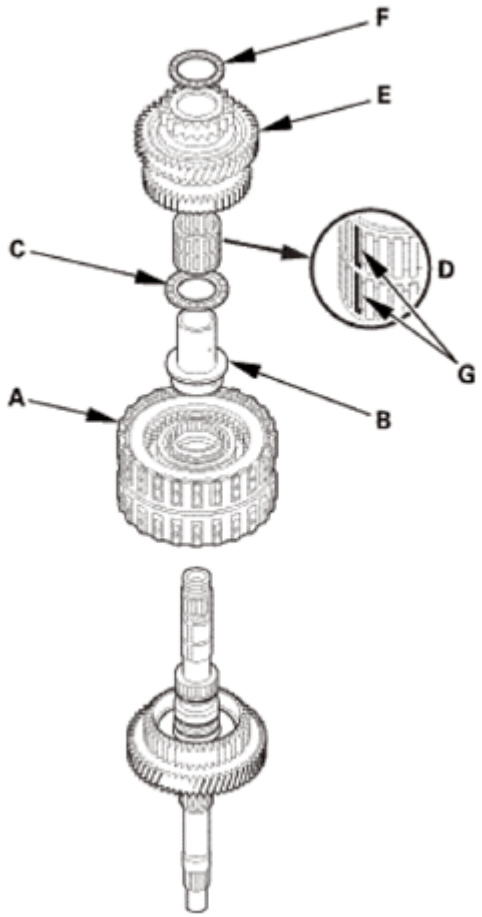

Fig. 62: Identifying 4th/5th Clutch, 4th Gear Collar, Thrust Needle Bearing And 4th Gear
Courtesy of AMERICAN HONDA MOTOR CO., INC.

8. Mainshaft and Countershaft and Secondary Shaft Assembly
    1. Be sure that each shaft is assembled. Also be sure that new sealing rings are installed on the mainshaft and the secondary shaft.
    2. Join the mainshaft subassembly (A), the countershaft subassembly (B), and the secondary shaft subassembly (C) together, and install them.

NOTE: Do not bump the countershaft on the baffle plate (D).

GETtheMANUALS.org

3. Make sure the countershaft subassembly and the differential assembly (E) are clear of the baffle plate.

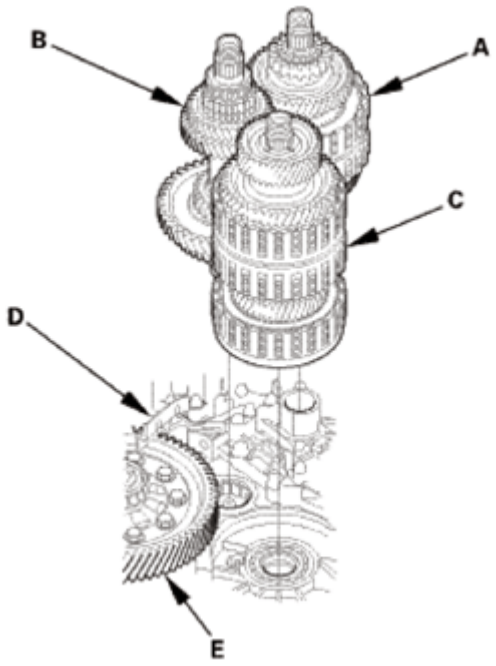

Fig. 63: Identifying Mainshaft Subassembly, Countershaft Subassembly, Secondary Shaft Subassembly, Baffle Plate And Differential Assembly
Courtesy of AMERICAN HONDA MOTOR CO., INC.

9. Selector Control Shaft
    1. Install the selector control shaft (A).

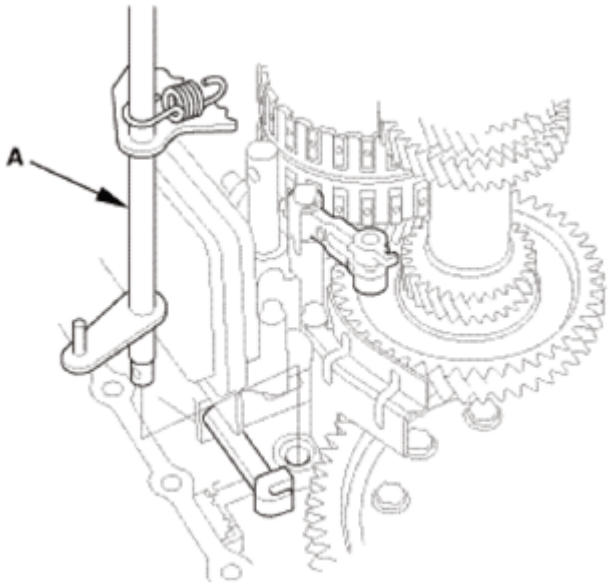

GETtheMANUALS.org

Fig. 64: Identifying Selector Control Shaft
Courtesy of AMERICAN HONDA MOTOR CO., INC.

2. Align the manual valve lever pin (A) on the selector control shaft (B) with the guide of the manual valve (C).

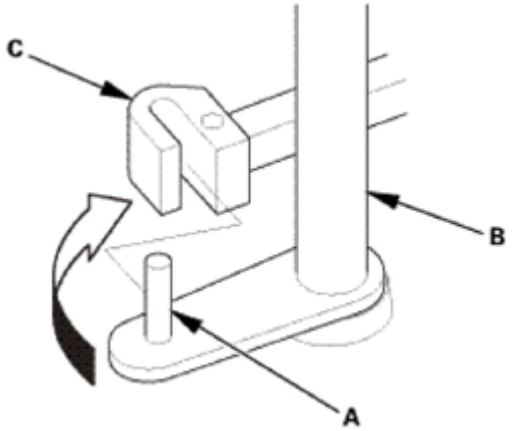

Fig. 65: Aligning Manual Valve Lever Pin On Selector Control Shaft With Guide Of Manual Valve
Courtesy of AMERICAN HONDA MOTOR CO., INC.

3. Hook the detent arm spring (A).

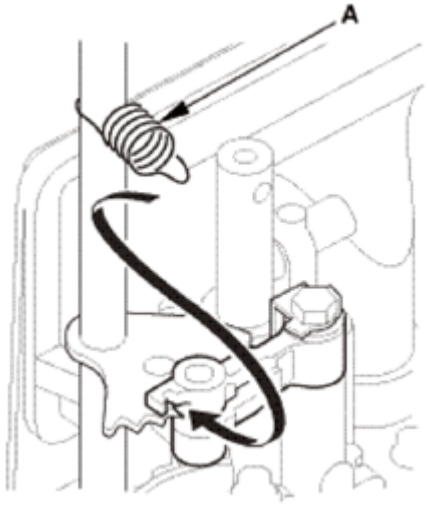

Fig. 66: Hooking Detent Arm Spring
Courtesy of AMERICAN HONDA MOTOR CO., INC.

10. Selector Control Lever (Except 2WD of USA Produced Models)

Except 2WD of USA Produced Models

GETtheMANUALS.org

1. Install the control lever (A) over the selector control shaft (B).
2. Install the lock bolt (C) using a new lock washer (D).
3. Pry up the lock tab (E) of the lock washer against the bolt head.

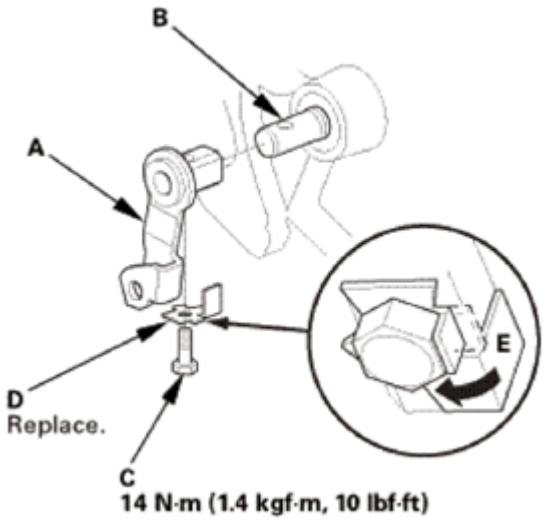

Fig. 67: Prying Up Lock Tab Of Lock Washer (Except 2WD Of USA Produced Models)
Courtesy of AMERICAN HONDA MOTOR CO., INC.

11. Reverse Shift fork
    1. Install the reverse shift fork (A) and the reverse selector (B) together.
    2. Install the lock bolt (C) using a new lock washer (D).
    3. Pry up the lock tab (E) of the lock washer against the bolt head.

GETtheMANUALS.org

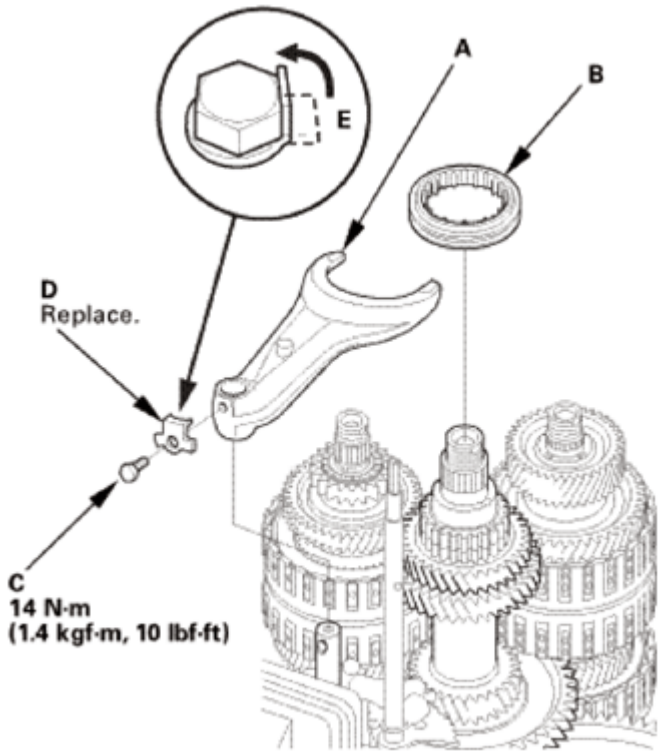

Fig. 68: Prying Up Lock Tab Of Lock Washer
Courtesy of AMERICAN HONDA MOTOR CO., INC.

12. A/T Countershaft Reverse Gear
    1. Install the needle bearing (A).
    2. Install the countershaft reverse gear (B).

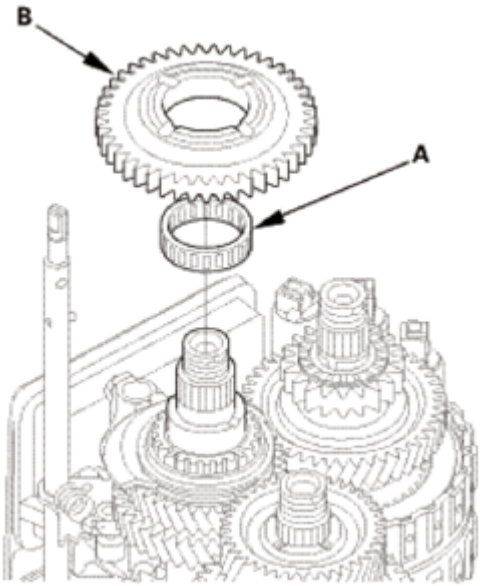

Fig. 69: Identifying Needle Bearing And Countershaft Reverse Gear

GETtheMANUALS.org

Courtesy of AMERICAN HONDA MOTOR CO., INC.

13. Transmission Housing Secondary Shaft Bearing
    1. Expand the snap ring using the snap ring pliers.
    2. Install the secondary shaft bearing (A) part-way into the housing using the driver handle and the 52 x 55 mm bearing driver attachment.
    3. Release the snap ring pliers, then push the bearing down into the transmission housing until the snap ring snaps in place around it.

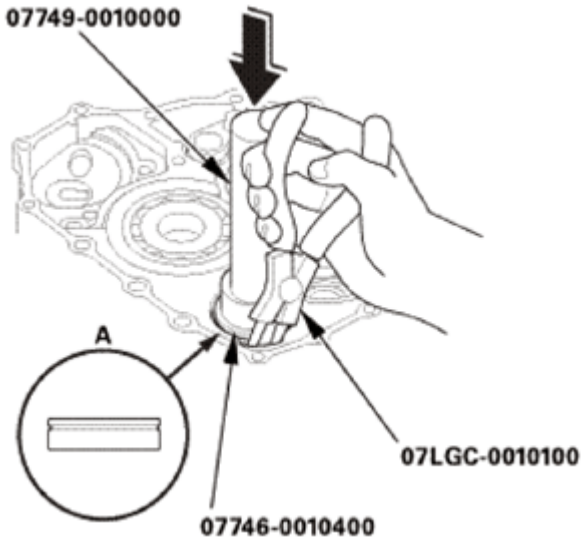

Fig. 70: Expanding Snap Ring Using Snap Ring Pliers
Courtesy of AMERICAN HONDA MOTOR CO., INC.

    4. After installing the bearing check that the snap ring (A) is seated in the bearing and the transmission housing groove, and that the snap ring end gap (B) is correct.

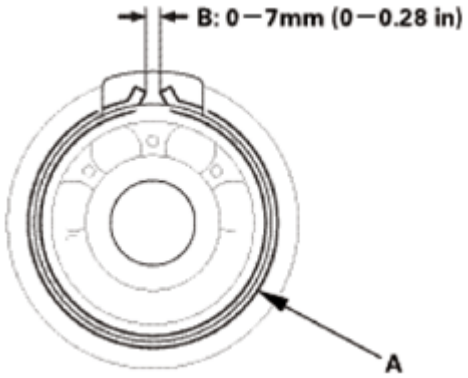

Fig. 71: Checking Snap Ring End Gap
Courtesy of AMERICAN HONDA MOTOR CO., INC.

14. Transmission Housing Mainshaft Bearing

GETtheMANUALS.org

1. Expand the snap ring using the snap ring pliers.
2. Install the mainshaft bearing (A) part-way into the housing using the driver handle and the 78 x 80 mm bearing driver attachment.
3. Release the snap ring pliers, then push the bearing down into the transmission housing until the snap ring snaps in place around it.

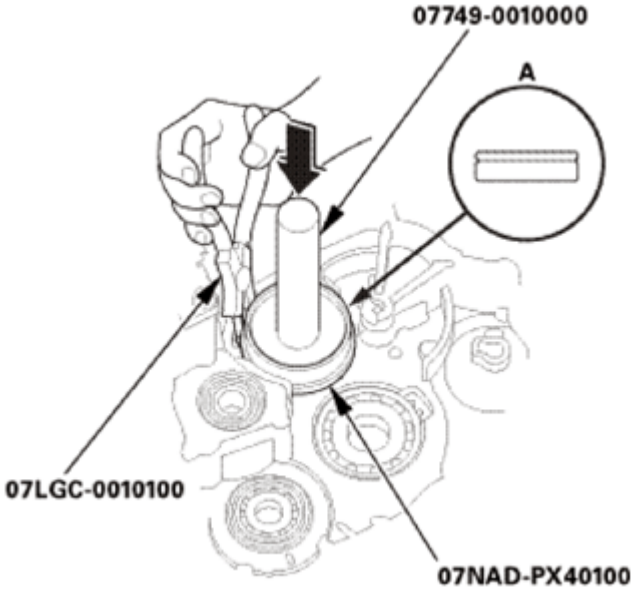

Fig. 72: Expanding Snap Ring Using Snap Ring Pliers
Courtesy of AMERICAN HONDA MOTOR CO., INC.

4. After installing the bearing check that the snap ring (A) is seated in the bearing and the transmission housing groove, and that the snap ring end gap (B) is correct.

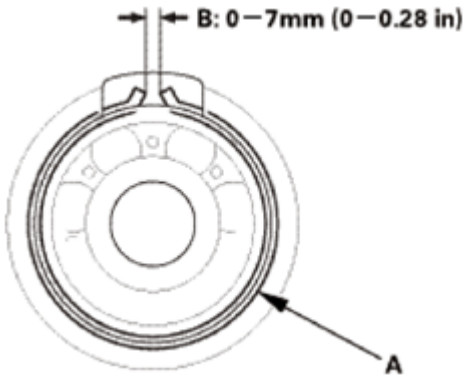

Fig. 73: Checking Snap Ring End Gap
Courtesy of AMERICAN HONDA MOTOR CO., INC.

15. A/T Idler Gear/Idler Gear Shaft Assembly
    1. Install the idler gear shaft/idler gear assembly (A).

GETtheMANUALS.org

2. Install the cotters (B), the cotter retainer (C), and a new snap ring (D) as shown.

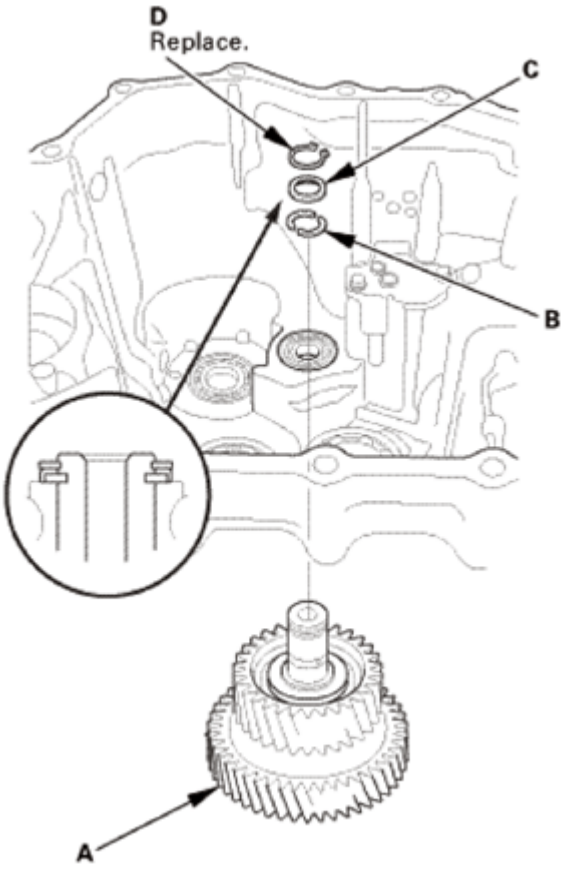

Fig. 74: Identifying Idler Gear Shaft/Idler Gear Assembly, Cotters, Cotter Retainer And Snap Ring
Courtesy of AMERICAN HONDA MOTOR CO., INC.

16. Reverse Idler Gear
    1. Install the reverse idler gear (A).

GETtheMANUALS.org

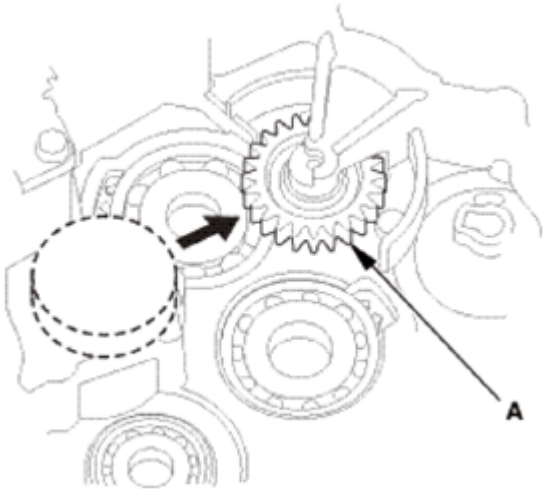

Fig. 75: Installing Reverse Idler Gear
Courtesy of AMERICAN HONDA MOTOR CO., INC.

2. Lightly coat the reverse idler gear shaft (A), the needle bearing (B), and new O-rings (C) with lithium grease.
3. Assemble new O-rings and the needle bearing on the reverse idler gear shaft, then install the reverse idler gear shaft in the reverse idler gear shaft holder (D). Align the D-shaped (E) cut out of the shaft with the D-shaped area (F) of the holder.

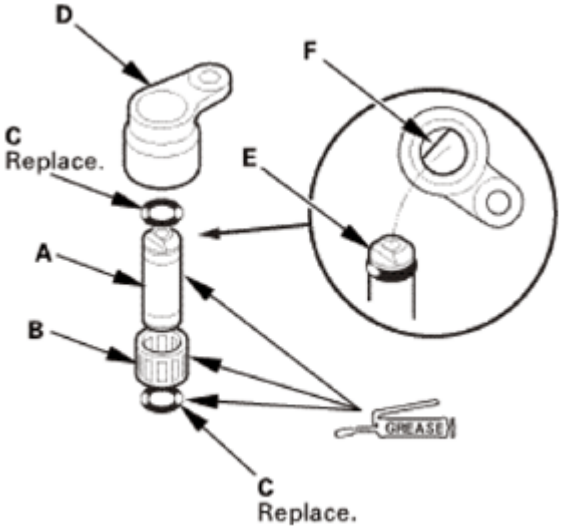

Fig. 76: Identifying Lithium Grease Applying Area On Reverse Idler Gear Shaft, Needle Bearing And O-Rings
Courtesy of AMERICAN HONDA MOTOR CO., INC.

4. Install the reverse idler gear shaft/holder assembly (A).

GETtheMANUALS.org

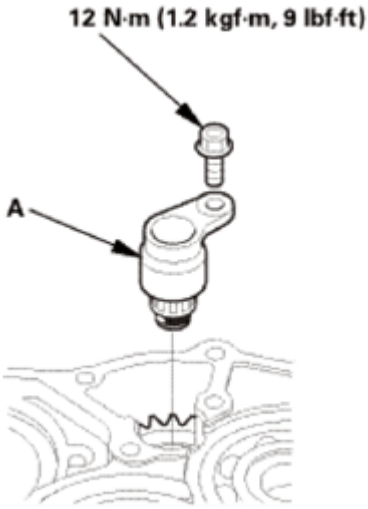

Fig. 77: Identifying Reverse Idler Gear Shaft/Holder Assembly And Bolt With Torque Specification
Courtesy of AMERICAN HONDA MOTOR CO., INC.

17. Automatic Transmission Housing
    1. Install the three dowel pins (A) and a new gasket (B).
    2. Align the spring pin (C) of the selector control shaft (D) with the transmission housing groove (E).

    NOTE: **Do not squeeze the end of the selector control shaft tips together when turning the shaft. If the tips are squeezed together, it will cause a faulty shift position signal or position due to the play between the selector control shaft and the transmission range switch.**

    3. Place the transmission housing (F) on the torque converter housing (G).

    NOTE: **Do not install the input shaft (mainshaft) speed sensor and the output shaft (countershaft) speed sensor before installing the transmission housing.**

    4. Wrap the tip of a screwdriver with tape so the reverse idler gear teeth do not get damaged. Engage the reverse idler gear (H) with the reverse gears (I) by rotating the idler gear using the screwdriver.
    5. Make sure the transmission housing is securely seated so there is no clearance between the transmission housing and the torque converter housing.
    6. Install the transmission hanger (J), and tighten the transmission housing mounting bolts (2WD: 19 bolts, AWD/4WD: 20 bolts) in at least two steps, in a crisscross pattern.

GETtheMANUALS.org

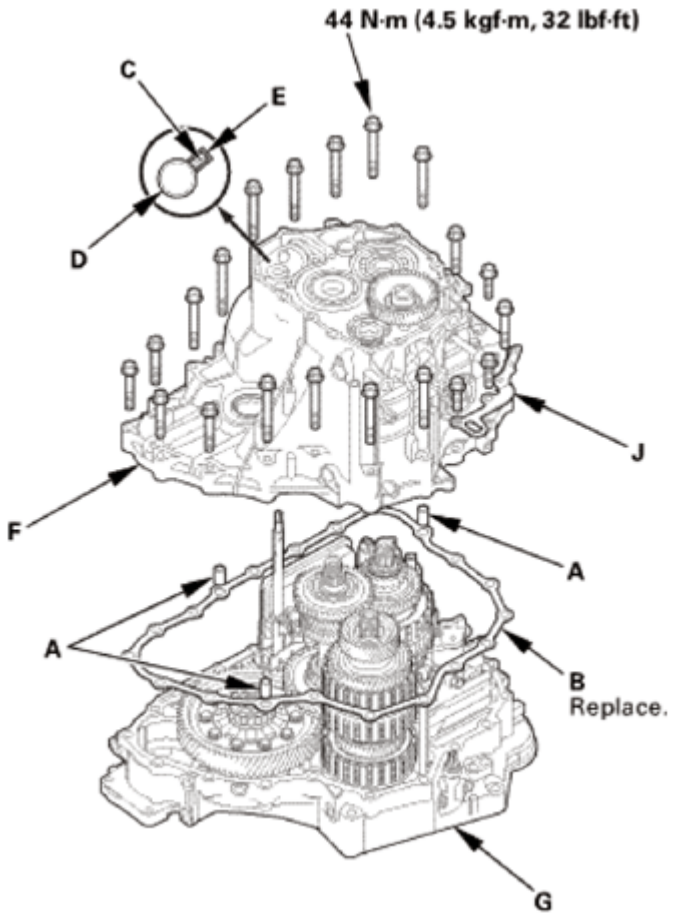

Fig. 78: Identifying Dowel Pins, Gasket, Spring Pin, Selector Control Shaft, Transmission Housing Groove And Mounting Bolts With Torque Specification
Courtesy of AMERICAN HONDA MOTOR CO., INC.

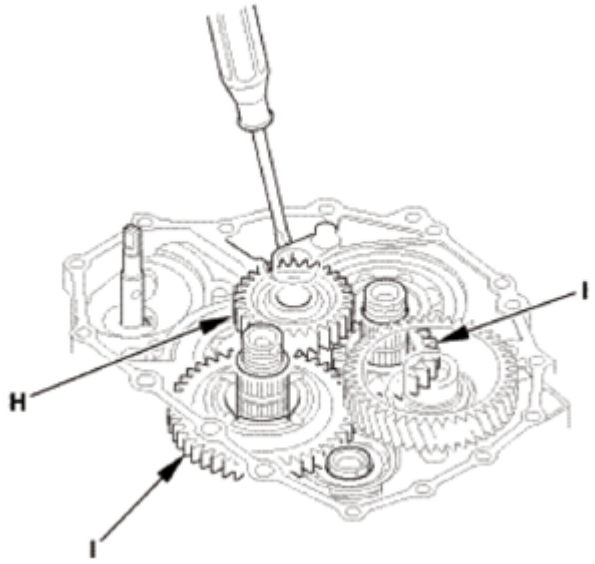

Fig. 79: Engaging Reverse Idler Gear With Reverse Gears By Rotating Idler Gear Using

GETtheMANUALS.org

Screwdriver
Courtesy of AMERICAN HONDA MOTOR CO., INC.

18. End Cover Idler Gear Assembly
    1. Install the mainshaft holder onto the mainshaft.

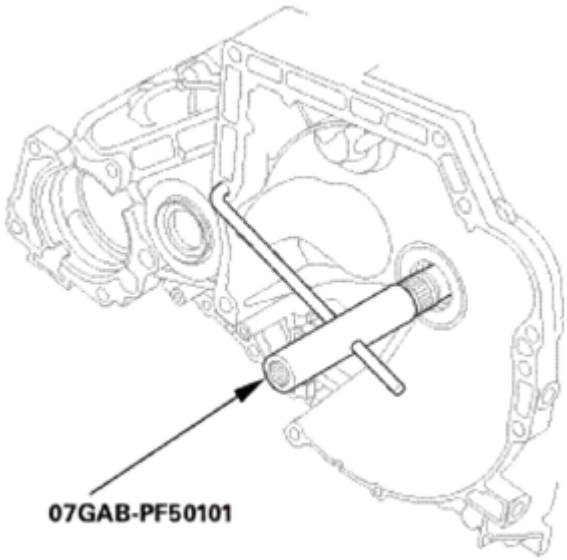

Fig. 80: Installing Mainshaft Holder Onto Mainshaft
Courtesy of AMERICAN HONDA MOTOR CO., INC.

    2. Lubricate the following parts with ATF:
        - Splines and threads of the mainshaft.
        - Splines of the mainshaft idler gear.
        - The old conical spring washer and the old locknut.
    3. Install the mainshaft idler gear (A), the old conical spring washer (B), and the old locknut (C), and tighten the locknut to 225 N.m (23.0 kgf.m, 166 lbf.ft).

NOTE:
- **Do not tap the mainshaft idler gear to install.**
- **Use a torque wrench to tighten the locknut. Do not use an impact wrench.**

GETtheMANUALS.org

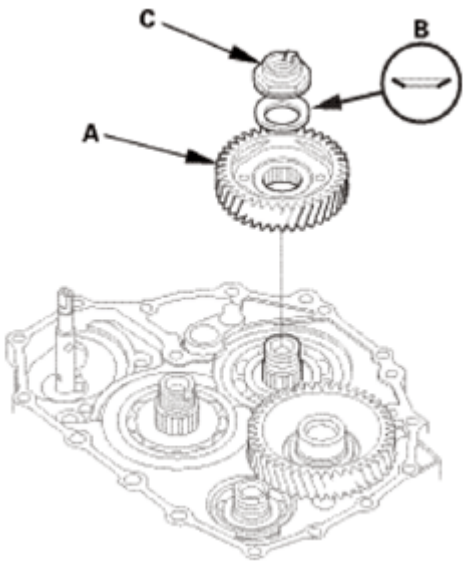

Fig. 81: Identifying Mainshaft Idler Gear, Conical Spring Washer And Locknut
Courtesy of AMERICAN HONDA MOTOR CO., INC.

4. Lubricate the following parts with ATF:
   - Splines and threads of the countershaft.
   - Splines of the park gear.
   - The old conical spring washer and the old locknut.
5. Install the park gear (A), the old conical spring washer (B), and the old locknut (C).

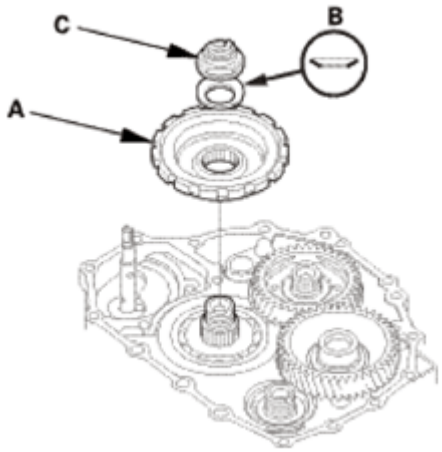

Fig. 82: Identifying Park Gear, Conical Spring Washer And Locknut
Courtesy of AMERICAN HONDA MOTOR CO., INC.

6. Install the park lever spring (D), the park lever (E), and the park lever stop (F).
7. Install the lock bolt (G) using a new lock washer (H).

NOTE: **Do not bend the lock tab of the lock washer until inspect the park**

GETtheMANUALS.org

lever stop.

8. Install the park pawl shaft (I), the park pawl spring (J), the park pawl (K), and the stop shaft (L).
9. Lift the park pawl up, and engage it with the park gear, and tighten the locknut to 225 N.m (23.0 kgf.m, 166 lbf.ft).

NOTE:

- **Do not tap the park gear to install.**
- **Use a torque wrench to tighten the locknut. Do not use an impact wrench.**
- **Countershaft locknut has left-hand threads.**

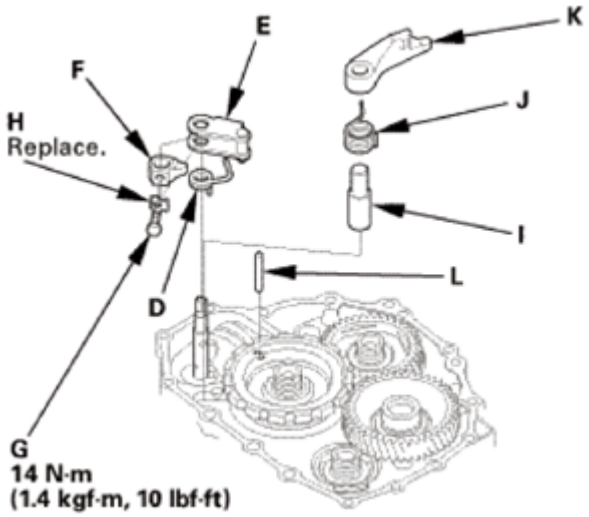

Fig. 83: Identifying Park Pawl Shaft, Park Lever Spring, Park Lever, Park Lever Stop, Lock Bolt, Lock Washer With Torque Specification
Courtesy of AMERICAN HONDA MOTOR CO., INC.

10. Remove the old locknuts and the old conical spring washers from the mainshaft and the countershaft.
11. Lubricate the following parts with ATF:
    - Splines and threads of the mainshaft, the countershaft, and the secondary shaft.
    - New conical spring washers and new locknuts.
    - Areas where the conical spring washers contact the mainshaft idler gear and the park gear.

GETtheMANUALS.org

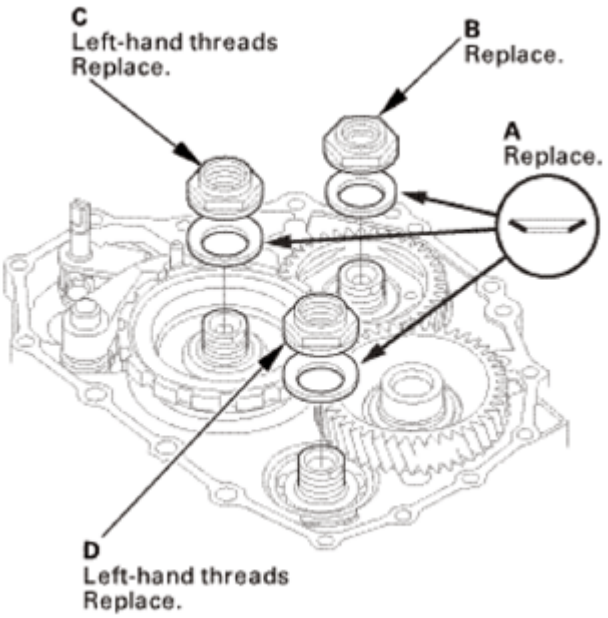

Fig. 84: Identifying Conical Spring Washers, Mainshaft Locknut, Countershaft Locknut And Secondary Shaft Locknut
Courtesy of AMERICAN HONDA MOTOR CO., INC.

12. Install new conical spring washers (A) in the direction shown.
13. Install a new mainshaft locknut (B), a new countershaft locknut (C), and a new secondary shaft locknut (D).
14. Tighten the locknuts to 167 N.m (17.0 kgf.m, 123 lbf.ft).

NOTE:

- **Use a torque wrench to tighten the locknut. Do not use an impact wrench.**
- **The countershaft and secondary shaft locknuts have left-hand threads.**

15. Remove the mainshaft holder.
16. Stake the locknuts into the shafts to a depth (A) of 0.7-1.3 mm (0.027-0.051 in) using a 3.5 mm punch (B).

GETtheMANUALS.org

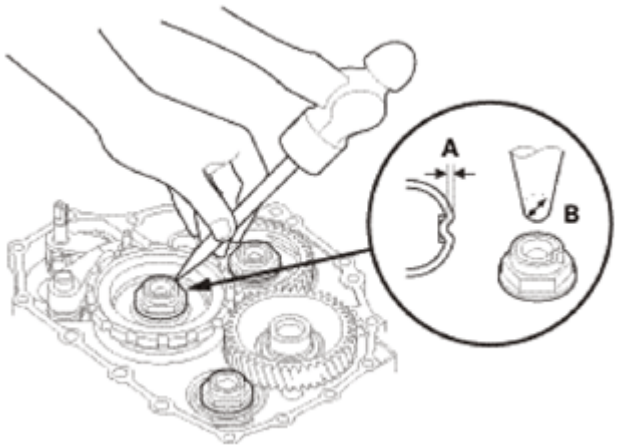

Fig. 85: Staking Locknuts Into Shafts Using Punch
Courtesy of AMERICAN HONDA MOTOR CO., INC.

17. Set the park lever in the P position.
18. Measure the distance (A) between the center of the park pawl shaft (B) and the center of the park lever roller pin (C) as shown.

    Standard: 57.7-58.7 mm (2.272-2.311 in)

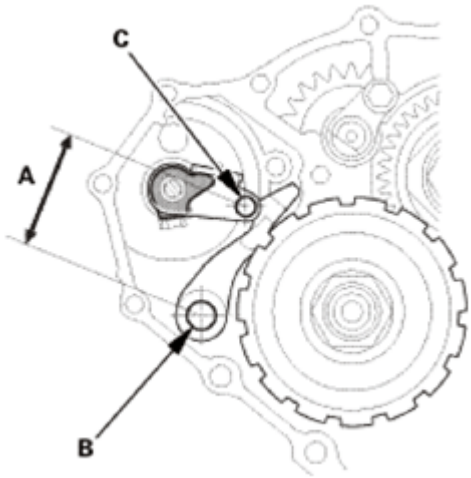

Fig. 86: Measuring Distance Between Center Of Park Pawl Shaft And Center Of Park Lever Roller Pin
Courtesy of AMERICAN HONDA MOTOR CO., INC.

19. If the measurement is out of the standard, select and install the appropriate park lever stop (A) from the table.

PARK LEVER STOP SPECIFICATION

Mark	B	C
1	11.00 mm (0.4331 in)	11.00 mm (0.4331 in)

GETtheMANUALS.org

2	10.80 mm (0.4252 in)	10.65 mm (0.4193 in)
3	10.60 mm (0.4173 in)	10.30 mm (0.4055 in)

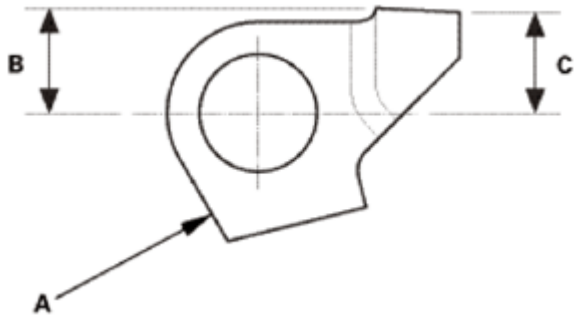

Fig. 87: Identifying Park Lever Stop Dimension
Courtesy of AMERICAN HONDA MOTOR CO., INC.

20. After replacing the park lever stop, make sure the distance is within the tolerance.
21. Pry up the lock tab (A) of the lock washer against the bolt head.

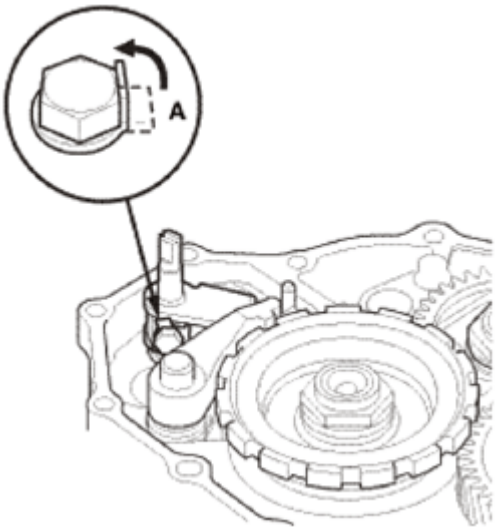

Fig. 88: Prying Up Lock Tab Of Lock Washer Against Bolt Head
Courtesy of AMERICAN HONDA MOTOR CO., INC.

19. ATF Feed Pipe/Lubrication Pipe
    1. Install the 6 x 201 mm ATF pipe (A).
    2. Install the ATF lubrication pipe (B).
    3. Install the 8 x 220 mm ATF pipe (C).
    4. Install the 8 x 198 mm ATF pipes (D).

GETtheMANUALS.org

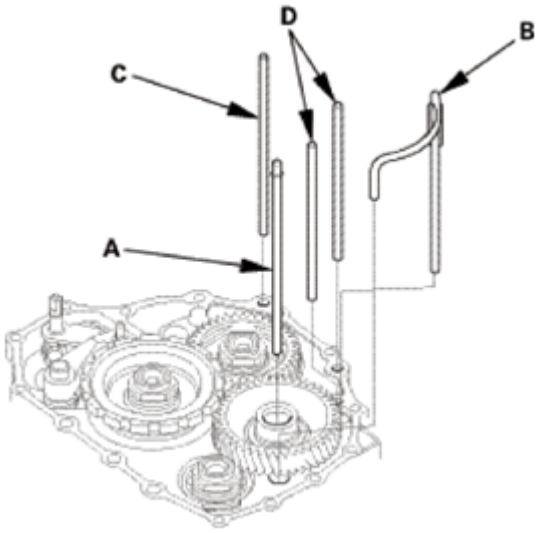

Fig. 89: Identifying ATF Feed Pipes And Lubrication Pipe
Courtesy of AMERICAN HONDA MOTOR CO., INC.

20. A/T Shift Solenoid Wire Harness - Reconnection
    1. Connect the shift solenoid valve connectors:
        - BLU wire to shift solenoid valve A.
        - ORN wire to shift solenoid valve B.
        - GRN wire to shift solenoid valve C.
        - YEL, WHT, and WHT wires to shift solenoid valve D.
        - RED wire to shift solenoid valve E.

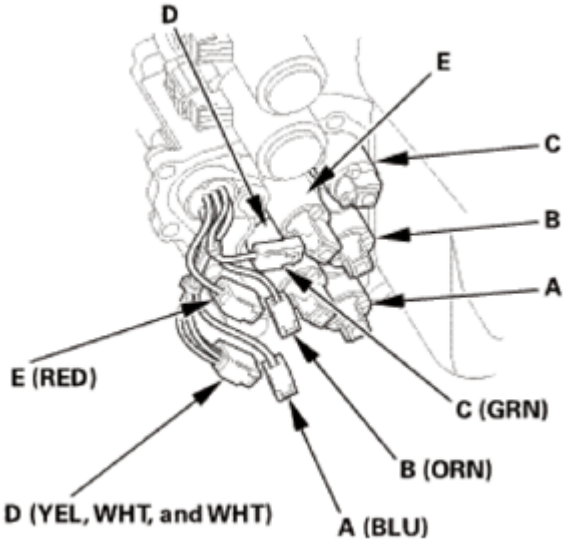

Fig. 90: Identifying Shift Solenoid Valves
Courtesy of AMERICAN HONDA MOTOR CO., INC.

GETtheMANUALS.org

21. A/T Shift Solenoid Cover
    1. Install the shift solenoid valve cover (A) with the dowel pins (B) and a new gasket (C).

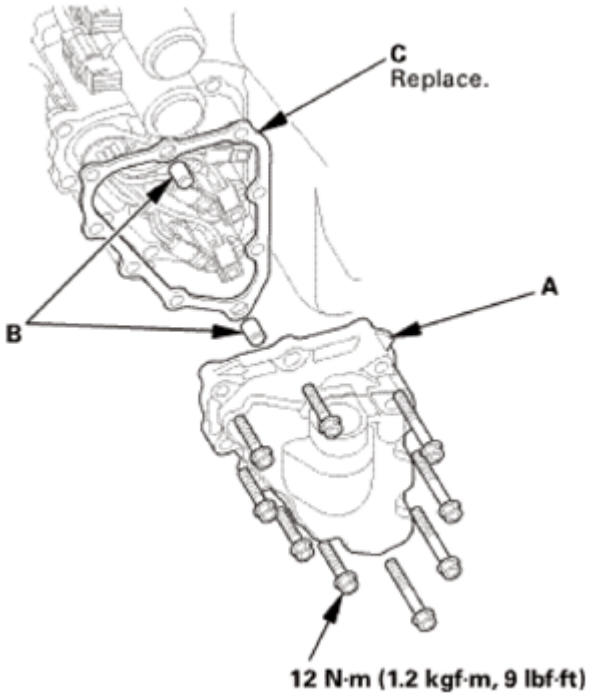

Fig. 91: Identifying Shift Solenoid Valve Cover, Dowel Pins, Gasket And Mounting Bolts With Torque Specification
Courtesy of AMERICAN HONDA MOTOR CO., INC.

22. Dipstick Guide Tube
    1. Install a new O-ring (A) on the ATF dipstick guide tube (B).
    2. Install the ATF dipstick guide tube.

GETtheMANUALS.org

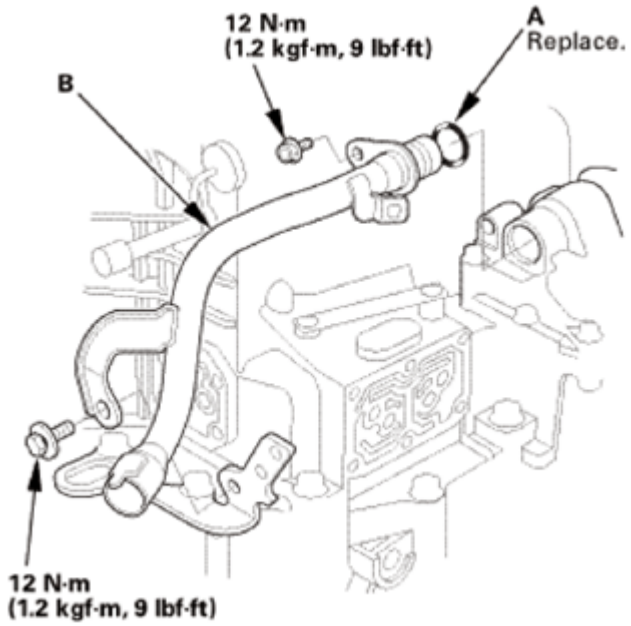

Fig. 92: Identifying ATF Dipstick Guide Tube, O-Ring And Mounting Bolts With Torque Specification
Courtesy of AMERICAN HONDA MOTOR CO., INC.

23. ATF Outlet Line
    1. Install the ATF outlet line (A) using new sealing washers (B).

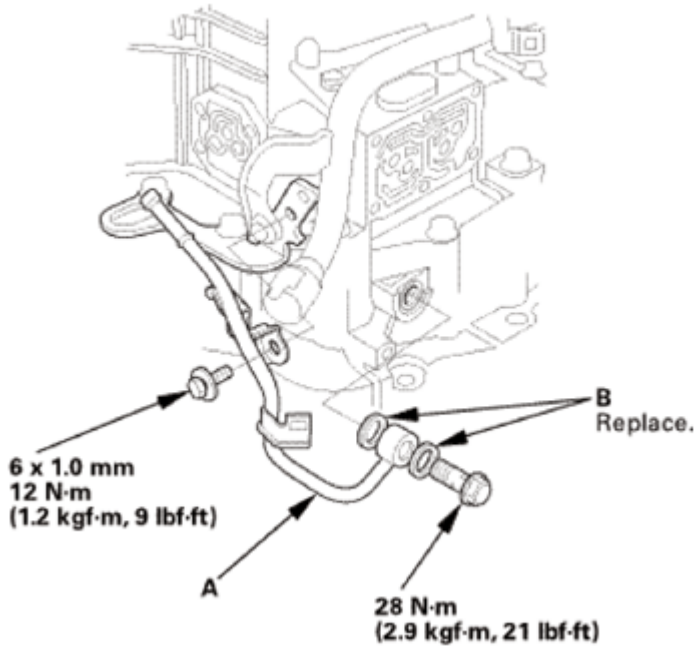

Fig. 93: Identifying ATF Outlet Line, Sealing Washers And Mounting Bolts With Torque Specification
Courtesy of AMERICAN HONDA MOTOR CO., INC.

GETtheMANUALS.org

24. ATF Inlet Line
    1. Install the ATF inlet line (A) using new sealing washers (B).

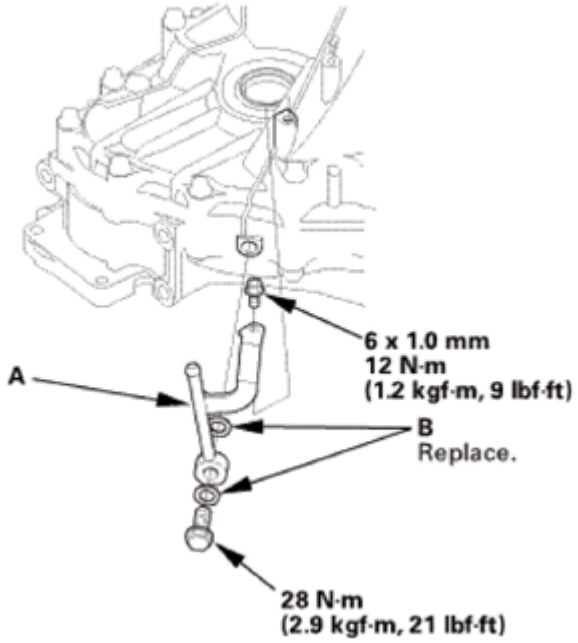

Fig. 94: Identifying ATF Inlet Line, Sealing Washers And Mounting Bolts With Torque Specification
Courtesy of AMERICAN HONDA MOTOR CO., INC.

25. A/T Clutch Pressure Control Solenoid Valve B and C
    1. Clean the mounting surfaces and the fluid passages of the solenoid valve body and the transmission housing.
    2. Install a new gasket (A) with the blue side toward the transmission housing, and Install the ATF joint pipes (D).
    3. Install new O-rings (E) over the ATF joint pipes.
    4. Install A/T clutch pressure control solenoid valves B and C with the clamp bracket (F).

GETtheMANUALS.org

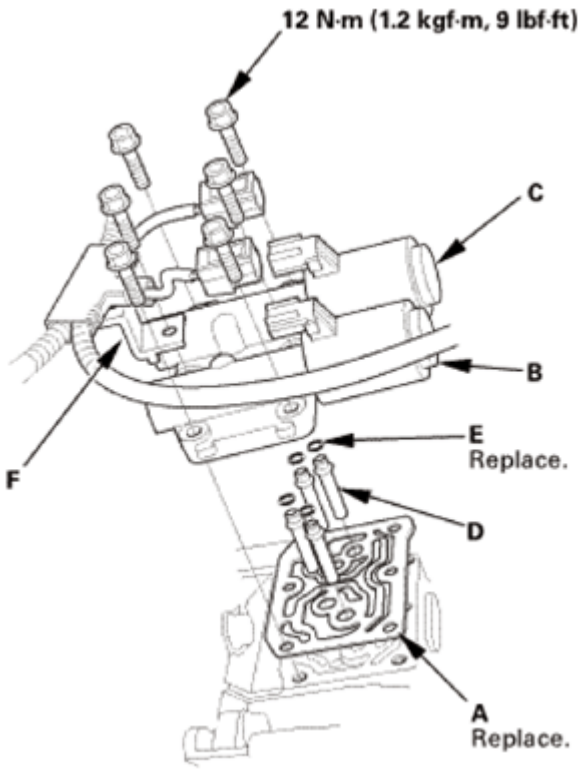

Fig. 95: Identifying Gasket, ATF Joint Pipes, O-Rings, A/T Clutch Pressure Control Solenoid Valves, Clamp Bracket And Mounting Bolts With Torque Specification
Courtesy of AMERICAN HONDA MOTOR CO., INC.

26. A/T Clutch Pressure Control Solenoid Valve A
    1. Clean the mounting surfaces and the fluid passages of the solenoid valve body and the transmission housing.
    2. Install a new gasket (B) with the blue side toward the transmission housing, and install the 35 mm ATF pipe (C) and the ATF joint pipes (D).
    3. Install new O-rings (E) over the ATF joint pipes.
    4. Install A/T clutch pressure control solenoid valve A.

GETtheMANUALS.org

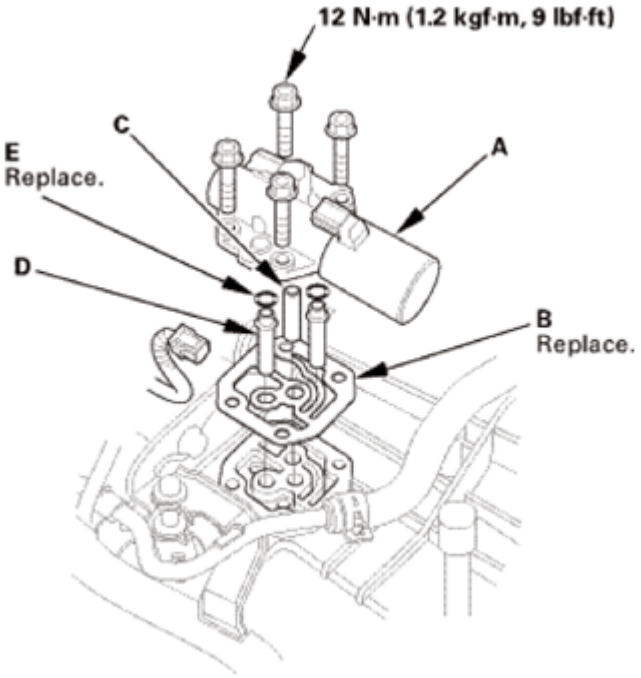

Fig. 96: Identifying A/T Clutch Pressure Control Solenoid Valve, Gasket, ATF Pipe, ATF Joint Pipes And Mounting Bolts With Torque Specification
Courtesy of AMERICAN HONDA MOTOR CO., INC.

27. Output Shaft (Countershaft) Speed Sensor
    1. Install a new O-ring (A) on the output shaft (countershaft) speed sensor (B).
    2. Install the output shaft (countershaft) speed sensor and the sensor washer (C).

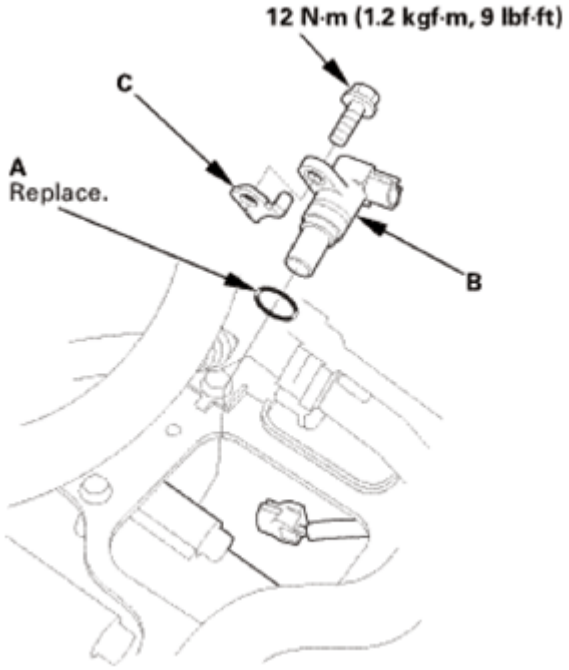

GETtheMANUALS.org

Fig. 97: Identifying Output Shaft (Countershaft) Speed Sensor, O-Ring, Sensor Washer And Mounting Bolts With Torque Specification
Courtesy of AMERICAN HONDA MOTOR CO., INC.

28. Input Shaft (Mainshaft) Speed Sensor
    1. Install a new O-ring (A) on the input shaft (mainshaft) speed sensor (B).
    2. Install the input shaft (mainshaft) speed sensor.

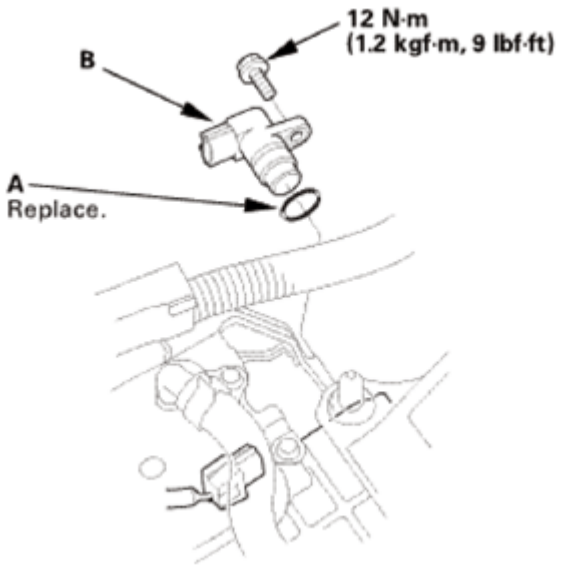

Fig. 98: Identifying Input Shaft (Mainshaft) Speed Sensor, O-Ring And Mounting Bolt With Torque Specification
Courtesy of AMERICAN HONDA MOTOR CO., INC.

29. Transmission End Cover
    1. Install the dowel pins (A) and a new gasket (B).
    2. Install new O-rings (C) over the ATF pipes.
    3. Install the end cover (D), and tighten the three special bolts (E) and the 6 x 1.0 mm bolts (F) (12 bolts).

GETtheMANUALS.org

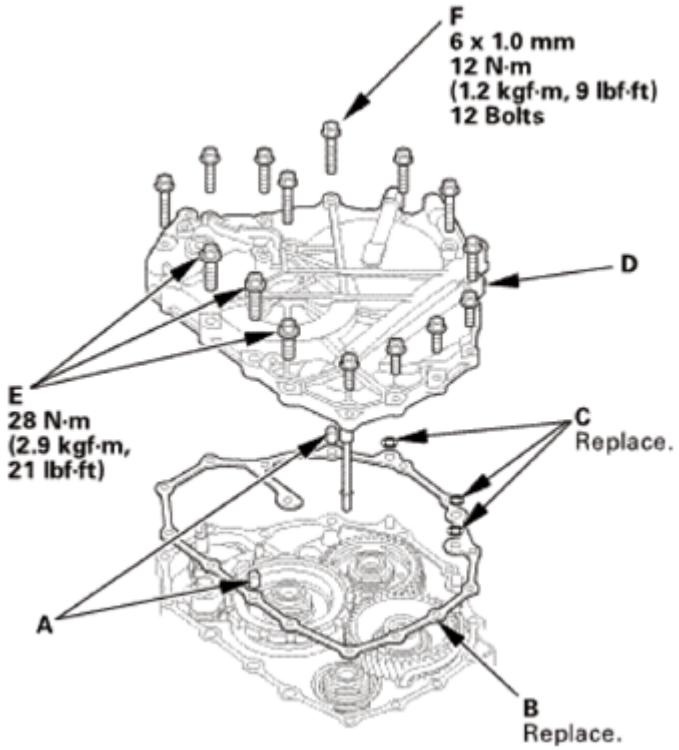

Fig. 99: Identifying Dowel Pins, Gasket, O-Rings, End Cover And Mounting Bolts With Torque Specification
Courtesy of AMERICAN HONDA MOTOR CO., INC.

30. Transmission Range Switch Subharness
    1. Install the clamp brackets (A).
    2. Install the transmission range switch subharness (B).

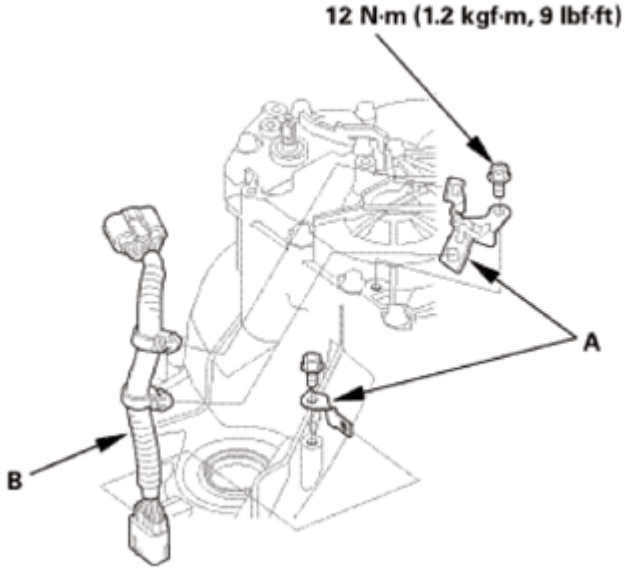

GETtheMANUALS.org

Fig. 100: Identifying Transmission Range Switch Subharness, Clamp Brackets And Mounting Bolts With Torque Specification
Courtesy of AMERICAN HONDA MOTOR CO., INC.

31. Transmission Range Switch
    1. Make sure the selector control shaft is in the N position. If necessary, move the selector control shaft to the N position.

NOTE: **Do not use the selector control shaft to adjust the shift position. If the selector control shaft tips are squeezed together it will cause a faulty signal or position due to play between the selector control shaft and switch.**

Fig. 101: Moving Selector Control Shaft To N Position
Courtesy of AMERICAN HONDA MOTOR CO., INC.

2. Align the cutouts (A) on the rotary-frame with the neutral positioning cutouts (B) on the transmission range switch (C), then put a 2.0 mm (0.079 in) feeler gauge blade (D) in the cutouts to hold the switch in the N position.

NOTE: **Be sure to use a 2.0 mm (0.079 in) blade or equivalent to hold the switch in the N position.**

GETtheMANUALS.org

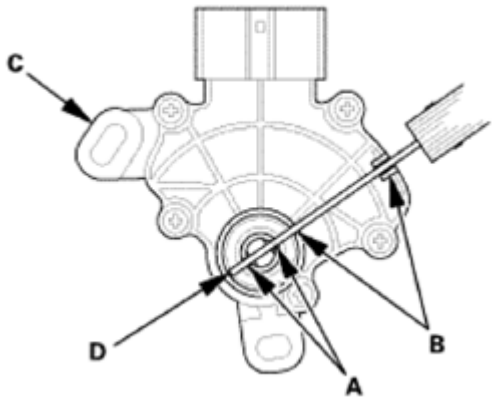

Fig. 102: Aligning Cutouts On Rotary-Frame With Neutral Positioning Cutouts On Transmission Range Switch
Courtesy of AMERICAN HONDA MOTOR CO., INC.

3. Install the transmission range switch (A) gently on the selector control shaft (B) while holding it in the N position with the 2.0 mm (0.079 in) blade (C).

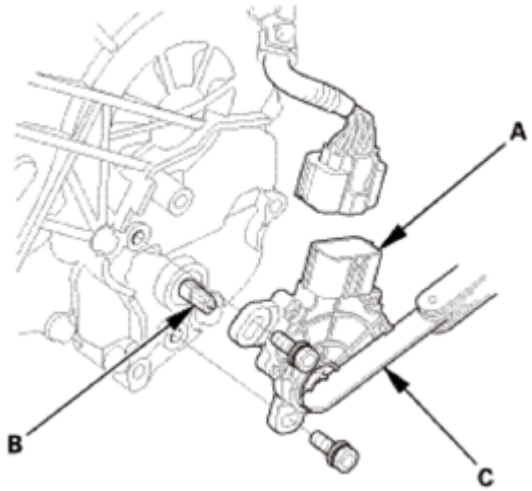

Fig. 103: Identifying Transmission Range Switch, Selector Control Shaft And Blade
Courtesy of AMERICAN HONDA MOTOR CO., INC.

4. Tighten the bolts on the transmission range switch (A) while you continue holding the N position.

NOTE: **Do not move the transmission range switch when tightening the bolts.**

5. Remove the feeler gauge (B).
6. Check the connector (C) for corrosion, dirt, or oil, and clean or repair if necessary, then connect the connector securely.

GETtheMANUALS.org

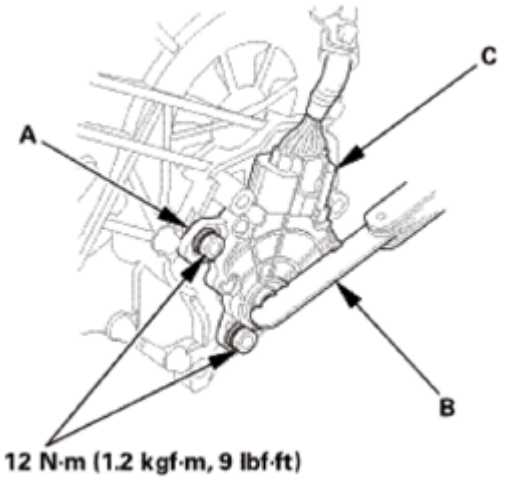

Fig. 104: Identifying Transmission Range Switch, Connector, Feeler Gauge And Mounting Bolts With Torque Specification
Courtesy of AMERICAN HONDA MOTOR CO., INC.

32. Transmission Range Switch Cover
    1. Install the transmission range switch cover (A).

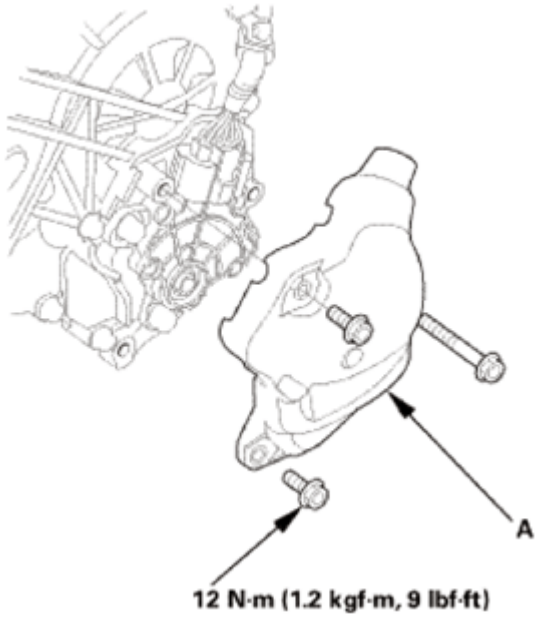

Fig. 105: Identifying Transmission Range Switch Cover And Mounting Bolts With Torque Specification
Courtesy of AMERICAN HONDA MOTOR CO., INC.

A/T CLUTCH PRESSURE CONTROL SOLENOID VALVE A REMOVAL AND INSTALLATION

GETtheMANUALS.org

REMOVAL

1. Air Cleaner Assembly
    1. Disconnect the MAF sensor/IAT sensor connector (A).
    2. Remove the harness clamp (B).
    3. Disconnect the intake air duct (C) and the intake air pipe (D).
    4. Remove the air cleaner (E).

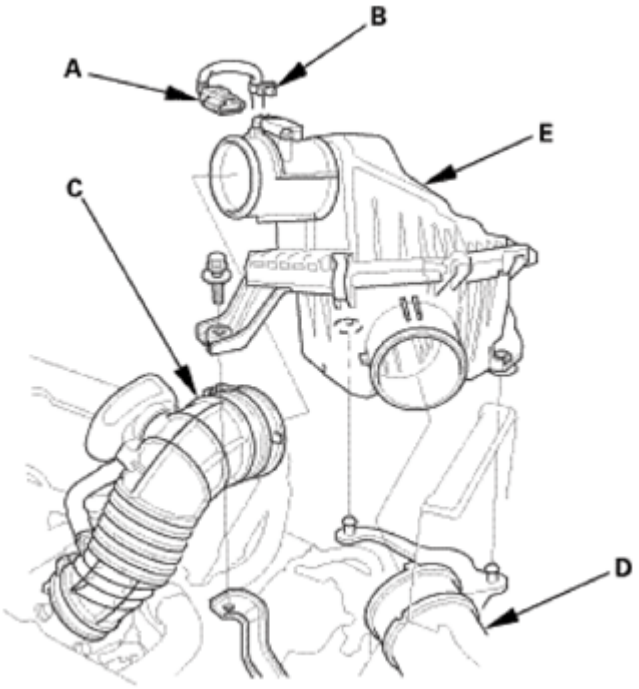

Fig. 106: Identifying MAF Sensor/IAT Sensor Connector, Harness Clamp, Intake Air Duct, Intake Air Pipe And Air Cleaner
Courtesy of AMERICAN HONDA MOTOR CO., INC.

2. Intake Air Duct
    1. Remove the intake air duct.

GETtheMANUALS.org

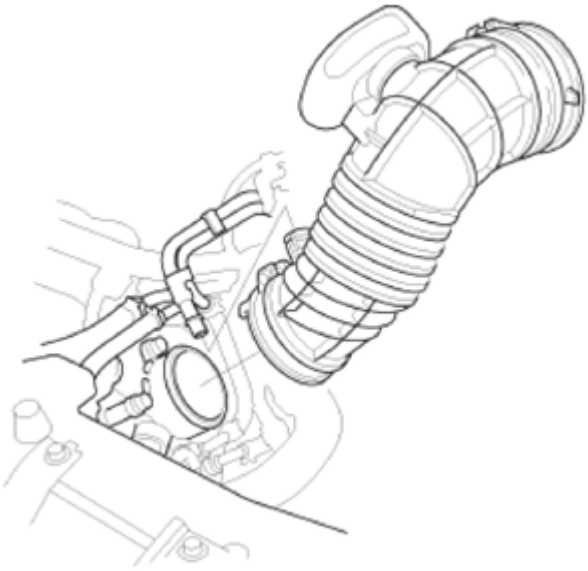

Fig. 107: Identifying Intake Air Duct
Courtesy of AMERICAN HONDA MOTOR CO., INC.

3. A/T Clutch Pressure Control Solenoid Valve A
    1. Remove A/T clutch pressure control solenoid valve A.
    2. Remove the 35 mm ATF pipe (B), the ATF joint pipes (C), the O-rings (D), and the gasket (E).
    3. Check the fluid passage for contamination.

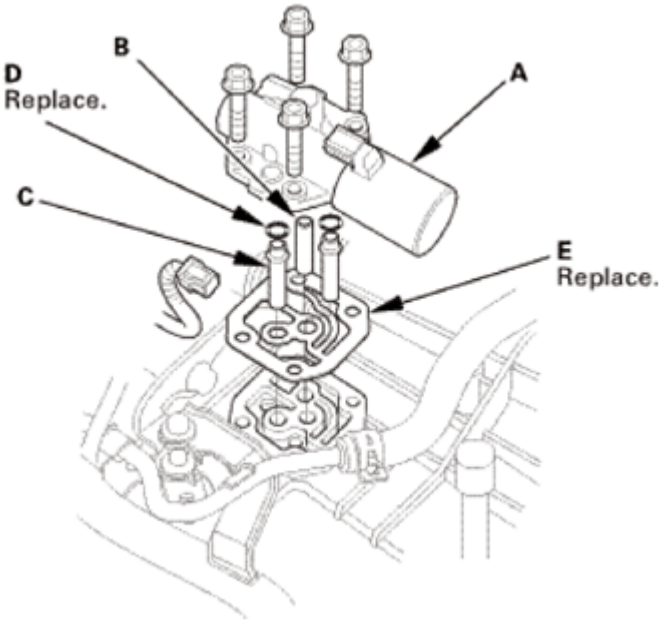

Fig. 108: Identifying A/T Clutch Pressure Control Solenoid Valve, ATF Pipe, ATF Joint Pipes, O-Rings And Gasket With Bolts
Courtesy of AMERICAN HONDA MOTOR CO., INC.

GETtheMANUALS.org

INSTALLATION

1. A/T Clutch Pressure Control Solenoid Valve A
    1. Clean the mounting surfaces and the fluid passages of the solenoid valve body and the transmission housing.
    2. Install a new gasket (B) with its blue side toward the transmission housing, and install the 35 mm ATF pipe (C) and the ATF joint pipes (D).
    3. Install new O-rings (E) over the ATF joint pipes.
    4. Install A/T clutch pressure control solenoid valve A.
    5. Check the connector (F) for corrosion, dirt, or oil, and clean or repair if necessary, then connect the connector securely.

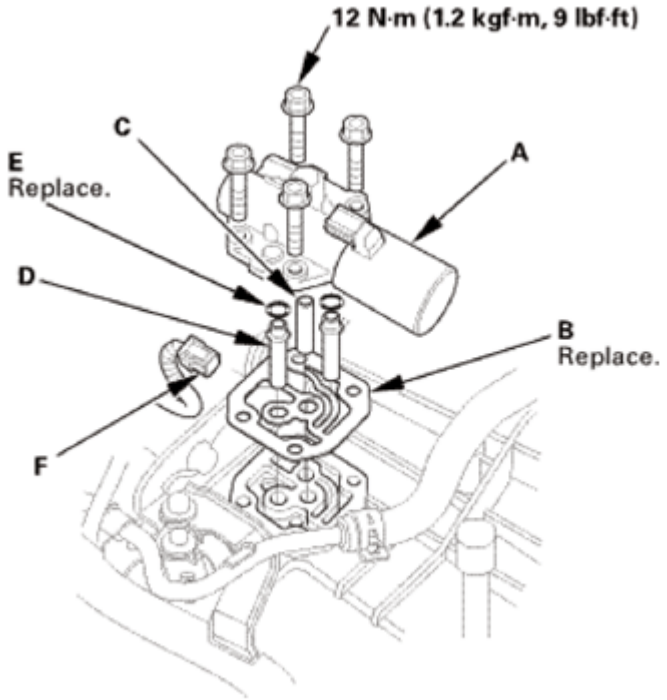

Fig. 109: Identifying A/T Clutch Pressure Control Solenoid Valve, Gasket, ATF Pipe, ATF Joint Pipes And Mounting Bolts With Torque Specification
Courtesy of AMERICAN HONDA MOTOR CO., INC.

2. Intake Air Duct
    1. Install the intake air duct.

GETtheMANUALS.org

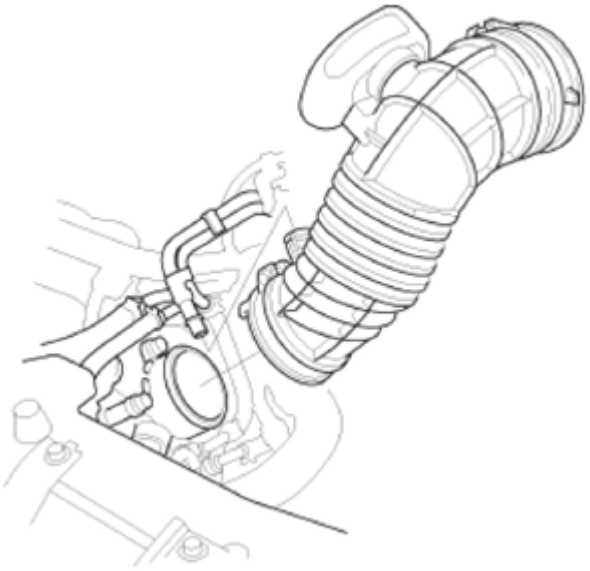

Fig. 110: Identifying Intake Air Duct
Courtesy of AMERICAN HONDA MOTOR CO., INC.

3. Air Cleaner Assembly
    1. Install the air cleaner (A).
    2. Connect the intake air pipe (B) and the intake air duct (C).
    3. Install the harness clamp (D).
    4. Connect the MAF sensor/IAT sensor connector (E).

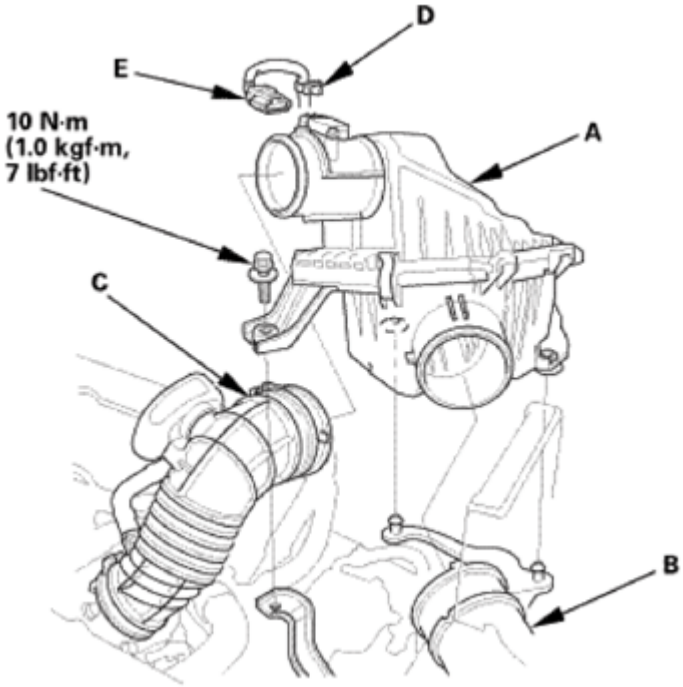

GETtheMANUALS.org

Fig. 111: Identifying MAF Sensor/IAT Sensor Connector, Harness Clamp, Air Cleaner, Intake Air Pipe And Bolts With Torque Specification
Courtesy of AMERICAN HONDA MOTOR CO., INC.

A/T CLUTCH PRESSURE CONTROL SOLENOID VALVE B AND C REMOVAL AND INSTALLATION

REMOVAL

1. Vehicle Lift
    1. Raise the vehicle on a lift, and make sure it is securely supported.
2. Front Splash Shield
    1. Remove the bolts (A), then remove the clips (B) that secure the front inner fender and the front splash shield (C) to the body.
    2. From under the front bumper (D), remove the clips (E).
    3. From under the body, remove the clips (F), then pull out the front splash shield.

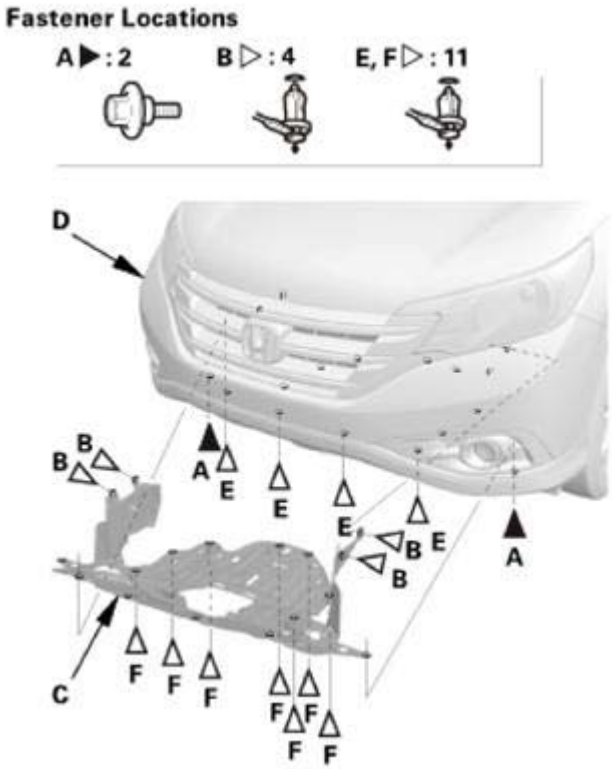

Fig. 112: Identifying Front Splash Shield, Front Bumper, Bolts And Clips
Courtesy of AMERICAN HONDA MOTOR CO., INC.

3. A/T Clutch Pressure Control Solenoid Valve B and C
    1. Remove A/T clutch pressure control solenoid valves B and C.
    2. Remove the ATF joint pipes (A), the O-rings (D), and the gasket (E).

GETtheMANUALS.org

3. Check the fluid passage for contamination.

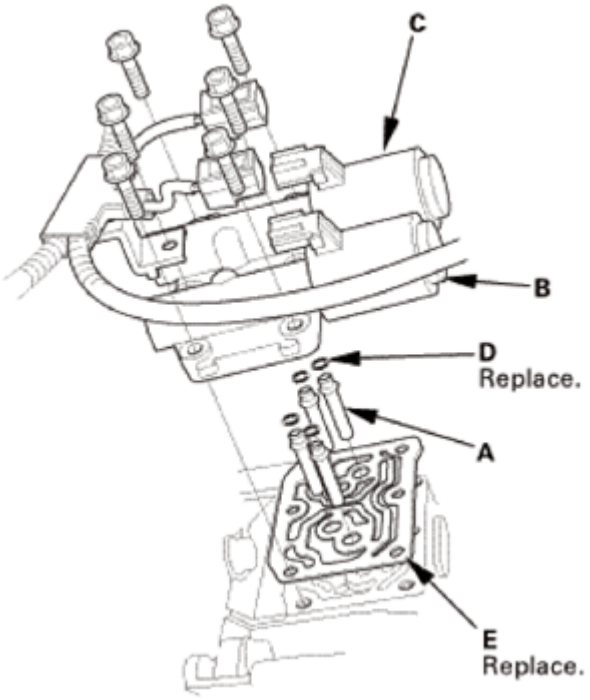

Fig. 113: Identifying A/T Clutch Pressure Control Solenoid Valves, ATF Joint Pipes, O-Rings And Gasket
Courtesy of AMERICAN HONDA MOTOR CO., INC.

INSTALLATION

1. A/T Clutch Pressure Control Solenoid Valve B and C
    1. Clean the mounting surfaces and the fluid passages of the solenoid valve body and the transmission housing.
    2. Install a new gasket (A) with its blue side toward the transmission housing, and install the ATF joint pipes (D).
    3. Install new O-rings (E) over the ATF joint pipes.
    4. Install A/T clutch pressure control solenoid valves B and C.
    5. Check the connectors (F) for corrosion, dirt, or oil, and clean or repair if necessary, then connect the connectors securely.

GETtheMANUALS.org

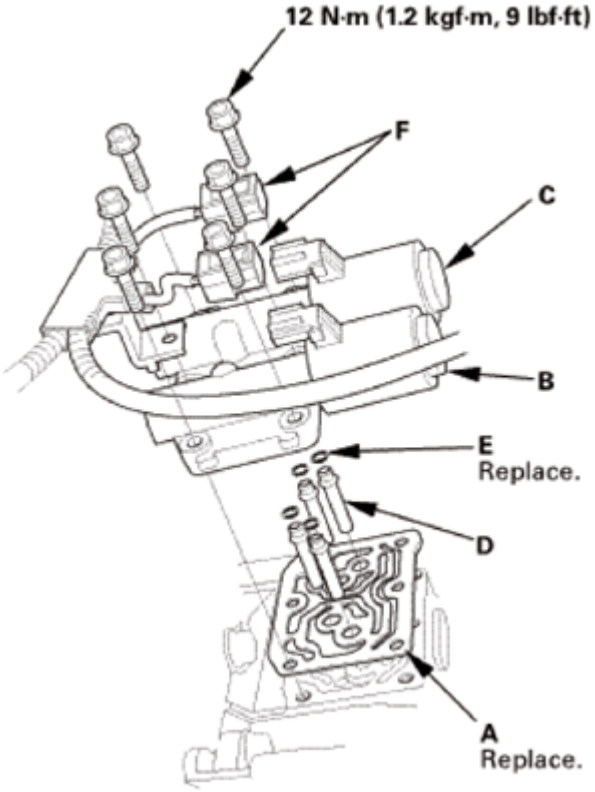

Fig. 114: Identifying A/T Clutch Pressure Control Solenoid Valves, O-Rings, Gasket, ATF Joint Pipes, Connectors And Bolts With Torque Specification
Courtesy of AMERICAN HONDA MOTOR CO., INC.

2. Front Splash Shield
    1. Install the front splash shield (A), then install the bolts (B) and the clips (C, D). Make sure the clips snap into place securely.

GETtheMANUALS.org

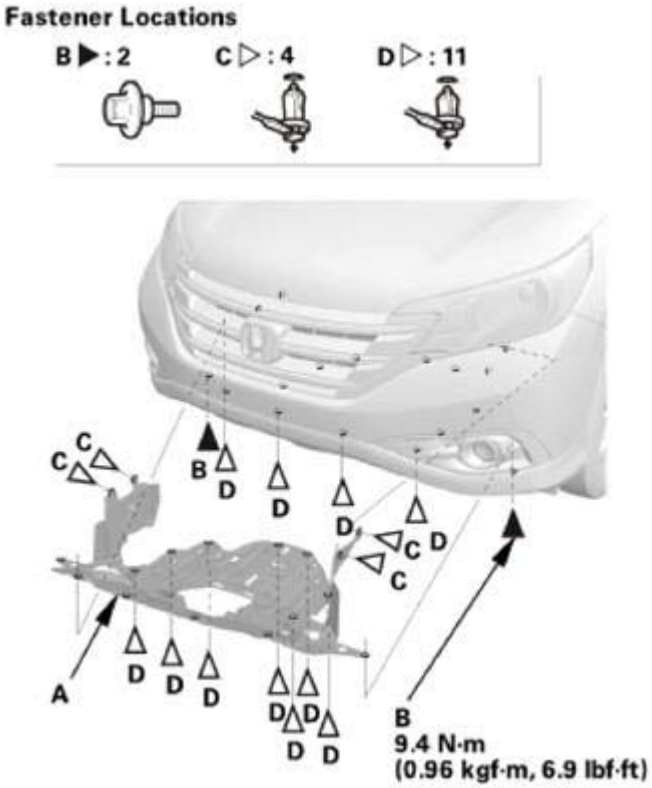

Fig. 115: Identifying Front Splash Shield, Bolts And Clips With Torque Specification
Courtesy of AMERICAN HONDA MOTOR CO., INC.

A/T COUNTERSHAFT DISASSEMBLY, REASSEMBLY, AND INSPECTION

SPECIAL TOOL REQUIRED

Image	Description/Tool Number
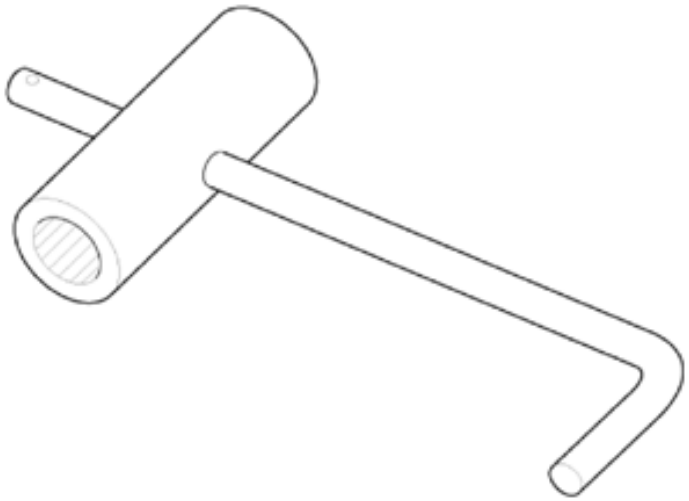	Mainshaft Holder 07GAB-PF50101

GETtheMANUALS.org

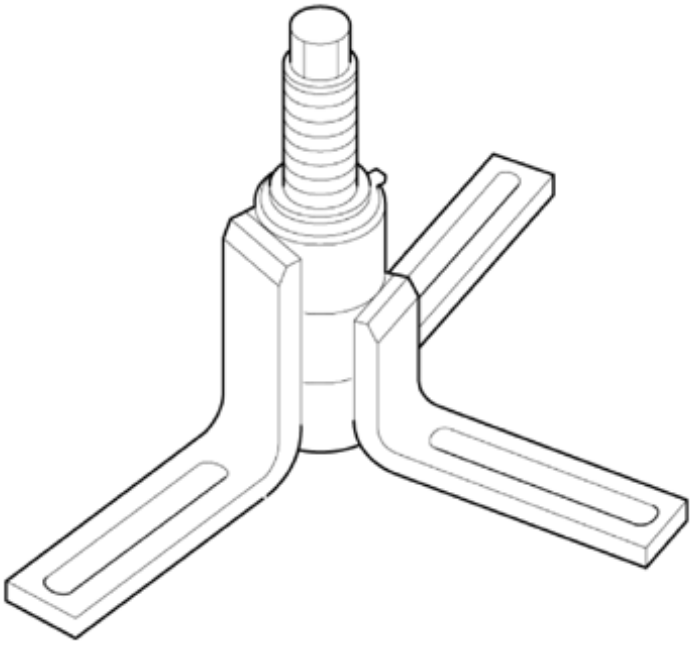	Housing Puller 07HAC-PK40102
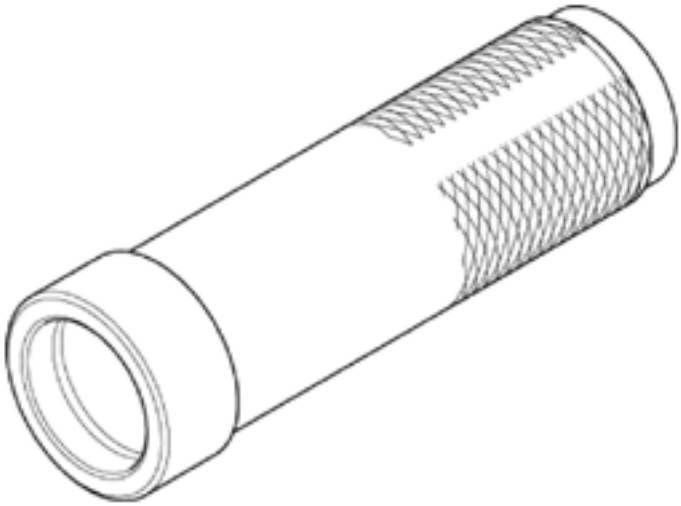	Driver Handle, 40 mm I.D. 07746-0030100

EXPLODED VIEW

1. A/T Countershaft Exploded View

   Exploded View

GETtheMANUALS.org

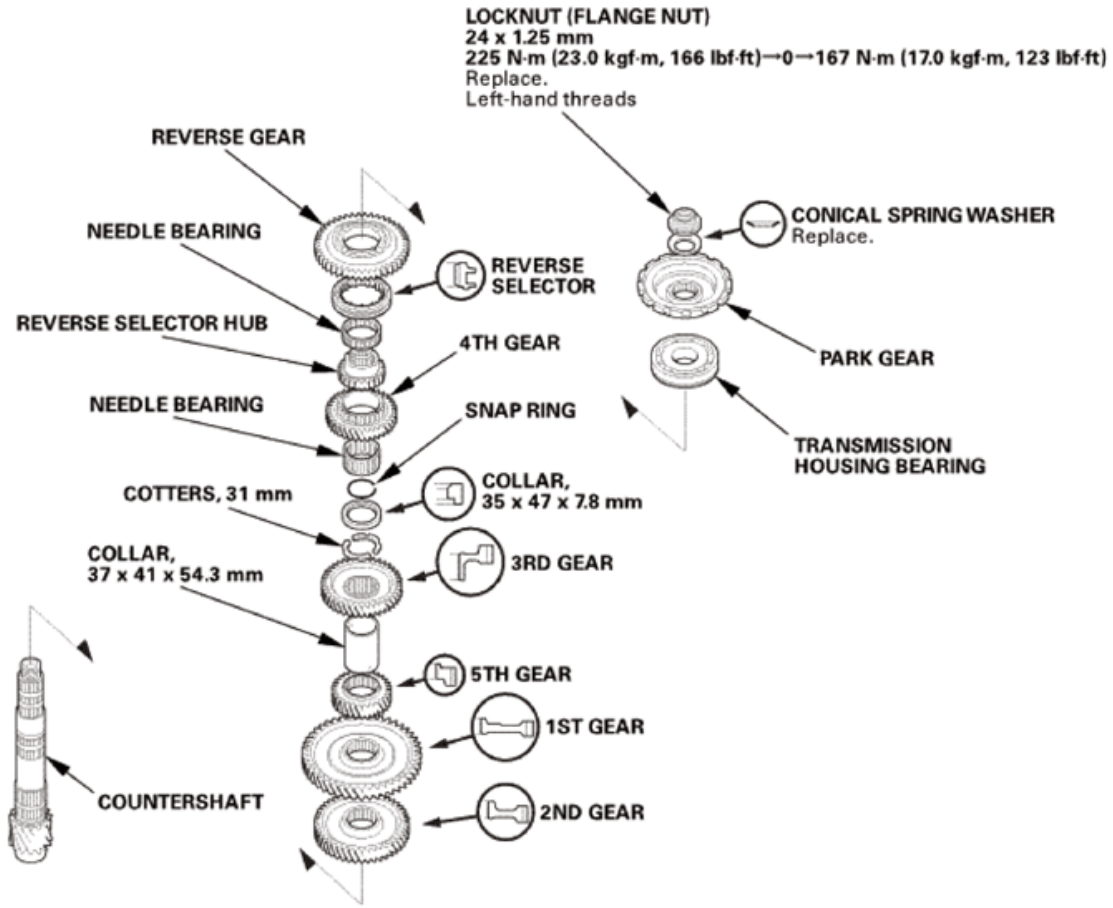

Fig. 116: Exploded View Of A/T Countershaft
Courtesy of AMERICAN HONDA MOTOR CO., INC.

DISASSEMBLY

NOTE: The illustration shows AWD/4WD transmission.

1. Transmission Range Switch Cover
    1. Remove the transmission range switch cover (A).

GETtheMANUALS.org

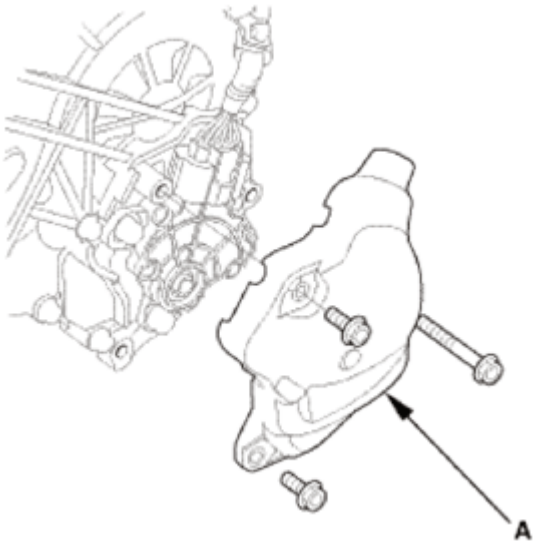

Fig. 117: Identifying Transmission Range Switch Cover With Bolts
Courtesy of AMERICAN HONDA MOTOR CO., INC.

2. Transmission Range Switch
    1. Remove the transmission range switch (A).

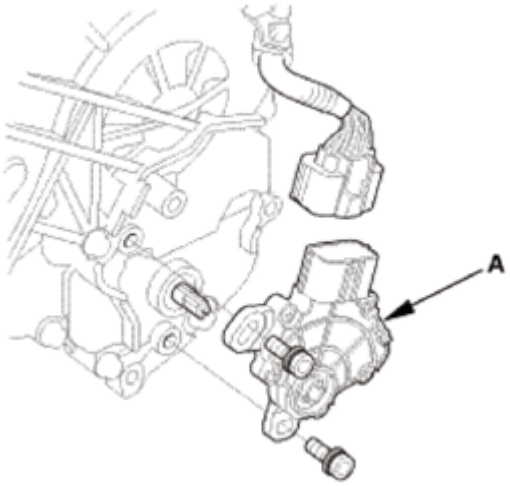

Fig. 118: Identifying Transmission Range Switch With Bolts
Courtesy of AMERICAN HONDA MOTOR CO., INC.

3. Transmission Range Switch Subharness
    1. Remove the transmission range switch subharness (A).
    2. Remove the clamp brackets (B).

GETtheMANUALS.org

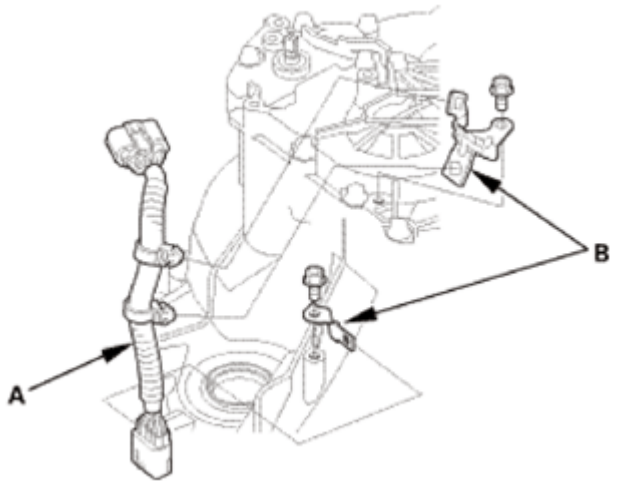

Fig. 119: Identifying Transmission Range Switch Subharness And Clamp Brackets
Courtesy of AMERICAN HONDA MOTOR CO., INC.

4. Transmission End Cover
    1. Remove the end cover (A), the dowel pins (B), the O-rings (C), and the gasket (D).

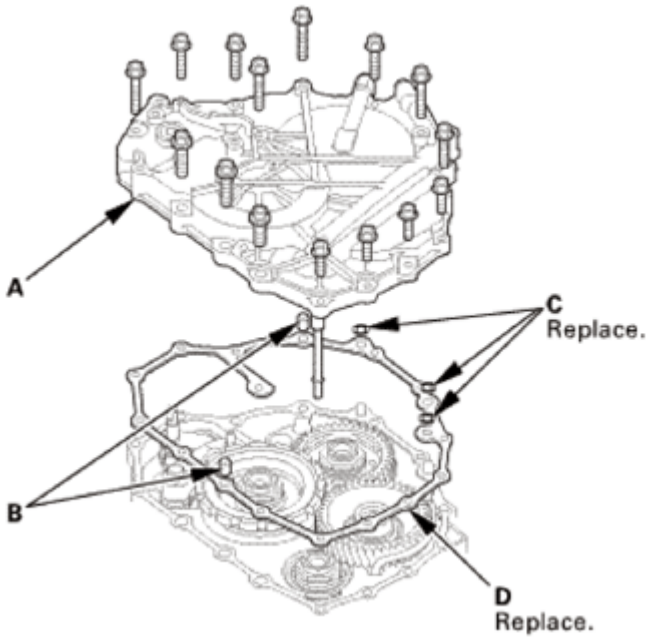

Fig. 120: Identifying Transmission End Cover, Dowel Pins, O-Rings And Gasket With Bolts
Courtesy of AMERICAN HONDA MOTOR CO., INC.

5. Input Shaft (Mainshaft) Speed Sensor
    1. Remove the input shaft (mainshaft) speed sensor (A).
    2. Remove the O-ring (B) from the input shaft (mainshaft) speed sensor.

GETtheMANUALS.org

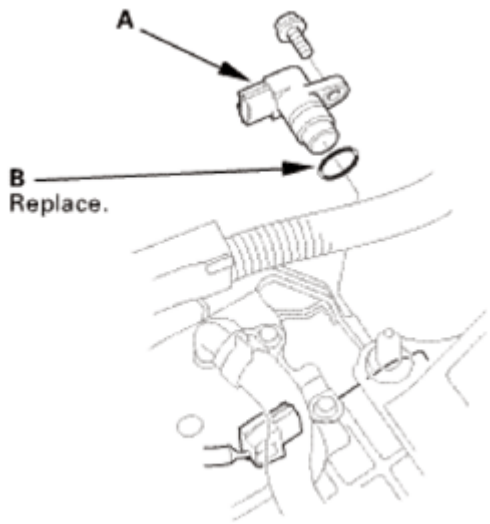

Fig. 121: Identifying Input Shaft (Mainshaft) Speed Sensor And O-Ring
Courtesy of AMERICAN HONDA MOTOR CO., INC.

6. Output Shaft (Countershaft) Speed Sensor
    1. Remove the output shaft (countershaft) speed sensor (A) and the sensor washer (B).
    2. Remove the O-ring (C) from the output shaft (countershaft) speed sensor.

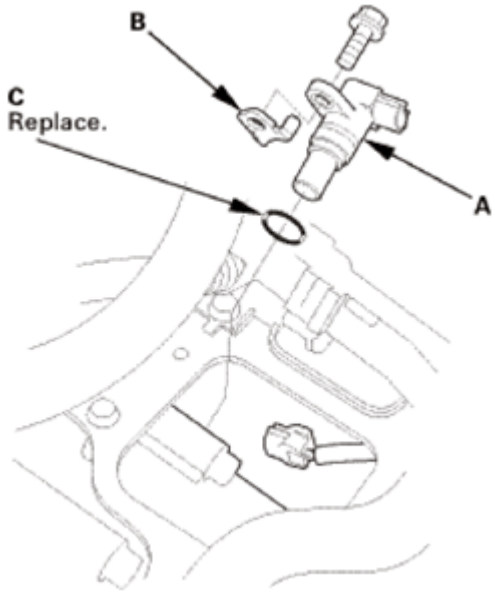

Fig. 122: Identifying Output Shaft (Countershaft) Speed Sensor, Sensor Washer And O-Ring
Courtesy of AMERICAN HONDA MOTOR CO., INC.

7. A/T Clutch Pressure Control Solenoid Valve A
    1. Remove A/T clutch pressure control solenoid valve A.
    2. Remove the 35 mm ATF pipe (B), the ATF joint pipes (C), the O-rings (D), and the gasket (E).

GETtheMANUALS.org

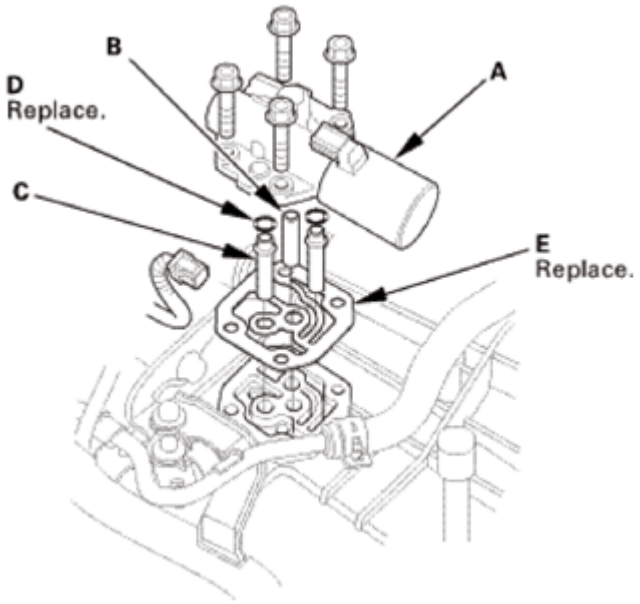

Fig. 123: Identifying A/T Clutch Pressure Control Solenoid Valve, ATF Pipe, ATF Joint Pipes, O-Rings And Gasket With Bolts
Courtesy of AMERICAN HONDA MOTOR CO., INC.

8. A/T Clutch Pressure Control Solenoid Valve B and C
    1. Remove the clamp bracket (A) and A/T clutch pressure control solenoid valves B and C.
    2. Remove the ATF joint pipes (D), the O-rings (E), and the gasket (F).

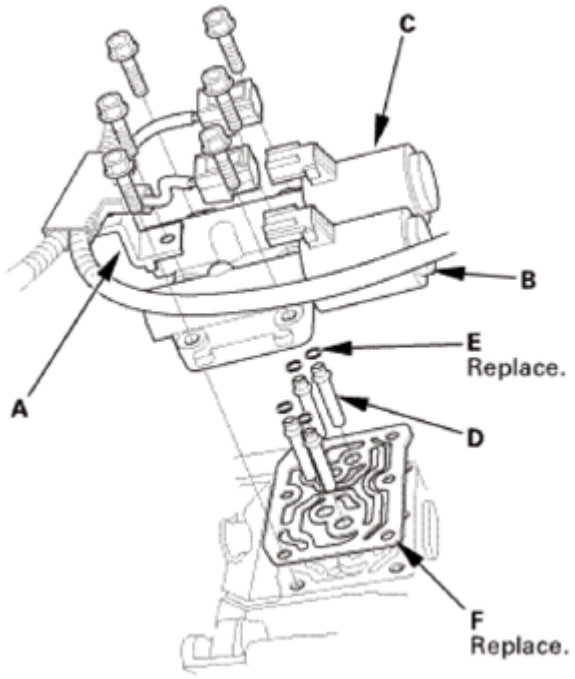

Fig. 124: Identifying A/T Clutch Pressure Control Solenoid Valves, Clamp Bracket, ATF

GETtheMANUALS.org

Joint Pipes, O-Rings And Gasket
Courtesy of AMERICAN HONDA MOTOR CO., INC.

9. ATF Inlet Line
    1. Remove the banjo bolt (A) and the sealing washers (B).
    2. Remove the ATF inlet line (C).

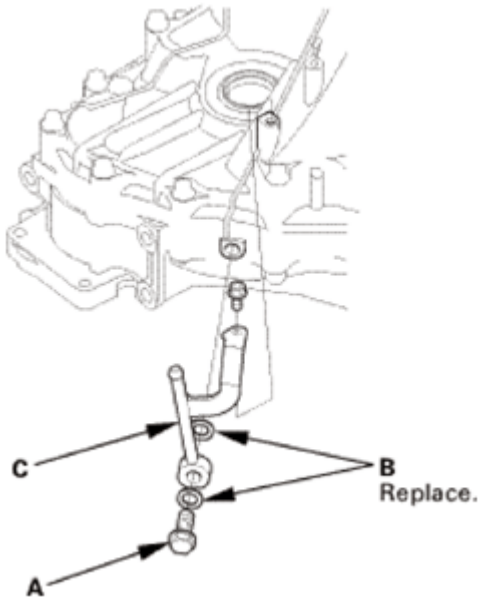

Fig. 125: Identifying ATF Inlet Line, Banjo Bolt And Sealing Washers
Courtesy of AMERICAN HONDA MOTOR CO., INC.

10. ATF Outlet Line
    1. Remove the banjo bolt (A) and the sealing washers (B).
    2. Remove the ATF outlet line (C).

GETtheMANUALS.org

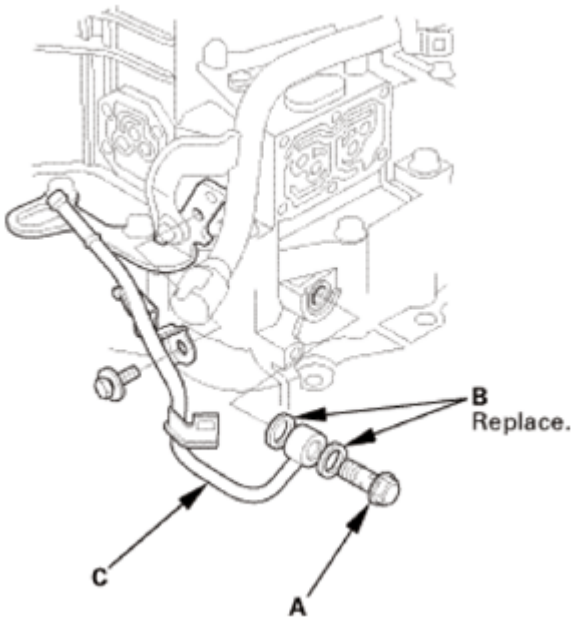

Fig. 126: Identifying ATF Outlet Line, Banjo Bolt And Sealing Washers
Courtesy of AMERICAN HONDA MOTOR CO., INC.

11. Dipstick Guide Tube
    1. Remove the ATF dipstick guide tube (A).
    2. Remove the O-ring (B) from the ATF dipstick guide tube.

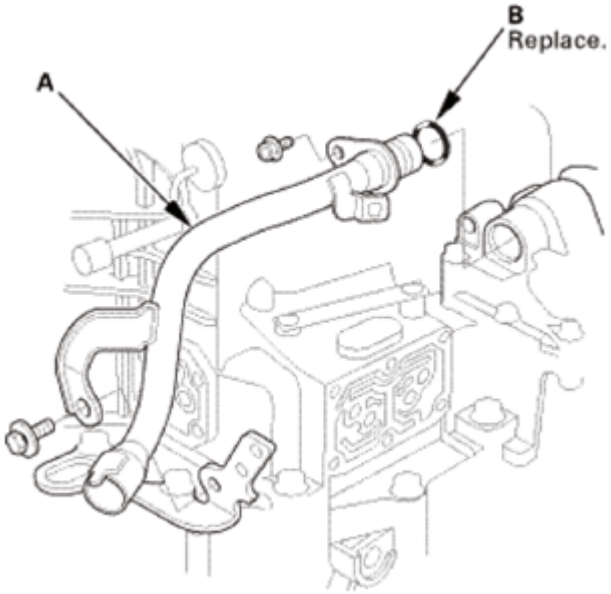

Fig. 127: Identifying ATF Dipstick Guide Tube And O-Ring
Courtesy of AMERICAN HONDA MOTOR CO., INC.

12. A/T Shift Solenoid Cover

GETtheMANUALS.org

1. Remove the shift solenoid valve cover (A), the dowel pins (B), and the gasket (C).

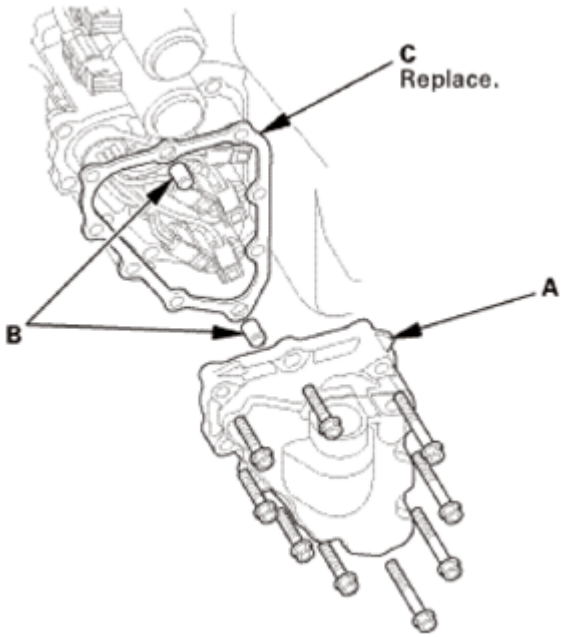

Fig. 128: Identifying Shift Solenoid Valve Cover, Dowel Pins And Gasket
Courtesy of AMERICAN HONDA MOTOR CO., INC.

13. A/T Shift Solenoid Wire Harness - Disconnection
    1. Disconnect the connectors.

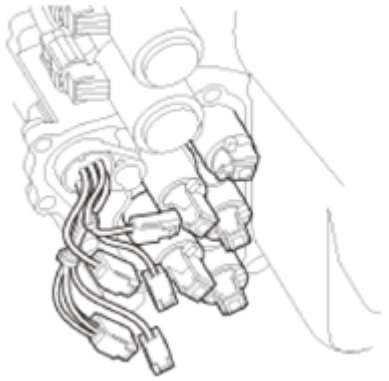

Fig. 129: Identifying A/T Shift Solenoid Wire Harness Connectors
Courtesy of AMERICAN HONDA MOTOR CO., INC.

14. ATF Feed Pipe/Lubrication Pipe
    1. Remove the 6 x 201 mm ATF pipe (A).
    2. Remove the ATF lubrication pipe (B).
    3. Remove the 8 x 220 mm ATF pipe (C).
    4. Remove the 8 x 198 mm ATF pipes (D).

GETtheMANUALS.org

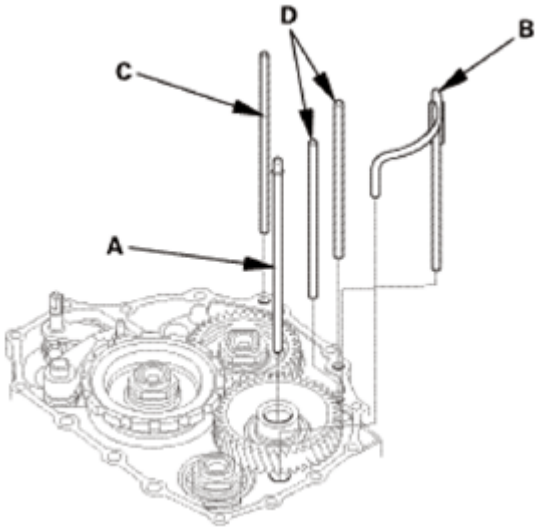

Fig. 130: Identifying ATF Feed Pipes And Lubrication Pipe
Courtesy of AMERICAN HONDA MOTOR CO., INC.

15. End Cover Idler Gear Assembly
    1. Install the mainshaft holder onto the mainshaft.
    2. Engage the park pawl with the park gear.

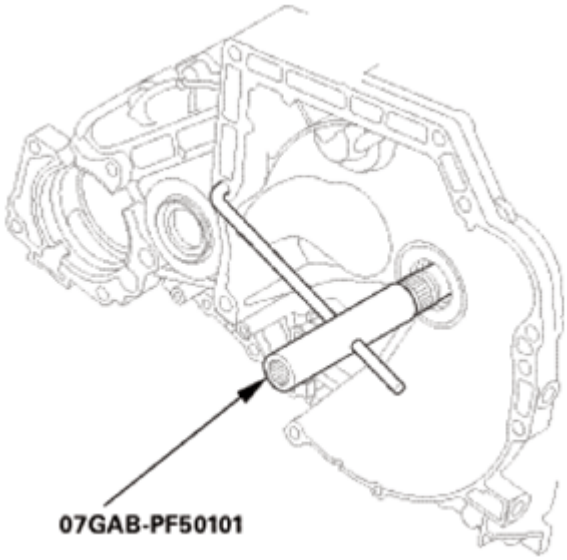

Fig. 131: Installing Mainshaft Holder Onto Mainshaft
Courtesy of AMERICAN HONDA MOTOR CO., INC.

3. Using a chisel, cut the lock tab (A) of the locknut (B).

NOTE: Keep all of the chiseled particles out of the transmission.

GETtheMANUALS.org

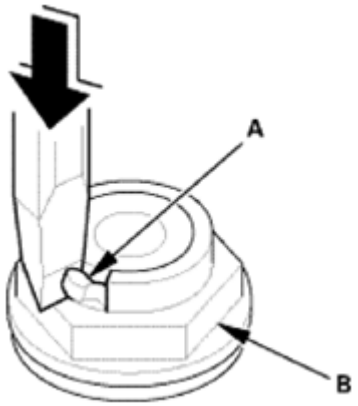

Fig. 132: Cutting Lock Tab Of Locknut Using Chisel
Courtesy of AMERICAN HONDA MOTOR CO., INC.

4. Remove the locknuts (A) and the conical spring washers (B) from each shaft.

NOTE:

- **The countershaft and secondary shaft locknuts have left-hand threads.**
- **Keep all of the chiseled particles out of the transmission.**
- **Clean the old locknuts; they are used to install the press fit idler gears and park gear.**

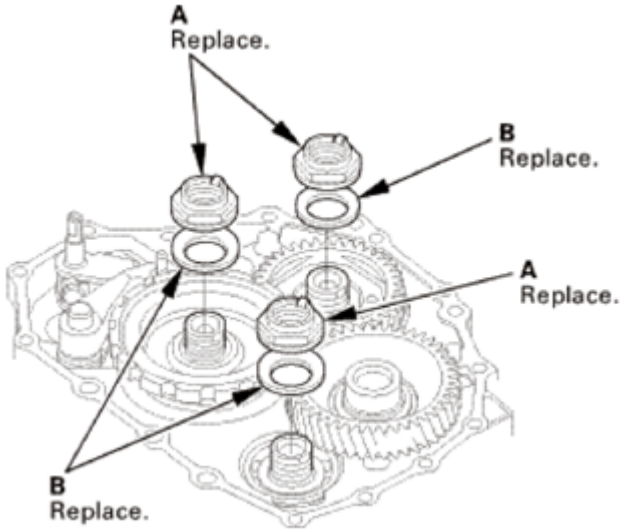

Fig. 133: Identifying Locknuts And Conical Spring Washers
Courtesy of AMERICAN HONDA MOTOR CO., INC.

5. Remove the mainshaft holder.
6. Remove the park pawl (A), the park pawl spring (B), the park pawl shaft (C), and the stop shaft (D).
7. Pry down the lock tab (E) of the lock washer (F).

GETtheMANUALS.org

8. Remove the lock bolt (G) and the lock washer.
9. Remove the park lever (H), the park lever stop (I), and the park lever spring (J).

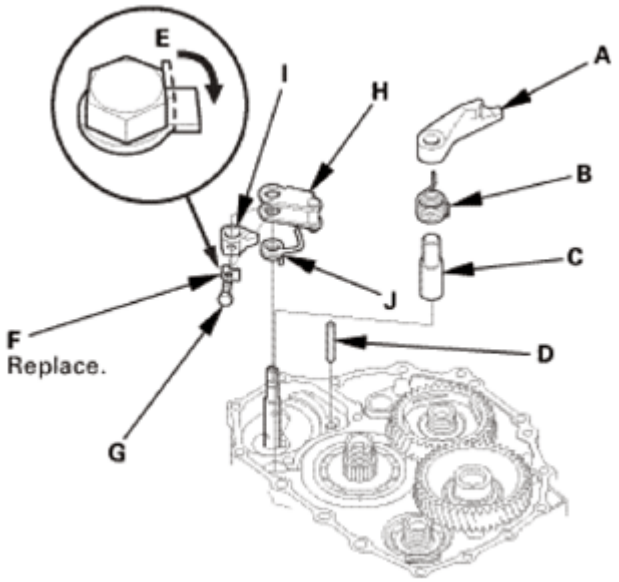

Fig. 134: Prying Down Lock Tab Of Lock Washer
Courtesy of AMERICAN HONDA MOTOR CO., INC.

10. Place a spacer (A) on the countershaft (B).
11. Set a commercially available bearing puller (C) on the park gear (D).
12. Remove the park gear.

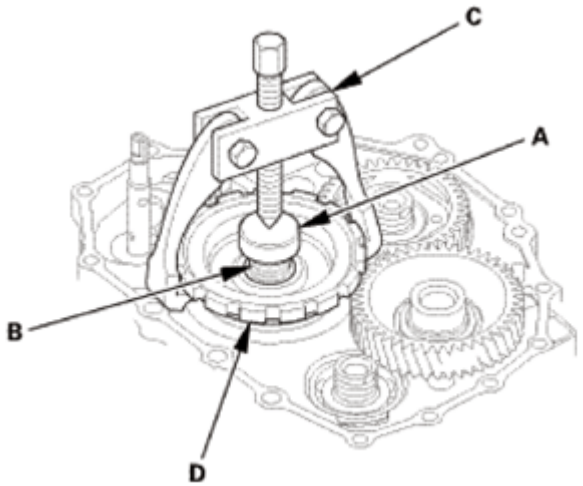

Fig. 135: Setting Commercially Available Bearing Puller On Park Gear
Courtesy of AMERICAN HONDA MOTOR CO., INC.

13. Install a puller (A) with two 6 x 1.0 mm bolts (B) on the mainshaft idler gear (C).
14. Set a spacer (D) between the puller and the mainshaft (E).

GETtheMANUALS.org

15. Remove the mainshaft idler gear.

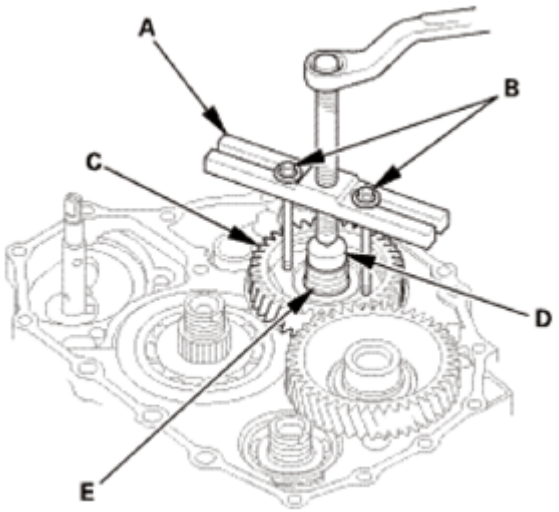

Fig. 136: Installing Puller With 6 X 1.0 mm Bolts On Mainshaft Idler Gear
Courtesy of AMERICAN HONDA MOTOR CO., INC.

16. Automatic Transmission Housing
    1. Align the spring pin (A) on the selector control shaft (B) with the transmission housing groove (C).

    NOTE: **Do not squeeze the end of the selector control shaft tips together when turning the control shaft. If the tips are squeezed together, it will cause a faulty shift position signal or position due to the play between the selector control shaft and the transmission range switch.**

    2. Remove the transmission housing mounting bolts (D) (2WD: 19 bolts, AWD/4WD: 20 bolts).
    3. Install the housing puller over the mainshaft.
    4. Remove the transmission housing (E) using the housing puller.
    5. Remove the dowel pins (F) and the gasket (G).

GETtheMANUALS.org

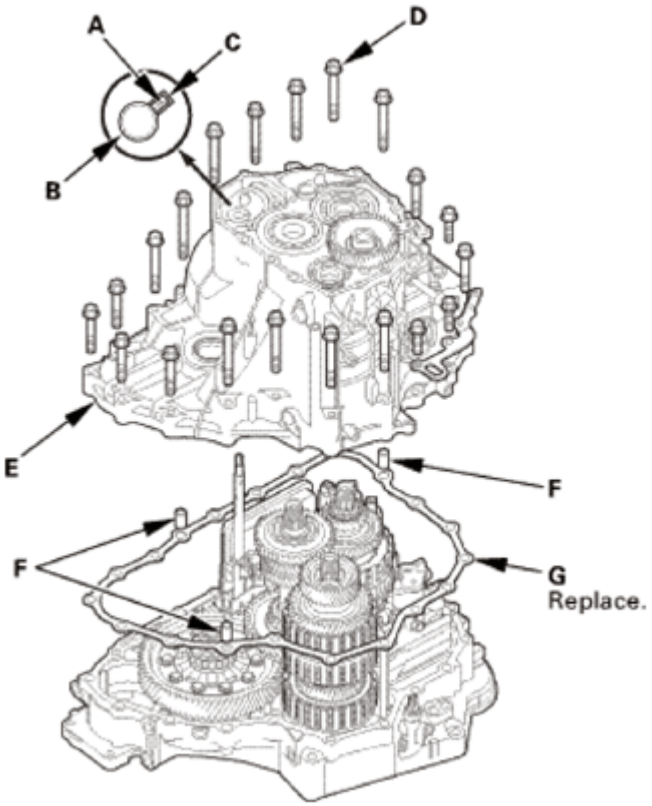

Fig. 137: Identifying Spring Pin, Selector Control Shaft, Transmission Housing Groove, Transmission Housing, Mounting Bolts And Gasket
Courtesy of AMERICAN HONDA MOTOR CO., INC.

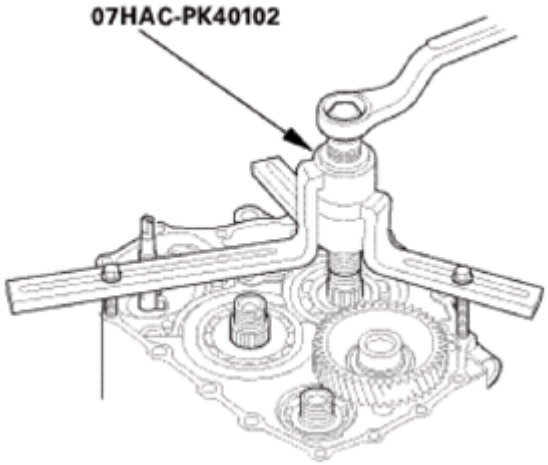

Fig. 138: Installing Housing Puller Over Mainshaft
Courtesy of AMERICAN HONDA MOTOR CO., INC.

17. A/T Countershaft Reverse Gear
    1. Remove the countershaft reverse gear (A).
    2. Remove the needle bearing (B).

GETtheMANUALS.org

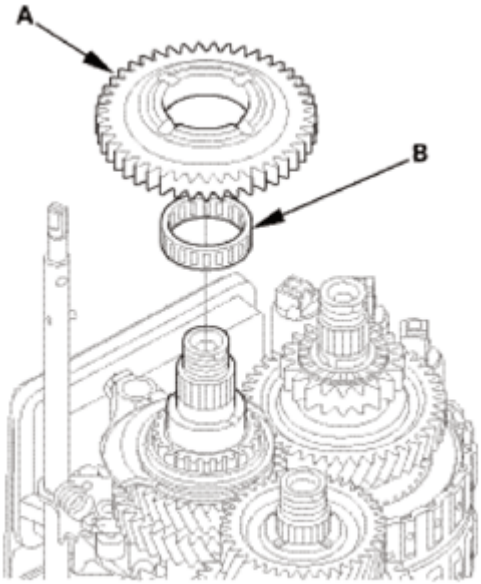

Fig. 139: Identifying Countershaft Reverse Gear And Needle Bearing
Courtesy of AMERICAN HONDA MOTOR CO., INC.

18. Reverse Shift fork
    1. Pry down the lock tab (A) of the lock washer (B).
    2. Remove the lock bolt (C) and the lock washer.
    3. Remove the reverse shift fork (D) and the reverse selector (E) together.

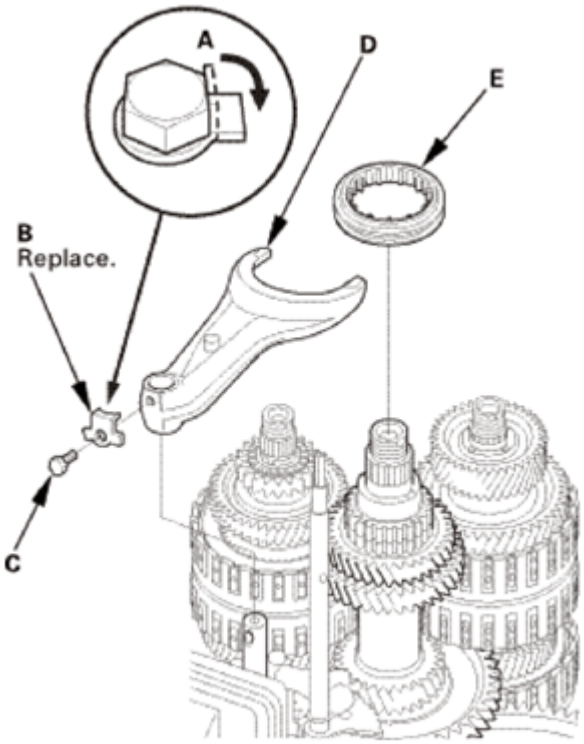

GETtheMANUALS.org

Fig. 140: Prying Down Lock Tab Of Lock Washer
Courtesy of AMERICAN HONDA MOTOR CO., INC.

19. Selector Control Lever (Except 2WD of USA Produced Models)

Except 2WD of USA Produced Models

1. Pry down the lock tab (A) of the lock washer (B).
2. Remove the lock bolt (C) and the lock washer.
3. Remove the selector control lever (D).

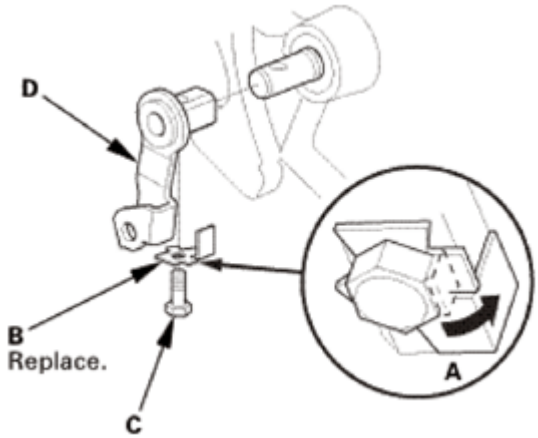

Fig. 141: Prying Down Lock Tab Of Lock Washer (Except 2WD Of USA Produced Models)
Courtesy of AMERICAN HONDA MOTOR CO., INC.

20. Selector Control Shaft
    1. Unhook the detent arm spring (A).

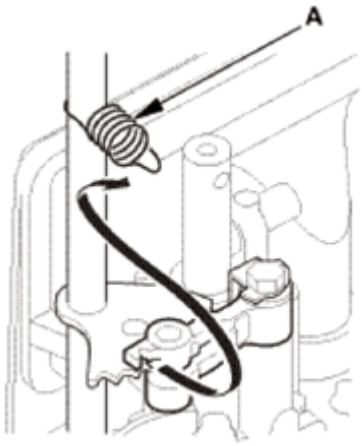

Fig. 142: Unhooking Detent Arm Spring
Courtesy of AMERICAN HONDA MOTOR CO., INC.

GETtheMANUALS.org

2. Separate the manual valve lever pin (A) on the selector control shaft (B) from the guide of the manual valve (C).

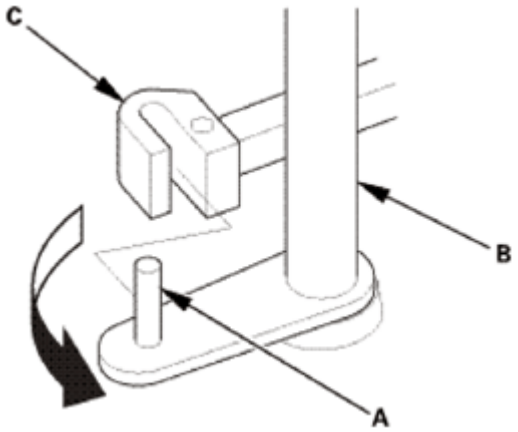

Fig. 143: Separating Manual Valve Lever Pin On Selector Control Shaft From Guide Of Manual Valve
Courtesy of AMERICAN HONDA MOTOR CO., INC.

3. Remove the selector control shaft (A).

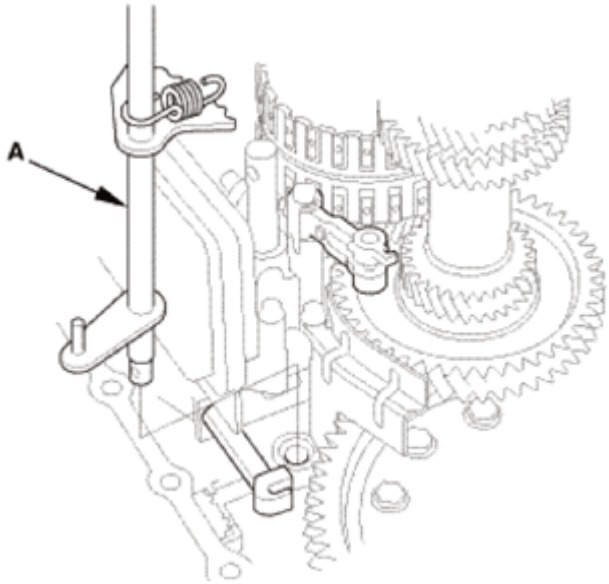

Fig. 144: Identifying Selector Control Shaft
Courtesy of AMERICAN HONDA MOTOR CO., INC.

21. Mainshaft and Countershaft and Secondary Shaft Assembly
    1. Turn the detent arm (A) away from the countershaft (B).

GETtheMANUALS.org

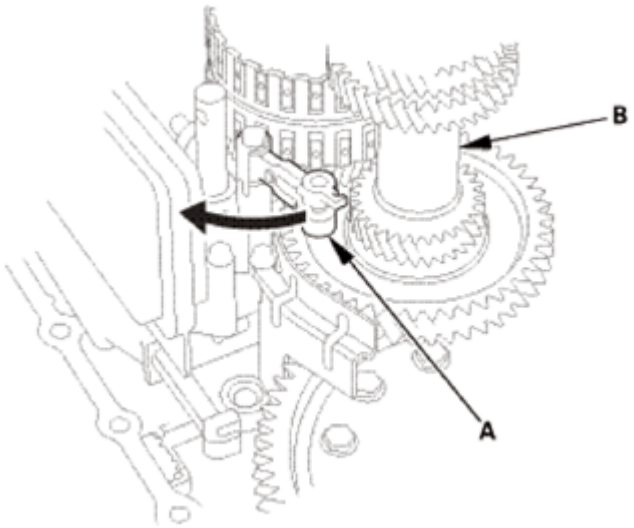

Fig. 145: Turning Detent Arm Away From Countershaft
Courtesy of AMERICAN HONDA MOTOR CO., INC.

2. Remove the mainshaft subassembly (A), the countershaft subassembly (B), and the secondary shaft subassembly (C) together.

NOTE: Do not bump the countershaft on the baffle plate (D).

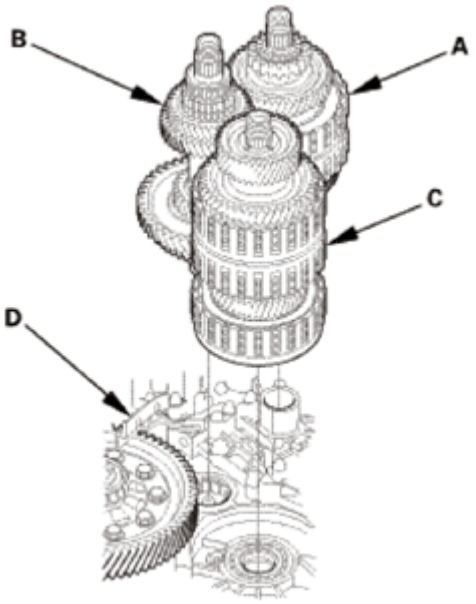

Fig. 146: Identifying Mainshaft Subassembly, Countershaft Subassembly, Secondary Shaft Subassembly And Baffle Plate
Courtesy of AMERICAN HONDA MOTOR CO., INC.

22. A/T Countershaft
    1. Install a commercially available bearing separator (A) on 4th gear (B).

GETtheMANUALS.org

2. Place the countershaft (C) on a press, and set a spacer (D) between the press and the countershaft to prevent damaging the countershaft.

NOTE: Some reverse selector hubs are not press-fitted, and can be removed without using a press.

3. Support the bottom of the countershaft with one hand, then press the countershaft out of the press-fitted reverse selector hub (E) with 4th gear, and remove the countershaft while holding the underside the countershaft. The countershaft will drop down after pressing it out of the press-fitted reverse selector hub.

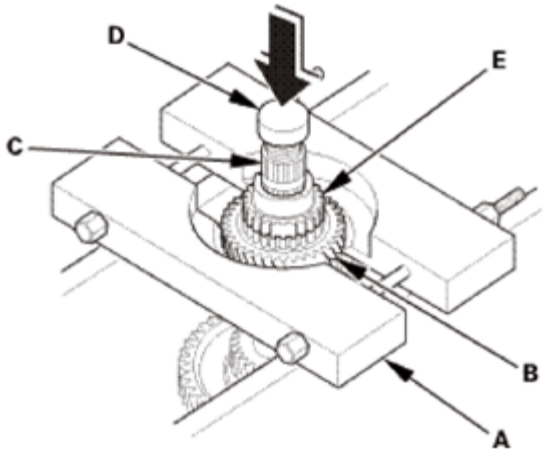

Fig. 147: Installing Commercially Available Bearing Separator On 4th Gear
Courtesy of AMERICAN HONDA MOTOR CO., INC.

4. Remove the needle bearing (A), the snap ring (B), the 35 x 47 x 7.8 mm collar (C), and the 31 mm cotters (D).

GETtheMANUALS.org

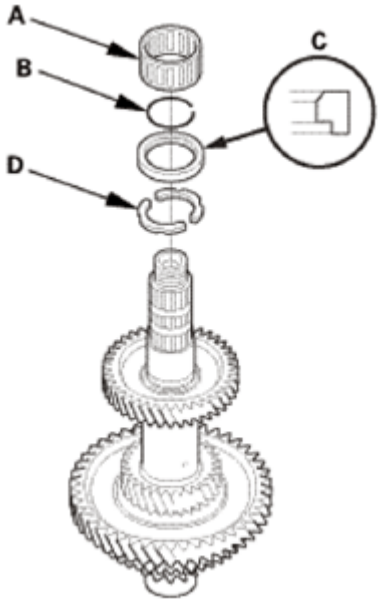

Fig. 148: Identifying Needle Bearing, Snap Ring, Collar And Cotters
Courtesy of AMERICAN HONDA MOTOR CO., INC.

5. Place the countershaft (A) on the press, and set the spacer (B) between the press and the countershaft to prevent damaging the countershaft.

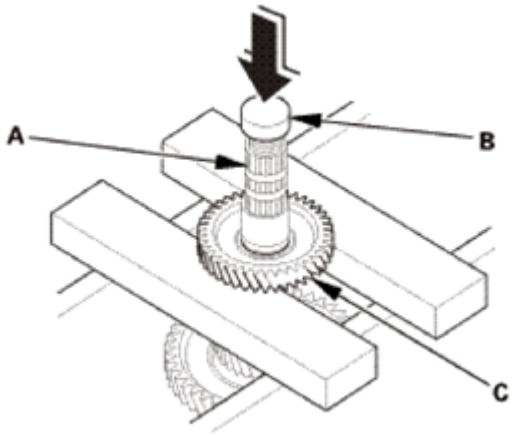

Fig. 149: Pressing Countershaft Out Of 3rd Gear
Courtesy of AMERICAN HONDA MOTOR CO., INC.

6. Support the bottom of the countershaft with one hand, then press the countershaft out of 3rd gear (C), and remove the countershaft while holding the underside the countershaft. The countershaft will drop down after pressing it out of 3rd gear.
7. Remove the 37 x 41 x 54.3 mm collar (A), 5th gear (B), 1st gear (C), and 2nd gear (D).

GETtheMANUALS.org

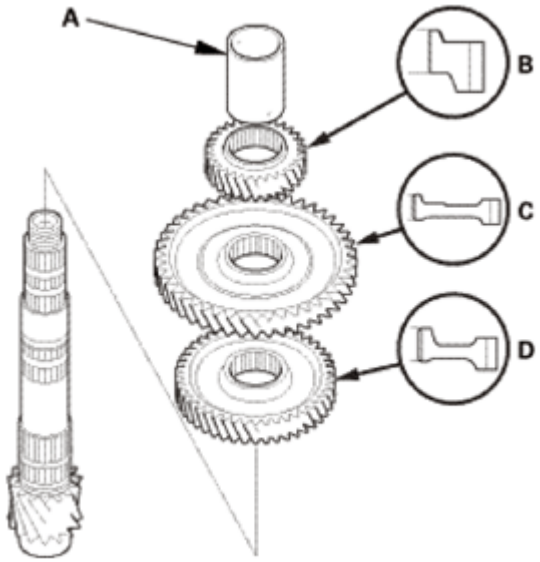

Fig. 150: Identifying Collar, 5th Gear, 1st Gear And 2nd Gear
Courtesy of AMERICAN HONDA MOTOR CO., INC.

INSPECTION

1. A/T Countershaft - Inspection
    1. Inspect the needle bearing for galling and rough movement.
    2. Inspect the splines for excessive wear and damage.
    3. Check the shaft bearing surface for scoring and excessive wear.

REASSEMBLY

NOTE:

- **Apply a light coat of clean ATF on all moving parts before installation.**
- **The illustration shows AWD/4WD transmission.**

1. A/T Countershaft
    1. Install 2nd gear (A), 1st gear (B), 5th gear (C), and the 37 x 41 x 54.3 mm collar (D).

GETtheMANUALS.org

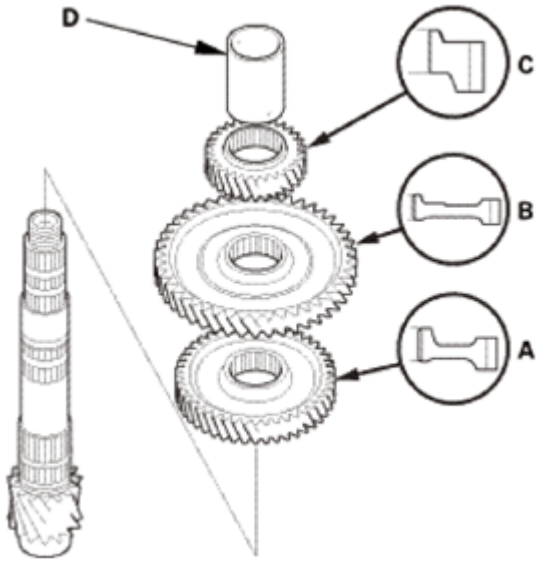

Fig. 151: Identifying 2nd Gear, 1st Gear, 5th Gear And Collar
Courtesy of AMERICAN HONDA MOTOR CO., INC.

2. Slide 3rd gear (A) over the countershaft, and press it in place using the 40 mm I.D. driver handle and a press.

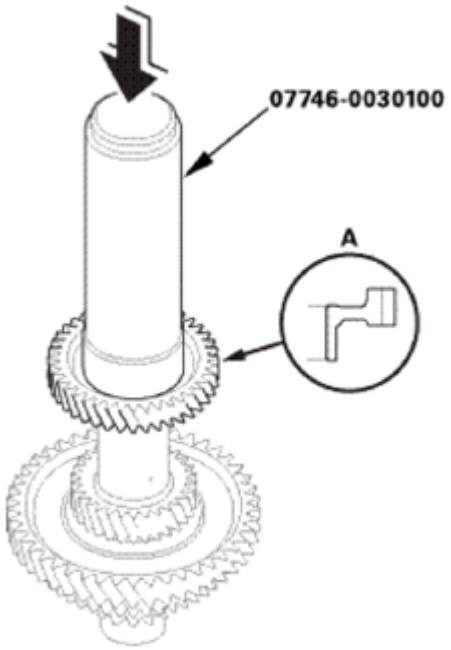

Fig. 152: Sliding 3rd Gear Over Countershaft
Courtesy of AMERICAN HONDA MOTOR CO., INC.

3. Install the 31 mm cotters (A), the 35 x 47 x 7.8 mm collar (B), the snap ring (C), the needle bearing (D), and 4th gear (E).

GETtheMANUALS.org

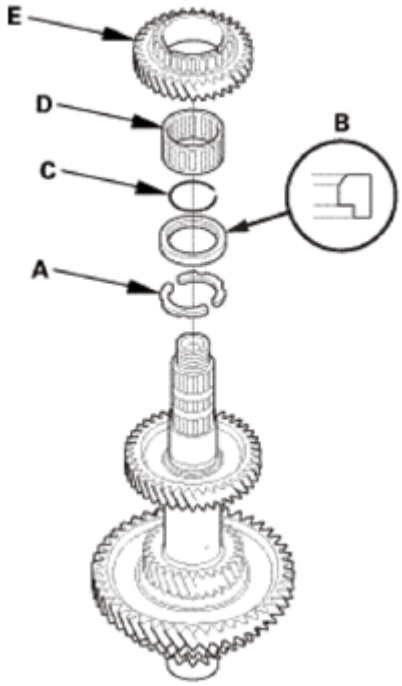

Fig. 153: Identifying Cotters, Collar, Snap Ring, Needle Bearing And 4th Gear
Courtesy of AMERICAN HONDA MOTOR CO., INC.

4. Slide the press-fitted reverse selector hub (A) over the countershaft, then press it in place using the 40 mm I.D. driver handle and the press.

NOTE: **Some reverse selector hubs are not press-fitted, and can be installed without using a press.**

GETtheMANUALS.org

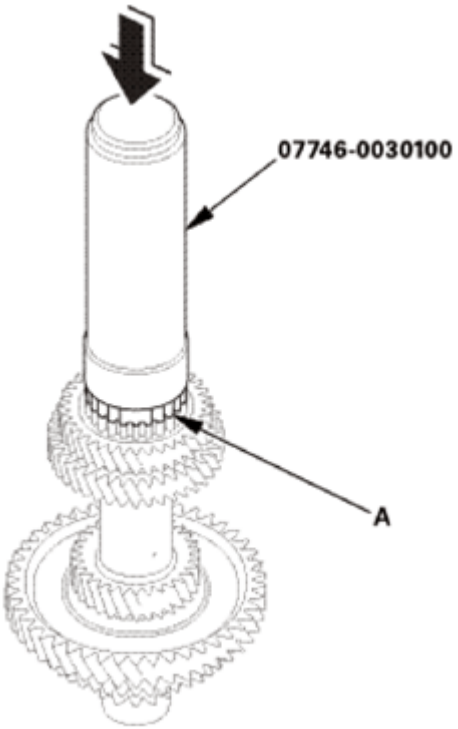

Fig. 154: Sliding Press-Fitted Reverse Selector Hub Over Countershaft
Courtesy of AMERICAN HONDA MOTOR CO., INC.

2. Mainshaft and Countershaft and Secondary Shaft Assembly
    1. Be sure that each shaft is assembled. Also be sure that new sealing rings are installed on the mainshaft and the secondary shaft.
    2. Join the mainshaft subassembly (A), the countershaft subassembly (B), and the secondary shaft subassembly (C) together, and install them.

    NOTE: Do not bump the countershaft on the baffle plate (D).

    3. Make sure the countershaft subassembly and the differential assembly (E) are clear of the baffle plate.

GETtheMANUALS.org

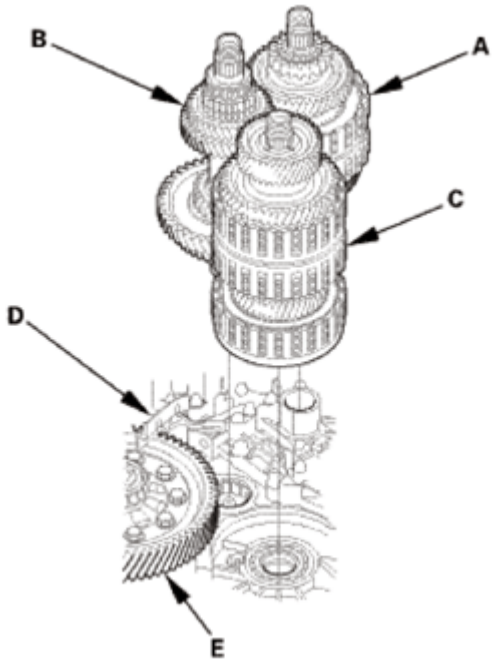

Fig. 155: Identifying Mainshaft Subassembly, Countershaft Subassembly, Secondary Shaft Subassembly, Baffle Plate And Differential Assembly
Courtesy of AMERICAN HONDA MOTOR CO., INC.

3. Selector Control Shaft
    1. Install the selector control shaft (A).

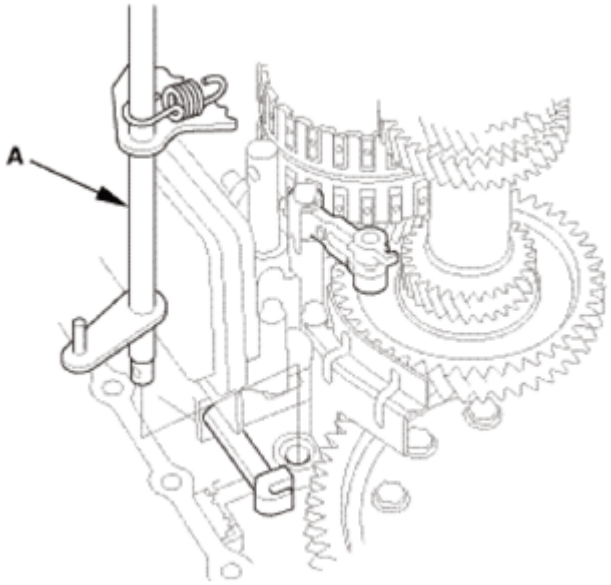

Fig. 156: Identifying Selector Control Shaft
Courtesy of AMERICAN HONDA MOTOR CO., INC.

    2. Align the manual valve lever pin (A) on the selector control shaft (B) with the guide of the manual

GETtheMANUALS.org

valve (C).

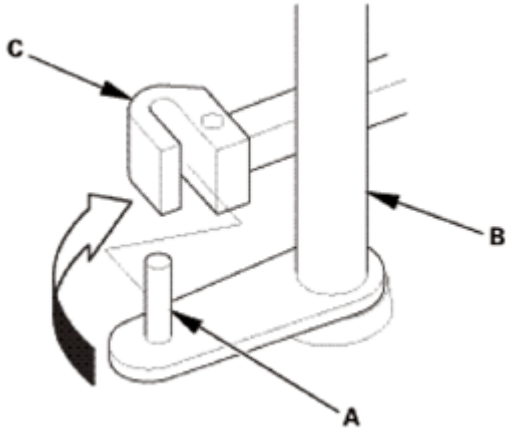

Fig. 157: Aligning Manual Valve Lever Pin On Selector Control Shaft With Guide Of Manual Valve
Courtesy of AMERICAN HONDA MOTOR CO., INC.

3. Hook the detent arm spring (A).

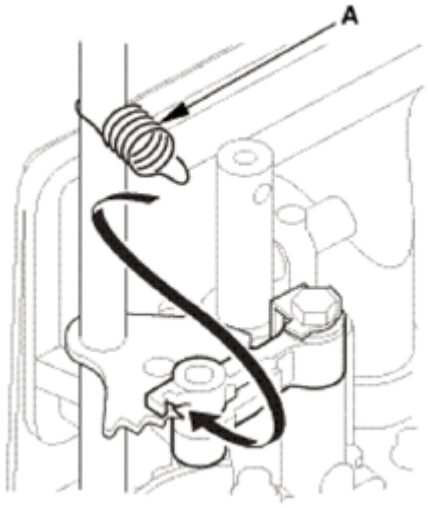

Fig. 158: Hooking Detent Arm Spring
Courtesy of AMERICAN HONDA MOTOR CO., INC.

4. Selector Control Lever (Except 2WD of USA Produced Models)

Except 2WD of USA Produced Models

1. Install the control lever (A) over the selector control shaft (B).
2. Install the lock bolt (C) using a new lock washer (D).
3. Pry up the lock tab (E) of the lock washer against the bolt head.

GETtheMANUALS.org

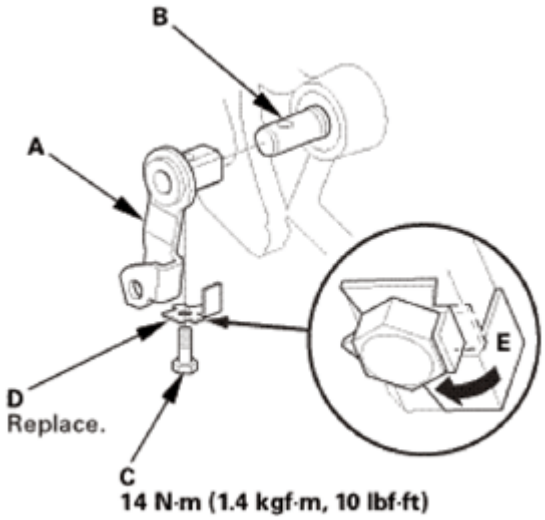

Fig. 159: Prying Up Lock Tab Of Lock Washer (Except 2WD Of USA Produced Models)
Courtesy of AMERICAN HONDA MOTOR CO., INC.

5. Reverse Shift fork
    1. Install the reverse shift fork (A) and the reverse selector (B) together.
    2. Install the lock bolt (C) using a new lock washer (D).
    3. Pry up the lock tab (E) of the lock washer against the bolt head.

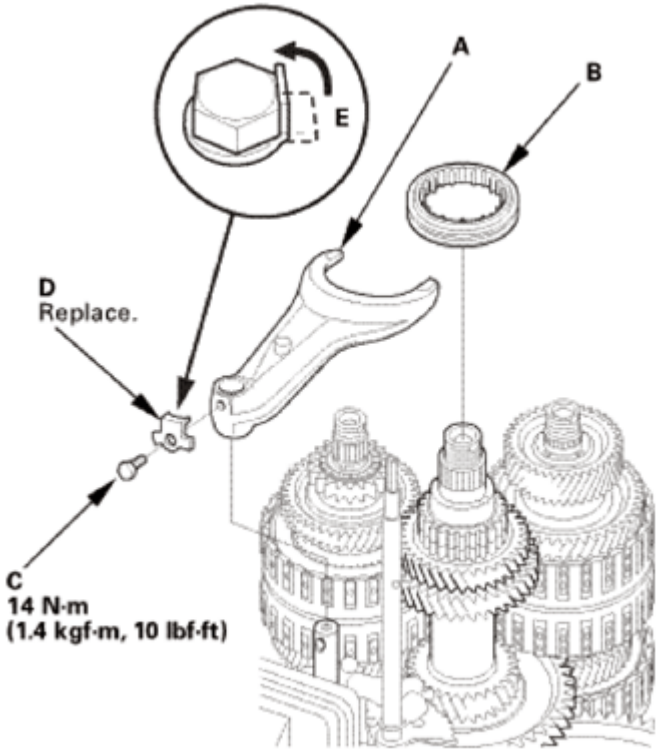

Fig. 160: Prying Up Lock Tab Of Lock Washer Against Bolt Head

GETtheMANUALS.org

Courtesy of AMERICAN HONDA MOTOR CO., INC.

6. A/T Countershaft Reverse Gear
    1. Install the needle bearing (A).
    2. Install the countershaft reverse gear (B).

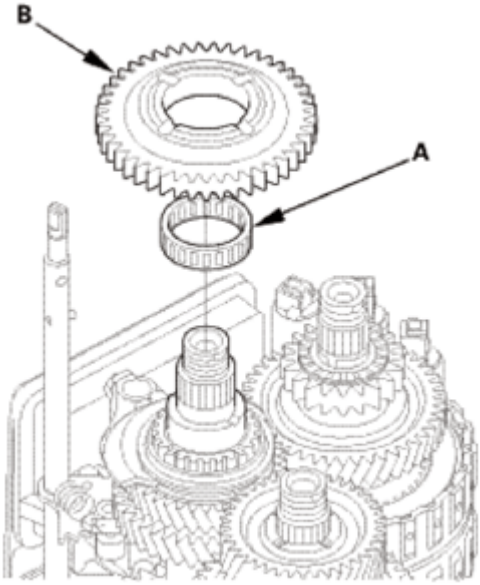

Fig. 161: Identifying Needle Bearing And Countershaft Reverse Gear
Courtesy of AMERICAN HONDA MOTOR CO., INC.

7. Automatic Transmission Housing
    1. Install the three dowel pins (A) and a new gasket (B).
    2. Align the spring pin (C) of the selector control shaft (D) with the transmission housing groove (E).

NOTE: **Do not squeeze the end of the selector control shaft tips together when turning the shaft. If the tips are squeezed together, it will cause a faulty shift position signal or position due to the play between the selector control shaft and the transmission range switch.**

    3. Place the transmission housing (F) on the torque converter housing (G).

NOTE: **Do not install the input shaft (mainshaft) speed sensor and the output shaft (countershaft) speed sensor before installing the transmission housing.**

    4. Wrap the tip of a screwdriver with tape so the reverse idler gear teeth do not get damaged. Engage the reverse idler gear (H) with the reverse gears (I) by rotating the idler gear using the screwdriver.
    5. Make sure the transmission housing is securely seated so there is no clearance between the transmission housing and the torque converter housing.

GETtheMANUALS.org

6. Install the transmission hanger (J), and tighten the transmission housing mounting bolts (2WD: 19 bolts, AWD/4WD: 20 bolts) in at least two steps, in a crisscross pattern.

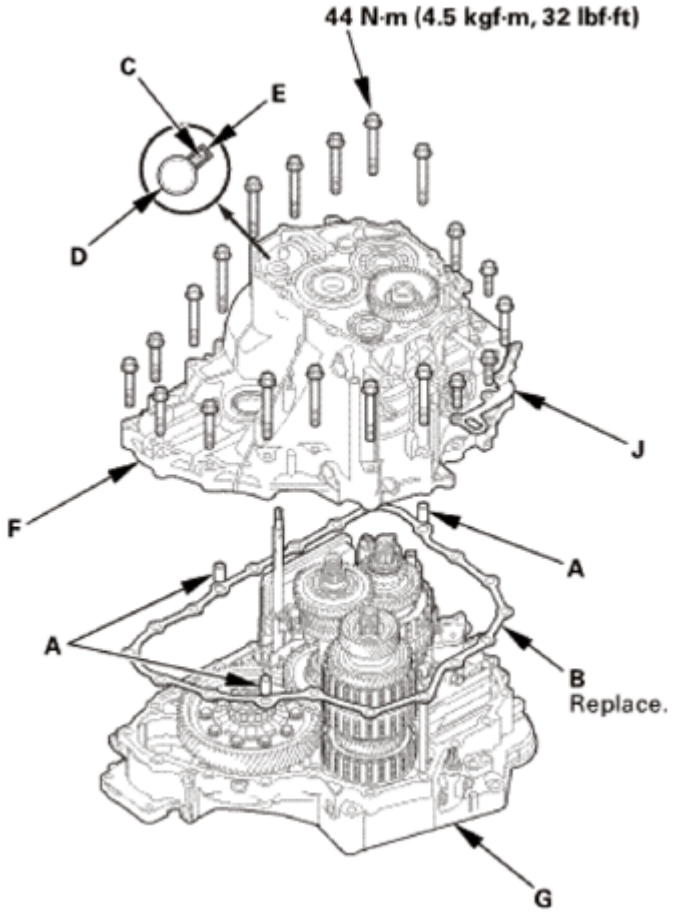

Fig. 162: Identifying Dowel Pins, Gasket, Spring Pin, Selector Control Shaft, Transmission Housing Groove And Mounting Bolts With Torque Specification
Courtesy of AMERICAN HONDA MOTOR CO., INC.

GETtheMANUALS.org

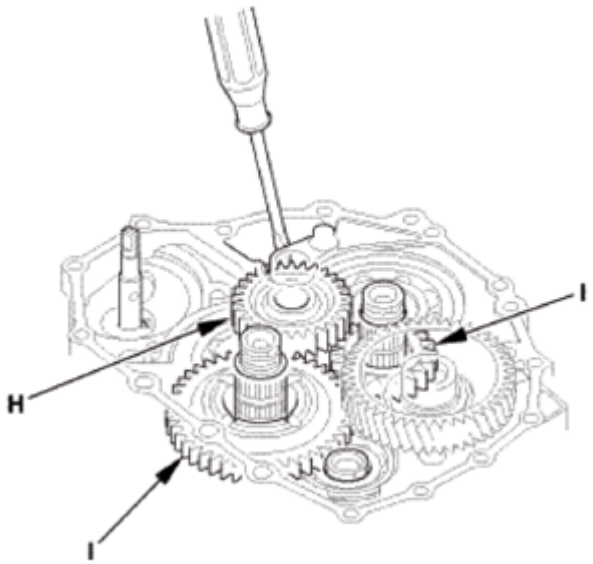

Fig. 163: Engaging Reverse Idler Gear With Reverse Gears By Rotating Idler Gear Using Screwdriver
Courtesy of AMERICAN HONDA MOTOR CO., INC.

8. End Cover Idler Gear Assembly
    1. Install the mainshaft holder onto the mainshaft.

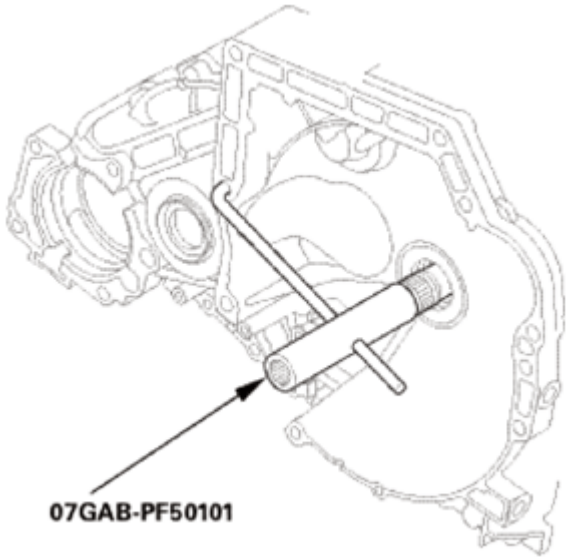

Fig. 164: Installing Mainshaft Holder Onto Mainshaft
Courtesy of AMERICAN HONDA MOTOR CO., INC.

    2. Lubricate the following parts with ATF:
        - Splines and threads of the mainshaft.
        - Splines of the mainshaft idler gear.

GETtheMANUALS.org

- The old conical spring washer and the old locknut.

3. Install the mainshaft idler gear (A), the old conical spring washer (B), and the old locknut (C), and tighten the locknut to 225 N.m (23.0 kgf.m, 166 lbf.ft).

NOTE:

- **Do not tap the mainshaft idler gear to install.**
- **Use a torque wrench to tighten the locknut. Do not use an impact wrench.**

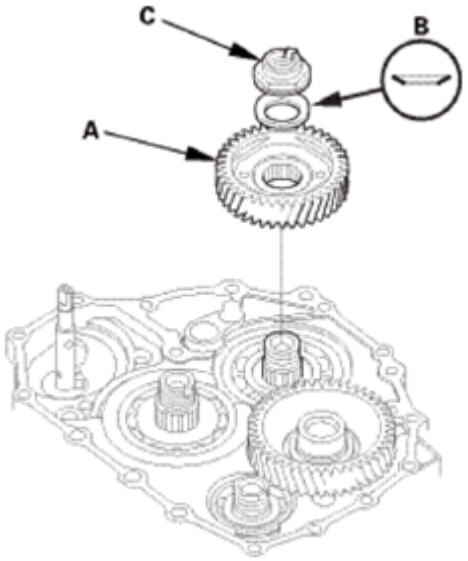

Fig. 165: Identifying Mainshaft Idler Gear, Conical Spring Washer And Locknut
Courtesy of AMERICAN HONDA MOTOR CO., INC.

4. Lubricate the following parts with ATF:
   - Splines and threads of the countershaft.
   - Splines of the park gear.
   - The old conical spring washer and the old locknut.
5. Install the park gear (A), the old conical spring washer (B), and the old locknut (C).

GETtheMANUALS.org

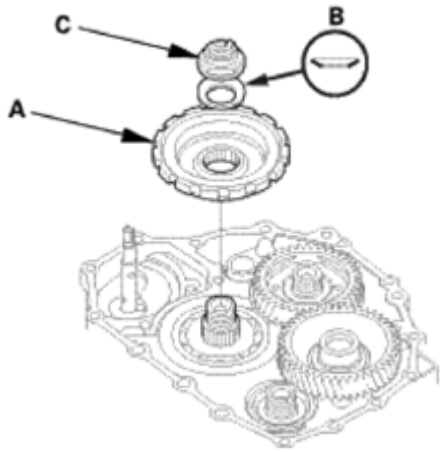

Fig. 166: Identifying Park Gear, Conical Spring Washer And Locknut
Courtesy of AMERICAN HONDA MOTOR CO., INC.

6. Install the park lever spring (D), the park lever (E), and the park lever stop (F).
7. Install the lock bolt (G) using a new lock washer (H).

NOTE: **Do not bend the lock tab of the lock washer until inspect the park lever stop.**

8. Install the park pawl shaft (I), the park pawl spring (J), the park pawl (K), and the stop shaft (L).
9. Lift the park pawl up, and engage it with the park gear, and tighten the locknut to 225 N.m (23.0 kgf.m, 166 lbf.ft).

NOTE:

- **Do not tap the park gear to install.**
- **Use a torque wrench to tighten the locknut. Do not use an impact wrench.**
- **Countershaft locknut has left-hand threads.**

GETtheMANUALS.org

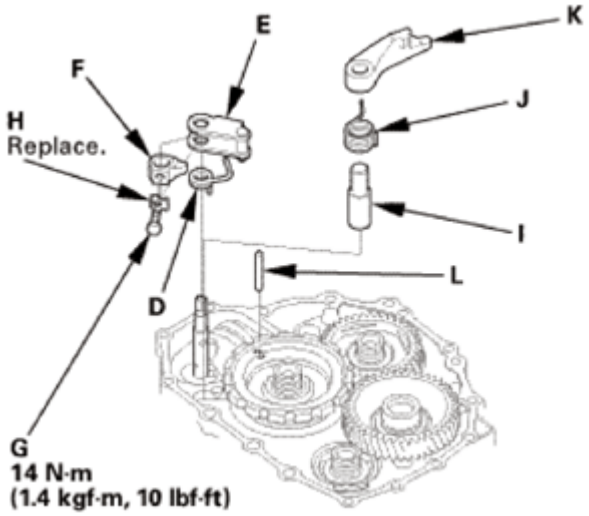

Fig. 167: Identifying Park Pawl Shaft, Park Lever Spring, Park Lever, Park Lever Stop, Lock Bolt, Lock Washer With Torque Specification
Courtesy of AMERICAN HONDA MOTOR CO., INC.

10. Remove the old locknuts and the old conical spring washers from the mainshaft and the countershaft.
11. Lubricate the following parts with ATF:
    - Splines and threads of the mainshaft, the countershaft, and the secondary shaft.
    - New conical spring washers and new locknuts.
    - Areas where the conical spring washers contact the mainshaft idler gear and the park gear.

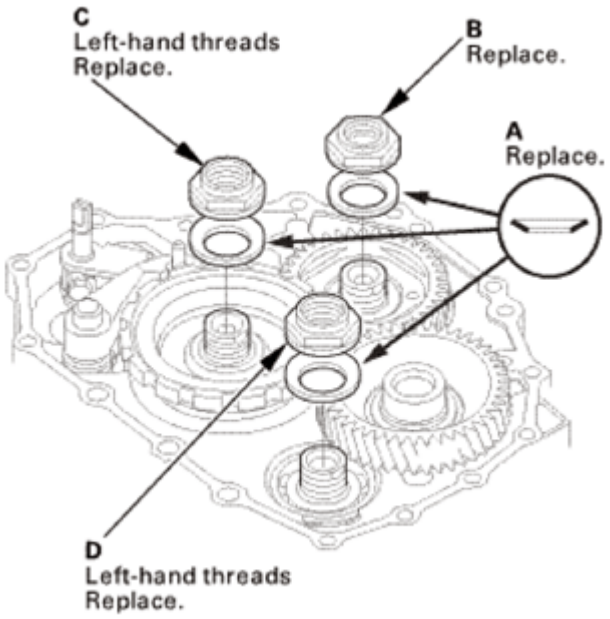

Fig. 168: Identifying Conical Spring Washers, Mainshaft Locknut, Countershaft Locknut And Secondary Shaft Locknut

GETtheMANUALS.org

Courtesy of AMERICAN HONDA MOTOR CO., INC.

12. Install new conical spring washers (A) in the direction shown.
13. Install a new mainshaft locknut (B), a new countershaft locknut (C), and a new secondary shaft locknut (D).
14. Tighten the locknuts to 167 N.m (17.0 kgf.m, 123 lbf.ft).

NOTE:

- **Use a torque wrench to tighten the locknut. Do not use an impact wrench.**
- **The countershaft and secondary shaft locknuts have left-hand threads.**

15. Remove the mainshaft holder.
16. Stake the locknuts into the shafts to a depth (A) of 0.7-1.3 mm (0.027-0.051 in) using a 3.5 mm punch (B).

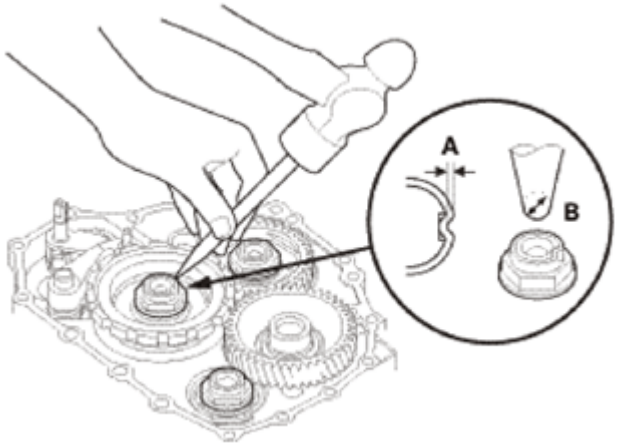

Fig. 169: Staking Locknuts Into Shafts Using Punch
Courtesy of AMERICAN HONDA MOTOR CO., INC.

17. Set the park lever in the P position.
18. Measure the distance (A) between the center of the park pawl shaft (B) and the center of the park lever roller pin (C) as shown.

Standard: 57.7-58.7 mm (2.272-2.311 in)

GETtheMANUALS.org

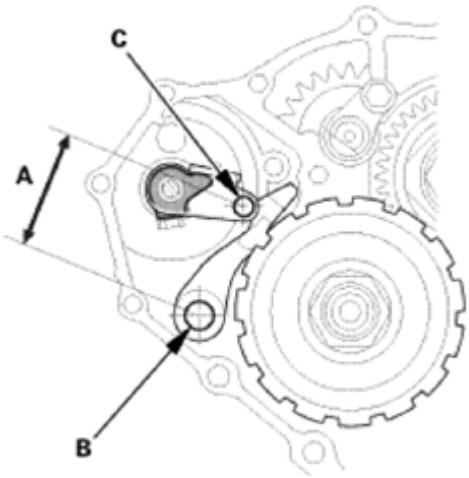

Fig. 170: Measuring Distance Between Center Of Park Pawl Shaft And Center Of Park Lever Roller Pin
Courtesy of AMERICAN HONDA MOTOR CO., INC.

19. If the measurement is out of the standard, select and install the appropriate park lever stop (A) from the table.

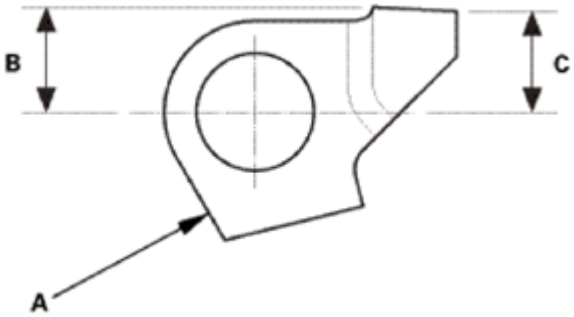

Fig. 171: Identifying Park Lever Stop Dimension
Courtesy of AMERICAN HONDA MOTOR CO., INC.

PARK LEVER STOP SPECIFICATION

Mark	B	C
1	11.00 mm (0.4331 in)	11.00 mm (0.4331 in)
2	10.80 mm (0.4252 in)	10.65 mm (0.4193 in)
3	10.60 mm (0.4173 in)	10.30 mm (0.4055 in)

20. After replacing the park lever stop, make sure the distance is within the tolerance.
21. Pry up the lock tab (A) of the lock washer against the bolt head.

GETtheMANUALS.org

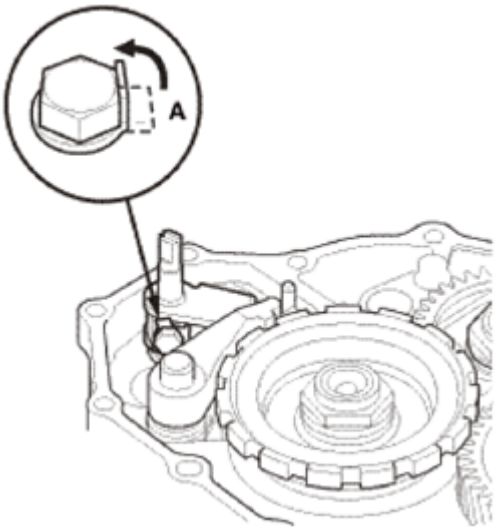

Fig. 172: Prying Up Lock Tab Of Lock Washer Against Bolt Head
Courtesy of AMERICAN HONDA MOTOR CO., INC.

9. ATF Feed Pipe/Lubrication Pipe
    1. Install the 6 x 201 mm ATF pipe (A).
    2. Install the ATF lubrication pipe (B).
    3. Install the 8 x 220 mm ATF pipe (C).
    4. Install the 8 x 198 mm ATF pipes (D).

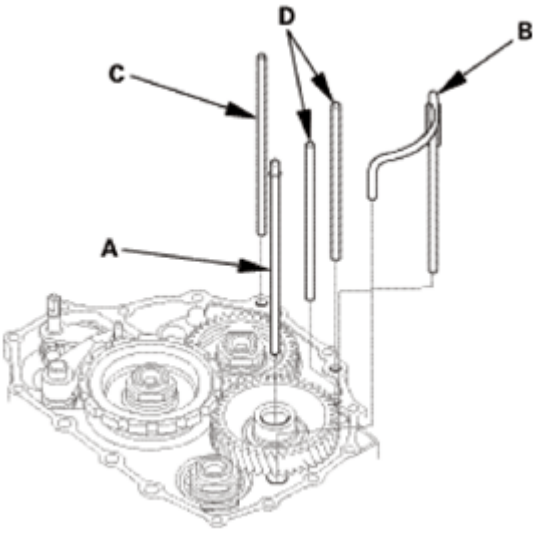

Fig. 173: Identifying ATF Feed Pipes And Lubrication Pipe
Courtesy of AMERICAN HONDA MOTOR CO., INC.

10. A/T Shift Solenoid Wire Harness - Reconnection
    1. Connect the shift solenoid valve connectors:
        - BLU wire to shift solenoid valve A.

GETtheMANUALS.org

- ORN wire to shift solenoid valve B.
- GRN wire to shift solenoid valve C.
- YEL, WHT, and WHT wires to shift solenoid valve D.
- RED wire to shift solenoid valve E.

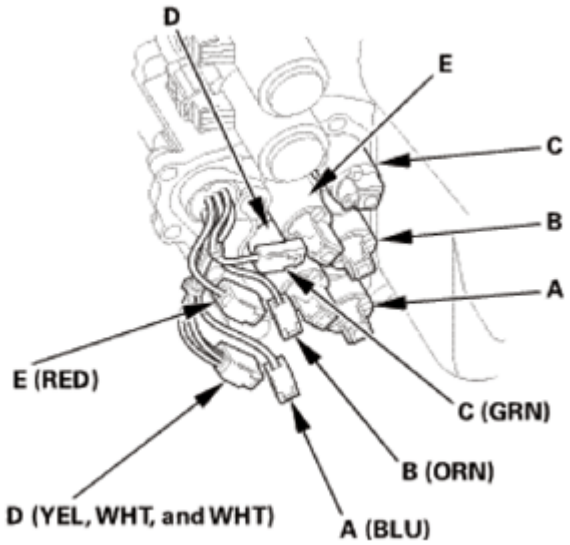

Fig. 174: Identifying Shift Solenoid Valves
Courtesy of AMERICAN HONDA MOTOR CO., INC.

11. A/T Shift Solenoid Cover
    1. Install the shift solenoid valve cover (A) with the dowel pins (B) and a new gasket (C).

GETtheMANUALS.org

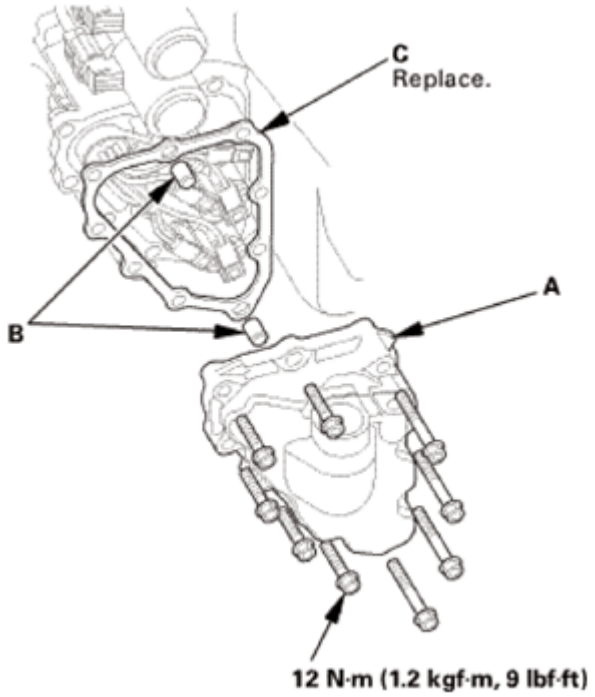

Fig. 175: Identifying Shift Solenoid Valve Cover, Dowel Pins, Gasket And Mounting Bolts With Torque Specification
Courtesy of AMERICAN HONDA MOTOR CO., INC.

12. Dipstick Guide Tube
    1. Install a new O-ring (A) on the ATF dipstick guide tube (B).
    2. Install the ATF dipstick guide tube.

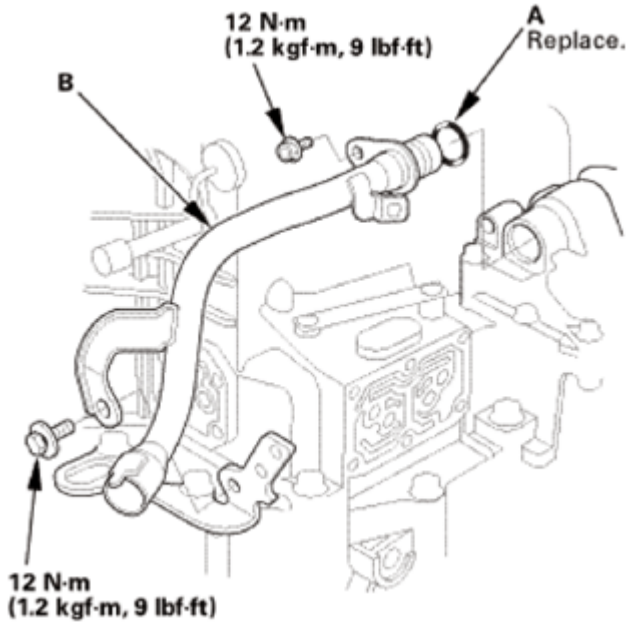

GETtheMANUALS.org

Fig. 176: Identifying ATF Dipstick Guide Tube, O-Ring And Mounting Bolts With Torque Specification
Courtesy of AMERICAN HONDA MOTOR CO., INC.

13. ATF Outlet Line
    1. Install the ATF outlet line (A) using new sealing washers (B).

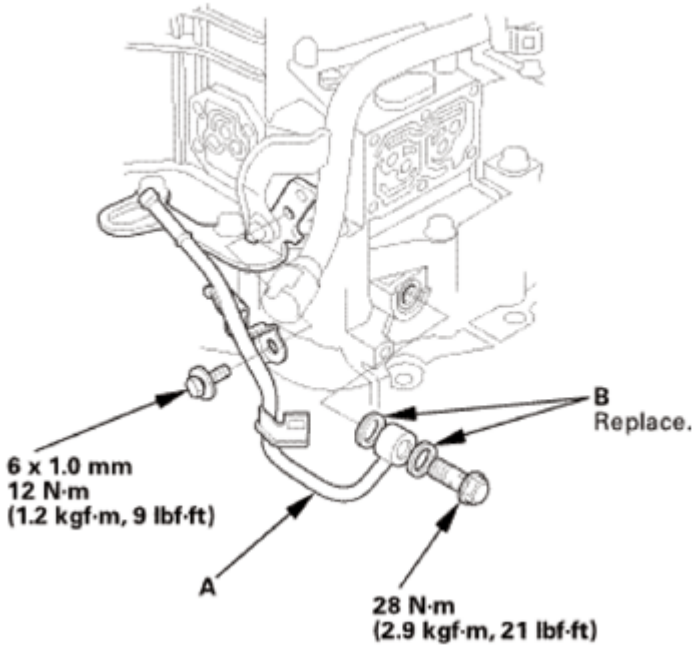

Fig. 177: Identifying ATF Outlet Line, Sealing Washers And Mounting Bolts With Torque Specification
Courtesy of AMERICAN HONDA MOTOR CO., INC.

14. ATF Inlet Line
    1. Install the ATF inlet line (A) using new sealing washers (B).

GETtheMANUALS.org

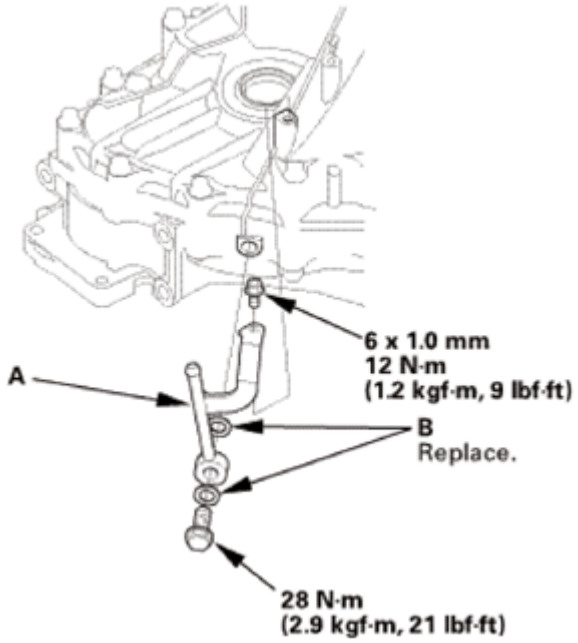

Fig. 178: Identifying ATF Inlet Line, Sealing Washers And Mounting Bolts With Torque Specification
Courtesy of AMERICAN HONDA MOTOR CO., INC.

15. A/T Clutch Pressure Control Solenoid Valve B and C
    1. Clean the mounting surfaces and the fluid passages of the solenoid valve body and the transmission housing.
    2. Install a new gasket (A) with the blue side toward the transmission housing, and Install the ATF joint pipes (D).
    3. Install new O-rings (E) over the ATF joint pipes.
    4. Install A/T clutch pressure control solenoid valves B and C with the clamp bracket (F).

GETtheMANUALS.org

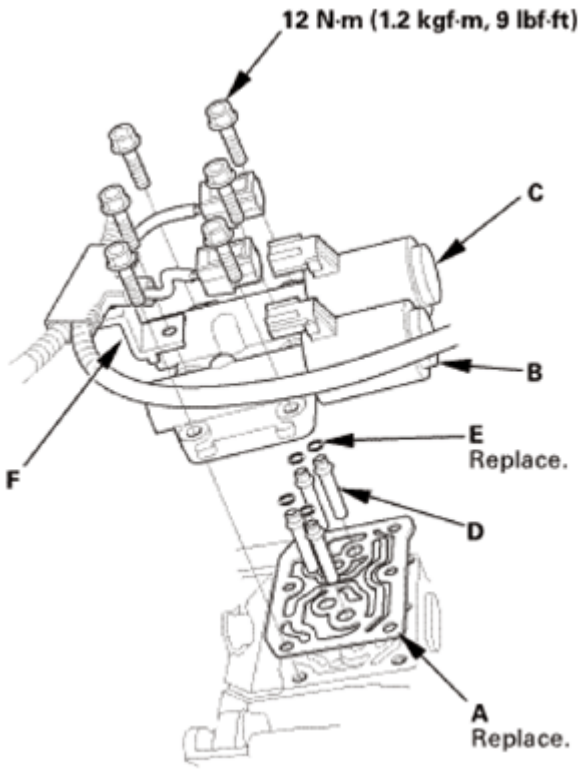

Fig. 179: Identifying Gasket, ATF Joint Pipes, O-Rings, A/T Clutch Pressure Control Solenoid Valves, Clamp Bracket And Mounting Bolts With Torque Specification
Courtesy of AMERICAN HONDA MOTOR CO., INC.

16. A/T Clutch Pressure Control Solenoid Valve A
    1. Clean the mounting surfaces and the fluid passages of the solenoid valve body and the transmission housing.
    2. Install a new gasket (B) with the blue side toward the transmission housing, and install the 35 mm ATF pipe (C) and the ATF joint pipes (D).
    3. Install new O-rings (E) over the ATF joint pipes.
    4. Install A/T clutch pressure control solenoid valve A.

GETtheMANUALS.org

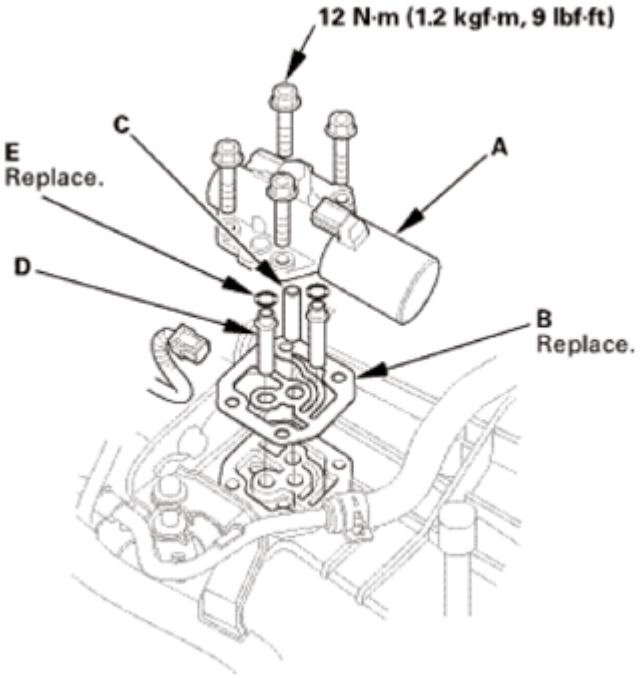

Fig. 180: Identifying A/T Clutch Pressure Control Solenoid Valve, Gasket, ATF Pipe, ATF Joint Pipes And Mounting Bolts With Torque Specification
Courtesy of AMERICAN HONDA MOTOR CO., INC.

17. Output Shaft (Countershaft) Speed Sensor
    1. Install a new O-ring (A) on the output shaft (countershaft) speed sensor (B).
    2. Install the input shaft (countershaft) spped and the senser washer(C).

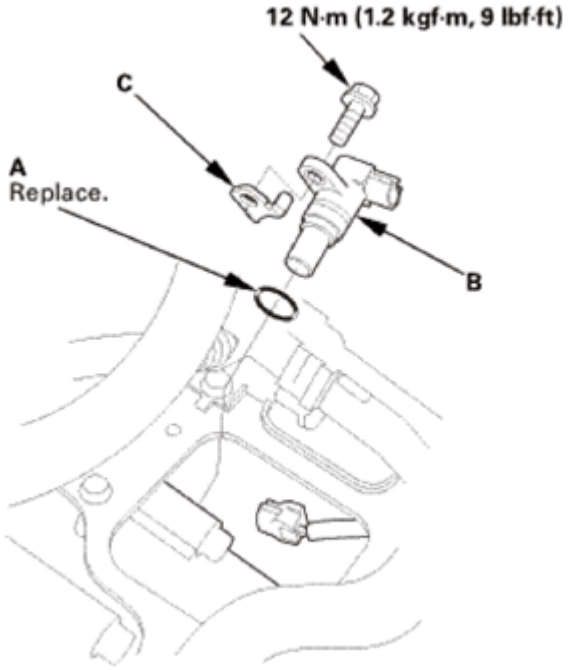

GETtheMANUALS.org

Fig. 181: Identifying Output Shaft (Countershaft) Speed Sensor, O-Ring, Sensor Washer And Mounting Bolts With Torque Specification
Courtesy of AMERICAN HONDA MOTOR CO., INC.

18. Input Shaft (Mainshaft) Speed Sensor
    1. Install a new O-ring (A) on the input shaft (mainshaft) speed sensor (B).
    2. Install the input shaft (mainshaft) speed sensor.

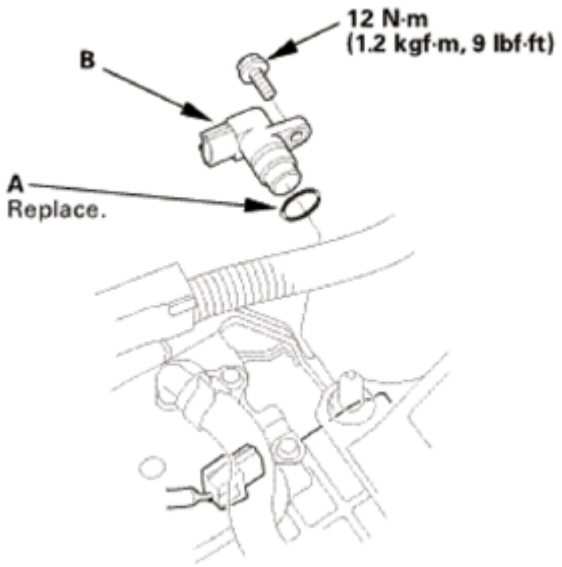

Fig. 182: Identifying Input Shaft (Mainshaft) Speed Sensor, O-Ring And Mounting Bolt With Torque Specification
Courtesy of AMERICAN HONDA MOTOR CO., INC.

19. Transmission End Cover
    1. Install the dowel pins (A) and a new gasket (B).
    2. Install new O-rings (C) over the ATF pipes.
    3. Install the end cover (D), and tighten the three special bolts (E) and the 6 x 1.0 mm bolts (F) (12 bolts).

GETtheMANUALS.org

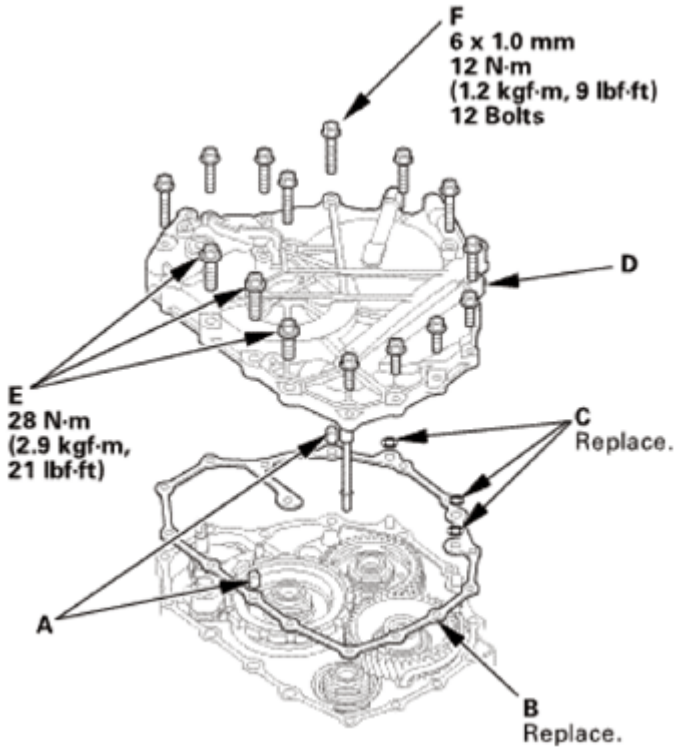

Fig. 183: Identifying Dowel Pins, Gasket, O-Rings, End Cover And Mounting Bolts With Torque Specification
Courtesy of AMERICAN HONDA MOTOR CO., INC.

20. Transmission Range Switch Subharness
    1. Install the clamp brackets (A).
    2. Install the transmission range switch subharness (B).

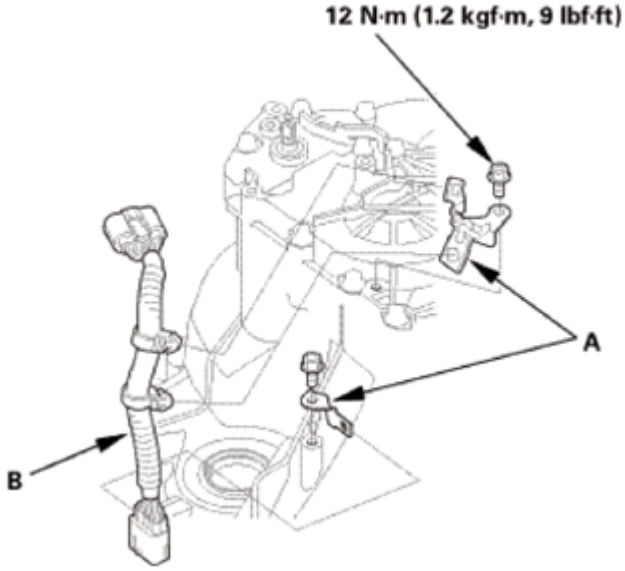

GETtheMANUALS.org

Fig. 184: Identifying Transmission Range Switch Subharness, Clamp Brackets And Mounting Bolts With Torque Specification
Courtesy of AMERICAN HONDA MOTOR CO., INC.

21. Transmission Range Switch
    1. Make sure the selector control shaft is in the N position. If necessary, move the selector control shaft to the N position.

NOTE: **Do not use the selector control shaft to adjust the shift position. If the selector control shaft tips are squeezed together it will cause a faulty signal or position due to play between the selector control shaft and switch.**

Fig. 185: Moving Selector Control Shaft To N Position
Courtesy of AMERICAN HONDA MOTOR CO., INC.

2. Align the cutouts (A) on the rotary-frame with the neutral positioning cutouts (B) on the transmission range switch (C), then put a 2.0 mm (0.079 in) feeler gauge blade (D) in the cutouts to hold the switch in the N position.

NOTE: **Be sure to use a 2.0 mm (0.079 in) blade or equivalent to hold the switch in the N position.**

GETtheMANUALS.org

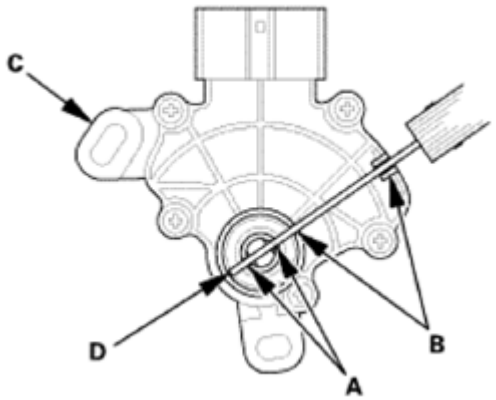

Fig. 186: Aligning Cutouts On Rotary-Frame With Neutral Positioning Cutouts On Transmission Range Switch
Courtesy of AMERICAN HONDA MOTOR CO., INC.

3. Install the transmission range switch (A) gently on the selector control shaft (B) while holding it in the N position with the 2.0 mm (0.079 in) blade (C).

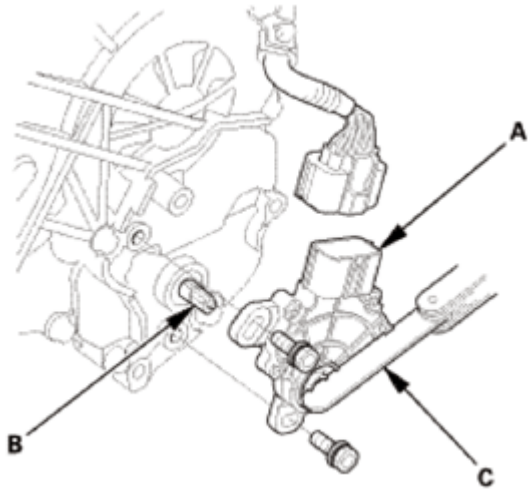

Fig. 187: Identifying Transmission Range Switch, Selector Control Shaft And Blade
Courtesy of AMERICAN HONDA MOTOR CO., INC.

4. Tighten the bolts on the transmission range switch (A) while you continue holding the N position.

NOTE: **Do not move the transmission range switch when tightening the bolts.**

5. Remove the feeler gauge (B).
6. Check the connector (C) for corrosion, dirt, or oil, and clean or repair if necessary, then connect the connector securely.

GETtheMANUALS.org

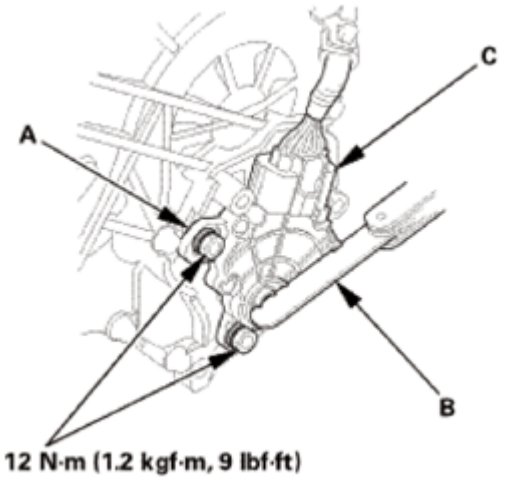

Fig. 188: Identifying Transmission Range Switch, Connector, Feeler Gauge And Mounting Bolts With Torque Specification
Courtesy of AMERICAN HONDA MOTOR CO., INC.

22. Transmission Range Switch Cover
    1. Install the transmission range switch cover (A).

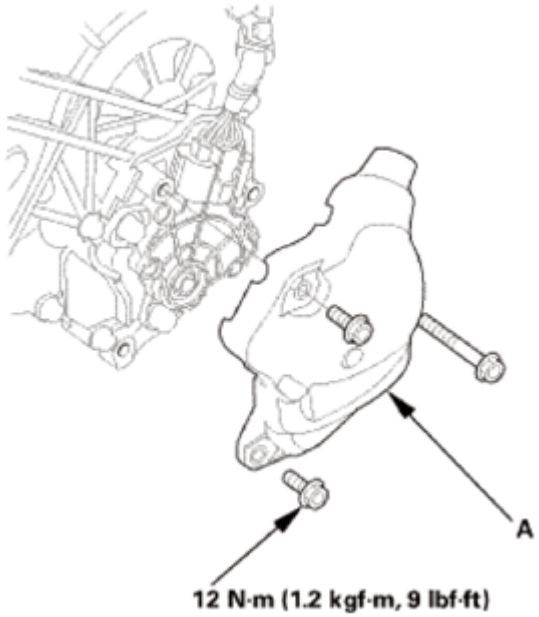

Fig. 189: Identifying Transmission Range Switch Cover And Mounting Bolts With Torque Specification
Courtesy of AMERICAN HONDA MOTOR CO., INC.

A/T DIFFERENTIAL BACKLASH INSPECTION

SPECIAL TOOL REQUIRED

GETtheMANUALS.org

Image	Description/Tool Number
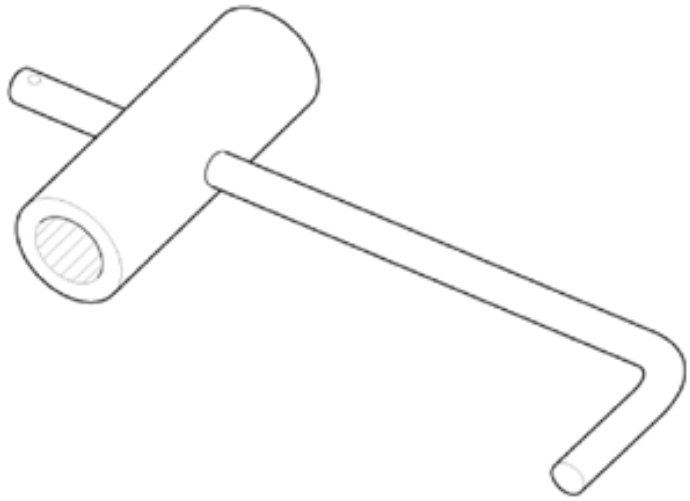	Mainshaft Holder 07GAB-PF50101
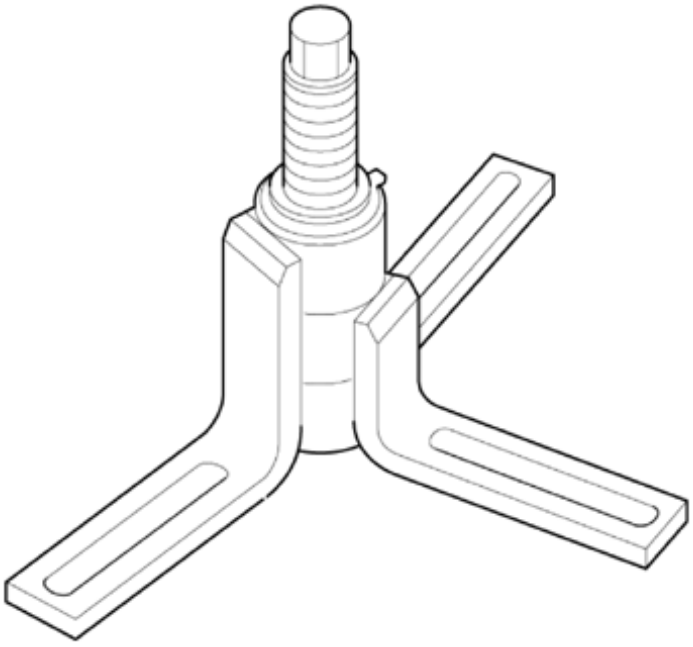	Housing Puller 07HAC-PK40102

REMOVAL

NOTE: The illustration shows AWD/4WD transmission.

1. Transmission Range Switch Cover
    1. Remove the transmission range switch cover (A).

GETtheMANUALS.org

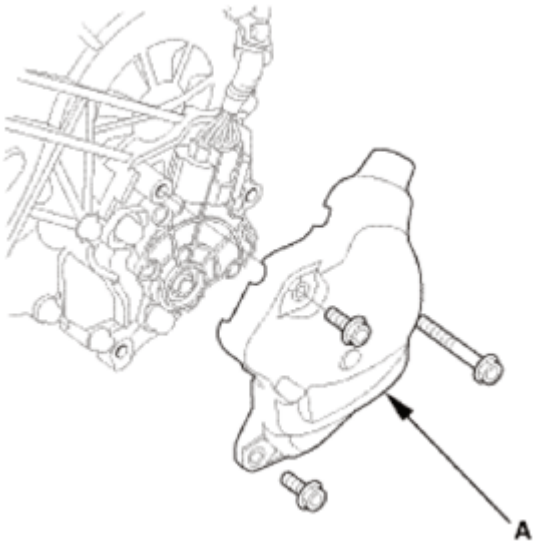

Fig. 190: Identifying Transmission Range Switch Cover With Bolts
Courtesy of AMERICAN HONDA MOTOR CO., INC.

2. Transmission Range Switch
    1. Remove the transmission range switch (A).

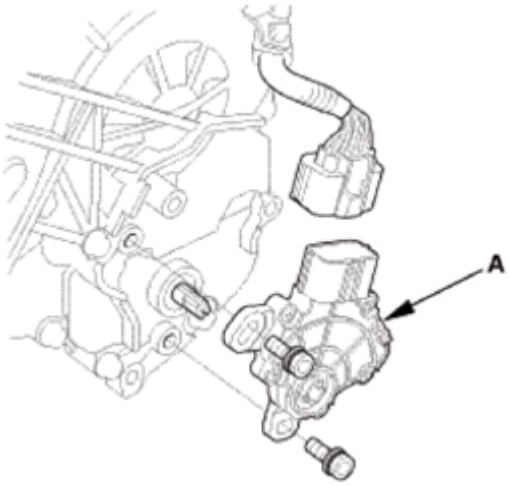

Fig. 191: Identifying Transmission Range Switch With Bolts
Courtesy of AMERICAN HONDA MOTOR CO., INC.

3. Transmission Range Switch Subharness
    1. Remove the transmission range switch subharness (A).
    2. Remove the clamp brackets (B).

GETtheMANUALS.org

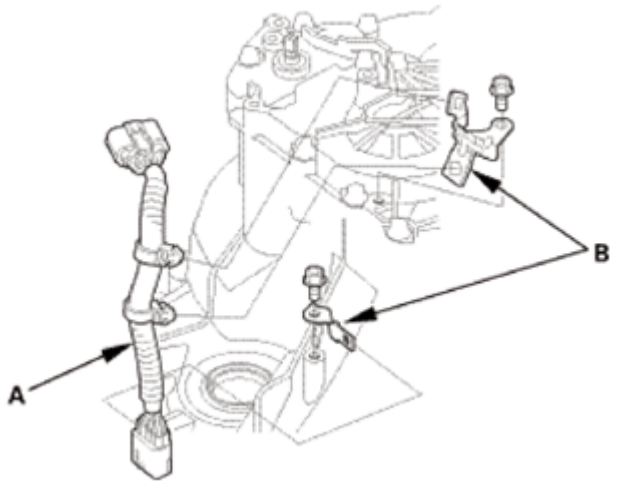

Fig. 192: Identifying Transmission Range Switch Subharness And Clamp Brackets
Courtesy of AMERICAN HONDA MOTOR CO., INC.

4. Transmission End Cover
    1. Remove the end cover (A), the dowel pins (B), the O-rings (C), and the gasket (D).

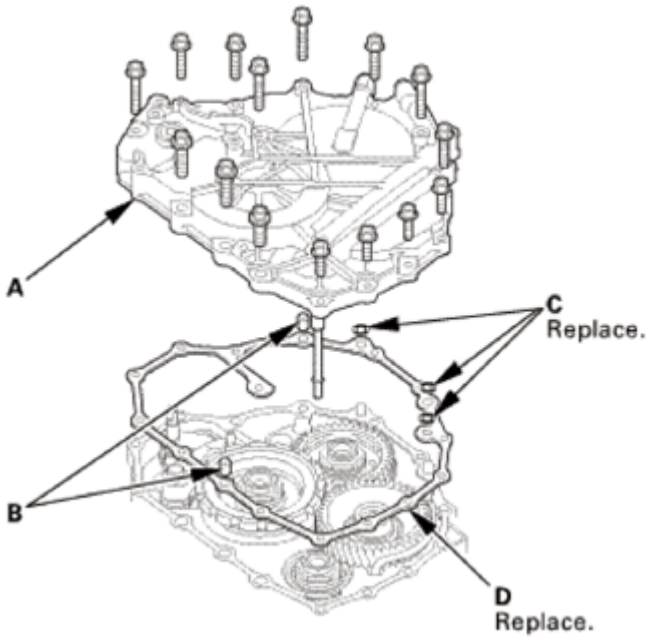

Fig. 193: Identifying Transmission End Cover, Dowel Pins, O-Rings And Gasket With Bolts
Courtesy of AMERICAN HONDA MOTOR CO., INC.

5. Input Shaft (Mainshaft) Speed Sensor
    1. Remove the input shaft (mainshaft) speed sensor (A).
    2. Remove the O-ring (B) from the input shaft (mainshaft) speed sensor.

GETtheMANUALS.org

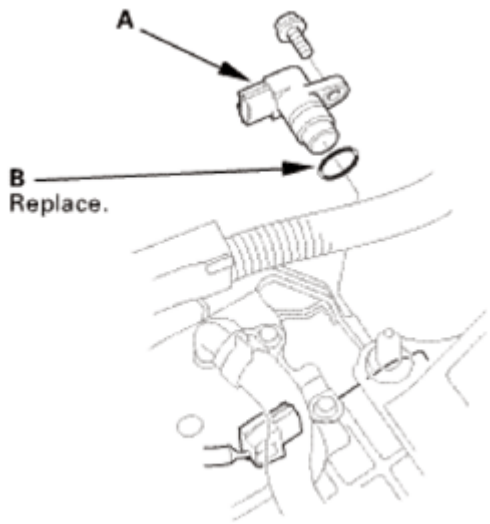

Fig. 194: Identifying Input Shaft (Mainshaft) Speed Sensor And O-Ring
Courtesy of AMERICAN HONDA MOTOR CO., INC.

6. Output Shaft (Countershaft) Speed Sensor
    1. Remove the output shaft (countershaft) speed sensor (A) and the sensor washer (B).
    2. Remove the O-ring (C) from the output shaft (countershaft) speed sensor.

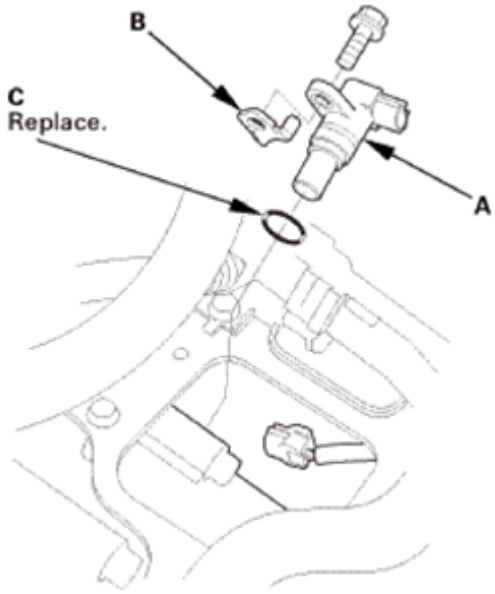

Fig. 195: Identifying Output Shaft (Countershaft) Speed Sensor, Sensor Washer And O-Ring
Courtesy of AMERICAN HONDA MOTOR CO., INC.

7. A/T Clutch Pressure Control Solenoid Valve A
    1. Remove A/T clutch pressure control solenoid valve A.
    2. Remove the 35 mm ATF pipe (B), the ATF joint pipes (C), the O-rings (D), and the gasket (E).

GETtheMANUALS.org

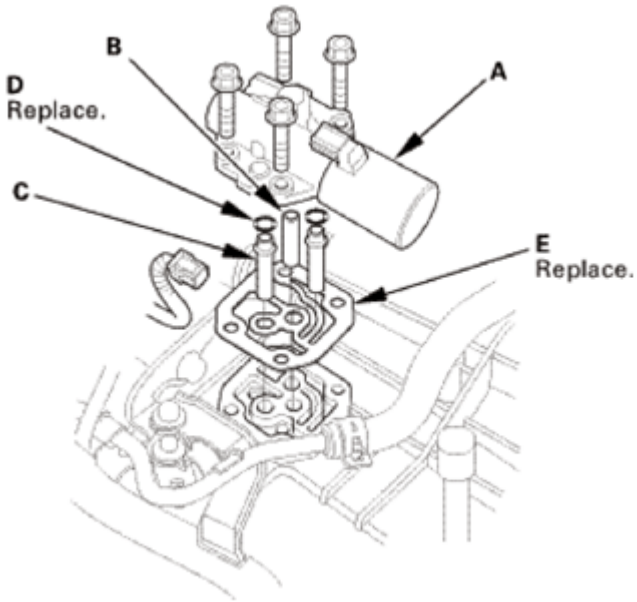

Fig. 196: Identifying A/T Clutch Pressure Control Solenoid Valve, ATF Pipe, ATF Joint Pipes, O-Rings And Gasket With Bolts
Courtesy of AMERICAN HONDA MOTOR CO., INC.

8. A/T Clutch Pressure Control Solenoid Valve B and C
    1. Remove the clamp bracket (A) and A/T clutch pressure control solenoid valves B and C.
    2. Remove the ATF joint pipes (D), the O-rings (E), and the gasket (F).

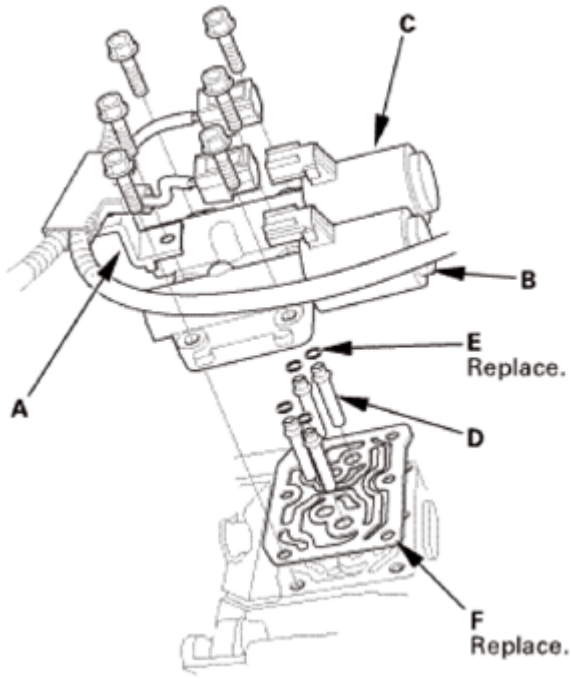

Fig. 197: Identifying A/T Clutch Pressure Control Solenoid Valves, Clamp Bracket, ATF

GETtheMANUALS.org

Joint Pipes, O-Rings And Gasket
Courtesy of AMERICAN HONDA MOTOR CO., INC.

9. ATF Inlet Line
    1. Remove the banjo bolt (A) and the sealing washers (B).
    2. Remove the ATF inlet line (C).

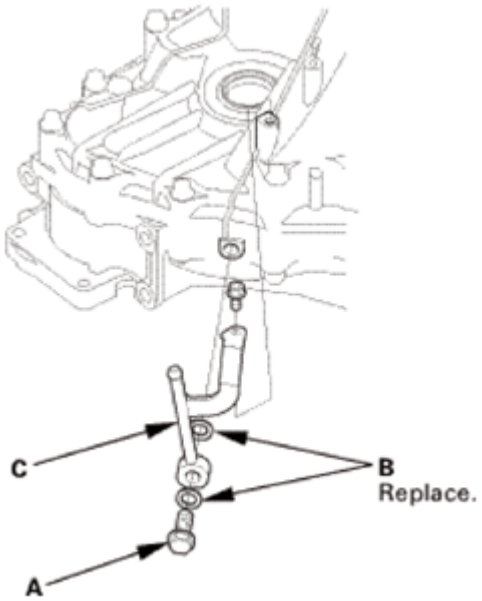

Fig. 198: Identifying ATF Inlet Line, Banjo Bolt And Sealing Washers
Courtesy of AMERICAN HONDA MOTOR CO., INC.

10. ATF Outlet Line
    1. Remove the banjo bolt (A) and the sealing washers (B).
    2. Remove the ATF outlet line (C).

GETtheMANUALS.org

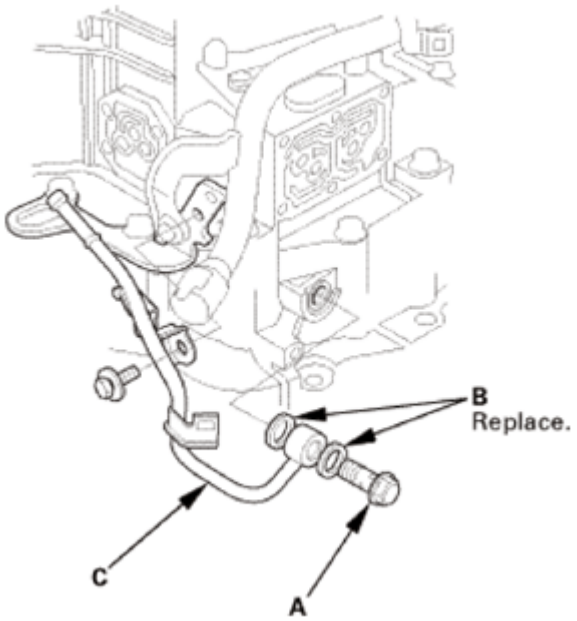

Fig. 199: Identifying ATF Outlet Line, Banjo Bolt And Sealing Washers
Courtesy of AMERICAN HONDA MOTOR CO., INC.

11. Dipstick Guide Tube
    1. Remove the ATF dipstick guide tube (A).
    2. Remove the O-ring (B) from the ATF dipstick guide tube.

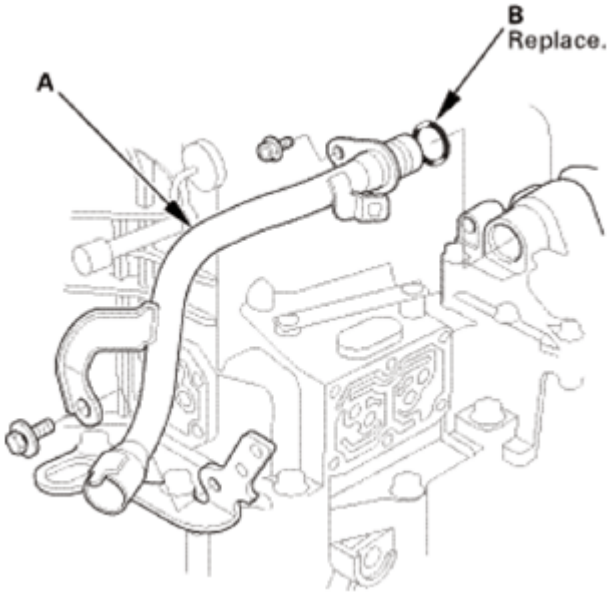

Fig. 200: Identifying ATF Dipstick Guide Tube And O-Ring
Courtesy of AMERICAN HONDA MOTOR CO., INC.

12. A/T Shift Solenoid Cover

GETtheMANUALS.org

1. Remove the shift solenoid valve cover (A), the dowel pins (B), and the gasket (C).

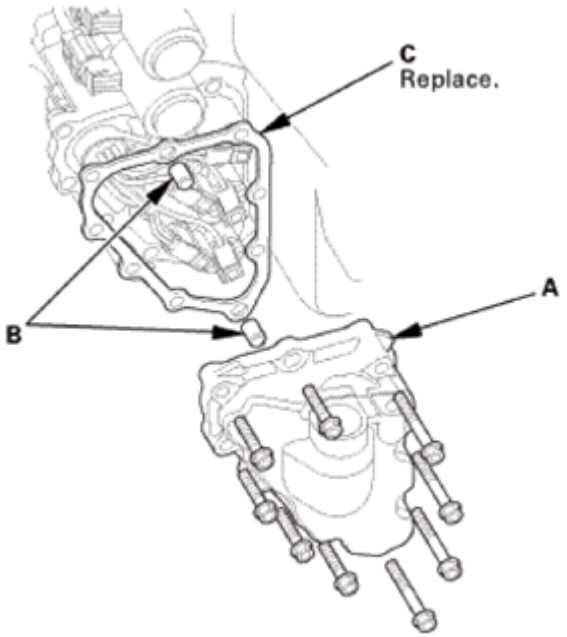

Fig. 201: Identifying Shift Solenoid Valve Cover, Dowel Pins And Gasket
Courtesy of AMERICAN HONDA MOTOR CO., INC.

13. A/T Shift Solenoid Wire Harness - Disconnection
    1. Disconnect the connectors.

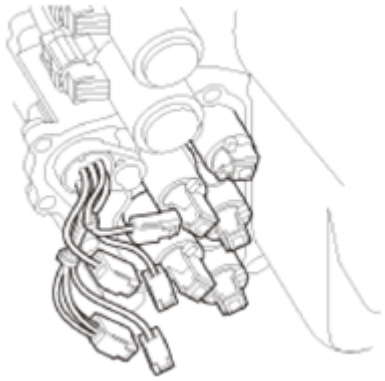

Fig. 202: Identifying A/T Shift Solenoid Wire Harness Connectors
Courtesy of AMERICAN HONDA MOTOR CO., INC.

14. ATF Feed Pipe/Lubrication Pipe
    1. Remove the 6 x 201 mm ATF pipe (A).
    2. Remove the ATF lubrication pipe (B).
    3. Remove the 8 x 220 mm ATF pipe (C).
    4. Remove the 8 x 198 mm ATF pipes (D).

GETtheMANUALS.org

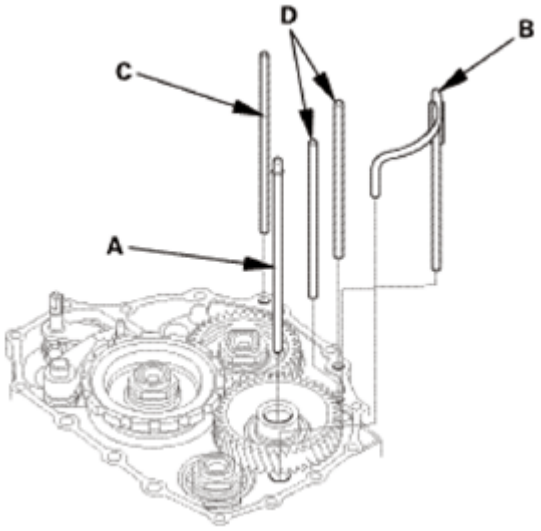

Fig. 203: Identifying ATF Feed Pipes And Lubrication Pipe
Courtesy of AMERICAN HONDA MOTOR CO., INC.

15. End Cover Idler Gear Assembly
    1. Install the mainshaft holder onto the mainshaft.
    2. Engage the park pawl with the park gear.

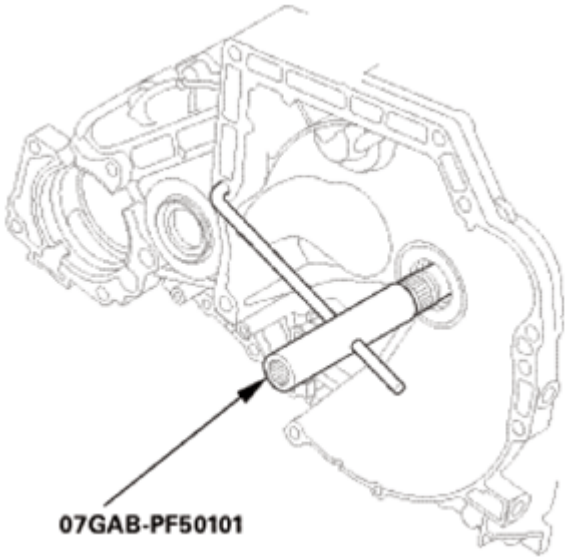

Fig. 204: Installing Mainshaft Holder Onto Mainshaft
Courtesy of AMERICAN HONDA MOTOR CO., INC.

    3. Using a chisel, cut the lock tab (A) of the locknut (B).

NOTE: Keep all of the chiseled particles out of the transmission.

GETtheMANUALS.org

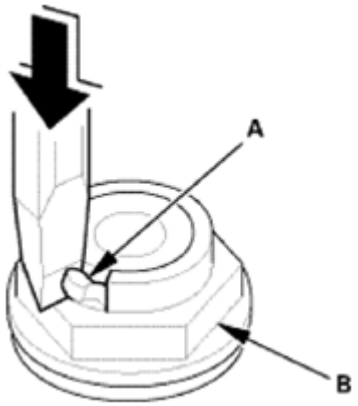

Fig. 205: Cutting Lock Tab Of Locknut Using Chisel
Courtesy of AMERICAN HONDA MOTOR CO., INC.

4. Remove the locknuts (A) and the conical spring washers (B) from each shaft.

NOTE:

- **The countershaft and secondary shaft locknuts have left-hand threads.**
- **Keep all of the chiseled particles out of the transmission.**
- **Clean the old locknuts; they are used to install the press fit idler gears and park gear.**

5. Remove the mainshaft holder.

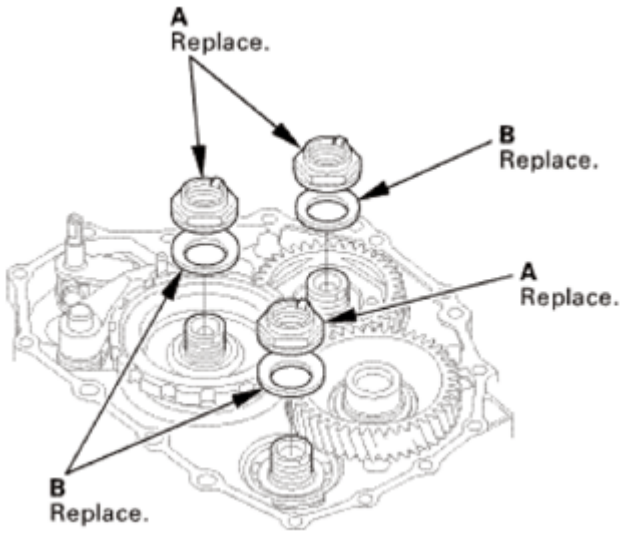

Fig. 206: Identifying Locknuts And Conical Spring Washers
Courtesy of AMERICAN HONDA MOTOR CO., INC.

6. Remove the park pawl (A), the park pawl spring (B), the park pawl shaft (C), and the stop shaft (D).

GETtheMANUALS.org

7. Pry down the lock tab (E) of the lock washer (F).
8. Remove the lock bolt (G) and the lock washer.
9. Remove the park lever (H), the park lever stop (I), and the park lever spring (J).

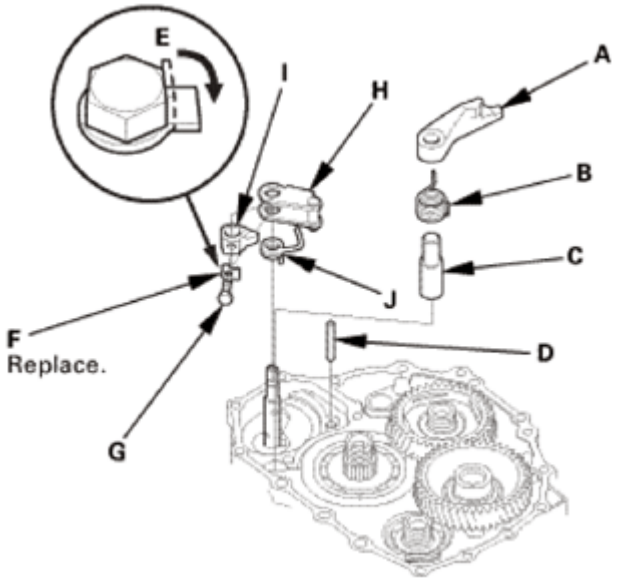

Fig. 207: Prying Down Lock Tab Of Lock Washer
Courtesy of AMERICAN HONDA MOTOR CO., INC.

10. Place a spacer (A) on the countershaft (B).
11. Set a commercially available bearing puller (C) on the park gear (D).
12. Remove the park gear.

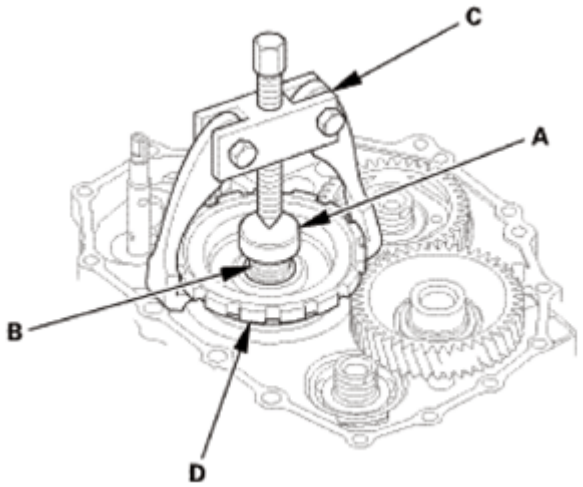

Fig. 208: Setting Commercially Available Bearing Puller On Park Gear
Courtesy of AMERICAN HONDA MOTOR CO., INC.

13. Install a puller (A) with two 6 x 1.0 mm bolts (B) on the mainshaft idler gear (C).

GETtheMANUALS.org

14. Set a spacer (D) between the puller and the mainshaft (E).
15. Remove the mainshaft idler gear.

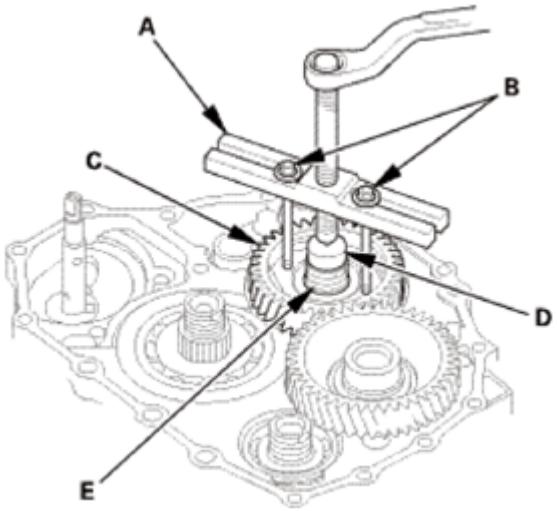

Fig. 209: Installing Puller With 6 X 1.0 mm Bolts On Mainshaft Idler Gear
Courtesy of AMERICAN HONDA MOTOR CO., INC.

16. Automatic Transmission Housing
    1. Align the spring pin (A) on the selector control shaft (B) with the transmission housing groove (C).

    NOTE: **Do not squeeze the end of the selector control shaft tips together when turning the control shaft. If the tips are squeezed together, it will cause a faulty shift position signal or position due to the play between the selector control shaft and the transmission range switch.**

    2. Remove the transmission housing mounting bolts (D) (2WD: 19 bolts, AWD/4WD: 20 bolts).
    3. Install the housing puller over the mainshaft.
    4. Remove the transmission housing (E) using the housing puller.
    5. Remove the dowel pins (F) and the gasket (G).

GETtheMANUALS.org

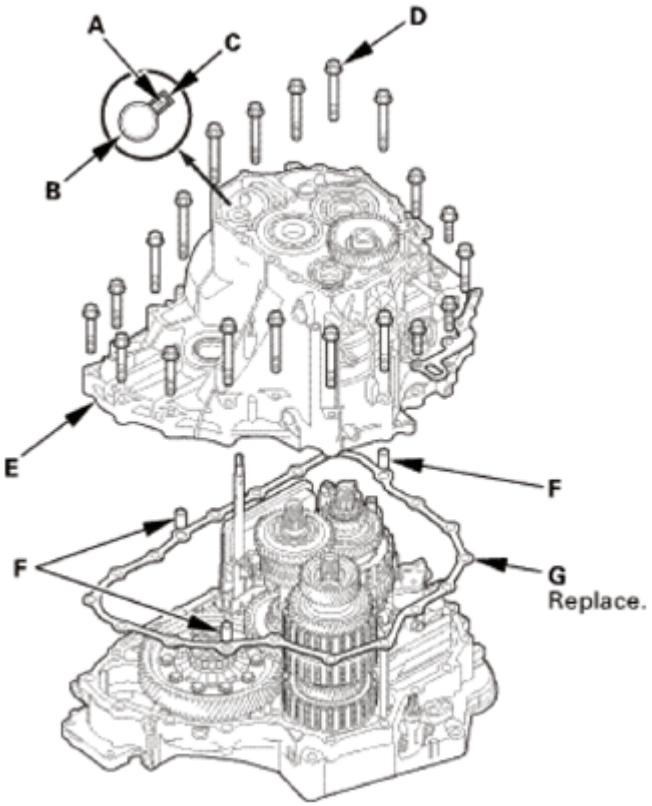

Fig. 210: Identifying Spring Pin, Selector Control Shaft, Transmission Housing Groove, Transmission Housing, Mounting Bolts And Gasket
Courtesy of AMERICAN HONDA MOTOR CO., INC.

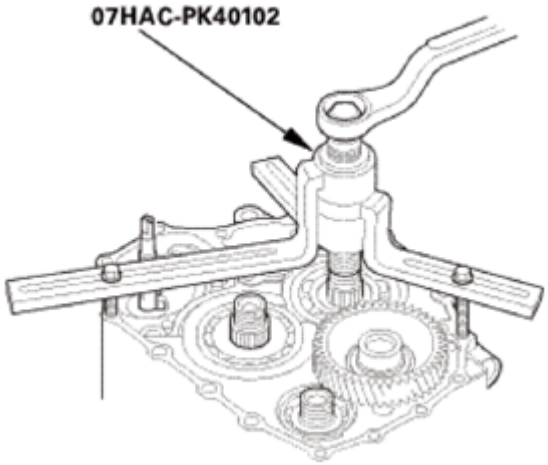

Fig. 211: Installing Housing Puller Over Mainshaft
Courtesy of AMERICAN HONDA MOTOR CO., INC.

17. A/T Countershaft Reverse Gear
    1. Remove the countershaft reverse gear (A).
    2. Remove the needle bearing (B).

GETtheMANUALS.org

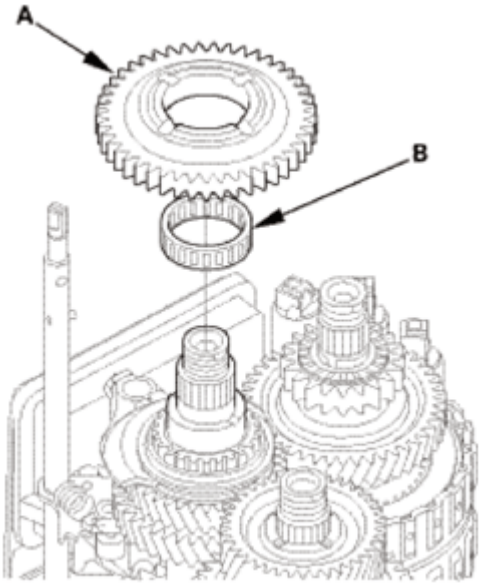

Fig. 212: Identifying Countershaft Reverse Gear And Needle Bearing
Courtesy of AMERICAN HONDA MOTOR CO., INC.

18. Reverse Shift fork
    1. Pry down the lock tab (A) of the lock washer (B).
    2. Remove the lock bolt (C) and the lock washer.
    3. Remove the reverse shift fork (D) and the reverse selector (E) together.

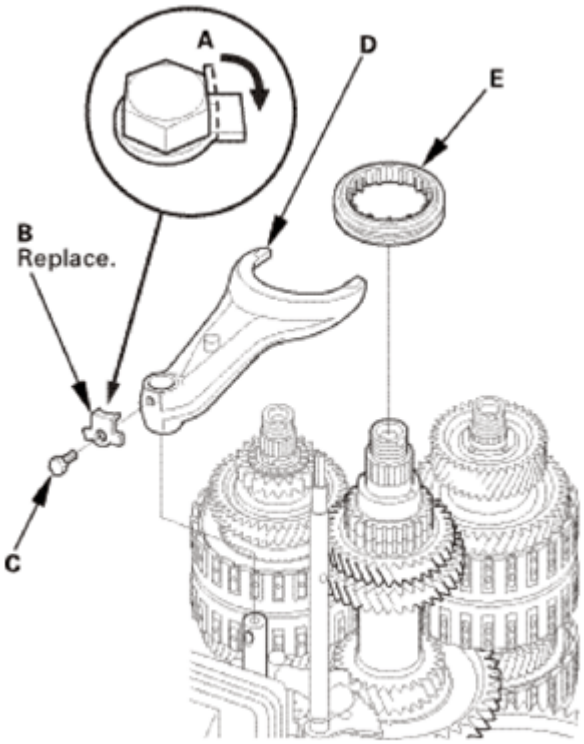

GETtheMANUALS.org

Fig. 213: Prying Down Lock Tab Of Lock Washer
Courtesy of AMERICAN HONDA MOTOR CO., INC.

19. Selector Control Lever (Except 2WD of USA Produced Models)

Except 2WD of USA Produced Models

1. Pry down the lock tab (A) of the lock washer (B).
2. Remove the lock bolt (C) and the lock washer.
3. Remove the selector control lever (D).

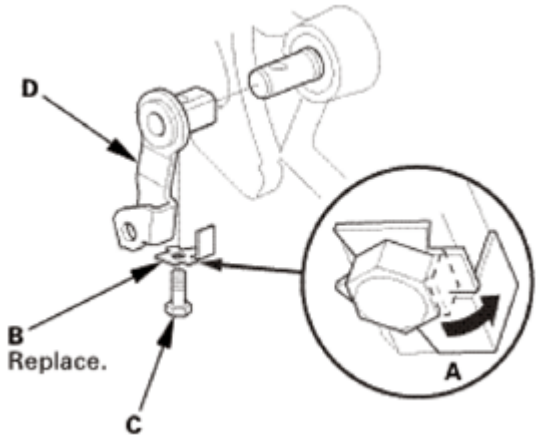

Fig. 214: Prying Down Lock Tab Of Lock Washer (Except 2WD Of USA Produced Models)
Courtesy of AMERICAN HONDA MOTOR CO., INC.

20. Selector Control Shaft
    1. Unhook the detent arm spring (A).

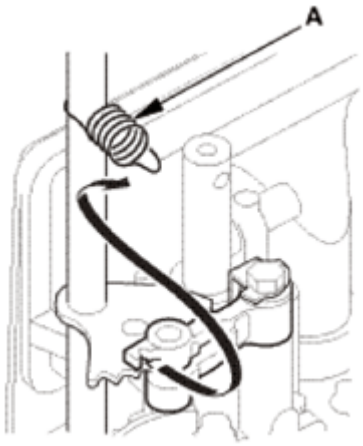

Fig. 215: Unhooking Detent Arm Spring
Courtesy of AMERICAN HONDA MOTOR CO., INC.

GETtheMANUALS.org

2. Separate the manual valve lever pin (A) on the selector control shaft (B) from the guide of the manual valve (C).

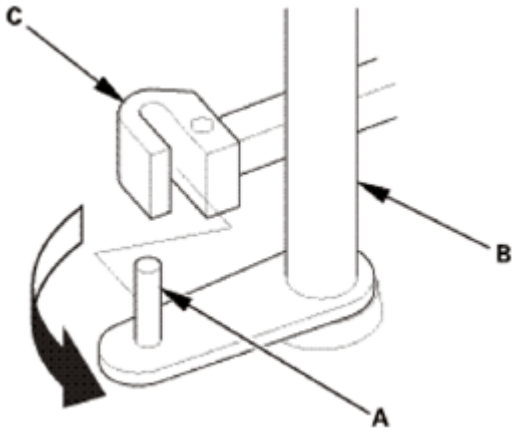

Fig. 216: Separating Manual Valve Lever Pin On Selector Control Shaft From Guide Of Manual Valve
Courtesy of AMERICAN HONDA MOTOR CO., INC.

3. Remove the selector control shaft (A).

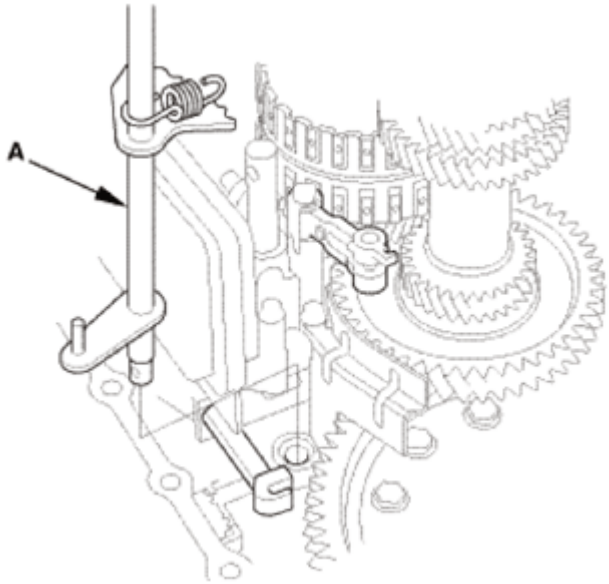

Fig. 217: Identifying Selector Control Shaft
Courtesy of AMERICAN HONDA MOTOR CO., INC.

21. Mainshaft and Countershaft and Secondary Shaft Assembly
    1. Turn the detent arm (A) away from the countershaft (B).

GETtheMANUALS.org

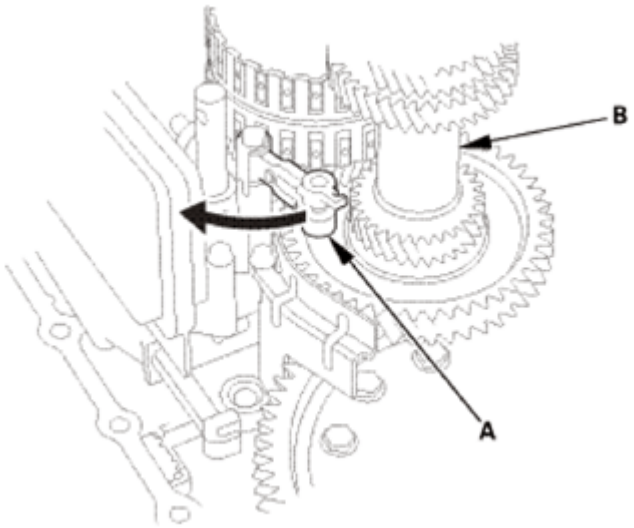

Fig. 218: Turning Detent Arm Away From Countershaft
Courtesy of AMERICAN HONDA MOTOR CO., INC.

2. Remove the mainshaft subassembly (A), the countershaft subassembly (B), and the secondary shaft subassembly (C) together.

NOTE: Do not bump the countershaft on the baffle plate (D).

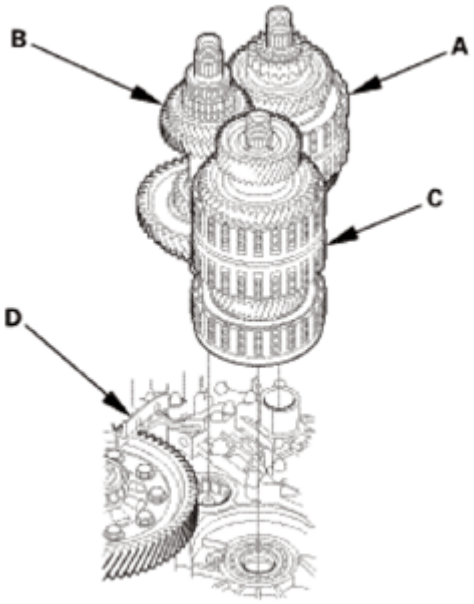

Fig. 219: Identifying Mainshaft Subassembly, Countershaft Subassembly, Secondary Shaft Subassembly And Baffle Plate
Courtesy of AMERICAN HONDA MOTOR CO., INC.

22. Differential Assembly
    1. Remove the baffle plate (A).

GETtheMANUALS.org

2. Remove the differential assembly (B).

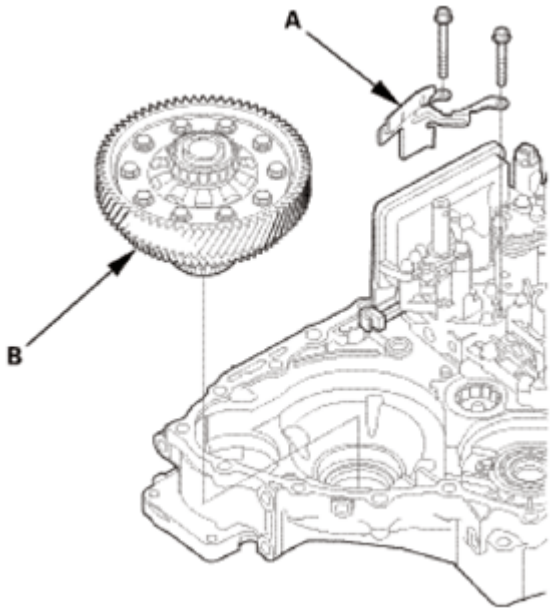

Fig. 220: Identifying Differential Assembly And Baffle Plate
Courtesy of AMERICAN HONDA MOTOR CO., INC.

INSPECTION

1. Differential Backlash - Inspection
    1. Install both axles into the A/T differential, then place the axles on V-blocks (A).
    2. Check the backlash of the pinion gears (B) using a dial indicator (C).

       Standard: 0.05-0.15 mm (0.0020-0.0059 in)

    3. If the backlash is out of the standard, replace the differential carrier.

GETtheMANUALS.org

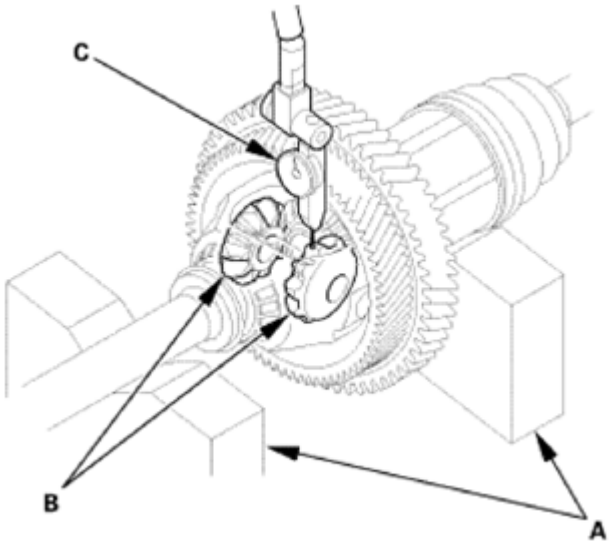

Fig. 221: Checking Backlash Of Pinion Gears Using Dial Indicator
Courtesy of AMERICAN HONDA MOTOR CO., INC.

INSTALLATION

NOTE:

- **Apply a light coat of clean ATF on all moving parts before installation.**
- **The illustration shows AWD/4WD transmission.**

1. Differential Assembly
    1. Install the differential assembly (A).
    2. Install the baffle plate (B).

GETtheMANUALS.org

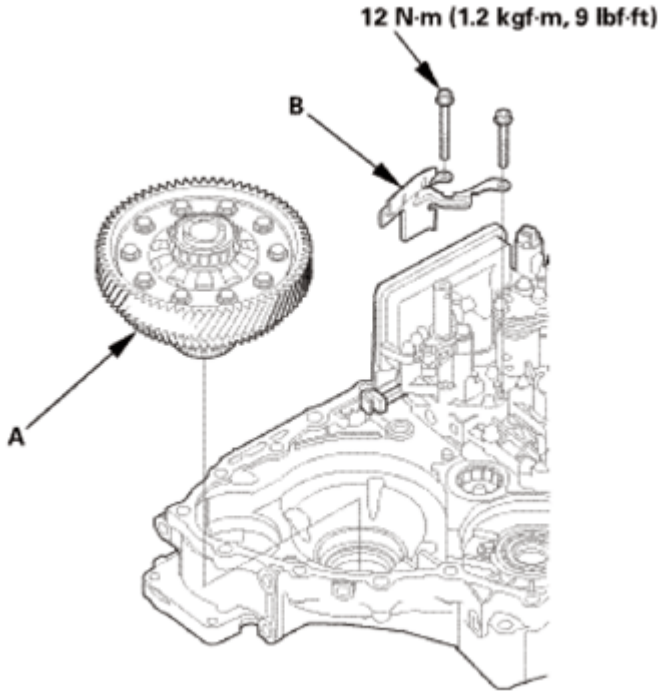

Fig. 222: Identifying Differential Assembly, Baffle Plate And Bolts With Torque Specification
Courtesy of AMERICAN HONDA MOTOR CO., INC.

2. Mainshaft and Countershaft and Secondary Shaft Assembly
    1. Be sure that each shaft is assembled. Also be sure that new sealing rings are installed on the mainshaft and the secondary shaft.
    2. Join the mainshaft subassembly (A), the countershaft subassembly (B), and the secondary shaft subassembly (C) together, and install them.

    NOTE: Do not bump the countershaft on the baffle plate (D).

    3. Make sure the countershaft subassembly and the differential assembly (E) are clear of the baffle plate.

GETtheMANUALS.org

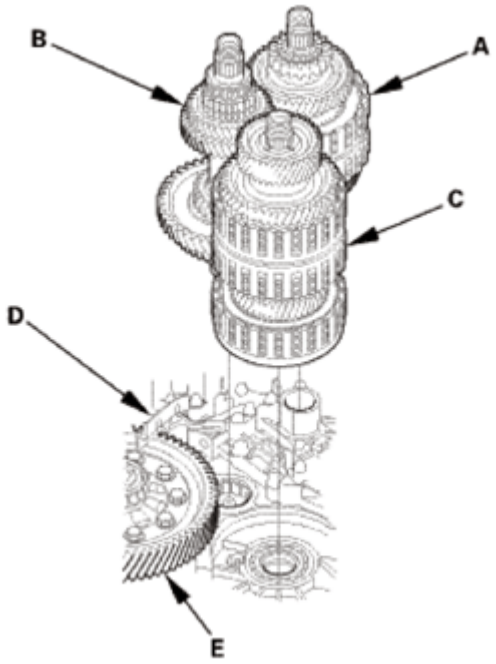

Fig. 223: Identifying Mainshaft Subassembly, Countershaft Subassembly, Secondary Shaft Subassembly, Baffle Plate And Differential Assembly
Courtesy of AMERICAN HONDA MOTOR CO., INC.

3. Selector Control Shaft
    1. Install the selector control shaft (A).

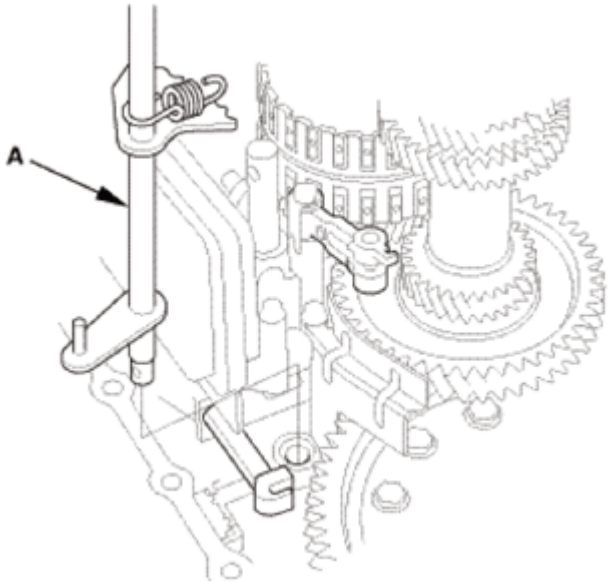

Fig. 224: Identifying Selector Control Shaft
Courtesy of AMERICAN HONDA MOTOR CO., INC.

    2. Align the manual valve lever pin (A) on the selector control shaft (B) with the guide of the manual

GETtheMANUALS.org

valve (C).

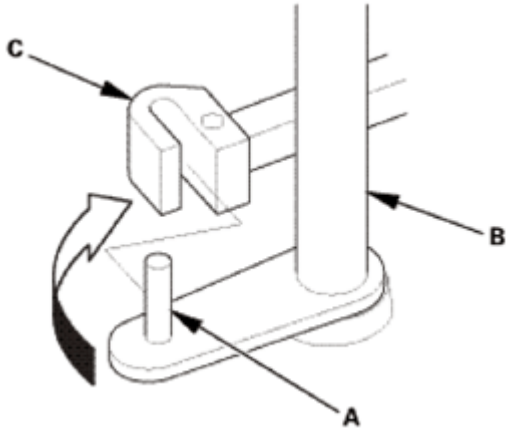

Fig. 225: Aligning Manual Valve Lever Pin On Selector Control Shaft With Guide Of Manual Valve
Courtesy of AMERICAN HONDA MOTOR CO., INC.

3. Hook the detent arm spring (A).

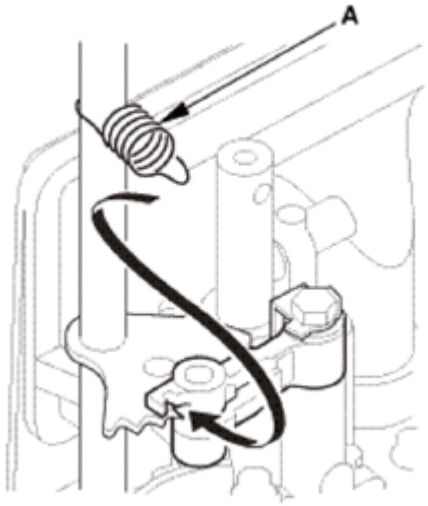

Fig. 226: Hooking Detent Arm Spring
Courtesy of AMERICAN HONDA MOTOR CO., INC.

4. Selector Control Lever (Except 2WD of USA Produced Models)

Except 2WD of USA Produced Models

1. Install the control lever (A) over the selector control shaft (B).
2. Install the lock bolt (C) using a new lock washer (D).
3. Pry up the lock tab (E) of the lock washer against the bolt head.

GETtheMANUALS.org

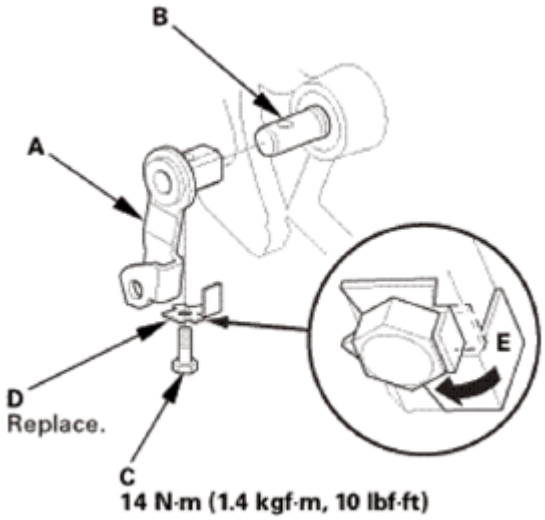

Fig. 227: Prying Up Lock Tab Of Lock Washer (Except 2WD Of USA Produced Models)
Courtesy of AMERICAN HONDA MOTOR CO., INC.

5. Reverse Shift fork
    1. Install the reverse shift fork (A) and the reverse selector (B) together.
    2. Install the lock bolt (C) using a new lock washer (D).
    3. Pry up the lock tab (E) of the lock washer against the bolt head.

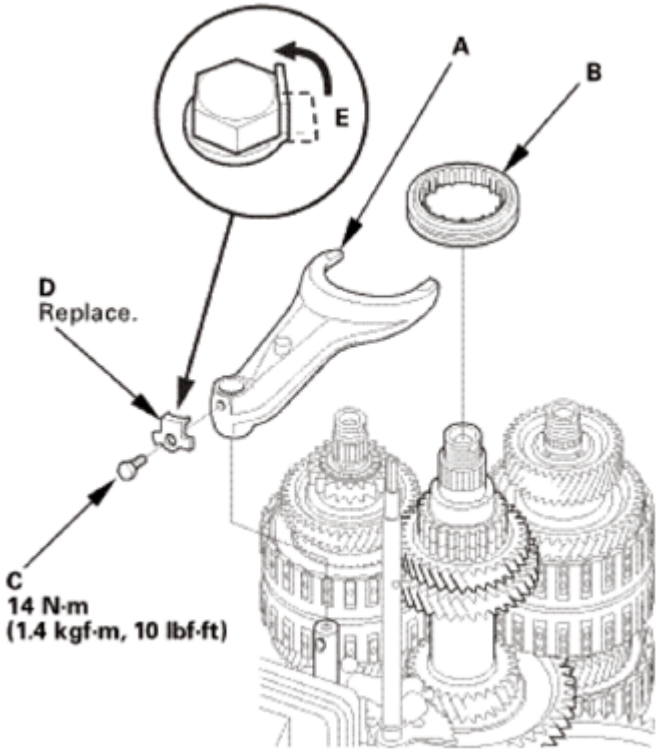

Fig. 228: Prying Up Lock Tab Of Lock Washer Against Bolt Head

GETtheMANUALS.org

Courtesy of AMERICAN HONDA MOTOR CO., INC.

6. A/T Countershaft Reverse Gear
    1. Install the needle bearing (A).
    2. Install the countershaft reverse gear (B).

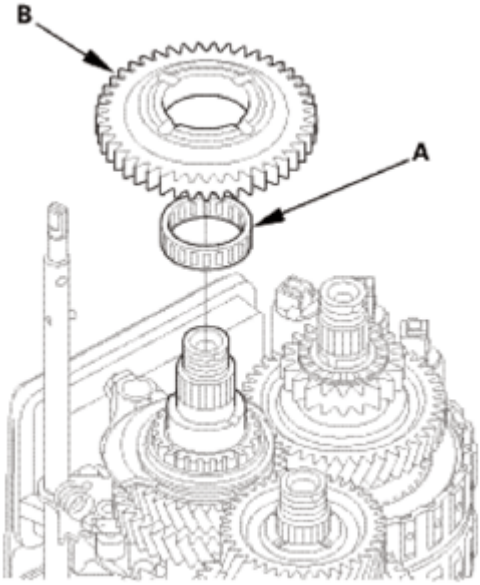

Fig. 229: Identifying Needle Bearing And Countershaft Reverse Gear
Courtesy of AMERICAN HONDA MOTOR CO., INC.

7. Automatic Transmission Housing
    1. Install the three dowel pins (A) and a new gasket (B).
    2. Align the spring pin (C) of the selector control shaft (D) with the transmission housing groove (E).

NOTE: **Do not squeeze the end of the selector control shaft tips together when turning the shaft. If the tips are squeezed together, it will cause a faulty shift position signal or position due to the play between the selector control shaft and the transmission range switch.**

    3. Place the transmission housing (F) on the torque converter housing (G).

NOTE: **Do not install the input shaft (mainshaft) speed sensor and the output shaft (countershaft) speed sensor before installing the transmission housing.**

    4. Wrap the tip of a screwdriver with tape so the reverse idler gear teeth do not get damaged. Engage the reverse idler gear (H) with the reverse gears (I) by rotating the idler gear using the screwdriver.
    5. Make sure the transmission housing is securely seated so there is no clearance between the transmission housing and the torque converter housing.

GETtheMANUALS.org

6. Install the transmission hanger (J), and tighten the transmission housing mounting bolts (2WD: 19 bolts, AWD/4WD: 20 bolts) in at least two steps, in a crisscross pattern.

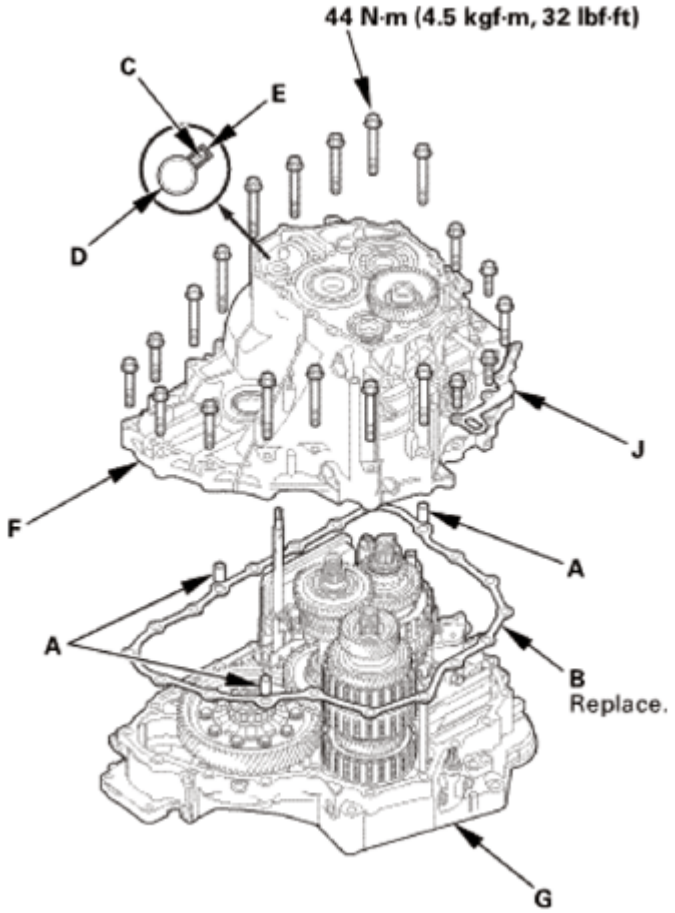

Fig. 230: Identifying Dowel Pins, Gasket, Spring Pin, Selector Control Shaft, Transmission Housing Groove And Mounting Bolts With Torque Specification
Courtesy of AMERICAN HONDA MOTOR CO., INC.

GETtheMANUALS.org

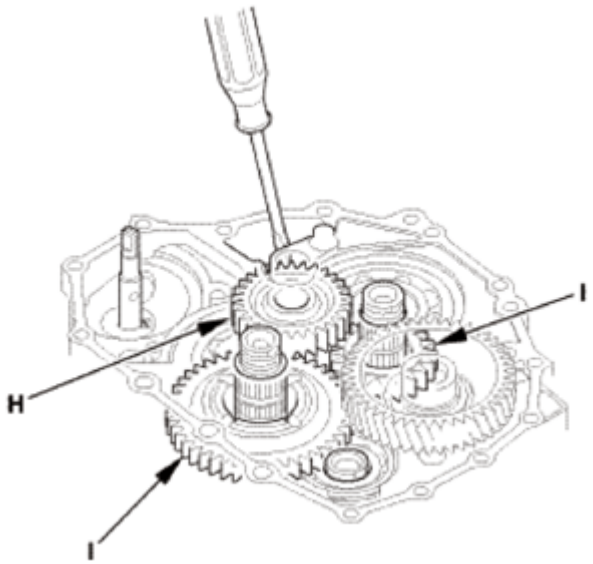

Fig. 231: Engaging Reverse Idler Gear With Reverse Gears By Rotating Idler Gear Using Screwdriver
Courtesy of AMERICAN HONDA MOTOR CO., INC.

8. End Cover Idler Gear Assembly
    1. Install the mainshaft holder onto the mainshaft.

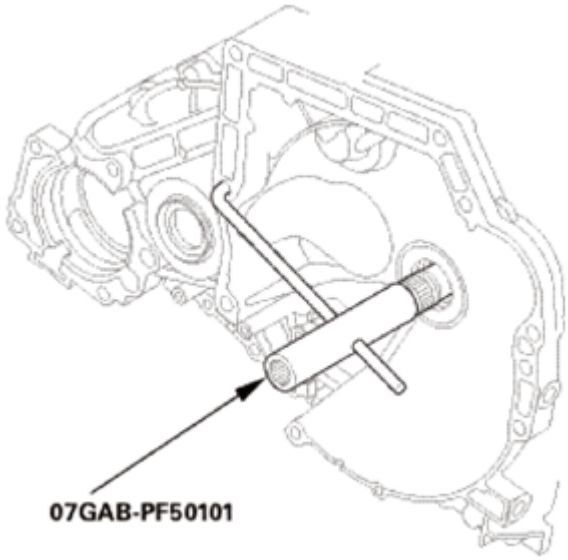

Fig. 232: Installing Mainshaft Holder Onto Mainshaft
Courtesy of AMERICAN HONDA MOTOR CO., INC.

    2. Lubricate the following parts with ATF:
        - Splines and threads of the mainshaft.
        - Splines of the mainshaft idler gear.

GETtheMANUALS.org

- The old conical spring washer and the old locknut.

3. Install the mainshaft idler gear (A), the old conical spring washer (B), and the old locknut (C), and tighten the locknut to 225 N.m (23.0 kgf.m, 166 lbf.ft).

NOTE:

- **Do not tap the mainshaft idler gear to install.**
- **Use a torque wrench to tighten the locknut. Do not use an impact wrench.**

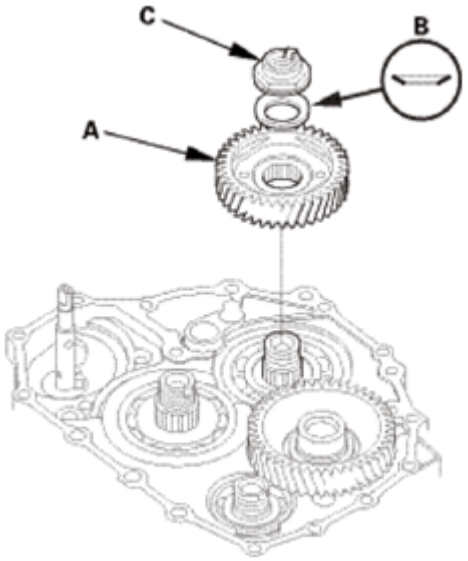

Fig. 233: Identifying Mainshaft Idler Gear, Conical Spring Washer And Locknut
Courtesy of AMERICAN HONDA MOTOR CO., INC.

4. Lubricate the following parts with ATF:
   - Splines and threads of the countershaft.
   - Splines of the park gear.
   - The old conical spring washer and the old locknut.

GETtheMANUALS.org

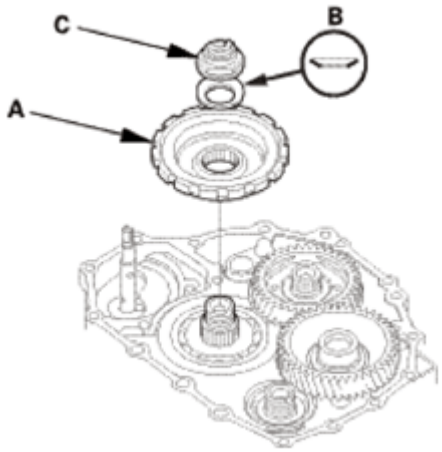

Fig. 234: Identifying Park Gear, Conical Spring Washer And Old Locknut
Courtesy of AMERICAN HONDA MOTOR CO., INC.

5. Install the park gear (A), the old conical spring washer (B), and the old locknut (C).
6. Install the park lever spring (D), the park lever (E), and the park lever stop (F).
7. Install the lock bolt (G) using a new lock washer (H).

NOTE: **Do not bend the lock tab of the lock washer until inspect the park lever stop.**

8. Install the park pawl shaft (I), the park pawl spring (J), the park pawl (K), and the stop shaft (L).
9. Lift the park pawl up, and engage it with the park gear, and tighten the locknut to 225 N.m (23.0 kgf.m, 166 lbf.ft).

NOTE:

- **Do not tap the park gear to install.**
- **Use a torque wrench to tighten the locknut. Do not use an impact wrench.**
- **Countershaft locknut has left-hand threads.**

GETtheMANUALS.org

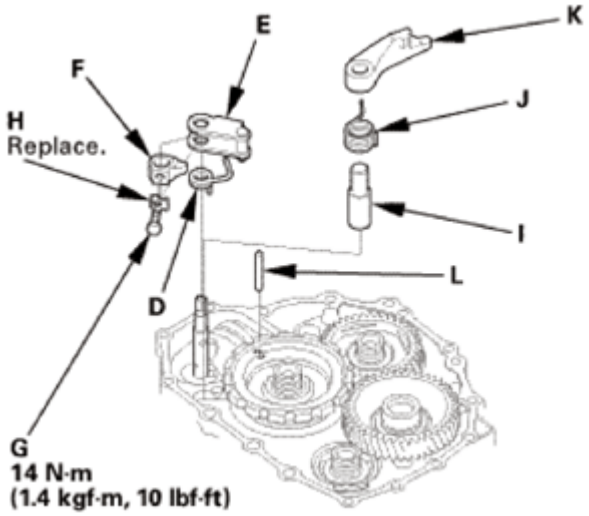

Fig. 235: Identifying Park Pawl Spring, Park Lever Spring, Park Lever, Lock Bolt, Lock Washer, Stop Shaft
Courtesy of AMERICAN HONDA MOTOR CO., INC.

10. Remove the old locknuts and the old conical spring washers from the mainshaft and the countershaft.
11. Lubricate the following parts with ATF:
    - Splines and threads of the mainshaft, the countershaft, and the secondary shaft.
    - New conical spring washers and new locknuts.
    - Areas where the conical spring washers contact the mainshaft idler gear and the park gear.

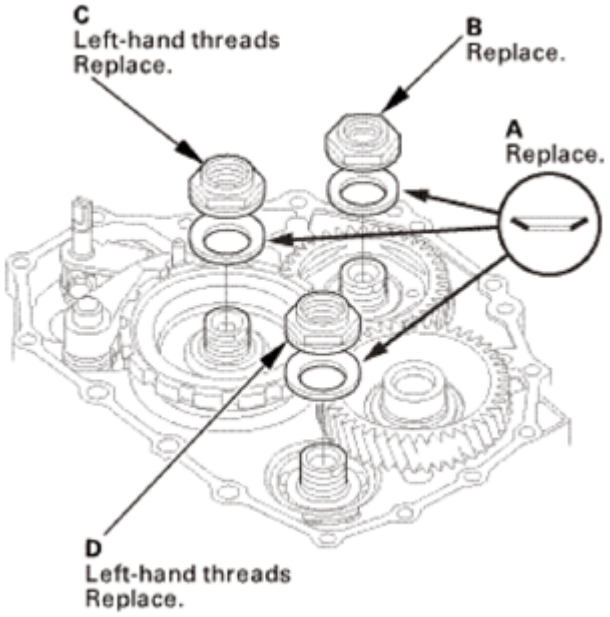

Fig. 236: Identifying Conical Spring Washers, Mainshaft Locknut, Countershaft Locknut And Secondary Shaft Locknut

GETtheMANUALS.org

Courtesy of AMERICAN HONDA MOTOR CO., INC.

12. Install new conical spring washers (A) in the direction shown.
13. Install a new mainshaft locknut (B), a new countershaft locknut (C), and a new secondary shaft locknut (D).
14. Tighten the locknuts to 167 N.m (17.0 kgf.m, 123 lbf.ft).

NOTE:

- **Use a torque wrench to tighten the locknut. Do not use an impact wrench.**
- **The countershaft and secondary shaft locknuts have left-hand threads.**

15. Remove the mainshaft holder.
16. Stake the locknuts into the shafts to a depth (A) of 0.7-1.3 mm (0.027-0.051 in) using a 3.5 mm punch (B).

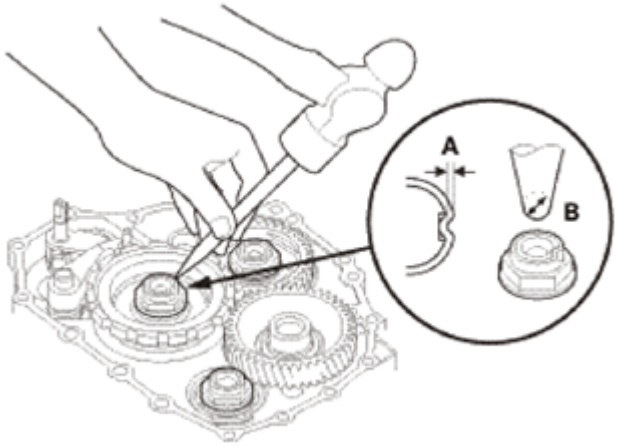

Fig. 237: Staking Locknuts Into Shafts Using Punch
Courtesy of AMERICAN HONDA MOTOR CO., INC.

17. Set the park lever in the P position.
18. Measure the distance (A) between the center of the park pawl shaft (B) and the center of the park lever roller pin (C) as shown.

Standard: 57.7-58.7 mm (2.272-2.311 in)

GETtheMANUALS.org

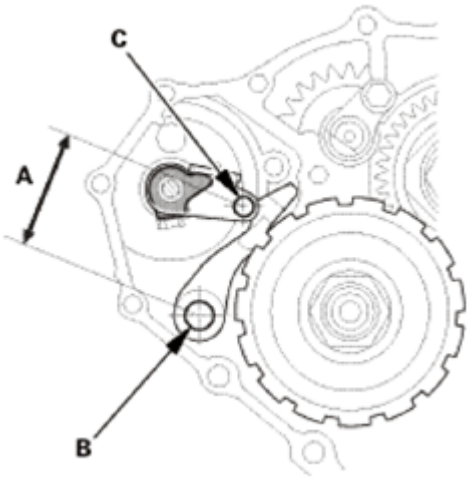

Fig. 238: Measuring Distance Between Center Of Park Pawl Shaft And Center Of Park Lever Roller Pin
Courtesy of AMERICAN HONDA MOTOR CO., INC.

19. If the measurement is out of the standard, select and install the appropriate park lever stop (A) from the table.

PARK LEVER STOP SPECIFICATION

Mark	B	C
1	11.00 mm (0.4331 in)	11.00 mm (0.4331 in)
2	10.80 mm (0.4252 in)	10.65 mm (0.4193 in)
3	10.60 mm (0.4173 in)	10.30 mm (0.4055 in)

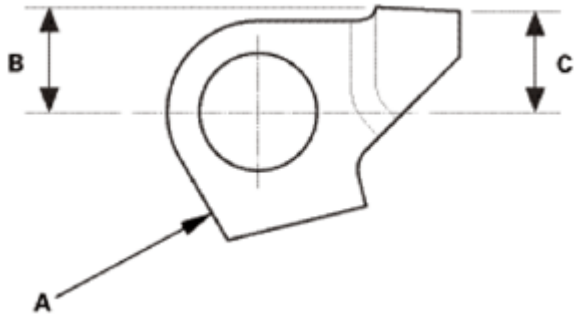

Fig. 239: Identifying Park Lever Stop Dimension
Courtesy of AMERICAN HONDA MOTOR CO., INC.

20. After replacing the park lever stop, make sure the distance is within the tolerance.
21. Pry up the lock tab (A) of the lock washer against the bolt head.

GETtheMANUALS.org

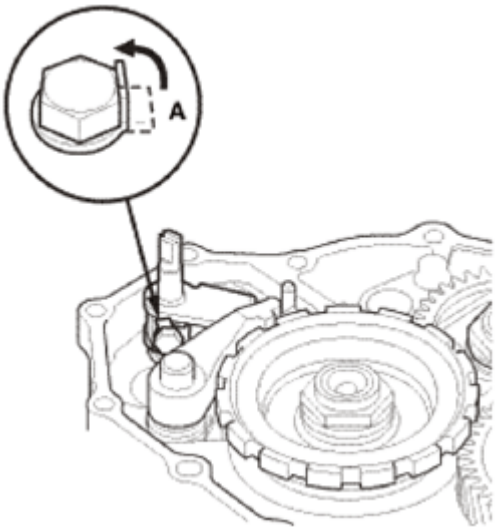

Fig. 240: Prying Up Lock Tab Of Lock Washer Against Bolt Head
Courtesy of AMERICAN HONDA MOTOR CO., INC.

9. ATF Feed Pipe/Lubrication Pipe
    1. Install the 6 x 201 mm ATF pipe (A).
    2. Install the ATF lubrication pipe (B).
    3. Install the 8 x 220 mm ATF pipe (C).
    4. Install the 8 x 198 mm ATF pipes (D).

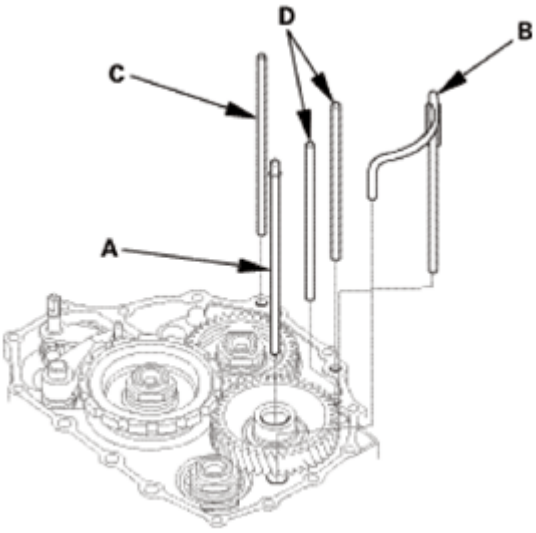

Fig. 241: Identifying ATF Feed Pipes And Lubrication Pipe
Courtesy of AMERICAN HONDA MOTOR CO., INC.

10. A/T Shift Solenoid Wire Harness - Reconnection
    1. Connect the shift solenoid valve connectors:
        - BLU wire to shift solenoid valve A.

GETtheMANUALS.org

- ORN wire to shift solenoid valve B.
- GRN wire to shift solenoid valve C.
- YEL, WHT, and WHT wires to shift solenoid valve D.
- RED wire to shift solenoid valve E.

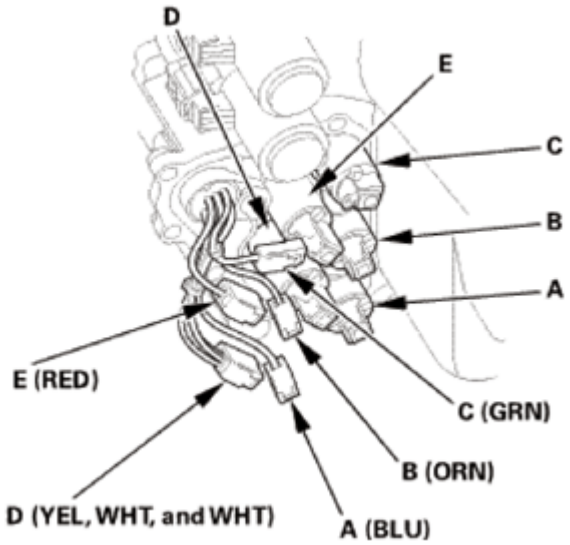

Fig. 242: Identifying Shift Solenoid Valves
Courtesy of AMERICAN HONDA MOTOR CO., INC.

11. A/T Shift Solenoid Cover
    1. Install the shift solenoid valve cover (A) with the dowel pins (B) and a new gasket (C).

GETtheMANUALS.org

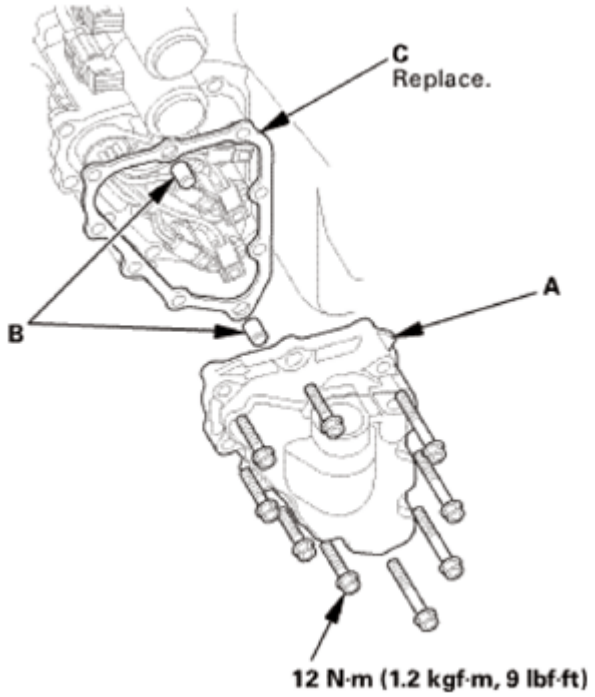

Fig. 243: Identifying Shift Solenoid Valve Cover, Dowel Pins, Gasket And Mounting Bolts With Torque Specification
Courtesy of AMERICAN HONDA MOTOR CO., INC.

12. Dipstick Guide Tube
    1. Install a new O-ring (A) on the ATF dipstick guide tube (B).
    2. Install the ATF dipstick guide tube.

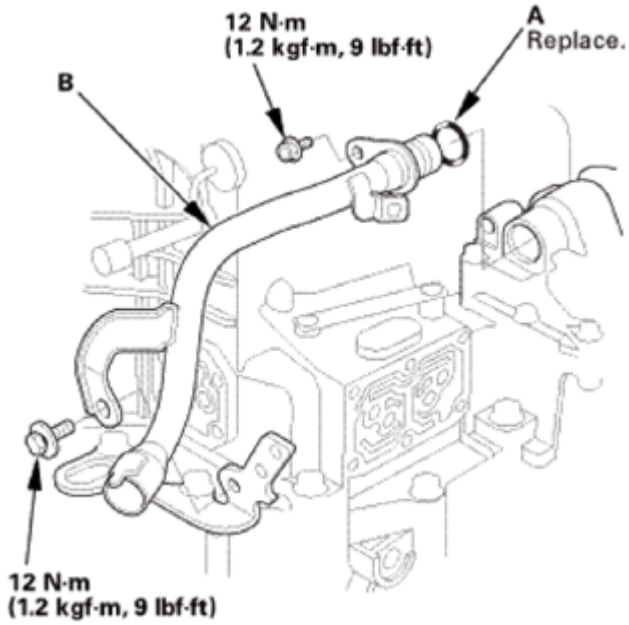

GETtheMANUALS.org

Fig. 244: Identifying ATF Dipstick Guide Tube, O-Ring And Mounting Bolts With Torque Specification
Courtesy of AMERICAN HONDA MOTOR CO., INC.

13. ATF Outlet Line
    1. Install the ATF outlet line (A) using new sealing washers (B).

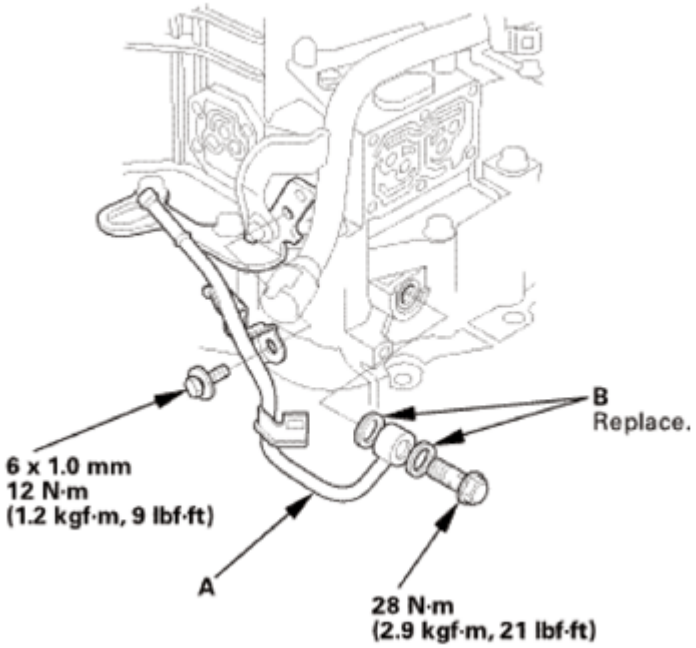

Fig. 245: Identifying ATF Outlet Line, Sealing Washers And Mounting Bolts With Torque Specification
Courtesy of AMERICAN HONDA MOTOR CO., INC.

14. ATF Inlet Line
    1. Install the ATF inlet line (A) using new sealing washers (B).

GETtheMANUALS.org

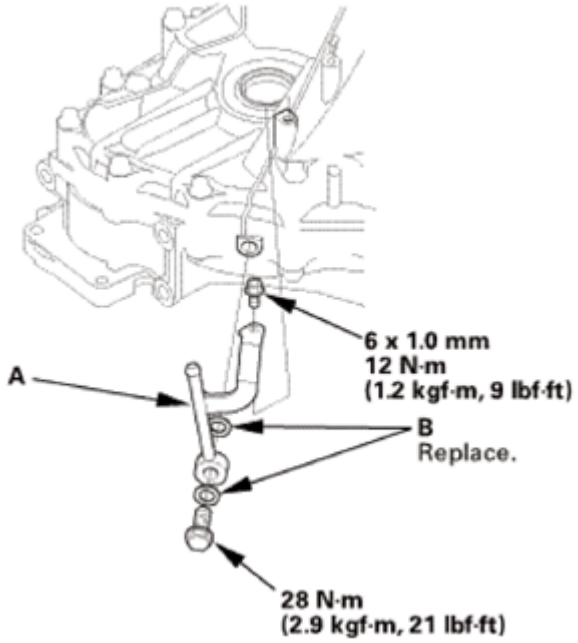

Fig. 246: Identifying ATF Inlet Line, Sealing Washers And Mounting Bolts With Torque Specification
Courtesy of AMERICAN HONDA MOTOR CO., INC.

15. A/T Clutch Pressure Control Solenoid Valve B and C
    1. Clean the mounting surfaces and the fluid passages of the solenoid valve body and the transmission housing.
    2. Install a new gasket (A) with the blue side toward the transmission housing, and Install the ATF joint pipes (D).
    3. Install new O-rings (E) over the ATF joint pipes.
    4. Install A/T clutch pressure control solenoid valves B and C with the clamp bracket (F).

GETtheMANUALS.org

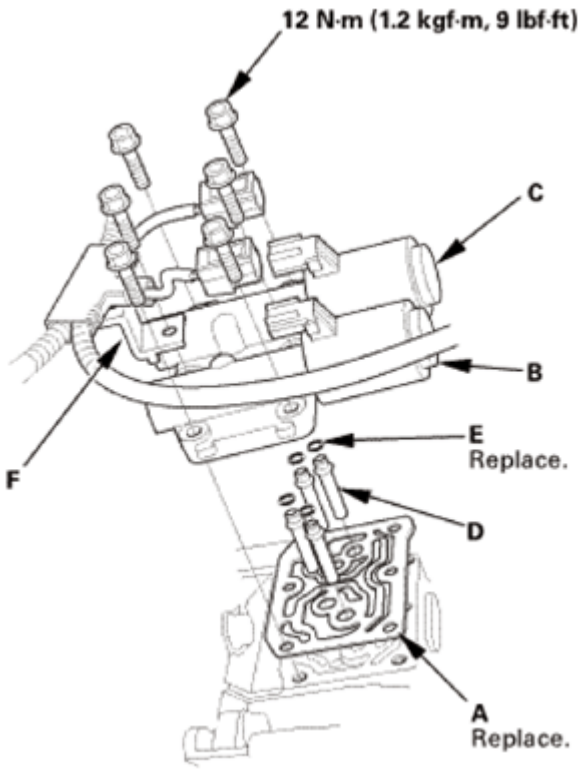

Fig. 247: Identifying Gasket, ATF Joint Pipes, O-Rings, A/T Clutch Pressure Control Solenoid Valves, Clamp Bracket And Mounting Bolts With Torque Specification
Courtesy of AMERICAN HONDA MOTOR CO., INC.

16. A/T Clutch Pressure Control Solenoid Valve A
    1. Clean the mounting surfaces and the fluid passages of the solenoid valve body and the transmission housing.
    2. Install a new gasket (B) with the blue side toward the transmission housing, and install the 35 mm ATF pipe (C) and the ATF joint pipes (D).
    3. Install new O-rings (E) over the ATF joint pipes.
    4. Install A/T clutch pressure control solenoid valve A.

GETtheMANUALS.org

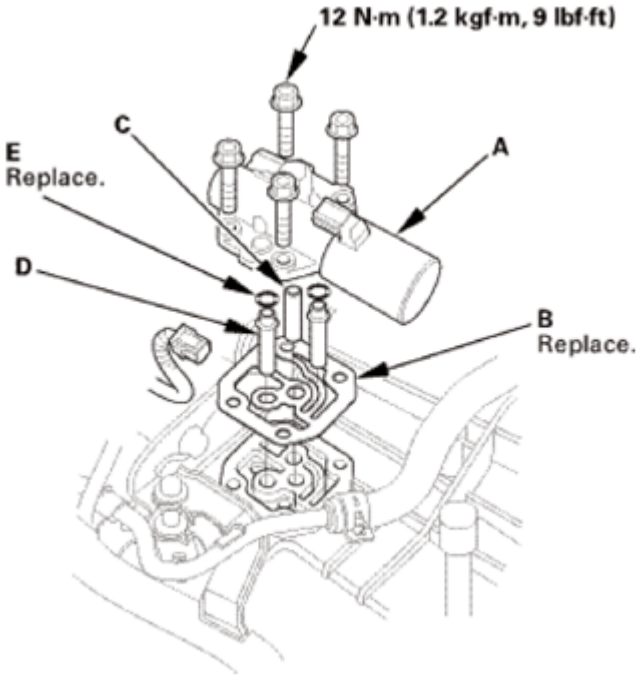

Fig. 248: Identifying A/T Clutch Pressure Control Solenoid Valve, Gasket, ATF Pipe, ATF Joint Pipes And Mounting Bolts With Torque Specification
Courtesy of AMERICAN HONDA MOTOR CO., INC.

17. Output Shaft (Countershaft) Speed Sensor
    1. Install a new O-ring (A) on the output shaft (countershaft) speed sensor (B).
    2. Install the output shaft (countershaft) speed sensor and senser washer (C).

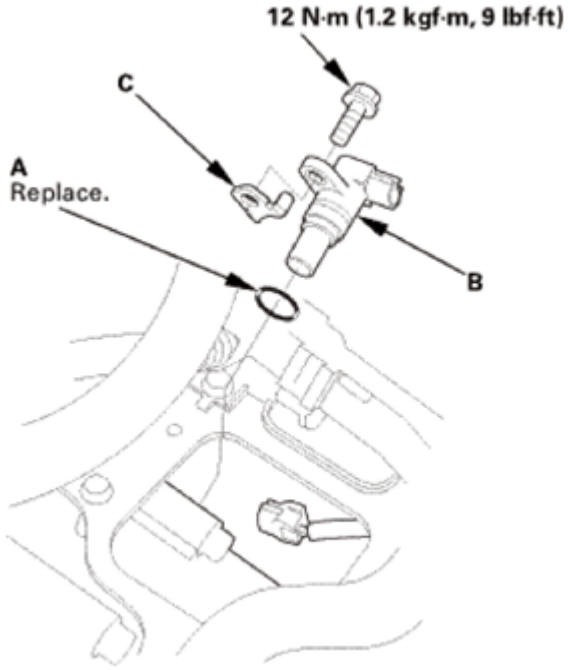

GETtheMANUALS.org

Fig. 249: Identifying Output Shaft (Countershaft) Speed Sensor, O-Ring, Sensor Washer And Mounting Bolts With Torque Specification
Courtesy of AMERICAN HONDA MOTOR CO., INC.

18. Input Shaft (Mainshaft) Speed Sensor
    1. Install a new O-ring (A) on the input shaft (mainshaft) speed sensor (B).
    2. Install the input shaft (mainshaft) speed sensor.

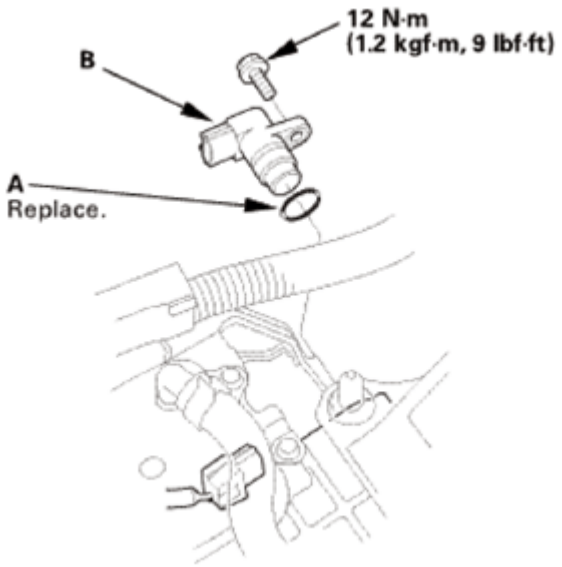

Fig. 250: Identifying Input Shaft (Mainshaft) Speed Sensor, O-Ring And Mounting Bolt With Torque Specification
Courtesy of AMERICAN HONDA MOTOR CO., INC.

19. Transmission End Cover
    1. Install the dowel pins (A) and a new gasket (B).
    2. Install new O-rings (C) over the ATF pipes.
    3. Install the end cover (D), and tighten the three special bolts (E) and the 6 x 1.0 mm bolts (F) (12 bolts).

GETtheMANUALS.org

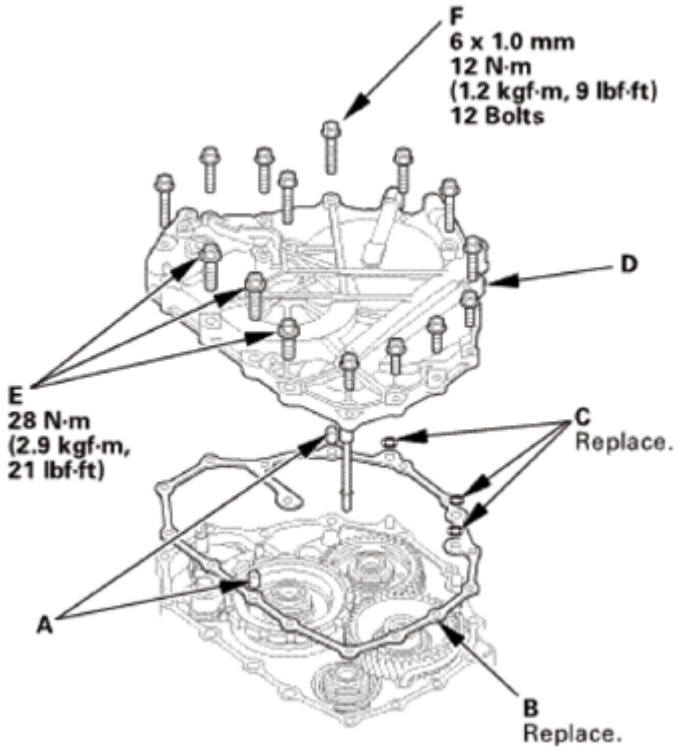

Fig. 251: Identifying Dowel Pins, Gasket, O-Rings, End Cover And Mounting Bolts With Torque Specification
Courtesy of AMERICAN HONDA MOTOR CO., INC.

20. Transmission Range Switch Subharness
    1. Install the clamp brackets (A).
    2. Install the transmission range switch subharness (B).

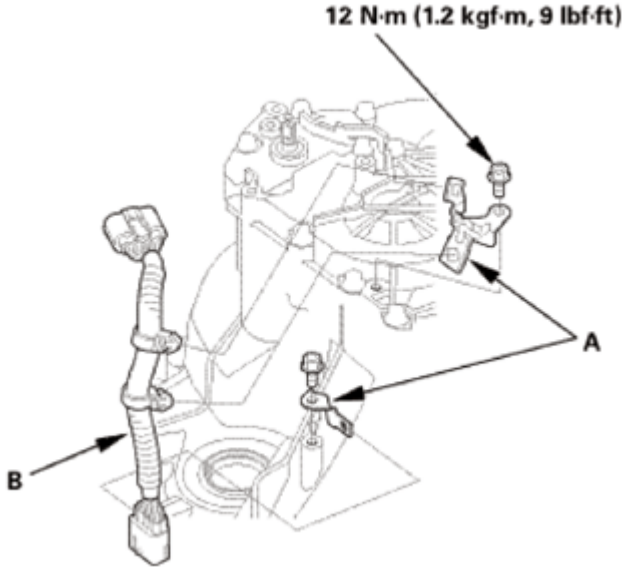

GETtheMANUALS.org

Fig. 252: Identifying Transmission Range Switch Subharness, Clamp Brackets And Mounting Bolts With Torque Specification
Courtesy of AMERICAN HONDA MOTOR CO., INC.

21. Transmission Range Switch
    1. Make sure the selector control shaft is in the N position. If necessary, move the selector control shaft to the N position.

NOTE: **Do not use the selector control shaft to adjust the shift position. If the selector control shaft tips are squeezed together it will cause a faulty signal or position due to play between the selector control shaft and switch.**

Fig. 253: Moving Selector Control Shaft To N Position
Courtesy of AMERICAN HONDA MOTOR CO., INC.

2. Align the cutouts (A) on the rotary-frame with the neutral positioning cutouts (B) on the transmission range switch (C), then put a 2.0 mm (0.079 in) feeler gauge blade (D) in the cutouts to hold the switch in the N position.

NOTE: **Be sure to use a 2.0 mm (0.079 in) blade or equivalent to hold the switch in the N position.**

GETtheMANUALS.org

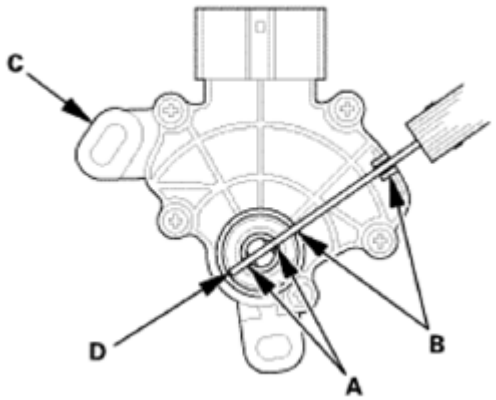

Fig. 254: Aligning Cutouts On Rotary-Frame With Neutral Positioning Cutouts On Transmission Range Switch
Courtesy of AMERICAN HONDA MOTOR CO., INC.

3. Install the transmission range switch (A) gently on the selector control shaft (B) while holding it in the N position with the 2.0 mm (0.079 in) blade (C).

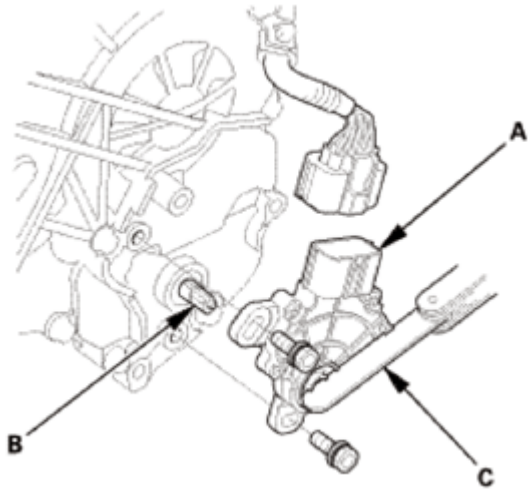

Fig. 255: Identifying Transmission Range Switch, Selector Control Shaft And Blade
Courtesy of AMERICAN HONDA MOTOR CO., INC.

4. Tighten the bolts on the transmission range switch (A) while you continue holding the N position.

NOTE: **Do not move the transmission range switch when tightening the bolts.**

5. Remove the feeler gauge (B).
6. Check the connector (C) for corrosion, dirt, or oil, and clean or repair if necessary, then connect the connector securely.

GETtheMANUALS.org

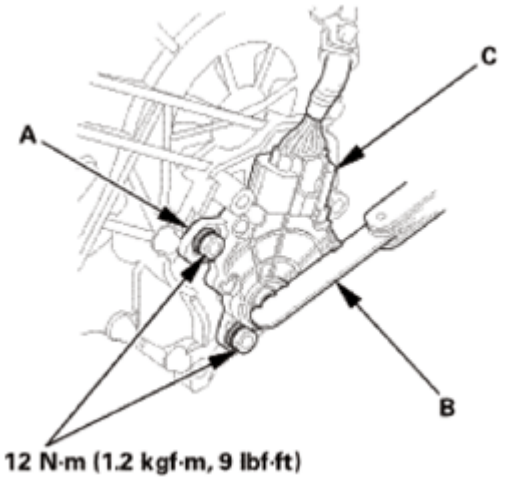

Fig. 256: Identifying Transmission Range Switch, Connector, Feeler Gauge And Mounting Bolts With Torque Specification
Courtesy of AMERICAN HONDA MOTOR CO., INC.

22. Transmission Range Switch Cover
    1. Install the transmission range switch cover (A).

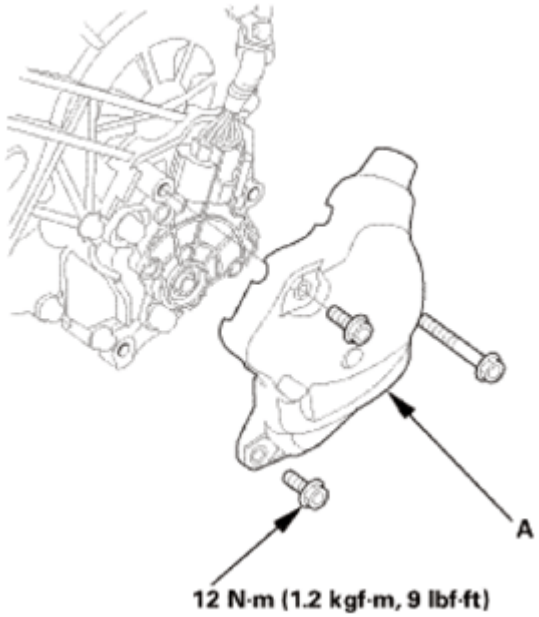

Fig. 257: Identifying Transmission Range Switch Cover And Mounting Bolts With Torque Specification
Courtesy of AMERICAN HONDA MOTOR CO., INC.

A/T DIFFERENTIAL CARRIER AND FINAL DRIVEN GEAR REMOVAL AND INSTALLATION

GETtheMANUALS.org

SPECIAL TOOL REQUIRED

Image	Description/Tool Number
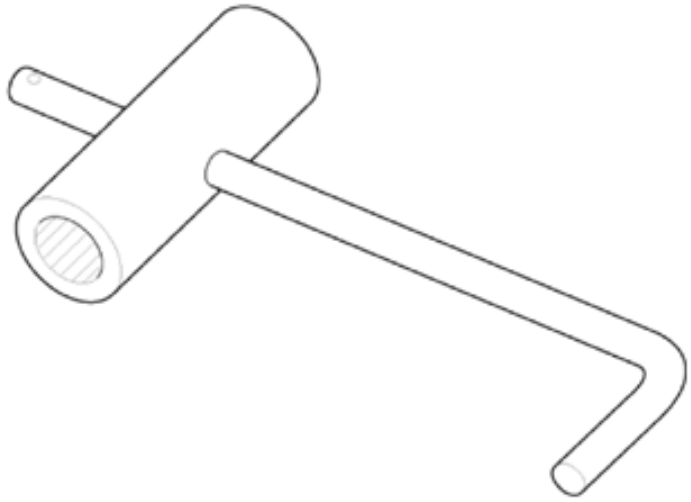	Mainshaft Holder 07GAB-PF50101
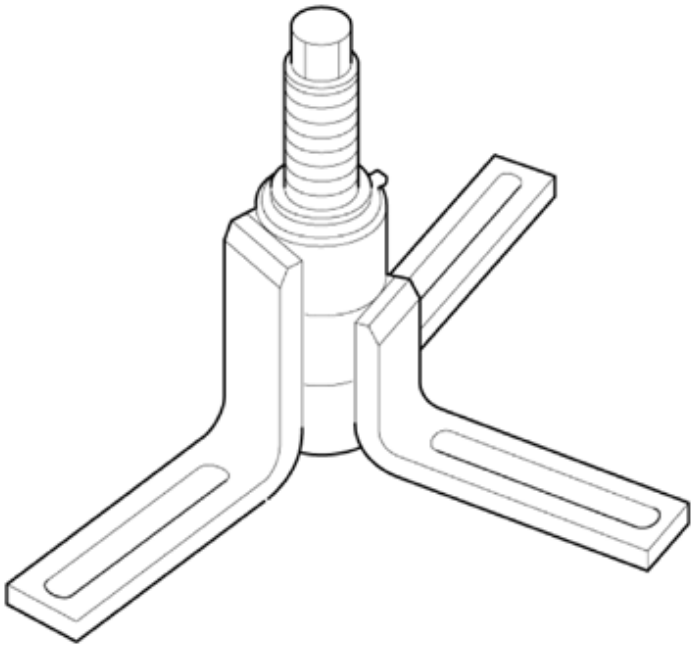	Housing Puller 07HAC-PK40102

REMOVAL

1. Transmission Range Switch Cover
    1. Remove the transmission range switch cover (A).

GETtheMANUALS.org

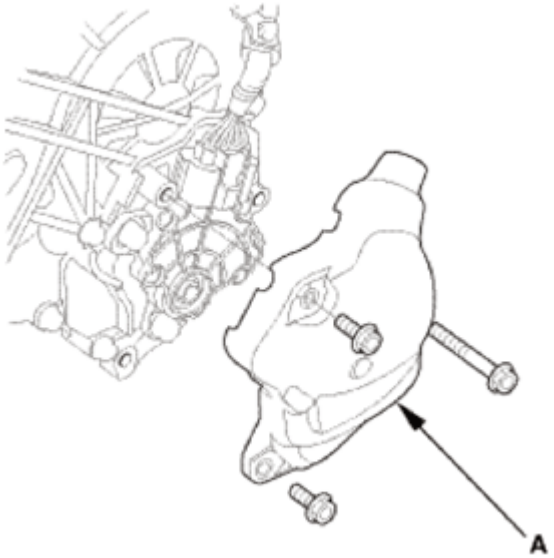

Fig. 258: Identifying Transmission Range Switch Cover With Bolts
Courtesy of AMERICAN HONDA MOTOR CO., INC.

2. Transmission Range Switch
    1. Remove the transmission range switch (A).

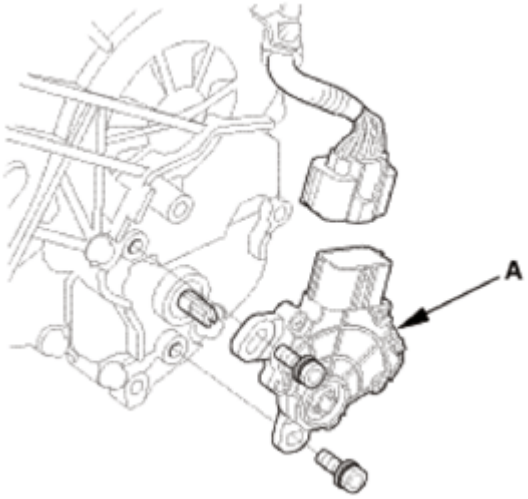

Fig. 259: Identifying Transmission Range Switch With Bolts
Courtesy of AMERICAN HONDA MOTOR CO., INC.

3. Transmission Range Switch Subharness
    1. Remove the transmission range switch subharness (A).
    2. Remove the clamp brackets (B).

GETtheMANUALS.org

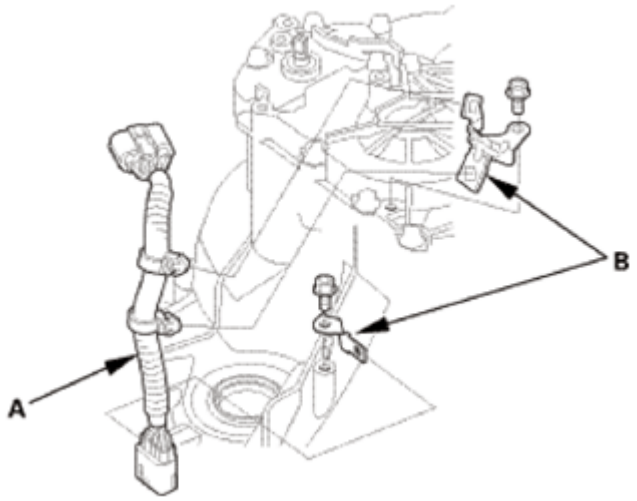

Fig. 260: Identifying Transmission Range Switch Subharness And Clamp Brackets
Courtesy of AMERICAN HONDA MOTOR CO., INC.

4. Transmission End Cover
    1. Remove the end cover (A), the dowel pins (B), the O-rings (C), and the gasket (D).

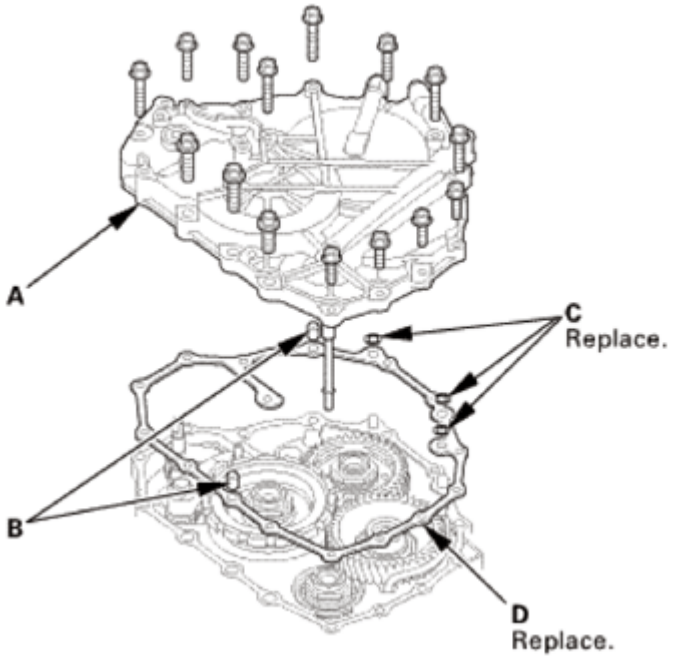

Fig. 261: Identifying Transmission End Cover, Dowel Pins, O-Rings And Gasket With Bolts
Courtesy of AMERICAN HONDA MOTOR CO., INC.

5. Input Shaft (Mainshaft) Speed Sensor
    1. Remove the input shaft (mainshaft) speed sensor (A).
    2. Remove the O-ring (B) from the input shaft (mainshaft) speed sensor.

GETtheMANUALS.org

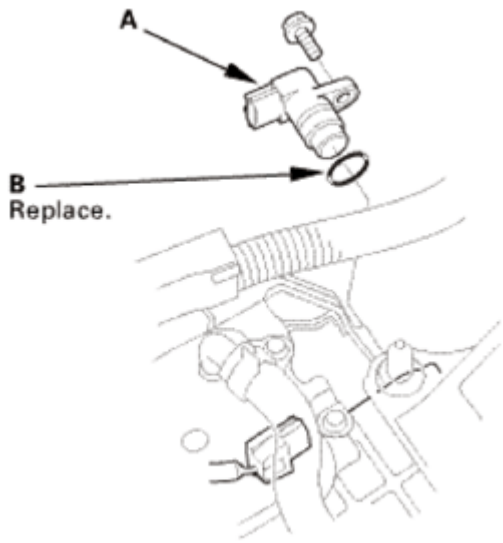

Fig. 262: Identifying Input Shaft (Mainshaft) Speed Sensor And O-Ring
Courtesy of AMERICAN HONDA MOTOR CO., INC.

6. Output Shaft (Countershaft) Speed Sensor
    1. Remove the output shaft (countershaft) speed sensor (A) and the sensor washer (B).
    2. Remove the O-ring (C) from the output shaft (countershaft) speed sensor.

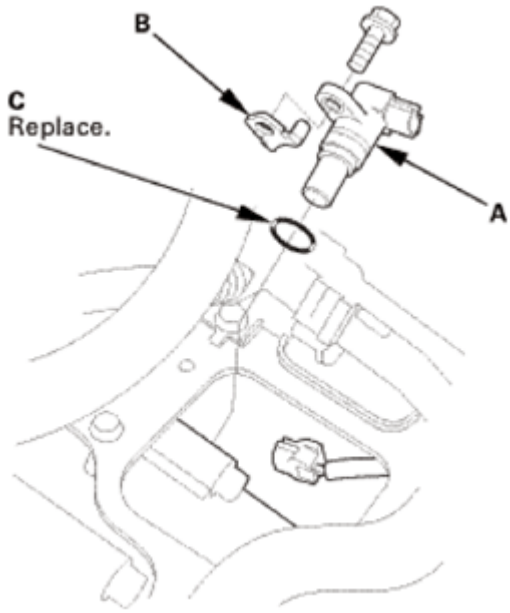

Fig. 263: Identifying Output Shaft (Countershaft) Speed Sensor, Sensor Washer And O-Ring
Courtesy of AMERICAN HONDA MOTOR CO., INC.

7. A/T Clutch Pressure Control Solenoid Valve A
    1. Remove A/T clutch pressure control solenoid valve A.
    2. Remove the 35 mm ATF pipe (B), the ATF joint pipes (C), the O-rings (D), and the gasket (E).

GETtheMANUALS.org

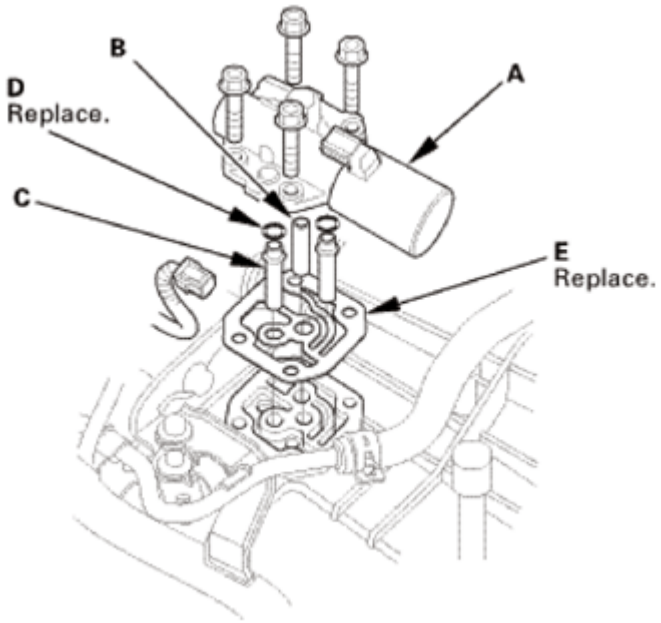

Fig. 264: Identifying A/T Clutch Pressure Control Solenoid Valve, ATF Pipe, ATF Joint Pipes, O-Rings And Gasket With Bolts
Courtesy of AMERICAN HONDA MOTOR CO., INC.

8. A/T Clutch Pressure Control Solenoid Valve B and C
    1. Remove the clamp bracket (A) and A/T clutch pressure control solenoid valves B and C.
    2. Remove the ATF joint pipes (D), the O-rings (E), and the gasket (F).

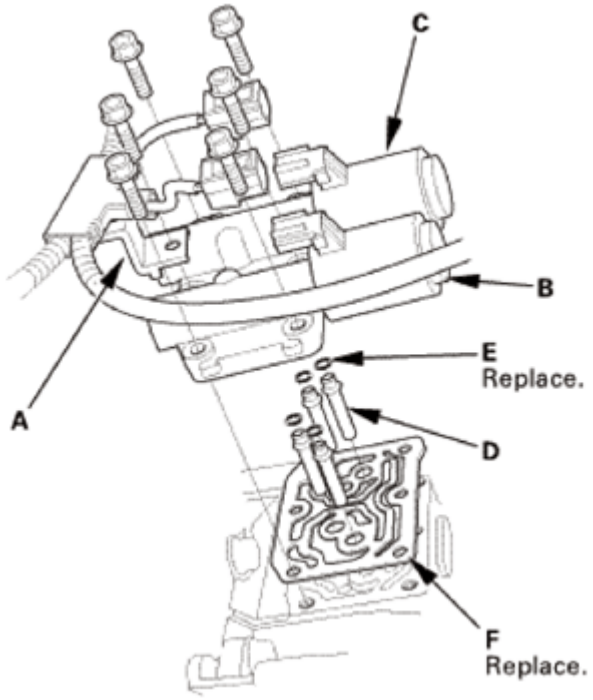

GETtheMANUALS.org

Fig. 265: Identifying A/T Clutch Pressure Control Solenoid Valves, Clamp Bracket, ATF Joint Pipes, O-Rings And Gasket
Courtesy of AMERICAN HONDA MOTOR CO., INC.

9. ATF Inlet Line
    1. Remove the banjo bolt (A) and the sealing washers (B).
    2. Remove the ATF inlet line (C).

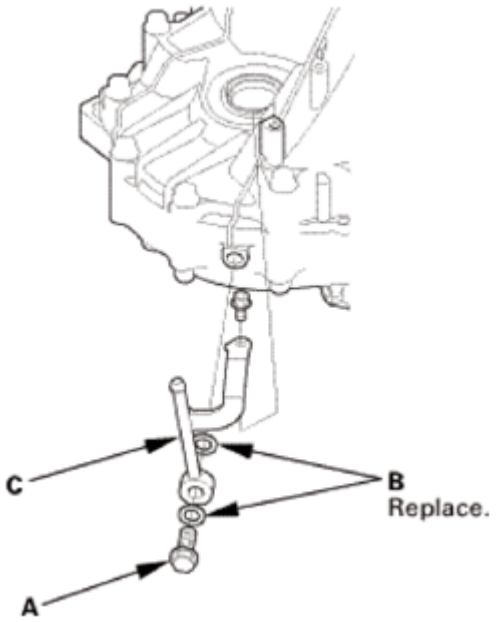

Fig. 266: Identifying ATF Inlet Line, Banjo Bolt And Sealing Washers
Courtesy of AMERICAN HONDA MOTOR CO., INC.

10. ATF Outlet Line
    1. Remove the banjo bolt (A) and the sealing washers (B).
    2. Remove the ATF outlet line (C).

GETtheMANUALS.org

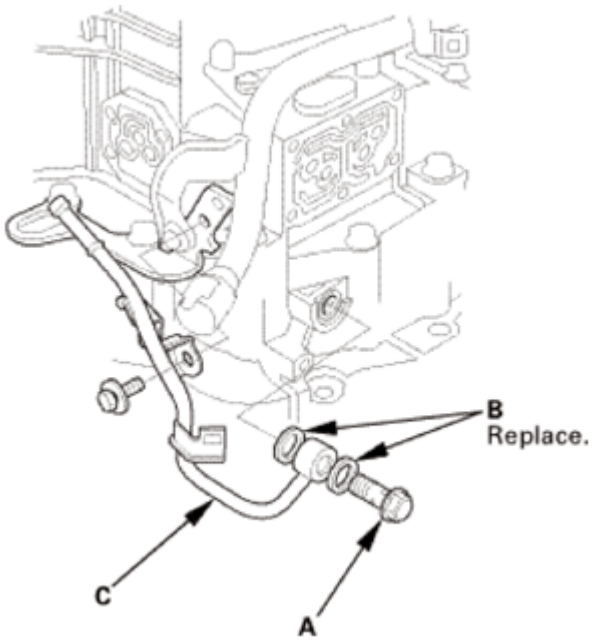

Fig. 267: Identifying ATF Outlet Line, Banjo Bolt And Sealing Washers
Courtesy of AMERICAN HONDA MOTOR CO., INC.

11. Dipstick Guide Tube
    1. Remove the ATF dipstick guide tube (A).
    2. Remove the O-ring (B) from the ATF dipstick guide tube.

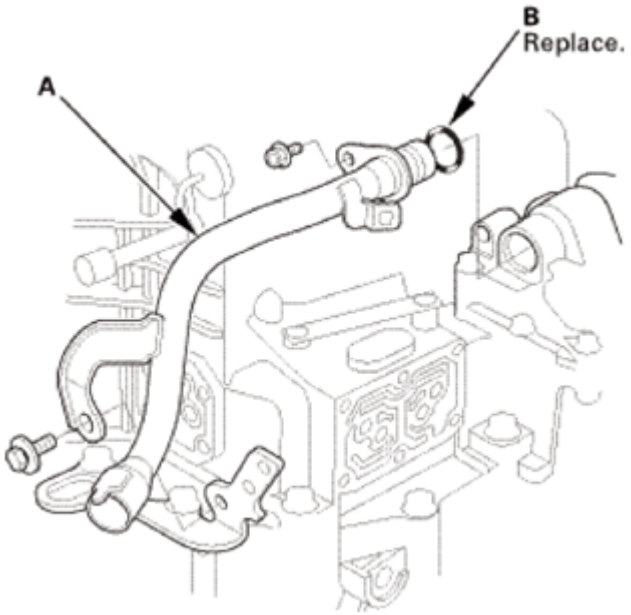

Fig. 268: Identifying ATF Dipstick Guide Tube And O-Ring
Courtesy of AMERICAN HONDA MOTOR CO., INC.

GETtheMANUALS.org

12. A/T Shift Solenoid Cover
    1. Remove the shift solenoid valve cover (A), the dowel pins (B), and the gasket (C).

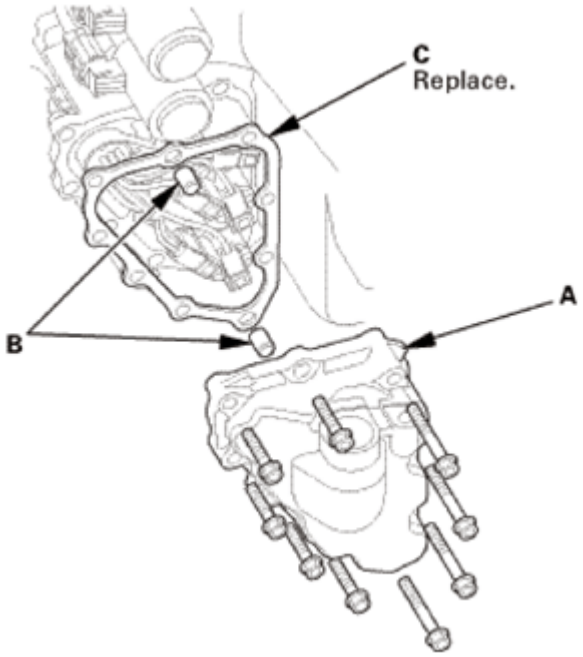

Fig. 269: Identifying Shift Solenoid Valve Cover, Dowel Pins And Gasket
Courtesy of AMERICAN HONDA MOTOR CO., INC.

13. A/T Shift Solenoid Wire Harness - Disconnection
    1. Disconnect the connectors.

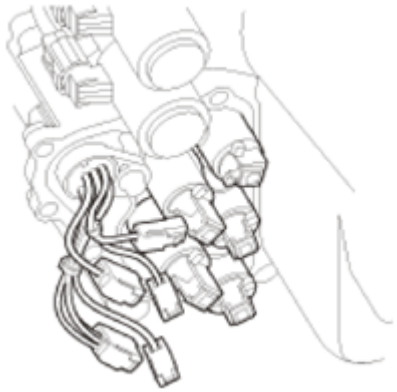

Fig. 270: Identifying A/T Shift Solenoid Wire Harness Connectors
Courtesy of AMERICAN HONDA MOTOR CO., INC.

14. ATF Feed Pipe/Lubrication Pipe
    1. Remove the 6 x 201 mm ATF pipe (A).
    2. Remove the ATF lubrication pipe (B).

GETtheMANUALS.org

3. Remove the 8 x 220 mm ATF pipe (C).
4. Remove the 8 x 198 mm ATF pipes (D).

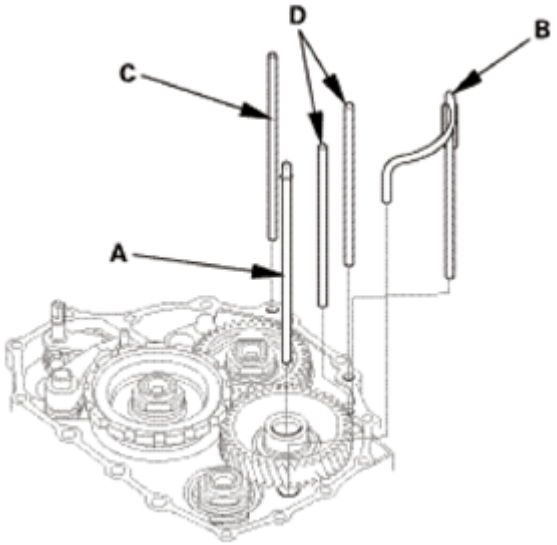

Fig. 271: Identifying ATF Feed Pipes And Lubrication Pipe
Courtesy of AMERICAN HONDA MOTOR CO., INC.

15. End Cover Idler Gear Assembly
    1. Install the mainshaft holder onto the mainshaft.
    2. Engage the park pawl with the park gear.

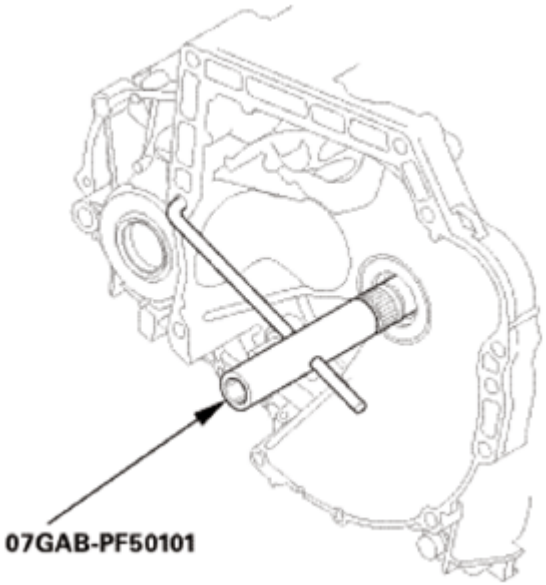

Fig. 272: Installing Mainshaft Holder Onto Mainshaft
Courtesy of AMERICAN HONDA MOTOR CO., INC.

GETtheMANUALS.org

3. Using a chisel, cut the lock tab (A) of the locknut (B).

NOTE: **Keep all of the chiseled particles out of the transmission.**

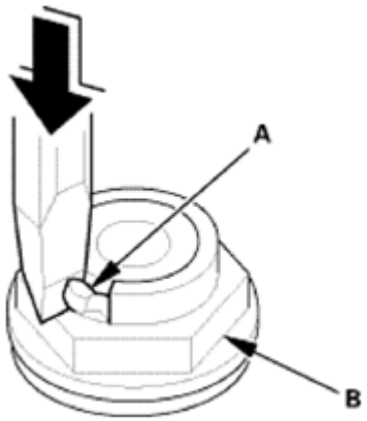

Fig. 273: Cutting Lock Tab Of Locknut Using Chisel
Courtesy of AMERICAN HONDA MOTOR CO., INC.

4. Remove the locknuts (A) and the conical spring washers (B) from each shaft.

NOTE:

- **The countershaft and secondary shaft locknuts have left-hand threads.**
- **Keep all of the chiseled particles out of the transmission.**
- **Clean the old locknuts; they are used to install the press fit idler gears and park gear.**

5. Remove the mainshaft holder.

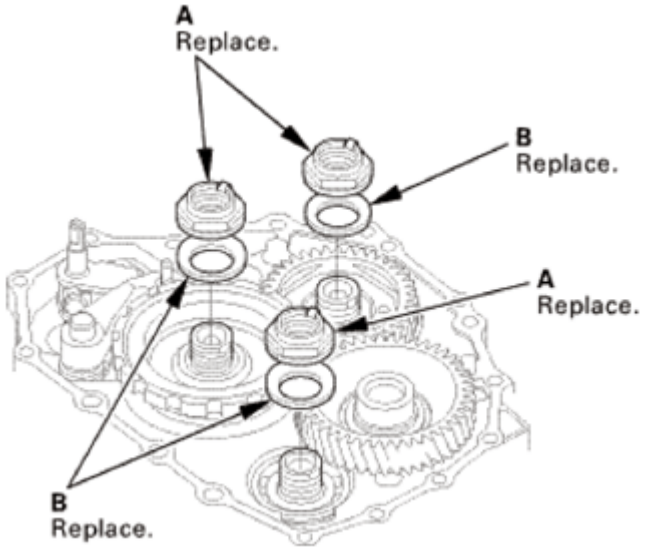

GETtheMANUALS.org

Fig. 274: Identifying Locknuts And Conical Spring Washers
Courtesy of AMERICAN HONDA MOTOR CO., INC.

6. Remove the park pawl (A), the park pawl spring (B), the park pawl shaft (C), and the stop shaft (D).
7. Pry down the lock tab (E) of the lock washer (F).
8. Remove the lock bolt (G) and the lock washer.
9. Remove the park lever (H), the park lever stop (I), and the park lever spring (J).

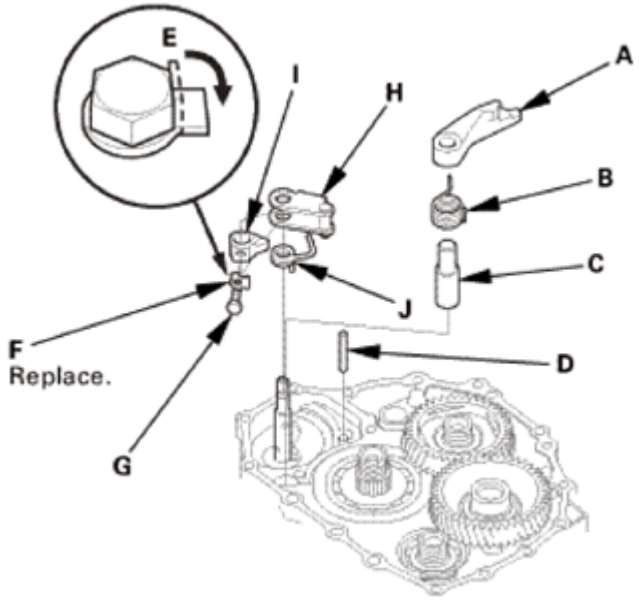

Fig. 275: Prying Down Lock Tab Of Lock Washer
Courtesy of AMERICAN HONDA MOTOR CO., INC.

10. Place a spacer (A) on the countershaft (B).
11. Set a commercially available bearing puller (C) on the park gear (D).
12. Remove the park gear.

GETtheMANUALS.org

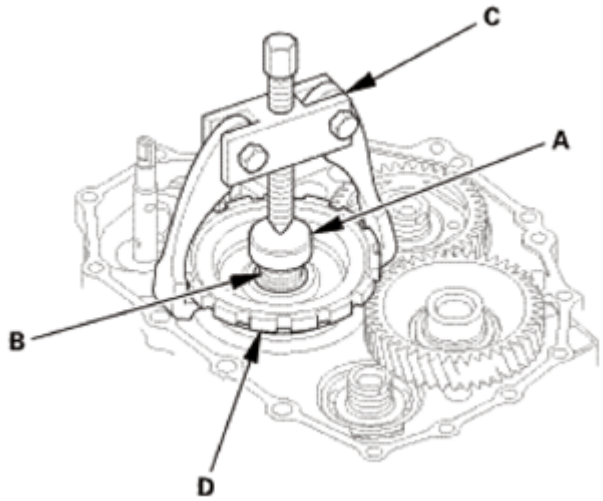

Fig. 276: Setting Commercially Available Bearing Puller On Park Gear
Courtesy of AMERICAN HONDA MOTOR CO., INC.

13. Install a puller (A) with two 6 x 1.0 mm bolts (B) on the mainshaft idler gear (C).
14. Set a spacer (D) between the puller and the mainshaft (E).
15. Remove the mainshaft idler gear.

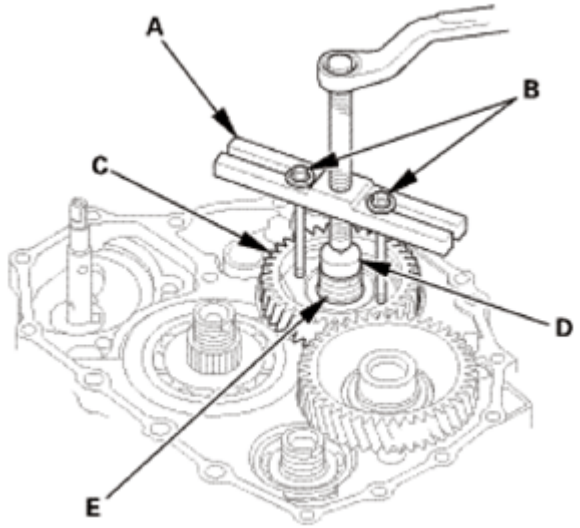

Fig. 277: Installing Puller With 6 X 1.0 mm Bolts On Mainshaft Idler Gear
Courtesy of AMERICAN HONDA MOTOR CO., INC.

16. Automatic Transmission Housing
    1. Align the spring pin (A) on the selector control shaft (B) with the transmission housing groove (C).

NOTE: **Do not squeeze the end of the selector control shaft tips together when turning the control shaft. If the tips are squeezed together, it will cause a faulty shift position signal or position due to the play**

GETtheMANUALS.org

between the selector control shaft and the transmission range switch.

2. Remove the transmission housing mounting bolts (D) (19 bolts).
3. Install the housing puller over the mainshaft.
4. Remove the transmission housing (E) using the housing puller.
5. Remove the dowel pins (F) and the gasket (G).

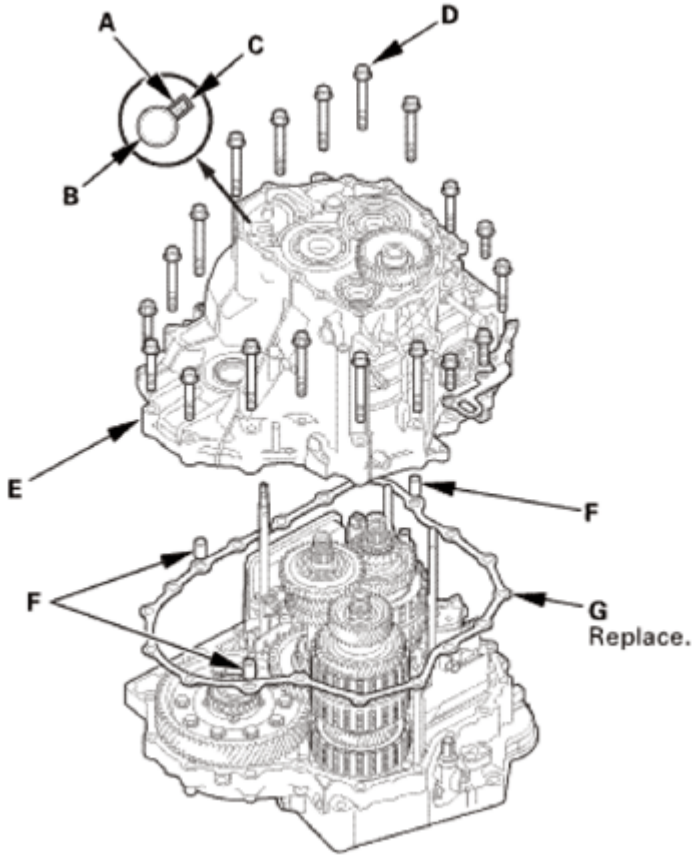

Fig. 278: Identifying Spring Pin, Selector Control Shaft, Transmission Housing Groove, Transmission Housing, Mounting Bolts And Gasket
Courtesy of AMERICAN HONDA MOTOR CO., INC.

GETtheMANUALS.org

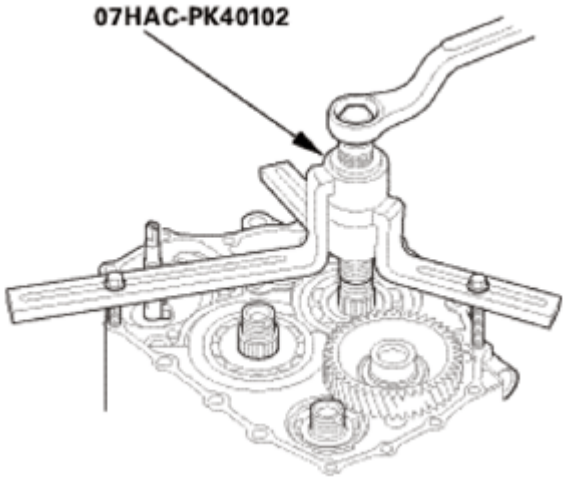

Fig. 279: Installing Housing Puller Over Mainshaft
Courtesy of AMERICAN HONDA MOTOR CO., INC.

17. A/T Countershaft Reverse Gear
    1. Remove the countershaft reverse gear (A).
    2. Remove the needle bearing (B).

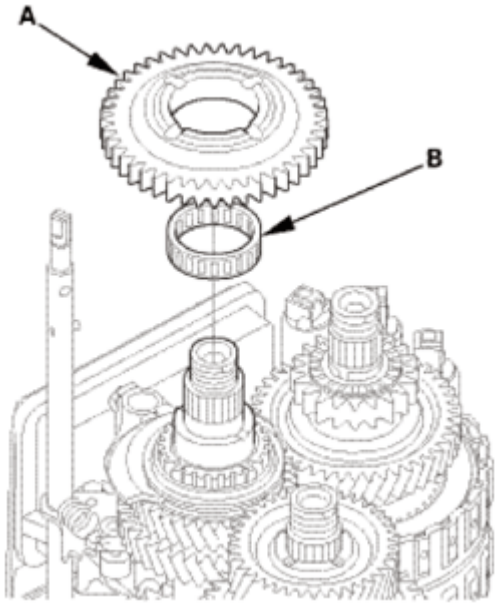

Fig. 280: Identifying Countershaft Reverse Gear And Needle Bearing
Courtesy of AMERICAN HONDA MOTOR CO., INC.

18. Reverse Shift fork
    1. Pry down the lock tab (A) of the lock washer (B).
    2. Remove the lock bolt (C) and the lock washer.
    3. Remove the reverse shift fork (D) and the reverse selector (E) together.

GETtheMANUALS.org

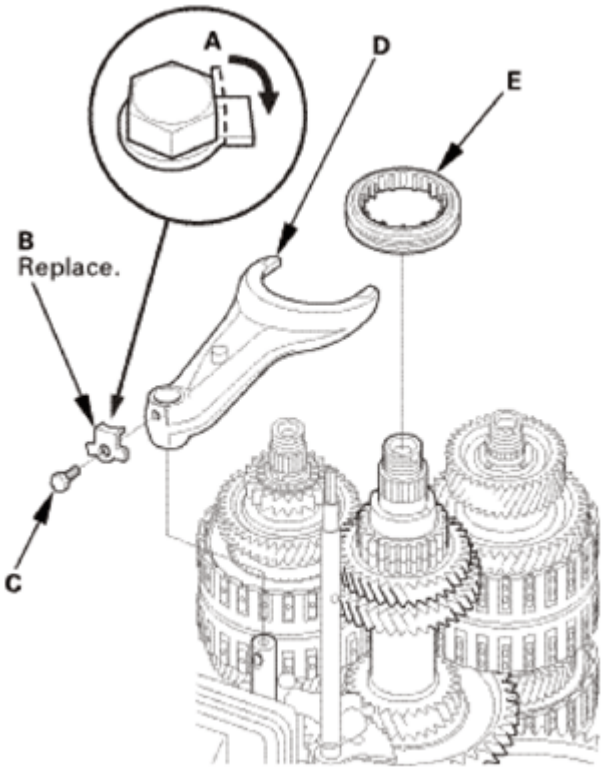

Fig. 281: Prying Down Lock Tab Of Lock Washer
Courtesy of AMERICAN HONDA MOTOR CO., INC.

19. Selector Control Lever (Except 2WD of USA Produced Models)

Except 2WD of USA Produced Models

1. Pry down the lock tab (A) of the lock washer (B).
2. Remove the lock bolt (C) and the lock washer.
3. Remove the selector control lever (D).

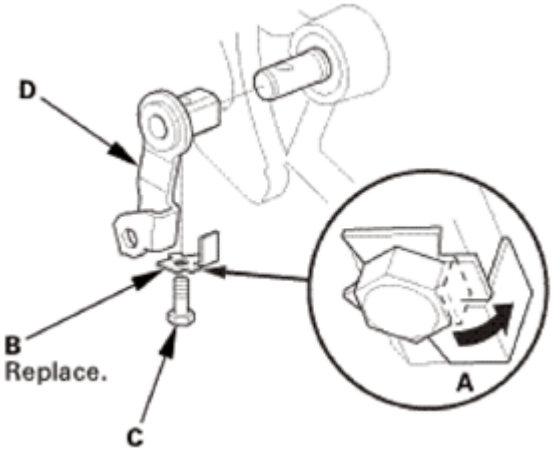

GETtheMANUALS.org

Fig. 282: Prying Down Lock Tab Of Lock Washer (Except 2WD Of USA Produced Models)
Courtesy of AMERICAN HONDA MOTOR CO., INC.

20. Selector Control Shaft
    1. Unhook the detent arm spring (A).

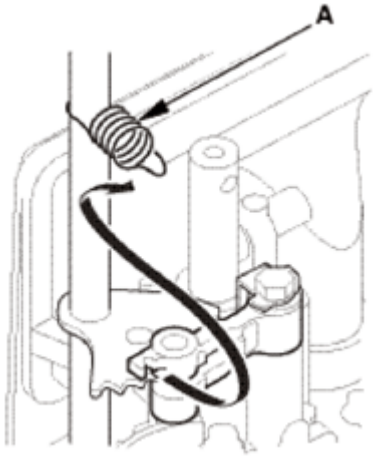

Fig. 283: Unhooking Detent Arm Spring
Courtesy of AMERICAN HONDA MOTOR CO., INC.

    2. Separate the manual valve lever pin (A) on the selector control shaft (B) from the guide of the manual valve (C).

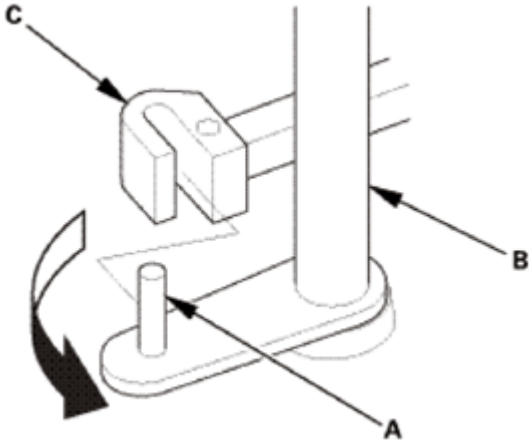

Fig. 284: Separating Manual Valve Lever Pin On Selector Control Shaft From Guide Of Manual Valve
Courtesy of AMERICAN HONDA MOTOR CO., INC.

    3. Remove the selector control shaft (A).

GETtheMANUALS.org

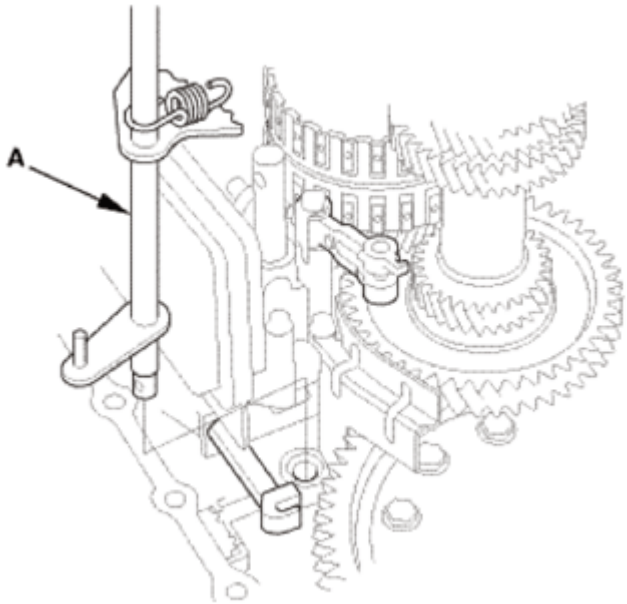

Fig. 285: Identifying Selector Control Shaft
Courtesy of AMERICAN HONDA MOTOR CO., INC.

21. Mainshaft and Countershaft and Secondary Shaft Assembly
    1. Turn the detent arm (A) away from the countershaft (B).

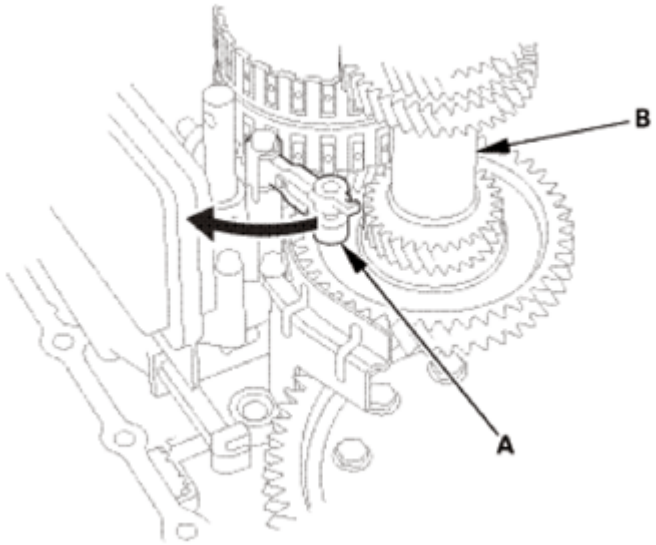

Fig. 286: Turning Detent Arm Away From Countershaft
Courtesy of AMERICAN HONDA MOTOR CO., INC.

    2. Remove the mainshaft subassembly (A), the countershaft subassembly (B), and the secondary shaft subassembly (C) together.

NOTE: Do not bump the countershaft on the baffle plate (D).

GETtheMANUALS.org

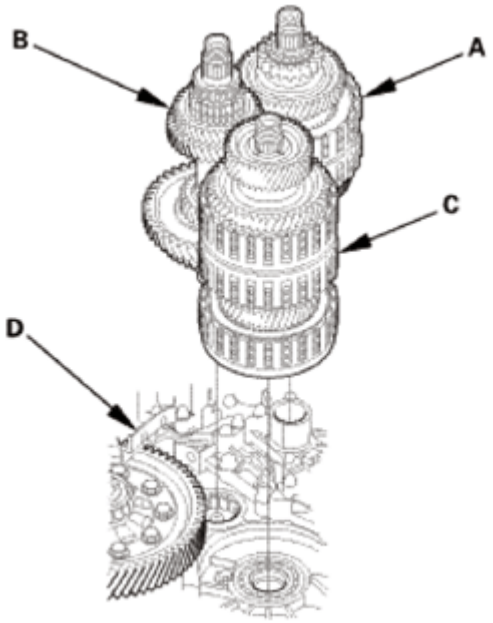

Fig. 287: Identifying Mainshaft Subassembly, Countershaft Subassembly, Secondary Shaft Subassembly And Baffle Plate
Courtesy of AMERICAN HONDA MOTOR CO., INC.

22. Differential Assembly
    1. Remove the baffle plate (A).
    2. Remove the differential assembly (B).

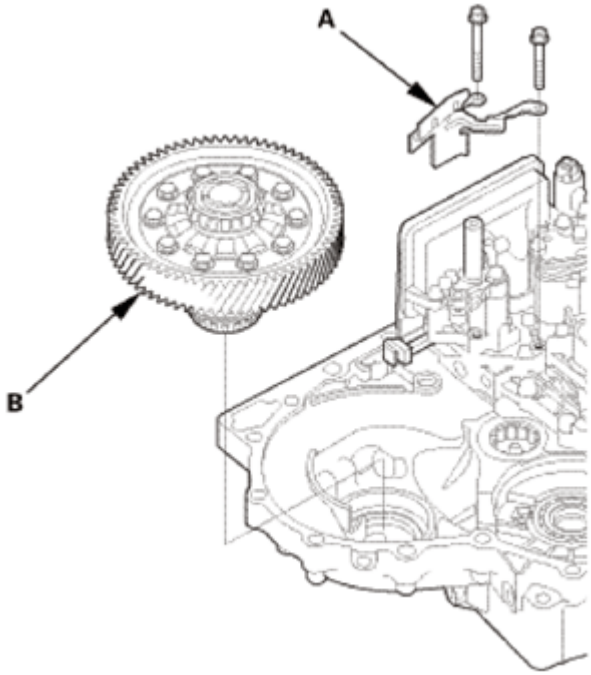

Fig. 288: Identifying Differential Assembly And Baffle Plate

GETtheMANUALS.org

Courtesy of AMERICAN HONDA MOTOR CO., INC.

23. Differential Final Driven Gear
    1. Remove the final driven gear (A).

NOTE: Differential carrier bolts have left-hand threads.

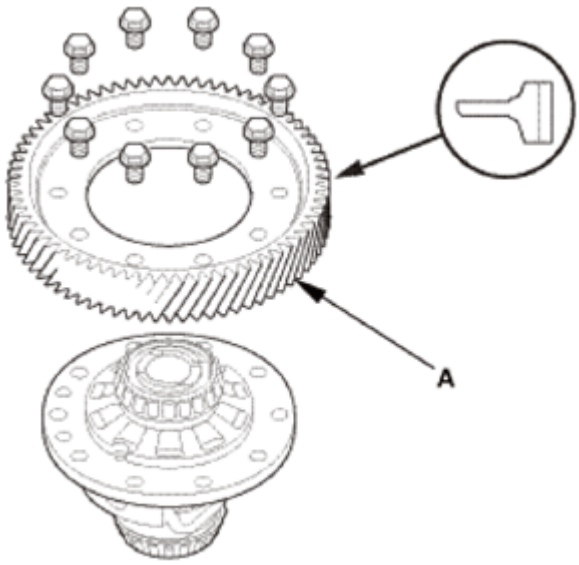

Fig. 289: Identifying Final Driven Gear And Differential Carrier Bolts
Courtesy of AMERICAN HONDA MOTOR CO., INC.

INSTALLATION

NOTE: Apply a light coat of clean ATF on all moving parts before installation.

1. Differential Final Driven Gear
    1. Install the final driven gear (A) in the direction shown.
    2. Tighten the bolts to the specified torque in a crisscross pattern in at least two steps.

NOTE: Differential carrier bolts have left-hand threads.

GETtheMANUALS.org

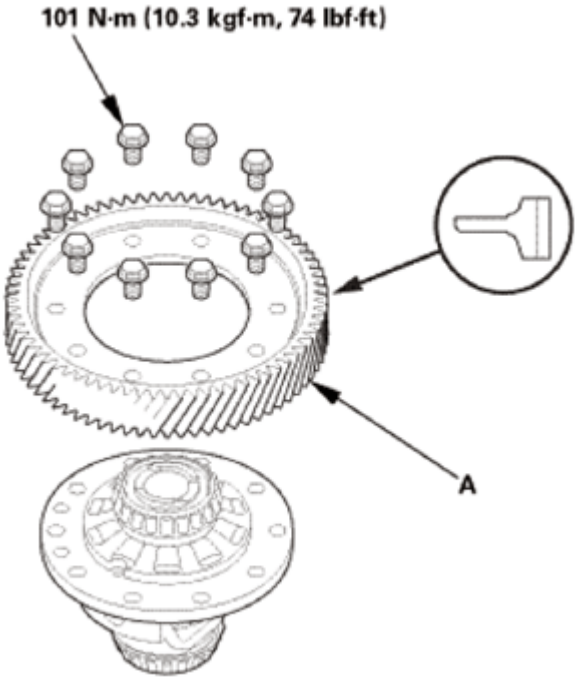

Fig. 290: Identifying Final Driven Gear And Mounting Bolts With Torque Specification
Courtesy of AMERICAN HONDA MOTOR CO., INC.

2. Differential Assembly
    1. Install the differential assembly (A).
    2. Install the baffle plate (B).

GETtheMANUALS.org

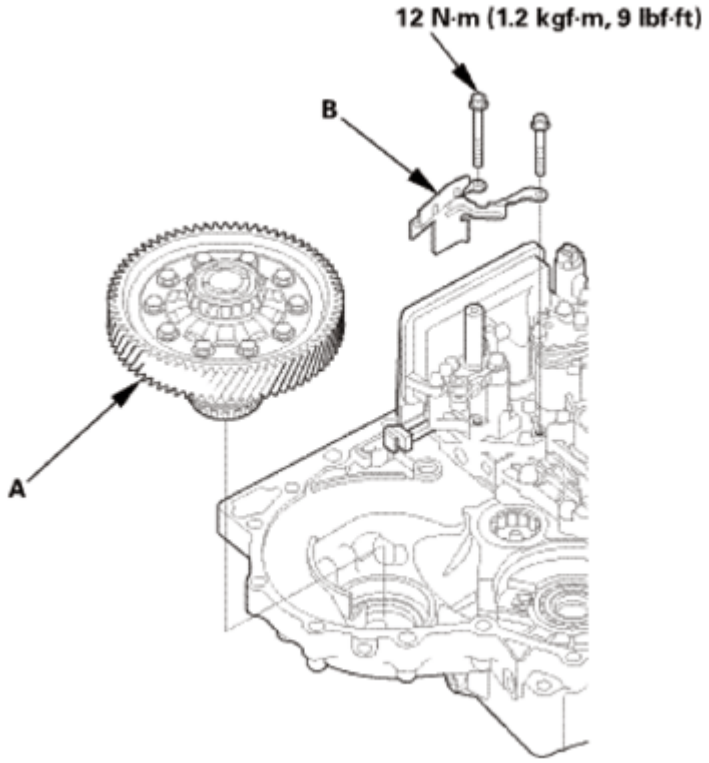

Fig. 291: Identifying Differential Assembly, Baffle Plate And Bolts With Torque Specification
Courtesy of AMERICAN HONDA MOTOR CO., INC.

3. Mainshaft and Countershaft and Secondary Shaft Assembly
    1. Be sure that each shaft is assembled. Also be sure that new sealing rings are installed on the mainshaft and the secondary shaft.
    2. Join the mainshaft subassembly (A), the countershaft subassembly (B), and the secondary shaft subassembly (C) together, and install them.

    NOTE: Do not bump the countershaft on the baffle plate (D).

    3. Make sure the countershaft subassembly and the differential assembly (E) are clear of the baffle plate.

GETtheMANUALS.org

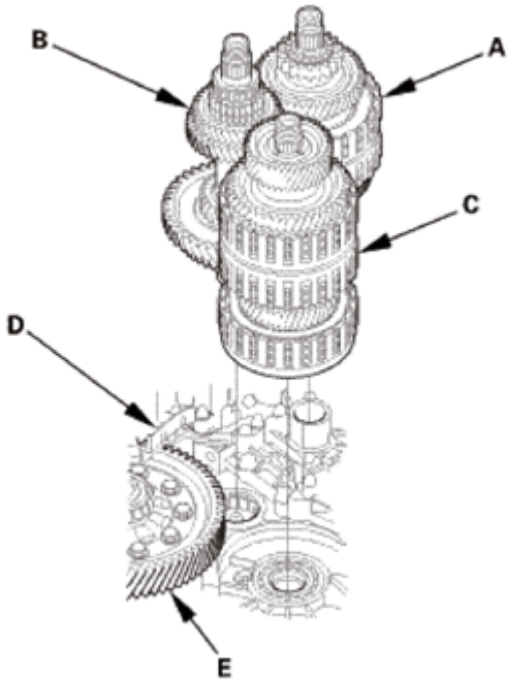

Fig. 292: Identifying Mainshaft Subassembly, Countershaft Subassembly, Secondary Shaft Subassembly, Baffle Plate And Differential Assembly
Courtesy of AMERICAN HONDA MOTOR CO., INC.

4. Selector Control Shaft
    1. Install the selector control shaft (A).

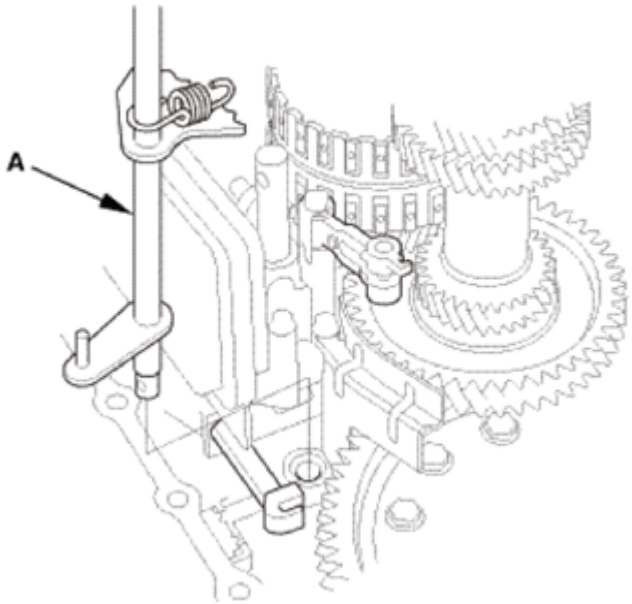

Fig. 293: Identifying Selector Control Shaft
Courtesy of AMERICAN HONDA MOTOR CO., INC.

GETtheMANUALS.org

2. Align the manual valve lever pin (A) on the selector control shaft (B) with the guide of the manual valve (C).

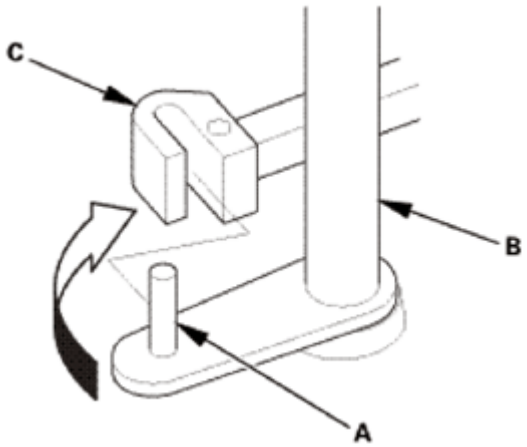

Fig. 294: Aligning Manual Valve Lever Pin On Selector Control Shaft With Guide Of Manual Valve
Courtesy of AMERICAN HONDA MOTOR CO., INC.

3. Hook the detent arm spring (A).

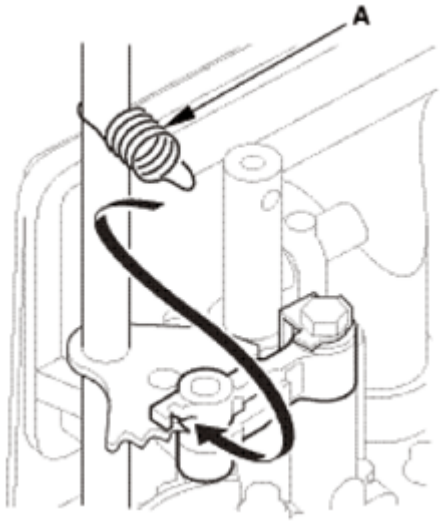

Fig. 295: Hooking Detent Arm Spring
Courtesy of AMERICAN HONDA MOTOR CO., INC.

5. Selector Control Lever (Except 2WD of USA Produced Models)

Except 2WD of USA Produced Models

1. Install the control lever (A) over the selector control shaft (B).
2. Install the lock bolt (C) using a new lock washer (D).

GETtheMANUALS.org

3. Pry up the lock tab (E) of the lock washer against the bolt head.

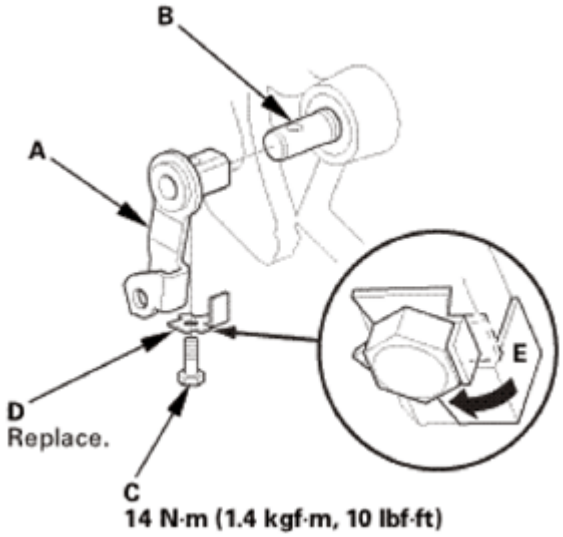

Fig. 296: Prying Up Lock Tab Of Lock Washer (Except 2WD Of USA Produced Models)
Courtesy of AMERICAN HONDA MOTOR CO., INC.

6. Reverse Shift fork
    1. Install the reverse shift fork (A) and the reverse selector (B) together.
    2. Install the lock bolt (C) using a new lock washer (D).
    3. Pry up the lock tab (E) of the lock washer against the bolt head.

GETtheMANUALS.org

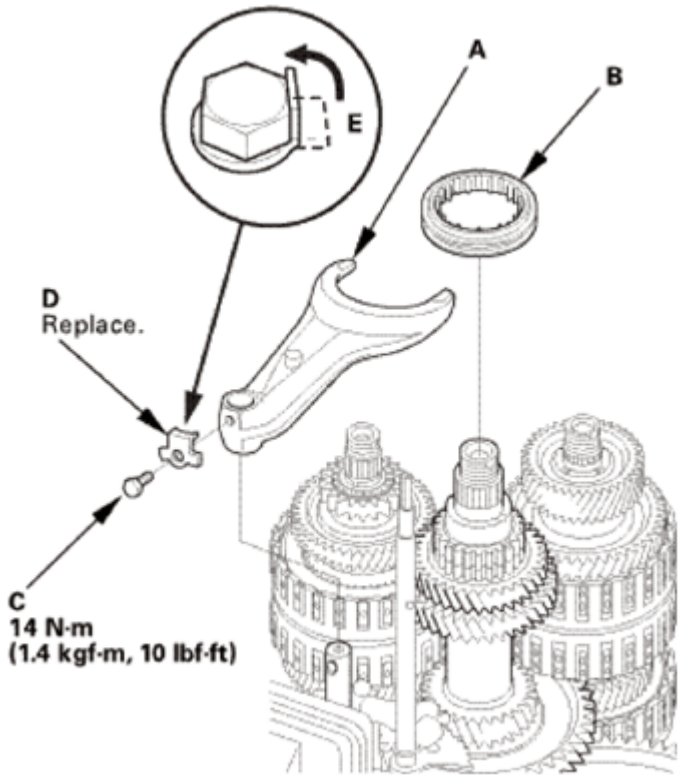

Fig. 297: Prying Up Lock Tab Of Lock Washer Against Bolt Head
Courtesy of AMERICAN HONDA MOTOR CO., INC.

7. A/T Countershaft Reverse Gear
    1. Install the needle bearing (A).
    2. Install the countershaft reverse gear (B).

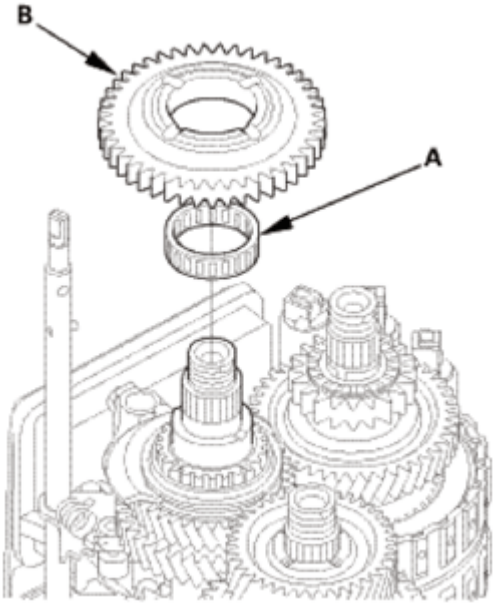

GETtheMANUALS.org

Fig. 298: Identifying Needle Bearing And Countershaft Reverse Gear
Courtesy of AMERICAN HONDA MOTOR CO., INC.

8. Automatic Transmission Housing
    1. Install the three dowel pins (A) and a new gasket (B).
    2. Align the spring pin (C) of the selector control shaft (D) with the transmission housing groove (E).

        NOTE: **Do not squeeze the end of the selector control shaft tips together when turning the shaft. If the tips are squeezed together, it will cause a faulty shift position signal or position due to the play between the selector control shaft and the transmission range switch.**

    3. Place the transmission housing (F) on the torque converter housing (G).

        NOTE: **Do not install the input shaft (mainshaft) speed sensor and the output shaft (countershaft) speed sensor before installing the transmission housing.**

    4. Wrap the tip of a screwdriver with tape so the reverse idler gear teeth do not get damaged. Engage the reverse idler gear (H) with the reverse gears (I) by rotating the idler gear using the screwdriver.
    5. Make sure the transmission housing is securely seated so there is no clearance between the transmission housing and the torque converter housing.
    6. Install the transmission hanger (J), and tighten the transmission housing mounting bolts (19 bolts) in at least two steps, in a crisscross pattern.

GETtheMANUALS.org

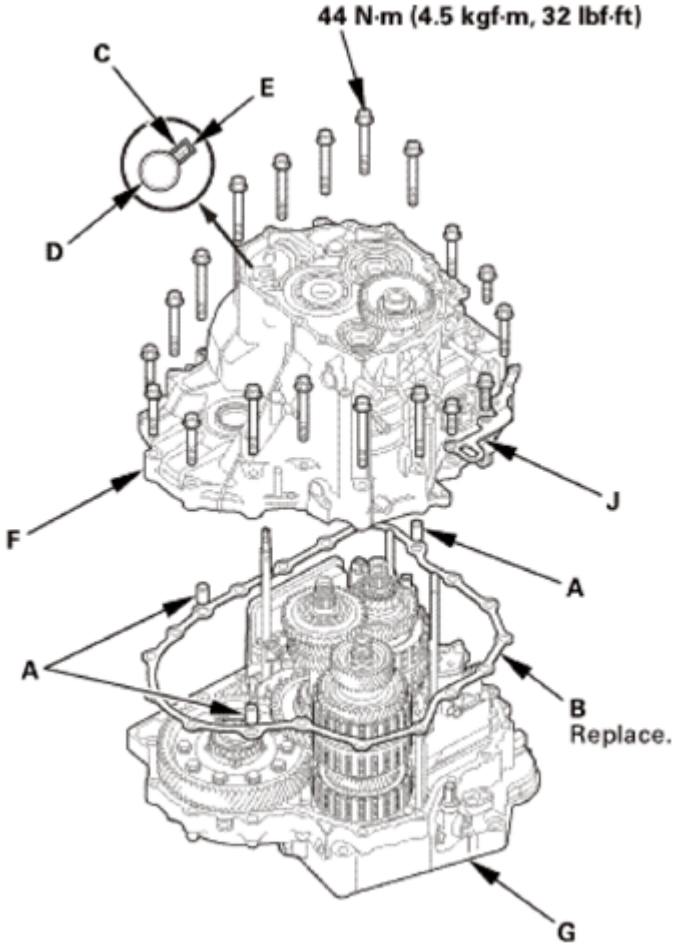

Fig. 299: Identifying Dowel Pins, Gasket, Spring Pin, Selector Control Shaft, Transmission Housing Groove And Mounting Bolts With Torque Specification
Courtesy of AMERICAN HONDA MOTOR CO., INC.

GETtheMANUALS.org

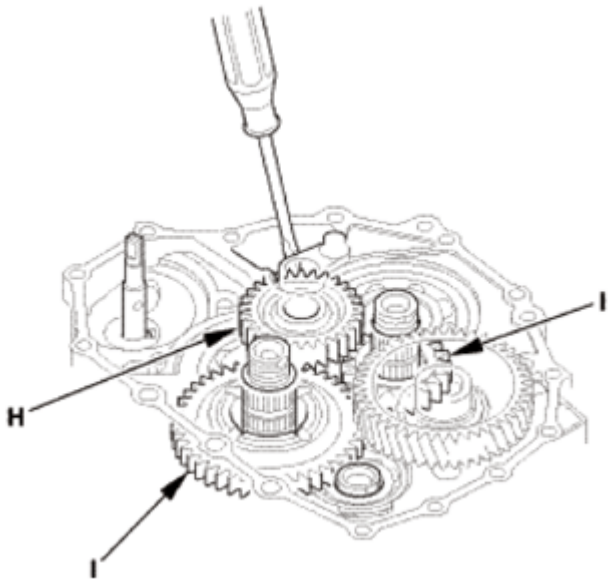

Fig. 300: Engaging Reverse Idler Gear With Reverse Gears By Rotating Idler Gear Using Screwdriver
Courtesy of AMERICAN HONDA MOTOR CO., INC.

9. End Cover Idler Gear Assembly
    1. Install the mainshaft holder onto the mainshaft.

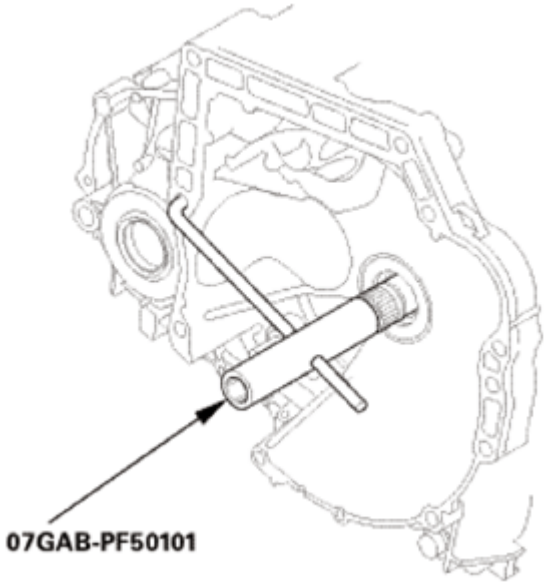

Fig. 301: Installing Mainshaft Holder Onto Mainshaft
Courtesy of AMERICAN HONDA MOTOR CO., INC.

    2. Lubricate the following parts with ATF:
        - Splines and threads of the mainshaft.

GETtheMANUALS.org

- Splines of the mainshaft idler gear.
- The old conical spring washer and the old locknut.

3. Install the mainshaft idler gear (A), the old conical spring washer (B), and the old locknut (C), and tighten the locknut to 225 N.m (23.0 kgf.m, 166 lbf.ft).

NOTE:

- **Do not tap the mainshaft idler gear to install.**
- **Use a torque wrench to tighten the locknut. Do not use an impact wrench.**

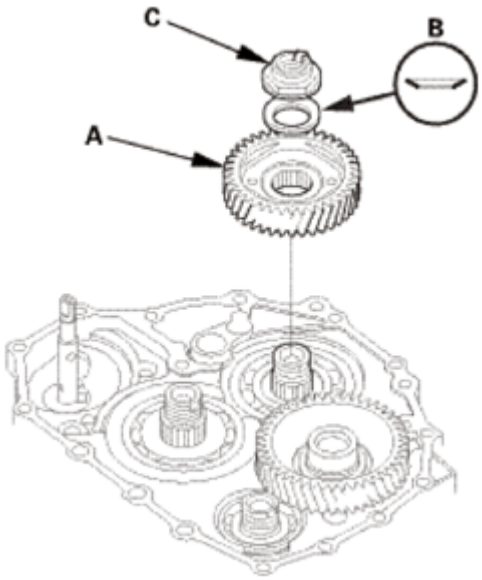

Fig. 302: Identifying Mainshaft Idler Gear, Conical Spring Washer And Locknut
Courtesy of AMERICAN HONDA MOTOR CO., INC.

4. Lubricate the following parts with ATF:
   - Splines and threads of the countershaft.
   - Splines of the park gear.
   - The old conical spring washer and the old locknut.
5. Install the park gear (A), the old conical spring washer (B), and the old locknut (C).

GETtheMANUALS.org

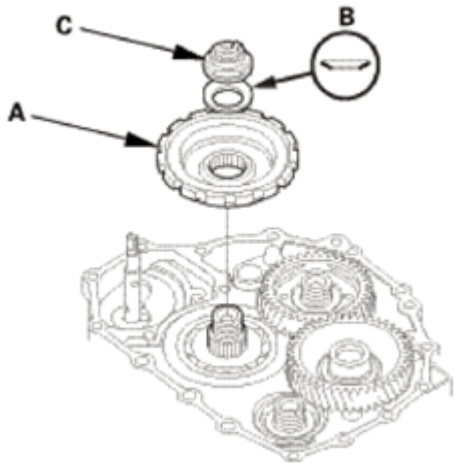

Fig. 303: Identifying Park Gear, Conical Spring Washer And Locknut
Courtesy of AMERICAN HONDA MOTOR CO., INC.

6. Install the park lever spring (D), the park lever (E), and the park lever stop (F).
7. Install the lock bolt (G) using a new lock washer (H).

NOTE: **Do not bend the lock tab of the lock washer until inspect the park lever stop.**

8. Install the park pawl shaft (I), the park pawl spring (J), the park pawl (K), and the stop shaft (L).
9. Lift the park pawl up, and engage it with the park gear, and tighten the locknut to 225 N.m (23.0 kgf.m, 166 lbf.ft).

NOTE:

- **Do not tap the park gear to install.**
- **Use a torque wrench to tighten the locknut. Do not use an impact wrench.**
- **Countershaft locknut has left-hand threads.**

GETtheMANUALS.org

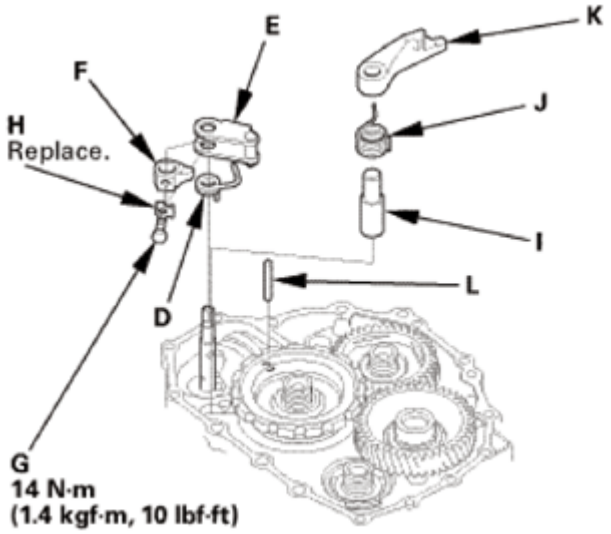

Fig. 304: Identifying Park Pawl Shaft, Park Lever Spring, Park Lever, Park Lever Stop, Lock Bolt, Lock Washer With Torque Specification
Courtesy of AMERICAN HONDA MOTOR CO., INC.

10. Remove the old locknuts and the old conical spring washers from the mainshaft and the countershaft.
11. Lubricate the following parts with ATF:
    - Splines and threads of the mainshaft, the countershaft, and the secondary shaft.
    - New conical spring washers and new locknuts.
    - Areas where the conical spring washers contact the mainshaft idler gear and the park gear.
12. Install new conical spring washers (A) in the direction shown.
13. Install a new mainshaft locknut (B), a new countershaft locknut (C), and a new secondary shaft locknut (D).
14. Tighten the locknuts to 167 N.m (17.0 kgf.m, 123 lbf.ft).

NOTE:

- **Use a torque wrench to tighten the locknut. Do not use an impact wrench.**
- **The countershaft and secondary shaft locknuts have left-hand threads.**

GETtheMANUALS.org

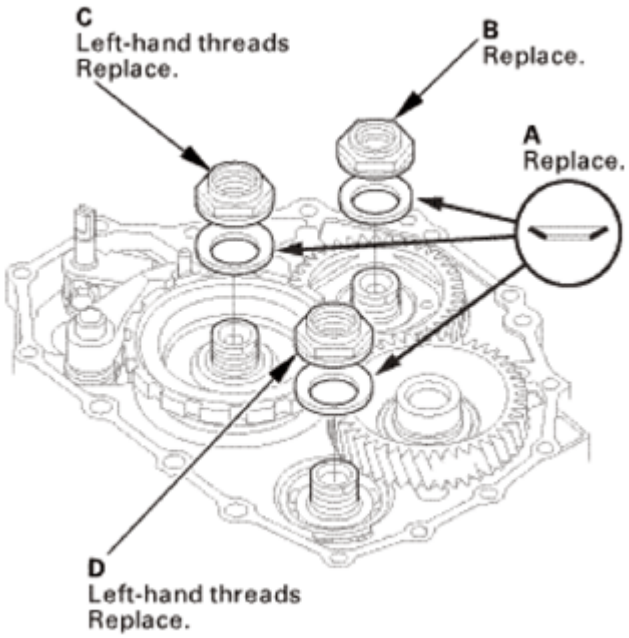

Fig. 305: Identifying Conical Spring Washers, Mainshaft Locknut, Countershaft Locknut And Secondary Shaft Locknut
Courtesy of AMERICAN HONDA MOTOR CO., INC.

15. Remove the mainshaft holder.
16. Stake the locknuts into the shafts to a depth (A) of 0.7-1.3 mm (0.027-0.051 in) using a 3.5 mm punch (B).

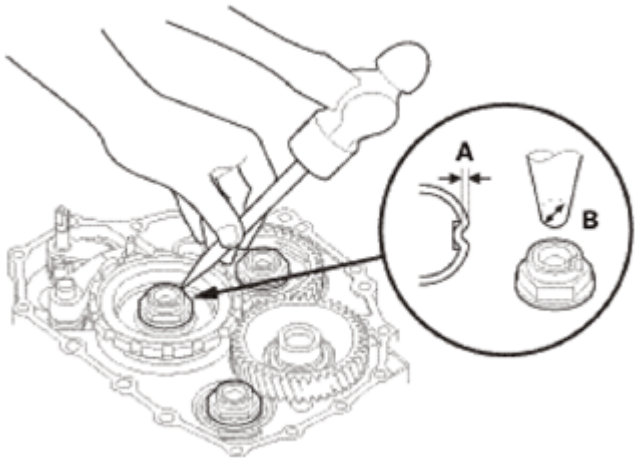

Fig. 306: Staking Locknuts Into Shafts Using Punch
Courtesy of AMERICAN HONDA MOTOR CO., INC.

17. Set the park lever in the P position.
18. Measure the distance (A) between the center of the park pawl shaft (B) and the center of the park lever roller pin (C) as shown.

GETtheMANUALS.org

Standard: 57.7-58.7 mm (2.272-2.311 in)

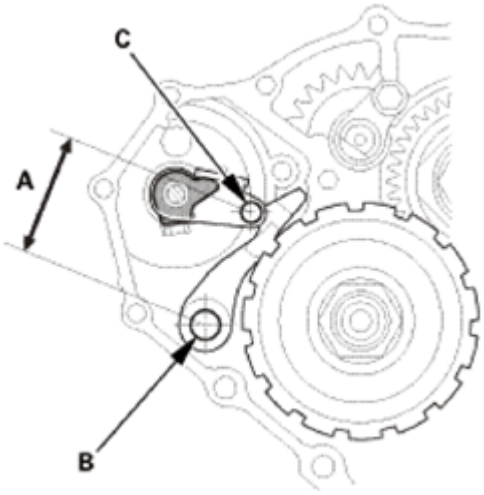

Fig. 307: Measuring Distance Between Center Of Park Pawl Shaft And Center Of Park Lever Roller Pin
Courtesy of AMERICAN HONDA MOTOR CO., INC.

19. If the measurement is out of the standard, select and install the appropriate park lever stop (A) from the table.

PARK LEVER STOP SPECIFICATION

Mark	B	C
1	11.00 mm (0.4331 in)	11.00 mm (0.4331 in)
2	10.80 mm (0.4252 in)	10.65 mm (0.4193 in)
3	10.60 mm (0.4173 in)	10.30 mm (0.4055 in)

20. After replacing the park lever stop, make sure the distance is within the tolerance.

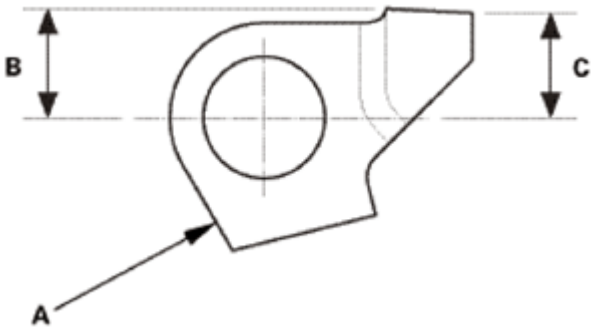

Fig. 308: Identifying Park Lever Stop Dimension
Courtesy of AMERICAN HONDA MOTOR CO., INC.

21. Pry up the lock tab (A) of the lock washer against the bolt head.

GETtheMANUALS.org

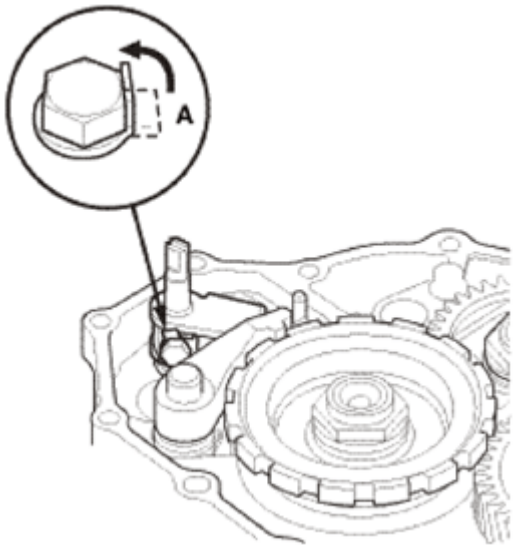

Fig. 309: Prying Up Lock Tab Of Lock Washer Against Bolt Head
Courtesy of AMERICAN HONDA MOTOR CO., INC.

10. ATF Feed Pipe/Lubrication Pipe
    1. Install the 6 x 201 mm ATF pipe (A).
    2. Install the ATF lubrication pipe (B).
    3. Install the 8 x 220 mm ATF pipe (C).
    4. Install the 8 x 198 mm ATF pipes (D).

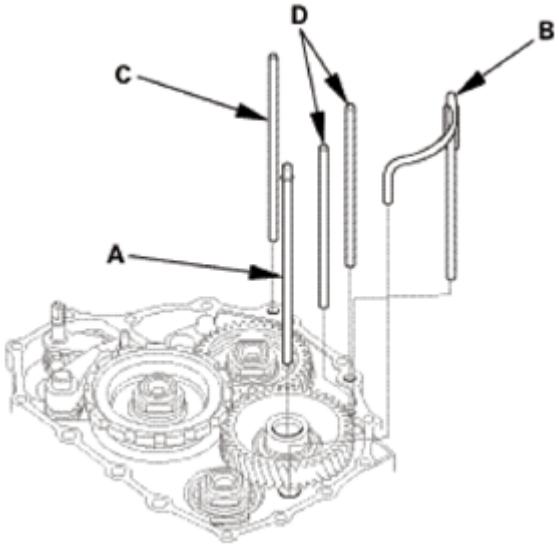

Fig. 310: Identifying ATF Feed Pipes And Lubrication Pipe
Courtesy of AMERICAN HONDA MOTOR CO., INC.

11. A/T Shift Solenoid Wire Harness - Reconnection
    1. Connect the shift solenoid valve connectors:

GETtheMANUALS.org

- BLU wire to shift solenoid valve A.
- ORN wire to shift solenoid valve B.
- GRN wire to shift solenoid valve C.
- YEL, WHT, and WHT wires to shift solenoid valve D.
- RED wire to shift solenoid valve E.

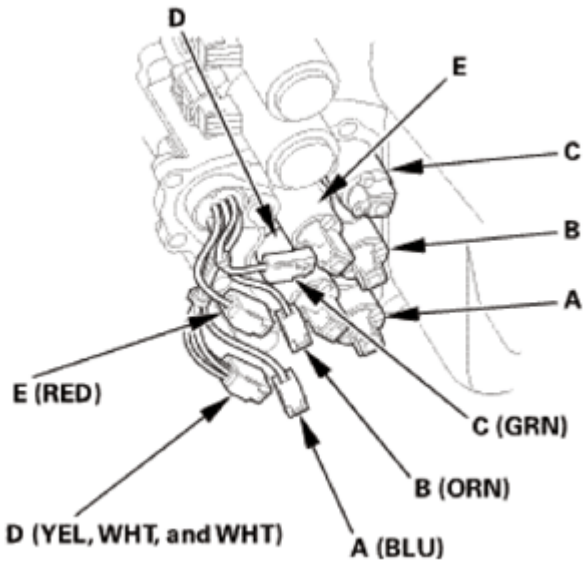

Fig. 311: Identifying Shift Solenoid Valves
Courtesy of AMERICAN HONDA MOTOR CO., INC.

12. A/T Shift Solenoid Cover
    1. Install the shift solenoid valve cover (A) with the dowel pins (B) and a new gasket (C).

GETtheMANUALS.org

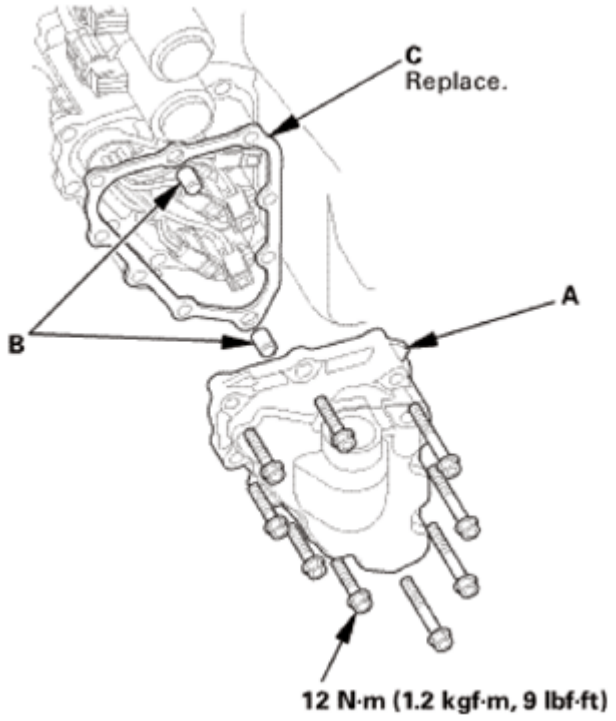

Fig. 312: Identifying Shift Solenoid Valve Cover, Dowel Pins, Gasket And Mounting Bolts With Torque Specification
Courtesy of AMERICAN HONDA MOTOR CO., INC.

13. Dipstick Guide Tube
    1. Install a new O-ring (A) on the ATF dipstick guide tube (B).
    2. Install the ATF dipstick guide tube.

GETtheMANUALS.org

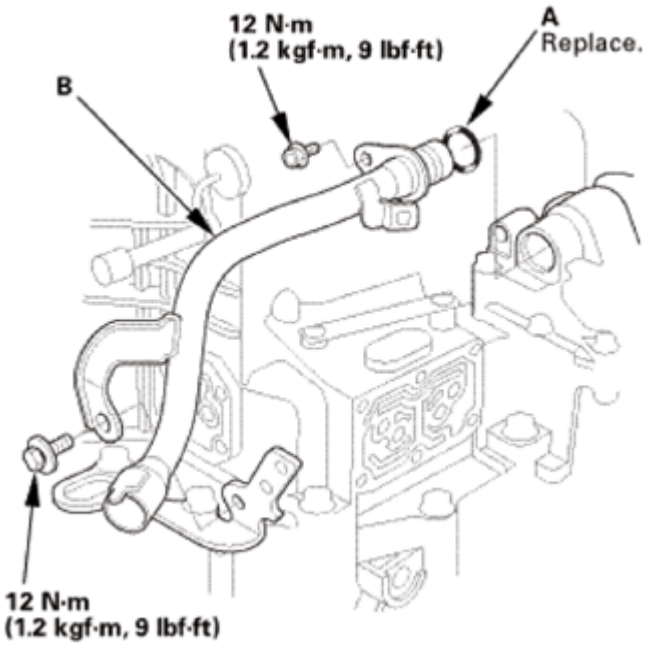

Fig. 313: Identifying ATF Dipstick Guide Tube, O-Ring And Mounting Bolts With Torque Specification
Courtesy of AMERICAN HONDA MOTOR CO., INC.

14. ATF Outlet Line
    1. Install the ATF outlet line (A) using new sealing washers (B).

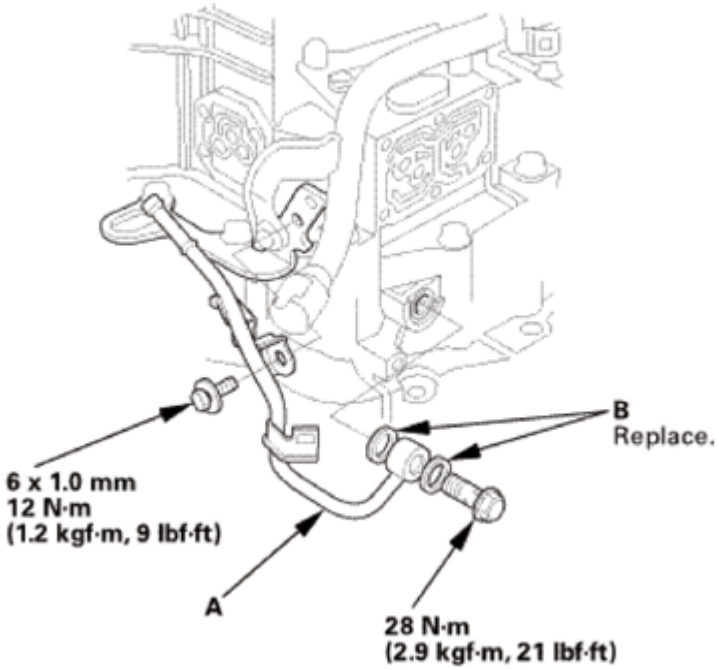

Fig. 314: Identifying ATF Outlet Line, Sealing Washers And Mounting Bolts With Torque Specification

GETtheMANUALS.org

Courtesy of AMERICAN HONDA MOTOR CO., INC.

15. ATF Inlet Line
    1. Install the ATF inlet line (A) using new sealing washers (B).

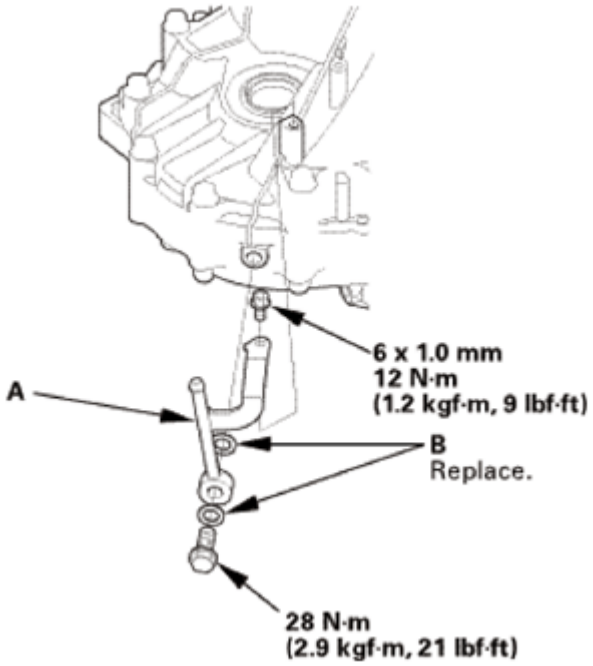

Fig. 315: Identifying ATF Inlet Line, Sealing Washers And Mounting Bolts With Torque Specification
Courtesy of AMERICAN HONDA MOTOR CO., INC.

16. A/T Clutch Pressure Control Solenoid Valve B and C
    1. Clean the mounting surfaces and the fluid passages of the solenoid valve body and the transmission housing.
    2. Install a new gasket (A) with the blue side toward the transmission housing, and Install the ATF joint pipes (D).
    3. Install new O-rings (E) over the ATF joint pipes.
    4. Install A/T clutch pressure control solenoid valves B and C with the clamp bracket (F).

GETtheMANUALS.org

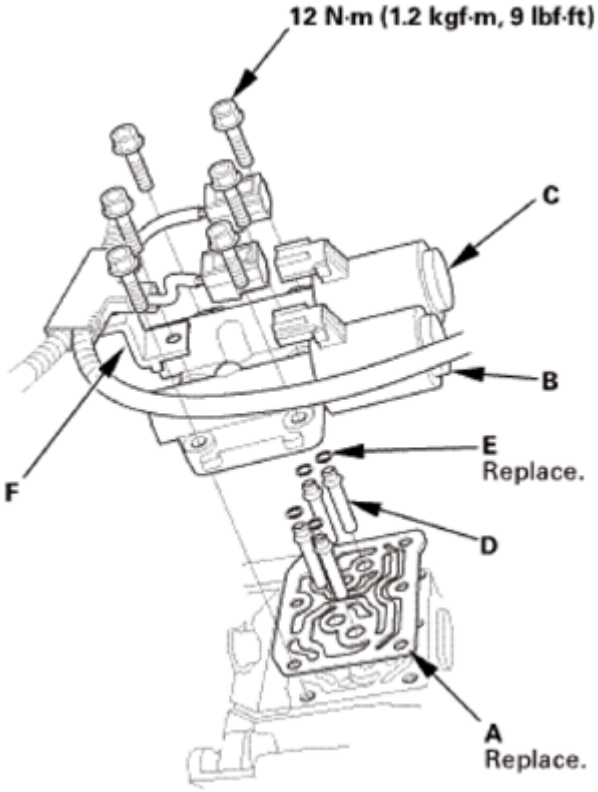

Fig. 316: Identifying Gasket, ATF Joint Pipes, O-Rings, A/T Clutch Pressure Control Solenoid Valves, Clamp Bracket And Mounting Bolts With Torque Specification
Courtesy of AMERICAN HONDA MOTOR CO., INC.

17. A/T Clutch Pressure Control Solenoid Valve A
    1. Clean the mounting surfaces and the fluid passages of the solenoid valve body and the transmission housing.
    2. Install a new gasket (B) with the blue side toward the transmission housing, and install the 35 mm ATF pipe (C) and the ATF joint pipes (D).
    3. Install new O-rings (E) over the ATF joint pipes.
    4. Install A/T clutch pressure control solenoid valve A.

GETtheMANUALS.org

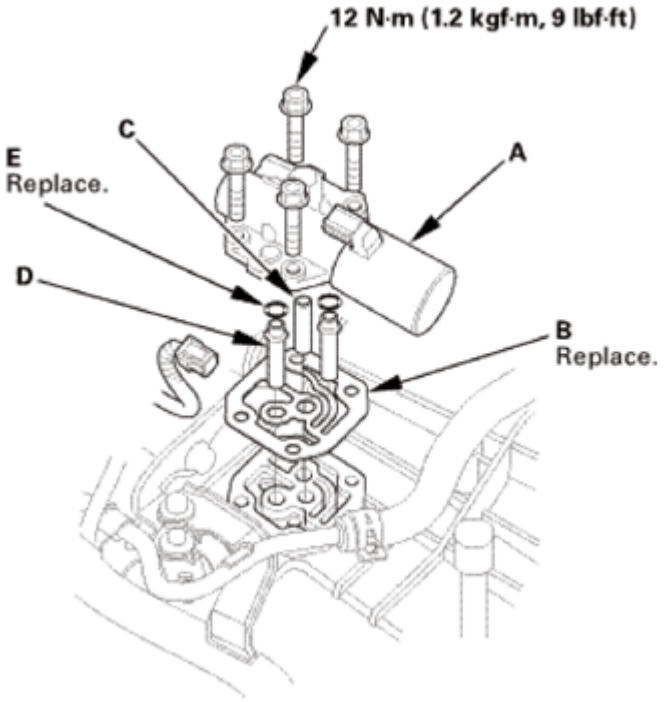

Fig. 317: Identifying A/T Clutch Pressure Control Solenoid Valve, Gasket, ATF Pipe, ATF Joint Pipes And Mounting Bolts With Torque Specification
Courtesy of AMERICAN HONDA MOTOR CO., INC.

18. Output Shaft (Countershaft) Speed Sensor
    1. Install a new O-ring (A) on the output shaft (countershaft) speed sensor (B).
    2. Install the output shaft (countershaft) speed sensor and the sensor washer (C).

GETtheMANUALS.org

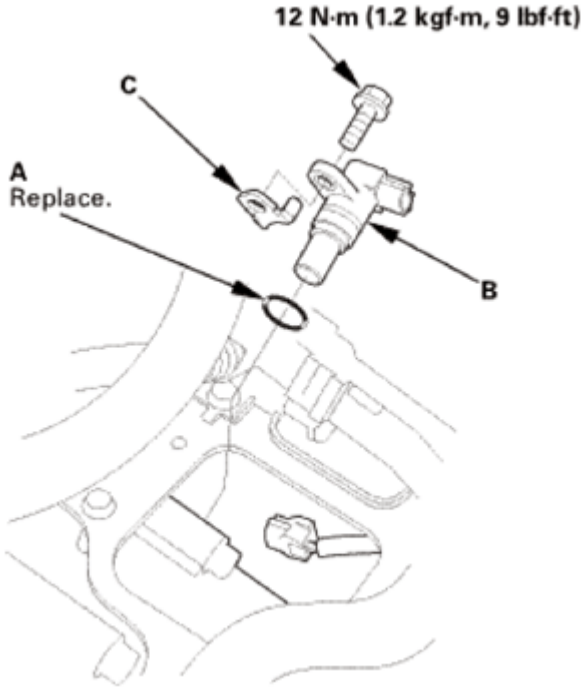

Fig. 318: Identifying Output Shaft (Countershaft) Speed Sensor, O-Ring, Sensor Washer And Mounting Bolts With Torque Specification
Courtesy of AMERICAN HONDA MOTOR CO., INC.

19. Input Shaft (Mainshaft) Speed Sensor
    1. Install a new O-ring (A) on the input shaft (mainshaft) speed sensor (B).
    2. Install the input shaft (mainshaft) speed sensor.

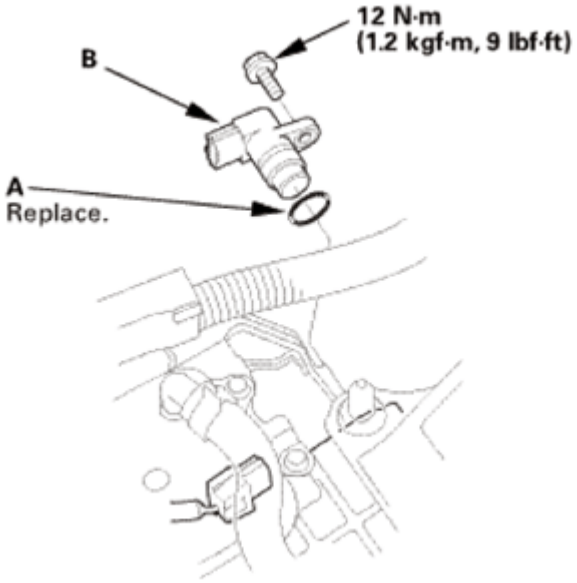

Fig. 319: Identifying Input Shaft (Mainshaft) Speed Sensor, O-Ring And Mounting Bolt With Torque Specification

GETtheMANUALS.org

Courtesy of AMERICAN HONDA MOTOR CO., INC.

20. Transmission End Cover
    1. Install the dowel pins (A) and a new gasket (B).
    2. Install new O-rings (C) over the ATF pipes.
    3. Install the end cover (D), and tighten the three special bolts (E) and the 6 x 1.0 mm bolts (F) (12 bolts).

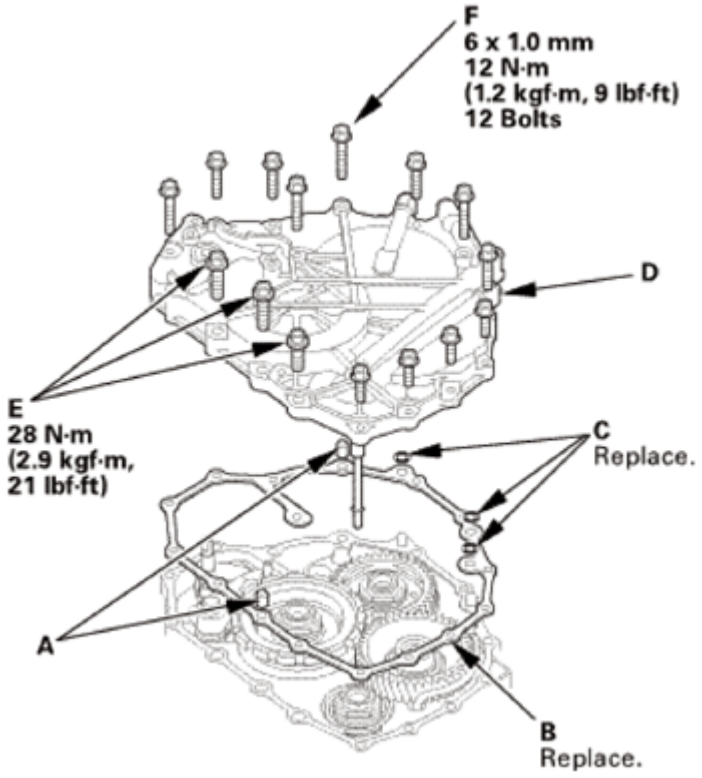

<u>Fig. 320: Identifying Dowel Pins, Gasket, O-Rings, End Cover And Mounting Bolts With Torque Specification</u>
Courtesy of AMERICAN HONDA MOTOR CO., INC.

21. Transmission Range Switch Subharness
    1. Install the clamp brackets (A).
    2. Install the transmission range switch subharness (B).

GETtheMANUALS.org

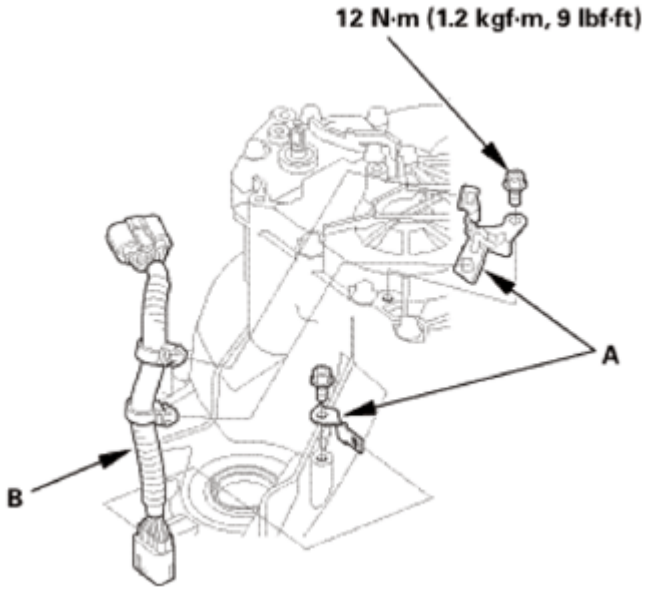

Fig. 321: Identifying Transmission Range Switch Subharness, Clamp Brackets And Mounting Bolts With Torque Specification
Courtesy of AMERICAN HONDA MOTOR CO., INC.

22. Transmission Range Switch
    1. Make sure the selector control shaft is in the N position. If necessary, move the selector control shaft to the N position.

NOTE: **Do not use the selector control shaft to adjust the shift position. If the selector control shaft tips are squeezed together it will cause a faulty signal or position due to play between the selector control shaft and switch.**

Fig. 322: Moving Selector Control Shaft To N Position
Courtesy of AMERICAN HONDA MOTOR CO., INC.

GETtheMANUALS.org

2. Align the cutouts (A) on the rotary-frame with the neutral positioning cutouts (B) on the transmission range switch (C), then put a 2.0 mm (0.079 in) feeler gauge blade (D) in the cutouts to hold the switch in the N position.

NOTE: Be sure to use a 2.0 mm (0.079 in) blade or equivalent to hold the switch in the N position.

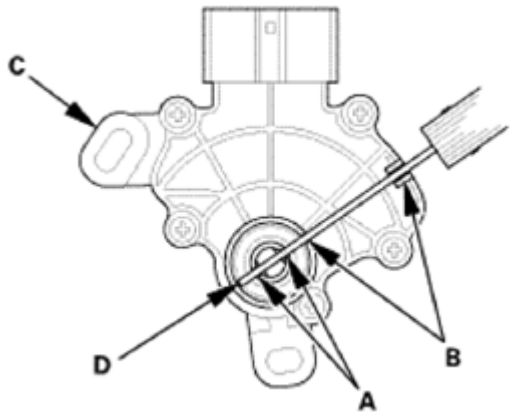

Fig. 323: Aligning Cutouts On Rotary-Frame With Neutral Positioning Cutouts On Transmission Range Switch
Courtesy of AMERICAN HONDA MOTOR CO., INC.

3. Install the transmission range switch (A) gently on the selector control shaft (B) while holding it in the N position with the 2.0 mm (0.079 in) blade (C).

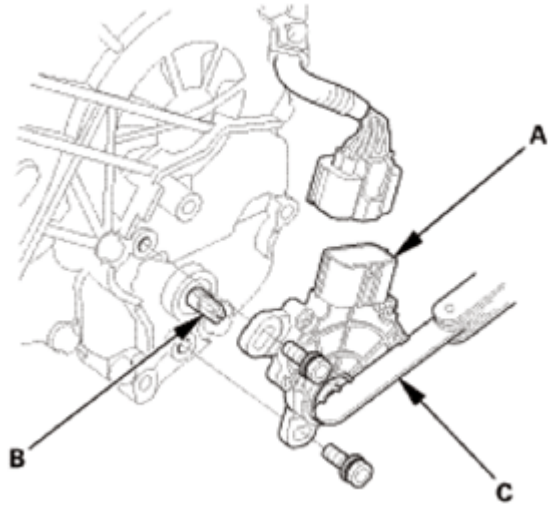

Fig. 324: Identifying Transmission Range Switch, Selector Control Shaft And Blade
Courtesy of AMERICAN HONDA MOTOR CO., INC.

4. Tighten the bolts on the transmission range switch (A) while you continue holding the N position.

GETtheMANUALS.org

NOTE: **Do not move the transmission range switch when tightening the bolts.**

5. Remove the feeler gauge (B).
6. Check the connector (C) for corrosion, dirt, or oil, and clean or repair if necessary, then connect the connector securely.

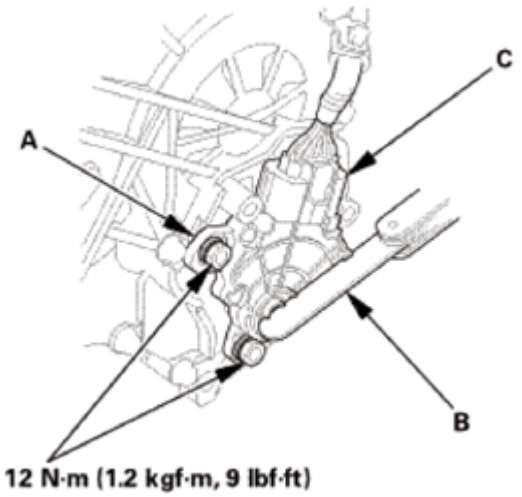

Fig. 325: Identifying Transmission Range Switch, Connector, Feeler Gauge And Mounting Bolts With Torque Specification
Courtesy of AMERICAN HONDA MOTOR CO., INC.

23. Transmission Range Switch Cover
    1. Install the transmission range switch cover (A).

GETtheMANUALS.org

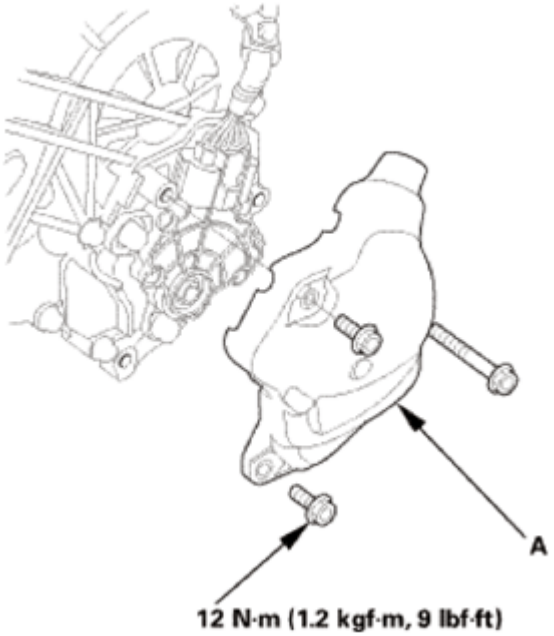

Fig. 326: Identifying Transmission Range Switch Cover And Mounting Bolts With Torque Specification
Courtesy of AMERICAN HONDA MOTOR CO., INC.

A/T DIFFERENTIAL CARRIER BEARING AND BEARING OUTER RACE REPLACEMENT

SPECIAL TOOL REQUIRED

Image	Description/Tool Number
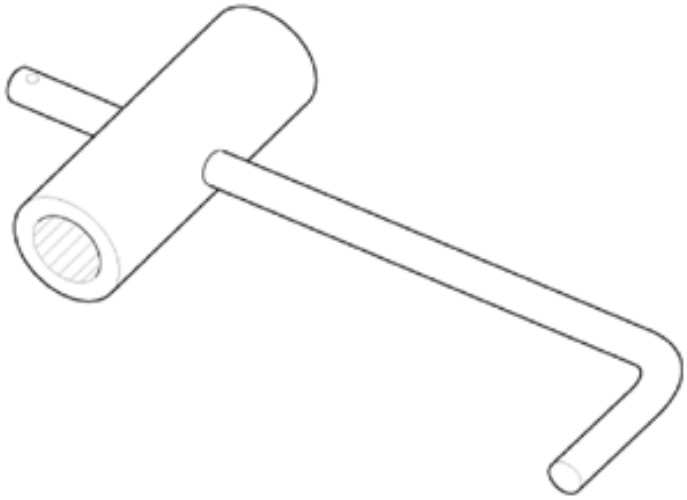	Mainshaft Holder 07GAB-PF50101

GETtheMANUALS.org

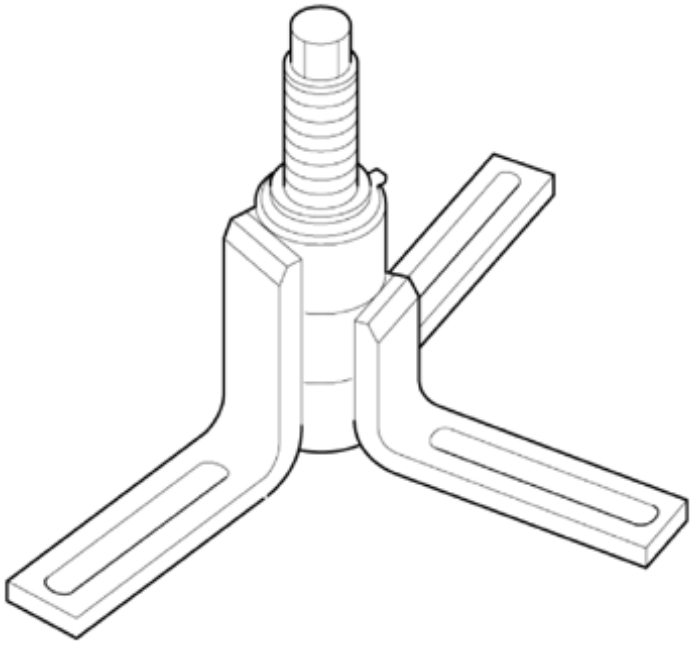	Housing Puller 07HAC-PK40102
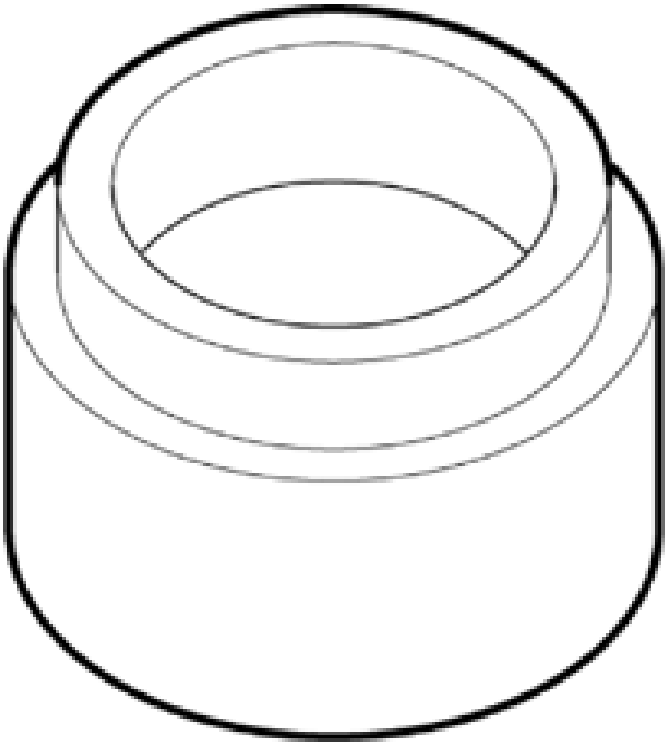	Installer Attachment 40 mm 07LAD-PW50601

GETtheMANUALS.org

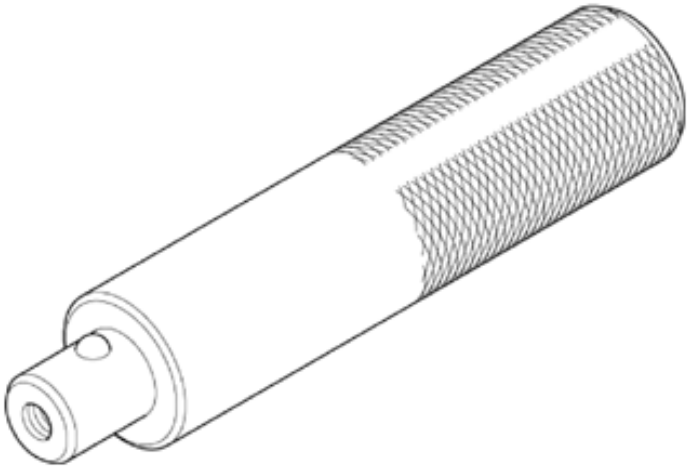	Driver Handle, 15 x 135L 07749-0010000
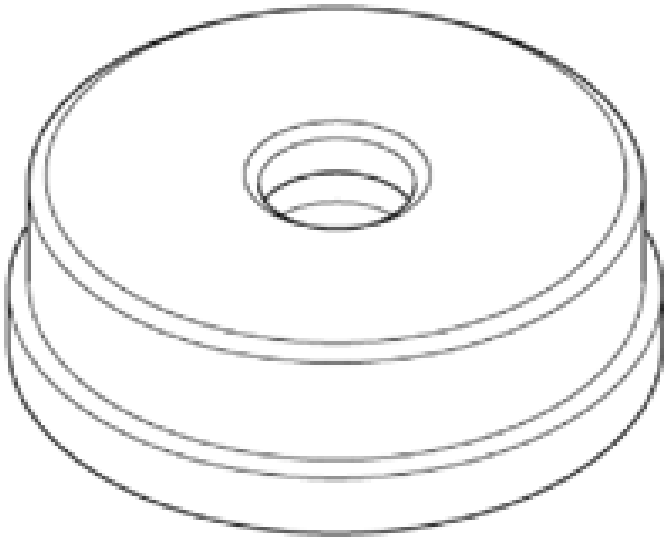	Bearing Driver Attachment, 72 x 75 mm 07746-0010600
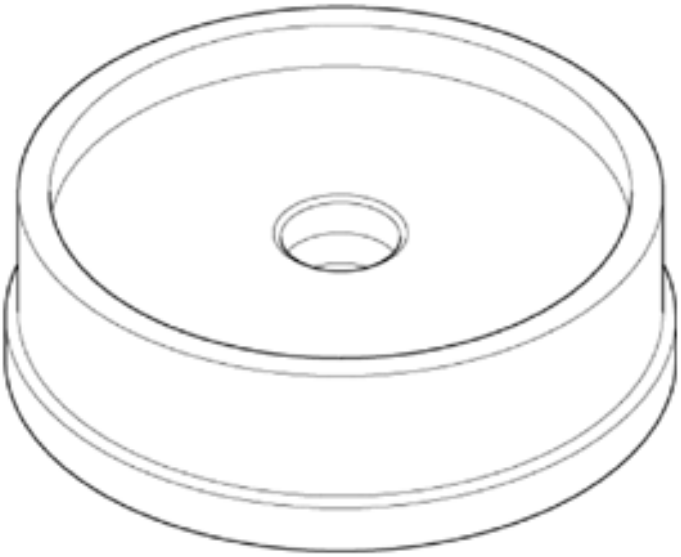	Bearing Driver Attachment, 78 x 80 mm 07NAD-PX40100

GETtheMANUALS.org

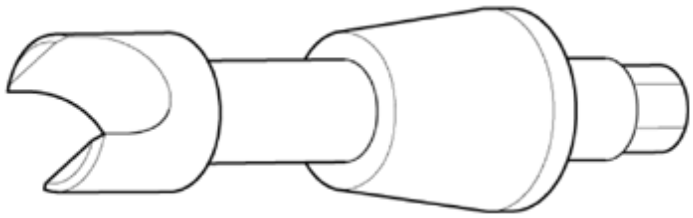	Preload Inspection Tool 07HAJ-PK40201

REMOVAL

NOTE:

- **The bearing and the bearing outer race should be replaced as a set.**
- **Adjust bearing preload after replacing the bearing and the outer race.**
- **The illustration shows AWD/4WD transmission.**

1. Transmission Range Switch Cover
    1. Remove the transmission range switch cover (A).

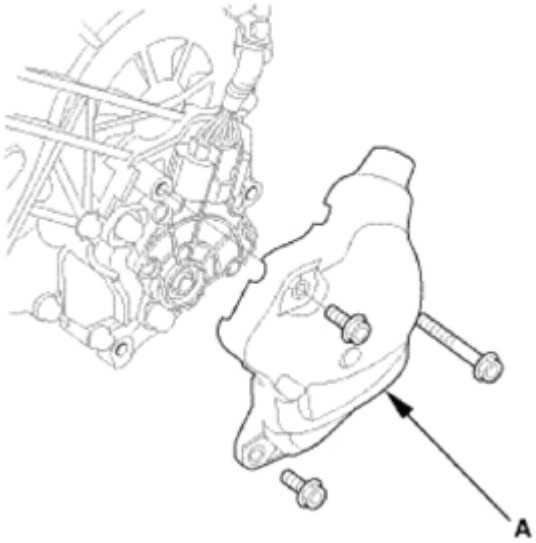

Fig. 327: Identifying Transmission Range Switch Cover With Bolts
Courtesy of AMERICAN HONDA MOTOR CO., INC.

2. Transmission Range Switch
    1. Remove the transmission range switch (A).

GETtheMANUALS.org

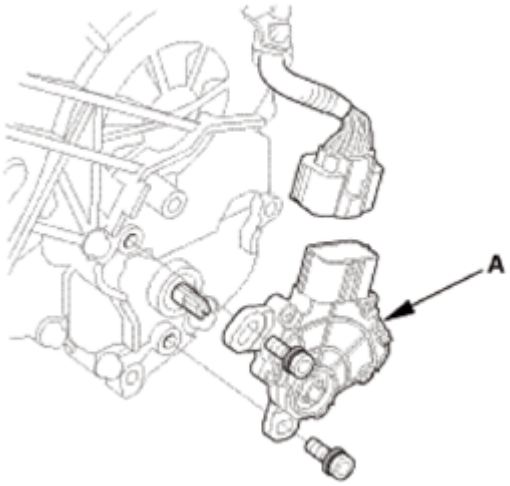

Fig. 328: Identifying Transmission Range Switch With Bolts
Courtesy of AMERICAN HONDA MOTOR CO., INC.

3. Transmission Range Switch Subharness
    1. Remove the transmission range switch subharness (A).
    2. Remove the clamp brackets (B).

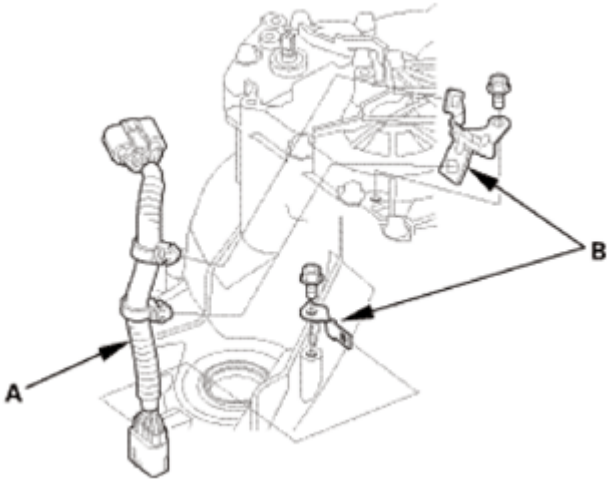

Fig. 329: Identifying Transmission Range Switch Subharness And Clamp Brackets
Courtesy of AMERICAN HONDA MOTOR CO., INC.

4. Transmission End Cover
    1. Remove the end cover (A), the dowel pins (B), the O-rings (C), and the gasket (D).

GETtheMANUALS.org

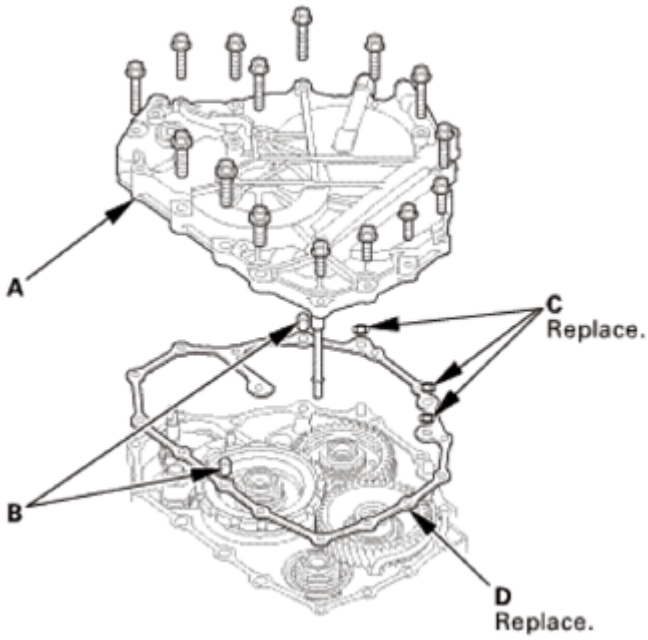

Fig. 330: Identifying Transmission End Cover, Dowel Pins, O-Rings And Gasket With Bolts
Courtesy of AMERICAN HONDA MOTOR CO., INC.

5. Input Shaft (Mainshaft) Speed Sensor
    1. Remove the input shaft (mainshaft) speed sensor (A).
    2. Remove the O-ring (B) from the input shaft (mainshaft) speed sensor.

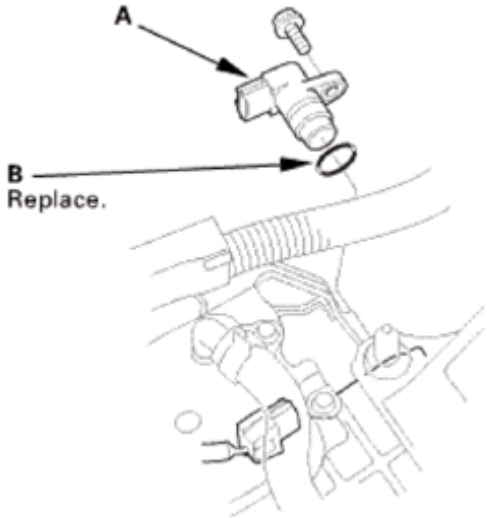

Fig. 331: Identifying Input Shaft (Mainshaft) Speed Sensor And O-Ring
Courtesy of AMERICAN HONDA MOTOR CO., INC.

6. Output Shaft (Countershaft) Speed Sensor
    1. Remove the output shaft (countershaft) speed sensor (A) and the sensor washer (B).

GETtheMANUALS.org

2. Remove the O-ring (C) from the output shaft (countershaft) speed sensor.

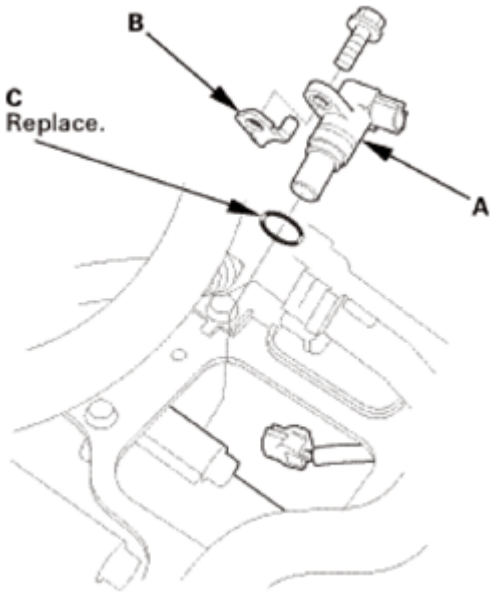

Fig. 332: Identifying Output Shaft (Countershaft) Speed Sensor, Sensor Washer And O-Ring
Courtesy of AMERICAN HONDA MOTOR CO., INC.

7. A/T Clutch Pressure Control Solenoid Valve A
    1. Remove A/T clutch pressure control solenoid valve A.
    2. Remove the 35 mm ATF pipe (B), the ATF joint pipes (C), the O-rings (D), and the gasket (E).

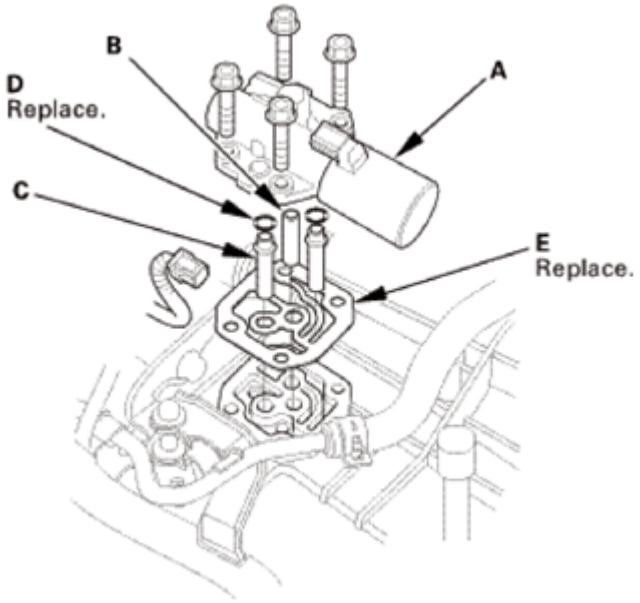

Fig. 333: Identifying A/T Clutch Pressure Control Solenoid Valve, ATF Pipe, ATF Joint Pipes, O-Rings And Gasket With Bolts
Courtesy of AMERICAN HONDA MOTOR CO., INC.

GETtheMANUALS.org

8. A/T Clutch Pressure Control Solenoid Valve B and C
    1. Remove the clamp bracket (A) and A/T clutch pressure control solenoid valves B and C.
    2. Remove the ATF joint pipes (D), the O-rings (E), and the gasket (F).

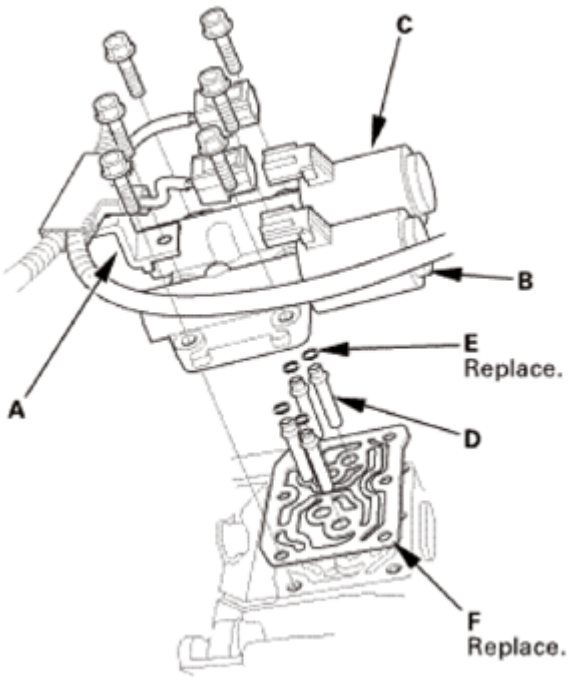

Fig. 334: Identifying A/T Clutch Pressure Control Solenoid Valves, Clamp Bracket, ATF Joint Pipes, O-Rings And Gasket
Courtesy of AMERICAN HONDA MOTOR CO., INC.

9. ATF Inlet Line
    1. Remove the banjo bolt (A) and the sealing washers (B).
    2. Remove the ATF inlet line (C).

GETtheMANUALS.org

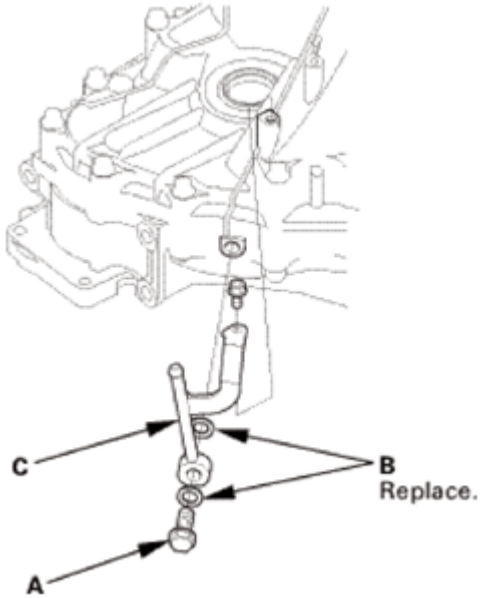

Fig. 335: Identifying ATF Inlet Line, Banjo Bolt And Sealing Washers
Courtesy of AMERICAN HONDA MOTOR CO., INC.

10. ATF Outlet Line
    1. Remove the banjo bolt (A) and the sealing washers (B).
    2. Remove the ATF outlet line (C).

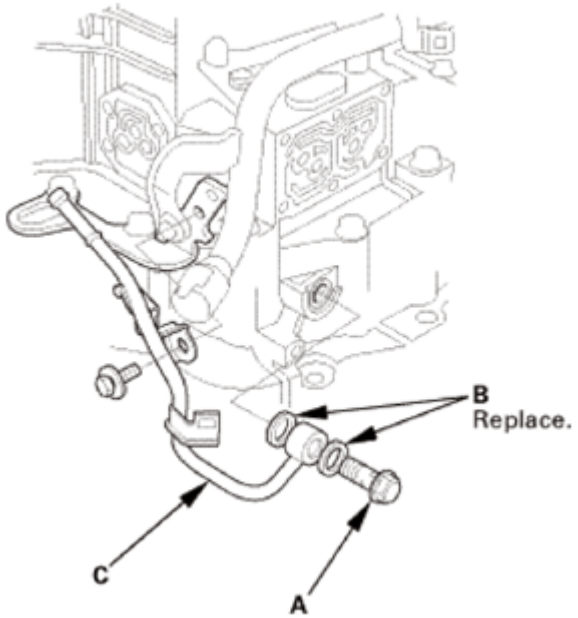

Fig. 336: Identifying ATF Outlet Line, Banjo Bolt And Sealing Washers
Courtesy of AMERICAN HONDA MOTOR CO., INC.

11. Dipstick Guide Tube

GETtheMANUALS.org

1. Remove the ATF dipstick guide tube (A).
2. Remove the O-ring (B) from the ATF dipstick guide tube.

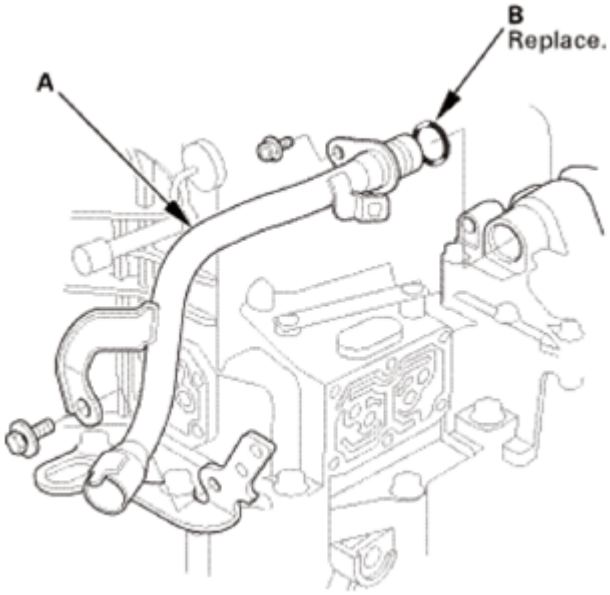

Fig. 337: Identifying ATF Dipstick Guide Tube And O-Ring
Courtesy of AMERICAN HONDA MOTOR CO., INC.

12. A/T Shift Solenoid Cover
    1. Remove the shift solenoid valve cover (A), the dowel pins (B), and the gasket (C).

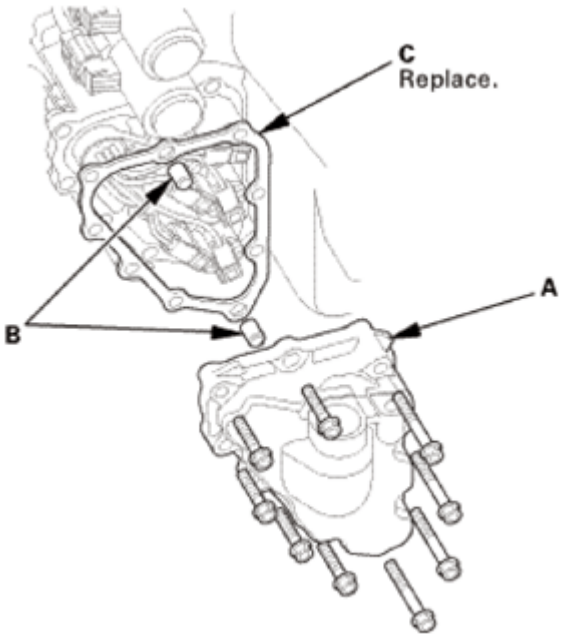

Fig. 338: Identifying Shift Solenoid Valve Cover, Dowel Pins And Gasket
Courtesy of AMERICAN HONDA MOTOR CO., INC.

GETtheMANUALS.org

13. A/T Shift Solenoid Wire Harness - Disconnection
    1. Disconnect the connectors.

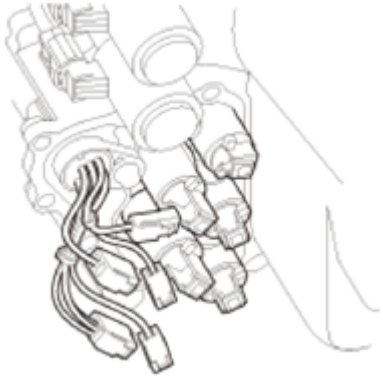

Fig. 339: Identifying A/T Shift Solenoid Wire Harness Connectors
Courtesy of AMERICAN HONDA MOTOR CO., INC.

14. ATF Feed Pipe/Lubrication Pipe
    1. Remove the 6 x 201 mm ATF pipe (A).
    2. Remove the ATF lubrication pipe (B).
    3. Remove the 8 x 220 mm ATF pipe (C).
    4. Remove the 8 x 198 mm ATF pipes (D).

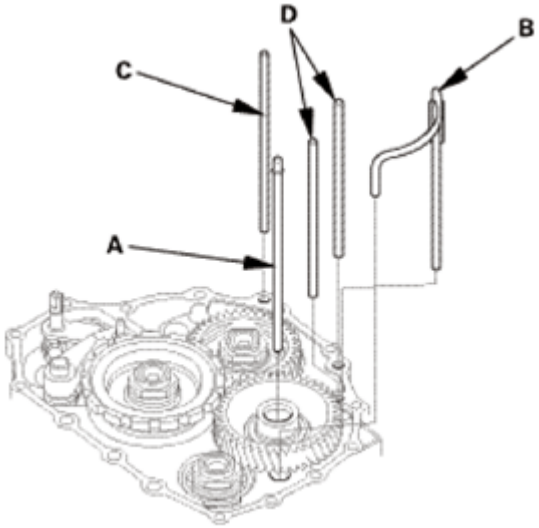

Fig. 340: Identifying ATF Feed Pipes And Lubrication Pipe
Courtesy of AMERICAN HONDA MOTOR CO., INC.

15. End Cover Idler Gear Assembly
    1. Install the mainshaft holder onto the mainshaft.
    2. Engage the park pawl with the park gear.

GETtheMANUALS.org

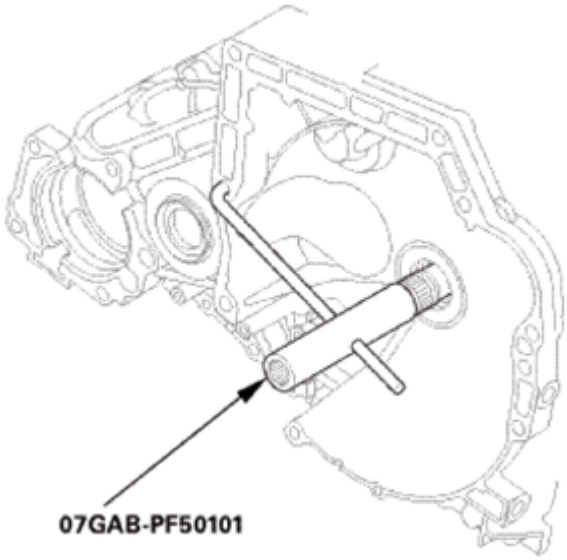

Fig. 341: Installing Mainshaft Holder Onto Mainshaft
Courtesy of AMERICAN HONDA MOTOR CO., INC.

3. Using a chisel, cut the lock tab (A) of the locknut (B).

NOTE: **Keep all of the chiseled particles out of the transmission.**

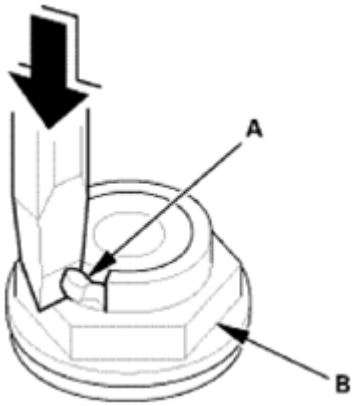

Fig. 342: Cutting Lock Tab Of Locknut Using Chisel
Courtesy of AMERICAN HONDA MOTOR CO., INC.

4. Remove the locknuts (A) and the conical spring washers (B) from each shaft.

NOTE:

- **The countershaft and secondary shaft locknuts have left-hand threads.**
- **Keep all of the chiseled particles out of the transmission.**
- **Clean the old locknuts; they are used to install the press fit idler gears and park gear.**

GETtheMANUALS.org

5. Remove the mainshaft holder.

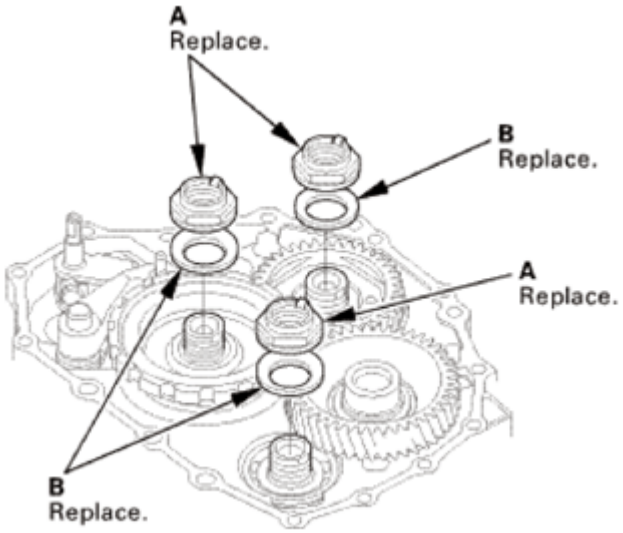

Fig. 343: Identifying Locknuts And Conical Spring Washers
Courtesy of AMERICAN HONDA MOTOR CO., INC.

6. Remove the park pawl (A), the park pawl spring (B), the park pawl shaft (C), and the stop shaft (D).
7. Pry down the lock tab (E) of the lock washer (F).
8. Remove the lock bolt (G) and the lock washer.
9. Remove the park lever (H), the park lever stop (I), and the park lever spring (J).

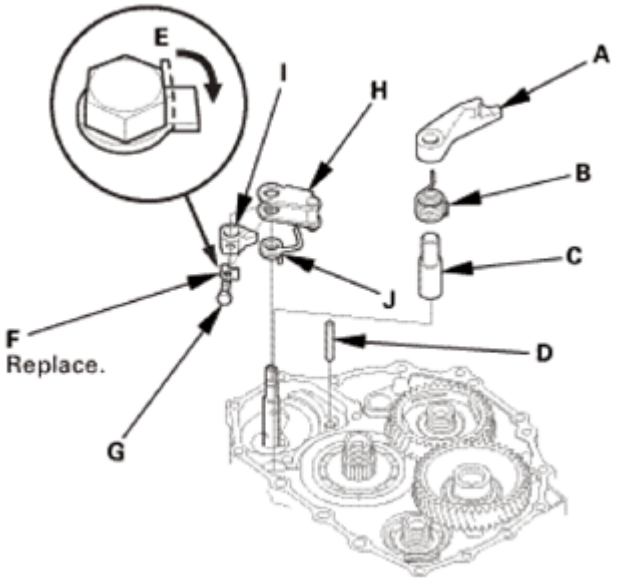

Fig. 344: Prying Down Lock Tab Of Lock Washer
Courtesy of AMERICAN HONDA MOTOR CO., INC.

GETtheMANUALS.org

10. Place a spacer (A) on the countershaft (B).
11. Set a commercially available bearing puller (C) on the park gear (D).
12. Remove the park gear.

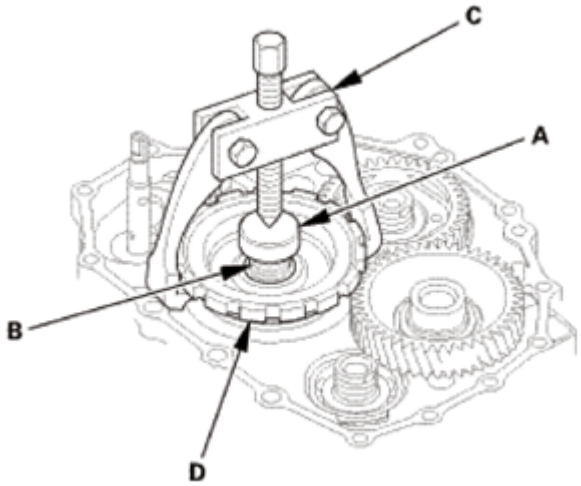

Fig. 345: Setting Commercially Available Bearing Puller On Park Gear
Courtesy of AMERICAN HONDA MOTOR CO., INC.

13. Install a puller (A) with two 6 x 1.0 mm bolts (B) on the mainshaft idler gear (C).
14. Set a spacer (D) between the puller and the mainshaft (E).
15. Remove the mainshaft idler gear.

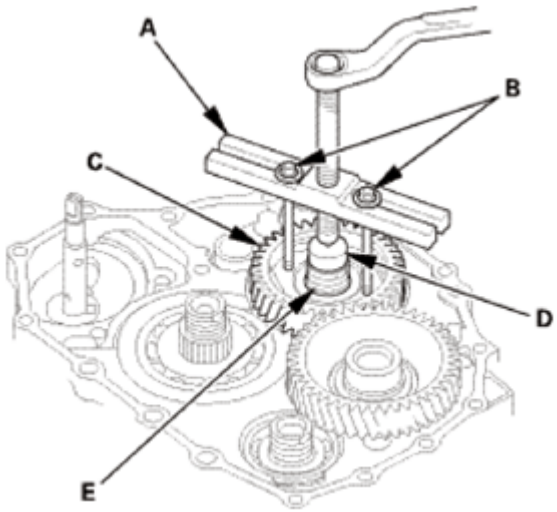

Fig. 346: Installing Puller With 6 X 1.0 mm Bolts On Mainshaft Idler Gear
Courtesy of AMERICAN HONDA MOTOR CO., INC.

16. Automatic Transmission Housing
    1. Align the spring pin (A) on the selector control shaft (B) with the transmission housing groove (C).

GETtheMANUALS.org

NOTE: **Do not squeeze the end of the selector control shaft tips together when turning the control shaft. If the tips are squeezed together, it will cause a faulty shift position signal or position due to the play between the selector control shaft and the transmission range switch.**

2. Remove the transmission housing mounting bolts (D) (2WD: 19 bolts, AWD/4WD: 20 bolts).
3. Install the housing puller over the mainshaft.
4. Remove the transmission housing (E) using the housing puller.
5. Remove the dowel pins (F) and the gasket (G).

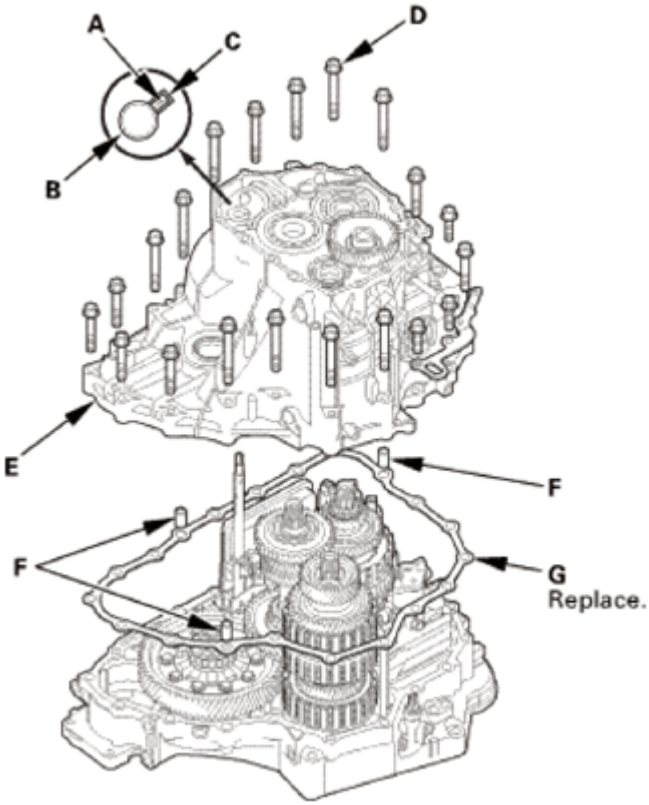

Fig. 347: Identifying Spring Pin, Selector Control Shaft, Transmission Housing Groove, Transmission Housing, Mounting Bolts And Gasket
Courtesy of AMERICAN HONDA MOTOR CO., INC.

GETtheMANUALS.org

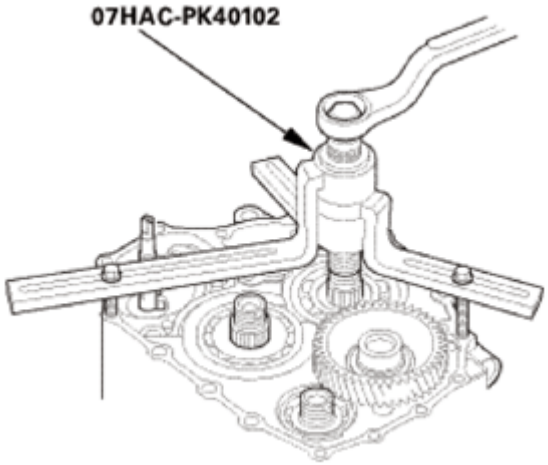

Fig. 348: Installing Housing Puller Over Mainshaft
Courtesy of AMERICAN HONDA MOTOR CO., INC.

17. A/T Countershaft Reverse Gear
    1. Remove the countershaft reverse gear (A).
    2. Remove the needle bearing (B).

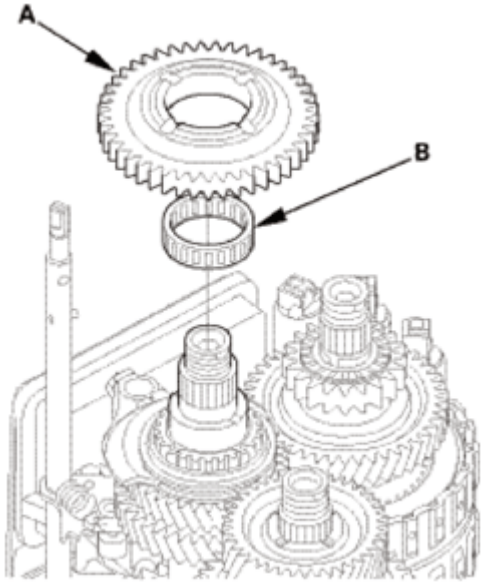

Fig. 349: Identifying Countershaft Reverse Gear And Needle Bearing
Courtesy of AMERICAN HONDA MOTOR CO., INC.

18. Reverse Shift fork
    1. Pry down the lock tab (A) of the lock washer (B).
    2. Remove the lock bolt (C) and the lock washer.
    3. Remove the reverse shift fork (D) and the reverse selector (E) together.

GETtheMANUALS.org

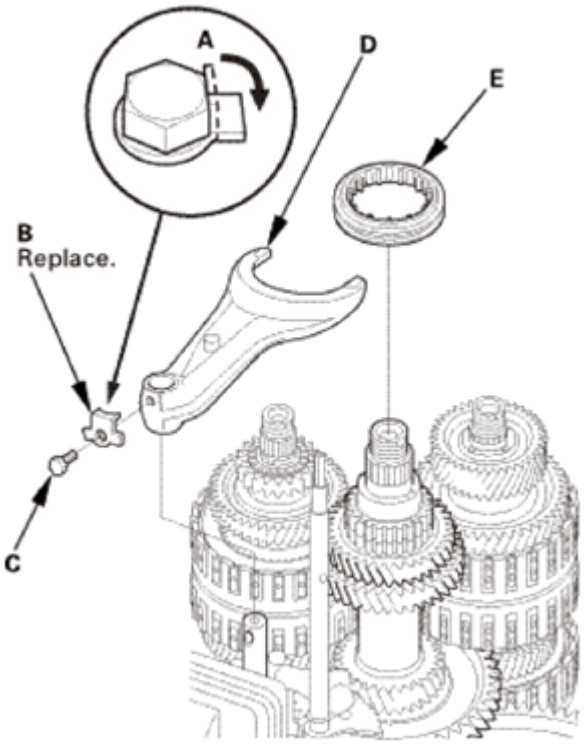

Fig. 350: Prying Down Lock Tab Of Lock Washer
Courtesy of AMERICAN HONDA MOTOR CO., INC.

19. Selector Control Lever (Except 2WD of USA Produced Models)

Except 2WD of USA Produced Models

1. Pry down the lock tab (A) of the lock washer (B).
2. Remove the lock bolt (C) and the lock washer.
3. Remove the selector control lever (D).

Except 2WD of USA Produced Models

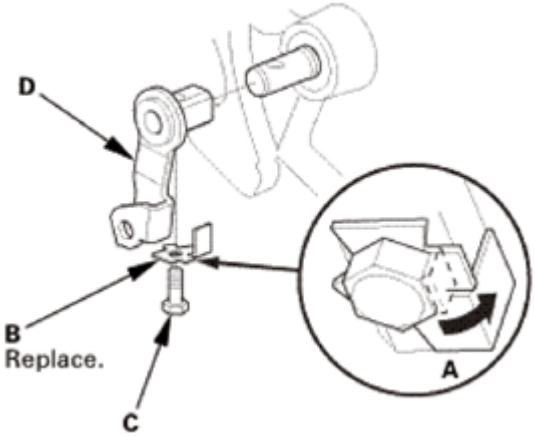

GETtheMANUALS.org

Fig. 351: Prying Down Lock Tab Of Lock Washer (Except 2WD Of USA Produced Models)
Courtesy of AMERICAN HONDA MOTOR CO., INC.

20. Selector Control Shaft
    1. Unhook the detent arm spring (A).

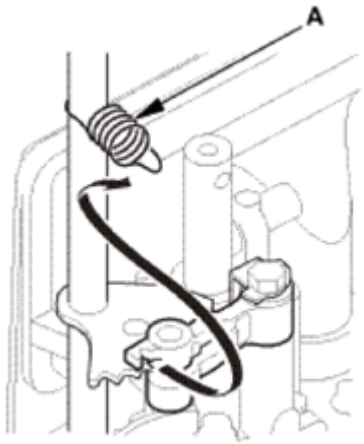

Fig. 352: Unhooking Detent Arm Spring
Courtesy of AMERICAN HONDA MOTOR CO., INC.

    2. Separate the manual valve lever pin (A) on the selector control shaft (B) from the guide of the manual valve (C).

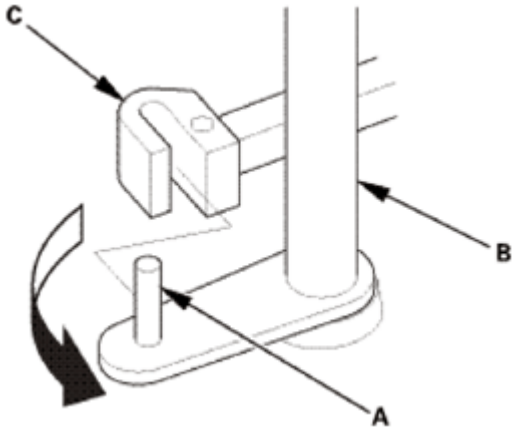

Fig. 353: Separating Manual Valve Lever Pin On Selector Control Shaft From Guide Of Manual Valve
Courtesy of AMERICAN HONDA MOTOR CO., INC.

    3. Remove the selector control shaft (A).

GETtheMANUALS.org

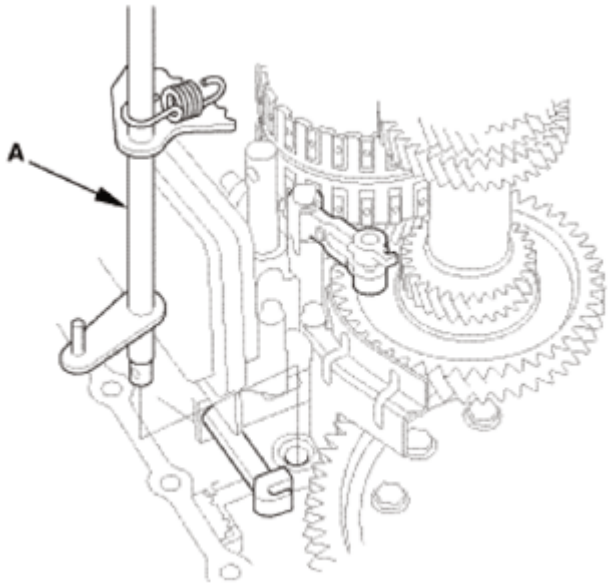

Fig. 354: Identifying Selector Control Shaft
Courtesy of AMERICAN HONDA MOTOR CO., INC.

21. Mainshaft and Countershaft and Secondary Shaft Assembly
    1. Turn the detent arm (A) away from the countershaft (B).

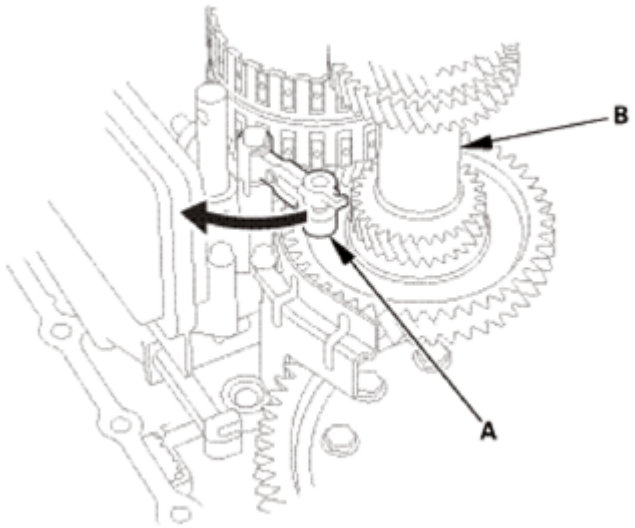

Fig. 355: Turning Detent Arm Away From Countershaft
Courtesy of AMERICAN HONDA MOTOR CO., INC.

    2. Remove the mainshaft subassembly (A), the countershaft subassembly (B), and the secondary shaft subassembly (C) together.

NOTE: Do not bump the countershaft on the baffle plate (D).

GETtheMANUALS.org

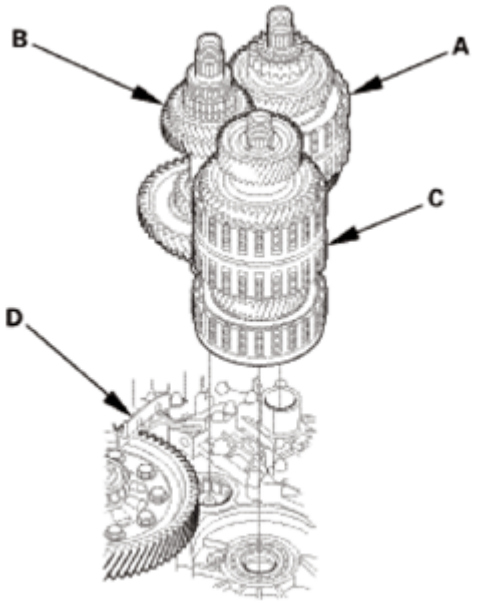

Fig. 356: Identifying Mainshaft Subassembly, Countershaft Subassembly, Secondary Shaft Subassembly And Baffle Plate
Courtesy of AMERICAN HONDA MOTOR CO., INC.

22. Differential Assembly
    1. Remove the baffle plate (A).
    2. Remove the differential assembly (B).

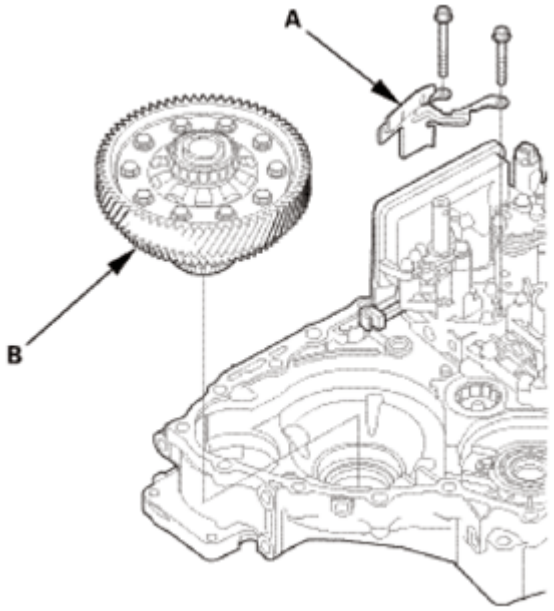

Fig. 357: Identifying Differential Assembly And Baffle Plate
Courtesy of AMERICAN HONDA MOTOR CO., INC.

GETtheMANUALS.org

23. Differential Carrier Bearing and Bearing Outer Race - Transmission Housing Side
    1. Remove the bearing outer race (A), the 76.2 mm spacer (B), and the 76 mm thrust shim (C) by heating the transmission housing to about 100 °C (212 °F) using a heat gun (D).

NOTE:

- **Do not heat the transmission housing more than 100 °C (212 °F).**
- **Let the transmission housing cool to room temperature before installing the bearing outer race.**

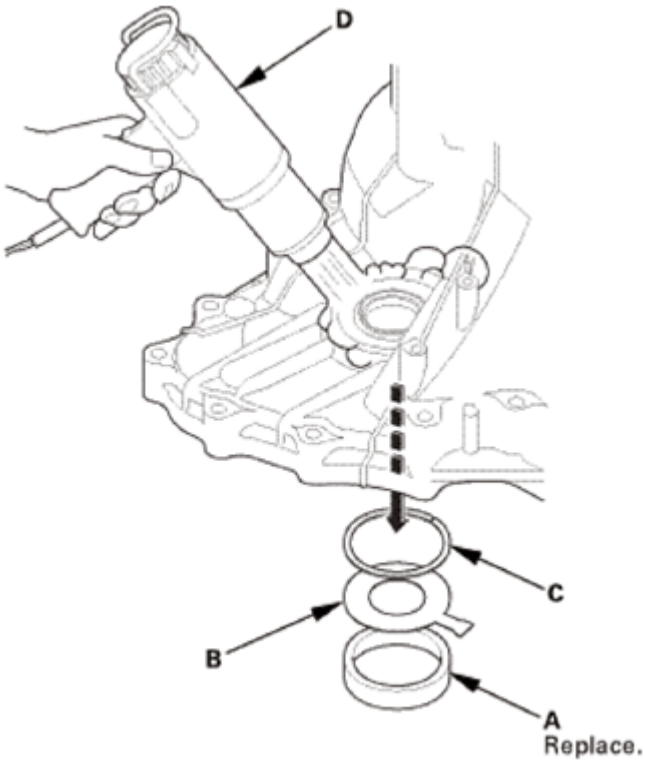

Fig. 358: Removing Bearing Outer Race, Spacer And Thrust Shim By Heating Transmission Housing Using Heat Gun
Courtesy of AMERICAN HONDA MOTOR CO., INC.

2WD

2. 2WD: Remove the final driven gear (A).

NOTE: **Differential carrier bolts have left-hand threads.**

GETtheMANUALS.org

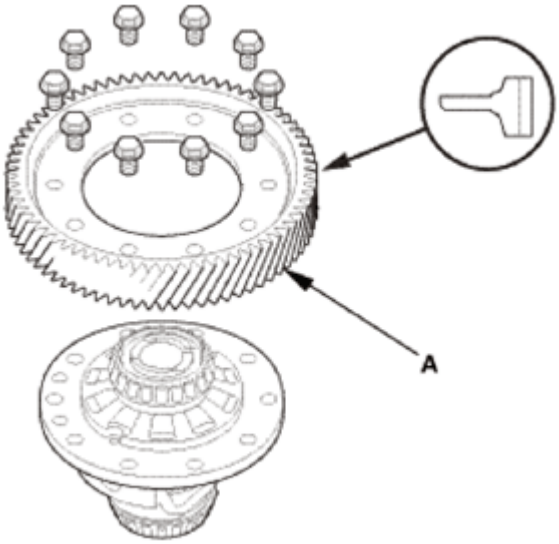

Fig. 359: Identifying Final Driven Gear And Differential Carrier Bolts (2WD)
Courtesy of AMERICAN HONDA MOTOR CO., INC.

AWD/4WD

3. AWD/4WD: Remove the final driven gear (A) and the transfer drive gear (B).

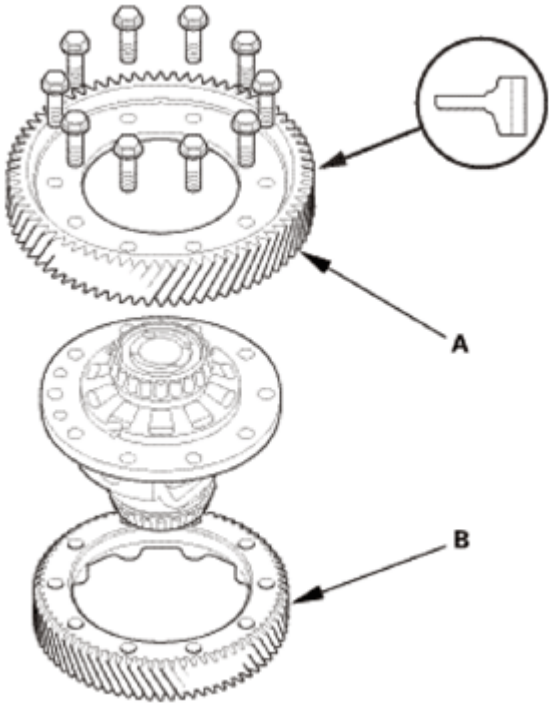

Fig. 360: Identifying Final Driven Gear And Transfer Drive Gear With Mounting Bolts (AWD/4WD)
Courtesy of AMERICAN HONDA MOTOR CO., INC.

GETtheMANUALS.org

4. Remove the carrier bearing (A) using a commercially available puller (B) and a spacer (C).

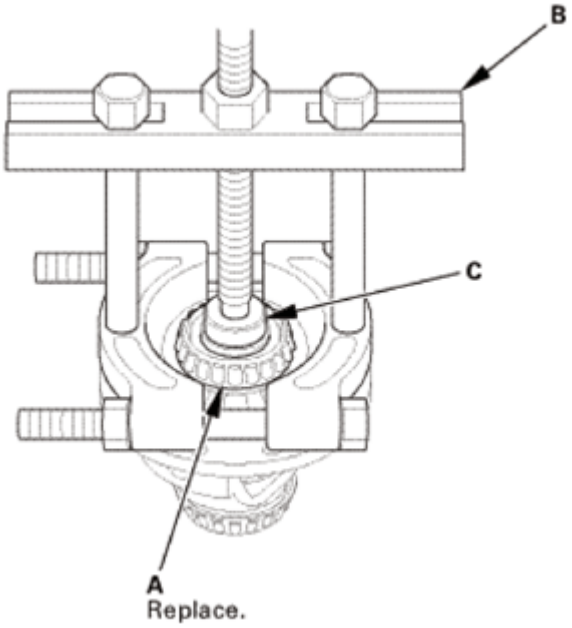

Fig. 361: Removing Carrier Bearing Using Commercially Available Puller And Spacer
Courtesy of AMERICAN HONDA MOTOR CO., INC.

24. Differential Carrier Bearing and Bearing Outer Race - Torque Converter Housing Side
    1. Remove the bearing outer race (A) and the 80 mm spacer (B).

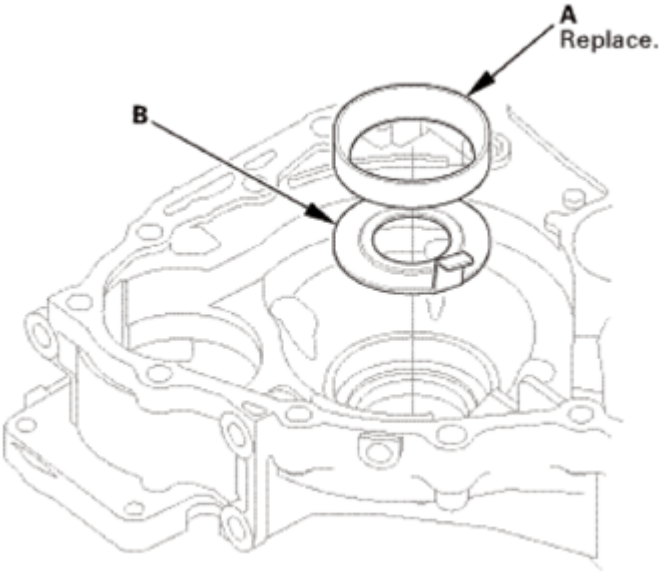

Fig. 362: Identifying Bearing Outer Race And Spacer
Courtesy of AMERICAN HONDA MOTOR CO., INC.

2. Remove the carrier bearing (A) using a commercially available puller (B) and a spacer (C).

GETtheMANUALS.org

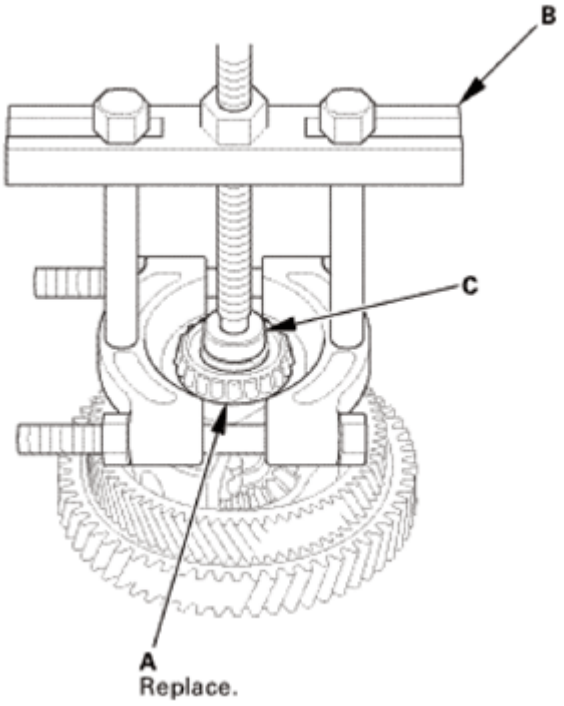

Fig. 363: Removing Carrier Bearing Using Commercially Available Puller And Spacer
Courtesy of AMERICAN HONDA MOTOR CO., INC.

INSTALLATION

NOTE:

- **The bearing and the bearing outer race should be replaced as a set.**
- **Inspect and adjust the carrier bearing preload whenever bearing is replaced.**
- **Apply a light coat of clean ATF on all moving parts before installation.**
- **The illustration shows AWD/4WD transmission.**

1. Differential Carrier Bearing and Bearing Outer Race - Torque Converter Housing Side
    1. Install a new carrier bearing (A) using the 40 mm installer attachment with the small end and a press. Press the carrier bearing on securely so there is no clearance between the carrier bearing and the differential carrier.

GETtheMANUALS.org

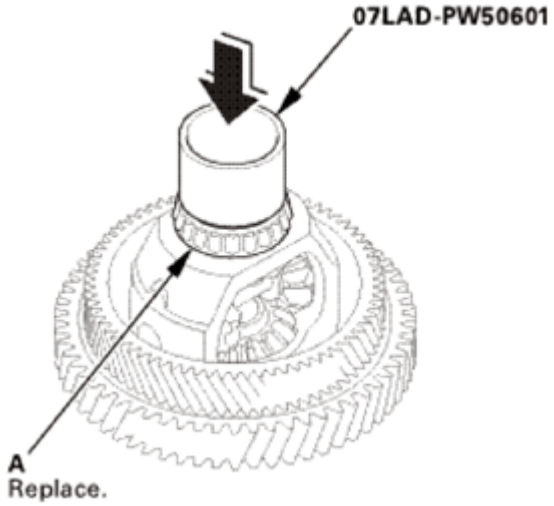

Fig. 364: Installing Carrier Bearing Using Installer Attachment
Courtesy of AMERICAN HONDA MOTOR CO., INC.

2. Install the 80 mm spacer (A) and a new bearing outer race (B).

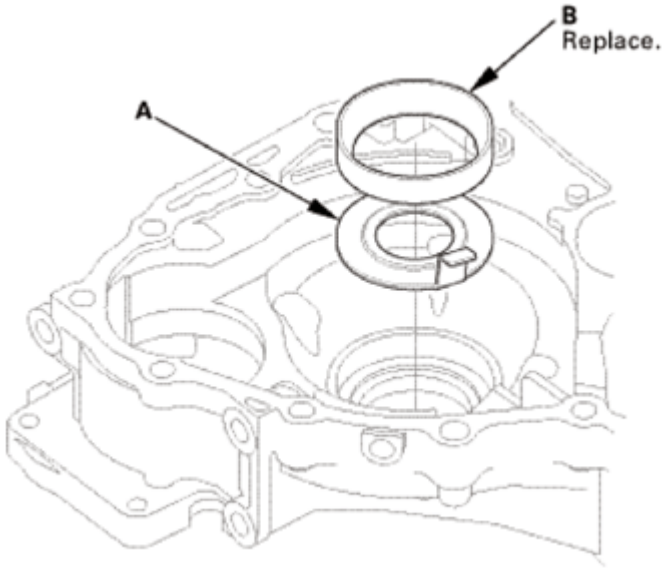

Fig. 365: Identifying Spacer And Bearing Outer Race
Courtesy of AMERICAN HONDA MOTOR CO., INC.

3. Install the bearing outer race securely in the torque converter housing using the driver handle and the 78 x 80 mm bearing driver attachment.

GETtheMANUALS.org

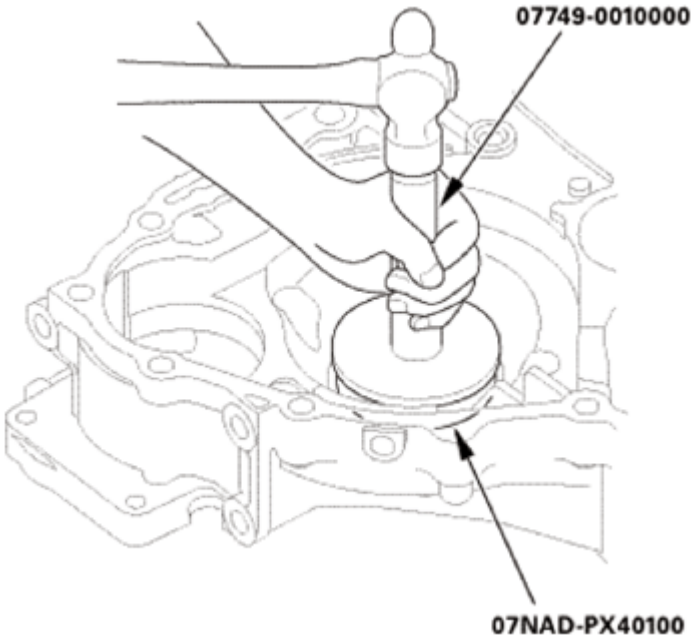

Fig. 366: Installing Bearing Outer Race Securely In Torque Converter Housing Using Driver Handle And Bearing Driver Attachment
Courtesy of AMERICAN HONDA MOTOR CO., INC.

2. Differential Carrier Bearing and Bearing Outer Race - Transmission Housing Side
    1. Install a new carrier bearing (A) using the 40 mm installer attachment with the small end and a press. Press the carrier bearing on securely so there is no clearance between the carrier bearing and the differential carrier.

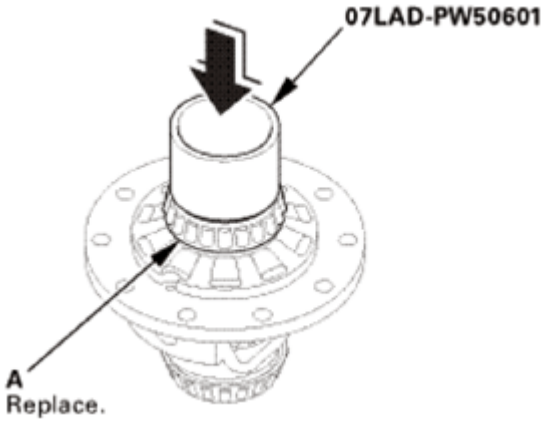

Fig. 367: Installing Carrier Bearing Using Installer Attachment
Courtesy of AMERICAN HONDA MOTOR CO., INC.

2WD

2. 2WD: Install the final driven gear (A) in the direction shown.
3. 2WD: Tighten the bolts to the specified torque in a crisscross pattern in at least two steps.

GETtheMANUALS.org

NOTE: **Differential carrier bolts have left-hand threads.**

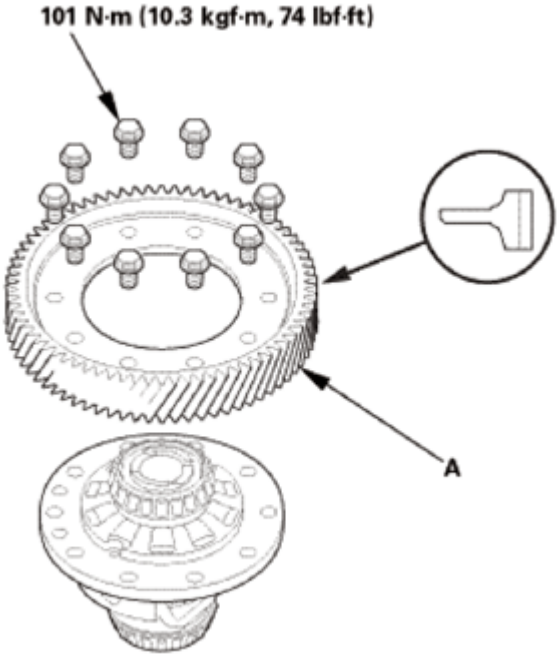

Fig. 368: Identifying Final Driven Gear And Differential Carrier Bolts With Torque Specification (2WD)
Courtesy of AMERICAN HONDA MOTOR CO., INC.

AWD/4WD

4. AWD/4WD: Install the final driven gear (A) and the transfer drive gear (B) in the direction shown.
5. AWD/4WD: Tighten the bolts to the specified torque in a crisscross pattern in at least two steps.

GETtheMANUALS.org

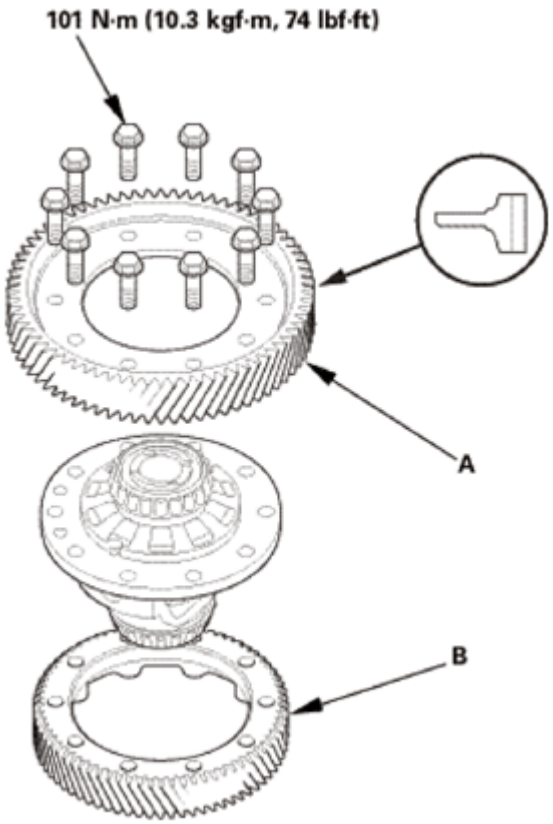

Fig. 369: Identifying Final Driven Gear Or Transfer Drive Gear And Mounting Bolts With Torque Specification (AWD/4WD)
Courtesy of AMERICAN HONDA MOTOR CO., INC.

6. Install the 76 mm thrust shim (A) in the transmission housing (B). If you replace the 76 mm thrust shim with a new one, use the same thickness shim as the old one.
7. Install the 76.2 mm spacer (C) and a new bearing outer race (D) in the transmission housing.

NOTE: **Be sure to install the 76.2 mm spacer with the engraved mark facing downward.**

GETtheMANUALS.org

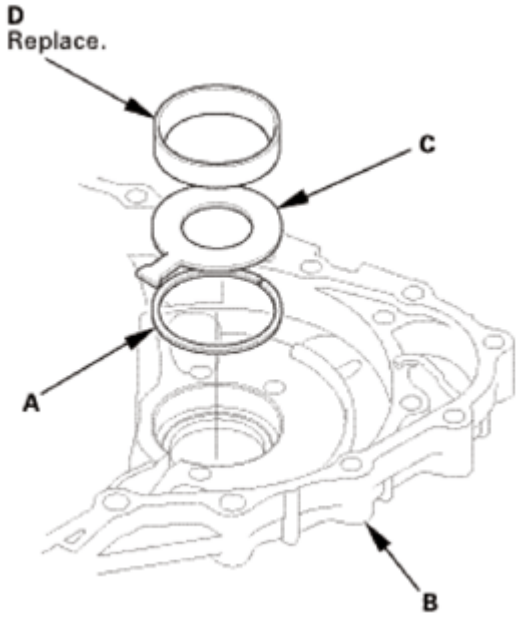

Fig. 370: Identifying Thrust Shim, Transmission Housing, Spacer And Bearing Outer Race
Courtesy of AMERICAN HONDA MOTOR CO., INC.

8. Install the bearing outer race securely so there is no clearance between the bearing outer race, the 76.2 mm spacer, the 76 mm thrust shim, and the transmission housing, using the driver handle and the 72 x 75 mm bearing driver attachment.

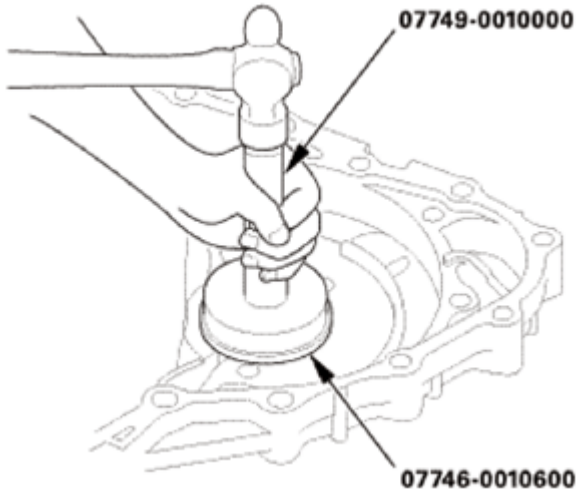

Fig. 371: Installing Bearing Outer Race Securely In Torque Converter Housing Using Driver Handle And Bearing Driver Attachment
Courtesy of AMERICAN HONDA MOTOR CO., INC.

3. Carrier Bearing Preload - Inspection
    1. Make sure that the carrier bearings and bearing outer races are installed securely.
    2. Install the differential assembly (A), and install a new gasket (B) and the dowel pins (C).

GETtheMANUALS.org

3. Install the transmission housing (D) with the transmission hanger (E), and tighten the transmission housing mounting bolts (2WD: 19 bolts, AWD/4WD: 20 bolts) in at least two steps, in a crisscross pattern.
4. Rotate the differential assembly in both directions to seat the bearings.

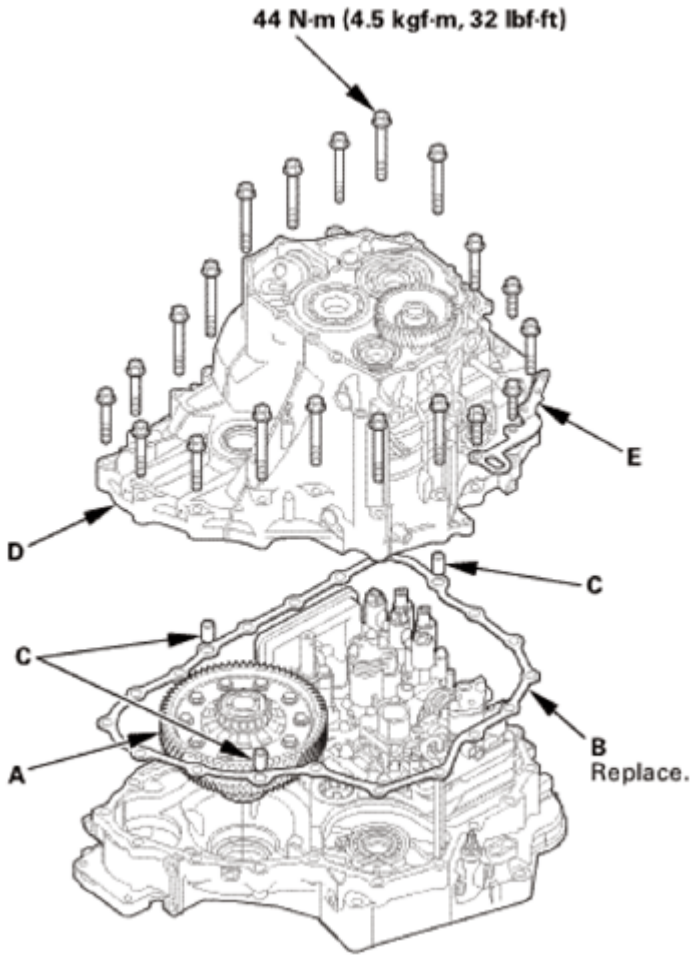

Fig. 372: Identifying Differential Assembly, Gasket, Dowel Pins, Transmission Housing, Transmission Hanger And Mounting Bolts With Torque Specification
Courtesy of AMERICAN HONDA MOTOR CO., INC.

5. Measure the starting torque of the differential assembly in both directions using the preload inspection tool, a torque wrench (A), and a socket (B) at normal room temperature.

Standard

New Bearing:

2.7-3.9 N.m (28-40 kgf.cm, 24-35 lbf.in)

Reused Bearing:

GETtheMANUALS.org

2.5-3.6 N.m (25-37 kgf.cm, 22-32 lbf.in)

6. If the starting torque is out of the standard, remove the 76 mm thrust shim to adjust the starting torque.

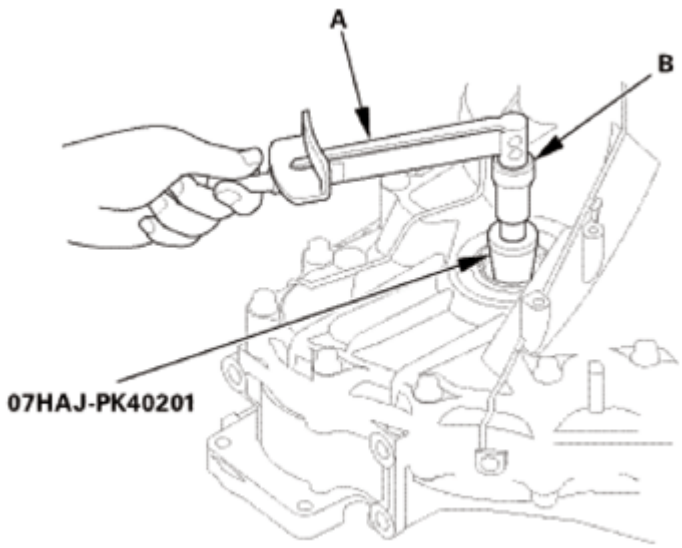

Fig. 373: Measuring Starting Torque Of Differential Assembly Using Torque Wrench And Socket
Courtesy of AMERICAN HONDA MOTOR CO., INC.

7. Remove the bearing outer race (A), the 76.2 mm spacer (B), and the 76 mm thrust shim (C) by heating the transmission housing to about 212 °F (100 °C) using a heat gun (D).

NOTE:

- **Do not heat the transmission housing more than 212 °F (100 °C).**
- **Let the transmission housing cool to room temperature before installing the bearing outer race.**

8. Measure the 76 mm thrust shim thickness, and select a 76 mm thrust shim from the table. To increase the starting torque, increase the thickness of the 76 mm thrust shim. To decrease the starting torque, decrease the thickness of the 76 mm thrust shim. Changing the 76 mm thrust shim to the next size will increase or decrease starting torque about 0.3-0.4 N.m (3-4 kgf.cm, 2-3 lbf.in).

GETtheMANUALS.org

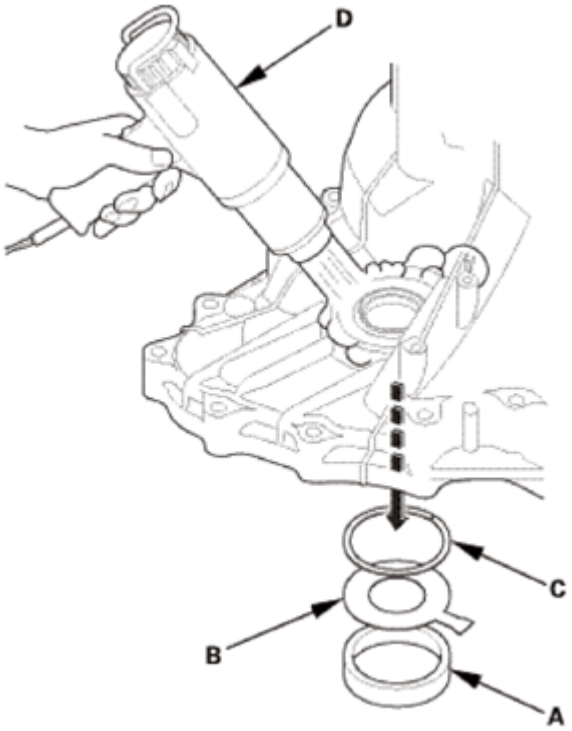

Fig. 374: Removing Bearing Outer Race, Spacer And Thrust Shim By Heating Transmission Housing Using Heat Gun
Courtesy of AMERICAN HONDA MOTOR CO., INC.

THRUST SHIM SPECIFICATION (76 MM) - TYPE A

No.	Thickness
S	2.05 mm (0.0807 in)
T	2.10 mm (0.0827 in)
U	2.15 mm (0.0846 in)
A	2.20 mm (0.0866 in)
B	2.25 mm (0.0886 in)
C	2.30 mm (0.0906 in)
D	2.35 mm (0.0925 in)
E	2.40 mm (0.0945 in)
F	2.45 mm (0.0965 in)
G	2.50 mm (0.0984 in)
H	2.55 mm (0.1004 in)
I	2.60 mm (0.1024 in)
J	2.65 mm (0.1043 in)
K	2.70 mm (0.1063 in)
L	2.75 mm (0.1083 in)
M	2.80 mm (0.1102 in)
N	2.85 mm (0.1122 in)

GETtheMANUALS.org

O	2.90 mm (0.1142 in)
P	2.95 mm (0.1161 in)
Q	3.00 mm (0.1181 in)
R	3.05 mm (0.1201 in)
0A	1.55 mm (0.0610 in)
0B	1.60 mm (0.0630 in)
0C	1.65 mm (0.0650 in)
0D	1.70 mm (0.0669 in)
0E	1.75 mm (0.0689 in)
0F	1.80 mm (0.0709 in)
0G	1.85 mm (0.0728 in)
0H	1.90 mm (0.0748 in)
0I	1.95 mm (0.0768 in)
0J	2.00 mm (0.0787 in)

THRUST SHIM SPECIFICATION (76 MM) - TYPE B

No.	Thickness
A	1.575 mm (0.06201 in)
B	1.625 mm (0.06398 in)
C	1.675 mm (0.06594 in)
D	1.725 mm (0.06791 in)
E	1.775 mm (0.06988 in)
F	1.825 mm (0.07185 in)
G	1.875 mm (0.07382 in)
H	1.925 mm (0.07579 in)
I	1.975 mm (0.07776 in)
J	2.025 mm (0.07972 in)
K	2.075 mm (0.08169 in)
L	2.125 mm (0.08366 in)
M	2.175 mm (0.08563 in)
N	2.225 mm (0.08760 in)
O	2.275 mm (0.08957 in)
P	2.325 mm (0.09154 in)
Q	2.375 mm (0.09350 in)
R	2.425 mm (0.09547 in)
S	2.475 mm (0.09744 in)
T	2.525 mm (0.09941 in)
U	2.575 mm (0.10138 in)
V	2.625 mm (0.10335 in)
W	2.675 mm (0.10531 in)
X	2.725 mm (0.10728 in)

GETtheMANUALS.org

Y	2.775 mm (0.10925 in)
Z	2.825 mm (0.11122 in)
0A	2.875 mm (0.11319 in)
0B	2.925 mm (0.11516 in)
0C	2.975 mm (0.11713 in)
0D	3.025 mm (0.11909 in)

9. Install a new 76 mm thrust shim (A) in the transmission housing (B).
10. Install the 76.2 mm spacer (C) and the bearing outer race (D) in the transmission housing.

NOTE: **Be sure to install the 76.2 mm thrust washer with the engraved mark facing downward.**

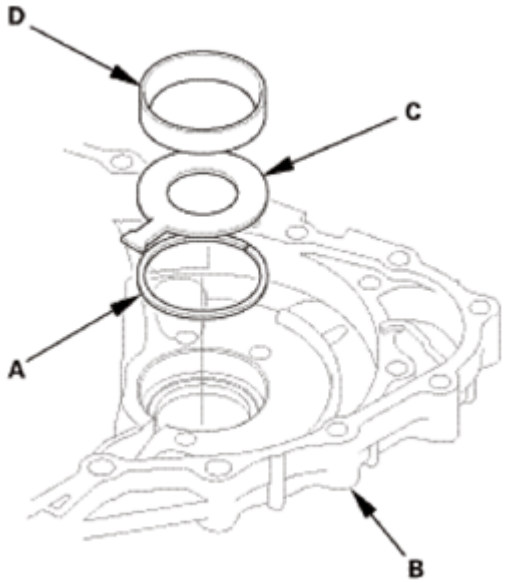

Fig. 375: Identifying Thrust Shim, Transmission Housing, Spacer And Bearing Outer Race
Courtesy of AMERICAN HONDA MOTOR CO., INC.

11. Install the bearing outer race securely so there is no clearance between the bearing outer race, the 76.2 mm spacer, the 76 mm thrust shim, and the transmission housing, using the driver handle and the 72 x 75 mm bearing driver attachment.
12. Recheck the starting torque.

GETtheMANUALS.org

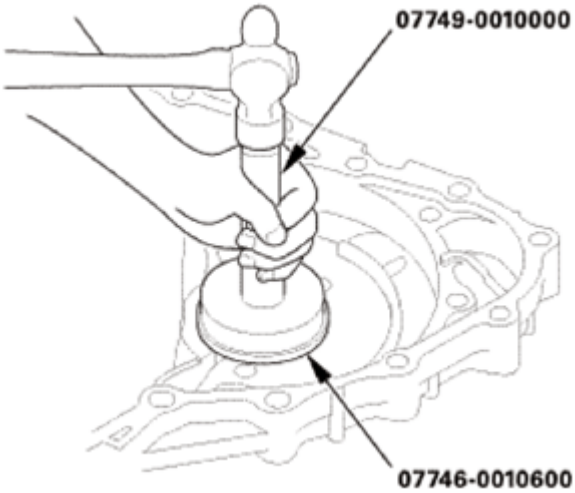

Fig. 376: Installing Bearing Outer Race Securely In Torque Converter Housing Using Driver Handle And Bearing Driver Attachment
Courtesy of AMERICAN HONDA MOTOR CO., INC.

4. Differential Assembly
    1. Install the differential assembly (A).
    2. Install the baffle plate (B).

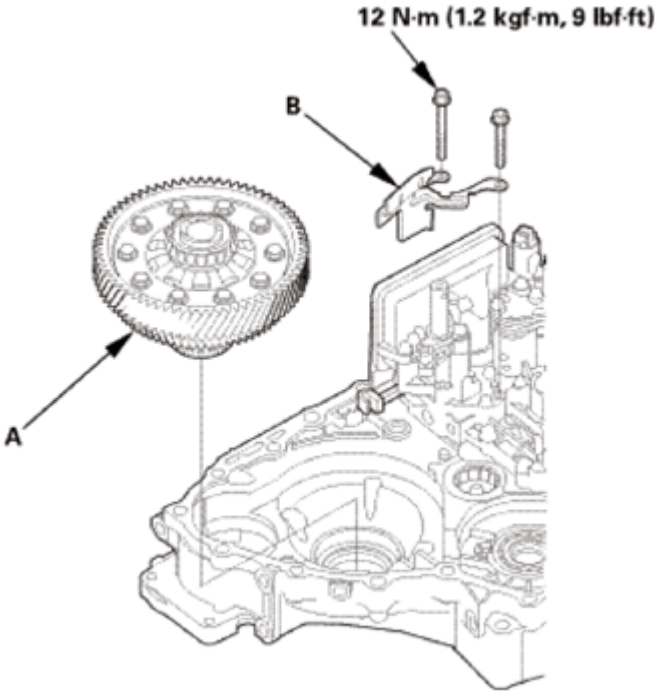

Fig. 377: Identifying Differential Assembly, Baffle Plate And Bolts With Torque Specification
Courtesy of AMERICAN HONDA MOTOR CO., INC.

5. Mainshaft and Countershaft and Secondary Shaft Assembly

GETtheMANUALS.org

1. Be sure that each shaft is assembled. Also be sure that new sealing rings are installed on the mainshaft and the secondary shaft.
2. Join the mainshaft subassembly (A), the countershaft subassembly (B), and the secondary shaft subassembly (C) together, and install them.

NOTE: Do not bump the countershaft on the baffle plate (D).

3. Make sure the countershaft subassembly and the differential assembly (E) are clear of the baffle plate.

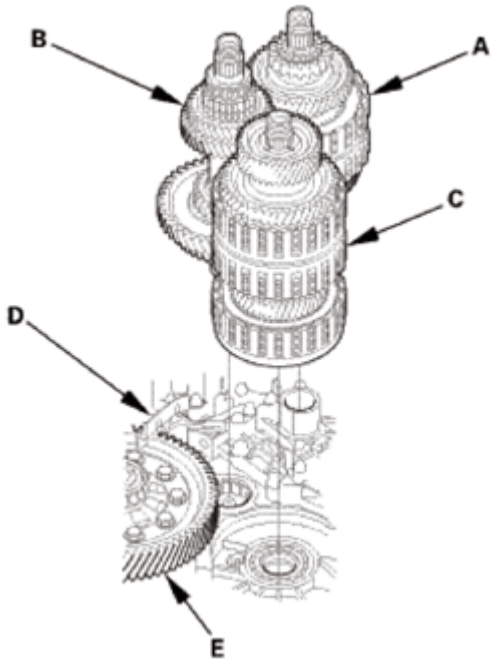

Fig. 378: Identifying Mainshaft Subassembly, Countershaft Subassembly, Secondary Shaft Subassembly, Baffle Plate And Differential Assembly
Courtesy of AMERICAN HONDA MOTOR CO., INC.

6. Selector Control Shaft
   1. Install the selector control shaft (A).

GETtheMANUALS.org

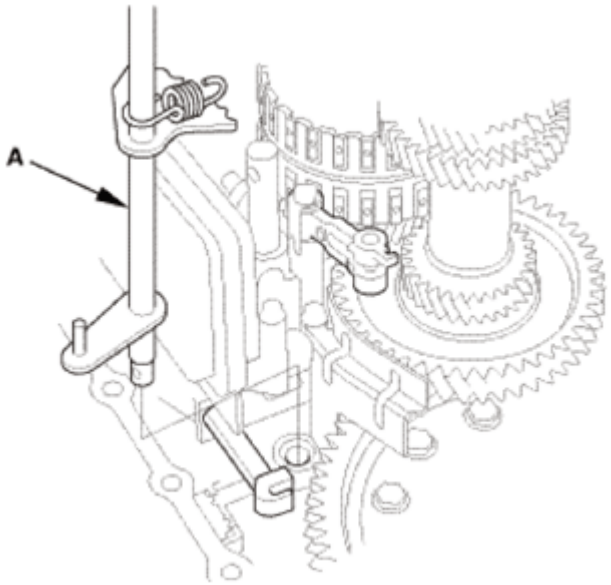

Fig. 379: Identifying Selector Control Shaft
Courtesy of AMERICAN HONDA MOTOR CO., INC.

2. Align the manual valve lever pin (A) on the selector control shaft (B) with the guide of the manual valve (C).

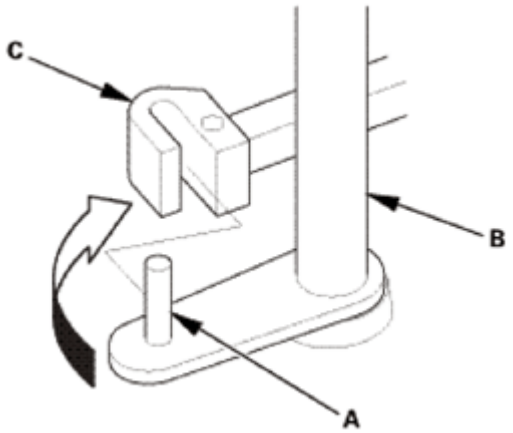

Fig. 380: Aligning Manual Valve Lever Pin On Selector Control Shaft With Guide Of Manual Valve
Courtesy of AMERICAN HONDA MOTOR CO., INC.

3. Hook the detent arm spring (A).

GETtheMANUALS.org

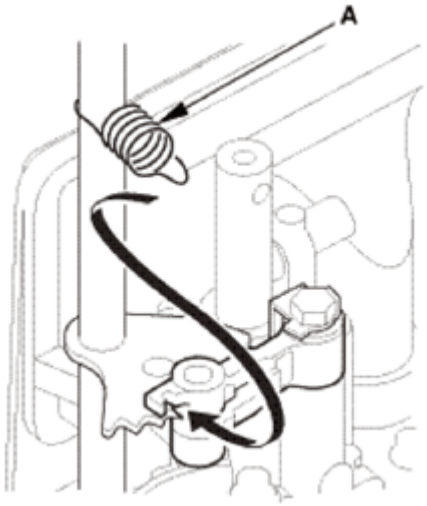

Fig. 381: Hooking Detent Arm Spring
Courtesy of AMERICAN HONDA MOTOR CO., INC.

7. Selector Control Lever (Except 2WD of USA Produced Models)

Except 2WD of USA Produced Models

1. Install the control lever (A) over the selector control shaft (B).
2. Install the lock bolt (C) using a new lock washer (D).
3. Pry up the lock tab (E) of the lock washer against the bolt head.

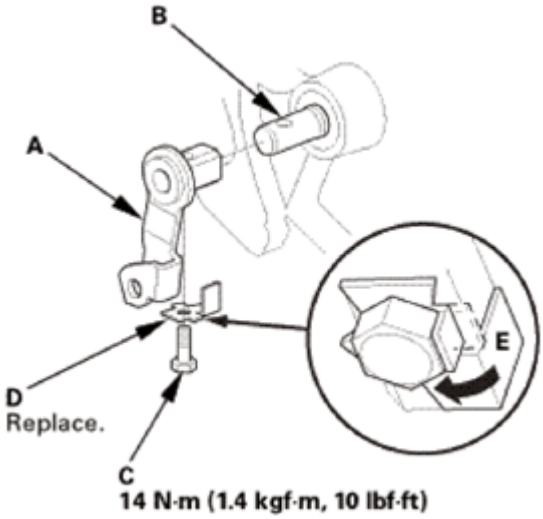

Fig. 382: Prying Up Lock Tab Of Lock Washer (Except 2WD Of USA Produced Models)
Courtesy of AMERICAN HONDA MOTOR CO., INC.

8. Reverse Shift fork
   1. Install the reverse shift fork (A) and the reverse selector (B) together.

GETtheMANUALS.org

2. Install the lock bolt (C) using a new lock washer (D).
3. Pry up the lock tab (E) of the lock washer against the bolt head.

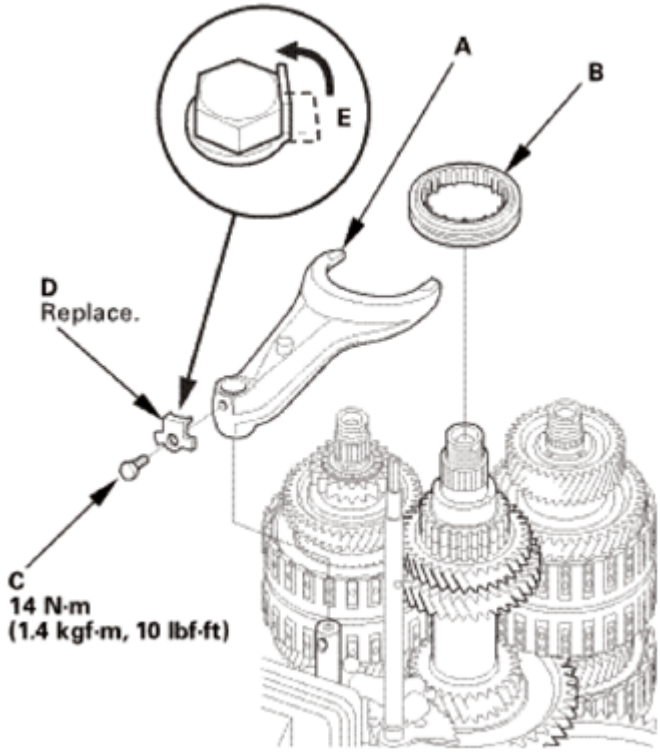

Fig. 383: Prying Up Lock Tab Of Lock Washer Against Bolt Head
Courtesy of AMERICAN HONDA MOTOR CO., INC.

9. A/T Countershaft Reverse Gear
    1. Install the needle bearing (A).
    2. Install the countershaft reverse gear (B).

GETtheMANUALS.org

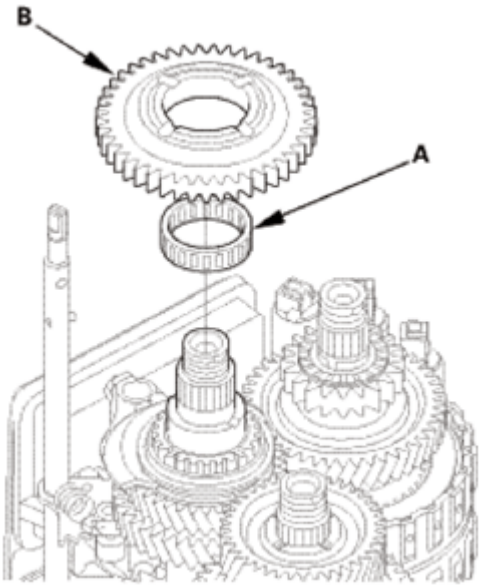

Fig. 384: Identifying Needle Bearing And Countershaft Reverse Gear
Courtesy of AMERICAN HONDA MOTOR CO., INC.

10. Automatic Transmission Housing
    1. Install the three dowel pins (A) and a new gasket (B).
    2. Align the spring pin (C) of the selector control shaft (D) with the transmission housing groove (E).

    NOTE: **Do not squeeze the end of the selector control shaft tips together when turning the shaft. If the tips are squeezed together, it will cause a faulty shift position signal or position due to the play between the selector control shaft and the transmission range switch.**

    3. Place the transmission housing (F) on the torque converter housing (G).

    NOTE: **Do not install the input shaft (mainshaft) speed sensor and the output shaft (countershaft) speed sensor before installing the transmission housing.**

    4. Wrap the tip of a screwdriver with tape so the reverse idler gear teeth do not get damaged. Engage the reverse idler gear (H) with the reverse gears (I) by rotating the idler gear using the screwdriver.
    5. Make sure the transmission housing is securely seated so there is no clearance between the transmission housing and the torque converter housing.
    6. Install the transmission hanger (J), and tighten the transmission housing mounting bolts (2WD: 19 bolts, AWD/4WD: 20 bolts) in at least two steps, in a crisscross pattern.

GETtheMANUALS.org

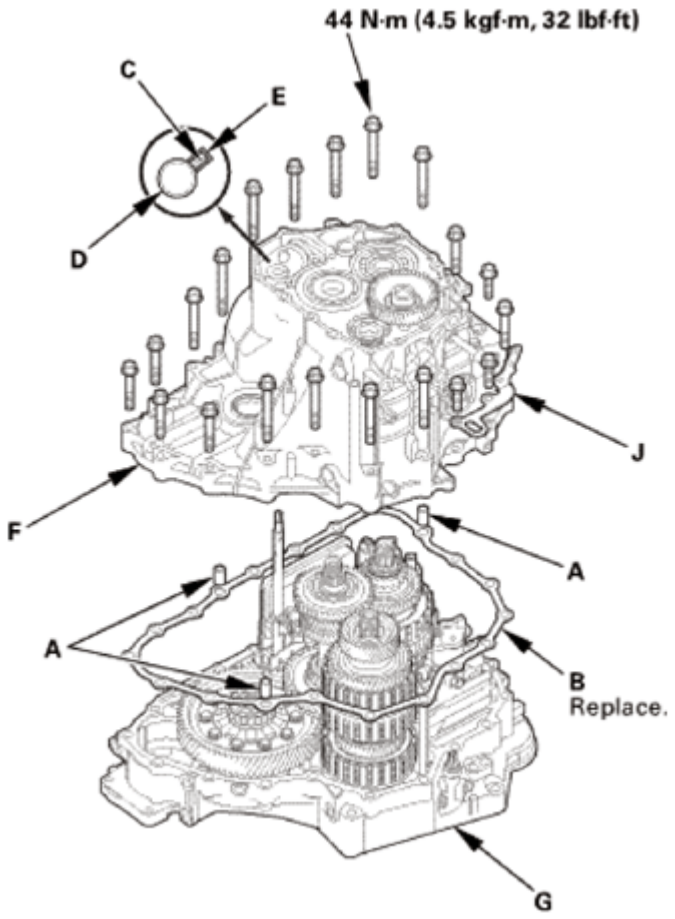

Fig. 385: Identifying Dowel Pins, Gasket, Spring Pin, Selector Control Shaft, Transmission Housing Groove And Mounting Bolts With Torque Specification
Courtesy of AMERICAN HONDA MOTOR CO., INC.

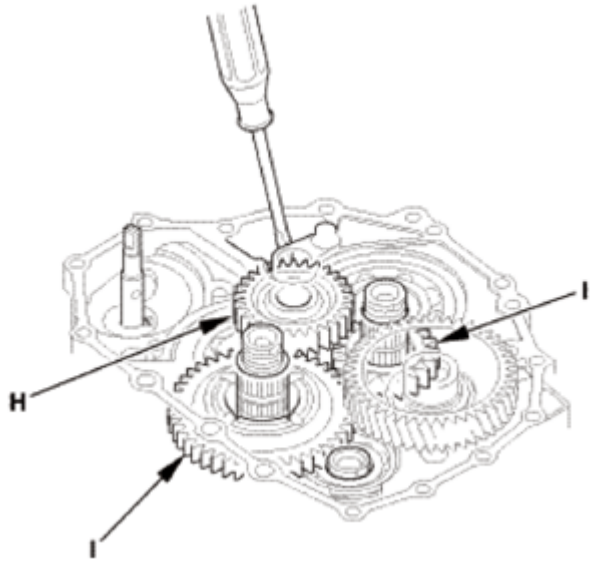

Fig. 386: Engaging Reverse Idler Gear With Reverse Gears By Rotating Idler Gear Using

GETtheMANUALS.org

Screwdriver
Courtesy of AMERICAN HONDA MOTOR CO., INC.

11. End Cover Idler Gear Assembly
    1. Install the mainshaft holder onto the mainshaft.

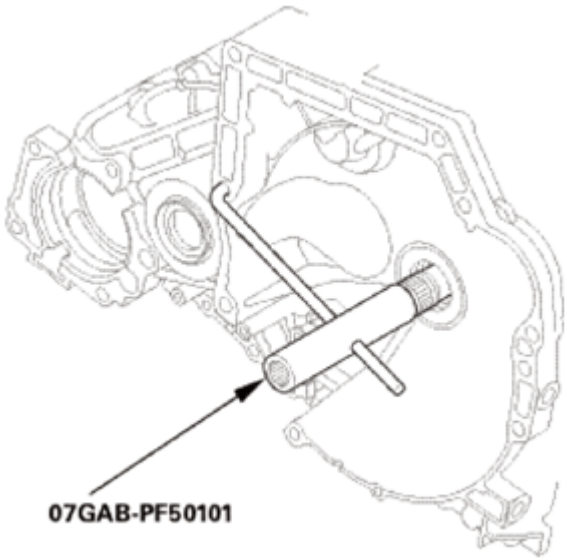

Fig. 387: Installing Mainshaft Holder Onto Mainshaft
Courtesy of AMERICAN HONDA MOTOR CO., INC.

    2. Lubricate the following parts with ATF:
        - Splines and threads of the mainshaft.
        - Splines of the mainshaft idler gear.
        - The old conical spring washer and the old locknut.
    3. Install the mainshaft idler gear (A), the old conical spring washer (B), and the old locknut (C), and tighten the locknut to 225 N.m (23.0 kgf.m, 166 lbf.ft).

NOTE:
- **Do not tap the mainshaft idler gear to install.**
- **Use a torque wrench to tighten the locknut. Do not use an impact wrench.**

GETtheMANUALS.org

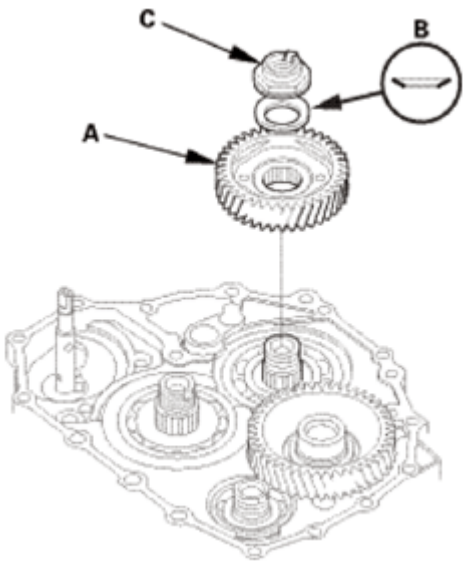

Fig. 388: Identifying Mainshaft Idler Gear, Conical Spring Washer And Locknut
Courtesy of AMERICAN HONDA MOTOR CO., INC.

4. Lubricate the following parts with ATF:
   - Splines and threads of the countershaft.
   - Splines of the park gear.
   - The old conical spring washer and the old locknut.
5. Install the park gear (A), the old conical spring washer (B), and the old locknut (C).

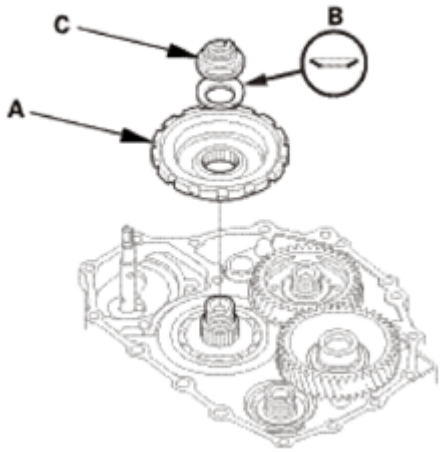

Fig. 389: Identifying Park Gear, Conical Spring Washer And Locknut
Courtesy of AMERICAN HONDA MOTOR CO., INC.

6. Install the park lever spring (D), the park lever (E), and the park lever stop (F).
7. Install the lock bolt (G) using a new lock washer (H).

NOTE: Do not bend the lock tab of the lock washer until inspect the park

GETtheMANUALS.org

lever stop.

8. Install the park pawl shaft (I), the park pawl spring (J), the park pawl (K), and the stop shaft (L).
9. Lift the park pawl up, and engage it with the park gear, and tighten the locknut to 225 N.m (23.0 kgf.m, 166 lbf.ft).

NOTE:

- **Do not tap the park gear to install.**
- **Use a torque wrench to tighten the locknut. Do not use an impact wrench.**
- **Countershaft locknut has left-hand threads.**

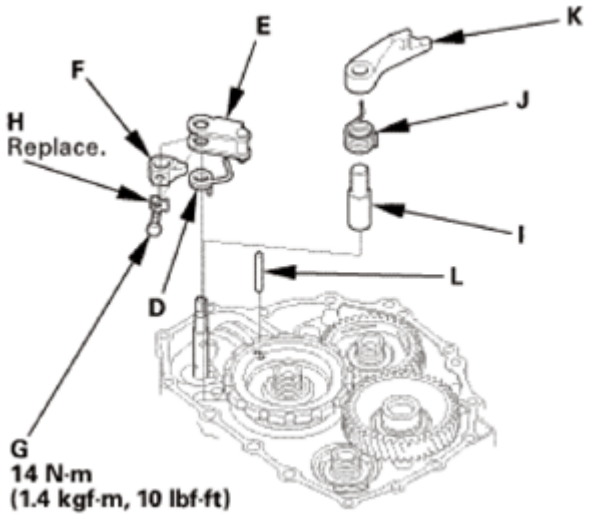

Fig. 390: Identifying Park Pawl Shaft, Park Lever Spring, Park Lever, Park Lever Stop, Lock Bolt, Lock Washer With Torque Specification
Courtesy of AMERICAN HONDA MOTOR CO., INC.

10. Remove the old locknuts and the old conical spring washers from the mainshaft and the countershaft.
11. Lubricate the following parts with ATF:

GETtheMANUALS.org

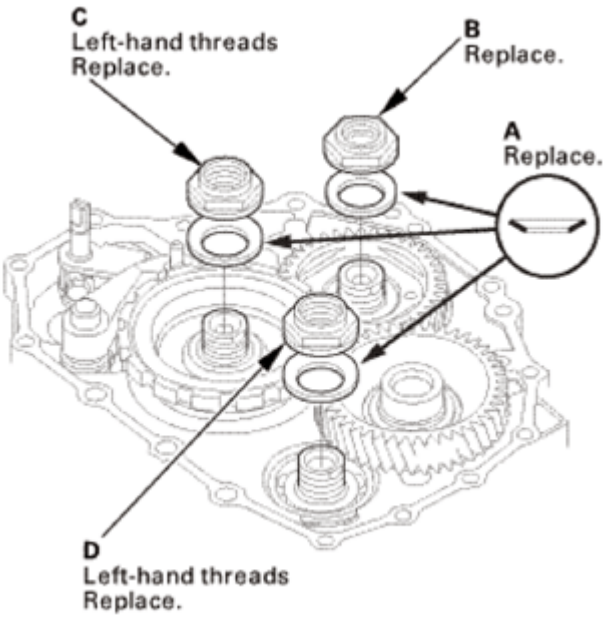

Fig. 391: Identifying Conical Spring Washers, Mainshaft Locknut, Countershaft Locknut And Secondary Shaft Locknut
Courtesy of AMERICAN HONDA MOTOR CO., INC.

- Splines and threads of the mainshaft, the countershaft, and the secondary shaft.
- New conical spring washers and new locknuts.
- Areas where the conical spring washers contact the mainshaft idler gear and the park gear.

12. Install new conical spring washers (A) in the direction shown.
13. Install a new mainshaft locknut (B), a new countershaft locknut (C), and a new secondary shaft locknut (D).
14. Tighten the locknuts to 167 N.m (17.0 kgf.m, 123 lbf.ft).

NOTE:

- **Use a torque wrench to tighten the locknut. Do not use an impact wrench.**
- **The countershaft and secondary shaft locknuts have left-hand threads.**

15. Remove the mainshaft holder.
16. Stake the locknuts into the shafts to a depth (A) of 0.7-1.3 mm (0.027-0.051 in) using a 3.5 mm punch (B).

GETtheMANUALS.org

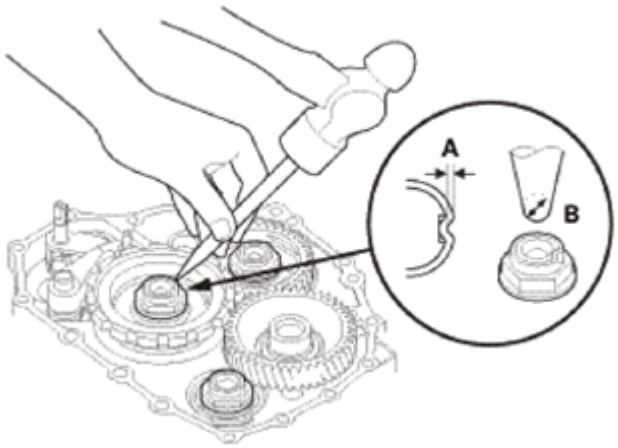

Fig. 392: Staking Locknuts Into Shafts Using Punch
Courtesy of AMERICAN HONDA MOTOR CO., INC.

17. Set the park lever in the P position.
18. Measure the distance (A) between the center of the park pawl shaft (B) and the center of the park lever roller pin (C) as shown.

    Standard: 57.7-58.7 mm (2.272-2.311 in)

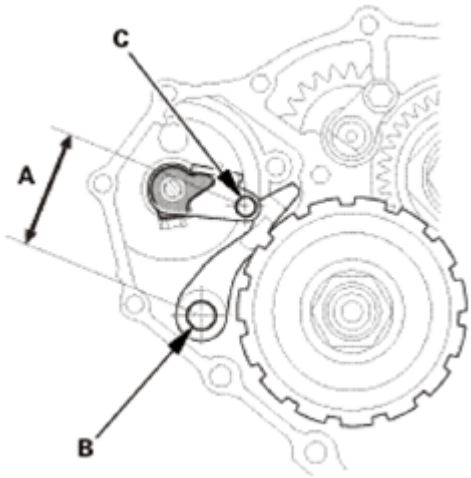

Fig. 393: Measuring Distance Between Center Of Park Pawl Shaft And Center Of Park Lever Roller Pin
Courtesy of AMERICAN HONDA MOTOR CO., INC.

19. If the measurement is out of the standard, select and install the appropriate park lever stop (A) from the table.

PARK LEVER STOP SPECIFICATION

Mark	B	C
1	11.00 mm (0.4331 in)	11.00 mm (0.4331 in)

GETtheMANUALS.org

2	10.80 mm (0.4252 in)	10.65 mm (0.4193 in)
3	10.60 mm (0.4173 in)	10.30 mm (0.4055 in)

20. After replacing the park lever stop, make sure the distance is within the tolerance.

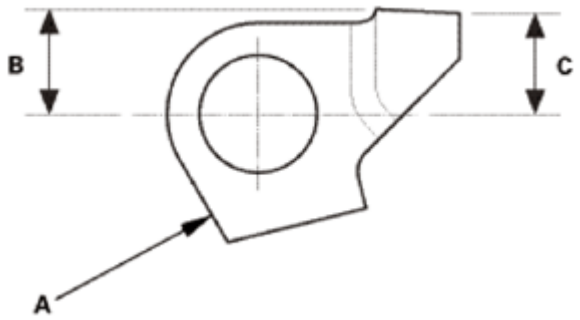

Fig. 394: Identifying Park Lever Stop Dimension
Courtesy of AMERICAN HONDA MOTOR CO., INC.

21. Pry up the lock tab (A) of the lock washer against the bolt head.

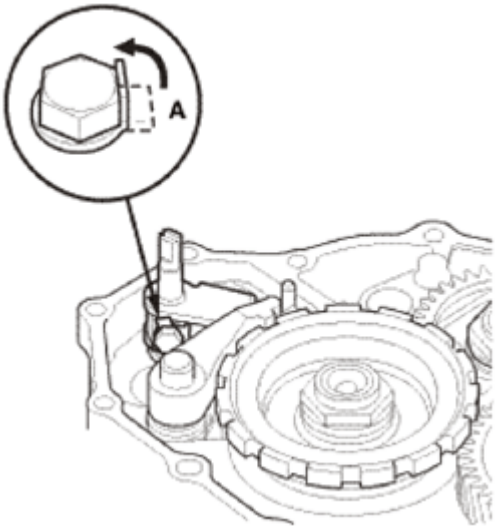

Fig. 395: Prying Up Lock Tab Of Lock Washer Against Bolt Head
Courtesy of AMERICAN HONDA MOTOR CO., INC.

12. ATF Feed Pipe/Lubrication Pipe
    1. Install the 6 x 201 mm ATF pipe (A).
    2. Install the ATF lubrication pipe (B).
    3. Install the 8 x 220 mm ATF pipe (C).
    4. Install the 8 x 198 mm ATF pipes (D).

GETtheMANUALS.org

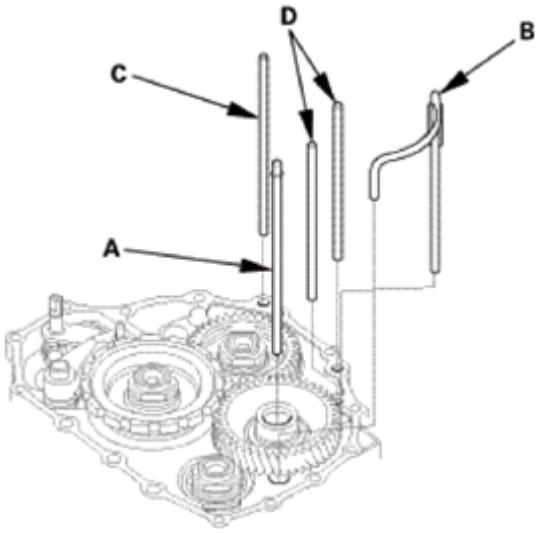

Fig. 396: Identifying ATF Feed Pipes And Lubrication Pipe
Courtesy of AMERICAN HONDA MOTOR CO., INC.

13. A/T Shift Solenoid Wire Harness - Reconnection
    1. Connect the shift solenoid valve connectors:
        - BLU wire to shift solenoid valve A.
        - ORN wire to shift solenoid valve B.
        - GRN wire to shift solenoid valve C.
        - YEL, WHT, and WHT wires to shift solenoid valve D.
        - RED wire to shift solenoid valve E.

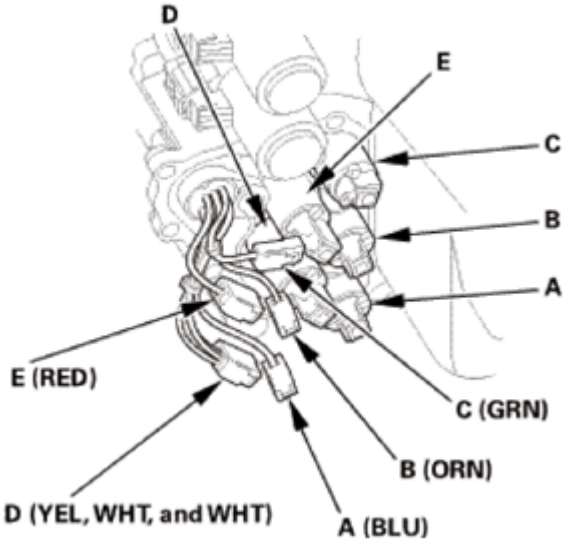

Fig. 397: Identifying Shift Solenoid Valves
Courtesy of AMERICAN HONDA MOTOR CO., INC.

GETtheMANUALS.org

14. A/T Shift Solenoid Cover
    1. Install the shift solenoid valve cover (A) with the dowel pins (B) and a new gasket (C).

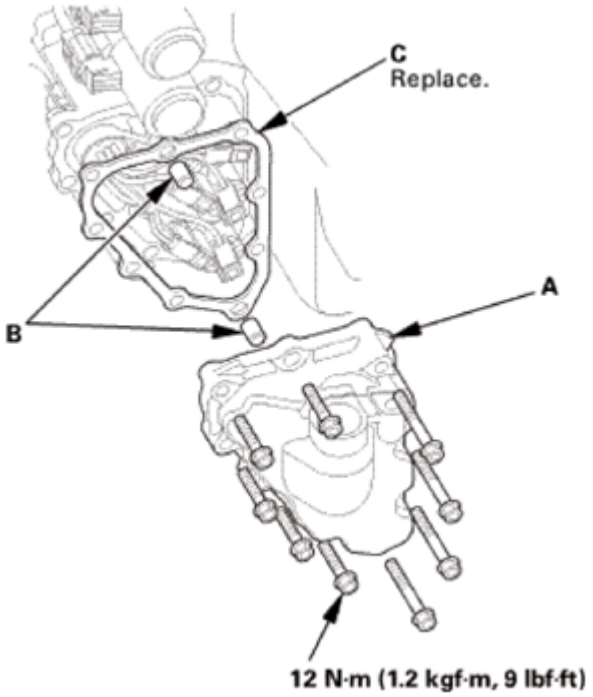

Fig. 398: Identifying Shift Solenoid Valve Cover, Dowel Pins, Gasket And Mounting Bolts With Torque Specification
Courtesy of AMERICAN HONDA MOTOR CO., INC.

15. Dipstick Guide Tube
    1. Install a new O-ring (A) on the ATF dipstick guide tube (B).
    2. Install the ATF dipstick guide tube.

GETtheMANUALS.org

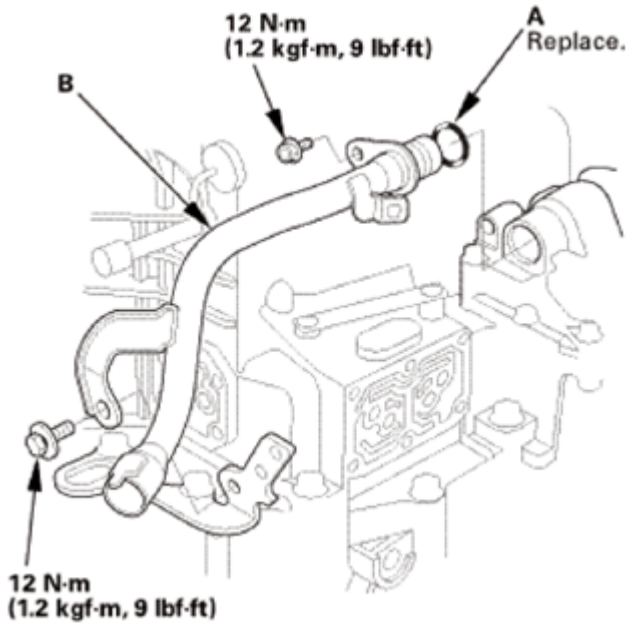

Fig. 399: Identifying ATF Dipstick Guide Tube, O-Ring And Mounting Bolts With Torque Specification
Courtesy of AMERICAN HONDA MOTOR CO., INC.

16. ATF Outlet Line
    1. Install the ATF outlet line (A) using new sealing washers (B).

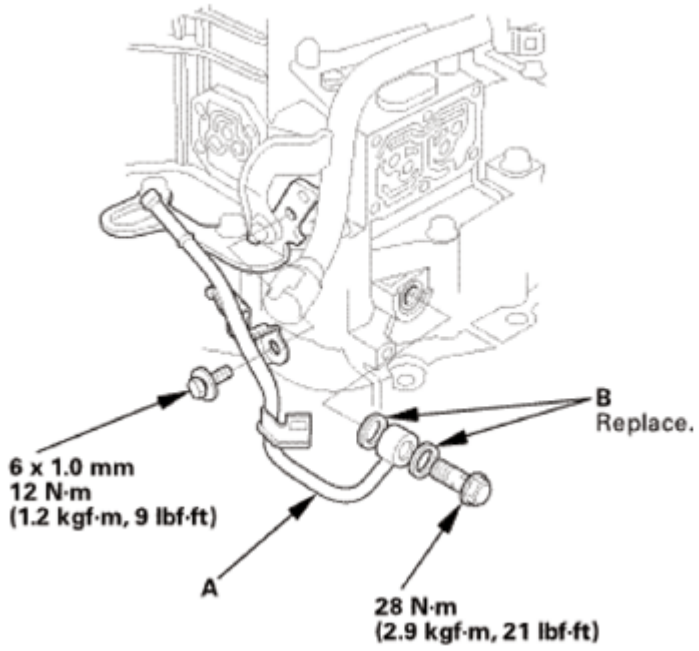

Fig. 400: Identifying ATF Outlet Line, Sealing Washers And Mounting Bolts With Torque Specification
Courtesy of AMERICAN HONDA MOTOR CO., INC.

GETtheMANUALS.org

17. ATF Inlet Line
    1. Install the ATF inlet line (A) using new sealing washers (B).

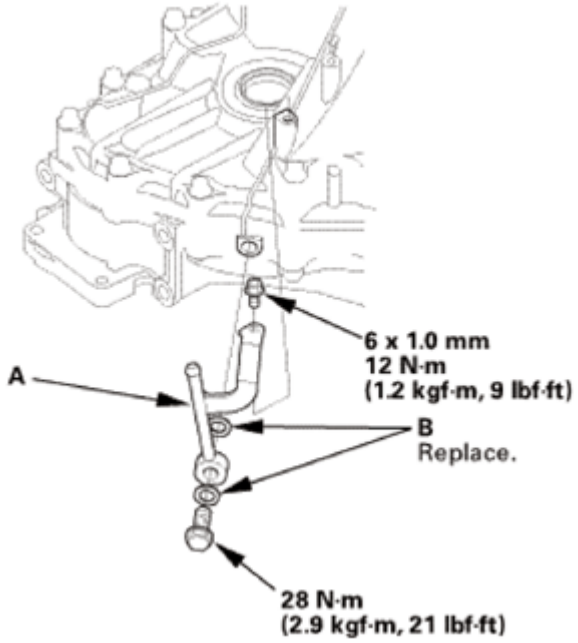

Fig. 401: Identifying ATF Inlet Line, Sealing Washers And Mounting Bolts With Torque Specification
Courtesy of AMERICAN HONDA MOTOR CO., INC.

18. A/T Clutch Pressure Control Solenoid Valve B and C
    1. Clean the mounting surfaces and the fluid passages of the solenoid valve body and the transmission housing.
    2. Install a new gasket (A) with the blue side toward the transmission housing, and Install the ATF joint pipes (D).
    3. Install new O-rings (E) over the ATF joint pipes.
    4. Install A/T clutch pressure control solenoid valves B and C with the clamp bracket (F).

GETtheMANUALS.org

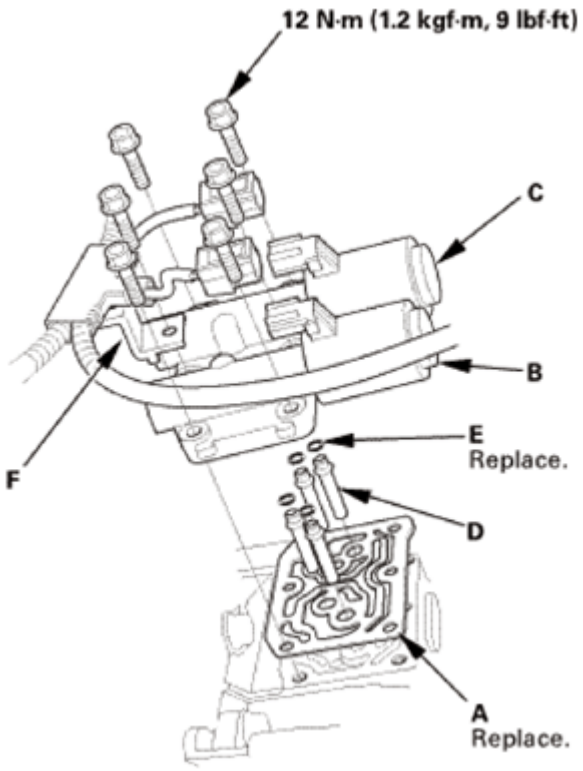

Fig. 402: Identifying Gasket, ATF Joint Pipes, O-Rings, A/T Clutch Pressure Control Solenoid Valves, Clamp Bracket And Mounting Bolts With Torque Specification
Courtesy of AMERICAN HONDA MOTOR CO., INC.

19. A/T Clutch Pressure Control Solenoid Valve A
    1. Clean the mounting surfaces and the fluid passages of the solenoid valve body and the transmission housing.
    2. Install a new gasket (B) with the blue side toward the transmission housing, and install the 35 mm ATF pipe (C) and the ATF joint pipes (D).
    3. Install new O-rings (E) over the ATF joint pipes.
    4. Install A/T clutch pressure control solenoid valve A.

GETtheMANUALS.org

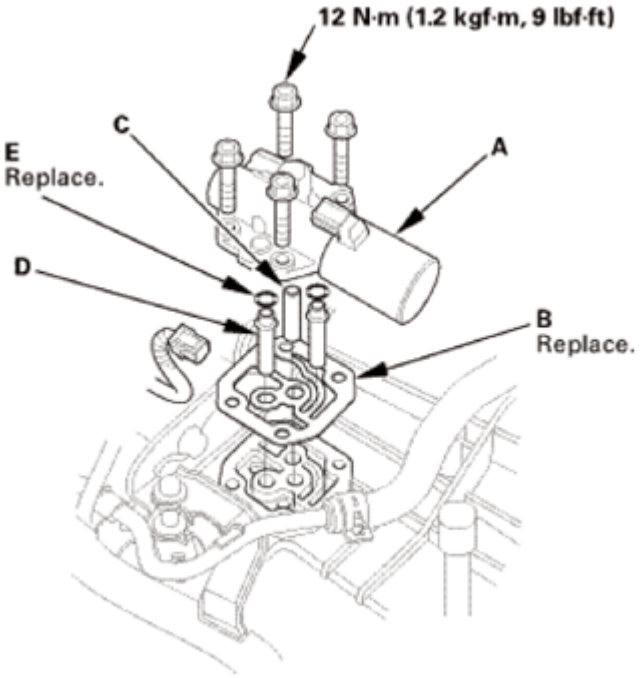

Fig. 403: Identifying A/T Clutch Pressure Control Solenoid Valve, Gasket, ATF Pipe, ATF Joint Pipes And Mounting Bolts With Torque Specification
Courtesy of AMERICAN HONDA MOTOR CO., INC.

20. Output Shaft (Countershaft) Speed Sensor
    1. Install a new O-ring (A) on the output shaft (countershaft) speed sensor (B).
    2. Install the input shaft (mainshaft) speed sensor.

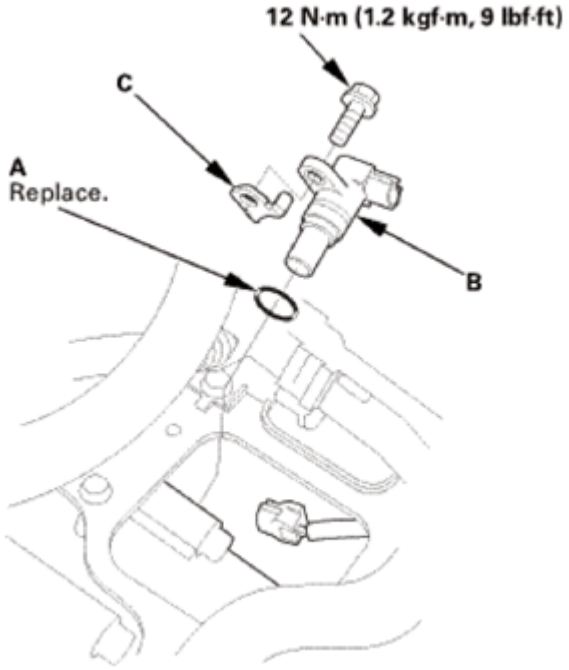

GETtheMANUALS.org

Fig. 404: Identifying Output Shaft (Countershaft) Speed Sensor, O-Ring, Sensor Washer And Mounting Bolts With Torque Specification
Courtesy of AMERICAN HONDA MOTOR CO., INC.

21. Input Shaft (Mainshaft) Speed Sensor
    1. Install a new O-ring (A) on the input shaft (mainshaft) speed sensor (B).
    2. Install the input shaft (mainshaft) speed sensor.

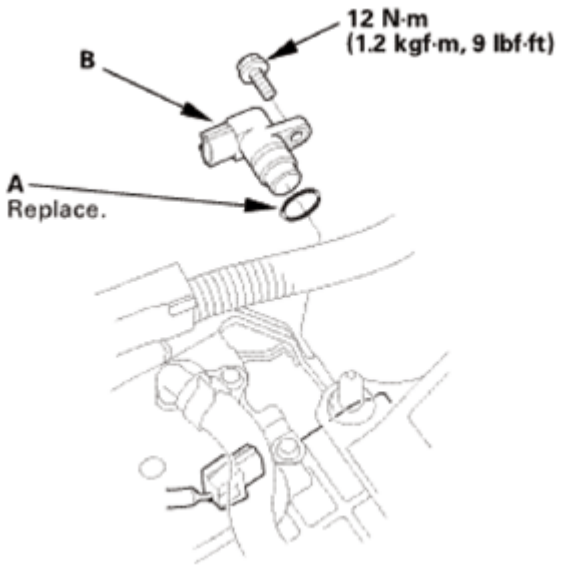

Fig. 405: Identifying Input Shaft (Mainshaft) Speed Sensor, O-Ring And Mounting Bolt With Torque Specification
Courtesy of AMERICAN HONDA MOTOR CO., INC.

22. Transmission End Cover
    1. Install the dowel pins (A) and a new gasket (B).
    2. Install new O-rings (C) over the ATF pipes.
    3. Install the end cover (D), and tighten the three special bolts (E) and the 6 x 1.0 mm bolts (F) (12 bolts).

GETtheMANUALS.org

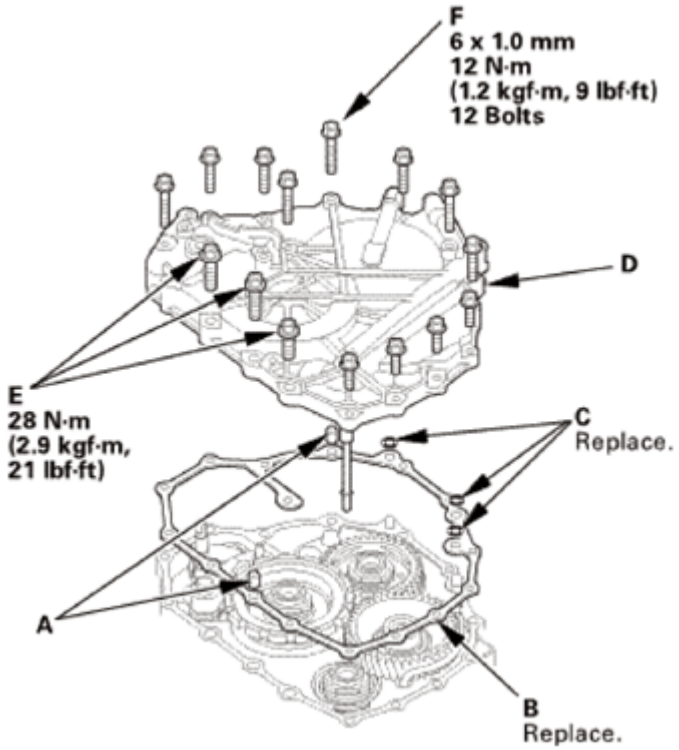

Fig. 406: Identifying Dowel Pins, Gasket, O-Rings, End Cover And Mounting Bolts With Torque Specification
Courtesy of AMERICAN HONDA MOTOR CO., INC.

23. Transmission Range Switch Subharness
    1. Install the clamp brackets (A).
    2. Install the transmission range switch subharness (B).

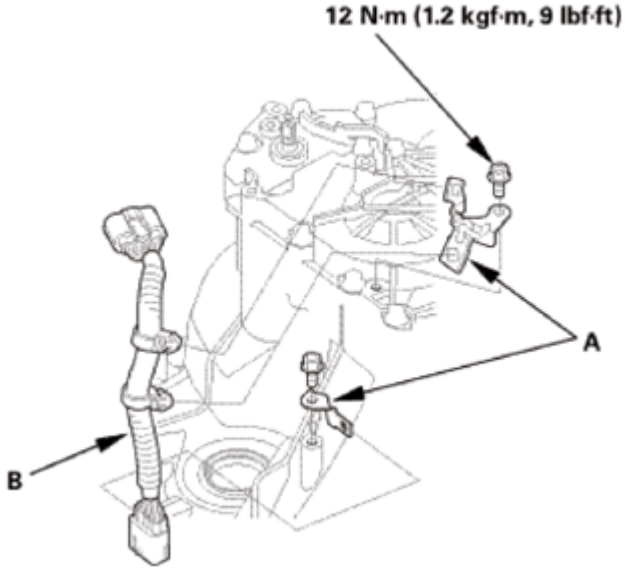

GETtheMANUALS.org

Fig. 407: Identifying Transmission Range Switch Subharness, Clamp Brackets And Mounting Bolts With Torque Specification
Courtesy of AMERICAN HONDA MOTOR CO., INC.

24. Transmission Range Switch
    1. Make sure the selector control shaft is in the N position. If necessary, move the selector control shaft to the N position.

NOTE: **Do not use the selector control shaft to adjust the shift position. If the selector control shaft tips are squeezed together it will cause a faulty signal or position due to play between the selector control shaft and switch.**

Fig. 408: Moving Selector Control Shaft To N Position
Courtesy of AMERICAN HONDA MOTOR CO., INC.

2. Align the cutouts (A) on the rotary-frame with the neutral positioning cutouts (B) on the transmission range switch (C), then put a 2.0 mm (0.079 in) feeler gauge blade (D) in the cutouts to hold the switch in the N position.

NOTE: **Be sure to use a 2.0 mm (0.079 in) blade or equivalent to hold the switch in the N position.**

GETtheMANUALS.org

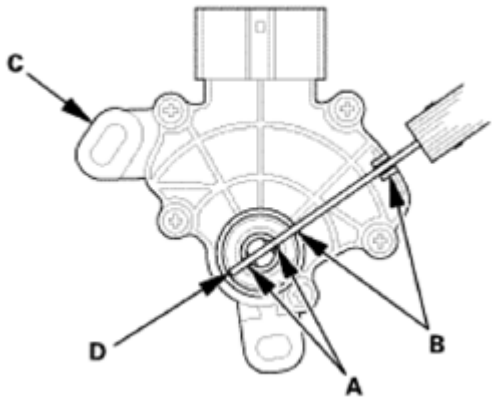

Fig. 409: Aligning Cutouts On Rotary-Frame With Neutral Positioning Cutouts On Transmission Range Switch
Courtesy of AMERICAN HONDA MOTOR CO., INC.

3. Install the transmission range switch (A) gently on the selector control shaft (B) while holding it in the N position with the 2.0 mm (0.079 in) blade (C).

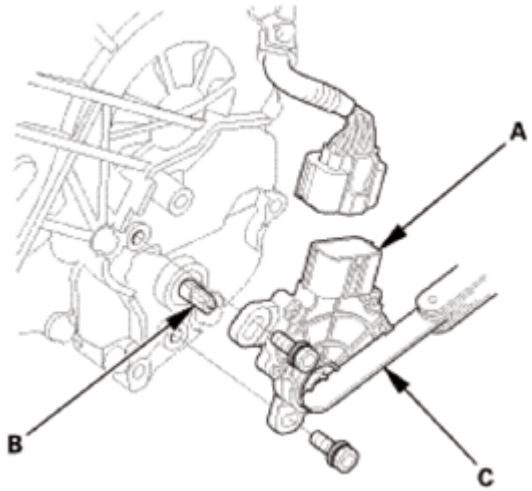

Fig. 410: Identifying Transmission Range Switch, Selector Control Shaft And Blade
Courtesy of AMERICAN HONDA MOTOR CO., INC.

4. Tighten the bolts on the transmission range switch (A) while you continue holding the N position.

NOTE: Do not move the transmission range switch when tightening the bolts.

5. Remove the feeler gauge (B).
6. Check the connector (C) for corrosion, dirt, or oil, and clean or repair if necessary, then connect the connector securely.

GETtheMANUALS.org

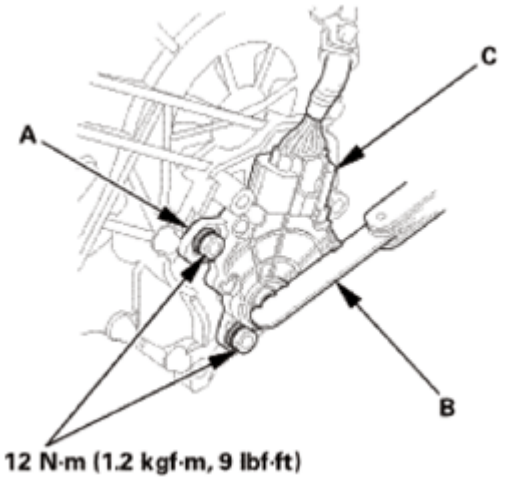

Fig. 411: Identifying Transmission Range Switch, Connector, Feeler Gauge And Mounting Bolts With Torque Specification
Courtesy of AMERICAN HONDA MOTOR CO., INC.

25. Transmission Range Switch Cover
    1. Install the transmission range switch cover (A).

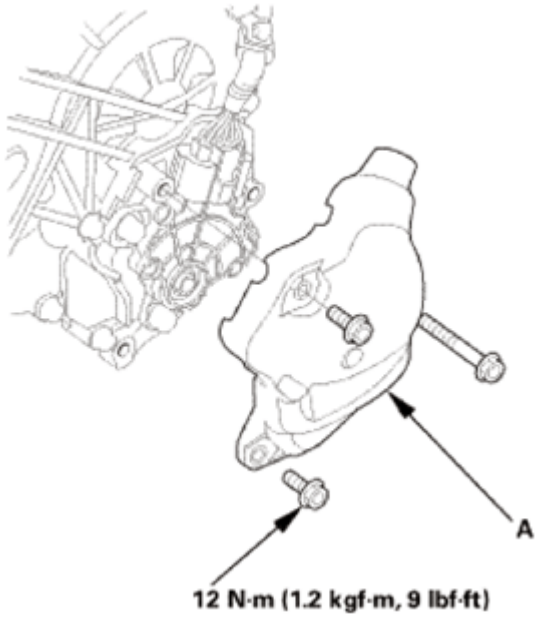

Fig. 412: Identifying Transmission Range Switch Cover And Mounting Bolts With Torque Specification
Courtesy of AMERICAN HONDA MOTOR CO., INC.

A/T DIFFERENTIAL CARRIER BEARING PRELOAD INSPECTION

SPECIAL TOOL REQUIRED

GETtheMANUALS.org

Image	Description/Tool Number
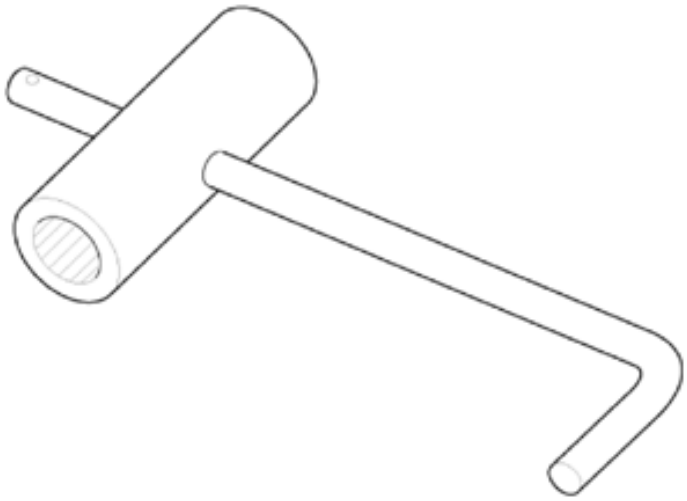	Mainshaft Holder 07GAB-PF50101
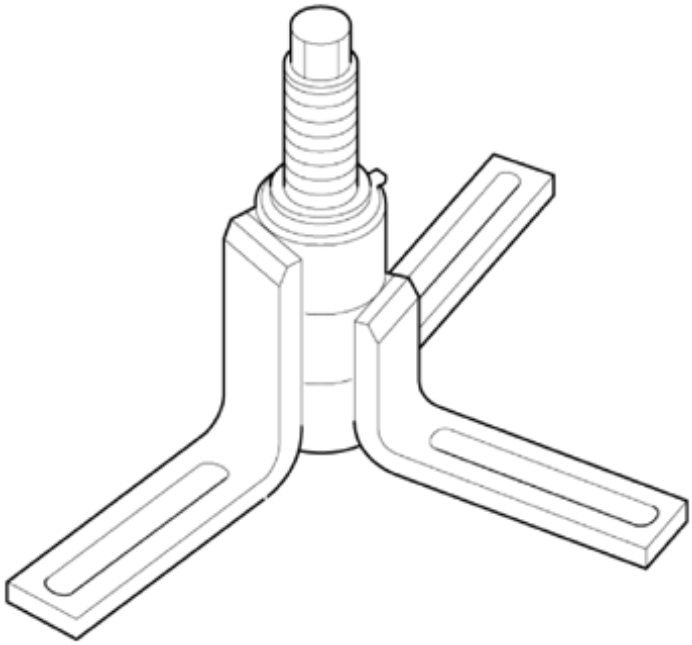	Housing Puller 07HAC-PK40102
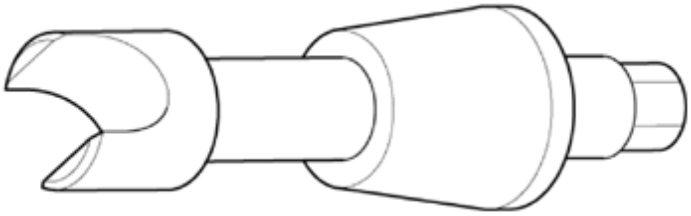	Preload Inspection Tool 07HAJ-PK40201

GETtheMANUALS.org

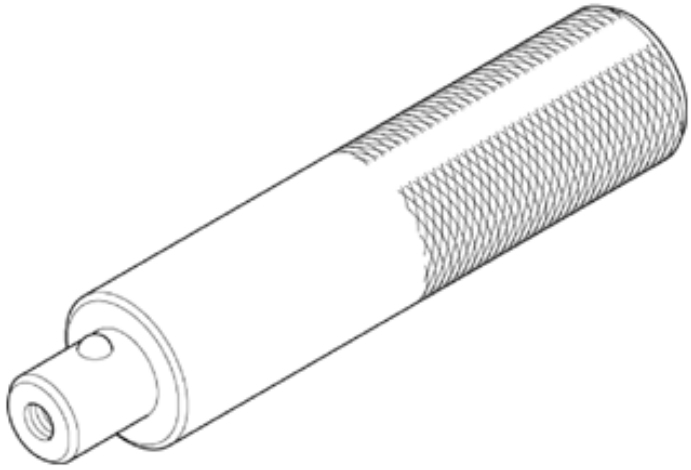	Driver Handle, 15 x 135L 07749-0010000
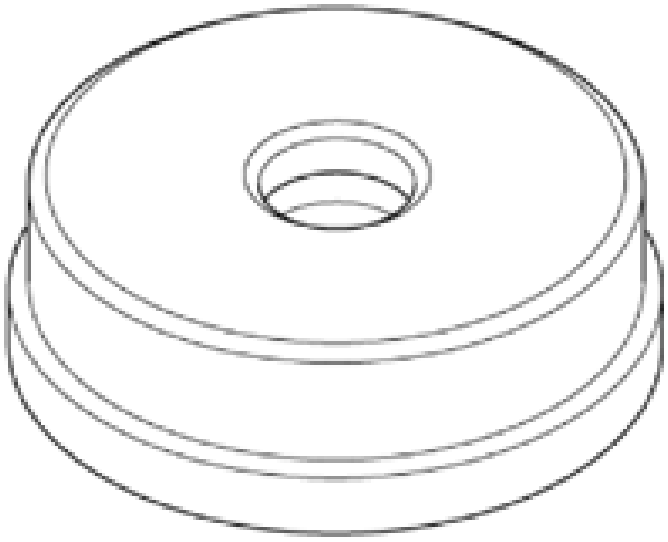	Bearing Driver Attachment, 72 x 75 mm 07746-0010600

REMOVAL

NOTE: The illustration shows AWD/4WD transmission.

1. Transmission Range Switch Cover
    1. Remove the transmission range switch cover (A).

GETtheMANUALS.org

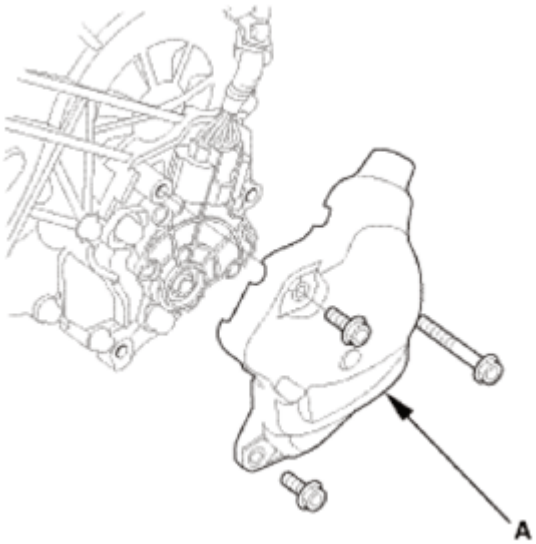

Fig. 413: Identifying Transmission Range Switch Cover With Bolts
Courtesy of AMERICAN HONDA MOTOR CO., INC.

2. Transmission Range Switch
    1. Remove the transmission range switch (A).

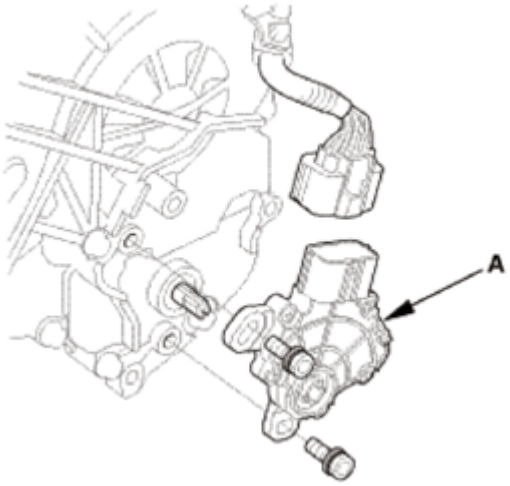

Fig. 414: Identifying Transmission Range Switch With Bolts
Courtesy of AMERICAN HONDA MOTOR CO., INC.

3. Transmission Range Switch Subharness
    1. Remove the transmission range switch subharness (A).
    2. Remove the clamp brackets (B).

GETtheMANUALS.org

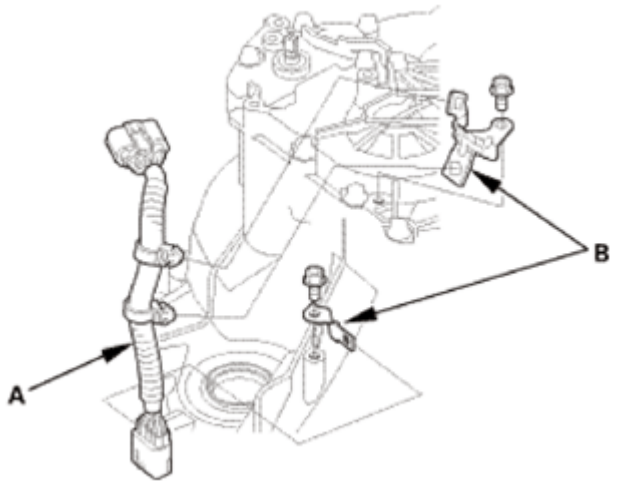

Fig. 415: Identifying Transmission Range Switch Subharness And Clamp Brackets
Courtesy of AMERICAN HONDA MOTOR CO., INC.

4. Transmission End Cover
    1. Remove the end cover (A), the dowel pins (B), the O-rings (C), and the gasket (D).

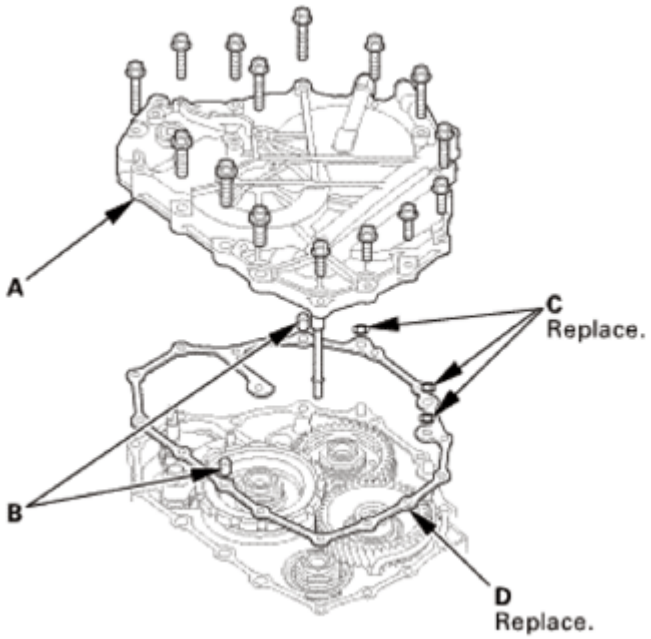

Fig. 416: Identifying Transmission End Cover, Dowel Pins, O-Rings And Gasket With Bolts
Courtesy of AMERICAN HONDA MOTOR CO., INC.

5. Input Shaft (Mainshaft) Speed Sensor
    1. Remove the input shaft (mainshaft) speed sensor (A).
    2. Remove the O-ring (B) from the input shaft (mainshaft) speed sensor.

GETtheMANUALS.org

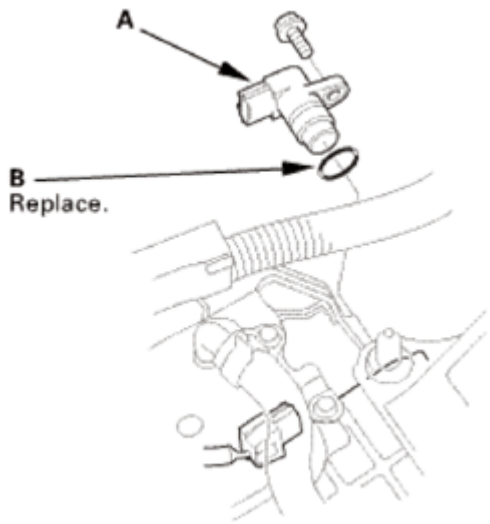

Fig. 417: Identifying Input Shaft (Mainshaft) Speed Sensor And O-Ring
Courtesy of AMERICAN HONDA MOTOR CO., INC.

6. Output Shaft (Countershaft) Speed Sensor
    1. Remove the output shaft (countershaft) speed sensor (A) and the sensor washer (B).
    2. Remove the O-ring (C) from the output shaft (countershaft) speed sensor.

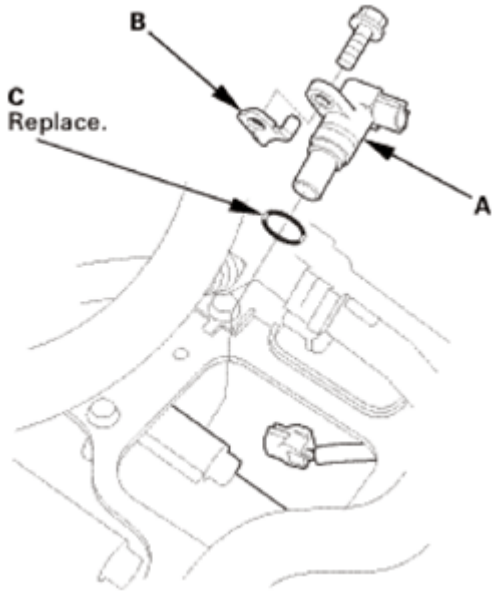

Fig. 418: Identifying Output Shaft (Countershaft) Speed Sensor, Sensor Washer And O-Ring
Courtesy of AMERICAN HONDA MOTOR CO., INC.

7. A/T Clutch Pressure Control Solenoid Valve A
    1. Remove A/T clutch pressure control solenoid valve A.
    2. Remove the 35 mm ATF pipe (B), the ATF joint pipes (C), the O-rings (D), and the gasket (E).

GETtheMANUALS.org

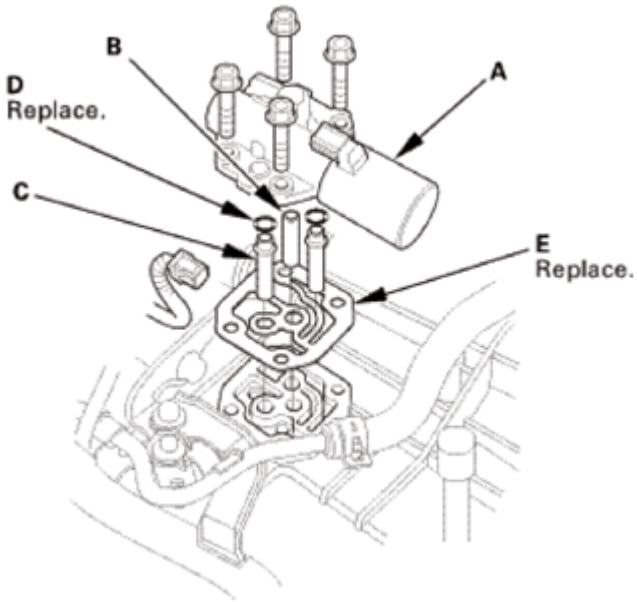

Fig. 419: Identifying A/T Clutch Pressure Control Solenoid Valve, ATF Pipe, ATF Joint Pipes, O-Rings And Gasket With Bolts
Courtesy of AMERICAN HONDA MOTOR CO., INC.

8. A/T Clutch Pressure Control Solenoid Valve B and C
    1. Remove the clamp bracket (A) and A/T clutch pressure control solenoid valves B and C.
    2. Remove the ATF joint pipes (D), the O-rings (E), and the gasket (F).

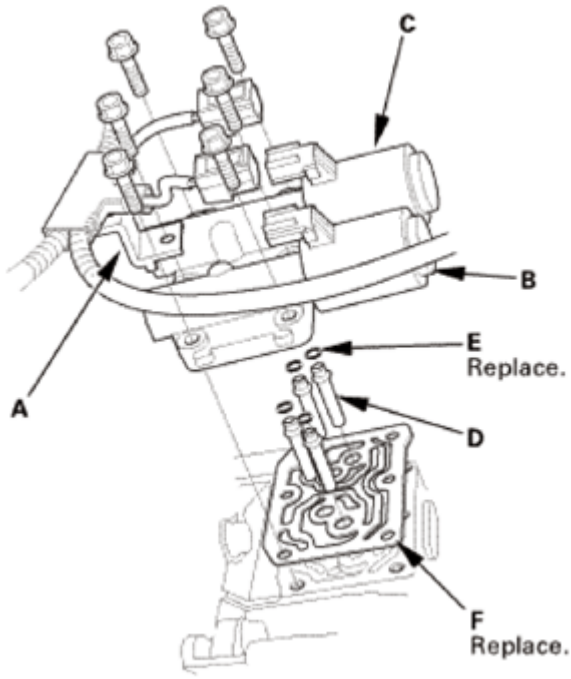

Fig. 420: Identifying A/T Clutch Pressure Control Solenoid Valves, Clamp Bracket, ATF

GETtheMANUALS.org

Joint Pipes, O-Rings And Gasket
Courtesy of AMERICAN HONDA MOTOR CO., INC.

9. ATF Inlet Line
    1. Remove the banjo bolt (A) and the sealing washers (B).
    2. Remove the ATF inlet line (C).

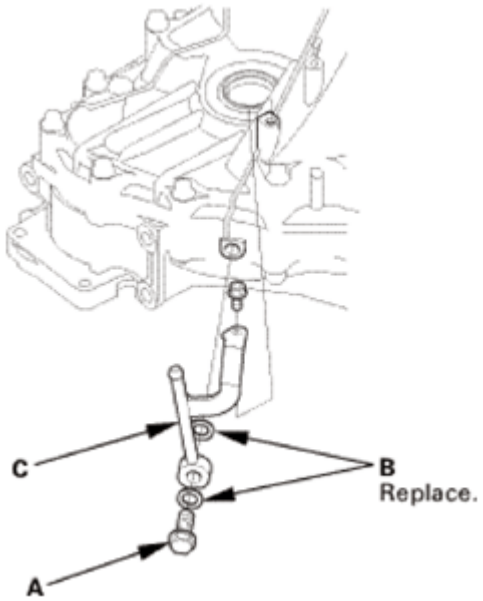

Fig. 421: Identifying ATF Inlet Line, Banjo Bolt And Sealing Washers
Courtesy of AMERICAN HONDA MOTOR CO., INC.

10. ATF Outlet Line
    1. Remove the banjo bolt (A) and the sealing washers (B).
    2. Remove the ATF outlet line (C).

GETtheMANUALS.org

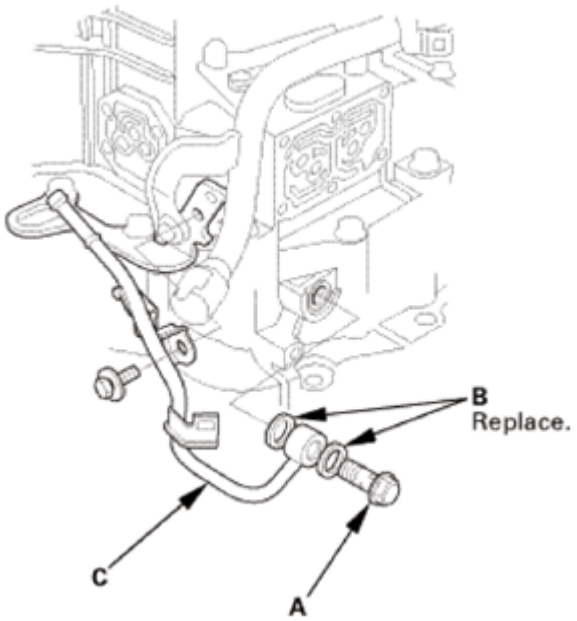

Fig. 422: Identifying ATF Outlet Line, Banjo Bolt And Sealing Washers
Courtesy of AMERICAN HONDA MOTOR CO., INC.

11. Dipstick Guide Tube
    1. Remove the ATF dipstick guide tube (A).
    2. Remove the O-ring (B) from the ATF dipstick guide tube.

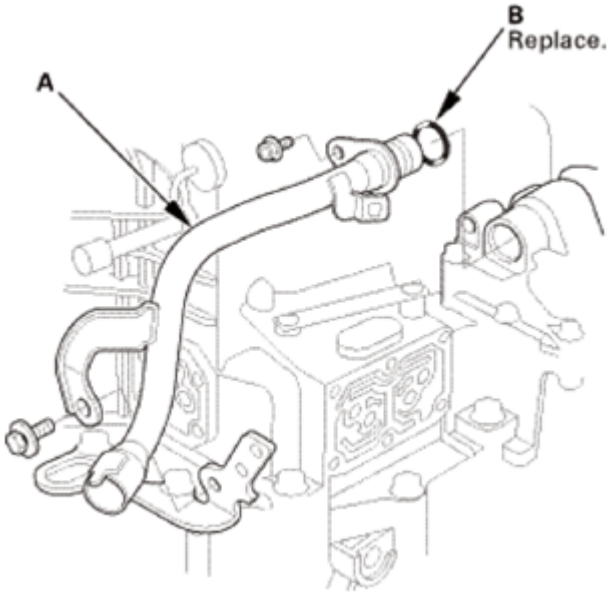

Fig. 423: Identifying ATF Dipstick Guide Tube And O-Ring
Courtesy of AMERICAN HONDA MOTOR CO., INC.

12. A/T Shift Solenoid Cover

GETtheMANUALS.org

1. Remove the shift solenoid valve cover (A), the dowel pins (B), and the gasket (C).

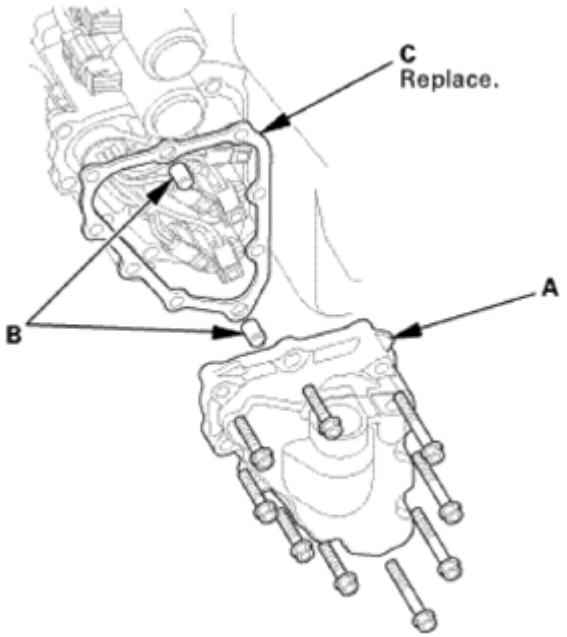

Fig. 424: Identifying Shift Solenoid Valve Cover, Dowel Pins And Gasket
Courtesy of AMERICAN HONDA MOTOR CO., INC.

13. A/T Shift Solenoid Wire Harness - Disconnection
    1. Disconnect the connectors.

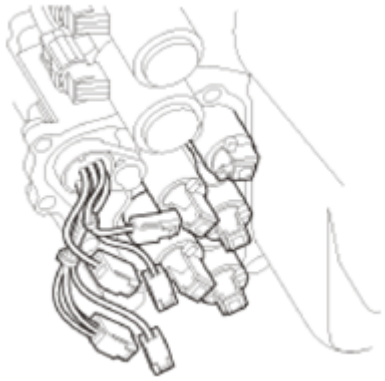

Fig. 425: Identifying A/T Shift Solenoid Wire Harness Connectors
Courtesy of AMERICAN HONDA MOTOR CO., INC.

14. ATF Feed Pipe/Lubrication Pipe
    1. Remove the 6 x 201 mm ATF pipe (A).
    2. Remove the ATF lubrication pipe (B).
    3. Remove the 8 x 220 mm ATF pipe (C).
    4. Remove the 8 x 198 mm ATF pipes (D).

GETtheMANUALS.org

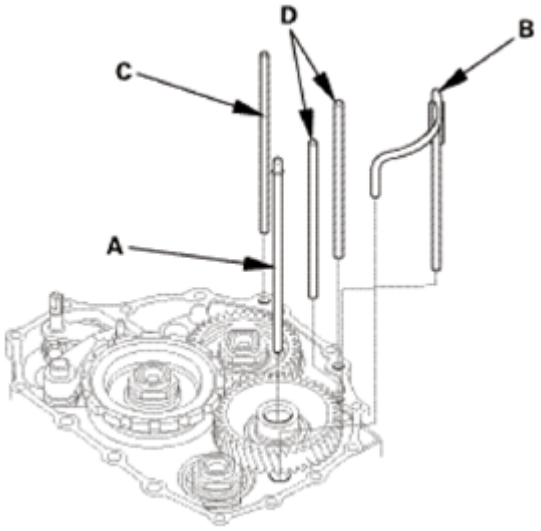

Fig. 426: Identifying ATF Feed Pipes And Lubrication Pipe
Courtesy of AMERICAN HONDA MOTOR CO., INC.

15. End Cover Idler Gear Assembly
    1. Install the mainshaft holder onto the mainshaft.
    2. Engage the park pawl with the park gear.

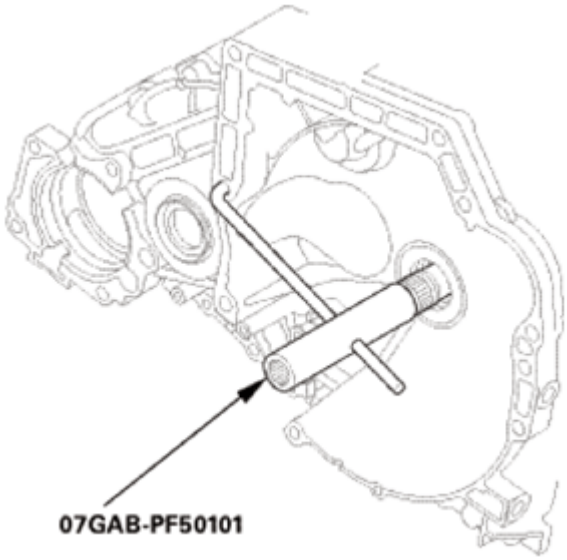

Fig. 427: Installing Mainshaft Holder Onto Mainshaft
Courtesy of AMERICAN HONDA MOTOR CO., INC.

    3. Using a chisel, cut the lock tab (A) of the locknut (B).

NOTE: Keep all of the chiseled particles out of the transmission.

GETtheMANUALS.org

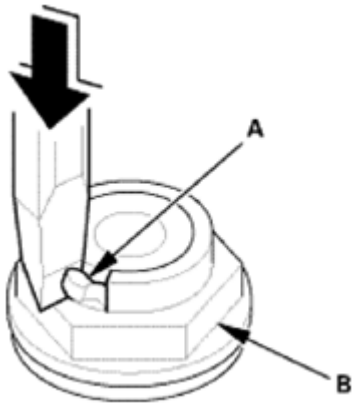

Fig. 428: Cutting Lock Tab Of Locknut Using Chisel
Courtesy of AMERICAN HONDA MOTOR CO., INC.

4. Remove the locknuts (A) and the conical spring washers (B) from each shaft.

NOTE:

- **The countershaft and secondary shaft locknuts have left-hand threads.**
- **Keep all of the chiseled particles out of the transmission.**
- **Clean the old locknuts; they are used to install the press fit idler gears and park gear.**

5. Remove the mainshaft holder.

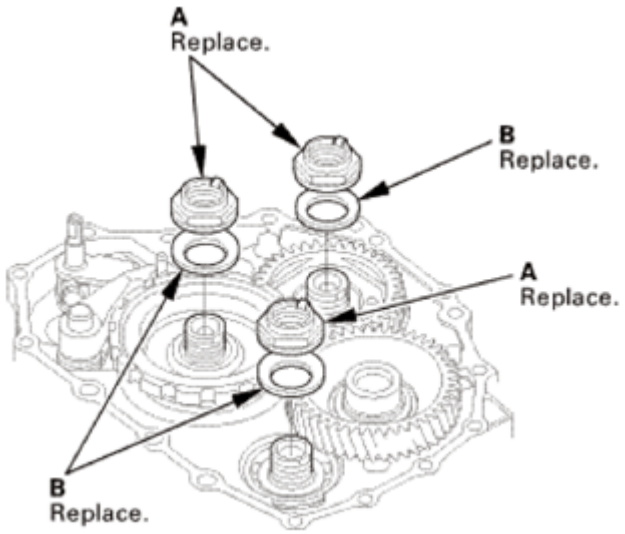

Fig. 429: Identifying Locknuts And Conical Spring Washers
Courtesy of AMERICAN HONDA MOTOR CO., INC.

6. Remove the park pawl (A), the park pawl spring (B), the park pawl shaft (C), and the stop shaft (D).

GETtheMANUALS.org

7. Pry down the lock tab (E) of the lock washer (F).
8. Remove the lock bolt (G) and the lock washer.
9. Remove the park lever (H), the park lever stop (I), and the park lever spring (J).

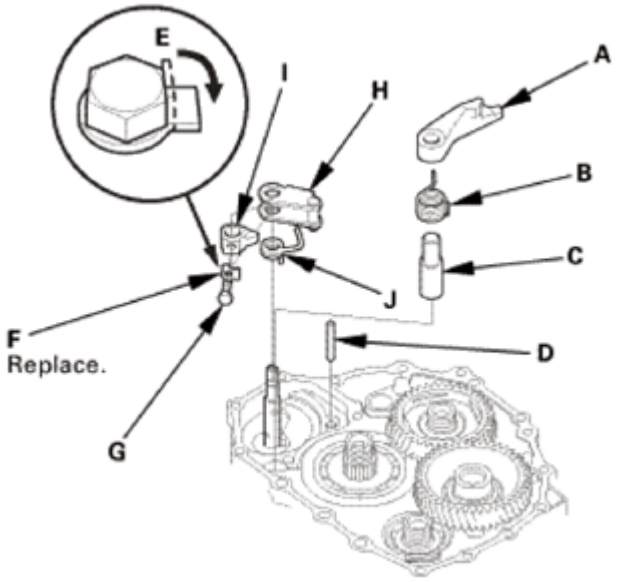

Fig. 430: Prying Down Lock Tab Of Lock Washer
Courtesy of AMERICAN HONDA MOTOR CO., INC.

10. Place a spacer (A) on the countershaft (B).
11. Set a commercially available bearing puller (C) on the park gear (D).
12. Remove the park gear.

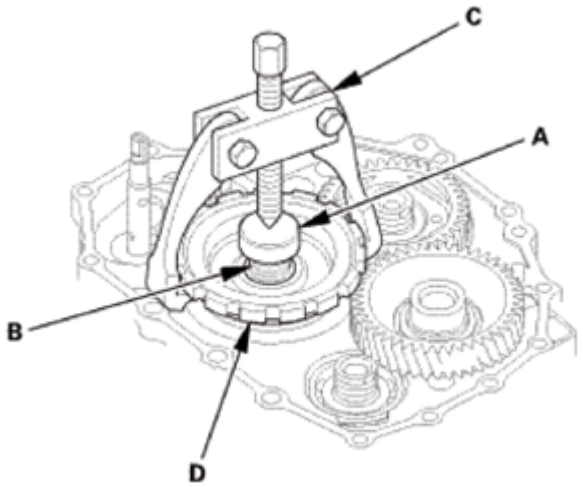

Fig. 431: Setting Commercially Available Bearing Puller On Park Gear
Courtesy of AMERICAN HONDA MOTOR CO., INC.

13. Install a puller (A) with two 6 x 1.0 mm bolts (B) on the mainshaft idler gear (C).

GETtheMANUALS.org

14. Set a spacer (D) between the puller and the mainshaft (E).
15. Remove the mainshaft idler gear.

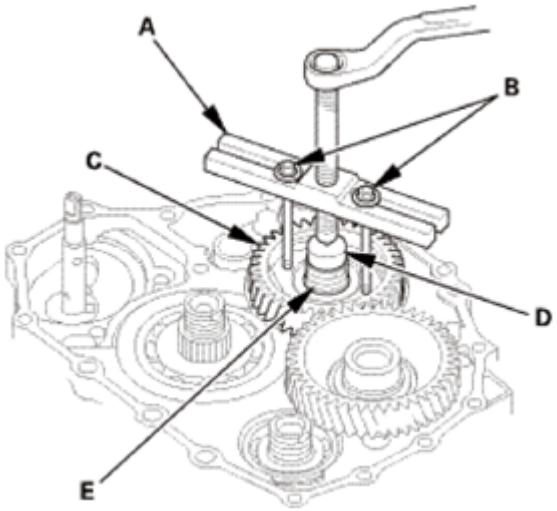

Fig. 432: Installing Puller With 6 X 1.0 mm Bolts On Mainshaft Idler Gear
Courtesy of AMERICAN HONDA MOTOR CO., INC.

16. Automatic Transmission Housing
    1. Align the spring pin (A) on the selector control shaft (B) with the transmission housing groove (C).

    NOTE: **Do not squeeze the end of the selector control shaft tips together when turning the control shaft. If the tips are squeezed together, it will cause a faulty shift position signal or position due to the play between the selector control shaft and the transmission range switch.**

    2. Remove the transmission housing mounting bolts (D) (2WD: 19 bolts, AWD/4WD: 20 bolts).
    3. Install the housing puller over the mainshaft.
    4. Remove the transmission housing (E) using the housing puller.
    5. Remove the dowel pins (F) and the gasket (G).

GETtheMANUALS.org

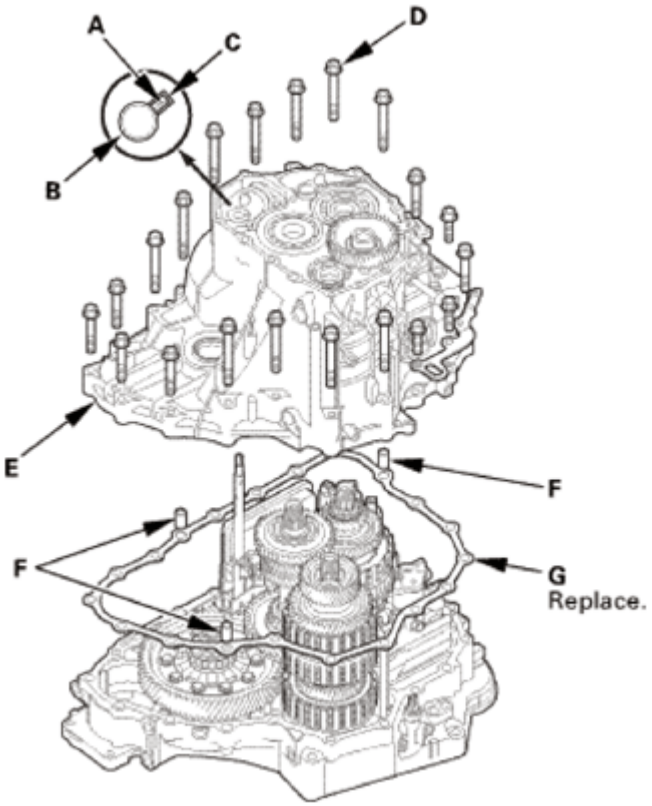

Fig. 433: Identifying Spring Pin, Selector Control Shaft, Transmission Housing Groove, Transmission Housing, Mounting Bolts And Gasket
Courtesy of AMERICAN HONDA MOTOR CO., INC.

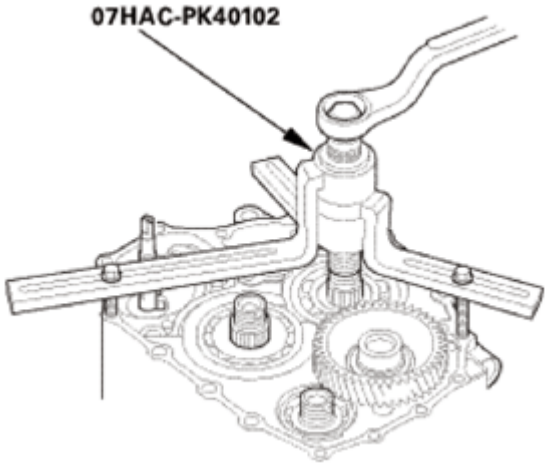

Fig. 434: Installing Housing Puller Over Mainshaft
Courtesy of AMERICAN HONDA MOTOR CO., INC.

17. A/T Countershaft Reverse Gear
    1. Remove the countershaft reverse gear (A).
    2. Remove the needle bearing (B).

GETtheMANUALS.org

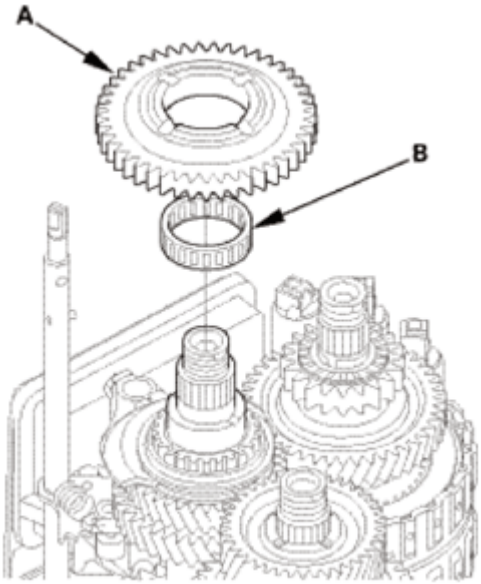

Fig. 435: Identifying Countershaft Reverse Gear And Needle Bearing
Courtesy of AMERICAN HONDA MOTOR CO., INC.

18. Reverse Shift fork
    1. Pry down the lock tab (A) of the lock washer (B).
    2. Remove the lock bolt (C) and the lock washer.
    3. Remove the reverse shift fork (D) and the reverse selector (E) together.

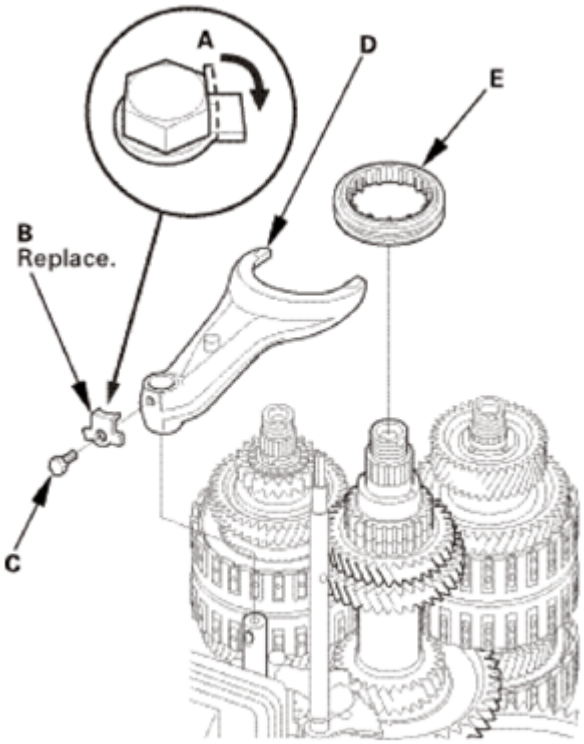

GETtheMANUALS.org

Fig. 436: Prying Down Lock Tab Of Lock Washer
Courtesy of AMERICAN HONDA MOTOR CO., INC.

19. Selector Control Lever (Except 2WD of USA Produced Models)

Except 2WD of USA Produced Models

1. Pry down the lock tab (A) of the lock washer (B).
2. Remove the lock bolt (C) and the lock washer.
3. Remove the selector control lever (D).

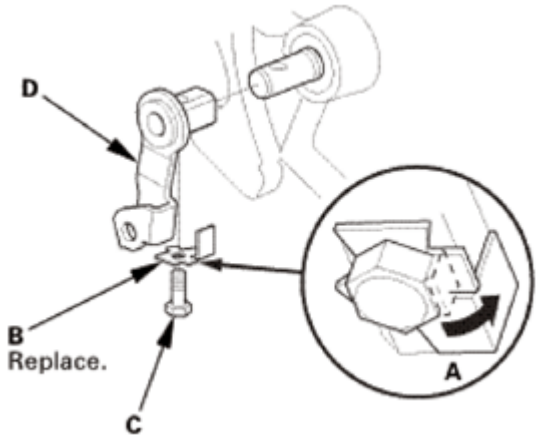

Fig. 437: Prying Down Lock Tab Of Lock Washer (Except 2WD Of USA Produced Models)
Courtesy of AMERICAN HONDA MOTOR CO., INC.

20. Selector Control Shaft
    1. Unhook the detent arm spring (A).

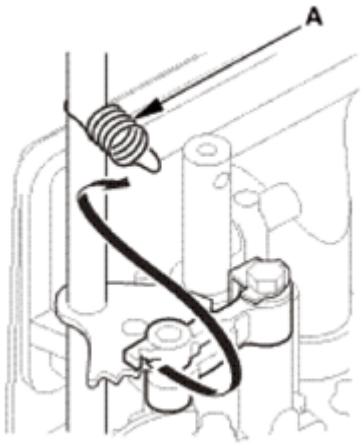

Fig. 438: Unhooking Detent Arm Spring
Courtesy of AMERICAN HONDA MOTOR CO., INC.

GETtheMANUALS.org

2. Separate the manual valve lever pin (A) on the selector control shaft (B) from the guide of the manual valve (C).

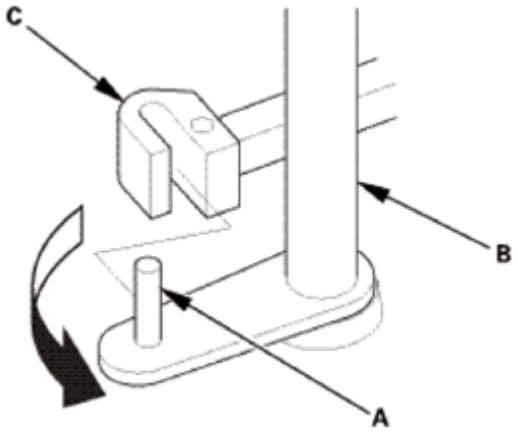

Fig. 439: Separating Manual Valve Lever Pin On Selector Control Shaft From Guide Of Manual Valve
Courtesy of AMERICAN HONDA MOTOR CO., INC.

3. Remove the selector control shaft (A).

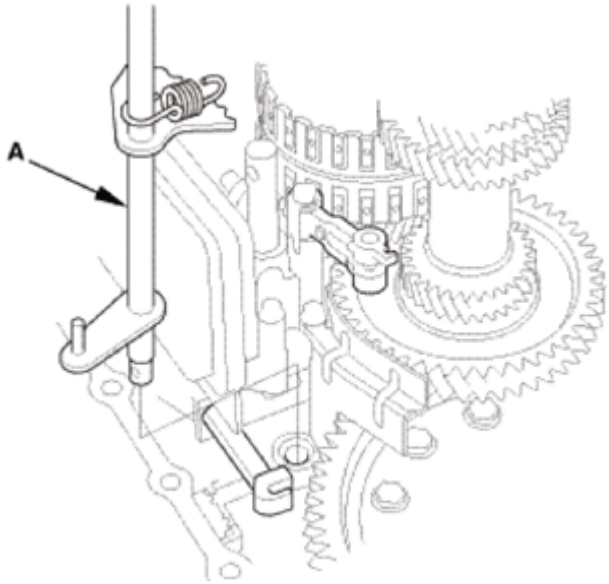

Fig. 440: Identifying Selector Control Shaft
Courtesy of AMERICAN HONDA MOTOR CO., INC.

21. Mainshaft and Countershaft and Secondary Shaft Assembly
    1. Turn the detent arm (A) away from the countershaft (B).

GETtheMANUALS.org

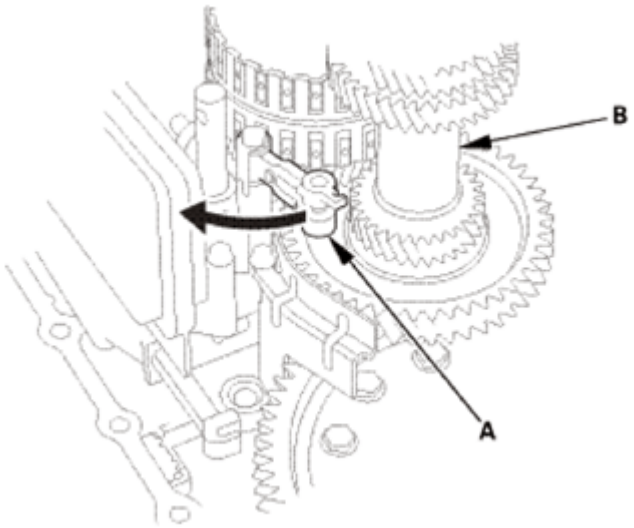

Fig. 441: Turning Detent Arm Away From Countershaft
Courtesy of AMERICAN HONDA MOTOR CO., INC.

2. Remove the mainshaft subassembly (A), the countershaft subassembly (B), and the secondary shaft subassembly (C) together.

NOTE: Do not bump the countershaft on the baffle plate (D).

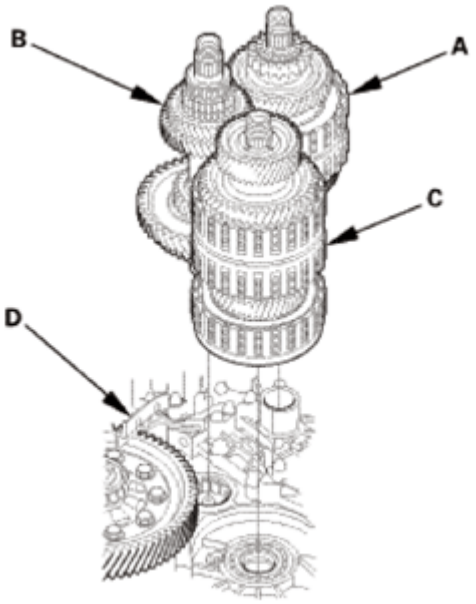

Fig. 442: Identifying Mainshaft Subassembly, Countershaft Subassembly, Secondary Shaft Subassembly And Baffle Plate
Courtesy of AMERICAN HONDA MOTOR CO., INC.

22. Differential Assembly
    1. Remove the baffle plate (A).

GETtheMANUALS.org

2. Remove the differential assembly (B).

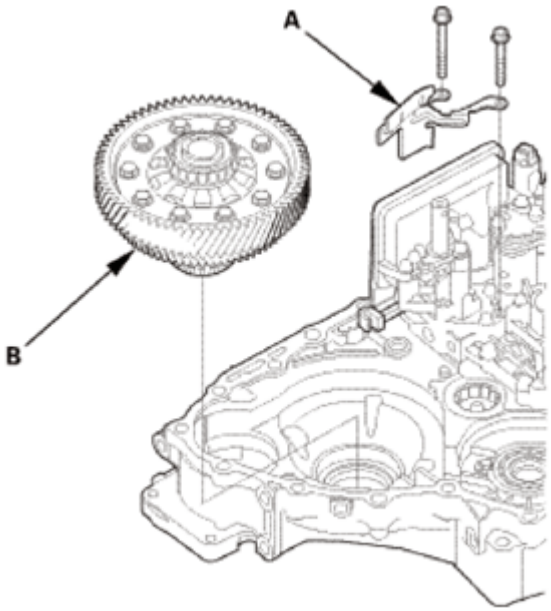

Fig. 443: Identifying Differential Assembly And Baffle Plate
Courtesy of AMERICAN HONDA MOTOR CO., INC.

INSPECTION

NOTE:

- **If the transmission housing, the torque converter housing, the differential carrier, the carrier bearing and the outer race, or the thrust shim were replaced, the bearing preload must be adjusted.**
- **Coat all parts with ATF during installation.**
- **Do not use the thrust shim on the torque converter housing.**
- **The illustration shows AWD/4WD transmission.**

1. Carrier Bearing Preload - Inspection
    1. Make sure that the carrier bearings and bearing outer races are installed securely.
    2. Install the differential assembly (A), and install a new gasket (B) and the dowel pins (C).
    3. Install the transmission housing (D) with the transmission hanger (E), and tighten the transmission housing mounting bolts (2WD: 19 bolts, AWD/4WD: 20 bolts) in at least two steps, in a crisscross pattern.
    4. Rotate the differential assembly in both directions to seat the bearings.

GETtheMANUALS.org

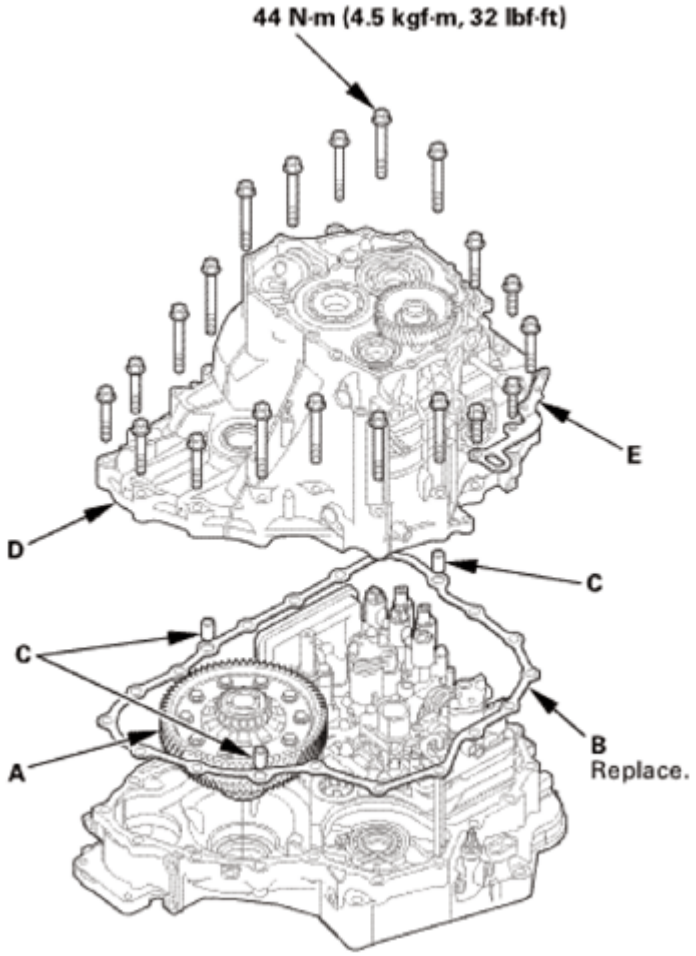

Fig. 444: Identifying Differential Assembly, Gasket, Dowel Pins, Transmission Housing, Transmission Hanger And Mounting Bolts With Torque Specification
Courtesy of AMERICAN HONDA MOTOR CO., INC.

5. Measure the starting torque of the differential assembly in both directions using the preload inspection tool, a torque wrench (A), and a socket (B) at normal room temperature.

   Standard

   New Bearing:

   2.7-3.9 N.m (28-40 kgf.cm, 24-35 lbf.in)

   Reused Bearing:

   2.5-3.6 N.m (25-37 kgf.cm, 22-32 lbf.in)

6. If the starting torque is out of the standard, remove the 76 mm thrust shim to adjust the starting torque.

GETtheMANUALS.org

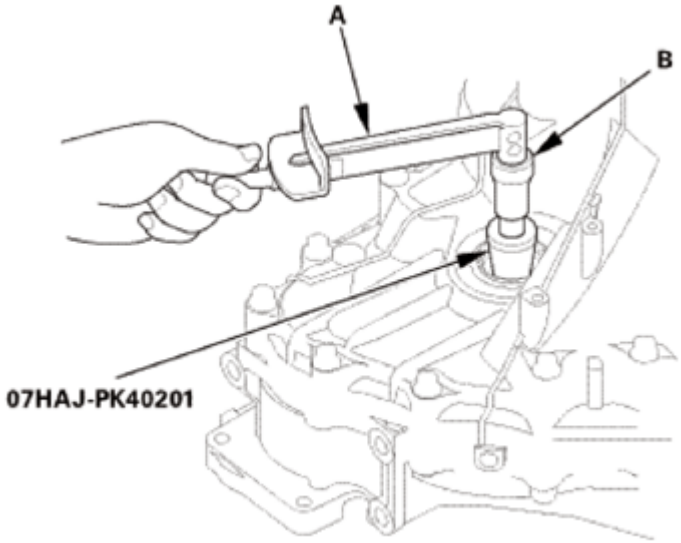

Fig. 445: Measuring Starting Torque Of Differential Assembly Using Torque Wrench And Socket
Courtesy of AMERICAN HONDA MOTOR CO., INC.

7. Remove the bearing outer race (A), the 76.2 mm spacer (B), and the 76 mm thrust shim (C) by heating the transmission housing to about 212 °F (100 °C) using a heat gun (D).

NOTE:

- **Do not heat the transmission housing more than 212 °F (100 °C).**
- **Let the transmission housing cool to room temperature before installing the bearing outer race.**

8. Measure the 76 mm thrust shim thickness, and select a 76 mm thrust shim from the table. To increase the starting torque, increase the thickness of the 76 mm thrust shim. To decrease the starting torque, decrease the thickness of the 76 mm thrust shim. Changing the 76 mm thrust shim to the next size will increase or decrease starting torque about 0.3-0.4 N.m (3-4 kgf.cm, 2-3 lbf.in).

THRUST SHIM SPECIFICATION (76 MM) - TYPE A

No.	Thickness
S	2.05 mm (0.0807 in)
T	2.10 mm (0.0827 in)
U	2.15 mm (0.0846 in)
A	2.20 mm (0.0866 in)
B	2.25 mm (0.0886 in)
C	2.30 mm (0.0906 in)
D	2.35 mm (0.0925 in)
E	2.40 mm (0.0945 in)
F	2.45 mm (0.0965 in)
G	2.50 mm (0.0984 in)
H	2.55 mm (0.1004 in)

GETtheMANUALS.org

I	2.60 mm (0.1024 in)
J	2.65 mm (0.1043 in)
K	2.70 mm (0.1063 in)
L	2.75 mm (0.1083 in)
M	2.80 mm (0.1102 in)
N	2.85 mm (0.1122 in)
O	2.90 mm (0.1142 in)
P	2.95 mm (0.1161 in)
Q	3.00 mm (0.1181 in)
R	3.05 mm (0.1201 in)
0A	1.55 mm (0.0610 in)
0B	1.60 mm (0.0630 in)
0C	1.65 mm (0.0650 in)
0D	1.70 mm (0.0669 in)
0E	1.75 mm (0.0689 in)
0F	1.80 mm (0.0709 in)
0G	1.85 mm (0.0728 in)
0H	1.90 mm (0.0748 in)
0I	1.95 mm (0.0768 in)
0J	2.00 mm (0.0787 in)

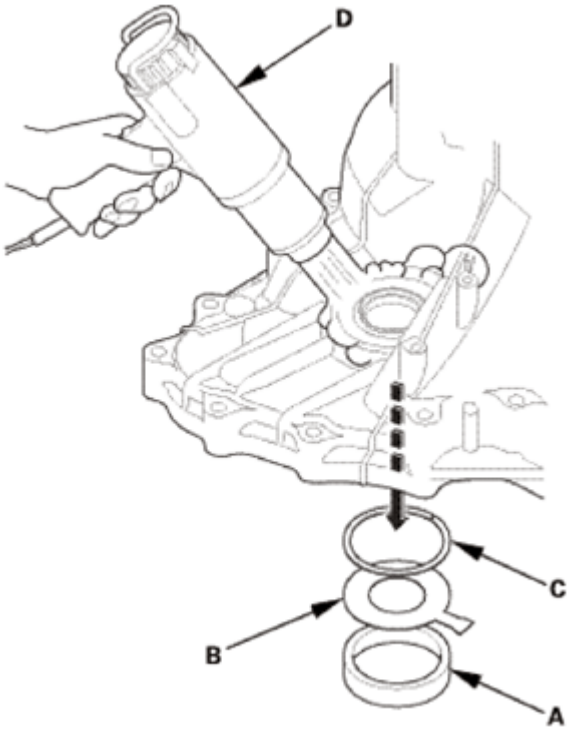

Fig. 446: Removing Bearing Outer Race, Spacer And Thrust Shim By Heating Transmission Housing Using Heat Gun

GETtheMANUALS.org

Courtesy of AMERICAN HONDA MOTOR CO., INC.

THRUST SHIM SPECIFICATION (76 MM) - TYPE B

No.	Thickness
A	1.575 mm (0.06201 in)
B	1.625 mm (0.06398 in)
C	1.675 mm (0.06594 in)
D	1.725 mm (0.06791 in)
E	1.775 mm (0.06988 in)
F	1.825 mm (0.07185 in)
G	1.875 mm (0.07382 in)
H	1.925 mm (0.07579 in)
I	1.975 mm (0.07776 in)
J	2.025 mm (0.07972 in)
K	2.075 mm (0.08169 in)
L	2.125 mm (0.08366 in)
M	2.175 mm (0.08563 in)
N	2.225 mm (0.08760 in)
O	2.275 mm (0.08957 in)
P	2.325 mm (0.09154 in)
Q	2.375 mm (0.09350 in)
R	2.425 mm (0.09547 in)
S	2.475 mm (0.09744 in)
T	2.525 mm (0.09941 in)
U	2.575 mm (0.10138 in)
V	2.625 mm (0.10335 in)
W	2.675 mm (0.10531 in)
X	2.725 mm (0.10728 in)
Y	2.775 mm (0.10925 in)
Z	2.825 mm (0.11122 in)
0A	2.875 mm (0.11319 in)
0B	2.925 mm (0.11516 in)
0C	2.975 mm (0.11713 in)
0D	3.025 mm (0.11909 in)

9. Install a new 76 mm thrust shim (A) in the transmission housing (B).
10. Install the 76.2 mm spacer (C) and the bearing outer race (D) in the transmission housing.

NOTE: **Be sure to install the 76.2 mm thrust washer with the engraved mark facing downward.**

GETtheMANUALS.org

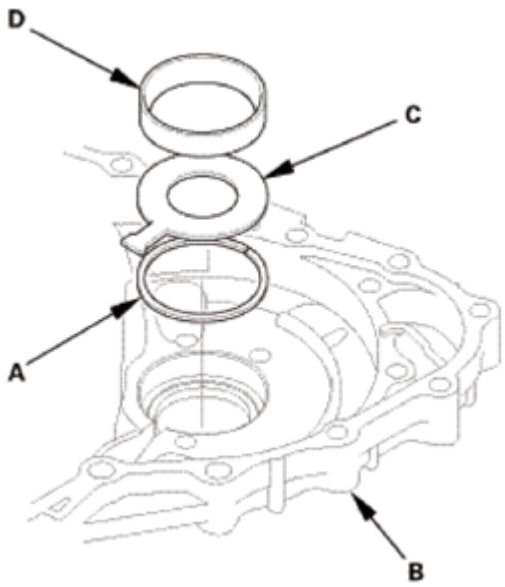

Fig. 447: Identifying Thrust Shim, Transmission Housing, Spacer And Bearing Outer Race
Courtesy of AMERICAN HONDA MOTOR CO., INC.

11. Install the bearing outer race securely so there is no clearance between the bearing outer race, the 76.2 mm spacer, the 76 mm thrust shim, and the transmission housing, using the driver handle and the 72 x 75 mm bearing driver attachment.
12. Recheck the starting torque.

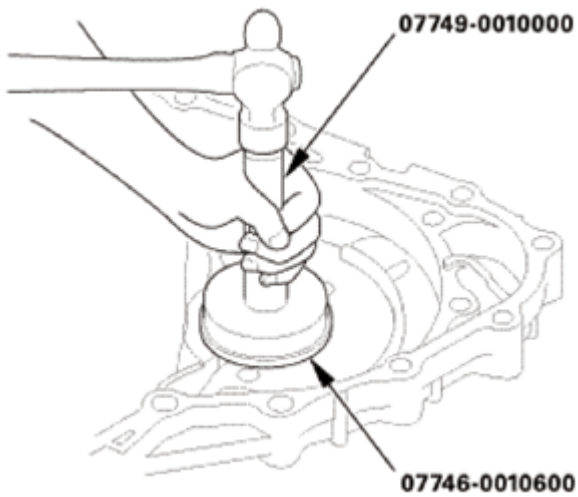

Fig. 448: Installing Bearing Outer Race Securely In Torque Converter Housing Using Driver Handle And Bearing Driver Attachment
Courtesy of AMERICAN HONDA MOTOR CO., INC.

INSTALLATION

NOTE:

- **Apply a light coat of clean ATF on all moving parts before installation.**

GETtheMANUALS.org

- **The illustration shows AWD/4WD transmission.**

1. Differential Assembly
    1. Install the differential assembly (A).
    2. Install the baffle plate (B).

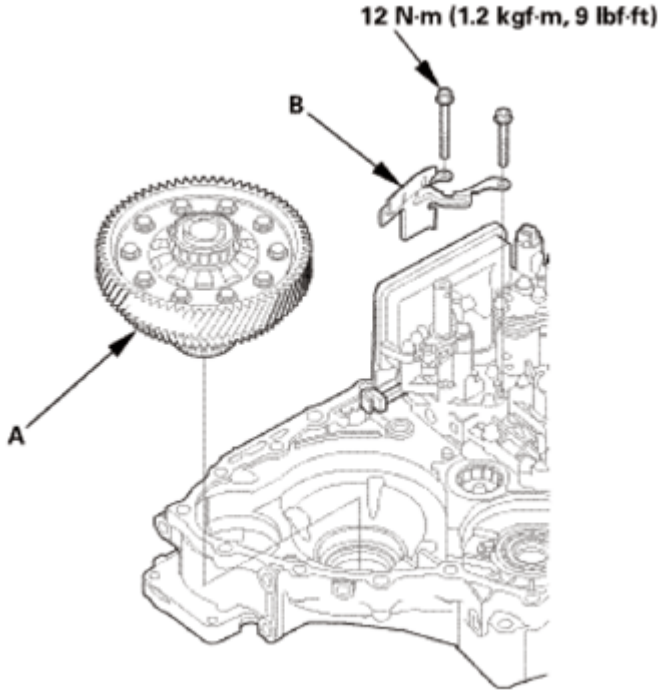

Fig. 449: Identifying Differential Assembly, Baffle Plate And Bolts With Torque Specification
Courtesy of AMERICAN HONDA MOTOR CO., INC.

2. Mainshaft and Countershaft and Secondary Shaft Assembly
    1. Be sure that each shaft is assembled. Also be sure that new sealing rings are installed on the mainshaft and the secondary shaft.
    2. Join the mainshaft subassembly (A), the countershaft subassembly (B), and the secondary shaft subassembly (C) together, and install them.

    NOTE: Do not bump the countershaft on the baffle plate (D).

    3. Make sure the countershaft subassembly and the differential assembly (E) are clear of the baffle plate.

GETtheMANUALS.org

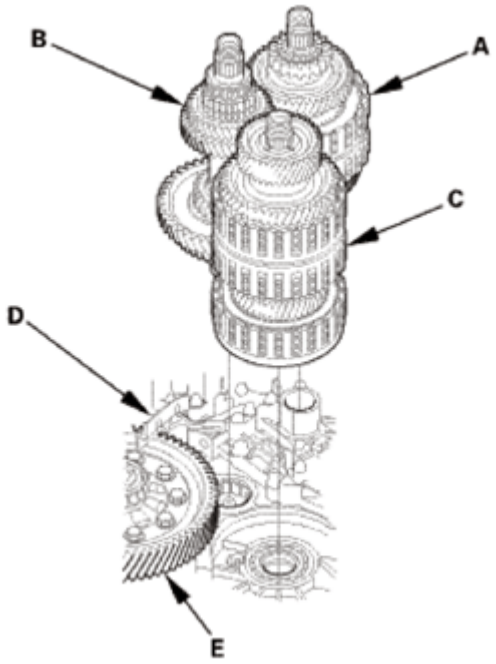

Fig. 450: Identifying Mainshaft Subassembly, Countershaft Subassembly, Secondary Shaft Subassembly, Baffle Plate And Differential Assembly
Courtesy of AMERICAN HONDA MOTOR CO., INC.

3. Selector Control Shaft
    1. Install the selector control shaft (A).

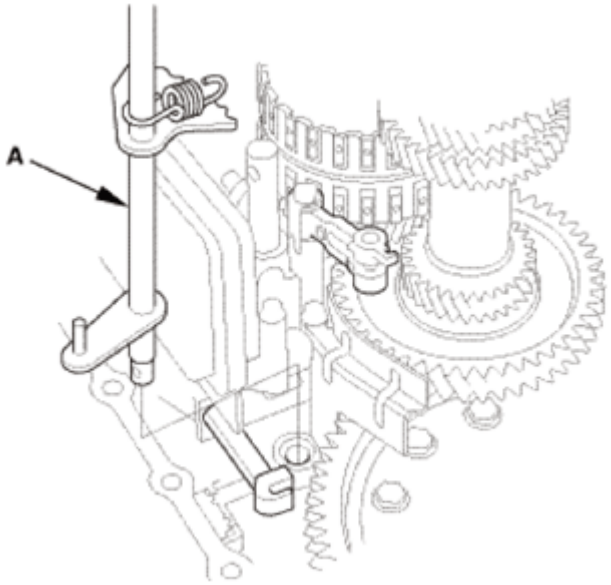

Fig. 451: Identifying Selector Control Shaft
Courtesy of AMERICAN HONDA MOTOR CO., INC.

    2. Align the manual valve lever pin (A) on the selector control shaft (B) with the guide of the manual

GETtheMANUALS.org

valve (C).

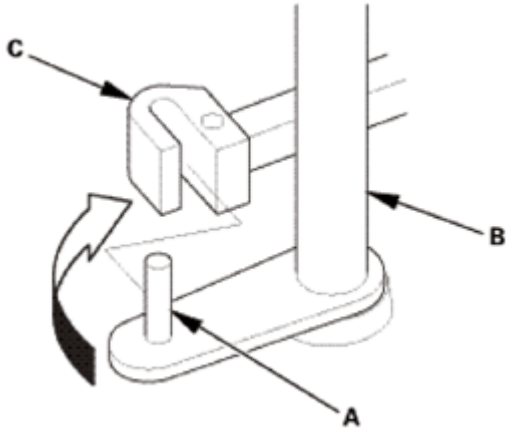

Fig. 452: Aligning Manual Valve Lever Pin On Selector Control Shaft With Guide Of Manual Valve
Courtesy of AMERICAN HONDA MOTOR CO., INC.

3. Hook the detent arm spring (A).

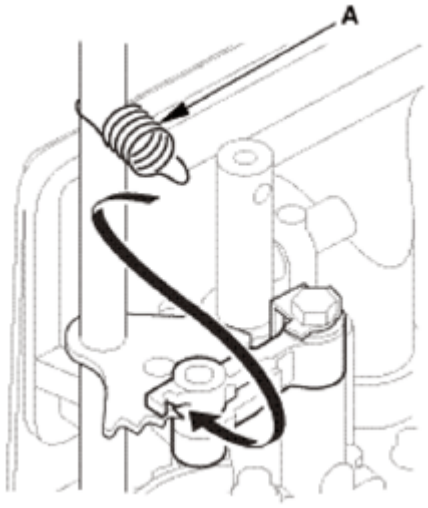

Fig. 453: Hooking Detent Arm Spring
Courtesy of AMERICAN HONDA MOTOR CO., INC.

4. Selector Control Lever (Except 2WD of USA Produced Models)

Except 2WD of USA Produced Models

1. Install the control lever (A) over the selector control shaft (B).
2. Install the lock bolt (C) using a new lock washer (D).
3. Pry up the lock tab (E) of the lock washer against the bolt head.

GETtheMANUALS.org

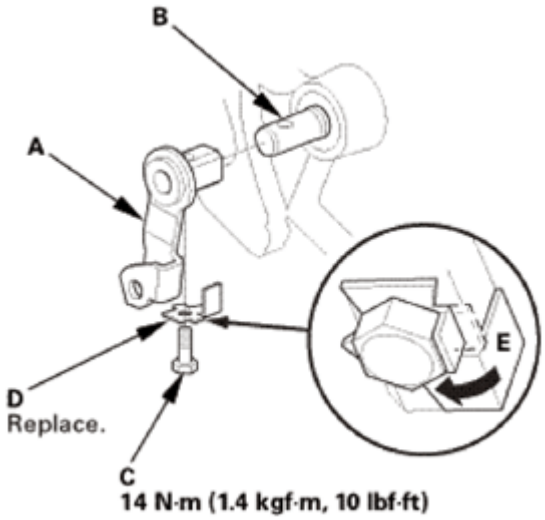

Fig. 454: Prying Up Lock Tab Of Lock Washer (Except 2WD Of USA Produced Models)
Courtesy of AMERICAN HONDA MOTOR CO., INC.

5. Reverse Shift fork
    1. Install the reverse shift fork (A) and the reverse selector (B) together.
    2. Install the lock bolt (C) using a new lock washer (D).
    3. Pry up the lock tab (E) of the lock washer against the bolt head.

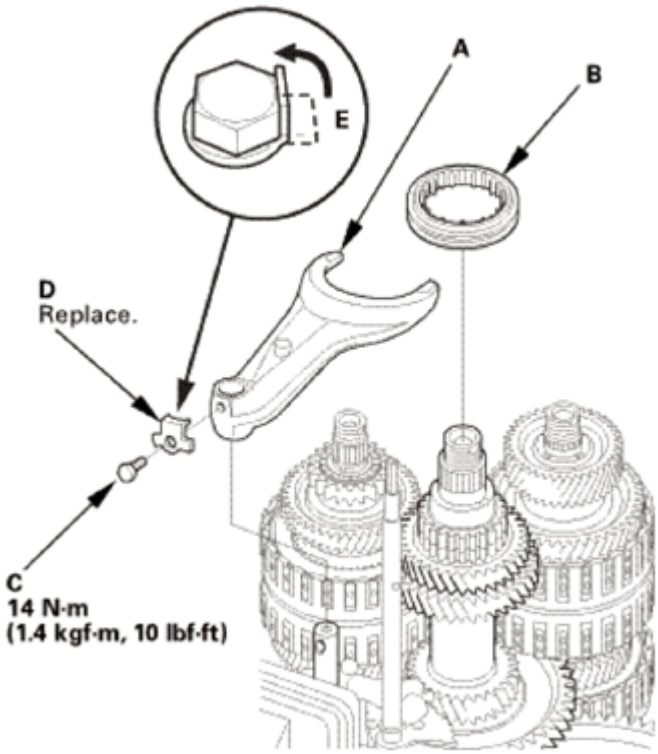

Fig. 455: Prying Up Lock Tab Of Lock Washer Against Bolt Head

GETtheMANUALS.org

Courtesy of AMERICAN HONDA MOTOR CO., INC.

6. A/T Countershaft Reverse Gear
    1. Install the needle bearing (A).
    2. Install the countershaft reverse gear (B).

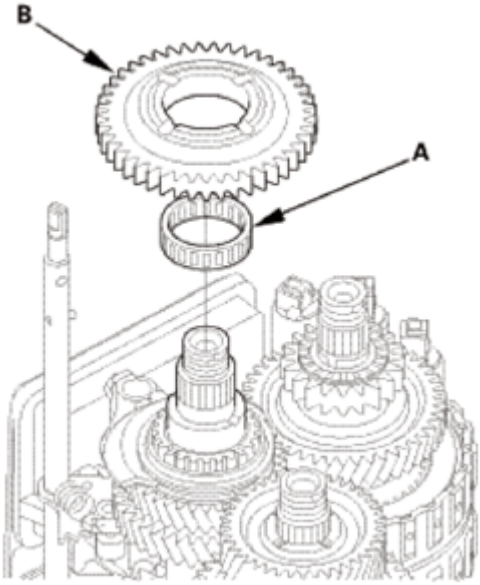

Fig. 456: Identifying Needle Bearing And Countershaft Reverse Gear
Courtesy of AMERICAN HONDA MOTOR CO., INC.

7. Automatic Transmission Housing
    1. Install the three dowel pins (A) and a new gasket (B).
    2. Align the spring pin (C) of the selector control shaft (D) with the transmission housing groove (E).

NOTE: **Do not squeeze the end of the selector control shaft tips together when turning the shaft. If the tips are squeezed together, it will cause a faulty shift position signal or position due to the play between the selector control shaft and the transmission range switch.**

    3. Place the transmission housing (F) on the torque converter housing (G).

NOTE: **Do not install the input shaft (mainshaft) speed sensor and the output shaft (countershaft) speed sensor before installing the transmission housing.**

    4. Wrap the tip of a screwdriver with tape so the reverse idler gear teeth do not get damaged. Engage the reverse idler gear (H) with the reverse gears (I) by rotating the idler gear using the screwdriver.
    5. Make sure the transmission housing is securely seated so there is no clearance between the transmission housing and the torque converter housing.

GETtheMANUALS.org

6. Install the transmission hanger (J), and tighten the transmission housing mounting bolts (2WD: 19 bolts, AWD/4WD: 20 bolts) in at least two steps, in a crisscross pattern.

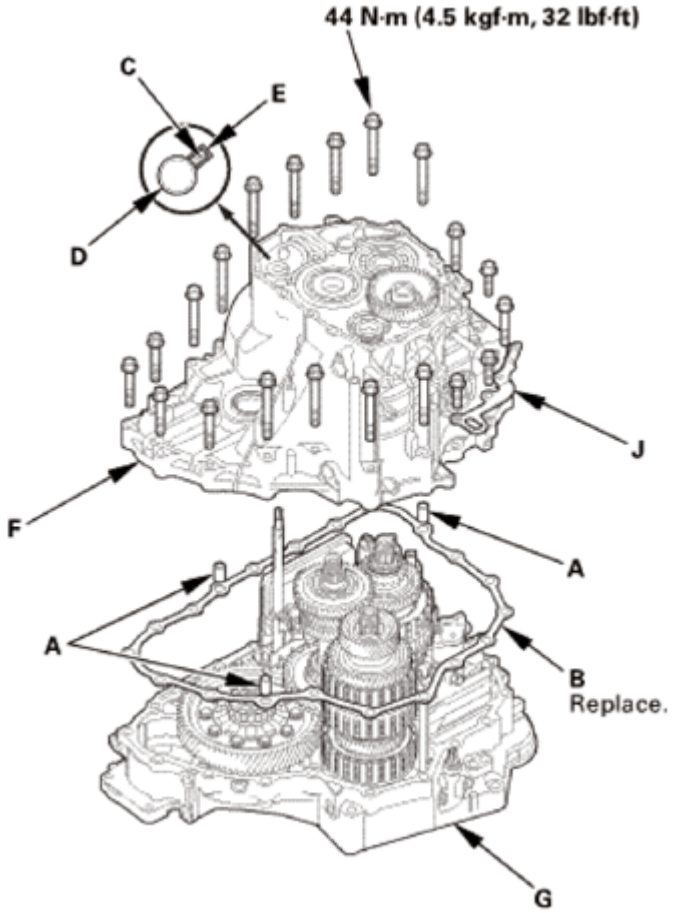

Fig. 457: Identifying Dowel Pins, Gasket, Spring Pin, Selector Control Shaft, Transmission Housing Groove And Mounting Bolts With Torque Specification
Courtesy of AMERICAN HONDA MOTOR CO., INC.

GETtheMANUALS.org

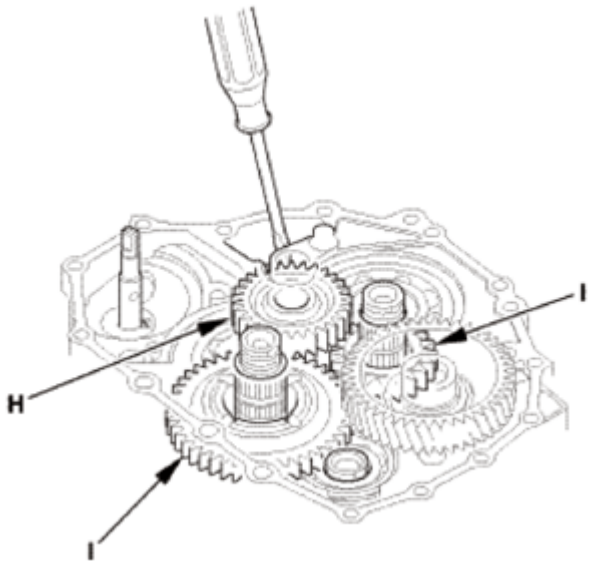

Fig. 458: Engaging Reverse Idler Gear With Reverse Gears By Rotating Idler Gear Using Screwdriver
Courtesy of AMERICAN HONDA MOTOR CO., INC.

8. End Cover Idler Gear Assembly
    1. Install the mainshaft holder onto the mainshaft.

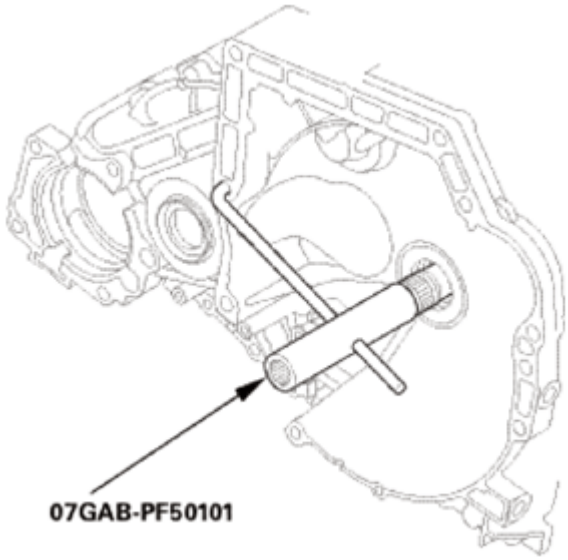

Fig. 459: Installing Mainshaft Holder Onto Mainshaft
Courtesy of AMERICAN HONDA MOTOR CO., INC.

    2. Lubricate the following parts with ATF:
        - Splines and threads of the mainshaft.
        - Splines of the mainshaft idler gear.

GETtheMANUALS.org

- The old conical spring washer and the old locknut.

3. Install the mainshaft idler gear (A), the old conical spring washer (B), and the old locknut (C), and tighten the locknut to 225 N.m (23.0 kgf.m, 166 lbf.ft).

NOTE:

- **Do not tap the mainshaft idler gear to install.**
- **Use a torque wrench to tighten the locknut. Do not use an impact wrench.**

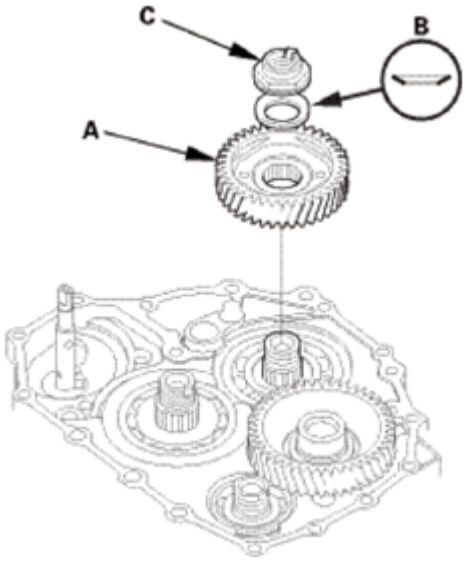

Fig. 460: Identifying Mainshaft Idler Gear, Conical Spring Washer And Locknut
Courtesy of AMERICAN HONDA MOTOR CO., INC.

4. Lubricate the following parts with ATF:
   - Splines and threads of the countershaft.
   - Splines of the park gear.
   - The old conical spring washer and the old locknut.
5. Install the park gear (A), the old conical spring washer (B), and the old locknut (C).

GETtheMANUALS.org

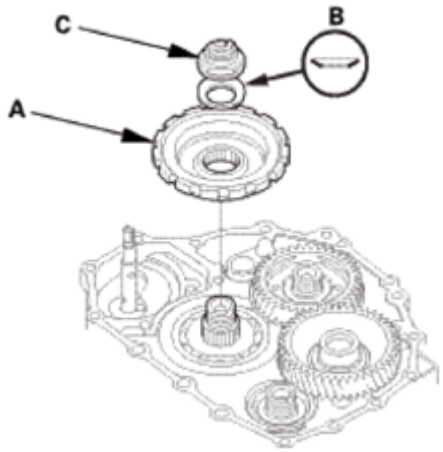

Fig. 461: Identifying Park Gear, Conical Spring Washer And Locknut
Courtesy of AMERICAN HONDA MOTOR CO., INC.

6. Install the park lever spring (D), the park lever (E), and the park lever stop (F).
7. Install the lock bolt (G) using a new lock washer (H).

NOTE: **Do not bend the lock tab of the lock washer until inspect the park lever stop.**

8. Install the park pawl shaft (I), the park pawl spring (J), the park pawl (K), and the stop shaft (L).
9. Lift the park pawl up, and engage it with the park gear, and tighten the locknut to 225 N.m (23.0 kgf.m, 166 lbf.ft).

NOTE:

- **Do not tap the park gear to install.**
- **Use a torque wrench to tighten the locknut. Do not use an impact wrench.**
- **Countershaft locknut has left-hand threads.**

GETtheMANUALS.org

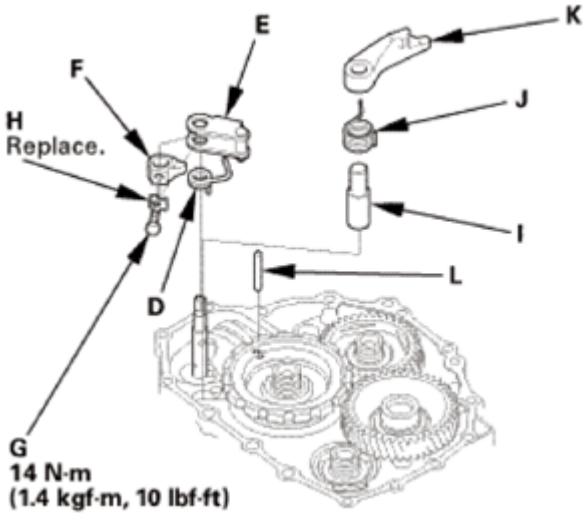

Fig. 462: Identifying Park Pawl Shaft, Park Lever Spring, Park Lever, Park Lever Stop, Lock Bolt, Lock Washer With Torque Specification
Courtesy of AMERICAN HONDA MOTOR CO., INC.

10. Remove the old locknuts and the old conical spring washers from the mainshaft and the countershaft.
11. Lubricate the following parts with ATF:

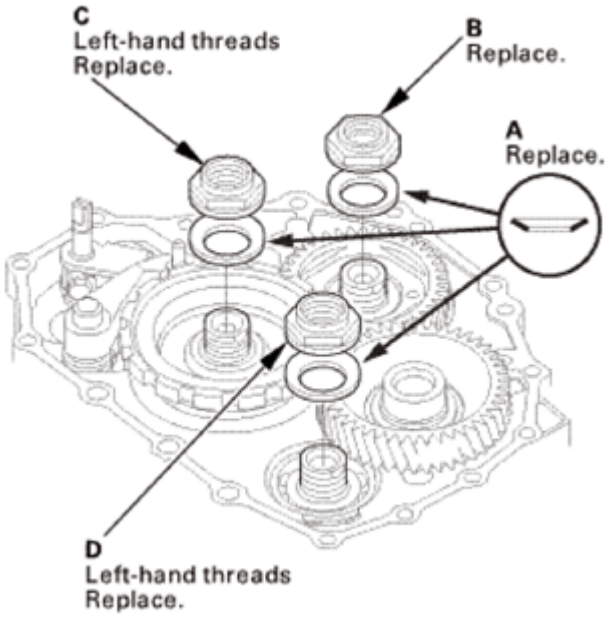

Fig. 463: Identifying Conical Spring Washers, Mainshaft Locknut, Countershaft Locknut And Secondary Shaft Locknut
Courtesy of AMERICAN HONDA MOTOR CO., INC.

- Splines and threads of the mainshaft, the countershaft, and the secondary shaft.
- New conical spring washers and new locknuts.

GETtheMANUALS.org

- Areas where the conical spring washers contact the mainshaft idler gear and the park gear.

12. Install new conical spring washers (A) in the direction shown.
13. Install a new mainshaft locknut (B), a new countershaft locknut (C), and a new secondary shaft locknut (D).
14. Tighten the locknuts to 167 N.m (17.0 kgf.m, 123 lbf.ft).

NOTE:

- **Use a torque wrench to tighten the locknut. Do not use an impact wrench.**
- **The countershaft and secondary shaft locknuts have left-hand threads.**

15. Remove the mainshaft holder.
16. Stake the locknuts into the shafts to a depth (A) of 0.7-1.3 mm (0.027-0.051 in) using a 3.5 mm punch (B).

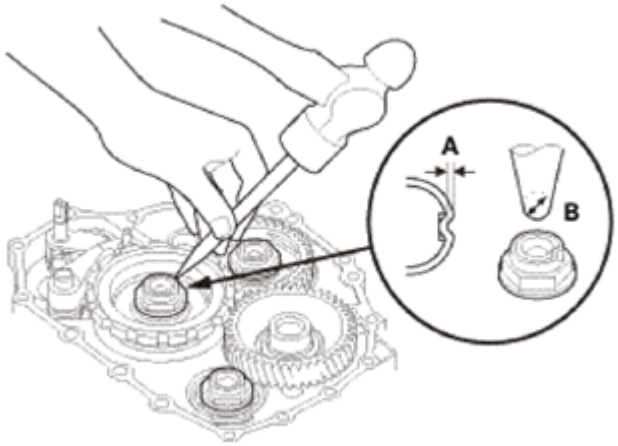

Fig. 464: Staking Locknuts Into Shafts Using Punch
Courtesy of AMERICAN HONDA MOTOR CO., INC.

17. Set the park lever in the P position.
18. Measure the distance (A) between the center of the park pawl shaft (B) and the center of the park lever roller pin (C) as shown.

Standard: 57.7-58.7 mm (2.272-2.311 in)

GETtheMANUALS.org

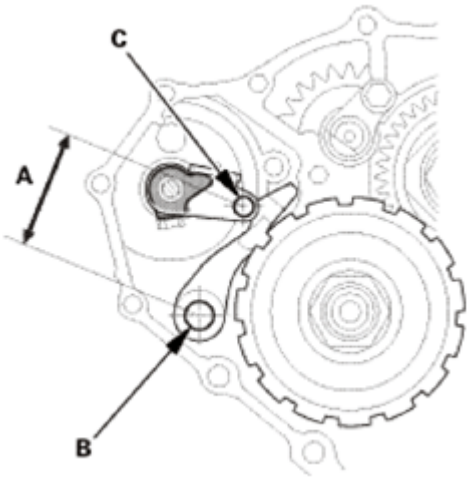

Fig. 465: Measuring Distance Between Center Of Park Pawl Shaft And Center Of Park Lever Roller Pin
Courtesy of AMERICAN HONDA MOTOR CO., INC.

19. If the measurement is out of the standard, select and install the appropriate park lever stop (A) from the table.

PARK LEVER STOP SPECIFICATION

Mark	B	C
1	11.00 mm (0.4331 in)	11.00 mm (0.4331 in)
2	10.80 mm (0.4252 in)	10.65 mm (0.4193 in)
3	10.60 mm (0.4173 in)	10.30 mm (0.4055 in)

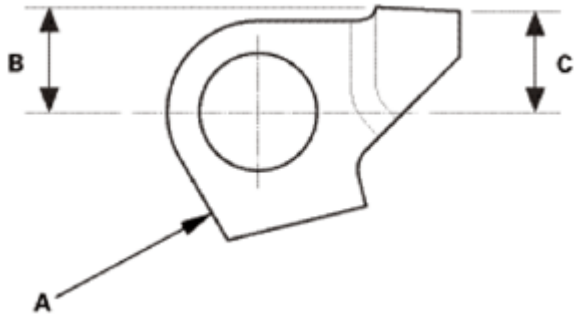

Fig. 466: Identifying Park Lever Stop Dimension
Courtesy of AMERICAN HONDA MOTOR CO., INC.

20. After replacing the park lever stop, make sure the distance is within the tolerance.
21. Pry up the lock tab (A) of the lock washer against the bolt head.

GETtheMANUALS.org

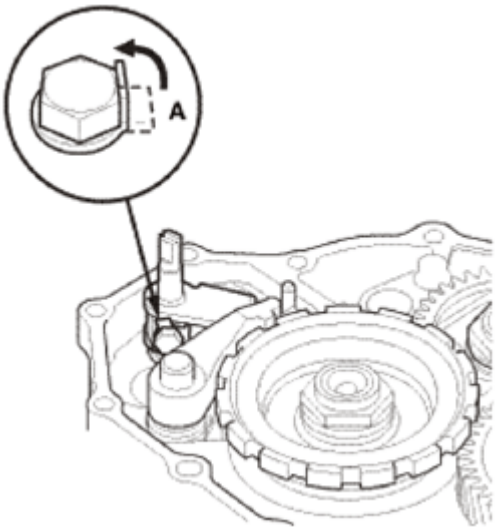

Fig. 467: Prying Up Lock Tab Of Lock Washer Against Bolt Head
Courtesy of AMERICAN HONDA MOTOR CO., INC.

9. ATF Feed Pipe/Lubrication Pipe
    1. Install the 6 x 201 mm ATF pipe (A).
    2. Install the ATF lubrication pipe (B).
    3. Install the 8 x 220 mm ATF pipe (C).
    4. Install the 8 x 198 mm ATF pipes (D).

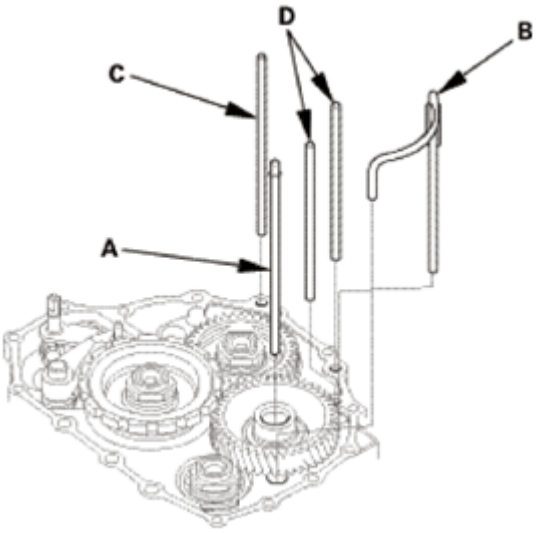

Fig. 468: Identifying ATF Feed Pipes And Lubrication Pipe
Courtesy of AMERICAN HONDA MOTOR CO., INC.

10. A/T Shift Solenoid Wire Harness - Reconnection
    1. Connect the shift solenoid valve connectors:
        - BLU wire to shift solenoid valve A.

GETtheMANUALS.org

- ORN wire to shift solenoid valve B.
- GRN wire to shift solenoid valve C.
- YEL, WHT, and WHT wires to shift solenoid valve D.
- RED wire to shift solenoid valve E.

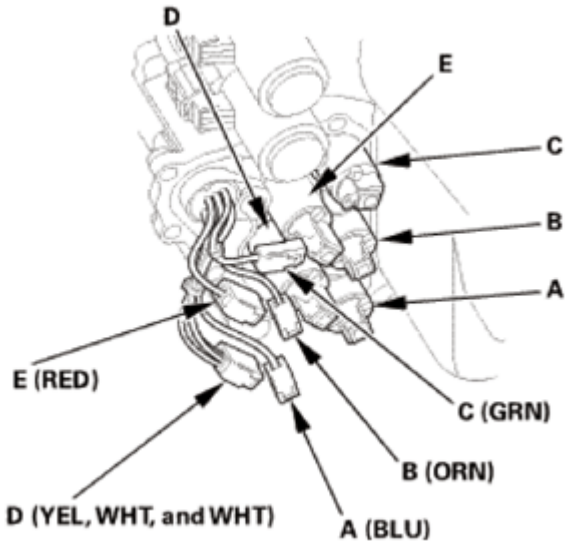

Fig. 469: Identifying Shift Solenoid Valves
Courtesy of AMERICAN HONDA MOTOR CO., INC.

11. A/T Shift Solenoid Cover
    1. Install the shift solenoid valve cover (A) with the dowel pins (B) and a new gasket (C).

GETtheMANUALS.org

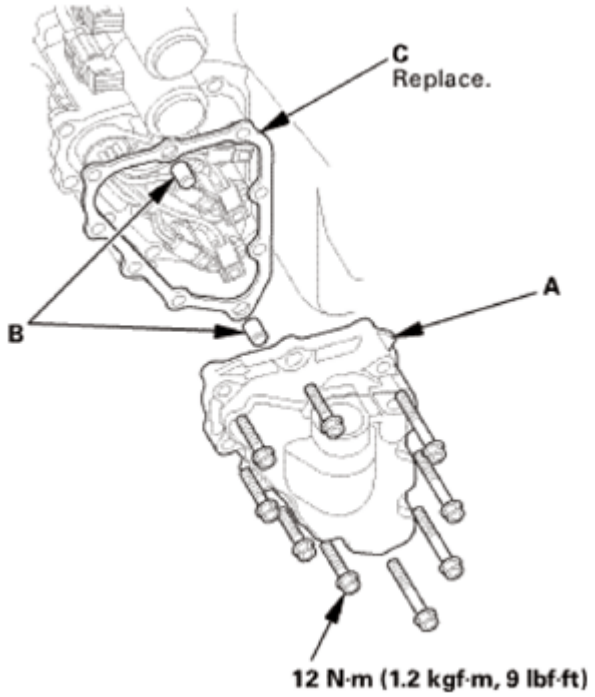

Fig. 470: Identifying Shift Solenoid Valve Cover, Dowel Pins, Gasket And Mounting Bolts With Torque Specification
Courtesy of AMERICAN HONDA MOTOR CO., INC.

12. Dipstick Guide Tube
    1. Install a new O-ring (A) on the ATF dipstick guide tube (B).
    2. Install the ATF dipstick guide tube.

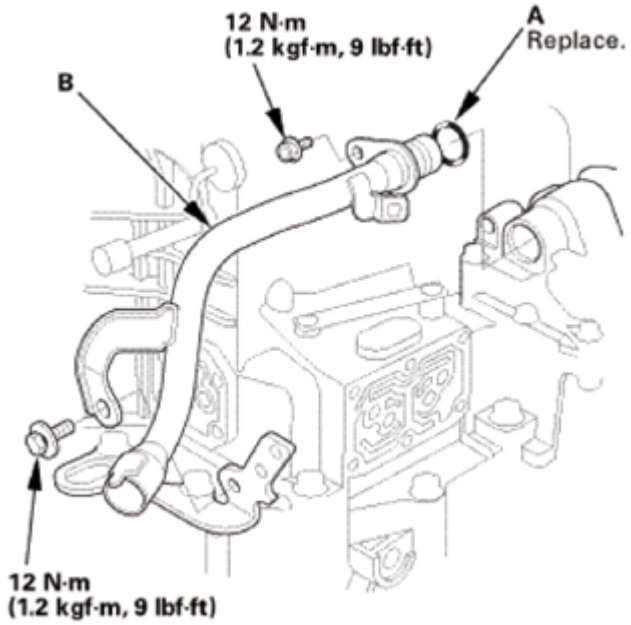

GETtheMANUALS.org

Fig. 471: Identifying ATF Dipstick Guide Tube, O-Ring And Mounting Bolts With Torque Specification
Courtesy of AMERICAN HONDA MOTOR CO., INC.

13. ATF Outlet Line
    1. Install the ATF outlet line (A) using new sealing washers (B).

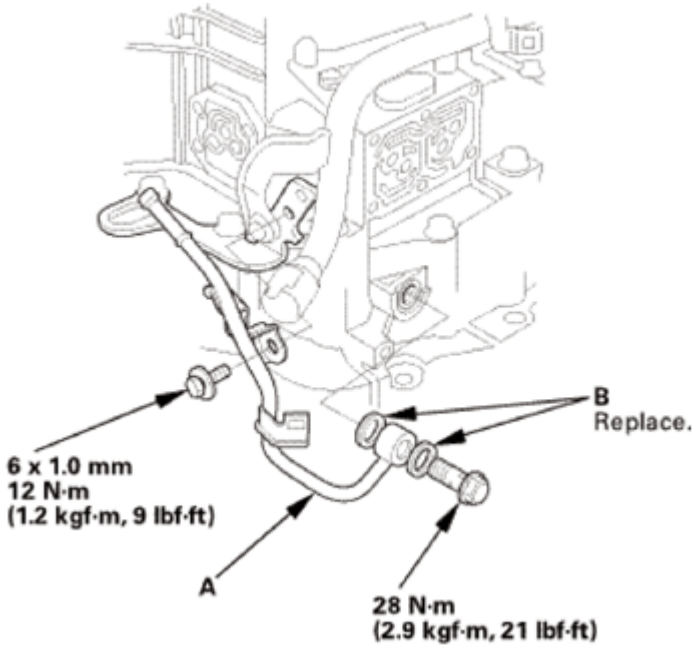

Fig. 472: Identifying ATF Outlet Line, Sealing Washers And Mounting Bolts With Torque Specification
Courtesy of AMERICAN HONDA MOTOR CO., INC.

14. ATF Inlet Line
    1. Install the ATF inlet line (A) using new sealing washers (B).

GETtheMANUALS.org

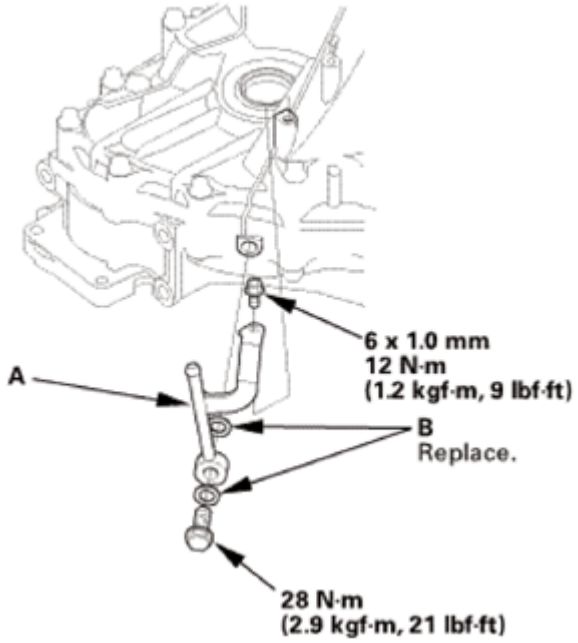

Fig. 473: Identifying ATF Inlet Line, Sealing Washers And Mounting Bolts With Torque Specification
Courtesy of AMERICAN HONDA MOTOR CO., INC.

15. A/T Clutch Pressure Control Solenoid Valve B and C
    1. Clean the mounting surfaces and the fluid passages of the solenoid valve body and the transmission housing.
    2. Install a new gasket (A) with the blue side toward the transmission housing, and Install the ATF joint pipes (D).
    3. Install new O-rings (E) over the ATF joint pipes.
    4. Install A/T clutch pressure control solenoid valves B and C with the clamp bracket (F).

GETtheMANUALS.org

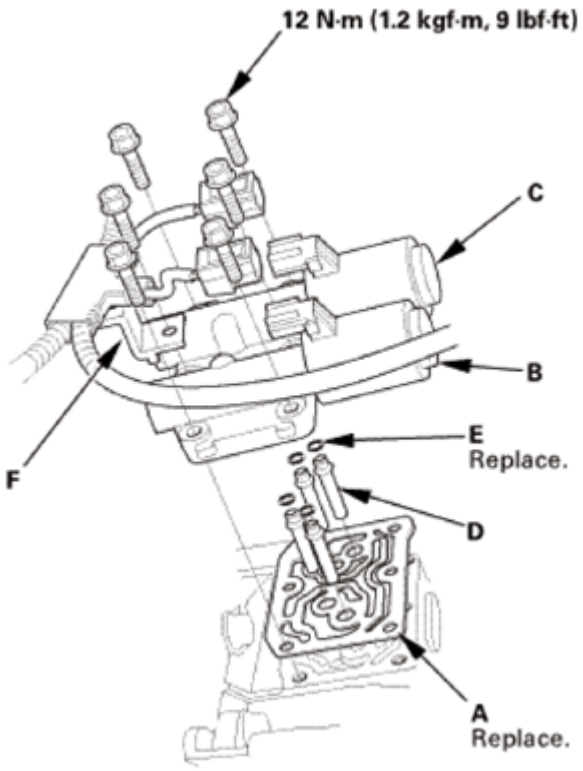

Fig. 474: Identifying Gasket, ATF Joint Pipes, O-Rings, A/T Clutch Pressure Control Solenoid Valves, Clamp Bracket And Mounting Bolts With Torque Specification
Courtesy of AMERICAN HONDA MOTOR CO., INC.

16. A/T Clutch Pressure Control Solenoid Valve A
    1. Clean the mounting surfaces and the fluid passages of the solenoid valve body and the transmission housing.
    2. Install a new gasket (B) with the blue side toward the transmission housing, and install the 35 mm ATF pipe (C) and the ATF joint pipes (D).
    3. Install new O-rings (E) over the ATF joint pipes.
    4. Install A/T clutch pressure control solenoid valve A.

GETtheMANUALS.org

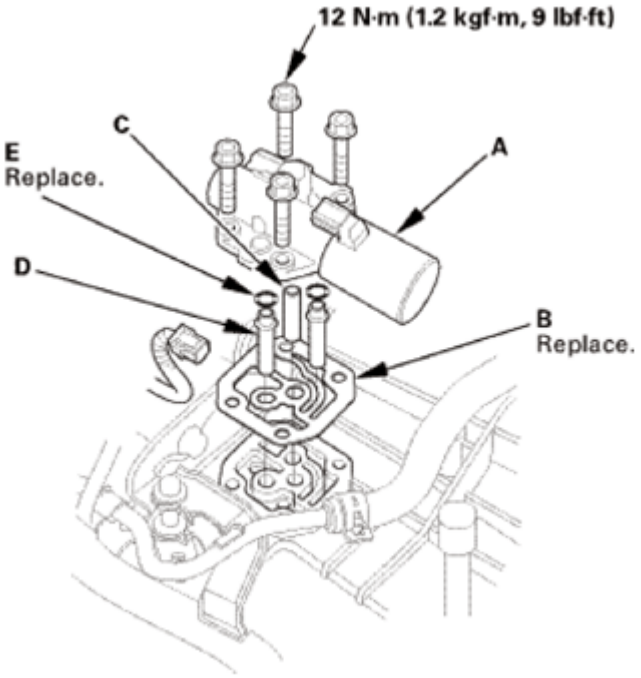

Fig. 475: Identifying A/T Clutch Pressure Control Solenoid Valve, Gasket, ATF Pipe, ATF Joint Pipes And Mounting Bolts With Torque Specification
Courtesy of AMERICAN HONDA MOTOR CO., INC.

17. Output Shaft (Countershaft) Speed Sensor
    1. Install a new O-ring (A) on the output shaft (countershaft) speed sensor (B).
    2. Install the output shaft (countershaft) speed sensor and the senser washer (C).

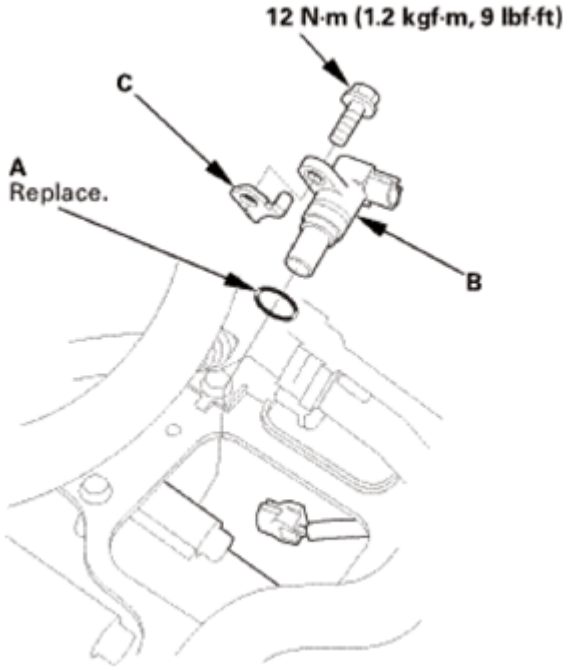

GETtheMANUALS.org

Fig. 476: Identifying Output Shaft (Countershaft) Speed Sensor, O-Ring, Sensor Washer And Mounting Bolts With Torque Specification
Courtesy of AMERICAN HONDA MOTOR CO., INC.

18. Input Shaft (Mainshaft) Speed Sensor
    1. Install a new O-ring (A) on the input shaft (mainshaft) speed sensor (B).
    2. Install the input shaft (mainshaft) speed sensor.

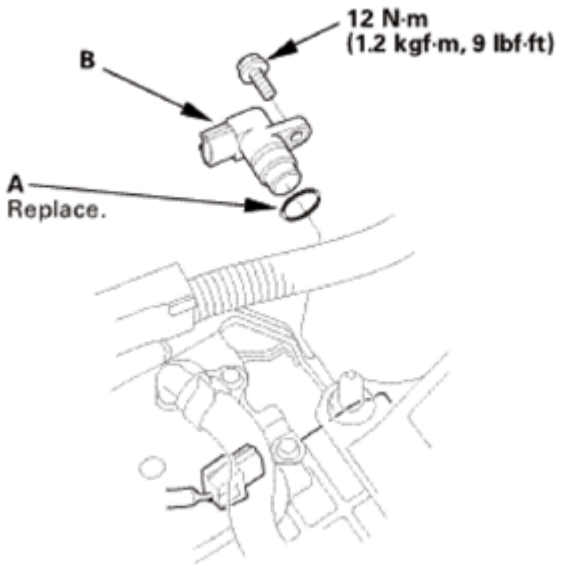

Fig. 477: Identifying Input Shaft (Mainshaft) Speed Sensor, O-Ring And Mounting Bolt With Torque Specification
Courtesy of AMERICAN HONDA MOTOR CO., INC.

19. Transmission End Cover
    1. Install the dowel pins (A) and a new gasket (B).
    2. Install new O-rings (C) over the ATF pipes.
    3. Install the end cover (D), and tighten the three special bolts (E) and the 6 x 1.0 mm bolts (F) (12 bolts).

GETtheMANUALS.org

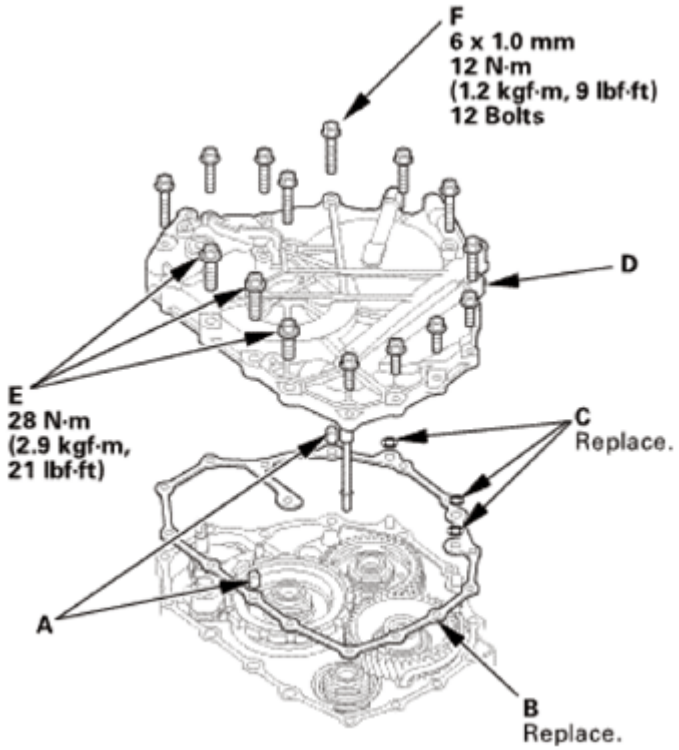

Fig. 478: Identifying Dowel Pins, Gasket, O-Rings, End Cover And Mounting Bolts With Torque Specification
Courtesy of AMERICAN HONDA MOTOR CO., INC.

20. Transmission Range Switch Subharness
    1. Install the clamp brackets (A).
    2. Install the transmission range switch subharness (B).

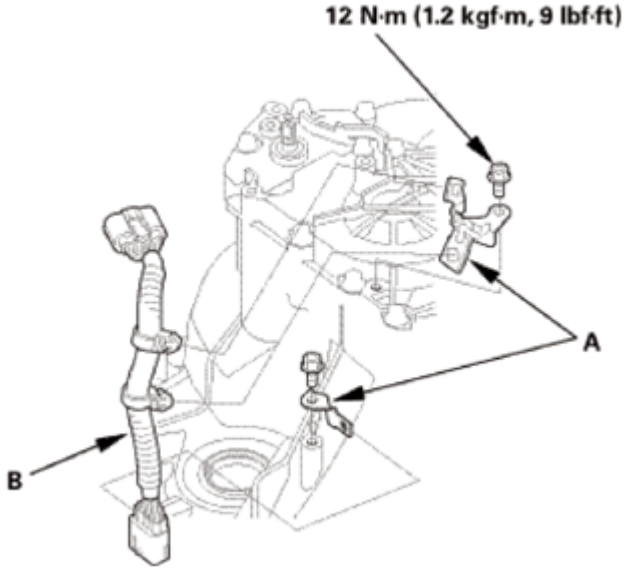

GETtheMANUALS.org

Fig. 479: Identifying Transmission Range Switch Subharness, Clamp Brackets And Mounting Bolts With Torque Specification
Courtesy of AMERICAN HONDA MOTOR CO., INC.

21. Transmission Range Switch
    1. Make sure the selector control shaft is in the N position. If necessary, move the selector control shaft to the N position.

NOTE: **Do not use the selector control shaft to adjust the shift position. If the selector control shaft tips are squeezed together it will cause a faulty signal or position due to play between the selector control shaft and switch.**

Fig. 480: Moving Selector Control Shaft To N Position
Courtesy of AMERICAN HONDA MOTOR CO., INC.

2. Align the cutouts (A) on the rotary-frame with the neutral positioning cutouts (B) on the transmission range switch (C), then put a 2.0 mm (0.079 in) feeler gauge blade (D) in the cutouts to hold the switch in the N position.

NOTE: **Be sure to use a 2.0 mm (0.079 in) blade or equivalent to hold the switch in the N position.**

GETtheMANUALS.org

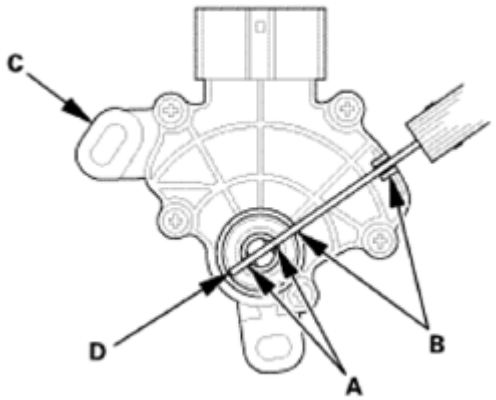

Fig. 481: Aligning Cutouts On Rotary-Frame With Neutral Positioning Cutouts On Transmission Range Switch
Courtesy of AMERICAN HONDA MOTOR CO., INC.

3. Install the transmission range switch (A) gently on the selector control shaft (B) while holding it in the N position with the 2.0 mm (0.079 in) blade (C).

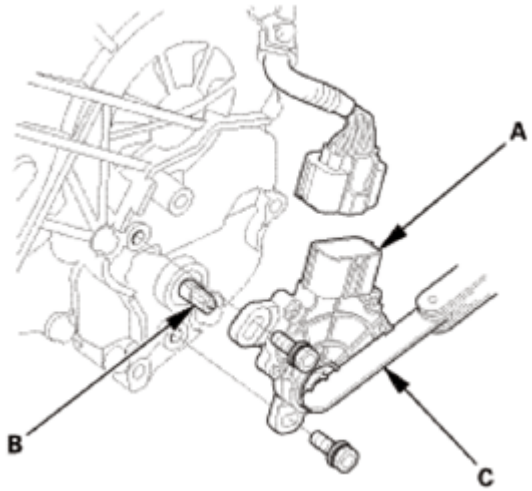

Fig. 482: Identifying Transmission Range Switch, Selector Control Shaft And Blade
Courtesy of AMERICAN HONDA MOTOR CO., INC.

4. Tighten the bolts on the transmission range switch (A) while you continue holding the N position.

NOTE: **Do not move the transmission range switch when tightening the bolts.**

5. Remove the feeler gauge (B).
6. Check the connector (C) for corrosion, dirt, or oil, and clean or repair if necessary, then connect the connector securely.

GETtheMANUALS.org

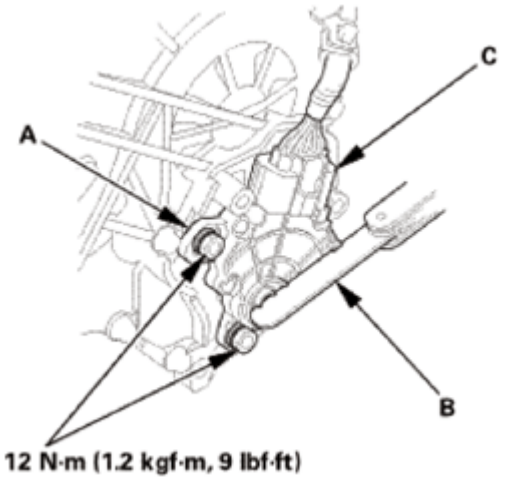

Fig. 483: Identifying Transmission Range Switch, Connector, Feeler Gauge And Mounting Bolts With Torque Specification
Courtesy of AMERICAN HONDA MOTOR CO., INC.

22. Transmission Range Switch Cover
    1. Install the transmission range switch cover (A).

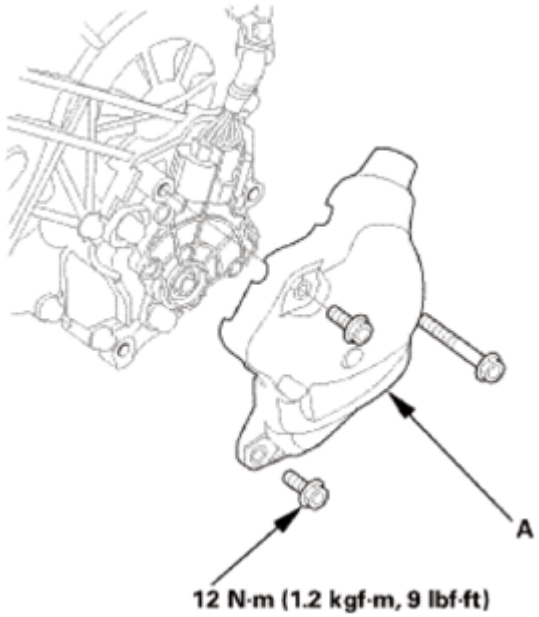

Fig. 484: Identifying Transmission Range Switch Cover And Mounting Bolts With Torque Specification
Courtesy of AMERICAN HONDA MOTOR CO., INC.

A/T DIFFERENTIAL CARRIER, FINAL DRIVEN GEAR, AND TRANSFER DRIVE GEAR REMOVAL AND INSTALLATION

GETtheMANUALS.org

SPECIAL TOOL REQUIRED

Image	Description/Tool Number
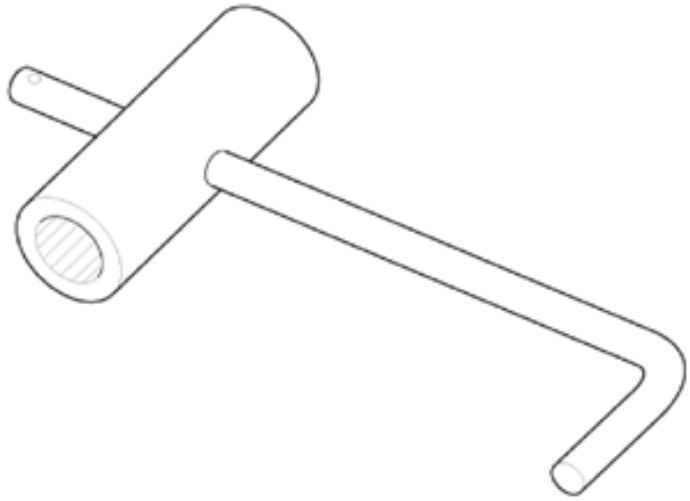	Mainshaft Holder 07GAB-PF50101
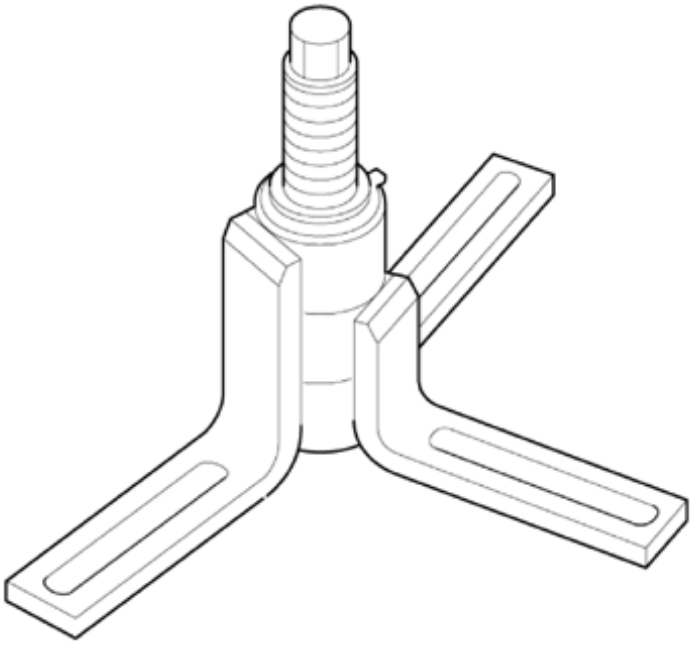	Housing Puller 07HAC-PK40102

REMOVAL

1. Transmission Range Switch Cover
    1. Remove the transmission range switch cover (A).

GETtheMANUALS.org

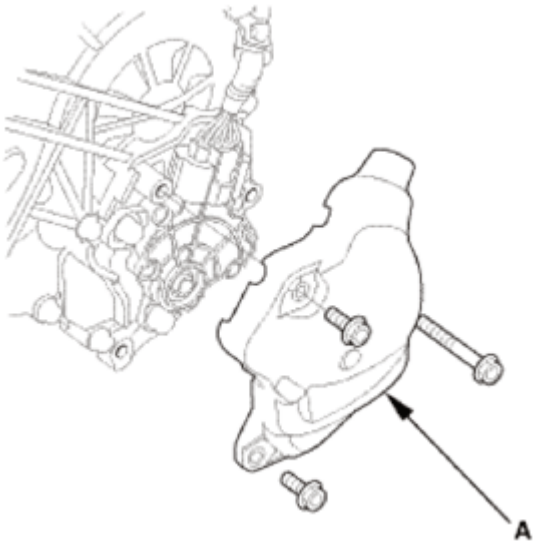

Fig. 485: Identifying Transmission Range Switch Cover With Bolts
Courtesy of AMERICAN HONDA MOTOR CO., INC.

2. Transmission Range Switch
    1. Remove the transmission range switch (A).

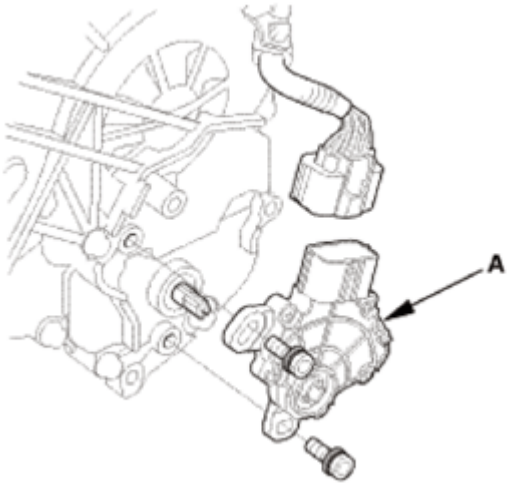

Fig. 486: Identifying Transmission Range Switch With Bolts
Courtesy of AMERICAN HONDA MOTOR CO., INC.

3. Transmission Range Switch Subharness
    1. Remove the transmission range switch subharness (A).
    2. Remove the clamp brackets (B).

GETtheMANUALS.org

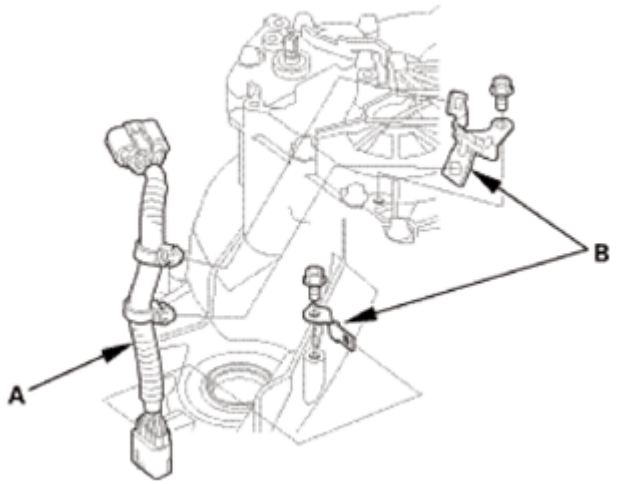

Fig. 487: Identifying Transmission Range Switch Subharness And Clamp Brackets
Courtesy of AMERICAN HONDA MOTOR CO., INC.

4. Transmission End Cover
    1. Remove the end cover (A), the dowel pins (B), the O-rings (C), and the gasket (D).

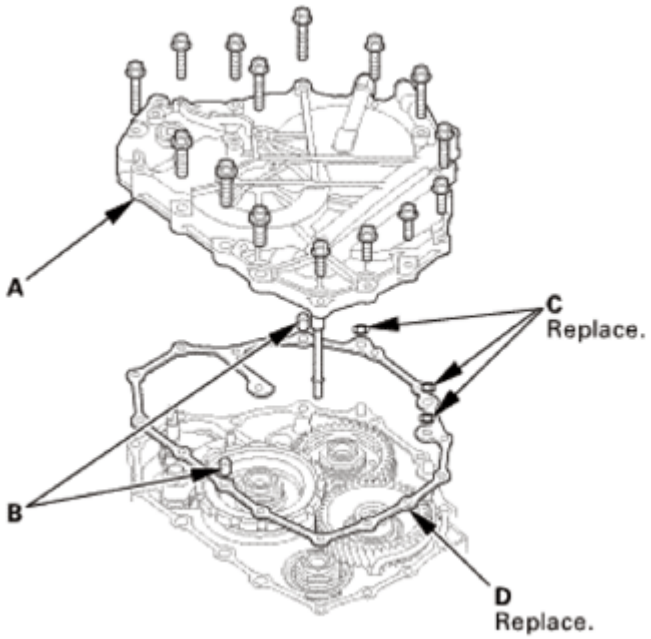

Fig. 488: Identifying Transmission End Cover, Dowel Pins, O-Rings And Gasket With Bolts
Courtesy of AMERICAN HONDA MOTOR CO., INC.

5. Input Shaft (Mainshaft) Speed Sensor
    1. Remove the input shaft (mainshaft) speed sensor (A).
    2. Remove the O-ring (B) from the input shaft (mainshaft) speed sensor.

GETtheMANUALS.org

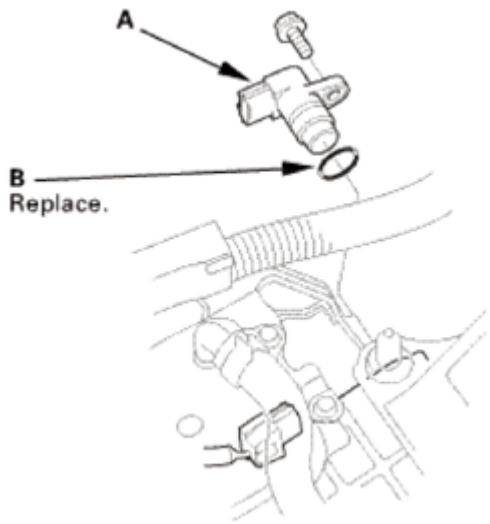

Fig. 489: Identifying Input Shaft (Mainshaft) Speed Sensor And O-Ring
Courtesy of AMERICAN HONDA MOTOR CO., INC.

6. Output Shaft (Countershaft) Speed Sensor
    1. Remove the output shaft (countershaft) speed sensor (A) and the sensor washer (B).
    2. Remove the O-ring (C) from the output shaft (countershaft) speed sensor.

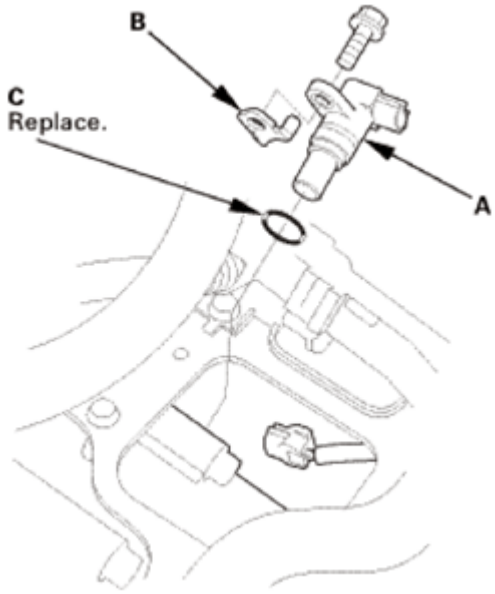

Fig. 490: Identifying Output Shaft (Countershaft) Speed Sensor, Sensor Washer And O-Ring
Courtesy of AMERICAN HONDA MOTOR CO., INC.

7. A/T Clutch Pressure Control Solenoid Valve A
    1. Remove A/T clutch pressure control solenoid valve A.
    2. Remove the 35 mm ATF pipe (B), the ATF joint pipes (C), the O-rings (D), and the gasket (E).

GETtheMANUALS.org

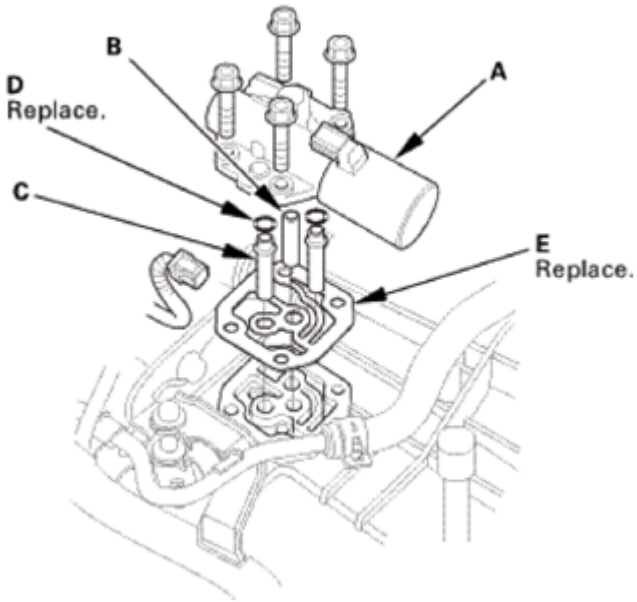

Fig. 491: Identifying A/T Clutch Pressure Control Solenoid Valve, ATF Pipe, ATF Joint Pipes, O-Rings And Gasket With Bolts
Courtesy of AMERICAN HONDA MOTOR CO., INC.

8. A/T Clutch Pressure Control Solenoid Valve B and C
    1. Remove the clamp bracket (A) and A/T clutch pressure control solenoid valves B and C.
    2. Remove the ATF joint pipes (D), the O-rings (E), and the gasket (F).

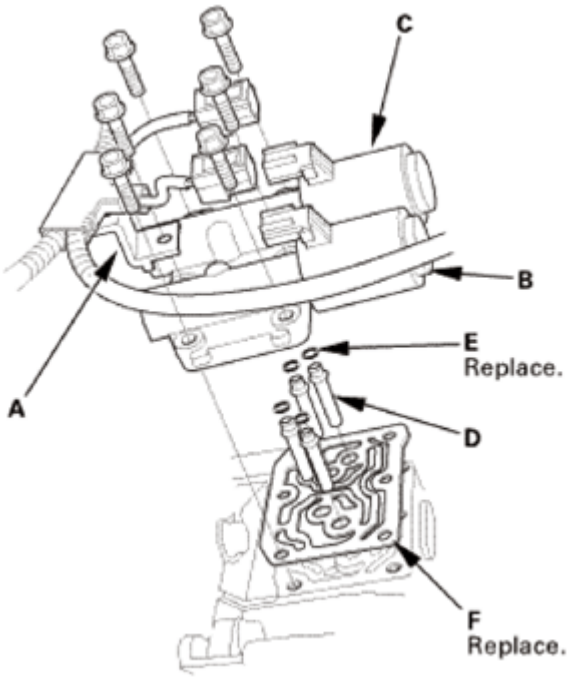

Fig. 492: Identifying A/T Clutch Pressure Control Solenoid Valves, Clamp Bracket, ATF

GETtheMANUALS.org

Joint Pipes, O-Rings And Gasket
Courtesy of AMERICAN HONDA MOTOR CO., INC.

9. ATF Inlet Line
    1. Remove the banjo bolt (A) and the sealing washers (B).
    2. Remove the ATF inlet line (C).

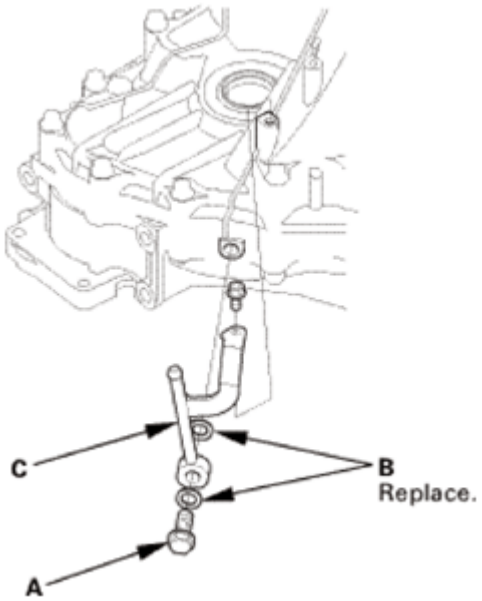

Fig. 493: Identifying ATF Inlet Line, Banjo Bolt And Sealing Washers
Courtesy of AMERICAN HONDA MOTOR CO., INC.

10. ATF Outlet Line
    1. Remove the banjo bolt (A) and the sealing washers (B).
    2. Remove the ATF outlet line (C).

GETtheMANUALS.org

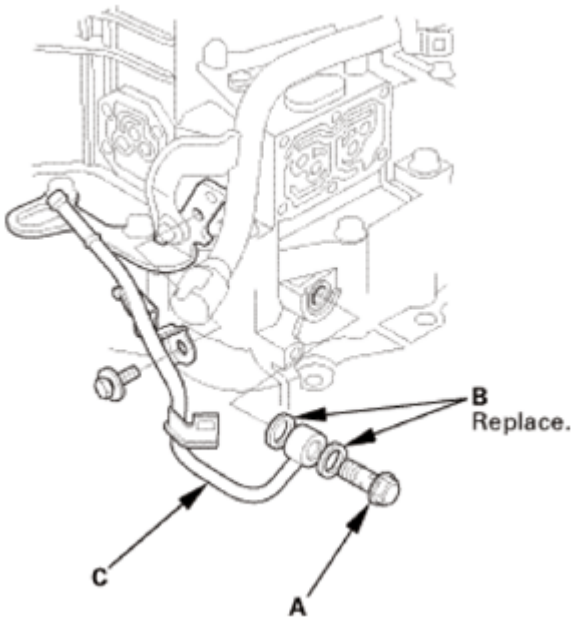

Fig. 494: Identifying ATF Outlet Line, Banjo Bolt And Sealing Washers
Courtesy of AMERICAN HONDA MOTOR CO., INC.

11. Dipstick Guide Tube
    1. Remove the ATF dipstick guide tube (A).
    2. Remove the O-ring (B) from the ATF dipstick guide tube.

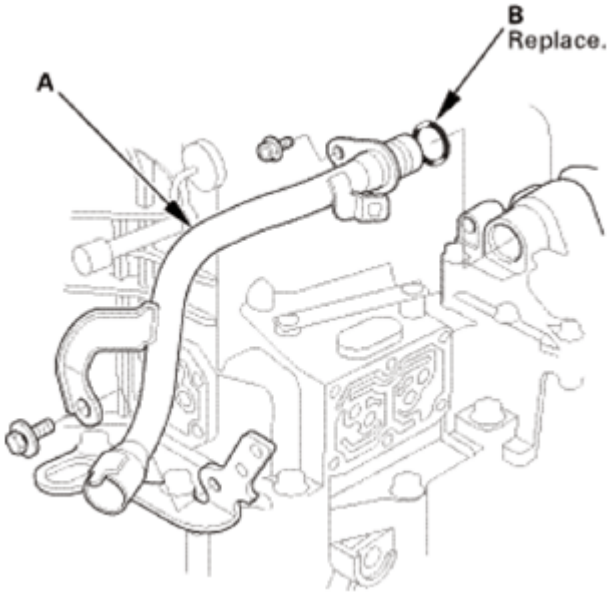

Fig. 495: Identifying ATF Dipstick Guide Tube And O-Ring
Courtesy of AMERICAN HONDA MOTOR CO., INC.

12. A/T Shift Solenoid Cover

GETtheMANUALS.org

1. Remove the shift solenoid valve cover (A), the dowel pins (B), and the gasket (C).

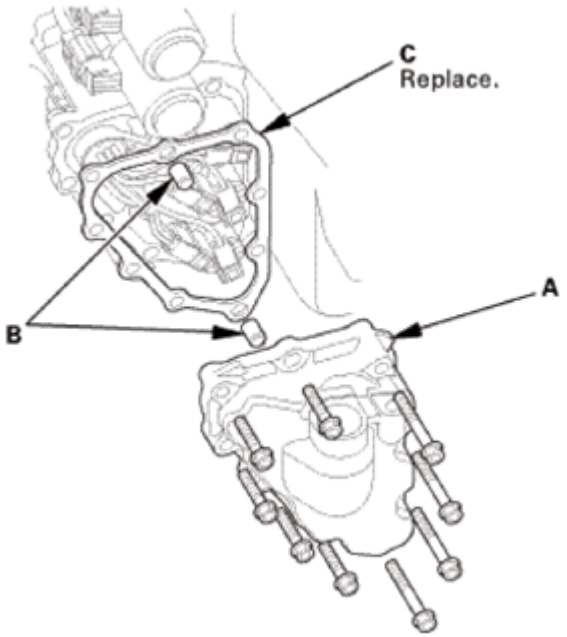

Fig. 496: Identifying Shift Solenoid Valve Cover, Dowel Pins And Gasket
Courtesy of AMERICAN HONDA MOTOR CO., INC.

13. A/T Shift Solenoid Wire Harness - Disconnection
    1. Disconnect the connectors.

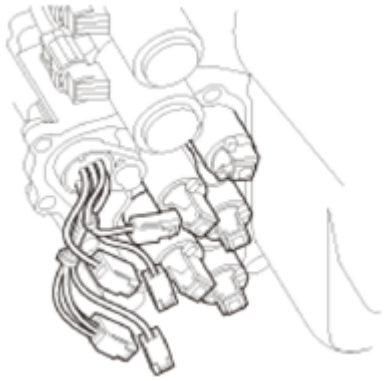

Fig. 497: Identifying A/T Shift Solenoid Wire Harness Connectors
Courtesy of AMERICAN HONDA MOTOR CO., INC.

14. ATF Feed Pipe/Lubrication Pipe
    1. Remove the 6 x 201 mm ATF pipe (A).
    2. Remove the ATF lubrication pipe (B).
    3. Remove the 8 x 220 mm ATF pipe (C).
    4. Remove the 8 x 198 mm ATF pipes (D).

GETtheMANUALS.org

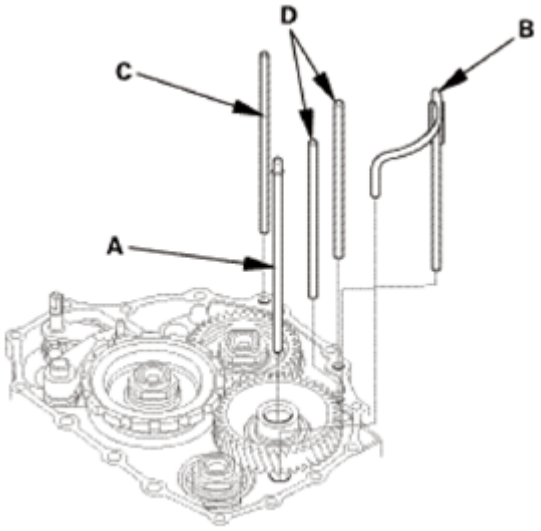

Fig. 498: Identifying ATF Feed Pipes And Lubrication Pipe
Courtesy of AMERICAN HONDA MOTOR CO., INC.

15. End Cover Idler Gear Assembly
    1. Install the mainshaft holder onto the mainshaft.
    2. Engage the park pawl with the park gear.

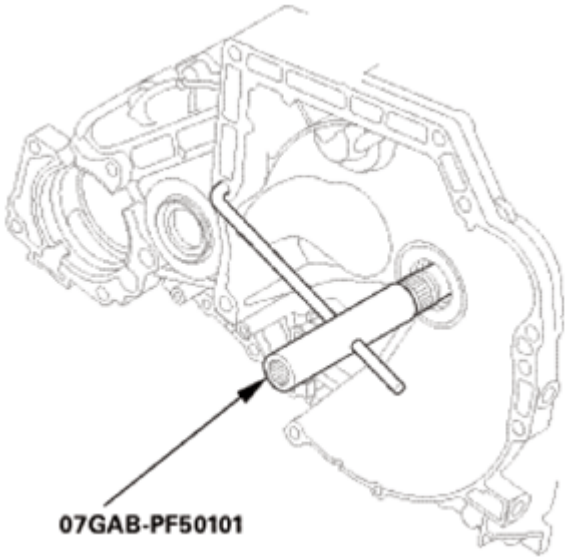

Fig. 499: Installing Mainshaft Holder Onto Mainshaft
Courtesy of AMERICAN HONDA MOTOR CO., INC.

3. Using a chisel, cut the lock tab (A) of the locknut (B).

NOTE: Keep all of the chiseled particles out of the transmission.

GETtheMANUALS.org

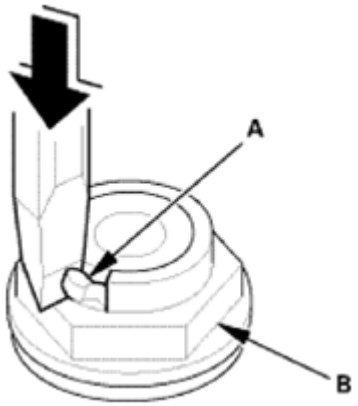

Fig. 500: Cutting Lock Tab Of Locknut Using Chisel
Courtesy of AMERICAN HONDA MOTOR CO., INC.

4. Remove the locknuts (A) and the conical spring washers (B) from each shaft.

NOTE:

- **The countershaft and secondary shaft locknuts have left-hand threads.**
- **Keep all of the chiseled particles out of the transmission.**
- **Clean the old locknuts; they are used to install the press fit idler gears and park gear.**

5. Remove the mainshaft holder.

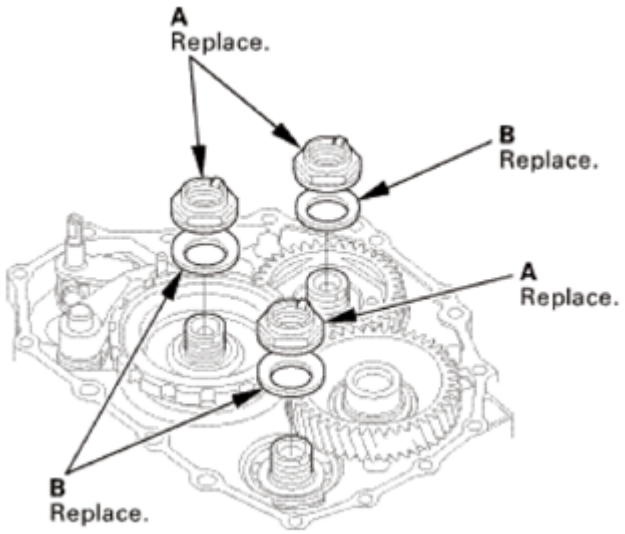

Fig. 501: Identifying Locknuts And Conical Spring Washers
Courtesy of AMERICAN HONDA MOTOR CO., INC.

6. Remove the park pawl (A), the park pawl spring (B), the park pawl shaft (C), and the stop shaft (D).

GETtheMANUALS.org

7. Pry down the lock tab (E) of the lock washer (F).
8. Remove the lock bolt (G) and the lock washer.
9. Remove the park lever (H), the park lever stop (I), and the park lever spring (J).

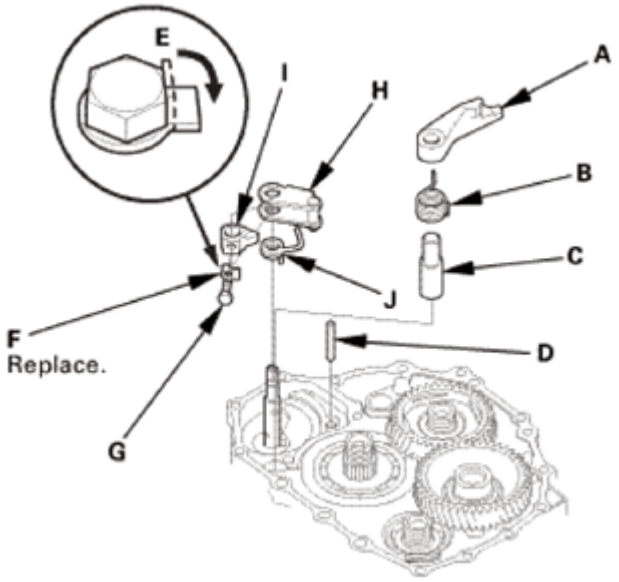

Fig. 502: Prying Down Lock Tab Of Lock Washer
Courtesy of AMERICAN HONDA MOTOR CO., INC.

10. Place a spacer (A) on the countershaft (B).
11. Set a commercially available bearing puller (C) on the park gear (D).
12. Remove the park gear.

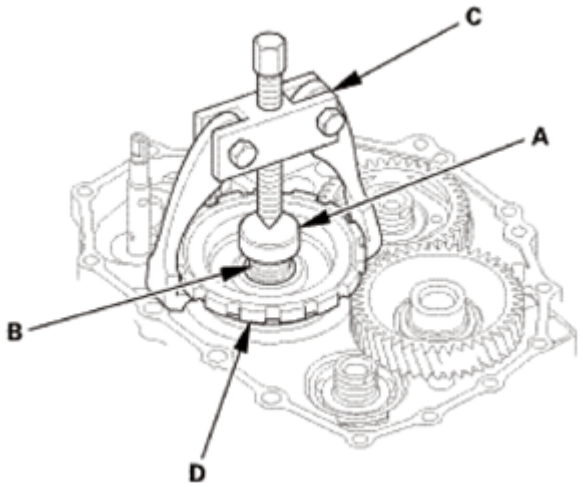

Fig. 503: Setting Commercially Available Bearing Puller On Park Gear
Courtesy of AMERICAN HONDA MOTOR CO., INC.

13. Install a puller (A) with two 6 x 1.0 mm bolts (B) on the mainshaft idler gear (C).

GETtheMANUALS.org

14. Set a spacer (D) between the puller and the mainshaft (E).
15. Remove the mainshaft idler gear.

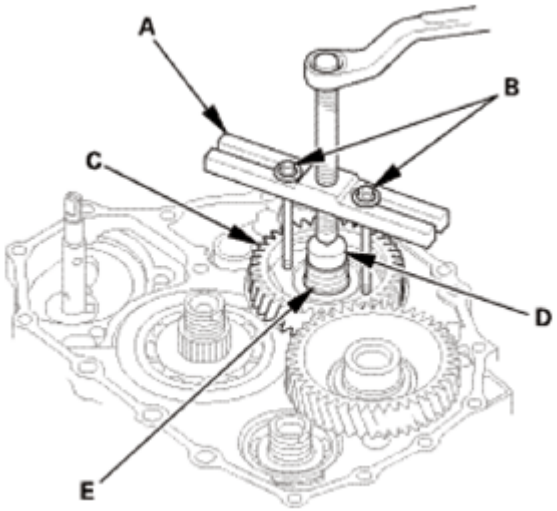

Fig. 504: Installing Puller With 6 X 1.0 mm Bolts On Mainshaft Idler Gear
Courtesy of AMERICAN HONDA MOTOR CO., INC.

16. Automatic Transmission Housing
    1. Align the spring pin (A) on the selector control shaft (B) with the transmission housing groove (C).

    NOTE: **Do not squeeze the end of the selector control shaft tips together when turning the control shaft. If the tips are squeezed together, it will cause a faulty shift position signal or position due to the play between the selector control shaft and the transmission range switch.**

    2. Remove the transmission housing mounting bolts (D) (20 bolts).
    3. Install the housing puller over the mainshaft.
    4. Remove the transmission housing (E) using the housing puller.
    5. Remove the dowel pins (F) and the gasket (G).

GETtheMANUALS.org

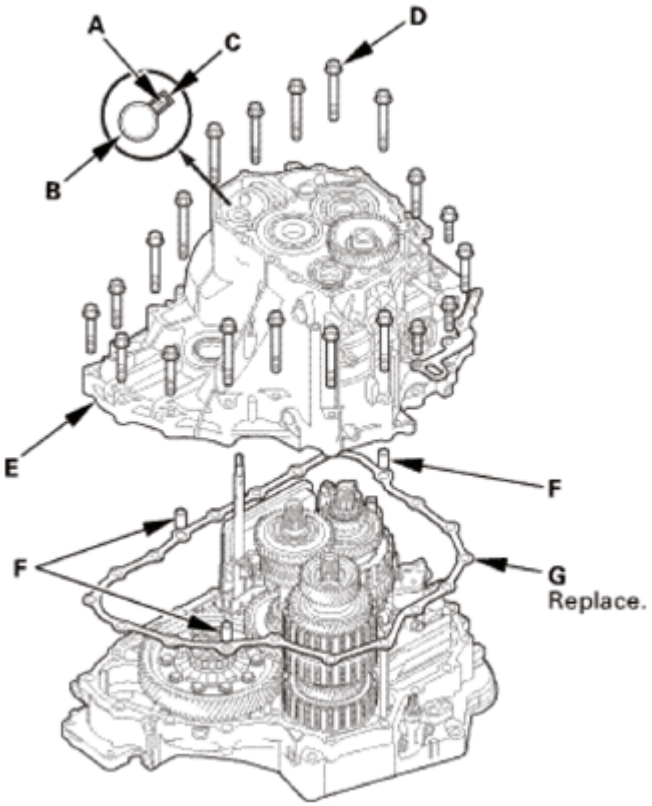

Fig. 505: Identifying Spring Pin, Selector Control Shaft, Transmission Housing Groove, Transmission Housing, Mounting Bolts And Gasket
Courtesy of AMERICAN HONDA MOTOR CO., INC.

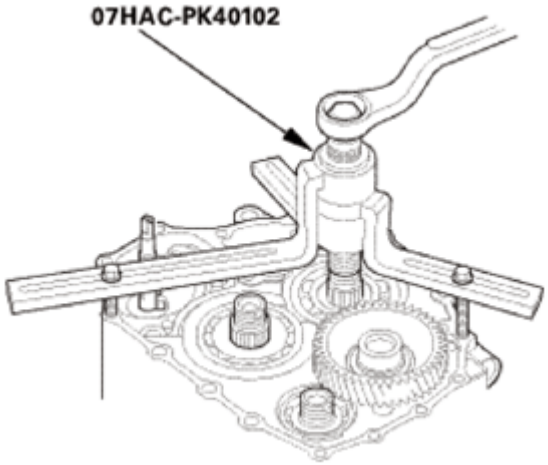

Fig. 506: Installing Housing Puller Over Mainshaft
Courtesy of AMERICAN HONDA MOTOR CO., INC.

17. A/T Countershaft Reverse Gear
    1. Remove the countershaft reverse gear (A).
    2. Remove the needle bearing (B).

GETtheMANUALS.org

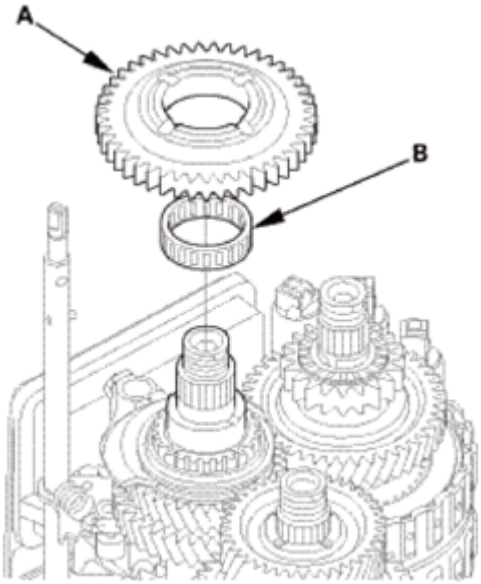

Fig. 507: Identifying Countershaft Reverse Gear And Needle Bearing
Courtesy of AMERICAN HONDA MOTOR CO., INC.

18. Reverse Shift fork
    1. Pry down the lock tab (A) of the lock washer (B).
    2. Remove the lock bolt (C) and the lock washer.
    3. Remove the reverse shift fork (D) and the reverse selector (E) together.

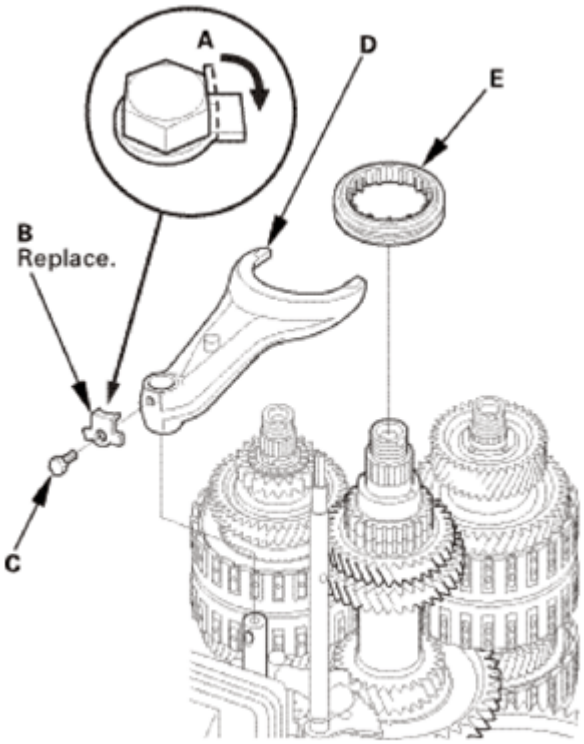

GETtheMANUALS.org

Fig. 508: Prying Down Lock Tab Of Lock Washer
Courtesy of AMERICAN HONDA MOTOR CO., INC.

19. Selector Control Lever (Except 2WD of USA Produced Models)

Except 2WD of USA Produced Models

1. Pry down the lock tab (A) of the lock washer (B).
2. Remove the lock bolt (C) and the lock washer.
3. Remove the selector control lever (D).

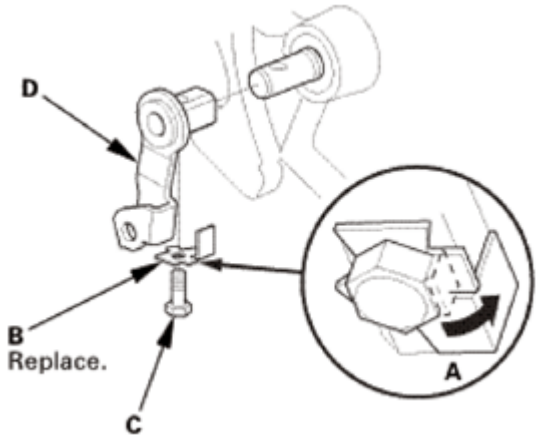

Fig. 509: Prying Down Lock Tab Of Lock Washer (Except 2WD Of USA Produced Models)
Courtesy of AMERICAN HONDA MOTOR CO., INC.

20. Selector Control Shaft
    1. Unhook the detent arm spring (A).

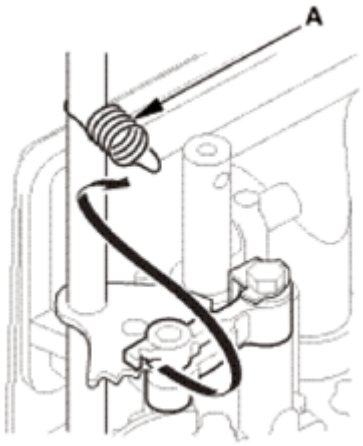

Fig. 510: Unhooking Detent Arm Spring
Courtesy of AMERICAN HONDA MOTOR CO., INC.

GETtheMANUALS.org

2. Separate the manual valve lever pin (A) on the selector control shaft (B) from the guide of the manual valve (C).

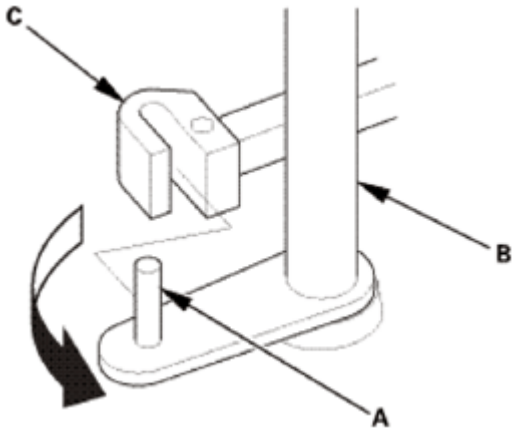

Fig. 511: Separating Manual Valve Lever Pin On Selector Control Shaft From Guide Of Manual Valve
Courtesy of AMERICAN HONDA MOTOR CO., INC.

3. Remove the selector control shaft (A).

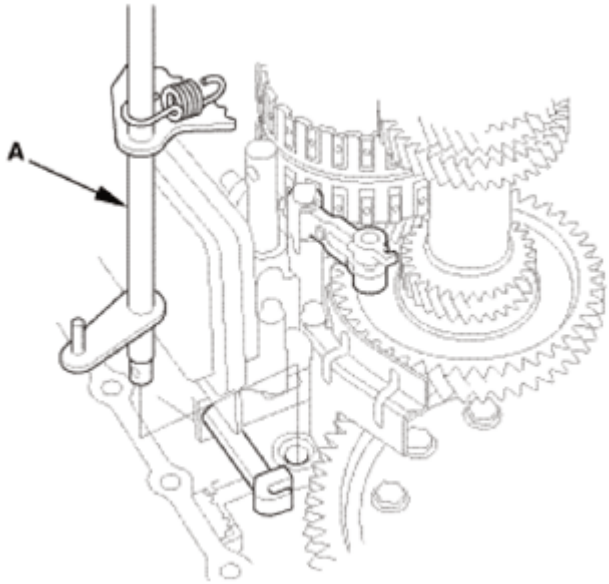

Fig. 512: Identifying Selector Control Shaft
Courtesy of AMERICAN HONDA MOTOR CO., INC.

21. Mainshaft and Countershaft and Secondary Shaft Assembly
    1. Turn the detent arm (A) away from the countershaft (B).

GETtheMANUALS.org

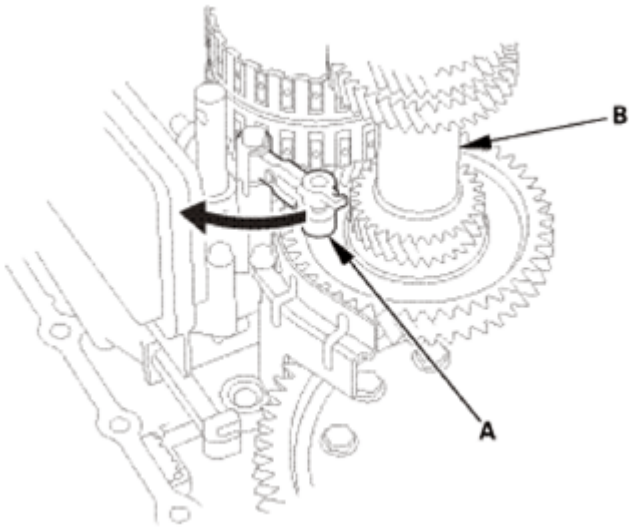

Fig. 513: Turning Detent Arm Away From Countershaft
Courtesy of AMERICAN HONDA MOTOR CO., INC.

2. Remove the mainshaft subassembly (A), the countershaft subassembly (B), and the secondary shaft subassembly (C) together.

NOTE: Do not bump the countershaft on the baffle plate (D).

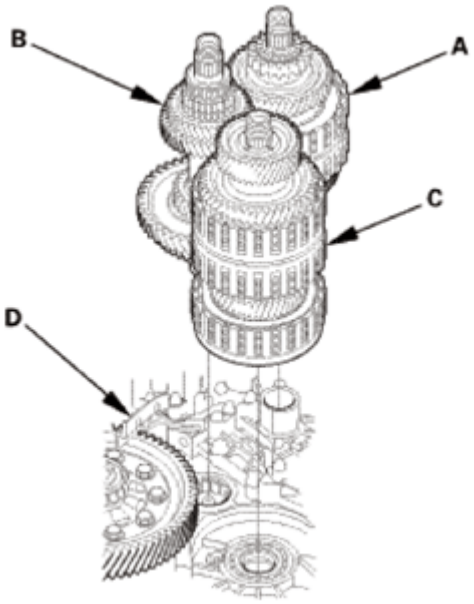

Fig. 514: Identifying Mainshaft Subassembly, Countershaft Subassembly, Secondary Shaft Subassembly And Baffle Plate
Courtesy of AMERICAN HONDA MOTOR CO., INC.

22. Differential Assembly
    1. Remove the baffle plate (A).

GETtheMANUALS.org

2. Remove the differential assembly (B).

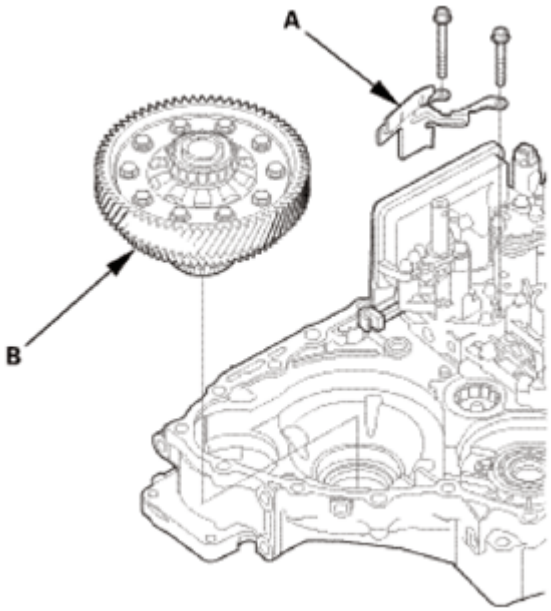

Fig. 515: Identifying Differential Assembly And Baffle Plate
Courtesy of AMERICAN HONDA MOTOR CO., INC.

23. Differential Final Driven Gear and Transfer Drive Gear
    1. Remove the final driven gear (A) and the transfer drive gear (B).

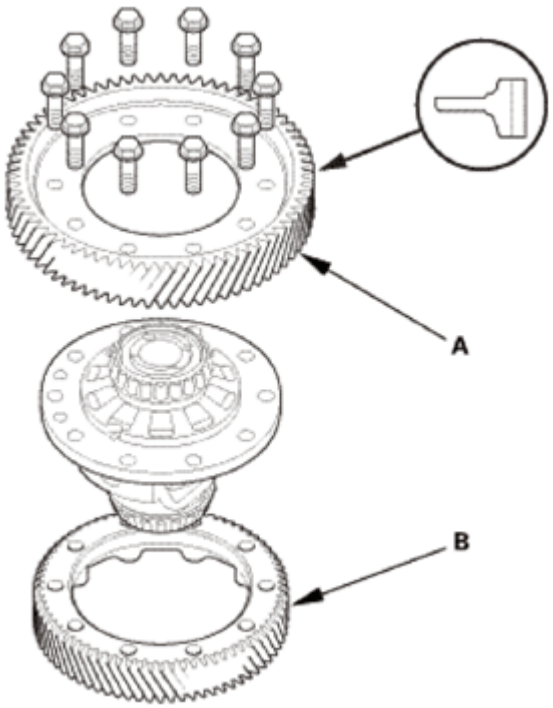

GETtheMANUALS.org

Fig. 516: Identifying Final Driven Gear And Transfer Drive Gear With Mounting Bolts
Courtesy of AMERICAN HONDA MOTOR CO., INC.

INSTALLATION

NOTE: Apply a light coat of clean ATF on all moving parts before installation.

1. Differential Final Driven Gear and Transfer Drive Gear
    1. Install the final driven gear (A) and the transfer drive gear (B) in the direction shown.
    2. Tighten the bolts to the specified torque in a crisscross pattern in at least two steps.

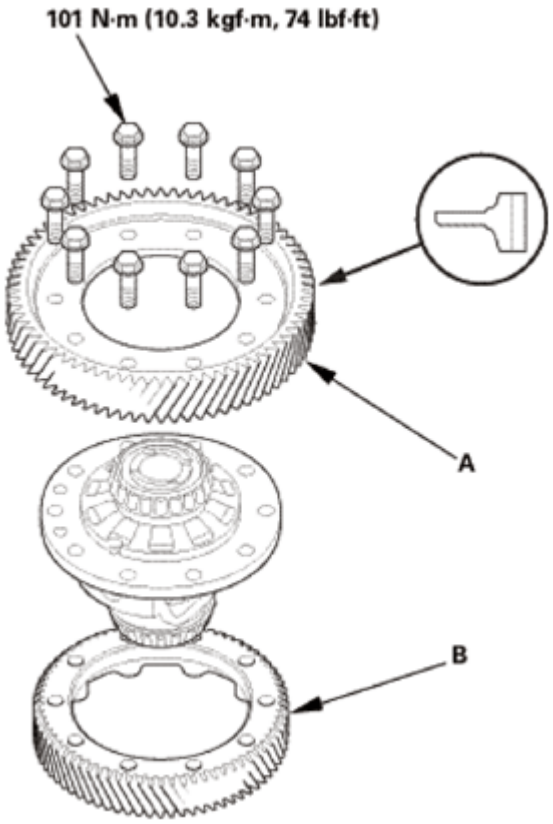

Fig. 517: Identifying Final Driven Gear Or Transfer Drive Gear And Mounting Bolts With Torque Specification
Courtesy of AMERICAN HONDA MOTOR CO., INC.

2. Differential Assembly
    1. Install the differential assembly (A).
    2. Install the baffle plate (B).

GETtheMANUALS.org

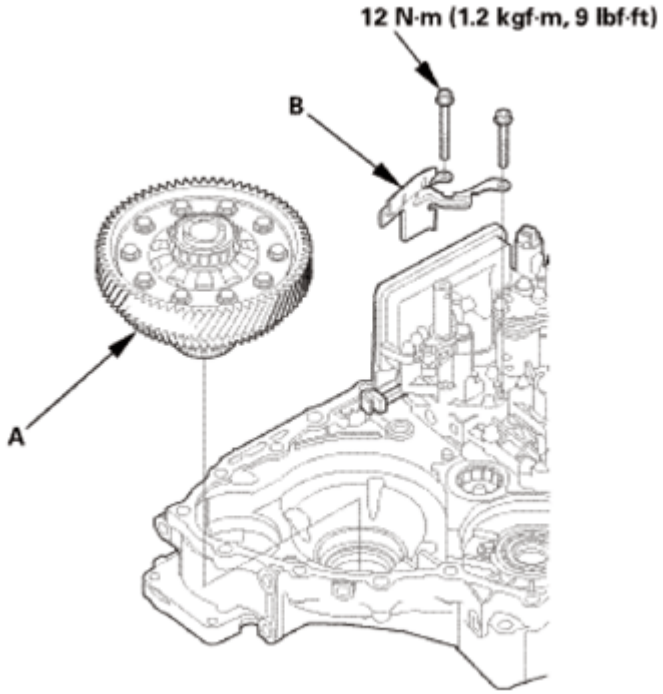

Fig. 518: Identifying Differential Assembly, Baffle Plate And Bolts With Torque Specification
Courtesy of AMERICAN HONDA MOTOR CO., INC.

3. Mainshaft and Countershaft and Secondary Shaft Assembly
    1. Be sure that each shaft is assembled. Also be sure that new sealing rings are installed on the mainshaft and the secondary shaft.
    2. Join the mainshaft subassembly (A), the countershaft subassembly (B), and the secondary shaft subassembly (C) together, and install them.

    NOTE: Do not bump the countershaft on the baffle plate (D).

    3. Make sure the countershaft subassembly and the differential assembly (E) are clear of the baffle plate.

GETtheMANUALS.org

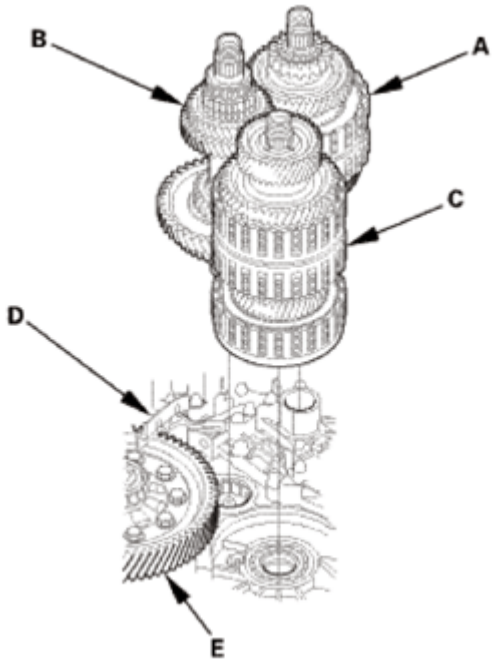

Fig. 519: Identifying Mainshaft Subassembly, Countershaft Subassembly, Secondary Shaft Subassembly, Baffle Plate And Differential Assembly
Courtesy of AMERICAN HONDA MOTOR CO., INC.

4. Selector Control Shaft
    1. Install the selector control shaft (A).

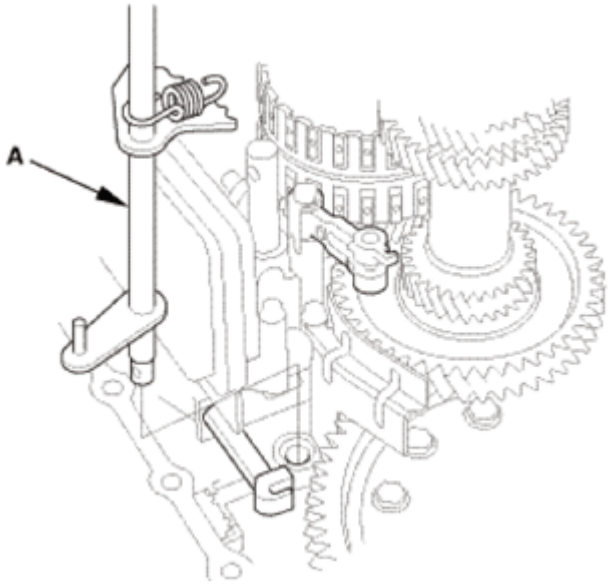

Fig. 520: Identifying Selector Control Shaft
Courtesy of AMERICAN HONDA MOTOR CO., INC.

    2. Align the manual valve lever pin (A) on the selector control shaft (B) with the guide of the manual

GETtheMANUALS.org

valve (C).

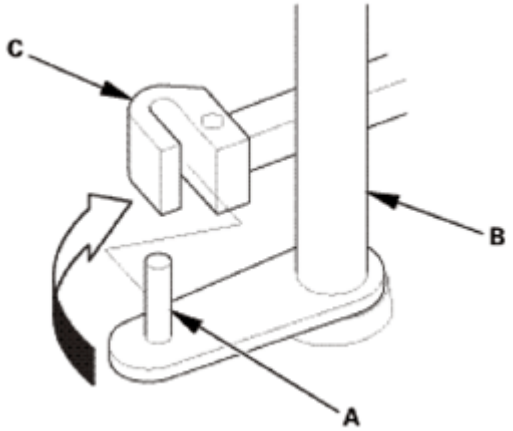

Fig. 521: Aligning Manual Valve Lever Pin On Selector Control Shaft With Guide Of Manual Valve
Courtesy of AMERICAN HONDA MOTOR CO., INC.

3. Hook the detent arm spring (A).

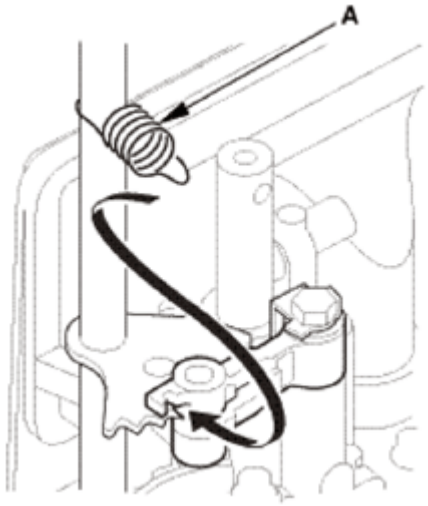

Fig. 522: Hooking Detent Arm Spring
Courtesy of AMERICAN HONDA MOTOR CO., INC.

5. Selector Control Lever (Except 2WD of USA Produced Models)

Except 2WD of USA Produced Models

1. Install the control lever (A) over the selector control shaft (B).
2. Install the lock bolt (C) using a new lock washer (D).
3. Pry up the lock tab (E) of the lock washer against the bolt head.

GETtheMANUALS.org

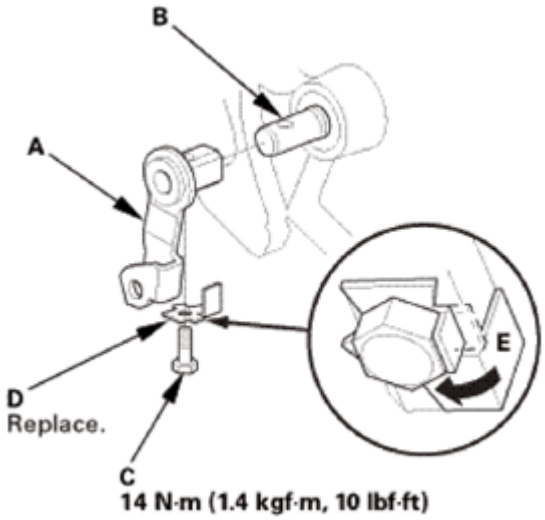

Fig. 523: Prying Up Lock Tab Of Lock Washer (Except 2WD Of USA Produced Models)
Courtesy of AMERICAN HONDA MOTOR CO., INC.

6. Reverse Shift fork
    1. Install the reverse shift fork (A) and the reverse selector (B) together.
    2. Install the lock bolt (C) using a new lock washer (D).
    3. Pry up the lock tab (E) of the lock washer against the bolt head.

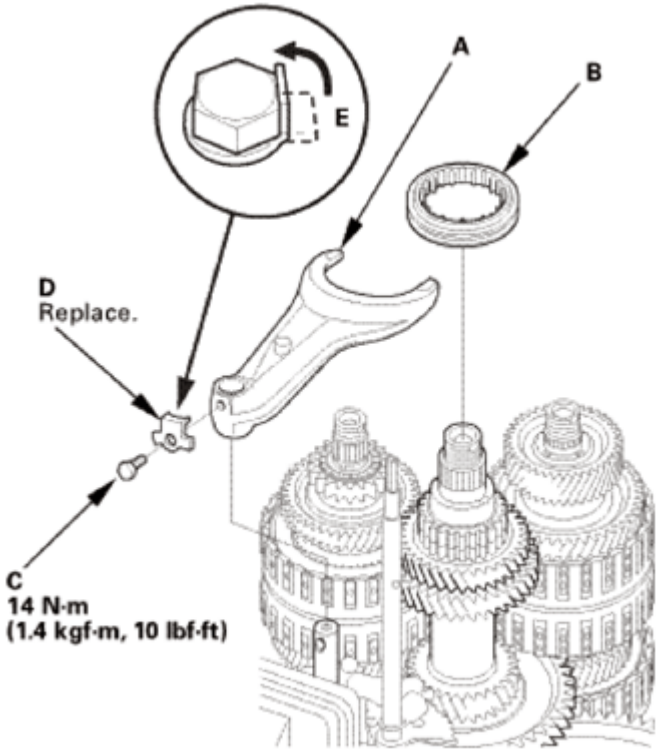

Fig. 524: Prying Up Lock Tab Of Lock Washer Against Bolt Head

GETtheMANUALS.org

Courtesy of AMERICAN HONDA MOTOR CO., INC.

7. A/T Countershaft Reverse Gear
    1. Install the needle bearing (A).
    2. Install the countershaft reverse gear (B).

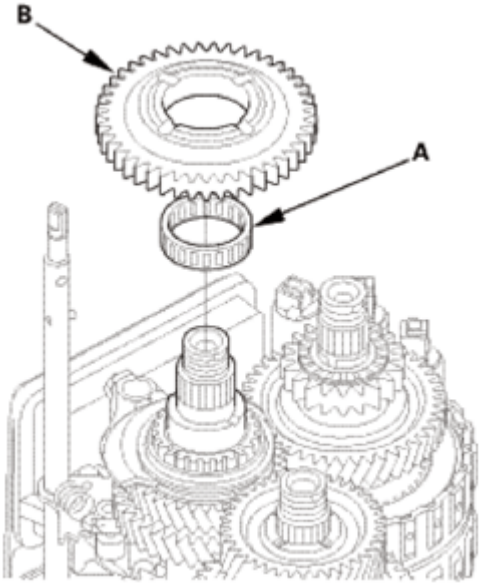

Fig. 525: Identifying Needle Bearing And Countershaft Reverse Gear
Courtesy of AMERICAN HONDA MOTOR CO., INC.

8. Automatic Transmission Housing
    1. Install the three dowel pins (A) and a new gasket (B).
    2. Align the spring pin (C) of the selector control shaft (D) with the transmission housing groove (E).

NOTE: **Do not squeeze the end of the selector control shaft tips together when turning the shaft. If the tips are squeezed together, it will cause a faulty shift position signal or position due to the play between the selector control shaft and the transmission range switch.**

    3. Place the transmission housing (F) on the torque converter housing (G).

NOTE: **Do not install the input shaft (mainshaft) speed sensor and the output shaft (countershaft) speed sensor before installing the transmission housing.**

    4. Wrap the tip of a screwdriver with tape so the reverse idler gear teeth do not get damaged. Engage the reverse idler gear (H) with the reverse gears (I) by rotating the idler gear using the screwdriver.
    5. Make sure the transmission housing is securely seated so there is no clearance between the transmission housing and the torque converter housing.

GETtheMANUALS.org

6. Install the transmission hanger (J), and tighten the transmission housing mounting bolts (20 bolts) in at least two steps, in a crisscross pattern.

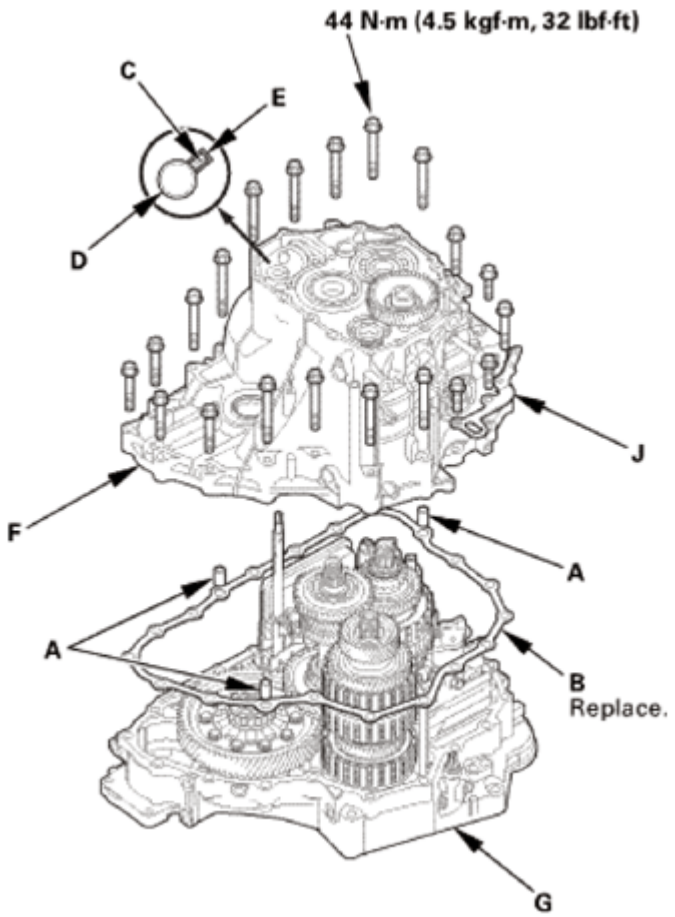

Fig. 526: Identifying Dowel Pins, Gasket, Spring Pin, Selector Control Shaft, Transmission Housing Groove And Mounting Bolts With Torque Specification
Courtesy of AMERICAN HONDA MOTOR CO., INC.

GETtheMANUALS.org

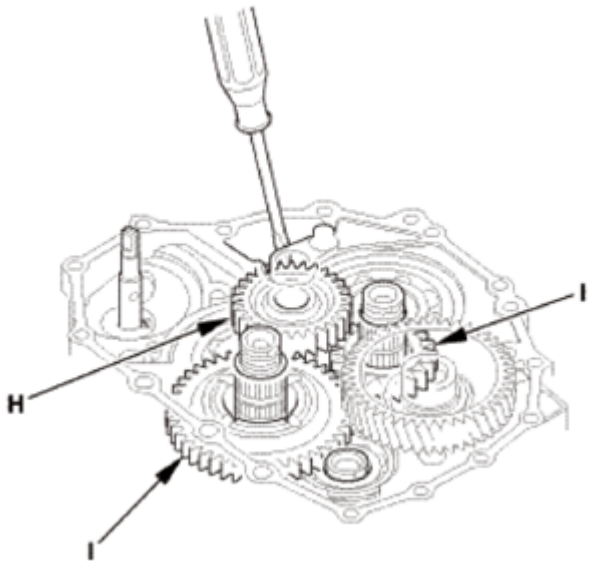

Fig. 527: Engaging Reverse Idler Gear With Reverse Gears By Rotating Idler Gear Using Screwdriver
Courtesy of AMERICAN HONDA MOTOR CO., INC.

9. End Cover Idler Gear Assembly
    1. Install the mainshaft holder onto the mainshaft.

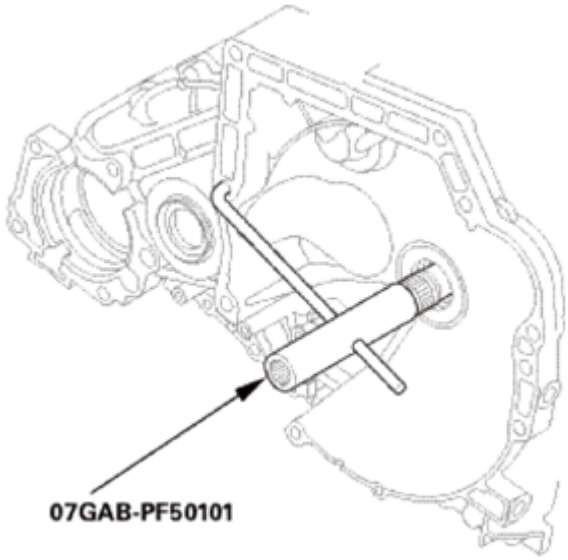

Fig. 528: Installing Mainshaft Holder Onto Mainshaft
Courtesy of AMERICAN HONDA MOTOR CO., INC.

    2. Lubricate the following parts with ATF:
        - Splines and threads of the mainshaft.
        - Splines of the mainshaft idler gear.

GETtheMANUALS.org

- The old conical spring washer and the old locknut.

3. Install the mainshaft idler gear (A), the old conical spring washer (B), and the old locknut (C), and tighten the locknut to 225 N.m (23.0 kgf.m, 166 lbf.ft).

NOTE:

- **Do not tap the mainshaft idler gear to install.**
- **Use a torque wrench to tighten the locknut. Do not use an impact wrench.**

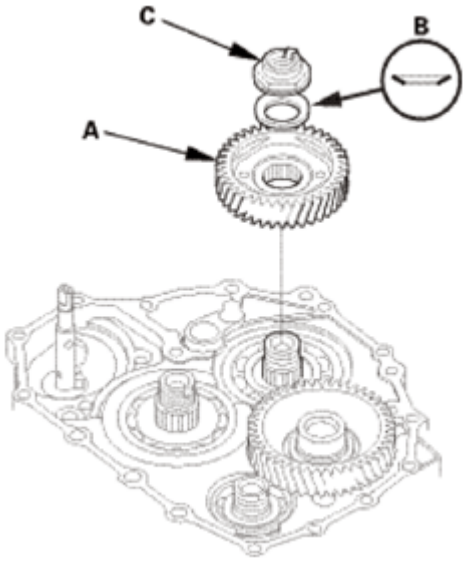

Fig. 529: Identifying Mainshaft Idler Gear, Conical Spring Washer And Locknut
Courtesy of AMERICAN HONDA MOTOR CO., INC.

4. Lubricate the following parts with ATF:
   - Splines and threads of the countershaft.
   - Splines of the park gear.
   - The old conical spring washer and the old locknut.
5. Install the park gear (A), the old conical spring washer (B), and the old locknut (C).
6. Install the park lever spring (D), the park lever (E), and the park lever stop (F).
7. Install the lock bolt (G) using a new lock washer (H).

GETtheMANUALS.org

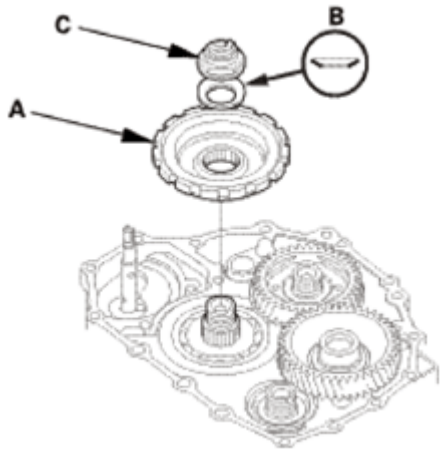

Fig. 530: Identifying Park Gear, Conical Spring Washer And Locknut
Courtesy of AMERICAN HONDA MOTOR CO., INC.

NOTE: **Do not bend the lock tab of the lock washer until inspect the park lever stop.**

8. Install the park pawl shaft (I), the park pawl spring (J), the park pawl (K), and the stop shaft (L).
9. Lift the park pawl up, and engage it with the park gear, and tighten the locknut to 225 N.m (23.0 kgf.m, 166 lbf.ft).

NOTE:

- **Do not tap the park gear to install.**
- **Use a torque wrench to tighten the locknut. Do not use an impact wrench.**
- **Countershaft locknut has left-hand threads.**

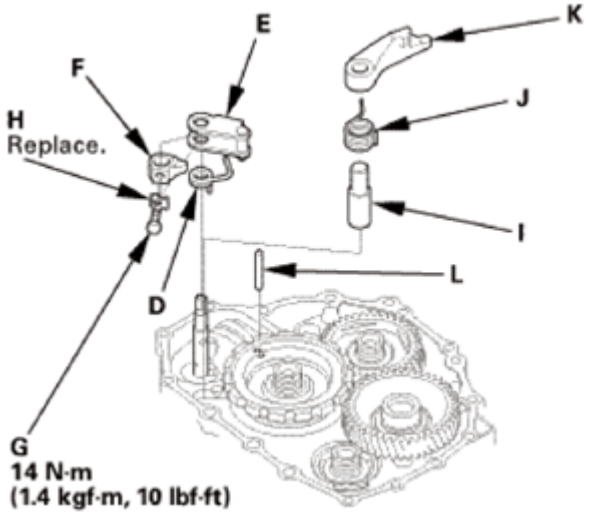

Fig. 531: Identifying Park Pawl Shaft, Park Lever Spring, Park Lever, Park Lever Stop, Lock Bolt, Lock Washer With Torque Specification

GETtheMANUALS.org

Courtesy of AMERICAN HONDA MOTOR CO., INC.

10. Remove the old locknuts and the old conical spring washers from the mainshaft and the countershaft.
11. Lubricate the following parts with ATF:
    - Splines and threads of the mainshaft, the countershaft, and the secondary shaft.
    - New conical spring washers and new locknuts.
    - Areas where the conical spring washers contact the mainshaft idler gear and the park gear.
12. Install new conical spring washers (A) in the direction shown.
13. Install a new mainshaft locknut (B), a new countershaft locknut (C), and a new secondary shaft locknut (D).
14. Tighten the locknuts to 167 N.m (17.0 kgf.m, 123 lbf.ft).

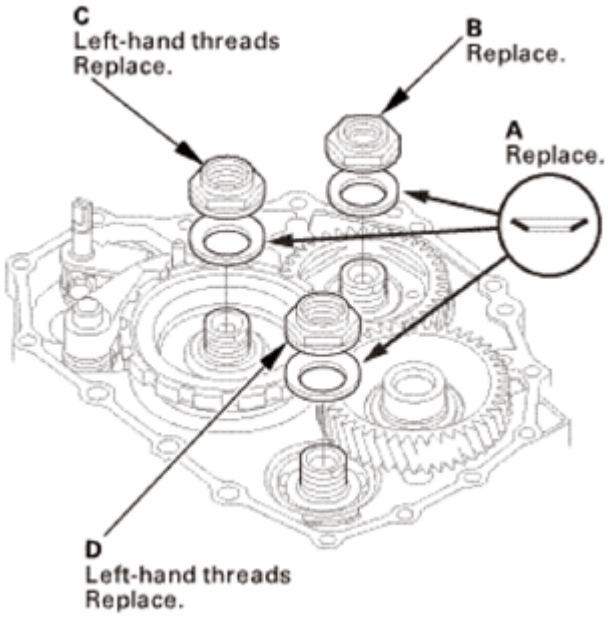

Fig. 532: Identifying Conical Spring Washers, Mainshaft Locknut, Countershaft Locknut And Secondary Shaft Locknut
Courtesy of AMERICAN HONDA MOTOR CO., INC.

NOTE:
- **Use a torque wrench to tighten the locknut. Do not use an impact wrench.**
- **The countershaft and secondary shaft locknuts have left-hand threads.**

15. Remove the mainshaft holder.
16. Stake the locknuts into the shafts to a depth (A) of 0.7-1.3 mm (0.027-0.051 in) using a 3.5 mm punch (B).

GETtheMANUALS.org

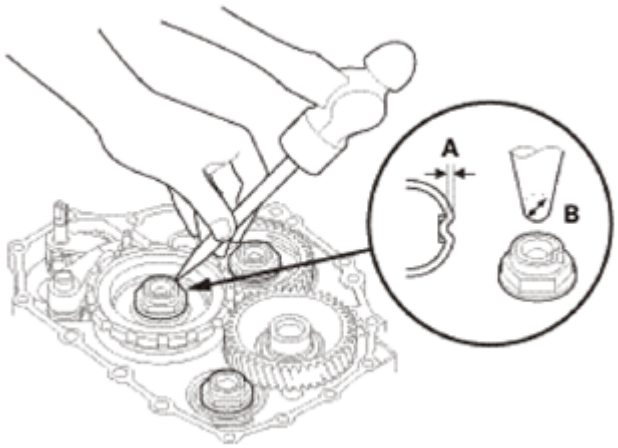

Fig. 533: Staking Locknuts Into Shafts Using Punch
Courtesy of AMERICAN HONDA MOTOR CO., INC.

17. Set the park lever in the P position.
18. Measure the distance (A) between the center of the park pawl shaft (B) and the center of the park lever roller pin (C) as shown.

    Standard: 57.7-58.7 mm (2.272-2.311 in)

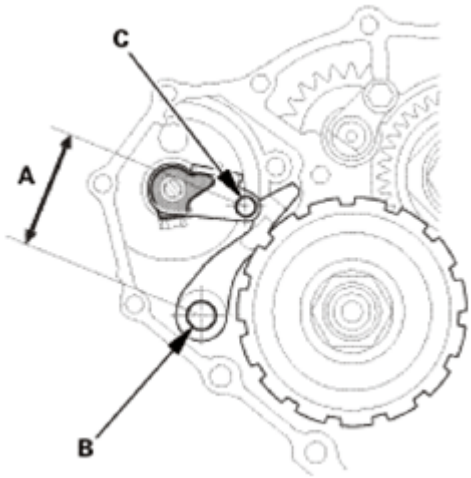

Fig. 534: Measuring Distance Between Center Of Park Pawl Shaft And Center Of Park Lever Roller Pin
Courtesy of AMERICAN HONDA MOTOR CO., INC.

19. If the measurement is out of the standard, select and install the appropriate park lever stop (A) from the table.

PARK LEVER STOP SPECIFICATION

Mark	B	C
1	11.00 mm (0.4331 in)	11.00 mm (0.4331 in)

GETtheMANUALS.org

2	10.80 mm (0.4252 in)	10.65 mm (0.4193 in)
3	10.60 mm (0.4173 in)	10.30 mm (0.4055 in)

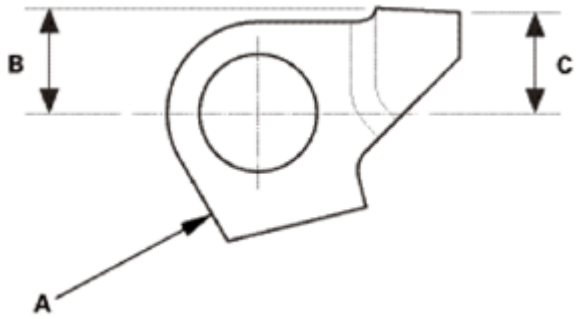

Fig. 535: Identifying Park Lever Stop Dimension
Courtesy of AMERICAN HONDA MOTOR CO., INC.

20. After replacing the park lever stop, make sure the distance is within the tolerance.
21. Pry up the lock tab (A) of the lock washer against the bolt head.

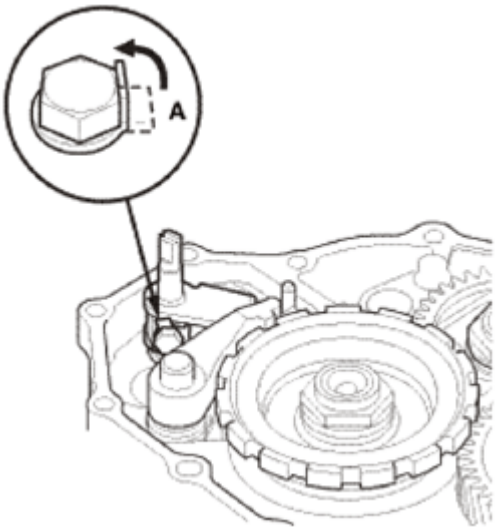

Fig. 536: Prying Up Lock Tab Of Lock Washer Against Bolt Head
Courtesy of AMERICAN HONDA MOTOR CO., INC.

10. ATF Feed Pipe/Lubrication Pipe
    1. Install the 6 x 201 mm ATF pipe (A).
    2. Install the ATF lubrication pipe (B).
    3. Install the 8 x 220 mm ATF pipe (C).
    4. Install the 8 x 198 mm ATF pipes (D).

GETtheMANUALS.org

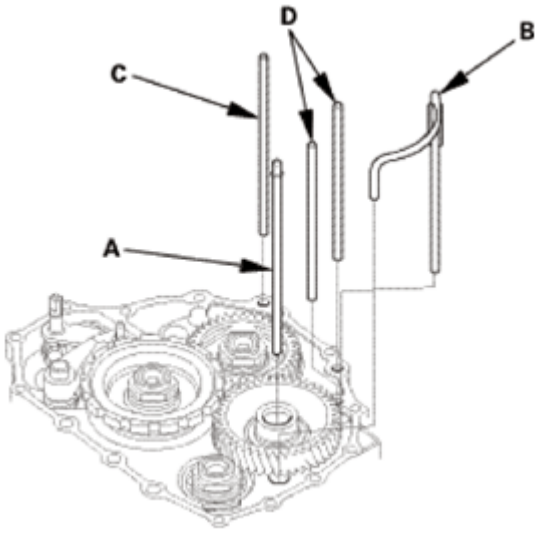

Fig. 537: Identifying ATF Feed Pipes And Lubrication Pipe
Courtesy of AMERICAN HONDA MOTOR CO., INC.

11. A/T Shift Solenoid Wire Harness - Reconnection
    1. Connect the shift solenoid valve connectors:
        - BLU wire to shift solenoid valve A.
        - ORN wire to shift solenoid valve B.
        - GRN wire to shift solenoid valve C.
        - YEL, WHT, and WHT wires to shift solenoid valve D.
        - RED wire to shift solenoid valve E.

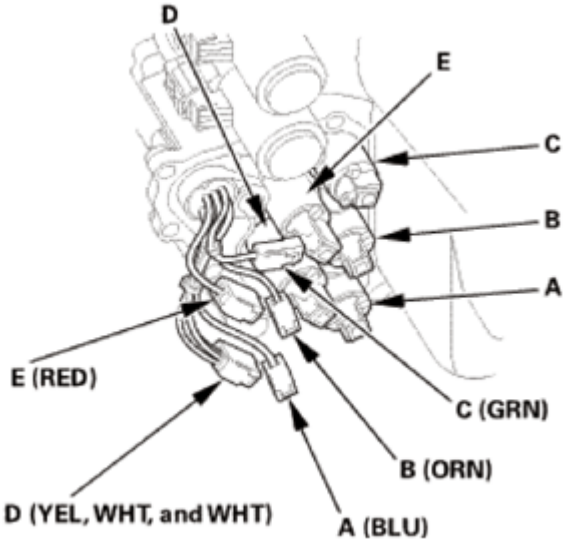

Fig. 538: Identifying Shift Solenoid Valves
Courtesy of AMERICAN HONDA MOTOR CO., INC.

GETtheMANUALS.org

12. A/T Shift Solenoid Cover
    1. Install the shift solenoid valve cover (A) with the dowel pins (B) and a new gasket (C).

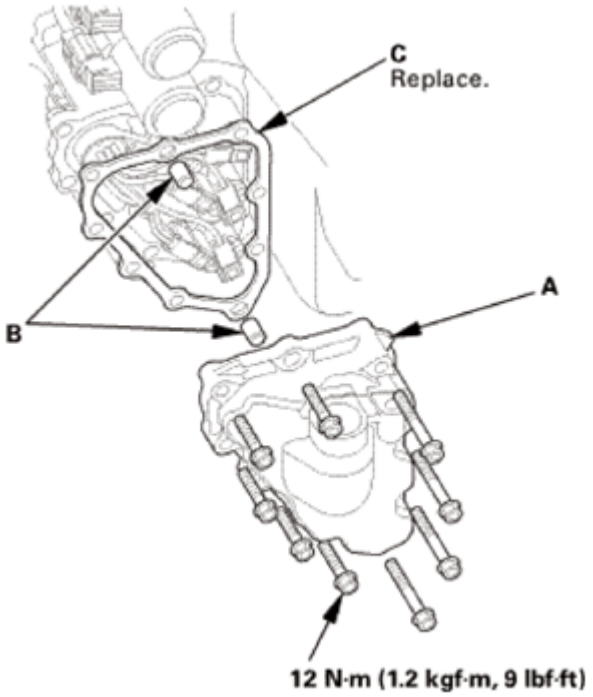

Fig. 539: Identifying Shift Solenoid Valve Cover, Dowel Pins, Gasket And Mounting Bolts With Torque Specification
Courtesy of AMERICAN HONDA MOTOR CO., INC.

13. Dipstick Guide Tube
    1. Install a new O-ring (A) on the ATF dipstick guide tube (B).
    2. Install the ATF dipstick guide tube.

GETtheMANUALS.org

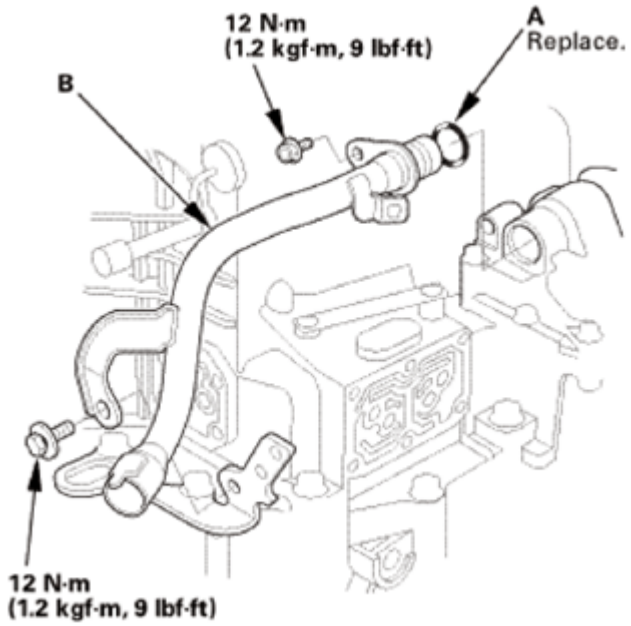

Fig. 540: Identifying ATF Dipstick Guide Tube, O-Ring And Mounting Bolts With Torque Specification
Courtesy of AMERICAN HONDA MOTOR CO., INC.

14. ATF Outlet Line
    1. Install the ATF outlet line (A) using new sealing washers (B).

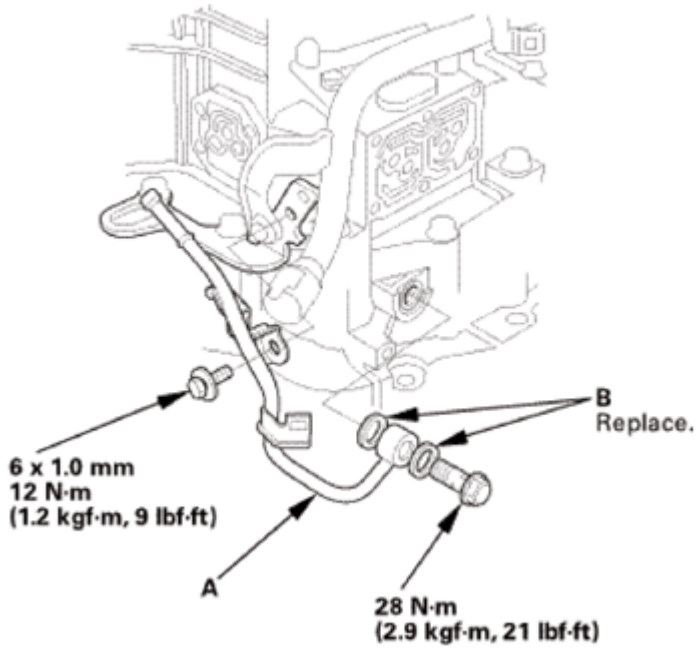

Fig. 541: Identifying ATF Outlet Line, Sealing Washers And Mounting Bolts With Torque Specification
Courtesy of AMERICAN HONDA MOTOR CO., INC.

GETtheMANUALS.org

15. ATF Inlet Line
    1. Install the ATF inlet line (A) using new sealing washers (B).

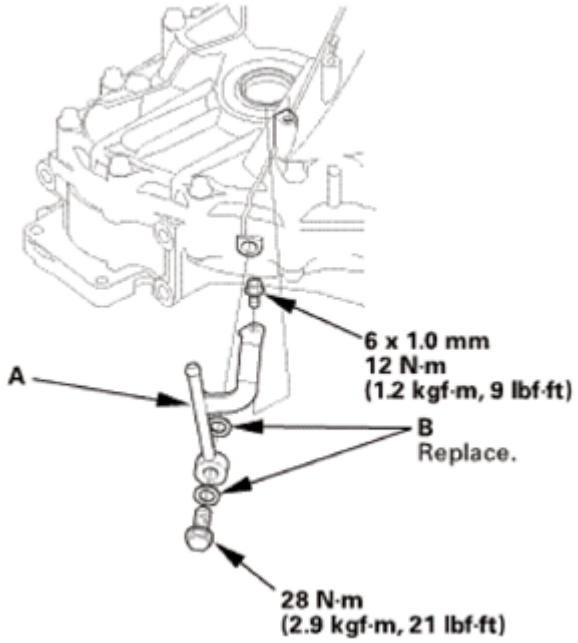

Fig. 542: Identifying ATF Inlet Line, Sealing Washers And Mounting Bolts With Torque Specification
Courtesy of AMERICAN HONDA MOTOR CO., INC.

16. A/T Clutch Pressure Control Solenoid Valve B and C
    1. Clean the mounting surfaces and the fluid passages of the solenoid valve body and the transmission housing.
    2. Install a new gasket (A) with the blue side toward the transmission housing, and Install the ATF joint pipes (D).
    3. Install new O-rings (E) over the ATF joint pipes.
    4. Install A/T clutch pressure control solenoid valves B and C with the clamp bracket (F).

GETtheMANUALS.org

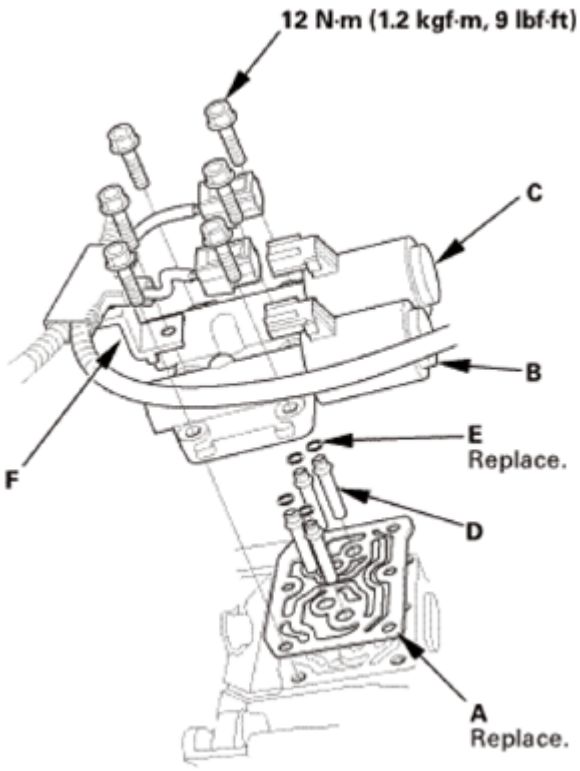

Fig. 543: Identifying Gasket, ATF Joint Pipes, O-Rings, A/T Clutch Pressure Control Solenoid Valves, Clamp Bracket And Mounting Bolts With Torque Specification
Courtesy of AMERICAN HONDA MOTOR CO., INC.

17. A/T Clutch Pressure Control Solenoid Valve A
    1. Clean the mounting surfaces and the fluid passages of the solenoid valve body and the transmission housing.
    2. Install a new gasket (B) with the blue side toward the transmission housing, and install the 35 mm ATF pipe (C) and the ATF joint pipes (D).
    3. Install new O-rings (E) over the ATF joint pipes.
    4. Install A/T clutch pressure control solenoid valve A.

GETtheMANUALS.org

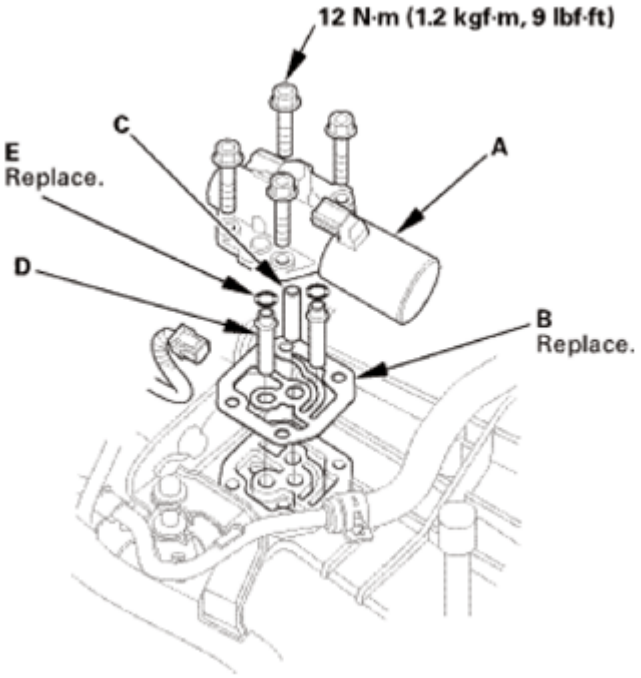

Fig. 544: Identifying A/T Clutch Pressure Control Solenoid Valve, Gasket, ATF Pipe, ATF Joint Pipes And Mounting Bolts With Torque Specification
Courtesy of AMERICAN HONDA MOTOR CO., INC.

18. Output Shaft (Countershaft) Speed Sensor
    1. Install a new O-ring (A) on the output shaft (countershaft) speed sensor (B).
    2. Install the output shaft (countershaft) speed sensor and the sensor washer (C).

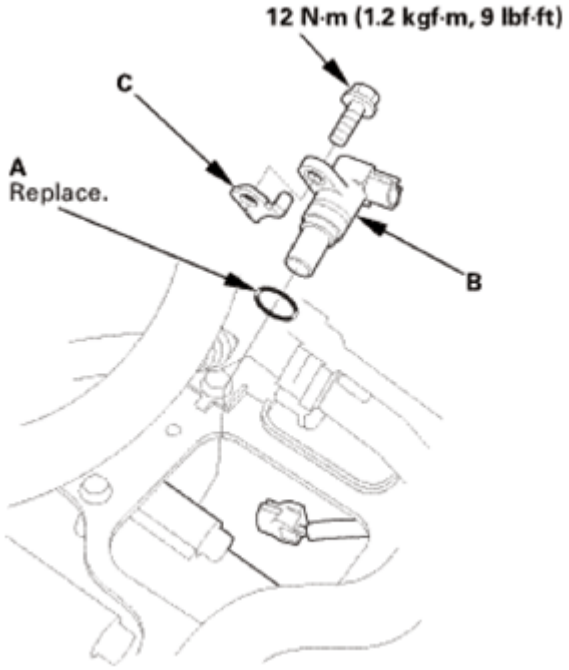

GETtheMANUALS.org

Fig. 545: Identifying Output Shaft (Countershaft) Speed Sensor, O-Ring, Sensor Washer And Mounting Bolts With Torque Specification
Courtesy of AMERICAN HONDA MOTOR CO., INC.

19. Input Shaft (Mainshaft) Speed Sensor
    1. Install a new O-ring (A) on the input shaft (mainshaft) speed sensor (B).
    2. Install the input shaft (mainshaft) speed sensor.

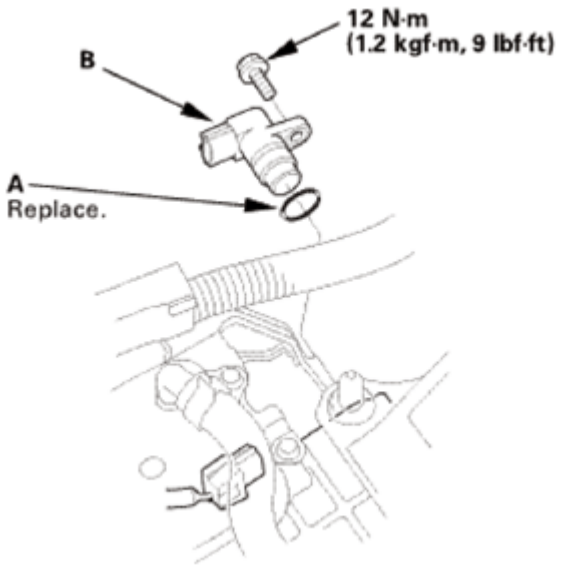

Fig. 546: Identifying Input Shaft (Mainshaft) Speed Sensor, O-Ring And Mounting Bolt With Torque Specification
Courtesy of AMERICAN HONDA MOTOR CO., INC.

20. Transmission End Cover
    1. Install the dowel pins (A) and a new gasket (B).
    2. Install new O-rings (C) over the ATF pipes.
    3. Install the end cover (D), and tighten the three special bolts (E) and the 6 x 1.0 mm bolts (F) (12 bolts).

GETtheMANUALS.org

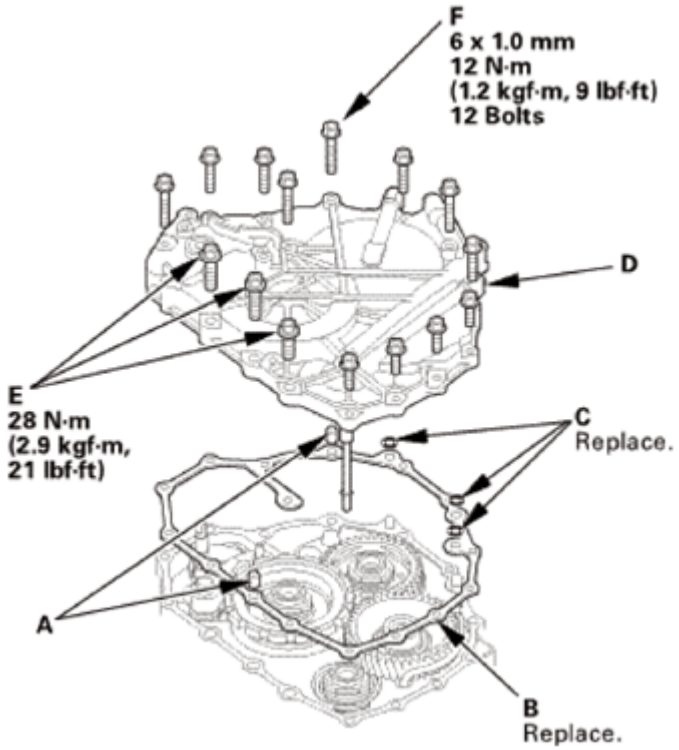

Fig. 547: Identifying Dowel Pins, Gasket, O-Rings, End Cover And Mounting Bolts With Torque Specification
Courtesy of AMERICAN HONDA MOTOR CO., INC.

21. Transmission Range Switch Subharness
    1. Install the clamp brackets (A).
    2. Install the transmission range switch subharness (B).

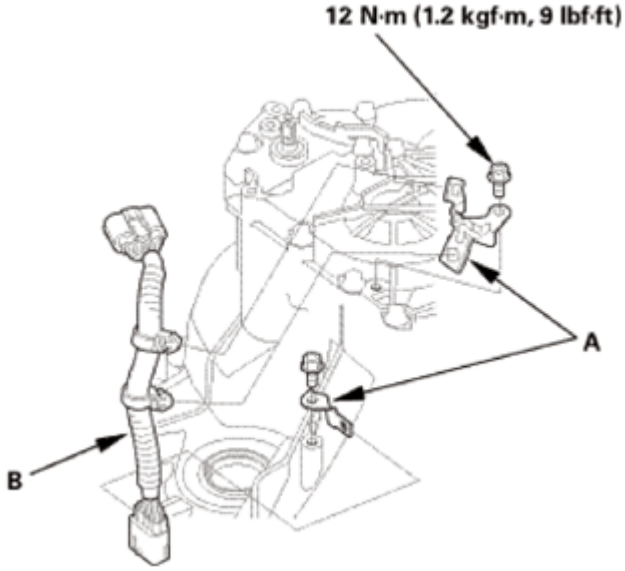

GETtheMANUALS.org

Fig. 548: Identifying Transmission Range Switch Subharness, Clamp Brackets And Mounting Bolts With Torque Specification
Courtesy of AMERICAN HONDA MOTOR CO., INC.

22. Transmission Range Switch
    1. Make sure the selector control shaft is in the N position. If necessary, move the selector control shaft to the N position.

NOTE: **Do not use the selector control shaft to adjust the shift position. If the selector control shaft tips are squeezed together it will cause a faulty signal or position due to play between the selector control shaft and switch.**

Fig. 549: Moving Selector Control Shaft To N Position
Courtesy of AMERICAN HONDA MOTOR CO., INC.

2. Align the cutouts (A) on the rotary-frame with the neutral positioning cutouts (B) on the transmission range switch (C), then put a 2.0 mm (0.079 in) feeler gauge blade (D) in the cutouts to hold the switch in the N position.

NOTE: **Be sure to use a 2.0 mm (0.079 in) blade or equivalent to hold the switch in the N position.**

GETtheMANUALS.org

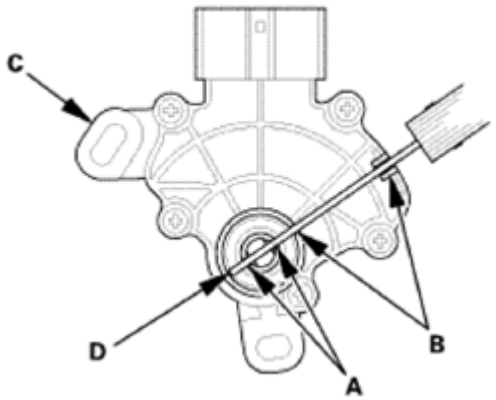

Fig. 550: Aligning Cutouts On Rotary-Frame With Neutral Positioning Cutouts On Transmission Range Switch
Courtesy of AMERICAN HONDA MOTOR CO., INC.

3. Install the transmission range switch (A) gently on the selector control shaft (B) while holding it in the N position with the 2.0 mm (0.079 in) blade (C).

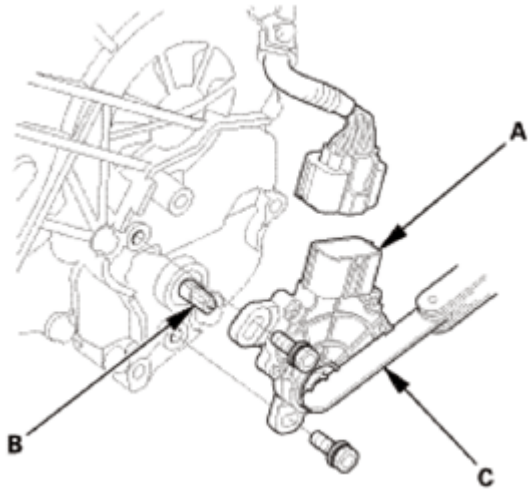

Fig. 551: Identifying Transmission Range Switch, Selector Control Shaft And Blade
Courtesy of AMERICAN HONDA MOTOR CO., INC.

4. Tighten the bolts on the transmission range switch (A) while you continue holding the N position.

NOTE: Do not move the transmission range switch when tightening the bolts.

5. Remove the feeler gauge (B).
6. Check the connector (C) for corrosion, dirt, or oil, and clean or repair if necessary, then connect the connector securely.

GETtheMANUALS.org

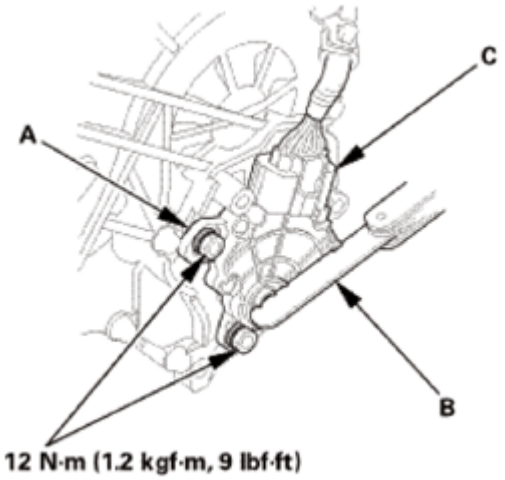

Fig. 552: Identifying Transmission Range Switch, Connector, Feeler Gauge And Mounting Bolts With Torque Specification
Courtesy of AMERICAN HONDA MOTOR CO., INC.

23. Transmission Range Switch Cover
    1. Install the transmission range switch cover (A).

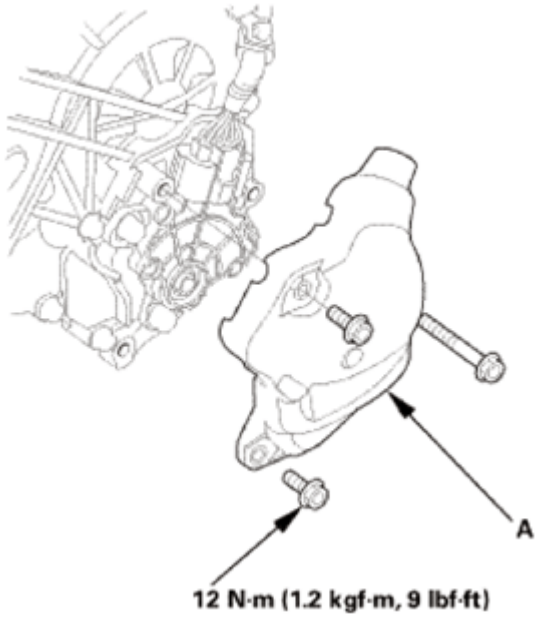

Fig. 553: Identifying Transmission Range Switch Cover And Mounting Bolts With Torque Specification
Courtesy of AMERICAN HONDA MOTOR CO., INC.

A/T DIFFERENTIAL COMPONENT LOCATION INDEX

2WD

GETtheMANUALS.org

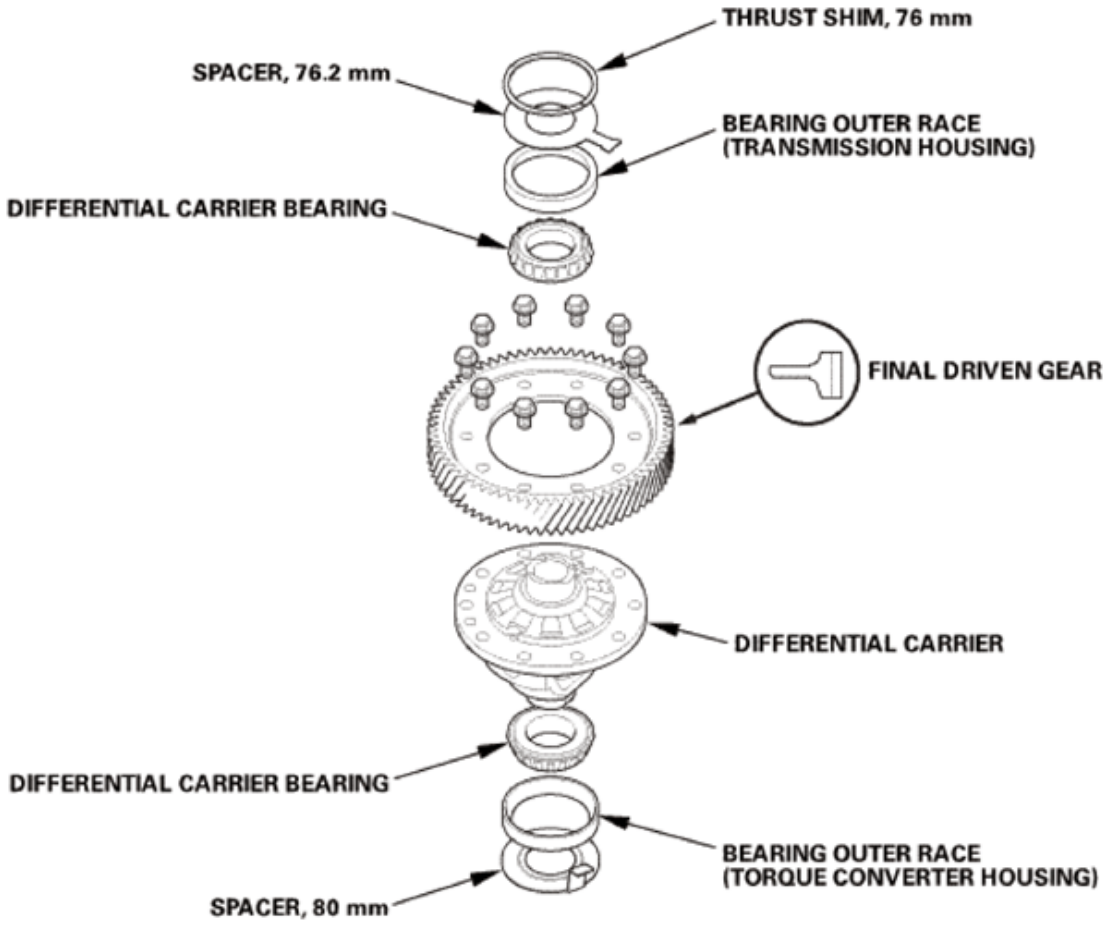

Fig. 554: Identifying A/T Differential Component Location (2WD)
Courtesy of AMERICAN HONDA MOTOR CO., INC.

A/T DIFFERENTIAL COMPONENT (2WD)

DIFFERENTIAL CARRIER	**BACKLASH INSPECTION**
	Removal and Installation See **A/T DIFFERENTIAL CARRIER AND FINAL DRIVEN GEAR REMOVAL AND INSTALLATION** or **A/T DIFFERENTIAL CARRIER, FINAL DRIVEN GEAR, AND TRANSFER DRIVE GEAR REMOVAL AND INSTALLATION**
FINAL DRIVEN GEAR	**Removal and Installation** See **A/T DIFFERENTIAL CARRIER AND FINAL DRIVEN GEAR REMOVAL AND INSTALLATION** or **A/T DIFFERENTIAL CARRIER, FINAL DRIVEN GEAR, AND TRANSFER DRIVE GEAR REMOVAL AND INSTALLATION**
DIFFERENTIAL CARRIER BEARING	**REPLACEMENT**
BEARING OUTER RACE	**REPLACEMENT**
THRUST SHIM, 76 mm	**PRELOAD INSPECTION**

GETtheMANUALS.org

AWD/4WD

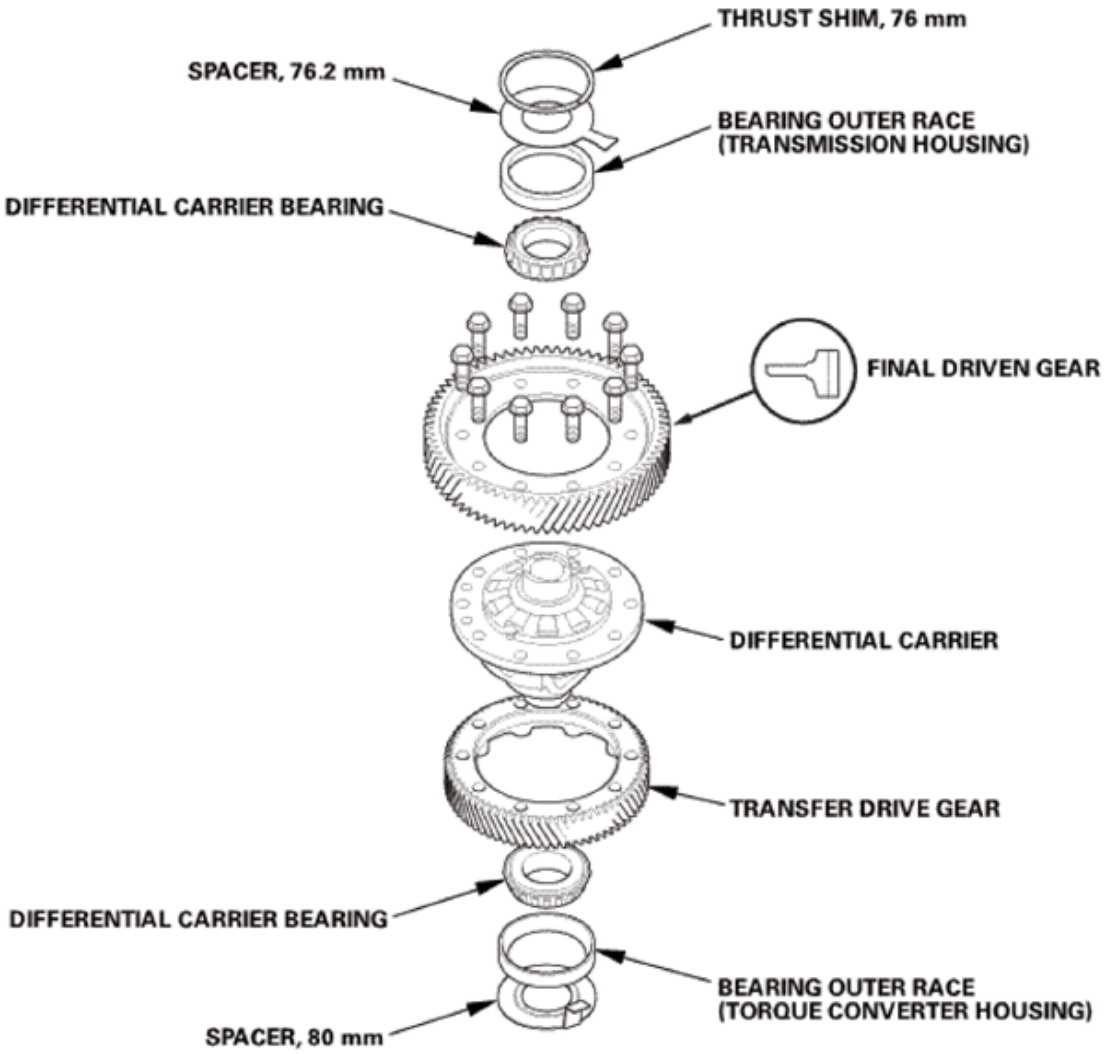

Fig. 555: Identifying A/T Differential Component Location (AWD/4WD)
Courtesy of AMERICAN HONDA MOTOR CO., INC.

A/T DIFFERENTIAL COMPONENT (AWD/4WD)

DIFFERENTIAL CARRIER	**BACKLASH INSPECTION**
	Removal and Installation See **A/T DIFFERENTIAL CARRIER AND FINAL DRIVEN GEAR REMOVAL AND INSTALLATION** or **A/T DIFFERENTIAL CARRIER, FINAL DRIVEN GEAR, AND TRANSFER DRIVE GEAR REMOVAL AND INSTALLATION**
FINAL DRIVEN GEAR	**Removal and Installation** See **A/T DIFFERENTIAL CARRIER AND FINAL DRIVEN GEAR REMOVAL AND INSTALLATION** or **A/T DIFFERENTIAL CARRIER, FINAL DRIVEN GEAR, AND TRANSFER DRIVE GEAR REMOVAL AND INSTALLATION**
TRANSFER DRIVE	**Removal and Installation** See **A/T DIFFERENTIAL CARRIER AND FINAL DRIVEN GEAR REMOVAL AND INSTALLATION** or **A/T**

GETtheMANUALS.org

GEAR	**DIFFERENTIAL CARRIER, FINAL DRIVEN GEAR, AND TRANSFER DRIVE GEAR REMOVAL AND INSTALLATION**
DIFFERENTIAL CARRIER BEARING	**REPLACEMENT**
BEARING OUTER RACE	**REPLACEMENT**
THRUST SHIM, 76 mm	**PRELOAD INSPECTION**

A/T HOUSING COUNTERSHAFT BEARING REPLACEMENT

SPECIAL TOOL REQUIRED

Image	Description/Tool Number
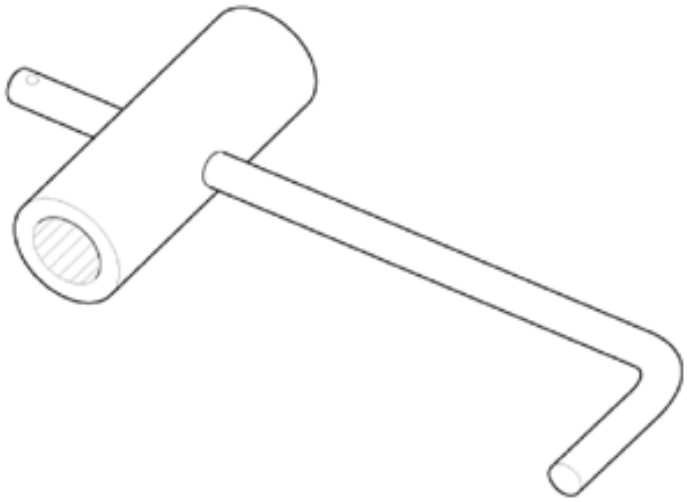	Mainshaft Holder 07GAB-PF50101
	Housing Puller 07HAC-PK40102

GETtheMANUALS.org

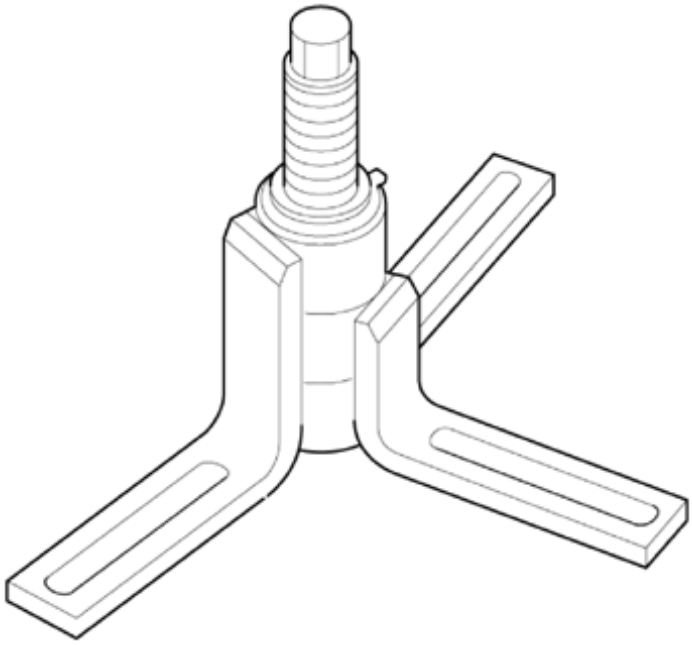	
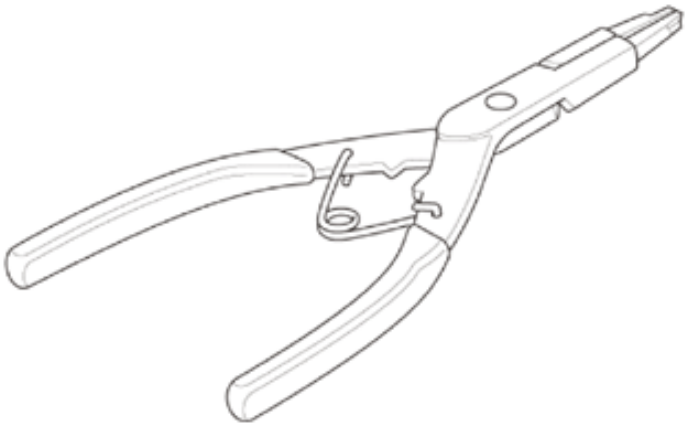	Snap Ring Pliers 07LGC-0010100
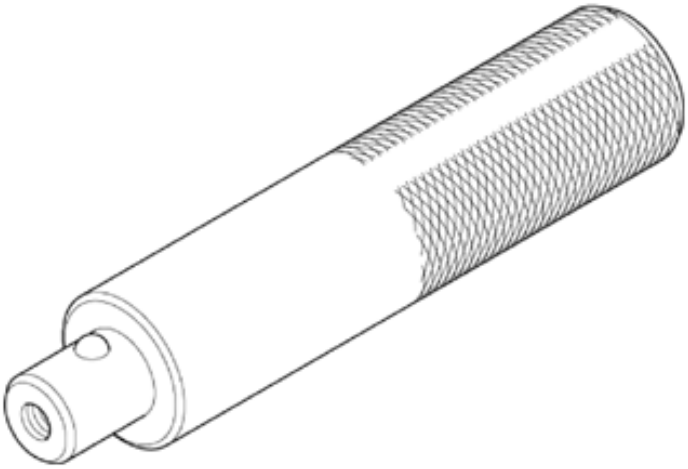	Driver Handle, 15 x 135L 07749-0010000

GETtheMANUALS.org

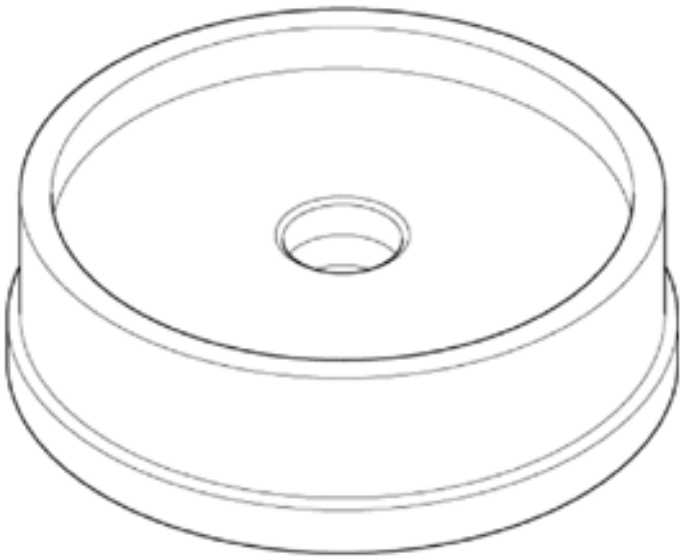	Bearing Driver Attachment, 78 x 80 mm 07NAD-PX40100

REMOVAL

NOTE: The illustration shows AWD/4WD transmission.

1. Transmission Range Switch Cover
    1. Remove the transmission range switch cover (A).

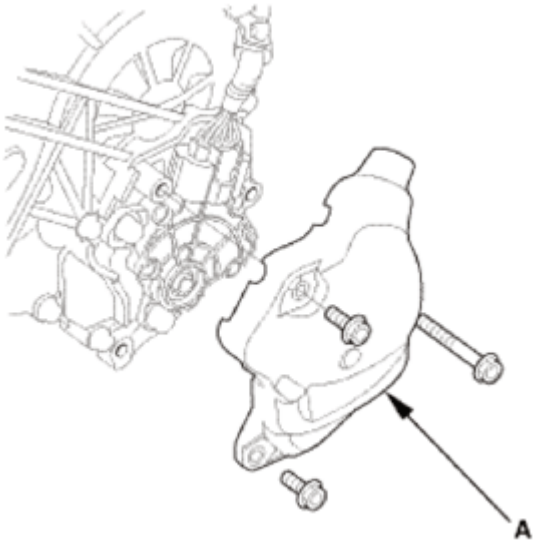

Fig. 556: Identifying Transmission Range Switch Cover With Bolts
Courtesy of AMERICAN HONDA MOTOR CO., INC.

2. Transmission Range Switch
    1. Remove the transmission range switch (A).

GETtheMANUALS.org

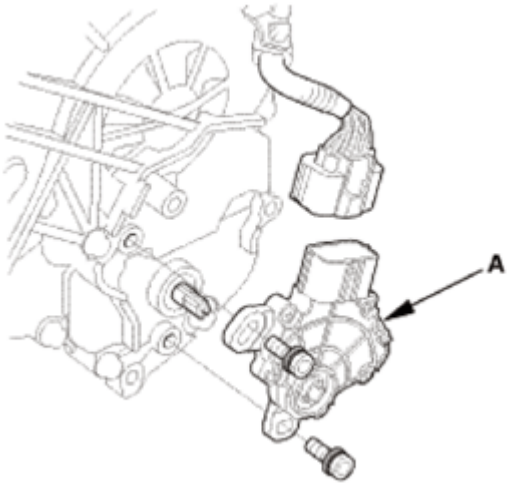

Fig. 557: Identifying Transmission Range Switch With Bolts
Courtesy of AMERICAN HONDA MOTOR CO., INC.

3. Transmission Range Switch Subharness
    1. Remove the transmission range switch subharness (A).
    2. Remove the clamp brackets (B).

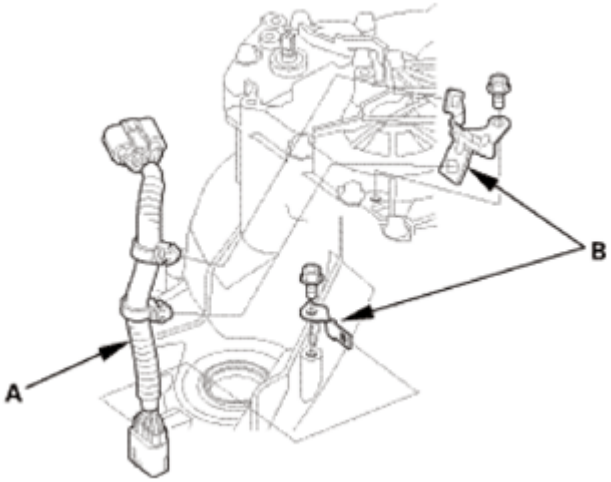

Fig. 558: Identifying Transmission Range Switch Subharness And Clamp Brackets
Courtesy of AMERICAN HONDA MOTOR CO., INC.

4. Transmission End Cover
    1. Remove the end cover (A), the dowel pins (B), the O-rings (C), and the gasket (D).

GETtheMANUALS.org

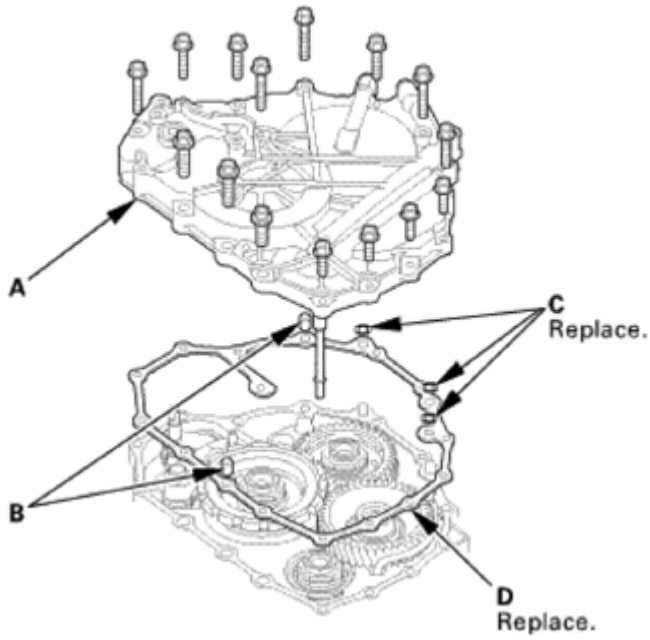

Fig. 559: Identifying Transmission End Cover, Dowel Pins, O-Rings And Gasket With Bolts
Courtesy of AMERICAN HONDA MOTOR CO., INC.

5. Input Shaft (Mainshaft) Speed Sensor
    1. Remove the input shaft (mainshaft) speed sensor (A).
    2. Remove the O-ring (B) from the input shaft (mainshaft) speed sensor.

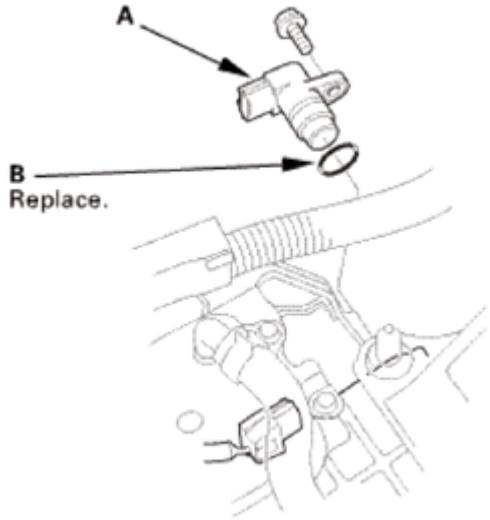

Fig. 560: Identifying Input Shaft (Mainshaft) Speed Sensor And O-Ring
Courtesy of AMERICAN HONDA MOTOR CO., INC.

6. Output Shaft (Countershaft) Speed Sensor
    1. Remove the output shaft (countershaft) speed sensor (A) and the sensor washer (B).

GETtheMANUALS.org

2. Remove the O-ring (C) from the output shaft (countershaft) speed sensor.

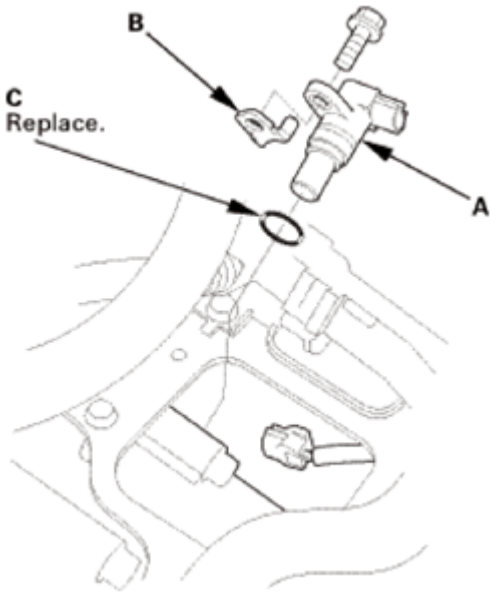

Fig. 561: Identifying Output Shaft (Countershaft) Speed Sensor, Sensor Washer And O-Ring
Courtesy of AMERICAN HONDA MOTOR CO., INC.

7. A/T Clutch Pressure Control Solenoid Valve A
    1. Remove A/T clutch pressure control solenoid valve A.
    2. Remove the 35 mm ATF pipe (B), the ATF joint pipes (C), the O-rings (D), and the gasket (E).

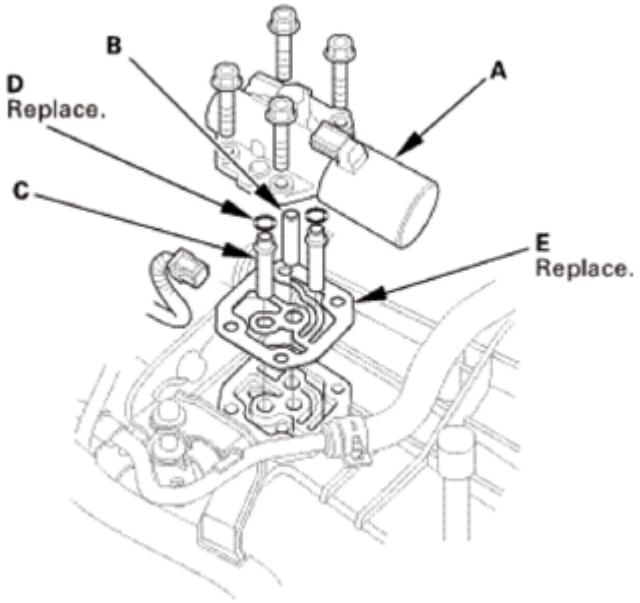

Fig. 562: Identifying A/T Clutch Pressure Control Solenoid Valve, ATF Pipe, ATF Joint Pipes, O-Rings And Gasket With Bolts
Courtesy of AMERICAN HONDA MOTOR CO., INC.

GETtheMANUALS.org

8. A/T Clutch Pressure Control Solenoid Valve B and C
    1. Remove the clamp bracket (A) and A/T clutch pressure control solenoid valves B and C.
    2. Remove the ATF joint pipes (D), the O-rings (E), and the gasket (F).

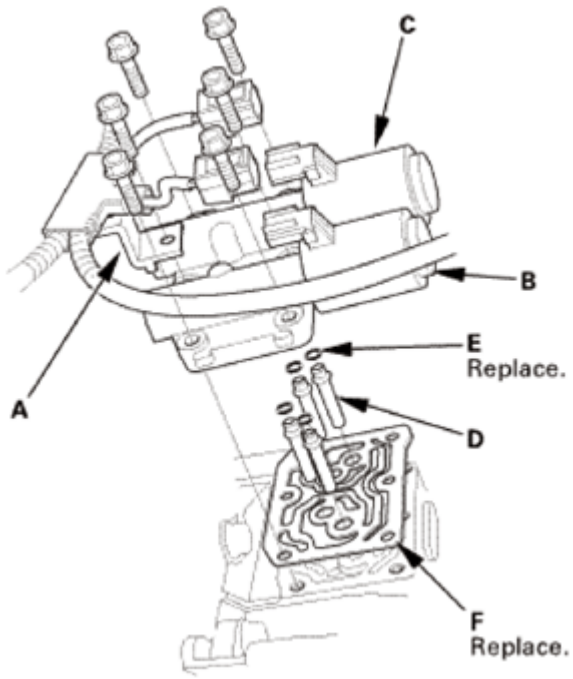

Fig. 563: Identifying A/T Clutch Pressure Control Solenoid Valves, Clamp Bracket, ATF Joint Pipes, O-Rings And Gasket
Courtesy of AMERICAN HONDA MOTOR CO., INC.

9. ATF Inlet Line
    1. Remove the banjo bolt (A) and the sealing washers (B).
    2. Remove the ATF inlet line (C).

GETtheMANUALS.org

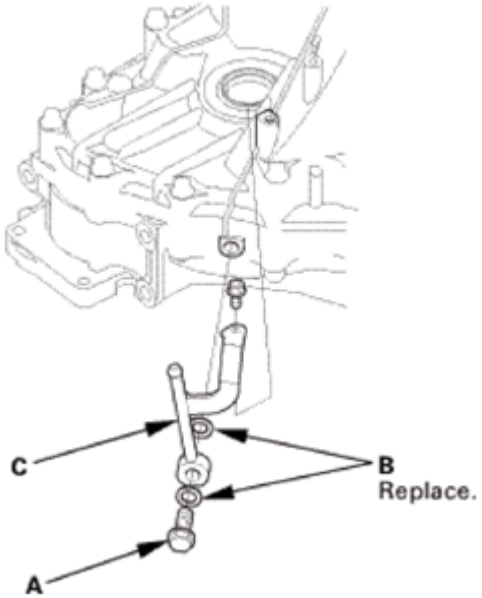

Fig. 564: Identifying ATF Inlet Line, Banjo Bolt And Sealing Washers
Courtesy of AMERICAN HONDA MOTOR CO., INC.

10. ATF Outlet Line
    1. Remove the banjo bolt (A) and the sealing washers (B).
    2. Remove the ATF outlet line (C).

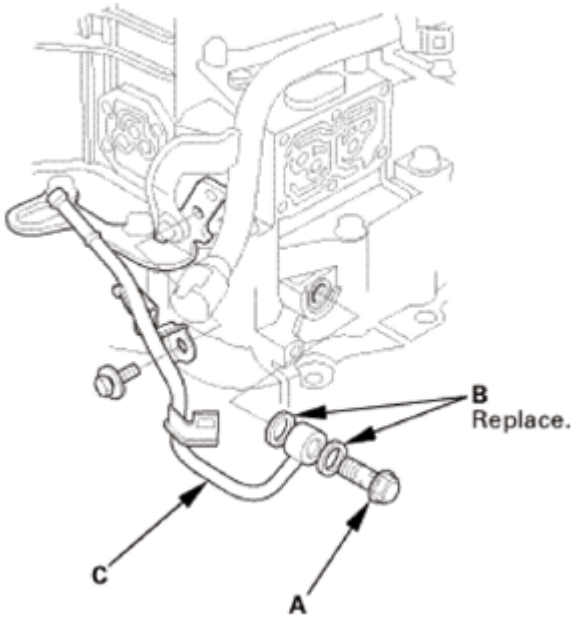

Fig. 565: Identifying ATF Outlet Line, Banjo Bolt And Sealing Washers
Courtesy of AMERICAN HONDA MOTOR CO., INC.

11. Dipstick Guide Tube

GETtheMANUALS.org

1. Remove the ATF dipstick guide tube (A).
2. Remove the O-ring (B) from the ATF dipstick guide tube.

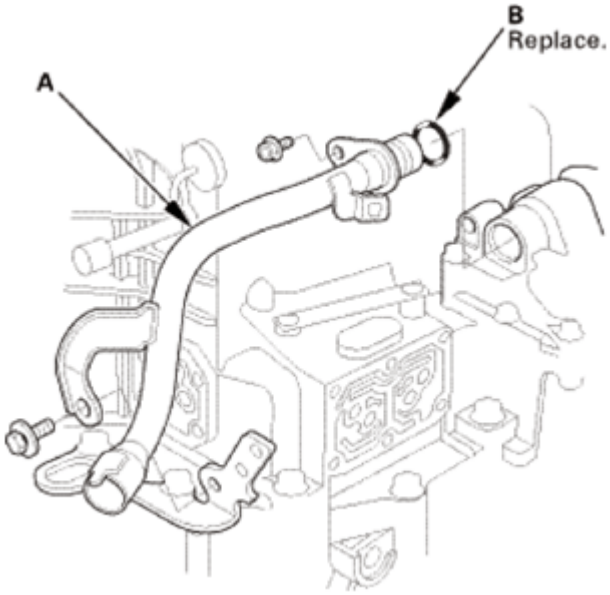

Fig. 566: Identifying ATF Dipstick Guide Tube And O-Ring
Courtesy of AMERICAN HONDA MOTOR CO., INC.

12. A/T Shift Solenoid Cover
    1. Remove the shift solenoid valve cover (A), the dowel pins (B), and the gasket (C).

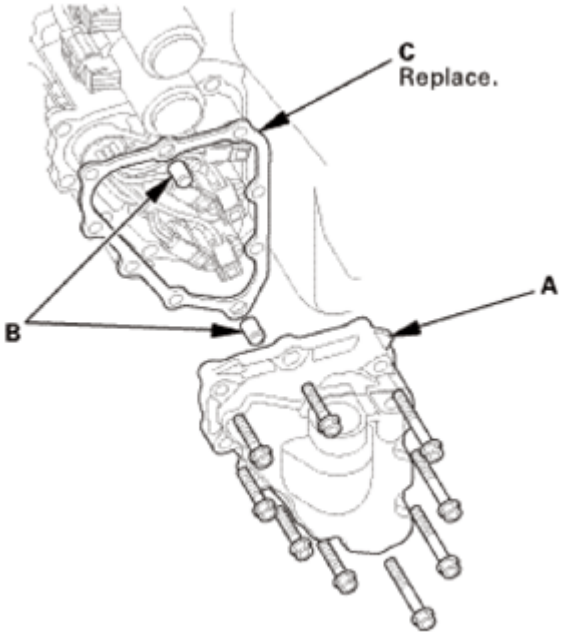

Fig. 567: Identifying Shift Solenoid Valve Cover, Dowel Pins And Gasket
Courtesy of AMERICAN HONDA MOTOR CO., INC.

GETtheMANUALS.org

13. A/T Shift Solenoid Wire Harness - Disconnection
    1. Disconnect the connectors.

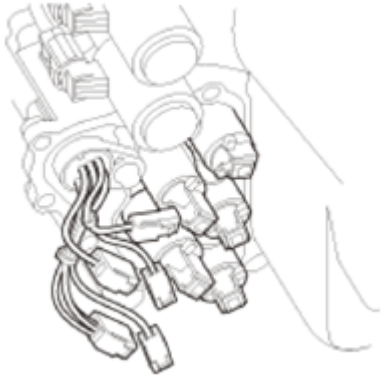

Fig. 568: Identifying A/T Shift Solenoid Wire Harness Connectors
Courtesy of AMERICAN HONDA MOTOR CO., INC.

14. ATF Feed Pipe/Lubrication Pipe
    1. Remove the 6 x 201 mm ATF pipe (A).
    2. Remove the ATF lubrication pipe (B).
    3. Remove the 8 x 220 mm ATF pipe (C).
    4. Remove the 8 x 198 mm ATF pipes (D).

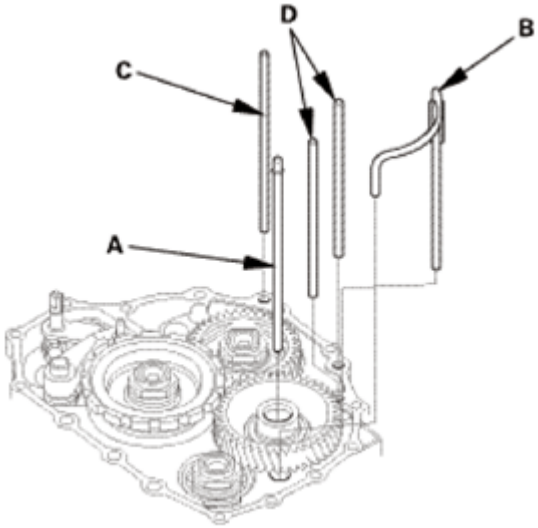

Fig. 569: Identifying ATF Feed Pipes And Lubrication Pipe
Courtesy of AMERICAN HONDA MOTOR CO., INC.

15. End Cover Idler Gear Assembly
    1. Install the mainshaft holder onto the mainshaft.
    2. Engage the park pawl with the park gear.

GETtheMANUALS.org

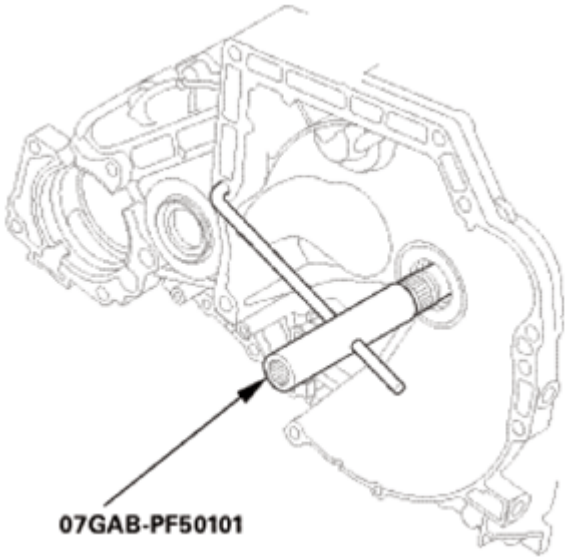

Fig. 570: Installing Mainshaft Holder Onto Mainshaft
Courtesy of AMERICAN HONDA MOTOR CO., INC.

3. Using a chisel, cut the lock tab (A) of the locknut (B).

NOTE: **Keep all of the chiseled particles out of the transmission.**

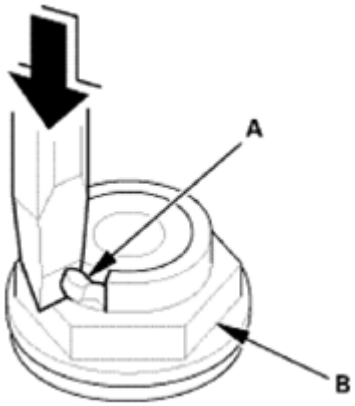

Fig. 571: Cutting Lock Tab Of Locknut Using Chisel
Courtesy of AMERICAN HONDA MOTOR CO., INC.

4. Remove the locknuts (A) and the conical spring washers (B) from each shaft.

NOTE:

- **The countershaft and secondary shaft locknuts have left-hand threads.**
- **Keep all of the chiseled particles out of the transmission.**
- **Clean the old locknuts; they are used to install the press fit idler gears and park gear.**

GETtheMANUALS.org

5. Remove the mainshaft holder.

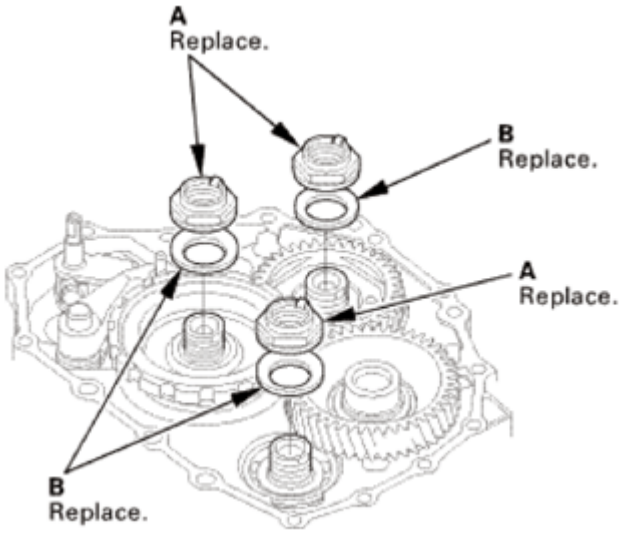

Fig. 572: Identifying Locknuts And Conical Spring Washers
Courtesy of AMERICAN HONDA MOTOR CO., INC.

6. Remove the park pawl (A), the park pawl spring (B), the park pawl shaft (C), and the stop shaft (D).
7. Pry down the lock tab (E) of the lock washer (F).
8. Remove the lock bolt (G) and the lock washer.
9. Remove the park lever (H), the park lever stop (I), and the park lever spring (J).

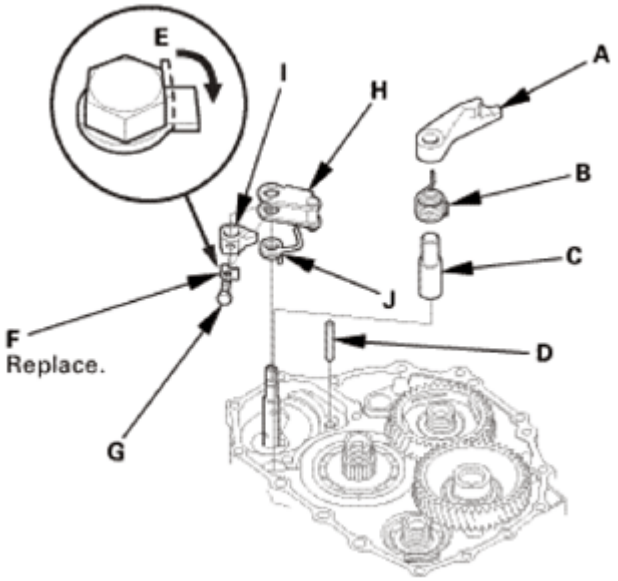

Fig. 573: Prying Down Lock Tab Of Lock Washer
Courtesy of AMERICAN HONDA MOTOR CO., INC.

GETtheMANUALS.org

10. Place a spacer (A) on the countershaft (B).
11. Set a commercially available bearing puller (C) on the park gear (D).
12. Remove the park gear.

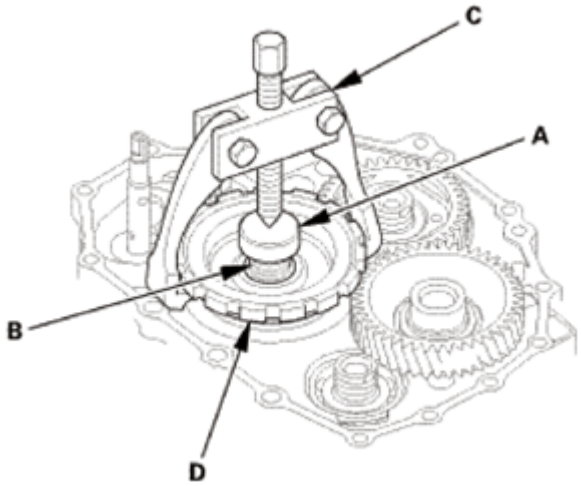

Fig. 574: Setting Commercially Available Bearing Puller On Park Gear
Courtesy of AMERICAN HONDA MOTOR CO., INC.

13. Install a puller (A) with two 6 x 1.0 mm bolts (B) on the mainshaft idler gear (C).
14. Set a spacer (D) between the puller and the mainshaft (E).
15. Remove the mainshaft idler gear.

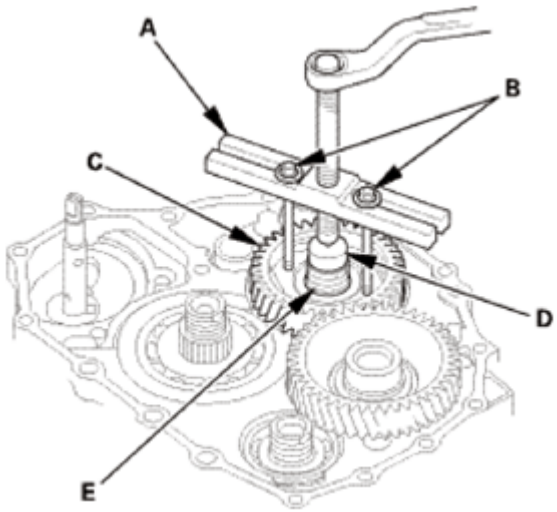

Fig. 575: Installing Puller With 6 X 1.0 mm Bolts On Mainshaft Idler Gear
Courtesy of AMERICAN HONDA MOTOR CO., INC.

16. Automatic Transmission Housing
    1. Align the spring pin (A) on the selector control shaft (B) with the transmission housing groove (C).

GETtheMANUALS.org

NOTE: **Do not squeeze the end of the selector control shaft tips together when turning the control shaft. If the tips are squeezed together, it will cause a faulty shift position signal or position due to the play between the selector control shaft and the transmission range switch.**

2. Remove the transmission housing mounting bolts (D) (2WD: 19 bolts, AWD/4WD: 20 bolts).

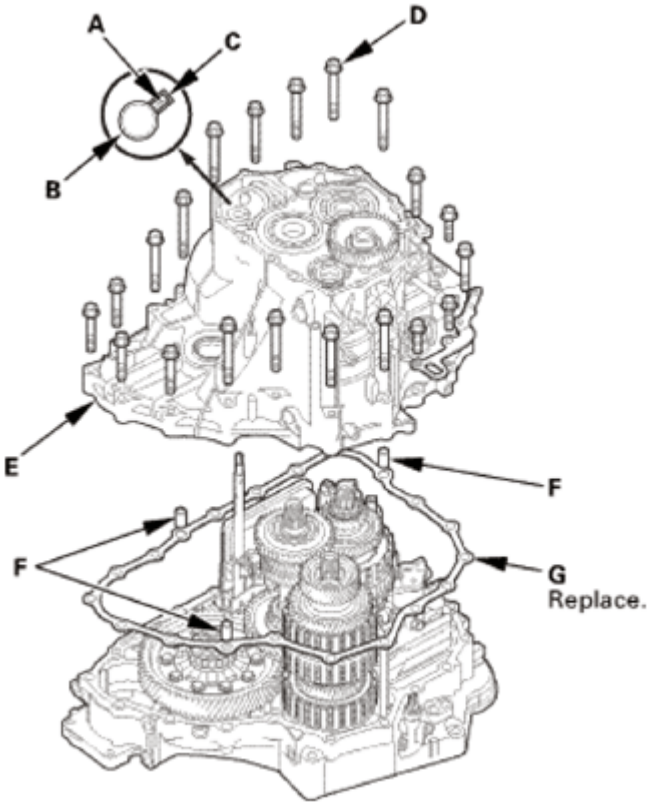

Fig. 576: Identifying Spring Pin, Selector Control Shaft, Transmission Housing Groove, Transmission Housing, Mounting Bolts And Gasket
Courtesy of AMERICAN HONDA MOTOR CO., INC.

3. Install the housing puller over the mainshaft.
4. Remove the transmission housing (E) using the housing puller.
5. Remove the dowel pins (F) and the gasket (G).

GETtheMANUALS.org

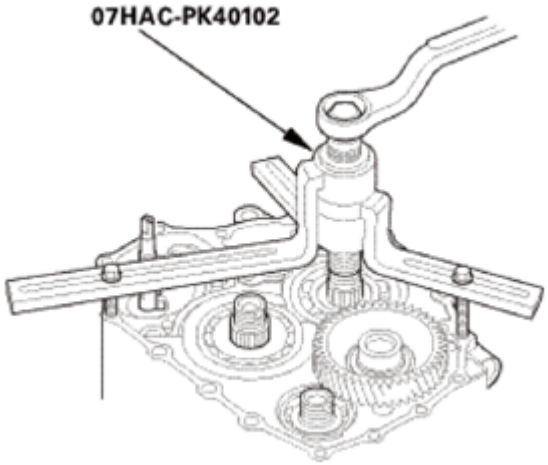

Fig. 577: Installing Housing Puller Over Mainshaft
Courtesy of AMERICAN HONDA MOTOR CO., INC.

17. Transmission Housing Countershaft Bearing
    1. Expand the snap ring using the snap ring pliers.
    2. Drive the countershaft bearing (A) out using the driver handle and the 78 x 80 mm bearing driver attachment.

NOTE: **Do not remove the snap ring unless it is necessary to clean the groove in the transmission housing.**

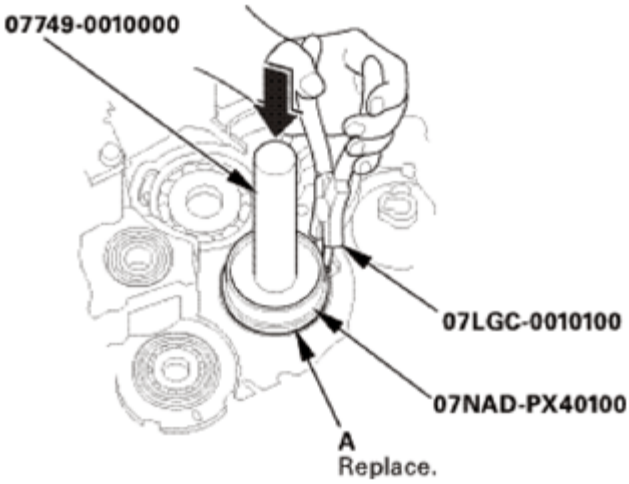

Fig. 578: Expanding Snap Ring Using Snap Ring Pliers
Courtesy of AMERICAN HONDA MOTOR CO., INC.

INSTALLATION

NOTE:
- **Apply a light coat of clean ATF on all moving parts before installation.**

GETtheMANUALS.org

- **The illustration shows AWD/4WD transmission.**

1. Transmission Housing Countershaft Bearing
    1. Expand the snap ring using the snap ring pliers.
    2. Install a new countershaft bearing (A) part-way into the housing using the driver handle and the 78 x 80 mm bearing driver attachment.
    3. Release the snap ring pliers, then push the bearing down into the transmission housing until the snap ring snaps in place around it.

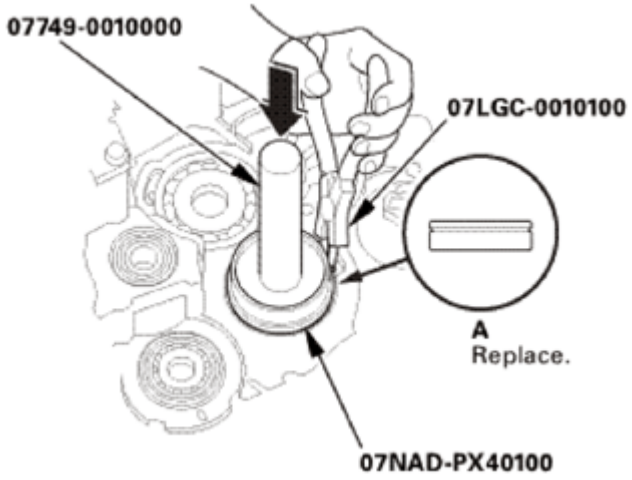

Fig. 579: Installing Countershaft Bearing Part-Way Into Housing Using Driver Handle And Bearing Driver Attachment
Courtesy of AMERICAN HONDA MOTOR CO., INC.

4. After installing the bearing check that the snap ring (A) is seated in the bearing and the transmission housing groove, and that the snap ring end gap (B) is correct.

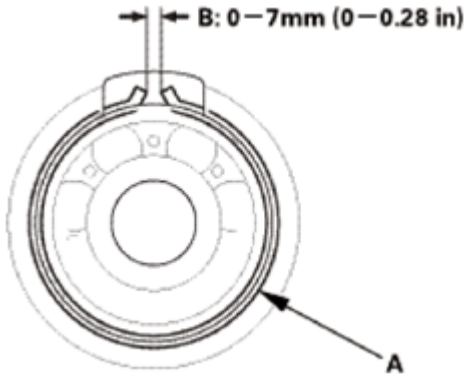

Fig. 580: Checking Snap Ring End Gap
Courtesy of AMERICAN HONDA MOTOR CO., INC.

2. Automatic Transmission Housing

GETtheMANUALS.org

1. Install the three dowel pins (A) and a new gasket (B).
2. Align the spring pin (C) of the selector control shaft (D) with the transmission housing groove (E).

NOTE: **Do not squeeze the end of the selector control shaft tips together when turning the shaft. If the tips are squeezed together, it will cause a faulty shift position signal or position due to the play between the selector control shaft and the transmission range switch.**

3. Place the transmission housing (F) on the torque converter housing (G).

NOTE: **Do not install the input shaft (mainshaft) speed sensor and the output shaft (countershaft) speed sensor before installing the transmission housing.**

4. Wrap the tip of a screwdriver with tape so the reverse idler gear teeth do not get damaged. Engage the reverse idler gear (H) with the reverse gears (I) by rotating the idler gear using the screwdriver.
5. Make sure the transmission housing is securely seated so there is no clearance between the transmission housing and the torque converter housing.
6. Install the transmission hanger (J), and tighten the transmission housing mounting bolts (2WD: 19 bolts, AWD/4WD: 20 bolts) in at least two steps, in a crisscross pattern.

GETtheMANUALS.org

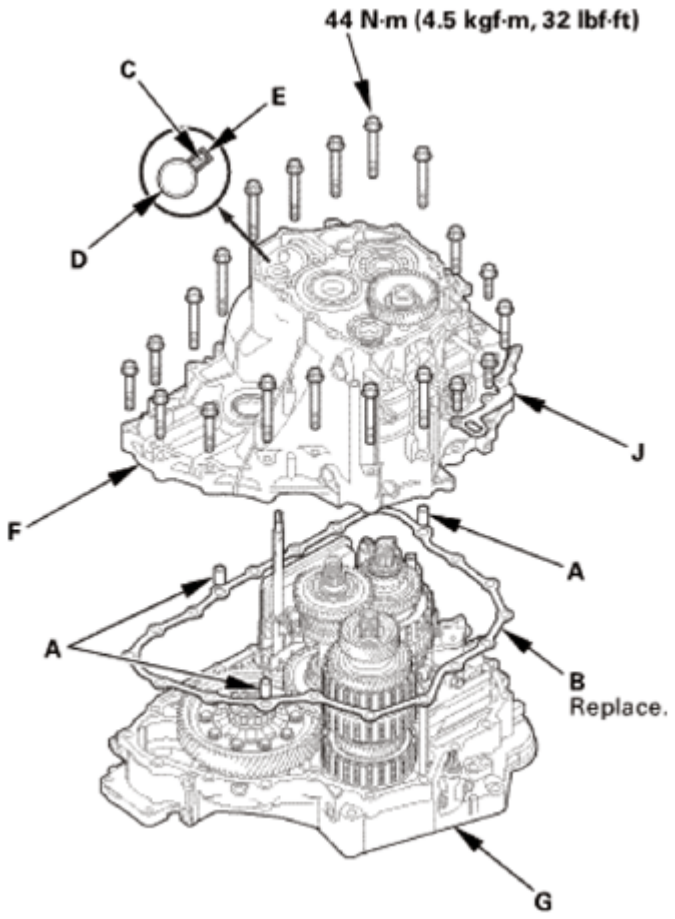

Fig. 581: Identifying Dowel Pins, Gasket, Spring Pin, Selector Control Shaft, Transmission Housing Groove And Mounting Bolts With Torque Specification
Courtesy of AMERICAN HONDA MOTOR CO., INC.

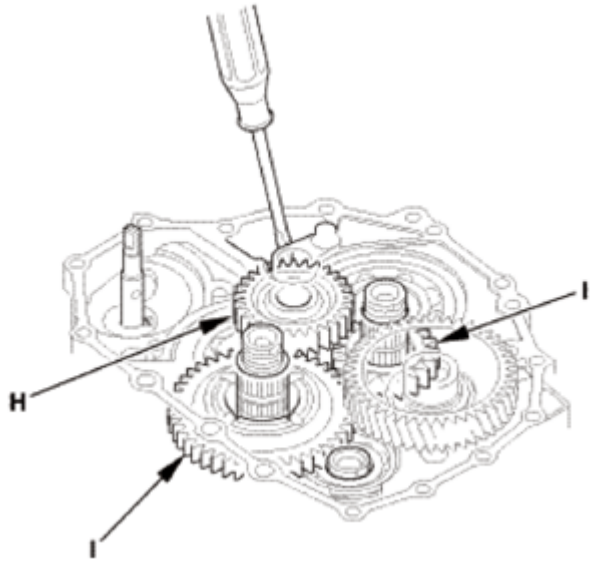

Fig. 582: Engaging Reverse Idler Gear With Reverse Gears By Rotating Idler Gear Using

GETtheMANUALS.org

Screwdriver
Courtesy of AMERICAN HONDA MOTOR CO., INC.

3. End Cover Idler Gear Assembly
    1. Install the mainshaft holder onto the mainshaft.

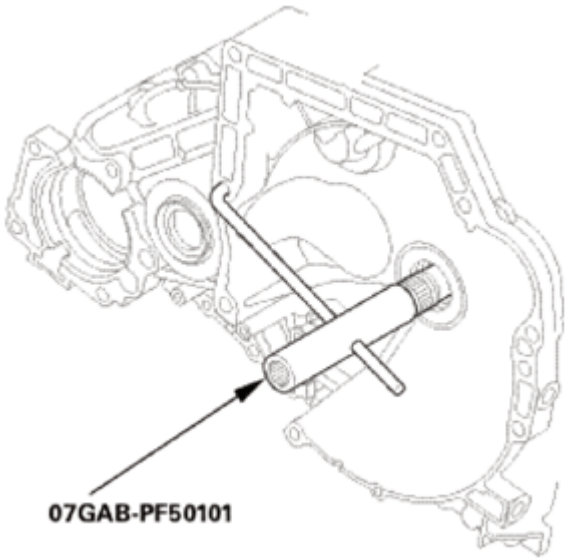

Fig. 583: Installing Mainshaft Holder Onto Mainshaft
Courtesy of AMERICAN HONDA MOTOR CO., INC.

    2. Lubricate the following parts with ATF:
        - Splines and threads of the mainshaft.
        - Splines of the mainshaft idler gear.
        - The old conical spring washer and the old locknut.
    3. Install the mainshaft idler gear (A), the old conical spring washer (B), and the old locknut (C), and tighten the locknut to 225 N.m (23.0 kgf.m, 166 lbf.ft).

NOTE:
- **Do not tap the mainshaft idler gear to install.**
- **Use a torque wrench to tighten the locknut. Do not use an impact wrench.**

GETtheMANUALS.org

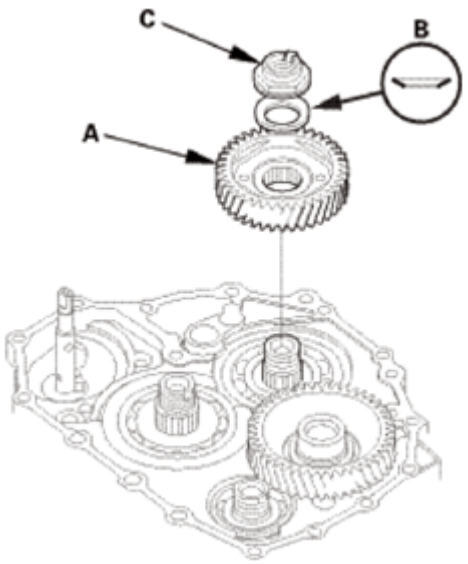

Fig. 584: Identifying Mainshaft Idler Gear, Conical Spring Washer And Locknut
Courtesy of AMERICAN HONDA MOTOR CO., INC.

4. Lubricate the following parts with ATF:
    - Splines and threads of the countershaft.
    - Splines of the park gear.
    - The old conical spring washer and the old locknut.
5. Install the park gear (A), the old conical spring washer (B), and the old locknut (C).
6. Install the park lever spring (D), the park lever (E), and the park lever stop (F).
7. Install the lock bolt (G) using a new lock washer (H).

NOTE: **Do not bend the lock tab of the lock washer until inspect the park lever stop.**

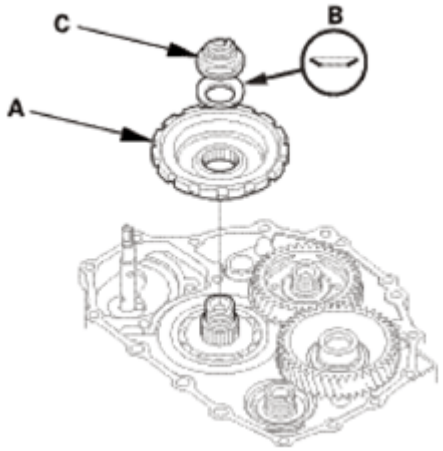

Fig. 585: Identifying Park Gear, Conical Spring Washer And Locknut
Courtesy of AMERICAN HONDA MOTOR CO., INC.

GETtheMANUALS.org

8. Install the park pawl shaft (I), the park pawl spring (J), the park pawl (K), and the stop shaft (L).
9. Lift the park pawl up, and engage it with the park gear, and tighten the locknut to 225 N.m (23.0 kgf.m, 166 lbf.ft).

NOTE:

- **Do not tap the park gear to install.**
- **Use a torque wrench to tighten the locknut. Do not use an impact wrench.**
- **Countershaft locknut has left-hand threads.**

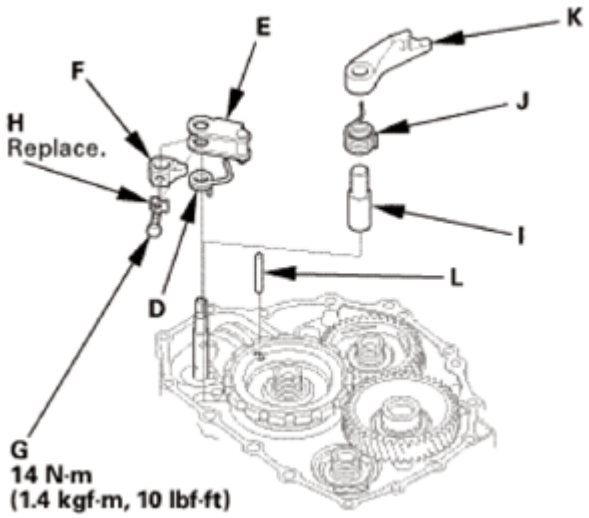

Fig. 586: Identifying Park Pawl Shaft, Park Lever Spring, Park Lever, Park Lever Stop, Lock Bolt, Lock Washer With Torque Specification
Courtesy of AMERICAN HONDA MOTOR CO., INC.

10. Remove the old locknuts and the old conical spring washers from the mainshaft and the countershaft.
11. Lubricate the following parts with ATF:
    - Splines and threads of the mainshaft, the countershaft, and the secondary shaft.
    - New conical spring washers and new locknuts.
    - Areas where the conical spring washers contact the mainshaft idler gear and the park gear.

GETtheMANUALS.org

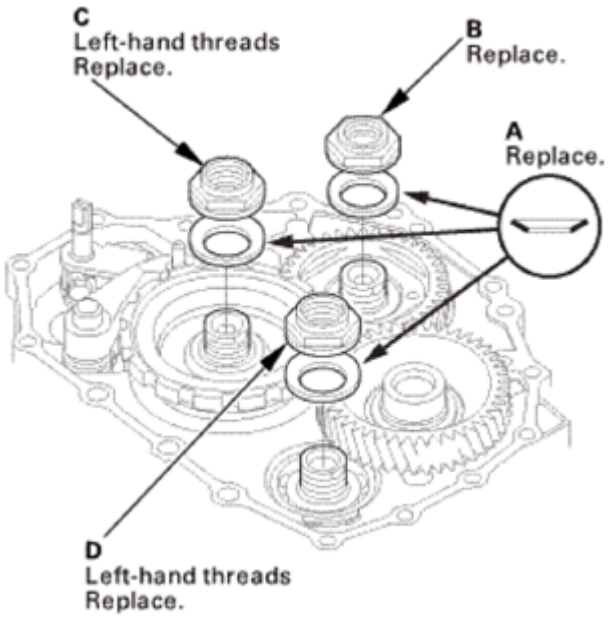

Fig. 587: Identifying Conical Spring Washers, Mainshaft Locknut, Countershaft Locknut And Secondary Shaft Locknut
Courtesy of AMERICAN HONDA MOTOR CO., INC.

12. Install new conical spring washers (A) in the direction shown.
13. Install a new mainshaft locknut (B), a new countershaft locknut (C), and a new secondary shaft locknut (D).
14. Tighten the locknuts to 167 N.m (17.0 kgf.m, 123 lbf.ft).

NOTE:

- **Use a torque wrench to tighten the locknut. Do not use an impact wrench.**
- **The countershaft and secondary shaft locknuts have left-hand threads.**

15. Remove the mainshaft holder.
16. Stake the locknuts into the shafts to a depth (A) of 0.7-1.3 mm (0.027-0.051 in) using a 3.5 mm punch (B).

GETtheMANUALS.org

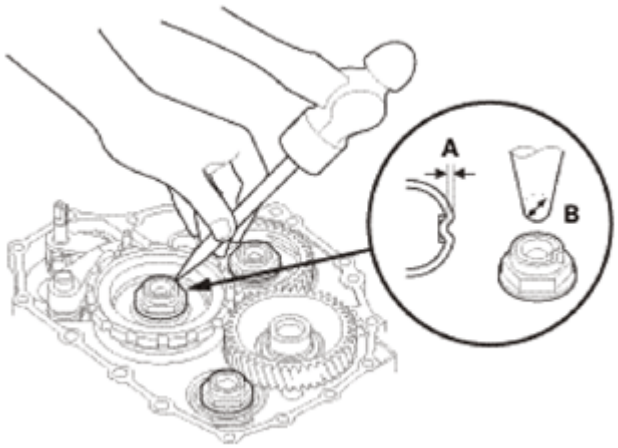

Fig. 588: Staking Locknuts Into Shafts Using Punch
Courtesy of AMERICAN HONDA MOTOR CO., INC.

17. Set the park lever in the P position.
18. Measure the distance (A) between the center of the park pawl shaft (B) and the center of the park lever roller pin (C) as shown.

    Standard: 57.7-58.7 mm (2.272-2.311 in)

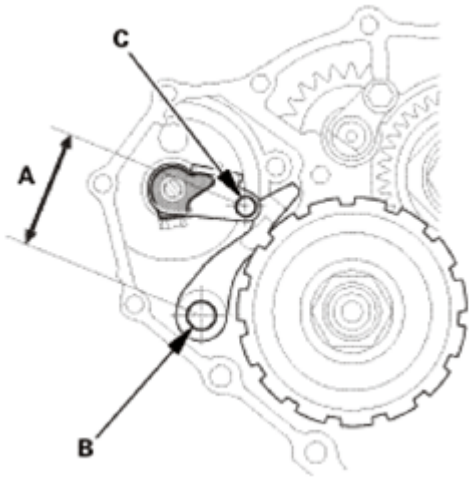

Fig. 589: Measuring Distance Between Center Of Park Pawl Shaft And Center Of Park Lever Roller Pin
Courtesy of AMERICAN HONDA MOTOR CO., INC.

19. If the measurement is out of the standard, select and install the appropriate park lever stop (A) from the table.

PARK LEVER STOP SPECIFICATION

Mark	B	C
1	11.00 mm (0.4331 in)	11.00 mm (0.4331 in)

GETtheMANUALS.org

2	10.80 mm (0.4252 in)	10.65 mm (0.4193 in)
3	10.60 mm (0.4173 in)	10.30 mm (0.4055 in)

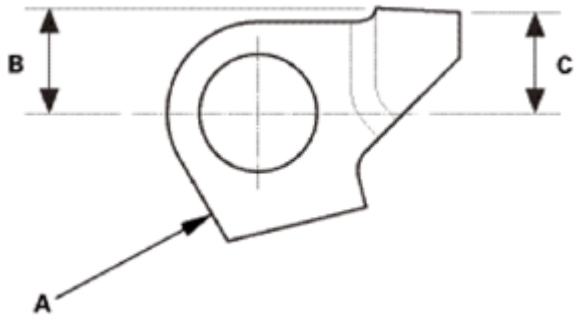

Fig. 590: Identifying Park Lever Stop Dimension
Courtesy of AMERICAN HONDA MOTOR CO., INC.

20. After replacing the park lever stop, make sure the distance is within the tolerance.
21. Pry up the lock tab (A) of the lock washer against the bolt head.

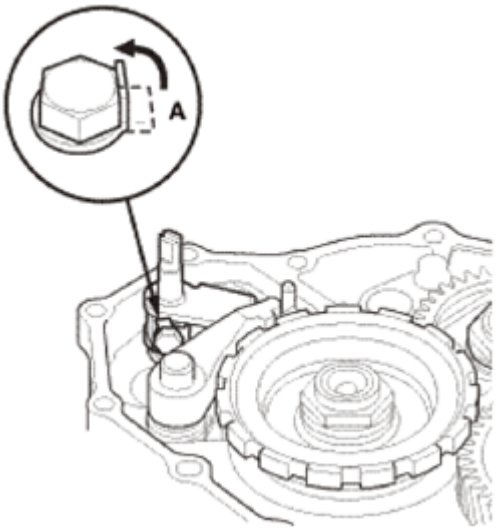

Fig. 591: Prying Up Lock Tab Of Lock Washer Against Bolt Head
Courtesy of AMERICAN HONDA MOTOR CO., INC.

4. ATF Feed Pipe/Lubrication Pipe
    1. Install the 6 x 201 mm ATF pipe (A).
    2. Install the ATF lubrication pipe (B).
    3. Install the 8 x 220 mm ATF pipe (C).
    4. Install the 8 x 198 mm ATF pipes (D).

GETtheMANUALS.org

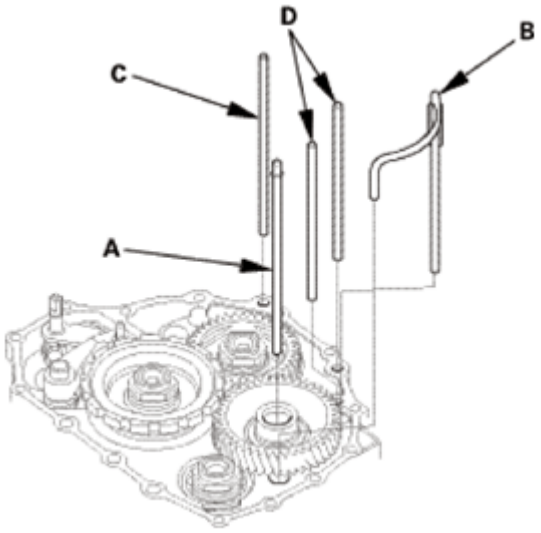

Fig. 592: Identifying ATF Feed Pipes And Lubrication Pipe
Courtesy of AMERICAN HONDA MOTOR CO., INC.

5. A/T Shift Solenoid Wire Harness - Reconnection
    1. Connect the shift solenoid valve connectors:
        - BLU wire to shift solenoid valve A.
        - ORN wire to shift solenoid valve B.
        - GRN wire to shift solenoid valve C.
        - YEL, WHT, and WHT wires to shift solenoid valve D.
        - RED wire to shift solenoid valve E.

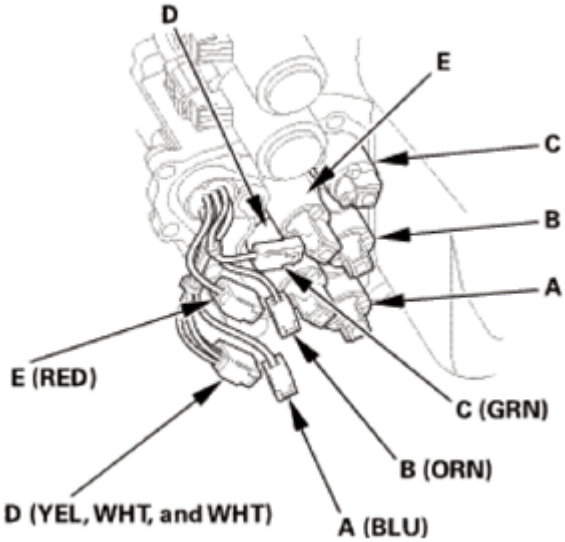

Fig. 593: Identifying Shift Solenoid Valves
Courtesy of AMERICAN HONDA MOTOR CO., INC.

GETtheMANUALS.org

6. A/T Shift Solenoid Cover
    1. Install the shift solenoid valve cover (A) with the dowel pins (B) and a new gasket (C).

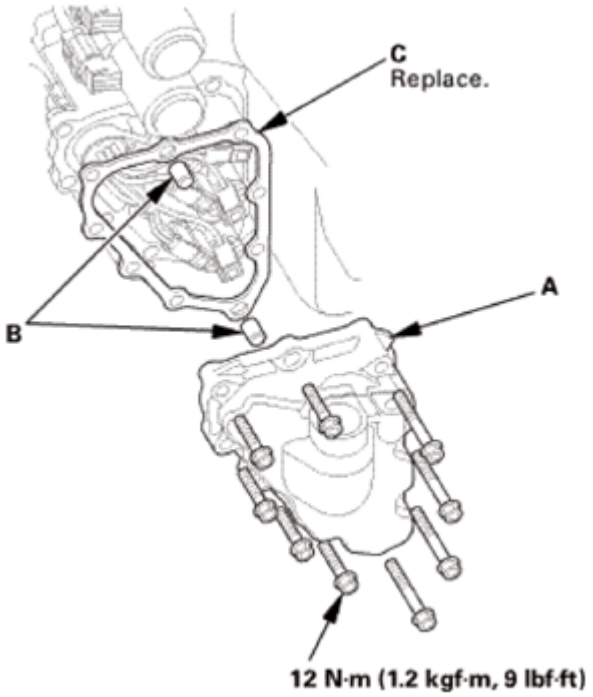

Fig. 594: Identifying Shift Solenoid Valve Cover, Dowel Pins, Gasket And Mounting Bolts With Torque Specification
Courtesy of AMERICAN HONDA MOTOR CO., INC.

7. Dipstick Guide Tube
    1. Install a new O-ring (A) on the ATF dipstick guide tube (B).
    2. Install the ATF dipstick guide tube.

GETtheMANUALS.org

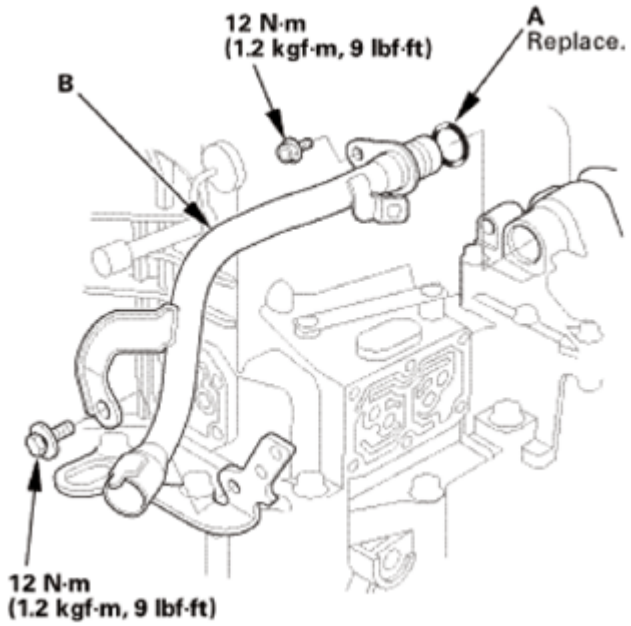

Fig. 595: Identifying ATF Dipstick Guide Tube, O-Ring And Mounting Bolts With Torque Specification
Courtesy of AMERICAN HONDA MOTOR CO., INC.

8. ATF Outlet Line
    1. Install the ATF outlet line (A) using new sealing washers (B).

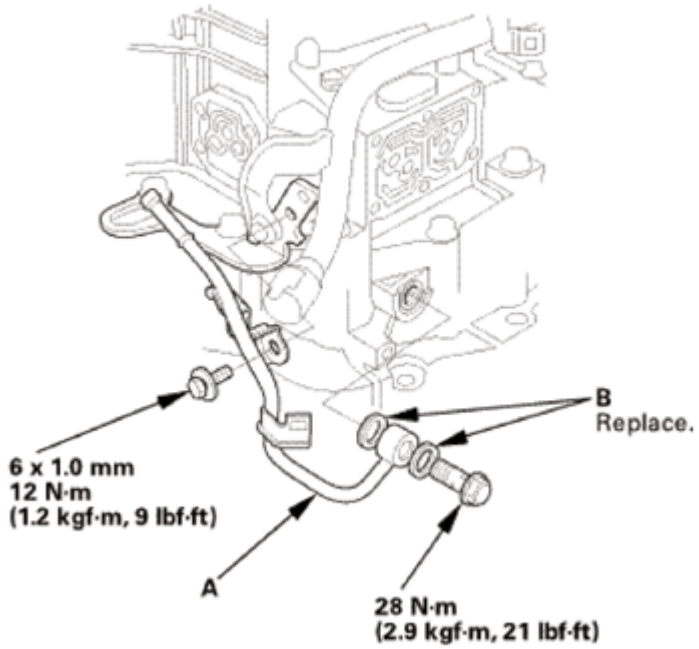

Fig. 596: Identifying ATF Outlet Line, Sealing Washers And Mounting Bolts With Torque Specification
Courtesy of AMERICAN HONDA MOTOR CO., INC.

GETtheMANUALS.org

9. ATF Inlet Line
    1. Install the ATF inlet line (A) using new sealing washers (B).

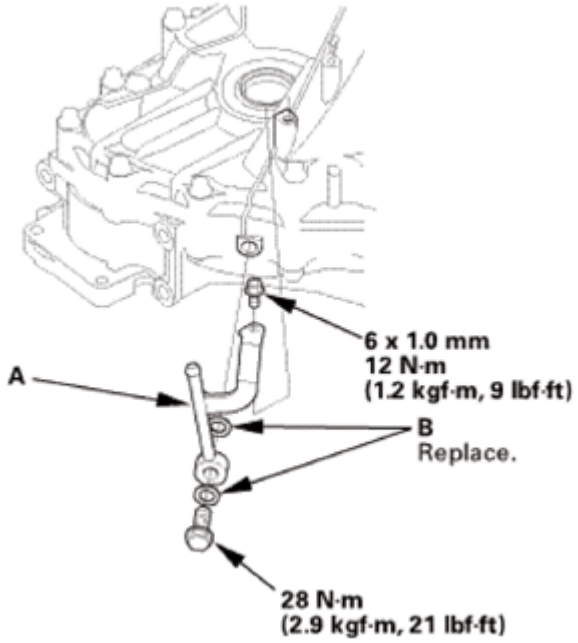

Fig. 597: Identifying ATF Inlet Line, Sealing Washers And Mounting Bolts With Torque Specification
Courtesy of AMERICAN HONDA MOTOR CO., INC.

10. A/T Clutch Pressure Control Solenoid Valve B and C
    1. Clean the mounting surfaces and the fluid passages of the solenoid valve body and the transmission housing.
    2. Install a new gasket (A) with the blue side toward the transmission housing, and Install the ATF joint pipes (D).
    3. Install new O-rings (E) over the ATF joint pipes.
    4. Install A/T clutch pressure control solenoid valves B and C with the clamp bracket (F).

GETtheMANUALS.org

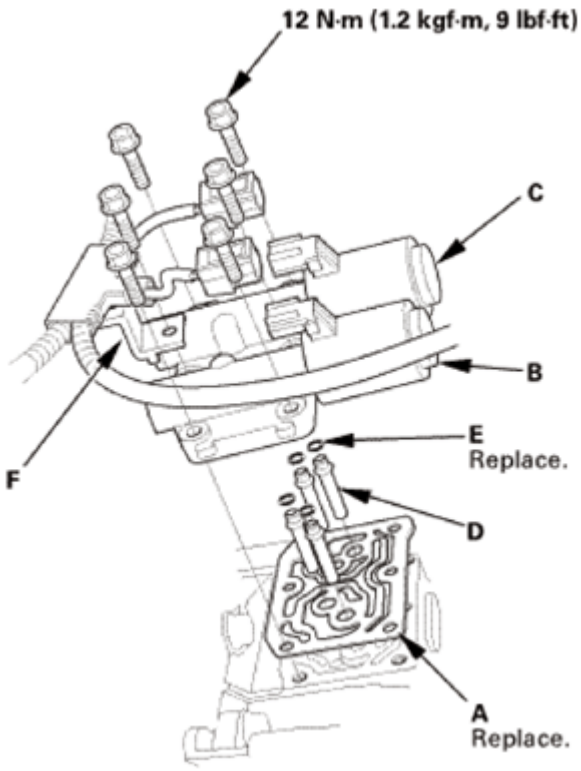

Fig. 598: Identifying Gasket, ATF Joint Pipes, O-Rings, A/T Clutch Pressure Control Solenoid Valves, Clamp Bracket And Mounting Bolts With Torque Specification
Courtesy of AMERICAN HONDA MOTOR CO., INC.

11. A/T Clutch Pressure Control Solenoid Valve A
    1. Clean the mounting surfaces and the fluid passages of the solenoid valve body and the transmission housing.
    2. Install a new gasket (B) with the blue side toward the transmission housing, and install the 35 mm ATF pipe (C) and the ATF joint pipes (D).
    3. Install new O-rings (E) over the ATF joint pipes.
    4. Install A/T clutch pressure control solenoid valve A.

GETtheMANUALS.org

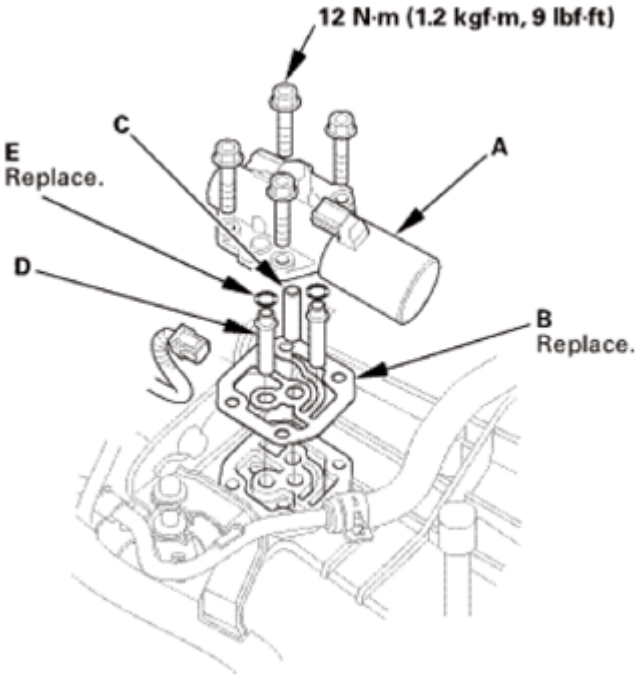

Fig. 599: Identifying A/T Clutch Pressure Control Solenoid Valve, Gasket, ATF Pipe, ATF Joint Pipes And Mounting Bolts With Torque Specification
Courtesy of AMERICAN HONDA MOTOR CO., INC.

12. Output Shaft (Countershaft) Speed Sensor
    1. Install a new O-ring (A) on the output shaft (countershaft) speed sensor (B).
    2. Install the output shaft (countershaft) speed sensor and the sensor washer (C).

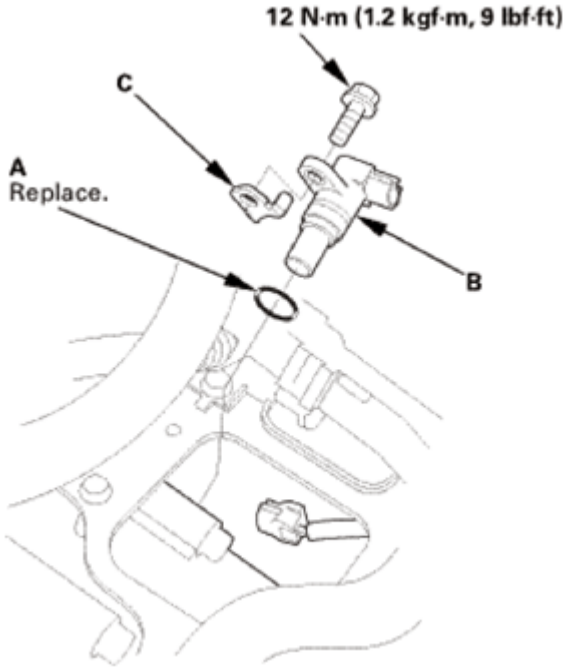

GETtheMANUALS.org

Fig. 600: Identifying Output Shaft (Countershaft) Speed Sensor, O-Ring, Sensor Washer And Mounting Bolts With Torque Specification
Courtesy of AMERICAN HONDA MOTOR CO., INC.

13. Input Shaft (Mainshaft) Speed Sensor
    1. Install a new O-ring (A) on the input shaft (mainshaft) speed sensor (B).
    2. Install the input shaft (mainshaft) speed sensor.

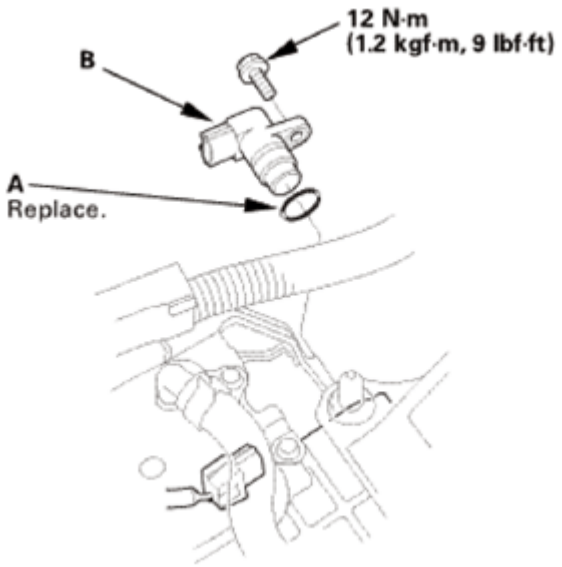

Fig. 601: Identifying Input Shaft (Mainshaft) Speed Sensor, O-Ring And Mounting Bolt With Torque Specification
Courtesy of AMERICAN HONDA MOTOR CO., INC.

14. Transmission End Cover
    1. Install the dowel pins (A) and a new gasket (B).
    2. Install new O-rings (C) over the ATF pipes.
    3. Install the end cover (D), and tighten the three special bolts (E) and the 6 x 1.0 mm bolts (F) (12 bolts).

GETtheMANUALS.org

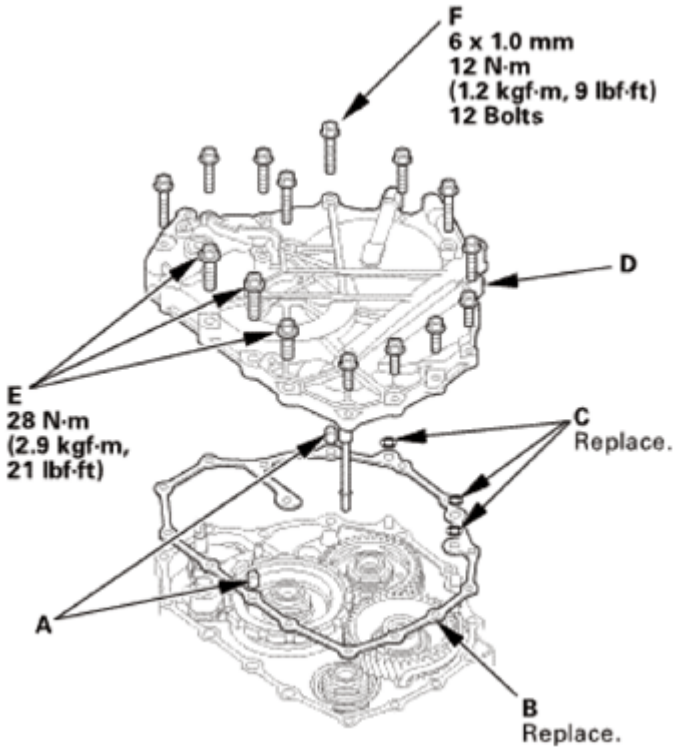

Fig. 602: Identifying Dowel Pins, Gasket, O-Rings, End Cover And Mounting Bolts With Torque Specification
Courtesy of AMERICAN HONDA MOTOR CO., INC.

15. Transmission Range Switch Subharness
    1. Install the clamp brackets (A).
    2. Install the transmission range switch subharness (B).

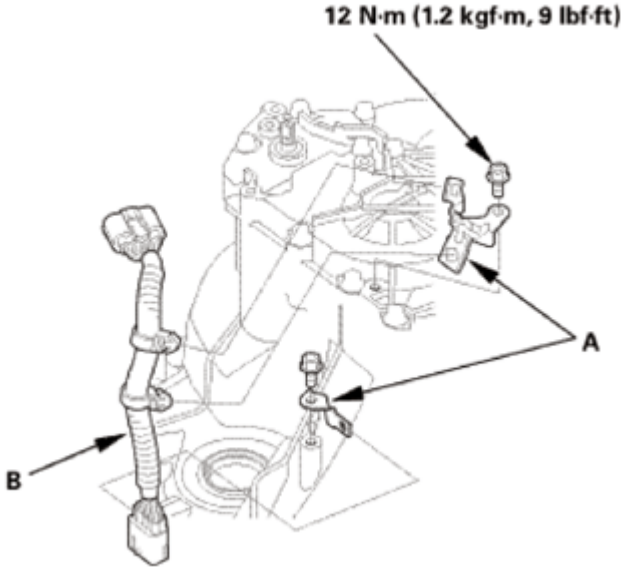

GETtheMANUALS.org

Fig. 603: Identifying Transmission Range Switch Subharness, Clamp Brackets And Mounting Bolts With Torque Specification
Courtesy of AMERICAN HONDA MOTOR CO., INC.

16. Transmission Range Switch
    1. Make sure the selector control shaft is in the N position. If necessary, move the selector control shaft to the N position.

NOTE: **Do not use the selector control shaft to adjust the shift position. If the selector control shaft tips are squeezed together it will cause a faulty signal or position due to play between the selector control shaft and switch.**

Fig. 604: Moving Selector Control Shaft To N Position
Courtesy of AMERICAN HONDA MOTOR CO., INC.

2. Align the cutouts (A) on the rotary-frame with the neutral positioning cutouts (B) on the transmission range switch (C), then put a 2.0 mm (0.079 in) feeler gauge blade (D) in the cutouts to hold the switch in the N position.

NOTE: **Be sure to use a 2.0 mm (0.079 in) blade or equivalent to hold the switch in the N position.**

GETtheMANUALS.org

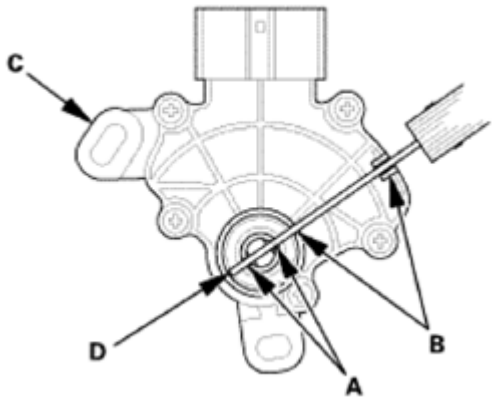

Fig. 605: Aligning Cutouts On Rotary-Frame With Neutral Positioning Cutouts On Transmission Range Switch
Courtesy of AMERICAN HONDA MOTOR CO., INC.

3. Install the transmission range switch (A) gently on the selector control shaft (B) while holding it in the N position with the 2.0 mm (0.079 in) blade (C).

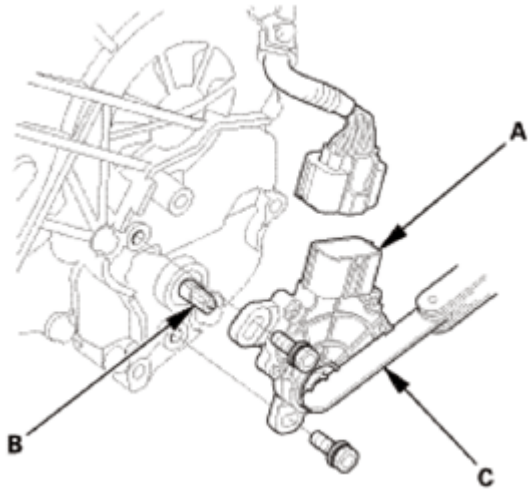

Fig. 606: Identifying Transmission Range Switch, Selector Control Shaft And Blade
Courtesy of AMERICAN HONDA MOTOR CO., INC.

4. Tighten the bolts on the transmission range switch (A) while you continue holding the N position.

NOTE: Do not move the transmission range switch when tightening the bolts.

5. Remove the feeler gauge (B).
6. Check the connector (C) for corrosion, dirt, or oil, and clean or repair if necessary, then connect the connector securely.

GETtheMANUALS.org

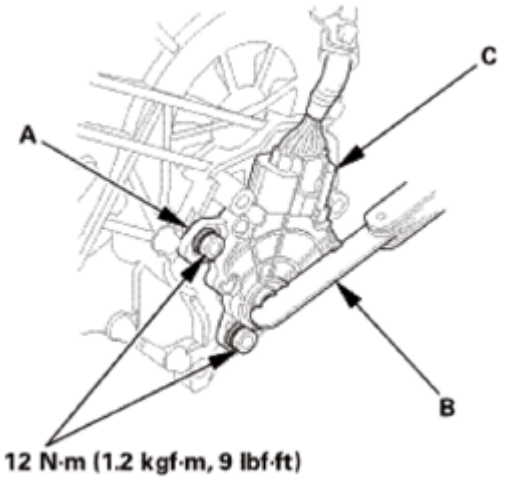

Fig. 607: Identifying Transmission Range Switch, Connector, Feeler Gauge And Mounting Bolts With Torque Specification
Courtesy of AMERICAN HONDA MOTOR CO., INC.

17. Transmission Range Switch Cover
    1. Install the transmission range switch cover (A).

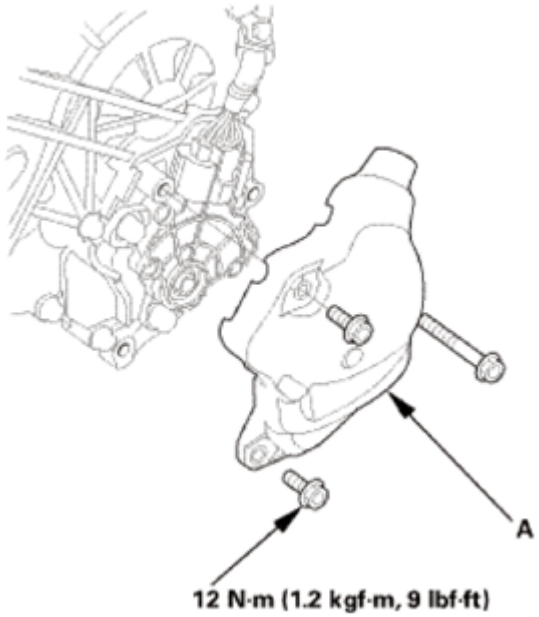

Fig. 608: Identifying Transmission Range Switch Cover And Mounting Bolts With Torque Specification
Courtesy of AMERICAN HONDA MOTOR CO., INC.

A/T HOUSING IDLER GEAR SHAFT BEARING REPLACEMENT

SPECIAL TOOL REQUIRED

GETtheMANUALS.org

Image	Description/Tool Number
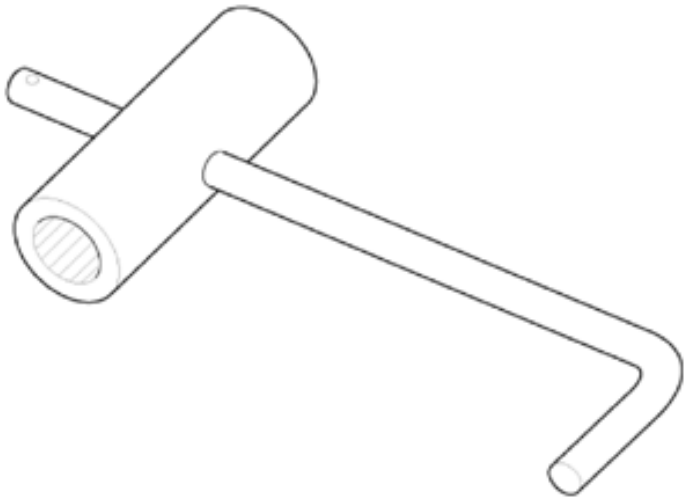	Mainshaft Holder 07GAB-PF50101
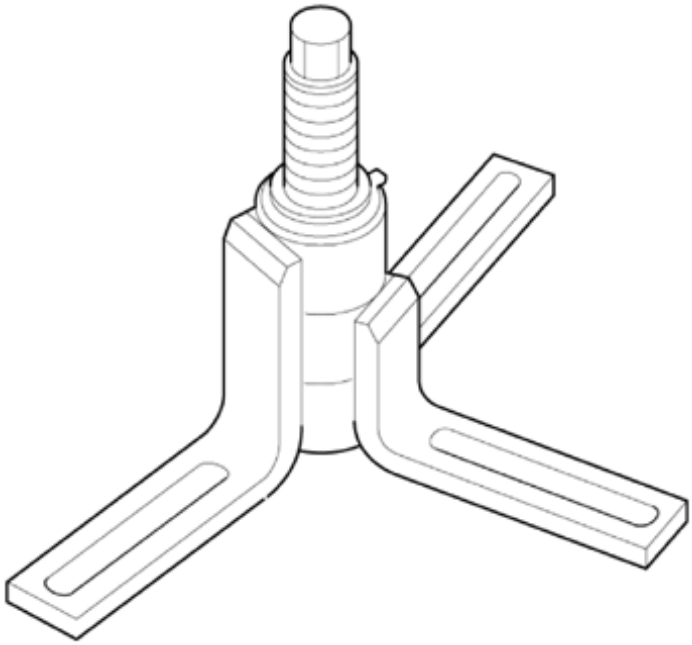	Housing Puller 07HAC-PK40102
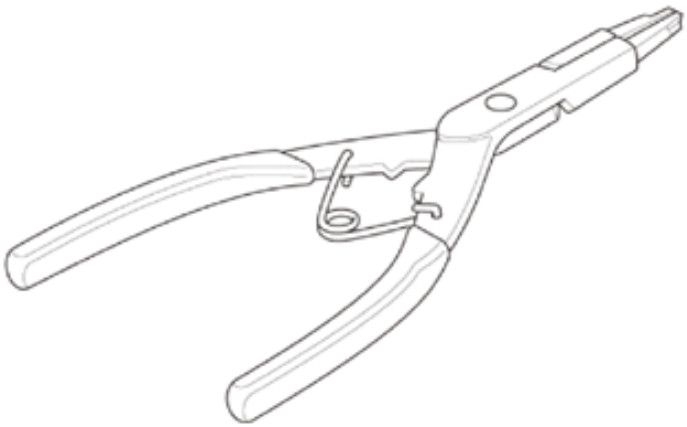	Snap Ring Pliers 07LGC-0010100

GETtheMANUALS.org

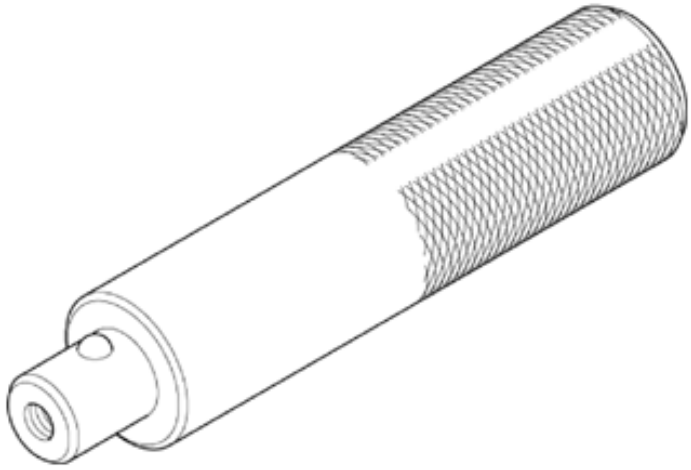	Driver Handle, 15 x 135L 07749-0010000
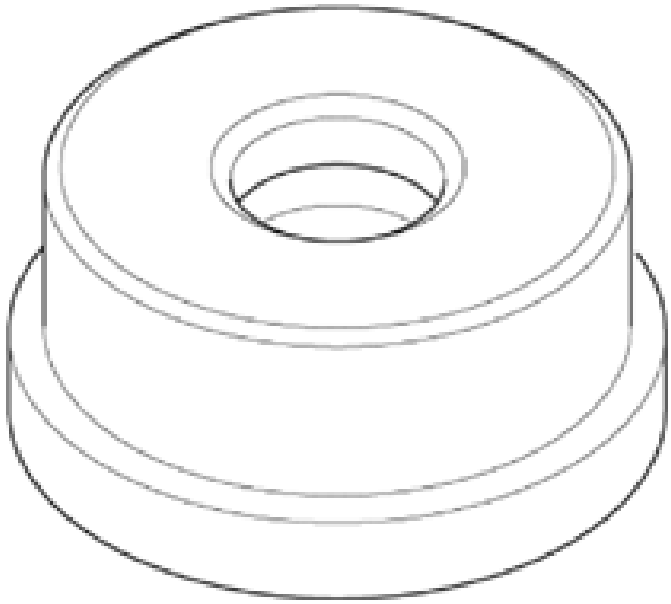	Bearing Driver Attachment, 42 x 47 mm 07746-0010300

REMOVAL

NOTE: The illustration shows AWD/4WD transmission.

1. Transmission Range Switch Cover
    1. Remove the transmission range switch cover (A).

GETtheMANUALS.org

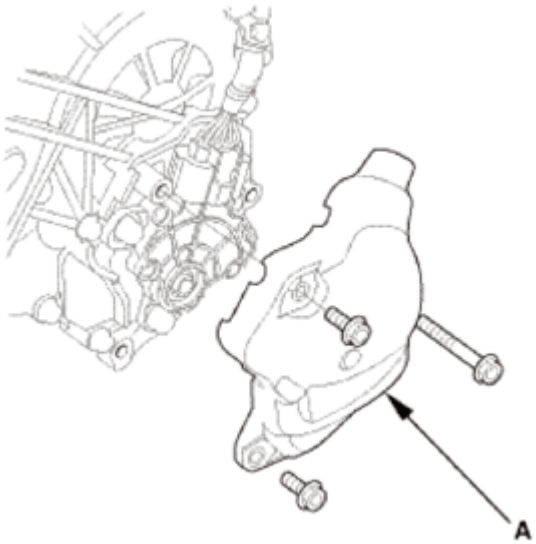

Fig. 609: Identifying Transmission Range Switch Cover With Bolts
Courtesy of AMERICAN HONDA MOTOR CO., INC.

2. Transmission Range Switch
    1. Remove the transmission range switch (A).

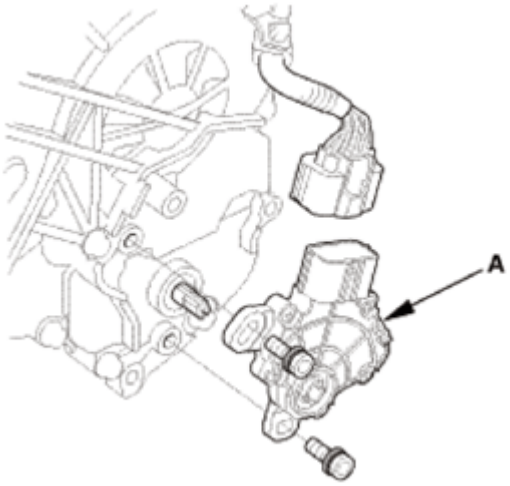

Fig. 610: Identifying Transmission Range Switch With Bolts
Courtesy of AMERICAN HONDA MOTOR CO., INC.

3. Transmission Range Switch Subharness
    1. Remove the transmission range switch subharness (A).
    2. Remove the clamp brackets (B).

GETtheMANUALS.org

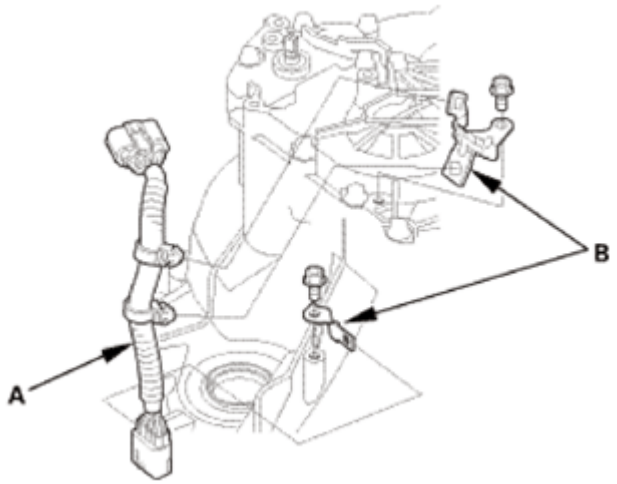

Fig. 611: Identifying Transmission Range Switch Subharness And Clamp Brackets
Courtesy of AMERICAN HONDA MOTOR CO., INC.

4. Transmission End Cover
    1. Remove the end cover (A), the dowel pins (B), the O-rings (C), and the gasket (D).

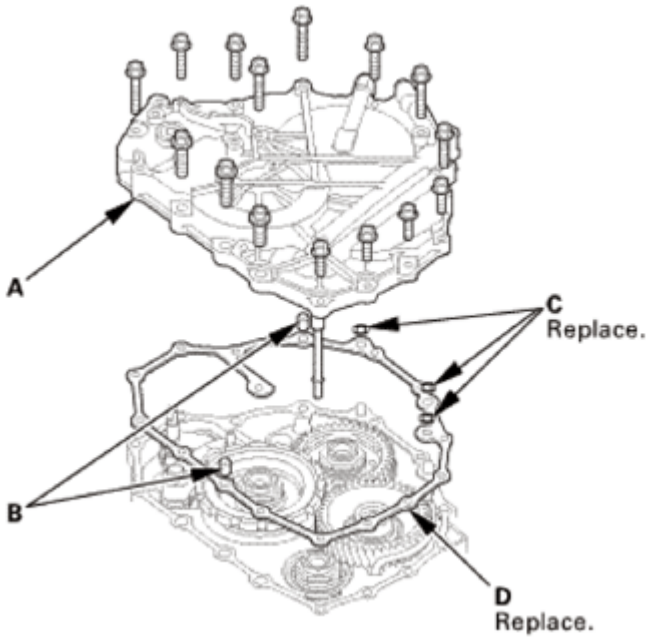

Fig. 612: Identifying Transmission End Cover, Dowel Pins, O-Rings And Gasket With Bolts
Courtesy of AMERICAN HONDA MOTOR CO., INC.

5. Input Shaft (Mainshaft) Speed Sensor
    1. Remove the input shaft (mainshaft) speed sensor (A).
    2. Remove the O-ring (B) from the input shaft (mainshaft) speed sensor.

GETtheMANUALS.org

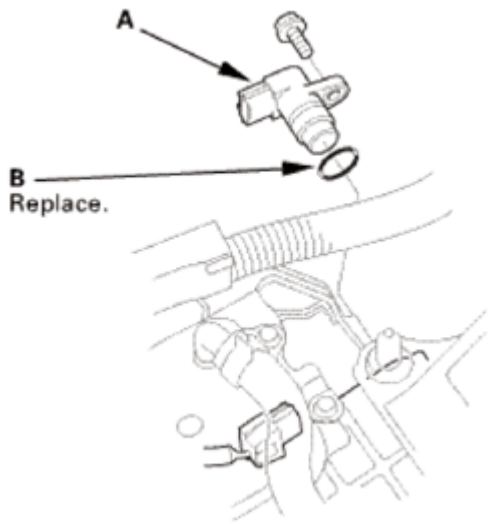

Fig. 613: Identifying Input Shaft (Mainshaft) Speed Sensor And O-Ring
Courtesy of AMERICAN HONDA MOTOR CO., INC.

6. Output Shaft (Countershaft) Speed Sensor
    1. Remove the output shaft (countershaft) speed sensor (A) and the sensor washer (B).
    2. Remove the O-ring (C) from the output shaft (countershaft) speed sensor.

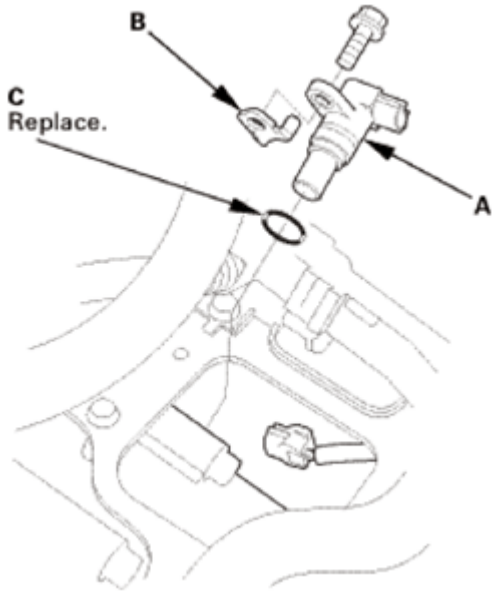

Fig. 614: Identifying Output Shaft (Countershaft) Speed Sensor, Sensor Washer And O-Ring
Courtesy of AMERICAN HONDA MOTOR CO., INC.

7. A/T Clutch Pressure Control Solenoid Valve A
    1. Remove A/T clutch pressure control solenoid valve A.
    2. Remove the 35 mm ATF pipe (B), the ATF joint pipes (C), the O-rings (D), and the gasket (E).

GETtheMANUALS.org

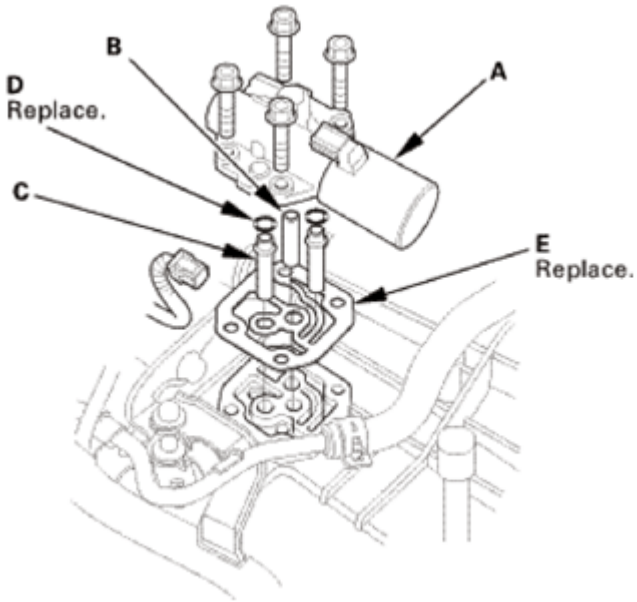

Fig. 615: Identifying A/T Clutch Pressure Control Solenoid Valve, ATF Pipe, ATF Joint Pipes, O-Rings And Gasket With Bolts
Courtesy of AMERICAN HONDA MOTOR CO., INC.

8. A/T Clutch Pressure Control Solenoid Valve B and C
    1. Remove the clamp bracket (A) and A/T clutch pressure control solenoid valves B and C.
    2. Remove the ATF joint pipes (D), the O-rings (E), and the gasket (F).

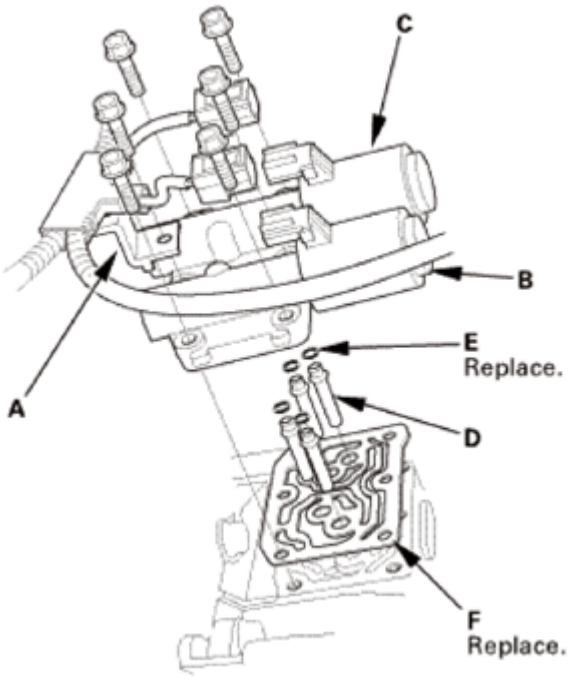

Fig. 616: Identifying A/T Clutch Pressure Control Solenoid Valves, Clamp Bracket, ATF

GETtheMANUALS.org

Joint Pipes, O-Rings And Gasket
Courtesy of AMERICAN HONDA MOTOR CO., INC.

9. ATF Inlet Line
    1. Remove the banjo bolt (A) and the sealing washers (B).
    2. Remove the ATF inlet line (C).

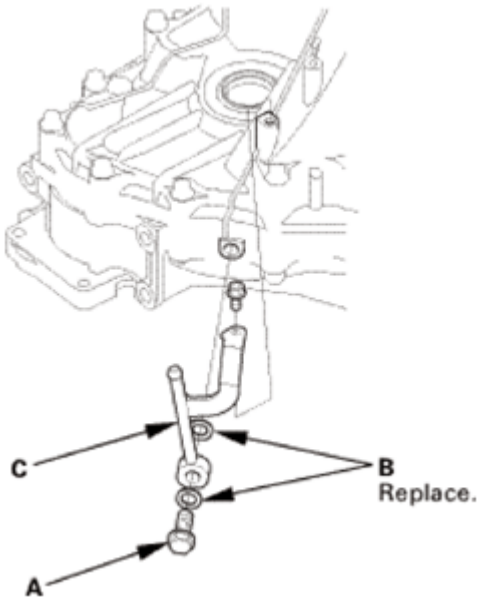

Fig. 617: Identifying ATF Inlet Line, Banjo Bolt And Sealing Washers
Courtesy of AMERICAN HONDA MOTOR CO., INC.

10. ATF Outlet Line
    1. Remove the banjo bolt (A) and the sealing washers (B).
    2. Remove the ATF outlet line (C).

GETtheMANUALS.org

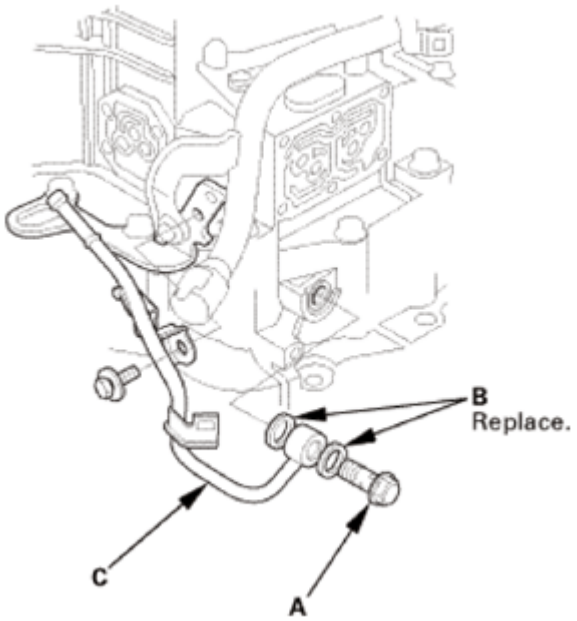

Fig. 618: Identifying ATF Outlet Line, Banjo Bolt And Sealing Washers
Courtesy of AMERICAN HONDA MOTOR CO., INC.

11. Dipstick Guide Tube
    1. Remove the ATF dipstick guide tube (A).
    2. Remove the O-ring (B) from the ATF dipstick guide tube.

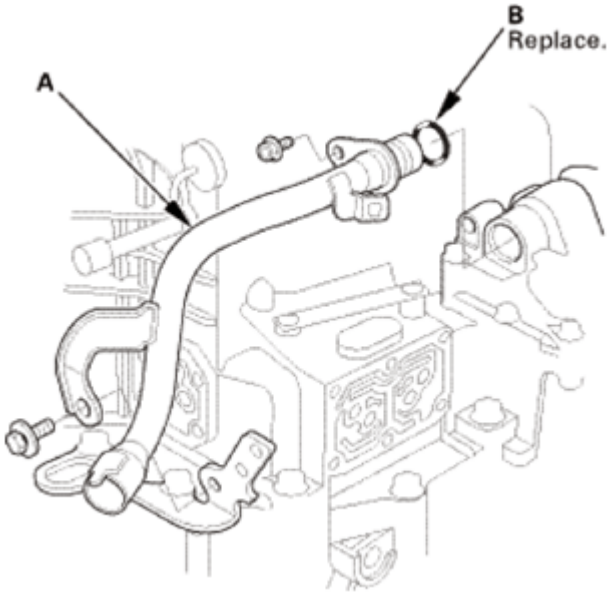

Fig. 619: Identifying ATF Dipstick Guide Tube And O-Ring
Courtesy of AMERICAN HONDA MOTOR CO., INC.

12. A/T Shift Solenoid Cover

GETtheMANUALS.org

1. Remove the shift solenoid valve cover (A), the dowel pins (B), and the gasket (C).

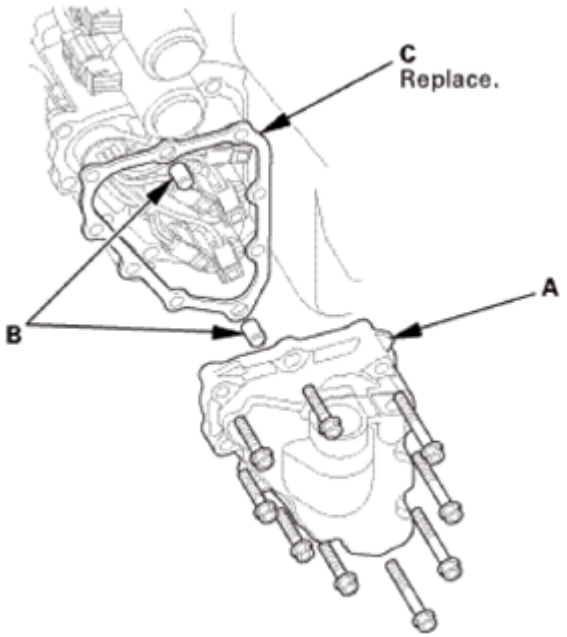

Fig. 620: Identifying Shift Solenoid Valve Cover, Dowel Pins And Gasket
Courtesy of AMERICAN HONDA MOTOR CO., INC.

13. A/T Shift Solenoid Wire Harness - Disconnection
    1. Disconnect the connectors.

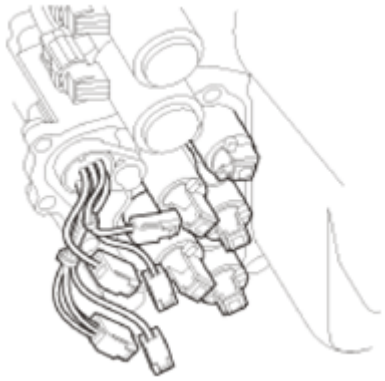

Fig. 621: Identifying A/T Shift Solenoid Wire Harness Connectors
Courtesy of AMERICAN HONDA MOTOR CO., INC.

14. ATF Feed Pipe/Lubrication Pipe
    1. Remove the 6 x 201 mm ATF pipe (A).
    2. Remove the ATF lubrication pipe (B).
    3. Remove the 8 x 220 mm ATF pipe (C).
    4. Remove the 8 x 198 mm ATF pipes (D).

GETtheMANUALS.org

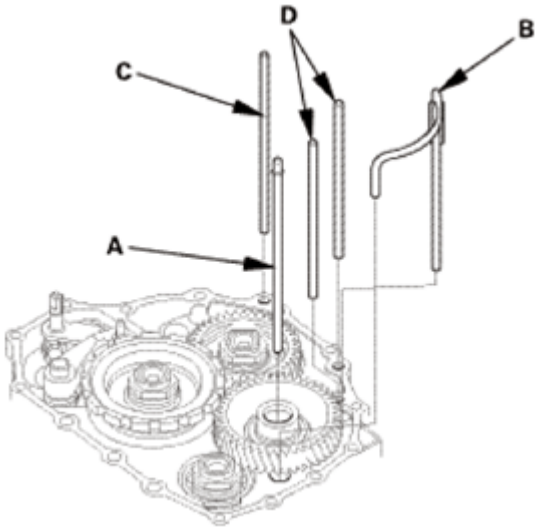

Fig. 622: Identifying ATF Feed Pipes And Lubrication Pipe
Courtesy of AMERICAN HONDA MOTOR CO., INC.

15. End Cover Idler Gear Assembly
    1. Install the mainshaft holder onto the mainshaft.
    2. Engage the park pawl with the park gear.

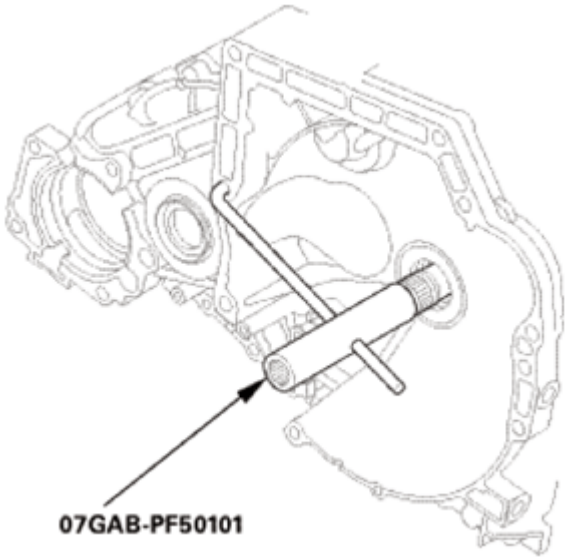

Fig. 623: Installing Mainshaft Holder Onto Mainshaft
Courtesy of AMERICAN HONDA MOTOR CO., INC.

    3. Using a chisel, cut the lock tab (A) of the locknut (B).

NOTE: Keep all of the chiseled particles out of the transmission.

GETtheMANUALS.org

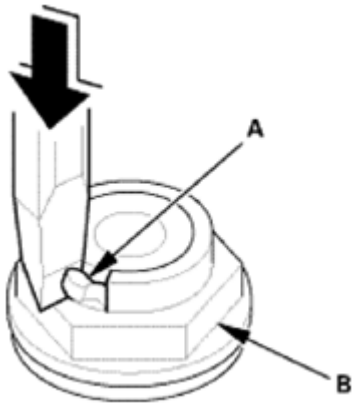

Fig. 624: Cutting Lock Tab Of Locknut Using Chisel
Courtesy of AMERICAN HONDA MOTOR CO., INC.

4. Remove the locknuts (A) and the conical spring washers (B) from each shaft.

NOTE:

- **The countershaft and secondary shaft locknuts have left-hand threads.**
- **Keep all of the chiseled particles out of the transmission.**
- **Clean the old locknuts; they are used to install the press fit idler gears and park gear.**

5. Remove the mainshaft holder.

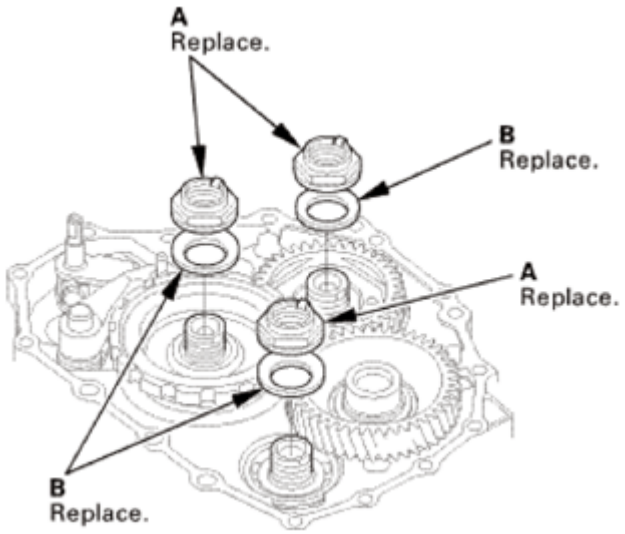

Fig. 625: Identifying Locknuts And Conical Spring Washers
Courtesy of AMERICAN HONDA MOTOR CO., INC.

6. Remove the park pawl (A), the park pawl spring (B), the park pawl shaft (C), and the stop shaft (D).

GETtheMANUALS.org

7. Pry down the lock tab (E) of the lock washer (F).
8. Remove the lock bolt (G) and the lock washer.
9. Remove the park lever (H), the park lever stop (I), and the park lever spring (J).

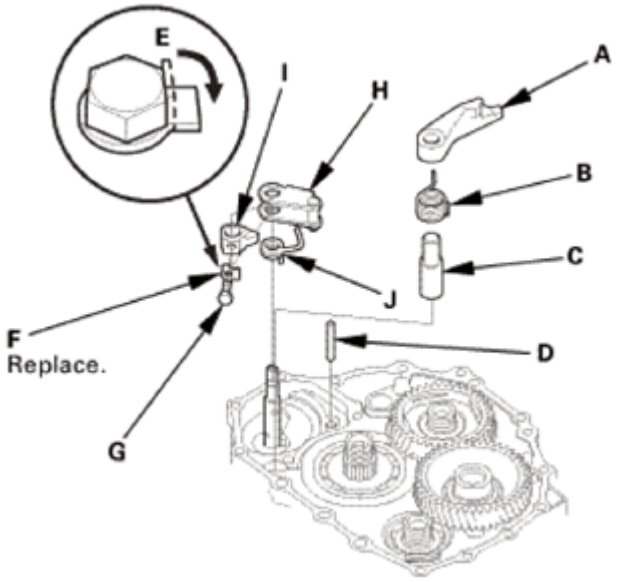

Fig. 626: Prying Down Lock Tab Of Lock Washer
Courtesy of AMERICAN HONDA MOTOR CO., INC.

10. Place a spacer (A) on the countershaft (B).
11. Set a commercially available bearing puller (C) on the park gear (D).
12. Remove the park gear.

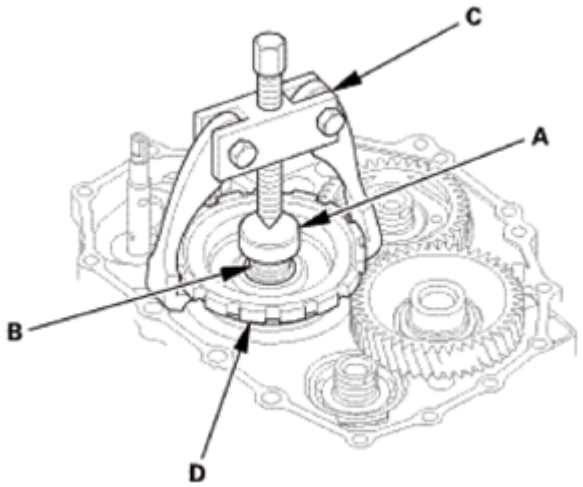

Fig. 627: Setting Commercially Available Bearing Puller On Park Gear
Courtesy of AMERICAN HONDA MOTOR CO., INC.

13. Install a puller (A) with two 6 x 1.0 mm bolts (B) on the mainshaft idler gear (C).

GETtheMANUALS.org

14. Set a spacer (D) between the puller and the mainshaft (E).
15. Remove the mainshaft idler gear.

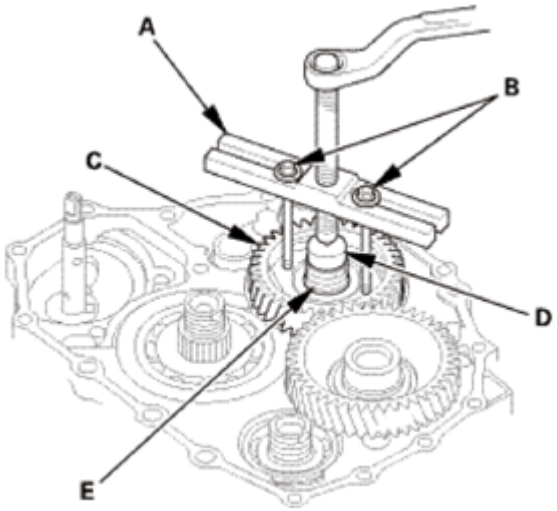

Fig. 628: Installing Puller With 6 X 1.0 mm Bolts On Mainshaft Idler Gear
Courtesy of AMERICAN HONDA MOTOR CO., INC.

16. Automatic Transmission Housing
    1. Align the spring pin (A) on the selector control shaft (B) with the transmission housing groove (C).

    NOTE: **Do not squeeze the end of the selector control shaft tips together when turning the control shaft. If the tips are squeezed together, it will cause a faulty shift position signal or position due to the play between the selector control shaft and the transmission range switch.**

    2. Remove the transmission housing mounting bolts (D) (2WD: 19 bolts, AWD/4WD: 20 bolts).
    3. Install the housing puller over the mainshaft.
    4. Remove the transmission housing (E) using the housing puller.
    5. Remove the dowel pins (F) and the gasket (G).

GETtheMANUALS.org

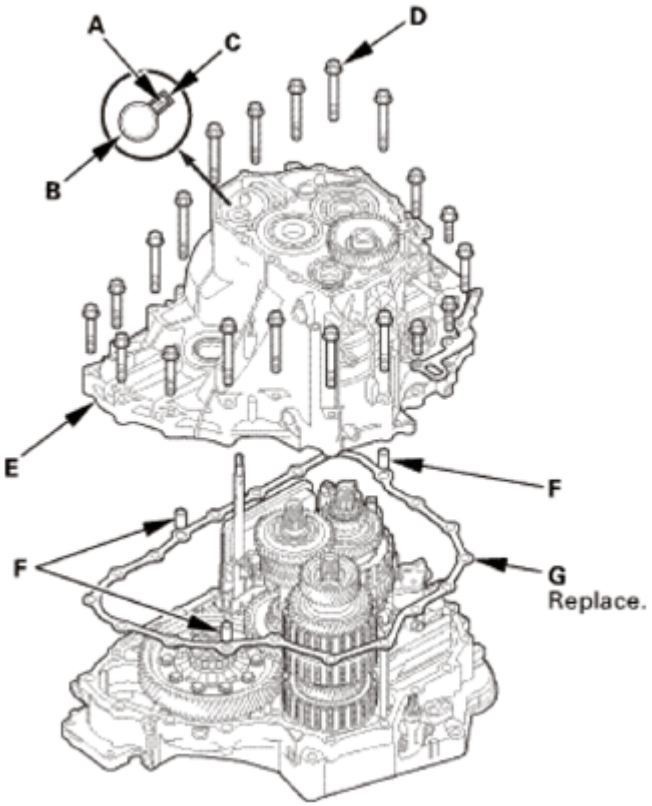

Fig. 629: Identifying Spring Pin, Selector Control Shaft, Transmission Housing Groove, Transmission Housing, Mounting Bolts And Gasket
Courtesy of AMERICAN HONDA MOTOR CO., INC.

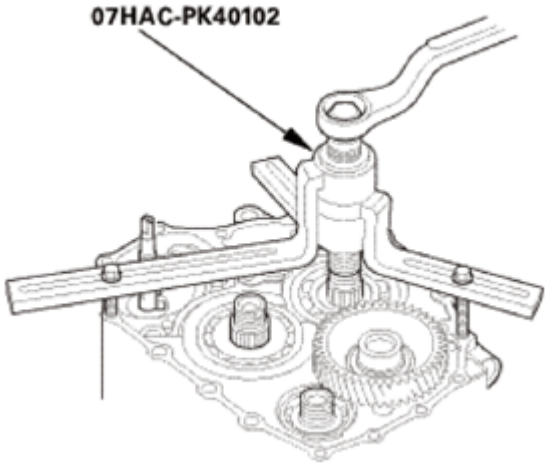

Fig. 630: Installing Housing Puller Over Mainshaft
Courtesy of AMERICAN HONDA MOTOR CO., INC.

17. A/T Idler Gear/Idler Gear Shaft Assembly
    1. Remove the snap ring (A), the cotter retainer (B), and the cotters (C).
    2. Remove the idler gear shaft/idler gear assembly (D).

GETtheMANUALS.org

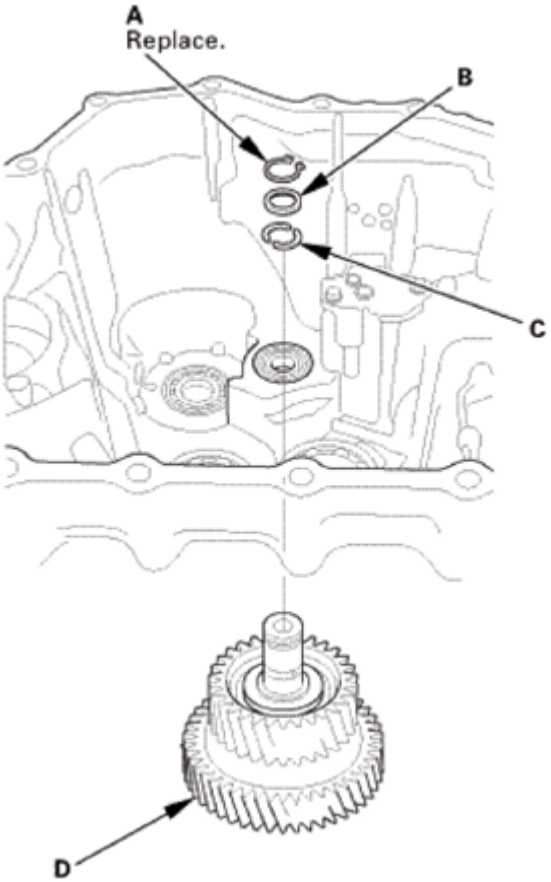

Fig. 631: Identifying Idler Gear Shaft/Idler Gear Assembly, Snap Ring, Cotter Retainer And Cotters
Courtesy of AMERICAN HONDA MOTOR CO., INC.

18. Transmission Housing Idler Gear Shaft Bearing
    1. Expand the snap ring using the snap ring pliers.
    2. Drive the idler gear shaft bearing (A) out using the driver handle and the 42 x 47 mm bearing driver attachment.

NOTE: **Do not remove the snap ring unless it is necessary to clean the grooves in the transmission housing.**

GETtheMANUALS.org

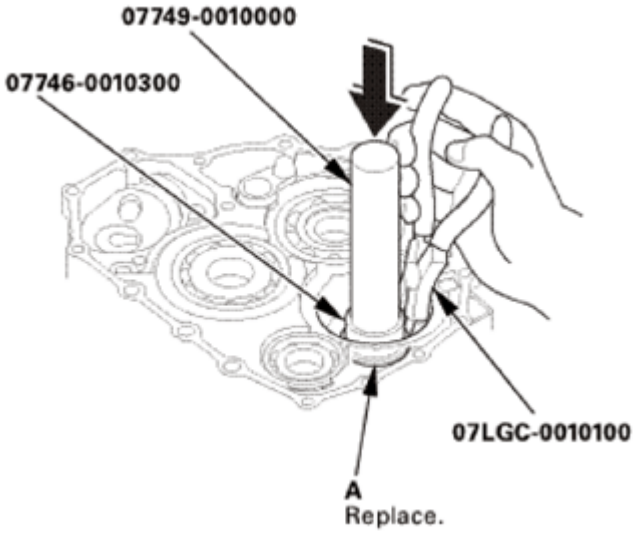

Fig. 632: Expanding Snap Ring Using Snap Ring Pliers
Courtesy of AMERICAN HONDA MOTOR CO., INC.

INSTALLATION

NOTE:

- **Apply a light coat of clean ATF on all moving parts before installation.**
- **The illustration shows AWD/4WD transmission.**

1. Transmission Housing Idler Gear Shaft Bearing
    1. Expand the snap ring using the snap ring pliers.
    2. Install a new idler gear shaft bearing (A) part-way into the housing using the driver handle and the 42 x 47 mm bearing driver attachment.
    3. Release the snap ring pliers, then push the bearing down into the transmission housing until the snap ring snaps in place around it.

GETtheMANUALS.org

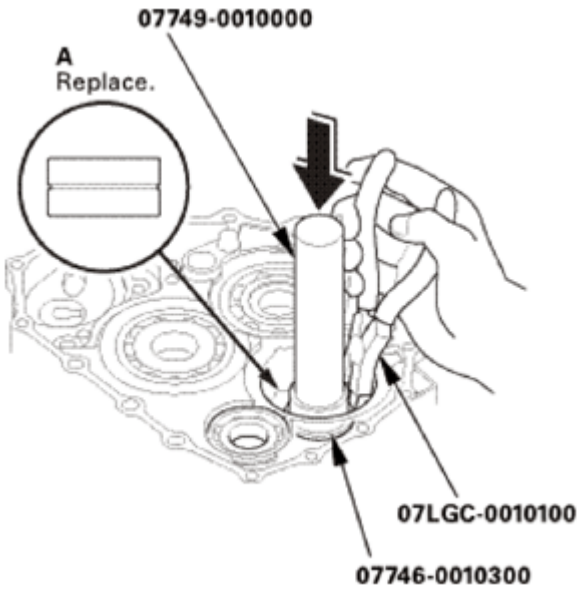

Fig. 633: Installing Idler Gear Shaft Bearing Part-Way Into Housing Using Driver Handle And Bearing Driver Attachment
Courtesy of AMERICAN HONDA MOTOR CO., INC.

4. After installing the bearing check that the snap ring (A) is seated in the bearing and the transmission housing groove, and that the snap ring end gap (B) is correct.

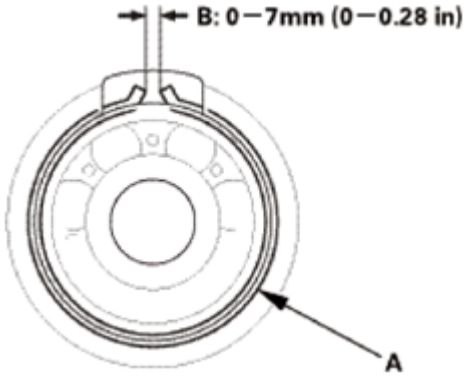

Fig. 634: Checking Snap Ring End Gap
Courtesy of AMERICAN HONDA MOTOR CO., INC.

2. A/T Idler Gear/Idler Gear Shaft Assembly
    1. Install the idler gear shaft/idler gear assembly (A).
    2. Install the cotters (B), the cotter retainer (C), and a new snap ring (D) as shown.

GETtheMANUALS.org

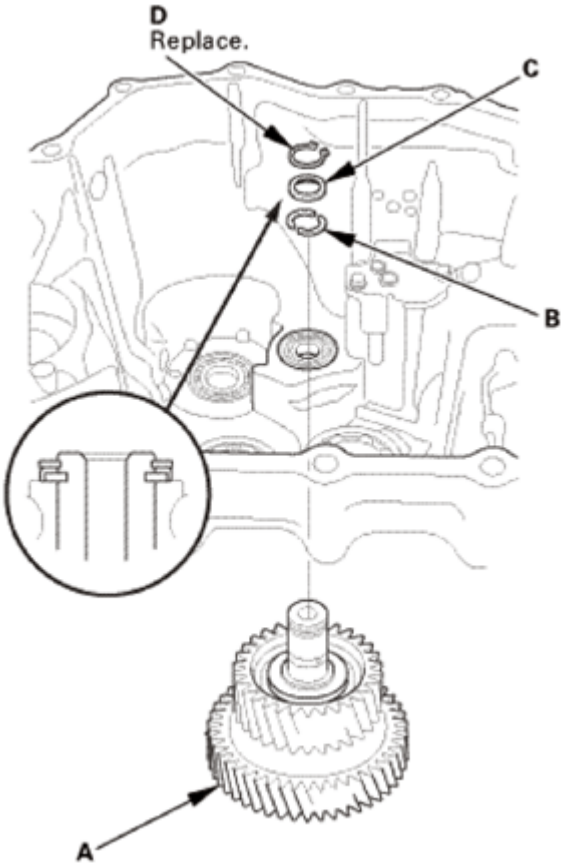

Fig. 635: Identifying Idler Gear Shaft/Idler Gear Assembly, Cotters, Cotter Retainer And Snap Ring
Courtesy of AMERICAN HONDA MOTOR CO., INC.

3. Automatic Transmission Housing
    1. Install the three dowel pins (A) and a new gasket (B).
    2. Align the spring pin (C) of the selector control shaft (D) with the transmission housing groove (E).

    NOTE: **Do not squeeze the end of the selector control shaft tips together when turning the shaft. If the tips are squeezed together, it will cause a faulty shift position signal or position due to the play between the selector control shaft and the transmission range switch.**

    3. Place the transmission housing (F) on the torque converter housing (G).

    NOTE: **Do not install the input shaft (mainshaft) speed sensor and the output shaft (countershaft) speed sensor before installing the transmission housing.**

    4. Wrap the tip of a screwdriver with tape so the reverse idler gear teeth do not get damaged. Engage the reverse idler gear (H) with the reverse gears (I) by rotating the idler gear using the screwdriver.

GETtheMANUALS.org

5. Make sure the transmission housing is securely seated so there is no clearance between the transmission housing and the torque converter housing.
6. Install the transmission hanger (J), and tighten the transmission housing mounting bolts (2WD: 19 bolts, AWD/4WD: 20 bolts) in at least two steps, in a crisscross pattern.

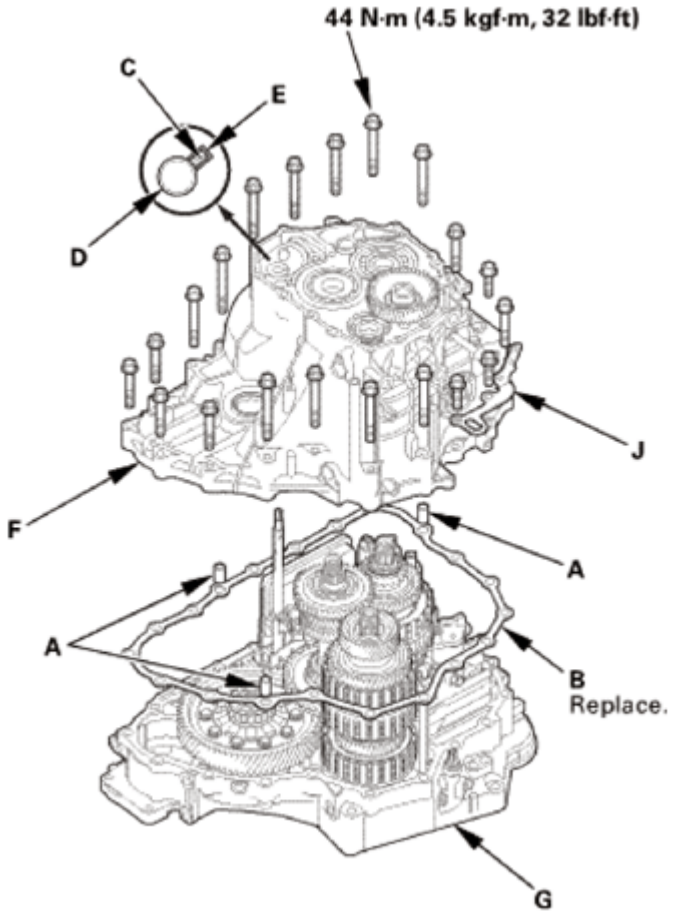

Fig. 636: Identifying Dowel Pins, Gasket, Spring Pin, Selector Control Shaft, Transmission Housing Groove And Mounting Bolts With Torque Specification
Courtesy of AMERICAN HONDA MOTOR CO., INC.

GETtheMANUALS.org

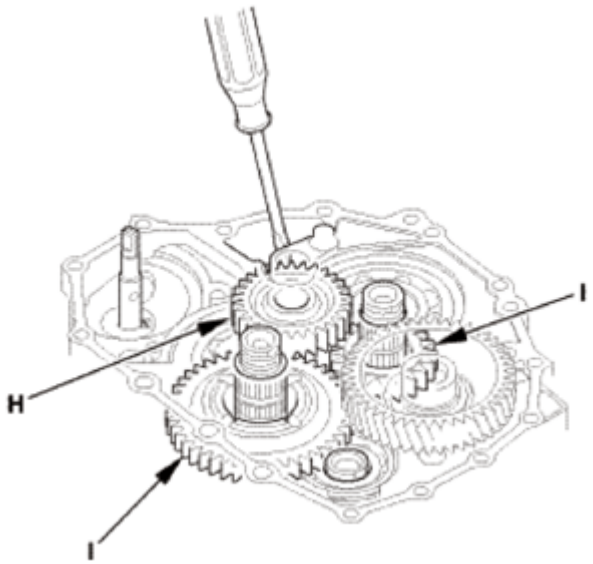

Fig. 637: Engaging Reverse Idler Gear With Reverse Gears By Rotating Idler Gear Using Screwdriver
Courtesy of AMERICAN HONDA MOTOR CO., INC.

4. End Cover Idler Gear Assembly
    1. Install the mainshaft holder onto the mainshaft.

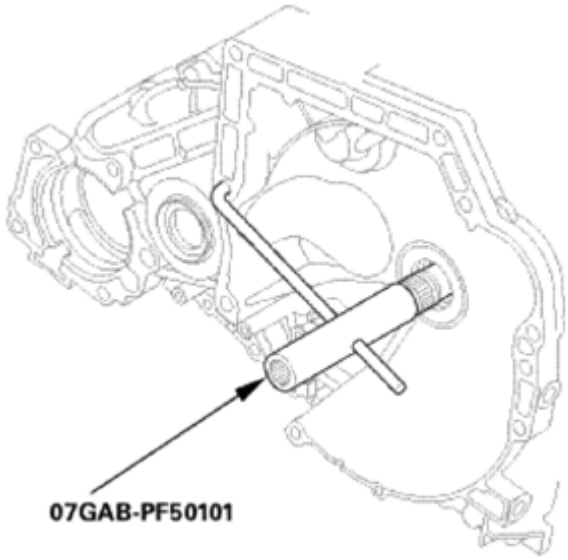

Fig. 638: Installing Mainshaft Holder Onto Mainshaft
Courtesy of AMERICAN HONDA MOTOR CO., INC.

    2. Lubricate the following parts with ATF:
        - Splines and threads of the mainshaft.
        - Splines of the mainshaft idler gear.

GETtheMANUALS.org

- The old conical spring washer and the old locknut.

3. Install the mainshaft idler gear (A), the old conical spring washer (B), and the old locknut (C), and tighten the locknut to 225 N.m (23.0 kgf.m, 166 lbf.ft).

NOTE:

- **Do not tap the mainshaft idler gear to install.**
- **Use a torque wrench to tighten the locknut. Do not use an impact wrench.**

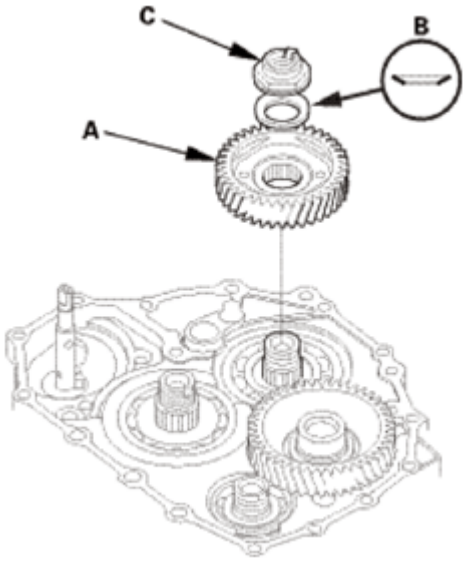

Fig. 639: Identifying Mainshaft Idler Gear, Conical Spring Washer And Locknut
Courtesy of AMERICAN HONDA MOTOR CO., INC.

4. Lubricate the following parts with ATF:
   - Splines and threads of the countershaft.
   - Splines of the park gear.
   - The old conical spring washer and the old locknut.
5. Install the park gear (A), the old conical spring washer (B), and the old locknut (C).
6. Install the park lever spring (D), the park lever (E), and the park lever stop (F).
7. Install the lock bolt (G) using a new lock washer (H).

GETtheMANUALS.org

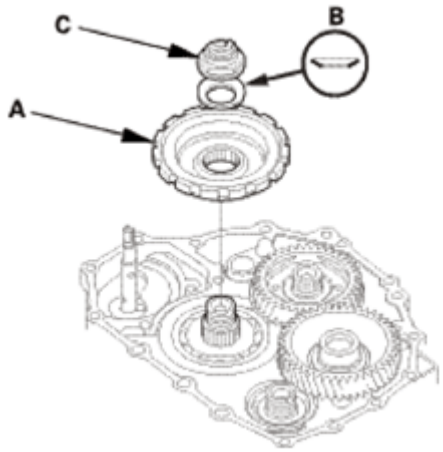

Fig. 640: Identifying Park Gear, Conical Spring Washer And Locknut
Courtesy of AMERICAN HONDA MOTOR CO., INC.

NOTE: **Do not bend the lock tab of the lock washer until inspect the park lever stop.**

8. Install the park pawl shaft (I), the park pawl spring (J), the park pawl (K), and the stop shaft (L).
9. Lift the park pawl up, and engage it with the park gear, and tighten the locknut to 225 N.m (23.0 kgf.m, 166 lbf.ft).

NOTE:

- **Do not tap the park gear to install.**
- **Use a torque wrench to tighten the locknut. Do not use an impact wrench.**
- **Countershaft locknut has left-hand threads.**

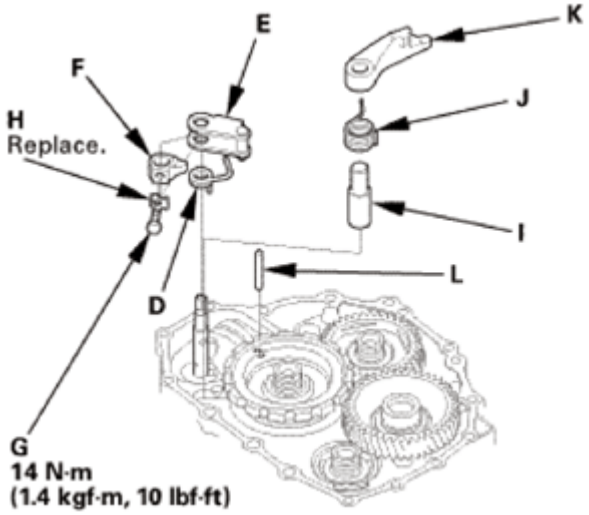

Fig. 641: Identifying Park Pawl Shaft, Park Lever Spring, Park Lever, Park Lever Stop, Lock Bolt, Lock Washer With Torque Specification

GETtheMANUALS.org

Courtesy of AMERICAN HONDA MOTOR CO., INC.

10. Remove the old locknuts and the old conical spring washers from the mainshaft and the countershaft.
11. Lubricate the following parts with ATF:
    - Splines and threads of the mainshaft, the countershaft, and the secondary shaft.
    - New conical spring washers and new locknuts.
    - Areas where the conical spring washers contact the mainshaft idler gear and the park gear.

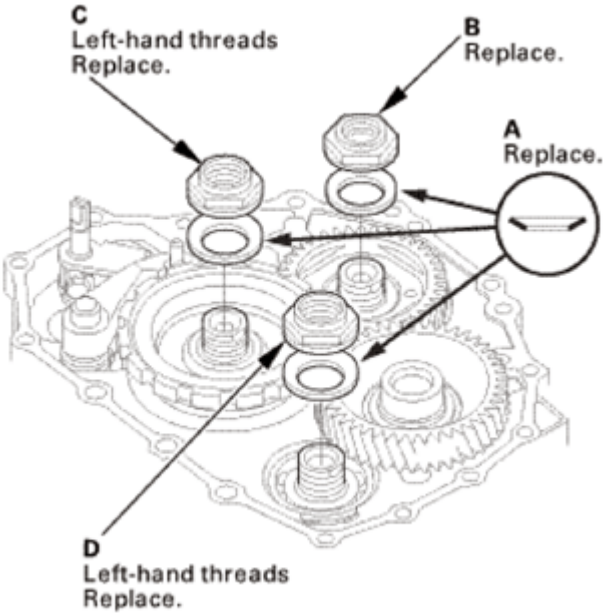

Fig. 642: Identifying Conical Spring Washers, Mainshaft Locknut, Countershaft Locknut And Secondary Shaft Locknut
Courtesy of AMERICAN HONDA MOTOR CO., INC.

12. Install new conical spring washers (A) in the direction shown.
13. Install a new mainshaft locknut (B), a new countershaft locknut (C), and a new secondary shaft locknut (D).
14. Tighten the locknuts to 167 N.m (17.0 kgf.m, 123 lbf.ft).

NOTE:

- **Use a torque wrench to tighten the locknut. Do not use an impact wrench.**
- **The countershaft and secondary shaft locknuts have left-hand threads.**

15. Remove the mainshaft holder.
16. Stake the locknuts into the shafts to a depth (A) of 0.7-1.3 mm (0.027-0.051 in) using a 3.5 mm punch (B).

GETtheMANUALS.org

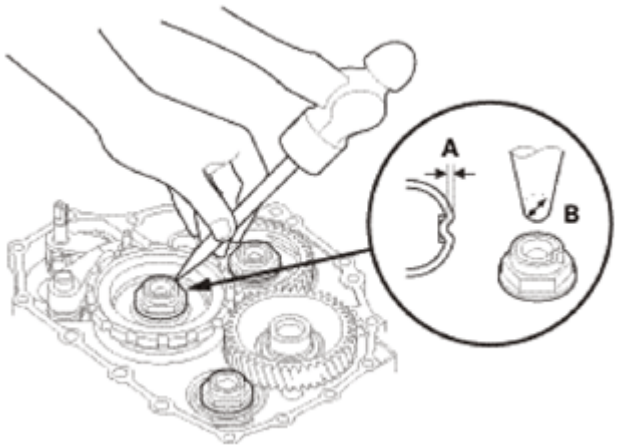

Fig. 643: Staking Locknuts Into Shafts Using Punch
Courtesy of AMERICAN HONDA MOTOR CO., INC.

17. Set the park lever in the P position.
18. Measure the distance (A) between the center of the park pawl shaft (B) and the center of the park lever roller pin (C) as shown.

    Standard: 57.7-58.7 mm (2.272-2.311 in)

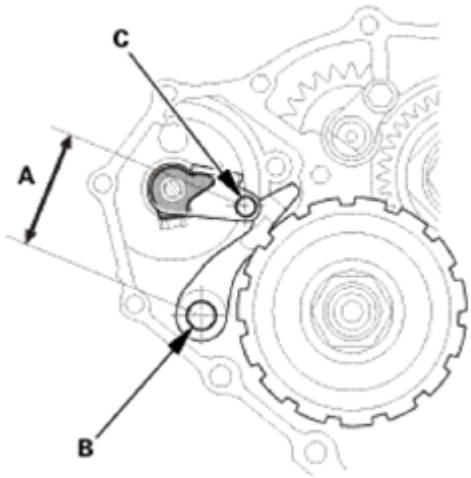

Fig. 644: Measuring Distance Between Center Of Park Pawl Shaft And Center Of Park Lever Roller Pin
Courtesy of AMERICAN HONDA MOTOR CO., INC.

19. If the measurement is out of the standard, select and install the appropriate park lever stop (A) from the table.

PARK LEVER STOP SPECIFICATION

Mark	B	C
1	11.00 mm (0.4331 in)	11.00 mm (0.4331 in)

GETtheMANUALS.org

2	10.80 mm (0.4252 in)	10.65 mm (0.4193 in)
3	10.60 mm (0.4173 in)	10.30 mm (0.4055 in)

20. After replacing the park lever stop, make sure the distance is within the tolerance.

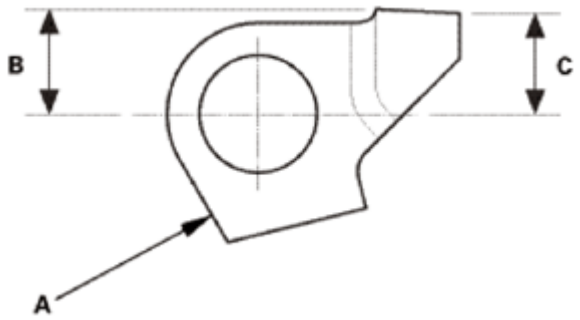

Fig. 645: Identifying Park Lever Stop Dimension
Courtesy of AMERICAN HONDA MOTOR CO., INC.

21. Pry up the lock tab (A) of the lock washer against the bolt head.

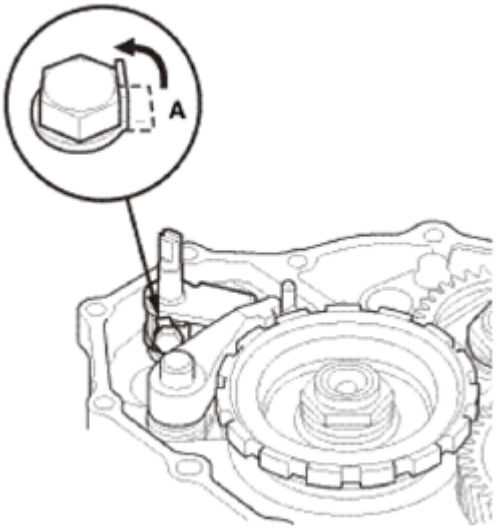

Fig. 646: Prying Up Lock Tab Of Lock Washer Against Bolt Head
Courtesy of AMERICAN HONDA MOTOR CO., INC.

5. ATF Feed Pipe/Lubrication Pipe
    1. Install the 6 x 201 mm ATF pipe (A).
    2. Install the ATF lubrication pipe (B).
    3. Install the 8 x 220 mm ATF pipe (C).
    4. Install the 8 x 198 mm ATF pipes (D).

GETtheMANUALS.org

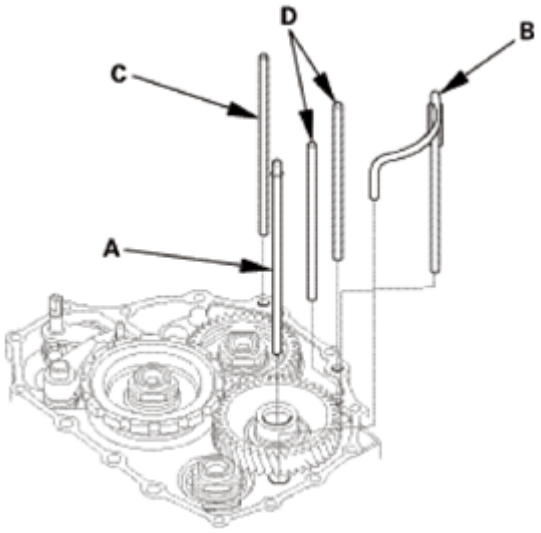

Fig. 647: Identifying ATF Feed Pipes And Lubrication Pipe
Courtesy of AMERICAN HONDA MOTOR CO., INC.

6. A/T Shift Solenoid Wire Harness - Reconnection
    1. Connect the shift solenoid valve connectors:
        - BLU wire to shift solenoid valve A.
        - ORN wire to shift solenoid valve B.
        - GRN wire to shift solenoid valve C.
        - YEL, WHT, and WHT wires to shift solenoid valve D.
        - RED wire to shift solenoid valve E.

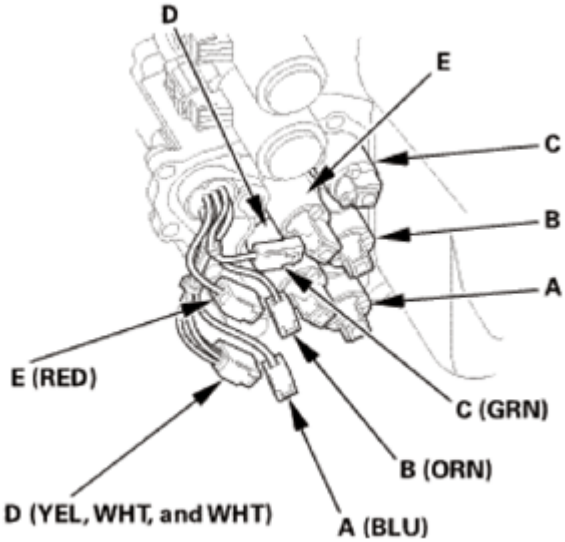

Fig. 648: Identifying Shift Solenoid Valves
Courtesy of AMERICAN HONDA MOTOR CO., INC.

GETtheMANUALS.org

7. A/T Shift Solenoid Cover
    1. Install the shift solenoid valve cover (A) with the dowel pins (B) and a new gasket (C).

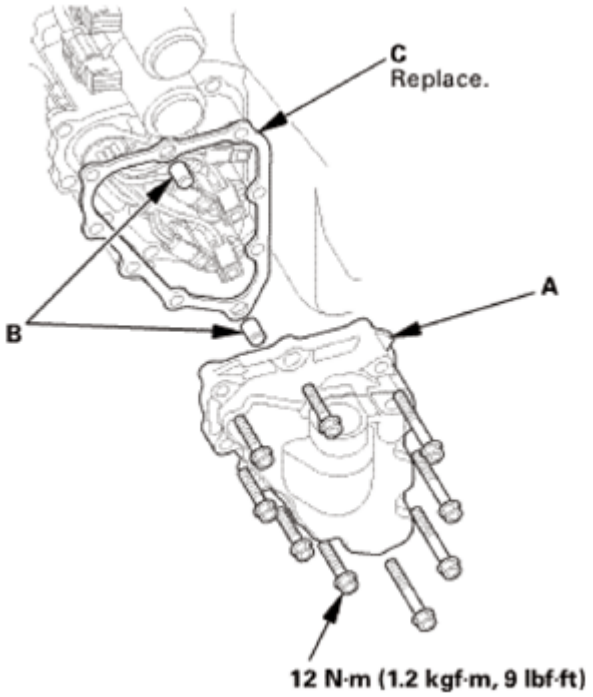

Fig. 649: Identifying Shift Solenoid Valve Cover, Dowel Pins, Gasket And Mounting Bolts With Torque Specification
Courtesy of AMERICAN HONDA MOTOR CO., INC.

8. Dipstick Guide Tube
    1. Install a new O-ring (A) on the ATF dipstick guide tube (B).
    2. Install the ATF dipstick guide tube.

GETtheMANUALS.org

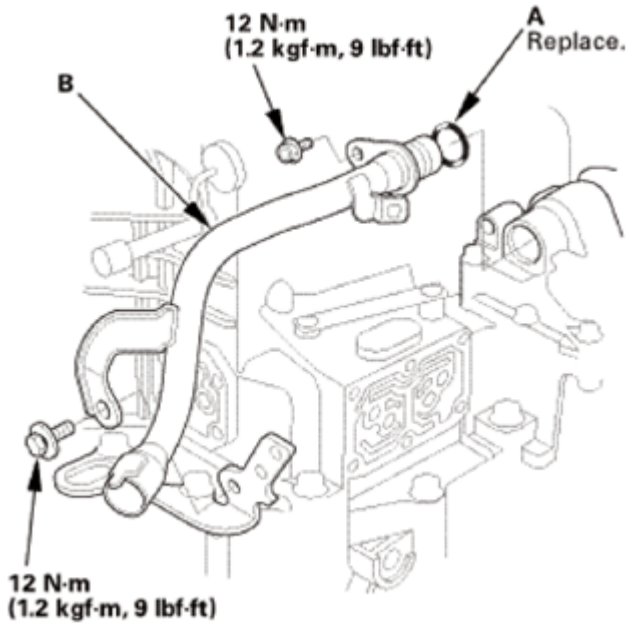

Fig. 650: Identifying ATF Dipstick Guide Tube, O-Ring And Mounting Bolts With Torque Specification
Courtesy of AMERICAN HONDA MOTOR CO., INC.

9. ATF Outlet Line
    1. Install the ATF outlet line (A) using new sealing washers (B).

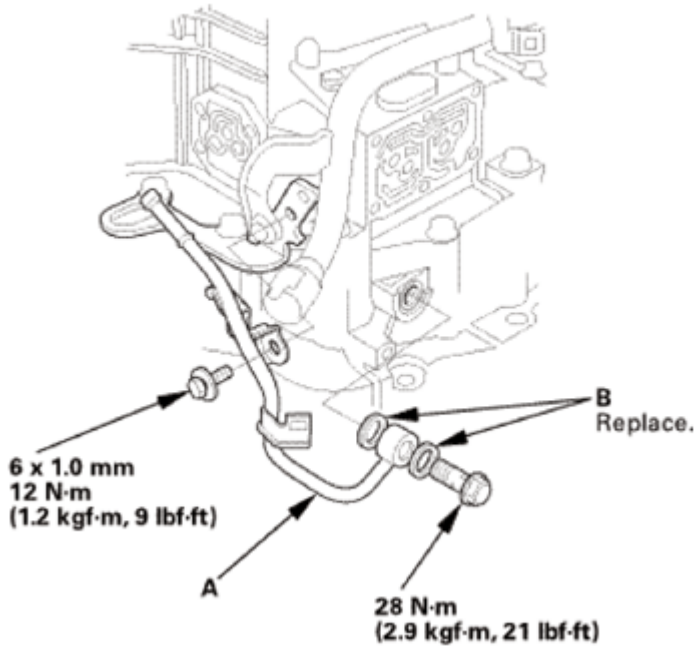

Fig. 651: Identifying ATF Outlet Line, Sealing Washers And Mounting Bolts With Torque Specification
Courtesy of AMERICAN HONDA MOTOR CO., INC.

GETtheMANUALS.org

10. ATF Inlet Line
    1. Install the ATF inlet line (A) using new sealing washers (B).

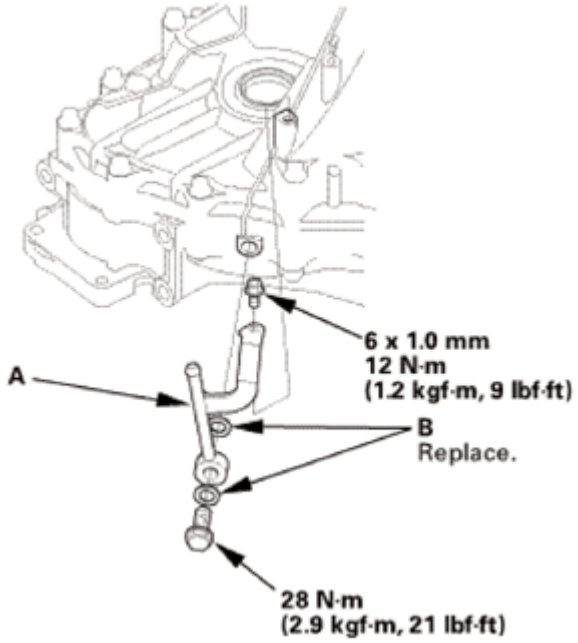

Fig. 652: Identifying ATF Inlet Line, Sealing Washers And Mounting Bolts With Torque Specification
Courtesy of AMERICAN HONDA MOTOR CO., INC.

11. A/T Clutch Pressure Control Solenoid Valve B and C
    1. Clean the mounting surfaces and the fluid passages of the solenoid valve body and the transmission housing.
    2. Install a new gasket (A) with the blue side toward the transmission housing, and Install the ATF joint pipes (D).
    3. Install new O-rings (E) over the ATF joint pipes.
    4. Install A/T clutch pressure control solenoid valves B and C with the clamp bracket (F).

GETtheMANUALS.org

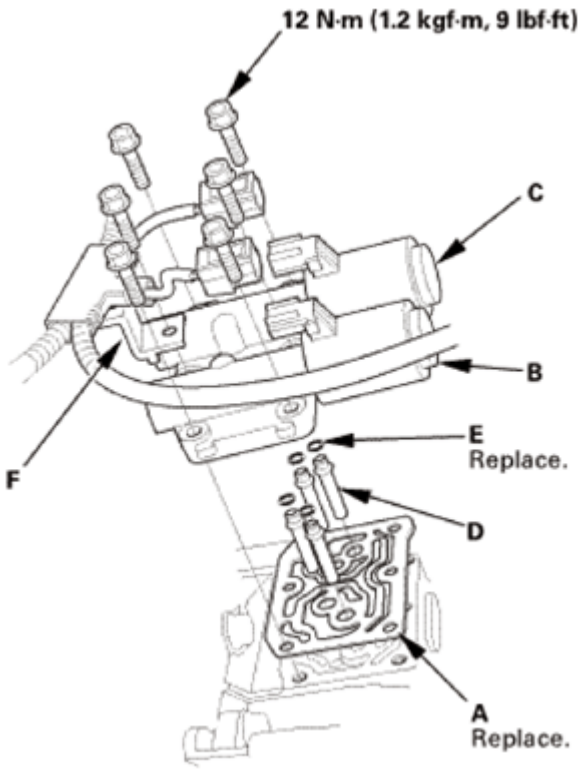

Fig. 653: Identifying Gasket, ATF Joint Pipes, O-Rings, A/T Clutch Pressure Control Solenoid Valves, Clamp Bracket And Mounting Bolts With Torque Specification
Courtesy of AMERICAN HONDA MOTOR CO., INC.

12. A/T Clutch Pressure Control Solenoid Valve A
    1. Clean the mounting surfaces and the fluid passages of the solenoid valve body and the transmission housing.
    2. Install a new gasket (B) with the blue side toward the transmission housing, and install the 35 mm ATF pipe (C) and the ATF joint pipes (D).
    3. Install new O-rings (E) over the ATF joint pipes.
    4. Install A/T clutch pressure control solenoid valve A.

GETtheMANUALS.org

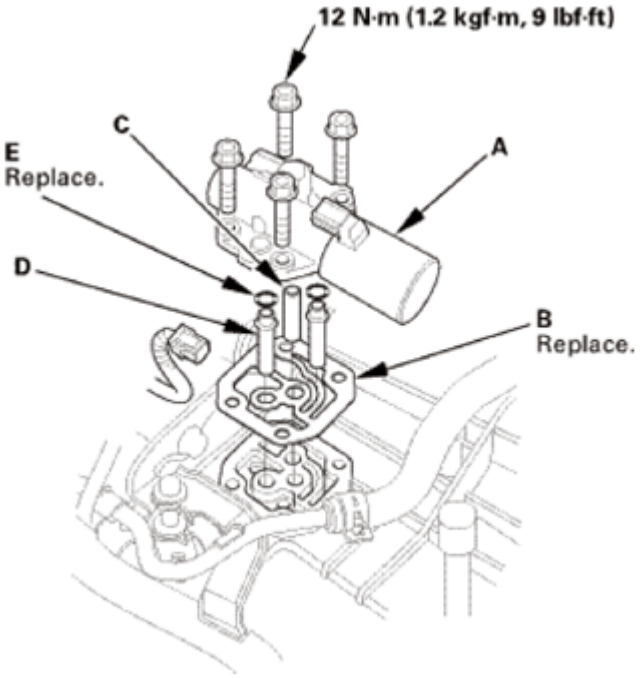

Fig. 654: Identifying A/T Clutch Pressure Control Solenoid Valve, Gasket, ATF Pipe, ATF Joint Pipes And Mounting Bolts With Torque Specification
Courtesy of AMERICAN HONDA MOTOR CO., INC.

13. Output Shaft (Countershaft) Speed Sensor
    1. Install a new O-ring (A) on the output shaft (countershaft) speed sensor (B).
    2. Install the output shaft (countershaft) speed sensor and the sensor washer (C).

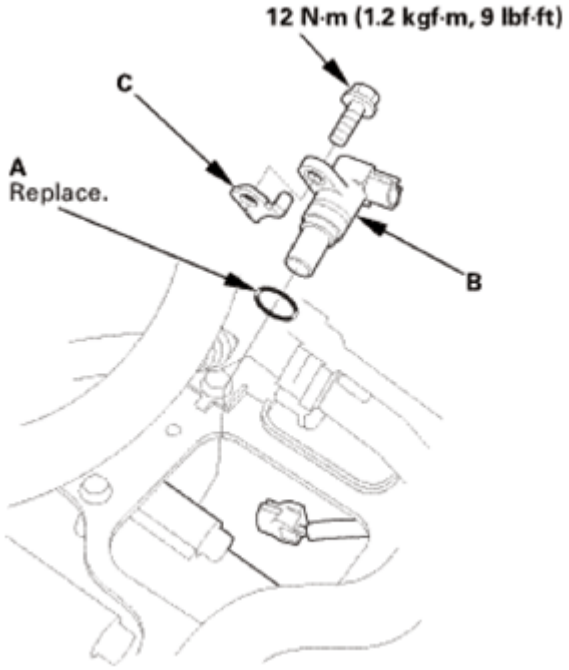

GETtheMANUALS.org

Fig. 655: Identifying Output Shaft (Countershaft) Speed Sensor, O-Ring, Sensor Washer And Mounting Bolts With Torque Specification
Courtesy of AMERICAN HONDA MOTOR CO., INC.

14. Input Shaft (Mainshaft) Speed Sensor
    1. Install a new O-ring (A) on the input shaft (mainshaft) speed sensor (B).
    2. Install the input shaft (mainshaft) speed sensor.

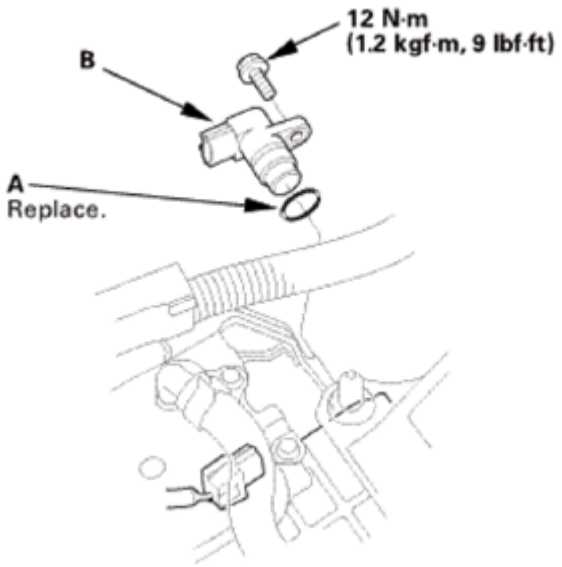

Fig. 656: Identifying Input Shaft (Mainshaft) Speed Sensor, O-Ring And Mounting Bolt With Torque Specification
Courtesy of AMERICAN HONDA MOTOR CO., INC.

15. Transmission End Cover
    1. Install the dowel pins (A) and a new gasket (B).
    2. Install new O-rings (C) over the ATF pipes.
    3. Install the end cover (D), and tighten the three special bolts (E) and the 6 x 1.0 mm bolts (F) (12 bolts).

GETtheMANUALS.org

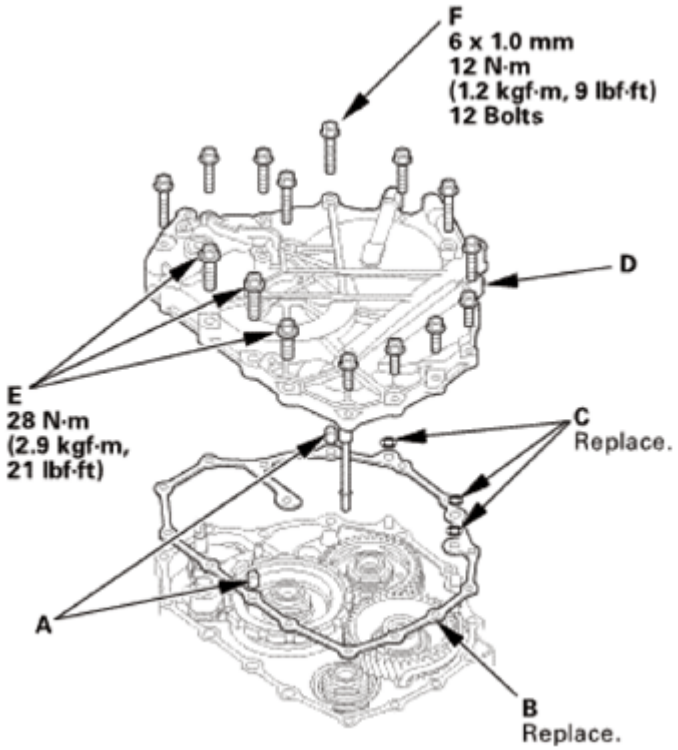

Fig. 657: Identifying Dowel Pins, Gasket, O-Rings, End Cover And Mounting Bolts With Torque Specification
Courtesy of AMERICAN HONDA MOTOR CO., INC.

16. Transmission Range Switch Subharness
    1. Install the clamp brackets (A).
    2. Install the transmission range switch subharness (B).

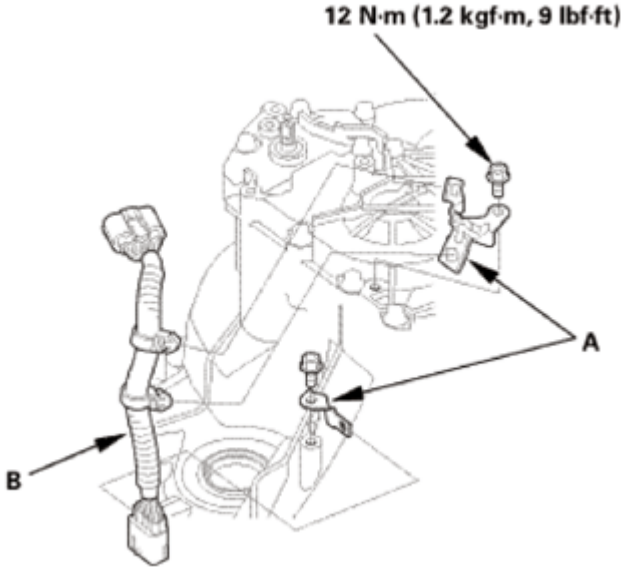

GETtheMANUALS.org

Fig. 658: Identifying Transmission Range Switch Subharness, Clamp Brackets And Mounting Bolts With Torque Specification
Courtesy of AMERICAN HONDA MOTOR CO., INC.

17. Transmission Range Switch
    1. Make sure the selector control shaft is in the N position. If necessary, move the selector control shaft to the N position.

NOTE: **Do not use the selector control shaft to adjust the shift position. If the selector control shaft tips are squeezed together it will cause a faulty signal or position due to play between the selector control shaft and switch.**

Fig. 659: Moving Selector Control Shaft To N Position
Courtesy of AMERICAN HONDA MOTOR CO., INC.

2. Align the cutouts (A) on the rotary-frame with the neutral positioning cutouts (B) on the transmission range switch (C), then put a 2.0 mm (0.079 in) feeler gauge blade (D) in the cutouts to hold the switch in the N position.

NOTE: **Be sure to use a 2.0 mm (0.079 in) blade or equivalent to hold the switch in the N position.**

GETtheMANUALS.org

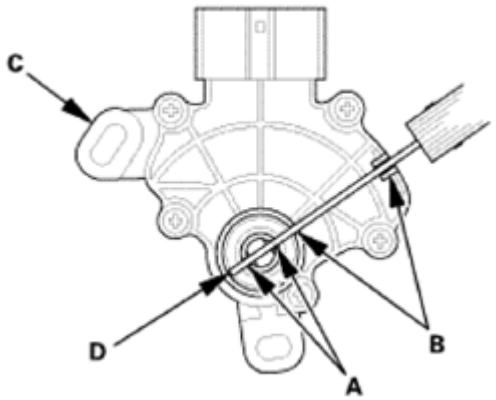

Fig. 660: Aligning Cutouts On Rotary-Frame With Neutral Positioning Cutouts On Transmission Range Switch
Courtesy of AMERICAN HONDA MOTOR CO., INC.

3. Install the transmission range switch (A) gently on the selector control shaft (B) while holding it in the N position with the 2.0 mm (0.079 in) blade (C).

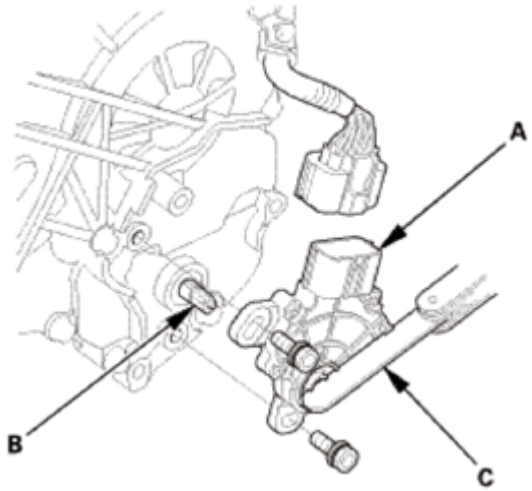

Fig. 661: Identifying Transmission Range Switch, Selector Control Shaft And Blade
Courtesy of AMERICAN HONDA MOTOR CO., INC.

4. Tighten the bolts on the transmission range switch (A) while you continue holding the N position.

NOTE: Do not move the transmission range switch when tightening the bolts.

5. Remove the feeler gauge (B).
6. Check the connector (C) for corrosion, dirt, or oil, and clean or repair if necessary, then connect the connector securely.

GETtheMANUALS.org

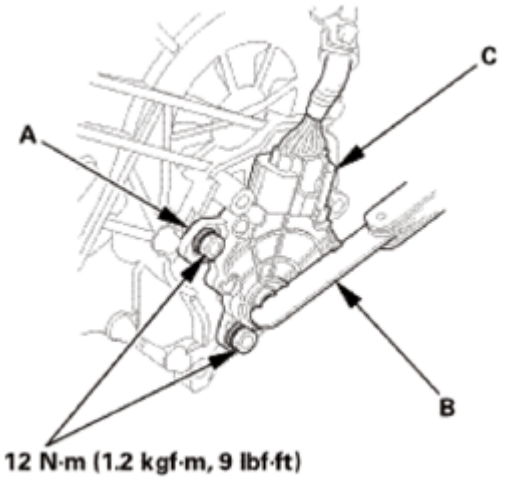

Fig. 662: Identifying Transmission Range Switch, Connector, Feeler Gauge And Mounting Bolts With Torque Specification
Courtesy of AMERICAN HONDA MOTOR CO., INC.

18. Transmission Range Switch Cover
    1. Install the transmission range switch cover (A).

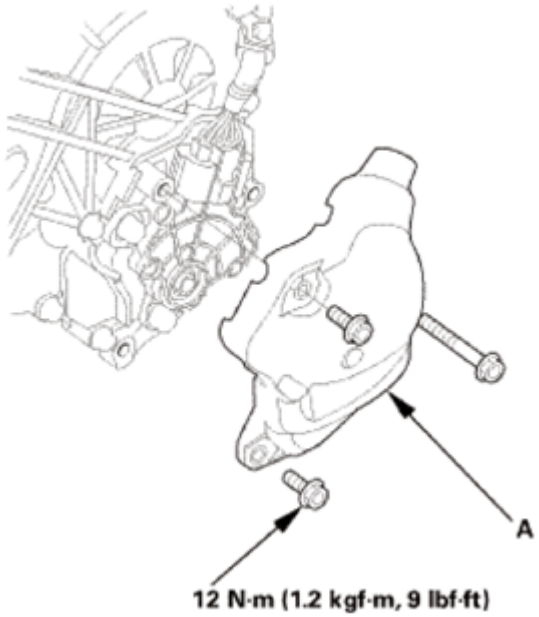

Fig. 663: Identifying Transmission Range Switch Cover And Mounting Bolts With Torque Specification
Courtesy of AMERICAN HONDA MOTOR CO., INC.

A/T HOUSING MAINSHAFT BEARING REPLACEMENT

SPECIAL TOOL REQUIRED

GETtheMANUALS.org

Image	Description/Tool Number
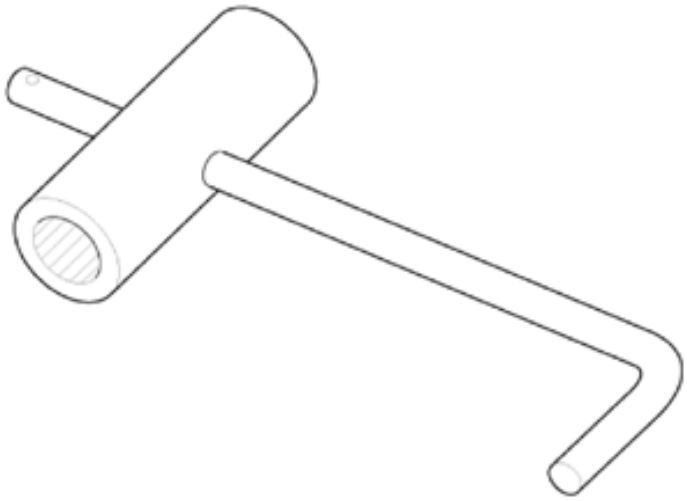	Mainshaft Holder 07GAB-PF50101
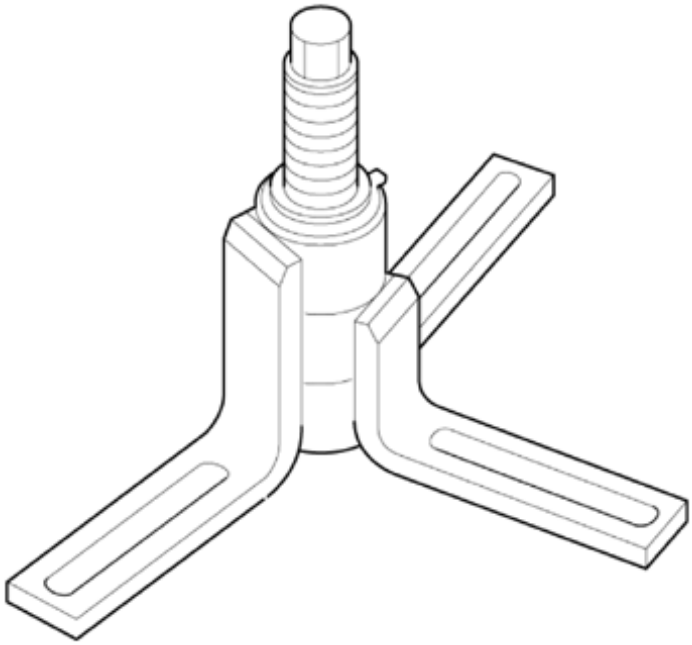	Housing Puller 07HAC-PK40102
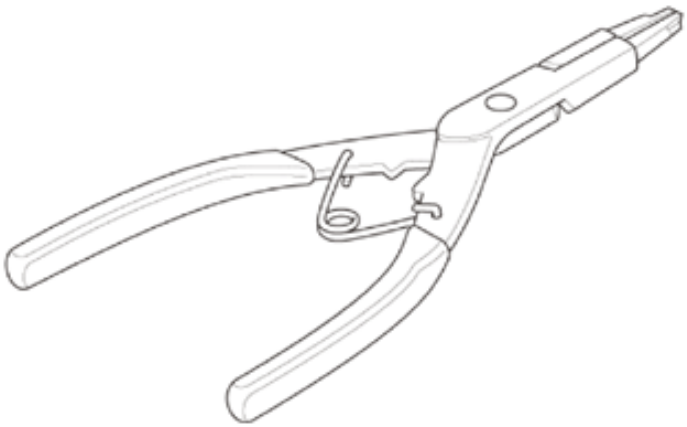	Snap Ring Pliers 07LGC-0010100

GETtheMANUALS.org

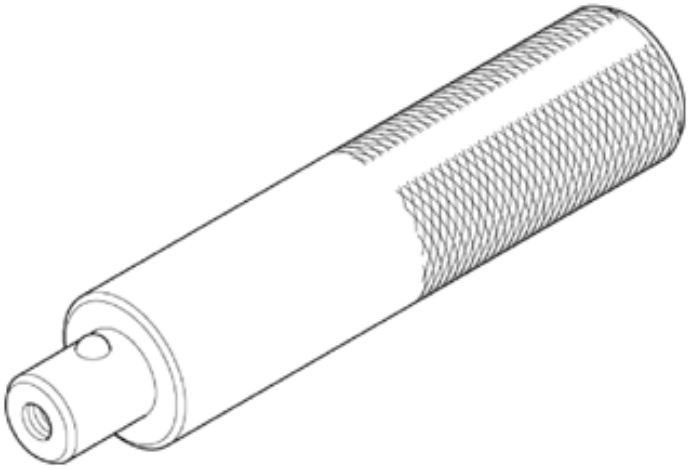	Driver Handle, 15 x 135L 07749-0010000
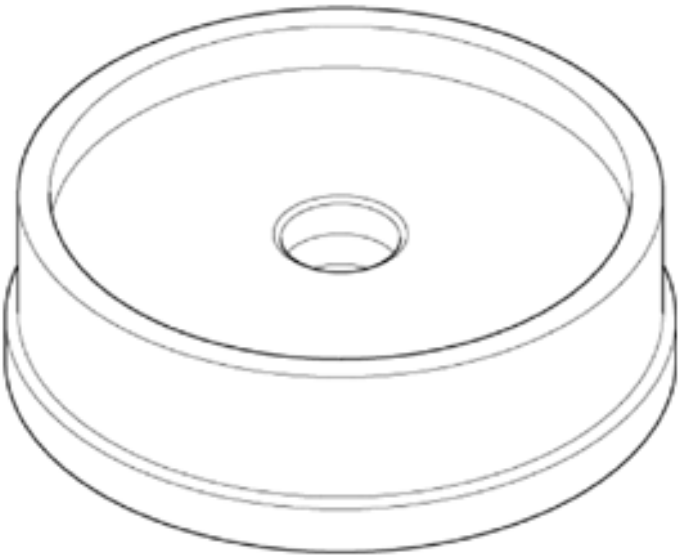	Bearing Driver Attachment, 78 x 80 mm 07NAD-PX40100

REMOVAL

NOTE: The illustration shows AWD/4WD transmission.

1. Transmission Range Switch Cover
    1. Remove the transmission range switch cover (A).

GETtheMANUALS.org

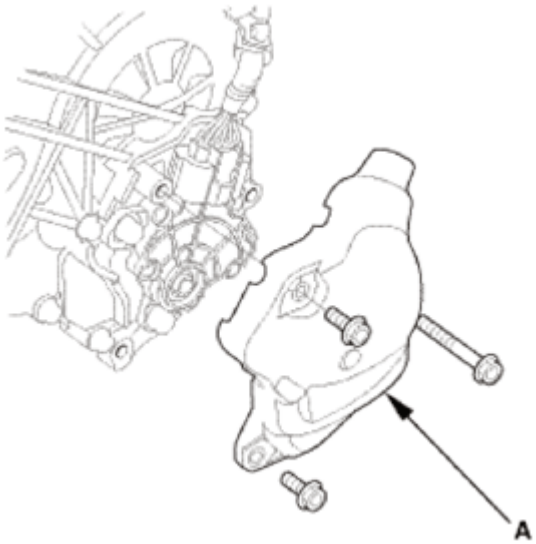

Fig. 664: Identifying Transmission Range Switch Cover With Bolts
Courtesy of AMERICAN HONDA MOTOR CO., INC.

2. Transmission Range Switch
    1. Remove the transmission range switch (A).

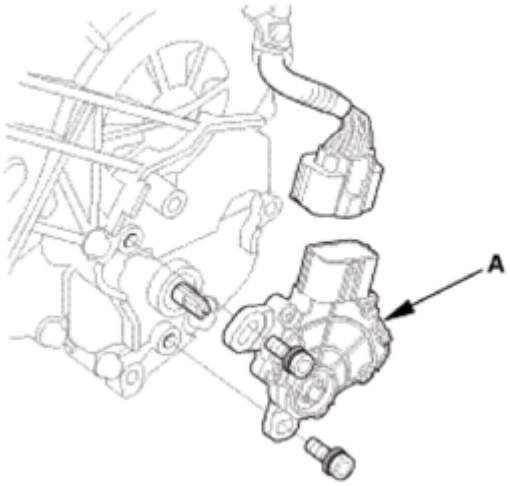

Fig. 665: Identifying Transmission Range Switch With Bolts
Courtesy of AMERICAN HONDA MOTOR CO., INC.

3. Transmission Range Switch Subharness
    1. Remove the transmission range switch subharness (A).
    2. Remove the clamp brackets (B).

GETtheMANUALS.org

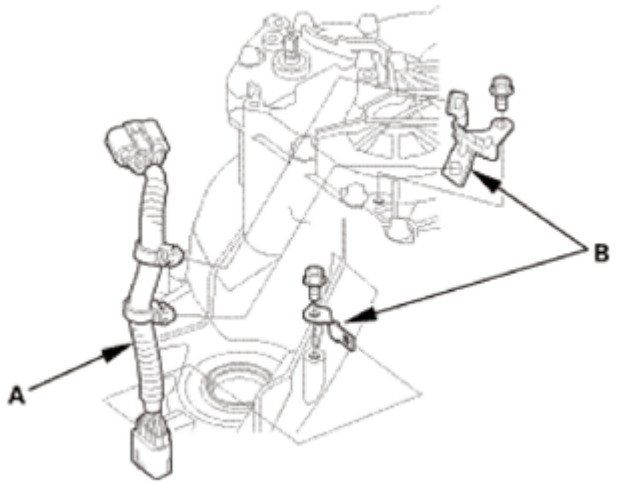

Fig. 666: Identifying Transmission Range Switch Subharness And Clamp Brackets
Courtesy of AMERICAN HONDA MOTOR CO., INC.

4. Transmission End Cover
    1. Remove the end cover (A), the dowel pins (B), the O-rings (C), and the gasket (D).

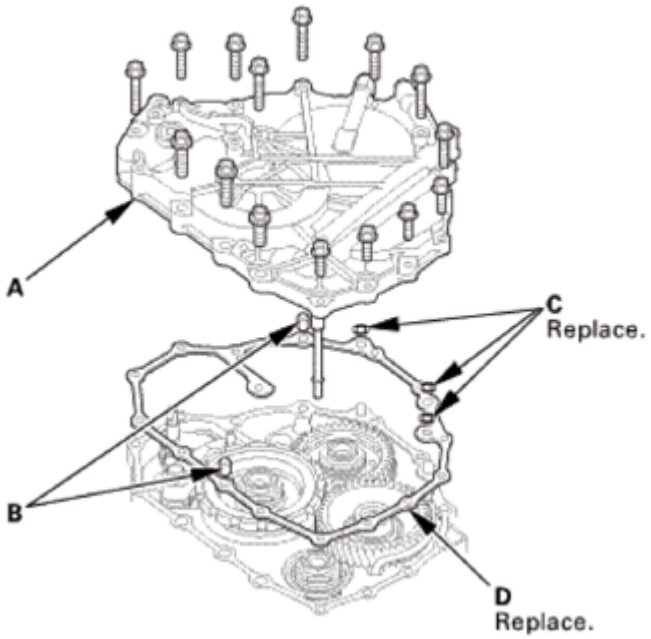

Fig. 667: Identifying Transmission End Cover, Dowel Pins, O-Rings And Gasket With Bolts
Courtesy of AMERICAN HONDA MOTOR CO., INC.

5. Input Shaft (Mainshaft) Speed Sensor
    1. Remove the input shaft (mainshaft) speed sensor (A).
    2. Remove the O-ring (B) from the input shaft (mainshaft) speed sensor.

GETtheMANUALS.org

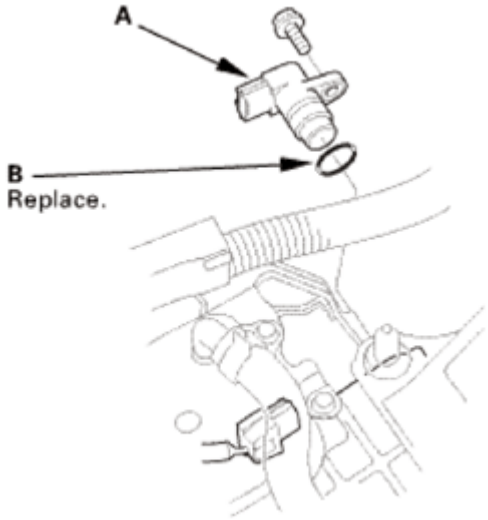

Fig. 668: Identifying Input Shaft (Mainshaft) Speed Sensor And O-Ring
Courtesy of AMERICAN HONDA MOTOR CO., INC.

6. Output Shaft (Countershaft) Speed Sensor
    1. Remove the output shaft (countershaft) speed sensor (A) and the sensor washer (B).
    2. Remove the O-ring (C) from the output shaft (countershaft) speed sensor.

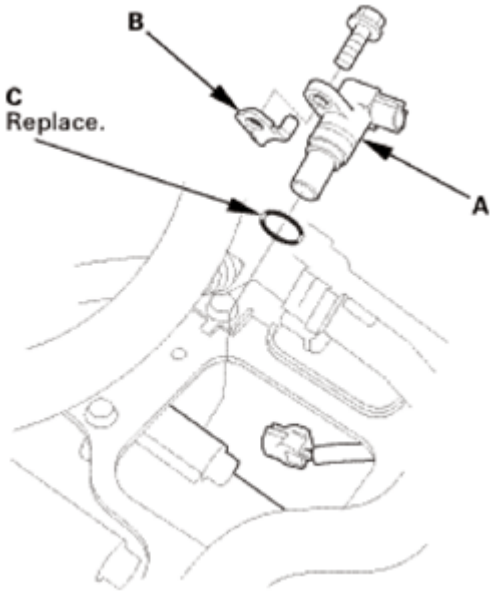

Fig. 669: Identifying Output Shaft (Countershaft) Speed Sensor, Sensor Washer And O-Ring
Courtesy of AMERICAN HONDA MOTOR CO., INC.

7. A/T Clutch Pressure Control Solenoid Valve A
    1. Remove A/T clutch pressure control solenoid valve A.
    2. Remove the 35 mm ATF pipe (B), the ATF joint pipes (C), the O-rings (D), and the gasket (E).

GETtheMANUALS.org

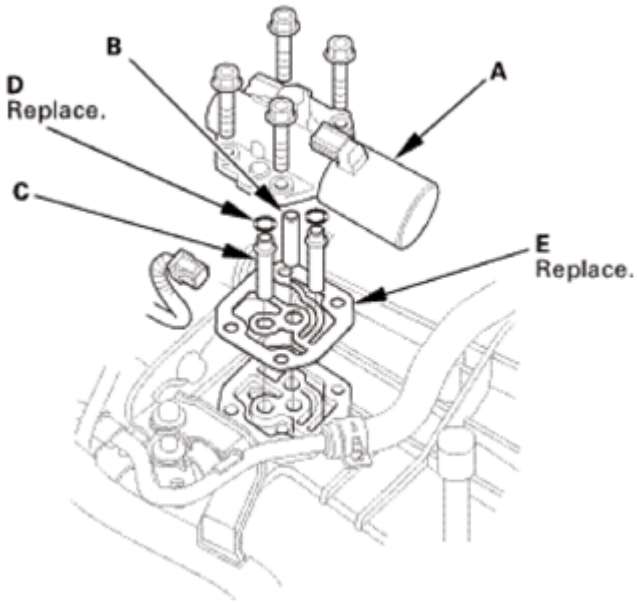

Fig. 670: Identifying A/T Clutch Pressure Control Solenoid Valve, ATF Pipe, ATF Joint Pipes, O-Rings And Gasket With Bolts
Courtesy of AMERICAN HONDA MOTOR CO., INC.

8. A/T Clutch Pressure Control Solenoid Valve B and C
    1. Remove the clamp bracket (A) and A/T clutch pressure control solenoid valves B and C.
    2. Remove the ATF joint pipes (D), the O-rings (E), and the gasket (F).

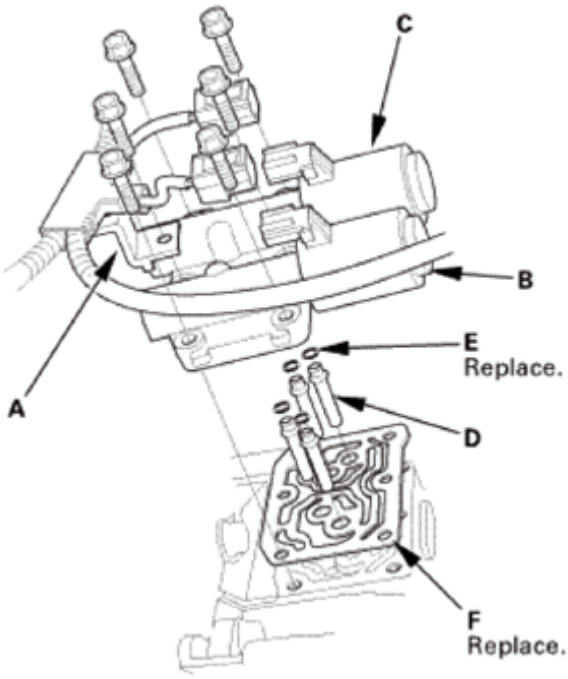

Fig. 671: Identifying A/T Clutch Pressure Control Solenoid Valves, Clamp Bracket, ATF

GETtheMANUALS.org

Joint Pipes, O-Rings And Gasket
Courtesy of AMERICAN HONDA MOTOR CO., INC.

9. ATF Inlet Line
    1. Remove the banjo bolt (A) and the sealing washers (B).
    2. Remove the ATF inlet line (C).

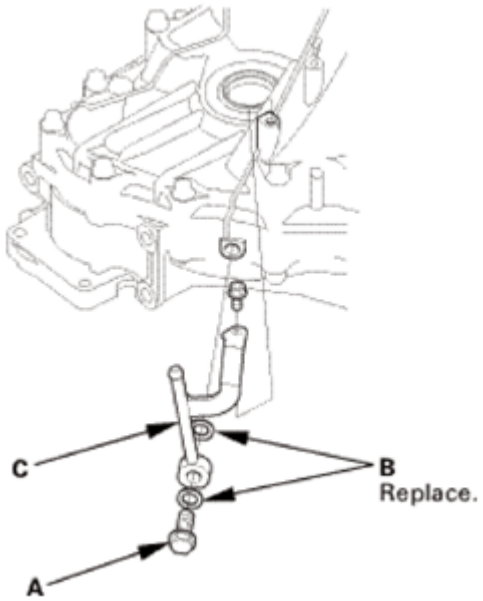

Fig. 672: Identifying ATF Inlet Line, Banjo Bolt And Sealing Washers
Courtesy of AMERICAN HONDA MOTOR CO., INC.

10. ATF Outlet Line
    1. Remove the banjo bolt (A) and the sealing washers (B).
    2. Remove the ATF outlet line (C).

GETtheMANUALS.org

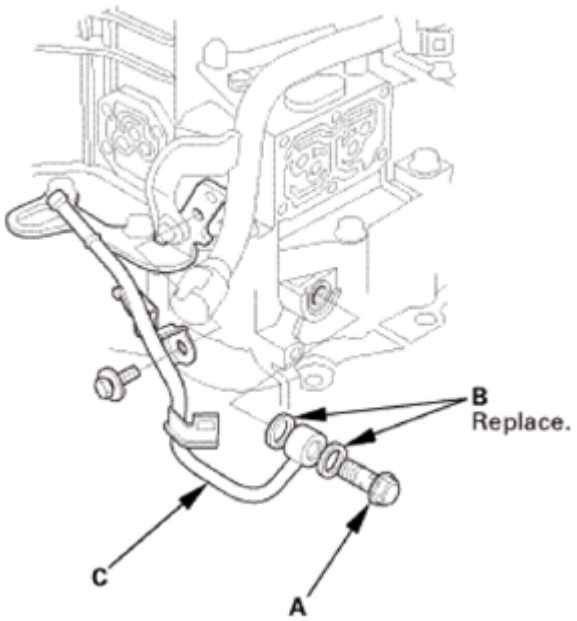

Fig. 673: Identifying ATF Outlet Line, Banjo Bolt And Sealing Washers
Courtesy of AMERICAN HONDA MOTOR CO., INC.

11. Dipstick Guide Tube
    1. Remove the ATF dipstick guide tube (A).
    2. Remove the O-ring (B) from the ATF dipstick guide tube.

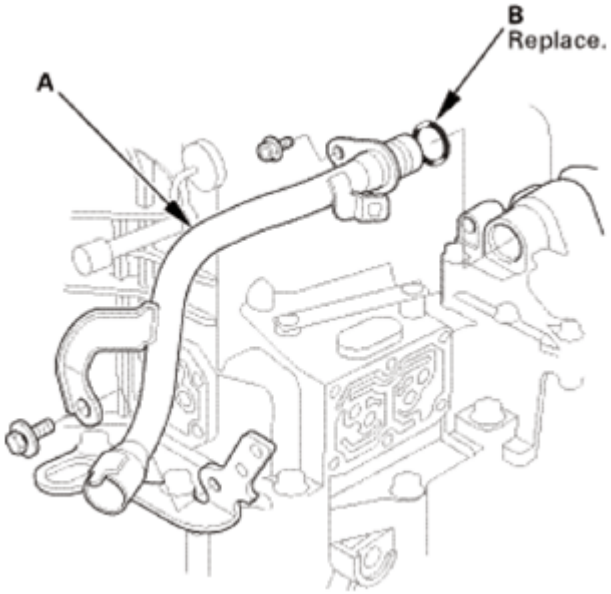

Fig. 674: Identifying ATF Dipstick Guide Tube And O-Ring
Courtesy of AMERICAN HONDA MOTOR CO., INC.

12. A/T Shift Solenoid Cover

GETtheMANUALS.org

1. Remove the shift solenoid valve cover (A), the dowel pins (B), and the gasket (C).

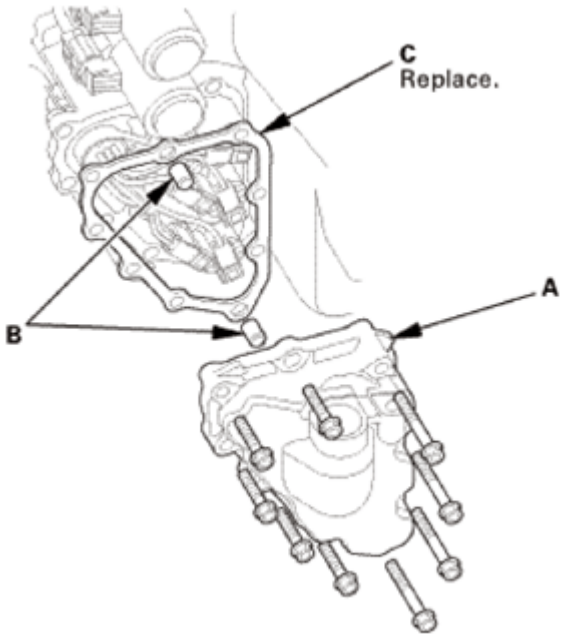

Fig. 675: Identifying Shift Solenoid Valve Cover, Dowel Pins And Gasket
Courtesy of AMERICAN HONDA MOTOR CO., INC.

13. A/T Shift Solenoid Wire Harness - Disconnection
    1. Disconnect the connectors.

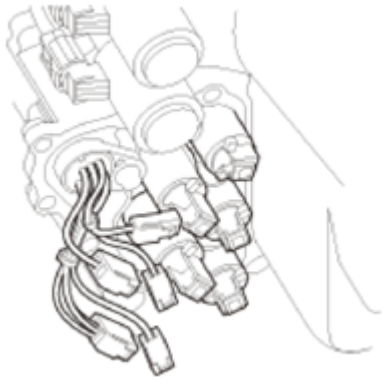

Fig. 676: Identifying A/T Shift Solenoid Wire Harness Connectors
Courtesy of AMERICAN HONDA MOTOR CO., INC.

14. ATF Feed Pipe/Lubrication Pipe
    1. Remove the 6 x 201 mm ATF pipe (A).
    2. Remove the ATF lubrication pipe (B).
    3. Remove the 8 x 220 mm ATF pipe (C).
    4. Remove the 8 x 198 mm ATF pipes (D).

GETtheMANUALS.org

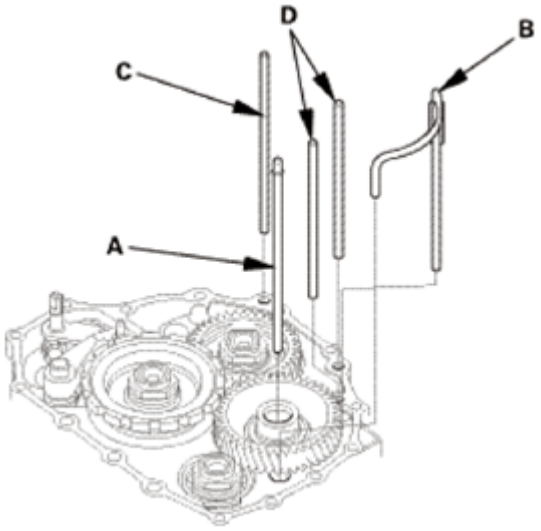

Fig. 677: Identifying ATF Feed Pipes And Lubrication Pipe
Courtesy of AMERICAN HONDA MOTOR CO., INC.

15. End Cover Idler Gear Assembly
    1. Install the mainshaft holder onto the mainshaft.
    2. Engage the park pawl with the park gear.

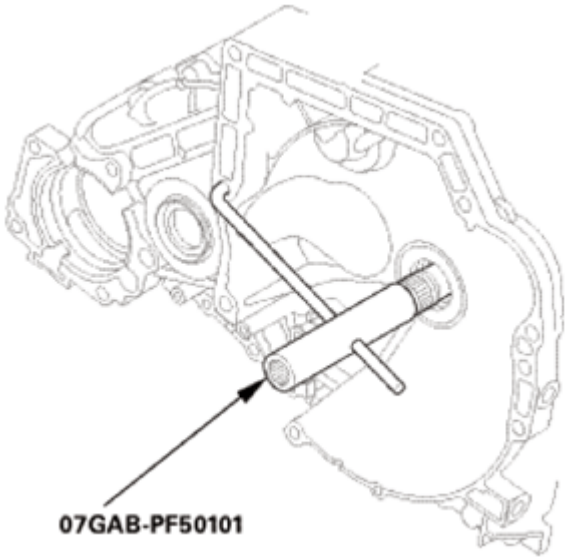

Fig. 678: Installing Mainshaft Holder Onto Mainshaft
Courtesy of AMERICAN HONDA MOTOR CO., INC.

    3. Using a chisel, cut the lock tab (A) of the locknut (B).

NOTE: Keep all of the chiseled particles out of the transmission.

GETtheMANUALS.org

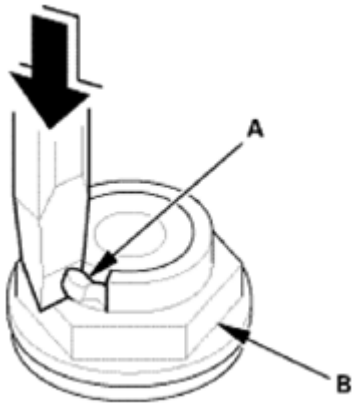

Fig. 679: Cutting Lock Tab Of Locknut Using Chisel
Courtesy of AMERICAN HONDA MOTOR CO., INC.

4. Remove the locknuts (A) and the conical spring washers (B) from each shaft.

NOTE:

- **The countershaft and secondary shaft locknuts have left-hand threads.**
- **Keep all of the chiseled particles out of the transmission.**
- **Clean the old locknuts; they are used to install the press fit idler gears and park gear.**

5. Remove the mainshaft holder.

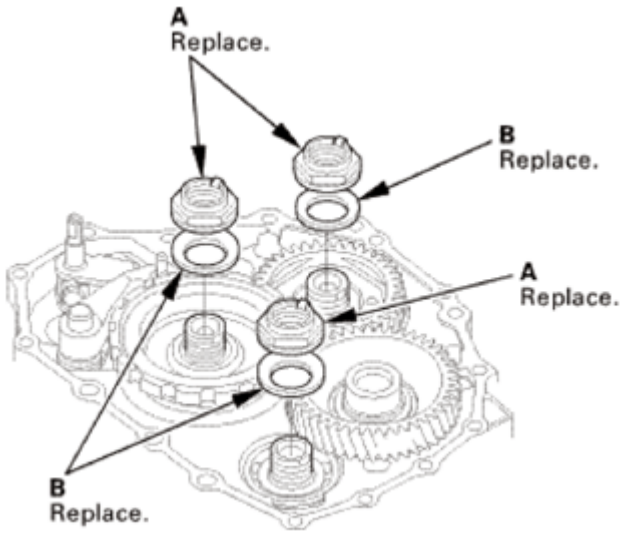

Fig. 680: Identifying Locknuts And Conical Spring Washers
Courtesy of AMERICAN HONDA MOTOR CO., INC.

6. Remove the park pawl (A), the park pawl spring (B), the park pawl shaft (C), and the stop shaft (D).

GETtheMANUALS.org

7. Pry down the lock tab (E) of the lock washer (F).
8. Remove the lock bolt (G) and the lock washer.
9. Remove the park lever (H), the park lever stop (I), and the park lever spring (J).

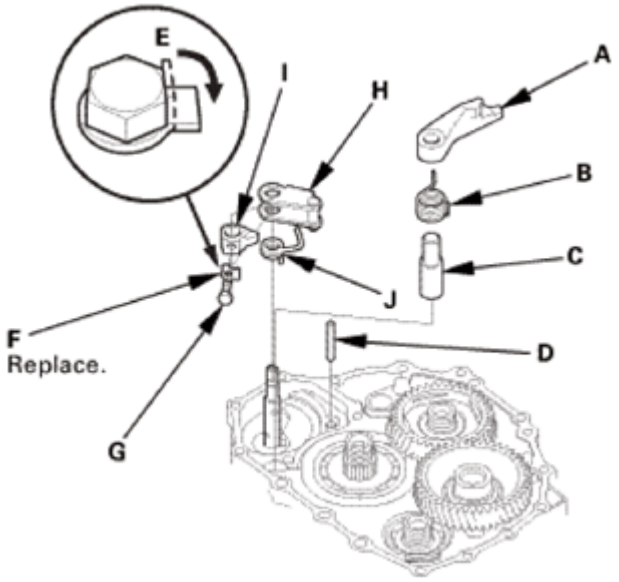

Fig. 681: Prying Down Lock Tab Of Lock Washer
Courtesy of AMERICAN HONDA MOTOR CO., INC.

10. Place a spacer (A) on the countershaft (B).
11. Set a commercially available bearing puller (C) on the park gear (D).
12. Remove the park gear.

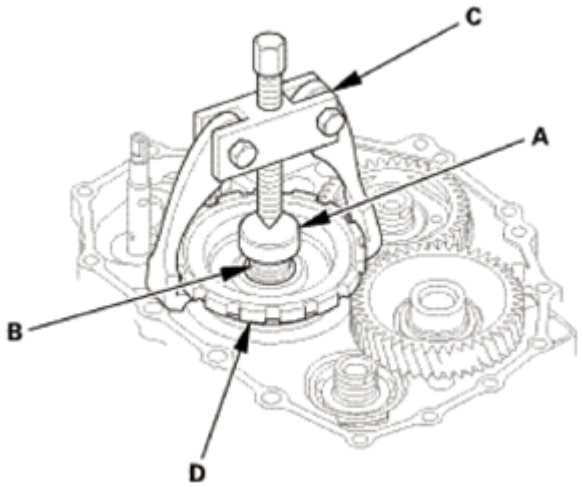

Fig. 682: Setting Commercially Available Bearing Puller On Park Gear
Courtesy of AMERICAN HONDA MOTOR CO., INC.

13. Install a puller (A) with two 6 x 1.0 mm bolts (B) on the mainshaft idler gear (C).

GETtheMANUALS.org

14. Set a spacer (D) between the puller and the mainshaft (E).
15. Remove the mainshaft idler gear.

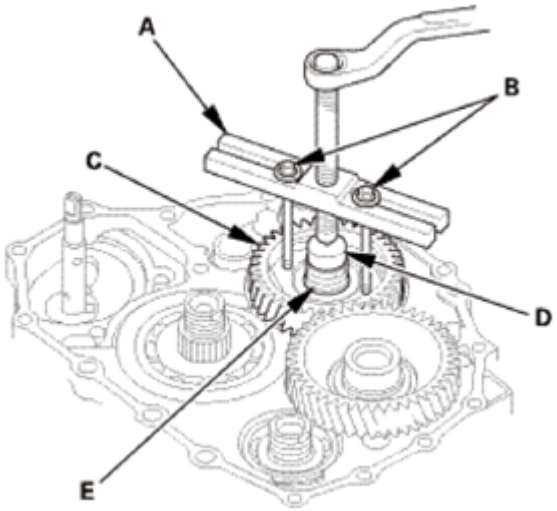

Fig. 683: Installing Puller With 6 X 1.0 mm Bolts On Mainshaft Idler Gear
Courtesy of AMERICAN HONDA MOTOR CO., INC.

16. Automatic Transmission Housing
    1. Align the spring pin (A) on the selector control shaft (B) with the transmission housing groove (C).

    NOTE: **Do not squeeze the end of the selector control shaft tips together when turning the control shaft. If the tips are squeezed together, it will cause a faulty shift position signal or position due to the play between the selector control shaft and the transmission range switch.**

    2. Remove the transmission housing mounting bolts (D) (2WD: 19 bolts, AWD/4WD: 20 bolts).
    3. Install the housing puller over the mainshaft.
    4. Remove the transmission housing (E) using the housing puller.
    5. Remove the dowel pins (F) and the gasket (G).

GETtheMANUALS.org

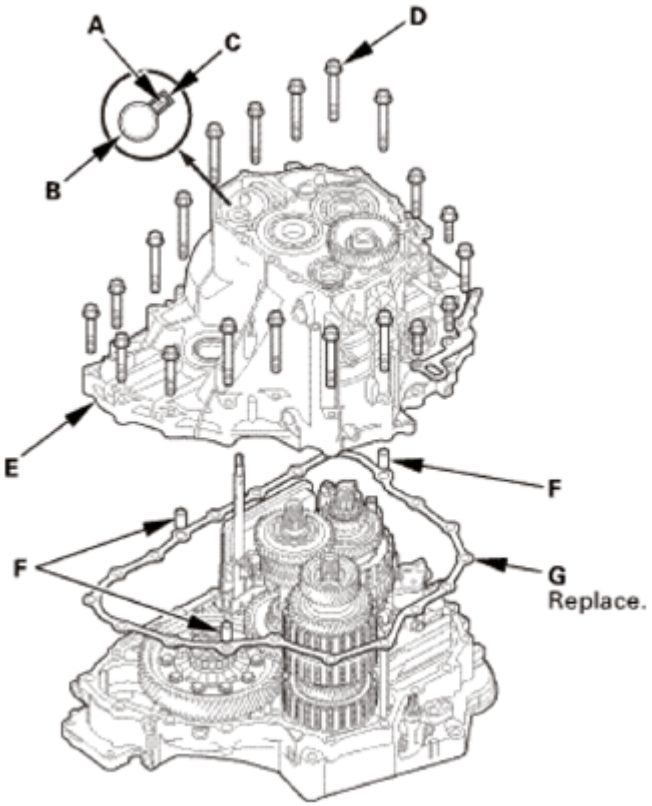

Fig. 684: Identifying Spring Pin, Selector Control Shaft, Transmission Housing Groove, Transmission Housing, Mounting Bolts And Gasket
Courtesy of AMERICAN HONDA MOTOR CO., INC.

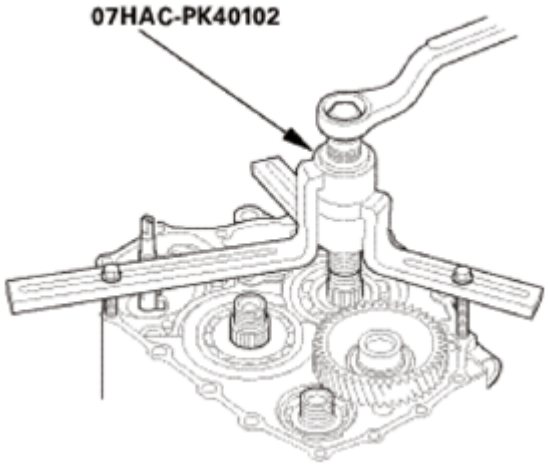

Fig. 685: Installing Housing Puller Over Mainshaft
Courtesy of AMERICAN HONDA MOTOR CO., INC.

17. Reverse Idler Gear
    1. Remove the bolt (A) securing the reverse idler gear shaft holder (B).
    2. Install a 5 x 0.8 mm bolt (C) in the reverse gear shaft, and pull it to remove the reverse idler gear

GETtheMANUALS.org

shaft (D) and the reverse idler gear shaft holder together.

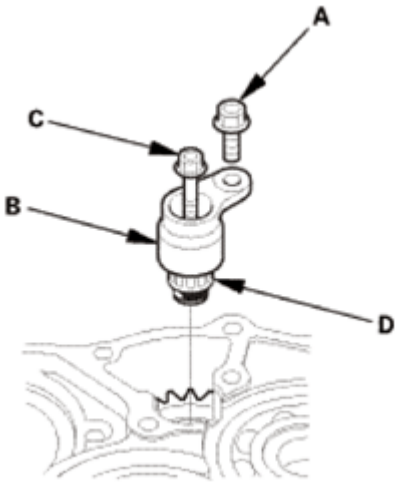

Fig. 686: Identifying Reverse Idler Gear Shaft, Holder And Bolts
Courtesy of AMERICAN HONDA MOTOR CO., INC.

3. Remove the reverse idler gear (A).

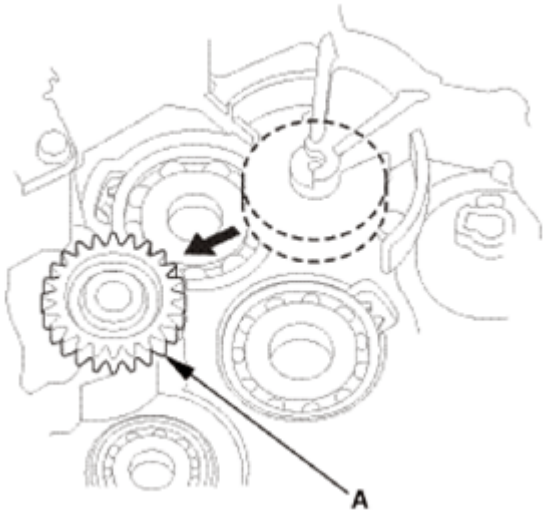

Fig. 687: Removing Reverse Idler Gear
Courtesy of AMERICAN HONDA MOTOR CO., INC.

18. A/T Idler Gear/Idler Gear Shaft Assembly
    1. Remove the snap ring (A), the cotter retainer (B), and the cotters (C).
    2. Remove the idler gear shaft/idler gear assembly (D).

GETtheMANUALS.org

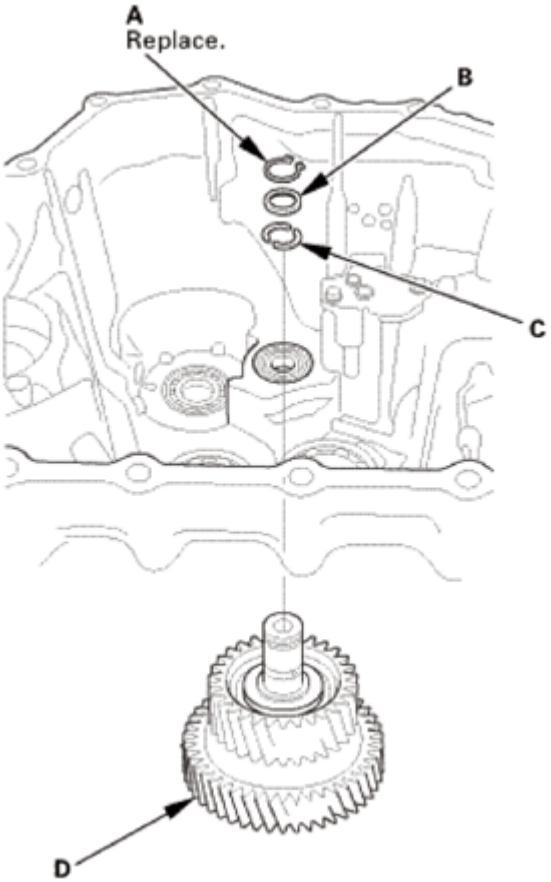

Fig. 688: Identifying Idler Gear Shaft/Idler Gear Assembly, Snap Ring, Cotter Retainer And Cotters
Courtesy of AMERICAN HONDA MOTOR CO., INC.

19. Transmission Housing Mainshaft Bearing
    1. Expand the snap ring using the snap ring pliers.
    2. Drive the mainshaft bearing out using the driver handle and the 78 x 80 mm bearing driver attachment.

NOTE: **Do not remove the snap ring unless it is necessary to clean the grooves in the transmission housing.**

GETtheMANUALS.org

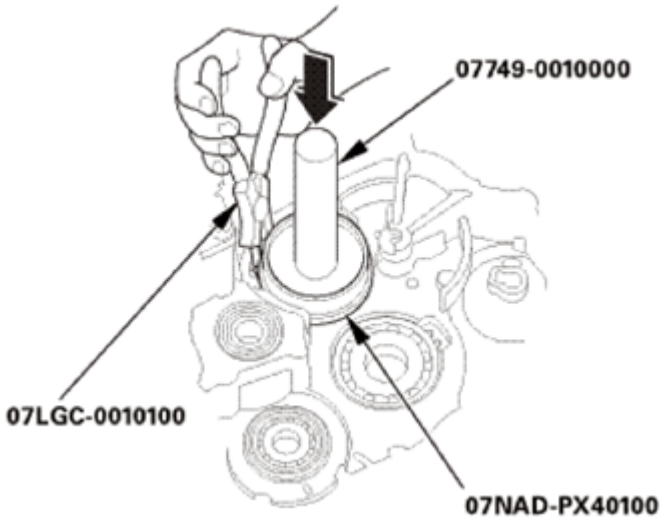

Fig. 689: Removing Snap Ring Using Snap Ring Pliers
Courtesy of AMERICAN HONDA MOTOR CO., INC.

INSTALLATION

NOTE:

- **Apply a light coat of clean ATF on all moving parts before installation.**
- **The illustration shows AWD/4WD transmission.**

1. Transmission Housing Mainshaft Bearing
    1. Expand the snap ring using the snap ring pliers.
    2. Install the mainshaft bearing (A) part-way into the housing using the driver handle and the 78 x 80 mm bearing driver attachment.
    3. Release the snap ring pliers, then push the bearing down into the transmission housing until the snap ring snaps in place around it.

GETtheMANUALS.org

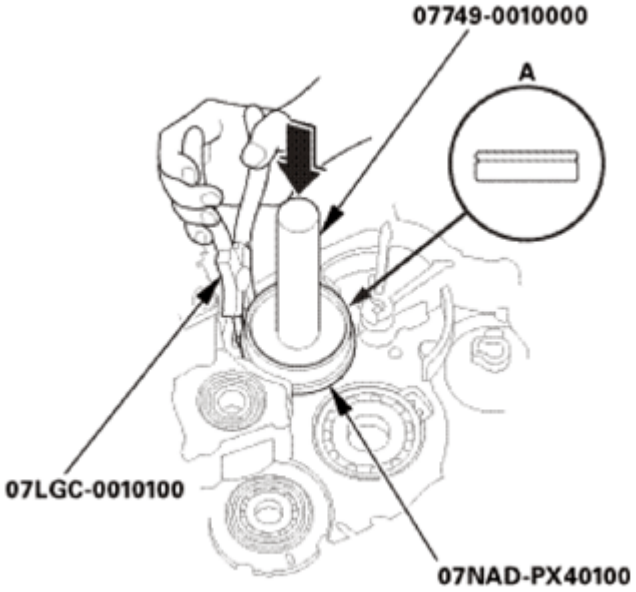

Fig. 690: Installing Mainshaft Bearing Part-Way Into Housing Using Driver Handle And Bearing Driver Attachment
Courtesy of AMERICAN HONDA MOTOR CO., INC.

4. After installing the bearing check that the snap ring (A) is seated in the bearing and the transmission housing groove, and that the snap ring end gap (B) is correct.

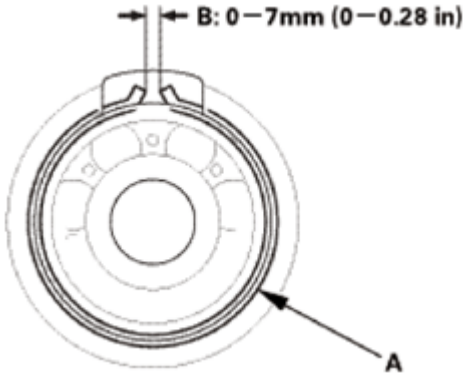

Fig. 691: Checking Snap Ring End Gap
Courtesy of AMERICAN HONDA MOTOR CO., INC.

2. A/T Idler Gear/Idler Gear Shaft Assembly
    1. Install the idler gear shaft/idler gear assembly (A).
    2. Install the cotters (B), the cotter retainer (C), and a new snap ring (D) as shown.

GETtheMANUALS.org

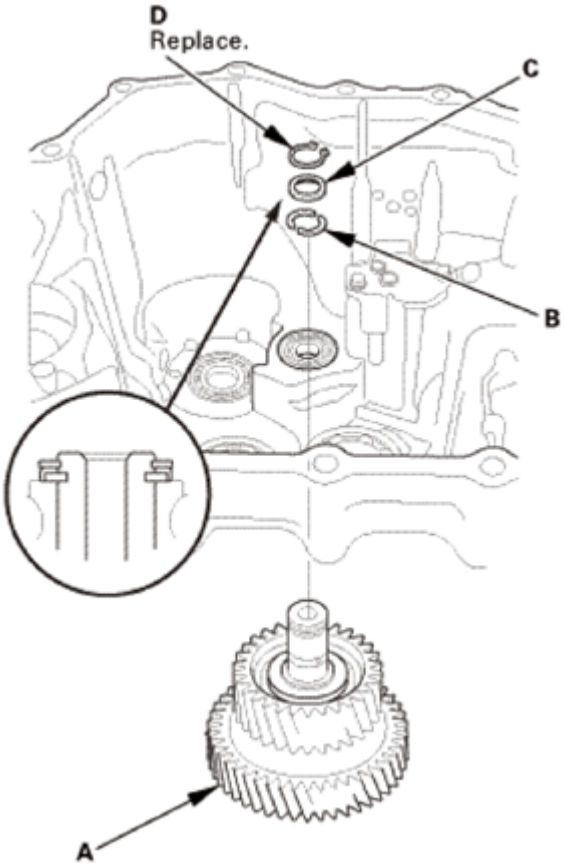

Fig. 692: Identifying Idler Gear Shaft/Idler Gear Assembly, Cotters, Cotter Retainer And Snap Ring
Courtesy of AMERICAN HONDA MOTOR CO., INC.

3. Reverse Idler Gear
    1. Install the reverse idler gear (A).

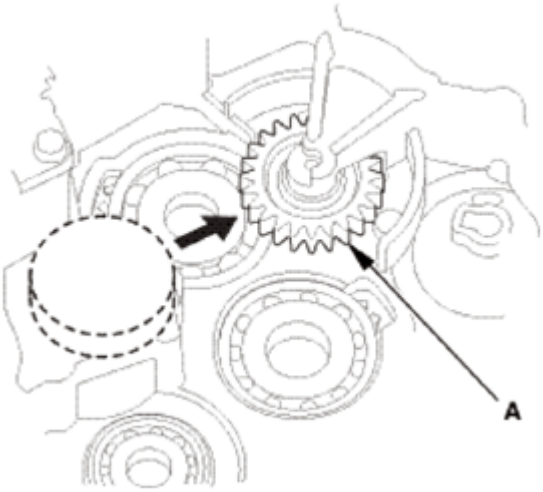

Fig. 693: Installing Reverse Idler Gear

GETtheMANUALS.org

Courtesy of AMERICAN HONDA MOTOR CO., INC.

2. Lightly coat the reverse idler gear shaft (A), the needle bearing (B), and new O-rings (C) with lithium grease.
3. Assemble new O-rings and the needle bearing on the reverse idler gear shaft, then install the reverse idler gear shaft in the reverse idler gear shaft holder (D). Align the D-shaped (E) cut out of the shaft with the D-shaped area (F) of the holder.

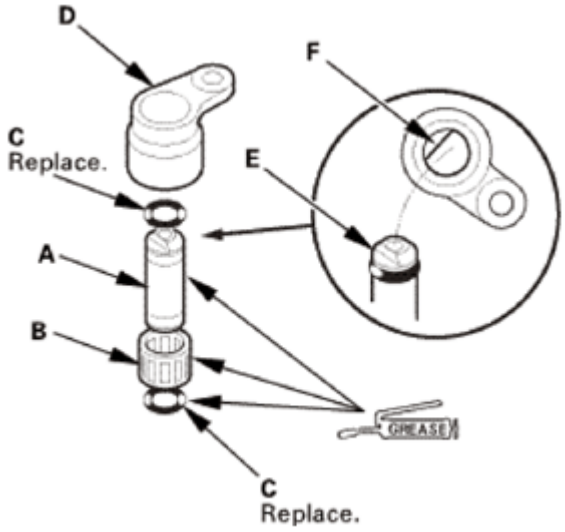

Fig. 694: Identifying Lithium Grease Applying Area On Reverse Idler Gear Shaft, Needle Bearing And O-Rings
Courtesy of AMERICAN HONDA MOTOR CO., INC.

4. Install the reverse idler gear shaft/holder assembly (A).

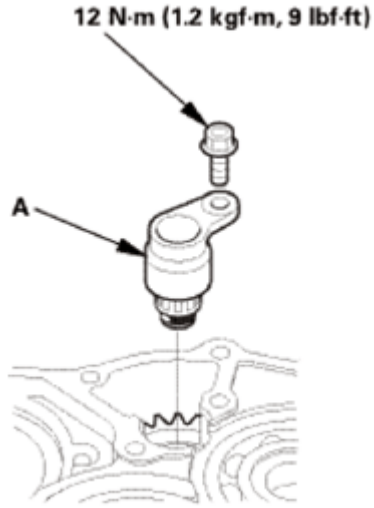

Fig. 695: Identifying Reverse Idler Gear Shaft/Holder Assembly And Bolt With Torque Specification
Courtesy of AMERICAN HONDA MOTOR CO., INC.

GETtheMANUALS.org

4. Automatic Transmission Housing
    1. Install the three dowel pins (A) and a new gasket (B).
    2. Align the spring pin (C) of the selector control shaft (D) with the transmission housing groove (E).

        NOTE: **Do not squeeze the end of the selector control shaft tips together when turning the shaft. If the tips are squeezed together, it will cause a faulty shift position signal or position due to the play between the selector control shaft and the transmission range switch.**

    3. Place the transmission housing (F) on the torque converter housing (G).

        NOTE: **Do not install the input shaft (mainshaft) speed sensor and the output shaft (countershaft) speed sensor before installing the transmission housing.**

    4. Wrap the tip of a screwdriver with tape so the reverse idler gear teeth do not get damaged. Engage the reverse idler gear (H) with the reverse gears (I) by rotating the idler gear using the screwdriver.
    5. Make sure the transmission housing is securely seated so there is no clearance between the transmission housing and the torque converter housing.
    6. Install the transmission hanger (J), and tighten the transmission housing mounting bolts (2WD: 19 bolts, AWD/4WD: 20 bolts) in at least two steps, in a crisscross pattern.

GETtheMANUALS.org

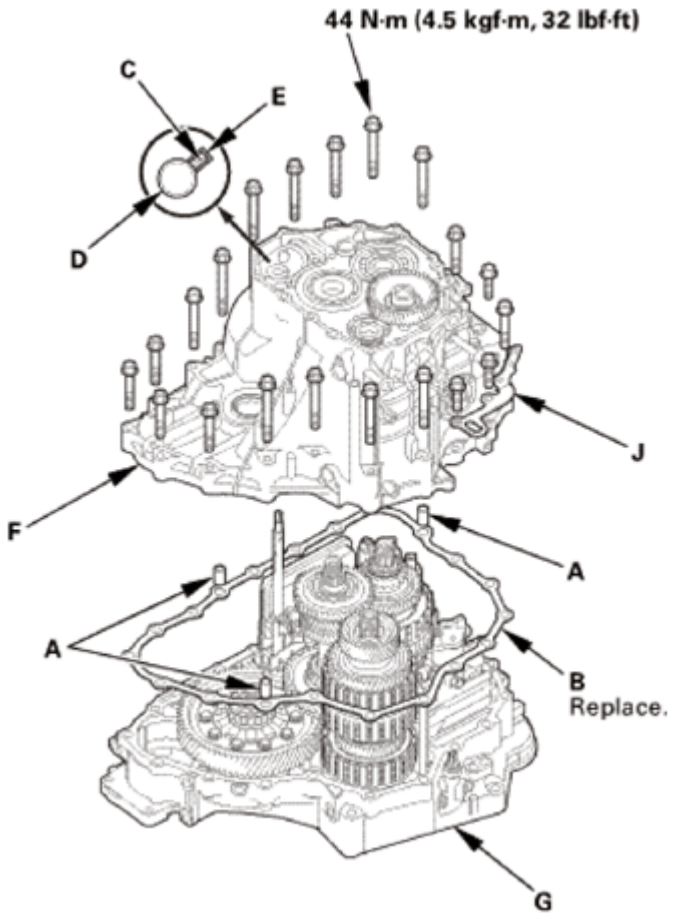

Fig. 696: Identifying Dowel Pins, Gasket, Spring Pin, Selector Control Shaft, Transmission Housing Groove And Mounting Bolts With Torque Specification
Courtesy of AMERICAN HONDA MOTOR CO., INC.

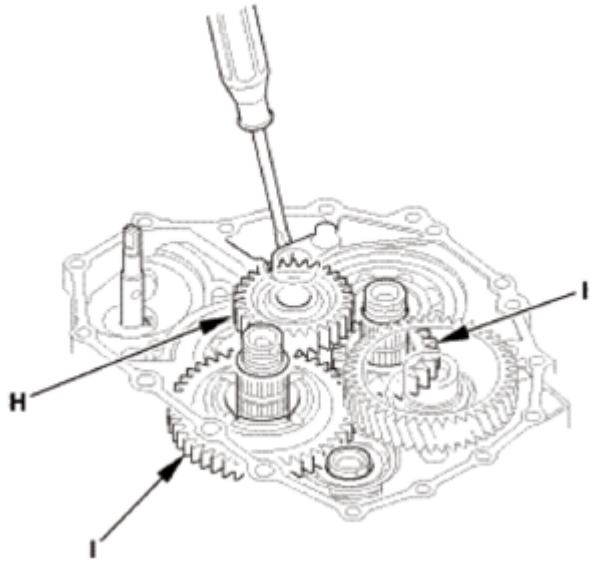

Fig. 697: Engaging Reverse Idler Gear With Reverse Gears By Rotating Idler Gear Using

GETtheMANUALS.org

Screwdriver
Courtesy of AMERICAN HONDA MOTOR CO., INC.

5. End Cover Idler Gear Assembly
    1. Install the mainshaft holder onto the mainshaft.

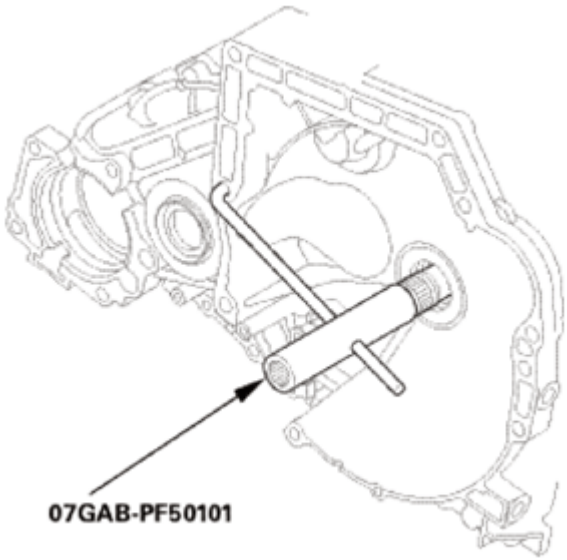

Fig. 698: Installing Mainshaft Holder Onto Mainshaft
Courtesy of AMERICAN HONDA MOTOR CO., INC.

    2. Lubricate the following parts with ATF:
        - Splines and threads of the mainshaft.
        - Splines of the mainshaft idler gear.
        - The old conical spring washer and the old locknut.
    3. Install the mainshaft idler gear (A), the old conical spring washer (B), and the old locknut (C), and tighten the locknut to 225 N.m (23.0 kgf.m, 166 lbf.ft).

NOTE:
- **Do not tap the mainshaft idler gear to install.**
- **Use a torque wrench to tighten the locknut. Do not use an impact wrench.**

GETtheMANUALS.org

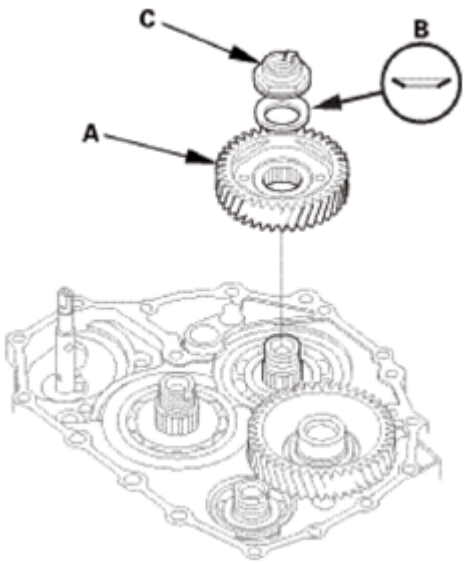

Fig. 699: Identifying Mainshaft Idler Gear, Conical Spring Washer And Locknut
Courtesy of AMERICAN HONDA MOTOR CO., INC.

4. Lubricate the following parts with ATF:
   - Splines and threads of the countershaft.
   - Splines of the park gear.
   - The old conical spring washer and the old locknut.
5. Install the park gear (A), the old conical spring washer (B), and the old locknut (C).

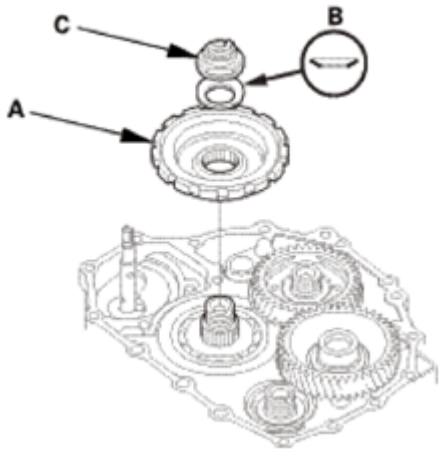

Fig. 700: Identifying Park Gear, Conical Spring Washer And Locknut
Courtesy of AMERICAN HONDA MOTOR CO., INC.

6. Install the park lever spring (D), the park lever (E), and the park lever stop (F).
7. Install the lock bolt (G) using a new lock washer (H).

NOTE: **Do not bend the lock tab of the lock washer until inspect the park**

GETtheMANUALS.org

lever stop.

8. Install the park pawl shaft (I), the park pawl spring (J), the park pawl (K), and the stop shaft (L).
9. Lift the park pawl up, and engage it with the park gear, and tighten the locknut to 225 N.m (23.0 kgf.m, 166 lbf.ft).

NOTE:

- **Do not tap the park gear to install.**
- **Use a torque wrench to tighten the locknut. Do not use an impact wrench.**
- **Countershaft locknut has left-hand threads.**

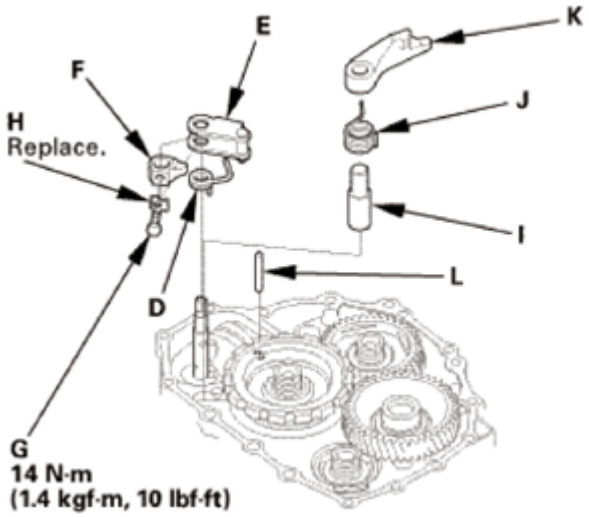

Fig. 701: Identifying Park Pawl Shaft, Park Lever Spring, Park Lever, Park Lever Stop, Lock Bolt, Lock Washer With Torque Specification
Courtesy of AMERICAN HONDA MOTOR CO., INC.

10. Remove the old locknuts and the old conical spring washers from the mainshaft and the countershaft.
11. Lubricate the following parts with ATF:
    - Splines and threads of the mainshaft, the countershaft, and the secondary shaft.
    - New conical spring washers and new locknuts.
    - Areas where the conical spring washers contact the mainshaft idler gear and the park gear.

GETtheMANUALS.org

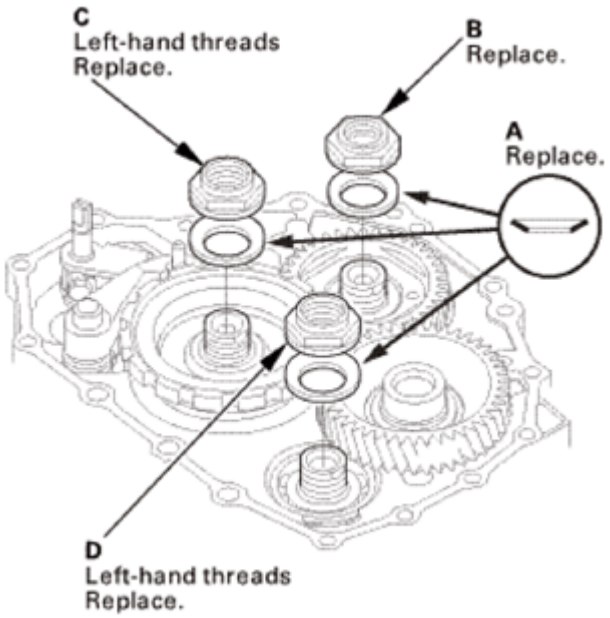

Fig. 702: Identifying Conical Spring Washers, Mainshaft Locknut, Countershaft Locknut And Secondary Shaft Locknut
Courtesy of AMERICAN HONDA MOTOR CO., INC.

12. Install new conical spring washers (A) in the direction shown.
13. Install a new mainshaft locknut (B), a new countershaft locknut (C), and a new secondary shaft locknut (D).
14. Tighten the locknuts to 167 N.m (17.0 kgf.m, 123 lbf.ft).

NOTE:

- **Use a torque wrench to tighten the locknut. Do not use an impact wrench.**
- **The countershaft and secondary shaft locknuts have left-hand threads.**

15. Remove the mainshaft holder.
16. Stake the locknuts into the shafts to a depth (A) of 0.7-1.3 mm (0.027-0.051 in) using a 3.5 mm punch (B).

GETtheMANUALS.org

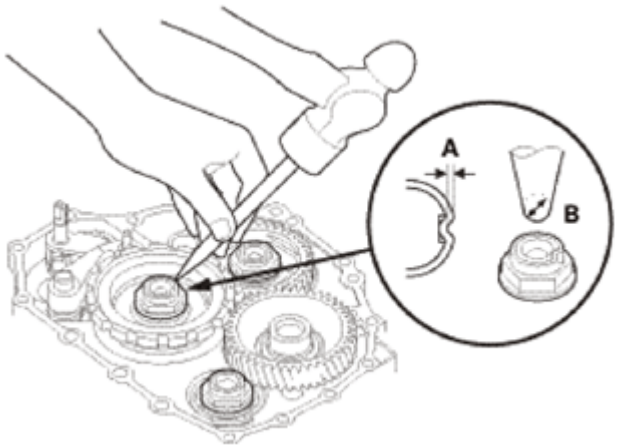

Fig. 703: Staking Locknuts Into Shafts Using Punch
Courtesy of AMERICAN HONDA MOTOR CO., INC.

17. Set the park lever in the P position.
18. Measure the distance (A) between the center of the park pawl shaft (B) and the center of the park lever roller pin (C) as shown.

    Standard: 57.7-58.7 mm (2.272-2.311 in)

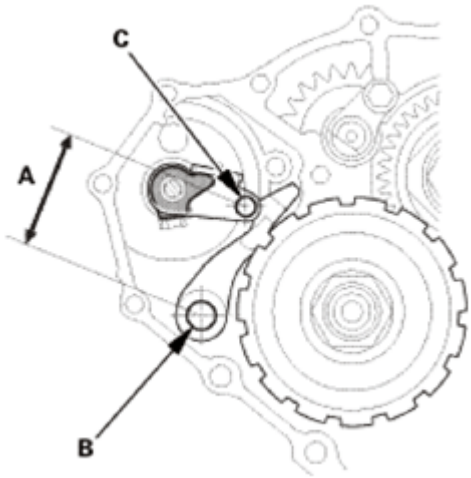

Fig. 704: Measuring Distance Between Center Of Park Pawl Shaft And Center Of Park Lever Roller Pin
Courtesy of AMERICAN HONDA MOTOR CO., INC.

19. If the measurement is out of the standard, select and install the appropriate park lever stop (A) from the table.

PARK LEVER STOP SPECIFICATION

Mark	B	C
1	11.00 mm (0.4331 in)	11.00 mm (0.4331 in)

GETtheMANUALS.org

2	10.80 mm (0.4252 in)	10.65 mm (0.4193 in)
3	10.60 mm (0.4173 in)	10.30 mm (0.4055 in)

20. After replacing the park lever stop, make sure the distance is within the tolerance.

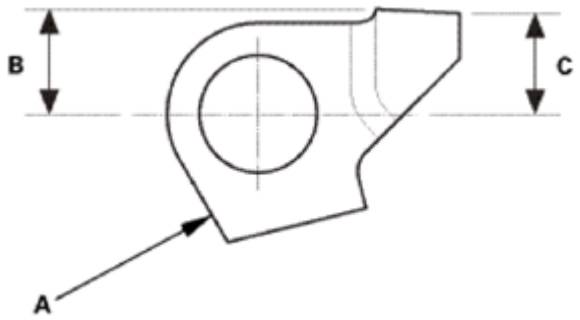

Fig. 705: Identifying Park Lever Stop Dimension
Courtesy of AMERICAN HONDA MOTOR CO., INC.

21. Pry up the lock tab (A) of the lock washer against the bolt head.

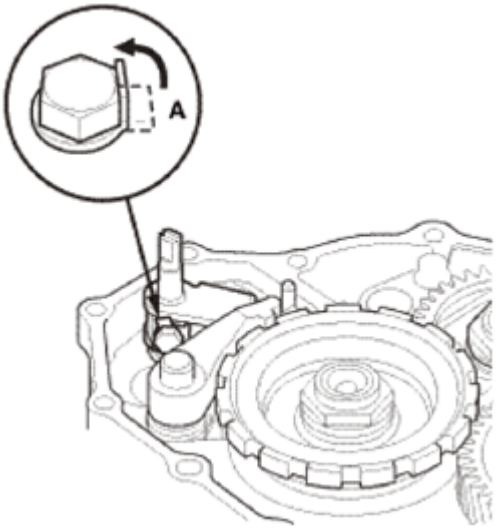

Fig. 706: Prying Up Lock Tab Of Lock Washer Against Bolt Head
Courtesy of AMERICAN HONDA MOTOR CO., INC.

6. ATF Feed Pipe/Lubrication Pipe
    1. Install the 6 x 201 mm ATF pipe (A).
    2. Install the ATF lubrication pipe (B).
    3. Install the 8 x 220 mm ATF pipe (C).
    4. Install the 8 x 198 mm ATF pipes (D).

GETtheMANUALS.org

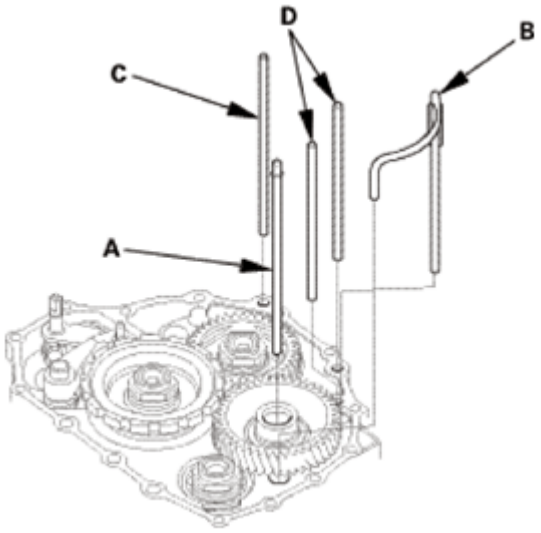

Fig. 707: Identifying ATF Feed Pipes And Lubrication Pipe
Courtesy of AMERICAN HONDA MOTOR CO., INC.

7. A/T Shift Solenoid Wire Harness - Reconnection
    1. Connect the shift solenoid valve connectors:
        - BLU wire to shift solenoid valve A.
        - ORN wire to shift solenoid valve B.
        - GRN wire to shift solenoid valve C.
        - YEL, WHT, and WHT wires to shift solenoid valve D.
        - RED wire to shift solenoid valve E.

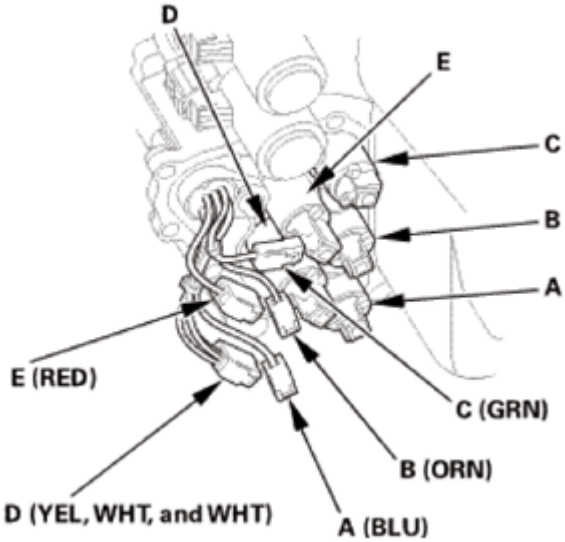

Fig. 708: Identifying Shift Solenoid Valves
Courtesy of AMERICAN HONDA MOTOR CO., INC.

GETtheMANUALS.org

8. A/T Shift Solenoid Cover
    1. Install the shift solenoid valve cover (A) with the dowel pins (B) and a new gasket (C).

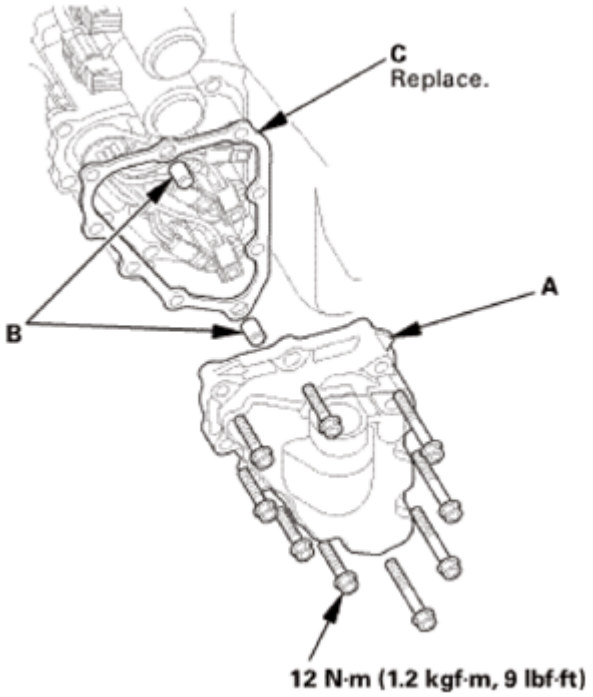

Fig. 709: Identifying Shift Solenoid Valve Cover, Dowel Pins, Gasket And Mounting Bolts With Torque Specification
Courtesy of AMERICAN HONDA MOTOR CO., INC.

9. Dipstick Guide Tube
    1. Install a new O-ring (A) on the ATF dipstick guide tube (B).
    2. Install the ATF dipstick guide tube.

GETtheMANUALS.org

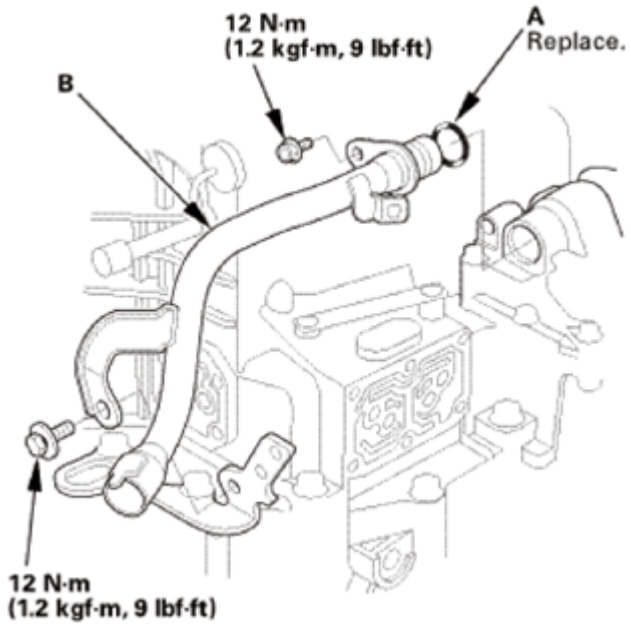

Fig. 710: Identifying ATF Dipstick Guide Tube, O-Ring And Mounting Bolts With Torque Specification
Courtesy of AMERICAN HONDA MOTOR CO., INC.

10. ATF Outlet Line
    1. Install the ATF outlet line (A) using new sealing washers (B).

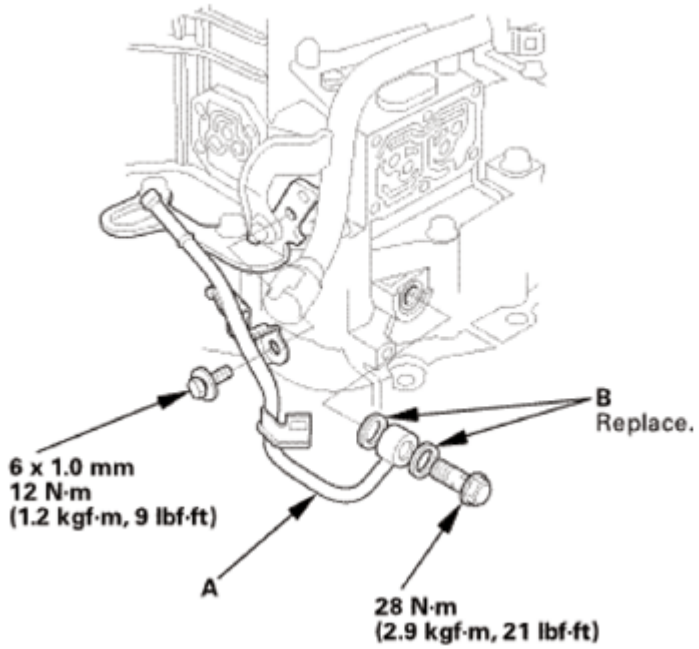

Fig. 711: Identifying ATF Outlet Line, Sealing Washers And Mounting Bolts With Torque Specification
Courtesy of AMERICAN HONDA MOTOR CO., INC.

GETtheMANUALS.org

11. ATF Inlet Line
    1. Install the ATF inlet line (A) using new sealing washers (B).

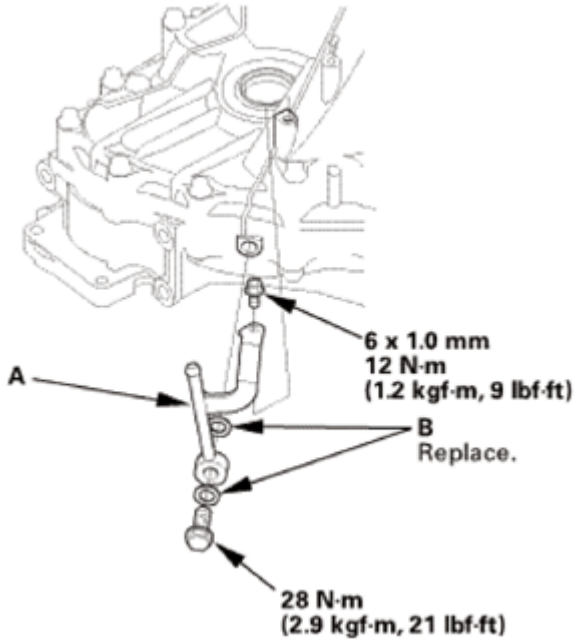

Fig. 712: Identifying ATF Inlet Line, Sealing Washers And Mounting Bolts With Torque Specification
Courtesy of AMERICAN HONDA MOTOR CO., INC.

12. A/T Clutch Pressure Control Solenoid Valve B and C
    1. Clean the mounting surfaces and the fluid passages of the solenoid valve body and the transmission housing.
    2. Install a new gasket (A) with the blue side toward the transmission housing, and Install the ATF joint pipes (D).
    3. Install new O-rings (E) over the ATF joint pipes.
    4. Install A/T clutch pressure control solenoid valves B and C with the clamp bracket (F).

GETtheMANUALS.org

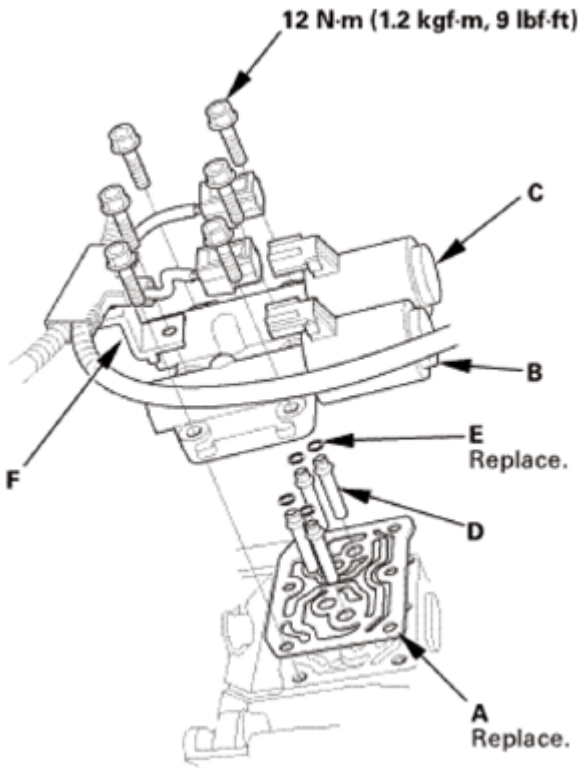

Fig. 713: Identifying Gasket, ATF Joint Pipes, O-Rings, A/T Clutch Pressure Control Solenoid Valves, Clamp Bracket And Mounting Bolts With Torque Specification
Courtesy of AMERICAN HONDA MOTOR CO., INC.

13. A/T Clutch Pressure Control Solenoid Valve A
    1. Clean the mounting surfaces and the fluid passages of the solenoid valve body and the transmission housing.
    2. Install a new gasket (B) with the blue side toward the transmission housing, and install the 35 mm ATF pipe (C) and the ATF joint pipes (D).
    3. Install new O-rings (E) over the ATF joint pipes.
    4. Install A/T clutch pressure control solenoid valve A.

GETtheMANUALS.org

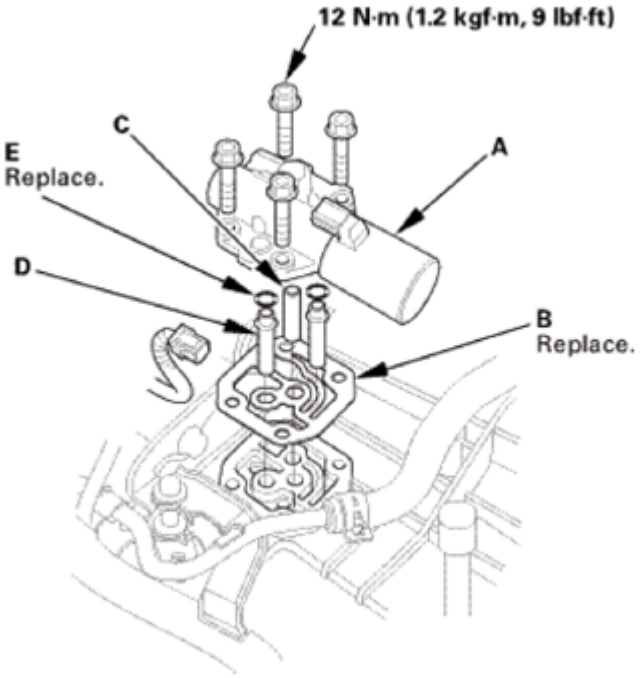

Fig. 714: Identifying A/T Clutch Pressure Control Solenoid Valve, Gasket, ATF Pipe, ATF Joint Pipes And Mounting Bolts With Torque Specification
Courtesy of AMERICAN HONDA MOTOR CO., INC.

14. Output Shaft (Countershaft) Speed Sensor
    1. Install a new O-ring (A) on the output shaft (countershaft) speed sensor (B).
    2. Install the output shaft (countershaft) speed sensor and the sensor washer (C).

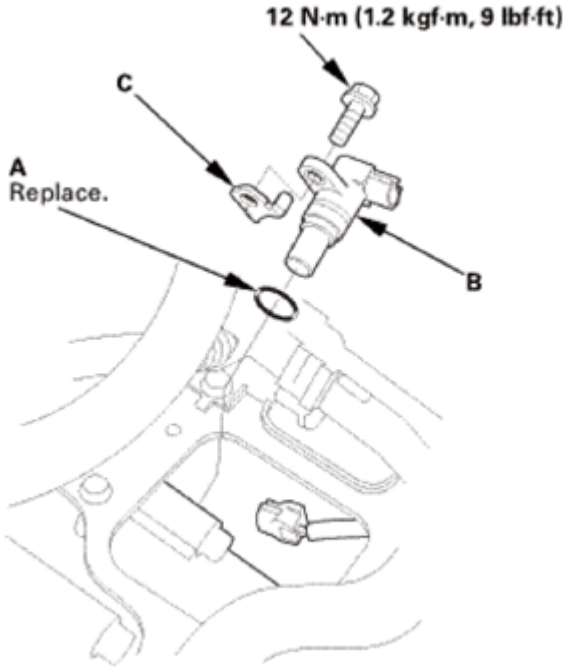

GETtheMANUALS.org

Fig. 715: Identifying Output Shaft (Countershaft) Speed Sensor, O-Ring, Sensor Washer And Mounting Bolts With Torque Specification
Courtesy of AMERICAN HONDA MOTOR CO., INC.

15. Input Shaft (Mainshaft) Speed Sensor
    1. Install a new O-ring (A) on the input shaft (mainshaft) speed sensor (B).
    2. Install the input shaft (mainshaft) speed sensor.

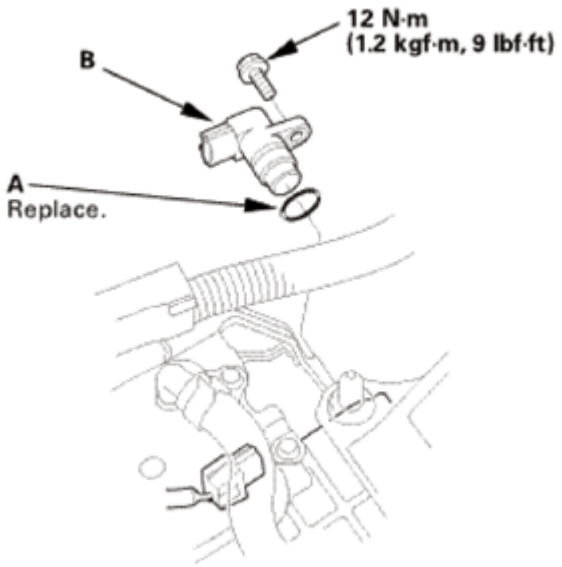

Fig. 716: Identifying Input Shaft (Mainshaft) Speed Sensor, O-Ring And Mounting Bolt With Torque Specification
Courtesy of AMERICAN HONDA MOTOR CO., INC.

16. Transmission End Cover
    1. Install the dowel pins (A) and a new gasket (B).
    2. Install new O-rings (C) over the ATF pipes.
    3. Install the end cover (D), and tighten the three special bolts (E) and the 6 x 1.0 mm bolts (F) (12 bolts).

GETtheMANUALS.org

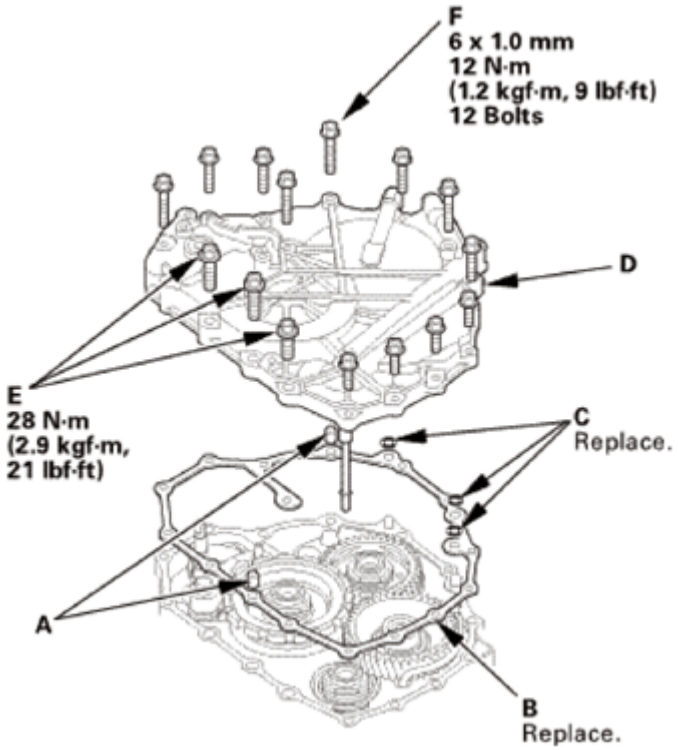

Fig. 717: Identifying Dowel Pins, Gasket, O-Rings, End Cover And Mounting Bolts With Torque Specification
Courtesy of AMERICAN HONDA MOTOR CO., INC.

17. Transmission Range Switch Subharness
    1. Install the clamp brackets (A).
    2. Install the transmission range switch subharness (B).

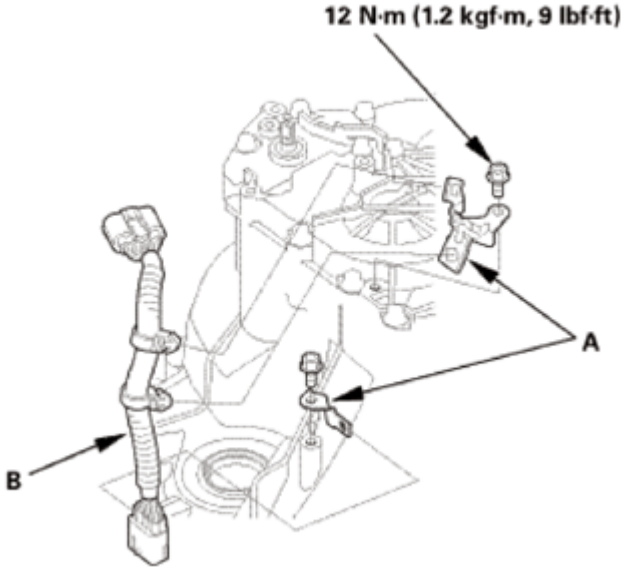

GETtheMANUALS.org

Fig. 718: Identifying Transmission Range Switch Subharness, Clamp Brackets And Mounting Bolts With Torque Specification
Courtesy of AMERICAN HONDA MOTOR CO., INC.

18. Transmission Range Switch
    1. Make sure the selector control shaft is in the N position. If necessary, move the selector control shaft to the N position.

NOTE: **Do not use the selector control shaft to adjust the shift position. If the selector control shaft tips are squeezed together it will cause a faulty signal or position due to play between the selector control shaft and switch.**

Fig. 719: Moving Selector Control Shaft To N Position
Courtesy of AMERICAN HONDA MOTOR CO., INC.

2. Align the cutouts (A) on the rotary-frame with the neutral positioning cutouts (B) on the transmission range switch (C), then put a 2.0 mm (0.079 in) feeler gauge blade (D) in the cutouts to hold the switch in the N position.

NOTE: **Be sure to use a 2.0 mm (0.079 in) blade or equivalent to hold the switch in the N position.**

GETtheMANUALS.org

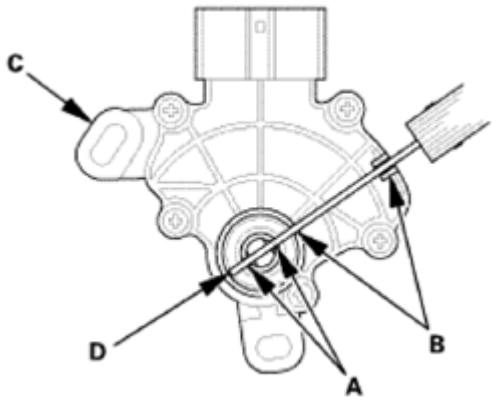

Fig. 720: Aligning Cutouts On Rotary-Frame With Neutral Positioning Cutouts On Transmission Range Switch
Courtesy of AMERICAN HONDA MOTOR CO., INC.

3. Install the transmission range switch (A) gently on the selector control shaft (B) while holding it in the N position with the 2.0 mm (0.079 in) blade (C).

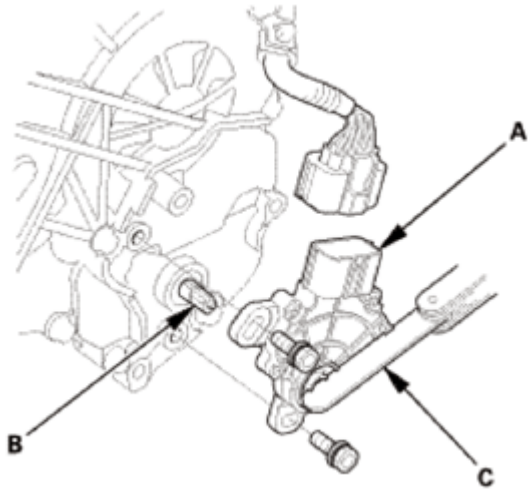

Fig. 721: Identifying Transmission Range Switch, Selector Control Shaft And Blade
Courtesy of AMERICAN HONDA MOTOR CO., INC.

4. Tighten the bolts on the transmission range switch (A) while you continue holding the N position.

NOTE: Do not move the transmission range switch when tightening the bolts.

5. Remove the feeler gauge (B).
6. Check the connector (C) for corrosion, dirt, or oil, and clean or repair if necessary, then connect the connector securely.

GETtheMANUALS.org

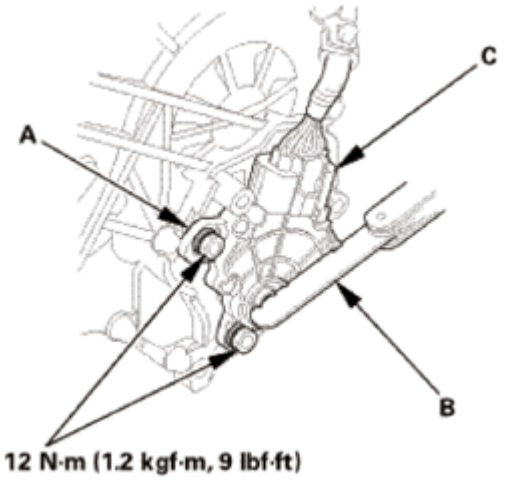

Fig. 722: Identifying Transmission Range Switch, Connector, Feeler Gauge And Mounting Bolts With Torque Specification
Courtesy of AMERICAN HONDA MOTOR CO., INC.

19. Transmission Range Switch Cover
    1. Install the transmission range switch cover (A).

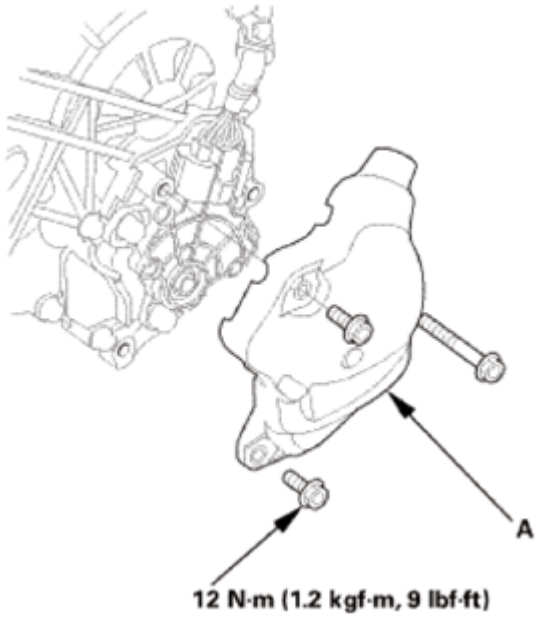

Fig. 723: Identifying Transmission Range Switch Cover And Mounting Bolts With Torque Specification
Courtesy of AMERICAN HONDA MOTOR CO., INC.

A/T HOUSING REVERSE IDLER GEAR REMOVAL AND INSTALLATION

SPECIAL TOOL REQUIRED

GETtheMANUALS.org

Image	Description/Tool Number
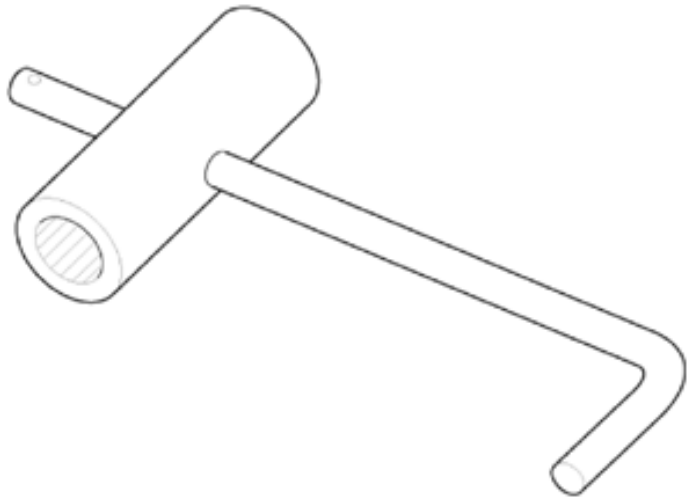	Mainshaft Holder 07GAB-PF50101
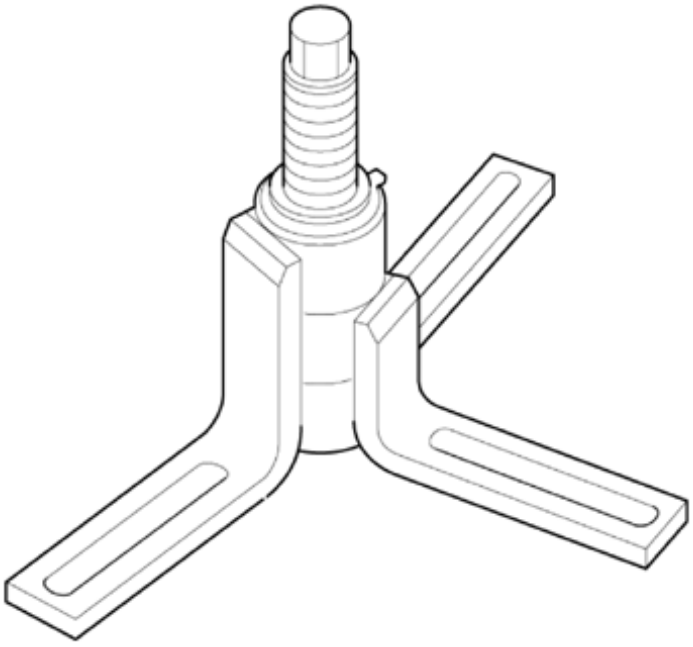	Housing Puller 07HAC-PK40102

REMOVAL

NOTE: The illustration shows AWD/4WD transmission.

1. Transmission Range Switch Cover
    1. Remove the transmission range switch cover (A).

GETtheMANUALS.org

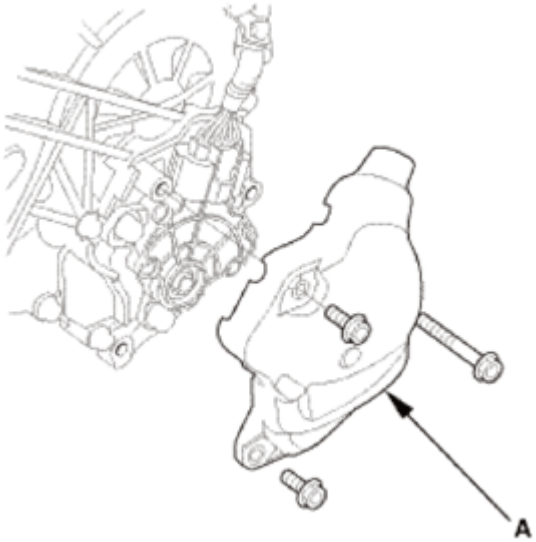

Fig. 724: Identifying Transmission Range Switch Cover With Bolts
Courtesy of AMERICAN HONDA MOTOR CO., INC.

2. Transmission Range Switch
    1. Remove the transmission range switch (A).

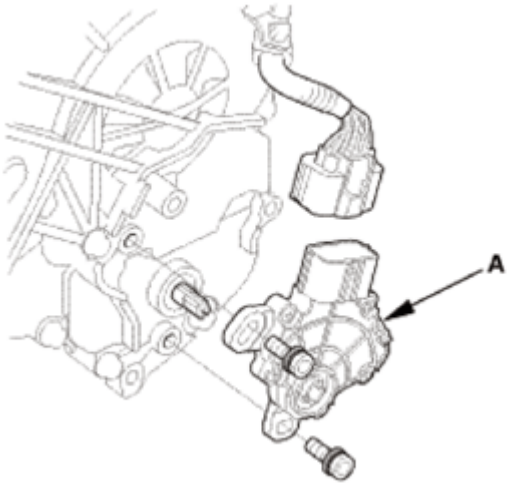

Fig. 725: Identifying Transmission Range Switch With Bolts
Courtesy of AMERICAN HONDA MOTOR CO., INC.

3. Transmission Range Switch Subharness
    1. Remove the transmission range switch subharness (A).
    2. Remove the clamp brackets (B).

GETtheMANUALS.org

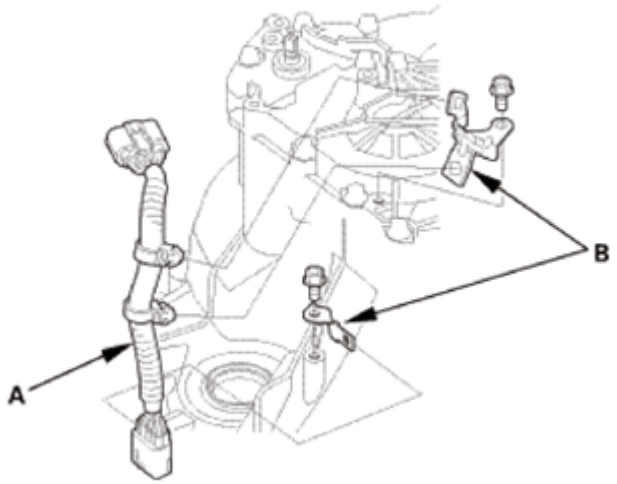

Fig. 726: Identifying Transmission Range Switch Subharness And Clamp Brackets
Courtesy of AMERICAN HONDA MOTOR CO., INC.

4. Transmission End Cover
    1. Remove the end cover (A), the dowel pins (B), the O-rings (C), and the gasket (D).

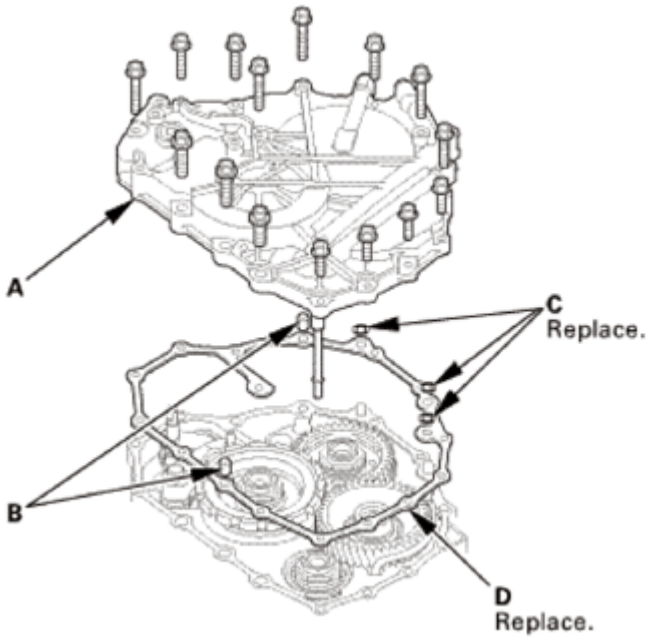

Fig. 727: Identifying Transmission End Cover, Dowel Pins, O-Rings And Gasket With Bolts
Courtesy of AMERICAN HONDA MOTOR CO., INC.

5. Input Shaft (Mainshaft) Speed Sensor
    1. Remove the input shaft (mainshaft) speed sensor (A).
    2. Remove the O-ring (B) from the input shaft (mainshaft) speed sensor.

GETtheMANUALS.org

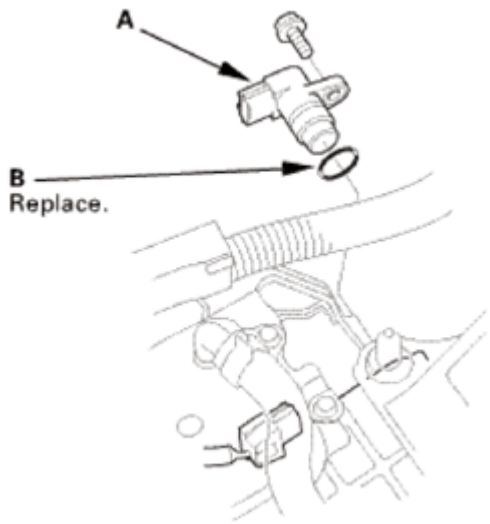

Fig. 728: Identifying Input Shaft (Mainshaft) Speed Sensor And O-Ring
Courtesy of AMERICAN HONDA MOTOR CO., INC.

6. Output Shaft (Countershaft) Speed Sensor
    1. Remove the output shaft (countershaft) speed sensor (A) and the sensor washer (B).
    2. Remove the O-ring (C) from the output shaft (countershaft) speed sensor.

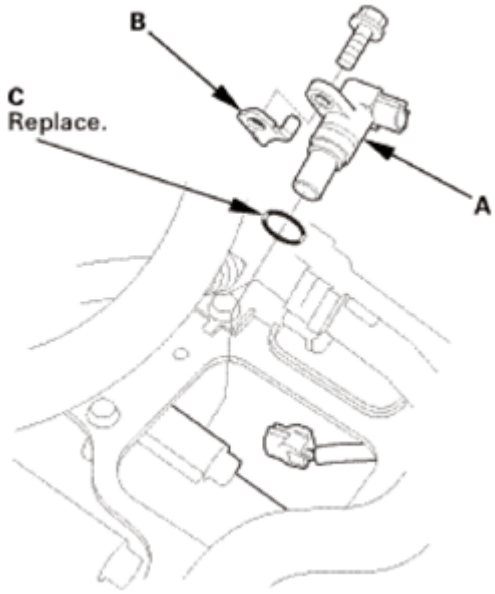

Fig. 729: Identifying Output Shaft (Countershaft) Speed Sensor, Sensor Washer And O-Ring
Courtesy of AMERICAN HONDA MOTOR CO., INC.

7. A/T Clutch Pressure Control Solenoid Valve A
    1. Remove A/T clutch pressure control solenoid valve A.
    2. Remove the 35 mm ATF pipe (B), the ATF joint pipes (C), the O-rings (D), and the gasket (E).

GETtheMANUALS.org

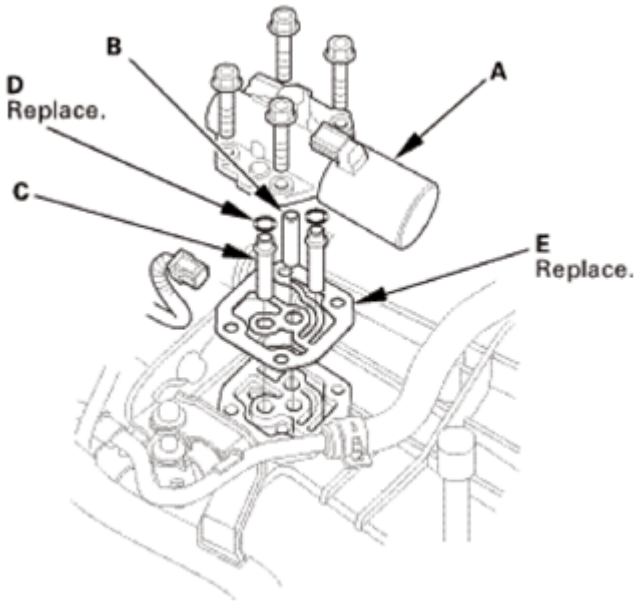

Fig. 730: Identifying A/T Clutch Pressure Control Solenoid Valve, ATF Pipe, ATF Joint Pipes, O-Rings And Gasket With Bolts
Courtesy of AMERICAN HONDA MOTOR CO., INC.

8. A/T Clutch Pressure Control Solenoid Valve B and C
    1. Remove the clamp bracket (A) and A/T clutch pressure control solenoid valves B and C.
    2. Remove the ATF joint pipes (D), the O-rings (E), and the gasket (F).

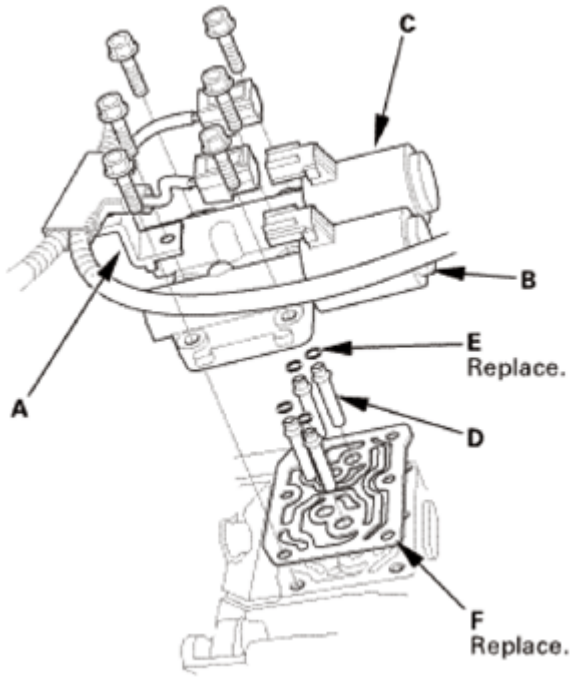

Fig. 731: Identifying A/T Clutch Pressure Control Solenoid Valves, Clamp Bracket, ATF

GETtheMANUALS.org

Joint Pipes, O-Rings And Gasket
Courtesy of AMERICAN HONDA MOTOR CO., INC.

9. ATF Inlet Line
    1. Remove the banjo bolt (A) and the sealing washers (B).
    2. Remove the ATF inlet line (C).

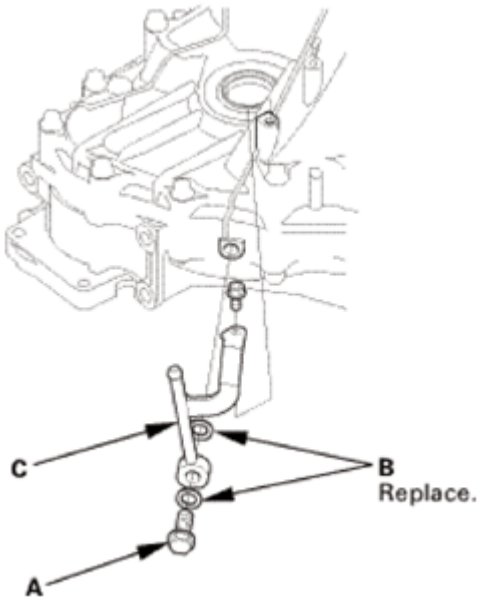

Fig. 732: Identifying ATF Inlet Line, Banjo Bolt And Sealing Washers
Courtesy of AMERICAN HONDA MOTOR CO., INC.

10. ATF Outlet Line
    1. Remove the banjo bolt (A) and the sealing washers (B).
    2. Remove the ATF outlet line (C).

GETtheMANUALS.org

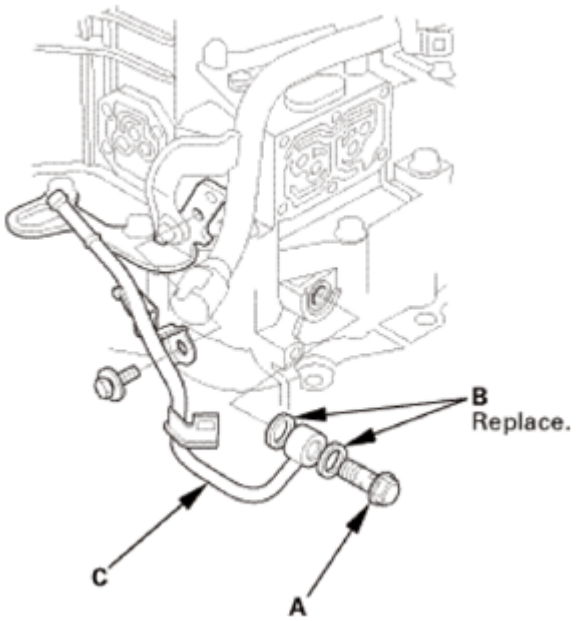

Fig. 733: Identifying ATF Outlet Line, Banjo Bolt And Sealing Washers
Courtesy of AMERICAN HONDA MOTOR CO., INC.

11. Dipstick Guide Tube
    1. Remove the ATF dipstick guide tube (A).
    2. Remove the O-ring (B) from the ATF dipstick guide tube.

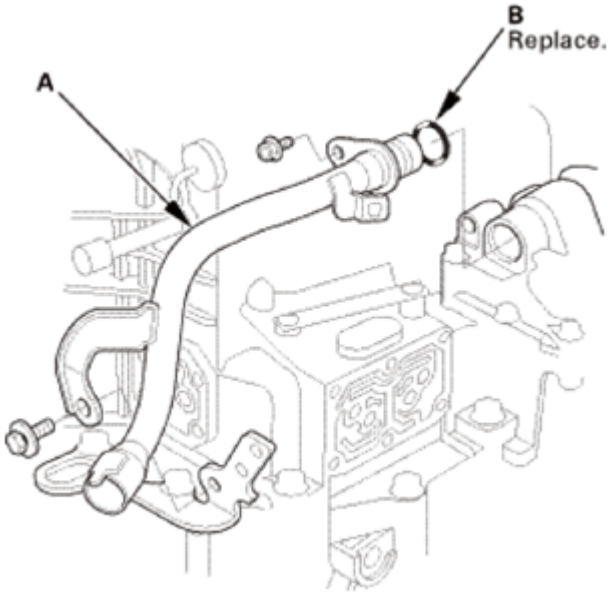

Fig. 734: Identifying ATF Dipstick Guide Tube And O-Ring
Courtesy of AMERICAN HONDA MOTOR CO., INC.

12. A/T Shift Solenoid Cover

GETtheMANUALS.org

1. Remove the shift solenoid valve cover (A), the dowel pins (B), and the gasket (C).

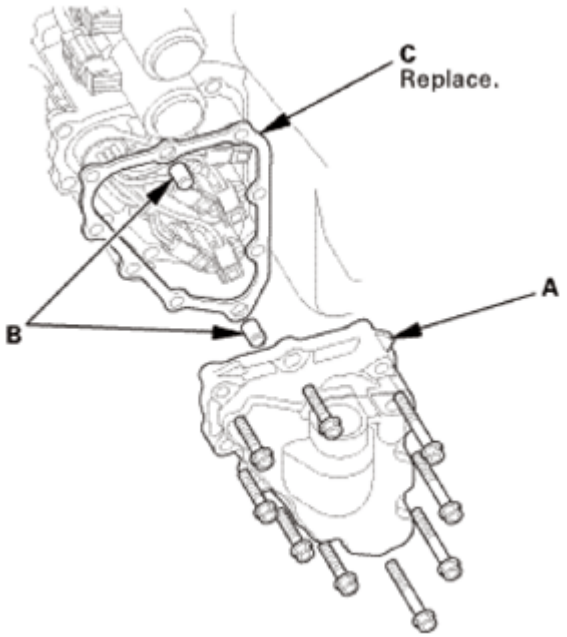

Fig. 735: Identifying Shift Solenoid Valve Cover, Dowel Pins And Gasket
Courtesy of AMERICAN HONDA MOTOR CO., INC.

13. A/T Shift Solenoid Wire Harness - Disconnection
    1. Disconnect the connectors.

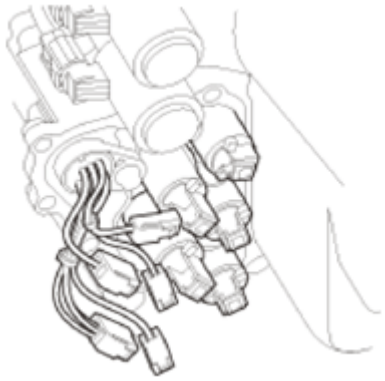

Fig. 736: Identifying A/T Shift Solenoid Wire Harness Connectors
Courtesy of AMERICAN HONDA MOTOR CO., INC.

14. ATF Feed Pipe/Lubrication Pipe
    1. Remove the 6 x 201 mm ATF pipe (A).
    2. Remove the ATF lubrication pipe (B).
    3. Remove the 8 x 220 mm ATF pipe (C).
    4. Remove the 8 x 198 mm ATF pipes (D).

GETtheMANUALS.org

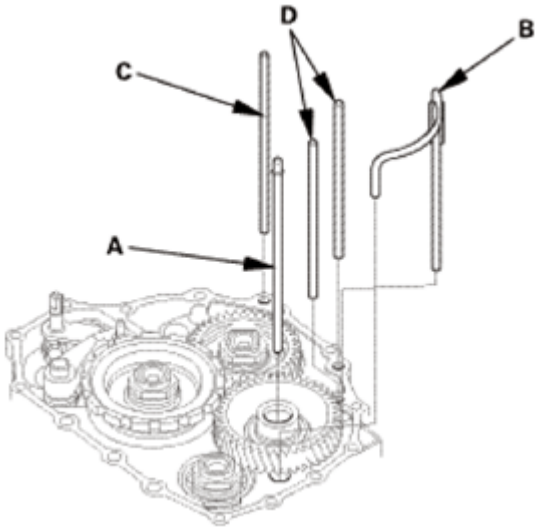

Fig. 737: Identifying ATF Feed Pipes And Lubrication Pipe
Courtesy of AMERICAN HONDA MOTOR CO., INC.

15. End Cover Idler Gear Assembly
    1. Install the mainshaft holder onto the mainshaft.
    2. Engage the park pawl with the park gear.

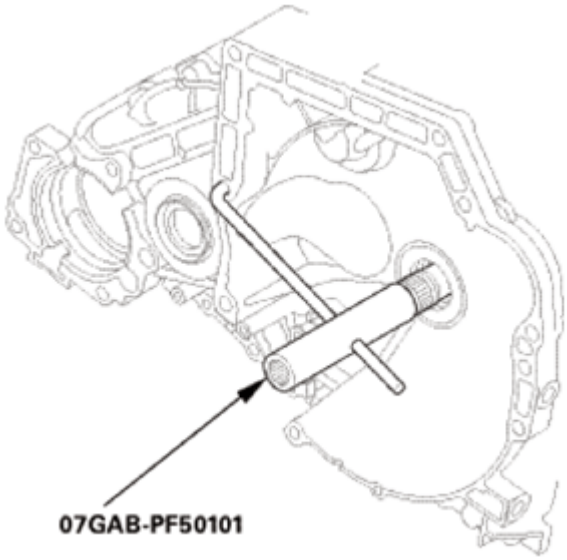

Fig. 738: Installing Mainshaft Holder Onto Mainshaft
Courtesy of AMERICAN HONDA MOTOR CO., INC.

    3. Using a chisel, cut the lock tab (A) of the locknut (B).

NOTE: Keep all of the chiseled particles out of the transmission.

GETtheMANUALS.org

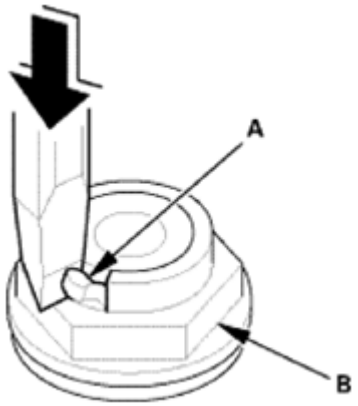

Fig. 739: Cutting Lock Tab Of Locknut Using Chisel
Courtesy of AMERICAN HONDA MOTOR CO., INC.

4. Remove the locknuts (A) and the conical spring washers (B) from each shaft.

NOTE:

- **The countershaft and secondary shaft locknuts have left-hand threads.**
- **Keep all of the chiseled particles out of the transmission.**
- **Clean the old locknuts; they are used to install the press fit idler gears and park gear.**

5. Remove the mainshaft holder.

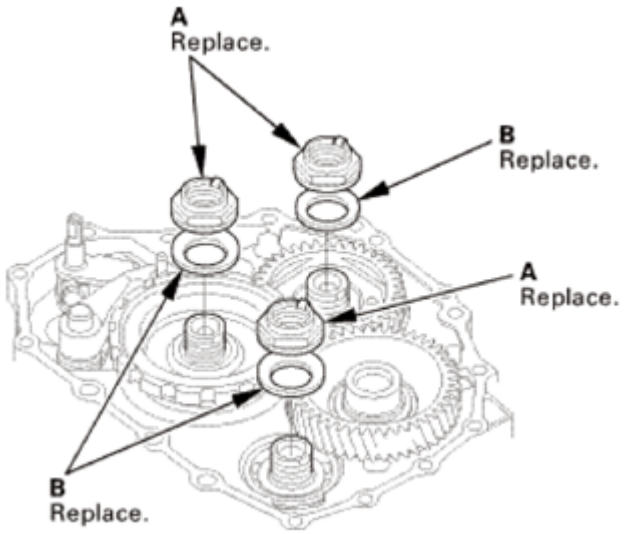

Fig. 740: Identifying Locknuts And Conical Spring Washers
Courtesy of AMERICAN HONDA MOTOR CO., INC.

6. Remove the park pawl (A), the park pawl spring (B), the park pawl shaft (C), and the stop shaft (D).

GETtheMANUALS.org

7. Pry down the lock tab (E) of the lock washer (F).
8. Remove the lock bolt (G) and the lock washer.
9. Remove the park lever (H), the park lever stop (I), and the park lever spring (J).

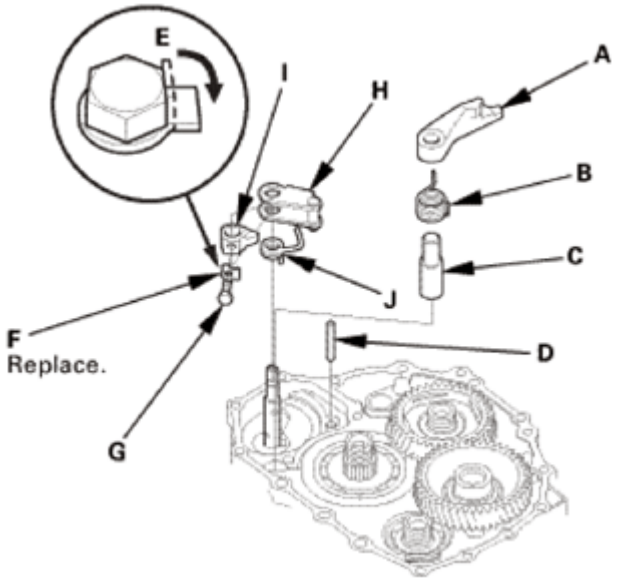

Fig. 741: Prying Down Lock Tab Of Lock Washer
Courtesy of AMERICAN HONDA MOTOR CO., INC.

10. Place a spacer (A) on the countershaft (B).
11. Set a commercially available bearing puller (C) on the park gear (D).
12. Remove the park gear.

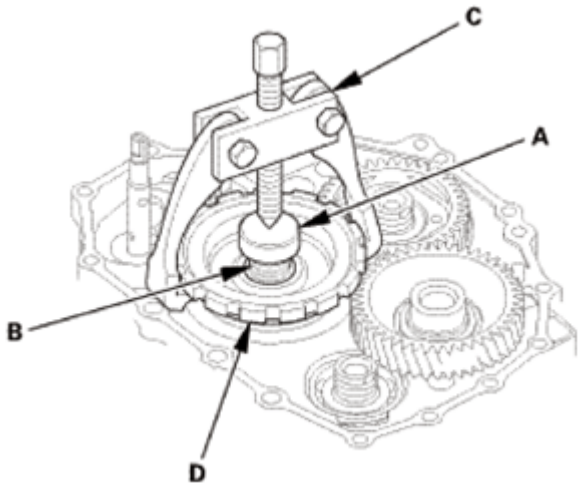

Fig. 742: Setting Commercially Available Bearing Puller On Park Gear
Courtesy of AMERICAN HONDA MOTOR CO., INC.

13. Install a puller (A) with two 6 x 1.0 mm bolts (B) on the mainshaft idler gear (C).

GETtheMANUALS.org

14. Set a spacer (D) between the puller and the mainshaft (E).
15. Remove the mainshaft idler gear.

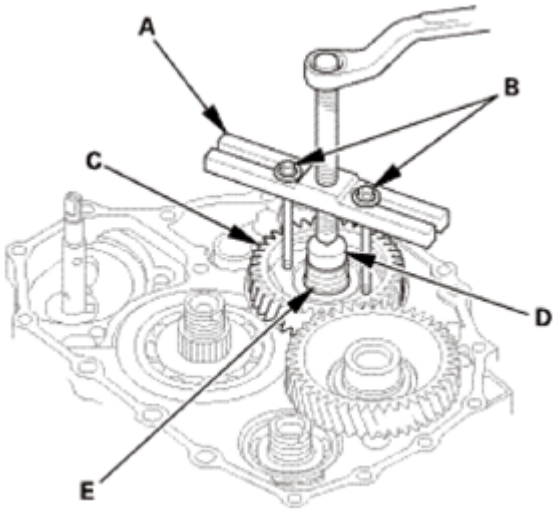

Fig. 743: Installing Puller With 6 X 1.0 mm Bolts On Mainshaft Idler Gear
Courtesy of AMERICAN HONDA MOTOR CO., INC.

16. Automatic Transmission Housing
    1. Align the spring pin (A) on the selector control shaft (B) with the transmission housing groove (C).

    NOTE: **Do not squeeze the end of the selector control shaft tips together when turning the control shaft. If the tips are squeezed together, it will cause a faulty shift position signal or position due to the play between the selector control shaft and the transmission range switch.**

    2. Remove the transmission housing mounting bolts (D) (2WD: 19 bolts, AWD/4WD: 20 bolts).
    3. Install the housing puller over the mainshaft.
    4. Remove the transmission housing (E) using the housing puller.
    5. Remove the dowel pins (F) and the gasket (G).

GETtheMANUALS.org

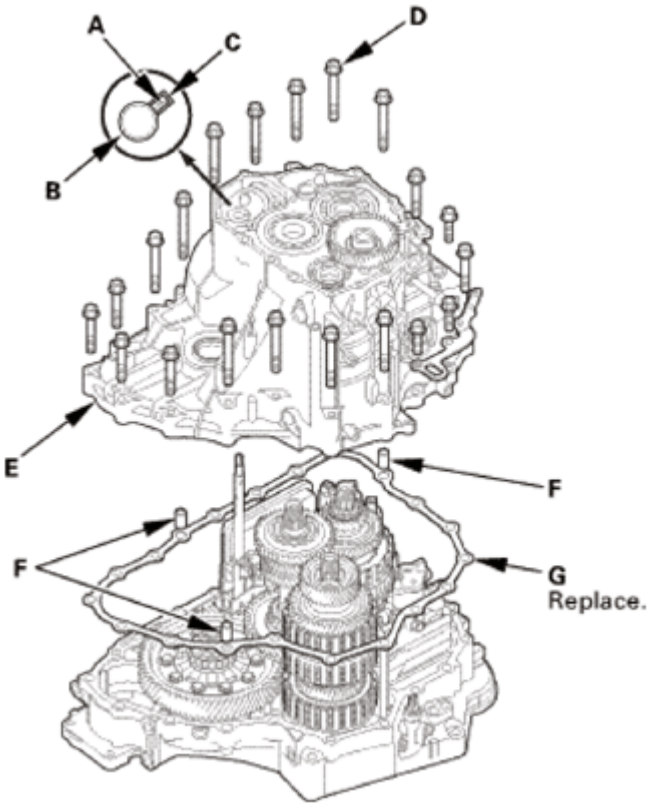

Fig. 744: Identifying Spring Pin, Selector Control Shaft, Transmission Housing Groove, Transmission Housing, Mounting Bolts And Gasket
Courtesy of AMERICAN HONDA MOTOR CO., INC.

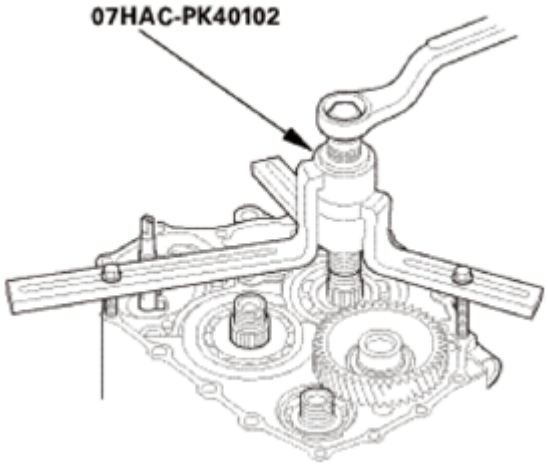

Fig. 745: Installing Housing Puller Over Mainshaft
Courtesy of AMERICAN HONDA MOTOR CO., INC.

17. Reverse Idler Gear
    1. Remove the bolt (A) securing the reverse idler gear shaft holder (B).
    2. Install a 5 x 0.8 mm bolt (C) in the reverse gear shaft, and pull it to remove the reverse idler gear

GETtheMANUALS.org

shaft (D) and the reverse idler gear shaft holder together.

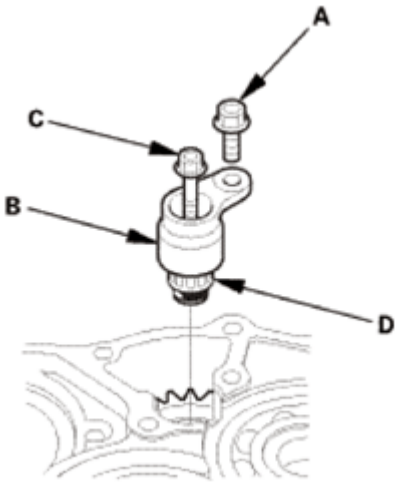

Fig. 746: Identifying Reverse Idler Gear Shaft, Holder And Bolts
Courtesy of AMERICAN HONDA MOTOR CO., INC.

3. Remove the reverse idler gear (A).

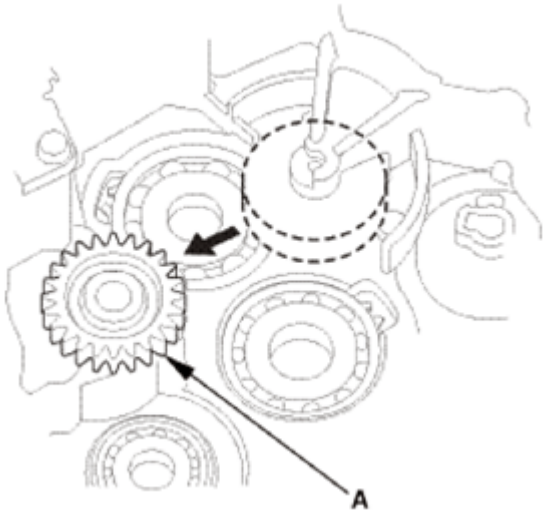

Fig. 747: Removing Reverse Idler Gear
Courtesy of AMERICAN HONDA MOTOR CO., INC.

INSTALLATION

NOTE:

- **Apply a light coat of clean ATF on all moving parts before installation.**
- **The illustration shows AWD/4WD transmission.**

1. Reverse Idler Gear
    1. Install the reverse idler gear (A).

GETtheMANUALS.org

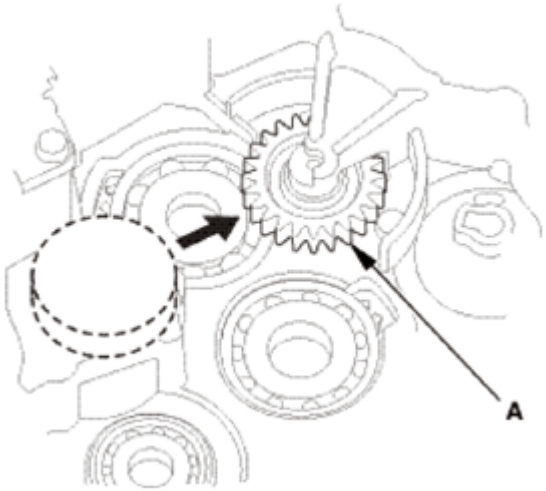

Fig. 748: Installing Reverse Idler Gear
Courtesy of AMERICAN HONDA MOTOR CO., INC.

2. Lightly coat the reverse idler gear shaft (A), the needle bearing (B), and new O-rings (C) with lithium grease.
3. Assemble new O-rings and the needle bearing on the reverse idler gear shaft, then install the reverse idler gear shaft in the reverse idler gear shaft holder (D). Align the D-shaped (E) cut out of the shaft with the D-shaped area (F) of the holder.

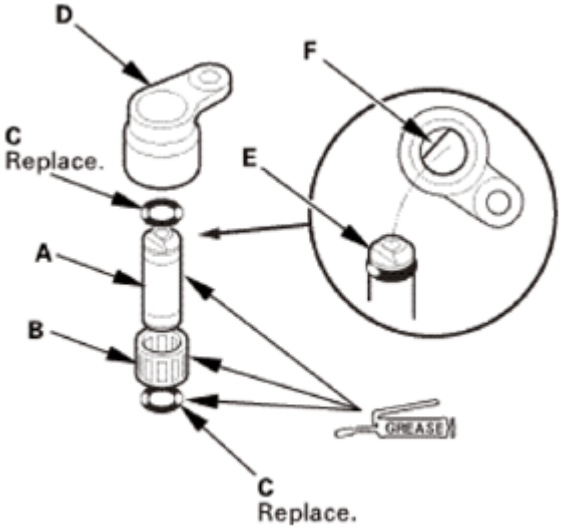

Fig. 749: Identifying Lithium Grease Applying Area On Reverse Idler Gear Shaft, Needle Bearing And O-Rings
Courtesy of AMERICAN HONDA MOTOR CO., INC.

4. Install the reverse idler gear shaft/holder assembly (A).

GETtheMANUALS.org

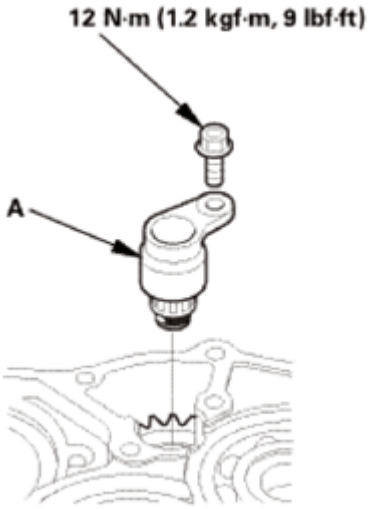

Fig. 750: Identifying Reverse Idler Gear Shaft/Holder Assembly And Bolt With Torque Specification
Courtesy of AMERICAN HONDA MOTOR CO., INC.

2. Automatic Transmission Housing
    1. Install the three dowel pins (A) and a new gasket (B).
    2. Align the spring pin (C) of the selector control shaft (D) with the transmission housing groove (E).

    NOTE: **Do not squeeze the end of the selector control shaft tips together when turning the shaft. If the tips are squeezed together, it will cause a faulty shift position signal or position due to the play between the selector control shaft and the transmission range switch.**

    3. Place the transmission housing (F) on the torque converter housing (G).

    NOTE: **Do not install the input shaft (mainshaft) speed sensor and the output shaft (countershaft) speed sensor before installing the transmission housing.**

    4. Wrap the tip of a screwdriver with tape so the reverse idler gear teeth do not get damaged. Engage the reverse idler gear (H) with the reverse gears (I) by rotating the idler gear using the screwdriver.
    5. Make sure the transmission housing is securely seated so there is no clearance between the transmission housing and the torque converter housing.
    6. Install the transmission hanger (J), and tighten the transmission housing mounting bolts (2WD: 19 bolts, AWD/4WD: 20 bolts) in at least two steps, in a crisscross pattern.

GETtheMANUALS.org

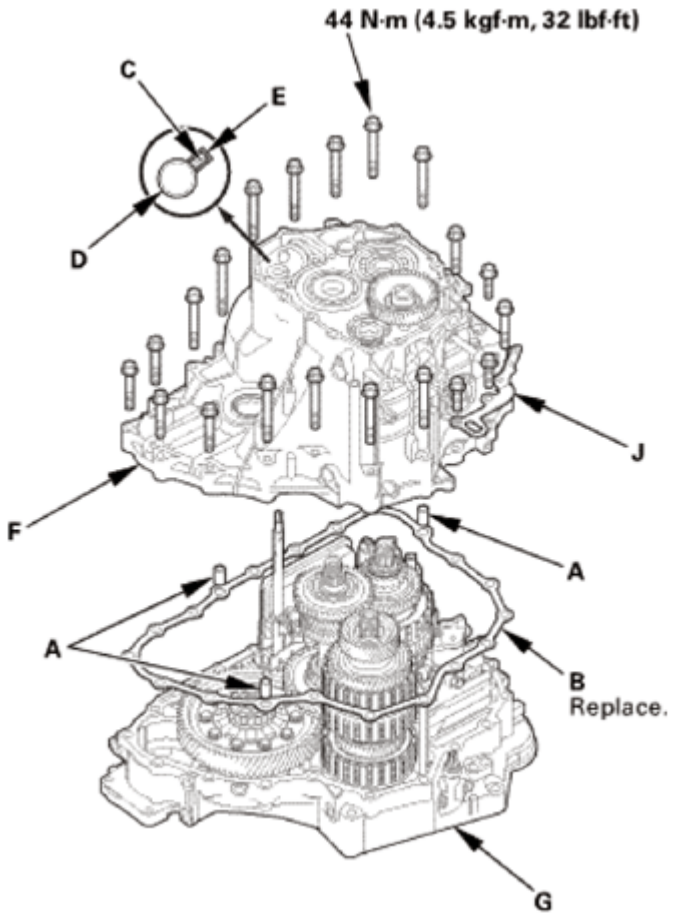

Fig. 751: Identifying Dowel Pins, Gasket, Spring Pin, Selector Control Shaft, Transmission Housing Groove And Mounting Bolts With Torque Specification
Courtesy of AMERICAN HONDA MOTOR CO., INC.

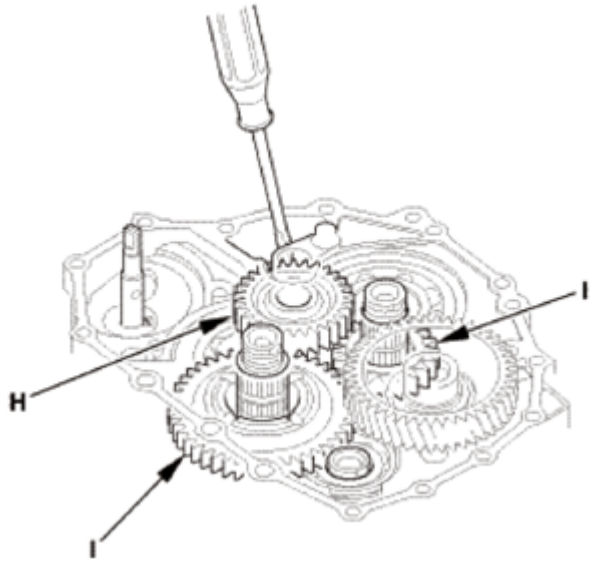

Fig. 752: Engaging Reverse Idler Gear With Reverse Gears By Rotating Idler Gear Using

GETtheMANUALS.org

Screwdriver
Courtesy of AMERICAN HONDA MOTOR CO., INC.

3. End Cover Idler Gear Assembly
    1. Install the mainshaft holder onto the mainshaft.

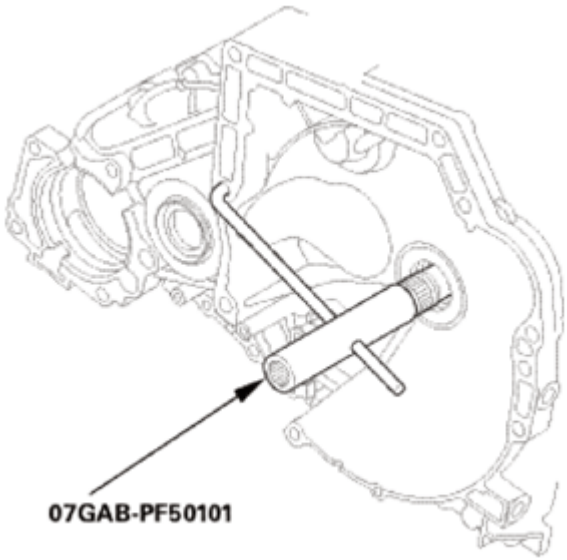

Fig. 753: Installing Mainshaft Holder Onto Mainshaft
Courtesy of AMERICAN HONDA MOTOR CO., INC.

    2. Lubricate the following parts with ATF:
        - Splines and threads of the mainshaft.
        - Splines of the mainshaft idler gear.
        - The old conical spring washer and the old locknut.
    3. Install the mainshaft idler gear (A), the old conical spring washer (B), and the old locknut (C), and tighten the locknut to 225 N.m (23.0 kgf.m, 166 lbf.ft).

NOTE:

- **Do not tap the mainshaft idler gear to install.**
- **Use a torque wrench to tighten the locknut. Do not use an impact wrench.**

GETtheMANUALS.org

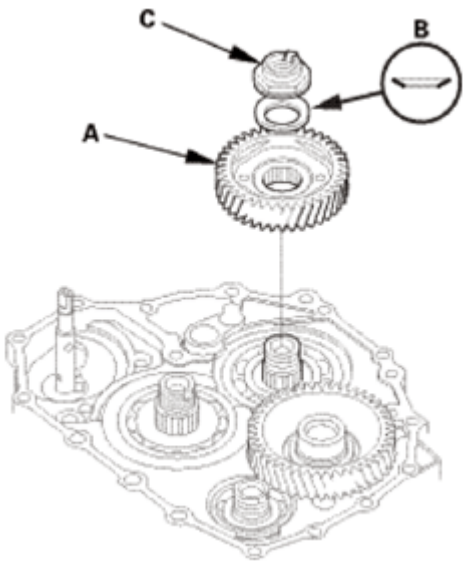

Fig. 754: Identifying Mainshaft Idler Gear, Conical Spring Washer And Locknut
Courtesy of AMERICAN HONDA MOTOR CO., INC.

4. Lubricate the following parts with ATF:
   - Splines and threads of the countershaft.
   - Splines of the park gear.
   - The old conical spring washer and the old locknut.
5. Install the park gear (A), the old conical spring washer (B), and the old locknut (C).
6. Install the park lever spring (D), the park lever (E), and the park lever stop (F).
7. Install the lock bolt (G) using a new lock washer (H).

NOTE: **Do not bend the lock tab of the lock washer until inspect the park lever stop.**

8. Install the park pawl shaft (I), the park pawl spring (J), the park pawl (K), and the stop shaft (L).
9. Lift the park pawl up, and engage it with the park gear, and tighten the locknut to 225 N.m (23.0 kgf.m, 166 lbf.ft).

GETtheMANUALS.org

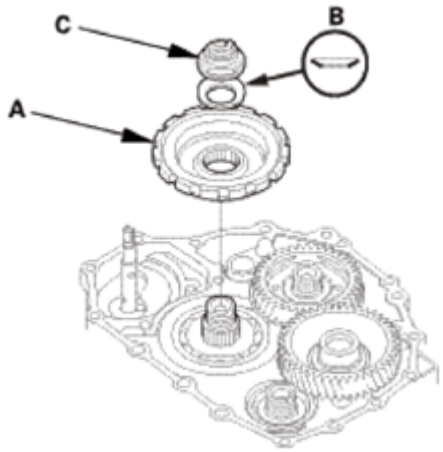

Fig. 755: Identifying Park Gear, Conical Spring Washer And Locknut
Courtesy of AMERICAN HONDA MOTOR CO., INC.

NOTE:

- **Do not tap the park gear to install.**
- **Use a torque wrench to tighten the locknut. Do not use an impact wrench.**
- **Countershaft locknut has left-hand threads.**

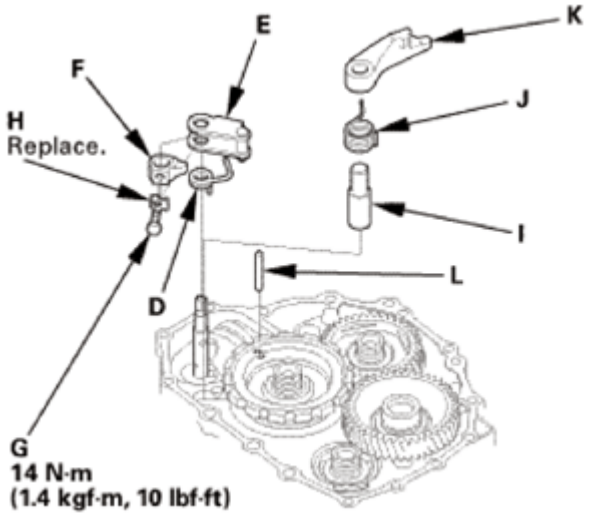

Fig. 756: Identifying Park Pawl Shaft, Park Lever Spring, Park Lever, Park Lever Stop, Lock Bolt, Lock Washer With Torque Specification
Courtesy of AMERICAN HONDA MOTOR CO., INC.

10. Remove the old locknuts and the old conical spring washers from the mainshaft and the countershaft.
11. Lubricate the following parts with ATF:
    - Splines and threads of the mainshaft, the countershaft, and the secondary shaft.
    - New conical spring washers and new locknuts.

GETtheMANUALS.org

- Areas where the conical spring washers contact the mainshaft idler gear and the park gear.

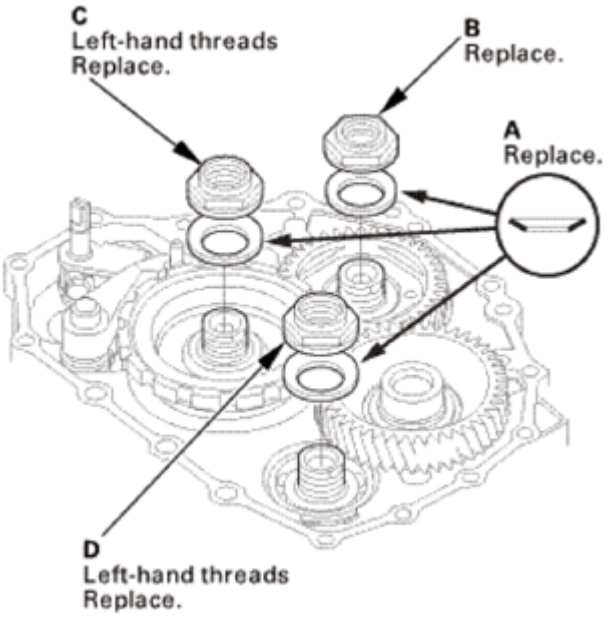

Fig. 757: Identifying Conical Spring Washers, Mainshaft Locknut, Countershaft Locknut And Secondary Shaft Locknut
Courtesy of AMERICAN HONDA MOTOR CO., INC.

12. Install new conical spring washers (A) in the direction shown.
13. Install a new mainshaft locknut (B), a new countershaft locknut (C), and a new secondary shaft locknut (D).
14. Tighten the locknuts to 167 N.m (17.0 kgf.m, 123 lbf.ft).

NOTE:

- **Use a torque wrench to tighten the locknut. Do not use an impact wrench.**
- **The countershaft and secondary shaft locknuts have left-hand threads.**

15. Remove the mainshaft holder.
16. Stake the locknuts into the shafts to a depth (A) of 0.7-1.3 mm (0.027-0.051 in) using a 3.5 mm punch (B).

GETtheMANUALS.org

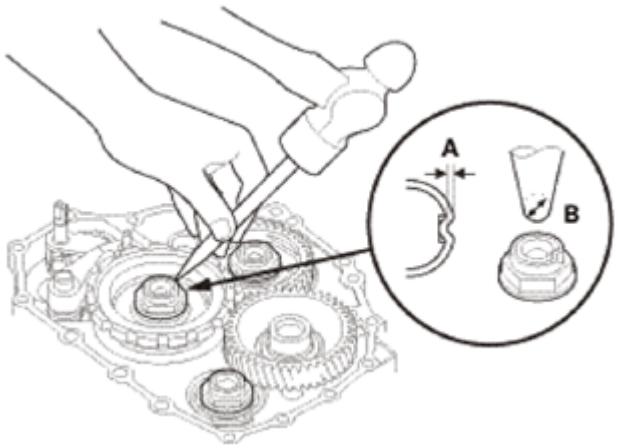

Fig. 758: Staking Locknuts Into Shafts Using Punch
Courtesy of AMERICAN HONDA MOTOR CO., INC.

17. Set the park lever in the P position.
18. Measure the distance (A) between the center of the park pawl shaft (B) and the center of the park lever roller pin (C) as shown.

    Standard: 57.7-58.7 mm (2.272-2.311 in)

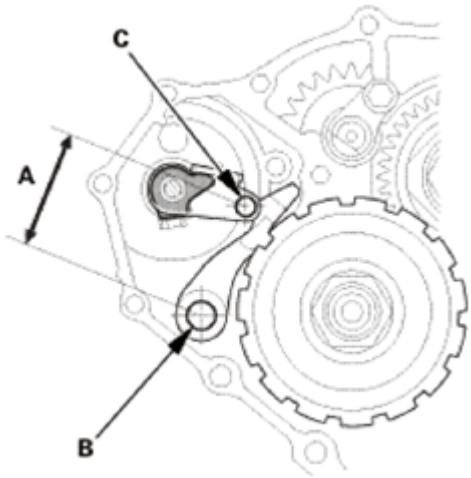

Fig. 759: Measuring Distance Between Center Of Park Pawl Shaft And Center Of Park Lever Roller Pin
Courtesy of AMERICAN HONDA MOTOR CO., INC.

19. If the measurement is out of the standard, select and install the appropriate park lever stop (A) from the table.

PARK LEVER STOP SPECIFICATION

Mark	B	C
1	11.00 mm (0.4331 in)	11.00 mm (0.4331 in)

GETtheMANUALS.org

2	10.80 mm (0.4252 in)	10.65 mm (0.4193 in)
3	10.60 mm (0.4173 in)	10.30 mm (0.4055 in)

20. After replacing the park lever stop, make sure the distance is within the tolerance.

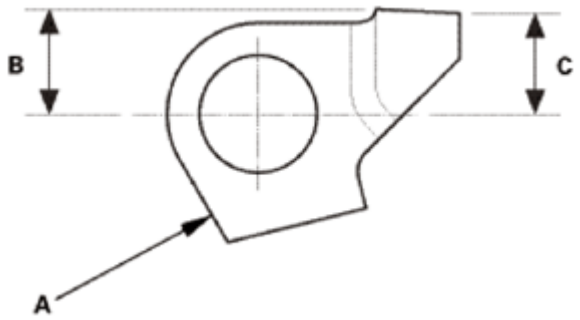

Fig. 760: Identifying Park Lever Stop Dimension
Courtesy of AMERICAN HONDA MOTOR CO., INC.

21. Pry up the lock tab (A) of the lock washer against the bolt head.

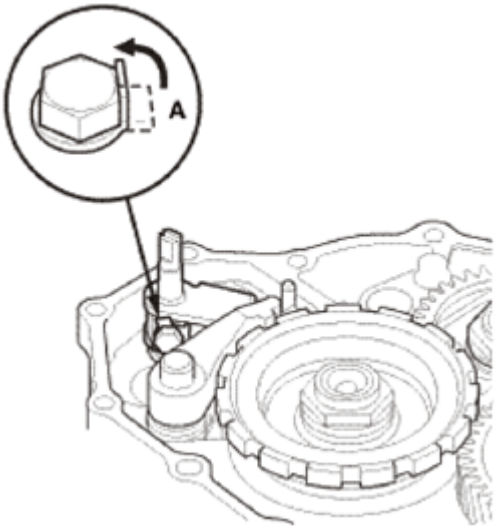

Fig. 761: Prying Up Lock Tab Of Lock Washer Against Bolt Head
Courtesy of AMERICAN HONDA MOTOR CO., INC.

4. ATF Feed Pipe/Lubrication Pipe
    1. Install the 6 x 201 mm ATF pipe (A).
    2. Install the ATF lubrication pipe (B).
    3. Install the 8 x 220 mm ATF pipe (C).
    4. Install the 8 x 198 mm ATF pipes (D).

GETtheMANUALS.org

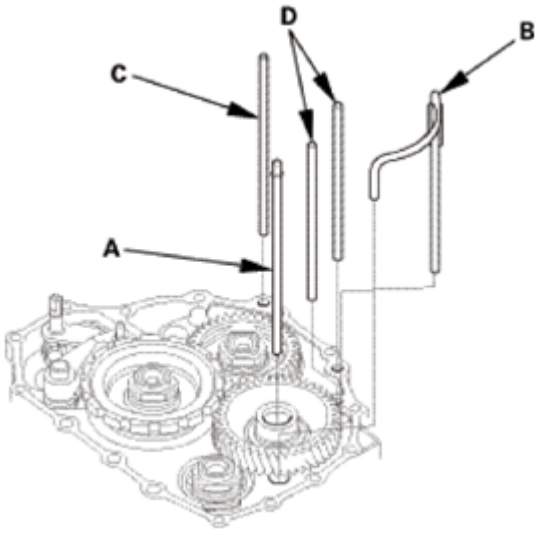

Fig. 762: Identifying ATF Feed Pipes And Lubrication Pipe
Courtesy of AMERICAN HONDA MOTOR CO., INC.

5. A/T Shift Solenoid Wire Harness - Reconnection
    1. Connect the shift solenoid valve connectors:
        - BLU wire to shift solenoid valve A.
        - ORN wire to shift solenoid valve B.
        - GRN wire to shift solenoid valve C.
        - YEL, WHT, and WHT wires to shift solenoid valve D.
        - RED wire to shift solenoid valve E.

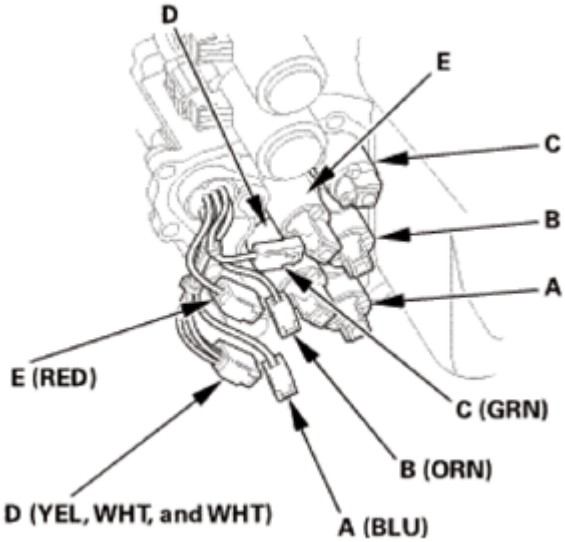

Fig. 763: Identifying Shift Solenoid Valves
Courtesy of AMERICAN HONDA MOTOR CO., INC.

GETtheMANUALS.org

6. A/T Shift Solenoid Cover
    1. Install the shift solenoid valve cover (A) with the dowel pins (B) and a new gasket (C).

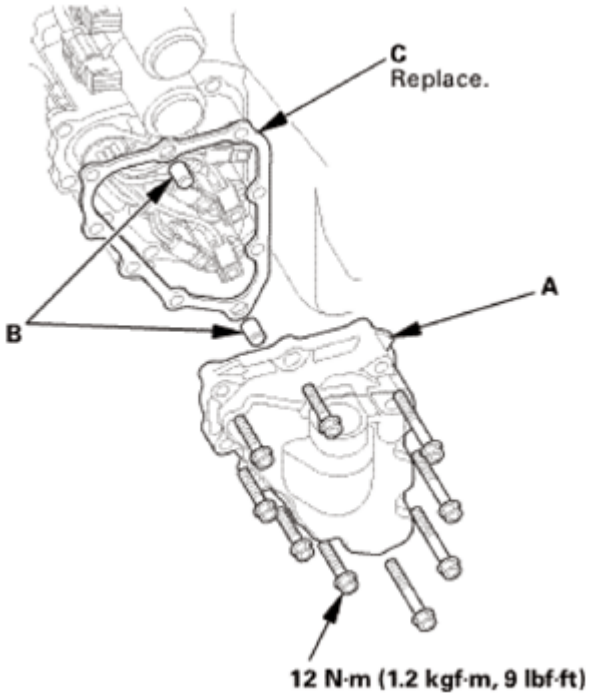

Fig. 764: Identifying Shift Solenoid Valve Cover, Dowel Pins, Gasket And Mounting Bolts With Torque Specification
Courtesy of AMERICAN HONDA MOTOR CO., INC.

7. Dipstick Guide Tube
    1. Install a new O-ring (A) on the ATF dipstick guide tube (B).
    2. Install the ATF dipstick guide tube.

GETtheMANUALS.org

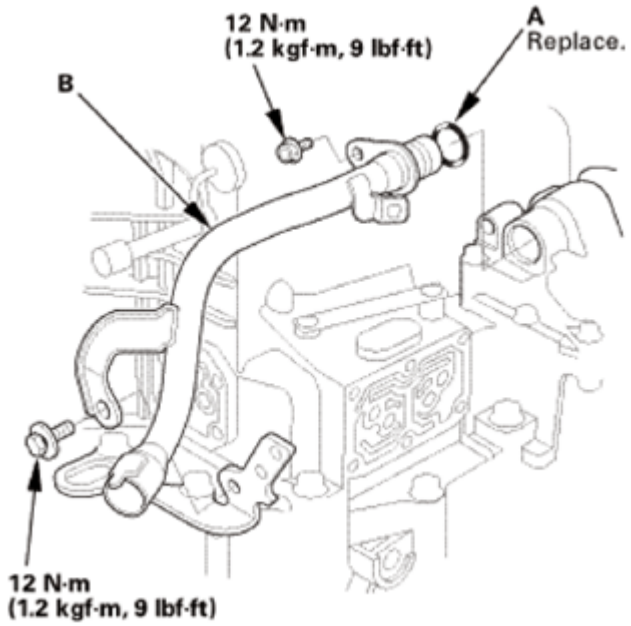

Fig. 765: Identifying ATF Dipstick Guide Tube, O-Ring And Mounting Bolts With Torque Specification
Courtesy of AMERICAN HONDA MOTOR CO., INC.

8. ATF Outlet Line
    1. Install the ATF outlet line (A) using new sealing washers (B).

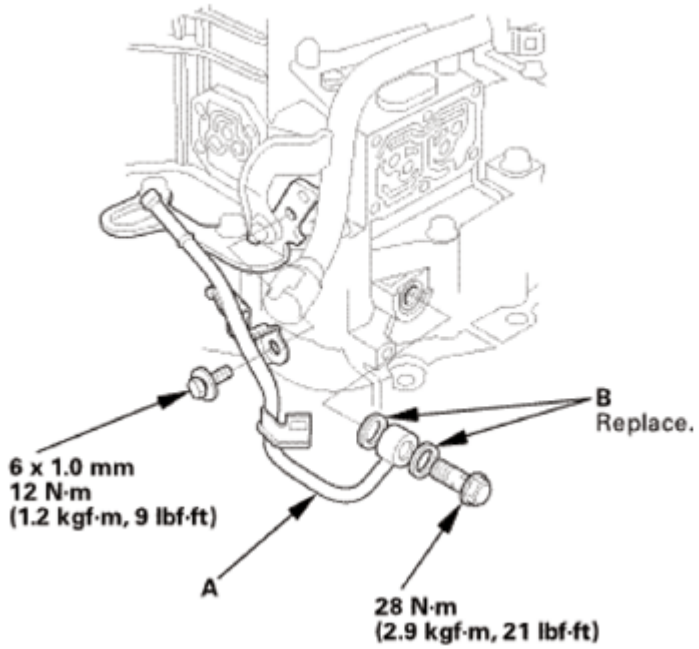

Fig. 766: Identifying ATF Outlet Line, Sealing Washers And Mounting Bolts With Torque Specification
Courtesy of AMERICAN HONDA MOTOR CO., INC.

GETtheMANUALS.org

9. ATF Inlet Line
    1. Install the ATF inlet line (A) using new sealing washers (B).

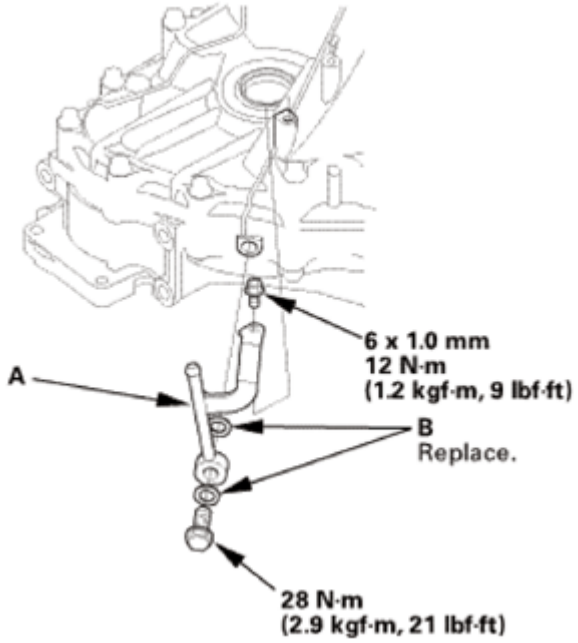

Fig. 767: Identifying ATF Inlet Line, Sealing Washers And Mounting Bolts With Torque Specification
Courtesy of AMERICAN HONDA MOTOR CO., INC.

10. A/T Clutch Pressure Control Solenoid Valve B and C
    1. Clean the mounting surfaces and the fluid passages of the solenoid valve body and the transmission housing.
    2. Install a new gasket (A) with the blue side toward the transmission housing, and Install the ATF joint pipes (D).
    3. Install new O-rings (E) over the ATF joint pipes.
    4. Install A/T clutch pressure control solenoid valves B and C with the clamp bracket (F).

GETtheMANUALS.org

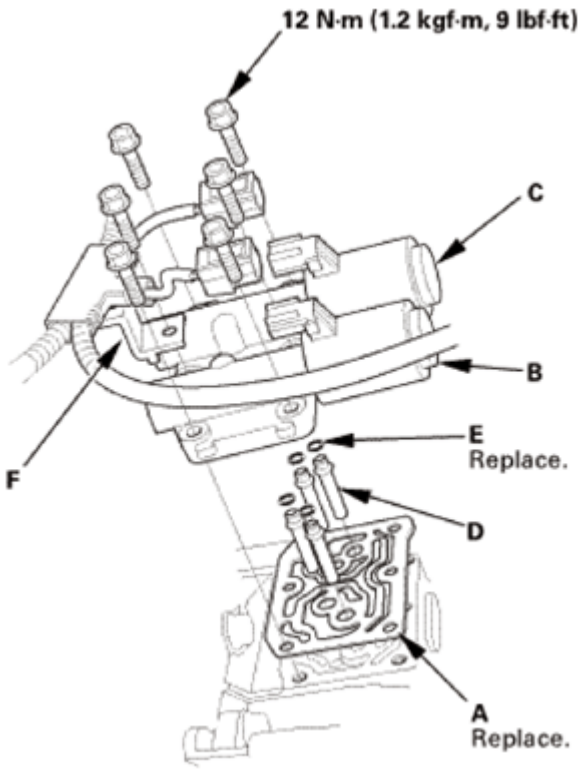

Fig. 768: Identifying Gasket, ATF Joint Pipes, O-Rings, A/T Clutch Pressure Control Solenoid Valves, Clamp Bracket And Mounting Bolts With Torque Specification
Courtesy of AMERICAN HONDA MOTOR CO., INC.

11. A/T Clutch Pressure Control Solenoid Valve A
    1. Clean the mounting surfaces and the fluid passages of the solenoid valve body and the transmission housing.
    2. Install a new gasket (B) with the blue side toward the transmission housing, and install the 35 mm ATF pipe (C) and the ATF joint pipes (D).
    3. Install new O-rings (E) over the ATF joint pipes.
    4. Install A/T clutch pressure control solenoid valve A.

GETtheMANUALS.org

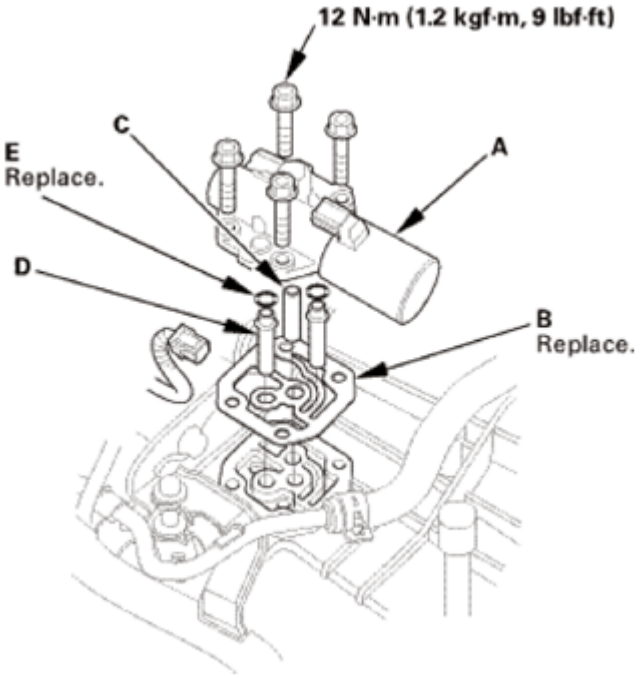

Fig. 769: Identifying A/T Clutch Pressure Control Solenoid Valve, Gasket, ATF Pipe, ATF Joint Pipes And Mounting Bolts With Torque Specification
Courtesy of AMERICAN HONDA MOTOR CO., INC.

12. Output Shaft (Countershaft) Speed Sensor
    1. Install a new O-ring (A) on the output shaft (countershaft) speed sensor (B).
    2. Install the output shaft (countershaft) speed sensor and the sensor washer (C).

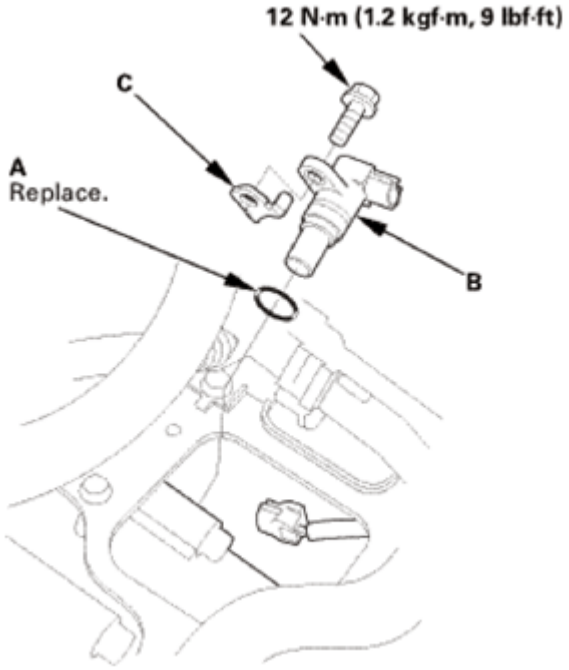

GETtheMANUALS.org

Fig. 770: Identifying Output Shaft (Countershaft) Speed Sensor, O-Ring, Sensor Washer And Mounting Bolts With Torque Specification
Courtesy of AMERICAN HONDA MOTOR CO., INC.

13. Input Shaft (Mainshaft) Speed Sensor
    1. Install a new O-ring (A) on the input shaft (mainshaft) speed sensor (B).
    2. Install the input shaft (mainshaft) speed sensor.

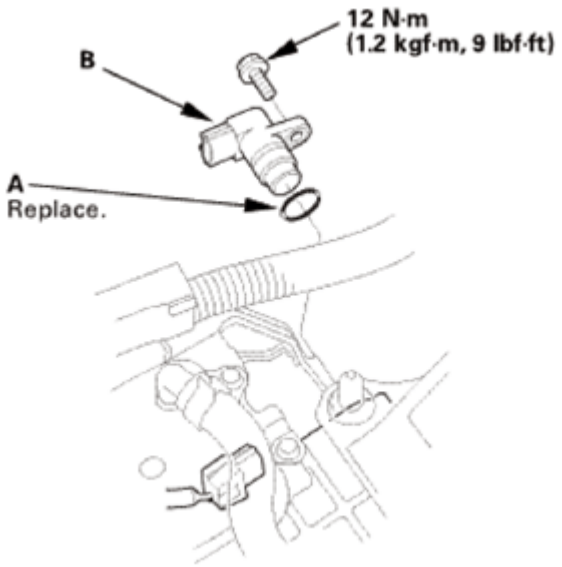

Fig. 771: Identifying Input Shaft (Mainshaft) Speed Sensor, O-Ring And Mounting Bolt With Torque Specification
Courtesy of AMERICAN HONDA MOTOR CO., INC.

14. Transmission End Cover
    1. Install the dowel pins (A) and a new gasket (B).
    2. Install new O-rings (C) over the ATF pipes.
    3. Install the end cover (D), and tighten the three special bolts (E) and the 6 x 1.0 mm bolts (F) (12 bolts).

GETtheMANUALS.org

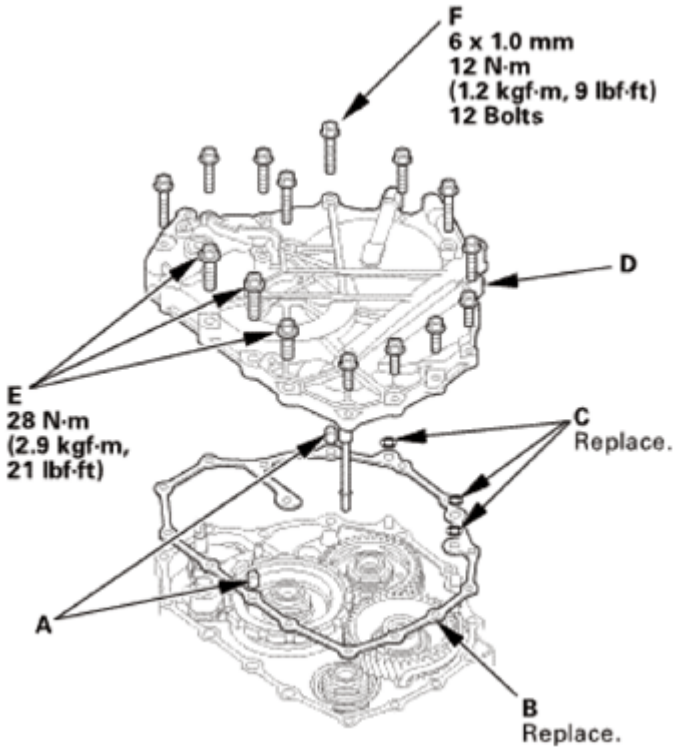

Fig. 772: Identifying Dowel Pins, Gasket, O-Rings, End Cover And Mounting Bolts With Torque Specification
Courtesy of AMERICAN HONDA MOTOR CO., INC.

15. Transmission Range Switch Subharness
    1. Install the clamp brackets (A).
    2. Install the transmission range switch subharness (B).

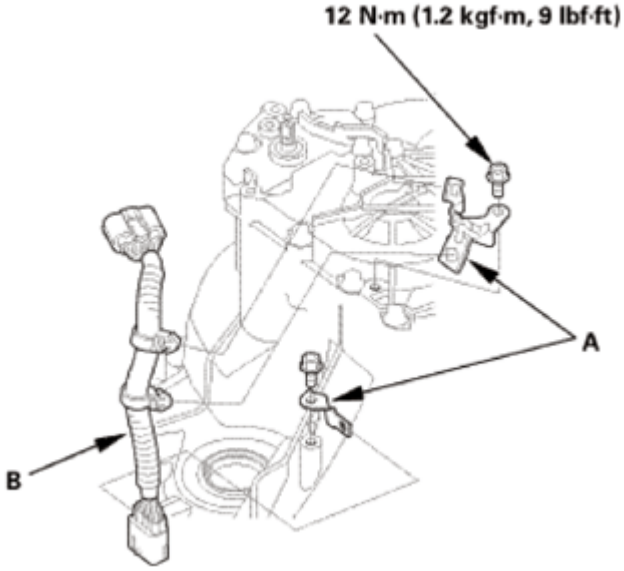

GETtheMANUALS.org

Fig. 773: Identifying Transmission Range Switch Subharness, Clamp Brackets And Mounting Bolts With Torque Specification
Courtesy of AMERICAN HONDA MOTOR CO., INC.

16. Transmission Range Switch
    1. Make sure the selector control shaft is in the N position. If necessary, move the selector control shaft to the N position.

NOTE: **Do not use the selector control shaft to adjust the shift position. If the selector control shaft tips are squeezed together it will cause a faulty signal or position due to play between the selector control shaft and switch.**

Fig. 774: Moving Selector Control Shaft To N Position
Courtesy of AMERICAN HONDA MOTOR CO., INC.

2. Align the cutouts (A) on the rotary-frame with the neutral positioning cutouts (B) on the transmission range switch (C), then put a 2.0 mm (0.079 in) feeler gauge blade (D) in the cutouts to hold the switch in the N position.

NOTE: **Be sure to use a 2.0 mm (0.079 in) blade or equivalent to hold the switch in the N position.**

GETtheMANUALS.org

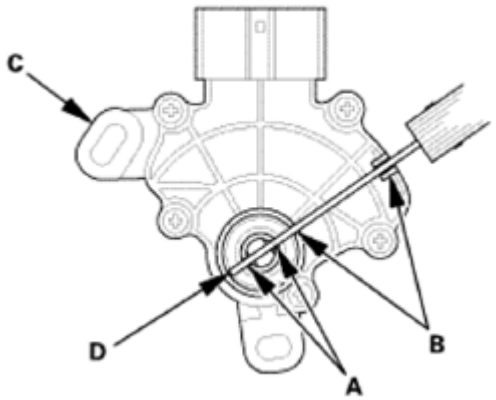

Fig. 775: Aligning Cutouts On Rotary-Frame With Neutral Positioning Cutouts On Transmission Range Switch
Courtesy of AMERICAN HONDA MOTOR CO., INC.

3. Install the transmission range switch (A) gently on the selector control shaft (B) while holding it in the N position with the 2.0 mm (0.079 in) blade (C).

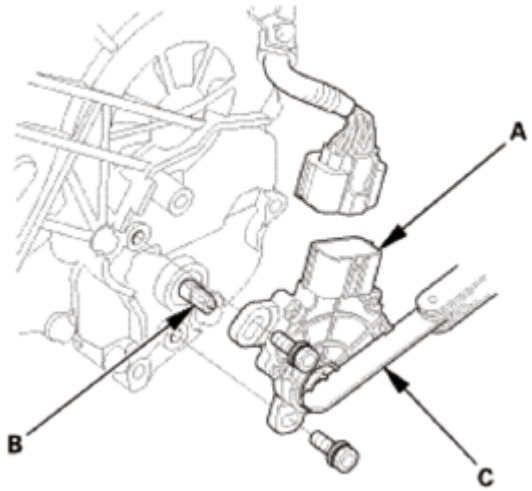

Fig. 776: Identifying Transmission Range Switch, Selector Control Shaft And Blade
Courtesy of AMERICAN HONDA MOTOR CO., INC.

4. Tighten the bolts on the transmission range switch (A) while you continue holding the N position.

NOTE: **Do not move the transmission range switch when tightening the bolts.**

5. Remove the feeler gauge (B).
6. Check the connector (C) for corrosion, dirt, or oil, and clean or repair if necessary, then connect the connector securely.

GETtheMANUALS.org

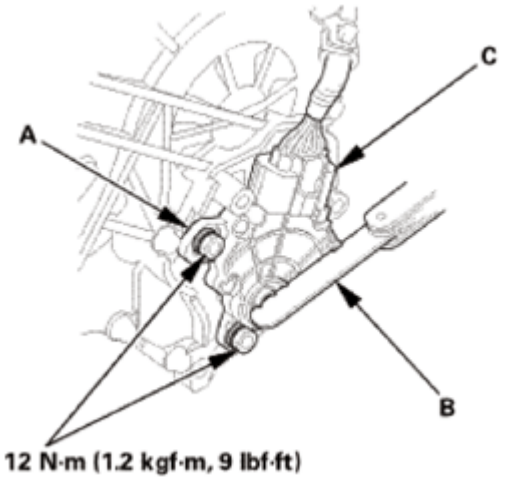

Fig. 777: Identifying Transmission Range Switch, Connector, Feeler Gauge And Mounting Bolts With Torque Specification
Courtesy of AMERICAN HONDA MOTOR CO., INC.

17. Transmission Range Switch Cover
    1. Install the transmission range switch cover (A).

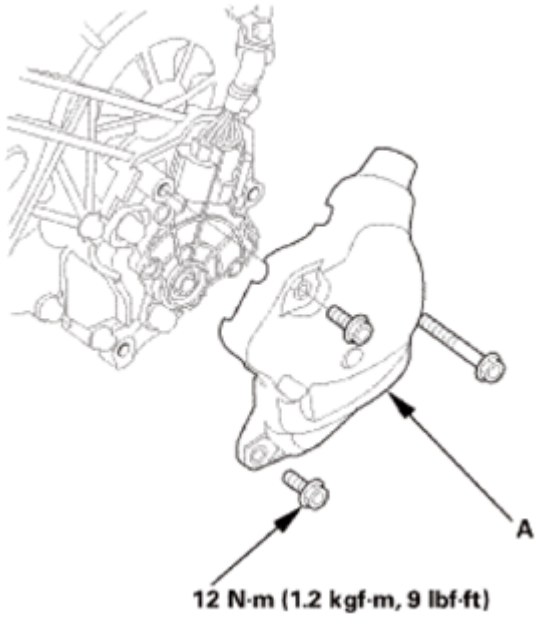

Fig. 778: Identifying Transmission Range Switch Cover And Mounting Bolts With Torque Specification
Courtesy of AMERICAN HONDA MOTOR CO., INC.

A/T HOUSING SECONDARY SHAFT BEARING REPLACEMENT

SPECIAL TOOL REQUIRED

GETtheMANUALS.org

Image	Description/Tool Number
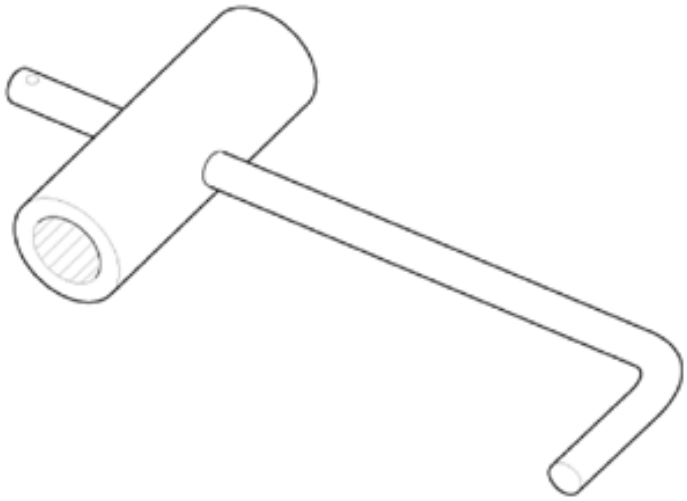	Mainshaft Holder 07GAB-PF50101
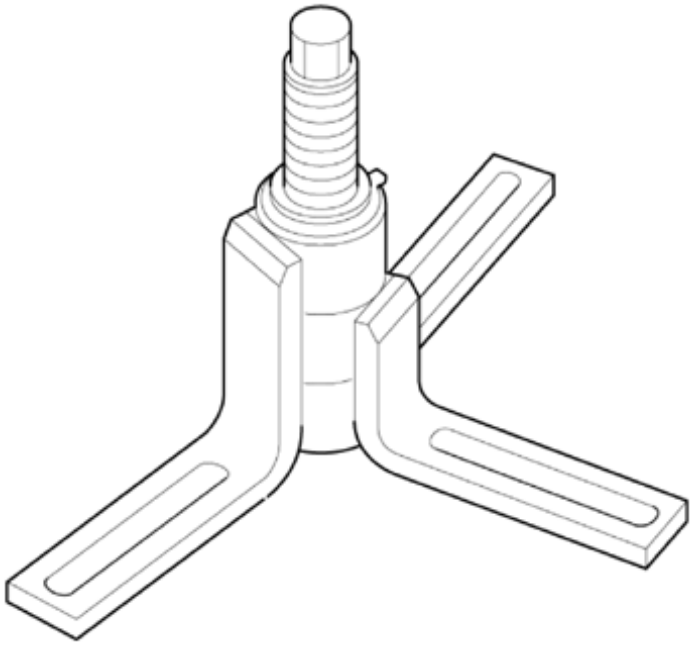	Housing Puller 07HAC-PK40102
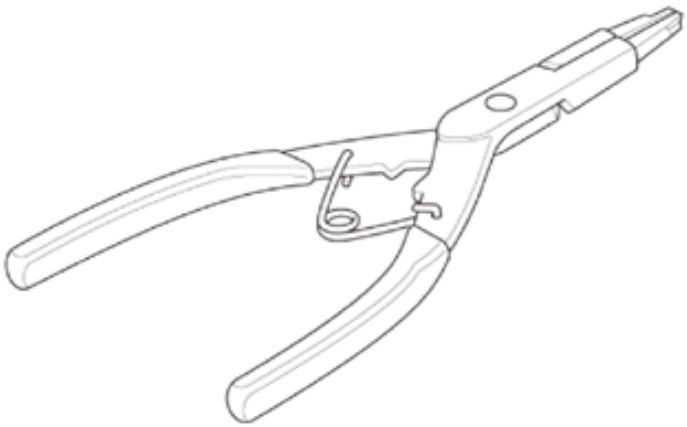	Snap Ring Pliers 07LGC-0010100

GETtheMANUALS.org

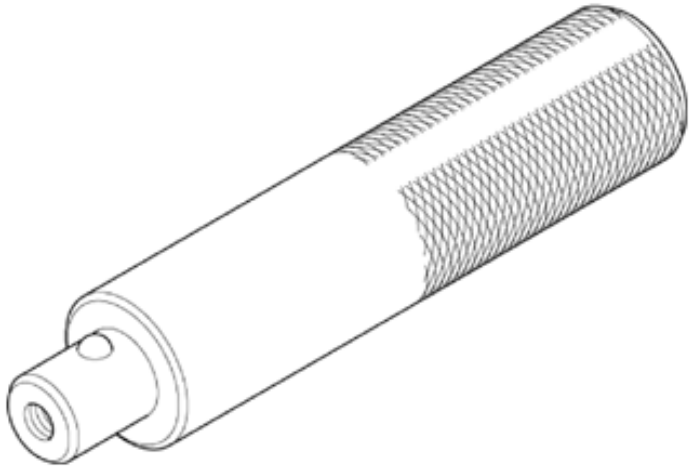	Driver Handle, 15 x 135L 07749-0010000
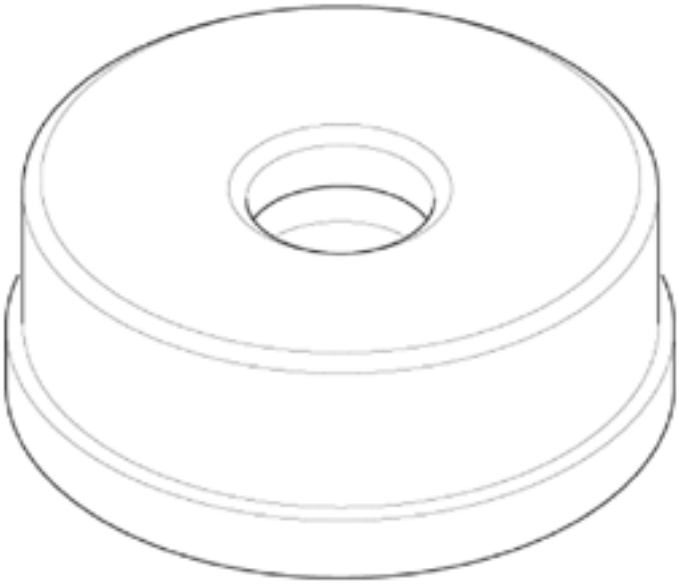	Bearing Driver Attachment, 52 x 55 mm 07746-0010400

REMOVAL

NOTE: The illustration shows AWD/4WD transmission.

1. Transmission Range Switch Cover
    1. Remove the transmission range switch cover (A).

GETtheMANUALS.org

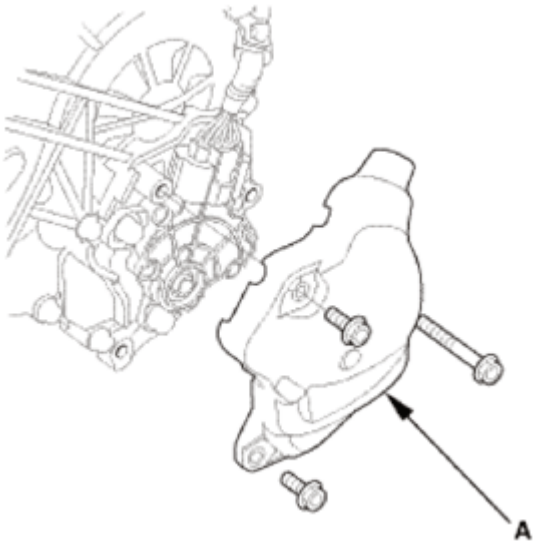

Fig. 779: Identifying Transmission Range Switch Cover With Bolts
Courtesy of AMERICAN HONDA MOTOR CO., INC.

2. Transmission Range Switch
    1. Remove the transmission range switch (A).

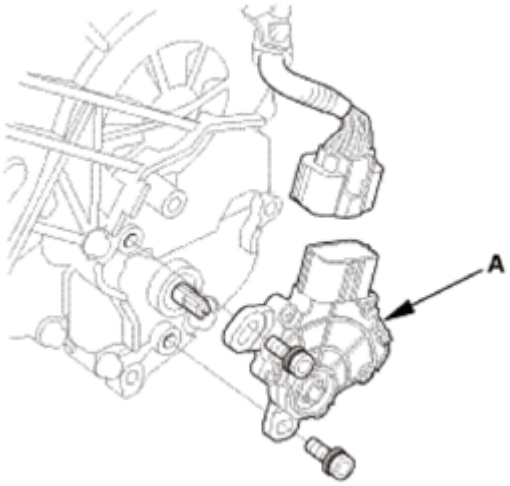

Fig. 780: Identifying Transmission Range Switch With Bolts
Courtesy of AMERICAN HONDA MOTOR CO., INC.

3. Transmission Range Switch Subharness
    1. Remove the transmission range switch subharness (A).
    2. Remove the clamp brackets (B).

GETtheMANUALS.org

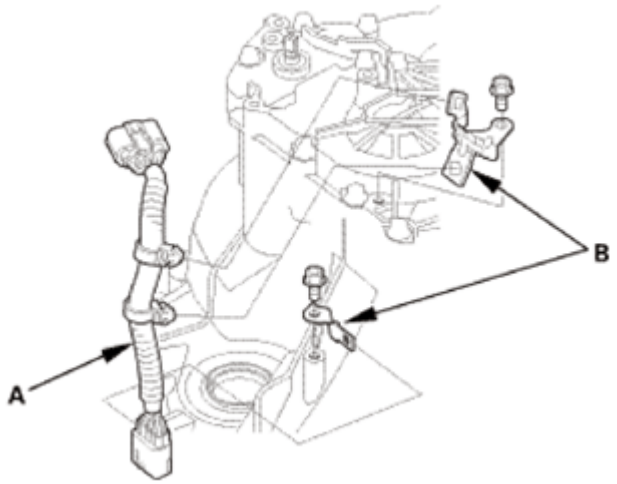

Fig. 781: Identifying Transmission Range Switch Subharness And Clamp Brackets
Courtesy of AMERICAN HONDA MOTOR CO., INC.

4. Transmission End Cover
    1. Remove the end cover (A), the dowel pins (B), the O-rings (C), and the gasket (D).

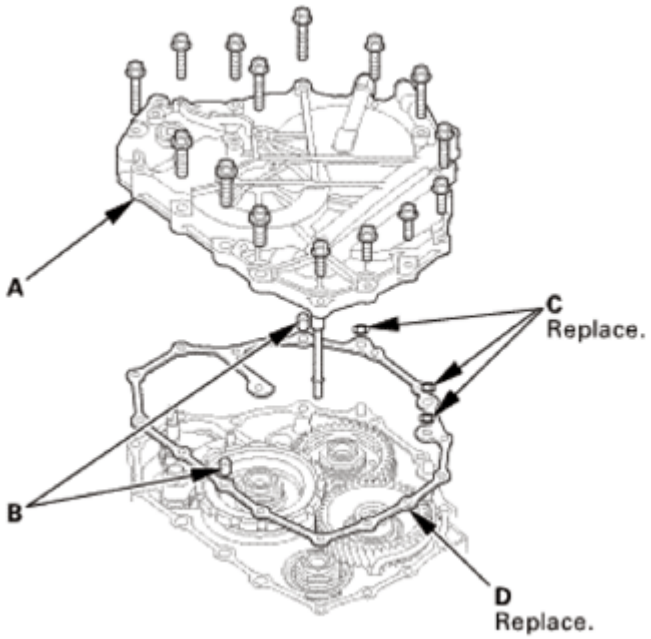

Fig. 782: Identifying Transmission End Cover, Dowel Pins, O-Rings And Gasket With Bolts
Courtesy of AMERICAN HONDA MOTOR CO., INC.

5. Input Shaft (Mainshaft) Speed Sensor
    1. Remove the input shaft (mainshaft) speed sensor (A).
    2. Remove the O-ring (B) from the input shaft (mainshaft) speed sensor.

GETtheMANUALS.org

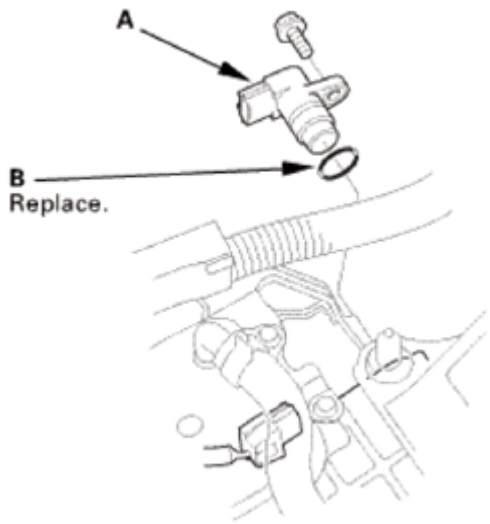

Fig. 783: Identifying Input Shaft (Mainshaft) Speed Sensor And O-Ring
Courtesy of AMERICAN HONDA MOTOR CO., INC.

6. Output Shaft (Countershaft) Speed Sensor
    1. Remove the output shaft (countershaft) speed sensor (A) and the sensor washer (B).
    2. Remove the O-ring (C) from the output shaft (countershaft) speed sensor.

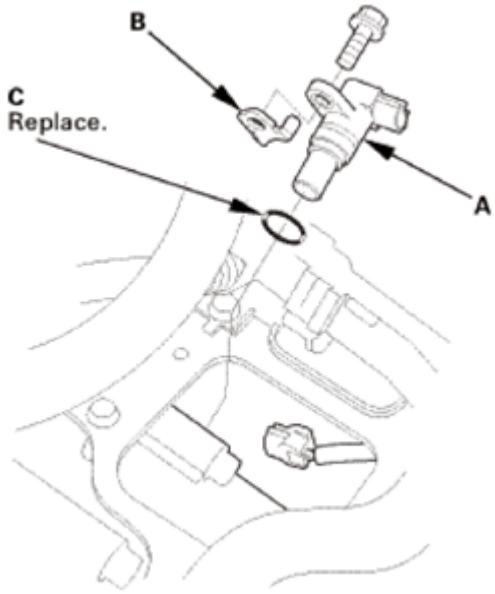

Fig. 784: Identifying Output Shaft (Countershaft) Speed Sensor, Sensor Washer And O-Ring
Courtesy of AMERICAN HONDA MOTOR CO., INC.

7. A/T Clutch Pressure Control Solenoid Valve A
    1. Remove A/T clutch pressure control solenoid valve A.
    2. Remove the 35 mm ATF pipe (B), the ATF joint pipes (C), the O-rings (D), and the gasket (E).

GETtheMANUALS.org

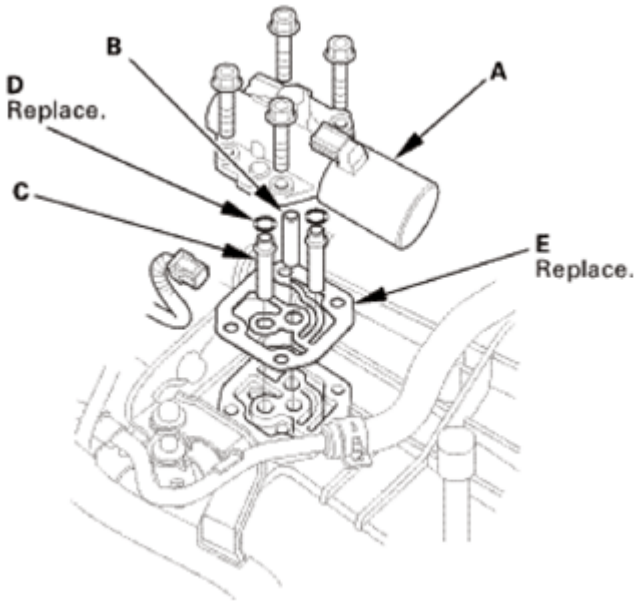

Fig. 785: Identifying A/T Clutch Pressure Control Solenoid Valve, ATF Pipe, ATF Joint Pipes, O-Rings And Gasket With Bolts
Courtesy of AMERICAN HONDA MOTOR CO., INC.

8. A/T Clutch Pressure Control Solenoid Valve B and C
    1. Remove the clamp bracket (A) and A/T clutch pressure control solenoid valves B and C.
    2. Remove the ATF joint pipes (D), the O-rings (E), and the gasket (F).

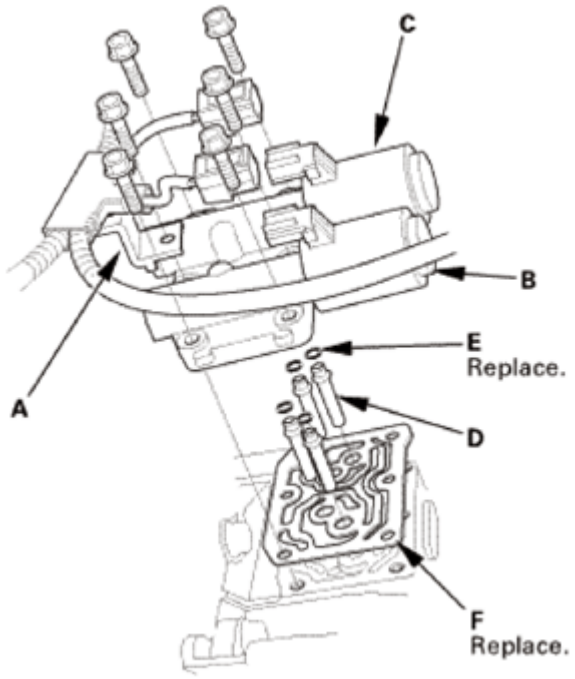

Fig. 786: Identifying A/T Clutch Pressure Control Solenoid Valves, Clamp Bracket, ATF

GETtheMANUALS.org

Joint Pipes, O-Rings And Gasket
Courtesy of AMERICAN HONDA MOTOR CO., INC.

9. ATF Inlet Line
    1. Remove the banjo bolt (A) and the sealing washers (B).
    2. Remove the ATF inlet line (C).

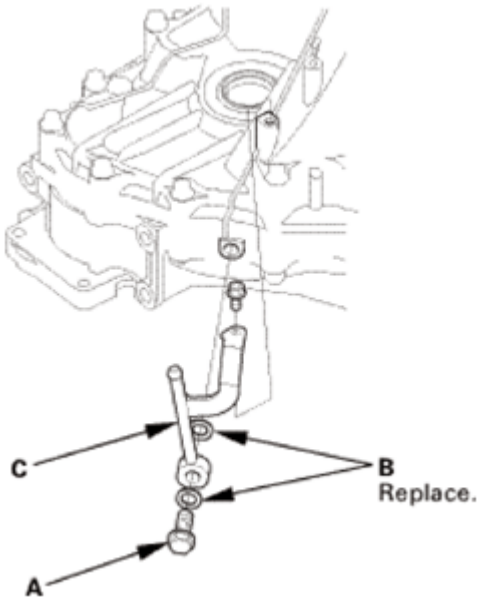

Fig. 787: Identifying ATF Inlet Line, Banjo Bolt And Sealing Washers
Courtesy of AMERICAN HONDA MOTOR CO., INC.

10. ATF Outlet Line
    1. Remove the banjo bolt (A) and the sealing washers (B).
    2. Remove the ATF outlet line (C).

GETtheMANUALS.org

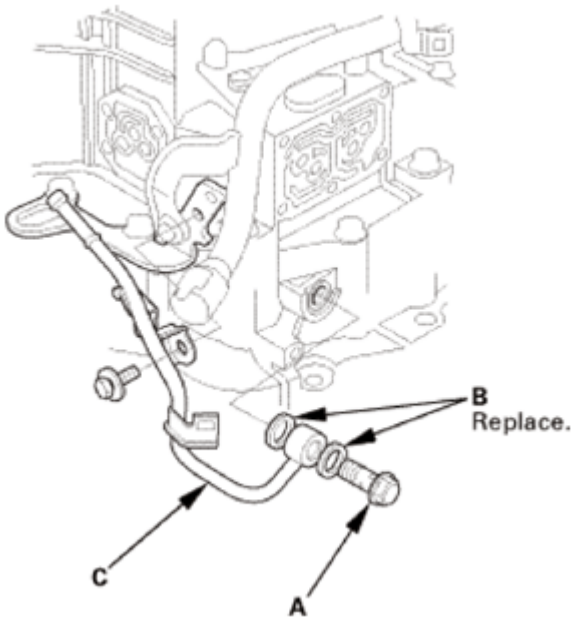

Fig. 788: Identifying ATF Outlet Line, Banjo Bolt And Sealing Washers
Courtesy of AMERICAN HONDA MOTOR CO., INC.

11. Dipstick Guide Tube
    1. Remove the ATF dipstick guide tube (A).
    2. Remove the O-ring (B) from the ATF dipstick guide tube.

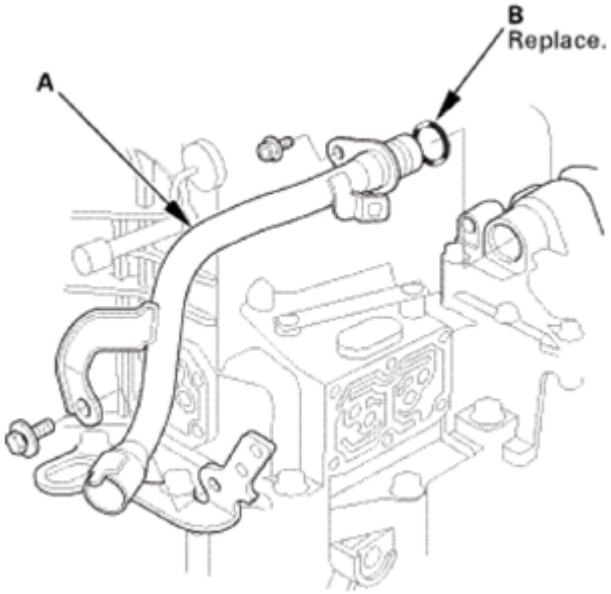

Fig. 789: Identifying ATF Dipstick Guide Tube And O-Ring
Courtesy of AMERICAN HONDA MOTOR CO., INC.

12. A/T Shift Solenoid Cover

GETtheMANUALS.org

1. Remove the shift solenoid valve cover (A), the dowel pins (B), and the gasket (C).

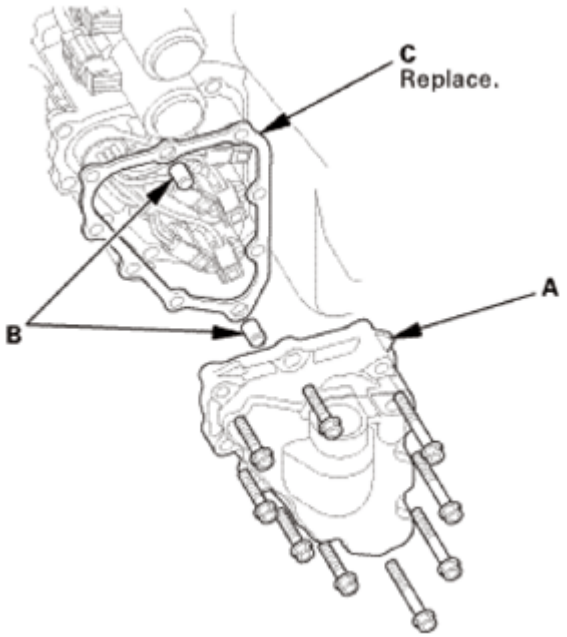

Fig. 790: Identifying Shift Solenoid Valve Cover, Dowel Pins And Gasket
Courtesy of AMERICAN HONDA MOTOR CO., INC.

13. A/T Shift Solenoid Wire Harness - Disconnection
    1. Disconnect the connectors.

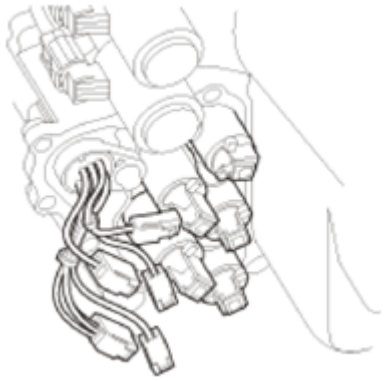

Fig. 791: Identifying A/T Shift Solenoid Wire Harness Connectors
Courtesy of AMERICAN HONDA MOTOR CO., INC.

14. ATF Feed Pipe/Lubrication Pipe
    1. Remove the 6 x 201 mm ATF pipe (A).
    2. Remove the ATF lubrication pipe (B).
    3. Remove the 8 x 220 mm ATF pipe (C).
    4. Remove the 8 x 198 mm ATF pipes (D).

GETtheMANUALS.org

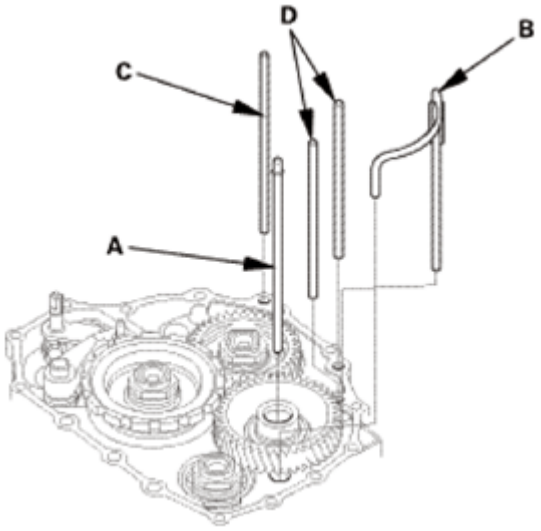

Fig. 792: Identifying ATF Feed Pipes And Lubrication Pipe
Courtesy of AMERICAN HONDA MOTOR CO., INC.

15. End Cover Idler Gear Assembly
    1. Install the mainshaft holder onto the mainshaft.
    2. Engage the park pawl with the park gear.

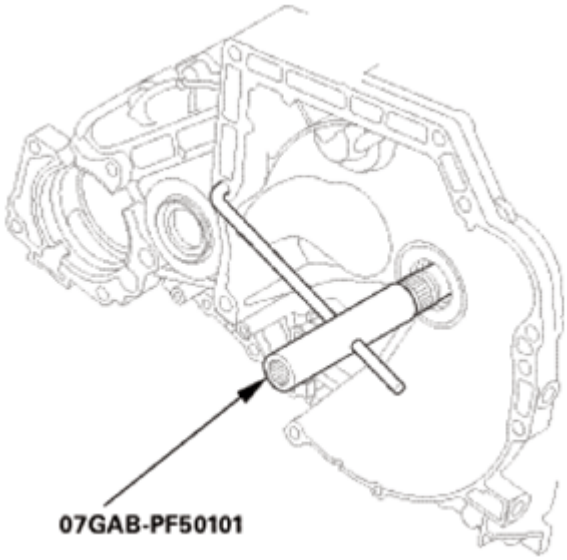

Fig. 793: Installing Mainshaft Holder Onto Mainshaft
Courtesy of AMERICAN HONDA MOTOR CO., INC.

    3. Using a chisel, cut the lock tab (A) of the locknut (B).

NOTE: Keep all of the chiseled particles out of the transmission.

GETtheMANUALS.org

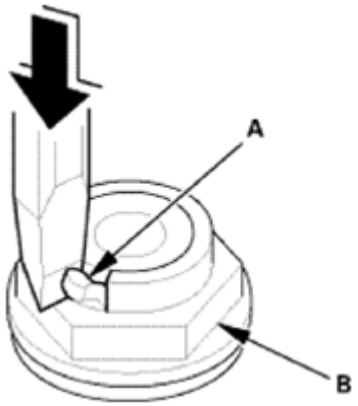

Fig. 794: Cutting Lock Tab Of Locknut Using Chisel
Courtesy of AMERICAN HONDA MOTOR CO., INC.

4. Remove the locknuts (A) and the conical spring washers (B) from each shaft.

NOTE:

- **The countershaft and secondary shaft locknuts have left-hand threads.**
- **Keep all of the chiseled particles out of the transmission.**
- **Clean the old locknuts; they are used to install the press fit idler gears and park gear.**

5. Remove the mainshaft holder.

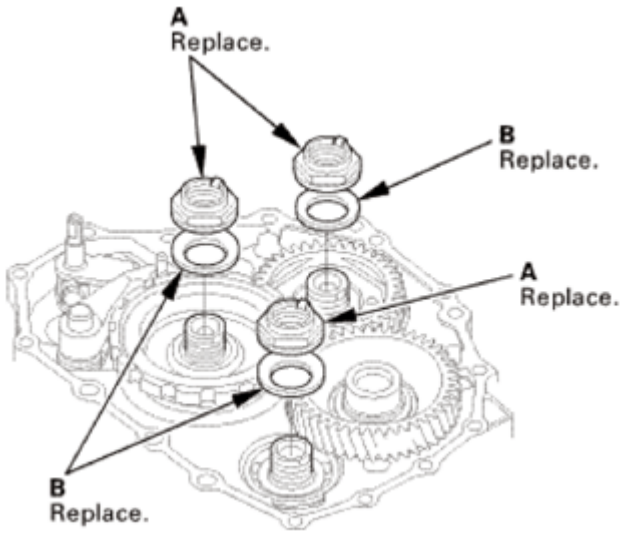

Fig. 795: Identifying Locknuts And Conical Spring Washers
Courtesy of AMERICAN HONDA MOTOR CO., INC.

6. Remove the park pawl (A), the park pawl spring (B), the park pawl shaft (C), and the stop shaft (D).

GETtheMANUALS.org

7. Pry down the lock tab (E) of the lock washer (F).
8. Remove the lock bolt (G) and the lock washer.
9. Remove the park lever (H), the park lever stop (I), and the park lever spring (J).

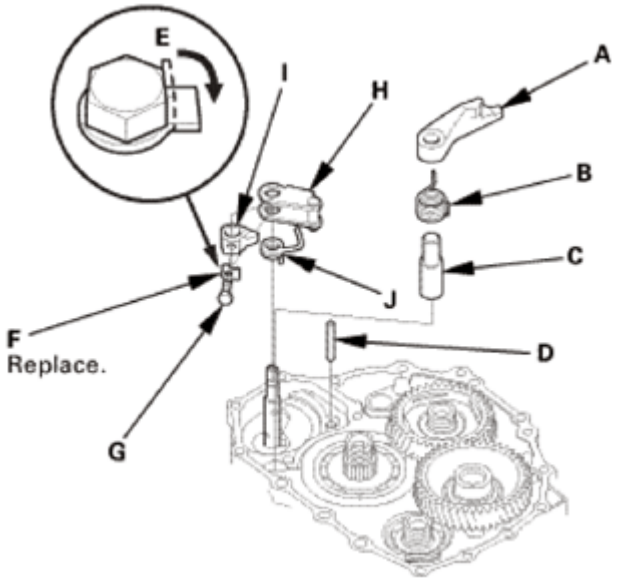

Fig. 796: Prying Down Lock Tab Of Lock Washer
Courtesy of AMERICAN HONDA MOTOR CO., INC.

10. Place a spacer (A) on the countershaft (B).
11. Set a commercially available bearing puller (C) on the park gear (D).
12. Remove the park gear.

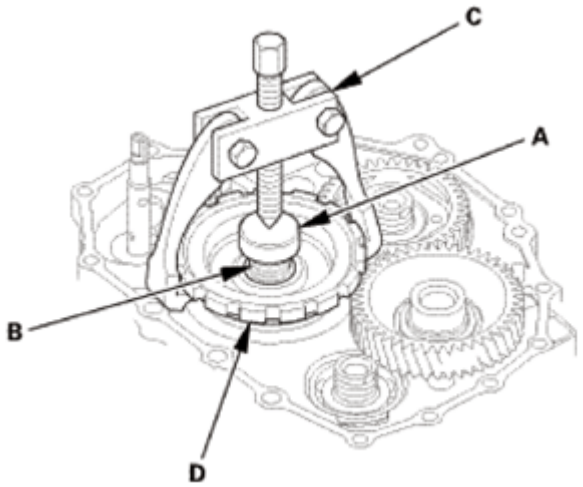

Fig. 797: Setting Commercially Available Bearing Puller On Park Gear
Courtesy of AMERICAN HONDA MOTOR CO., INC.

13. Install a puller (A) with two 6 x 1.0 mm bolts (B) on the mainshaft idler gear (C).

GETtheMANUALS.org

14. Set a spacer (D) between the puller and the mainshaft (E).
15. Remove the mainshaft idler gear.

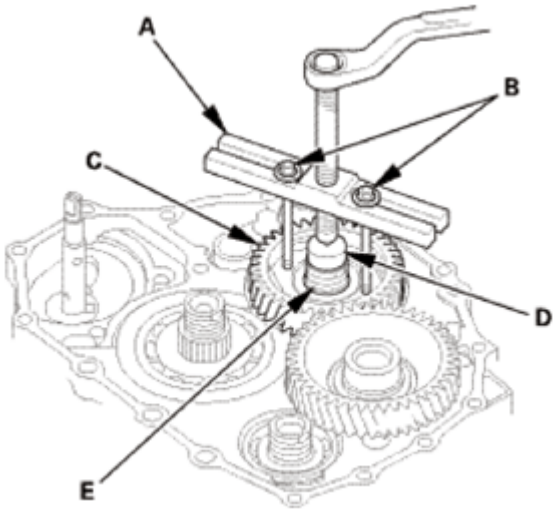

Fig. 798: Installing Puller With 6 X 1.0 mm Bolts On Mainshaft Idler Gear
Courtesy of AMERICAN HONDA MOTOR CO., INC.

16. Automatic Transmission Housing
    1. Align the spring pin (A) on the selector control shaft (B) with the transmission housing groove (C).

    NOTE: **Do not squeeze the end of the selector control shaft tips together when turning the control shaft. If the tips are squeezed together, it will cause a faulty shift position signal or position due to the play between the selector control shaft and the transmission range switch.**

    2. Remove the transmission housing mounting bolts (D) (2WD: 19 bolts, AWD/4WD: 20 bolts).
    3. Install the housing puller over the mainshaft.
    4. Remove the transmission housing (E) using the housing puller.
    5. Remove the dowel pins (F) and the gasket (G).

GETtheMANUALS.org

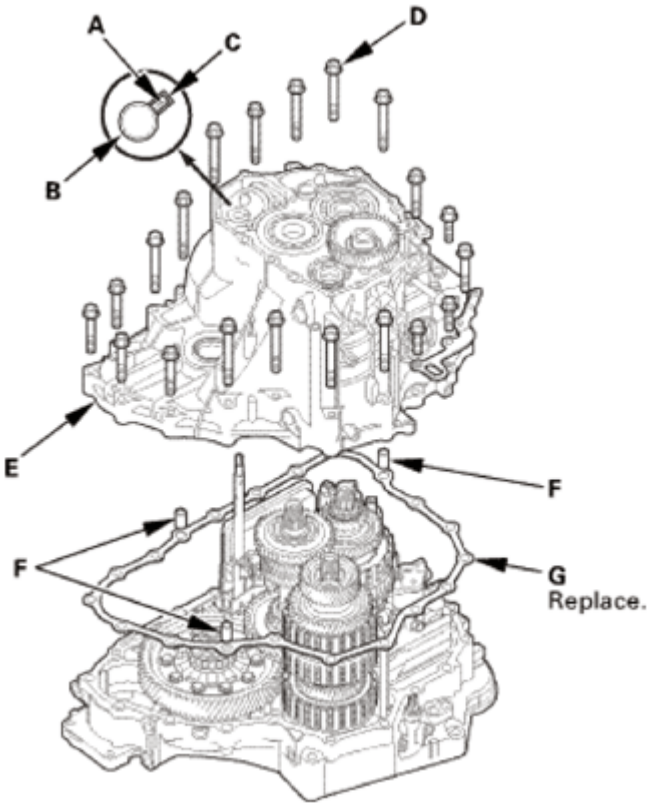

Fig. 799: Identifying Spring Pin, Selector Control Shaft, Transmission Housing Groove, Transmission Housing, Mounting Bolts And Gasket
Courtesy of AMERICAN HONDA MOTOR CO., INC.

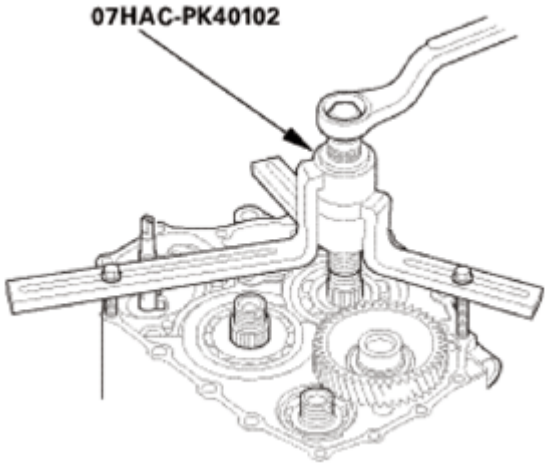

Fig. 800: Installing Housing Puller Over Mainshaft
Courtesy of AMERICAN HONDA MOTOR CO., INC.

17. A/T Idler Gear/Idler Gear Shaft Assembly
    1. Remove the snap ring (A), the cotter retainer (B), and the cotters (C).
    2. Remove the idler gear shaft/idler gear assembly (D).

GETtheMANUALS.org

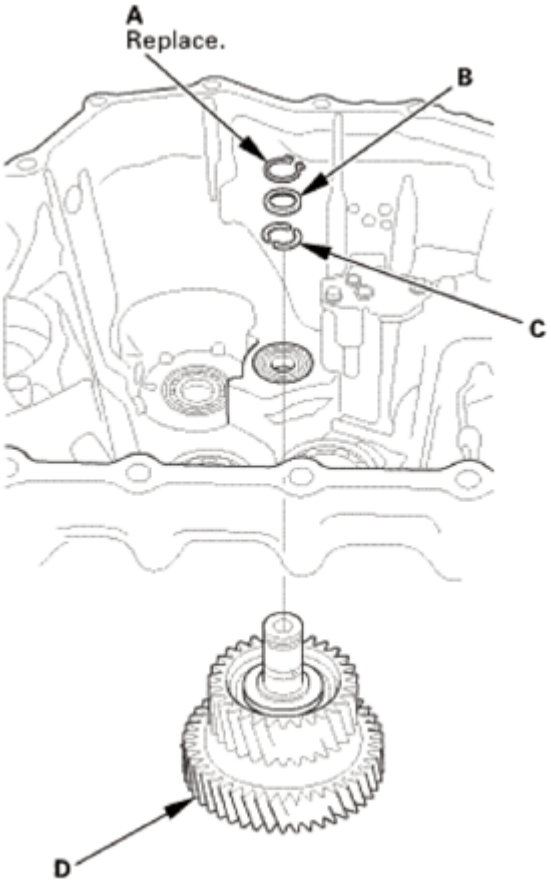

Fig. 801: Identifying Idler Gear Shaft/Idler Gear Assembly, Snap Ring, Cotter Retainer And Cotters
Courtesy of AMERICAN HONDA MOTOR CO., INC.

18. Transmission Housing Secondary Shaft Bearing
    1. Expand the snap ring using the snap ring pliers.
    2. Drive the secondary shaft bearing out using the driver handle and the 52 x 55 mm bearing driver attachment.

NOTE: **Do not remove the snap ring unless it is necessary to clean the groove in the transmission housing.**

GETtheMANUALS.org

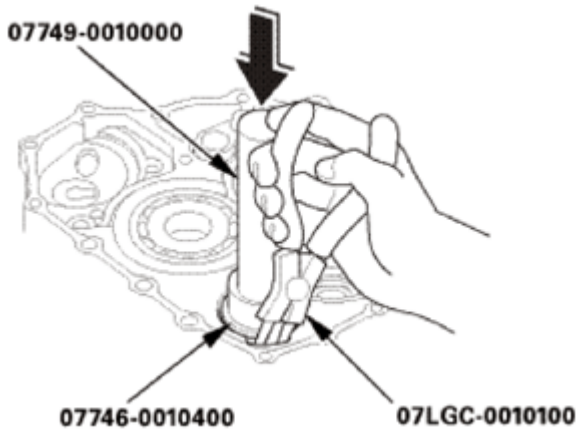

Fig. 802: Driving Secondary Shaft Bearing Out Using Driver Handle And 52 X 55 mm Bearing Driver Attachment
Courtesy of AMERICAN HONDA MOTOR CO., INC.

INSTALLATION

NOTE:

- **Apply a light coat of clean ATF on all moving parts before installation.**
- **The illustration shows AWD/4WD transmission.**

1. Transmission Housing Secondary Shaft Bearing
    1. Expand the snap ring using the snap ring pliers.
    2. Install the secondary shaft bearing (A) part-way into the housing using the driver handle and the 52 x 55 mm bearing driver attachment.
    3. Release the snap ring pliers, then push the bearing down into the transmission housing until the snap ring snaps in place around it.

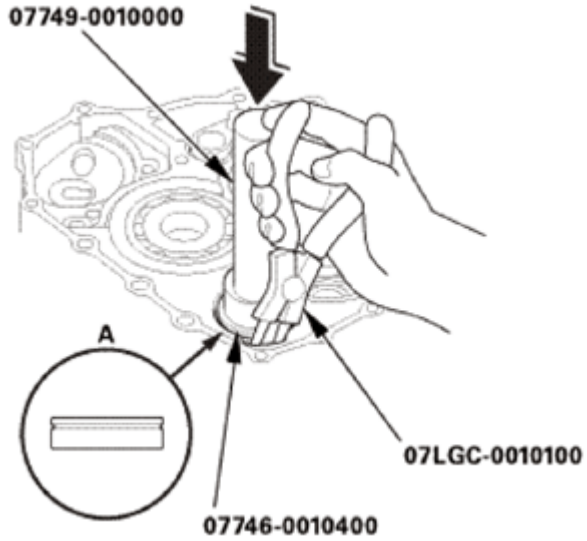

Fig. 803: Expanding Snap Ring Using Snap Ring Pliers

GETtheMANUALS.org

Courtesy of AMERICAN HONDA MOTOR CO., INC.

4. After installing the bearing check that the snap ring (A) is seated in the bearing and the transmission housing groove, and that the snap ring end gap (B) is correct.

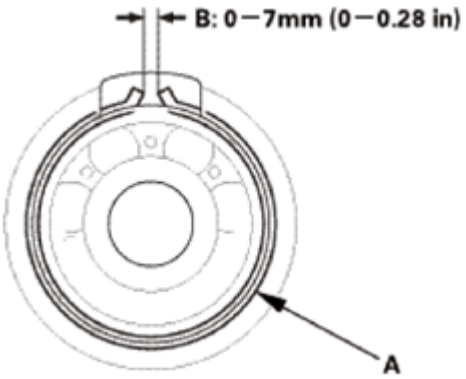

Fig. 804: Checking Snap Ring End Gap
Courtesy of AMERICAN HONDA MOTOR CO., INC.

2. A/T Idler Gear/Idler Gear Shaft Assembly
    1. Install the idler gear shaft/idler gear assembly (A).
    2. Install the cotters (B), the cotter retainer (C), and a new snap ring (D) as shown.

GETtheMANUALS.org

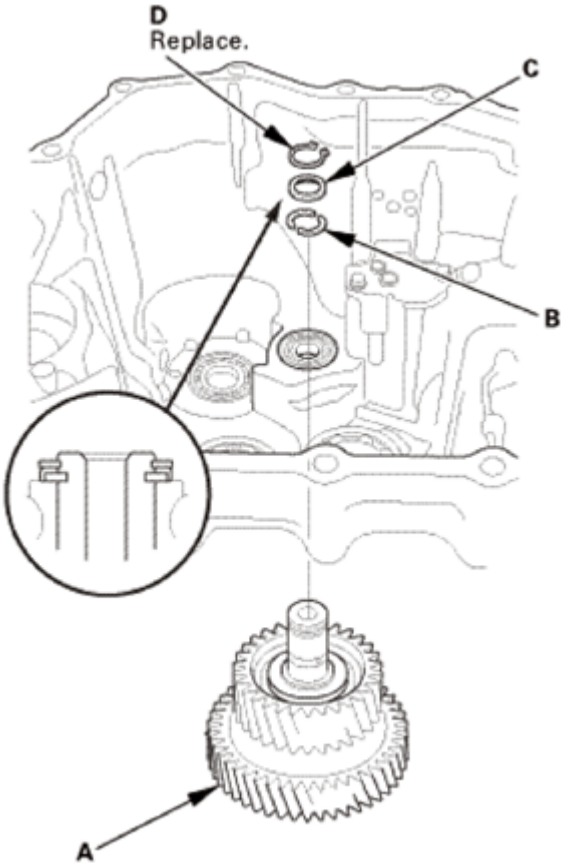

Fig. 805: Identifying Idler Gear Shaft/Idler Gear Assembly, Cotters, Cotter Retainer And Snap Ring
Courtesy of AMERICAN HONDA MOTOR CO., INC.

3. Automatic Transmission Housing
    1. Install the three dowel pins (A) and a new gasket (B).
    2. Align the spring pin (C) of the selector control shaft (D) with the transmission housing groove (E).

    NOTE: **Do not squeeze the end of the selector control shaft tips together when turning the shaft. If the tips are squeezed together, it will cause a faulty shift position signal or position due to the play between the selector control shaft and the transmission range switch.**

    3. Place the transmission housing (F) on the torque converter housing (G).

    NOTE: **Do not install the input shaft (mainshaft) speed sensor and the output shaft (countershaft) speed sensor before installing the transmission housing.**

    4. Wrap the tip of a screwdriver with tape so the reverse idler gear teeth do not get damaged. Engage the reverse idler gear (H) with the reverse gears (I) by rotating the idler gear using the screwdriver.

GETtheMANUALS.org

5. Make sure the transmission housing is securely seated so there is no clearance between the transmission housing and the torque converter housing.
6. Install the transmission hanger (J), and tighten the transmission housing mounting bolts (2WD: 19 bolts, AWD/4WD: 20 bolts) in at least two steps, in a crisscross pattern.

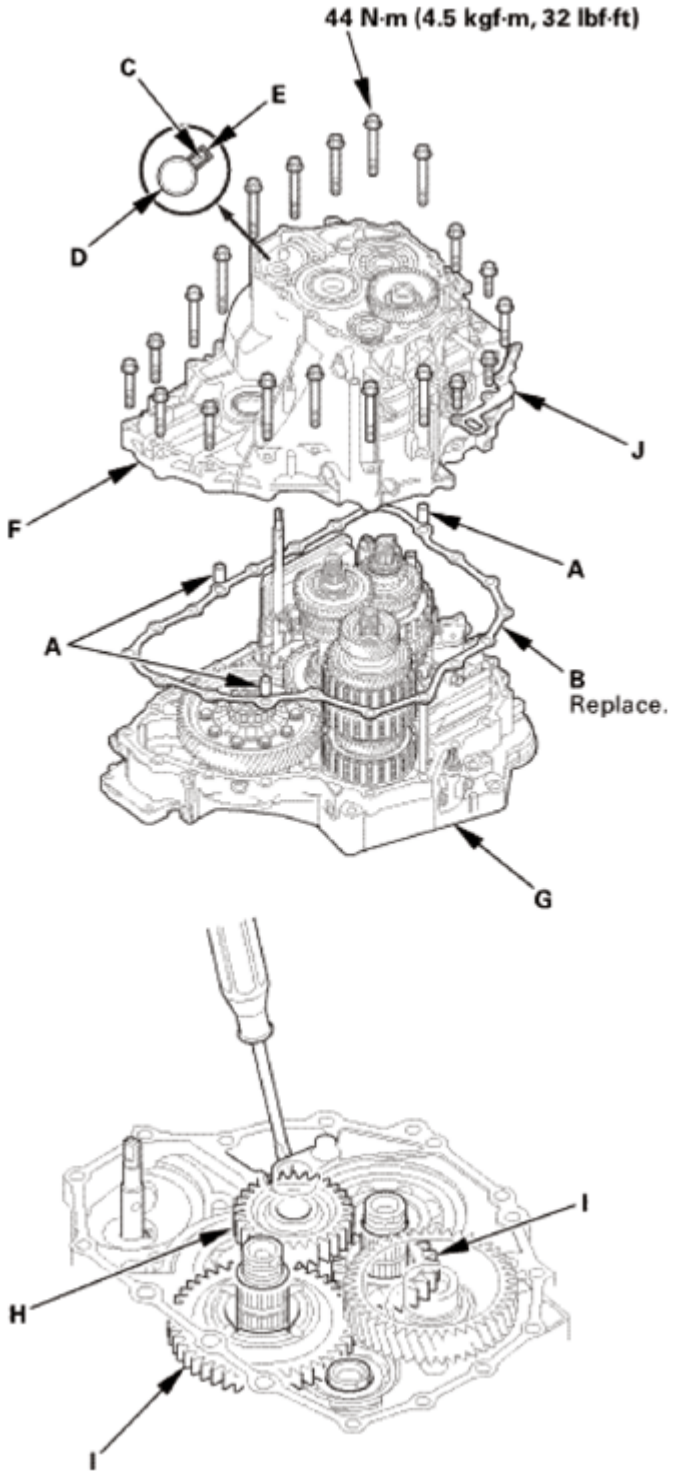

GETtheMANUALS.org

Fig. 806: Identifying Dowel Pins, Gasket, Spring Pin, Selector Control Shaft, Transmission Housing Groove And Mounting Bolts With Torque Specification
Courtesy of AMERICAN HONDA MOTOR CO., INC.

4. End Cover Idler Gear Assembly
    1. Install the mainshaft holder onto the mainshaft.

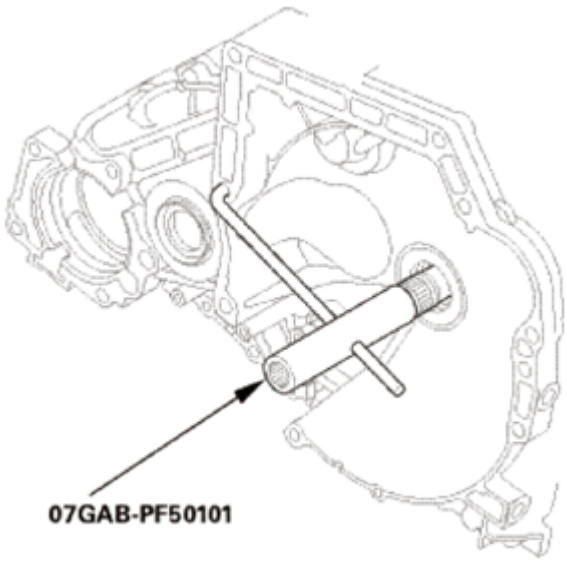

Fig. 807: Installing Mainshaft Holder Onto Mainshaft
Courtesy of AMERICAN HONDA MOTOR CO., INC.

    2. Lubricate the following parts with ATF:
        - Splines and threads of the mainshaft.
        - Splines of the mainshaft idler gear.
        - The old conical spring washer and the old locknut.
    3. Install the mainshaft idler gear (A), the old conical spring washer (B), and the old locknut (C), and tighten the locknut to 225 N.m (23.0 kgf.m, 166 lbf.ft).

NOTE:

- **Do not tap the mainshaft idler gear to install.**
- **Use a torque wrench to tighten the locknut. Do not use an impact wrench.**

GETtheMANUALS.org

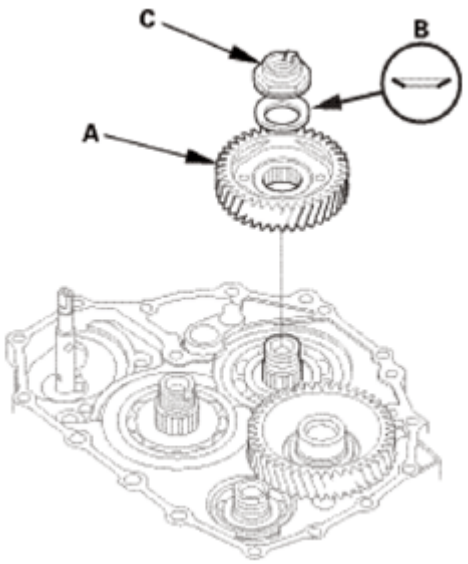

Fig. 808: Identifying Mainshaft Idler Gear, Conical Spring Washer And Locknut
Courtesy of AMERICAN HONDA MOTOR CO., INC.

4. Lubricate the following parts with ATF:
    - Splines and threads of the countershaft.
    - Splines of the park gear.
    - The old conical spring washer and the old locknut.
5. Install the park gear (A), the old conical spring washer (B), and the old locknut (C).
6. Install the park lever spring (D), the park lever (E), and the park lever stop (F).
7. Install the lock bolt (G) using a new lock washer (H).

NOTE: **Do not bend the lock tab of the lock washer until inspect the park lever stop.**

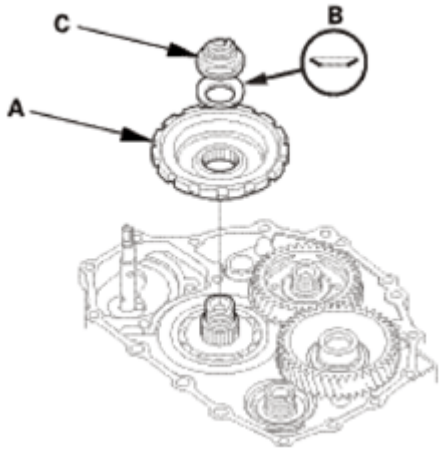

Fig. 809: Identifying Park Gear, Conical Spring Washer And Locknut
Courtesy of AMERICAN HONDA MOTOR CO., INC.

GETtheMANUALS.org

8. Install the park pawl shaft (I), the park pawl spring (J), the park pawl (K), and the stop shaft (L).
9. Lift the park pawl up, and engage it with the park gear, and tighten the locknut to 225 N.m (23.0 kgf.m, 166 lbf.ft).

NOTE:

- **Do not tap the park gear to install.**
- **Use a torque wrench to tighten the locknut. Do not use an impact wrench.**
- **Countershaft locknut has left-hand threads.**

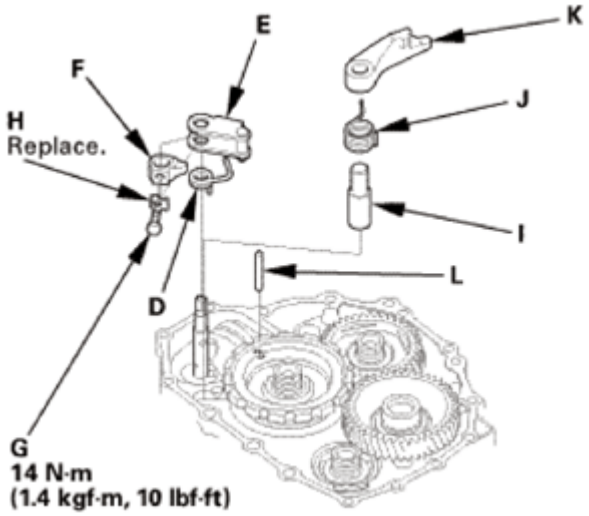

Fig. 810: Identifying Park Pawl Shaft, Park Lever Spring, Park Lever, Park Lever Stop, Lock Bolt, Lock Washer With Torque Specification
Courtesy of AMERICAN HONDA MOTOR CO., INC.

10. Remove the old locknuts and the old conical spring washers from the mainshaft and the countershaft.
11. Lubricate the following parts with ATF:
    - Splines and threads of the mainshaft, the countershaft, and the secondary shaft.
    - New conical spring washers and new locknuts.
    - Areas where the conical spring washers contact the mainshaft idler gear and the park gear.
12. Install new conical spring washers (A) in the direction shown.
13. Install a new mainshaft locknut (B), a new countershaft locknut (C), and a new secondary shaft locknut (D).
14. Tighten the locknuts to 167 N.m (17.0 kgf.m, 123 lbf.ft).

NOTE:

- **Use a torque wrench to tighten the locknut. Do not use an impact wrench.**
- **The countershaft and secondary shaft locknuts have left-hand threads.**

GETtheMANUALS.org

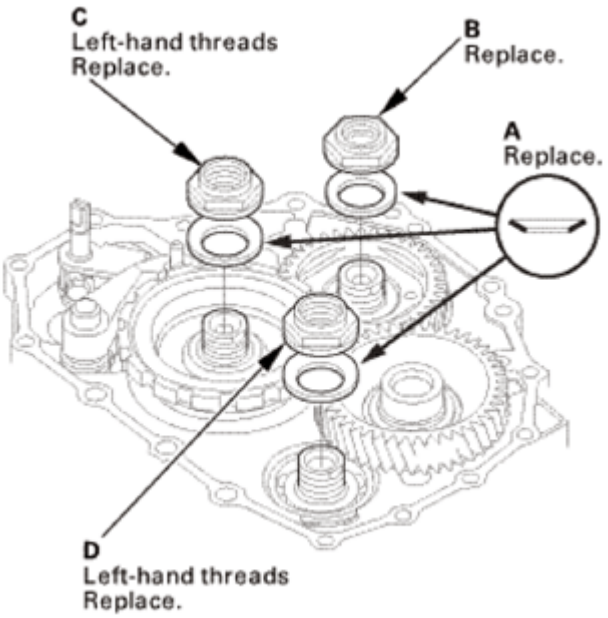

Fig. 811: Identifying Conical Spring Washers, Mainshaft Locknut, Countershaft Locknut And Secondary Shaft Locknut
Courtesy of AMERICAN HONDA MOTOR CO., INC.

15. Remove the mainshaft holder.
16. Stake the locknuts into the shafts to a depth (A) of 0.7-1.3 mm (0.027-0.051 in) using a 3.5 mm punch (B).

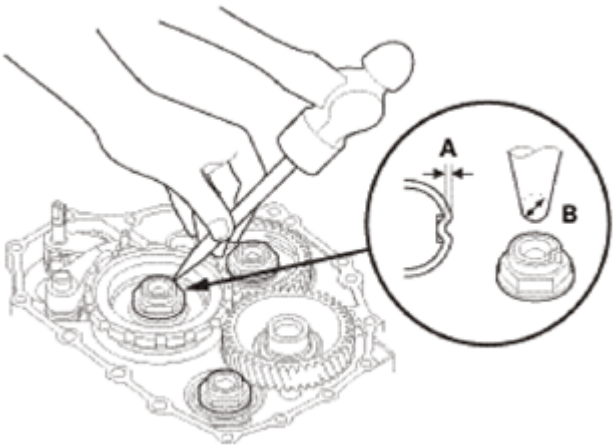

Fig. 812: Staking Locknuts Into Shafts Using Punch
Courtesy of AMERICAN HONDA MOTOR CO., INC.

17. Set the park lever in the P position.
18. Measure the distance (A) between the center of the park pawl shaft (B) and the center of the park lever roller pin (C) as shown.

GETtheMANUALS.org

Standard: 57.7-58.7 mm (2.272-2.311 in)

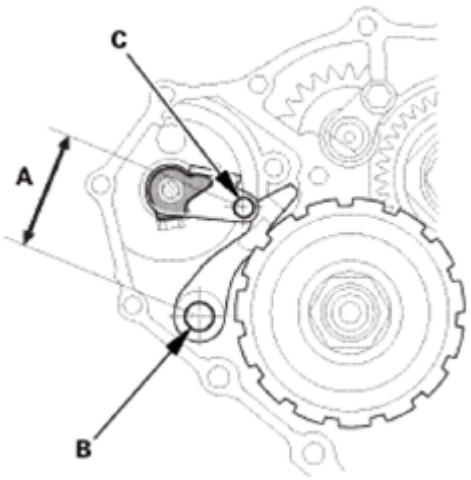

Fig. 813: Measuring Distance Between Center Of Park Pawl Shaft And Center Of Park Lever Roller Pin
Courtesy of AMERICAN HONDA MOTOR CO., INC.

19. If the measurement is out of the standard, select and install the appropriate park lever stop (A) from the table.

PARK LEVER STOP SPECIFICATION

Mark	B	C
1	11.00 mm (0.4331 in)	11.00 mm (0.4331 in)
2	10.80 mm (0.4252 in)	10.65 mm (0.4193 in)
3	10.60 mm (0.4173 in)	10.30 mm (0.4055 in)

20. After replacing the park lever stop, make sure the distance is within the tolerance.

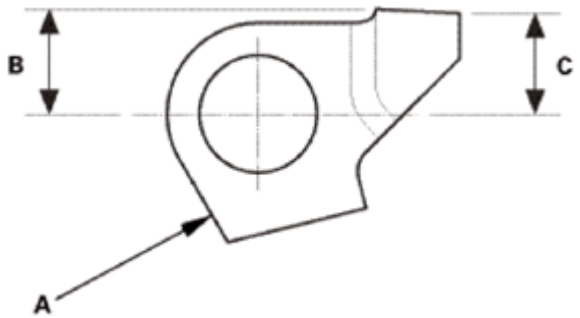

Fig. 814: Identifying Park Lever Stop Dimension
Courtesy of AMERICAN HONDA MOTOR CO., INC.

21. Pry up the lock tab (A) of the lock washer against the bolt head.

GETtheMANUALS.org

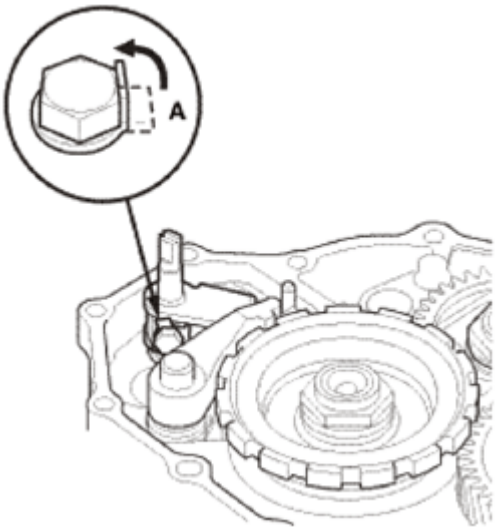

Fig. 815: Prying Up Lock Tab Of Lock Washer Against Bolt Head
Courtesy of AMERICAN HONDA MOTOR CO., INC.

5. ATF Feed Pipe/Lubrication Pipe
    1. Install the 6 x 201 mm ATF pipe (A).
    2. Install the ATF lubrication pipe (B).
    3. Install the 8 x 220 mm ATF pipe (C).
    4. Install the 8 x 198 mm ATF pipes (D).

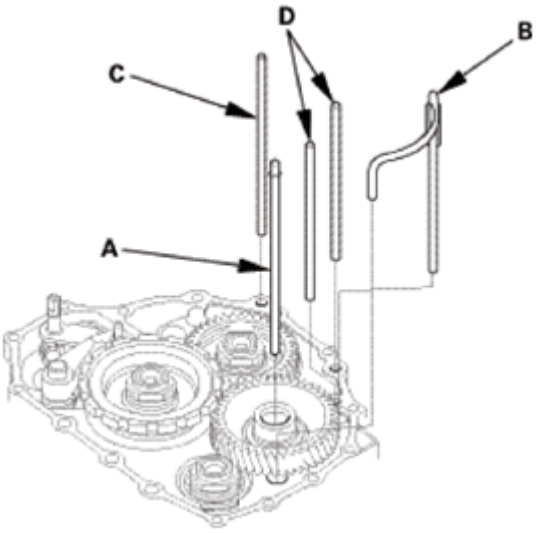

Fig. 816: Identifying ATF Feed Pipes And Lubrication Pipe
Courtesy of AMERICAN HONDA MOTOR CO., INC.

6. A/T Shift Solenoid Wire Harness - Reconnection
    1. Connect the shift solenoid valve connectors:
        - BLU wire to shift solenoid valve A.

GETtheMANUALS.org

- ORN wire to shift solenoid valve B.
- GRN wire to shift solenoid valve C.
- YEL, WHT, and WHT wires to shift solenoid valve D.
- RED wire to shift solenoid valve E.

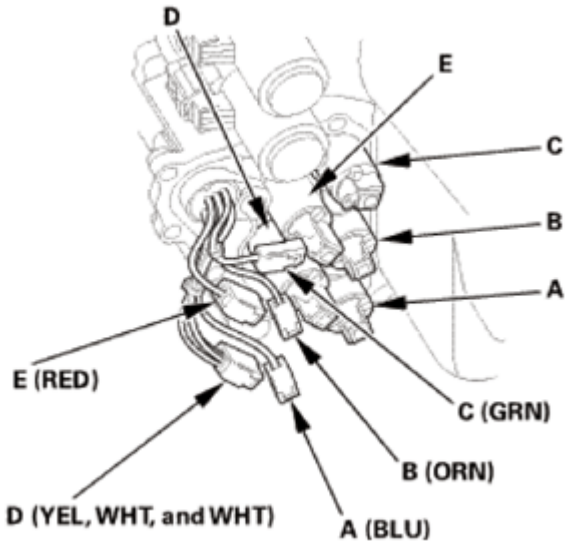

Fig. 817: Identifying Shift Solenoid Valves
Courtesy of AMERICAN HONDA MOTOR CO., INC.

7. A/T Shift Solenoid Cover
    1. Install the shift solenoid valve cover (A) with the dowel pins (B) and a new gasket (C).

GETtheMANUALS.org

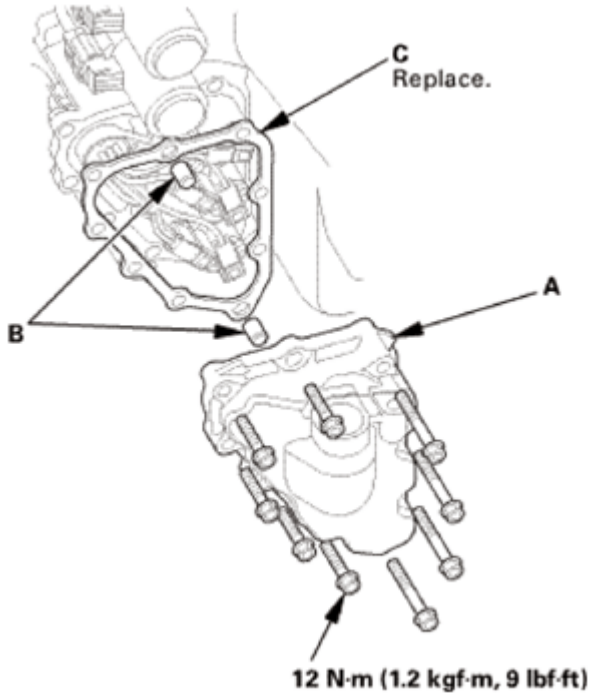

Fig. 818: Identifying Shift Solenoid Valve Cover, Dowel Pins, Gasket And Mounting Bolts With Torque Specification
Courtesy of AMERICAN HONDA MOTOR CO., INC.

8. Dipstick Guide Tube
    1. Install a new O-ring (A) on the ATF dipstick guide tube (B).
    2. Install the ATF dipstick guide tube.

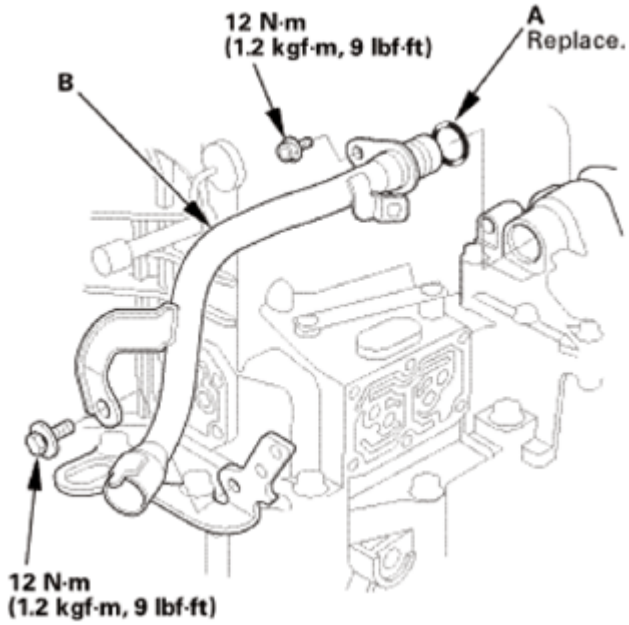

GETtheMANUALS.org

Fig. 819: Identifying ATF Dipstick Guide Tube, O-Ring And Mounting Bolts With Torque Specification
Courtesy of AMERICAN HONDA MOTOR CO., INC.

9. ATF Outlet Line
    1. Install the ATF outlet line (A) using new sealing washers (B).

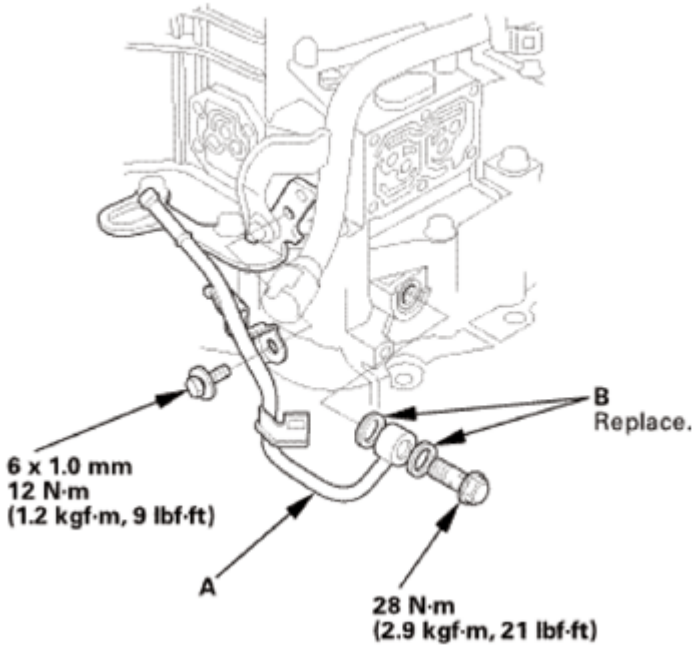

Fig. 820: Identifying ATF Outlet Line, Sealing Washers And Mounting Bolts With Torque Specification
Courtesy of AMERICAN HONDA MOTOR CO., INC.

10. ATF Inlet Line
    1. Install the ATF inlet line (A) using new sealing washers (B).

GETtheMANUALS.org

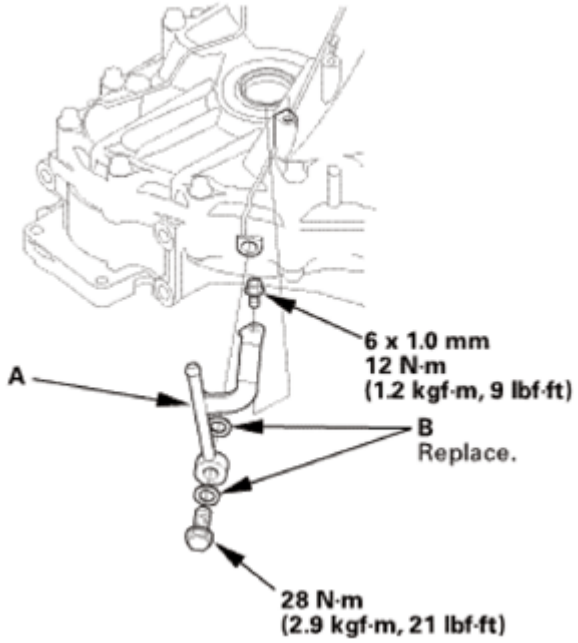

Fig. 821: Identifying ATF Inlet Line, Sealing Washers And Mounting Bolts With Torque Specification
Courtesy of AMERICAN HONDA MOTOR CO., INC.

11. A/T Clutch Pressure Control Solenoid Valve B and C
    1. Clean the mounting surfaces and the fluid passages of the solenoid valve body and the transmission housing.
    2. Install a new gasket (A) with the blue side toward the transmission housing, and Install the ATF joint pipes (D).
    3. Install new O-rings (E) over the ATF joint pipes.
    4. Install A/T clutch pressure control solenoid valves B and C with the clamp bracket (F).

GETtheMANUALS.org

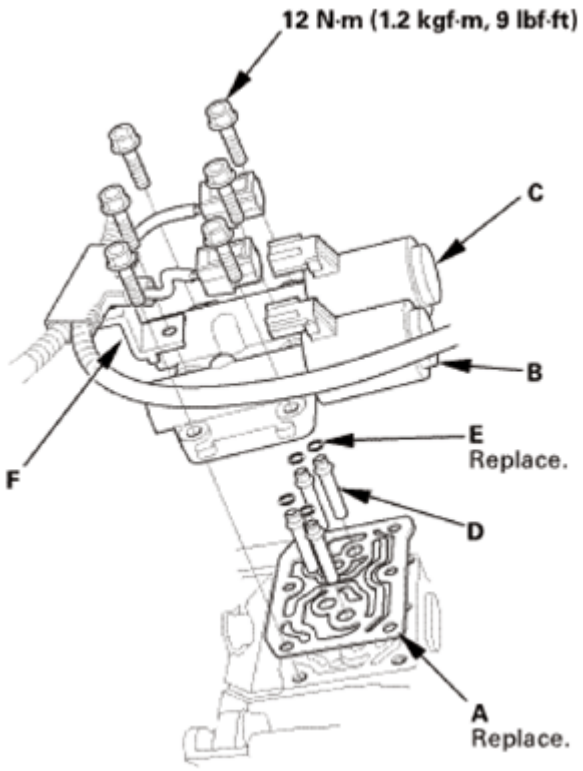

Fig. 822: Identifying Gasket, ATF Joint Pipes, O-Rings, A/T Clutch Pressure Control Solenoid Valves, Clamp Bracket And Mounting Bolts With Torque Specification
Courtesy of AMERICAN HONDA MOTOR CO., INC.

12. A/T Clutch Pressure Control Solenoid Valve A
    1. Clean the mounting surfaces and the fluid passages of the solenoid valve body and the transmission housing.
    2. Install a new gasket (B) with the blue side toward the transmission housing, and install the 35 mm ATF pipe (C) and the ATF joint pipes (D).
    3. Install new O-rings (E) over the ATF joint pipes.
    4. Install A/T clutch pressure control solenoid valve A.

GETtheMANUALS.org

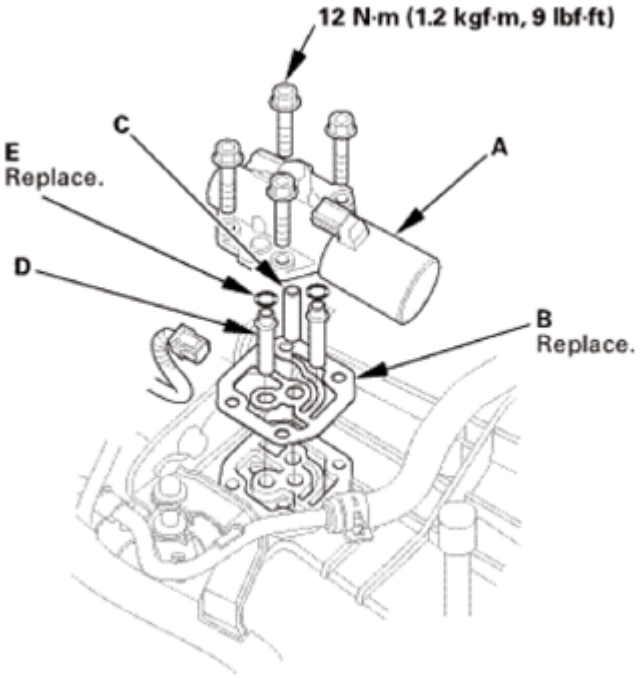

Fig. 823: Identifying A/T Clutch Pressure Control Solenoid Valve, Gasket, ATF Pipe, ATF Joint Pipes And Mounting Bolts With Torque Specification
Courtesy of AMERICAN HONDA MOTOR CO., INC.

13. Output Shaft (Countershaft) Speed Sensor
    1. Install a new O-ring (A) on the output shaft (countershaft) speed sensor (B).
    2. Install the output shaft (countershaft) speed sensor and the sensor washer (C).

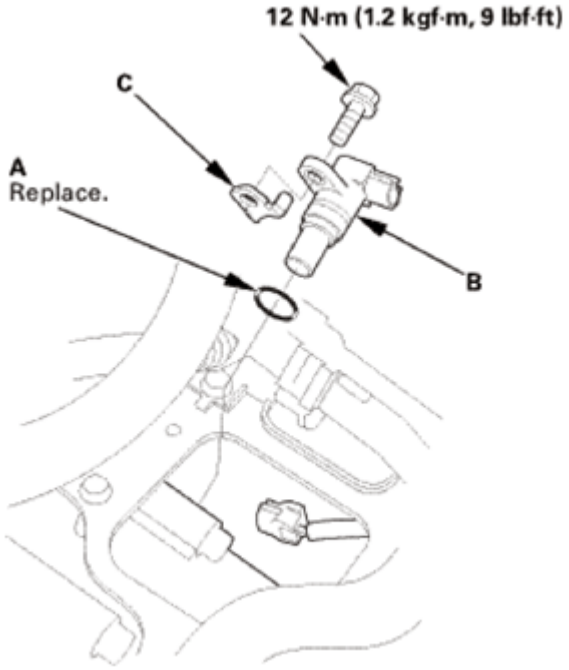

GETtheMANUALS.org

Fig. 824: Identifying Output Shaft (Countershaft) Speed Sensor, O-Ring, Sensor Washer And Mounting Bolts With Torque Specification
Courtesy of AMERICAN HONDA MOTOR CO., INC.

14. Input Shaft (Mainshaft) Speed Sensor
    1. Install a new O-ring (A) on the input shaft (mainshaft) speed sensor (B).
    2. Install the input shaft (mainshaft) speed sensor.

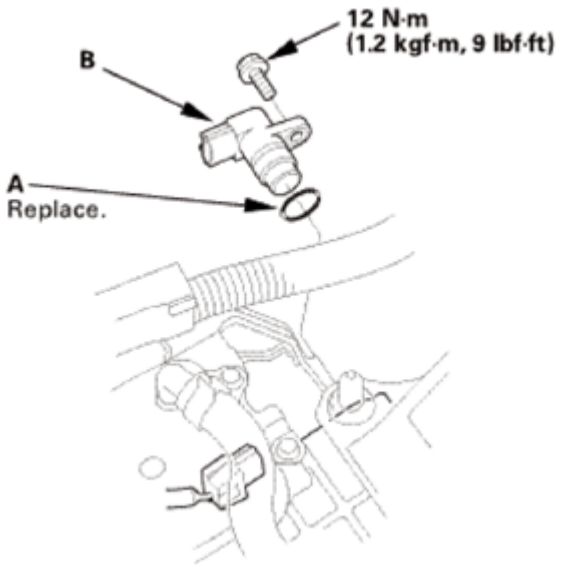

Fig. 825: Identifying Input Shaft (Mainshaft) Speed Sensor, O-Ring And Mounting Bolt With Torque Specification
Courtesy of AMERICAN HONDA MOTOR CO., INC.

15. Transmission End Cover
    1. Install the dowel pins (A) and a new gasket (B).
    2. Install new O-rings (C) over the ATF pipes.
    3. Install the end cover (D), and tighten the three special bolts (E) and the 6 x 1.0 mm bolts (F) (12 bolts).

GETtheMANUALS.org

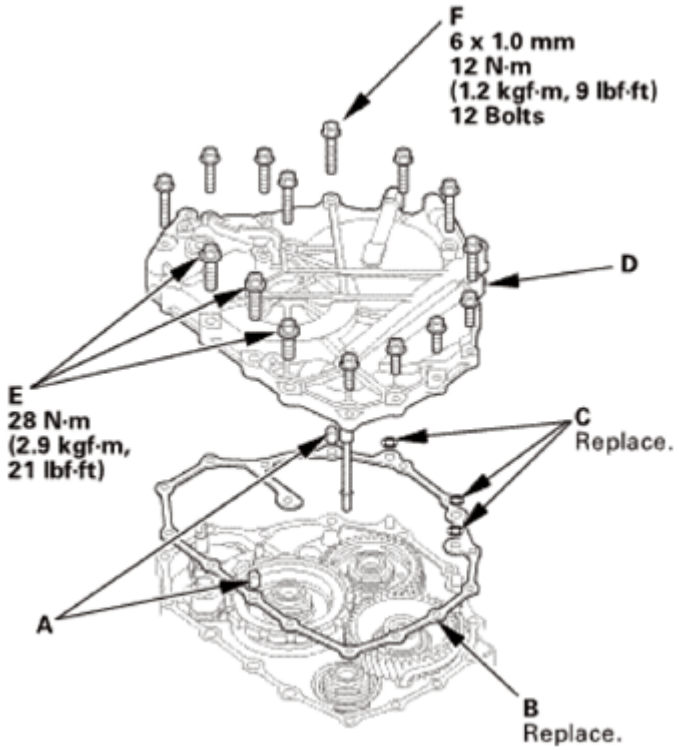

Fig. 826: Identifying Dowel Pins, Gasket, O-Rings, End Cover And Mounting Bolts With Torque Specification
Courtesy of AMERICAN HONDA MOTOR CO., INC.

16. Transmission Range Switch Subharness
    1. Install the clamp brackets (A).
    2. Install the transmission range switch subharness (B).

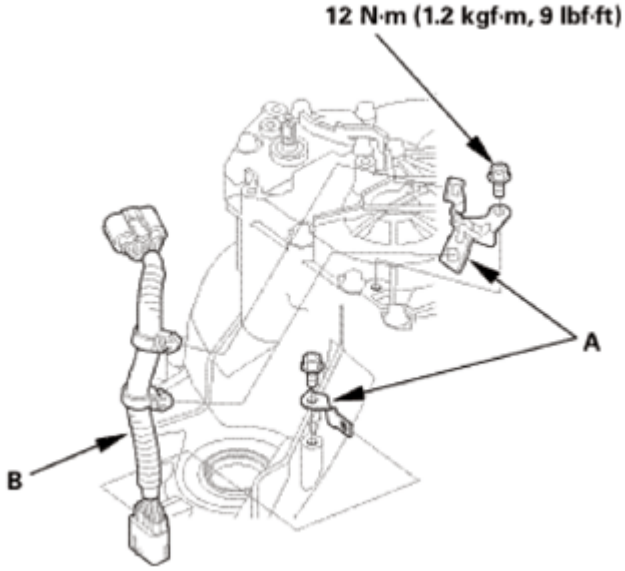

GETtheMANUALS.org

Fig. 827: Identifying Transmission Range Switch Subharness, Clamp Brackets And Mounting Bolts With Torque Specification
Courtesy of AMERICAN HONDA MOTOR CO., INC.

17. Transmission Range Switch
    1. Make sure the selector control shaft is in the N position. If necessary, move the selector control shaft to the N position.

NOTE: **Do not use the selector control shaft to adjust the shift position. If the selector control shaft tips are squeezed together it will cause a faulty signal or position due to play between the selector control shaft and switch.**

Fig. 828: Moving Selector Control Shaft To N Position
Courtesy of AMERICAN HONDA MOTOR CO., INC.

2. Align the cutouts (A) on the rotary-frame with the neutral positioning cutouts (B) on the transmission range switch (C), then put a 2.0 mm (0.079 in) feeler gauge blade (D) in the cutouts to hold the switch in the N position.

NOTE: **Be sure to use a 2.0 mm (0.079 in) blade or equivalent to hold the switch in the N position.**

GETtheMANUALS.org

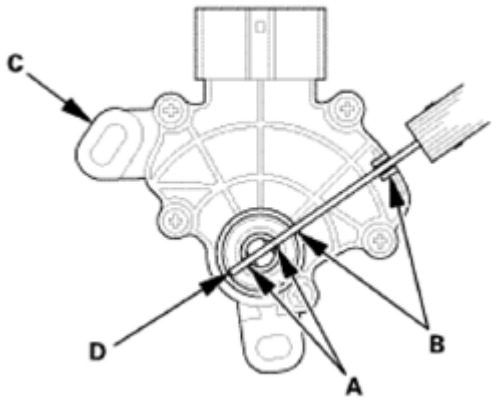

Fig. 829: Aligning Cutouts On Rotary-Frame With Neutral Positioning Cutouts On Transmission Range Switch
Courtesy of AMERICAN HONDA MOTOR CO., INC.

3. Install the transmission range switch (A) gently on the selector control shaft (B) while holding it in the N position with the 2.0 mm (0.079 in) blade (C).

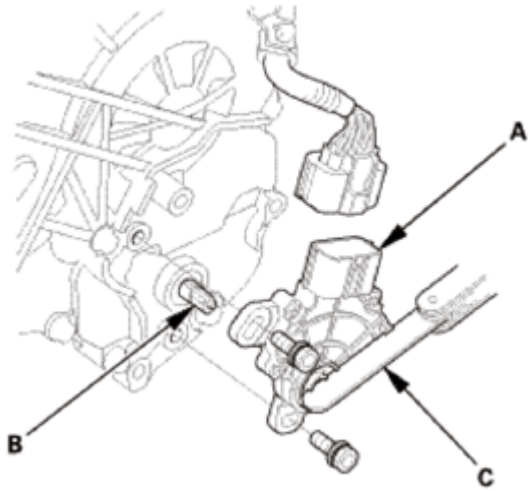

Fig. 830: Identifying Transmission Range Switch, Selector Control Shaft And Blade
Courtesy of AMERICAN HONDA MOTOR CO., INC.

4. Tighten the bolts on the transmission range switch (A) while you continue holding the N position.

NOTE: Do not move the transmission range switch when tightening the bolts.

5. Remove the feeler gauge (B).
6. Check the connector (C) for corrosion, dirt, or oil, and clean or repair if necessary, then connect the connector securely.

GETtheMANUALS.org

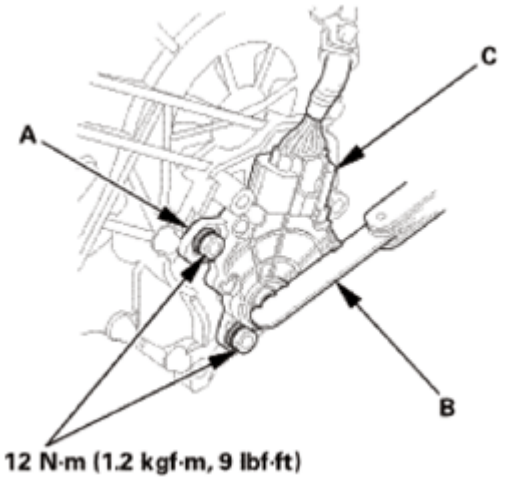

Fig. 831: Identifying Transmission Range Switch, Connector, Feeler Gauge And Mounting Bolts With Torque Specification
Courtesy of AMERICAN HONDA MOTOR CO., INC.

18. Transmission Range Switch Cover
    1. Install the transmission range switch cover (A).

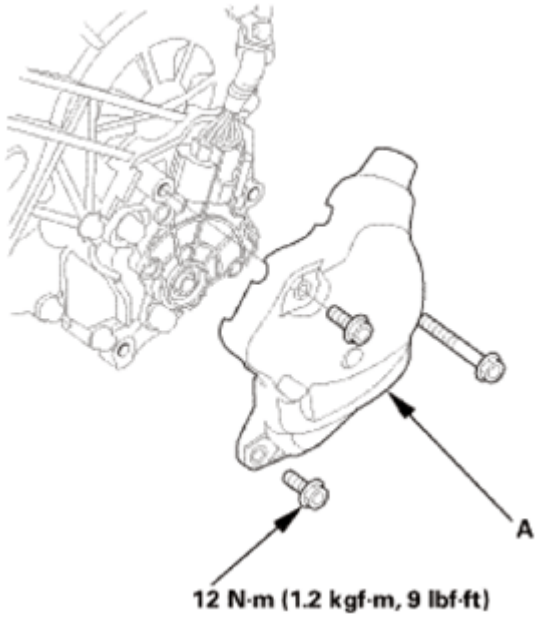

Fig. 832: Identifying Transmission Range Switch Cover And Mounting Bolts With Torque Specification
Courtesy of AMERICAN HONDA MOTOR CO., INC.

A/T IDLER GEAR/IDLER GEAR SHAFT REMOVAL AND INSTALLATION

SPECIAL TOOL REQUIRED

GETtheMANUALS.org

Image	Description/Tool Number
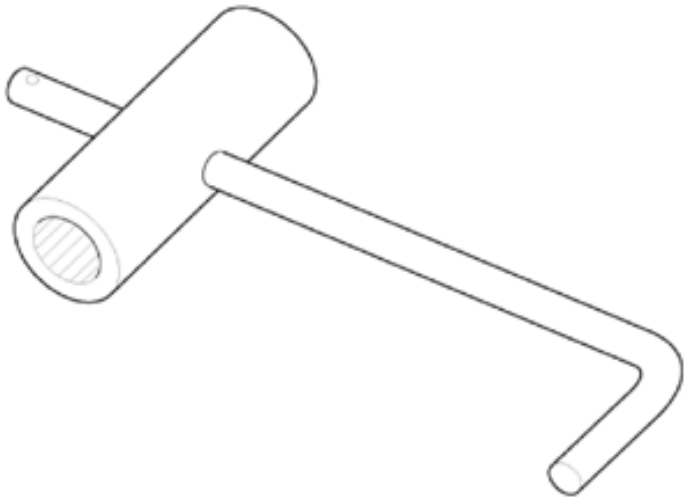	Mainshaft Holder 07GAB-PF50101
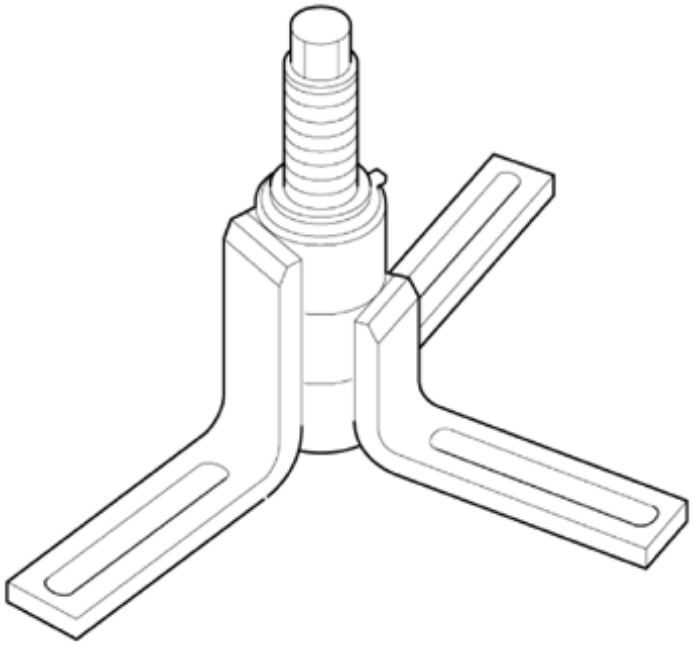	Housing Puller 07HAC-PK40102
	Driver Handle, 15 x 135L 07749-0010000

GETtheMANUALS.org

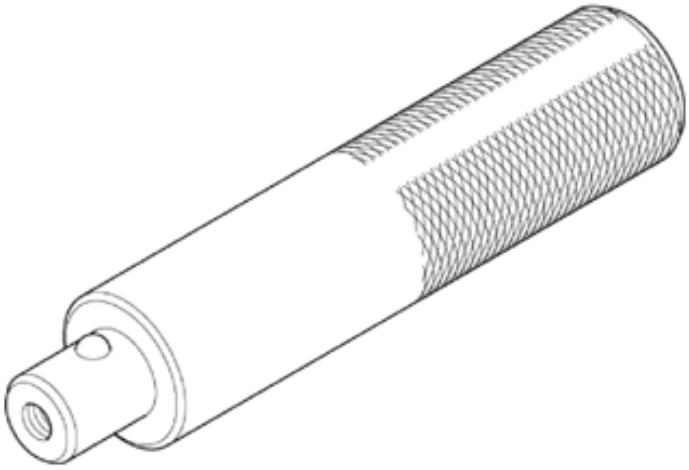	
	Bearing Driver Attachment, 32 x 35 mm 07746-0010100

REMOVAL

NOTE: The illustration shows AWD/4WD transmission.

1. Transmission Range Switch Cover
    1. Remove the transmission range switch cover (A).

GETtheMANUALS.org

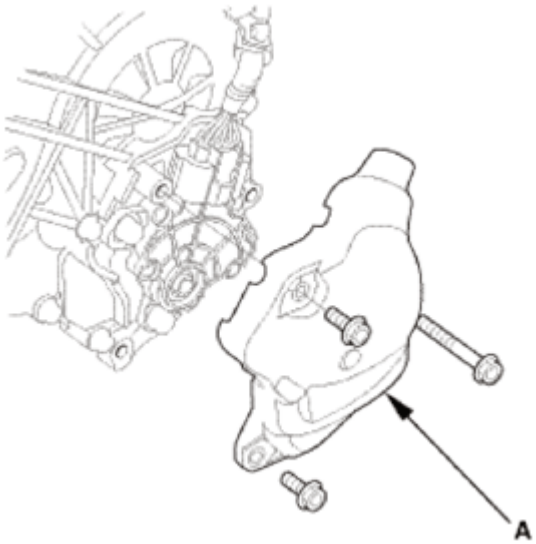

Fig. 833: Identifying Transmission Range Switch Cover With Bolts
Courtesy of AMERICAN HONDA MOTOR CO., INC.

2. Transmission Range Switch
    1. Remove the transmission range switch (A).

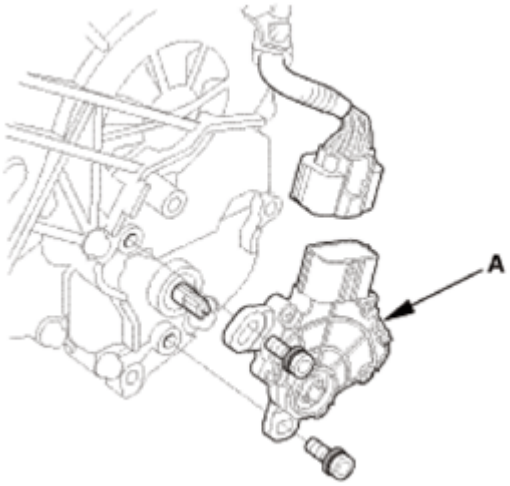

Fig. 834: Identifying Transmission Range Switch With Bolts
Courtesy of AMERICAN HONDA MOTOR CO., INC.

3. Transmission Range Switch Subharness
    1. Remove the transmission range switch subharness (A).
    2. Remove the clamp brackets (B).

GETtheMANUALS.org

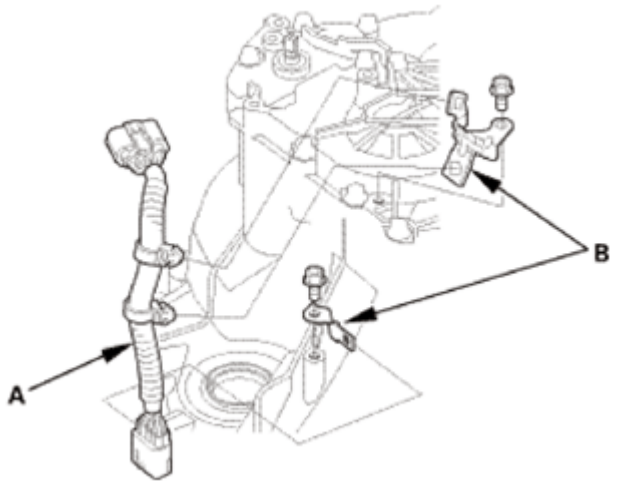

Fig. 835: Identifying Transmission Range Switch Subharness And Clamp Brackets
Courtesy of AMERICAN HONDA MOTOR CO., INC.

4. Transmission End Cover
    1. Remove the end cover (A), the dowel pins (B), the O-rings (C), and the gasket (D).

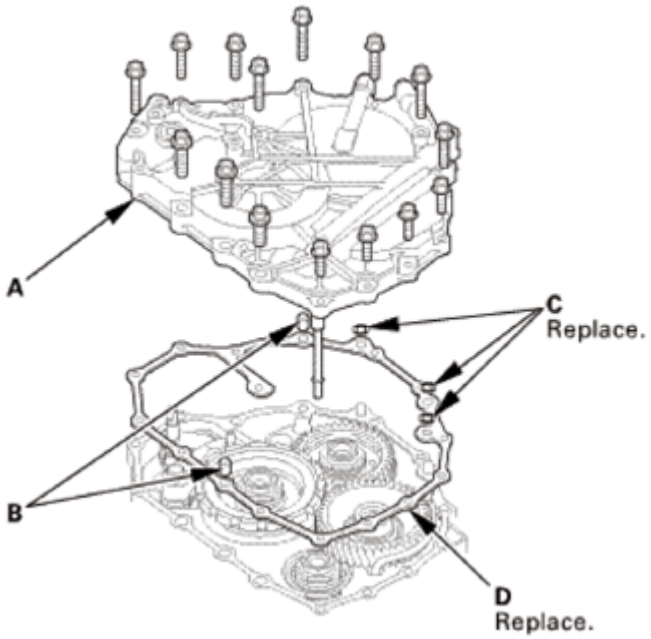

Fig. 836: Identifying Transmission End Cover, Dowel Pins, O-Rings And Gasket With Bolts
Courtesy of AMERICAN HONDA MOTOR CO., INC.

5. Input Shaft (Mainshaft) Speed Sensor
    1. Remove the input shaft (mainshaft) speed sensor (A).
    2. Remove the O-ring (B) from the input shaft (mainshaft) speed sensor.

GETtheMANUALS.org

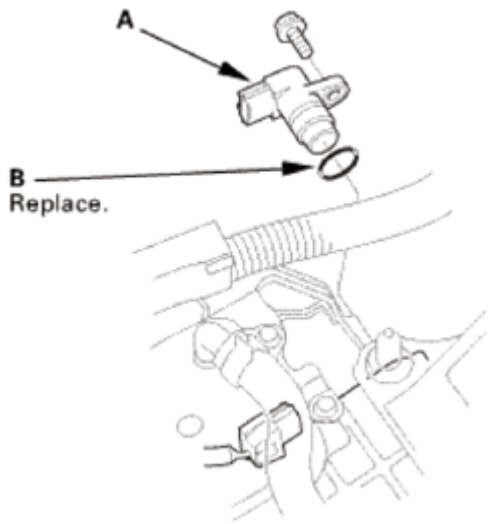

Fig. 837: Identifying Input Shaft (Mainshaft) Speed Sensor And O-Ring
Courtesy of AMERICAN HONDA MOTOR CO., INC.

6. Output Shaft (Countershaft) Speed Sensor
    1. Remove the output shaft (countershaft) speed sensor (A) and the sensor washer (B).
    2. Remove the O-ring (C) from the output shaft (countershaft) speed sensor.

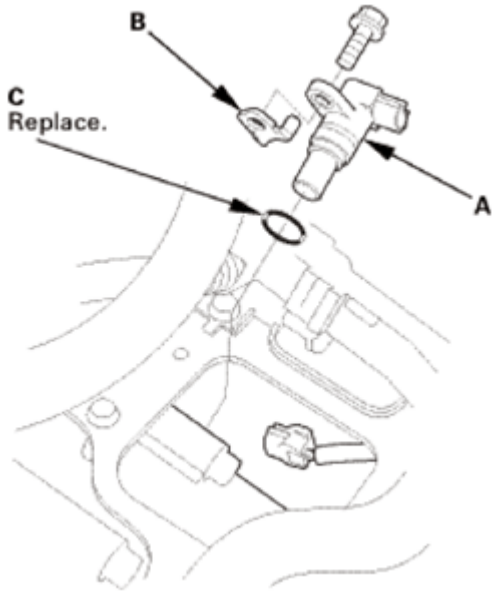

Fig. 838: Identifying Output Shaft (Countershaft) Speed Sensor, Sensor Washer And O-Ring
Courtesy of AMERICAN HONDA MOTOR CO., INC.

7. A/T Clutch Pressure Control Solenoid Valve A
    1. Remove A/T clutch pressure control solenoid valve A.
    2. Remove the 35 mm ATF pipe (B), the ATF joint pipes (C), the O-rings (D), and the gasket (E).

GETtheMANUALS.org

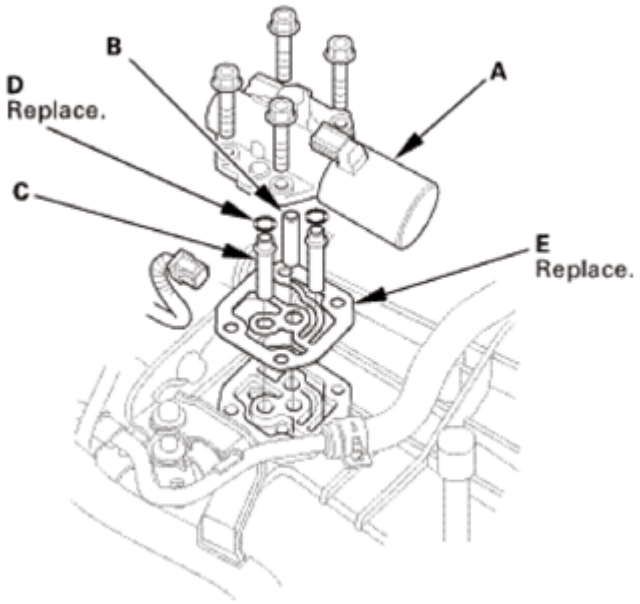

Fig. 839: Identifying A/T Clutch Pressure Control Solenoid Valve, ATF Pipe, ATF Joint Pipes, O-Rings And Gasket With Bolts
Courtesy of AMERICAN HONDA MOTOR CO., INC.

8. A/T Clutch Pressure Control Solenoid Valve B and C
    1. Remove the clamp bracket (A) and A/T clutch pressure control solenoid valves B and C.
    2. Remove the ATF joint pipes (D), the O-rings (E), and the gasket (F).

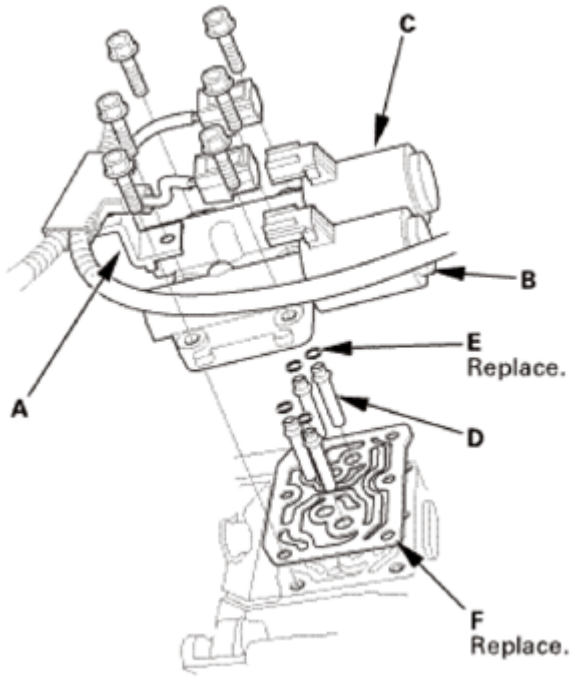

Fig. 840: Identifying A/T Clutch Pressure Control Solenoid Valves, Clamp Bracket, ATF

GETtheMANUALS.org

Joint Pipes, O-Rings And Gasket
Courtesy of AMERICAN HONDA MOTOR CO., INC.

9. ATF Inlet Line
    1. Remove the banjo bolt (A) and the sealing washers (B).
    2. Remove the ATF inlet line (C).

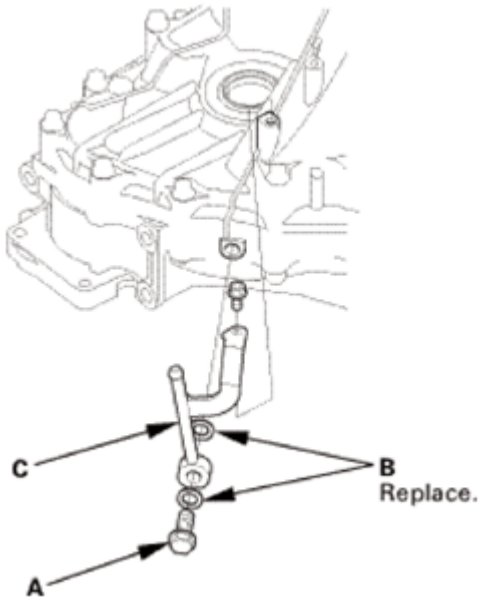

Fig. 841: Identifying ATF Inlet Line, Banjo Bolt And Sealing Washers
Courtesy of AMERICAN HONDA MOTOR CO., INC.

10. ATF Outlet Line
    1. Remove the banjo bolt (A) and the sealing washers (B).
    2. Remove the ATF outlet line (C).

GETtheMANUALS.org

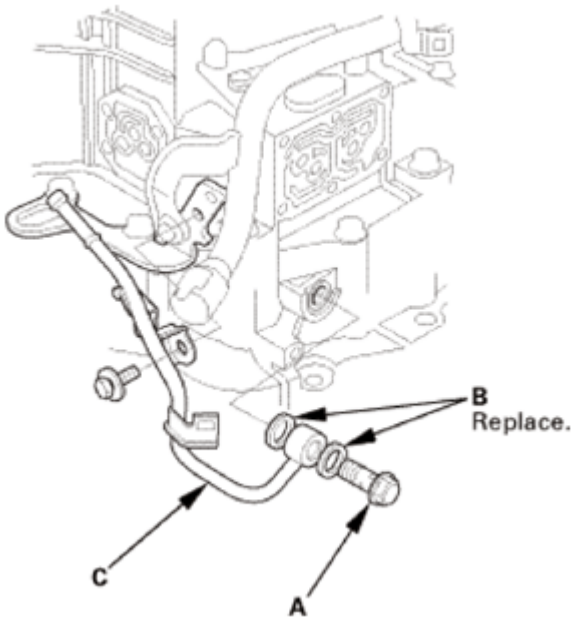

Fig. 842: Identifying ATF Outlet Line, Banjo Bolt And Sealing Washers
Courtesy of AMERICAN HONDA MOTOR CO., INC.

11. Dipstick Guide Tube
    1. Remove the ATF dipstick guide tube (A).
    2. Remove the O-ring (B) from the ATF dipstick guide tube.

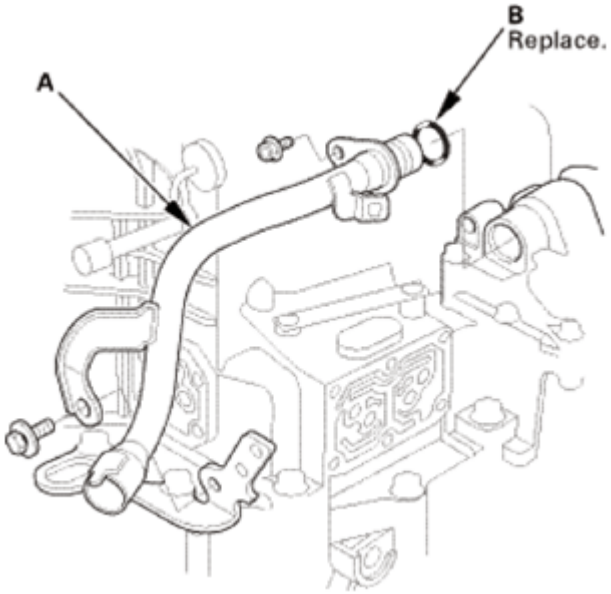

Fig. 843: Identifying ATF Dipstick Guide Tube And O-Ring
Courtesy of AMERICAN HONDA MOTOR CO., INC.

12. A/T Shift Solenoid Cover

GETtheMANUALS.org

1. Remove the shift solenoid valve cover (A), the dowel pins (B), and the gasket (C).

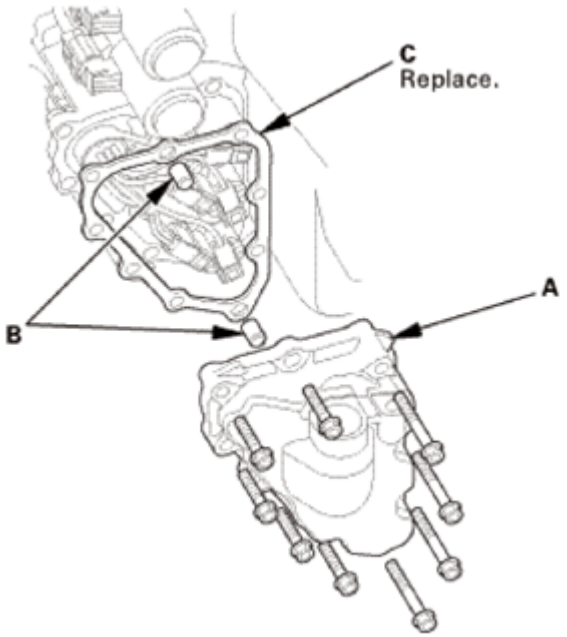

Fig. 844: Identifying Shift Solenoid Valve Cover, Dowel Pins And Gasket
Courtesy of AMERICAN HONDA MOTOR CO., INC.

13. A/T Shift Solenoid Wire Harness - Disconnection
    1. Disconnect the connectors.

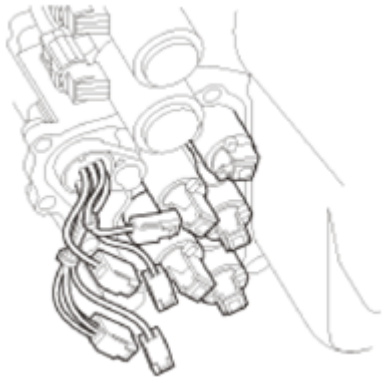

Fig. 845: Identifying A/T Shift Solenoid Wire Harness Connectors
Courtesy of AMERICAN HONDA MOTOR CO., INC.

14. ATF Feed Pipe/Lubrication Pipe
    1. Remove the 6 x 201 mm ATF pipe (A).
    2. Remove the ATF lubrication pipe (B).
    3. Remove the 8 x 220 mm ATF pipe (C).
    4. Remove the 8 x 198 mm ATF pipes (D).

GETtheMANUALS.org

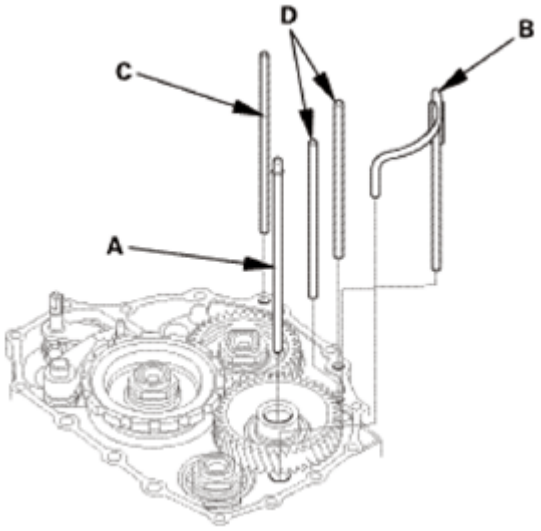

Fig. 846: Identifying ATF Feed Pipes And Lubrication Pipe
Courtesy of AMERICAN HONDA MOTOR CO., INC.

15. End Cover Idler Gear Assembly
    1. Install the mainshaft holder onto the mainshaft.
    2. Engage the park pawl with the park gear.

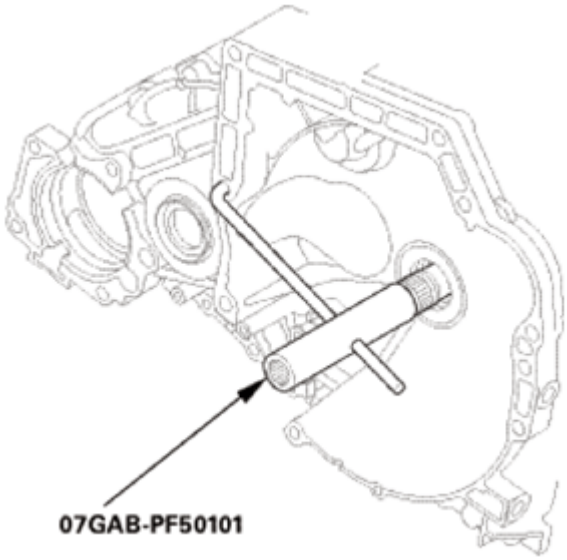

Fig. 847: Installing Mainshaft Holder Onto Mainshaft
Courtesy of AMERICAN HONDA MOTOR CO., INC.

    3. Using a chisel, cut the lock tab (A) of the locknut (B).

NOTE: Keep all of the chiseled particles out of the transmission.

GETtheMANUALS.org

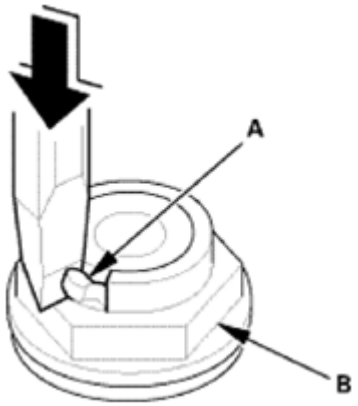

Fig. 848: Cutting Lock Tab Of Locknut Using Chisel
Courtesy of AMERICAN HONDA MOTOR CO., INC.

4. Remove the locknuts (A) and the conical spring washers (B) from each shaft.

NOTE:

- **The countershaft and secondary shaft locknuts have left-hand threads.**
- **Keep all of the chiseled particles out of the transmission.**
- **Clean the old locknuts; they are used to install the press fit idler gears and park gear.**

5. Remove the mainshaft holder.

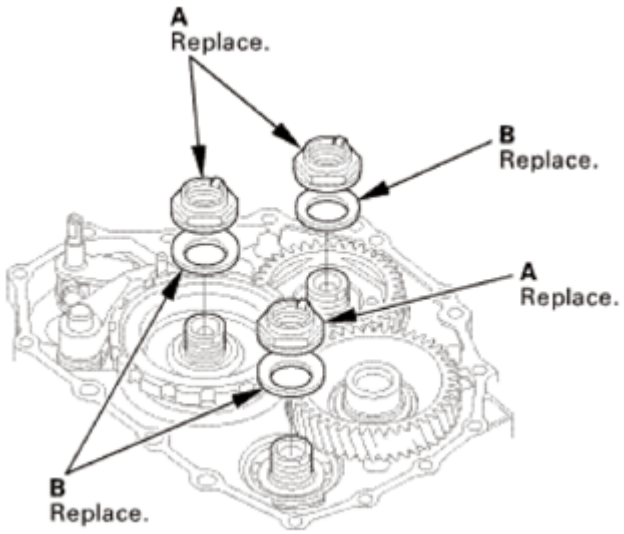

Fig. 849: Identifying Locknuts And Conical Spring Washers
Courtesy of AMERICAN HONDA MOTOR CO., INC.

6. Remove the park pawl (A), the park pawl spring (B), the park pawl shaft (C), and the stop shaft (D).

GETtheMANUALS.org

7. Pry down the lock tab (E) of the lock washer (F).
8. Remove the lock bolt (G) and the lock washer.
9. Remove the park lever (H), the park lever stop (I), and the park lever spring (J).

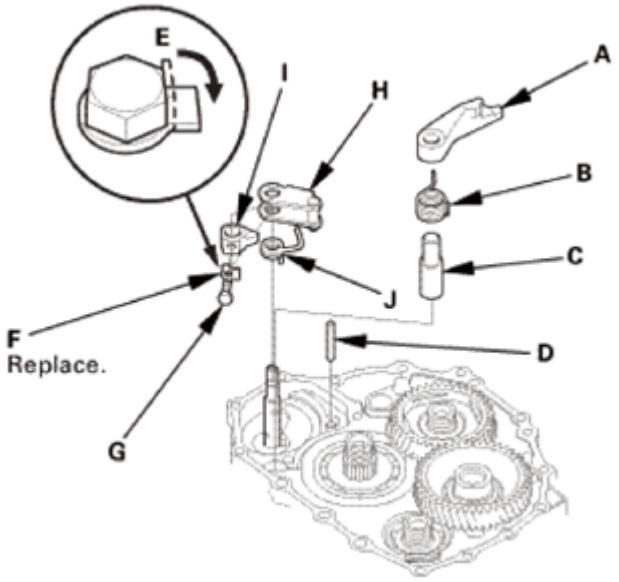

Fig. 850: Prying Down Lock Tab Of Lock Washer
Courtesy of AMERICAN HONDA MOTOR CO., INC.

10. Place a spacer (A) on the countershaft (B).
11. Set a commercially available bearing puller (C) on the park gear (D).
12. Remove the park gear.

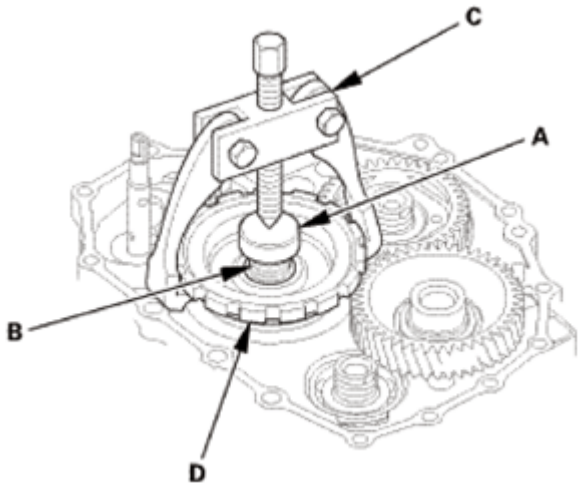

Fig. 851: Setting Commercially Available Bearing Puller On Park Gear
Courtesy of AMERICAN HONDA MOTOR CO., INC.

13. Install a puller (A) with two 6 x 1.0 mm bolts (B) on the mainshaft idler gear (C).

GETtheMANUALS.org

14. Set a spacer (D) between the puller and the mainshaft (E).
15. Remove the mainshaft idler gear.

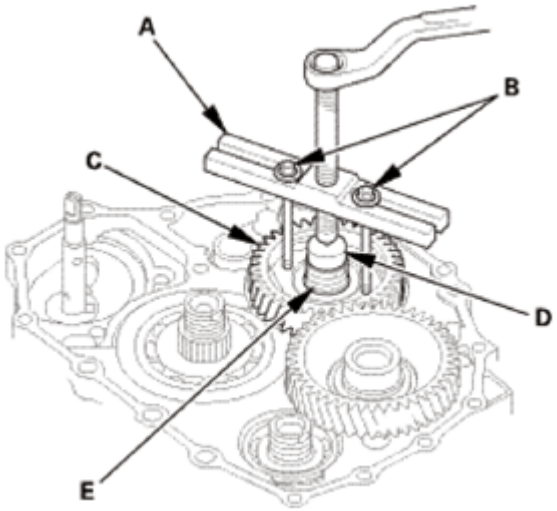

Fig. 852: Installing Puller With 6 X 1.0 mm Bolts On Mainshaft Idler Gear
Courtesy of AMERICAN HONDA MOTOR CO., INC.

16. Automatic Transmission Housing
    1. Align the spring pin (A) on the selector control shaft (B) with the transmission housing groove (C).

    NOTE: **Do not squeeze the end of the selector control shaft tips together when turning the control shaft. If the tips are squeezed together, it will cause a faulty shift position signal or position due to the play between the selector control shaft and the transmission range switch.**

    2. Remove the transmission housing mounting bolts (D) (2WD: 19 bolts, AWD/4WD: 20 bolts).
    3. Install the housing puller over the mainshaft.
    4. Remove the transmission housing (E) using the housing puller.
    5. Remove the dowel pins (F) and the gasket (G).

GETtheMANUALS.org

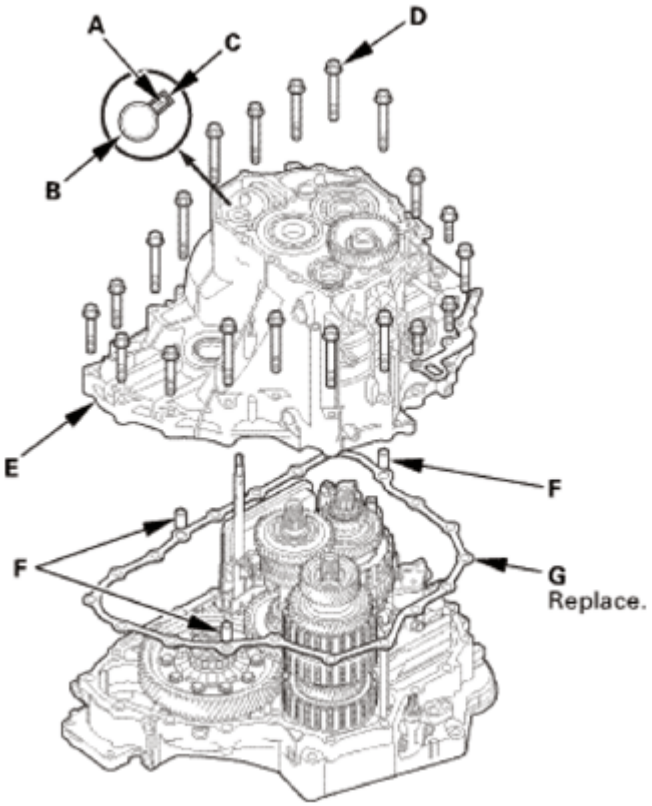

Fig. 853: Identifying Spring Pin, Selector Control Shaft, Transmission Housing Groove, Transmission Housing, Mounting Bolts And Gasket
Courtesy of AMERICAN HONDA MOTOR CO., INC.

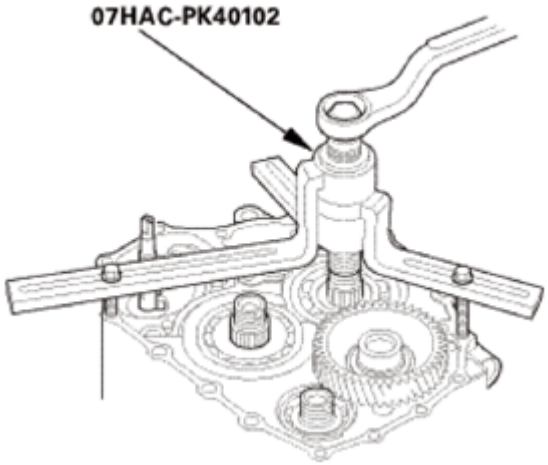

Fig. 854: Installing Housing Puller Over Mainshaft
Courtesy of AMERICAN HONDA MOTOR CO., INC.

17. A/T Idler Gear/Idler Gear Shaft
    1. Remove the snap ring (A), the cotter retainer (B), and the cotters (C).
    2. Remove the idler gear/idler gear shaft assembly (D).

GETtheMANUALS.org

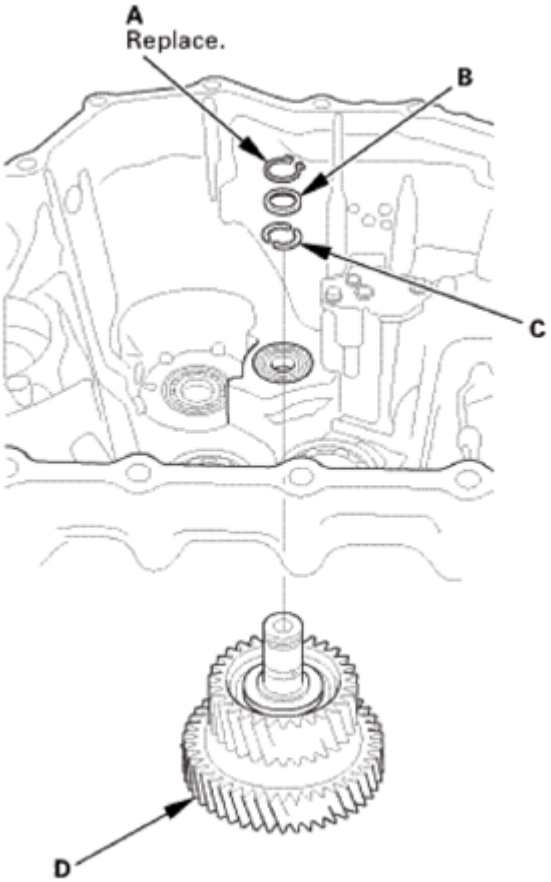

Fig. 855: Identifying Idler Gear Shaft/Idler Gear Assembly, Snap Ring, Cotter Retainer And Cotters
Courtesy of AMERICAN HONDA MOTOR CO., INC.

3. Remove the snap ring (A).

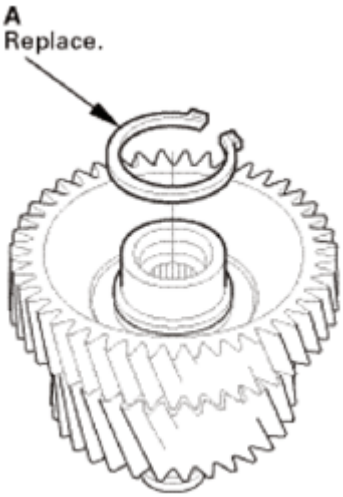

Fig. 856: Identifying Snap Ring

GETtheMANUALS.org

Courtesy of AMERICAN HONDA MOTOR CO., INC.

4. Remove the idler gear shaft (A) using the driver handle, the 32 x 35 mm bearing driver attachment, and a press.

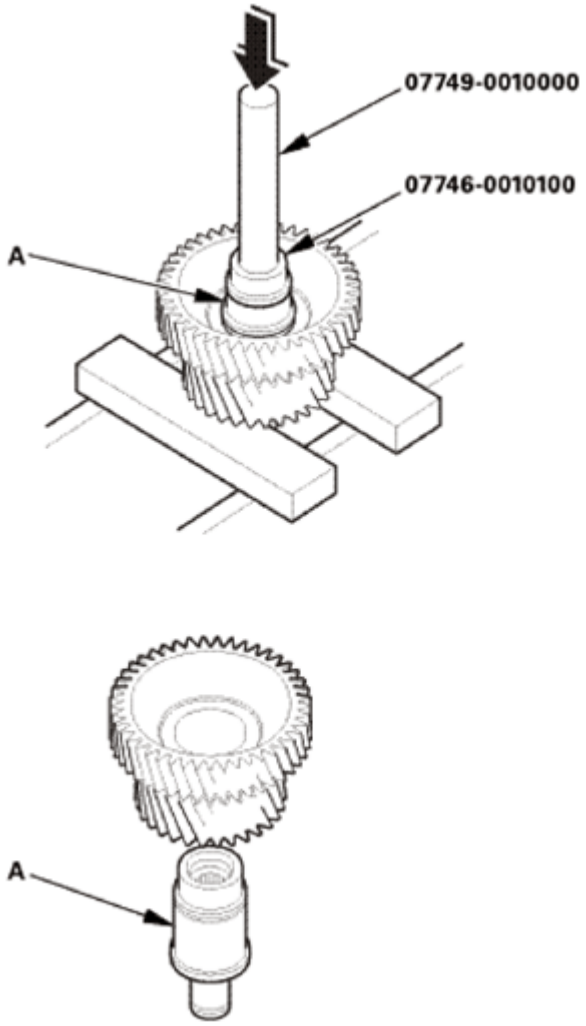

Fig. 857: Removing Idler Gear Shaft Using Driver Handle And Bearing Driver Attachment
Courtesy of AMERICAN HONDA MOTOR CO., INC.

INSTALLATION

NOTE:

- **Apply a light coat of clean ATF on all moving parts before installation.**
- **The illustration shows AWD/4WD transmission.**

1. A/T Idler Gear/Idler Gear Shaft
    1. Install the idler gear shaft (A) using the driver handle, the 32 x 35 mm bearing driver attachment, and a press.

GETtheMANUALS.org

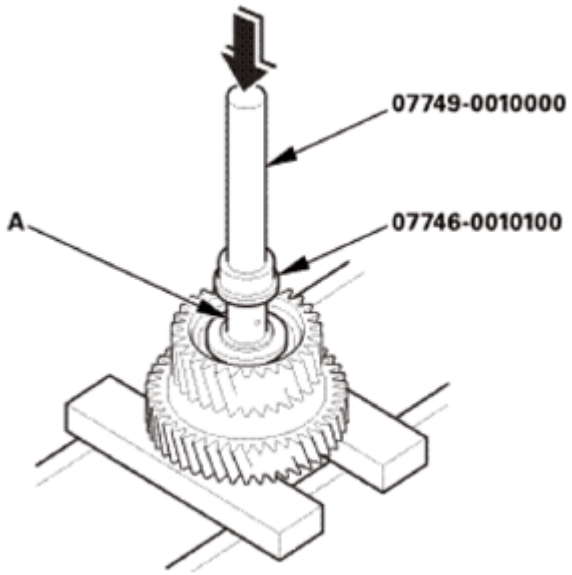

Fig. 858: Installing Idler Gear Shaft Using Driver Handle And Bearing Driver Attachment
Courtesy of AMERICAN HONDA MOTOR CO., INC.

2. Install a new snap ring (A).

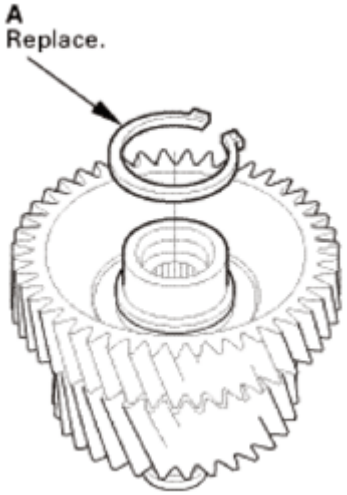

Fig. 859: Identifying Snap Ring
Courtesy of AMERICAN HONDA MOTOR CO., INC.

3. Install the idler gear/idler gear shaft assembly (A).
4. Install the cotters (B), the cotter retainer (C), and a new snap ring (D) as shown.

GETtheMANUALS.org

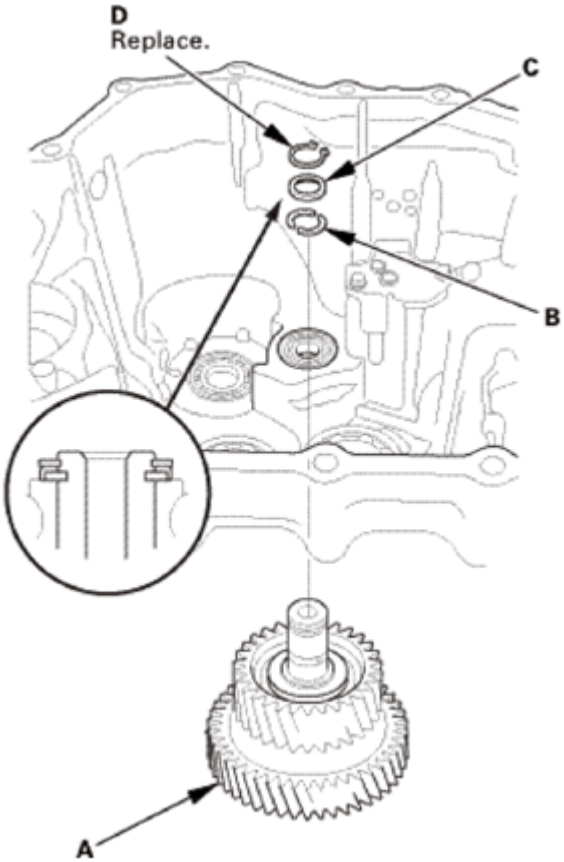

Fig. 860: Identifying Idler Gear Shaft/Idler Gear Assembly, Cotters, Cotter Retainer And Snap Ring
Courtesy of AMERICAN HONDA MOTOR CO., INC.

2. Automatic Transmission Housing
    1. Install the three dowel pins (A) and a new gasket (B).
    2. Align the spring pin (C) of the selector control shaft (D) with the transmission housing groove (E).

    NOTE: **Do not squeeze the end of the selector control shaft tips together when turning the shaft. If the tips are squeezed together, it will cause a faulty shift position signal or position due to the play between the selector control shaft and the transmission range switch.**

    3. Place the transmission housing (F) on the torque converter housing (G).

    NOTE: **Do not install the input shaft (mainshaft) speed sensor and the output shaft (countershaft) speed sensor before installing the transmission housing.**

    4. Wrap the tip of a screwdriver with tape so the reverse idler gear teeth do not get damaged. Engage the reverse idler gear (H) with the reverse gears (I) by rotating the idler gear using the screwdriver.

GETtheMANUALS.org

5. Make sure the transmission housing is securely seated so there is no clearance between the transmission housing and the torque converter housing.

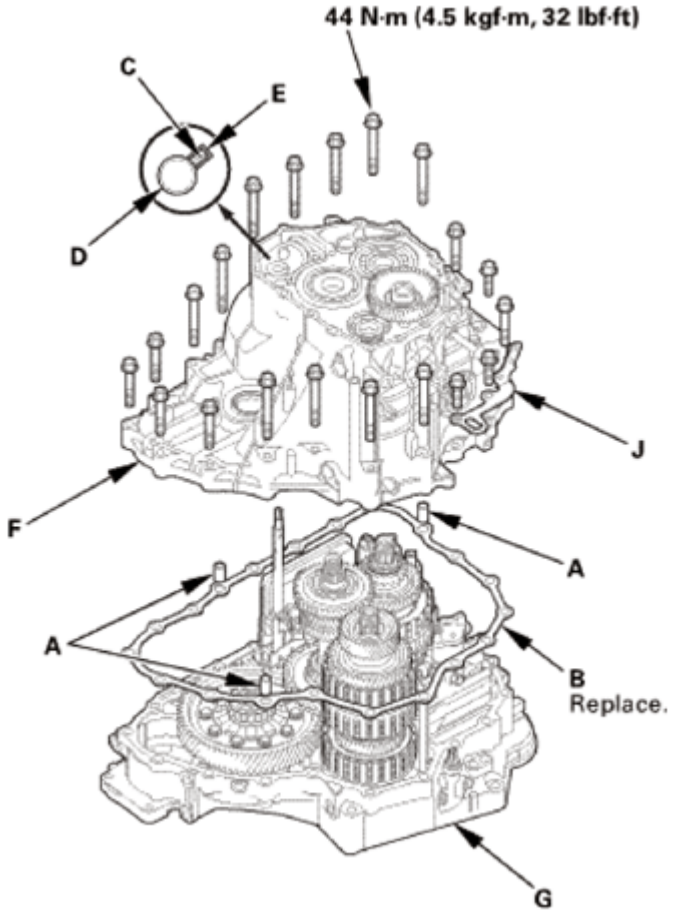

Fig. 861: Identifying Dowel Pins, Gasket, Spring Pin, Selector Control Shaft, Transmission Housing Groove And Mounting Bolts With Torque Specification
Courtesy of AMERICAN HONDA MOTOR CO., INC.

6. Install the transmission hanger (J), and tighten the transmission housing mounting bolts (2WD: 19 bolts, AWD/4WD: 20 bolts) in at least two steps, in a crisscross pattern.

GETtheMANUALS.org

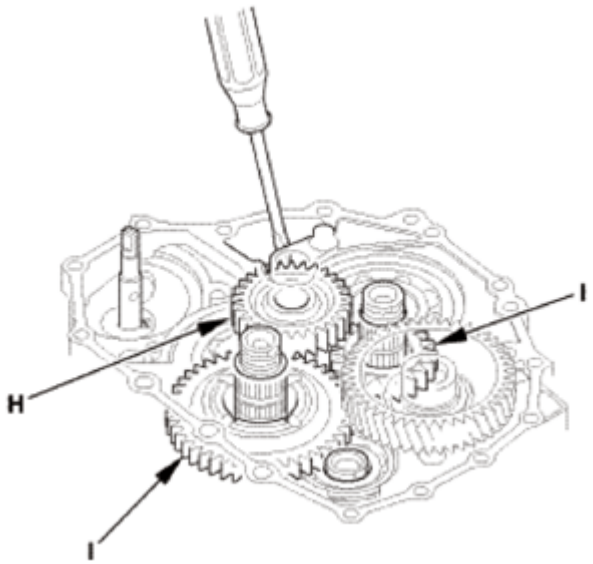

Fig. 862: Engaging Reverse Idler Gear With Reverse Gears By Rotating Idler Gear Using Screwdriver
Courtesy of AMERICAN HONDA MOTOR CO., INC.

3. End Cover Idler Gear Assembly
    1. Install the mainshaft holder onto the mainshaft.

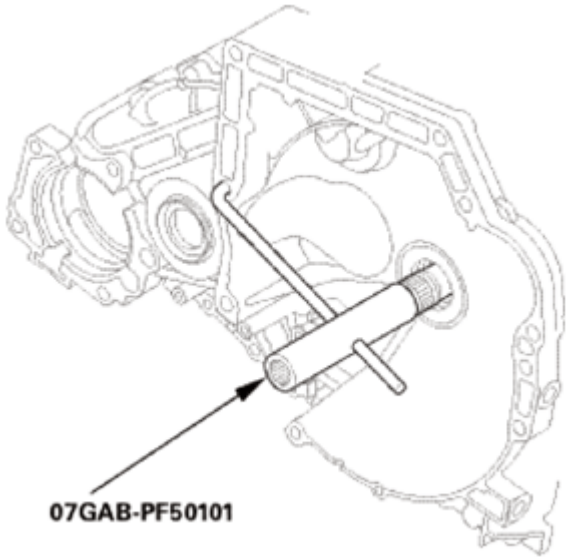

Fig. 863: Installing Mainshaft Holder Onto Mainshaft
Courtesy of AMERICAN HONDA MOTOR CO., INC.

    2. Lubricate the following parts with ATF:
        - Splines and threads of the mainshaft.
        - Splines of the mainshaft idler gear.

GETtheMANUALS.org

- The old conical spring washer and the old locknut.

3. Install the mainshaft idler gear (A), the old conical spring washer (B), and the old locknut (C), and tighten the locknut to 225 N.m (23.0 kgf.m, 166 lbf.ft).

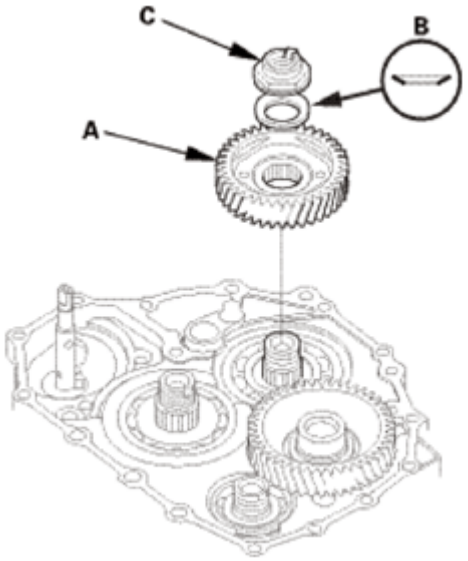

Fig. 864: Identifying Mainshaft Idler Gear, Conical Spring Washer And Locknut
Courtesy of AMERICAN HONDA MOTOR CO., INC.

NOTE:
- **Do not tap the mainshaft idler gear to install.**
- **Use a torque wrench to tighten the locknut. Do not use an impact wrench.**

4. Lubricate the following parts with ATF:
   - Splines and threads of the countershaft.
   - Splines of the park gear.
   - The old conical spring washer and the old locknut.
5. Install the park gear (A), the old conical spring washer (B), and the old locknut (C).
6. Install the park lever spring (D), the park lever (E), and the park lever stop (F).
7. Install the lock bolt (G) using a new lock washer (H).

NOTE: **Do not bend the lock tab of the lock washer until inspect the park lever stop.**

8. Install the park pawl shaft (I), the park pawl spring (J), the park pawl (K), and the stop shaft (L).
9. Lift the park pawl up, and engage it with the park gear, and tighten the locknut to 225 N.m (23.0 kgf.m, 166 lbf.ft).

NOTE:
- **Do not tap the park gear to install.**

GETtheMANUALS.org

- **Use a torque wrench to tighten the locknut. Do not use an impact wrench.**
- **Countershaft locknut has left-hand threads.**

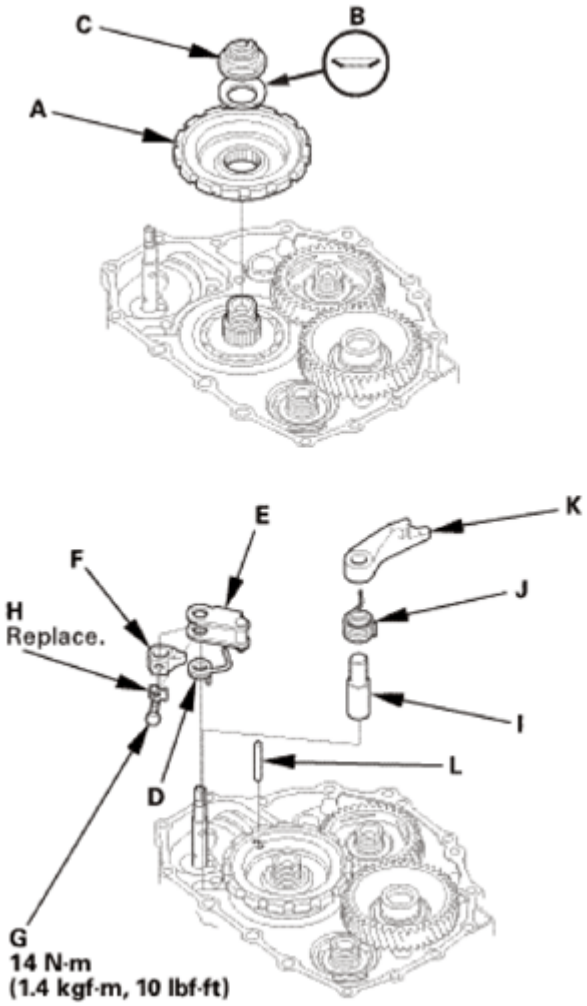

Fig. 865: Identifying Park Pawl Shaft, Park Lever Spring, Park Lever, Park Lever Stop, Lock Bolt, Lock Washer With Torque Specification
Courtesy of AMERICAN HONDA MOTOR CO., INC.

10. Remove the old locknuts and the old conical spring washers from the mainshaft and the countershaft.
11. Lubricate the following parts with ATF:
    - Splines and threads of the mainshaft, the countershaft, and the secondary shaft.
    - New conical spring washers and new locknuts.
    - Areas where the conical spring washers contact the mainshaft idler gear and the park gear.
12. Install new conical spring washers (A) in the direction shown.
13. Install a new mainshaft locknut (B), a new countershaft locknut (C), and a new secondary shaft

GETtheMANUALS.org

locknut (D).

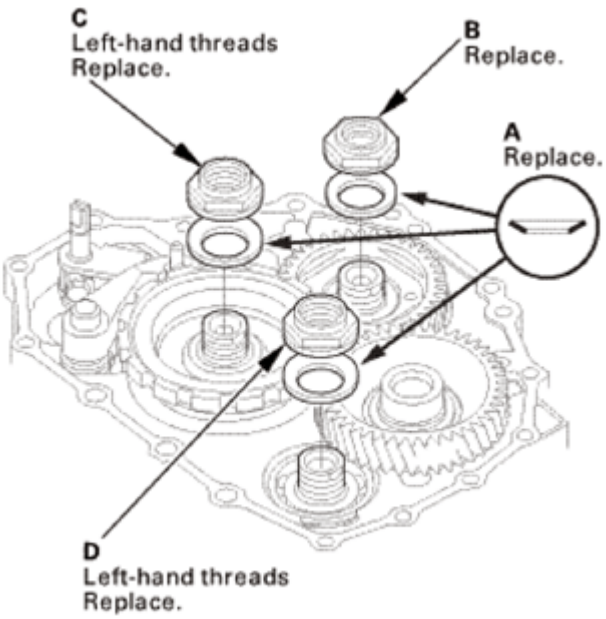

Fig. 866: Identifying Conical Spring Washers, Mainshaft Locknut, Countershaft Locknut And Secondary Shaft Locknut
Courtesy of AMERICAN HONDA MOTOR CO., INC.

14. Tighten the locknuts to 167 N.m (17.0 kgf.m, 123 lbf.ft).

NOTE:

- **Use a torque wrench to tighten the locknut. Do not use an impact wrench.**
- **The countershaft and secondary shaft locknuts have left-hand threads.**

15. Remove the mainshaft holder.
16. Stake the locknuts into the shafts to a depth (A) of 0.7-1.3 mm (0.027-0.051 in) using a 3.5 mm punch (B).

GETtheMANUALS.org

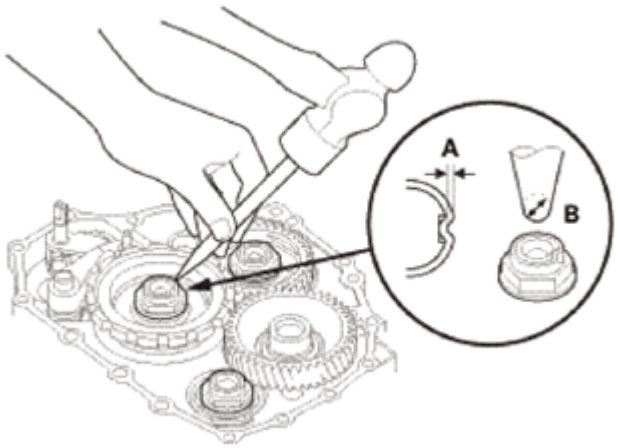

Fig. 867: Staking Locknuts Into Shafts Using Punch
Courtesy of AMERICAN HONDA MOTOR CO., INC.

17. Set the park lever in the P position.
18. Measure the distance (A) between the center of the park pawl shaft (B) and the center of the park lever roller pin (C) as shown.

    Standard: 57.7-58.7 mm (2.272-2.311 in)

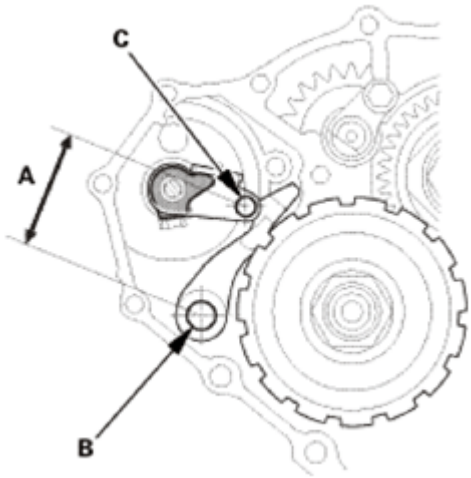

Fig. 868: Measuring Distance Between Center Of Park Pawl Shaft And Center Of Park Lever Roller Pin
Courtesy of AMERICAN HONDA MOTOR CO., INC.

19. If the measurement is out of the standard, select and install the appropriate park lever stop (A) from the table.

PARK LEVER STOP SPECIFICATION

Mark	B	C
1	11.00 mm (0.4331 in)	11.00 mm (0.4331 in)

GETtheMANUALS.org

2	10.80 mm (0.4252 in)	10.65 mm (0.4193 in)
3	10.60 mm (0.4173 in)	10.30 mm (0.4055 in)

20. After replacing the park lever stop, make sure the distance is within the tolerance.

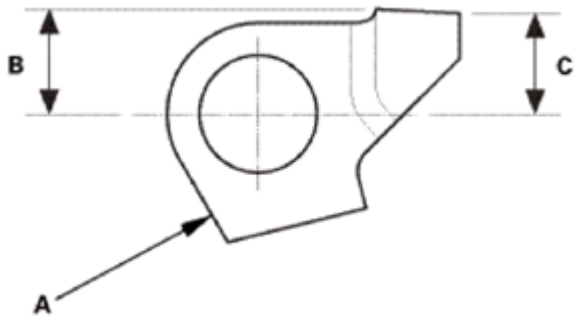

Fig. 869: Identifying Park Lever Stop Dimension
Courtesy of AMERICAN HONDA MOTOR CO., INC.

21. Pry up the lock tab (A) of the lock washer against the bolt head.

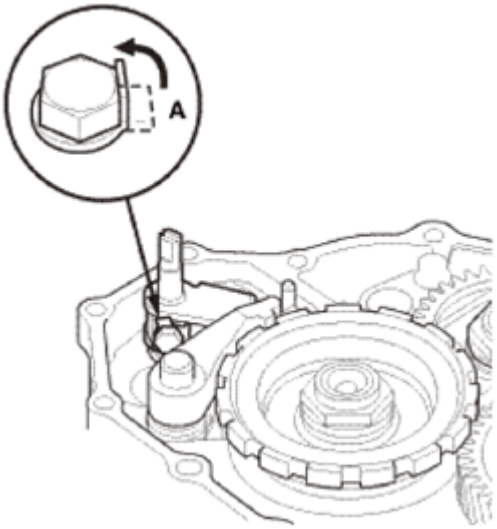

Fig. 870: Prying Up Lock Tab Of Lock Washer Against Bolt Head
Courtesy of AMERICAN HONDA MOTOR CO., INC.

4. ATF Feed Pipe/Lubrication Pipe
    1. Install the 6 x 201 mm ATF pipe (A).
    2. Install the ATF lubrication pipe (B).
    3. Install the 8 x 220 mm ATF pipe (C).
    4. Install the 8 x 198 mm ATF pipes (D).

GETtheMANUALS.org

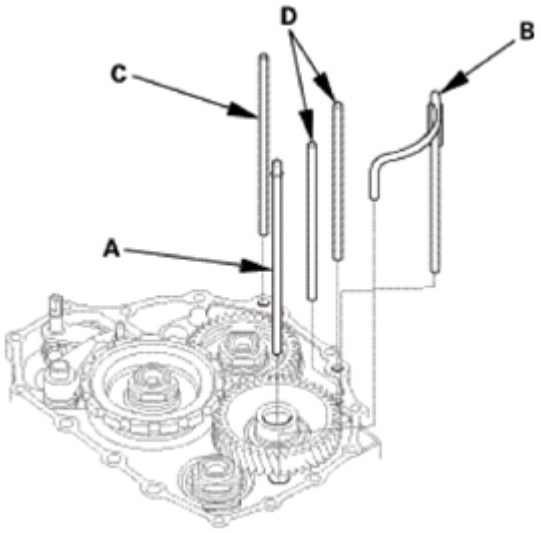

Fig. 871: Identifying ATF Feed Pipes And Lubrication Pipe
Courtesy of AMERICAN HONDA MOTOR CO., INC.

5. A/T Shift Solenoid Wire Harness - Reconnection
    1. Connect the shift solenoid valve connectors:
        - BLU wire to shift solenoid valve A.
        - ORN wire to shift solenoid valve B.
        - GRN wire to shift solenoid valve C.
        - YEL, WHT, and WHT wires to shift solenoid valve D.
        - RED wire to shift solenoid valve E.

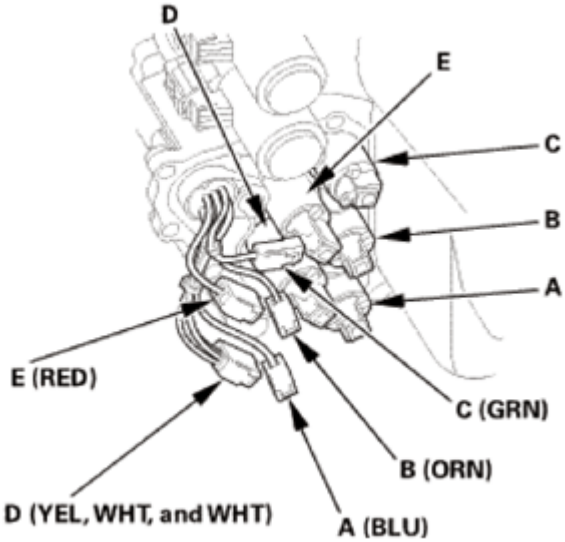

Fig. 872: Identifying Shift Solenoid Valves
Courtesy of AMERICAN HONDA MOTOR CO., INC.

GETtheMANUALS.org

6. A/T Shift Solenoid Cover
    1. Install the shift solenoid valve cover (A) with the dowel pins (B) and a new gasket (C).

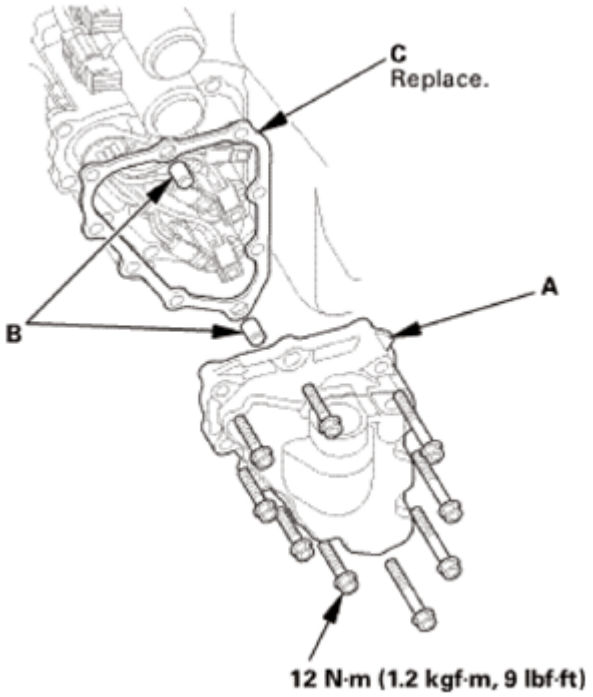

Fig. 873: Identifying Shift Solenoid Valve Cover, Dowel Pins, Gasket And Mounting Bolts With Torque Specification
Courtesy of AMERICAN HONDA MOTOR CO., INC.

7. Dipstick Guide Tube
    1. Install a new O-ring (A) on the ATF dipstick guide tube (B).
    2. Install the ATF dipstick guide tube.

GETtheMANUALS.org

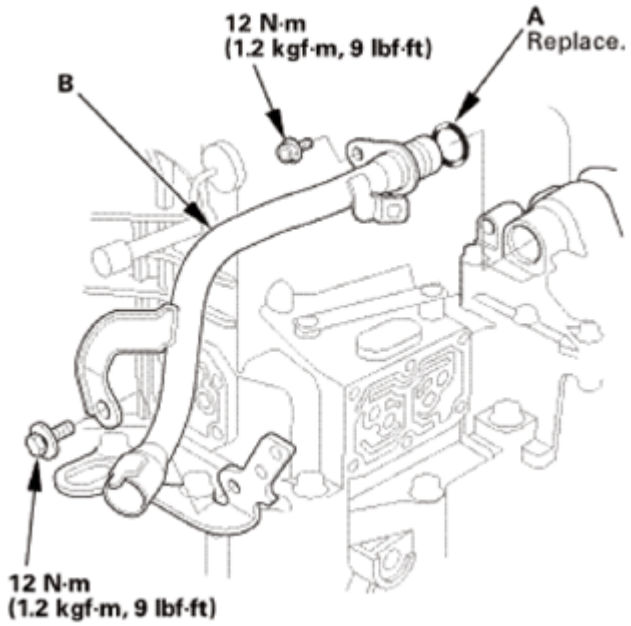

Fig. 874: Identifying ATF Dipstick Guide Tube, O-Ring And Mounting Bolts With Torque Specification
Courtesy of AMERICAN HONDA MOTOR CO., INC.

8. ATF Outlet Line
    1. Install the ATF outlet line (A) using new sealing washers (B).

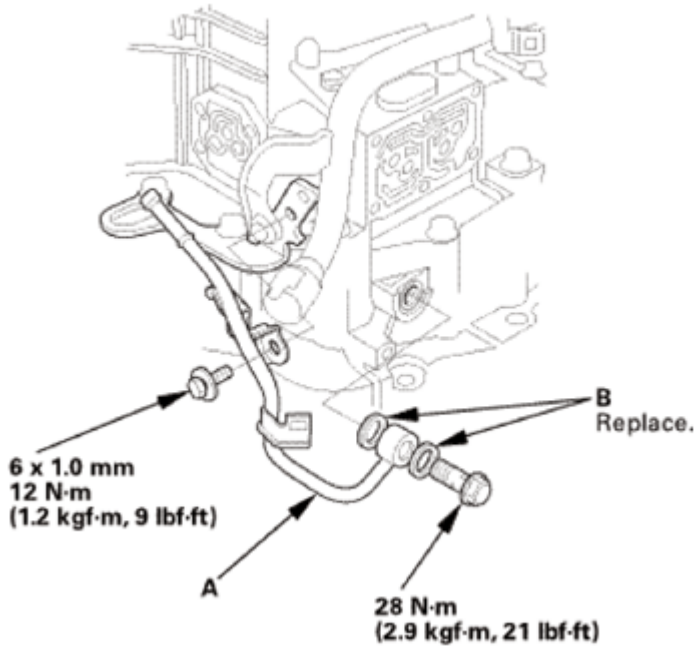

Fig. 875: Identifying ATF Outlet Line, Sealing Washers And Mounting Bolts With Torque Specification
Courtesy of AMERICAN HONDA MOTOR CO., INC.

GETtheMANUALS.org

9. ATF Inlet Line
    1. Install the ATF inlet line (A) using new sealing washers (B).

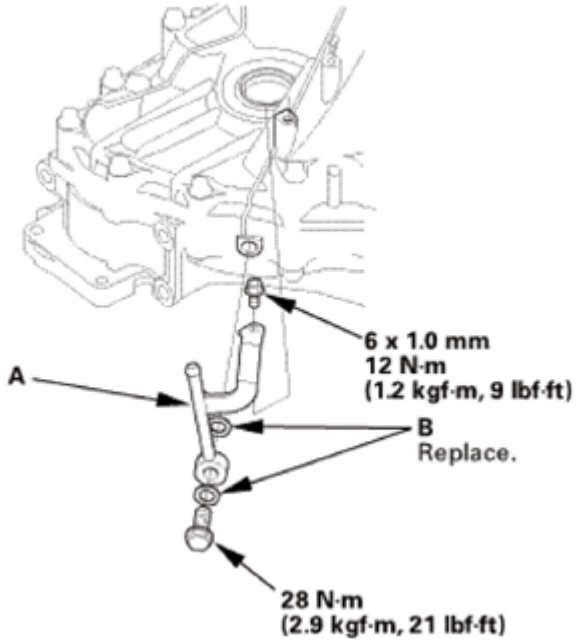

Fig. 876: Identifying ATF Inlet Line, Sealing Washers And Mounting Bolts With Torque Specification
Courtesy of AMERICAN HONDA MOTOR CO., INC.

10. A/T Clutch Pressure Control Solenoid Valve B and C
    1. Clean the mounting surfaces and the fluid passages of the solenoid valve body and the transmission housing.
    2. Install a new gasket (A) with the blue side toward the transmission housing, and Install the ATF joint pipes (D).
    3. Install new O-rings (E) over the ATF joint pipes.
    4. Install A/T clutch pressure control solenoid valves B and C with the clamp bracket (F).

GETtheMANUALS.org

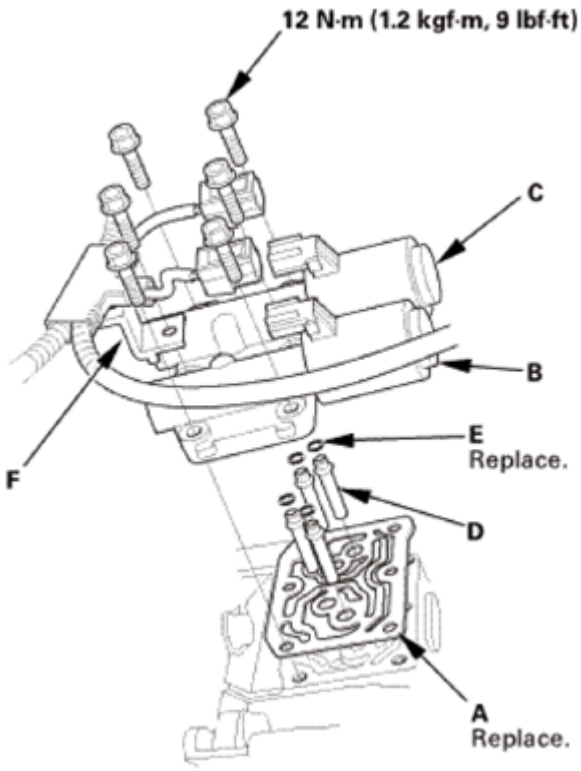

Fig. 877: Identifying Gasket, ATF Joint Pipes, O-Rings, A/T Clutch Pressure Control Solenoid Valves, Clamp Bracket And Mounting Bolts With Torque Specification
Courtesy of AMERICAN HONDA MOTOR CO., INC.

11. A/T Clutch Pressure Control Solenoid Valve A
    1. Clean the mounting surfaces and the fluid passages of the solenoid valve body and the transmission housing.
    2. Install a new gasket (B) with the blue side toward the transmission housing, and install the 35 mm ATF pipe (C) and the ATF joint pipes (D).
    3. Install new O-rings (E) over the ATF joint pipes.
    4. Install A/T clutch pressure control solenoid valve A.

GETtheMANUALS.org

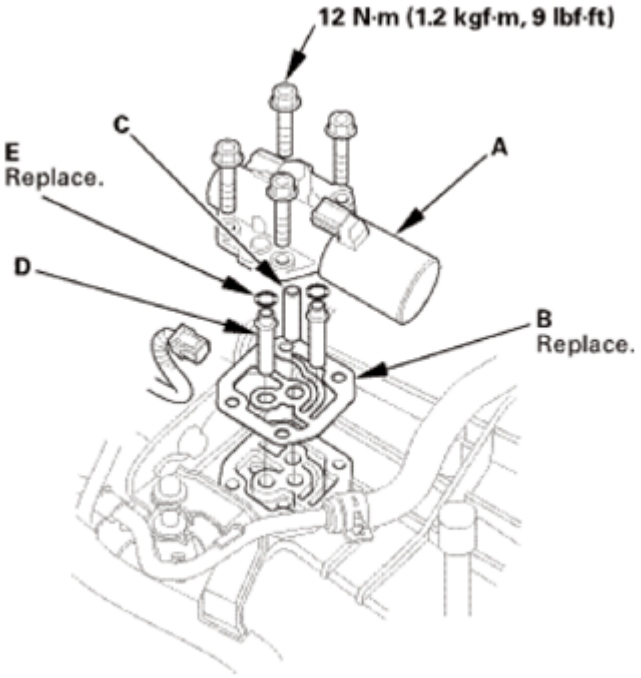

Fig. 878: Identifying A/T Clutch Pressure Control Solenoid Valve, Gasket, ATF Pipe, ATF Joint Pipes And Mounting Bolts With Torque Specification
Courtesy of AMERICAN HONDA MOTOR CO., INC.

12. Output Shaft (Countershaft) Speed Sensor
    1. Install a new O-ring (A) on the output shaft (countershaft) speed sensor (B).
    2. Install the output shaft (countershaft) speed sensor and the sensor washer (C).

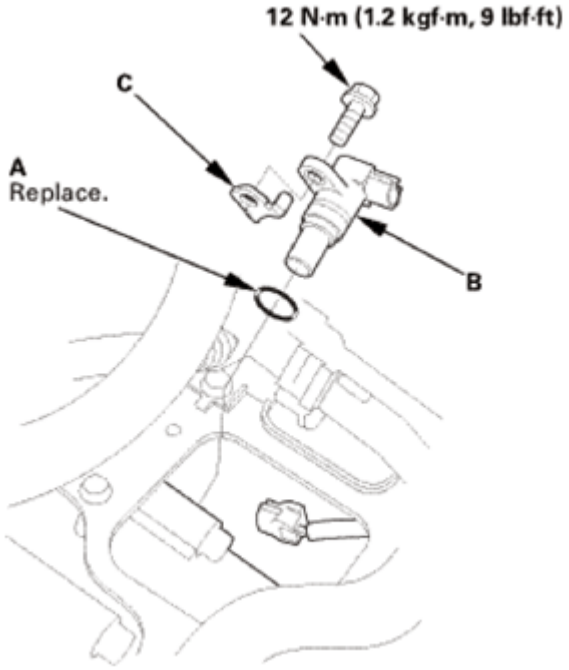

GETtheMANUALS.org

Fig. 879: Identifying Output Shaft (Countershaft) Speed Sensor, O-Ring, Sensor Washer And Mounting Bolts With Torque Specification
Courtesy of AMERICAN HONDA MOTOR CO., INC.

13. Input Shaft (Mainshaft) Speed Sensor
    1. Install a new O-ring (A) on the input shaft (mainshaft) speed sensor (B).
    2. Install the input shaft (mainshaft) speed sensor.

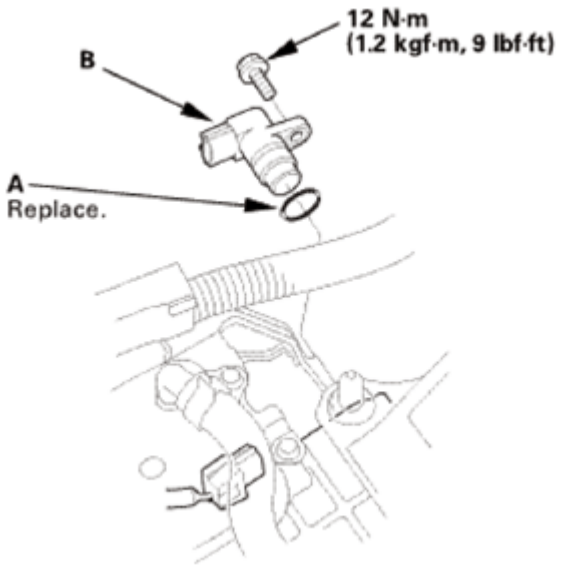

Fig. 880: Identifying Input Shaft (Mainshaft) Speed Sensor, O-Ring And Mounting Bolt With Torque Specification
Courtesy of AMERICAN HONDA MOTOR CO., INC.

14. Transmission End Cover
    1. Install the dowel pins (A) and a new gasket (B).
    2. Install new O-rings (C) over the ATF pipes.
    3. Install the end cover (D), and tighten the three special bolts (E) and the 6 x 1.0 mm bolts (F) (12 bolts).

GETtheMANUALS.org

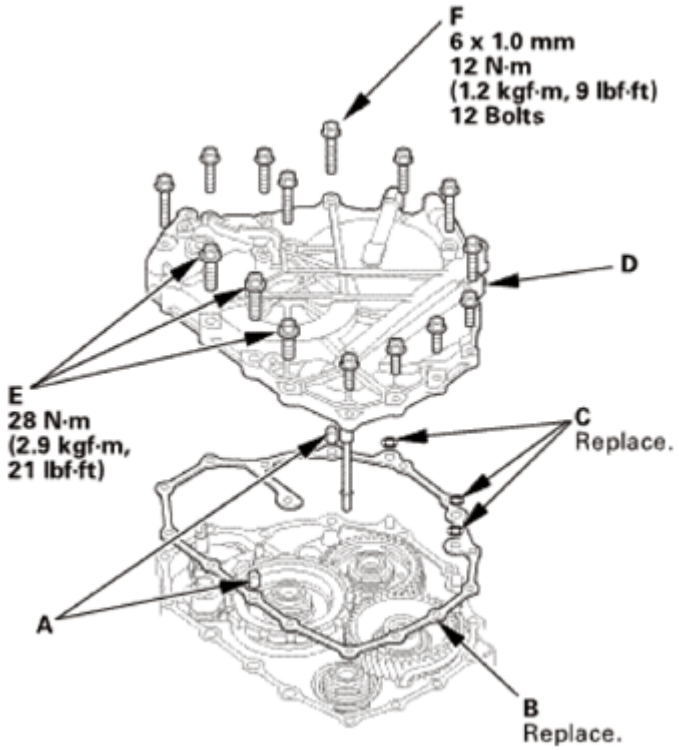

Fig. 881: Identifying Dowel Pins, Gasket, O-Rings, End Cover And Mounting Bolts With Torque Specification
Courtesy of AMERICAN HONDA MOTOR CO., INC.

15. Transmission Range Switch Subharness
    1. Install the clamp brackets (A).
    2. Install the transmission range switch subharness (B).

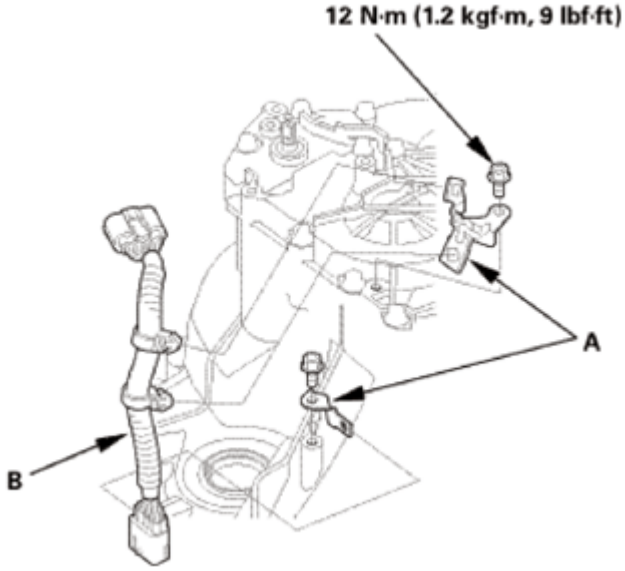

GETtheMANUALS.org

Fig. 882: Identifying Transmission Range Switch Subharness, Clamp Brackets And Mounting Bolts With Torque Specification
Courtesy of AMERICAN HONDA MOTOR CO., INC.

16. Transmission Range Switch
    1. Make sure the selector control shaft is in the N position. If necessary, move the selector control shaft to the N position.

NOTE: **Do not use the selector control shaft to adjust the shift position. If the selector control shaft tips are squeezed together it will cause a faulty signal or position due to play between the selector control shaft and switch.**

Fig. 883: Moving Selector Control Shaft To N Position
Courtesy of AMERICAN HONDA MOTOR CO., INC.

2. Align the cutouts (A) on the rotary-frame with the neutral positioning cutouts (B) on the transmission range switch (C), then put a 2.0 mm (0.079 in) feeler gauge blade (D) in the cutouts to hold the switch in the N position.

NOTE: **Be sure to use a 2.0 mm (0.079 in) blade or equivalent to hold the switch in the N position.**

GETtheMANUALS.org

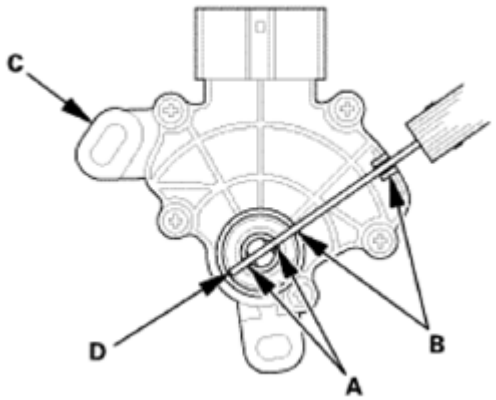

Fig. 884: Aligning Cutouts On Rotary-Frame With Neutral Positioning Cutouts On Transmission Range Switch
Courtesy of AMERICAN HONDA MOTOR CO., INC.

3. Install the transmission range switch (A) gently on the selector control shaft (B) while holding it in the N position with the 2.0 mm (0.079 in) blade (C).

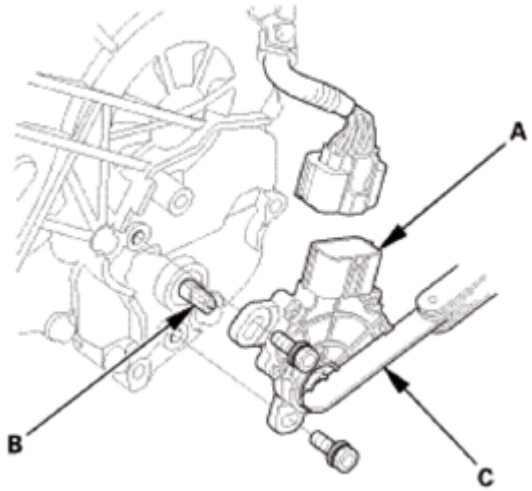

Fig. 885: Identifying Transmission Range Switch, Selector Control Shaft And Blade
Courtesy of AMERICAN HONDA MOTOR CO., INC.

4. Tighten the bolts on the transmission range switch (A) while you continue holding the N position.

NOTE: **Do not move the transmission range switch when tightening the bolts.**

5. Remove the feeler gauge (B).
6. Check the connector (C) for corrosion, dirt, or oil, and clean or repair if necessary, then connect the connector securely.

GETtheMANUALS.org

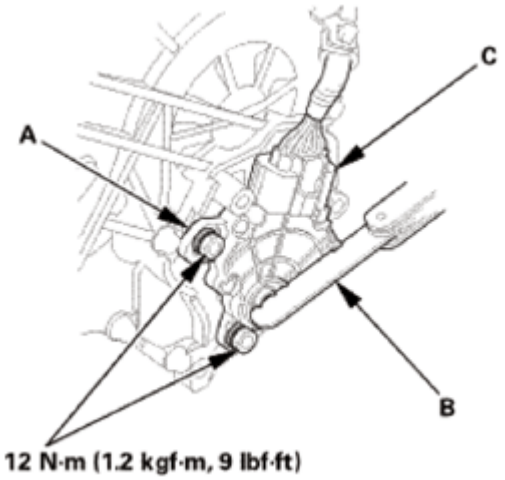

Fig. 886: Identifying Transmission Range Switch, Connector, Feeler Gauge And Mounting Bolts With Torque Specification
Courtesy of AMERICAN HONDA MOTOR CO., INC.

17. Transmission Range Switch Cover
    1. Install the transmission range switch cover (A).

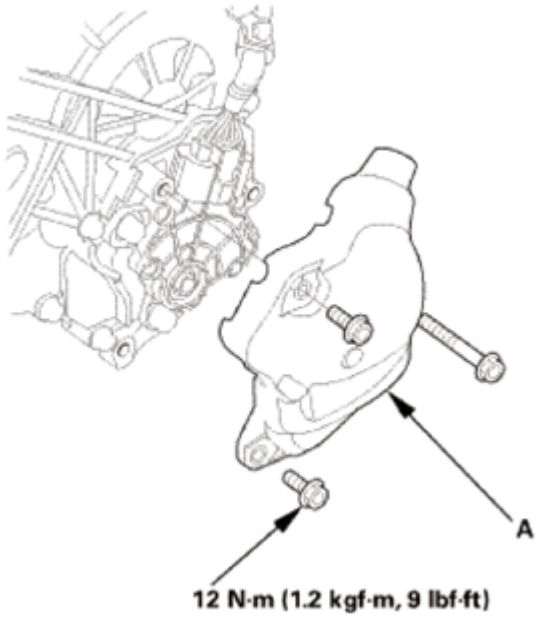

Fig. 887: Identifying Transmission Range Switch Cover And Mounting Bolts With Torque Specification
Courtesy of AMERICAN HONDA MOTOR CO., INC.

A/T MAINSHAFT DISASSEMBLY, REASSEMBLY, AND INSPECTION

SPECIAL TOOL REQUIRED

GETtheMANUALS.org

Image	Description/Tool Number
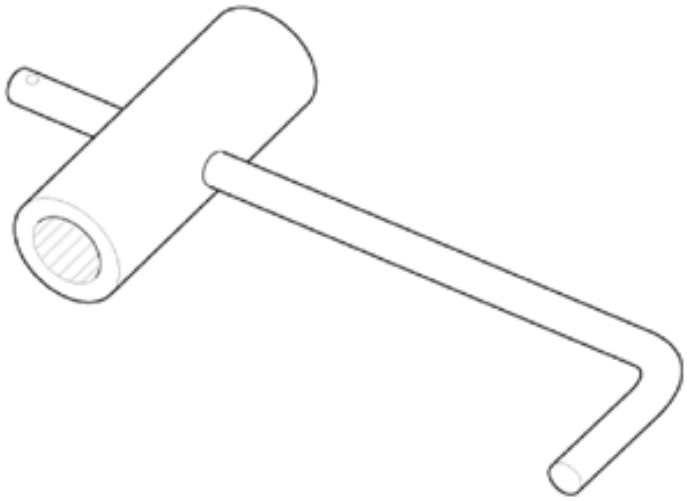	Mainshaft Holder 07GAB-PF50101
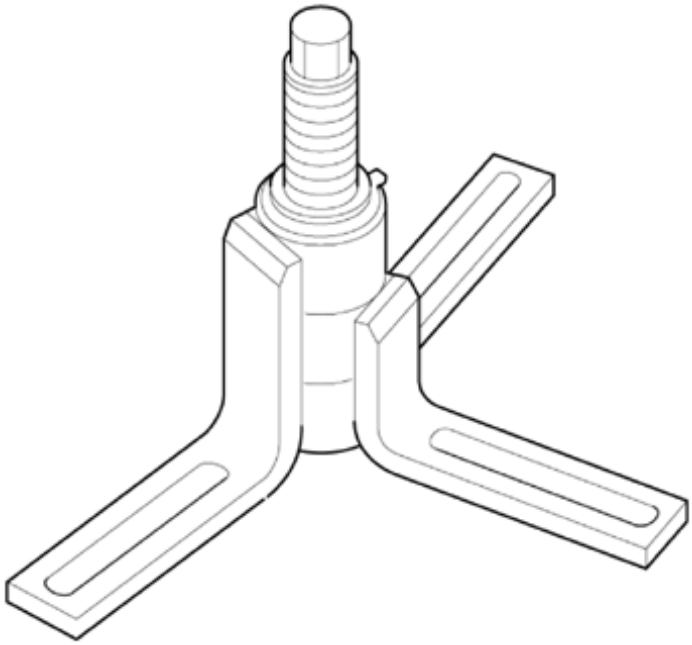	Housing Puller 07HAC-PK40102
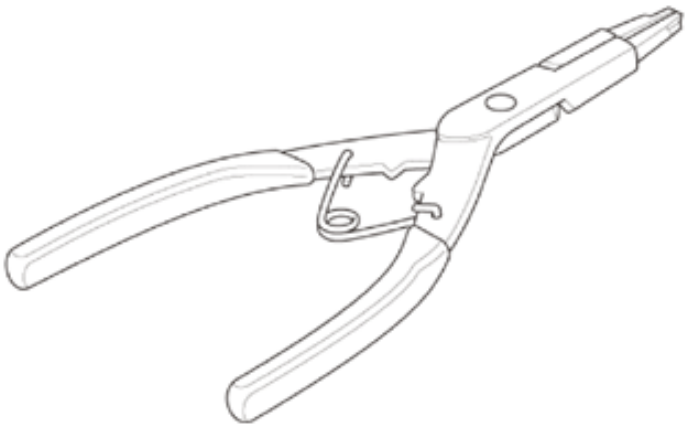	Snap Ring Pliers 07LGC-0010100

GETtheMANUALS.org

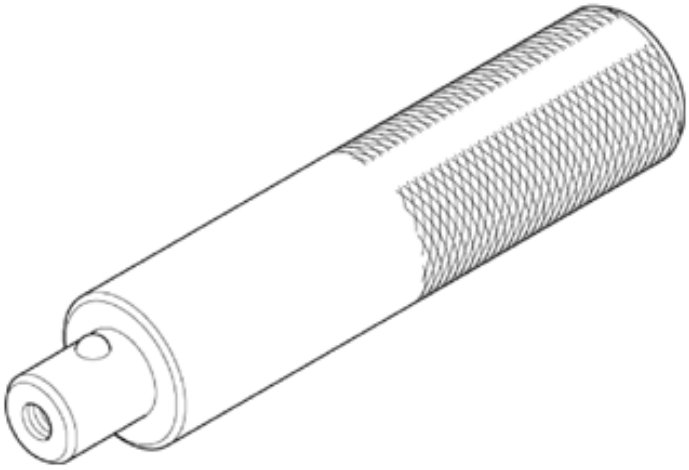	Driver Handle, 15 x 135L 07749-0010000
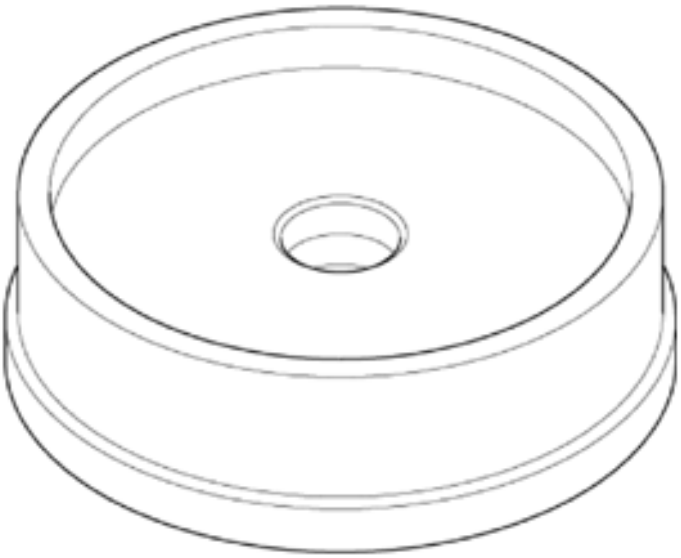	Bearing Driver Attachment, 78 x 80 mm 07NAD-PX40100

EXPLODED VIEW

1. A/T Mainshaft Exploded View

   Exploded View

GETtheMANUALS.org

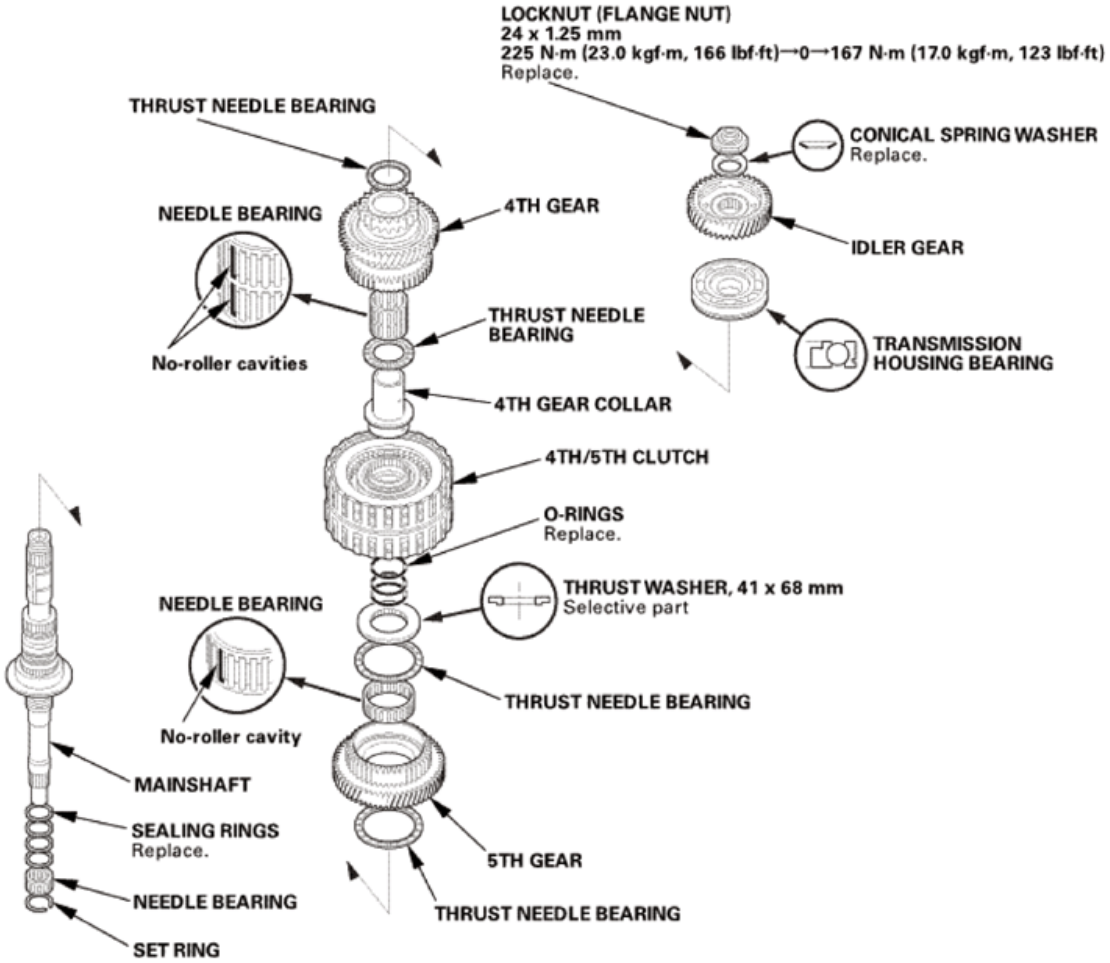

Fig. 888: Exploded View Of A/T Mainshaft
Courtesy of AMERICAN HONDA MOTOR CO., INC.

DISASSEMBLY

NOTE: The illustration shows AWD/4WD transmission.

1. Transmission Range Switch Cover
    1. Remove the transmission range switch cover (A).

GETtheMANUALS.org

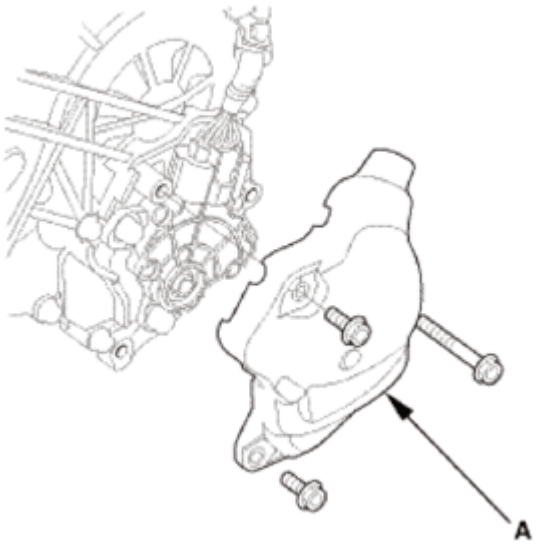

Fig. 889: Identifying Transmission Range Switch Cover With Bolts
Courtesy of AMERICAN HONDA MOTOR CO., INC.

2. Transmission Range Switch
    1. Remove the transmission range switch (A).

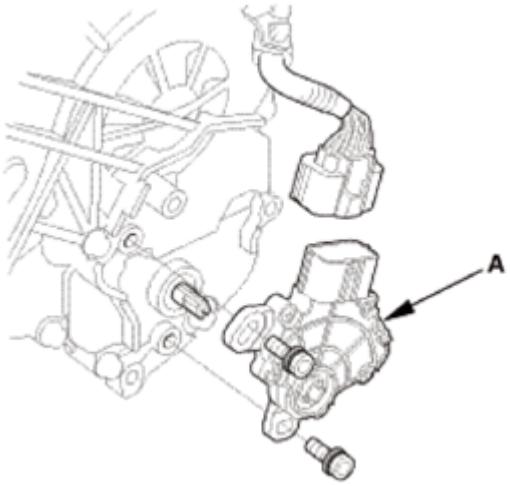

Fig. 890: Identifying Transmission Range Switch With Bolts
Courtesy of AMERICAN HONDA MOTOR CO., INC.

3. Transmission Range Switch Subharness
    1. Remove the transmission range switch subharness (A).
    2. Remove the clamp brackets (B).

GETtheMANUALS.org

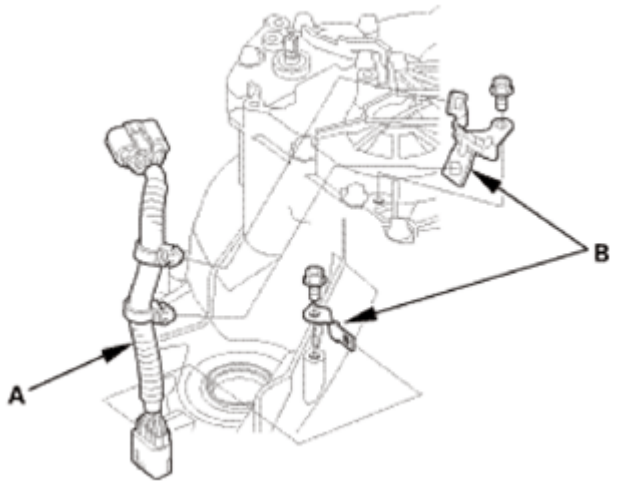

Fig. 891: Identifying Transmission Range Switch Subharness And Clamp Brackets
Courtesy of AMERICAN HONDA MOTOR CO., INC.

4. Transmission End Cover
    1. Remove the end cover (A), the dowel pins (B), the O-rings (C), and the gasket (D).

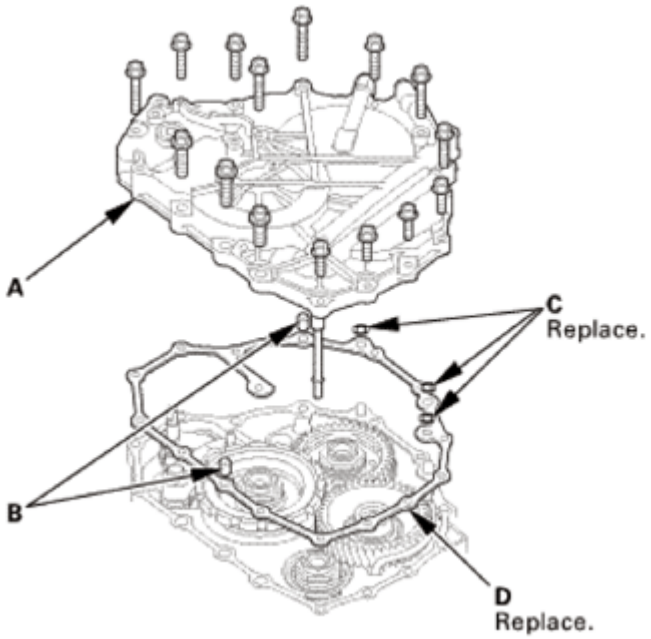

Fig. 892: Identifying Transmission End Cover, Dowel Pins, O-Rings And Gasket With Bolts
Courtesy of AMERICAN HONDA MOTOR CO., INC.

5. Input Shaft (Mainshaft) Speed Sensor
    1. Remove the input shaft (mainshaft) speed sensor (A).
    2. Remove the O-ring (B) from the input shaft (mainshaft) speed sensor.

GETtheMANUALS.org

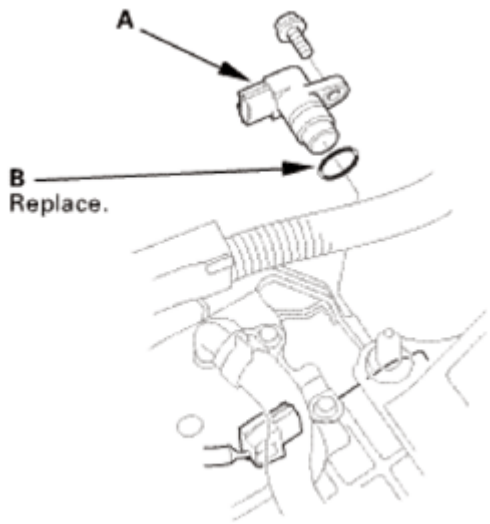

Fig. 893: Identifying Input Shaft (Mainshaft) Speed Sensor And O-Ring
Courtesy of AMERICAN HONDA MOTOR CO., INC.

6. Output Shaft (Countershaft) Speed Sensor
    1. Remove the output shaft (countershaft) speed sensor (A) and the sensor washer (B).
    2. Remove the O-ring (C) from the output shaft (countershaft) speed sensor.

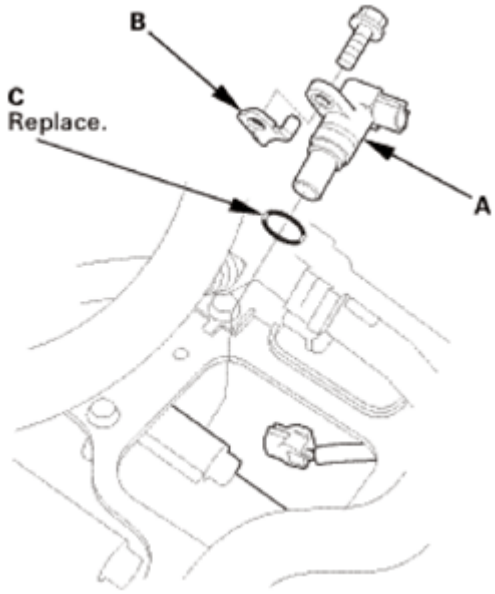

Fig. 894: Identifying Output Shaft (Countershaft) Speed Sensor, Sensor Washer And O-Ring
Courtesy of AMERICAN HONDA MOTOR CO., INC.

7. A/T Clutch Pressure Control Solenoid Valve A
    1. Remove A/T clutch pressure control solenoid valve A.
    2. Remove the 35 mm ATF pipe (B), the ATF joint pipes (C), the O-rings (D), and the gasket (E).

GETtheMANUALS.org

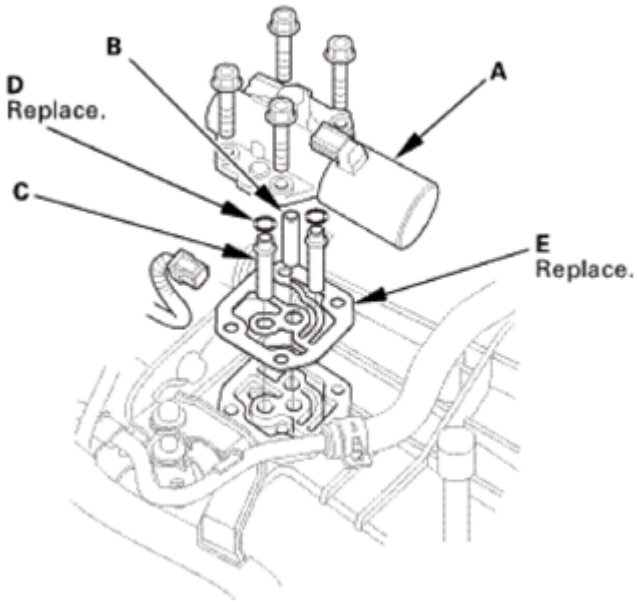

Fig. 895: Identifying A/T Clutch Pressure Control Solenoid Valve, ATF Pipe, ATF Joint Pipes, O-Rings And Gasket With Bolts
Courtesy of AMERICAN HONDA MOTOR CO., INC.

8. A/T Clutch Pressure Control Solenoid Valve B and C
    1. Remove the clamp bracket (A) and A/T clutch pressure control solenoid valves B and C.
    2. Remove the ATF joint pipes (D), the O-rings (E), and the gasket (F).

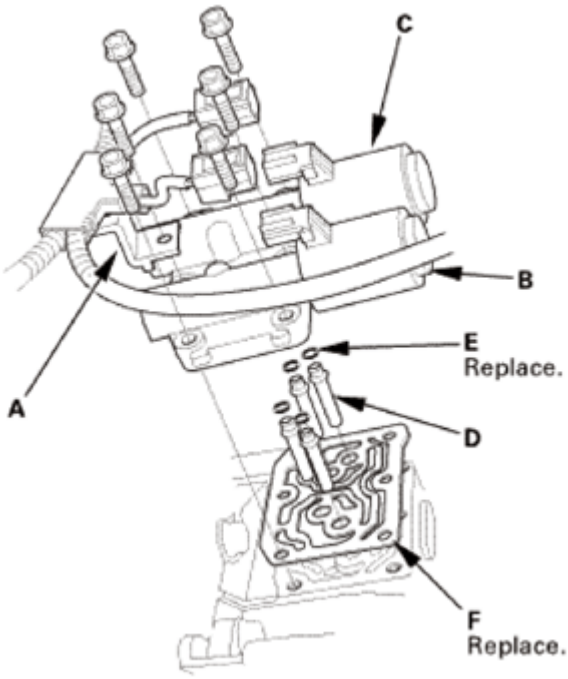

Fig. 896: Identifying A/T Clutch Pressure Control Solenoid Valves, Clamp Bracket, ATF

GETtheMANUALS.org

Joint Pipes, O-Rings And Gasket
Courtesy of AMERICAN HONDA MOTOR CO., INC.

9. ATF Inlet Line
    1. Remove the banjo bolt (A) and the sealing washers (B).
    2. Remove the ATF inlet line (C).

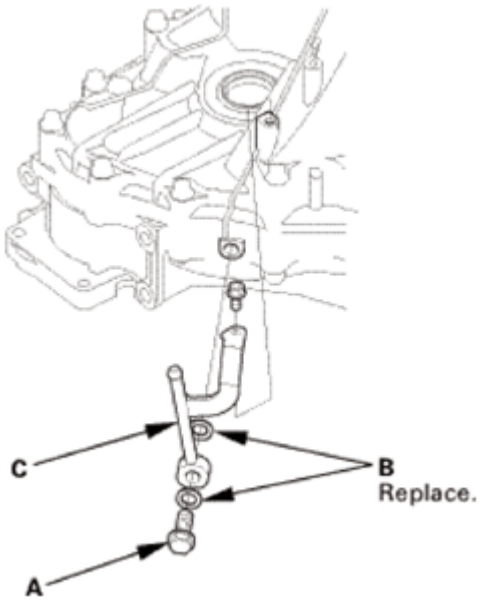

Fig. 897: Identifying ATF Inlet Line, Banjo Bolt And Sealing Washers
Courtesy of AMERICAN HONDA MOTOR CO., INC.

10. ATF Outlet Line
    1. Remove the banjo bolt (A) and the sealing washers (B).
    2. Remove the ATF outlet line (C).

GETtheMANUALS.org

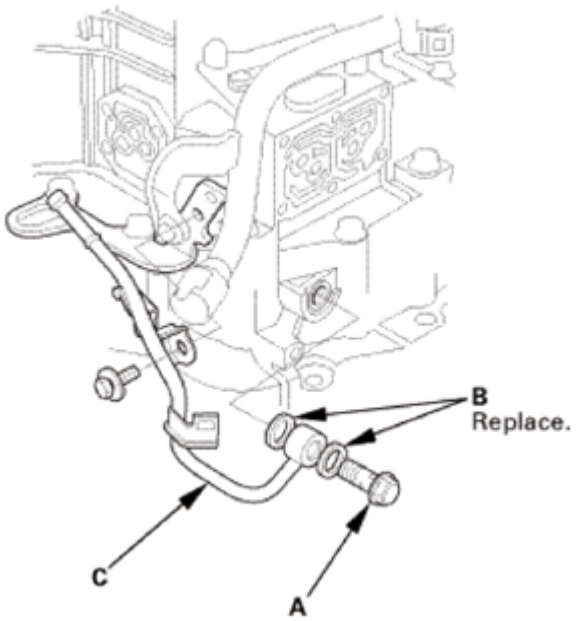

Fig. 898: Identifying ATF Outlet Line, Banjo Bolt And Sealing Washers
Courtesy of AMERICAN HONDA MOTOR CO., INC.

11. Dipstick Guide Tube
    1. Remove the ATF dipstick guide tube (A).
    2. Remove the O-ring (B) from the ATF dipstick guide tube.

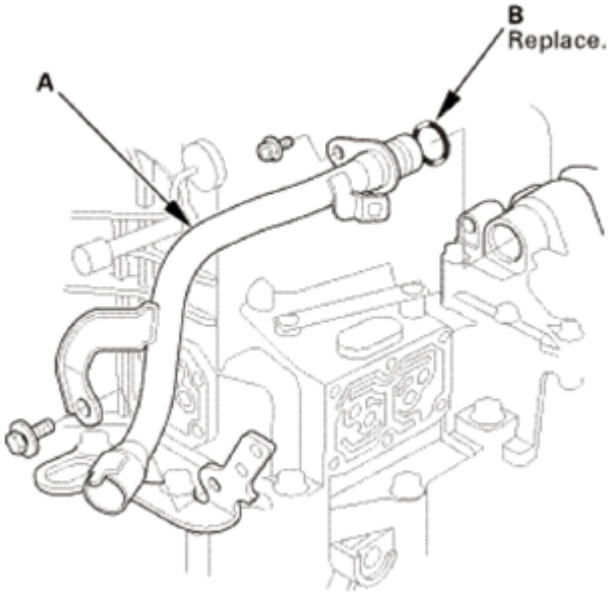

Fig. 899: Identifying ATF Dipstick Guide Tube And O-Ring
Courtesy of AMERICAN HONDA MOTOR CO., INC.

12. A/T Shift Solenoid Cover

GETtheMANUALS.org

1. Remove the shift solenoid valve cover (A), the dowel pins (B), and the gasket (C).

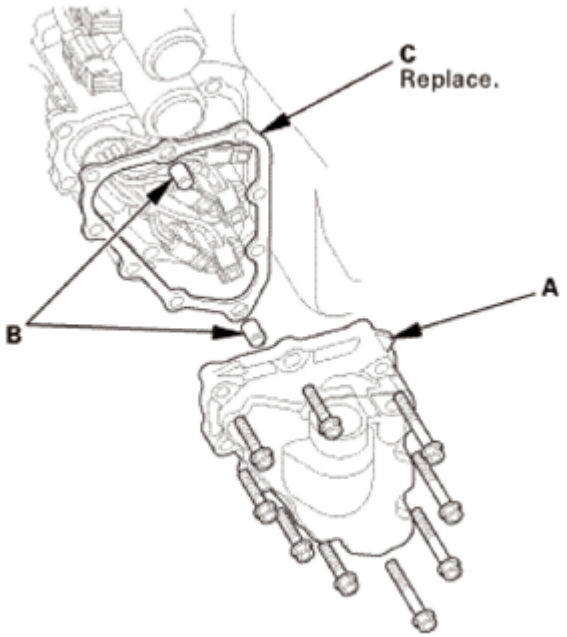

Fig. 900: Identifying Shift Solenoid Valve Cover, Dowel Pins And Gasket
Courtesy of AMERICAN HONDA MOTOR CO., INC.

13. A/T Shift Solenoid Wire Harness - Disconnection
    1. Disconnect the connectors.

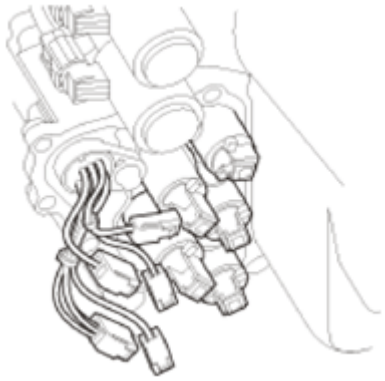

Fig. 901: Identifying A/T Shift Solenoid Wire Harness Connectors
Courtesy of AMERICAN HONDA MOTOR CO., INC.

14. ATF Feed Pipe/Lubrication Pipe
    1. Remove the 6 x 201 mm ATF pipe (A).
    2. Remove the ATF lubrication pipe (B).
    3. Remove the 8 x 220 mm ATF pipe (C).
    4. Remove the 8 x 198 mm ATF pipes (D).

GETtheMANUALS.org

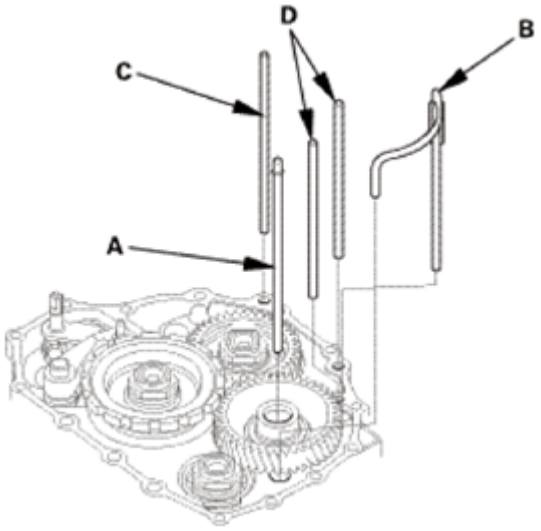

Fig. 902: Identifying ATF Feed Pipes And Lubrication Pipe
Courtesy of AMERICAN HONDA MOTOR CO., INC.

15. End Cover Idler Gear Assembly
    1. Install the mainshaft holder onto the mainshaft.
    2. Engage the park pawl with the park gear.

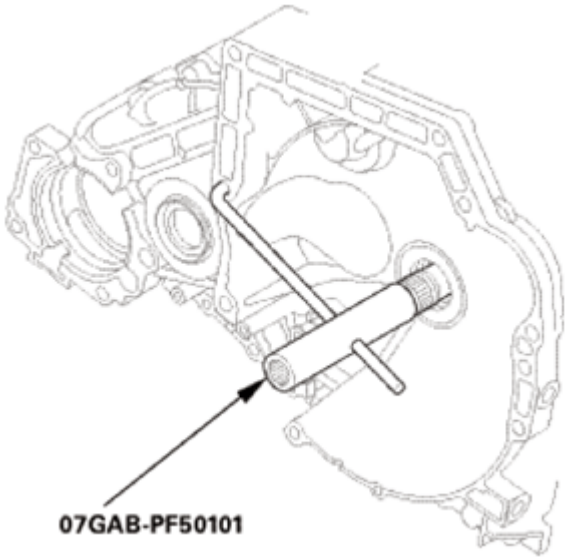

Fig. 903: Installing Mainshaft Holder Onto Mainshaft
Courtesy of AMERICAN HONDA MOTOR CO., INC.

    3. Using a chisel, cut the lock tab (A) of the locknut (B).

NOTE: Keep all of the chiseled particles out of the transmission.

GETtheMANUALS.org

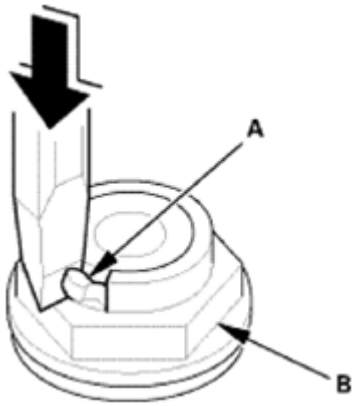

Fig. 904: Cutting Lock Tab Of Locknut Using Chisel
Courtesy of AMERICAN HONDA MOTOR CO., INC.

4. Remove the locknuts (A) and the conical spring washers (B) from each shaft.

NOTE:

- **The countershaft and secondary shaft locknuts have left-hand threads.**
- **Keep all of the chiseled particles out of the transmission.**
- **Clean the old locknuts; they are used to install the press fit idler gears and park gear.**

5. Remove the mainshaft holder.

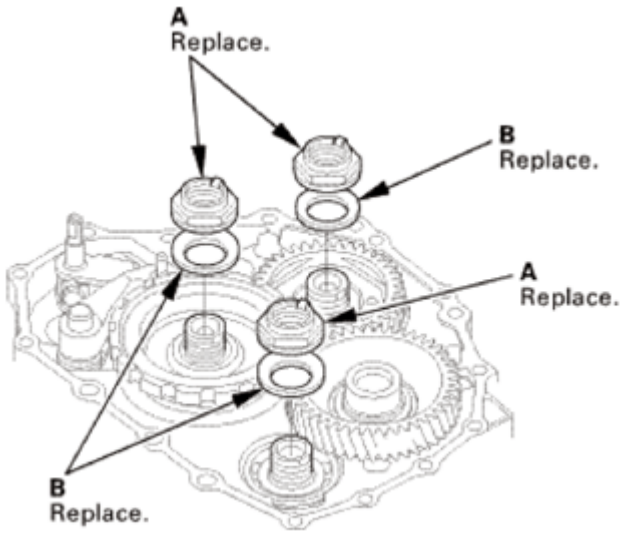

Fig. 905: Identifying Locknuts And Conical Spring Washers
Courtesy of AMERICAN HONDA MOTOR CO., INC.

6. Remove the park pawl (A), the park pawl spring (B), the park pawl shaft (C), and the stop shaft (D).

GETtheMANUALS.org

7. Pry down the lock tab (E) of the lock washer (F).
8. Remove the lock bolt (G) and the lock washer.
9. Remove the park lever (H), the park lever stop (I), and the park lever spring (J).

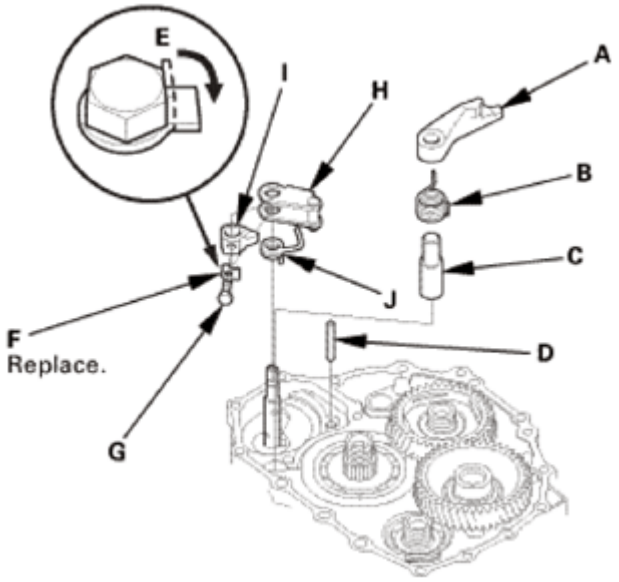

Fig. 906: Prying Down Lock Tab Of Lock Washer
Courtesy of AMERICAN HONDA MOTOR CO., INC.

10. Place a spacer (A) on the countershaft (B).
11. Set a commercially available bearing puller (C) on the park gear (D).
12. Remove the park gear.

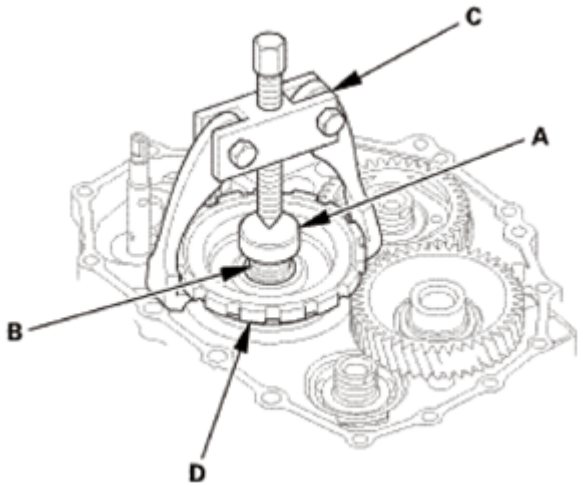

Fig. 907: Setting Commercially Available Bearing Puller On Park Gear
Courtesy of AMERICAN HONDA MOTOR CO., INC.

13. Install a puller (A) with two 6 x 1.0 mm bolts (B) on the mainshaft idler gear (C).

GETtheMANUALS.org

14. Set a spacer (D) between the puller and the mainshaft (E).
15. Remove the mainshaft idler gear.

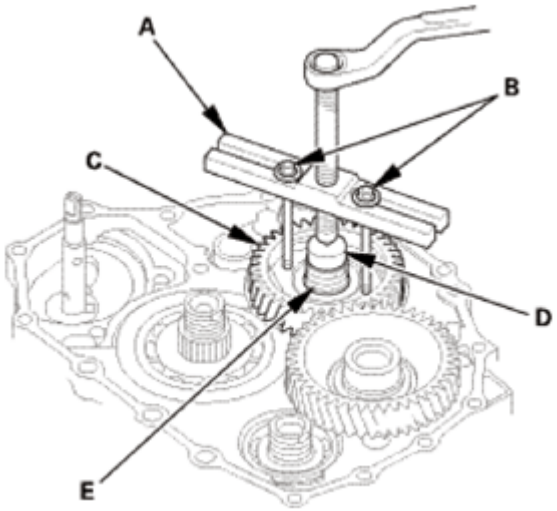

Fig. 908: Installing Puller With 6 X 1.0 mm Bolts On Mainshaft Idler Gear
Courtesy of AMERICAN HONDA MOTOR CO., INC.

16. Automatic Transmission Housing
    1. Align the spring pin (A) on the selector control shaft (B) with the transmission housing groove (C).

    NOTE: **Do not squeeze the end of the selector control shaft tips together when turning the control shaft. If the tips are squeezed together, it will cause a faulty shift position signal or position due to the play between the selector control shaft and the transmission range switch.**

    2. Remove the transmission housing mounting bolts (D) (2WD: 19 bolts, AWD/4WD: 20 bolts).
    3. Install the housing puller over the mainshaft.
    4. Remove the transmission housing (E) using the housing puller.
    5. Remove the dowel pins (F) and the gasket (G).

GETtheMANUALS.org

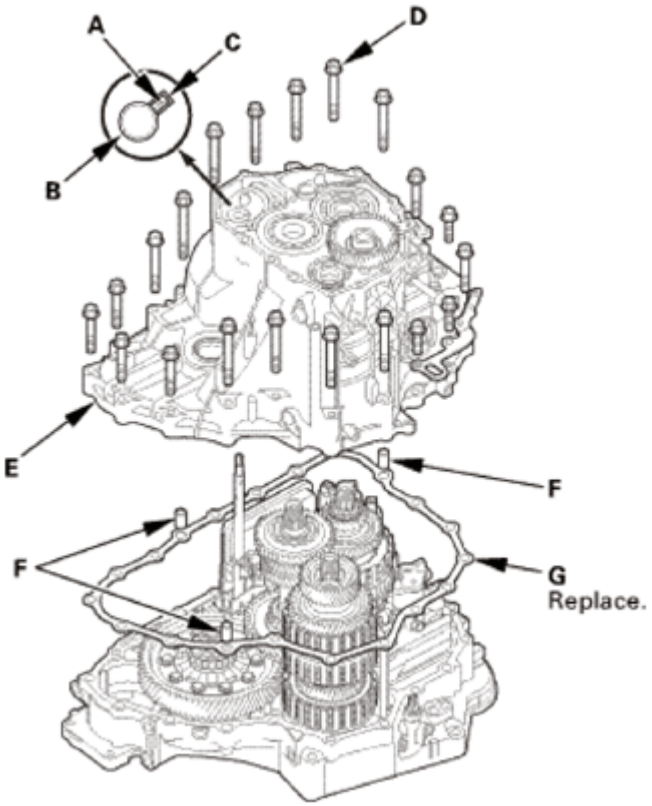

Fig. 909: Identifying Spring Pin, Selector Control Shaft, Transmission Housing Groove, Transmission Housing, Mounting Bolts And Gasket
Courtesy of AMERICAN HONDA MOTOR CO., INC.

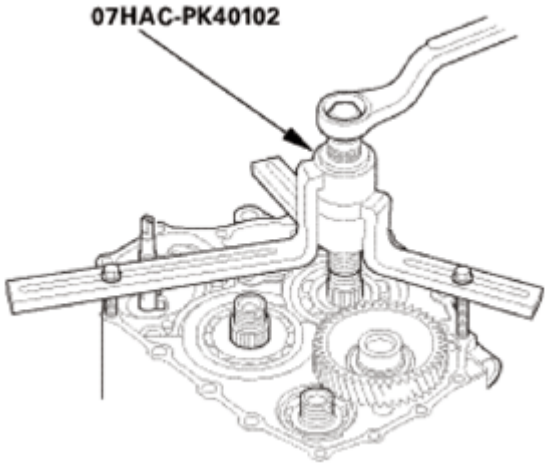

Fig. 910: Installing Housing Puller Over Mainshaft
Courtesy of AMERICAN HONDA MOTOR CO., INC.

17. Reverse Idler Gear
    1. Remove the bolt (A) securing the reverse idler gear shaft holder (B).
    2. Install a 5 x 0.8 mm bolt (C) in the reverse gear shaft, and pull it to remove the reverse idler gear

GETtheMANUALS.org

shaft (D) and the reverse idler gear shaft holder together.

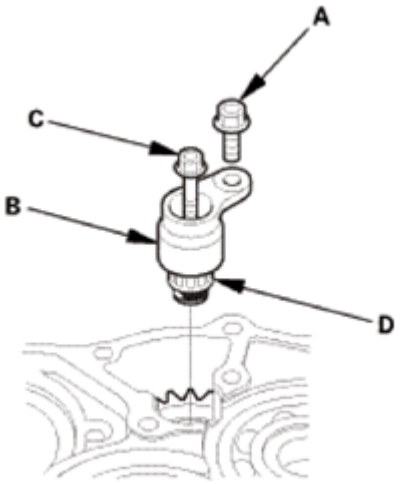

Fig. 911: Identifying Reverse Idler Gear Shaft, Holder And Bolts
Courtesy of AMERICAN HONDA MOTOR CO., INC.

3. Remove the reverse idler gear (A).

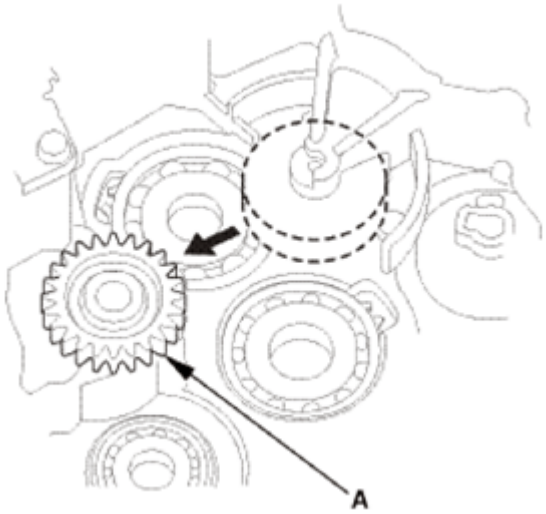

Fig. 912: Removing Reverse Idler Gear
Courtesy of AMERICAN HONDA MOTOR CO., INC.

18. A/T Idler Gear/Idler Gear Shaft Assembly
    1. Remove the snap ring (A), the cotter retainer (B), and the cotters (C).
    2. Remove the idler gear shaft/idler gear assembly (D).

GETtheMANUALS.org

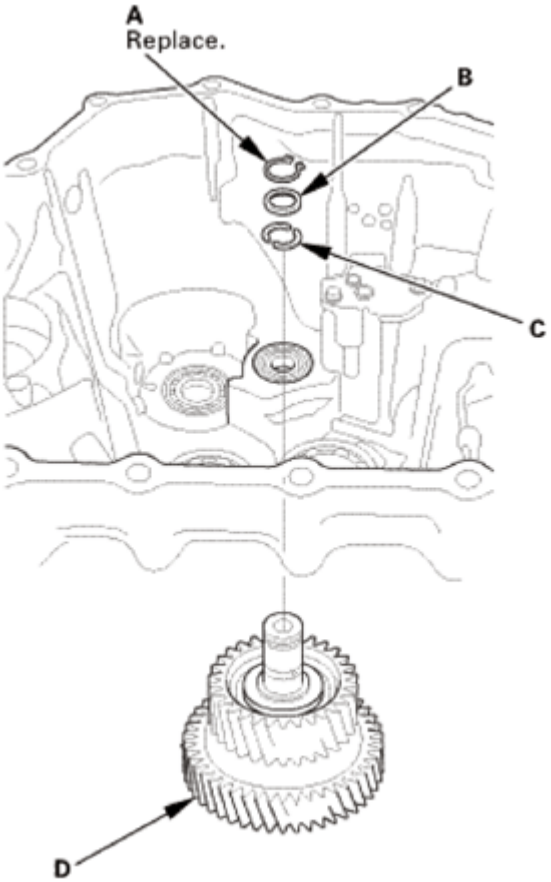

Fig. 913: Identifying Idler Gear Shaft/Idler Gear Assembly, Snap Ring, Cotter Retainer And Cotters
Courtesy of AMERICAN HONDA MOTOR CO., INC.

19. Transmission Housing Mainshaft Bearing
    1. Expand the snap ring using the snap ring pliers.
    2. Drive the mainshaft bearing out using the driver handle and the 78 x 80 mm bearing driver attachment.

NOTE: **Do not remove the snap ring unless it is necessary to clean the grooves in the transmission housing.**

GETtheMANUALS.org

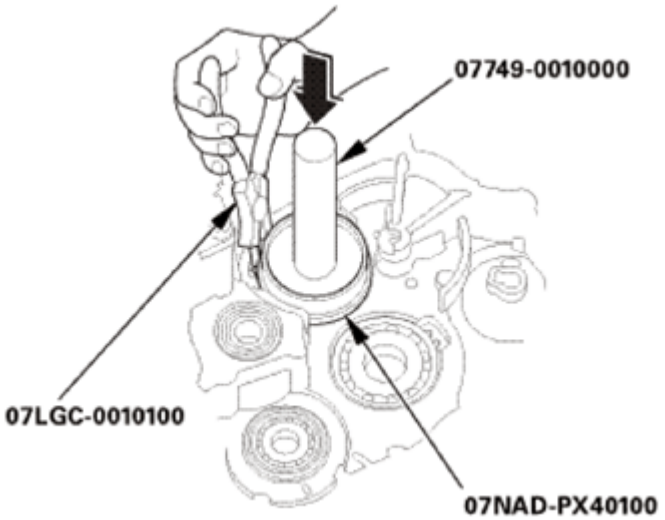

Fig. 914: Removing Snap Ring Using Snap Ring Pliers
Courtesy of AMERICAN HONDA MOTOR CO., INC.

20. A/T Countershaft Reverse Gear
    1. Remove the countershaft reverse gear (A).
    2. Remove the needle bearing (B).

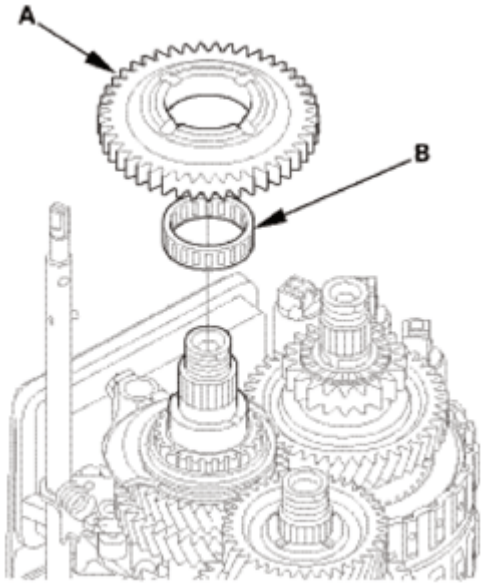

Fig. 915: Identifying Countershaft Reverse Gear And Needle Bearing
Courtesy of AMERICAN HONDA MOTOR CO., INC.

21. Reverse Shift fork
    1. Pry down the lock tab (A) of the lock washer (B).
    2. Remove the lock bolt (C) and the lock washer.
    3. Remove the reverse shift fork (D) and the reverse selector (E) together.

GETtheMANUALS.org

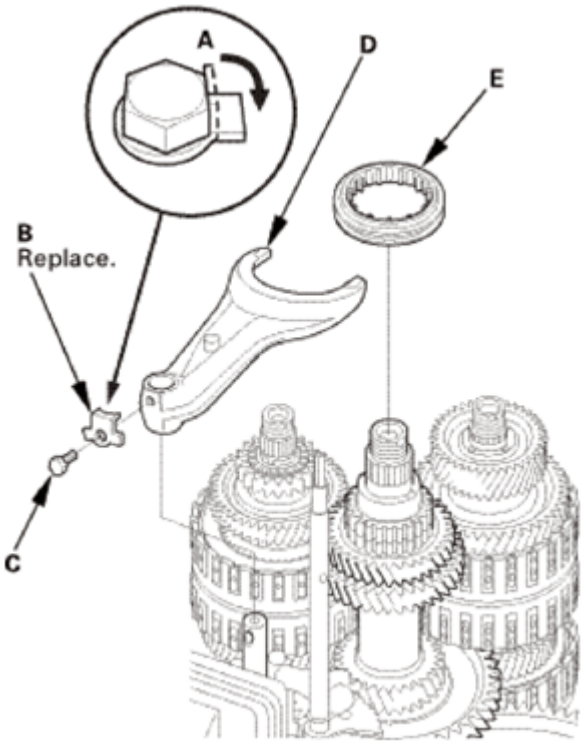

Fig. 916: Prying Down Lock Tab Of Lock Washer
Courtesy of AMERICAN HONDA MOTOR CO., INC.

22. Selector Control Lever (Except 2WD of USA Produced Models)

Except 2WD of USA Produced Models

1. Pry down the lock tab (A) of the lock washer (B).
2. Remove the lock bolt (C) and the lock washer.
3. Remove the selector control lever (D).

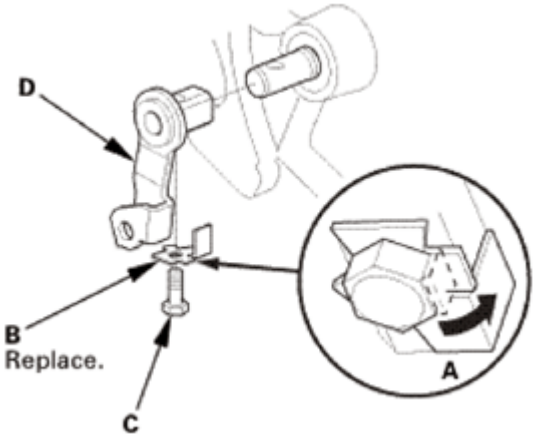

Fig. 917: Prying Down Lock Tab Of Lock Washer (Except 2WD Of USA Produced Models)

GETtheMANUALS.org

Courtesy of AMERICAN HONDA MOTOR CO., INC.

23. Selector Control Shaft
    1. Unhook the detent arm spring (A).

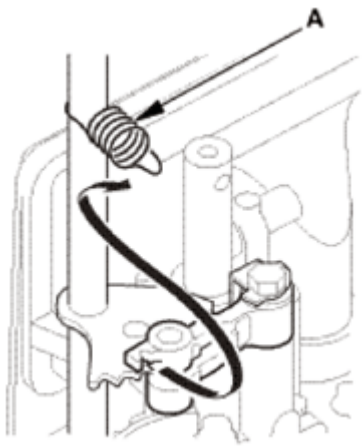

Fig. 918: Unhooking Detent Arm Spring
Courtesy of AMERICAN HONDA MOTOR CO., INC.

    2. Separate the manual valve lever pin (A) on the selector control shaft (B) from the guide of the manual valve (C).

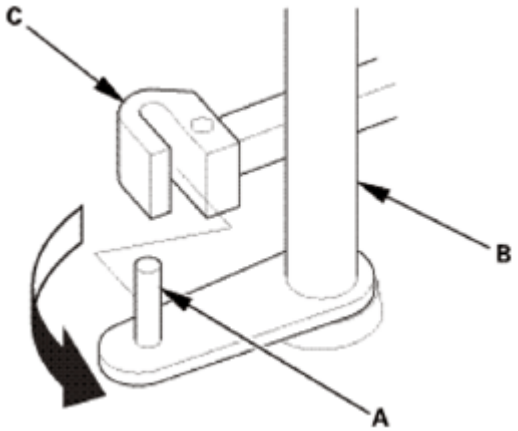

Fig. 919: Separating Manual Valve Lever Pin On Selector Control Shaft From Guide Of Manual Valve
Courtesy of AMERICAN HONDA MOTOR CO., INC.

    3. Remove the selector control shaft (A).

GETtheMANUALS.org

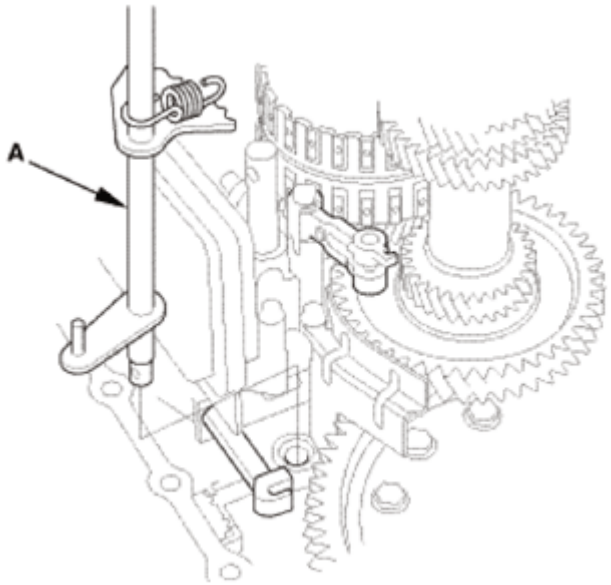

Fig. 920: Identifying Selector Control Shaft
Courtesy of AMERICAN HONDA MOTOR CO., INC.

24. Mainshaft and Countershaft and Secondary Shaft Assembly
    1. Turn the detent arm (A) away from the countershaft (B).

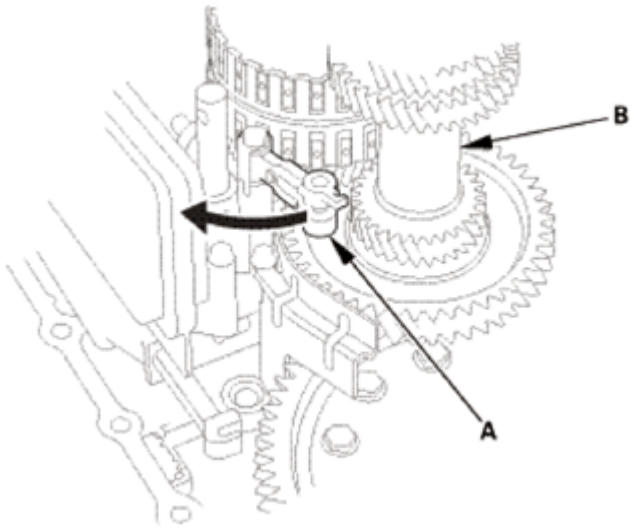

Fig. 921: Turning Detent Arm Away From Countershaft
Courtesy of AMERICAN HONDA MOTOR CO., INC.

    2. Remove the mainshaft subassembly (A), the countershaft subassembly (B), and the secondary shaft subassembly (C) together.

NOTE: Do not bump the countershaft on the baffle plate (D).

GETtheMANUALS.org

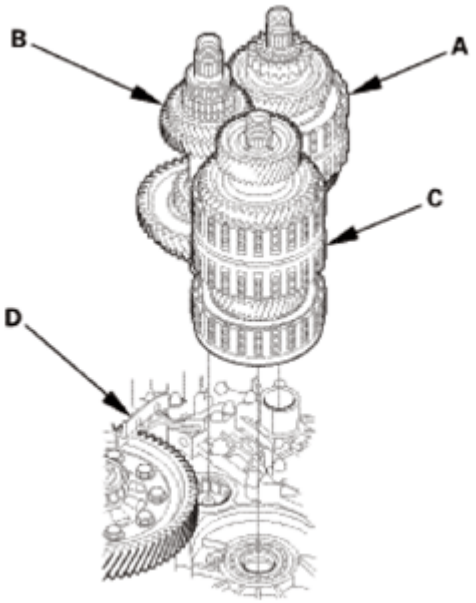

Fig. 922: Identifying Mainshaft Subassembly, Countershaft Subassembly, Secondary Shaft Subassembly And Baffle Plate
Courtesy of AMERICAN HONDA MOTOR CO., INC.

25. A/T Mainshaft
    1. Remove the thrust needle bearing (A), 4th gear (B), the needle bearing (C), the thrust needle bearing (D), the 4th gear collar (E), and the 4th/5th clutch (F).

NOTE: **The needle bearing contains the no-roller cavities (G); this is normal.**

GETtheMANUALS.org

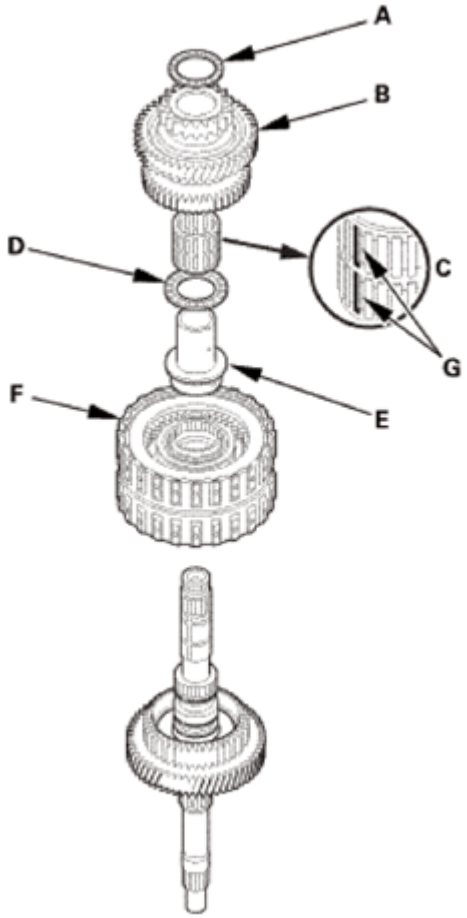

Fig. 923: Identifying No-Roller Cavities, Thrust Needle Bearing, 4th Gear, Needle Bearing And 4th Gear Collar
Courtesy of AMERICAN HONDA MOTOR CO., INC.

2. Remove the O-rings (A), the 41 x 68 mm thrust washer (B), the thrust needle bearing (C), the needle bearing (D), 5th gear (E), and the thrust needle bearing (F).

NOTE: The needle bearing contains the no-roller cavity (G); this is normal.

GETtheMANUALS.org

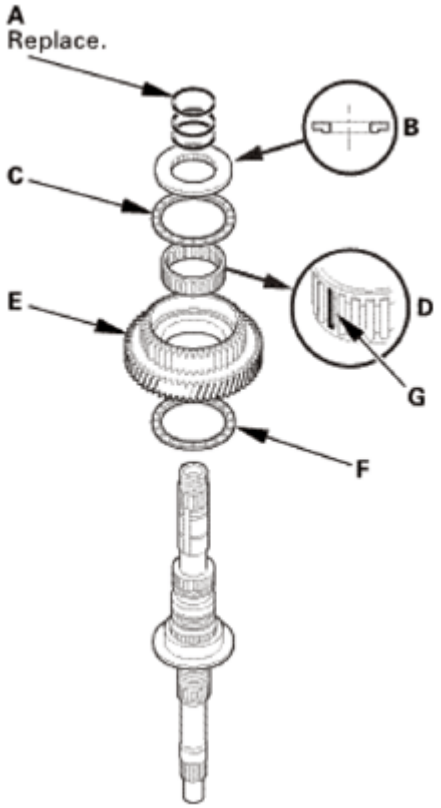

Fig. 924: Identifying O-Rings, Thrust Washer, Thrust Needle Bearing, Needle Bearing, 5th Gear, Thrust Needle Bearing And No-Roller Cavity
Courtesy of AMERICAN HONDA MOTOR CO., INC.

3. Remove the set ring (A), the needle bearing (B), and the sealing rings (C).

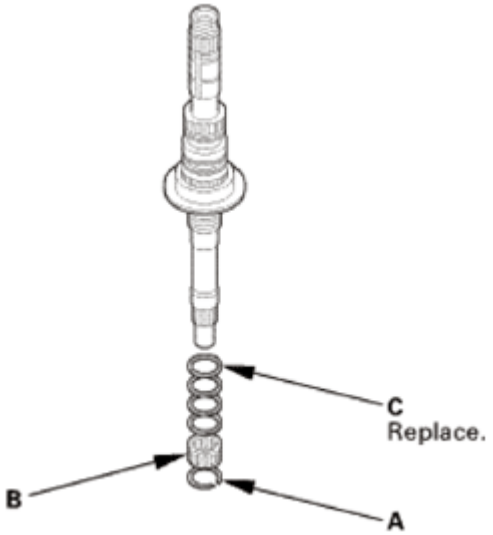

Fig. 925: Identifying Set Ring, Needle Bearing And Sealing Rings
Courtesy of AMERICAN HONDA MOTOR CO., INC.

GETtheMANUALS.org

INSPECTION

1. Mainshaft - Inspection
    1. Inspect the thrust needle bearings and the needle bearings for galling and rough movement.
    2. Inspect the splines for excessive wear and damage.
    3. Check the shaft bearing surface for scoring and excessive wear.
2. 5th Gear Axial Clearance - Inspection
    1. Install the thrust needle bearing (A), 5th gear (B), the needle bearing (C), the thrust needle bearing (D), the 41 x 68 mm thrust washer (E), the 4th/5th clutch (F), the 4th gear collar (G), and the transmission housing bearing (H).

    NOTE:
    - **Do not install the O-rings during inspection.**
    - **The needle bearing contains the no-roller cavity (I); this is normal.**

    2. Install the idler gear (J) on the mainshaft using a press, then install the conical spring washer (K) and the locknut (L).

GETtheMANUALS.org

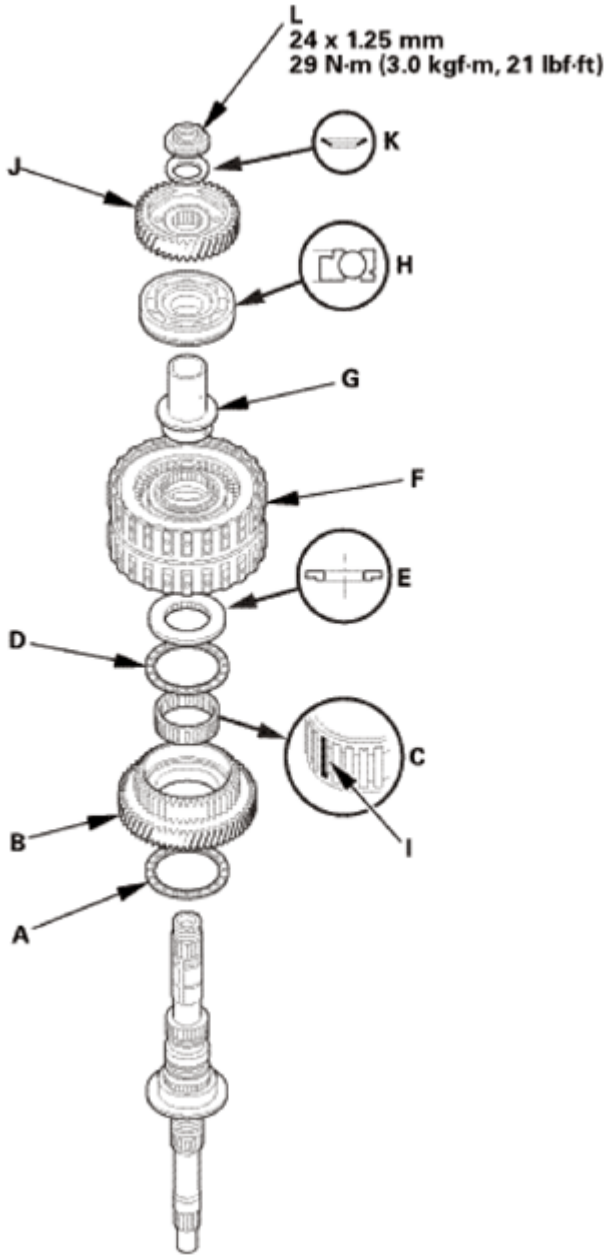

Fig. 926: Identifying 5th Gear Axial Related Components With Torque Specification
Courtesy of AMERICAN HONDA MOTOR CO., INC.

3. Set a dial indicator (A) on 5th gear (B).

GETtheMANUALS.org

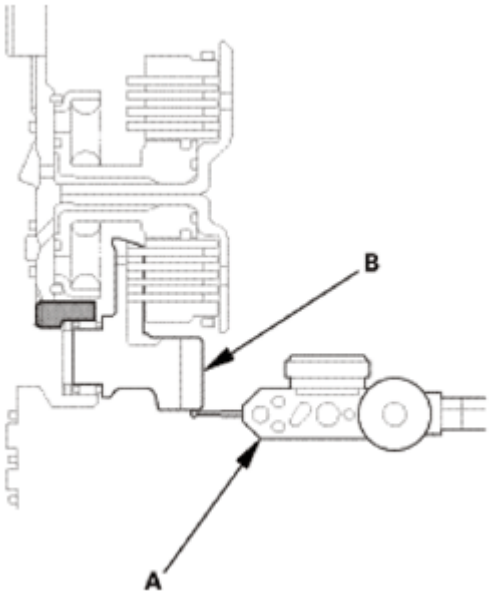

Fig. 927: Setting Dial Indicator On 5th Gear
Courtesy of AMERICAN HONDA MOTOR CO., INC.

4. Lift 5th gear (A) up while holding the mainshaft, and use the dial indicator (B) to read the 5th gear axial clearance.
5. Measure the 5th gear axial clearance in at least three places while moving 5th gear. Use the average as the actual clearance.

Standard: 0.04-0.10 mm (0.0016-0.0039 in)

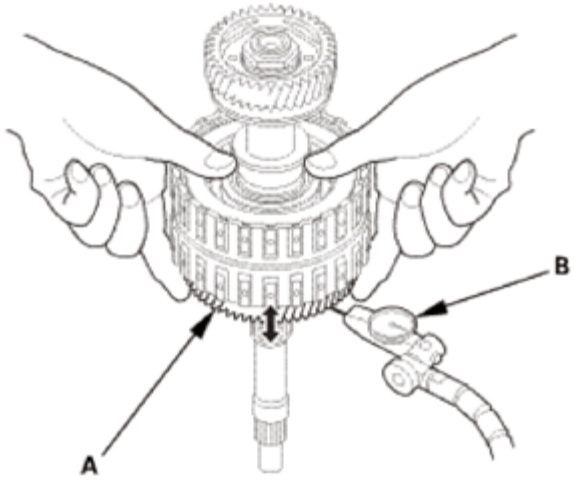

Fig. 928: Measuring 5th Gear Axial Clearance
Courtesy of AMERICAN HONDA MOTOR CO., INC.

6. If the clearance is out of the standard, remove the 41 x 68 mm thrust washer and measure its height.
7. Select and install a new thrust washer, then recheck.

GETtheMANUALS.org

Fig. 929: Identifying Thrust Washer Dimension
Courtesy of AMERICAN HONDA MOTOR CO., INC.

THRUST WASHER SPECIFICATION (41 x 68 MM)

No.	Height
1	4.450 mm (0.17520 in)
2	4.475 mm (0.17618 in)
3	4.500 mm (0.17717 in)
4	4.525 mm (0.17815 in)
5	4.550 mm (0.17913 in)
6	4.575 mm (0.18012 in)
7	4.600 mm (0.18110 in)
8	4.625 mm (0.18209 in)
9	4.650 mm (0.18307 in)
10	4.675 mm (0.18405 in)
11	4.700 mm (0.18504 in)
12	4.725 mm (0.18602 in)
13	4.750 mm (0.18701 in)
14	4.775 mm (0.18799 in)
15	4.800 mm (0.18900 in)

8. After replacing the thrust washer, make sure the clearance is within the standard.
9. Disassemble the installed parts from the mainshaft.

REASSEMBLY

NOTE:

- **Apply a light coat of clean ATF on all moving parts before installation.**
- **The illustration shows AWD/4WD transmission.**

1. A/T Mainshaft
    1. Install new sealing rings (A), the needle bearing (B), and the set ring (C).

GETtheMANUALS.org

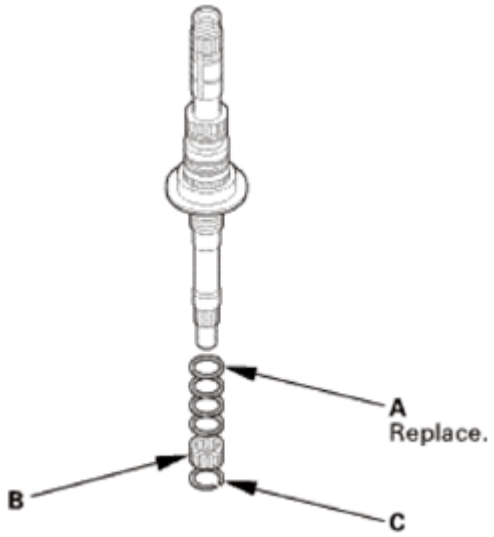

Fig. 930: Identifying Sealing Rings, Needle Bearing And Set Ring
Courtesy of AMERICAN HONDA MOTOR CO., INC.

2. Install the thrust needle bearing (A), 5th gear (B), the needle bearing (C), the thrust needle bearing (D), the selected 41 x 68 mm thrust washer (E), and new O-rings (F).

NOTE: The needle bearing contains the no-roller cavity (G); this is normal.

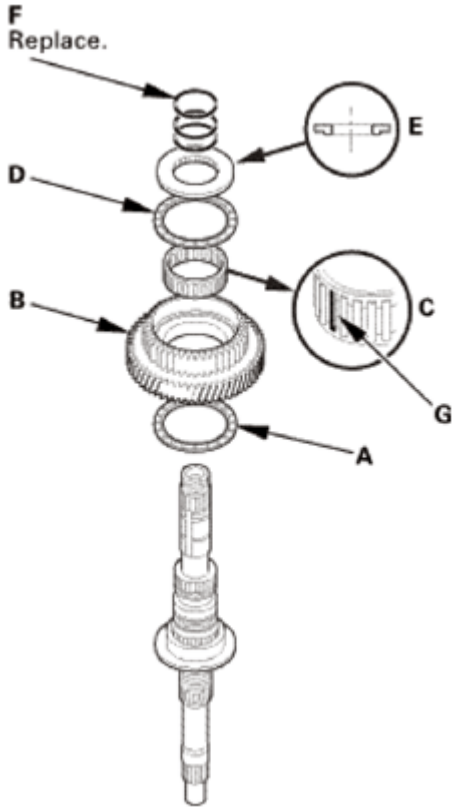

GETtheMANUALS.org

Fig. 931: Identifying Thrust Needle Bearing, 5th Gear, Needle Bearing, Thrust Washer And O-Rings
Courtesy of AMERICAN HONDA MOTOR CO., INC.

3. Install the 4th/5th clutch (A), the 4th gear collar (B), the thrust needle bearing (C), the needle bearing (D), 4th gear (E), and the thrust needle bearing (F).

NOTE: The needle bearing contains the no-roller cavities (G); this is normal.

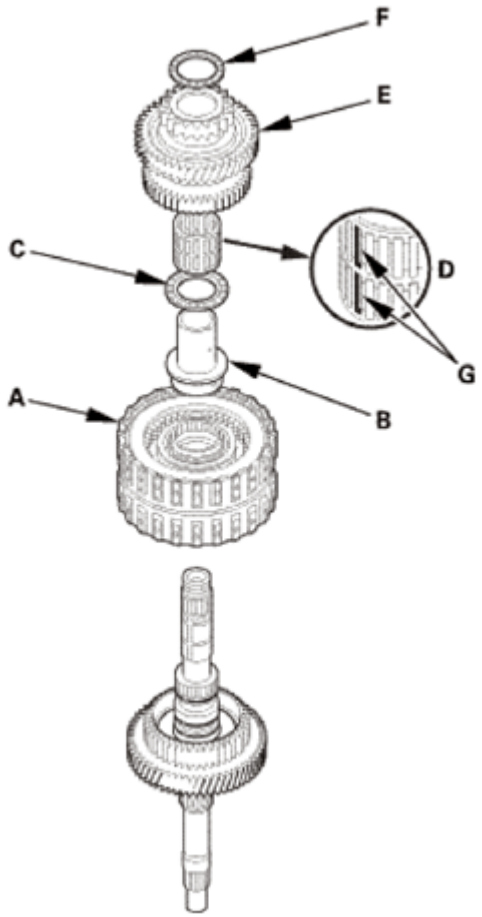

Fig. 932: Identifying 4th/5th Clutch, 4th Gear Collar, Thrust Needle Bearing And 4th Gear
Courtesy of AMERICAN HONDA MOTOR CO., INC.

2. Mainshaft and Countershaft and Secondary Shaft Assembly
    1. Be sure that each shaft is assembled. Also be sure that new sealing rings are installed on the mainshaft and the secondary shaft.
    2. Join the mainshaft subassembly (A), the countershaft subassembly (B), and the secondary shaft subassembly (C) together, and install them.

NOTE: Do not bump the countershaft on the baffle plate (D).

GETtheMANUALS.org

3. Make sure the countershaft subassembly and the differential assembly (E) are clear of the baffle plate.

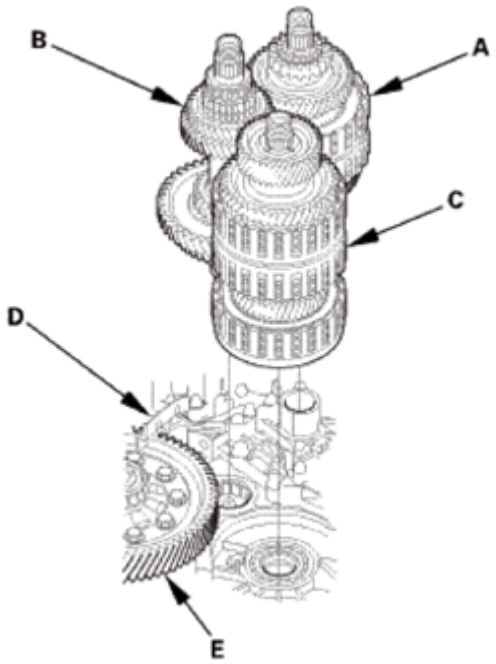

Fig. 933: Identifying Mainshaft Subassembly, Countershaft Subassembly, Secondary Shaft Subassembly, Baffle Plate And Differential Assembly
Courtesy of AMERICAN HONDA MOTOR CO., INC.

3. Selector Control Shaft
    1. Install the selector control shaft (A).

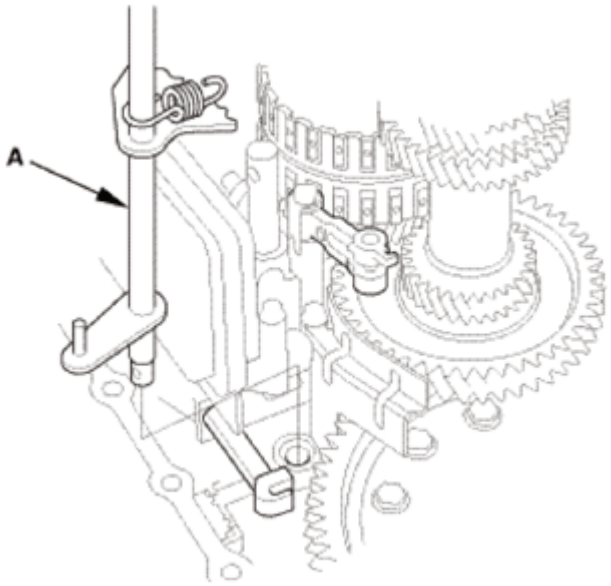

GETtheMANUALS.org

Fig. 934: Identifying Selector Control Shaft
Courtesy of AMERICAN HONDA MOTOR CO., INC.

2. Align the manual valve lever pin (A) on the selector control shaft (B) with the guide of the manual valve (C).

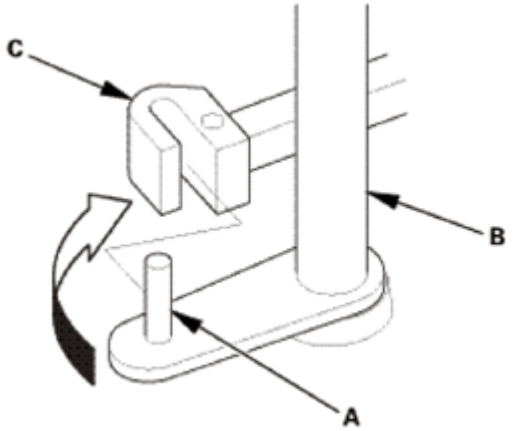

Fig. 935: Aligning Manual Valve Lever Pin On Selector Control Shaft With Guide Of Manual Valve
Courtesy of AMERICAN HONDA MOTOR CO., INC.

3. Hook the detent arm spring (A).

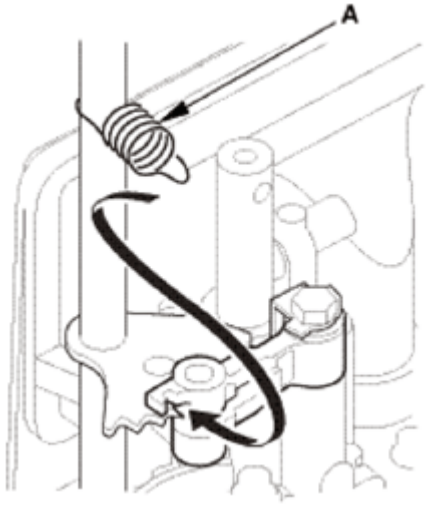

Fig. 936: Hooking Detent Arm Spring
Courtesy of AMERICAN HONDA MOTOR CO., INC.

4. Selector Control Lever (Except 2WD of USA Produced Models)

Except 2WD of USA Produced Models

GETtheMANUALS.org

1. Install the control lever (A) over the selector control shaft (B).
2. Install the lock bolt (C) using a new lock washer (D).
3. Pry up the lock tab (E) of the lock washer against the bolt head.

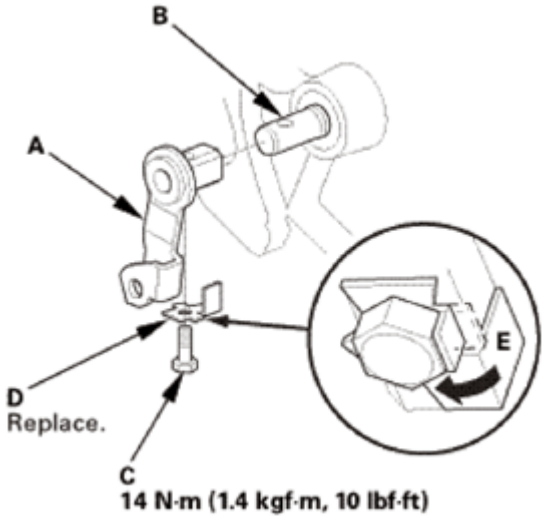

Fig. 937: Prying Up Lock Tab Of Lock Washer (Except 2WD Of USA Produced Models)
Courtesy of AMERICAN HONDA MOTOR CO., INC.

5. Reverse Shift fork
    1. Install the reverse shift fork (A) and the reverse selector (B) together.
    2. Install the lock bolt (C) using a new lock washer (D).
    3. Pry up the lock tab (E) of the lock washer against the bolt head.

GETtheMANUALS.org

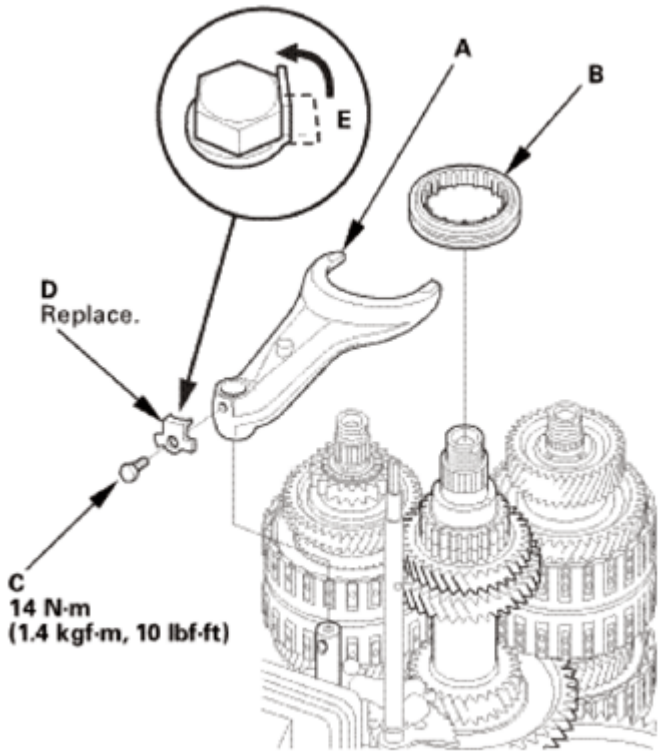

Fig. 938: Prying Up Lock Tab Of Lock Washer Against Bolt Head
Courtesy of AMERICAN HONDA MOTOR CO., INC.

6. A/T Countershaft Reverse Gear
    1. Install the needle bearing (A).
    2. Install the countershaft reverse gear (B).

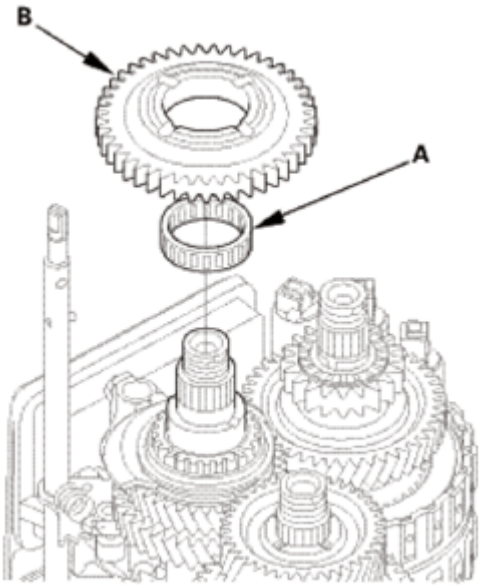

Fig. 939: Identifying Needle Bearing And Countershaft Reverse Gear

GETtheMANUALS.org

Courtesy of AMERICAN HONDA MOTOR CO., INC.

7. Transmission Housing Mainshaft Bearing
    1. Expand the snap ring using the snap ring pliers.
    2. Install the mainshaft bearing (A) part-way into the housing using the driver handle and the 78 x 80 mm bearing driver attachment.
    3. Release the snap ring pliers, then push the bearing down into the transmission housing until the snap ring snaps in place around it.

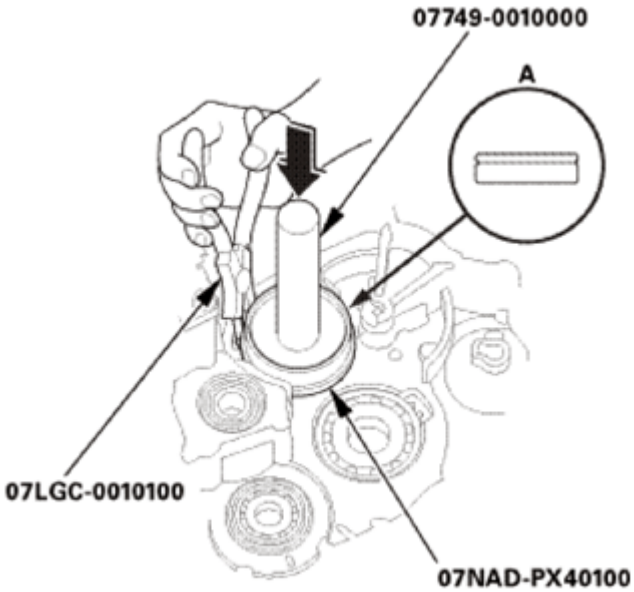

Fig. 940: Expanding Snap Ring Using Snap Ring Pliers
Courtesy of AMERICAN HONDA MOTOR CO., INC.

4. After installing the bearing check that the snap ring (A) is seated in the bearing and the transmission housing groove, and that the snap ring end gap (B) is correct.

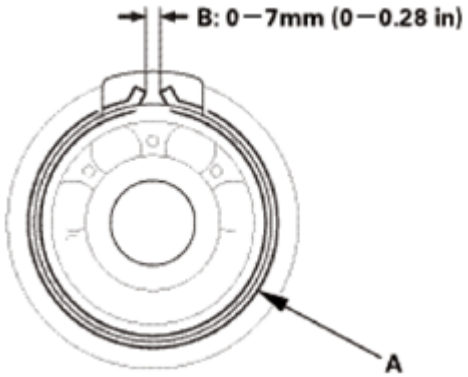

Fig. 941: Checking Snap Ring End Gap
Courtesy of AMERICAN HONDA MOTOR CO., INC.

GETtheMANUALS.org

8. A/T Idler Gear/Idler Gear Shaft Assembly
    1. Install the idler gear shaft/idler gear assembly (A).
    2. Install the cotters (B), the cotter retainer (C), and a new snap ring (D) as shown.

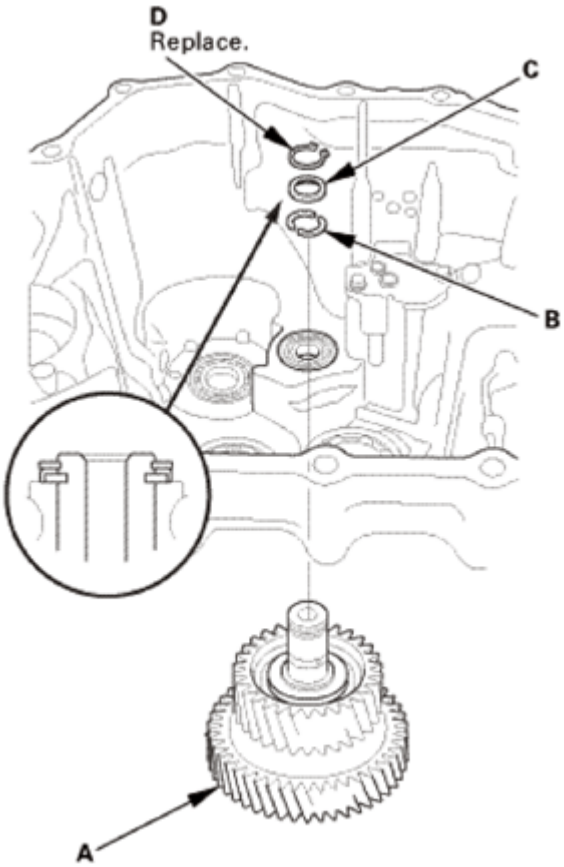

Fig. 942: Identifying Idler Gear Shaft/Idler Gear Assembly, Cotters, Cotter Retainer And Snap Ring
Courtesy of AMERICAN HONDA MOTOR CO., INC.

9. Reverse Idler Gear
    1. Install the reverse idler gear (A).

GETtheMANUALS.org

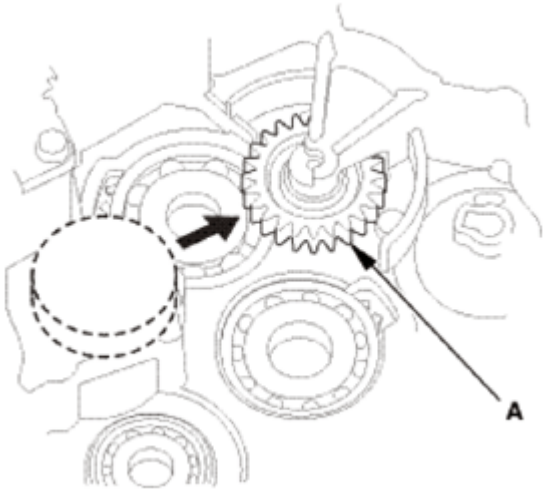

Fig. 943: Installing Reverse Idler Gear
Courtesy of AMERICAN HONDA MOTOR CO., INC.

2. Lightly coat the reverse idler gear shaft (A), the needle bearing (B), and new O-rings (C) with lithium grease.
3. Assemble new O-rings and the needle bearing on the reverse idler gear shaft, then install the reverse idler gear shaft in the reverse idler gear shaft holder (D). Align the D-shaped (E) cut out of the shaft with the D-shaped area (F) of the holder.

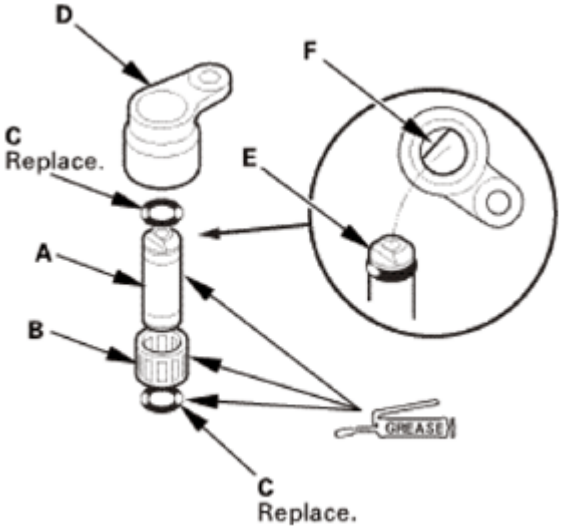

Fig. 944: Identifying Lithium Grease Applying Area On Reverse Idler Gear Shaft, Needle Bearing And O-Rings
Courtesy of AMERICAN HONDA MOTOR CO., INC.

4. Install the reverse idler gear shaft/holder assembly (A).

GETtheMANUALS.org

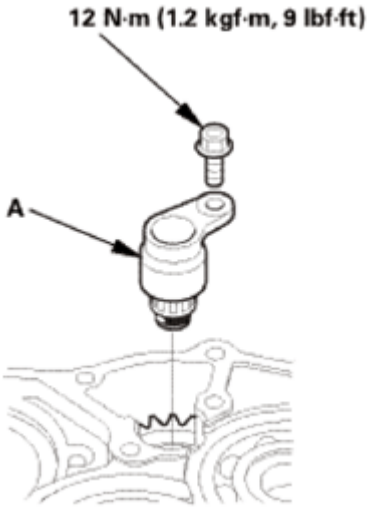

Fig. 945: Identifying Reverse Idler Gear Shaft/Holder Assembly And Bolt With Torque Specification
Courtesy of AMERICAN HONDA MOTOR CO., INC.

10. Automatic Transmission Housing
    1. Install the three dowel pins (A) and a new gasket (B).
    2. Align the spring pin (C) of the selector control shaft (D) with the transmission housing groove (E).

       NOTE: Do not squeeze the end of the selector control shaft tips together when turning the shaft. If the tips are squeezed together, it will cause a faulty shift position signal or position due to the play between the selector control shaft and the transmission range switch.

    3. Place the transmission housing (F) on the torque converter housing (G).

       NOTE: Do not install the input shaft (mainshaft) speed sensor and the output shaft (countershaft) speed sensor before installing the transmission housing.

    4. Wrap the tip of a screwdriver with tape so the reverse idler gear teeth do not get damaged. Engage the reverse idler gear (H) with the reverse gears (I) by rotating the idler gear using the screwdriver.
    5. Make sure the transmission housing is securely seated so there is no clearance between the transmission housing and the torque converter housing.
    6. Install the transmission hanger (J), and tighten the transmission housing mounting bolts (2WD: 19 bolts, AWD/4WD: 20 bolts) in at least two steps, in a crisscross pattern.

GETtheMANUALS.org

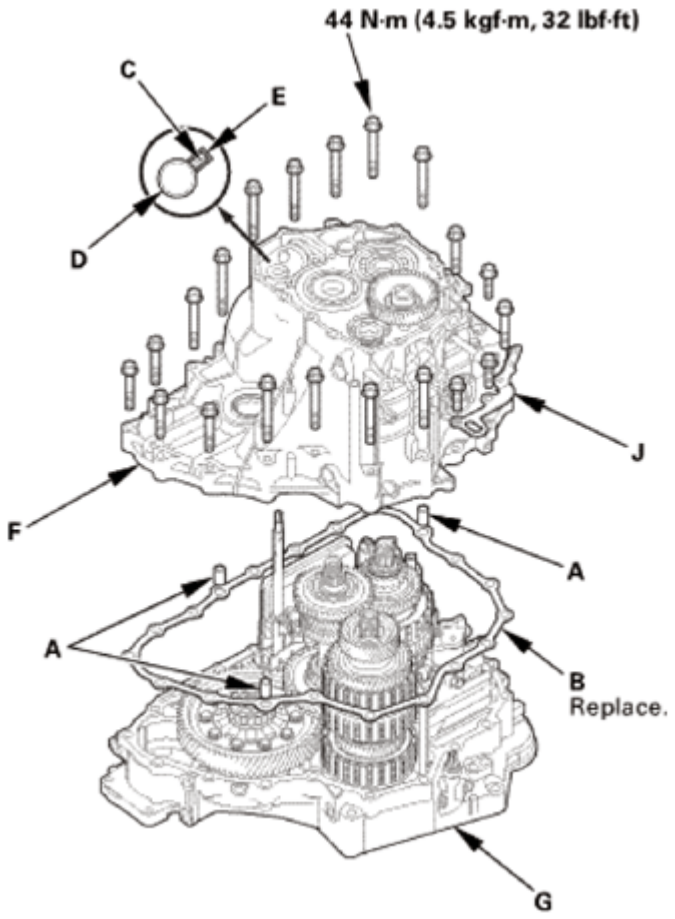

Fig. 946: Identifying Dowel Pins, Gasket, Spring Pin, Selector Control Shaft, Transmission Housing Groove And Mounting Bolts With Torque Specification
Courtesy of AMERICAN HONDA MOTOR CO., INC.

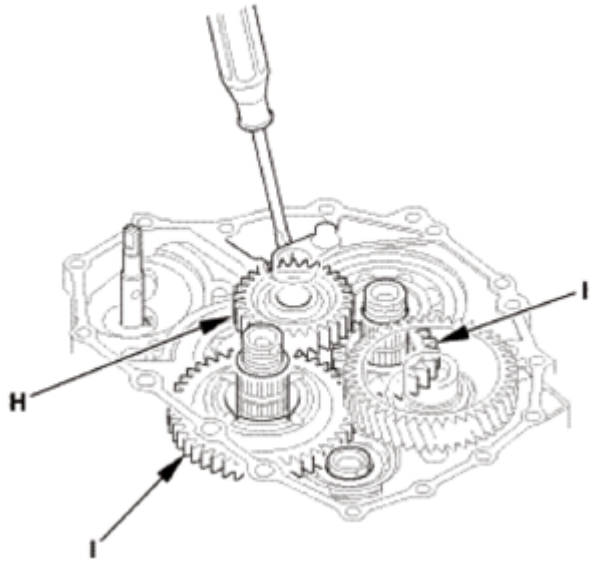

Fig. 947: Engaging Reverse Idler Gear With Reverse Gears By Rotating Idler Gear Using

GETtheMANUALS.org

Screwdriver
Courtesy of AMERICAN HONDA MOTOR CO., INC.

11. End Cover Idler Gear Assembly
    1. Install the mainshaft holder onto the mainshaft.

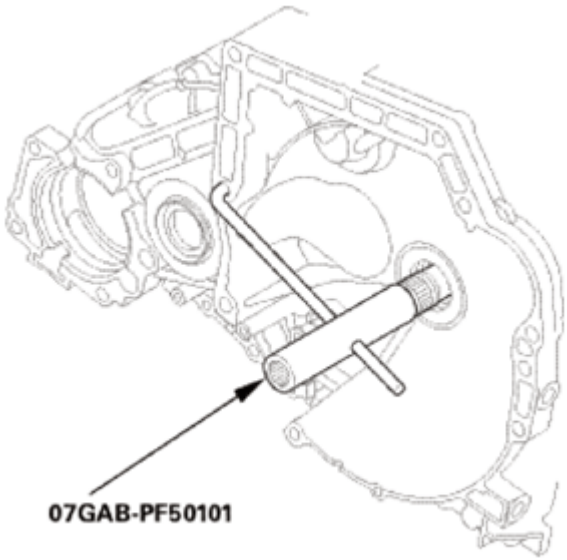

Fig. 948: Installing Mainshaft Holder Onto Mainshaft
Courtesy of AMERICAN HONDA MOTOR CO., INC.

    2. Lubricate the following parts with ATF:
        - Splines and threads of the mainshaft.
        - Splines of the mainshaft idler gear.
        - The old conical spring washer and the old locknut.
    3. Install the mainshaft idler gear (A), the old conical spring washer (B), and the old locknut (C), and tighten the locknut to 225 N.m (23.0 kgf.m, 166 lbf.ft).

NOTE:
- **Do not tap the mainshaft idler gear to install.**
- **Use a torque wrench to tighten the locknut. Do not use an impact wrench.**

GETtheMANUALS.org

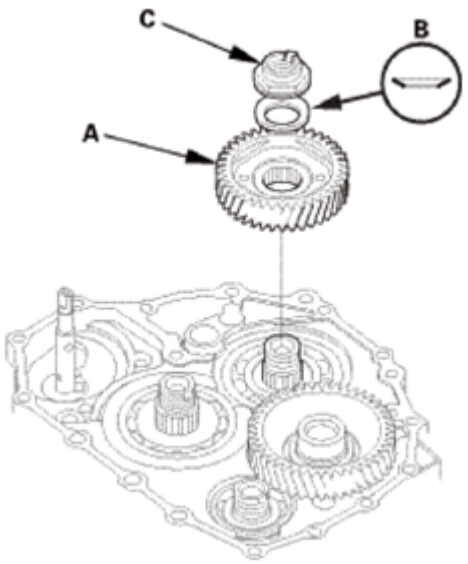

Fig. 949: Identifying Mainshaft Idler Gear, Conical Spring Washer And Locknut
Courtesy of AMERICAN HONDA MOTOR CO., INC.

4. Lubricate the following parts with ATF:
    - Splines and threads of the countershaft.
    - Splines of the park gear.
    - The old conical spring washer and the old locknut.
5. Install the park gear (A), the old conical spring washer (B), and the old locknut (C).
6. Install the park lever spring (D), the park lever (E), and the park lever stop (F).
7. Install the lock bolt (G) using a new lock washer (H).

NOTE: **Do not bend the lock tab of the lock washer until inspect the park lever stop.**

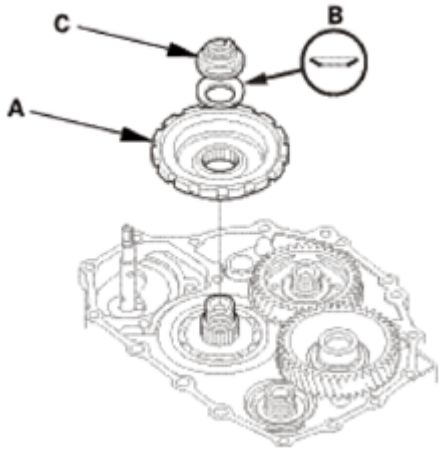

Fig. 950: Identifying Park Pawl Shaft, Park Lever Spring, Park Lever, Park Lever Stop, Lock Bolt, Lock Washer With Torque Specification

GETtheMANUALS.org

Courtesy of AMERICAN HONDA MOTOR CO., INC.

8. Install the park pawl shaft (I), the park pawl spring (J), the park pawl (K), and the stop shaft (L).
9. Lift the park pawl up, and engage it with the park gear, and tighten the locknut to 225 N.m (23.0 kgf.m, 166 lbf.ft).

NOTE:

- **Do not tap the park gear to install.**
- **Use a torque wrench to tighten the locknut. Do not use an impact wrench.**
- **Countershaft locknut has left-hand threads.**

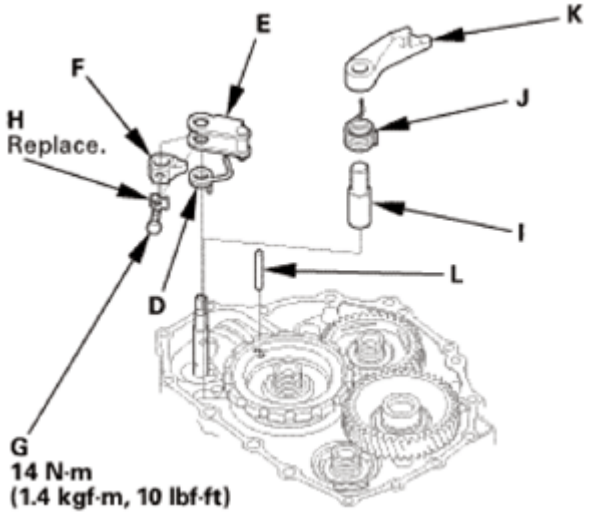

Fig. 951: Identifying Park Lever Spring, Lever Stop, Park Pawl Shaft, Park Pawl Spring, Park Pawl And Mounting Bolts With Torque Specification
Courtesy of AMERICAN HONDA MOTOR CO., INC.

10. Remove the old locknuts and the old conical spring washers from the mainshaft and the countershaft.
11. Lubricate the following parts with ATF:
    - Splines and threads of the mainshaft, the countershaft, and the secondary shaft.
    - New conical spring washers and new locknuts.
    - Areas where the conical spring washers contact the mainshaft idler gear and the park gear.
12. Install new conical spring washers (A) in the direction shown.
13. Install a new mainshaft locknut (B), a new countershaft locknut (C), and a new secondary shaft locknut (D).
14. Tighten the locknuts to 167 N.m (17.0 kgf.m, 123 lbf.ft).

NOTE:

- **Use a torque wrench to tighten the locknut. Do not use an impact wrench.**

GETtheMANUALS.org

- **The countershaft and secondary shaft locknuts have left-hand threads.**

15. Remove the mainshaft holder.

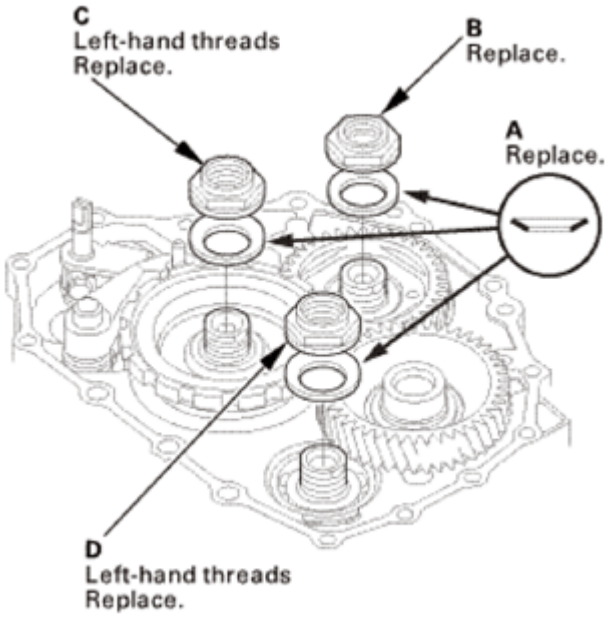

Fig. 952: Identifying Conical Spring Washers, Mainshaft Locknut, Countershaft Locknut And Secondary Shaft Locknut
Courtesy of AMERICAN HONDA MOTOR CO., INC.

16. Stake the locknuts into the shafts to a depth (A) of 0.7-1.3 mm (0.027-0.051 in) using a 3.5 mm punch (B).

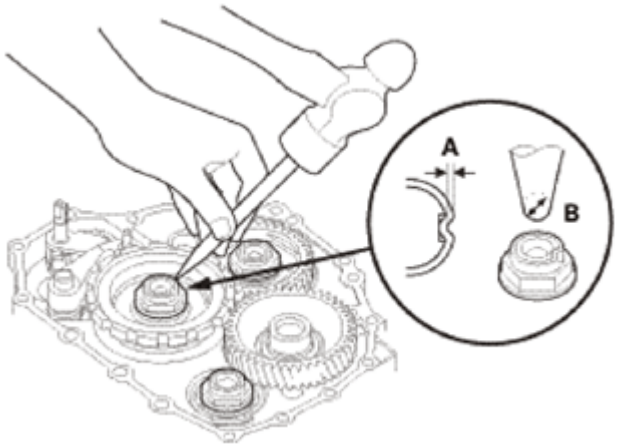

Fig. 953: Staking Locknuts Into Shafts Using Punch
Courtesy of AMERICAN HONDA MOTOR CO., INC.

GETtheMANUALS.org

17. Set the park lever in the P position.
18. Measure the distance (A) between the center of the park pawl shaft (B) and the center of the park lever roller pin (C) as shown.

    Standard: 57.7-58.7 mm (2.272-2.311 in)

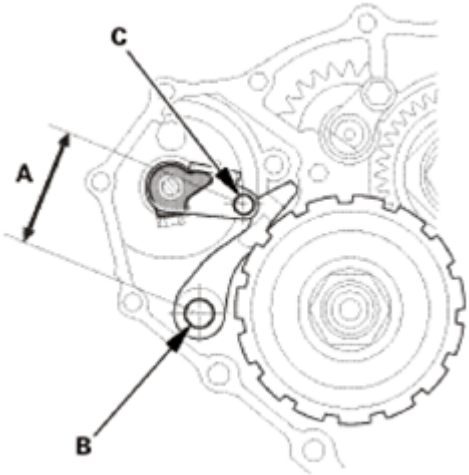

Fig. 954: Measuring Distance Between Center Of Park Pawl Shaft And Center Of Park Lever Roller Pin
Courtesy of AMERICAN HONDA MOTOR CO., INC.

19. If the measurement is out of the standard, select and install the appropriate park lever stop (A) from the table.

PARK LEVER STOP SPECIFICATION

Mark	B	C
1	11.00 mm (0.4331 in)	11.00 mm (0.4331 in)
2	10.80 mm (0.4252 in)	10.65 mm (0.4193 in)
3	10.60 mm (0.4173 in)	10.30 mm (0.4055 in)

20. After replacing the park lever stop, make sure the distance is within the tolerance.

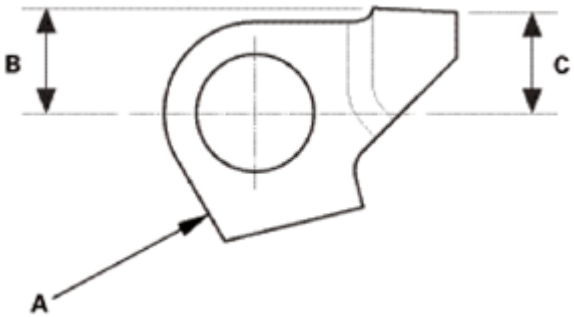

Fig. 955: Identifying Park Lever Stop Dimension

GETtheMANUALS.org

Courtesy of AMERICAN HONDA MOTOR CO., INC.

21. Pry up the lock tab (A) of the lock washer against the bolt head.

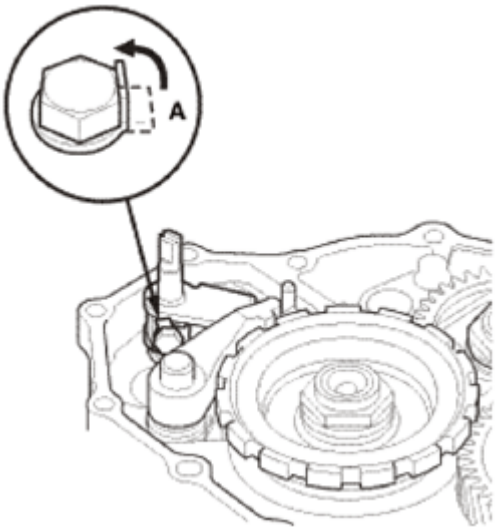

Fig. 956: Prying Up Lock Tab Of Lock Washer Against Bolt Head
Courtesy of AMERICAN HONDA MOTOR CO., INC.

12. ATF Feed Pipe/Lubrication Pipe
    1. Install the 6 x 201 mm ATF pipe (A).
    2. Install the ATF lubrication pipe (B).
    3. Install the 8 x 220 mm ATF pipe (C).
    4. Install the 8 x 198 mm ATF pipes (D).

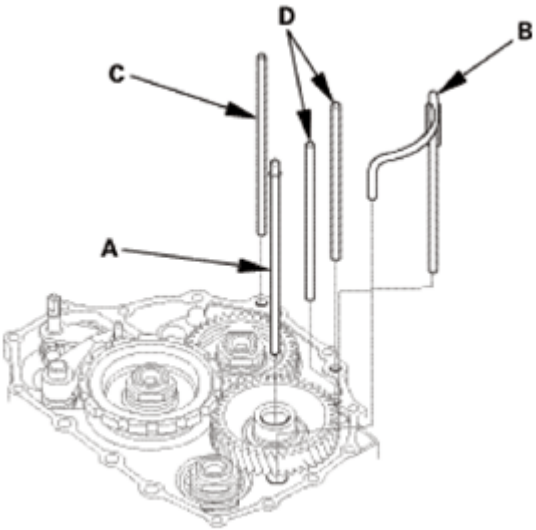

Fig. 957: Identifying ATF Feed Pipes And Lubrication Pipe
Courtesy of AMERICAN HONDA MOTOR CO., INC.

GETtheMANUALS.org

13. A/T Shift Solenoid Wire Harness - Reconnection
    1. Connect the shift solenoid valve connectors:
        - BLU wire to shift solenoid valve A.
        - ORN wire to shift solenoid valve B.
        - GRN wire to shift solenoid valve C.
        - YEL, WHT, and WHT wires to shift solenoid valve D.
        - RED wire to shift solenoid valve E.

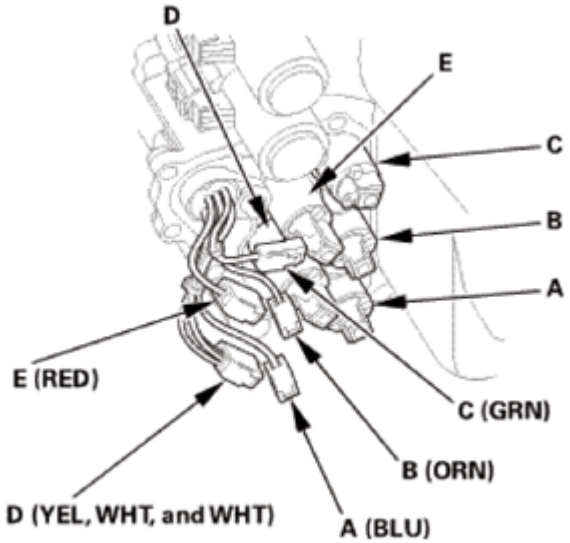

Fig. 958: Identifying Shift Solenoid Valves
Courtesy of AMERICAN HONDA MOTOR CO., INC.

14. A/T Shift Solenoid Cover
    1. Install the shift solenoid valve cover (A) with the dowel pins (B) and a new gasket (C).

GETtheMANUALS.org

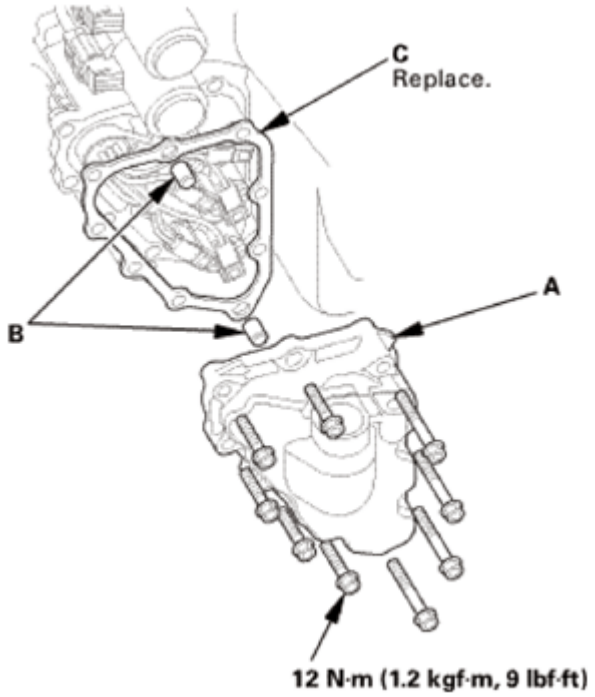

Fig. 959: Identifying Shift Solenoid Valve Cover, Dowel Pins, Gasket And Mounting Bolts With Torque Specification
Courtesy of AMERICAN HONDA MOTOR CO., INC.

15. Dipstick Guide Tube
    1. Install a new O-ring (A) on the ATF dipstick guide tube (B).
    2. Install the ATF dipstick guide tube.

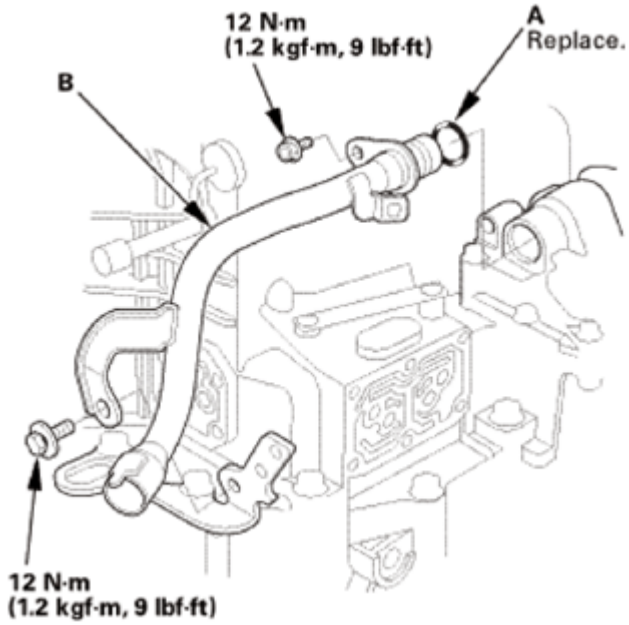

GETtheMANUALS.org

Fig. 960: Identifying ATF Dipstick Guide Tube, O-Ring And Mounting Bolts With Torque Specification
Courtesy of AMERICAN HONDA MOTOR CO., INC.

16. ATF Outlet Line
    1. Install the ATF outlet line (A) using new sealing washers (B).

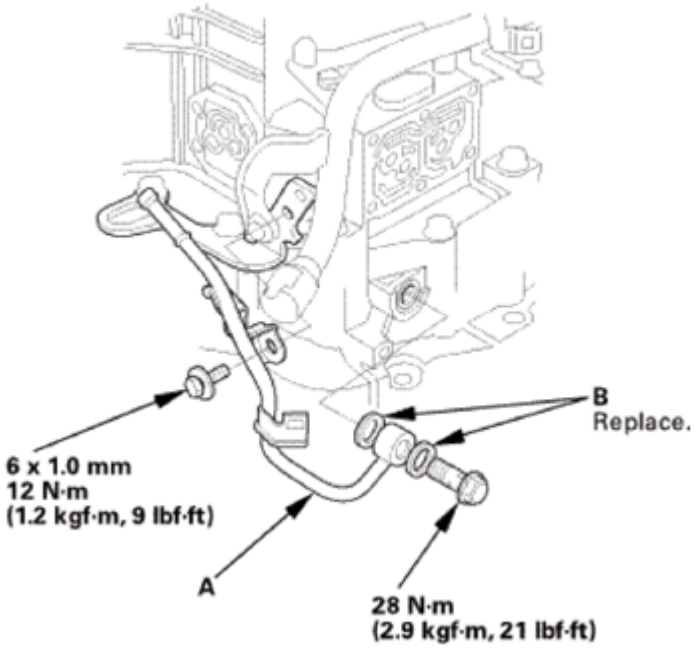

Fig. 961: Identifying ATF Outlet Line, Sealing Washers And Mounting Bolts With Torque Specification
Courtesy of AMERICAN HONDA MOTOR CO., INC.

17. ATF Inlet Line
    1. Install the ATF inlet line (A) using new sealing washers (B).

GETtheMANUALS.org

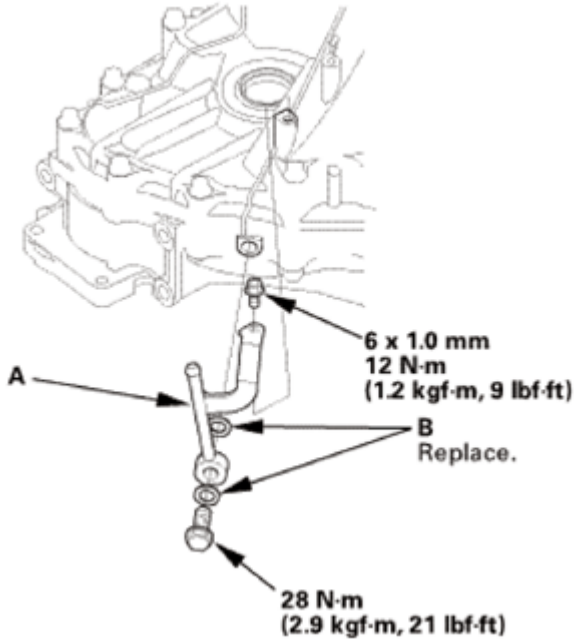

Fig. 962: Identifying ATF Inlet Line, Sealing Washers And Mounting Bolts With Torque Specification
Courtesy of AMERICAN HONDA MOTOR CO., INC.

18. A/T Clutch Pressure Control Solenoid Valve B and C
    1. Clean the mounting surfaces and the fluid passages of the solenoid valve body and the transmission housing.
    2. Install a new gasket (A) with the blue side toward the transmission housing, and Install the ATF joint pipes (D).
    3. Install new O-rings (E) over the ATF joint pipes.
    4. Install A/T clutch pressure control solenoid valves B and C with the clamp bracket (F).

GETtheMANUALS.org

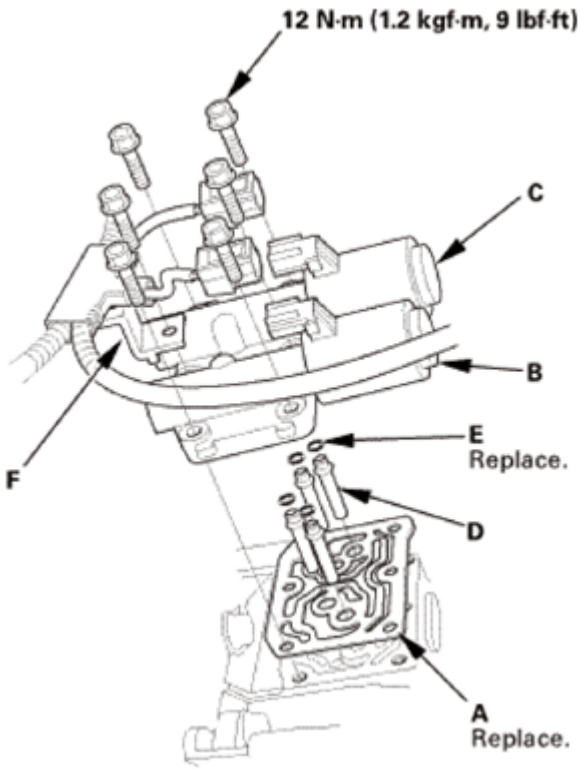

Fig. 963: Identifying Gasket, ATF Joint Pipes, O-Rings, A/T Clutch Pressure Control Solenoid Valves, Clamp Bracket And Mounting Bolts With Torque Specification
Courtesy of AMERICAN HONDA MOTOR CO., INC.

19. A/T Clutch Pressure Control Solenoid Valve A
    1. Clean the mounting surfaces and the fluid passages of the solenoid valve body and the transmission housing.
    2. Install a new gasket (B) with the blue side toward the transmission housing, and install the 35 mm ATF pipe (C) and the ATF joint pipes (D).
    3. Install new O-rings (E) over the ATF joint pipes.
    4. Install A/T clutch pressure control solenoid valve A.

GETtheMANUALS.org

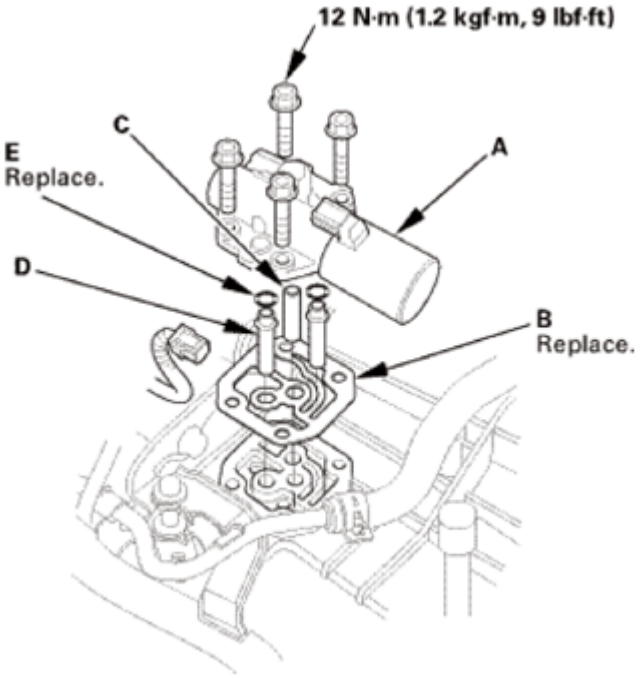

Fig. 964: Identifying A/T Clutch Pressure Control Solenoid Valve, Gasket, ATF Pipe, ATF Joint Pipes And Mounting Bolts With Torque Specification
Courtesy of AMERICAN HONDA MOTOR CO., INC.

20. Output Shaft (Countershaft) Speed Sensor
    1. Install a new O-ring (A) on the output shaft (countershaft) speed sensor (B).
    2. Install the output shaft (countershaft) speed sensor and the sensor washer (C).

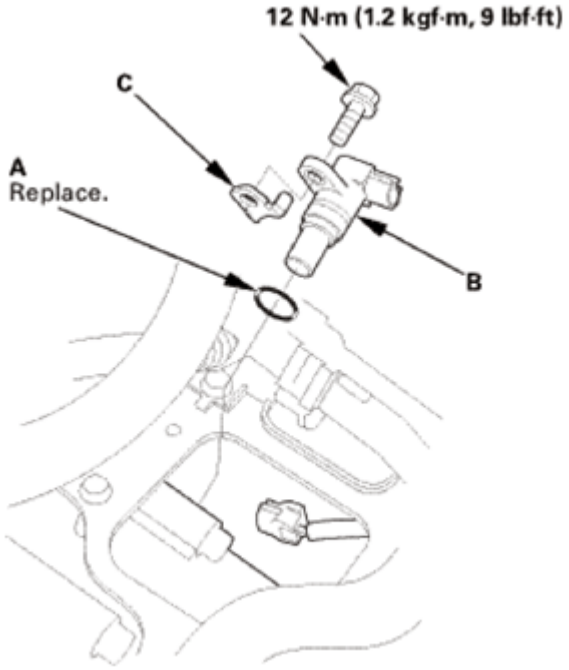

GETtheMANUALS.org

Fig. 965: Identifying Output Shaft (Countershaft) Speed Sensor, O-Ring, Sensor Washer And Mounting Bolts With Torque Specification
Courtesy of AMERICAN HONDA MOTOR CO., INC.

21. Input Shaft (Mainshaft) Speed Sensor
    1. Install a new O-ring (A) on the input shaft (mainshaft) speed sensor (B).
    2. Install the input shaft (mainshaft) speed sensor.

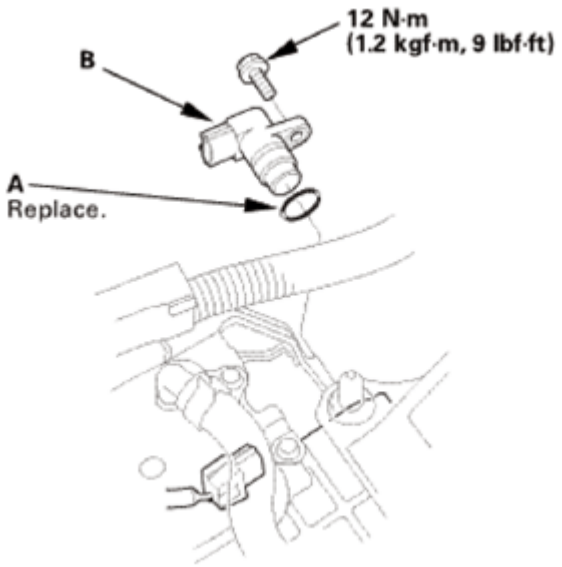

Fig. 966: Identifying Input Shaft (Mainshaft) Speed Sensor, O-Ring And Mounting Bolt With Torque Specification
Courtesy of AMERICAN HONDA MOTOR CO., INC.

22. Transmission End Cover
    1. Install the dowel pins (A) and a new gasket (B).
    2. Install new O-rings (C) over the ATF pipes.
    3. Install the end cover (D), and tighten the three special bolts (E) and the 6 x 1.0 mm bolts (F) (12 bolts).

GETtheMANUALS.org

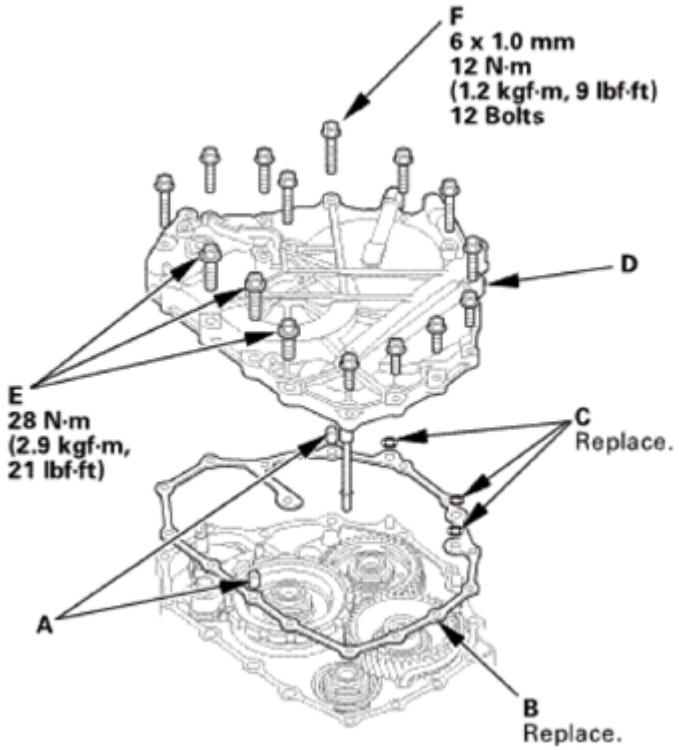

Fig. 967: Identifying Dowel Pins, Gasket, O-Rings, End Cover And Mounting Bolts With Torque Specification
Courtesy of AMERICAN HONDA MOTOR CO., INC.

23. Transmission Range Switch Subharness
    1. Install the clamp brackets (A).
    2. Install the transmission range switch subharness (B).

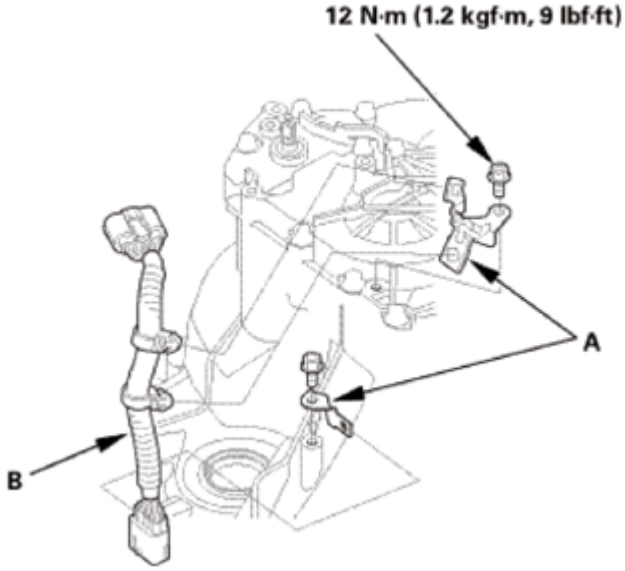

GETtheMANUALS.org

Fig. 968: Identifying Transmission Range Switch Subharness, Clamp Brackets And Mounting Bolts With Torque Specification
Courtesy of AMERICAN HONDA MOTOR CO., INC.

24. Transmission Range Switch
    1. Make sure the selector control shaft is in the N position. If necessary, move the selector control shaft to the N position.

NOTE: **Do not use the selector control shaft to adjust the shift position. If the selector control shaft tips are squeezed together it will cause a faulty signal or position due to play between the selector control shaft and switch.**

Fig. 969: Moving Selector Control Shaft To N Position
Courtesy of AMERICAN HONDA MOTOR CO., INC.

2. Align the cutouts (A) on the rotary-frame with the neutral positioning cutouts (B) on the transmission range switch (C), then put a 2.0 mm (0.079 in) feeler gauge blade (D) in the cutouts to hold the switch in the N position.

NOTE: **Be sure to use a 2.0 mm (0.079 in) blade or equivalent to hold the switch in the N position.**

GETtheMANUALS.org

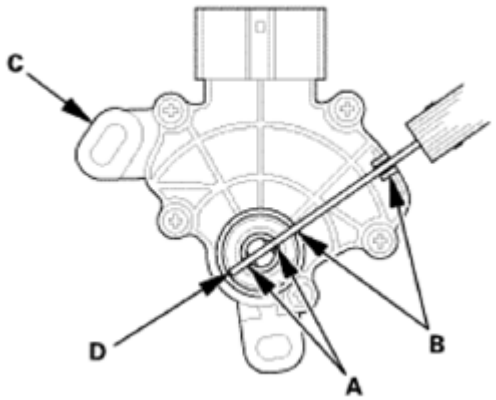

Fig. 970: Aligning Cutouts On Rotary-Frame With Neutral Positioning Cutouts On Transmission Range Switch
Courtesy of AMERICAN HONDA MOTOR CO., INC.

3. Install the transmission range switch (A) gently on the selector control shaft (B) while holding it in the N position with the 2.0 mm (0.079 in) blade (C).

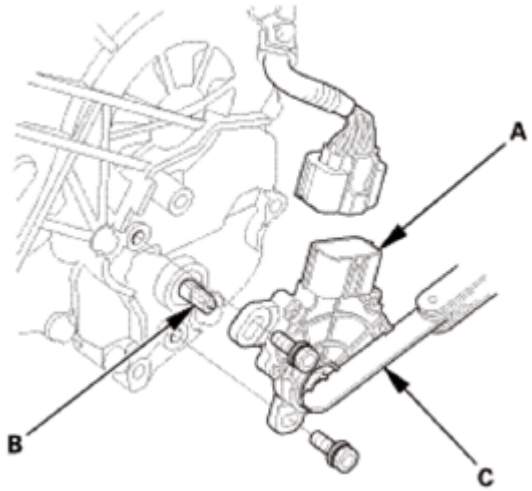

Fig. 971: Identifying Transmission Range Switch, Selector Control Shaft And Blade
Courtesy of AMERICAN HONDA MOTOR CO., INC.

4. Tighten the bolts on the transmission range switch (A) while you continue holding the N position.

NOTE: Do not move the transmission range switch when tightening the bolts.

5. Remove the feeler gauge (B).
6. Check the connector (C) for corrosion, dirt, or oil, and clean or repair if necessary, then connect the connector securely.

GETtheMANUALS.org

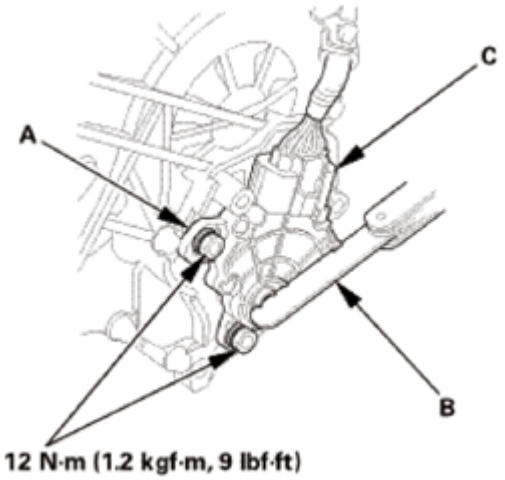

Fig. 972: Identifying Transmission Range Switch, Connector, Feeler Gauge And Mounting Bolts With Torque Specification
Courtesy of AMERICAN HONDA MOTOR CO., INC.

25. Transmission Range Switch Cover
    1. Install the transmission range switch cover (A).

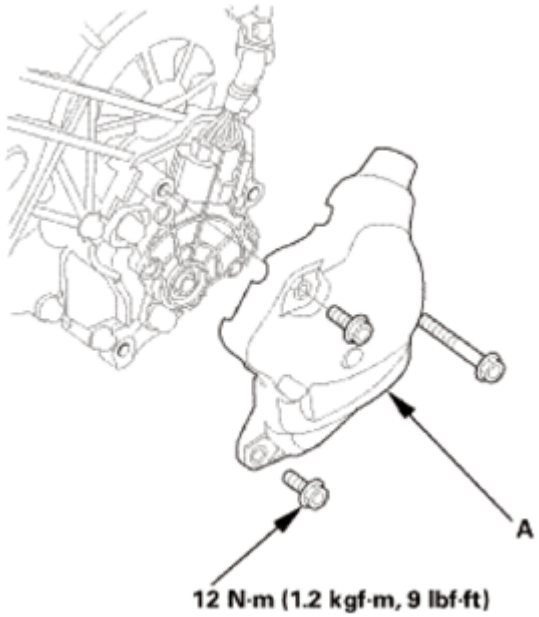

Fig. 973: Identifying Transmission Range Switch Cover And Mounting Bolts With Torque Specification
Courtesy of AMERICAN HONDA MOTOR CO., INC.

A/T SECONDARY SHAFT DISASSEMBLY, REASSEMBLY, AND INSPECTION

SPECIAL TOOL REQUIRED

GETtheMANUALS.org

Image	Description/Tool Number
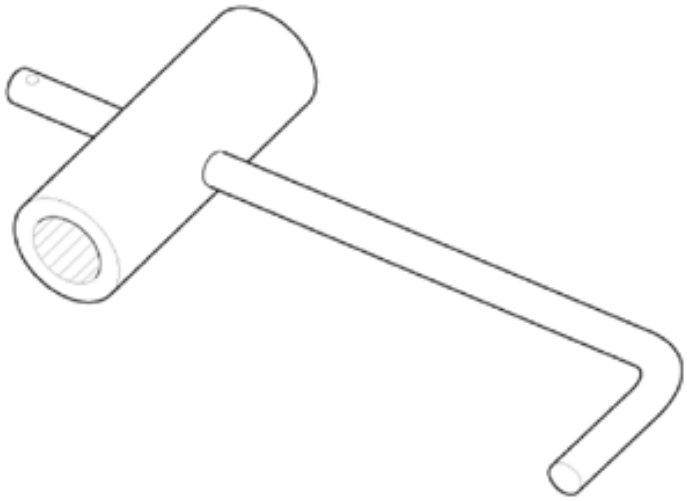	Mainshaft Holder 07GAB-PF50101
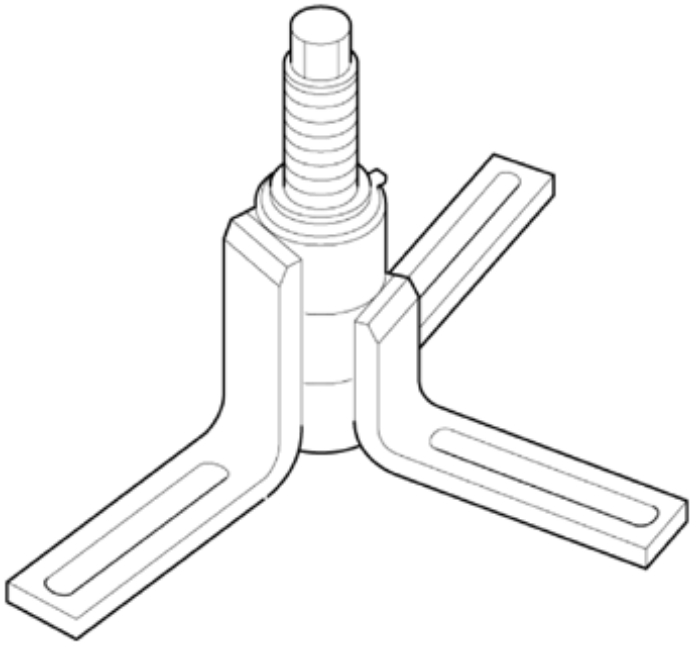	Housing Puller 07HAC-PK40102
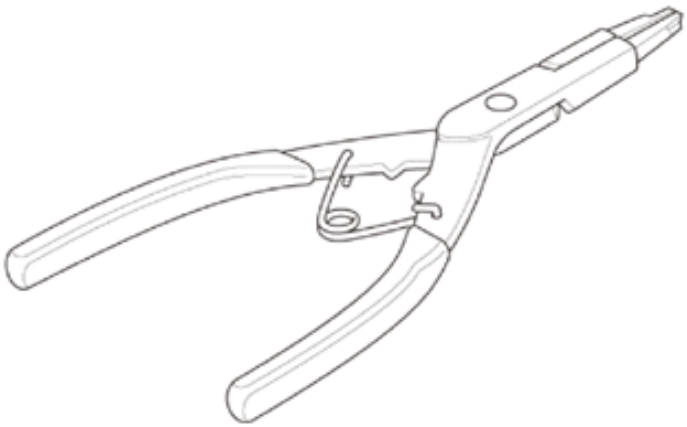	Snap Ring Pliers 07LGC-0010100

GETtheMANUALS.org

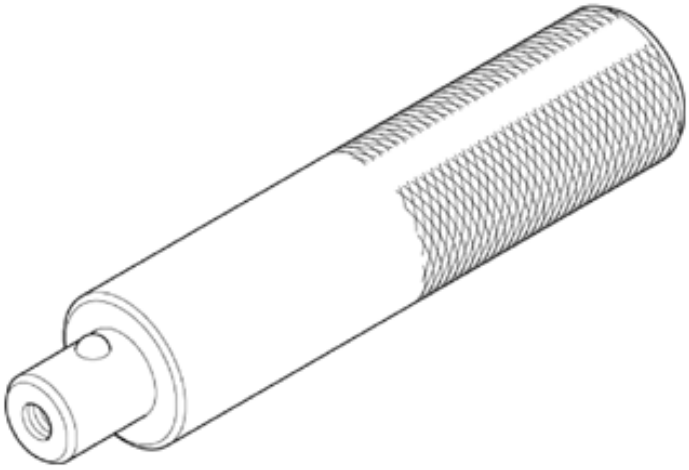	Driver Handle, 15 x 135L 07749-0010000
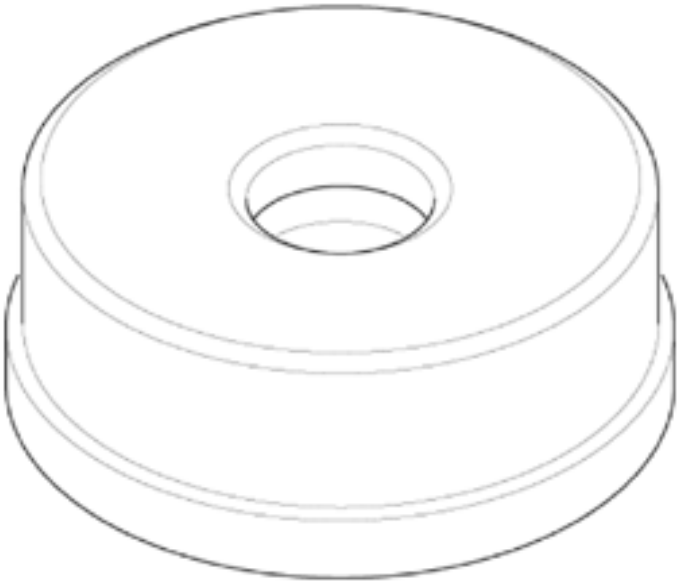	Bearing Driver Attachment, 52 x 55 mm 07746-0010400
	Bearing Driver Attachment, 42 mm 07QAD-P0A0100

GETtheMANUALS.org

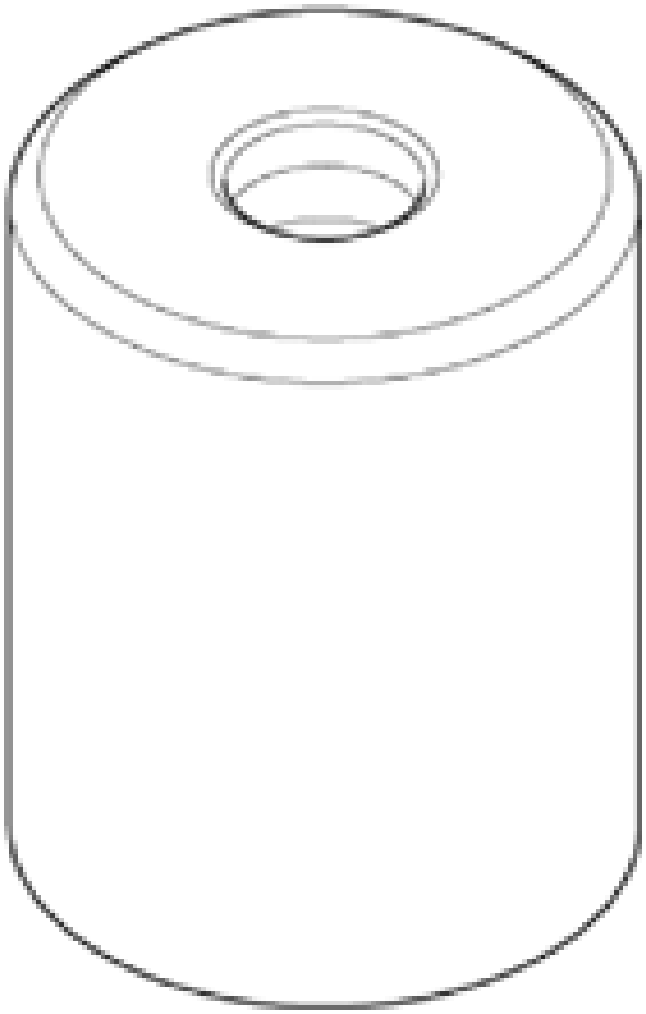	
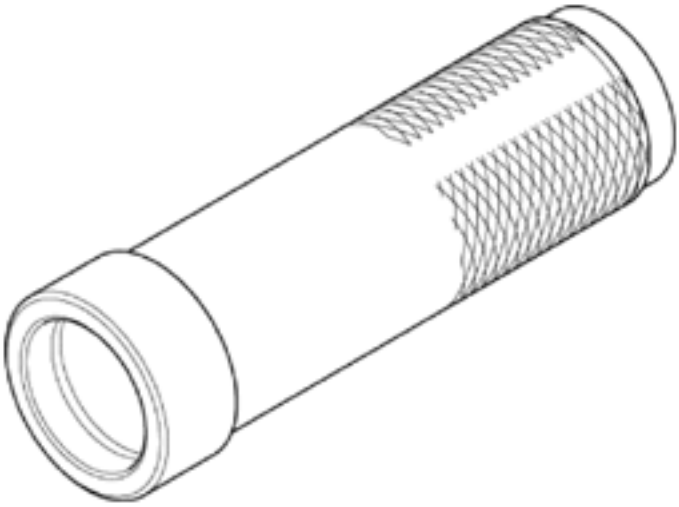	Driver Handle, 40 mm I.D. 07746-0030100

GETtheMANUALS.org

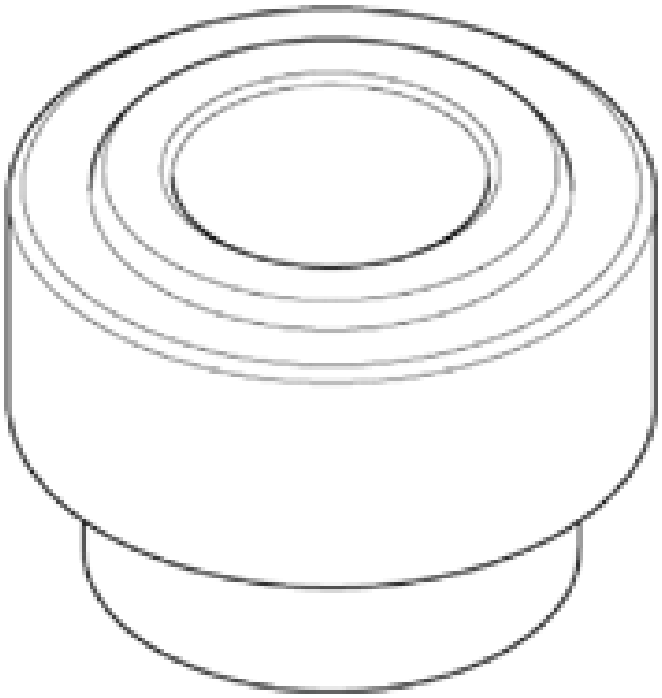	Bearing Driver Attachment, 30 mm I.D. 07746-0030300

EXPLODED VIEW

1. A/T Secondary Shaft Exploded View

   Exploded View

GETtheMANUALS.org

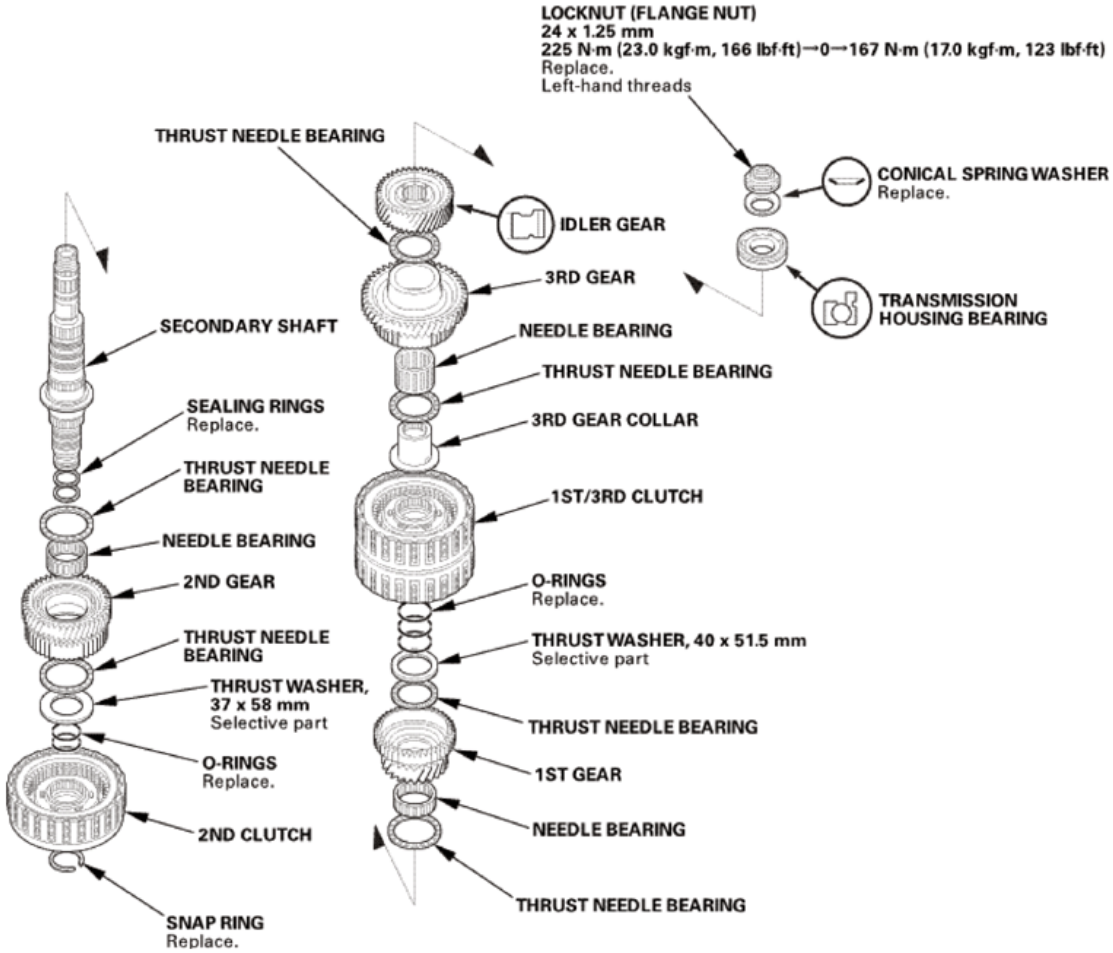

Fig. 974: Exploded View Of A/T Secondary Shaft
Courtesy of AMERICAN HONDA MOTOR CO., INC.

DISASSEMBLY

NOTE: The illustration shows AWD/4WD transmission.

1. Transmission Range Switch Cover
    1. Remove the transmission range switch cover (A).

GETtheMANUALS.org

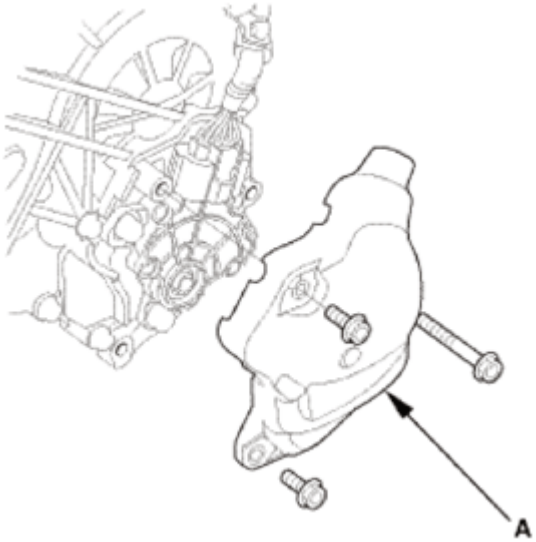

Fig. 975: Identifying Transmission Range Switch Cover With Bolts
Courtesy of AMERICAN HONDA MOTOR CO., INC.

2. Transmission Range Switch
    1. Remove the transmission range switch (A).

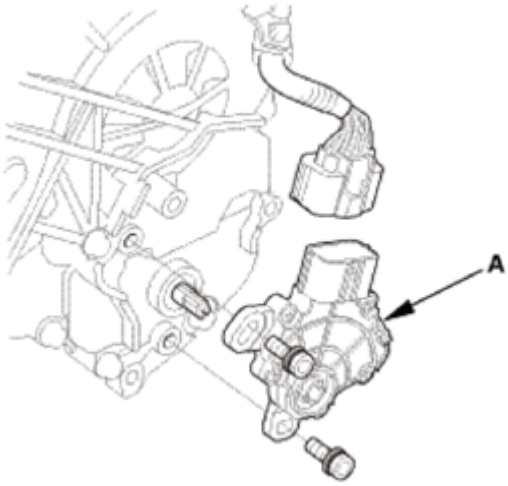

Fig. 976: Identifying Transmission Range Switch With Bolts
Courtesy of AMERICAN HONDA MOTOR CO., INC.

3. Transmission Range Switch Subharness
    1. Remove the transmission range switch subharness (A).
    2. Remove the clamp brackets (B).

GETtheMANUALS.org

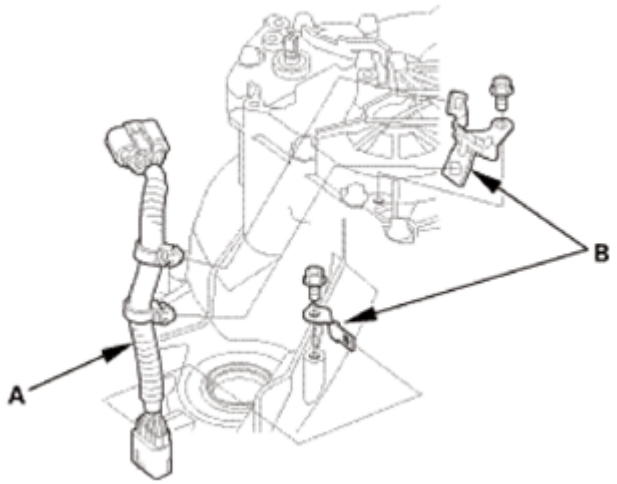

Fig. 977: Identifying Transmission Range Switch Subharness And Clamp Brackets
Courtesy of AMERICAN HONDA MOTOR CO., INC.

4. Transmission End Cover
    1. Remove the end cover (A), the dowel pins (B), the O-rings (C), and the gasket (D).

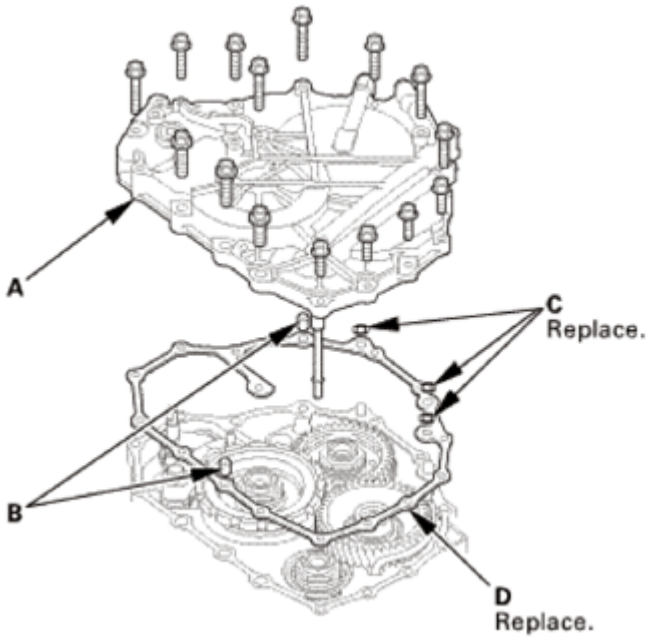

Fig. 978: Identifying Transmission End Cover, Dowel Pins, O-Rings And Gasket With Bolts
Courtesy of AMERICAN HONDA MOTOR CO., INC.

5. Input Shaft (Mainshaft) Speed Sensor
    1. Remove the input shaft (mainshaft) speed sensor (A).
    2. Remove the O-ring (B) from the input shaft (mainshaft) speed sensor.

GETtheMANUALS.org

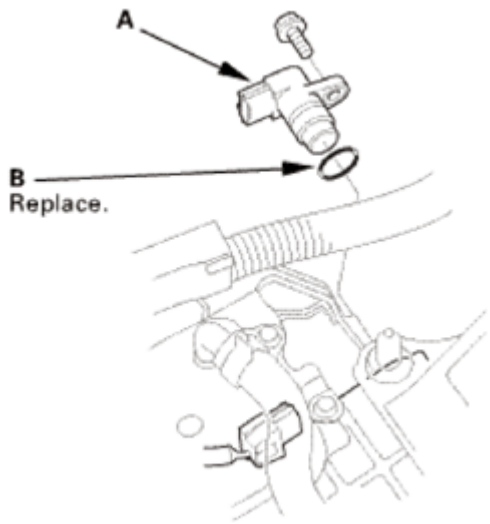

Fig. 979: Identifying Input Shaft (Mainshaft) Speed Sensor And O-Ring
Courtesy of AMERICAN HONDA MOTOR CO., INC.

6. Output Shaft (Countershaft) Speed Sensor
    1. Remove the output shaft (countershaft) speed sensor (A) and the sensor washer (B).
    2. Remove the O-ring (C) from the output shaft (countershaft) speed sensor.

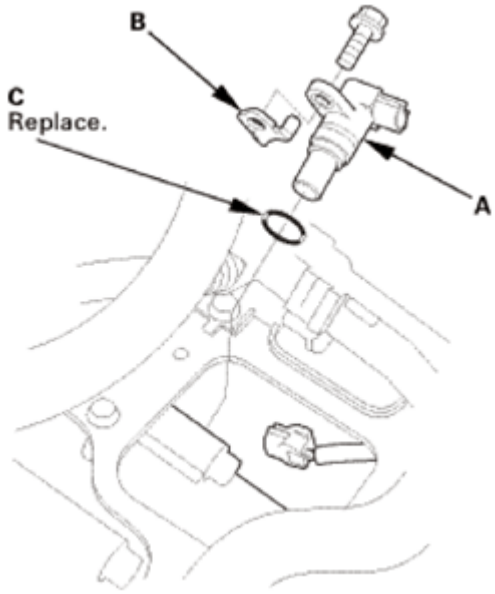

Fig. 980: Identifying Output Shaft (Countershaft) Speed Sensor, Sensor Washer And O-Ring
Courtesy of AMERICAN HONDA MOTOR CO., INC.

7. A/T Clutch Pressure Control Solenoid Valve A
    1. Remove A/T clutch pressure control solenoid valve A.
    2. Remove the 35 mm ATF pipe (B), the ATF joint pipes (C), the O-rings (D), and the gasket (E).

GETtheMANUALS.org

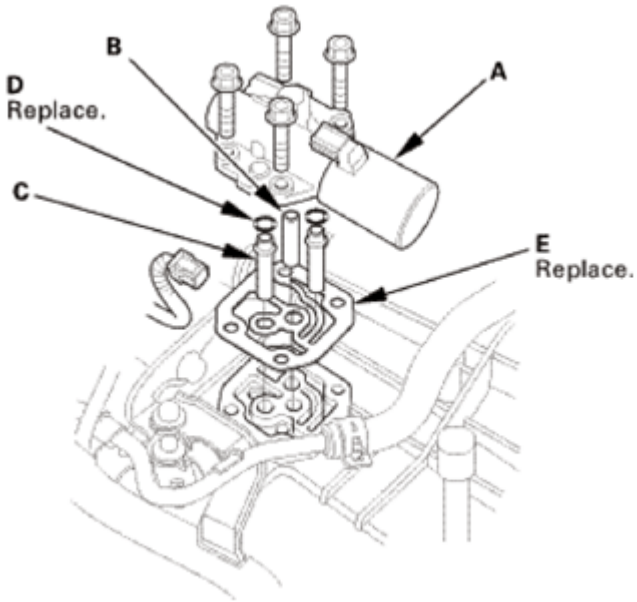

Fig. 981: Identifying A/T Clutch Pressure Control Solenoid Valve, ATF Pipe, ATF Joint Pipes, O-Rings And Gasket With Bolts
Courtesy of AMERICAN HONDA MOTOR CO., INC.

8. A/T Clutch Pressure Control Solenoid Valve B and C
    1. Remove the clamp bracket (A) and A/T clutch pressure control solenoid valves B and C.
    2. Remove the ATF joint pipes (D), the O-rings (E), and the gasket (F).

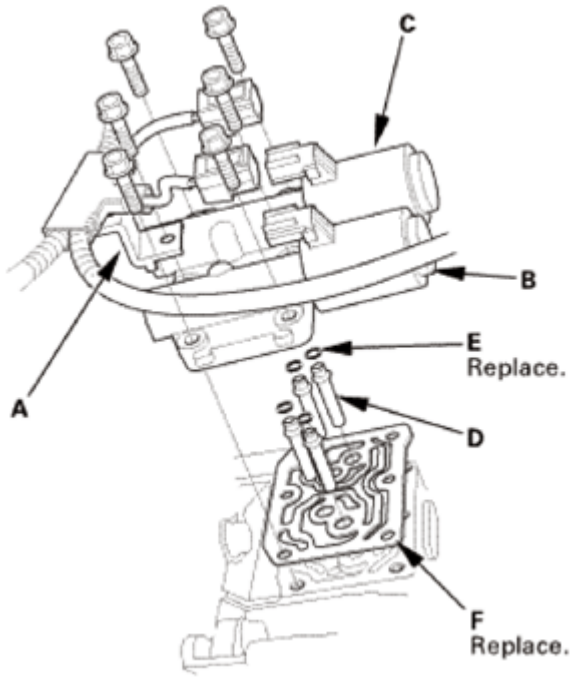

Fig. 982: Identifying A/T Clutch Pressure Control Solenoid Valves, Clamp Bracket, ATF

GETtheMANUALS.org

Joint Pipes, O-Rings And Gasket
Courtesy of AMERICAN HONDA MOTOR CO., INC.

9. ATF Inlet Line
    1. Remove the banjo bolt (A) and the sealing washers (B).
    2. Remove the ATF inlet line (C).

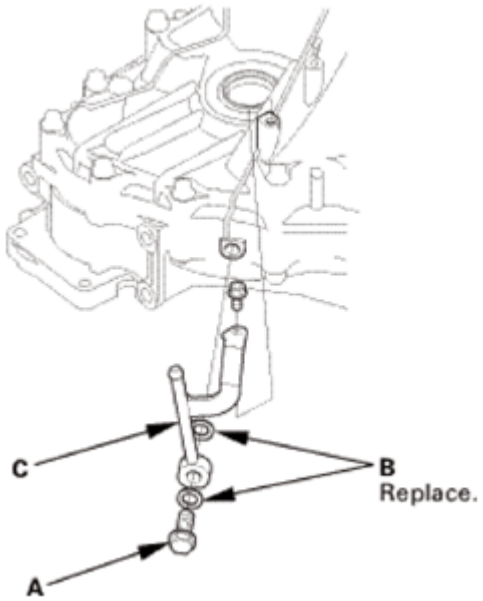

Fig. 983: Identifying ATF Inlet Line, Banjo Bolt And Sealing Washers
Courtesy of AMERICAN HONDA MOTOR CO., INC.

10. ATF Outlet Line
    1. Remove the banjo bolt (A) and the sealing washers (B).
    2. Remove the ATF outlet line (C).

GETtheMANUALS.org

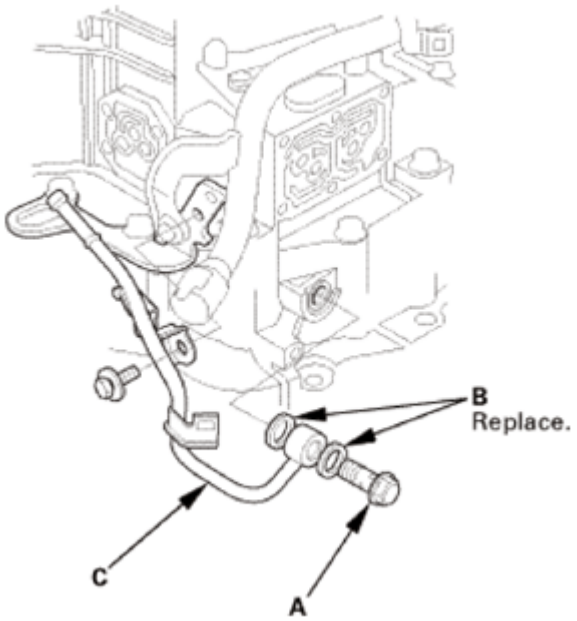

Fig. 984: Identifying ATF Outlet Line, Banjo Bolt And Sealing Washers
Courtesy of AMERICAN HONDA MOTOR CO., INC.

11. Dipstick Guide Tube
    1. Remove the ATF dipstick guide tube (A).
    2. Remove the O-ring (B) from the ATF dipstick guide tube.

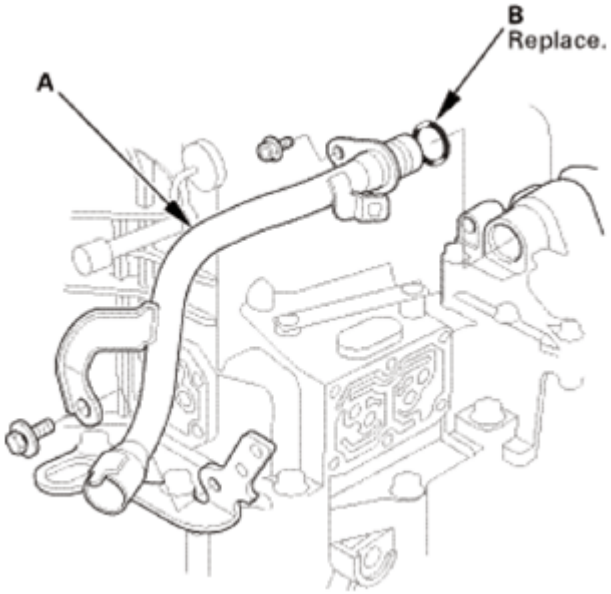

Fig. 985: Identifying ATF Dipstick Guide Tube And O-Ring
Courtesy of AMERICAN HONDA MOTOR CO., INC.

12. A/T Shift Solenoid Cover

GETtheMANUALS.org

1. Remove the shift solenoid valve cover (A), the dowel pins (B), and the gasket (C).

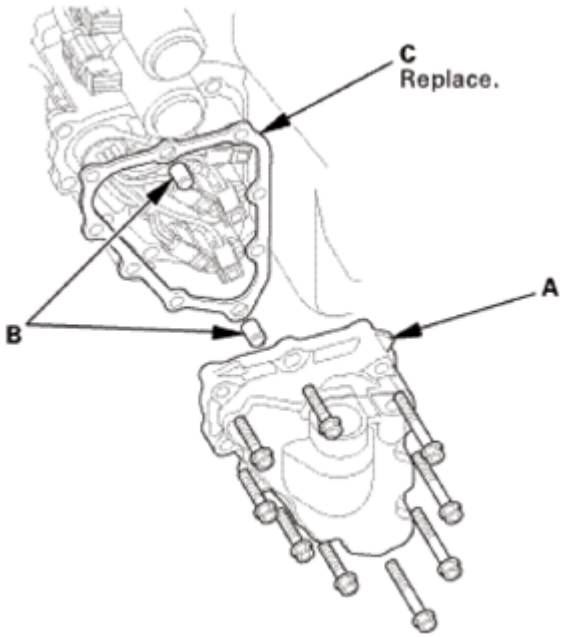

Fig. 986: Identifying Shift Solenoid Valve Cover, Dowel Pins And Gasket
Courtesy of AMERICAN HONDA MOTOR CO., INC.

13. A/T Shift Solenoid Wire Harness - Disconnection
    1. Disconnect the connectors.

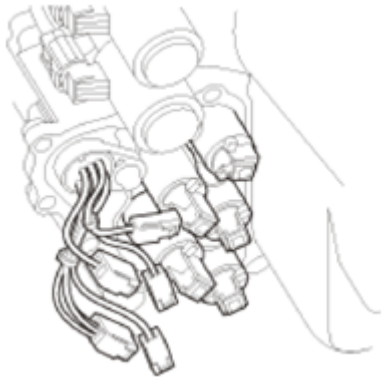

Fig. 987: Identifying A/T Shift Solenoid Wire Harness Connectors
Courtesy of AMERICAN HONDA MOTOR CO., INC.

14. ATF Feed Pipe/Lubrication Pipe
    1. Remove the 6 x 201 mm ATF pipe (A).
    2. Remove the ATF lubrication pipe (B).
    3. Remove the 8 x 220 mm ATF pipe (C).
    4. Remove the 8 x 198 mm ATF pipes (D).

GETtheMANUALS.org

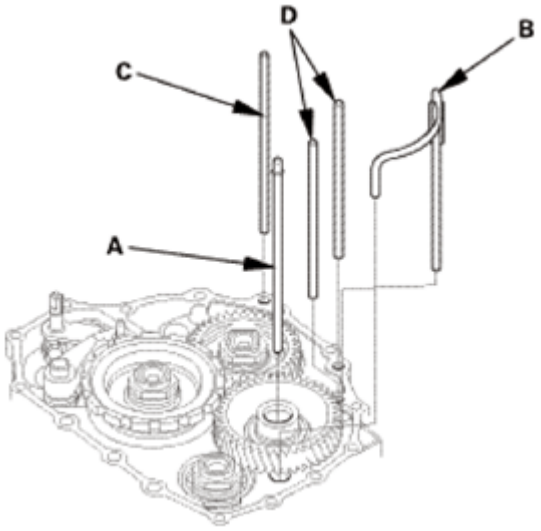

Fig. 988: Identifying ATF Feed Pipes And Lubrication Pipe
Courtesy of AMERICAN HONDA MOTOR CO., INC.

15. End Cover Idler Gear Assembly
    1. Install the mainshaft holder onto the mainshaft.
    2. Engage the park pawl with the park gear.

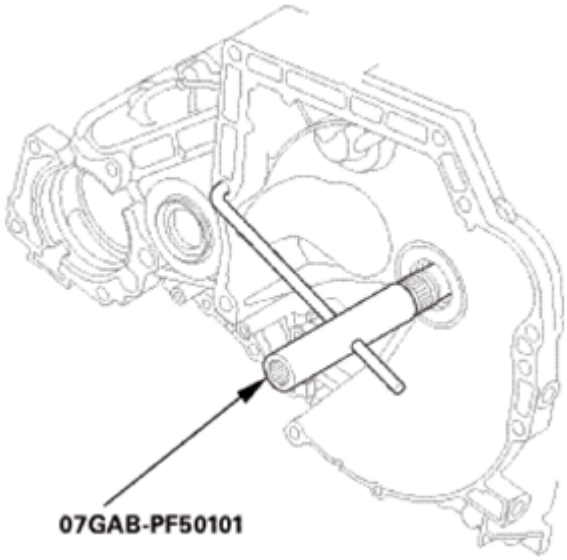

Fig. 989: Installing Mainshaft Holder Onto Mainshaft
Courtesy of AMERICAN HONDA MOTOR CO., INC.

    3. Using a chisel, cut the lock tab (A) of the locknut (B).

NOTE: Keep all of the chiseled particles out of the transmission.

GETtheMANUALS.org

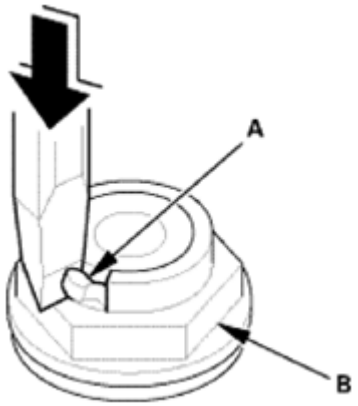

Fig. 990: Cutting Lock Tab Of Locknut Using Chisel
Courtesy of AMERICAN HONDA MOTOR CO., INC.

4. Remove the locknuts (A) and the conical spring washers (B) from each shaft.

NOTE:

- **The countershaft and secondary shaft locknuts have left-hand threads.**
- **Keep all of the chiseled particles out of the transmission.**
- **Clean the old locknuts; they are used to install the press fit idler gears and park gear.**

5. Remove the mainshaft holder.

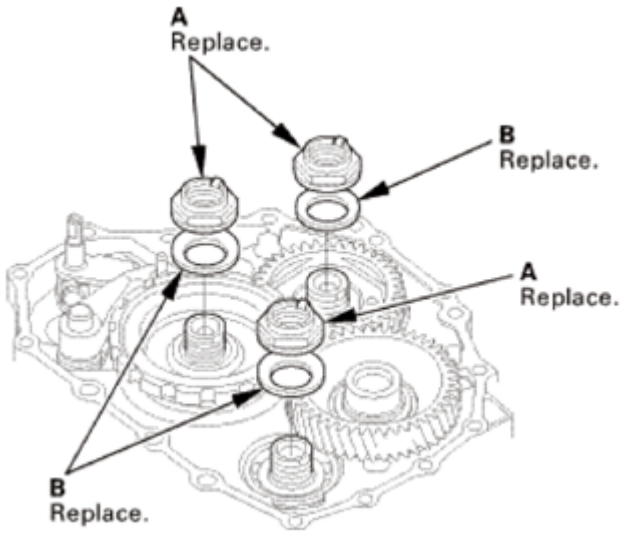

Fig. 991: Identifying Locknuts And Conical Spring Washers
Courtesy of AMERICAN HONDA MOTOR CO., INC.

6. Remove the park pawl (A), the park pawl spring (B), the park pawl shaft (C), and the stop shaft (D).

GETtheMANUALS.org

7. Pry down the lock tab (E) of the lock washer (F).
8. Remove the lock bolt (G) and the lock washer.
9. Remove the park lever (H), the park lever stop (I), and the park lever spring (J).

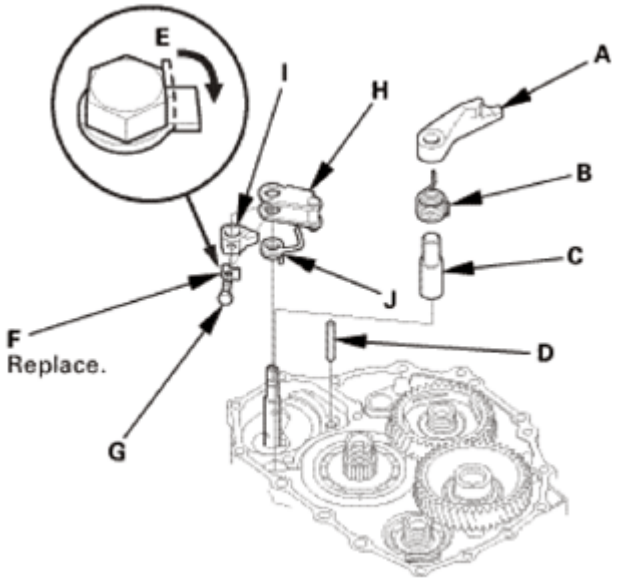

Fig. 992: Prying Down Lock Tab Of Lock Washer
Courtesy of AMERICAN HONDA MOTOR CO., INC.

10. Place a spacer (A) on the countershaft (B).
11. Set a commercially available bearing puller (C) on the park gear (D).
12. Remove the park gear.

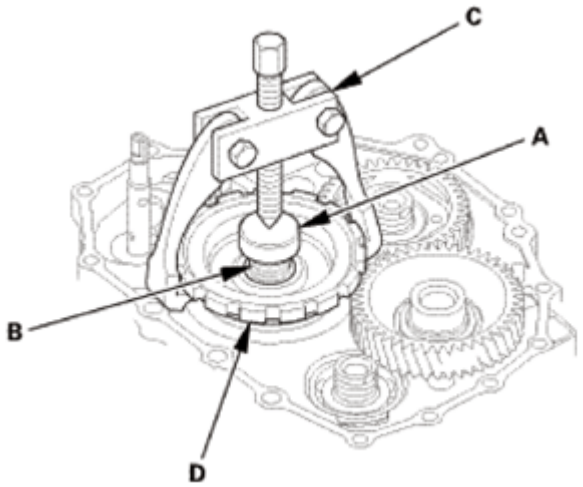

Fig. 993: Setting Commercially Available Bearing Puller On Park Gear
Courtesy of AMERICAN HONDA MOTOR CO., INC.

13. Install a puller (A) with two 6 x 1.0 mm bolts (B) on the mainshaft idler gear (C).

GETtheMANUALS.org

14. Set a spacer (D) between the puller and the mainshaft (E).
15. Remove the mainshaft idler gear.

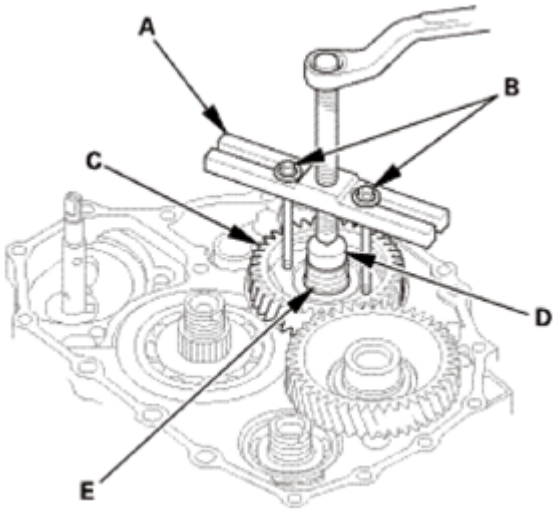

Fig. 994: Installing Puller With 6 X 1.0 mm Bolts On Mainshaft Idler Gear
Courtesy of AMERICAN HONDA MOTOR CO., INC.

16. Automatic Transmission Housing
    1. Align the spring pin (A) on the selector control shaft (B) with the transmission housing groove (C).

    NOTE: **Do not squeeze the end of the selector control shaft tips together when turning the control shaft. If the tips are squeezed together, it will cause a faulty shift position signal or position due to the play between the selector control shaft and the transmission range switch.**

    2. Remove the transmission housing mounting bolts (D) (2WD: 19 bolts, AWD/4WD: 20 bolts).
    3. Install the housing puller over the mainshaft.
    4. Remove the transmission housing (E) using the housing puller.
    5. Remove the dowel pins (F) and the gasket (G).

GETtheMANUALS.org

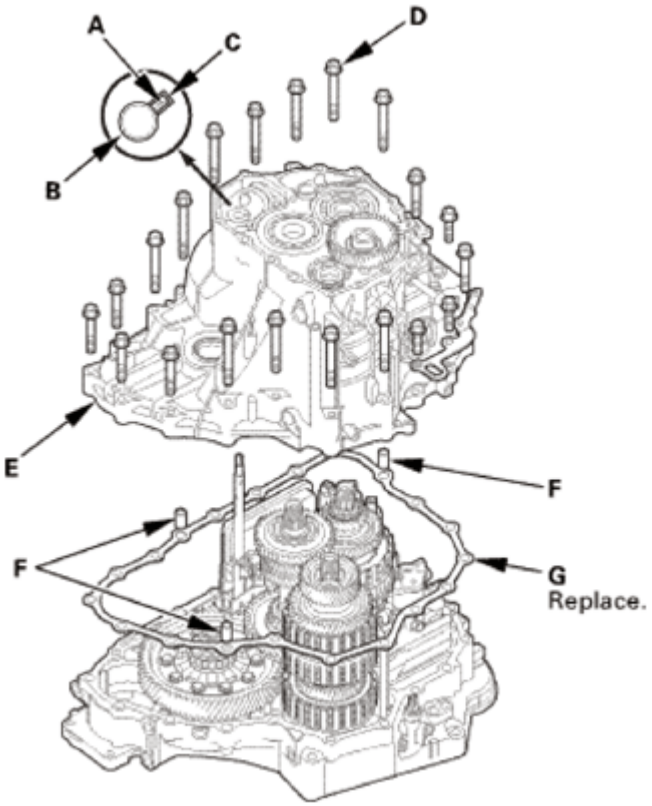

Fig. 995: Identifying Spring Pin, Selector Control Shaft, Transmission Housing Groove, Transmission Housing, Mounting Bolts And Gasket
Courtesy of AMERICAN HONDA MOTOR CO., INC.

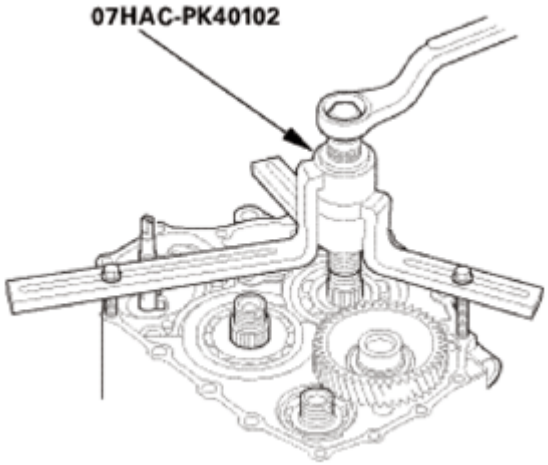

Fig. 996: Installing Housing Puller Over Mainshaft
Courtesy of AMERICAN HONDA MOTOR CO., INC.

17. A/T Idler Gear/Idler Gear Shaft Assembly
    1. Remove the snap ring (A), the cotter retainer (B), and the cotters (C).
    2. Remove the idler gear shaft/idler gear assembly (D).

GETtheMANUALS.org

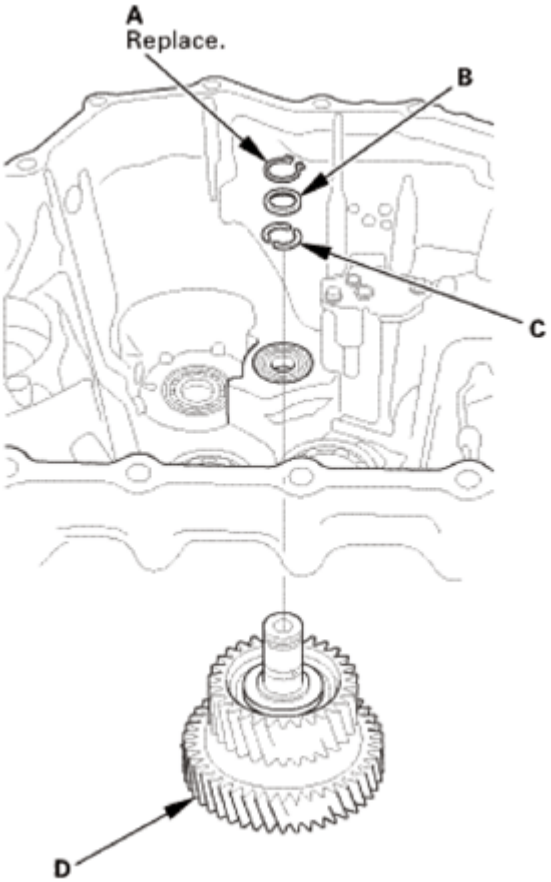

Fig. 997: Identifying Idler Gear Shaft/Idler Gear Assembly, Snap Ring, Cotter Retainer And Cotters
Courtesy of AMERICAN HONDA MOTOR CO., INC.

18. Transmission Housing Secondary Shaft Bearing
    1. Expand the snap ring using the snap ring pliers.
    2. Drive the secondary shaft bearing out using the driver handle and the 52 x 55 mm bearing driver attachment.

NOTE: **Do not remove the snap ring unless it is necessary to clean the groove in the transmission housing.**

GETtheMANUALS.org

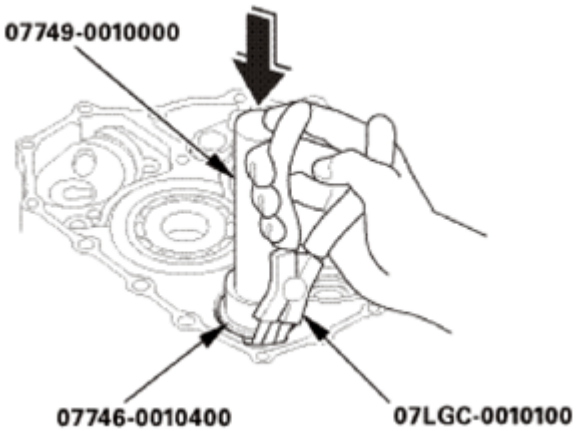

Fig. 998: Driving Secondary Shaft Bearing Out Using Driver Handle And 52 X 55 mm Bearing Driver Attachment
Courtesy of AMERICAN HONDA MOTOR CO., INC.

19. A/T Countershaft Reverse Gear
    1. Remove the countershaft reverse gear (A).
    2. Remove the needle bearing (B).

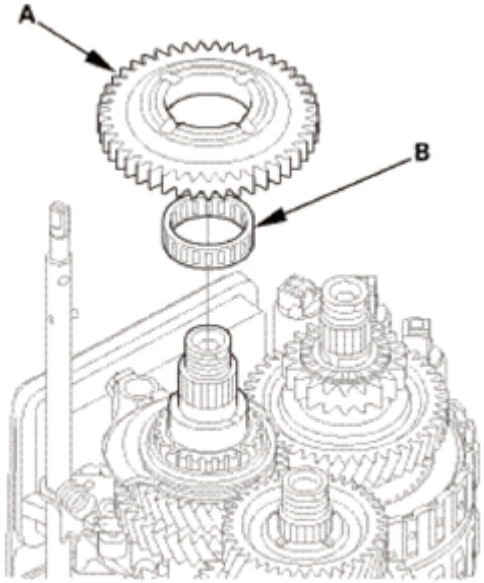

Fig. 999: Identifying Countershaft Reverse Gear And Needle Bearing
Courtesy of AMERICAN HONDA MOTOR CO., INC.

20. Reverse Shift fork
    1. Pry down the lock tab (A) of the lock washer (B).
    2. Remove the lock bolt (C) and the lock washer.
    3. Remove the reverse shift fork (D) and the reverse selector (E) together.

GETtheMANUALS.org

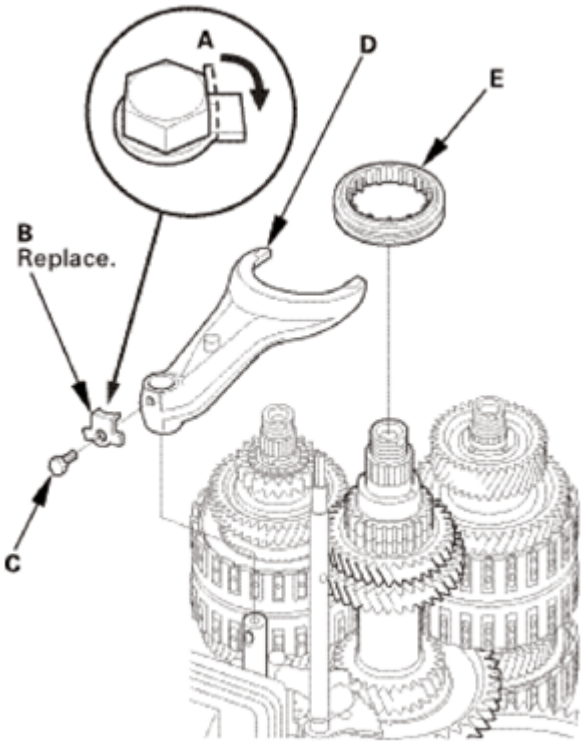

Fig. 1000: Prying Down Lock Tab Of Lock Washer
Courtesy of AMERICAN HONDA MOTOR CO., INC.

21. Selector Control Lever (Except 2WD of USA Produced Models)

Except 2WD of USA Produced Models

1. Pry down the lock tab (A) of the lock washer (B).
2. Remove the lock bolt (C) and the lock washer.
3. Remove the selector control lever (D).

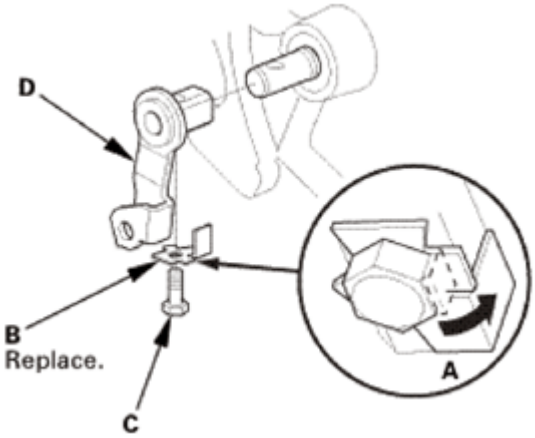

Fig. 1001: Prying Down Lock Tab Of Lock Washer (Except 2WD Of USA Produced Models)

GETtheMANUALS.org

Courtesy of AMERICAN HONDA MOTOR CO., INC.

22. Selector Control Shaft
    1. Unhook the detent arm spring (A).

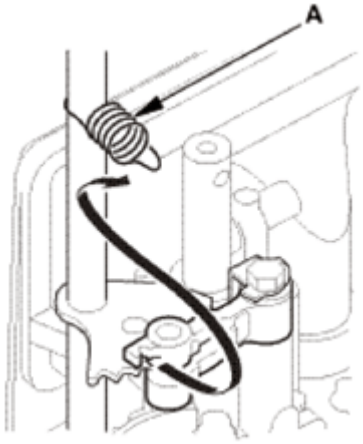

Fig. 1002: Unhooking Detent Arm Spring
Courtesy of AMERICAN HONDA MOTOR CO., INC.

    2. Separate the manual valve lever pin (A) on the selector control shaft (B) from the guide of the manual valve (C).

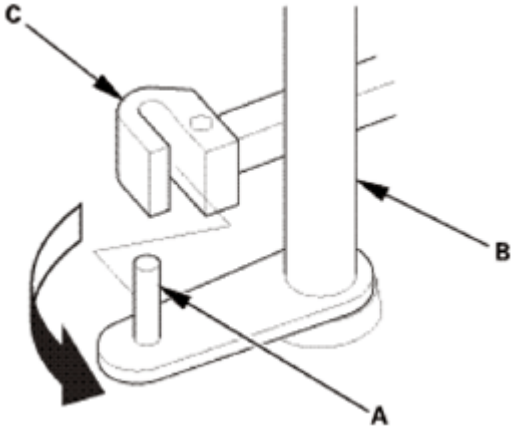

Fig. 1003: Separating Manual Valve Lever Pin On Selector Control Shaft From Guide Of Manual Valve
Courtesy of AMERICAN HONDA MOTOR CO., INC.

    3. Remove the selector control shaft (A).

GETtheMANUALS.org

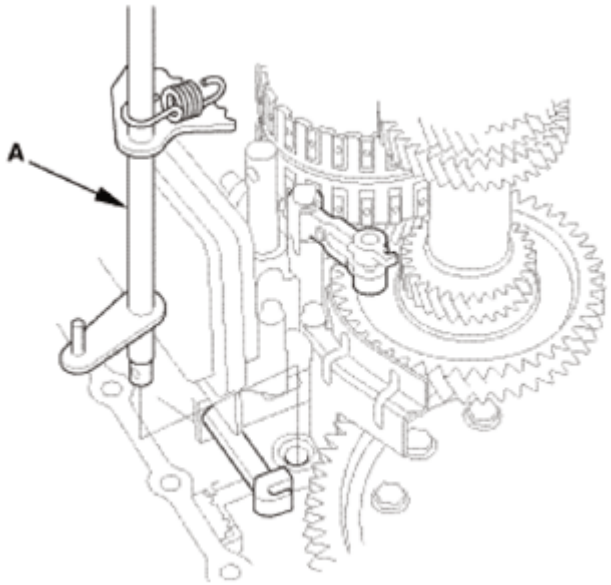

Fig. 1004: Identifying Selector Control Shaft
Courtesy of AMERICAN HONDA MOTOR CO., INC.

23. Mainshaft and Countershaft and Secondary Shaft Assembly
    1. Turn the detent arm (A) away from the countershaft (B).

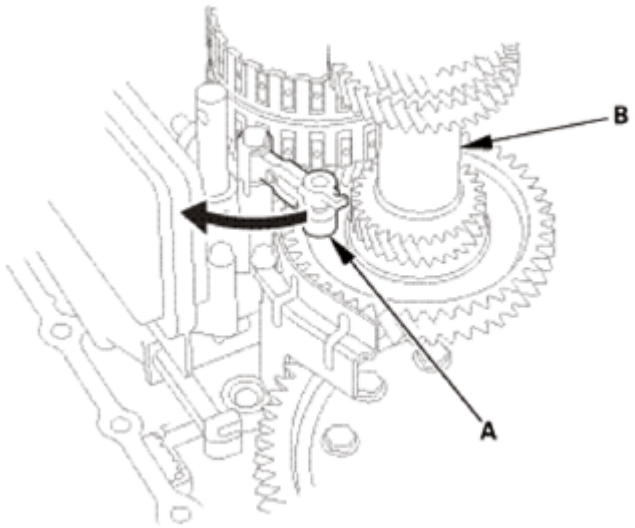

Fig. 1005: Turning Detent Arm Away From Countershaft
Courtesy of AMERICAN HONDA MOTOR CO., INC.

    2. Remove the mainshaft subassembly (A), the countershaft subassembly (B), and the secondary shaft subassembly (C) together.

NOTE: Do not bump the countershaft on the baffle plate (D).

GETtheMANUALS.org

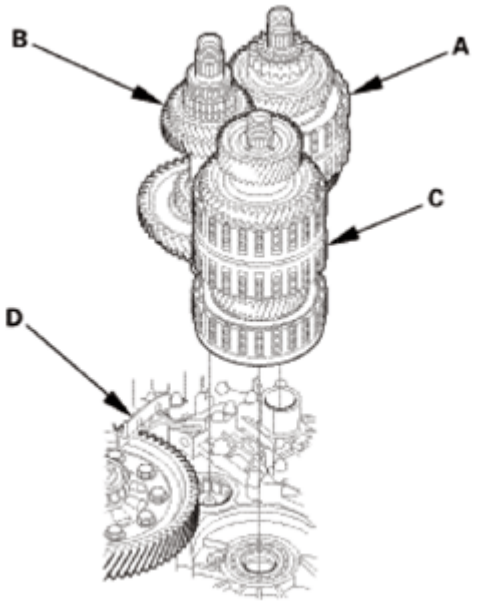

Fig. 1006: Identifying Mainshaft Subassembly, Countershaft Subassembly, Secondary Shaft Subassembly And Baffle Plate
Courtesy of AMERICAN HONDA MOTOR CO., INC.

24. A/T Secondary Shaft
    1. Place a spacer (A) on the secondary shaft (B), and set a puller (C) under the idler gear (D).
    2. Remove the idler gear.

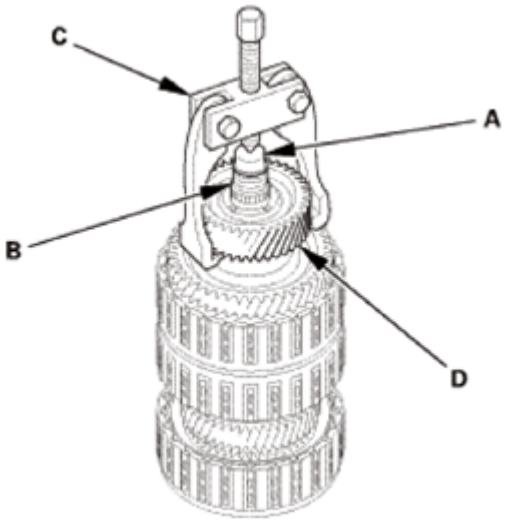

Fig. 1007: Identifying Spacer, Secondary Shaft, Puller And Idler Gear
Courtesy of AMERICAN HONDA MOTOR CO., INC.

    3. Remove the thrust needle bearing (A), 3rd gear (B), the needle bearing (C), the thrust needle bearing (D), the 3rd gear collar (E), and the 1st/3rd clutch (F).

GETtheMANUALS.org

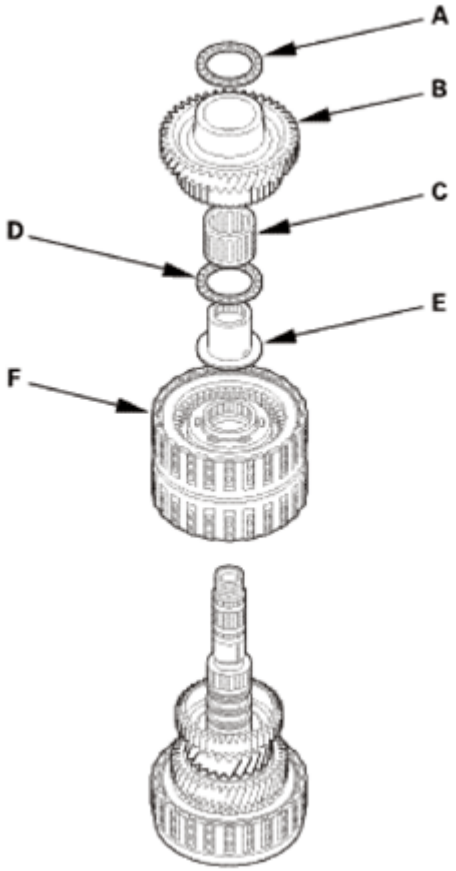

Fig. 1008: Identifying Thrust Needle Bearing, 3rd Gear, Needle Bearing, Thrust Needle Bearing, 3rd Gear Collar And 1st/3rd Clutch
Courtesy of AMERICAN HONDA MOTOR CO., INC.

4. Remove the O-rings (A), the 40 x 51.5 mm thrust washer (B), the thrust needle bearing (C), 1st gear (D), the needle bearing (E), and the thrust needle bearing (F).

GETtheMANUALS.org

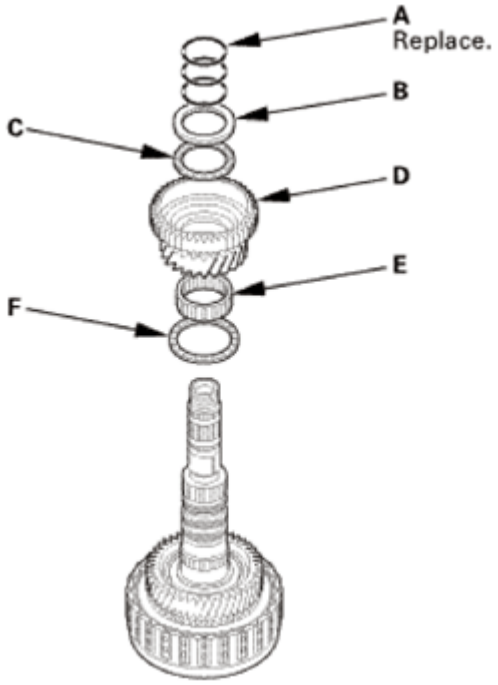

Fig. 1009: Identifying O-Rings, Thrust Washer, Thrust Needle Bearing, 1st Gear, Needle Bearing And Thrust Needle Bearing
Courtesy of AMERICAN HONDA MOTOR CO., INC.

5. Remove the sealing rings (A), the snap ring (B), the 2nd clutch (C), the O-rings (D), the 37 x 58 mm thrust washer (E), the thrust needle bearing (F), 2nd gear (G), the needle bearing (H), and the thrust needle bearing (I).

GETtheMANUALS.org

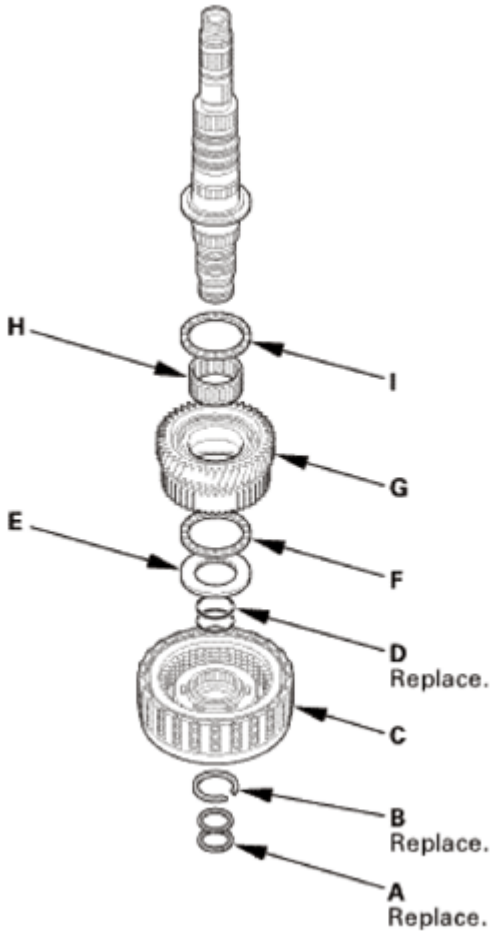

Fig. 1010: Identifying Sealing Rings, Snap Ring, 2nd Clutch, O-Rings, Thrust Washer, Thrust Needle Bearing And 2nd Gear
Courtesy of AMERICAN HONDA MOTOR CO., INC.

INSPECTION

1. Secondary Shaft - Inspection
    1. Inspect the thrust needle bearings and the needle bearings for galling and rough movement.
    2. Inspect the splines for excessive wear and damage.
    3. Check the shaft bearing surface for scoring and excessive wear.
2. Secondary Shaft 1st Gear Axial Clearance - Inspection
    1. Install the thrust needle bearing (A), the needle bearing (B), 1st gear (C), the thrust needle bearing (D), the 40 x 51.5 mm thrust washer (E), the 1st/3rd clutch (F), and the 3rd gear collar (G).

    NOTE: Do not install the O-rings during inspection.

    2. Install the idler gear (H), then install the transmission housing bearing (I) using the 42 mm bearing driver attachment and a press.
    3. Install the conical spring washer (J) and the locknut (K).

GETtheMANUALS.org

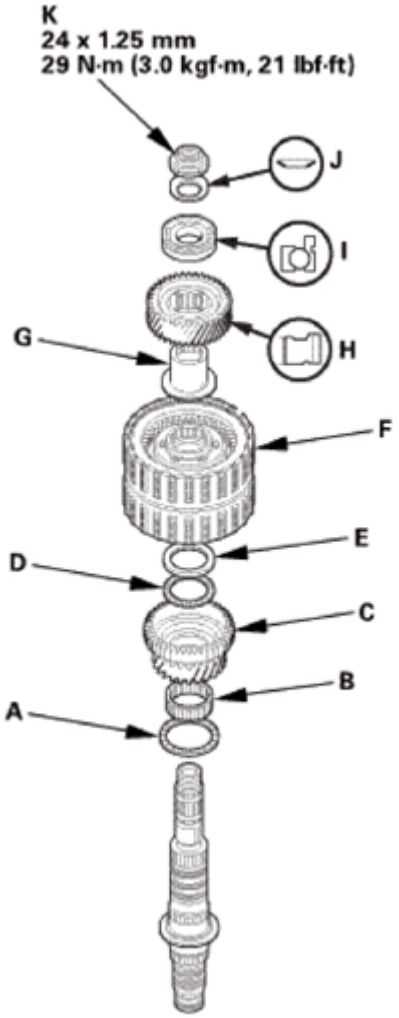

Fig. 1011: Identifying Secondary Shaft 1st Gear Axial Related Components With Torque Specification
Courtesy of AMERICAN HONDA MOTOR CO., INC.

GETtheMANUALS.org

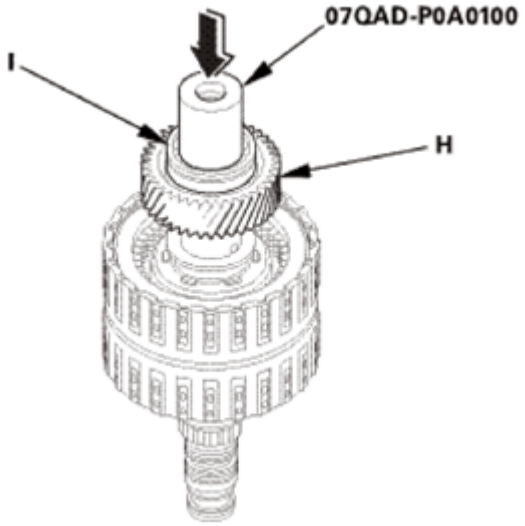

Fig. 1012: Installing Idler Gear And Transmission Housing Bearing Using Bearing Driver Attachment
Courtesy of AMERICAN HONDA MOTOR CO., INC.

4. Turn the secondary shaft assembly upside down, and set a dial indicator (A) on 1st gear (B).

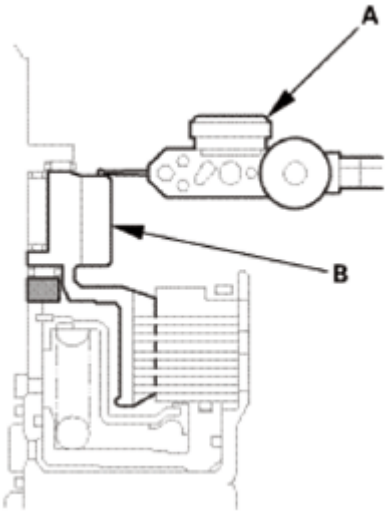

Fig. 1013: Setting Dial Indicator On 1st Gear
Courtesy of AMERICAN HONDA MOTOR CO., INC.

5. Lift 1st gear (A) up while holding the secondary shaft, and use the dial indicator (B) to read the 1st gear axial clearance.
6. Measure the 1st gear axial clearance in at least three places while moving 1st gear. Use the average as the actual clearance.

Standard: 0.04-0.12 mm (0.0016-0.0047 in)

GETtheMANUALS.org

7. If the clearance is out of the standard, remove the 40 x 51.5 mm thrust washer and measure its thickness.
8. Select and install a new thrust washer, then recheck.

THRUST WASHER SPECIFICATION (40 X 51.5 MM)

No.	Thickness
1	4.80 mm (0.1890 in)
2	4.85 mm (0.1909 in)
3	4.90 mm (0.1929 in)
4	4.95 mm (0.1949 in)
5	5.00 mm (0.1969 in)
6	5.05 mm (0.1988 in)

9. After replacing the thrust washer, make sure the clearance is within the standard.
10. Disassemble the installed parts from the secondary shaft.

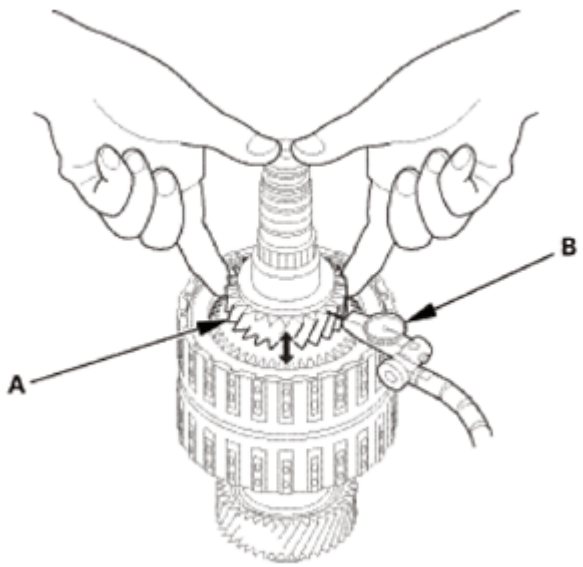

Fig. 1014: Measuring 1st Gear Axial Clearance
Courtesy of AMERICAN HONDA MOTOR CO., INC.

3. Secondary Shaft 2nd Gear Axial Clearance - Inspection
   1. Install the thrust needle bearing (A), the needle bearing (B), 2nd gear (C), the thrust needle bearing (D), the 37 x 58 mm thrust washer (E), and the 2nd clutch (F), then secure them with the set ring (G).

NOTE: **Do not install the O-rings during inspection.**

GETtheMANUALS.org

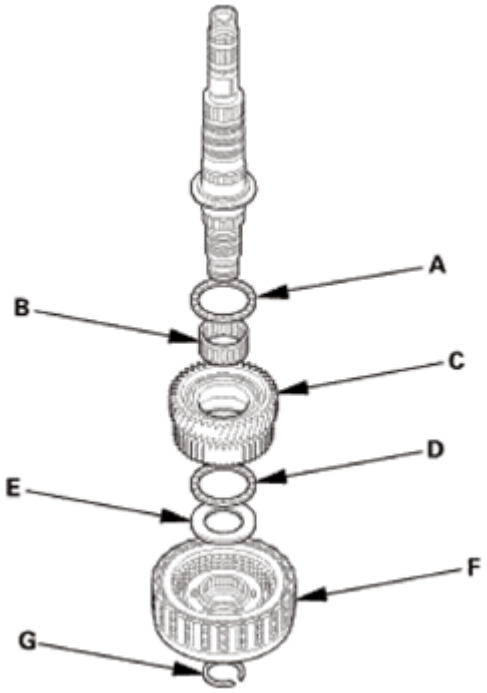

Fig. 1015: Identifying Thrust Needle Bearing, 2nd Gear, Thrust Washer, 2nd Clutch And Set Ring
Courtesy of AMERICAN HONDA MOTOR CO., INC.

2. Measure the clearance between the set ring (A) and the 2nd clutch guide (B) using a feeler gauge (C), in at least three places. Use the average as the actual clearance.

   Standard: 0.04-0.12 mm (0.002-0.004 in)

3. If the clearance is out of the standard, remove the 37 x 58 mm thrust washer, and measure its thickness.
4. Select and install a new thrust washer, then recheck.

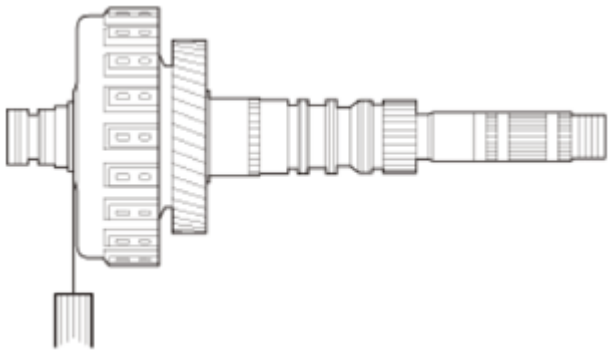

Fig. 1016: Measuring Clearance Between Set Ring And 2nd Clutch Guide Using Feeler Gauge
Courtesy of AMERICAN HONDA MOTOR CO., INC.

GETtheMANUALS.org

No.	Thickness
1	3.900 mm (0.15354 in)
2	3.925 mm (0.15453 in)
3	3.950 mm (0.15551 in)
4	3.975 mm (0.15650 in)
5	4.000 mm (0.15748 in)
6	4.025 mm (0.15846 in)
7	4.050 mm (0.15944 in)
8	4.075 mm (0.16043 in)
9	4.100 mm (0.16142 in)
10	4.125 mm (0.16240 in)
11	4.150 mm (0.16339 in)
12	4.175 mm (0.16437 in)
13	4.200 mm (0.16535 in)
14	4.225 mm (0.16634 in)
15	4.250 mm (0.16732 in)
16	4.275 mm (0.16831 in)
17	4.300 mm (0.16929 in)
18	4.325 mm (0.17028 in)
19	4.350 mm (0.17126 in)
20	4.375 mm (0.17224 in)

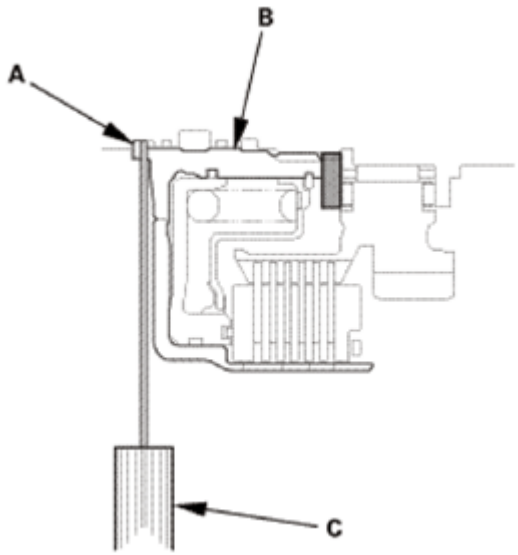

Fig. 1017: Measuring Clearance Between Set Ring And 2nd Clutch Guide Using Feeler Gauge
Courtesy of AMERICAN HONDA MOTOR CO., INC.

5. After replacing the thrust washer, make sure the clearance is within the standard.
6. Disassemble the installed parts from the secondary shaft.

GETtheMANUALS.org

REASSEMBLY

NOTE:

- **Apply a light coat of clean ATF on all moving parts before installation.**
- **The illustration shows AWD/4WD transmission.**

1. A/T Secondary Shaft
    1. Install the thrust needle bearing (A), the needle bearing (B), 2nd gear (C), the thrust needle bearing (D), the selected 37 x 58 mm thrust washer (E), new O-rings (F), the 2nd clutch (G), a new snap ring (H), and new 29 mm sealing rings (I).

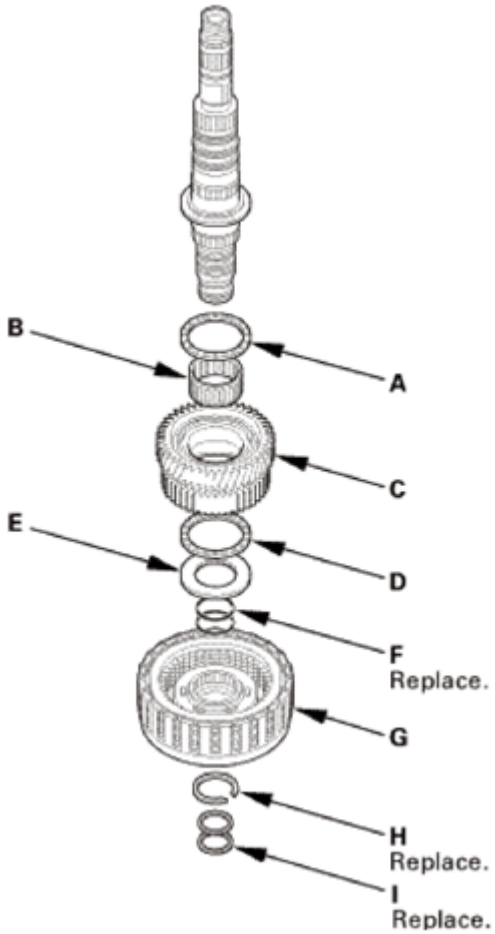

Fig. 1018: Identifying Thrust Needle Bearing, 2nd Gear, Thrust Washer, O-Rings, 2nd Clutch, Snap Ring And Sealing Rings
Courtesy of AMERICAN HONDA MOTOR CO., INC.

2. Install the thrust needle bearing (A), the needle bearing (B), 1st gear (C), the thrust needle bearing (D), the selected 40 x 51.5 mm thrust washer (E), and new O-rings (F).

GETtheMANUALS.org

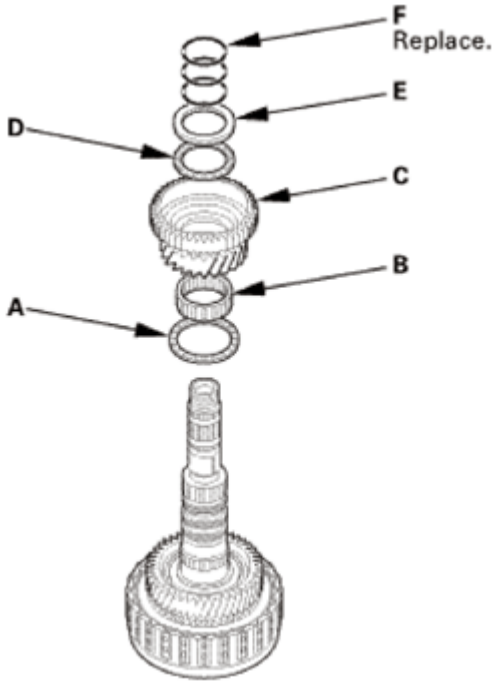

Fig. 1019: Identifying Thrust Needle Bearing, 1st Gear, Thrust Washer And O-Rings
Courtesy of AMERICAN HONDA MOTOR CO., INC.

3. Install the 1st/3rd clutch (A), the 3rd gear collar (B), the thrust needle bearing (C), the needle bearing (D), 3rd gear (E), and the thrust needle bearing (F).

GETtheMANUALS.org

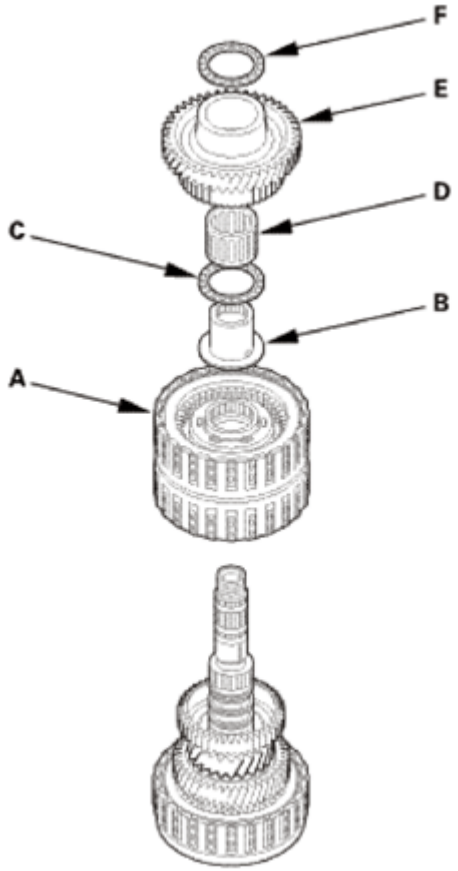

Fig. 1020: Identifying 1st/3rd Clutch, 3rd Gear Collar, Thrust Needle Bearing, 3rd Gear And Thrust Needle Bearing
Courtesy of AMERICAN HONDA MOTOR CO., INC.

4. Install the idler gear (A) in the direction shown on the secondary shaft (B) using the 40 mm I.D. driver handle, the 30 mm I.D. bearing driver attachment, and the press.

GETtheMANUALS.org

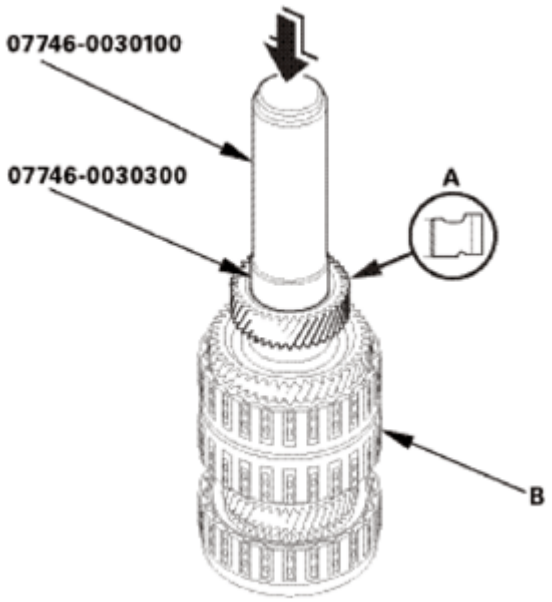

Fig. 1021: Installing Idler Gear On Secondary Shaft Using. Driver Handle And I.D. Bearing Driver Attachment
Courtesy of AMERICAN HONDA MOTOR CO., INC.

2. Mainshaft and Countershaft and Secondary Shaft Assembly
    1. Be sure that each shaft is assembled. Also be sure that new sealing rings are installed on the mainshaft and the secondary shaft.
    2. Join the mainshaft subassembly (A), the countershaft subassembly (B), and the secondary shaft subassembly (C) together, and install them.

    NOTE: Do not bump the countershaft on the baffle plate (D).

    3. Make sure the countershaft subassembly and the differential assembly (E) are clear of the baffle plate.

GETtheMANUALS.org

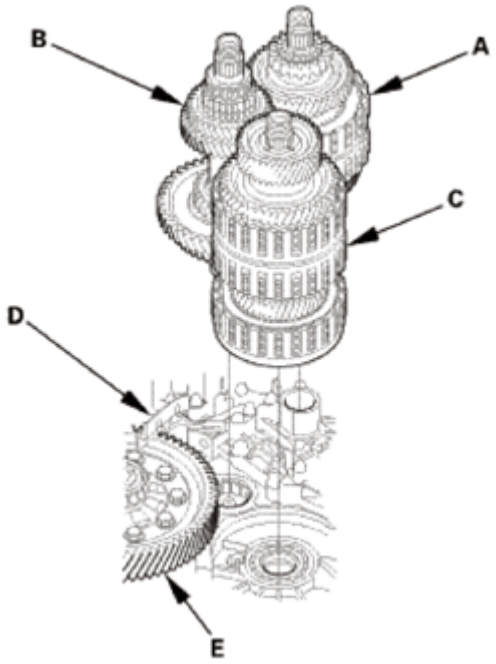

Fig. 1022: Identifying Mainshaft Subassembly, Countershaft Subassembly, Secondary Shaft Subassembly, Baffle Plate And Differential Assembly
Courtesy of AMERICAN HONDA MOTOR CO., INC.

3. Selector Control Shaft
    1. Install the selector control shaft (A).

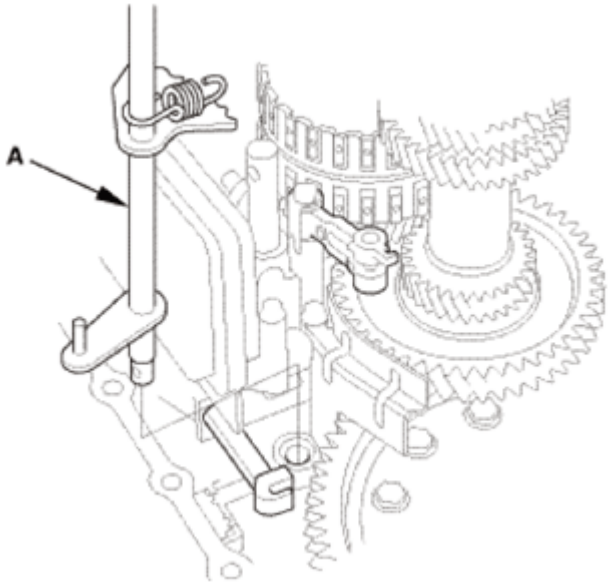

Fig. 1023: Identifying Selector Control Shaft
Courtesy of AMERICAN HONDA MOTOR CO., INC.

    2. Align the manual valve lever pin (A) on the selector control shaft (B) with the guide of the manual

GETtheMANUALS.org

valve (C).

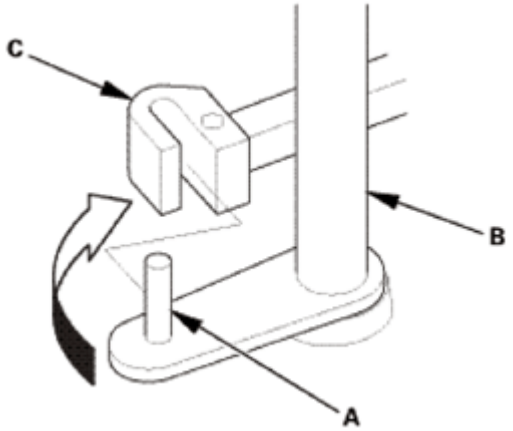

Fig. 1024: Aligning Manual Valve Lever Pin On Selector Control Shaft With Guide Of Manual Valve
Courtesy of AMERICAN HONDA MOTOR CO., INC.

3. Hook the detent arm spring (A).

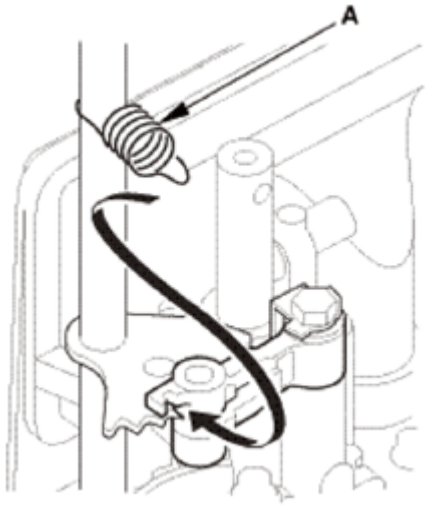

Fig. 1025: Hooking Detent Arm Spring
Courtesy of AMERICAN HONDA MOTOR CO., INC.

4. Selector Control Lever (Except 2WD of USA Produced Models)

Except 2WD of USA Produced Models

1. Install the control lever (A) over the selector control shaft (B).
2. Install the lock bolt (C) using a new lock washer (D).
3. Pry up the lock tab (E) of the lock washer against the bolt head.

GETtheMANUALS.org

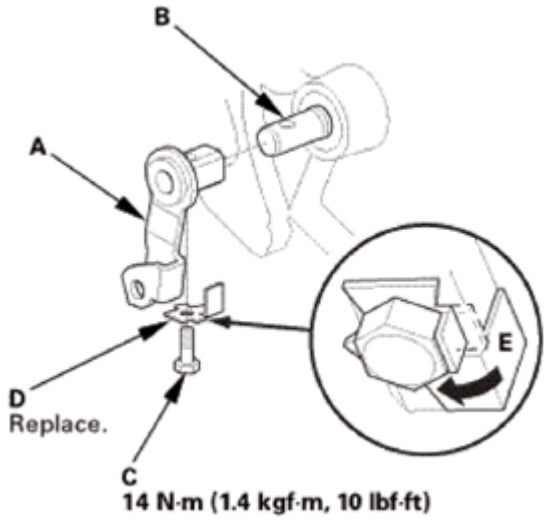

Fig. 1026: Prying Up Lock Tab Of Lock Washer (Except 2WD Of USA Produced Models)
Courtesy of AMERICAN HONDA MOTOR CO., INC.

5. Reverse Shift fork
    1. Install the reverse shift fork (A) and the reverse selector (B) together.
    2. Install the lock bolt (C) using a new lock washer (D).
    3. Pry up the lock tab (E) of the lock washer against the bolt head.

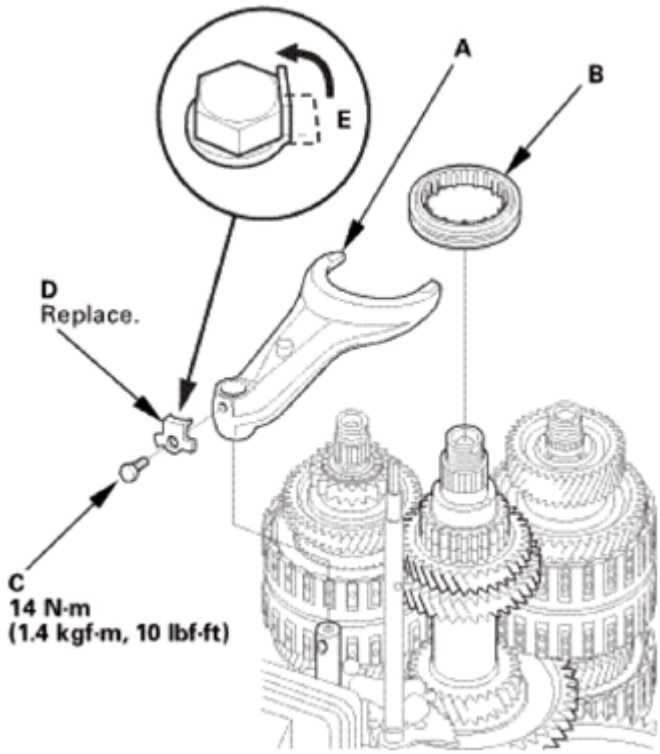

Fig. 1027: Prying Up Lock Tab Of Lock Washer Against Bolt Head

GETtheMANUALS.org

Courtesy of AMERICAN HONDA MOTOR CO., INC.

6. A/T Countershaft Reverse Gear
    1. Install the needle bearing (A).
    2. Install the countershaft reverse gear (B).

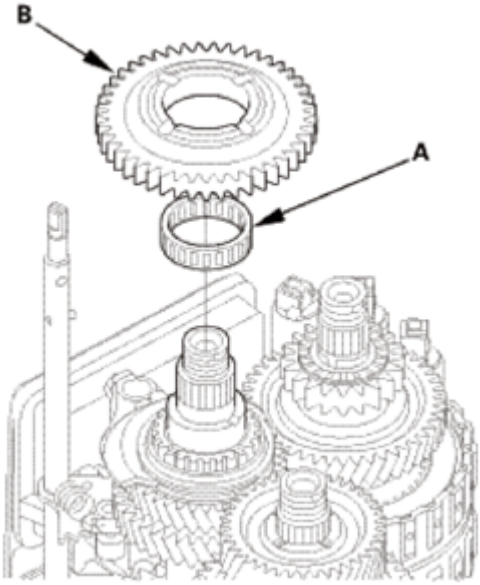

Fig. 1028: Identifying Needle Bearing And Countershaft Reverse Gear
Courtesy of AMERICAN HONDA MOTOR CO., INC.

7. Transmission Housing Secondary Shaft Bearing
    1. Expand the snap ring using the snap ring pliers.
    2. Install the secondary shaft bearing (A) part-way into the housing using the driver handle and the 52 x 55 mm bearing driver attachment.
    3. Release the snap ring pliers, then push the bearing down into the transmission housing until the snap ring snaps in place around it.

GETtheMANUALS.org

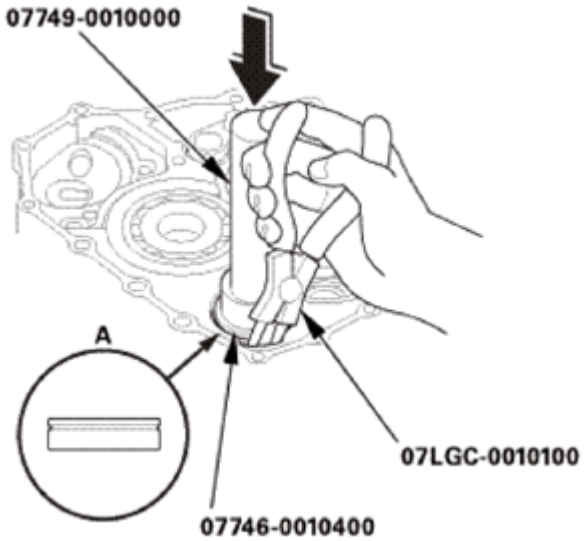

Fig. 1029: Expanding Snap Ring Using Snap Ring Pliers
Courtesy of AMERICAN HONDA MOTOR CO., INC.

4. After installing the bearing check that the snap ring (A) is seated in the bearing and the transmission housing groove, and that the snap ring end gap (B) is correct.

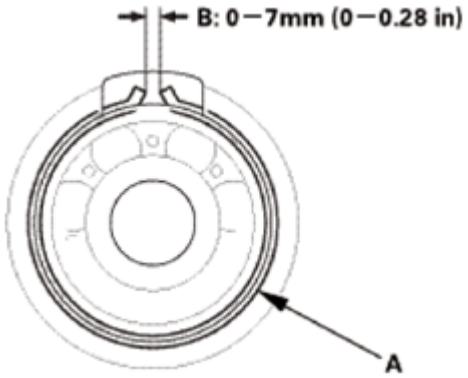

Fig. 1030: Checking Snap Ring End Gap
Courtesy of AMERICAN HONDA MOTOR CO., INC.

8. A/T Idler Gear/Idler Gear Shaft Assembly
    1. Install the idler gear shaft/idler gear assembly (A).
    2. Install the cotters (B), the cotter retainer (C), and a new snap ring (D) as shown.

GETtheMANUALS.org

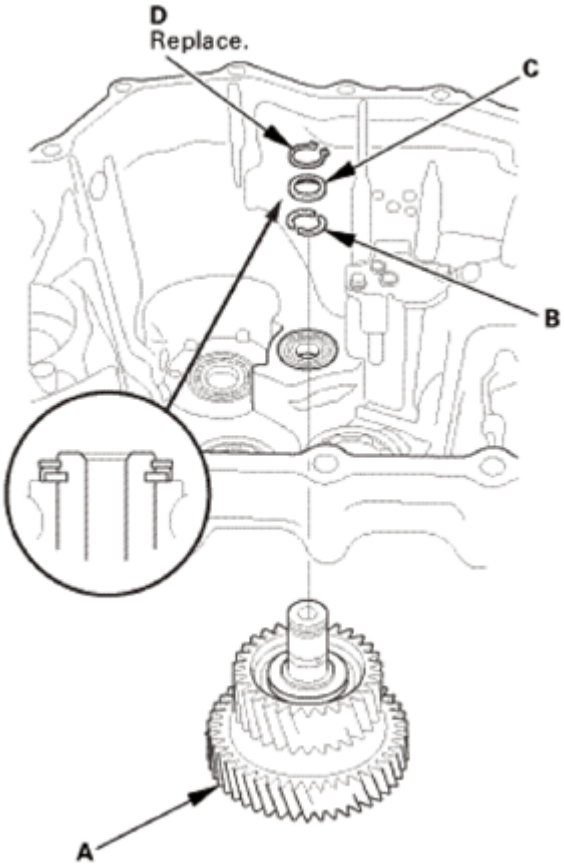

Fig. 1031: Identifying Idler Gear Shaft/Idler Gear Assembly, Cotters, Cotter Retainer And Snap Ring
Courtesy of AMERICAN HONDA MOTOR CO., INC.

9. Automatic Transmission Housing
    1. Install the three dowel pins (A) and a new gasket (B).
    2. Align the spring pin (C) of the selector control shaft (D) with the transmission housing groove (E).

    NOTE: **Do not squeeze the end of the selector control shaft tips together when turning the shaft. If the tips are squeezed together, it will cause a faulty shift position signal or position due to the play between the selector control shaft and the transmission range switch.**

    3. Place the transmission housing (F) on the torque converter housing (G).

    NOTE: **Do not install the input shaft (mainshaft) speed sensor and the output shaft (countershaft) speed sensor before installing the transmission housing.**

    4. Wrap the tip of a screwdriver with tape so the reverse idler gear teeth do not get damaged. Engage the reverse idler gear (H) with the reverse gears (I) by rotating the idler gear using the screwdriver.

GETtheMANUALS.org

5. Make sure the transmission housing is securely seated so there is no clearance between the transmission housing and the torque converter housing.

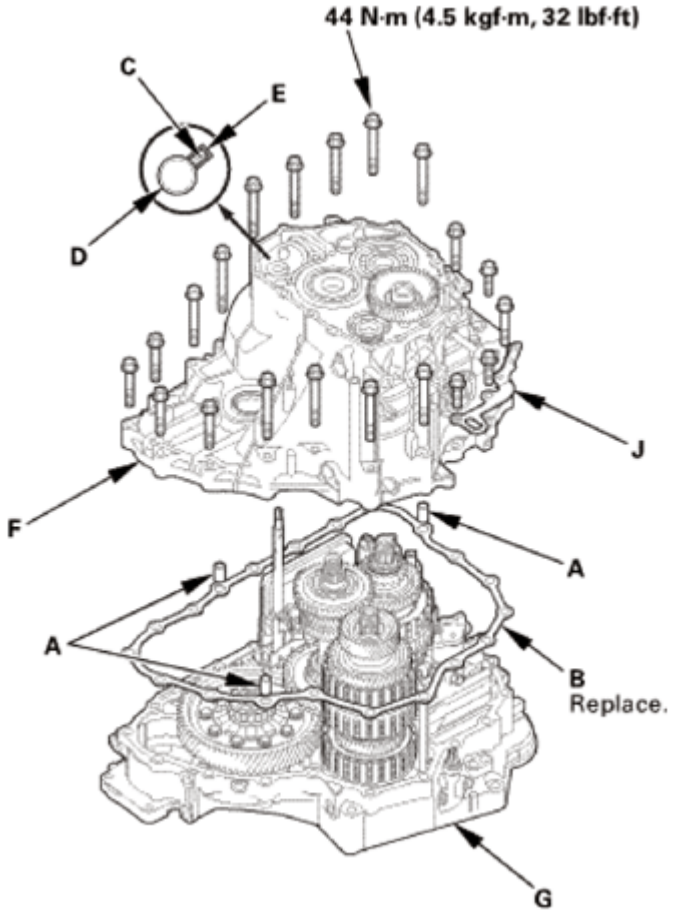

Fig. 1032: Identifying Dowel Pins, Gasket, Spring Pin, Selector Control Shaft, Transmission Housing Groove And Mounting Bolts With Torque Specification
Courtesy of AMERICAN HONDA MOTOR CO., INC.

6. Install the transmission hanger (J), and tighten the transmission housing mounting bolts (2WD: 19 bolts, AWD/4WD: 20 bolts) in at least two steps, in a crisscross pattern.

GETtheMANUALS.org

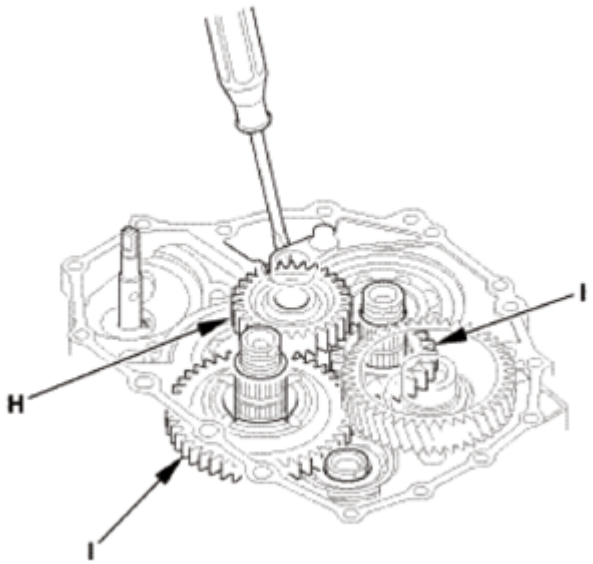

Fig. 1033: Engaging Reverse Idler Gear With Reverse Gears By Rotating Idler Gear Using Screwdriver
Courtesy of AMERICAN HONDA MOTOR CO., INC.

10. End Cover Idler Gear Assembly
    1. Install the mainshaft holder onto the mainshaft.

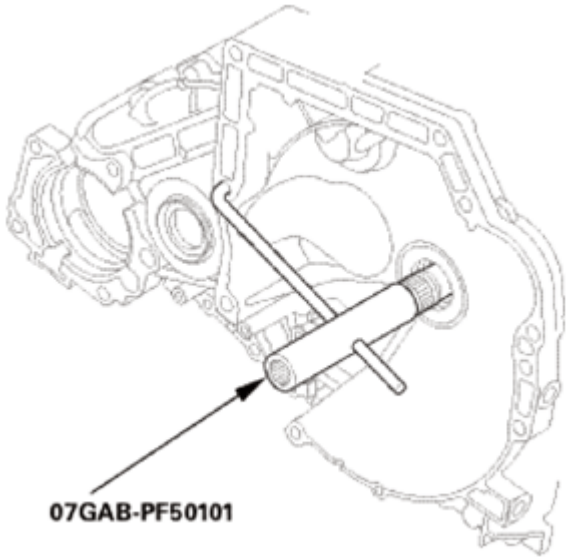

Fig. 1034: Installing Mainshaft Holder Onto Mainshaft
Courtesy of AMERICAN HONDA MOTOR CO., INC.

    2. Lubricate the following parts with ATF:
        - Splines and threads of the mainshaft.
        - Splines of the mainshaft idler gear.

GETtheMANUALS.org

- The old conical spring washer and the old locknut.

3. Install the mainshaft idler gear (A), the old conical spring washer (B), and the old locknut (C), and tighten the locknut to 225 N.m (23.0 kgf.m, 166 lbf.ft).

NOTE:

- **Do not tap the mainshaft idler gear to install.**
- **Use a torque wrench to tighten the locknut. Do not use an impact wrench.**

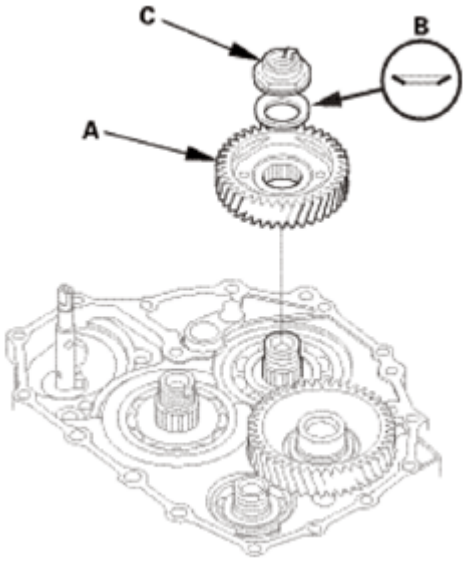

Fig. 1035: Identifying Mainshaft Idler Gear, Conical Spring Washer And Locknut
Courtesy of AMERICAN HONDA MOTOR CO., INC.

4. Lubricate the following parts with ATF:
   - Splines and threads of the countershaft.
   - Splines of the park gear.
   - The old conical spring washer and the old locknut.
5. Install the park gear (A), the old conical spring washer (B), and the old locknut (C).
6. Install the park lever spring (D), the park lever (E), and the park lever stop (F).
7. Install the lock bolt (G) using a new lock washer (H).

NOTE: **Do not bend the lock tab of the lock washer until inspect the park lever stop.**

8. Install the park pawl shaft (I), the park pawl spring (J), the park pawl (K), and the stop shaft (L).
9. Lift the park pawl up, and engage it with the park gear, and tighten the locknut to 225 N.m (23.0 kgf.m, 166 lbf.ft).

NOTE:

- **Do not tap the park gear to install.**

GETtheMANUALS.org

- **Use a torque wrench to tighten the locknut. Do not use an impact wrench.**
- **Countershaft locknut has left-hand threads.**

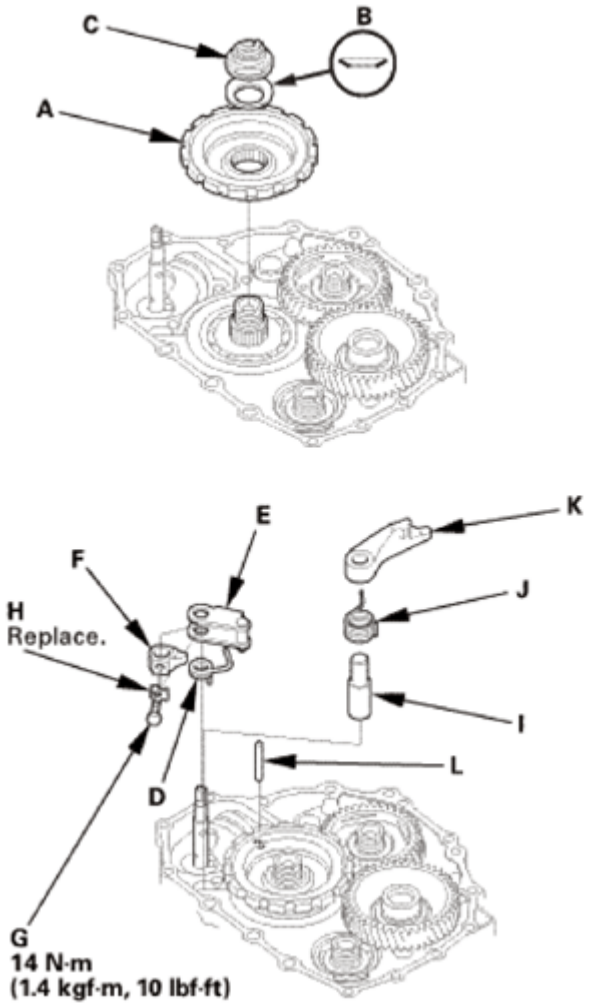

Fig. 1036: Identifying Park Pawl Shaft, Park Lever Spring, Park Lever, Park Lever Stop, Lock Bolt, Lock Washer With Torque Specification
Courtesy of AMERICAN HONDA MOTOR CO., INC.

10. Remove the old locknuts and the old conical spring washers from the mainshaft and the countershaft.
11. Lubricate the following parts with ATF:
    - Splines and threads of the mainshaft, the countershaft, and the secondary shaft.
    - New conical spring washers and new locknuts.
    - Areas where the conical spring washers contact the mainshaft idler gear and the park gear.
12. Install new conical spring washers (A) in the direction shown.
13. Install a new mainshaft locknut (B), a new countershaft locknut (C), and a new secondary shaft

GETtheMANUALS.org

locknut (D).

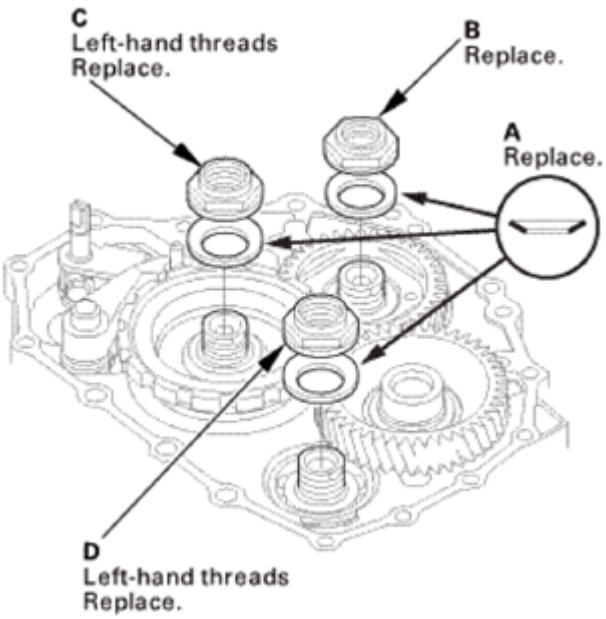

Fig. 1037: Identifying Conical Spring Washers, Mainshaft Locknut, Countershaft Locknut And Secondary Shaft Locknut
Courtesy of AMERICAN HONDA MOTOR CO., INC.

14. Tighten the locknuts to 167 N.m (17.0 kgf.m, 123 lbf.ft).

NOTE:

- **Use a torque wrench to tighten the locknut. Do not use an impact wrench.**
- **The countershaft and secondary shaft locknuts have left-hand threads.**

15. Remove the mainshaft holder.
16. Stake the locknuts into the shafts to a depth (A) of 0.7-1.3 mm (0.027-0.051 in) using a 3.5 mm punch (B).

GETtheMANUALS.org

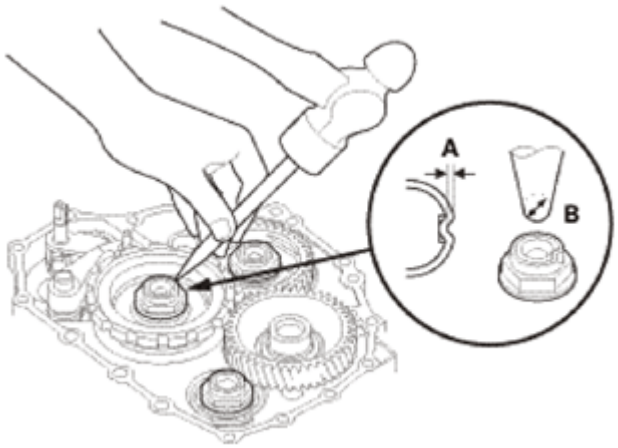

Fig. 1038: Staking Locknuts Into Shafts Using Punch
Courtesy of AMERICAN HONDA MOTOR CO., INC.

17. Set the park lever in the P position.
18. Measure the distance (A) between the center of the park pawl shaft (B) and the center of the park lever roller pin (C) as shown.

    Standard: 57.7-58.7 mm (2.272-2.311 in)

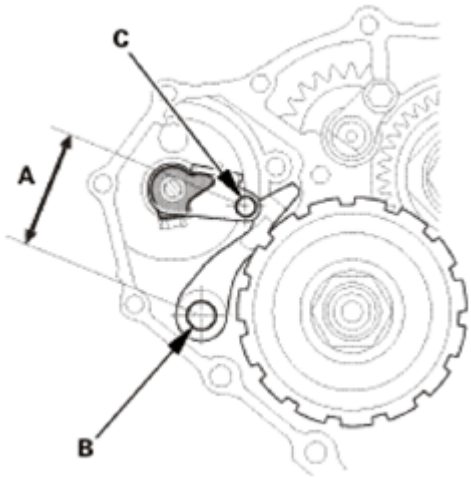

Fig. 1039: Measuring Distance Between Center Of Park Pawl Shaft And Center Of Park Lever Roller Pin
Courtesy of AMERICAN HONDA MOTOR CO., INC.

19. If the measurement is out of the standard, select and install the appropriate park lever stop (A) from the table.

PARK LEVER STOP SPECIFICATION

Mark	B	C
1	11.00 mm (0.4331 in)	11.00 mm (0.4331 in)

GETtheMANUALS.org

2	10.80 mm (0.4252 in)	10.65 mm (0.4193 in)
3	10.60 mm (0.4173 in)	10.30 mm (0.4055 in)

20. After replacing the park lever stop, make sure the distance is within the tolerance.

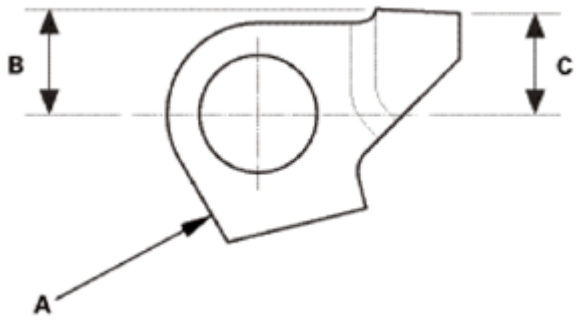

Fig. 1040: Identifying Park Lever Stop Dimension
Courtesy of AMERICAN HONDA MOTOR CO., INC.

21. Pry up the lock tab (A) of the lock washer against the bolt head.

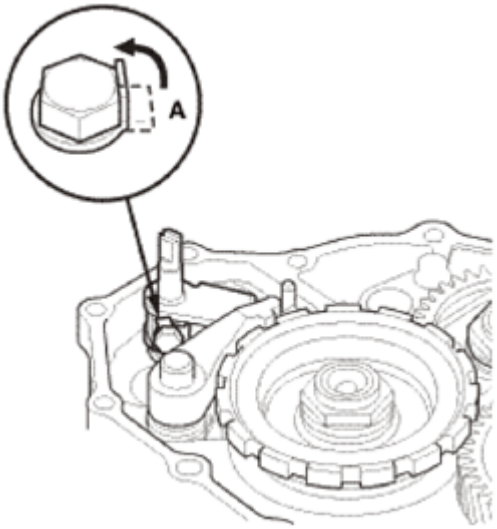

Fig. 1041: Prying Up Lock Tab Of Lock Washer Against Bolt Head
Courtesy of AMERICAN HONDA MOTOR CO., INC.

11. ATF Feed Pipe/Lubrication Pipe
    1. Install the 6 x 201 mm ATF pipe (A).
    2. Install the ATF lubrication pipe (B).
    3. Install the 8 x 220 mm ATF pipe (C).
    4. Install the 8 x 198 mm ATF pipes (D).

GETtheMANUALS.org

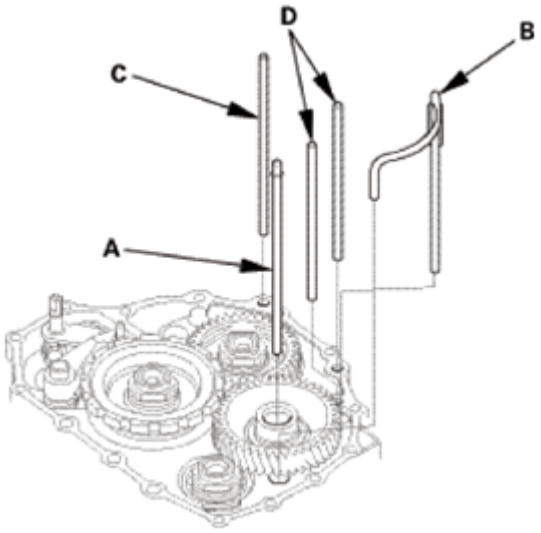

Fig. 1042: Identifying ATF Feed Pipes And Lubrication Pipe
Courtesy of AMERICAN HONDA MOTOR CO., INC.

12. A/T Shift Solenoid Wire Harness - Reconnection
    1. Connect the shift solenoid valve connectors:
        - BLU wire to shift solenoid valve A.
        - ORN wire to shift solenoid valve B.
        - GRN wire to shift solenoid valve C.
        - YEL, WHT, and WHT wires to shift solenoid valve D.
        - RED wire to shift solenoid valve E.

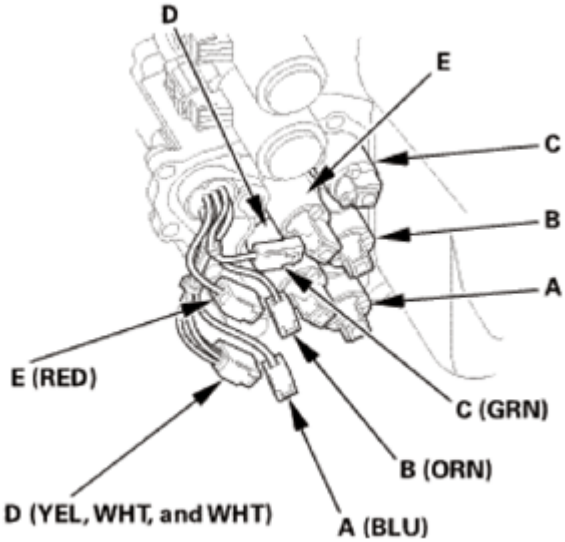

Fig. 1043: Identifying Shift Solenoid Valves
Courtesy of AMERICAN HONDA MOTOR CO., INC.

GETtheMANUALS.org

13. A/T Shift Solenoid Cover
    1. Install the shift solenoid valve cover (A) with the dowel pins (B) and a new gasket (C).

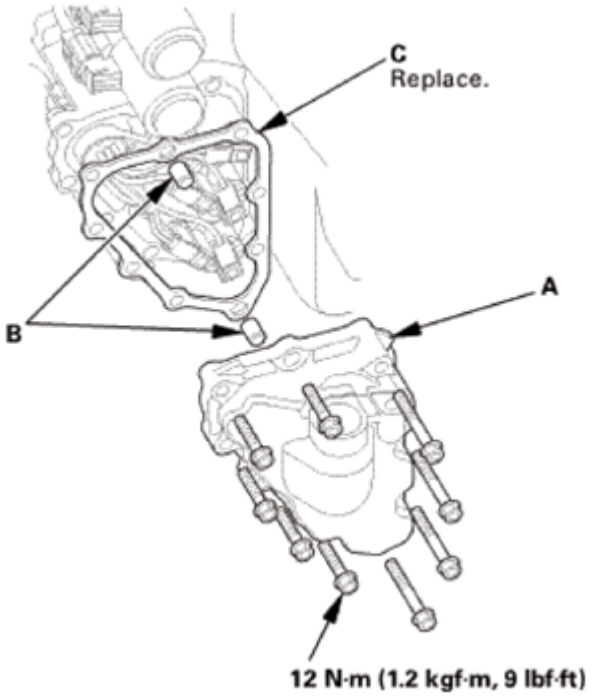

Fig. 1044: Identifying Shift Solenoid Valve Cover, Dowel Pins, Gasket And Mounting Bolts With Torque Specification
Courtesy of AMERICAN HONDA MOTOR CO., INC.

14. Dipstick Guide Tube
    1. Install a new O-ring (A) on the ATF dipstick guide tube (B).
    2. Install the ATF dipstick guide tube.

GETtheMANUALS.org

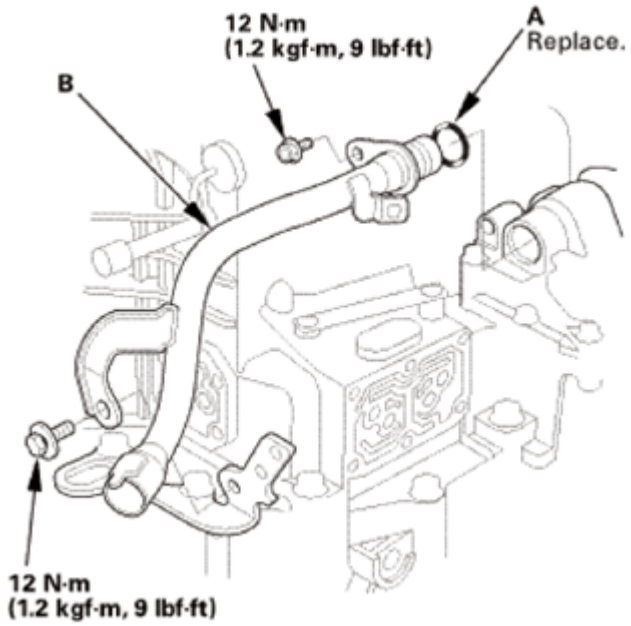

Fig. 1045: Identifying ATF Dipstick Guide Tube, O-Ring And Mounting Bolts With Torque Specification
Courtesy of AMERICAN HONDA MOTOR CO., INC.

15. ATF Outlet Line
    1. Install the ATF outlet line (A) using new sealing washers (B).

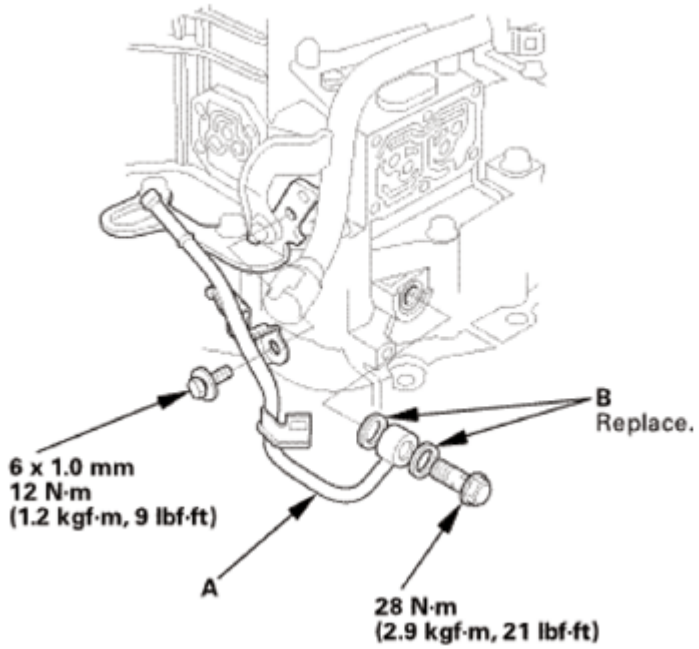

Fig. 1046: Identifying ATF Outlet Line, Sealing Washers And Mounting Bolts With Torque Specification
Courtesy of AMERICAN HONDA MOTOR CO., INC.

GETtheMANUALS.org

16. ATF Inlet Line
    1. Install the ATF inlet line (A) using new sealing washers (B).

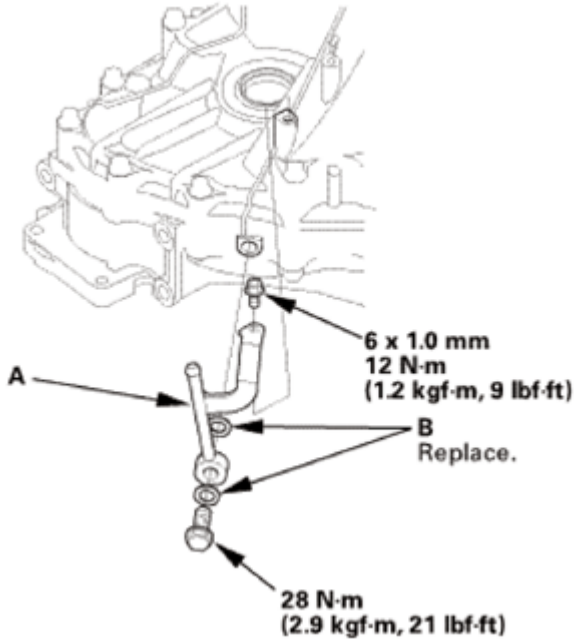

Fig. 1047: Identifying ATF Inlet Line, Sealing Washers And Mounting Bolts With Torque Specification
Courtesy of AMERICAN HONDA MOTOR CO., INC.

17. A/T Clutch Pressure Control Solenoid Valve B and C
    1. Clean the mounting surfaces and the fluid passages of the solenoid valve body and the transmission housing.
    2. Install a new gasket (A) with the blue side toward the transmission housing, and Install the ATF joint pipes (D).
    3. Install new O-rings (E) over the ATF joint pipes.
    4. Install A/T clutch pressure control solenoid valves B and C with the clamp bracket (F).

GETtheMANUALS.org

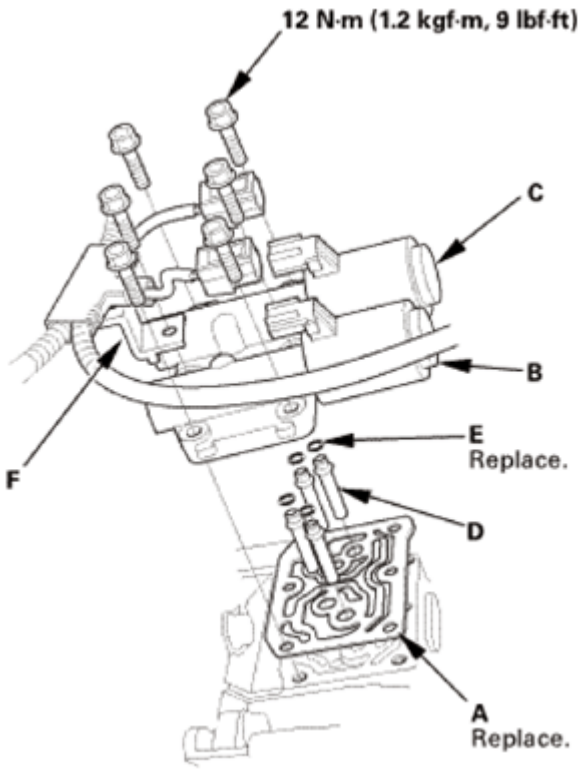

Fig. 1048: Identifying Gasket, ATF Joint Pipes, O-Rings, A/T Clutch Pressure Control Solenoid Valves, Clamp Bracket And Mounting Bolts With Torque Specification
Courtesy of AMERICAN HONDA MOTOR CO., INC.

18. A/T Clutch Pressure Control Solenoid Valve A
    1. Clean the mounting surfaces and the fluid passages of the solenoid valve body and the transmission housing.
    2. Install a new gasket (B) with the blue side toward the transmission housing, and install the 35 mm ATF pipe (C) and the ATF joint pipes (D).
    3. Install new O-rings (E) over the ATF joint pipes.
    4. Install A/T clutch pressure control solenoid valve A.

GETtheMANUALS.org

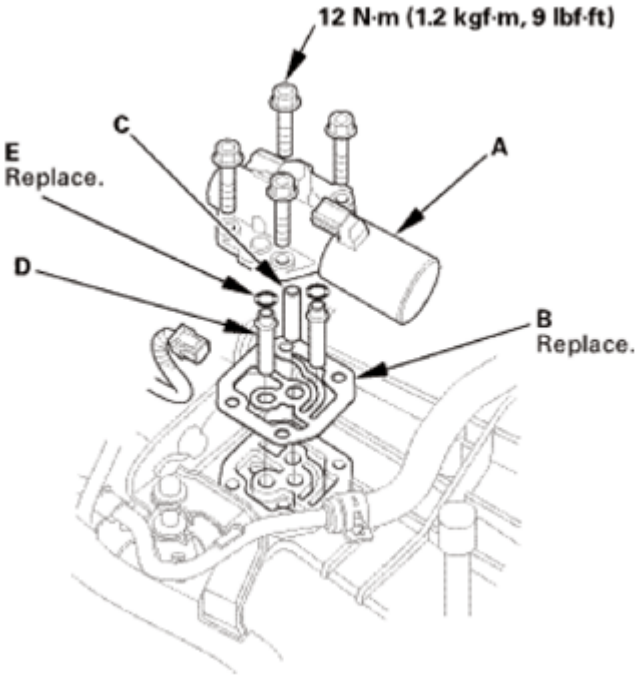

Fig. 1049: Identifying A/T Clutch Pressure Control Solenoid Valve, Gasket, ATF Pipe, ATF Joint Pipes And Mounting Bolts With Torque Specification
Courtesy of AMERICAN HONDA MOTOR CO., INC.

19. Output Shaft (Countershaft) Speed Sensor
    1. Install a new O-ring (A) on the output shaft (countershaft) speed sensor (B).
    2. Install the output shaft (countershaft) speed sensor and the sensor washer (C).

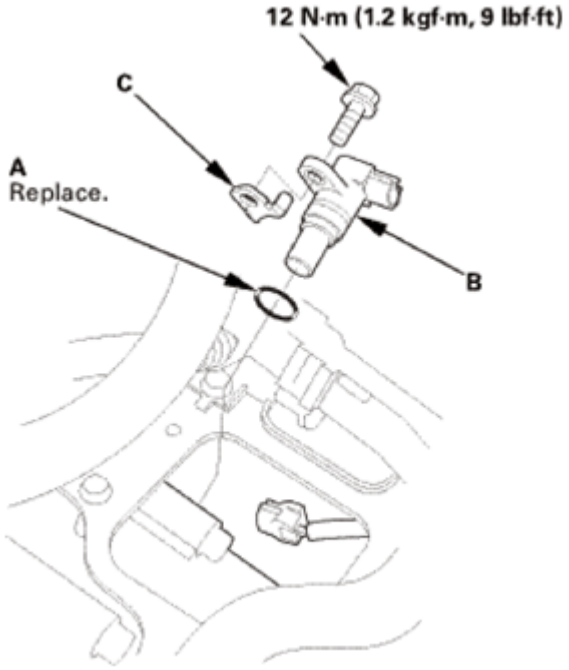

GETtheMANUALS.org

Fig. 1050: Identifying Output Shaft (Countershaft) Speed Sensor, O-Ring, Sensor Washer And Mounting Bolts With Torque Specification
Courtesy of AMERICAN HONDA MOTOR CO., INC.

20. Input Shaft (Mainshaft) Speed Sensor
    1. Install a new O-ring (A) on the input shaft (mainshaft) speed sensor (B).
    2. Install the input shaft (mainshaft) speed sensor.

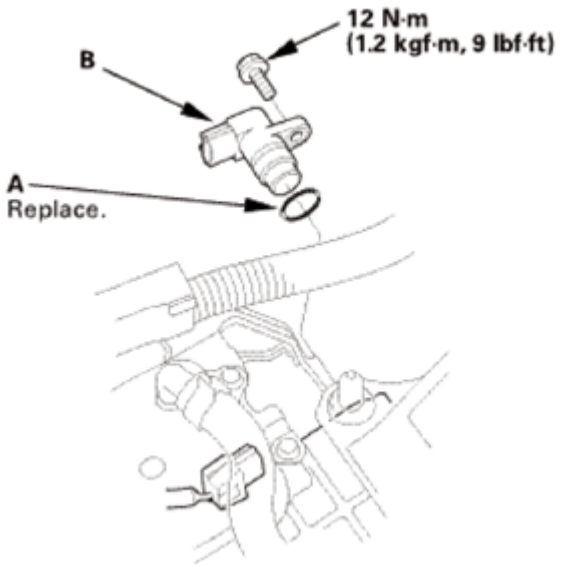

Fig. 1051: Identifying Input Shaft (Mainshaft) Speed Sensor, O-Ring And Mounting Bolt With Torque Specification
Courtesy of AMERICAN HONDA MOTOR CO., INC.

21. Transmission End Cover
    1. Install the dowel pins (A) and a new gasket (B).
    2. Install new O-rings (C) over the ATF pipes.
    3. Install the end cover (D), and tighten the three special bolts (E) and the 6 x 1.0 mm bolts (F) (12 bolts).

GETtheMANUALS.org

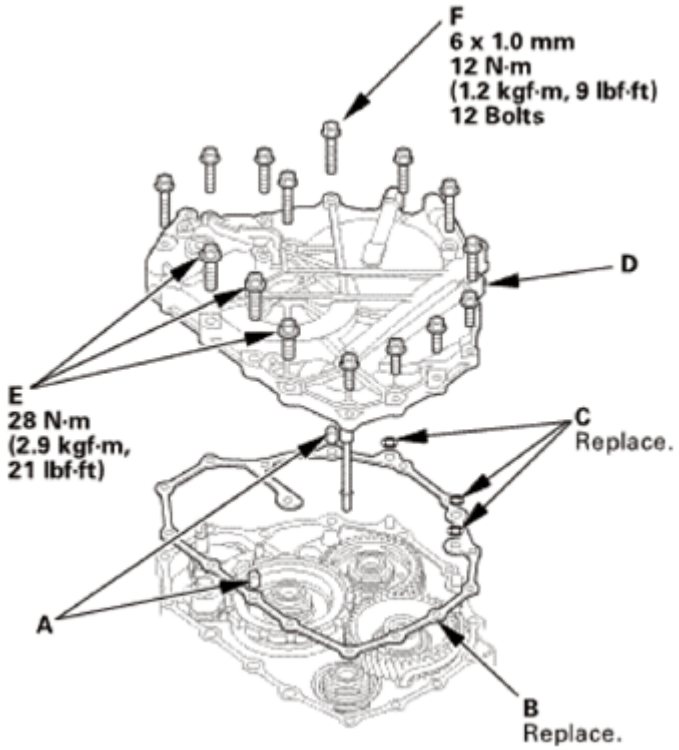

Fig. 1052: Identifying Dowel Pins, Gasket, O-Rings, End Cover And Mounting Bolts With Torque Specification
Courtesy of AMERICAN HONDA MOTOR CO., INC.

22. Transmission Range Switch Subharness
    1. Install the clamp brackets (A).
    2. Install the transmission range switch subharness (B).

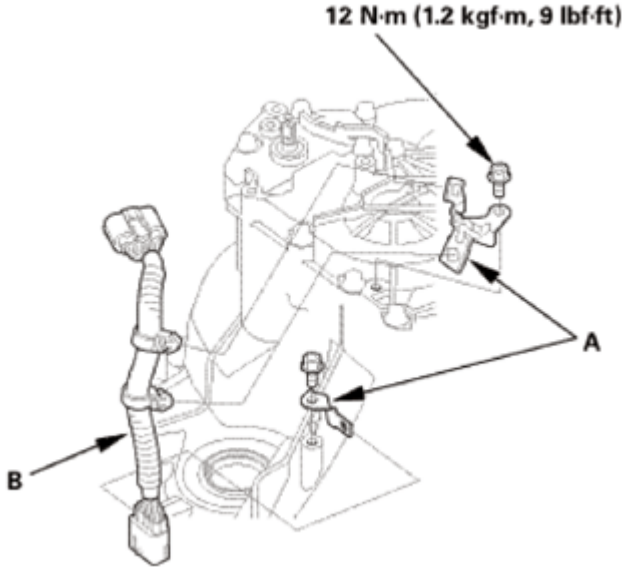

GETtheMANUALS.org

Fig. 1053: Identifying Transmission Range Switch Subharness, Clamp Brackets And Mounting Bolts With Torque Specification
Courtesy of AMERICAN HONDA MOTOR CO., INC.

23. Transmission Range Switch
    1. Make sure the selector control shaft is in the N position. If necessary, move the selector control shaft to the N position.

NOTE: **Do not use the selector control shaft to adjust the shift position. If the selector control shaft tips are squeezed together it will cause a faulty signal or position due to play between the selector control shaft and switch.**

Fig. 1054: Moving Selector Control Shaft To N Position
Courtesy of AMERICAN HONDA MOTOR CO., INC.

    2. Align the cutouts (A) on the rotary-frame with the neutral positioning cutouts (B) on the transmission range switch (C), then put a 2.0 mm (0.079 in) feeler gauge blade (D) in the cutouts to hold the switch in the N position.

NOTE: **Be sure to use a 2.0 mm (0.079 in) blade or equivalent to hold the switch in the N position.**

GETtheMANUALS.org

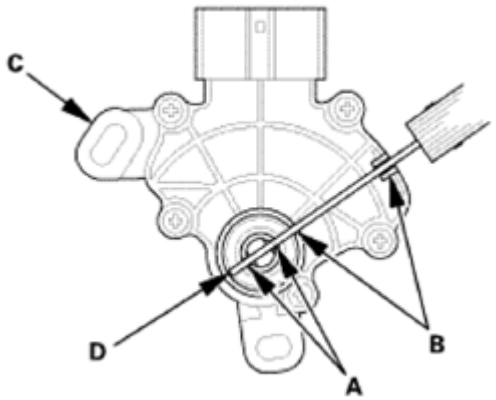

Fig. 1055: Aligning Cutouts On Rotary-Frame With Neutral Positioning Cutouts On Transmission Range Switch
Courtesy of AMERICAN HONDA MOTOR CO., INC.

3. Install the transmission range switch (A) gently on the selector control shaft (B) while holding it in the N position with the 2.0 mm (0.079 in) blade (C).

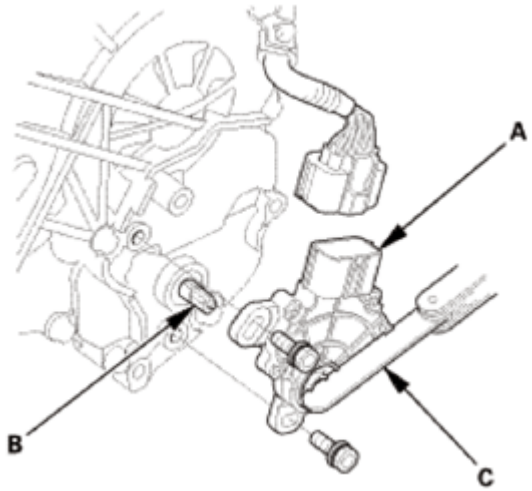

Fig. 1056: Identifying Transmission Range Switch, Selector Control Shaft And Blade
Courtesy of AMERICAN HONDA MOTOR CO., INC.

4. Tighten the bolts on the transmission range switch (A) while you continue holding the N position.

NOTE: **Do not move the transmission range switch when tightening the bolts.**

5. Remove the feeler gauge (B).
6. Check the connector (C) for corrosion, dirt, or oil, and clean or repair if necessary, then connect the connector securely.

GETtheMANUALS.org

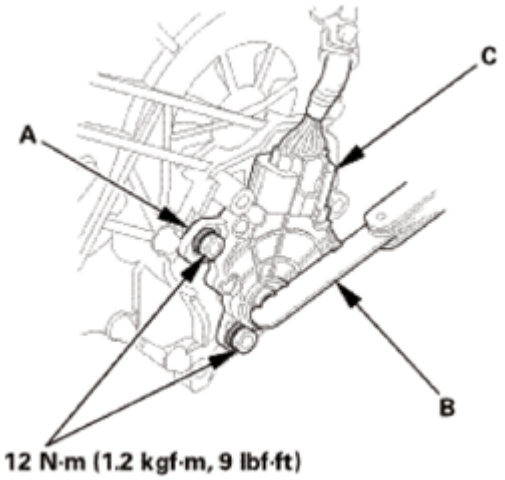

Fig. 1057: Identifying Transmission Range Switch, Connector, Feeler Gauge And Mounting Bolts With Torque Specification
Courtesy of AMERICAN HONDA MOTOR CO., INC.

24. Transmission Range Switch Cover
    1. Install the transmission range switch cover (A).

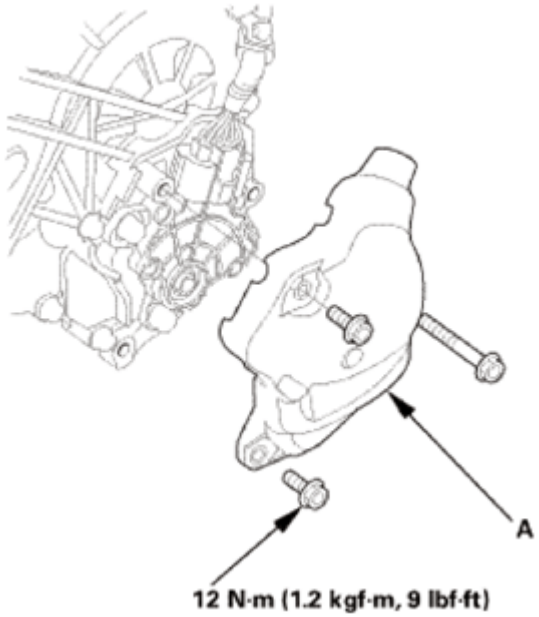

Fig. 1058: Identifying Transmission Range Switch Cover And Mounting Bolts With Torque Specification
Courtesy of AMERICAN HONDA MOTOR CO., INC.

A/T SHIFT CABLE ADJUSTMENT

REMOVAL

GETtheMANUALS.org

1. Front Console Cover - Both Sides
    1. Remove the clips (A).
    2. Detach the clips (B), then remove the front console covers (C).

Left side

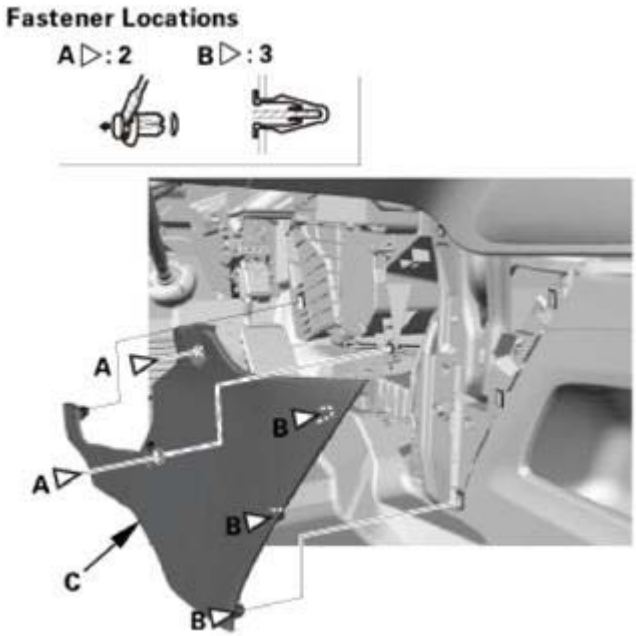

Fig. 1059: Identifying Front Console Covers And Clips (Left Side)
Courtesy of AMERICAN HONDA MOTOR CO., INC.

Right side

GETtheMANUALS.org

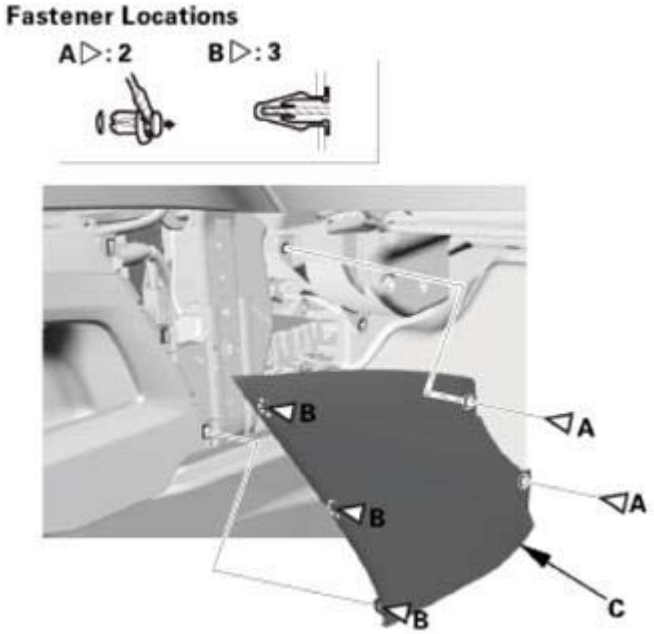

Fig. 1060: Identifying Front Console Covers And Clips (Right Side)
Courtesy of AMERICAN HONDA MOTOR CO., INC.

2. Center Console Rear Trim
    1. Carefully pry out the center console rear trim (A) with the appropriate trim tool to detach the clips (B) and the hooks (C), then remove the center console rear trim.

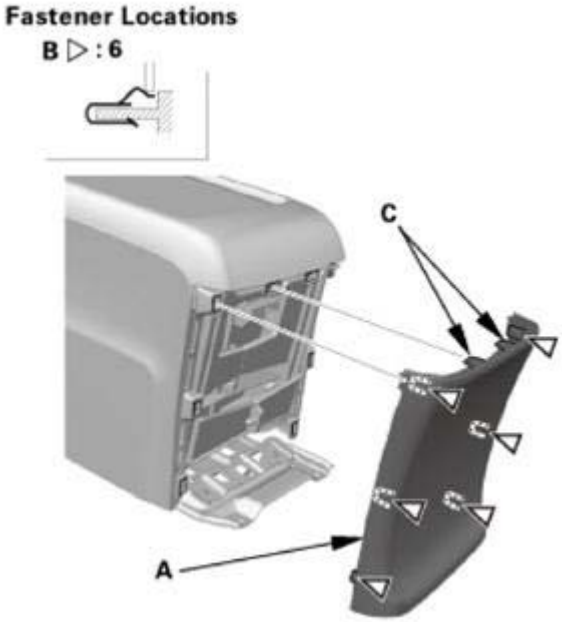

Fig. 1061: Identifying Center Console Rear Trim, Clips And Hooks
Courtesy of AMERICAN HONDA MOTOR CO., INC.

GETtheMANUALS.org

3. Center Console
    1. Carefully pry out the center lower cover (A) with the appropriate trim tool to detach the clips (B), then remove the center lower cover.
    2. Remove the bolt (C).

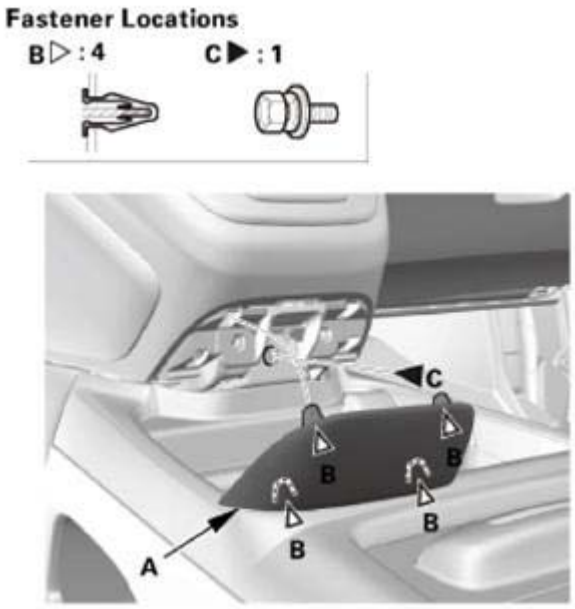

Fig. 1062: Identifying Center Lower Cover, Clips And Bolts
Courtesy of AMERICAN HONDA MOTOR CO., INC.

3. Remove the bolts (A).

Fig. 1063: Identifying Center Console Bolts
Courtesy of AMERICAN HONDA MOTOR CO., INC.

GETtheMANUALS.org

4. Remove the console box mat (A), then remove the bolts (B).

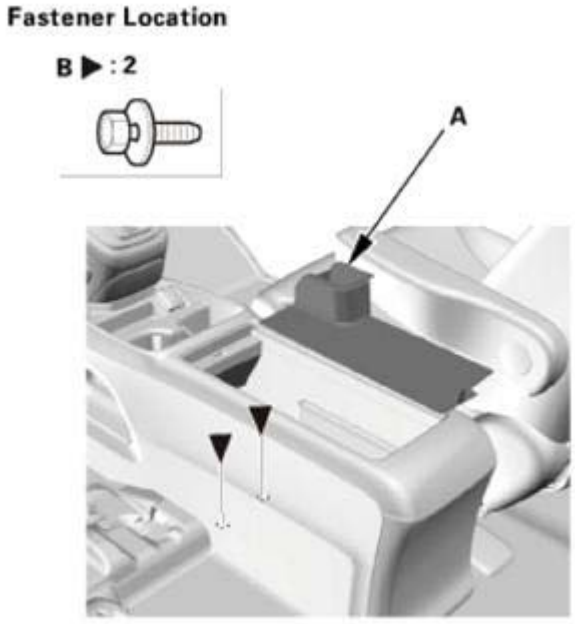

Fig. 1064: Identifying Console Box Mat And Bolts
Courtesy of AMERICAN HONDA MOTOR CO., INC.

5. Disconnect the connectors (A), and remove the clips (B).

GETtheMANUALS.org

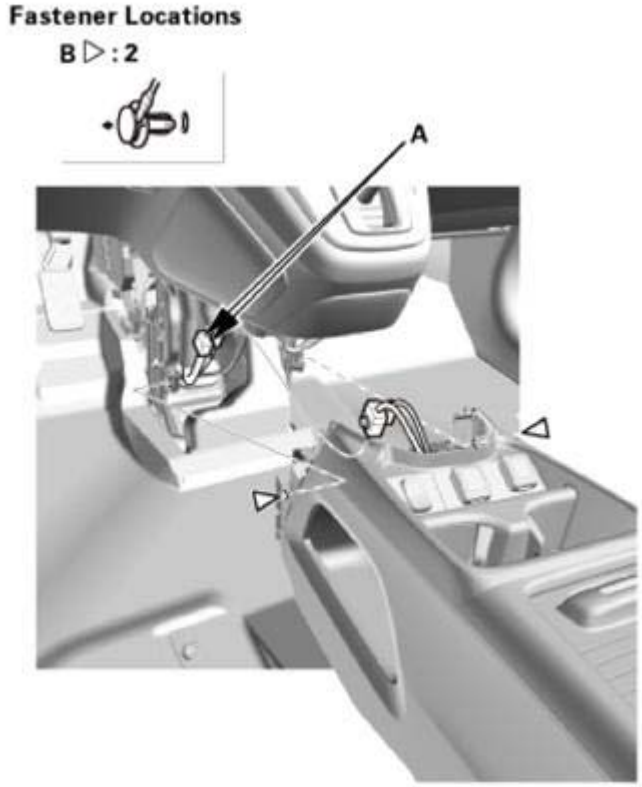

Fig. 1065: Identifying Connectors And Clips
Courtesy of AMERICAN HONDA MOTOR CO., INC.

6. Slide both front seats fully rearward, and recline the seat-backs around two thirds to the rear.
7. Remove the center console (A).

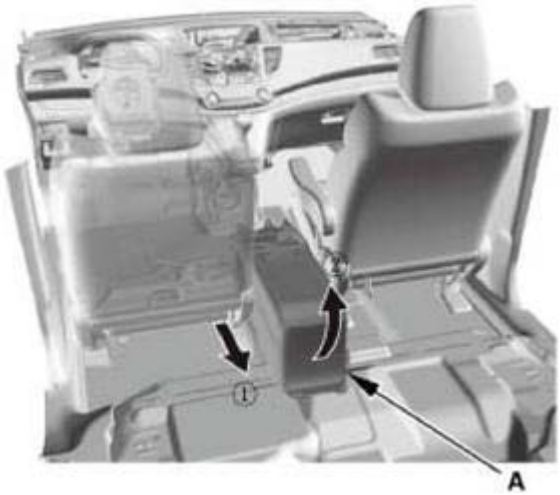

Fig. 1066: Removing Center Console
Courtesy of AMERICAN HONDA MOTOR CO., INC.

GETtheMANUALS.org

4. Center Maintenance Cover
    1. Remove the maintenance cover (A).

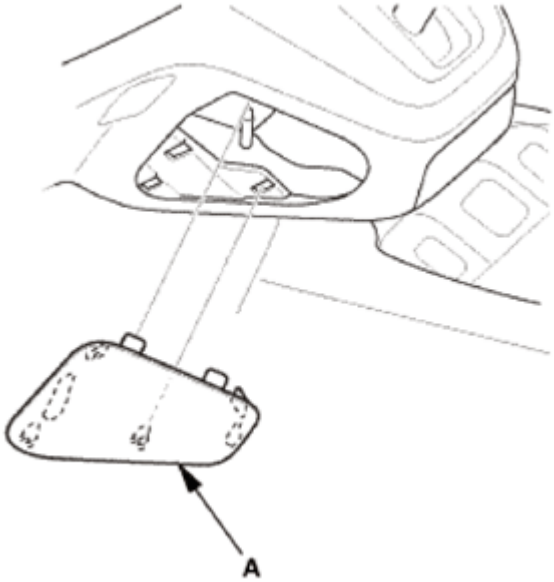

Fig. 1067: Identifying Center Maintenance Cover
Courtesy of AMERICAN HONDA MOTOR CO., INC.

5. Shift Cable - Disconnection Lever Side
    1. Shift the shift lever to R.
    2. Insert a 6.0 mm (0.236 in) pin (A) into the positioning holes (B).

NOTE: Use only a 6.0 mm (0.236 in) pin with no burrs.

    3. Remove the nut (C) securing the shift cable end (D).

GETtheMANUALS.org

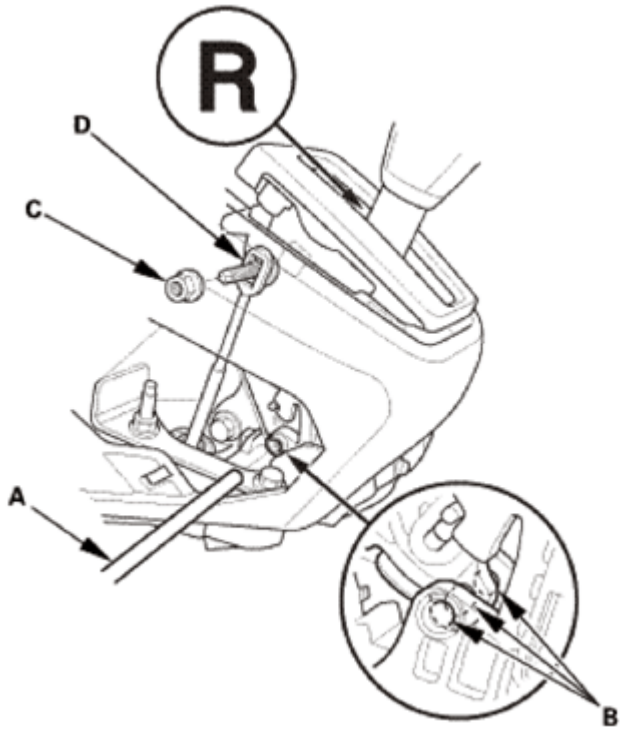

Fig. 1068: Inserting Pin Into Positioning Holes
Courtesy of AMERICAN HONDA MOTOR CO., INC.

4. Unlock the retainer lock (A).

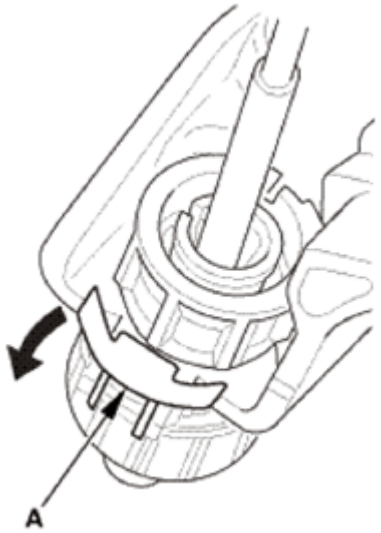

Fig. 1069: Unlocking Retainer Lock
Courtesy of AMERICAN HONDA MOTOR CO., INC.

5. Rotate the socket holder retainer (A) counterclockwise (B) until it stops, and push the retainer lock (C) into the socket holder retainer to lock the retainer.

GETtheMANUALS.org

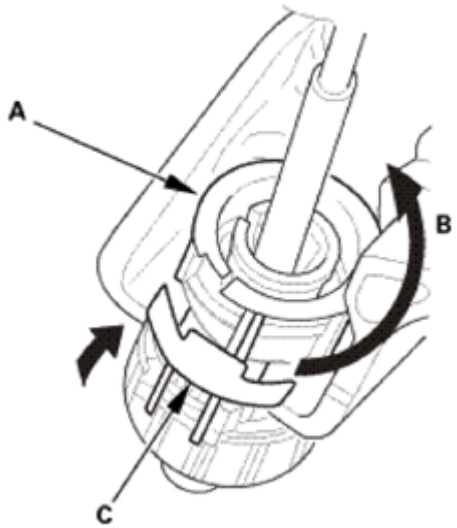

Fig. 1070: Rotating Socket Holder Retainer Counterclockwise
Courtesy of AMERICAN HONDA MOTOR CO., INC.

6. Slide the socket holder (A) away from the bracket as shown to remove the shift cable (B) from the shift cable bracket (C).

NOTE: Do not remove the shift cable by pulling the shift cable guide (D).

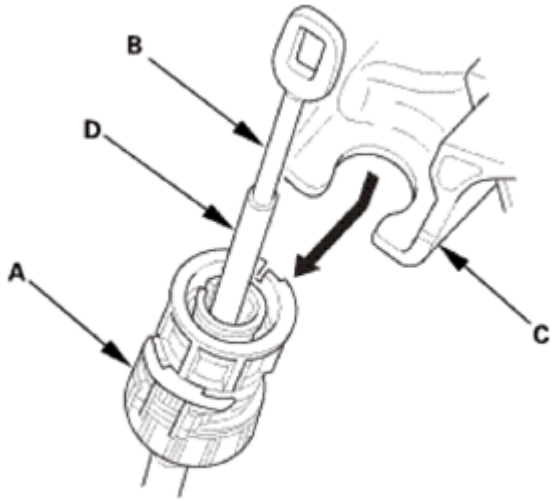

Fig. 1071: Removing Shift Cable From Shift Cable Bracket
Courtesy of AMERICAN HONDA MOTOR CO., INC.

ADJUSTMENT

1. Shift Cable - Adjustment
    1. Push the shift cable (A) until it stops, then release it. Pull the shift cable back one step so that the shift position is in R.

GETtheMANUALS.org

NOTE: **Do not hold the shift cable guide (B) to adjust the shift cable.**

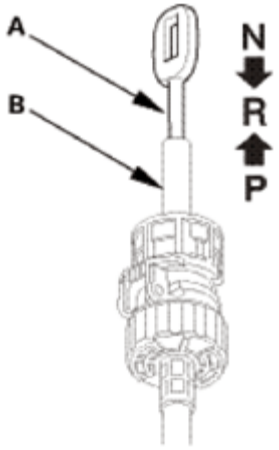

Fig. 1072: Identifying Shift Cable And Shift Cable Guide
Courtesy of AMERICAN HONDA MOTOR CO., INC.

2. Turn the ignition switch to ON (II).
3. Check that the R position indicator comes on.
4. Turn the ignition switch to LOCK (0).

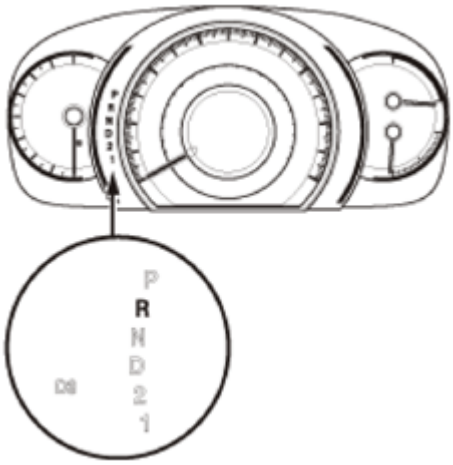

Fig. 1073: Identifying R Position Indicator
Courtesy of AMERICAN HONDA MOTOR CO., INC.

5. Unlock the retainer lock (A).

GETtheMANUALS.org

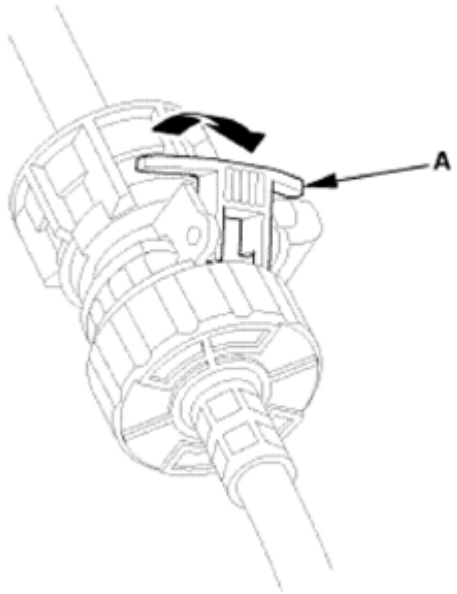

Fig. 1074: Unlocking Retainer Lock
Courtesy of AMERICAN HONDA MOTOR CO., INC.

6. Rotate the socket holder retainer (A) in arrow direction (B) until it stops to create clearance (C) between the socket holder (D) and holder retainer, and push the retainer lock (E) into the socket holder retainer to lock the retainer.

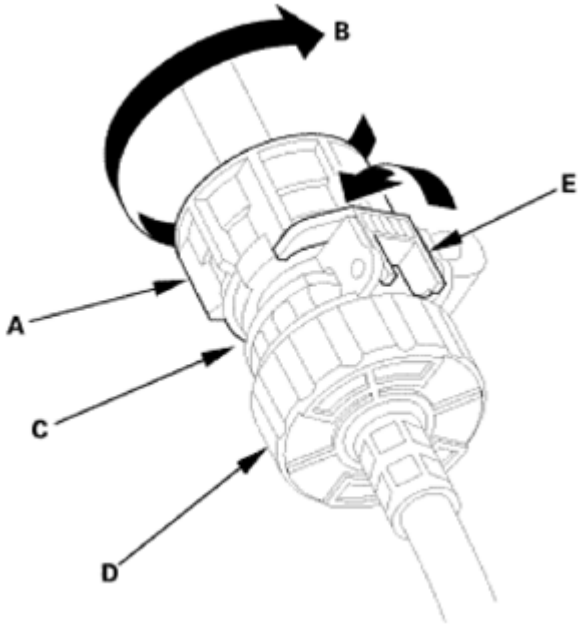

Fig. 1075: Rotating Socket Holder Retainer
Courtesy of AMERICAN HONDA MOTOR CO., INC.

7. Align the shift cable slot (A) between the socket holder (B) and the socket holder retainer (C) with the opening (D) in the shift cable bracket (E), then slide the holder into the bracket while installing

GETtheMANUALS.org

the shift cable end (F) over the mounting stud (G) by aligning its square hole (H) with the square fitting (I) at the bottom of the stud.

NOTE:

- **Do not install the shift cable by holding the shift cable guide (J).**
- **When the socket holder is installed in the shift cable bracket, the retainer lock is unhinged and releases the holder retainer lock, then the holder retainer returns under spring force to secure the shift cable.**

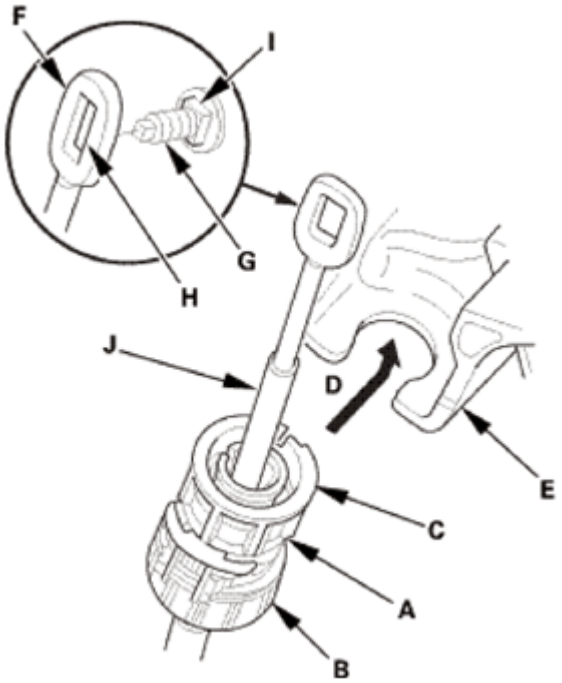

Fig. 1076: Aligning Shift Cable Slot Between Socket Holder And Socket Holder Retainer With Opening In Shift Cable Bracket
Courtesy of AMERICAN HONDA MOTOR CO., INC.

8. Push the retainer lock (A) fully to lock the socket holder retainer (B), and make sure that the retainer lock fits into the hinged-joint (C). If the retainer lock does not fit with the edge of the hinged-joint, rotate the holder retainer counterclockwise while pushing the retainer lock until it locks.

GETtheMANUALS.org

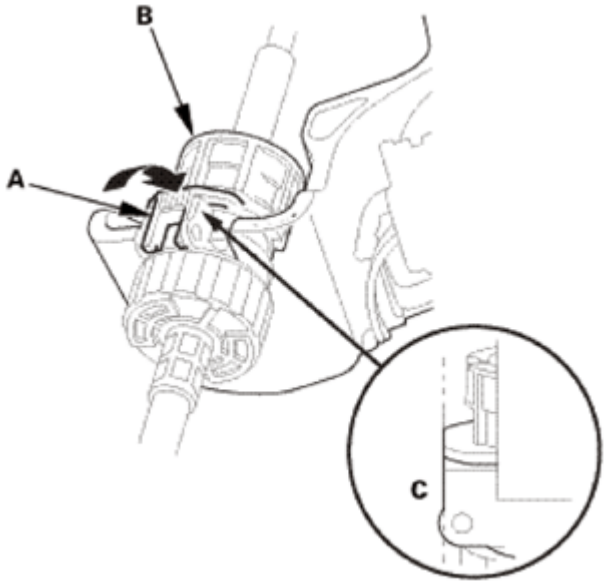

Fig. 1077: Pushing Retainer Lock
Courtesy of AMERICAN HONDA MOTOR CO., INC.

9. Make sure that the shift cable end (A) is properly installed on the mounting stud (B).
    - If the shift cable end is out of position with the mounting stud, remove the shift cable from the shift cable bracket, then reinstall the cable end over the mounting stud before reinstalling the shift cable to the shift cable bracket. Do not install the shift cable end on the mounting stud with the shift cable install on the shift cable bracket.
    - If the shift cable end does not ride at the bottom of the mounting stud, rotate the stud to align the square fitting with the hole.

GETtheMANUALS.org

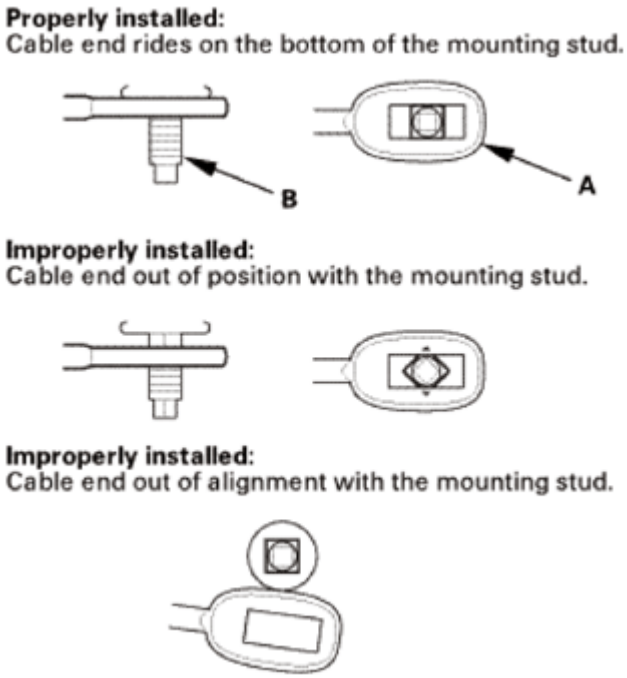

Fig. 1078: Identifying Shift Cable End Proper And Improper Installation
Courtesy of AMERICAN HONDA MOTOR CO., INC.

10. Install the shift cable end nut (A).
11. Remove the 6.0 mm (0.236 in) pin (B) that was installed to hold the shift lever.
12. Turn the ignition switch to ON (II).
13. Move the shift lever to each position, and check that the A/T gear position indicator follows the transmission range switch.
14. Shift the shift lever to P.
15. Check that the shift lock works properly.
16. Push the shift lock release, and check that the shift lever releases. Also check that the shift lever locks when it is shifted back to P.

GETtheMANUALS.org

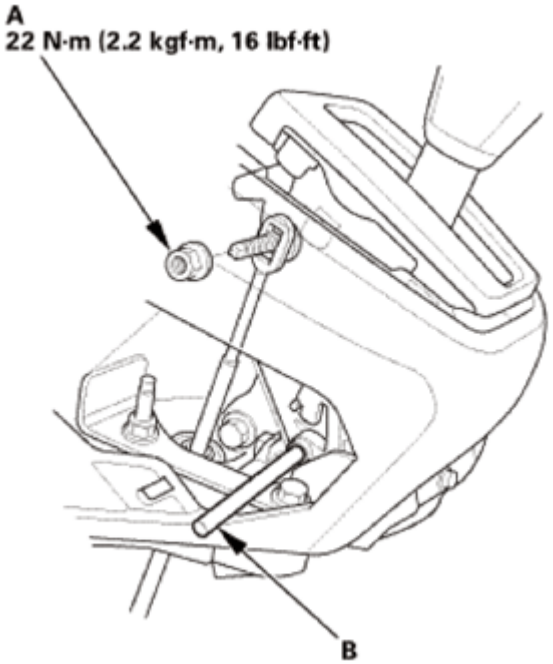

Fig. 1079: Identifying Pin And Shift Cable End Nut With Torque Specification
Courtesy of AMERICAN HONDA MOTOR CO., INC.

INSTALLATION

1. Center Maintenance Cover
    1. Install the maintenance cover (A).

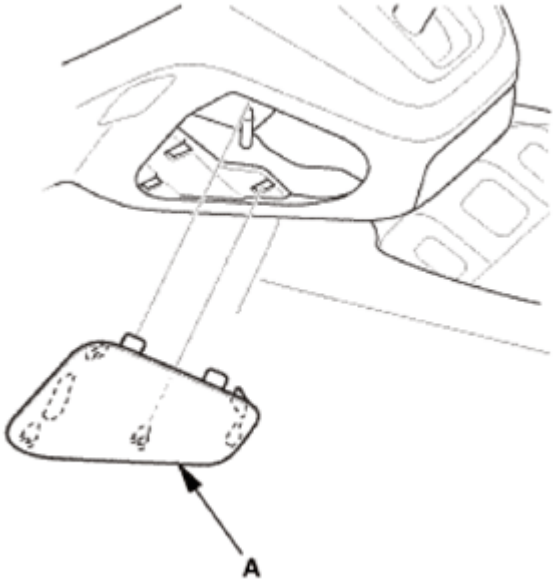

Fig. 1080: Identifying Center Maintenance Cover
Courtesy of AMERICAN HONDA MOTOR CO., INC.

GETtheMANUALS.org

2. Center Console
    1. Install the center console (A).

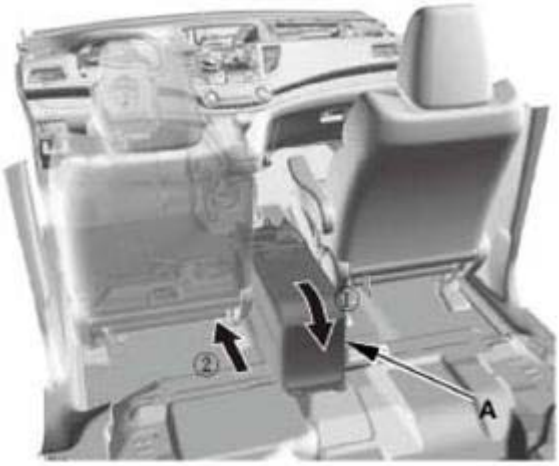

Fig. 1081: Installing Center Console
Courtesy of AMERICAN HONDA MOTOR CO., INC.

    2. Connect the connectors (A), and install the clips (B).

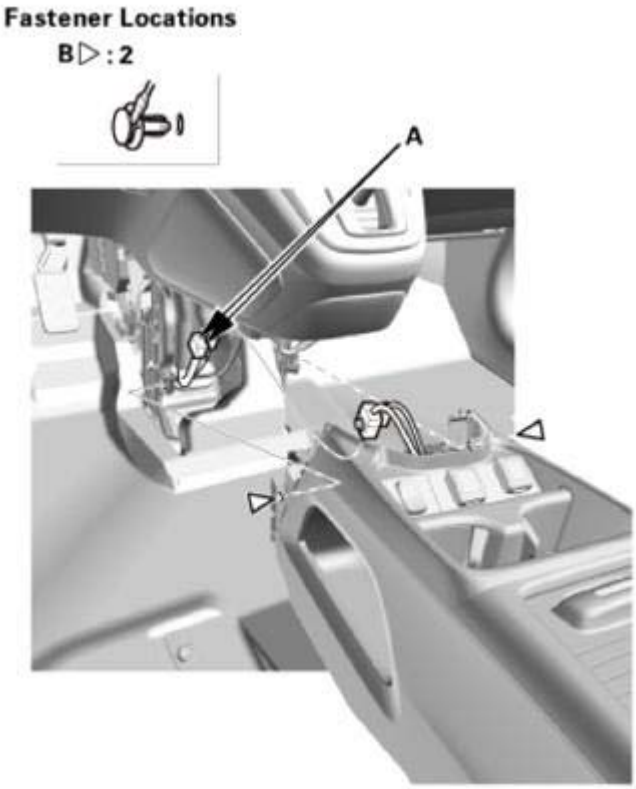

Fig. 1082: Identifying Center Console Connectors And Clips
Courtesy of AMERICAN HONDA MOTOR CO., INC.

GETtheMANUALS.org

3. Install the bolts (A), then install the console box mat (B).

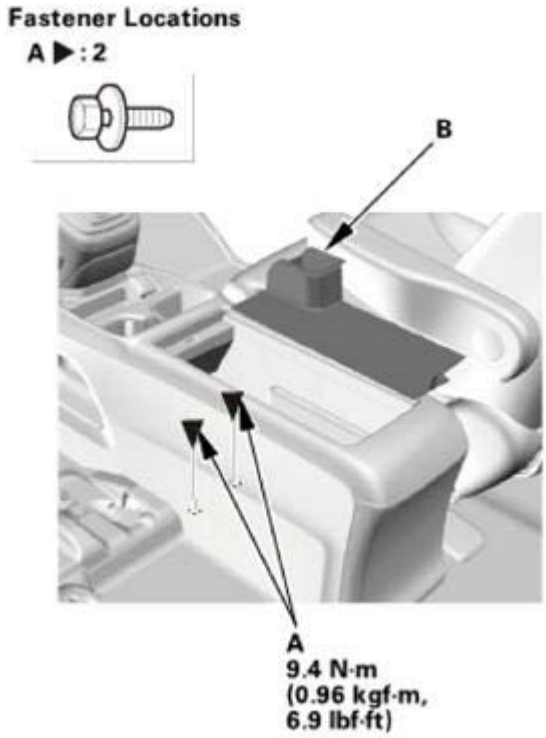

Fig. 1083: Identifying Console Box Mat And Bolts With Torque Specification
Courtesy of AMERICAN HONDA MOTOR CO., INC.

4. Install the bolts (A).

GETtheMANUALS.org

Fig. 1084: Identifying Center Console Bolts With Torque Specification
Courtesy of AMERICAN HONDA MOTOR CO., INC.

5. Install the bolt (A), then install the center lower cover (B). Make sure the clips (C) snap into place securely.

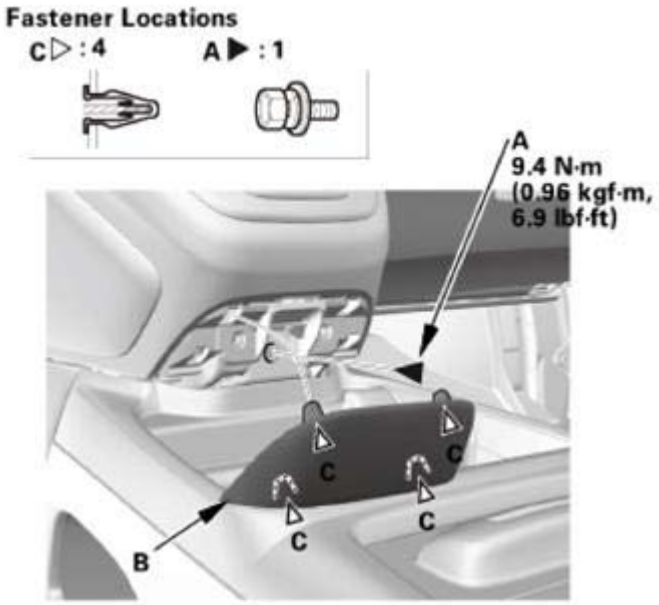

Fig. 1085: Identifying Center Lower Cover, Clips And Bolt With Torque Specification
Courtesy of AMERICAN HONDA MOTOR CO., INC.

3. Center Console Rear Trim
    1. Install the center console rear trim (A). Make sure the clips (B) and the hooks (C) snap into place securely.

GETtheMANUALS.org

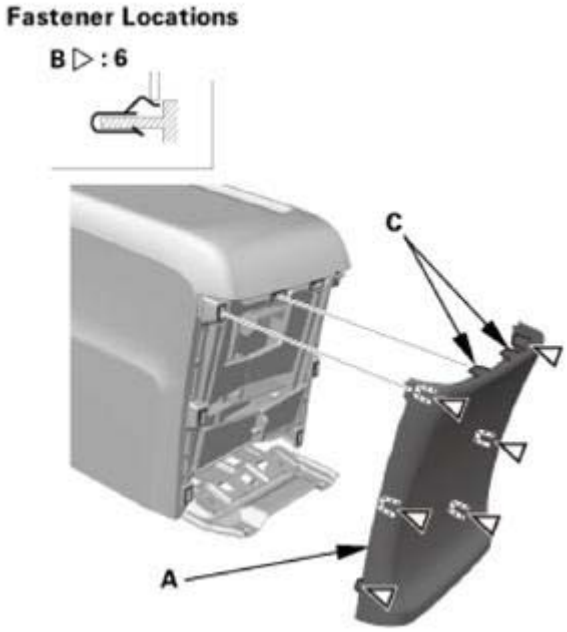

Fig. 1086: Identifying Center Console Rear Trim, Clips And Hooks
Courtesy of AMERICAN HONDA MOTOR CO., INC.

4. Front Console Cover - Both Sides
    1. Install the front console covers (A). Make sure the clips (B, C) snap into place securely.

Left side

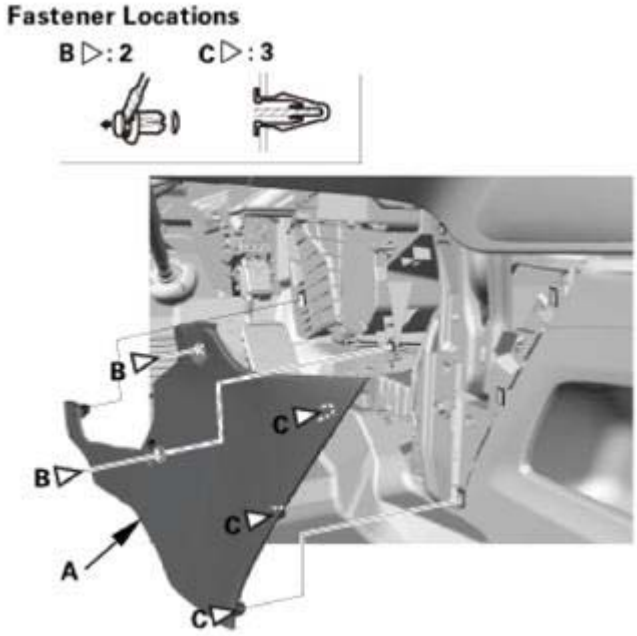

Fig. 1087: Identifying Front Console Covers And Clips (Left Side)
Courtesy of AMERICAN HONDA MOTOR CO., INC.

GETtheMANUALS.org

Right side

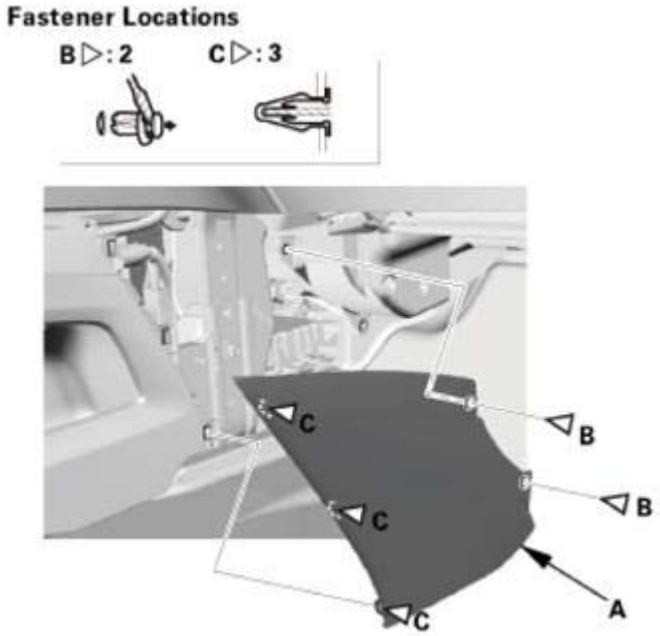

Fig. 1088: Identifying Front Console Covers And Clips (Right Side)
Courtesy of AMERICAN HONDA MOTOR CO., INC.

A/T SHIFT CABLE REMOVAL AND INSTALLATION

REMOVAL

1. Vehicle Lift
    1. Raise the vehicle on a lift, and make sure it is securely supported.
2. Front Console Cover - Both Sides
    1. Remove the clips (A).
    2. Detach the clips (B), then remove the front console covers (C).

Left side

GETtheMANUALS.org

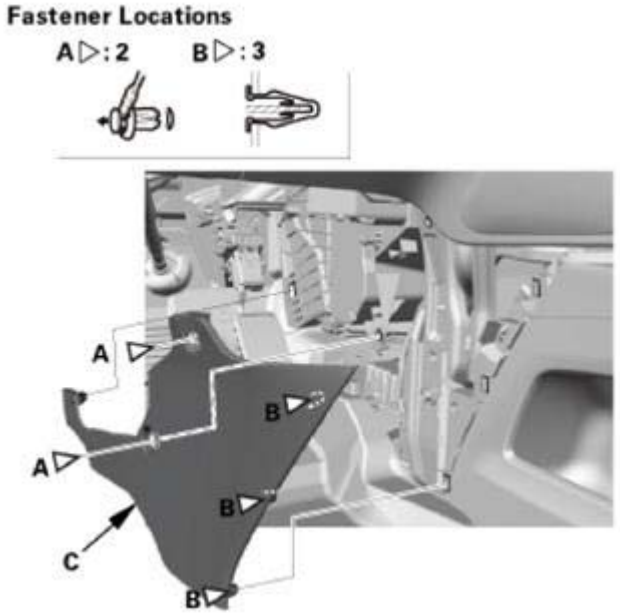

Fig. 1089: Identifying Front Console Covers And Clips (Left Side)
Courtesy of AMERICAN HONDA MOTOR CO., INC.

Right side

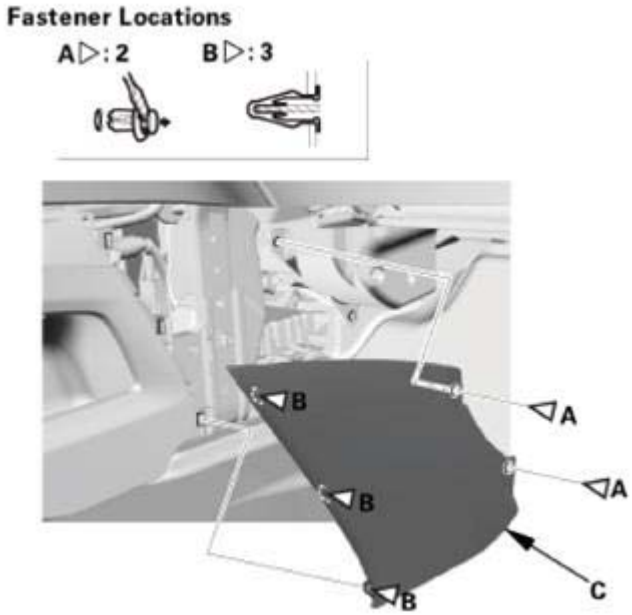

Fig. 1090: Identifying Front Console Covers And Clips (Right Side)
Courtesy of AMERICAN HONDA MOTOR CO., INC.

3. Center Console Rear Trim
    1. Carefully pry out the center console rear trim (A) with the appropriate trim tool to detach the clips (B) and the hooks (C), then remove the center console rear trim.

GETtheMANUALS.org

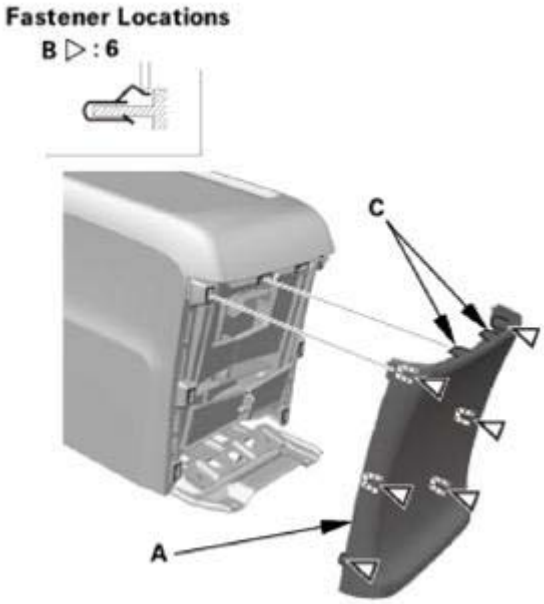

Fig. 1091: Identifying Center Console Rear Trim, Clips And Hooks
Courtesy of AMERICAN HONDA MOTOR CO., INC.

4. Center Console
    1. Carefully pry out the center lower cover (A) with the appropriate trim tool to detach the clips (B), then remove the center lower cover.
    2. Remove the bolt (C).

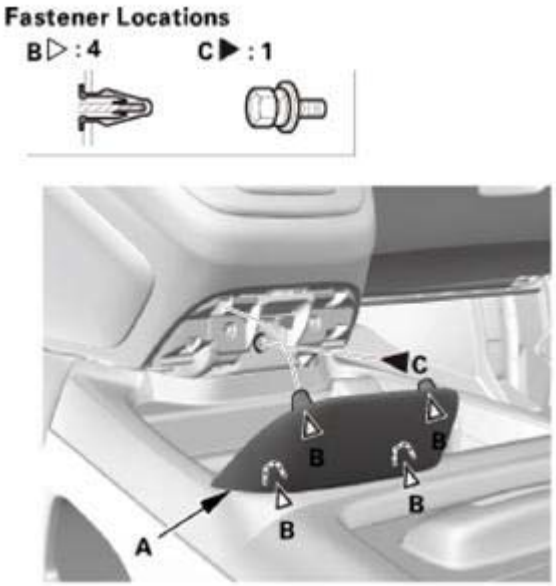

Fig. 1092: Identifying Center Lower Cover, Clips And Bolts
Courtesy of AMERICAN HONDA MOTOR CO., INC.

    3. Remove the bolts (A).

GETtheMANUALS.org

Fig. 1093: Identifying Center Console Bolts
Courtesy of AMERICAN HONDA MOTOR CO., INC.

4. Remove the console box mat (A), then remove the bolts (B).

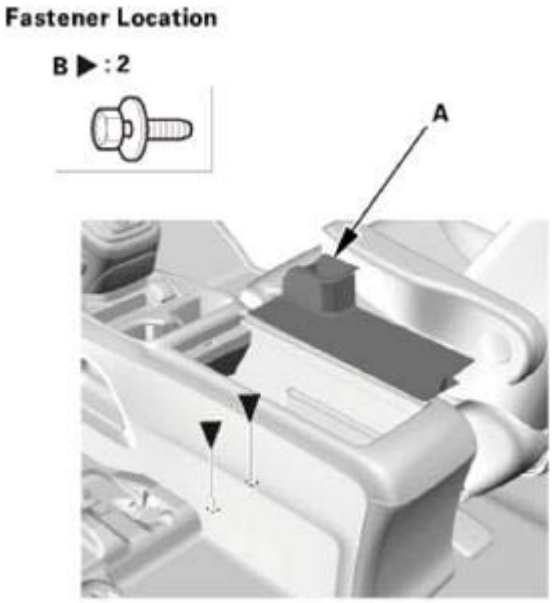

Fig. 1094: Identifying Console Box Mat And Bolts
Courtesy of AMERICAN HONDA MOTOR CO., INC.

5. Disconnect the connectors (A), and remove the clips (B).

GETtheMANUALS.org

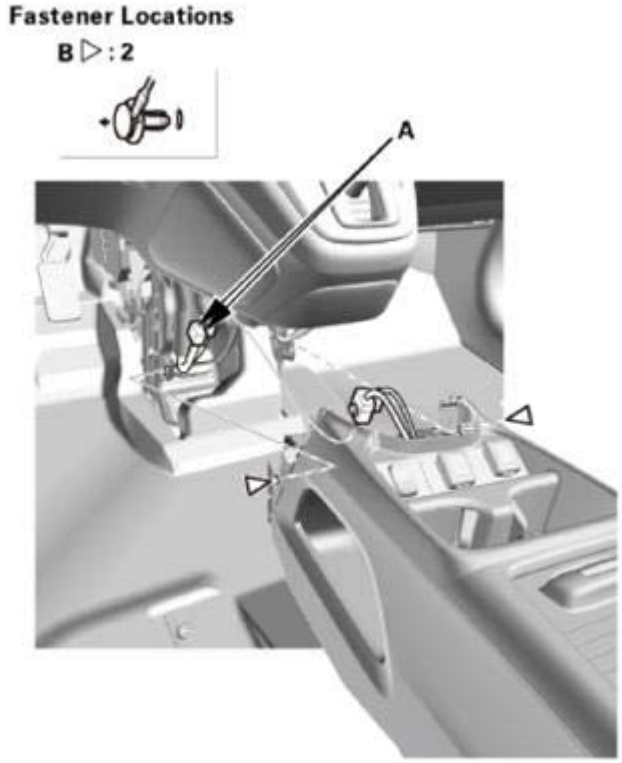

Fig. 1095: Identifying Connectors And Clips
Courtesy of AMERICAN HONDA MOTOR CO., INC.

6. Slide both front seats fully rearward, and recline the seat-backs around two thirds to the rear.
7. Remove the center console (A).

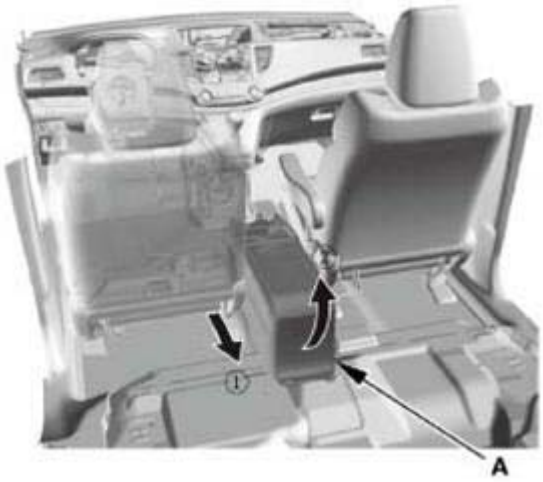

Fig. 1096: Removing Center Console
Courtesy of AMERICAN HONDA MOTOR CO., INC.

5. Center Maintenance Cover

GETtheMANUALS.org

1. Remove the maintenance cover (A).

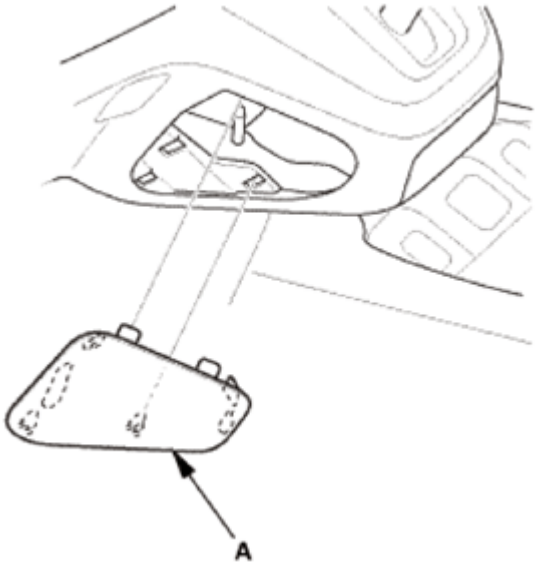

Fig. 1097: Identifying Center Maintenance Cover
Courtesy of AMERICAN HONDA MOTOR CO., INC.

6. Shift Cable - Disconnection Lever Side
    1. Shift the shift lever to R.
    2. Insert a 6.0 mm (0.236 in) pin (A) into the positioning holes (B).

    NOTE: Use only a 6.0 mm (0.236 in) pin with no burrs.

    3. Remove the nut (C) securing the shift cable end (D).

GETtheMANUALS.org

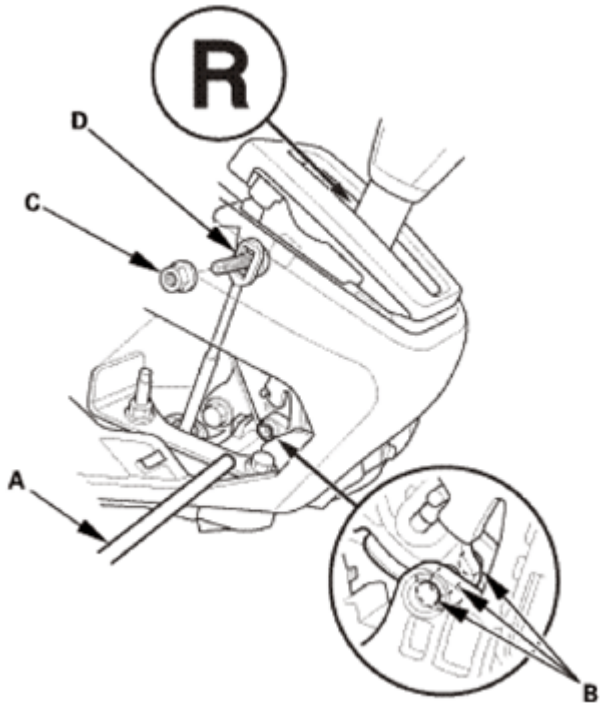

Fig. 1098: Inserting Pin Into Positioning Holes
Courtesy of AMERICAN HONDA MOTOR CO., INC.

4. Unlock the retainer lock (A).

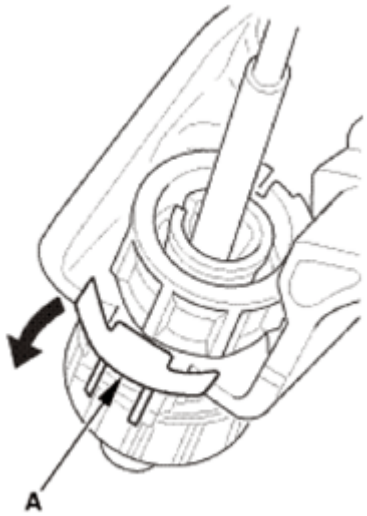

Fig. 1099: Unlocking Retainer Lock
Courtesy of AMERICAN HONDA MOTOR CO., INC.

5. Rotate the socket holder retainer (A) counterclockwise (B) until it stops, and push the retainer lock (C) into the socket holder retainer to lock the retainer.

GETtheMANUALS.org

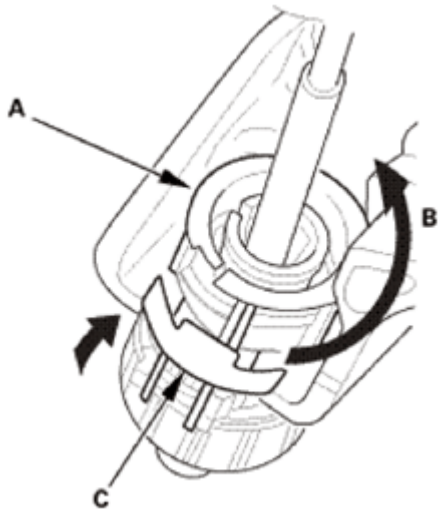

Fig. 1100: Rotating Socket Holder Retainer Counterclockwise
Courtesy of AMERICAN HONDA MOTOR CO., INC.

6. Slide the socket holder (A) away from the bracket as shown to remove the shift cable (B) from the shift cable bracket (C).

NOTE: Do not remove the shift cable by pulling the shift cable guide (D).

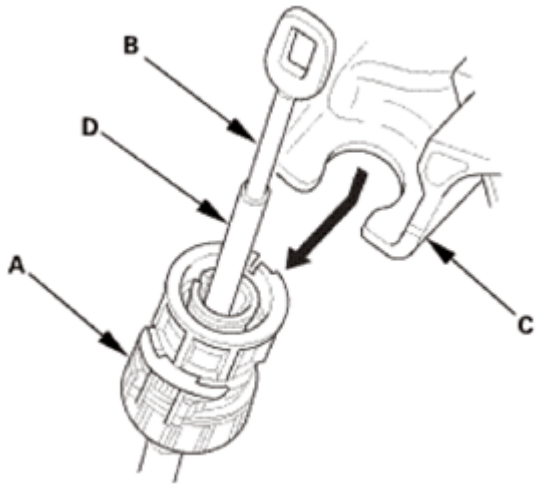

Fig. 1101: Removing Shift Cable From Shift Cable Bracket
Courtesy of AMERICAN HONDA MOTOR CO., INC.

7. Front Splash Shield
    1. Remove the bolts (A), then remove the clips (B) that secure the front inner fender and the front splash shield (C) to the body.
    2. From under the front bumper (D), remove the clips (E).
    3. From under the body, remove the clips (F), then pull out the front splash shield.

GETtheMANUALS.org

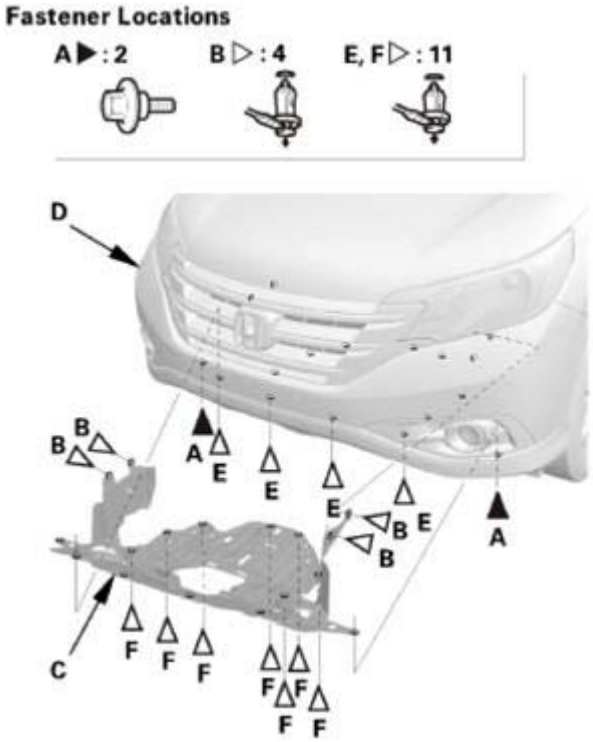

Fig. 1102: Identifying Front Splash Shield, Front Bumper, Bolts And Clips
Courtesy of AMERICAN HONDA MOTOR CO., INC.

8. Front Floor Undercover
    1. Remove the bolts (A) and the clips (B, C) securing the front floor undercover (D), then remove the front floor undercover.

GETtheMANUALS.org

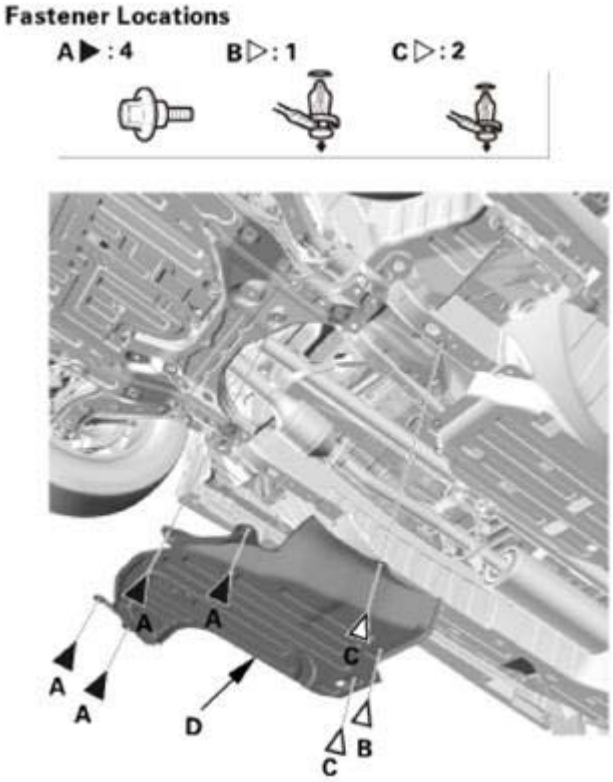

Fig. 1103: Identifying Front Floor Undercover, Bolts And Clips
Courtesy of AMERICAN HONDA MOTOR CO., INC.

9. Shift Cable Cover
    1. Remove the shift cable cover (A).

2WD

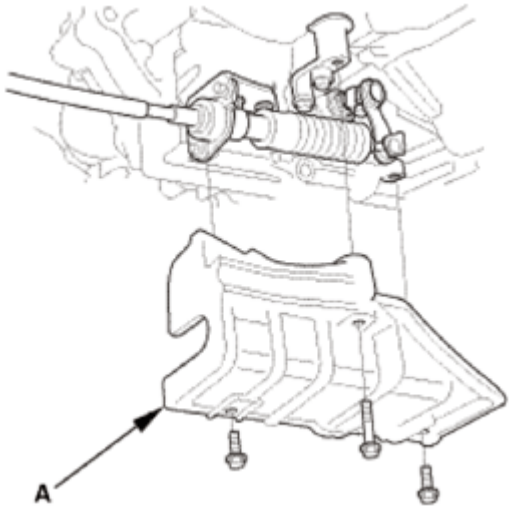

Fig. 1104: Identifying Shift Cable Cover With Mounting Bolts (2WD)
Courtesy of AMERICAN HONDA MOTOR CO., INC.

GETtheMANUALS.org

AWD/4WD

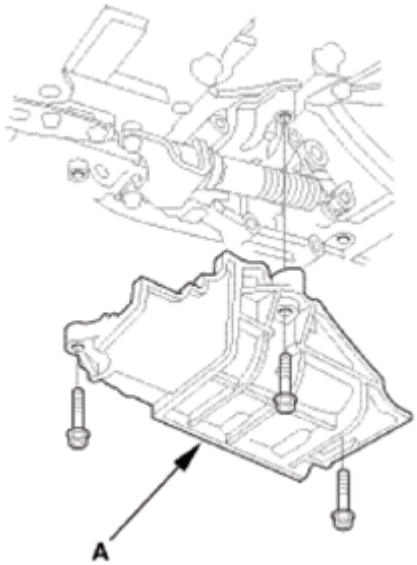

Fig. 1105: Identifying Shift Cable Cover With Mounting Bolts (AWD/4WD)
Courtesy of AMERICAN HONDA MOTOR CO., INC.

10. Shift Cable - Disconnection A/T Side (Except 2WD of USA Produced Models)
    1. Remove the spring clip (A) and the control pin (B).
    2. Separate the shift cable (C) from the selector control lever (D).

    NOTE: Do not bend the shift cable excessively.

    3. Remove the shift cable bracket(s) (E).
    4. Check the bushing (F) in the shift cable end for proper fit and wear. If the bushing is loose or worn, replace the shift cable.

    Except 2WD of USA Produced Models

GETtheMANUALS.org

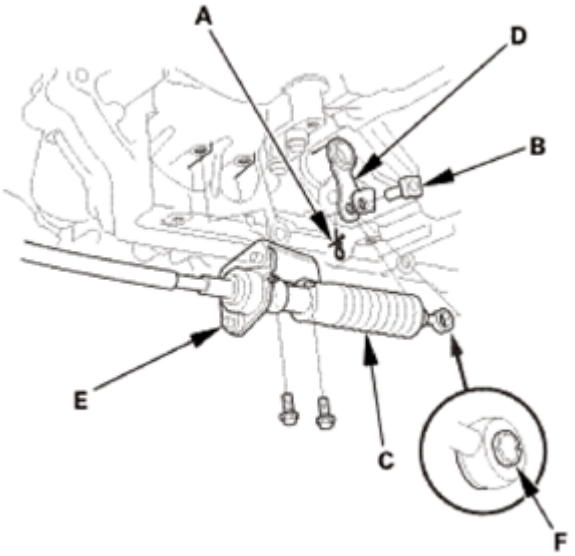

Fig. 1106: Identifying Bushing, Shift Cable Bracket, Shift Cable, Selector Control Lever, Spring Clip And Control Pin (Except 2WD Of USA Produced Models)
Courtesy of AMERICAN HONDA MOTOR CO., INC.

AWD/4WD

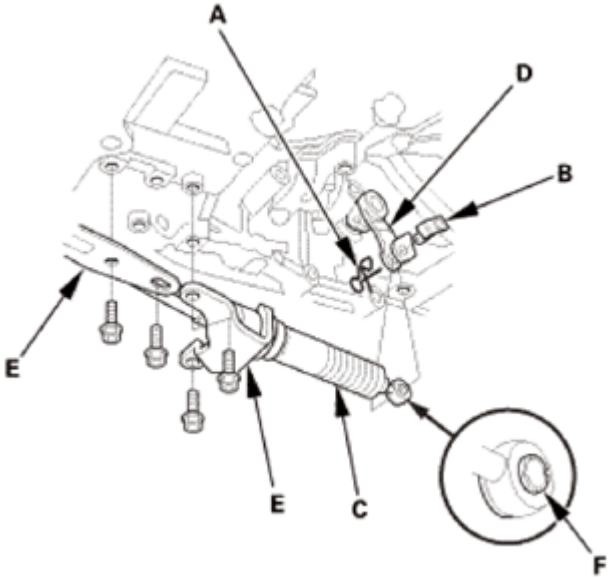

Fig. 1107: Identifying Bushing, Shift Cable Bracket, Shift Cable, Selector Control Lever, Spring Clip And Control Pin (AWD/4WD)
Courtesy of AMERICAN HONDA MOTOR CO., INC.

11. Shift Cable - Disconnection A/T Side (2WD of USA Produced Models)

2WD of USA Produced Models

GETtheMANUALS.org

1. Pry down the lock tab (A) of the lock washer (B).
2. Remove the lock bolt (C) and the lock washer.
3. Separate the shift cable (D) from the selector control shaft (E).

NOTE: Do not bend the shift cable excessively.

4. Remove the shift cable bracket (F).

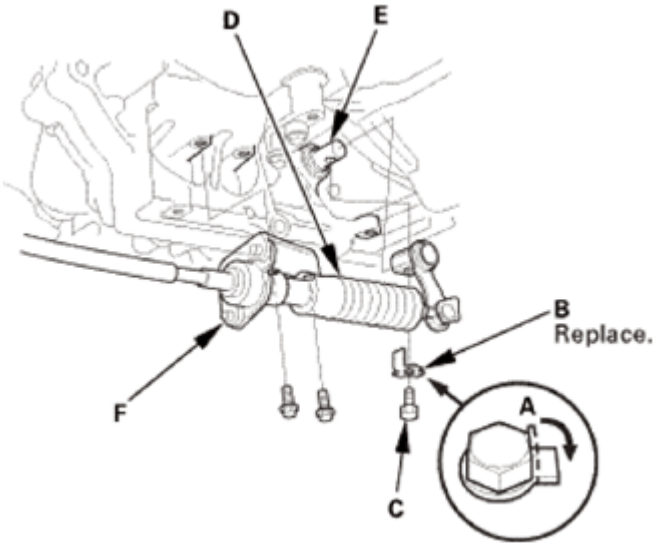

Fig. 1108: Identifying Shift Cable Bracket, Selector Control Shaft, Lock Tab, Lock Washer, Lock Bolt And Shift Cable (2WD Of USA Produced Models)
Courtesy of AMERICAN HONDA MOTOR CO., INC.

12. Shift Cable
    1. Remove the shift cable grommet (A), and pull out the shift cable (B).

NOTE: Do not bend the shift cable excessively.

GETtheMANUALS.org

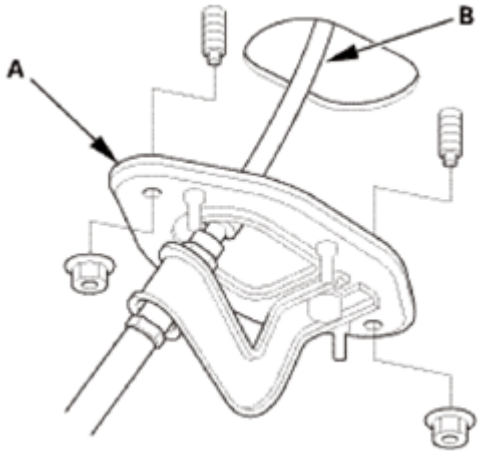

Fig. 1109: Identifying Shift Cable Grommet And Shift Cable
Courtesy of AMERICAN HONDA MOTOR CO., INC.

INSTALLATION

1. Shift Cable
    1. Insert the shift cable (A) through the grommet hole (B), and install the shift cable grommet (C) in its hole.

NOTE: Do not bend the shift cable excessively.

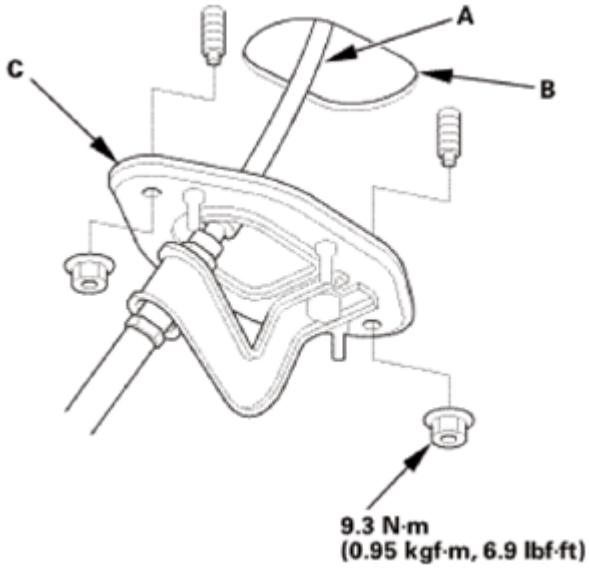

Fig. 1110: Identifying Shift Cable, Grommet Hole, Shift Cable Grommet And Nuts With Torque Specification
Courtesy of AMERICAN HONDA MOTOR CO., INC.

2. Shift Cable - Reconnection A/T Side (2WD of USA Produced Models)

GETtheMANUALS.org

2WD of USA Produced Models

1. Install the shift cable bracket (A).
2. Install the control lever (B) over the selector control shaft (C).

NOTE: Do not bend the shift cable excessively.

3. Install the lock bolt (D) using a new lock washer (E).
4. Pry up the lock tab (F) of the lock washer against the bolt head.

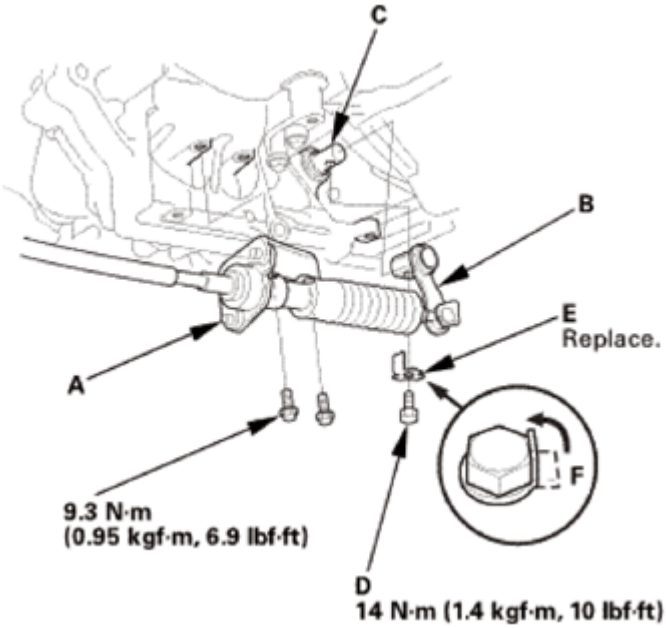

Fig. 1111: Prying Up Lock Tab Of Lock Washer Against Bolt Head
Courtesy of AMERICAN HONDA MOTOR CO., INC.

3. Shift Cable - Reconnection A/T Side (Except 2WD of USA Produced Models)
   1. Apply molybdenum grease to the hole in the bushing (A) in the shift cable end (B).
   2. Install the shift cable bracket(s) (C).
   3. Attach the shift cable end to the selector control lever (D), then insert the control pin (E) into the control lever hole through the shift cable end.

NOTE: Do not bend the shift cable excessively.

   4. Secure the control pin with the spring clip (F).

Except 2WD of USA Produced Models

GETtheMANUALS.org

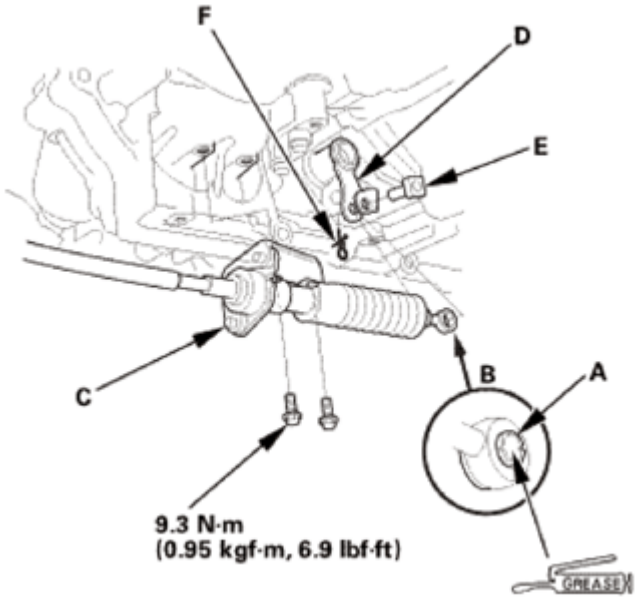

Fig. 1112: Identifying Molybdenum Grease Applying Area To Hole In Shift Cable End Bushing (Except 2WD Of USA Produced Models)
Courtesy of AMERICAN HONDA MOTOR CO., INC.

AWD/4WD

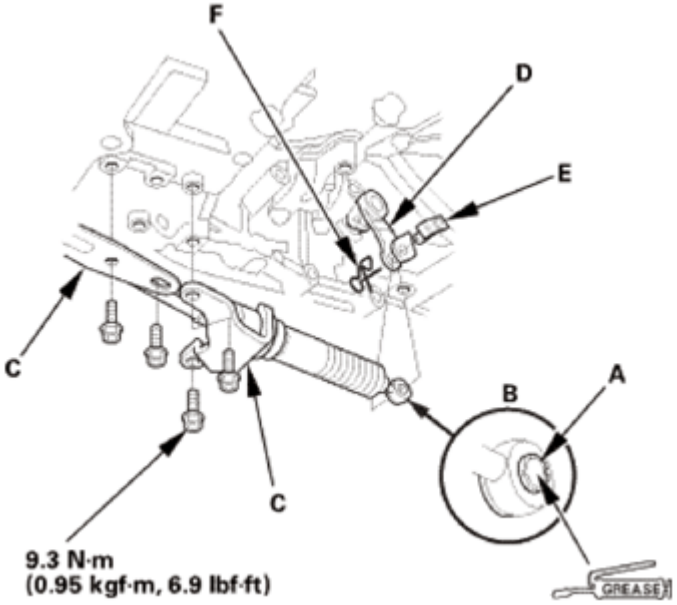

Fig. 1113: Identifying Molybdenum Grease Applying Area To Hole In Shift Cable End Bushing (AWD/4WD)
Courtesy of AMERICAN HONDA MOTOR CO., INC.

4. Shift Cable Cover
    1. Install the shift cable cover (A).

GETtheMANUALS.org

2WD

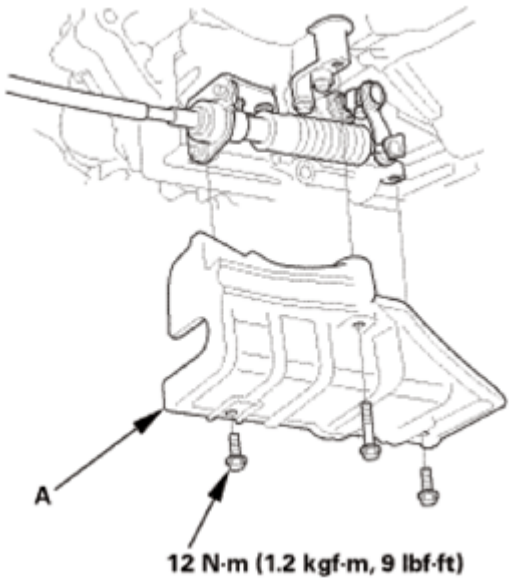

Fig. 1114: Identifying Shift Cable Cover And Mounting Bolts With Torque Specification (2WD)
Courtesy of AMERICAN HONDA MOTOR CO., INC.

AWD/4WD

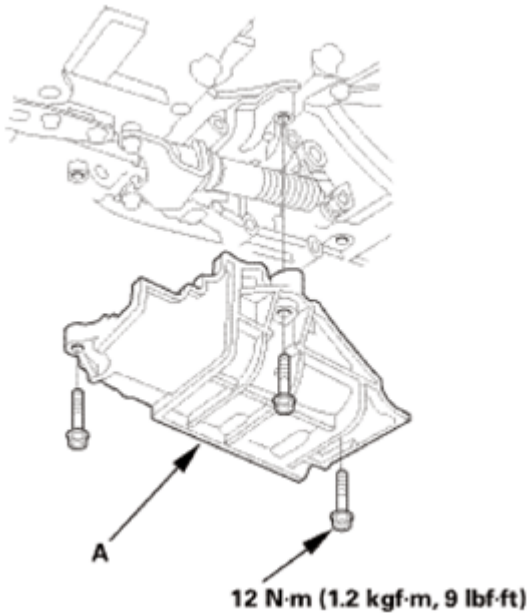

Fig. 1115: Identifying Shift Cable Cover And Mounting Bolts With Torque Specification (AWD/4WD)
Courtesy of AMERICAN HONDA MOTOR CO., INC.

GETtheMANUALS.org

5. Front Floor Undercover
    1. Install the front floor undercover (A), then install the bolts (B) and the clips (C, D). Make sure the clips snap into place securely.

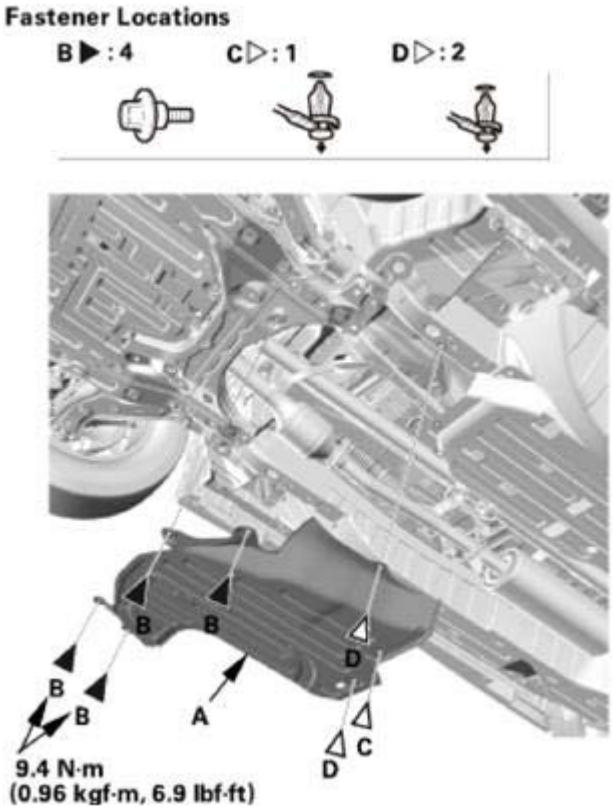

Fig. 1116: Identifying Front Floor Undercover, Bolts And Clips With Torque Specification
Courtesy of AMERICAN HONDA MOTOR CO., INC.

6. Front Splash Shield
    1. Install the front splash shield (A), then install the bolts (B) and the clips (C, D). Make sure the clips snap into place securely.

GETtheMANUALS.org

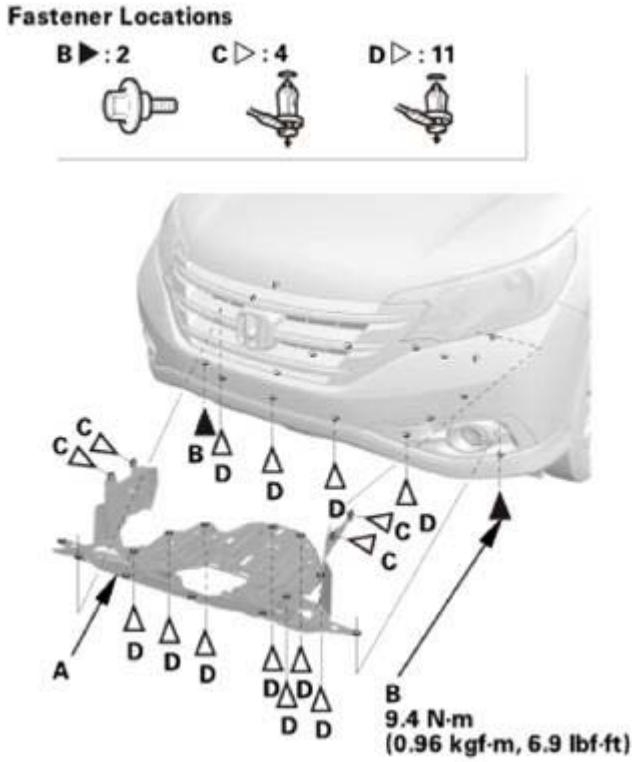

Fig. 1117: Identifying Front Splash Shield, Bolts And Clips With Torque Specification
Courtesy of AMERICAN HONDA MOTOR CO., INC.

7. Shift Cable - Adjustment
    1. Push the shift cable (A) until it stops, then release it. Pull the shift cable back one step so that the shift position is in R.

NOTE: Do not hold the shift cable guide (B) to adjust the shift cable.

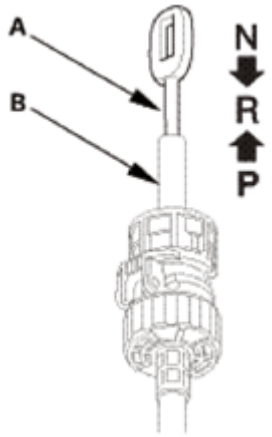

Fig. 1118: Identifying Shift Cable And Shift Cable Guide
Courtesy of AMERICAN HONDA MOTOR CO., INC.

GETtheMANUALS.org

2. Turn the ignition switch to ON (II).
3. Check that the R position indicator comes on.
4. Turn the ignition switch to LOCK (0).

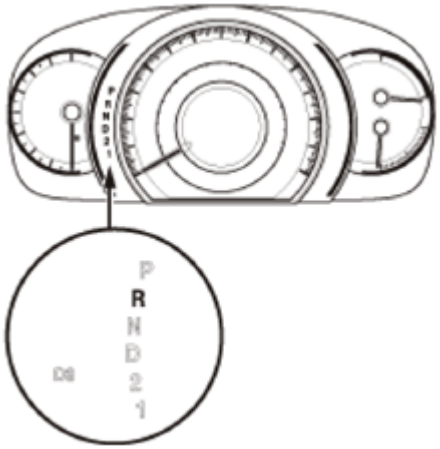

Fig. 1119: Identifying R Position Indicator
Courtesy of AMERICAN HONDA MOTOR CO., INC.

5. Unlock the retainer lock (A).

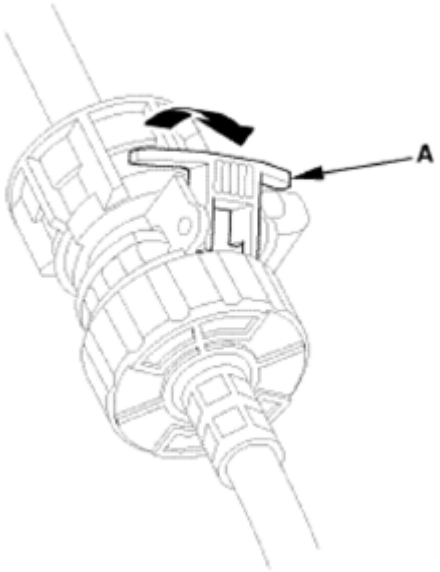

Fig. 1120: Unlocking Retainer Lock
Courtesy of AMERICAN HONDA MOTOR CO., INC.

6. Rotate the socket holder retainer (A) in arrow direction (B) until it stops to create clearance (C) between the socket holder (D) and holder retainer, and push the retainer lock (E) into the socket holder retainer to lock the retainer.

GETtheMANUALS.org

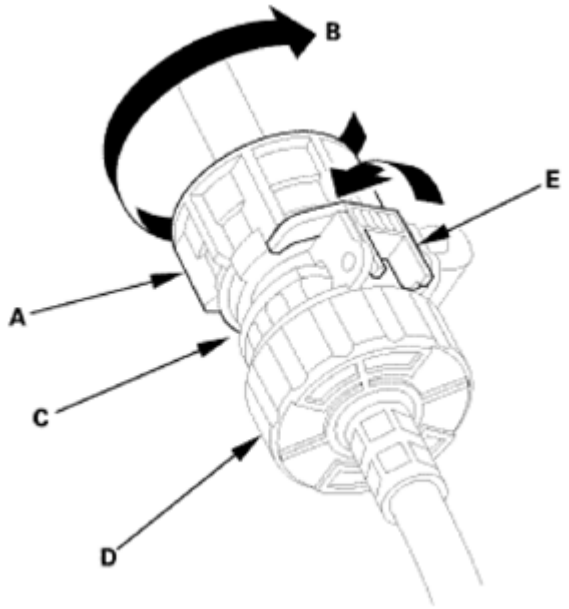

Fig. 1121: Rotating Socket Holder Retainer
Courtesy of AMERICAN HONDA MOTOR CO., INC.

7. Align the shift cable slot (A) between the socket holder (B) and the socket holder retainer (C) with the opening (D) in the shift cable bracket (E), then slide the holder into the bracket while installing the shift cable end (F) over the mounting stud (G) by aligning its square hole (H) with the square fitting (I) at the bottom of the stud.

NOTE:

- **Do not install the shift cable by holding the shift cable guide (J).**
- **When the socket holder is installed in the shift cable bracket, the retainer lock is unhinged and releases the holder retainer lock, then the holder retainer returns under spring force to secure the shift cable.**

GETtheMANUALS.org

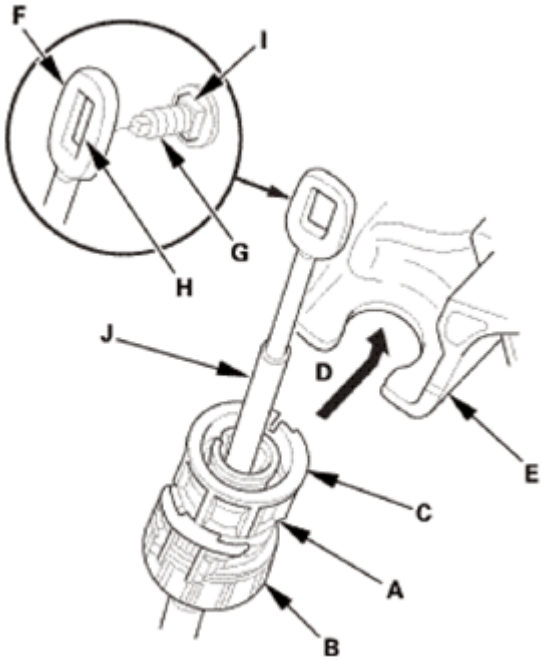

Fig. 1122: Aligning Shift Cable Slot Between Socket Holder And Socket Holder Retainer With Opening In Shift Cable Bracket
Courtesy of AMERICAN HONDA MOTOR CO., INC.

8. Push the retainer lock (A) fully to lock the socket holder retainer (B), and make sure that the retainer lock fits into the hinged-joint (C). If the retainer lock does not fit with the edge of the hinged-joint, rotate the holder retainer counterclockwise while pushing the retainer lock until it locks.

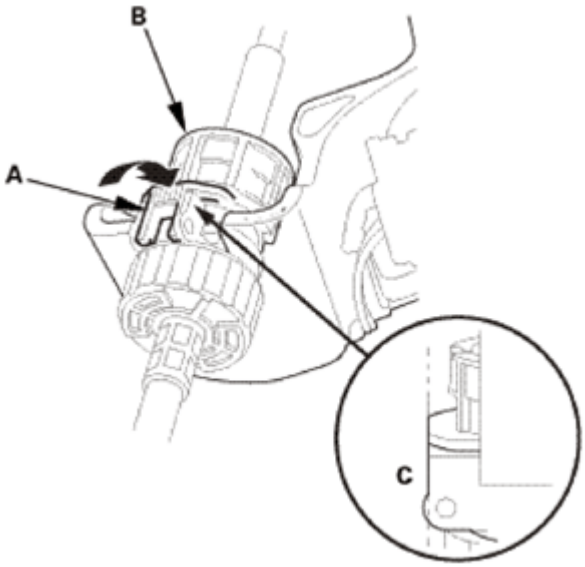

Fig. 1123: Pushing Retainer Lock
Courtesy of AMERICAN HONDA MOTOR CO., INC.

GETtheMANUALS.org

9. Make sure that the shift cable end (A) is properly installed on the mounting stud (B).
    - If the shift cable end is out of position with the mounting stud, remove the shift cable from the shift cable bracket, then reinstall the cable end over the mounting stud before reinstalling the shift cable to the shift cable bracket. Do not install the shift cable end on the mounting stud with the shift cable install on the shift cable bracket.
    - If the shift cable end does not ride at the bottom of the mounting stud, rotate the stud to align the square fitting with the hole.

    Properly installed:

    Cable end rides on the bottom of the mounting stud.

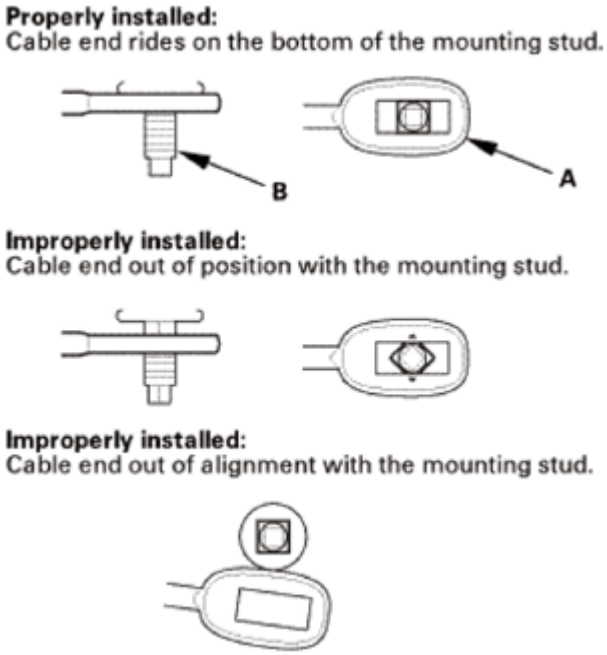

Fig. 1124: Identifying Shift Cable End Proper And Improper Installation
Courtesy of AMERICAN HONDA MOTOR CO., INC.

10. Install the shift cable end nut (A).
11. Remove the 6.0 mm (0.236 in) pin (B) that was installed to hold the shift lever.
12. Turn the ignition switch to ON (II).
13. Move the shift lever to each position, and check that the A/T gear position indicator follows the transmission range switch.
14. Shift the shift lever to P.
15. Check that the shift lock works properly.
16. Push the shift lock release, and check that the shift lever releases. Also check that the shift lever locks when it is shifted back to P.

GETtheMANUALS.org

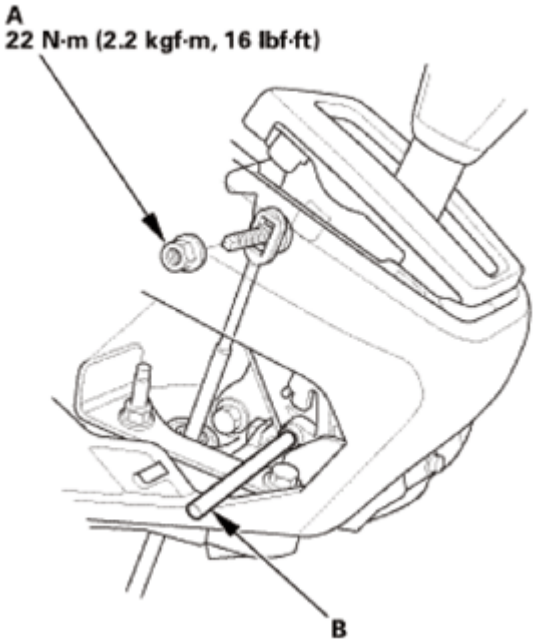

Fig. 1125: Identifying Pin And Shift Cable End Nut With Torque Specification
Courtesy of AMERICAN HONDA MOTOR CO., INC.

8. Center Maintenance Cover
    1. Install the maintenance cover (A).

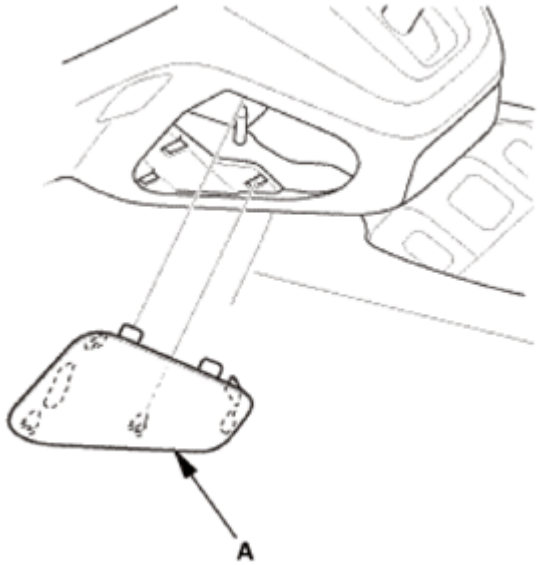

Fig. 1126: Identifying Center Maintenance Cover
Courtesy of AMERICAN HONDA MOTOR CO., INC.

9. Center Console
    1. Install the center console (A).

GETtheMANUALS.org

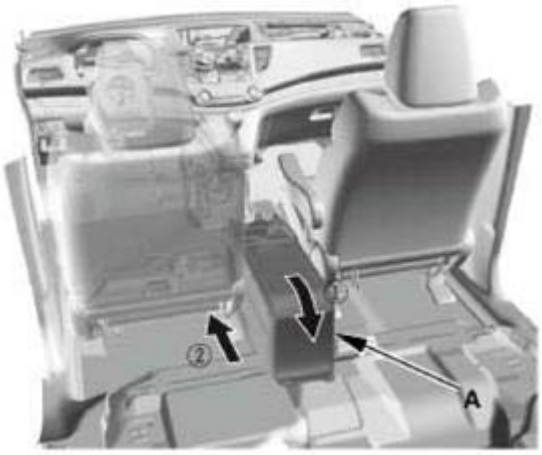

Fig. 1127: Installing Center Console
Courtesy of AMERICAN HONDA MOTOR CO., INC.

2. Connect the connectors (A), and install the clips (B).

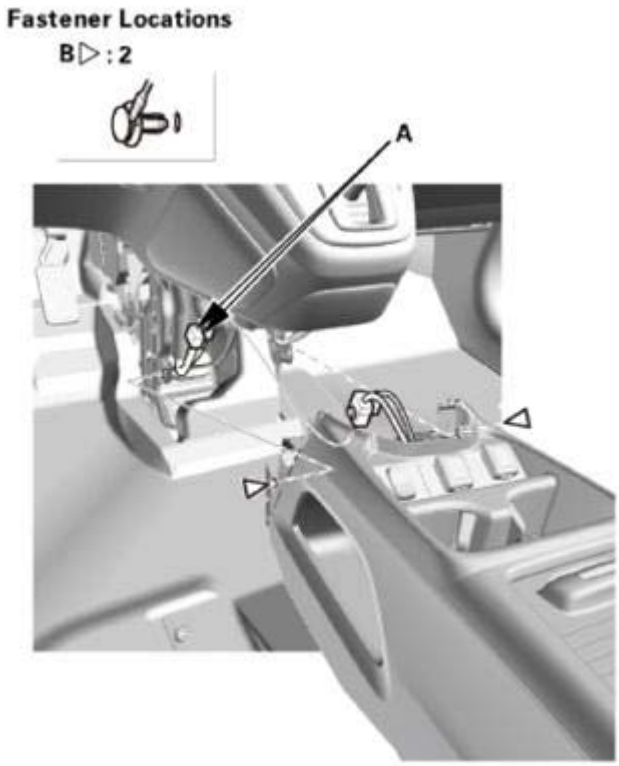

Fig. 1128: Identifying Center Console Connectors And Clips
Courtesy of AMERICAN HONDA MOTOR CO., INC.

3. Install the bolts (A), then install the console box mat (B).

GETtheMANUALS.org

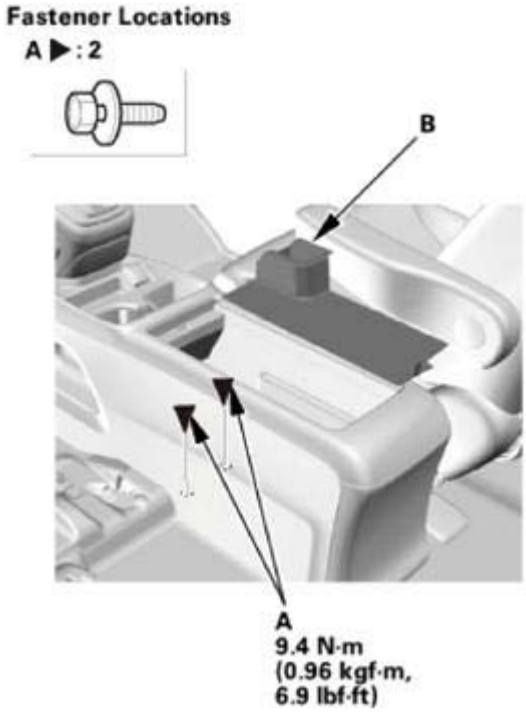

Fig. 1129: Identifying Console Box Mat And Bolts With Torque Specification
Courtesy of AMERICAN HONDA MOTOR CO., INC.

4. Install the bolts (A).

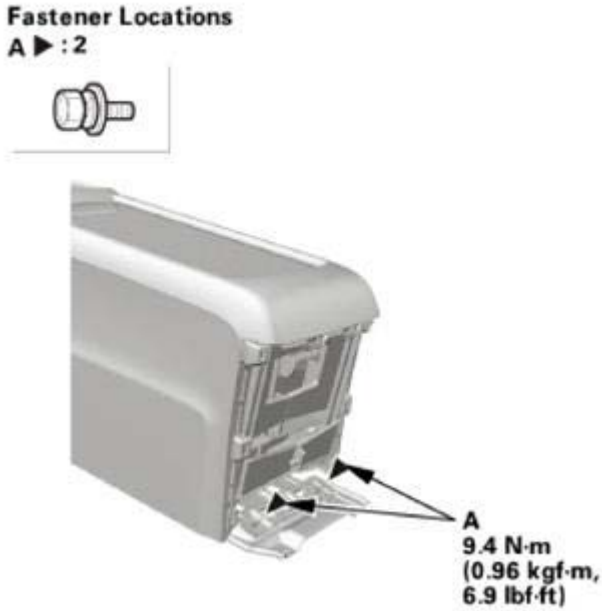

Fig. 1130: Identifying Center Console Bolts With Torque Specification
Courtesy of AMERICAN HONDA MOTOR CO., INC.

5. Install the bolt (A), then install the center lower cover (B). Make sure the clips (C) snap into place

GETtheMANUALS.org

securely.

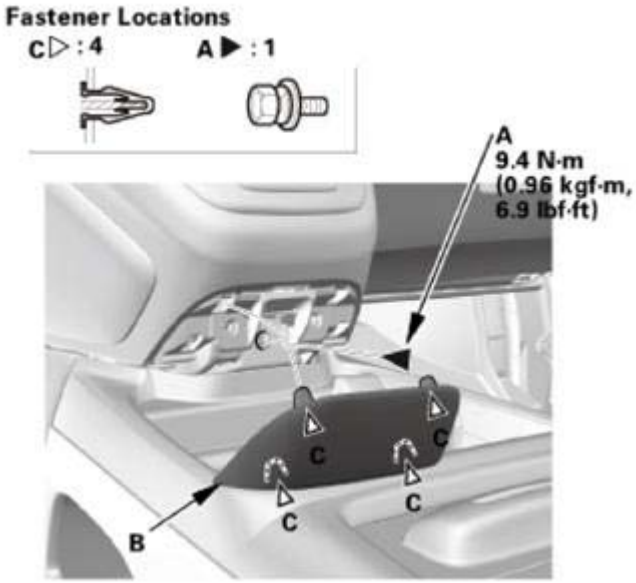

Fig. 1131: Identifying Center Lower Cover, Clips And Bolt With Torque Specification
Courtesy of AMERICAN HONDA MOTOR CO., INC.

10. Center Console Rear Trim
    1. Install the center console rear trim (A). Make sure the clips (B) and the hooks (C) snap into place securely.

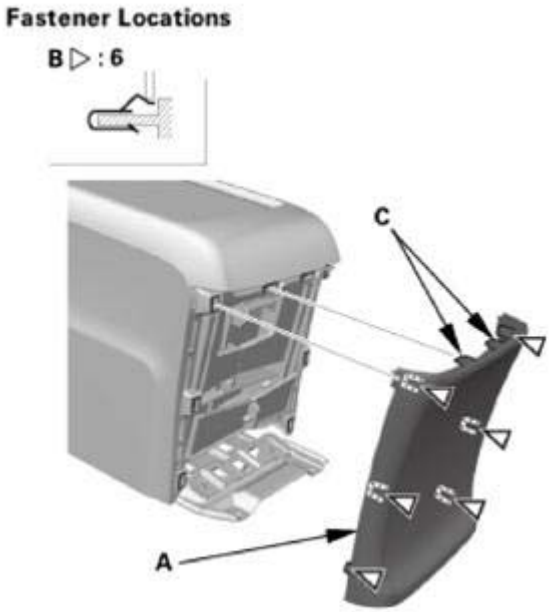

Fig. 1132: Identifying Center Console Rear Trim, Clips And Hooks
Courtesy of AMERICAN HONDA MOTOR CO., INC.

GETtheMANUALS.org

11. Front Console Cover - Both Sides
    1. Install the front console covers (A). Make sure the clips (B, C) snap into place securely.

Left side

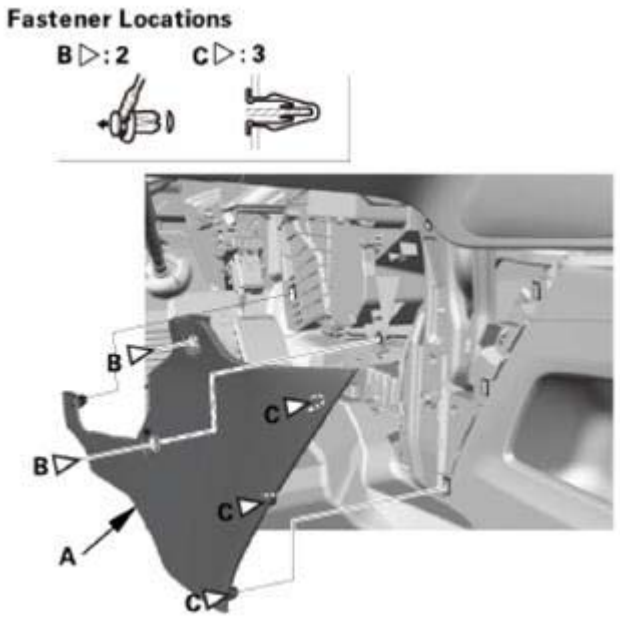

Fig. 1133: Identifying Front Console Covers And Clips (Left Side)
Courtesy of AMERICAN HONDA MOTOR CO., INC.

Right side

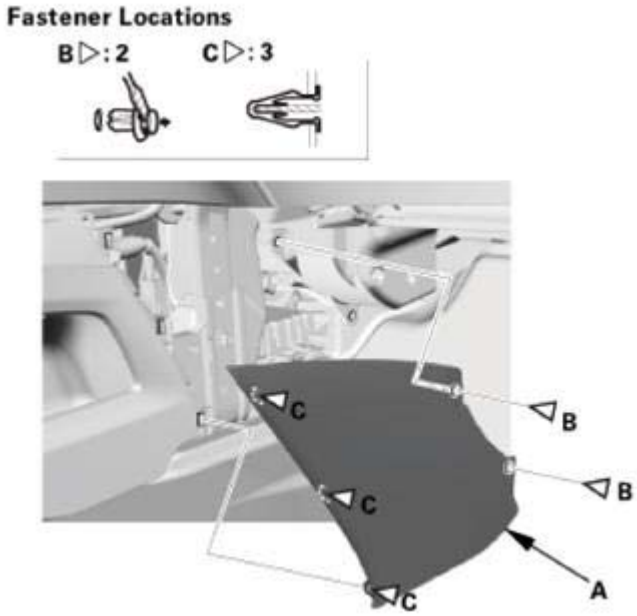

Fig. 1134: Identifying Front Console Covers And Clips (Right Side)

GETtheMANUALS.org

Courtesy of AMERICAN HONDA MOTOR CO., INC.

A/T SHIFT LEVER BRACKET BASE REMOVAL AND INSTALLATION

REMOVAL

1. Shift Lever Panel (AT)
    1. Carefully pry out the shift lever panel (A) with the appropriate trim tool to detach the clips (B, C) and the hooks (D), then remove the shift lever panel.

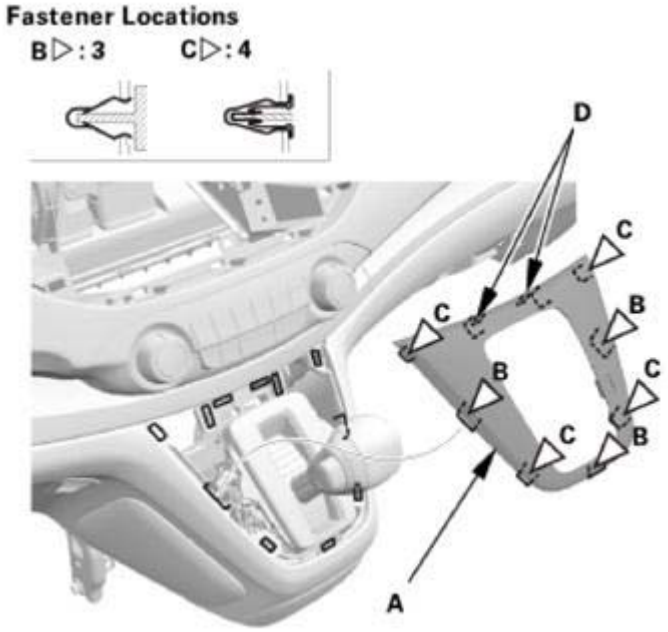

Fig. 1135: Identifying Shift Lever Panel, Clips And Hooks
Courtesy of AMERICAN HONDA MOTOR CO., INC.

2. Front Console Cover - Both Sides
    1. Remove the clips (A).
    2. Detach the clips (B), then remove the front console covers (C).

Left side

GETtheMANUALS.org

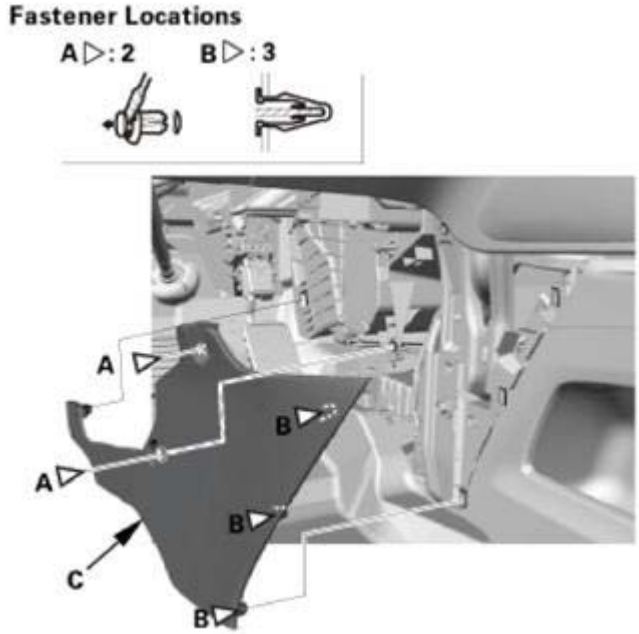

Fig. 1136: Identifying Front Console Covers And Clips (Left Side)
Courtesy of AMERICAN HONDA MOTOR CO., INC.

Right side

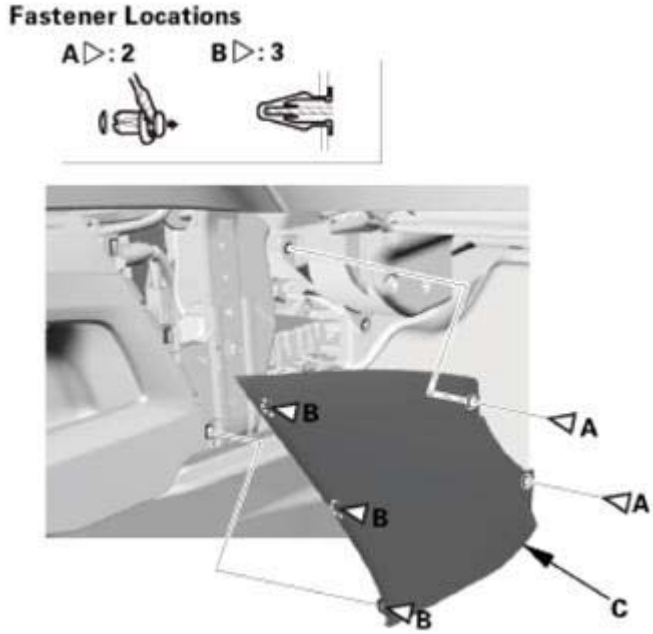

Fig. 1137: Identifying Front Console Covers And Clips (Right Side)
Courtesy of AMERICAN HONDA MOTOR CO., INC.

3. Center Console Rear Trim
    1. Carefully pry out the center console rear trim (A) with the appropriate trim tool to detach the clips

GETtheMANUALS.org

(B) and the hooks (C), then remove the center console rear trim.

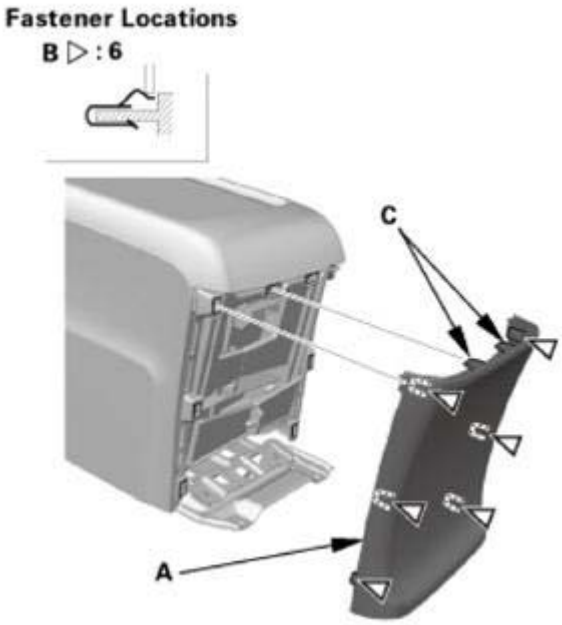

Fig. 1138: Identifying Center Console Rear Trim, Clips And Hooks
Courtesy of AMERICAN HONDA MOTOR CO., INC.

4. Center Console
    1. Carefully pry out the center lower cover (A) with the appropriate trim tool to detach the clips (B), then remove the center lower cover.
    2. Remove the bolt (C).

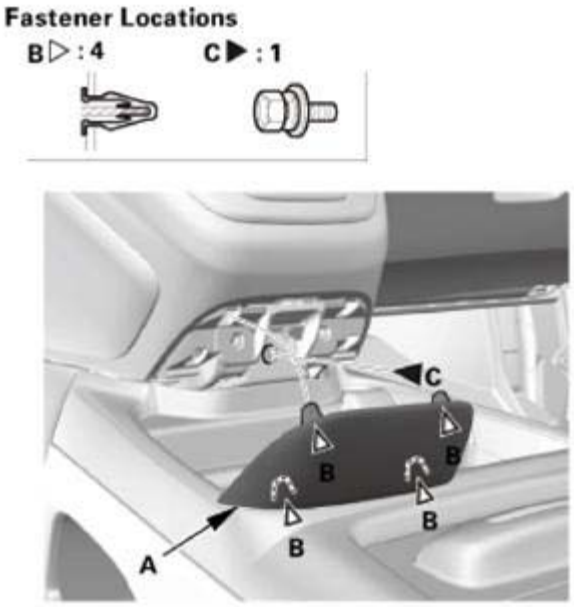

Fig. 1139: Identifying Center Lower Cover, Clips And Bolts

GETtheMANUALS.org

Courtesy of AMERICAN HONDA MOTOR CO., INC.

3. Remove the bolts (A).

Fig. 1140: Identifying Center Console Bolts
Courtesy of AMERICAN HONDA MOTOR CO., INC.

4. Remove the console box mat (A), then remove the bolts (B).

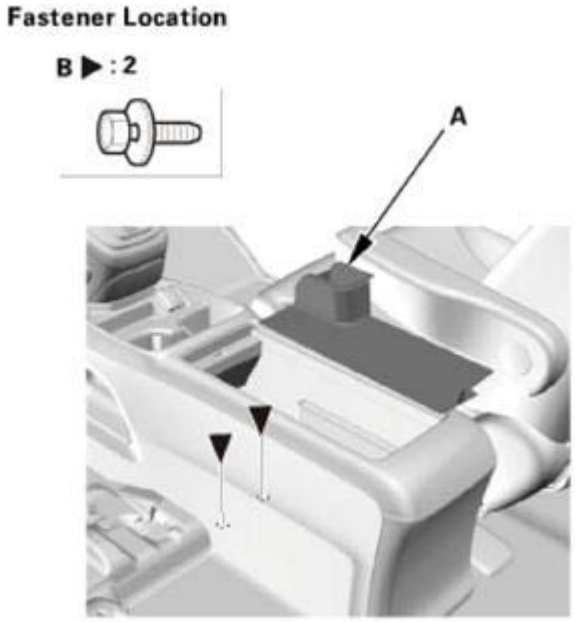

Fig. 1141: Identifying Console Box Mat And Bolts
Courtesy of AMERICAN HONDA MOTOR CO., INC.

GETtheMANUALS.org

5. Disconnect the connectors (A), and remove the clips (B).

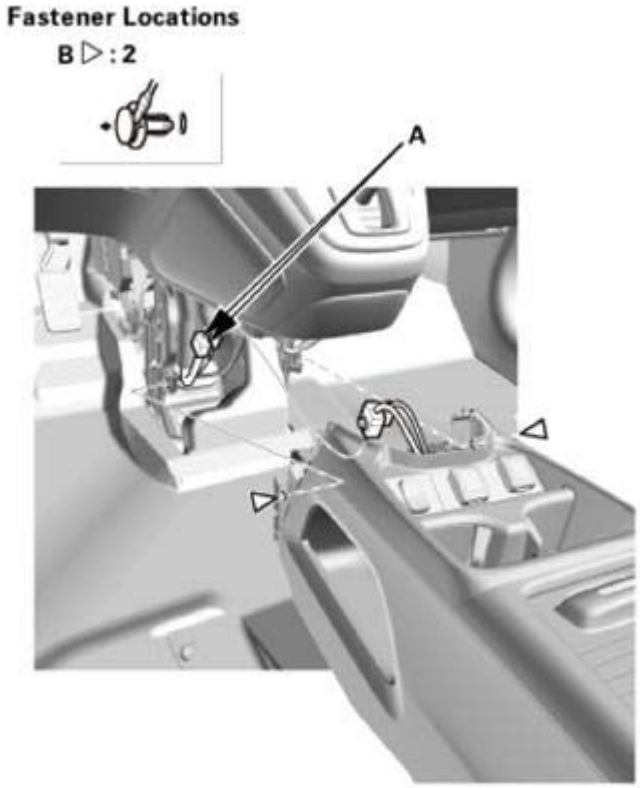

Fig. 1142: Identifying Connectors And Clips
Courtesy of AMERICAN HONDA MOTOR CO., INC.

6. Slide both front seats fully rearward, and recline the seat-backs around two thirds to the rear.
7. Remove the center console (A).

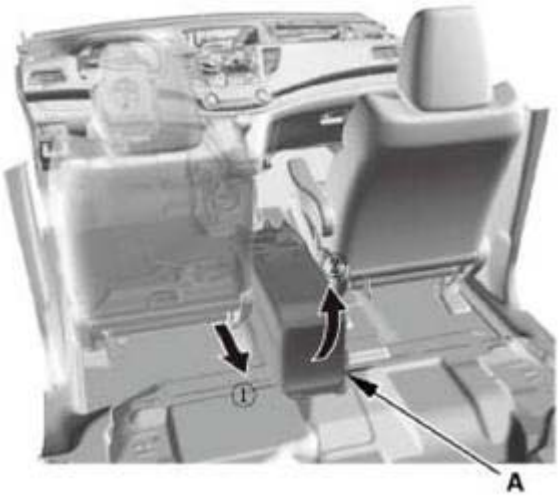

Fig. 1143: Removing Center Console

GETtheMANUALS.org

Courtesy of AMERICAN HONDA MOTOR CO., INC.

5. Center Maintenance Cover
    1. Remove the maintenance cover (A).

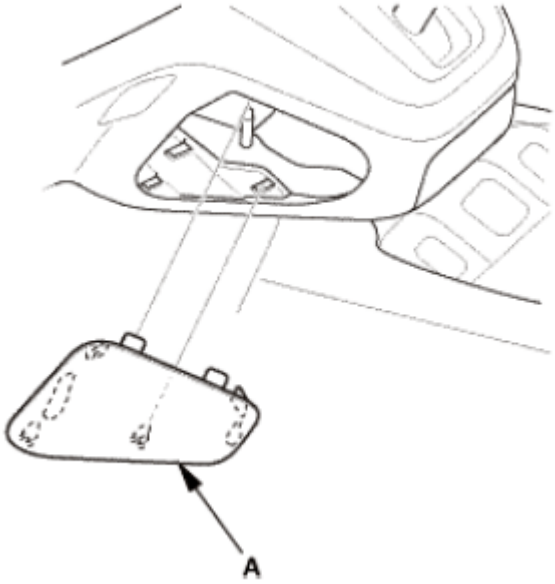

Fig. 1144: Identifying Center Maintenance Cover
Courtesy of AMERICAN HONDA MOTOR CO., INC.

6. Shift Cable - Disconnection Lever Side
    1. Shift the shift lever to R.
    2. Insert a 6.0 mm (0.236 in) pin (A) into the positioning holes (B).

    NOTE: Use only a 6.0 mm (0.236 in) pin with no burrs.

    3. Remove the nut (C) securing the shift cable end (D).

GETtheMANUALS.org

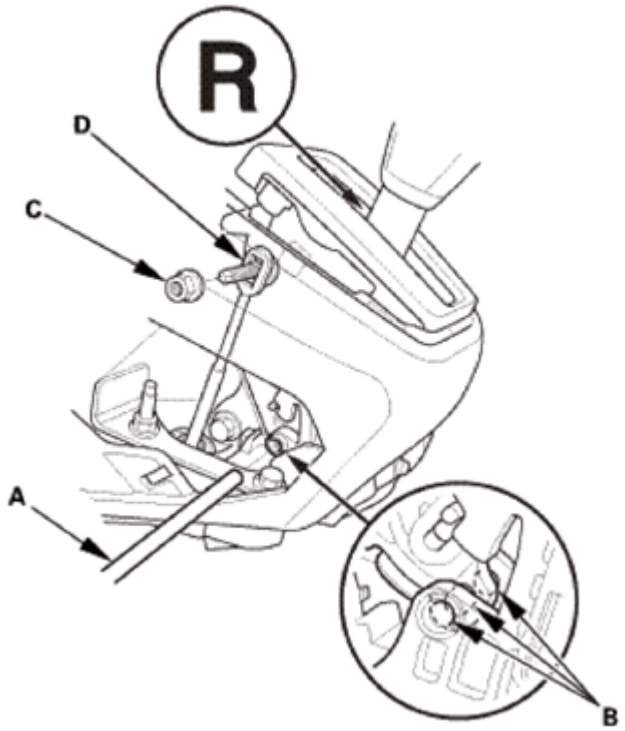

Fig. 1145: Inserting Pin Into Positioning Holes
Courtesy of AMERICAN HONDA MOTOR CO., INC.

4. Unlock the retainer lock (A).

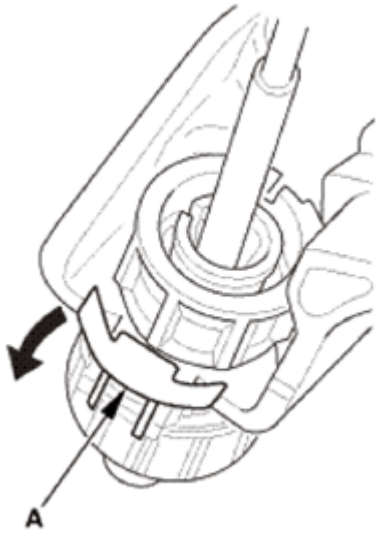

Fig. 1146: Unlocking Retainer Lock
Courtesy of AMERICAN HONDA MOTOR CO., INC.

5. Rotate the socket holder retainer (A) counterclockwise (B) until it stops, and push the retainer lock (C) into the socket holder retainer to lock the retainer.

GETtheMANUALS.org

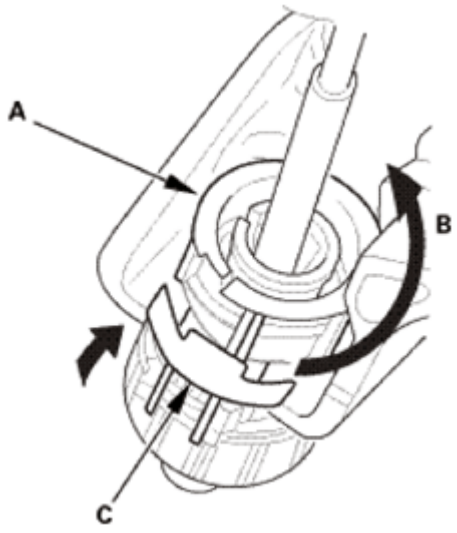

Fig. 1147: Rotating Socket Holder Retainer Counterclockwise
Courtesy of AMERICAN HONDA MOTOR CO., INC.

6. Slide the socket holder (A) away from the bracket as shown to remove the shift cable (B) from the shift cable bracket (C).

NOTE: Do not remove the shift cable by pulling the shift cable guide (D).

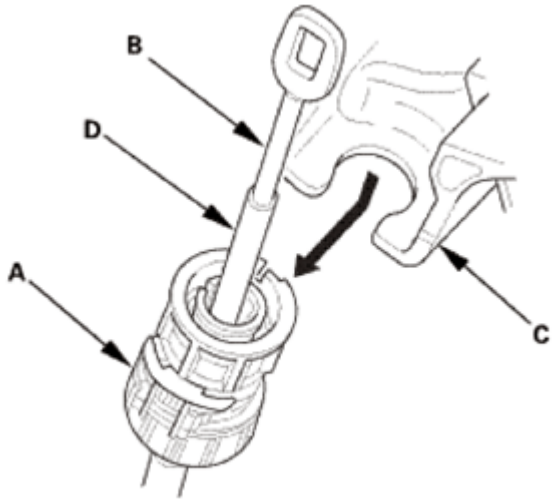

Fig. 1148: Removing Shift Cable From Shift Cable Bracket
Courtesy of AMERICAN HONDA MOTOR CO., INC.

7. A/T Shift Lever Assembly
    1. Disconnect the shift lever connector.

GETtheMANUALS.org

Fig. 1149: Identifying Shift Lever Connector
Courtesy of AMERICAN HONDA MOTOR CO., INC.

2. Remove the shift lever assembly.

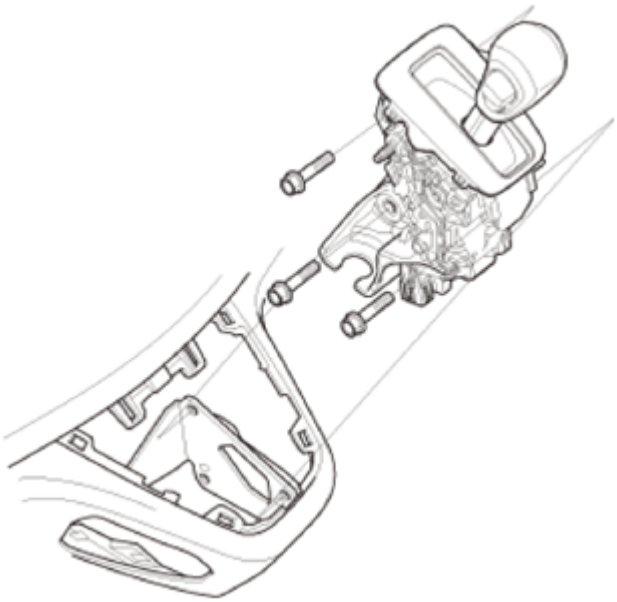

Fig. 1150: Identifying Shift Lever Assembly
Courtesy of AMERICAN HONDA MOTOR CO., INC.

8. Shift Lever Bracket Base
    1. Remove the shift lever bracket base (A).

GETtheMANUALS.org

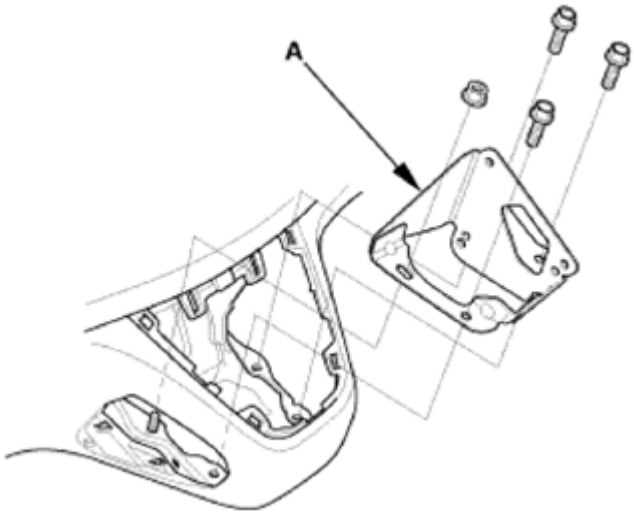

Fig. 1151: Identifying Shift Lever Bracket Base With Mounting Bolts
Courtesy of AMERICAN HONDA MOTOR CO., INC.

INSTALLATION

1. Shift Lever Bracket Base
    1. Install the shift lever bracket base (A).
    2. Tighten the bolts and the nut in the sequence shown.

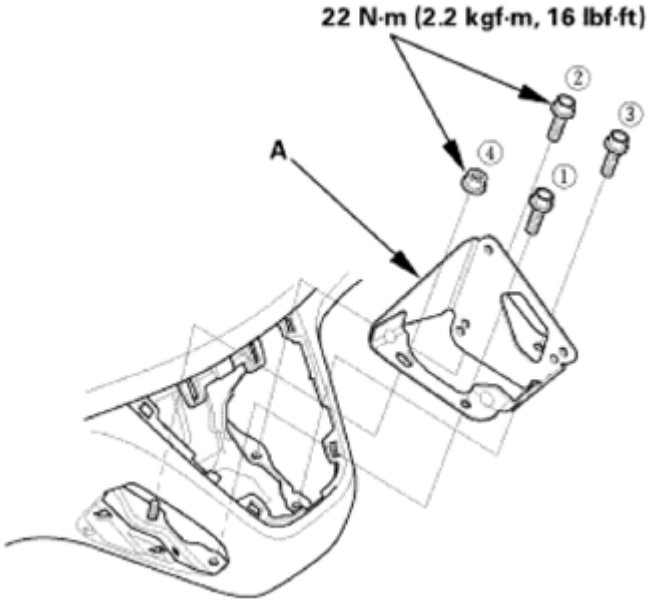

Fig. 1152: Identifying Shift Lever Bracket Base And Mounting Bolts Tightening Sequence
Courtesy of AMERICAN HONDA MOTOR CO., INC.

2. A/T Shift Lever Assembly
    1. Install the shift lever assembly.

GETtheMANUALS.org

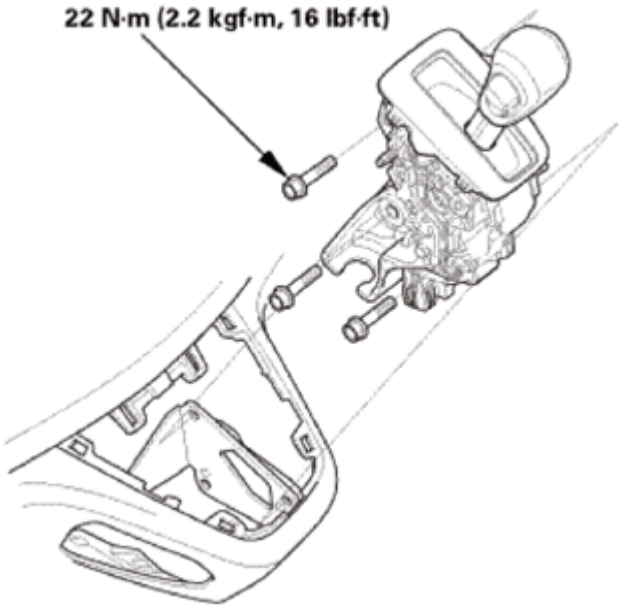

Fig. 1153: Identifying Shift Lever Assembly And Mounting Bolts With Torque Specification
Courtesy of AMERICAN HONDA MOTOR CO., INC.

2. Connect the shift lever connector.

Fig. 1154: Identifying Shift Lever Connector
Courtesy of AMERICAN HONDA MOTOR CO., INC.

3. Shift Cable - Adjustment
    1. Push the shift cable (A) until it stops, then release it. Pull the shift cable back one step so that the shift position is in R.

NOTE: Do not hold the shift cable guide (B) to adjust the shift cable.

GETtheMANUALS.org

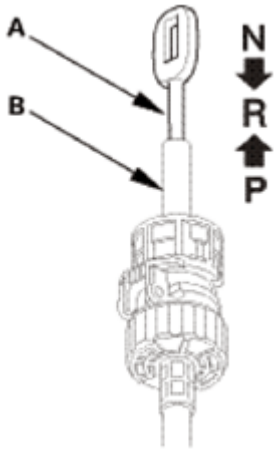

Fig. 1155: Identifying Shift Cable And Shift Cable Guide
Courtesy of AMERICAN HONDA MOTOR CO., INC.

2. Turn the ignition switch to ON (II).
3. Check that the R position indicator comes on.
4. Turn the ignition switch to LOCK (0).

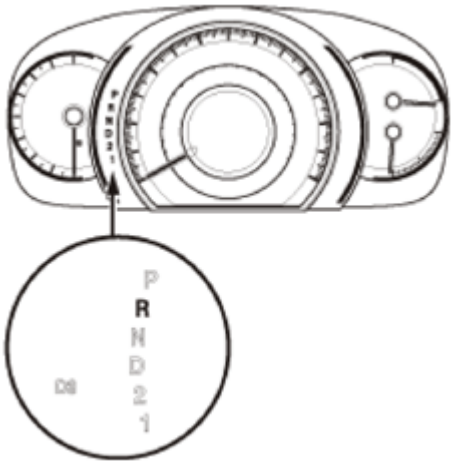

Fig. 1156: Identifying R Position Indicator
Courtesy of AMERICAN HONDA MOTOR CO., INC.

5. Shift the shift lever to R.
6. Insert a 6.0 mm (0.236 in) pin (A) into the positioning holes (B).

NOTE: Use only a 6.0 mm (0.236 in) pin with no burrs.

GETtheMANUALS.org

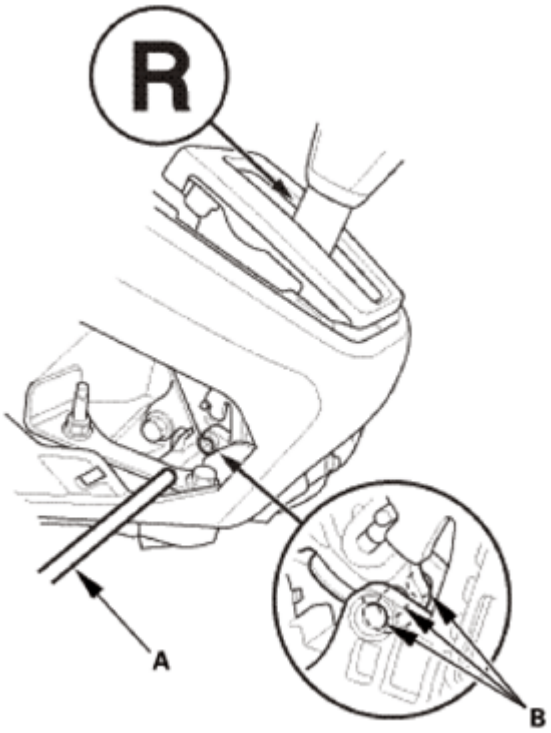

Fig. 1157: Inserting Pin Into Positioning Holes
Courtesy of AMERICAN HONDA MOTOR CO., INC.

7. Unlock the retainer lock (A).

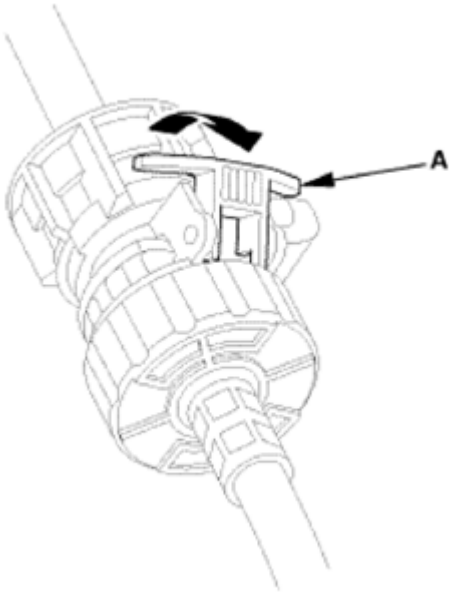

Fig. 1158: Unlocking Retainer Lock
Courtesy of AMERICAN HONDA MOTOR CO., INC.

8. Rotate the socket holder retainer (A) in arrow direction (B) until it stops to create clearance (C)

GETtheMANUALS.org

between the socket holder (D) and holder retainer, and push the retainer lock (E) into the socket holder retainer to lock the retainer.

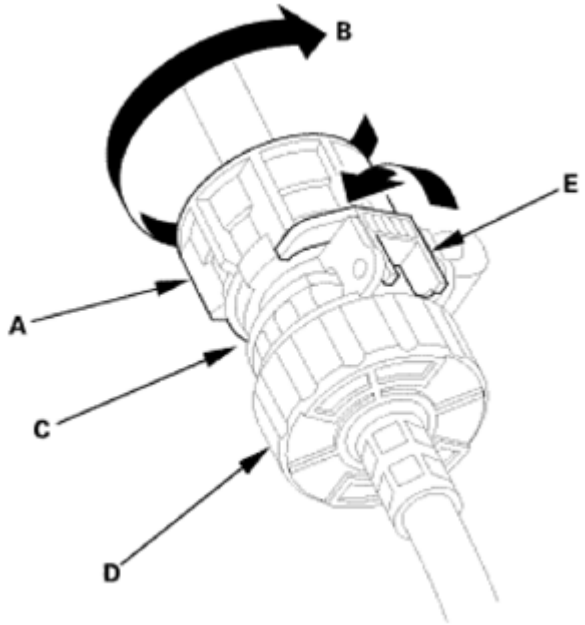

Fig. 1159: Rotating Socket Holder Retainer
Courtesy of AMERICAN HONDA MOTOR CO., INC.

9. Align the shift cable slot (A) between the socket holder (B) and the socket holder retainer (C) with the opening (D) in the shift cable bracket (E), then slide the holder into the bracket while installing the shift cable end (F) over the mounting stud (G) by aligning its square hole (H) with the square fitting (I) at the bottom of the stud.

NOTE:

- **Do not install the shift cable by holding the shift cable guide (J).**
- **When the socket holder is installed in the shift cable bracket, the retainer lock is unhinged and releases the holder retainer lock, then the holder retainer returns under spring force to secure the shift cable.**

GETtheMANUALS.org

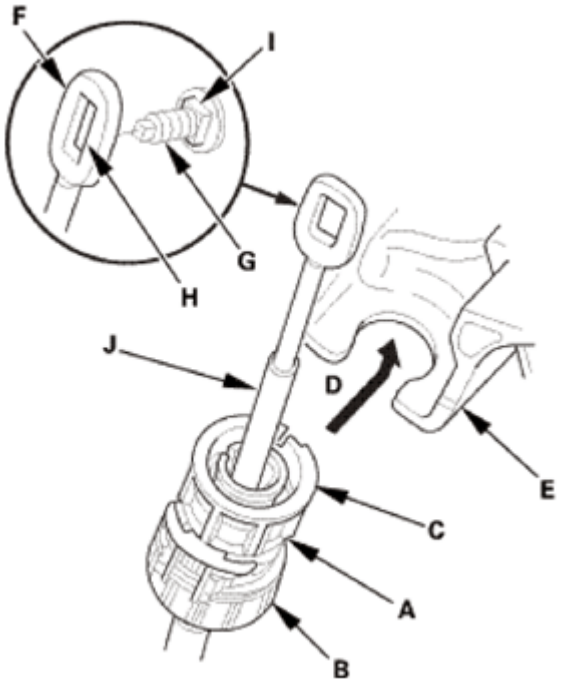

Fig. 1160: Aligning Shift Cable Slot Between Socket Holder And Socket Holder Retainer With Opening In Shift Cable Bracket
Courtesy of AMERICAN HONDA MOTOR CO., INC.

10. Push the retainer lock (A) fully to lock the socket holder retainer (B), and make sure that the retainer lock fits into the hinged-joint (C). If the retainer lock does not fit with the edge of the hinged-joint, rotate the holder retainer counterclockwise while pushing the retainer lock until it locks.

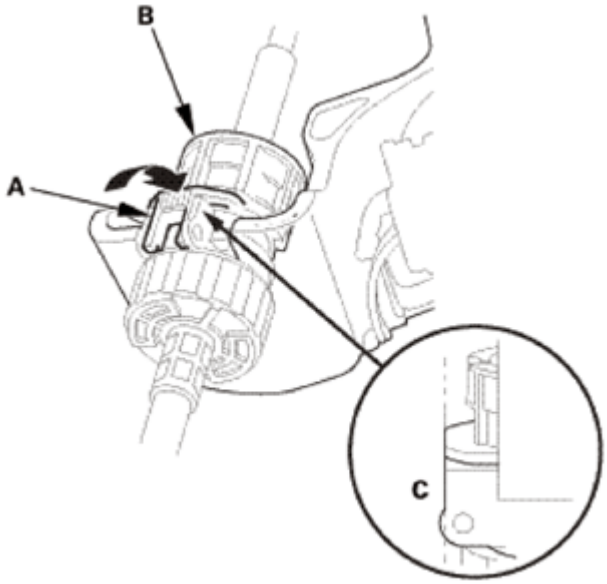

Fig. 1161: Pushing Retainer Lock
Courtesy of AMERICAN HONDA MOTOR CO., INC.

GETtheMANUALS.org

11. Make sure that the shift cable end (A) is properly installed on the mounting stud (B).
    - If the shift cable end is out of position with the mounting stud, remove the shift cable from the shift cable bracket, then reinstall the cable end over the mounting stud before reinstalling the shift cable to the shift cable bracket. Do not install the shift cable end on the mounting stud with the shift cable install on the shift cable bracket.
    - If the shift cable end does not ride at the bottom of the mounting stud, rotate the stud to align the square fitting with the hole.

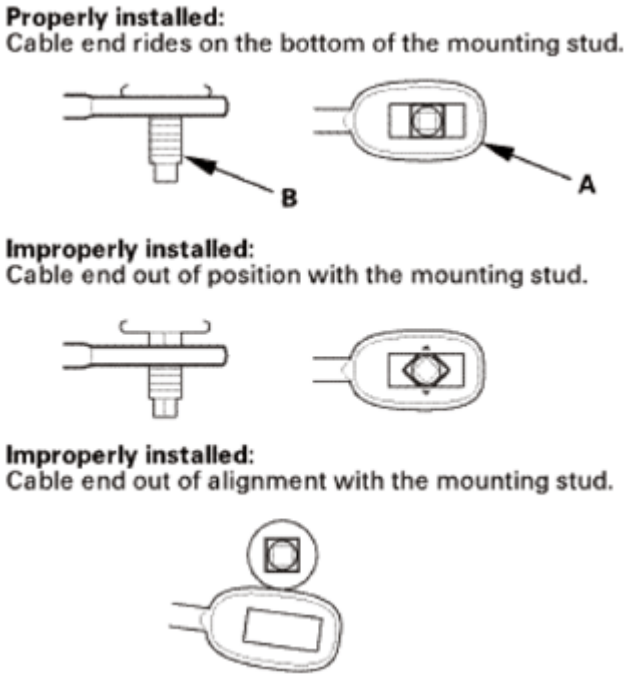

Fig. 1162: Identifying Shift Cable End Proper And Improper Installation
Courtesy of AMERICAN HONDA MOTOR CO., INC.

12. Install the shift cable end nut (A).
13. Remove the 6.0 mm (0.236 in) pin (B) that was installed to hold the shift lever.
14. Turn the ignition switch to ON (II).
15. Move the shift lever to each position, and check that the A/T gear position indicator follows the transmission range switch.
16. Shift the shift lever to P.
17. Check that the shift lock works properly.
18. Push the shift lock release, and check that the shift lever releases. Also check that the shift lever locks when it is shifted back to P.
19. Turn the ignition switch to LOCK (0).

GETtheMANUALS.org

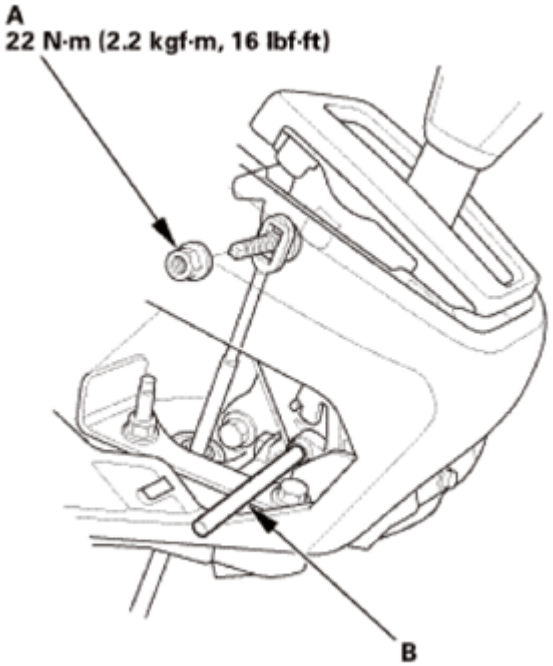

Fig. 1163: Identifying Pin And Shift Cable End Nut With Torque Specification
Courtesy of AMERICAN HONDA MOTOR CO., INC.

4. Center Maintenance Cover
    1. Install the maintenance cover (A).

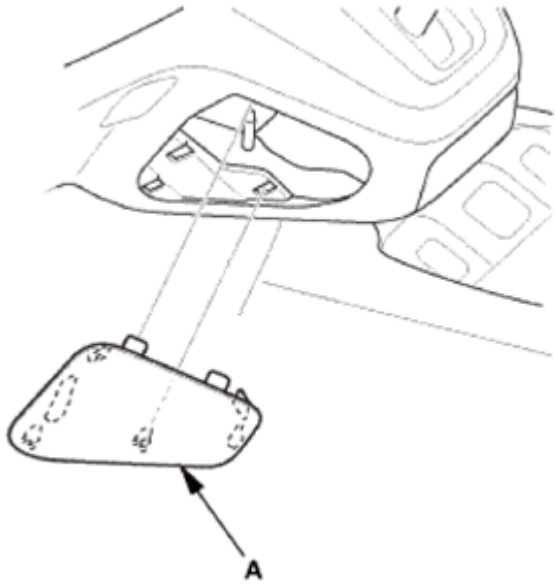

Fig. 1164: Identifying Center Maintenance Cover
Courtesy of AMERICAN HONDA MOTOR CO., INC.

5. Center Console

GETtheMANUALS.org

1. Install the center console (A).

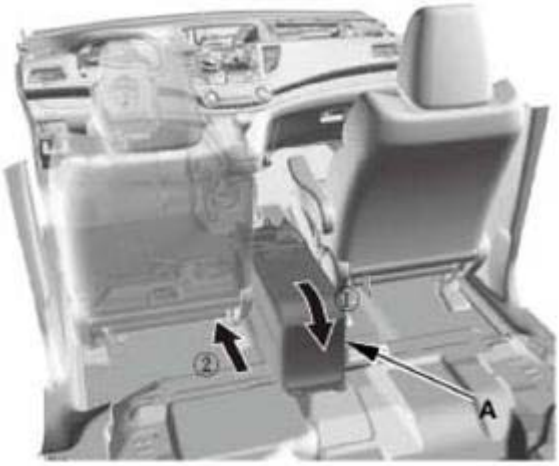

Fig. 1165: Installing Center Console
Courtesy of AMERICAN HONDA MOTOR CO., INC.

2. Connect the connectors (A), and install the clips (B).

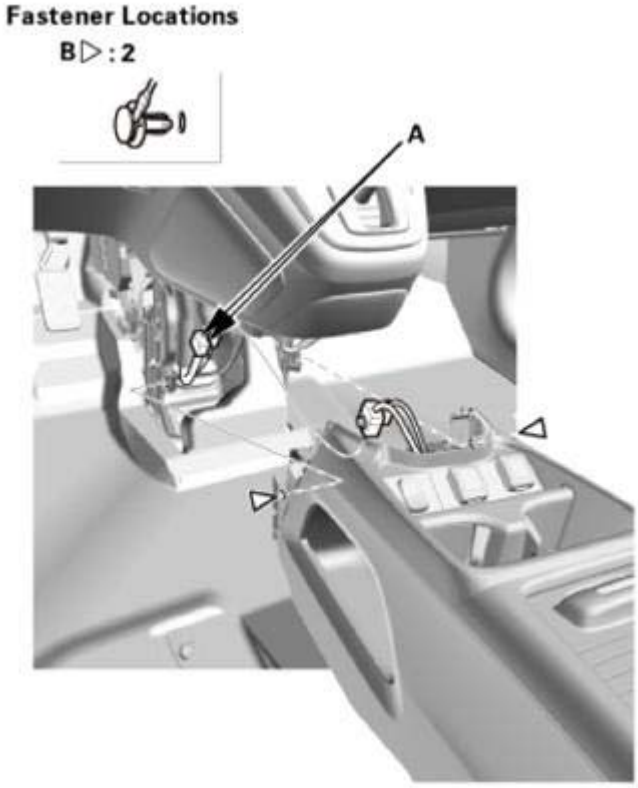

Fig. 1166: Identifying Center Console Connectors And Clips
Courtesy of AMERICAN HONDA MOTOR CO., INC.

GETtheMANUALS.org

3. Install the bolts (A), then install the console box mat (B).

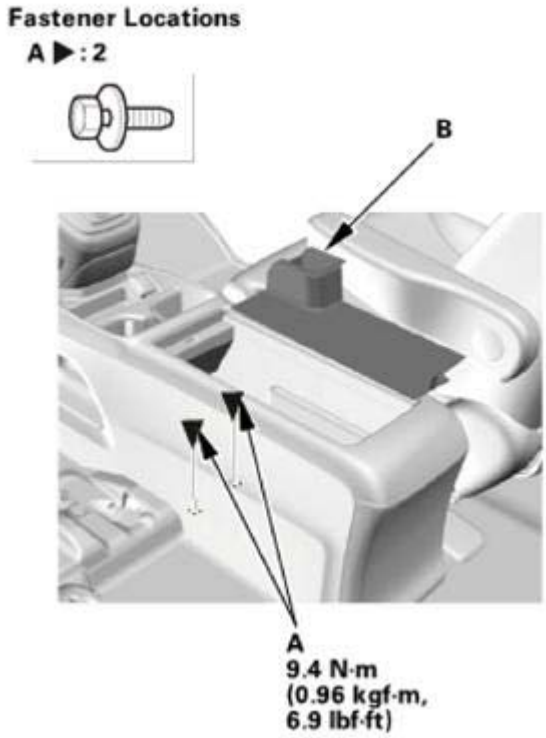

Fig. 1167: Identifying Console Box Mat And Bolts With Torque Specification
Courtesy of AMERICAN HONDA MOTOR CO., INC.

4. Install the bolts (A).

GETtheMANUALS.org

Fig. 1168: Identifying Center Console Bolts With Torque Specification
Courtesy of AMERICAN HONDA MOTOR CO., INC.

5. Install the bolt (A), then install the center lower cover (B). Make sure the clips (C) snap into place securely.

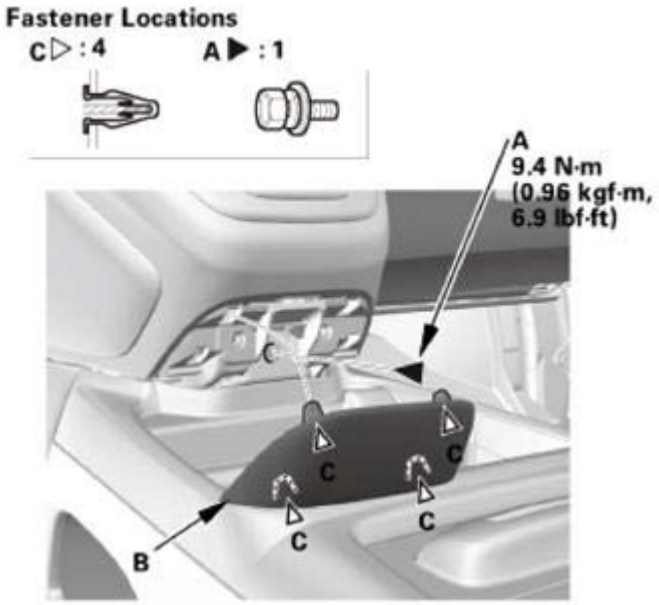

Fig. 1169: Identifying Center Lower Cover, Clips And Bolt With Torque Specification
Courtesy of AMERICAN HONDA MOTOR CO., INC.

6. Center Console Rear Trim
    1. Install the center console rear trim (A). Make sure the clips (B) and the hooks (C) snap into place securely.

GETtheMANUALS.org

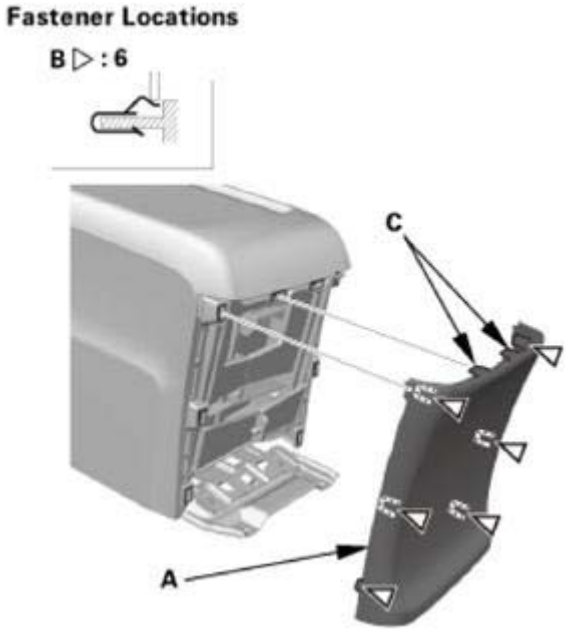

Fig. 1170: Identifying Center Console Rear Trim, Clips And Hooks
Courtesy of AMERICAN HONDA MOTOR CO., INC.

7. Front Console Cover - Both Sides
    1. Install the front console covers (A). Make sure the clips (B, C) snap into place securely.

Left side

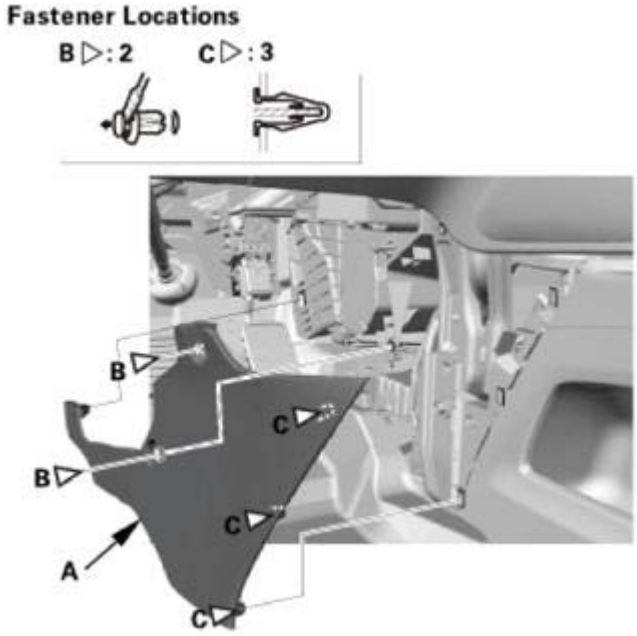

Fig. 1171: Identifying Front Console Covers And Clips (Left Side)
Courtesy of AMERICAN HONDA MOTOR CO., INC.

GETtheMANUALS.org

Right side

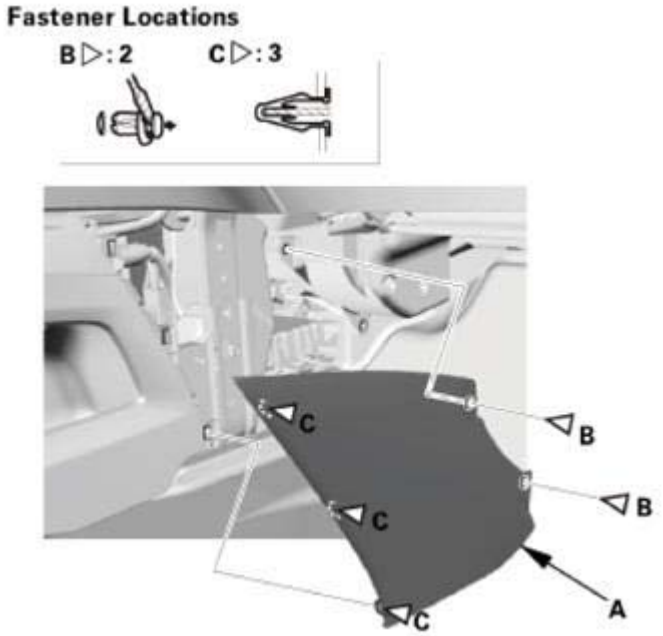

Fig. 1172: Identifying Front Console Covers And Clips (Right Side)
Courtesy of AMERICAN HONDA MOTOR CO., INC.

8. Shift Lever Panel (AT)
    1. Install the shift lever panel (A). Make sure the clips (B, C) and the hooks (D) snap into place securely.

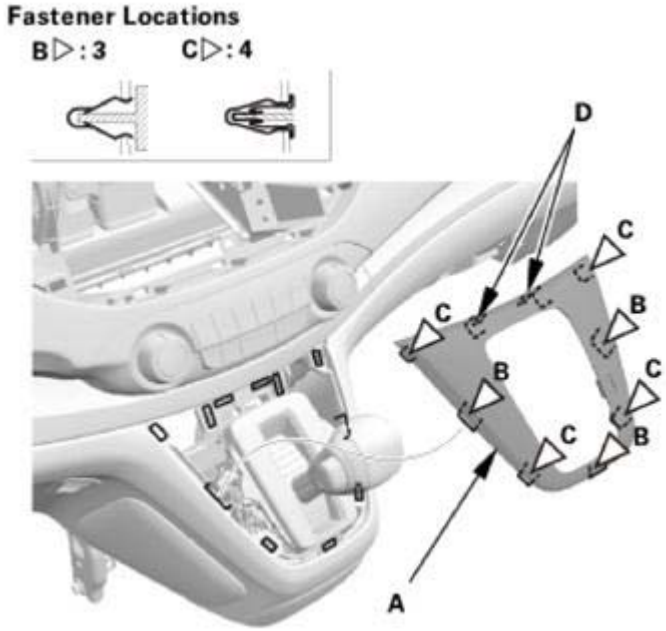

Fig. 1173: Identifying Shift Lever Panel, Clips And Hooks

GETtheMANUALS.org

Courtesy of AMERICAN HONDA MOTOR CO., INC.

A/T SHIFT LEVER KNOB COVER REMOVAL AND INSTALLATION

REMOVAL

1. Shift Lever Knob Cover, Both Sides

NOTE: Do not wipe off the special grease applied to the area of the shift lever marked with an asterisk (*) when you disassemble or assemble it.

1. Wrap the end of a flat-tip screwdriver (A) with tape, remove the shift lever knob cover (B) using the screwdriver.

Driver's Side

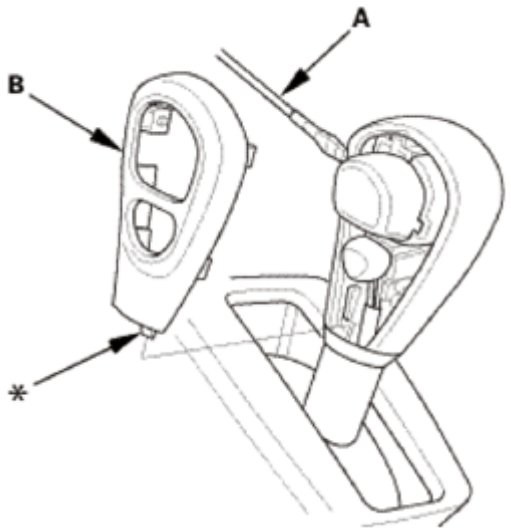

Fig. 1174: Removing Shift Lever Knob Cover Using Screwdriver (Driver's Side)
Courtesy of AMERICAN HONDA MOTOR CO., INC.

Passenger's Side

GETtheMANUALS.org

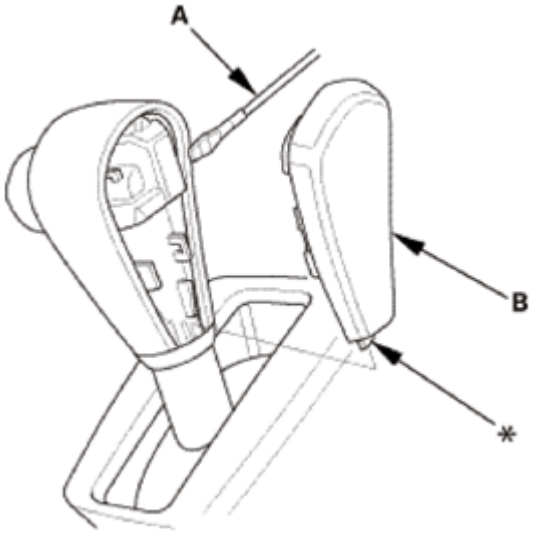

Fig. 1175: Removing Shift Lever Knob Cover Using Screwdriver (Passenger's Side)
Courtesy of AMERICAN HONDA MOTOR CO., INC.

INSTALLATION

1. Shift Lever Knob Cover, Both Sides

NOTE: **Do not wipe off the special grease applied to the area of the shift lever marked with an asterisk (*) when you disassemble or assemble it.**

1. Install the shift lever knob cover (A).

Driver's Side

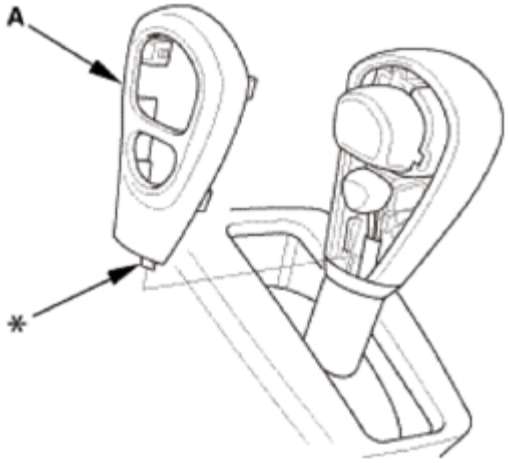

Fig. 1176: Identifying Shift Lever Knob Cover (Driver's Side)
Courtesy of AMERICAN HONDA MOTOR CO., INC.

GETtheMANUALS.org

Passenger's Side

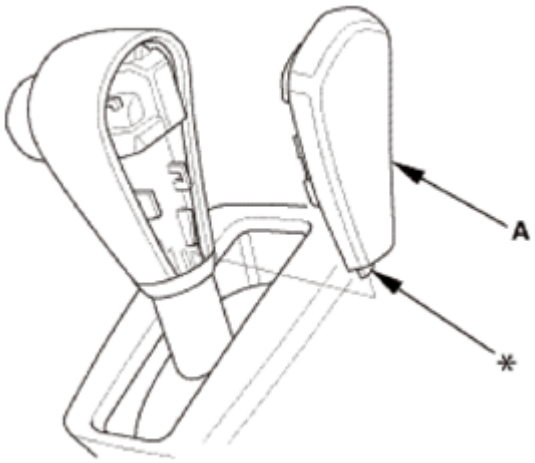

Fig. 1177: Identifying Shift Lever Knob Cover (Passenger's Side)
Courtesy of AMERICAN HONDA MOTOR CO., INC.

A/T SHIFT LEVER KNOB REMOVAL AND INSTALLATION

REMOVAL

1. Shift Lever Panel (AT)
    1. Carefully pry out the shift lever panel (A) with the appropriate trim tool to detach the clips (B, C) and the hooks (D), then remove the shift lever panel.

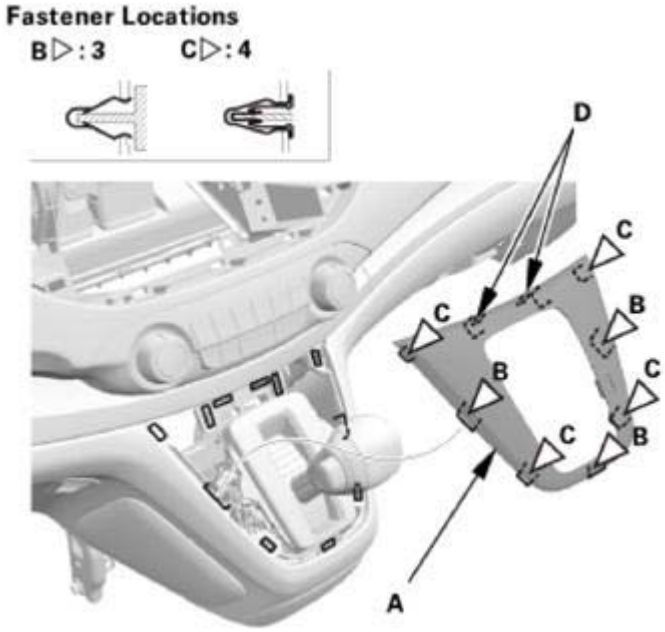

Fig. 1178: Identifying Shift Lever Panel, Clips And Hooks
Courtesy of AMERICAN HONDA MOTOR CO., INC.

GETtheMANUALS.org

2. Center Maintenance Cover
    1. Remove the maintenance cover (A).

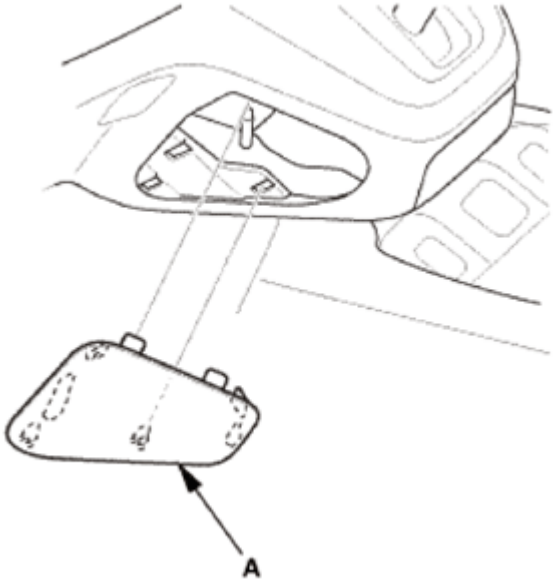

Fig. 1179: Identifying Center Maintenance Cover
Courtesy of AMERICAN HONDA MOTOR CO., INC.

3. D3 Switch Harness - Disconnection
    1. Remove the harness wire tie (A).
    2. Disconnect the D3 switch connector (B).

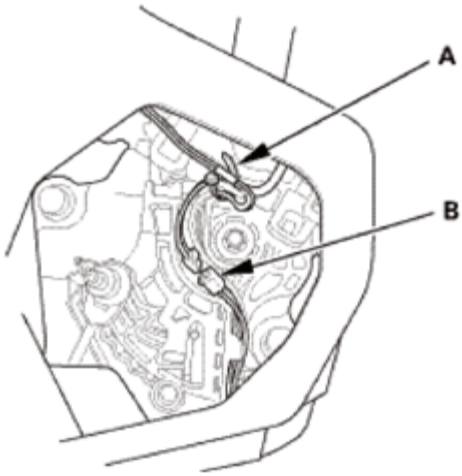

Fig. 1180: Identifying D3 Switch Connector And Harness Wire Tie
Courtesy of AMERICAN HONDA MOTOR CO., INC.

4. Shift Lever Knob/Shift Lever Knob Ring Assembly

GETtheMANUALS.org

NOTE: **Do not wipe off the special grease applied to the area of the shift lever marked with an asterisk (*) when you disassemble or assemble it.**

1. Unhook the D3 switch harness (A) from the harness guide (B).
2. Remove the shift lever knob/shift lever knob ring assembly (C).

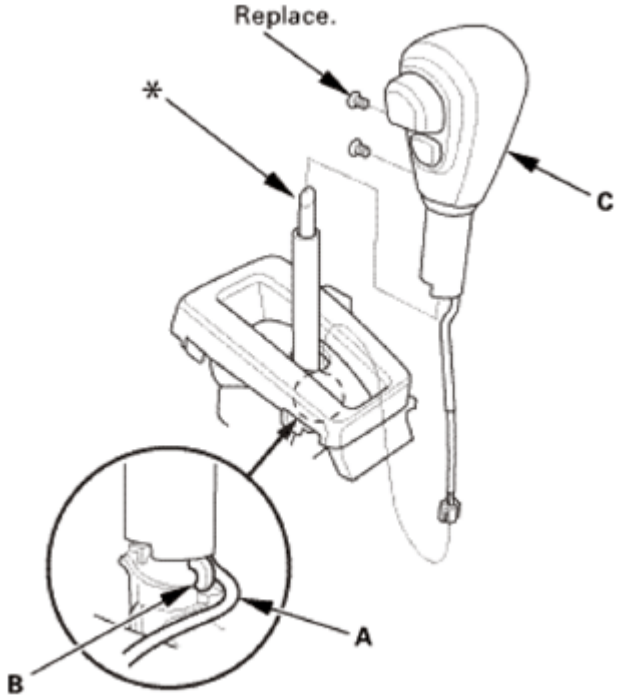

Fig. 1181: Identifying Shift Lever Knob/Shift Lever Knob Ring Assembly, D3 Switch Harness And Harness Guide With Mounting Bolts
Courtesy of AMERICAN HONDA MOTOR CO., INC.

5. Shift Lever Knob Ring

NOTE: **Do not wipe off the special grease applied to the area of the shift lever marked with an asterisk (*) when you disassemble or assemble it.**

1. Remove the shift lever ring (A).

GETtheMANUALS.org

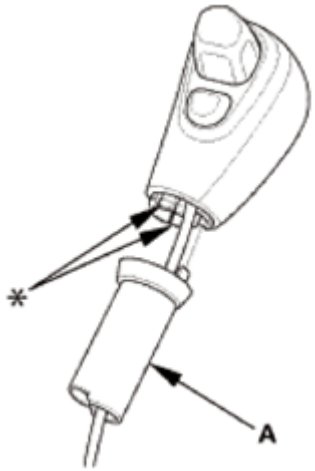

Fig. 1182: Identifying Shift Lever Ring
Courtesy of AMERICAN HONDA MOTOR CO., INC.

6. Shift Lever Knob Cover - Passenger's Side

NOTE: **Do not wipe off the special grease applied to the area of the shift lever marked with an asterisk (*) when you disassemble or assemble it.**

1. Wrap the end of a flat-tip screwdriver (A) with tape, remove the shift lever knob cover (B) using the screwdriver.

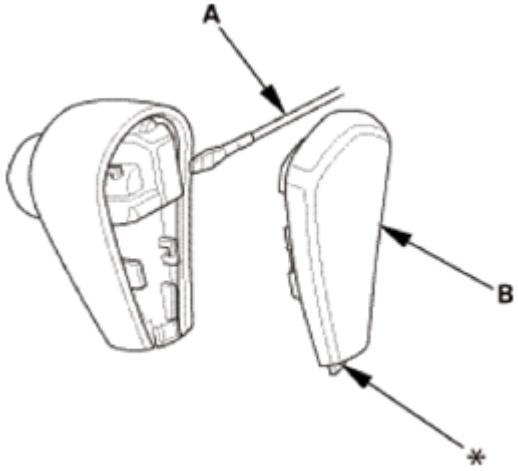

Fig. 1183: Removing Shift Lever Knob Cover Using Screwdriver (Passenger's Side)
Courtesy of AMERICAN HONDA MOTOR CO., INC.

7. Shift Lever Knob Cover - Driver's Side

NOTE: **Do not wipe off the special grease applied to the area of the shift lever marked with an asterisk (*) when you disassemble or assemble it.**

GETtheMANUALS.org

1. Wrap the end of a flat-tip screwdriver (A) with tape, remove the shift lever knob cover (B) using the screwdriver.
2. Remove the shift lever button (C) and the spring (D).

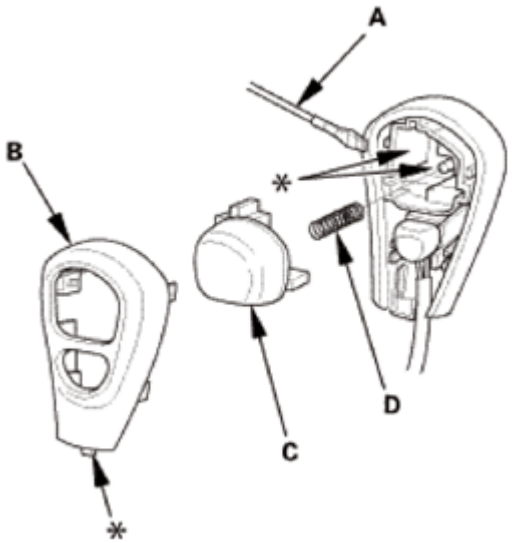

Fig. 1184: Removing Shift Lever Knob Cover Using Screwdriver (Driver's Side)
Courtesy of AMERICAN HONDA MOTOR CO., INC.

8. Shift Lever Knob

NOTE: **Do not wipe off the special grease applied to the area of the shift lever marked with an asterisk (*) when you disassemble or assemble it.**

1. Remove the D3 switch (A) by expanding the lock tabs (B).

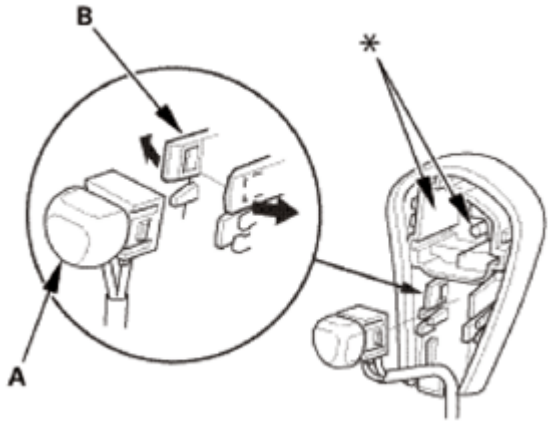

Fig. 1185: Removing D3 Switch By Expanding Lock Tabs
Courtesy of AMERICAN HONDA MOTOR CO., INC.

INSTALLATION

GETtheMANUALS.org

1. Shift Lever Knob

NOTE: **Do not wipe off the special grease applied to the area of the shift lever marked with an asterisk (*) when you disassemble or assemble it.**

1. Install the D3 switch (A).

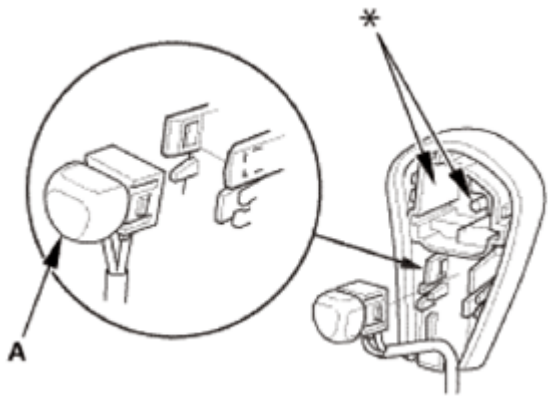

Fig. 1186: Identifying D3 Switch
Courtesy of AMERICAN HONDA MOTOR CO., INC.

2. Shift Lever Knob Cover - Driver's Side

NOTE: **Do not wipe off the special grease applied to the area of the shift lever marked with an asterisk (*) when you disassemble or assemble it.**

1. Install the spring (A) and the shift lever button (B).
2. Install the shift lever knob cover (C).

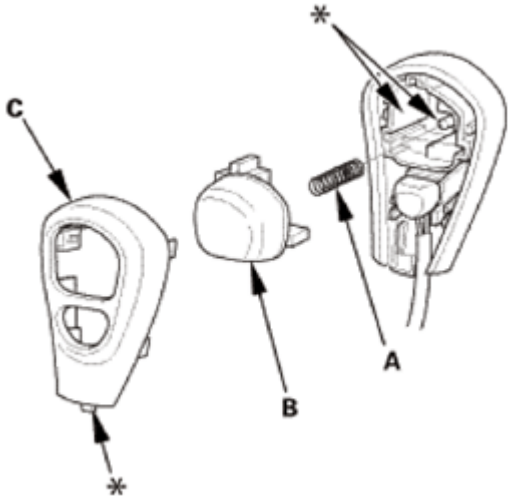

Fig. 1187: Identifying Shift Lever Knob Cover, Spring And Shift Lever Button

GETtheMANUALS.org

Courtesy of AMERICAN HONDA MOTOR CO., INC.

3. Shift Lever Knob Cover - Passenger's Side

NOTE: **Do not wipe off the special grease applied to the area of the shift lever marked with an asterisk (*) when you disassemble or assemble it.**

1. Install the shift lever knob cover (A).

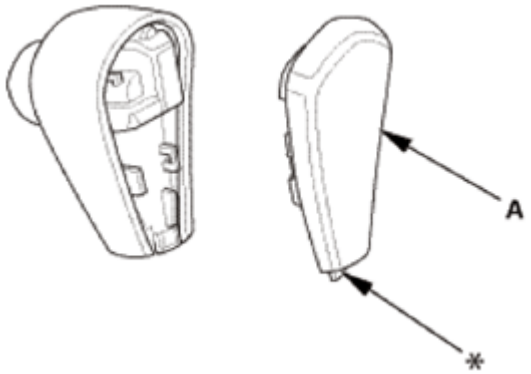

Fig. 1188: Identifying Shift Lever Knob Cover
Courtesy of AMERICAN HONDA MOTOR CO., INC.

4. Shift Lever Knob Ring

NOTE: **Do not wipe off the special grease applied to the area of the shift lever marked with an asterisk (*) when you disassemble or assemble it.**

1. Install the shift lever ring (A).

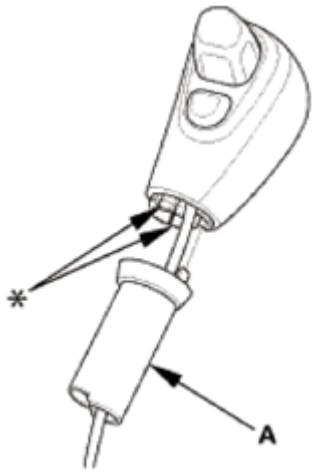

Fig. 1189: Identifying Shift Lever Ring
Courtesy of AMERICAN HONDA MOTOR CO., INC.

GETtheMANUALS.org

5. Shift Lever Knob/Shift Lever Knob Ring Assembly

NOTE: **Do not wipe off the special grease applied to the area of the shift lever marked with an asterisk (*) when you disassemble or assemble it.**

1. Install the shift lever knob/shift lever knob ring assembly (A).
2. Hook the D3 switch harness (B) to the harness guide (C).

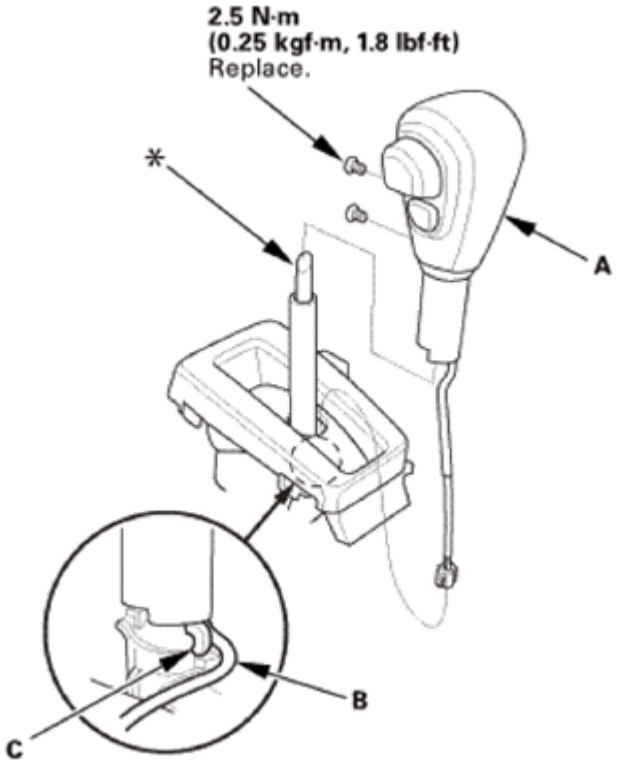

Fig. 1190: Identifying Shift Lever Knob/Shift Lever Knob Ring Assembly, D3 Switch Harness, Harness Guide And Mounting Bolts With Torque Specification
Courtesy of AMERICAN HONDA MOTOR CO., INC.

6. D3 Switch Harness - Reconnection
   1. Connect the D3 switch connector (A).
   2. Route the D3 switch harness (B) along with the shift lever assembly, and tie the harnesses at the guide (C) with the harness wire tie (D).

GETtheMANUALS.org

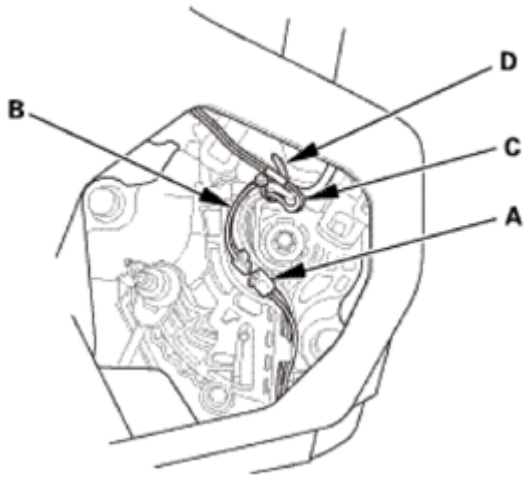

Fig. 1191: Identifying D3 Switch Harness, Connector, Guide And Harness Wire Tie
Courtesy of AMERICAN HONDA MOTOR CO., INC.

7. Center Maintenance Cover
    1. Install the maintenance cover (A).

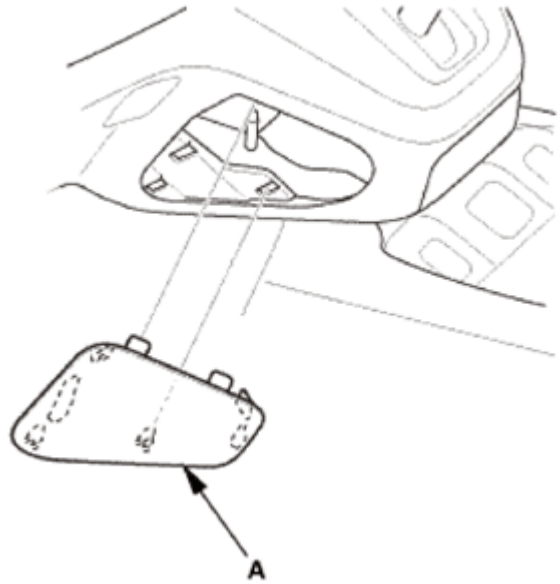

Fig. 1192: Identifying Center Maintenance Cover
Courtesy of AMERICAN HONDA MOTOR CO., INC.

8. Shift Lever Panel (AT)
    1. Install the shift lever panel (A). Make sure the clips (B, C) and the hooks (D) snap into place securely.

GETtheMANUALS.org

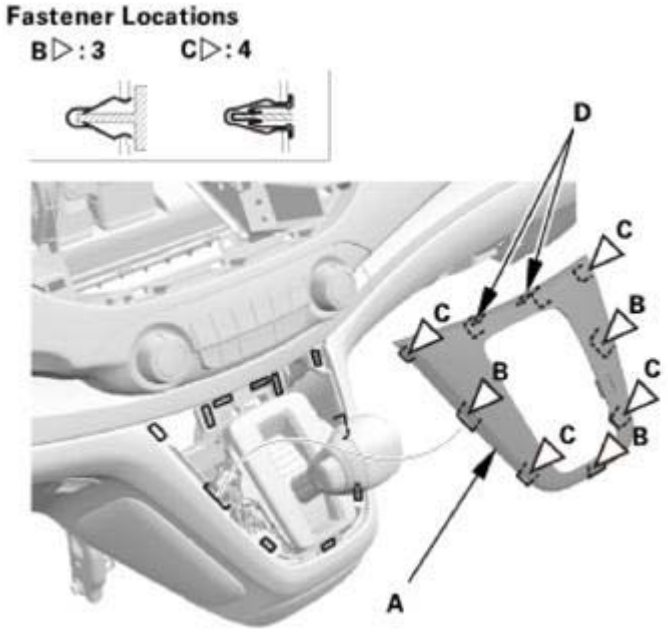

Fig. 1193: Identifying Shift Lever Panel, Clips And Hooks
Courtesy of AMERICAN HONDA MOTOR CO., INC.

A/T SHIFT LEVER REMOVAL AND INSTALLATION

REMOVAL

1. Shift Lever Panel (AT)
    1. Carefully pry out the shift lever panel (A) with the appropriate trim tool to detach the clips (B, C) and the hooks (D), then remove the shift lever panel.

GETtheMANUALS.org

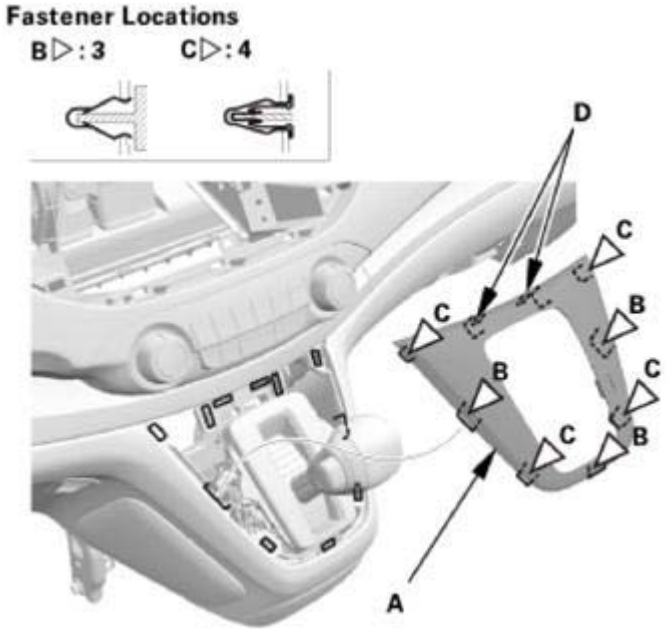

Fig. 1194: Identifying Shift Lever Panel, Clips And Hooks
Courtesy of AMERICAN HONDA MOTOR CO., INC.

2. Front Console Cover - Both Sides
    1. Remove the clips (A).
    2. Detach the clips (B), then remove the front console covers (C).

Left side

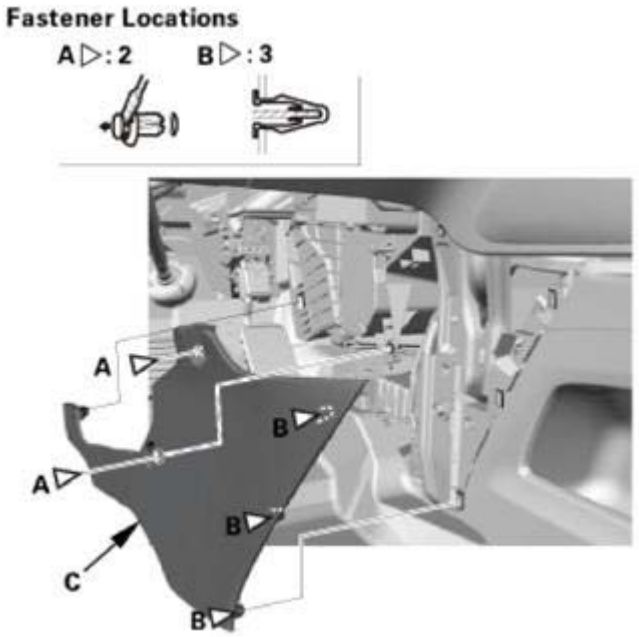

Fig. 1195: Identifying Front Console Covers And Clips (Left Side)

GETtheMANUALS.org

Courtesy of AMERICAN HONDA MOTOR CO., INC.

Right side

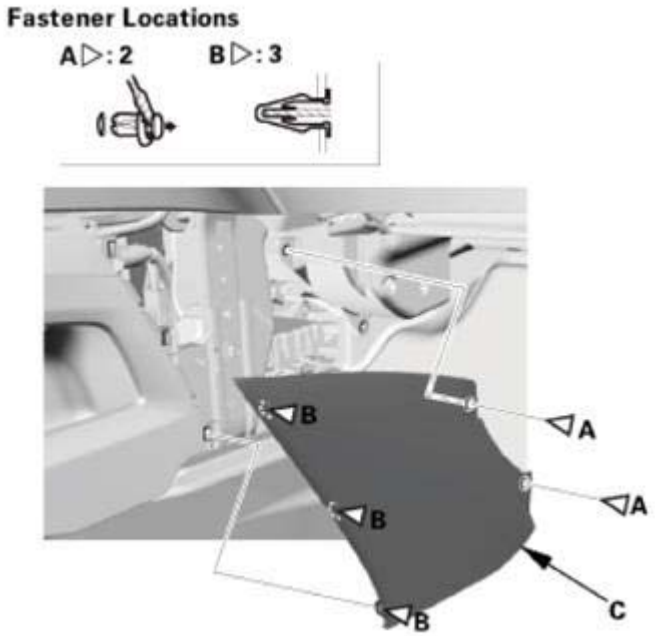

Fig. 1196: Identifying Front Console Covers And Clips (Right Side)
Courtesy of AMERICAN HONDA MOTOR CO., INC.

3. Center Console Rear Trim
    1. Carefully pry out the center console rear trim (A) with the appropriate trim tool to detach the clips (B) and the hooks (C), then remove the center console rear trim.

GETtheMANUALS.org

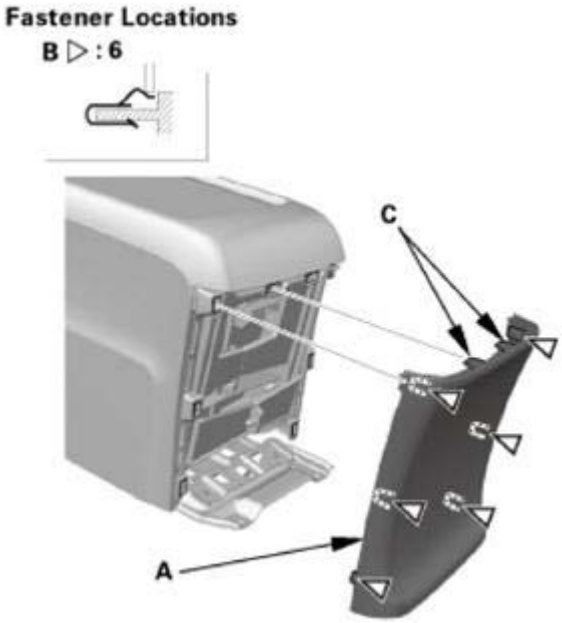

Fig. 1197: Identifying Center Console Rear Trim, Clips And Hooks
Courtesy of AMERICAN HONDA MOTOR CO., INC.

4. Center Console
    1. Carefully pry out the center lower cover (A) with the appropriate trim tool to detach the clips (B), then remove the center lower cover.
    2. Remove the bolt (C).

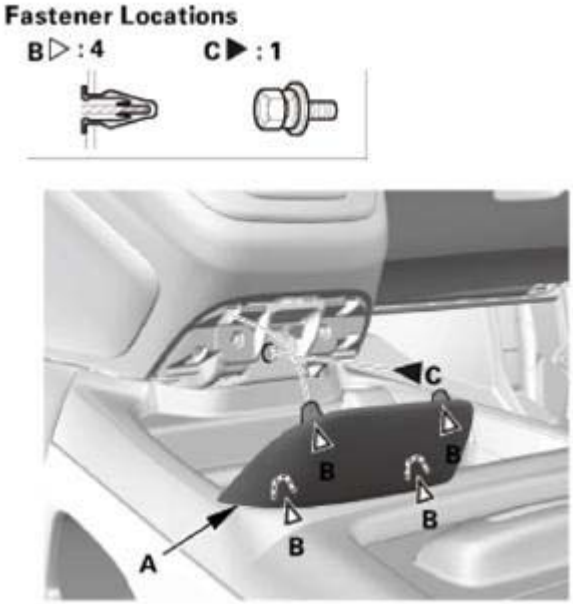

Fig. 1198: Identifying Center Lower Cover, Clips And Bolts
Courtesy of AMERICAN HONDA MOTOR CO., INC.

GETtheMANUALS.org

3. Remove the bolts (A).

Fig. 1199: Identifying Center Console Bolts
Courtesy of AMERICAN HONDA MOTOR CO., INC.

4. Remove the console box mat (A), then remove the bolts (B).

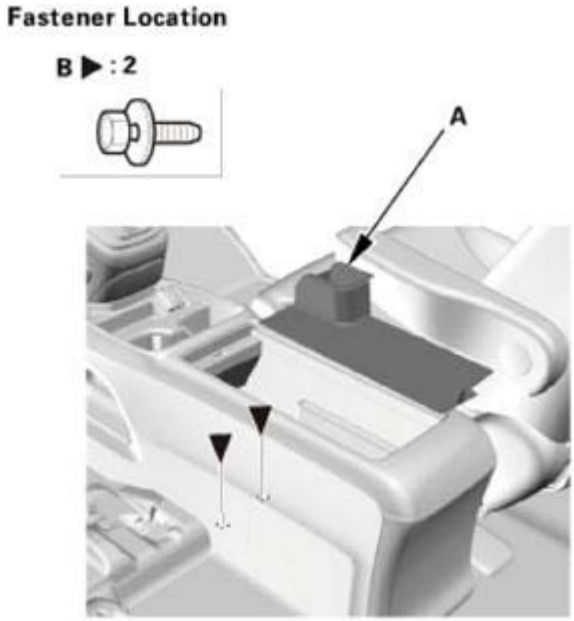

Fig. 1200: Identifying Console Box Mat And Bolts
Courtesy of AMERICAN HONDA MOTOR CO., INC.

5. Disconnect the connectors (A), and remove the clips (B).

GETtheMANUALS.org

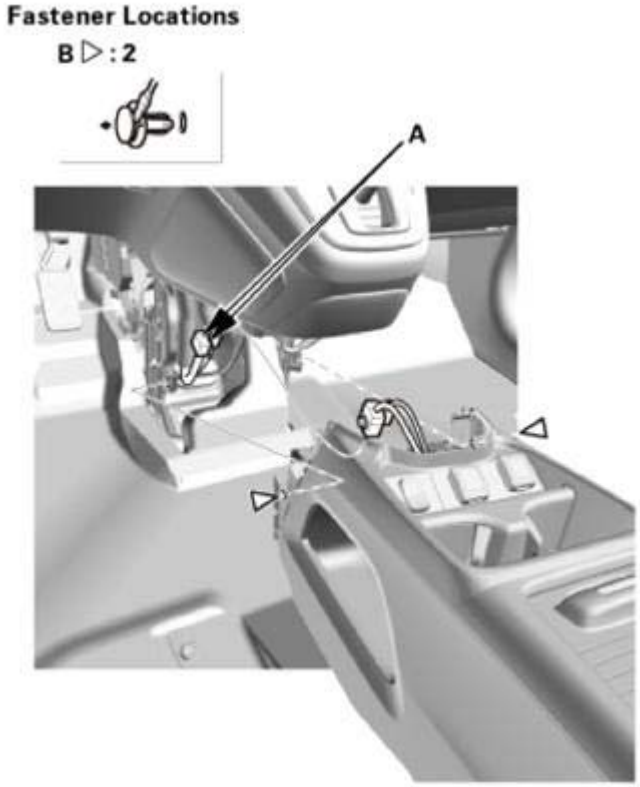

Fig. 1201: Identifying Connectors And Clips
Courtesy of AMERICAN HONDA MOTOR CO., INC.

6. Slide both front seats fully rearward, and recline the seat-backs around two thirds to the rear.
7. Remove the center console (A).

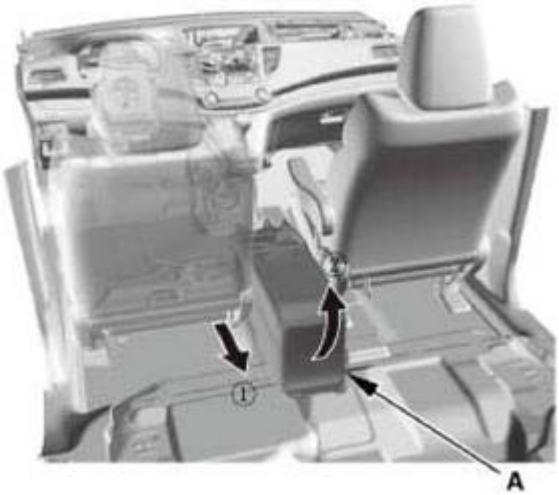

Fig. 1202: Removing Center Console
Courtesy of AMERICAN HONDA MOTOR CO., INC.

GETtheMANUALS.org

5. Center Maintenance Cover
    1. Remove the maintenance cover (A).

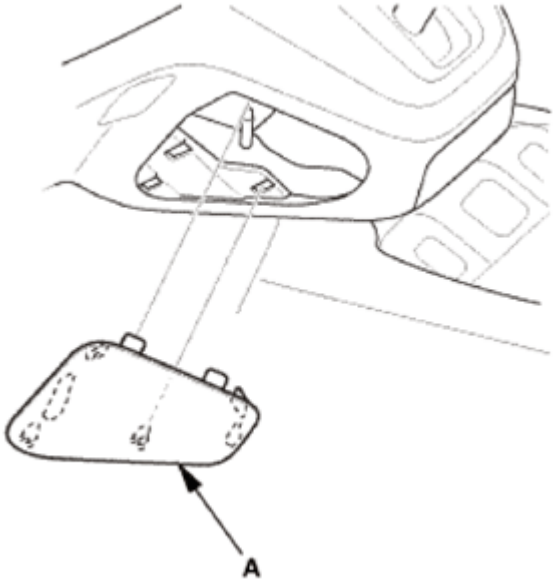

Fig. 1203: Identifying Center Maintenance Cover
Courtesy of AMERICAN HONDA MOTOR CO., INC.

6. Shift Cable - Disconnection Lever Side
    1. Shift the shift lever to R.
    2. Insert a 6.0 mm (0.236 in) pin (A) into the positioning holes (B).

NOTE: Use only a 6.0 mm (0.236 in) pin with no burrs.

    3. Remove the nut (C) securing the shift cable end (D).

GETtheMANUALS.org

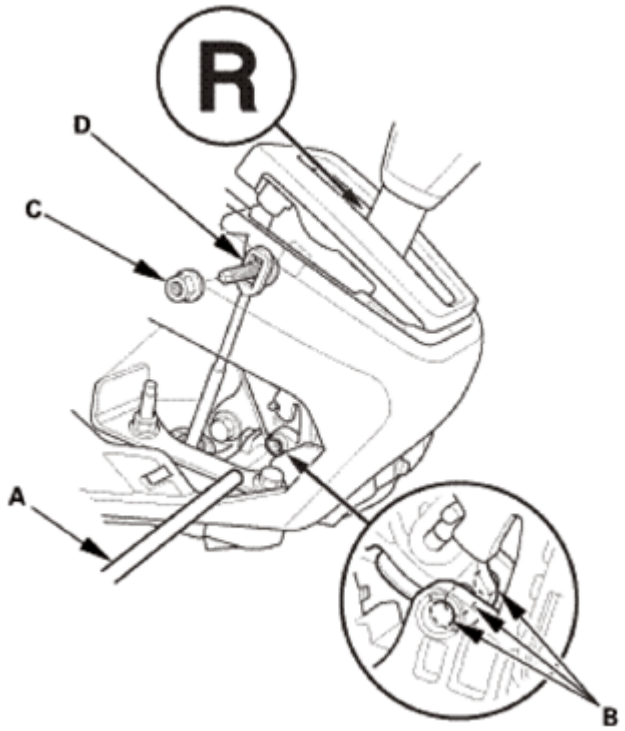

Fig. 1204: Inserting Pin Into Positioning Holes
Courtesy of AMERICAN HONDA MOTOR CO., INC.

4. Unlock the retainer lock (A).

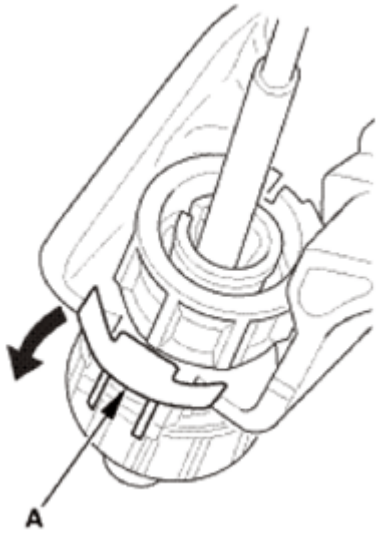

Fig. 1205: Unlocking Retainer Lock
Courtesy of AMERICAN HONDA MOTOR CO., INC.

5. Rotate the socket holder retainer (A) counterclockwise (B) until it stops, and push the retainer lock (C) into the socket holder retainer to lock the retainer.

GETtheMANUALS.org

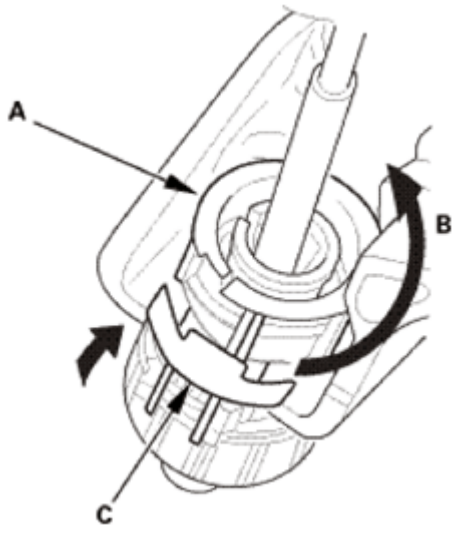

Fig. 1206: Rotating Socket Holder Retainer Counterclockwise
Courtesy of AMERICAN HONDA MOTOR CO., INC.

6. Slide the socket holder (A) away from the bracket as shown to remove the shift cable (B) from the shift cable bracket (C).

NOTE: Do not remove the shift cable by pulling the shift cable guide (D).

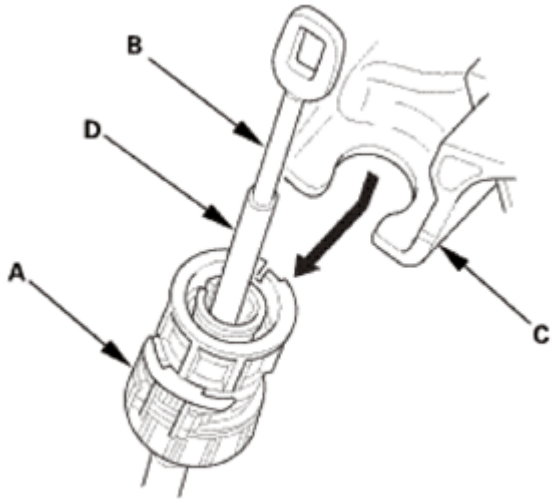

Fig. 1207: Removing Shift Cable From Shift Cable Bracket
Courtesy of AMERICAN HONDA MOTOR CO., INC.

7. A/T Shift Lever Assembly
    1. Disconnect the shift lever connector.

GETtheMANUALS.org

Fig. 1208: Identifying Shift Lever Connector
Courtesy of AMERICAN HONDA MOTOR CO., INC.

2. Remove the shift lever assembly.

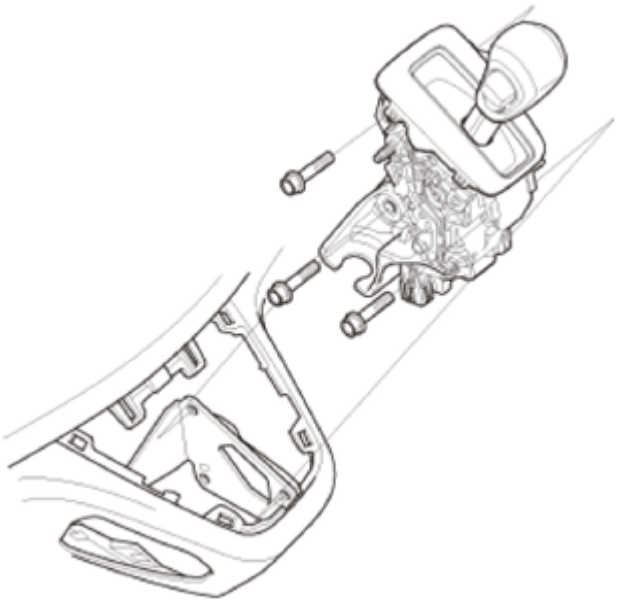

Fig. 1209: Identifying Shift Lever Assembly
Courtesy of AMERICAN HONDA MOTOR CO., INC.

INSTALLATION

1. A/T Shift Lever Assembly
    1. Install the shift lever assembly.

GETtheMANUALS.org

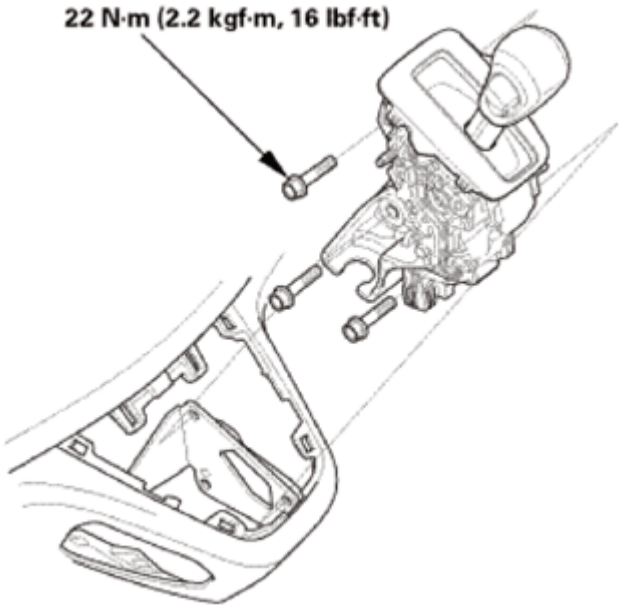

Fig. 1210: Identifying Shift Lever Assembly And Mounting Bolts With Torque Specification
Courtesy of AMERICAN HONDA MOTOR CO., INC.

2. Connect the shift lever connector.

Fig. 1211: Identifying Shift Lever Connector
Courtesy of AMERICAN HONDA MOTOR CO., INC.

2. Shift Cable - Adjustment
    1. Push the shift cable (A) until it stops, then release it. Pull the shift cable back one step so that the shift position is in R.

NOTE: **Do not hold the shift cable guide (B) to adjust the shift cable.**

GETtheMANUALS.org

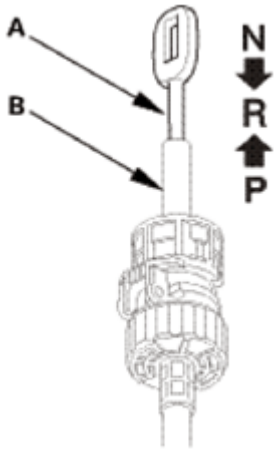

Fig. 1212: Identifying Shift Cable And Shift Cable Guide
Courtesy of AMERICAN HONDA MOTOR CO., INC.

2. Turn the ignition switch to ON (II).
3. Check that the R position indicator comes on.
4. Turn the ignition switch to LOCK (0).

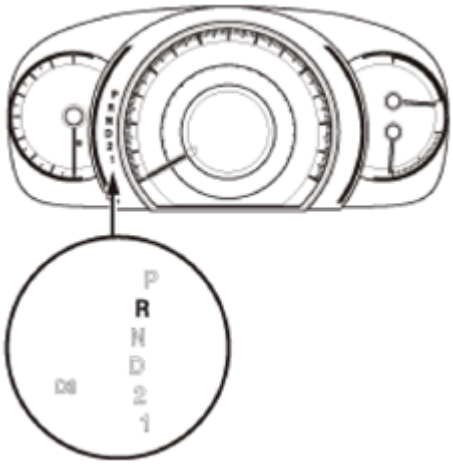

Fig. 1213: Identifying R Position Indicator
Courtesy of AMERICAN HONDA MOTOR CO., INC.

5. Shift the shift lever to R.
6. Insert a 6.0 mm (0.236 in) pin (A) into the positioning holes (B).

NOTE: Use only a 6.0 mm (0.236 in) pin with no burrs.

GETtheMANUALS.org

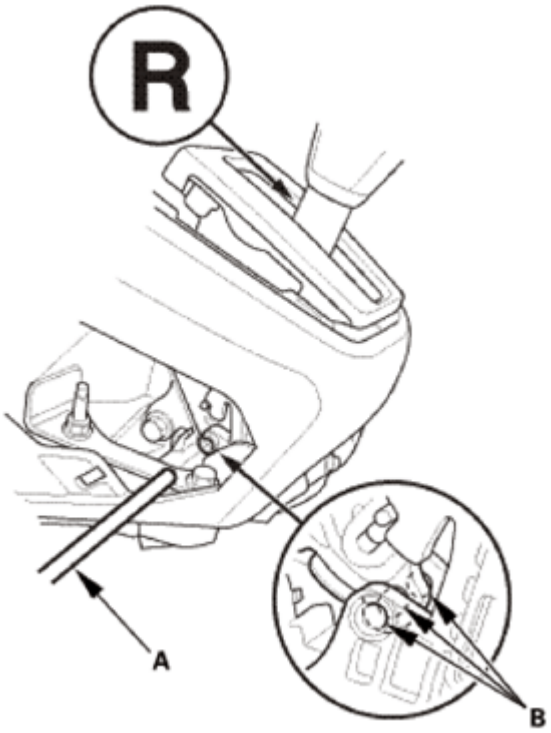

Fig. 1214: Inserting Pin Into Positioning Holes
Courtesy of AMERICAN HONDA MOTOR CO., INC.

7. Unlock the retainer lock (A).

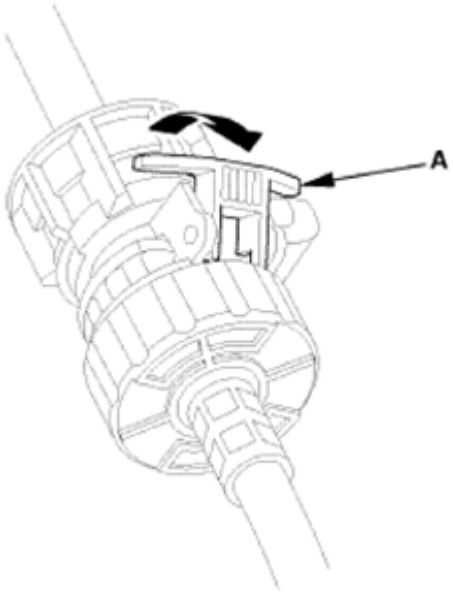

Fig. 1215: Unlocking Retainer Lock
Courtesy of AMERICAN HONDA MOTOR CO., INC.

8. Rotate the socket holder retainer (A) in arrow direction (B) until it stops to create clearance (C)

GETtheMANUALS.org

between the socket holder (D) and holder retainer, and push the retainer lock (E) into the socket holder retainer to lock the retainer.

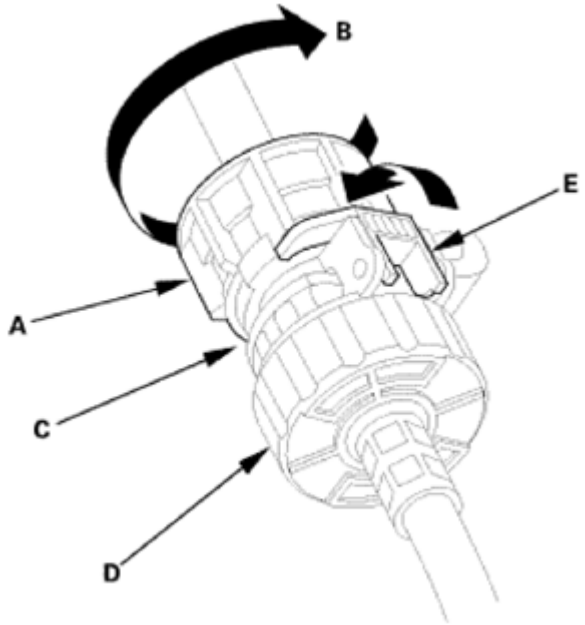

Fig. 1216: Rotating Socket Holder Retainer
Courtesy of AMERICAN HONDA MOTOR CO., INC.

9. Align the shift cable slot (A) between the socket holder (B) and the socket holder retainer (C) with the opening (D) in the shift cable bracket (E), then slide the holder into the bracket while installing the shift cable end (F) over the mounting stud (G) by aligning its square hole (H) with the square fitting (I) at the bottom of the stud.

NOTE:

- **Do not install the shift cable by holding the shift cable guide (J).**
- **When the socket holder is installed in the shift cable bracket, the retainer lock is unhinged and releases the holder retainer lock, then the holder retainer returns under spring force to secure the shift cable.**

GETtheMANUALS.org

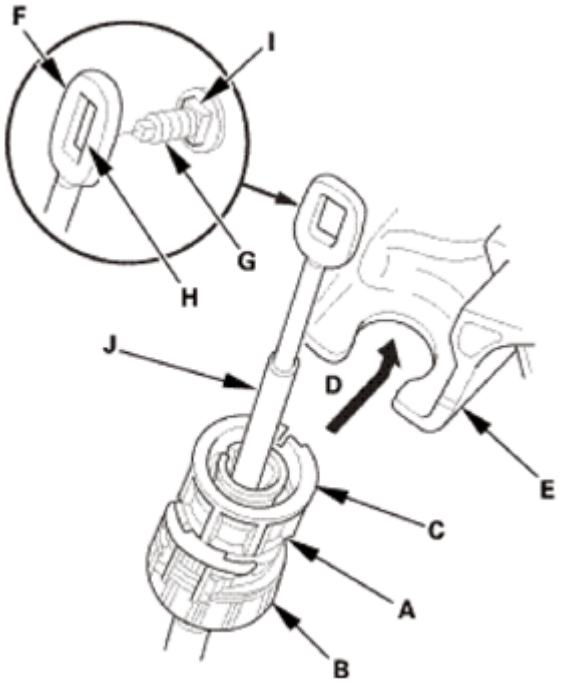

Fig. 1217: Aligning Shift Cable Slot Between Socket Holder And Socket Holder Retainer With Opening In Shift Cable Bracket
Courtesy of AMERICAN HONDA MOTOR CO., INC.

10. Push the retainer lock (A) fully to lock the socket holder retainer (B), and make sure that the retainer lock fits into the hinged-joint (C). If the retainer lock does not fit with the edge of the hinged-joint, rotate the holder retainer counterclockwise while pushing the retainer lock until it locks.

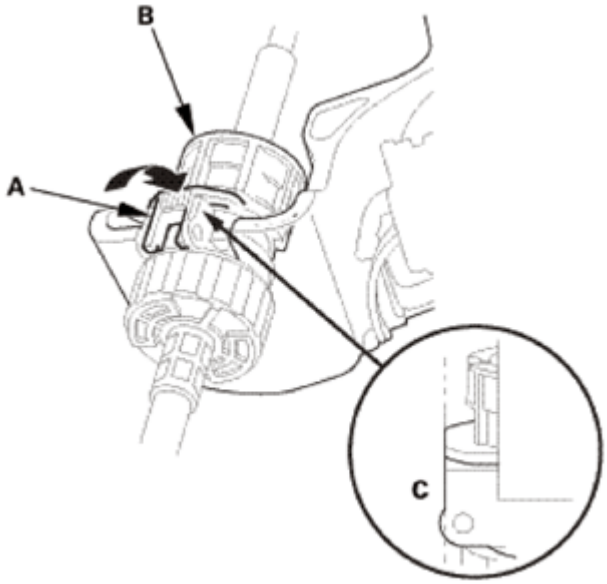

Fig. 1218: Pushing Retainer Lock
Courtesy of AMERICAN HONDA MOTOR CO., INC.

GETtheMANUALS.org

11. Make sure that the shift cable end (A) is properly installed on the mounting stud (B).
    - If the shift cable end is out of position with the mounting stud, remove the shift cable from the shift cable bracket, then reinstall the cable end over the mounting stud before reinstalling the shift cable to the shift cable bracket. Do not install the shift cable end on the mounting stud with the shift cable install on the shift cable bracket.
    - If the shift cable end does not ride at the bottom of the mounting stud, rotate the stud to align the square fitting with the hole.

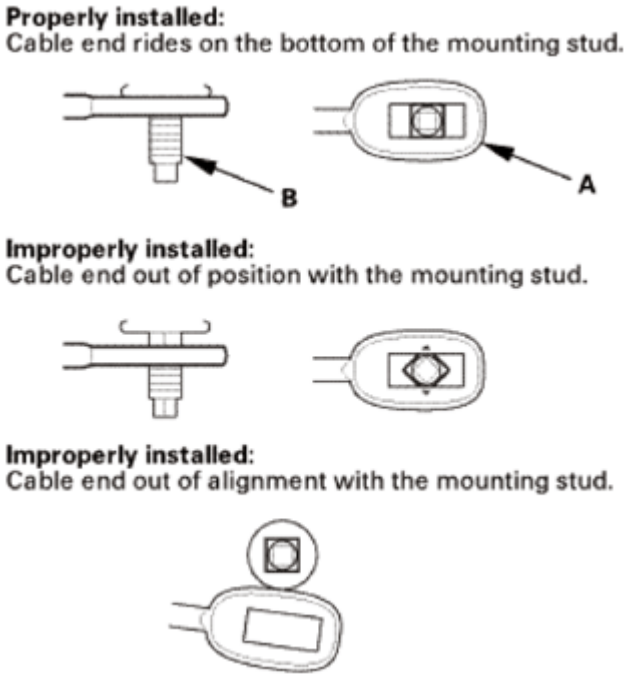

Fig. 1219: Identifying Shift Cable End Proper And Improper Installation
Courtesy of AMERICAN HONDA MOTOR CO., INC.

12. Install the shift cable end nut (A).
13. Remove the 6.0 mm (0.236 in) pin (B) that was installed to hold the shift lever.
14. Turn the ignition switch to ON (II).
15. Move the shift lever to each position, and check that the A/T gear position indicator follows the transmission range switch.
16. Shift the shift lever to P.
17. Check that the shift lock works properly.
18. Push the shift lock release, and check that the shift lever releases. Also check that the shift lever locks when it is shifted back to P.
19. Turn the ignition switch to LOCK (0).

GETtheMANUALS.org

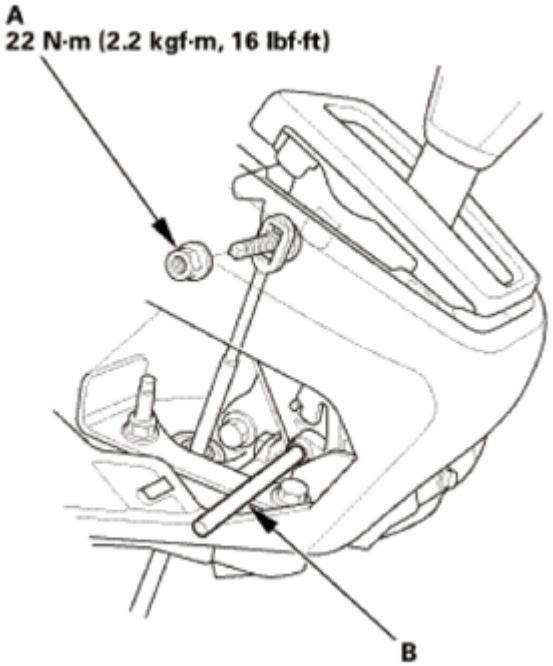

Fig. 1220: Identifying Pin And Shift Cable End Nut With Torque Specification
Courtesy of AMERICAN HONDA MOTOR CO., INC.

3. Center Maintenance Cover
    1. Install the maintenance cover (A).

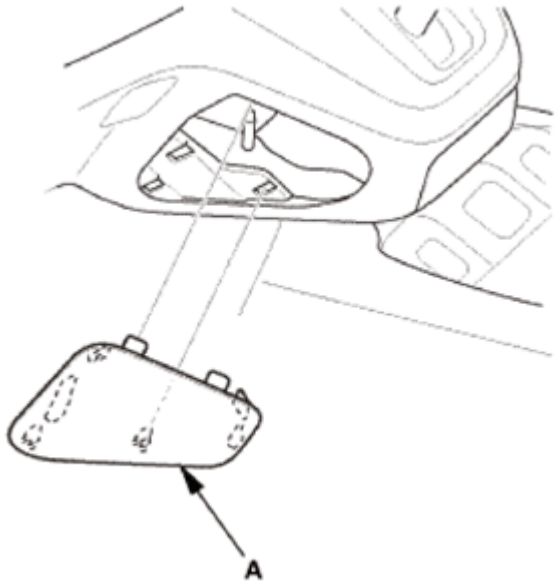

Fig. 1221: Identifying Center Maintenance Cover
Courtesy of AMERICAN HONDA MOTOR CO., INC.

4. Center Console

GETtheMANUALS.org

1. Install the center console (A).

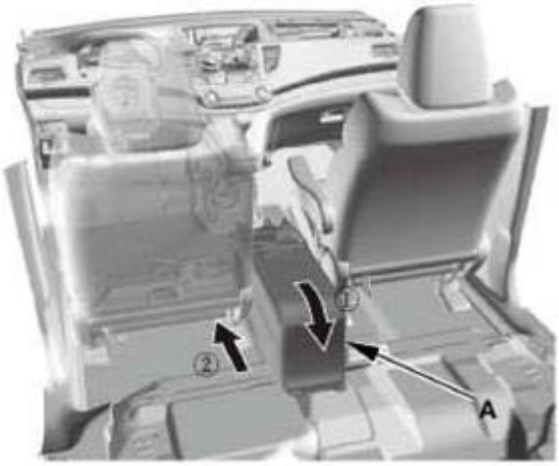

Fig. 1222: Installing Center Console
Courtesy of AMERICAN HONDA MOTOR CO., INC.

2. Connect the connectors (A), and install the clips (B).

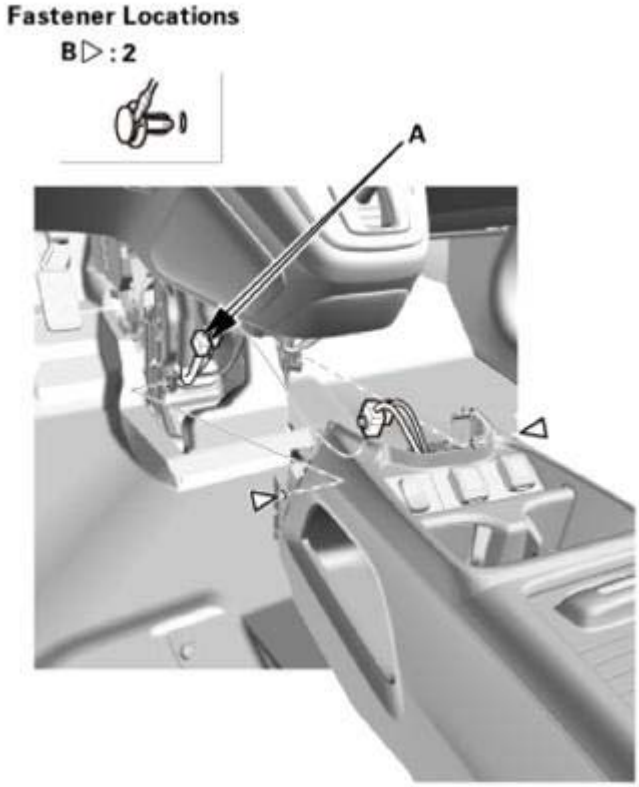

Fig. 1223: Identifying Center Console Connectors And Clips
Courtesy of AMERICAN HONDA MOTOR CO., INC.

GETtheMANUALS.org

3. Install the bolts (A), then install the console box mat (B).

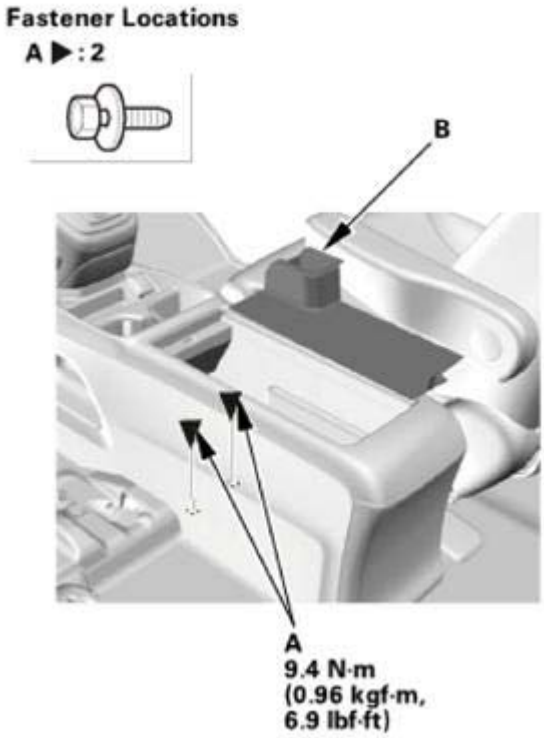

Fig. 1224: Identifying Console Box Mat And Bolts With Torque Specification
Courtesy of AMERICAN HONDA MOTOR CO., INC.

4. Install the bolts (A).

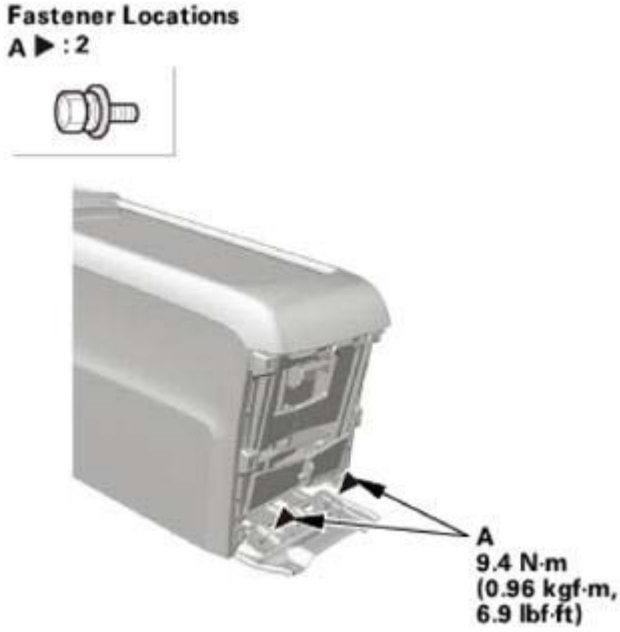

GETtheMANUALS.org

Fig. 1225: Identifying Center Console Bolts With Torque Specification
Courtesy of AMERICAN HONDA MOTOR CO., INC.

5. Install the bolt (A), then install the center lower cover (B). Make sure the clips (C) snap into place securely.

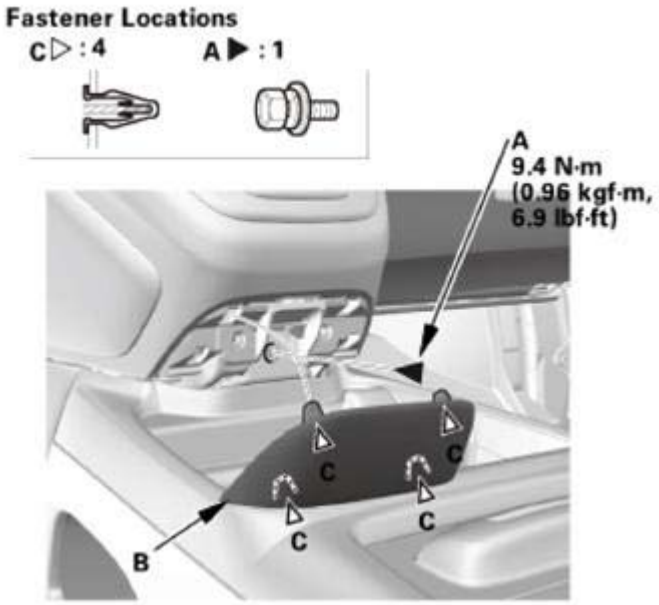

Fig. 1226: Identifying Center Lower Cover, Clips And Bolt With Torque Specification
Courtesy of AMERICAN HONDA MOTOR CO., INC.

5. Center Console Rear Trim
    1. Install the center console rear trim (A). Make sure the clips (B) and the hooks (C) snap into place securely.

GETtheMANUALS.org

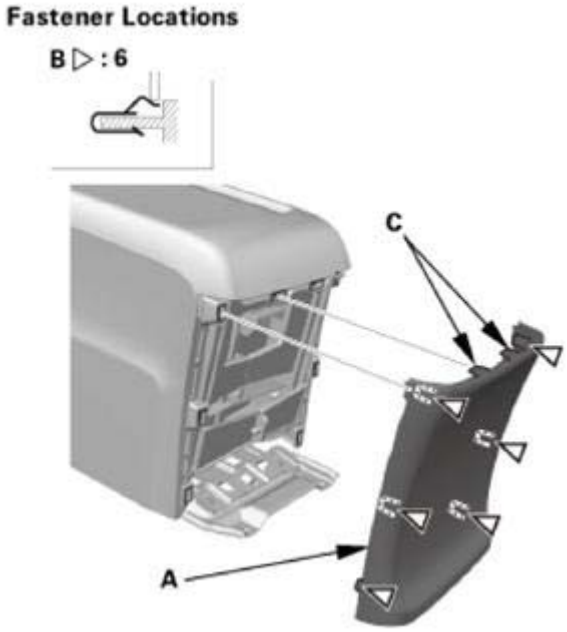

Fig. 1227: Identifying Center Console Rear Trim, Clips And Hooks
Courtesy of AMERICAN HONDA MOTOR CO., INC.

6. Front Console Cover - Both Sides
    1. Install the front console covers (A). Make sure the clips (B, C) snap into place securely.

Left side

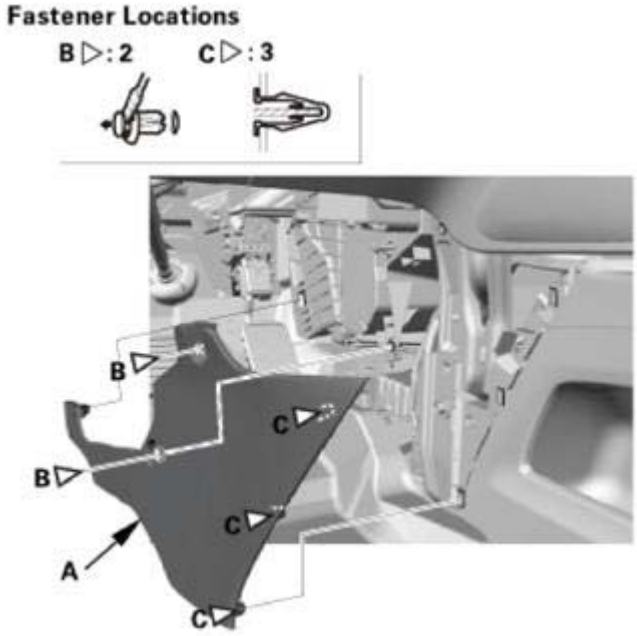

Fig. 1228: Identifying Front Console Covers And Clips (Left Side)
Courtesy of AMERICAN HONDA MOTOR CO., INC.

GETtheMANUALS.org

Right side

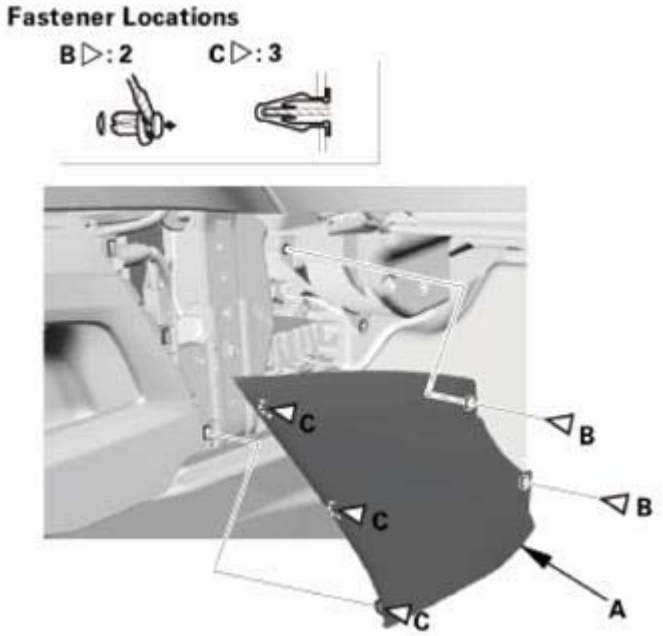

Fig. 1229: Identifying Front Console Covers And Clips (Right Side)
Courtesy of AMERICAN HONDA MOTOR CO., INC.

7. Shift Lever Panel (AT)
    1. Install the shift lever panel (A). Make sure the clips (B, C) and the hooks (D) snap into place securely.

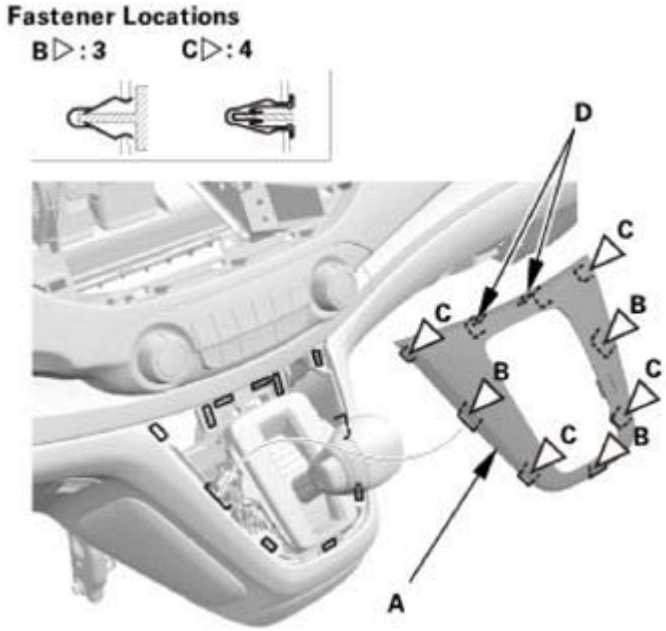

Fig. 1230: Identifying Shift Lever Panel, Clips And Hooks

GETtheMANUALS.org

Courtesy of AMERICAN HONDA MOTOR CO., INC.

A/T SHIFT LEVER RING REMOVAL AND INSTALLATION

REMOVAL

1. Shift Lever Panel (AT)
    1. Carefully pry out the shift lever panel (A) with the appropriate trim tool to detach the clips (B, C) and the hooks (D), then remove the shift lever panel.

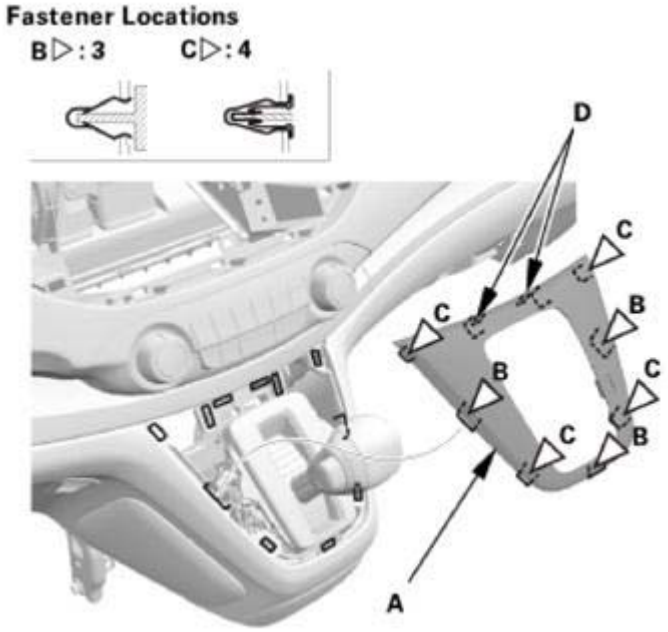

Fig. 1231: Identifying Shift Lever Panel, Clips And Hooks
Courtesy of AMERICAN HONDA MOTOR CO., INC.

2. Center Maintenance Cover
    1. Remove the maintenance cover (A).

GETtheMANUALS.org

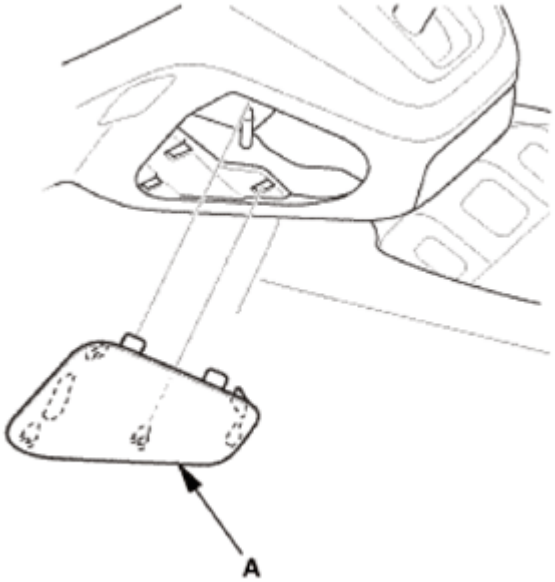

Fig. 1232: Identifying Center Maintenance Cover
Courtesy of AMERICAN HONDA MOTOR CO., INC.

3. D3 Switch Harness - Disconnection
    1. Remove the harness wire tie (A).
    2. Disconnect the D3 switch connector (B).

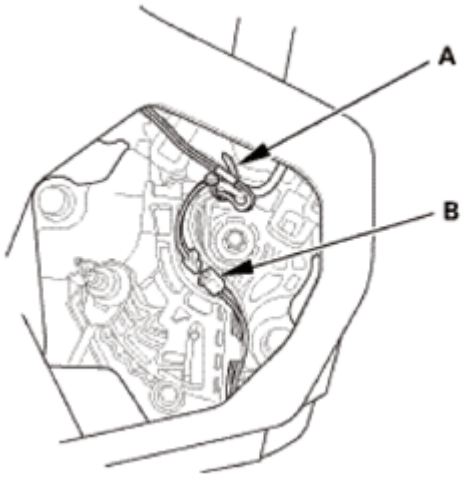

Fig. 1233: Identifying D3 Switch Connector And Harness Wire Tie
Courtesy of AMERICAN HONDA MOTOR CO., INC.

4. Shift Lever Knob/Shift Lever Knob Ring Assembly

NOTE: **Do not wipe off the special grease applied to the area of the shift lever marked with an asterisk (*) when you disassemble or assemble it.**

GETtheMANUALS.org

1. Unhook the D3 switch harness (A) from the harness guide (B).
2. Remove the shift lever knob/shift lever knob ring assembly (C).

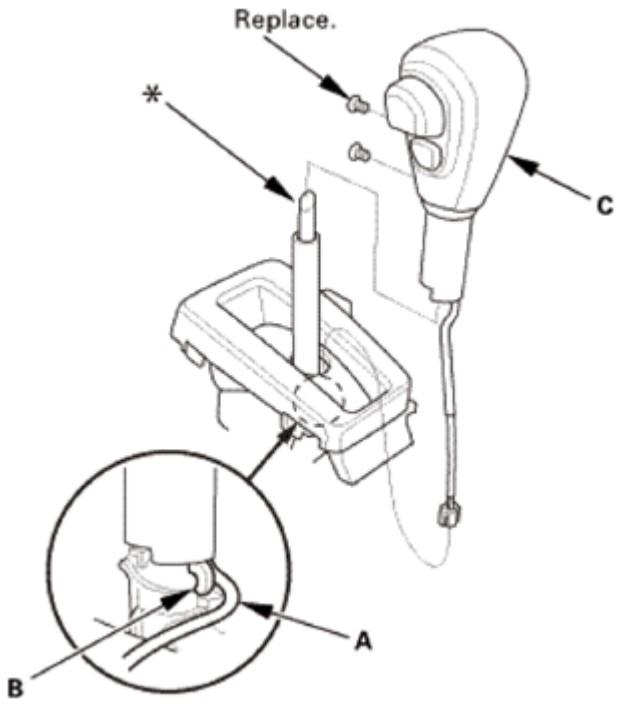

Fig. 1234: Identifying Shift Lever Knob/Shift Lever Knob Ring Assembly, D3 Switch Harness And Harness Guide With Mounting Bolts
Courtesy of AMERICAN HONDA MOTOR CO., INC.

5. Shift Lever Knob Ring

NOTE: Do not wipe off the special grease applied to the area of the shift lever marked with an asterisk (*) when you disassemble or assemble it.

1. Remove the shift lever ring (A).

GETtheMANUALS.org

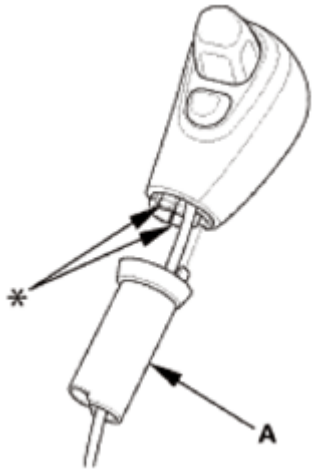

Fig. 1235: Identifying Shift Lever Ring
Courtesy of AMERICAN HONDA MOTOR CO., INC.

INSTALLATION

1. Shift Lever Knob Ring

NOTE: **Do not wipe off the special grease applied to the area of the shift lever marked with an asterisk (*) when you disassemble or assemble it.**

1. Install the shift lever ring (A).

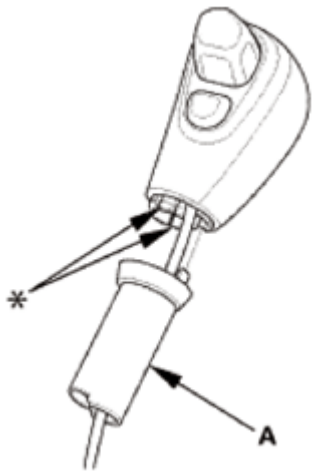

Fig. 1236: Identifying Shift Lever Ring
Courtesy of AMERICAN HONDA MOTOR CO., INC.

2. Shift Lever Knob/Shift Lever Knob Ring Assembly

NOTE: **Do not wipe off the special grease applied to the area of the shift lever marked with an asterisk (*) when you disassemble or assemble it.**

GETtheMANUALS.org

1. Install the shift lever knob/shift lever knob ring assembly (A).
2. Hook the D3 switch harness (B) to the harness guide (C).

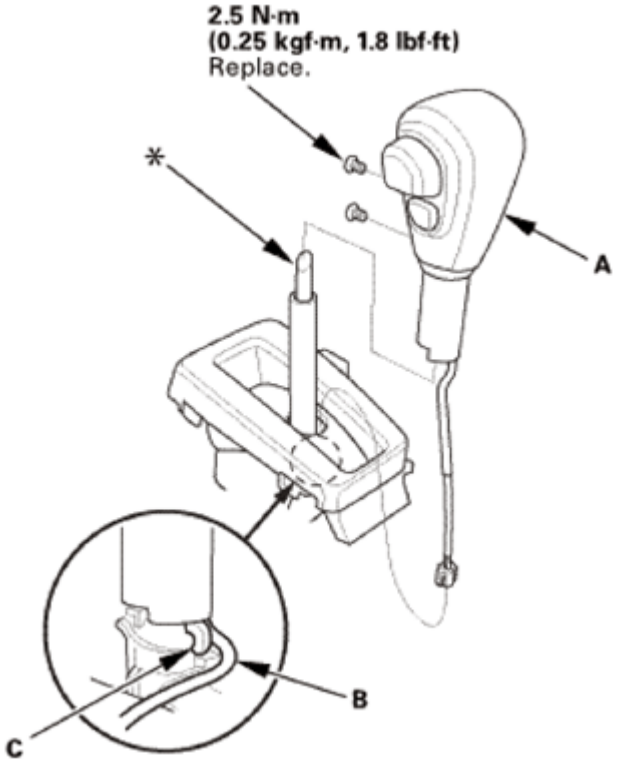

Fig. 1237: Identifying Shift Lever Knob/Shift Lever Knob Ring Assembly, D3 Switch Harness, Harness Guide And Mounting Bolts With Torque Specification
Courtesy of AMERICAN HONDA MOTOR CO., INC.

3. D3 Switch Harness - Reconnection
    1. Connect the D3 switch connector (A).
    2. Route the D3 switch harness (B) along with the shift lever assembly, and tie the harnesses at the guide (C) with the harness wire tie (D).

GETtheMANUALS.org

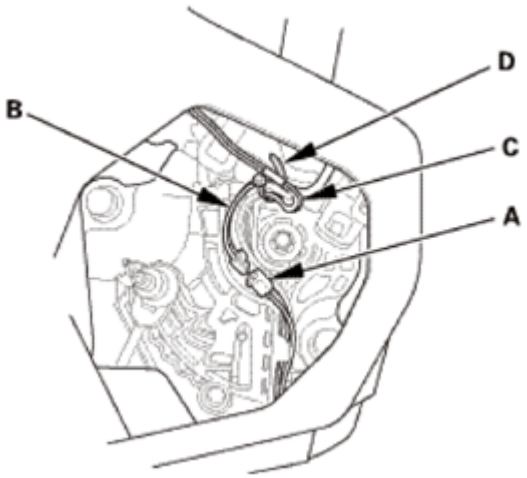

Fig. 1238: Identifying D3 Switch Harness, Connector, Guide And Harness Wire Tie
Courtesy of AMERICAN HONDA MOTOR CO., INC.

4. Center Maintenance Cover
    1. Install the maintenance cover (A).

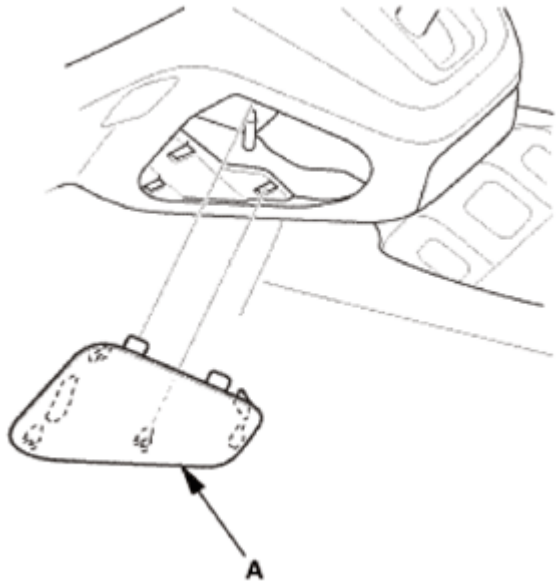

Fig. 1239: Identifying Center Maintenance Cover
Courtesy of AMERICAN HONDA MOTOR CO., INC.

5. Shift Lever Panel (AT)
    1. Install the shift lever panel (A). Make sure the clips (B, C) and the hooks (D) snap into place securely.

GETtheMANUALS.org

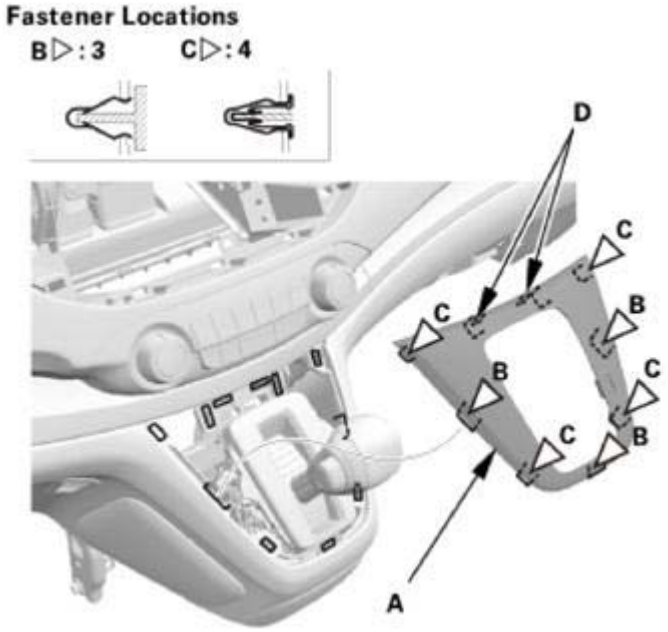

Fig. 1240: Identifying Shift Lever Panel, Clips And Hooks
Courtesy of AMERICAN HONDA MOTOR CO., INC.

A/T SHIFT LEVER/SHIFT CABLE BRACKET ASSEMBLY REMOVAL AND INSTALLATION

REMOVAL

1. Shift Lever Panel (AT)
    1. Carefully pry out the shift lever panel (A) with the appropriate trim tool to detach the clips (B, C) and the hooks (D), then remove the shift lever panel.

GETtheMANUALS.org

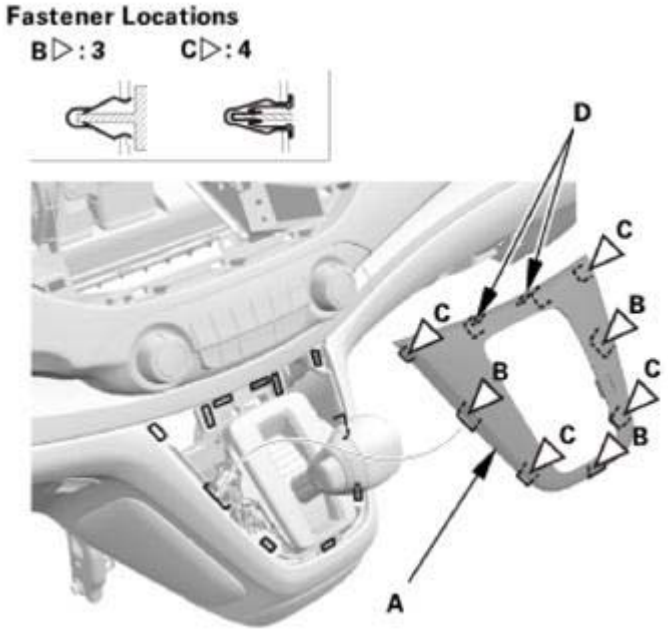

Fig. 1241: Identifying Shift Lever Panel, Clips And Hooks
Courtesy of AMERICAN HONDA MOTOR CO., INC.

2. Front Console Cover - Both Sides
    1. Remove the clips (A).
    2. Detach the clips (B), then remove the front console covers (C).

Left side

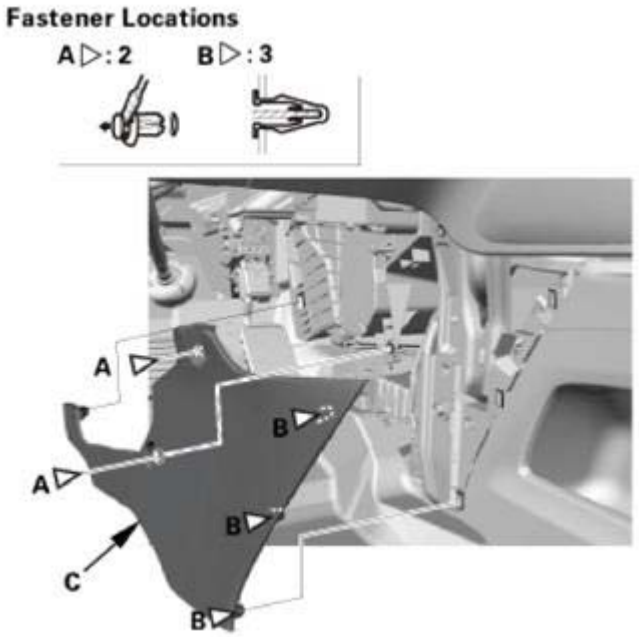

Fig. 1242: Identifying Front Console Covers And Clips (Left Side)

GETtheMANUALS.org

Courtesy of AMERICAN HONDA MOTOR CO., INC.

Right side

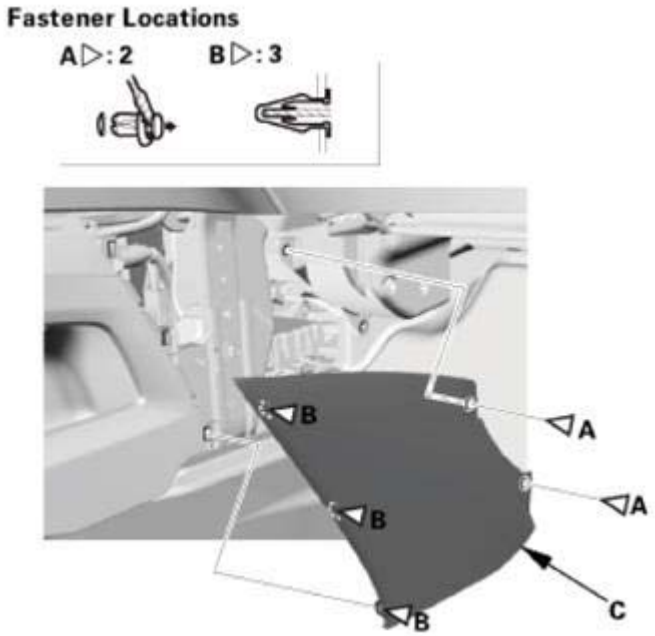

Fig. 1243: Identifying Front Console Covers And Clips (Right Side)
Courtesy of AMERICAN HONDA MOTOR CO., INC.

3. Center Console Rear Trim
    1. Carefully pry out the center console rear trim (A) with the appropriate trim tool to detach the clips (B) and the hooks (C), then remove the center console rear trim.

GETtheMANUALS.org

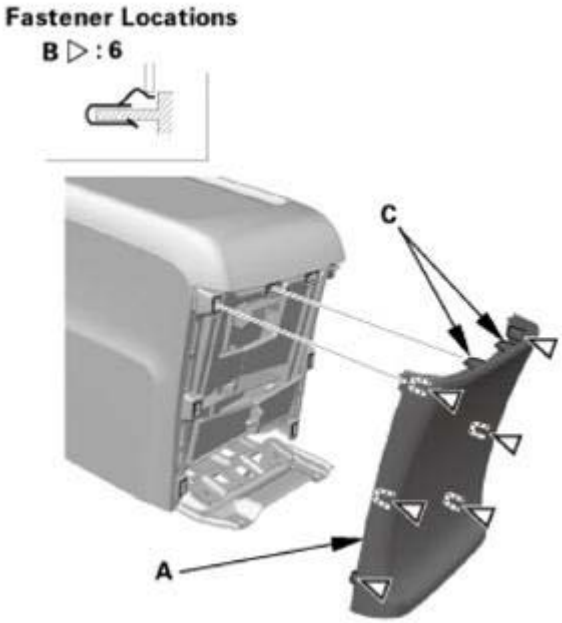

Fig. 1244: Identifying Center Console Rear Trim, Clips And Hooks
Courtesy of AMERICAN HONDA MOTOR CO., INC.

4. Center Console
    1. Carefully pry out the center lower cover (A) with the appropriate trim tool to detach the clips (B), then remove the center lower cover.
    2. Remove the bolt (C).

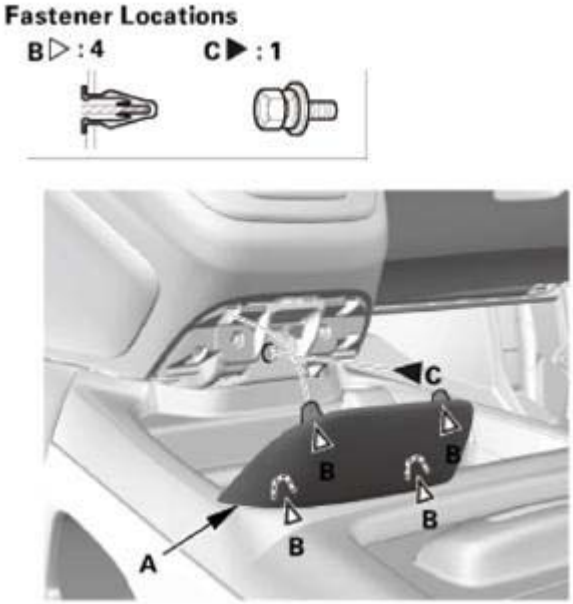

Fig. 1245: Identifying Center Lower Cover, Clips And Bolts
Courtesy of AMERICAN HONDA MOTOR CO., INC.

GETtheMANUALS.org

3. Remove the bolts (A).

Fig. 1246: Identifying Center Console Bolts
Courtesy of AMERICAN HONDA MOTOR CO., INC.

4. Remove the console box mat (A), then remove the bolts (B).

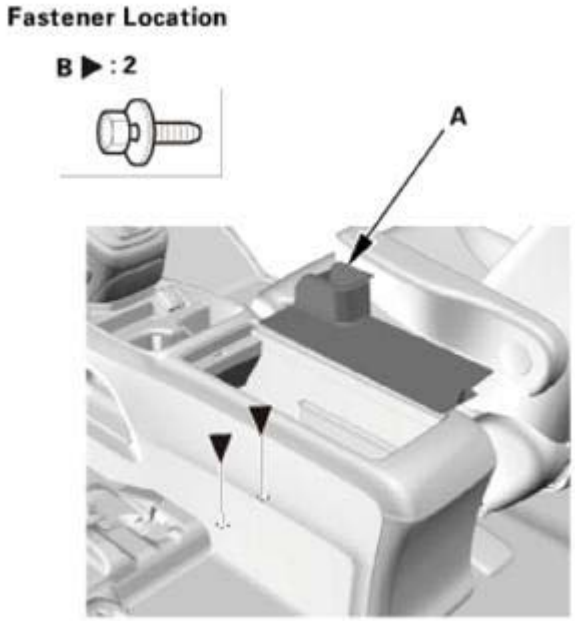

Fig. 1247: Identifying Console Box Mat And Bolts
Courtesy of AMERICAN HONDA MOTOR CO., INC.

5. Disconnect the connectors (A), and remove the clips (B).

GETtheMANUALS.org

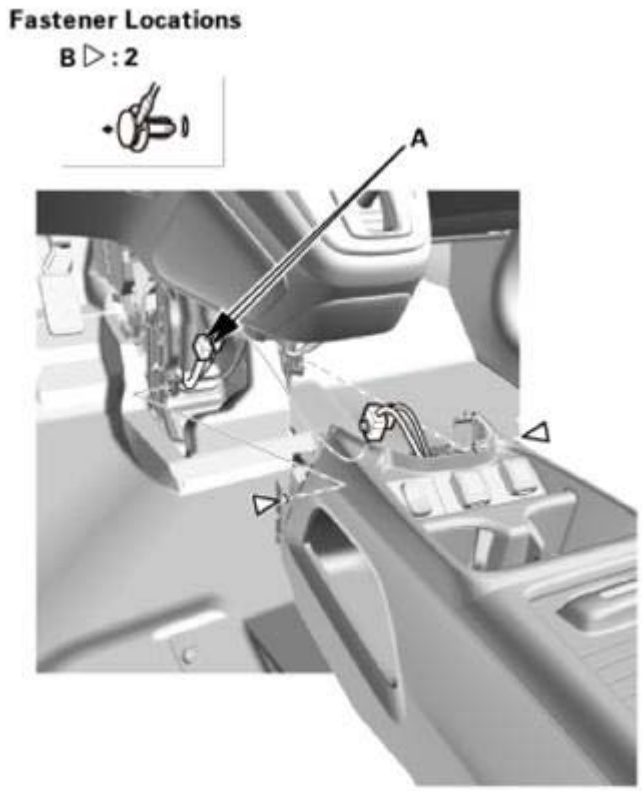

Fig. 1248: Identifying Connectors And Clips
Courtesy of AMERICAN HONDA MOTOR CO., INC.

6. Slide both front seats fully rearward, and recline the seat-backs around two thirds to the rear.
7. Remove the center console (A).

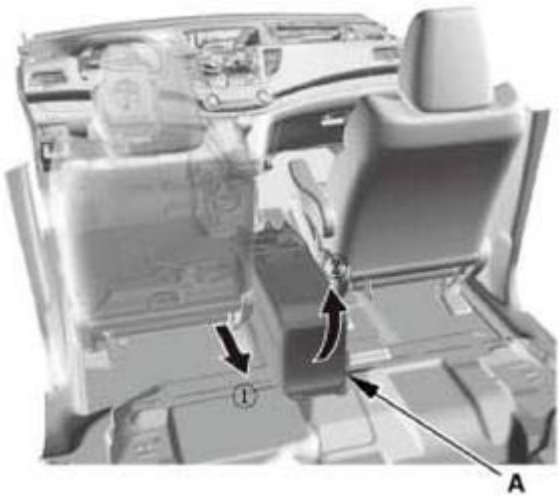

Fig. 1249: Removing Center Console
Courtesy of AMERICAN HONDA MOTOR CO., INC.

GETtheMANUALS.org

5. Center Maintenance Cover
    1. Remove the maintenance cover (A).

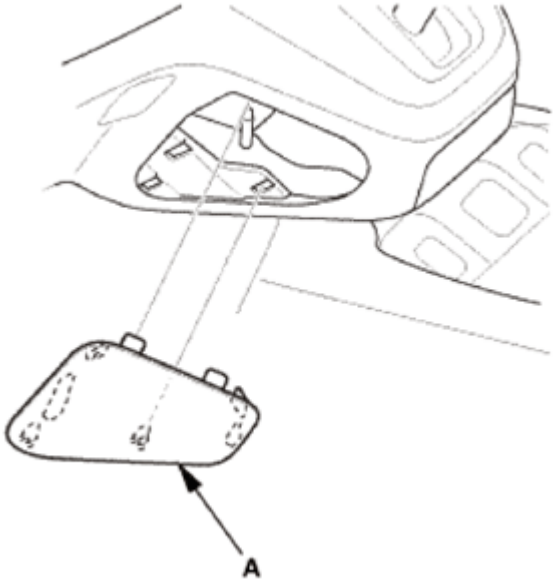

Fig. 1250: Identifying Center Maintenance Cover
Courtesy of AMERICAN HONDA MOTOR CO., INC.

6. Shift Cable - Disconnection Lever Side
    1. Shift the shift lever to R.
    2. Insert a 6.0 mm (0.236 in) pin (A) into the positioning holes (B).

NOTE: Use only a 6.0 mm (0.236 in) pin with no burrs.

    3. Remove the nut (C) securing the shift cable end (D).

GETtheMANUALS.org

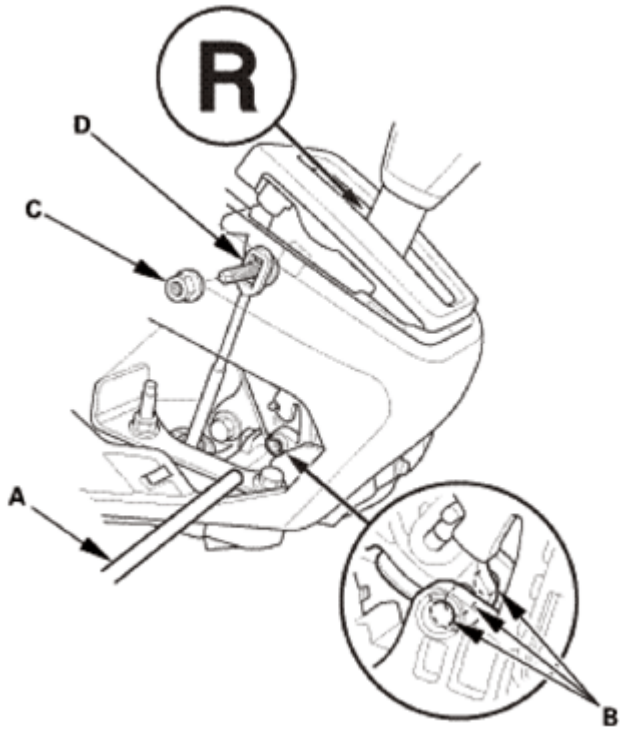

Fig. 1251: Inserting Pin Into Positioning Holes
Courtesy of AMERICAN HONDA MOTOR CO., INC.

4. Unlock the retainer lock (A).

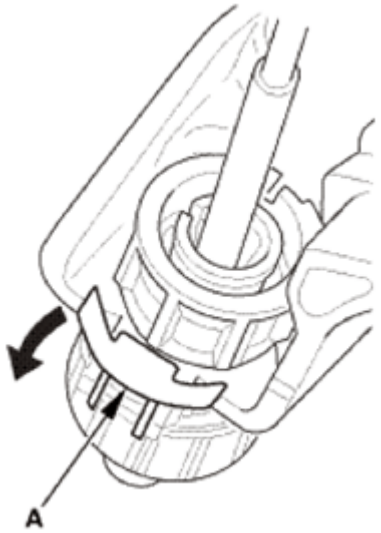

Fig. 1252: Unlocking Retainer Lock
Courtesy of AMERICAN HONDA MOTOR CO., INC.

5. Rotate the socket holder retainer (A) counterclockwise (B) until it stops, and push the retainer lock (C) into the socket holder retainer to lock the retainer.

GETtheMANUALS.org

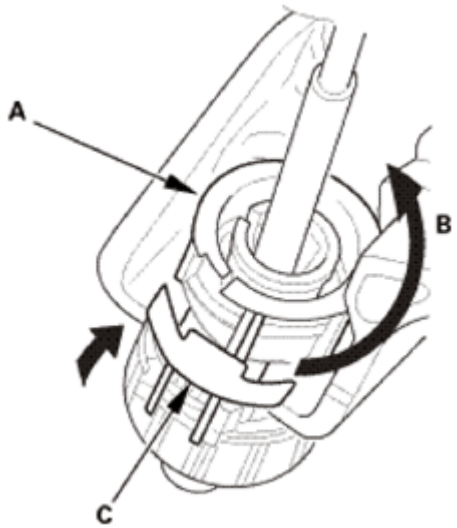

Fig. 1253: Rotating Socket Holder Retainer Counterclockwise
Courtesy of AMERICAN HONDA MOTOR CO., INC.

6. Slide the socket holder (A) away from the bracket as shown to remove the shift cable (B) from the shift cable bracket (C).

NOTE: Do not remove the shift cable by pulling the shift cable guide (D).

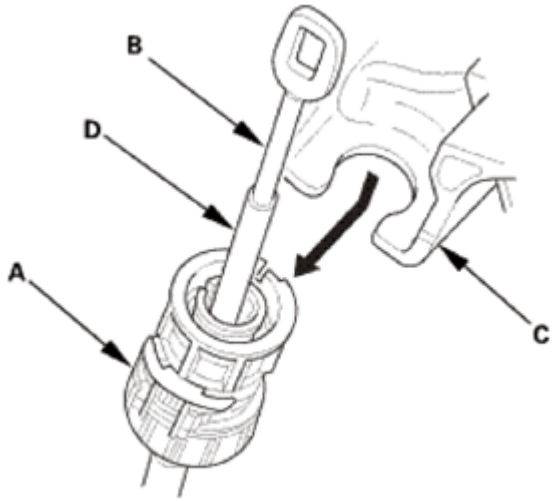

Fig. 1254: Removing Shift Cable From Shift Cable Bracket
Courtesy of AMERICAN HONDA MOTOR CO., INC.

7. A/T Shift Lever Assembly
    1. Disconnect the shift lever connector.

GETtheMANUALS.org

Fig. 1255: Identifying Shift Lever Connector
Courtesy of AMERICAN HONDA MOTOR CO., INC.

2. Remove the shift lever assembly.

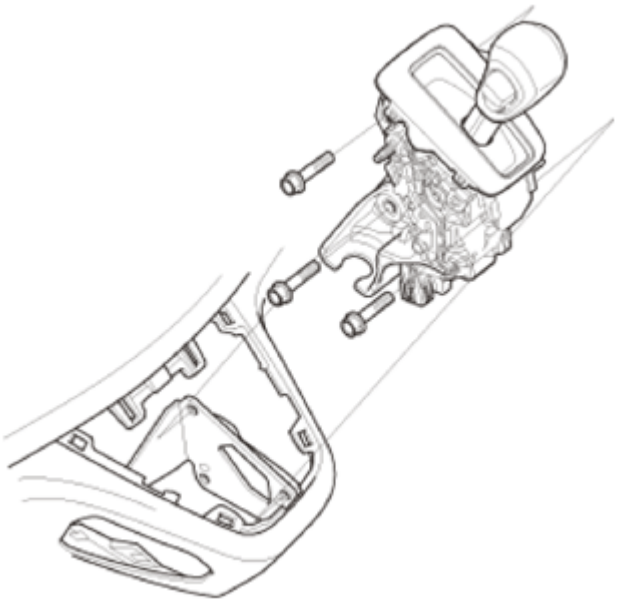

Fig. 1256: Identifying Shift Lever Assembly
Courtesy of AMERICAN HONDA MOTOR CO., INC.

8. D3 Switch Harness - Disconnection
    1. Remove the harness wire tie (A).
    2. Disconnect the D3 switch connector (B).

GETtheMANUALS.org

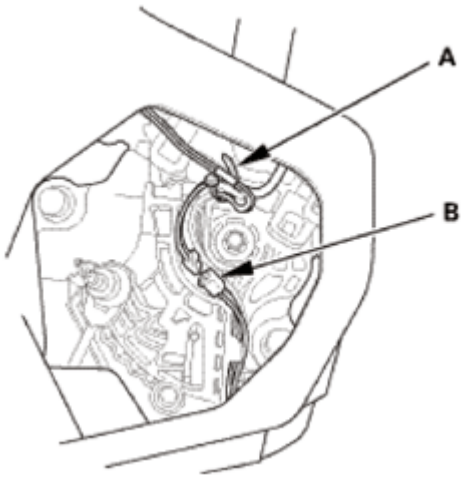

Fig. 1257: Identifying D3 Switch Connector And Harness Wire Tie
Courtesy of AMERICAN HONDA MOTOR CO., INC.

9. Shift Lever Knob/Shift Lever Knob Ring Assembly

NOTE: **Do not wipe off the special grease applied to the area of the shift lever marked with an asterisk (*) when you disassemble or assemble it.**

1. Unhook the D3 switch harness (A) from the harness guide (B).
2. Remove the shift lever knob/shift lever knob ring assembly (C).

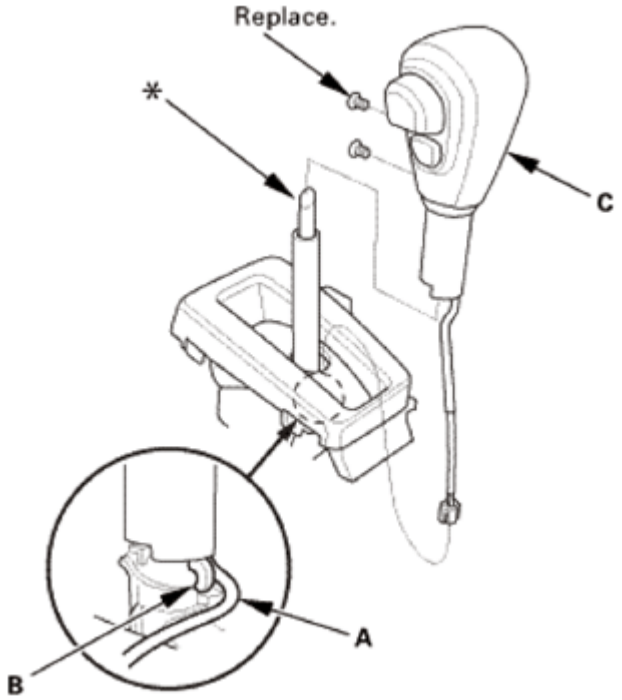

Fig. 1258: Identifying Shift Lever Knob/Shift Lever Knob Ring Assembly, D3 Switch Harness

GETtheMANUALS.org

And Harness Guide With Mounting Bolts
Courtesy of AMERICAN HONDA MOTOR CO., INC.

10. A/T Gear Position Indicator Panel Assembly
    1. Remove the A/T gear position indicator panel light socket (A) from the A/T gear position indicator panel assembly (B).
    2. Unhook the A/T gear position indicator panel light harness (C) from the harness guide (D).
    3. Remove the A/T gear position indicator panel assembly by expanding the four lock tabs (E).

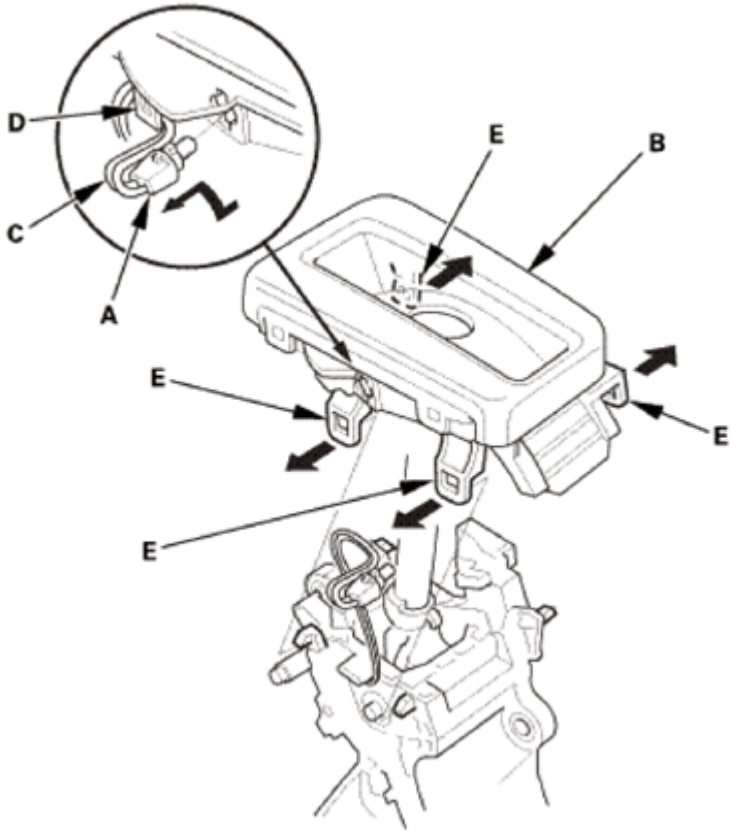

Fig. 1259: Removing A/T Gear Position Indicator Panel Assembly By Expanding Lock Tabs
Courtesy of AMERICAN HONDA MOTOR CO., INC.

11. Shift Lever/Shift Cable Bracket Assembly

NOTE:

- **The park pin switch (A) and the A/T gear position indicator panel light/D3 switch/shift lock solenoid harness (B) are not available separately from the shift lever/shift cable bracket (C); replace the park pin switch, the A/T gear position indicator panel light/D3 switch/shift lock solenoid harness, and the shift lever/shift cable bracket as an assembly.**
- **Do not wipe off the special grease applied to the area of the shift lever marked with an asterisk (*) when you disassemble or assemble**

GETtheMANUALS.org

it.

1. Pull the shift lock solenoid (D) out by releasing the lock tab (E) using a screwdriver.

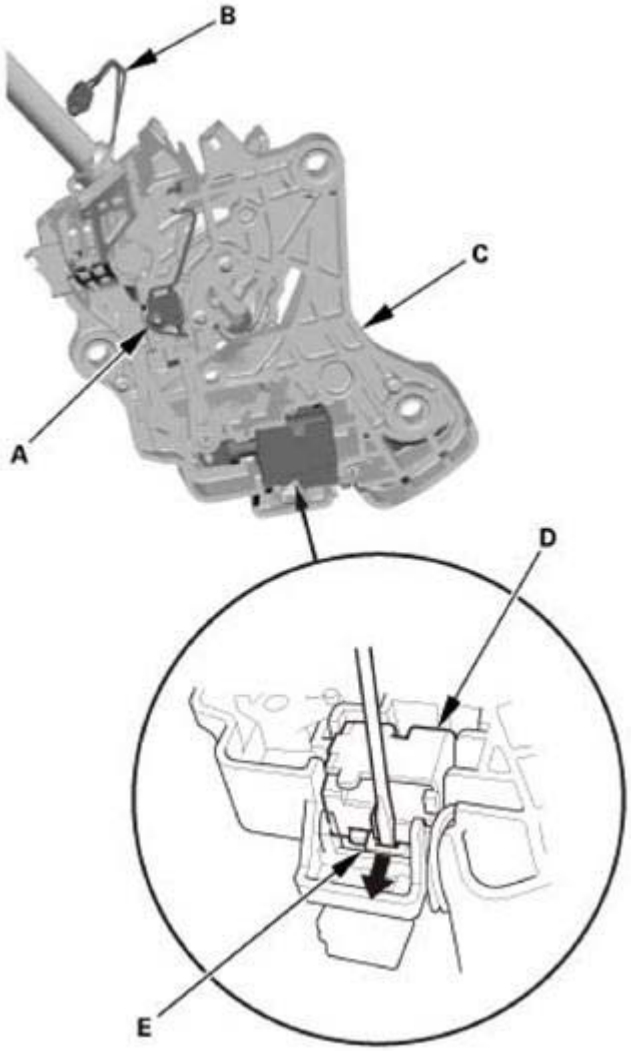

Fig. 1260: Pulling Out Shift Lock Solenoid
Courtesy of AMERICAN HONDA MOTOR CO., INC.

2. Remove the shift lock solenoid (A).

NOTE: **The shift lock solenoid consists of the solenoid (B), the solenoid plunger (C), and the plunger spring (D).**

3. Disconnect the shift lock solenoid connector (E).

GETtheMANUALS.org

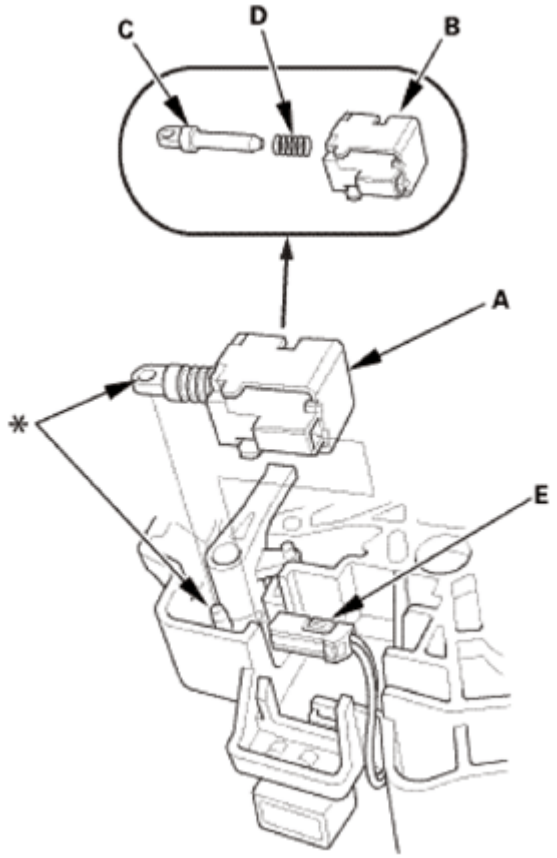

Fig. 1261: Identifying Shift Lock Solenoid, Connector, Solenoid Plunger And Plunger Spring
Courtesy of AMERICAN HONDA MOTOR CO., INC.

INSTALLATION

1. Shift Lever/Shift Cable Bracket Assembly

NOTE: Do not wipe off the special grease applied to the area of the shift lever marked with an asterisk (*) when you disassemble or assemble it.

1. Connect the shift lock solenoid connector (A).
2. Install the shift lock solenoid (B) by aligning the joint of the shift lock solenoid plunger (C) with the tip of the shift lock stop (D).

NOTE: The shift lock solenoid consists of the solenoid (E), the solenoid plunger (F), and the plunger spring (G).

GETtheMANUALS.org

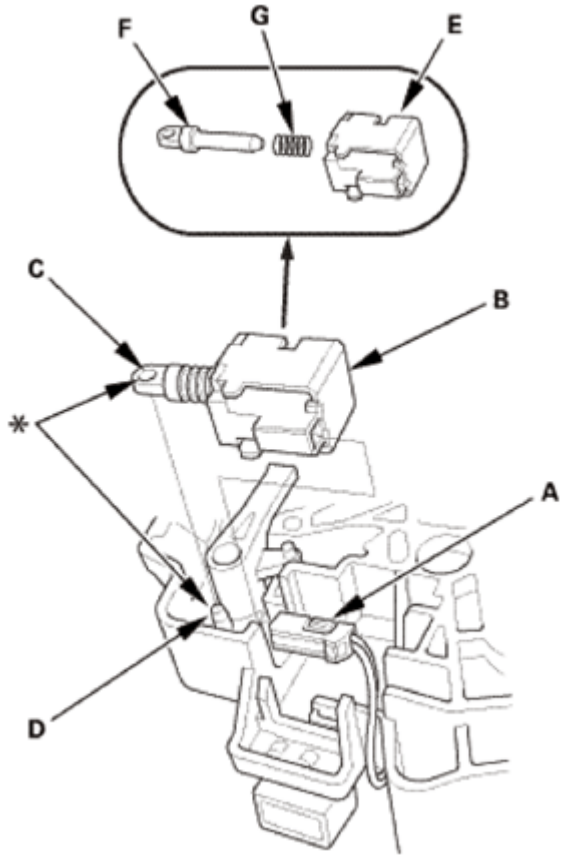

Fig. 1262: Identifying Shift Lock Solenoid, Connector, Solenoid Plunger, Solenoid And Plunger Spring
Courtesy of AMERICAN HONDA MOTOR CO., INC.

2. A/T Gear Position Indicator Panel Assembly
    1. Install the A/T gear position indicator panel assembly (A) by aligning the four lock tabs (B).
    2. Hook the A/T gear position indicator panel light harness (C) to the harness guide (D).
    3. Install the A/T gear position indicator panel light socket (E).

GETtheMANUALS.org

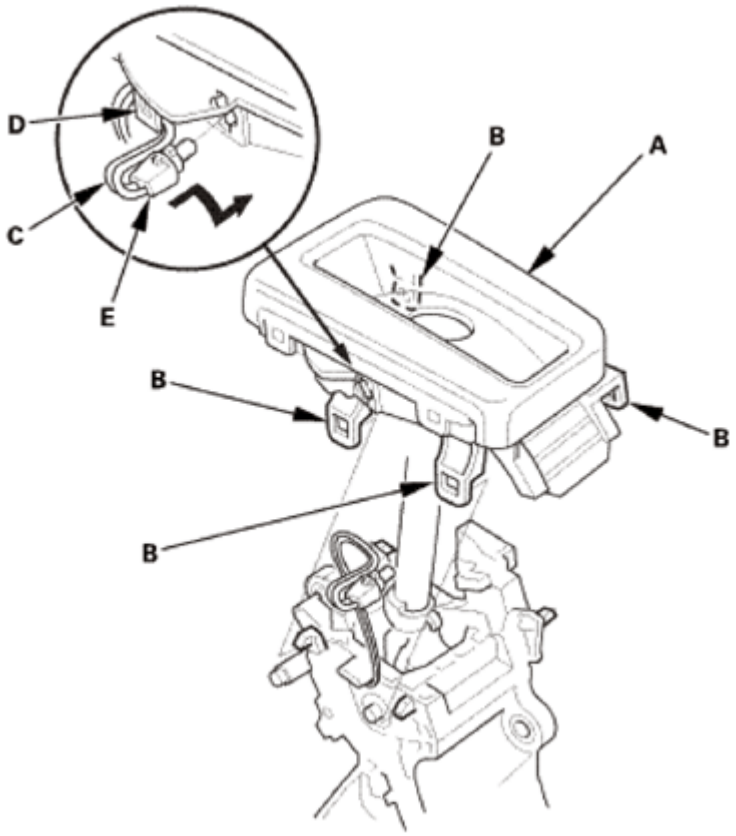

Fig. 1263: Installing A/T Gear Position Indicator Panel Light Socket
Courtesy of AMERICAN HONDA MOTOR CO., INC.

3. Shift Lever Knob/Shift Lever Knob Ring Assembly

NOTE: Do not wipe off the special grease applied to the area of the shift lever marked with an asterisk (*) when you disassemble or assemble it.

1. Install the shift lever knob/shift lever knob ring assembly (A).
2. Hook the D3 switch harness (B) to the harness guide (C).

GETtheMANUALS.org

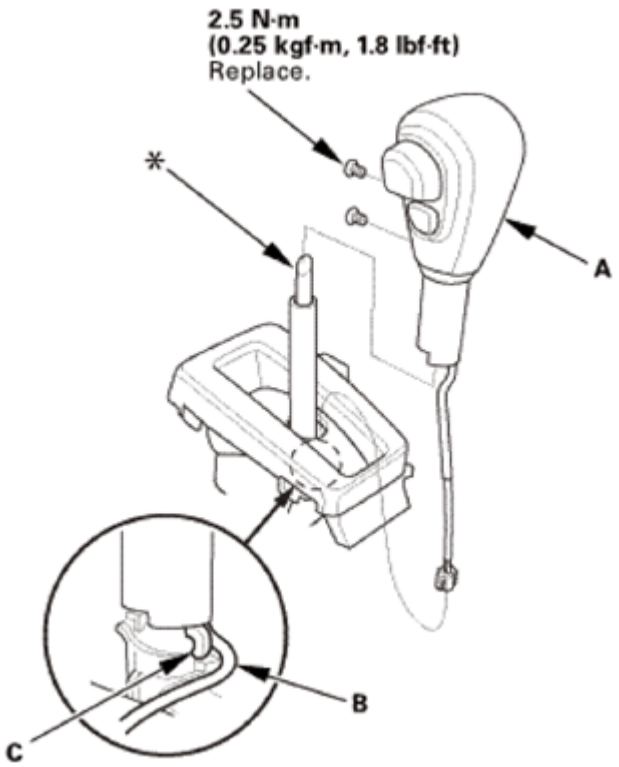

Fig. 1264: Identifying Shift Lever Knob/Shift Lever Knob Ring Assembly, D3 Switch Harness, Harness Guide And Mounting Bolts With Torque Specification
Courtesy of AMERICAN HONDA MOTOR CO., INC.

4. D3 Switch Harness - Reconnection
    1. Connect the D3 switch connector (A).
    2. Route the D3 switch harness (B) along with the shift lever assembly, and tie the harnesses at the guide (C) with the harness wire tie (D).

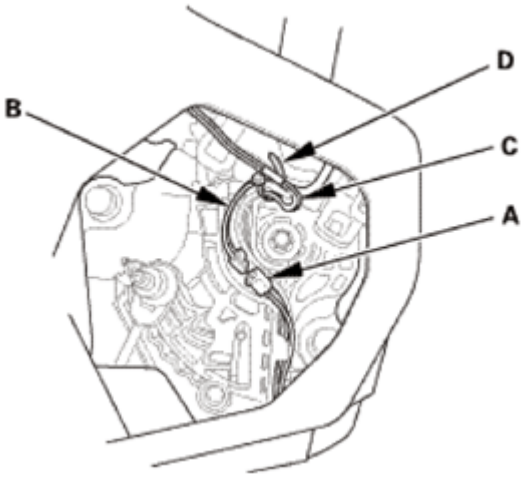

Fig. 1265: Identifying D3 Switch Harness, Connector, Guide And Harness Wire Tie
Courtesy of AMERICAN HONDA MOTOR CO., INC.

GETtheMANUALS.org

5. A/T Shift Lever Assembly
    1. Install the shift lever assembly.

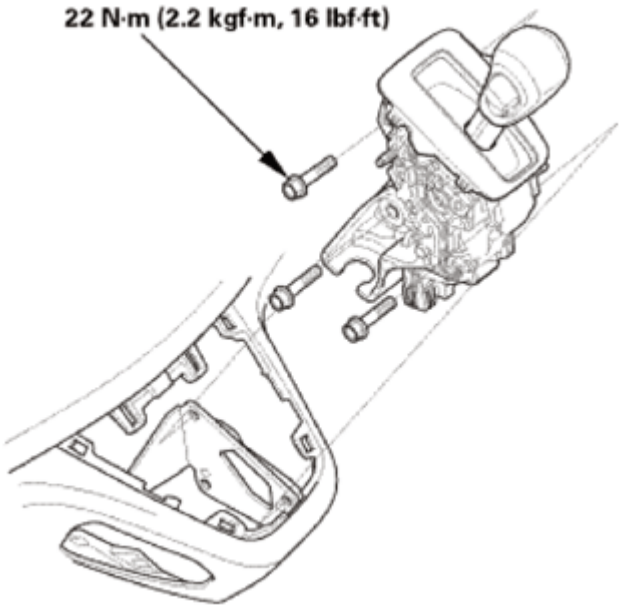

Fig. 1266: Identifying Shift Lever Assembly And Mounting Bolts With Torque Specification
Courtesy of AMERICAN HONDA MOTOR CO., INC.

    2. Connect the shift lever connector.

Fig. 1267: Identifying Shift Lever Connector
Courtesy of AMERICAN HONDA MOTOR CO., INC.

6. Shift Cable - Adjustment
    1. Push the shift cable (A) until it stops, then release it. Pull the shift cable back one step so that the shift position is in R.

GETtheMANUALS.org

NOTE: **Do not hold the shift cable guide (B) to adjust the shift cable.**

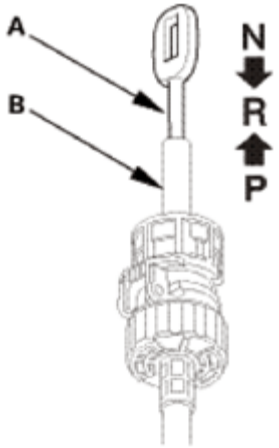

Fig. 1268: Identifying Shift Cable And Shift Cable Guide
Courtesy of AMERICAN HONDA MOTOR CO., INC.

2. Turn the ignition switch to ON (II).
3. Check that the R position indicator comes on.
4. Turn the ignition switch to LOCK (0).

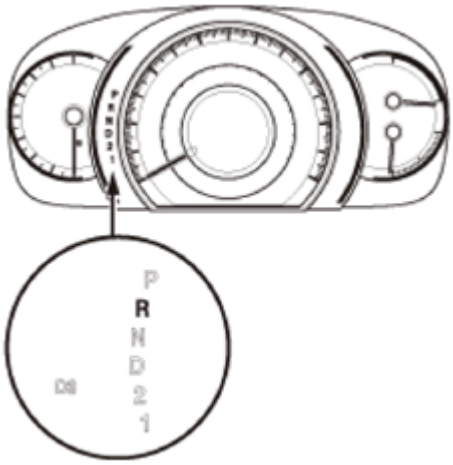

Fig. 1269: Identifying R Position Indicator
Courtesy of AMERICAN HONDA MOTOR CO., INC.

5. Shift the shift lever to R.
6. Insert a 6.0 mm (0.236 in) pin (A) into the positioning holes (B).

NOTE: **Use only a 6.0 mm (0.236 in) pin with no burrs.**

GETtheMANUALS.org

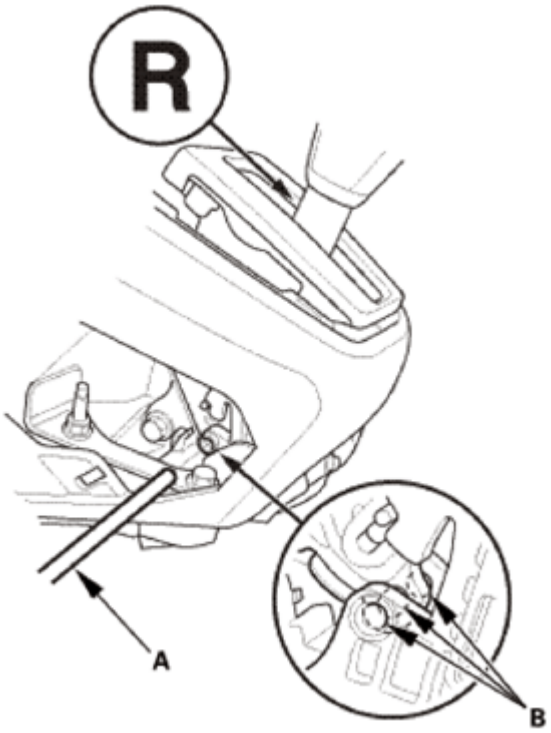

Fig. 1270: Inserting Pin Into Positioning Holes
Courtesy of AMERICAN HONDA MOTOR CO., INC.

7. Unlock the retainer lock (A).

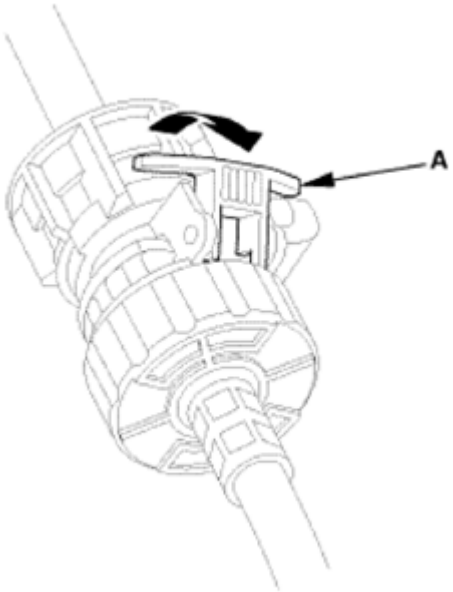

Fig. 1271: Unlocking Retainer Lock
Courtesy of AMERICAN HONDA MOTOR CO., INC.

8. Rotate the socket holder retainer (A) in arrow direction (B) until it stops to create clearance (C)

GETtheMANUALS.org

between the socket holder (D) and holder retainer, and push the retainer lock (E) into the socket holder retainer to lock the retainer.

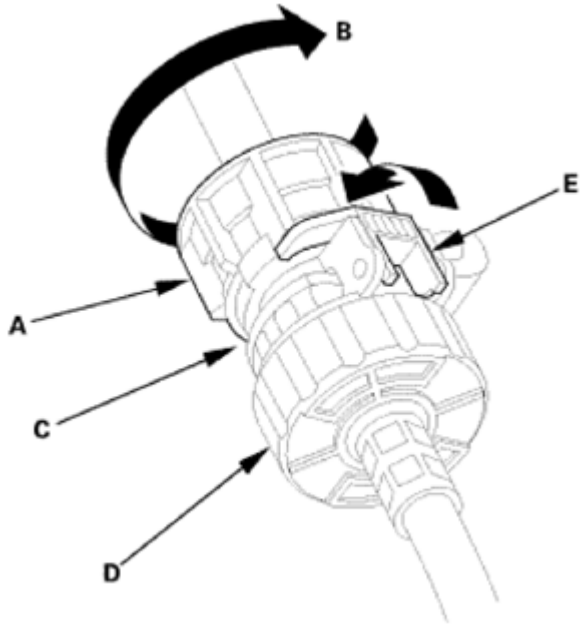

Fig. 1272: Rotating Socket Holder Retainer
Courtesy of AMERICAN HONDA MOTOR CO., INC.

9. Align the shift cable slot (A) between the socket holder (B) and the socket holder retainer (C) with the opening (D) in the shift cable bracket (E), then slide the holder into the bracket while installing the shift cable end (F) over the mounting stud (G) by aligning its square hole (H) with the square fitting (I) at the bottom of the stud.

NOTE:

- **Do not install the shift cable by holding the shift cable guide(J).**
- **When the socket holder is installed in the shift cable bracket, the retainer lock is unhinged and releases the holder retainer lock, then the holder retainer returns under spring force to secure the shift cable.**

GETtheMANUALS.org

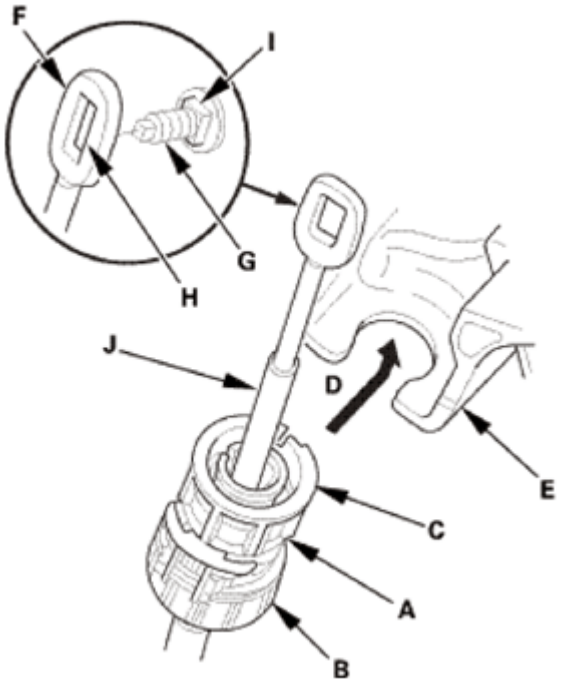

Fig. 1273: Aligning Shift Cable Slot Between Socket Holder And Socket Holder Retainer With Opening In Shift Cable Bracket
Courtesy of AMERICAN HONDA MOTOR CO., INC.

10. Push the retainer lock (A) fully to lock the socket holder retainer (B), and make sure that the retainer lock fits into the hinged-joint (C). If the retainer lock does not fit with the edge of the hinged-joint, rotate the holder retainer counterclockwise while pushing the retainer lock until it locks.

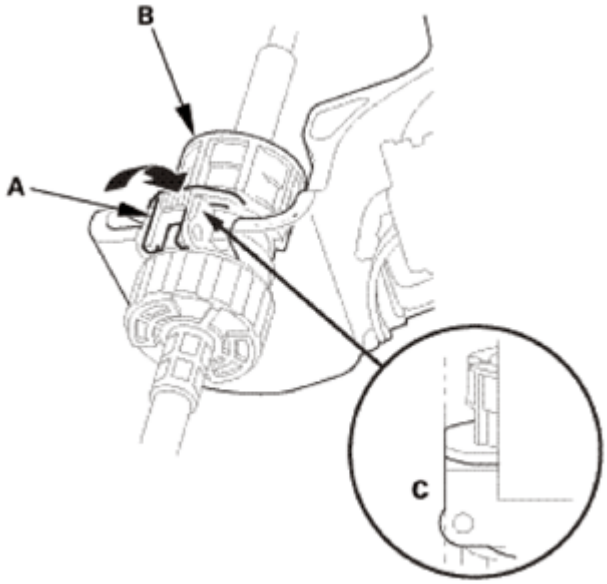

Fig. 1274: Pushing Retainer Lock
Courtesy of AMERICAN HONDA MOTOR CO., INC.

GETtheMANUALS.org

11. Make sure that the shift cable end (A) is properly installed on the mounting stud (B).
    - If the shift cable end is out of position with the mounting stud, remove the shift cable from the shift cable bracket, then reinstall the cable end over the mounting stud before reinstalling the shift cable to the shift cable bracket. Do not install the shift cable end on the mounting stud with the shift cable install on the shift cable bracket.
    - If the shift cable end does not ride at the bottom of the mounting stud, rotate the stud to align the square fitting with the hole.

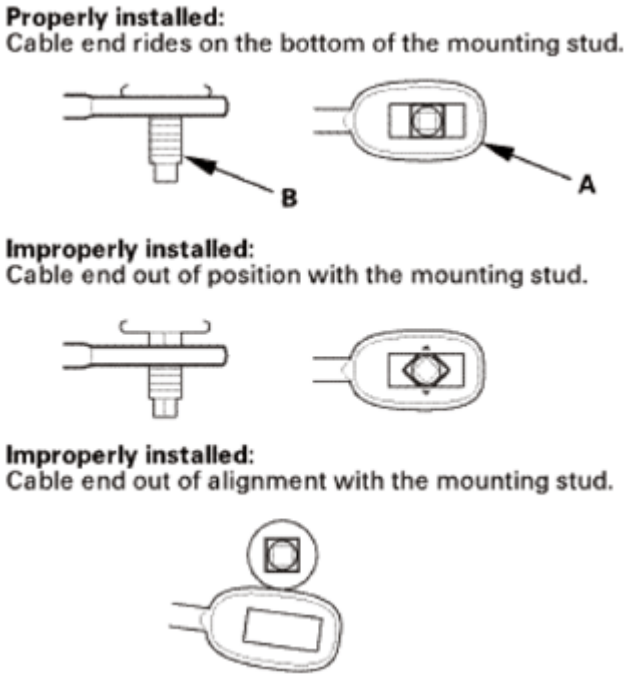

Fig. 1275: Identifying Shift Cable End Proper And Improper Installation
Courtesy of AMERICAN HONDA MOTOR CO., INC.

12. Install the shift cable end nut (A).
13. Remove the 6.0 mm (0.236 in) pin (B) that was installed to hold the shift lever.
14. Turn the ignition switch to ON (II).
15. Move the shift lever to each position, and check that the A/T gear position indicator follows the transmission range switch.
16. Shift the shift lever to P.
17. Check that the shift lock works properly.
18. Push the shift lock release, and check that the shift lever releases. Also check that the shift lever locks when it is shifted back to P.
19. Turn the ignition switch to LOCK (0).

GETtheMANUALS.org

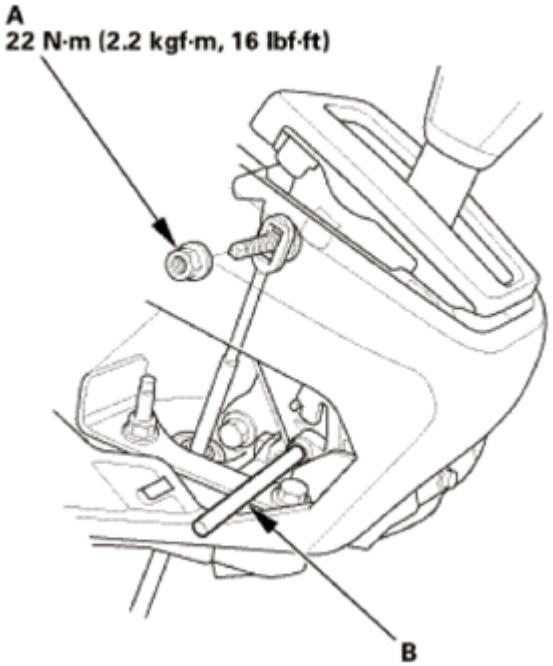

Fig. 1276: Identifying Pin And Shift Cable End Nut With Torque Specification
Courtesy of AMERICAN HONDA MOTOR CO., INC.

7. Center Maintenance Cover
    1. Install the maintenance cover (A).

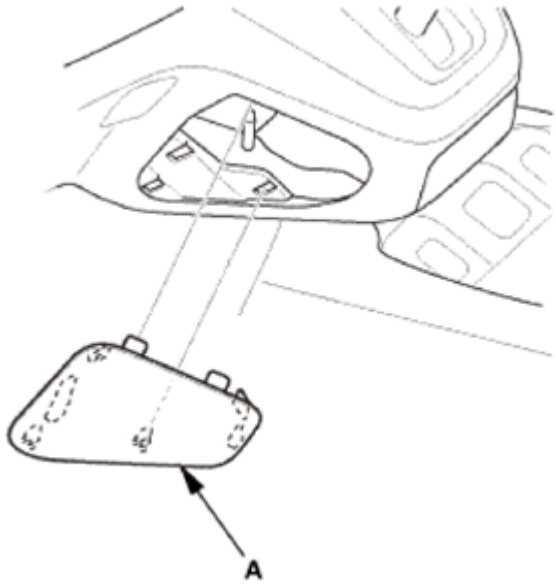

Fig. 1277: Identifying Center Maintenance Cover
Courtesy of AMERICAN HONDA MOTOR CO., INC.

8. Center Console

GETtheMANUALS.org

1. Install the center console (A).

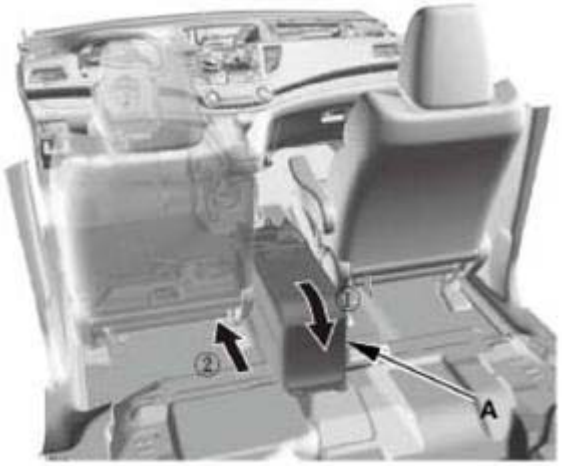

Fig. 1278: Installing Center Console
Courtesy of AMERICAN HONDA MOTOR CO., INC.

2. Connect the connectors (A), and install the clips (B).

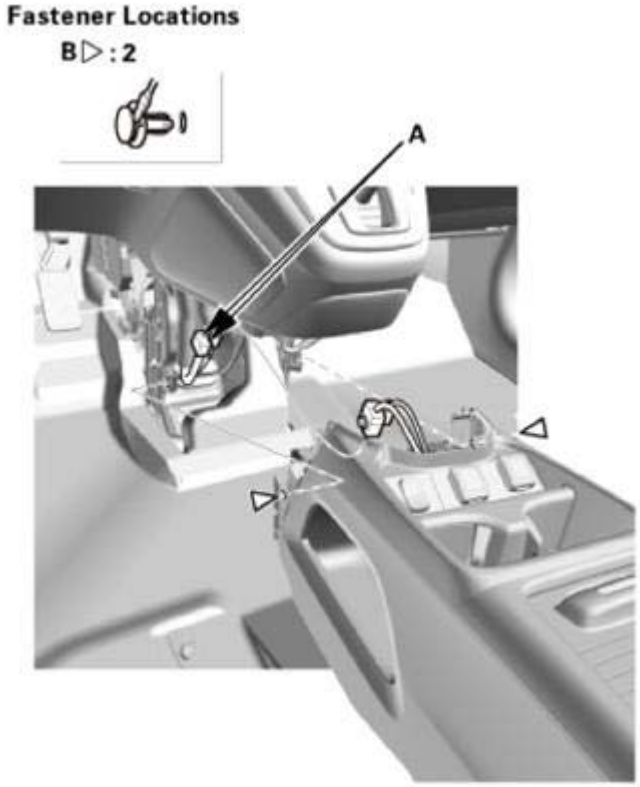

Fig. 1279: Identifying Center Console Connectors And Clips
Courtesy of AMERICAN HONDA MOTOR CO., INC.

GETtheMANUALS.org

3. Install the bolts (A), then install the console box mat (B).

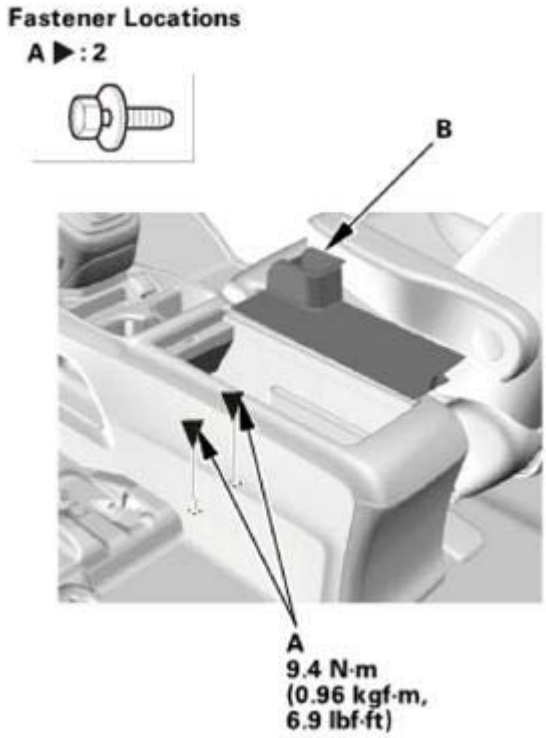

Fig. 1280: Identifying Console Box Mat And Bolts With Torque Specification
Courtesy of AMERICAN HONDA MOTOR CO., INC.

4. Install the bolts (A).

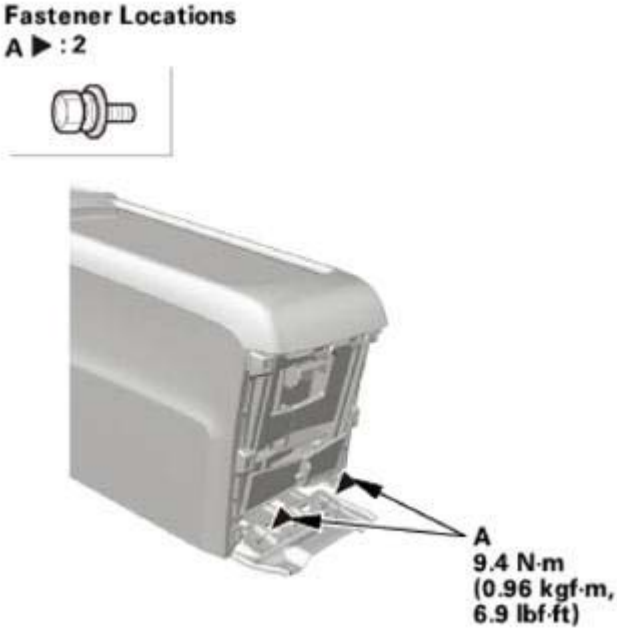

GETtheMANUALS.org

Fig. 1281: Identifying Center Console Bolts With Torque Specification
Courtesy of AMERICAN HONDA MOTOR CO., INC.

5. Install the bolt (A), then install the center lower cover (B). Make sure the clips (C) snap into place securely.

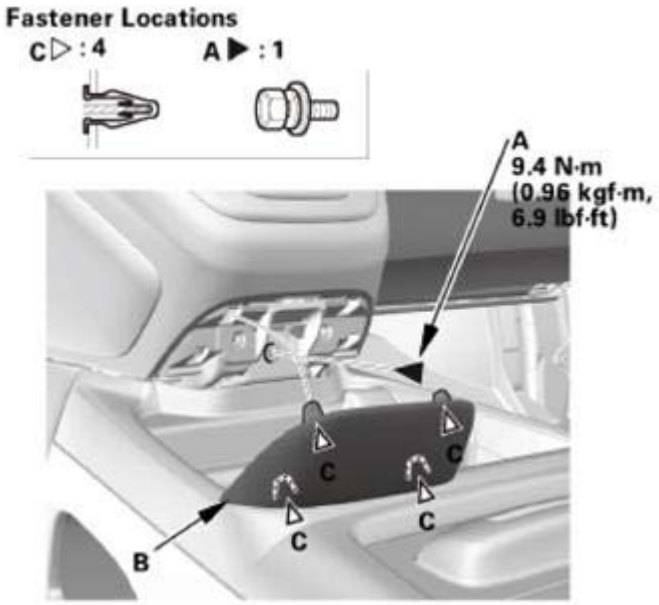

Fig. 1282: Identifying Center Lower Cover, Clips And Bolt With Torque Specification
Courtesy of AMERICAN HONDA MOTOR CO., INC.

9. Center Console Rear Trim
    1. Install the center console rear trim (A). Make sure the clips (B) and the hooks (C) snap into place securely.

GETtheMANUALS.org

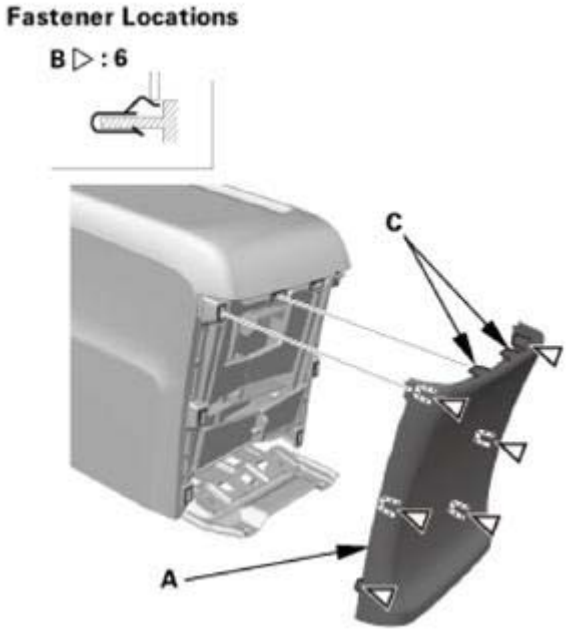

Fig. 1283: Identifying Center Console Rear Trim, Clips And Hooks
Courtesy of AMERICAN HONDA MOTOR CO., INC.

10. Front Console Cover - Both Sides
    1. Install the front console covers (A). Make sure the clips (B, C) snap into place securely.

Left side

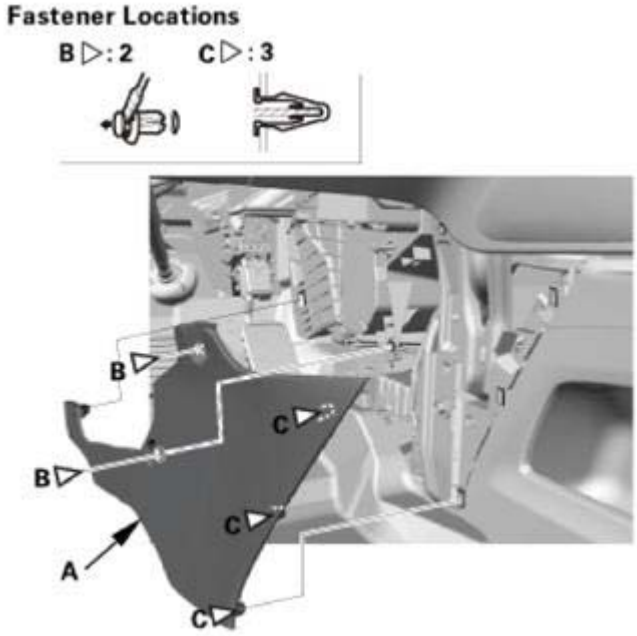

Fig. 1284: Identifying Front Console Covers And Clips (Left Side)
Courtesy of AMERICAN HONDA MOTOR CO., INC.

GETtheMANUALS.org

Right side

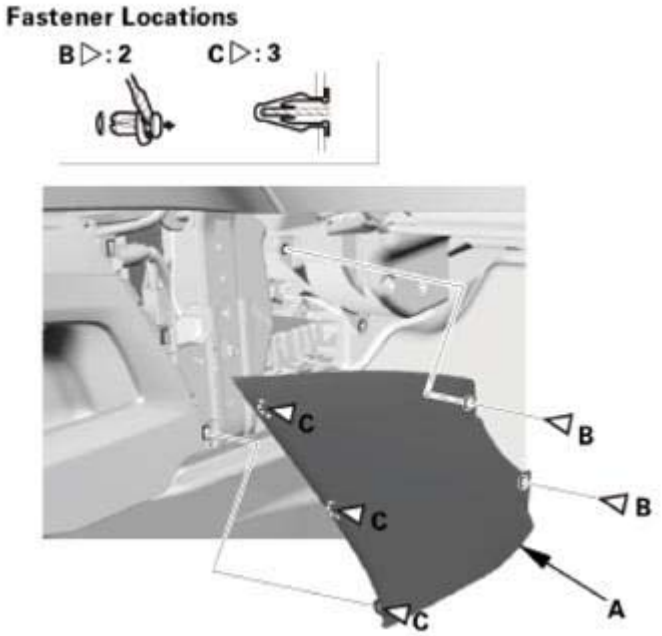

Fig. 1285: Identifying Front Console Covers And Clips (Right Side)
Courtesy of AMERICAN HONDA MOTOR CO., INC.

11. Shift Lever Panel (AT)
    1. Install the shift lever panel (A). Make sure the clips (B, C) and the hooks (D) snap into place securely.

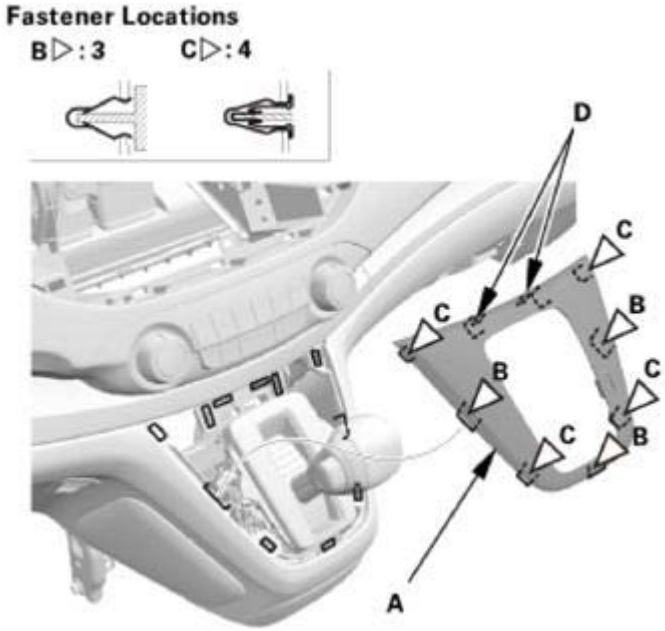

Fig. 1286: Identifying Shift Lever Panel, Clips And Hooks

GETtheMANUALS.org

Courtesy of AMERICAN HONDA MOTOR CO., INC.

ATF FILTER REMOVAL AND INSTALLATION

REMOVAL

1. Air Cleaner Assembly
    1. Disconnect the MAF sensor/IAT sensor connector (A).
    2. Remove the harness clamp (B).
    3. Disconnect the intake air duct (C) and the intake air pipe (D).
    4. Remove the air cleaner (E).

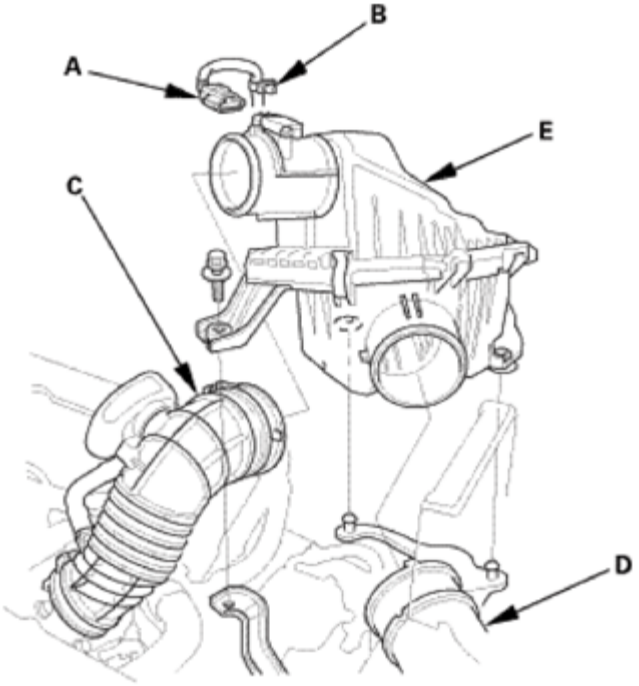

Fig. 1287: Identifying MAF Sensor/IAT Sensor Connector, Harness Clamp, Intake Air Duct, Intake Air Pipe And Air Cleaner
Courtesy of AMERICAN HONDA MOTOR CO., INC.

2. ATF Filter
    1. Raise the vehicle on the lift.
    2. Disconnect the ATF hose (A).
    3. Turn the end of the ATF hose up to prevent ATF from flowing out, then plug the hose.

GETtheMANUALS.org

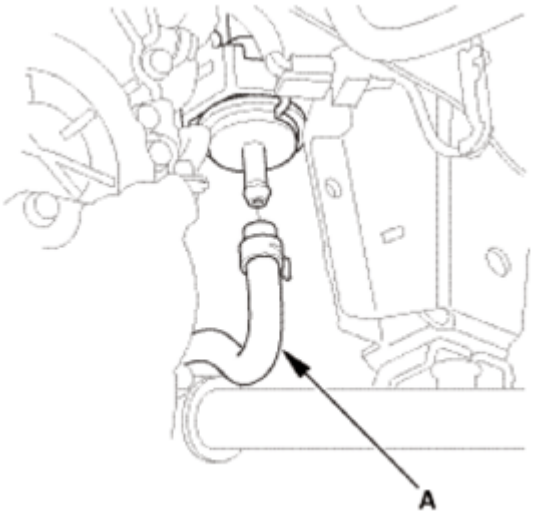

Fig. 1288: Identifying ATF Hose
Courtesy of AMERICAN HONDA MOTOR CO., INC.

4. Lower the vehicle on the lift.
5. Disconnect the ATF hose (A).
6. Turn the end of the ATF hose up to prevent ATF from flowing out, then plug the hose and line.
7. Remove the ATF filter holder (B).
8. Remove the ATF filter (C).

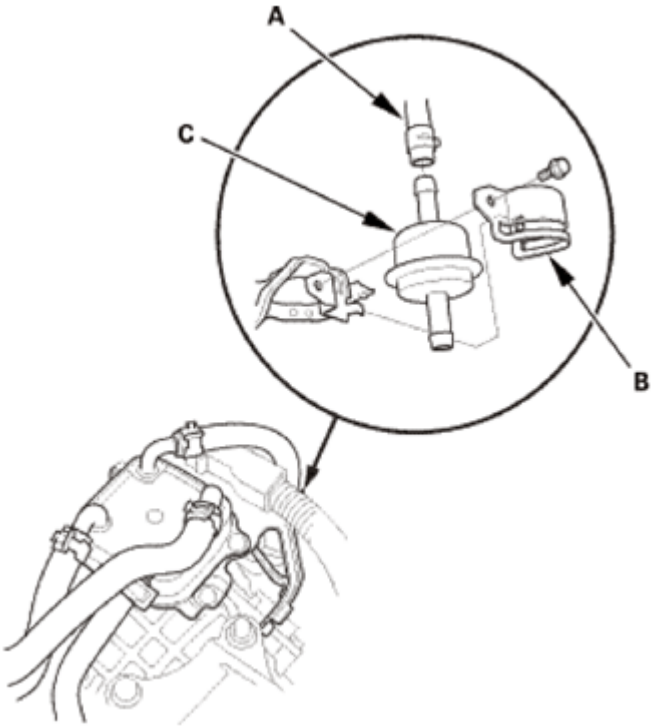

Fig. 1289: Identifying ATF Hose, ATF Filter And ATF Filter Holder

GETtheMANUALS.org

Courtesy of AMERICAN HONDA MOTOR CO., INC.

INSTALLATION

1. ATF Filter
    1. Connect the ATF hose (A) until the hose end contacts the ATF filter (B).
    2. Secure the hose with the clip (C) at 6-8 mm (0.24-0.31 in) (D) from the hose end. Keep the tabs of the clip clear of other parts.
    3. Install the ATF filter.
    4. Install the ATF filter holder (E).

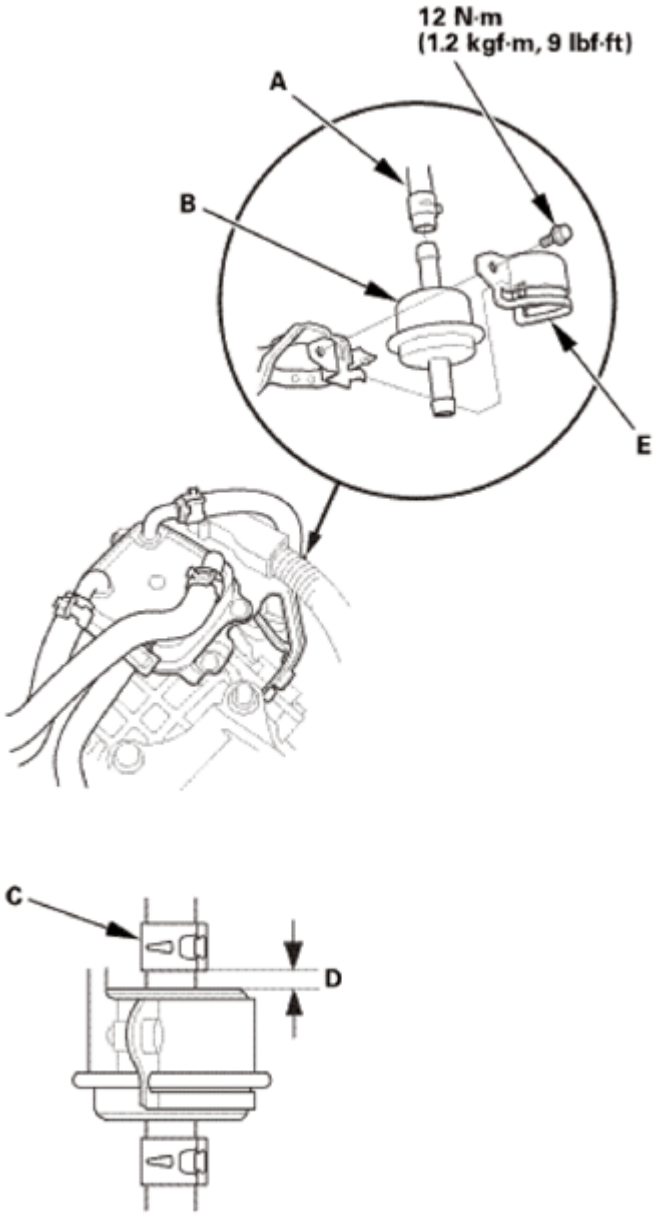

Fig. 1290: Identifying ATF Filter, ATF Filter Holder, Clip, ATF Hose And Mounting Bolts

GETtheMANUALS.org

With Torque Specification
Courtesy of AMERICAN HONDA MOTOR CO., INC.

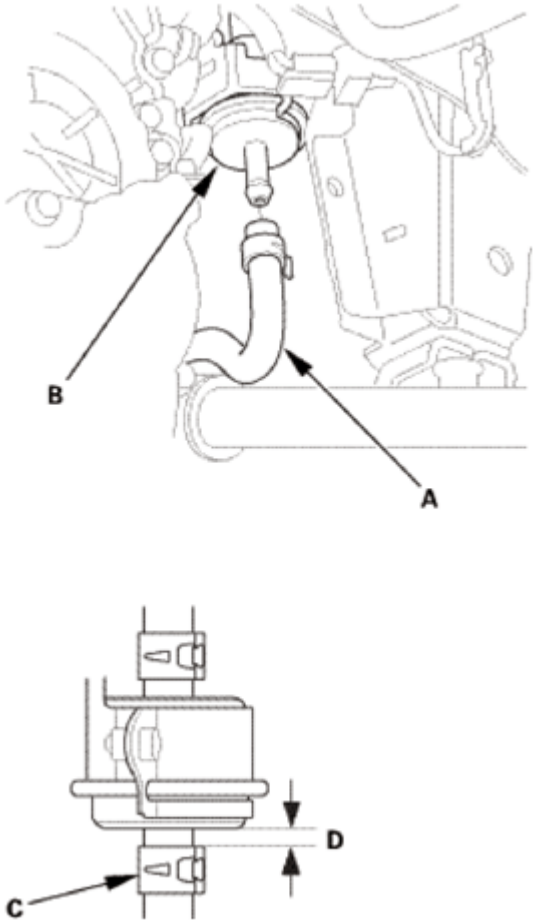

Fig. 1291: Identifying Hose And Clip Installation Dimension
Courtesy of AMERICAN HONDA MOTOR CO., INC.

5. Raise the vehicle on the lift.
6. Connect the ATF hose (A) until the hose end contacts the ATF filter (B).
7. Secure the hose with the clip (C) at 6-8 mm (0.24-0.31 in) (D) from the hose end. Keep the tabs of the clip clear of other parts.
8. Lower the vehicle on the lift

2. Air Cleaner Assembly
    1. Install the air cleaner (A).
    2. Connect the intake air pipe (B) and the intake air duct (C).
    3. Install the harness clamp (D).
    4. Connect the MAF sensor/IAT sensor connector (E).

GETtheMANUALS.org

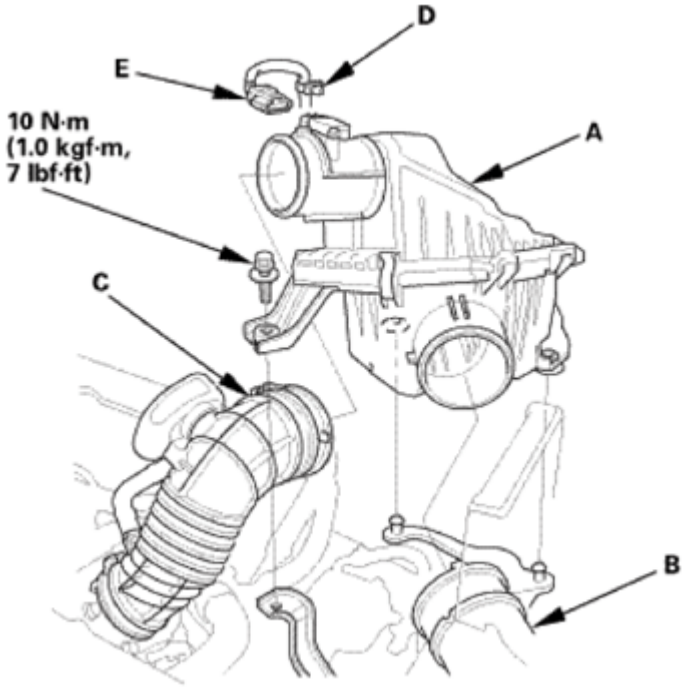

Fig. 1292: Identifying MAF Sensor/IAT Sensor Connector, Harness Clamp, Air Cleaner, Intake Air Pipe And Bolts With Torque Specification
Courtesy of AMERICAN HONDA MOTOR CO., INC.

3. Warm Up The Engine
    1. Start the engine. Hold the engine speed at 3, 000 rpm without load in P or N until the radiator fan comes on.
    2. Park the vehicle on level ground.
    3. Turn the ignition switch to LOCK (0).
4. ATF Level Check

NOTE:

- **Keep all foreign particles out of the transmission.**
- **Check the fluid level within 60-90 seconds after turning the engine off.**
- **Higher fluid level may be indicated if the radiator fan comes on twice or more.**

1. Remove the ATF dipstick (yellow loop) (A), and wipe it with a clean cloth.
2. Insert the dipstick into the guide tube aligning the notch (B) with the guide tab (C).

GETtheMANUALS.org

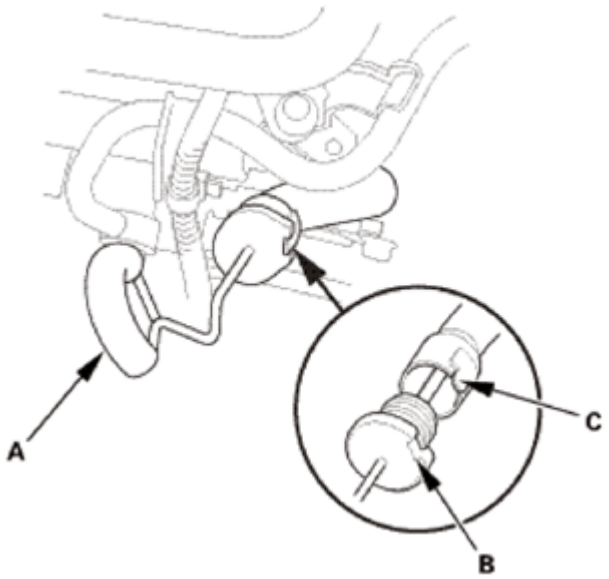

Fig. 1293: Identifying Notch, Tab And ATF Dipstick (Yellow Loop)
Courtesy of AMERICAN HONDA MOTOR CO., INC.

3. Remove the dipstick, and check the ATF level. It should be between the upper mark (A) and the lower mark (B).
4. If the ATF level is below the lower mark, check for fluid leaks at the transmission, the hoses, and the line joints. If a problem is found, fix it before filling the transmission with ATF.

NOTE: **If the vehicle is driven when the ATF level is below the lower mark, one or more of these symptoms may occur:**

- **Transmission damage.**
- **Vehicle does not move in any gear.**
- **Vehicle accelerates poorly, and engine revs up abnormally high when starting off in forward and reverse positions.**
- **Engine vibrates at idle.**

GETtheMANUALS.org

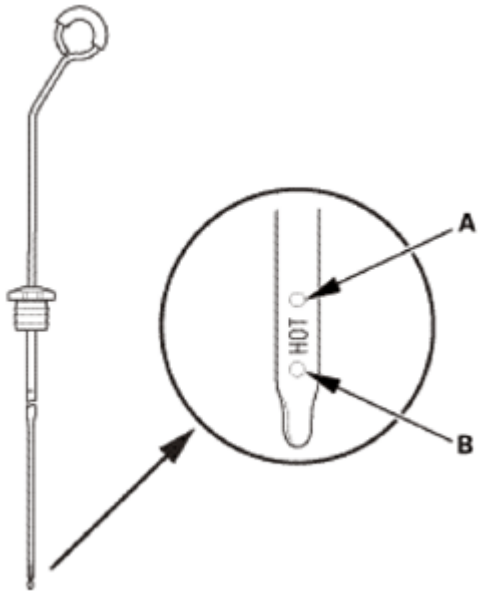

Fig. 1294: Identifying Upper And Lower Mark On Dipstick
Courtesy of AMERICAN HONDA MOTOR CO., INC.

5. If the ATF level is above the upper mark, drain the ATF to proper level.

NOTE: **If the vehicle is driven when the ATF level is above the upper mark, the vehicle may creep forward while in N, or have shifting problems.**

6. If necessary, fill the transmission with ATF through the dipstick guide tube opening (A) to bring the fluid level between the upper mark and the lower mark of the dipstick. Do not fill the fluid above the upper mark. Always use ATF DW-1 (genuine Honda automatic transmission fluid). Using a non-Honda ATF can affect shift quality.
7. Insert the dipstick into the guide tube aligning the notch with the guide tab.

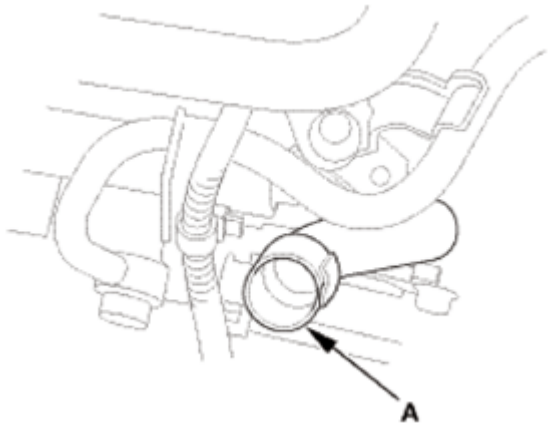

Fig. 1295: Identifying Dipstick Guide Tube Opening
Courtesy of AMERICAN HONDA MOTOR CO., INC.

GETtheMANUALS.org

ATF LEVEL CHECK

CHECK

NOTE:

- **Keep all foreign particles out of the transmission.**
- **Check the fluid level within 60-90 seconds after turning the engine off.**
- **Higher fluid level may be indicated if the radiator fan comes on twice or more.**

1. Warm Up The Engine
    1. Start the engine. Hold the engine speed at 3, 000 rpm without load in P or N until the radiator fan comes on.
    2. Park the vehicle on level ground.
    3. Turn the ignition switch to LOCK (0).
2. ATF Level Check
    1. Remove the ATF dipstick (yellow loop) (A), and wipe it with a clean cloth.
    2. Insert the dipstick into the guide tube aligning the notch (B) with the guide tab (C).

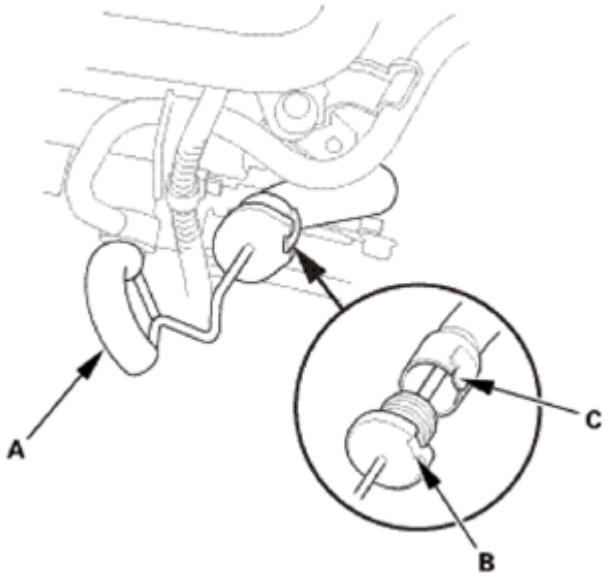

Fig. 1296: Identifying Notch, Tab And ATF Dipstick (Yellow Loop)
Courtesy of AMERICAN HONDA MOTOR CO., INC.

3. Remove the dipstick, and check the ATF level. It should be between the upper mark (A) and the lower mark (B).
4. If the ATF level is below the lower mark, check for fluid leaks at the transmission, the hoses, and the line joints. If a problem is found, fix it before filling the transmission with ATF.

NOTE: **If the vehicle is driven when the ATF level is below the lower mark,**

GETtheMANUALS.org

one or more of these symptoms may occur:

- **Transmission damage.**
- **Vehicle does not move in any gear.**
- **Vehicle accelerates poorly, and engine revs up abnormally high when starting off in forward and reverse positions.**
- **Engine vibrates at idle.**

5. If the ATF level is above the upper mark, drain the ATF to proper level.

NOTE: **If the vehicle is driven when the ATF level is above the upper mark, the vehicle may creep forward while in N, or have shifting problems.**

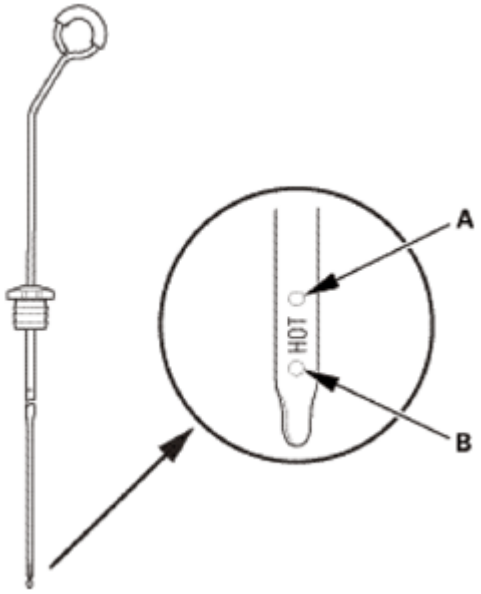

Fig. 1297: Identifying Upper And Lower Mark On Dipstick
Courtesy of AMERICAN HONDA MOTOR CO., INC.

6. If necessary, fill the transmission with ATF through the dipstick guide tube opening (A) to bring the fluid level between the upper mark and the lower mark of the dipstick. Do not fill the fluid above the upper mark. Always use ATF DW-1 (genuine Honda automatic transmission fluid). Using a non-Honda ATF can affect shift quality.
7. Insert the dipstick into the guide tube aligning the notch with the guide tab.

GETtheMANUALS.org

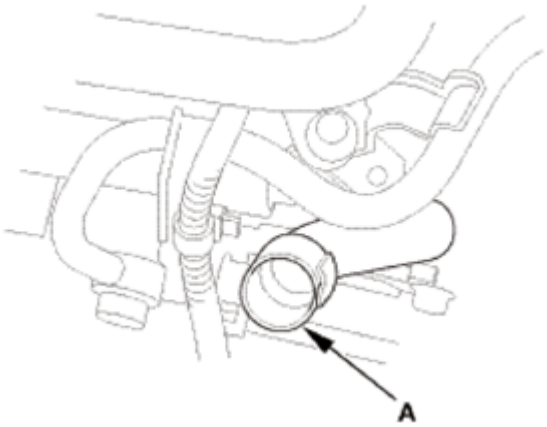

Fig. 1298: Identifying Dipstick Guide Tube Opening
Courtesy of AMERICAN HONDA MOTOR CO., INC.

ATF PUMP INSPECTION

SPECIAL TOOL REQUIRED

Image	Description/Tool Number
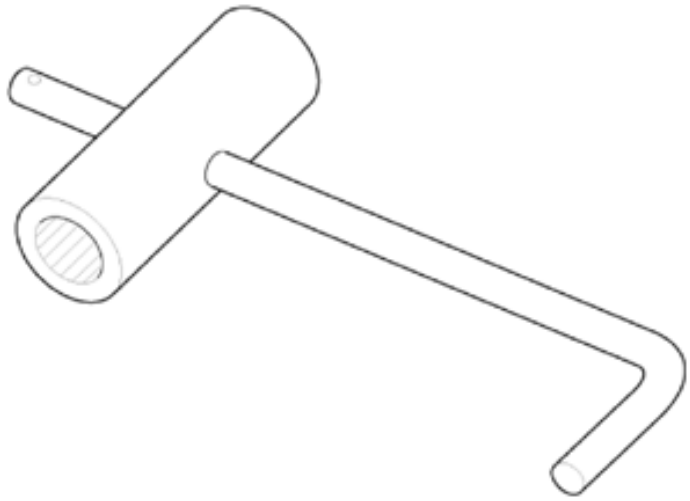	Mainshaft Holder 07GAB-PF50101
	Housing Puller 07HAC-PK40102

GETtheMANUALS.org

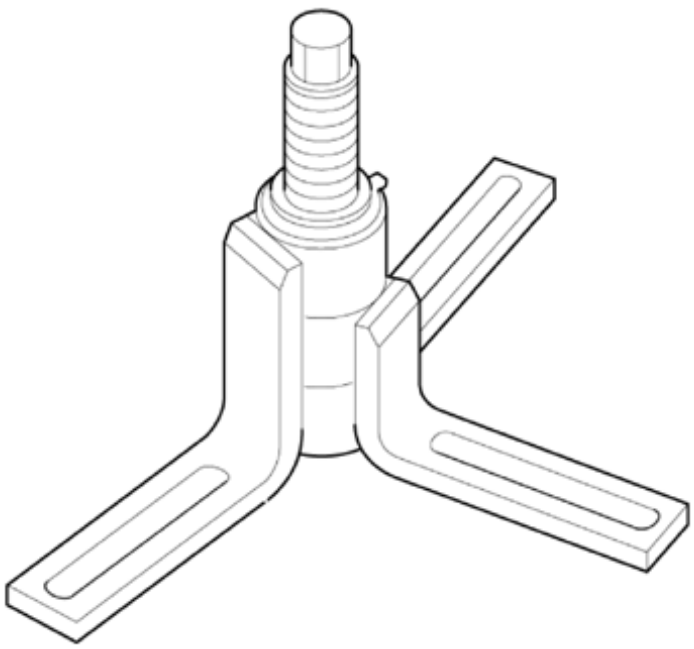

REMOVAL

NOTE: The illustration shows AWD/4WD transmission.

1. Transmission Range Switch Cover
    1. Remove the transmission range switch cover (A).

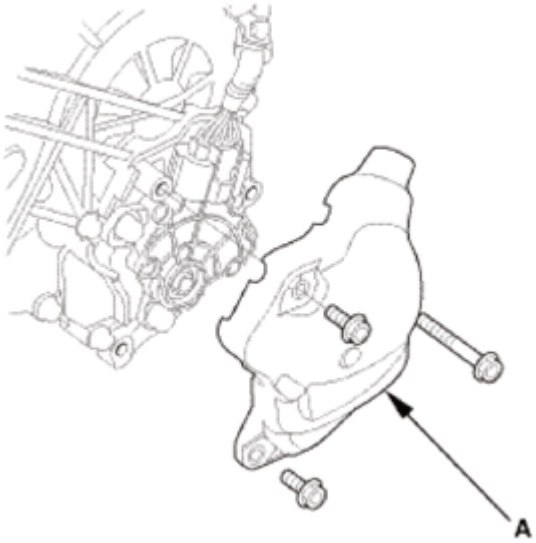

Fig. 1299: Identifying Transmission Range Switch Cover With Bolts
Courtesy of AMERICAN HONDA MOTOR CO., INC.

2. Transmission Range Switch

GETtheMANUALS.org

1. Remove the transmission range switch (A).

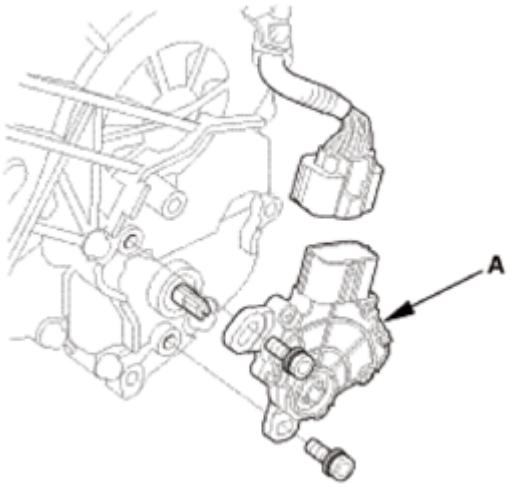

Fig. 1300: Identifying Transmission Range Switch With Bolts
Courtesy of AMERICAN HONDA MOTOR CO., INC.

3. Transmission Range Switch Subharness
    1. Remove the transmission range switch subharness (A).
    2. Remove the clamp brackets (B).

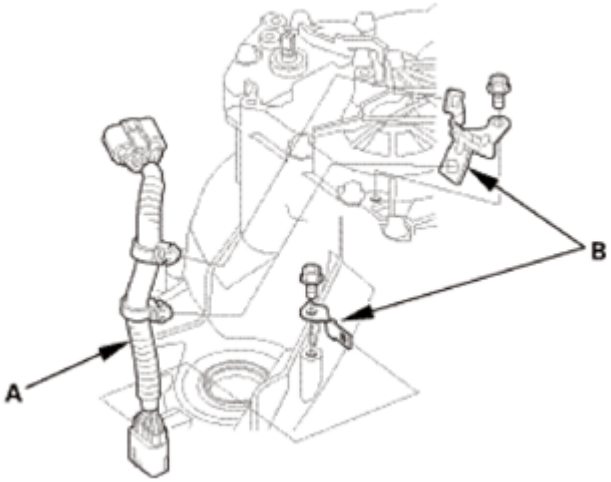

Fig. 1301: Identifying Transmission Range Switch Subharness And Clamp Brackets
Courtesy of AMERICAN HONDA MOTOR CO., INC.

4. Transmission End Cover
    1. Remove the end cover (A), the dowel pins (B), the O-rings (C), and the gasket (D).

GETtheMANUALS.org

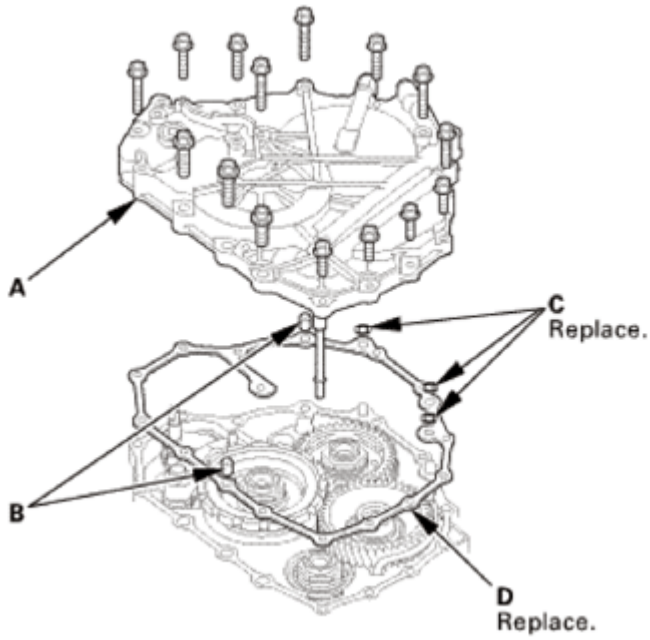

Fig. 1302: Identifying Transmission End Cover, Dowel Pins, O-Rings And Gasket With Bolts
Courtesy of AMERICAN HONDA MOTOR CO., INC.

5. Input Shaft (Mainshaft) Speed Sensor
    1. Remove the input shaft (mainshaft) speed sensor (A).
    2. Remove the O-ring (B) from the input shaft (mainshaft) speed sensor.

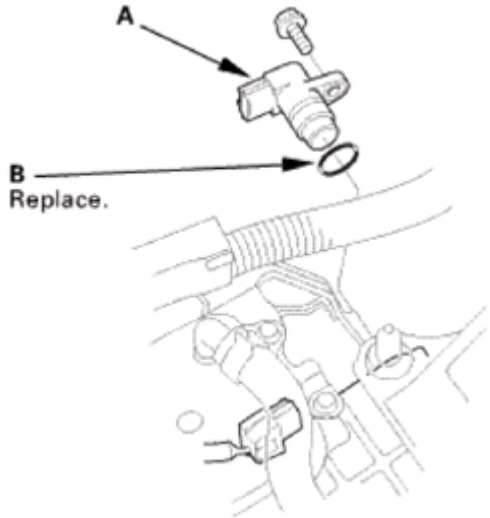

Fig. 1303: Identifying Input Shaft (Mainshaft) Speed Sensor And O-Ring
Courtesy of AMERICAN HONDA MOTOR CO., INC.

6. Output Shaft (Countershaft) Speed Sensor
    1. Remove the output shaft (countershaft) speed sensor (A) and the sensor washer (B).

GETtheMANUALS.org

2. Remove the O-ring (C) from the output shaft (countershaft) speed sensor.

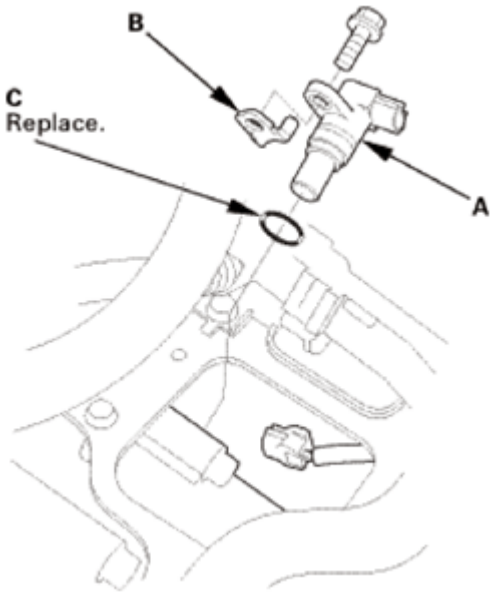

Fig. 1304: Identifying Output Shaft (Countershaft) Speed Sensor, Sensor Washer And O-Ring
Courtesy of AMERICAN HONDA MOTOR CO., INC.

7. A/T Clutch Pressure Control Solenoid Valve A
    1. Remove A/T clutch pressure control solenoid valve A.
    2. Remove the 35 mm ATF pipe (B), the ATF joint pipes (C), the O-rings (D), and the gasket (E).

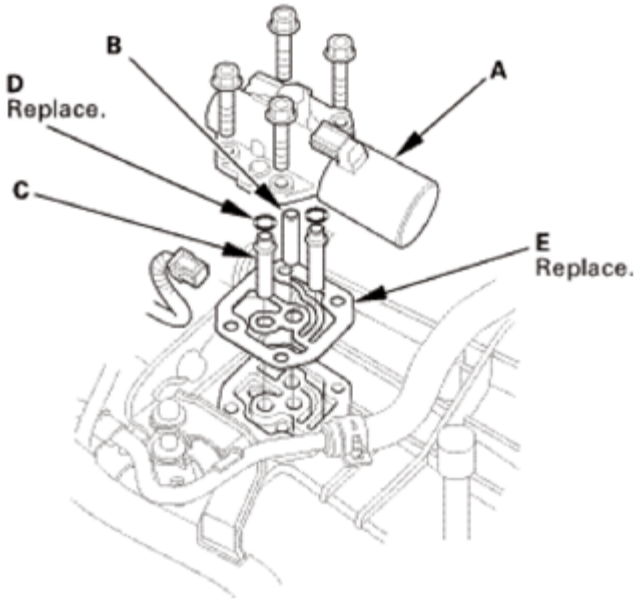

Fig. 1305: Identifying A/T Clutch Pressure Control Solenoid Valve, ATF Pipe, ATF Joint Pipes, O-Rings And Gasket With Bolts

GETtheMANUALS.org

Courtesy of AMERICAN HONDA MOTOR CO., INC.

8. A/T Clutch Pressure Control Solenoid Valve B and C
    1. Remove the clamp bracket (A) and A/T clutch pressure control solenoid valves B and C.
    2. Remove the ATF joint pipes (D), the O-rings (E), and the gasket (F).

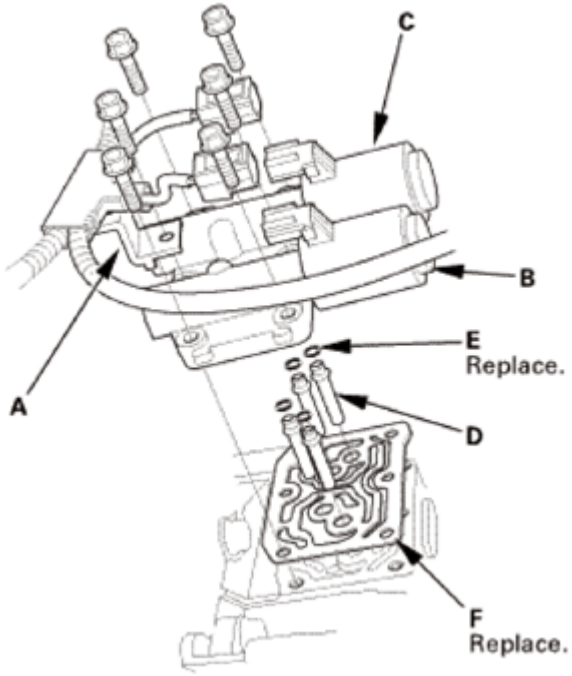

Fig. 1306: Identifying A/T Clutch Pressure Control Solenoid Valves, Clamp Bracket, ATF Joint Pipes, O-Rings And Gasket
Courtesy of AMERICAN HONDA MOTOR CO., INC.

9. ATF Inlet Line
    1. Remove the banjo bolt (A) and the sealing washers (B).
    2. Remove the ATF inlet line (C).

GETtheMANUALS.org

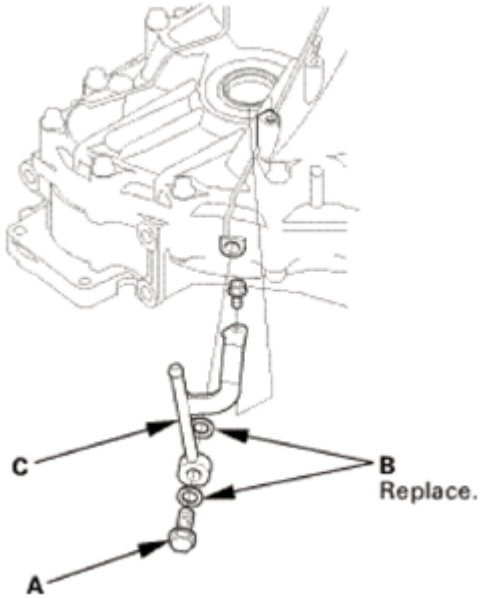

Fig. 1307: Identifying ATF Inlet Line, Banjo Bolt And Sealing Washers
Courtesy of AMERICAN HONDA MOTOR CO., INC.

10. ATF Outlet Line
    1. Remove the banjo bolt (A) and the sealing washers (B).
    2. Remove the ATF outlet line (C).

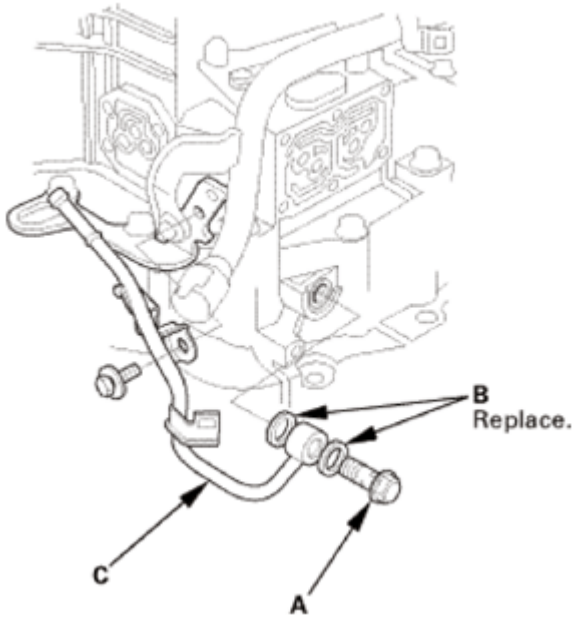

Fig. 1308: Identifying ATF Outlet Line, Banjo Bolt And Sealing Washers
Courtesy of AMERICAN HONDA MOTOR CO., INC.

11. Dipstick Guide Tube

GETtheMANUALS.org

1. Remove the ATF dipstick guide tube (A).
2. Remove the O-ring (B) from the ATF dipstick guide tube.

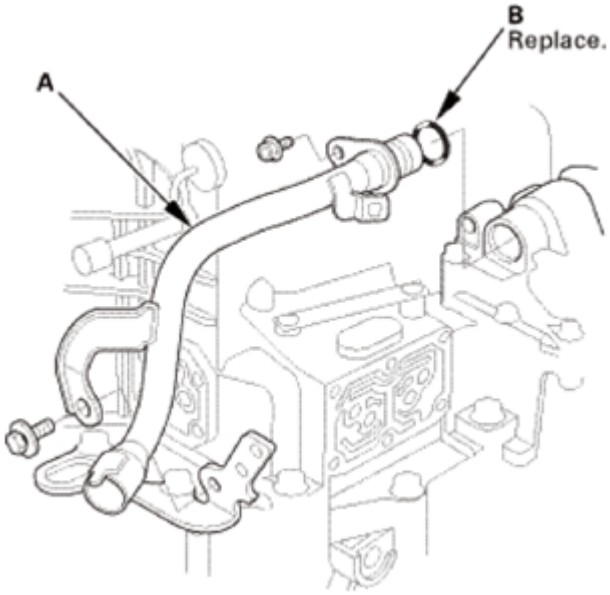

Fig. 1309: Identifying ATF Dipstick Guide Tube And O-Ring
Courtesy of AMERICAN HONDA MOTOR CO., INC.

12. A/T Shift Solenoid Cover
    1. Remove the shift solenoid valve cover (A), the dowel pins (B), and the gasket (C).

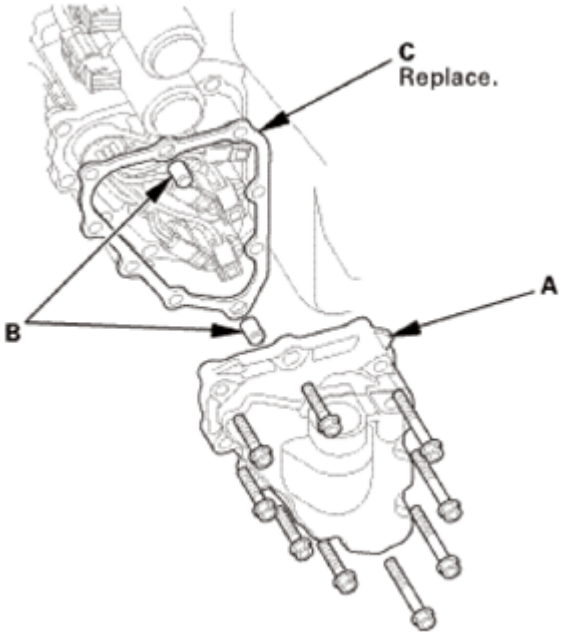

Fig. 1310: Identifying Shift Solenoid Valve Cover, Dowel Pins And Gasket
Courtesy of AMERICAN HONDA MOTOR CO., INC.

GETtheMANUALS.org

13. A/T Shift Solenoid Wire Harness - Disconnection
    1. Disconnect the connectors.

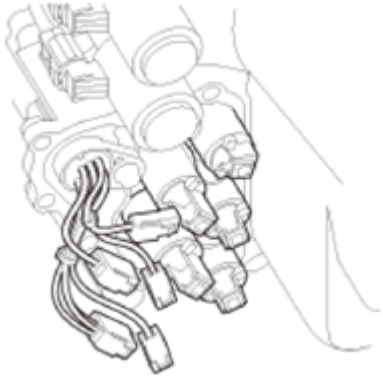

Fig. 1311: Identifying A/T Shift Solenoid Wire Harness Connectors
Courtesy of AMERICAN HONDA MOTOR CO., INC.

14. ATF Feed Pipe/Lubrication Pipe
    1. Remove the 6 x 201 mm ATF pipe (A).
    2. Remove the ATF lubrication pipe (B).
    3. Remove the 8 x 220 mm ATF pipe (C).
    4. Remove the 8 x 198 mm ATF pipes (D).

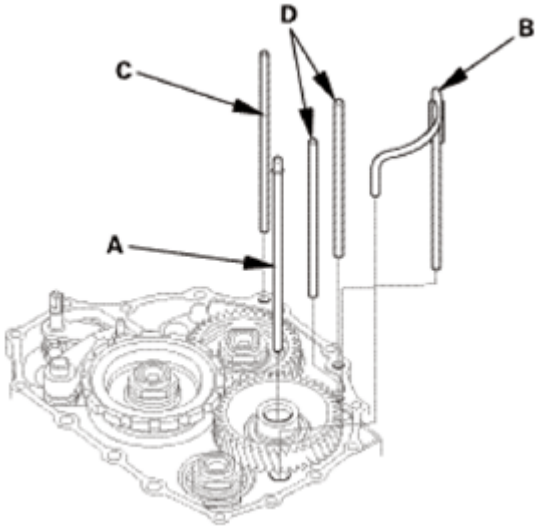

Fig. 1312: Identifying ATF Feed Pipes And Lubrication Pipe
Courtesy of AMERICAN HONDA MOTOR CO., INC.

15. End Cover Idler Gear Assembly
    1. Install the mainshaft holder onto the mainshaft.
    2. Engage the park pawl with the park gear.

GETtheMANUALS.org

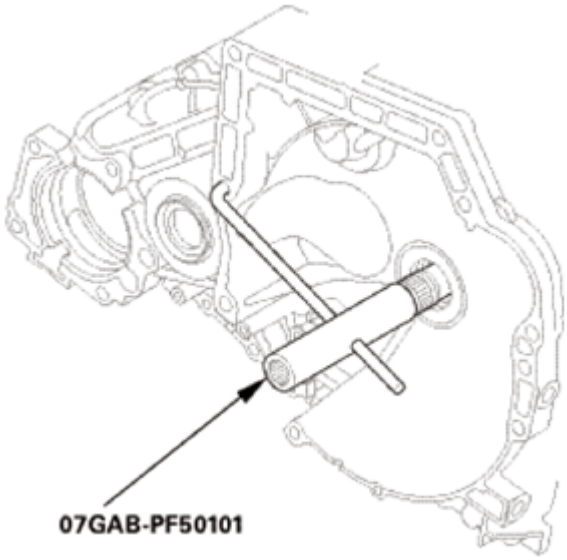

Fig. 1313: Installing Mainshaft Holder Onto Mainshaft
Courtesy of AMERICAN HONDA MOTOR CO., INC.

3. Using a chisel, cut the lock tab (A) of the locknut (B).

NOTE: **Keep all of the chiseled particles out of the transmission.**

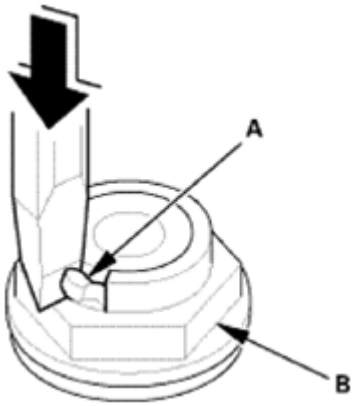

Fig. 1314: Cutting Lock Tab Of Locknut Using Chisel
Courtesy of AMERICAN HONDA MOTOR CO., INC.

4. Remove the locknuts (A) and the conical spring washers (B) from each shaft.

NOTE:

- **The countershaft and secondary shaft locknuts have left-hand threads.**
- **Keep all of the chiseled particles out of the transmission.**
- **Clean the old locknuts; they are used to install the press fit idler gears and park gear.**

GETtheMANUALS.org

5. Remove the mainshaft holder.

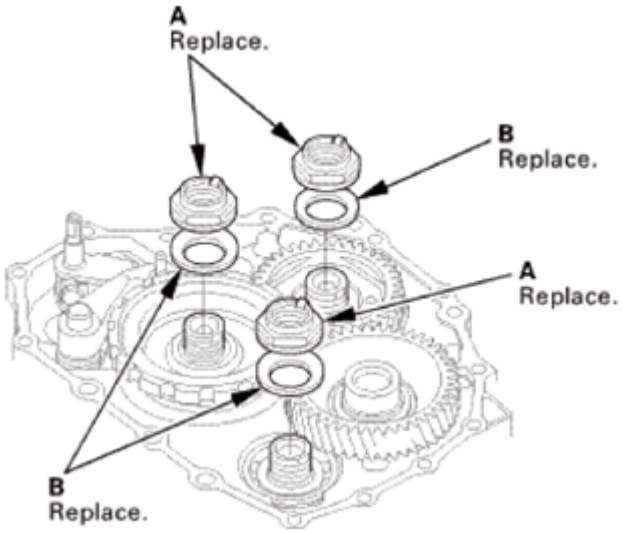

Fig. 1315: Identifying Locknuts And Conical Spring Washers
Courtesy of AMERICAN HONDA MOTOR CO., INC.

6. Remove the park pawl (A), the park pawl spring (B), the park pawl shaft (C), and the stop shaft (D).
7. Pry down the lock tab (E) of the lock washer (F).
8. Remove the lock bolt (G) and the lock washer.
9. Remove the park lever (H), the park lever stop (I), and the park lever spring (J).

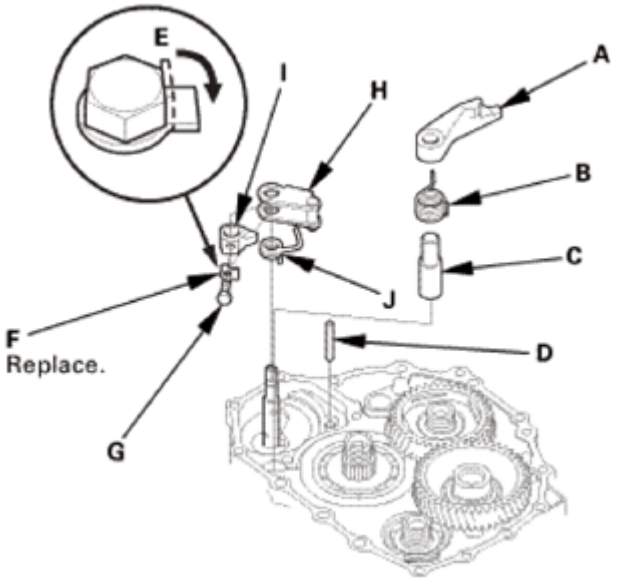

Fig. 1316: Prying Down Lock Tab Of Lock Washer
Courtesy of AMERICAN HONDA MOTOR CO., INC.

GETtheMANUALS.org

10. Place a spacer (A) on the countershaft (B).
11. Set a commercially available bearing puller (C) on the park gear (D).
12. Remove the park gear.

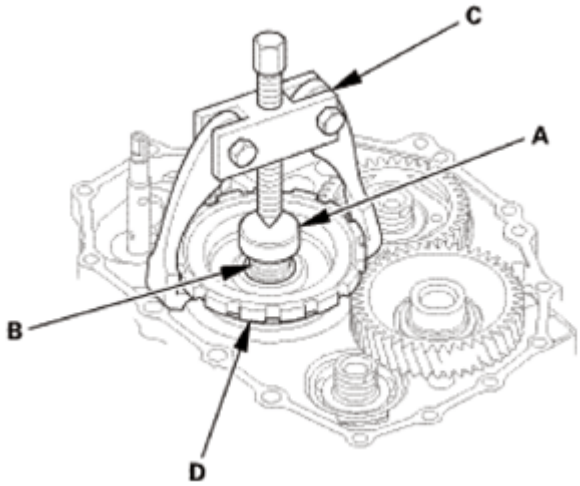

Fig. 1317: Setting Commercially Available Bearing Puller On Park Gear
Courtesy of AMERICAN HONDA MOTOR CO., INC.

13. Install a puller (A) with two 6 x 1.0 mm bolts (B) on the mainshaft idler gear (C).
14. Set a spacer (D) between the puller and the mainshaft (E).
15. Remove the mainshaft idler gear.

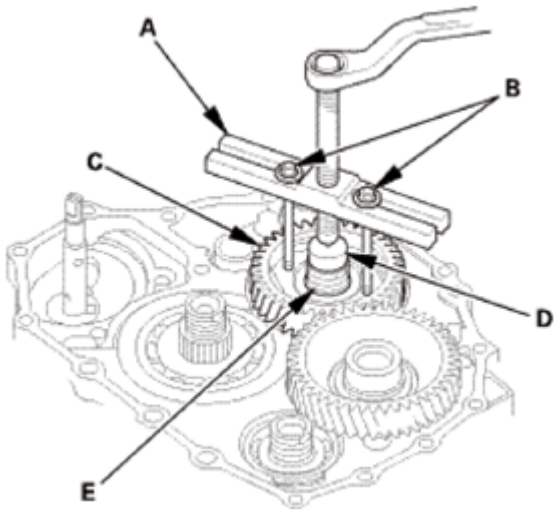

Fig. 1318: Installing Puller With 6 X 1.0 mm Bolts On Mainshaft Idler Gear
Courtesy of AMERICAN HONDA MOTOR CO., INC.

16. Automatic Transmission Housing
    1. Align the spring pin (A) on the selector control shaft (B) with the transmission housing groove (C).

GETtheMANUALS.org

NOTE: **Do not squeeze the end of the selector control shaft tips together when turning the control shaft. If the tips are squeezed together, it will cause a faulty shift position signal or position due to the play between the selector control shaft and the transmission range switch.**

2. Remove the transmission housing mounting bolts (D) (2WD: 19 bolts, AWD/4WD: 20 bolts).
3. Install the housing puller over the mainshaft.
4. Remove the transmission housing (E) using the housing puller.
5. Remove the dowel pins (F) and the gasket (G).

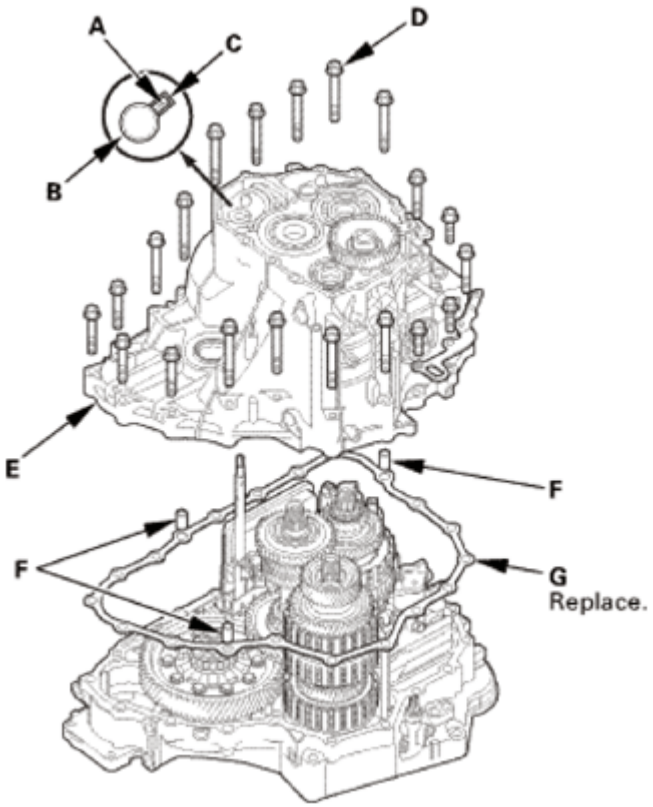

Fig. 1319: Identifying Spring Pin, Selector Control Shaft, Transmission Housing Groove, Transmission Housing, Mounting Bolts And Gasket
Courtesy of AMERICAN HONDA MOTOR CO., INC.

GETtheMANUALS.org

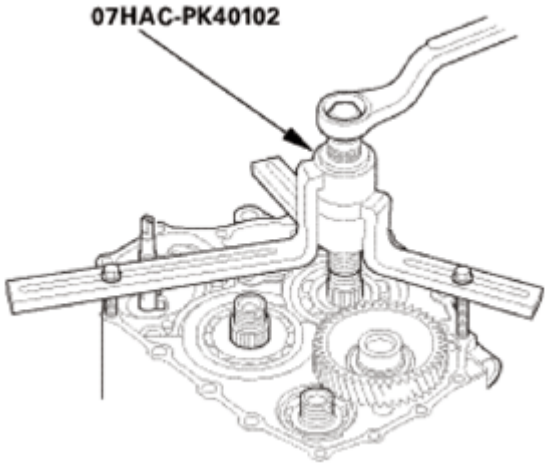

Fig. 1320: Installing Housing Puller Over Mainshaft
Courtesy of AMERICAN HONDA MOTOR CO., INC.

17. A/T Countershaft Reverse Gear
    1. Remove the countershaft reverse gear (A).
    2. Remove the needle bearing (B).

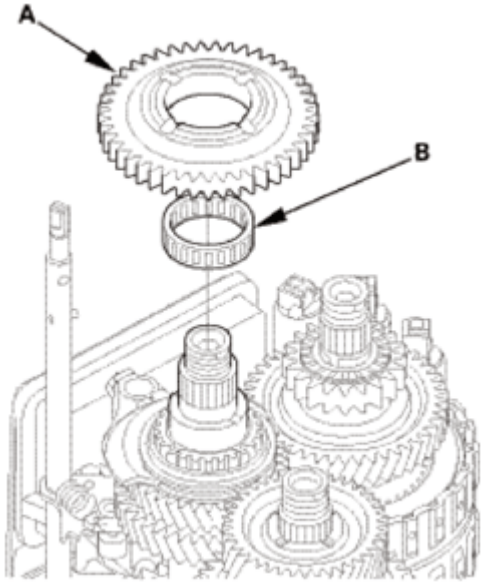

Fig. 1321: Identifying Countershaft Reverse Gear And Needle Bearing
Courtesy of AMERICAN HONDA MOTOR CO., INC.

18. Reverse Shift fork
    1. Pry down the lock tab (A) of the lock washer (B).
    2. Remove the lock bolt (C) and the lock washer.
    3. Remove the reverse shift fork (D) and the reverse selector (E) together.

GETtheMANUALS.org

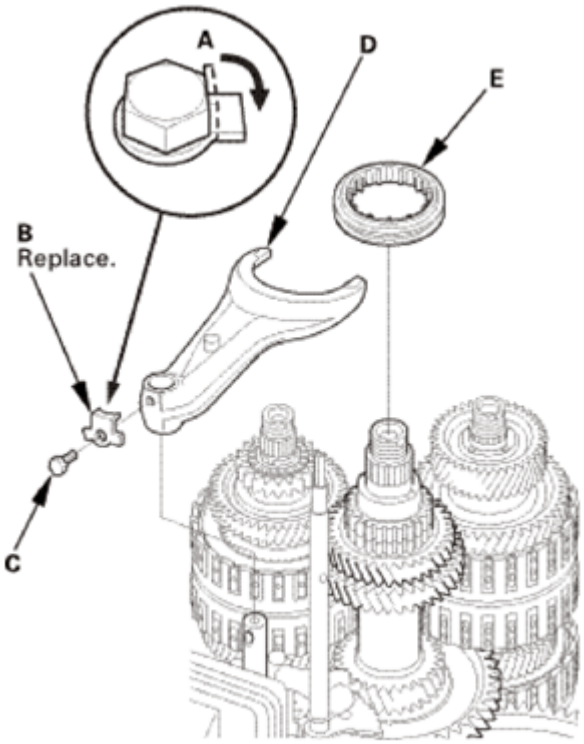

Fig. 1322: Prying Down Lock Tab Of Lock Washer
Courtesy of AMERICAN HONDA MOTOR CO., INC.

19. Selector Control Lever (Except 2WD of USA Produced Models)
    1. Pry down the lock tab (A) of the lock washer (B).
    2. Remove the lock bolt (C) and the lock washer.
    3. Remove the selector control lever (D).

Except 2WD of USA Produced Models

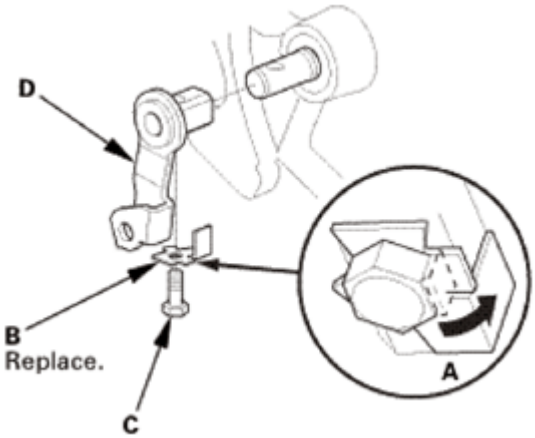

Fig. 1323: Prying Down Lock Tab Of Lock Washer (Except 2WD Of USA Produced Models)
Courtesy of AMERICAN HONDA MOTOR CO., INC.

GETtheMANUALS.org

20. Selector Control Shaft
    1. Unhook the detent arm spring (A).

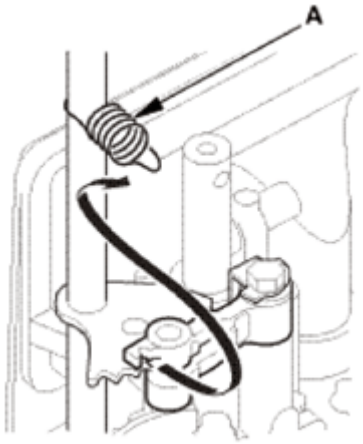

Fig. 1324: Unhooking Detent Arm Spring
Courtesy of AMERICAN HONDA MOTOR CO., INC.

    2. Separate the manual valve lever pin (A) on the selector control shaft (B) from the guide of the manual valve (C).

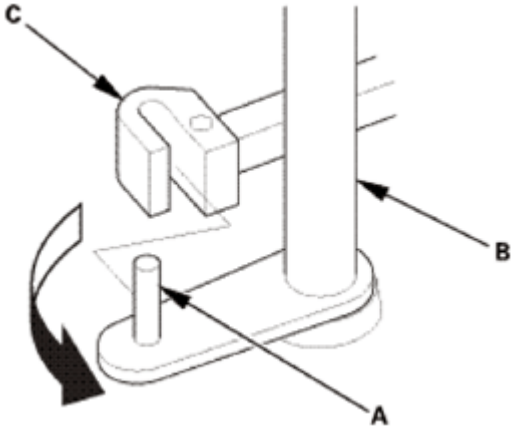

Fig. 1325: Separating Manual Valve Lever Pin On Selector Control Shaft From Guide Of Manual Valve
Courtesy of AMERICAN HONDA MOTOR CO., INC.

    3. Remove the selector control shaft (A).

GETtheMANUALS.org

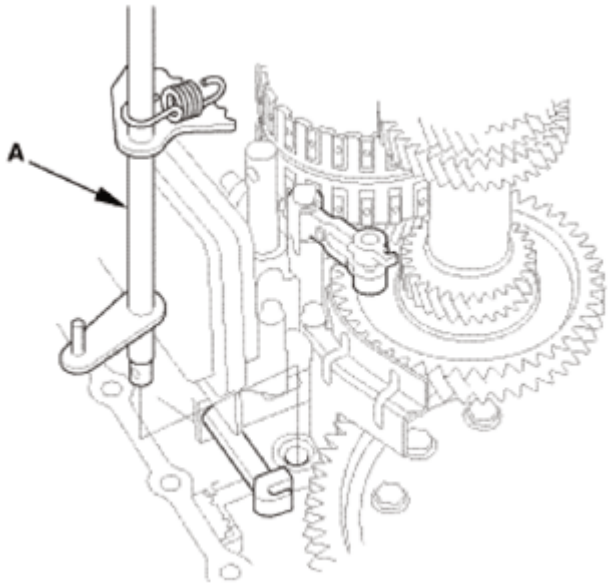

Fig. 1326: Identifying Selector Control Shaft
Courtesy of AMERICAN HONDA MOTOR CO., INC.

21. Mainshaft and Countershaft and Secondary Shaft Assembly
    1. Turn the detent arm (A) away from the countershaft (B).

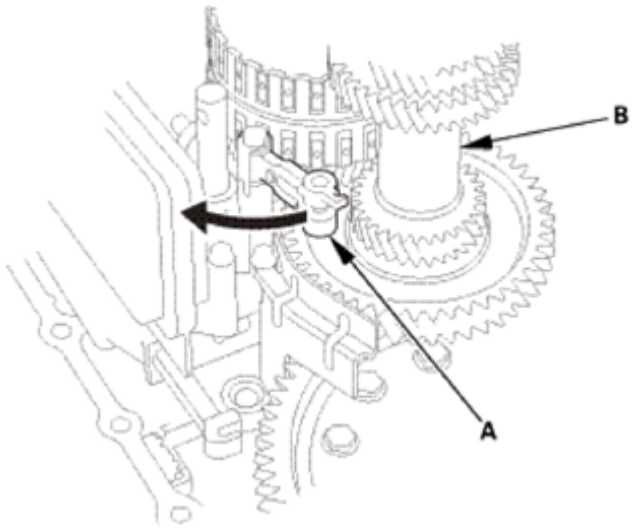

Fig. 1327: Turning Detent Arm Away From Countershaft
Courtesy of AMERICAN HONDA MOTOR CO., INC.

    2. Remove the mainshaft subassembly (A), the countershaft subassembly (B), and the secondary shaft subassembly (C) together.

NOTE: Do not bump the countershaft on the baffle plate (D).

GETtheMANUALS.org

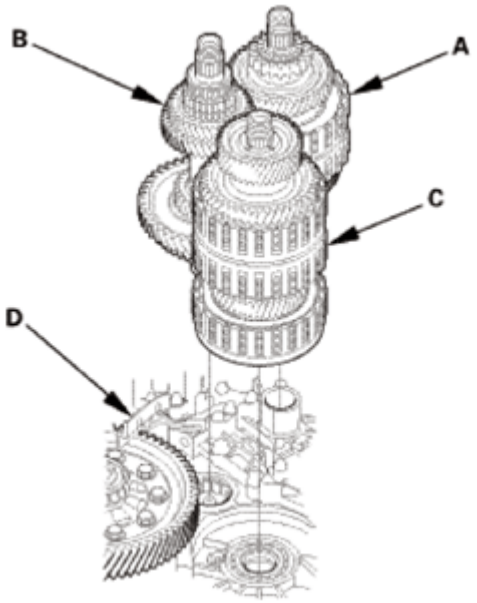

Fig. 1328: Identifying Mainshaft Subassembly, Countershaft Subassembly, Secondary Shaft Subassembly And Baffle Plate
Courtesy of AMERICAN HONDA MOTOR CO., INC.

22. Differential Assembly
    1. Remove the baffle plate (A).
    2. Remove the differential assembly (B).

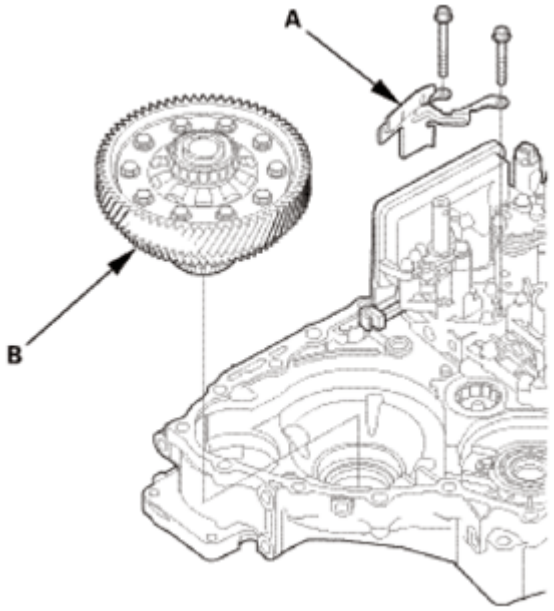

Fig. 1329: Identifying Differential Assembly And Baffle Plate
Courtesy of AMERICAN HONDA MOTOR CO., INC.

GETtheMANUALS.org

23. Regulator Valve Body
    1. Remove ATF joint pipe A.
    2. Remove ATF joint pipe B.

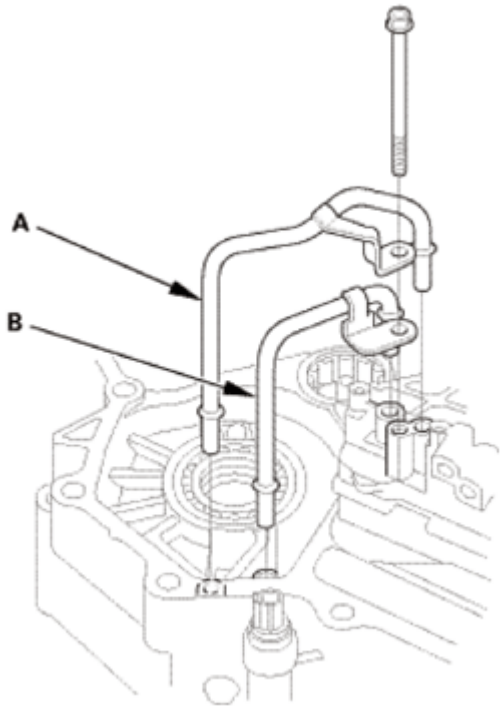

Fig. 1330: Identifying ATF Joint Pipes
Courtesy of AMERICAN HONDA MOTOR CO., INC.

    3. Remove the regulator valve body (A).

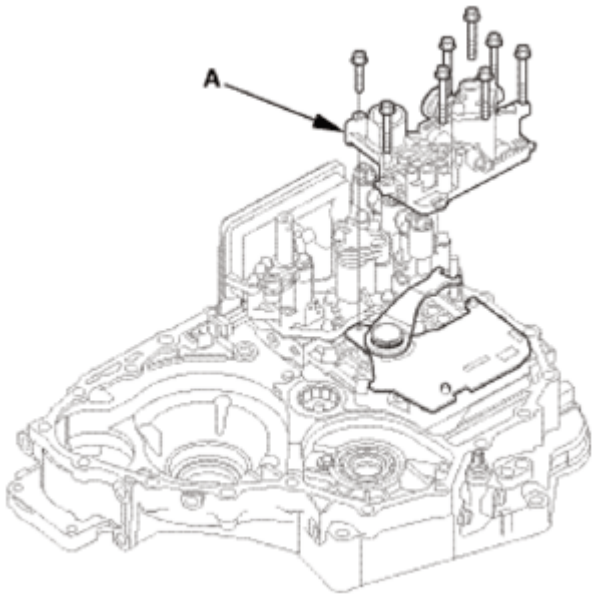

GETtheMANUALS.org

Fig. 1331: Identifying Regulator Valve Body With Mounting Bolts
Courtesy of AMERICAN HONDA MOTOR CO., INC.

4. Remove the stator shaft (A).
5. Remove the O-ring (B) from the stator shaft.
6. Remove the stator shaft stop (C).

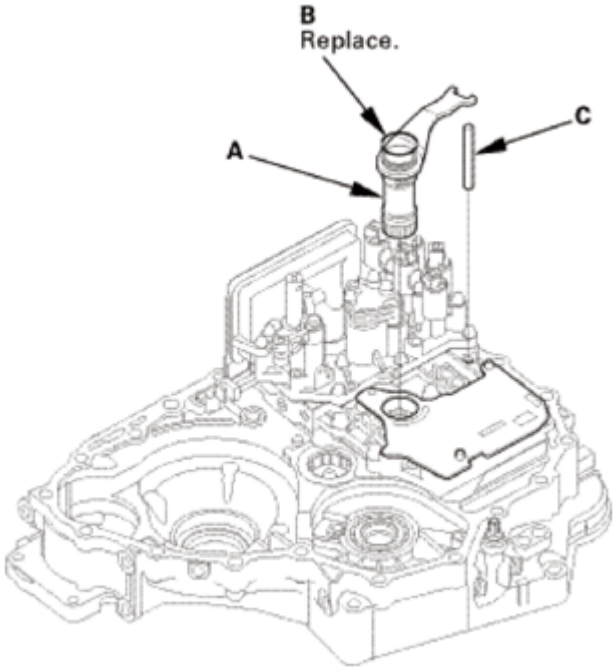

Fig. 1332: Identifying Stator Shaft, O-Ring And Stator Shaft Stop
Courtesy of AMERICAN HONDA MOTOR CO., INC.

7. Remove the regulator separator plate (A) and the dowel pins (B).

GETtheMANUALS.org

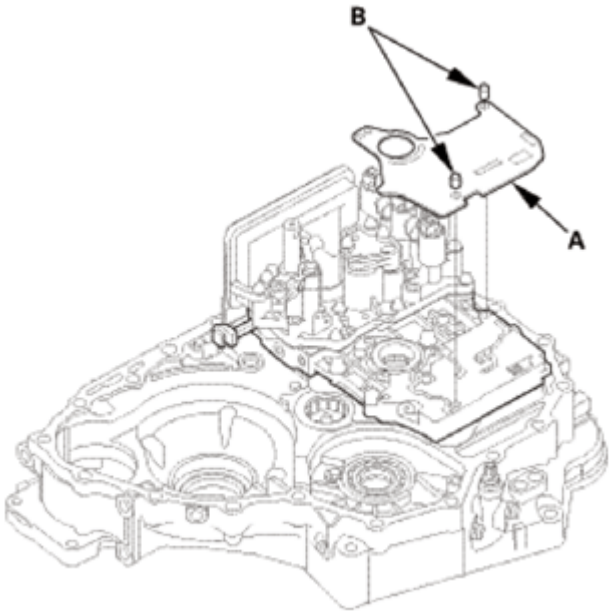

Fig. 1333: Identifying Regulator Separator Plate And Dowel Pins
Courtesy of AMERICAN HONDA MOTOR CO., INC.

24. ATF Strainer
    1. Remove the ATF strainer (A) and the O-ring (B).

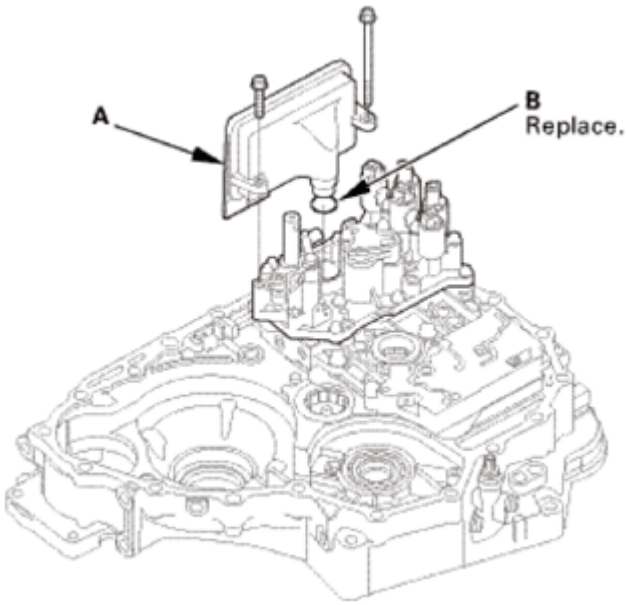

Fig. 1334: Identifying ATF Strainer And O-Ring With Mounting Bolts
Courtesy of AMERICAN HONDA MOTOR CO., INC.

    2. Clean the inlet opening (A) of the ATF strainer (B) thoroughly with compressed air, then check that it is in good condition and that the inlet opening is not clogged.

GETtheMANUALS.org

3. Test the ATF strainer by pouring clean ATF through the inlet opening, and replace it if it is clogged or damaged.

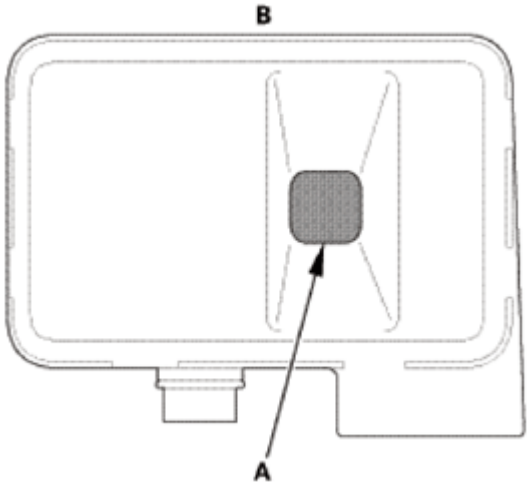

Fig. 1335: Identifying Inlet Opening Of ATF Strainer
Courtesy of AMERICAN HONDA MOTOR CO., INC.

25. Servo Body
    1. Remove the servo body (A).

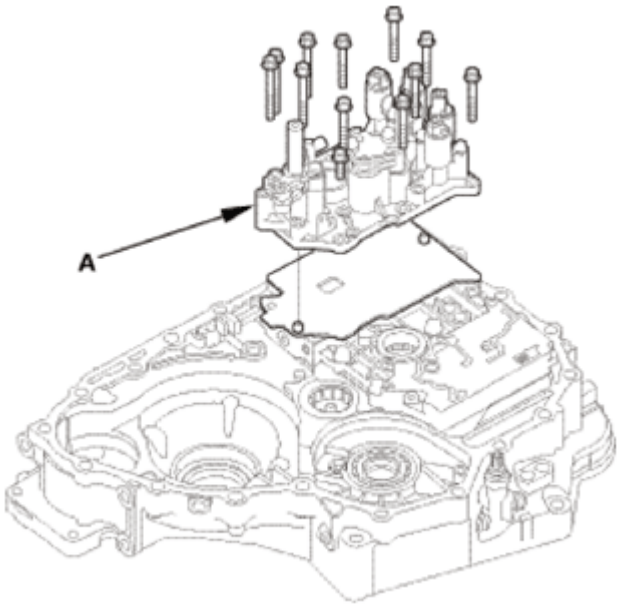

Fig. 1336: Identifying Servo Body With Mounting Bolts
Courtesy of AMERICAN HONDA MOTOR CO., INC.

    2. Remove the servo separator plate (A) and the dowel pins (B).

GETtheMANUALS.org

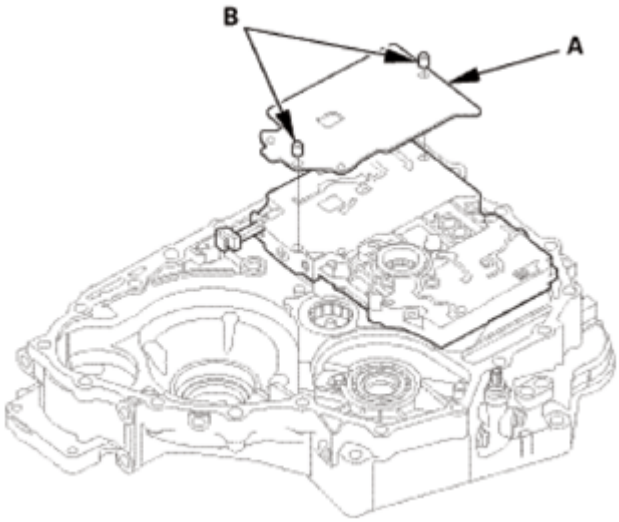

Fig. 1337: Identifying Servo Separator Plate And Dowel Pins
Courtesy of AMERICAN HONDA MOTOR CO., INC.

26. Main Valve Body
    1. Remove the cooler check valve spring (A) and the cooler check valve (B).
    2. Remove the main valve body (C).

NOTE: **Do not let the check balls (D) fall out, and do not use a magnet to remove the check balls, it may magnetize them.**

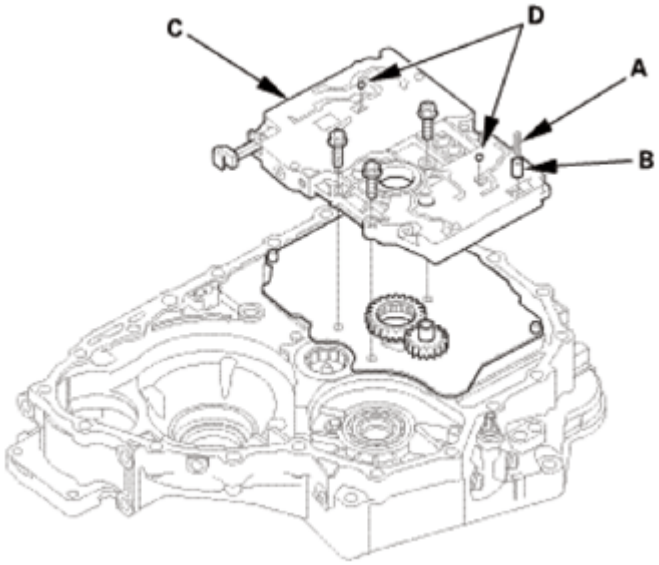

Fig. 1338: Identifying Cooler Check Valve, Spring, Main Valve Body And Check Balls
Courtesy of AMERICAN HONDA MOTOR CO., INC.

    3. Remove the ATF pump driven gear shaft (A).

GETtheMANUALS.org

4. Remove the ATF pump drive gear (B) and the ATF pump driven gear (C).

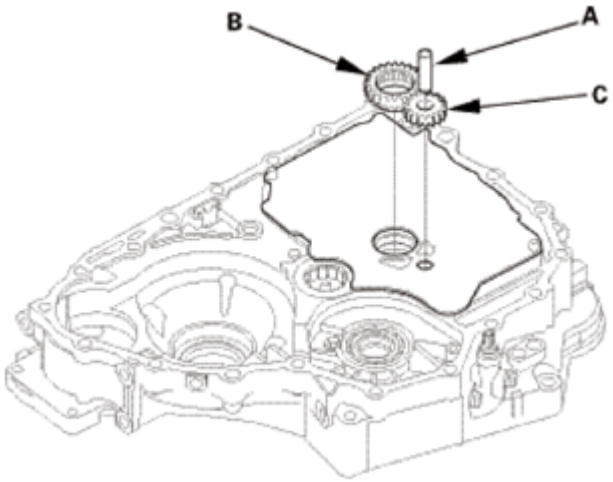

Fig. 1339: Identifying ATF Pump Driven Gear Shaft, ATF Pump Drive And Driven Gear
Courtesy of AMERICAN HONDA MOTOR CO., INC.

5. Remove the main separator plate (A) and the dowel pins (B).

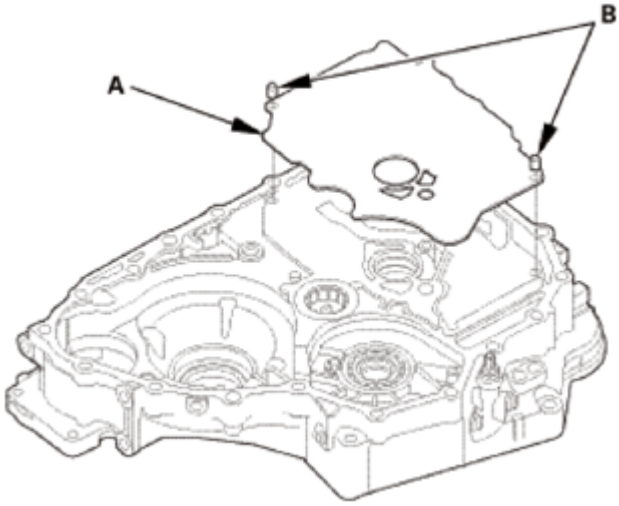

Fig. 1340: Identifying Main Separator Plate And Dowel Pins
Courtesy of AMERICAN HONDA MOTOR CO., INC.

INSPECTION

1. ATF Pump - Inspection
    1. Install the ATF pump drive gear (A), the driven gear (B), and the ATF pump driven gear shaft (C) in the main valve body (D). Lubricate all parts with ATF, and install the ATF pump driven gear with its grooved and chamfered side facing up.

GETtheMANUALS.org

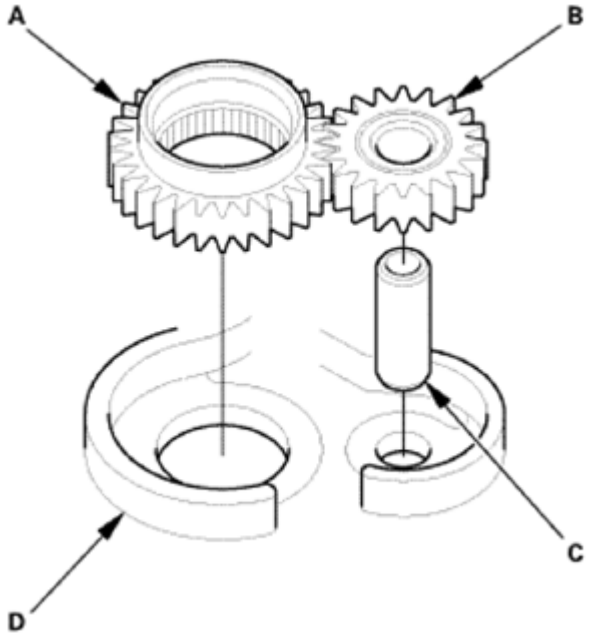

Fig. 1341: Identifying ATF Pump Drive Gear, Driven Gear, ATF Pump Driven Gear Shaft And Main Valve Body
Courtesy of AMERICAN HONDA MOTOR CO., INC.

2. Measure the side clearance of the ATF pump drive gear (A) and the ATF pump driven gear (B).

   ATF Pump Gears Side (Radial) Clearance:

   Standard (New)

   ATF Pump Drive Gear: 0.210-0.265 mm (0.009-0.010 in)

   ATF Pump Driven Gear: 0.070-0.125 mm (0.003-0.004 in)

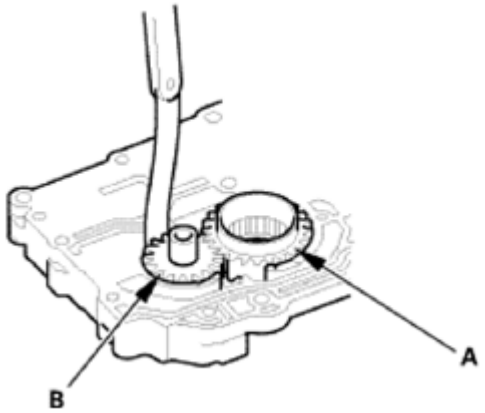

Fig. 1342: Measuring Side Clearance Of ATF Pump Drive Gear And ATF Pump Driven Gear
Courtesy of AMERICAN HONDA MOTOR CO., INC.

GETtheMANUALS.org

3. Remove the ATF pump driven gear shaft.

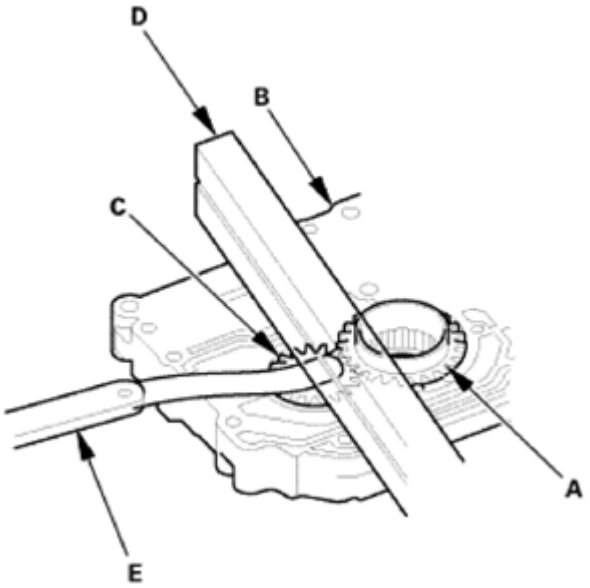

Fig. 1343: Measuring Thrust Clearance Between ATF Pump Drive Gear And Main Valve Body Using Straight Edge And Feeler Gauge
Courtesy of AMERICAN HONDA MOTOR CO., INC.

4. Measure the thrust clearance between the ATF pump drive gear (A) and the main valve body (B), and between the ATF pump driven gear (C) and the main valve body using a straight edge (D) and a feeler gauge (E).

   ATF Pump Drive/Driven Gear Thrust (Axial) Clearance:

   Standard (New): 0.03-0.06 mm (0.002-0.002 in)

   Service Limit: 0.07 mm (0.002 in)

5. If the measurements are out of the standards, replace the main valve body assembly.

INSTALLATION

NOTE:

- **Apply a light coat of clean ATF on all moving parts before installation.**
- **The illustration shows AWD/4WD transmission.**

1. Main Valve Body
   1. Install the main separator plate (A) and the dowel pins (B).

GETtheMANUALS.org

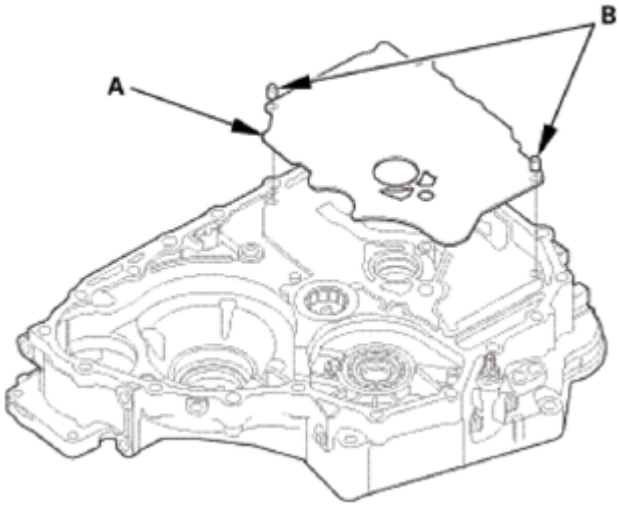

Fig. 1344: Identifying Main Separator Plate And Dowel Pins
Courtesy of AMERICAN HONDA MOTOR CO., INC.

2. Install the ATF pump drive gear (A) and the ATF pump driven gear (B).

NOTE: **Install the ATF pump driven gear with its grooved and chamfered side facing down.**

3. Install the ATF pump driven gear shaft (C).

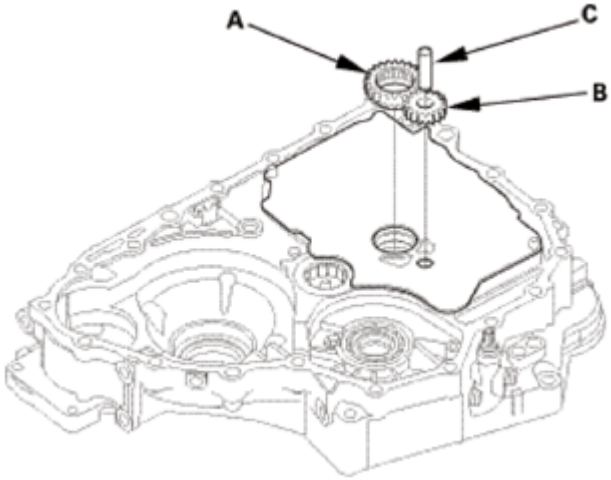

Fig. 1345: Identifying ATF Pump Driven Gear Shaft, ATF Pump Drive And Driven Gear (1 Of 2)
Courtesy of AMERICAN HONDA MOTOR CO., INC.

GETtheMANUALS.org

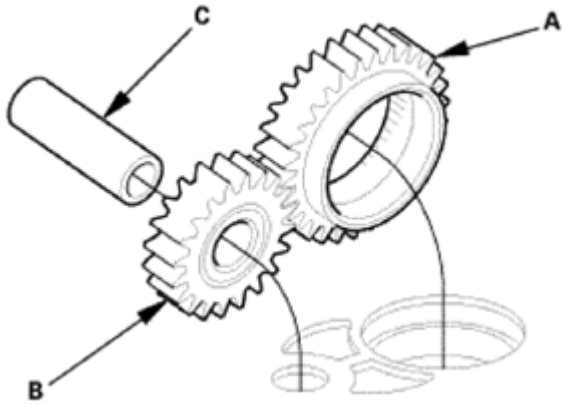

Fig. 1346: Identifying ATF Pump Driven Gear Shaft, ATF Pump Drive And Driven Gear (2 Of 2)
Courtesy of AMERICAN HONDA MOTOR CO., INC.

4. Install the main valve body (A).

NOTE: **Make sure that the check balls (B) are in the main valve body.**

5. Make sure the ATF pump drive gear (C) rotates smoothly in the normal operating direction, and the ATF pump driven gear shaft (D) moves smoothly in the axial and normal operating direction.
6. If the ATF pump drive gear and the ATF pump driven gear shaft do not move smoothly, loosen the main valve body bolts. Realign the ATF pump driven gear shaft, and retighten the bolts to the specified torque, then recheck.

NOTE: **Failure to align the ATF pump driven gear shaft correctly will result in a seized ATF pump drive gear or ATF pump driven gear shaft.**

7. Install the cooler check valve (E) and the cooler check valve spring (F).

GETtheMANUALS.org

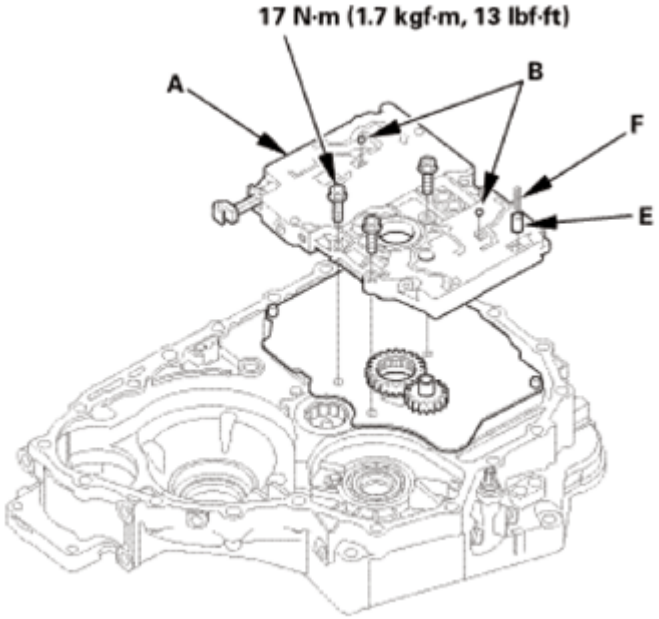

Fig. 1347: Identifying Main Valve Body, Check Balls, Cooler Check Valve And Cooler Check Valve Spring
Courtesy of AMERICAN HONDA MOTOR CO., INC.

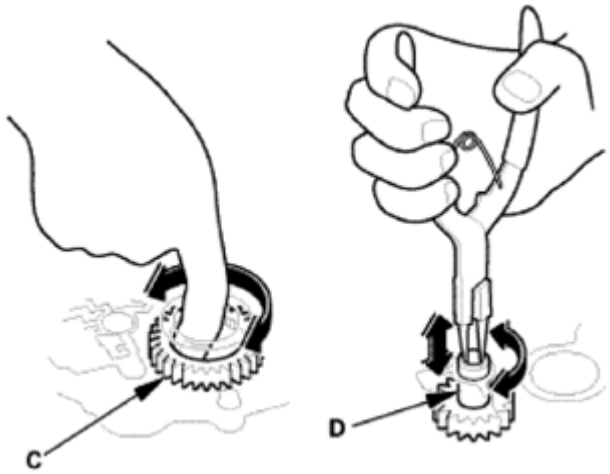

Fig. 1348: Rotating ATF Pump Drive Gear
Courtesy of AMERICAN HONDA MOTOR CO., INC.

2. Servo Body
    1. Install the servo separator plate (A) and the dowel pins (B).

GETtheMANUALS.org

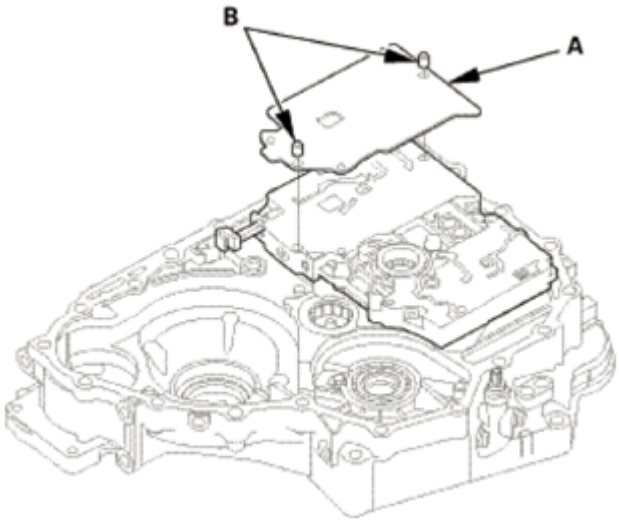

Fig. 1349: Identifying Servo Separator Plate And Dowel Pins
Courtesy of AMERICAN HONDA MOTOR CO., INC.

2. Install the servo body (A).

NOTE: **Do not install the servo body mounting bolts to the baffle plate bolt holes (B) and the ATF strainer bolt holes (C) in this step.**

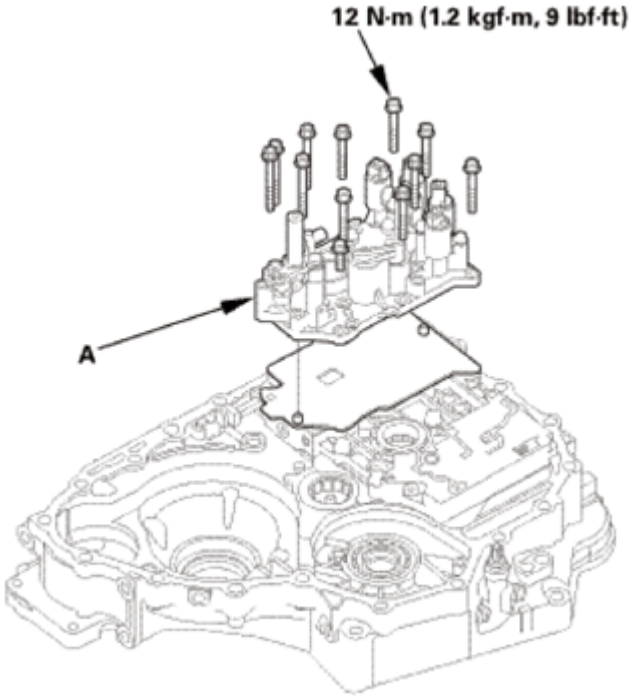

Fig. 1350: Identifying Servo Body And Mounting Bolts With Torque Specification
Courtesy of AMERICAN HONDA MOTOR CO., INC.

GETtheMANUALS.org

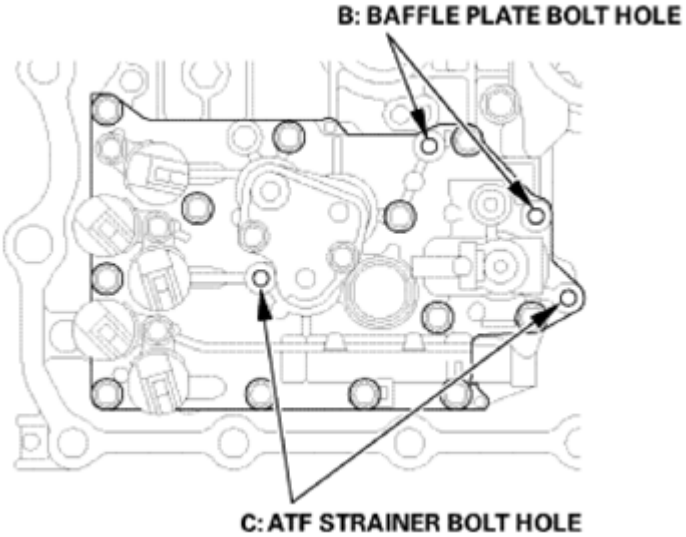

Fig. 1351: Identifying Baffle Plate Bolt Holes And ATF Strainer Bolt Holes
Courtesy of AMERICAN HONDA MOTOR CO., INC.

3. ATF Strainer
    1. Install the ATF strainer (A) using a new O-ring (B).

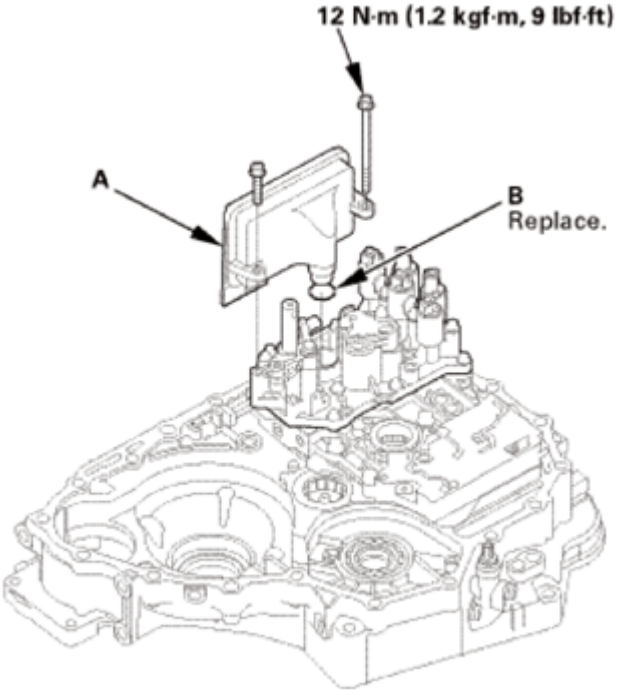

Fig. 1352: Identifying ATF Strainer, O-Ring And Mounting Bolts With Torque Specification
Courtesy of AMERICAN HONDA MOTOR CO., INC.

4. Regulator Valve Body
    1. Install the regulator separator plate (A) and the dowel pins (B).

GETtheMANUALS.org

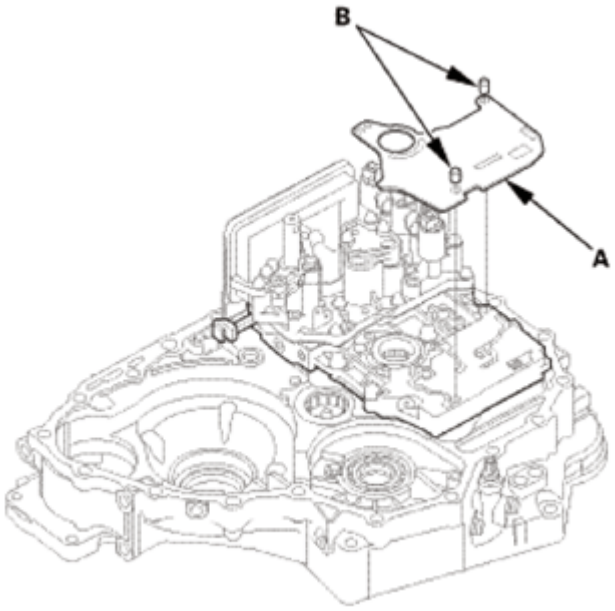

Fig. 1353: Identifying Regulator Separator Plate And Dowel Pins
Courtesy of AMERICAN HONDA MOTOR CO., INC.

2. Install a new O-ring (A) on the stator shaft (B).
3. Install the stator shaft.
4. Install the stator shaft stop (C).

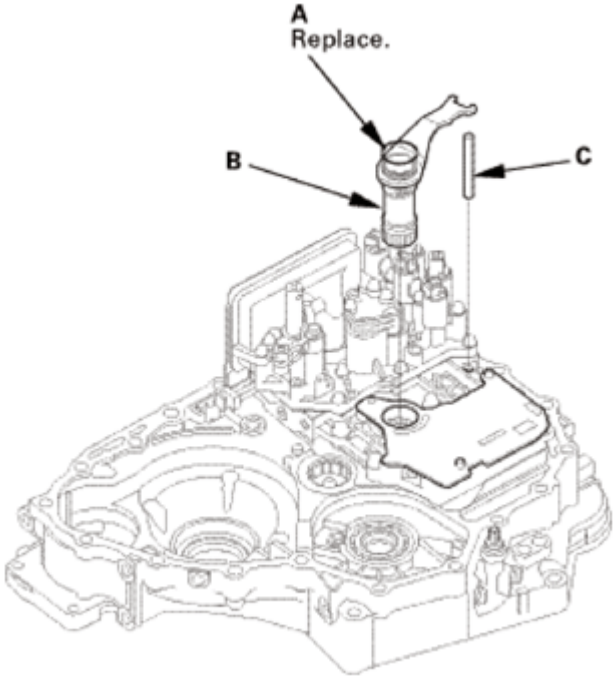

Fig. 1354: Identifying Stator Shaft, O-Ring And Stator Shaft Stop
Courtesy of AMERICAN HONDA MOTOR CO., INC.

GETtheMANUALS.org

5. Install the regulator valve body (A).

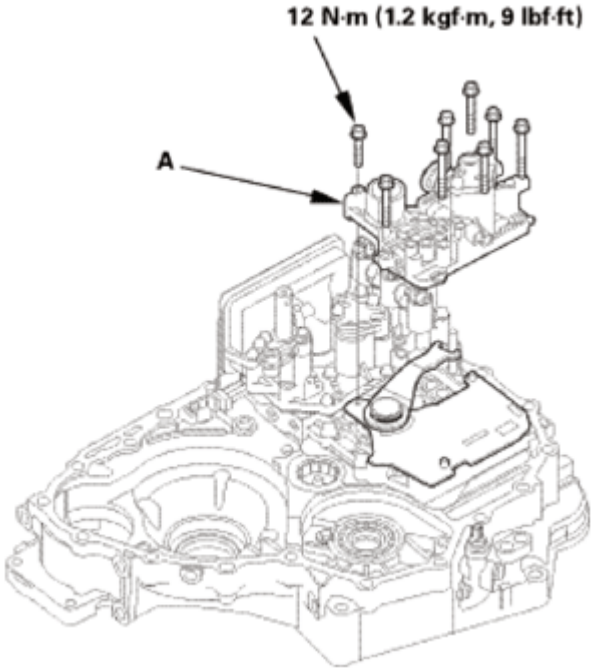

Fig. 1355: Identifying Regulator Valve Body And Mounting Bolts With Torque Specification
Courtesy of AMERICAN HONDA MOTOR CO., INC.

6. Install ATF joint pipe B.
7. Install ATF joint pipe A.

GETtheMANUALS.org

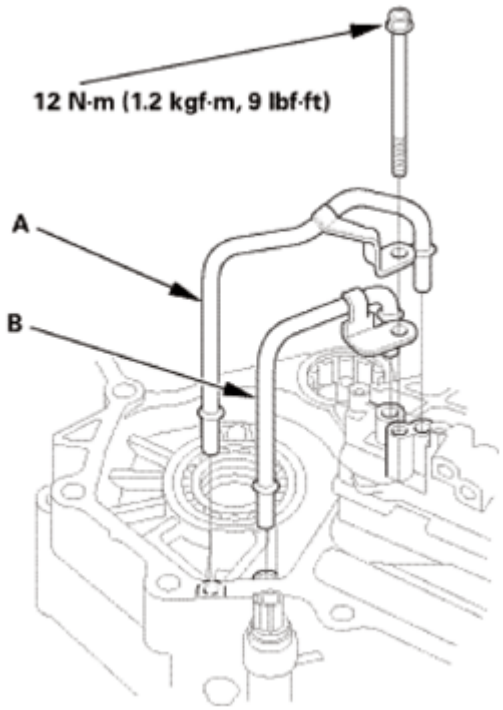

Fig. 1356: Identifying ATF Joint Pipes And Mounting Bolts With Torque Specification
Courtesy of AMERICAN HONDA MOTOR CO., INC.

5. Differential Assembly
    1. Install the differential assembly (A).
    2. Install the baffle plate (B).

GETtheMANUALS.org

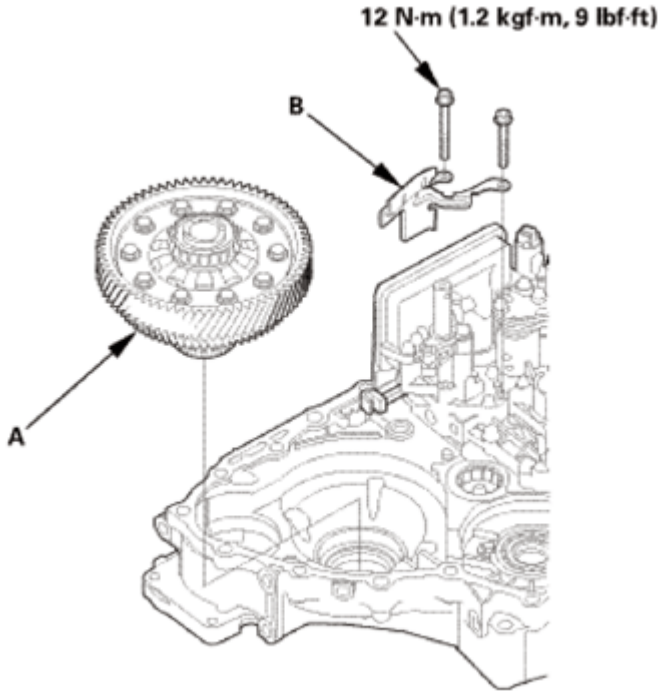

Fig. 1357: Identifying Differential Assembly, Baffle Plate And Bolts With Torque Specification
Courtesy of AMERICAN HONDA MOTOR CO., INC.

6. Mainshaft and Countershaft and Secondary Shaft Assembly
    1. Be sure that each shaft is assembled. Also be sure that new sealing rings are installed on the mainshaft and the secondary shaft.
    2. Join the mainshaft subassembly (A), the countershaft subassembly (B), and the secondary shaft subassembly (C) together, and install them.

    NOTE: Do not bump the countershaft on the baffle plate (D).

    3. Make sure the countershaft subassembly and the differential assembly (E) are clear of the baffle plate.

GETtheMANUALS.org

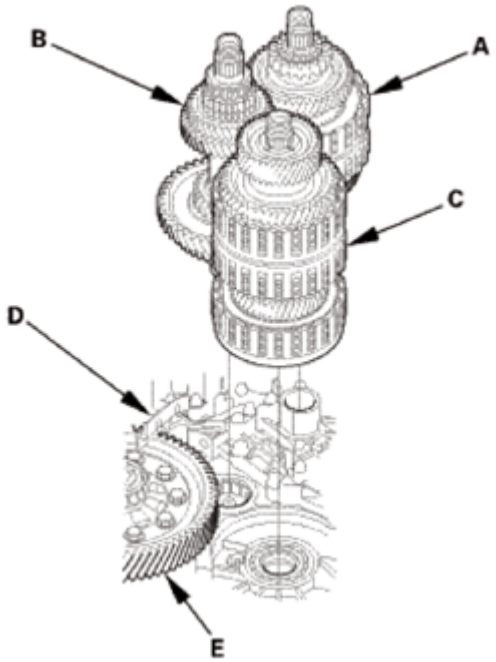

Fig. 1358: Identifying Mainshaft Subassembly, Countershaft Subassembly, Secondary Shaft Subassembly, Baffle Plate And Differential Assembly
Courtesy of AMERICAN HONDA MOTOR CO., INC.

7. Selector Control Shaft
    1. Install the selector control shaft (A).

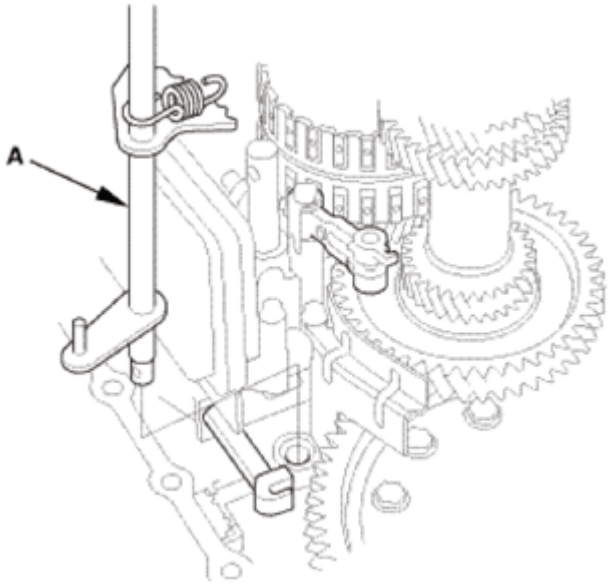

Fig. 1359: Identifying Selector Control Shaft
Courtesy of AMERICAN HONDA MOTOR CO., INC.

    2. Align the manual valve lever pin (A) on the selector control shaft (B) with the guide of the manual

GETtheMANUALS.org

valve (C).

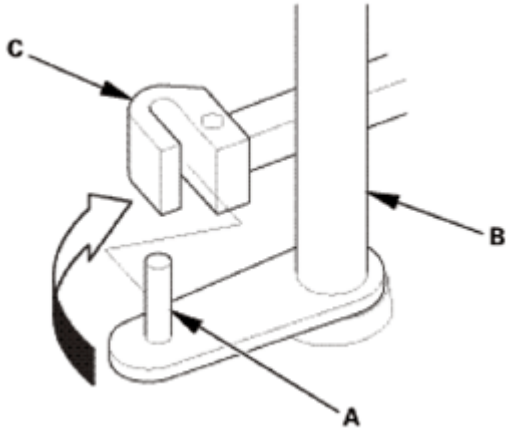

Fig. 1360: Aligning Manual Valve Lever Pin On Selector Control Shaft With Guide Of Manual Valve
Courtesy of AMERICAN HONDA MOTOR CO., INC.

3. Hook the detent arm spring (A).

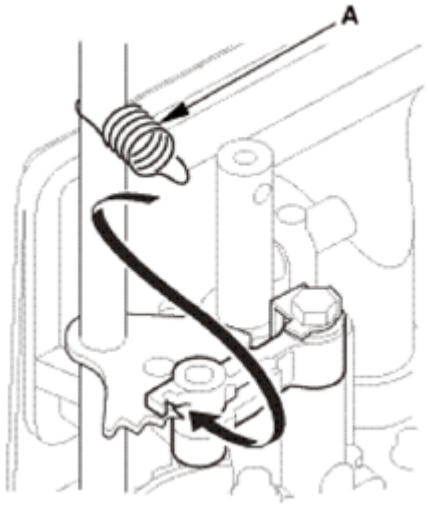

Fig. 1361: Hooking Detent Arm Spring
Courtesy of AMERICAN HONDA MOTOR CO., INC.

8. Selector Control Lever (Except 2WD of USA Produced Models)
    1. Install the control lever (A) over the selector control shaft (B).
    2. Install the lock bolt (C) using a new lock washer (D).
    3. Pry up the lock tab (E) of the lock washer against the bolt head.

Except 2WD of USA Produced Models

GETtheMANUALS.org

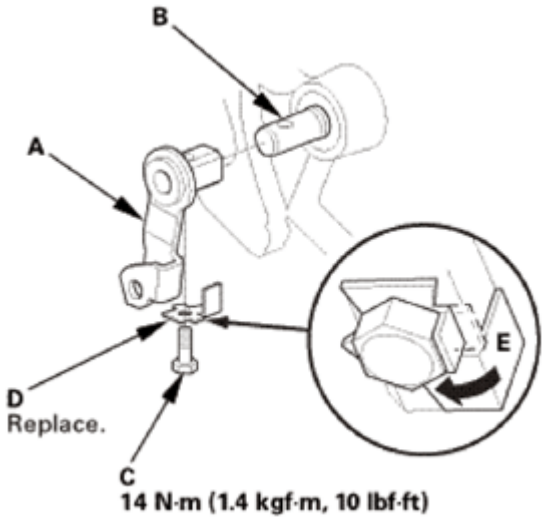

Fig. 1362: Prying Up Lock Tab Of Lock Washer (Except 2WD Of USA Produced Models)
Courtesy of AMERICAN HONDA MOTOR CO., INC.

9. Reverse Shift fork
    1. Install the reverse shift fork (A) and the reverse selector (B) together.
    2. Install the lock bolt (C) using a new lock washer (D).
    3. Pry up the lock tab (E) of the lock washer against the bolt head.

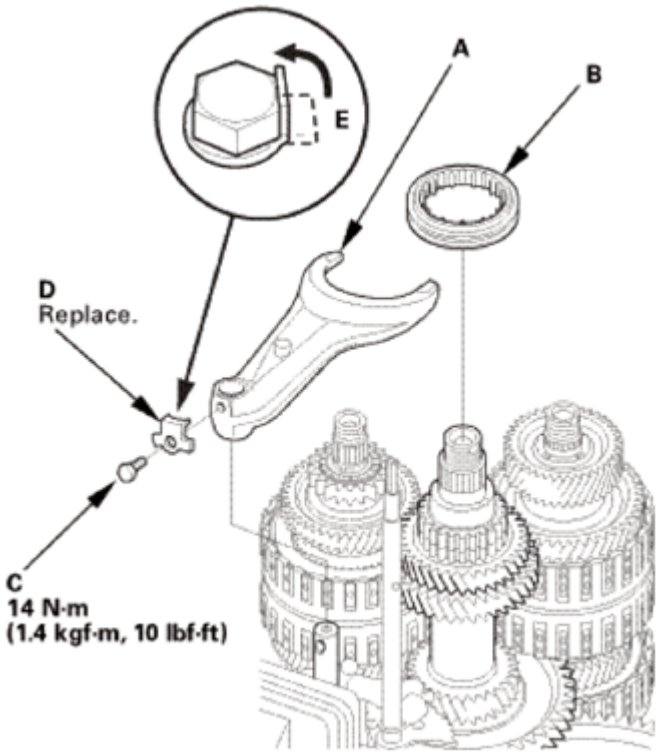

Fig. 1363: Prying Up Lock Tab Of Lock Washer

GETtheMANUALS.org

Courtesy of AMERICAN HONDA MOTOR CO., INC.

10. A/T Countershaft Reverse Gear
    1. Install the needle bearing (A).
    2. Install the countershaft reverse gear (B).

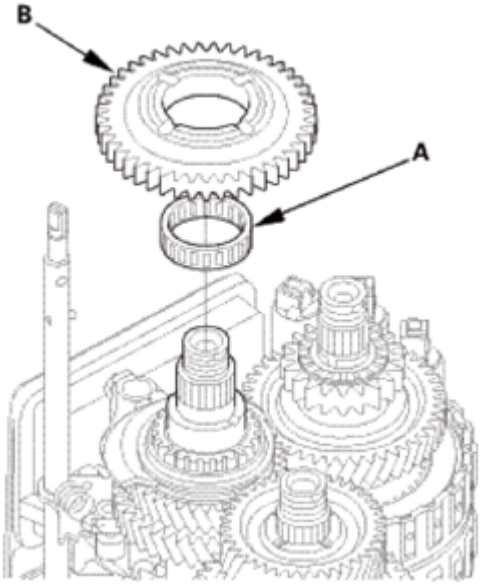

Fig. 1364: Identifying Needle Bearing And Countershaft Reverse Gear
Courtesy of AMERICAN HONDA MOTOR CO., INC.

11. Automatic Transmission Housing
    1. Install the three dowel pins (A) and a new gasket (B).
    2. Align the spring pin (C) of the selector control shaft (D) with the transmission housing groove (E).

NOTE: **Do not squeeze the end of the selector control shaft tips together when turning the shaft. If the tips are squeezed together, it will cause a faulty shift position signal or position due to the play between the selector control shaft and the transmission range switch.**

    3. Place the transmission housing (F) on the torque converter housing (G).

NOTE: **Do not install the input shaft (mainshaft) speed sensor and the output shaft (countershaft) speed sensor before installing the transmission housing.**

    4. Wrap the tip of a screwdriver with tape so the reverse idler gear teeth do not get damaged. Engage the reverse idler gear (H) with the reverse gears (I) by rotating the idler gear using the screwdriver.
    5. Make sure the transmission housing is securely seated so there is no clearance between the transmission housing and the torque converter housing.

GETtheMANUALS.org

6. Install the transmission hanger (J), and tighten the transmission housing mounting bolts (2WD: 19 bolts, AWD/4WD: 20 bolts) in at least two steps, in a crisscross pattern.

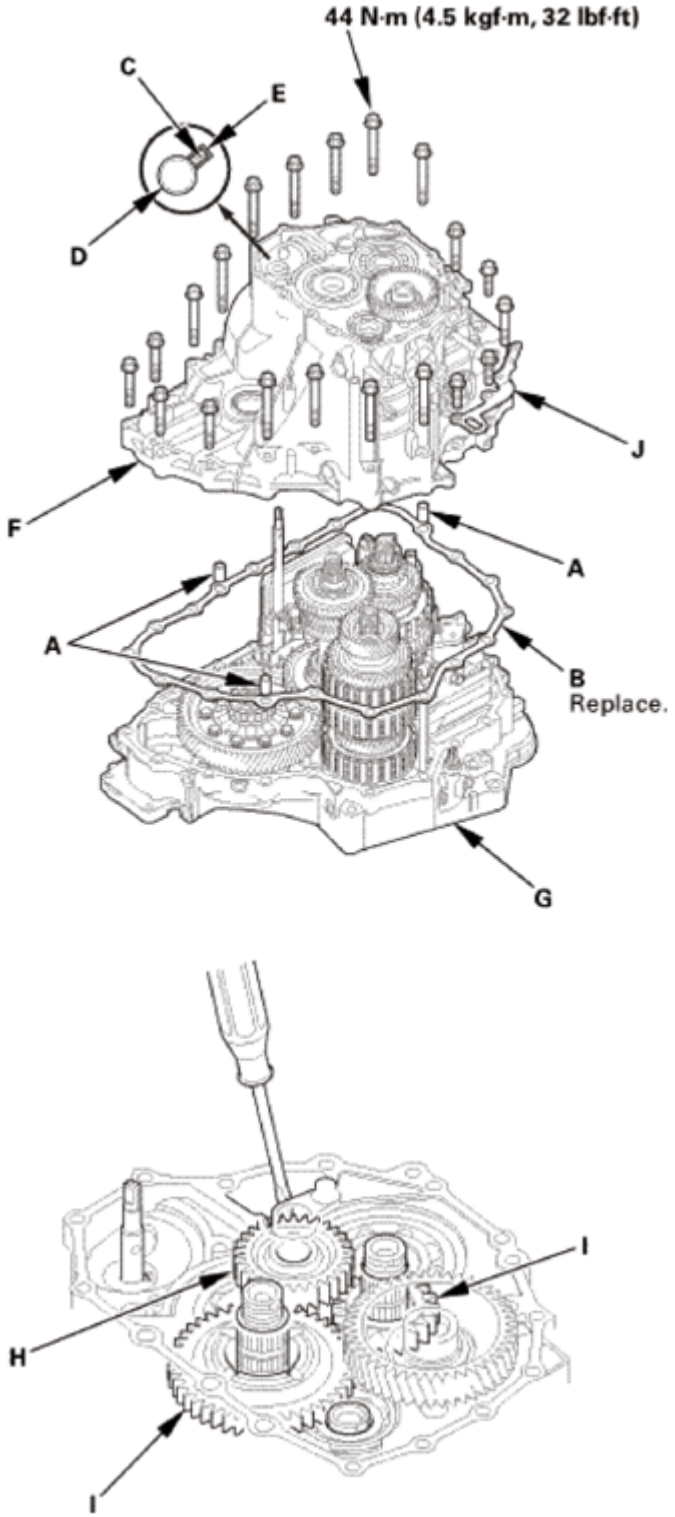

Fig. 1365: Identifying Dowel Pins, Gasket, Spring Pin, Selector Control Shaft, Transmission

GETtheMANUALS.org

Housing Groove And Mounting Bolts With Torque Specification
Courtesy of AMERICAN HONDA MOTOR CO., INC.

12. End Cover Idler Gear Assembly
    1. Install the mainshaft holder onto the mainshaft.

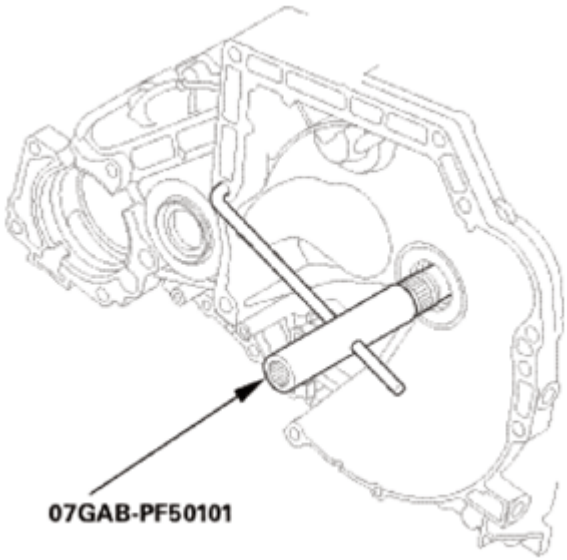

Fig. 1366: Installing Mainshaft Holder Onto Mainshaft
Courtesy of AMERICAN HONDA MOTOR CO., INC.

    2. Lubricate the following parts with ATF:
        - Splines and threads of the mainshaft.
        - Splines of the mainshaft idler gear.
        - The old conical spring washer and the old locknut.
    3. Install the mainshaft idler gear (A), the old conical spring washer (B), and the old locknut (C), and tighten the locknut to 225 N.m (23.0 kgf.m, 166 lbf.ft).

NOTE:
- **Do not tap the mainshaft idler gear to install.**
- **Use a torque wrench to tighten the locknut. Do not use an impact wrench.**

GETtheMANUALS.org

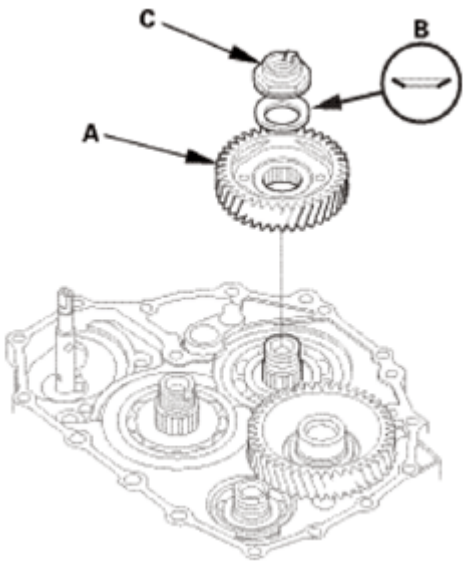

Fig. 1367: Identifying Mainshaft Idler Gear, Conical Spring Washer And Locknut
Courtesy of AMERICAN HONDA MOTOR CO., INC.

4. Lubricate the following parts with ATF:
    - Splines and threads of the countershaft.
    - Splines of the park gear.
    - The old conical spring washer and the old locknut.
5. Install the park gear (A), the old conical spring washer (B), and the old locknut (C).
6. Install the park lever spring (D), the park lever (E), and the park lever stop (F).
7. Install the lock bolt (G) using a new lock washer (H).

NOTE: **Do not bend the lock tab of the lock washer until inspect the park lever stop.**

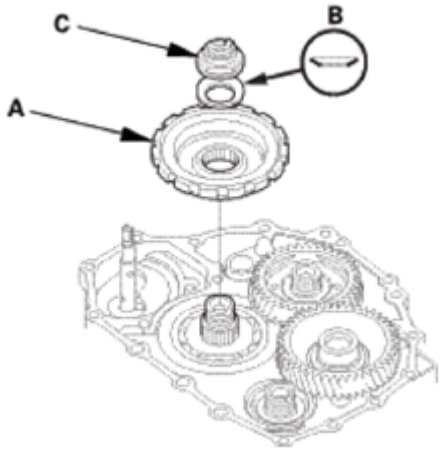

Fig. 1368: Identifying Park Gear, Conical Spring Washer And Locknut
Courtesy of AMERICAN HONDA MOTOR CO., INC.

GETtheMANUALS.org

8. Install the park pawl shaft (I), the park pawl spring (J), the park pawl (K), and the stop shaft (L).
9. Lift the park pawl up, and engage it with the park gear, and tighten the locknut to 225 N.m (23.0 kgf.m, 166 lbf.ft).

NOTE:

- **Do not tap the park gear to install.**
- **Use a torque wrench to tighten the locknut. Do not use an impact wrench.**
- **Countershaft locknut has left-hand threads.**

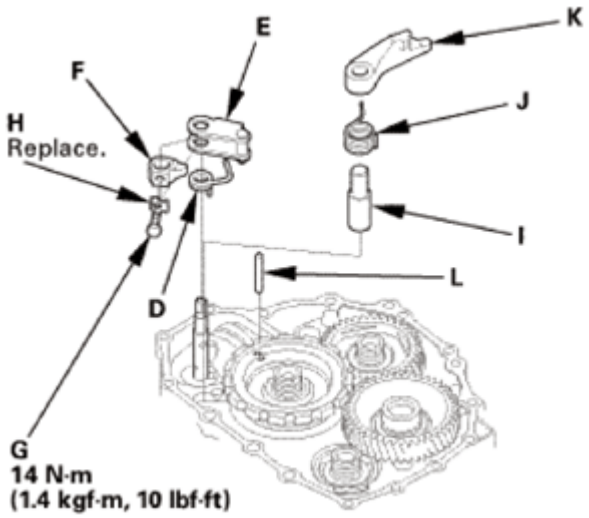

Fig. 1369: Identifying Park Pawl Shaft, Park Lever Spring, Park Lever, Park Lever Stop, Lock Bolt, Lock Washer With Torque Specification
Courtesy of AMERICAN HONDA MOTOR CO., INC.

10. Remove the old locknuts and the old conical spring washers from the mainshaft and the countershaft.
11. Lubricate the following parts with ATF:
    - Splines and threads of the mainshaft, the countershaft, and the secondary shaft.
    - New conical spring washers and new locknuts.
    - Areas where the conical spring washers contact the mainshaft idler gear and the park gear.
12. Install new conical spring washers (A) in the direction shown.
13. Install a new mainshaft locknut (B), a new countershaft locknut (C), and a new secondary shaft locknut (D).
14. Tighten the locknuts to 167 N.m (17.0 kgf.m, 123 lbf.ft).

NOTE:

- **Use a torque wrench to tighten the locknut. Do not use an impact wrench.**
- **The countershaft and secondary shaft locknuts have left-hand threads.**

GETtheMANUALS.org

15. Remove the mainshaft holder.

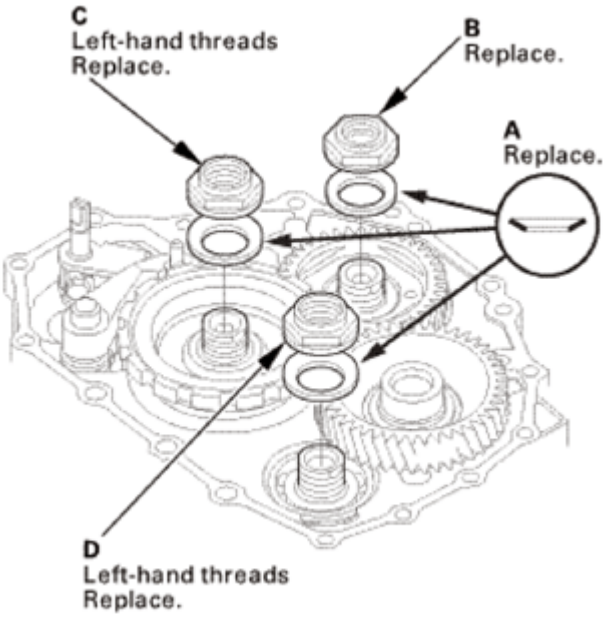

Fig. 1370: Identifying Conical Spring Washers, Mainshaft Locknut, Countershaft Locknut And Secondary Shaft Locknut
Courtesy of AMERICAN HONDA MOTOR CO., INC.

16. Stake the locknuts into the shafts to a depth (A) of 0.7-1.3 mm (0.027-0.051 in) using a 3.5 mm punch (B).

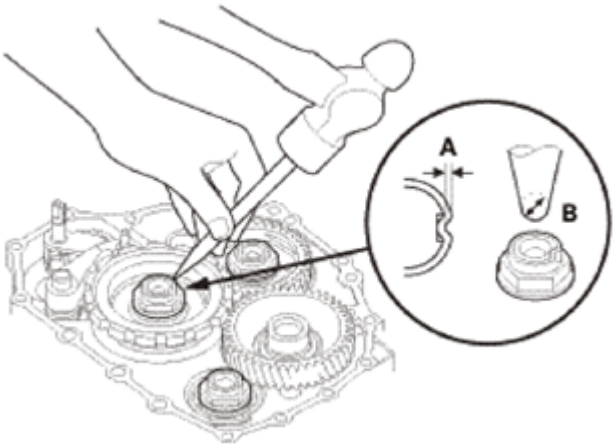

Fig. 1371: Staking Locknuts Into Shafts Using Punch
Courtesy of AMERICAN HONDA MOTOR CO., INC.

17. Set the park lever in the P position.
18. Measure the distance (A) between the center of the park pawl shaft (B) and the center of the park lever roller pin (C) as shown.

GETtheMANUALS.org

Standard: 57.7-58.7 mm (2.272-2.311 in)

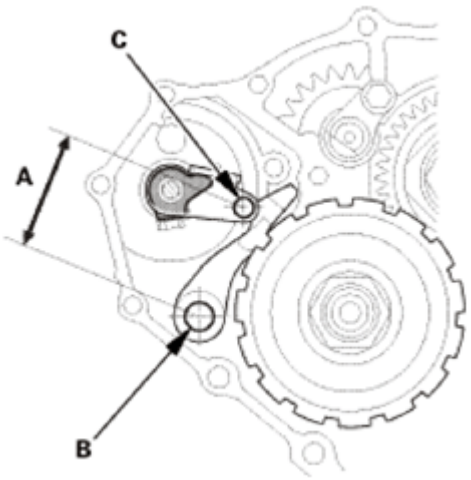

Fig. 1372: Measuring Distance Between Center Of Park Pawl Shaft And Center Of Park Lever Roller Pin
Courtesy of AMERICAN HONDA MOTOR CO., INC.

19. If the measurement is out of the standard, select and install the appropriate park lever stop (A) from the table.

PARK LEVER STOP SPECIFICATION

Mark	B	C
1	11.00 mm (0.4331 in)	11.00 mm (0.4331 in)
2	10.80 mm (0.4252 in)	10.65 mm (0.4193 in)
3	10.60 mm (0.4173 in)	10.30 mm (0.4055 in)

20. After replacing the park lever stop, make sure the distance is within the tolerance.

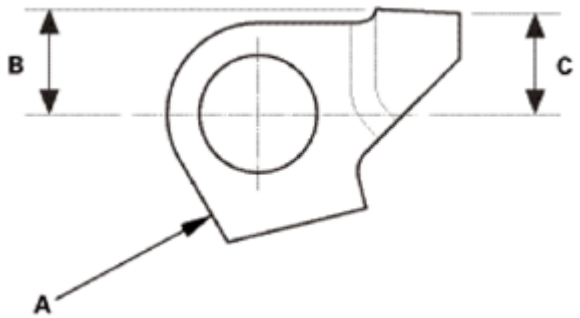

Fig. 1373: Identifying Park Lever Stop Dimension
Courtesy of AMERICAN HONDA MOTOR CO., INC.

21. Pry up the lock tab (A) of the lock washer against the bolt head.

GETtheMANUALS.org

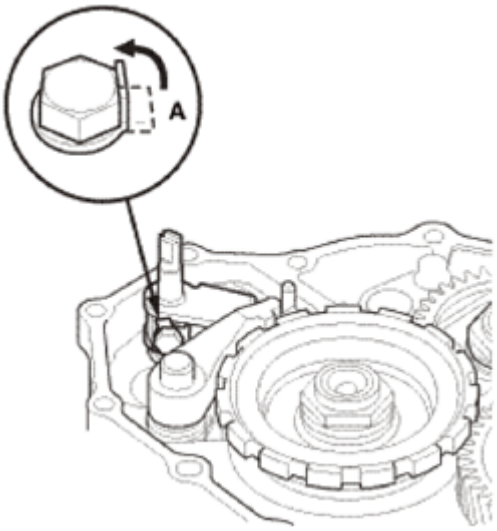

Fig. 1374: Prying Up Lock Tab Of Lock Washer Against Bolt Head
Courtesy of AMERICAN HONDA MOTOR CO., INC.

13. ATF Feed Pipe/Lubrication Pipe
    1. Install the 6 x 201 mm ATF pipe (A).
    2. Install the ATF lubrication pipe (B).
    3. Install the 8 x 220 mm ATF pipe (C).
    4. Install the 8 x 198 mm ATF pipes (D).

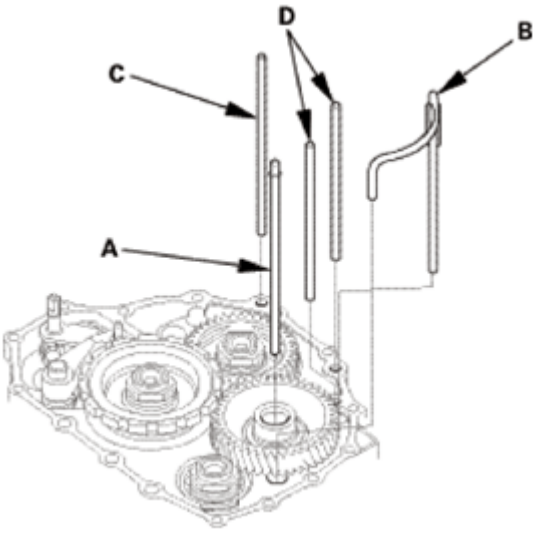

Fig. 1375: Identifying ATF Feed Pipes And Lubrication Pipe
Courtesy of AMERICAN HONDA MOTOR CO., INC.

14. A/T Shift Solenoid Wire Harness - Reconnection
    1. Connect the shift solenoid valve connectors:
        - BLU wire to shift solenoid valve A.

GETtheMANUALS.org

- ORN wire to shift solenoid valve B.
- GRN wire to shift solenoid valve C.
- YEL, WHT, and WHT wires to shift solenoid valve D.
- RED wire to shift solenoid valve E.

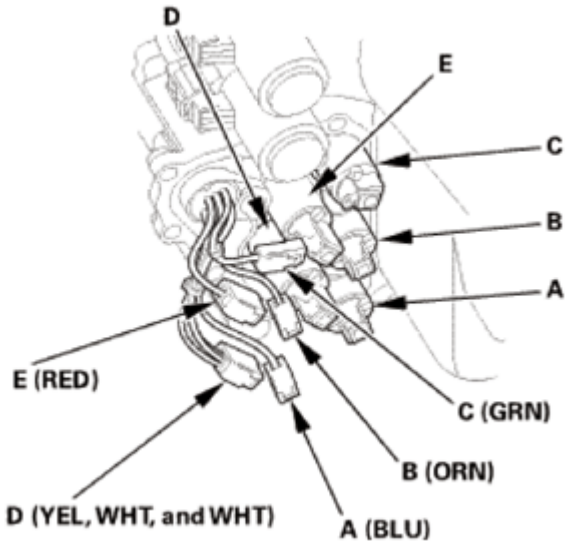

Fig. 1376: Identifying Shift Solenoid Valves
Courtesy of AMERICAN HONDA MOTOR CO., INC.

15. A/T Shift Solenoid Cover
    1. Install the shift solenoid valve cover (A) with the dowel pins (B) and a new gasket (C).

GETtheMANUALS.org

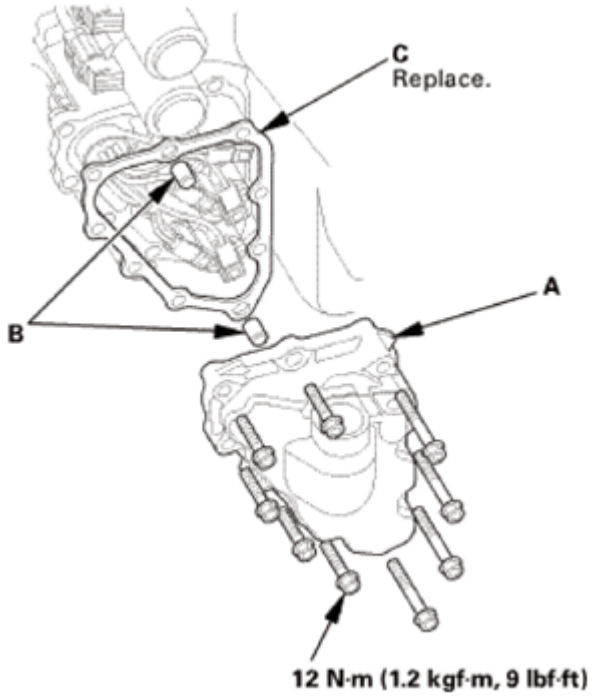

Fig. 1377: Identifying Shift Solenoid Valve Cover, Dowel Pins, Gasket And Mounting Bolts With Torque Specification
Courtesy of AMERICAN HONDA MOTOR CO., INC.

16. Dipstick Guide Tube
    1. Install a new O-ring (A) on the ATF dipstick guide tube (B).
    2. Install the ATF dipstick guide tube.

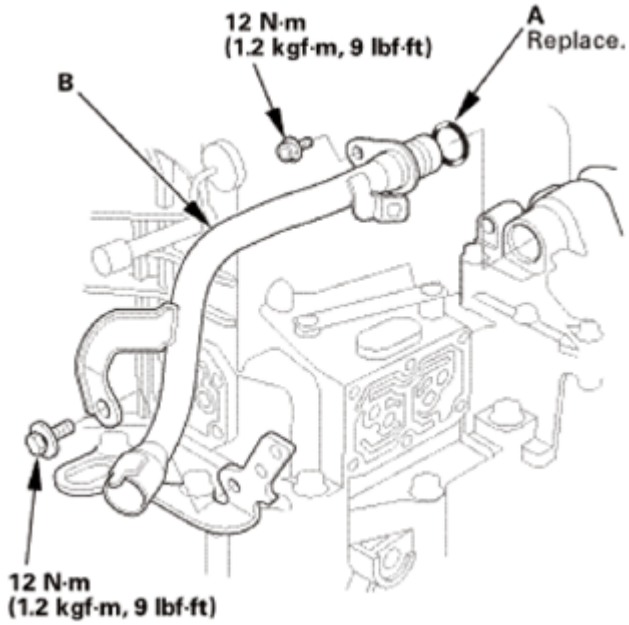

GETtheMANUALS.org

Fig. 1378: Identifying ATF Dipstick Guide Tube, O-Ring And Mounting Bolts With Torque Specification
Courtesy of AMERICAN HONDA MOTOR CO., INC.

17. ATF Outlet Line
    1. Install the ATF outlet line (A) using new sealing washers (B).

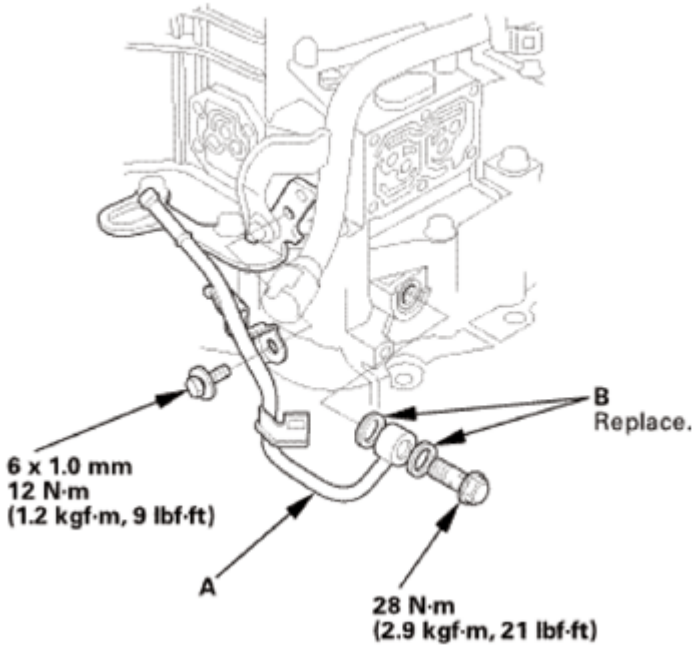

Fig. 1379: Identifying ATF Outlet Line, Sealing Washers And Mounting Bolts With Torque Specification
Courtesy of AMERICAN HONDA MOTOR CO., INC.

18. ATF Inlet Line
    1. Install the ATF inlet line (A) using new sealing washers (B).

GETtheMANUALS.org

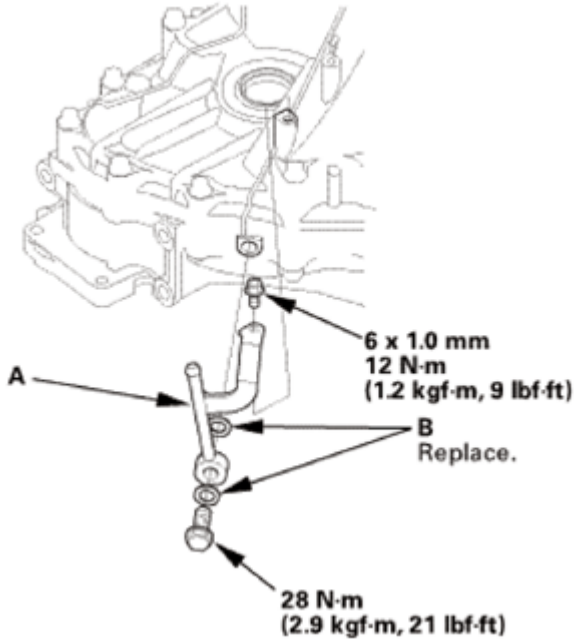

Fig. 1380: Identifying ATF Inlet Line, Sealing Washers And Mounting Bolts With Torque Specification
Courtesy of AMERICAN HONDA MOTOR CO., INC.

19. A/T Clutch Pressure Control Solenoid Valve B and C
    1. Clean the mounting surfaces and the fluid passages of the solenoid valve body and the transmission housing.
    2. Install a new gasket (A) with the blue side toward the transmission housing, and Install the ATF joint pipes (D).
    3. Install new O-rings (E) over the ATF joint pipes.
    4. Install A/T clutch pressure control solenoid valves B and C with the clamp bracket (F).

GETtheMANUALS.org

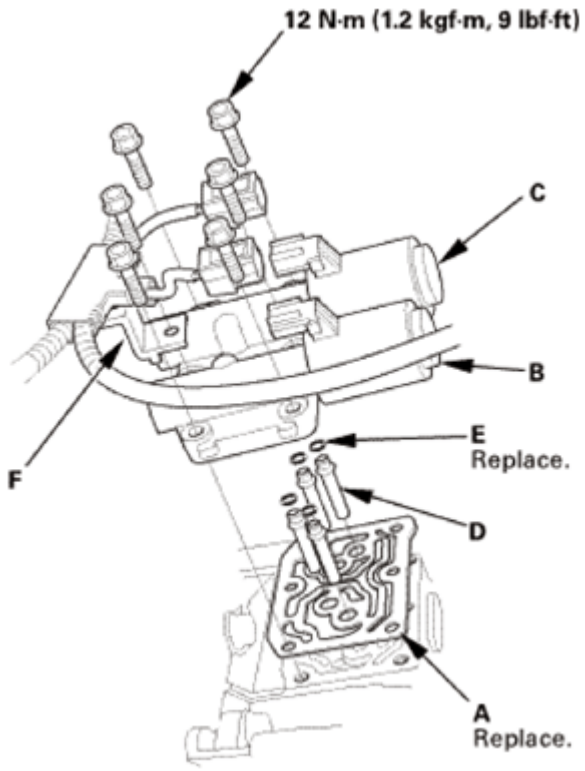

Fig. 1381: Identifying Gasket, ATF Joint Pipes, O-Rings, A/T Clutch Pressure Control Solenoid Valves, Clamp Bracket And Mounting Bolts With Torque Specification
Courtesy of AMERICAN HONDA MOTOR CO., INC.

20. A/T Clutch Pressure Control Solenoid Valve A
    1. Clean the mounting surfaces and the fluid passages of the solenoid valve body and the transmission housing.
    2. Install a new gasket (B) with the blue side toward the transmission housing, and install the 35 mm ATF pipe (C) and the ATF joint pipes (D).
    3. Install new O-rings (E) over the ATF joint pipes.
    4. Install A/T clutch pressure control solenoid valve A.

GETtheMANUALS.org

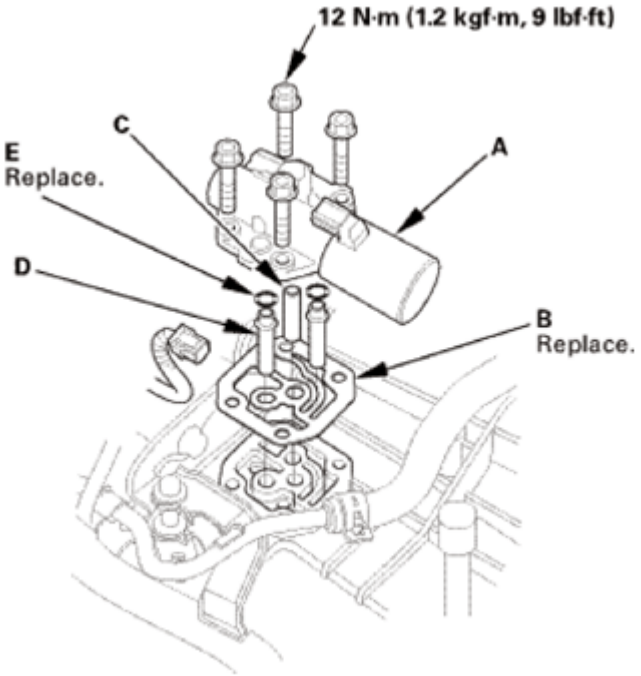

Fig. 1382: Identifying A/T Clutch Pressure Control Solenoid Valve, Gasket, ATF Pipe, ATF Joint Pipes And Mounting Bolts With Torque Specification
Courtesy of AMERICAN HONDA MOTOR CO., INC.

21. Output Shaft (Countershaft) Speed Sensor
    1. Install a new O-ring (A) on the output shaft (countershaft) speed sensor (B).
    2. Install the output shaft (countershaft) speed sensor and the sensor washer (C).

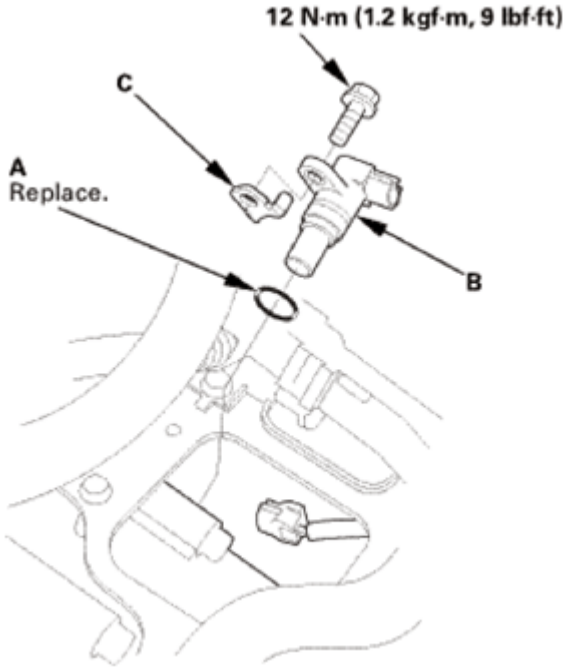

GETtheMANUALS.org

Fig. 1383: Identifying Output Shaft (Countershaft) Speed Sensor, O-Ring, Sensor Washer And Mounting Bolts With Torque Specification
Courtesy of AMERICAN HONDA MOTOR CO., INC.

22. Input Shaft (Mainshaft) Speed Sensor
    1. Install a new O-ring (A) on the input shaft (mainshaft) speed sensor (B).
    2. Install the input shaft (mainshaft) speed sensor.

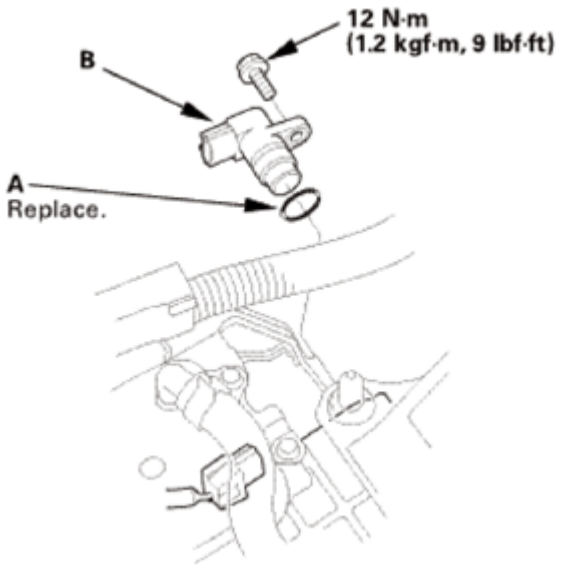

Fig. 1384: Identifying Input Shaft (Mainshaft) Speed Sensor, O-Ring And Mounting Bolt With Torque Specification
Courtesy of AMERICAN HONDA MOTOR CO., INC.

23. Transmission End Cover
    1. Install the dowel pins (A) and a new gasket (B).
    2. Install new O-rings (C) over the ATF pipes.
    3. Install the end cover (D), and tighten the three special bolts (E) and the 6 x 1.0 mm bolts (F) (12 bolts).

GETtheMANUALS.org

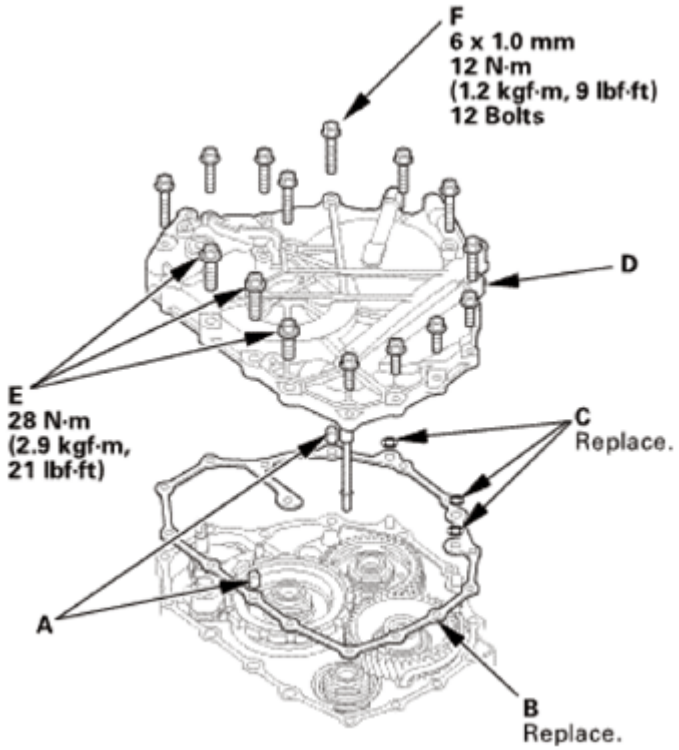

Fig. 1385: Identifying Dowel Pins, Gasket, O-Rings, End Cover And Mounting Bolts With Torque Specification
Courtesy of AMERICAN HONDA MOTOR CO., INC.

24. Transmission Range Switch Subharness
    1. Install the clamp brackets (A).
    2. Install the transmission range switch subharness (B).

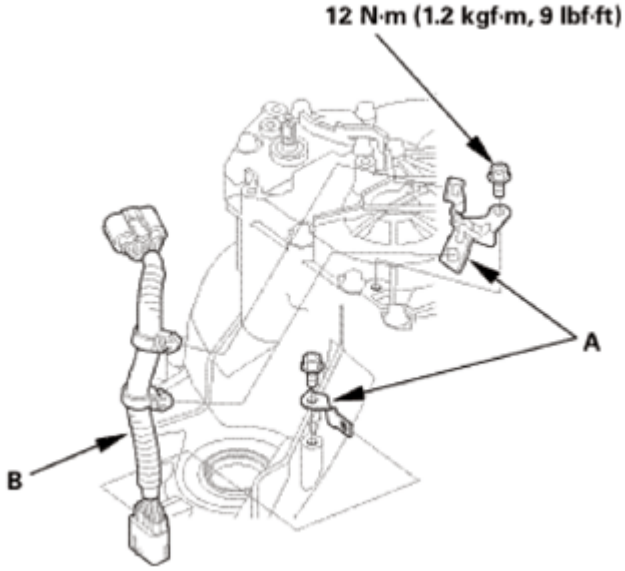

GETtheMANUALS.org

Fig. 1386: Identifying Transmission Range Switch Subharness, Clamp Brackets And Mounting Bolts With Torque Specification
Courtesy of AMERICAN HONDA MOTOR CO., INC.

25. Transmission Range Switch
    1. Make sure the selector control shaft is in the N position. If necessary, move the selector control shaft to the N position.

NOTE: **Do not use the selector control shaft to adjust the shift position. If the selector control shaft tips are squeezed together it will cause a faulty signal or position due to play between the selector control shaft and switch.**

Fig. 1387: Moving Selector Control Shaft To N Position
Courtesy of AMERICAN HONDA MOTOR CO., INC.

    2. Align the cutouts (A) on the rotary-frame with the neutral positioning cutouts (B) on the transmission range switch (C), then put a 2.0 mm (0.079 in) feeler gauge blade (D) in the cutouts to hold the switch in the N position.

NOTE: **Be sure to use a 2.0 mm (0.079 in) blade or equivalent to hold the switch in the N position.**

GETtheMANUALS.org

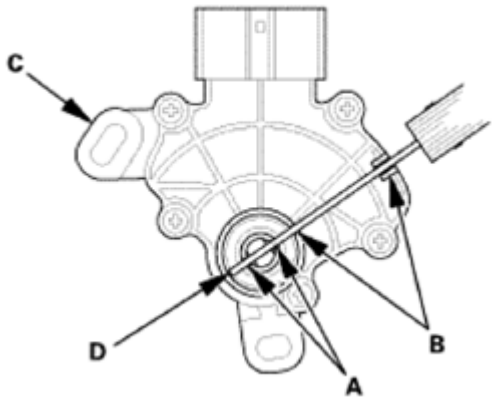

Fig. 1388: Aligning Cutouts On Rotary-Frame With Neutral Positioning Cutouts On Transmission Range Switch
Courtesy of AMERICAN HONDA MOTOR CO., INC.

3. Install the transmission range switch (A) gently on the selector control shaft (B) while holding it in the N position with the 2.0 mm (0.079 in) blade (C).

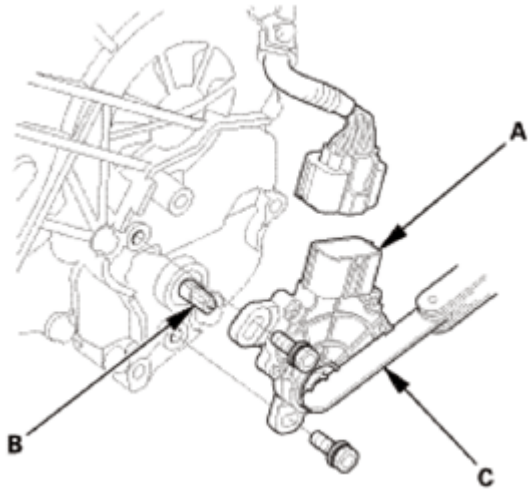

Fig. 1389: Identifying Transmission Range Switch, Selector Control Shaft And Blade
Courtesy of AMERICAN HONDA MOTOR CO., INC.

4. Tighten the bolts on the transmission range switch (A) while you continue holding the N position.

NOTE: Do not move the transmission range switch when tightening the bolts.

5. Remove the feeler gauge (B).
6. Check the connector (C) for corrosion, dirt, or oil, and clean or repair if necessary, then connect the connector securely.

GETtheMANUALS.org

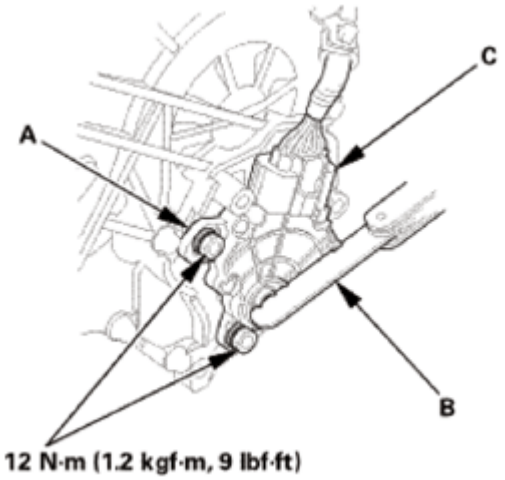

Fig. 1390: Identifying Transmission Range Switch, Connector, Feeler Gauge And Mounting Bolts With Torque Specification
Courtesy of AMERICAN HONDA MOTOR CO., INC.

26. Transmission Range Switch Cover
    1. Install the transmission range switch cover (A).

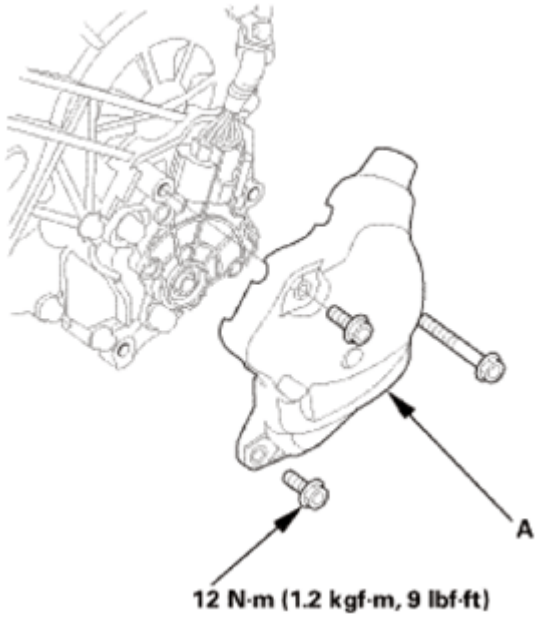

Fig. 1391: Identifying Transmission Range Switch Cover And Mounting Bolts With Torque Specification
Courtesy of AMERICAN HONDA MOTOR CO., INC.

ATF REPLACEMENT

DRAIN

GETtheMANUALS.org

1. Vehicle Lift
    1. Raise the vehicle on a lift, and make sure it is securely supported.
2. Warm Up The Engine
    1. Start the engine. Hold the engine speed at 3, 000 rpm without load in P or N until the radiator fan comes on.
    2. Park the vehicle on level ground.
    3. Turn the ignition switch to LOCK (0).
3. ATF Drain Cover
    1. Remove the ATF drain cover (A).

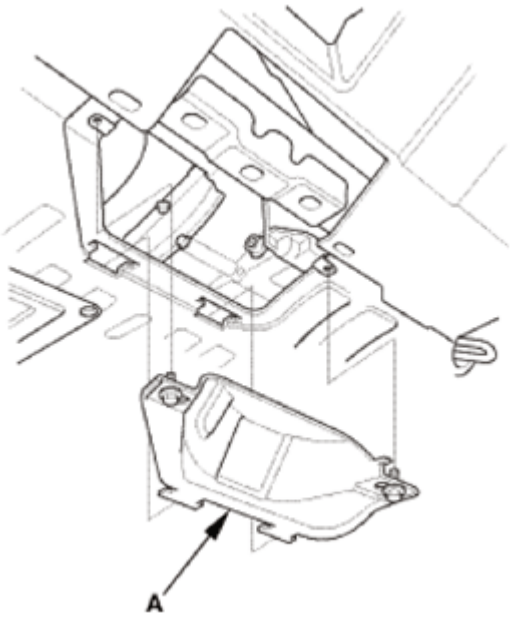

Fig. 1392: Identifying ATF Drain Cover
Courtesy of AMERICAN HONDA MOTOR CO., INC.

4. ATF - Replacement
    1. Remove the drain plug (A), and drain the ATF.
    2. Reinstall the drain plug using a new sealing washer (B).

GETtheMANUALS.org

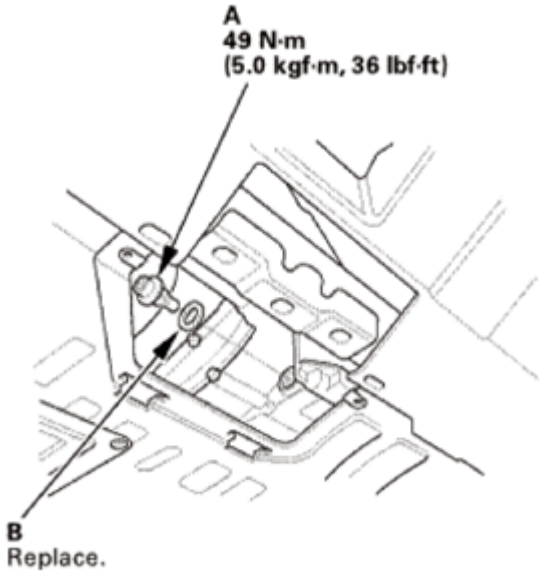

Fig. 1393: Identifying Drain Plug And Sealing Washer With Torque Specification
Courtesy of AMERICAN HONDA MOTOR CO., INC.

REFILL

1. ATF - Replacement
    1. Remove the ATF dipstick (yellow loop) (A), and wipe it with a clean cloth.

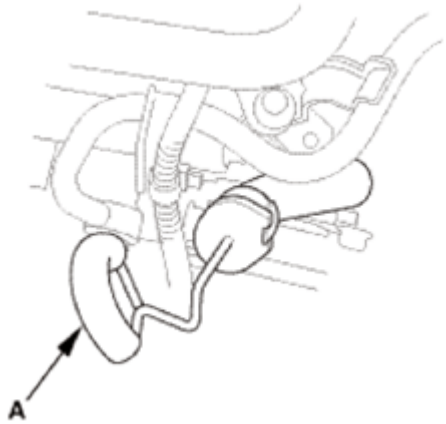

Fig. 1394: Identifying ATF Dipstick (Yellow Loop)
Courtesy of AMERICAN HONDA MOTOR CO., INC.

    2. Refill the transmission with the recommended fluid into the dipstick guide tube opening (A) to bring the fluid level between the upper mark and the lower mark of the dipstick. Always use ATF DW-1 (genuine Honda automatic transmission fluid). Using a non-Honda ATF can affect shift quality.

    Automatic Transmission Fluid Capacity

GETtheMANUALS.org

2WD:

2.2 L (2.3 US qt) at change

5.85 L (6.18 US qt) at overhaul

AWD/4WD:

2.6 L (2.7 US qt) at change

6.4 L (6.8 US qt) at overhaul

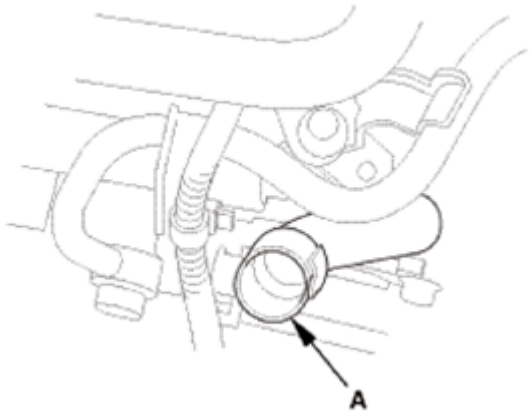

Fig. 1395: Identifying Dipstick Guide Tube Opening
Courtesy of AMERICAN HONDA MOTOR CO., INC.

3. Insert the dipstick (A) into the guide tube aligning the notch (B) with the guide tab (C).

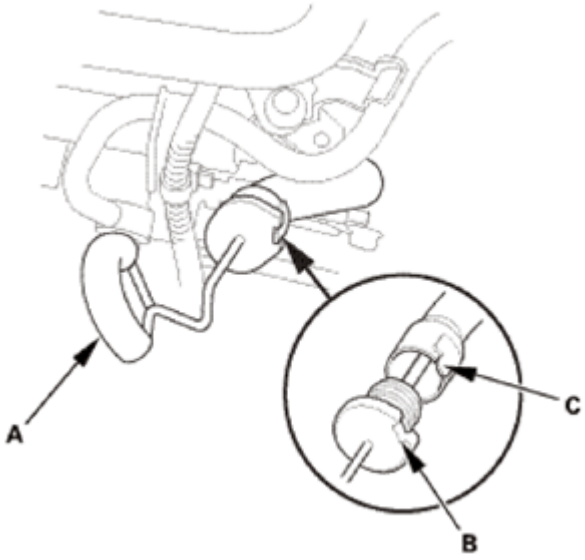

Fig. 1396: Identifying Dipstick, Notch And Guide Tab

GETtheMANUALS.org

Courtesy of AMERICAN HONDA MOTOR CO., INC.

4. Remove the dipstick.
5. Make sure the fluid level is between the upper mark (A) and the lower mark (B) on the dipstick.
6. Insert the dipstick into the guide tube aligning the notch with the guide tab.

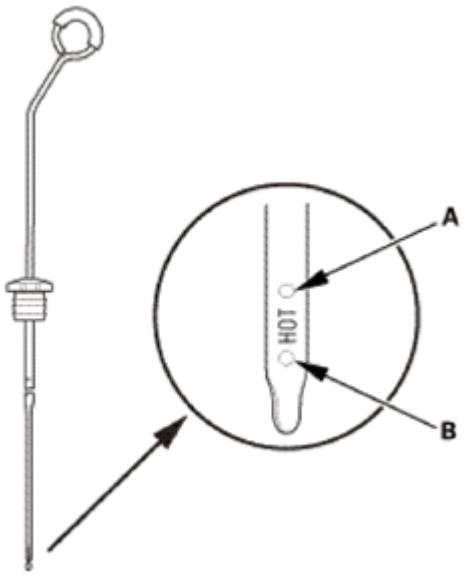

Fig. 1397: Identifying Upper And Lower Mark On Dipstick
Courtesy of AMERICAN HONDA MOTOR CO., INC.

2. ATF Drain Lid
    1. Install the ATF drain lid.

GETtheMANUALS.org

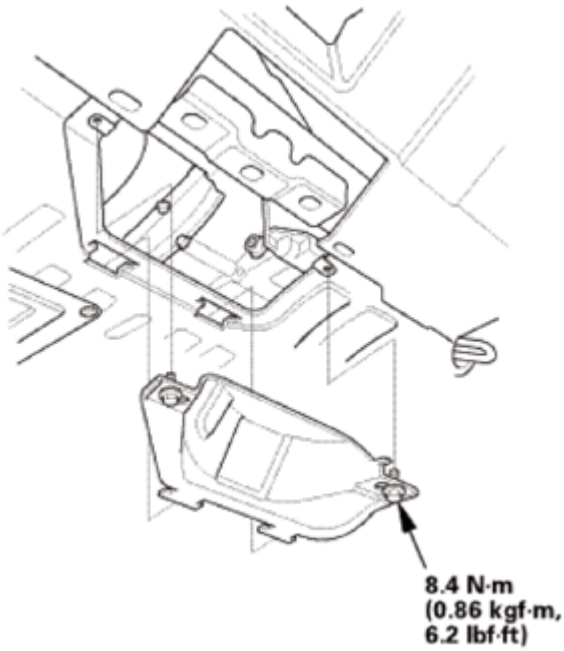

Fig. 1398: Identifying ATF Drain Lid And Mounting Bolt With Torque Specification
Courtesy of AMERICAN HONDA MOTOR CO., INC.

3. Warm Up The Engine
    1. Start the engine. Hold the engine speed at 3, 000 rpm without load in P or N until the radiator fan comes on.
    2. Park the vehicle on level ground.
    3. Turn the ignition switch to LOCK (0).
4. ATF Level Check

NOTE:

- **Keep all foreign particles out of the transmission.**
- **Check the fluid level within 60-90 seconds after turning the engine off.**
- **Higher fluid level may be indicated if the radiator fan comes on twice or more.**

1. Remove the ATF dipstick (yellow loop) (A), and wipe it with a clean cloth.
2. Insert the dipstick into the guide tube aligning the notch (B) with the guide tab (C).

GETtheMANUALS.org

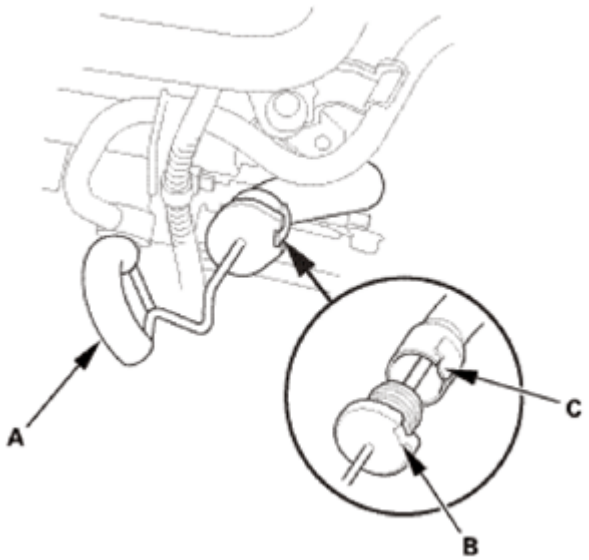

Fig. 1399: Identifying Notch, Tab And ATF Dipstick (Yellow Loop)
Courtesy of AMERICAN HONDA MOTOR CO., INC.

3. Remove the dipstick, and check the ATF level. It should be between the upper mark (A) and the lower mark (B).
4. If the ATF level is below the lower mark, check for fluid leaks at the transmission, the hoses, and the line joints. If a problem is found, fix it before filling the transmission with ATF.

NOTE: **If the vehicle is driven when the ATF level is below the lower mark, one or more of these symptoms may occur:**

- **Transmission damage.**
- **Vehicle does not move in any gear.**
- **Vehicle accelerates poorly, and engine revs up abnormally high when starting off in forward and reverse positions.**
- **Engine vibrates at idle.**

5. If the ATF level is above the upper mark, drain the ATF to proper level.

NOTE: **If the vehicle is driven when the ATF level is above the upper mark, the vehicle may creep forward while in N, or have shifting problems.**

GETtheMANUALS.org

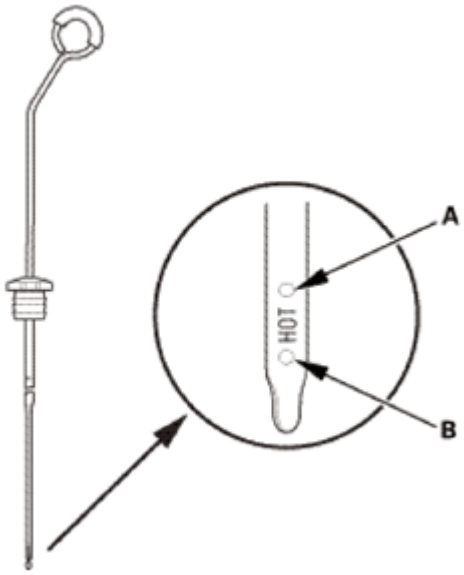

Fig. 1400: Identifying Upper And Lower Mark On Dipstick
Courtesy of AMERICAN HONDA MOTOR CO., INC.

6. If necessary, fill the transmission with ATF through the dipstick guide tube opening (A) to bring the fluid level between the upper mark and the lower mark of the dipstick. Do not fill the fluid above the upper mark. Always use ATF DW-1 (genuine Honda automatic transmission fluid). Using a non-Honda ATF can affect shift quality.
7. Insert the dipstick into the guide tube aligning the notch with the guide tab.

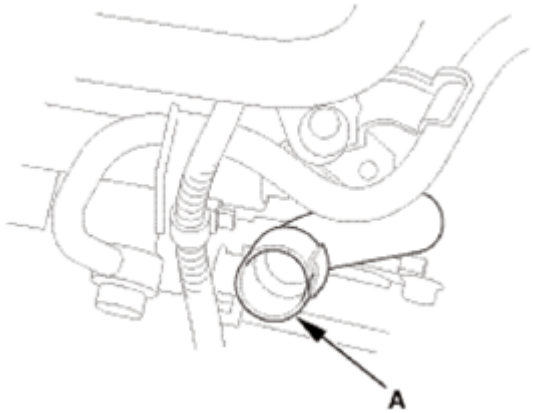

Fig. 1401: Identifying Dipstick Guide Tube Opening
Courtesy of AMERICAN HONDA MOTOR CO., INC.

5. HDS DLC - Connection
    1. Connect the HDS to the data link connector (DLC) (A) located under the driver's side of the dashboard.
    2. Turn the ignition switch to ON (II).
    3. Make sure the HDS communicates with the vehicle. If it does not communicate, go to the DLC

GETtheMANUALS.org

circuit troubleshooting.

Fig. 1402: Identifying Data Link Connector Located Under Driver's Side Of Dashboard
Courtesy of AMERICAN HONDA MOTOR CO., INC.

6. Maintenance Minder Reset
    1. **RESET THE MAINTENANCE MINDER** .

ATF TEMPERATURE SENSOR REMOVAL AND INSTALLATION

REMOVAL

1. Vehicle Lift
    1. Raise the vehicle on a lift, and make sure it is securely supported.
2. Front Splash Shield
    1. Remove the bolts (A), then remove the clips (B) that secure the front inner fender and the front splash shield (C) to the body.
    2. From under the front bumper (D), remove the clips (E).
    3. From under the body, remove the clips (F), then pull out the front splash shield.

GETtheMANUALS.org

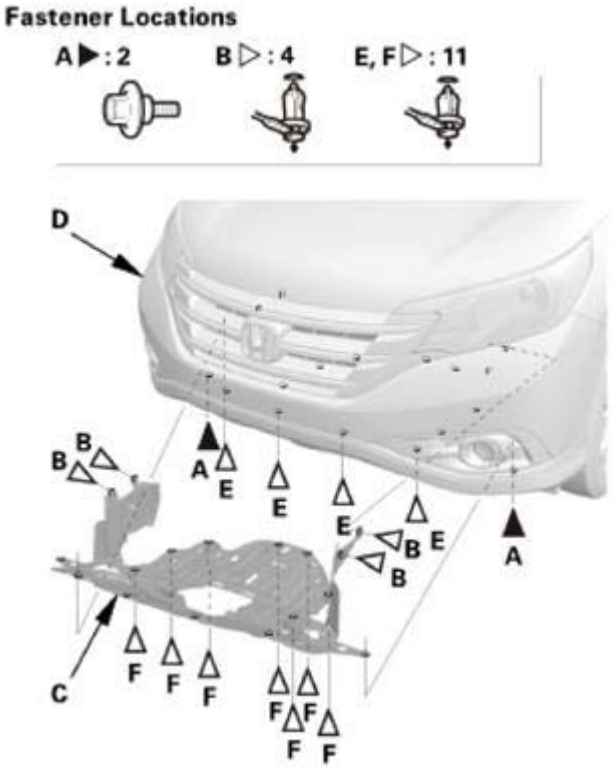

Fig. 1403: Identifying Front Splash Shield, Front Bumper, Bolts And Clips
Courtesy of AMERICAN HONDA MOTOR CO., INC.

3. ATF - Replacement
    1. Remove the drain plug (A), and drain the ATF.
    2. Reinstall the drain plug using a new sealing washer (B).

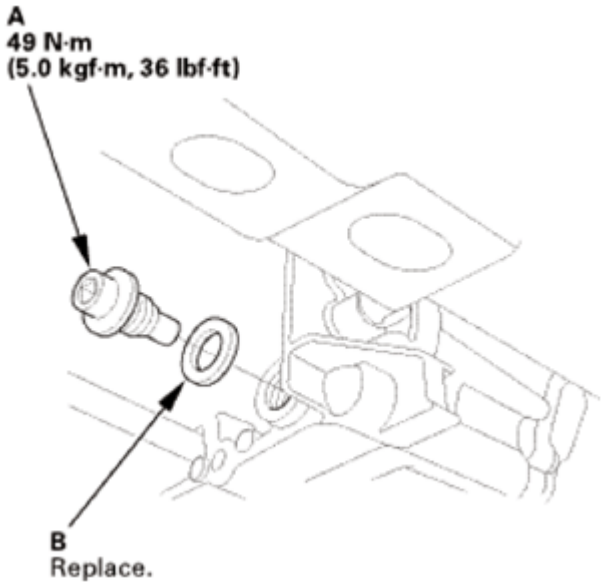

Fig. 1404: Identifying Drain Plug And Sealing Washer With Torque Specification

GETtheMANUALS.org

Courtesy of AMERICAN HONDA MOTOR CO., INC.

4. Dipstick Guide Tube
    1. Remove the ATF dipstick (yellow loop) (A).
    2. Remove the harness clamp (B).
    3. Remove the ATF dipstick guide tube (C).
    4. Remove the O-ring (D) from the ATF dipstick guide tube.

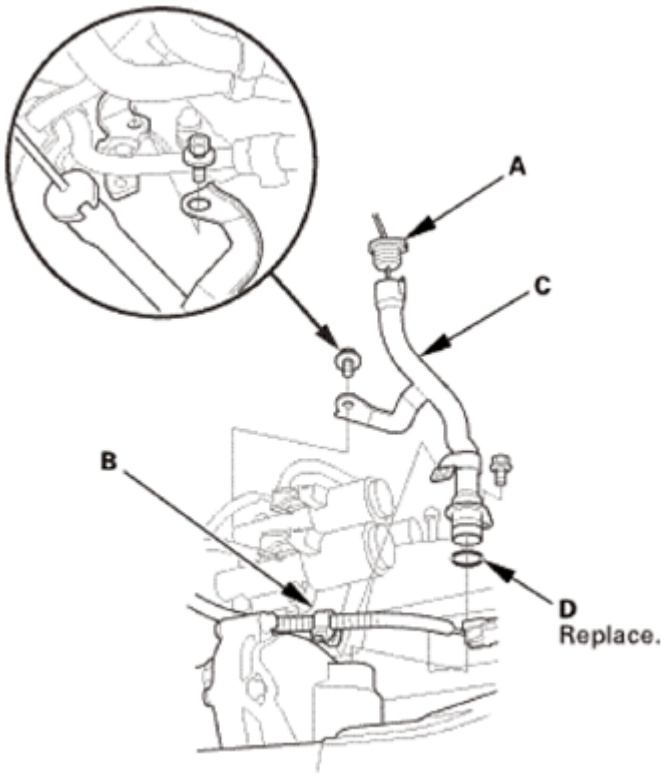

Fig. 1405: Identifying Harness Clamp, ATF Dipstick Guide Tube, O-Ring And ATF Dipstick (Yellow Loop)
Courtesy of AMERICAN HONDA MOTOR CO., INC.

5. A/T Shift Solenoid Cover
    1. Remove the shift solenoid valve cover (A), the dowel pins (B), and the gasket (C).

GETtheMANUALS.org

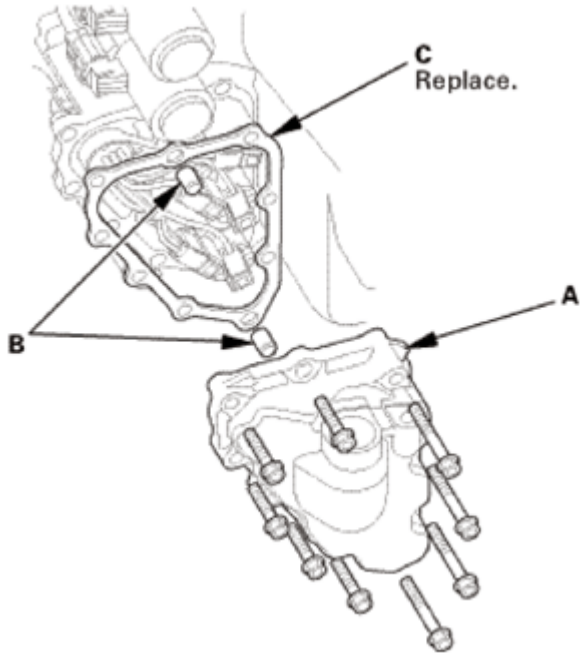

Fig. 1406: Identifying Shift Solenoid Valve Cover, Dowel Pins And Gasket
Courtesy of AMERICAN HONDA MOTOR CO., INC.

6. ATF Temperature Sensor
    1. Disconnect the connectors (A).
    2. Remove the shift solenoid wire harness (B).

    NOTE: The ATF temperature sensor is not available separately from the shift solenoid wire harness.

    3. Remove the O-ring (C) from the shift solenoid wire harness.

GETtheMANUALS.org

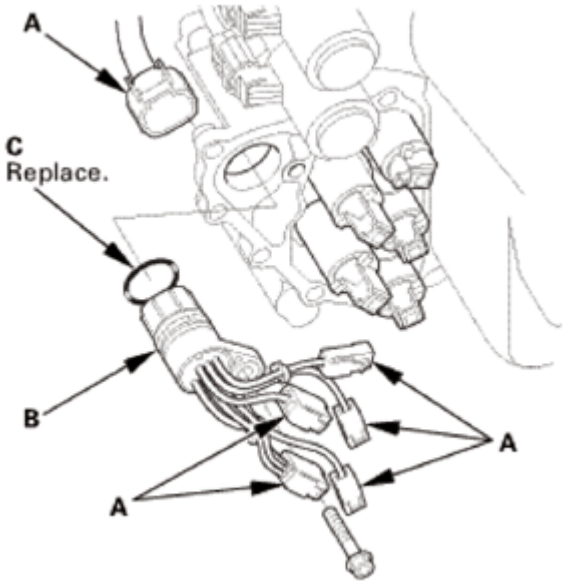

Fig. 1407: Identifying Shift Solenoid Wire Harness, Connectors And O-Ring
Courtesy of AMERICAN HONDA MOTOR CO., INC.

INSTALLATION

1. ATF Temperature Sensor
    1. Install a new O-ring (F) on the shift solenoid wire harness (G).
    2. Install the shift solenoid wire harness.
    3. Connect the shift solenoid valve connectors:
        - BLU wire to shift solenoid valve A.
        - ORN wire to shift solenoid valve B.
        - GRN wire to shift solenoid valve C.
        - YEL, WHT, and WHT wires to shift solenoid valve D.
        - RED wire to shift solenoid valve E.
    4. Check the connector (H) for corrosion, dirt, or oil, and clean or repair if necessary, then connect the connector securely.

GETtheMANUALS.org

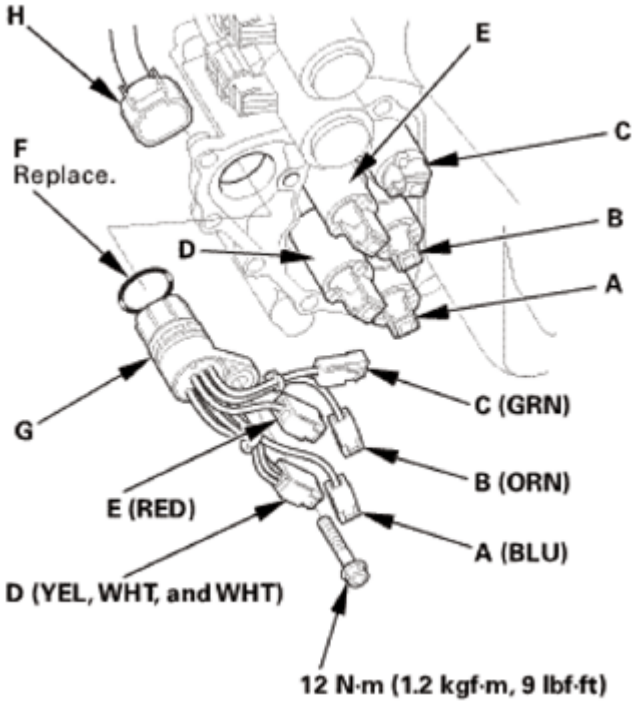

Fig. 1408: Identifying O-Ring, Connector, Shift Solenoid Wire Harness And Shift Solenoid Valves
Courtesy of AMERICAN HONDA MOTOR CO., INC.

2. A/T Shift Solenoid Cover
    1. Install the shift solenoid valve cover (A) with the dowel pins (B) and a new gasket (C).

GETtheMANUALS.org

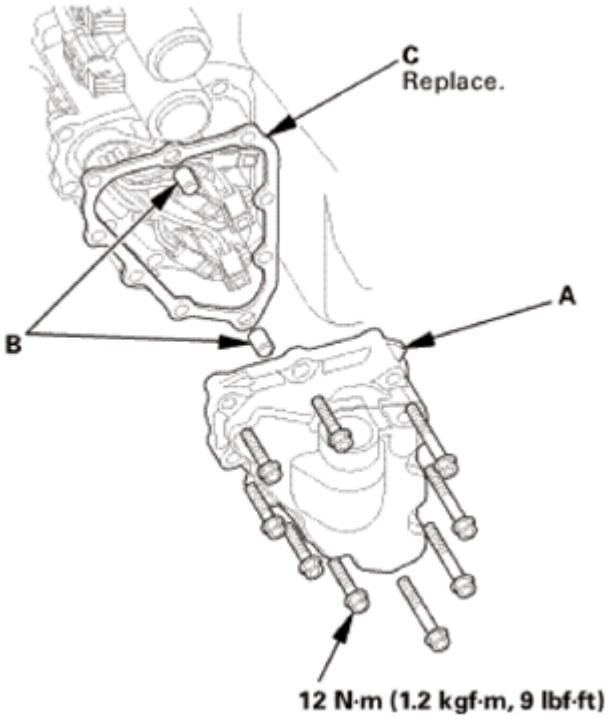

Fig. 1409: Identifying Shift Solenoid Valve Cover, Dowel Pins, Gasket And Mounting Bolts With Torque Specification
Courtesy of AMERICAN HONDA MOTOR CO., INC.

3. Dipstick Guide Tube
    1. Install a new O-ring (A) on the ATF dipstick guide tube (B).
    2. Install the ATF dipstick guide tube.
    3. Install the harness clamp (C).
    4. Install the ATF dipstick (D).

GETtheMANUALS.org

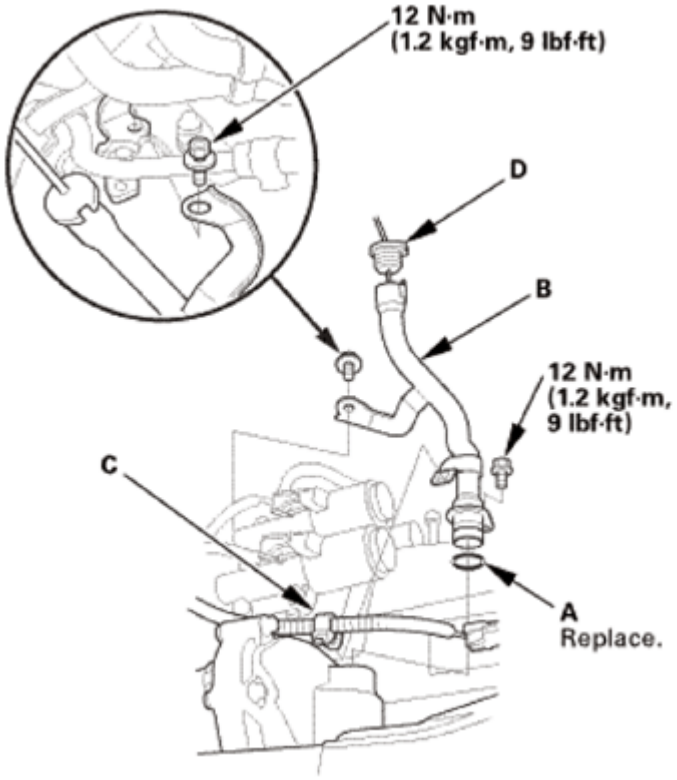

Fig. 1410: Identifying O-Ring, ATF Dipstick Guide Tube, Harness Clamp, ATF Dipstick And Mounting Bolts With Torque Specification
Courtesy of AMERICAN HONDA MOTOR CO., INC.

4. Front Splash Shield
    1. Install the front splash shield (A), then install the bolts (B) and the clips (C, D). Make sure the clips snap into place securely.

GETtheMANUALS.org

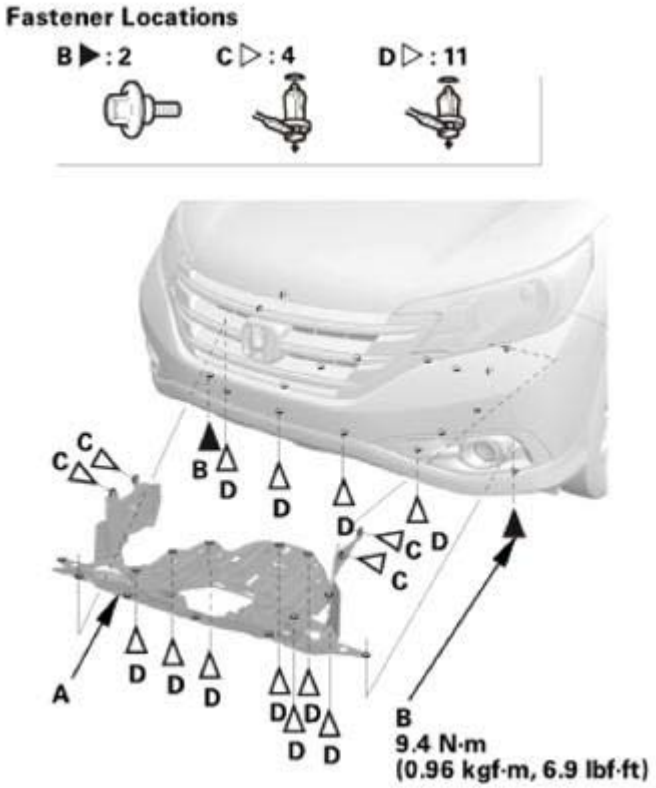

Fig. 1411: Identifying Front Splash Shield, Bolts And Clips With Torque Specification
Courtesy of AMERICAN HONDA MOTOR CO., INC.

5. ATF - Replacement
    1. Remove the ATF dipstick (yellow loop) (A), and wipe it with a clean cloth.

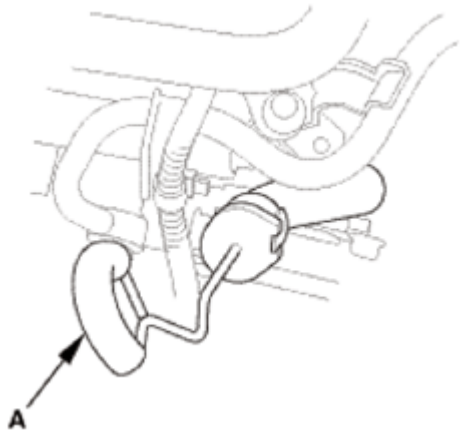

Fig. 1412: Identifying ATF Dipstick (Yellow Loop)
Courtesy of AMERICAN HONDA MOTOR CO., INC.

    2. Refill the transmission with the recommended fluid into the dipstick guide tube opening (A) to bring the fluid level between the upper mark and the lower mark of the dipstick. Always use ATF

GETtheMANUALS.org

DW-1 (genuine Honda automatic transmission fluid). Using a non-Honda ATF can affect shift quality.

Automatic Transmission Fluid Capacity

2WD:

2.2 L (2.3 US qt) at change

5.85 L (6.18 US qt) at overhaul

AWD/4WD:

2.6 L (2.7 US qt) at change

6.4 L (6.8 US qt) at overhaul

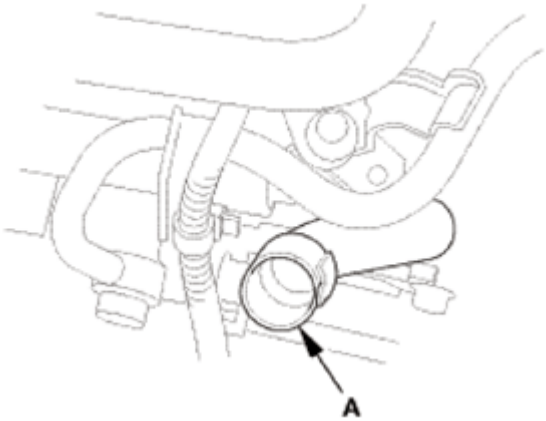

Fig. 1413: Identifying Dipstick Guide Tube Opening
Courtesy of AMERICAN HONDA MOTOR CO., INC.

3. Insert the dipstick (A) into the guide tube aligning the notch (B) with the guide tab (C).

GETtheMANUALS.org

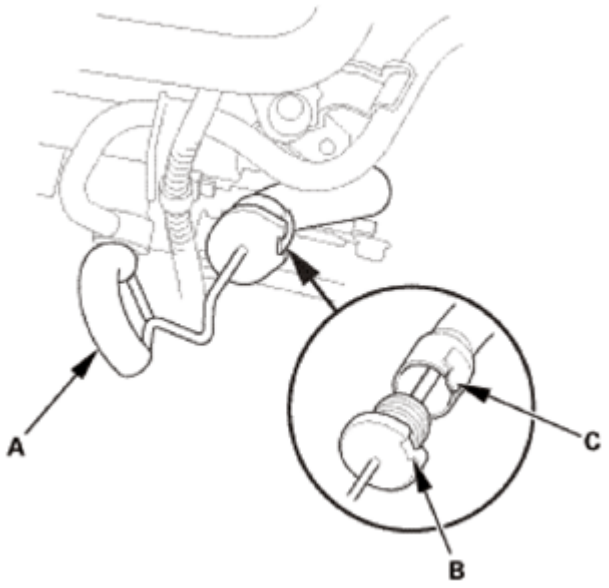

Fig. 1414: Identifying Dipstick, Notch And Guide Tab
Courtesy of AMERICAN HONDA MOTOR CO., INC.

4. Remove the dipstick.
5. Make sure the fluid level is between the upper mark (A) and the lower mark (B) on the dipstick.
6. Insert the dipstick into the guide tube aligning the notch with the guide tab.

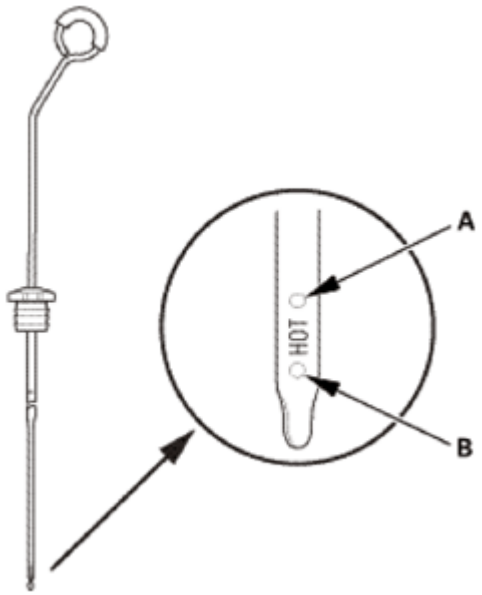

Fig. 1415: Identifying Upper And Lower Mark On Dipstick
Courtesy of AMERICAN HONDA MOTOR CO., INC.

6. Warm Up The Engine
    1. Start the engine. Hold the engine speed at 3, 000 rpm without load in P or N until the radiator fan

GETtheMANUALS.org

comes on.

2. Park the vehicle on level ground.
3. Turn the ignition switch to LOCK (0).

7. ATF Level Check

NOTE:

- **Keep all foreign particles out of the transmission.**
- **Check the fluid level within 60-90 seconds after turning the engine off.**
- **Higher fluid level may be indicated if the radiator fan comes on twice or more.**

1. Remove the ATF dipstick (yellow loop) (A), and wipe it with a clean cloth.
2. Insert the dipstick into the guide tube aligning the notch (B) with the guide tab (C).

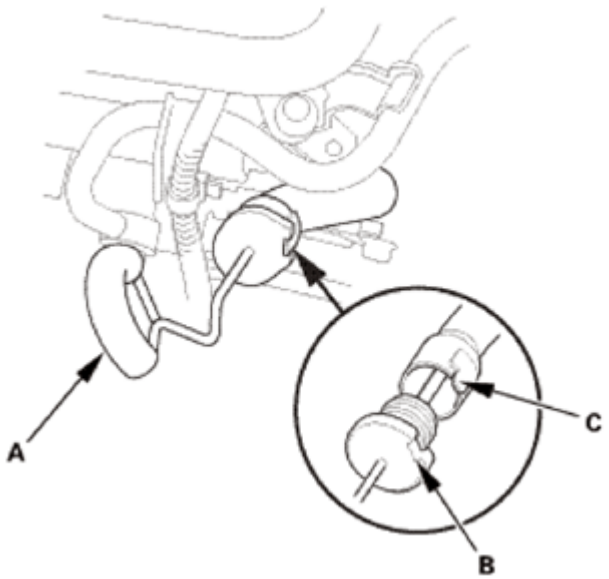

Fig. 1416: Identifying Notch, Tab And ATF Dipstick (Yellow Loop)
Courtesy of AMERICAN HONDA MOTOR CO., INC.

3. Remove the dipstick, and check the ATF level. It should be between the upper mark (A) and the lower mark (B).
4. If the ATF level is below the lower mark, check for fluid leaks at the transmission, the hoses, and the line joints. If a problem is found, fix it before filling the transmission with ATF.

NOTE: **If the vehicle is driven when the ATF level is below the lower mark, one or more of these symptoms may occur:**

- **Transmission damage.**
- **Vehicle does not move in any gear.**

GETtheMANUALS.org

- **Vehicle accelerates poorly, and engine revs up abnormally high when starting off in forward and reverse positions.**
- **Engine vibrates at idle.**

5. If the ATF level is above the upper mark, drain the ATF to proper level.

NOTE: **If the vehicle is driven when the ATF level is above the upper mark, the vehicle may creep forward while in N, or have shifting problems.**

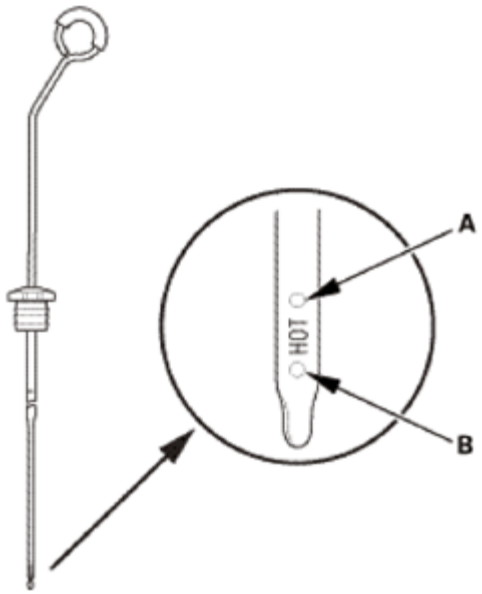

Fig. 1417: Identifying Upper And Lower Mark On Dipstick
Courtesy of AMERICAN HONDA MOTOR CO., INC.

6. If necessary, fill the transmission with ATF through the dipstick guide tube opening (A) to bring the fluid level between the upper mark and the lower mark of the dipstick. Do not fill the fluid above the upper mark. Always use ATF DW-1 (genuine Honda automatic transmission fluid). Using a non-Honda ATF can affect shift quality.
7. Insert the dipstick into the guide tube aligning the notch with the guide tab.

GETtheMANUALS.org

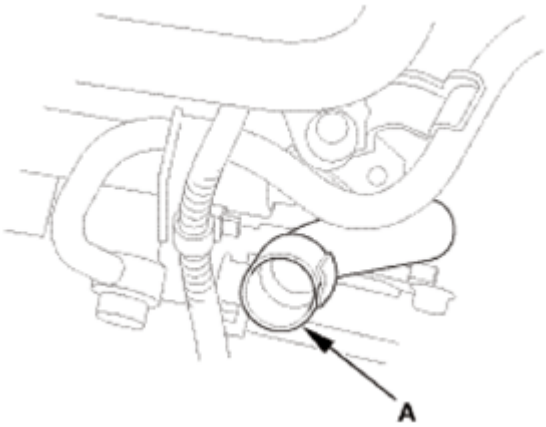

Fig. 1418: Identifying Dipstick Guide Tube Opening
Courtesy of AMERICAN HONDA MOTOR CO., INC.

8. HDS DLC - Connection
    1. Connect the HDS to the data link connector (DLC) (A) located under the driver's side of the dashboard.
    2. Turn the ignition switch to ON (II).
    3. Make sure the HDS communicates with the vehicle. If it does not communicate, go to the DLC circuit troubleshooting.

Fig. 1419: Identifying Data Link Connector Located Under Driver's Side Of Dashboard
Courtesy of AMERICAN HONDA MOTOR CO., INC.

9. Maintenance Minder Reset
    1. **RESET THE MAINTENANCE MINDER** .

ATF WARMER HOSE REPLACEMENT

GETtheMANUALS.org

REPLACEMENT

NOTE: **When installing the clips, make sure the tabs of the clip do not interfere with the surrounding parts.**

1. ATF Warmer Hose
    1. Install the ATF hoses over the ATF lines with the clips at appropriate points in reference to the following list. Align the green paint marks (F) and the white paint mark (G) pointing up.

Point	Distance from Hose End to Clip (E)	Hose End Contact Point
A	6-8 mm (0.24-0.31 in)	ATF Filter
B	6-8 mm (0.24-0.31 in)	Bracket
C	2-4 mm (0.08-0.16 in)	Bulge
D	6-8 mm (0.24-0.31 in)	Bulge

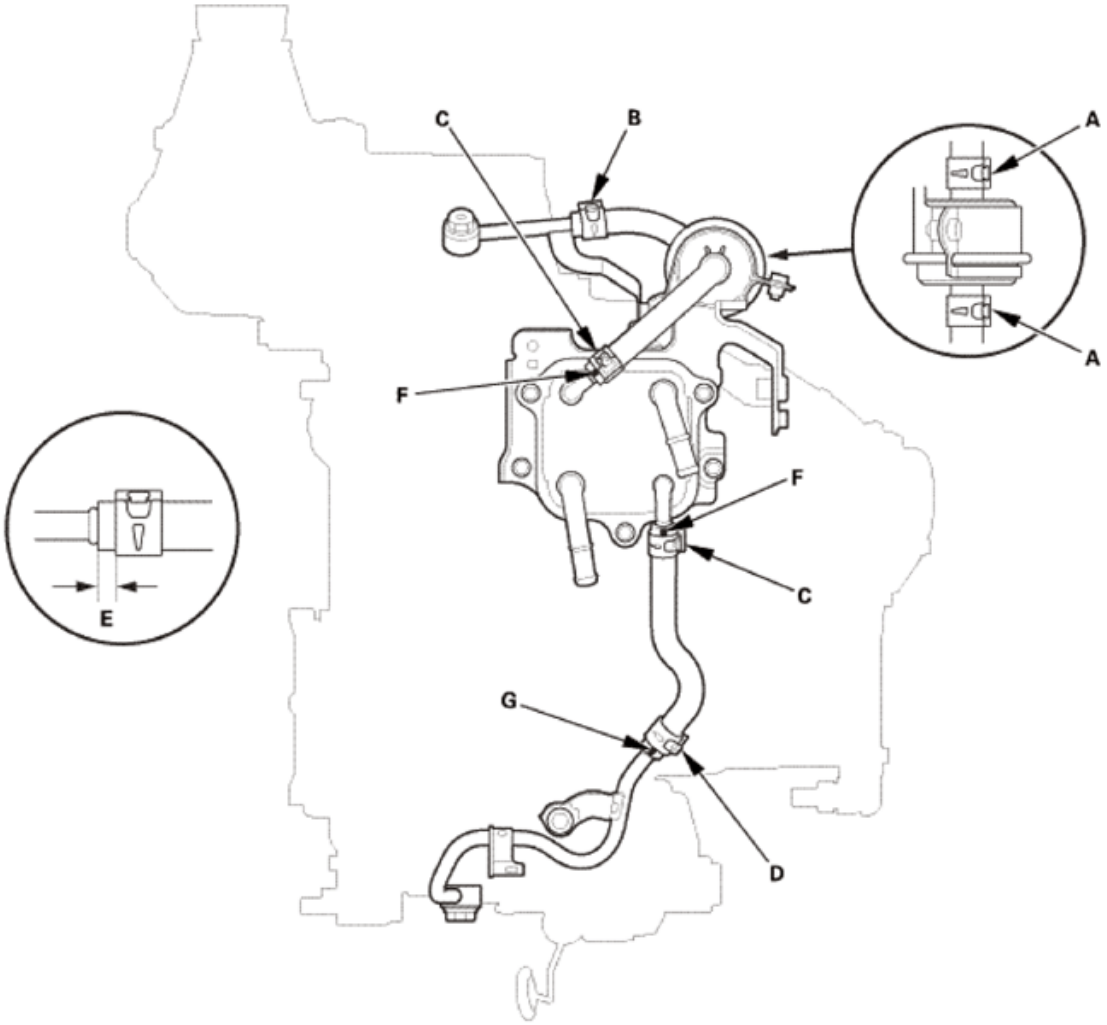

Fig. 1420: Identifying Distance Between Hose End To Clip
Courtesy of AMERICAN HONDA MOTOR CO., INC.

GETtheMANUALS.org

This illustration shows the AWD/4WD transmission.

2. Warm Up The Engine
   1. Start the engine. Hold the engine speed at 3, 000 rpm without load in P or N until the radiator fan comes on.
   2. Park the vehicle on level ground.
   3. Turn the ignition switch to LOCK (0).
3. ATF Level Check

NOTE:

- **Keep all foreign particles out of the transmission.**
- **Check the fluid level within 60-90 seconds after turning the engine off.**
- **Higher fluid level may be indicated if the radiator fan comes on twice or more.**

1. Remove the ATF dipstick (yellow loop) (A), and wipe it with a clean cloth.
2. Insert the dipstick into the guide tube aligning the notch (B) with the guide tab (C).

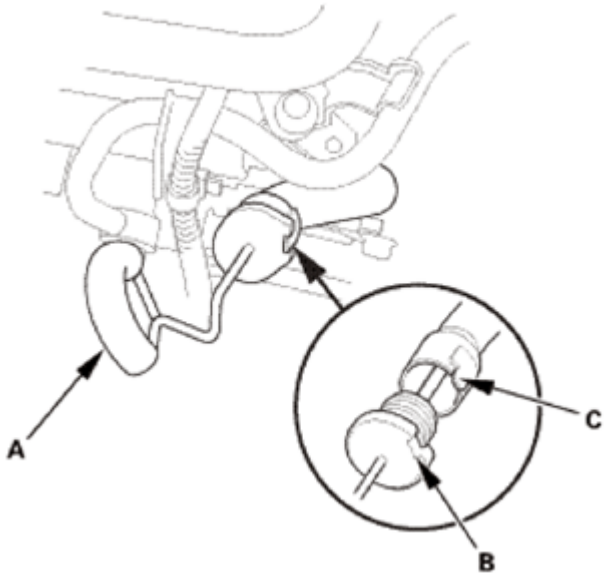

Fig. 1421: Identifying Notch, Tab And ATF Dipstick (Yellow Loop)
Courtesy of AMERICAN HONDA MOTOR CO., INC.

3. Remove the dipstick, and check the ATF level. It should be between the upper mark (A) and the lower mark (B).
4. If the ATF level is below the lower mark, check for fluid leaks at the transmission, the hoses, and the line joints. If a problem is found, fix it before filling the transmission with ATF.

NOTE: **If the vehicle is driven when the ATF level is below the lower mark,**

GETtheMANUALS.org

one or more of these symptoms may occur:

- **Transmission damage.**
- **Vehicle does not move in any gear.**
- **Vehicle accelerates poorly, and engine revs up abnormally high when starting off in forward and reverse positions.**
- **Engine vibrates at idle.**

5. If the ATF level is above the upper mark, drain the ATF to proper level.

NOTE: **If the vehicle is driven when the ATF level is above the upper mark, the vehicle may creep forward while in N, or have shifting problems.**

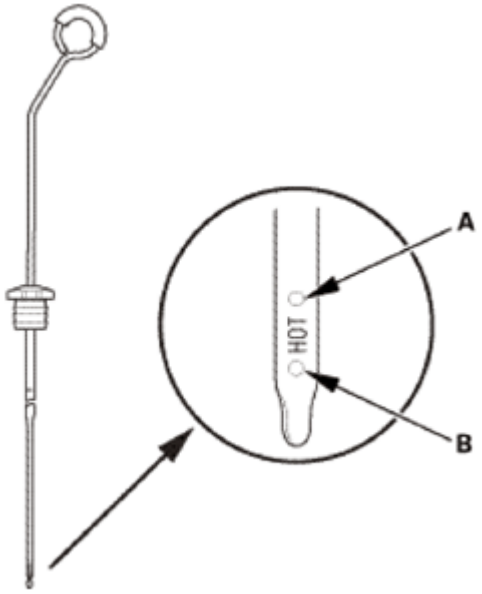

Fig. 1422: Identifying Upper And Lower Mark On Dipstick
Courtesy of AMERICAN HONDA MOTOR CO., INC.

6. If necessary, fill the transmission with ATF through the dipstick guide tube opening (A) to bring the fluid level between the upper mark and the lower mark of the dipstick. Do not fill the fluid above the upper mark. Always use ATF DW-1 (genuine Honda automatic transmission fluid). Using a non-Honda ATF can affect shift quality.
7. Insert the dipstick into the guide tube aligning the notch with the guide tab.

GETtheMANUALS.org

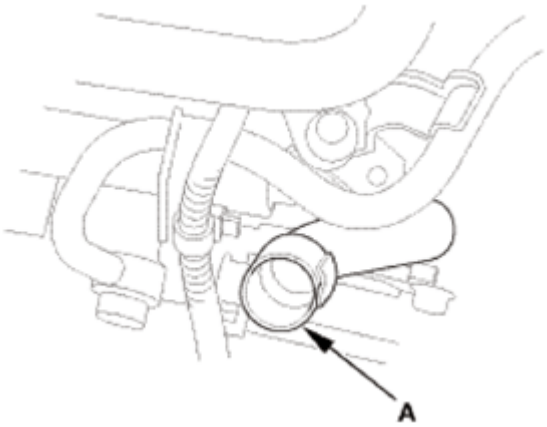

Fig. 1423: Identifying Dipstick Guide Tube Opening
Courtesy of AMERICAN HONDA MOTOR CO., INC.

ATF WARMER REMOVAL AND INSTALLATION

REMOVAL

1. Vehicle Lift
    1. Raise the vehicle on a lift, and make sure it is securely supported.
2. Radiator Cap
    1. Wait until the engine is cool, then carefully remove the radiator cap.
3. Radiator Coolant - Replacement
    1. Loosen the drain plug (A), and drain the coolant.
    2. After the coolant has drained, tighten the drain plug securely.

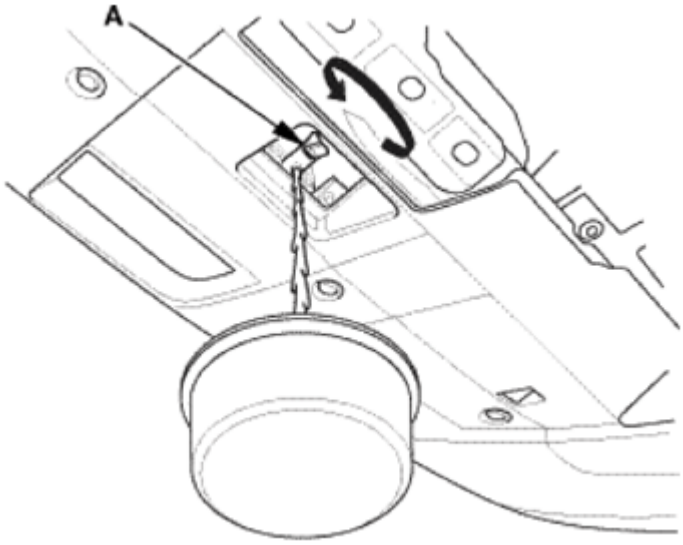

Fig. 1424: Loosening Drain Plug
Courtesy of AMERICAN HONDA MOTOR CO., INC.

GETtheMANUALS.org

4. Air Cleaner Assembly
    1. Disconnect the MAF sensor/IAT sensor connector (A).
    2. Remove the harness clamp (B).
    3. Disconnect the intake air duct (C) and the intake air pipe (D).
    4. Remove the air cleaner (E).

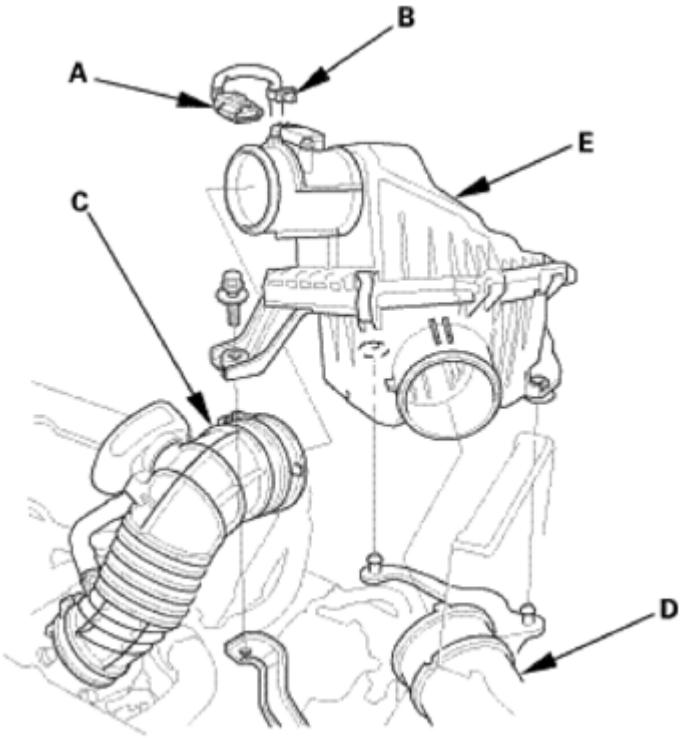

Fig. 1425: Identifying MAF Sensor/IAT Sensor Connector, Harness Clamp, Intake Air Duct, Intake Air Pipe And Air Cleaner
Courtesy of AMERICAN HONDA MOTOR CO., INC.

5. ATF Warmer
    1. Disconnect the water bypass hoses (A).

        NOTE: Be careful not to damage the lines when disconnecting the hoses.

    2. Disconnect the ATF hoses (B).

        NOTE: Be careful not to damage the lines when disconnecting the hoses.

    3. Turn the end of the ATF hoses up to prevent ATF from flowing out, then plug the hoses and lines.
    4. Remove the ATF warmer (C).

GETtheMANUALS.org

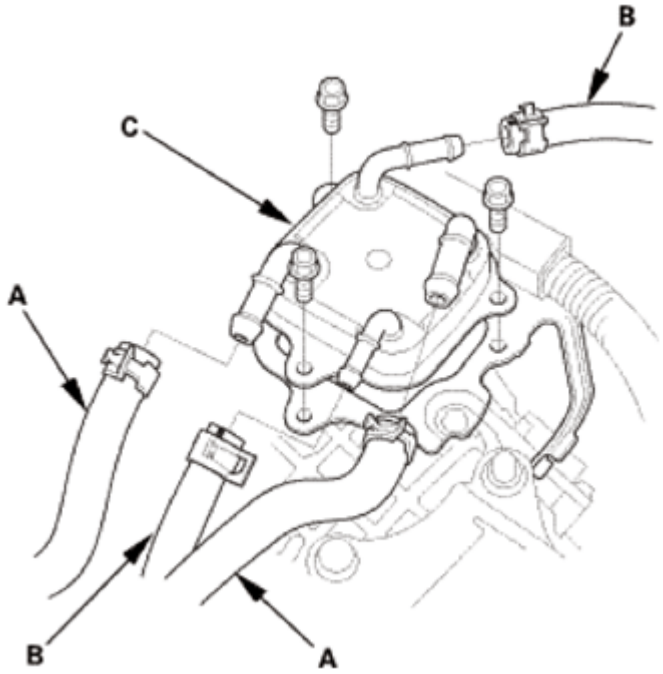

Fig. 1426: Identifying Water Bypass Hoses, ATF Hoses And ATF Warmer
Courtesy of AMERICAN HONDA MOTOR CO., INC.

INSTALLATION

1. ATF Warmer
    1. Install the ATF warmer (A).
    2. Connect the ATF hoses (B) until the hose end contacts the bulge. Align the green paint marks (C) pointing up.

    NOTE: Be careful not to damage the lines when connecting the hoses.

    3. Secure the hoses with the clips (D) at 2-4 mm (0.08-0.16 in) (E) from the hose ends. Keep the tabs of the clips clear of other parts.
    4. Connect the water bypass hoses (F) until the hose end contacts the bulge.

    NOTE: Be careful not to damage the lines when connecting the hoses.

    5. Secure the water bypass hoses with the clips. Keep the tabs of the clips clear of other parts.

GETtheMANUALS.org

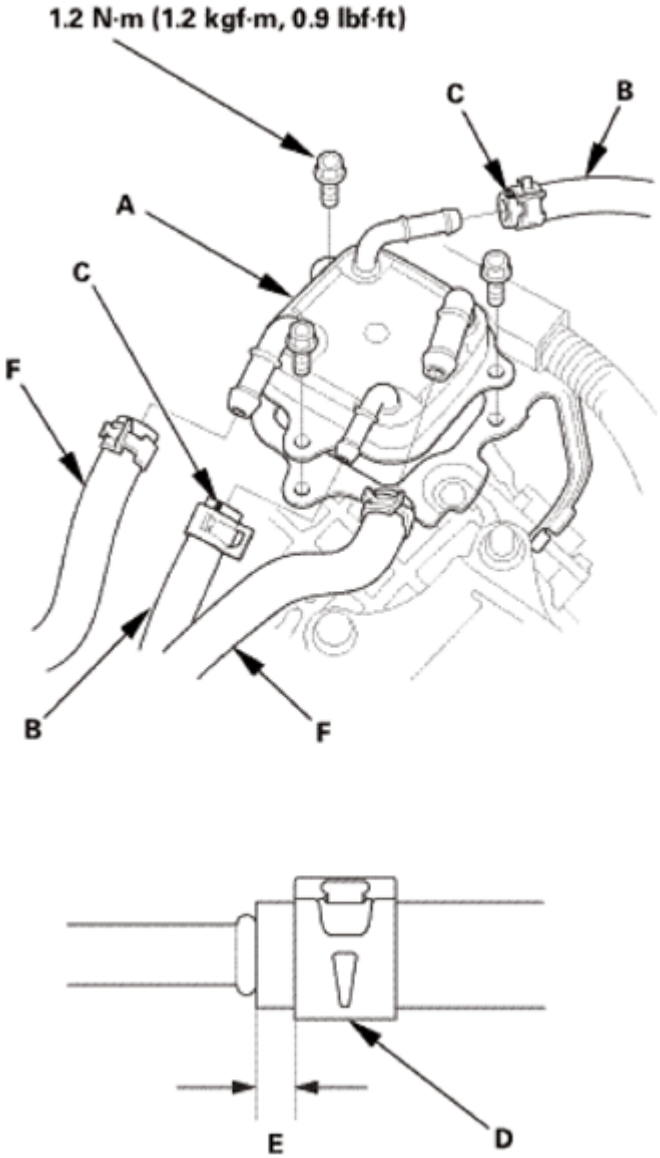

Fig. 1427: Identifying Water Bypass Hoses, ATF Warmer, ATF Hoses, Clips And Mounting Bolts With Torque Specification
Courtesy of AMERICAN HONDA MOTOR CO., INC.

2. Air Cleaner Assembly
    1. Install the air cleaner (A).
    2. Connect the intake air pipe (B) and the intake air duct (C).
    3. Install the harness clamp (D).
    4. Connect the MAF sensor/IAT sensor connector (E).

GETtheMANUALS.org

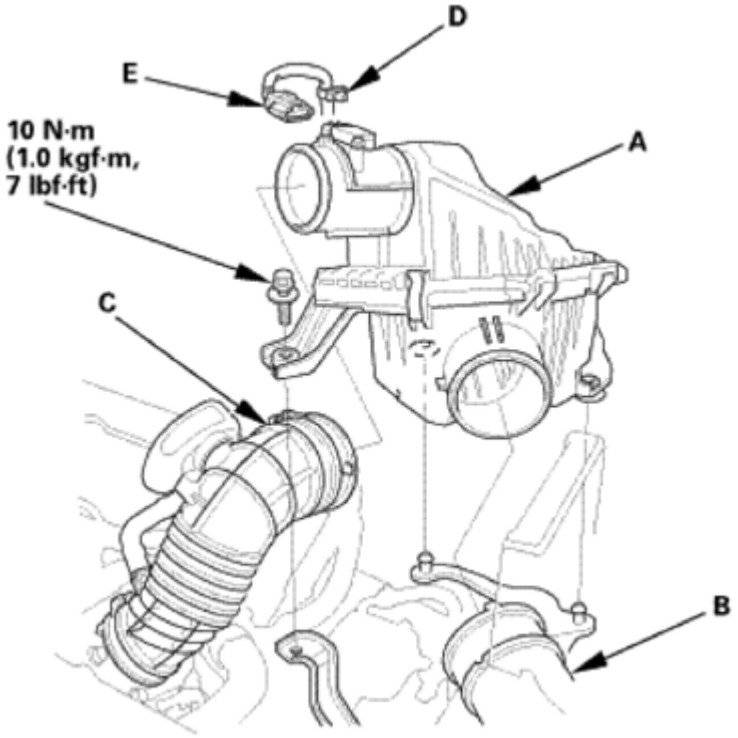

Fig. 1428: Identifying MAF Sensor/IAT Sensor Connector, Harness Clamp, Air Cleaner, Intake Air Pipe And Bolts With Torque Specification
Courtesy of AMERICAN HONDA MOTOR CO., INC.

3. Radiator Coolant - Replacement
    1. Follow the chart and pour coolant into the radiator up to the base of the filler neck.

NOTE:

- **Always use Honda Long Life Antifreeze/Coolant Type 2 or Honda Extreme Cold Weather Antifreeze/Coolant Type 2. Using a non-Honda coolant can result in corrosion, causing the cooling system to malfunction or fail.**
- **Honda Long Life Antifreeze/Coolant Type 2 is a mixture of 50 % antifreeze and 50 % water. Honda Extreme Cold Weather Antifreeze/Coolant Type 2 is a 100% concentration coolant. Do not add water to either coolant.**
- **If the vehicle is regularly used in very low temperatures (under -22 °F (-30 °C)) a 60% concentration of coolant should be used.**

Operation	Vehicle Usage (Desired Mixture)	Current Mixture	Coolant Drain	Add Amount of Honda Extreme Cold Weather Antifreeze/Coolant Type 2 (100% concentrate)	Then add Honda Long Life Antifreeze/Coolant Type 2 (50/50)
	Normal Area	50/50 60/40	Drain	None	

GETtheMANUALS.org

Coolant Change	(50/50)	unknown	radiator and reservoir		Top off the cooling system
	Very Cold Area (60/40)	50/50 unknown		About 1.5 L (51 fl oz)	
		60/40		About 1.3L (44 fl oz)	
Engine Overhaul	Normal Area (50/50)	-	-	None	
	Very Cold Area (60/40)	-	-	About 1.5 L (51 fl oz)	
Coolant Winterizing	Very Cold Area (60/40)	50/50	Drain about 2.0 L (68 fl oz) from radiator	About 1.5 L (51 fl oz)	
		unknown (1)	Drain radiator and reservoir		
(1) When you want to winterize the coolant with the minimum amount of coolant change but the current coolant concentration in the vehicle is unknown, you must drain all coolant from the cooling system.					

Engine Coolant Capacities (Including the coolant reservoir capacity of 0.62 L (0.164 US gal))	
At Coolant Change:	6.23 L (1.646 US gal)
After Engine Overhaul:	7.44 L (1.966 US gal)

Fig. 1429: Filling Coolant Into Radiator
Courtesy of AMERICAN HONDA MOTOR CO., INC.

2. Loosely install the radiator cap.
3. Start the engine and let it run until the radiator fan comes on at least twice. Do not operate the air

GETtheMANUALS.org

conditioning system.

4. Turn off the engine. Check the level in the radiator and add Honda Long Life Antifreeze/Coolant Type 2 if needed.
5. Put the radiator cap securely, then start the engine again, and check for leaks.
6. Clean up any spilled engine coolant.
7. Fill the coolant reservoir to the MAX mark (A) with Honda Long Life Antifreeze/Coolant Type 2.

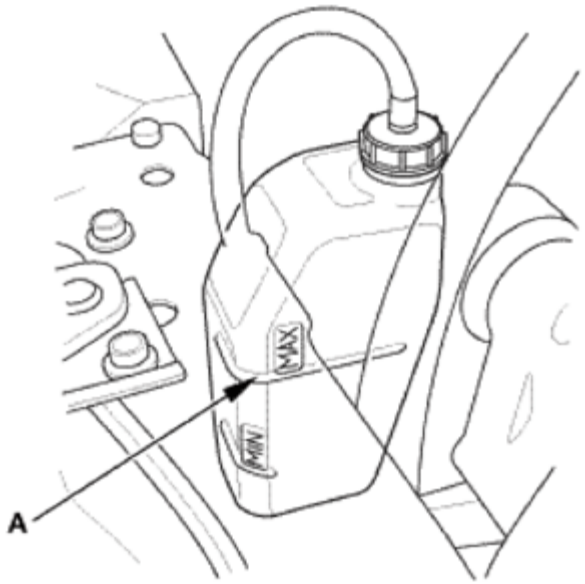

Fig. 1430: Identifying Coolant Reservoir MAX Mark
Courtesy of AMERICAN HONDA MOTOR CO., INC.

4. Warm Up The Engine
   1. Start the engine. Hold the engine speed at 3, 000 rpm without load in P or N until the radiator fan comes on.
   2. Park the vehicle on level ground.
   3. Turn the ignition switch to LOCK (0).
5. ATF Level Check

NOTE:

- **Keep all foreign particles out of the transmission.**
- **Check the fluid level within 60-90 seconds after turning the engine off.**
- **Higher fluid level may be indicated if the radiator fan comes on twice or more.**

   1. Remove the ATF dipstick (yellow loop) (A), and wipe it with a clean cloth.
   2. Insert the dipstick into the guide tube aligning the notch (B) with the guide tab (C).

GETtheMANUALS.org

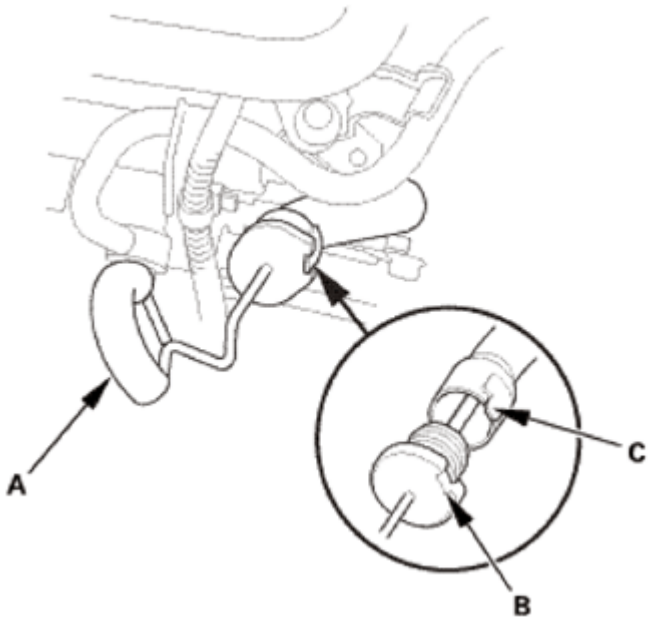

Fig. 1431: Identifying Notch, Tab And ATF Dipstick (Yellow Loop)
Courtesy of AMERICAN HONDA MOTOR CO., INC.

3. Remove the dipstick, and check the ATF level. It should be between the upper mark (A) and the lower mark (B).
4. If the ATF level is below the lower mark, check for fluid leaks at the transmission, the hoses, and the line joints. If a problem is found, fix it before filling the transmission with ATF.

NOTE: **If the vehicle is driven when the ATF level is below the lower mark, one or more of these symptoms may occur:**

- **Transmission damage.**
- **Vehicle does not move in any gear.**
- **Vehicle accelerates poorly, and engine revs up abnormally high when starting off in forward and reverse positions.**
- **Engine vibrates at idle.**

5. If the ATF level is above the upper mark, drain the ATF to proper level.

NOTE: **If the vehicle is driven when the ATF level is above the upper mark, the vehicle may creep forward while in N, or have shifting problems.**

GETtheMANUALS.org

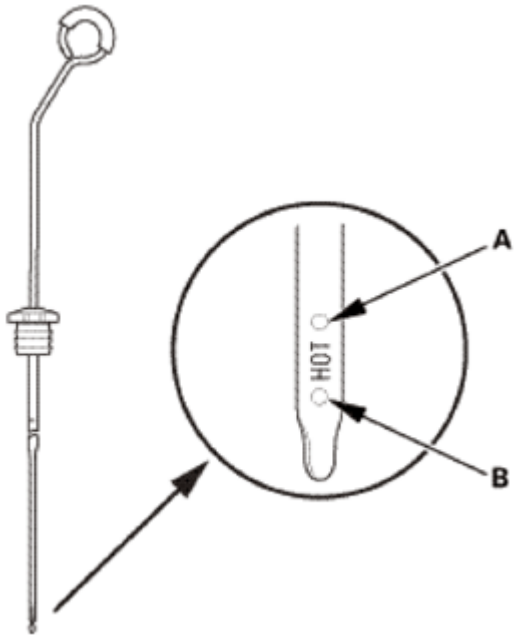

Fig. 1432: Identifying Upper And Lower Mark On Dipstick
Courtesy of AMERICAN HONDA MOTOR CO., INC.

6. If necessary, fill the transmission with ATF through the dipstick guide tube opening (A) to bring the fluid level between the upper mark and the lower mark of the dipstick. Do not fill the fluid above the upper mark. Always use ATF DW-1 (genuine Honda automatic transmission fluid). Using a non-Honda ATF can affect shift quality.
7. Insert the dipstick into the guide tube aligning the notch with the guide tab.

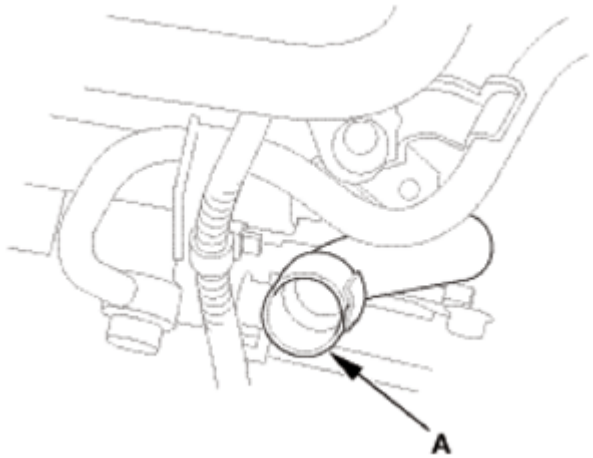

Fig. 1433: Identifying Dipstick Guide Tube Opening
Courtesy of AMERICAN HONDA MOTOR CO., INC.

6. HDS DLC - Connection
    1. Connect the HDS to the data link connector (DLC) (A) located under the driver's side of the dashboard.

GETtheMANUALS.org

2. Turn the ignition switch to ON (II).
3. Make sure the HDS communicates with the vehicle. If it does not communicate, go to the DLC circuit troubleshooting.

Fig. 1434: Identifying Data Link Connector Located Under Driver's Side Of Dashboard
Courtesy of AMERICAN HONDA MOTOR CO., INC.

7. Maintenance Minder Reset
    1. **RESET THE MAINTENANCE MINDER** .

AUTOMATIC TRANSMISSION COMPONENT LOCATION INDEX

GETtheMANUALS.org

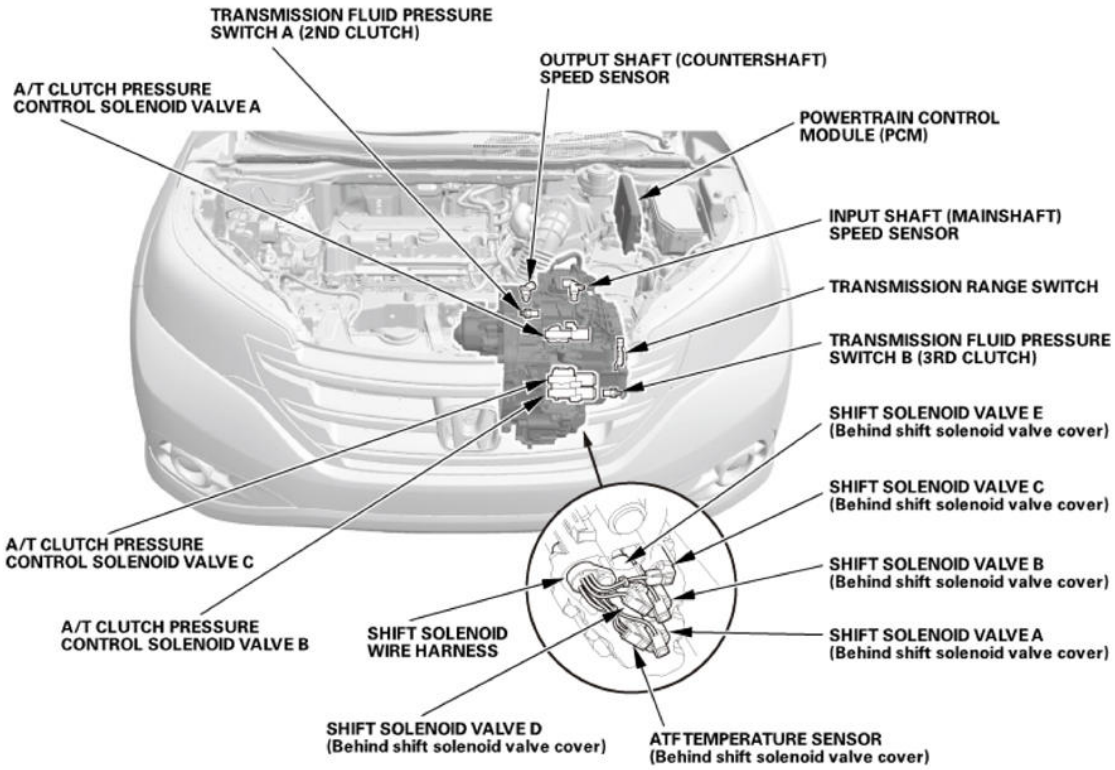

Fig. 1435: Identifying Automatic Transmission Component Location
Courtesy of AMERICAN HONDA MOTOR CO., INC.

INPUT SHAFT (MAINSHAFT) SPEED SENSOR	**REMOVAL AND INSTALLATION**
OUTPUT SHAFT (COUNTERSHAFT) SPEED SENSOR	**REMOVAL AND INSTALLATION**
SHIFT SOLENOID VALVE A	**TEST**
	REMOVAL AND INSTALLATION
SHIFT SOLENOID VALVE B	**TEST**
	REMOVAL AND INSTALLATION
SHIFT SOLENOID VALVE C	**TEST**
	REMOVAL AND INSTALLATION
SHIFT SOLENOID VALVE D	**TEST**
	REMOVAL AND INSTALLATION
SHIFT SOLENOID VALVE E	**TEST**
	REMOVAL AND INSTALLATION
SHIFT SOLENOID WIRE HARNESS	**REMOVAL AND INSTALLATION**
	Test See **A/T CLUTCH PRESSURE CONTROL SOLENOID VALVE A TEST** or **A/T CLUTCH PRESSURE CONTROL**

GETtheMANUALS.org

A/T CLUTCH PRESSURE CONTROL SOLENOID VALVE A	**SOLENOID VALVE B AND C TEST**
	Removal and Installation See **A/T CLUTCH PRESSURE CONTROL SOLENOID VALVE A REMOVAL AND INSTALLATION** or **A/T CLUTCH PRESSURE CONTROL SOLENOID VALVE B AND C REMOVAL AND INSTALLATION**
A/T CLUTCH PRESSURE CONTROL SOLENOID VALVE B	**Test** See **A/T CLUTCH PRESSURE CONTROL SOLENOID VALVE A TEST** or **A/T CLUTCH PRESSURE CONTROL SOLENOID VALVE B AND C TEST**
	Removal and Installation See **A/T CLUTCH PRESSURE CONTROL SOLENOID VALVE A REMOVAL AND INSTALLATION** or **A/T CLUTCH PRESSURE CONTROL SOLENOID VALVE B AND C REMOVAL AND INSTALLATION**
A/T CLUTCH PRESSURE CONTROL SOLENOID VALVE C	**Test** See **A/T CLUTCH PRESSURE CONTROL SOLENOID VALVE A TEST** or **A/T CLUTCH PRESSURE CONTROL SOLENOID VALVE B AND C TEST**
	Removal and Installation See **A/T CLUTCH PRESSURE CONTROL SOLENOID VALVE A REMOVAL AND INSTALLATION** or **A/T CLUTCH PRESSURE CONTROL SOLENOID VALVE B AND C REMOVAL AND INSTALLATION**
ATF TEMPERATURE SENSOR	**TEST**
	REMOVAL AND INSTALLATION
TRANSMISSION FLUID PRESSURE SWITCH A (2ND CLUTCH)	**REMOVAL AND INSTALLATION**
TRANSMISSION FLUID PRESSURE SWITCH B (3RD CLUTCH)	**REMOVAL AND INSTALLATION**
TRANSMISSION RANGE SWITCH	**TEST**
	REMOVAL AND INSTALLATION
POWERTRAIN CONTROL MODULE (PCM)	**Update** See **PCM REMOVAL AND INSTALLATION** or **PCM UPDATE**
	Removal and Installation See **PCM REMOVAL AND INSTALLATION** or **PCM UPDATE**

GETtheMANUALS.org

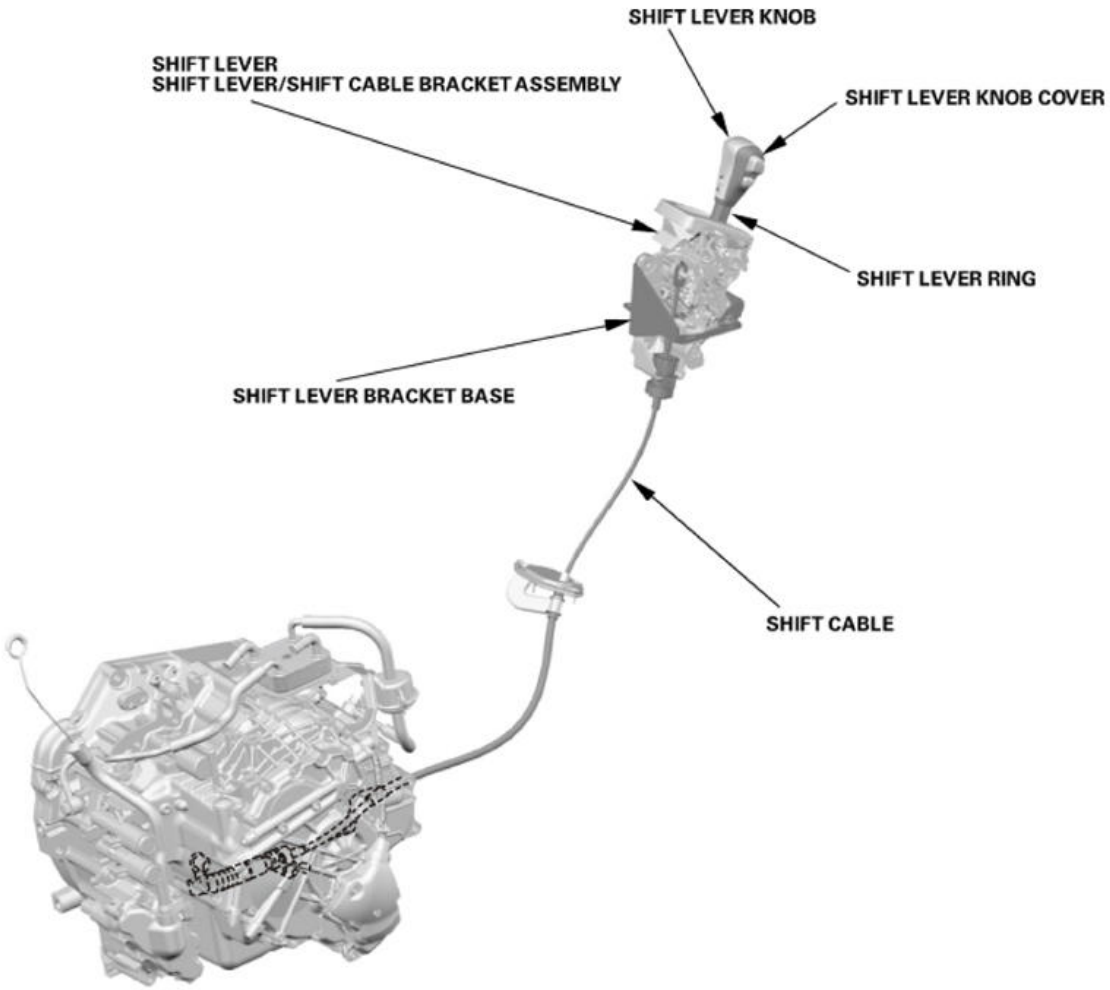

Fig. 1436: Identifying Shift Cable And Shift Lever Related Components
Courtesy of AMERICAN HONDA MOTOR CO., INC.

SHIFT CABLE	**Removal and Installation** See **A/T SHIFT CABLE ADJUSTMENT** or **A/T SHIFT CABLE REMOVAL AND INSTALLATION**
	Adjustment See **A/T SHIFT CABLE ADJUSTMENT** or **A/T SHIFT CABLE REMOVAL AND INSTALLATION**
SHIFT LEVER	**REMOVAL AND INSTALLATION**
SHIFT LEVER/SHIFT CABLE BRACKET ASSEMBLY	**REMOVAL AND INSTALLATION**
SHIFT LEVER BRACKET BASE	**REMOVAL AND INSTALLATION**
SHIFT LEVER KNOB	**REMOVAL AND INSTALLATION**
SHIFT LEVER KNOB COVER	**REMOVAL AND INSTALLATION**
SHIFT LEVER RING	**REMOVAL AND INSTALLATION**

AUTOMATIC TRANSMISSION DISASSEMBLY AND REASSEMBLY

GETtheMANUALS.org

SPECIAL TOOL REQUIRED

Image	Description/Tool Number
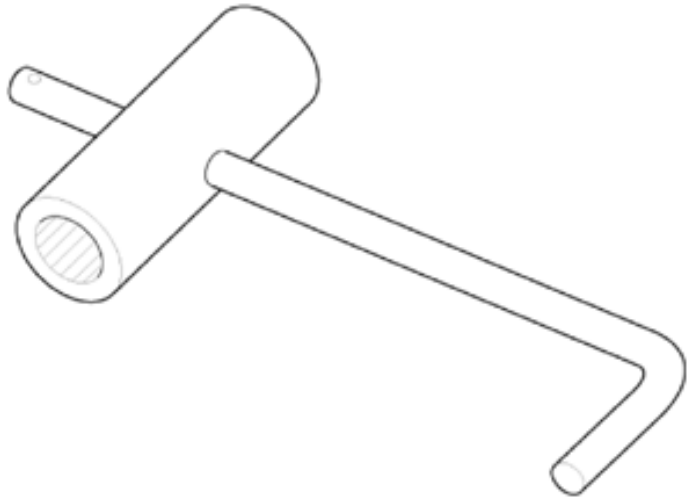	Mainshaft Holder 07GAB-PF50101
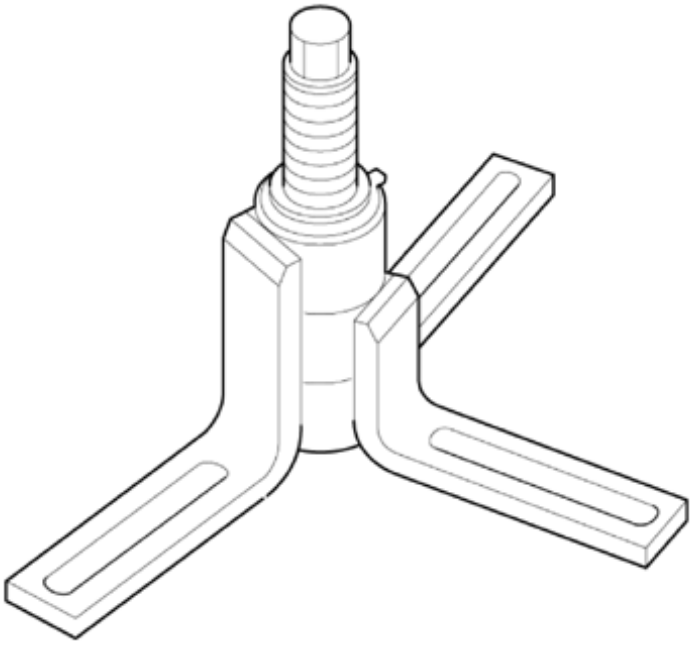	Housing Puller 07HAC-PK40102

EXPLODED VIEW

NOTE: The illustration shows AWD/4WD transmission.

1. Transmission End Cover Exploded View

   Exploded View

GETtheMANUALS.org

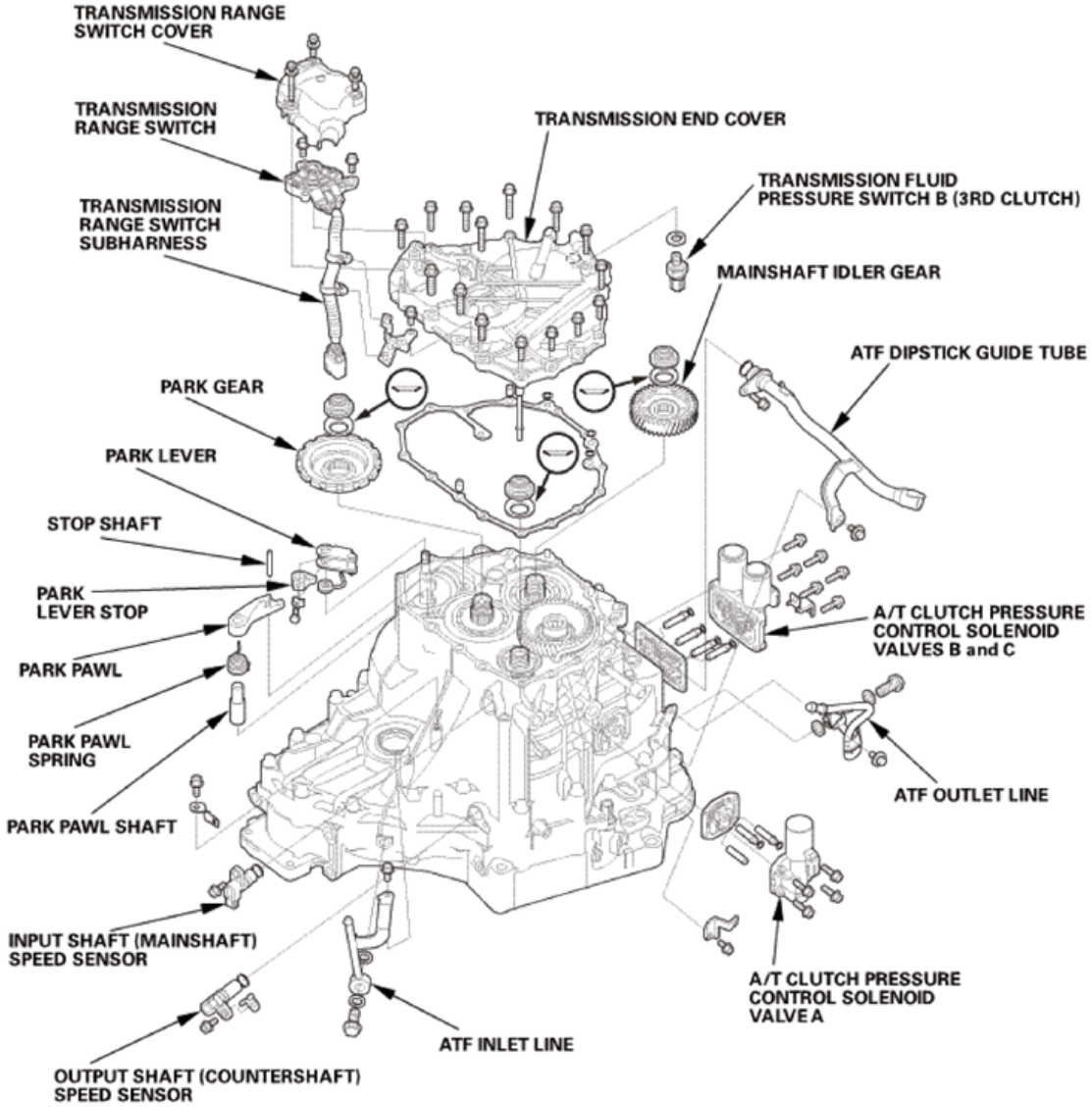

Fig. 1437: Exploded View Of Transmission End Cover
Courtesy of AMERICAN HONDA MOTOR CO., INC.

2. Automatic Shaft Assembly and Housing Exploded View

Exploded View

GETtheMANUALS.org

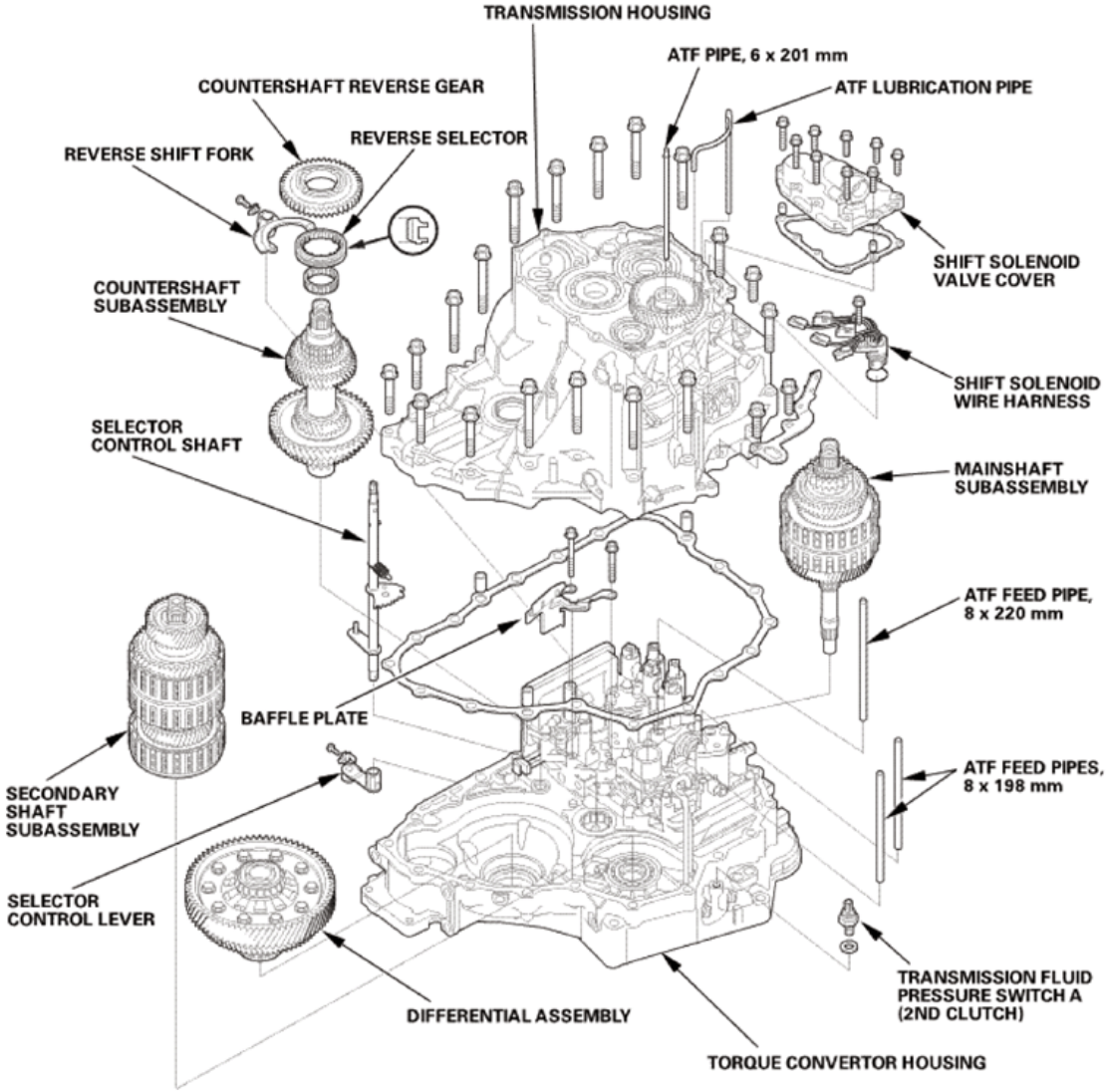

Fig. 1438: Exploded View Of Automatic Shaft Assembly And Housing
Courtesy of AMERICAN HONDA MOTOR CO., INC.

3. Valve Body and ATF Strainer Exploded View

Exploded View

GETtheMANUALS.org

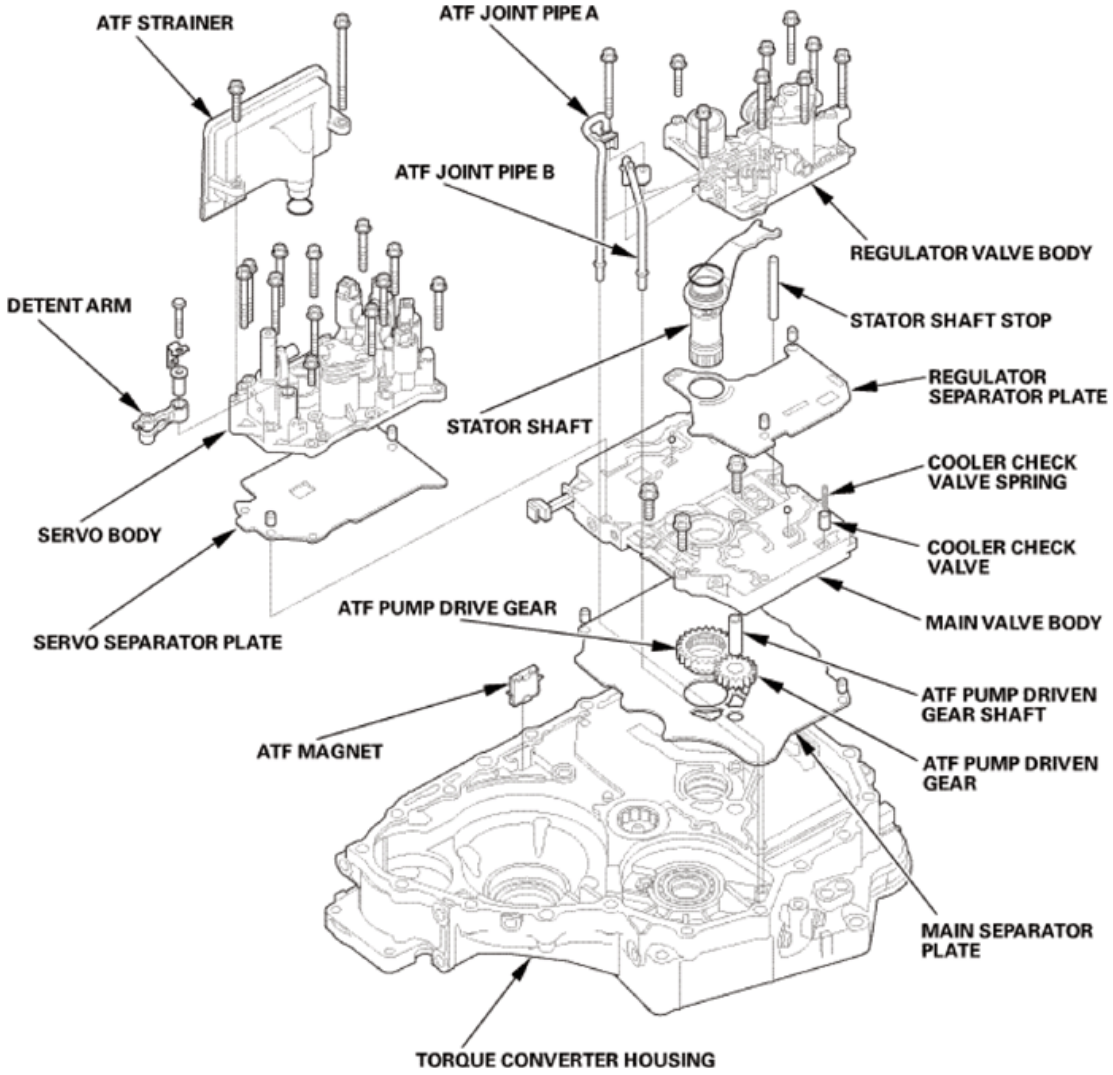

Fig. 1439: Exploded View Of Valve Body And ATF Strainer
Courtesy of AMERICAN HONDA MOTOR CO., INC.

DISASSEMBLY

NOTE: The illustration shows AWD/4WD transmission.

1. Transmission Range Switch Cover
    1. Remove the transmission range switch cover (A).

GETtheMANUALS.org

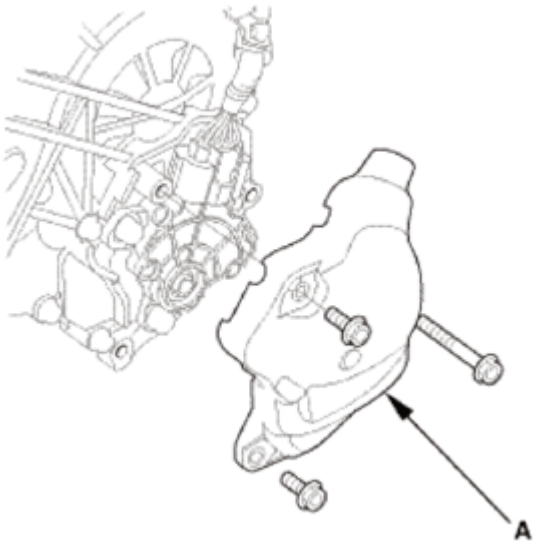

Fig. 1440: Identifying Transmission Range Switch Cover With Bolts
Courtesy of AMERICAN HONDA MOTOR CO., INC.

2. Transmission Range Switch
    1. Remove the transmission range switch (A).

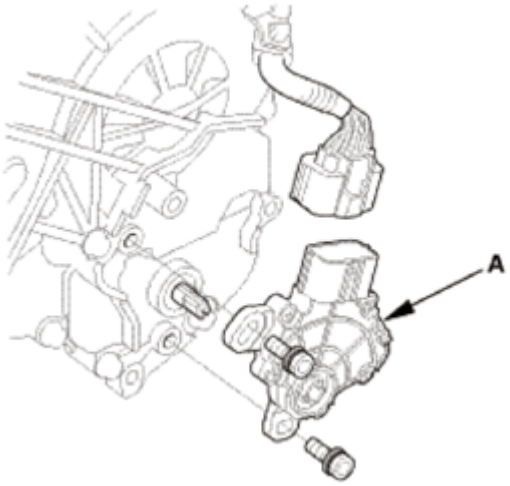

Fig. 1441: Identifying Transmission Range Switch With Bolts
Courtesy of AMERICAN HONDA MOTOR CO., INC.

3. Transmission Range Switch Subharness
    1. Remove the transmission range switch subharness (A).
    2. Remove the clamp brackets (B).

GETtheMANUALS.org

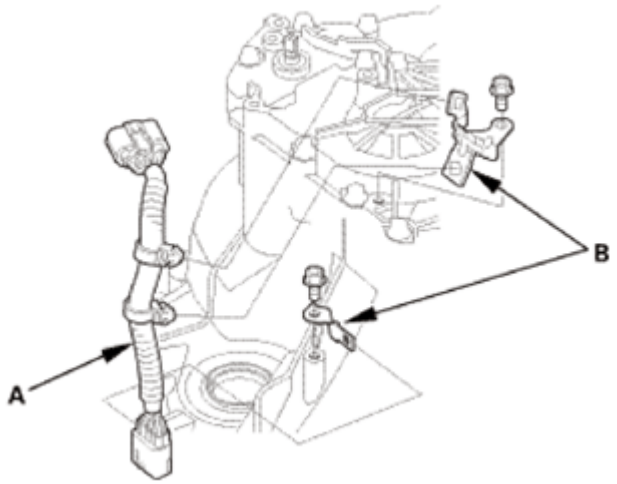

Fig. 1442: Identifying Transmission Range Switch Subharness And Clamp Brackets
Courtesy of AMERICAN HONDA MOTOR CO., INC.

4. Transmission Fluid Pressure Switch B (3rd Clutch)
    1. Remove transmission fluid pressure switch B (3rd clutch) and the sealing washer (A).

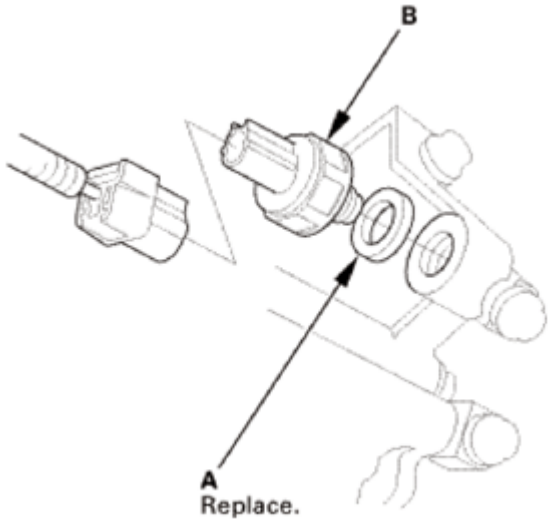

Fig. 1443: Identifying Transmission Fluid Pressure Switch (3rd Clutch) And Sealing Washer
Courtesy of AMERICAN HONDA MOTOR CO., INC.

5. Transmission End Cover
    1. Remove the end cover (A), the dowel pins (B), the O-rings (C), and the gasket (D).

GETtheMANUALS.org

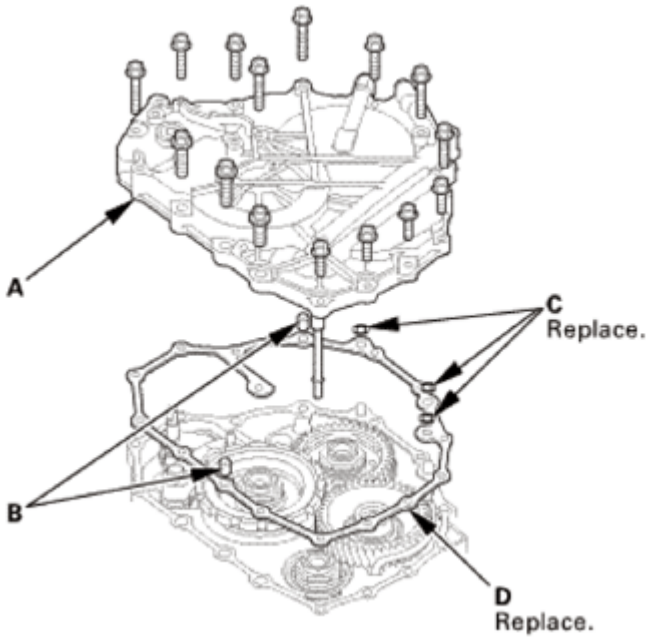

Fig. 1444: Identifying Transmission End Cover, Dowel Pins, O-Rings And Gasket With Bolts
Courtesy of AMERICAN HONDA MOTOR CO., INC.

6. Harness Cover Clamp Bracket
    1. Remove the harness cover clamp bracket (A).

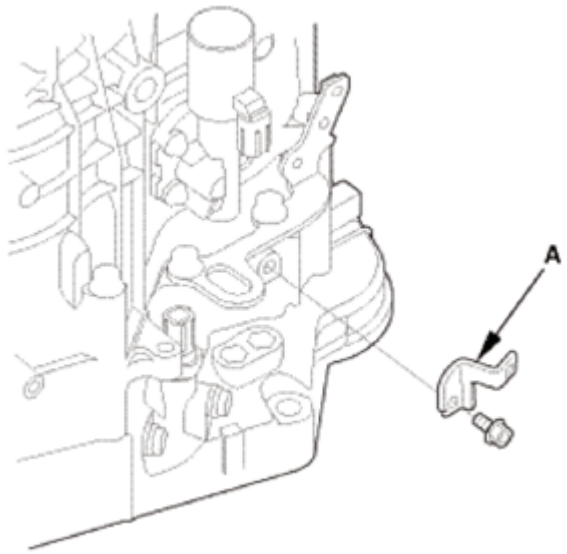

Fig. 1445: Identifying Harness Cover Clamp Bracket
Courtesy of AMERICAN HONDA MOTOR CO., INC.

7. Input Shaft (Mainshaft) Speed Sensor
    1. Remove the input shaft (mainshaft) speed sensor (A).
    2. Remove the O-ring (B) from the input shaft (mainshaft) speed sensor.

GETtheMANUALS.org

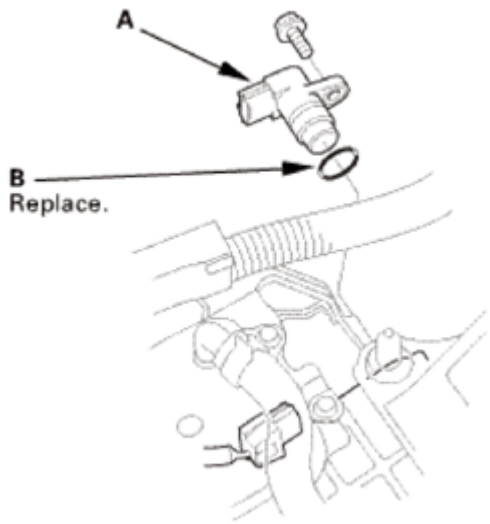

Fig. 1446: Identifying Input Shaft (Mainshaft) Speed Sensor And O-Ring
Courtesy of AMERICAN HONDA MOTOR CO., INC.

8. Output Shaft (Countershaft) Speed Sensor
    1. Remove the output shaft (countershaft) speed sensor (A) and the sensor washer (B).
    2. Remove the O-ring (C) from the output shaft (countershaft) speed sensor.

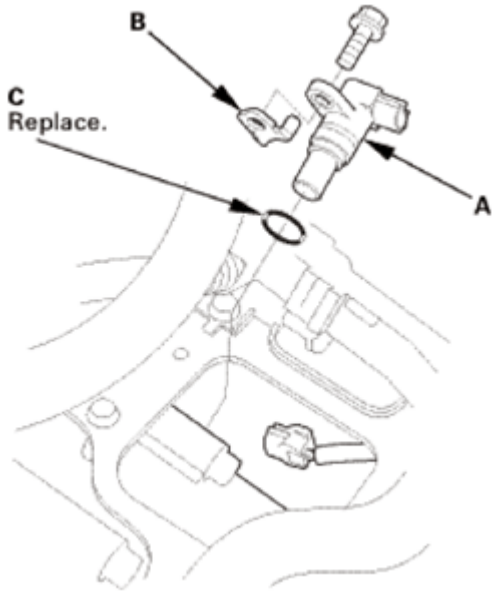

Fig. 1447: Identifying Output Shaft (Countershaft) Speed Sensor, Sensor Washer And O-Ring
Courtesy of AMERICAN HONDA MOTOR CO., INC.

9. A/T Clutch Pressure Control Solenoid Valve A
    1. Remove A/T clutch pressure control solenoid valve A.
    2. Remove the 35 mm ATF pipe (B), the ATF joint pipes (C), the O-rings (D), and the gasket (E).

GETtheMANUALS.org

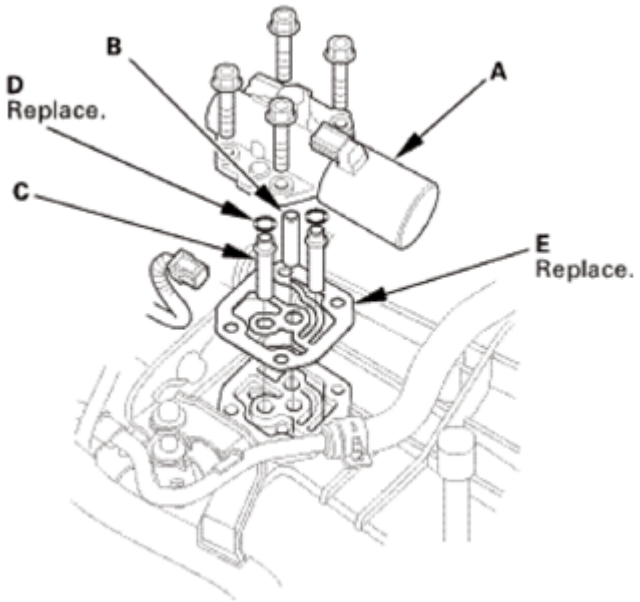

Fig. 1448: Identifying A/T Clutch Pressure Control Solenoid Valve, ATF Pipe, ATF Joint Pipes, O-Rings And Gasket With Bolts
Courtesy of AMERICAN HONDA MOTOR CO., INC.

10. A/T Clutch Pressure Control Solenoid Valve B and C
    1. Remove the clamp bracket (A) and A/T clutch pressure control solenoid valves B and C.
    2. Remove the ATF joint pipes (D), the O-rings (E), and the gasket (F).

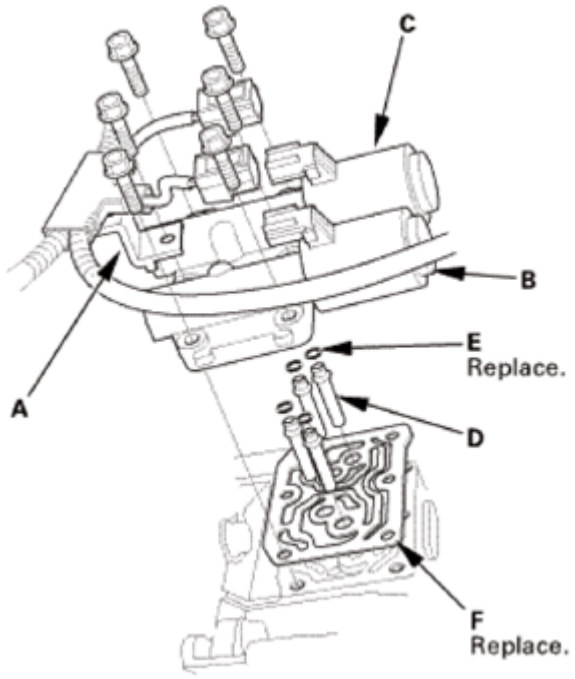

Fig. 1449: Identifying A/T Clutch Pressure Control Solenoid Valves, Clamp Bracket, ATF

GETtheMANUALS.org

Joint Pipes, O-Rings And Gasket
Courtesy of AMERICAN HONDA MOTOR CO., INC.

11. ATF Inlet Line
    1. Remove the banjo bolt (A) and the sealing washers (B).
    2. Remove the ATF inlet line (C).

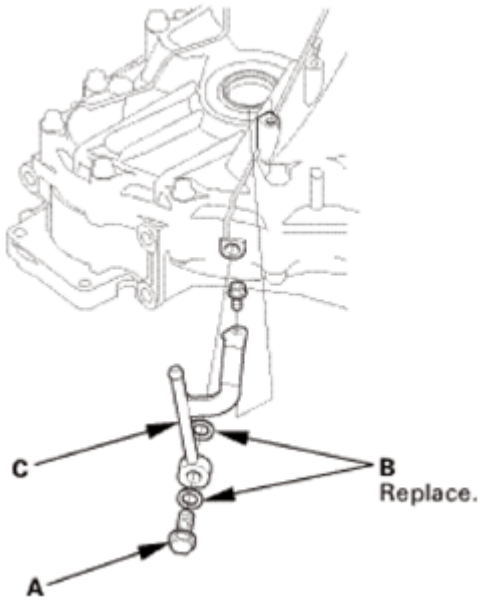

Fig. 1450: Identifying ATF Inlet Line, Banjo Bolt And Sealing Washers
Courtesy of AMERICAN HONDA MOTOR CO., INC.

12. ATF Outlet Line
    1. Remove the banjo bolt (A) and the sealing washers (B).
    2. Remove the ATF outlet line (C).

GETtheMANUALS.org

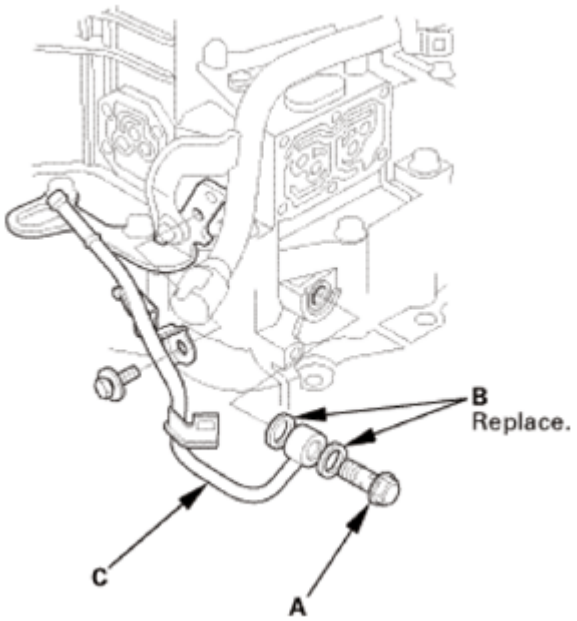

Fig. 1451: Identifying ATF Outlet Line, Banjo Bolt And Sealing Washers
Courtesy of AMERICAN HONDA MOTOR CO., INC.

13. Dipstick Guide Tube
    1. Remove the ATF dipstick guide tube (A).
    2. Remove the O-ring (B) from the ATF dipstick guide tube.

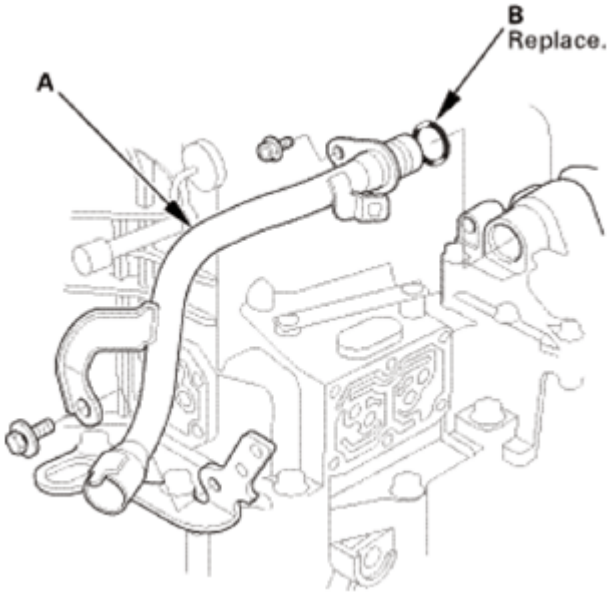

Fig. 1452: Identifying ATF Dipstick Guide Tube And O-Ring
Courtesy of AMERICAN HONDA MOTOR CO., INC.

14. A/T Shift Solenoid Cover

GETtheMANUALS.org

1. Remove the shift solenoid valve cover (A), the dowel pins (B), and the gasket (C).

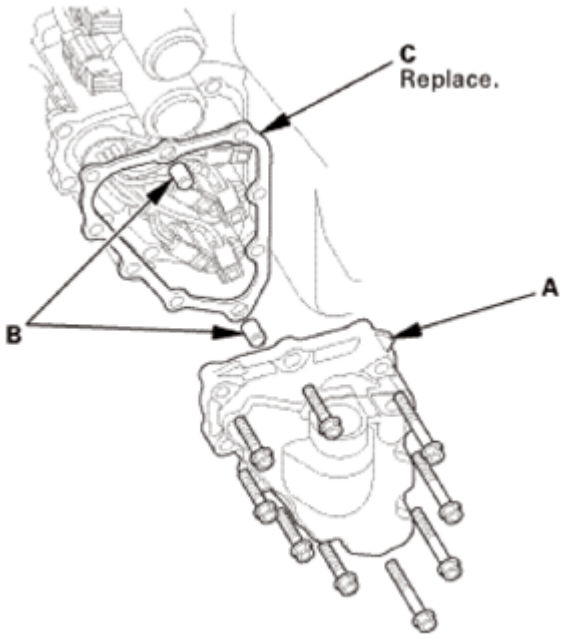

Fig. 1453: Identifying Shift Solenoid Valve Cover, Dowel Pins And Gasket
Courtesy of AMERICAN HONDA MOTOR CO., INC.

15. Shift Solenoid Wire Harness
    1. Disconnect the connectors (A).
    2. Remove the shift solenoid wire harness (B).
    3. Remove the O-ring (C) from the shift solenoid wire harness.

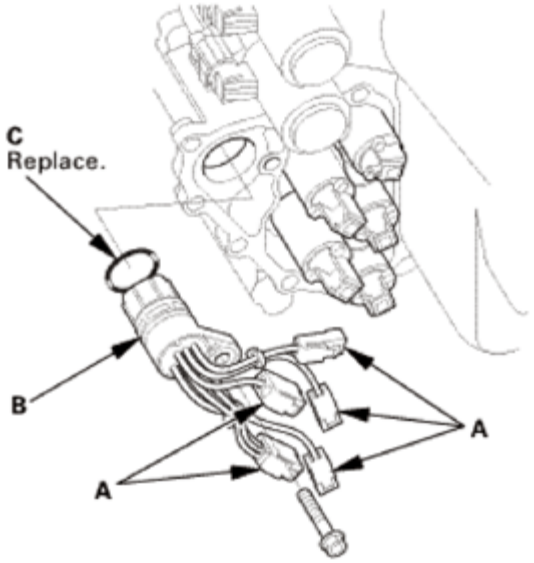

Fig. 1454: Identifying Shift Solenoid Wire Harness, Connectors And O-Ring

GETtheMANUALS.org

Courtesy of AMERICAN HONDA MOTOR CO., INC.

16. ATF Feed Pipe/Lubrication Pipe
    1. Remove the 6 x 201 mm ATF pipe (A).
    2. Remove the ATF lubrication pipe (B).
    3. Remove the 8 x 220 mm ATF pipe (C).
    4. Remove the 8 x 198 mm ATF pipes (D).

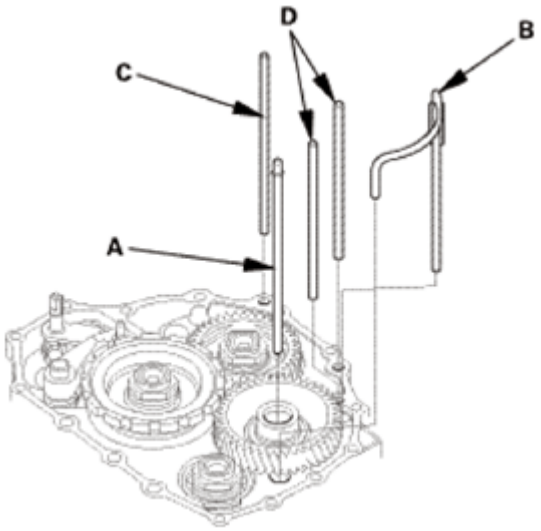

Fig. 1455: Identifying ATF Feed Pipes And Lubrication Pipe
Courtesy of AMERICAN HONDA MOTOR CO., INC.

17. End Cover Idler Gear Assembly
    1. Install the mainshaft holder onto the mainshaft.
    2. Engage the park pawl with the park gear.

GETtheMANUALS.org

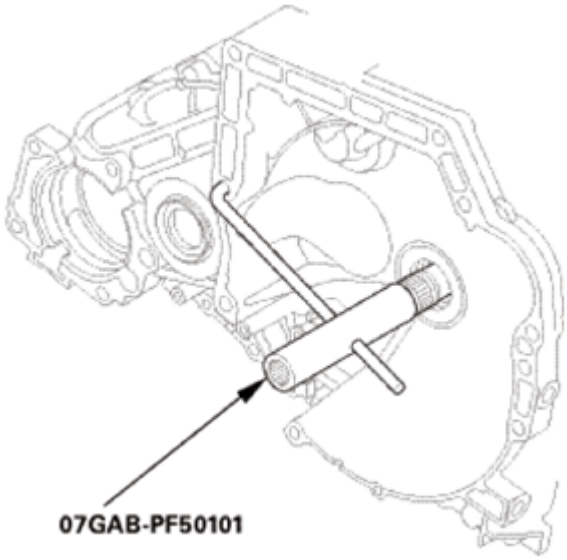

Fig. 1456: Installing Mainshaft Holder Onto Mainshaft
Courtesy of AMERICAN HONDA MOTOR CO., INC.

3. Using a chisel, cut the lock tab (A) of the locknut (B).

NOTE: **Keep all of the chiseled particles out of the transmission.**

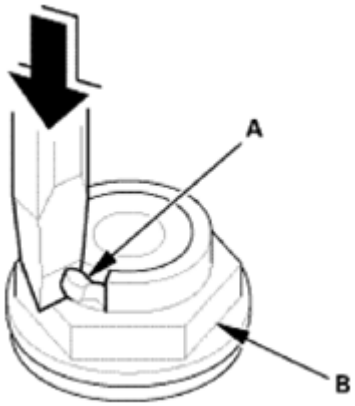

Fig. 1457: Cutting Lock Tab Of Locknut Using Chisel
Courtesy of AMERICAN HONDA MOTOR CO., INC.

4. Remove the locknuts (A) and the conical spring washers (B) from each shaft.

NOTE:

- **The countershaft and secondary shaft locknuts have left-hand threads.**
- **Keep all of the chiseled particles out of the transmission.**
- **Clean the old locknuts; they are used to install the press fit idler gears and park gear.**

GETtheMANUALS.org

5. Remove the mainshaft holder.

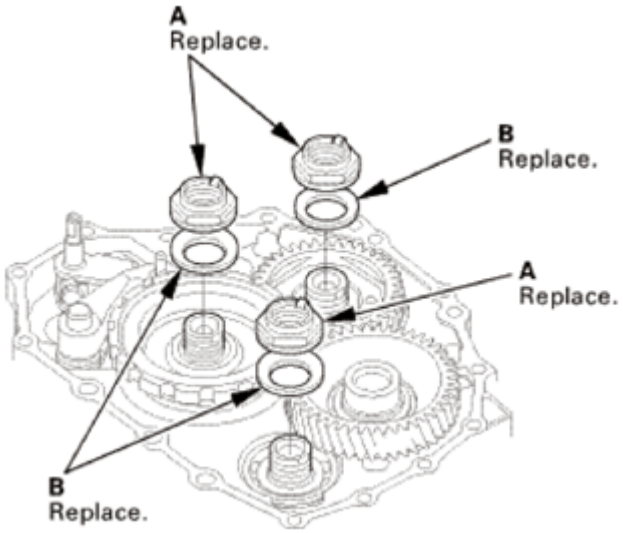

Fig. 1458: Identifying Locknuts And Conical Spring Washers
Courtesy of AMERICAN HONDA MOTOR CO., INC.

6. Remove the park pawl (A), the park pawl spring (B), the park pawl shaft (C), and the stop shaft (D).
7. Pry down the lock tab (E) of the lock washer (F).
8. Remove the lock bolt (G) and the lock washer.
9. Remove the park lever (H), the park lever stop (I), and the park lever spring (J).

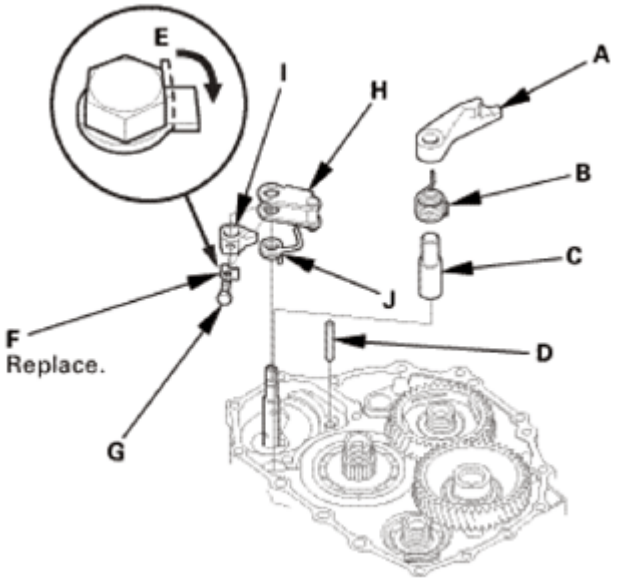

Fig. 1459: Prying Down Lock Tab Of Lock Washer
Courtesy of AMERICAN HONDA MOTOR CO., INC.

GETtheMANUALS.org

10. Place a spacer (A) on the countershaft (B).
11. Set a commercially available bearing puller (C) on the park gear (D).
12. Remove the park gear.

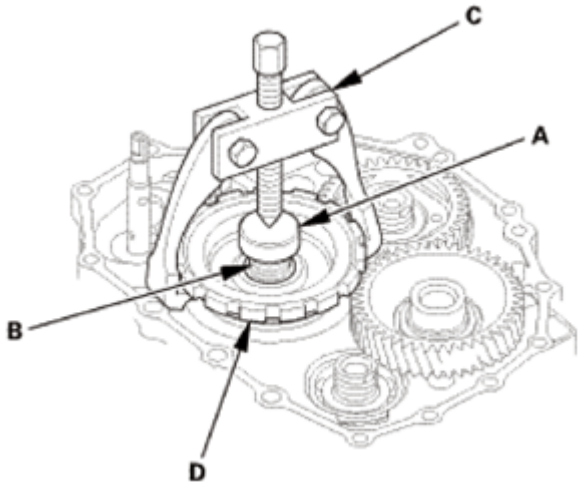

Fig. 1460: Setting Commercially Available Bearing Puller On Park Gear
Courtesy of AMERICAN HONDA MOTOR CO., INC.

13. Install a puller (A) with two 6 x 1.0 mm bolts (B) on the mainshaft idler gear (C).
14. Set a spacer (D) between the puller and the mainshaft (E).
15. Remove the mainshaft idler gear.

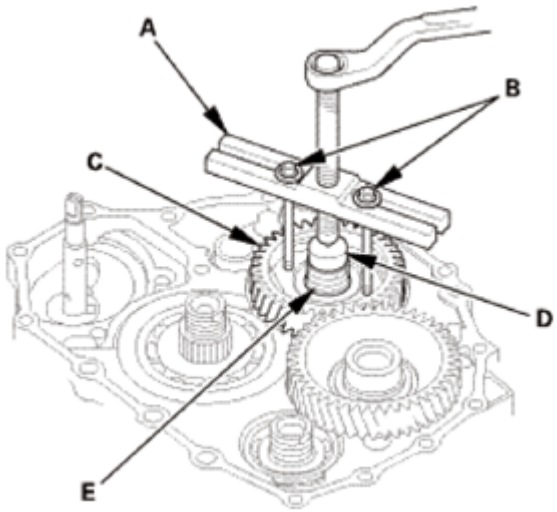

Fig. 1461: Installing Puller With 6 X 1.0 mm Bolts On Mainshaft Idler Gear
Courtesy of AMERICAN HONDA MOTOR CO., INC.

18. Automatic Transmission Housing
    1. Align the spring pin (A) on the selector control shaft (B) with the transmission housing groove (C).

GETtheMANUALS.org

NOTE: **Do not squeeze the end of the selector control shaft tips together when turning the control shaft. If the tips are squeezed together, it will cause a faulty shift position signal or position due to the play between the selector control shaft and the transmission range switch.**

2. Remove the transmission housing mounting bolts (D) (2WD: 19 bolts, AWD/4WD: 20 bolts).
3. Install the housing puller over the mainshaft.
4. Remove the transmission housing (E) using the housing puller.
5. Remove the dowel pins (F) and the gasket (G).

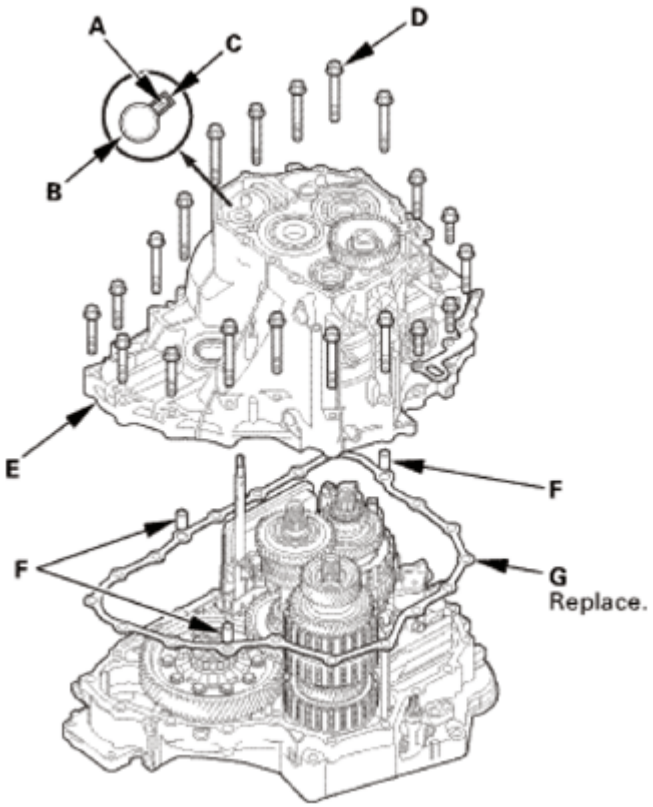

Fig. 1462: Identifying Spring Pin, Selector Control Shaft, Transmission Housing Groove, Transmission Housing, Mounting Bolts And Gasket
Courtesy of AMERICAN HONDA MOTOR CO., INC.

GETtheMANUALS.org

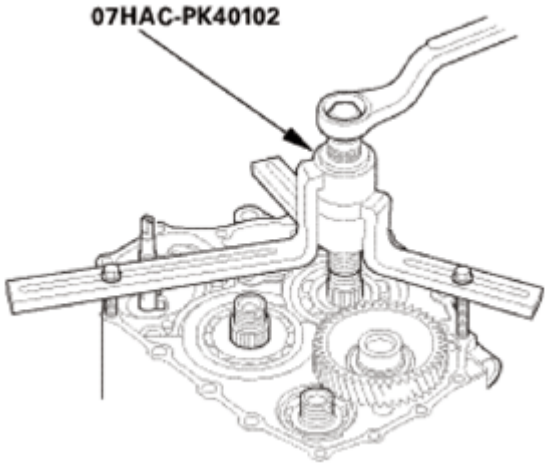

Fig. 1463: Installing Housing Puller Over Mainshaft
Courtesy of AMERICAN HONDA MOTOR CO., INC.

19. A/T Countershaft Reverse Gear
    1. Remove the countershaft reverse gear (A).
    2. Remove the needle bearing (B).

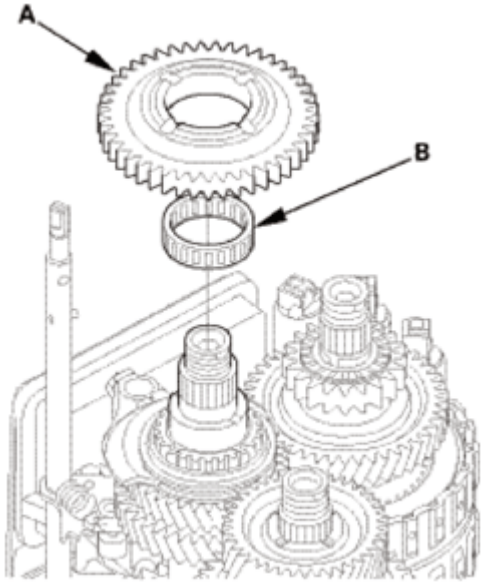

Fig. 1464: Identifying Countershaft Reverse Gear And Needle Bearing
Courtesy of AMERICAN HONDA MOTOR CO., INC.

20. Reverse Shift fork
    1. Pry down the lock tab (A) of the lock washer (B).
    2. Remove the lock bolt (C) and the lock washer.
    3. Remove the reverse shift fork (D) and the reverse selector (E) together.

GETtheMANUALS.org

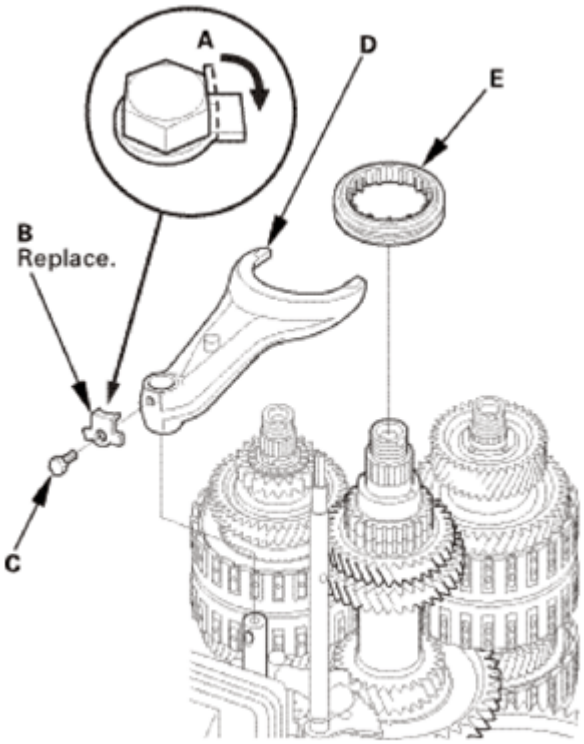

Fig. 1465: Prying Down Lock Tab Of Lock Washer
Courtesy of AMERICAN HONDA MOTOR CO., INC.

21. Selector Control Lever (Except 2WD of USA Produced Models)
    1. Pry down the lock tab (A) of the lock washer (B).
    2. Remove the lock bolt (C) and the lock washer.
    3. Remove the selector control lever (D).

Except 2WD of USA Produced Models

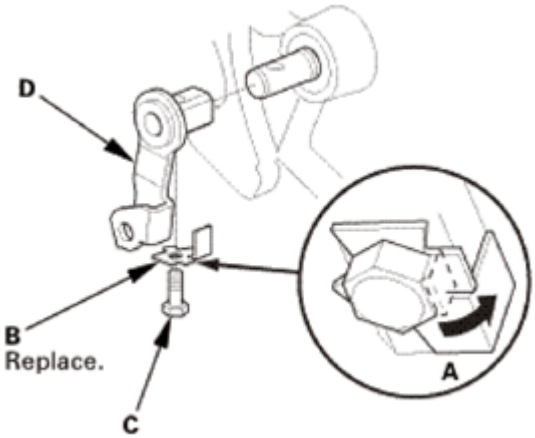

Fig. 1466: Prying Down Lock Tab Of Lock Washer (Except 2WD Of USA Produced Models)
Courtesy of AMERICAN HONDA MOTOR CO., INC.

GETtheMANUALS.org

22. Selector Control Shaft
    1. Unhook the detent arm spring (A).

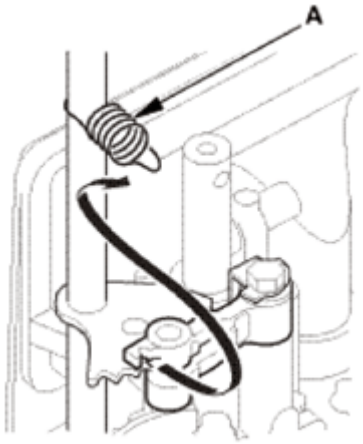

Fig. 1467: Unhooking Detent Arm Spring
Courtesy of AMERICAN HONDA MOTOR CO., INC.

    2. Separate the manual valve lever pin (A) on the selector control shaft (B) from the guide of the manual valve (C).

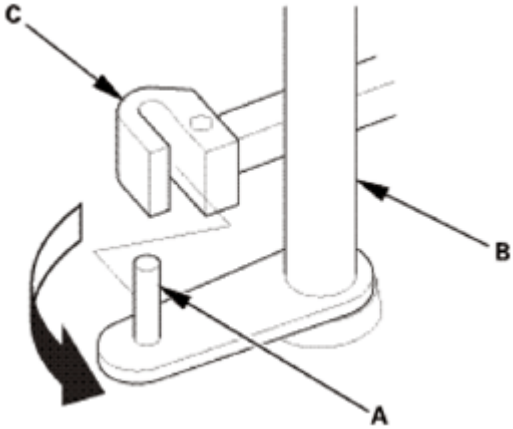

Fig. 1468: Separating Manual Valve Lever Pin On Selector Control Shaft From Guide Of Manual Valve
Courtesy of AMERICAN HONDA MOTOR CO., INC.

    3. Remove the selector control shaft (A).

GETtheMANUALS.org

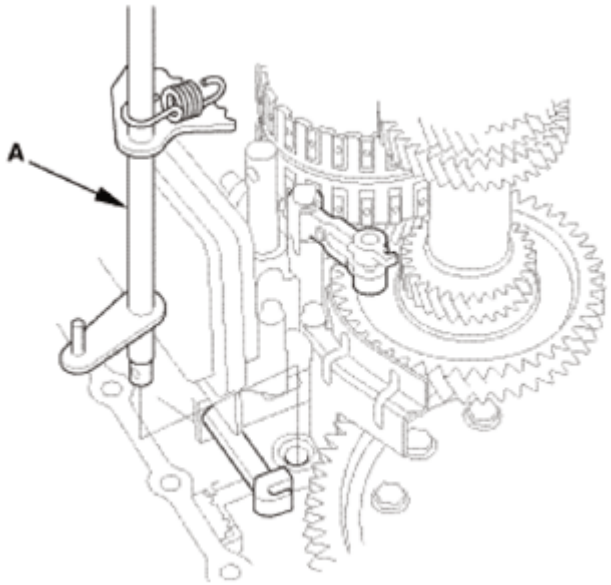

Fig. 1469: Identifying Selector Control Shaft
Courtesy of AMERICAN HONDA MOTOR CO., INC.

23. Mainshaft and Countershaft and Secondary Shaft Assembly
    1. Turn the detent arm (A) away from the countershaft (B).

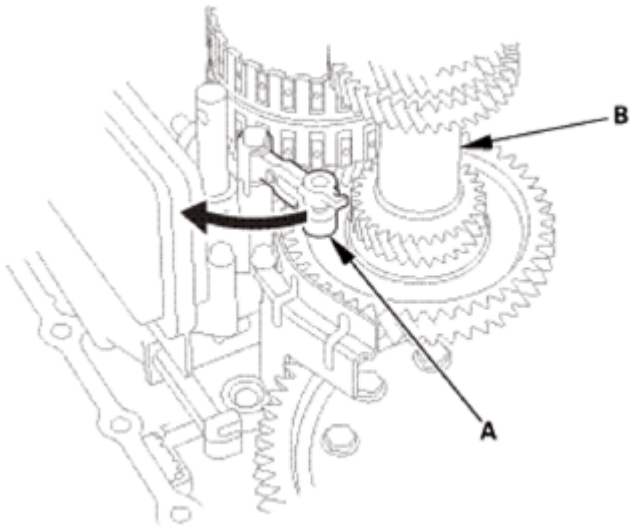

Fig. 1470: Turning Detent Arm Away From Countershaft
Courtesy of AMERICAN HONDA MOTOR CO., INC.

    2. Remove the mainshaft subassembly (A), the countershaft subassembly (B), and the secondary shaft subassembly (C) together.

NOTE: Do not bump the countershaft on the baffle plate (D).

GETtheMANUALS.org

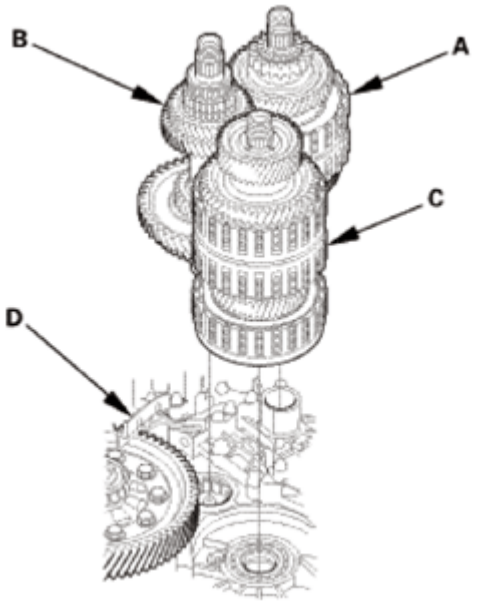

Fig. 1471: Identifying Mainshaft Subassembly, Countershaft Subassembly, Secondary Shaft Subassembly And Baffle Plate
Courtesy of AMERICAN HONDA MOTOR CO., INC.

24. Differential Assembly
    1. Remove the baffle plate (A).
    2. Remove the differential assembly (B).

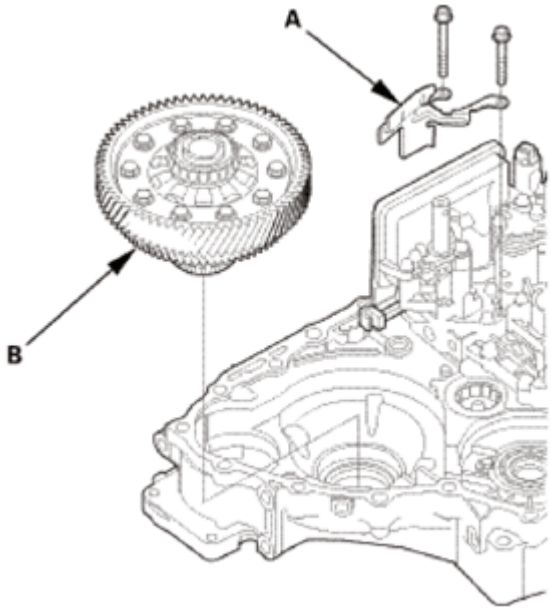

Fig. 1472: Identifying Differential Assembly And Baffle Plate
Courtesy of AMERICAN HONDA MOTOR CO., INC.

GETtheMANUALS.org

25. Regulator Valve Body
    1. Remove ATF joint pipe A.
    2. Remove ATF joint pipe B.

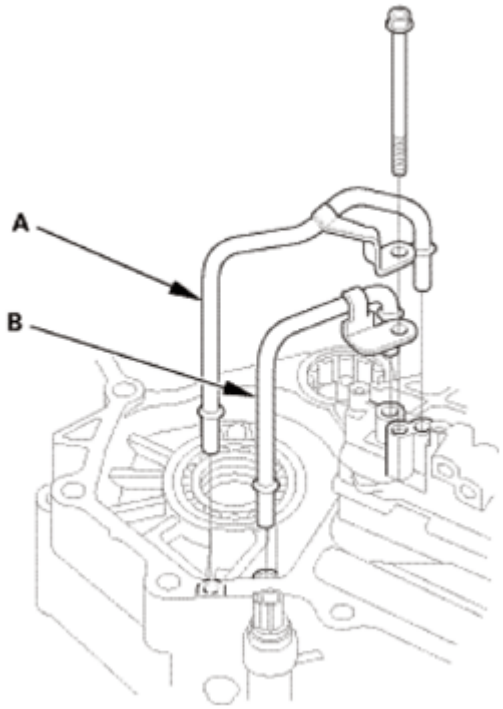

Fig. 1473: Identifying ATF Joint Pipes
Courtesy of AMERICAN HONDA MOTOR CO., INC.

3. Remove the regulator valve body (A).

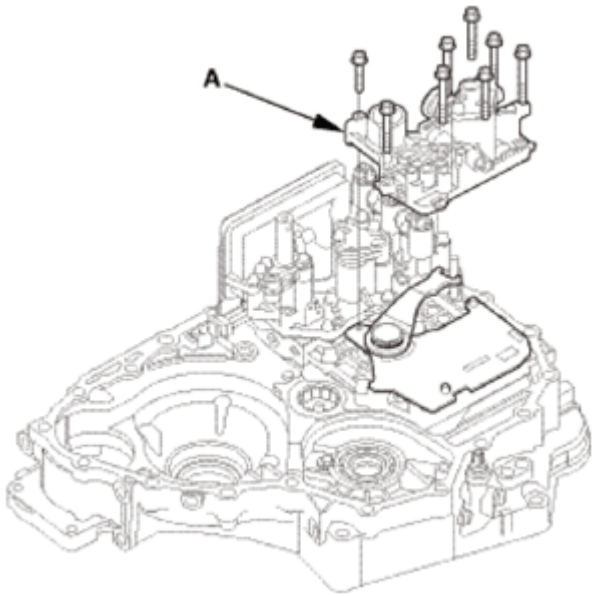

GETtheMANUALS.org

Fig. 1474: Identifying Regulator Valve Body With Mounting Bolts
Courtesy of AMERICAN HONDA MOTOR CO., INC.

4. Remove the stator shaft (A).
5. Remove the O-ring (B) from the stator shaft.
6. Remove the stator shaft stop (C).

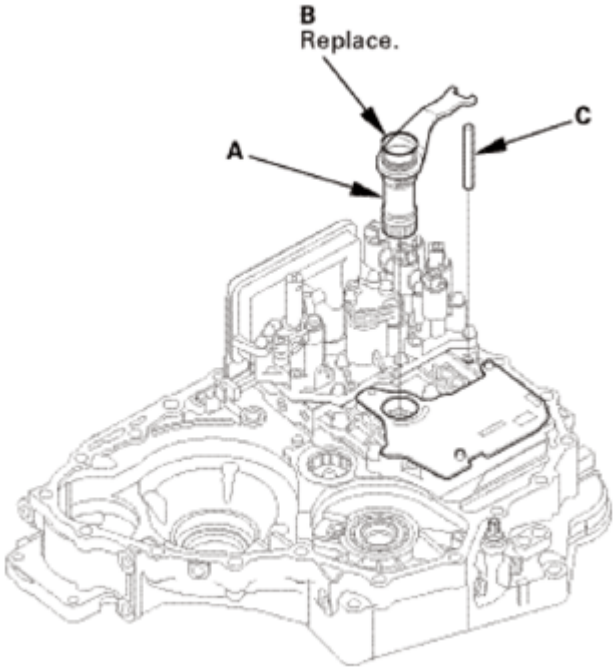

Fig. 1475: Identifying Stator Shaft, O-Ring And Stator Shaft Stop
Courtesy of AMERICAN HONDA MOTOR CO., INC.

7. Remove the regulator separator plate (A) and the dowel pins (B).

GETtheMANUALS.org

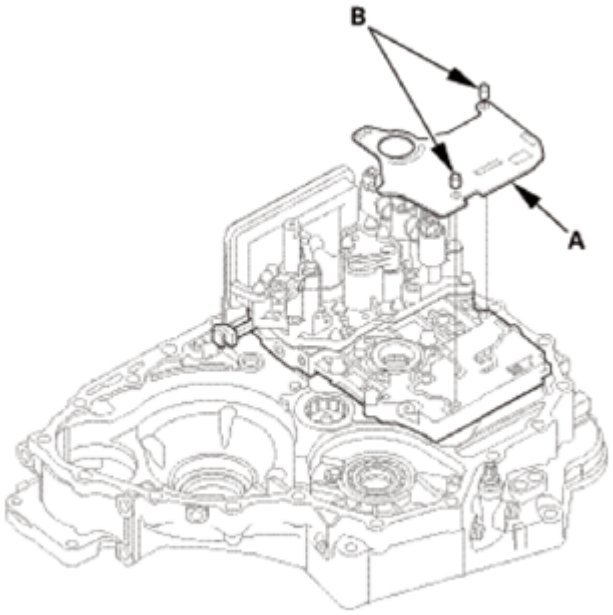

Fig. 1476: Identifying Regulator Separator Plate And Dowel Pins
Courtesy of AMERICAN HONDA MOTOR CO., INC.

26. Shift Solenoid Valve

NOTE: **Do not hold the shift solenoid valve connector to remove the shift solenoid valves. Be sure to hold the shift solenoid valve body.**

1. Remove shift solenoid valve A.
2. Remove shift solenoid valve B.
3. Remove shift solenoid valve C.
4. Remove the O-rings (D) from the shift solenoid valves.

GETtheMANUALS.org

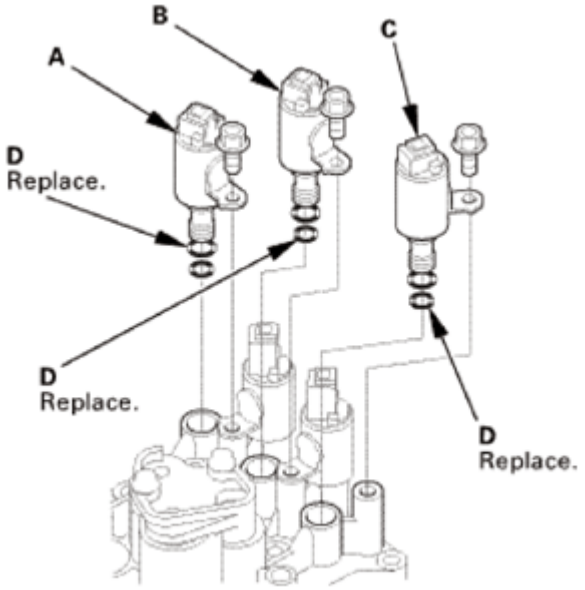

Fig. 1477: Identifying Shift Solenoid Valves And O-Rings
Courtesy of AMERICAN HONDA MOTOR CO., INC.

5. Remove shift solenoid valve D.
6. Remove shift solenoid valve E.
7. Remove the O-rings (A) from the shift solenoid valves.

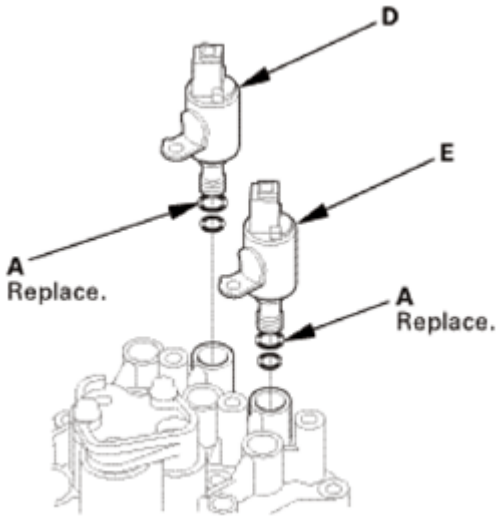

Fig. 1478: Identifying Shift Solenoid Valves And O-Rings
Courtesy of AMERICAN HONDA MOTOR CO., INC.

27. ATF Strainer
    1. Remove the ATF strainer (A) and the O-ring (B).

GETtheMANUALS.org

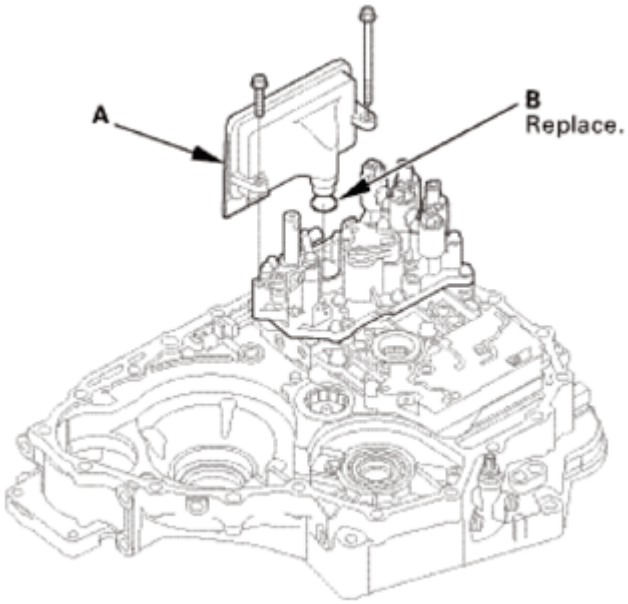

Fig. 1479: Identifying ATF Strainer And O-Ring With Mounting Bolts
Courtesy of AMERICAN HONDA MOTOR CO., INC.

2. Clean the inlet opening (A) of the ATF strainer (B) thoroughly with compressed air, then check that it is in good condition and that the inlet opening is not clogged.
3. Test the ATF strainer by pouring clean ATF through the inlet opening, and replace it if it is clogged or damaged.

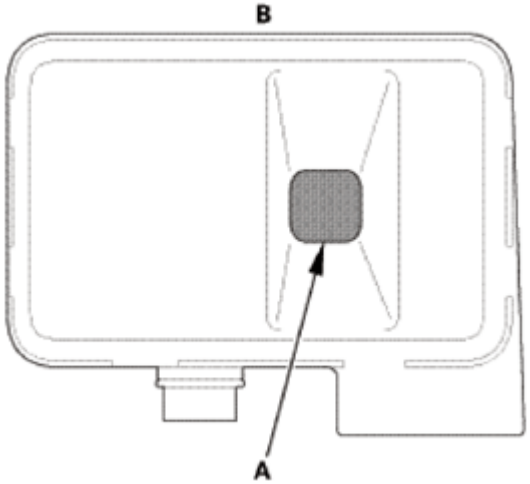

Fig. 1480: Identifying Inlet Opening Of ATF Strainer
Courtesy of AMERICAN HONDA MOTOR CO., INC.

28. Detent Arm
    1. Pry down the lock tab (A) of the lock washer (B).
    2. Remove the lock bolt (C) and the lock washer.

GETtheMANUALS.org

3. Remove the detent arm (D) and the arm collar (E).

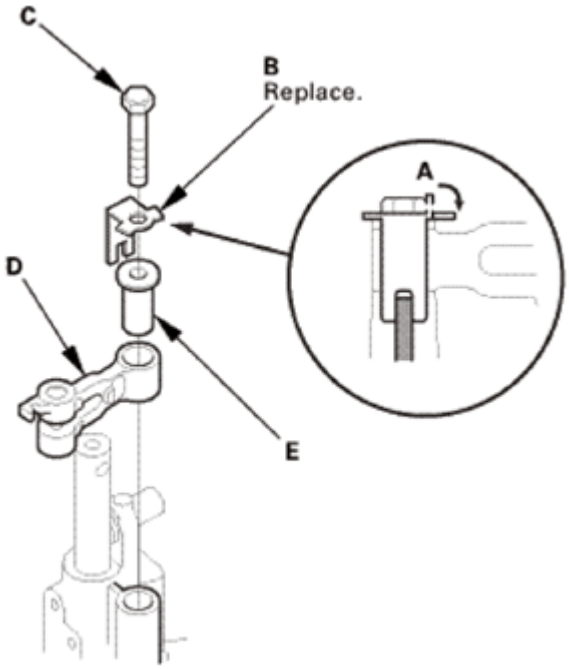

Fig. 1481: Prying Down Lock Tab Of Lock Washer
Courtesy of AMERICAN HONDA MOTOR CO., INC.

29. Servo Body
    1. Remove the servo body (A).

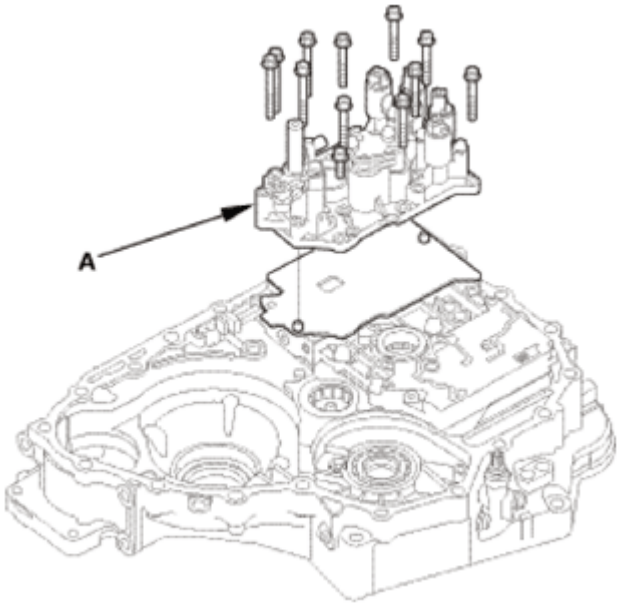

Fig. 1482: Identifying Servo Body With Mounting Bolts
Courtesy of AMERICAN HONDA MOTOR CO., INC.

GETtheMANUALS.org

2. Remove the servo separator plate (A) and the dowel pins (B).

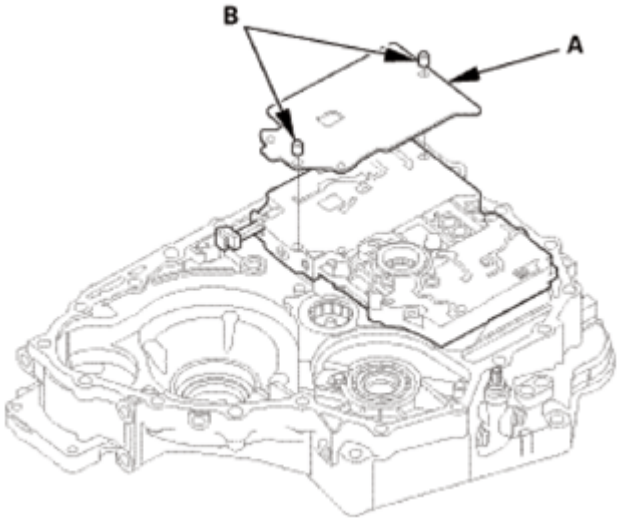

Fig. 1483: Identifying Servo Separator Plate And Dowel Pins
Courtesy of AMERICAN HONDA MOTOR CO., INC.

30. Main Valve Body
    1. Remove the cooler check valve spring (A) and the cooler check valve (B).
    2. Remove the main valve body (C).

NOTE: **Do not let the check balls (D) fall out, and do not use a magnet to remove the check balls, it may magnetize them.**

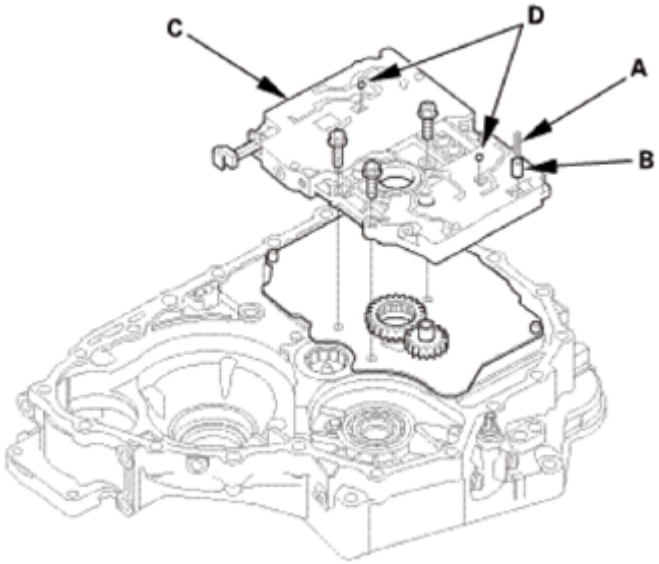

Fig. 1484: Identifying Cooler Check Valve, Spring, Main Valve Body And Check Balls
Courtesy of AMERICAN HONDA MOTOR CO., INC.

GETtheMANUALS.org

3. Remove the ATF pump driven gear shaft (A).
4. Remove the ATF pump drive gear (B) and the ATF pump driven gear (C).

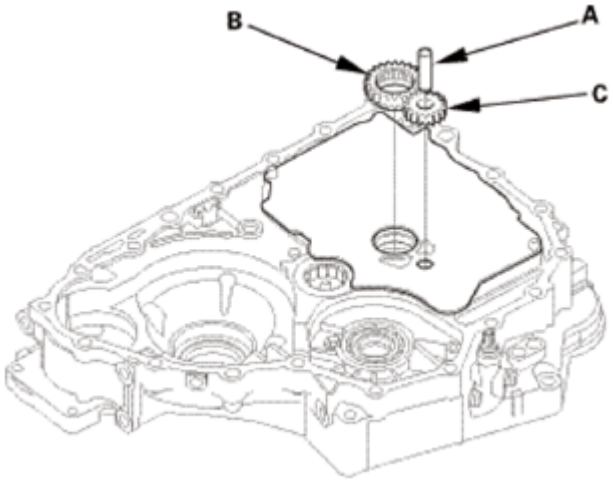

Fig. 1485: Identifying ATF Pump Driven Gear Shaft, ATF Pump Drive And Driven Gear
Courtesy of AMERICAN HONDA MOTOR CO., INC.

5. Remove the main separator plate (A) and the dowel pins (B).

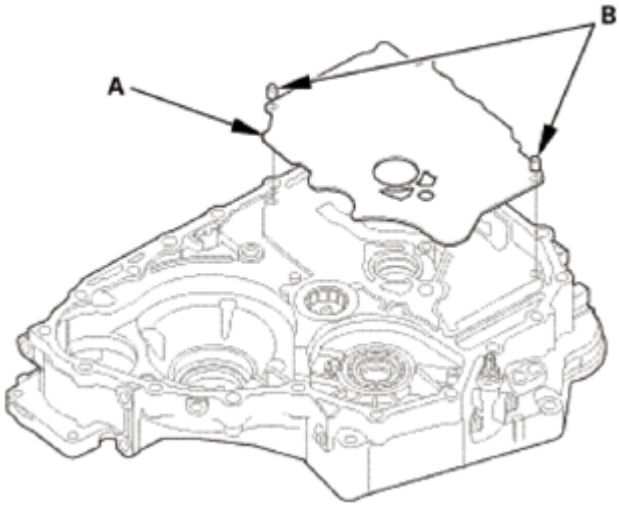

Fig. 1486: Identifying Main Separator Plate And Dowel Pins
Courtesy of AMERICAN HONDA MOTOR CO., INC.

31. Torque Converter Housing
    1. Remove transmission fluid pressure switch A (2nd clutch) and the sealing washer (B).
    2. Remove the magnet (C).
    3. Remove the drain plug (D) and the sealing washer (E).

GETtheMANUALS.org

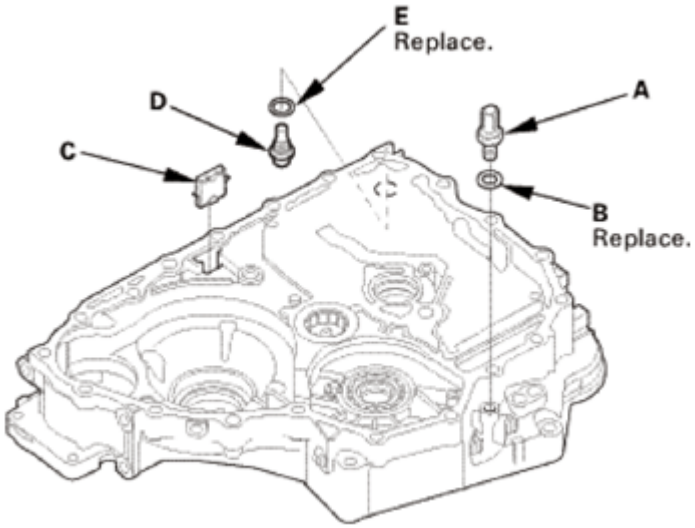

Fig. 1487: Identifying Transmission Fluid Pressure Switch (2nd Clutch), Magnet, Drain Plug And Sealing Washer
Courtesy of AMERICAN HONDA MOTOR CO., INC.

REASSEMBLY

NOTE:

- **Apply a light coat of clean ATF on all tubes, O-rings, and moving parts before reassembly.**
- **The illustration shows AWD/4WD transmission.**

1. Torque Converter Housing
    1. Install transmission fluid pressure switch A (2nd clutch) using a new sealing washer (B).
    2. Clean the magnet (C), then install it.
    3. Install the drain plug (D) using a new sealing washer (E).

GETtheMANUALS.org

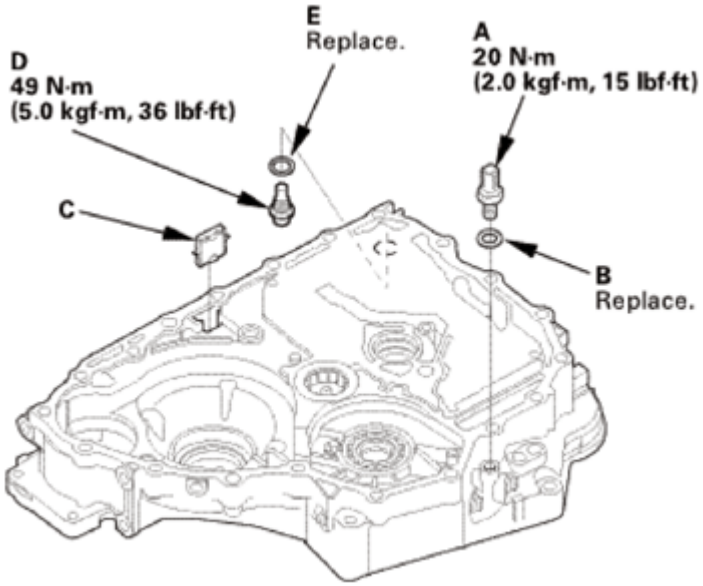

Fig. 1488: Identifying Transmission Fluid Pressure Switch (2nd Clutch), Magnet, Drain Plug And Sealing Washer With Torque Specification
Courtesy of AMERICAN HONDA MOTOR CO., INC.

2. Main Valve Body
    1. Install the main separator plate (A) and the dowel pins (B).

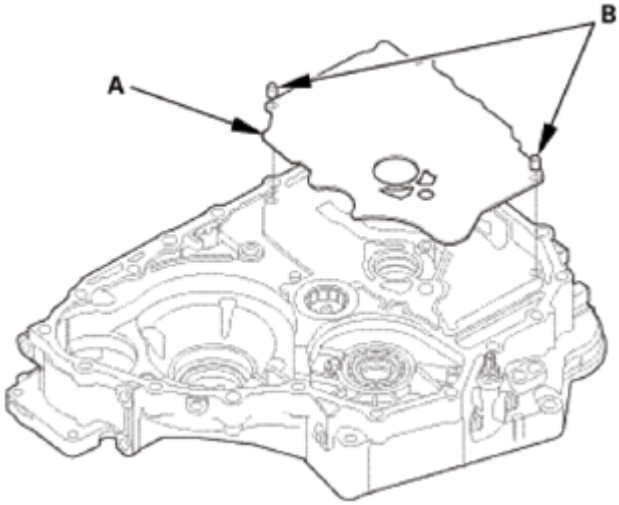

Fig. 1489: Identifying Main Separator Plate And Dowel Pins
Courtesy of AMERICAN HONDA MOTOR CO., INC.

    2. Install the ATF pump drive gear (A) and the ATF pump driven gear (B).

NOTE: **Install the ATF pump driven gear with its grooved and chamfered side facing down.**

GETtheMANUALS.org

3. Install the ATF pump driven gear shaft (C).

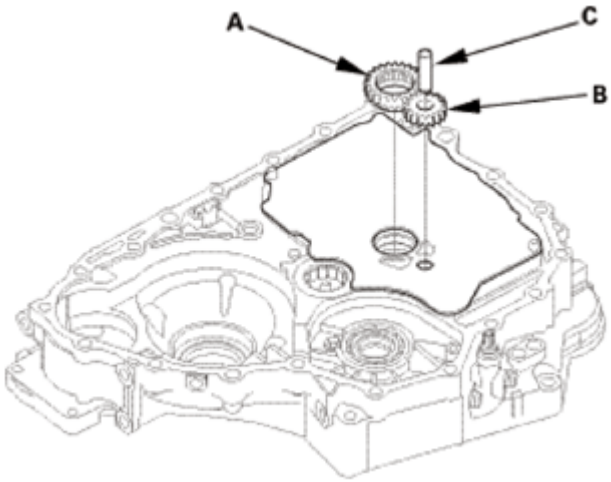

Fig. 1490: Identifying ATF Pump Driven Gear Shaft, ATF Pump Drive And Driven Gear (1 Of 2)
Courtesy of AMERICAN HONDA MOTOR CO., INC.

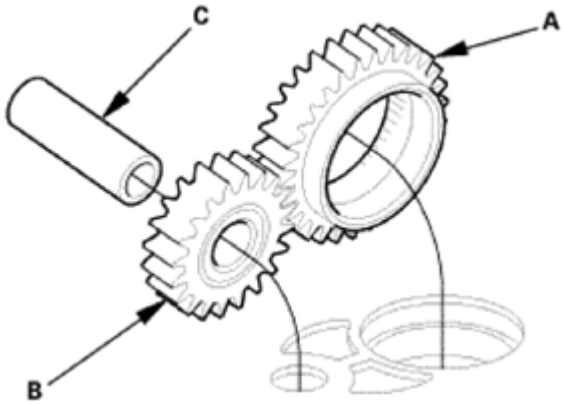

Fig. 1491: Identifying ATF Pump Driven Gear Shaft, ATF Pump Drive And Driven Gear (2 Of 2)
Courtesy of AMERICAN HONDA MOTOR CO., INC.

4. Install the main valve body (A).

NOTE: Make sure that the check balls (B) are in the main valve body.

5. Make sure the ATF pump drive gear (C) rotates smoothly in the normal operating direction, and the ATF pump driven gear shaft (D) moves smoothly in the axial and normal operating direction.
6. If the ATF pump drive gear and the ATF pump driven gear shaft do not move smoothly, loosen the main valve body bolts. Realign the ATF pump driven gear shaft, and retighten the bolts to the specified torque, then recheck.

GETtheMANUALS.org

NOTE: **Failure to align the ATF pump driven gear shaft correctly will result in a seized ATF pump drive gear or ATF pump driven gear shaft.**

7. Install the cooler check valve (E) and the cooler check valve spring (F).

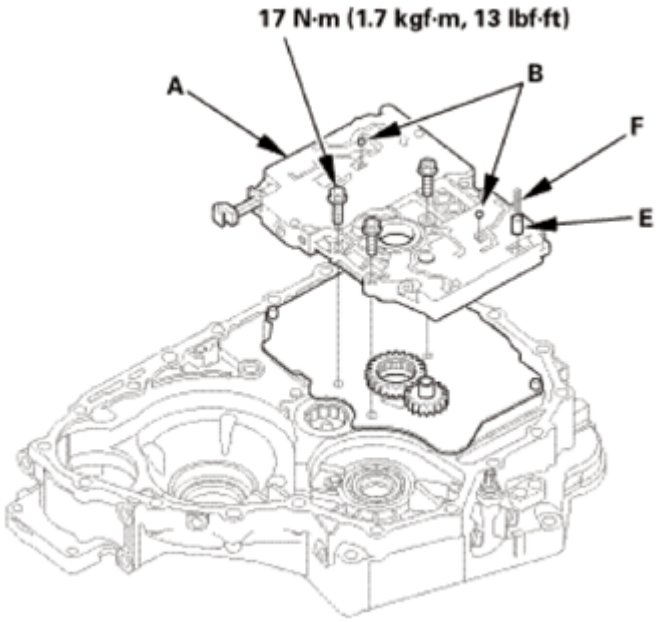

Fig. 1492: Identifying Main Valve Body, Check Balls, Cooler Check Valve And Cooler Check Valve Spring
Courtesy of AMERICAN HONDA MOTOR CO., INC.

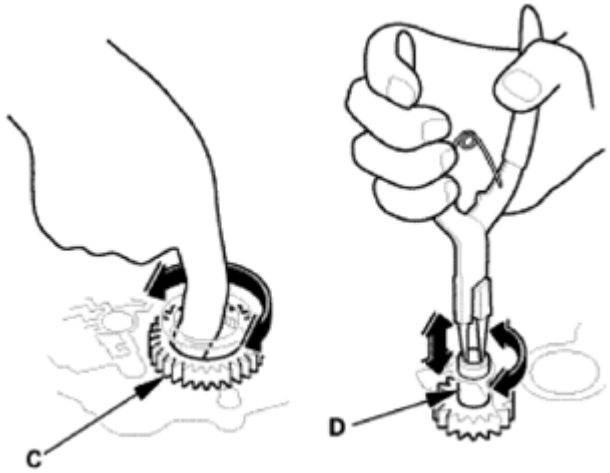

Fig. 1493: Rotating ATF Pump Drive Gear
Courtesy of AMERICAN HONDA MOTOR CO., INC.

3. Servo Body
    1. Install the servo separator plate (A) and the dowel pins (B).

GETtheMANUALS.org

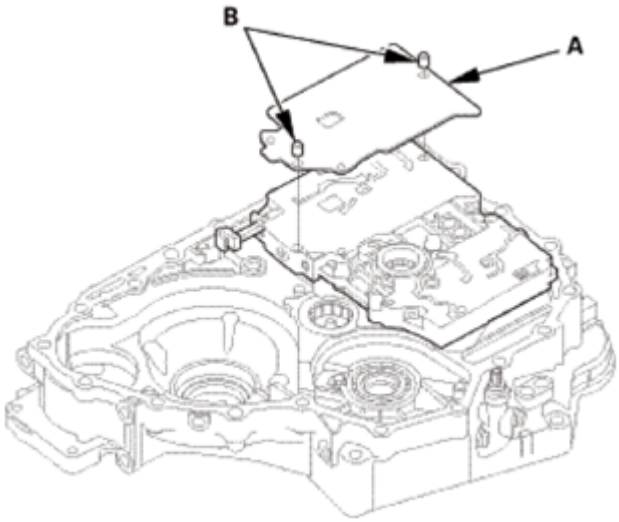

Fig. 1494: Identifying Servo Separator Plate And Dowel Pins
Courtesy of AMERICAN HONDA MOTOR CO., INC.

2. Install the servo body (A).

NOTE: **Do not install the servo body mounting bolts to the baffle plate bolt holes (B) and the ATF strainer bolt holes (C) in this step.**

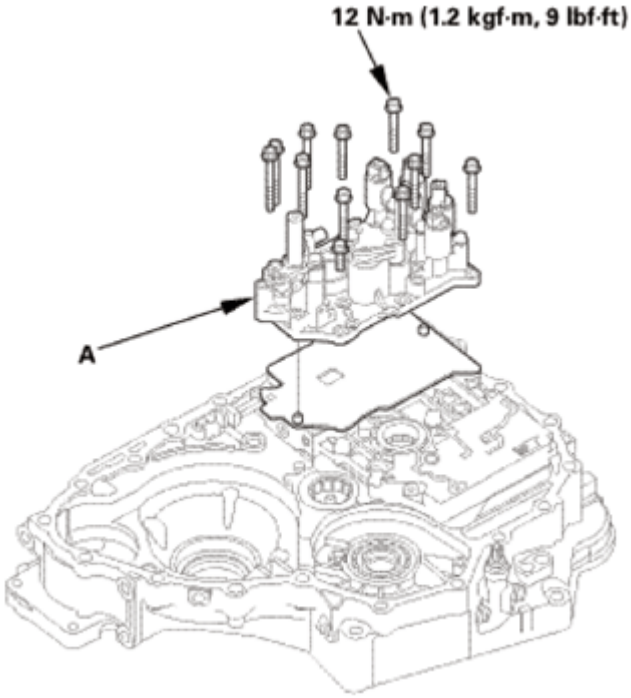

Fig. 1495: Identifying Servo Body And Mounting Bolts With Torque Specification
Courtesy of AMERICAN HONDA MOTOR CO., INC.

GETtheMANUALS.org

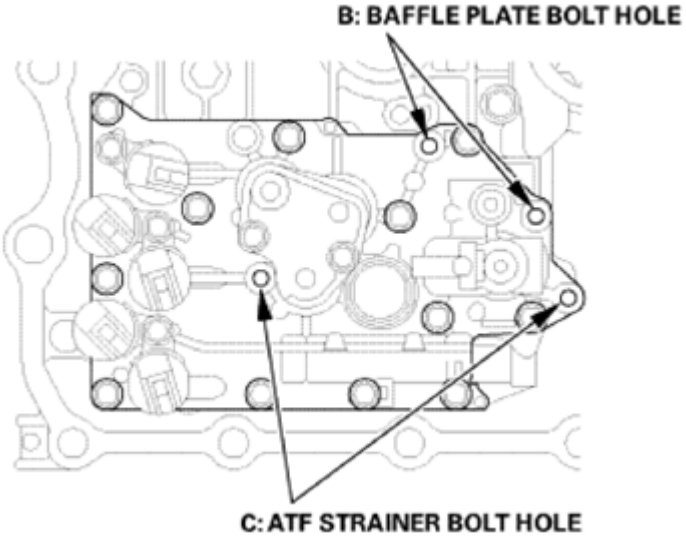

Fig. 1496: Identifying Baffle Plate Bolt Holes And ATF Strainer Bolt Holes
Courtesy of AMERICAN HONDA MOTOR CO., INC.

4. Detent Arm
    1. Install the detent arm (A) and the arm collar (B).
    2. Install a new lock washer (C) by aligning its cutout (D) with the projection (E).
    3. Install and tighten the bolt, then pry up the lock tab (F) of the lock washer against the bolt head.

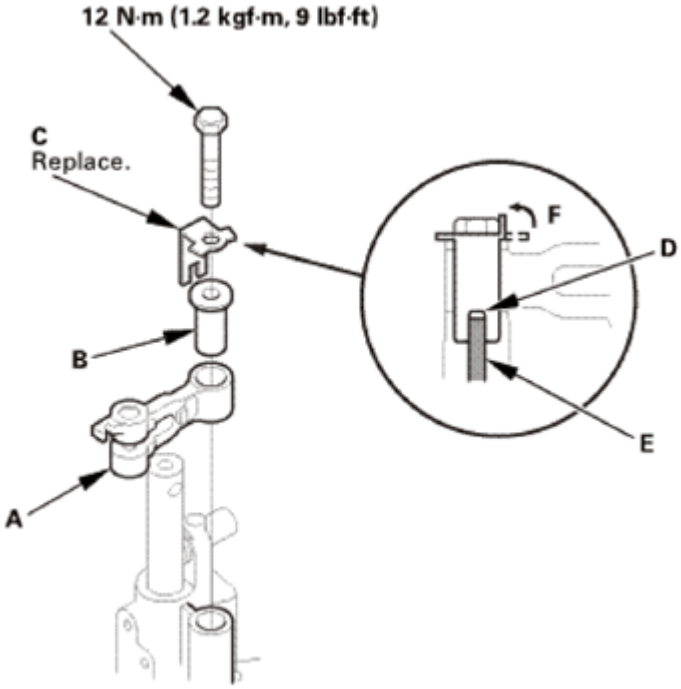

Fig. 1497: Prying Up Lock Tab Of Lock Washer Against Bolt Head
Courtesy of AMERICAN HONDA MOTOR CO., INC.

GETtheMANUALS.org

5. ATF Strainer
    1. Install the ATF strainer (A) using a new O-ring (B).

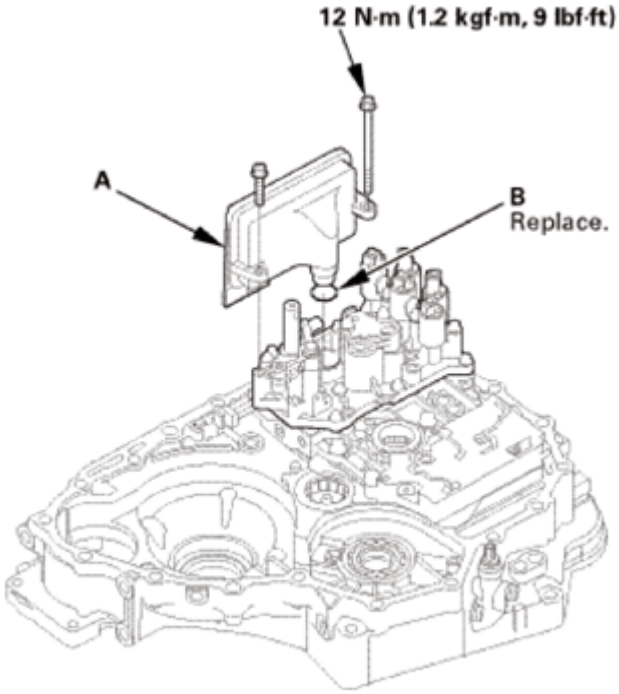

Fig. 1498: Identifying ATF Strainer, O-Ring And Mounting Bolts With Torque Specification
Courtesy of AMERICAN HONDA MOTOR CO., INC.

6. Shift Solenoid Valve

NOTE:

- **Do not hold the shift solenoid valve connector to install the shift solenoid valves. Be sure to hold the shift solenoid valve body.**
- **Do not install shift solenoid valve A before installing shift solenoid valve D, and do not install shift solenoid valve B before installing shift solenoid valve E. If shift solenoid valves A and B are installed before shift solenoid valves D and E, it may damage the hydraulic control system.**
- **A new shift solenoid valve comes with new O-rings. If you install a new solenoid valve, use the O-rings provided on it.**

1. Install shift solenoid valve D (black connector) using new O-rings (A) by holding the shift solenoid valve body; be sure that the mounting bracket contacts to the servo body.
2. Install shift solenoid valve E (black connector) using new O-rings (B) by holding the shift solenoid valve body; be sure that the mounting bracket contacts to the servo body.

GETtheMANUALS.org

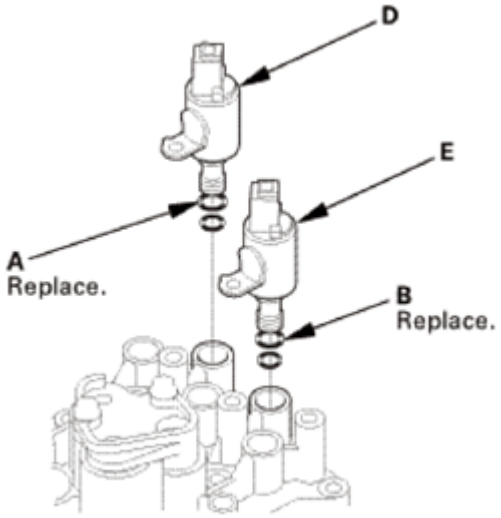

Fig. 1499: Identifying Shift Solenoid Valves And O-Rings
Courtesy of AMERICAN HONDA MOTOR CO., INC.

3. Install shift solenoid valve A (brown connector) using new O-rings (D) by holding the shift solenoid valve body; be sure that the mounting bracket contacts to the bracket of shift solenoid valve D.
4. Install shift solenoid valve B (brown connector) using new O-rings (E) by holding the shift solenoid valve body; be sure that the mounting bracket contacts to the bracket of shift solenoid valve E.
5. Install shift solenoid valve C (brown connector) using new O-rings (F) by holding the shift solenoid valve body; be sure that the mounting bracket contacts to the servo body.

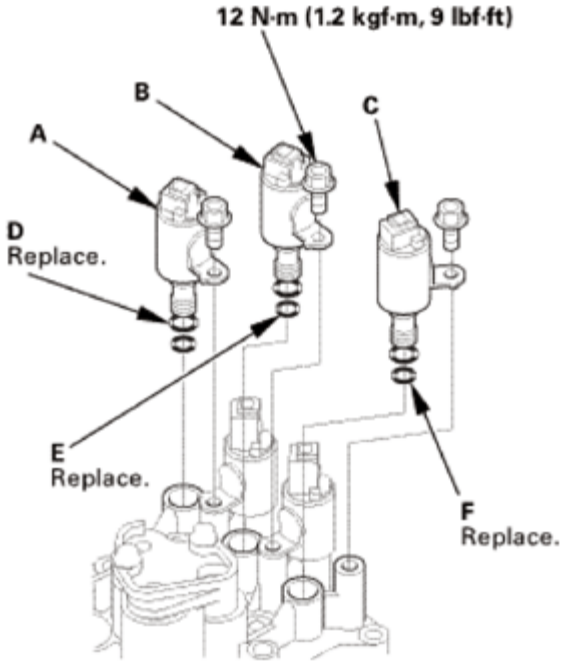

GETtheMANUALS.org

Fig. 1500: Identifying Shift Solenoid Valves, O-Rings And Mounting Bolts With Torque Specification
Courtesy of AMERICAN HONDA MOTOR CO., INC.

7. Regulator Valve Body
    1. Install the regulator separator plate (A) and the dowel pins (B).

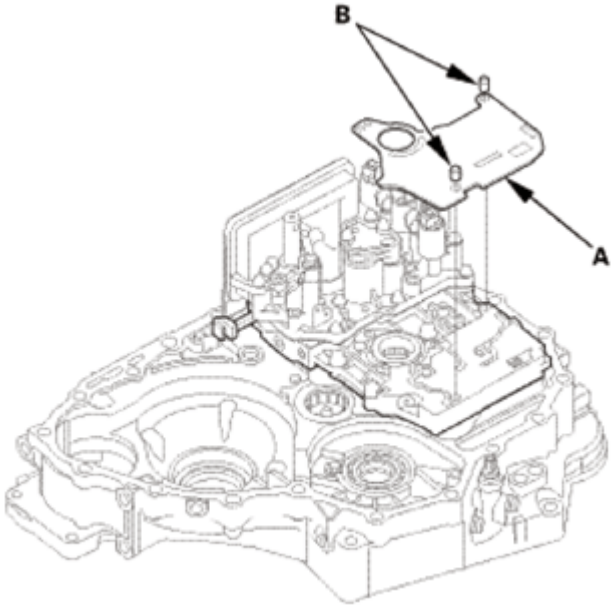

Fig. 1501: Identifying Regulator Separator Plate And Dowel Pins
Courtesy of AMERICAN HONDA MOTOR CO., INC.

    2. Install a new O-ring (A) on the stator shaft (B).
    3. Install the stator shaft.
    4. Install the stator shaft stop (C).

GETtheMANUALS.org

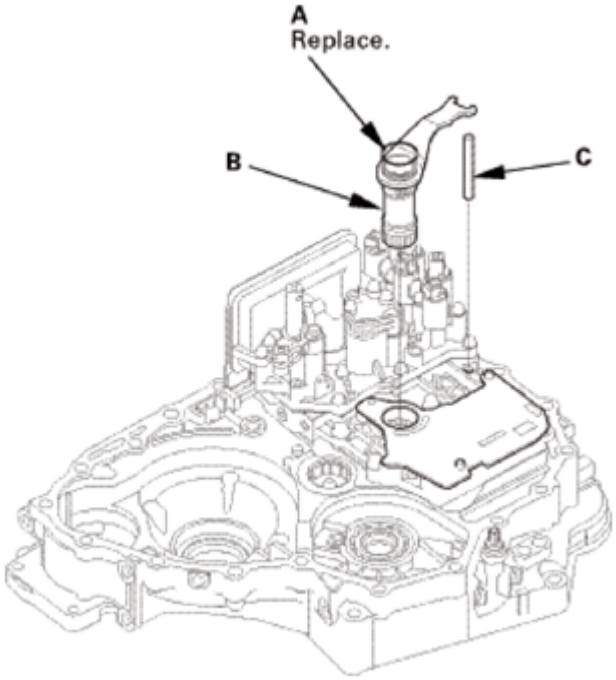

Fig. 1502: Identifying Stator Shaft, O-Ring And Stator Shaft Stop
Courtesy of AMERICAN HONDA MOTOR CO., INC.

5. Install the regulator valve body (A).

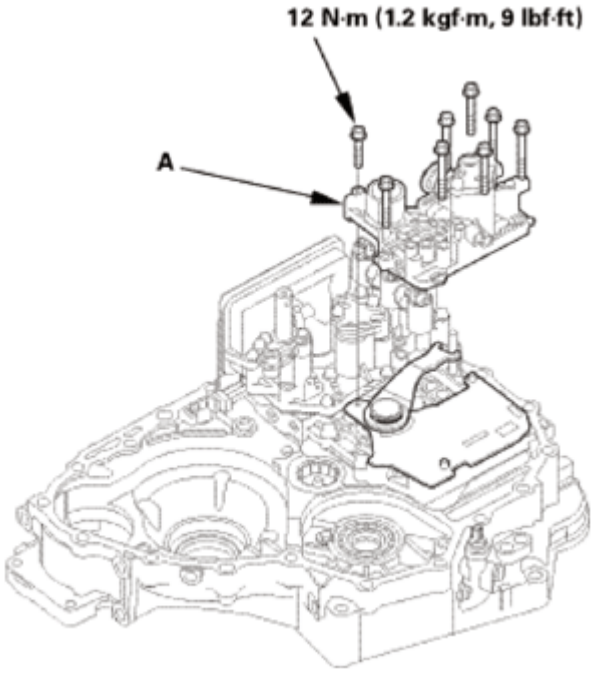

Fig. 1503: Identifying Regulator Valve Body And Mounting Bolts With Torque Specification
Courtesy of AMERICAN HONDA MOTOR CO., INC.

GETtheMANUALS.org

6. Install ATF joint pipe B.
7. Install ATF joint pipe A.

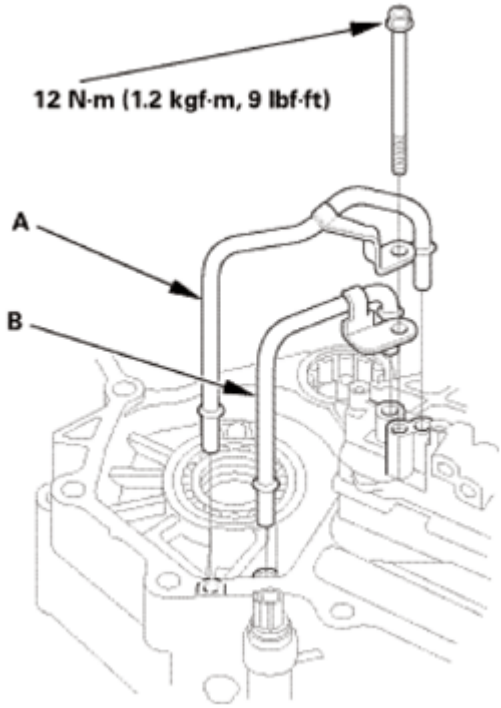

Fig. 1504: Identifying ATF Joint Pipes And Mounting Bolts With Torque Specification
Courtesy of AMERICAN HONDA MOTOR CO., INC.

8. Differential Assembly
    1. Install the differential assembly (A).
    2. Install the baffle plate (B).

GETtheMANUALS.org

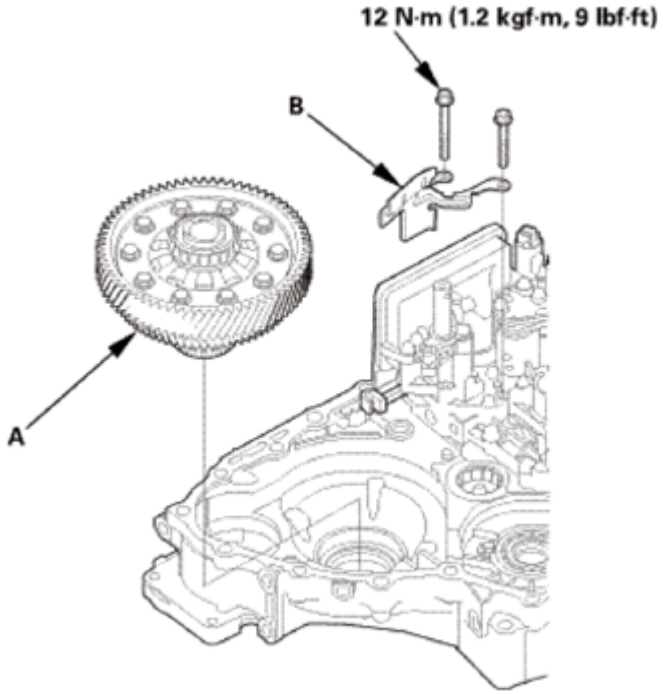

Fig. 1505: Identifying Differential Assembly, Baffle Plate And Bolts With Torque Specification
Courtesy of AMERICAN HONDA MOTOR CO., INC.

9. Mainshaft and Countershaft and Secondary Shaft Assembly
    1. Be sure that each shaft is assembled. Also be sure that new sealing rings are installed on the mainshaft and the secondary shaft.
    2. Join the mainshaft subassembly (A), the countershaft subassembly (B), and the secondary shaft subassembly (C) together, and install them.

    NOTE: Do not bump the countershaft on the baffle plate (D).

    3. Make sure the countershaft subassembly and the differential assembly (E) are clear of the baffle plate.

GETtheMANUALS.org

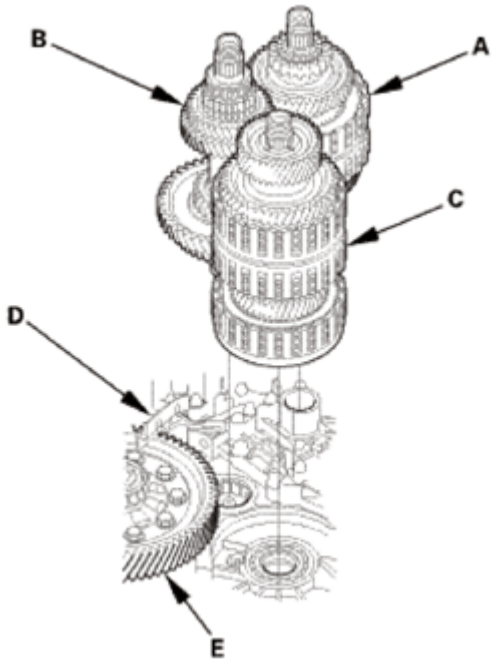

Fig. 1506: Identifying Mainshaft Subassembly, Countershaft Subassembly, Secondary Shaft Subassembly, Baffle Plate And Differential Assembly
Courtesy of AMERICAN HONDA MOTOR CO., INC.

10. Selector Control Shaft
    1. Install the selector control shaft (A).

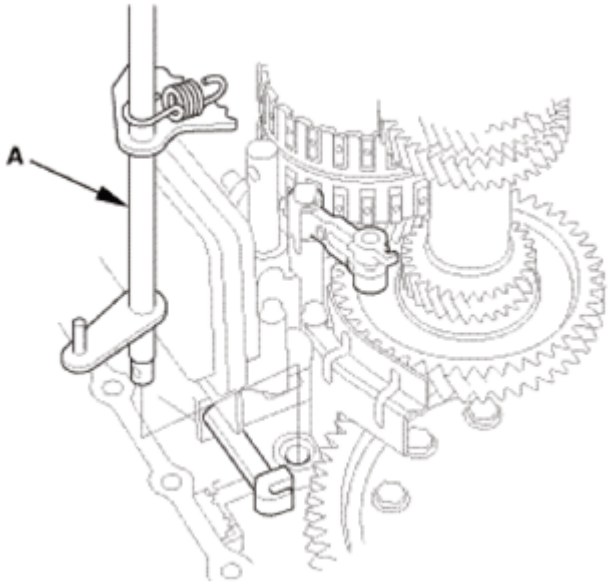

Fig. 1507: Identifying Selector Control Shaft
Courtesy of AMERICAN HONDA MOTOR CO., INC.

    2. Align the manual valve lever pin (A) on the selector control shaft (B) with the guide of the manual

GETtheMANUALS.org

valve (C).

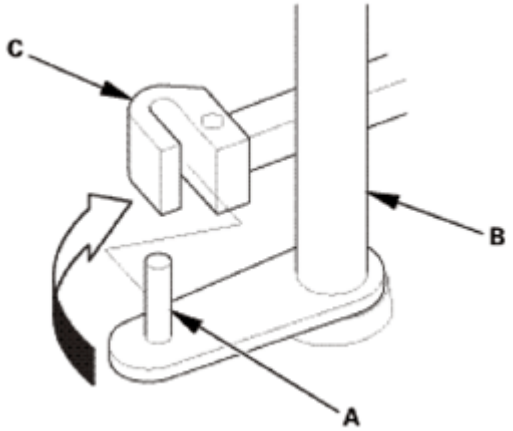

Fig. 1508: Aligning Manual Valve Lever Pin On Selector Control Shaft With Guide Of Manual Valve
Courtesy of AMERICAN HONDA MOTOR CO., INC.

3. Hook the detent arm spring (A).

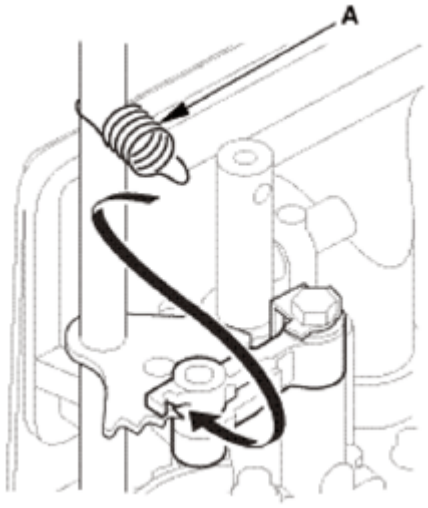

Fig. 1509: Hooking Detent Arm Spring
Courtesy of AMERICAN HONDA MOTOR CO., INC.

11. Selector Control Lever (Except 2WD of USA Produced Models)

Except 2WD of USA Produced Models

1. Install the control lever (A) over the selector control shaft (B).
2. Install the lock bolt (C) using a new lock washer (D).
3. Pry up the lock tab (E) of the lock washer against the bolt head.

GETtheMANUALS.org

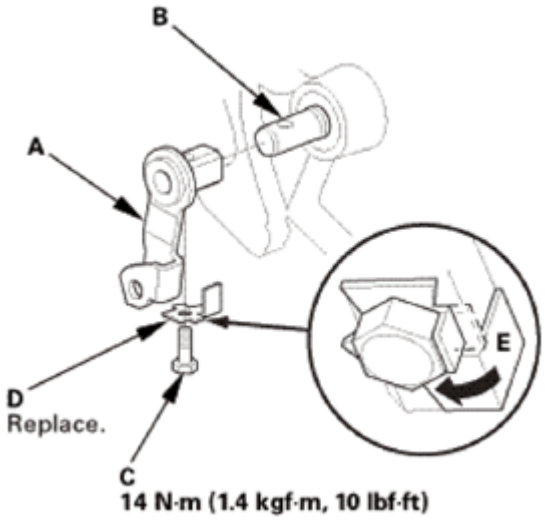

Fig. 1510: Prying Up Lock Tab Of Lock Washer (Except 2WD Of USA Produced Models)
Courtesy of AMERICAN HONDA MOTOR CO., INC.

12. Reverse Shift fork
    1. Install the reverse shift fork (A) and the reverse selector (B) together.
    2. Install the lock bolt (C) using a new lock washer (D).
    3. Pry up the lock tab (E) of the lock washer against the bolt head.

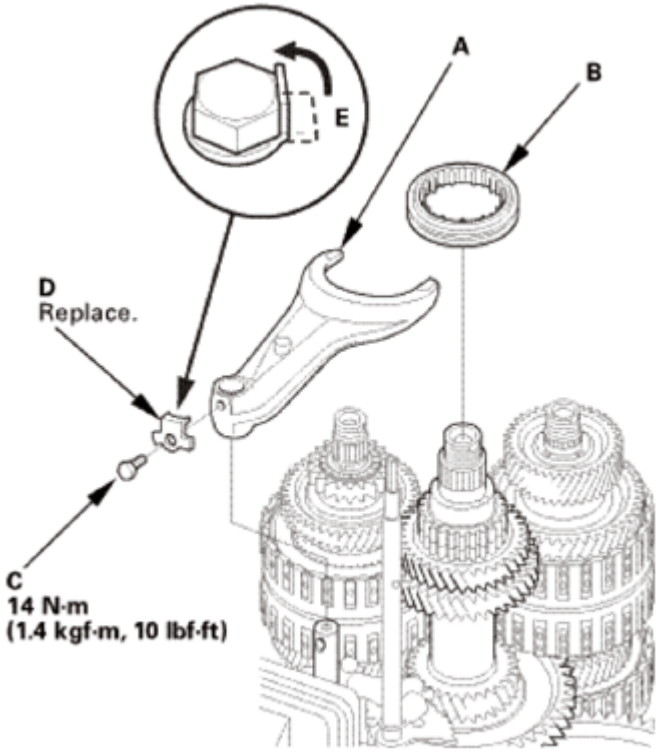

Fig. 1511: Prying Up Lock Tab Of Lock Washer Against Bolt Head

GETtheMANUALS.org

Courtesy of AMERICAN HONDA MOTOR CO., INC.

13. A/T Countershaft Reverse Gear
    1. Install the needle bearing (A).
    2. Install the countershaft reverse gear (B).

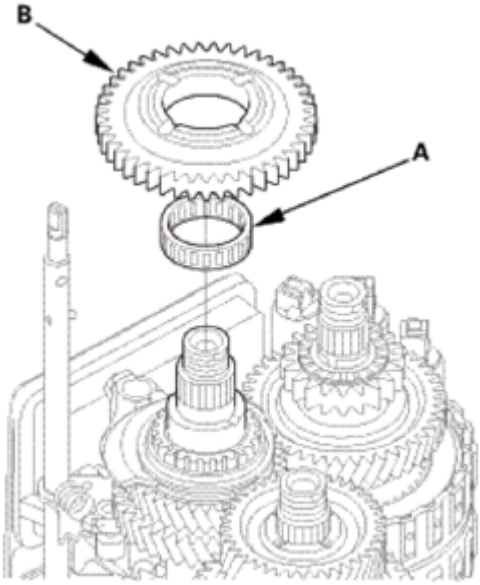

Fig. 1512: Identifying Needle Bearing And Countershaft Reverse Gear
Courtesy of AMERICAN HONDA MOTOR CO., INC.

14. Automatic Transmission Housing
    1. Install the three dowel pins (A) and a new gasket (B).
    2. Align the spring pin (C) of the selector control shaft (D) with the transmission housing groove (E).

NOTE: **Do not squeeze the end of the selector control shaft tips together when turning the shaft. If the tips are squeezed together, it will cause a faulty shift position signal or position due to the play between the selector control shaft and the transmission range switch.**

    3. Place the transmission housing (F) on the torque converter housing (G).

NOTE: **Do not install the input shaft (mainshaft) speed sensor and the output shaft (countershaft) speed sensor before installing the transmission housing.**

    4. Wrap the tip of a screwdriver with tape so the reverse idler gear teeth do not get damaged. Engage the reverse idler gear (H) with the reverse gears (I) by rotating the idler gear using the screwdriver.
    5. Make sure the transmission housing is securely seated so there is no clearance between the transmission housing and the torque converter housing.

GETtheMANUALS.org

6. Install the transmission hanger (J), and tighten the transmission housing mounting bolts (2WD: 19 bolts, AWD/4WD: 20 bolts) in at least two steps, in a crisscross pattern.

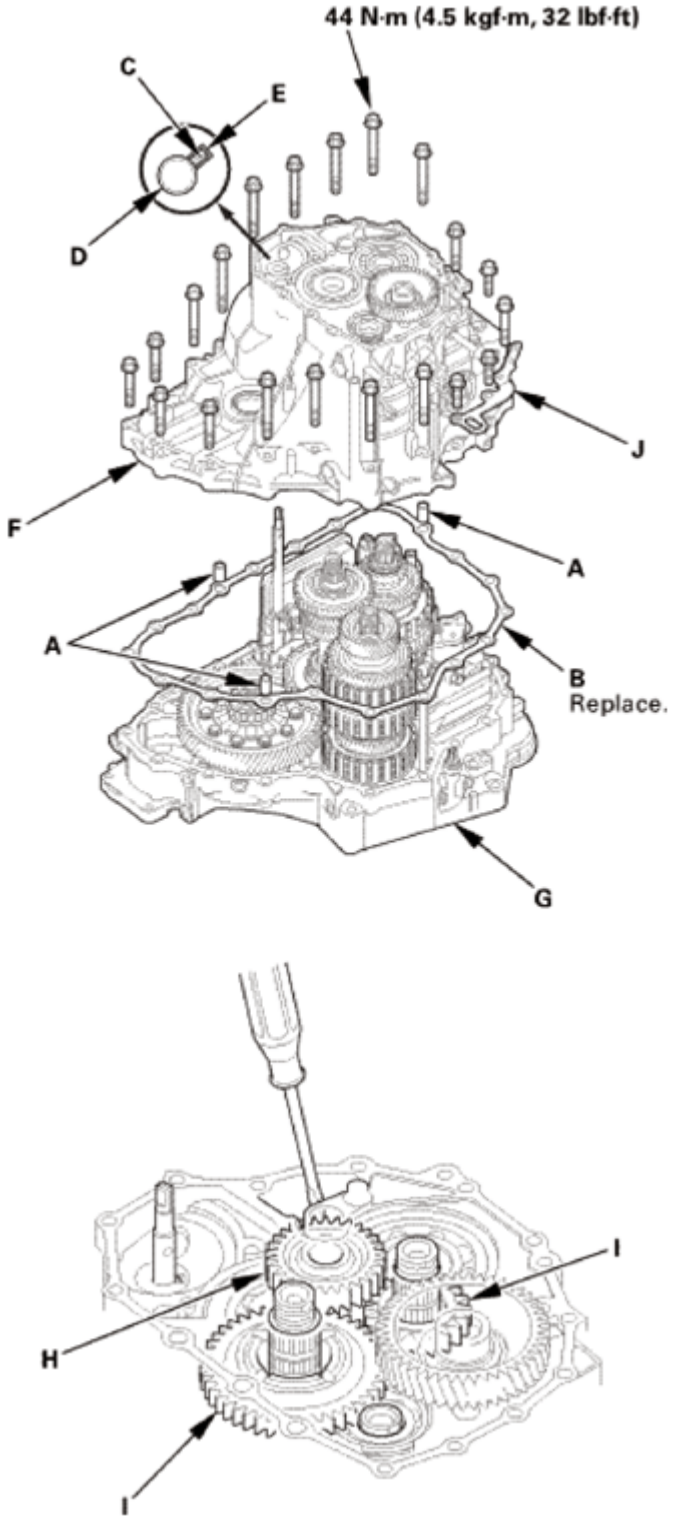

Fig. 1513: Identifying Dowel Pins, Gasket, Spring Pin, Selector Control Shaft, Transmission

GETtheMANUALS.org

Housing Groove And Mounting Bolts With Torque Specification
Courtesy of AMERICAN HONDA MOTOR CO., INC.

15. End Cover Idler Gear Assembly
    1. Install the mainshaft holder onto the mainshaft.

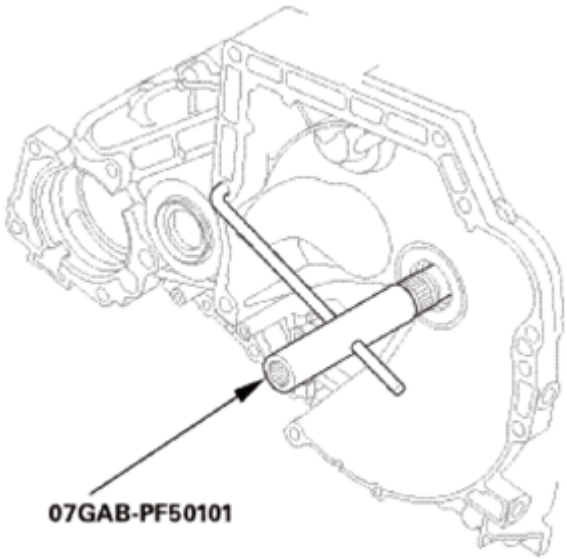

Fig. 1514: Installing Mainshaft Holder Onto Mainshaft
Courtesy of AMERICAN HONDA MOTOR CO., INC.

    2. Lubricate the following parts with ATF:
        - Splines and threads of the mainshaft.
        - Splines of the mainshaft idler gear.
        - The old conical spring washer and the old locknut.
    3. Install the mainshaft idler gear (A), the old conical spring washer (B), and the old locknut (C), and tighten the locknut to 225 N.m (23.0 kgf.m, 166 lbf.ft).

NOTE:
- **Do not tap the mainshaft idler gear to install.**
- **Use a torque wrench to tighten the locknut. Do not use an impact wrench.**

GETtheMANUALS.org

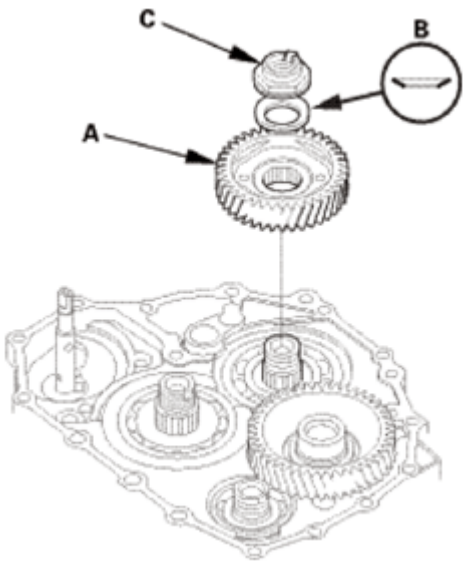

Fig. 1515: Identifying Mainshaft Idler Gear, Conical Spring Washer And Locknut
Courtesy of AMERICAN HONDA MOTOR CO., INC.

4. Lubricate the following parts with ATF:
   - Splines and threads of the countershaft.
   - Splines of the park gear.
   - The old conical spring washer and the old locknut.
5. Install the park gear (A), the old conical spring washer (B), and the old locknut (C).

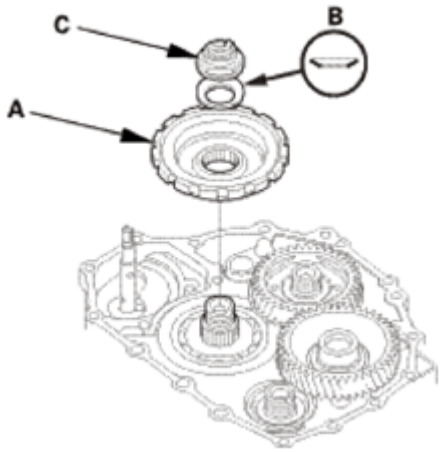

Fig. 1516: Identifying Park Gear, Conical Spring Washer And Locknut
Courtesy of AMERICAN HONDA MOTOR CO., INC.

6. Install the park lever spring (D), the park lever (E), and the park lever stop (F).
7. Install the lock bolt (G) using a new lock washer (H).

NOTE: Do not bend the lock tab of the lock washer until inspect the park

GETtheMANUALS.org

lever stop.

8. Install the park pawl shaft (I), the park pawl spring (J), the park pawl (K), and the stop shaft (L).
9. Lift the park pawl up, and engage it with the park gear, and tighten the locknut to 225 N.m (23.0 kgf.m, 166 lbf.ft).

NOTE:

- **Do not tap the park gear to install.**
- **Use a torque wrench to tighten the locknut. Do not use an impact wrench.**
- **Countershaft locknut has left-hand threads.**

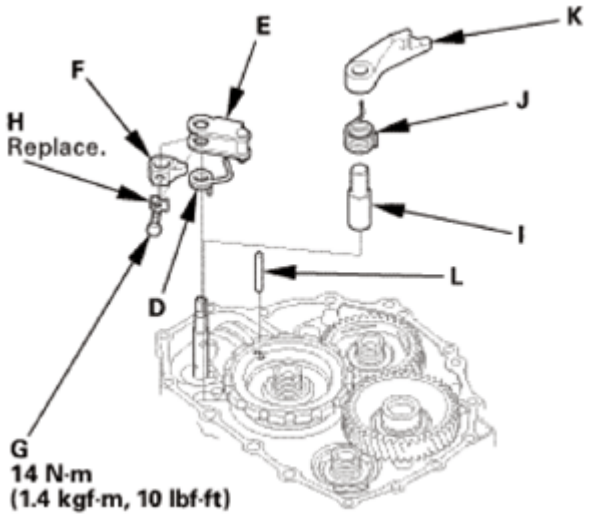

Fig. 1517: Identifying Park Pawl Shaft, Park Lever Spring, Park Lever, Park Lever Stop, Lock Bolt, Lock Washer With Torque Specification
Courtesy of AMERICAN HONDA MOTOR CO., INC.

10. Remove the old locknuts and the old conical spring washers from the mainshaft and the countershaft.
11. Lubricate the following parts with ATF:
    - Splines and threads of the mainshaft, the countershaft, and the secondary shaft.
    - New conical spring washers and new locknuts.
    - Areas where the conical spring washers contact the mainshaft idler gear and the park gear.

GETtheMANUALS.org

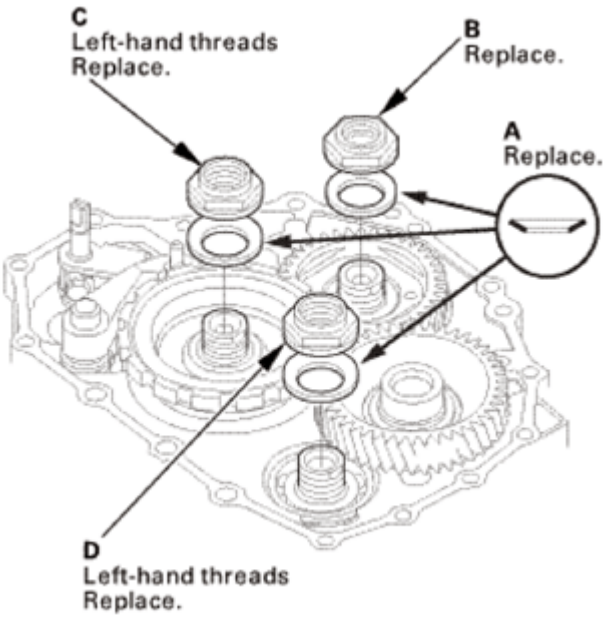

Fig. 1518: Identifying Conical Spring Washers, Mainshaft Locknut, Countershaft Locknut And Secondary Shaft Locknut
Courtesy of AMERICAN HONDA MOTOR CO., INC.

12. Install new conical spring washers (A) in the direction shown.
13. Install a new mainshaft locknut (B), a new countershaft locknut (C), and a new secondary shaft locknut (D).
14. Tighten the locknuts to 167 N.m (17.0 kgf.m, 123 lbf.ft).

NOTE:

- **Use a torque wrench to tighten the locknut. Do not use an impact wrench.**
- **The countershaft and secondary shaft locknuts have left-hand threads.**

15. Remove the mainshaft holder.
16. Stake the locknuts into the shafts to a depth (A) of 0.7-1.3 mm (0.027-0.051 in) using a 3.5 mm punch (B).

GETtheMANUALS.org

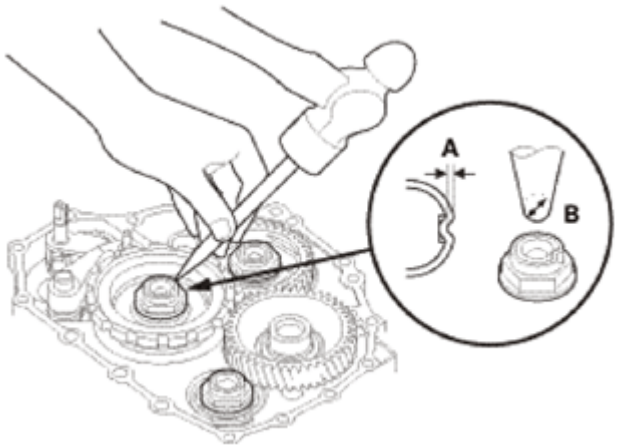

Fig. 1519: Staking Locknuts Into Shafts Using Punch
Courtesy of AMERICAN HONDA MOTOR CO., INC.

17. Set the park lever in the P position.
18. Measure the distance (A) between the center of the park pawl shaft (B) and the center of the park lever roller pin (C) as shown.

    Standard: 57.7-58.7 mm (2.272-2.311 in)

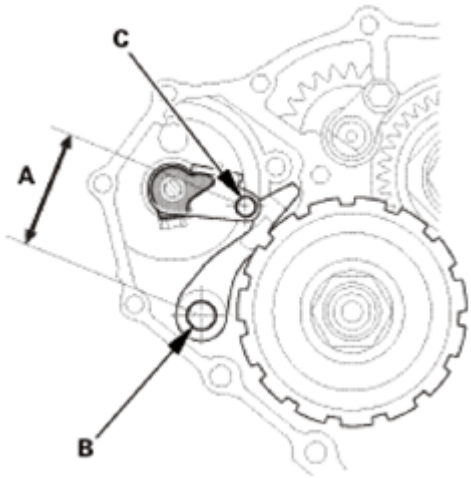

Fig. 1520: Measuring Distance Between Center Of Park Pawl Shaft And Center Of Park Lever Roller Pin
Courtesy of AMERICAN HONDA MOTOR CO., INC.

19. If the measurement is out of the standard, select and install the appropriate park lever stop (A) from the table.

PARK LEVER STOP SPECIFICATION

Mark	B	C
1	11.00 mm (0.4331 in)	11.00 mm (0.4331 in)

GETtheMANUALS.org

2	10.80 mm (0.4252 in)	10.65 mm (0.4193 in)
3	10.60 mm (0.4173 in)	10.30 mm (0.4055 in)

20. After replacing the park lever stop, make sure the distance is within the tolerance.

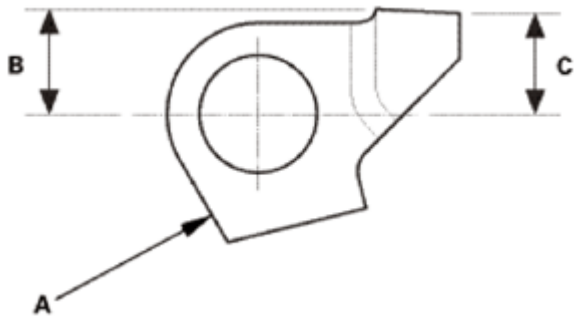

Fig. 1521: Identifying Park Lever Stop Dimension
Courtesy of AMERICAN HONDA MOTOR CO., INC.

21. Pry up the lock tab (A) of the lock washer against the bolt head.

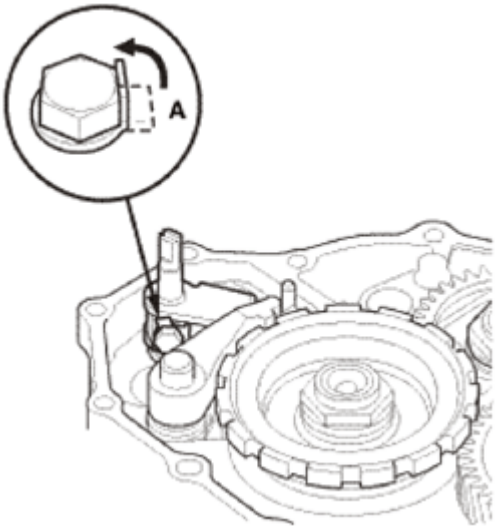

Fig. 1522: Prying Up Lock Tab Of Lock Washer Against Bolt Head
Courtesy of AMERICAN HONDA MOTOR CO., INC.

16. ATF Feed Pipe/Lubrication Pipe
    1. Install the 6 x 201 mm ATF pipe (A).
    2. Install the ATF lubrication pipe (B).
    3. Install the 8 x 220 mm ATF pipe (C).
    4. Install the 8 x 198 mm ATF pipes (D).

GETtheMANUALS.org

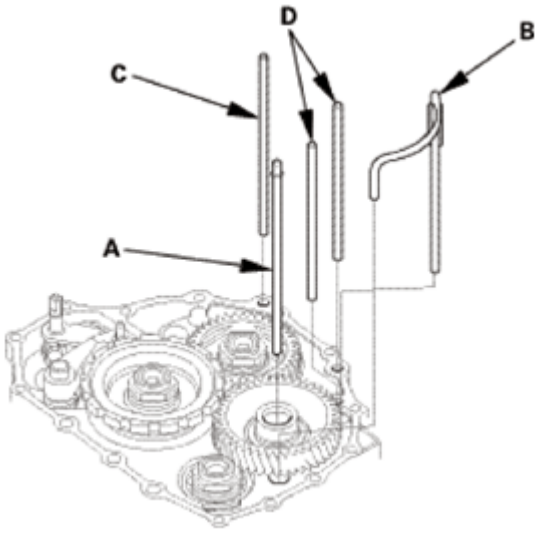

Fig. 1523: Identifying ATF Feed Pipes And Lubrication Pipe
Courtesy of AMERICAN HONDA MOTOR CO., INC.

17. Shift Solenoid Wire Harness
    1. Install the shift solenoid wire harness (F) using a new O-ring (G).
    2. Connect the shift solenoid valve connectors:
        - BLU wire to shift solenoid valve A.
        - ORN wire to shift solenoid valve B.
        - GRN wire to shift solenoid valve C.
        - YEL, WHT, and WHT wires to shift solenoid valve D.
        - RED wire to shift solenoid valve E.

GETtheMANUALS.org

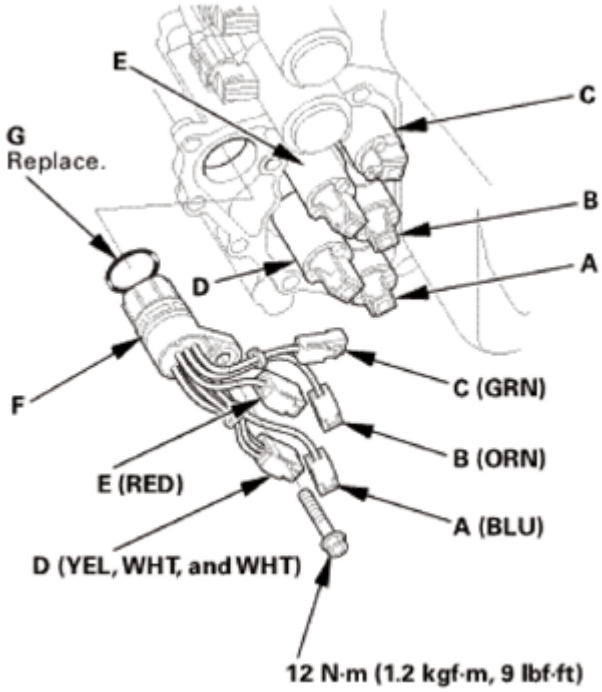

Fig. 1524: Identifying Shift Solenoid Valves, Shift Solenoid Wire Harness And O-Ring
Courtesy of AMERICAN HONDA MOTOR CO., INC.

18. A/T Shift Solenoid Cover
    1. Install the shift solenoid valve cover (A) with the dowel pins (B) and a new gasket (C).

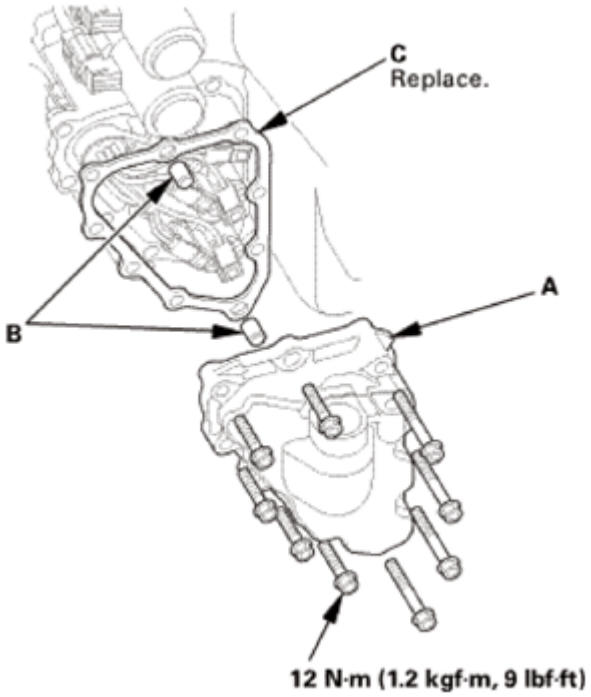

Fig. 1525: Identifying Shift Solenoid Valve Cover, Dowel Pins, Gasket And Mounting Bolts

GETtheMANUALS.org

With Torque Specification
Courtesy of AMERICAN HONDA MOTOR CO., INC.

19. Dipstick Guide Tube
    1. Install a new O-ring (A) on the ATF dipstick guide tube (B).
    2. Install the ATF dipstick guide tube.

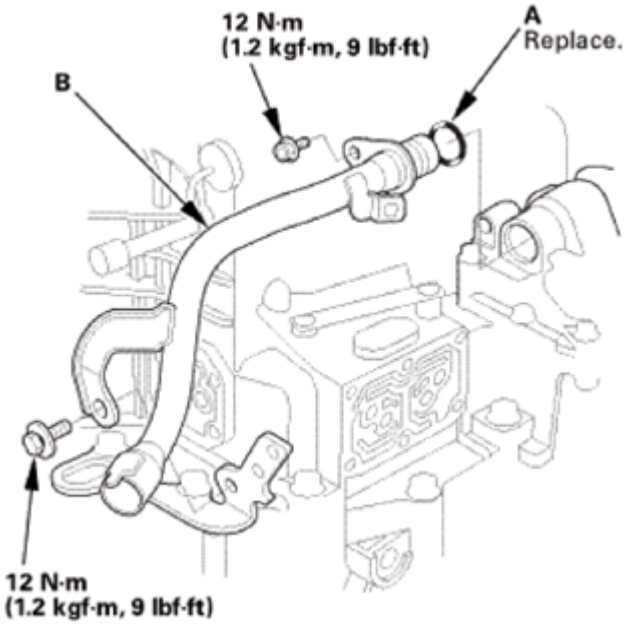

Fig. 1526: Identifying ATF Dipstick Guide Tube, O-Ring And Mounting Bolts With Torque Specification
Courtesy of AMERICAN HONDA MOTOR CO., INC.

20. ATF Outlet Line
    1. Install the ATF outlet line (A) using new sealing washers (B).

GETtheMANUALS.org

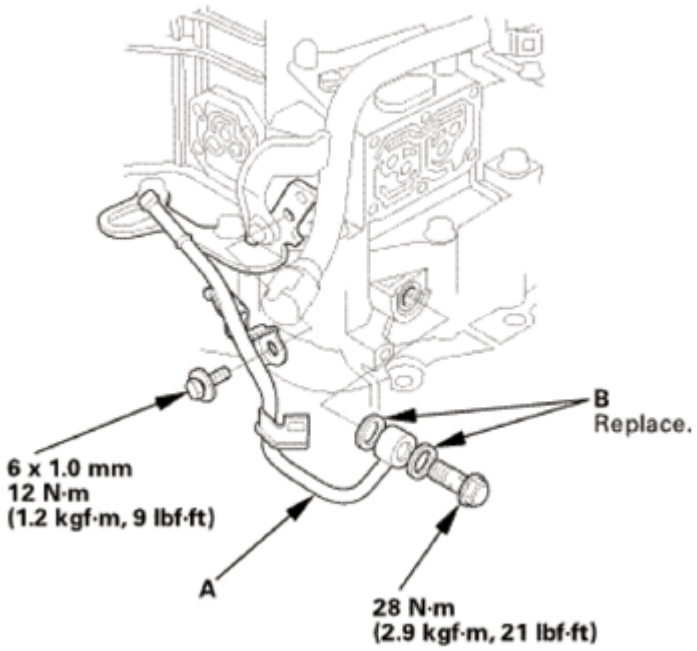

Fig. 1527: Identifying ATF Outlet Line, Sealing Washers And Mounting Bolts With Torque Specification
Courtesy of AMERICAN HONDA MOTOR CO., INC.

21. ATF Inlet Line
    1. Install the ATF inlet line (A) using new sealing washers (B).

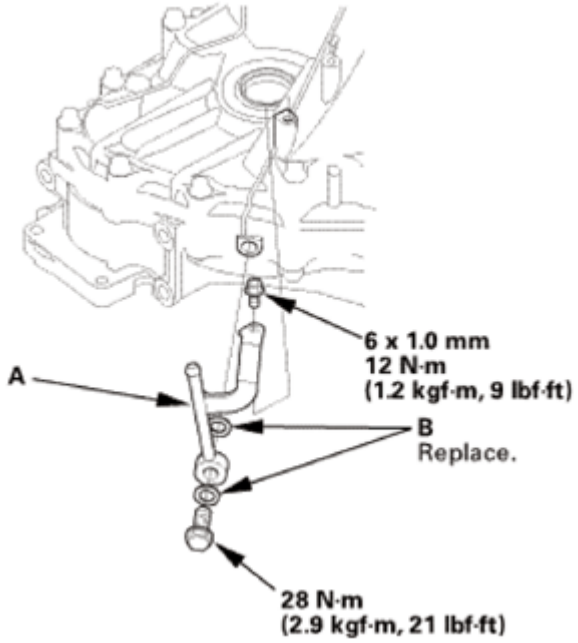

Fig. 1528: Identifying ATF Inlet Line, Sealing Washers And Mounting Bolts With Torque Specification

GETtheMANUALS.org

Courtesy of AMERICAN HONDA MOTOR CO., INC.

22. A/T Clutch Pressure Control Solenoid Valve B and C
    1. Clean the mounting surfaces and the fluid passages of the solenoid valve body and the transmission housing.
    2. Install a new gasket (A) with the blue side toward the transmission housing, and Install the ATF joint pipes (D).
    3. Install new O-rings (E) over the ATF joint pipes.
    4. Install A/T clutch pressure control solenoid valves B and C with the clamp bracket (F).

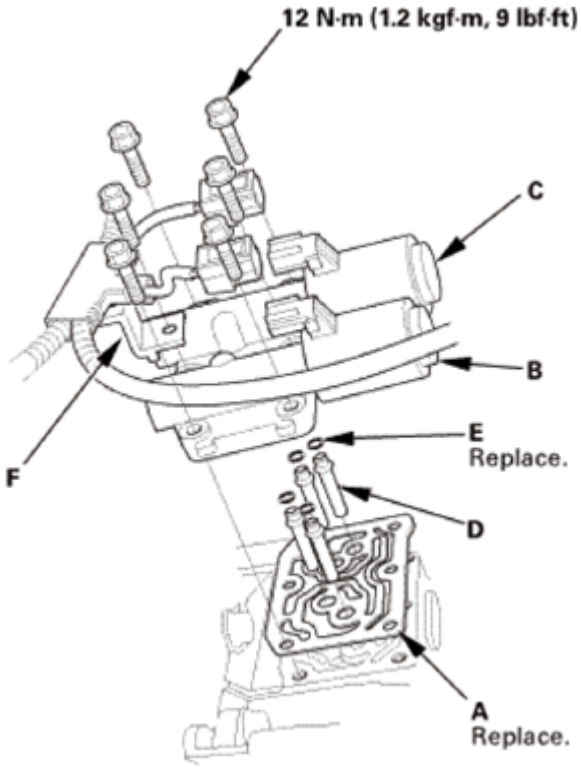

Fig. 1529: Identifying Gasket, ATF Joint Pipes, O-Rings, A/T Clutch Pressure Control Solenoid Valves, Clamp Bracket And Mounting Bolts With Torque Specification
Courtesy of AMERICAN HONDA MOTOR CO., INC.

23. A/T Clutch Pressure Control Solenoid Valve A
    1. Clean the mounting surfaces and the fluid passages of the solenoid valve body and the transmission housing.
    2. Install a new gasket (B) with the blue side toward the transmission housing, and install the 35 mm ATF pipe (C) and the ATF joint pipes (D).
    3. Install new O-rings (E) over the ATF joint pipes.
    4. Install A/T clutch pressure control solenoid valve A.

GETtheMANUALS.org

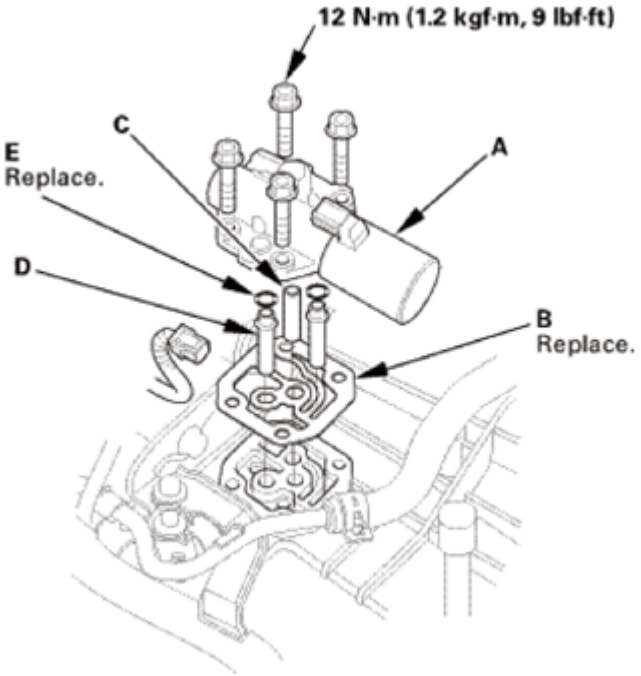

Fig. 1530: Identifying A/T Clutch Pressure Control Solenoid Valve, Gasket, ATF Pipe, ATF Joint Pipes And Mounting Bolts With Torque Specification
Courtesy of AMERICAN HONDA MOTOR CO., INC.

24. Output Shaft (Countershaft) Speed Sensor
    1. Install a new O-ring (A) on the output shaft (countershaft) speed sensor (B).
    2. Install the output shaft (countershaft) speed sensor and the sensor washer (C).

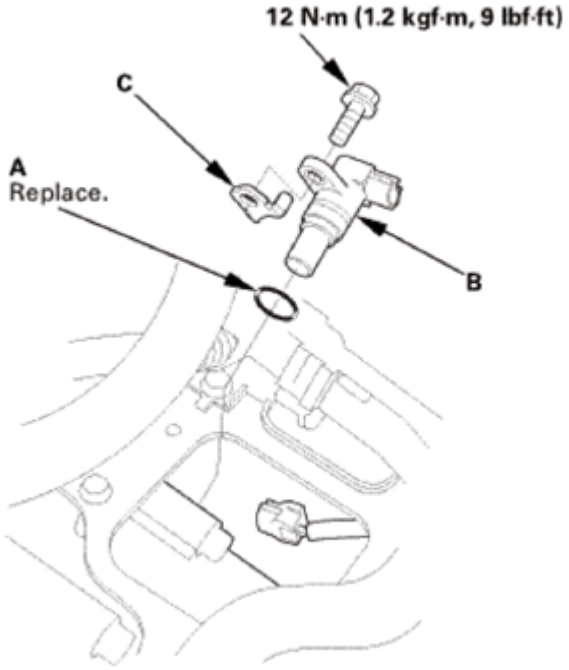

GETtheMANUALS.org

Fig. 1531: Identifying Output Shaft (Countershaft) Speed Sensor, O-Ring, Sensor Washer And Mounting Bolts With Torque Specification
Courtesy of AMERICAN HONDA MOTOR CO., INC.

25. Input Shaft (Mainshaft) Speed Sensor
    1. Install a new O-ring (A) on the input shaft (mainshaft) speed sensor (B).
    2. Install the input shaft (mainshaft) speed sensor.

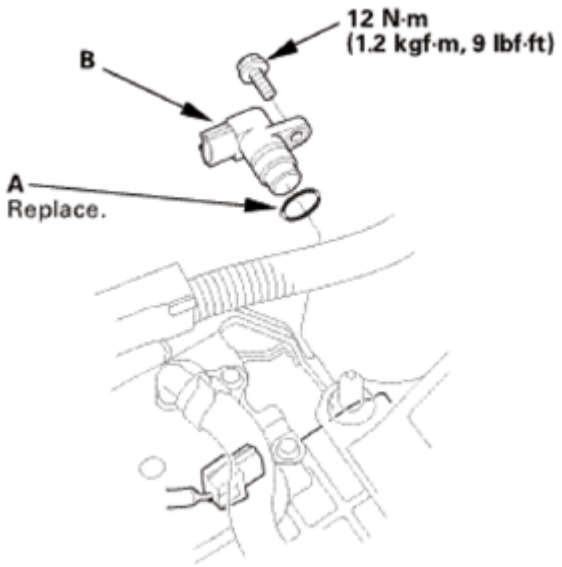

Fig. 1532: Identifying Input Shaft (Mainshaft) Speed Sensor, O-Ring And Mounting Bolt With Torque Specification
Courtesy of AMERICAN HONDA MOTOR CO., INC.

26. Harness Cover Clamp Bracket
    1. Install the harness cover clamp bracket (A).

GETtheMANUALS.org

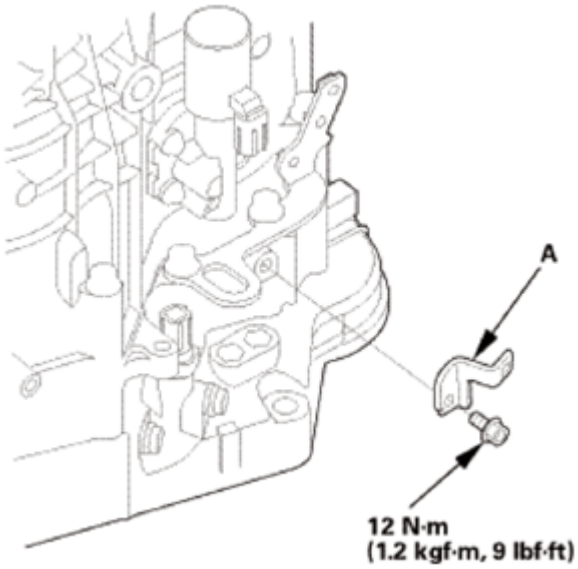

Fig. 1533: Identifying Harness Cover Clamp Bracket
Courtesy of AMERICAN HONDA MOTOR CO., INC.

27. Transmission End Cover
    1. Install the dowel pins (A) and a new gasket (B).
    2. Install new O-rings (C) over the ATF pipes.
    3. Install the end cover (D), and tighten the three special bolts (E) and the 6 x 1.0 mm bolts (F) (12 bolts).

GETtheMANUALS.org

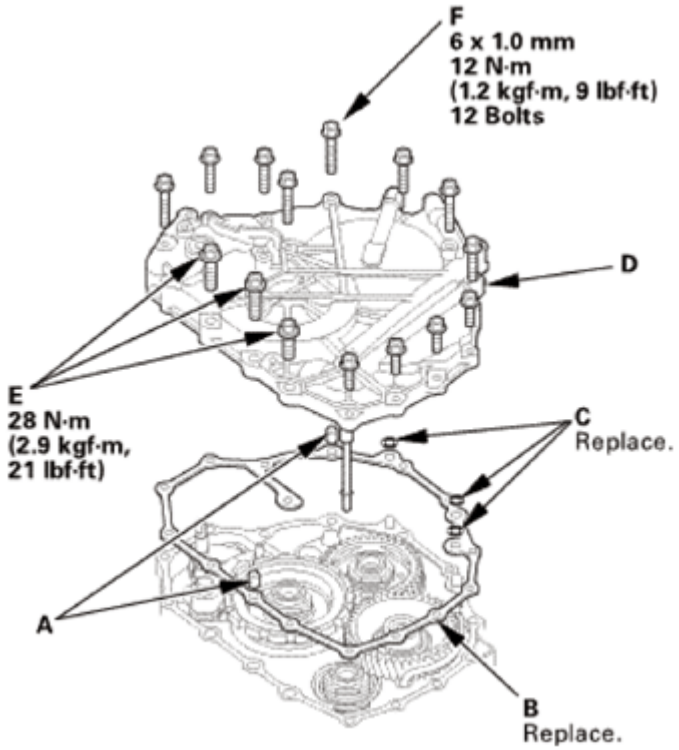

Fig. 1534: Identifying Dowel Pins, Gasket, O-Rings, End Cover And Mounting Bolts With Torque Specification
Courtesy of AMERICAN HONDA MOTOR CO., INC.

28. Transmission Fluid Pressure Switch B (3rd Clutch)
    1. Install transmission fluid pressure switch B (3rd clutch) using a new sealing washer (A) by turning the metal part, not the plastic part.

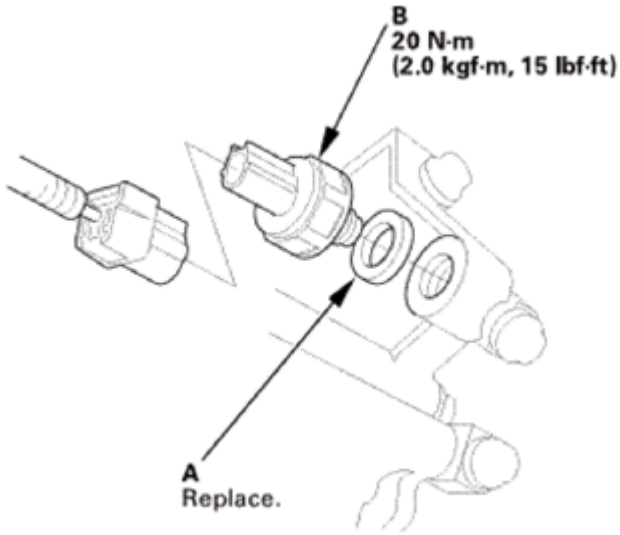

Fig. 1535: Identifying Transmission Fluid Pressure Switch (3rd Clutch) And Sealing Washer With Torque Specification

GETtheMANUALS.org

Courtesy of AMERICAN HONDA MOTOR CO., INC.

29. Transmission Range Switch Subharness
    1. Install the clamp brackets (A).
    2. Install the transmission range switch subharness (B).

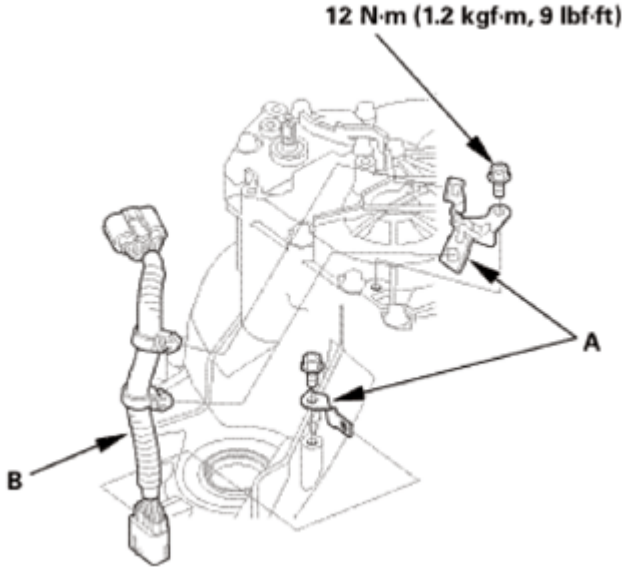

Fig. 1536: Identifying Transmission Range Switch Subharness, Clamp Brackets And Mounting Bolts With Torque Specification
Courtesy of AMERICAN HONDA MOTOR CO., INC.

30. Transmission Range Switch
    1. Make sure the selector control shaft is in the N position. If necessary, move the selector control shaft to the N position.

NOTE: **Do not use the selector control shaft to adjust the shift position. If the selector control shaft tips are squeezed together it will cause a faulty signal or position due to play between the selector control shaft and switch.**

GETtheMANUALS.org

Fig. 1537: Moving Selector Control Shaft To N Position
Courtesy of AMERICAN HONDA MOTOR CO., INC.

2. Align the cutouts (A) on the rotary-frame with the neutral positioning cutouts (B) on the transmission range switch (C), then put a 2.0 mm (0.079 in) feeler gauge blade (D) in the cutouts to hold the switch in the N position.

NOTE: **Be sure to use a 2.0 mm (0.079 in) blade or equivalent to hold the switch in the N position.**

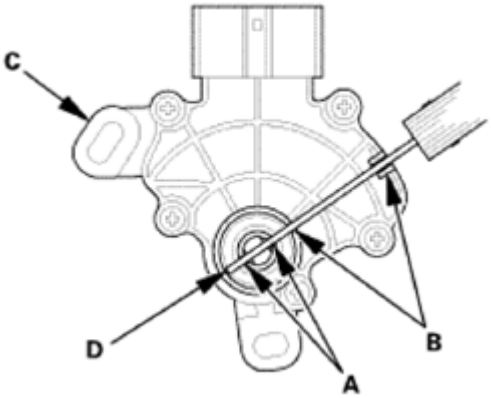

Fig. 1538: Aligning Cutouts On Rotary-Frame With Neutral Positioning Cutouts On Transmission Range Switch
Courtesy of AMERICAN HONDA MOTOR CO., INC.

3. Install the transmission range switch (A) gently on the selector control shaft (B) while holding it in the N position with the 2.0 mm (0.079 in) blade (C).

GETtheMANUALS.org

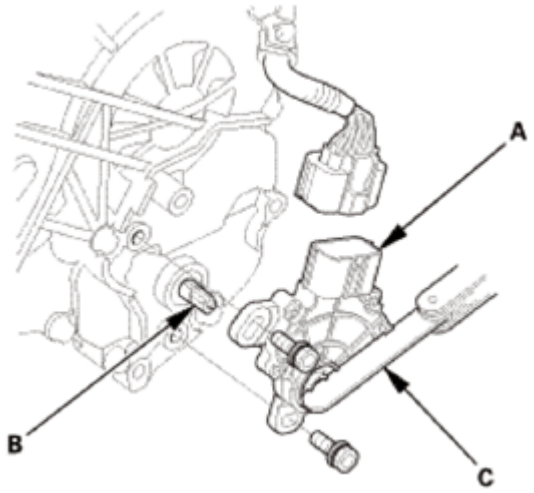

Fig. 1539: Identifying Transmission Range Switch, Selector Control Shaft And Blade
Courtesy of AMERICAN HONDA MOTOR CO., INC.

4. Tighten the bolts on the transmission range switch (A) while you continue holding the N position.

NOTE: **Do not move the transmission range switch when tightening the bolts.**

5. Remove the feeler gauge (B).
6. Check the connector (C) for corrosion, dirt, or oil, and clean or repair if necessary, then connect the connector securely.

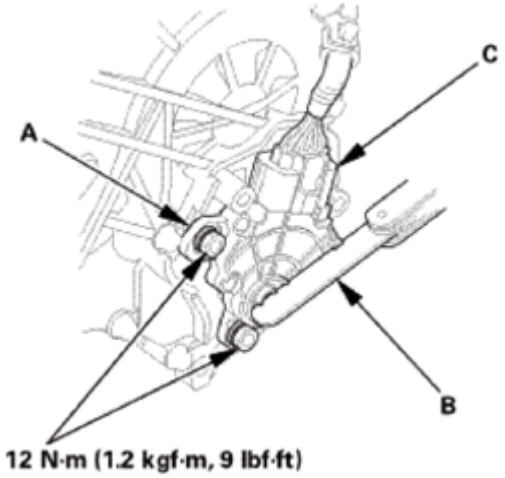

Fig. 1540: Identifying Transmission Range Switch, Connector, Feeler Gauge And Mounting Bolts With Torque Specification
Courtesy of AMERICAN HONDA MOTOR CO., INC.

31. Transmission Range Switch Cover
    1. Install the transmission range switch cover (A).

GETtheMANUALS.org

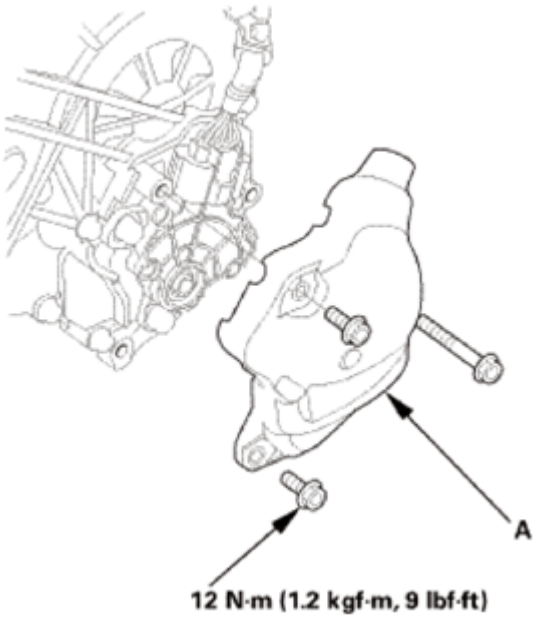

Fig. 1541: Identifying Transmission Range Switch Cover And Mounting Bolts With Torque Specification
Courtesy of AMERICAN HONDA MOTOR CO., INC.

AUTOMATIC TRANSMISSION REMOVAL AND INSTALLATION

SPECIAL TOOL REQUIRED

Image	Description/Tool Number
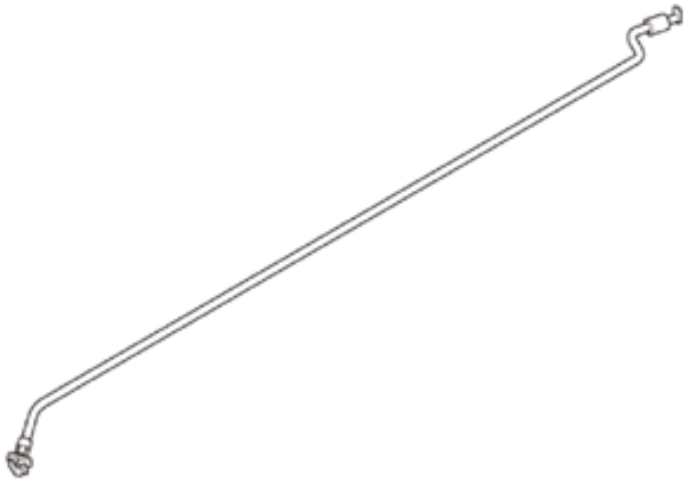	Hood Prop Bar 07AAZ-T0AA100
	Engine Support Hanger, A and Reds AAR-

GETtheMANUALS.org

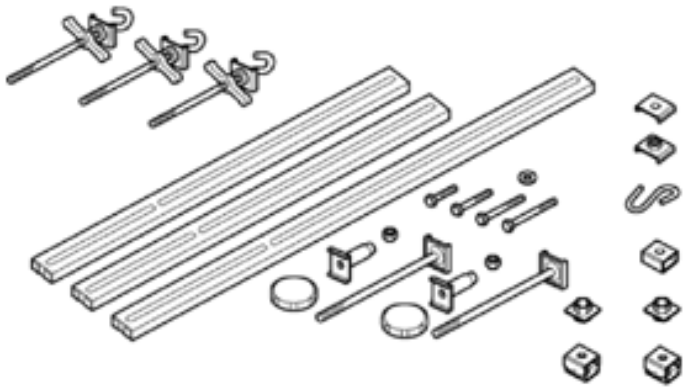	T1256(1)
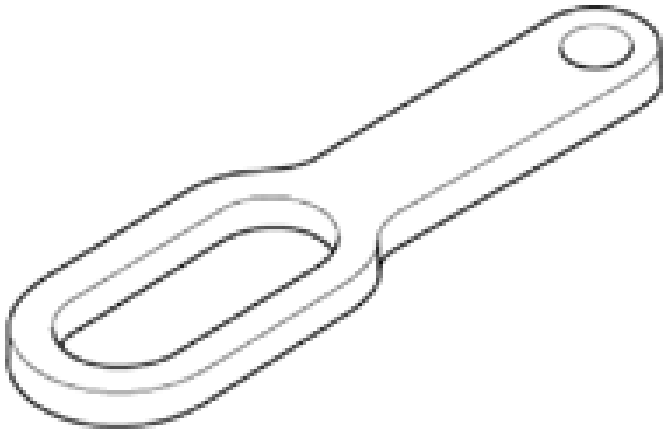	Universal Lifting Eyelet 07AAK-SNAA120
	Subframe Adapter VSB02C000016(1)

GETtheMANUALS.org

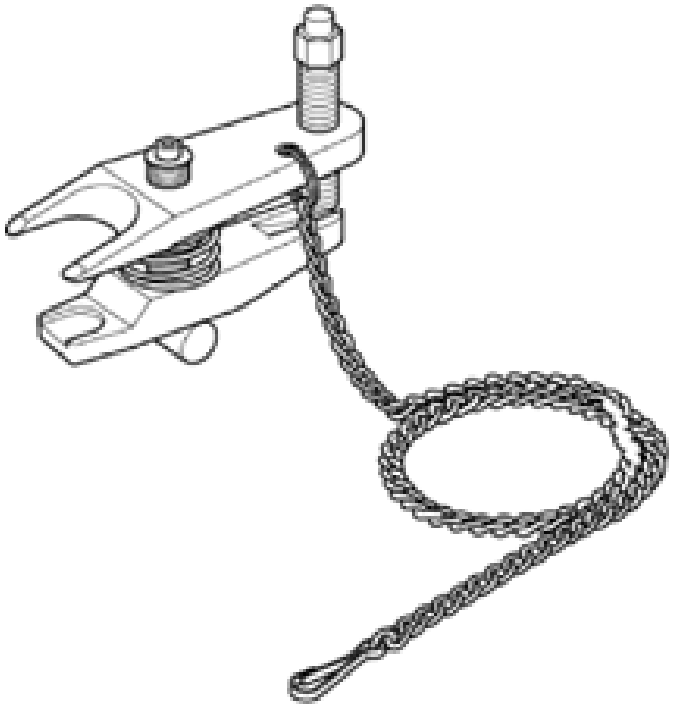	Ball Joint Remover, 28 mm 07MAC-SL0A202
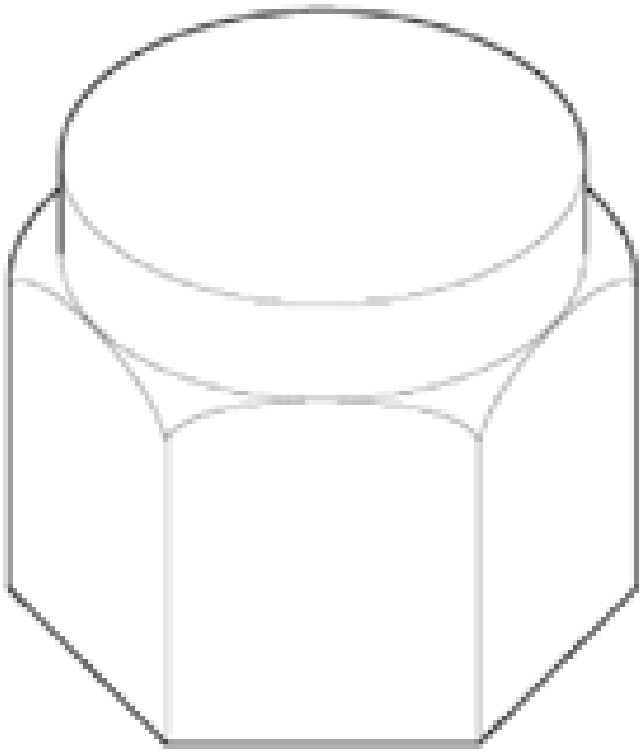	Ball Joint Thread Protector, 12 mm 07AAF-SDAA100

GETtheMANUALS.org

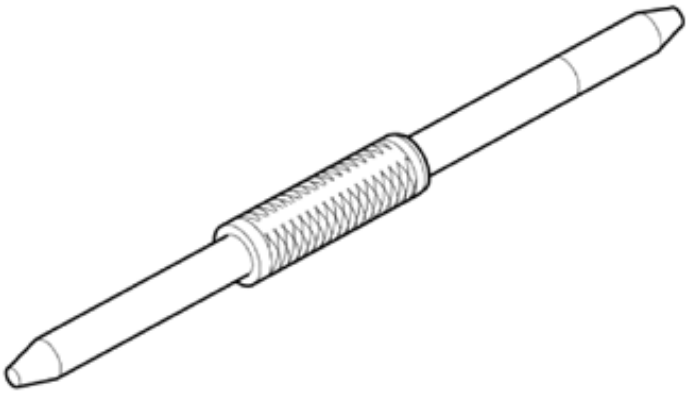	Subframe Alignment Pin 070AG-SJAA10S
(1) Available through the Honda Tool and Equipment Program 888-424-6857	

REMOVAL

NOTE:

- **Use fender covers to avoid damaging painted surfaces.**
- **Special tool Reds engine support hanger AAR-T1256 must be used with the side engine mount installed.**

1. Wide - Hood Open Position
    1. Remove the clips (A, B).
    2. Pull up the left front fender trim (C) by hand to detach the clips (D), then remove the trim.

GETtheMANUALS.org

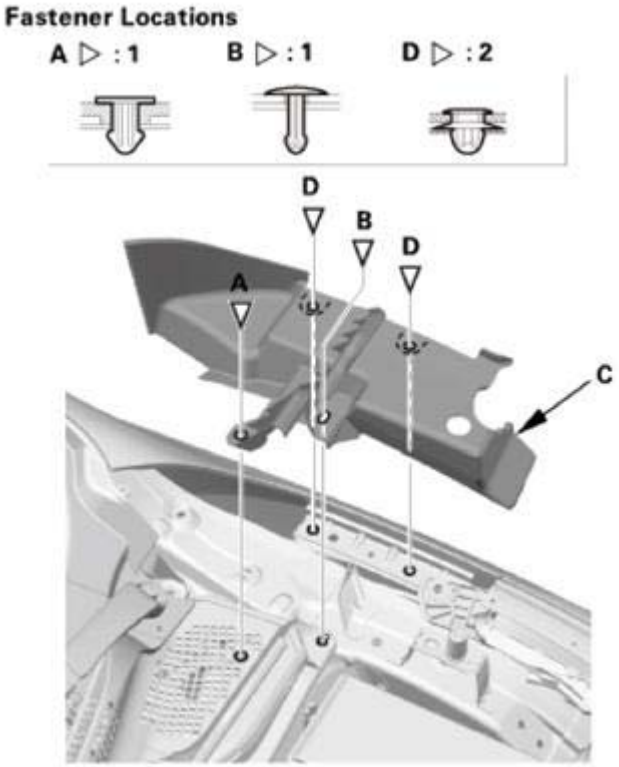

Fig. 1542: Identifying Left Front Fender Trim And Clips
Courtesy of AMERICAN HONDA MOTOR CO., INC.

3. Open the hood, and secure it with hood prop bar in the wide-open position (A).

NOTE: Install the hood prop bar in the wide-open bracket correctly.

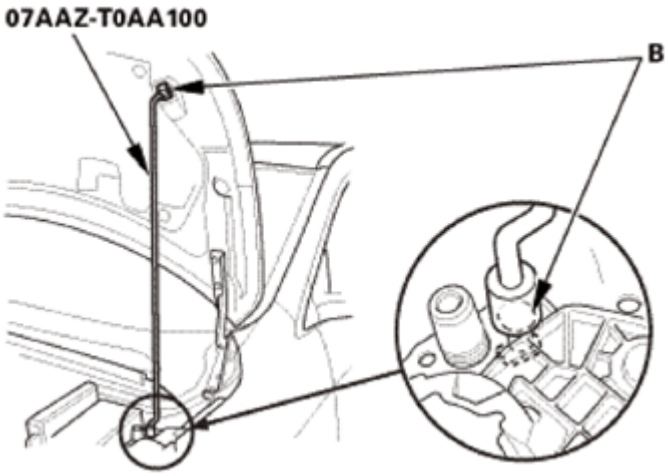

Fig. 1543: Installing Hood Prop Bar In Wide-Open Bracket
Courtesy of AMERICAN HONDA MOTOR CO., INC.

2. Battery Terminal - Disconnection

GETtheMANUALS.org

1. Make sure the ignition switch is in LOCK (0).
2. Disconnect and isolate the negative cable (A) from the battery.

NOTE: Always disconnect the negative side first.

3. Disconnect the positive cable (B) from the battery.

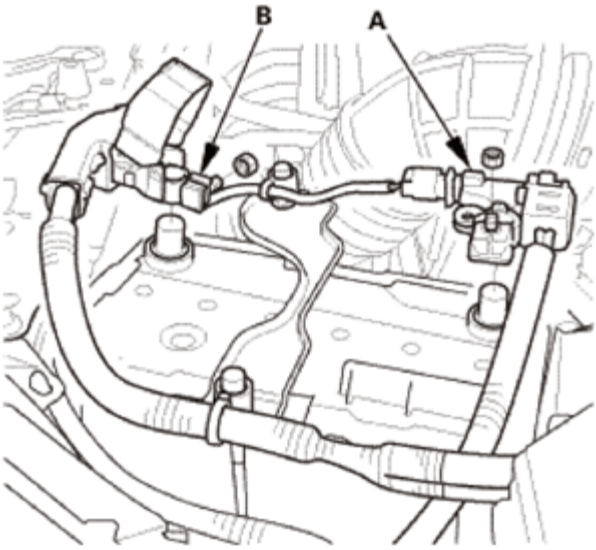

Fig. 1544: Identifying Negative And Positive Cable Of Battery
Courtesy of AMERICAN HONDA MOTOR CO., INC.

3. Battery
    1. Remove the battery setting plate (A) and the battery (B).

GETtheMANUALS.org

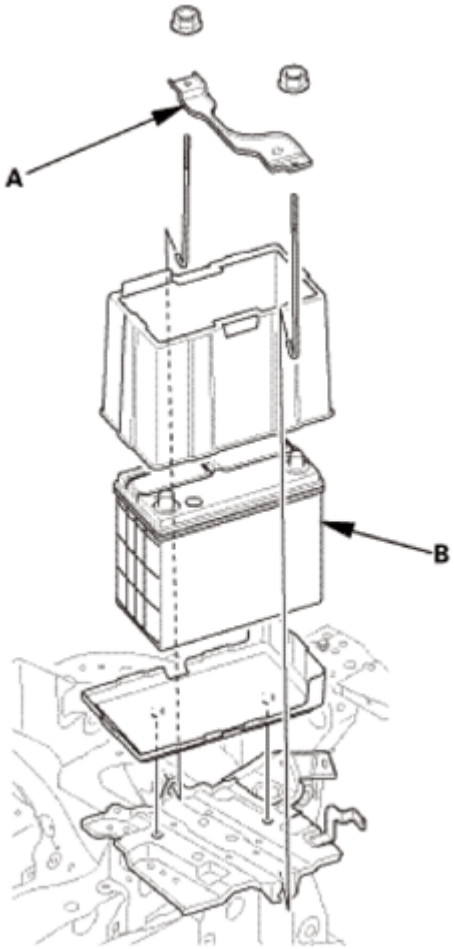

Fig. 1545: Identifying Battery And Battery Setting Plate
Courtesy of AMERICAN HONDA MOTOR CO., INC.

4. Air Cleaner Assembly
    1. Disconnect the MAF sensor/IAT sensor connector (A).
    2. Remove the harness clamp (B).
    3. Disconnect the intake air duct (C) and the intake air pipe (D).
    4. Remove the air cleaner (E).

GETtheMANUALS.org

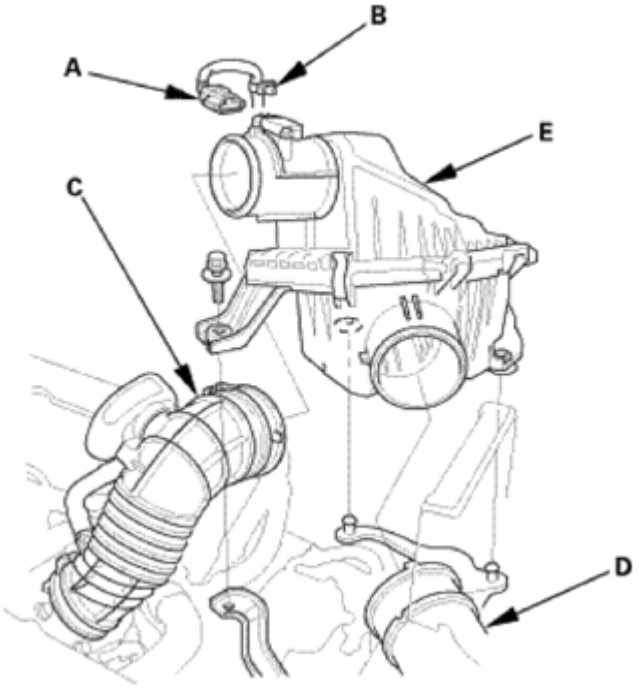

Fig. 1546: Identifying MAF Sensor/IAT Sensor Connector, Harness Clamp, Intake Air Duct, Intake Air Pipe And Air Cleaner
Courtesy of AMERICAN HONDA MOTOR CO., INC.

5. Intake Air Duct
    1. Remove the intake air duct.

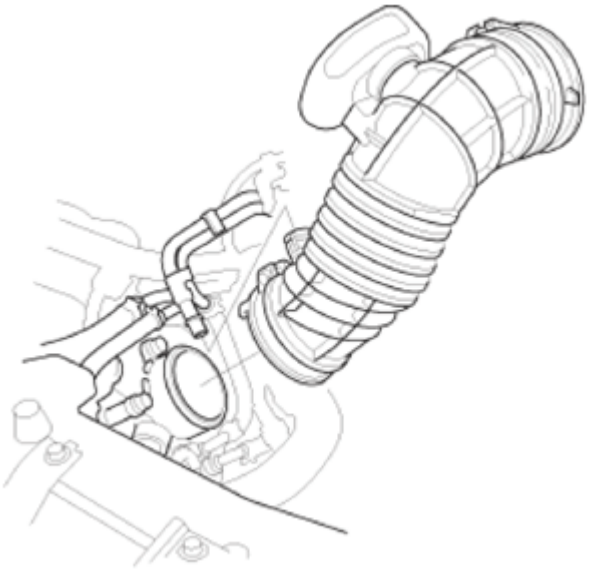

Fig. 1547: Identifying Intake Air Duct
Courtesy of AMERICAN HONDA MOTOR CO., INC.

GETtheMANUALS.org

6. Intake Air Pipe
    1. Remove the intake air pipe.

Fig. 1548: Identifying Intake Air Pipe And Mounting Bolt
Courtesy of AMERICAN HONDA MOTOR CO., INC.

7. Battery Base Assembly
    1. Remove the battery base and the harness clamps.

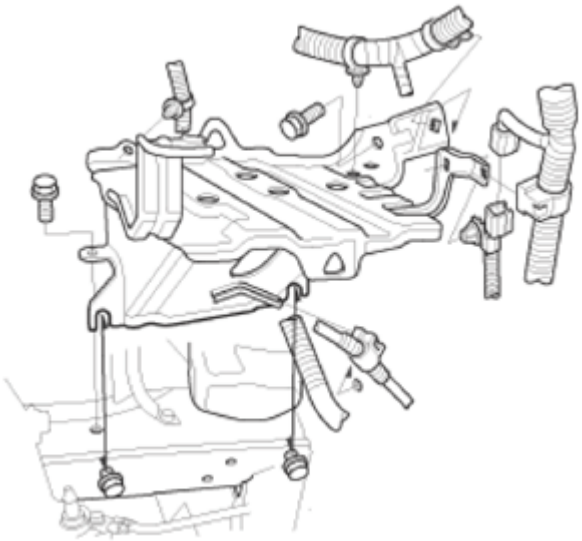

Fig. 1549: Identifying Battery Base And Harness Clamps With Mounting Bolts
Courtesy of AMERICAN HONDA MOTOR CO., INC.

8. Steering Joint Cover
    1. Remove the steering joint cover (A).

GETtheMANUALS.org

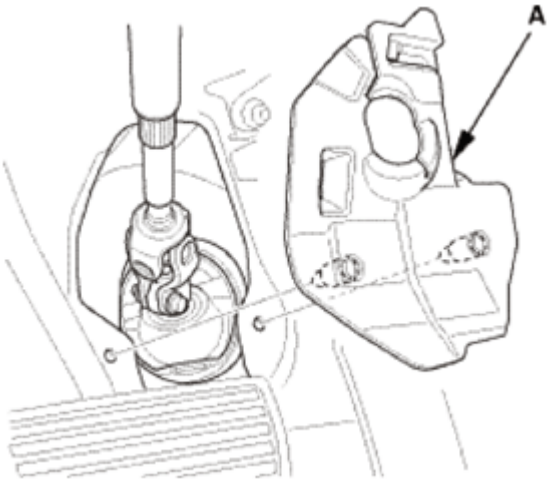

Fig. 1550: Identifying Steering Joint Cover
Courtesy of AMERICAN HONDA MOTOR CO., INC.

9. Steering Column Lower Slide Shaft - Hold
    1. Set the steering column to the center tilt position, and to the center telescopic position.
    2. Hold the lower slide shaft (A) on the column with a piece of wire (B) between the joint yoke (C) of the lower slide shaft and the joint yoke (D) of the upper shaft to prevent the lower slider shaft from pulling out.

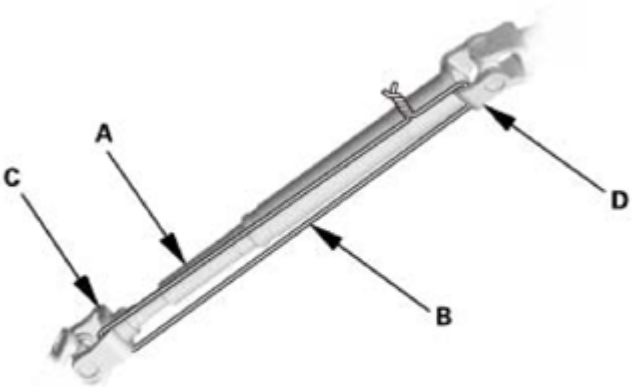

Fig. 1551: Identifying Lower Slide Shaft, Wire And Joint Yoke
Courtesy of AMERICAN HONDA MOTOR CO., INC.

10. Steering Wheel Hold
    1. Center the steering wheel spoke angle.
    2. Install a commercially available steering wheel holder tool (A).

GETtheMANUALS.org

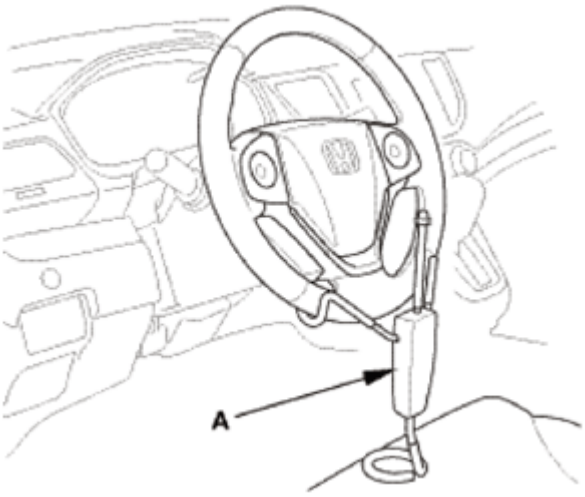

Fig. 1552: Identifying Commercially Available Steering Wheel Holder Tool
Courtesy of AMERICAN HONDA MOTOR CO., INC.

11. Steering Joint - Disconnection
    1. Remove the steering joint bolt (A).
    2. Disconnect the steering joint (B) from the pinion shaft.

NOTE:

- **If the center guide (C) is in place and has not moved, leave it in place.**
- **If the center guide has come off, discard it.**

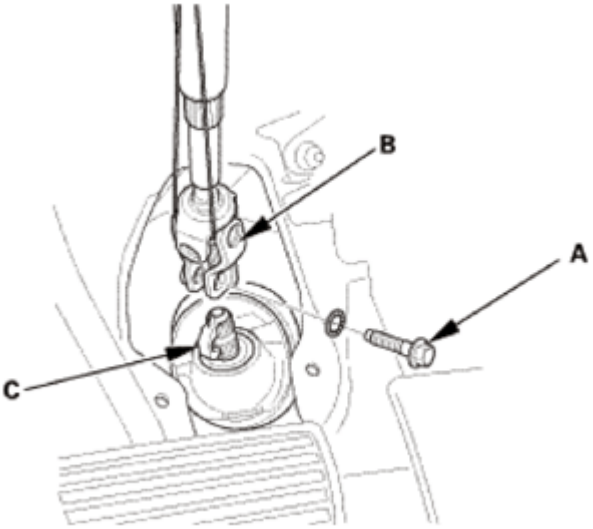

Fig. 1553: Identifying Steering Joint, Bolt And Center Guide
Courtesy of AMERICAN HONDA MOTOR CO., INC.

12. Automatic Transmission Peripheral Assembly, Upper Side

GETtheMANUALS.org

1. Remove the ATF dipstick (yellow loop) (A).

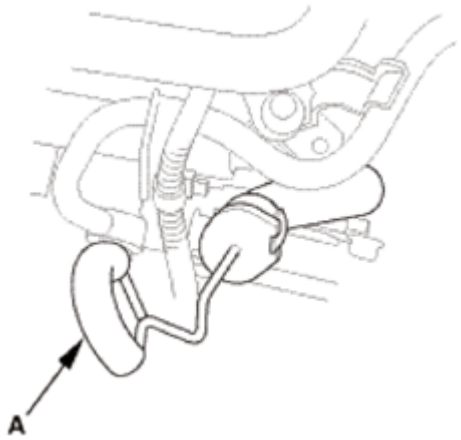

Fig. 1554: Identifying ATF Dipstick (Yellow Loop)
Courtesy of AMERICAN HONDA MOTOR CO., INC.

2. Disconnect the connectors (A).
3. Remove the harness clamps (B).

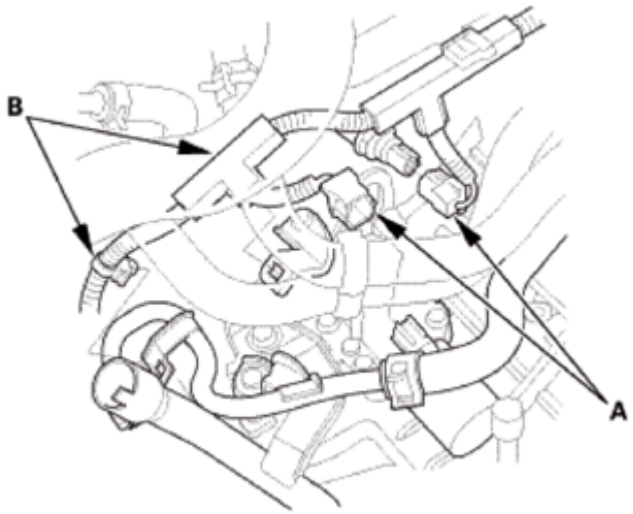

Fig. 1555: Identifying Harness Clamps And Connectors
Courtesy of AMERICAN HONDA MOTOR CO., INC.

4. Disconnect the ATF warmer hose (A).
5. Turn the end of the ATF hose up to prevent ATF from flowing out, then plug the hose and line.

GETtheMANUALS.org

Fig. 1556: Identifying ATF Warmer Hose
Courtesy of AMERICAN HONDA MOTOR CO., INC.

6. Remove the bolts (A) securing the ATF warmer bracket (B).

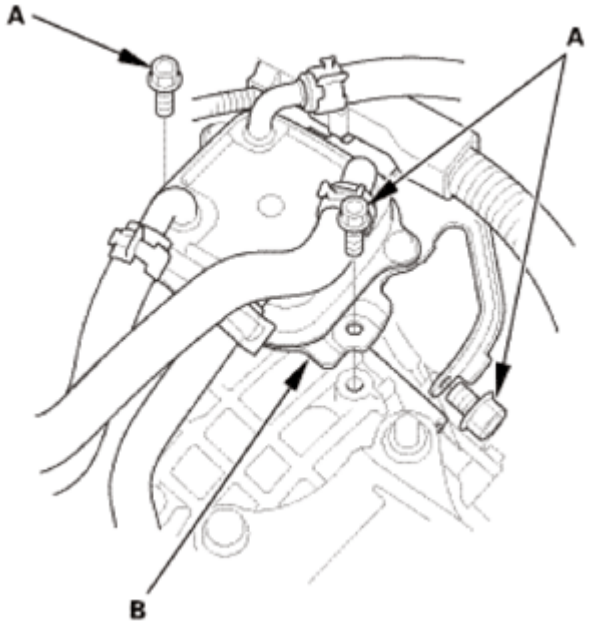

Fig. 1557: Identifying ATF Warmer Bracket And Mounting Bolts
Courtesy of AMERICAN HONDA MOTOR CO., INC.

13. Cowl Top Cover - Both Sides

NOTE: Repeat this procedure on the opposite side.

1. Remove the clip (A).
2. Pull out the hood rear seal (B).
3. Detach the hooks, and remove the cowl top cover (C).

GETtheMANUALS.org

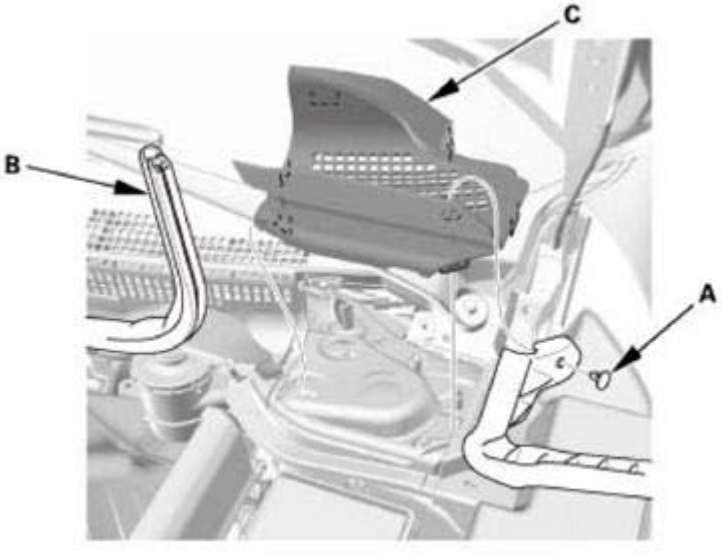

Fig. 1558: Identifying Cowl Top Cover, Hood Rear Seal And Clip
Courtesy of AMERICAN HONDA MOTOR CO., INC.

14. Engine Support Hanger
    1. Install the universal lifting eyelet to the special nut (A) with a spacer (B) and an 8 x 1.25 mm bolt (C).

NOTE: **Select a spacer that is long enough that the universal lifting eyelet does not interfere with the harness holder (D).**

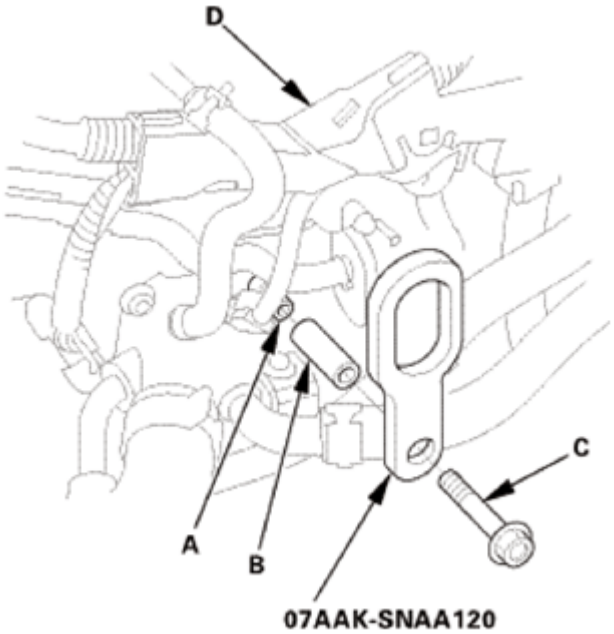

Fig. 1559: Installing Universal Lifting Eyelet To Special Nut With Spacer And 8 X 1.25 mm Bolt

GETtheMANUALS.org

Courtesy of AMERICAN HONDA MOTOR CO., INC.

2. Install the engine support hanger as shown.
3. Attach the hook to the slotted hole in the universal lifting eyelet.
4. Tighten the wing nut (A) by hand, and lift and support the engine/transmission.

NOTE: Be careful when working around the windshield.

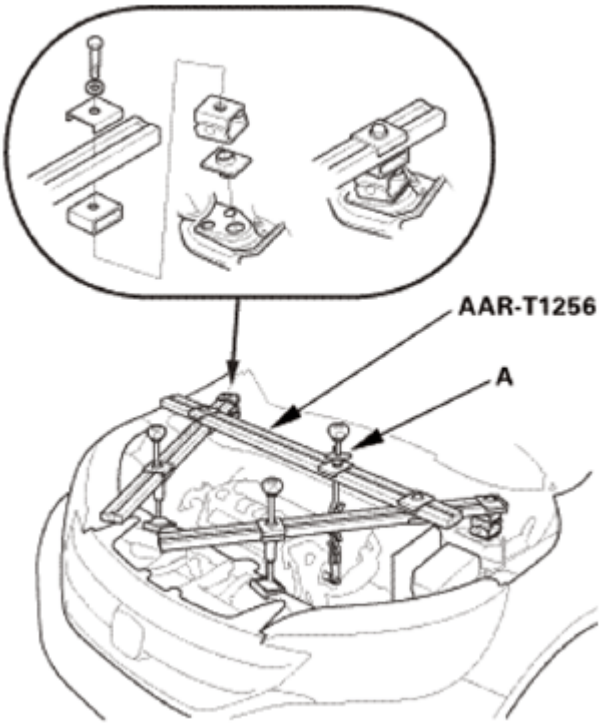

Fig. 1560: Installing Engine Support Hanger
Courtesy of AMERICAN HONDA MOTOR CO., INC.

15. Upper Transmission Mounting Bolt
    1. Remove the upper transmission assembly mounting bolts.

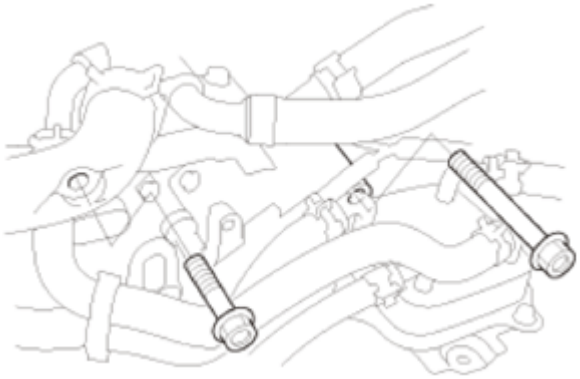

GETtheMANUALS.org

Fig. 1561: Identifying Upper Transmission Assembly Mounting Bolts
Courtesy of AMERICAN HONDA MOTOR CO., INC.

16. Transmission Mount Bracket
    1. Remove the ground cable terminal (A).
    2. Remove the transmission mount bracket (B).

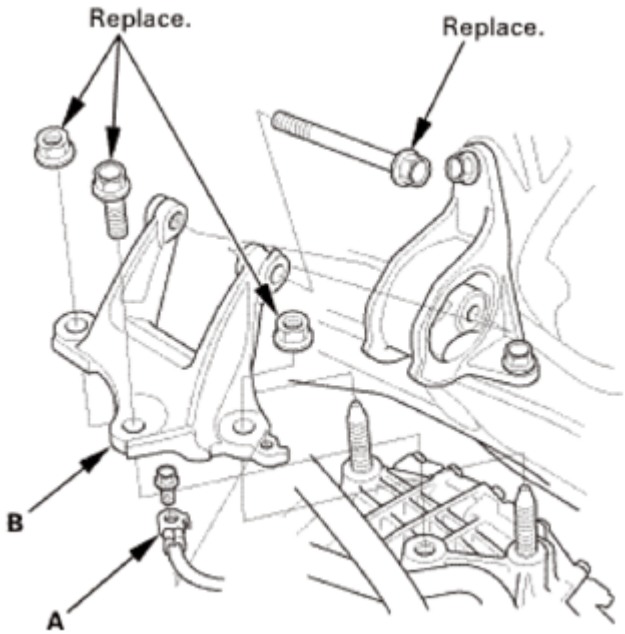

Fig. 1562: Identifying Transmission Mount Bracket And Ground Cable Terminal With Mounting Bolts
Courtesy of AMERICAN HONDA MOTOR CO., INC.

17. Raise The Vehicle On The Lift
    1. Raise the vehicle on the lift.
18. Front Wheel - Both Side
    1. Remove both front wheels.

GETtheMANUALS.org

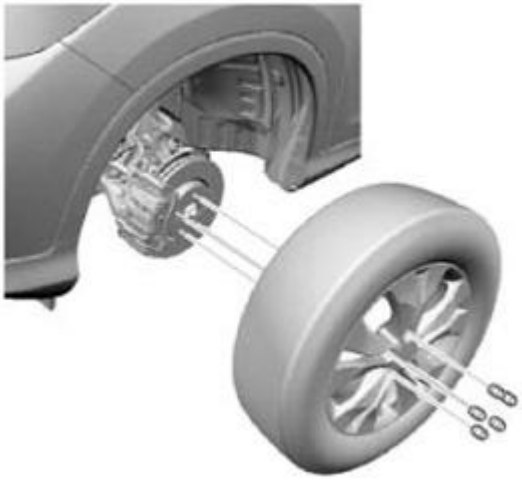

Fig. 1563: Identifying Front Wheels With Studs
Courtesy of AMERICAN HONDA MOTOR CO., INC.

19. Front Splash Shield
    1. Remove the bolts (A), then remove the clips (B) that secure the front inner fender and the front splash shield (C) to the body.
    2. From under the front bumper (D), remove the clips (E).
    3. From under the body, remove the clips (F), then pull out the front splash shield.

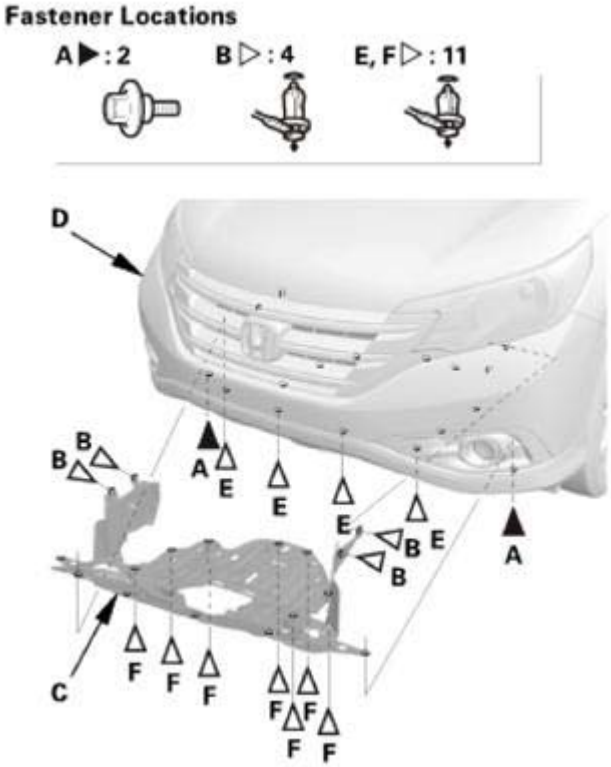

Fig. 1564: Identifying Front Splash Shield, Front Bumper, Bolts And Clips

GETtheMANUALS.org

Courtesy of AMERICAN HONDA MOTOR CO., INC.

20. ATF - Replacement
    1. Remove the drain plug (A), and drain the ATF.
    2. Reinstall the drain plug using a new sealing washer (B).

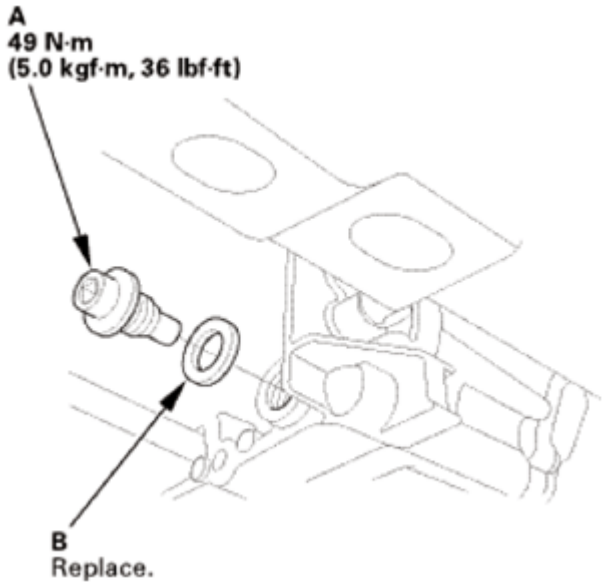

Fig. 1565: Identifying Drain Plug And Sealing Washer With Torque Specification
Courtesy of AMERICAN HONDA MOTOR CO., INC.

21. Lower Arm Joint - Disconnection, Both Knuckle Side
    1. Remove the flange bolt and the self-locking nuts on both sides.
    2. Separate the lower arm using a pry bar on both sides.

Fig. 1566: Identifying Flange Bolt And Self-Locking Nuts Of Lower Arm
Courtesy of AMERICAN HONDA MOTOR CO., INC.

GETtheMANUALS.org

22. Ball Joint - Removal

NOTE: **Always use a ball joint remover to disconnect a ball joint. Do not strike the housing or any other part of the ball joint connection to disconnect it.**

1. Install a hex nut (A) or the ball joint thread protector.

NOTE: **When using a hex nut, make sure the nut is flush with the ball joint pin end to prevent damage to the threaded end of the ball joint pin.**

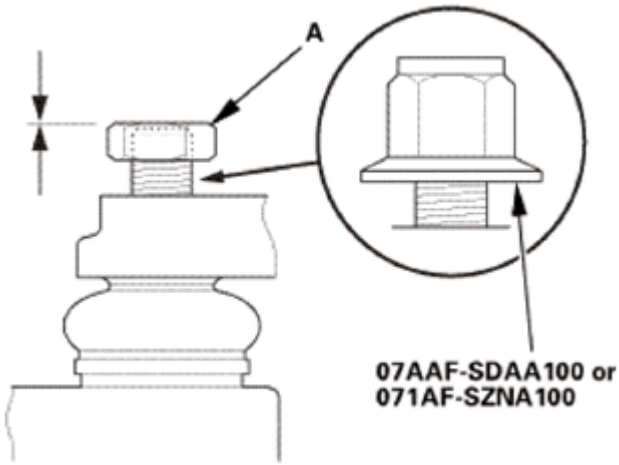

Fig. 1567: Identifying Hex Nut Installation Dimension
Courtesy of AMERICAN HONDA MOTOR CO., INC.

2. Apply grease to the ball joint remover on the areas shown (A).

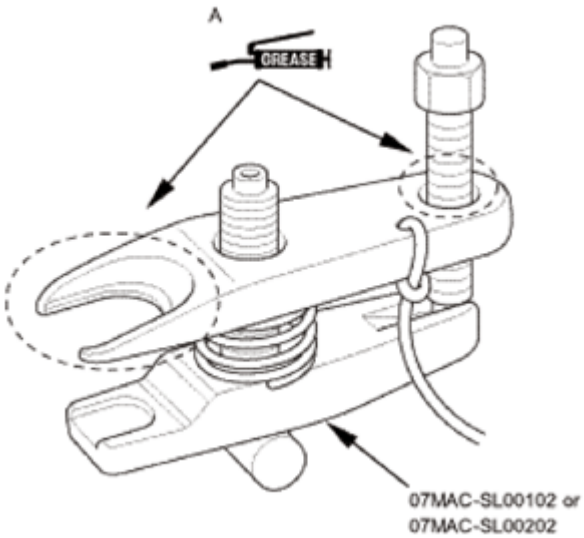

Fig. 1568: Identifying Grease Applying To Ball Joint Remover Area
Courtesy of AMERICAN HONDA MOTOR CO., INC.

GETtheMANUALS.org

3. Install the ball joint remover as shown.

NOTE:

- **Fasten the safety tie (A) securely to a suspension arm or the subframe (B).**
- **Making sure not to damage the ball joint boot.**

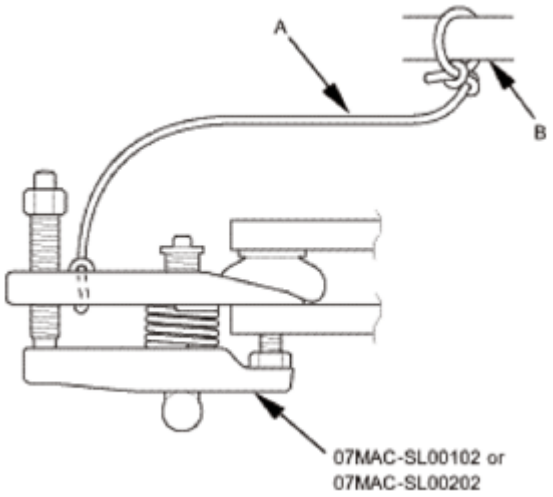

Fig. 1569: Installing Ball Joint Remover
Courtesy of AMERICAN HONDA MOTOR CO., INC.

4. Tighten the pressure bolt until the ball joint pin pops loose from the ball joint connecting hole.

NOTE: **Do not use pneumatic or electric tools on the pressure bolt.**

5. Remove the ball joint remover.
6. Remove the hex nut or the ball joint thread protector.
7. Pull the ball joint out of the ball joint connecting hole.

23. Tie-Rod End Ball Joint - Disconnection, Both Side
    1. Remove the cotter pin (A) from the tie-rod end ball joint.
    2. Remove the nut (B).
    3. Disconnect the tie-rod end ball joint.

NOTE: **Be careful not to damage the ball joint boot when installing the remover.**

GETtheMANUALS.org

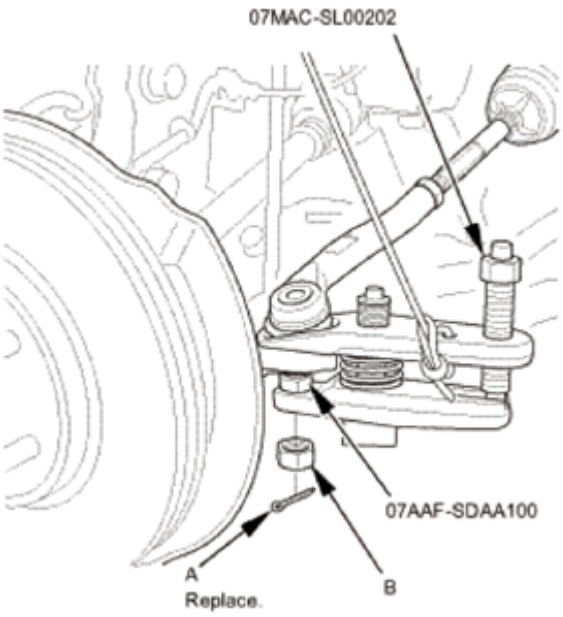

Fig. 1570: Disconnecting Tie-Rod End Ball Joint
Courtesy of AMERICAN HONDA MOTOR CO., INC.

24. Front Stabilizer Link Stabilizer Bar Side - Disconnection, Both Side
    1. Remove the flange nuts (A) while holding the respective joint pin (B) with a hex wrench (C).
    2. Disconnect both sides of the stabilizer link (D) from the front stabilizer bar (E).

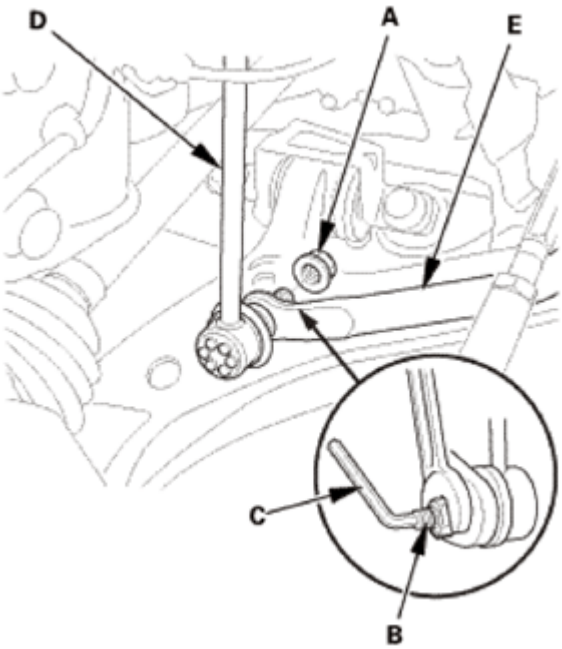

Fig. 1571: Removing Flange Nuts While Holding Respective Joint Pin With Hex Wrench
Courtesy of AMERICAN HONDA MOTOR CO., INC.

GETtheMANUALS.org

25. Shift Cable Cover
    1. Remove the shift cable cover (A).

2WD

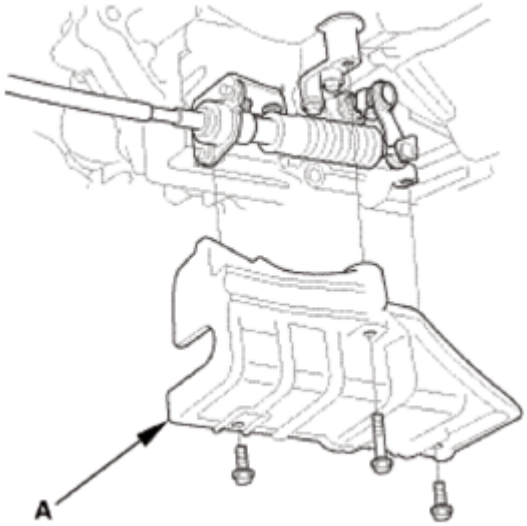

Fig. 1572: Identifying Shift Cable Cover With Mounting Bolts (2WD)
Courtesy of AMERICAN HONDA MOTOR CO., INC.

AWD/4WD

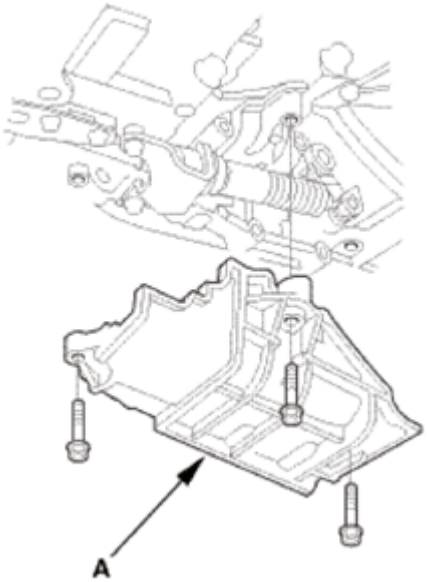

Fig. 1573: Identifying Shift Cable Cover With Mounting Bolts (AWD/4WD)
Courtesy of AMERICAN HONDA MOTOR CO., INC.

26. Shift Cable - Disconnection A/T Side (Except 2WD of USA Produced Models)

GETtheMANUALS.org

Except 2WD of USA Produced Models

1. Remove the spring clip (A) and the control pin (B).
2. Separate the shift cable (C) from the selector control lever (D).

NOTE: Do not bend the shift cable excessively.

3. Remove the shift cable bracket(s) (E).
4. Check the bushing (F) in the shift cable end for proper fit and wear. If the bushing is loose or worn, replace the shift cable.

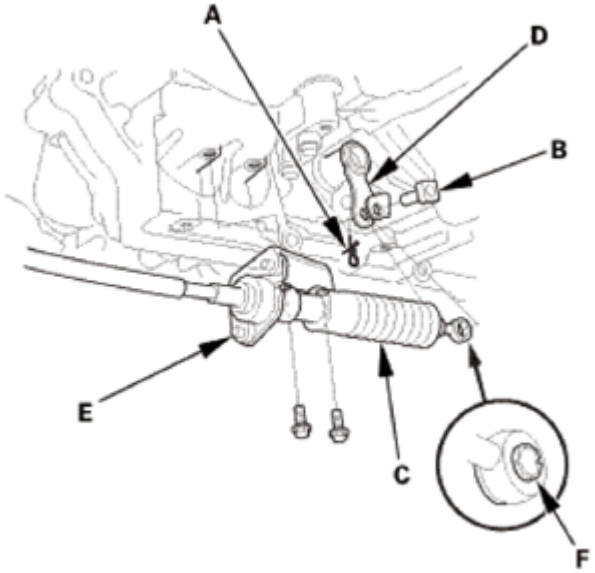

Fig. 1574: Identifying Bushing, Shift Cable Bracket, Shift Cable, Selector Control Lever, Spring Clip And Control Pin (Except 2WD Of USA Produced Models)
Courtesy of AMERICAN HONDA MOTOR CO., INC.

AWD/4WD

GETtheMANUALS.org

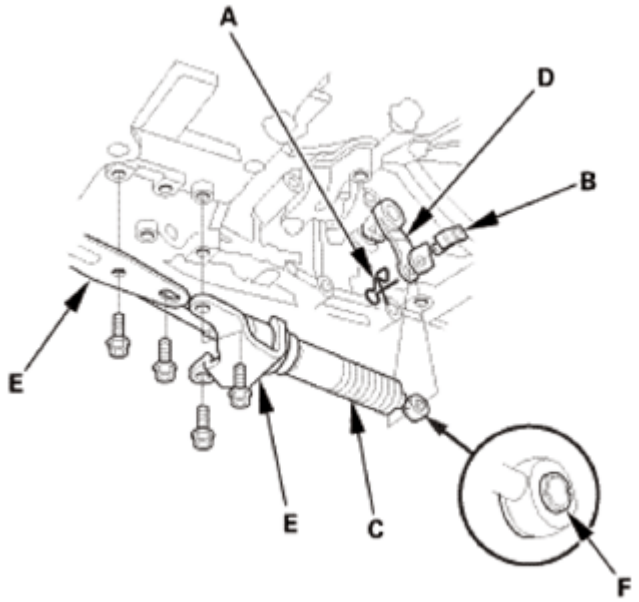

Fig. 1575: Identifying Bushing, Shift Cable Bracket, Shift Cable, Selector Control Lever, Spring Clip And Control Pin (AWD/4WD)
Courtesy of AMERICAN HONDA MOTOR CO., INC.

27. Shift Cable - Disconnection A/T Side (2WD of USA Produced Models)

2WD of USA Produced Models

1. Pry down the lock tab (A) of the lock washer (B).
2. Remove the lock bolt (C) and the lock washer.
3. Separate the shift cable (D) from the selector control shaft (E).

NOTE: Do not bend the shift cable excessively.

4. Remove the shift cable bracket (F).

GETtheMANUALS.org

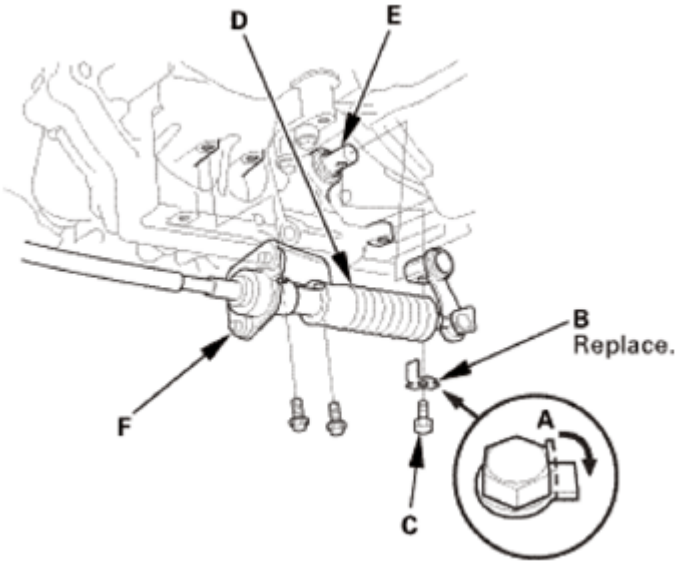

Fig. 1576: Identifying Shift Cable Bracket, Selector Control Shaft, Lock Tab, Lock Washer, Lock Bolt And Shift Cable (2WD Of USA Produced Models)
Courtesy of AMERICAN HONDA MOTOR CO., INC.

28. A/T Shift Cable Cover Bracket
    1. Remove the shift cable cover bracket (A).

2WD

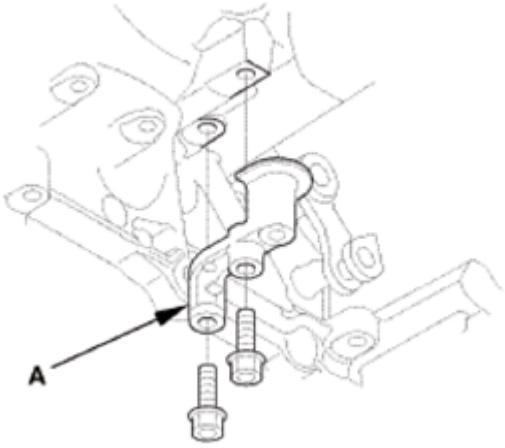

Fig. 1577: Identifying Shift Cable Cover Bracket With Mounting Bolts (2WD)
Courtesy of AMERICAN HONDA MOTOR CO., INC.

AWD/4WD

GETtheMANUALS.org

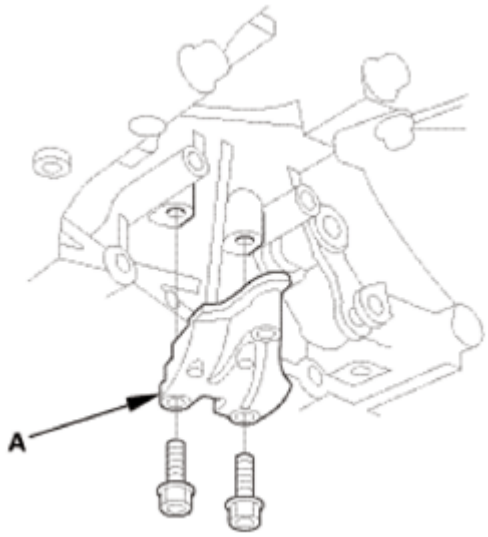

Fig. 1578: Identifying Shift Cable Cover Bracket With Mounting Bolts (AWD/4WD)
Courtesy of AMERICAN HONDA MOTOR CO., INC.

29. Front Floor Undercover
    1. Remove the bolts (A) and the clips (B, C) securing the front floor undercover (D), then remove the front floor undercover.

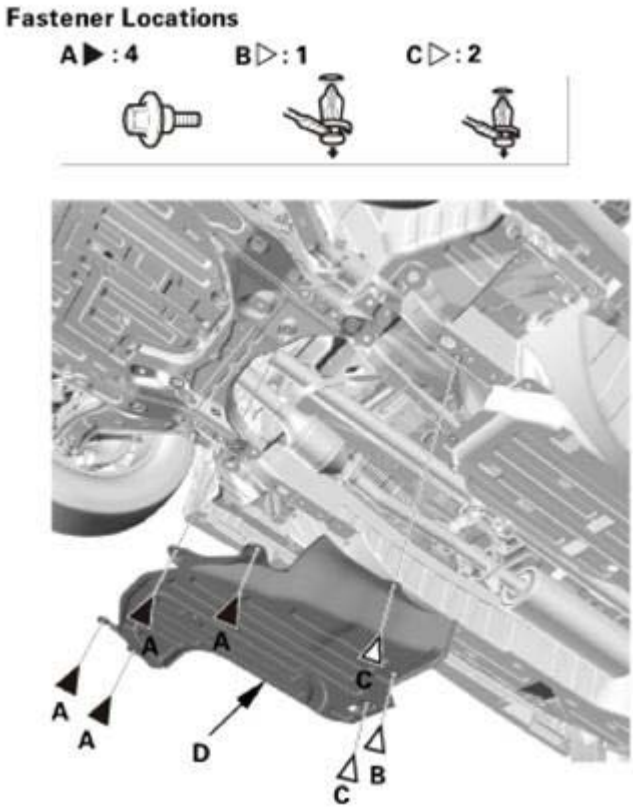

Fig. 1579: Identifying Front Floor Undercover, Bolts And Clips

GETtheMANUALS.org

Courtesy of AMERICAN HONDA MOTOR CO., INC.

30. Left Middle Floor Undercover (AWD/4WD)
    1. Remove the bolts (A) and clips (B, C), then remove the left middle floor undercover (D).

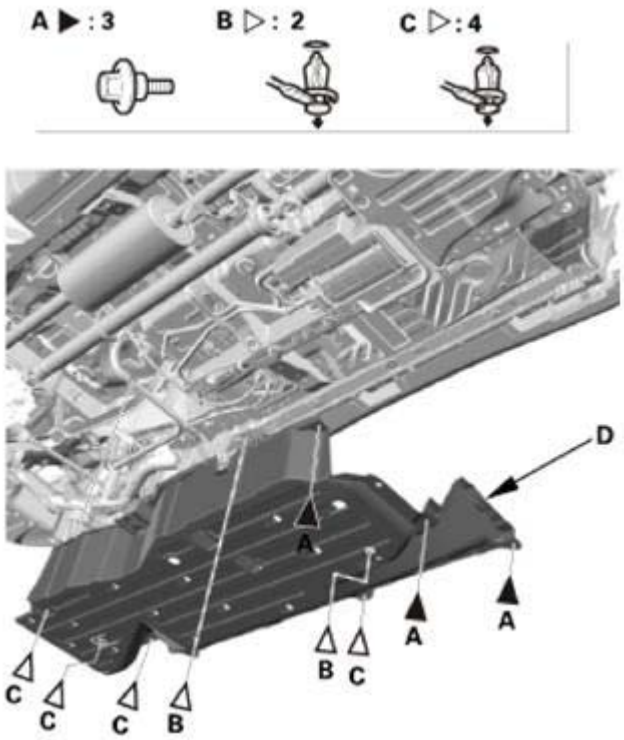

Fig. 1580: Identifying Left Middle Floor Undercover, Bolts And Clips
Courtesy of AMERICAN HONDA MOTOR CO., INC.

31. Propeller Shaft Protector No. 1 (AWD/4WD)
    1. Remove the No. 1 propeller shaft protector (A).

GETtheMANUALS.org

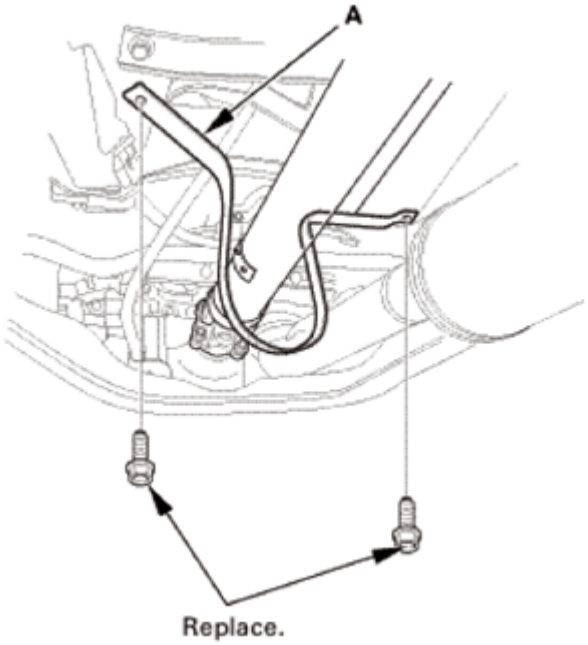

Fig. 1581: Identifying No. 1 Propeller Shaft Protector With Mounting Bolts
Courtesy of AMERICAN HONDA MOTOR CO., INC.

32. Propeller Shaft Protector No. 2 (AWD/4WD)
    1. Remove the No. 2 propeller shaft protector (A).

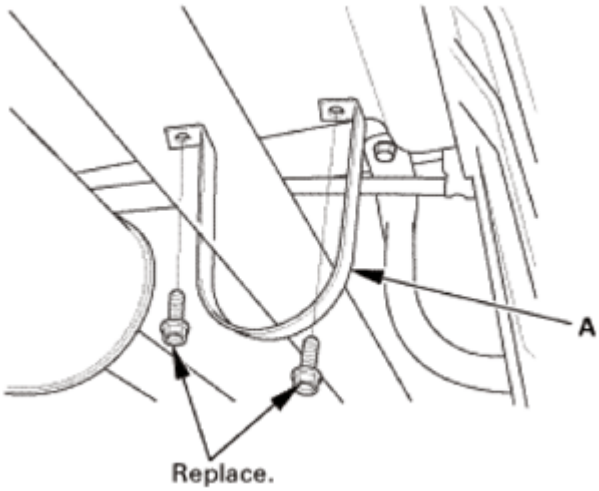

Fig. 1582: Identifying No. 2 Propeller Shaft Protector With Mounting Bolts
Courtesy of AMERICAN HONDA MOTOR CO., INC.

33. Propeller Shaft Transmission Side - Disconnection (AWD/4WD)
    1. Make reference mark (A) across the No. 1 propeller shaft (B) and the transfer companion flange (C).
    2. Remove the No. 1 propeller shaft flange bolts (D).

GETtheMANUALS.org

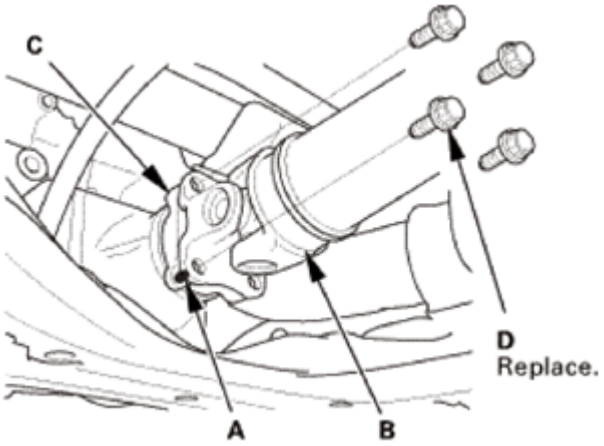

Fig. 1583: Identifying No. 1 Propeller Shaft, Flange Bolts, Reference Mark And Transfer Companion Flange
Courtesy of AMERICAN HONDA MOTOR CO., INC.

34. Propeller Shaft Differential Side - Disconnection (AWD/4WD)
    1. Make reference mark (A) across the No. 2 propeller shaft (B) and the rear differential companion flange (C).
    2. Remove the No. 2 propeller shaft flange bolts (D).

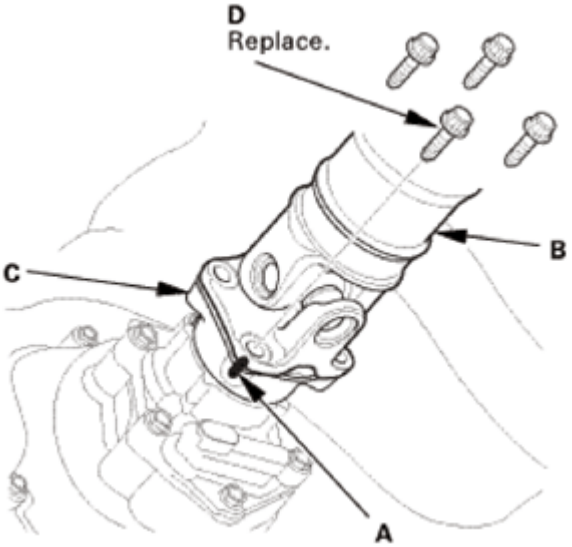

Fig. 1584: Identifying No. 2 Propeller Shaft, Flange Bolts, Reference Mark And Rear Differential Companion Flange
Courtesy of AMERICAN HONDA MOTOR CO., INC.

35. Propeller Shaft Assembly (AWD/4WD)
    1. Remove the center support bearing mounting bolts (A), then remove the propeller shaft assembly (B).

GETtheMANUALS.org

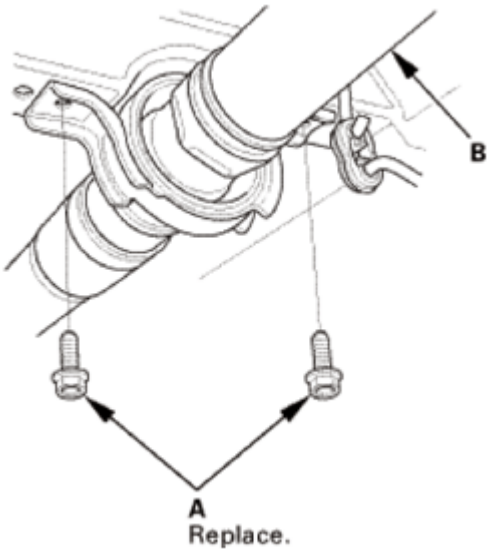

Fig. 1585: Identifying Center Support Bearing Mounting Bolts And Propeller Shaft Assembly
Courtesy of AMERICAN HONDA MOTOR CO., INC.

36. Under-Floor TWC Assembly
    1. Remove the under-floor TWC.

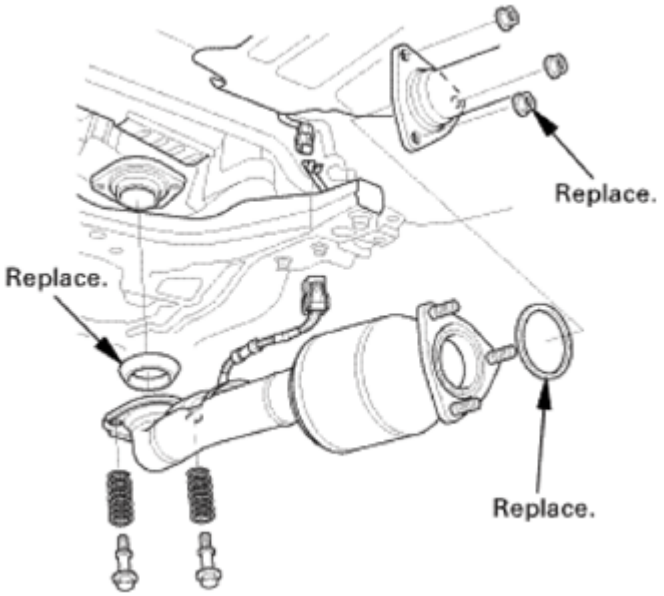

Fig. 1586: Identifying Under-Floor TWC Assembly
Courtesy of AMERICAN HONDA MOTOR CO., INC.

37. Transfer Assembly (AWD/4WD)
    1. Remove the transfer assembly (A) and the dowel pin (B).
    2. Remove the O-ring (C) from the transfer assembly.

GETtheMANUALS.org

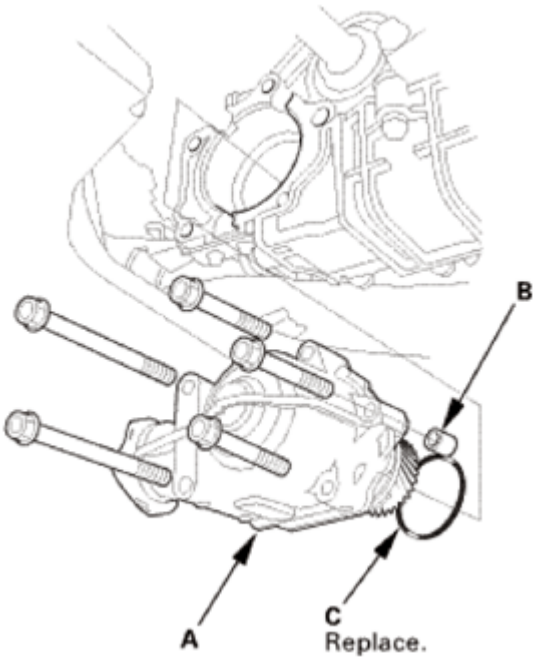

Fig. 1587: Identifying Transfer Assembly, Dowel Pin And O-Ring
Courtesy of AMERICAN HONDA MOTOR CO., INC.

38. Lower Torque Rod - Disconnection
    1. Remove the lower torque rod mounting bolts.

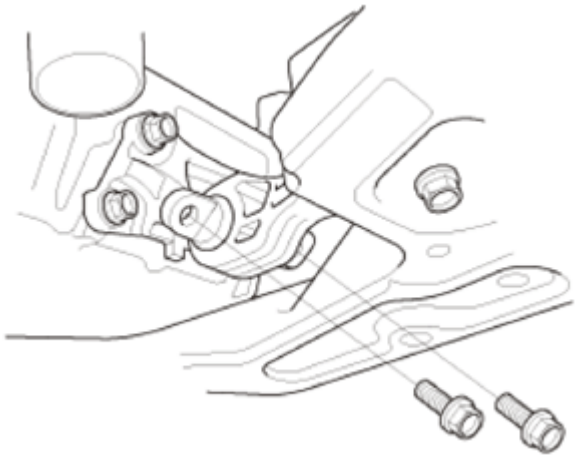

Fig. 1588: Identifying Lower Torque Rod Mounting Bolts
Courtesy of AMERICAN HONDA MOTOR CO., INC.

39. Front Engine Mount - Disconnection/Reconnection
    1. Remove the front engine mount mounting bolt.

GETtheMANUALS.org

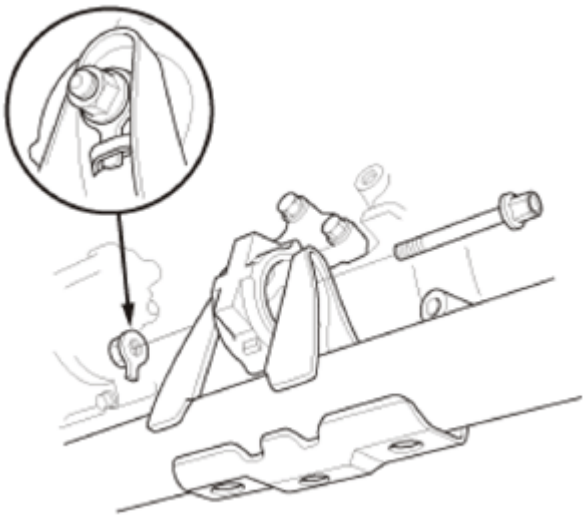

Fig. 1589: Identifying Front Engine Mount Mounting Bolt
Courtesy of AMERICAN HONDA MOTOR CO., INC.

40. EPS Motor Connector - Disconnection/Reconnection

NOTE: **Wrap the connectors with vinyl tape to avoid contamination from grease or water.**

1. Disconnect the EPS motor 3P connector (A) by pushing the lock (B) and pulling up the lever (C).
2. Disconnect the connectors (D).
3. Remove the harness clip (E).

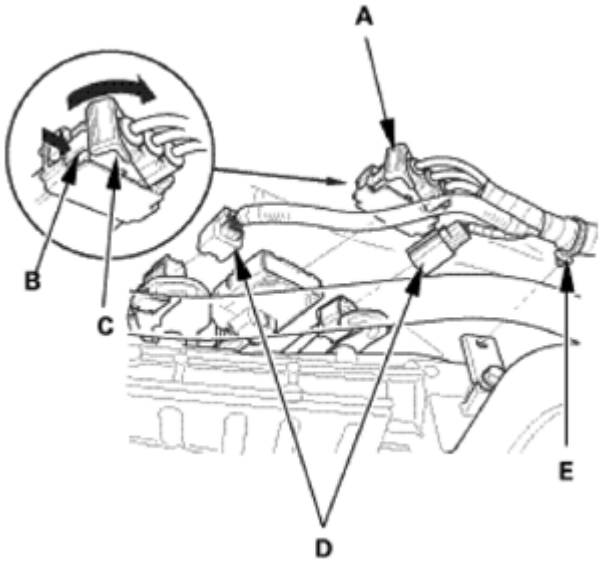

Fig. 1590: Pushing Lock And Pulling Up Lever
Courtesy of AMERICAN HONDA MOTOR CO., INC.

GETtheMANUALS.org

41. Subframe Support
    1. Attach the subframe adapter (A) to the front subframe by looping the belt (B) over the front of the front subframe (C), then secure the belt with its stop (D).
    2. Raise the jack and line up the slots in the subframe adapter arms with the bolt holes on the jack base, then securely attach them with four bolts.

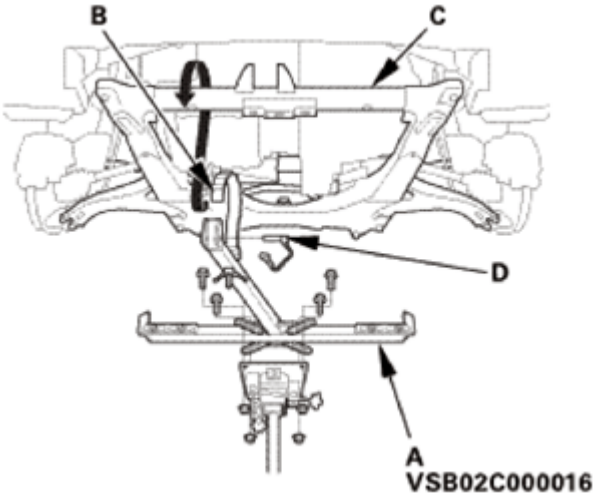

Fig. 1591: Attaching Subframe Adapter To Front Subframe By Looping Belt
Courtesy of AMERICAN HONDA MOTOR CO., INC.

42. Front Subframe Assembly
    1. Remove the front subframe mid bolts.

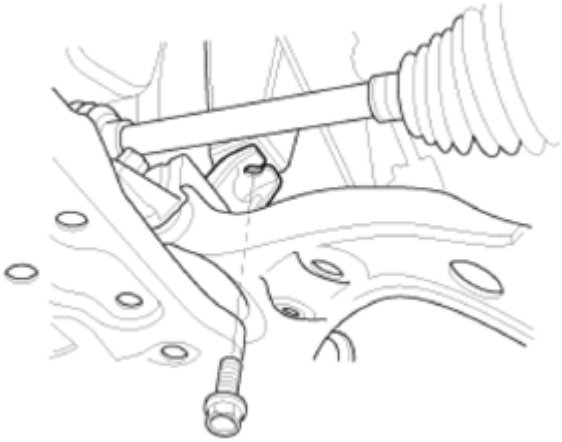

Fig. 1592: Identifying Front Subframe Mid Bolt
Courtesy of AMERICAN HONDA MOTOR CO., INC.

    2. Remove the front subframe mounting bolts.
    3. Lower the front subframe.

GETtheMANUALS.org

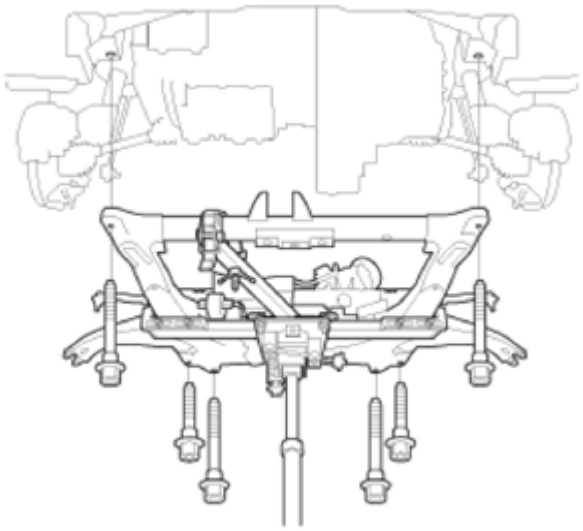

Fig. 1593: Identifying Front Subframe Mounting Bolts
Courtesy of AMERICAN HONDA MOTOR CO., INC.

43. Transmission Jack Support
    1. Support the transmission with a transmission jack.
44. A/T Peripheral Assembly, Lower Side
    1. Disconnect the connectors (A).
    2. Remove the harness clamps (B).

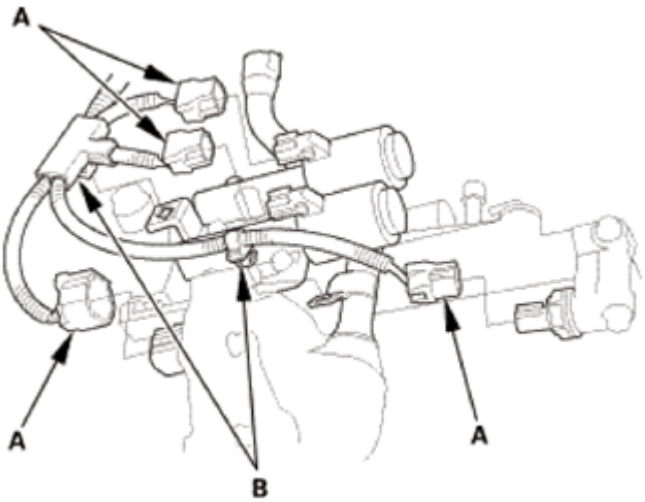

Fig. 1594: Identifying Harness Clamps And Connectors
Courtesy of AMERICAN HONDA MOTOR CO., INC.

    3. Disconnect the ATF warmer hose (A).
    4. Turn the end of the ATF hose up to prevent ATF from flowing out, then plug the hose and line.

GETtheMANUALS.org

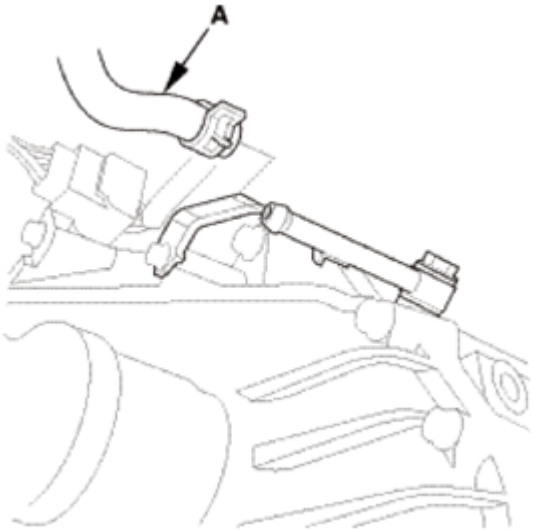

Fig. 1595: Identifying ATF Warmer Hose
Courtesy of AMERICAN HONDA MOTOR CO., INC.

5. Disconnect the connectors (A).

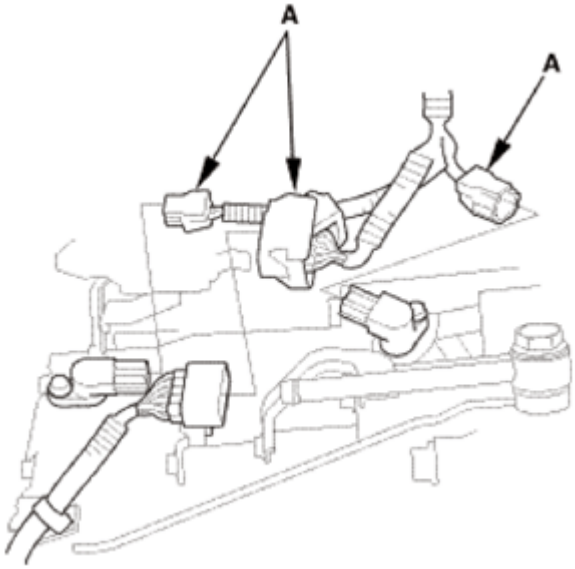

Fig. 1596: Identifying ATF Harness Connectors
Courtesy of AMERICAN HONDA MOTOR CO., INC.

45. Torque Converter - Disconnection
    1. Remove the torque converter cover (A).
    2. Remove eight drive plate bolts (B) while rotating the crankshaft pulley.

GETtheMANUALS.org

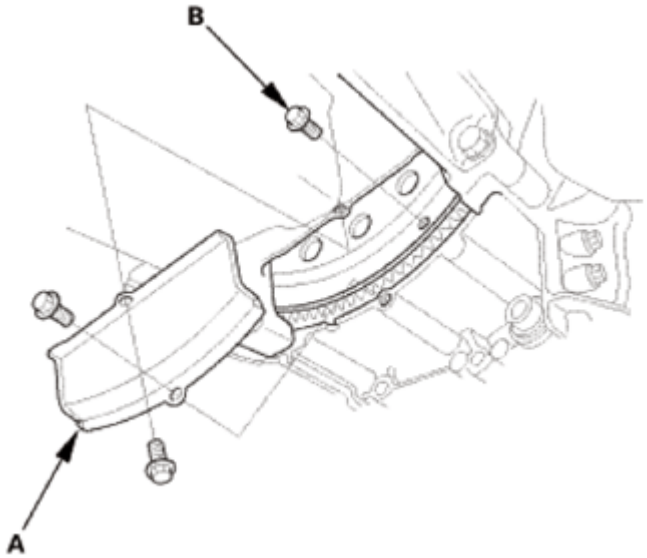

Fig. 1597: Identifying Torque Converter Cover And Drive Plate Bolts
Courtesy of AMERICAN HONDA MOTOR CO., INC.

46. Driveshaft Front Both, Inboard Side - Disconnection

Left Driveshaft

1. Left driveshaft: Pry the inboard joint (A) from the differential using a pry bar (B).

NOTE:

- **Do not pull on the driveshaft (C), or the inboard joint may come apart. Pull the inboard joint straight out to avoid damaging the oil seal.**
- **Be careful not to damage the oil seal or the end of the inboard joint using the pry bar.**

GETtheMANUALS.org

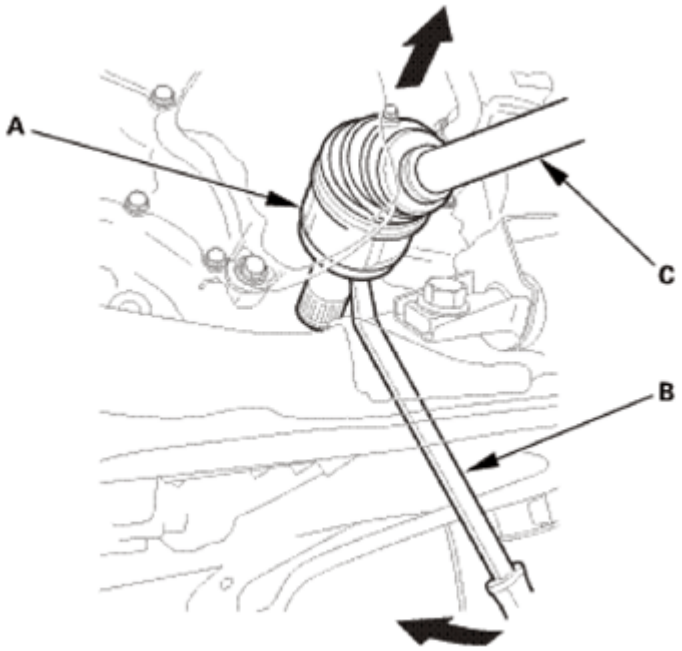

Fig. 1598: Prying Inboard Joint From Differential Using Pry Bar
Courtesy of AMERICAN HONDA MOTOR CO., INC.

Left Driveshaft

2. Left driveshaft: Remove the set ring (A) from the inboard joint.

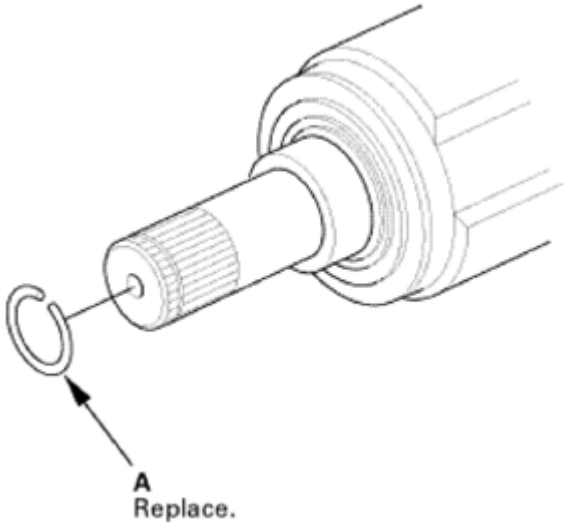

Fig. 1599: Identifying Set Ring Of Inboard Joint
Courtesy of AMERICAN HONDA MOTOR CO., INC.

Right Driveshaft

3. Right driveshaft: Drive the inboard joint (A) off of the intermediate shaft using a drift punch and a

GETtheMANUALS.org

hammer.

NOTE: Do not pull on the driveshaft (B), or the inboard joint may come apart.

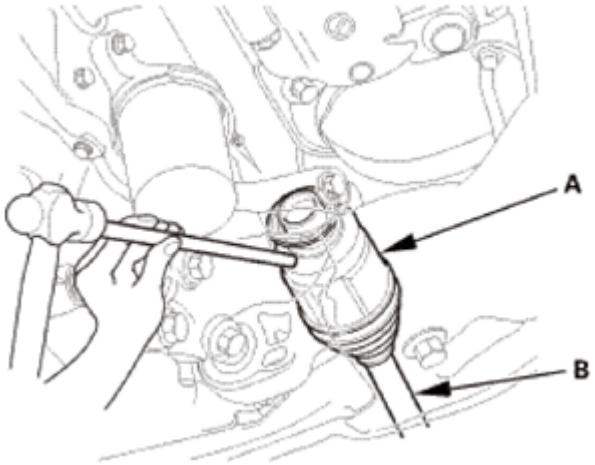

Fig. 1600: Driving Inboard Joint Of Intermediate Shaft Using Drift Punch And Hammer
Courtesy of AMERICAN HONDA MOTOR CO., INC.

4. Right driveshaft: Remove the set ring (A) from the intermediate shaft.

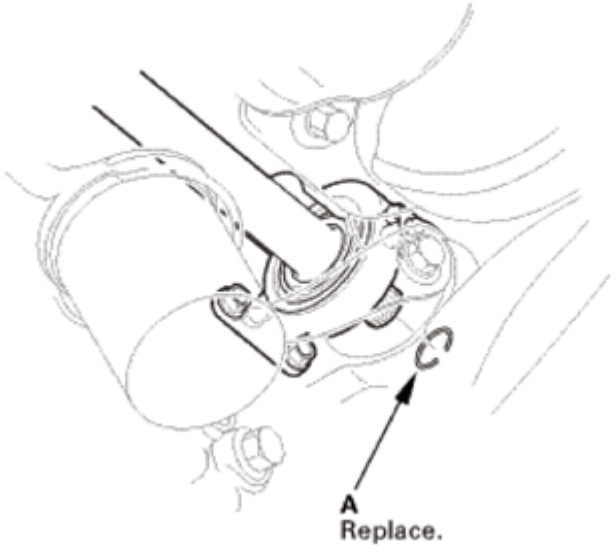

Fig. 1601: Identifying Set Ring Of Intermediate Shaft
Courtesy of AMERICAN HONDA MOTOR CO., INC.

47. A/T Intermediate Shaft Assembly
    1. Remove the flange bolt (A) and the two dowel bolts (B).

GETtheMANUALS.org

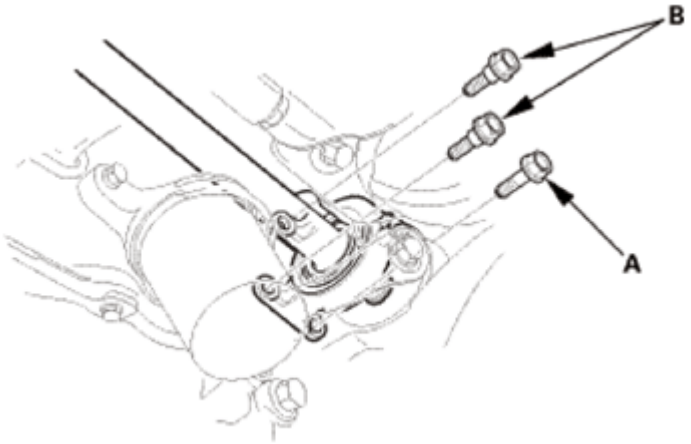

Fig. 1602: Identifying Flange Bolt And Dowel Bolts
Courtesy of AMERICAN HONDA MOTOR CO., INC.

2. Remove the intermediate shaft (A) from the differential. Hold the intermediate shaft horizontal until it is clear of the differential to prevent damaging the oil seal (B).

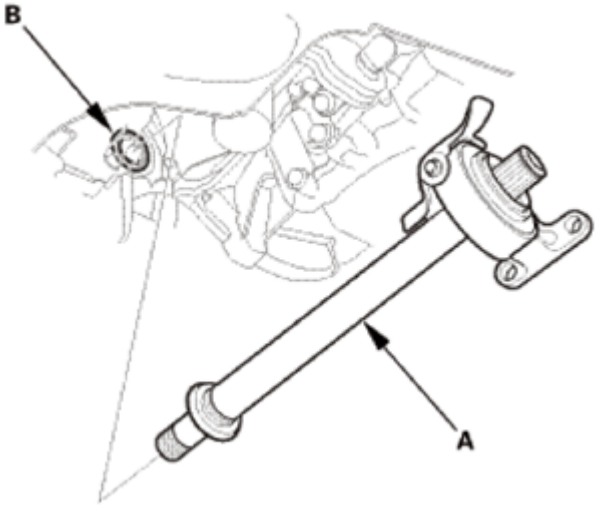

Fig. 1603: Identifying Intermediate Shaft And Oil Seal
Courtesy of AMERICAN HONDA MOTOR CO., INC.

48. CKP Sensor Cover
    1. Remove the CKP sensor cover (A).

GETtheMANUALS.org

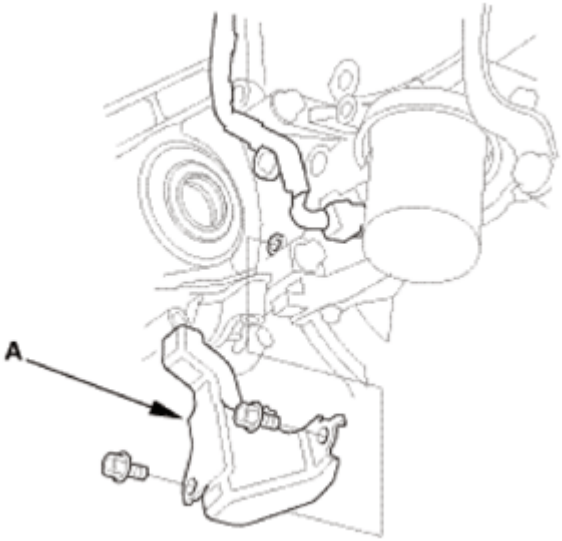

Fig. 1604: Identifying CKP Sensor Cover
Courtesy of AMERICAN HONDA MOTOR CO., INC.

49. A/T Assembly
    1. Lower the transmission by loosening the wing nut of the engine support hanger, and tilt the engine just enough for the transmission to clear its end from the side frame.
    2. Remove the lower transmission assembly mounting bolts.

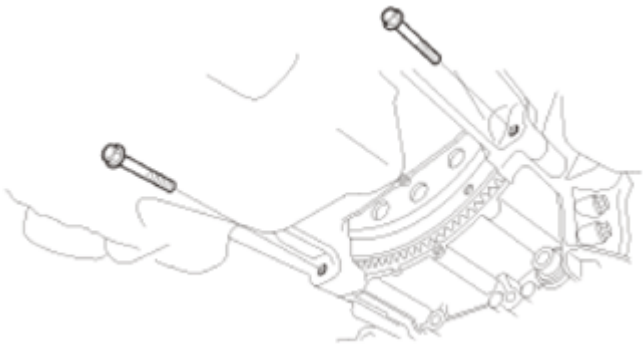

Fig. 1605: Identifying Lower Transmission Assembly Mounting Bolts
Courtesy of AMERICAN HONDA MOTOR CO., INC.

    3. Remove the front transmission assembly mounting bolts.

GETtheMANUALS.org

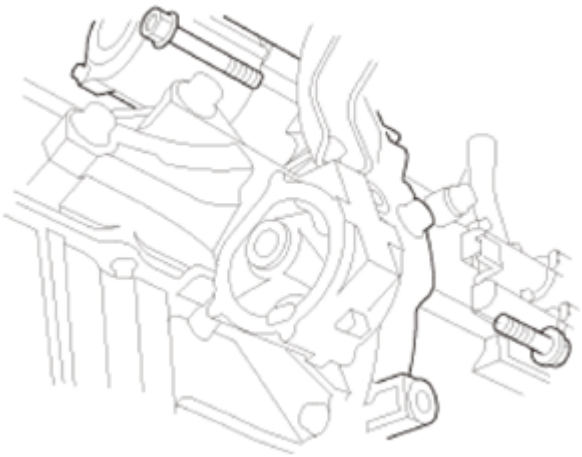

Fig. 1606: Identifying Front Transmission Assembly Mounting Bolts
Courtesy of AMERICAN HONDA MOTOR CO., INC.

4. Remove the rear transmission assembly mounting bolts.
5. Check once again that the transmission is free of hoses and electrical wiring.
6. Slide the transmission away from the engine by holding the torque converter in the transmission, then remove it from the vehicle.

NOTE: Be careful not to drop the torque converter.

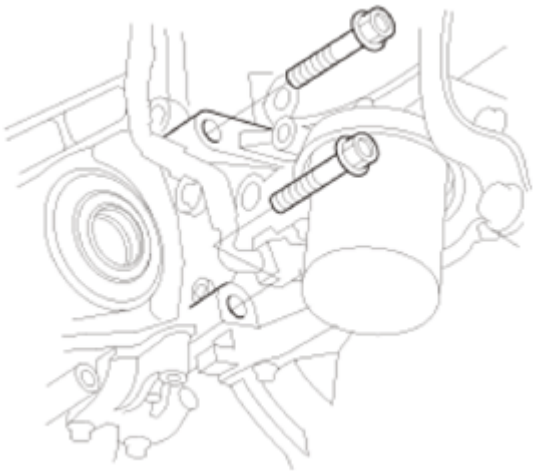

Fig. 1607: Identifying Rear Transmission Assembly Mounting Bolts
Courtesy of AMERICAN HONDA MOTOR CO., INC.

50. Torque Converter
    1. Remove the torque converter (A), the O-ring (B), and the dowel pins (C).
    2. Inspect the drive plate, and replace it if it is damaged.

GETtheMANUALS.org

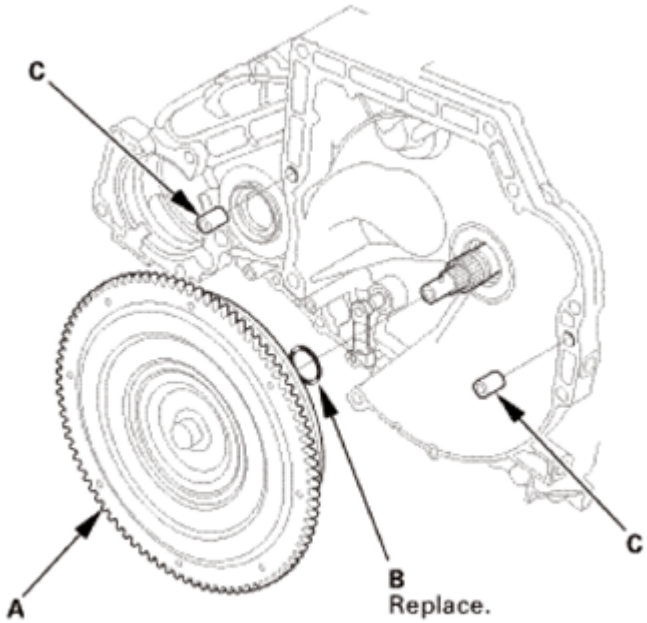

This illustration shows the AWD/4WD transmission.

Fig. 1608: Identifying Torque Converter, O-Ring And Dowel Pins
Courtesy of AMERICAN HONDA MOTOR CO., INC.

INSTALLATION

1. Torque Converter
    1. Install the torque converter (A) using a new O-ring (B).

        NOTE: **Make sure the torque converter is fully engaged on the mainshaft, the stator shaft, and the ATF pump drive gear. Failure to do so will result in severe transmission or engine damage.**

    2. Install the dowel pins (C).

GETtheMANUALS.org

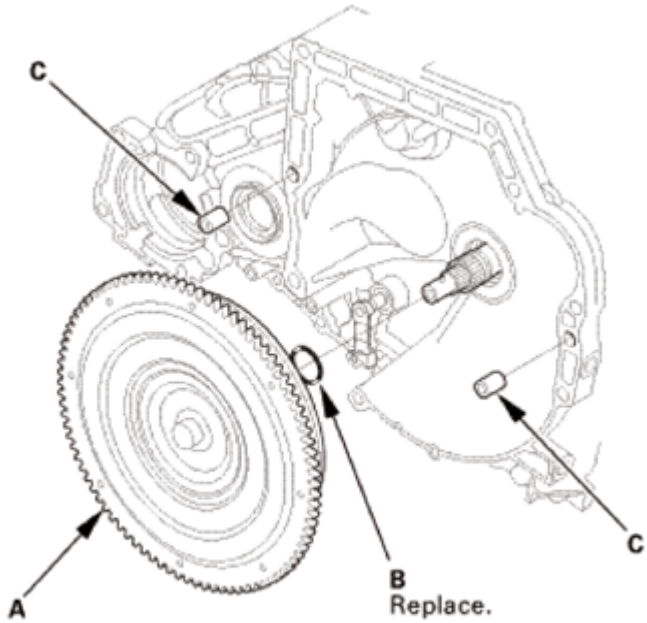

This illustration shows the AWD/4WD transmission.

Fig. 1609: Identifying Torque Converter, O-Ring And Dowel Pins
Courtesy of AMERICAN HONDA MOTOR CO., INC.

2. A/T Assembly
    1. Place the transmission on a jack, and raise the transmission to the engine level.
    2. Attach the transmission to the engine.
    3. Install the front transmission assembly mounting bolts.

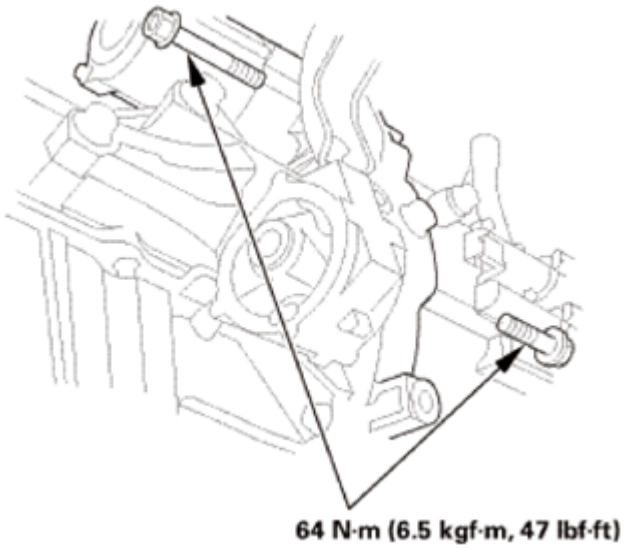

Fig. 1610: Identifying Front Transmission Assembly Mounting Bolts With Torque Specification
Courtesy of AMERICAN HONDA MOTOR CO., INC.

GETtheMANUALS.org

4. Install the rear transmission assembly mounting bolts.

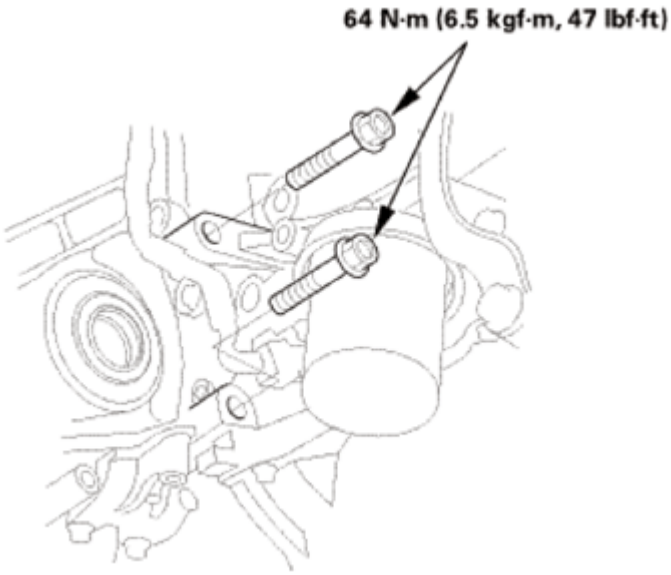

Fig. 1611: Identifying Rear Transmission Assembly Mounting Bolts With Torque Specification
Courtesy of AMERICAN HONDA MOTOR CO., INC.

5. Install the lower transmission assembly mounting bolts.

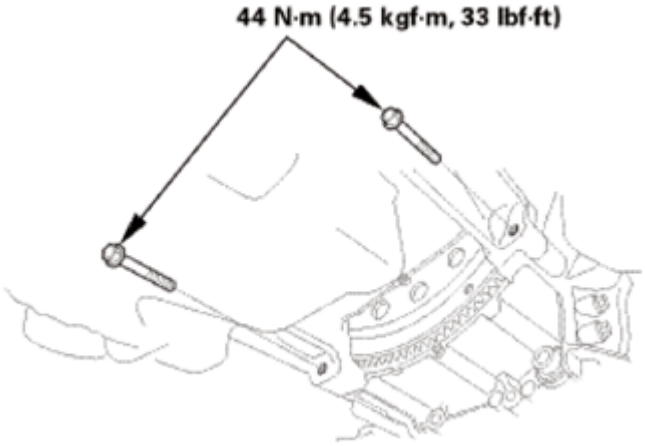

Fig. 1612: Identifying Lower Transmission Assembly Mounting Bolts With Torque Specification
Courtesy of AMERICAN HONDA MOTOR CO., INC.

3. CKP Sensor Cover
   1. Install the CKP sensor cover (A).

GETtheMANUALS.org

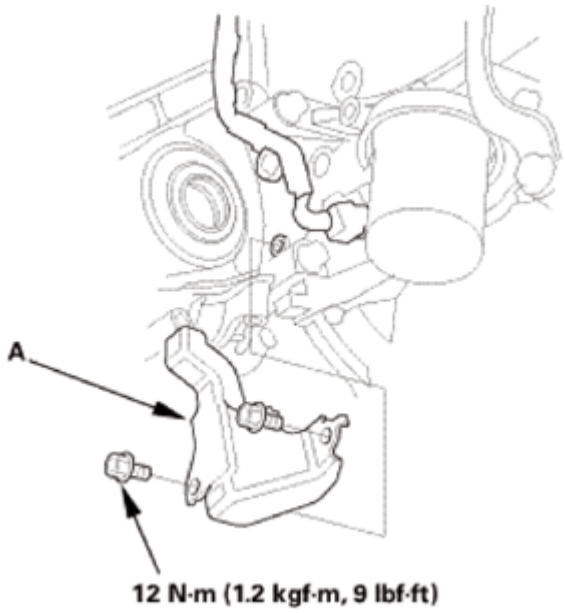

Fig. 1613: Identifying CKP Sensor Cover And Mounting Bolts With Torque Specification
Courtesy of AMERICAN HONDA MOTOR CO., INC.

4. A/T Intermediate Shaft Assembly
    1. Clean the areas where the intermediate shaft contacts the differential thoroughly with solvent, and dry them with compressed air.

    NOTE: Do not wash the rubber parts with solvent.

    2. Insert the intermediate shaft (A) into the differential correctly.

    NOTE: Insert the intermediate shaft carefully to prevent damaging the oil seal (B).

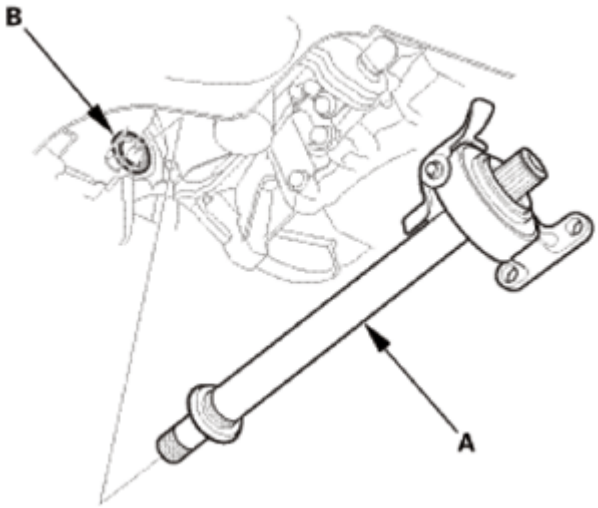

GETtheMANUALS.org

Fig. 1614: Identifying Intermediate Shaft And Oil Seal
Courtesy of AMERICAN HONDA MOTOR CO., INC.

3. Install the two dowel bolts (A) and the flange bolt (B).

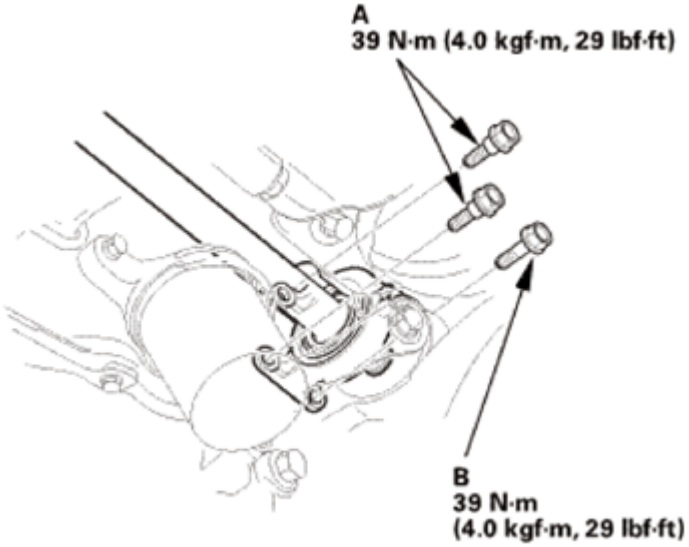

Fig. 1615: Identifying Dowel Bolts And Flange Bolt With Torque Specification
Courtesy of AMERICAN HONDA MOTOR CO., INC.

5. Driveshaft Front Both, Inboard Side - Reconnection

Left Driveshaft

1. Left driveshaft: Install a new set ring (A) into the set ring groove (B) of the driveshaft.

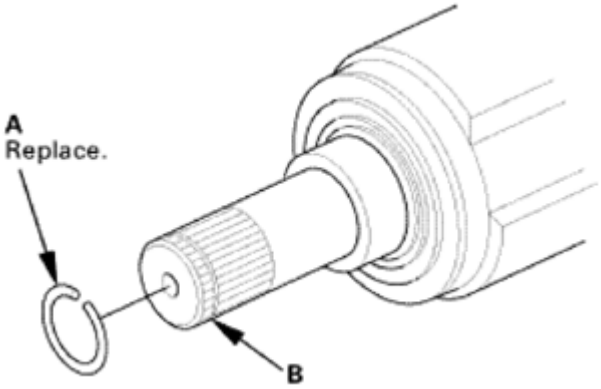

Fig. 1616: Identifying Set Ring And Set Ring Groove Of Driveshaft
Courtesy of AMERICAN HONDA MOTOR CO., INC.

Left Driveshaft

GETtheMANUALS.org

2. Left driveshaft: Clean the areas where the driveshaft contacts the differential thoroughly with solvent, then dry them with compressed air.

NOTE: Do not wash the rubber parts with solvent.

3. Left driveshaft: Insert the inboard end (A) of the driveshaft into the differential (B) until the set ring (C) locks in the groove (D).

NOTE: Insert the driveshaft horizontally to prevent damaging the oil seal.

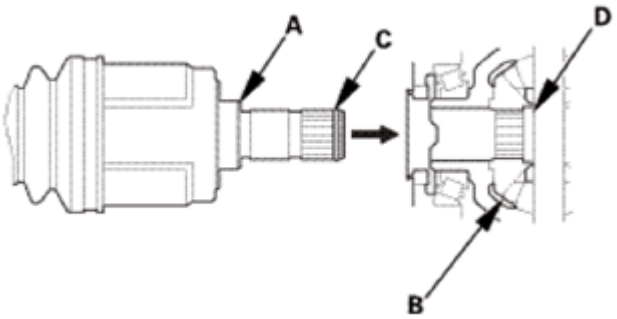

Fig. 1617: Inserting Inboard End Of Driveshaft Into Differential Until Set Ring Locks In Groove
Courtesy of AMERICAN HONDA MOTOR CO., INC.

4. Right driveshaft: Install a new set ring (A) into the set ring groove (B) of the intermediate shaft.

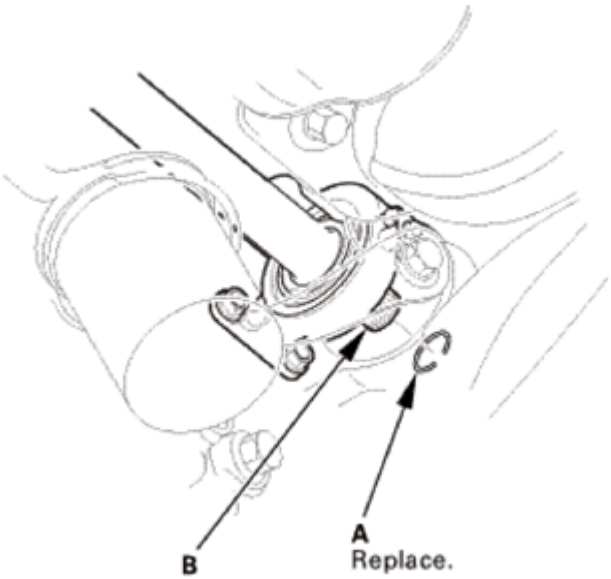

Fig. 1618: Identifying Set Ring And Set Ring Groove Of Intermediate Shaft
Courtesy of AMERICAN HONDA MOTOR CO., INC.

Right Driveshaft

GETtheMANUALS.org

5. Right driveshaft: Apply 0.5-1.0 g (0.018-0.035 oz) of molybdenum grease to the whole splined surface (A) of the right driveshaft.
6. Right driveshaft: After applying grease, remove the grease from the splined grooves at intervals of 2-3 splines and from the set ring groove (B) so that air can bleed from the intermediate shaft.

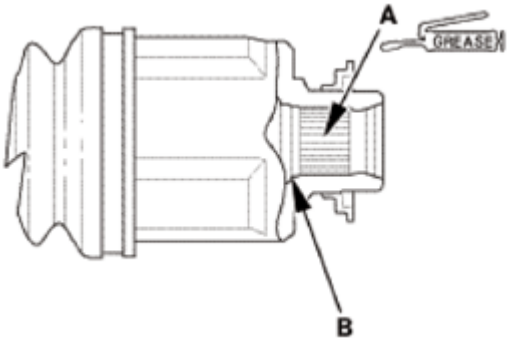

Fig. 1619: Identifying Molybdenum Grease Applying Area To Whole Splined Surface Of Right Driveshaft
Courtesy of AMERICAN HONDA MOTOR CO., INC.

Right Driveshaft

7. Right driveshaft: Clean the areas where the driveshaft contacts the intermediate shaft thoroughly with solvent, then dry them with compressed air.

NOTE: Do not wash the rubber parts with solvent.

8. Right driveshaft: Insert the inboard end (A) of the driveshaft into the intermediate shaft (B) until the set ring (C) locks in the groove (D).

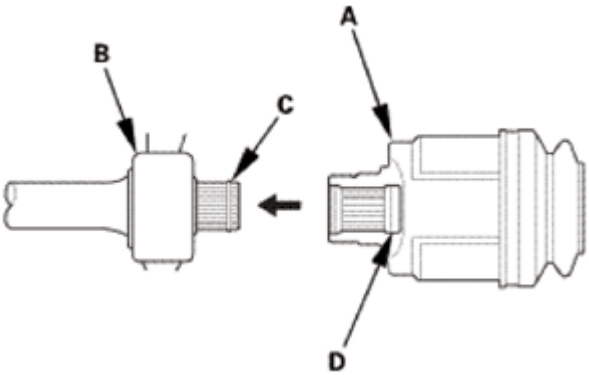

Fig. 1620: Inserting Inboard End Of Driveshaft Into Intermediate Shaft Until Set Ring Locks In Groove
Courtesy of AMERICAN HONDA MOTOR CO., INC.

6. Torque Converter - Reconnection
   1. Attach the torque converter to the drive plate (A) with eight drive plate bolts (B). Rotate the

GETtheMANUALS.org

crankshaft pulley as necessary to tighten the bolt to half of the specified torque, then to the final torque, in a crisscross pattern. After tightening the last bolt, check that the crankshaft rotates freely.

2. Install the torque converter cover (C).

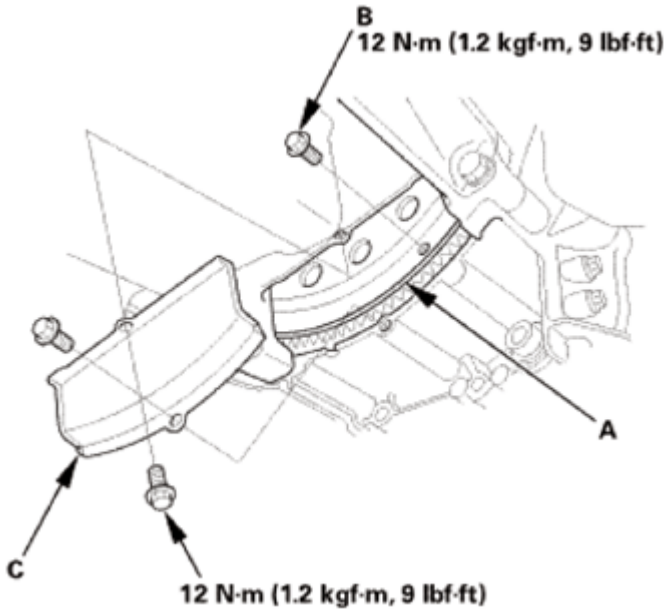

Fig. 1621: Identifying Torque Converter Cover, Drive Plate And Drive Plate Bolts With Torque Specification
Courtesy of AMERICAN HONDA MOTOR CO., INC.

7. A/T Peripheral Assembly, Lower Side
   1. Connect the connectors (A).

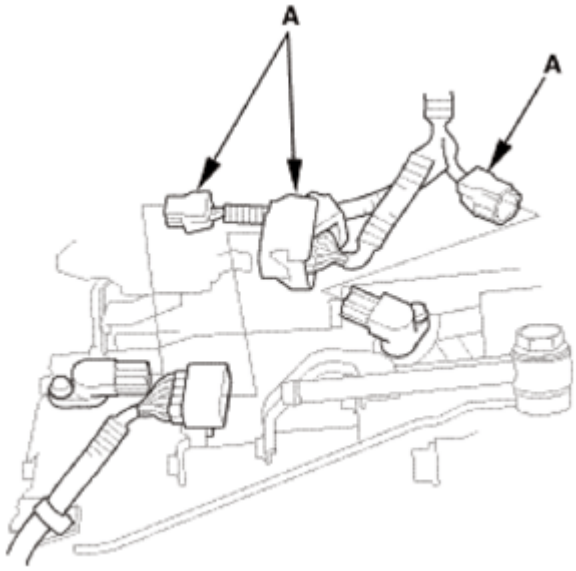

Fig. 1622: Identifying A/T Peripheral Assembly Connectors (Lower Side)

GETtheMANUALS.org

Courtesy of AMERICAN HONDA MOTOR CO., INC.

2. Connect the ATF warmer hose (A) until the hose end contacts the bracket.
3. Secure the hose with the clip (B) at 6-8 mm (0.24-0.31 in) (C) from the hose end. Keep the tabs of the clip clear of other parts.

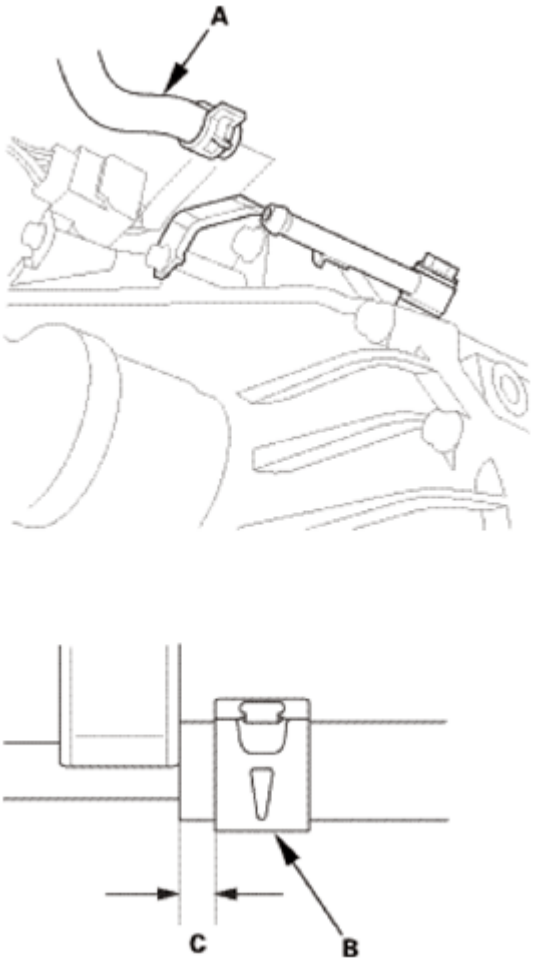

Fig. 1623: Identifying ATF Warmer Hose
Courtesy of AMERICAN HONDA MOTOR CO., INC.

4. Install the harness clamps (A).
5. Connect the connectors (B).

GETtheMANUALS.org

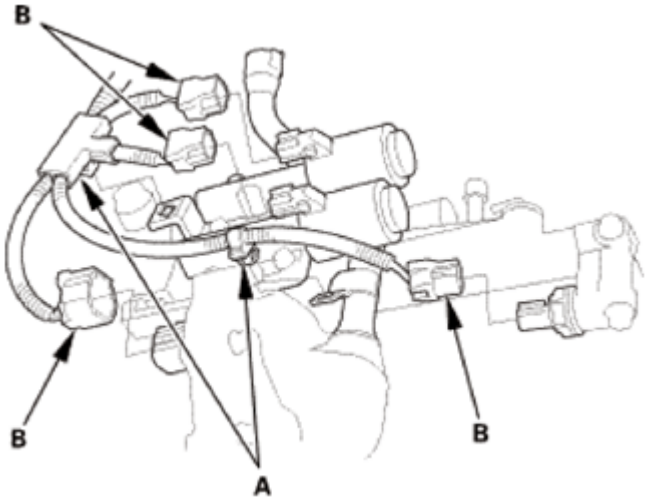

Fig. 1624: Identifying Harness Clamps And Connectors
Courtesy of AMERICAN HONDA MOTOR CO., INC.

8. Subframe Support
    1. Attach the subframe adapter to the front subframe by looping the belt (A) over the front of the front subframe (B), then secure the belt with its stop (C).

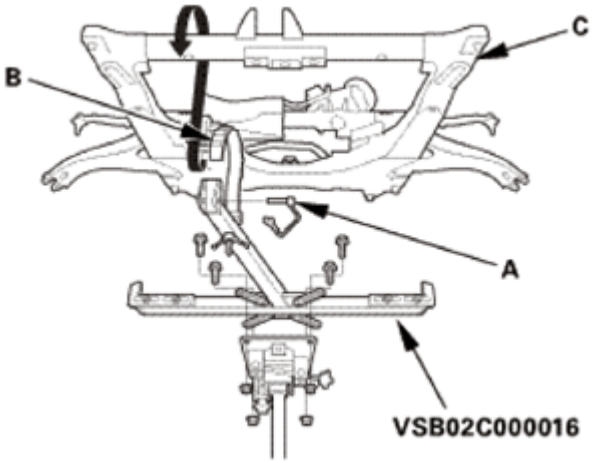

Fig. 1625: Attaching Subframe Adapter To Front Subframe By Looping Belt Over Front Of Front Subframe
Courtesy of AMERICAN HONDA MOTOR CO., INC.

9. Front Subframe - Alignment

NOTE:

- **Align the front subframe in the following sequence.**
- **When Installing, align both installation reference holes in the subframe with both reference holes in the body using the subframe alignment pin as a guide.**

GETtheMANUALS.org

1. Lift the front subframe (A) up to the body, and loosely install new subframe mounting bolts (B, C).

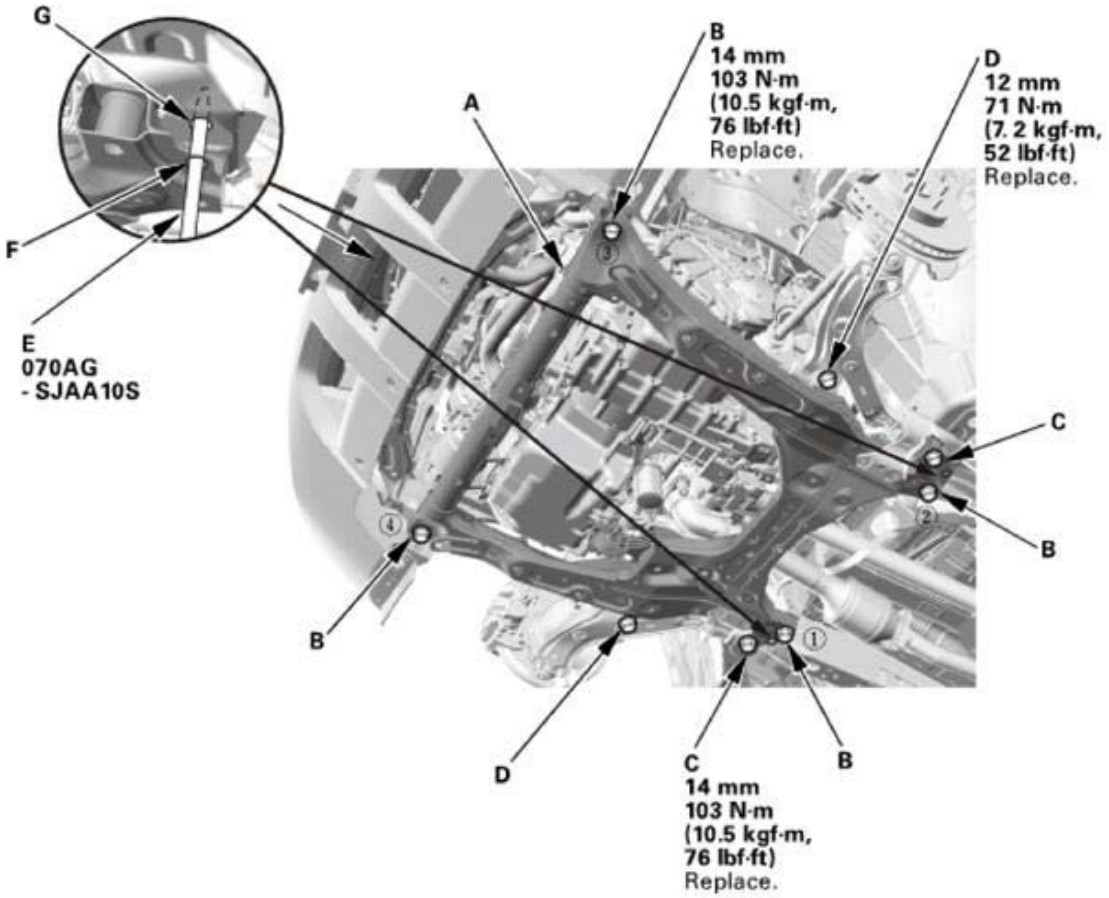

Fig. 1626: Identifying Front Subframe Related Components With Torque Specification
Courtesy of AMERICAN HONDA MOTOR CO., INC.

2. Loosely install new mid mounting bolts (D).
3. Insert the subframe alignment pin (E) through the positioning hole (F) on the right rear subframe, and into the positioning hole (G) on the body, then loosely tighten the subframe right rear mounting bolt.
4. Insert the subframe alignment pin through the positioning hole on the left rear subframe, and into the positioning hole on the body, then loosely tighten the subframe left rear mounting bolt.
5. Tighten the subframe mounting bolts to the specified torque values starting with the right rear subframe mounting bolt. Use the subframe alignment pin when tightening the rear side subframe mounting bolts.
6. Check all of the subframe mounting bolts, and retighten if necessary.

NOTE: Tighten the bolts in the sequence shown.

7. Tighten the mid mounting bolts to the specified torque.
8. After reinstalling all remaining parts, check and adjust the front wheel alignment.

GETtheMANUALS.org

10. EPS Motor Connector - Disconnection/Reconnection
    1. Install the harness clip (A).
    2. Pull down the lever (B) of the EPS motor 3P connector (C), then confirm the connector is fully seated.
    3. Connect the Connectors (D).

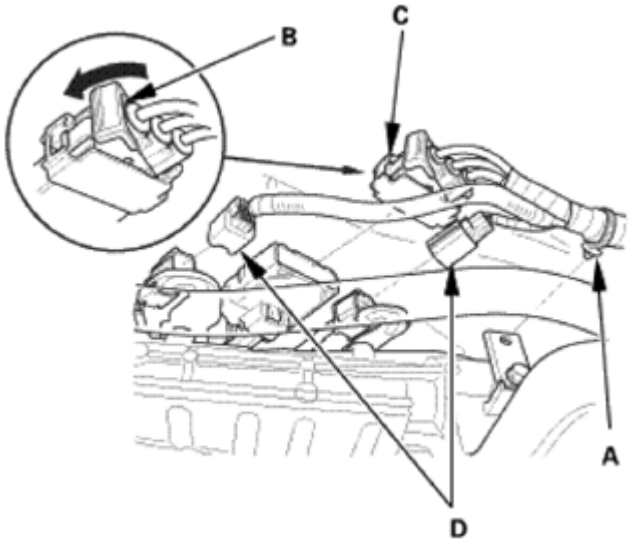

Fig. 1627: Pulling Down Lever Of EPS Motor 3P Connector
Courtesy of AMERICAN HONDA MOTOR CO., INC.

11. Front Engine Mount - Disconnection/Reconnection
    1. Loosely install the front engine mount mounting bolt.

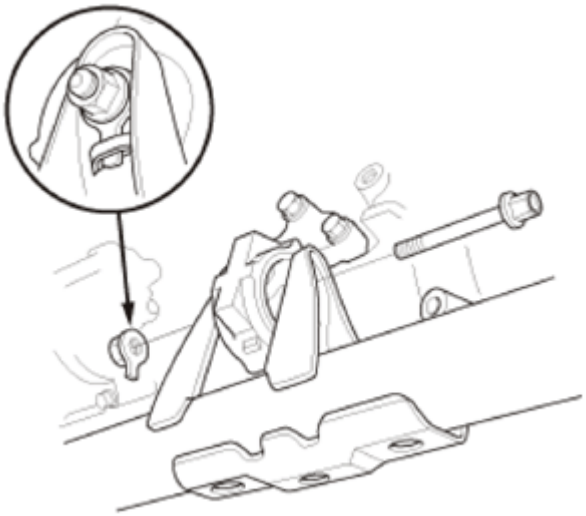

Fig. 1628: Identifying Front Engine Mount Mounting Bolt
Courtesy of AMERICAN HONDA MOTOR CO., INC.

GETtheMANUALS.org

12. Lower Torque Rod - Reconnection
    1. Loosely install the new lower torque rod mounting bolts.

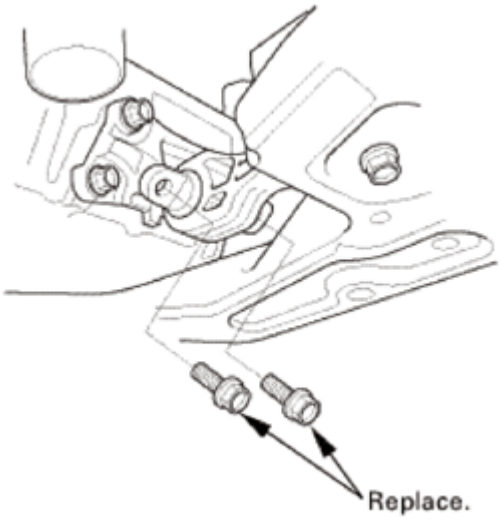

Fig. 1629: Identifying Lower Torque Rod Mounting Bolts
Courtesy of AMERICAN HONDA MOTOR CO., INC.

13. Front Stabilizer Link Stabilizer Bar Side - Reconnection, Both Side
    1. Connect both sides of the stabilizer link (A) to the front stabilizer bar (B).
    2. Install the flange nuts (C), and tighten them to the specified torque while holding the respective joint pin (D) with a hex wrench (E).

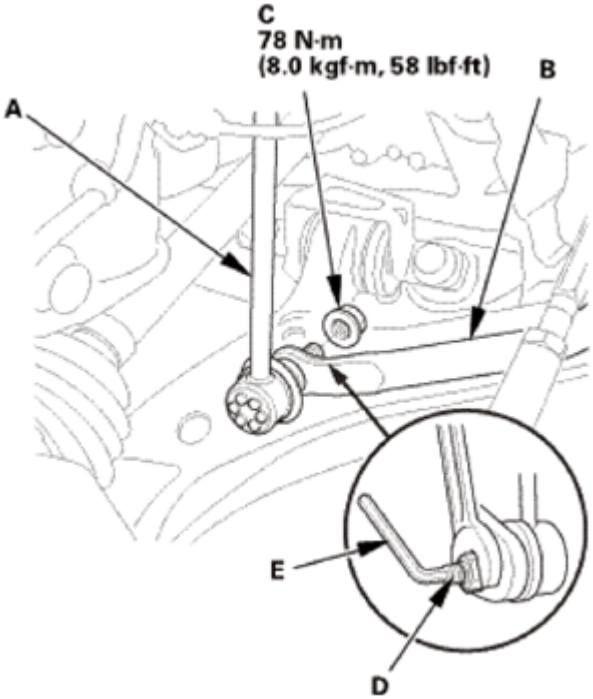

GETtheMANUALS.org

Fig. 1630: Installing Flange Nuts While Holding Respective Joint Pin With Hex Wrench
Courtesy of AMERICAN HONDA MOTOR CO., INC.

14. Tie-Rod End Ball Joint - Connection, Both Side
    1. Wipe off any grease contamination from the ball joint tapered section and threads.
    2. Connect the tie-rod ball joint (A) to the knuckle.
    3. Install the nut (B) and tighten to the specified torque.
    4. Install a new cotter pin (C).

NOTE: Bend the cotter pin as shown.

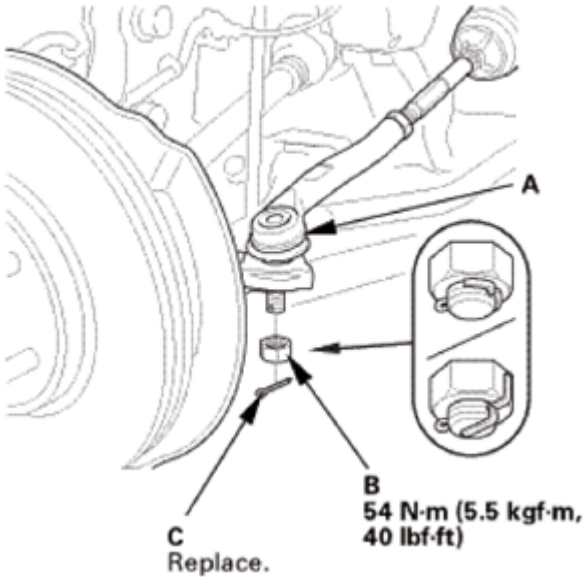

Fig. 1631: Identifying Tie-Rod Ball Joint, Nut And Cotter Pin With Torque Specification
Courtesy of AMERICAN HONDA MOTOR CO., INC.

15. Lower Arm Joint - Reconnection, Both Knuckle Side
    1. Connect the lower arm to the knuckle on both sides using new flange bolt and new self-locking nuts.
    2. After lightly tightening all three fasteners, tighten them to the specified torque in the following order; the nut on the front (B), the nut on the rear (C), then the bolt (D).

GETtheMANUALS.org

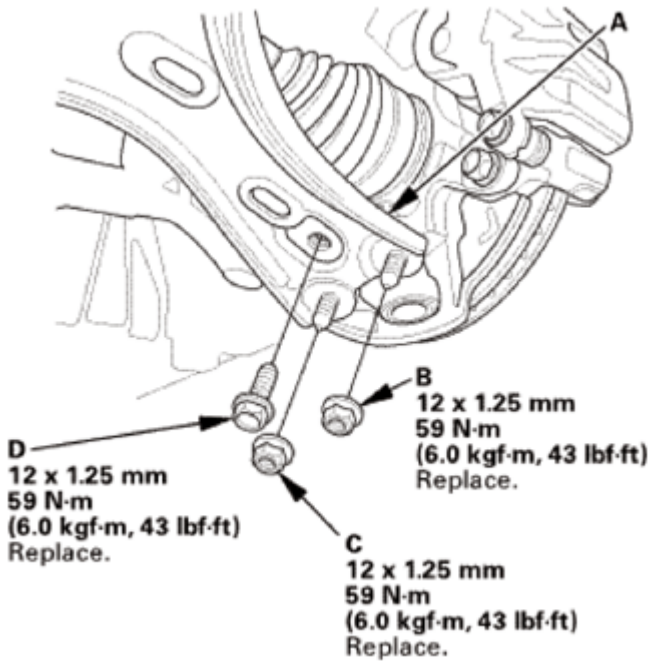

Fig. 1632: Identifying Lower Arm Front Nuts And Rear Bolt With Torque Specification
Courtesy of AMERICAN HONDA MOTOR CO., INC.

16. Transfer Assembly (AWD/4WD)
    1. Install a new O-ring (A) on the transfer assembly (B).
    2. Install the transfer assembly and the dowel pin (C).

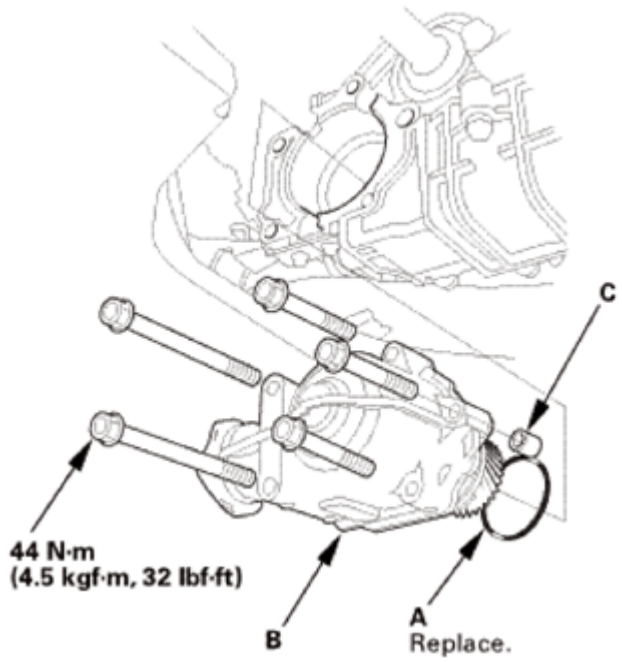

Fig. 1633: Identifying Transfer Assembly, Dowel Pin, O-Ring And Mounting Bolts With

GETtheMANUALS.org

Torque Specification
Courtesy of AMERICAN HONDA MOTOR CO., INC.

17. Under Floor TWC Assembly
    1. Install the under-floor TWC.

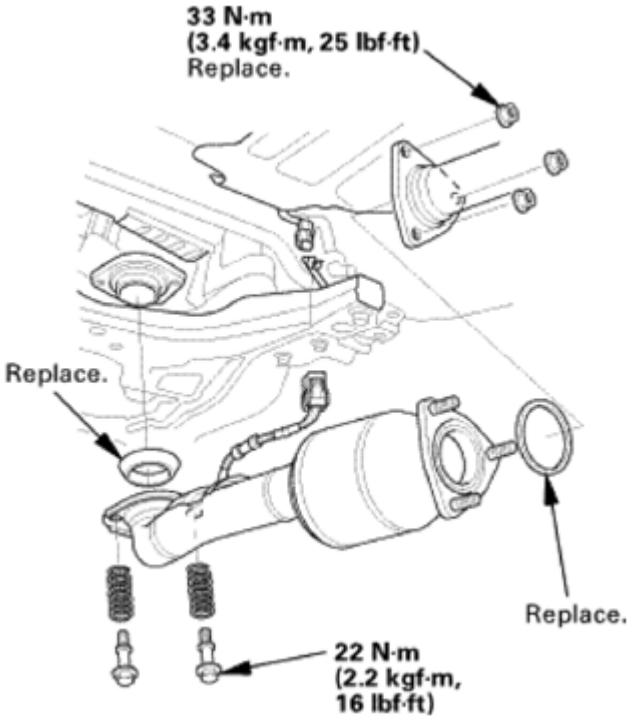

Fig. 1634: Identifying Under Floor TWC Assembly With Torque Specification
Courtesy of AMERICAN HONDA MOTOR CO., INC.

18. Propeller Shaft Assembly (AWD/4WD)
    1. Install the propeller shaft assembly (A), then Install new center support bearing mounting bolts (B).

GETtheMANUALS.org

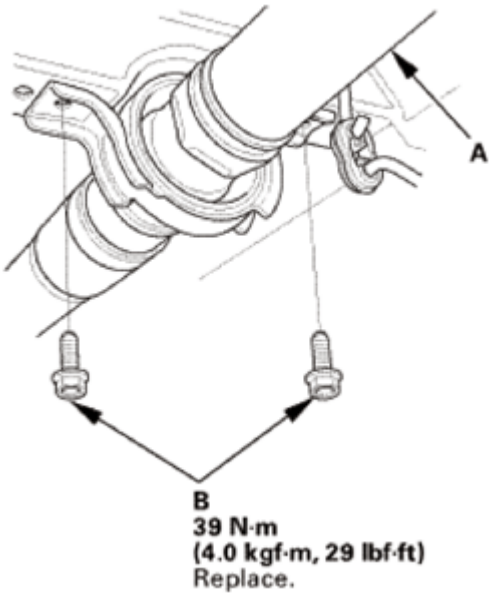

Fig. 1635: Identifying Propeller Shaft Assembly And Center Support Bearing Mounting Bolts With Torque Specification
Courtesy of AMERICAN HONDA MOTOR CO., INC.

19. Propeller Shaft Differential Side - Reconnection (AWD/4WD)
    1. Set the No. 2 propeller shaft (A) to the rear differential companion flange (B) by aligning the reference mark (C) you made during the removal procedure.
    2. Install new No. 2 propeller shaft flange bolts (D) to the specified torque.

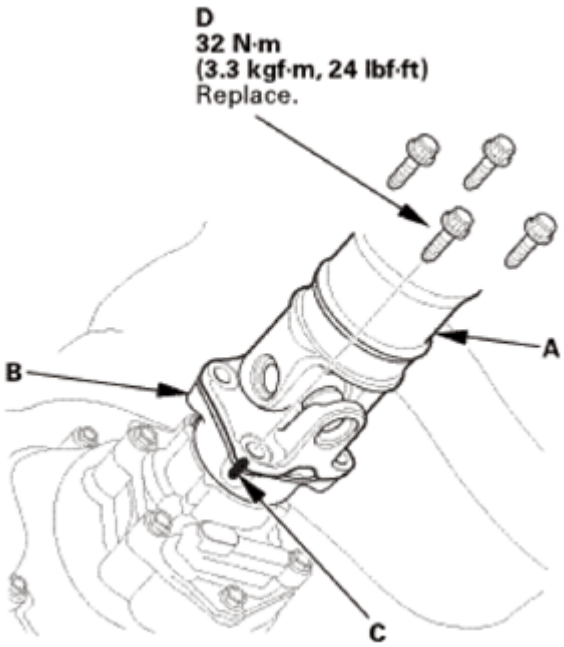

Fig. 1636: Identifying No. 2 Propeller Shaft, Rear Differential Companion Flange, Reference Mark And Flange Bolts With Torque Specification

GETtheMANUALS.org

Courtesy of AMERICAN HONDA MOTOR CO., INC.

20. Propeller Shaft Transmission Side - Reconnection (AWD/4WD)
    1. Set the No. 1 propeller shaft (A) to the transfer companion flange (B) by aligning the reference mark (C) you made during the removal procedure.
    2. Install new No. 1 propeller shaft flange bolts (D) to the specified torque.

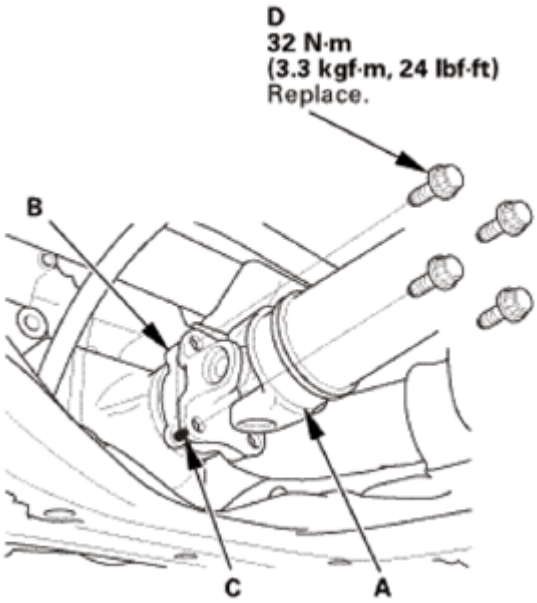

Fig. 1637: Identifying No. 1 Propeller Shaft, Transfer Companion Flange, Reference Mark And Flange Bolts With Torque Specification
Courtesy of AMERICAN HONDA MOTOR CO., INC.

21. Propeller Shaft Protector No. 2 (AWD/4WD)
    1. Install the No. 2 propeller shaft protector (A).

GETtheMANUALS.org

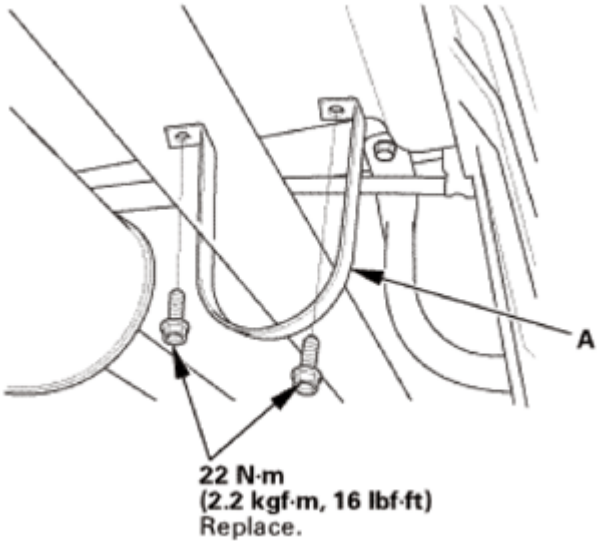

Fig. 1638: Identifying No. 2 Propeller Shaft Protector And Mounting Bolts With Torque Specification
Courtesy of AMERICAN HONDA MOTOR CO., INC.

22. Propeller Shaft Protector No. 1 (AWD/4WD)
    1. Install the No. 1 propeller shaft protector (A).

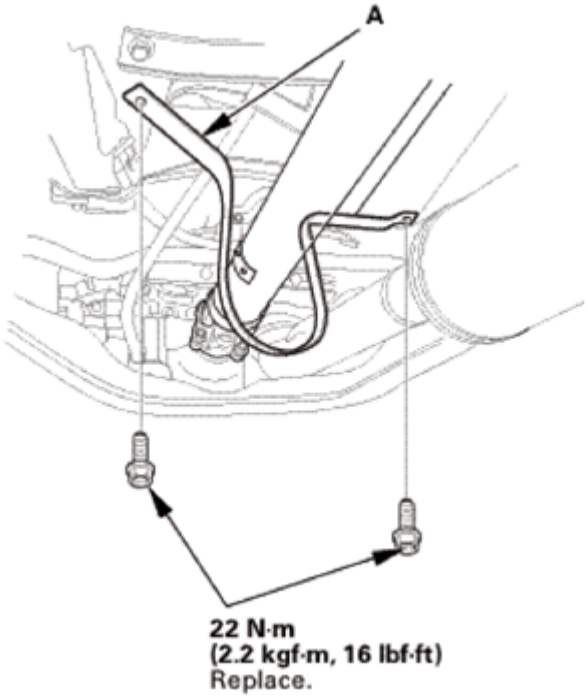

Fig. 1639: Identifying No. 1 Propeller Shaft Protector And Mounting Bolts With Torque Specification
Courtesy of AMERICAN HONDA MOTOR CO., INC.

GETtheMANUALS.org

23. Left Middle Floor Undercover (AWD/4WD)
    1. Install the left middle floor undercover (A), then install the bolts (B) and the clips (C, D). The clips snap into place securely.

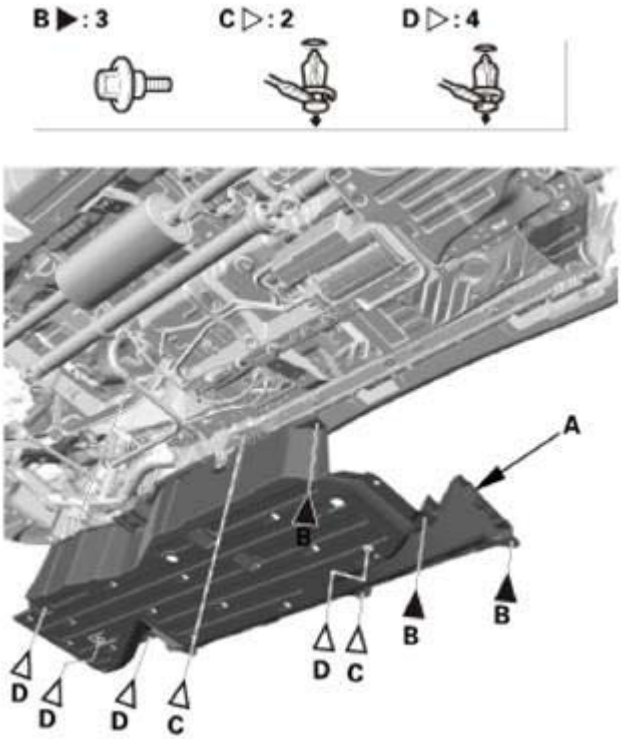

Fig. 1640: Identifying Left Middle Floor Undercover, Bolts And Clips
Courtesy of AMERICAN HONDA MOTOR CO., INC.

24. Front Floor Undercover
    1. Install the front floor undercover (A), then install the bolts (B) and the clips (C, D). Make sure the clips snap into place securely.

GETtheMANUALS.org

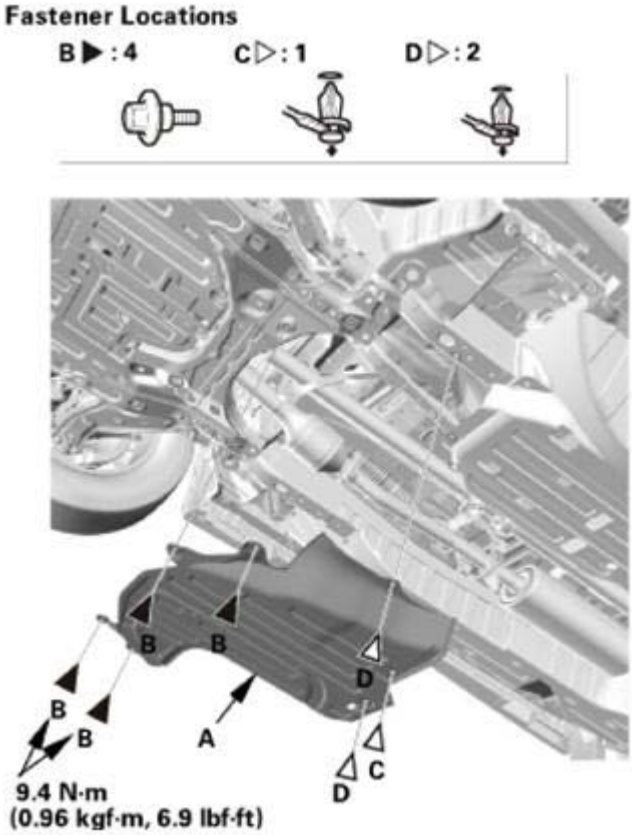

Fig. 1641: Identifying Front Floor Undercover, Bolts And Clips With Torque Specification
Courtesy of AMERICAN HONDA MOTOR CO., INC.

25. A/T Shift Cable Cover Bracket
    1. Install the shift cable cover bracket (A).

2WD

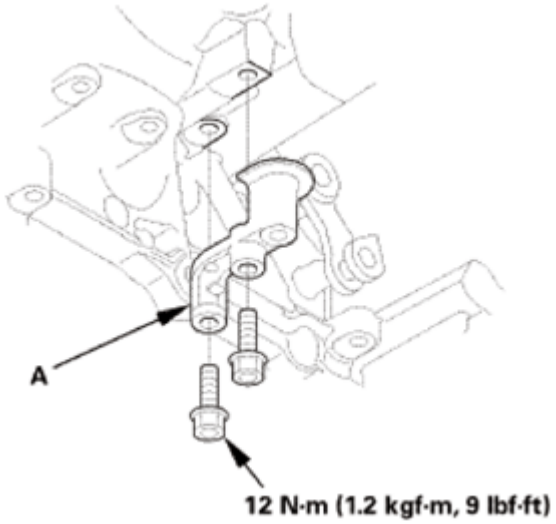

GETtheMANUALS.org

Fig. 1642: Identifying Shift Cable Cover Bracket And Mounting Bolts With Torque Specification (2WD)
Courtesy of AMERICAN HONDA MOTOR CO., INC.

AWD/4WD

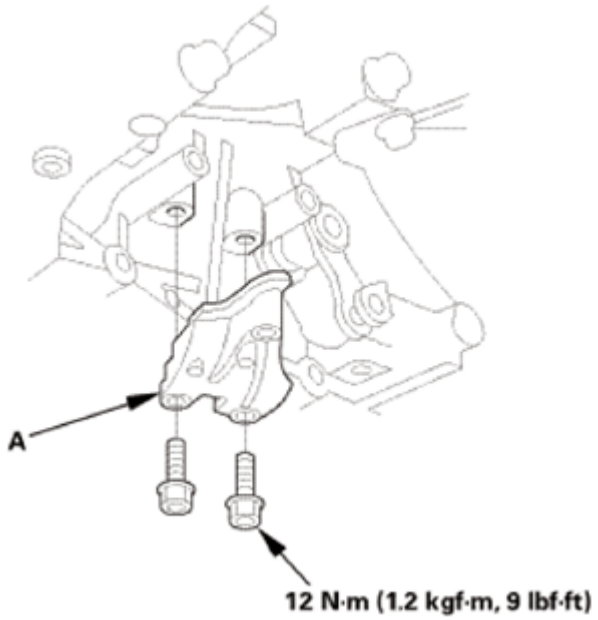

Fig. 1643: Identifying Shift Cable Cover Bracket And Mounting Bolts With Torque Specification (AWD/4WD)
Courtesy of AMERICAN HONDA MOTOR CO., INC.

26. Shift Cable - Reconnection A/T Side (2WD of USA Produced Models)

2WD of USA Produced Models

1. Install the shift cable bracket (A).
2. Install the control lever (B) over the selector control shaft (C).

NOTE: Do not bend the shift cable excessively.

3. Install the lock bolt (D) using a new lock washer (E).
4. Pry up the lock tab (F) of the lock washer against the bolt head.

GETtheMANUALS.org

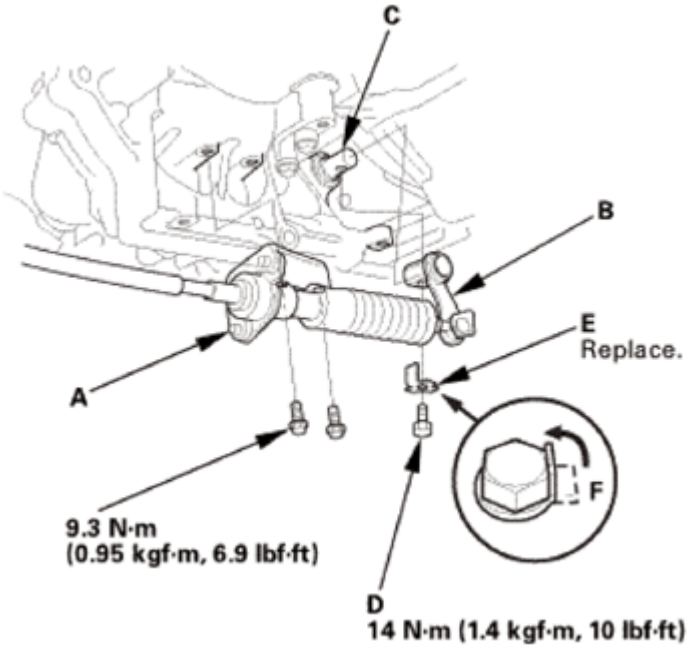

Fig. 1644: Prying Up Lock Tab Of Lock Washer Against Bolt Head (2WD Of USA Produced Models)
Courtesy of AMERICAN HONDA MOTOR CO., INC.

27. Shift Cable - Reconnection A/T Side (Except 2WD of USA Produced Models)

Except 2WD of USA Produced Models

1. Apply molybdenum grease to the hole in the bushing (A) in the shift cable end (B).
2. Install the shift cable bracket(s) (C).
3. Attach the shift cable end to the selector control lever (D), then insert the control pin (E) into the control lever hole through the shift cable end.

NOTE: Do not bend the shift cable excessively.

4. Secure the control pin with the spring clip (F).

GETtheMANUALS.org

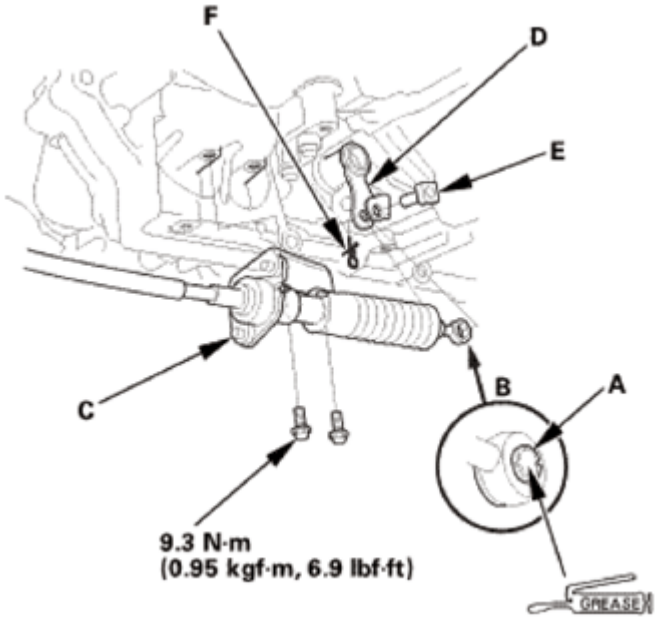

Fig. 1645: Identifying Molybdenum Grease Applying Area To Hole In Shift Cable End Bushing (Except 2WD Of USA Produced Models)
Courtesy of AMERICAN HONDA MOTOR CO., INC.

AWD/4WD

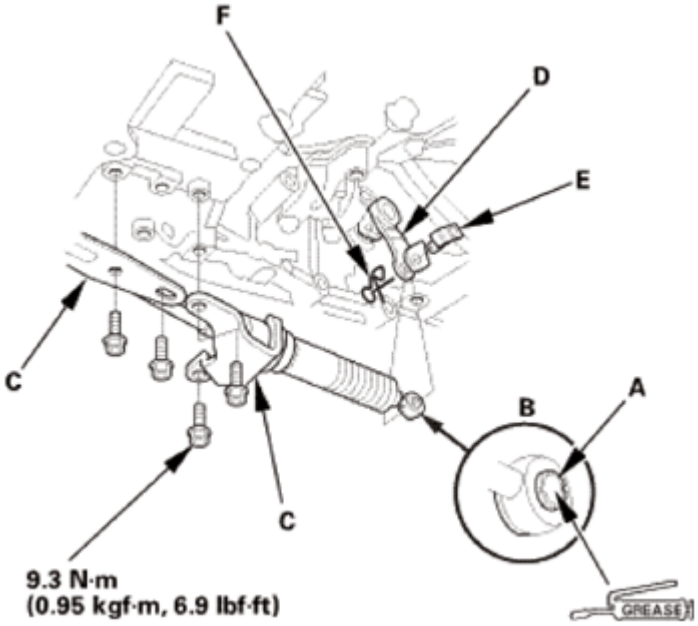

Fig. 1646: Identifying Molybdenum Grease Applying Area To Hole In Shift Cable End Bushing (AWD/4WD)
Courtesy of AMERICAN HONDA MOTOR CO., INC.

28. Shift Cable Cover

GETtheMANUALS.org

1. Install the shift cable cover (A).

2WD

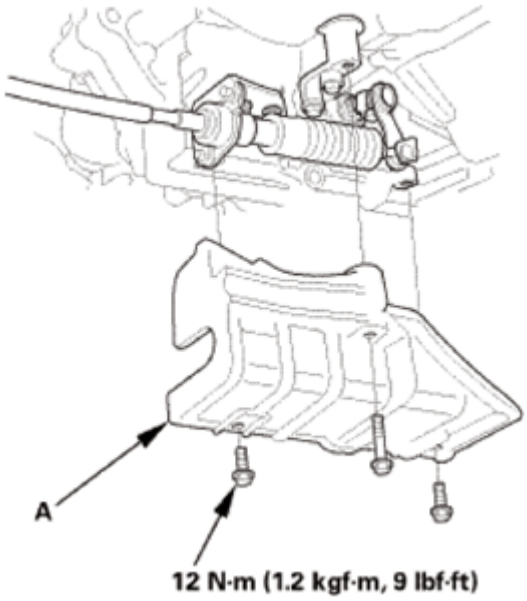

Fig. 1647: Identifying Shift Cable Cover And Mounting Bolts With Torque Specification (2WD)
Courtesy of AMERICAN HONDA MOTOR CO., INC.

AWD/4WD

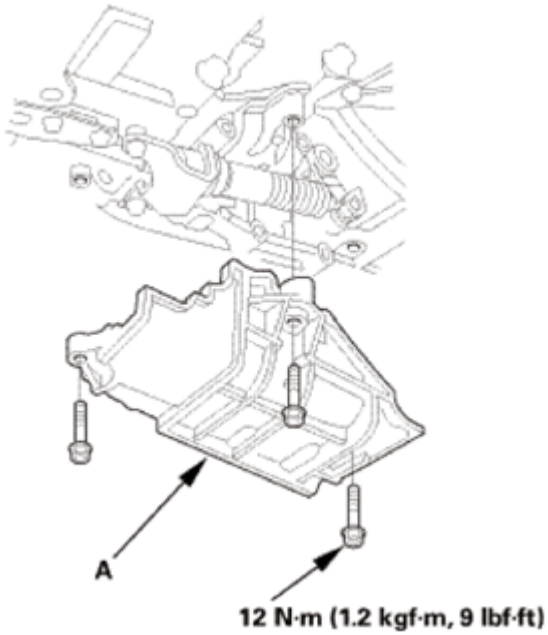

Fig. 1648: Identifying Shift Cable Cover And Mounting Bolts With Torque Specification

GETtheMANUALS.org

(AWD/4WD)
Courtesy of AMERICAN HONDA MOTOR CO., INC.

29. Lower The Vehicle On The Lift
    1. Lower the vehicle on the lift.
30. Upper Torque Rod Mounting Bolt - Loosen
    1. Loosen the upper torque rod mounting bolt (A).

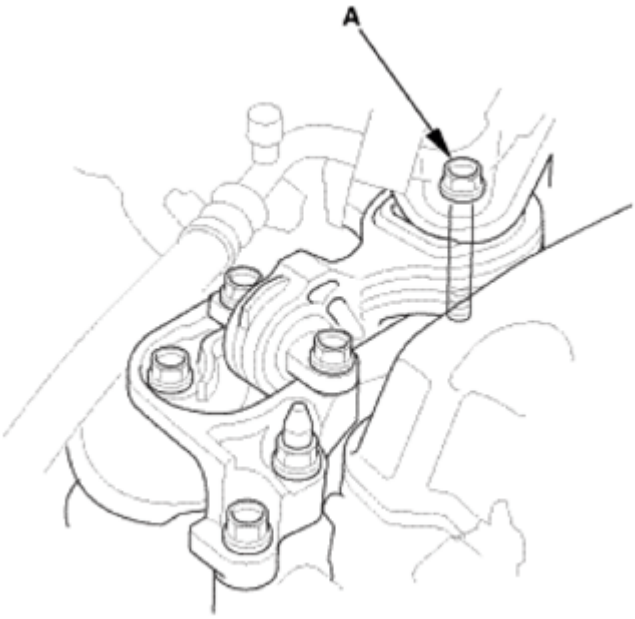

Fig. 1649: Identifying Upper Torque Rod Mounting Bolt
Courtesy of AMERICAN HONDA MOTOR CO., INC.

31. Transmission Mount Bracket
    1. Loosely install new transmission mount bracket mounting bolt and nuts (A).
    2. Tighten a new transmission mount mounting bolt (B).
    3. Tighten the transmission mount bracket mounting bolt and nuts.
    4. Install the ground cable terminal (C).

GETtheMANUALS.org

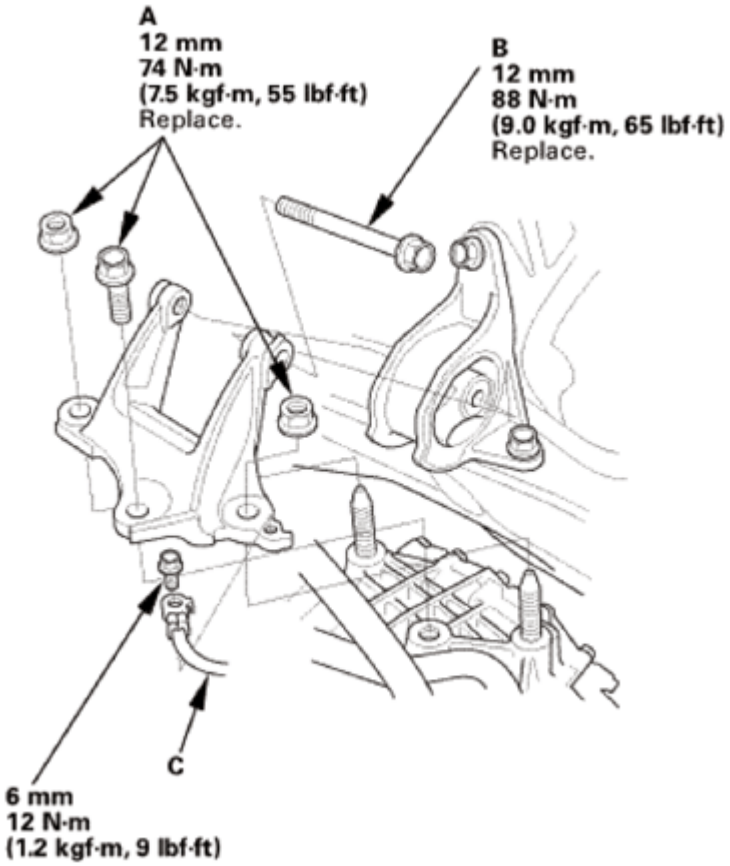

Fig. 1650: Identifying Ground Cable Terminal, Transmission Mount Bracket Mounting Bolt And Nuts With Torque Specification
Courtesy of AMERICAN HONDA MOTOR CO., INC.

32. Raise The Vehicle On The Lift
    1. Raise the vehicle on the lift.
33. Lower Torque Rod Mounting Bolt - Tighten
    1. Loosen the lower torque mount mounting bolt.
    2. Tighten the lower torque rod mount mounting bolts in the numbered sequence shown.

GETtheMANUALS.org

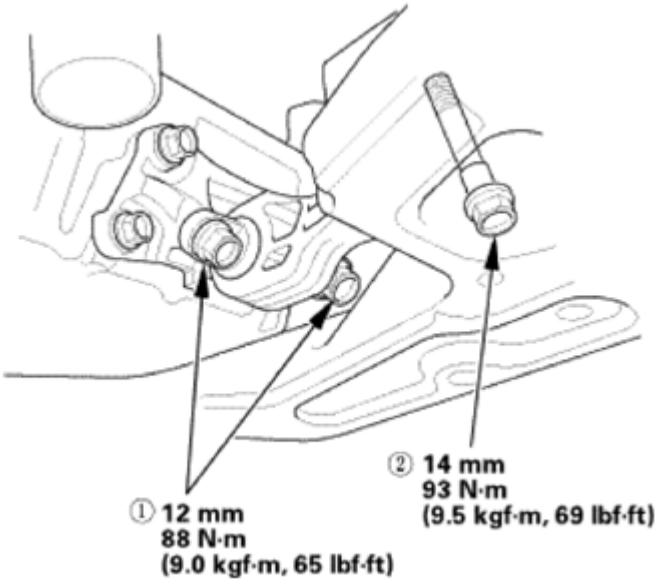

Fig. 1651: Identifying Lower Torque Rod Mount Mounting Bolts With Torque Specification
Courtesy of AMERICAN HONDA MOTOR CO., INC.

34. Lower The Vehicle On The Lift
    1. Lower the vehicle on the lift.
35. Upper Torque Rod - Tighten
    1. Tighten the upper torque rod mounting bolt.

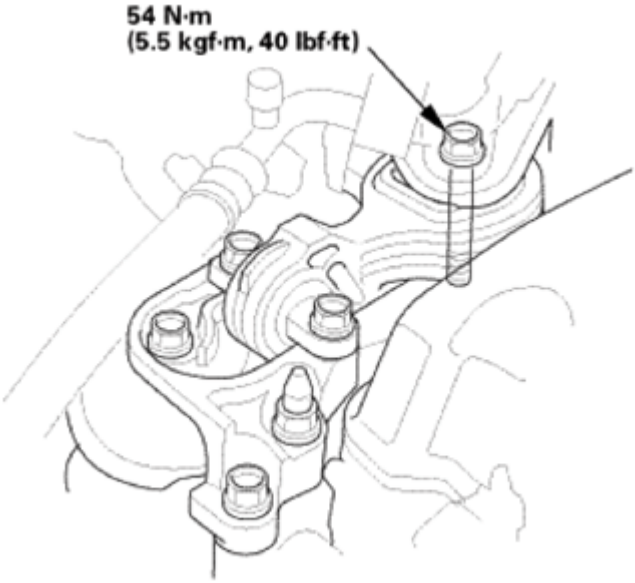

Fig. 1652: Identifying Upper Torque Rod Mounting Bolt With Torque Specification
Courtesy of AMERICAN HONDA MOTOR CO., INC.

36. Raise The Vehicle On The Lift

GETtheMANUALS.org

1. Raise the vehicle on the lift.

37. Front Engine Mount Mounting Bolt - Tighten
    1. Tighten the front engine mount mounting bolt.

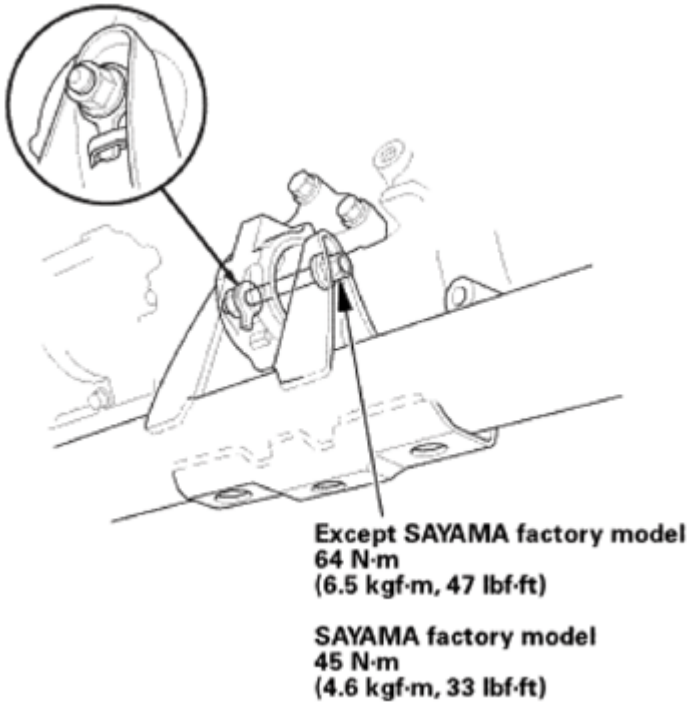

Fig. 1653: Identifying Front Engine Mount Mounting Bolt With Torque Specification
Courtesy of AMERICAN HONDA MOTOR CO., INC.

38. Lower The Vehicle On The Lift
    1. Lower the vehicle on the lift.
39. Upper Transmission Mounting Bolt
    1. Install the upper transmission assembly mounting bolts.

GETtheMANUALS.org

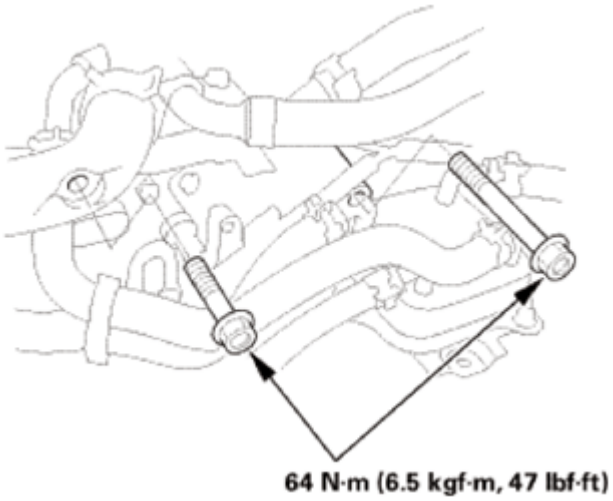

Fig. 1654: Identifying Upper Transmission Assembly Mounting Bolts With Torque Specification
Courtesy of AMERICAN HONDA MOTOR CO., INC.

40. Engine Support Hanger
    1. Remove the engine support hanger.
    2. Remove the universal lifting eyelet and the spacer (A).

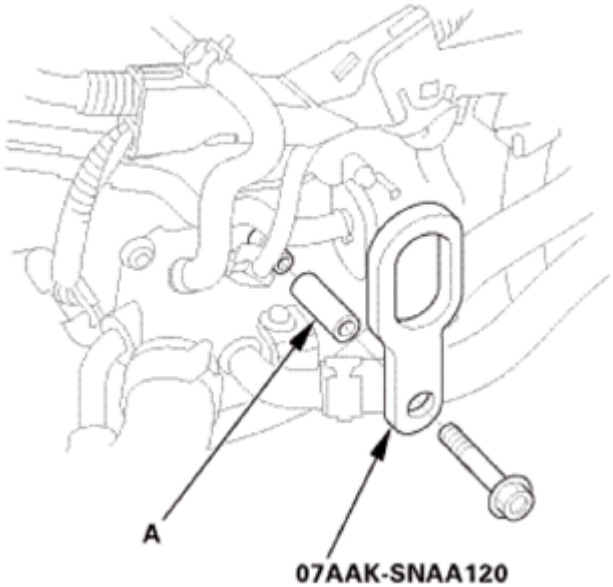

Fig. 1655: Identifying Universal Lifting Eyelet And Spacer With Mounting Bolts
Courtesy of AMERICAN HONDA MOTOR CO., INC.

41. Cowl Top Cover - Both Sides

NOTE: Repeat this procedure on the opposite side.

GETtheMANUALS.org

1. Install the cowl top cover (A).
2. Install the hood rear seal (B).
3. Install the clip (C).

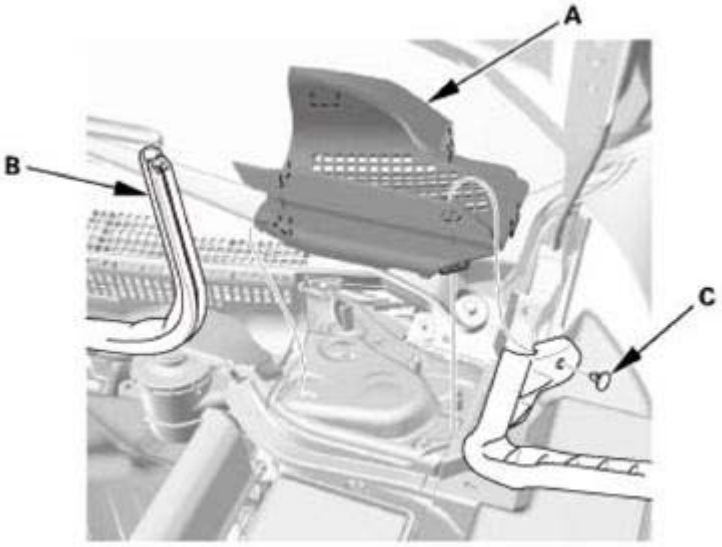

Fig. 1656: Identifying Cowl Top Cover, Hood Rear Seal And Clip
Courtesy of AMERICAN HONDA MOTOR CO., INC.

42. Automatic Transmission Peripheral Assembly, Upper Side
    1. Install the ATF warmer bracket.

GETtheMANUALS.org

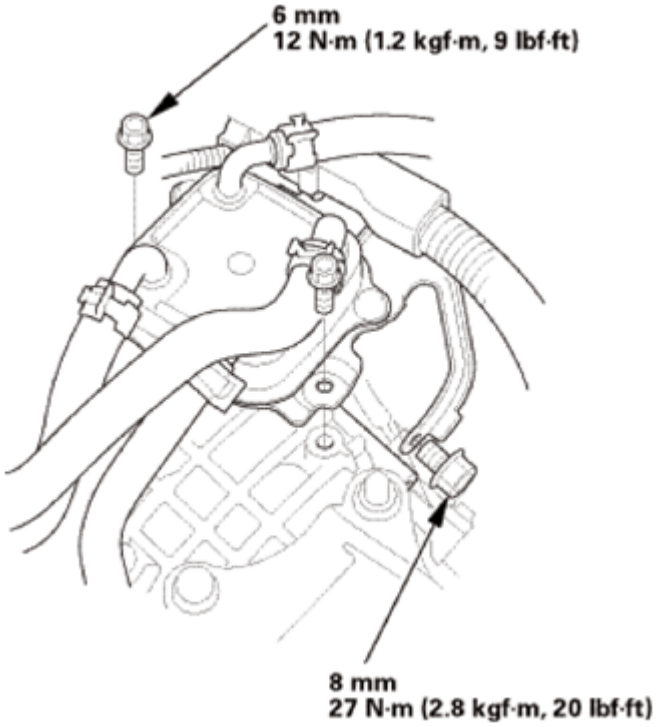

Fig. 1657: Identifying ATF Warmer Bracket And Mounting Bolts With Torque Specification
Courtesy of AMERICAN HONDA MOTOR CO., INC.

2. Connect the ATF warmer hose (A) until the hose end contacts the bulge. Align the green paint mark (B) pointing up.
3. Secure the hose with the clip (C) at 6-8 mm (0.24-0.31 in) (D) from the hose end. Keep the tabs of the clip clear of other parts.

GETtheMANUALS.org

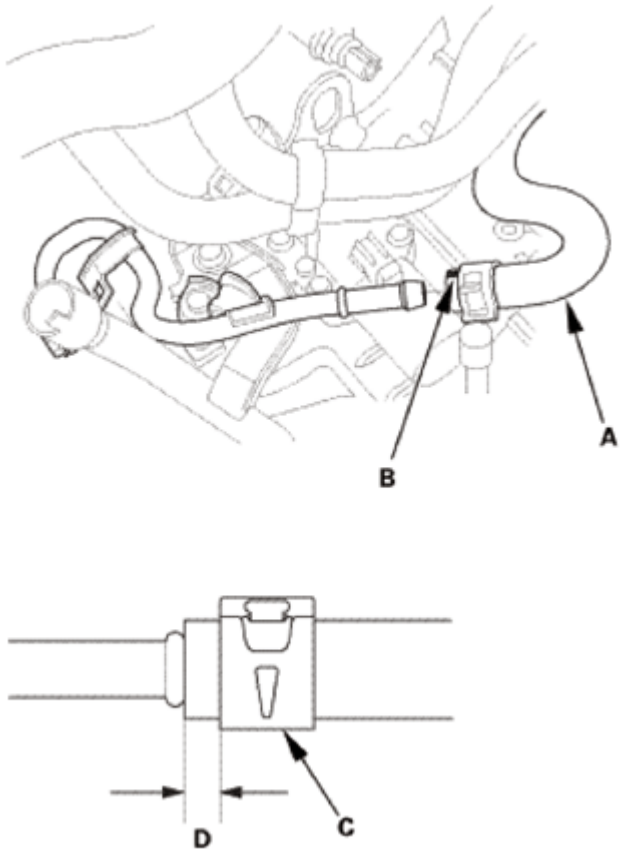

Fig. 1658: Identifying ATF Warmer Hose And Green Paint Mark
Courtesy of AMERICAN HONDA MOTOR CO., INC.

4. Install the harness clamps (A).
5. Connect the connectors (B).

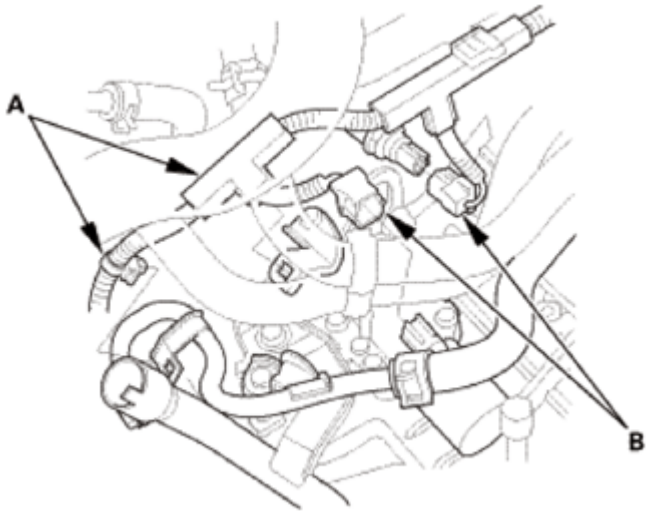

Fig. 1659: Identifying Harness Clamps And Connectors

GETtheMANUALS.org

Courtesy of AMERICAN HONDA MOTOR CO., INC.

6. Insert the dipstick (A) into the guide tube aligning the notch (B) with the guide tab (C).

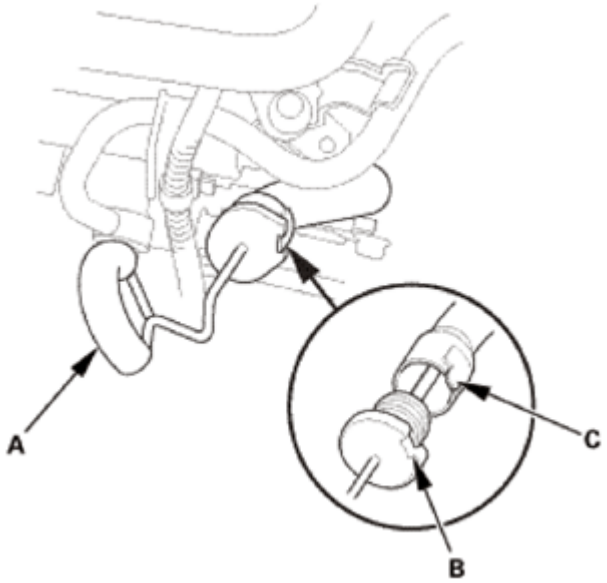

Fig. 1660: Identifying Dipstick, Notch And Guide Tab
Courtesy of AMERICAN HONDA MOTOR CO., INC.

43. ATF - Replacement
    1. Remove the ATF dipstick (yellow loop) (A), and wipe it with a clean cloth.

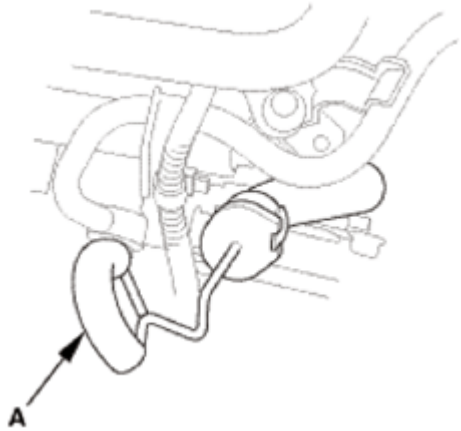

Fig. 1661: Identifying ATF Dipstick (Yellow Loop)
Courtesy of AMERICAN HONDA MOTOR CO., INC.

    2. Refill the transmission with the recommended fluid into the dipstick guide tube opening (A) to bring the fluid level between the upper mark and the lower mark of the dipstick. Always use ATF DW-1 (genuine Honda automatic transmission fluid). Using a non-Honda ATF can affect shift quality.

GETtheMANUALS.org

Automatic Transmission Fluid Capacity

2WD:

2.2 L (2.3 US qt) at change

5.85 L (6.18 US qt) at overhaul

AWD/4WD:

2.6 L (2.7 US qt) at change

6.4 L (6.8 US qt) at overhaul

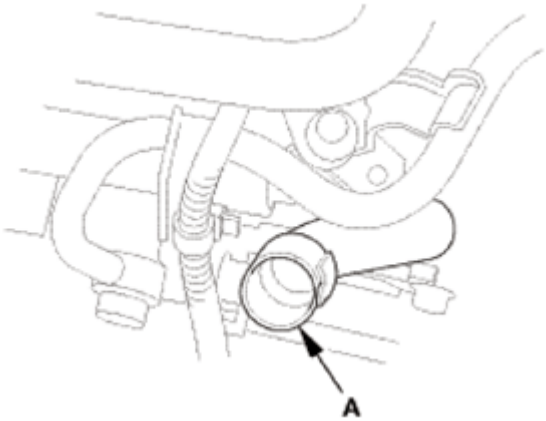

Fig. 1662: Identifying Dipstick Guide Tube Opening
Courtesy of AMERICAN HONDA MOTOR CO., INC.

3. Insert the dipstick (A) into the guide tube aligning the notch (B) with the guide tab (C).

GETtheMANUALS.org

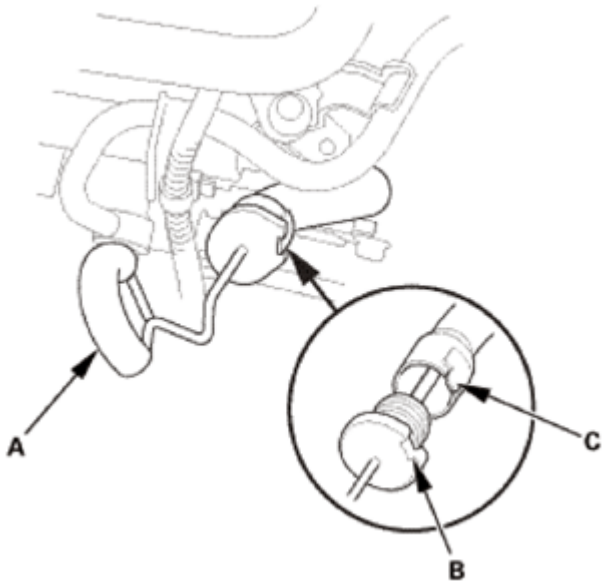

Fig. 1663: Identifying Dipstick, Notch And Guide Tab
Courtesy of AMERICAN HONDA MOTOR CO., INC.

4. Remove the dipstick.
5. Make sure the fluid level is between the upper mark (A) and the lower mark (B) on the dipstick.
6. Insert the dipstick into the guide tube aligning the notch with the guide tab.

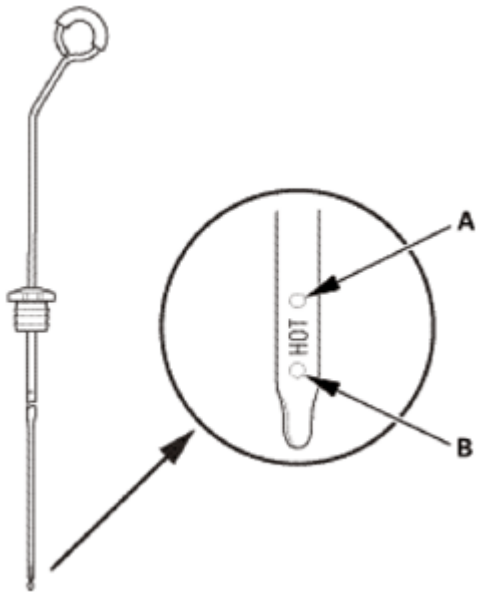

Fig. 1664: Identifying Upper And Lower Mark On Dipstick
Courtesy of AMERICAN HONDA MOTOR CO., INC.

44. Steering Column Lower Slide Shaft - Release
    1. Cut the wire (A).

GETtheMANUALS.org

Fig. 1665: Identifying Steering Column Lower Slide Shaft Wire
Courtesy of AMERICAN HONDA MOTOR CO., INC.

45. Steering Wheel Release
    1. Remove the steering wheel holder tool (A).

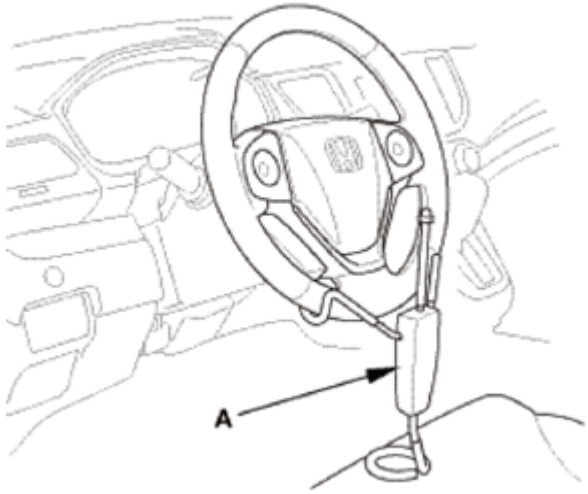

Fig. 1666: Identifying Steering Wheel Holder Tool
Courtesy of AMERICAN HONDA MOTOR CO., INC.

46. Steering Joint - Reconnection
    1. Place the rack in the straight ahead driving position.
    2. Slip the lower end of the steering joint (A) onto the pinion shaft (B).

NOTE: Position the steering column by aligning the gap (C) within the angle.

GETtheMANUALS.org

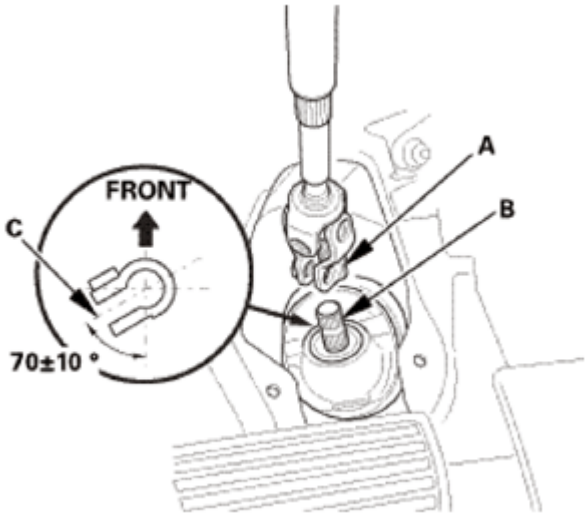

Fig. 1667: Identifying Steering Joint And Pinion Shaft
Courtesy of AMERICAN HONDA MOTOR CO., INC.

3. Align the bolt hole (A) on the steering joint with the groove (B) around the pinion shaft.
4. Loosely install the steering joint bolt (C).
5. Be sure that the joint bolt is securely in the groove in the pinion shaft.
6. Pull on the steering joint to make sure that the steering joint is fully seated.
7. Tighten the steering joint bolt to the specified torque.

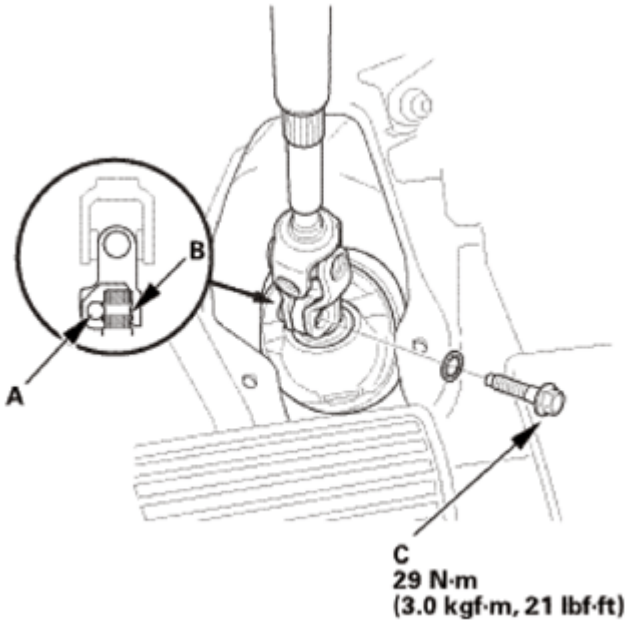

Fig. 1668: Identifying Bolt Hole, Groove And Steering Joint Bolt With Torque Specification
Courtesy of AMERICAN HONDA MOTOR CO., INC.

47. Steering Joint Cover

GETtheMANUALS.org

1. Install the steering joint cover (A).

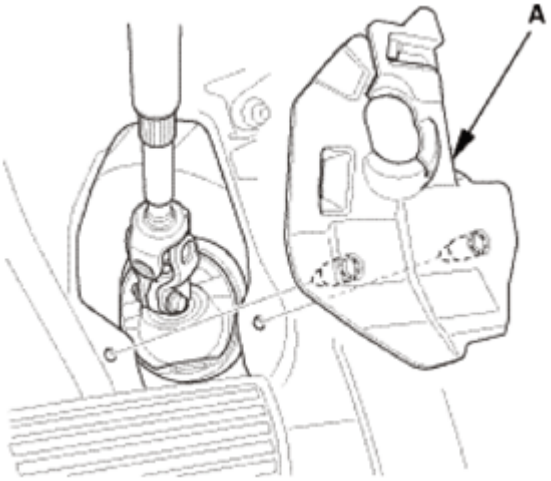

Fig. 1669: Identifying Steering Joint Cover
Courtesy of AMERICAN HONDA MOTOR CO., INC.

48. Battery Base Assembly
    1. Remove the battery base and install the clamps.

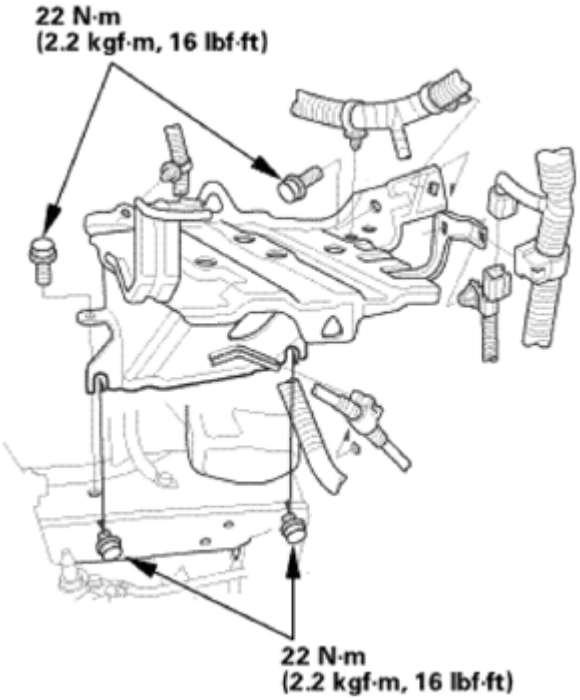

Fig. 1670: Identifying Battery Base, Clamps And Mounting Bolts With Torque Specification
Courtesy of AMERICAN HONDA MOTOR CO., INC.

49. Intake Air Pipe

GETtheMANUALS.org

1. Install the intake air pipe.

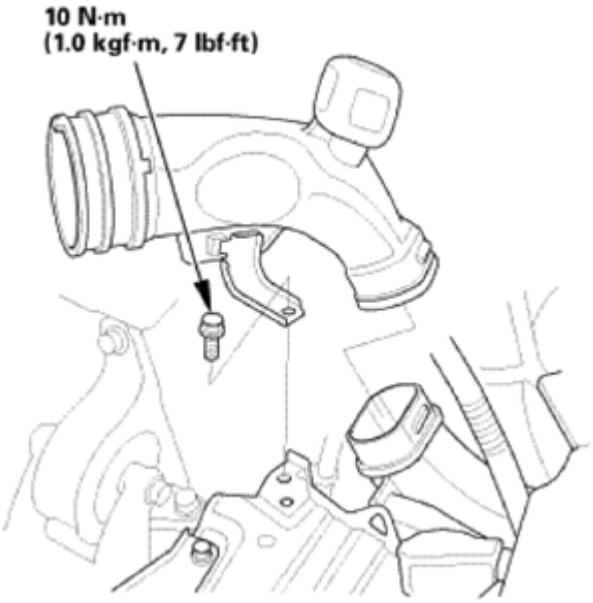

Fig. 1671: Identifying Intake Air Pipe And Mounting Bolts With Torque Specification
Courtesy of AMERICAN HONDA MOTOR CO., INC.

50. Intake Air Duct
    1. Install the intake air duct.

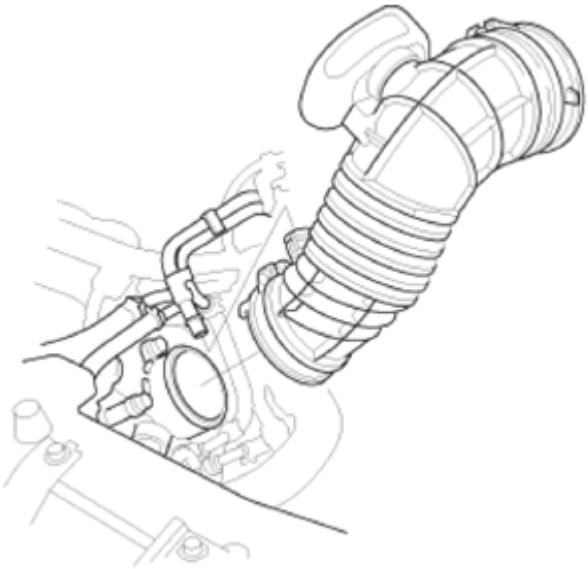

Fig. 1672: Identifying Intake Air Duct
Courtesy of AMERICAN HONDA MOTOR CO., INC.

51. Air Cleaner Assembly

GETtheMANUALS.org

1. Install the air cleaner (A).
2. Connect the intake air pipe (B) and the intake air duct (C).
3. Install the harness clamp (D).
4. Connect the MAF sensor/IAT sensor connector (E).

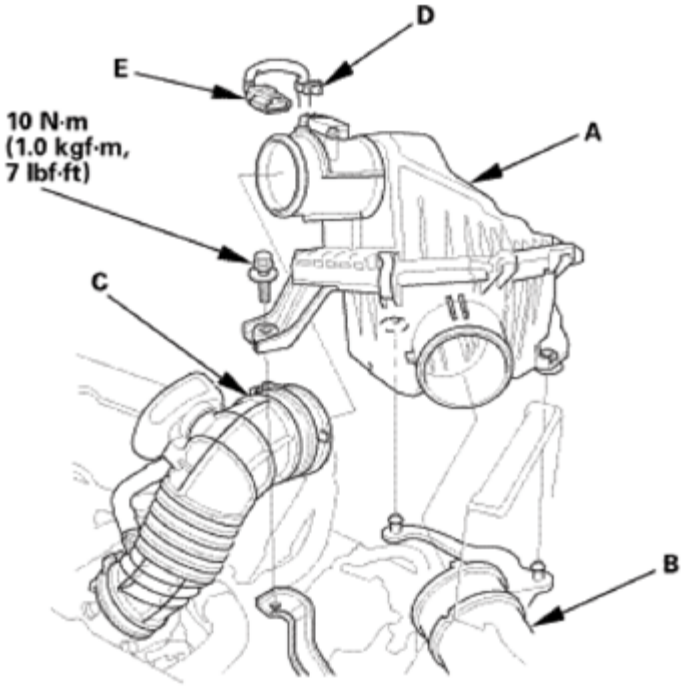

Fig. 1673: Identifying MAF Sensor/IAT Sensor Connector, Harness Clamp, Air Cleaner, Intake Air Pipe And Bolts With Torque Specification
Courtesy of AMERICAN HONDA MOTOR CO., INC.

52. Battery
    1. Install the battery (A) and the battery setting plate (B).

NOTE: **Do not deform the battery setting plate by over-tightening the nuts.**

GETtheMANUALS.org

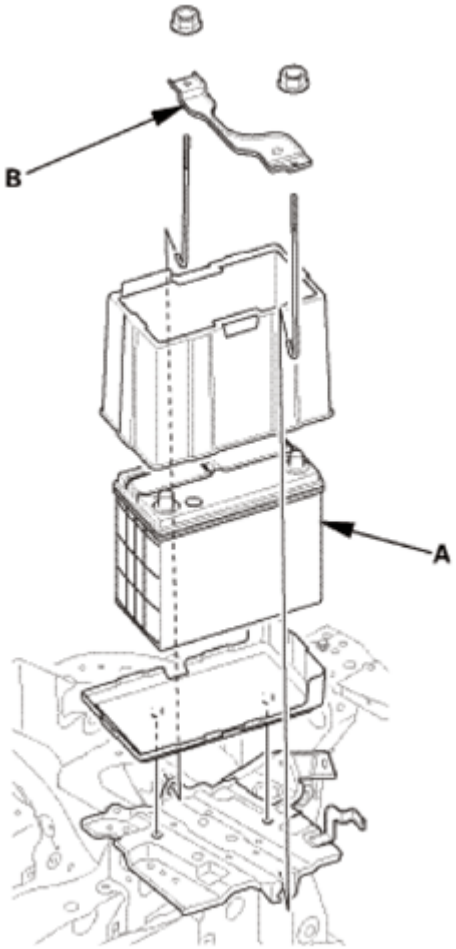

Fig. 1674: Identifying Battery And Battery Setting Plate With Nuts
Courtesy of AMERICAN HONDA MOTOR CO., INC.

53. Battery Terminal - Reconnection

NOTE: If the battery performance is abnormal, test the battery.

1. Clean the battery terminals.
2. Connect the positive cable (A) to the battery.

NOTE: Always connect the positive side first.

3. Connect the negative cable (B) to the battery.
4. Apply multipurpose grease to the terminals to prevent corrosion.

GETtheMANUALS.org

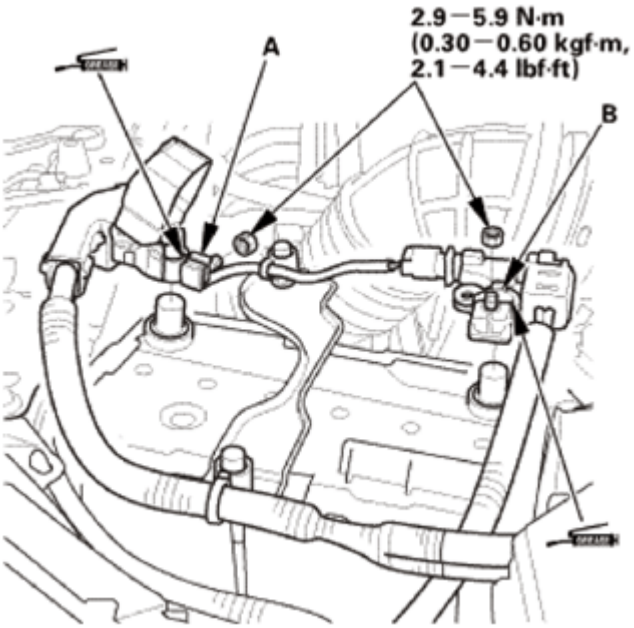

Fig. 1675: Identifying Multipurpose Grease Applying Area Into Battery Terminals
Courtesy of AMERICAN HONDA MOTOR CO., INC.

54. Wide - Hood Open Position
    1. Remove the hood prop bar.
    2. Install the front fender trim (A), then install the clips (B, C). Make sure the clips (D) snap into place securely.

GETtheMANUALS.org

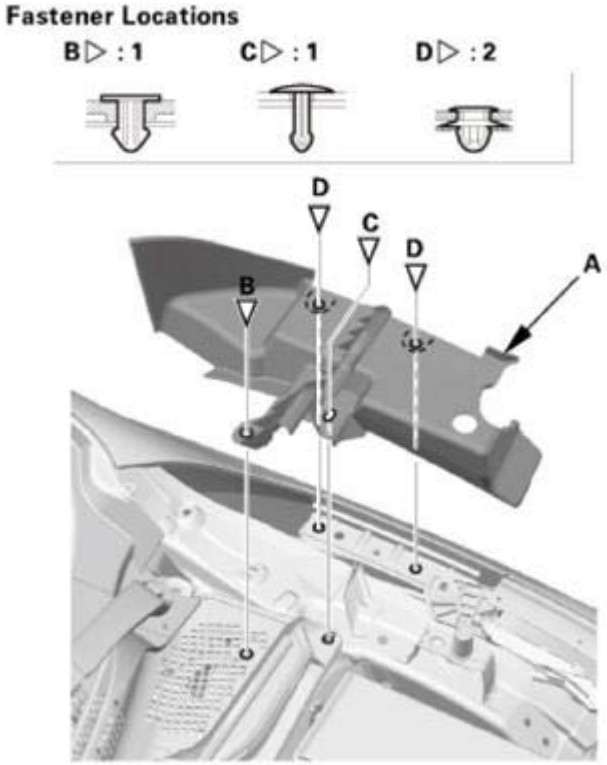

Fig. 1676: Identifying Front Fender Trim And Clips
Courtesy of AMERICAN HONDA MOTOR CO., INC.

55. Front Splash Shield
    1. Install the front splash shield (A), then install the bolts (B) and the clips (C, D). Make sure the clips snap into place securely.

GETtheMANUALS.org

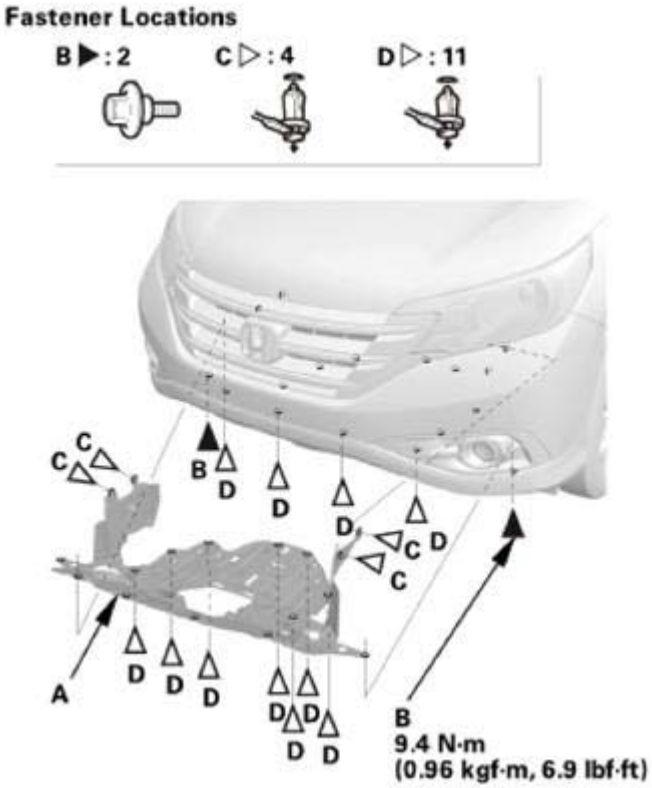

Fig. 1677: Identifying Front Splash Shield, Bolts And Clips With Torque Specification
Courtesy of AMERICAN HONDA MOTOR CO., INC.

56. Front Wheel - Both Side
    1. Install both front wheels.

NOTE: **Before installing the wheel, clean the mating surfaces between the brake disc and the inside of the wheel.**

GETtheMANUALS.org

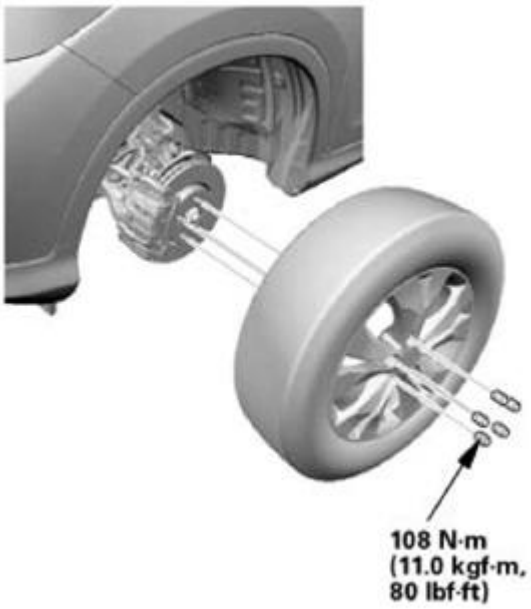

Fig. 1678: Identifying Front Wheels And Studs With Torque Specification
Courtesy of AMERICAN HONDA MOTOR CO., INC.

57. A/T After Install Check
    1. Set the parking brake. Start the engine, and shift the transmission through all positions three times.
    2. Check the shift lever operation, the A/T gear position indicator operation, and the shift cable adjustment.
58. Pre-Alignment Checks

    For proper inspection and adjustment of the wheel alignment, do these checks:

    1. Release the parking brake to avoid an incorrect measurement.
    2. Make sure the suspension is not modified.
    3. Make sure the fuel tank is full, and that the spare tire, the jack, and the tools are in place on the vehicle.
    4. Check the tire size and tire pressure according to tire information.
    5. Set the steering column to the middle tilt position and telescopic position.
59. Caster - Inspection

    Use commercially available computerized four wheel alignment equipment to measure wheel alignment (caster, camber, toe, and turning angle). Follow the equipment manufacturer's instructions.

    1. Check the caster angle.

       Caster angle:

       2WD:

GETtheMANUALS.org

With 16 inch wheel: 2 ° 44 '±30 '

Without 16 inch wheel: 2 ° 50 '±30 '

AWD/4WD:

With 16 inch wheel: 2 ° 38 '±30 '

Without 16 inch wheel: 2 ° 44 '±30 '

- If the measurement is within specifications, measure the front camber angle.
- If the measurement is not within specifications, check for bent or damaged suspension components.

60. Camber - Inspection

Use commercially available computerized four wheel alignment equipment to measure wheel alignment (caster, camber, toe, and turning angle). Follow the equipment manufacturer's instructions.

1. Check the camber angle.

Camber angle:

2WD:

Front:

With 16 inch wheel: -0 ° 01 '±1 ° 00 '

Without 16 inch wheel: -0 ° 10 '±1 ° 00 '

(Maximum difference between the front right and left side: 1 °00 ')

Rear:

With 16 inch wheel: -1 ° 06 '±45 '

Without 16 inch wheel: -1 ° 12 '±45 '

(Maximum difference between the front right and left side: 0 °45 ')

AWD/4WD:

Front:

With 16 inch wheel: -0 ° 08 '±1 ° 00 '

Without 16 inch wheel: 0 ° 00 '±1 ° 00 '

GETtheMANUALS.org

(Maximum difference between the front right and left side: 1 °00 ')

Rear:

With 16 inch wheel: -0 ° 50 '±45 '

Without 16 inch wheel: -1 ° 00 '±45 '

(Maximum difference between the front right and left side: 0 °45 ')

- If the measurement is within specification, measure the toe-in.
- If the measurement for the front camber is not within the specification, go to front camber adjustment.
- If the measurement for the rear camber is not within the specification, check for bent or damaged suspension components.

61. Front Toe - Inspection

Use commercially available computerized four wheel alignment equipment to measure wheel alignment (caster, camber, toe, and turning angle). Follow the equipment manufacturer's instructions.

1. Set the steering column to the middle tilt position and telescopic positions.
2. Center the steering wheel spokes, and install a steering wheel holder tool.
3. Check the toe with the wheels pointed straight ahead.

   Front toe-in: 0±2 mm (0±0.08 in)

   - If adjustment is required, go to the front toe adjustment.
   - If no adjustment is required, remove the alignment equipment.

62. Turning Angle - Inspection

Use commercially available computerized four wheel alignment equipment to measure wheel alignment (caster, camber, toe, and turning angle). Follow the equipment manufacturer's instructions.

1. Turn the wheel right and left while applying the brake, and measure the turning angle of both wheels.

   Turning angle:

   2WD:

   Inward:

   With 16 inch wheel: 36 ° 29 '±2 °

   Without 16 inch wheel: 36 ° 13 '±2 °

GETtheMANUALS.org

Outward (reference):

With 16 inch wheel: 31 ° 13 '

Without 16 inch wheel: 31 ° 02 '

AWD/4WD:

Inward:

With 16 inch wheel: 36 ° 48 '±2 °

Without 16 inch wheel: 36 ° 30 '±2 °

Outward (reference):

With 16 inch wheel: 31 ° 18 '

Without 16 inch wheel: 31 ° 12 '

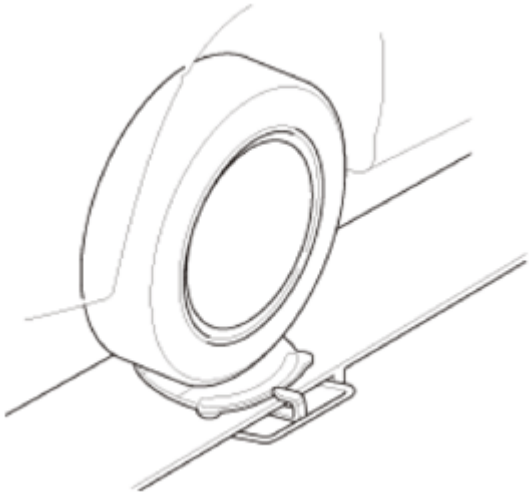

Fig. 1679: Measuring Wheel Alignment (Caster, Camber, Toe And Turning Angle)
Courtesy of AMERICAN HONDA MOTOR CO., INC.

2. If the measurement is not within the specifications, even up both sides of the tie-rod threaded section length while adjusting the front toe.
3. If it is correct, but the turning angle is not within the specifications, check for bent or damaged suspension components.

63. Warm Up The Engine
    1. Start the engine. Hold the engine speed at 3, 000 rpm without load in P or N until the radiator fan comes on.
    2. Park the vehicle on level ground.

GETtheMANUALS.org

3. Turn the ignition switch to LOCK (0).

64. ATF Level Check

NOTE:

- **Keep all foreign particles out of the transmission.**
- **Check the fluid level within 60-90 seconds after turning the engine off.**
- **Higher fluid level may be indicated if the radiator fan comes on twice or more.**

1. Remove the ATF dipstick (yellow loop) (A), and wipe it with a clean cloth.
2. Insert the dipstick into the guide tube aligning the notch (B) with the guide tab (C).

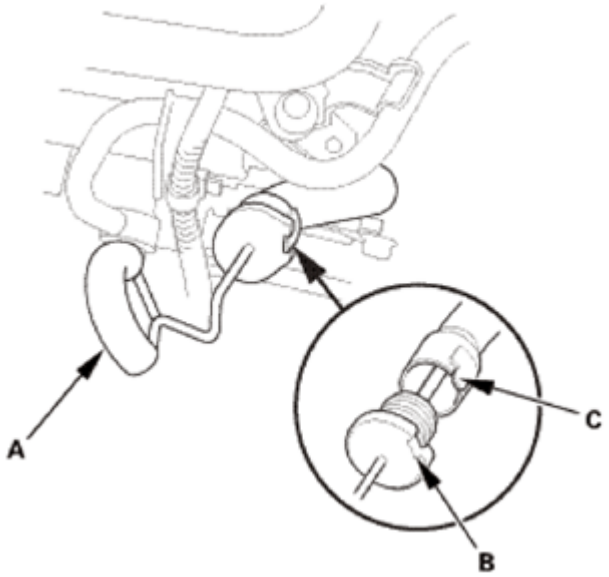

Fig. 1680: Identifying Notch, Tab And ATF Dipstick (Yellow Loop)
Courtesy of AMERICAN HONDA MOTOR CO., INC.

3. Remove the dipstick, and check the ATF level. It should be between the upper mark (A) and the lower mark (B).
4. If the ATF level is below the lower mark, check for fluid leaks at the transmission, the hoses, and the line joints. If a problem is found, fix it before filling the transmission with ATF.

NOTE: **If the vehicle is driven when the ATF level is below the lower mark, one or more of these symptoms may occur:**

- **Transmission damage.**
- **Vehicle does not move in any gear.**
- **Vehicle accelerates poorly, and engine revs up abnormally high when starting off in forward and reverse positions.**

GETtheMANUALS.org

- **Engine vibrates at idle.**

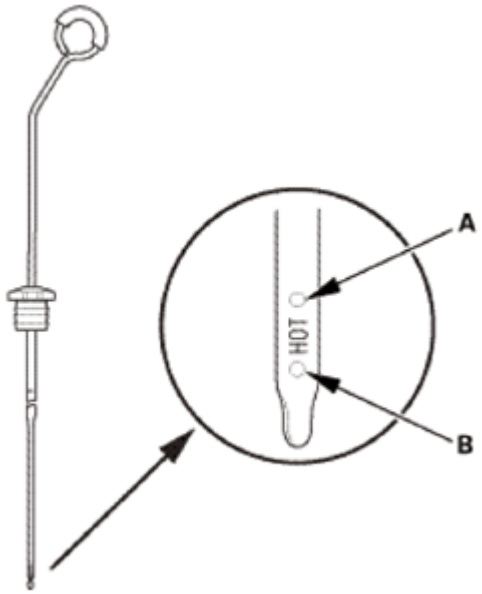

Fig. 1681: Identifying Upper And Lower Mark On Dipstick
Courtesy of AMERICAN HONDA MOTOR CO., INC.

5. If the ATF level is above the upper mark, drain the ATF to proper level.

NOTE: **If the vehicle is driven when the ATF level is above the upper mark, the vehicle may creep forward while in N, or have shifting problems.**

6. If necessary, fill the transmission with ATF through the dipstick guide tube opening (A) to bring the fluid level between the upper mark and the lower mark of the dipstick. Do not fill the fluid above the upper mark. Always use ATF DW-1 (genuine Honda automatic transmission fluid). Using a non-Honda ATF can affect shift quality.
7. Insert the dipstick into the guide tube aligning the notch with the guide tab.

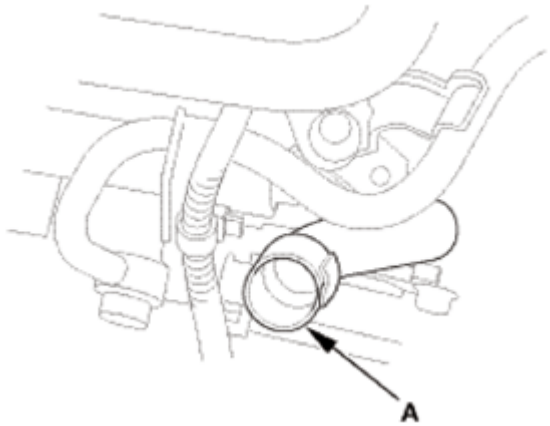

GETtheMANUALS.org

Fig. 1682: Identifying Dipstick Guide Tube Opening
Courtesy of AMERICAN HONDA MOTOR CO., INC.

65. HDS DLC - Connection
    1. Connect the HDS to the data link connector (DLC) (A) located under the driver's side of the dashboard.
    2. Turn the ignition switch to ON (II).
    3. Make sure the HDS communicates with the vehicle. If it does not communicate, go to the DLC circuit troubleshooting.

Fig. 1683: Identifying Data Link Connector Located Under Driver's Side Of Dashboard
Courtesy of AMERICAN HONDA MOTOR CO., INC.

66. Automatic Transmission Road - Test
    1. Apply the parking brake, and block all four wheels.
    2. Start the engine.
    3. Shift to D while pressing the brake pedal. Press the accelerator pedal, and release it suddenly. The engine should not stall.
    4. Repeat step 3 in all shift lever positions.
    5. Prepare the HDS and the MVCI to take a SNAPSHOT (refer to the user's guide for more details if needed):
        - Set the Trigger Type to Parameter.
        - Adjust the Parameter setting to APP Sensor A (V) above 1.2 V.
        - Set the recording time to 60 seconds.
        - Set the trigger point to (Negative) -30 seconds.
    6. Find a suitable level road.
    7. When you are ready to do the test, press OK on the HDS.
    8. Accelerate quickly until APP Sensor A reads 1.3 V. Maintain a steady throttle until the

GETtheMANUALS.org

transmission shifts to 5th gear, then slow the vehicle and come to a stop.

9. Save the snapshot if the entire event was recorded or increase the recording time setting as necessary, and repeat step 8.
10. Adjust the APP Sensor A parameter setting to 2.4 V.
11. Test-drive the vehicle again. Accelerate quickly until APP Sensor A reads 2.5 V. Maintain a steady throttle until the transmission shifts to 5th gear (or a reasonable speed), then slow the vehicle and come to a stop.
12. Save the snapshot if the entire event was recorded or increase the recording time setting as necessary, and repeat step 11.
13. Adjust the APP Sensor A parameter setting to 4.5 V.
14. Accelerate quickly until the accelerator pedal is to the floor. Maintain a steady pedal until the transmission shifts to 4th gear, then slow to a stop, and save the snapshot.
15. Review each snapshot individually, and compare the Shift Control, APP Sensor A (V), and the Vehicle Speed to the following table.

VEHICLE SPEED SPECIFICATION - KA (2WD), KC (2WD)

Upshift: D Position	**APP Sensor A (V): 1.3 V**	
	1st-->2nd	9-11 mph (14-18 km/h)
	2nd-->3rd	18-22 mph (29-35 km/h)
	3rd-->4th	26-31 mph (42-50 km/h)
	4th-->5th	38-44 mph (61-71 km/h)
	Lock-up ON	34-39 mph (54-62 km/h)
	APP Sensor A (V): 2.5 V	
	1st-->2nd	24-27 mph (38-44 km/h)
	2nd-->3rd	44-50 mph (70-80 km/h)
	3rd-->4th	65-73 mph (105-117 km/h)
	4th-->5th	109-119 mph (175-191 km/h)
	Lock-up ON	83-91 mph (133-147 km/h)
	APP Sensor A (V): 4.5 V (Fully-opened throttle)	
	1st-->2nd	44-50 mph (71-81 km/h)
	2nd-->3rd	76-85 mph (122-136 km/h)
	3rd-->4th	113-123 mph (182-198 km/h)
Downshift: D Position	**APP Sensor A (V): 1.3 V**	
	Lock-up OFF	33-38 mph (53-61 km/h)
	5th-->4th	33-39 mph (53-63 km/h)
	4th-->3rd	24-29 mph (38-46 km/h)
	3rd-->1st	4-8 mph (7-13 km/h)
	APP Sensor A (V): 2.5 V	
	Lock-up OFF	62-69 mph (99-111 km/h)
	APP Sensor A (V): 4.5 V (Fully-opened throttle)	
	Lock-up OFF	112-122 mph (181-197 km/h)
	5th-->4th	113-123 mph (182-198 km/h)

GETtheMANUALS.org

	4th-->3rd	89-98 mph (143-157 km/h)
	3rd-->2nd	54-62 mph (87-99 km/h)
	2nd-->1st	25-31 mph (40-50 km/h)

VEHICLE SPEED SPECIFICATION - KA (AWD), KC (AWD)

Upshift: D Position	**APP Sensor A (V): 1.3 V**	
	1st-->2nd	9-11 mph (14-18 km/h)
	2nd-->3rd	17-21 mph (27-33 km/h)
	3rd-->4th	26-31 mph (42-50 km/h)
	4th-->5th	37-43 mph (59-69 km/h)
	Lock-up ON	31-36 mph (50-58 km/h)
	APP Sensor A (V): 2.5 V	
	1st-->2nd	23-27 mph (37-43 km/h)
	2nd-->3rd	42-48 mph (67-77 km/h)
	3rd-->4th	64-71 mph (103-115 km/h)
	4th-->5th	106-116 mph (170-186 km/h)
	Lock-up ON	83-92 mph (134-148 km/h)
	APP Sensor A (V): 4.5 V (Fully-opened throttle)	
	1st-->2nd	42-48 mph (68-78 km/h)
	2nd-->3rd	71-80 mph (115-129 km/h)
	3rd-->4th	109-119 mph (175-191 km/h)
Downshift: D Position	**APP Sensor A (V): 1.3 V**	
	Lock-up OFF	30-35 mph (49-57 km/h)
	5th-->4th	30-37 mph (49-59 km/h)
	4th-->3rd	22-25 mph (35-41 km/h)
	3rd-->1st	4-8 mph (7-13 km/h)
	APP Sensor A (V): 2.5 V	
	Lock-up OFF	62-70 mph (100-112 km/h)
	APP-->Sensor A (V): 4.5 V (Fully-opened throttle)	
	Lock-up OFF	112-122 mph (181-197 km/h)
	5th-->4th	113-123 mph (182-198 km/h)
	4th-->3rd	89-98 mph (143-157 km/h)
	3rd-->2nd	54-62 mph (87-99 km/h)
	2nd-->1st	25-31 mph (40-50 km/h)

VEHICLE SPEED SPECIFICATION - KX (2WD)

	APP Sensor A (V): 1.3 V	
	1st-->2nd	9-11 mph (14-18 km/h)
	2nd-->3rd	18-22 mph (29-35 km/h)
	3rd-->4th	26-31 mph (42-50 km/h)
	4th-->5th	38-44 mph (61-71 km/h)

GETtheMANUALS.org

Upshift: D Position	Lock-up ON	34-39 mph (54-62 km/h)
	APP Sensor A (V): 2.5 V	
	1st-->2nd	24-27 mph (38-44 km/h)
	2nd-->3rd	44-50 mph (70-80 km/h)
	3rd-->4th	65-73 mph (105-117 km/h)
	4th-->5th	109-119 mph (175-191 km/h)
	Lock-up ON	83-91 mph (133-147 km/h)
	APP Sensor A (V): 4.5 V (Fully-opened throttle)	
	1st-->2nd	41-47 mph (66-76 km/h)
	2nd-->3rd	69-76 mph (111-123 km/h)
	3rd-->4th	107-117 mph (172-188 km/h)
Downshift: D Position	**APP Sensor A (V): 1.3 V**	
	Lock-up OFF	33-38 mph (53-61 km/h)
	5th-->4th	33-39 mph (53-63 km/h)
	4th-->3rd	24-29 mph (38-46 km/h)
	3rd-->1st	4-8 mph (7-13 km/h)
	APP Sensor A (V): 2.5 V	
	Lock-up OFF	62-69 mph (99-111 km/h)
	APP Sensor A (V): 4.5 V (Fully-opened throttle)	
	Lock-up OFF	112-122 mph (181-197 km/h)
	5th-->4th	113-123 mph (182-198 km/h)
	4th-->3rd	83-91 mph (133-147 km/h)
	3rd-->2nd	51-58 mph (82-94 km/h)
	2nd-->1st	25-31 mph (40-50 km/h)

VEHICLE SPEED SPECIFICATION - KX (4WD)

Upshift: D Position	**APP Sensor A (V): 1.3 V**	
	1st-->2nd	9-11 mph (14-18 km/h)
	2nd-->3rd	17-21 mph (27-33 km/h)
	3rd-->4th	26-31 mph (42-50 km/h)
	4th-->5th	37-43 mph (59-69 km/h)
	Lock-up ON	31-36 mph (50-58 km/h)
	APP Sensor A (V): 2.5 V	
	1st-->2nd	23-27 mph (37-43 km/h)
	2nd-->3rd	42-48 mph (67-77 km/h)
	3rd-->4th	64-71 mph (103-115 km/h)
	4th-->5th	106-116 mph (170-186 km/h)
	Lock-up ON	83-92 mph (134-148 km/h)
	APP Sensor A (V): 4.5 V (Fully-opened throttle)	
	1st-->2nd	39-45 mph (63-73 km/h)
	2nd-->3rd	65-72 mph (104-116 km/h)

GETtheMANUALS.org

	3rd-->4th	103-112 mph (165-181 km/h)
Downshift: D Position	**APP Sensor A (V): 1.3 V**	
	Lock-up OFF	30-35 mph (49-57 km/h)
	5th-->4th	30-37 mph (49-59 km/h)
	4th-->3rd	22-25 mph (35-41 km/h)
	3rd-->1st	4-8 mph (7-13 km/h)
	APP Sensor A (V): 2.5 V	
	Lock-up OFF	60-67 mph (96-108 km/h)
	APP Sensor A (V): 4.5 V (Fully-opened throttle)	
	Lock-up OFF	112-122 mph (181-197 km/h)
	5th-->4th	113-123 mph (182-198 km/h)
	4th-->3rd	83-91 mph (133-147 km/h)
	3rd-->2nd	51-58 mph (82-94 km/h)
	2nd-->1st	25-31 mph (40-50 km/h)

16. Drive the vehicle in 4th or 5th gear, then shift to 2nd gear. The vehicle should immediately begin to slow down from engine braking.
17. Shift to 1, accelerate from a stop at full throttle, and check for abnormal noise and clutch slippage. Upshifts should not occur in this position.
18. Shift to 2, accelerate from a stop at full throttle, and check for abnormal noise and clutch slippage. Upshifts and downshifts should not occur in this position.
19. Shift to R, accelerate from a stop at to full throttle momentarily, and check for abnormal noise and clutch slippage.
20. Park the vehicle on an upward slope (about 16 degrees), apply the parking brake, and shift into P. Release the brake; the vehicle should not move.

NOTE: **Always use the parking brake to hold the vehicle when stopped on an incline in gear. Depending on the grade of the incline, the vehicle could roll if the brake is released.**

67. VSA Sensor Neutral Position - Memorization
    1. Park the vehicle on a flat and level surface, with the steering wheel in the straight ahead position.
    2. Select VSA ADJUSTMENT, then select ALL SENSORS with the HDS, and follow the screen prompts.

NOTE: **See the HDS Help menu for specific instructions.**

68. Steering Angle Sensor Neutral Position - Clear
    1. Select EPS ADJUSTMENT, then select EPS STEERING ANGLE SENSOR VALUE CLEAR and follow the screen prompts on the HDS.

NOTE: **See the HDS Help menu for specific instructions.**

GETtheMANUALS.org

69. Maintenance Minder Reset
    1. **RESET THE MAINTENANCE MINDER** .

DRIVE PLATE REMOVAL AND INSTALLATION

REMOVAL

1. Drive Plate Assembly
    1. Remove the drive plate (A) and the washer (B).

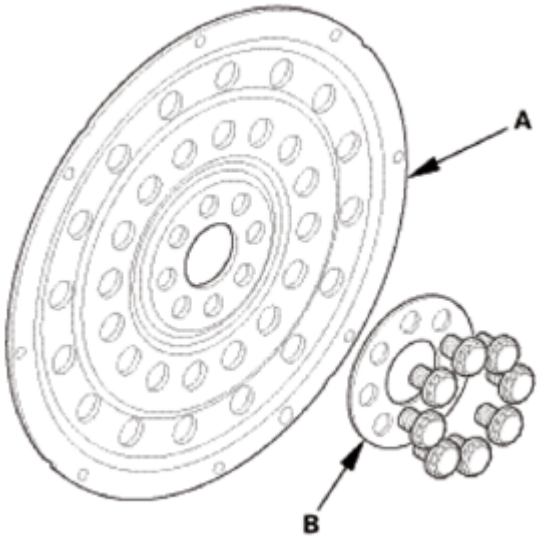

Fig. 1684: Identifying Drive Plate And Washer With Mounting Bolts
Courtesy of AMERICAN HONDA MOTOR CO., INC.

INSTALLATION

1. Drive Plate Assembly
    1. Install the drive plate (A) and the washer (B), and tighten the eight bolts in a crisscross pattern in at least two steps.

GETtheMANUALS.org

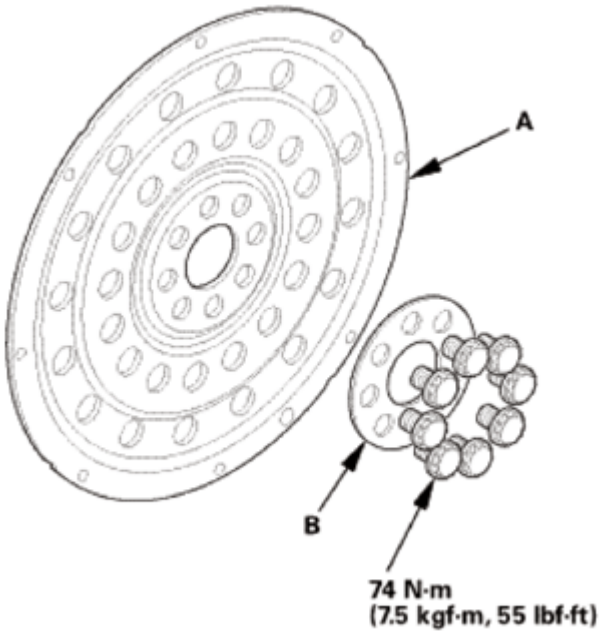

Fig. 1685: Identifying Drive Plate, Washer And Mounting Bolts With Torque Specification
Courtesy of AMERICAN HONDA MOTOR CO., INC.

INPUT SHAFT (MAINSHAFT) SPEED SENSOR REMOVAL AND INSTALLATION

REMOVAL

1. Air Cleaner Assembly
    1. Disconnect the MAF sensor/IAT sensor connector (A).
    2. Remove the harness clamp (B).
    3. Disconnect the intake air duct (C) and the intake air pipe (D).
    4. Remove the air cleaner (E).

GETtheMANUALS.org

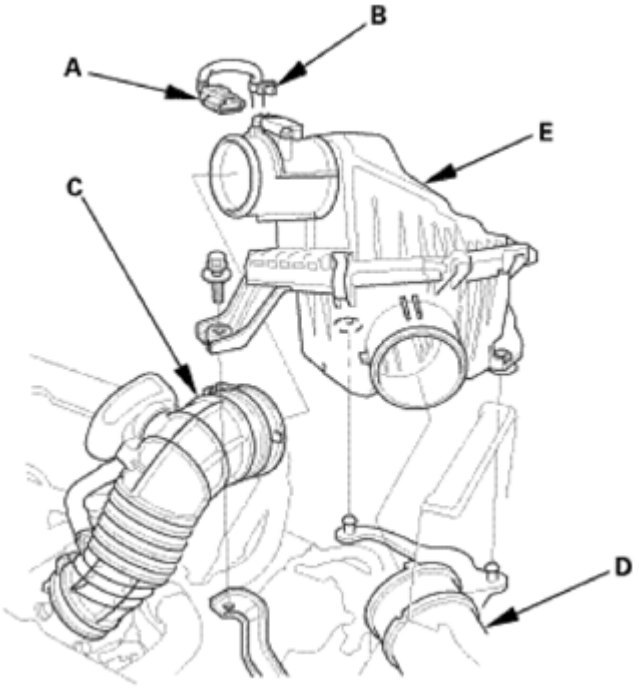

Fig. 1686: Identifying MAF Sensor/IAT Sensor Connector, Harness Clamp, Intake Air Duct, Intake Air Pipe And Air Cleaner
Courtesy of AMERICAN HONDA MOTOR CO., INC.

2. Input Shaft (Mainshaft) Speed Sensor
    1. Remove the input shaft (mainshaft) speed sensor (A).
    2. Remove the O-ring (B) from the input shaft (mainshaft) speed sensor.

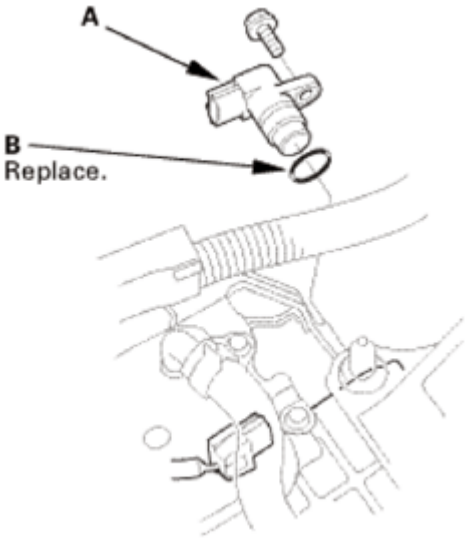

Fig. 1687: Identifying Input Shaft (Mainshaft) Speed Sensor And O-Ring
Courtesy of AMERICAN HONDA MOTOR CO., INC.

GETtheMANUALS.org

INSTALLATION

1. Input Shaft (Mainshaft) Speed Sensor
    1. Install a new O-ring (A) on the input shaft (mainshaft) speed sensor (B).
    2. Install the input shaft (mainshaft) speed sensor.
    3. Check the connector (C) for corrosion, dirt, or oil, and clean or repair if necessary, then connect the connector securely.

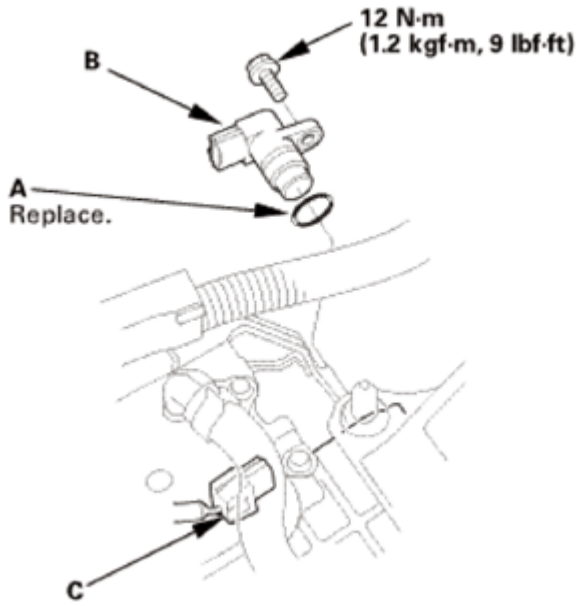

Fig. 1688: Identifying Input Shaft (Mainshaft) Speed Sensor, O-Ring And Mounting Bolt With Torque Specification
Courtesy of AMERICAN HONDA MOTOR CO., INC.

2. Air Cleaner Assembly
    1. Install the air cleaner (A).
    2. Connect the intake air pipe (B) and the intake air duct (C).
    3. Install the harness clamp (D).
    4. Connect the MAF sensor/IAT sensor connector (E).

GETtheMANUALS.org

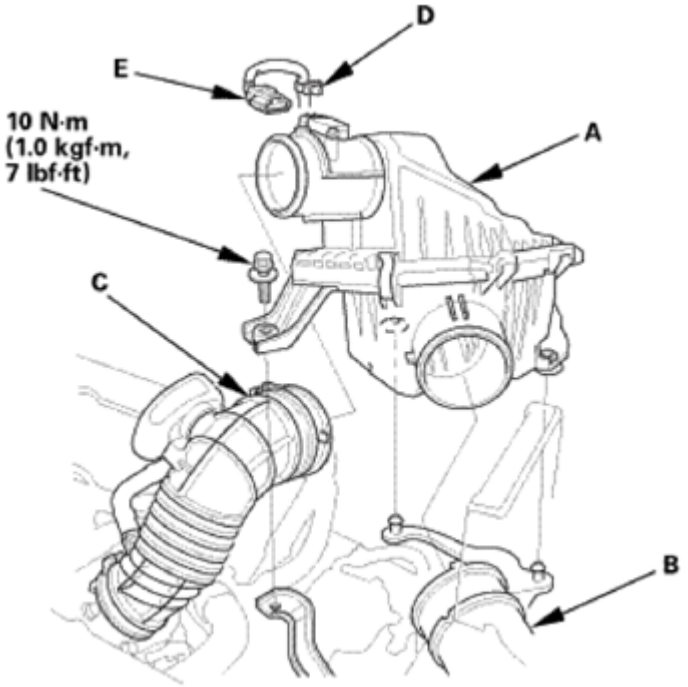

Fig. 1689: Identifying MAF Sensor/IAT Sensor Connector, Harness Clamp, Air Cleaner, Intake Air Pipe And Bolts With Torque Specification
Courtesy of AMERICAN HONDA MOTOR CO., INC.

INTERMEDIATE SHAFT DISASSEMBLY AND REASSEMBLY

SPECIAL TOOL REQUIRED

Image	Description/Tool Number
	Bearing Driver Attachment, 35 mm I.D. 07746-0030400

GETtheMANUALS.org

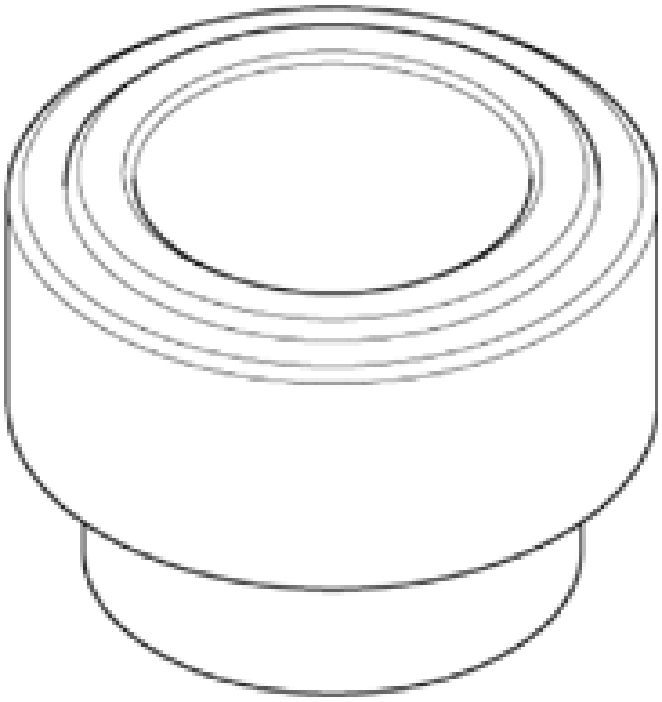	
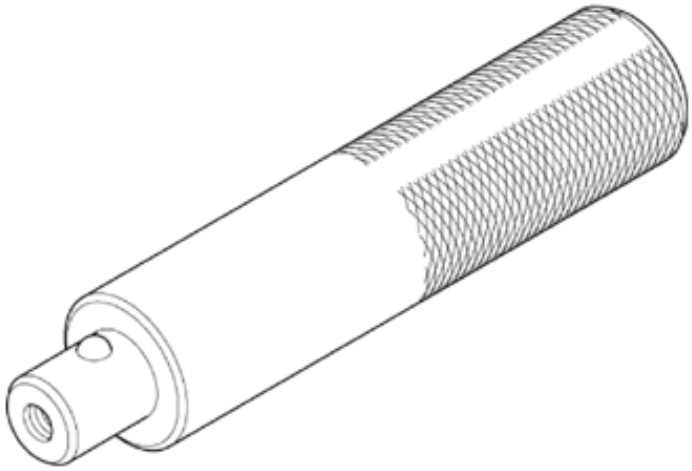	Driver Handle, 15 x 135L 07749-0010000

GETtheMANUALS.org

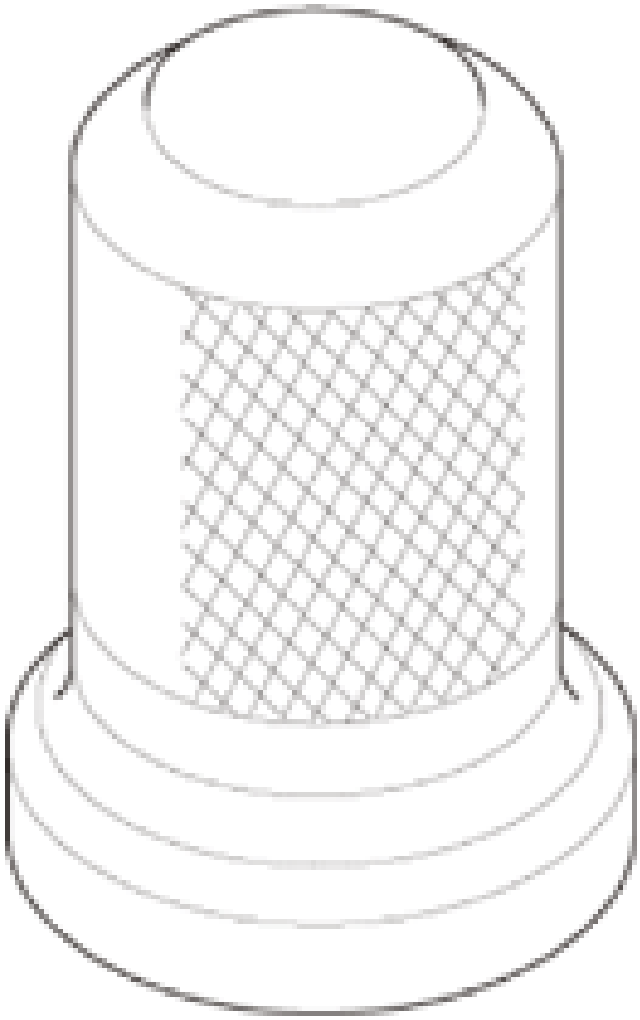	Oil Seal Driver, 44.5 mm 07947-SB0A100

GETtheMANUALS.org

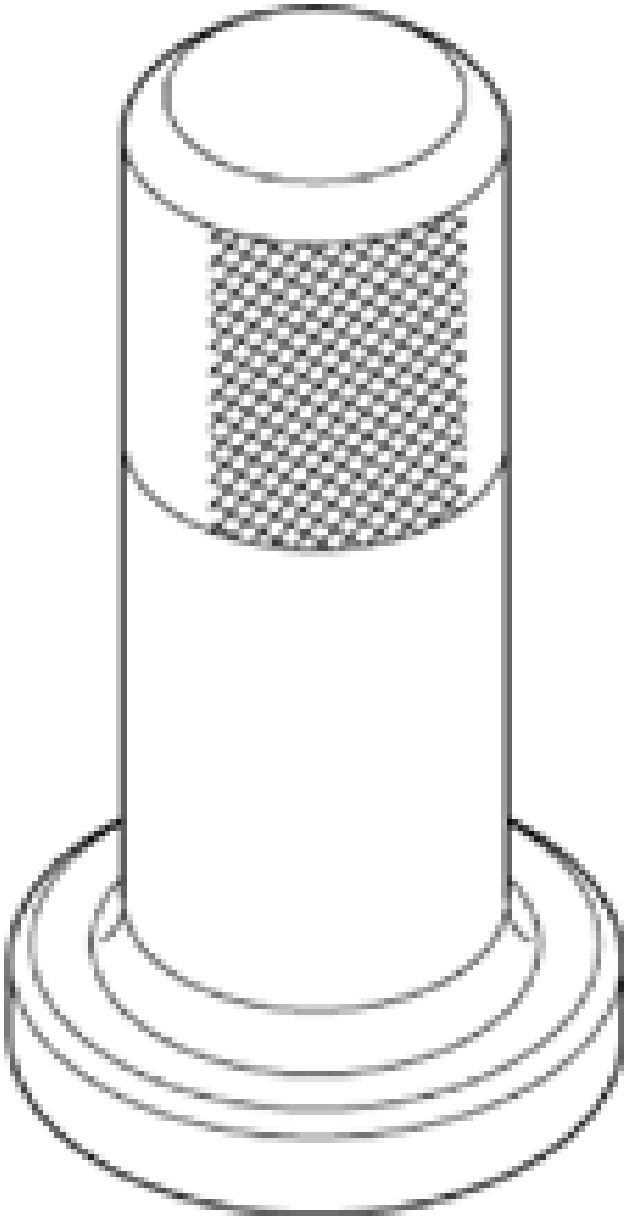	Oil Seal Driver, 65 mm 07JAD-PL9A100
	Oil Seal Driver Attachment 07NAD-P20A100

GETtheMANUALS.org

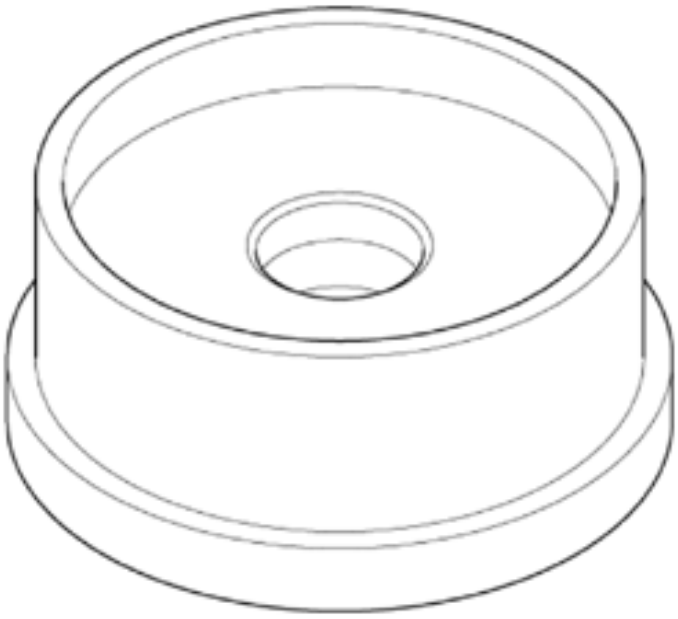	
	Half Shaft Base 07NAF-SR3A101

DISASSEMBLY

GETtheMANUALS.org

1. Intermediate Shaft Bearing
    1. Remove the heat shield (A).

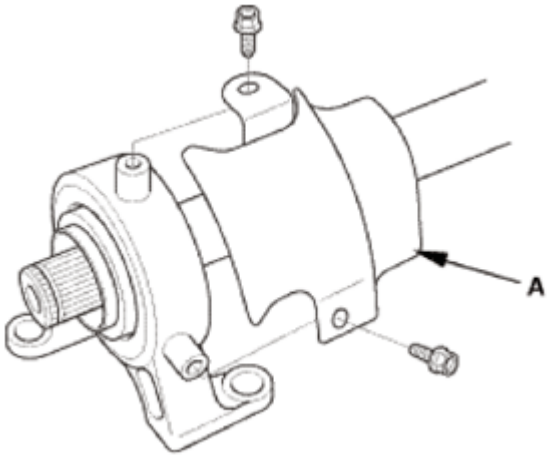

Fig. 1690: Identifying Heat Shield With Mounting Bolts
Courtesy of AMERICAN HONDA MOTOR CO., INC.

    2. Remove the outer seal (A).
    3. Remove the external snap ring (B).

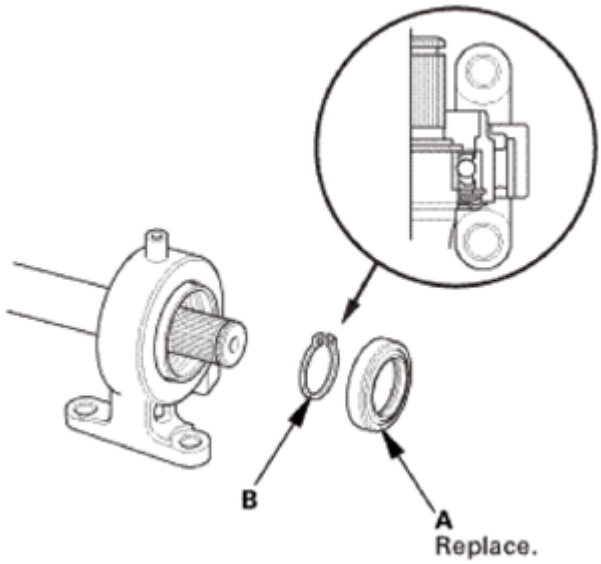

Fig. 1691: Identifying External Snap Ring And Outer Seal
Courtesy of AMERICAN HONDA MOTOR CO., INC.

    4. Press the intermediate shaft (A) out of the intermediate shaft bearing (B) using the half shaft base and a press.

NOTE: Be careful not to damage the bearing support ring (C) on the

GETtheMANUALS.org

intermediate shaft during disassembly.

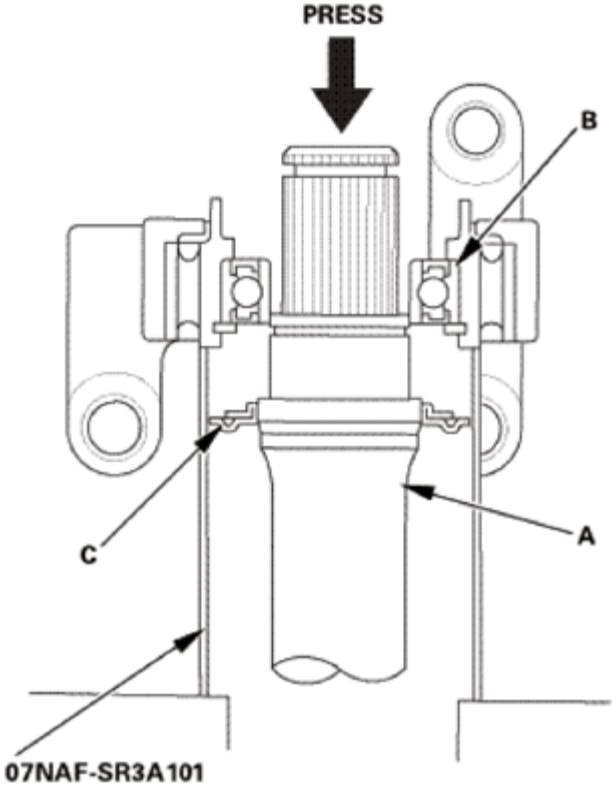

Fig. 1692: Pressing Intermediate Shaft Out Of Intermediate Shaft Bearing Using Half Shaft Base
Courtesy of AMERICAN HONDA MOTOR CO., INC.

5. Remove the internal snap ring (A).

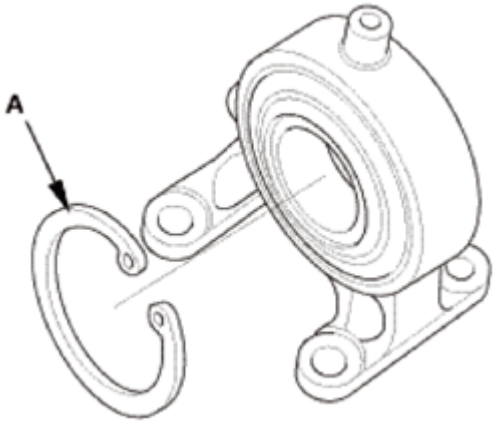

Fig. 1693: Identifying Internal Snap Ring
Courtesy of AMERICAN HONDA MOTOR CO., INC.

6. Press the intermediate shaft bearing (A) out of the bearing support (B) using the 44.5 mm oil seal

GETtheMANUALS.org

driver, the half shaft base, and a press.

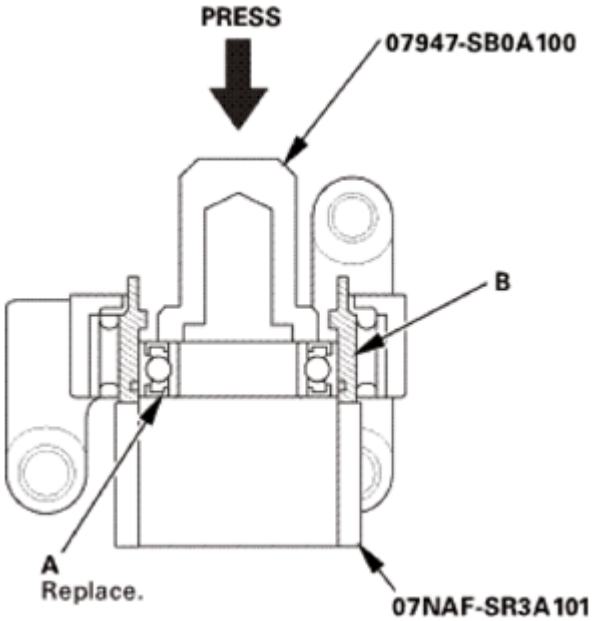

Fig. 1694: Pressing Intermediate Shaft Bearing Out Of Bearing Support Using Oil Seal Driver And Half Shaft Base
Courtesy of AMERICAN HONDA MOTOR CO., INC.

EXPLODED VIEW

1. Intermediate Shaft Exploded View

   Exploded View

GETtheMANUALS.org

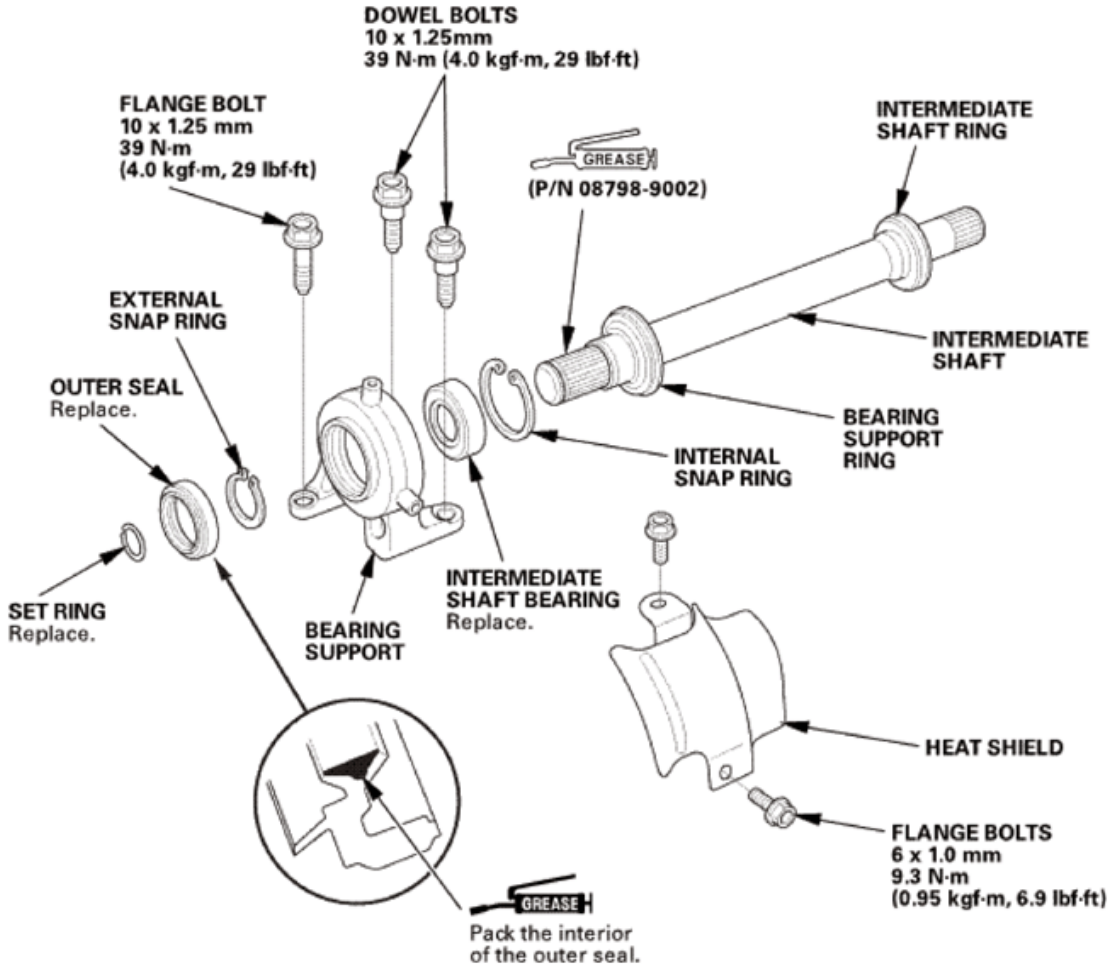

Fig. 1695: Exploded View Of Intermediate Shaft
Courtesy of AMERICAN HONDA MOTOR CO., INC.

REASSEMBLY

1. Intermediate Shaft Bearing
    1. Clean the disassembled parts with solvent.

        NOTE: Do not wash the rubber parts with solvent.

    2. Dry the disassembled parts with compressed air.
    3. Press a new intermediate shaft bearing (A) into the bearing support (B) using the 15 x 135L driver handle, oil seal driver attachment, and a press.

GETtheMANUALS.org

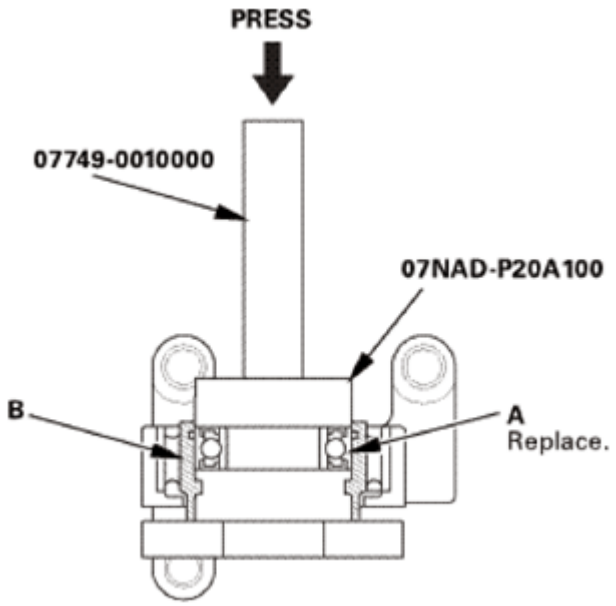

Fig. 1696: Pressing Intermediate Shaft Bearing Into Bearing Support Using Driver Handle And Oil Seal Driver Attachment
Courtesy of AMERICAN HONDA MOTOR CO., INC.

4. Install the internal snap ring (A).

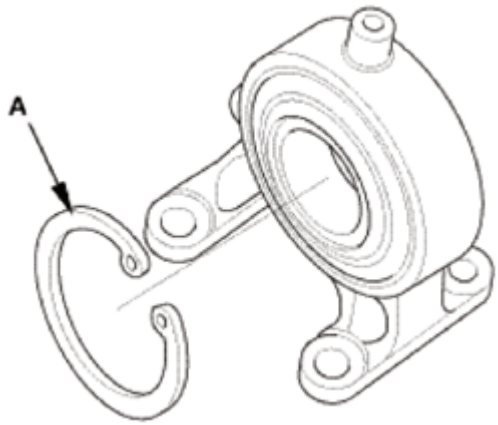

Fig. 1697: Identifying Internal Snap Ring
Courtesy of AMERICAN HONDA MOTOR CO., INC.

5. Press the intermediate shaft (A) into the shaft bearing (B) using the 35 mm I.D. bearing driver attachment and a press.

GETtheMANUALS.org

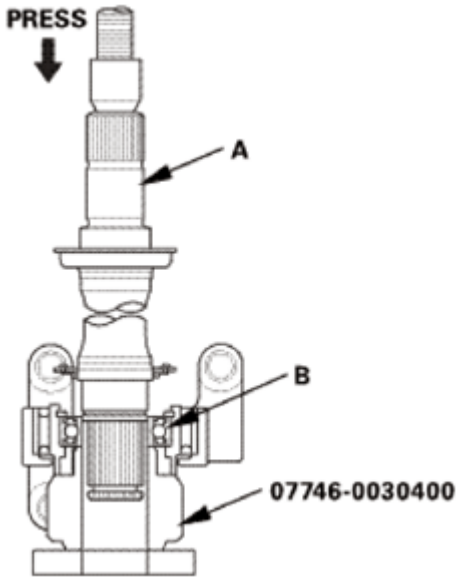

Fig. 1698: Pressing Intermediate Shaft Into Shaft Bearing Using Bearing Driver Attachment
Courtesy of AMERICAN HONDA MOTOR CO., INC.

6. Install the external snap ring (A).

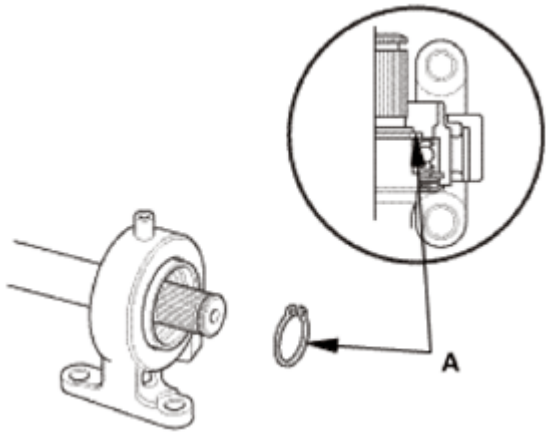

Fig. 1699: Identifying External Snap Ring
Courtesy of AMERICAN HONDA MOTOR CO., INC.

7. Install a new outer seal (A) into the bearing support (B) using the 65 mm oil seal driver, the half shaft base, and a press. Press in the seal until it is even with the surface of the bearing support.

GETtheMANUALS.org

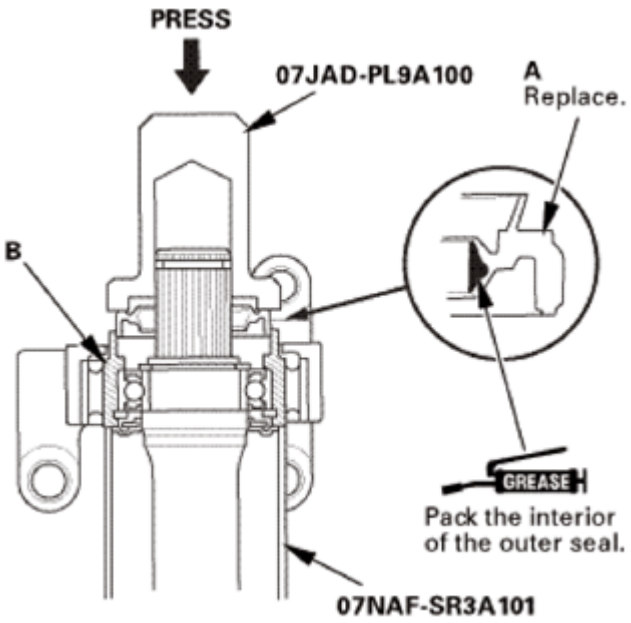

Fig. 1700: Installing Outer Seal Into Bearing Support Using Oil Seal Driver And Half Shaft Base
Courtesy of AMERICAN HONDA MOTOR CO., INC.

8. Install the heat shield (A).

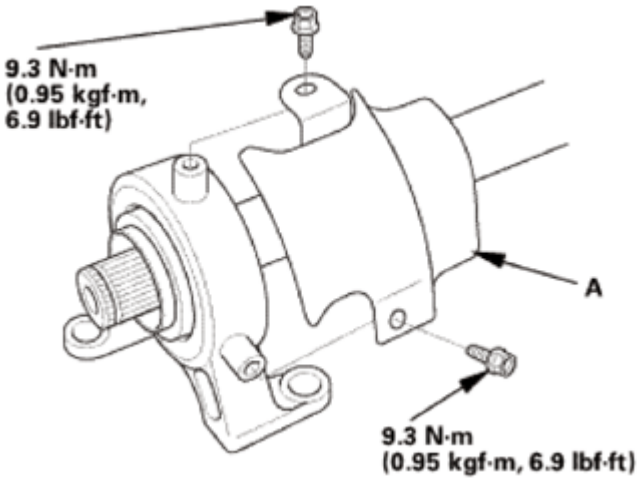

Fig. 1701: Identifying Heat Shield And Mounting Bolts With Torque Specification
Courtesy of AMERICAN HONDA MOTOR CO., INC.

INTERMEDIATE SHAFT REMOVAL AND INSTALLATION

REMOVAL

1. Vehicle Lift
    1. Raise the vehicle on a lift, and make sure it is securely supported.

GETtheMANUALS.org

2. Front Splash Shield
    1. Remove the bolts (A), then remove the clips (B) that secure the front inner fender and the front splash shield (C) to the body.
    2. From under the front bumper (D), remove the clips (E).
    3. From under the body, remove the clips (F), then pull out the front splash shield.

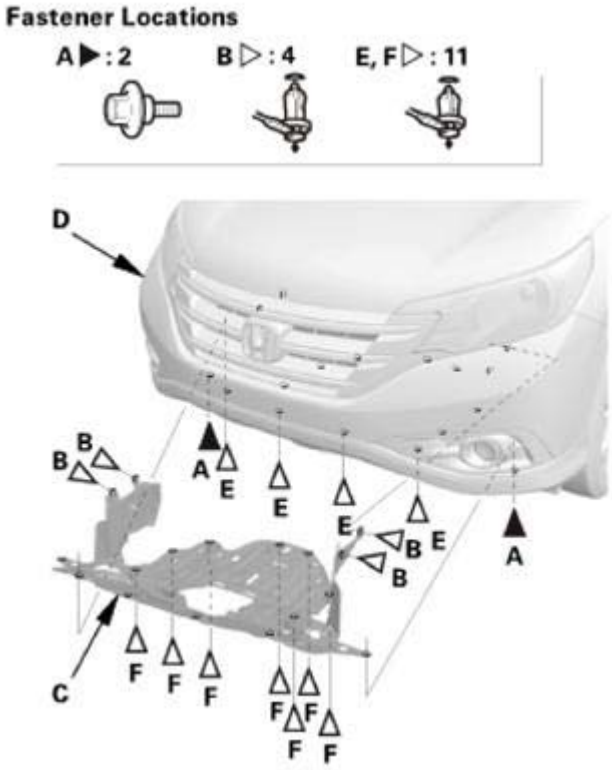

<u>Fig. 1702: Identifying Front Splash Shield, Front Bumper, Bolts And Clips</u>
Courtesy of AMERICAN HONDA MOTOR CO., INC.

3. ATF - Replacement
    1. Remove the drain plug (A), and drain the ATF.
    2. Reinstall the drain plug using a new sealing washer (B).

GETtheMANUALS.org

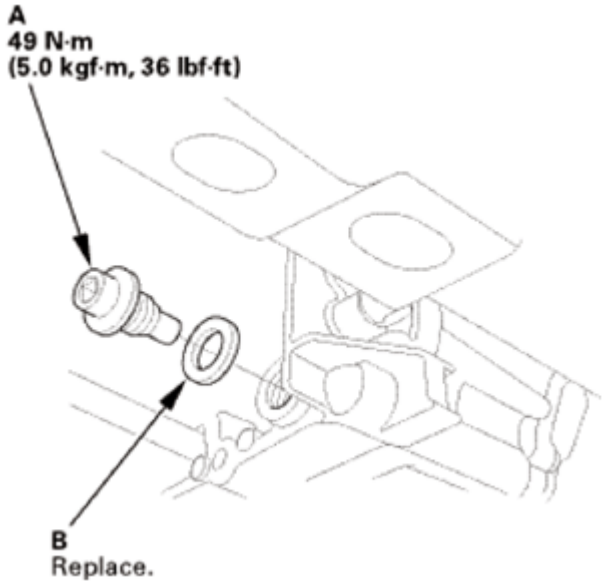

Fig. 1703: Identifying Drain Plug And Sealing Washer With Torque Specification
Courtesy of AMERICAN HONDA MOTOR CO., INC.

4. Right Front Wheel
    1. Remove the right front wheel.

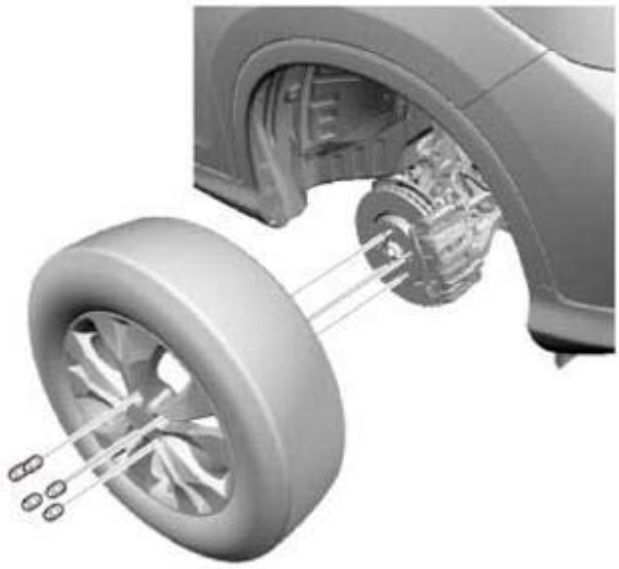

Fig. 1704: Identifying Right Front Wheel With Studs
Courtesy of AMERICAN HONDA MOTOR CO., INC.

5. Right Lower Ball Joint Lower Arm Side Disconnection
    1. Remove the flange bolt (A).
    2. Remove the flange nuts (B).

GETtheMANUALS.org

3. Disconnect the lower ball joint (C) from the lower arm.

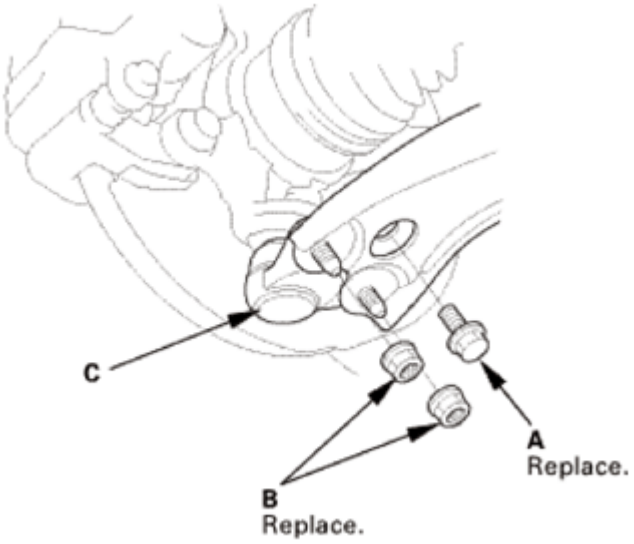

Fig. 1705: Identifying Lower Ball Joint, Flange Bolt And Flange Nuts
Courtesy of AMERICAN HONDA MOTOR CO., INC.

6. Right Front Driveshaft Inboard Side - Disconnection
   1. Drive the inboard joint (A) off of the intermediate shaft using a drift punch and a hammer.

NOTE: Do not pull on the driveshaft or the inboard joint may come apart.

Fig. 1706: Driving Inboard Joint Of Intermediate Shaft Using Drift Punch And Hammer
Courtesy of AMERICAN HONDA MOTOR CO., INC.

   2. Remove the set ring (A).

GETtheMANUALS.org

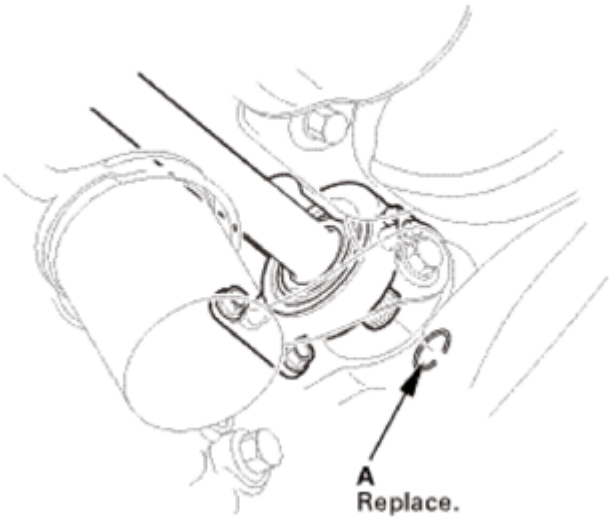

Fig. 1707: Identifying Set Ring
Courtesy of AMERICAN HONDA MOTOR CO., INC.

7. A/T Intermediate Shaft Assembly
    1. Remove the flange bolt (A) and the two dowel bolts (B).

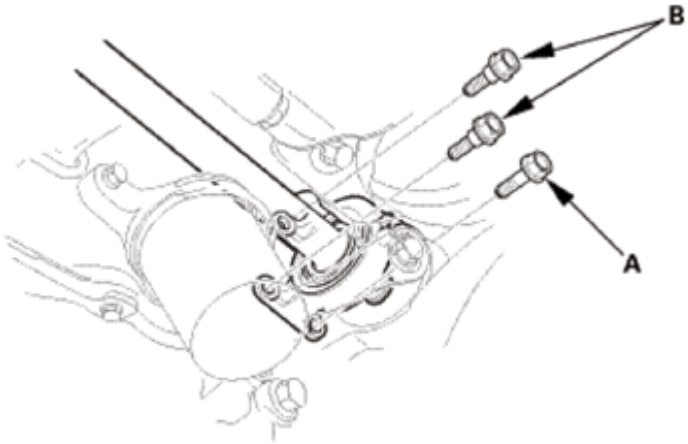

Fig. 1708: Identifying Flange Bolt And Dowel Bolts
Courtesy of AMERICAN HONDA MOTOR CO., INC.

    2. Remove the intermediate shaft (A) from the differential. Hold the intermediate shaft horizontal until it is clear of the differential to prevent damaging the oil seal (B).

GETtheMANUALS.org

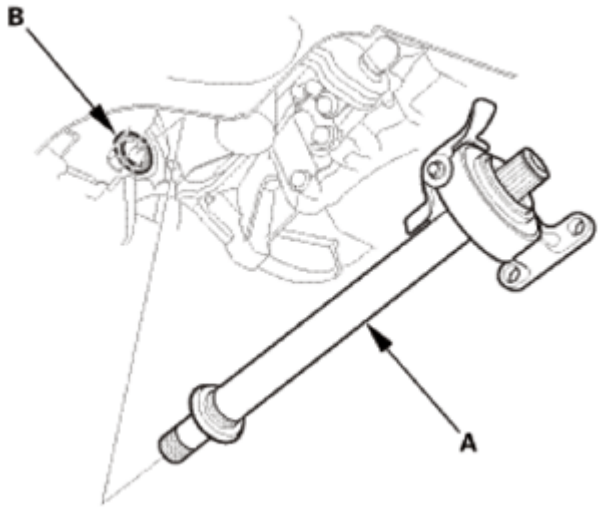

Fig. 1709: Identifying Intermediate Shaft And Oil Seal
Courtesy of AMERICAN HONDA MOTOR CO., INC.

INSTALLATION

1. A/T Intermediate Shaft Assembly
    1. Clean the areas where the intermediate shaft contacts the differential thoroughly with solvent, and dry them with compressed air.

        NOTE: Do not wash the rubber parts with solvent.

    2. Insert the intermediate shaft (A) into the differential correctly.

        NOTE: Insert the intermediate shaft carefully to prevent damaging the oil seal (B).

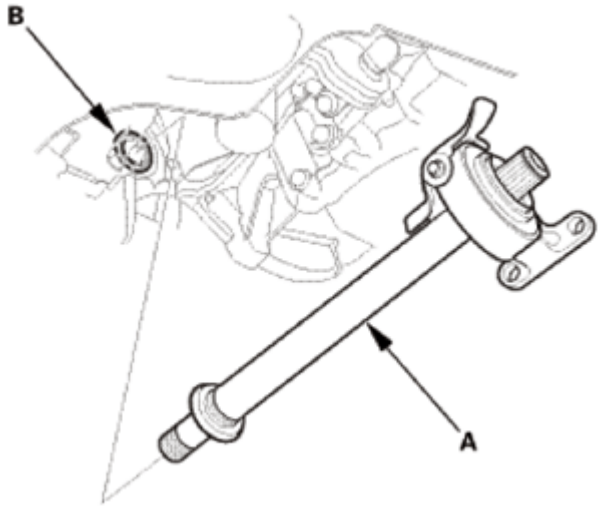

GETtheMANUALS.org

Fig. 1710: Identifying Intermediate Shaft And Oil Seal
Courtesy of AMERICAN HONDA MOTOR CO., INC.

3. Install the two dowel bolts (A) and the flange bolt (B).

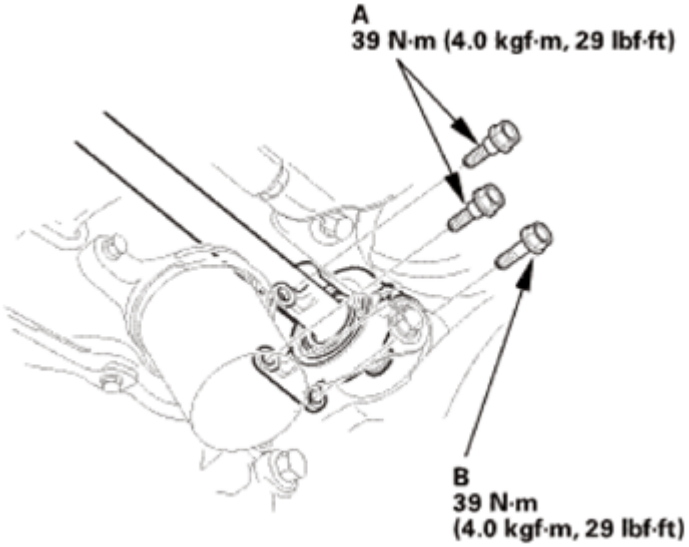

Fig. 1711: Identifying Dowel Bolts And Flange Bolt With Torque Specification
Courtesy of AMERICAN HONDA MOTOR CO., INC.

2. Right Front Driveshaft Inboard Side - Reconnection
    1. Install a new set ring (A).

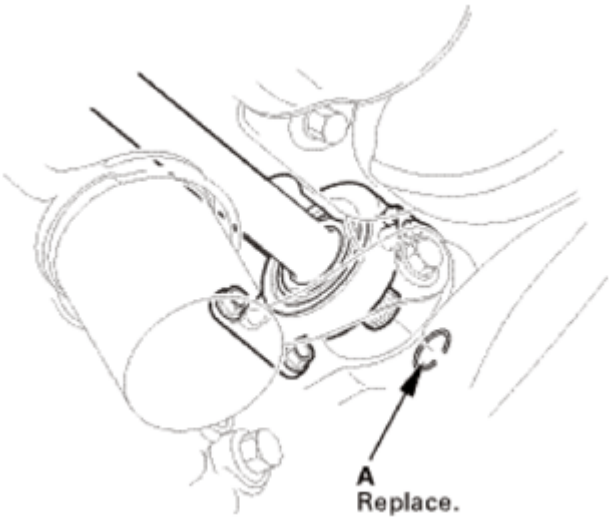

Fig. 1712: Identifying Set Ring Of Right Front Driveshaft Inboard Side
Courtesy of AMERICAN HONDA MOTOR CO., INC.

2. Apply 0.5-1.0 g (0.018-0.035 oz) of super high temp urea grease (P/N 08798-9002) to the whole splined surface (A) of the right driveshaft.

GETtheMANUALS.org

3. After applying grease, remove the grease from the splined grooves at intervals of 2-3 splines and from the set ring groove (B) so that air can bleed from the intermediate shaft.

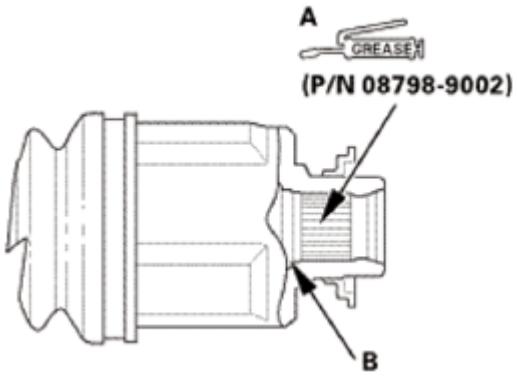

Fig. 1713: Identifying Super High Temp Urea Grease Applying Area On Whole Splined Surface Of Right Driveshaft
Courtesy of AMERICAN HONDA MOTOR CO., INC.

4. Insert the inboard end (A) of the driveshaft onto the intermediate shaft (B) until the set ring (C) lock in the groove (D).

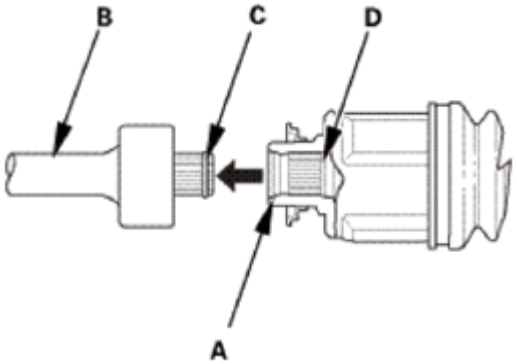

Fig. 1714: Inserting Inboard End Of Driveshaft Onto Intermediate Shaft Until Set Ring Lock In Groove
Courtesy of AMERICAN HONDA MOTOR CO., INC.

3. Right Lower Ball Joint Lower Arm Side Reconnection
   1. Connect the lower ball joint (A) to the lower arm.
   2. Install new flange nuts and a new flange bolt in the sequence shown.

GETtheMANUALS.org

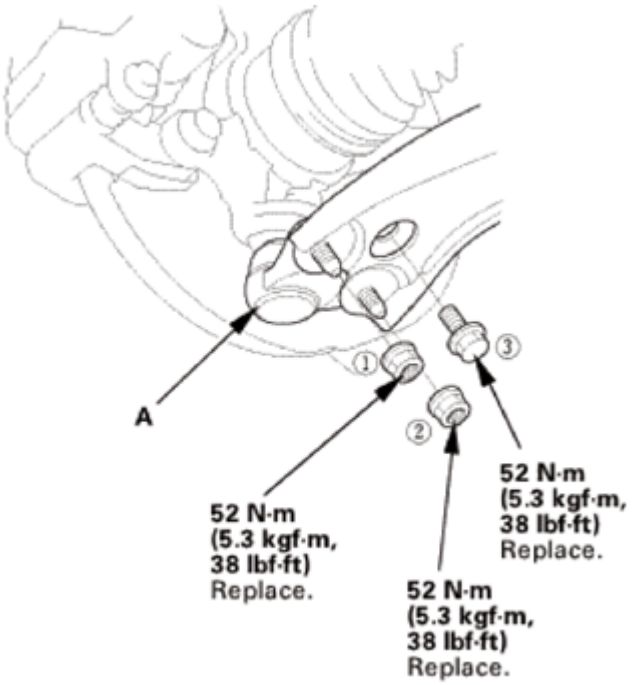

Fig. 1715: Identifying Lower Ball Joint, Flange Nuts And Bolt With Torque Specification
Courtesy of AMERICAN HONDA MOTOR CO., INC.

4. Right Front Wheel
    1. Install the right front wheel.

Fig. 1716: Identifying Right Front Wheel And Studs With Torque Specification
Courtesy of AMERICAN HONDA MOTOR CO., INC.

GETtheMANUALS.org

5. ATF - Replacement
    1. Remove the ATF dipstick (yellow loop) (A), and wipe it with a clean cloth.

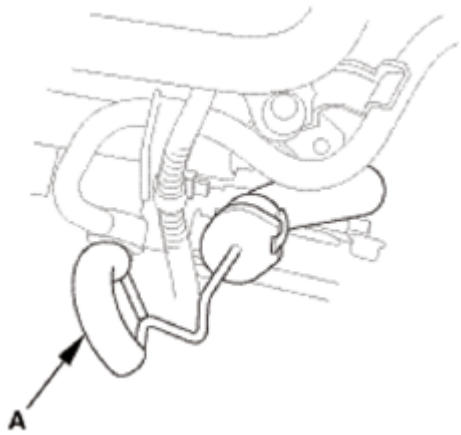

Fig. 1717: Identifying ATF Dipstick (Yellow Loop)
Courtesy of AMERICAN HONDA MOTOR CO., INC.

    2. Refill the transmission with the recommended fluid into the dipstick guide tube opening (A) to bring the fluid level between the upper mark and the lower mark of the dipstick. Always use ATF DW-1 (genuine Honda automatic transmission fluid). Using a non-Honda ATF can affect shift quality.

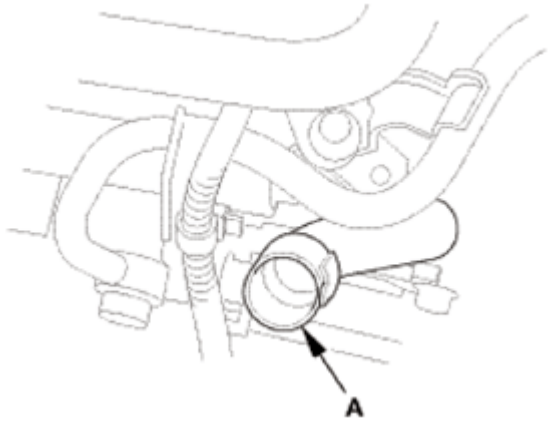

Fig. 1718: Identifying Dipstick Guide Tube Opening
Courtesy of AMERICAN HONDA MOTOR CO., INC.

Automatic Transmission Fluid Capacity

2WD:

2.2 L (2.3 US qt) at change

5.85 L (6.18 US qt) at overhaul

GETtheMANUALS.org

AWD/4WD:

2.6 L (2.7 US qt) at change

6.4 L (6.8 US qt) at overhaul

3. Insert the dipstick (A) into the guide tube aligning the notch (B) with the guide tab (C).

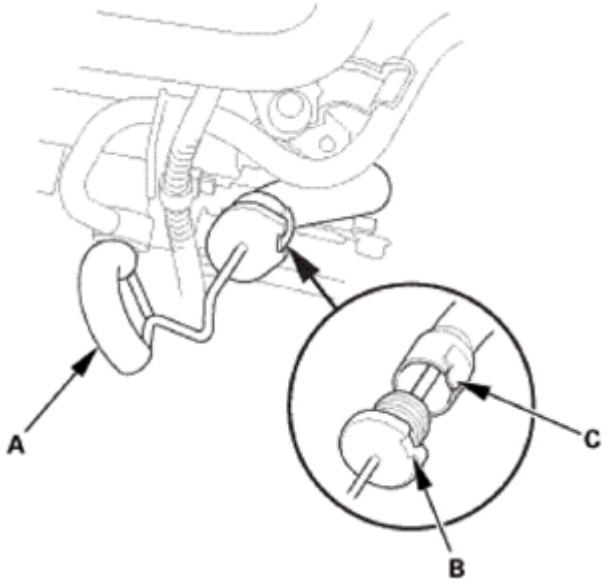

Fig. 1719: Identifying Dipstick, Notch And Guide Tab
Courtesy of AMERICAN HONDA MOTOR CO., INC.

4. Remove the dipstick.
5. Make sure the fluid level is between the upper mark (A) and the lower mark (B) on the dipstick.
6. Insert the dipstick into the guide tube aligning the notch with the guide tab.

GETtheMANUALS.org

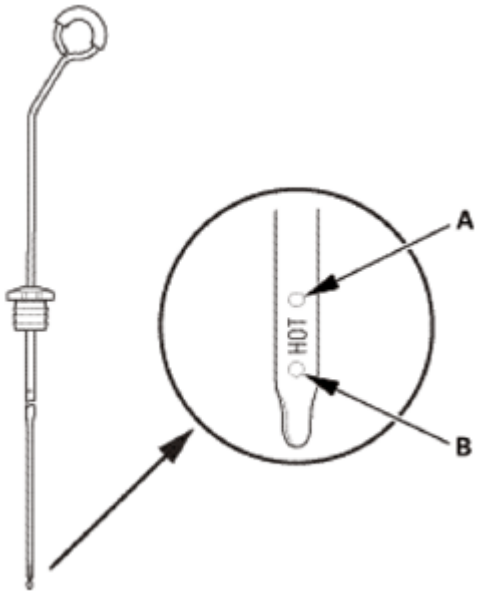

Fig. 1720: Identifying Upper And Lower Mark On Dipstick
Courtesy of AMERICAN HONDA MOTOR CO., INC.

6. Front Splash Shield
    1. Install the front splash shield (A), then install the bolts (B) and the clips (C, D). Make sure the clips snap into place securely.

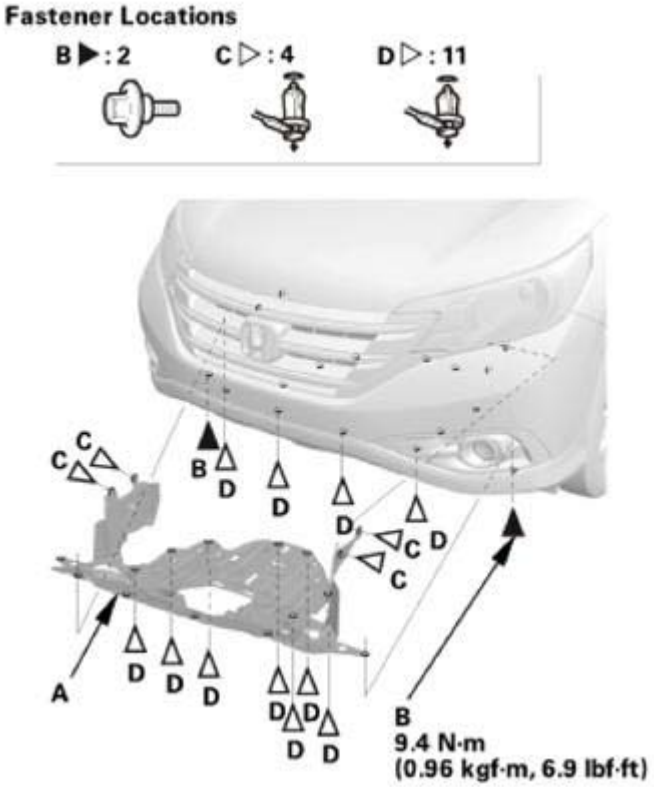

GETtheMANUALS.org

Fig. 1721: Identifying Front Splash Shield, Bolts And Clips With Torque Specification
Courtesy of AMERICAN HONDA MOTOR CO., INC.

7. Pre-Alignment Checks

   For proper inspection and adjustment of the wheel alignment, do these checks:

   1. Release the parking brake to avoid an incorrect measurement.
   2. Make sure the suspension is not modified.
   3. Make sure the fuel tank is full, and that the spare tire, the jack, and the tools are in place on the vehicle.
   4. Check the tire size and tire pressure according to tire information.
   5. Set the steering column to the middle tilt position and telescopic position.

8. Caster - Inspection

   Use commercially available computerized four wheel alignment equipment to measure wheel alignment (caster, camber, toe, and turning angle). Follow the equipment manufacturer's instructions.

   1. Check the caster angle.

      Caster angle:

      2WD:

      With 16 inch wheel: 2 ° 44 '±30 '

      Without 16 inch wheel: 2 ° 50 '±30 '

      AWD/4WD:

      With 16 inch wheel: 2 ° 38 '±30 '

      Without 16 inch wheel: 2 ° 44 '±30 '

      - If the measurement is within specifications, measure the front camber angle.
      - If the measurement is not within specifications, check for bent or damaged suspension components.

9. Camber - Inspection

   Use commercially available computerized four wheel alignment equipment to measure wheel alignment (caster, camber, toe, and turning angle). Follow the equipment manufacturer's instructions.

   1. Check the camber angle.

      Camber angle:

GETtheMANUALS.org

2WD:

Front:

With 16 inch wheel: -0 ° 01 '±1 ° 00 '

Without 16 inch wheel: -0 ° 10 '±1 ° 00 '

(Maximum difference between the front right and left side: 1 °00 ')

Rear:

With 16 inch wheel: -1 ° 06 '±45 '

Without 16 inch wheel: -1 ° 12 '±45 '

(Maximum difference between the front right and left side: 0 °45 ')

AWD/4WD:

Front:

With 16 inch wheel: -0 ° 08 '±1 ° 00 '

Without 16 inch wheel: 0 ° 00 '±1 ° 00 '

(Maximum difference between the front right and left side: 1 °00 ')

Rear:

With 16 inch wheel: -0 ° 50 '±45 '

Without 16 inch wheel: -1 ° 00 '±45 '

(Maximum difference between the front right and left side: 0 °45 ')

- If the measurement is within specification, measure the toe-in.
- If the measurement for the front camber is not within the specification, go to front camber adjustment.
- If the measurement for the rear camber is not within the specification, check for bent or damaged suspension components.

10. Front Toe - Inspection

Use commercially available computerized four wheel alignment equipment to measure wheel alignment (caster, camber, toe, and turning angle). Follow the equipment manufacturer's instructions.

GETtheMANUALS.org

1. Set the steering column to the middle tilt position and telescopic positions.
2. Center the steering wheel spokes, and install a steering wheel holder tool.
3. Check the toe with the wheels pointed straight ahead.

   Front toe-in: 0±2 mm (0±0.08 in)

   - If adjustment is required, go to the front toe adjustment.
   - If no adjustment is required, remove the alignment equipment.

11. Turning Angle - Inspection

Use commercially available computerized four wheel alignment equipment to measure wheel alignment (caster, camber, toe, and turning angle). Follow the equipment manufacturer's instructions.

1. Turn the wheel right and left while applying the brake, and measure the turning angle of both wheels.

   Turning angle:

   2WD:

   Inward:

   With 16 inch wheel: 36 ° 29 '±2 °

   Without 16 inch wheel: 36 ° 13 '±2 °

   Outward (reference):

   With 16 inch wheel: 31 ° 13 '

   Without 16 inch wheel: 31 ° 02 '

   AWD/4WD:

   Inward:

   With 16 inch wheel: 36 ° 48 '±2 °

   Without 16 inch wheel: 36 ° 30 '±2 °

   Outward (reference):

   With 16 inch wheel: 31 ° 18 '

   Without 16 inch wheel: 31 ° 12 '

GETtheMANUALS.org

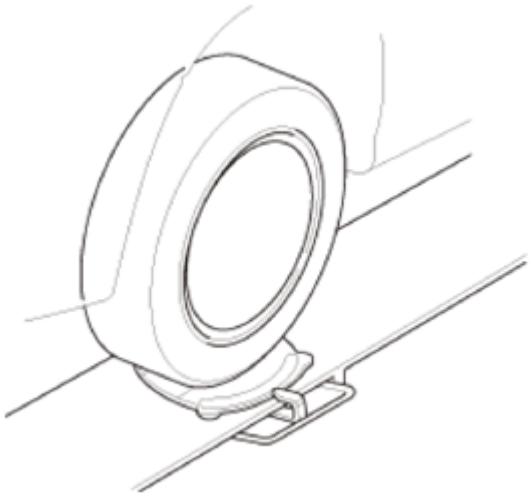

Fig. 1722: Measuring Wheel Alignment (Caster, Camber, Toe And Turning Angle)
Courtesy of AMERICAN HONDA MOTOR CO., INC.

2. If the measurement is not within the specifications, even up both sides of the tie-rod threaded section length while adjusting the front toe.
3. If it is correct, but the turning angle is not within the specifications, check for bent or damaged suspension components.

12. Warm Up The Engine
    1. Start the engine. Hold the engine speed at 3, 000 rpm without load in P or N until the radiator fan comes on.
    2. Park the vehicle on level ground.
    3. Turn the ignition switch to LOCK (0).
13. ATF Level Check

NOTE:

- **Keep all foreign particles out of the transmission.**
- **Check the fluid level within 60-90 seconds after turning the engine off.**
- **Higher fluid level may be indicated if the radiator fan comes on twice or more.**

1. Remove the ATF dipstick (yellow loop) (A), and wipe it with a clean cloth.
2. Insert the dipstick into the guide tube aligning the notch (B) with the guide tab (C).

GETtheMANUALS.org

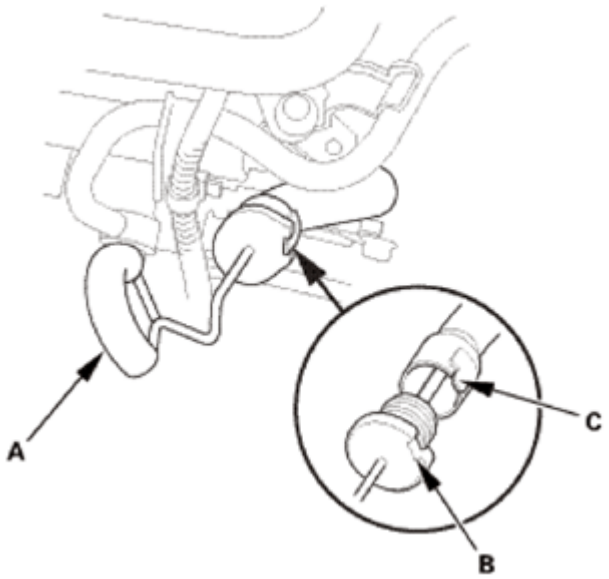

Fig. 1723: Identifying Notch, Tab And ATF Dipstick (Yellow Loop)
Courtesy of AMERICAN HONDA MOTOR CO., INC.

3. Remove the dipstick, and check the ATF level. It should be between the upper mark (A) and the lower mark (B).
4. If the ATF level is below the lower mark, check for fluid leaks at the transmission, the hoses, and the line joints. If a problem is found, fix it before filling the transmission with ATF.

NOTE: **If the vehicle is driven when the ATF level is below the lower mark, one or more of these symptoms may occur:**

- **Transmission damage.**
- **Vehicle does not move in any gear.**
- **Vehicle accelerates poorly, and engine revs up abnormally high when starting off in forward and reverse positions.**
- **Engine vibrates at idle.**

5. If the ATF level is above the upper mark, drain the ATF to proper level.

NOTE: **If the vehicle is driven when the ATF level is above the upper mark, the vehicle may creep forward while in N, or have shifting problems.**

GETtheMANUALS.org

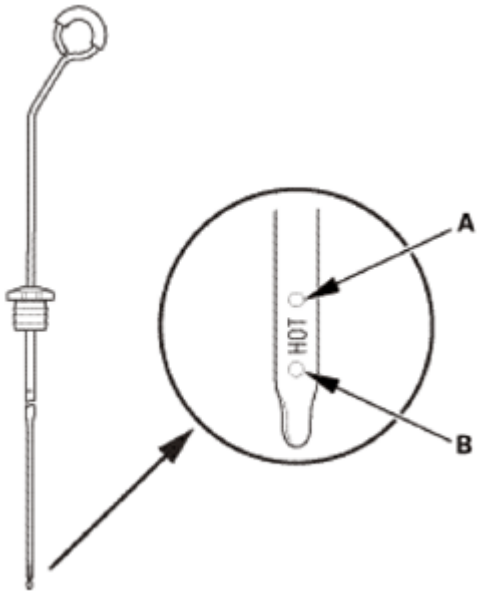

Fig. 1724: Identifying Upper And Lower Mark On Dipstick
Courtesy of AMERICAN HONDA MOTOR CO., INC.

6. If necessary, fill the transmission with ATF through the dipstick guide tube opening (A) to bring the fluid level between the upper mark and the lower mark of the dipstick. Do not fill the fluid above the upper mark. Always use ATF DW-1 (genuine Honda automatic transmission fluid). Using a non-Honda ATF can affect shift quality.
7. Insert the dipstick into the guide tube aligning the notch with the guide tab.

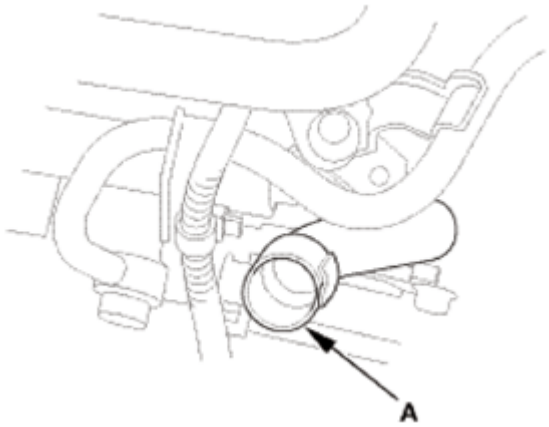

Fig. 1725: Identifying Dipstick Guide Tube Opening
Courtesy of AMERICAN HONDA MOTOR CO., INC.

14. Test Drive
    1. Test-drive the vehicle.
15. HDS DLC - Connection
    1. Connect the HDS to the data link connector (DLC) (A) located under the driver's side of the

GETtheMANUALS.org

dashboard.

2. Turn the ignition switch to ON (II).
3. Make sure the HDS communicates with the vehicle. If it does not communicate, go to the DLC circuit troubleshooting.

Fig. 1726: Identifying Data Link Connector Located Under Driver's Side Of Dashboard
Courtesy of AMERICAN HONDA MOTOR CO., INC.

16. VSA Sensor Neutral Position - Memorization
    1. Park the vehicle on a flat and level surface, with the steering wheel in the straight ahead position.
    2. Select VSA ADJUSTMENT, then select ALL SENSORS with the HDS, and follow the screen prompts.

    NOTE: See the HDS Help menu for specific instructions.

17. Steering Angle Sensor Neutral Position - Clear
    1. Select EPS ADJUSTMENT, then select EPS STEERING ANGLE SENSOR VALUE CLEAR and follow the screen prompts on the HDS.

    NOTE: See the HDS Help menu for specific instructions.

18. Maintenance Minder Reset
    1. **RESET THE MAINTENANCE MINDER** .

LEFT A/T DIFFERENTIAL OIL SEAL REPLACEMENT

SPECIAL TOOL REQUIRED

Image	Description/Tool Number

GETtheMANUALS.org

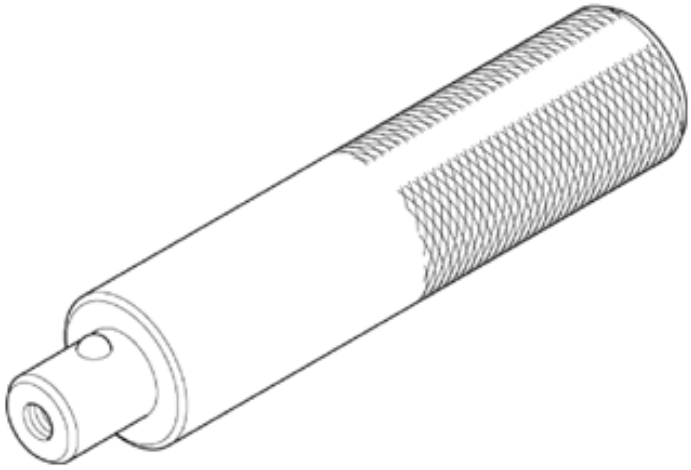	Driver Handle, 15 x 135L 07749-0010000
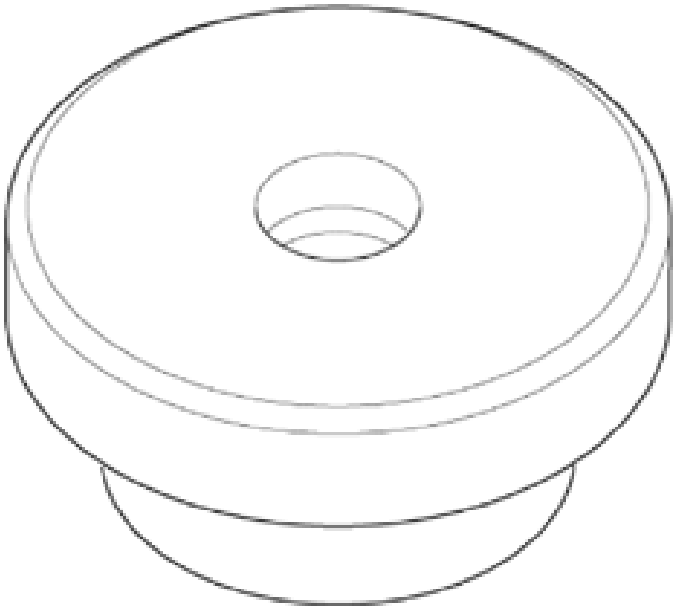	Oil Seal Driver Attachment 07GAD-PG40100

REMOVAL

1. Vehicle Lift
    1. Raise the vehicle on a lift, and make sure it is securely supported.
2. Left Front Wheel
    1. Remove the left front wheel.

GETtheMANUALS.org

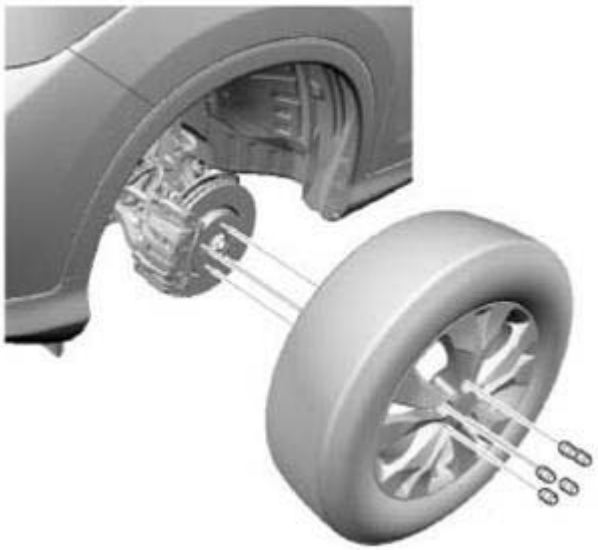

Fig. 1727: Identifying Left Front Wheel With Studs
Courtesy of AMERICAN HONDA MOTOR CO., INC.

3. Front Splash Shield
    1. Remove the bolts (A), then remove the clips (B) that secure the front inner fender and the front splash shield (C) to the body.
    2. From under the front bumper (D), remove the clips (E).
    3. From under the body, remove the clips (F), then pull out the front splash shield.

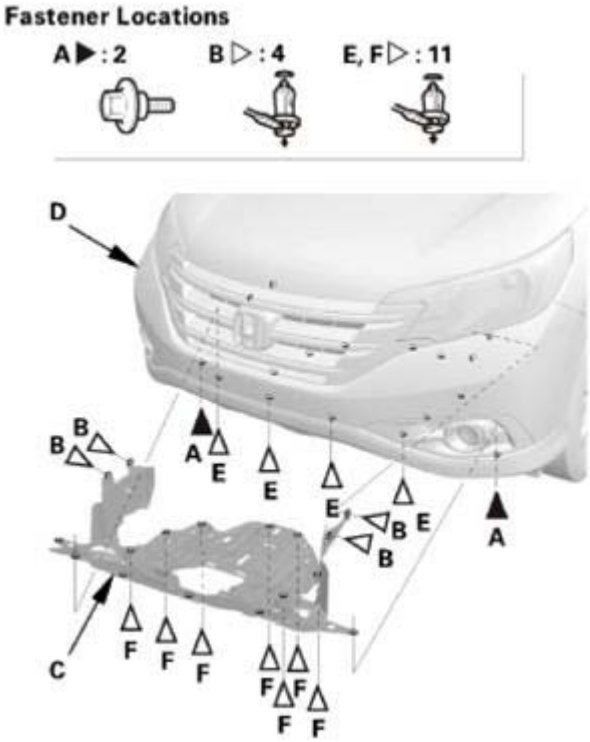

GETtheMANUALS.org

Fig. 1728: Identifying Front Splash Shield, Front Bumper, Bolts And Clips
Courtesy of AMERICAN HONDA MOTOR CO., INC.

4. ATF - Replacement
    1. Remove the drain plug (A), and drain the ATF.
    2. Reinstall the drain plug using a new sealing washer (B).

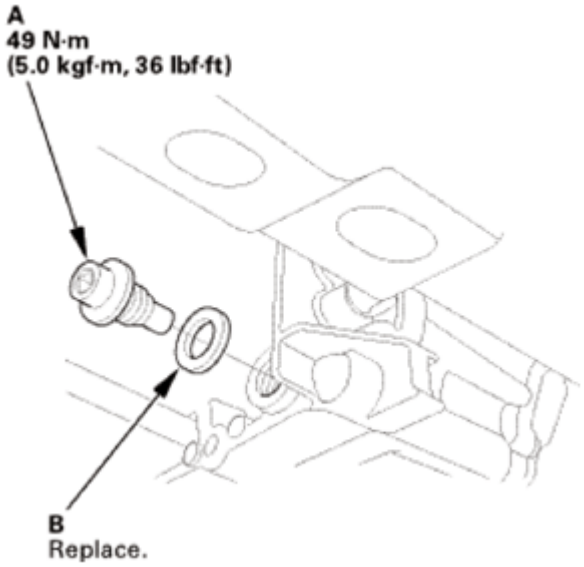

Fig. 1729: Identifying Drain Plug And Sealing Washer With Torque Specification
Courtesy of AMERICAN HONDA MOTOR CO., INC.

5. Lower Ball Joint Lower Arm Side - Disconnection
    1. Remove the flange bolt (A).
    2. Remove the flange nuts (B).
    3. Disconnect the lower arm (C) from the front lower ball joint (D).

GETtheMANUALS.org

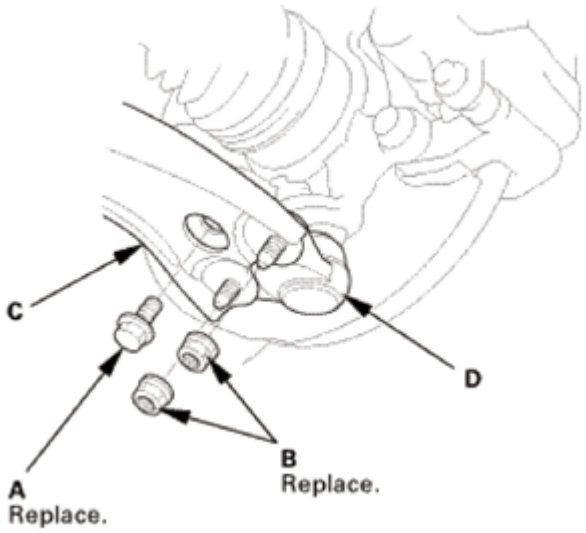

Fig. 1730: Identifying Lower Arm, Front Lower Ball Joint, Flange Nuts And Bolts
Courtesy of AMERICAN HONDA MOTOR CO., INC.

6. Left Front Driveshaft, Inboard Side - Disconnection
    1. Pry the inboard joint (A) using a pry bar (B).

NOTE:

- **Do not pull on the driveshaft (C), or the inboard joint may come apart.**
- **Be careful not to damage the inboard joint using the pry bar.**

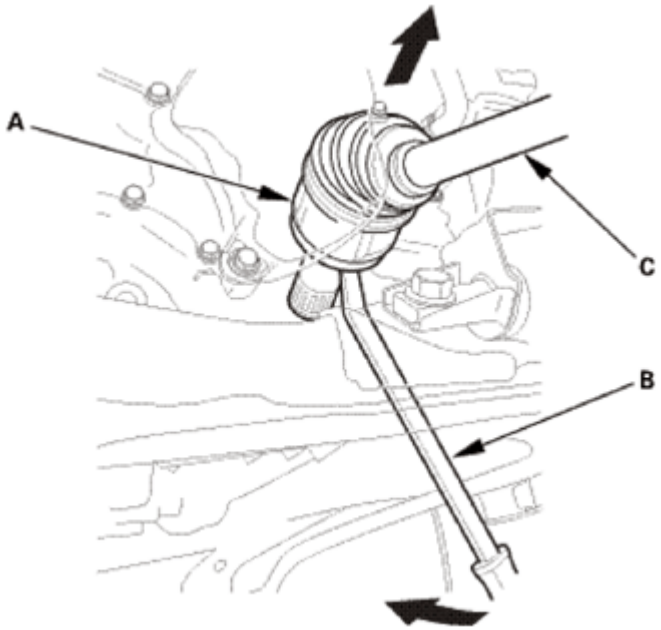

Fig. 1731: Prying Inboard Joint Using Pry Bar
Courtesy of AMERICAN HONDA MOTOR CO., INC.

GETtheMANUALS.org

2. Remove the set ring (A).

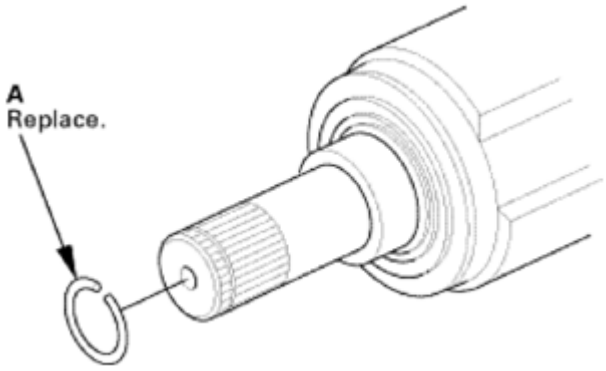

Fig. 1732: Identifying Set Ring
Courtesy of AMERICAN HONDA MOTOR CO., INC.

7. Left Differential Oil Seal
    1. Remove the oil seal (A) using the pry bar (B).

NOTE: **Be careful not to damage the transmission housing while removing the oil seal.**

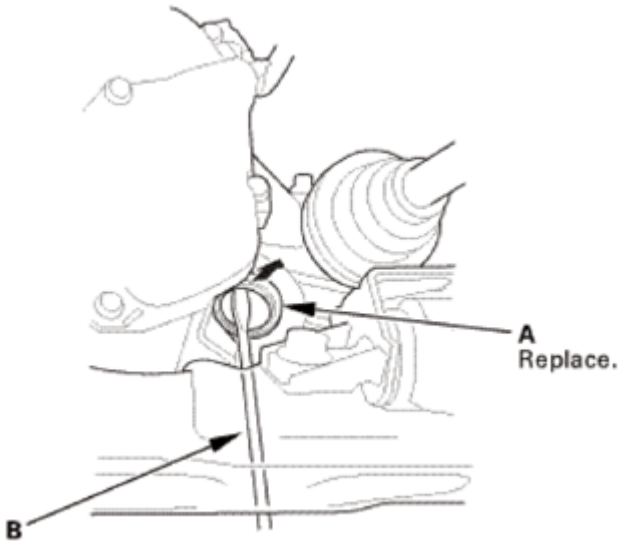

Fig. 1733: Removing Oil Seal Using Pry Bar
Courtesy of AMERICAN HONDA MOTOR CO., INC.

INSTALLATION

1. Left Differential Oil Seal
    1. Install a new oil seal (A) flush with the transmission housing using the driver handle and the oil seal driver attachment.

GETtheMANUALS.org

NOTE: **Apply a light coat of clean ATF on oil seal before installation.**

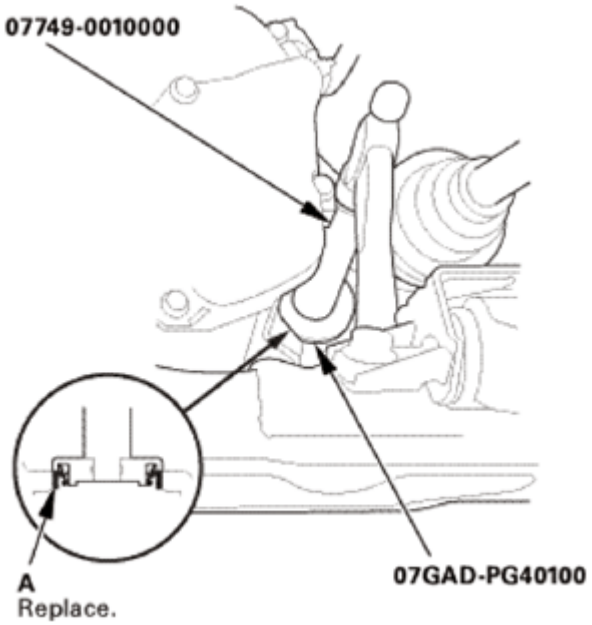

Fig. 1734: Installing Oil Seal Flush With Transmission Housing Using Driver Handle And Oil Seal Driver Attachment
Courtesy of AMERICAN HONDA MOTOR CO., INC.

2. Left Front Driveshaft, Inboard Side - Reconnection
    1. Install a new set ring (A) into the set ring groove (B) of the driveshaft.

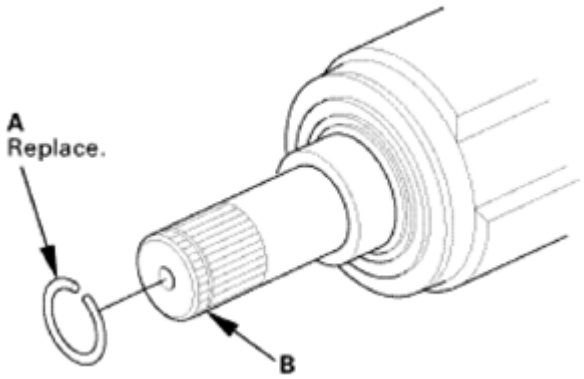

Fig. 1735: Identifying Set Ring And Set Ring Groove Of Driveshaft
Courtesy of AMERICAN HONDA MOTOR CO., INC.

    2. Clean the areas where the driveshaft contacts the differential thoroughly with solvent, and dry them with compressed air.

NOTE: **Do not wash the rubber parts with solvent.**

GETtheMANUALS.org

3. Insert the inboard end (A) of the driveshaft into the differential (B) until the set ring (C) locks in the groove (D).

NOTE: Insert the driveshaft horizontally to prevent damaging the oil seal.

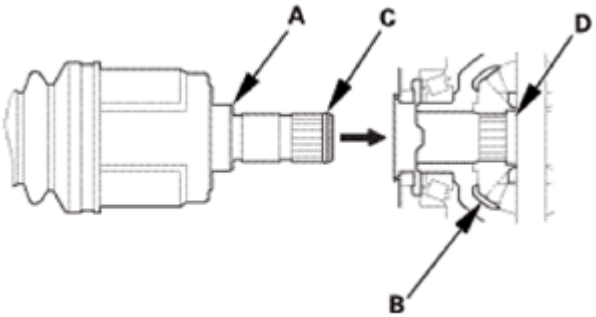

Fig. 1736: Inserting Inboard End Of Driveshaft Into Differential Until Set Ring Locks In Groove
Courtesy of AMERICAN HONDA MOTOR CO., INC.

3. Front Lower Ball Joint Lower Arm Side - Reconnection
   1. Connect the front lower ball joint (A) to the lower arm.
   2. Install the new flange nuts and the new flange bolt in the sequence shown.

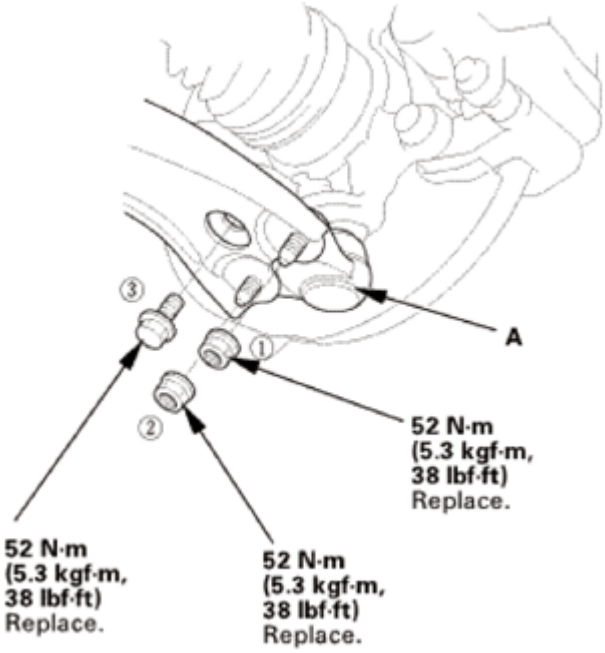

Fig. 1737: Identifying Front Lower Ball Joint, Flange Nuts And Bolt Tightening Sequence
Courtesy of AMERICAN HONDA MOTOR CO., INC.

4. Front Splash Shield

GETtheMANUALS.org

1. Install the front splash shield (A), then install the bolts (B) and the clips (C, D). Make sure the clips snap into place securely.

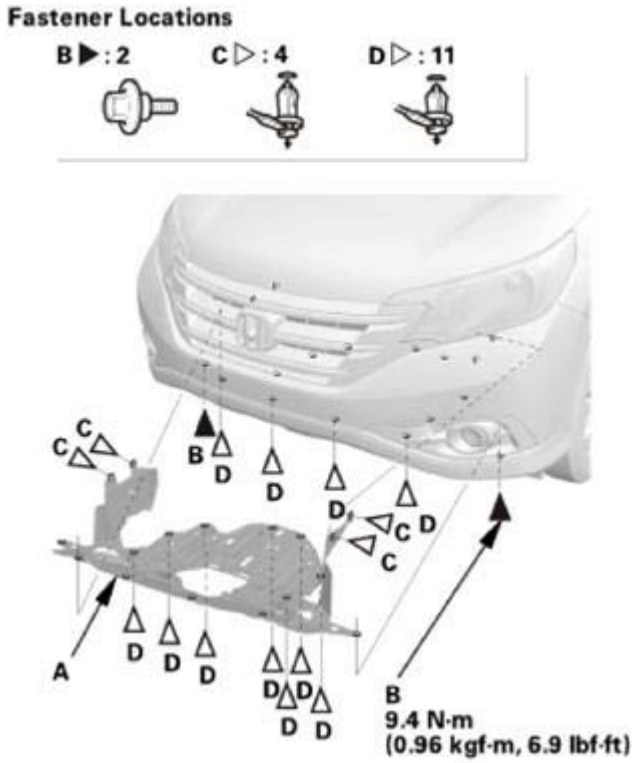

Fig. 1738: Identifying Front Splash Shield, Bolts And Clips With Torque Specification
Courtesy of AMERICAN HONDA MOTOR CO., INC.

5. Left Front Wheel
    1. Install the left front wheel.

GETtheMANUALS.org

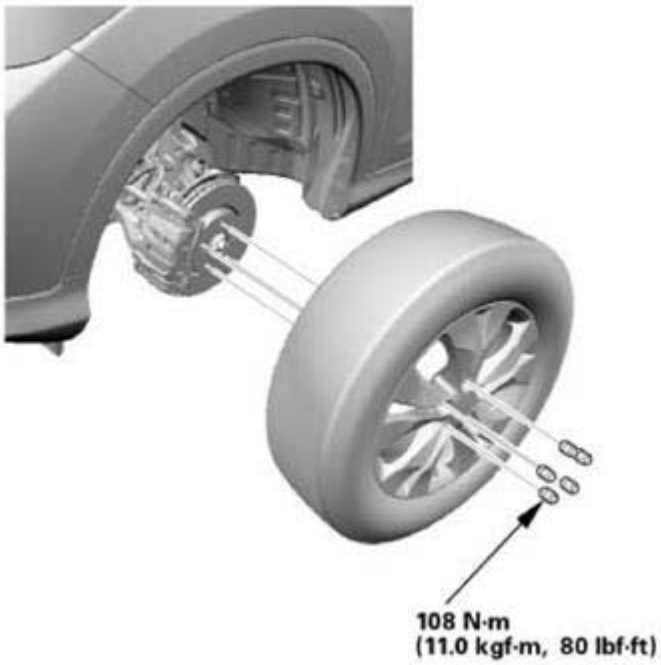

Fig. 1739: Identifying Left Front Wheel And Studs With Torque Specification
Courtesy of AMERICAN HONDA MOTOR CO., INC.

6. Driveshaft After Install Check
    1. Turn the wheel by hand, and make sure there is no interference between the driveshaft and surrounding parts.
7. ATF - Replacement
    1. Remove the ATF dipstick (yellow loop) (A), and wipe it with a clean cloth.

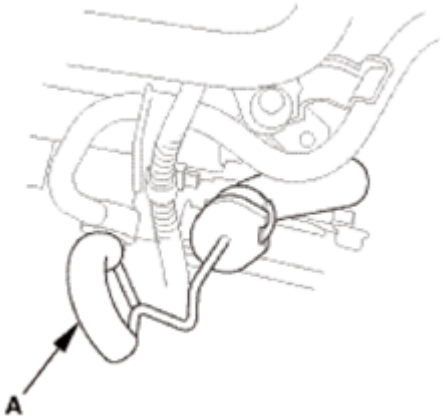

Fig. 1740: Identifying ATF Dipstick (Yellow Loop)
Courtesy of AMERICAN HONDA MOTOR CO., INC.

    2. Refill the transmission with the recommended fluid into the dipstick guide tube opening (A) to bring the fluid level between the upper mark and the lower mark of the dipstick. Always use ATF

GETtheMANUALS.org

DW-1 (genuine Honda automatic transmission fluid). Using a non-Honda ATF can affect shift quality.

Automatic Transmission Fluid Capacity

2WD:

2.2 L (2.3 US qt) at change

5.85 L (6.18 US qt) at overhaul

AWD/4WD:

2.6 L (2.7 US qt) at change

6.4 L (6.8 US qt) at overhaul

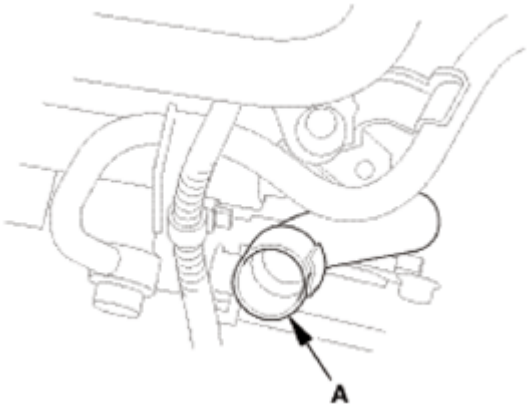

Fig. 1741: Identifying Dipstick Guide Tube Opening
Courtesy of AMERICAN HONDA MOTOR CO., INC.

3. Insert the dipstick (A) into the guide tube aligning the notch (B) with the guide tab (C).

GETtheMANUALS.org

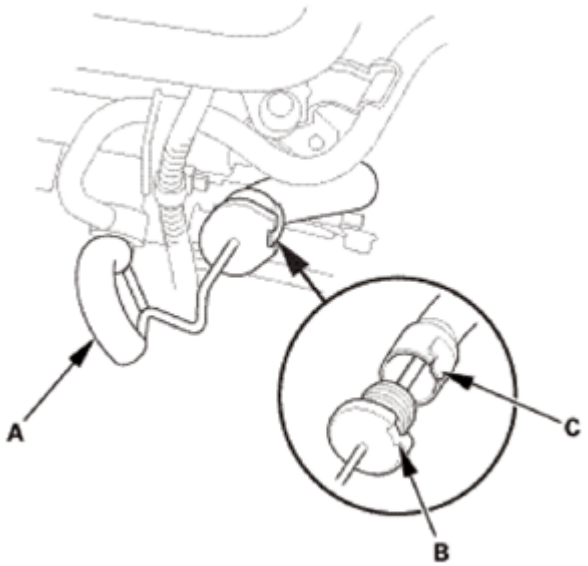

Fig. 1742: Identifying Dipstick, Notch And Guide Tab
Courtesy of AMERICAN HONDA MOTOR CO., INC.

4. Remove the dipstick.
5. Make sure the fluid level is between the upper mark (A) and the lower mark (B) on the dipstick.
6. Insert the dipstick into the guide tube aligning the notch with the guide tab.

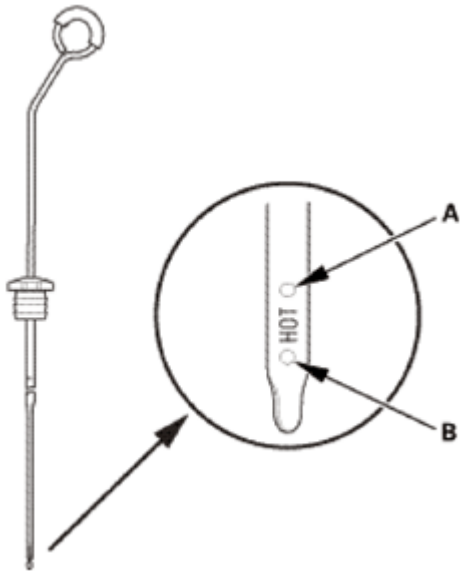

Fig. 1743: Identifying Upper And Lower Mark On Dipstick
Courtesy of AMERICAN HONDA MOTOR CO., INC.

8. Warm Up The Engine
    1. Start the engine. Hold the engine speed at 3, 000 rpm without load in P or N until the radiator fan comes on.

GETtheMANUALS.org

2. Park the vehicle on level ground.
3. Turn the ignition switch to LOCK (0).

9. ATF Level Check

NOTE:

- **Keep all foreign particles out of the transmission.**
- **Check the fluid level within 60-90 seconds after turning the engine off.**
- **Higher fluid level may be indicated if the radiator fan comes on twice or more.**

1. Remove the ATF dipstick (yellow loop) (A), and wipe it with a clean cloth.
2. Insert the dipstick into the guide tube aligning the notch (B) with the guide tab (C).

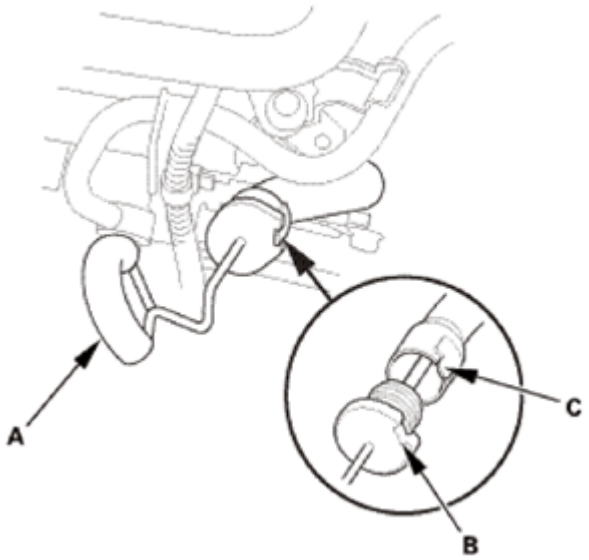

Fig. 1744: Identifying Notch, Tab And ATF Dipstick (Yellow Loop)
Courtesy of AMERICAN HONDA MOTOR CO., INC.

3. Remove the dipstick, and check the ATF level. It should be between the upper mark (A) and the lower mark (B).

GETtheMANUALS.org

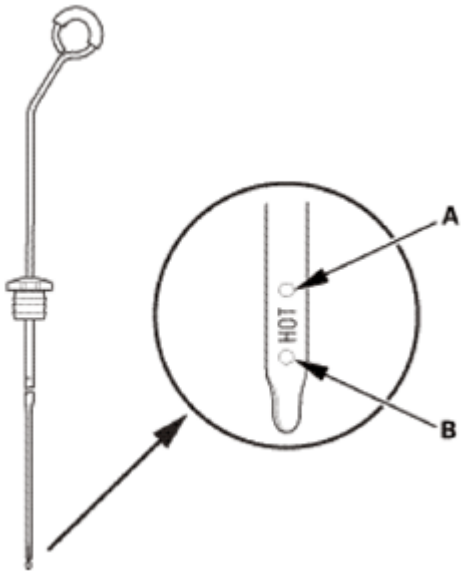

Fig. 1745: Identifying Upper And Lower Mark On Dipstick
Courtesy of AMERICAN HONDA MOTOR CO., INC.

4. If the ATF level is below the lower mark, check for fluid leaks at the transmission, the hoses, and the line joints. If a problem is found, fix it before filling the transmission with ATF.

NOTE: **If the vehicle is driven when the ATF level is below the lower mark, one or more of these symptoms may occur:**

- **Transmission damage.**
- **Vehicle does not move in any gear.**
- **Vehicle accelerates poorly, and engine revs up abnormally high when starting off in forward and reverse positions.**
- **Engine vibrates at idle.**

5. If the ATF level is above the upper mark, drain the ATF to proper level.

NOTE: **If the vehicle is driven when the ATF level is above the upper mark, the vehicle may creep forward while in N, or have shifting problems.**

6. If necessary, fill the transmission with ATF through the dipstick guide tube opening (A) to bring the fluid level between the upper mark and the lower mark of the dipstick. Do not fill the fluid above the upper mark. Always use ATF DW-1 (genuine Honda automatic transmission fluid). Using a non-Honda ATF can affect shift quality.
7. Insert the dipstick into the guide tube aligning the notch with the guide tab.

GETtheMANUALS.org

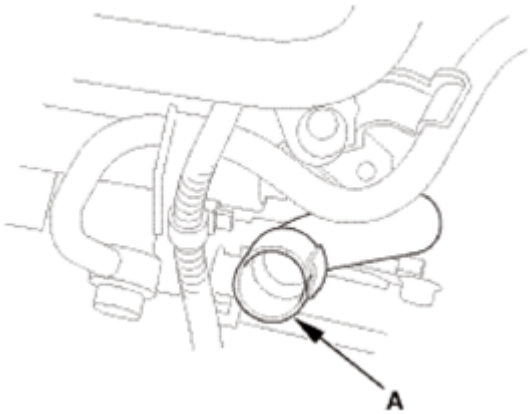

Fig. 1746: Identifying Dipstick Guide Tube Opening
Courtesy of AMERICAN HONDA MOTOR CO., INC.

10. Pre-Alignment Checks

    For proper inspection and adjustment of the wheel alignment, do these checks:

    1. Release the parking brake to avoid an incorrect measurement.
    2. Make sure the suspension is not modified.
    3. Make sure the fuel tank is full, and that the spare tire, the jack, and the tools are in place on the vehicle.
    4. Check the tire size and tire pressure according to tire information.
    5. Set the steering column to the middle tilt position and telescopic position.
11. Caster - Inspection

    Use commercially available computerized four wheel alignment equipment to measure wheel alignment (caster, camber, toe, and turning angle). Follow the equipment manufacturer's instructions.

    1. Check the caster angle.

       Caster angle:

       2WD:

       With 16 inch wheel: 2 ° 44 '±30 '

       Without 16 inch wheel: 2 ° 50 '±30 '

       AWD/4WD:

       With 16 inch wheel: 2 ° 38 '±30 '

       Without 16 inch wheel: 2 ° 44 '±30 '

GETtheMANUALS.org

- If the measurement is within specifications, measure the front camber angle.
- If the measurement is not within specifications, check for bent or damaged suspension components.

12. Camber - Inspection

    Use commercially available computerized four wheel alignment equipment to measure wheel alignment (caster, camber, toe, and turning angle). Follow the equipment manufacturer's instructions.

    1. Check the camber angle.

       Camber angle:

       2WD:

       Front:

       With 16 inch wheel: -0 ° 01 '±1 ° 00 '

       Without 16 inch wheel: -0 ° 10 '±1 ° 00 '

       (Maximum difference between the front right and left side: 1 °00 ')

       Rear:

       With 16 inch wheel: -1 ° 06 '±45 '

       Without 16 inch wheel: -1 ° 12 '±45 '

       (Maximum difference between the front right and left side: 0 °45 ')

       AWD/4WD:

       Front:

       With 16 inch wheel: -0 ° 08 '±1 ° 00 '

       Without 16 inch wheel: 0 ° 00 '±1 ° 00 '

       (Maximum difference between the front right and left side: 1 °00 ')

       Rear:

       With 16 inch wheel: -0 ° 50 '±45 '

       Without 16 inch wheel: -1 ° 00 '±45 '

GETtheMANUALS.org

(Maximum difference between the front right and left side: 0 °45 ')

- If the measurement is within specification, measure the toe-in.
- If the measurement for the front camber is not within the specification, go to front camber adjustment.
- If the measurement for the rear camber is not within the specification, check for bent or damaged suspension components.

13. Front Toe - Inspection

Use commercially available computerized four wheel alignment equipment to measure wheel alignment (caster, camber, toe, and turning angle). Follow the equipment manufacturer's instructions.

1. Set the steering column to the middle tilt position and telescopic positions.
2. Center the steering wheel spokes, and install a steering wheel holder tool.
3. Check the toe with the wheels pointed straight ahead.

Front toe-in: 0±2 mm (0±0.08 in)

- If adjustment is required, go to the front toe adjustment.
- If no adjustment is required, remove the alignment equipment.

14. Turning Angle - Inspection

Use commercially available computerized four wheel alignment equipment to measure wheel alignment (caster, camber, toe, and turning angle). Follow the equipment manufacturer's instructions.

1. Turn the wheel right and left while applying the brake, and measure the turning angle of both wheels.

Turning angle:

2WD:

Inward:

With 16 inch wheel: 36 ° 29 '±2 °

Without 16 inch wheel: 36 ° 13 '±2 °

Outward (reference):

With 16 inch wheel: 31 ° 13 '

Without 16 inch wheel: 31 ° 02 '

GETtheMANUALS.org

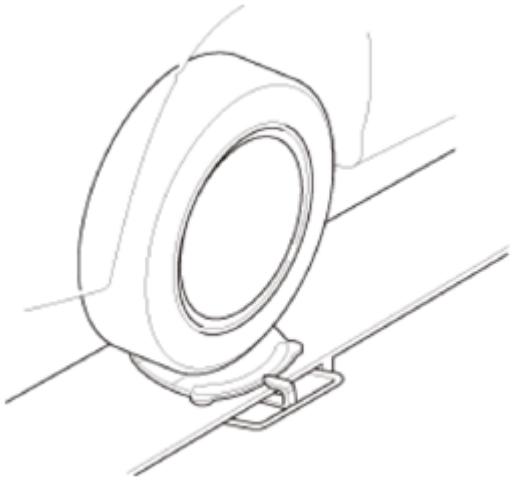

Fig. 1747: Measuring Wheel Alignment (Caster, Camber, Toe And Turning Angle)
Courtesy of AMERICAN HONDA MOTOR CO., INC.

AWD/4WD:

Inward:

With 16 inch wheel: 36 ° 48 '±2 °

Without 16 inch wheel: 36 ° 30 '±2 °

Outward (reference):

With 16 inch wheel: 31 ° 18 '

Without 16 inch wheel: 31 ° 12 '

2. If the measurement is not within the specifications, even up both sides of the tie-rod threaded section length while adjusting the front toe.
3. If it is correct, but the turning angle is not within the specifications, check for bent or damaged suspension components.

15. Test Drive
    1. Test-drive the vehicle.
16. HDS DLC - Connection
    1. Connect the HDS to the data link connector (DLC) (A) located under the driver's side of the dashboard.
    2. Turn the ignition switch to ON (II).
    3. Make sure the HDS communicates with the vehicle. If it does not communicate, go to the DLC circuit troubleshooting.

GETtheMANUALS.org

Fig. 1748: Identifying Data Link Connector Located Under Driver's Side Of Dashboard
Courtesy of AMERICAN HONDA MOTOR CO., INC.

17. Maintenance Minder Reset
    1. **RESET THE MAINTENANCE MINDER** .

OUTPUT SHAFT (COUNTERSHAFT) SPEED SENSOR REMOVAL AND INSTALLATION

REMOVAL

1. Air Cleaner Assembly
    1. Disconnect the MAF sensor/IAT sensor connector (A).
    2. Remove the harness clamp (B).
    3. Disconnect the intake air duct (C) and the intake air pipe (D).
    4. Remove the air cleaner (E).

GETtheMANUALS.org

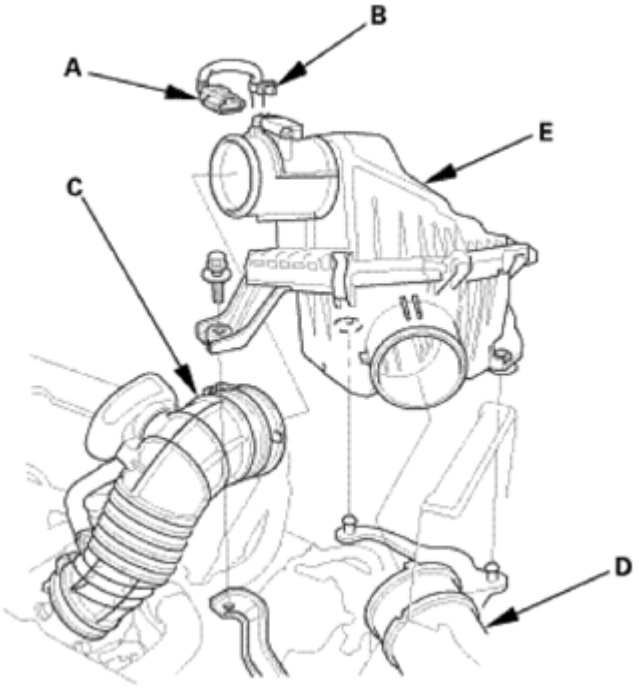

Fig. 1749: Identifying MAF Sensor/IAT Sensor Connector, Harness Clamp, Intake Air Duct, Intake Air Pipe And Air Cleaner
Courtesy of AMERICAN HONDA MOTOR CO., INC.

2. ATF Warmer - Move
    1. Remove the bolts (A) securing the ATF warmer (B), and move it out of the way.

NOTE: **Be careful not to damage the lines and fin part of the ATF warmer when moving ATF warmer.**

GETtheMANUALS.org

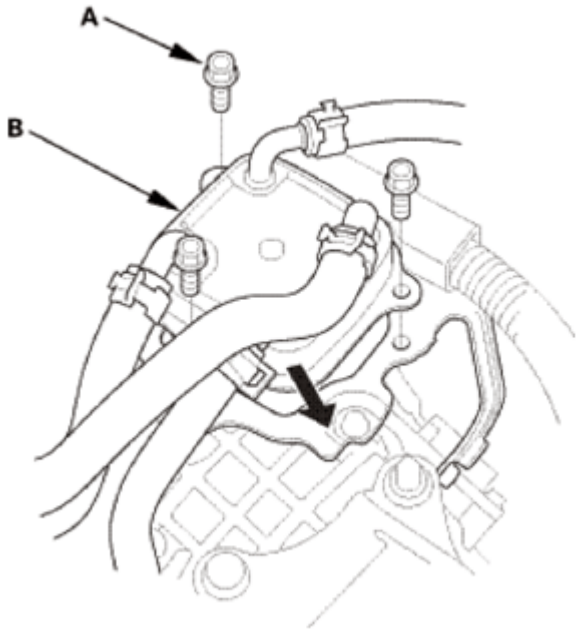

Fig. 1750: Removing ATF Warmer With bolts
Courtesy of AMERICAN HONDA MOTOR CO., INC.

3. Output Shaft (Countershaft) Speed Sensor
    1. Remove the output shaft (countershaft) speed sensor (A) and the sensor washer (B).
    2. Remove the O-ring (C) from the output shaft (countershaft) speed sensor.

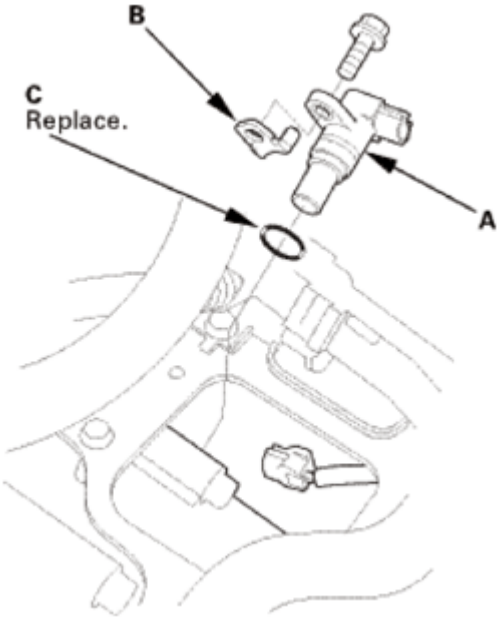

Fig. 1751: Identifying Output Shaft (Countershaft) Speed Sensor, Sensor Washer And O-Ring
Courtesy of AMERICAN HONDA MOTOR CO., INC.

GETtheMANUALS.org

INSTALLATION

1. Output Shaft (Countershaft) Speed Sensor
    1. Install a new O-ring (A) on the output shaft (countershaft) speed sensor (B).
    2. Install the output shaft (countershaft) speed sensor and the sensor washer (C).
    3. Check the connector (D) for corrosion, dirt, or oil, and clean or repair if necessary, then connect the connector securely.

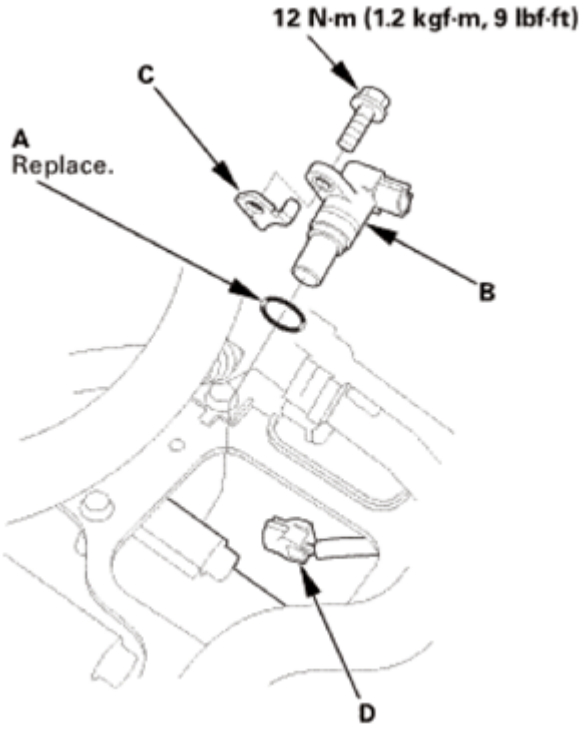

Fig. 1752: Identifying Output Shaft (Countershaft) Speed Sensor, O-Ring, Sensor Washer And Mounting Bolts With Torque Specification
Courtesy of AMERICAN HONDA MOTOR CO., INC.

2. ATF Warmer - Move
    1. Install the ATF warmer (A).

GETtheMANUALS.org

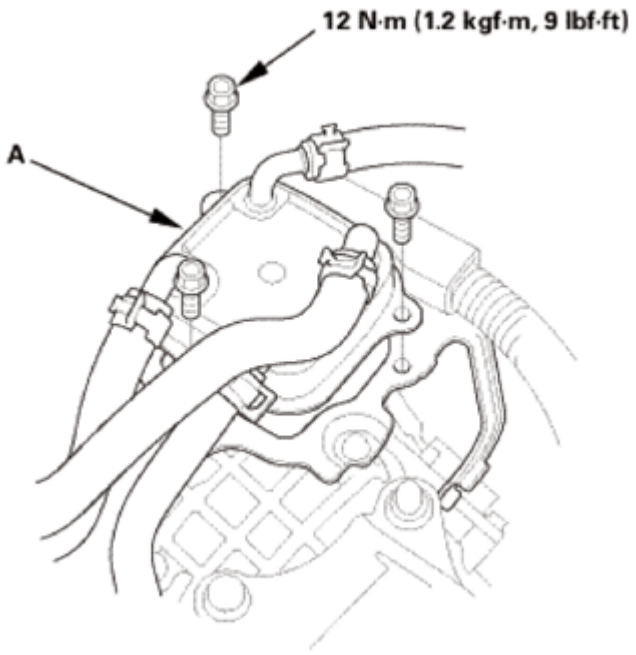

Fig. 1753: Identifying ATF Warmer And Mounting Bolts With Torque Specification
Courtesy of AMERICAN HONDA MOTOR CO., INC.

3. Air Cleaner Assembly
    1. Install the air cleaner (A).
    2. Connect the intake air pipe (B) and the intake air duct (C).
    3. Install the harness clamp (D).
    4. Connect the MAF sensor/IAT sensor connector (E).

GETtheMANUALS.org

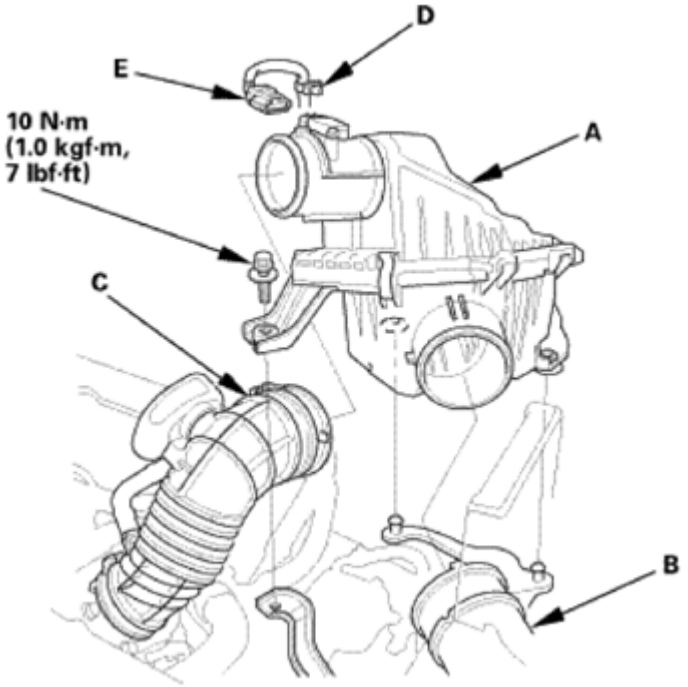

Fig. 1754: Identifying MAF Sensor/IAT Sensor Connector, Harness Clamp, Air Cleaner, Intake Air Pipe And Bolts With Torque Specification
Courtesy of AMERICAN HONDA MOTOR CO., INC.

PARK PIN SWITCH REMOVAL AND INSTALLATION

REMOVAL

1. Shift Lever Panel (AT)
    1. Carefully pry out the shift lever panel (A) with the appropriate trim tool to detach the clips (B, C) and the hooks (D), then remove the shift lever panel.

GETtheMANUALS.org

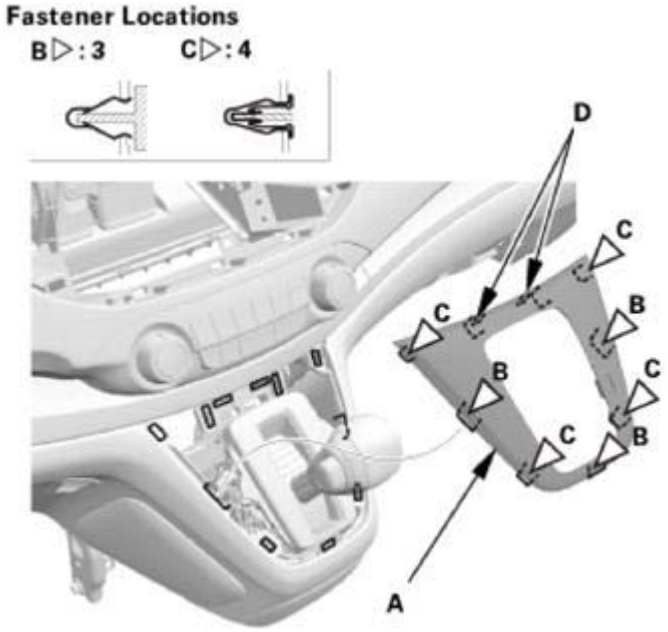

Fig. 1755: Identifying Shift Lever Panel, Clips And Hooks
Courtesy of AMERICAN HONDA MOTOR CO., INC.

2. Front Console Cover - Both Sides
    1. Remove the clips (A).
    2. Detach the clips (B), then remove the front console covers (C).

Left side

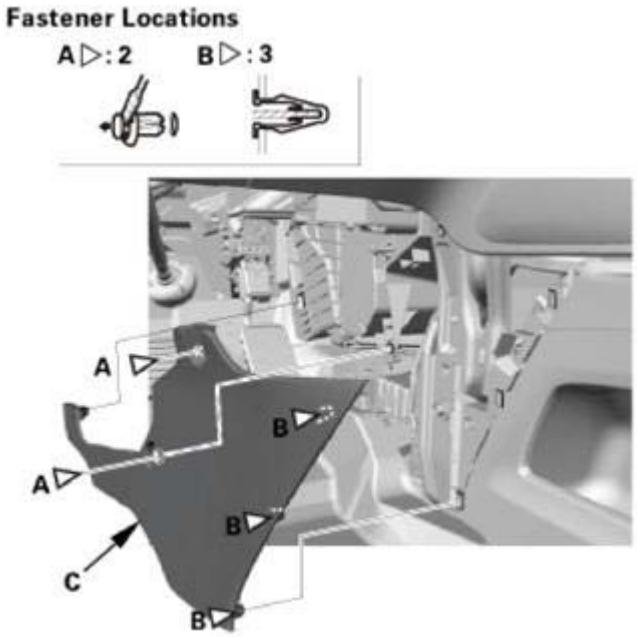

Fig. 1756: Identifying Front Console Covers And Clips (Left Side)

GETtheMANUALS.org

Courtesy of AMERICAN HONDA MOTOR CO., INC.

Right side

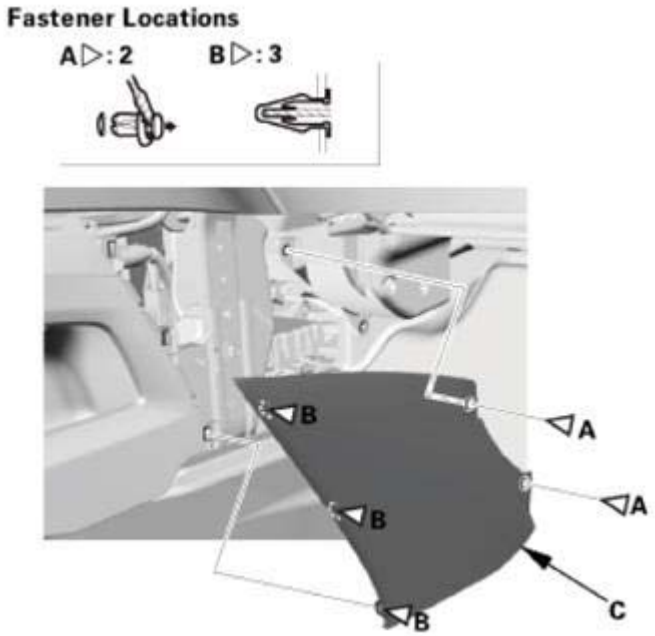

Fig. 1757: Identifying Front Console Covers And Clips (Right Side)
Courtesy of AMERICAN HONDA MOTOR CO., INC.

3. Center Console Rear Trim
    1. Carefully pry out the center console rear trim (A) with the appropriate trim tool to detach the clips (B) and the hooks (C), then remove the center console rear trim.

GETtheMANUALS.org

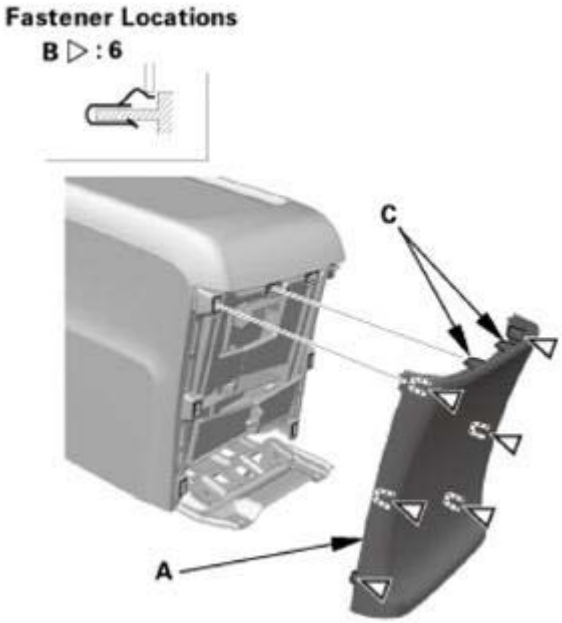

Fig. 1758: Identifying Center Console Rear Trim, Clips And Hooks
Courtesy of AMERICAN HONDA MOTOR CO., INC.

4. Center Console
    1. Carefully pry out the center lower cover (A) with the appropriate trim tool to detach the clips (B), then remove the center lower cover.
    2. Remove the bolt (C).

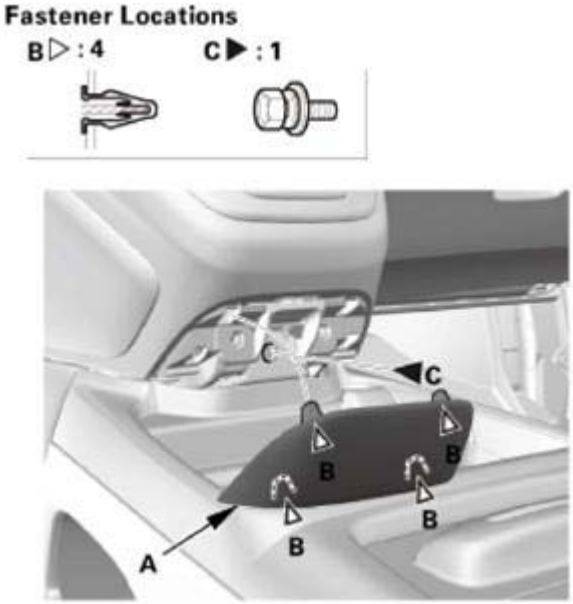

Fig. 1759: Identifying Center Lower Cover, Clips And Bolts
Courtesy of AMERICAN HONDA MOTOR CO., INC.

GETtheMANUALS.org

3. Remove the bolts (A).

Fig. 1760: Identifying Center Console Bolts
Courtesy of AMERICAN HONDA MOTOR CO., INC.

4. Remove the console box mat (A), then remove the bolts (B).

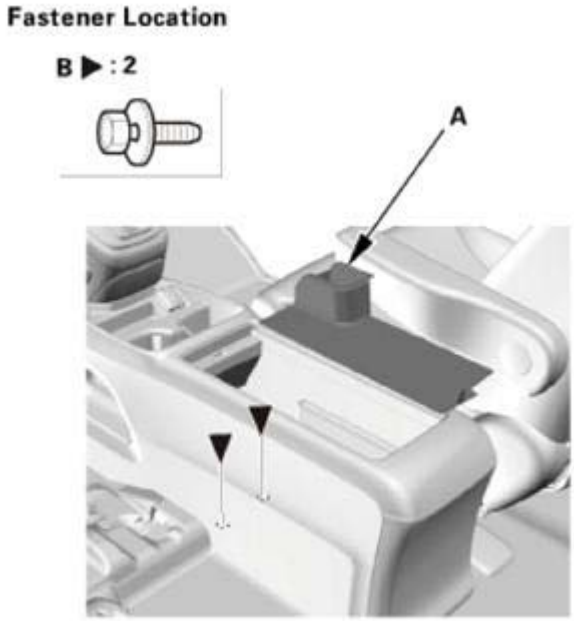

Fig. 1761: Identifying Console Box Mat And Bolts
Courtesy of AMERICAN HONDA MOTOR CO., INC.

5. Disconnect the connectors (A), and remove the clips (B).

GETtheMANUALS.org

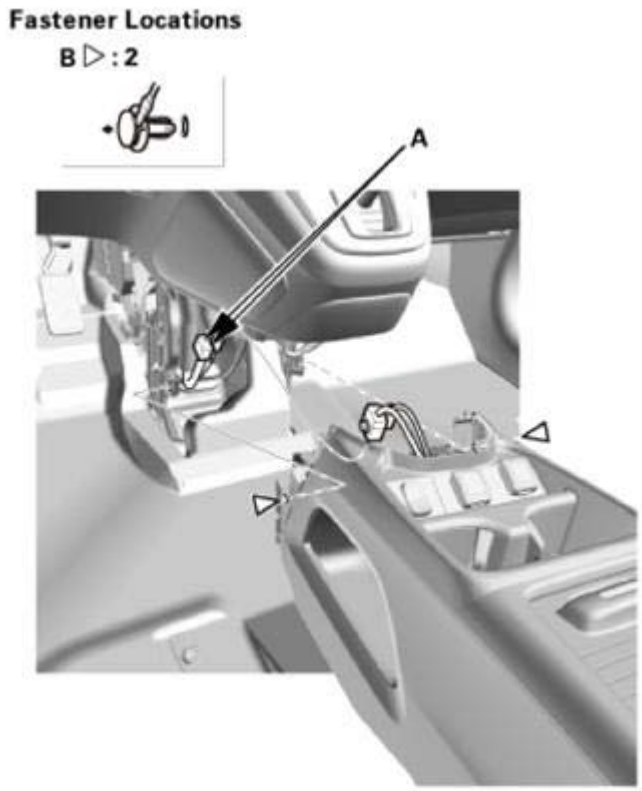

Fig. 1762: Identifying Connectors And Clips
Courtesy of AMERICAN HONDA MOTOR CO., INC.

6. Slide both front seats fully rearward, and recline the seat-backs around two thirds to the rear.
7. Remove the center console (A).

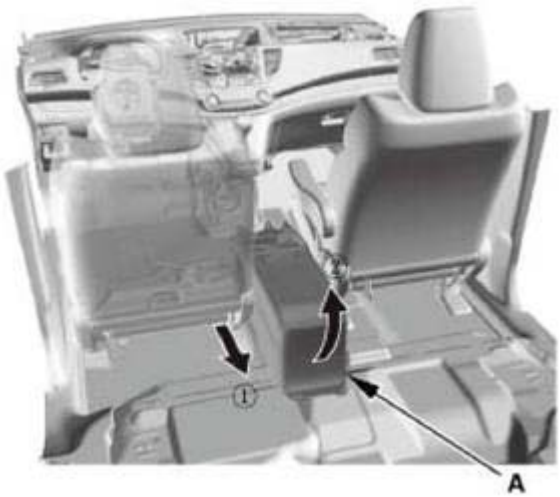

Fig. 1763: Removing Center Console
Courtesy of AMERICAN HONDA MOTOR CO., INC.

GETtheMANUALS.org

5. Center Maintenance Cover
    1. Remove the maintenance cover (A).

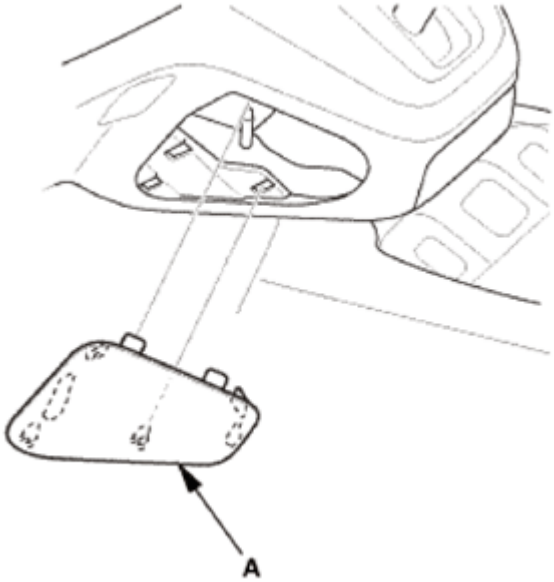

Fig. 1764: Identifying Center Maintenance Cover
Courtesy of AMERICAN HONDA MOTOR CO., INC.

6. Shift Cable - Disconnection Lever Side
    1. Shift the shift lever to R.
    2. Insert a 6.0 mm (0.236 in) pin (A) into the positioning holes (B).

NOTE: Use only a 6.0 mm (0.236 in) pin with no burrs.

    3. Remove the nut (C) securing the shift cable end (D).

GETtheMANUALS.org

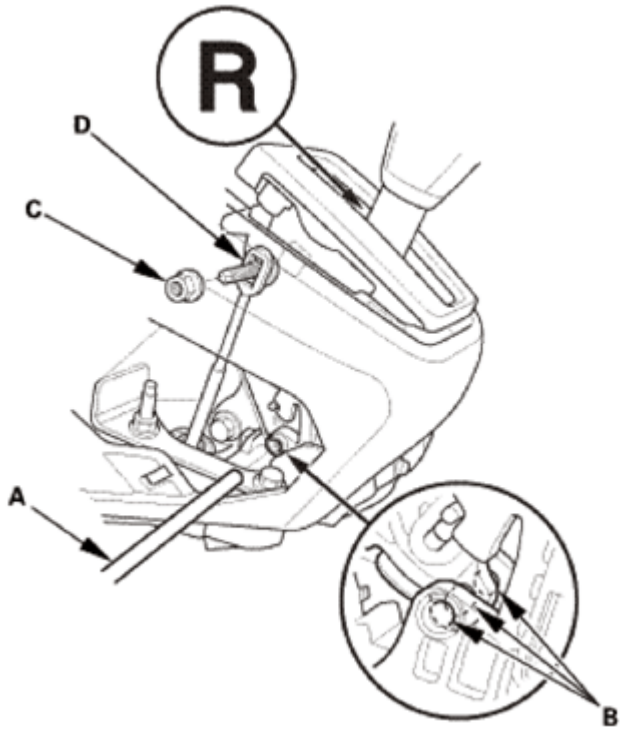

Fig. 1765: Inserting Pin Into Positioning Holes
Courtesy of AMERICAN HONDA MOTOR CO., INC.

4. Unlock the retainer lock (A).

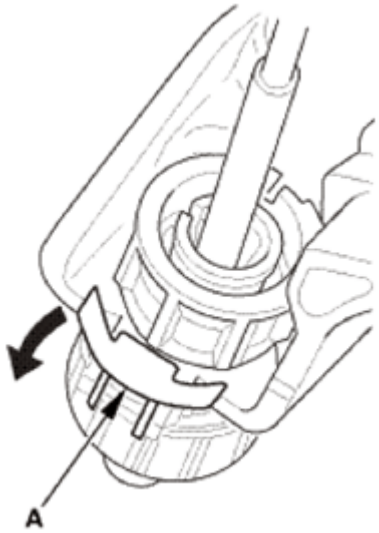

Fig. 1766: Unlocking Retainer Lock
Courtesy of AMERICAN HONDA MOTOR CO., INC.

5. Rotate the socket holder retainer (A) counterclockwise (B) until it stops, and push the retainer lock (C) into the socket holder retainer to lock the retainer.

GETtheMANUALS.org

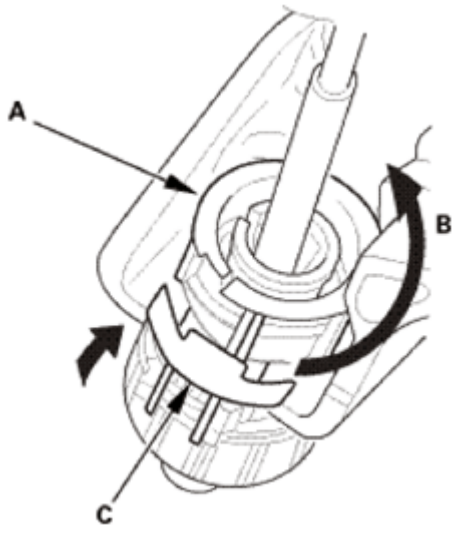

Fig. 1767: Rotating Socket Holder Retainer Counterclockwise
Courtesy of AMERICAN HONDA MOTOR CO., INC.

6. Slide the socket holder (A) away from the bracket as shown to remove the shift cable (B) from the shift cable bracket (C).

NOTE: Do not remove the shift cable by pulling the shift cable guide (D).

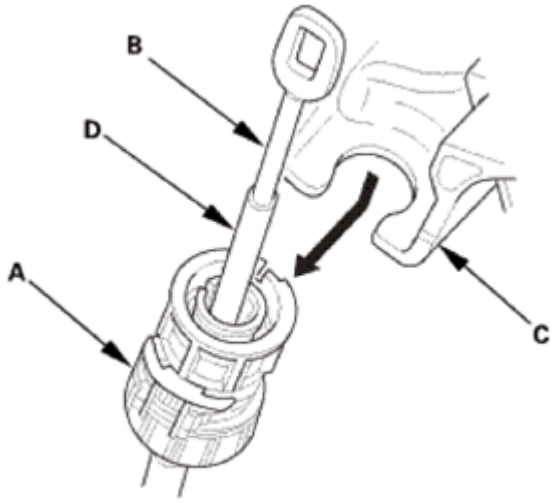

Fig. 1768: Removing Shift Cable From Shift Cable Bracket
Courtesy of AMERICAN HONDA MOTOR CO., INC.

7. A/T Shift Lever Assembly
    1. Disconnect the shift lever connector.

GETtheMANUALS.org

Fig. 1769: Identifying Shift Lever Connector
Courtesy of AMERICAN HONDA MOTOR CO., INC.

2. Remove the shift lever assembly.

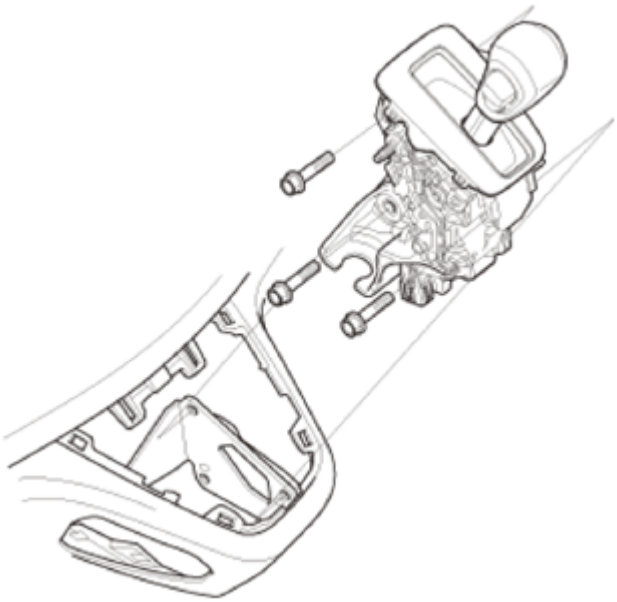

Fig. 1770: Identifying Shift Lever Assembly
Courtesy of AMERICAN HONDA MOTOR CO., INC.

8. D3 Switch Harness - Disconnection
    1. Remove the harness wire tie (A).
    2. Disconnect the D3 switch connector (B).

GETtheMANUALS.org

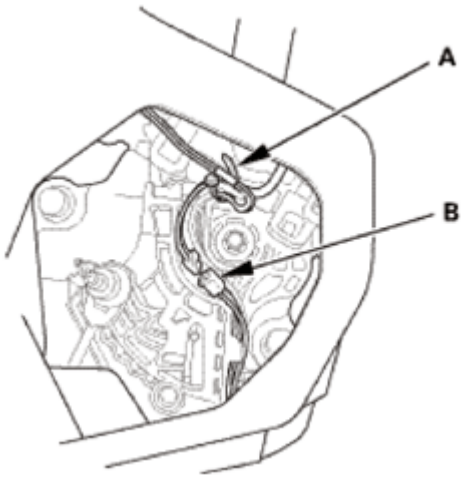

Fig. 1771: Identifying D3 Switch Connector And Harness Wire Tie
Courtesy of AMERICAN HONDA MOTOR CO., INC.

9. Shift Lever Knob/Shift Lever Knob Ring Assembly

NOTE: **Do not wipe off the special grease applied to the area of the shift lever marked with an asterisk (*) when you disassemble or assemble it.**

1. Unhook the D3 switch harness (A) from the harness guide (B).
2. Remove the shift lever knob/shift lever knob ring assembly (C).

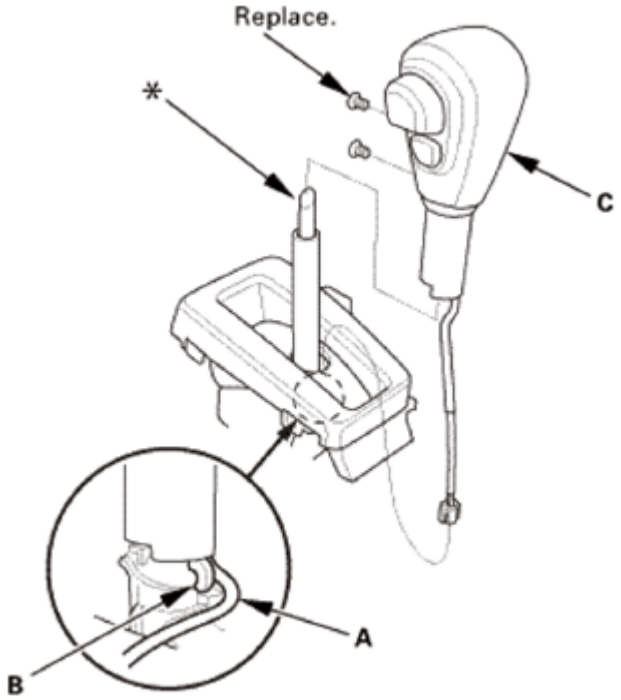

Fig. 1772: Identifying Shift Lever Knob/Shift Lever Knob Ring Assembly, D3 Switch Harness

GETtheMANUALS.org

And Harness Guide With Mounting Bolts
Courtesy of AMERICAN HONDA MOTOR CO., INC.

10. A/T Gear Position Indicator Panel Assembly
    1. Remove the A/T gear position indicator panel light socket (A) from the A/T gear position indicator panel assembly (B).
    2. Unhook the A/T gear position indicator panel light harness (C) from the harness guide (D).
    3. Remove the A/T gear position indicator panel assembly by expanding the four lock tabs (E).

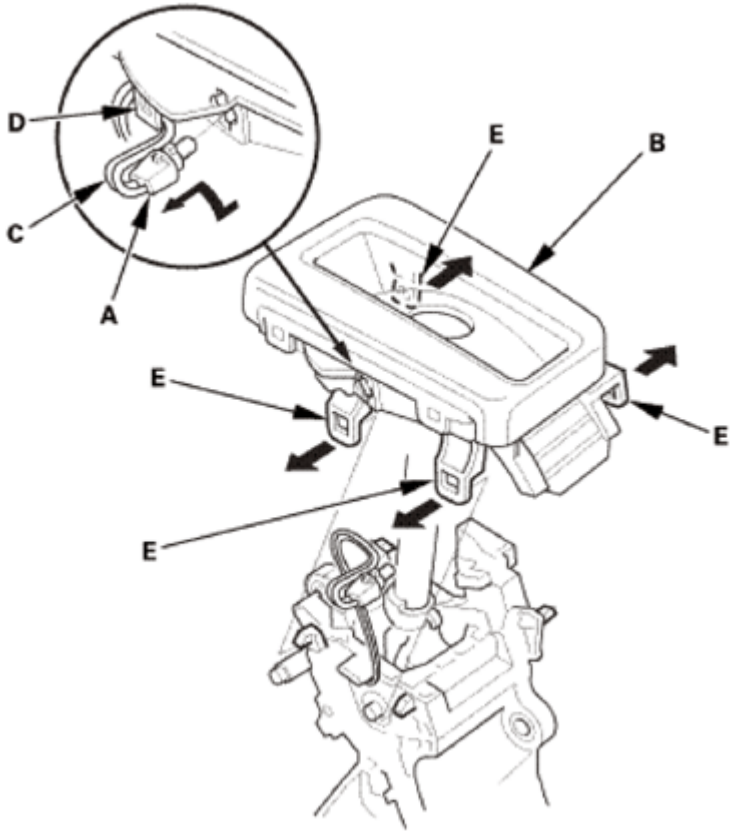

Fig. 1773: Removing A/T Gear Position Indicator Panel Assembly By Expanding Lock Tabs
Courtesy of AMERICAN HONDA MOTOR CO., INC.

11. Park Pin Switch

NOTE:

- **The park pin switch (A) and the A/T gear position indicator panel light/D3 switch/shift lock solenoid harness (B) are not available separately from the shift lever/shift cable bracket (C); replace the park pin switch, the A/T gear position indicator panel light/D3 switch/shift lock solenoid harness, and the shift lever/shift cable bracket as an assembly.**
- **Do not wipe off the special grease applied to the area of the shift lever marked with an asterisk (*) when you disassemble or assemble**

GETtheMANUALS.org

it.

1. Pull the shift lock solenoid (D) out by releasing the lock tab (E) using a screwdriver.

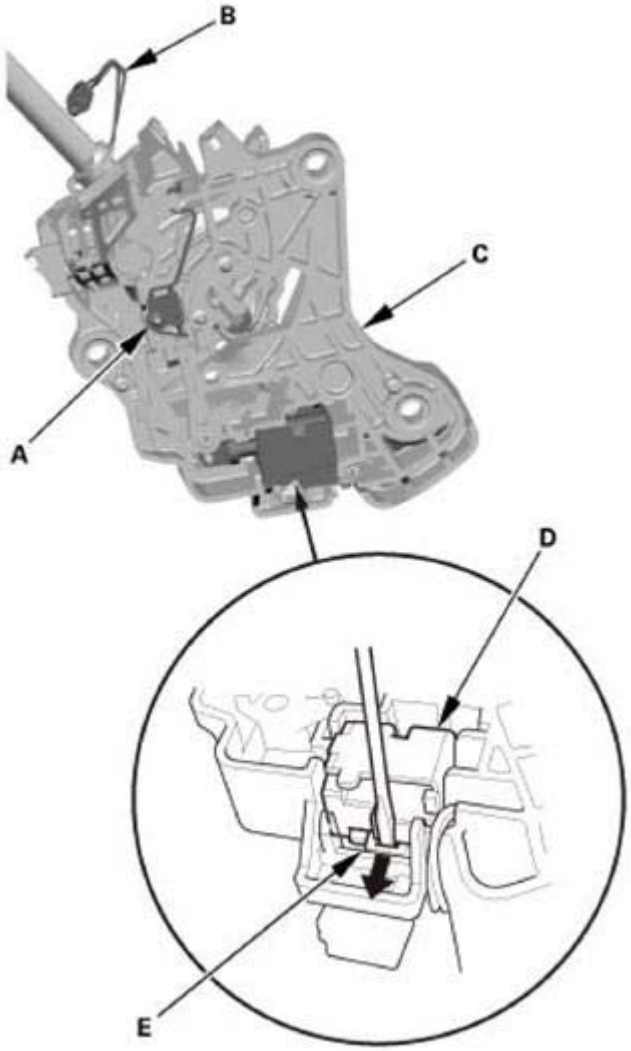

Fig. 1774: Pulling Out Shift Lock Solenoid
Courtesy of AMERICAN HONDA MOTOR CO., INC.

2. Remove the shift lock solenoid (A).

NOTE: **The shift lock solenoid consists of the solenoid (B), the solenoid plunger (C), and the plunger spring (D).**

3. Disconnect the shift lock solenoid connector (E).

GETtheMANUALS.org

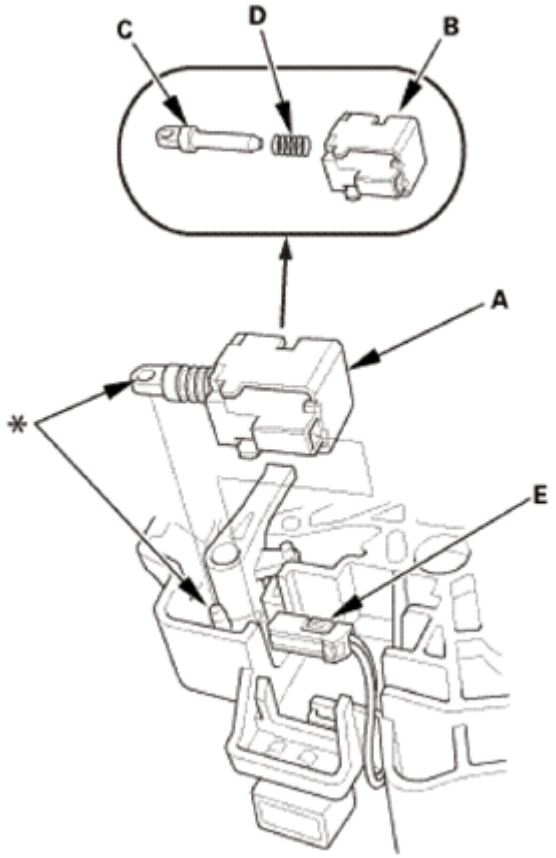

Fig. 1775: Identifying Shift Lock Solenoid, Connector, Solenoid Plunger And Plunger Spring
Courtesy of AMERICAN HONDA MOTOR CO., INC.

INSTALLATION

1. Park Pin Switch

NOTE: Do not wipe off the special grease applied to the area of the shift lever marked with an asterisk (*) when you disassemble or assemble it.

1. Connect the shift lock solenoid connector (A).
2. Install the shift lock solenoid (B) by aligning the joint of the shift lock solenoid plunger (C) with the tip of the shift lock stop (D).

NOTE: The shift lock solenoid consists of the solenoid (E), the solenoid plunger (F), and the plunger spring (G).

GETtheMANUALS.org

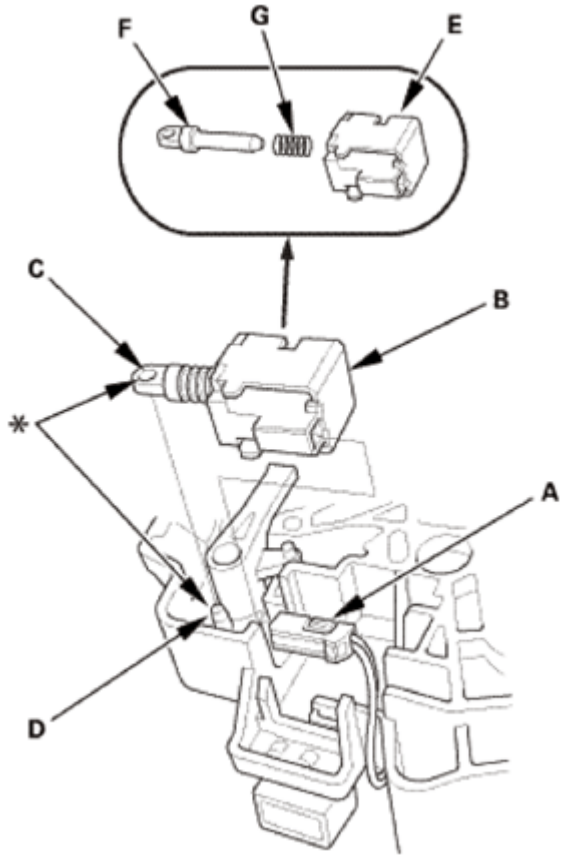

Fig. 1776: Identifying Shift Lock Solenoid, Connector, Solenoid Plunger, Solenoid And Plunger Spring
Courtesy of AMERICAN HONDA MOTOR CO., INC.

2. A/T Gear Position Indicator Panel Assembly
    1. Install the A/T gear position indicator panel assembly (A) by aligning the four lock tabs (B).
    2. Hook the A/T gear position indicator panel light harness (C) to the harness guide (D).
    3. Install the A/T gear position indicator panel light socket (E).

GETtheMANUALS.org

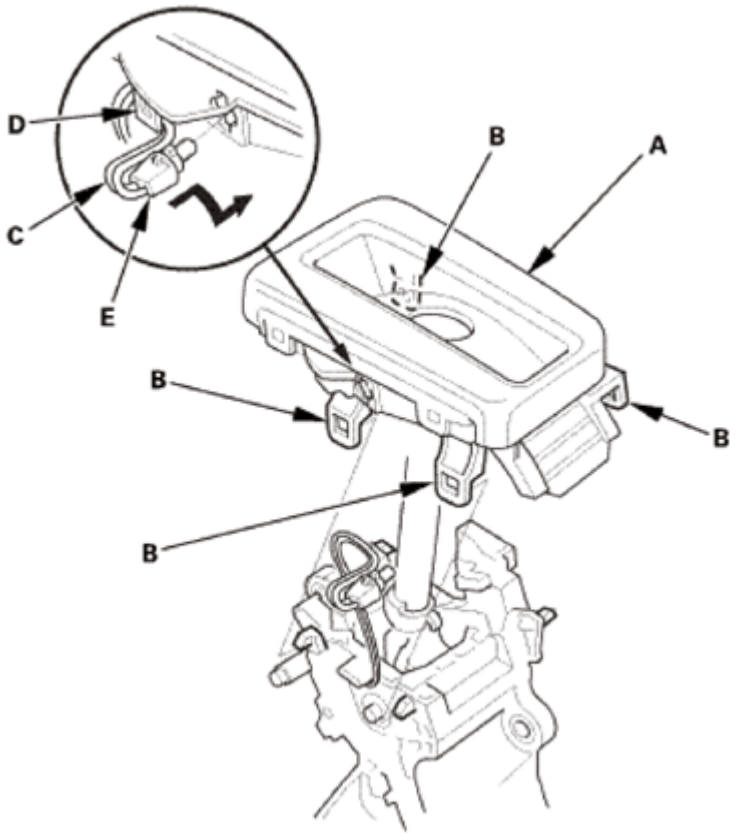

Fig. 1777: Installing A/T Gear Position Indicator Panel Light Socket
Courtesy of AMERICAN HONDA MOTOR CO., INC.

3. Shift Lever Knob/Shift Lever Knob Ring Assembly

NOTE: Do not wipe off the special grease applied to the area of the shift lever marked with an asterisk (*) when you disassemble or assemble it.

1. Install the shift lever knob/shift lever knob ring assembly (A).
2. Hook the D3 switch harness (B) to the harness guide (C).

GETtheMANUALS.org

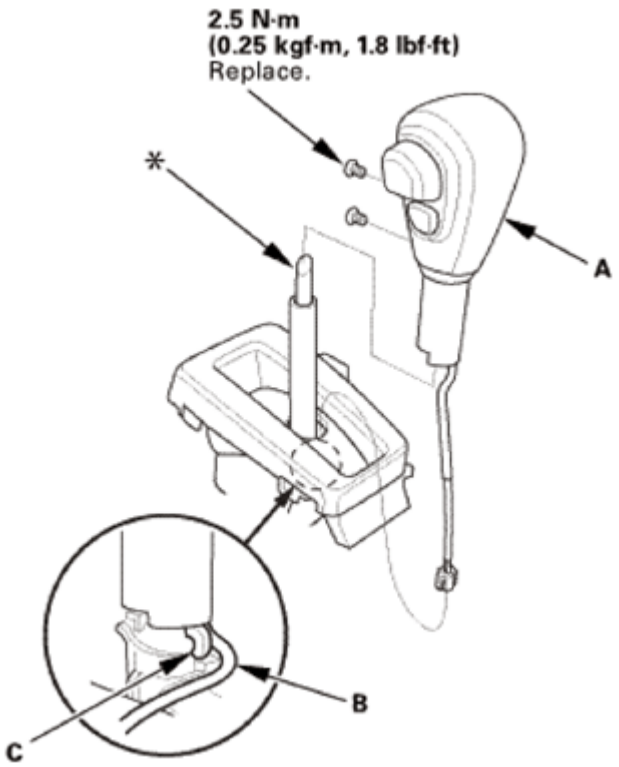

Fig. 1778: Identifying Shift Lever Knob/Shift Lever Knob Ring Assembly, D3 Switch Harness, Harness Guide And Mounting Bolts With Torque Specification
Courtesy of AMERICAN HONDA MOTOR CO., INC.

4. D3 Switch Harness - Reconnection
    1. Connect the D3 switch connector (A).
    2. Route the D3 switch harness (B) along with the shift lever assembly, and tie the harnesses at the guide (C) with the harness wire tie (D).

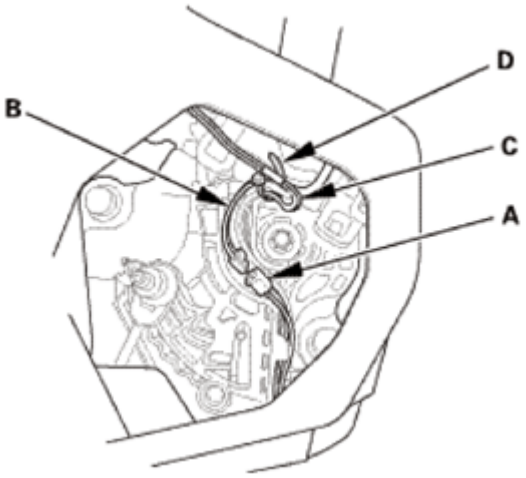

Fig. 1779: Identifying D3 Switch Harness, Connector, Guide And Harness Wire Tie
Courtesy of AMERICAN HONDA MOTOR CO., INC.

GETtheMANUALS.org

5. A/T Shift Lever Assembly
    1. Install the shift lever assembly.

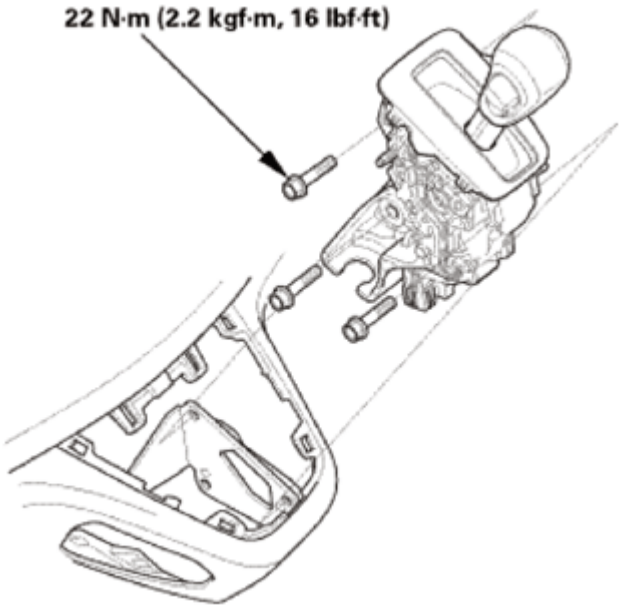

Fig. 1780: Identifying Shift Lever Assembly And Mounting Bolts With Torque Specification
Courtesy of AMERICAN HONDA MOTOR CO., INC.

    2. Connect the shift lever connector.

Fig. 1781: Identifying Shift Lever Connector
Courtesy of AMERICAN HONDA MOTOR CO., INC.

6. Shift Cable - Adjustment
    1. Push the shift cable (A) until it stops, then release it. Pull the shift cable back one step so that the shift position is in R.

GETtheMANUALS.org

NOTE: **Do not hold the shift cable guide (B) to adjust the shift cable.**

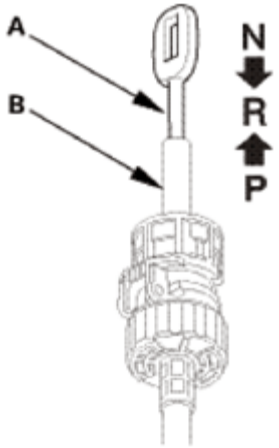

Fig. 1782: Identifying Shift Cable And Shift Cable Guide
Courtesy of AMERICAN HONDA MOTOR CO., INC.

2. Turn the ignition switch to ON (II).
3. Check that the R position indicator comes on.
4. Turn the ignition switch to LOCK (0).

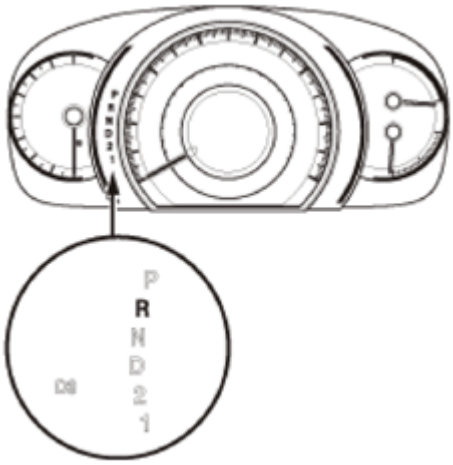

Fig. 1783: Identifying R Position Indicator
Courtesy of AMERICAN HONDA MOTOR CO., INC.

5. Shift the shift lever to R.
6. Insert a 6.0 mm (0.236 in) pin (A) into the positioning holes (B).

NOTE: **Use only a 6.0 mm (0.236 in) pin with no burrs.**

GETtheMANUALS.org

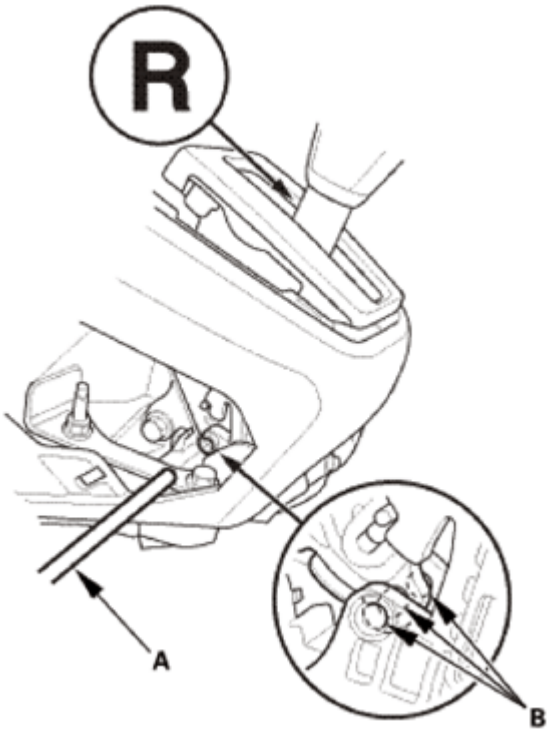

Fig. 1784: Inserting Pin Into Positioning Holes
Courtesy of AMERICAN HONDA MOTOR CO., INC.

7. Unlock the retainer lock (A).

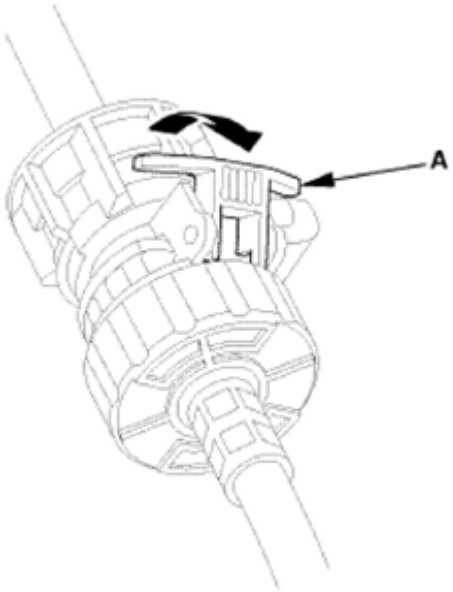

Fig. 1785: Unlocking Retainer Lock
Courtesy of AMERICAN HONDA MOTOR CO., INC.

8. Rotate the socket holder retainer (A) in arrow direction (B) until it stops to create clearance (C)

GETtheMANUALS.org

between the socket holder (D) and holder retainer, and push the retainer lock (E) into the socket holder retainer to lock the retainer.

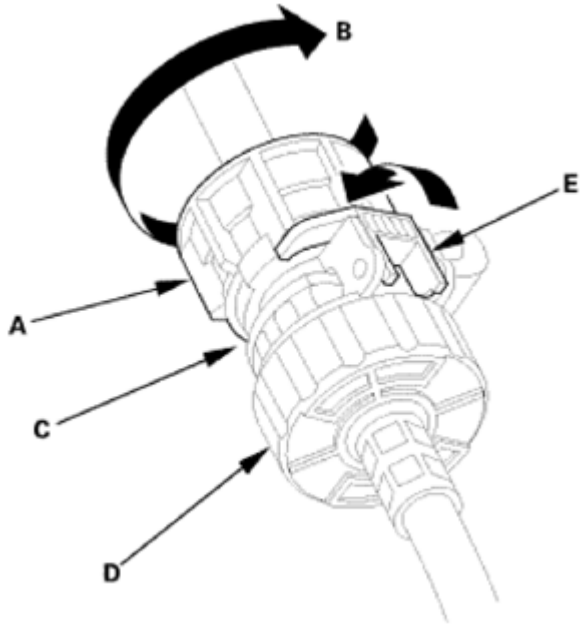

Fig. 1786: Rotating Socket Holder Retainer
Courtesy of AMERICAN HONDA MOTOR CO., INC.

9. Align the shift cable slot (A) between the socket holder (B) and the socket holder retainer (C) with the opening (D) in the shift cable bracket (E), then slide the holder into the bracket while installing the shift cable end (F) over the mounting stud (G) by aligning its square hole (H) with the square fitting (I) at the bottom of the stud.

NOTE:

- **Do not install the shift cable by holding the shift cable guide (J).**
- **When the socket holder is installed in the shift cable bracket, the retainer lock is unhinged and releases the holder retainer lock, then the holder retainer returns under spring force to secure the shift cable.**

GETtheMANUALS.org

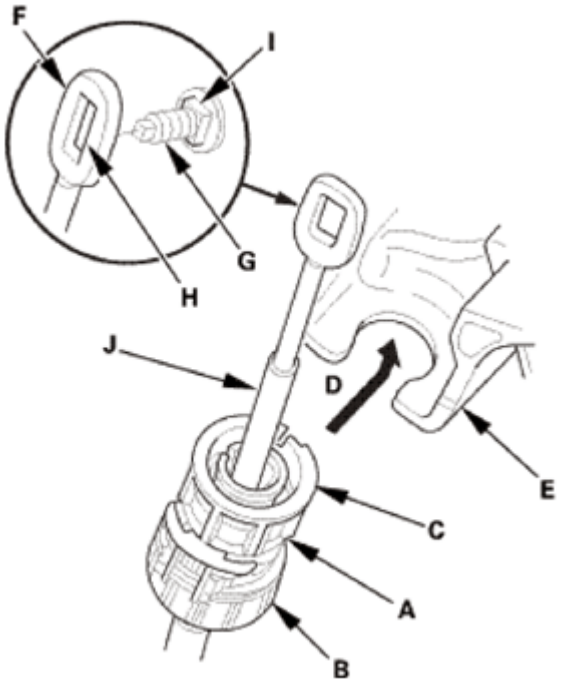

Fig. 1787: Aligning Shift Cable Slot Between Socket Holder And Socket Holder Retainer With Opening In Shift Cable Bracket
Courtesy of AMERICAN HONDA MOTOR CO., INC.

10. Push the retainer lock (A) fully to lock the socket holder retainer (B), and make sure that the retainer lock fits into the hinged-joint (C). If the retainer lock does not fit with the edge of the hinged-joint, rotate the holder retainer counterclockwise while pushing the retainer lock until it locks.

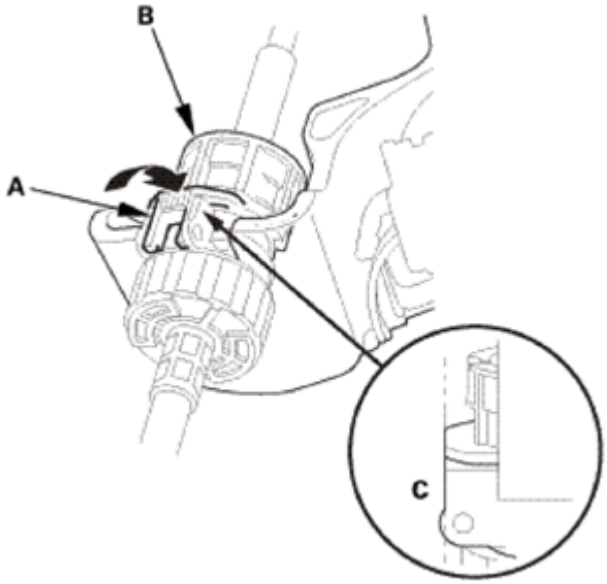

Fig. 1788: Pushing Retainer Lock
Courtesy of AMERICAN HONDA MOTOR CO., INC.

GETtheMANUALS.org

11. Make sure that the shift cable end (A) is properly installed on the mounting stud (B).

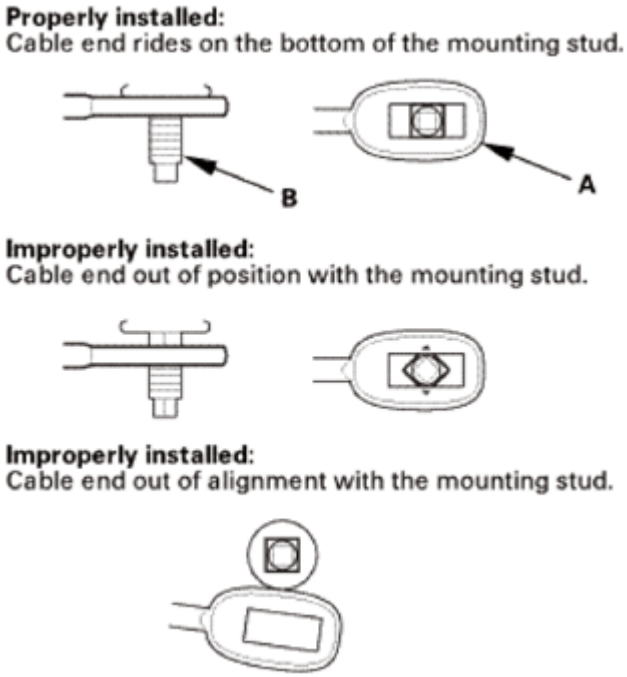

Fig. 1789: Identifying Shift Cable End Proper And Improper Installation
Courtesy of AMERICAN HONDA MOTOR CO., INC.

- If the shift cable end is out of position with the mounting stud, remove the shift cable from the shift cable bracket, then reinstall the cable end over the mounting stud before reinstalling the shift cable to the shift cable bracket. Do not install the shift cable end on the mounting stud with the shift cable install on the shift cable bracket.
- If the shift cable end does not ride at the bottom of the mounting stud, rotate the stud to align the square fitting with the hole.

12. Install the shift cable end nut (A).
13. Remove the 6.0 mm (0.236 in) pin (B) that was installed to hold the shift lever.
14. Turn the ignition switch to ON (II).
15. Move the shift lever to each position, and check that the A/T gear position indicator follows the transmission range switch.
16. Shift the shift lever to P.
17. Check that the shift lock works properly.
18. Push the shift lock release, and check that the shift lever releases. Also check that the shift lever locks when it is shifted back to P.
19. Turn the ignition switch to LOCK (0).

GETtheMANUALS.org

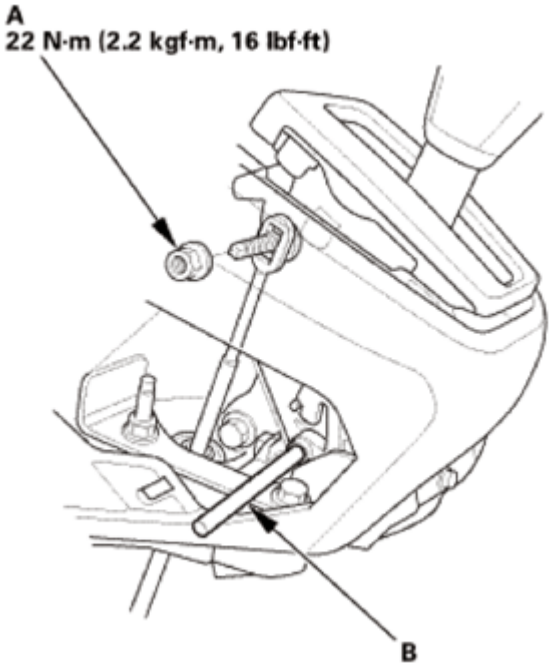

Fig. 1790: Identifying Pin And Shift Cable End Nut With Torque Specification
Courtesy of AMERICAN HONDA MOTOR CO., INC.

7. Center Maintenance Cover
    1. Install the maintenance cover (A).

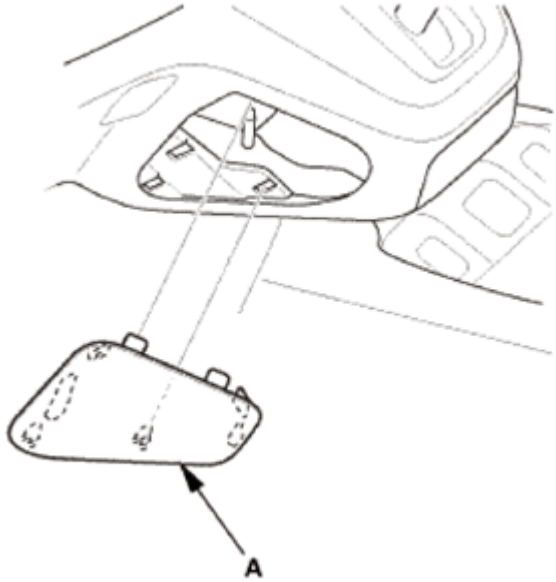

Fig. 1791: Identifying Center Maintenance Cover
Courtesy of AMERICAN HONDA MOTOR CO., INC.

8. Center Console

GETtheMANUALS.org

1. Install the center console (A).

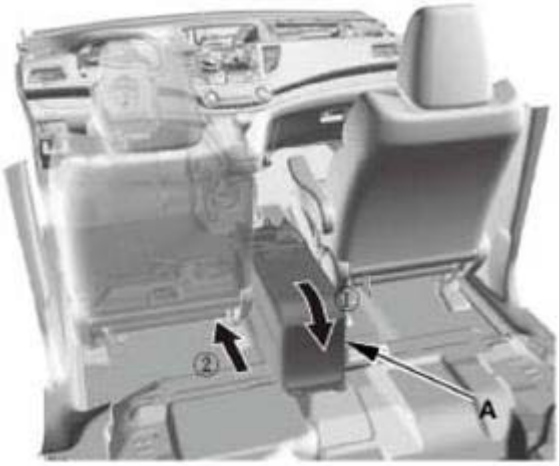

Fig. 1792: Installing Center Console
Courtesy of AMERICAN HONDA MOTOR CO., INC.

2. Connect the connectors (A), and install the clips (B).

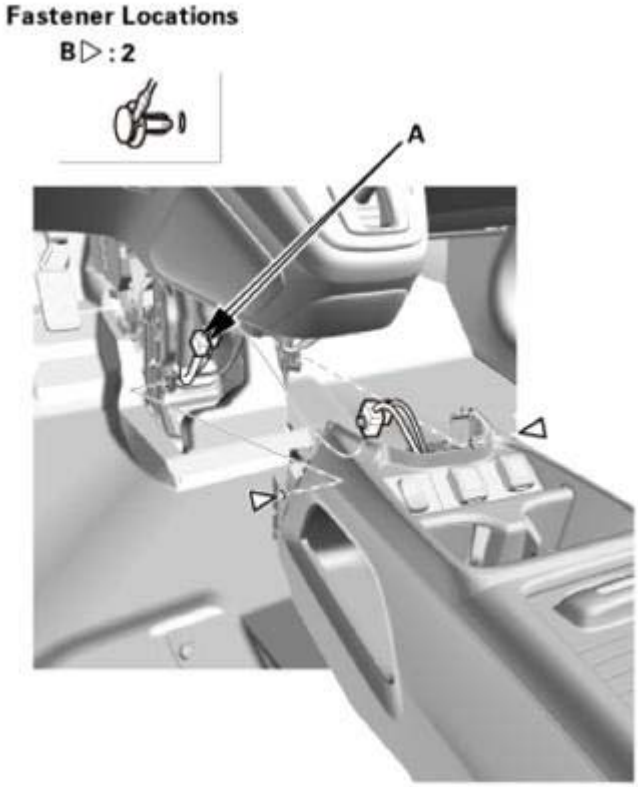

Fig. 1793: Identifying Center Console Connectors And Clips
Courtesy of AMERICAN HONDA MOTOR CO., INC.

GETtheMANUALS.org

3. Install the bolts (A), then install the console box mat (B).

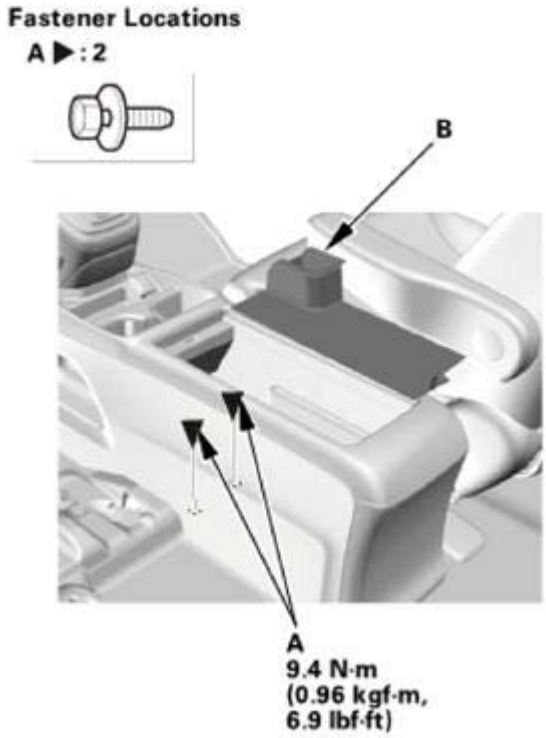

Fig. 1794: Identifying Console Box Mat And Bolts With Torque Specification
Courtesy of AMERICAN HONDA MOTOR CO., INC.

4. Install the bolts (A).

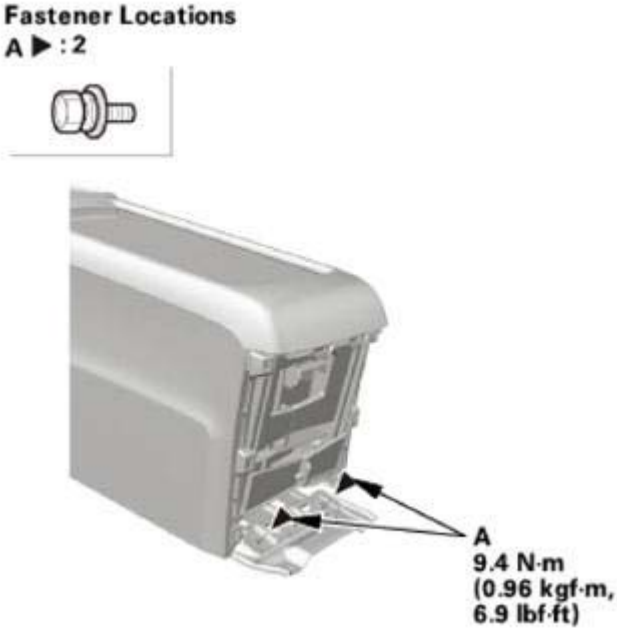

GETtheMANUALS.org

Fig. 1795: Identifying Center Console Bolts With Torque Specification
Courtesy of AMERICAN HONDA MOTOR CO., INC.

5. Install the bolt (A), then install the center lower cover (B). Make sure the clips (C) snap into place securely.

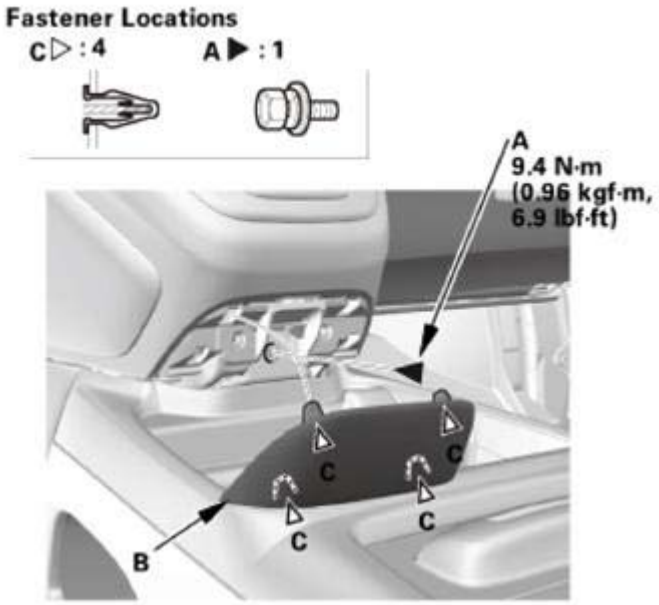

Fig. 1796: Identifying Center Lower Cover, Clips And Bolt With Torque Specification
Courtesy of AMERICAN HONDA MOTOR CO., INC.

9. Center Console Rear Trim
    1. Install the center console rear trim (A). Make sure the clips (B) and the hooks (C) snap into place securely.

GETtheMANUALS.org

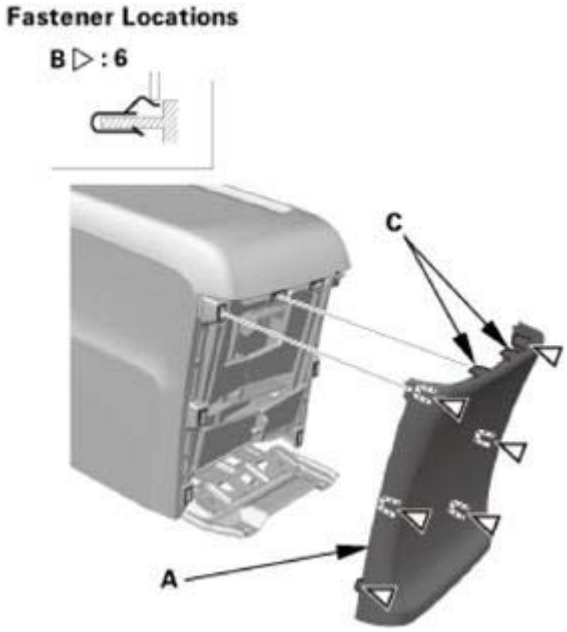

Fig. 1797: Identifying Center Console Rear Trim, Clips And Hooks
Courtesy of AMERICAN HONDA MOTOR CO., INC.

10. Front Console Cover - Both Sides
    1. Install the front console covers (A). Make sure the clips (B, C) snap into place securely.

Left side

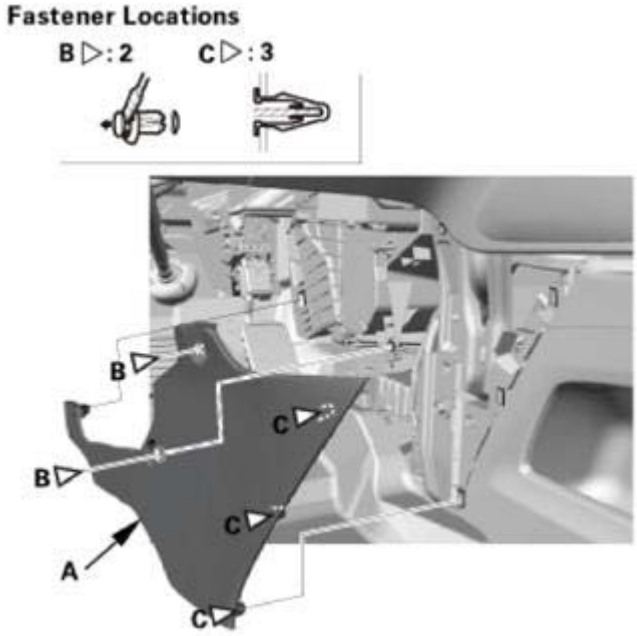

Fig. 1798: Identifying Front Console Covers And Clips (Left Side)
Courtesy of AMERICAN HONDA MOTOR CO., INC.

GETtheMANUALS.org

Right side

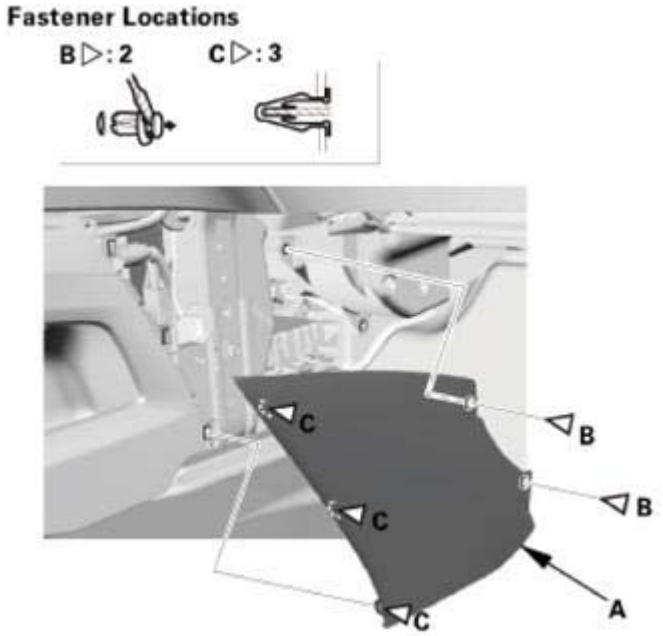

Fig. 1799: Identifying Front Console Covers And Clips (Right Side)
Courtesy of AMERICAN HONDA MOTOR CO., INC.

11. Shift Lever Panel (AT)
    1. Install the shift lever panel (A). Make sure the clips (B, C) and the hooks (D) snap into place securely.

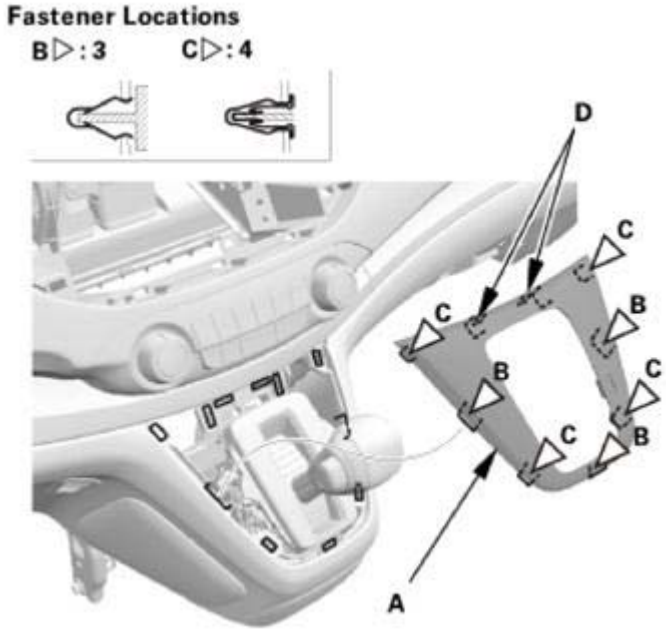

Fig. 1800: Identifying Shift Lever Panel, Clips And Hooks

GETtheMANUALS.org

Courtesy of AMERICAN HONDA MOTOR CO., INC.

RIGHT A/T DIFFERENTIAL OIL SEAL REPLACEMENT

SPECIAL TOOL REQUIRED

Image	Description/Tool Number
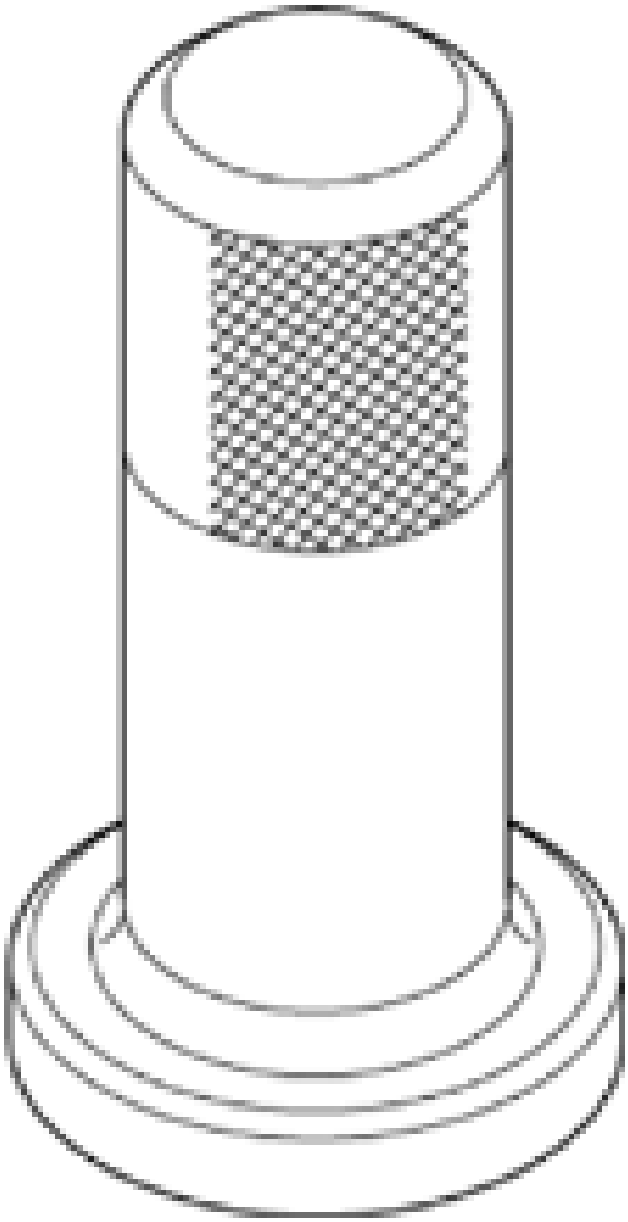	Oil Seal Driver, 65 mm 07JAD-PL9A100

REMOVAL

1. Vehicle Lift

GETtheMANUALS.org

1. Raise the vehicle on a lift, and make sure it is securely supported.

2. Right Front Wheel
    1. Remove the right front wheel.

Fig. 1801: Identifying Right Front Wheel With Studs
Courtesy of AMERICAN HONDA MOTOR CO., INC.

3. Front Splash Shield
    1. Remove the bolts (A), then remove the clips (B) that secure the front inner fender and the front splash shield (C) to the body.
    2. From under the front bumper (D), remove the clips (E).
    3. From under the body, remove the clips (F), then pull out the front splash shield.

GETtheMANUALS.org

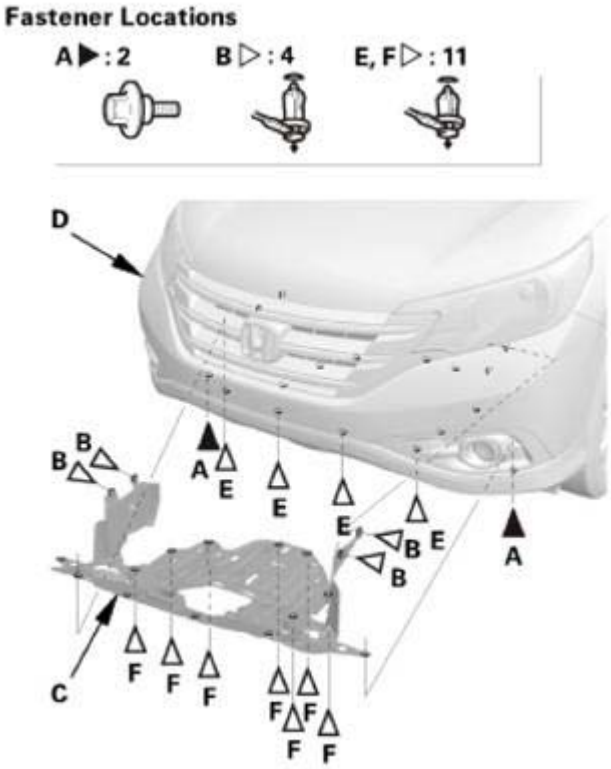

Fig. 1802: Identifying Front Splash Shield, Front Bumper, Bolts And Clips
Courtesy of AMERICAN HONDA MOTOR CO., INC.

4. ATF - Replacement
    1. Remove the drain plug (A), and drain the ATF.
    2. Reinstall the drain plug using a new sealing washer (B).

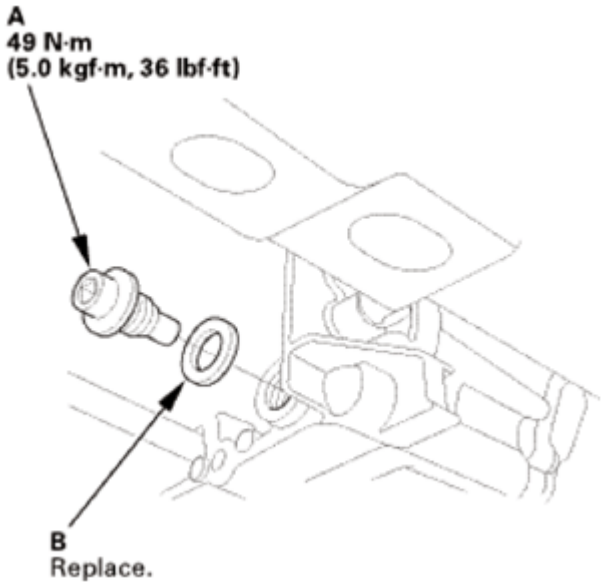

Fig. 1803: Identifying Drain Plug And Sealing Washer With Torque Specification

GETtheMANUALS.org

Courtesy of AMERICAN HONDA MOTOR CO., INC.

5. Right Lower Ball Joint Lower Arm Side Disconnection
    1. Remove the flange bolt (A).
    2. Remove the flange nuts (B).
    3. Disconnect the lower ball joint (C) from the lower arm.

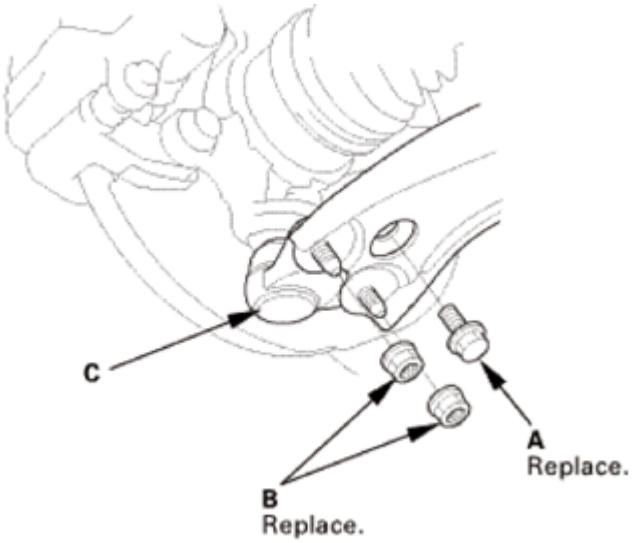

Fig. 1804: Identifying Lower Ball Joint, Flange Bolt And Flange Nuts
Courtesy of AMERICAN HONDA MOTOR CO., INC.

6. Driveshaft Front Right, Inboard Side - Disconnection
    1. Drive the inboard joint (A) off of the intermediate shaft using a drift punch and a hammer.

NOTE: Do not pull on the driveshaft (B), or the inboard joint may come apart.

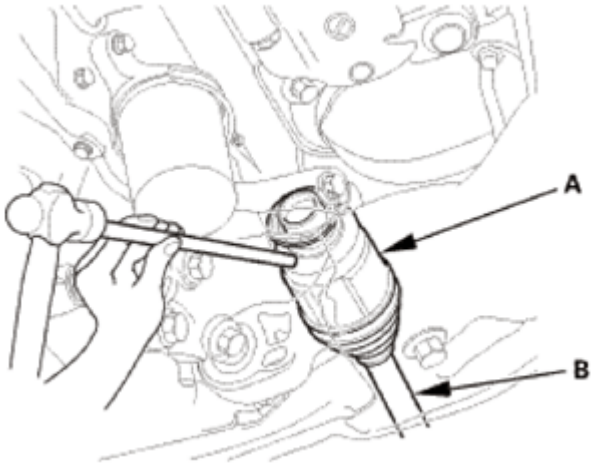

Fig. 1805: Driving Inboard Joint Of Intermediate Shaft Using Drift Punch And Hammer

GETtheMANUALS.org

Courtesy of AMERICAN HONDA MOTOR CO., INC.

2. Remove the set ring (A) from the intermediate shaft.

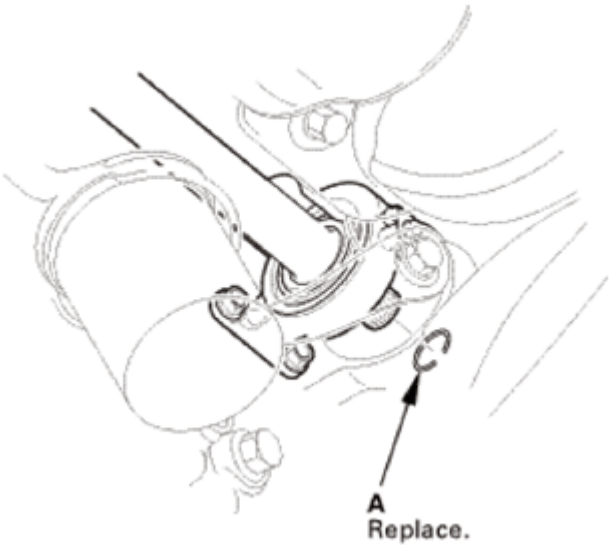

Fig. 1806: Identifying Set Ring Of Intermediate Shaft
Courtesy of AMERICAN HONDA MOTOR CO., INC.

7. A/T Intermediate Shaft Assembly
   1. Remove the flange bolt (A) and the two dowel bolts (B).

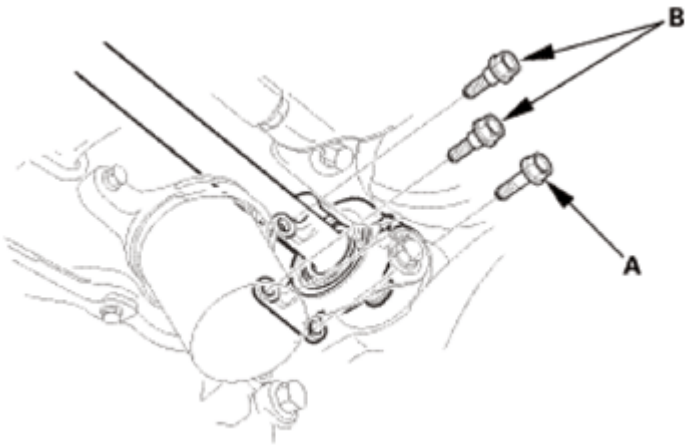

Fig. 1807: Identifying Flange Bolt And Dowel Bolts
Courtesy of AMERICAN HONDA MOTOR CO., INC.

   2. Remove the intermediate shaft (A) from the differential. Hold the intermediate shaft horizontal until it is clear of the differential to prevent damaging the oil seal (B).

GETtheMANUALS.org

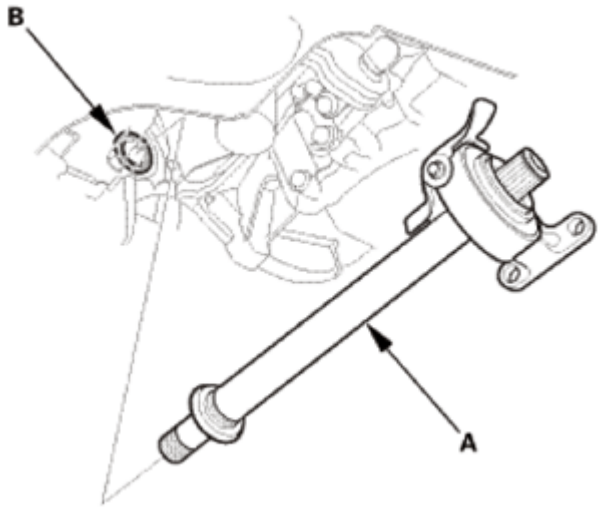

Fig. 1808: Identifying Intermediate Shaft And Oil Seal
Courtesy of AMERICAN HONDA MOTOR CO., INC.

8. Warm Up TWC Bracket
    1. Remove the warm up TWC bracket (A).

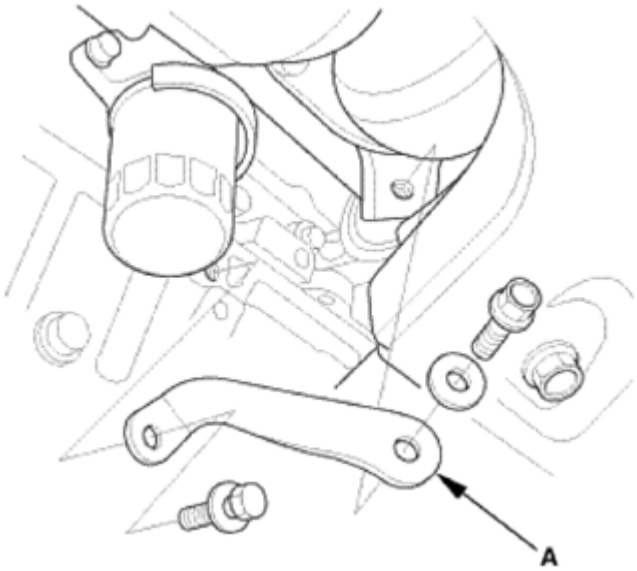

Fig. 1809: Identifying Warm Up TWC Bracket With Mounting Bolt
Courtesy of AMERICAN HONDA MOTOR CO., INC.

9. Engine Oil Filter and Filter Base
    1. Remove the engine oil filter base (A) and O-rings (B).

GETtheMANUALS.org

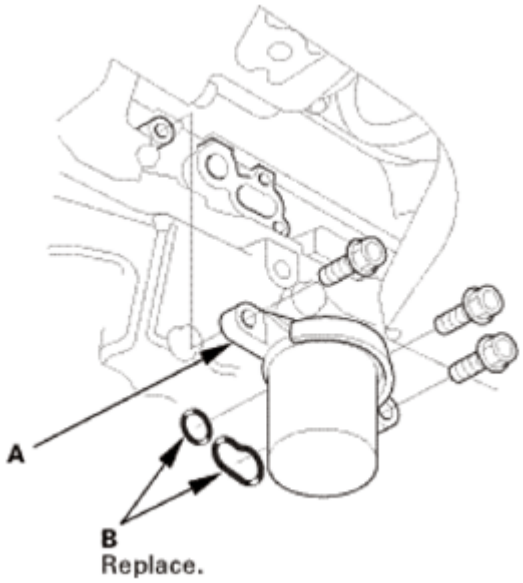

Fig. 1810: Identifying Engine Oil Filter Base And O-Rings With Mounting Bolts
Courtesy of AMERICAN HONDA MOTOR CO., INC.

10. Right Differential Oil Seal
    1. Remove the oil seal (A) using the pry bar (B).

NOTE: **Be careful not to damage the torque converter housing while removing the oil seal.**

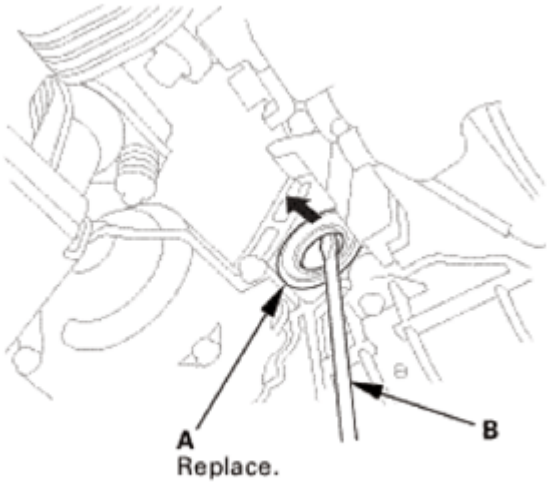

This illustration shows AWD/4WD transmission.

Fig. 1811: Removing Oil Seal Using Pry Bar
Courtesy of AMERICAN HONDA MOTOR CO., INC.

This illustration shows AWD/4WD transmission .

GETtheMANUALS.org

INSTALLATION

1. Right Differential Oil Seal
    1. Install a new oil seal (A) flush with the torque converter housing using the 65 mm oil seal driver.

NOTE: Apply a light coat of clean ATF on oil seal before installation.

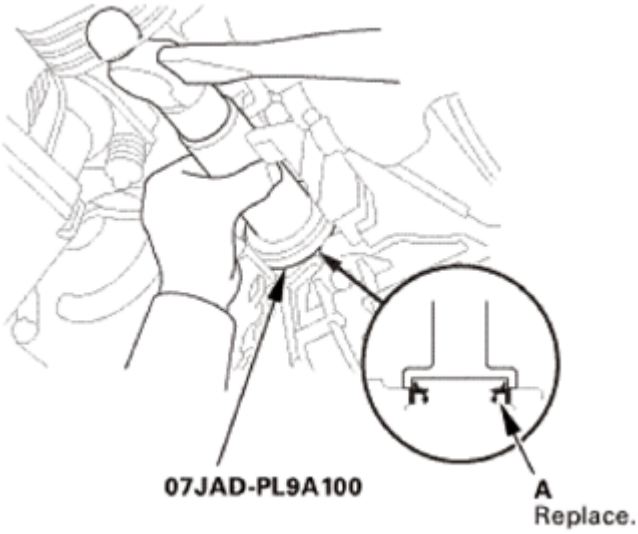

This illustration shows AWD/4WD transmission.

Fig. 1812: Installing Oil Seal Flush With Torque Converter Housing Using Oil Seal Driver
Courtesy of AMERICAN HONDA MOTOR CO., INC.

This illustration shows AWD/4WD transmission .

2. Engine Oil Filter and Filter Base
    1. Install the engine oil filter base (A) using new O-rings (B).

GETtheMANUALS.org

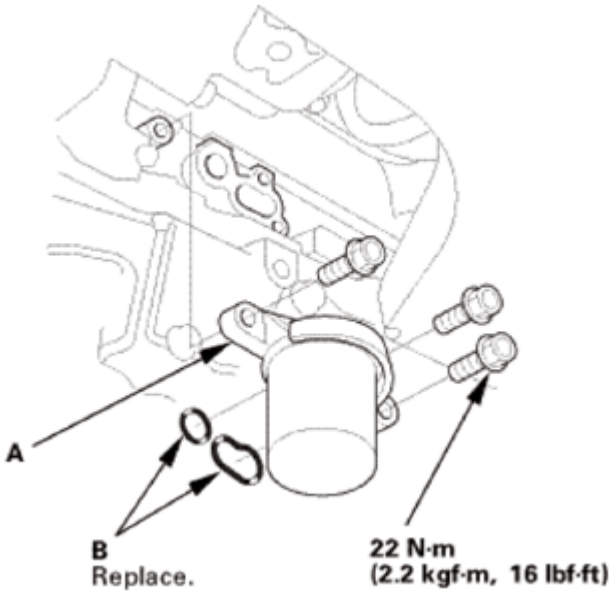

Fig. 1813: Identifying Engine Oil Filter Base, O-Rings And Mounting Bolts With Torque Specification
Courtesy of AMERICAN HONDA MOTOR CO., INC.

3. Warm Up TWC Bracket
    1. Install the warm up TWC bracket (A).

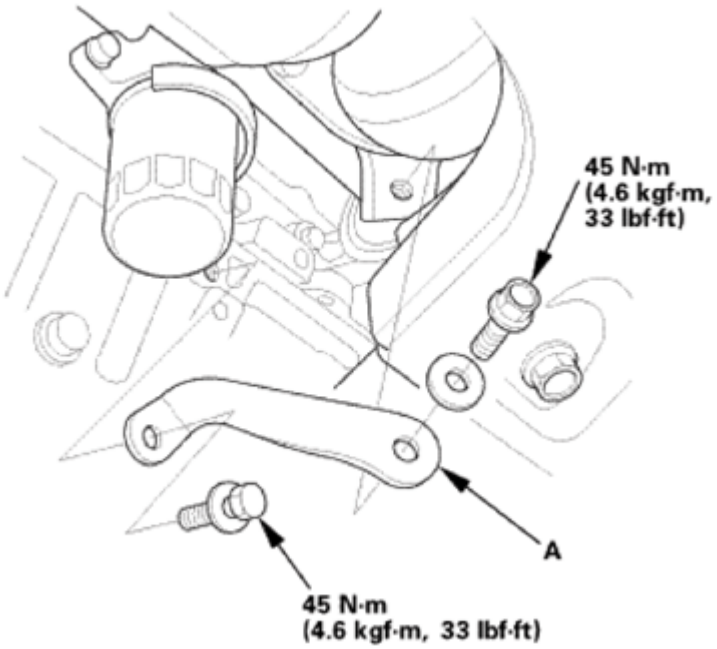

Fig. 1814: Identifying Warm Up TWC Bracket And Mounting Bolts With Torque Specification
Courtesy of AMERICAN HONDA MOTOR CO., INC.

GETtheMANUALS.org

4. A/T Intermediate Shaft Assembly
    1. Clean the areas where the intermediate shaft contacts the differential thoroughly with solvent, and dry them with compressed air.

        NOTE: Do not wash the rubber parts with solvent.

    2. Insert the intermediate shaft (A) into the differential correctly.

        NOTE: Insert the intermediate shaft carefully to prevent damaging the oil seal (B).

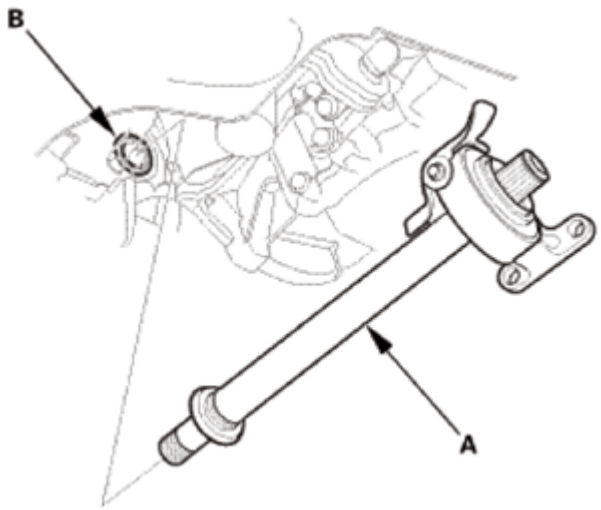

Fig. 1815: Identifying Intermediate Shaft And Oil Seal
Courtesy of AMERICAN HONDA MOTOR CO., INC.

    3. Install the two dowel bolts (A) and the flange bolt (B).

GETtheMANUALS.org

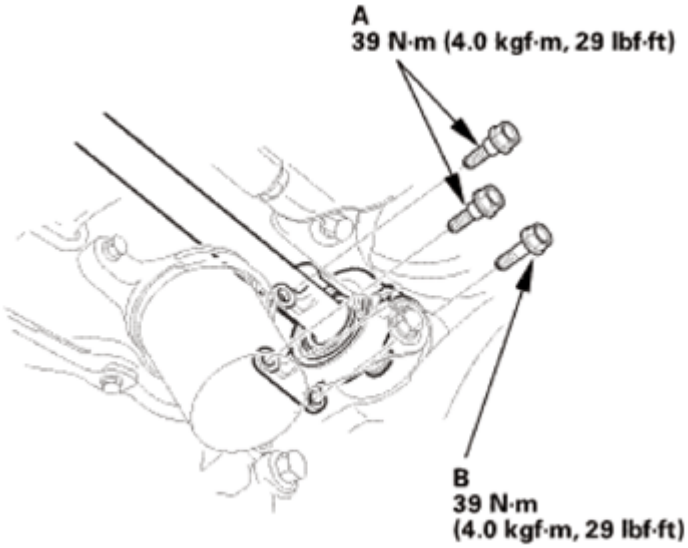

Fig. 1816: Identifying Dowel Bolts And Flange Bolt With Torque Specification
Courtesy of AMERICAN HONDA MOTOR CO., INC.

5. Driveshaft Front Right, Inboard Side - Reconnection
    1. Install a new set ring (A) into the set ring groove (B) of the intermediate shaft.

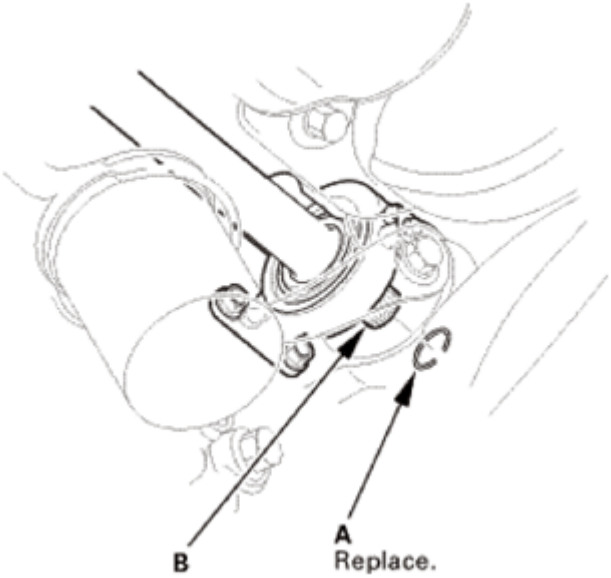

Fig. 1817: Identifying Set Ring And Set Ring Groove Of Intermediate Shaft
Courtesy of AMERICAN HONDA MOTOR CO., INC.

    2. Apply 0.5-1.0 g (0.018-0.035 oz) of molybdenum grease to the whole splined surface (A) of the right driveshaft.
    3. After applying grease, remove the grease from the splined grooves at intervals of 2-3 splines and from the set ring groove (B) so that air can bleed from the intermediate shaft.

GETtheMANUALS.org

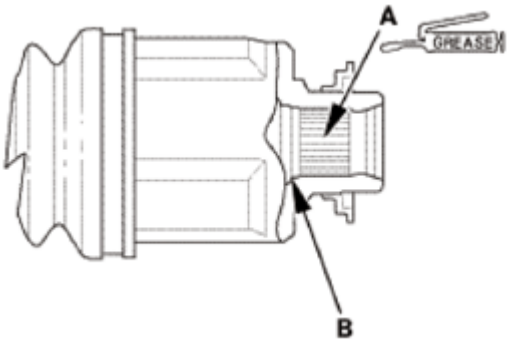

Fig. 1818: Identifying Molybdenum Grease Applying Area On Whole Splined Surface Of Right Driveshaft
Courtesy of AMERICAN HONDA MOTOR CO., INC.

4. Clean the areas where the driveshaft contacts the intermediate shaft thoroughly with solvent, then dry them with compressed air.

NOTE: Do not wash the rubber parts with solvent.

5. Insert the inboard end (A) of the driveshaft into the intermediate shaft (B) until the set ring (C) locks in the groove (D).

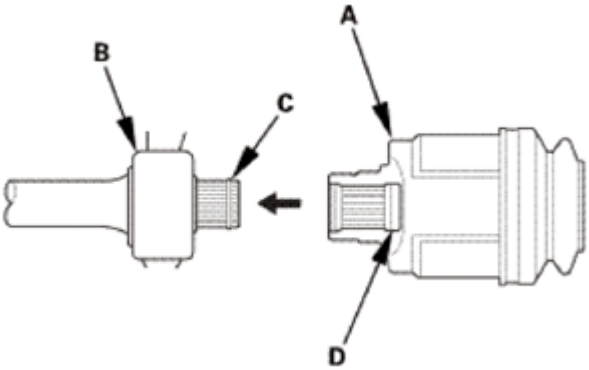

Fig. 1819: Inserting Inboard End Of Driveshaft Into Intermediate Shaft Until Set Ring Locks In Groove
Courtesy of AMERICAN HONDA MOTOR CO., INC.

6. Right Lower Ball Joint Lower Arm Side Reconnection
    1. Connect the lower ball joint (A) to the lower arm.
    2. Install new flange nuts and a new flange bolt in the sequence shown.

GETtheMANUALS.org

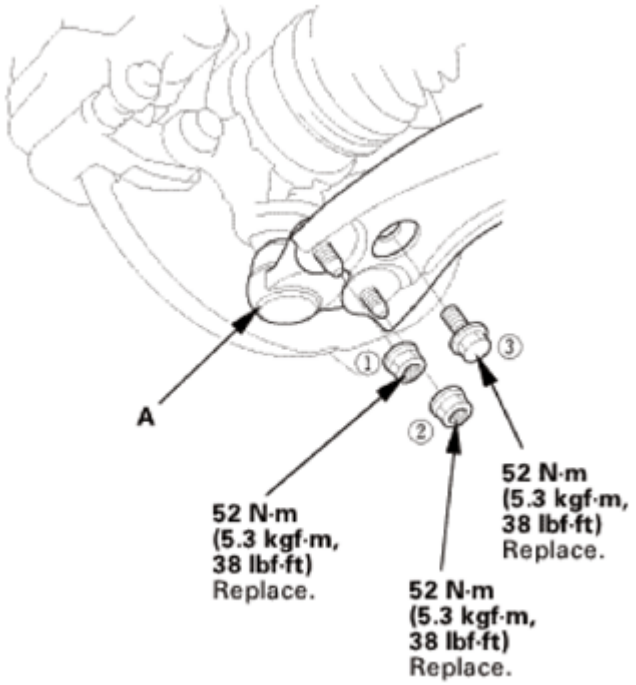

Fig. 1820: Identifying Lower Ball Joint, Flange Nuts And Bolt With Torque Specification
Courtesy of AMERICAN HONDA MOTOR CO., INC.

7. Front Splash Shield
    1. Install the front splash shield (A), then install the bolts (B) and the clips (C, D). Make sure the clips snap into place securely.

GETtheMANUALS.org

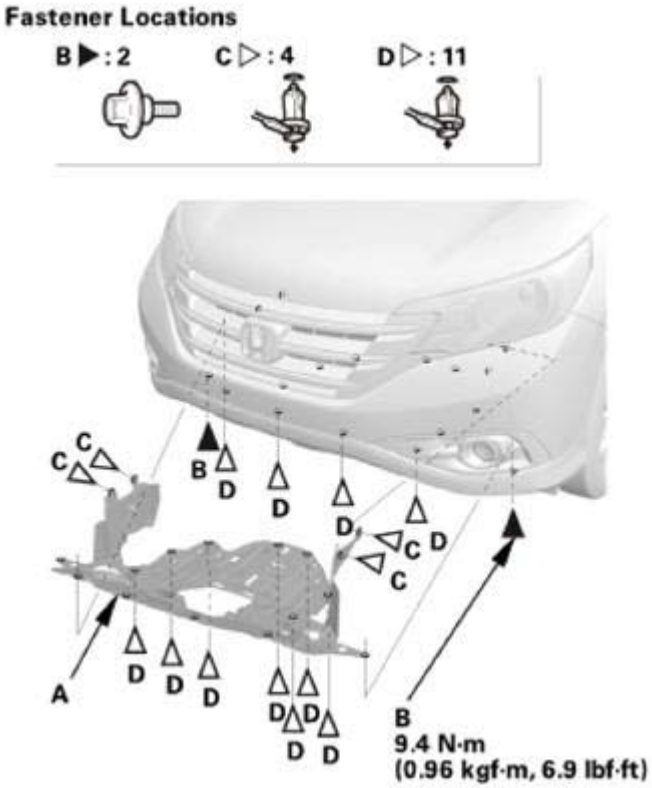

Fig. 1821: Identifying Front Splash Shield, Bolts And Clips With Torque Specification
Courtesy of AMERICAN HONDA MOTOR CO., INC.

8. Right Front Wheel
    1. Install the right front wheel.

GETtheMANUALS.org

Fig. 1822: Identifying Right Front Wheel And Studs With Torque Specification
Courtesy of AMERICAN HONDA MOTOR CO., INC.

9. Driveshaft After Install Check
    1. Turn the wheel by hand, and make sure there is no interference between the driveshaft and surrounding parts.
10. ATF - Replacement
    1. Remove the ATF dipstick (yellow loop) (A), and wipe it with a clean cloth.

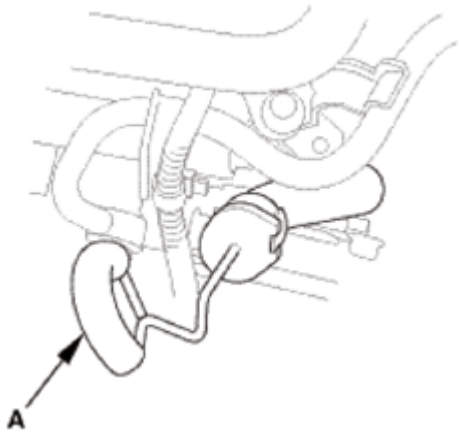

Fig. 1823: Identifying ATF Dipstick (Yellow Loop)
Courtesy of AMERICAN HONDA MOTOR CO., INC.

    2. Refill the transmission with the recommended fluid into the dipstick guide tube opening (A) to bring the fluid level between the upper mark and the lower mark of the dipstick. Always use ATF

GETtheMANUALS.org

DW-1 (genuine Honda automatic transmission fluid). Using a non-Honda ATF can affect shift quality.

Automatic Transmission Fluid Capacity

2WD:

2.2 L (2.3 US qt) at change

5.85 L (6.18 US qt) at overhaul

AWD/4WD:

2.6 L (2.7 US qt) at change

6.4 L (6.8 US qt) at overhaul

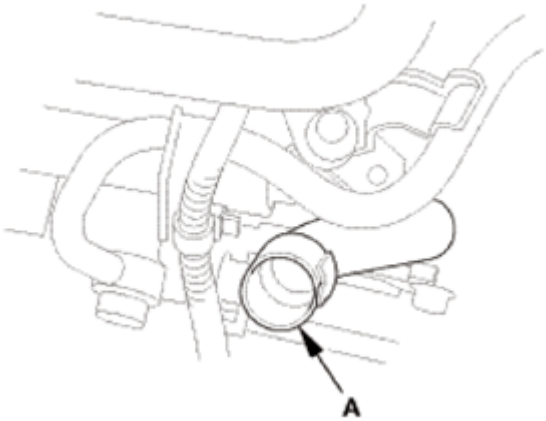

Fig. 1824: Identifying Dipstick Guide Tube Opening
Courtesy of AMERICAN HONDA MOTOR CO., INC.

3. Insert the dipstick (A) into the guide tube aligning the notch (B) with the guide tab (C).

GETtheMANUALS.org

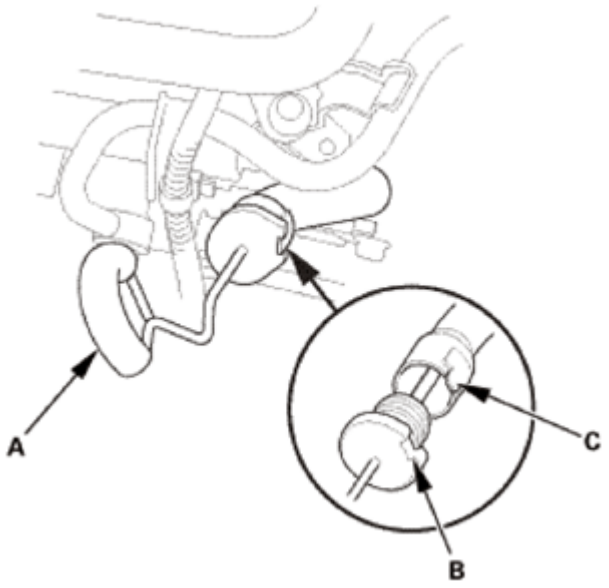

Fig. 1825: Identifying Dipstick, Notch And Guide Tab
Courtesy of AMERICAN HONDA MOTOR CO., INC.

4. Remove the dipstick.
5. Make sure the fluid level is between the upper mark (A) and the lower mark (B) on the dipstick.
6. Insert the dipstick into the guide tube aligning the notch with the guide tab.

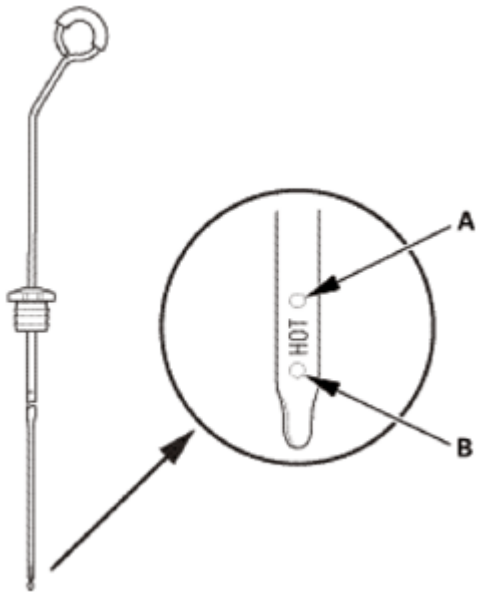

Fig. 1826: Identifying Upper And Lower Mark On Dipstick
Courtesy of AMERICAN HONDA MOTOR CO., INC.

11. Warm Up The Engine
    1. Start the engine. Hold the engine speed at 3, 000 rpm without load in P or N until the radiator fan

GETtheMANUALS.org

comes on.

2. Park the vehicle on level ground.
3. Turn the ignition switch to LOCK (0).

12. ATF Level Check

NOTE:

- **Keep all foreign particles out of the transmission.**
- **Check the fluid level within 60-90 seconds after turning the engine off.**
- **Higher fluid level may be indicated if the radiator fan comes on twice or more.**

1. Remove the ATF dipstick (yellow loop) (A), and wipe it with a clean cloth.
2. Insert the dipstick into the guide tube aligning the notch (B) with the guide tab (C).

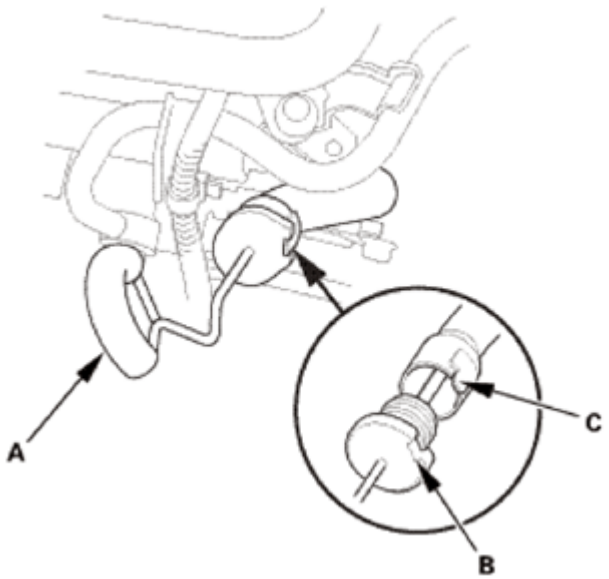

Fig. 1827: Identifying Notch, Tab And ATF Dipstick (Yellow Loop)
Courtesy of AMERICAN HONDA MOTOR CO., INC.

3. Remove the dipstick, and check the ATF level. It should be between the upper mark (A) and the lower mark (B).
4. If the ATF level is below the lower mark, check for fluid leaks at the transmission, the hoses, and the line joints. If a problem is found, fix it before filling the transmission with ATF.

NOTE: **If the vehicle is driven when the ATF level is below the lower mark, one or more of these symptoms may occur:**

GETtheMANUALS.org

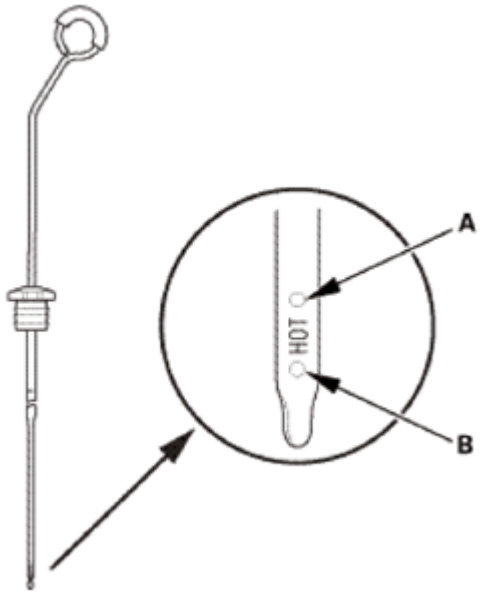

Fig. 1828: Identifying Upper And Lower Mark On Dipstick
Courtesy of AMERICAN HONDA MOTOR CO., INC.

- Transmission damage.
- Vehicle does not move in any gear.
- Vehicle accelerates poorly, and engine revs up abnormally high when starting off in forward and reverse positions.
- Engine vibrates at idle.

5. If the ATF level is above the upper mark, drain the ATF to proper level.

NOTE: **If the vehicle is driven when the ATF level is above the upper mark, the vehicle may creep forward while in N, or have shifting problems.**

6. If necessary, fill the transmission with ATF through the dipstick guide tube opening (A) to bring the fluid level between the upper mark and the lower mark of the dipstick. Do not fill the fluid above the upper mark. Always use ATF DW-1 (genuine Honda automatic transmission fluid). Using a non-Honda ATF can affect shift quality.
7. Insert the dipstick into the guide tube aligning the notch with the guide tab.

GETtheMANUALS.org

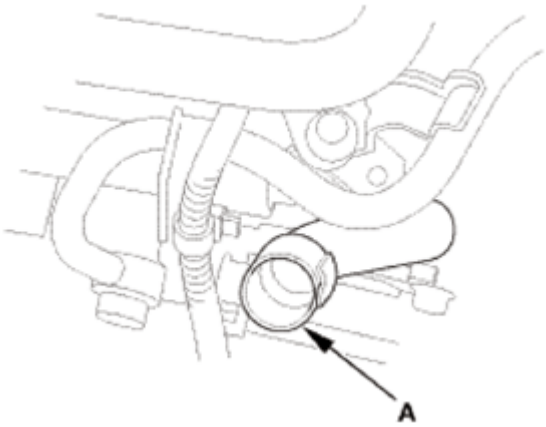

Fig. 1829: Identifying Dipstick Guide Tube Opening
Courtesy of AMERICAN HONDA MOTOR CO., INC.

13. Engine Oil Level - Check
    1. Remove the dipstick, and wipe off the dipstick, then reinstall the dipstick.
    2. Remove the dipstick.
    3. Check the engine oil level. It should be between the upper mark (A) and the lower mark (B).
    4. If the engine oil level is near or below the lower mark check for oil leakage, and add the engine oil to bring it to the upper mark.

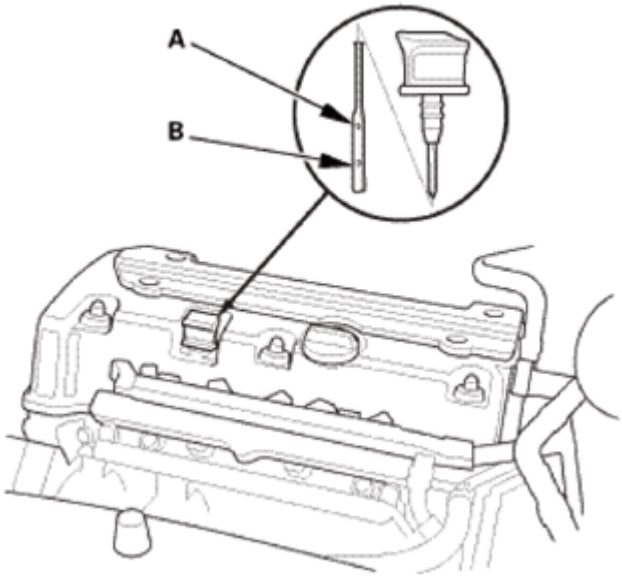

Fig. 1830: Checking Engine Oil Level
Courtesy of AMERICAN HONDA MOTOR CO., INC.

14. Pre-Alignment Checks

    For proper inspection and adjustment of the wheel alignment, do these checks:

GETtheMANUALS.org

1. Release the parking brake to avoid an incorrect measurement.
2. Make sure the suspension is not modified.
3. Make sure the fuel tank is full, and that the spare tire, the jack, and the tools are in place on the vehicle.
4. Check the tire size and tire pressure according to tire information.
5. Set the steering column to the middle tilt position and telescopic position.

15. Caster - Inspection

Use commercially available computerized four wheel alignment equipment to measure wheel alignment (caster, camber, toe, and turning angle). Follow the equipment manufacturer's instructions.

1. Check the caster angle.

   Caster angle:

   2WD:

   With 16 inch wheel: 2 ° 44 '±30 '

   Without 16 inch wheel: 2 ° 50 '±30 '

   AWD/4WD:

   With 16 inch wheel: 2 ° 38 '±30 '

   Without 16 inch wheel: 2 ° 44 '±30 '

   - If the measurement is within specifications, measure the front camber angle.
   - If the measurement is not within specifications, check for bent or damaged suspension components.

16. Camber - Inspection

Use commercially available computerized four wheel alignment equipment to measure wheel alignment (caster, camber, toe, and turning angle). Follow the equipment manufacturer's instructions.

1. Check the camber angle.

   Camber angle:

   2WD:

   Front:

   With 16 inch wheel: -0 ° 01 '±1 ° 00 '

GETtheMANUALS.org

Without 16 inch wheel: -0 ° 10 '±1 ° 00 '

(Maximum difference between the front right and left side: 1 °00 ')

Rear:

With 16 inch wheel: -1 ° 06 '±45 '

Without 16 inch wheel: -1 ° 12 '±45 '

(Maximum difference between the front right and left side: 0 °45 ')

AWD/4WD:

Front:

With 16 inch wheel: -0 ° 08 '±1 ° 00 '

Without 16 inch wheel: 0 ° 00 '±1 ° 00 '

(Maximum difference between the front right and left side: 1 °00 ')

Rear:

With 16 inch wheel: -0 ° 50 '±45 '

Without 16 inch wheel: -1 ° 00 '±45 '

(Maximum difference between the front right and left side: 0 °45 ')

- If the measurement is within specification, measure the toe-in.
- If the measurement for the front camber is not within the specification, go to front camber adjustment.
- If the measurement for the rear camber is not within the specification, check for bent or damaged suspension components.

17. Front Toe - Inspection

Use commercially available computerized four wheel alignment equipment to measure wheel alignment (caster, camber, toe, and turning angle). Follow the equipment manufacturer's instructions.

1. Set the steering column to the middle tilt position and telescopic positions.
2. Center the steering wheel spokes, and install a steering wheel holder tool.
3. Check the toe with the wheels pointed straight ahead.

Front toe-in: 0±2 mm (0±0.08 in)

GETtheMANUALS.org

- If adjustment is required, go to the front toe adjustment.
- If no adjustment is required, remove the alignment equipment.

18. Turning Angle - Inspection

Use commercially available computerized four wheel alignment equipment to measure wheel alignment (caster, camber, toe, and turning angle). Follow the equipment manufacturer's instructions.

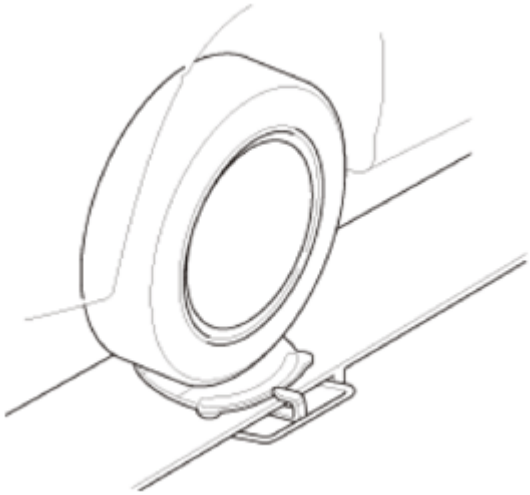

Fig. 1831: Measuring Wheel Alignment (Caster, Camber, Toe And Turning Angle)
Courtesy of AMERICAN HONDA MOTOR CO., INC.

1. Turn the wheel right and left while applying the brake, and measure the turning angle of both wheels.

   Turning angle:

   2WD:

   Inward:

   With 16 inch wheel: 36 ° 29 '±2 °

   Without 16 inch wheel: 36 ° 13 '±2 °

   Outward (reference):

   With 16 inch wheel: 31 ° 13 '

   Without 16 inch wheel: 31 ° 02 '

   AWD/4WD:

   Inward:

GETtheMANUALS.org

With 16 inch wheel: 36 ° 48 '±2 °

Without 16 inch wheel: 36 ° 30 '±2 °

Outward (reference):

With 16 inch wheel: 31 ° 18 '

Without 16 inch wheel: 31 ° 12 '

2. If the measurement is not within the specifications, even up both sides of the tie-rod threaded section length while adjusting the front toe.
3. If it is correct, but the turning angle is not within the specifications, check for bent or damaged suspension components.

19. Test Drive
    1. Test-drive the vehicle.
20. HDS DLC - Connection
    1. Connect the HDS to the data link connector (DLC) (A) located under the driver's side of the dashboard.
    2. Turn the ignition switch to ON (II).
    3. Make sure the HDS communicates with the vehicle. If it does not communicate, go to the DLC circuit troubleshooting.

Fig. 1832: Identifying Data Link Connector Located Under Driver's Side Of Dashboard
Courtesy of AMERICAN HONDA MOTOR CO., INC.

21. Maintenance Minder Reset
    1. **RESET THE MAINTENANCE MINDER** .

GETtheMANUALS.org

SHIFT LEVER PANEL REMOVAL AND INSTALLATION

REMOVAL

1. Shift Lever Panel (AT)
    1. Carefully pry out the shift lever panel (A) with the appropriate trim tool to detach the clips (B, C) and the hooks (D), then remove the shift lever panel.

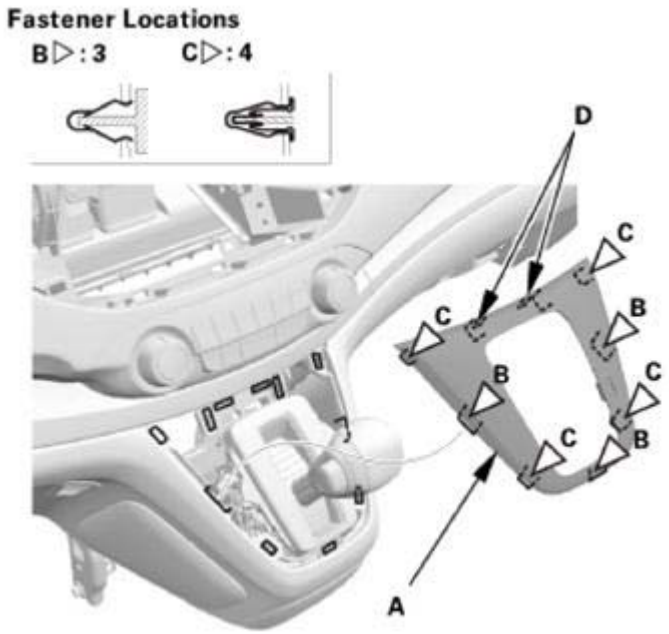

Fig. 1833: Identifying Shift Lever Panel, Clips And Hooks
Courtesy of AMERICAN HONDA MOTOR CO., INC.

INSTALLATION

1. Shift Lever Panel (AT)
    1. Install the shift lever panel (A). Make sure the clips (B, C) and the hooks (D) snap into place securely.

GETtheMANUALS.org

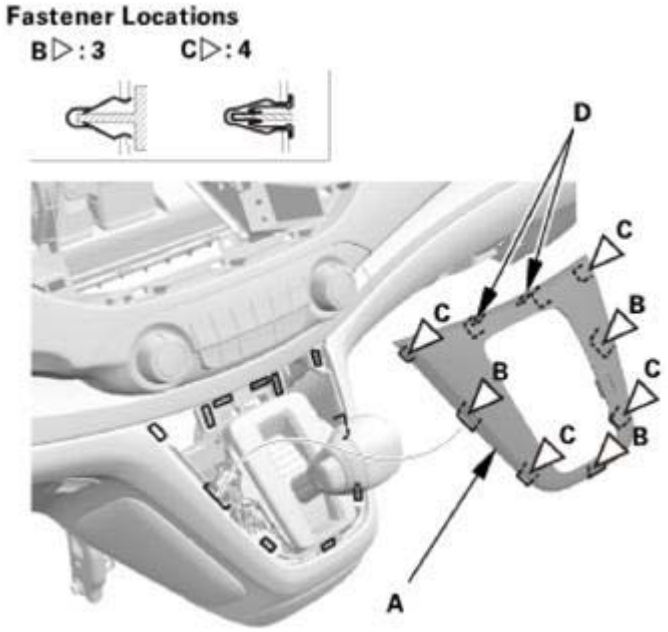

Fig. 1834: Identifying Shift Lever Panel, Clips And Hooks
Courtesy of AMERICAN HONDA MOTOR CO., INC.

SHIFT SOLENOID VALVE REMOVAL AND INSTALLATION

REMOVAL

1. Vehicle Lift
    1. Raise the vehicle on a lift, and make sure it is securely supported.
2. Front Splash Shield
    1. Remove the bolts (A), then remove the clips (B) that secure the front inner fender and the front splash shield (C) to the body.
    2. From under the front bumper (D), remove the clips (E).
    3. From under the body, remove the clips (F), then pull out the front splash shield.

GETtheMANUALS.org

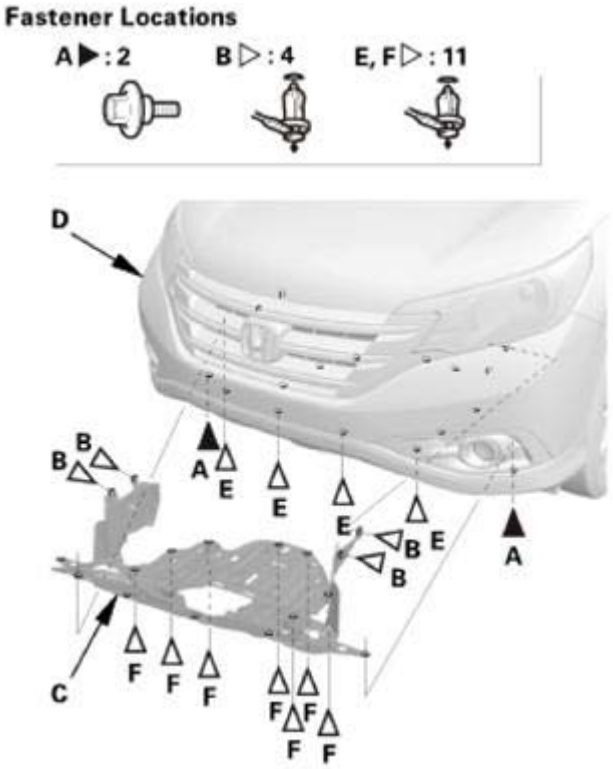

Fig. 1835: Identifying Front Splash Shield, Front Bumper, Bolts And Clips
Courtesy of AMERICAN HONDA MOTOR CO., INC.

3. ATF - Replacement
    1. Remove the drain plug (A), and drain the ATF.
    2. Reinstall the drain plug using a new sealing washer (B).

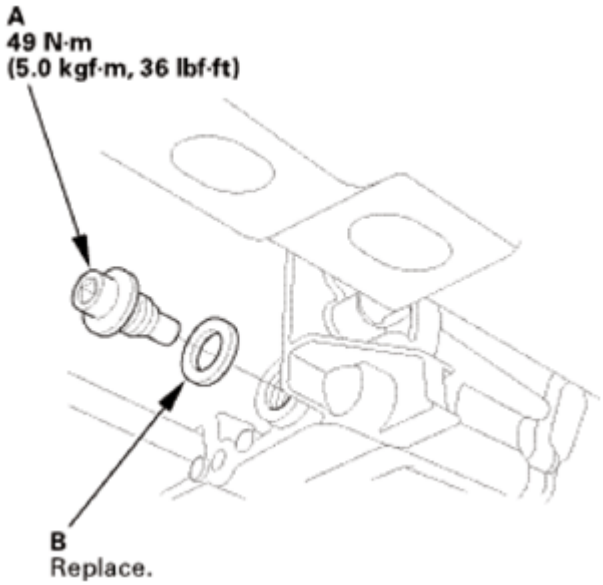

Fig. 1836: Identifying Drain Plug And Sealing Washer With Torque Specification

GETtheMANUALS.org

Courtesy of AMERICAN HONDA MOTOR CO., INC.

4. Dipstick Guide Tube
    1. Remove the ATF dipstick (yellow loop) (A).
    2. Remove the harness clamp (B).
    3. Remove the ATF dipstick guide tube (C).
    4. Remove the O-ring (D) from the ATF dipstick guide tube.

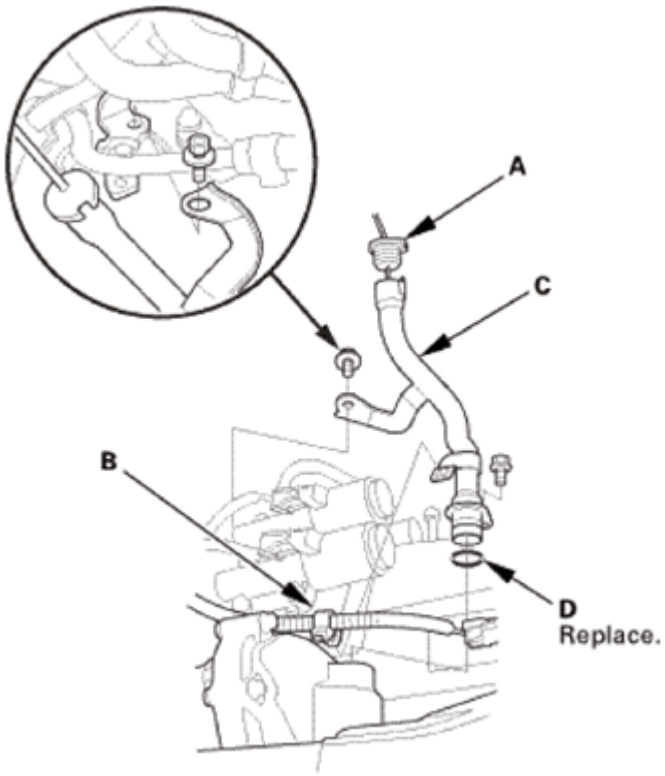

Fig. 1837: Identifying Harness Clamp, ATF Dipstick Guide Tube, O-Ring And ATF Dipstick (Yellow Loop)
Courtesy of AMERICAN HONDA MOTOR CO., INC.

5. A/T Shift Solenoid Cover
    1. Remove the shift solenoid valve cover (A), the dowel pins (B), and the gasket (C).

GETtheMANUALS.org

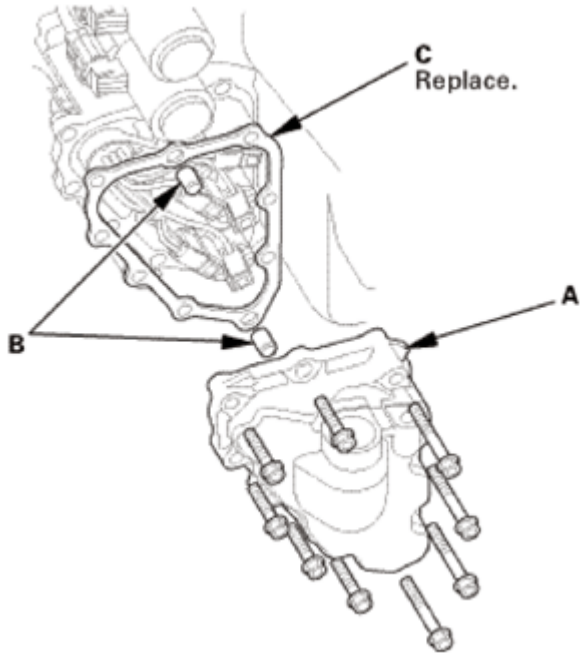

Fig. 1838: Identifying Shift Solenoid Valve Cover, Dowel Pins And Gasket
Courtesy of AMERICAN HONDA MOTOR CO., INC.

6. Shift Solenoid Valve

NOTE: **Do not hold the shift solenoid valve connector to remove the shift solenoid valves. Be sure to hold the shift solenoid valve body.**

1. Disconnect the shift solenoid valve connectors:
   - BLU wire from shift solenoid valve A.
   - ORN wire from shift solenoid valve B.
   - GRN wire from shift solenoid valve C.
   - YEL, WHT, and WHT wires from shift solenoid valve D.
   - RED wire from shift solenoid valve E.
2. Remove shift solenoid valves A, B, C, D, and E by holding the shift solenoid valve body.
3. Remove the O-rings (F) from the shift solenoid valves.

GETtheMANUALS.org

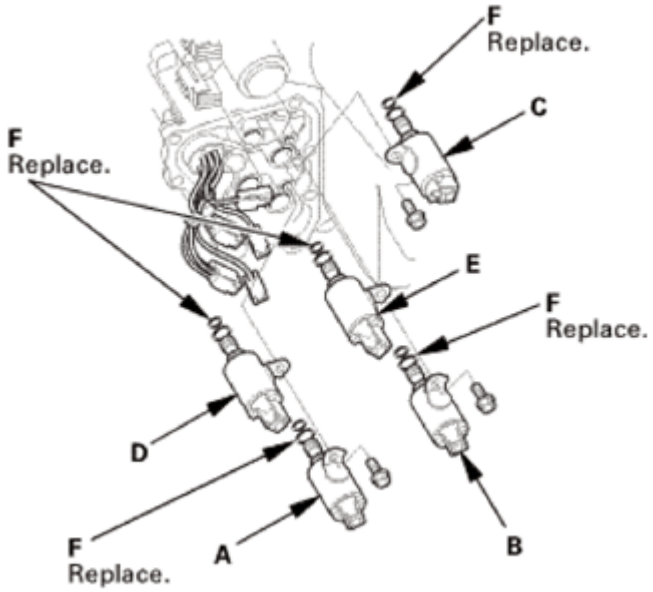

Fig. 1839: Identifying Shift Solenoid Valves And O-Rings
Courtesy of AMERICAN HONDA MOTOR CO., INC.

INSTALLATION

1. Shift Solenoid Valve

NOTE: **Do not hold the shift solenoid valve connector to install the shift solenoid valves. Be sure to hold the shift solenoid valve body.**

1. Install new O-rings (two O-rings per solenoid valve) (F) on the shift solenoid valve.

NOTE: **A new solenoid valve comes with new O-rings. If you install a new solenoid valve, use the O-rings provided on it.**

2. Install shift solenoid valve D (black connector) by holding the shift solenoid valve body; be sure that the mounting bracket contacts to the servo body.
3. Install shift solenoid valve A (brown connector) by holding the shift solenoid valve body; be sure that the mounting bracket contacts to the bracket of shift solenoid valve D.

GETtheMANUALS.org

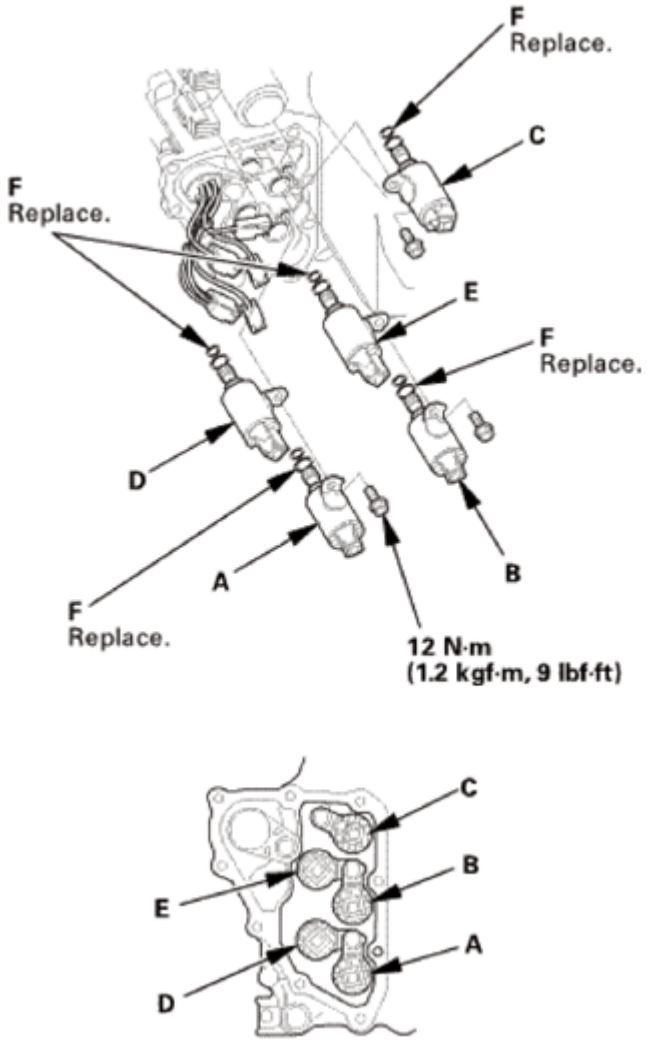

Fig. 1840: Identifying Shift Solenoid Valves And O-Rings
Courtesy of AMERICAN HONDA MOTOR CO., INC.

NOTE: **Do not install shift solenoid valve A before installing shift solenoid valve D. If shift solenoid valve A is installed before installing shift solenoid valve D, it may damage to hydraulic control system.**

4. Install shift solenoid valve E (black connector) by holding the shift solenoid valve body; be sure that the mounting bracket contacts to the servo body.
5. Install shift solenoid valve B (brown connector) by holding the shift solenoid valve body; be sure that the mounting bracket contacts to the bracket of shift solenoid valve E.

NOTE: **Do not install shift solenoid valve B before installing shift solenoid valve E. If shift solenoid valve B is installed before installing shift solenoid valve E, it may damage to hydraulic control system.**

6. Install shift solenoid valve C (brown connector) by holding the shift solenoid valve body; be sure

GETtheMANUALS.org

that the mounting bracket contacts to the servo body.

7. Connect the shift solenoid valve connectors:
    - BLU wire to shift solenoid valve A.
    - ORN wire to shift solenoid valve B.
    - GRN wire to shift solenoid valve C.
    - YEL, WHT, and WHT wires to shift solenoid valve D.
    - RED wire to shift solenoid valve E.

2. A/T Shift Solenoid Cover
    1. Install the shift solenoid valve cover (A) with the dowel pins (B) and a new gasket (C).

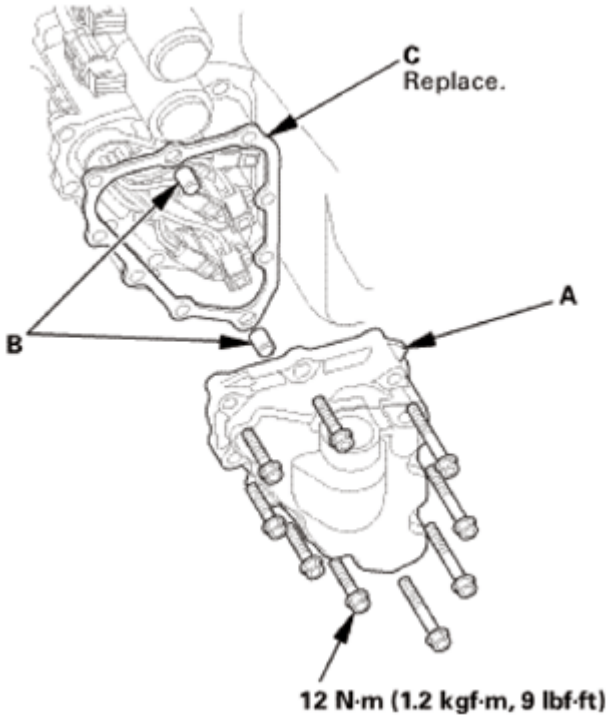

Fig. 1841: Identifying Shift Solenoid Valve Cover, Dowel Pins, Gasket And Mounting Bolts With Torque Specification
Courtesy of AMERICAN HONDA MOTOR CO., INC.

3. Dipstick Guide Tube
    1. Install a new O-ring (A) on the ATF dipstick guide tube (B).
    2. Install the ATF dipstick guide tube.
    3. Install the harness clamp (C).
    4. Install the ATF dipstick (D).

GETtheMANUALS.org

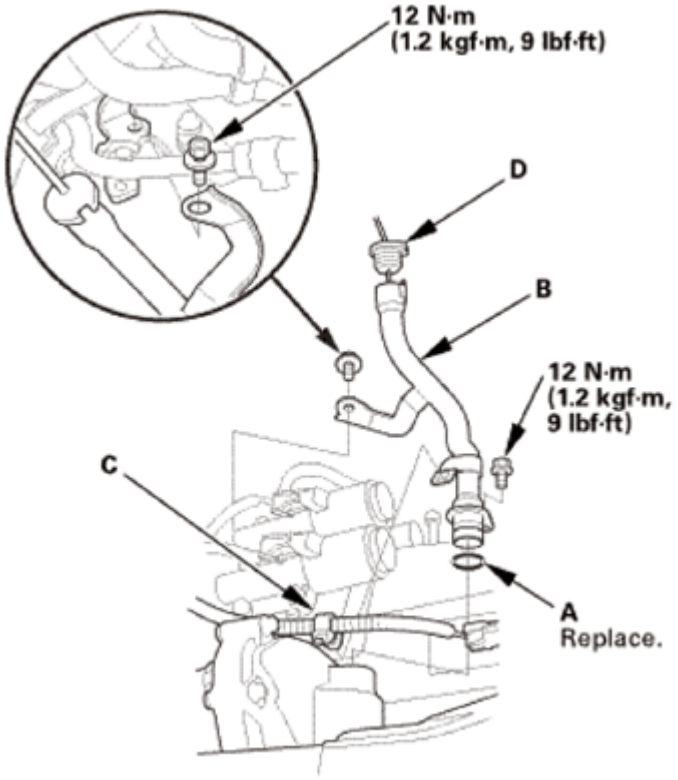

Fig. 1842: Identifying O-Ring, ATF Dipstick Guide Tube, Harness Clamp, ATF Dipstick And Mounting Bolts With Torque Specification
Courtesy of AMERICAN HONDA MOTOR CO., INC.

4. Front Splash Shield
    1. Install the front splash shield (A), then install the bolts (B) and the clips (C, D). Make sure the clips snap into place securely.

GETtheMANUALS.org

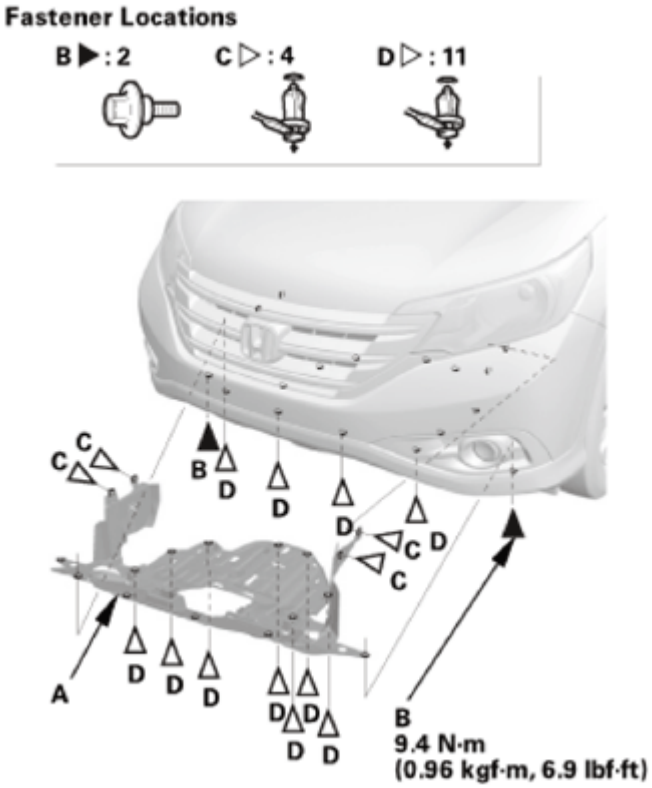

Fig. 1843: Identifying Front Splash Shield, Bolts And Clips With Torque Specification
Courtesy of AMERICAN HONDA MOTOR CO., INC.

5. ATF - Replacement
    1. Remove the ATF dipstick (yellow loop) (A), and wipe it with a clean cloth.

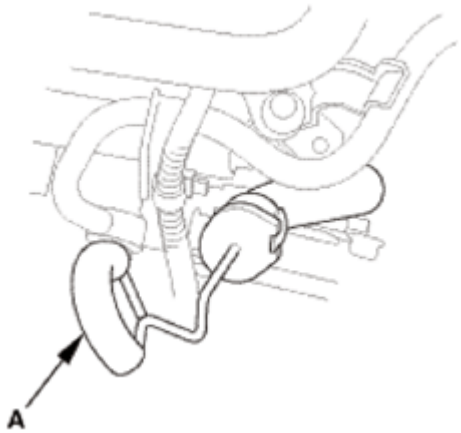

Fig. 1844: Identifying ATF Dipstick (Yellow Loop)
Courtesy of AMERICAN HONDA MOTOR CO., INC.

    2. Refill the transmission with the recommended fluid into the dipstick guide tube opening (A) to bring the fluid level between the upper mark and the lower mark of the dipstick. Always use ATF

GETtheMANUALS.org

DW-1 (genuine Honda automatic transmission fluid). Using a non-Honda ATF can affect shift quality.

Automatic Transmission Fluid Capacity

2WD:

2.2 L (2.3 US qt) at change

5.85 L (6.18 US qt) at overhaul

AWD/4WD:

2.6 L (2.7 US qt) at change

6.4 L (6.8 US qt) at overhaul

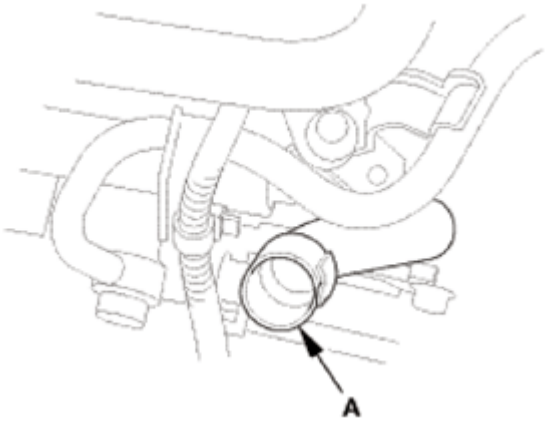

Fig. 1845: Identifying Dipstick Guide Tube Opening
Courtesy of AMERICAN HONDA MOTOR CO., INC.

3. Insert the dipstick (A) into the guide tube aligning the notch (B) with the guide tab (C).

GETtheMANUALS.org

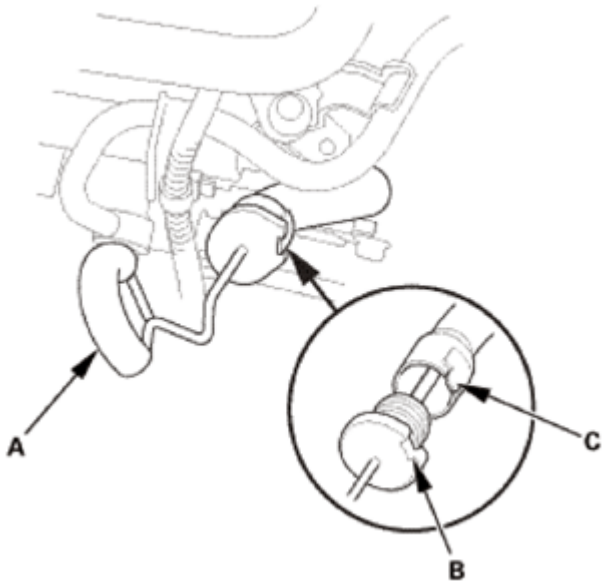

Fig. 1846: Identifying Dipstick, Notch And Guide Tab
Courtesy of AMERICAN HONDA MOTOR CO., INC.

4. Remove the dipstick.
5. Make sure the fluid level is between the upper mark (A) and the lower mark (B) on the dipstick.
6. Insert the dipstick into the guide tube aligning the notch with the guide tab.

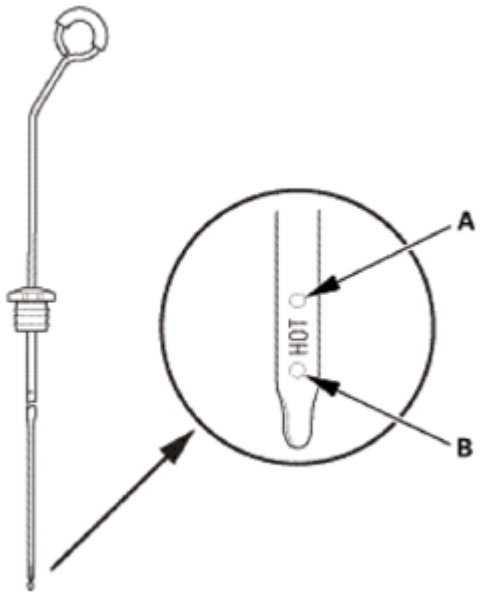

Fig. 1847: Identifying Upper And Lower Mark On Dipstick
Courtesy of AMERICAN HONDA MOTOR CO., INC.

6. Warm Up The Engine
    1. Start the engine. Hold the engine speed at 3, 000 rpm without load in P or N until the radiator fan

GETtheMANUALS.org

comes on.

2. Park the vehicle on level ground.
3. Turn the ignition switch to LOCK (0).

7. ATF Level Check

NOTE:

- **Keep all foreign particles out of the transmission.**
- **Check the fluid level within 60-90 seconds after turning the engine off.**
- **Higher fluid level may be indicated if the radiator fan comes on twice or more.**

1. Remove the ATF dipstick (yellow loop) (A), and wipe it with a clean cloth.
2. Insert the dipstick into the guide tube aligning the notch (B) with the guide tab (C).

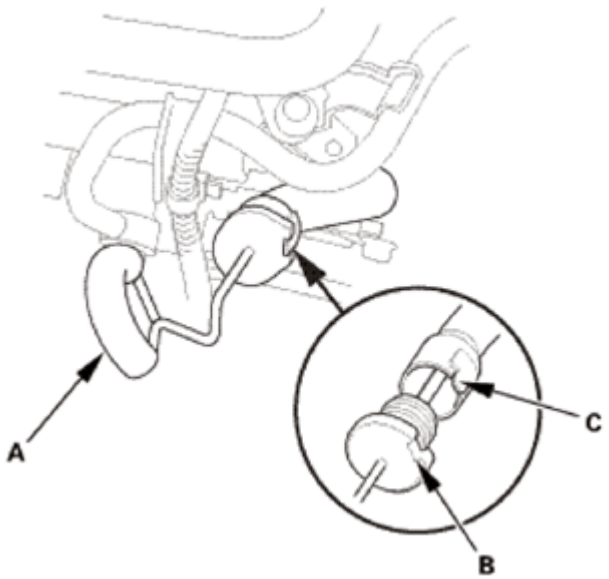

Fig. 1848: Identifying Notch, Tab And ATF Dipstick (Yellow Loop)
Courtesy of AMERICAN HONDA MOTOR CO., INC.

3. Remove the dipstick, and check the ATF level. It should be between the upper mark (A) and the lower mark (B).
4. If the ATF level is below the lower mark, check for fluid leaks at the transmission, the hoses, and the line joints. If a problem is found, fix it before filling the transmission with ATF.

NOTE: **If the vehicle is driven when the ATF level is below the lower mark, one or more of these symptoms may occur:**

- **Transmission damage.**
- **Vehicle does not move in any gear.**

GETtheMANUALS.org

- **Vehicle accelerates poorly, and engine revs up abnormally high when starting off in forward and reverse positions.**
- **Engine vibrates at idle.**

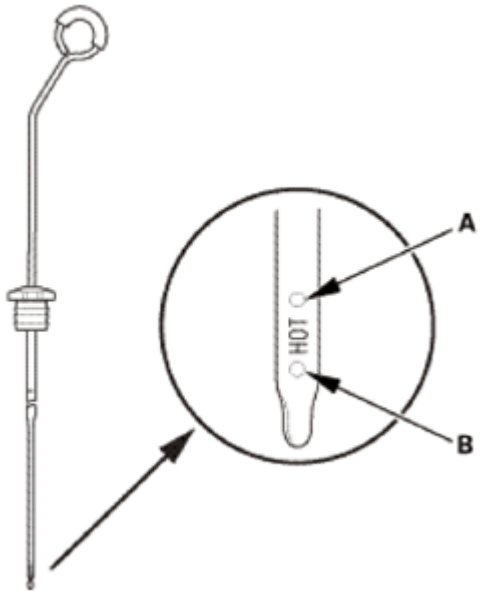

Fig. 1849: Identifying Upper And Lower Mark On Dipstick
Courtesy of AMERICAN HONDA MOTOR CO., INC.

5. If the ATF level is above the upper mark, drain the ATF to proper level.

NOTE: **If the vehicle is driven when the ATF level is above the upper mark, the vehicle may creep forward while in N, or have shifting problems.**

6. If necessary, fill the transmission with ATF through the dipstick guide tube opening (A) to bring the fluid level between the upper mark and the lower mark of the dipstick. Do not fill the fluid above the upper mark. Always use ATF DW-1 (genuine Honda automatic transmission fluid). Using a non-Honda ATF can affect shift quality.
7. Insert the dipstick into the guide tube aligning the notch with the guide tab.

GETtheMANUALS.org

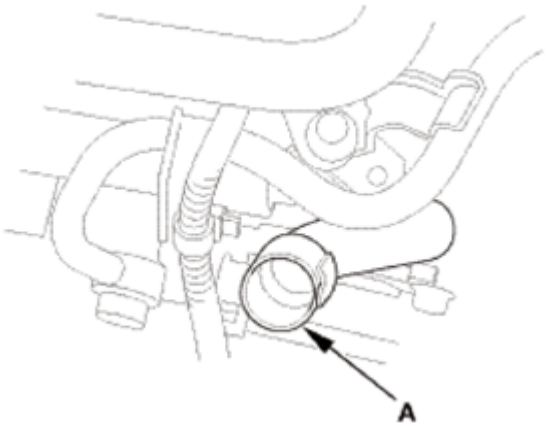

Fig. 1850: Identifying Dipstick Guide Tube Opening
Courtesy of AMERICAN HONDA MOTOR CO., INC.

8. HDS DLC - Connection
    1. Connect the HDS to the data link connector (DLC) (A) located under the driver's side of the dashboard.
    2. Turn the ignition switch to ON (II).
    3. Make sure the HDS communicates with the vehicle. If it does not communicate, go to the DLC circuit troubleshooting.

Fig. 1851: Identifying Data Link Connector Located Under Driver's Side Of Dashboard
Courtesy of AMERICAN HONDA MOTOR CO., INC.

9. Maintenance Minder Reset
    1. **RESET THE MAINTENANCE MINDER** .

SHIFT SOLENOID WIRE HARNESS REMOVAL AND INSTALLATION

GETtheMANUALS.org

REMOVAL

1. Vehicle Lift
    1. Raise the vehicle on a lift, and make sure it is securely supported.
2. Front Splash Shield
    1. Remove the bolts (A), then remove the clips (B) that secure the front inner fender and the front splash shield (C) to the body.
    2. From under the front bumper (D), remove the clips (E).
    3. From under the body, remove the clips (F), then pull out the front splash shield.

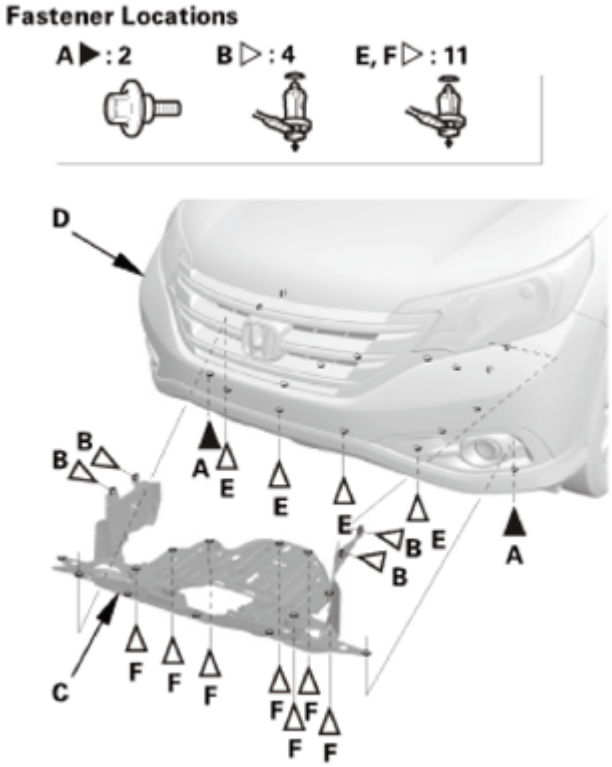

Fig. 1852: Identifying Front Splash Shield, Front Bumper, Bolts And Clips
Courtesy of AMERICAN HONDA MOTOR CO., INC.

3. ATF - Replacement
    1. Remove the drain plug (A), and drain the ATF.
    2. Reinstall the drain plug using a new sealing washer (B).

GETtheMANUALS.org

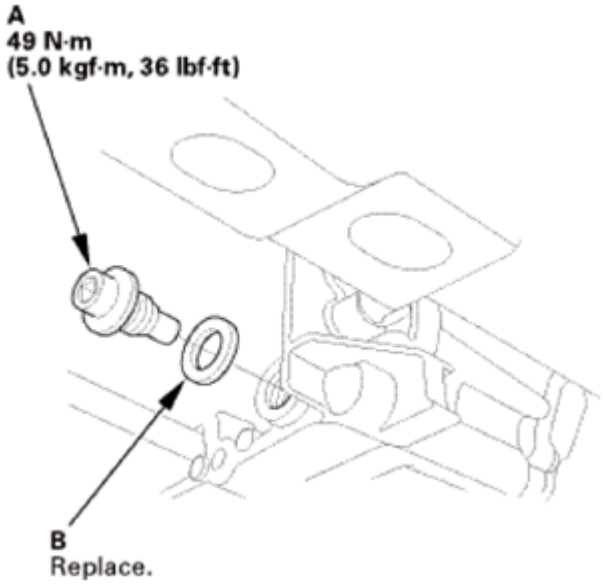

Fig. 1853: Identifying Drain Plug And Sealing Washer With Torque Specification
Courtesy of AMERICAN HONDA MOTOR CO., INC.

4. Dipstick Guide Tube
    1. Remove the ATF dipstick (yellow loop) (A).
    2. Remove the harness clamp (B).
    3. Remove the ATF dipstick guide tube (C).
    4. Remove the O-ring (D) from the ATF dipstick guide tube.

GETtheMANUALS.org

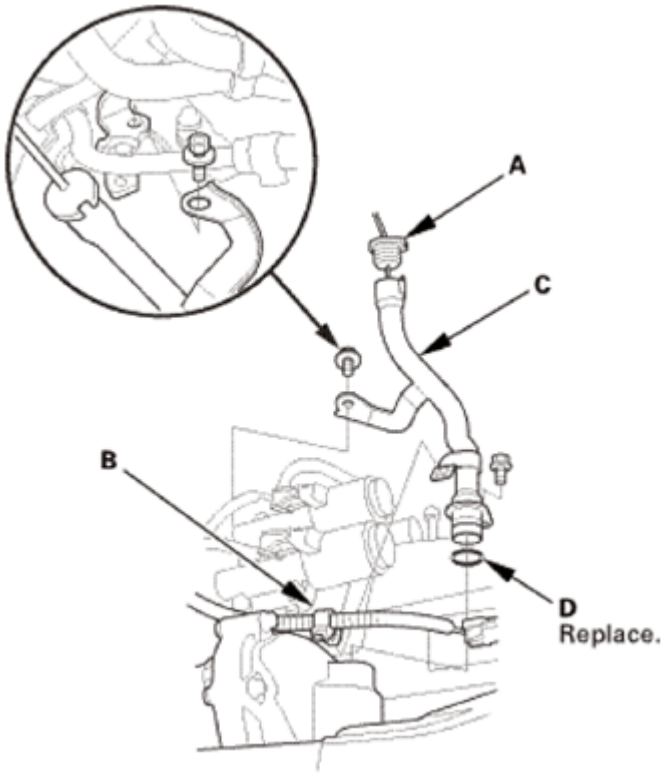

Fig. 1854: Identifying Harness Clamp, ATF Dipstick Guide Tube, O-Ring And ATF Dipstick (Yellow Loop)
Courtesy of AMERICAN HONDA MOTOR CO., INC.

5. A/T Shift Solenoid Cover
    1. Remove the shift solenoid valve cover (A), the dowel pins (B), and the gasket (C).

GETtheMANUALS.org

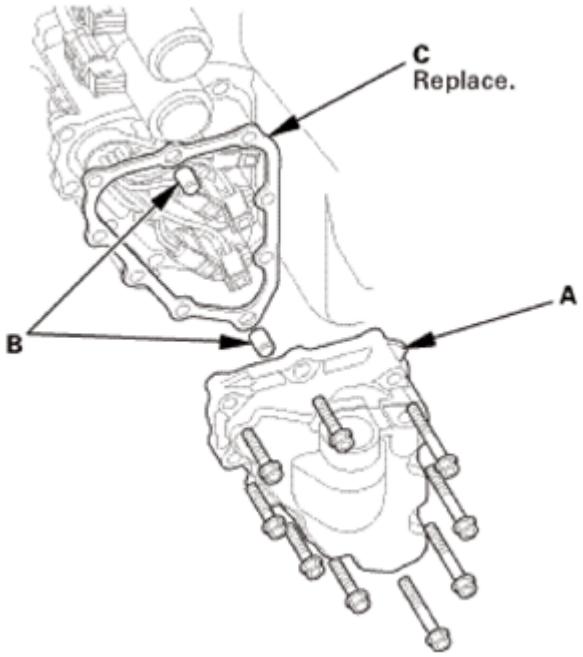

Fig. 1855: Identifying Shift Solenoid Valve Cover, Dowel Pins And Gasket
Courtesy of AMERICAN HONDA MOTOR CO., INC.

6. Shift Solenoid Wire Harness
    1. Disconnect the connectors (A).
    2. Remove the shift solenoid wire harness (B).
    3. Remove the O-ring (C) from the shift solenoid wire harness.

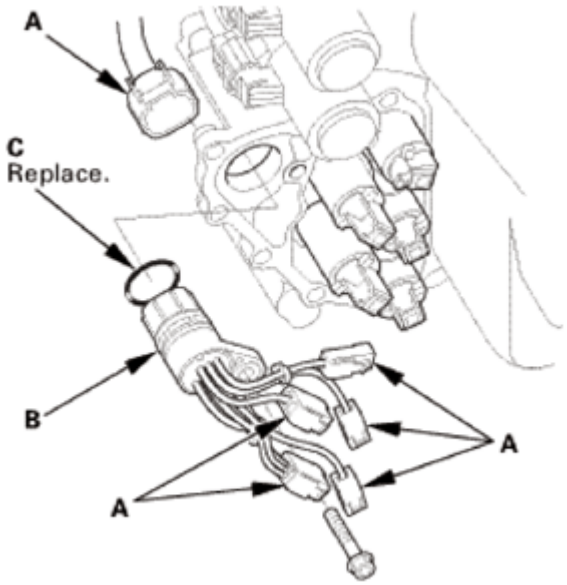

Fig. 1856: Identifying Shift Solenoid Wire Harness, Connectors And O-Ring
Courtesy of AMERICAN HONDA MOTOR CO., INC.

GETtheMANUALS.org

INSTALLATION

1. Shift Solenoid Wire Harness
    1. Install a new O-ring (F) on the shift solenoid wire harness (G).
    2. Install the shift solenoid wire harness.
    3. Connect the shift solenoid valve connectors:

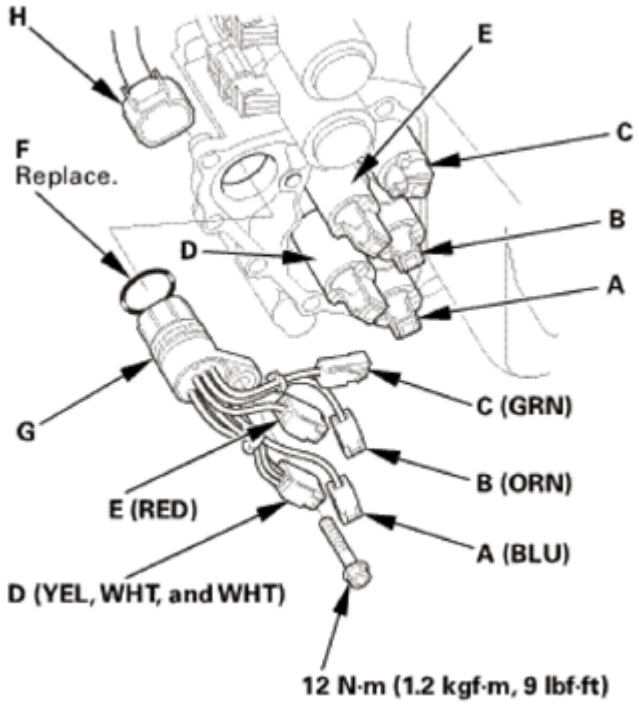

Fig. 1857: Identifying O-Ring, Connector, Shift Solenoid Wire Harness And Shift Solenoid Valves
Courtesy of AMERICAN HONDA MOTOR CO., INC.

- BLU wire to shift solenoid valve A.
- ORN wire to shift solenoid valve B.
- GRN wire to shift solenoid valve C.
- YEL, WHT, and WHT wires to shift solenoid valve D.
- RED wire to shift solenoid valve E.

    4. Check the connector (H) for corrosion, dirt, or oil, and clean or repair if necessary, then connect the connector securely.
2. A/T Shift Solenoid Cover
    1. Install the shift solenoid valve cover (A) with the dowel pins (B) and a new gasket (C).

GETtheMANUALS.org

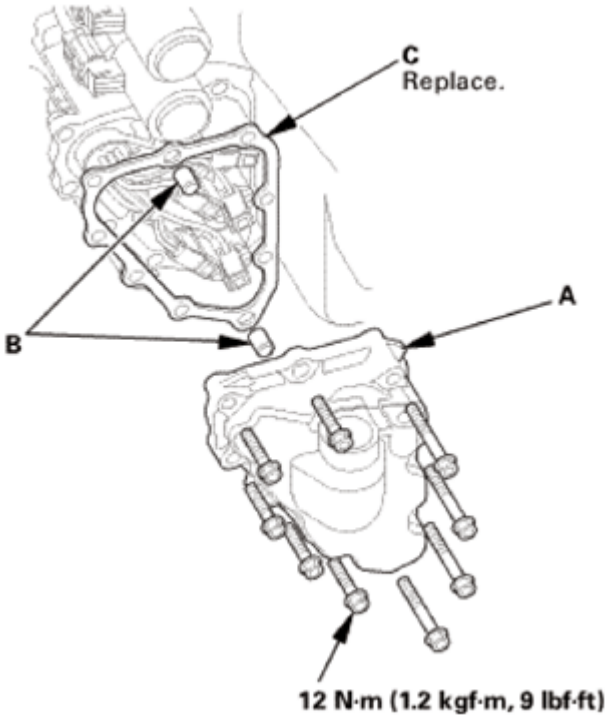

Fig. 1858: Identifying Shift Solenoid Valve Cover, Dowel Pins, Gasket And Mounting Bolts With Torque Specification
Courtesy of AMERICAN HONDA MOTOR CO., INC.

3. Dipstick Guide Tube
    1. Install a new O-ring (A) on the ATF dipstick guide tube (B).
    2. Install the ATF dipstick guide tube.
    3. Install the harness clamp (C).
    4. Install the ATF dipstick (D).

GETtheMANUALS.org

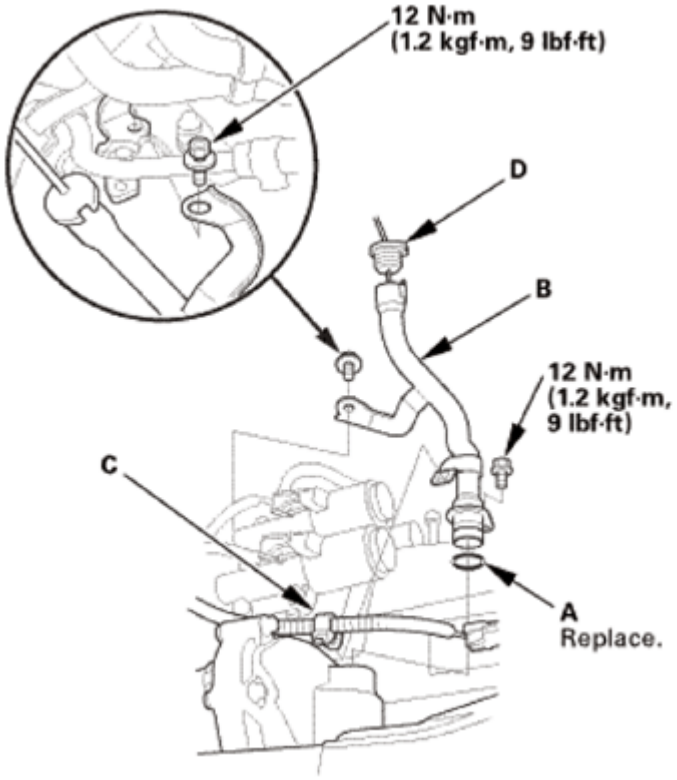

Fig. 1859: Identifying O-Ring, ATF Dipstick Guide Tube, Harness Clamp, ATF Dipstick And Mounting Bolts With Torque Specification
Courtesy of AMERICAN HONDA MOTOR CO., INC.

4. Front Splash Shield
    1. Install the front splash shield (A), then install the bolts (B) and the clips (C, D). Make sure the clips snap into place securely.

GETtheMANUALS.org

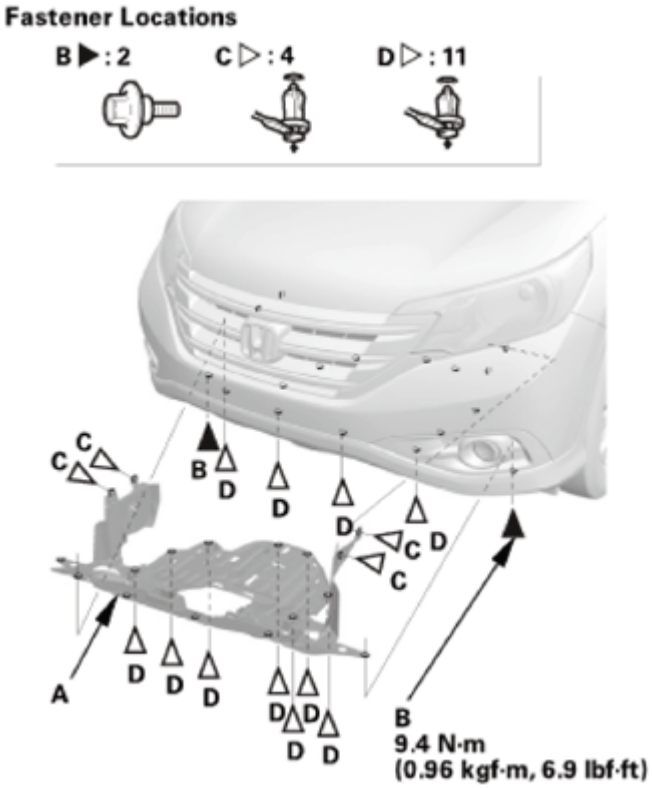

Fig. 1860: Identifying Front Splash Shield, Bolts And Clips With Torque Specification
Courtesy of AMERICAN HONDA MOTOR CO., INC.

5. ATF - Replacement
    1. Remove the ATF dipstick (yellow loop) (A), and wipe it with a clean cloth.

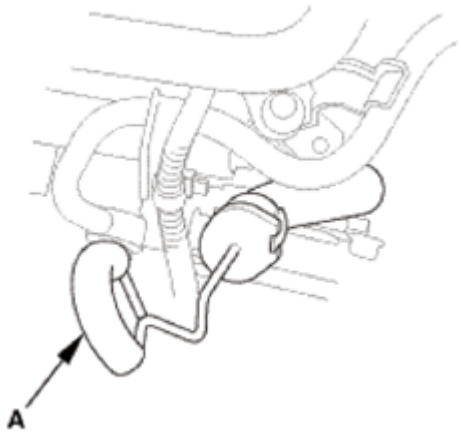

Fig. 1861: Identifying ATF Dipstick (Yellow Loop)
Courtesy of AMERICAN HONDA MOTOR CO., INC.

    2. Refill the transmission with the recommended fluid into the dipstick guide tube opening (A) to bring the fluid level between the upper mark and the lower mark of the dipstick. Always use ATF

GETtheMANUALS.org

DW-1 (genuine Honda automatic transmission fluid). Using a non-Honda ATF can affect shift quality.

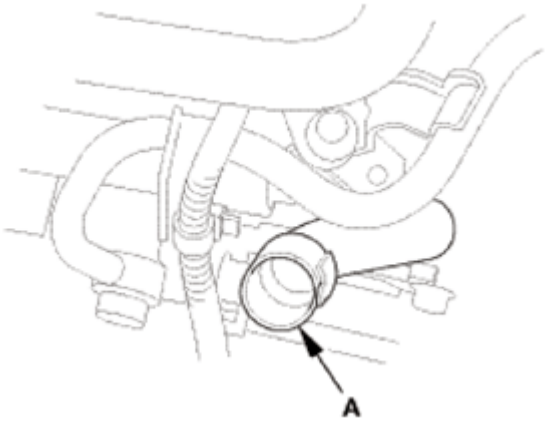

Fig. 1862: Identifying Dipstick Guide Tube Opening
Courtesy of AMERICAN HONDA MOTOR CO., INC.

Automatic Transmission Fluid Capacity

2WD:

2.2 L (2.3 US qt) at change

5.85 L (6.18 US qt) at overhaul

AWD/4WD:

2.6 L (2.7 US qt) at change

6.4 L (6.8 US qt) at overhaul

3. Insert the dipstick (A) into the guide tube aligning the notch (B) with the guide tab (C).

GETtheMANUALS.org

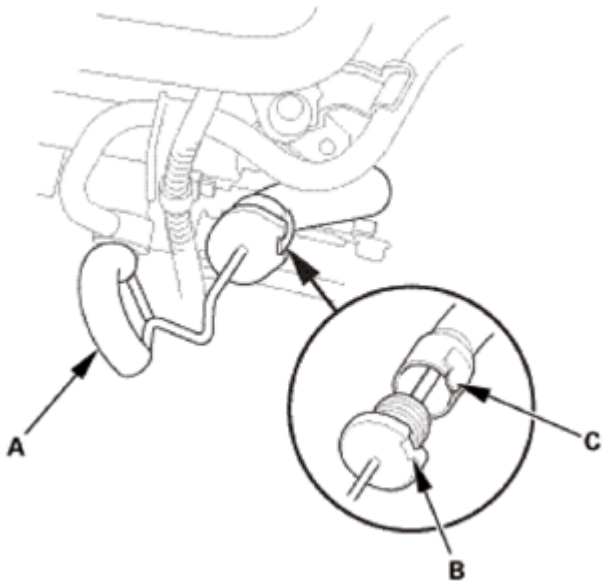

Fig. 1863: Identifying Dipstick, Notch And Guide Tab
Courtesy of AMERICAN HONDA MOTOR CO., INC.

4. Remove the dipstick.
5. Make sure the fluid level is between the upper mark (A) and the lower mark (B) on the dipstick.
6. Insert the dipstick into the guide tube aligning the notch with the guide tab.

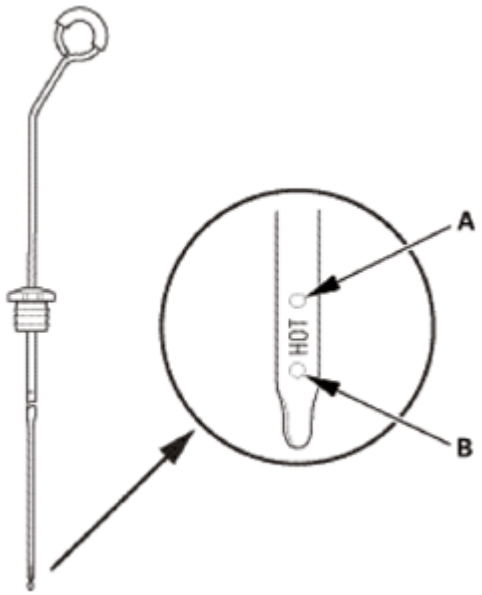

Fig. 1864: Identifying Upper And Lower Mark On Dipstick
Courtesy of AMERICAN HONDA MOTOR CO., INC.

6. Warm Up The Engine
    1. Start the engine. Hold the engine speed at 3, 000 rpm without load in P or N until the radiator fan

GETtheMANUALS.org

comes on.

2. Park the vehicle on level ground.
3. Turn the ignition switch to LOCK (0).

7. ATF Level Check

NOTE:

- **Keep all foreign particles out of the transmission.**
- **Check the fluid level within 60-90 seconds after turning the engine off.**
- **Higher fluid level may be indicated if the radiator fan comes on twice or more.**

1. Remove the ATF dipstick (yellow loop) (A), and wipe it with a clean cloth.
2. Insert the dipstick into the guide tube aligning the notch (B) with the guide tab (C).

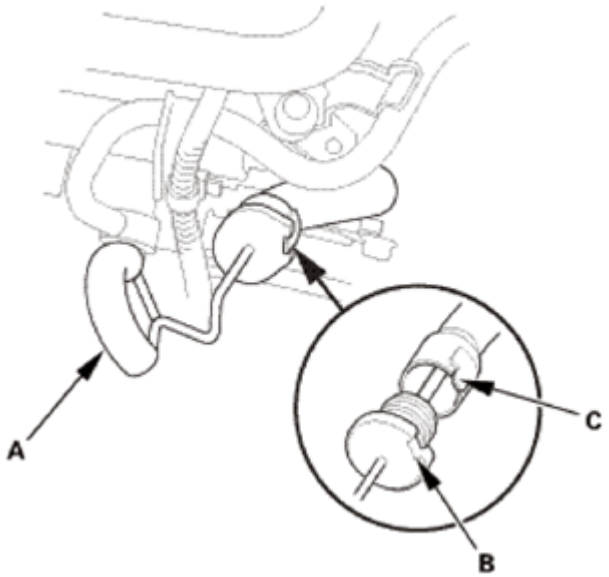

Fig. 1865: Identifying Notch, Tab And ATF Dipstick (Yellow Loop)
Courtesy of AMERICAN HONDA MOTOR CO., INC.

3. Remove the dipstick, and check the ATF level. It should be between the upper mark (A) and the lower mark (B).
4. If the ATF level is below the lower mark, check for fluid leaks at the transmission, the hoses, and the line joints. If a problem is found, fix it before filling the transmission with ATF.

NOTE: **If the vehicle is driven when the ATF level is below the lower mark, one or more of these symptoms may occur:**

- **Transmission damage.**
- **Vehicle does not move in any gear.**

GETtheMANUALS.org

- **Vehicle accelerates poorly, and engine revs up abnormally high when starting off in forward and reverse positions.**
- **Engine vibrates at idle.**

5. If the ATF level is above the upper mark, drain the ATF to proper level.

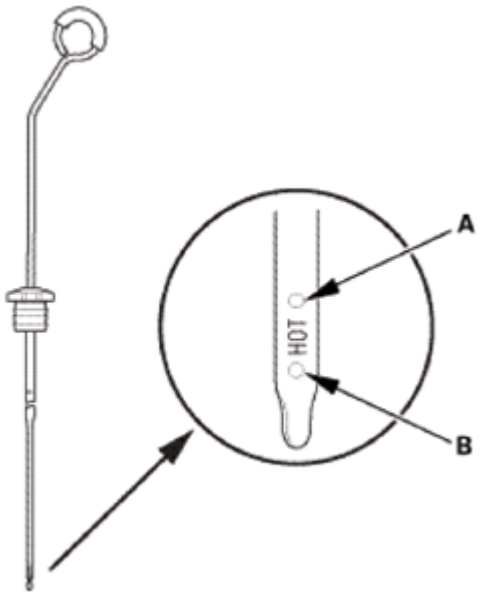

Fig. 1866: Identifying Upper And Lower Mark On Dipstick
Courtesy of AMERICAN HONDA MOTOR CO., INC.

NOTE: **If the vehicle is driven when the ATF level is above the upper mark, the vehicle may creep forward while in N, or have shifting problems.**

6. If necessary, fill the transmission with ATF through the dipstick guide tube opening (A) to bring the fluid level between the upper mark and the lower mark of the dipstick. Do not fill the fluid above the upper mark. Always use ATF DW-1 (genuine Honda automatic transmission fluid). Using a non-Honda ATF can affect shift quality.
7. Insert the dipstick into the guide tube aligning the notch with the guide tab.

GETtheMANUALS.org

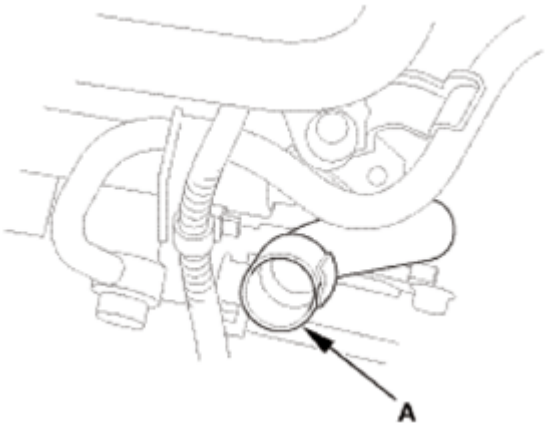

Fig. 1867: Identifying Dipstick Guide Tube Opening
Courtesy of AMERICAN HONDA MOTOR CO., INC.

8. HDS DLC - Connection
    1. Connect the HDS to the data link connector (DLC) (A) located under the driver's side of the dashboard.
    2. Turn the ignition switch to ON (II).
    3. Make sure the HDS communicates with the vehicle. If it does not communicate, go to the DLC circuit troubleshooting.

Fig. 1868: Identifying Data Link Connector Located Under Driver's Side Of Dashboard
Courtesy of AMERICAN HONDA MOTOR CO., INC.

9. Maintenance Minder Reset
    1. **RESET THE MAINTENANCE MINDER** .

TORQUE CONVERTER HOUSING COUNTERSHAFT BEARING

GETtheMANUALS.org

REPLACEMENT

SPECIAL TOOL REQUIRED

Image	Description/Tool Number
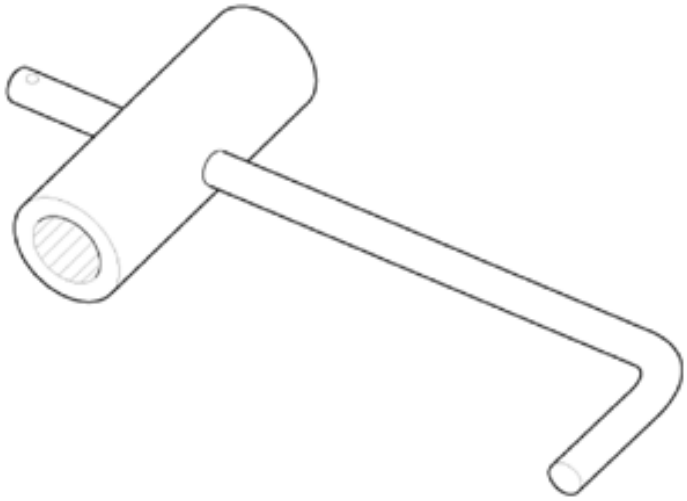	Mainshaft Holder 07GAB-PF50101
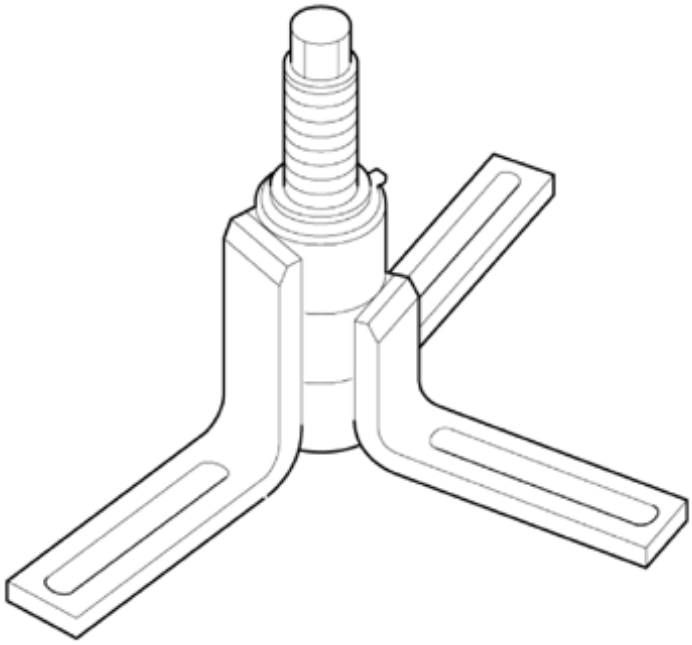	Housing Puller 07HAC-PK40102

GETtheMANUALS.org

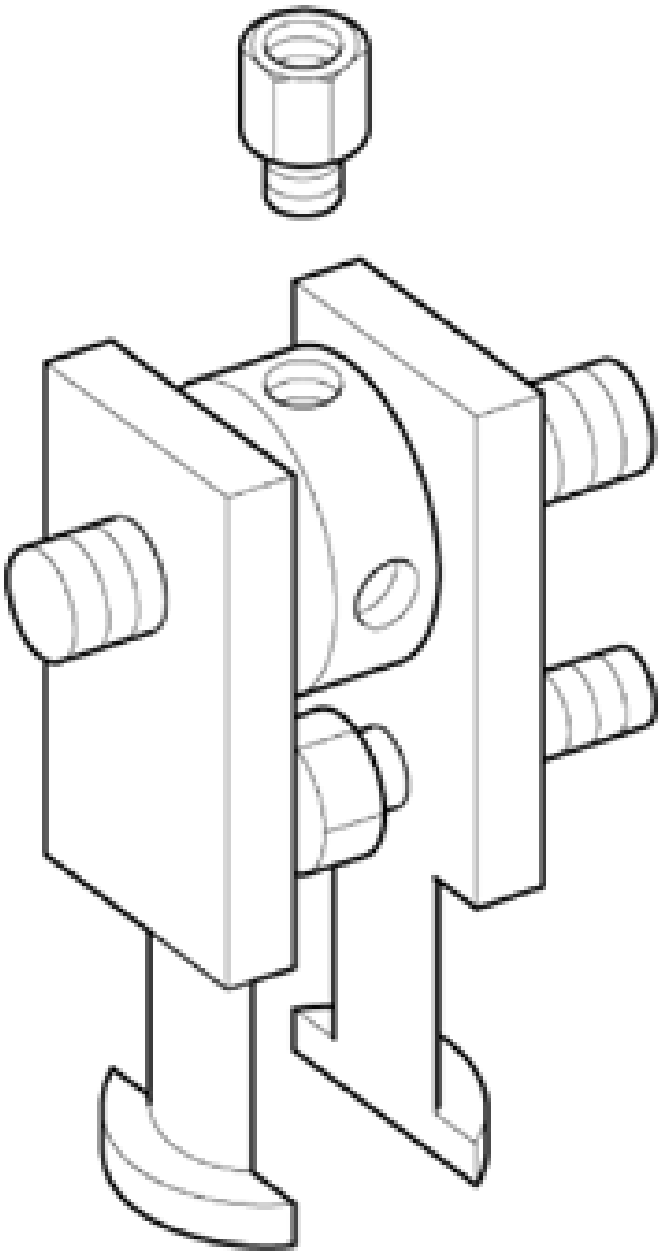	Adjustable Bearing Puller, 25-40 mm 07736-A01000B(1)
	Driver Handle, 15 x 135L 07749-0010000

GETtheMANUALS.org

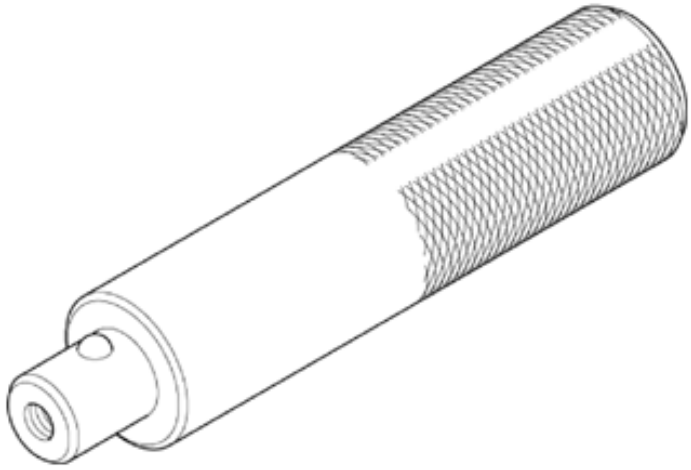	
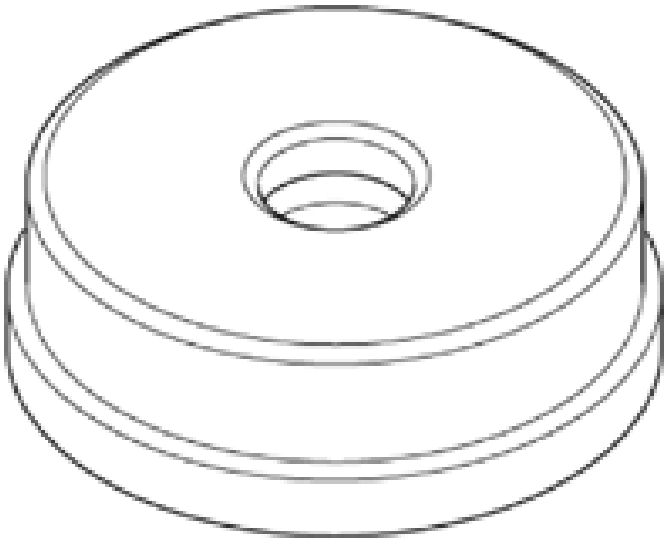	Bearing Driver Attachment, 62 x 68 mm 07746-0010500
(1) Must be used with commercially available 3/8"-16 slide hammer	

REMOVAL

NOTE: The illustration shows AWD/4WD transmission.

1. Transmission Range Switch Cover
    1. Remove the transmission range switch cover (A).

GETtheMANUALS.org

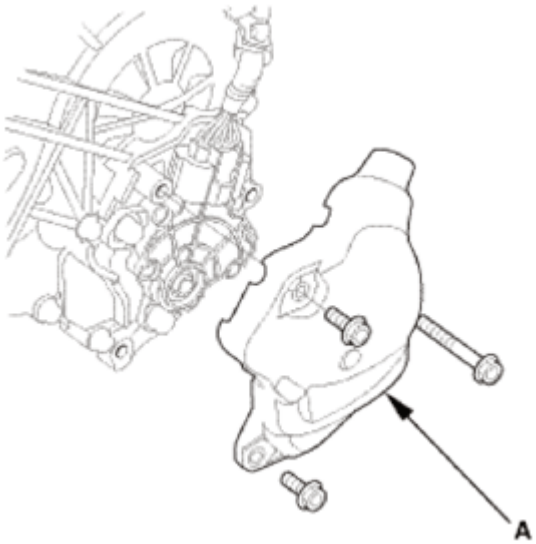

Fig. 1869: Identifying Transmission Range Switch Cover With Bolts
Courtesy of AMERICAN HONDA MOTOR CO., INC.

2. Transmission Range Switch
    1. Remove the transmission range switch (A).

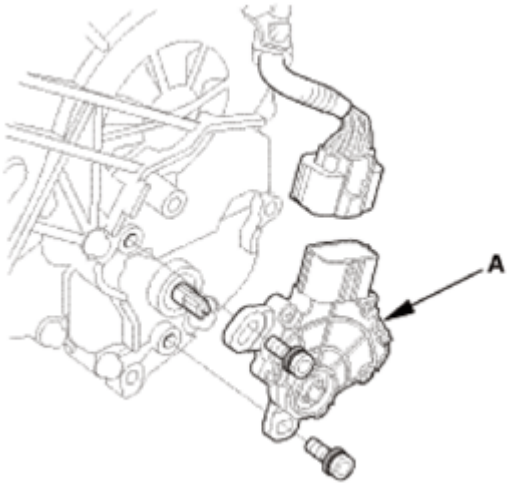

Fig. 1870: Identifying Transmission Range Switch With Bolts
Courtesy of AMERICAN HONDA MOTOR CO., INC.

3. Transmission Range Switch Subharness
    1. Remove the transmission range switch subharness (A).
    2. Remove the clamp brackets (B).

GETtheMANUALS.org

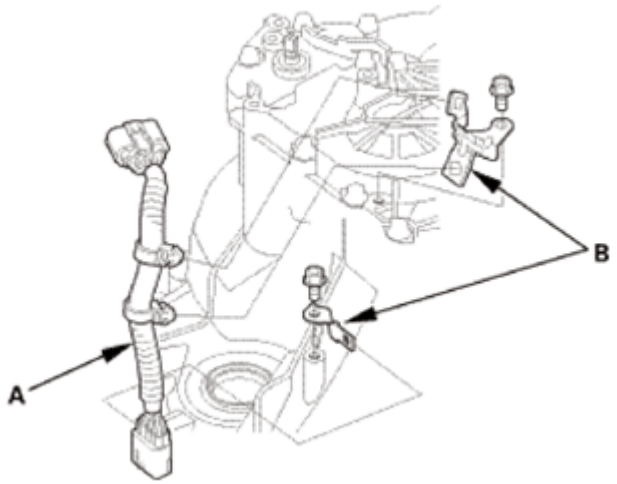

Fig. 1871: Identifying Transmission Range Switch Subharness And Clamp Brackets
Courtesy of AMERICAN HONDA MOTOR CO., INC.

4. Transmission End Cover
    1. Remove the end cover (A), the dowel pins (B), the O-rings (C), and the gasket (D).

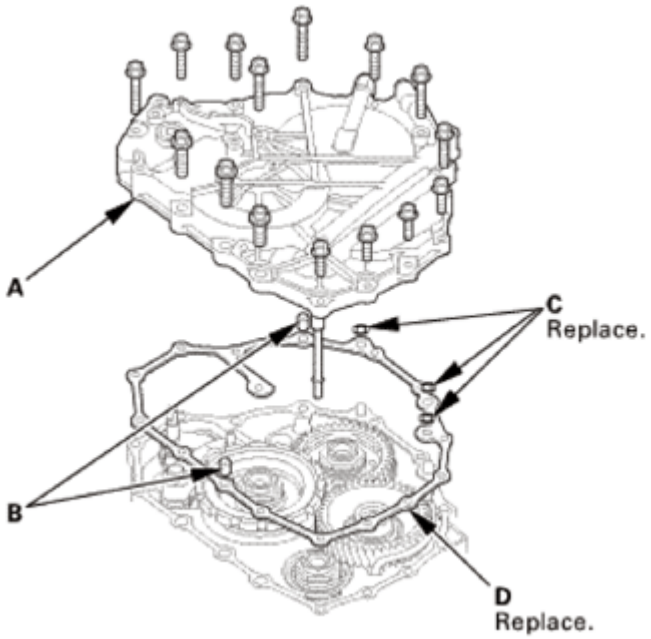

Fig. 1872: Identifying Transmission End Cover, Dowel Pins, O-Rings And Gasket With Bolts
Courtesy of AMERICAN HONDA MOTOR CO., INC.

5. Input Shaft (Mainshaft) Speed Sensor
    1. Remove the input shaft (mainshaft) speed sensor (A).
    2. Remove the O-ring (B) from the input shaft (mainshaft) speed sensor.

GETtheMANUALS.org

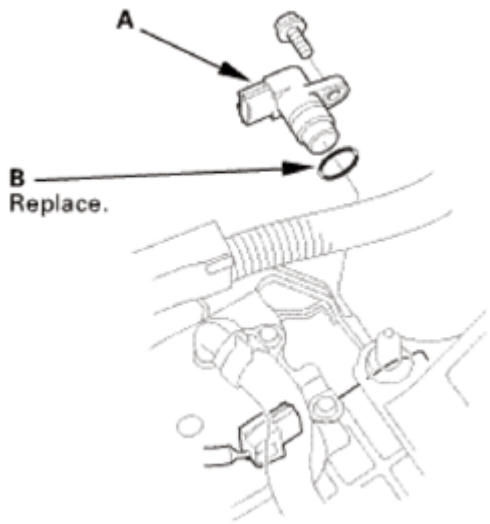

Fig. 1873: Identifying Input Shaft (Mainshaft) Speed Sensor And O-Ring
Courtesy of AMERICAN HONDA MOTOR CO., INC.

6. Output Shaft (Countershaft) Speed Sensor
    1. Remove the output shaft (countershaft) speed sensor (A) and the sensor washer (B).
    2. Remove the O-ring (C) from the output shaft (countershaft) speed sensor.

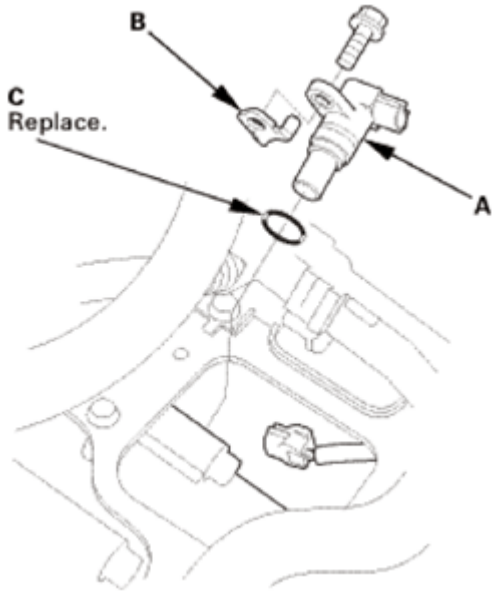

Fig. 1874: Identifying Output Shaft (Countershaft) Speed Sensor, Sensor Washer And O-Ring
Courtesy of AMERICAN HONDA MOTOR CO., INC.

7. A/T Clutch Pressure Control Solenoid Valve A
    1. Remove A/T clutch pressure control solenoid valve A.
    2. Remove the 35 mm ATF pipe (B), the ATF joint pipes (C), the O-rings (D), and the gasket (E).

GETtheMANUALS.org

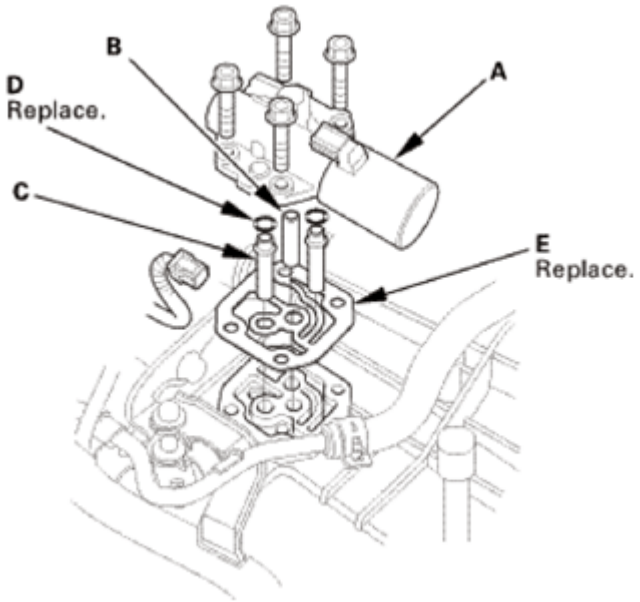

Fig. 1875: Identifying A/T Clutch Pressure Control Solenoid Valve, ATF Pipe, ATF Joint Pipes, O-Rings And Gasket With Bolts
Courtesy of AMERICAN HONDA MOTOR CO., INC.

8. A/T Clutch Pressure Control Solenoid Valve B and C
    1. Remove the clamp bracket (A) and A/T clutch pressure control solenoid valves B and C.
    2. Remove the ATF joint pipes (D), the O-rings (E), and the gasket (F).

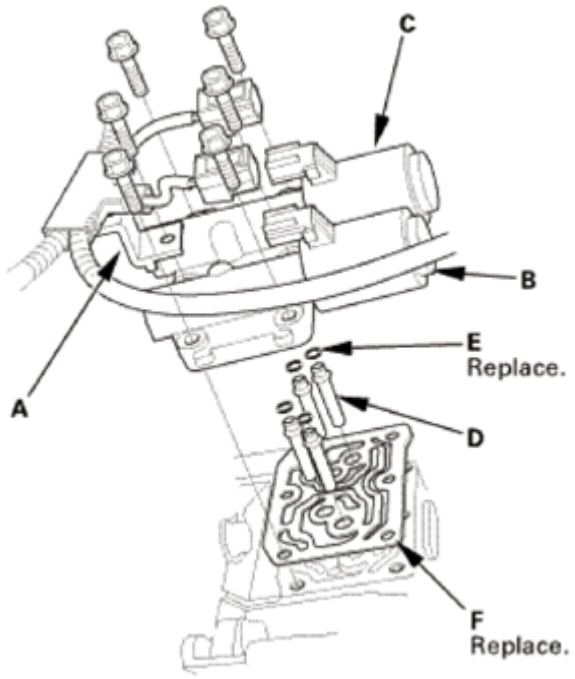

Fig. 1876: Identifying A/T Clutch Pressure Control Solenoid Valves, Clamp Bracket, ATF

GETtheMANUALS.org

Joint Pipes, O-Rings And Gasket
Courtesy of AMERICAN HONDA MOTOR CO., INC.

9. ATF Inlet Line
    1. Remove the banjo bolt (A) and the sealing washers (B).
    2. Remove the ATF inlet line (C).

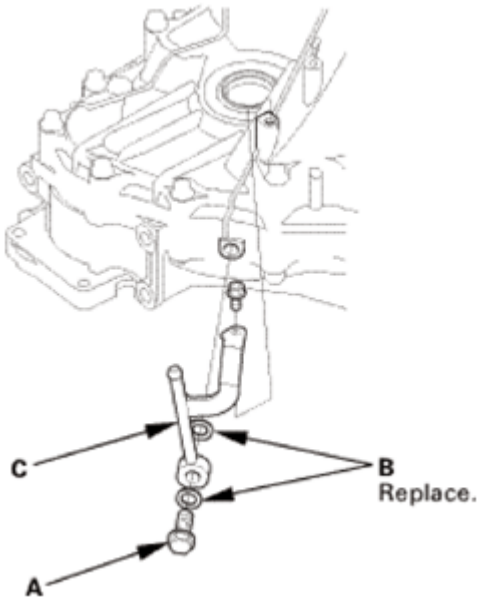

Fig. 1877: Identifying ATF Inlet Line, Banjo Bolt And Sealing Washers
Courtesy of AMERICAN HONDA MOTOR CO., INC.

10. ATF Outlet Line
    1. Remove the banjo bolt (A) and the sealing washers (B).
    2. Remove the ATF outlet line (C).

GETtheMANUALS.org

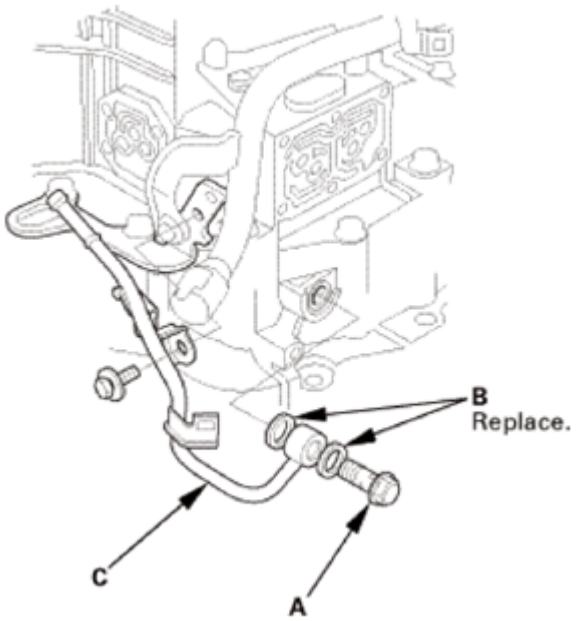

Fig. 1878: Identifying ATF Outlet Line, Banjo Bolt And Sealing Washers
Courtesy of AMERICAN HONDA MOTOR CO., INC.

11. Dipstick Guide Tube
    1. Remove the ATF dipstick guide tube (A).
    2. Remove the O-ring (B) from the ATF dipstick guide tube.

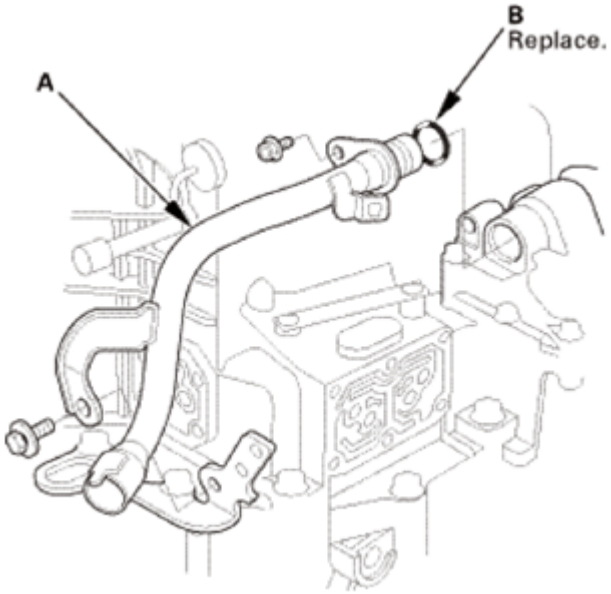

Fig. 1879: Identifying ATF Dipstick Guide Tube And O-Ring
Courtesy of AMERICAN HONDA MOTOR CO., INC.

12. A/T Shift Solenoid Cover

GETtheMANUALS.org

1. Remove the shift solenoid valve cover (A), the dowel pins (B), and the gasket (C).

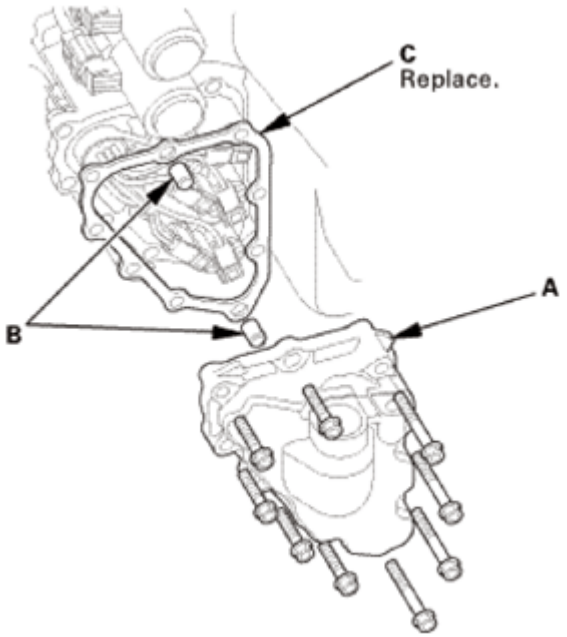

Fig. 1880: Identifying Shift Solenoid Valve Cover, Dowel Pins And Gasket
Courtesy of AMERICAN HONDA MOTOR CO., INC.

13. A/T Shift Solenoid Wire Harness - Disconnection
    1. Disconnect the connectors.

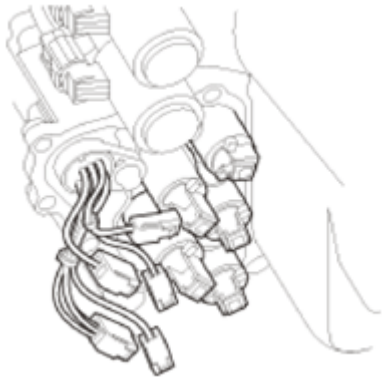

Fig. 1881: Identifying A/T Shift Solenoid Wire Harness Connectors
Courtesy of AMERICAN HONDA MOTOR CO., INC.

14. ATF Feed Pipe/Lubrication Pipe
    1. Remove the 6 x 201 mm ATF pipe (A).
    2. Remove the ATF lubrication pipe (B).
    3. Remove the 8 x 220 mm ATF pipe (C).
    4. Remove the 8 x 198 mm ATF pipes (D).

GETtheMANUALS.org

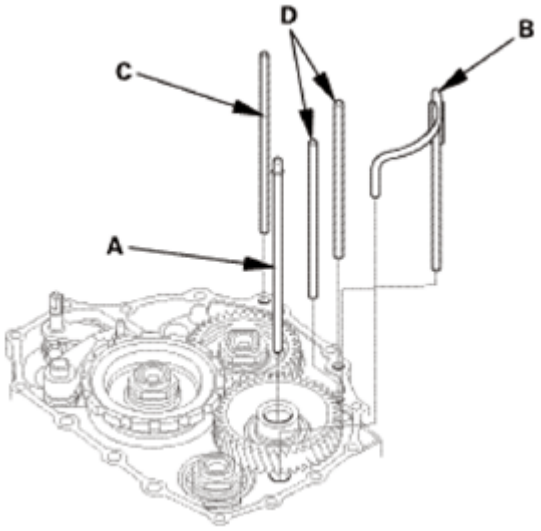

Fig. 1882: Identifying ATF Feed Pipes And Lubrication Pipe
Courtesy of AMERICAN HONDA MOTOR CO., INC.

15. End Cover Idler Gear Assembly
    1. Install the mainshaft holder onto the mainshaft.
    2. Engage the park pawl with the park gear.

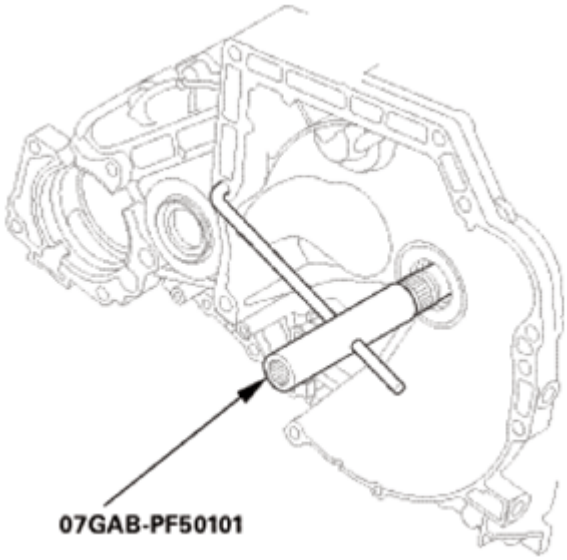

Fig. 1883: Installing Mainshaft Holder Onto Mainshaft
Courtesy of AMERICAN HONDA MOTOR CO., INC.

    3. Using a chisel, cut the lock tab (A) of the locknut (B).

NOTE: Keep all of the chiseled particles out of the transmission.

GETtheMANUALS.org

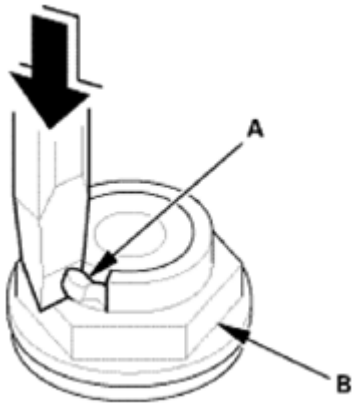

Fig. 1884: Cutting Lock Tab Of Locknut Using Chisel
Courtesy of AMERICAN HONDA MOTOR CO., INC.

4. Remove the locknuts (A) and the conical spring washers (B) from each shaft.

NOTE:

- **The countershaft and secondary shaft locknuts have left-hand threads.**
- **Keep all of the chiseled particles out of the transmission.**
- **Clean the old locknuts; they are used to install the press fit idler gears and park gear.**

5. Remove the mainshaft holder.

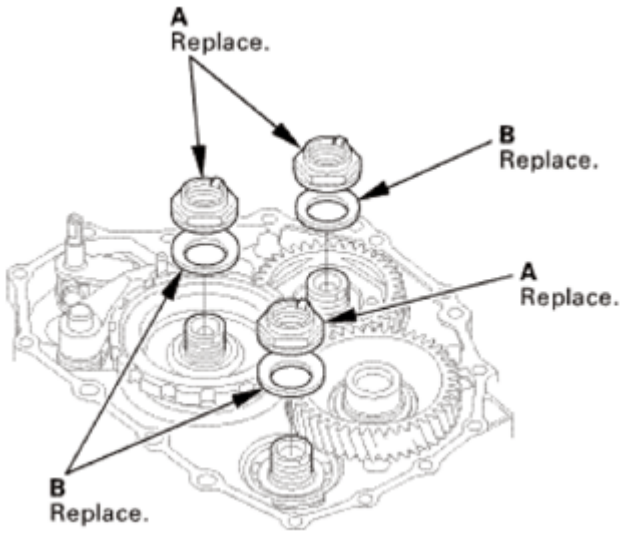

Fig. 1885: Identifying Locknuts And Conical Spring Washers
Courtesy of AMERICAN HONDA MOTOR CO., INC.

6. Remove the park pawl (A), the park pawl spring (B), the park pawl shaft (C), and the stop shaft (D).

GETtheMANUALS.org

7. Pry down the lock tab (E) of the lock washer (F).
8. Remove the lock bolt (G) and the lock washer.
9. Remove the park lever (H), the park lever stop (I), and the park lever spring (J).

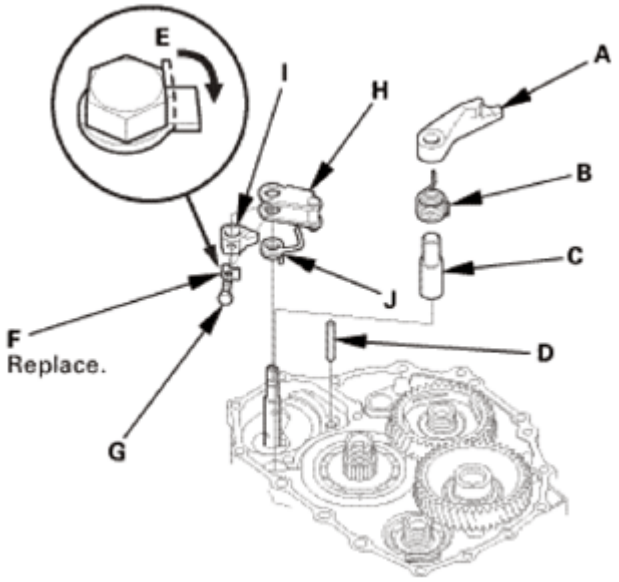

Fig. 1886: Prying Down Lock Tab Of Lock Washer
Courtesy of AMERICAN HONDA MOTOR CO., INC.

10. Place a spacer (A) on the countershaft (B).
11. Set a commercially available bearing puller (C) on the park gear (D).
12. Remove the park gear.

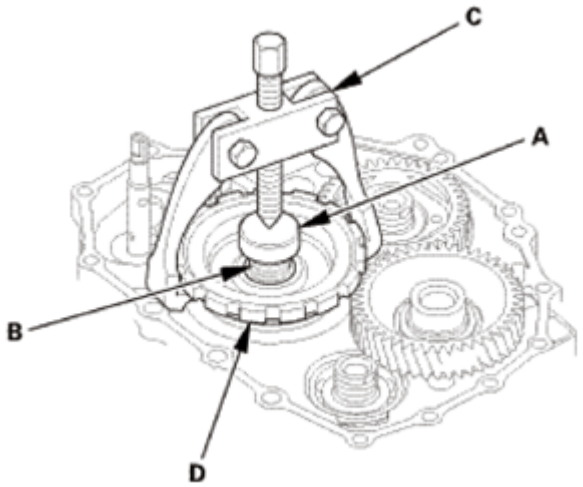

Fig. 1887: Setting Commercially Available Bearing Puller On Park Gear
Courtesy of AMERICAN HONDA MOTOR CO., INC.

13. Install a puller (A) with two 6 x 1.0 mm bolts (B) on the mainshaft idler gear (C).

GETtheMANUALS.org

14. Set a spacer (D) between the puller and the mainshaft (E).
15. Remove the mainshaft idler gear.

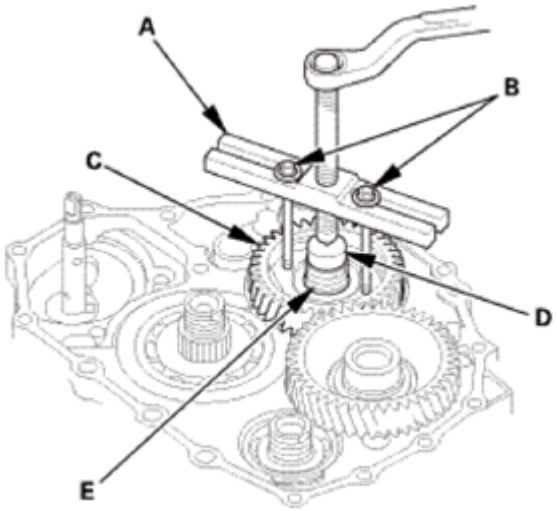

Fig. 1888: Installing Puller With 6 X 1.0 mm Bolts On Mainshaft Idler Gear
Courtesy of AMERICAN HONDA MOTOR CO., INC.

16. Automatic Transmission Housing
    1. Align the spring pin (A) on the selector control shaft (B) with the transmission housing groove (C).

    NOTE: **Do not squeeze the end of the selector control shaft tips together when turning the control shaft. If the tips are squeezed together, it will cause a faulty shift position signal or position due to the play between the selector control shaft and the transmission range switch.**

    2. Remove the transmission housing mounting bolts (D) (2WD: 19 bolts, AWD/4WD: 20 bolts).

GETtheMANUALS.org

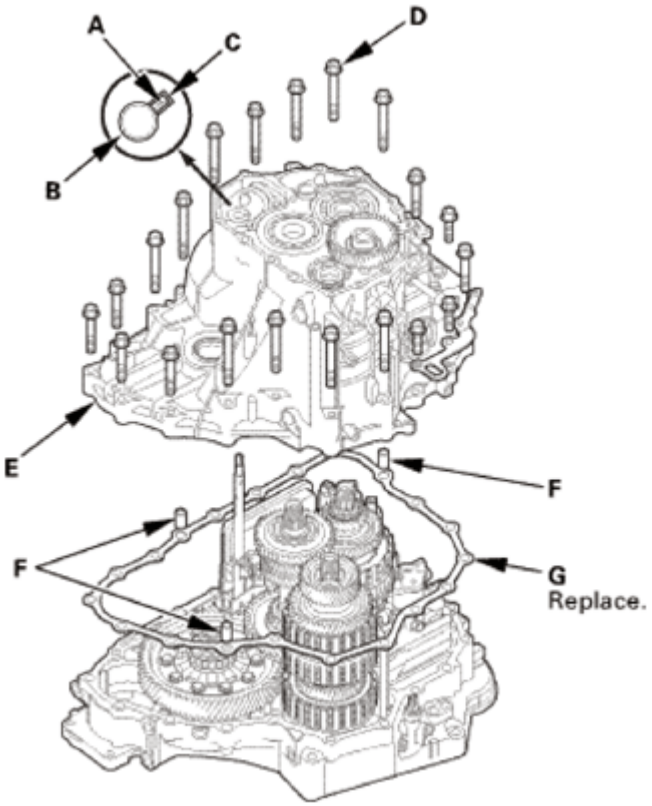

Fig. 1889: Identifying Spring Pin, Selector Control Shaft, Transmission Housing Groove, Transmission Housing, Mounting Bolts And Gasket
Courtesy of AMERICAN HONDA MOTOR CO., INC.

3. Install the housing puller over the mainshaft.
4. Remove the transmission housing (E) using the housing puller.
5. Remove the dowel pins (F) and the gasket (G).

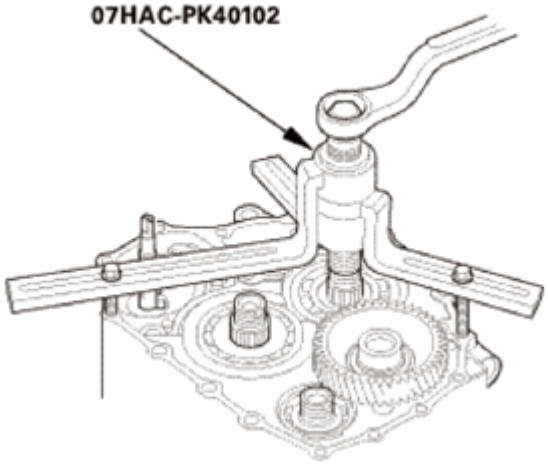

Fig. 1890: Installing Housing Puller Over Mainshaft
Courtesy of AMERICAN HONDA MOTOR CO., INC.

GETtheMANUALS.org

17. A/T Countershaft Reverse Gear
    1. Remove the countershaft reverse gear (A).
    2. Remove the needle bearing (B).

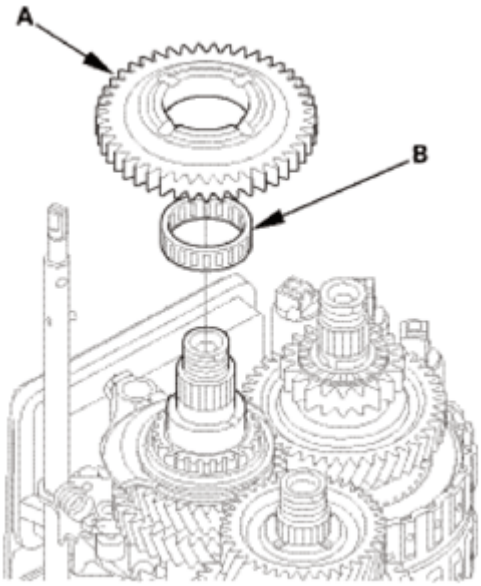

Fig. 1891: Identifying Countershaft Reverse Gear And Needle Bearing
Courtesy of AMERICAN HONDA MOTOR CO., INC.

18. Reverse Shift fork
    1. Pry down the lock tab (A) of the lock washer (B).
    2. Remove the lock bolt (C) and the lock washer.
    3. Remove the reverse shift fork (D) and the reverse selector (E) together.

GETtheMANUALS.org

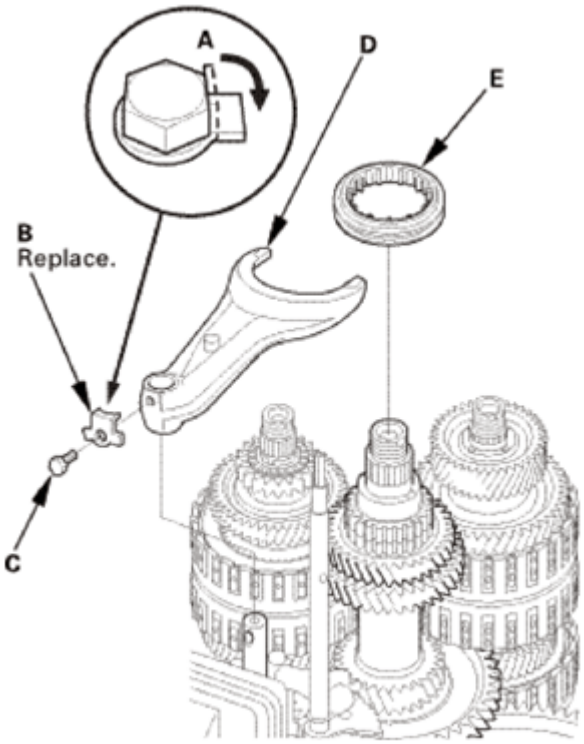

Fig. 1892: Prying Down Lock Tab Of Lock Washer
Courtesy of AMERICAN HONDA MOTOR CO., INC.

19. Selector Control Lever (Except 2WD of USA Produced Models)

Except 2WD of USA Produced Models

1. Pry down the lock tab (A) of the lock washer (B).
2. Remove the lock bolt (C) and the lock washer.
3. Remove the selector control lever (D).

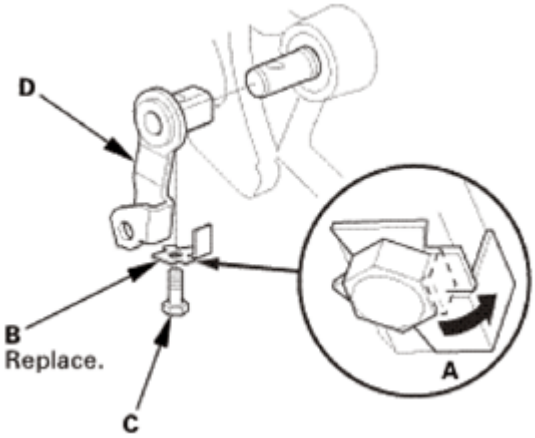

Fig. 1893: Prying Down Lock Tab Of Lock Washer (Except 2WD Of USA Produced Models)

GETtheMANUALS.org

Courtesy of AMERICAN HONDA MOTOR CO., INC.

20. Selector Control Shaft
    1. Unhook the detent arm spring (A).

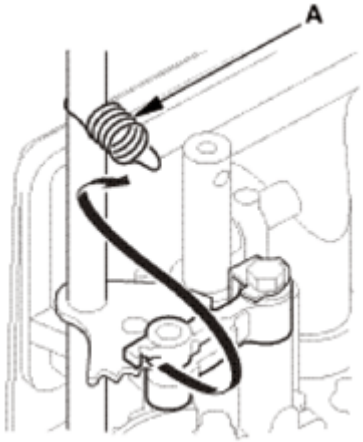

Fig. 1894: Unhooking Detent Arm Spring
Courtesy of AMERICAN HONDA MOTOR CO., INC.

    2. Separate the manual valve lever pin (A) on the selector control shaft (B) from the guide of the manual valve (C).

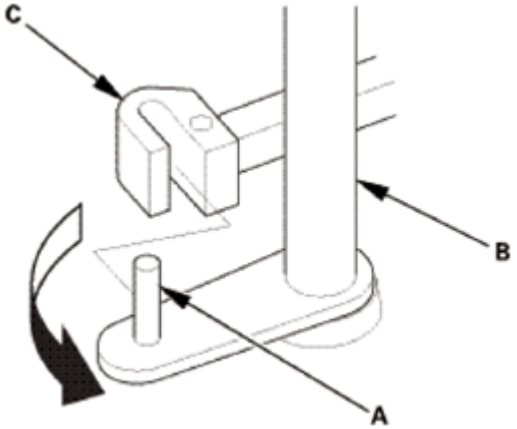

Fig. 1895: Separating Manual Valve Lever Pin On Selector Control Shaft From Guide Of Manual Valve
Courtesy of AMERICAN HONDA MOTOR CO., INC.

    3. Remove the selector control shaft (A).

GETtheMANUALS.org

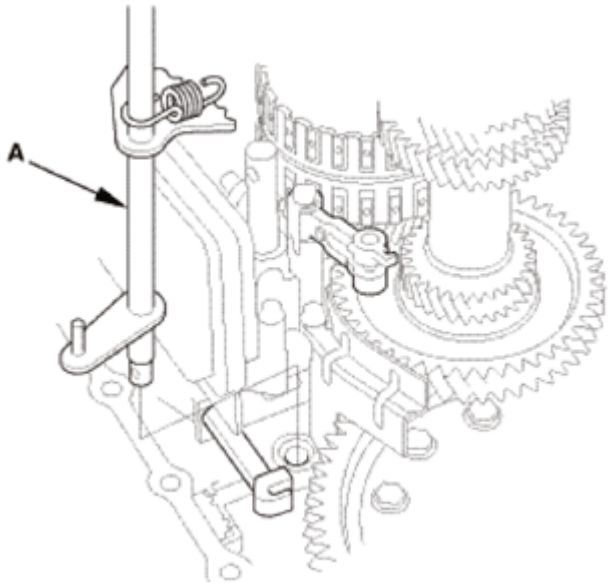

Fig. 1896: Identifying Selector Control Shaft
Courtesy of AMERICAN HONDA MOTOR CO., INC.

21. Mainshaft and Countershaft and Secondary Shaft Assembly
    1. Turn the detent arm (A) away from the countershaft (B).

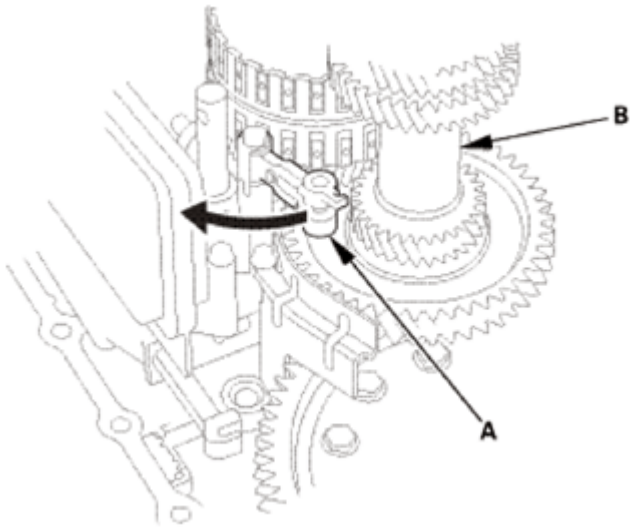

Fig. 1897: Turning Detent Arm Away From Countershaft
Courtesy of AMERICAN HONDA MOTOR CO., INC.

    2. Remove the mainshaft subassembly (A), the countershaft subassembly (B), and the secondary shaft subassembly (C) together.

NOTE: Do not bump the countershaft on the baffle plate (D).

GETtheMANUALS.org

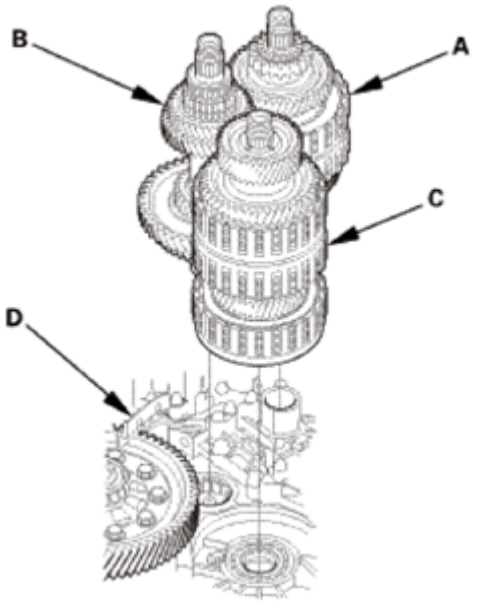

Fig. 1898: Identifying Mainshaft Subassembly, Countershaft Subassembly, Secondary Shaft Subassembly And Baffle Plate
Courtesy of AMERICAN HONDA MOTOR CO., INC.

22. Differential Assembly
    1. Remove the baffle plate (A).
    2. Remove the differential assembly (B).

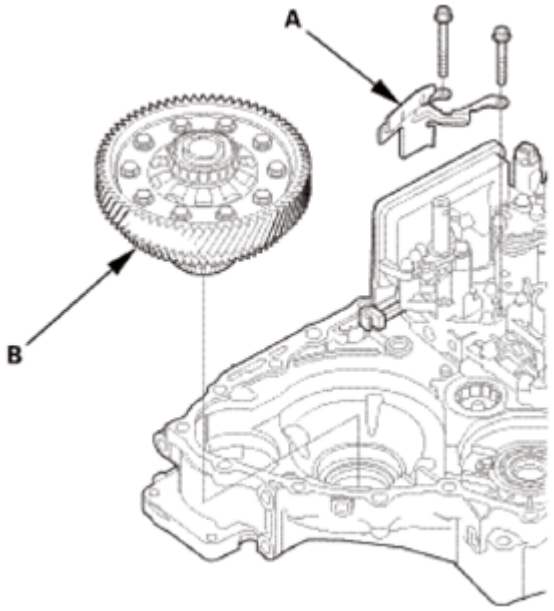

Fig. 1899: Identifying Differential Assembly And Baffle Plate
Courtesy of AMERICAN HONDA MOTOR CO., INC.

GETtheMANUALS.org

23. Regulator Valve Body
    1. Remove ATF joint pipe A.
    2. Remove ATF joint pipe B.

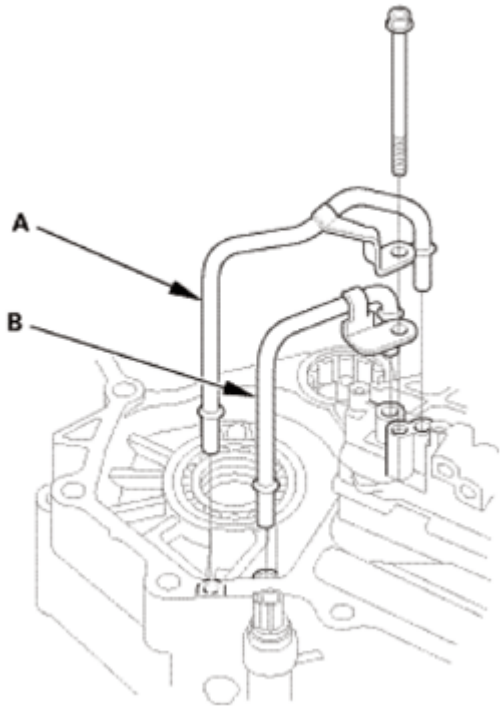

Fig. 1900: Identifying ATF Joint Pipes
Courtesy of AMERICAN HONDA MOTOR CO., INC.

3. Remove the regulator valve body (A).

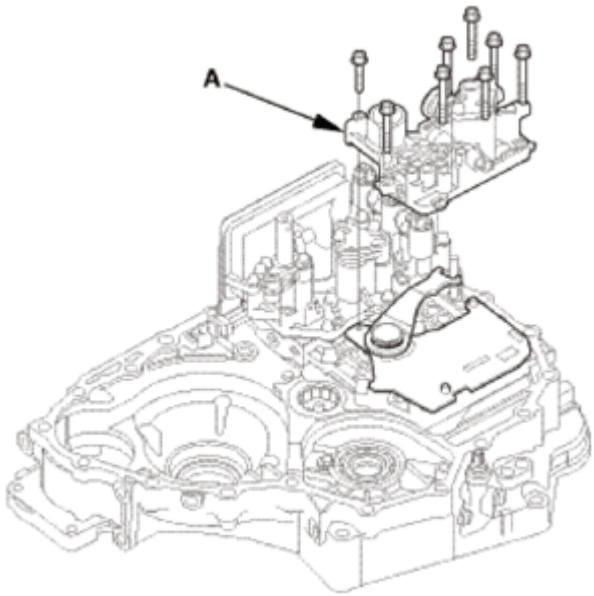

GETtheMANUALS.org

Fig. 1901: Identifying Regulator Valve Body With Mounting Bolts
Courtesy of AMERICAN HONDA MOTOR CO., INC.

4. Remove the stator shaft (A).
5. Remove the O-ring (B) from the stator shaft.
6. Remove the stator shaft stop (C).

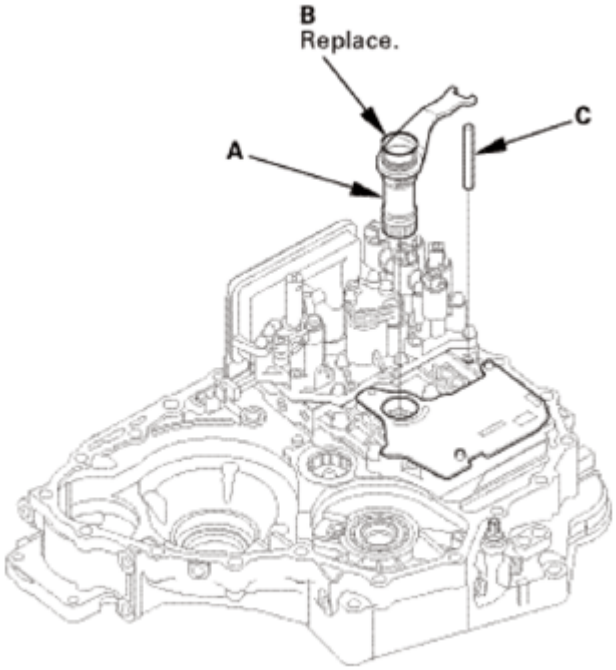

Fig. 1902: Identifying Stator Shaft, O-Ring And Stator Shaft Stop
Courtesy of AMERICAN HONDA MOTOR CO., INC.

7. Remove the regulator separator plate (A) and the dowel pins (B).

GETtheMANUALS.org

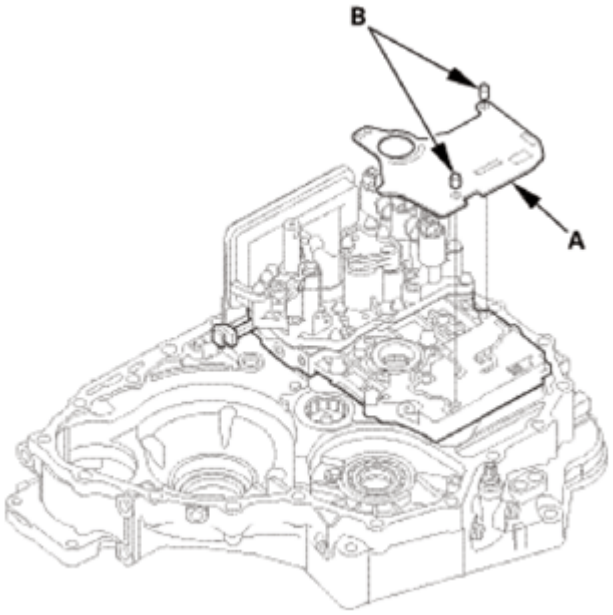

Fig. 1903: Identifying Regulator Separator Plate And Dowel Pins
Courtesy of AMERICAN HONDA MOTOR CO., INC.

24. ATF Strainer
    1. Remove the ATF strainer (A) and the O-ring (B).

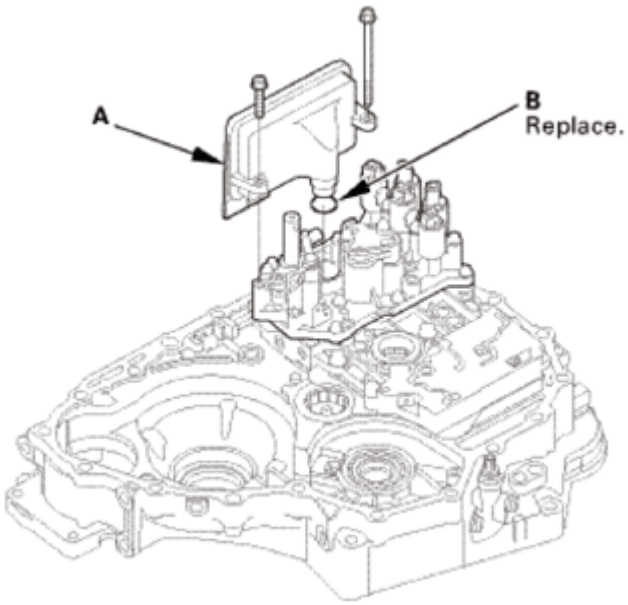

Fig. 1904: Identifying ATF Strainer And O-Ring With Mounting Bolts
Courtesy of AMERICAN HONDA MOTOR CO., INC.

    2. Clean the inlet opening (A) of the ATF strainer (B) thoroughly with compressed air, then check that it is in good condition and that the inlet opening is not clogged.

GETtheMANUALS.org

3. Test the ATF strainer by pouring clean ATF through the inlet opening, and replace it if it is clogged or damaged.

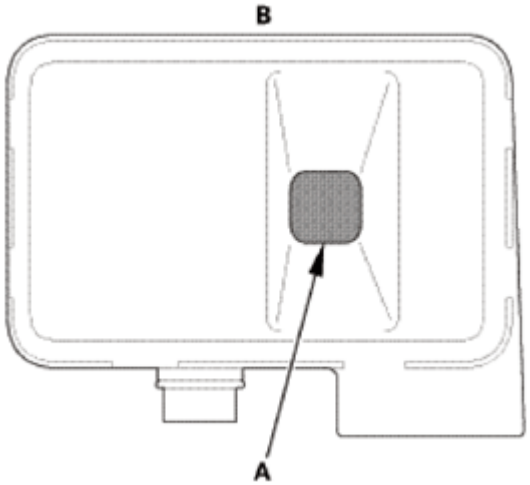

Fig. 1905: Identifying Inlet Opening Of ATF Strainer
Courtesy of AMERICAN HONDA MOTOR CO., INC.

25. Servo Body
    1. Remove the servo body (A).

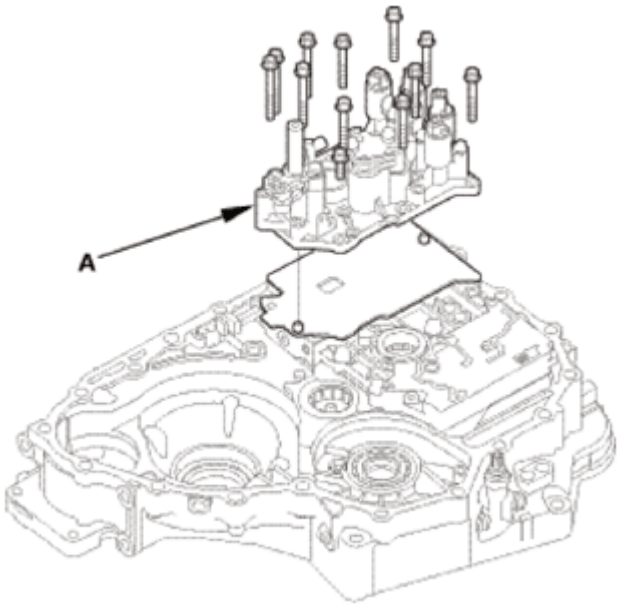

Fig. 1906: Identifying Servo Body With Mounting Bolts
Courtesy of AMERICAN HONDA MOTOR CO., INC.

    2. Remove the servo separator plate (A) and the dowel pins (B).

GETtheMANUALS.org

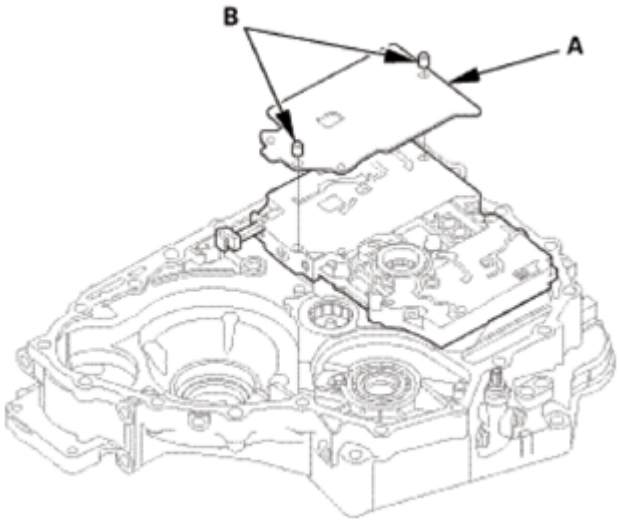

Fig. 1907: Identifying Servo Separator Plate And Dowel Pins
Courtesy of AMERICAN HONDA MOTOR CO., INC.

26. Main Valve Body
    1. Remove the cooler check valve spring (A) and the cooler check valve (B).
    2. Remove the main valve body (C).

NOTE: **Do not let the check balls (D) fall out, and do not use a magnet to remove the check balls, it may magnetize them.**

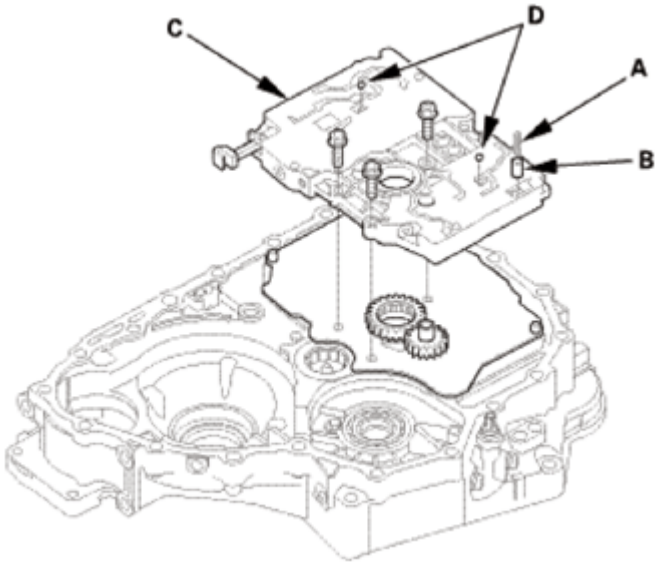

Fig. 1908: Identifying Cooler Check Valve, Spring, Main Valve Body And Check Balls
Courtesy of AMERICAN HONDA MOTOR CO., INC.

    3. Remove the ATF pump driven gear shaft (A).

GETtheMANUALS.org

4. Remove the ATF pump drive gear (B) and the ATF pump driven gear (C).

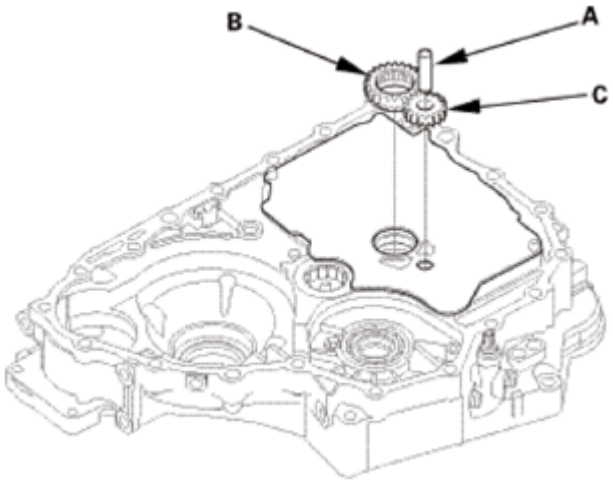

Fig. 1909: Identifying ATF Pump Driven Gear Shaft, ATF Pump Drive And Driven Gear
Courtesy of AMERICAN HONDA MOTOR CO., INC.

5. Remove the main separator plate (A) and the dowel pins (B).

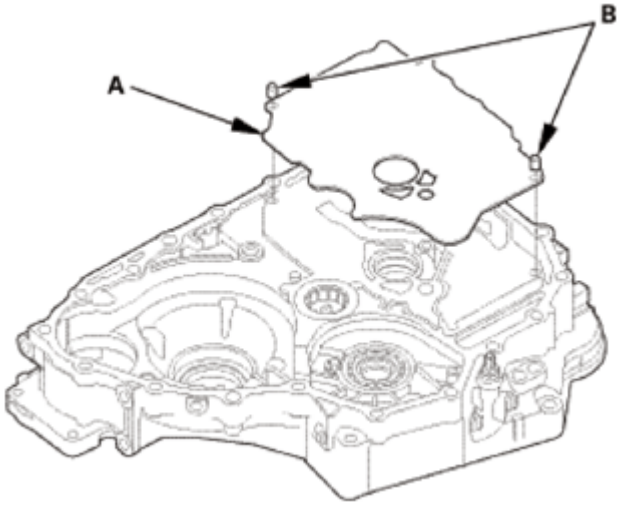

Fig. 1910: Identifying Main Separator Plate And Dowel Pins
Courtesy of AMERICAN HONDA MOTOR CO., INC.

27. Torque Converter Housing Countershaft Bearing
    1. Remove the countershaft bearing (A) using the 25-40 mm adjustable bearing puller and a commercially available 3/8"-16 slide hammer (B).
    2. Remove the ATF guide plate (C), and check it for wear and damage. If the guide plate is worn or damaged, replace it.

GETtheMANUALS.org

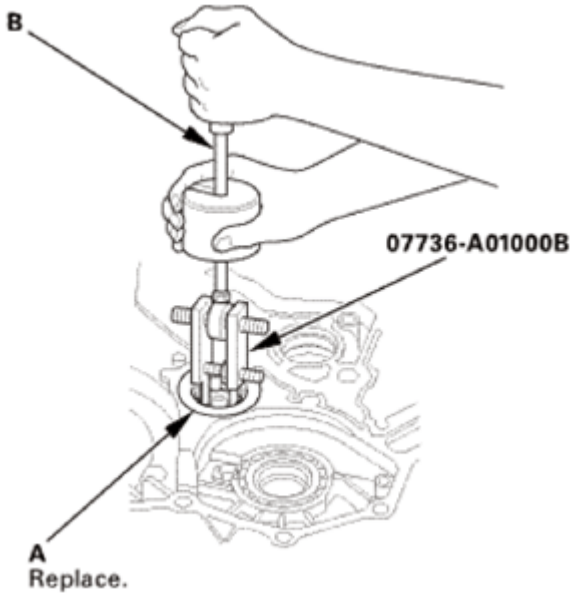

Fig. 1911: Removing Countershaft Bearing Using Adjustable Bearing Puller And Commercially Available Slide Hammer
Courtesy of AMERICAN HONDA MOTOR CO., INC.

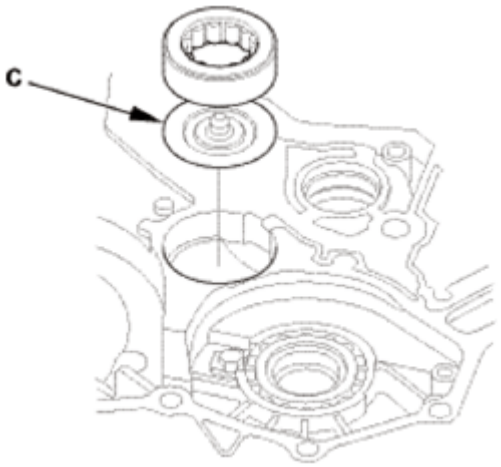

Fig. 1912: Identifying ATF Guide Plate
Courtesy of AMERICAN HONDA MOTOR CO., INC.

INSTALLATION

NOTE:

- **Apply a light coat of clean ATF on all moving parts before installation.**
- **The illustration shows AWD/4WD transmission.**

1. Torque Converter Housing Countershaft Bearing
    1. Install the ATF guide plate (A) and a new countershaft bearing (B).

GETtheMANUALS.org

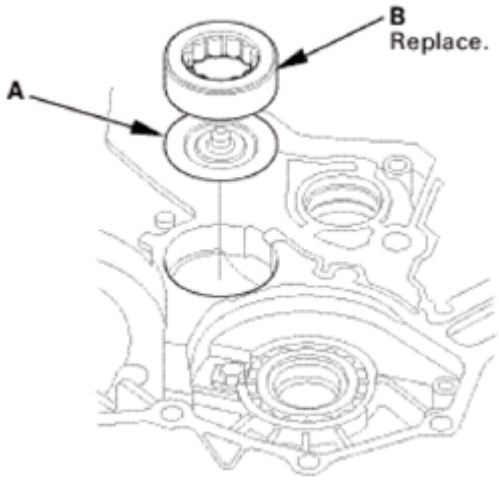

Fig. 1913: Identifying ATF Guide Plate And Countershaft Bearing
Courtesy of AMERICAN HONDA MOTOR CO., INC.

2. Install the countershaft bearing securely in the torque converter housing using the driver handle and the 62 x 68 mm bearing driver attachment.

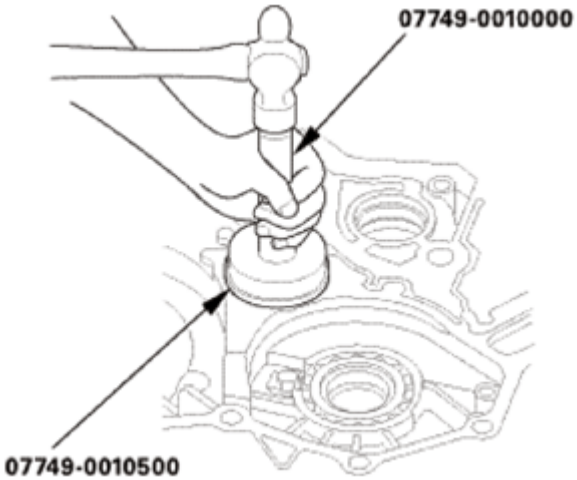

Fig. 1914: Installing Countershaft Bearing Securely In Torque Converter Housing Using Driver Handle And Bearing Driver Attachment
Courtesy of AMERICAN HONDA MOTOR CO., INC.

3. Make sure that the bearing outer race notch-cut (A) is installed at a height of 0-0.05 mm (0-0.0020 in) (B) above the torque converter housing surface (C).

NOTE: **Do not install the countershaft bearing higher than 0.05 mm (0.002 in) above the torque converter housing surface.**

GETtheMANUALS.org

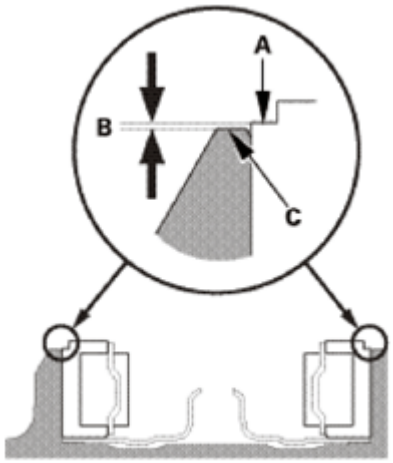

Fig. 1915: Identifying Bearing Outer Race Notch-Cut Installation Dimension
Courtesy of AMERICAN HONDA MOTOR CO., INC.

2. Main Valve Body
    1. Install the main separator plate (A) and the dowel pins (B).

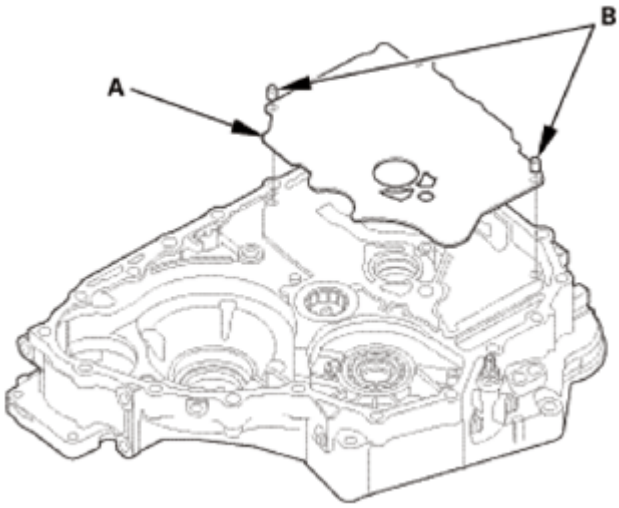

Fig. 1916: Identifying Main Separator Plate And Dowel Pins
Courtesy of AMERICAN HONDA MOTOR CO., INC.

    2. Install the ATF pump drive gear (A) and the ATF pump driven gear (B).

NOTE: **Install the ATF pump driven gear with its grooved and chamfered side facing down.**

    3. Install the ATF pump driven gear shaft (C).

GETtheMANUALS.org

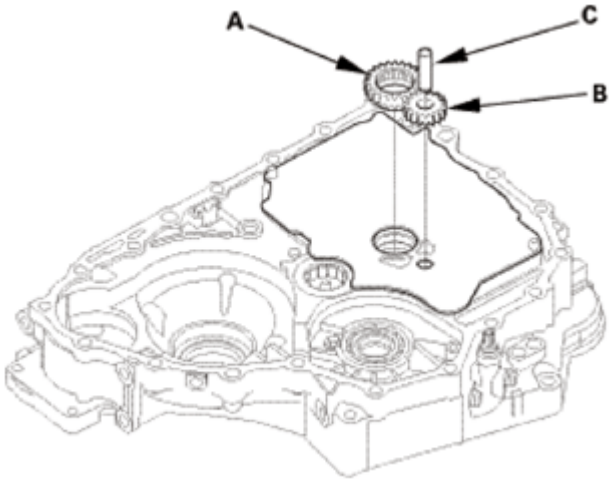

Fig. 1917: Identifying ATF Pump Driven Gear Shaft, ATF Pump Drive And Driven Gear (1 Of 2)
Courtesy of AMERICAN HONDA MOTOR CO., INC.

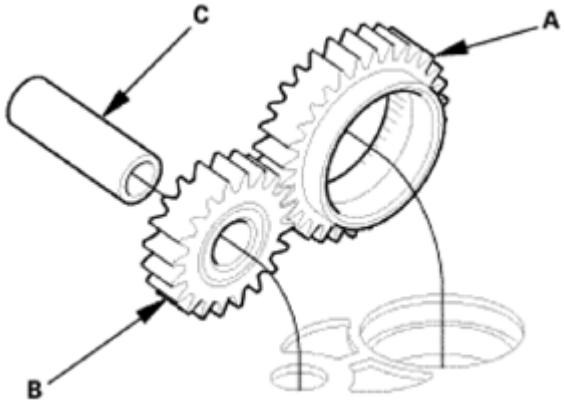

Fig. 1918: Identifying ATF Pump Driven Gear Shaft, ATF Pump Drive And Driven Gear (2 Of 2)
Courtesy of AMERICAN HONDA MOTOR CO., INC.

4. Install the main valve body (A).

NOTE: Make sure that the check balls (B) are in the main valve body.

5. Make sure the ATF pump drive gear (C) rotates smoothly in the normal operating direction, and the ATF pump driven gear shaft (D) moves smoothly in the axial and normal operating direction.
6. If the ATF pump drive gear and the ATF pump driven gear shaft do not move smoothly, loosen the main valve body bolts. Realign the ATF pump driven gear shaft, and retighten the bolts to the specified torque, then recheck.

NOTE: Failure to align the ATF pump driven gear shaft correctly will result in a seized ATF pump drive gear or ATF pump driven gear shaft.

GETtheMANUALS.org

7. Install the cooler check valve (E) and the cooler check valve spring (F).

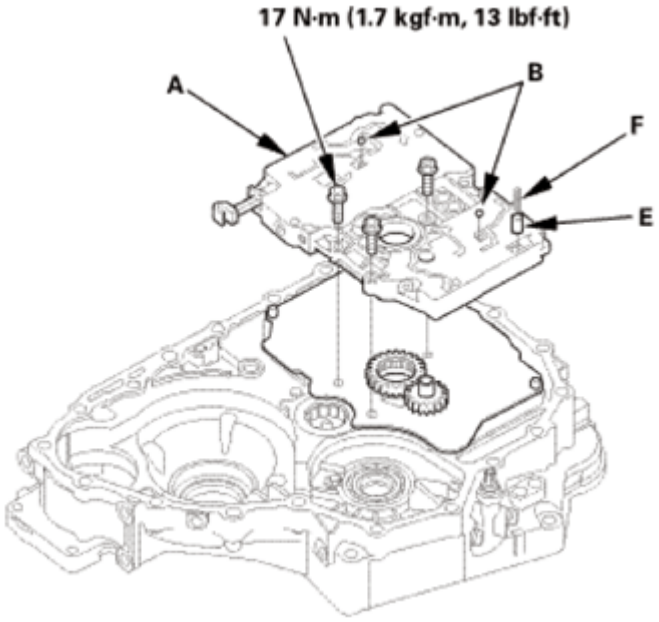

Fig. 1919: Identifying Main Valve Body, Check Balls, Cooler Check Valve And Cooler Check Valve Spring
Courtesy of AMERICAN HONDA MOTOR CO., INC.

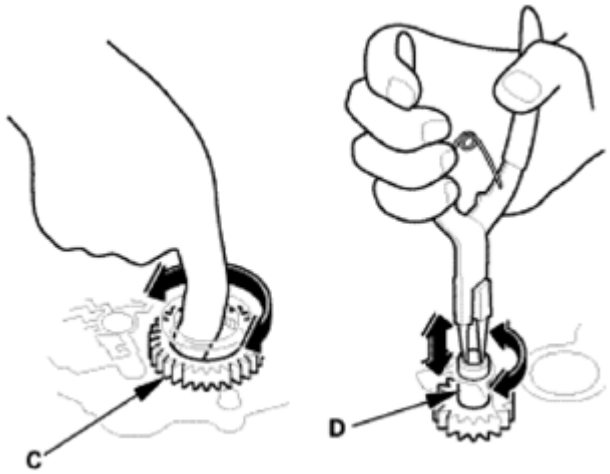

Fig. 1920: Rotating ATF Pump Drive Gear
Courtesy of AMERICAN HONDA MOTOR CO., INC.

3. Servo Body
    1. Install the servo separator plate (A) and the dowel pins (B).

GETtheMANUALS.org

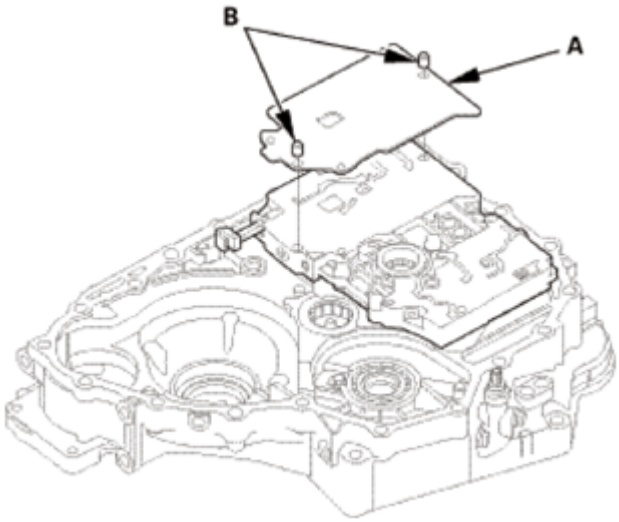

Fig. 1921: Identifying Servo Separator Plate And Dowel Pins
Courtesy of AMERICAN HONDA MOTOR CO., INC.

2. Install the servo body (A).

NOTE: **Do not install the servo body mounting bolts to the baffle plate bolt holes (B) and the ATF strainer bolt holes (C) in this step.**

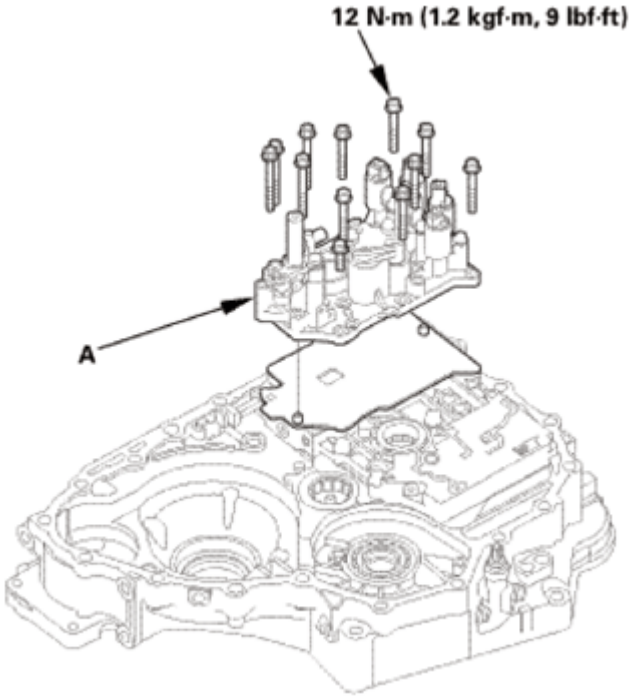

Fig. 1922: Identifying Servo Body And Mounting Bolts With Torque Specification
Courtesy of AMERICAN HONDA MOTOR CO., INC.

GETtheMANUALS.org

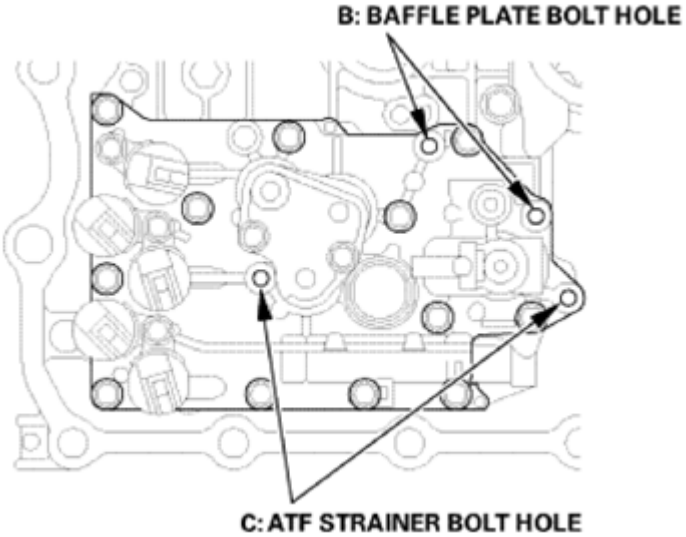

Fig. 1923: Identifying Baffle Plate Bolt Holes And ATF Strainer Bolt Holes
Courtesy of AMERICAN HONDA MOTOR CO., INC.

4. ATF Strainer
    1. Install the ATF strainer (A) using a new O-ring (B).

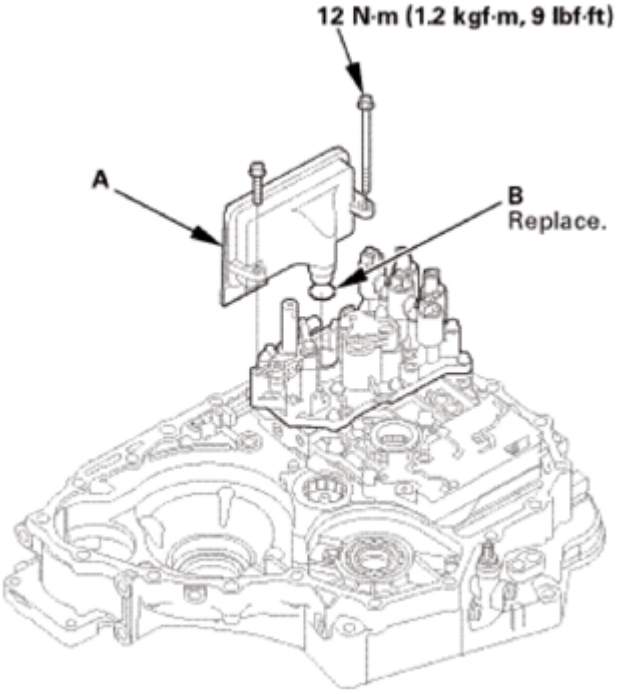

Fig. 1924: Identifying ATF Strainer, O-Ring And Mounting Bolts With Torque Specification
Courtesy of AMERICAN HONDA MOTOR CO., INC.

5. Regulator Valve Body
    1. Install the regulator separator plate (A) and the dowel pins (B).

GETtheMANUALS.org

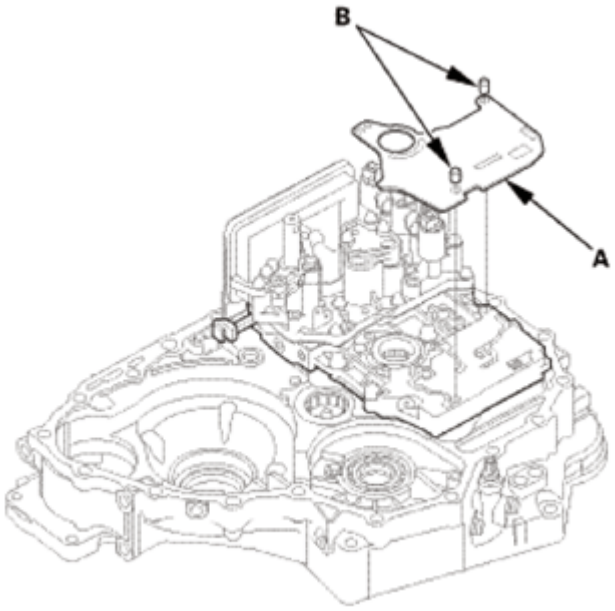

Fig. 1925: Identifying Regulator Separator Plate And Dowel Pins
Courtesy of AMERICAN HONDA MOTOR CO., INC.

2. Install a new O-ring (A) on the stator shaft (B).
3. Install the stator shaft.
4. Install the stator shaft stop (C).

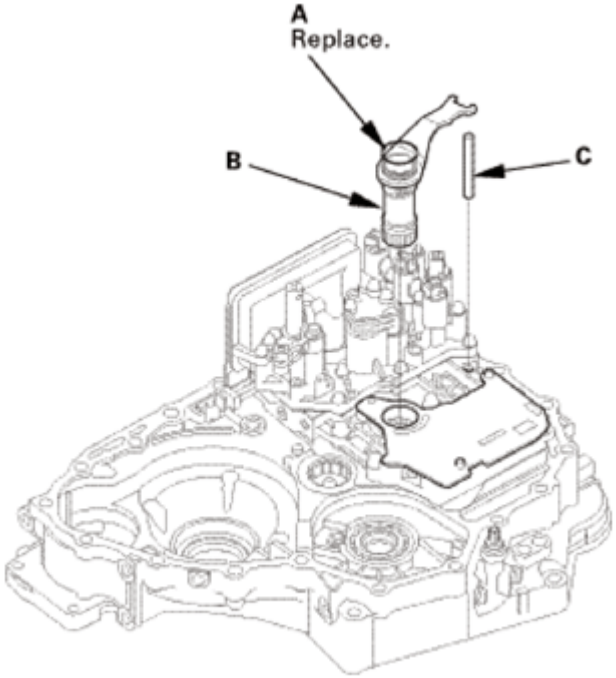

Fig. 1926: Identifying Stator Shaft, O-Ring And Stator Shaft Stop
Courtesy of AMERICAN HONDA MOTOR CO., INC.

GETtheMANUALS.org

5. Install the regulator valve body (A).

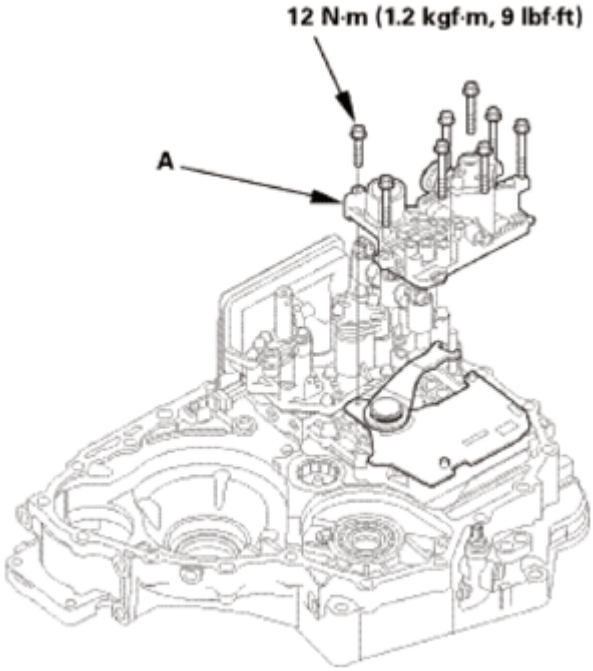

Fig. 1927: Identifying Regulator Valve Body And Mounting Bolts With Torque Specification
Courtesy of AMERICAN HONDA MOTOR CO., INC.

6. Install ATF joint pipe B.
7. Install ATF joint pipe A.

GETtheMANUALS.org

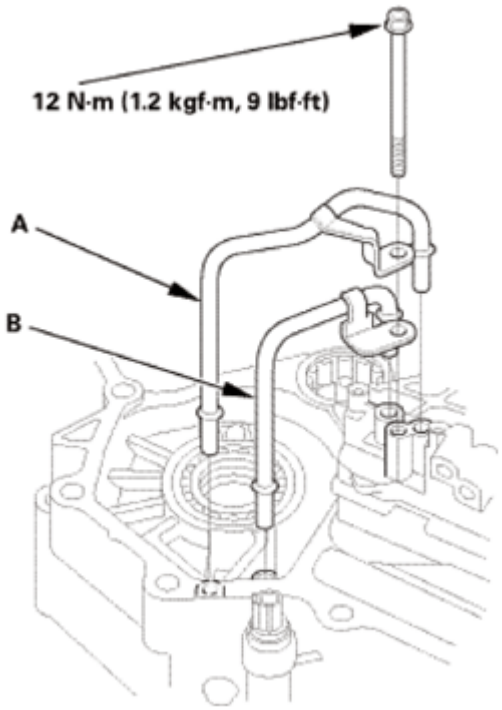

Fig. 1928: Identifying ATF Joint Pipes And Mounting Bolts With Torque Specification
Courtesy of AMERICAN HONDA MOTOR CO., INC.

6. Differential Assembly
    1. Install the differential assembly (A).
    2. Install the baffle plate (B).

GETtheMANUALS.org

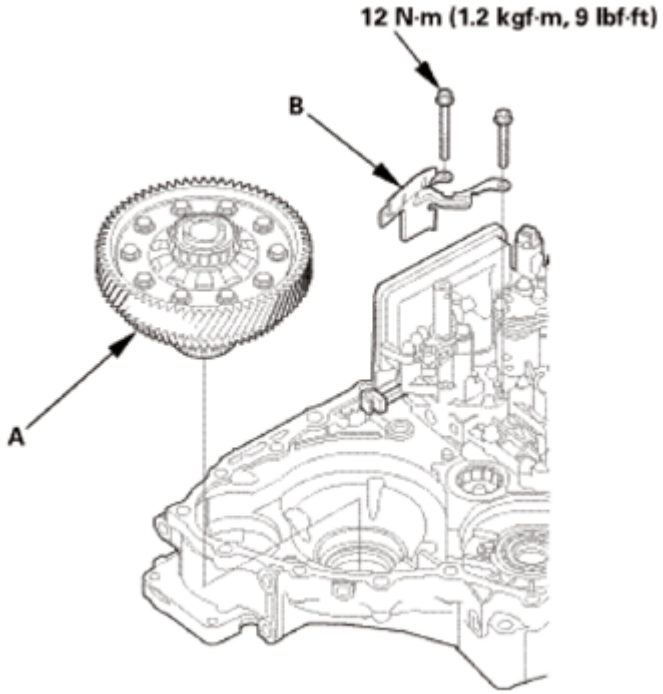

Fig. 1929: Identifying Differential Assembly, Baffle Plate And Bolts With Torque Specification
Courtesy of AMERICAN HONDA MOTOR CO., INC.

7. Mainshaft and Countershaft and Secondary Shaft Assembly
    1. Be sure that each shaft is assembled. Also be sure that new sealing rings are installed on the mainshaft and the secondary shaft.
    2. Join the mainshaft subassembly (A), the countershaft subassembly (B), and the secondary shaft subassembly (C) together, and install them.

    NOTE: Do not bump the countershaft on the baffle plate (D).

    3. Make sure the countershaft subassembly and the differential assembly (E) are clear of the baffle plate.

GETtheMANUALS.org

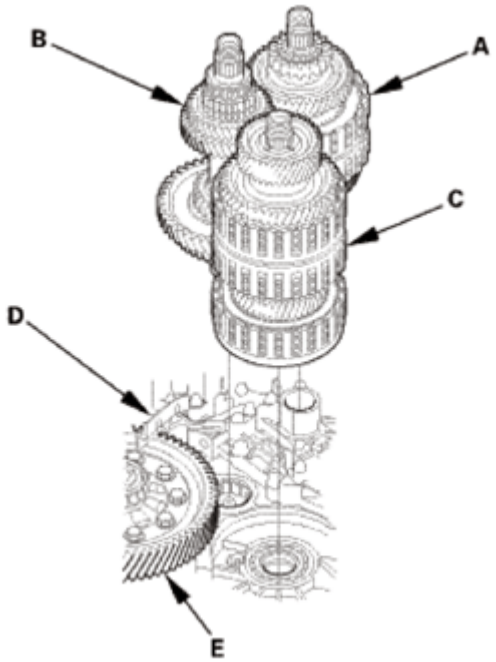

Fig. 1930: Identifying Mainshaft Subassembly, Countershaft Subassembly, Secondary Shaft Subassembly, Baffle Plate And Differential Assembly
Courtesy of AMERICAN HONDA MOTOR CO., INC.

8. Selector Control Shaft
    1. Install the selector control shaft (A).

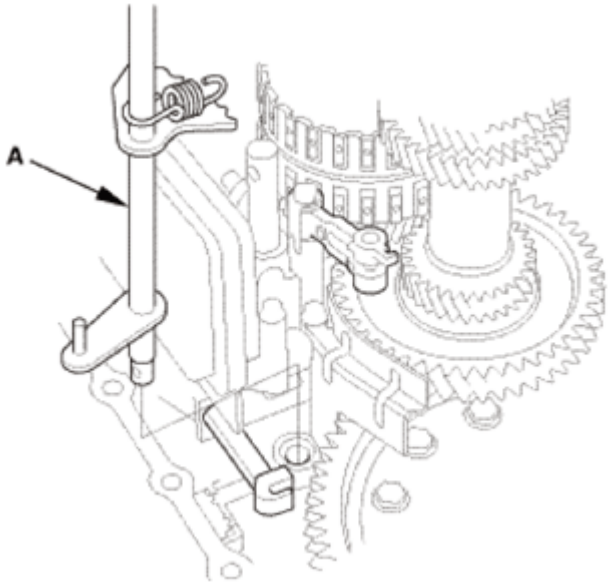

Fig. 1931: Identifying Selector Control Shaft
Courtesy of AMERICAN HONDA MOTOR CO., INC.

    2. Align the manual valve lever pin (A) on the selector control shaft (B) with the guide of the manual

GETtheMANUALS.org

valve (C).

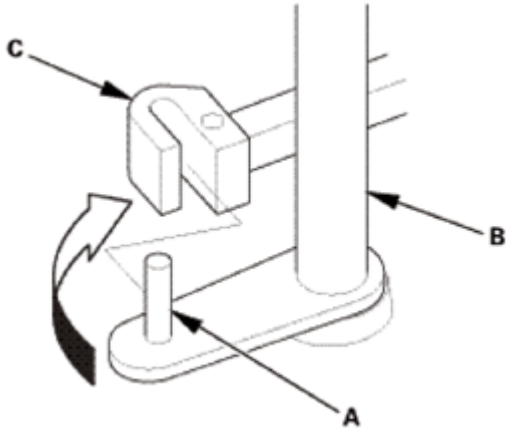

Fig. 1932: Aligning Manual Valve Lever Pin On Selector Control Shaft With Guide Of Manual Valve
Courtesy of AMERICAN HONDA MOTOR CO., INC.

3. Hook the detent arm spring (A).

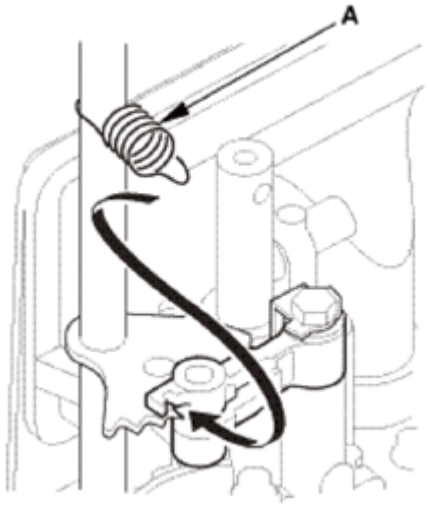

Fig. 1933: Hooking Detent Arm Spring
Courtesy of AMERICAN HONDA MOTOR CO., INC.

9. Selector Control Lever (Except 2WD of USA Produced Models)

Except 2WD of USA Produced Models

1. Install the control lever (A) over the selector control shaft (B).
2. Install the lock bolt (C) using a new lock washer (D).
3. Pry up the lock tab (E) of the lock washer against the bolt head.

GETtheMANUALS.org

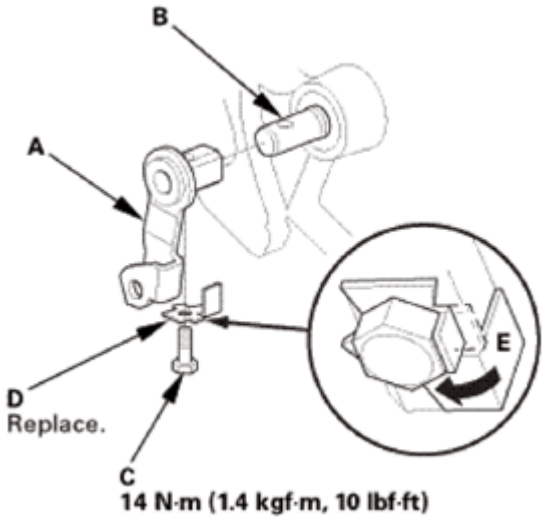

Fig. 1934: Prying Up Lock Tab Of Lock Washer (Except 2WD Of USA Produced Models)
Courtesy of AMERICAN HONDA MOTOR CO., INC.

10. Reverse Shift fork
    1. Install the reverse shift fork (A) and the reverse selector (B) together.
    2. Install the lock bolt (C) using a new lock washer (D).
    3. Pry up the lock tab (E) of the lock washer against the bolt head.

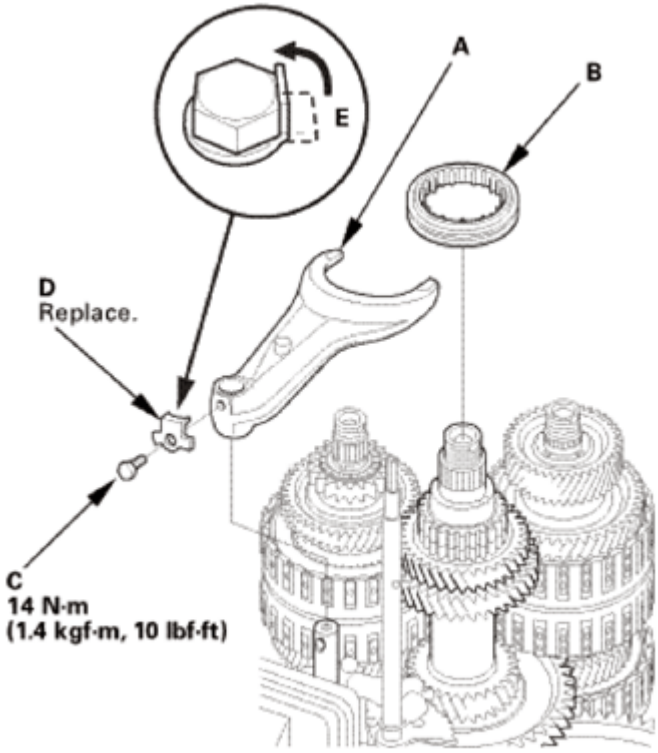

Fig. 1935: Prying Up Lock Tab Of Lock Washer

GETtheMANUALS.org

Courtesy of AMERICAN HONDA MOTOR CO., INC.

11. A/T Countershaft Reverse Gear
    1. Install the needle bearing (A).
    2. Install the countershaft reverse gear (B).

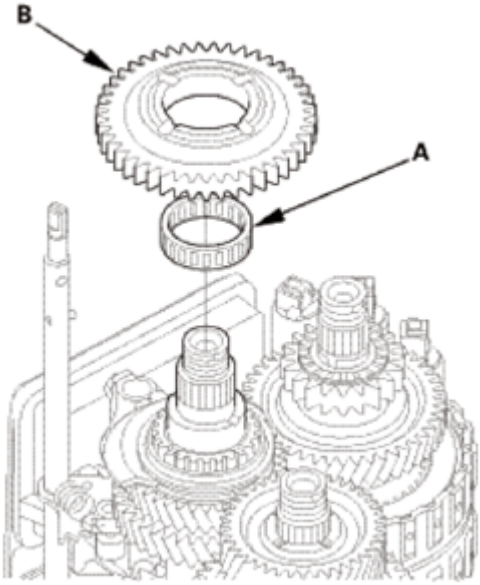

Fig. 1936: Identifying Needle Bearing And Countershaft Reverse Gear
Courtesy of AMERICAN HONDA MOTOR CO., INC.

12. Automatic Transmission Housing
    1. Install the three dowel pins (A) and a new gasket (B).
    2. Align the spring pin (C) of the selector control shaft (D) with the transmission housing groove (E).

NOTE: **Do not squeeze the end of the selector control shaft tips together when turning the shaft. If the tips are squeezed together, it will cause a faulty shift position signal or position due to the play between the selector control shaft and the transmission range switch.**

    3. Place the transmission housing (F) on the torque converter housing (G).

NOTE: **Do not install the input shaft (mainshaft) speed sensor and the output shaft (countershaft) speed sensor before installing the transmission housing.**

    4. Wrap the tip of a screwdriver with tape so the reverse idler gear teeth do not get damaged. Engage the reverse idler gear (H) with the reverse gears (I) by rotating the idler gear using the screwdriver.
    5. Make sure the transmission housing is securely seated so there is no clearance between the transmission housing and the torque converter housing.

GETtheMANUALS.org

6. Install the transmission hanger (J), and tighten the transmission housing mounting bolts (2WD: 19 bolts, AWD/4WD: 20 bolts) in at least two steps, in a crisscross pattern.

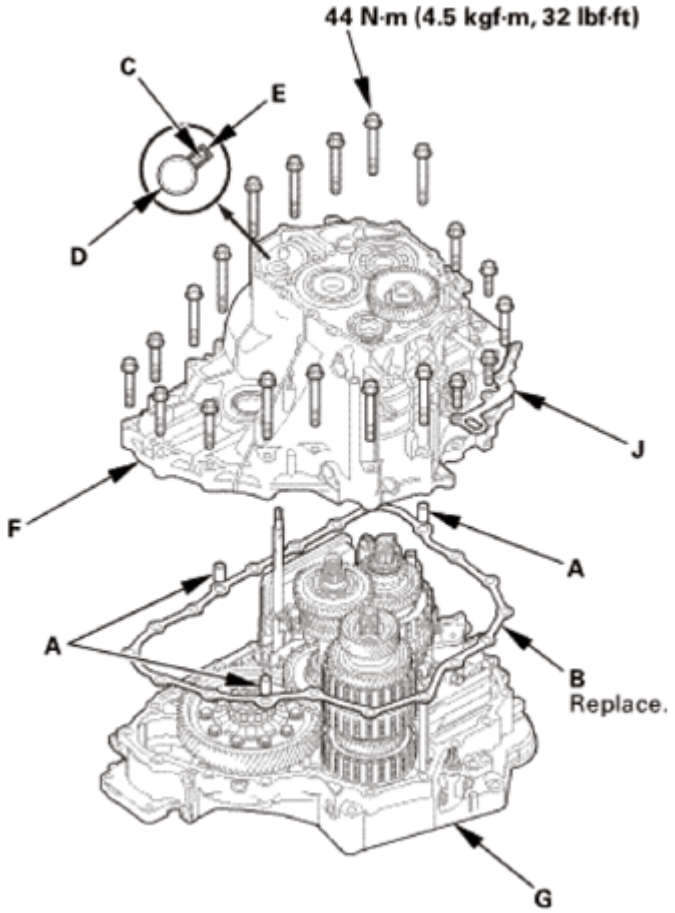

Fig. 1937: Identifying Dowel Pins, Gasket, Spring Pin, Selector Control Shaft, Transmission Housing Groove And Mounting Bolts With Torque Specification
Courtesy of AMERICAN HONDA MOTOR CO., INC.

GETtheMANUALS.org

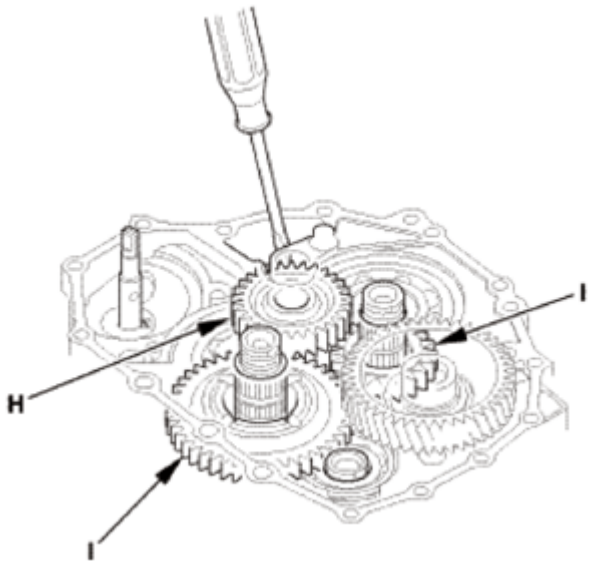

Fig. 1938: Engaging Reverse Idler Gear With Reverse Gears By Rotating Idler Gear Using Screwdriver
Courtesy of AMERICAN HONDA MOTOR CO., INC.

13. End Cover Idler Gear Assembly
    1. Install the mainshaft holder onto the mainshaft.

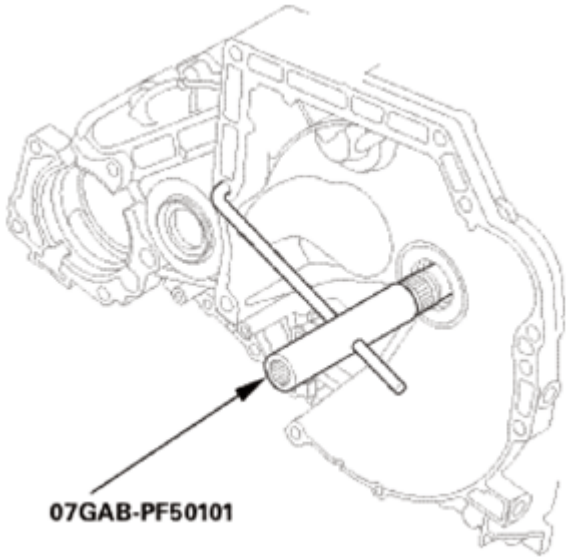

Fig. 1939: Installing Mainshaft Holder Onto Mainshaft
Courtesy of AMERICAN HONDA MOTOR CO., INC.

    2. Lubricate the following parts with ATF:
        - Splines and threads of the mainshaft.
        - Splines of the mainshaft idler gear.

GETtheMANUALS.org

- The old conical spring washer and the old locknut.

3. Install the mainshaft idler gear (A), the old conical spring washer (B), and the old locknut (C), and tighten the locknut to 225 N.m (23.0 kgf.m, 166 lbf.ft).

NOTE:

- **Do not tap the mainshaft idler gear to install.**
- **Use a torque wrench to tighten the locknut. Do not use an impact wrench.**

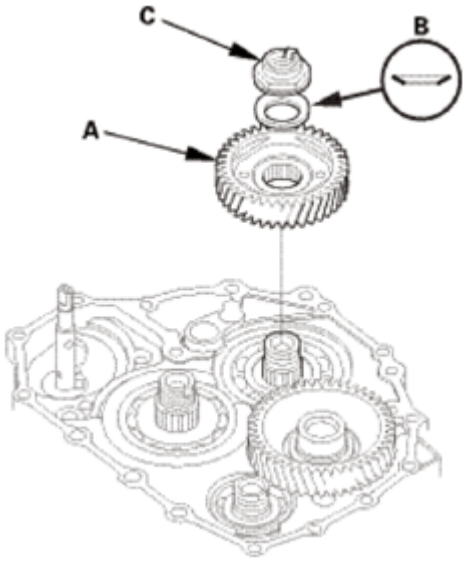

Fig. 1940: Identifying Mainshaft Idler Gear, Conical Spring Washer And Locknut
Courtesy of AMERICAN HONDA MOTOR CO., INC.

4. Lubricate the following parts with ATF:
   - Splines and threads of the countershaft.
   - Splines of the park gear.
   - The old conical spring washer and the old locknut.
5. Install the park gear (A), the old conical spring washer (B), and the old locknut (C).
6. Install the park lever spring (D), the park lever (E), and the park lever stop (F).
7. Install the lock bolt (G) using a new lock washer (H).

GETtheMANUALS.org

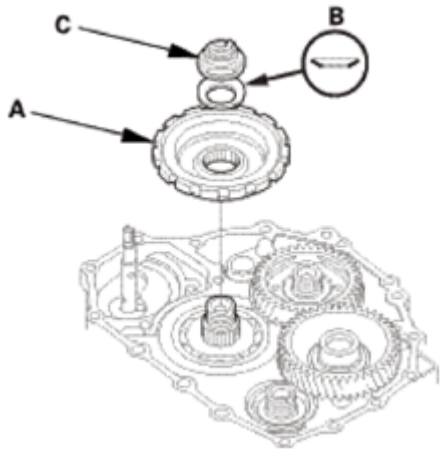

Fig. 1941: Identifying Park Pawl Shaft, Park Lever Spring, Park Lever, Park Lever Stop, Lock Bolt, Lock Washer With Torque Specification
Courtesy of AMERICAN HONDA MOTOR CO., INC.

NOTE: **Do not bend the lock tab of the lock washer until inspect the park lever stop.**

8. Install the park pawl shaft (I), the park pawl spring (J), the park pawl (K), and the stop shaft (L).
9. Lift the park pawl up, and engage it with the park gear, and tighten the locknut to 225 N.m (23.0 kgf.m, 166 lbf.ft).

NOTE:

- **Do not tap the park gear to install.**
- **Use a torque wrench to tighten the locknut. Do not use an impact wrench.**
- **Countershaft locknut has left-hand threads.**

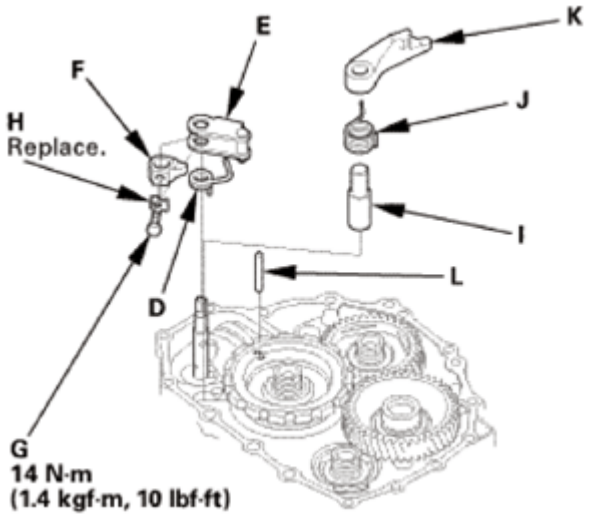

Fig. 1942: Identifying Park Pawl Shaft, Park Lever Spring, Park Lever, Park Lever Stop,

GETtheMANUALS.org

Lock Bolt, Lock Washer With Torque Specification
Courtesy of AMERICAN HONDA MOTOR CO., INC.

10. Remove the old locknuts and the old conical spring washers from the mainshaft and the countershaft.
11. Lubricate the following parts with ATF:
    - Splines and threads of the mainshaft, the countershaft, and the secondary shaft.
    - New conical spring washers and new locknuts.
    - Areas where the conical spring washers contact the mainshaft idler gear and the park gear.
12. Install new conical spring washers (A) in the direction shown.

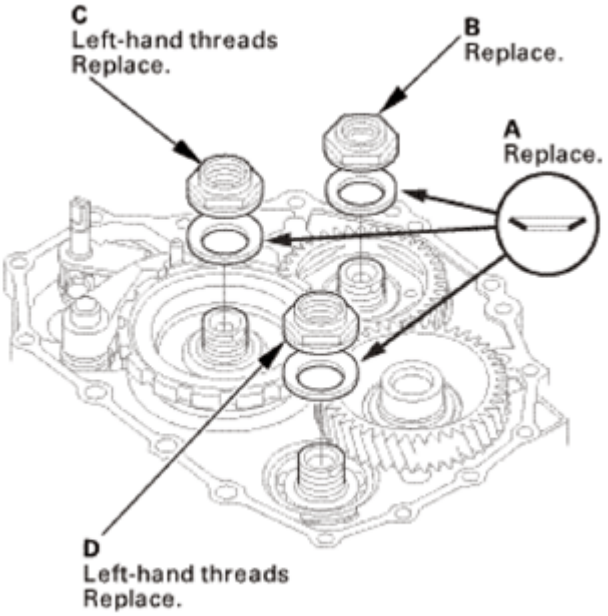

Fig. 1943: Identifying Conical Spring Washers, Mainshaft Locknut, Countershaft Locknut And Secondary Shaft Locknut
Courtesy of AMERICAN HONDA MOTOR CO., INC.

13. Install a new mainshaft locknut (B), a new countershaft locknut (C), and a new secondary shaft locknut (D).
14. Tighten the locknuts to 167 N.m (17.0 kgf.m, 123 lbf.ft).

NOTE:
- **Use a torque wrench to tighten the locknut. Do not use an impact wrench.**
- **The countershaft and secondary shaft locknuts have left-hand threads.**

15. Remove the mainshaft holder.
16. Stake the locknuts into the shafts to a depth (A) of 0.7-1.3 mm (0.027-0.051 in) using a 3.5 mm punch (B).

GETtheMANUALS.org

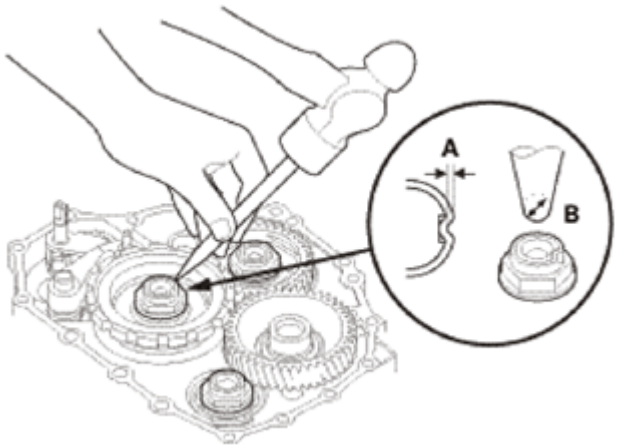

Fig. 1944: Staking Locknuts Into Shafts Using Punch
Courtesy of AMERICAN HONDA MOTOR CO., INC.

17. Set the park lever in the P position.
18. Measure the distance (A) between the center of the park pawl shaft (B) and the center of the park lever roller pin (C) as shown.

    Standard: 57.7-58.7 mm (2.272-2.311 in)

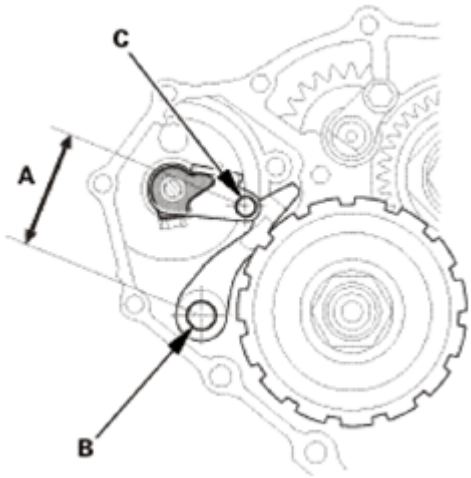

Fig. 1945: Measuring Distance Between Center Of Park Pawl Shaft And Center Of Park Lever Roller Pin
Courtesy of AMERICAN HONDA MOTOR CO., INC.

19. If the measurement is out of the standard, select and install the appropriate park lever stop (A) from the table.

PARK LEVER STOP SPECIFICATION

Mark	B	C
1	11.00 mm (0.4331 in)	11.00 mm (0.4331 in)

GETtheMANUALS.org

2	10.80 mm (0.4252 in)	10.65 mm (0.4193 in)
3	10.60 mm (0.4173 in)	10.30 mm (0.4055 in)

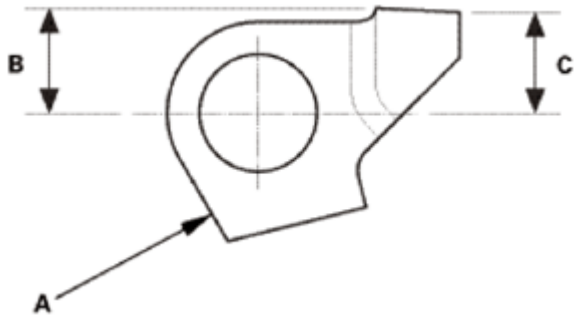

Fig. 1946: Identifying Park Lever Stop Dimension
Courtesy of AMERICAN HONDA MOTOR CO., INC.

20. After replacing the park lever stop, make sure the distance is within the tolerance.
21. Pry up the lock tab (A) of the lock washer against the bolt head.

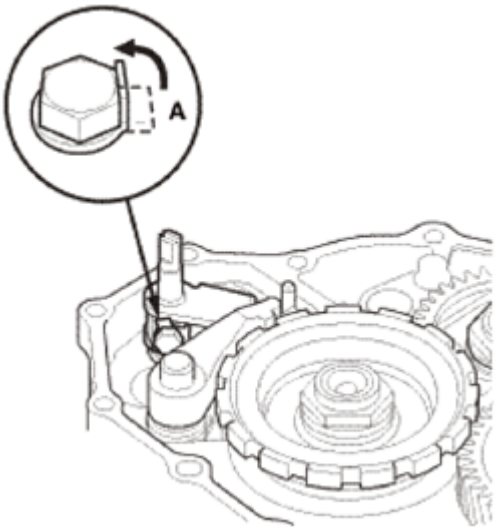

Fig. 1947: Prying Up Lock Tab Of Lock Washer Against Bolt Head
Courtesy of AMERICAN HONDA MOTOR CO., INC.

14. ATF Feed Pipe/Lubrication Pipe
    1. Install the 6 x 201 mm ATF pipe (A).
    2. Install the ATF lubrication pipe (B).
    3. Install the 8 x 220 mm ATF pipe (C).
    4. Install the 8 x 198 mm ATF pipes (D).

GETtheMANUALS.org

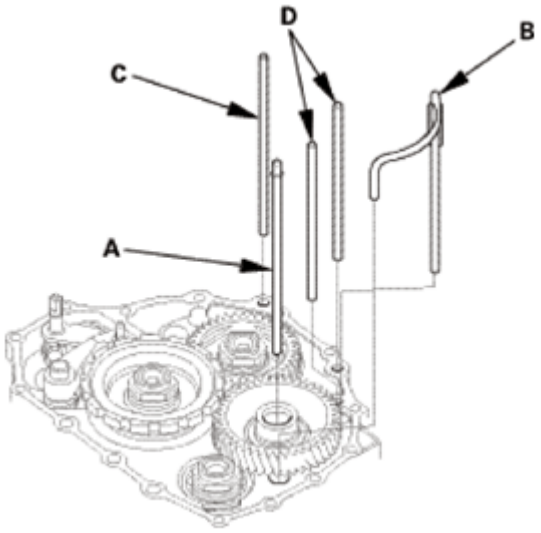

Fig. 1948: Identifying ATF Feed Pipes And Lubrication Pipe
Courtesy of AMERICAN HONDA MOTOR CO., INC.

15. A/T Shift Solenoid Wire Harness - Reconnection
    1. Connect the shift solenoid valve connectors:
        - BLU wire to shift solenoid valve A.
        - ORN wire to shift solenoid valve B.
        - GRN wire to shift solenoid valve C.
        - YEL, WHT, and WHT wires to shift solenoid valve D.
        - RED wire to shift solenoid valve E.

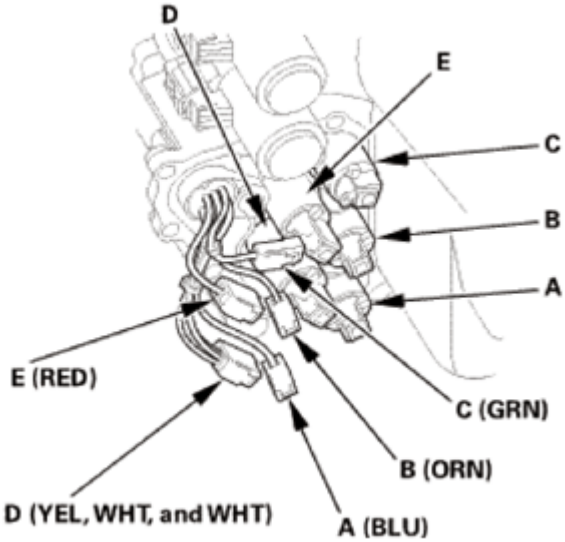

Fig. 1949: Identifying Shift Solenoid Valves
Courtesy of AMERICAN HONDA MOTOR CO., INC.

GETtheMANUALS.org

16. A/T Shift Solenoid Cover
    1. Install the shift solenoid valve cover (A) with the dowel pins (B) and a new gasket (C).

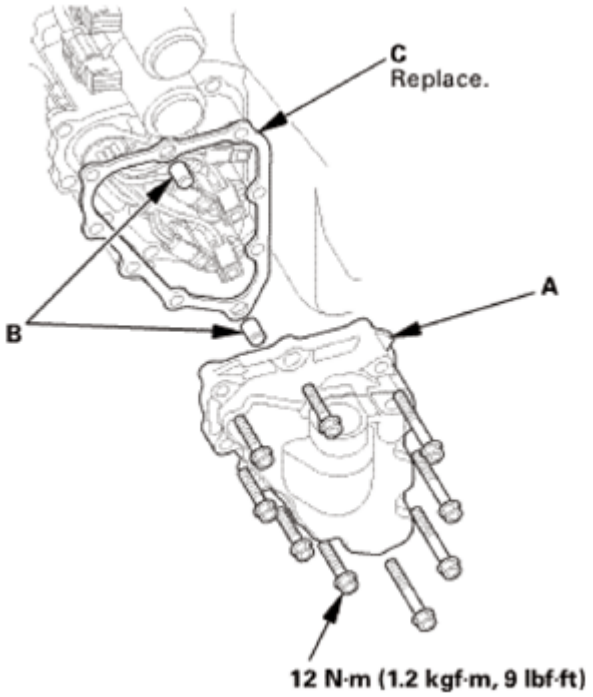

Fig. 1950: Identifying Shift Solenoid Valve Cover, Dowel Pins, Gasket And Mounting Bolts With Torque Specification
Courtesy of AMERICAN HONDA MOTOR CO., INC.

17. Dipstick Guide Tube
    1. Install a new O-ring (A) on the ATF dipstick guide tube (B).
    2. Install the ATF dipstick guide tube.

GETtheMANUALS.org

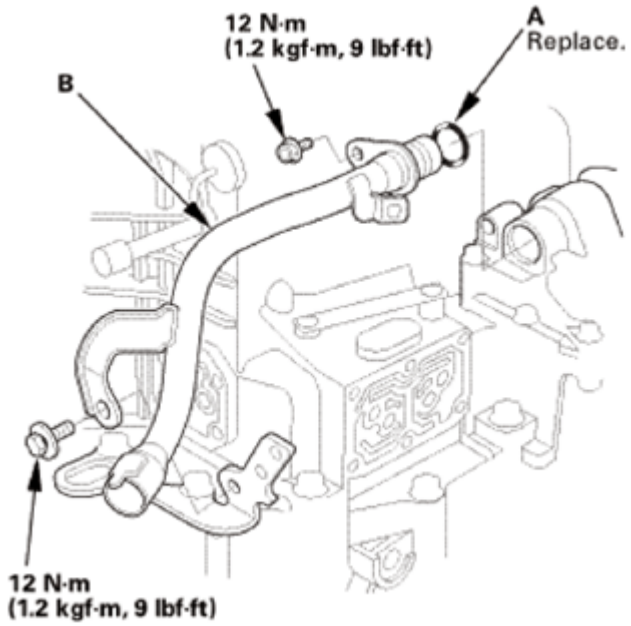

Fig. 1951: Identifying ATF Dipstick Guide Tube, O-Ring And Mounting Bolts With Torque Specification
Courtesy of AMERICAN HONDA MOTOR CO., INC.

18. ATF Outlet Line
    1. Install the ATF outlet line (A) using new sealing washers (B).

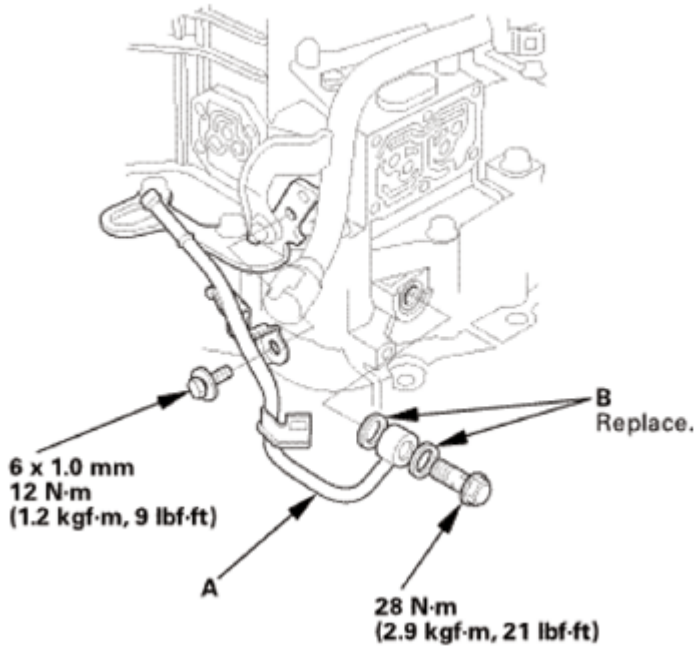

Fig. 1952: Identifying ATF Outlet Line, Sealing Washers And Mounting Bolts With Torque Specification
Courtesy of AMERICAN HONDA MOTOR CO., INC.

GETtheMANUALS.org

19. ATF Inlet Line
    1. Install the ATF inlet line (A) using new sealing washers (B).

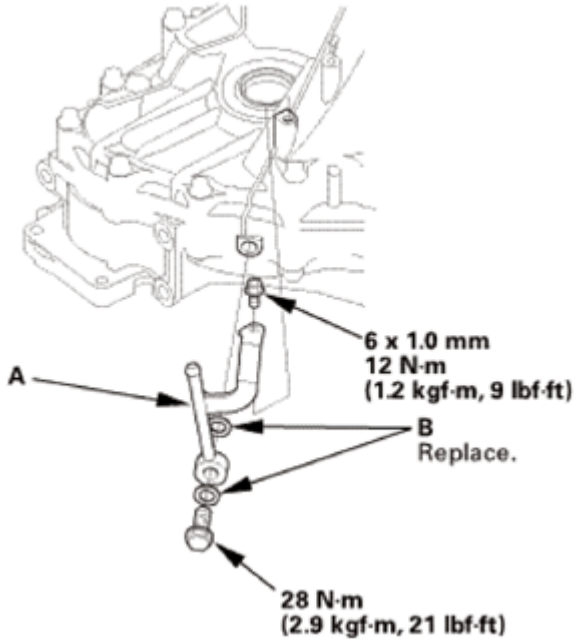

Fig. 1953: Identifying ATF Inlet Line, Sealing Washers And Mounting Bolts With Torque Specification
Courtesy of AMERICAN HONDA MOTOR CO., INC.

20. A/T Clutch Pressure Control Solenoid Valve B and C
    1. Clean the mounting surfaces and the fluid passages of the solenoid valve body and the transmission housing.
    2. Install a new gasket (A) with the blue side toward the transmission housing, and Install the ATF joint pipes (D).
    3. Install new O-rings (E) over the ATF joint pipes.
    4. Install A/T clutch pressure control solenoid valves B and C with the clamp bracket (F).

GETtheMANUALS.org

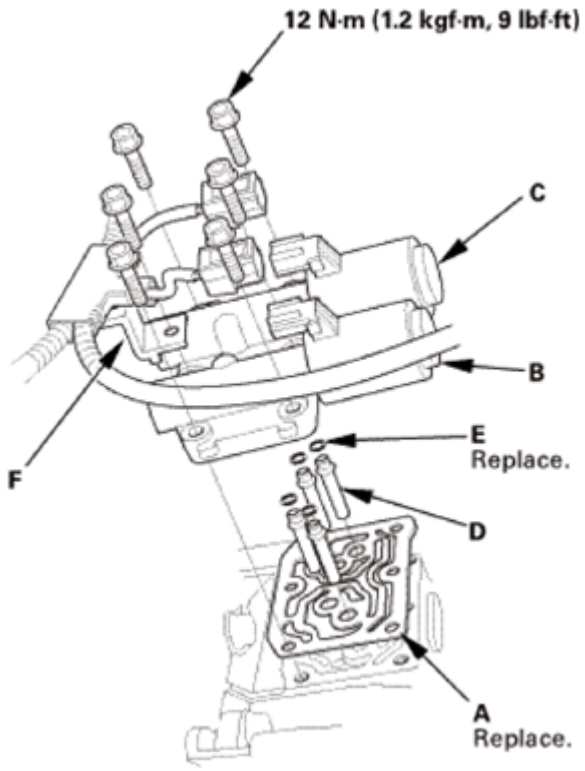

Fig. 1954: Identifying Gasket, ATF Joint Pipes, O-Rings, A/T Clutch Pressure Control Solenoid Valves, Clamp Bracket And Mounting Bolts With Torque Specification
Courtesy of AMERICAN HONDA MOTOR CO., INC.

21. A/T Clutch Pressure Control Solenoid Valve A
    1. Clean the mounting surfaces and the fluid passages of the solenoid valve body and the transmission housing.
    2. Install a new gasket (B) with the blue side toward the transmission housing, and install the 35 mm ATF pipe (C) and the ATF joint pipes (D).
    3. Install new O-rings (E) over the ATF joint pipes.
    4. Install A/T clutch pressure control solenoid valve A.

GETtheMANUALS.org

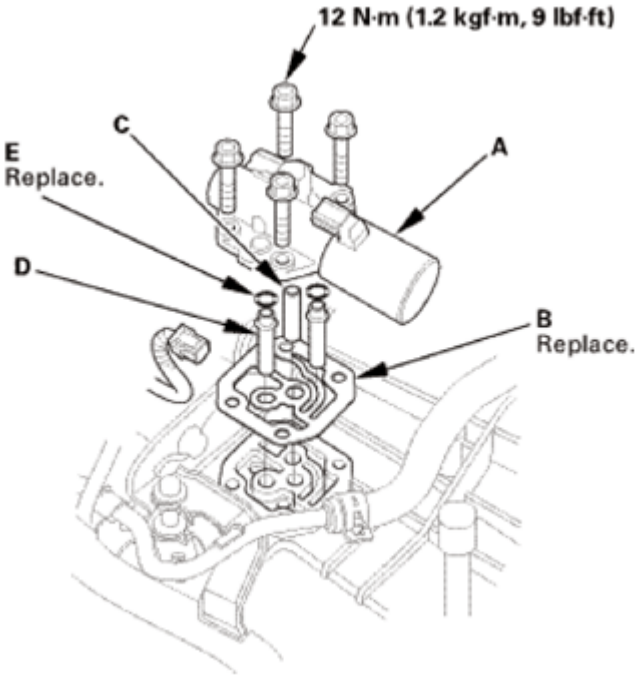

Fig. 1955: Identifying A/T Clutch Pressure Control Solenoid Valve, Gasket, ATF Pipe, ATF Joint Pipes And Mounting Bolts With Torque Specification
Courtesy of AMERICAN HONDA MOTOR CO., INC.

22. Output Shaft (Countershaft) Speed Sensor
    1. Install a new O-ring (A) on the output shaft (countershaft) speed sensor (B).
    2. Install the output shaft (countershaft) speed sensor and the sensor washer (C).

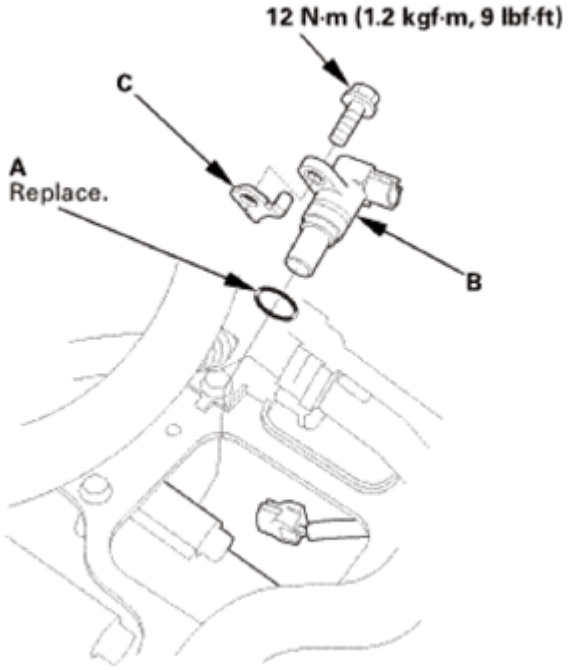

GETtheMANUALS.org

Fig. 1956: Identifying Output Shaft (Countershaft) Speed Sensor, O-Ring, Sensor Washer And Mounting Bolts With Torque Specification
Courtesy of AMERICAN HONDA MOTOR CO., INC.

23. Input Shaft (Mainshaft) Speed Sensor
    1. Install a new O-ring (A) on the input shaft (mainshaft) speed sensor (B).
    2. Install the input shaft (mainshaft) speed sensor.

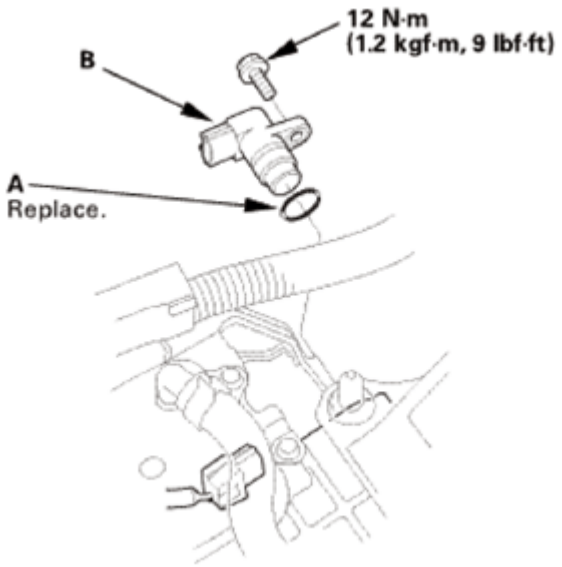

Fig. 1957: Identifying Input Shaft (Mainshaft) Speed Sensor, O-Ring And Mounting Bolt With Torque Specification
Courtesy of AMERICAN HONDA MOTOR CO., INC.

24. Transmission End Cover
    1. Install the dowel pins (A) and a new gasket (B).
    2. Install new O-rings (C) over the ATF pipes.
    3. Install the end cover (D), and tighten the three special bolts (E) and the 6 x 1.0 mm bolts (F) (12 bolts).

GETtheMANUALS.org

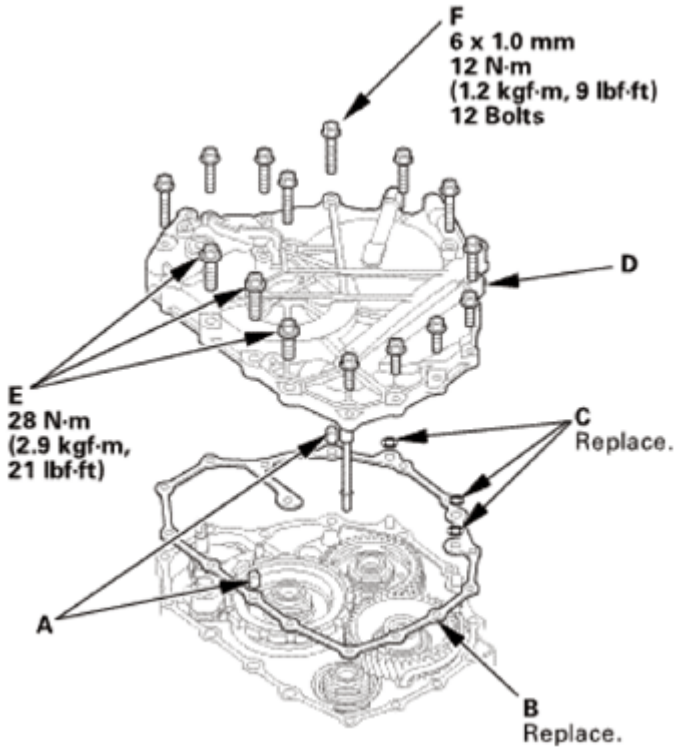

Fig. 1958: Identifying Dowel Pins, Gasket, O-Rings, End Cover And Mounting Bolts With Torque Specification
Courtesy of AMERICAN HONDA MOTOR CO., INC.

25. Transmission Range Switch Subharness
    1. Install the clamp brackets (A).
    2. Install the transmission range switch subharness (B).

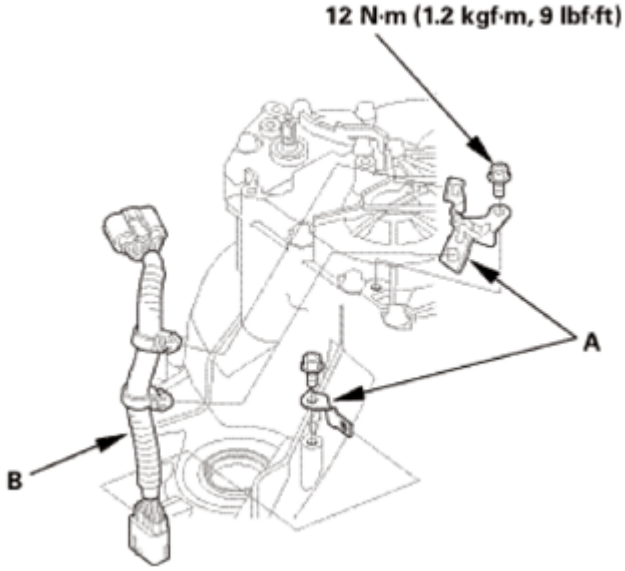

GETtheMANUALS.org

Fig. 1959: Identifying Transmission Range Switch Subharness, Clamp Brackets And Mounting Bolts With Torque Specification
Courtesy of AMERICAN HONDA MOTOR CO., INC.

26. Transmission Range Switch
    1. Make sure the selector control shaft is in the N position. If necessary, move the selector control shaft to the N position.

NOTE: **Do not use the selector control shaft to adjust the shift position. If the selector control shaft tips are squeezed together it will cause a faulty signal or position due to play between the selector control shaft and switch.**

Fig. 1960: Moving Selector Control Shaft To N Position
Courtesy of AMERICAN HONDA MOTOR CO., INC.

2. Align the cutouts (A) on the rotary-frame with the neutral positioning cutouts (B) on the transmission range switch (C), then put a 2.0 mm (0.079 in) feeler gauge blade (D) in the cutouts to hold the switch in the N position.

NOTE: **Be sure to use a 2.0 mm (0.079 in) blade or equivalent to hold the switch in the N position.**

GETtheMANUALS.org

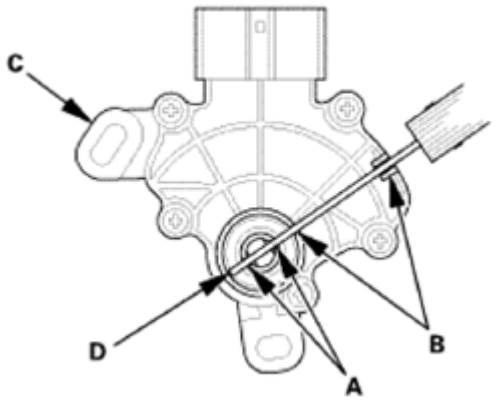

Fig. 1961: Aligning Cutouts On Rotary-Frame With Neutral Positioning Cutouts On Transmission Range Switch
Courtesy of AMERICAN HONDA MOTOR CO., INC.

3. Install the transmission range switch (A) gently on the selector control shaft (B) while holding it in the N position with the 2.0 mm (0.079 in) blade (C).

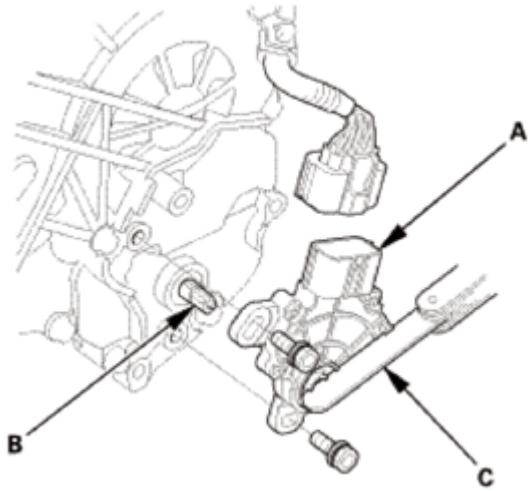

Fig. 1962: Identifying Transmission Range Switch, Selector Control Shaft And Blade
Courtesy of AMERICAN HONDA MOTOR CO., INC.

4. Tighten the bolts on the transmission range switch (A) while you continue holding the N position.

NOTE: Do not move the transmission range switch when tightening the bolts.

5. Remove the feeler gauge (B).
6. Check the connector (C) for corrosion, dirt, or oil, and clean or repair if necessary, then connect the connector securely.

GETtheMANUALS.org

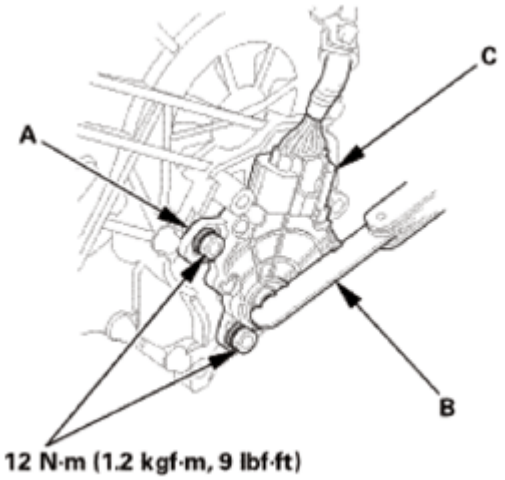

Fig. 1963: Identifying Transmission Range Switch, Connector, Feeler Gauge And Mounting Bolts With Torque Specification
Courtesy of AMERICAN HONDA MOTOR CO., INC.

27. Transmission Range Switch Cover
    1. Install the transmission range switch cover (A).

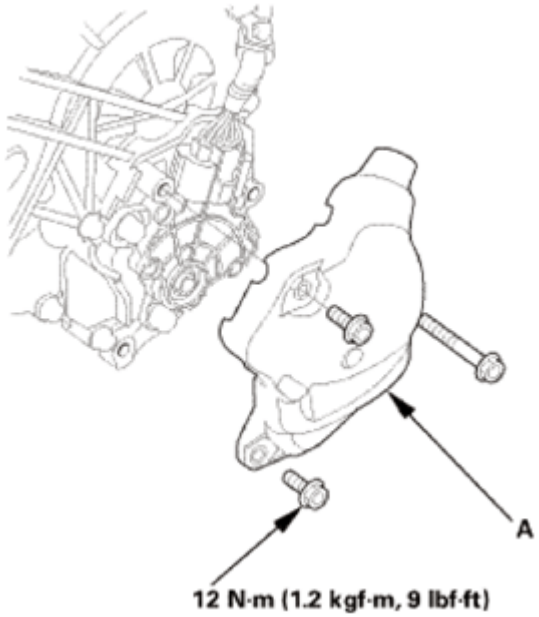

Fig. 1964: Identifying Transmission Range Switch Cover And Mounting Bolts With Torque Specification
Courtesy of AMERICAN HONDA MOTOR CO., INC.

TORQUE CONVERTER HOUSING MAINSHAFT BEARING REPLACEMENT

SPECIAL TOOL REQUIRED

GETtheMANUALS.org

Image	Description/Tool Number
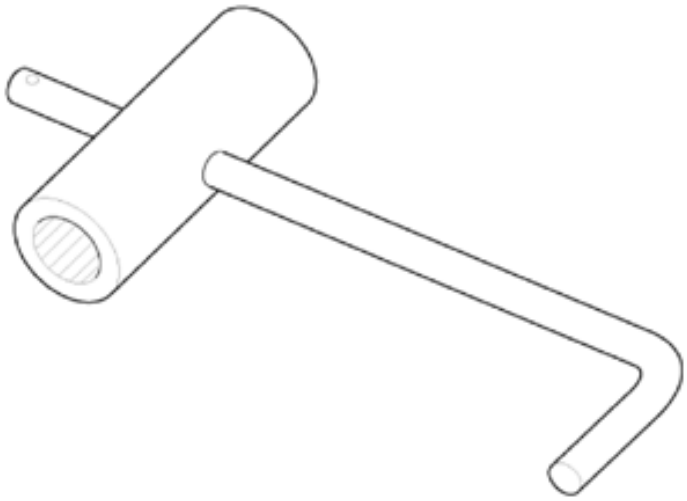	Mainshaft Holder 07GAB-PF50101
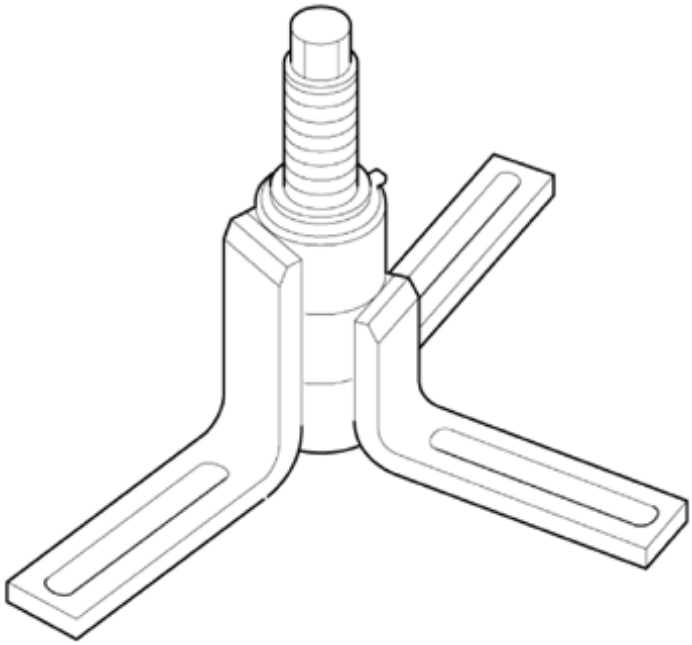	Housing Puller 07HAC-PK40102

GETtheMANUALS.org

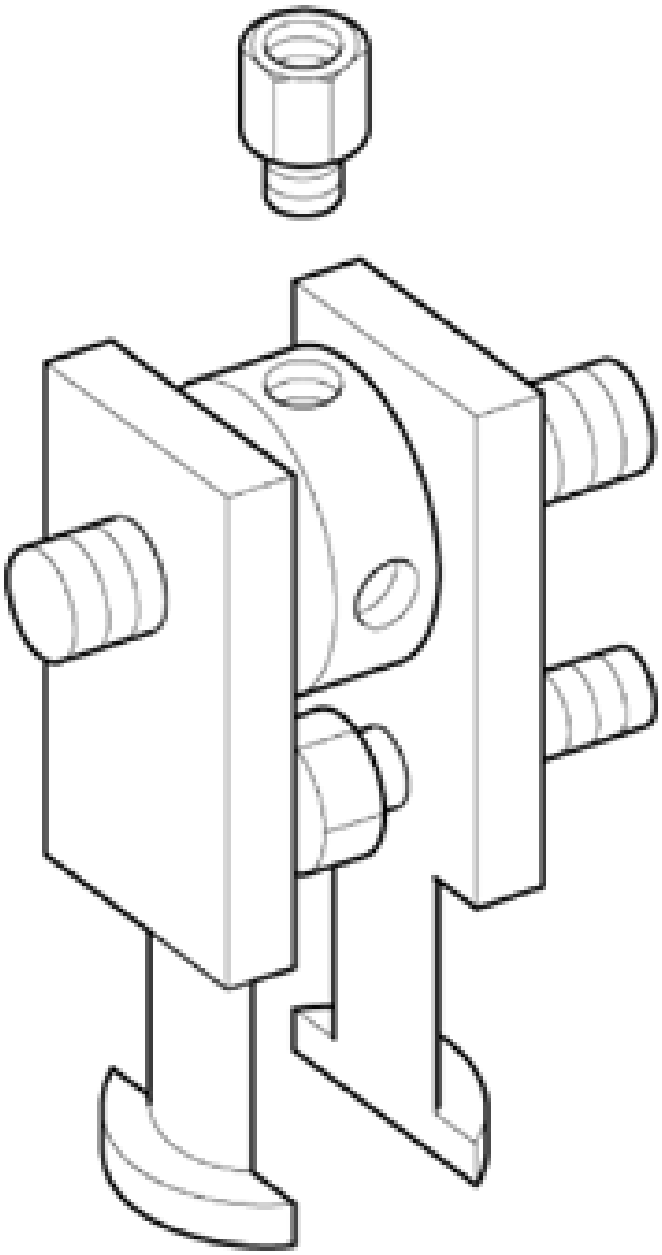	Adjustable Bearing Puller, 25-40 mm 07736-A01000B(1)
	Driver Handle, 15 x 135L 07749-0010000

GETtheMANUALS.org

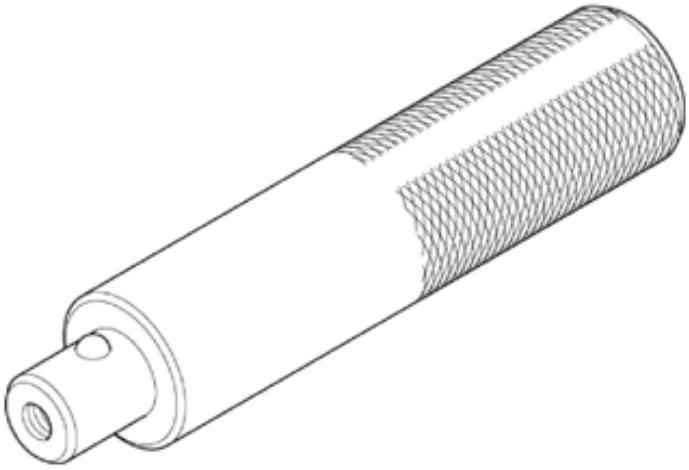	
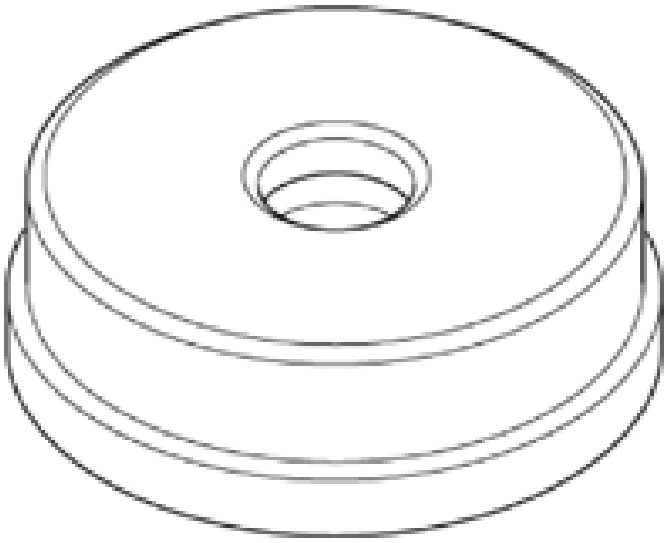	Bearing Driver Attachment, 62 x 68 mm 07746-0010500
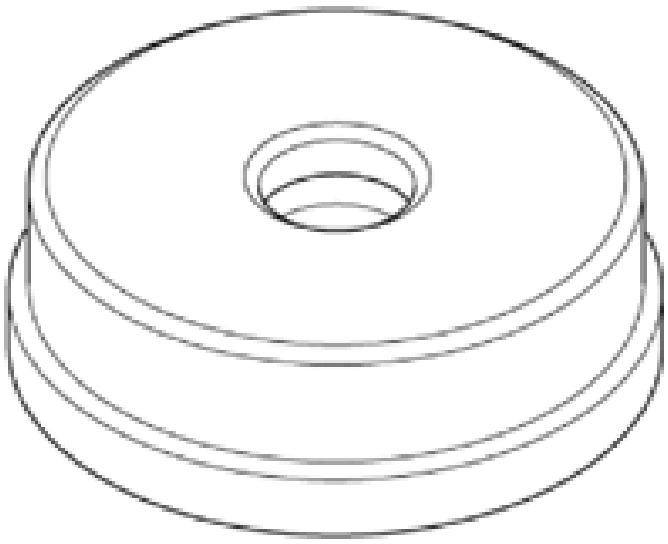	Bearing Driver Attachment, 72 x 75 mm 07746-0010600

GETtheMANUALS.org

(1) Must be used with commercially available 3/8"-16 slide hammer

REMOVAL

NOTE: The illustration shows AWD/4WD transmission.

1. Transmission Range Switch Cover
    1. Remove the transmission range switch cover (A).

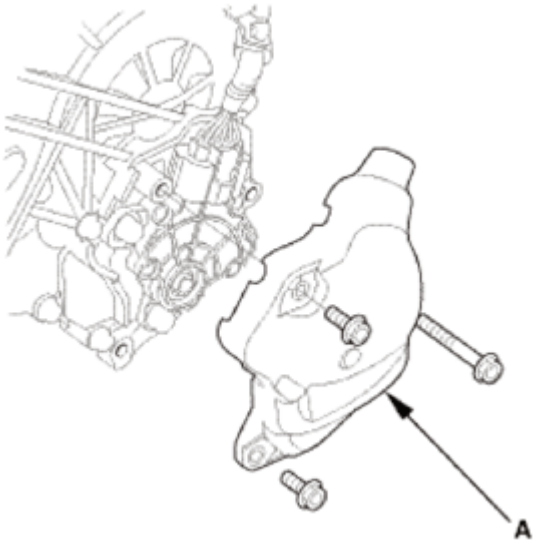

Fig. 1965: Identifying Transmission Range Switch Cover With Bolts
Courtesy of AMERICAN HONDA MOTOR CO., INC.

2. Transmission Range Switch
    1. Remove the transmission range switch (A).

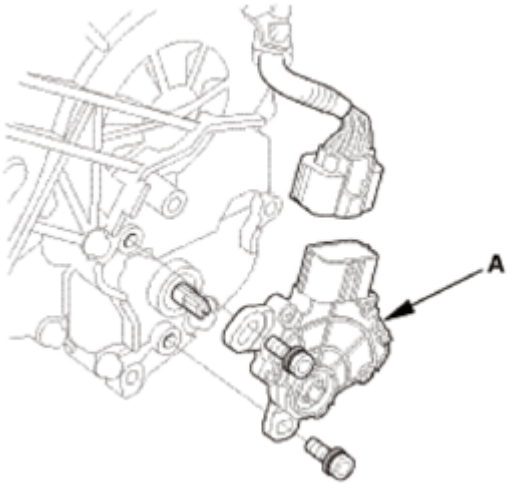

GETtheMANUALS.org

Fig. 1966: Identifying Transmission Range Switch With Bolts
Courtesy of AMERICAN HONDA MOTOR CO., INC.

3. Transmission Range Switch Subharness
    1. Remove the transmission range switch subharness (A).
    2. Remove the clamp brackets (B).

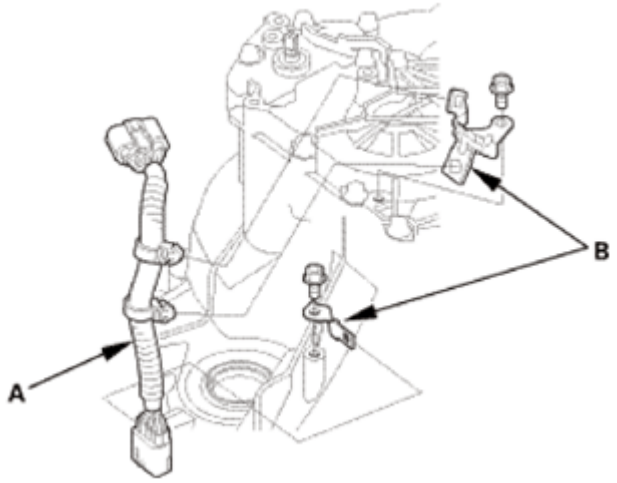

Fig. 1967: Identifying Transmission Range Switch Subharness And Clamp Brackets
Courtesy of AMERICAN HONDA MOTOR CO., INC.

4. Transmission End Cover
    1. Remove the end cover (A), the dowel pins (B), the O-rings (C), and the gasket (D).

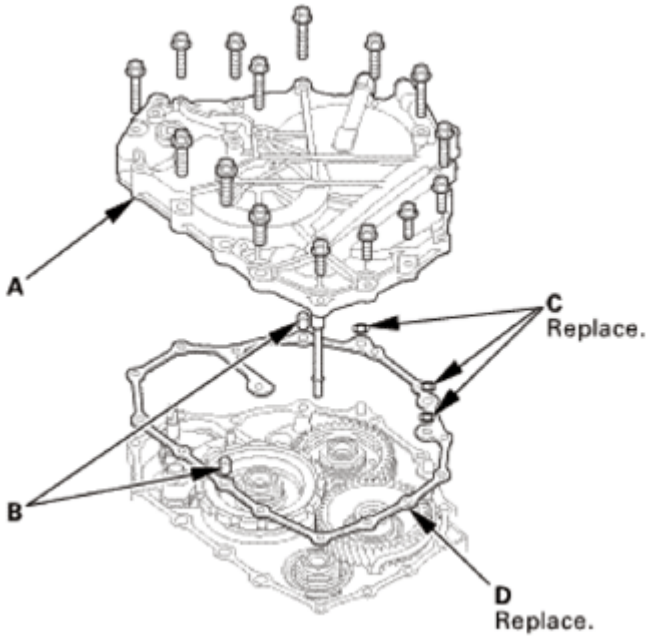

Fig. 1968: Identifying Transmission End Cover, Dowel Pins, O-Rings And Gasket With Bolts

GETtheMANUALS.org

Courtesy of AMERICAN HONDA MOTOR CO., INC.

5. Input Shaft (Mainshaft) Speed Sensor
    1. Remove the input shaft (mainshaft) speed sensor (A).
    2. Remove the O-ring (B) from the input shaft (mainshaft) speed sensor.

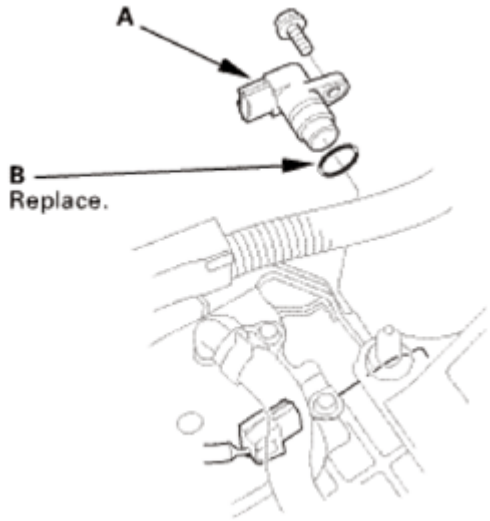

Fig. 1969: Identifying Input Shaft (Mainshaft) Speed Sensor And O-Ring
Courtesy of AMERICAN HONDA MOTOR CO., INC.

6. Output Shaft (Countershaft) Speed Sensor
    1. Remove the output shaft (countershaft) speed sensor (A) and the sensor washer (B).
    2. Remove the O-ring (C) from the output shaft (countershaft) speed sensor.

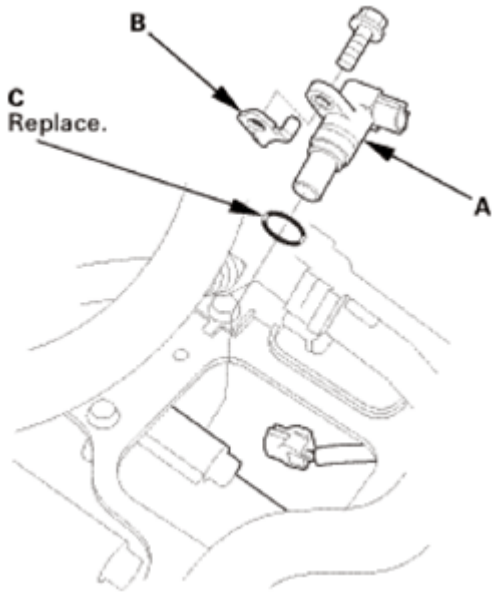

Fig. 1970: Identifying Output Shaft (Countershaft) Speed Sensor, Sensor Washer And O-

GETtheMANUALS.org

Ring
Courtesy of AMERICAN HONDA MOTOR CO., INC.

7. A/T Clutch Pressure Control Solenoid Valve A
    1. Remove A/T clutch pressure control solenoid valve A.
    2. Remove the 35 mm ATF pipe (B), the ATF joint pipes (C), the O-rings (D), and the gasket (E).

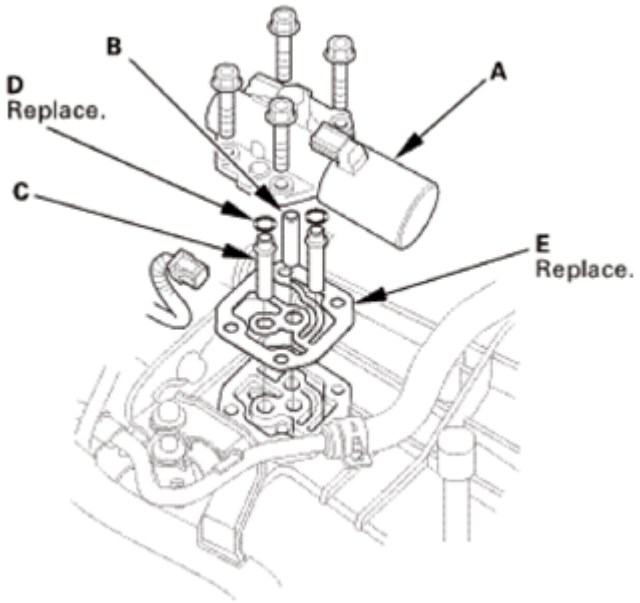

Fig. 1971: Identifying A/T Clutch Pressure Control Solenoid Valve, ATF Pipe, ATF Joint Pipes, O-Rings And Gasket With Bolts
Courtesy of AMERICAN HONDA MOTOR CO., INC.

8. A/T Clutch Pressure Control Solenoid Valve B and C
    1. Remove the clamp bracket (A) and A/T clutch pressure control solenoid valves B and C.
    2. Remove the ATF joint pipes (D), the O-rings (E), and the gasket (F).

GETtheMANUALS.org

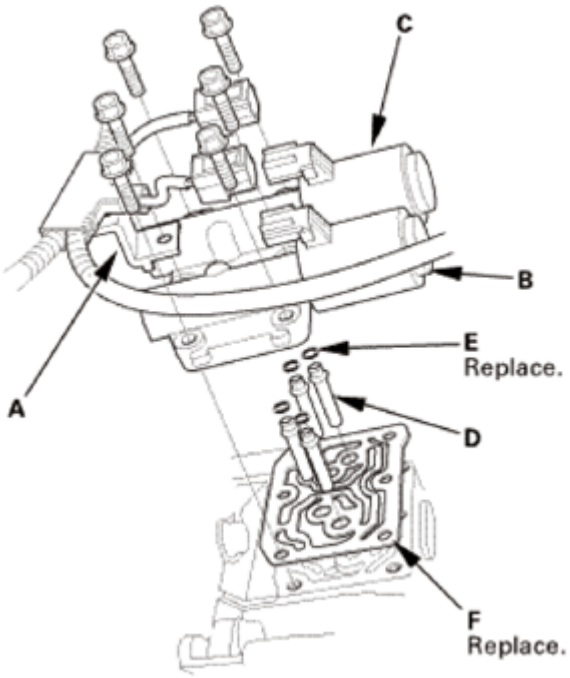

Fig. 1972: Identifying A/T Clutch Pressure Control Solenoid Valves, Clamp Bracket, ATF Joint Pipes, O-Rings And Gasket
Courtesy of AMERICAN HONDA MOTOR CO., INC.

9. ATF Inlet Line
    1. Remove the banjo bolt (A) and the sealing washers (B).
    2. Remove the ATF inlet line (C).

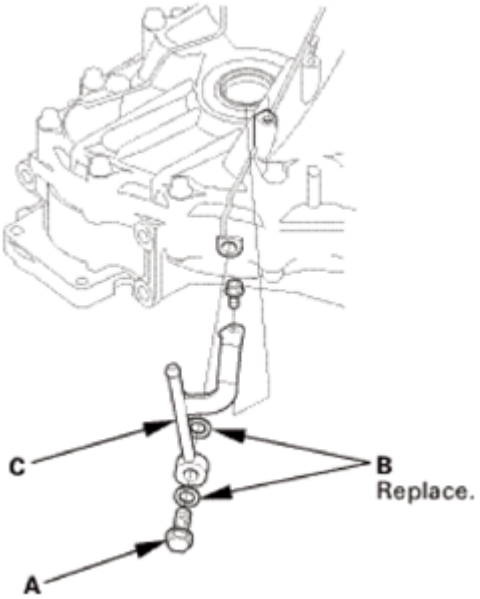

Fig. 1973: Identifying ATF Inlet Line, Banjo Bolt And Sealing Washers

GETtheMANUALS.org

Courtesy of AMERICAN HONDA MOTOR CO., INC.

10. ATF Outlet Line
    1. Remove the banjo bolt (A) and the sealing washers (B).
    2. Remove the ATF outlet line (C).

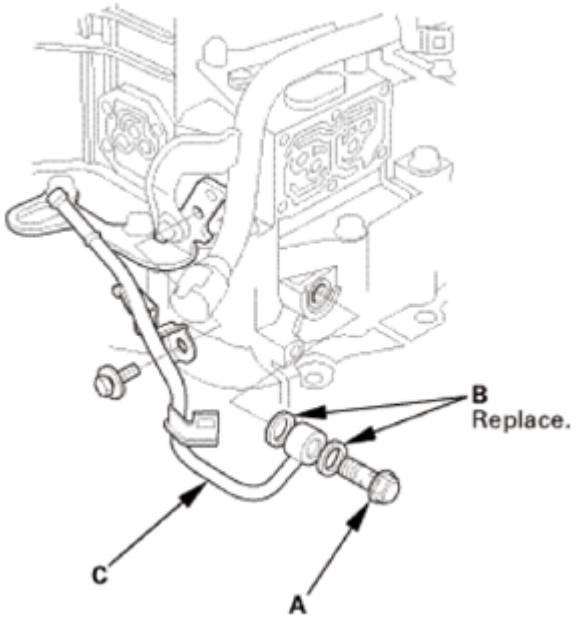

Fig. 1974: Identifying ATF Outlet Line, Banjo Bolt And Sealing Washers
Courtesy of AMERICAN HONDA MOTOR CO., INC.

11. Dipstick Guide Tube
    1. Remove the ATF dipstick guide tube (A).
    2. Remove the O-ring (B) from the ATF dipstick guide tube.

GETtheMANUALS.org

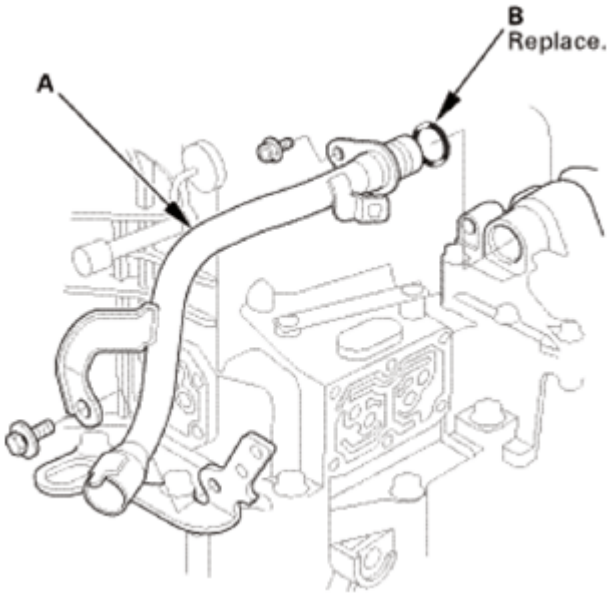

Fig. 1975: Identifying ATF Dipstick Guide Tube And O-Ring
Courtesy of AMERICAN HONDA MOTOR CO., INC.

12. A/T Shift Solenoid Cover
    1. Remove the shift solenoid valve cover (A), the dowel pins (B), and the gasket (C).

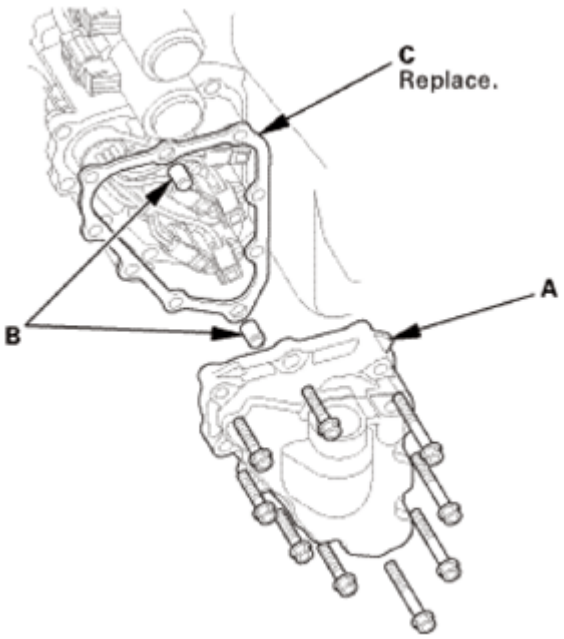

Fig. 1976: Identifying Shift Solenoid Valve Cover, Dowel Pins And Gasket
Courtesy of AMERICAN HONDA MOTOR CO., INC.

13. A/T Shift Solenoid Wire Harness - Disconnection
    1. Disconnect the connectors.

GETtheMANUALS.org

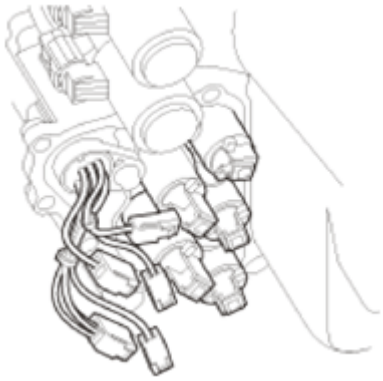

Fig. 1977: Identifying A/T Shift Solenoid Wire Harness Connectors
Courtesy of AMERICAN HONDA MOTOR CO., INC.

14. ATF Feed Pipe/Lubrication Pipe
    1. Remove the 6 x 201 mm ATF pipe (A).
    2. Remove the ATF lubrication pipe (B).
    3. Remove the 8 x 220 mm ATF pipe (C).
    4. Remove the 8 x 198 mm ATF pipes (D).

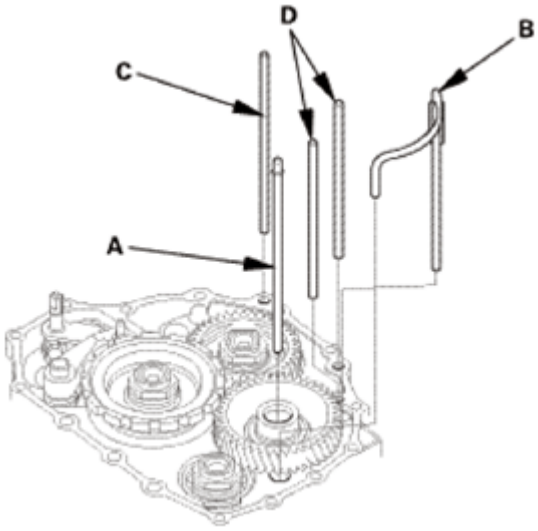

Fig. 1978: Identifying ATF Feed Pipes And Lubrication Pipe
Courtesy of AMERICAN HONDA MOTOR CO., INC.

15. End Cover Idler Gear Assembly
    1. Install the mainshaft holder onto the mainshaft.
    2. Engage the park pawl with the park gear.

GETtheMANUALS.org

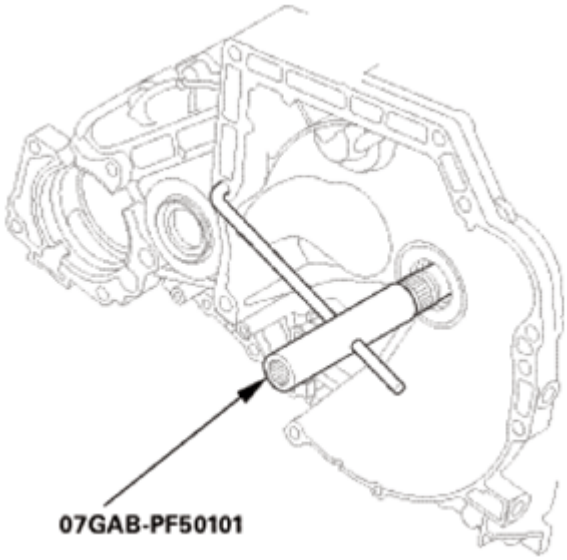

Fig. 1979: Installing Mainshaft Holder Onto Mainshaft
Courtesy of AMERICAN HONDA MOTOR CO., INC.

3. Using a chisel, cut the lock tab (A) of the locknut (B).

NOTE: **Keep all of the chiseled particles out of the transmission.**

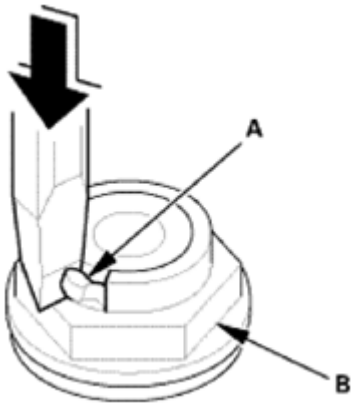

Fig. 1980: Cutting Lock Tab Of Locknut Using Chisel
Courtesy of AMERICAN HONDA MOTOR CO., INC.

4. Remove the locknuts (A) and the conical spring washers (B) from each shaft.

NOTE:

- **The countershaft and secondary shaft locknuts have left-hand threads.**
- **Keep all of the chiseled particles out of the transmission.**
- **Clean the old locknuts; they are used to install the press fit idler gears and park gear.**

GETtheMANUALS.org

5. Remove the mainshaft holder.

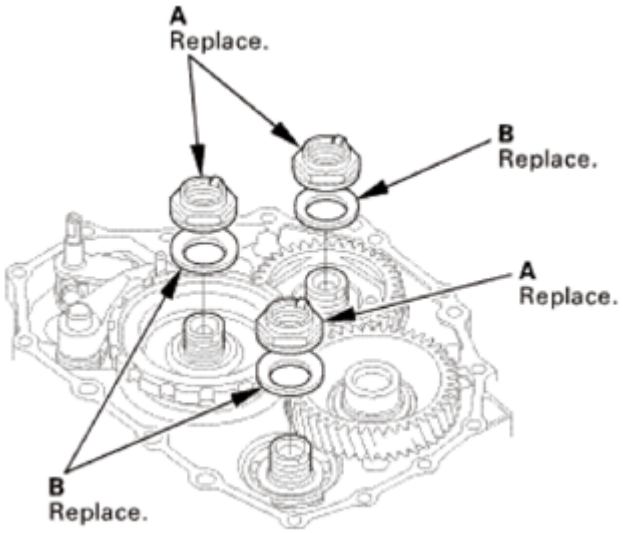

Fig. 1981: Identifying Locknuts And Conical Spring Washers
Courtesy of AMERICAN HONDA MOTOR CO., INC.

6. Remove the park pawl (A), the park pawl spring (B), the park pawl shaft (C), and the stop shaft (D).
7. Pry down the lock tab (E) of the lock washer (F).
8. Remove the lock bolt (G) and the lock washer.
9. Remove the park lever (H), the park lever stop (I), and the park lever spring (J).

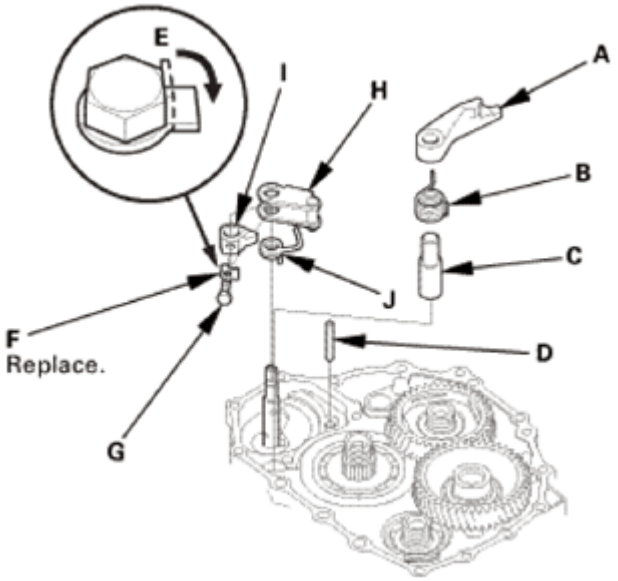

Fig. 1982: Prying Down Lock Tab Of Lock Washer
Courtesy of AMERICAN HONDA MOTOR CO., INC.

GETtheMANUALS.org

10. Place a spacer (A) on the countershaft (B).
11. Set a commercially available bearing puller (C) on the park gear (D).
12. Remove the park gear.

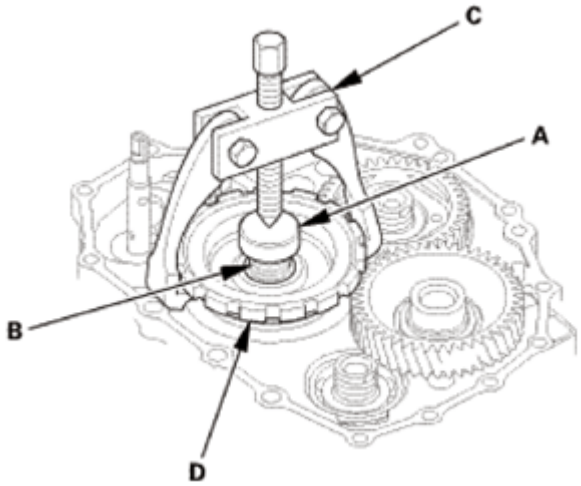

Fig. 1983: Setting Commercially Available Bearing Puller On Park Gear
Courtesy of AMERICAN HONDA MOTOR CO., INC.

13. Install a puller (A) with two 6 x 1.0 mm bolts (B) on the mainshaft idler gear (C).
14. Set a spacer (D) between the puller and the mainshaft (E).
15. Remove the mainshaft idler gear.

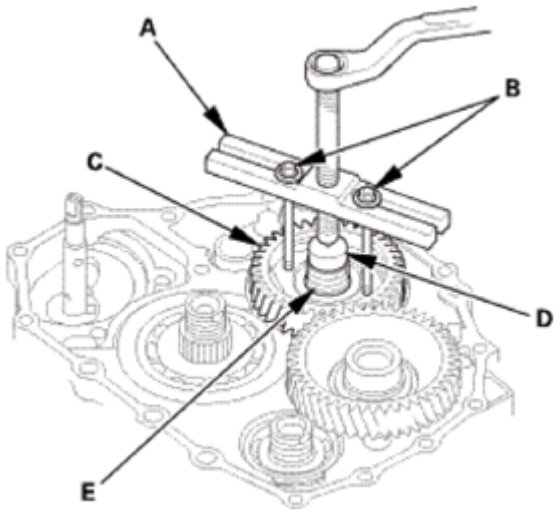

Fig. 1984: Installing Puller With 6 X 1.0 mm Bolts On Mainshaft Idler Gear
Courtesy of AMERICAN HONDA MOTOR CO., INC.

16. Automatic Transmission Housing
    1. Align the spring pin (A) on the selector control shaft (B) with the transmission housing groove (C).

GETtheMANUALS.org

NOTE: **Do not squeeze the end of the selector control shaft tips together when turning the control shaft. If the tips are squeezed together, it will cause a faulty shift position signal or position due to the play between the selector control shaft and the transmission range switch.**

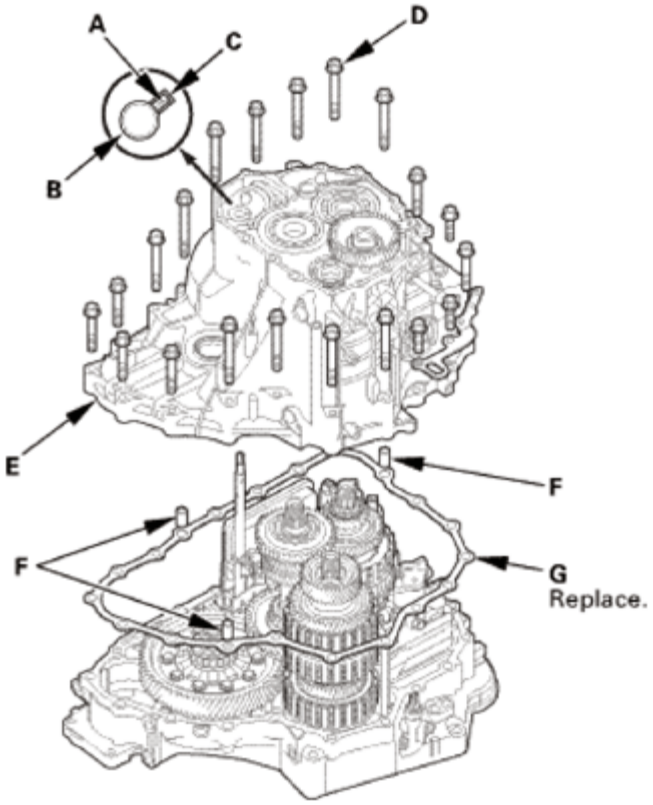

Fig. 1985: Identifying Spring Pin, Selector Control Shaft, Transmission Housing Groove, Transmission Housing, Mounting Bolts And Gasket
Courtesy of AMERICAN HONDA MOTOR CO., INC.

2. Remove the transmission housing mounting bolts (D) (2WD: 19 bolts, AWD/4WD: 20 bolts).
3. Install the housing puller over the mainshaft.
4. Remove the transmission housing (E) using the housing puller.
5. Remove the dowel pins (F) and the gasket (G).

GETtheMANUALS.org

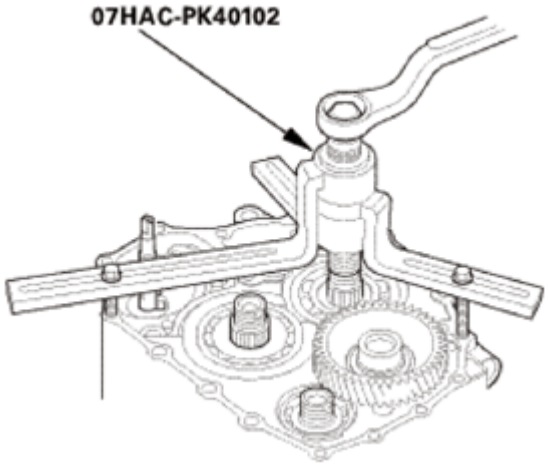

Fig. 1986: Installing Housing Puller Over Mainshaft
Courtesy of AMERICAN HONDA MOTOR CO., INC.

17. A/T Countershaft Reverse Gear
    1. Remove the countershaft reverse gear (A).
    2. Remove the needle bearing (B).

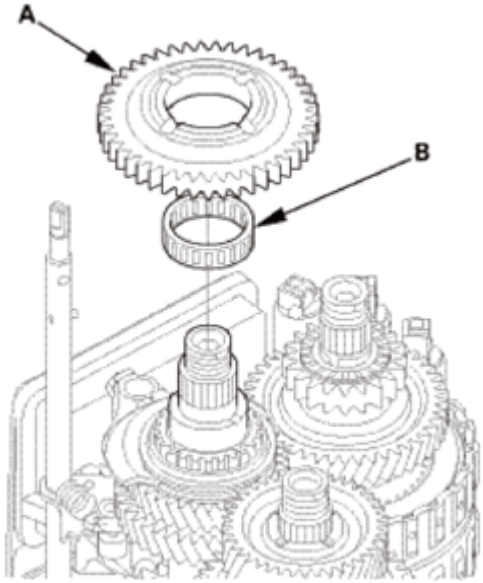

Fig. 1987: Identifying Countershaft Reverse Gear And Needle Bearing
Courtesy of AMERICAN HONDA MOTOR CO., INC.

18. Reverse Shift fork
    1. Pry down the lock tab (A) of the lock washer (B).
    2. Remove the lock bolt (C) and the lock washer.
    3. Remove the reverse shift fork (D) and the reverse selector (E) together.

GETtheMANUALS.org

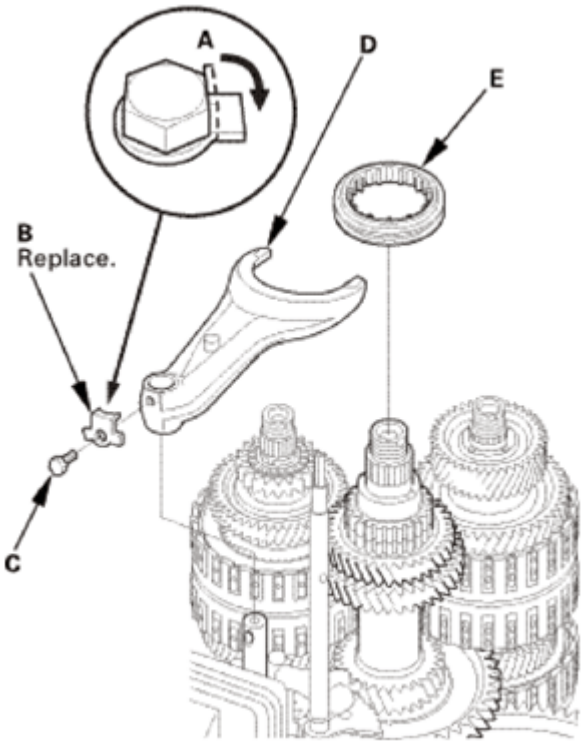

Fig. 1988: Prying Down Lock Tab Of Lock Washer
Courtesy of AMERICAN HONDA MOTOR CO., INC.

19. Selector Control Lever (Except 2WD of USA Produced Models)

Except 2WD of USA Produced Models

1. Pry down the lock tab (A) of the lock washer (B).
2. Remove the lock bolt (C) and the lock washer.
3. Remove the selector control lever (D).

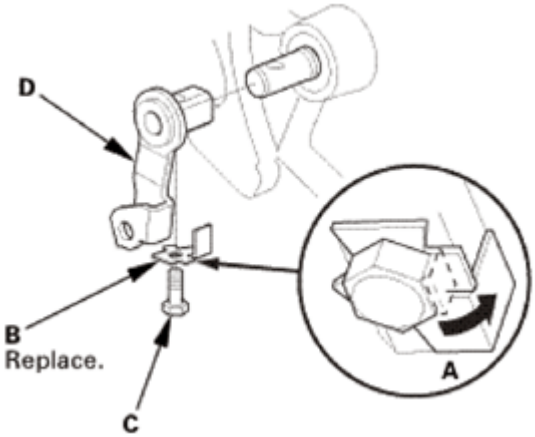

Fig. 1989: Prying Down Lock Tab Of Lock Washer (Except 2WD Of USA Produced Models)

GETtheMANUALS.org

Courtesy of AMERICAN HONDA MOTOR CO., INC.

20. Selector Control Shaft
    1. Unhook the detent arm spring (A).

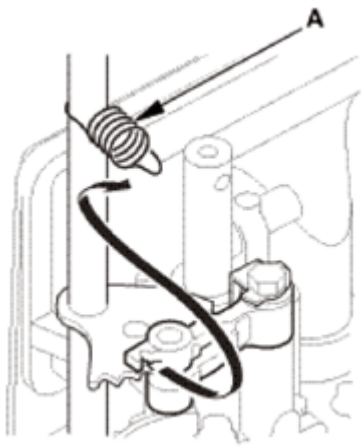

Fig. 1990: Unhooking Detent Arm Spring
Courtesy of AMERICAN HONDA MOTOR CO., INC.

    2. Separate the manual valve lever pin (A) on the selector control shaft (B) from the guide of the manual valve (C).

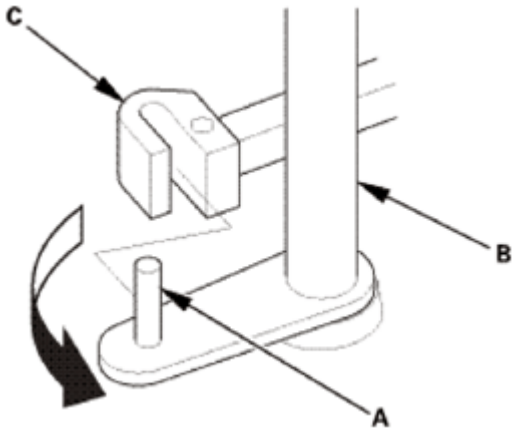

Fig. 1991: Separating Manual Valve Lever Pin On Selector Control Shaft From Guide Of Manual Valve
Courtesy of AMERICAN HONDA MOTOR CO., INC.

    3. Remove the selector control shaft (A).

GETtheMANUALS.org

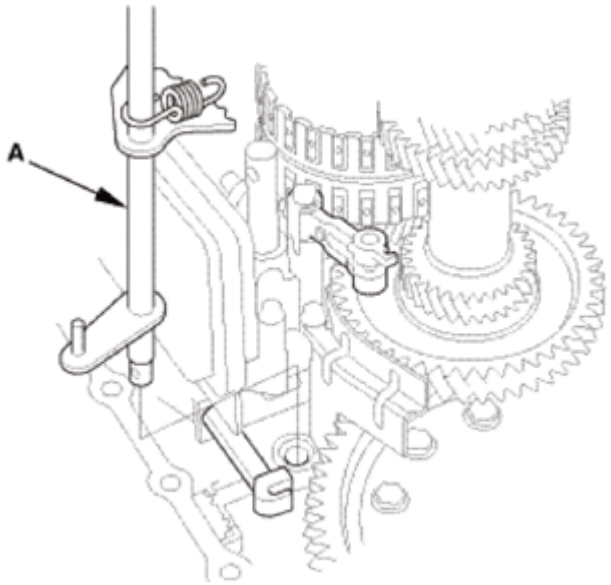

Fig. 1992: Identifying Selector Control Shaft
Courtesy of AMERICAN HONDA MOTOR CO., INC.

21. Mainshaft and Countershaft and Secondary Shaft Assembly
    1. Turn the detent arm (A) away from the countershaft (B).

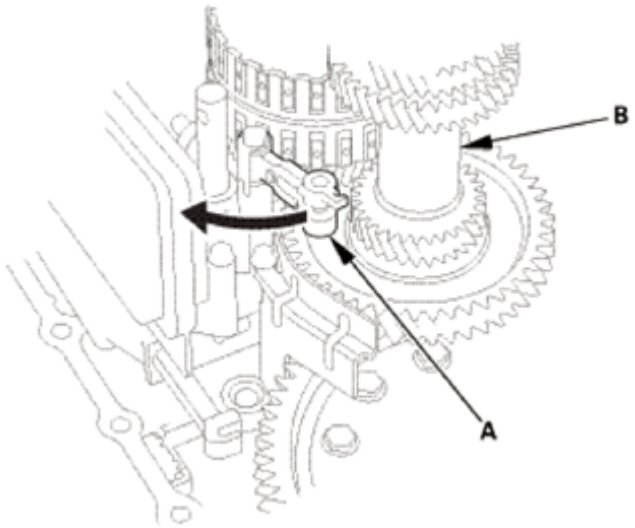

Fig. 1993: Turning Detent Arm Away From Countershaft
Courtesy of AMERICAN HONDA MOTOR CO., INC.

    2. Remove the mainshaft subassembly (A), the countershaft subassembly (B), and the secondary shaft subassembly (C) together.

NOTE: Do not bump the countershaft on the baffle plate (D).

GETtheMANUALS.org

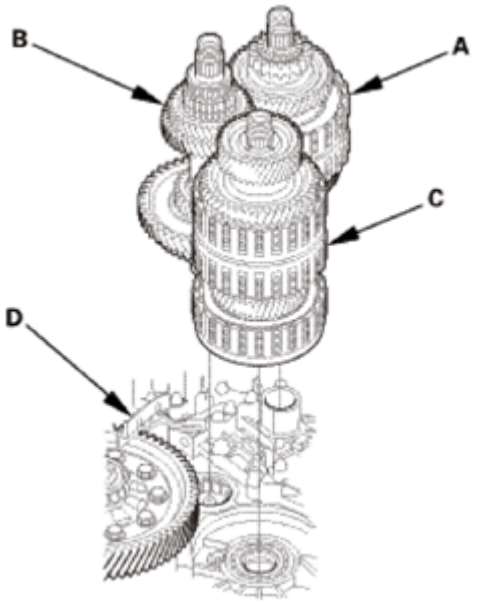

Fig. 1994: Identifying Mainshaft Subassembly, Countershaft Subassembly, Secondary Shaft Subassembly And Baffle Plate
Courtesy of AMERICAN HONDA MOTOR CO., INC.

22. Differential Assembly
    1. Remove the baffle plate (A).
    2. Remove the differential assembly (B).

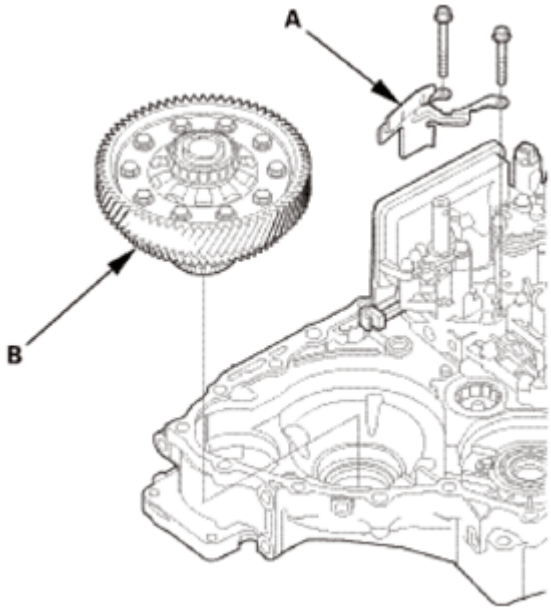

Fig. 1995: Identifying Differential Assembly And Baffle Plate
Courtesy of AMERICAN HONDA MOTOR CO., INC.

GETtheMANUALS.org

23. Regulator Valve Body
    1. Remove ATF joint pipe A.
    2. Remove ATF joint pipe B.

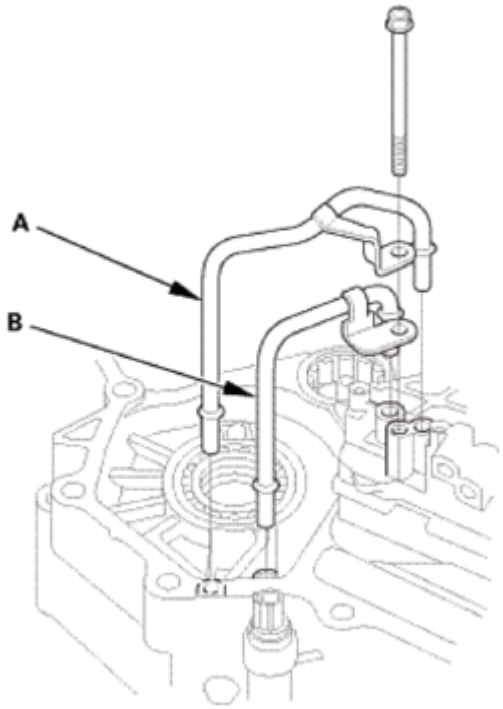

Fig. 1996: Identifying ATF Joint Pipes
Courtesy of AMERICAN HONDA MOTOR CO., INC.

    3. Remove the regulator valve body (A).

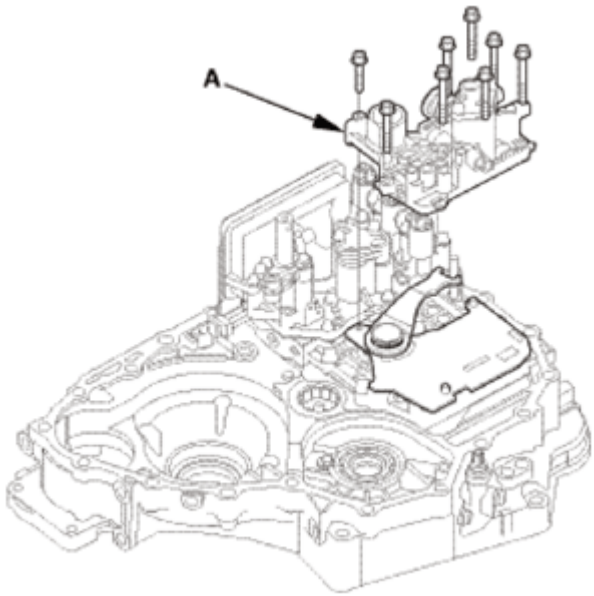

GETtheMANUALS.org

Fig. 1997: Identifying Regulator Valve Body With Mounting Bolts
Courtesy of AMERICAN HONDA MOTOR CO., INC.

4. Remove the stator shaft (A).
5. Remove the O-ring (B) from the stator shaft.
6. Remove the stator shaft stop (C).

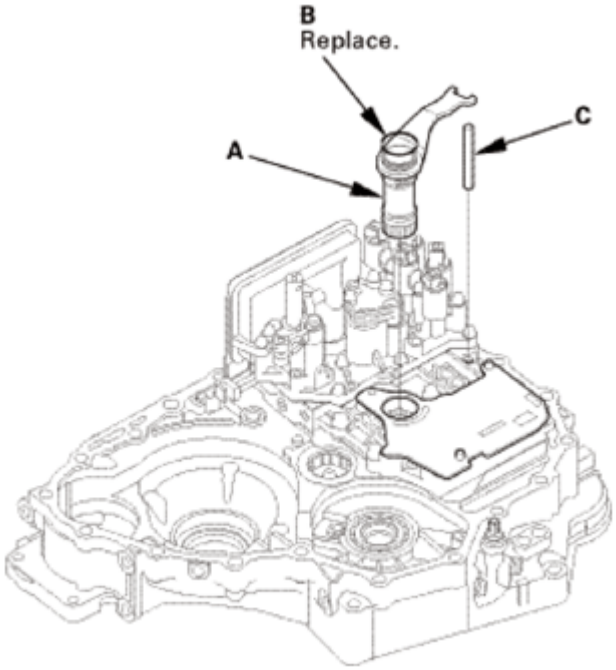

Fig. 1998: Identifying Stator Shaft, O-Ring And Stator Shaft Stop
Courtesy of AMERICAN HONDA MOTOR CO., INC.

7. Remove the regulator separator plate (A) and the dowel pins (B).

GETtheMANUALS.org

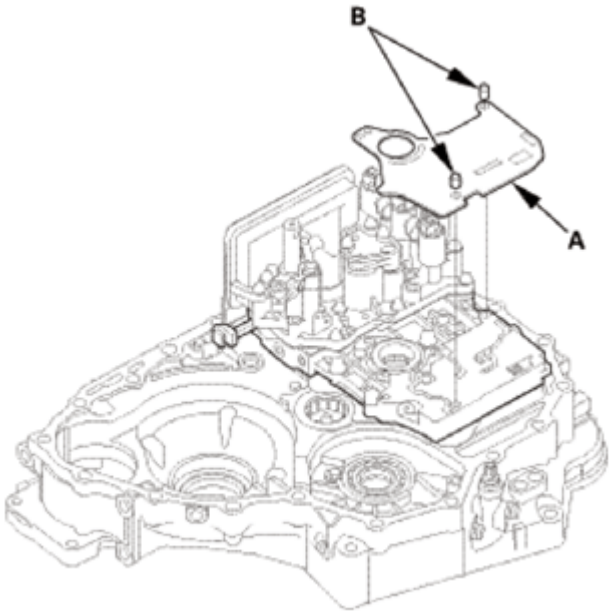

Fig. 1999: Identifying Regulator Separator Plate And Dowel Pins
Courtesy of AMERICAN HONDA MOTOR CO., INC.

24. ATF Strainer
    1. Remove the ATF strainer (A) and the O-ring (B).

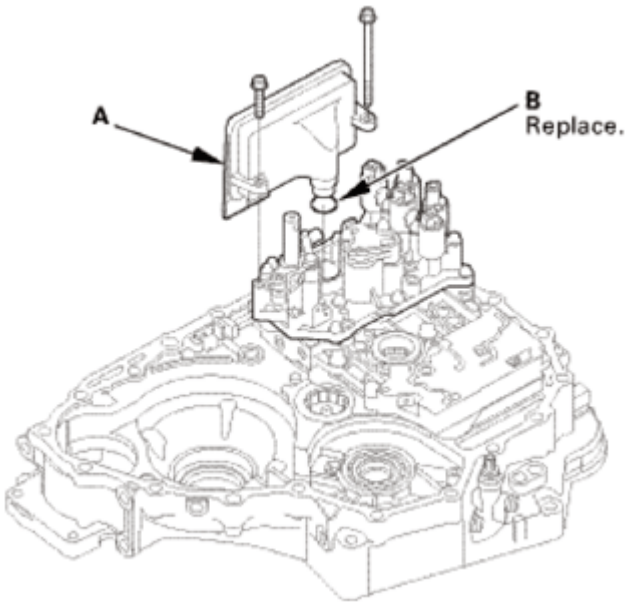

Fig. 2000: Identifying ATF Strainer And O-Ring With Mounting Bolts
Courtesy of AMERICAN HONDA MOTOR CO., INC.

    2. Clean the inlet opening (A) of the ATF strainer (B) thoroughly with compressed air, then check that it is in good condition and that the inlet opening is not clogged.

GETtheMANUALS.org

3. Test the ATF strainer by pouring clean ATF through the inlet opening, and replace it if it is clogged or damaged.

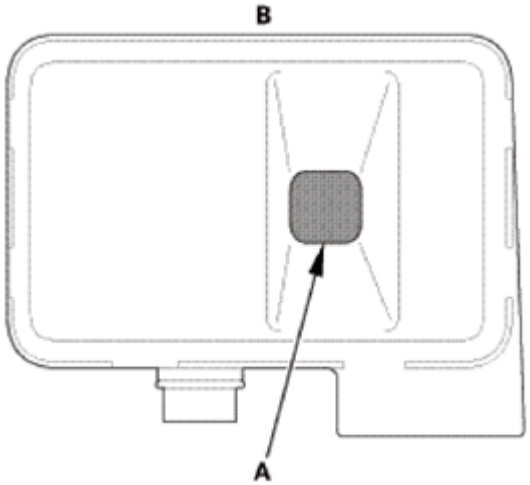

Fig. 2001: Identifying Inlet Opening Of ATF Strainer
Courtesy of AMERICAN HONDA MOTOR CO., INC.

25. Servo Body
    1. Remove the servo body (A).

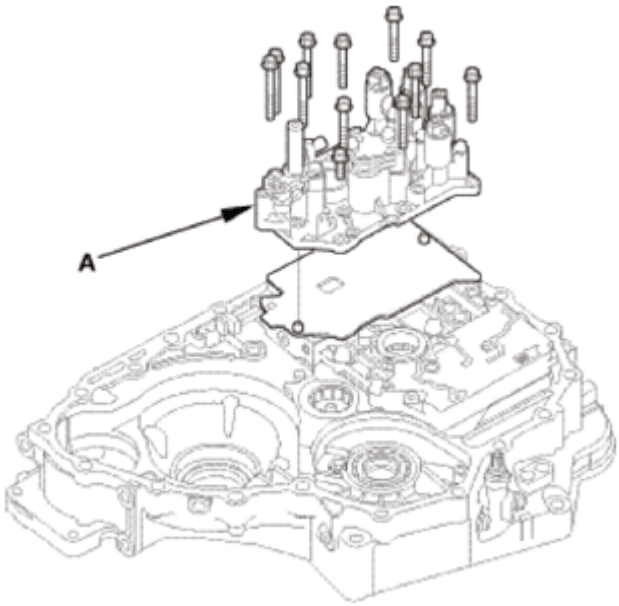

Fig. 2002: Identifying Servo Body With Mounting Bolts
Courtesy of AMERICAN HONDA MOTOR CO., INC.

    2. Remove the servo separator plate (A) and the dowel pins (B).

GETtheMANUALS.org

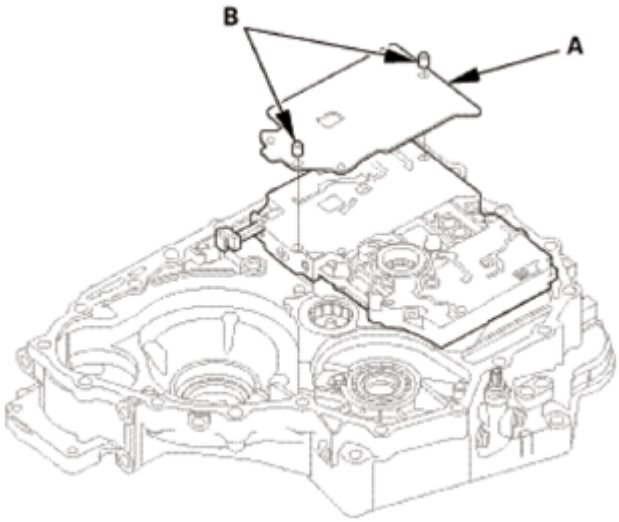

Fig. 2003: Identifying Servo Separator Plate And Dowel Pins
Courtesy of AMERICAN HONDA MOTOR CO., INC.

26. Main Valve Body
    1. Remove the cooler check valve spring (A) and the cooler check valve (B).
    2. Remove the main valve body (C).

NOTE: **Do not let the check balls (D) fall out, and do not use a magnet to remove the check balls, it may magnetize them.**

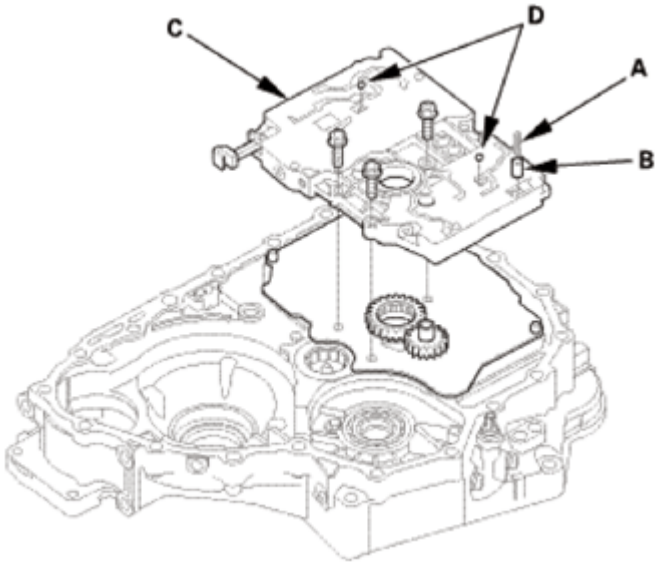

Fig. 2004: Identifying Cooler Check Valve, Spring, Main Valve Body And Check Balls
Courtesy of AMERICAN HONDA MOTOR CO., INC.

    3. Remove the ATF pump driven gear shaft (A).

GETtheMANUALS.org

4. Remove the ATF pump drive gear (B) and the ATF pump driven gear (C).

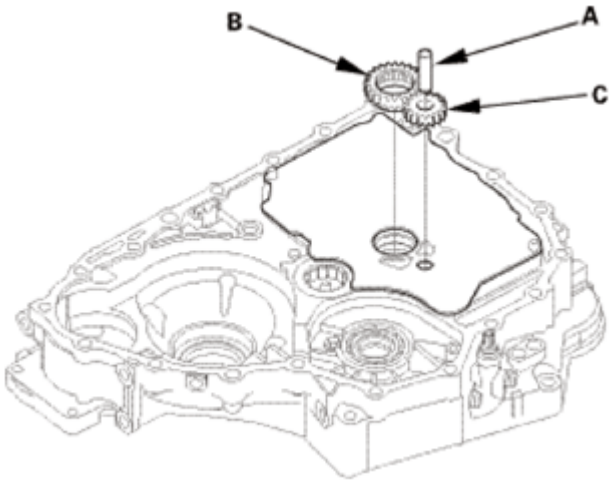

Fig. 2005: Identifying ATF Pump Driven Gear Shaft, ATF Pump Drive And Driven Gear
Courtesy of AMERICAN HONDA MOTOR CO., INC.

5. Remove the main separator plate (A) and the dowel pins (B).

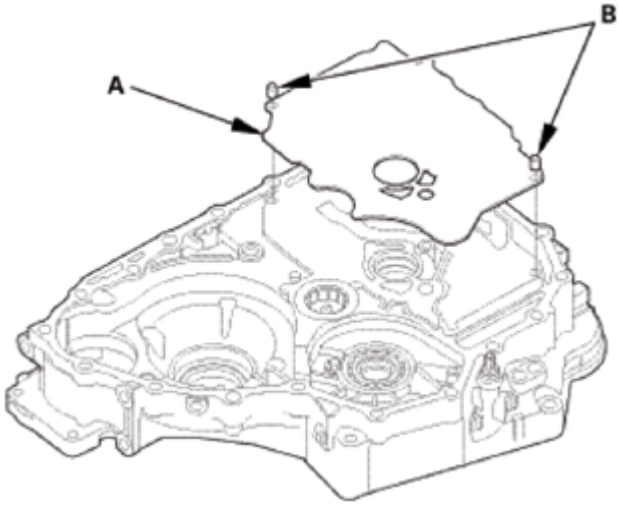

Fig. 2006: Identifying Main Separator Plate And Dowel Pins
Courtesy of AMERICAN HONDA MOTOR CO., INC.

27. Mainshaft Oil Seal
    1. Remove the mainshaft oil seal (A).

GETtheMANUALS.org

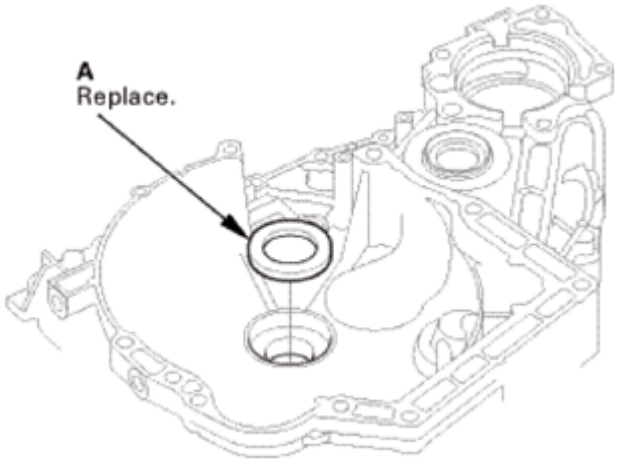

Fig. 2007: Identifying Mainshaft Oil Seal
Courtesy of AMERICAN HONDA MOTOR CO., INC.

28. Torque Converter Housing Mainshaft Bearing
    1. Remove the mainshaft bearing (A) using the 25-40 mm adjustable bearing puller and a commercially available 3/8"-16 slide hammer (B).

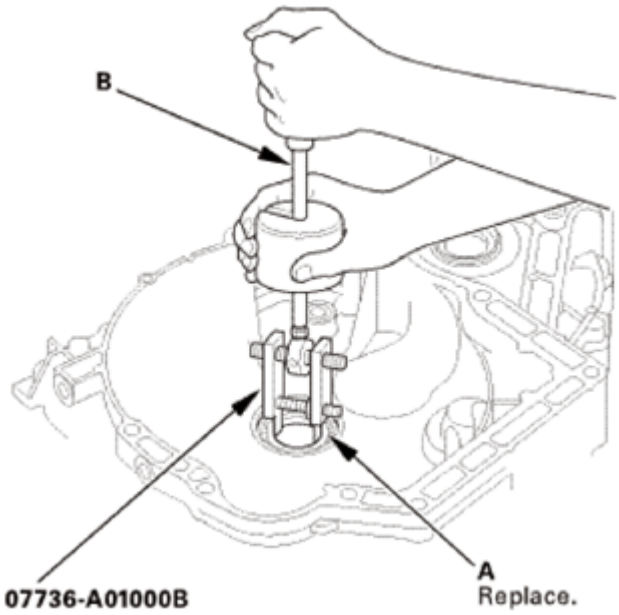

Fig. 2008: Removing Mainshaft Bearing Using Adjustable Bearing Puller And Commercially Available Slide Hammer
Courtesy of AMERICAN HONDA MOTOR CO., INC.

INSTALLATION

NOTE:

- **Apply a light coat of clean ATF on all moving parts before installation.**
- **The illustration shows AWD/4WD transmission.**

GETtheMANUALS.org

1. Torque Converter Housing Mainshaft Bearing
    1. Install a new mainshaft bearing (A) until it bottoms in the torque converter housing using the driver handle and the 62 x 68 mm bearing driver attachment.

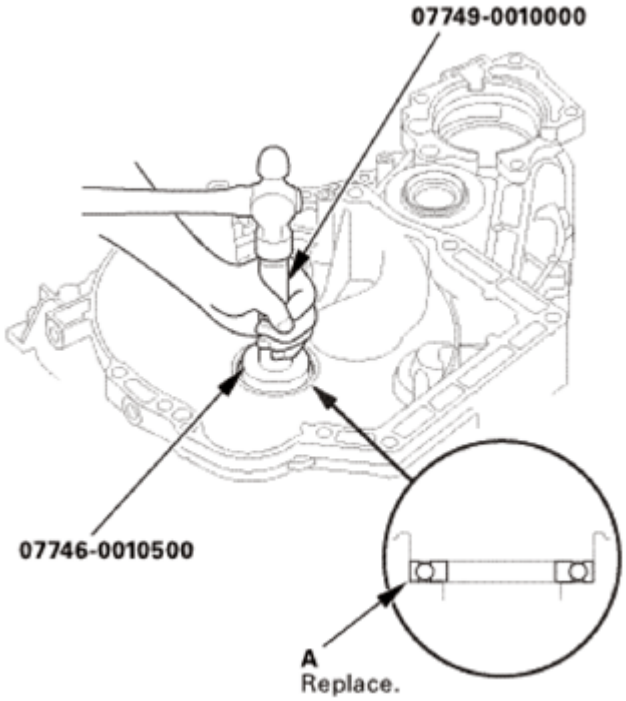

Fig. 2009: Installing Mainshaft Bearing Until It Bottoms In Torque Converter Housing Using Driver Handle And Bearing Driver Attachment
Courtesy of AMERICAN HONDA MOTOR CO., INC.

2. Mainshaft Oil Seal
    1. Install a new mainshaft oil seal (A) flush with the torque converter housing using the driver handle and the 72 x 75 mm bearing driver attachment.

NOTE: **Do not drive the oil seal into the torque converter housing until it bottoms out; it will block the fluid return passage and cause transmission damage.**

GETtheMANUALS.org

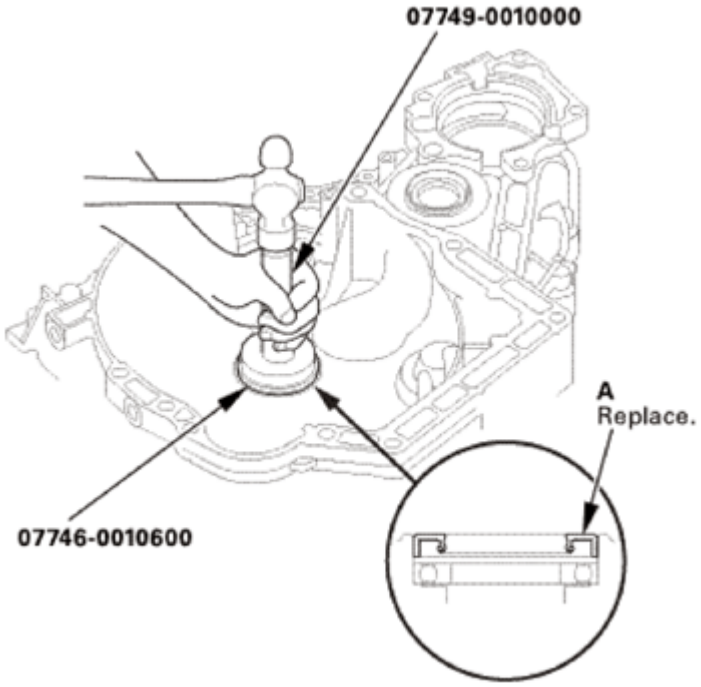

Fig. 2010: Installing Mainshaft Oil Seal Flush With Torque Converter Housing Using Driver Handle And Bearing Driver Attachment
Courtesy of AMERICAN HONDA MOTOR CO., INC.

3. Main Valve Body
    1. Install the main separator plate (A) and the dowel pins (B).

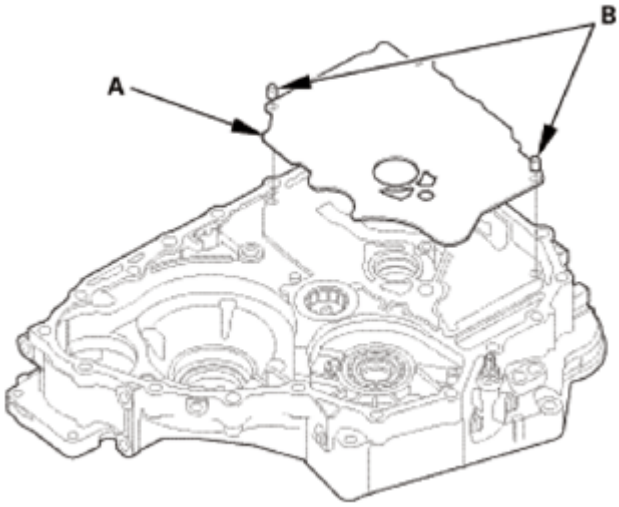

Fig. 2011: Identifying Main Separator Plate And Dowel Pins
Courtesy of AMERICAN HONDA MOTOR CO., INC.

    2. Install the ATF pump drive gear (A) and the ATF pump driven gear (B).

GETtheMANUALS.org

NOTE: **Install the ATF pump driven gear with its grooved and chamfered side facing down.**

3. Install the ATF pump driven gear shaft (C).

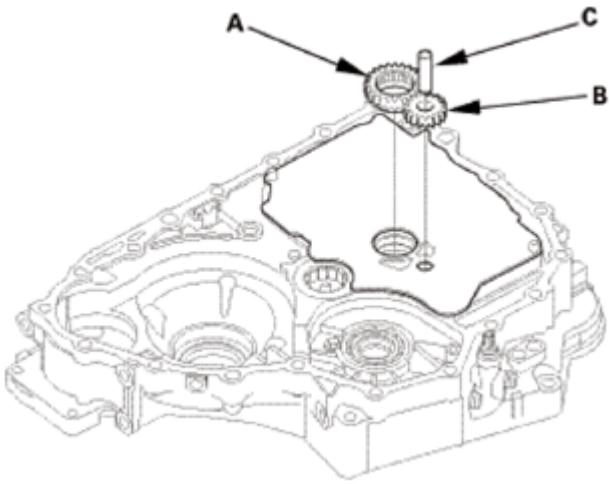

Fig. 2012: Identifying ATF Pump Driven Gear Shaft, ATF Pump Drive And Driven Gear (1 Of 2)
Courtesy of AMERICAN HONDA MOTOR CO., INC.

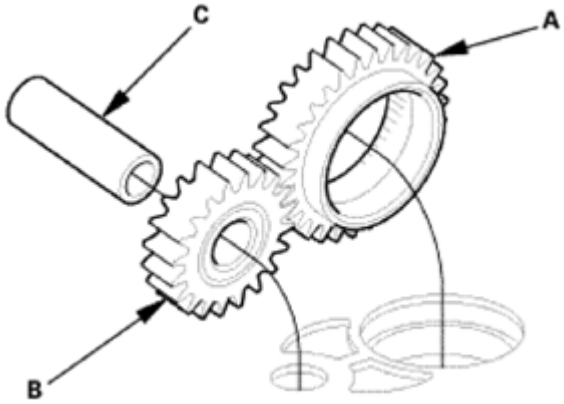

Fig. 2013: Identifying ATF Pump Driven Gear Shaft, ATF Pump Drive And Driven Gear (2 Of 2)
Courtesy of AMERICAN HONDA MOTOR CO., INC.

4. Install the main valve body (A).

NOTE: **Make sure that the check balls (B) are in the main valve body.**

5. Make sure the ATF pump drive gear (C) rotates smoothly in the normal operating direction, and the ATF pump driven gear shaft (D) moves smoothly in the axial and normal operating direction.
6. If the ATF pump drive gear and the ATF pump driven gear shaft do not move smoothly, loosen the

GETtheMANUALS.org

main valve body bolts. Realign the ATF pump driven gear shaft, and retighten the bolts to the specified torque, then recheck.

NOTE: **Failure to align the ATF pump driven gear shaft correctly will result in a seized ATF pump drive gear or ATF pump driven gear shaft.**

7. Install the cooler check valve (E) and the cooler check valve spring (F).

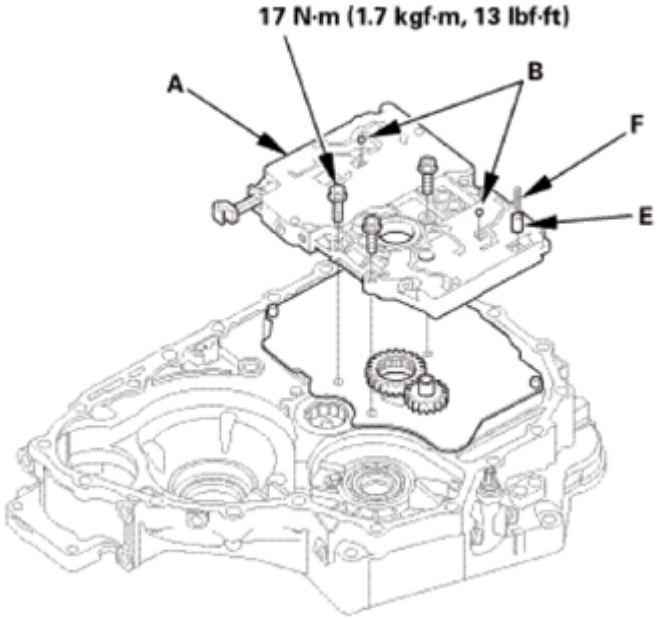

Fig. 2014: Identifying Main Valve Body, Check Balls, Cooler Check Valve And Cooler Check Valve Spring
Courtesy of AMERICAN HONDA MOTOR CO., INC.

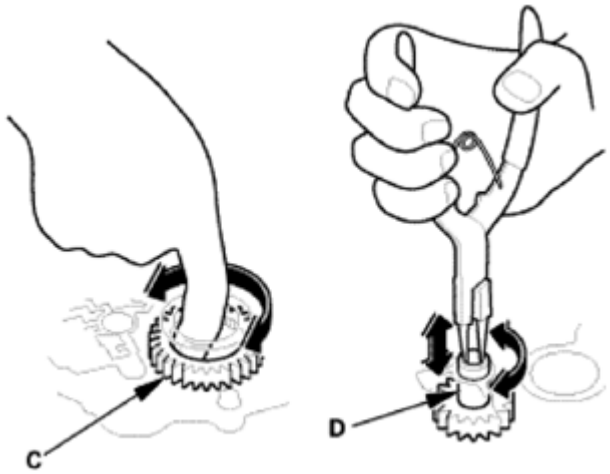

Fig. 2015: Rotating ATF Pump Drive Gear
Courtesy of AMERICAN HONDA MOTOR CO., INC.

GETtheMANUALS.org

4. Servo Body
    1. Install the servo separator plate (A) and the dowel pins (B).

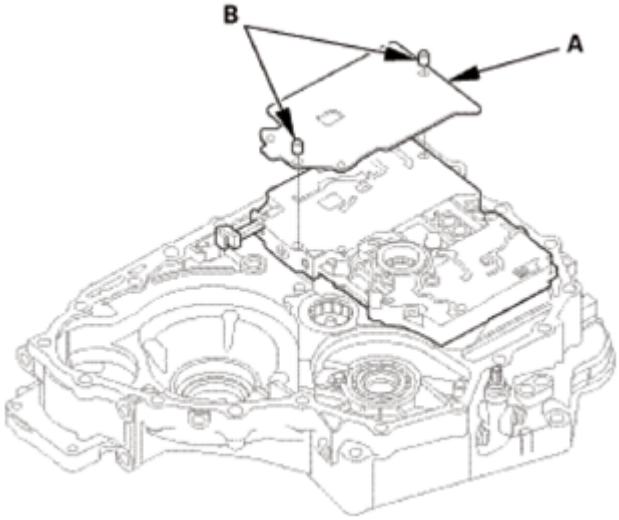

Fig. 2016: Identifying Servo Separator Plate And Dowel Pins
Courtesy of AMERICAN HONDA MOTOR CO., INC.

    2. Install the servo body (A).

NOTE: **Do not install the servo body mounting bolts to the baffle plate bolt holes (B) and the ATF strainer bolt holes (C) in this step.**

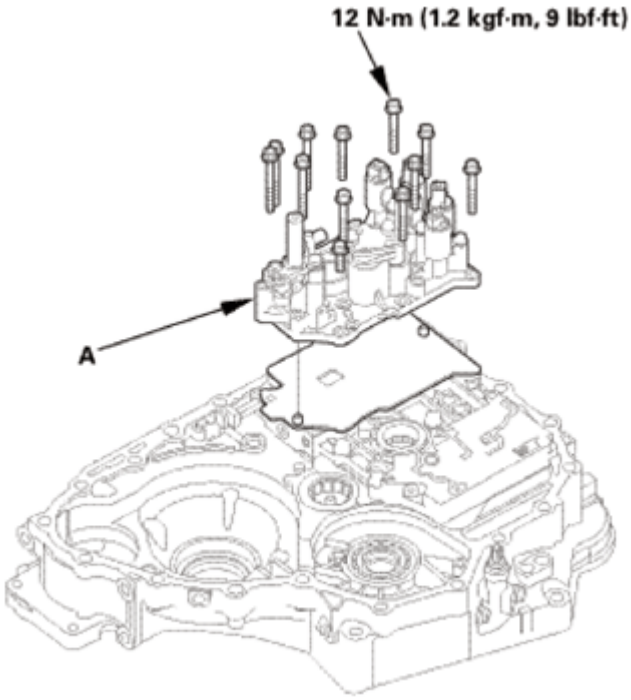

GETtheMANUALS.org

Fig. 2017: Identifying Servo Body And Mounting Bolts With Torque Specification
Courtesy of AMERICAN HONDA MOTOR CO., INC.

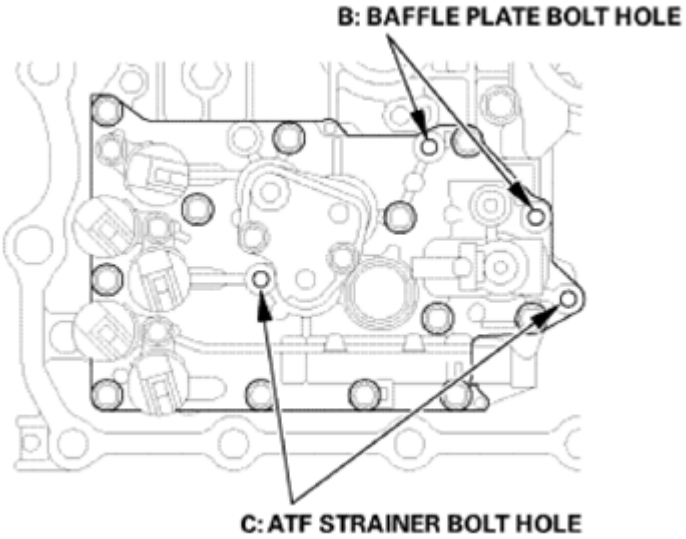

Fig. 2018: Identifying Baffle Plate Bolt Holes And ATF Strainer Bolt Holes
Courtesy of AMERICAN HONDA MOTOR CO., INC.

5. ATF Strainer
    1. Install the ATF strainer (A) using a new O-ring (B).

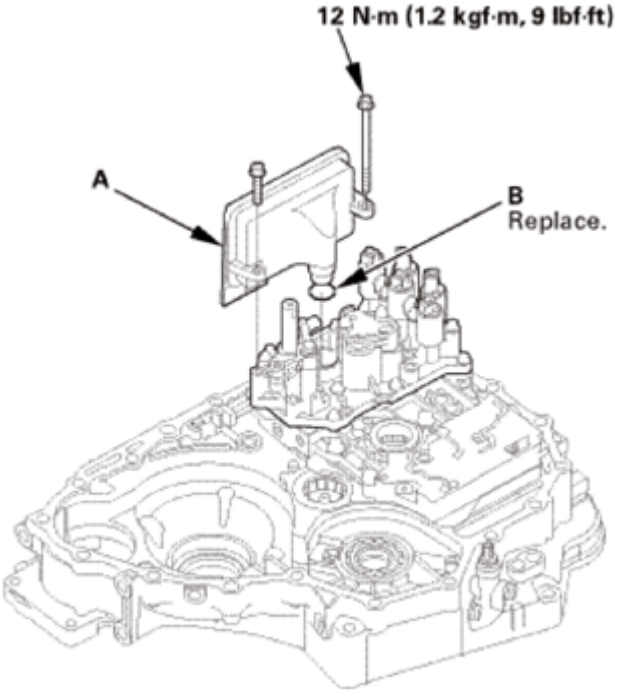

Fig. 2019: Identifying ATF Strainer, O-Ring And Mounting Bolts With Torque Specification
Courtesy of AMERICAN HONDA MOTOR CO., INC.

GETtheMANUALS.org

6. Regulator Valve Body
    1. Install the regulator separator plate (A) and the dowel pins (B).

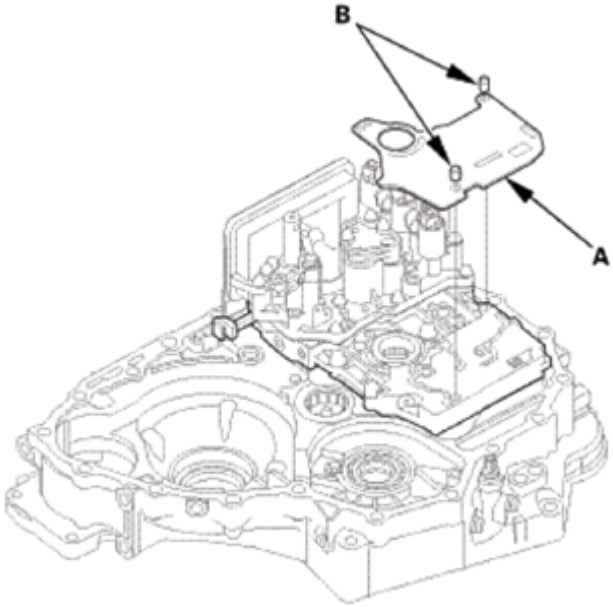

Fig. 2020: Identifying Regulator Separator Plate And Dowel Pins
Courtesy of AMERICAN HONDA MOTOR CO., INC.

    2. Install a new O-ring (A) on the stator shaft (B).
    3. Install the stator shaft.
    4. Install the stator shaft stop (C).

GETtheMANUALS.org

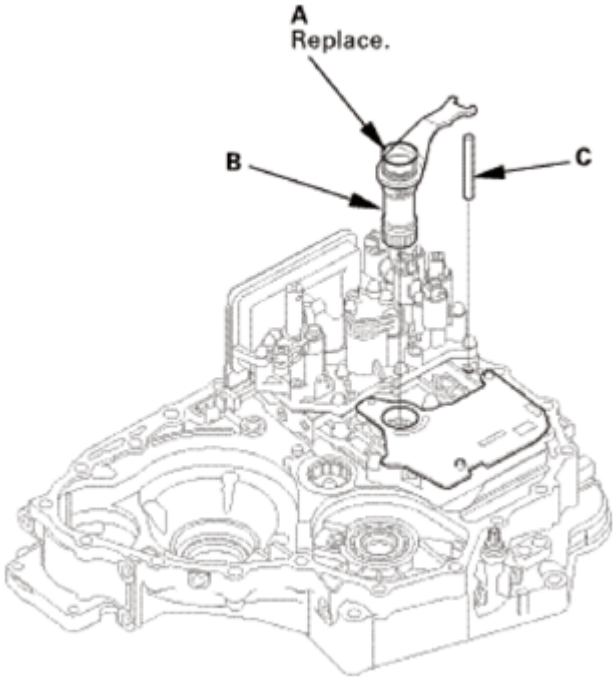

Fig. 2021: Identifying Stator Shaft, O-Ring And Stator Shaft Stop
Courtesy of AMERICAN HONDA MOTOR CO., INC.

5. Install the regulator valve body (A).

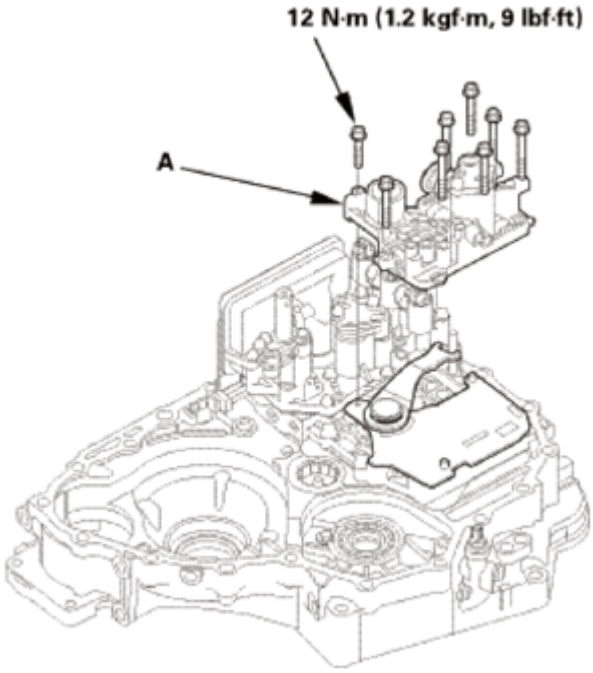

Fig. 2022: Identifying Regulator Valve Body And Mounting Bolts With Torque Specification
Courtesy of AMERICAN HONDA MOTOR CO., INC.

GETtheMANUALS.org

6. Install ATF joint pipe B.
7. Install ATF joint pipe A.

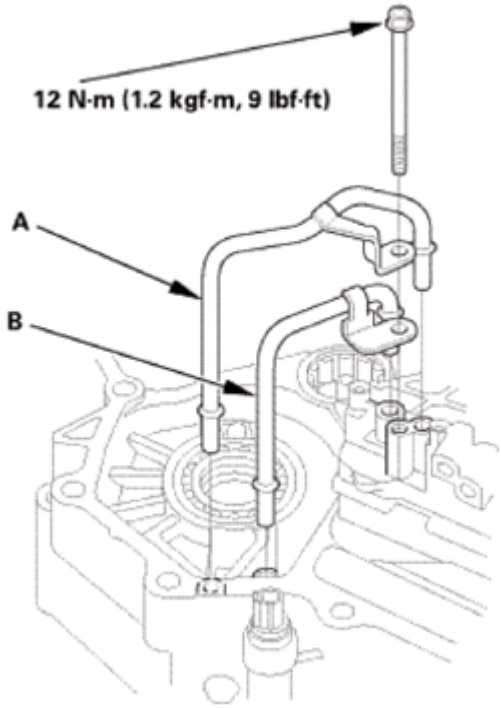

Fig. 2023: Identifying ATF Joint Pipes And Mounting Bolts With Torque Specification
Courtesy of AMERICAN HONDA MOTOR CO., INC.

7. Differential Assembly
    1. Install the differential assembly (A).
    2. Install the baffle plate (B).

GETtheMANUALS.org

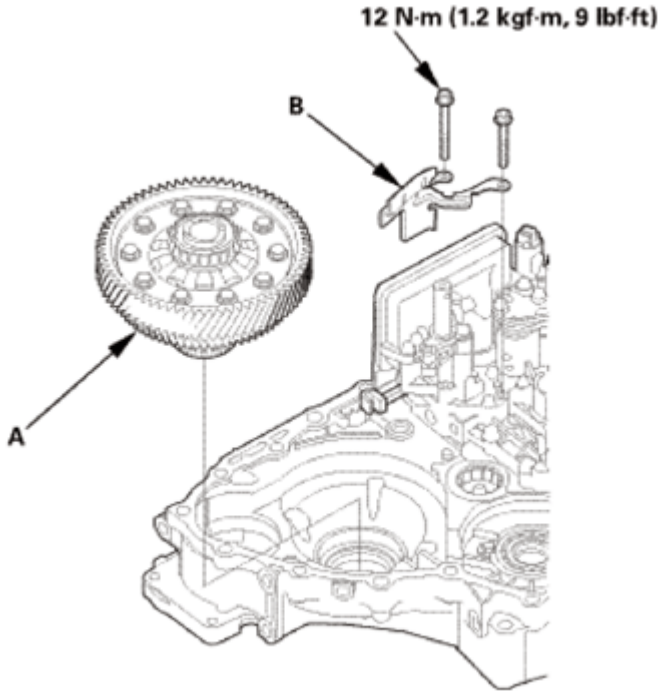

Fig. 2024: Identifying Differential Assembly, Baffle Plate And Bolts With Torque Specification
Courtesy of AMERICAN HONDA MOTOR CO., INC.

8. Mainshaft and Countershaft and Secondary Shaft Assembly
    1. Be sure that each shaft is assembled. Also be sure that new sealing rings are installed on the mainshaft and the secondary shaft.
    2. Join the mainshaft subassembly (A), the countershaft subassembly (B), and the secondary shaft subassembly (C) together, and install them.

    NOTE: Do not bump the countershaft on the baffle plate (D).

    3. Make sure the countershaft subassembly and the differential assembly (E) are clear of the baffle plate.

GETtheMANUALS.org

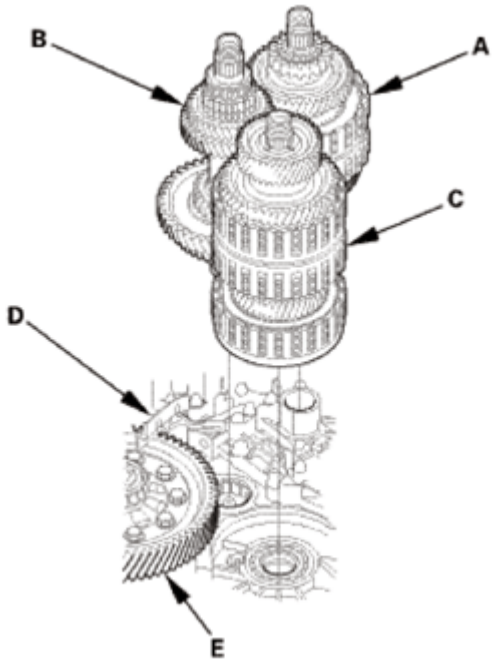

Fig. 2025: Identifying Mainshaft Subassembly, Countershaft Subassembly, Secondary Shaft Subassembly, Baffle Plate And Differential Assembly
Courtesy of AMERICAN HONDA MOTOR CO., INC.

9. Selector Control Shaft
    1. Install the selector control shaft (A).

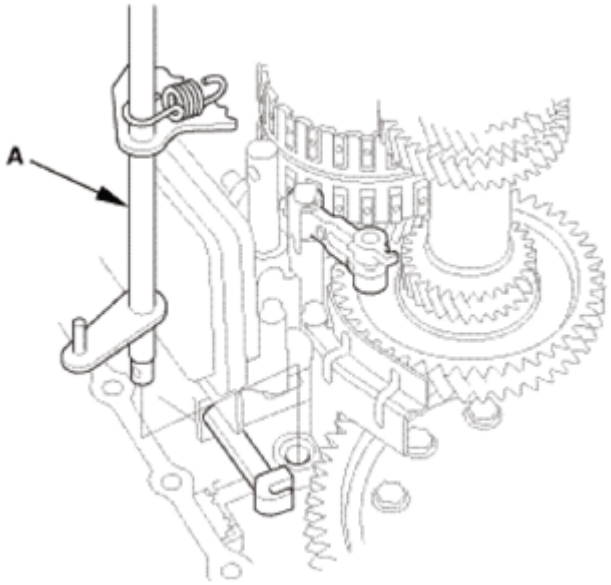

Fig. 2026: Identifying Selector Control Shaft
Courtesy of AMERICAN HONDA MOTOR CO., INC.

    2. Align the manual valve lever pin (A) on the selector control shaft (B) with the guide of the manual

GETtheMANUALS.org

valve (C).

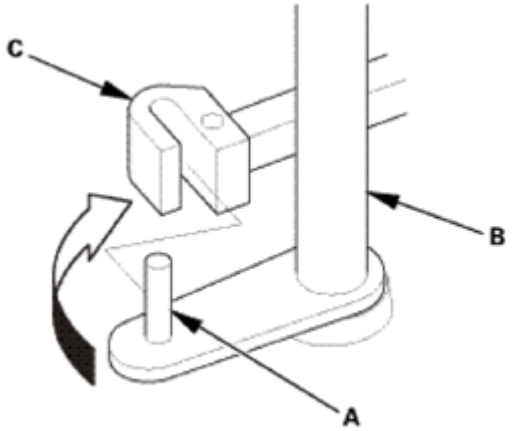

Fig. 2027: Aligning Manual Valve Lever Pin On Selector Control Shaft With Guide Of Manual Valve
Courtesy of AMERICAN HONDA MOTOR CO., INC.

3. Hook the detent arm spring (A).

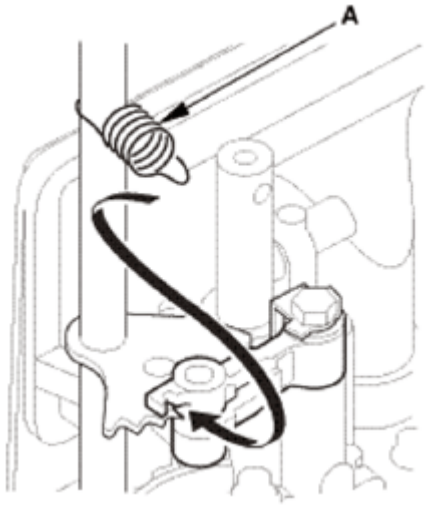

Fig. 2028: Hooking Detent Arm Spring
Courtesy of AMERICAN HONDA MOTOR CO., INC.

10. Selector Control Lever (Except 2WD of USA Produced Models)

Except 2WD of USA Produced Models

1. Install the control lever (A) over the selector control shaft (B).
2. Install the lock bolt (C) using a new lock washer (D).
3. Pry up the lock tab (E) of the lock washer against the bolt head.

GETtheMANUALS.org

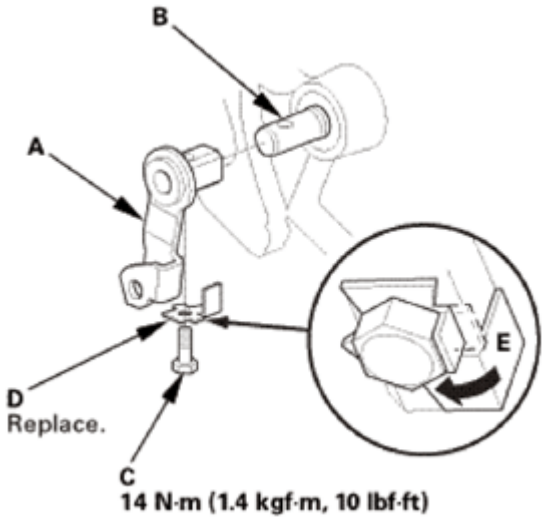

Fig. 2029: Prying Up Lock Tab Of Lock Washer (Except 2WD Of USA Produced Models)
Courtesy of AMERICAN HONDA MOTOR CO., INC.

11. Reverse Shift fork
    1. Install the reverse shift fork (A) and the reverse selector (B) together.
    2. Install the lock bolt (C) using a new lock washer (D).
    3. Pry up the lock tab (E) of the lock washer against the bolt head.

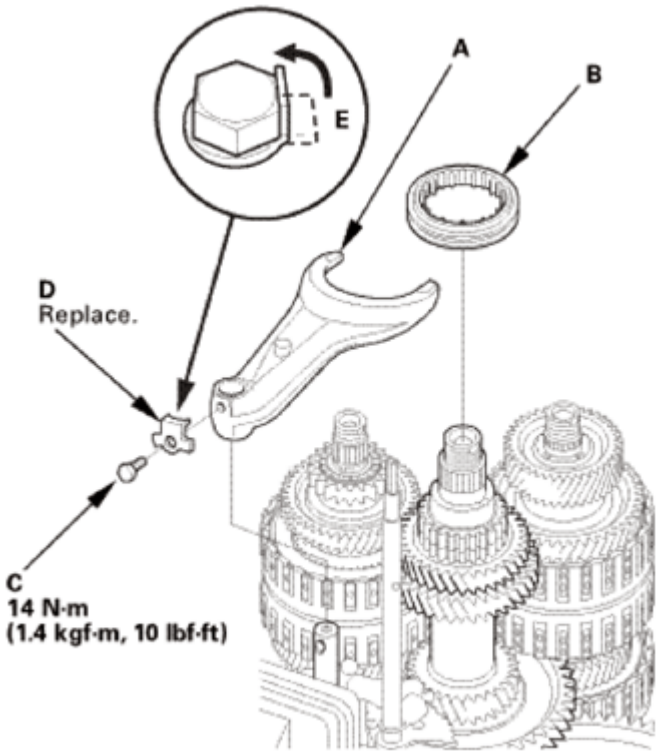

Fig. 2030: Prying Up Lock Tab Of Lock Washer

GETtheMANUALS.org

Courtesy of AMERICAN HONDA MOTOR CO., INC.

12. A/T Countershaft Reverse Gear
    1. Install the needle bearing (A).
    2. Install the countershaft reverse gear (B).

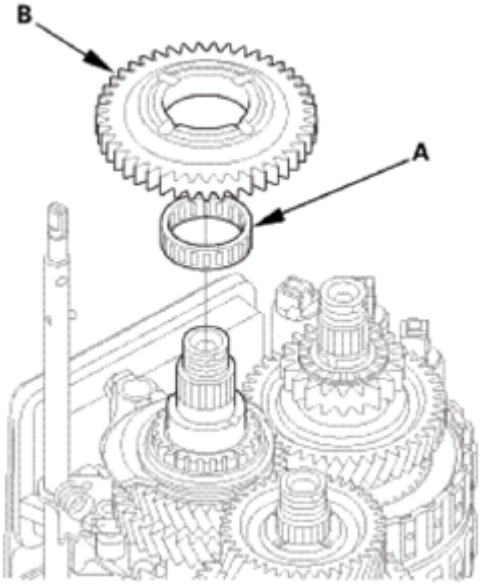

Fig. 2031: Identifying Needle Bearing And Countershaft Reverse Gear
Courtesy of AMERICAN HONDA MOTOR CO., INC.

13. Automatic Transmission Housing
    1. Install the three dowel pins (A) and a new gasket (B).
    2. Align the spring pin (C) of the selector control shaft (D) with the transmission housing groove (E).

NOTE: **Do not squeeze the end of the selector control shaft tips together when turning the shaft. If the tips are squeezed together, it will cause a faulty shift position signal or position due to the play between the selector control shaft and the transmission range switch.**

    3. Place the transmission housing (F) on the torque converter housing (G).

NOTE: **Do not install the input shaft (mainshaft) speed sensor and the output shaft (countershaft) speed sensor before installing the transmission housing.**

    4. Wrap the tip of a screwdriver with tape so the reverse idler gear teeth do not get damaged. Engage the reverse idler gear (H) with the reverse gears (I) by rotating the idler gear using the screwdriver.
    5. Make sure the transmission housing is securely seated so there is no clearance between the transmission housing and the torque converter housing.

GETtheMANUALS.org

6. Install the transmission hanger (J), and tighten the transmission housing mounting bolts (2WD: 19 bolts, AWD/4WD: 20 bolts) in at least two steps, in a crisscross pattern.

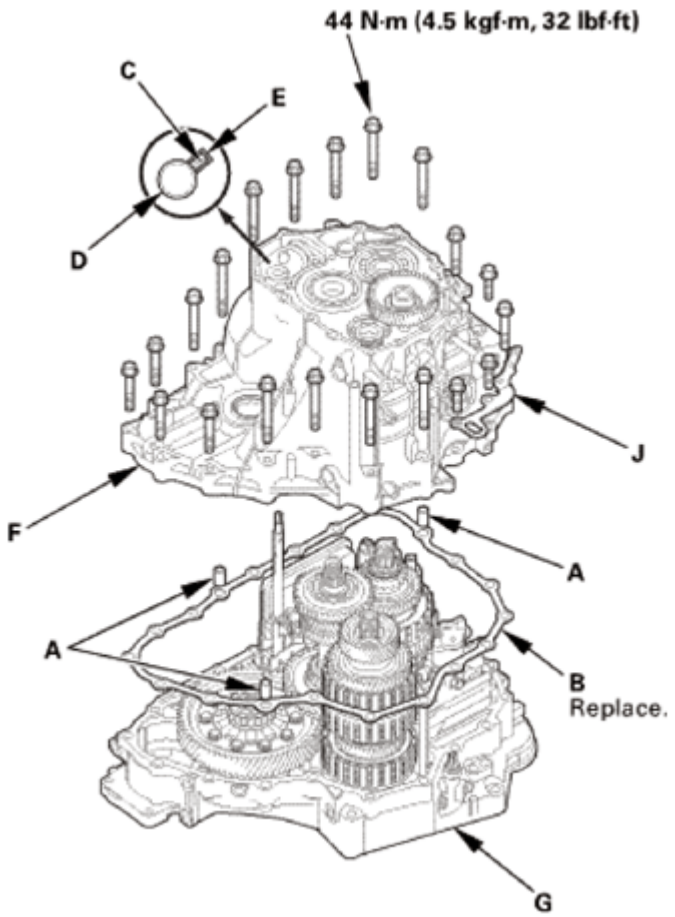

Fig. 2032: Identifying Dowel Pins, Gasket, Spring Pin, Selector Control Shaft, Transmission Housing Groove And Mounting Bolts With Torque Specification
Courtesy of AMERICAN HONDA MOTOR CO., INC.

GETtheMANUALS.org

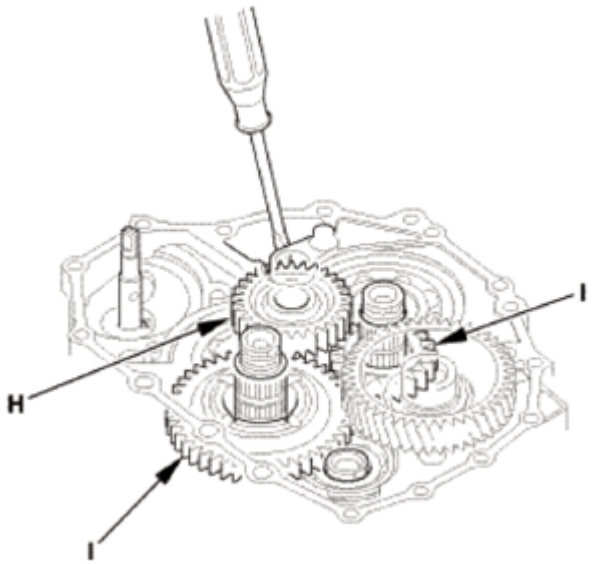

Fig. 2033: Engaging Reverse Idler Gear With Reverse Gears By Rotating Idler Gear Using Screwdriver
Courtesy of AMERICAN HONDA MOTOR CO., INC.

14. End Cover Idler Gear Assembly
    1. Install the mainshaft holder onto the mainshaft.

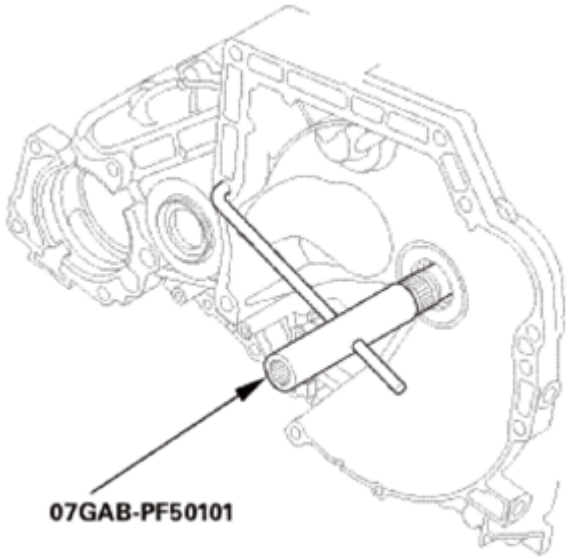

Fig. 2034: Installing Mainshaft Holder Onto Mainshaft
Courtesy of AMERICAN HONDA MOTOR CO., INC.

    2. Lubricate the following parts with ATF:
        - Splines and threads of the mainshaft.
        - Splines of the mainshaft idler gear.

GETtheMANUALS.org

- The old conical spring washer and the old locknut.

3. Install the mainshaft idler gear (A), the old conical spring washer (B), and the old locknut (C), and tighten the locknut to 225 N.m (23.0 kgf.m, 166 lbf.ft).

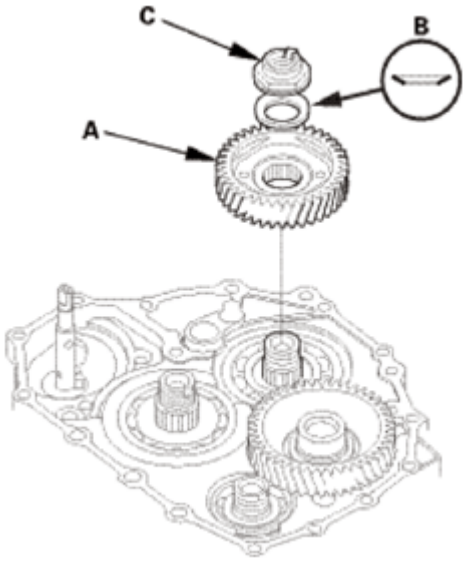

Fig. 2035: Identifying Mainshaft Idler Gear, Conical Spring Washer And Locknut
Courtesy of AMERICAN HONDA MOTOR CO., INC.

NOTE:

- **Do not tap the mainshaft idler gear to install.**
- **Use a torque wrench to tighten the locknut. Do not use an impact wrench.**

4. Lubricate the following parts with ATF:
   - Splines and threads of the countershaft.
   - Splines of the park gear.
   - The old conical spring washer and the old locknut.

GETtheMANUALS.org

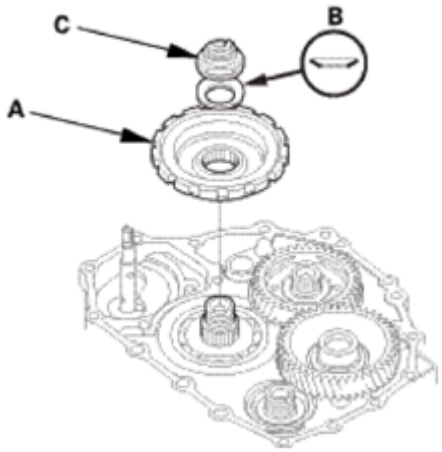

Fig. 2036: Identifying Park Gear, Conical Spring Washer And Locknut
Courtesy of AMERICAN HONDA MOTOR CO., INC.

5. Install the park gear (A), the old conical spring washer (B), and the old locknut (C).
6. Install the park lever spring (D), the park lever (E), and the park lever stop (F).
7. Install the lock bolt (G) using a new lock washer (H).

NOTE: **Do not bend the lock tab of the lock washer until inspect the park lever stop.**

8. Install the park pawl shaft (I), the park pawl spring (J), the park pawl (K), and the stop shaft (L).
9. Lift the park pawl up, and engage it with the park gear, and tighten the locknut to 225 N.m (23.0 kgf.m, 166 lbf.ft).

NOTE:

- **Do not tap the park gear to install.**
- **Use a torque wrench to tighten the locknut. Do not use an impact wrench.**
- **Countershaft locknut has left-hand threads.**

GETtheMANUALS.org

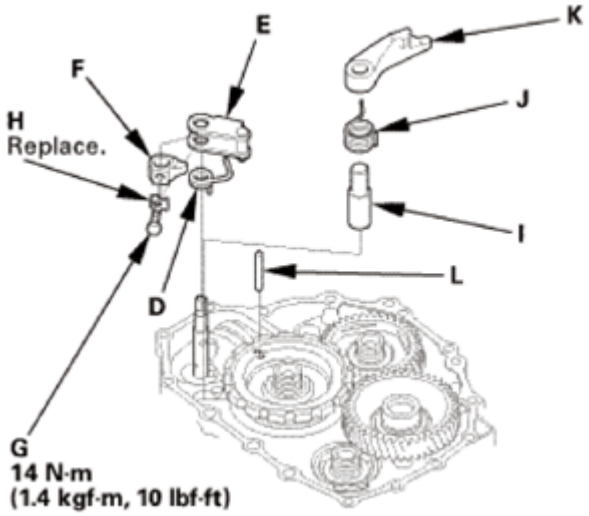

Fig. 2037: Identifying Park Pawl Shaft, Park Lever Spring, Park Lever, Park Lever Stop, Lock Bolt, Lock Washer With Torque Specification
Courtesy of AMERICAN HONDA MOTOR CO., INC.

10. Remove the old locknuts and the old conical spring washers from the mainshaft and the countershaft.
11. Lubricate the following parts with ATF:
    - Splines and threads of the mainshaft, the countershaft, and the secondary shaft.
    - New conical spring washers and new locknuts.
    - Areas where the conical spring washers contact the mainshaft idler gear and the park gear.
12. Install new conical spring washers (A) in the direction shown.
13. Install a new mainshaft locknut (B), a new countershaft locknut (C), and a new secondary shaft locknut (D).

GETtheMANUALS.org

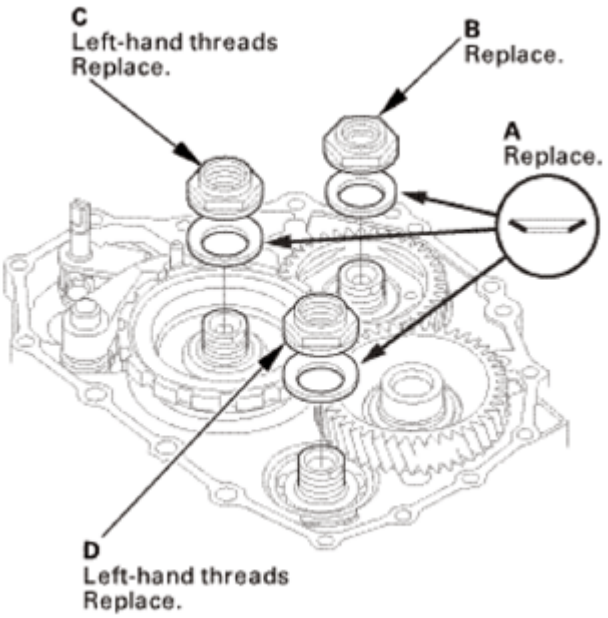

Fig. 2038: Identifying Conical Spring Washers, Mainshaft Locknut, Countershaft Locknut And Secondary Shaft Locknut
Courtesy of AMERICAN HONDA MOTOR CO., INC.

14. Tighten the locknuts to 167 N.m (17.0 kgf.m, 123 lbf.ft).

NOTE:

- **Use a torque wrench to tighten the locknut. Do not use an impact wrench.**
- **The countershaft and secondary shaft locknuts have left-hand threads.**

15. Remove the mainshaft holder.
16. Stake the locknuts into the shafts to a depth (A) of 0.7-1.3 mm (0.027-0.051 in) using a 3.5 mm punch (B).

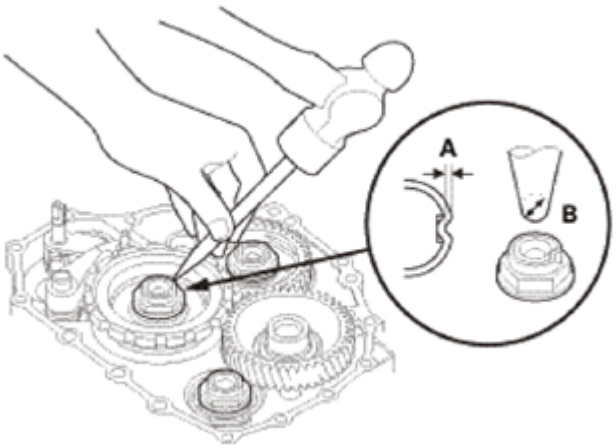

GETtheMANUALS.org

Fig. 2039: Staking Locknuts Into Shafts Using Punch
Courtesy of AMERICAN HONDA MOTOR CO., INC.

17. Set the park lever in the P position.
18. Measure the distance (A) between the center of the park pawl shaft (B) and the center of the park lever roller pin (C) as shown.

    Standard: 57.7-58.7 mm (2.272-2.311 in)

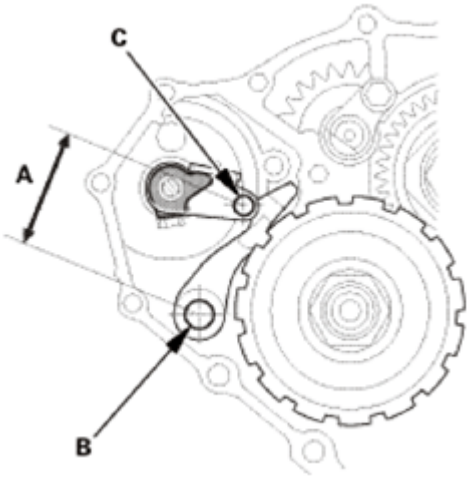

Fig. 2040: Measuring Distance Between Center Of Park Pawl Shaft And Center Of Park Lever Roller Pin
Courtesy of AMERICAN HONDA MOTOR CO., INC.

19. If the measurement is out of the standard, select and install the appropriate park lever stop (A) from the table.

PARK LEVER STOP SPECIFICATION

Mark	B	C
1	11.00 mm (0.4331 in)	11.00 mm (0.4331 in)
2	10.80 mm (0.4252 in)	10.65 mm (0.4193 in)
3	10.60 mm (0.4173 in)	10.30 mm (0.4055 in)

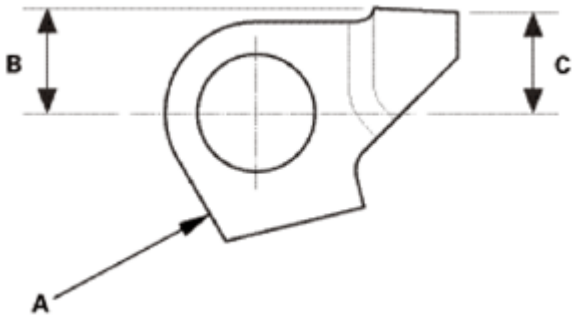

GETtheMANUALS.org

Fig. 2041: Identifying Park Lever Stop Dimension
Courtesy of AMERICAN HONDA MOTOR CO., INC.

20. After replacing the park lever stop, make sure the distance is within the tolerance.
21. Pry up the lock tab (A) of the lock washer against the bolt head.

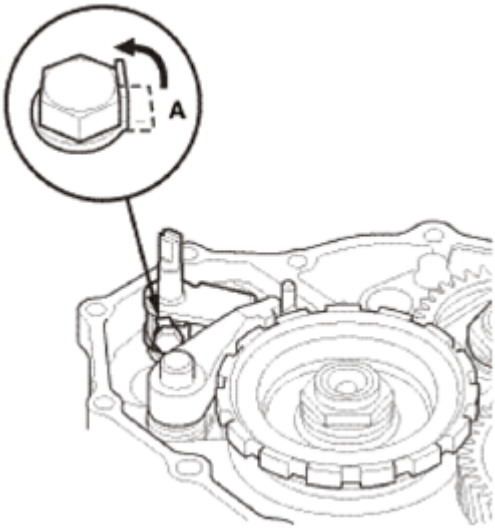

Fig. 2042: Prying Up Lock Tab Of Lock Washer Against Bolt Head
Courtesy of AMERICAN HONDA MOTOR CO., INC.

15. ATF Feed Pipe/Lubrication Pipe
    1. Install the 6 x 201 mm ATF pipe (A).
    2. Install the ATF lubrication pipe (B).
    3. Install the 8 x 220 mm ATF pipe (C).
    4. Install the 8 x 198 mm ATF pipes (D).

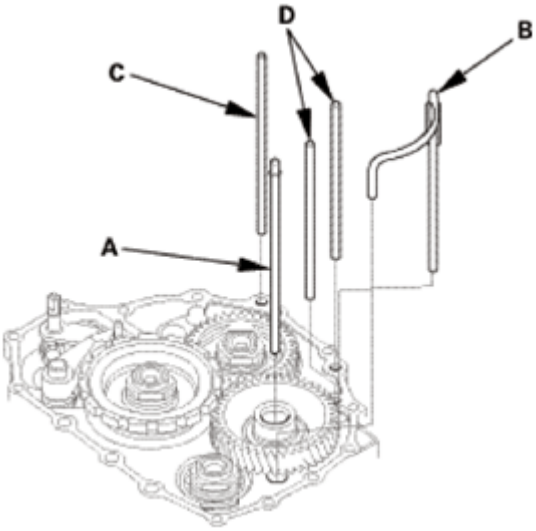

GETtheMANUALS.org

Fig. 2043: Identifying ATF Feed Pipes And Lubrication Pipe
Courtesy of AMERICAN HONDA MOTOR CO., INC.

16. A/T Shift Solenoid Wire Harness - Reconnection
    1. Connect the shift solenoid valve connectors:
        - BLU wire to shift solenoid valve A.
        - ORN wire to shift solenoid valve B.
        - GRN wire to shift solenoid valve C.
        - YEL, WHT, and WHT wires to shift solenoid valve D.
        - RED wire to shift solenoid valve E.

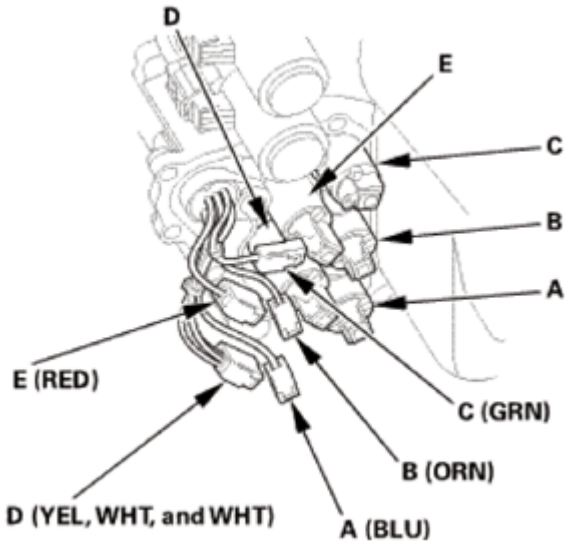

Fig. 2044: Identifying Shift Solenoid Valves
Courtesy of AMERICAN HONDA MOTOR CO., INC.

17. A/T Shift Solenoid Cover
    1. Install the shift solenoid valve cover (A) with the dowel pins (B) and a new gasket (C).

GETtheMANUALS.org

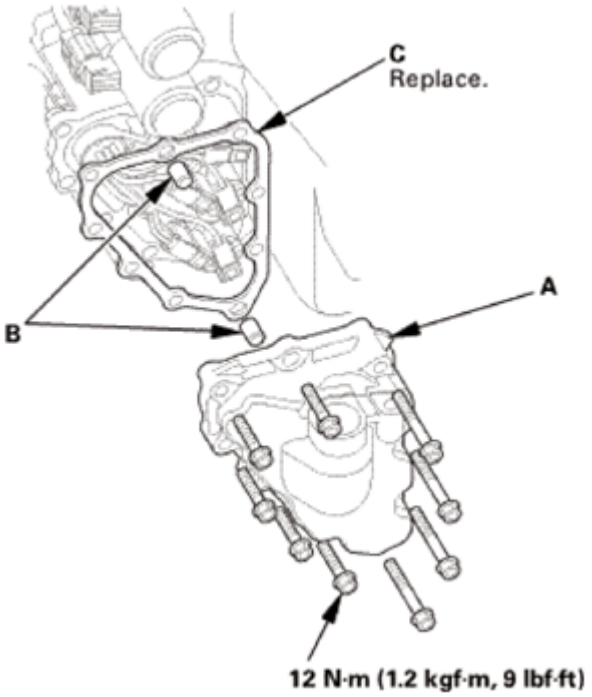

Fig. 2045: Identifying Shift Solenoid Valve Cover, Dowel Pins, Gasket And Mounting Bolts With Torque Specification
Courtesy of AMERICAN HONDA MOTOR CO., INC.

18. Dipstick Guide Tube
    1. Install a new O-ring (A) on the ATF dipstick guide tube (B).
    2. Install the ATF dipstick guide tube.

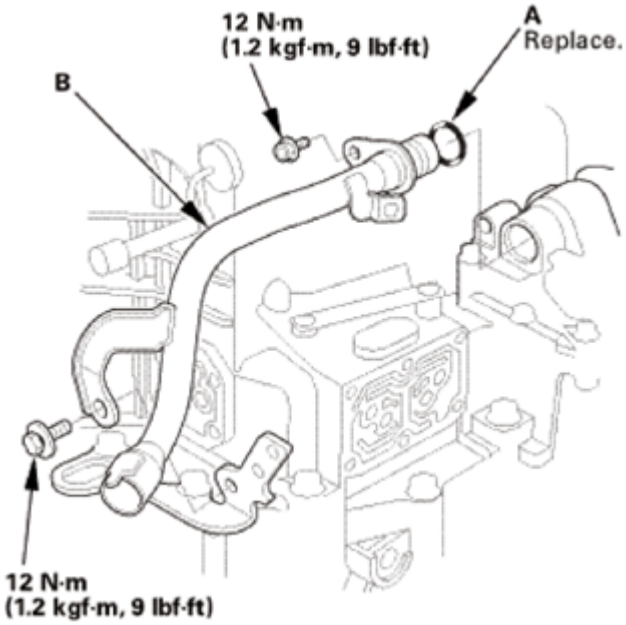

GETtheMANUALS.org

Fig. 2046: Identifying ATF Dipstick Guide Tube, O-Ring And Mounting Bolts With Torque Specification
Courtesy of AMERICAN HONDA MOTOR CO., INC.

19. ATF Outlet Line
    1. Install the ATF outlet line (A) using new sealing washers (B).

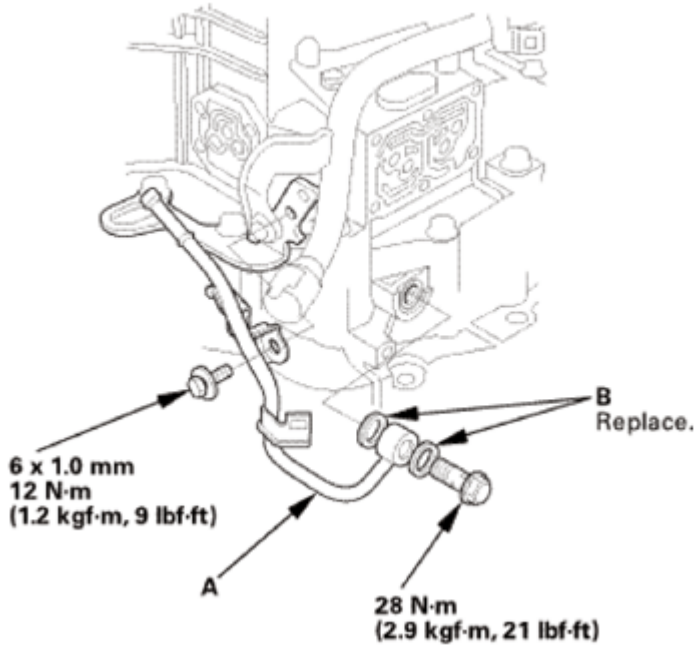

Fig. 2047: Identifying ATF Outlet Line, Sealing Washers And Mounting Bolts With Torque Specification
Courtesy of AMERICAN HONDA MOTOR CO., INC.

20. ATF Inlet Line
    1. Install the ATF inlet line (A) using new sealing washers (B).

GETtheMANUALS.org

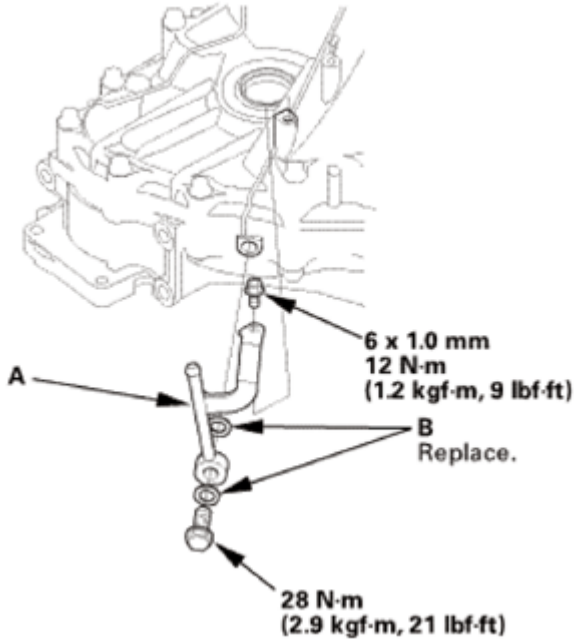

Fig. 2048: Identifying ATF Inlet Line, Sealing Washers And Mounting Bolts With Torque Specification
Courtesy of AMERICAN HONDA MOTOR CO., INC.

21. A/T Clutch Pressure Control Solenoid Valve B and C
    1. Clean the mounting surfaces and the fluid passages of the solenoid valve body and the transmission housing.
    2. Install a new gasket (A) with the blue side toward the transmission housing, and Install the ATF joint pipes (D).
    3. Install new O-rings (E) over the ATF joint pipes.
    4. Install A/T clutch pressure control solenoid valves B and C with the clamp bracket (F).

GETtheMANUALS.org

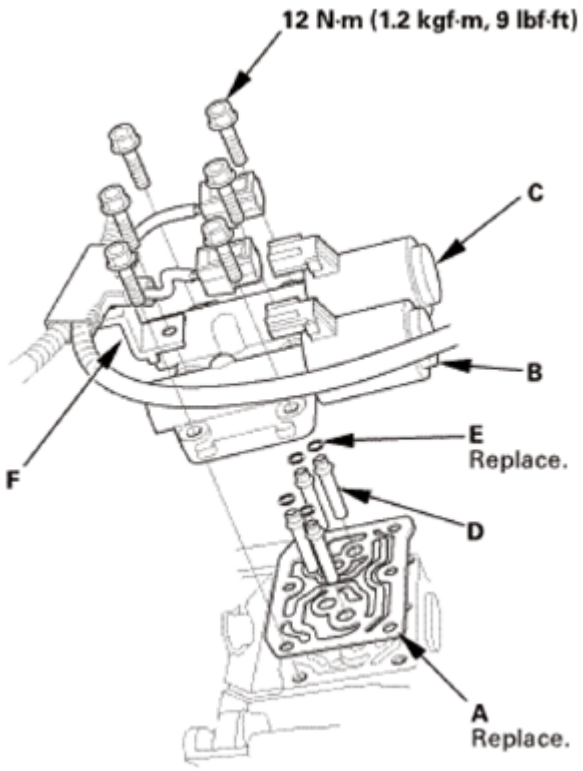

Fig. 2049: Identifying Gasket, ATF Joint Pipes, O-Rings, A/T Clutch Pressure Control Solenoid Valves, Clamp Bracket And Mounting Bolts With Torque Specification
Courtesy of AMERICAN HONDA MOTOR CO., INC.

22. A/T Clutch Pressure Control Solenoid Valve A
    1. Clean the mounting surfaces and the fluid passages of the solenoid valve body and the transmission housing.
    2. Install a new gasket (B) with the blue side toward the transmission housing, and install the 35 mm ATF pipe (C) and the ATF joint pipes (D).
    3. Install new O-rings (E) over the ATF joint pipes.
    4. Install A/T clutch pressure control solenoid valve A.

GETtheMANUALS.org

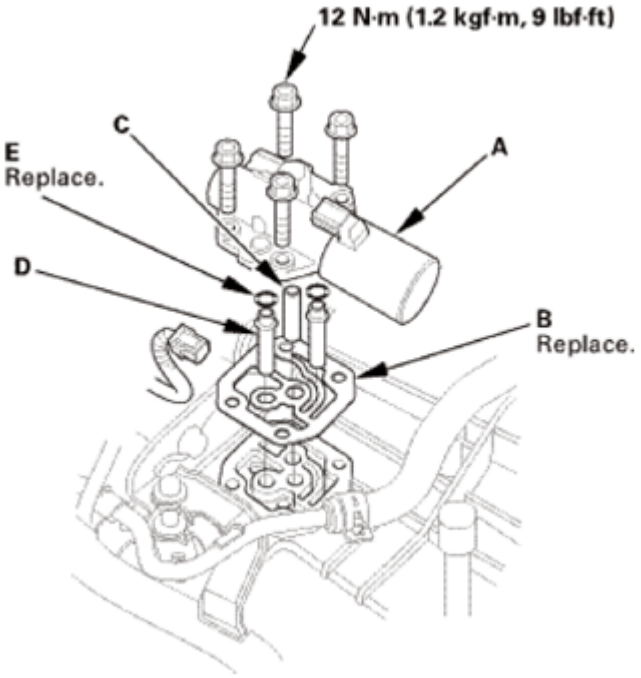

Fig. 2050: Identifying A/T Clutch Pressure Control Solenoid Valve, Gasket, ATF Pipe, ATF Joint Pipes And Mounting Bolts With Torque Specification
Courtesy of AMERICAN HONDA MOTOR CO., INC.

23. Output Shaft (Countershaft) Speed Sensor
    1. Install a new O-ring (A) on the output shaft (countershaft) speed sensor (B).
    2. Install the output shaft (countershaft) speed sensor and the sensor washer (C).

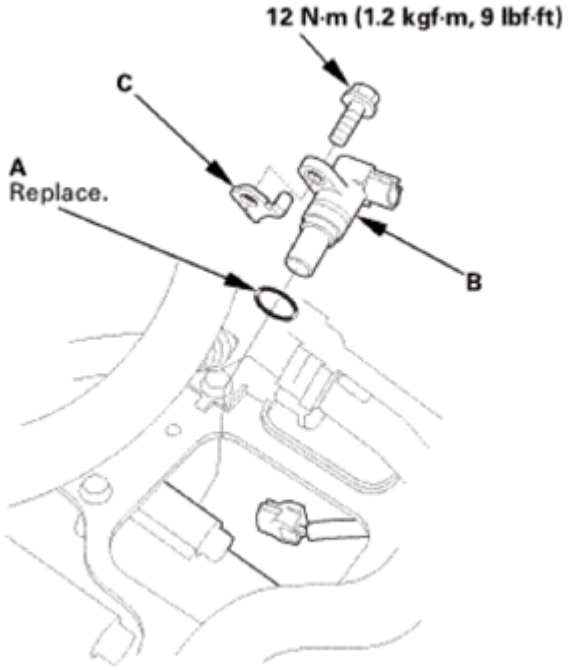

GETtheMANUALS.org

Fig. 2051: Identifying Output Shaft (Countershaft) Speed Sensor, O-Ring, Sensor Washer And Mounting Bolts With Torque Specification
Courtesy of AMERICAN HONDA MOTOR CO., INC.

24. Input Shaft (Mainshaft) Speed Sensor
    1. Install a new O-ring (A) on the input shaft (mainshaft) speed sensor (B).
    2. Install the input shaft (mainshaft) speed sensor.

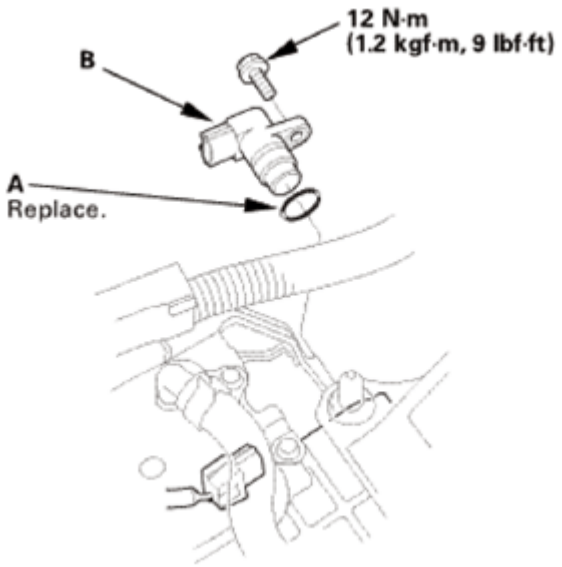

Fig. 2052: Identifying Input Shaft (Mainshaft) Speed Sensor, O-Ring And Mounting Bolt With Torque Specification
Courtesy of AMERICAN HONDA MOTOR CO., INC.

25. Transmission End Cover
    1. Install the dowel pins (A) and a new gasket (B).
    2. Install new O-rings (C) over the ATF pipes.
    3. Install the end cover (D), and tighten the three special bolts (E) and the 6 x 1.0 mm bolts (F) (12 bolts).

GETtheMANUALS.org

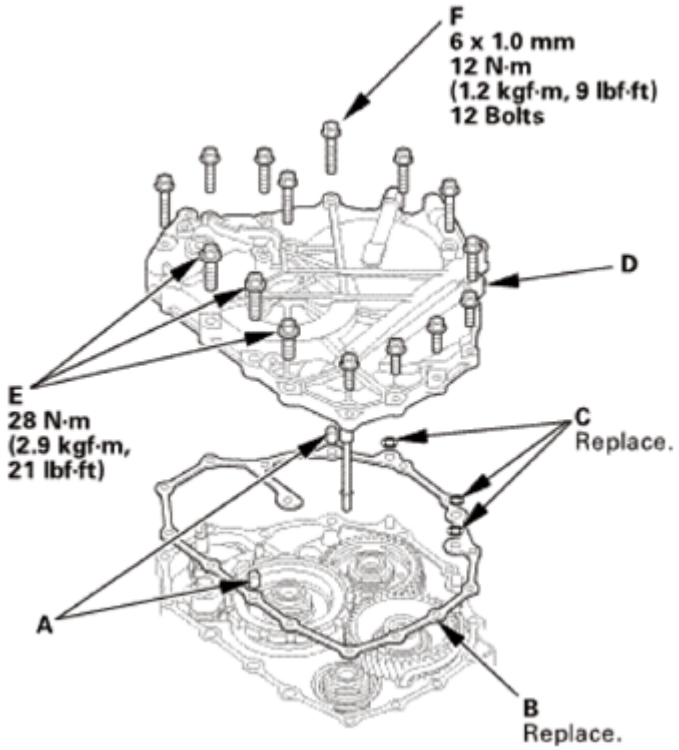

Fig. 2053: Identifying Dowel Pins, Gasket, O-Rings, End Cover And Mounting Bolts With Torque Specification
Courtesy of AMERICAN HONDA MOTOR CO., INC.

26. Transmission Range Switch Subharness
    1. Install the clamp brackets (A).
    2. Install the transmission range switch subharness (B).

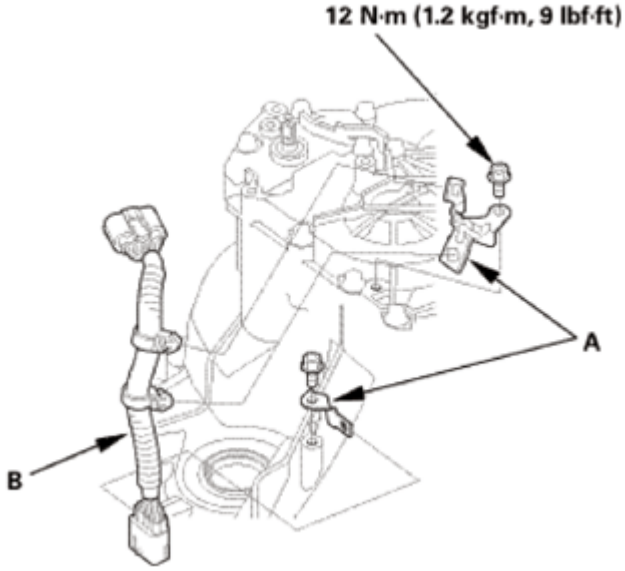

GETtheMANUALS.org

Fig. 2054: Identifying Transmission Range Switch Subharness, Clamp Brackets And Mounting Bolts With Torque Specification
Courtesy of AMERICAN HONDA MOTOR CO., INC.

27. Transmission Range Switch
    1. Make sure the selector control shaft is in the N position. If necessary, move the selector control shaft to the N position.

NOTE: **Do not use the selector control shaft to adjust the shift position. If the selector control shaft tips are squeezed together it will cause a faulty signal or position due to play between the selector control shaft and switch.**

Fig. 2055: Moving Selector Control Shaft To N Position
Courtesy of AMERICAN HONDA MOTOR CO., INC.

    2. Align the cutouts (A) on the rotary-frame with the neutral positioning cutouts (B) on the transmission range switch (C), then put a 2.0 mm (0.079 in) feeler gauge blade (D) in the cutouts to hold the switch in the N position.

NOTE: **Be sure to use a 2.0 mm (0.079 in) blade or equivalent to hold the switch in the N position.**

GETtheMANUALS.org

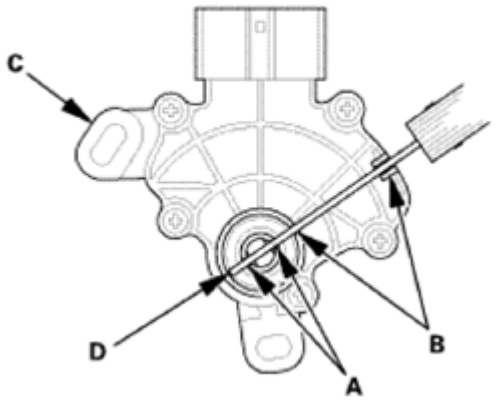

Fig. 2056: Aligning Cutouts On Rotary-Frame With Neutral Positioning Cutouts On Transmission Range Switch
Courtesy of AMERICAN HONDA MOTOR CO., INC.

3. Install the transmission range switch (A) gently on the selector control shaft (B) while holding it in the N position with the 2.0 mm (0.079 in) blade (C).

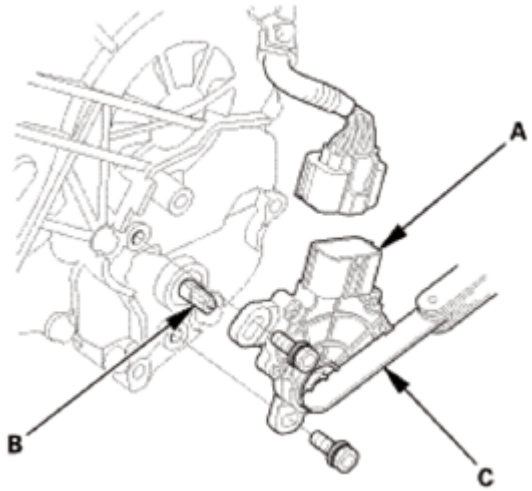

Fig. 2057: Identifying Transmission Range Switch, Selector Control Shaft And Blade
Courtesy of AMERICAN HONDA MOTOR CO., INC.

4. Tighten the bolts on the transmission range switch (A) while you continue holding the N position.

NOTE: **Do not move the transmission range switch when tightening the bolts.**

5. Remove the feeler gauge (B).
6. Check the connector (C) for corrosion, dirt, or oil, and clean or repair if necessary, then connect the connector securely.

GETtheMANUALS.org

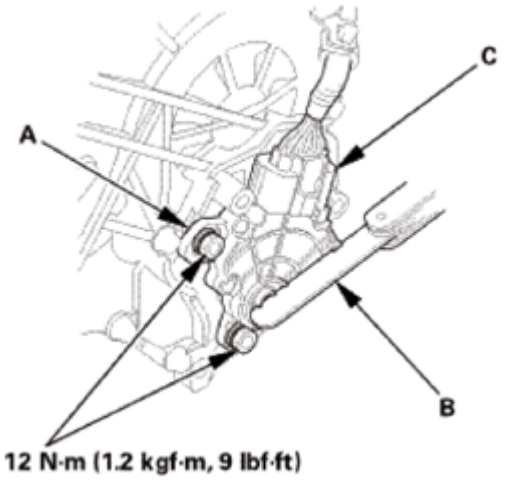

Fig. 2058: Identifying Transmission Range Switch, Connector, Feeler Gauge And Mounting Bolts With Torque Specification
Courtesy of AMERICAN HONDA MOTOR CO., INC.

28. Transmission Range Switch Cover
    1. Install the transmission range switch cover (A).

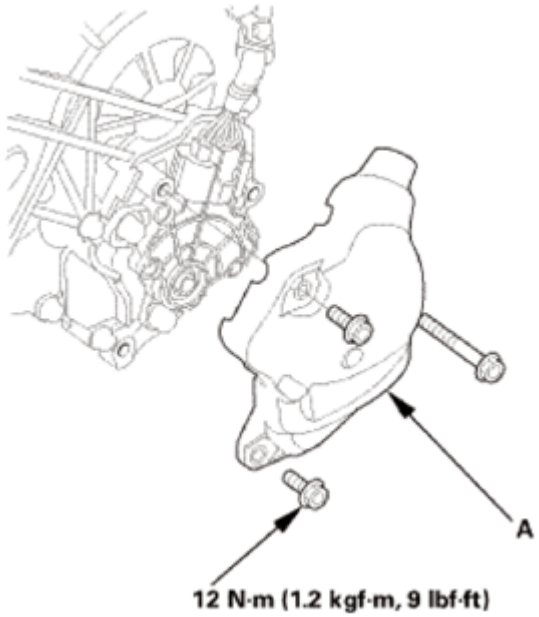

Fig. 2059: Identifying Transmission Range Switch Cover And Mounting Bolts With Torque Specification
Courtesy of AMERICAN HONDA MOTOR CO., INC.

TORQUE CONVERTER HOUSING MAINSHAFT OIL SEAL REPLACEMENT

SPECIAL TOOL REQUIRED

GETtheMANUALS.org

Image	Description/Tool Number
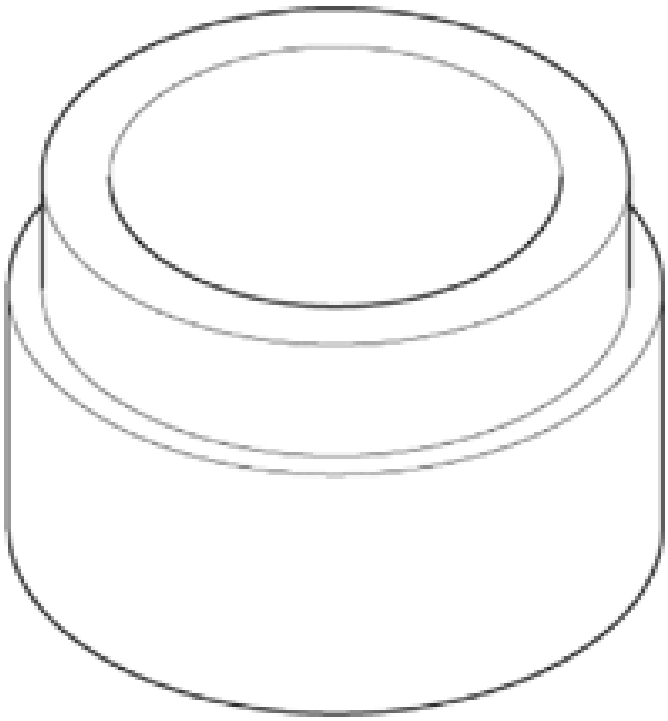	Oil Seal Driver C 070AD-RJC0130

REMOVAL

NOTE: The illustration shows AWD/4WD transmission.

1. Mainshaft Oil Seal
    1. Remove the mainshaft oil seal (A) using a commercially available oil seal remover.

NOTE: Be careful not to damage the torque converter housing and mainshaft when removing the oil seal.

GETtheMANUALS.org

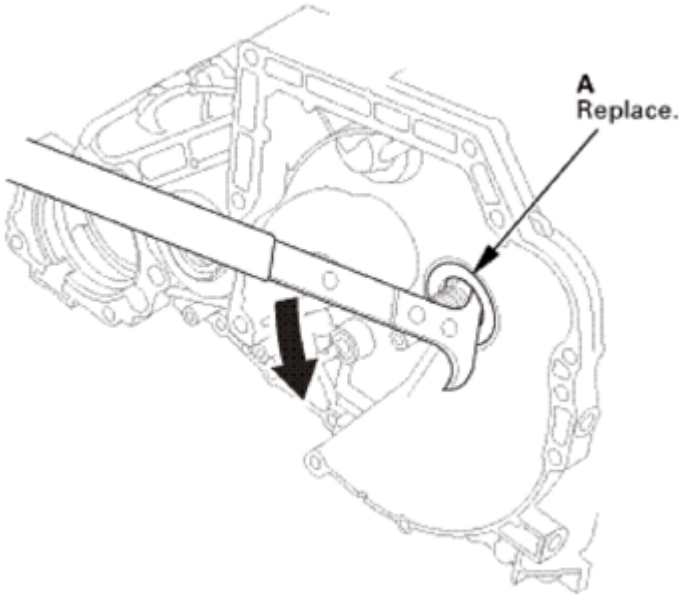

Fig. 2060: Removing Mainshaft Oil Seal Using Commercially Available Oil Seal Remover
Courtesy of AMERICAN HONDA MOTOR CO., INC.

INSTALLATION

NOTE: The illustration shows AWD/4WD transmission.

1. Mainshaft Oil Seal
    1. Install a new mainshaft oil seal (A) flush with the torque converter housing using oil seal driver C.

NOTE: Do not drive the oil seal into the torque converter housing until it bottoms out; it will block the fluid return passage and cause transmission damage.

GETtheMANUALS.org

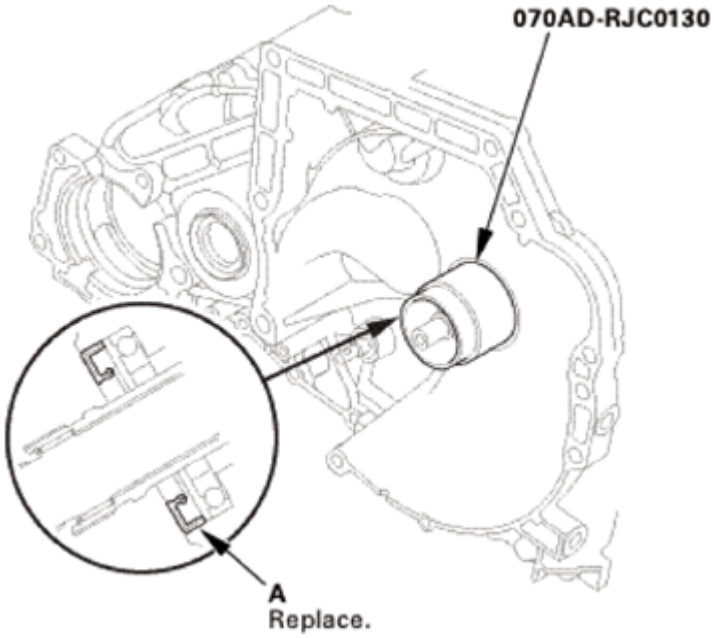

Fig. 2061: Installing Mainshaft Oil Seal Flush With Torque Converter Housing Using Oil Seal Driver C
Courtesy of AMERICAN HONDA MOTOR CO., INC.

TORQUE CONVERTER HOUSING SECONDARY SHAFT BEARING REPLACEMENT

SPECIAL TOOL REQUIRED

Image	Description/Tool Number
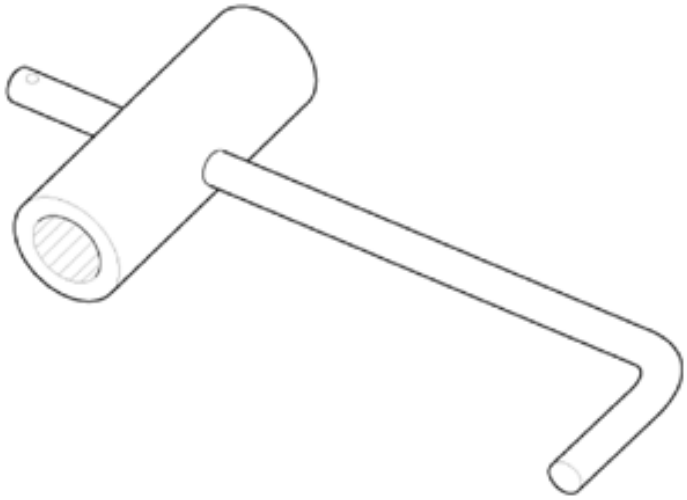	Mainshaft Holder 07GAB-PF50101

GETtheMANUALS.org

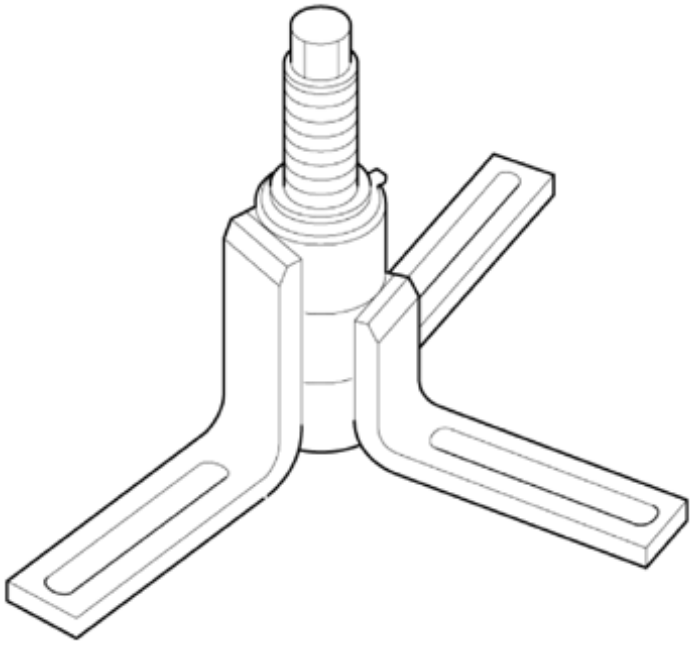	Housing Puller 07HAC-PK40102
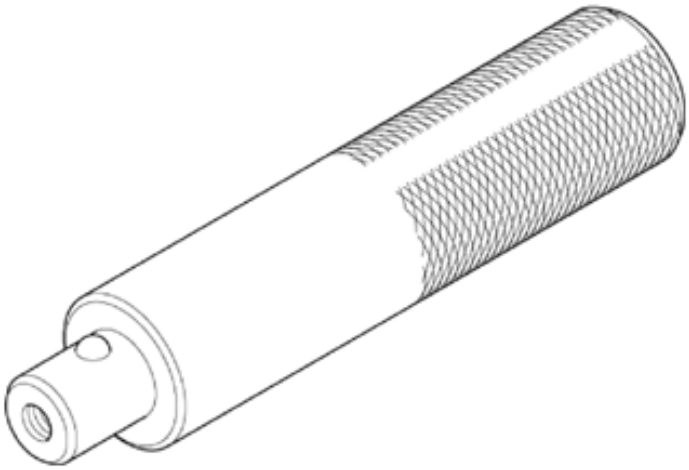	Driver Handle, 15 x 135L 07749-0010000
	Bearing Driver Attachment, 62 x 68 mm 07746-0010500

GETtheMANUALS.org

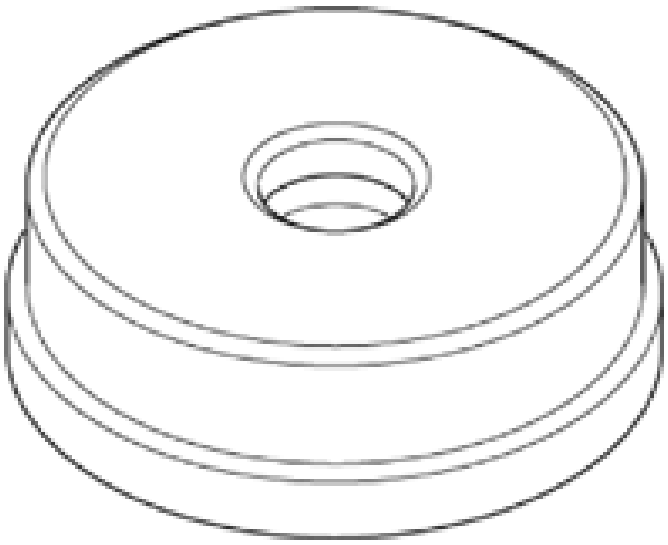

REMOVAL

NOTE: The illustration shows AWD/4WD transmission.

1. Transmission Range Switch Cover
    1. Remove the transmission range switch cover (A).

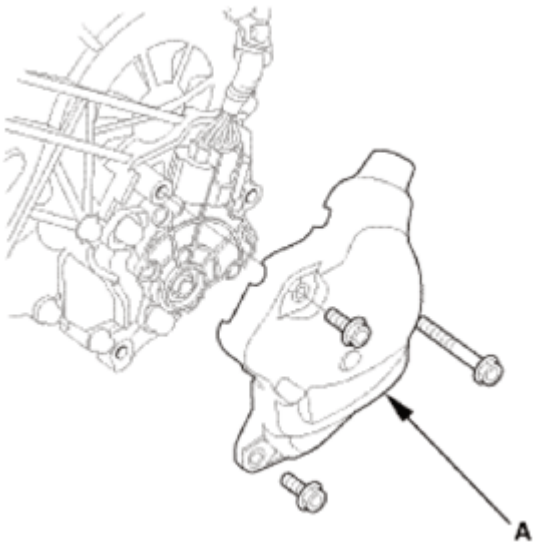

Fig. 2062: Identifying Transmission Range Switch Cover With Bolts
Courtesy of AMERICAN HONDA MOTOR CO., INC.

2. Transmission Range Switch
    1. Remove the transmission range switch (A).

GETtheMANUALS.org

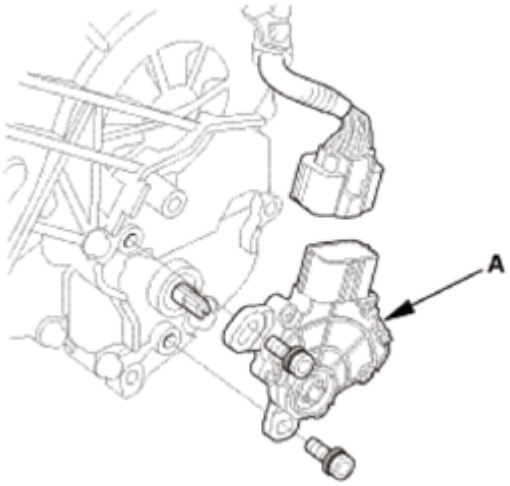

Fig. 2063: Identifying Transmission Range Switch With Bolts
Courtesy of AMERICAN HONDA MOTOR CO., INC.

3. Transmission Range Switch Subharness
    1. Remove the transmission range switch subharness (A).
    2. Remove the clamp brackets (B).

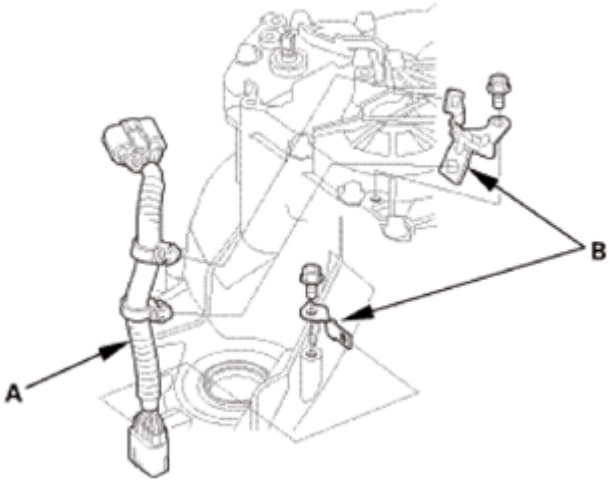

Fig. 2064: Identifying Transmission Range Switch Subharness And Clamp Brackets
Courtesy of AMERICAN HONDA MOTOR CO., INC.

4. Transmission End Cover
    1. Remove the end cover (A), the dowel pins (B), the O-rings (C), and the gasket (D).

GETtheMANUALS.org

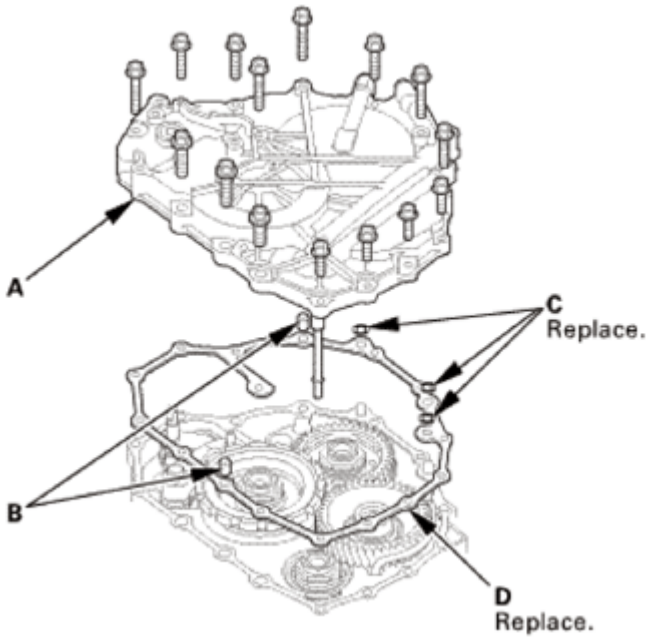

Fig. 2065: Identifying Transmission End Cover, Dowel Pins, O-Rings And Gasket With Bolts
Courtesy of AMERICAN HONDA MOTOR CO., INC.

5. Input Shaft (Mainshaft) Speed Sensor
    1. Remove the input shaft (mainshaft) speed sensor (A).
    2. Remove the O-ring (B) from the input shaft (mainshaft) speed sensor.

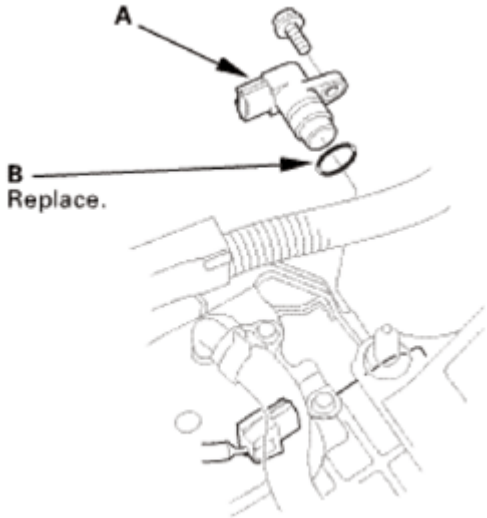

Fig. 2066: Identifying Input Shaft (Mainshaft) Speed Sensor And O-Ring
Courtesy of AMERICAN HONDA MOTOR CO., INC.

6. Output Shaft (Countershaft) Speed Sensor
    1. Remove the output shaft (countershaft) speed sensor (A) and the sensor washer (B).

GETtheMANUALS.org

2. Remove the O-ring (C) from the output shaft (countershaft) speed sensor.

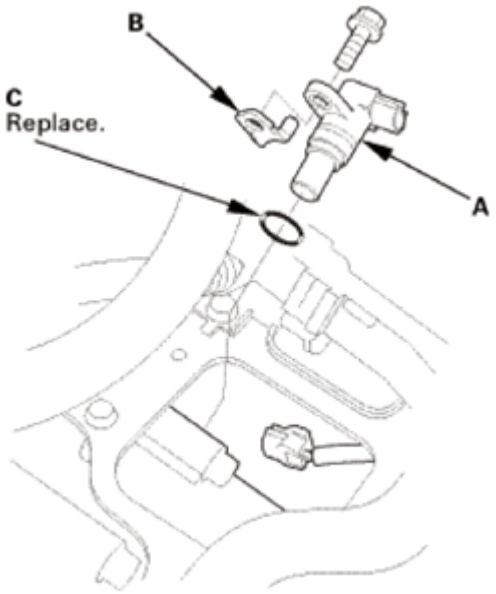

Fig. 2067: Identifying Output Shaft (Countershaft) Speed Sensor, Sensor Washer And O-Ring
Courtesy of AMERICAN HONDA MOTOR CO., INC.

7. A/T Clutch Pressure Control Solenoid Valve A
    1. Remove A/T clutch pressure control solenoid valve A.
    2. Remove the 35 mm ATF pipe (B), the ATF joint pipes (C), the O-rings (D), and the gasket (E).

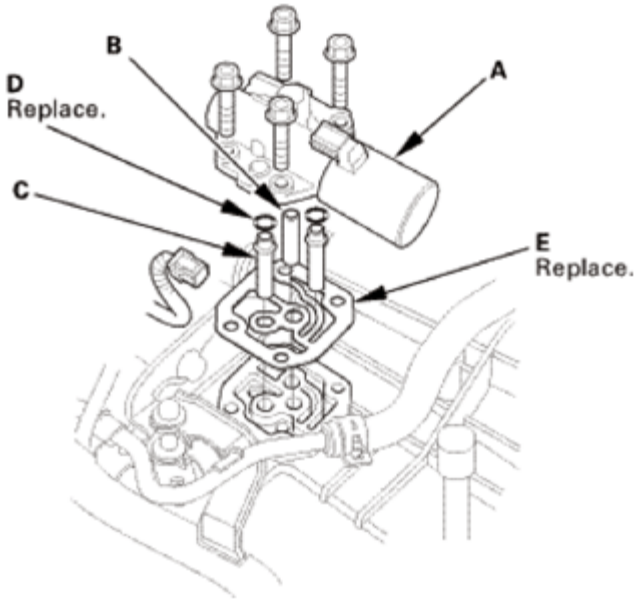

Fig. 2068: Identifying A/T Clutch Pressure Control Solenoid Valve, ATF Pipe, ATF Joint Pipes, O-Rings And Gasket With Bolts

GETtheMANUALS.org

Courtesy of AMERICAN HONDA MOTOR CO., INC.

8. A/T Clutch Pressure Control Solenoid Valve B and C
    1. Remove the clamp bracket (A) and A/T clutch pressure control solenoid valves B and C.
    2. Remove the ATF joint pipes (D), the O-rings (E), and the gasket (F).

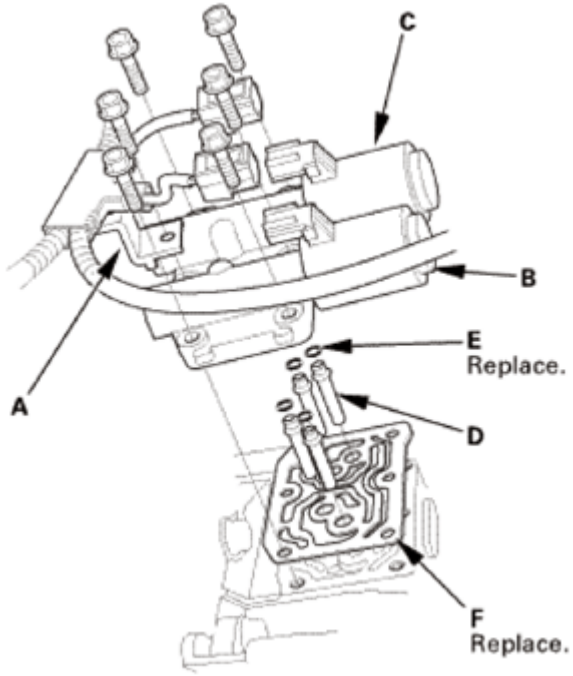

Fig. 2069: Identifying A/T Clutch Pressure Control Solenoid Valves, Clamp Bracket, ATF Joint Pipes, O-Rings And Gasket
Courtesy of AMERICAN HONDA MOTOR CO., INC.

9. ATF Inlet Line
    1. Remove the banjo bolt (A) and the sealing washers (B).
    2. Remove the ATF inlet line (C).

GETtheMANUALS.org

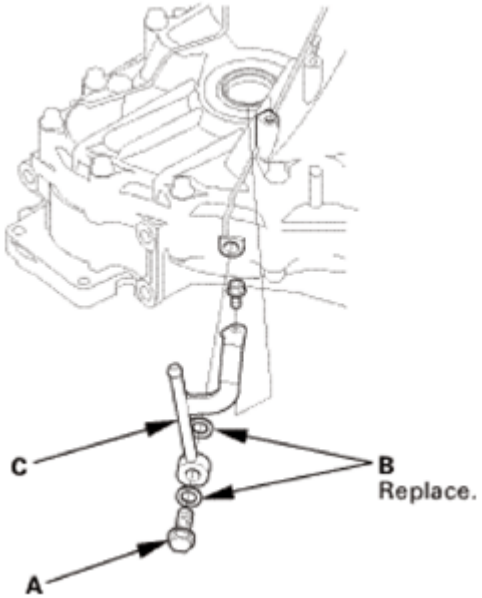

Fig. 2070: Identifying ATF Inlet Line, Banjo Bolt And Sealing Washers
Courtesy of AMERICAN HONDA MOTOR CO., INC.

10. ATF Outlet Line
    1. Remove the banjo bolt (A) and the sealing washers (B).
    2. Remove the ATF outlet line (C).

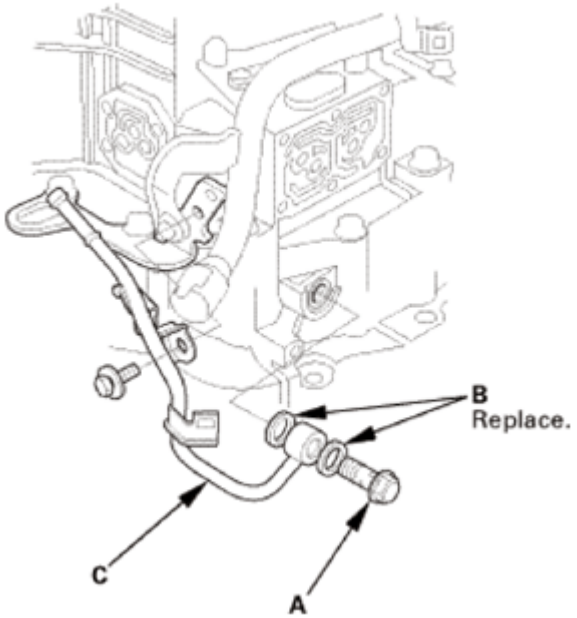

Fig. 2071: Identifying ATF Outlet Line, Banjo Bolt And Sealing Washers
Courtesy of AMERICAN HONDA MOTOR CO., INC.

11. Dipstick Guide Tube

GETtheMANUALS.org

1. Remove the ATF dipstick guide tube (A).
2. Remove the O-ring (B) from the ATF dipstick guide tube.

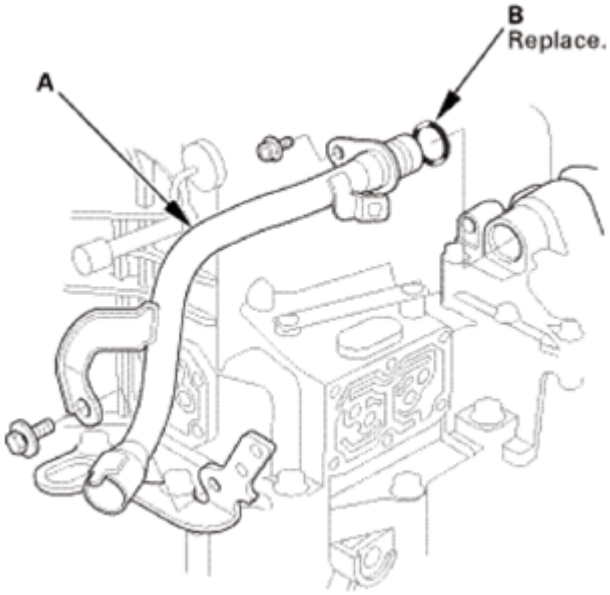

Fig. 2072: Identifying ATF Dipstick Guide Tube And O-Ring
Courtesy of AMERICAN HONDA MOTOR CO., INC.

12. A/T Shift Solenoid Cover
    1. Remove the shift solenoid valve cover (A), the dowel pins (B), and the gasket (C).

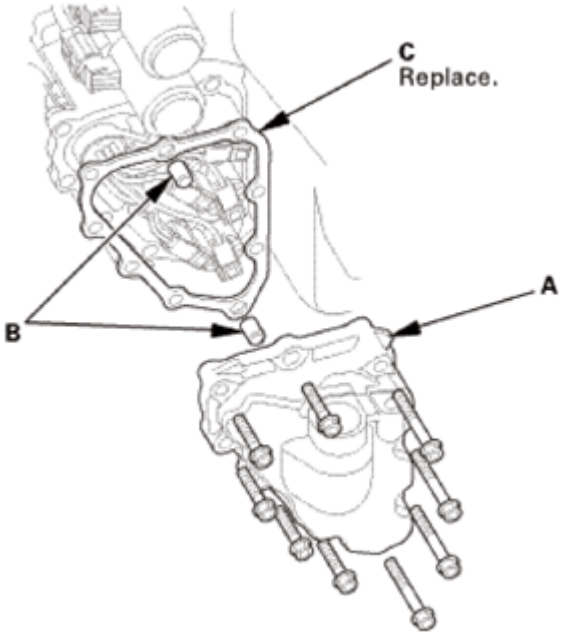

Fig. 2073: Identifying Shift Solenoid Valve Cover, Dowel Pins And Gasket
Courtesy of AMERICAN HONDA MOTOR CO., INC.

GETtheMANUALS.org

13. A/T Shift Solenoid Wire Harness - Disconnection
    1. Disconnect the connectors.

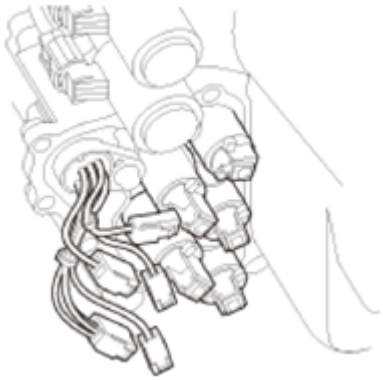

Fig. 2074: Identifying A/T Shift Solenoid Wire Harness Connectors
Courtesy of AMERICAN HONDA MOTOR CO., INC.

14. ATF Feed Pipe/Lubrication Pipe
    1. Remove the 6 x 201 mm ATF pipe (A).
    2. Remove the ATF lubrication pipe (B).
    3. Remove the 8 x 220 mm ATF pipe (C).
    4. Remove the 8 x 198 mm ATF pipes (D).

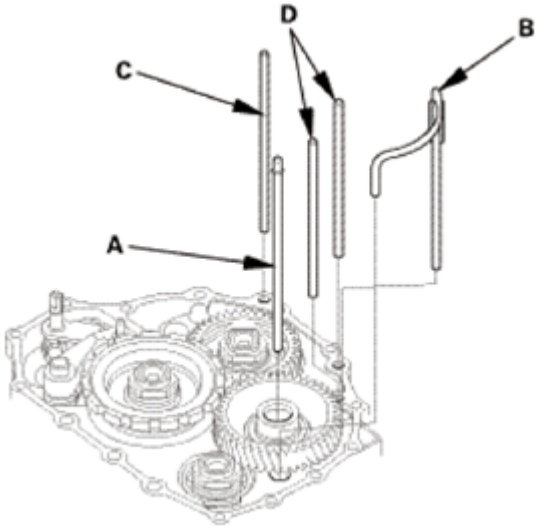

Fig. 2075: Identifying ATF Feed Pipes And Lubrication Pipe
Courtesy of AMERICAN HONDA MOTOR CO., INC.

15. End Cover Idler Gear Assembly
    1. Install the mainshaft holder onto the mainshaft.
    2. Engage the park pawl with the park gear.

GETtheMANUALS.org

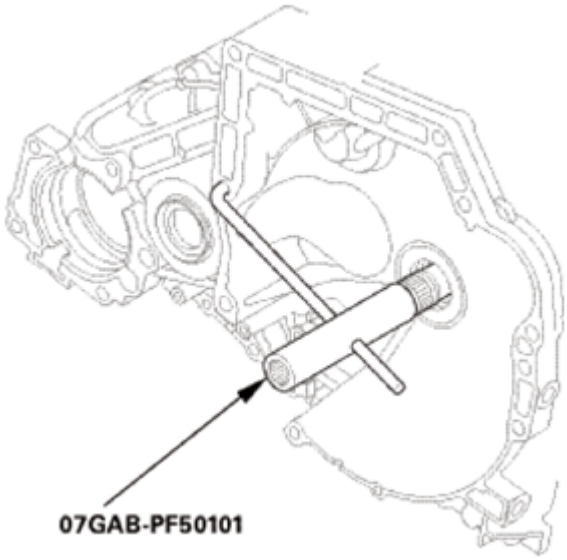

Fig. 2076: Installing Mainshaft Holder Onto Mainshaft
Courtesy of AMERICAN HONDA MOTOR CO., INC.

3. Using a chisel, cut the lock tab (A) of the locknut (B).

NOTE: **Keep all of the chiseled particles out of the transmission.**

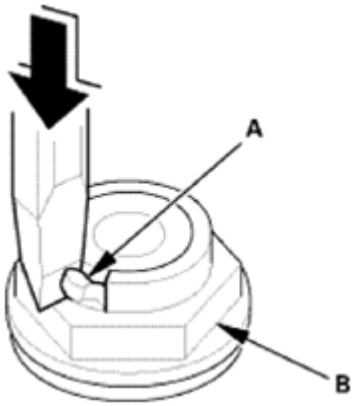

Fig. 2077: Cutting Lock Tab Of Locknut Using Chisel
Courtesy of AMERICAN HONDA MOTOR CO., INC.

4. Remove the locknuts (A) and the conical spring washers (B) from each shaft.

NOTE:

- **The countershaft and secondary shaft locknuts have left-hand threads.**
- **Keep all of the chiseled particles out of the transmission.**
- **Clean the old locknuts; they are used to install the press fit idler gears and park gear.**

GETtheMANUALS.org

5. Remove the mainshaft holder.

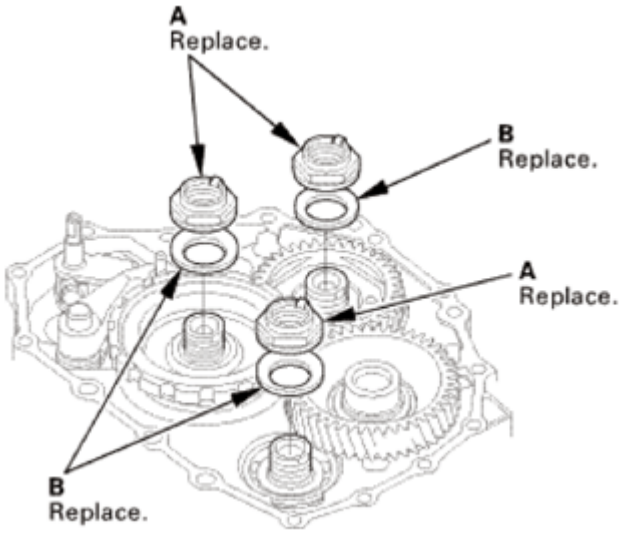

Fig. 2078: Identifying Locknuts And Conical Spring Washers
Courtesy of AMERICAN HONDA MOTOR CO., INC.

6. Remove the park pawl (A), the park pawl spring (B), the park pawl shaft (C), and the stop shaft (D).
7. Pry down the lock tab (E) of the lock washer (F).
8. Remove the lock bolt (G) and the lock washer.
9. Remove the park lever (H), the park lever stop (I), and the park lever spring (J).

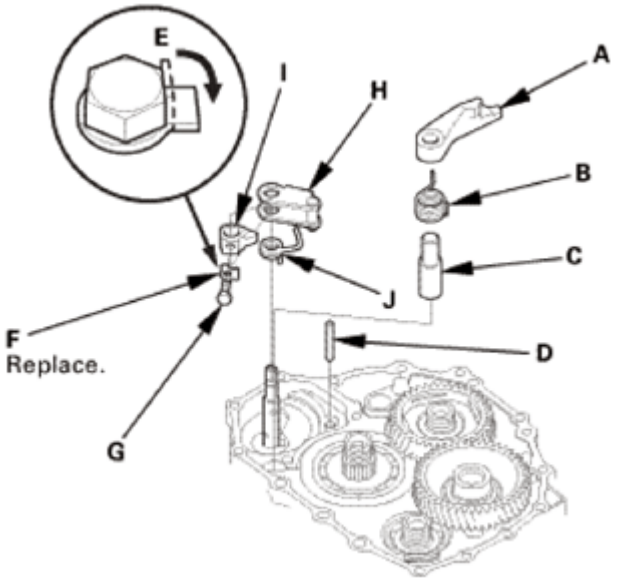

Fig. 2079: Prying Down Lock Tab Of Lock Washer
Courtesy of AMERICAN HONDA MOTOR CO., INC.

GETtheMANUALS.org

10. Place a spacer (A) on the countershaft (B).
11. Set a commercially available bearing puller (C) on the park gear (D).
12. Remove the park gear.

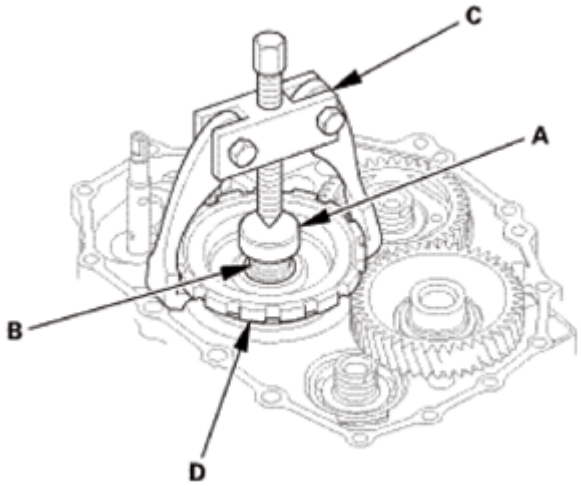

Fig. 2080: Setting Commercially Available Bearing Puller On Park Gear
Courtesy of AMERICAN HONDA MOTOR CO., INC.

13. Install a puller (A) with two 6 x 1.0 mm bolts (B) on the mainshaft idler gear (C).
14. Set a spacer (D) between the puller and the mainshaft (E).
15. Remove the mainshaft idler gear.

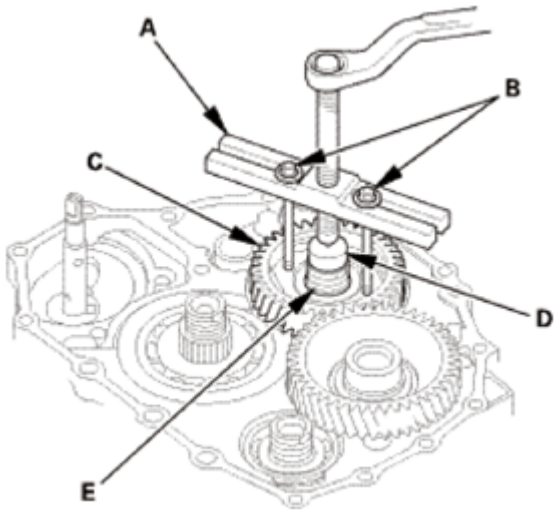

Fig. 2081: Installing Puller With 6 X 1.0 mm Bolts On Mainshaft Idler Gear
Courtesy of AMERICAN HONDA MOTOR CO., INC.

16. Automatic Transmission Housing
    1. Align the spring pin (A) on the selector control shaft (B) with the transmission housing groove (C).

GETtheMANUALS.org

NOTE: **Do not squeeze the end of the selector control shaft tips together when turning the control shaft. If the tips are squeezed together, it will cause a faulty shift position signal or position due to the play between the selector control shaft and the transmission range switch.**

2. Remove the transmission housing mounting bolts (D) (2WD: 19 bolts, AWD/4WD: 20 bolts).
3. Install the housing puller over the mainshaft.
4. Remove the transmission housing (E) using the housing puller.
5. Remove the dowel pins (F) and the gasket (G).

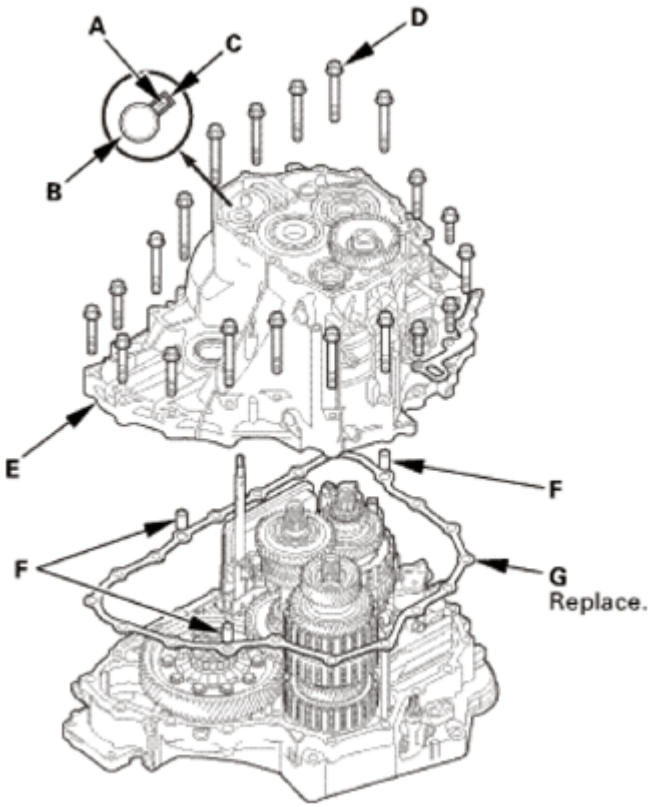

Fig. 2082: Identifying Spring Pin, Selector Control Shaft, Transmission Housing Groove, Transmission Housing, Mounting Bolts And Gasket
Courtesy of AMERICAN HONDA MOTOR CO., INC.

GETtheMANUALS.org

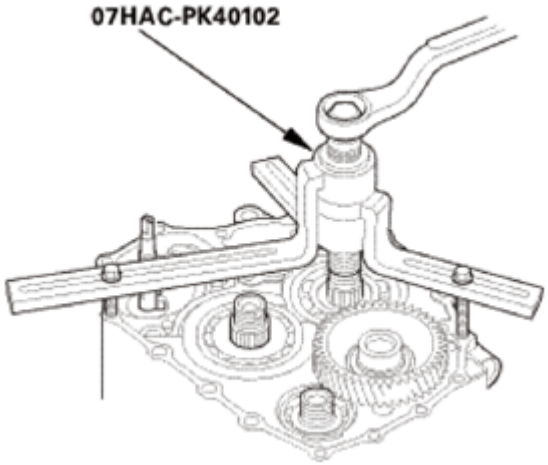

Fig. 2083: Installing Housing Puller Over Mainshaft
Courtesy of AMERICAN HONDA MOTOR CO., INC.

17. A/T Countershaft Reverse Gear
    1. Remove the countershaft reverse gear (A).
    2. Remove the needle bearing (B).

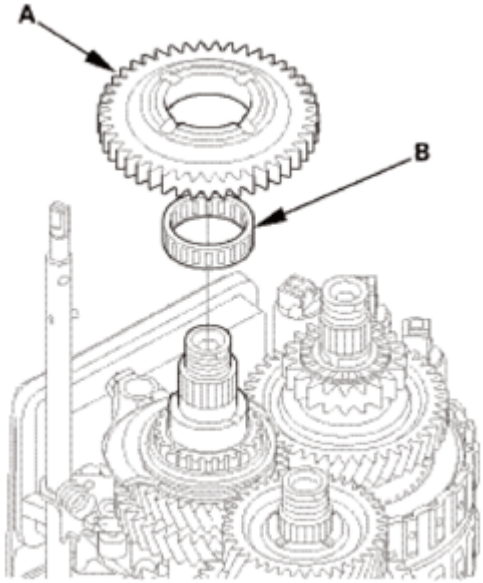

Fig. 2084: Identifying Countershaft Reverse Gear And Needle Bearing
Courtesy of AMERICAN HONDA MOTOR CO., INC.

18. Reverse Shift fork
    1. Pry down the lock tab (A) of the lock washer (B).
    2. Remove the lock bolt (C) and the lock washer.
    3. Remove the reverse shift fork (D) and the reverse selector (E) together.

GETtheMANUALS.org

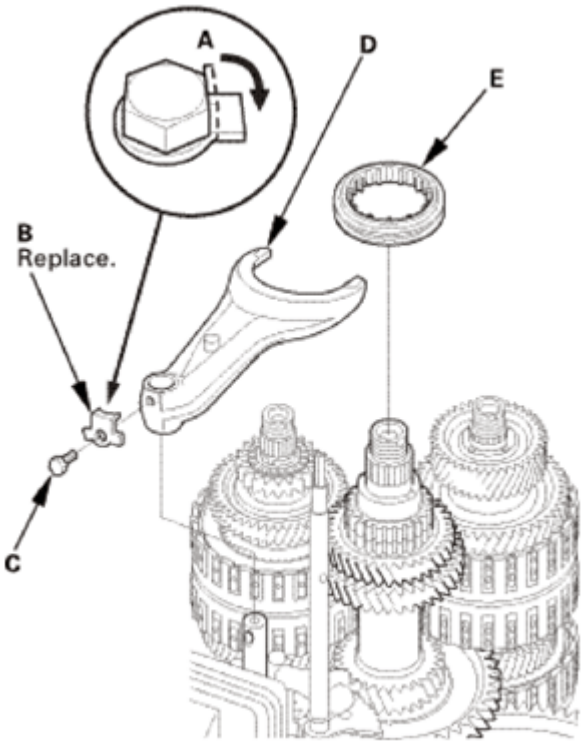

Fig. 2085: Prying Down Lock Tab Of Lock Washer
Courtesy of AMERICAN HONDA MOTOR CO., INC.

19. Selector Control Lever (Except 2WD of USA Produced Models)

Except 2WD of USA Produced Models

1. Pry down the lock tab (A) of the lock washer (B).
2. Remove the lock bolt (C) and the lock washer.
3. Remove the selector control lever (D).

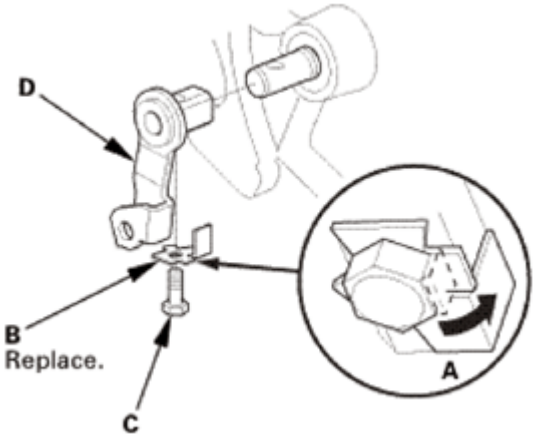

Fig. 2086: Prying Down Lock Tab Of Lock Washer (Except 2WD Of USA Produced Models)

GETtheMANUALS.org

Courtesy of AMERICAN HONDA MOTOR CO., INC.

20. Selector Control Shaft
    1. Unhook the detent arm spring (A).

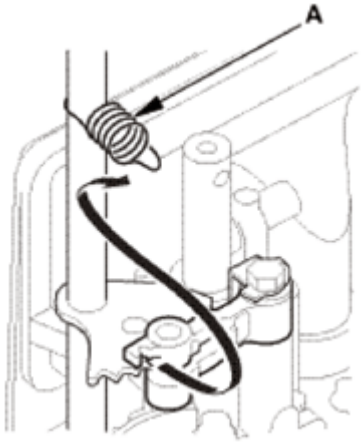

Fig. 2087: Unhooking Detent Arm Spring
Courtesy of AMERICAN HONDA MOTOR CO., INC.

    2. Separate the manual valve lever pin (A) on the selector control shaft (B) from the guide of the manual valve (C).

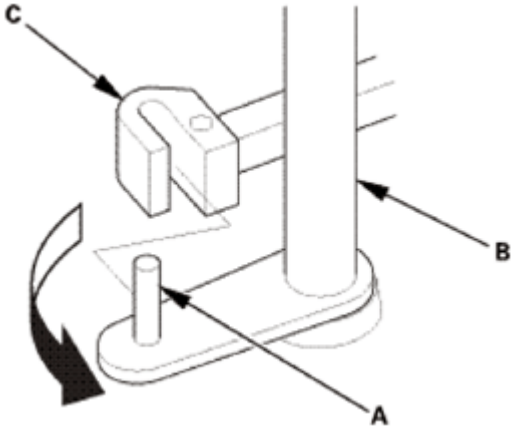

Fig. 2088: Separating Manual Valve Lever Pin On Selector Control Shaft From Guide Of Manual Valve
Courtesy of AMERICAN HONDA MOTOR CO., INC.

    3. Remove the selector control shaft (A).

GETtheMANUALS.org

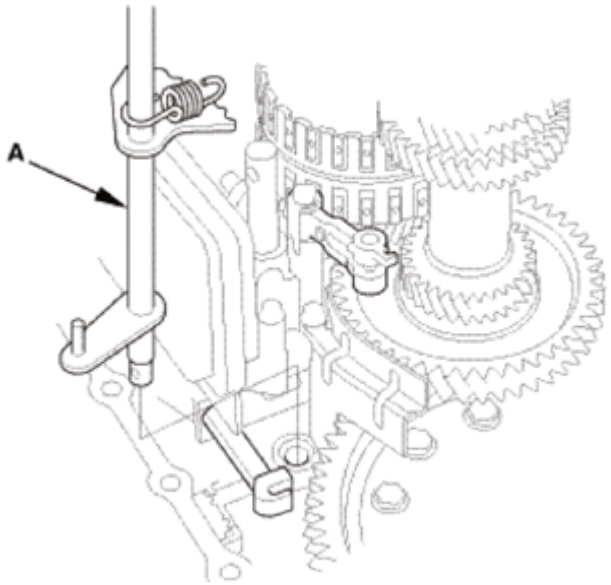

Fig. 2089: Identifying Selector Control Shaft
Courtesy of AMERICAN HONDA MOTOR CO., INC.

21. Mainshaft and Countershaft and Secondary Shaft Assembly
    1. Turn the detent arm (A) away from the countershaft (B).

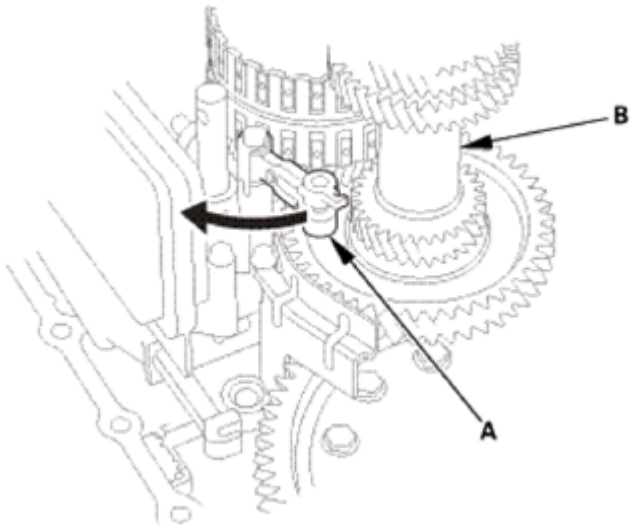

Fig. 2090: Turning Detent Arm Away From Countershaft
Courtesy of AMERICAN HONDA MOTOR CO., INC.

    2. Remove the mainshaft subassembly (A), the countershaft subassembly (B), and the secondary shaft subassembly (C) together.

NOTE: Do not bump the countershaft on the baffle plate (D).

GETtheMANUALS.org

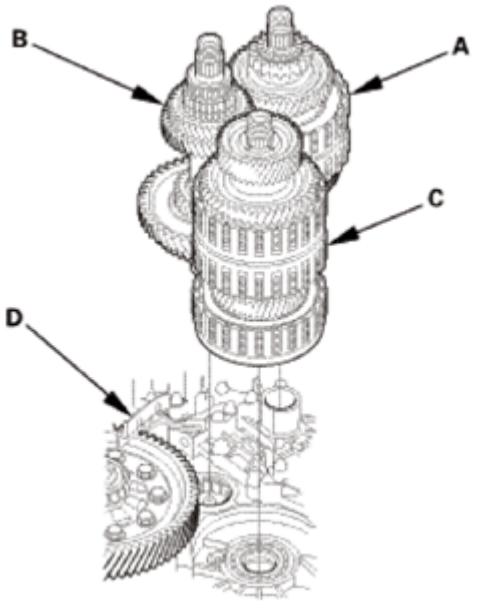

Fig. 2091: Identifying Mainshaft Subassembly, Countershaft Subassembly, Secondary Shaft Subassembly And Baffle Plate
Courtesy of AMERICAN HONDA MOTOR CO., INC.

22. Differential Assembly
    1. Remove the baffle plate (A).
    2. Remove the differential assembly (B).

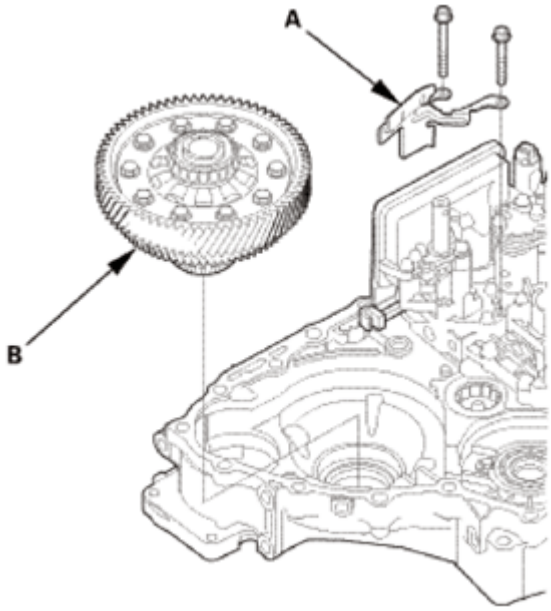

Fig. 2092: Identifying Differential Assembly And Baffle Plate
Courtesy of AMERICAN HONDA MOTOR CO., INC.

GETtheMANUALS.org

23. Regulator Valve Body
    1. Remove ATF joint pipe A.
    2. Remove ATF joint pipe B.

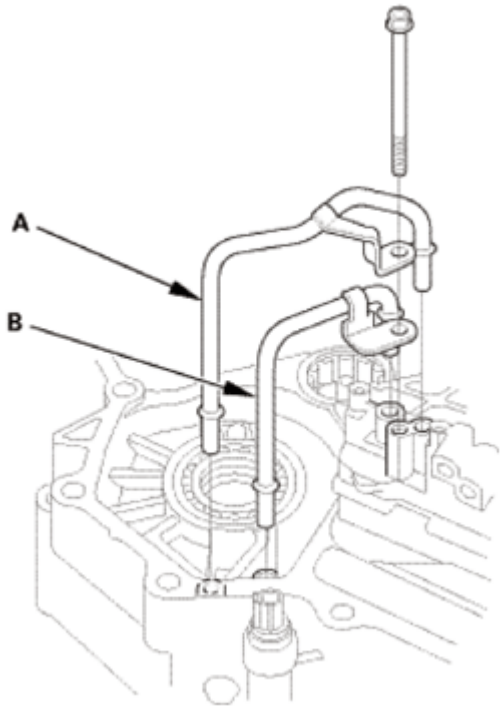

Fig. 2093: Identifying ATF Joint Pipes
Courtesy of AMERICAN HONDA MOTOR CO., INC.

    3. Remove the regulator valve body (A).

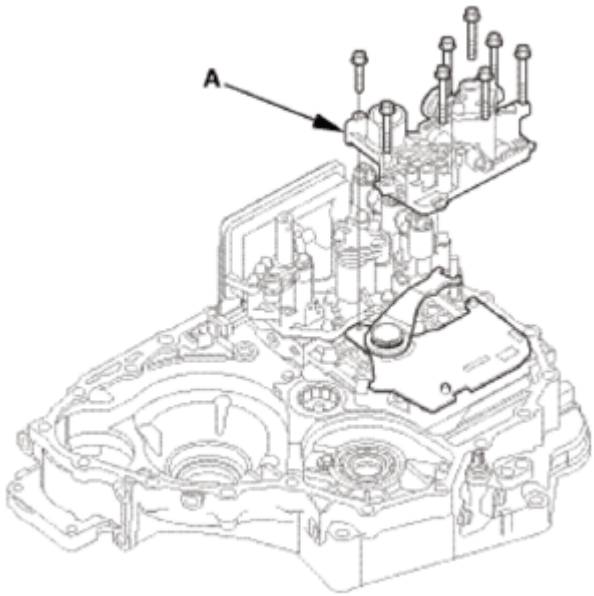

GETtheMANUALS.org

Fig. 2094: Identifying Regulator Valve Body With Mounting Bolts
Courtesy of AMERICAN HONDA MOTOR CO., INC.

4. Remove the stator shaft (A).
5. Remove the O-ring (B) from the stator shaft.
6. Remove the stator shaft stop (C).

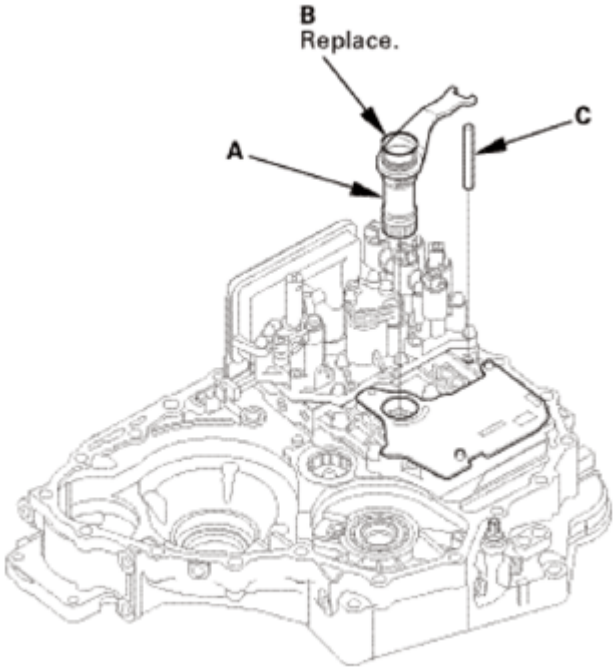

Fig. 2095: Identifying Stator Shaft, O-Ring And Stator Shaft Stop
Courtesy of AMERICAN HONDA MOTOR CO., INC.

7. Remove the regulator separator plate (A) and the dowel pins (B).

GETtheMANUALS.org

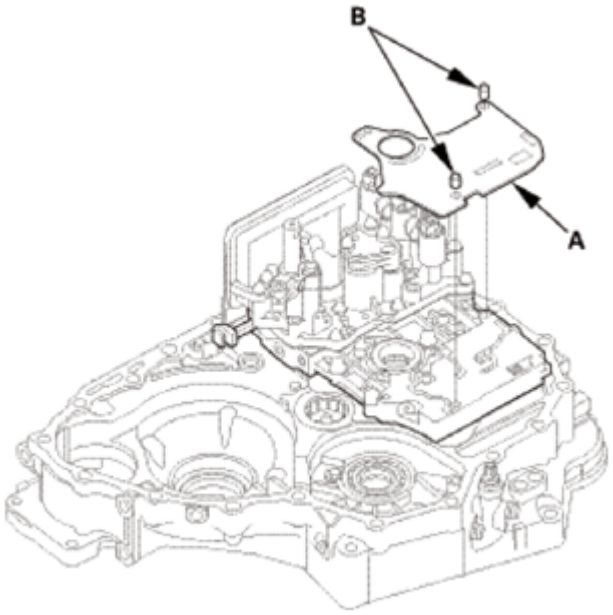

Fig. 2096: Identifying Regulator Separator Plate And Dowel Pins
Courtesy of AMERICAN HONDA MOTOR CO., INC.

24. ATF Strainer
    1. Remove the ATF strainer (A) and the O-ring (B).

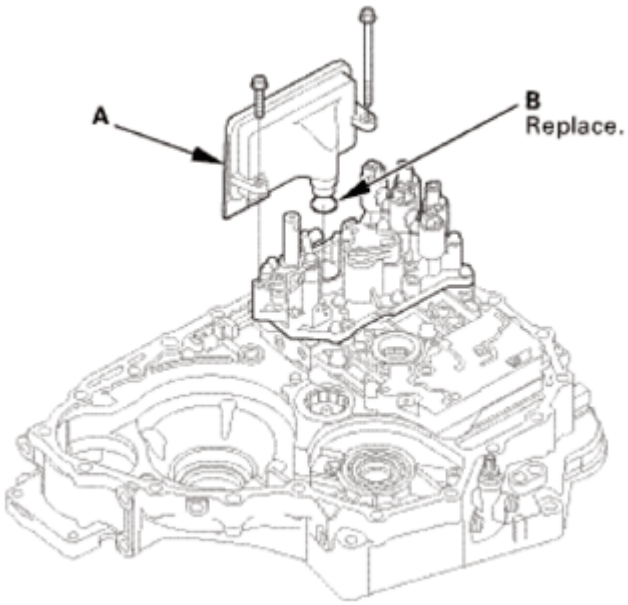

Fig. 2097: Identifying ATF Strainer And O-Ring With Mounting Bolts
Courtesy of AMERICAN HONDA MOTOR CO., INC.

    2. Clean the inlet opening (A) of the ATF strainer (B) thoroughly with compressed air, then check that it is in good condition and that the inlet opening is not clogged.

GETtheMANUALS.org

3. Test the ATF strainer by pouring clean ATF through the inlet opening, and replace it if it is clogged or damaged.

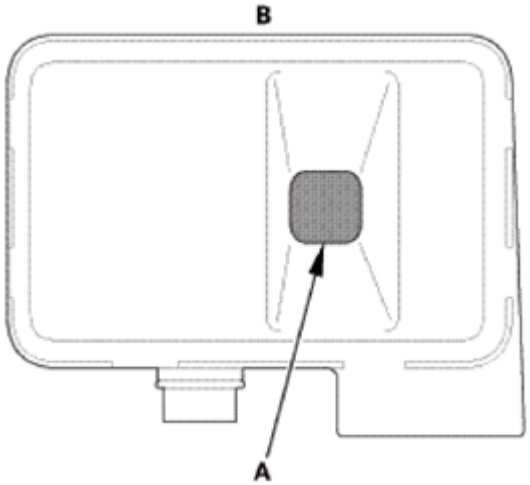

Fig. 2098: Identifying Inlet Opening Of ATF Strainer
Courtesy of AMERICAN HONDA MOTOR CO., INC.

25. Servo Body
    1. Remove the servo body (A).

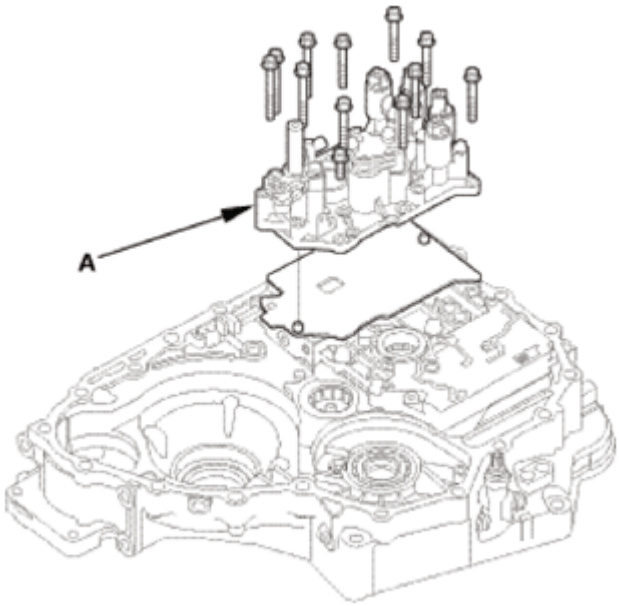

Fig. 2099: Identifying Servo Body With Mounting Bolts
Courtesy of AMERICAN HONDA MOTOR CO., INC.

    2. Remove the servo separator plate (A) and the dowel pins (B).

GETtheMANUALS.org

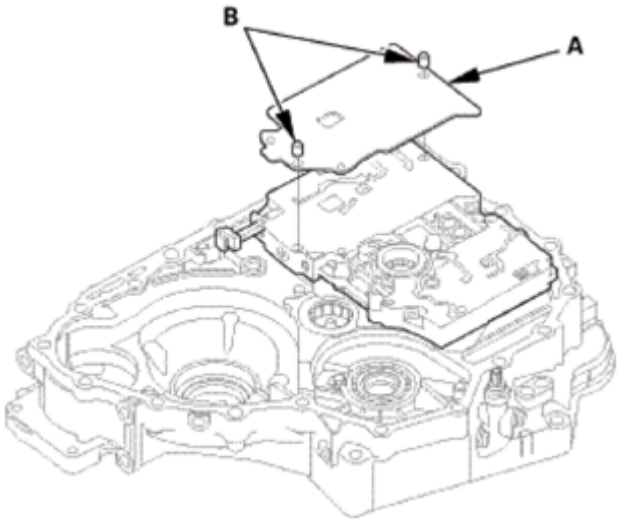

Fig. 2100: Identifying Servo Separator Plate And Dowel Pins
Courtesy of AMERICAN HONDA MOTOR CO., INC.

26. Main Valve Body
    1. Remove the cooler check valve spring (A) and the cooler check valve (B).
    2. Remove the main valve body (C).

NOTE: **Do not let the check balls (D) fall out, and do not use a magnet to remove the check balls, it may magnetize them.**

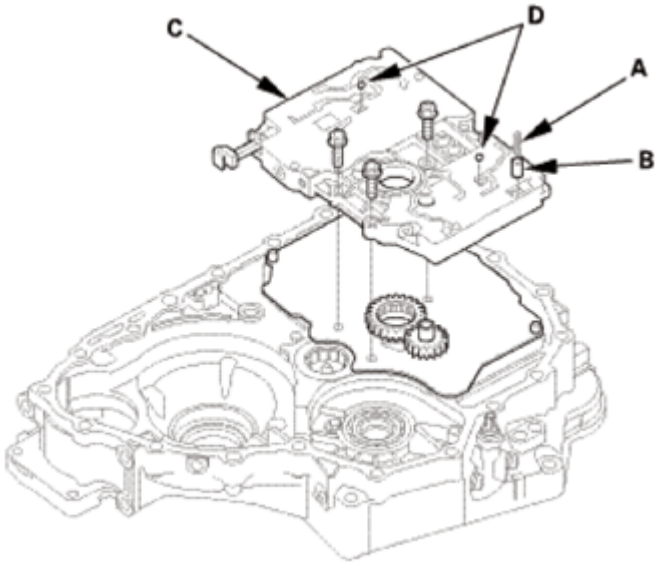

Fig. 2101: Identifying Cooler Check Valve, Spring, Main Valve Body And Check Balls
Courtesy of AMERICAN HONDA MOTOR CO., INC.

    3. Remove the ATF pump driven gear shaft (A).

GETtheMANUALS.org

4. Remove the ATF pump drive gear (B) and the ATF pump driven gear (C).

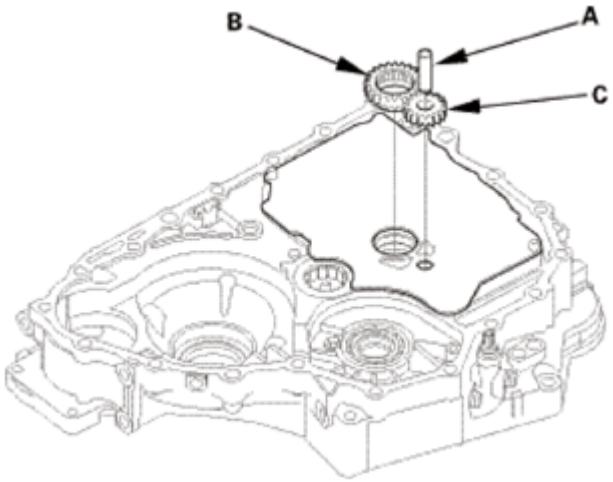

Fig. 2102: Identifying ATF Pump Driven Gear Shaft, ATF Pump Drive And Driven Gear
Courtesy of AMERICAN HONDA MOTOR CO., INC.

5. Remove the main separator plate (A) and the dowel pins (B).

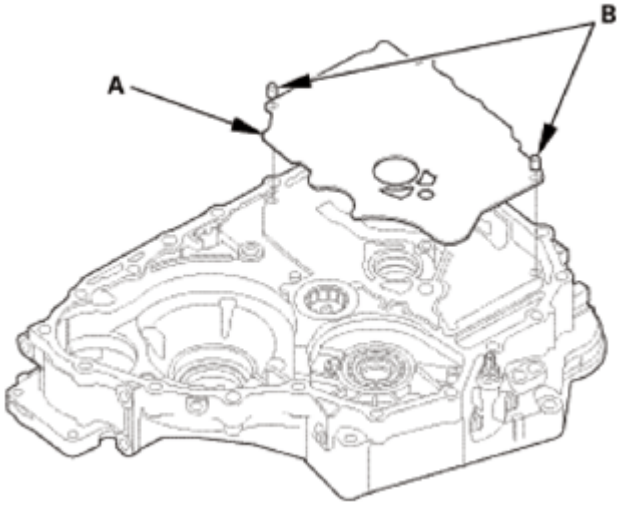

Fig. 2103: Identifying Main Separator Plate And Dowel Pins
Courtesy of AMERICAN HONDA MOTOR CO., INC.

27. Torque Converter Housing Secondary Shaft Bearing
    1. Pry down the lock tab (A) of the lock washer (B).
    2. Remove the set plate bolt (C), the lock washer, and the bearing set plate (D).

GETtheMANUALS.org

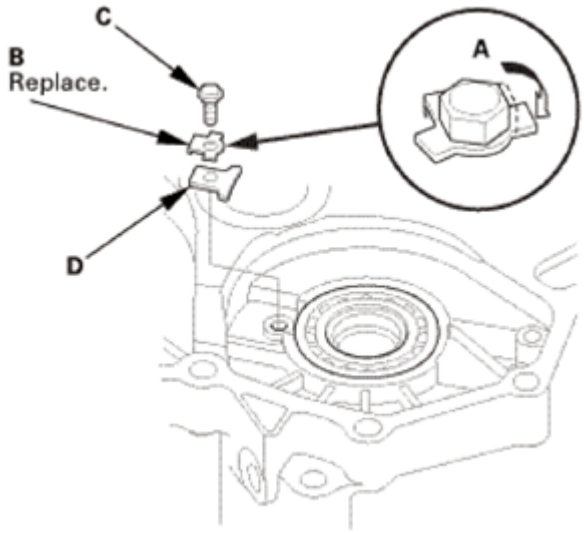

Fig. 2104: Prying Down Lock Tab Of Lock Washer
Courtesy of AMERICAN HONDA MOTOR CO., INC.

3. Remove the secondary shaft bearing (A) by heating the torque converter housing to about 212 °F (100 °C) using a heat gun (B).

NOTE:

- **Do not heat the torque converter housing more than 212 °F (100 °C).**
- **Let the torque converter housing cool to normal temperature before installing the secondary shaft bearing.**

4. Remove the ATF guide collar (C) with the O-rings (D).
5. Clean and dry the ATF guide collar surfaces and the torque converter housing if necessary.

GETtheMANUALS.org

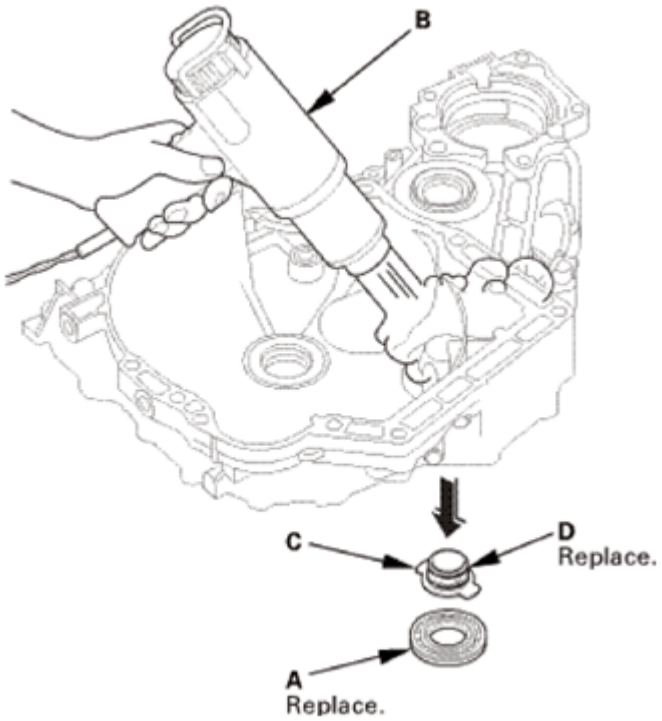

Fig. 2105: Removing Secondary Shaft Bearing By Heating Torque Converter Housing Using Heat Gun
Courtesy of AMERICAN HONDA MOTOR CO., INC.

INSTALLATION

NOTE:

- **Apply a light coat of clean ATF on all moving parts before installation.**
- **The illustration shows AWD/4WD transmission.**

1. Torque Converter Housing Secondary Shaft Bearing
    1. Apply a light coat of clean ATF on new O-rings (A).
    2. Install the O-rings on the ATF guide collar (B).
    3. Install the ATF guide collar by aligning the tabs (C) with the grooves (D).
    4. Install a new secondary shaft bearing (E) in the direction shown.

GETtheMANUALS.org

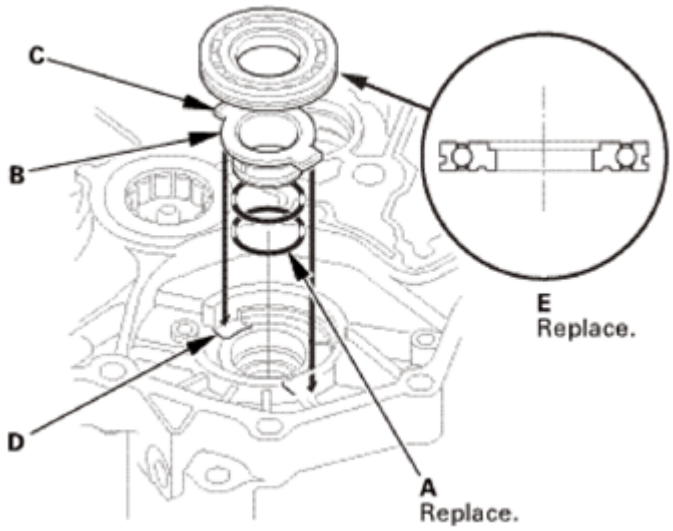

Fig. 2106: Identifying ATF Guide Collar, O-Rings, Tabs, Grooves And Secondary Shaft Bearing
Courtesy of AMERICAN HONDA MOTOR CO., INC.

5. Install the secondary shaft bearing securely in the torque converter housing using the driver handle and the 62 x 68 mm bearing driver attachment.

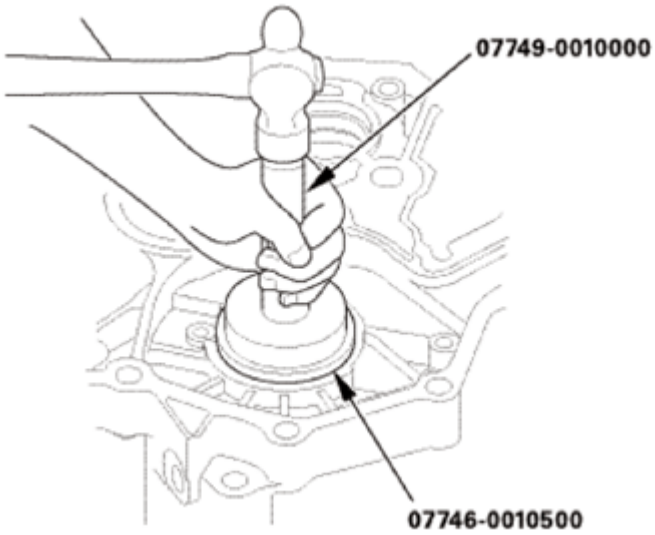

Fig. 2107: Installing Secondary Shaft Bearing Securely In Torque Converter Housing Using Driver Handle And Bearing Driver Attachment
Courtesy of AMERICAN HONDA MOTOR CO., INC.

6. Check that the bearing groove aligns with the torque converter housing surface, then install the bearing set plate (A) with aligning the bearing groove.
7. Install the set plate bolt (B) using a new lock washer (C).
8. Pry up the lock tab (D) of the lock washer against the bolt head.

GETtheMANUALS.org

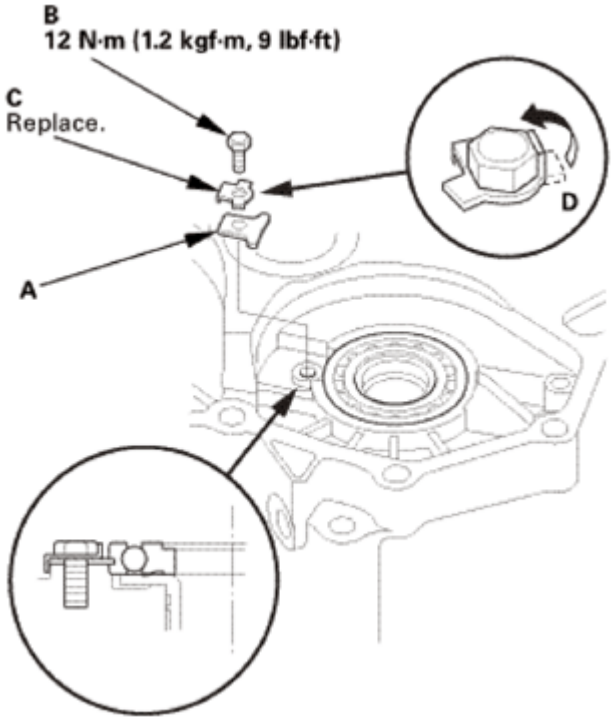

Fig. 2108: Prying Up Lock Tab Of Lock Washer Against Bolt Head
Courtesy of AMERICAN HONDA MOTOR CO., INC.

2. Main Valve Body
    1. Install the main separator plate (A) and the dowel pins (B).

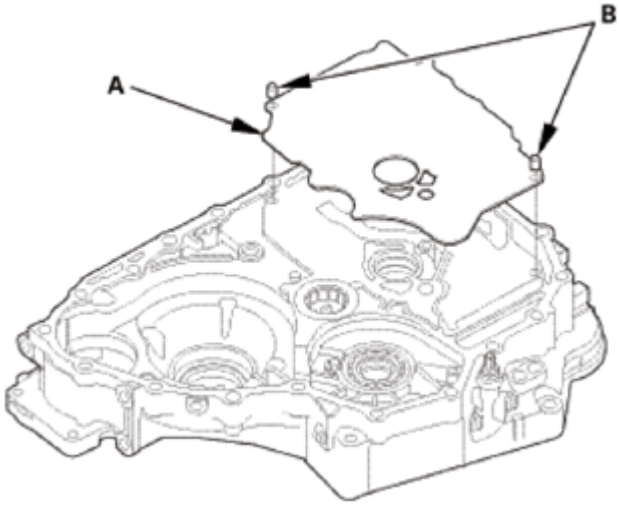

Fig. 2109: Identifying Main Separator Plate And Dowel Pins
Courtesy of AMERICAN HONDA MOTOR CO., INC.

    2. Install the ATF pump drive gear (A) and the ATF pump driven gear (B).

GETtheMANUALS.org

NOTE: **Install the ATF pump driven gear with its grooved and chamfered side facing down.**

3. Install the ATF pump driven gear shaft (C).

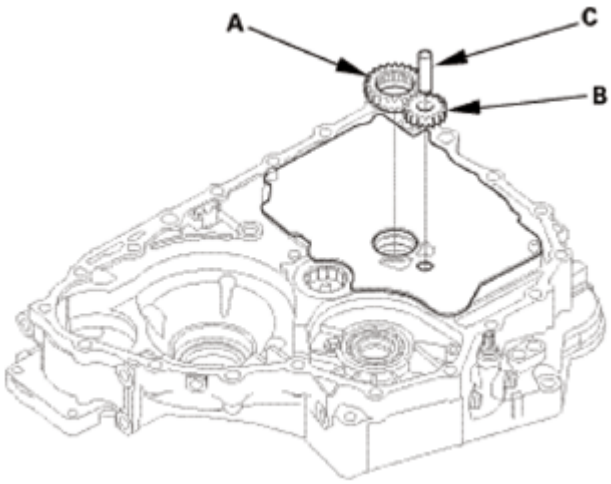

Fig. 2110: Identifying ATF Pump Driven Gear Shaft, ATF Pump Drive And Driven Gear (1 Of 2)
Courtesy of AMERICAN HONDA MOTOR CO., INC.

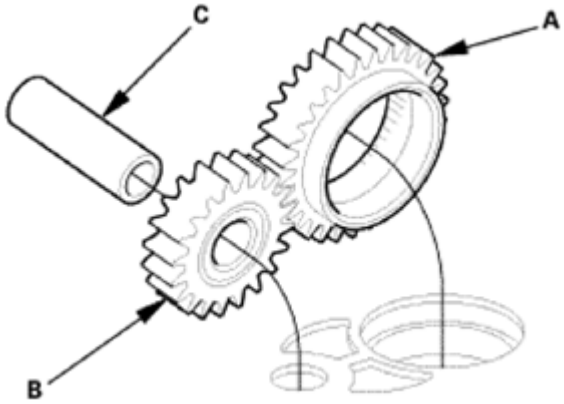

Fig. 2111: Identifying ATF Pump Driven Gear Shaft, ATF Pump Drive And Driven Gear (2 Of 2)
Courtesy of AMERICAN HONDA MOTOR CO., INC.

4. Install the main valve body (A).

NOTE: **Make sure that the check balls (B) are in the main valve body.**

5. Make sure the ATF pump drive gear (C) rotates smoothly in the normal operating direction, and the ATF pump driven gear shaft (D) moves smoothly in the axial and normal operating direction.
6. If the ATF pump drive gear and the ATF pump driven gear shaft do not move smoothly, loosen the

GETtheMANUALS.org

main valve body bolts. Realign the ATF pump driven gear shaft, and retighten the bolts to the specified torque, then recheck.

NOTE: **Failure to align the ATF pump driven gear shaft correctly will result in a seized ATF pump drive gear or ATF pump driven gear shaft.**

7. Install the cooler check valve (E) and the cooler check valve spring (F).

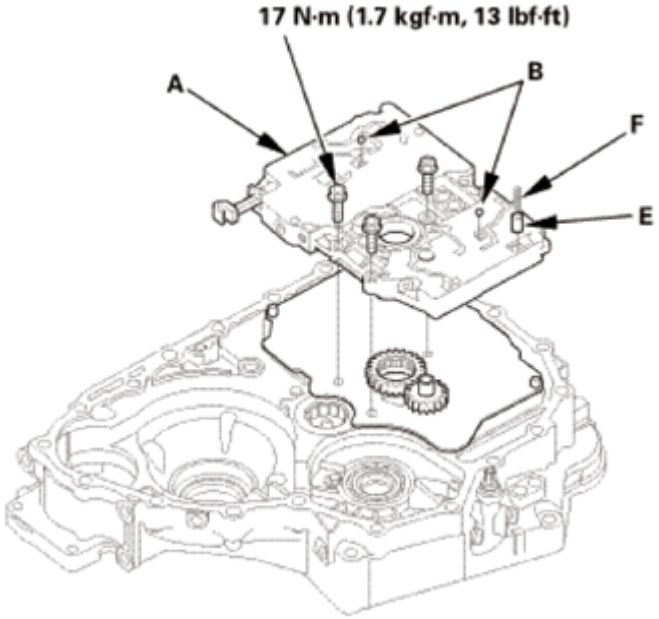

Fig. 2112: Identifying Main Valve Body, Check Balls, Cooler Check Valve And Cooler Check Valve Spring
Courtesy of AMERICAN HONDA MOTOR CO., INC.

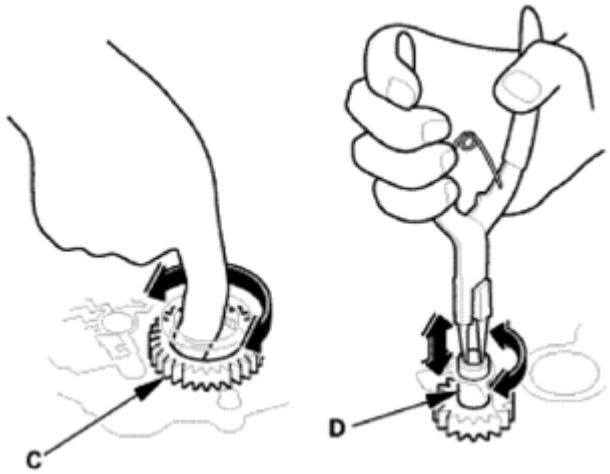

Fig. 2113: Rotating ATF Pump Drive Gear
Courtesy of AMERICAN HONDA MOTOR CO., INC.

GETtheMANUALS.org

3. Servo Body
    1. Install the servo separator plate (A) and the dowel pins (B).

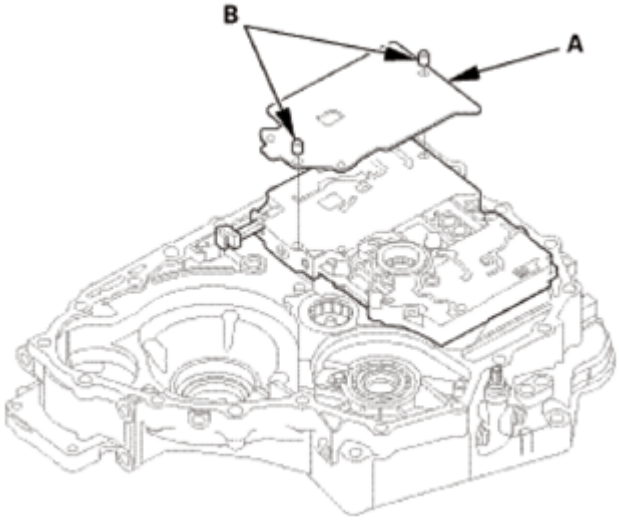

Fig. 2114: Identifying Servo Separator Plate And Dowel Pins
Courtesy of AMERICAN HONDA MOTOR CO., INC.

    2. Install the servo body (A).

NOTE: **Do not install the servo body mounting bolts to the baffle plate bolt holes (B) and the ATF strainer bolt holes (C) in this step.**

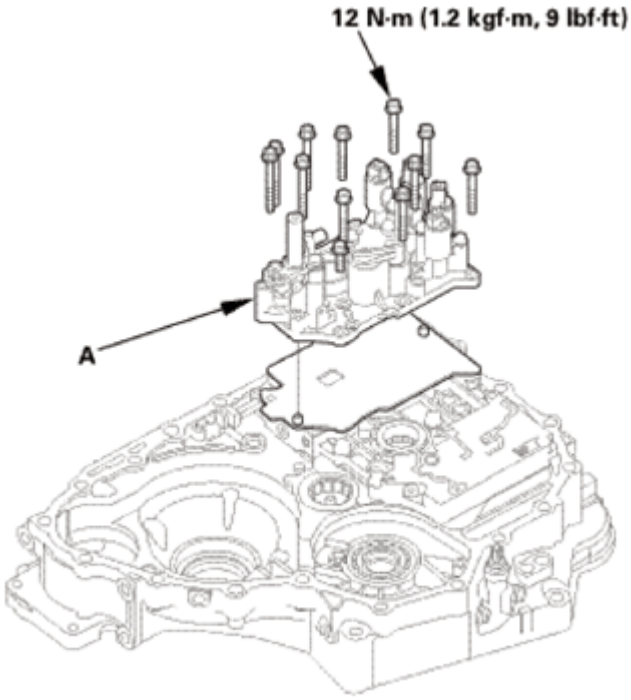

GETtheMANUALS.org

Fig. 2115: Identifying Servo Body And Mounting Bolts With Torque Specification
Courtesy of AMERICAN HONDA MOTOR CO., INC.

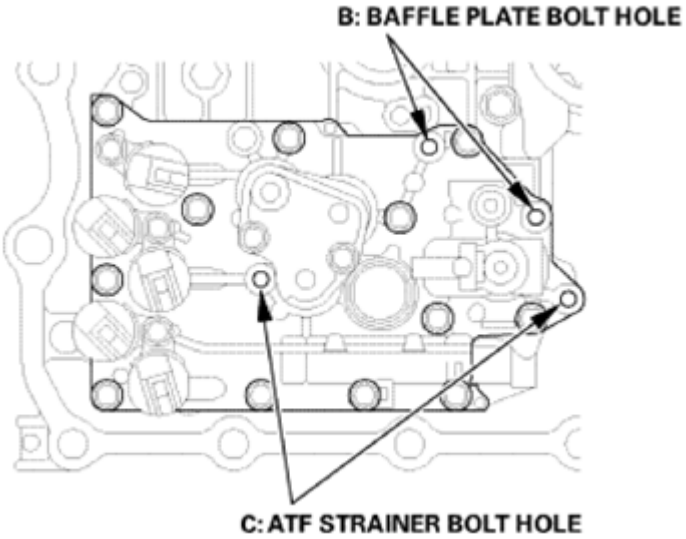

Fig. 2116: Identifying Baffle Plate Bolt Holes And ATF Strainer Bolt Holes
Courtesy of AMERICAN HONDA MOTOR CO., INC.

4. ATF Strainer
    1. Install the ATF strainer (A) using a new O-ring (B).

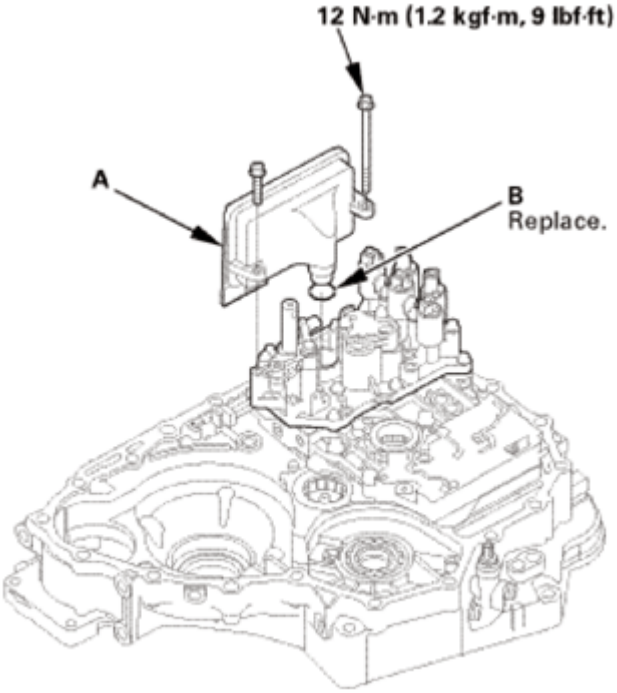

Fig. 2117: Identifying ATF Strainer, O-Ring And Mounting Bolts With Torque Specification
Courtesy of AMERICAN HONDA MOTOR CO., INC.

GETtheMANUALS.org

5. Regulator Valve Body
    1. Install the regulator separator plate (A) and the dowel pins (B).

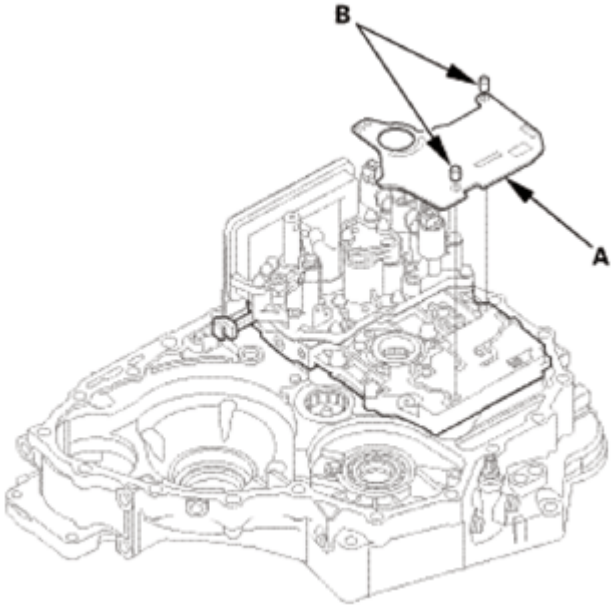

Fig. 2118: Identifying Regulator Separator Plate And Dowel Pins
Courtesy of AMERICAN HONDA MOTOR CO., INC.

    2. Install a new O-ring (A) on the stator shaft (B).
    3. Install the stator shaft.
    4. Install the stator shaft stop (C).

GETtheMANUALS.org

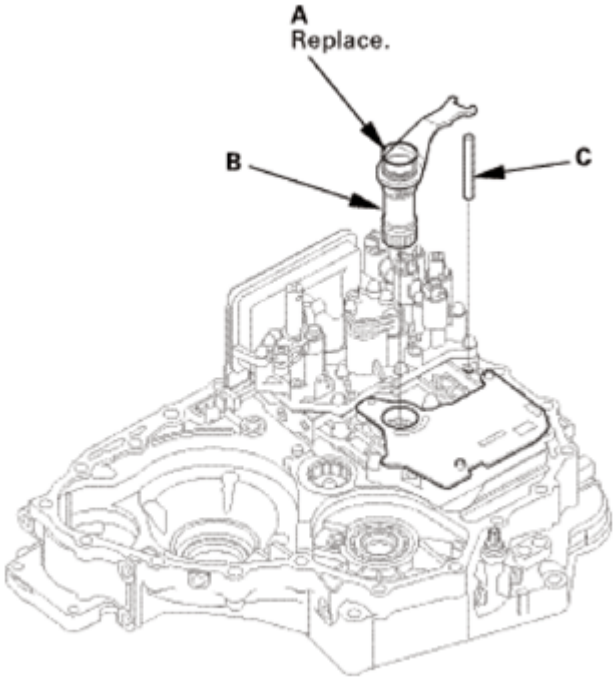

Fig. 2119: Identifying Stator Shaft, O-Ring And Stator Shaft Stop
Courtesy of AMERICAN HONDA MOTOR CO., INC.

5. Install the regulator valve body (A).

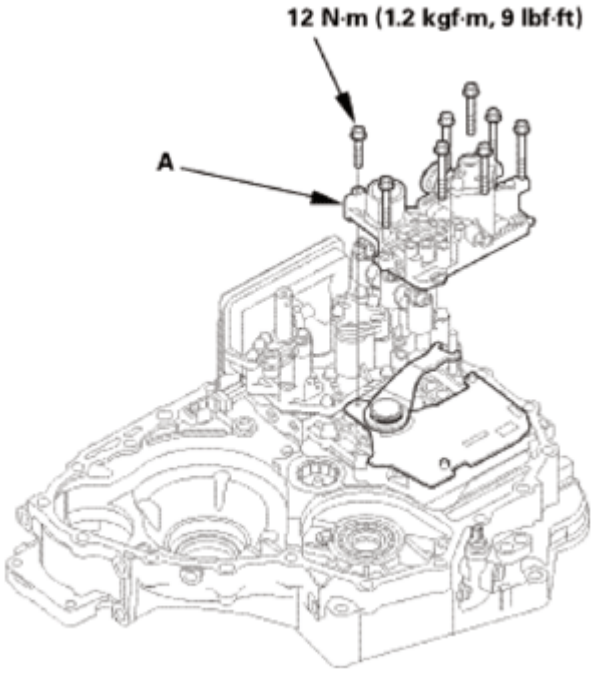

Fig. 2120: Identifying Regulator Valve Body And Mounting Bolts With Torque Specification
Courtesy of AMERICAN HONDA MOTOR CO., INC.

GETtheMANUALS.org

6. Install ATF joint pipe B.
7. Install ATF joint pipe A.

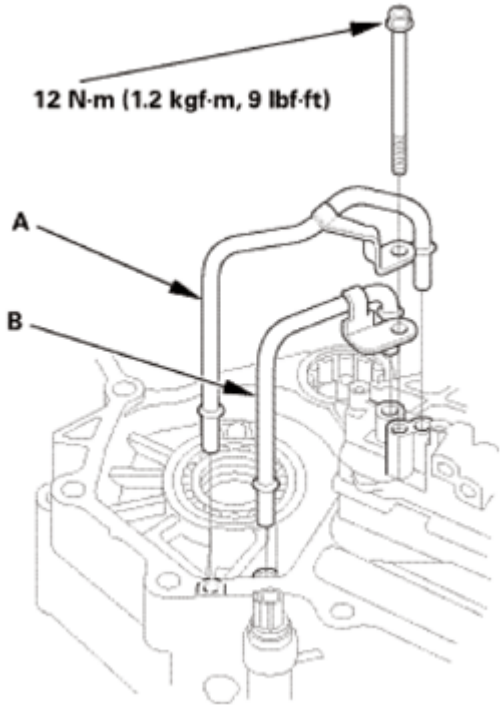

Fig. 2121: Identifying ATF Joint Pipes And Mounting Bolts With Torque Specification
Courtesy of AMERICAN HONDA MOTOR CO., INC.

6. Differential Assembly
    1. Install the differential assembly (A).
    2. Install the baffle plate (B).

GETtheMANUALS.org

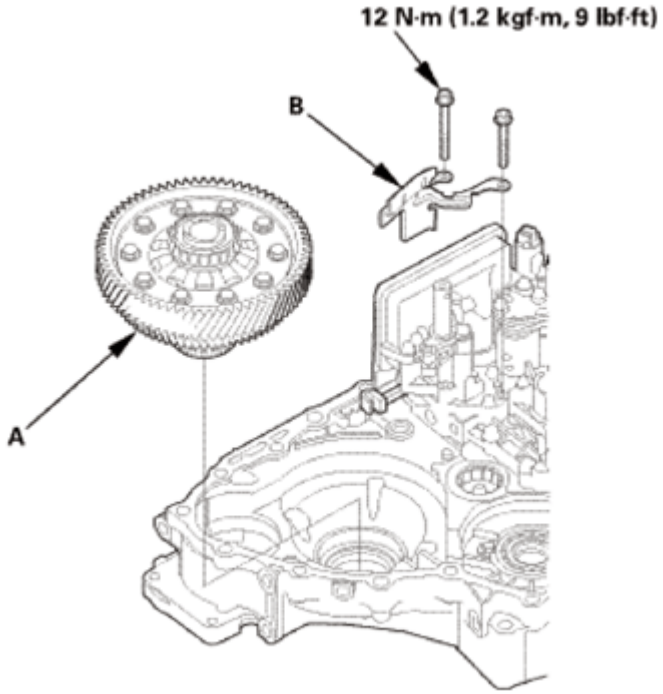

Fig. 2122: Identifying Differential Assembly, Baffle Plate And Bolts With Torque Specification
Courtesy of AMERICAN HONDA MOTOR CO., INC.

7. Mainshaft and Countershaft and Secondary Shaft Assembly
    1. Be sure that each shaft is assembled. Also be sure that new sealing rings are installed on the mainshaft and the secondary shaft.
    2. Join the mainshaft subassembly (A), the countershaft subassembly (B), and the secondary shaft subassembly (C) together, and install them.

    NOTE: Do not bump the countershaft on the baffle plate (D).

    3. Make sure the countershaft subassembly and the differential assembly (E) are clear of the baffle plate.

GETtheMANUALS.org

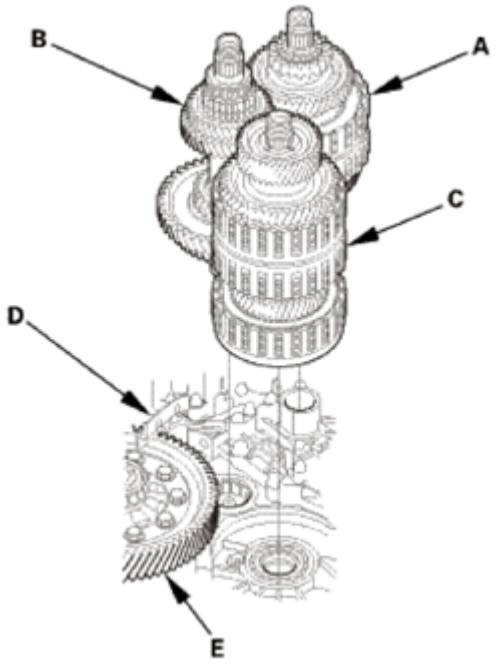

Fig. 2123: Identifying Mainshaft Subassembly, Countershaft Subassembly, Secondary Shaft Subassembly, Baffle Plate And Differential Assembly
Courtesy of AMERICAN HONDA MOTOR CO., INC.

8. Selector Control Shaft
    1. Install the selector control shaft (A).

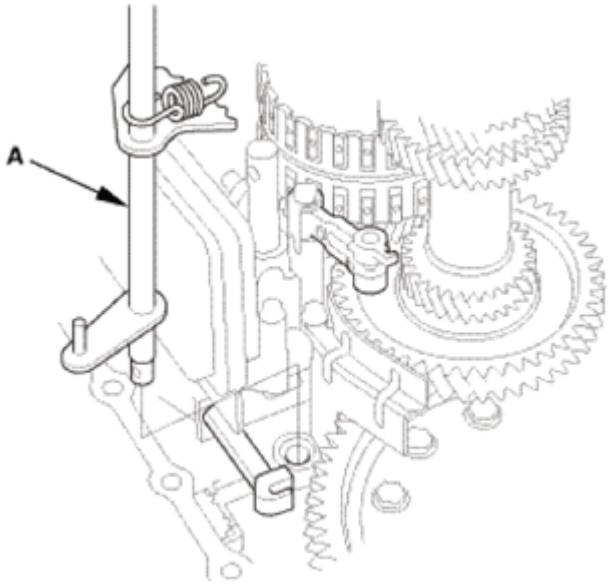

Fig. 2124: Identifying Selector Control Shaft
Courtesy of AMERICAN HONDA MOTOR CO., INC.

    2. Align the manual valve lever pin (A) on the selector control shaft (B) with the guide of the manual

GETtheMANUALS.org

valve (C).

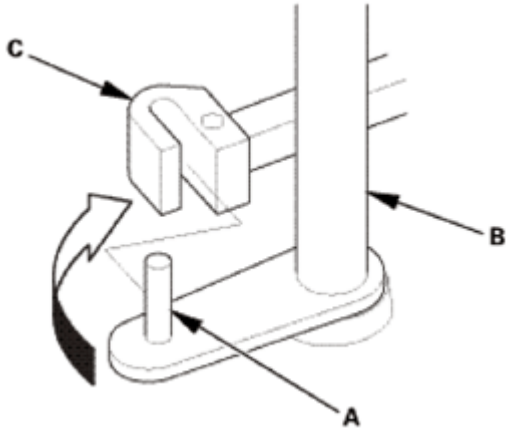

Fig. 2125: Aligning Manual Valve Lever Pin On Selector Control Shaft With Guide Of Manual Valve
Courtesy of AMERICAN HONDA MOTOR CO., INC.

3. Hook the detent arm spring (A).

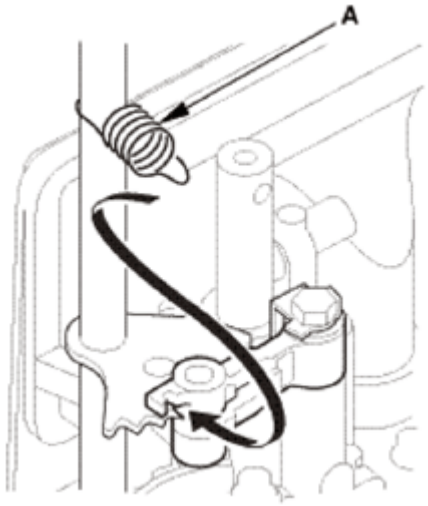

Fig. 2126: Hooking Detent Arm Spring
Courtesy of AMERICAN HONDA MOTOR CO., INC.

9. Selector Control Lever (Except 2WD of USA Produced Models)

Except 2WD of USA Produced Models

1. Install the control lever (A) over the selector control shaft (B).
2. Install the lock bolt (C) using a new lock washer (D).
3. Pry up the lock tab (E) of the lock washer against the bolt head.

GETtheMANUALS.org

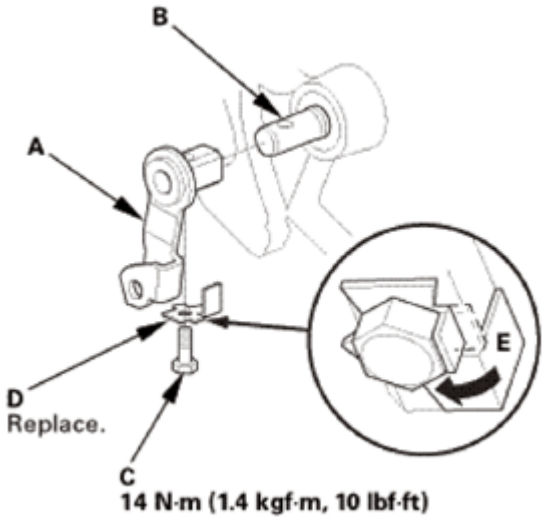

Fig. 2127: Prying Up Lock Tab Of Lock Washer (Except 2WD Of USA Produced Models)
Courtesy of AMERICAN HONDA MOTOR CO., INC.

10. Reverse Shift fork
    1. Install the reverse shift fork (A) and the reverse selector (B) together.
    2. Install the lock bolt (C) using a new lock washer (D).
    3. Pry up the lock tab (E) of the lock washer against the bolt head.

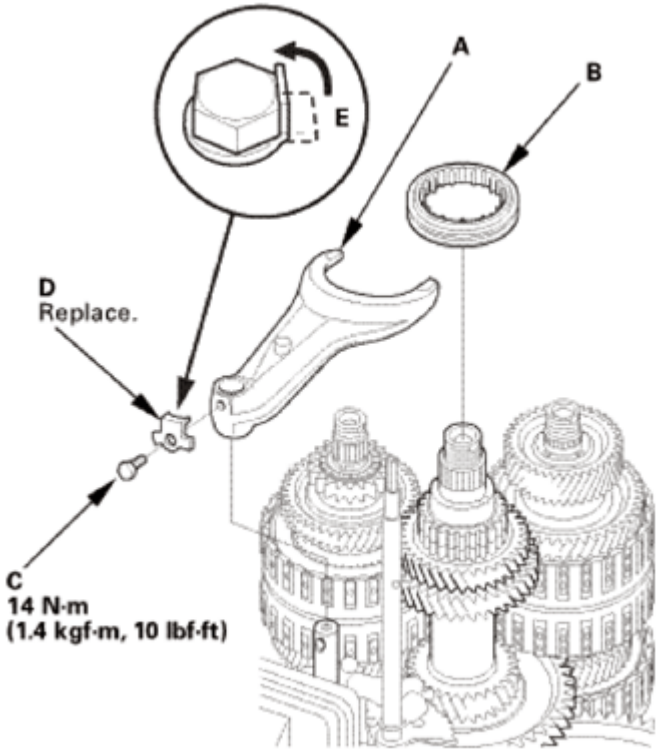

Fig. 2128: Prying Up Lock Tab Of Lock Washer

GETtheMANUALS.org

Courtesy of AMERICAN HONDA MOTOR CO., INC.

11. A/T Countershaft Reverse Gear
    1. Install the needle bearing (A).
    2. Install the countershaft reverse gear (B).

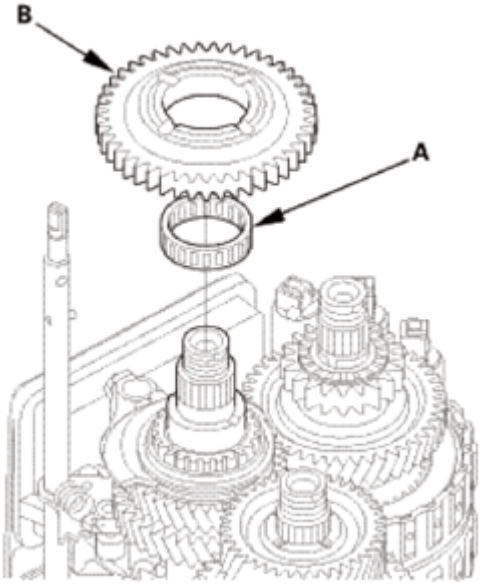

Fig. 2129: Identifying Needle Bearing And Countershaft Reverse Gear
Courtesy of AMERICAN HONDA MOTOR CO., INC.

12. Automatic Transmission Housing
    1. Install the three dowel pins (A) and a new gasket (B).
    2. Align the spring pin (C) of the selector control shaft (D) with the transmission housing groove (E).

NOTE: **Do not squeeze the end of the selector control shaft tips together when turning the shaft. If the tips are squeezed together, it will cause a faulty shift position signal or position due to the play between the selector control shaft and the transmission range switch.**

    3. Place the transmission housing (F) on the torque converter housing (G).

NOTE: **Do not install the input shaft (mainshaft) speed sensor and the output shaft (countershaft) speed sensor before installing the transmission housing.**

    4. Wrap the tip of a screwdriver with tape so the reverse idler gear teeth do not get damaged. Engage the reverse idler gear (H) with the reverse gears (I) by rotating the idler gear using the screwdriver.
    5. Make sure the transmission housing is securely seated so there is no clearance between the transmission housing and the torque converter housing.

GETtheMANUALS.org

6. Install the transmission hanger (J), and tighten the transmission housing mounting bolts (2WD: 19 bolts, AWD/4WD: 20 bolts) in at least two steps, in a crisscross pattern.

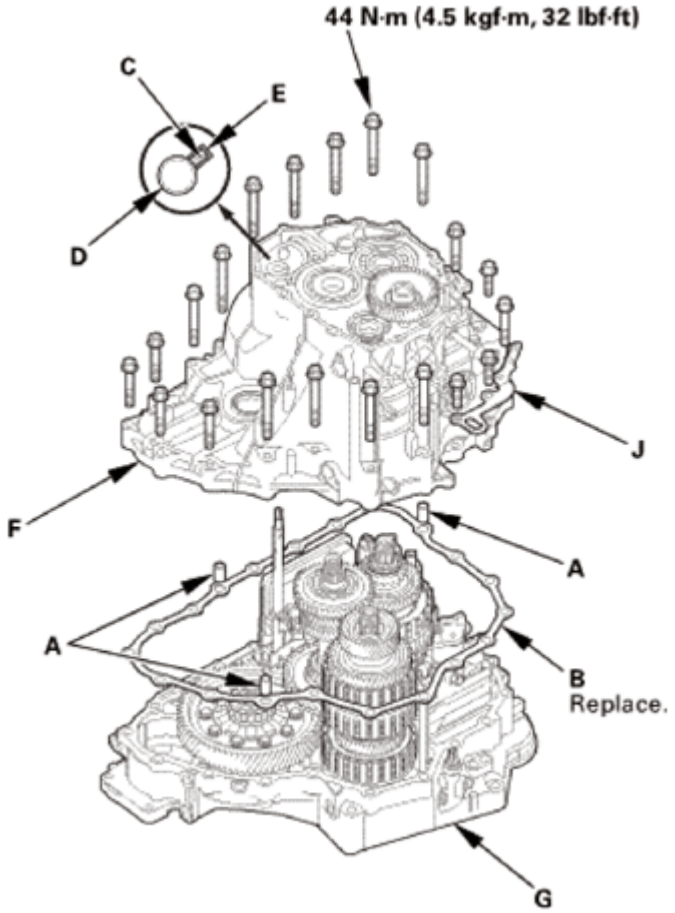

Fig. 2130: Identifying Dowel Pins, Gasket, Spring Pin, Selector Control Shaft, Transmission Housing Groove And Mounting Bolts With Torque Specification
Courtesy of AMERICAN HONDA MOTOR CO., INC.

GETtheMANUALS.org

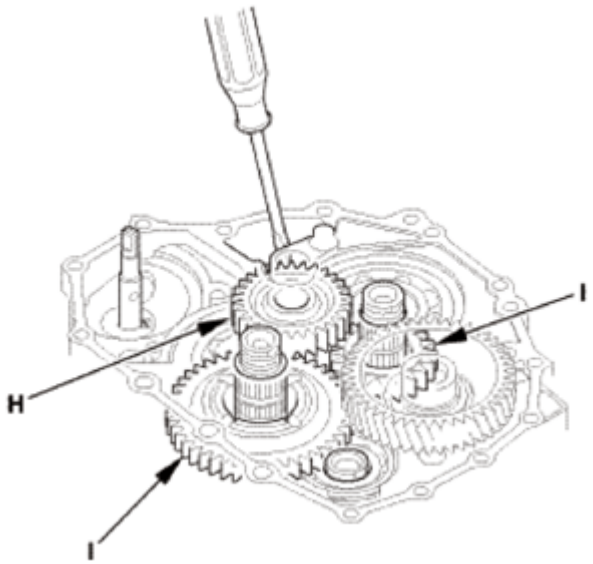

Fig. 2131: Engaging Reverse Idler Gear With Reverse Gears By Rotating Idler Gear Using Screwdriver
Courtesy of AMERICAN HONDA MOTOR CO., INC.

13. End Cover Idler Gear Assembly
    1. Install the mainshaft holder onto the mainshaft.

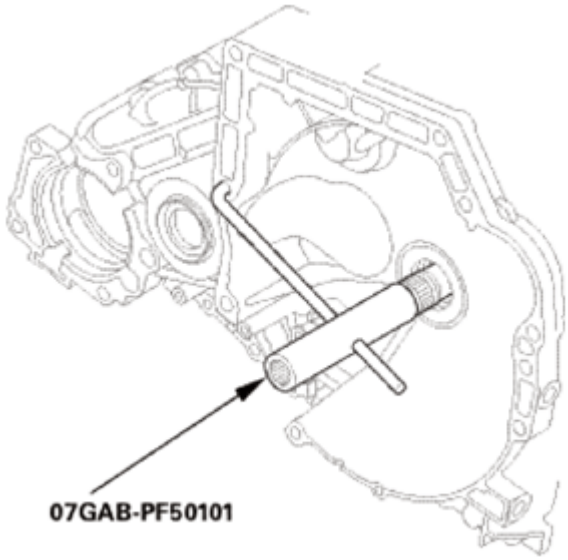

Fig. 2132: Installing Mainshaft Holder Onto Mainshaft
Courtesy of AMERICAN HONDA MOTOR CO., INC.

    2. Lubricate the following parts with ATF:
        - Splines and threads of the mainshaft.
        - Splines of the mainshaft idler gear.

GETtheMANUALS.org

- The old conical spring washer and the old locknut.

3. Install the mainshaft idler gear (A), the old conical spring washer (B), and the old locknut (C), and tighten the locknut to 225 N.m (23.0 kgf.m, 166 lbf.ft).

NOTE:

- **Do not tap the mainshaft idler gear to install.**
- **Use a torque wrench to tighten the locknut. Do not use an impact wrench.**

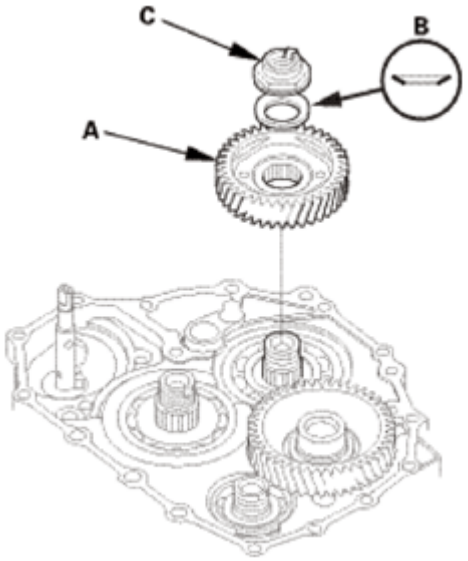

Fig. 2133: Identifying Mainshaft Idler Gear, Conical Spring Washer And Locknut
Courtesy of AMERICAN HONDA MOTOR CO., INC.

4. Lubricate the following parts with ATF:
   - Splines and threads of the countershaft.
   - Splines of the park gear.
   - The old conical spring washer and the old locknut.
5. Install the park gear (A), the old conical spring washer (B), and the old locknut (C).
6. Install the park lever spring (D), the park lever (E), and the park lever stop (F).
7. Install the lock bolt (G) using a new lock washer (H).

GETtheMANUALS.org

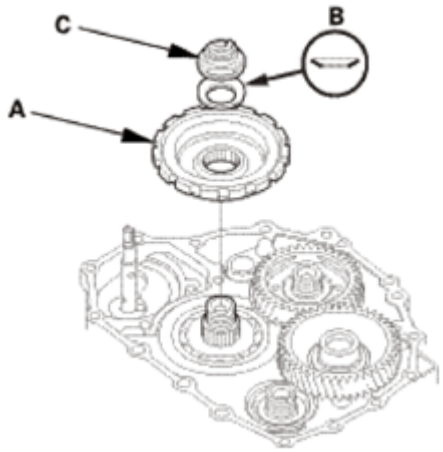

Fig. 2134: Identifying Park Gear, Conical Spring Washer And Locknut
Courtesy of AMERICAN HONDA MOTOR CO., INC.

NOTE: **Do not bend the lock tab of the lock washer until inspect the park lever stop.**

8. Install the park pawl shaft (I), the park pawl spring (J), the park pawl (K), and the stop shaft (L).
9. Lift the park pawl up, and engage it with the park gear, and tighten the locknut to 225 N.m (23.0 kgf.m, 166 lbf.ft).

NOTE:

- **Do not tap the park gear to install.**
- **Use a torque wrench to tighten the locknut. Do not use an impact wrench.**
- **Countershaft locknut has left-hand threads.**

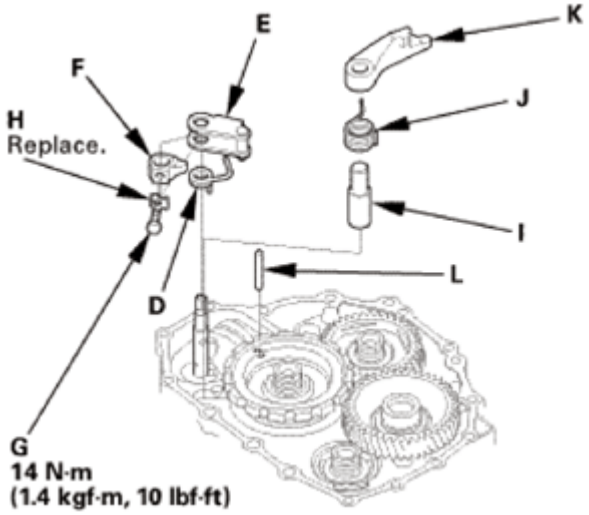

Fig. 2135: Identifying Park Pawl Shaft, Park Lever Spring, Park Lever, Park Lever Stop, Lock Bolt, Lock Washer With Torque Specification

GETtheMANUALS.org

Courtesy of AMERICAN HONDA MOTOR CO., INC.

10. Remove the old locknuts and the old conical spring washers from the mainshaft and the countershaft.
11. Lubricate the following parts with ATF:
    - Splines and threads of the mainshaft, the countershaft, and the secondary shaft.
    - New conical spring washers and new locknuts.
    - Areas where the conical spring washers contact the mainshaft idler gear and the park gear.
12. Install new conical spring washers (A) in the direction shown.
13. Install a new mainshaft locknut (B), a new countershaft locknut (C), and a new secondary shaft locknut (D).

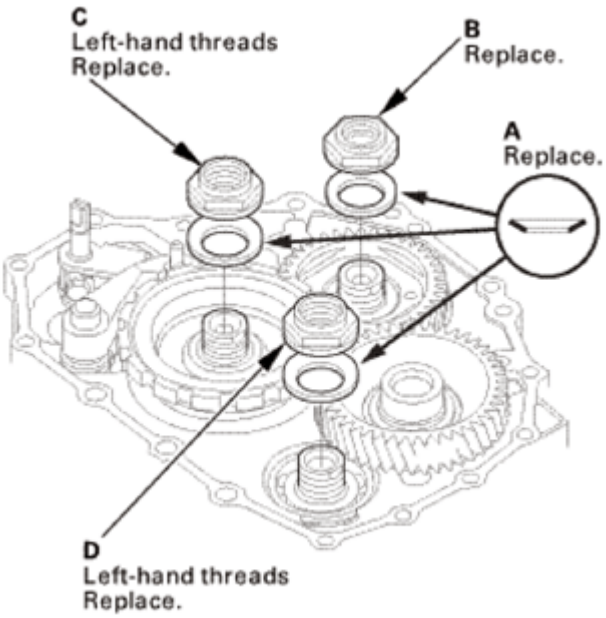

Fig. 2136: Identifying Conical Spring Washers, Mainshaft Locknut, Countershaft Locknut And Secondary Shaft Locknut
Courtesy of AMERICAN HONDA MOTOR CO., INC.

14. Tighten the locknuts to 167 N.m (17.0 kgf.m, 123 lbf.ft).

NOTE:
- **Use a torque wrench to tighten the locknut. Do not use an impact wrench.**
- **The countershaft and secondary shaft locknuts have left-hand threads.**

15. Remove the mainshaft holder.
16. Stake the locknuts into the shafts to a depth (A) of 0.7-1.3 mm (0.027-0.051 in) using a 3.5 mm punch (B).

GETtheMANUALS.org

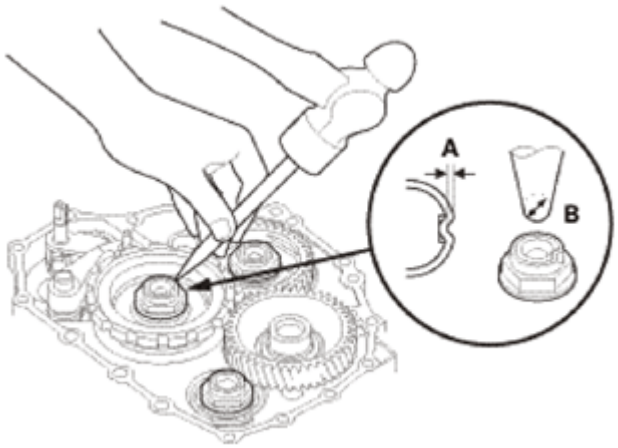

Fig. 2137: Staking Locknuts Into Shafts Using Punch
Courtesy of AMERICAN HONDA MOTOR CO., INC.

17. Set the park lever in the P position.
18. Measure the distance (A) between the center of the park pawl shaft (B) and the center of the park lever roller pin (C) as shown.

    Standard: 57.7-58.7 mm (2.272-2.311 in)

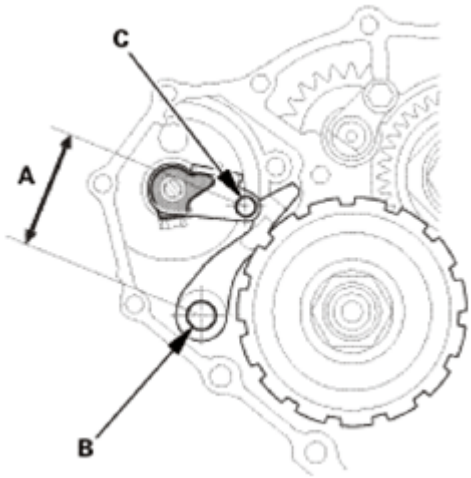

Fig. 2138: Measuring Distance Between Center Of Park Pawl Shaft And Center Of Park Lever Roller Pin
Courtesy of AMERICAN HONDA MOTOR CO., INC.

19. If the measurement is out of the standard, select and install the appropriate park lever stop (A) from the table.

PARK LEVER STOP SPECIFICATION

Mark	B	C
1	11.00 mm (0.4331 in)	11.00 mm (0.4331 in)

GETtheMANUALS.org

2	10.80 mm (0.4252 in)	10.65 mm (0.4193 in)
3	10.60 mm (0.4173 in)	10.30 mm (0.4055 in)

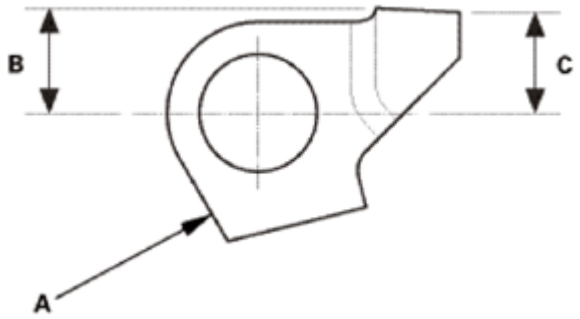

Fig. 2139: Identifying Park Lever Stop Dimension
Courtesy of AMERICAN HONDA MOTOR CO., INC.

20. After replacing the park lever stop, make sure the distance is within the tolerance.
21. Pry up the lock tab (A) of the lock washer against the bolt head.

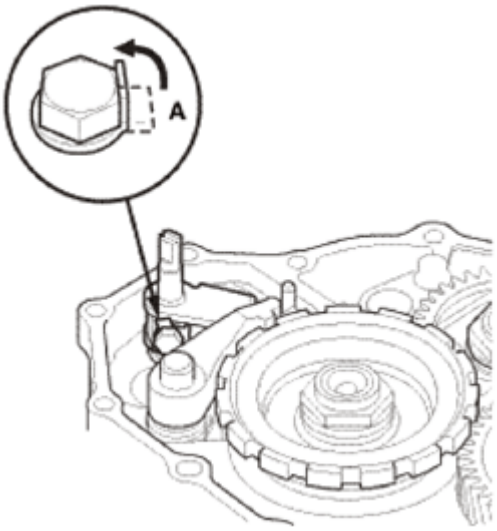

Fig. 2140: Prying Up Lock Tab Of Lock Washer Against Bolt Head
Courtesy of AMERICAN HONDA MOTOR CO., INC.

14. ATF Feed Pipe/Lubrication Pipe
    1. Install the 6 x 201 mm ATF pipe (A).
    2. Install the ATF lubrication pipe (B).
    3. Install the 8 x 220 mm ATF pipe (C).
    4. Install the 8 x 198 mm ATF pipes (D).

GETtheMANUALS.org

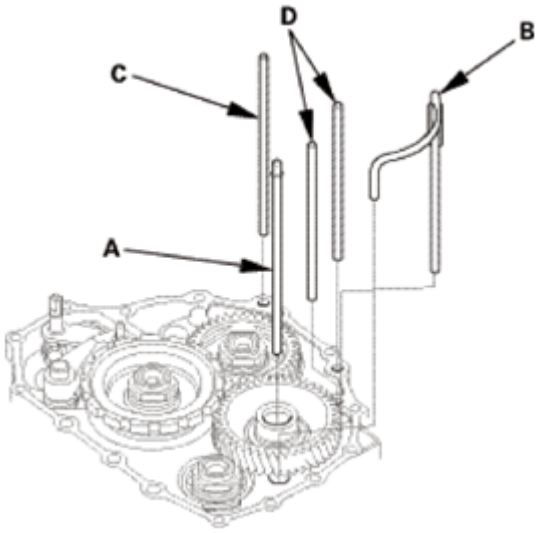

Fig. 2141: Identifying ATF Feed Pipes And Lubrication Pipe
Courtesy of AMERICAN HONDA MOTOR CO., INC.

15. A/T Shift Solenoid Wire Harness - Reconnection
    1. Connect the shift solenoid valve connectors:
        - BLU wire to shift solenoid valve A.
        - ORN wire to shift solenoid valve B.
        - GRN wire to shift solenoid valve C.
        - YEL, WHT, and WHT wires to shift solenoid valve D.
        - RED wire to shift solenoid valve E.

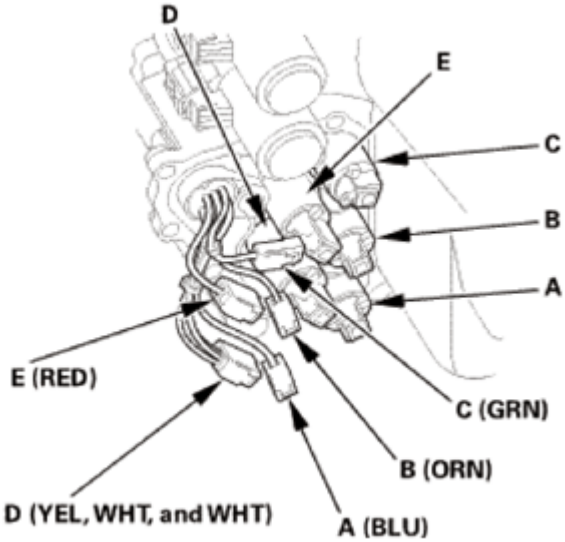

Fig. 2142: Identifying Shift Solenoid Valves
Courtesy of AMERICAN HONDA MOTOR CO., INC.

GETtheMANUALS.org

16. A/T Shift Solenoid Cover
    1. Install the shift solenoid valve cover (A) with the dowel pins (B) and a new gasket (C).

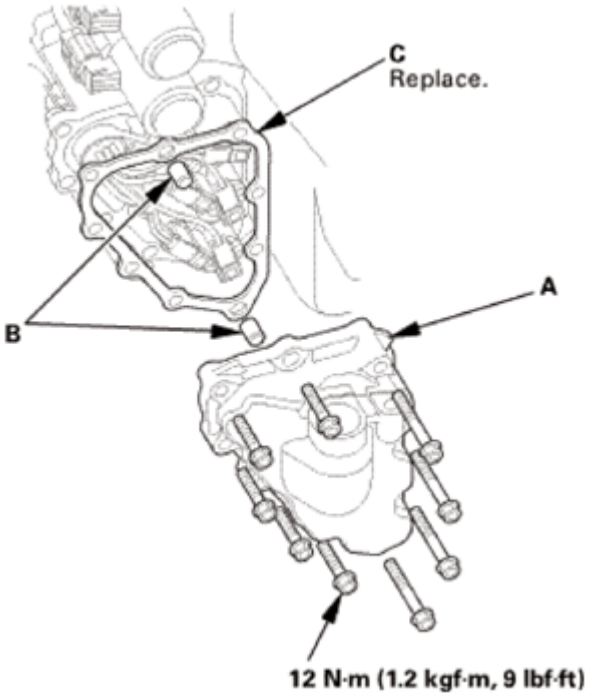

Fig. 2143: Identifying Shift Solenoid Valve Cover, Dowel Pins, Gasket And Mounting Bolts With Torque Specification
Courtesy of AMERICAN HONDA MOTOR CO., INC.

17. Dipstick Guide Tube
    1. Install a new O-ring (A) on the ATF dipstick guide tube (B).
    2. Install the ATF dipstick guide tube.

GETtheMANUALS.org

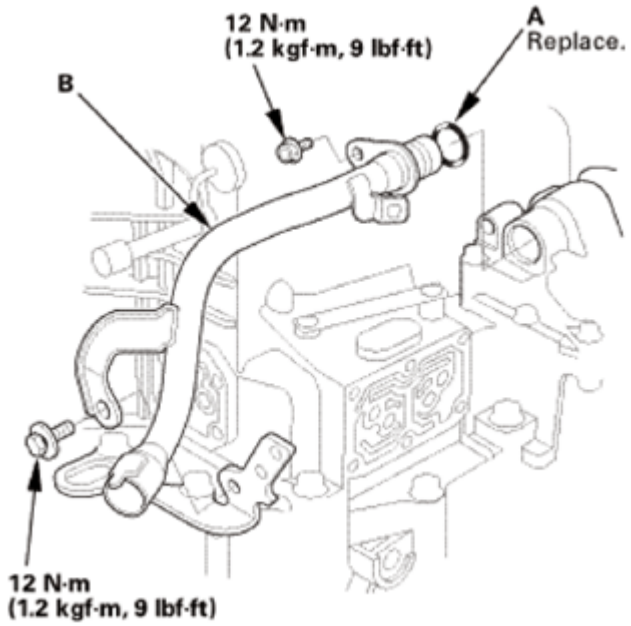

Fig. 2144: Identifying ATF Dipstick Guide Tube, O-Ring And Mounting Bolts With Torque Specification
Courtesy of AMERICAN HONDA MOTOR CO., INC.

18. ATF Outlet Line
    1. Install the ATF outlet line (A) using new sealing washers (B).

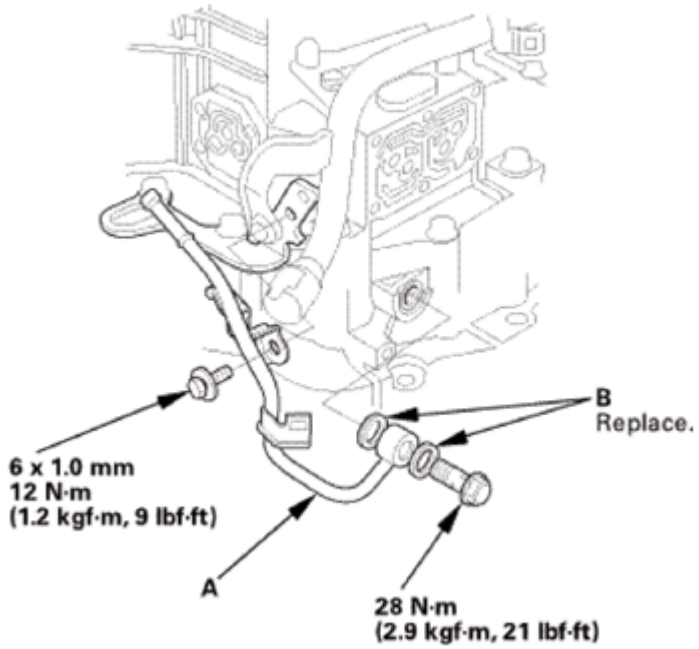

Fig. 2145: Identifying ATF Outlet Line, Sealing Washers And Mounting Bolts With Torque Specification
Courtesy of AMERICAN HONDA MOTOR CO., INC.

GETtheMANUALS.org

19. ATF Inlet Line
    1. Install the ATF inlet line (A) using new sealing washers (B).

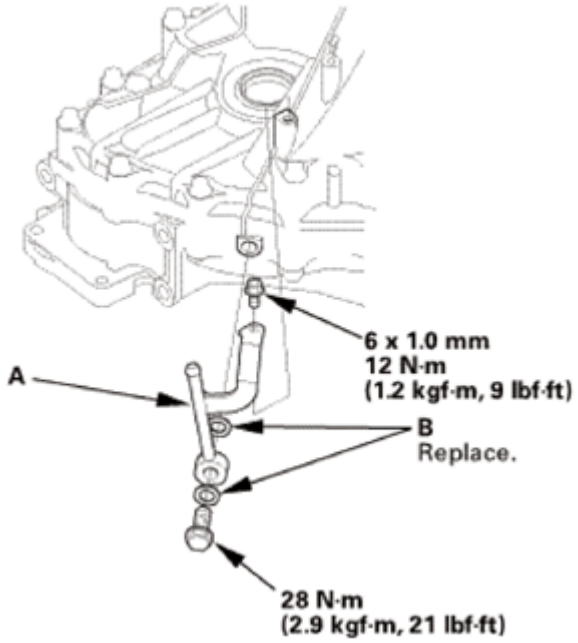

Fig. 2146: Identifying ATF Inlet Line, Sealing Washers And Mounting Bolts With Torque Specification
Courtesy of AMERICAN HONDA MOTOR CO., INC.

20. A/T Clutch Pressure Control Solenoid Valve B and C
    1. Clean the mounting surfaces and the fluid passages of the solenoid valve body and the transmission housing.
    2. Install a new gasket (A) with the blue side toward the transmission housing, and Install the ATF joint pipes (D).
    3. Install new O-rings (E) over the ATF joint pipes.
    4. Install A/T clutch pressure control solenoid valves B and C with the clamp bracket (F).

GETtheMANUALS.org

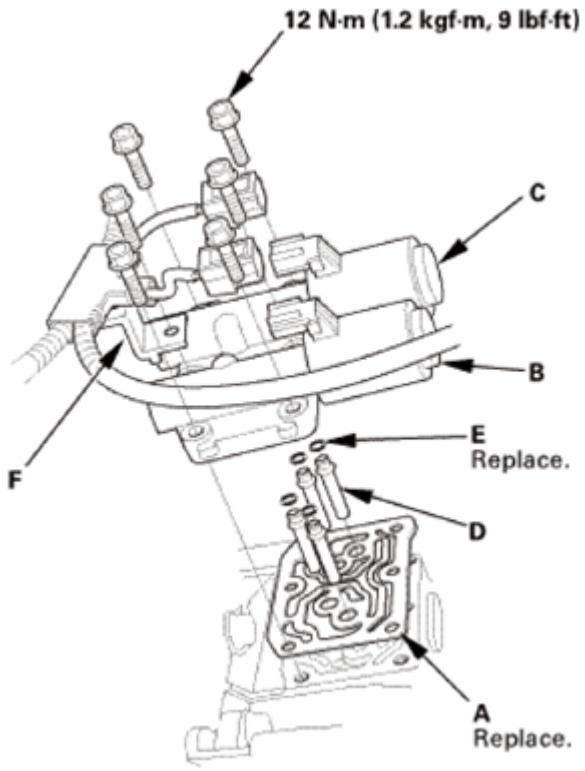

Fig. 2147: Identifying Gasket, ATF Joint Pipes, O-Rings, A/T Clutch Pressure Control Solenoid Valves, Clamp Bracket And Mounting Bolts With Torque Specification
Courtesy of AMERICAN HONDA MOTOR CO., INC.

21. A/T Clutch Pressure Control Solenoid Valve A
    1. Clean the mounting surfaces and the fluid passages of the solenoid valve body and the transmission housing.
    2. Install a new gasket (B) with the blue side toward the transmission housing, and install the 35 mm ATF pipe (C) and the ATF joint pipes (D).
    3. Install new O-rings (E) over the ATF joint pipes.
    4. Install A/T clutch pressure control solenoid valve A.

GETtheMANUALS.org

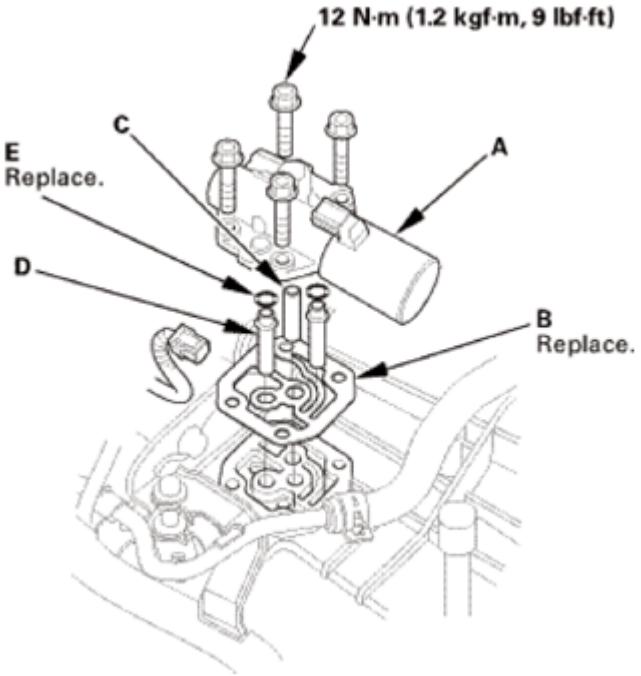

Fig. 2148: Identifying A/T Clutch Pressure Control Solenoid Valve, Gasket, ATF Pipe, ATF Joint Pipes And Mounting Bolts With Torque Specification
Courtesy of AMERICAN HONDA MOTOR CO., INC.

22. Output Shaft (Countershaft) Speed Sensor
    1. Install a new O-ring (A) on the output shaft (countershaft) speed sensor (B).
    2. Install the output shaft (countershaft) speed sensor and the sensor washer (C).

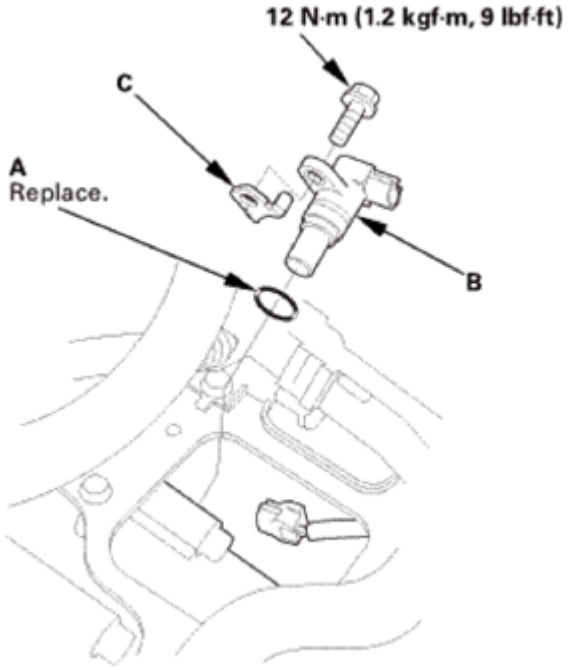

GETtheMANUALS.org

Fig. 2149: Identifying Output Shaft (Countershaft) Speed Sensor, O-Ring, Sensor Washer And Mounting Bolts With Torque Specification
Courtesy of AMERICAN HONDA MOTOR CO., INC.

23. Input Shaft (Mainshaft) Speed Sensor
    1. Install a new O-ring (A) on the input shaft (mainshaft) speed sensor (B).
    2. Install the input shaft (mainshaft) speed sensor.

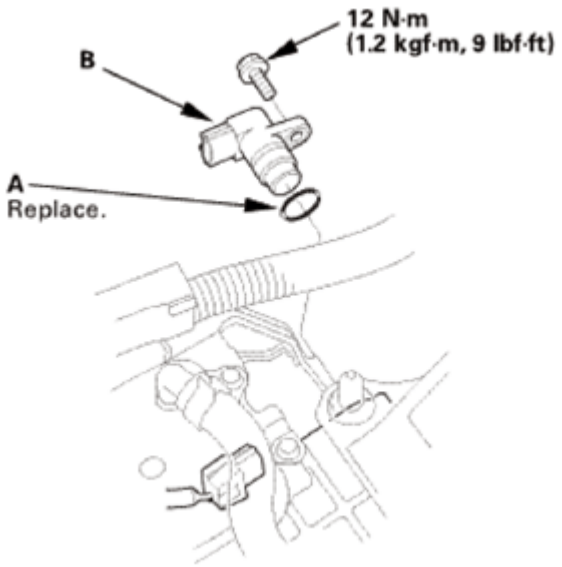

Fig. 2150: Identifying Input Shaft (Mainshaft) Speed Sensor, O-Ring And Mounting Bolt With Torque Specification
Courtesy of AMERICAN HONDA MOTOR CO., INC.

24. Transmission End Cover
    1. Install the dowel pins (A) and a new gasket (B).
    2. Install new O-rings (C) over the ATF pipes.
    3. Install the end cover (D), and tighten the three special bolts (E) and the 6 x 1.0 mm bolts (F) (12 bolts).

GETtheMANUALS.org

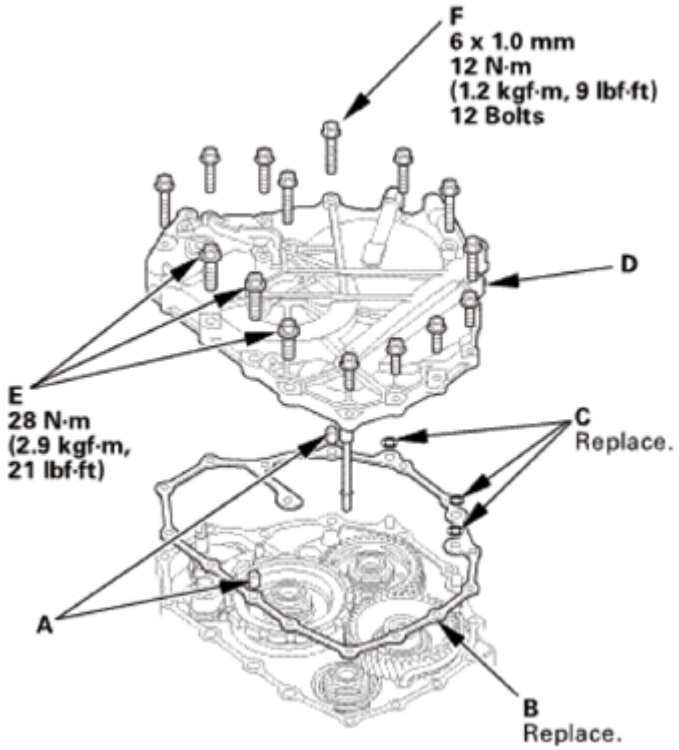

Fig. 2151: Identifying Dowel Pins, Gasket, O-Rings, End Cover And Mounting Bolts With Torque Specification
Courtesy of AMERICAN HONDA MOTOR CO., INC.

25. Transmission Range Switch Subharness
    1. Install the clamp brackets (A).
    2. Install the transmission range switch subharness (B).

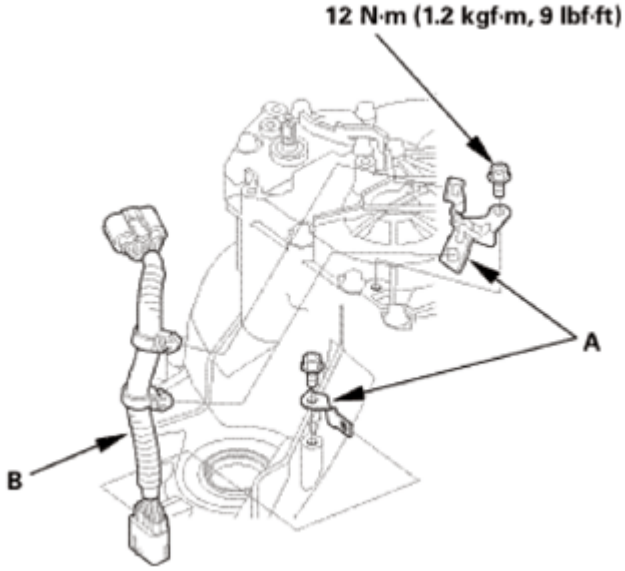

GETtheMANUALS.org

Fig. 2152: Identifying Transmission Range Switch Subharness, Clamp Brackets And Mounting Bolts With Torque Specification
Courtesy of AMERICAN HONDA MOTOR CO., INC.

26. Transmission Range Switch
    1. Make sure the selector control shaft is in the N position. If necessary, move the selector control shaft to the N position.

NOTE: **Do not use the selector control shaft to adjust the shift position. If the selector control shaft tips are squeezed together it will cause a faulty signal or position due to play between the selector control shaft and switch.**

Fig. 2153: Moving Selector Control Shaft To N Position
Courtesy of AMERICAN HONDA MOTOR CO., INC.

    2. Align the cutouts (A) on the rotary-frame with the neutral positioning cutouts (B) on the transmission range switch (C), then put a 2.0 mm (0.079 in) feeler gauge blade (D) in the cutouts to hold the switch in the N position.

NOTE: **Be sure to use a 2.0 mm (0.079 in) blade or equivalent to hold the switch in the N position.**

GETtheMANUALS.org

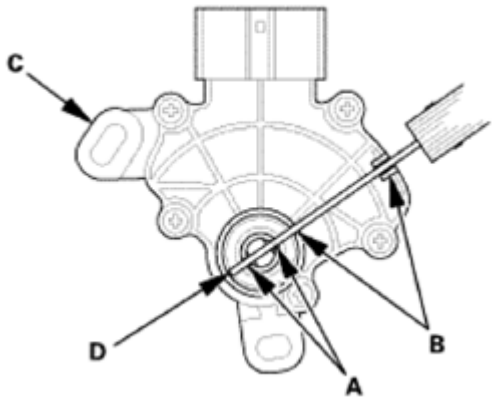

Fig. 2154: Aligning Cutouts On Rotary-Frame With Neutral Positioning Cutouts On Transmission Range Switch
Courtesy of AMERICAN HONDA MOTOR CO., INC.

3. Install the transmission range switch (A) gently on the selector control shaft (B) while holding it in the N position with the 2.0 mm (0.079 in) blade (C).

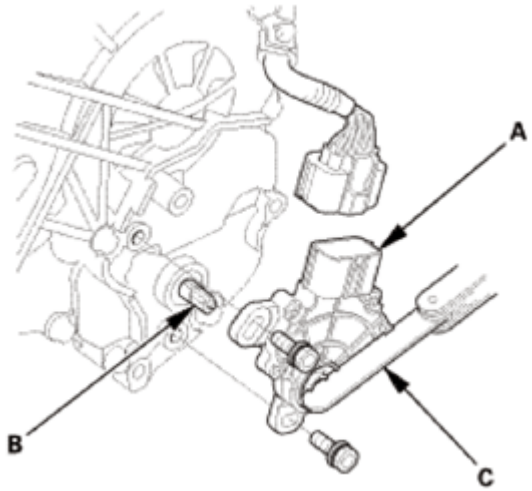

Fig. 2155: Identifying Transmission Range Switch, Selector Control Shaft And Blade
Courtesy of AMERICAN HONDA MOTOR CO., INC.

4. Tighten the bolts on the transmission range switch (A) while you continue holding the N position.

NOTE: **Do not move the transmission range switch when tightening the bolts.**

5. Remove the feeler gauge (B).
6. Check the connector (C) for corrosion, dirt, or oil, and clean or repair if necessary, then connect the connector securely.

GETtheMANUALS.org

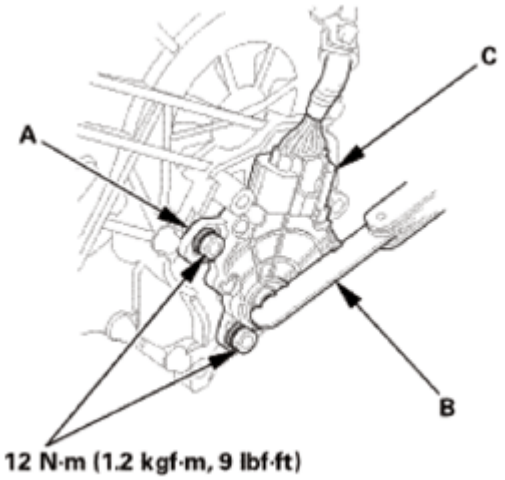

Fig. 2156: Identifying Transmission Range Switch, Connector, Feeler Gauge And Mounting Bolts With Torque Specification
Courtesy of AMERICAN HONDA MOTOR CO., INC.

27. Transmission Range Switch Cover
    1. Install the transmission range switch cover (A).

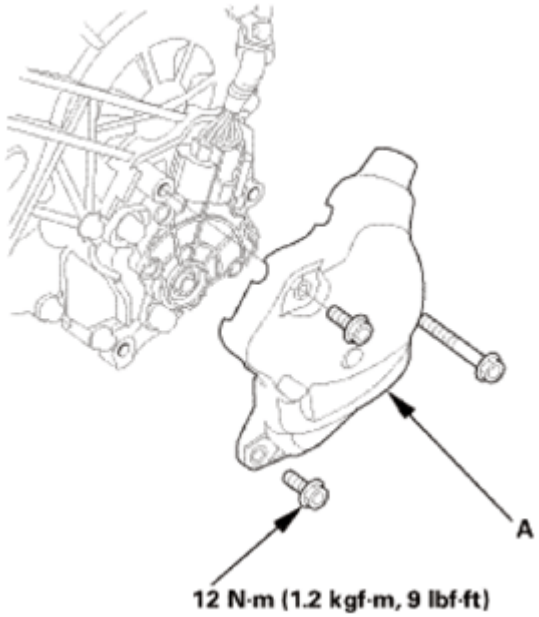

Fig. 2157: Identifying Transmission Range Switch Cover And Mounting Bolts With Torque Specification
Courtesy of AMERICAN HONDA MOTOR CO., INC.

TORQUE CONVERTER HOUSING SELECTOR CONTROL SHAFT OIL SEAL REPLACEMENT

GETtheMANUALS.org

SPECIAL TOOL REQUIRED

Image	Description/Tool Number
	Attachment, 22 x 24 mm 07746-001A800

REMOVAL

Except 2WD of USA Produced Models

1. Selector Control Lever (Except 2WD of USA Produced Models)
    1. Pry down the lock tab (A) of the lock washer (B).
    2. Remove the lock bolt (C) and the lock washer.
    3. Remove the selector control lever (D).

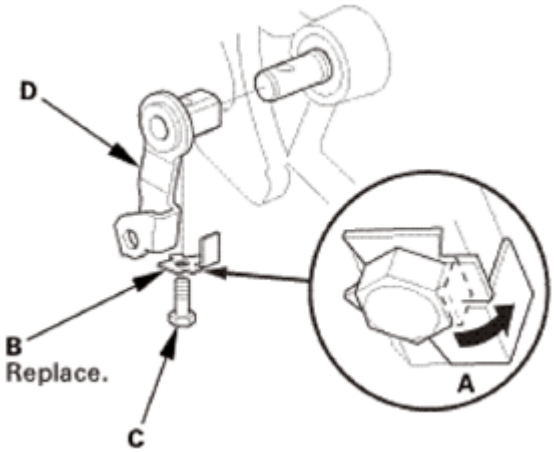

GETtheMANUALS.org

Fig. 2158: Prying Down Lock Tab Of Lock Washer (Except 2WD Of USA Produced Models)
Courtesy of AMERICAN HONDA MOTOR CO., INC.

2. Torque Converter Selector Control Shaft Oil Seal
    1. Remove the selector control shaft oil seal (A).

NOTE: **Be careful not to damage the selector control shaft and the torque converter housing when removing the oil seal.**

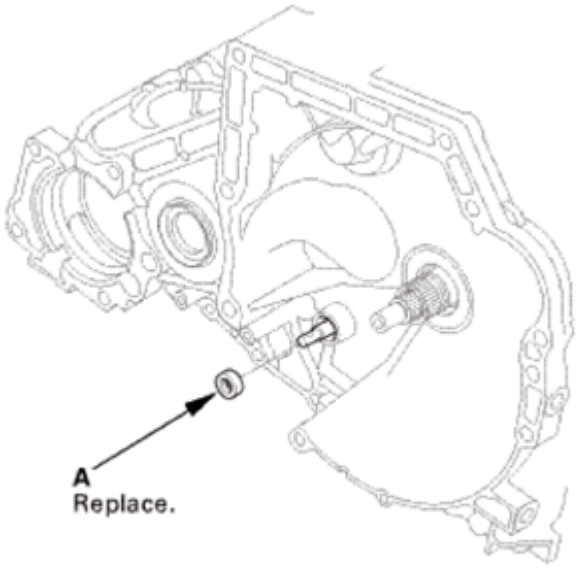

This illustration shows the AWD/4WD transmission.

Fig. 2159: Identifying Selector Control Shaft Oil Seal
Courtesy of AMERICAN HONDA MOTOR CO., INC.

INSTALLATION

1. Torque Converter Selector Control Shaft Oil Seal
    1. Install a new selector control shaft oil seal (A) to a depth (B) of 0.5-1.5 mm (0.020-0.059 in) below the torque converter housing surface using the 22 x 24 mm attachment.

GETtheMANUALS.org

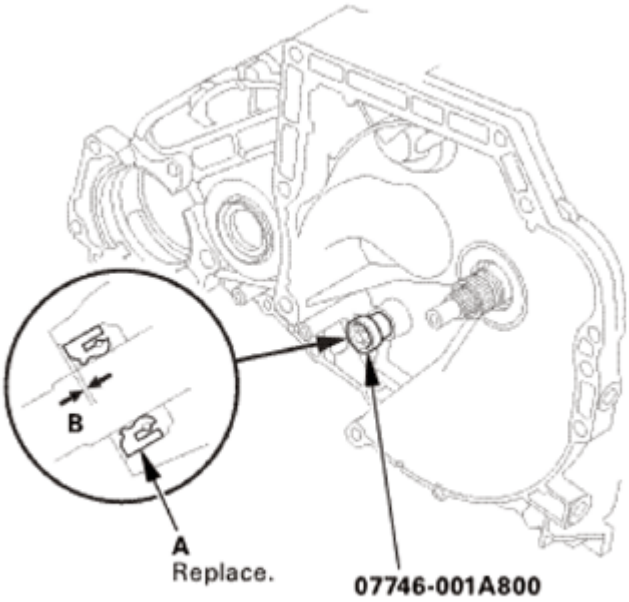

This illustration shows the AWD/4WD transmission.

Fig. 2160: Installing Selector Control Shaft Oil Seal
Courtesy of AMERICAN HONDA MOTOR CO., INC.

2. Selector Control Lever (Except 2WD of USA Produced Models)

Except 2WD of USA Produced Models

1. Install the control lever (A) over the selector control shaft (B).
2. Install the lock bolt (C) using a new lock washer (D).
3. Pry up the lock tab (E) of the lock washer against the bolt head.

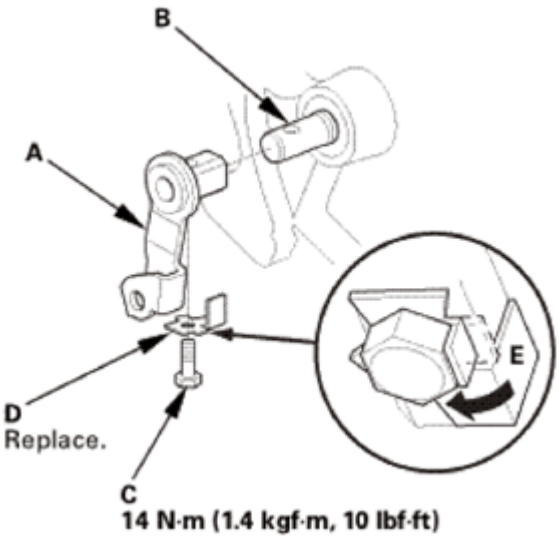

GETtheMANUALS.org

Fig. 2161: Prying Up Lock Tab Of Lock Washer (Except 2WD Of USA Produced Models)
Courtesy of AMERICAN HONDA MOTOR CO., INC.

TRANSMISSION END COVER ATF FEED PIPE INSPECTION

REMOVAL

1. Transmission Range Switch Cover
    1. Remove the transmission range switch cover (A).

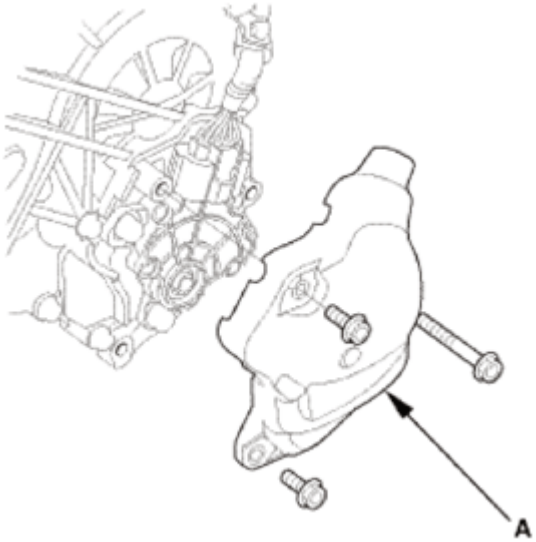

Fig. 2162: Identifying Transmission Range Switch Cover With Bolts
Courtesy of AMERICAN HONDA MOTOR CO., INC.

2. Transmission Range Switch
    1. Remove the transmission range switch (A).

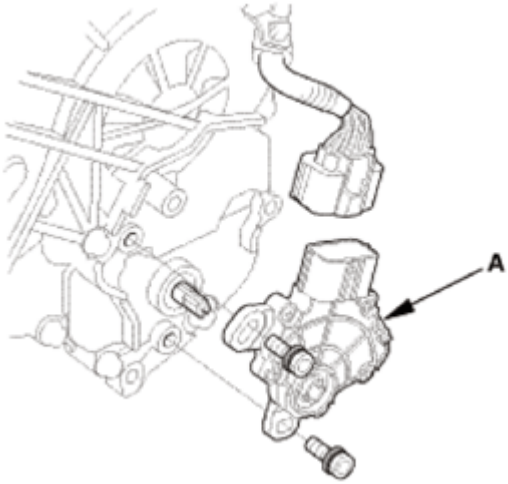

GETtheMANUALS.org

Fig. 2163: Identifying Transmission Range Switch With Bolts
Courtesy of AMERICAN HONDA MOTOR CO., INC.

3. Transmission Range Switch Subharness
    1. Remove the transmission range switch subharness (A).
    2. Remove the clamp brackets (B).

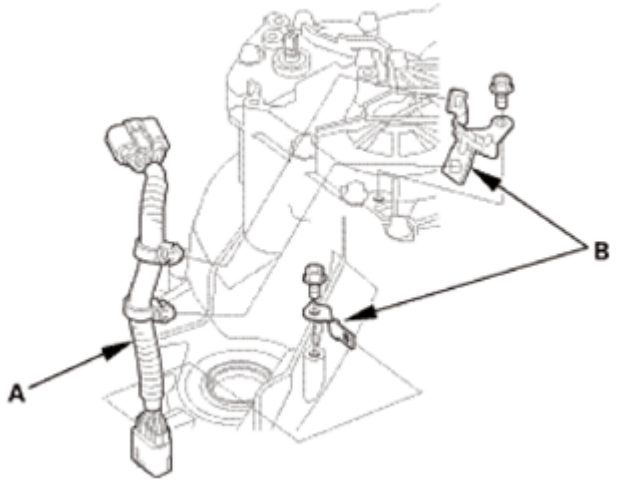

Fig. 2164: Identifying Transmission Range Switch Subharness And Clamp Brackets
Courtesy of AMERICAN HONDA MOTOR CO., INC.

4. Transmission End Cover
    1. Remove the end cover (A), the dowel pins (B), the O-rings (C), and the gasket (D).

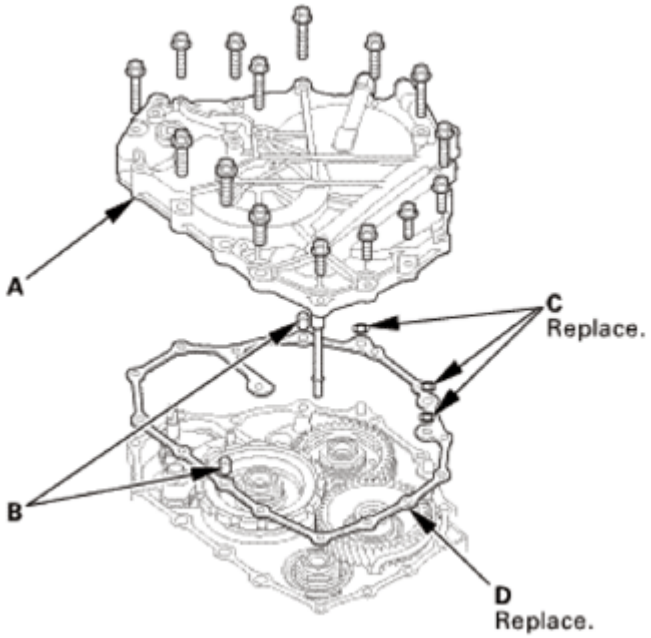

Fig. 2165: Identifying Transmission End Cover, Dowel Pins, O-Rings And Gasket With Bolts

GETtheMANUALS.org

Courtesy of AMERICAN HONDA MOTOR CO., INC.

5. ATF Feed Pipe
    1. Remove the snap ring (A).
    2. Remove the 3rd clutch feed pipe (B), the feed pipe flange (C), and the O-rings (D).

    NOTE: Replace the end cover, if the 1st clutch ATF feed pipe (E) replacement is required.

    3. Remove the snap ring (F).
    4. Remove the 5th clutch feed pipe (G), the feed pipe flange (H), and the O-rings (I).

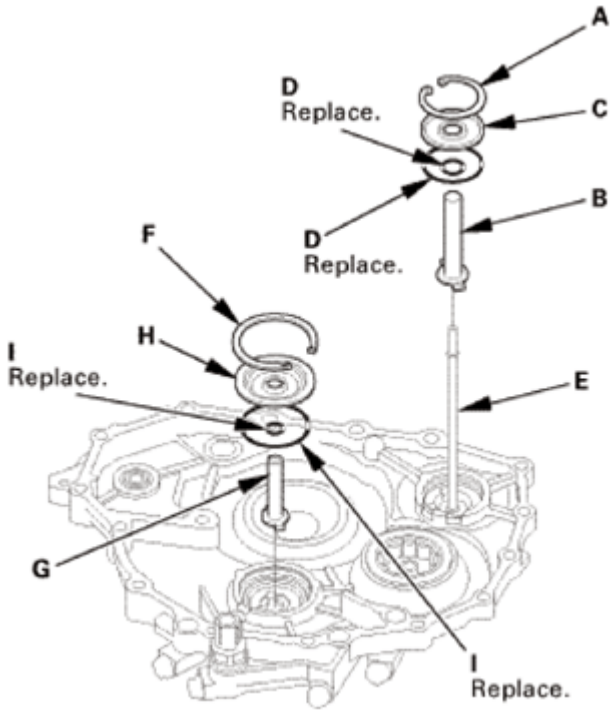

Fig. 2166: Identifying 5th Clutch Feed Pipe, Feed Pipe Flange, O-Rings, Snap Ring, 3rd Clutch Feed Pipe And 1st Clutch ATF Feed Pipe
Courtesy of AMERICAN HONDA MOTOR CO., INC.

INSPECTION

1. ATF Feed Pipe - Inspection
    1. Clean the fluid passage of the end cover, then check that it is not clogged.
    2. Check the 1st clutch ATF feed pipe, the 3rd clutch ATF feed pipe, the 5th clutch ATF feed pipe, and the feed pipe flanges for wear or damage. If the feed pipes and feed pipe flange are worn or damaged, replace the end cover.

    NOTE: The feed pipes, the feed pipe flange, and the end cover are supplied

GETtheMANUALS.org

as an assembly.

INSTALLATION

NOTE: Apply a light coat of clean ATF on all moving parts before installation.

1. ATF Feed Pipe
    1. Install a new O-ring (A) over the 3rd clutch feed pipe (B).
    2. Install the 3rd clutch feed pipe by aligning the feed pipe tabs (C) with the indentations in the end cover.
    3. Install a new O-ring (D), then install the feed pipe flange (E) over the 3rd clutch feed pipe.
    4. Secure the 3rd clutch feed pipe and the feed pipe flange with the snap ring (F).
    5. Install a new O-ring (G) over the 5th clutch feed pipe (H).
    6. Install the 5th clutch feed pipe by aligning the feed pipe tabs (I) with the indentations in the end cover.
    7. Install a new O-ring (J), then install the feed pipe flange (K) over the 5th clutch feed pipe.
    8. Secure the 5th clutch feed pipe and the feed pipe flange with the snap ring (L).

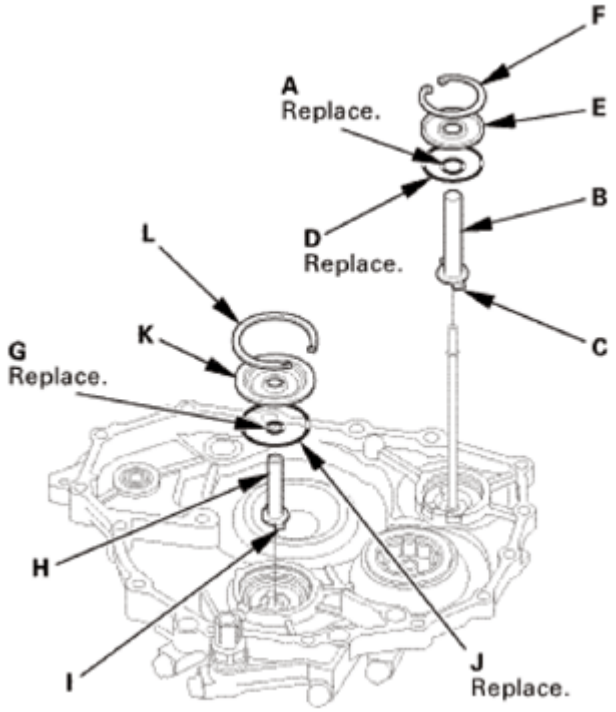

Fig. 2167: Identifying ATF Feed Pipe Related Components
Courtesy of AMERICAN HONDA MOTOR CO., INC.

2. Transmission End Cover
    1. Install the dowel pins (A) and a new gasket (B).

GETtheMANUALS.org

2. Install new O-rings (C) over the ATF pipes.
3. Install the end cover (D), and tighten the three special bolts (E) and the 6 x 1.0 mm bolts (F) (12 bolts).

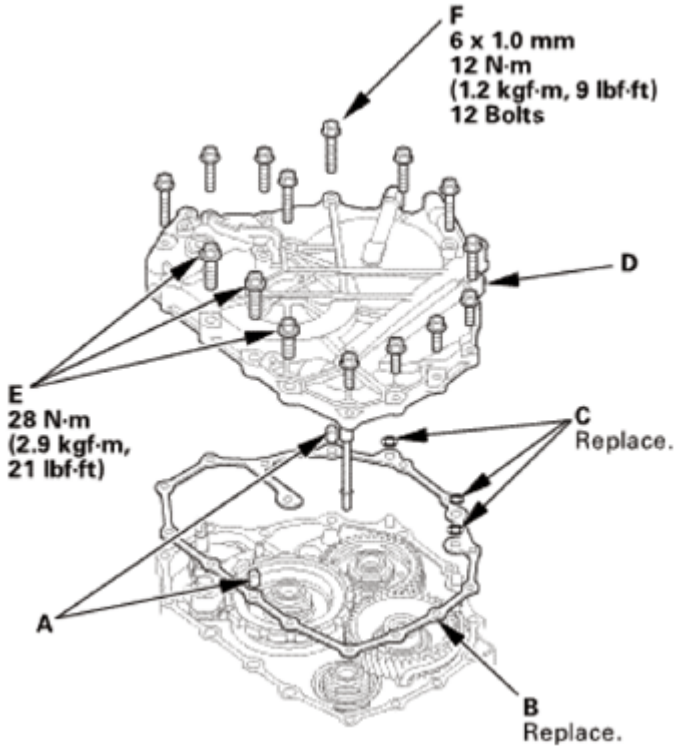

Fig. 2168: Identifying Dowel Pins, Gasket, O-Rings, End Cover And Mounting Bolts With Torque Specification
Courtesy of AMERICAN HONDA MOTOR CO., INC.

3. Transmission Range Switch Subharness
    1. Install the clamp brackets (A).
    2. Install the transmission range switch subharness (B).

GETtheMANUALS.org

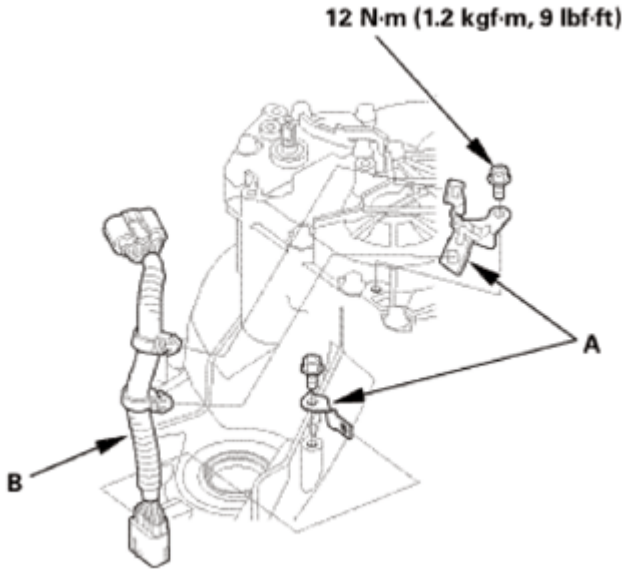

Fig. 2169: Identifying Transmission Range Switch Subharness, Clamp Brackets And Mounting Bolts With Torque Specification
Courtesy of AMERICAN HONDA MOTOR CO., INC.

4. Transmission Range Switch
    1. Make sure the selector control shaft is in the N position. If necessary, move the selector control shaft to the N position.

NOTE: **Do not use the selector control shaft to adjust the shift position. If the selector control shaft tips are squeezed together it will cause a faulty signal or position due to play between the selector control shaft and switch.**

Fig. 2170: Moving Selector Control Shaft To N Position
Courtesy of AMERICAN HONDA MOTOR CO., INC.

GETtheMANUALS.org

2. Align the cutouts (A) on the rotary-frame with the neutral positioning cutouts (B) on the transmission range switch (C), then put a 2.0 mm (0.079 in) feeler gauge blade (D) in the cutouts to hold the switch in the N position.

NOTE: Be sure to use a 2.0 mm (0.079 in) blade or equivalent to hold the switch in the N position.

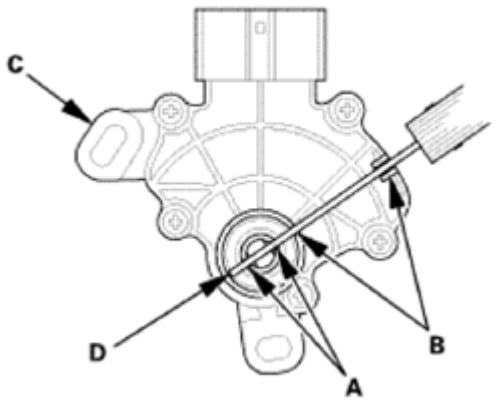

Fig. 2171: Aligning Cutouts On Rotary-Frame With Neutral Positioning Cutouts On Transmission Range Switch
Courtesy of AMERICAN HONDA MOTOR CO., INC.

3. Install the transmission range switch (A) gently on the selector control shaft (B) while holding it in the N position with the 2.0 mm (0.079 in) blade (C).

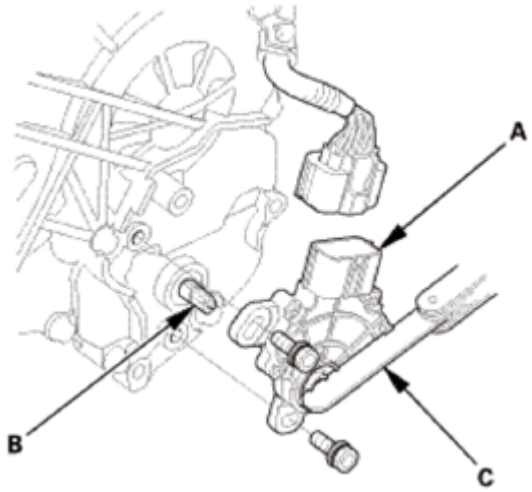

Fig. 2172: Identifying Transmission Range Switch, Selector Control Shaft And Blade
Courtesy of AMERICAN HONDA MOTOR CO., INC.

4. Tighten the bolts on the transmission range switch (A) while you continue holding the N position.

NOTE: Do not move the transmission range switch when tightening the

GETtheMANUALS.org

bolts.

5. Remove the feeler gauge (B).
6. Check the connector (C) for corrosion, dirt, or oil, and clean or repair if necessary, then connect the connector securely.

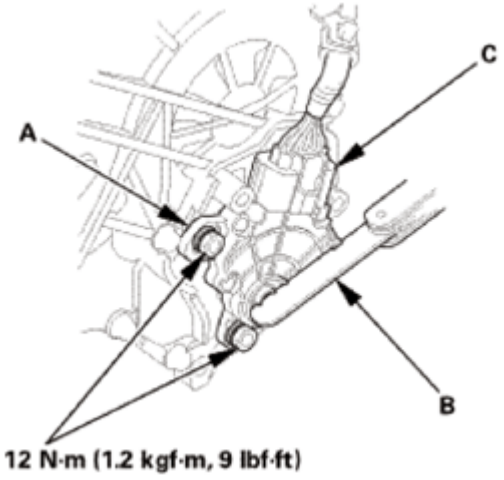

Fig. 2173: Identifying Transmission Range Switch, Connector, Feeler Gauge And Mounting Bolts With Torque Specification
Courtesy of AMERICAN HONDA MOTOR CO., INC.

5. Transmission Range Switch Cover
   1. Install the transmission range switch cover (A).

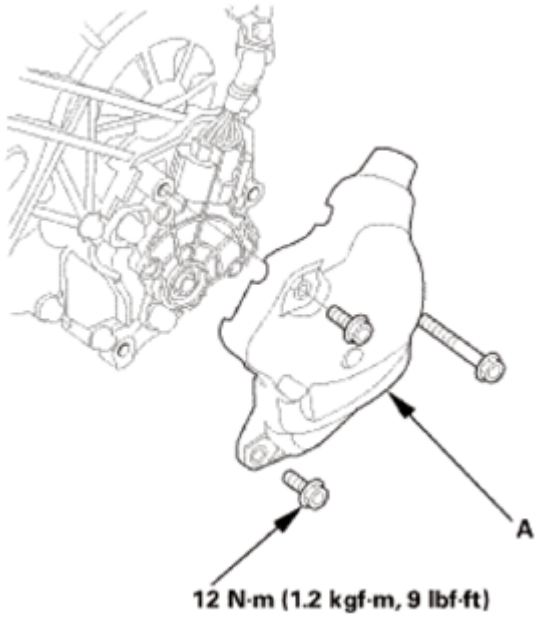

Fig. 2174: Identifying Transmission Range Switch Cover And Mounting Bolts With Torque

GETtheMANUALS.org

Specification
Courtesy of AMERICAN HONDA MOTOR CO., INC.

TRANSMISSION END COVER IDLER GEAR SHAFT BEARING REPLACEMENT

SPECIAL TOOL REQUIRED

Image	Description/Tool Number
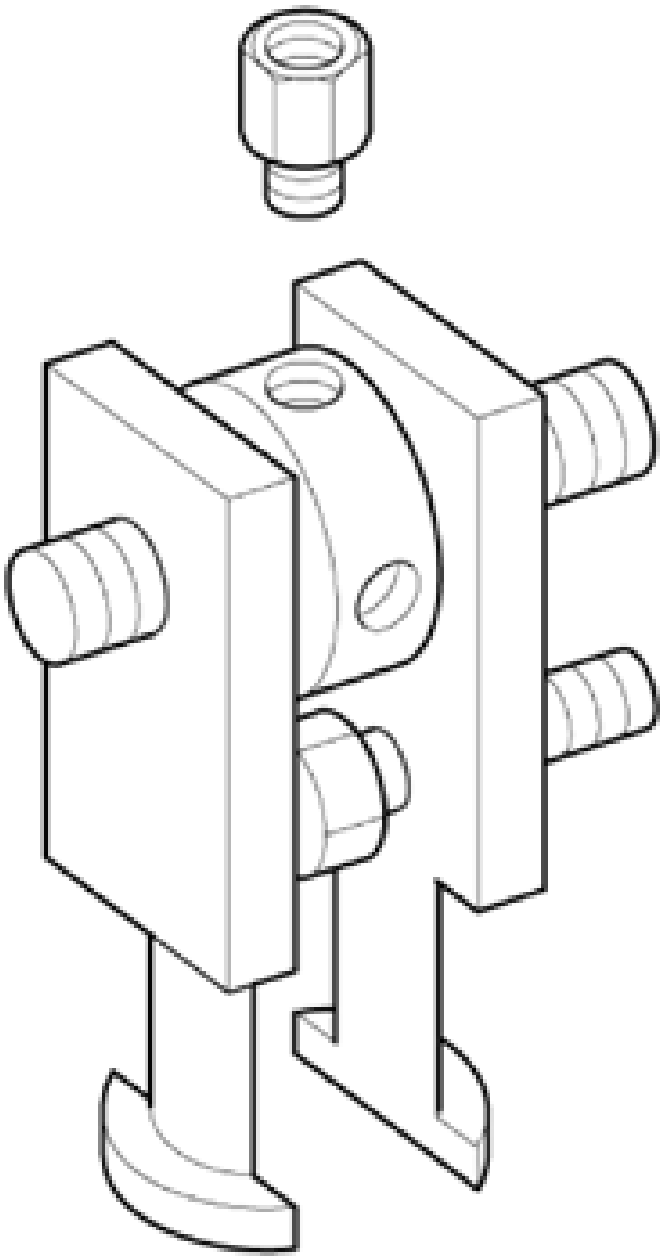	Adjustable Bearing Puller, 25-40 mm 07736-A01000B(1)

GETtheMANUALS.org

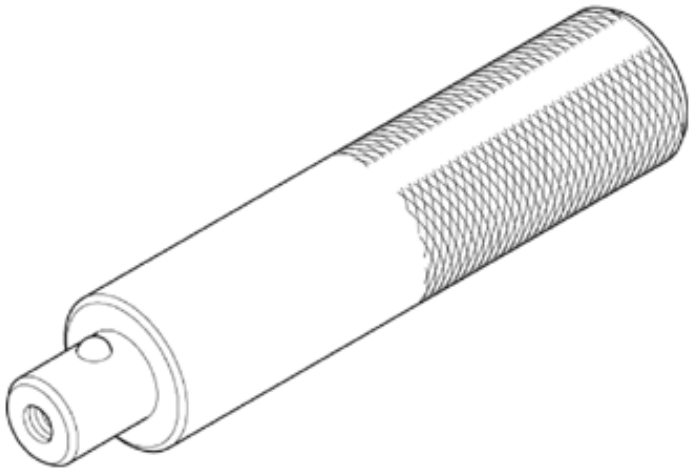	Driver Handle, 15 x 135L 07749-0010000
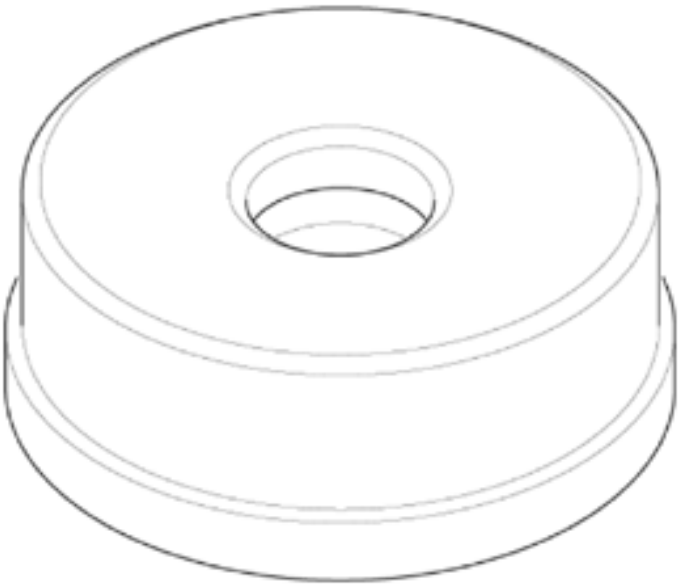	Bearing Driver Attachment, 52 x 55 mm 07746-0010400
(1) Must be used with commercially available 3/8"-16 slide hammer	

REMOVAL

1. Transmission Range Switch Cover
    1. Remove the transmission range switch cover (A).

GETtheMANUALS.org

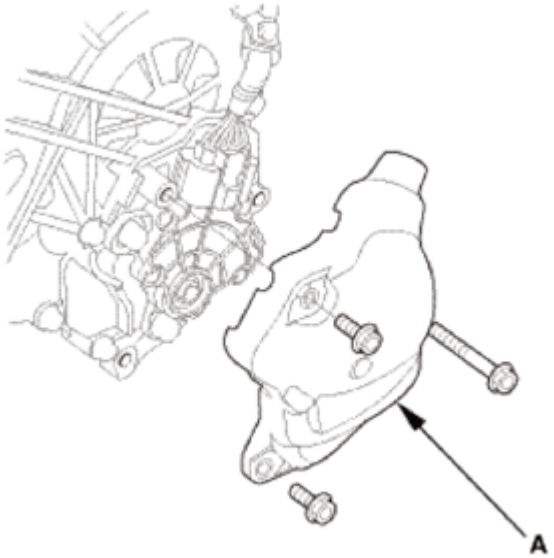

Fig. 2175: Identifying Transmission Range Switch Cover With Bolts
Courtesy of AMERICAN HONDA MOTOR CO., INC.

2. Transmission Range Switch
    1. Remove the transmission range switch (A).

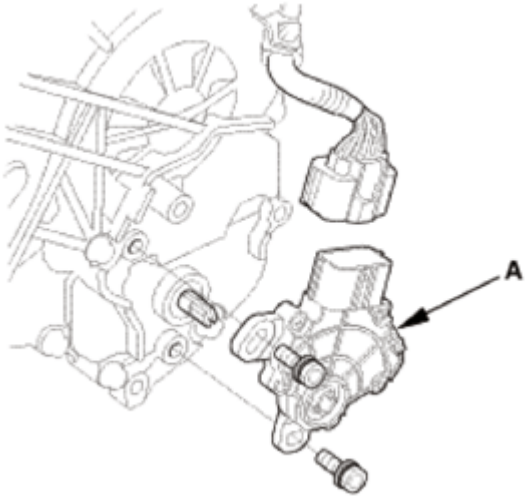

Fig. 2176: Identifying Transmission Range Switch With Bolts
Courtesy of AMERICAN HONDA MOTOR CO., INC.

3. Transmission Range Switch Subharness
    1. Remove the transmission range switch subharness (A).
    2. Remove the clamp brackets (B).

GETtheMANUALS.org

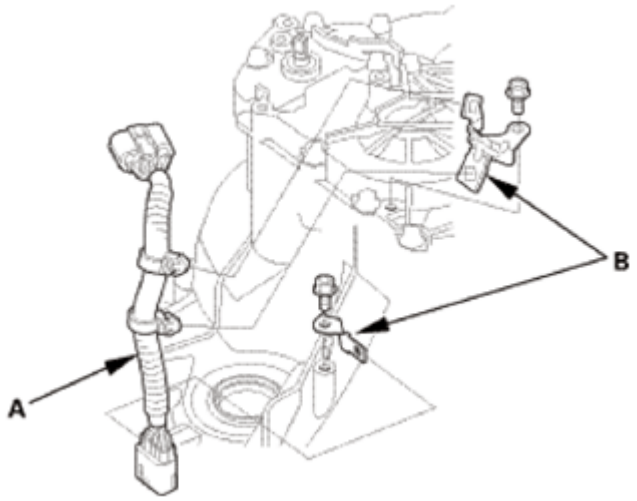

Fig. 2177: Identifying Transmission Range Switch Subharness And Clamp Brackets
Courtesy of AMERICAN HONDA MOTOR CO., INC.

4. Transmission End Cover
    1. Remove the end cover (A), the dowel pins (B), the O-rings (C), and the gasket (D).

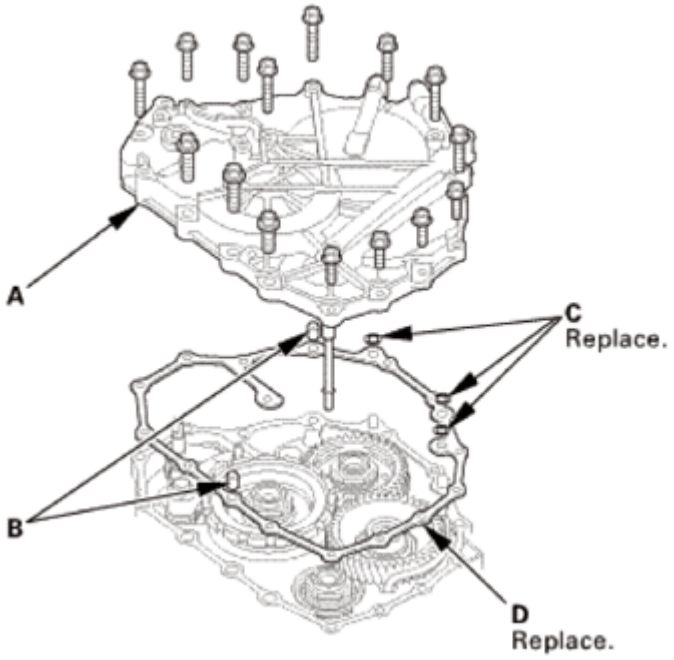

Fig. 2178: Identifying Transmission End Cover, Dowel Pins, O-Rings And Gasket With Bolts
Courtesy of AMERICAN HONDA MOTOR CO., INC.

5. Transmission End Cover Idler Gear Shaft Bearing
    1. Remove the idler gear shaft bearing (A) using the 25-40 mm adjustable bearing puller and a commercially available 3/8"-16 slide hammer (B).

GETtheMANUALS.org

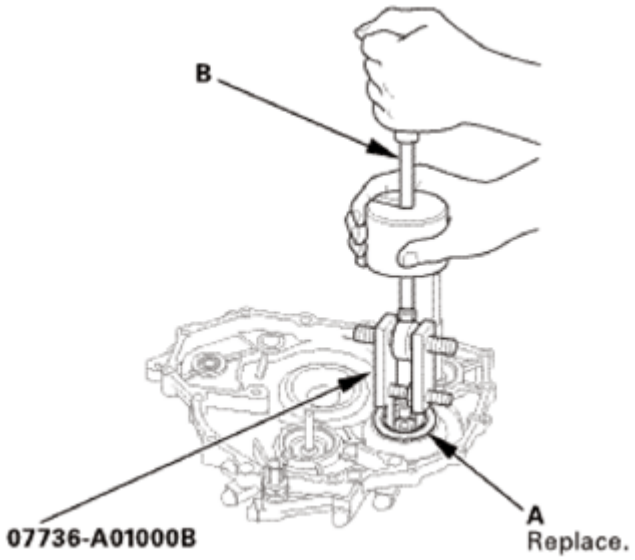

Fig. 2179: Removing Idler Gear Shaft Bearing Using Adjustable Bearing Puller And Commercially Available Slide Hammer
Courtesy of AMERICAN HONDA MOTOR CO., INC.

INSTALLATION

NOTE: Apply a light coat of clean ATF on all moving parts before installation.

1. Transmission End Cover Idler Gear Shaft Bearing
    1. Install a new idler gear shaft bearing (A) using the driver handle and the 52 x 55 mm bearing driver attachment.

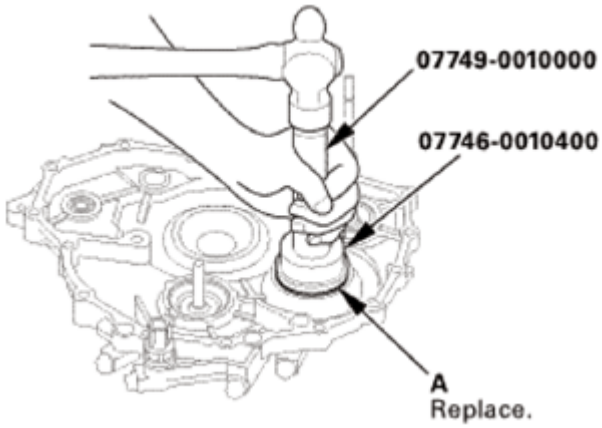

Fig. 2180: Installing Idler Gear Shaft Bearing Using Driver Handle And Bearing Driver Attachment
Courtesy of AMERICAN HONDA MOTOR CO., INC.

2. Transmission End Cover

GETtheMANUALS.org

1. Install the dowel pins (A) and a new gasket (B).
2. Install new O-rings (C) over the ATF pipes.
3. Install the end cover (D), and tighten the three special bolts (E) and the 6 x 1.0 mm bolts (F) (12 bolts).

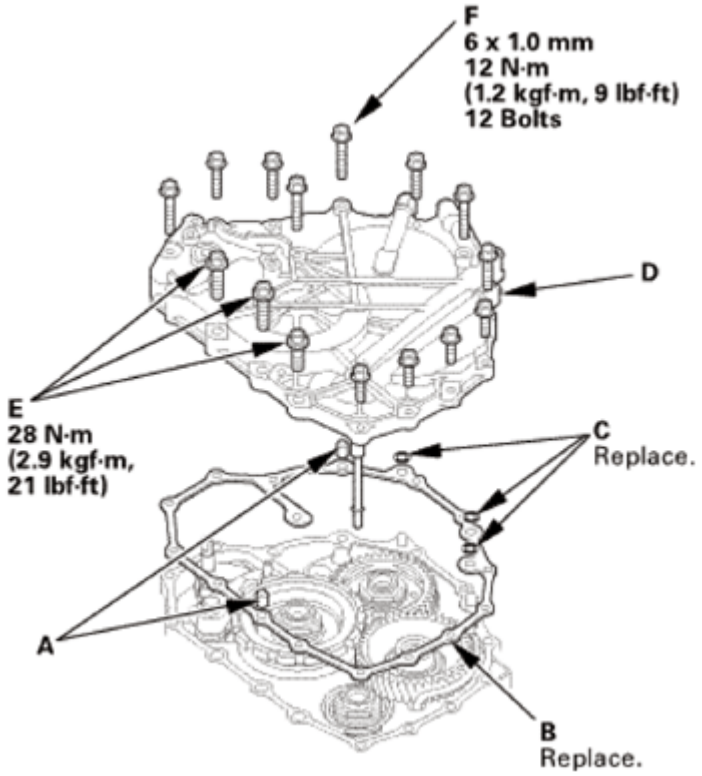

Fig. 2181: Identifying Dowel Pins, Gasket, O-Rings, End Cover And Mounting Bolts With Torque Specification
Courtesy of AMERICAN HONDA MOTOR CO., INC.

3. Transmission Range Switch Subharness
   1. Install the clamp brackets (A).
   2. Install the transmission range switch subharness (B).

GETtheMANUALS.org

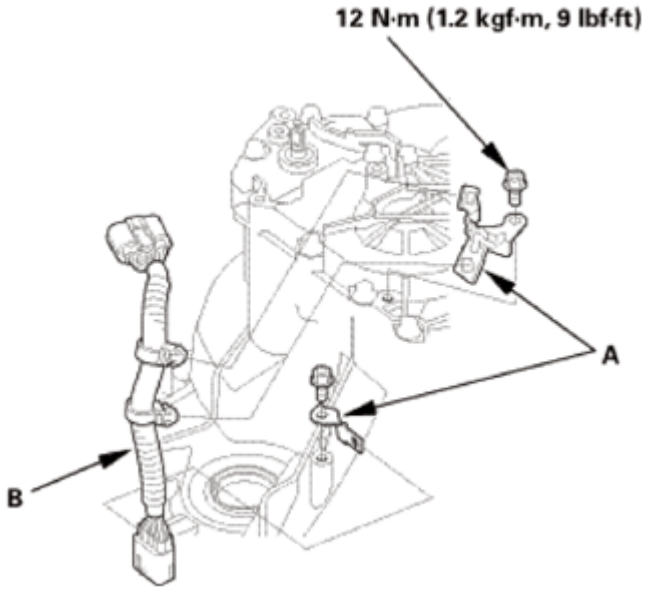

Fig. 2182: Identifying Transmission Range Switch Subharness, Clamp Brackets And Mounting Bolts With Torque Specification
Courtesy of AMERICAN HONDA MOTOR CO., INC.

4. Transmission Range Switch
    1. Make sure the selector control shaft is in the N position. If necessary, move the selector control shaft to the N position.

NOTE: **Do not use the selector control shaft to adjust the shift position. If the selector control shaft tips are squeezed together it will cause a faulty signal or position due to play between the selector control shaft and switch.**

Fig. 2183: Moving Selector Control Shaft To N Position
Courtesy of AMERICAN HONDA MOTOR CO., INC.

GETtheMANUALS.org

2. Align the cutouts (A) on the rotary-frame with the neutral positioning cutouts (B) on the transmission range switch (C), then put a 2.0 mm (0.079 in) feeler gauge blade (D) in the cutouts to hold the switch in the N position.

NOTE: Be sure to use a 2.0 mm (0.079 in) blade or equivalent to hold the switch in the N position.

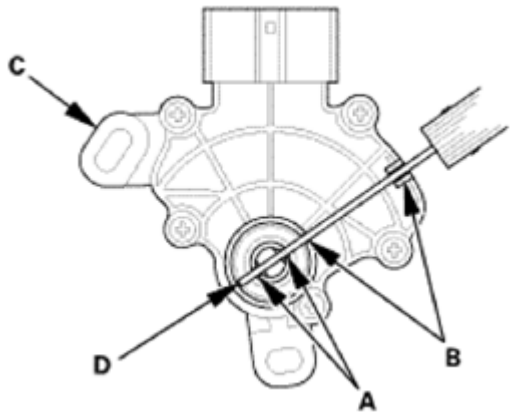

Fig. 2184: Aligning Cutouts On Rotary-Frame With Neutral Positioning Cutouts On Transmission Range Switch
Courtesy of AMERICAN HONDA MOTOR CO., INC.

3. Install the transmission range switch (A) gently on the selector control shaft (B) while holding it in the N position with the 2.0 mm (0.079 in) blade (C).

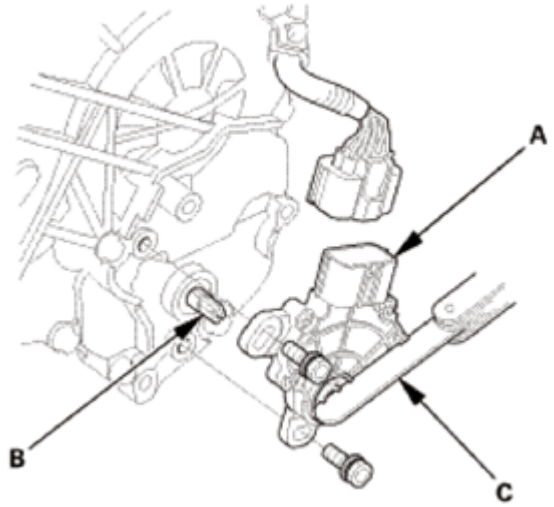

Fig. 2185: Identifying Transmission Range Switch, Selector Control Shaft And Blade
Courtesy of AMERICAN HONDA MOTOR CO., INC.

4. Tighten the bolts on the transmission range switch (A) while you continue holding the N position.

GETtheMANUALS.org

NOTE: **Do not move the transmission range switch when tightening the bolts.**

5. Remove the feeler gauge (B).
6. Check the connector (C) for corrosion, dirt, or oil, and clean or repair if necessary, then connect the connector securely.

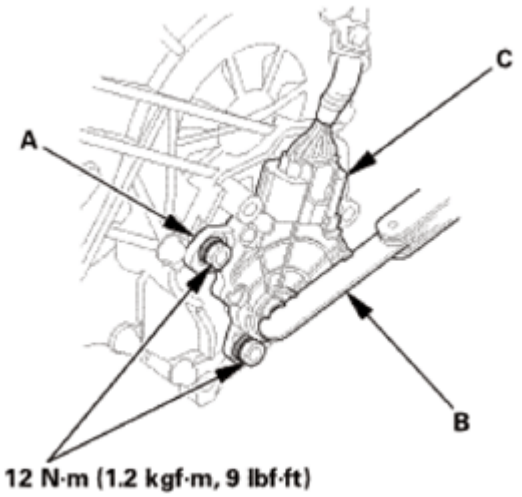

Fig. 2186: Identifying Transmission Range Switch, Connector, Feeler Gauge And Mounting Bolts With Torque Specification
Courtesy of AMERICAN HONDA MOTOR CO., INC.

5. Transmission Range Switch Cover
   1. Install the transmission range switch cover (A).

GETtheMANUALS.org

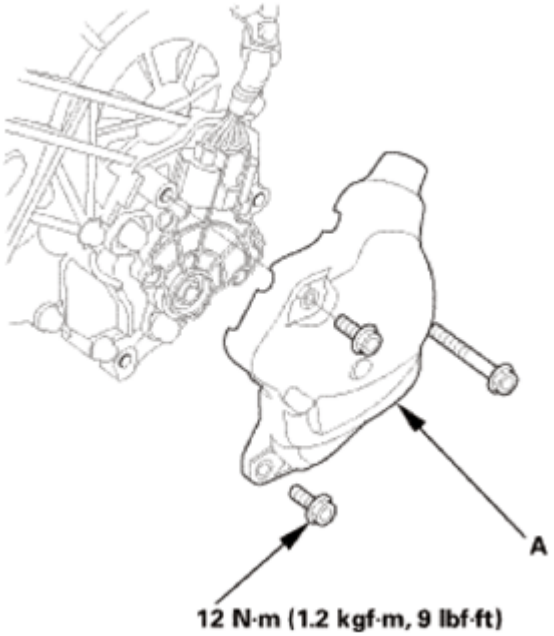

Fig. 2187: Identifying Transmission Range Switch Cover And Mounting Bolts With Torque Specification
Courtesy of AMERICAN HONDA MOTOR CO., INC.

TRANSMISSION END COVER PARK LEVER STOP INSPECTION AND ADJUSTMENT

REMOVAL

1. Transmission Range Switch Cover
    1. Remove the transmission range switch cover (A).

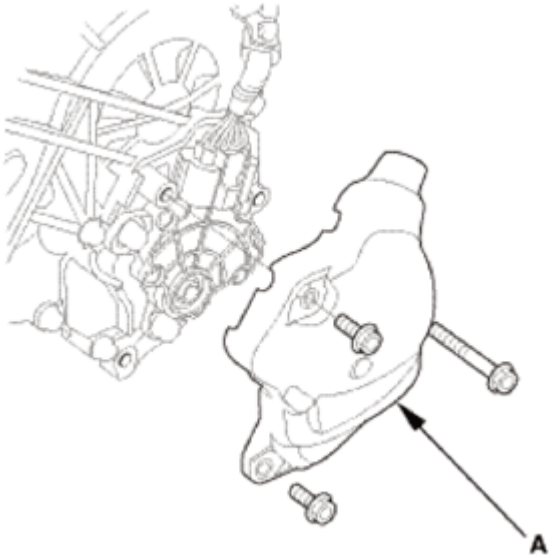

GETtheMANUALS.org

Fig. 2188: Identifying Transmission Range Switch Cover With Bolts
Courtesy of AMERICAN HONDA MOTOR CO., INC.

2. Transmission Range Switch
    1. Remove the transmission range switch (A).

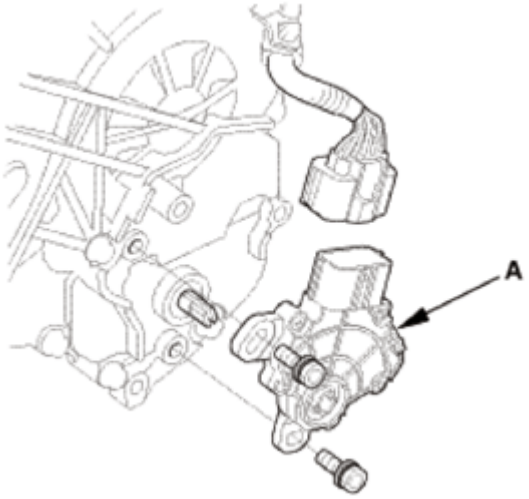

Fig. 2189: Identifying Transmission Range Switch With Bolts
Courtesy of AMERICAN HONDA MOTOR CO., INC.

3. Transmission Range Switch Subharness
    1. Remove the transmission range switch subharness (A).
    2. Remove the clamp brackets (B).

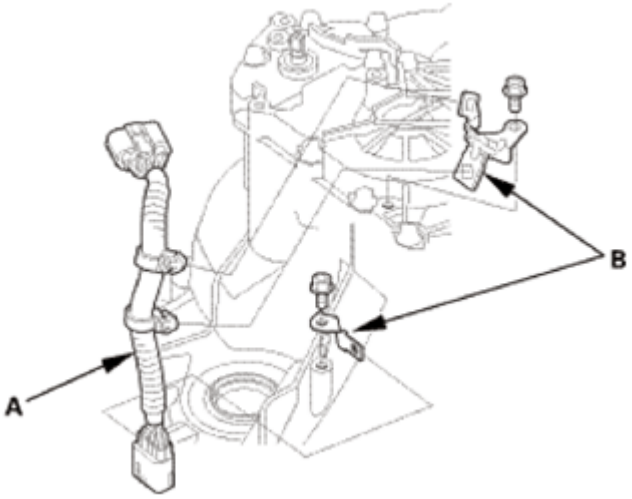

Fig. 2190: Identifying Transmission Range Switch Subharness And Clamp Brackets
Courtesy of AMERICAN HONDA MOTOR CO., INC.

4. Transmission End Cover

GETtheMANUALS.org

1. Remove the end cover (A), the dowel pins (B), the O-rings (C), and the gasket (D).

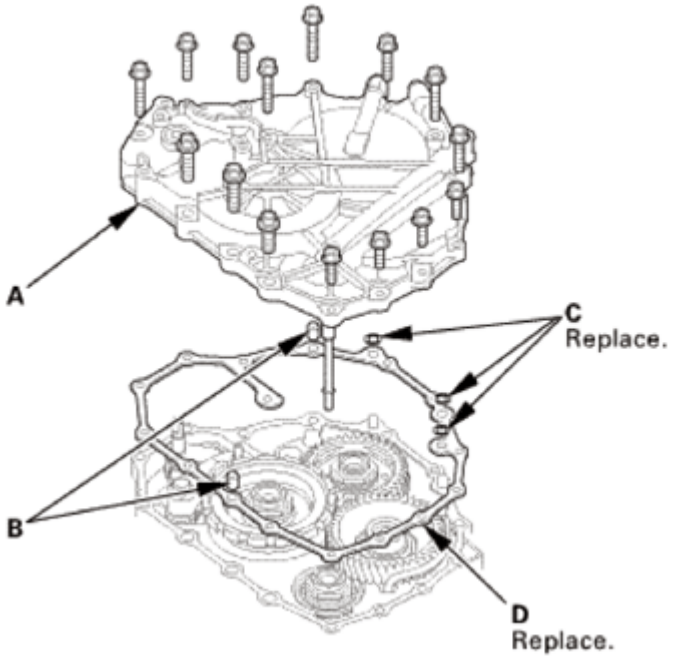

Fig. 2191: Identifying Transmission End Cover, Dowel Pins, O-Rings And Gasket With Bolts
Courtesy of AMERICAN HONDA MOTOR CO., INC.

ADJUSTMENT

NOTE: Apply a light coat of clean ATF on all moving parts before installation.

1. Park Lever Stop - Inspection and Adjustment
    1. Set the park lever in the P position.
    2. Measure the distance (A) between the center of the park pawl shaft (B) and the center of the park lever roller pin (C) as shown.

       Standard: 57.7-58.7 mm (2.272-2.311 in)

    3. If the measurement is out of the standard, remove the park lever stop to adjust the distance.

GETtheMANUALS.org

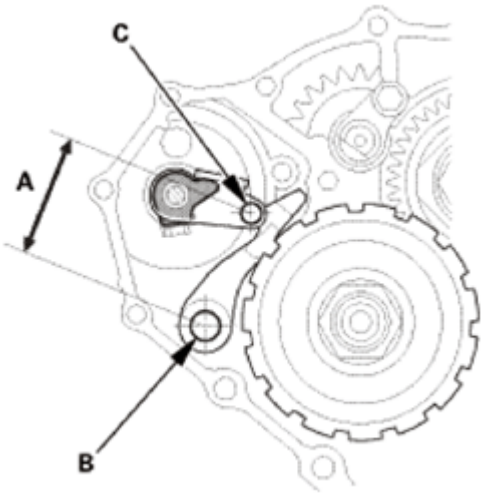

Fig. 2192: Measuring Distance Between Center Of Park Pawl Shaft And Center Of Park Lever Roller Pin
Courtesy of AMERICAN HONDA MOTOR CO., INC.

4. Remove the park pawl (A), the park pawl spring (B), the park pawl shaft (C), and the stop shaft (D).
5. Pry down the lock tap (E) of the lock washer (F).
6. Remove the lock bolt (G) and the lock washer.
7. Remove the park lever (H), the park lever stop (I), and the park lever spring (J).

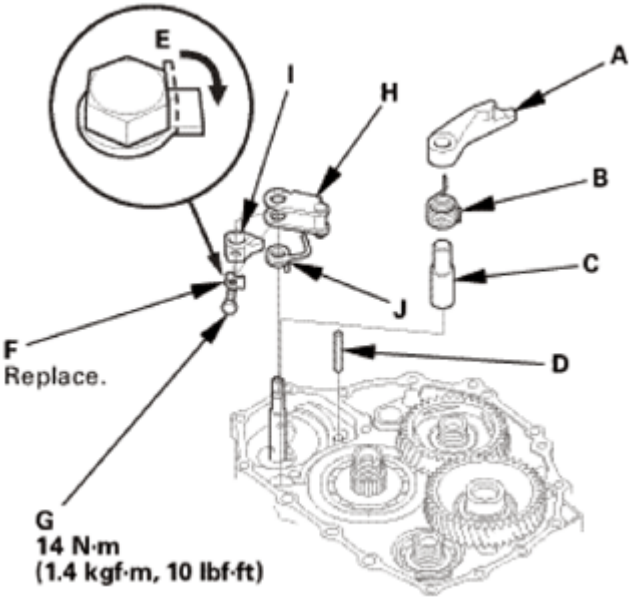

Fig. 2193: Prying Down Lock Tap Of Lock Washer
Courtesy of AMERICAN HONDA MOTOR CO., INC.

8. Select and install the appropriate park lever stop (A) from the table.

GETtheMANUALS.org

PARK LEVER STOP SPECIFICATION

Mark	B	C
1	11.00 mm (0.4331 in)	11.00 mm (0.4331 in)
2	10.80 mm (0.4252 in)	10.65 mm (0.4193 in)
3	10.60 mm (0.4173 in)	10.30 mm (0.4055 in)

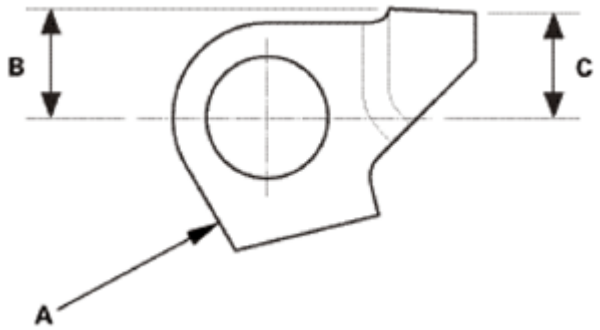

Fig. 2194: Identifying Park Lever Stop Dimension
Courtesy of AMERICAN HONDA MOTOR CO., INC.

9. After replacing the park lever stop, make sure the distance is within the tolerance.

INSTALLATION

1. Transmission End Cover
    1. Install the dowel pins (A) and a new gasket (B).
    2. Install new O-rings (C) over the ATF pipes.
    3. Install the end cover (D), and tighten the three special bolts (E) and the 6 x 1.0 mm bolts (F) (12 bolts).

GETtheMANUALS.org

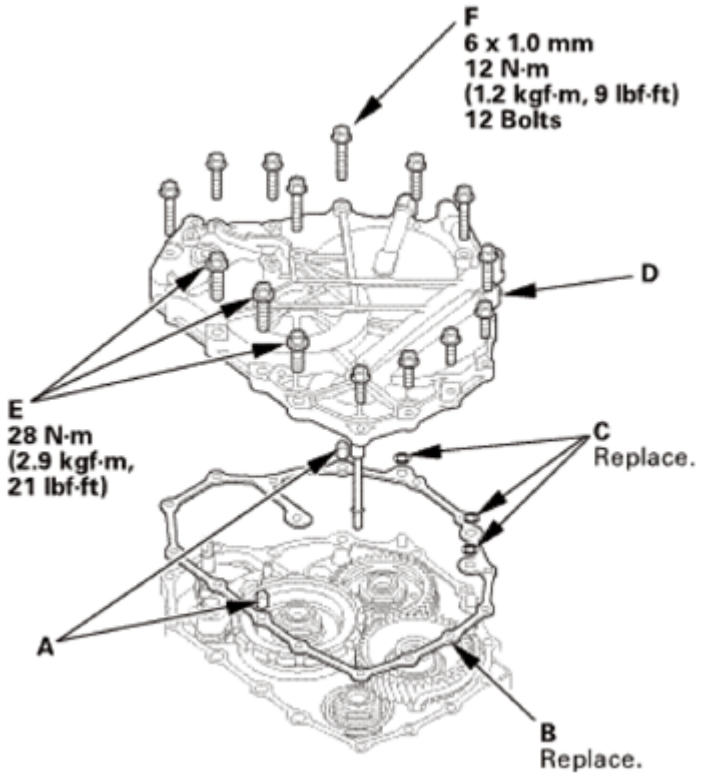

Fig. 2195: Identifying Dowel Pins, Gasket, O-Rings, End Cover And Mounting Bolts With Torque Specification
Courtesy of AMERICAN HONDA MOTOR CO., INC.

2. Transmission Range Switch Subharness
    1. Install the clamp brackets (A).
    2. Install the transmission range switch subharness (B).

GETtheMANUALS.org

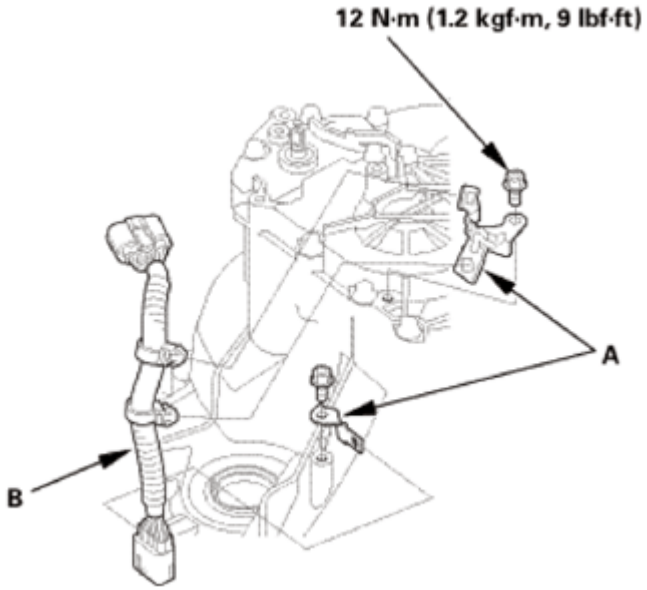

Fig. 2196: Identifying Transmission Range Switch Subharness, Clamp Brackets And Mounting Bolts With Torque Specification
Courtesy of AMERICAN HONDA MOTOR CO., INC.

3. Transmission Range Switch
    1. Make sure the selector control shaft is in the N position. If necessary, move the selector control shaft to the N position.

NOTE: **Do not use the selector control shaft to adjust the shift position. If the selector control shaft tips are squeezed together it will cause a faulty signal or position due to play between the selector control shaft and switch.**

Fig. 2197: Moving Selector Control Shaft To N Position
Courtesy of AMERICAN HONDA MOTOR CO., INC.

GETtheMANUALS.org

2. Align the cutouts (A) on the rotary-frame with the neutral positioning cutouts (B) on the transmission range switch (C), then put a 2.0 mm (0.079 in) feeler gauge blade (D) in the cutouts to hold the switch in the N position.

NOTE: Be sure to use a 2.0 mm (0.079 in) blade or equivalent to hold the switch in the N position.

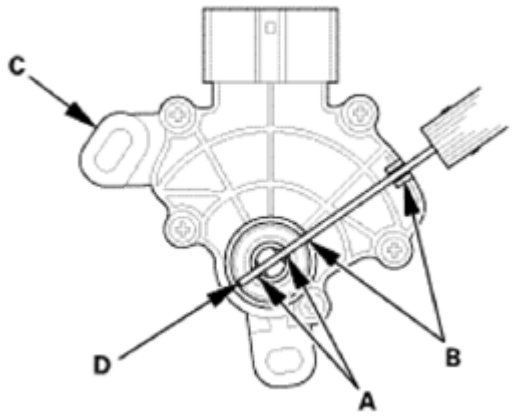

Fig. 2198: Aligning Cutouts On Rotary-Frame With Neutral Positioning Cutouts On Transmission Range Switch
Courtesy of AMERICAN HONDA MOTOR CO., INC.

3. Install the transmission range switch (A) gently on the selector control shaft (B) while holding it in the N position with the 2.0 mm (0.079 in) blade (C).

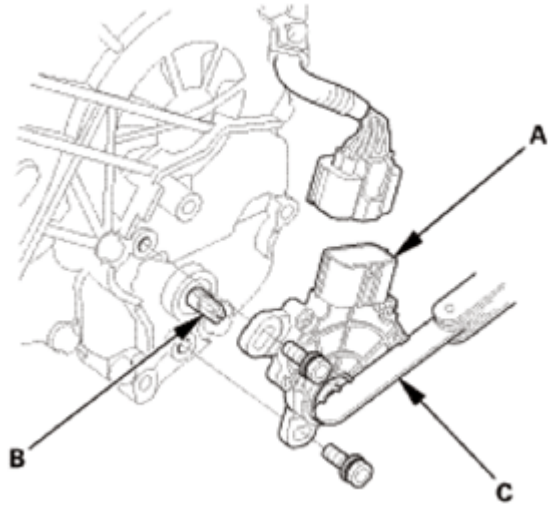

Fig. 2199: Identifying Transmission Range Switch, Selector Control Shaft And Blade
Courtesy of AMERICAN HONDA MOTOR CO., INC.

4. Tighten the bolts on the transmission range switch (A) while you continue holding the N position.

GETtheMANUALS.org

NOTE: **Do not move the transmission range switch when tightening the bolts.**

5. Remove the feeler gauge (B).
6. Check the connector (C) for corrosion, dirt, or oil, and clean or repair if necessary, then connect the connector securely.

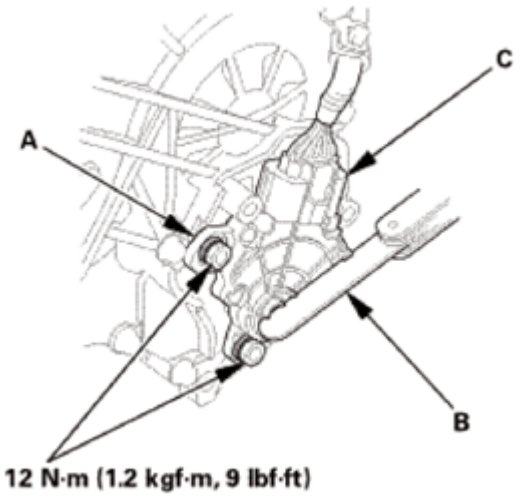

Fig. 2200: Identifying Transmission Range Switch, Connector, Feeler Gauge And Mounting Bolts With Torque Specification
Courtesy of AMERICAN HONDA MOTOR CO., INC.

4. Transmission Range Switch Cover
   1. Install the transmission range switch cover (A).

GETtheMANUALS.org

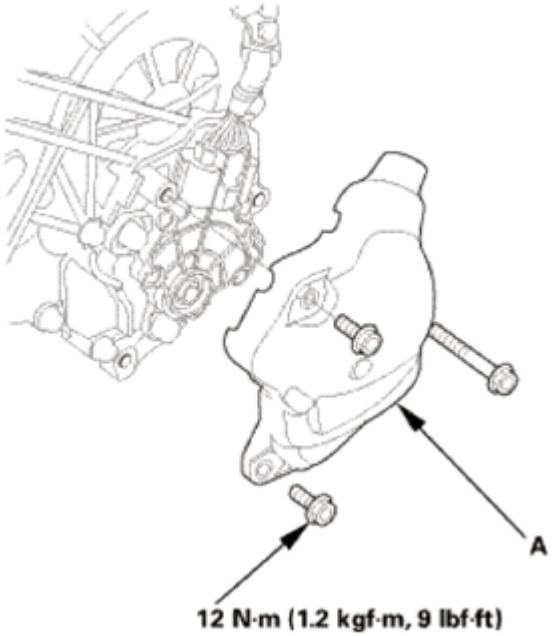

Fig. 2201: Identifying Transmission Range Switch Cover And Mounting Bolts With Torque Specification
Courtesy of AMERICAN HONDA MOTOR CO., INC.

TRANSMISSION END COVER SELECTOR CONTROL SHAFT BEARING REPLACEMENT

SPECIAL TOOL REQUIRED

Image	Description/Tool Number
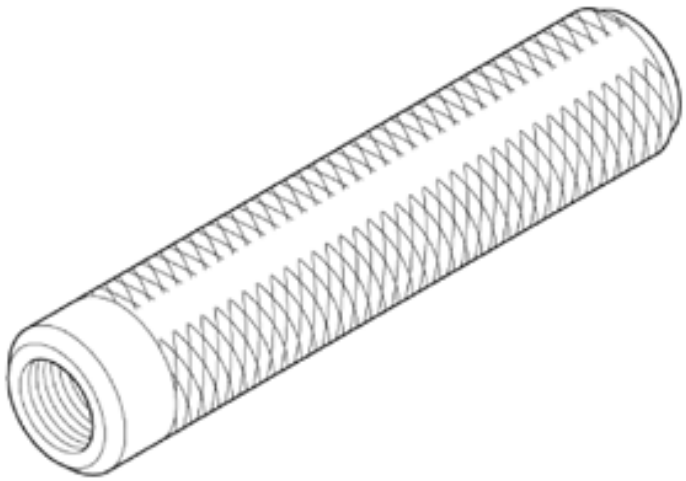	Remover Handle 07936-3710100

GETtheMANUALS.org

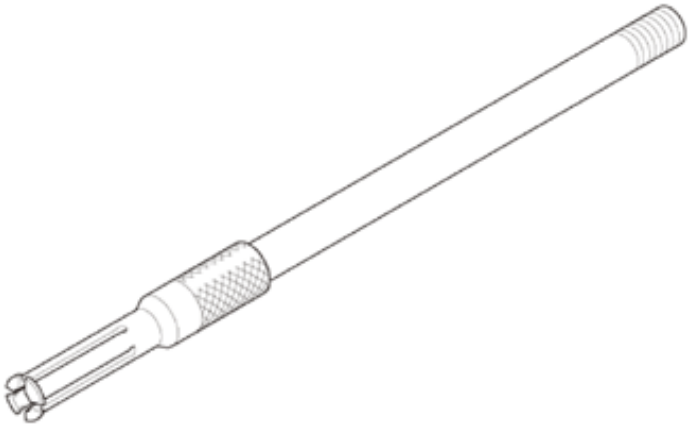	Bearing Remover, 10 mm 07936-GE0A000
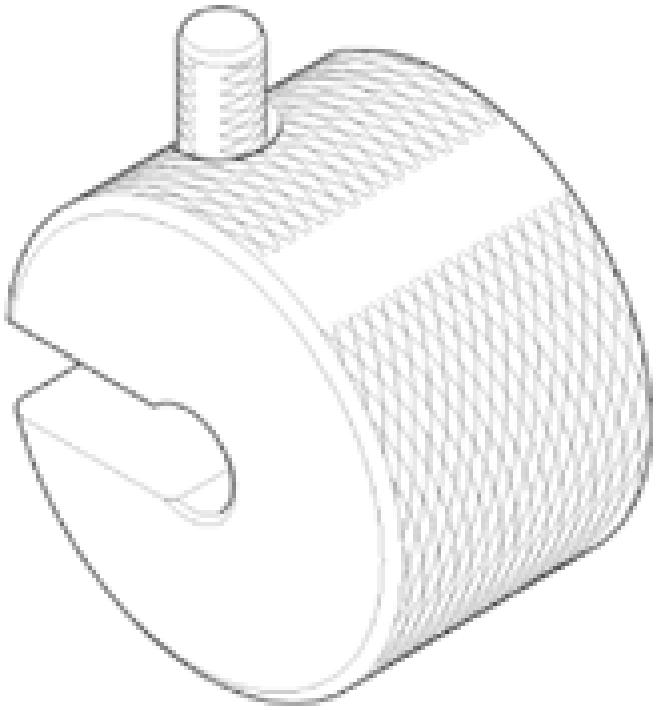	Slide Hammer 07936-371020A
	Driver Handle, 15 x 135L 07749-0010000

GETtheMANUALS.org

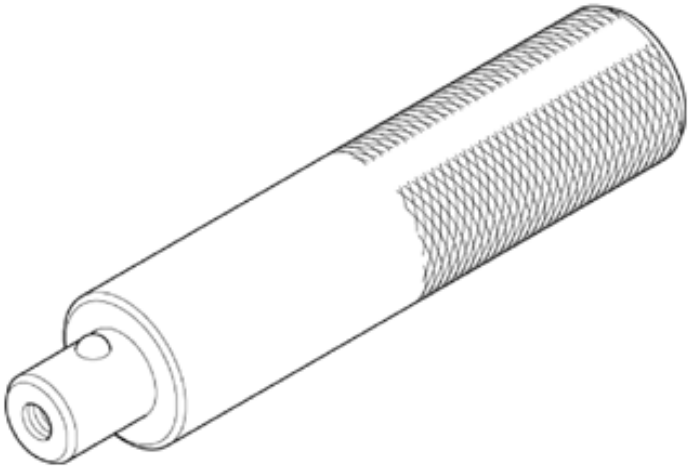	
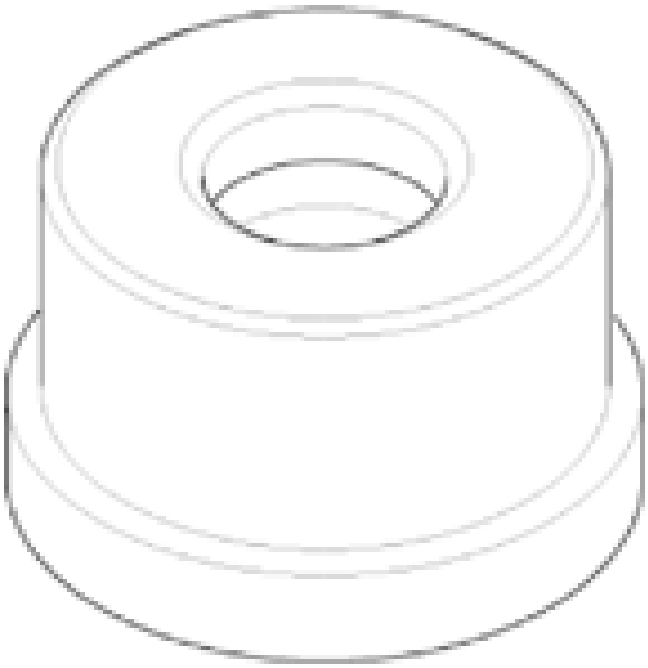	Attachment, 22 x 24 mm 07746-001A800

REMOVAL

1. Transmission Range Switch Cover
    1. Remove the transmission range switch cover (A).

GETtheMANUALS.org

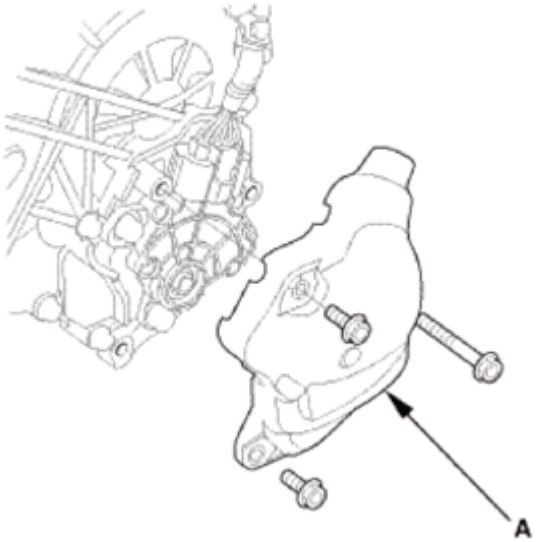

Fig. 2202: Identifying Transmission Range Switch Cover With Bolts
Courtesy of AMERICAN HONDA MOTOR CO., INC.

2. Transmission Range Switch
    1. Remove the transmission range switch (A).

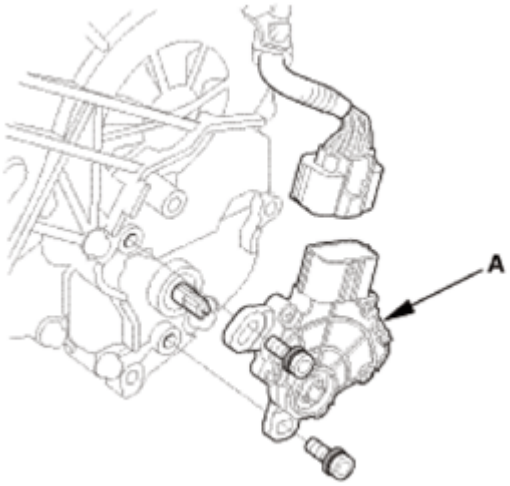

Fig. 2203: Identifying Transmission Range Switch With Bolts
Courtesy of AMERICAN HONDA MOTOR CO., INC.

3. Transmission Range Switch Subharness
    1. Remove the transmission range switch subharness (A).
    2. Remove the clamp brackets (B).

GETtheMANUALS.org

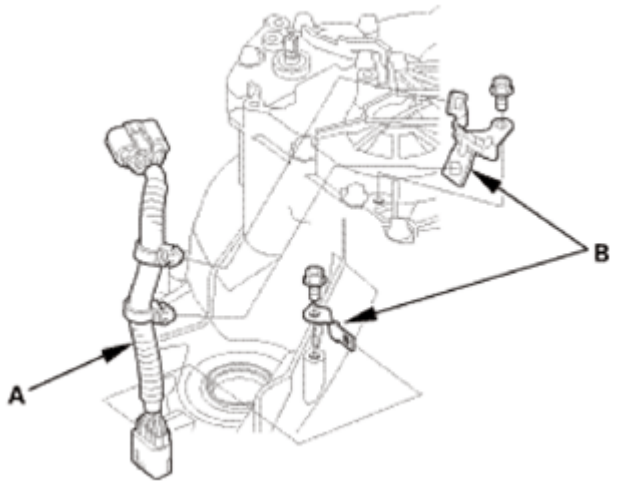

Fig. 2204: Identifying Transmission Range Switch Subharness And Clamp Brackets
Courtesy of AMERICAN HONDA MOTOR CO., INC.

4. Transmission End Cover
    1. Remove the end cover (A), the dowel pins (B), the O-rings (C), and the gasket (D).

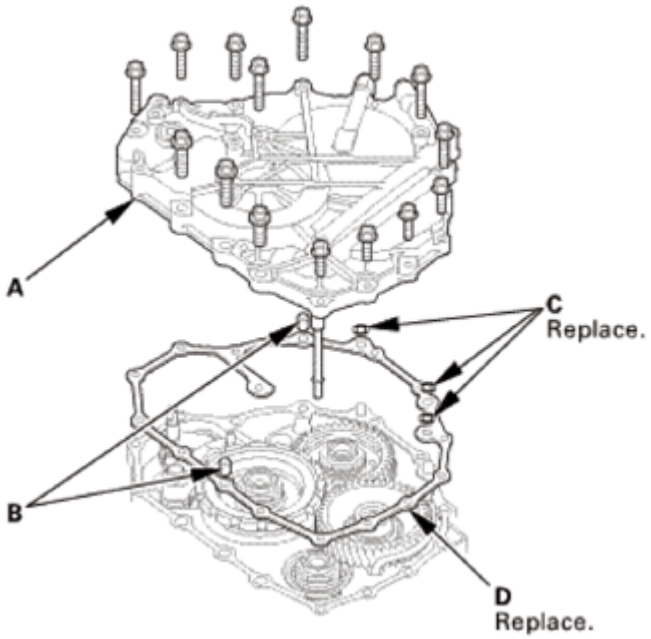

Fig. 2205: Identifying Transmission End Cover, Dowel Pins, O-Rings And Gasket With Bolts
Courtesy of AMERICAN HONDA MOTOR CO., INC.

5. Selector Control Shaft Bearing
    1. Remove the selector control shaft bearing (A) using the 10 mm bearing remover, the remover handle, and the slide hammer.

NOTE: Be careful not to damage the selector control shaft oil seal when

GETtheMANUALS.org

removing the bearing.

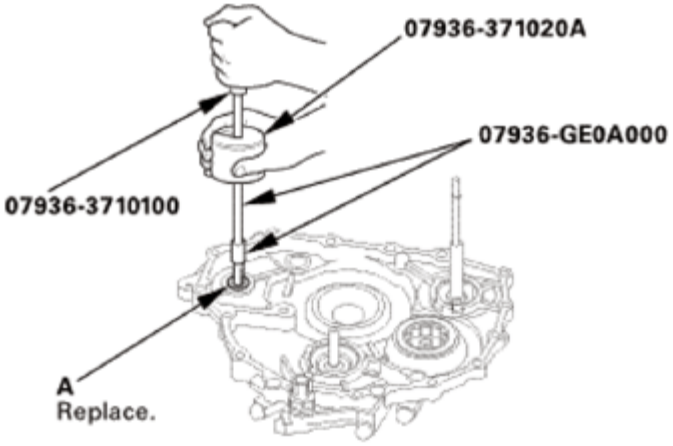

Fig. 2206: Removing Selector Control Shaft Bearing Using Bearing Remover, Remover Handle And Slide Hammer
Courtesy of AMERICAN HONDA MOTOR CO., INC.

INSTALLATION

NOTE: Apply a light coat of clean ATF on all moving parts before installation.

1. Selector Control Shaft Bearing
    1. Install a new selector control shaft bearing (A) flush with the end cover using the driver handle and the 22 x 24 mm attachment.

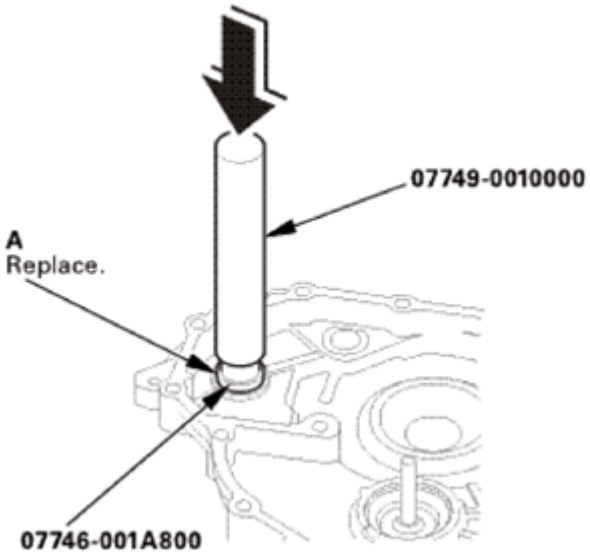

Fig. 2207: Installing Selector Control Shaft Bearing Flush With End Cover Using Driver Handle And Attachment
Courtesy of AMERICAN HONDA MOTOR CO., INC.

GETtheMANUALS.org

2. Transmission End Cover
    1. Install the dowel pins (A) and a new gasket (B).
    2. Install new O-rings (C) over the ATF pipes.
    3. Install the end cover (D), and tighten the three special bolts (E) and the 6 x 1.0 mm bolts (F) (12 bolts).

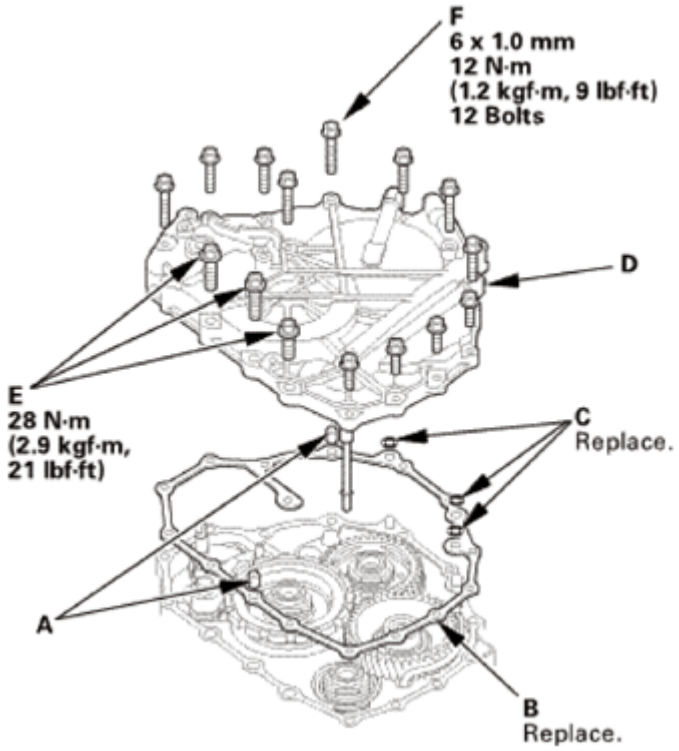

Fig. 2208: Identifying Dowel Pins, Gasket, O-Rings, End Cover And Mounting Bolts With Torque Specification
Courtesy of AMERICAN HONDA MOTOR CO., INC.

3. Transmission Range Switch Subharness
    1. Install the clamp brackets (A).
    2. Install the transmission range switch subharness (B).

GETtheMANUALS.org

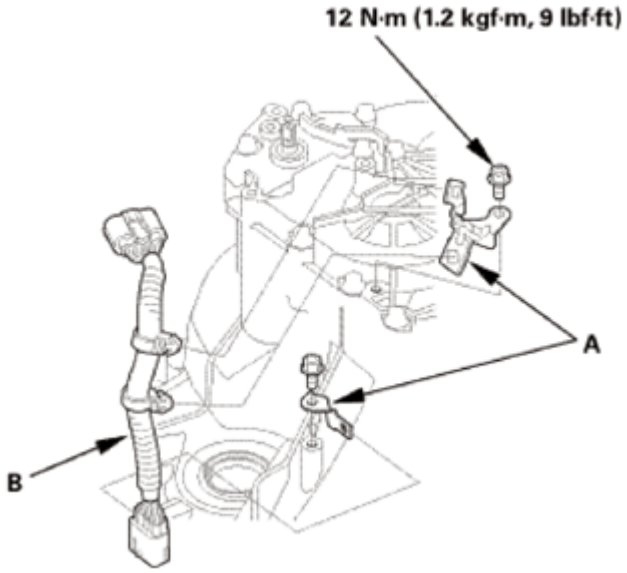

Fig. 2209: Identifying Transmission Range Switch Subharness, Clamp Brackets And Mounting Bolts With Torque Specification
Courtesy of AMERICAN HONDA MOTOR CO., INC.

4. Transmission Range Switch
    1. Make sure the selector control shaft is in the N position. If necessary, move the selector control shaft to the N position.

NOTE: **Do not use the selector control shaft to adjust the shift position. If the selector control shaft tips are squeezed together it will cause a faulty signal or position due to play between the selector control shaft and switch.**

Fig. 2210: Moving Selector Control Shaft To N Position
Courtesy of AMERICAN HONDA MOTOR CO., INC.

GETtheMANUALS.org

2. Align the cutouts (A) on the rotary-frame with the neutral positioning cutouts (B) on the transmission range switch (C), then put a 2.0 mm (0.079 in) feeler gauge blade (D) in the cutouts to hold the switch in the N position.

NOTE: Be sure to use a 2.0 mm (0.079 in) blade or equivalent to hold the switch in the N position.

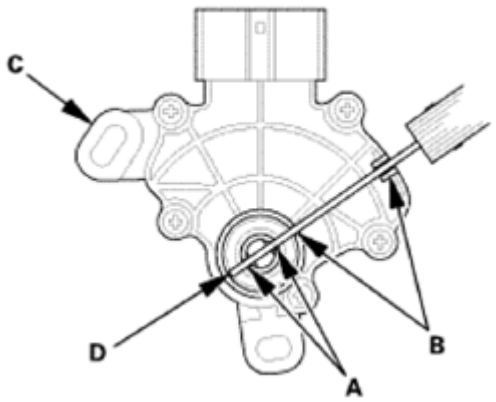

Fig. 2211: Aligning Cutouts On Rotary-Frame With Neutral Positioning Cutouts On Transmission Range Switch
Courtesy of AMERICAN HONDA MOTOR CO., INC.

3. Install the transmission range switch (A) gently on the selector control shaft (B) while holding it in the N position with the 2.0 mm (0.079 in) blade (C).

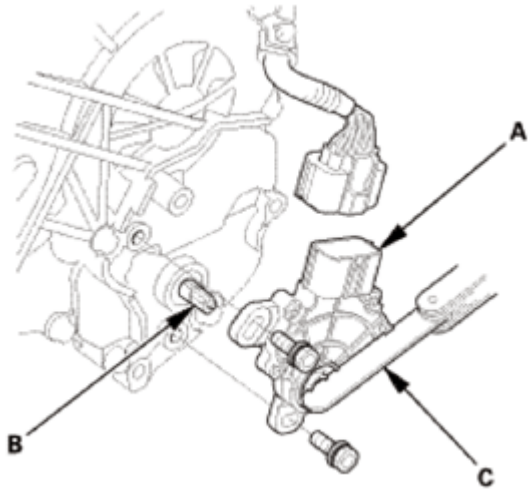

Fig. 2212: Identifying Transmission Range Switch, Selector Control Shaft And Blade
Courtesy of AMERICAN HONDA MOTOR CO., INC.

4. Tighten the bolts on the transmission range switch (A) while you continue holding the N position.

NOTE: Do not move the transmission range switch when tightening the

GETtheMANUALS.org

bolts.

5. Remove the feeler gauge (B).
6. Check the connector (C) for corrosion, dirt, or oil, and clean or repair if necessary, then connect the connector securely.

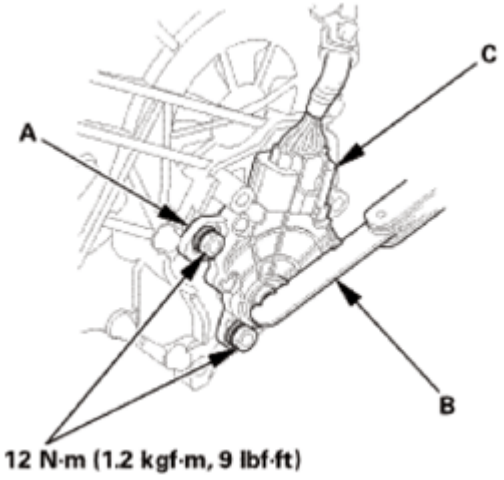

Fig. 2213: Identifying Transmission Range Switch, Connector, Feeler Gauge And Mounting Bolts With Torque Specification
Courtesy of AMERICAN HONDA MOTOR CO., INC.

5. Transmission Range Switch Cover
   1. Install the transmission range switch cover (A).

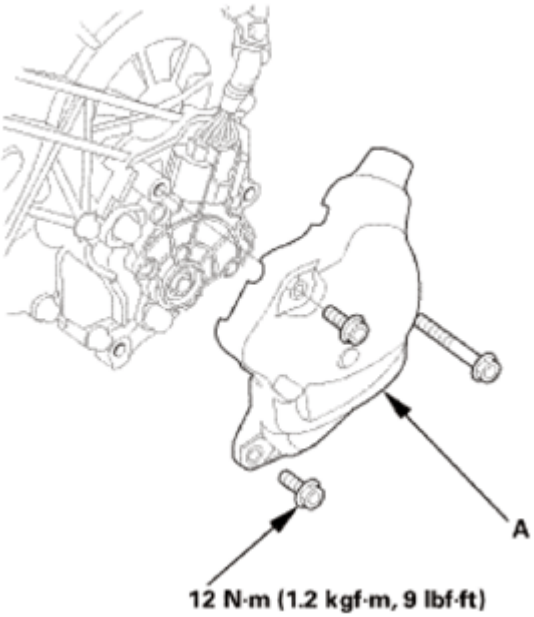

Fig. 2214: Identifying Transmission Range Switch Cover And Mounting Bolts With Torque

GETtheMANUALS.org

Specification
Courtesy of AMERICAN HONDA MOTOR CO., INC.

TRANSMISSION END COVER SELECTOR CONTROL SHAFT OIL SEAL REPLACEMENT

SPECIAL TOOL REQUIRED

Image	Description/Tool Number
	Attachment, 22 x 24 mm 07746-001A800

REMOVAL

1. Transmission Range Switch Cover
    1. Remove the transmission range switch cover (A).

GETtheMANUALS.org

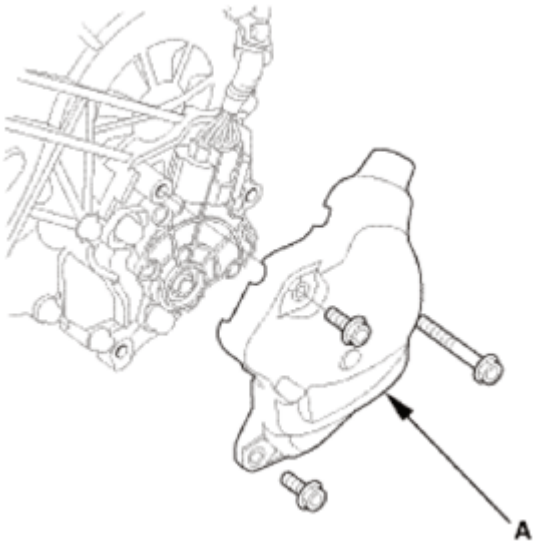

Fig. 2215: Identifying Transmission Range Switch Cover With Bolts
Courtesy of AMERICAN HONDA MOTOR CO., INC.

2. Transmission Range Switch
    1. Shift the shift lever to N.
    2. Remove the transmission range switch (A).

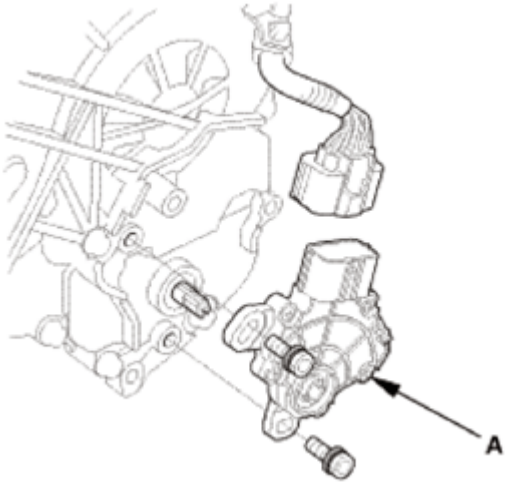

Fig. 2216: Identifying Transmission Range Switch With Bolts
Courtesy of AMERICAN HONDA MOTOR CO., INC.

3. Transmission End Cover Selector Control Shaft Oil Seal
    1. Remove the selector control shaft oil seal (A).

NOTE: **Be careful not to damage the selector control shaft and the end cover when removing the oil seal.**

GETtheMANUALS.org

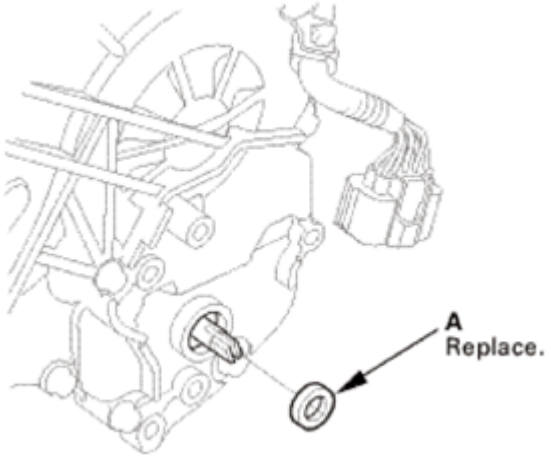

Fig. 2217: Identifying Selector Control Shaft Oil Seal
Courtesy of AMERICAN HONDA MOTOR CO., INC.

INSTALLATION

1. Transmission End Cover Selector Control Shaft Oil Seal
    1. Install a new selector control shaft oil seal (A) flush with the end cover using the 22 x 24 mm attachment.

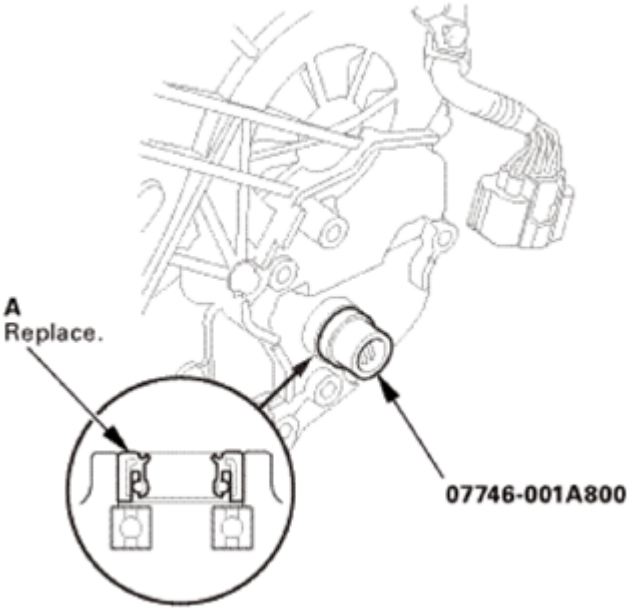

Fig. 2218: Installing Selector Control Shaft Oil Seal Flush With End Cover Using Attachment
Courtesy of AMERICAN HONDA MOTOR CO., INC.

2. Transmission Range Switch
    1. Make sure the selector control shaft is in the N position. If necessary, move the selector control shaft to the N position.

GETtheMANUALS.org

NOTE: **Do not use the selector control shaft to adjust the shift position. If the selector control shaft tips are squeezed together it will cause a faulty signal or position due to play between the selector control shaft and switch.**

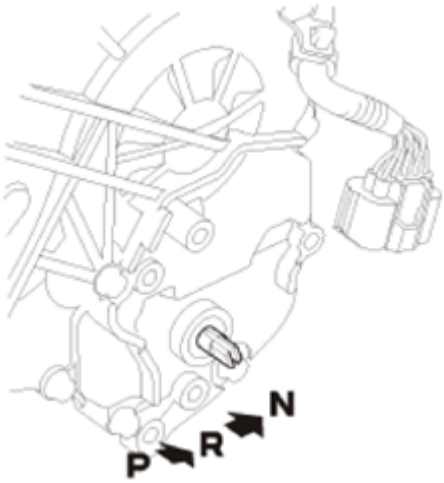

Fig. 2219: Moving Selector Control Shaft To N Position
Courtesy of AMERICAN HONDA MOTOR CO., INC.

2. Align the cutouts (A) on the rotary-frame with the neutral positioning cutouts (B) on the transmission range switch (C), then put a 2.0 mm (0.079 in) feeler gauge blade (D) in the cutouts to hold the switch in the N position.

NOTE: **Be sure to use a 2.0 mm (0.079 in) blade or equivalent to hold the switch in the N position.**

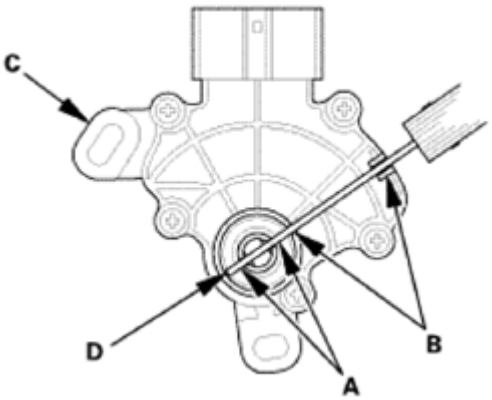

Fig. 2220: Aligning Cutouts On Rotary-Frame With Neutral Positioning Cutouts On Transmission Range Switch
Courtesy of AMERICAN HONDA MOTOR CO., INC.

3. Install the transmission range switch (A) gently on the selector control shaft (B) while holding it in

GETtheMANUALS.org

the N position with the 2.0 mm (0.079 in) blade (C).

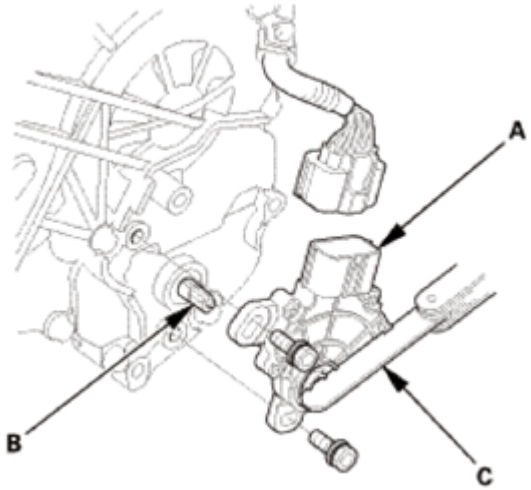

Fig. 2221: Identifying Transmission Range Switch, Selector Control Shaft And Blade
Courtesy of AMERICAN HONDA MOTOR CO., INC.

4. Tighten the bolts on the transmission range switch (A) while you continue holding the N position.

NOTE: **Do not move the transmission range switch when tightening the bolts.**

5. Remove the feeler gauge (B).
6. Check the connector (C) for corrosion, dirt, or oil, and clean or repair if necessary, then connect the connector securely.

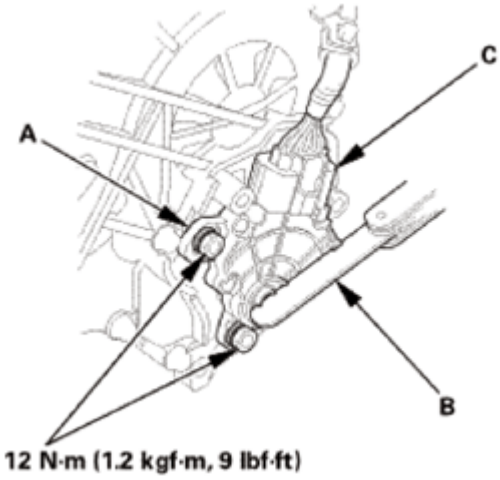

Fig. 2222: Identifying Transmission Range Switch, Connector, Feeler Gauge And Mounting Bolts With Torque Specification
Courtesy of AMERICAN HONDA MOTOR CO., INC.

GETtheMANUALS.org

3. Transmission Range Switch Cover
    1. Install the transmission range switch cover (A).

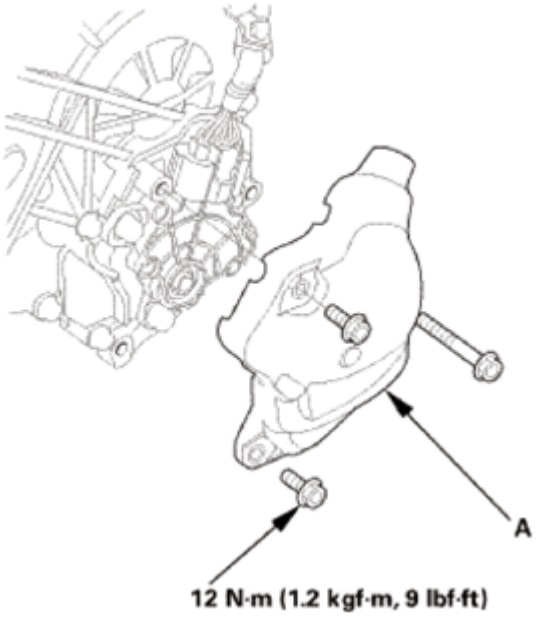

Fig. 2223: Identifying Transmission Range Switch Cover And Mounting Bolts With Torque Specification
Courtesy of AMERICAN HONDA MOTOR CO., INC.

4. After Installing Transmission Range Switch - Check
    1. Turn the ignition switch to ON (II), or press the engine start/stop button to select the ON mode.
    2. Move the shift lever through all positions, and check the transmission range switch synchronization with the A/T gear position indicator.
    3. Check that the engine will start with the shift lever in P and N, and will not start in any other shift lever position.
    4. Check that the back-up lights come on when the shift lever is in R.
    5. Raise the vehicle on a lift, and make sure it is securely supported.
    6. Start the engine, and check the shift lever operation.

TRANSMISSION END CRANKSHAFT OIL SEAL REPLACEMENT - IN CAR

SPECIAL TOOL REQUIRED

Image	Description/Tool Number

GETtheMANUALS.org

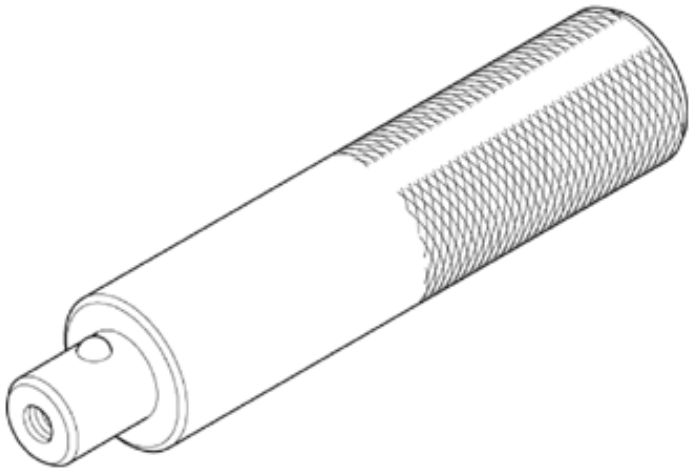	Driver Handle, 15 x 135L 07749-0010000
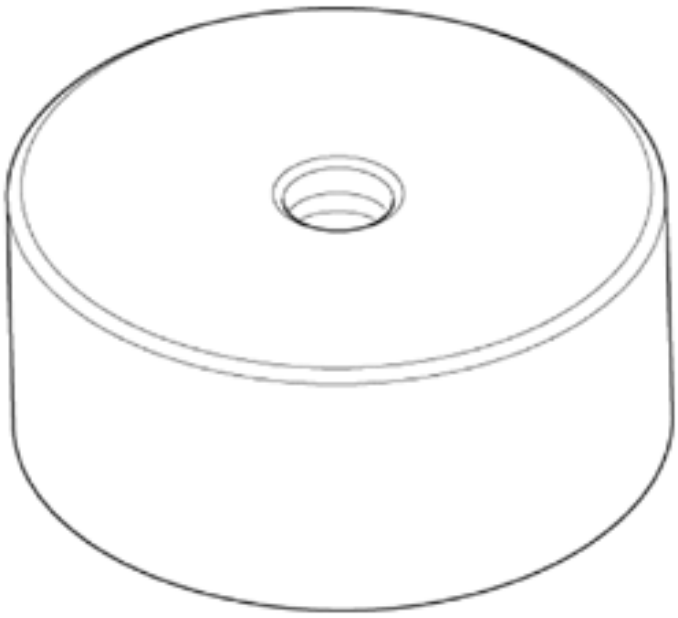	Oil Seal Driver Attachment, 96 mm 07ZAD-PNAA100

REMOVAL

1. Drive Plate Assembly
    1. Remove the drive plate (A) and the washer (B).

GETtheMANUALS.org

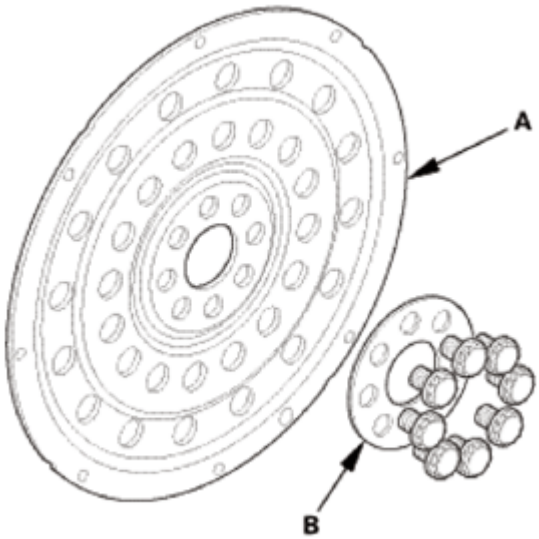

Fig. 2224: Identifying Drive Plate And Washer With Mounting Bolts
Courtesy of AMERICAN HONDA MOTOR CO., INC.

2. Crankshaft Oil Seal Transmission Side
    1. Remove the transmission end crankshaft oil seal.

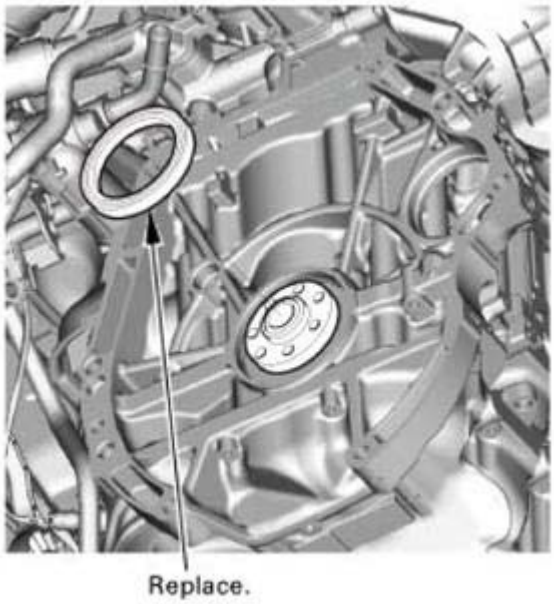

Fig. 2225: Identifying Transmission End Crankshaft Oil Seal
Courtesy of AMERICAN HONDA MOTOR CO., INC.

INSTALLATION

1. Crankshaft Oil Seal Transmission Side
    1. Clean and dry the crankshaft oil seal housing.

GETtheMANUALS.org

2. Apply a light coat of new engine oil to the lip of the crankshaft oil seal.
3. Use the driver handle, 15 x 135L and the oil seal driver attachment, 96 mm to drive a new crankshaft oil seal (A) squarely into the engine block to the specified installed height.
4. Clean the excess oil off the crankshaft, and check that the oil seal lip is not distorted.

Fig. 2226: Driving Crankshaft Oil Seal Squarely Into Engine Block Using Driver Handle And Oil Seal Driver Attachment
Courtesy of AMERICAN HONDA MOTOR CO., INC.

5. Measure the distance between the engine block (A) and the crankshaft oil seal (B).

   Oil Seal Installed Height: 0.2-1.2 mm (0.008-0.047 in)

GETtheMANUALS.org

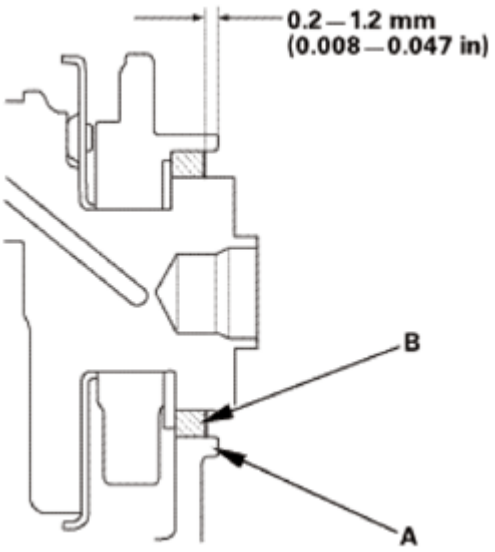

Fig. 2227: Identifying Distance Between Engine Block And Crankshaft Oil Seal
Courtesy of AMERICAN HONDA MOTOR CO., INC.

2. Drive Plate Assembly
    1. Install the drive plate (A) and the washer (B), and tighten the eight bolts in a crisscross pattern in at least two steps.

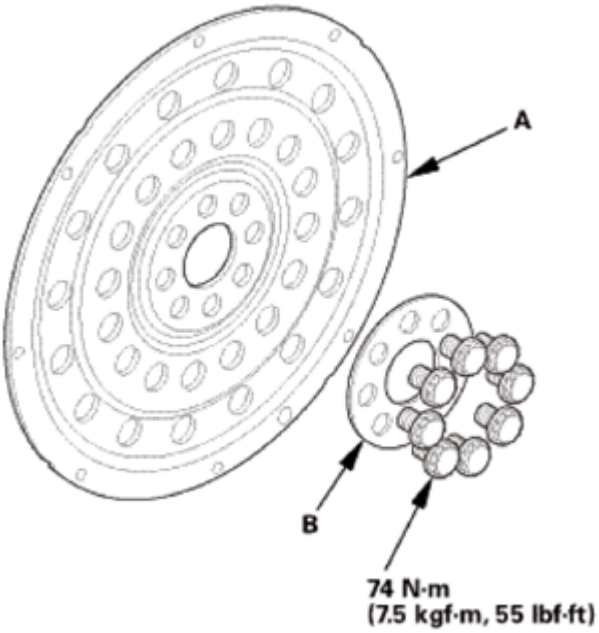

Fig. 2228: Identifying Drive Plate, Washer And Mounting Bolts With Torque Specification
Courtesy of AMERICAN HONDA MOTOR CO., INC.

TRANSMISSION FLUID PRESSURE SWITCH A (2ND CLUTCH) REMOVAL AND INSTALLATION

GETtheMANUALS.org

REMOVAL

1. Air Cleaner Assembly
    1. Disconnect the MAF sensor/IAT sensor connector (A).
    2. Remove the harness clamp (B).
    3. Disconnect the intake air duct (C) and the intake air pipe (D).
    4. Remove the air cleaner (E).

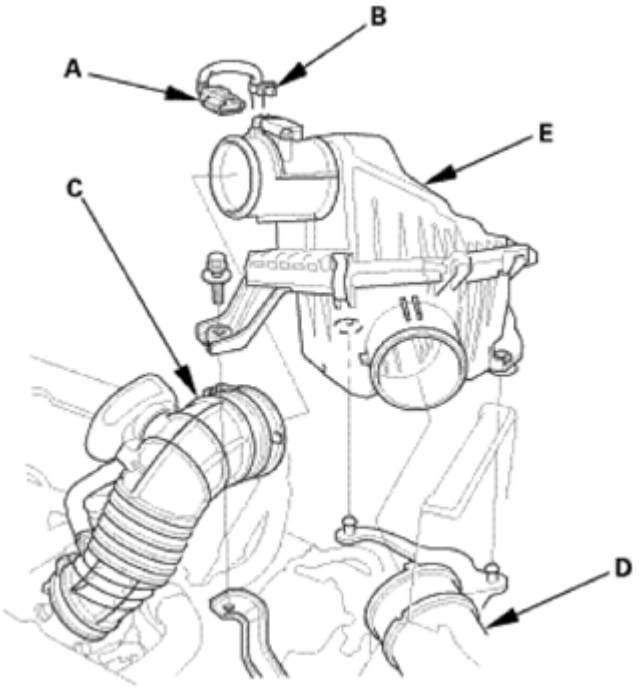

Fig. 2229: Identifying MAF Sensor/IAT Sensor Connector, Harness Clamp, Intake Air Duct, Intake Air Pipe And Air Cleaner
Courtesy of AMERICAN HONDA MOTOR CO., INC.

2. Transmission Fluid Pressure Switch A (2nd Clutch)
    1. Remove transmission fluid pressure switch A (2nd clutch) and the sealing washer (B).

GETtheMANUALS.org

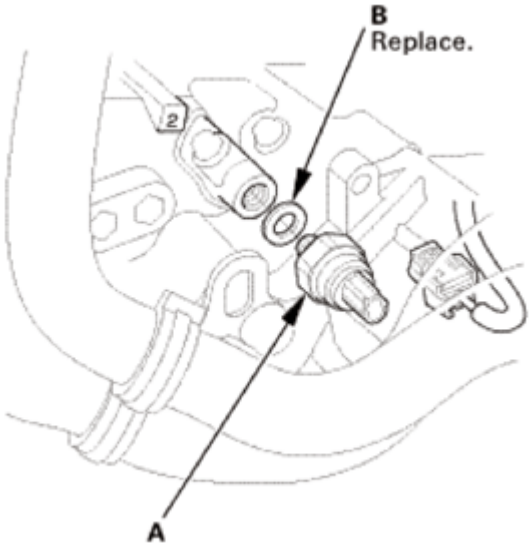

Fig. 2230: Identifying Transmission Fluid Pressure Switch (2nd Clutch) And Sealing Washer
Courtesy of AMERICAN HONDA MOTOR CO., INC.

INSTALLATION

1. Transmission Fluid Pressure Switch A (2nd Clutch)
    1. Install transmission fluid pressure switch A (2nd clutch) using a new sealing washer (B) by turning the metal part, not the plastic part.
    2. Check the connector (C) for corrosion, dirt, or oil, and clean or repair if necessary, then connect the connector securely.

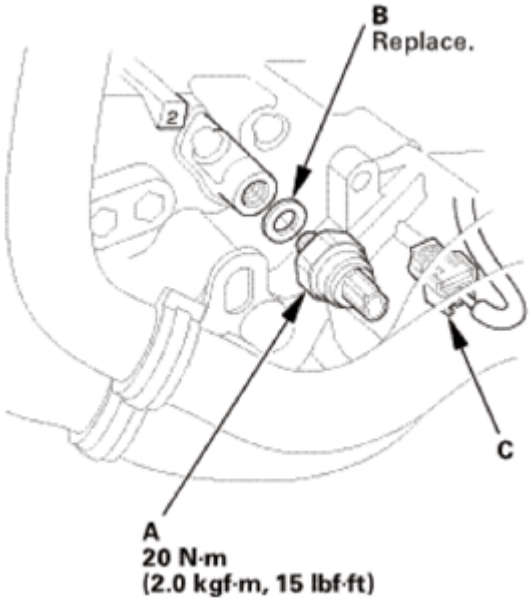

Fig. 2231: Identifying Transmission Fluid Pressure Switch (2nd Clutch), Sealing Washer And Connector

GETtheMANUALS.org

Courtesy of AMERICAN HONDA MOTOR CO., INC.

2. Air Cleaner Assembly
    1. Install the air cleaner (A).
    2. Connect the intake air pipe (B) and the intake air duct (C).
    3. Install the harness clamp (D).
    4. Connect the MAF sensor/IAT sensor connector (E).

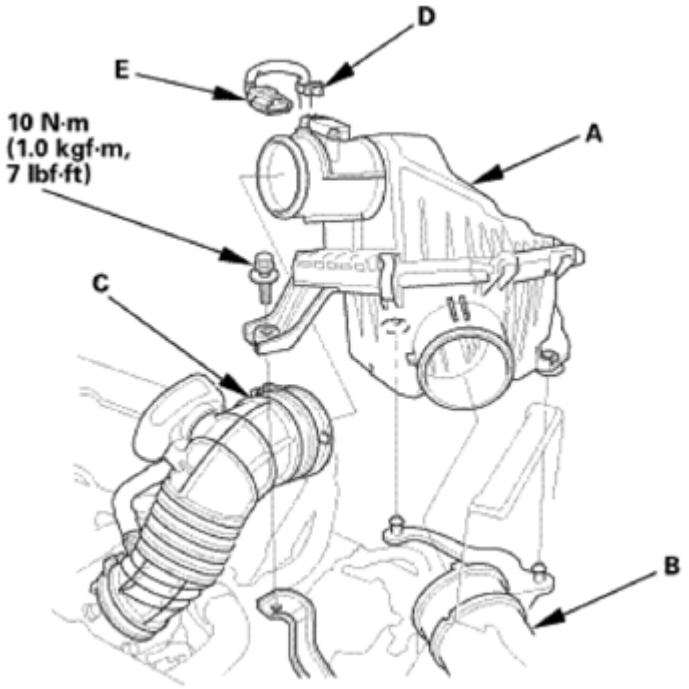

Fig. 2232: Identifying MAF Sensor/IAT Sensor Connector, Harness Clamp, Air Cleaner, Intake Air Pipe And Bolts With Torque Specification
Courtesy of AMERICAN HONDA MOTOR CO., INC.

TRANSMISSION FLUID PRESSURE SWITCH B (3RD CLUTCH) REMOVAL AND INSTALLATION

REMOVAL

1. Vehicle Lift
    1. Raise the vehicle on a lift, and make sure it is securely supported.
2. Front Splash Shield
    1. Remove the bolts (A), then remove the clips (B) that secure the front inner fender and the front splash shield (C) to the body.
    2. From under the front bumper (D), remove the clips (E).
    3. From under the body, remove the clips (F), then pull out the front splash shield.

GETtheMANUALS.org

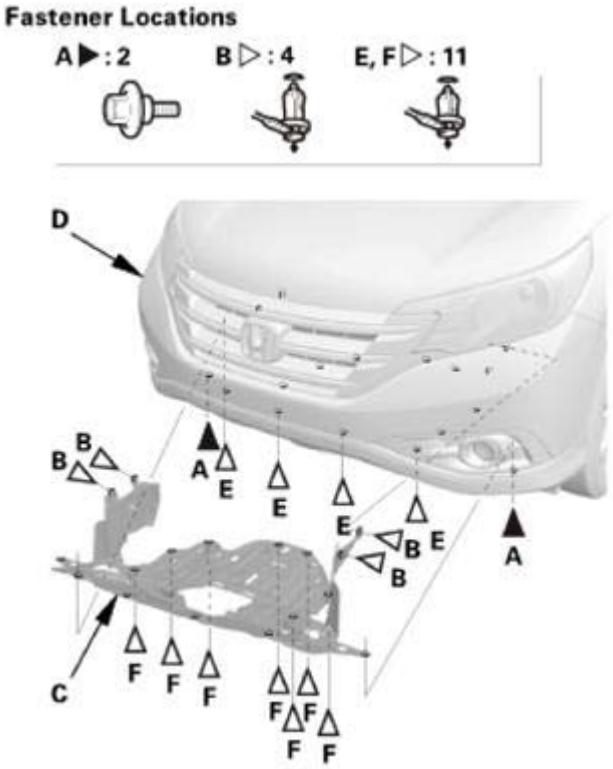

Fig. 2233: Identifying Front Splash Shield, Front Bumper, Bolts And Clips
Courtesy of AMERICAN HONDA MOTOR CO., INC.

3. Transmission Fluid Pressure Switch B (3rd Clutch)
    1. Remove transmission fluid pressure switch B (3rd clutch) and the sealing washer (A).

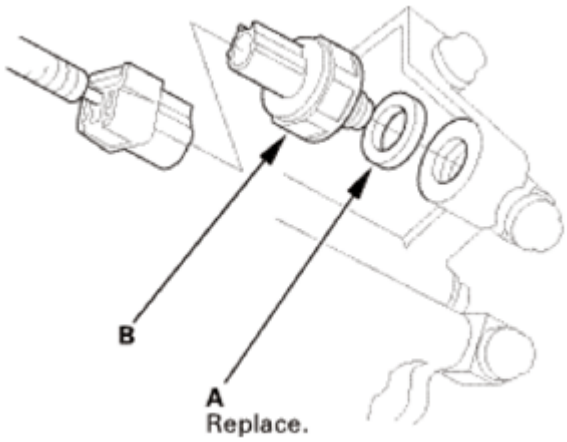

Fig. 2234: Identifying Transmission Fluid Pressure Switch (3rd Clutch) And Sealing Washer
Courtesy of AMERICAN HONDA MOTOR CO., INC.

INSTALLATION

1. Transmission Fluid Pressure Switch B (3rd Clutch)

GETtheMANUALS.org

1. Install transmission fluid pressure switch B (3rd clutch) using a new sealing washer (A) by turning the metal part, not the plastic part.
2. Check the connector (C) for corrosion, dirt, or oil, and clean or repair if necessary, then connect the connector securely.

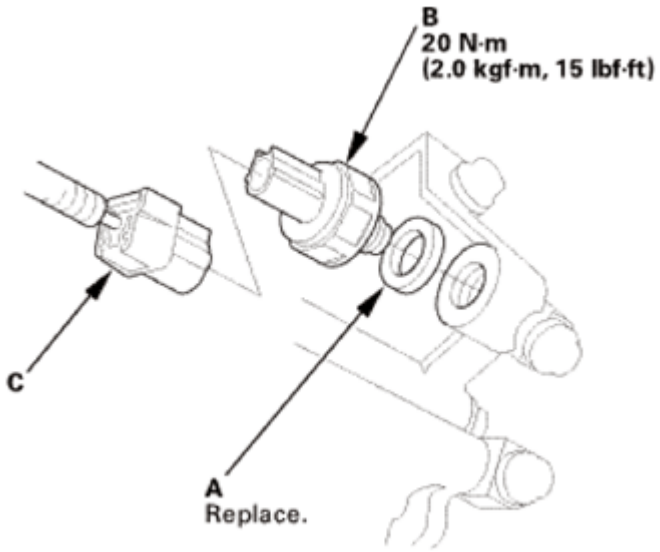

Fig. 2235: Identifying Transmission Fluid Pressure Switch (3rd Clutch), Sealing Washer, Connector And Mounting Bolts With Torque Specification
Courtesy of AMERICAN HONDA MOTOR CO., INC.

2. Front Splash Shield
    1. Install the front splash shield (A), then install the bolts (B) and the clips (C, D). Make sure the clips snap into place securely.

GETtheMANUALS.org

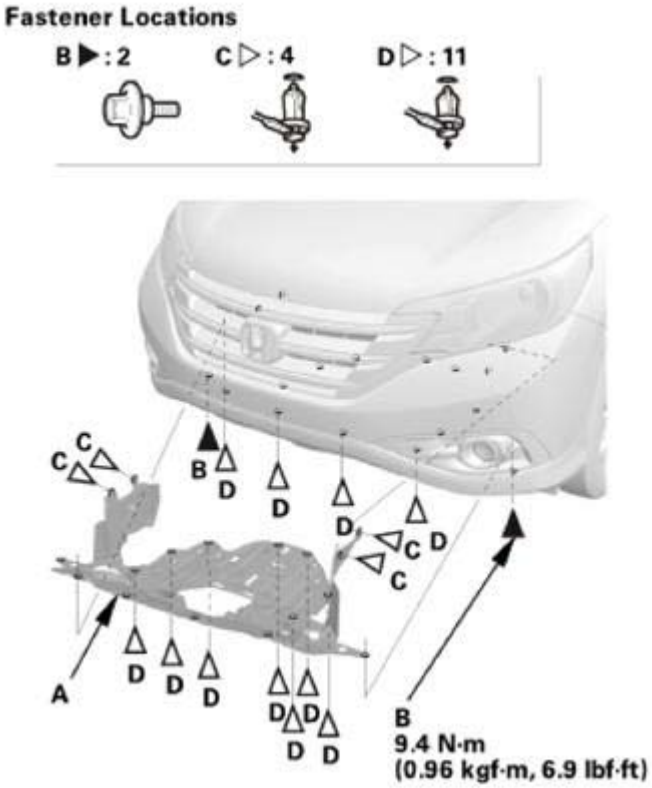

Fig. 2236: Identifying Front Splash Shield, Bolts And Clips With Torque Specification
Courtesy of AMERICAN HONDA MOTOR CO., INC.

TRANSMISSION MOUNT REMOVAL AND INSTALLATION

REMOVAL

1. Upper Torque Rod Mounting Bolt - Loosen
    1. Loosen the upper torque rod mounting bolt (A).

GETtheMANUALS.org

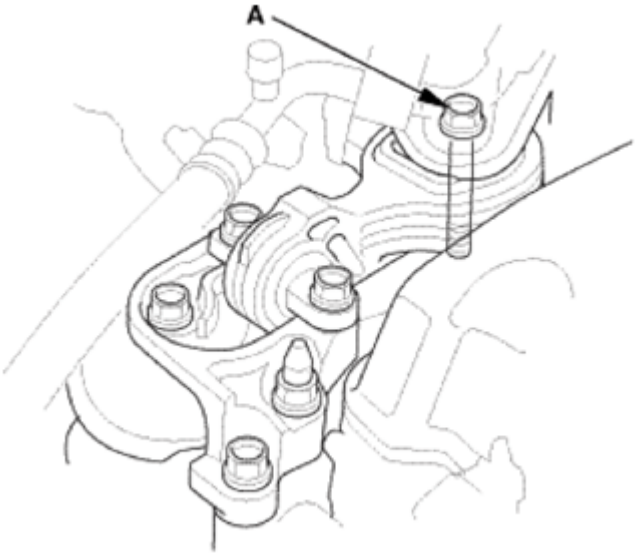

Fig. 2237: Identifying Upper Torque Rod Mounting Bolt
Courtesy of AMERICAN HONDA MOTOR CO., INC.

2. Air Cleaner Assembly
    1. Disconnect the MAF sensor/IAT sensor connector (A).
    2. Remove the harness clamp (B).
    3. Disconnect the intake air duct (C) and the intake air pipe (D).
    4. Remove the air cleaner (E).

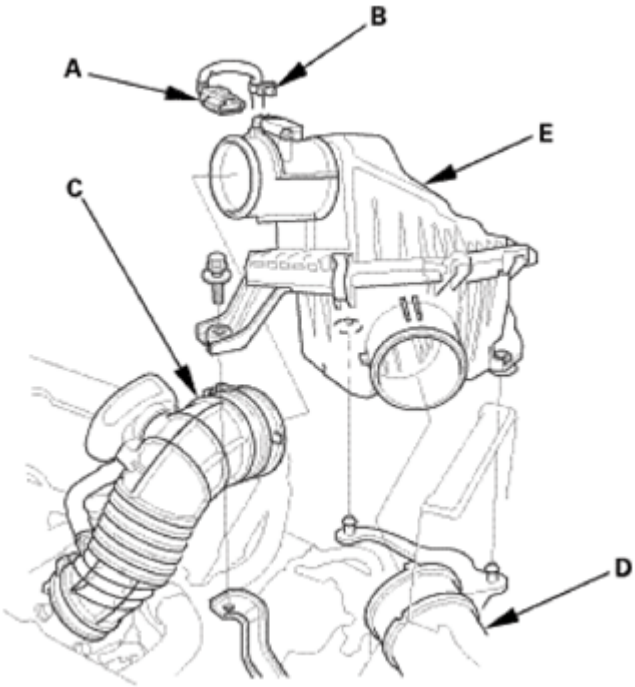

Fig. 2238: Identifying MAF Sensor/IAT Sensor Connector, Harness Clamp, Intake Air Duct,

GETtheMANUALS.org

Intake Air Pipe And Air Cleaner
Courtesy of AMERICAN HONDA MOTOR CO., INC.

3. Intake Air Duct
    1. Remove the intake air duct.

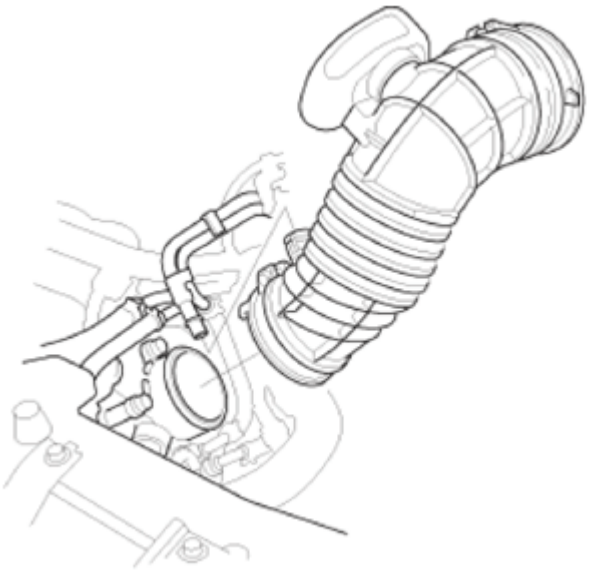

Fig. 2239: Identifying Intake Air Duct
Courtesy of AMERICAN HONDA MOTOR CO., INC.

4. Battery Terminal - Disconnection
    1. Make sure the ignition switch is in LOCK (0).
    2. Disconnect and isolate the negative cable (A) from the battery.

    NOTE: Always disconnect the negative side first.

    3. Disconnect the positive cable (B) from the battery.

GETtheMANUALS.org

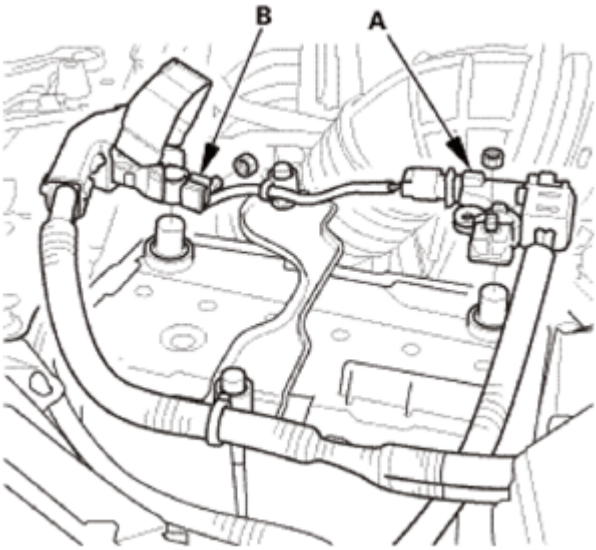

Fig. 2240: Identifying Negative And Positive Cable Of Battery
Courtesy of AMERICAN HONDA MOTOR CO., INC.

5. Battery
    1. Remove the battery setting plate (A) and the battery (B).

GETtheMANUALS.org

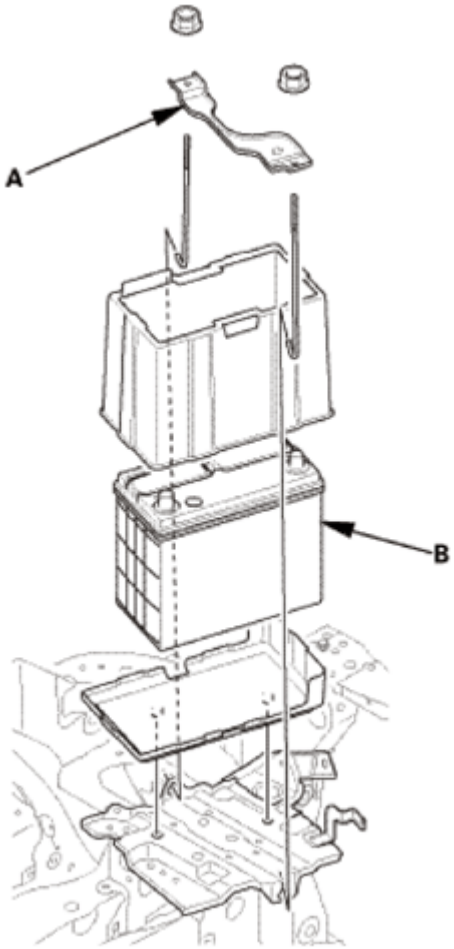

Fig. 2241: Identifying Battery And Battery Setting Plate
Courtesy of AMERICAN HONDA MOTOR CO., INC.

6. Battery Base Assembly
    1. Remove the battery base and the harness clamps.

GETtheMANUALS.org

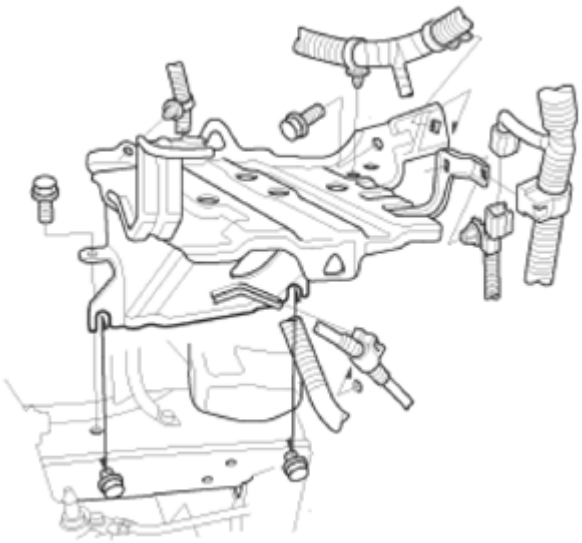

Fig. 2242: Identifying Battery Base And Harness Clamps With Mounting Bolts
Courtesy of AMERICAN HONDA MOTOR CO., INC.

7. PCM Assembly
    1. Remove the PCM cover (D).
    2. Disconnect PCM connectors A, B, and C.

    NOTE: PCM connectors A, B, and C have symbols (A=[], B= delta C=o) embossed on them for identification.

    3. Remove the PCM (E).

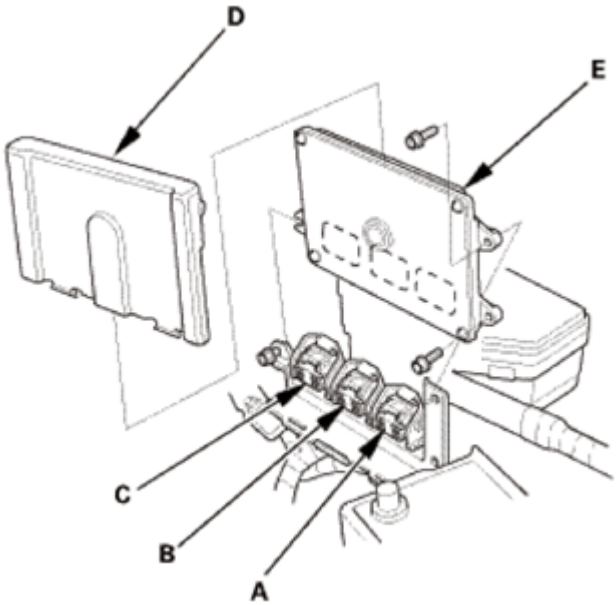

Fig. 2243: Identifying PCM, PCM Cover And PCM Connectors

GETtheMANUALS.org

Courtesy of AMERICAN HONDA MOTOR CO., INC.

8. Vehicle Lift
    1. Raise the vehicle on a lift, and make sure it is securely supported.
9. Front Splash Shield
    1. Remove the bolts (A), then remove the clips (B) that secure the front inner fender and the front splash shield (C) to the body.
    2. From under the front bumper (D), remove the clips (E).
    3. From under the body, remove the clips (F), then pull out the front splash shield.

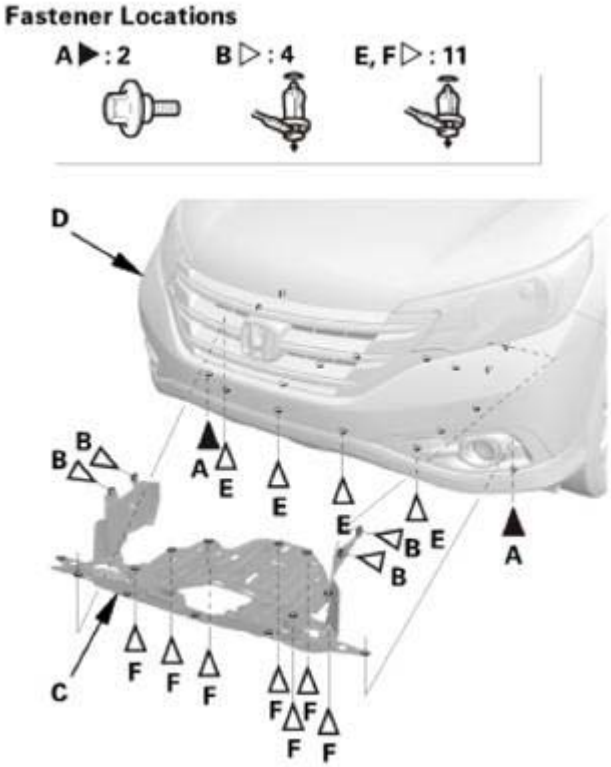

Fig. 2244: Identifying Front Splash Shield, Front Bumper, Bolts And Clips
Courtesy of AMERICAN HONDA MOTOR CO., INC.

10. Lower Torque Rod Mounting Bolt - Loosen
    1. Loosen the lower torque rod mounting bolt (A).

GETtheMANUALS.org

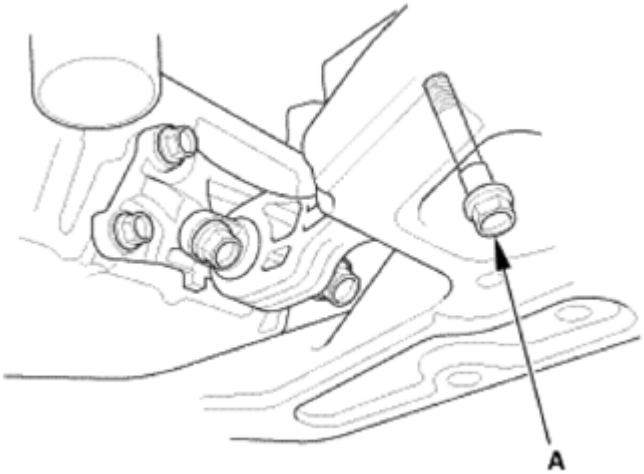

Fig. 2245: Identifying Lower Torque Rod Mounting Bolt
Courtesy of AMERICAN HONDA MOTOR CO., INC.

11. Front Engine Mount Mounting Bolt - Loosen
    1. Loosen the front engine mount mounting bolt (A).

Fig. 2246: Identifying Front Engine Mount Mounting Bolt
Courtesy of AMERICAN HONDA MOTOR CO., INC.

12. Transmission Jack Support
    1. Lift and support the engine with a jack and a wood block under the transmission.
13. Transmission Mount
    1. Remove the ground cable (A).
    2. Remove the transmission mount bracket (B).

GETtheMANUALS.org

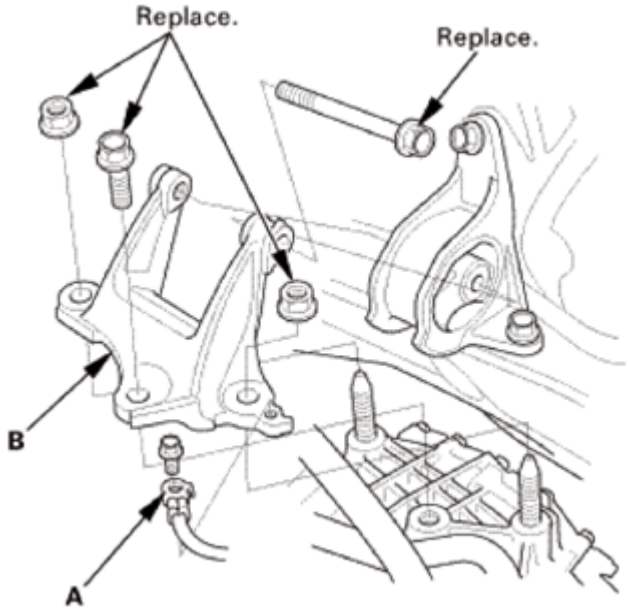

Fig. 2247: Identifying Transmission Mount Bracket And Ground Cable With Mounting Bolts
Courtesy of AMERICAN HONDA MOTOR CO., INC.

3. Remove the transmission mount.

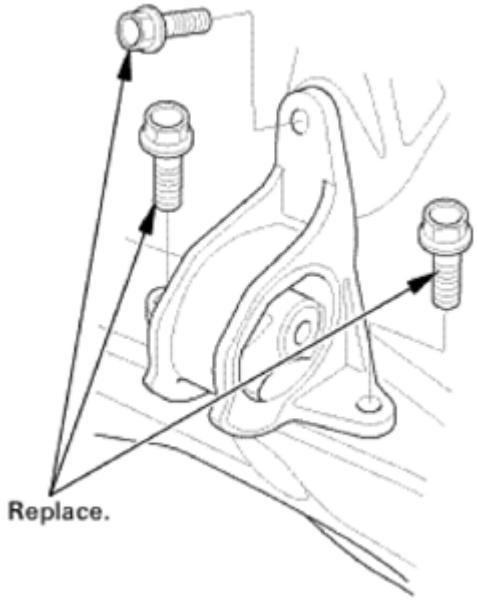

Fig. 2248: Identifying Transmission Mount Bolts
Courtesy of AMERICAN HONDA MOTOR CO., INC.

INSTALLATION

1. Transmission Mount
    1. Install the transmission mount.

GETtheMANUALS.org

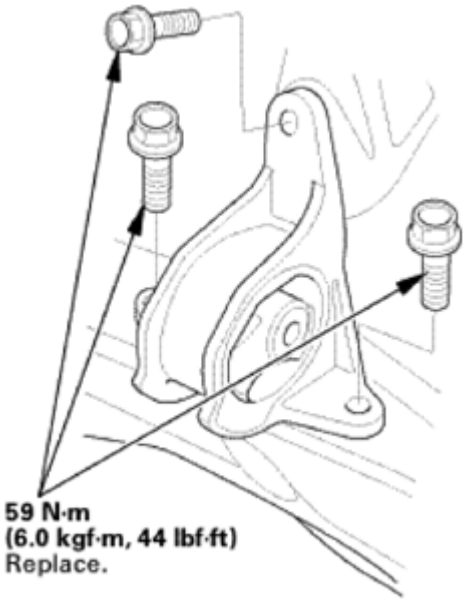

Fig. 2249: Identifying Transmission Mount Bolts With Mounting Bolts
Courtesy of AMERICAN HONDA MOTOR CO., INC.

2. Loosely install the new transmission mount bracket mounting bolt and nuts (A).
3. Tighten the new transmission mount mounting bolt (B).
4. Install the ground cable.

GETtheMANUALS.org

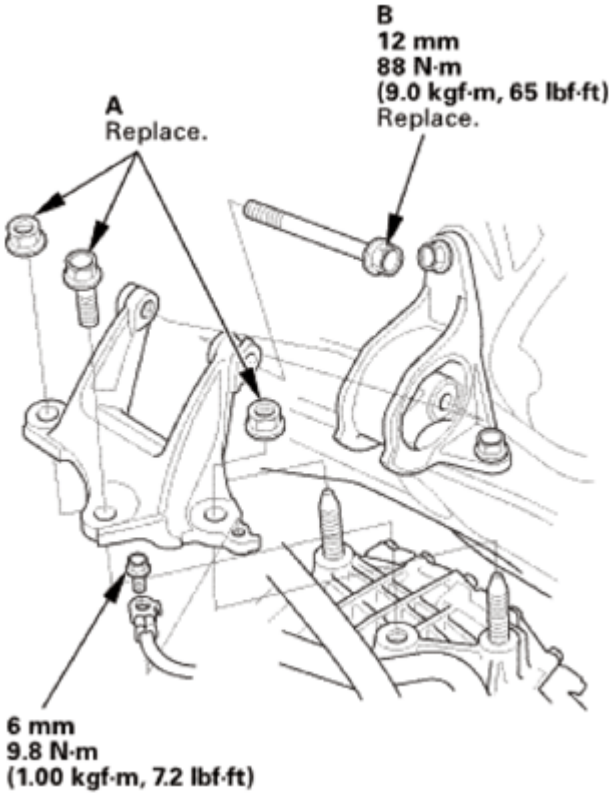

Fig. 2250: Identifying Transmission Mount Mounting Bolt, Transmission Mount Bracket Mounting Bolt And Nuts With Mounting Bolts
Courtesy of AMERICAN HONDA MOTOR CO., INC.

2. Transmission Jack Support
    1. Remove the jack from under the transmission.
3. Transmission Mount - Tighten
    1. Tighten the transmission mount bracket mounting bolt and nuts.

GETtheMANUALS.org

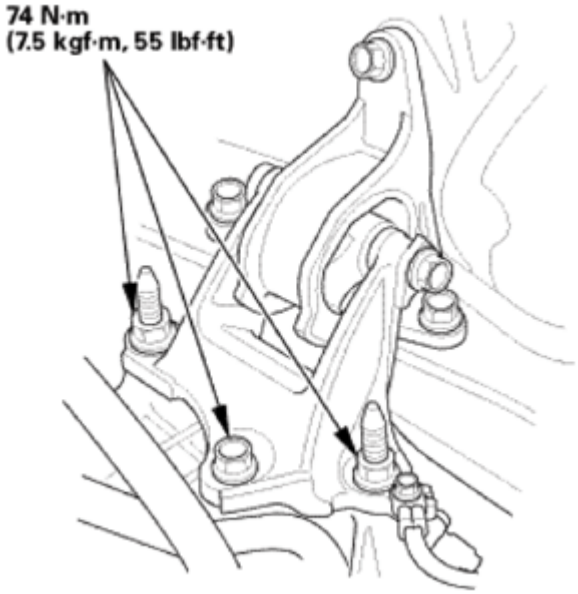

Fig. 2251: Identifying Transmission Mount Bracket Mounting Bolt And Nuts With Mounting Bolts
Courtesy of AMERICAN HONDA MOTOR CO., INC.

4. Lower Torque Rod Bolt - Tighten
    1. Tighten the lower torque rod mounting bolt (A).

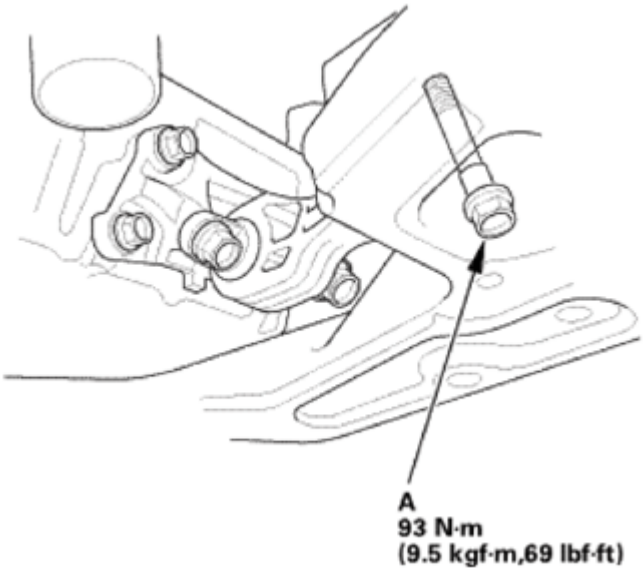

Fig. 2252: Identifying Lower Torque Rod Mounting Bolt With Mounting Bolts
Courtesy of AMERICAN HONDA MOTOR CO., INC.

5. Upper Torque Rod - Tighten
    1. Tighten the upper torque rod mounting bolt.

GETtheMANUALS.org

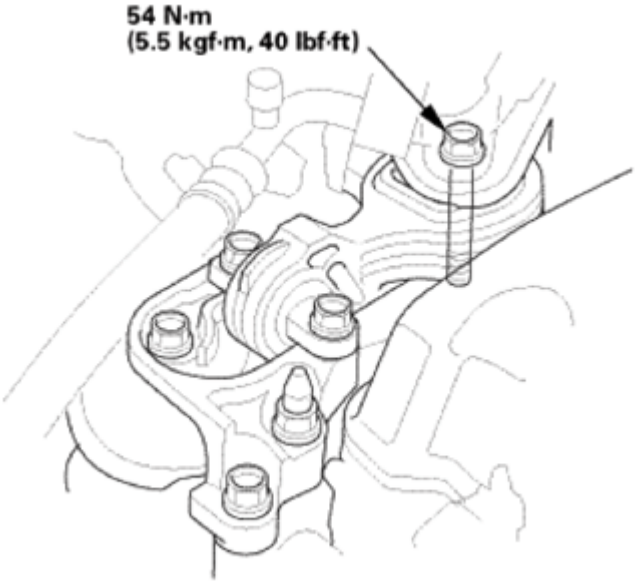

Fig. 2253: Identifying Upper Torque Rod Mounting Bolt With Torque Specification
Courtesy of AMERICAN HONDA MOTOR CO., INC.

6. Front Engine Mount Mounting Bolt - Tighten
    1. Tighten the front engine mount mounting bolt.

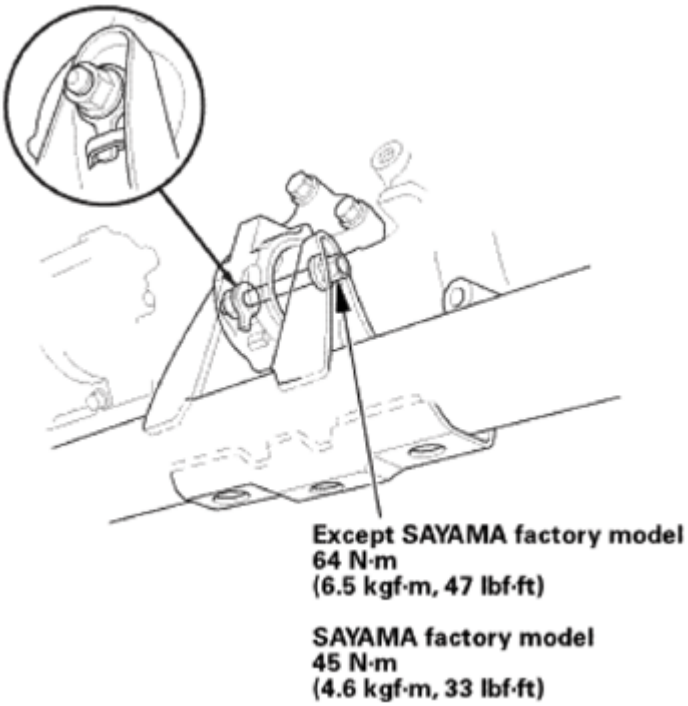

Fig. 2254: Identifying Front Engine Mount Mounting Bolt With Mounting Bolts
Courtesy of AMERICAN HONDA MOTOR CO., INC.

GETtheMANUALS.org

7. Front Splash Shield
    1. Install the front splash shield (A), then install the bolts (B) and the clips (C, D). Make sure the clips snap into place securely.

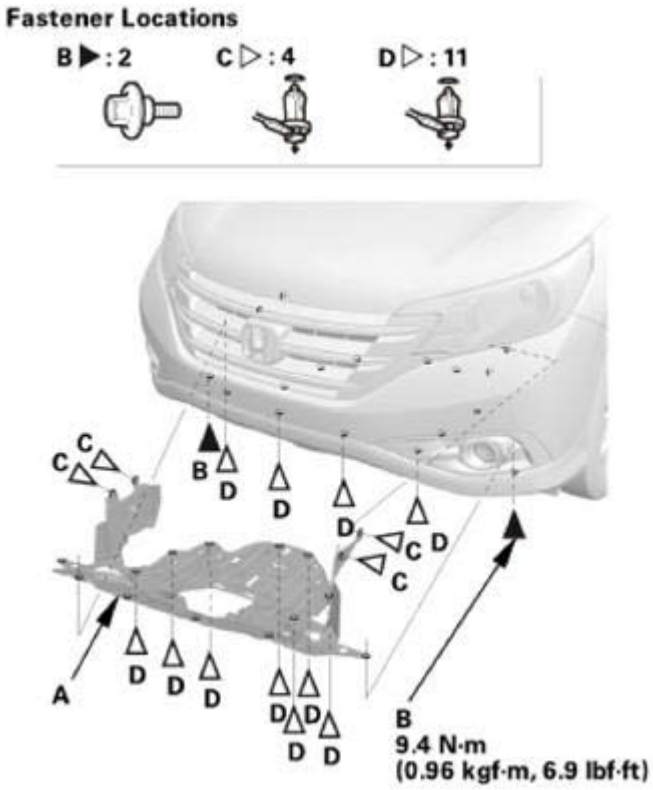

Fig. 2255: Identifying Front Splash Shield, Bolts And Clips With Torque Specification
Courtesy of AMERICAN HONDA MOTOR CO., INC.

8. Battery Base Assembly
    1. Remove the battery base and install the clamps.

GETtheMANUALS.org

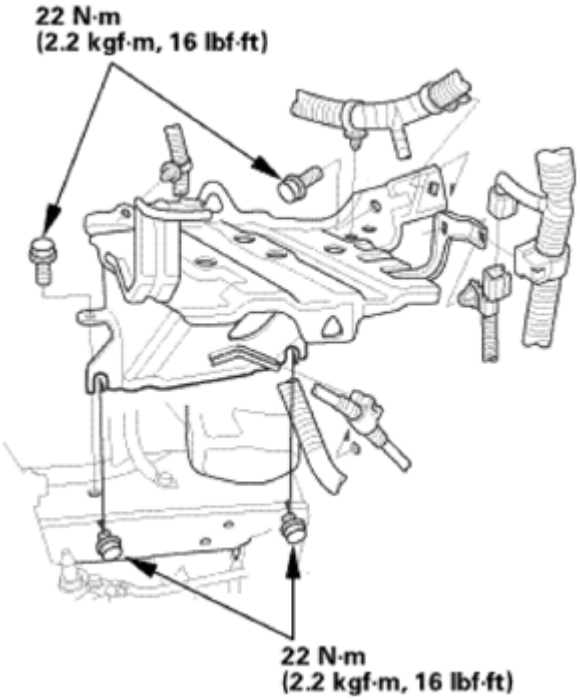

Fig. 2256: Identifying Battery Base, Clamps And Mounting Bolts With Torque Specification
Courtesy of AMERICAN HONDA MOTOR CO., INC.

9. Intake Air Duct
    1. Install the intake air duct.

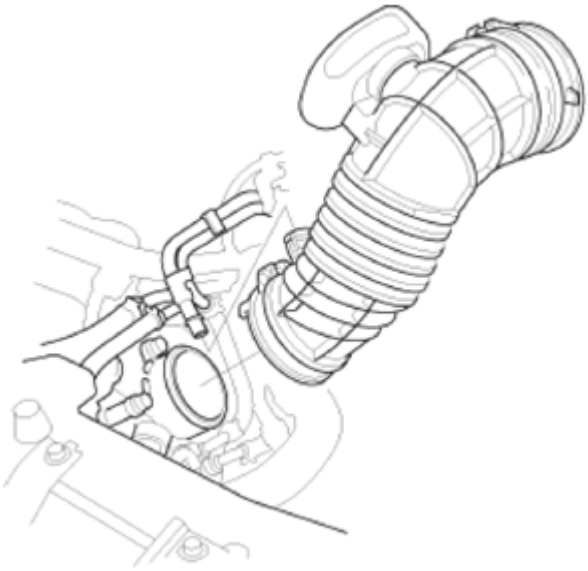

Fig. 2257: Identifying Intake Air Duct
Courtesy of AMERICAN HONDA MOTOR CO., INC.

10. PCM Assembly

GETtheMANUALS.org

1. Install the PCM (D).
2. Connect PCM connectors A, B, and C.

NOTE: **PCM connectors A, B, and C have symbols (A=[], B= delta C=o) embossed on them for identification.**

3. Install the PCM cover (E).

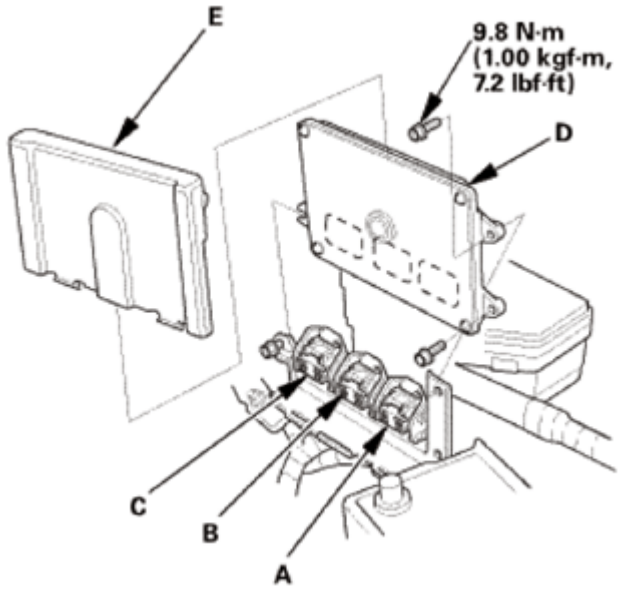

Fig. 2258: Identifying PCM, PCM Cover, PCM Connectors And Mounting Bolts With Torque Specification
Courtesy of AMERICAN HONDA MOTOR CO., INC.

11. Air Cleaner Assembly
    1. Install the air cleaner (A).
    2. Connect the intake air pipe (B) and the intake air duct (C).
    3. Install the harness clamp (D).
    4. Connect the MAF sensor/IAT sensor connector (E).

GETtheMANUALS.org

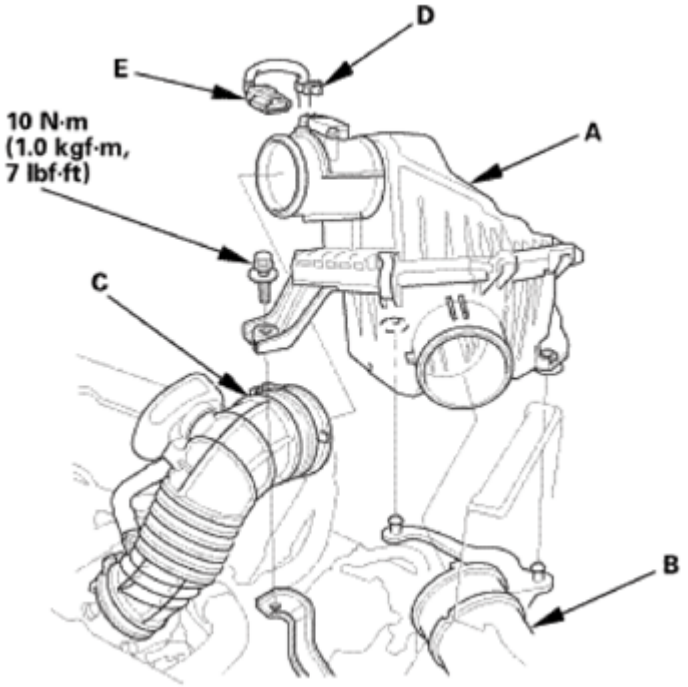

Fig. 2259: Identifying MAF Sensor/IAT Sensor Connector, Harness Clamp, Air Cleaner, Intake Air Pipe And Bolts With Torque Specification
Courtesy of AMERICAN HONDA MOTOR CO., INC.

12. Battery
    1. Install the battery (A) and the battery setting plate (B).

NOTE: **Do not deform the battery setting plate by over-tightening the nuts.**

GETtheMANUALS.org

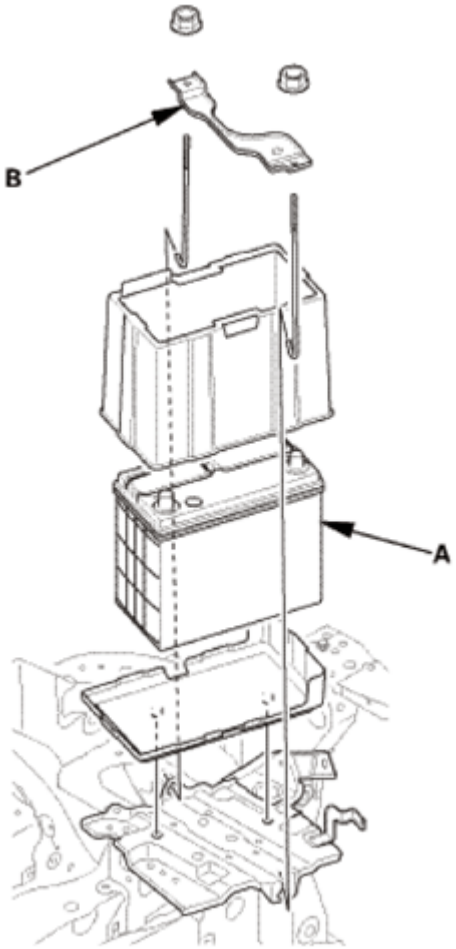

Fig. 2260: Identifying Battery And Battery Setting Plate With Nuts
Courtesy of AMERICAN HONDA MOTOR CO., INC.

13. Battery Terminal - Reconnection

NOTE: If the battery performance is abnormal, test the battery.

1. Clean the battery terminals.
2. Connect the positive cable (A) to the battery.

NOTE: Always connect the positive side first.

3. Connect the negative cable (B) to the battery.
4. Apply multipurpose grease to the terminals to prevent corrosion.

GETtheMANUALS.org

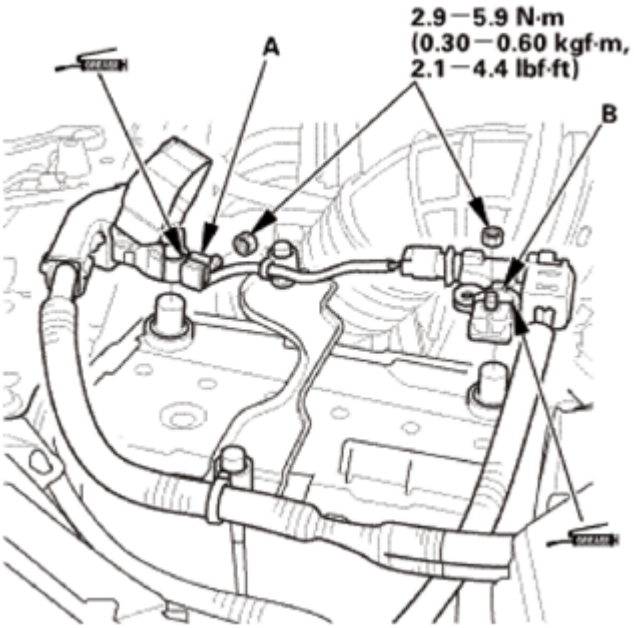

Fig. 2261: Identifying Multipurpose Grease Applying Area Into Battery Terminals
Courtesy of AMERICAN HONDA MOTOR CO., INC.

TRANSMISSION RANGE SWITCH REMOVAL AND INSTALLATION

REMOVAL

1. Transmission Range Switch Cover
    1. Remove the transmission range switch cover (A).

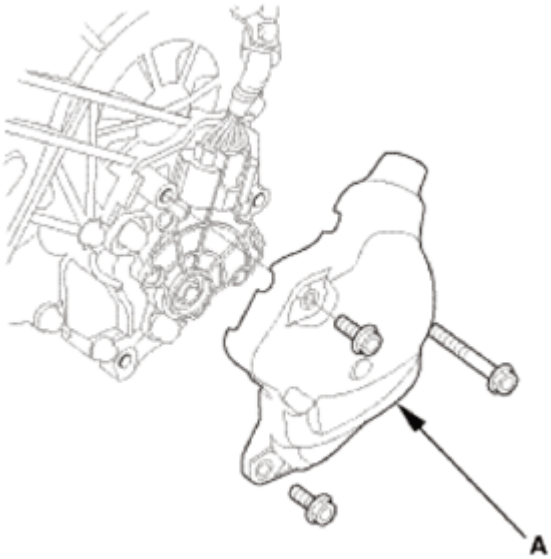

Fig. 2262: Identifying Transmission Range Switch Cover With Bolts
Courtesy of AMERICAN HONDA MOTOR CO., INC.

GETtheMANUALS.org

2. Transmission Range Switch
    1. Shift the shift lever to N.
    2. Remove the transmission range switch (A).

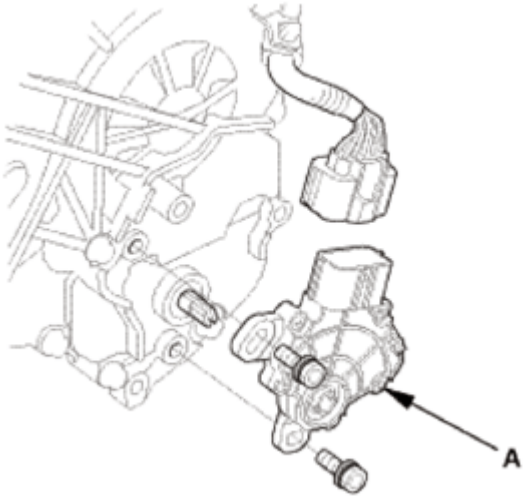

Fig. 2263: Identifying Transmission Range Switch With Bolts
Courtesy of AMERICAN HONDA MOTOR CO., INC.

INSTALLATION

1. Transmission Range Switch
    1. Make sure the selector control shaft is in the N position. If necessary, move the selector control shaft to the N position.

NOTE: **Do not use the selector control shaft to adjust the shift position. If the selector control shaft tips are squeezed together it will cause a faulty signal or position due to play between the selector control shaft and switch.**

GETtheMANUALS.org

Fig. 2264: Moving Selector Control Shaft To N Position
Courtesy of AMERICAN HONDA MOTOR CO., INC.

2. Align the cutouts (A) on the rotary-frame with the neutral positioning cutouts (B) on the transmission range switch (C), then put a 2.0 mm (0.079 in) feeler gauge blade (D) in the cutouts to hold the switch in the N position.

NOTE: **Be sure to use a 2.0 mm (0.079 in) blade or equivalent to hold the switch in the N position.**

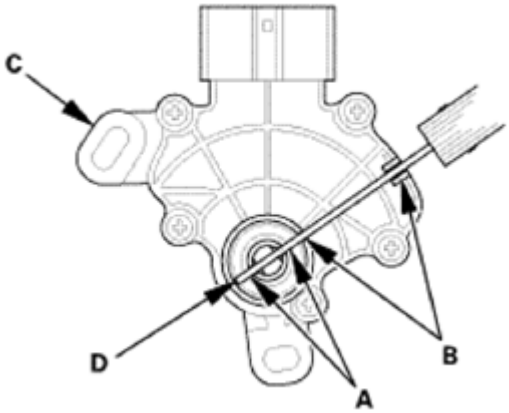

Fig. 2265: Aligning Cutouts On Rotary-Frame With Neutral Positioning Cutouts On Transmission Range Switch
Courtesy of AMERICAN HONDA MOTOR CO., INC.

3. Install the transmission range switch (A) gently on the selector control shaft (B) while holding it in the N position with the 2.0 mm (0.079 in) blade (C).

GETtheMANUALS.org

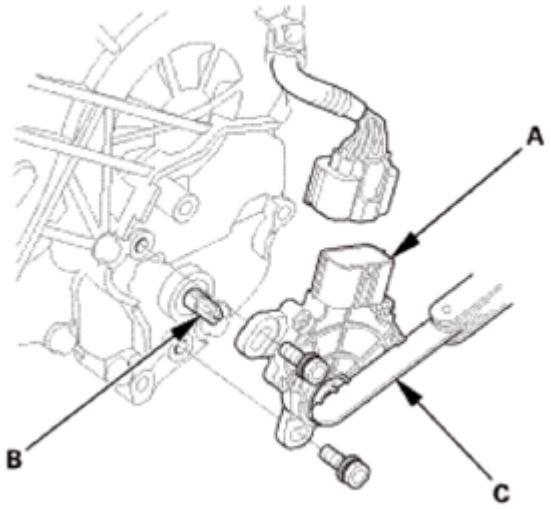

Fig. 2266: Identifying Transmission Range Switch, Selector Control Shaft And Blade
Courtesy of AMERICAN HONDA MOTOR CO., INC.

4. Tighten the bolts on the transmission range switch (A) while you continue holding the N position.

NOTE: **Do not move the transmission range switch when tightening the bolts.**

5. Remove the feeler gauge (B).
6. Check the connector (C) for corrosion, dirt, or oil, and clean or repair if necessary, then connect the connector securely.

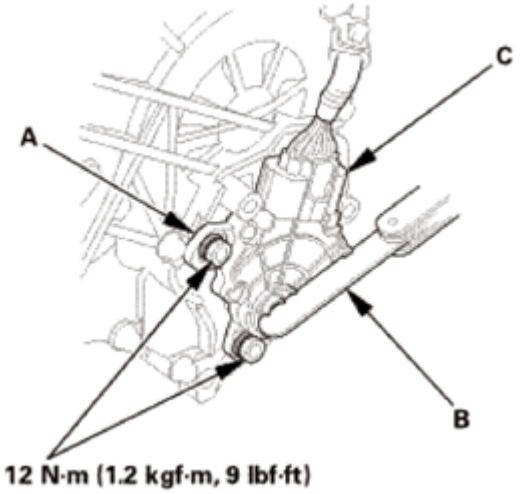

Fig. 2267: Identifying Transmission Range Switch, Connector, Feeler Gauge And Mounting Bolts With Torque Specification
Courtesy of AMERICAN HONDA MOTOR CO., INC.

2. Transmission Range Switch Cover

GETtheMANUALS.org

1. Install the transmission range switch cover (A).

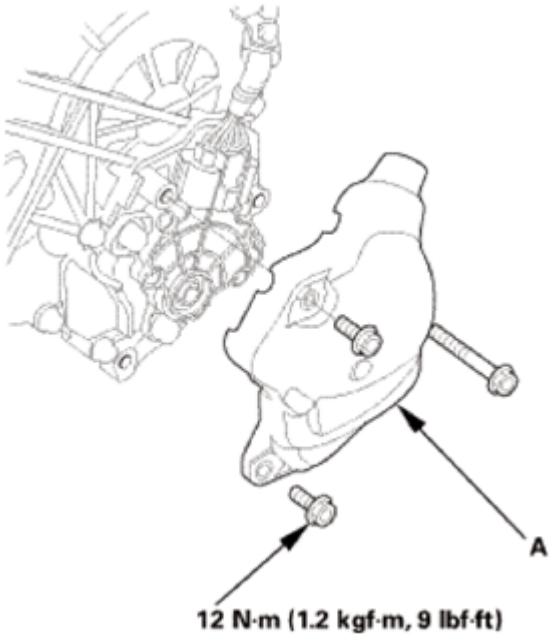

Fig. 2268: Identifying Transmission Range Switch Cover And Mounting Bolts With Torque Specification
Courtesy of AMERICAN HONDA MOTOR CO., INC.

3. After Installing Transmission Range Switch - Check
    1. Turn the ignition switch to ON (II), or press the engine start/stop button to select the ON mode.
    2. Move the shift lever through all positions, and check the transmission range switch synchronization with the A/T gear position indicator.
    3. Check that the engine will start with the shift lever in P and N, and will not start in any other shift lever position.
    4. Check that the back-up lights come on when the shift lever is in R.
    5. Raise the vehicle on a lift, and make sure it is securely supported.
    6. Start the engine, and check the shift lever operation.

GETtheMANUALS.org

HOW TO TROUBLESHOOT THE A/T SYSTEM

HOW TO CHECK FOR DTCS WITH THE HONDA DIAGNOSTIC SYSTEM (HDS)

When the powertrain control module (PCM) senses an abnormality in the input or output system, the D indicator (A) in the gauge control module (B) will usually blink.

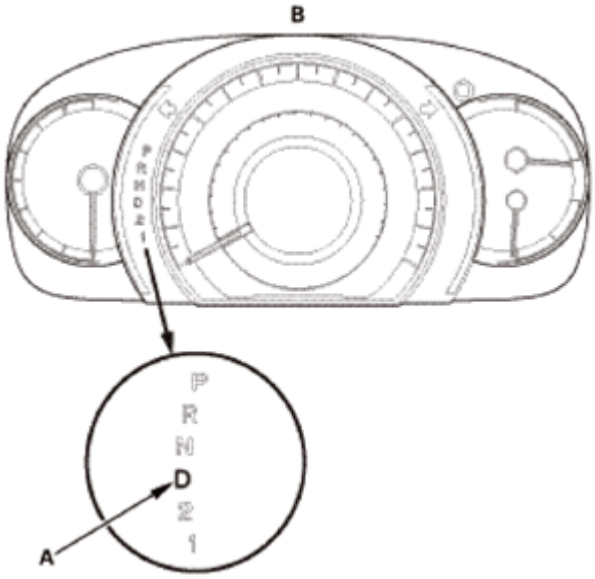

Fig. 1: Identifying D Indicator And Gauge Control Module
Courtesy of AMERICAN HONDA MOTOR CO., INC.

When the Honda Diagnostic System (HDS) is connected to the data link connector (DLC) (A) located under the driver's side of the dashboard, and when the ignition switch is turned to ON (II), and the appropriate menu is selected, it will indicate the diagnostic trouble code (DTC).

GETtheMANUALS.org

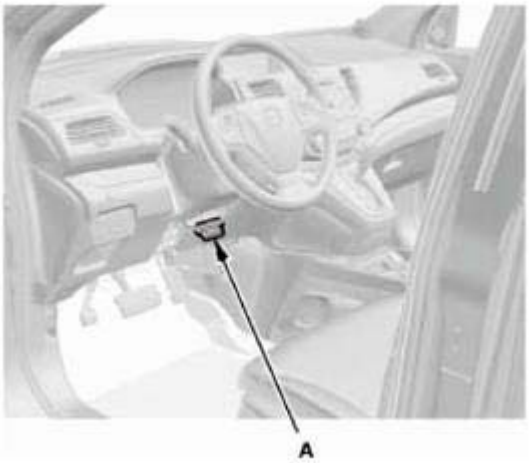

Fig. 2: Locating Data Link Connector
Courtesy of AMERICAN HONDA MOTOR CO., INC.

If the D indicator or the malfunction indicator lamp (MIL) has been reported on, or if a driveability problem is suspected, follow this procedure:

1. Connect the HDS to the DLC. (See the HDS user's manual for specific instructions.)
2. Turn the ignition switch to ON (II). Make sure the HDS communicates with the PCM. If it does not, **GO TO THE DLC CIRCUIT TROUBLESHOOTING.**
3. Check for Pending or Confirmed DTCs with the HDS.
4. Record the freeze data and the on-board snapshots for all fuel and emissions DTCs and A/T DTCs.
5. If there is a fuel and emissions DTC, first check the fuel and emissions system as indicated by the DTC.
6. Clear the DTC.
7. Drive the vehicle for several minutes under the same conditions as those indicated by the freeze data or the on-board snapshot, and then recheck for the DTC. If the A/T DTC returns, go to the indicated DTC's troubleshooting. If the DTC does not return, there was an intermittent problem within the circuit. Make sure all pins and terminals in the circuit are tight.

SYMPTOM TROUBLESHOOTING VERSUS DTC TROUBLESHOOTING

Some symptoms will not set DTCs or cause the D indicator to blink. If the MIL was reported ON or the D indicator has been blinking, check for DTCs. If the vehicle has an abnormal symptom, and there are no DTCs stored, do the symptom troubleshooting. Check the list of probable cause (s) for the symptom, in the sequence listed, until you find the problem.

HOW TO CHECK FOR DTCS WITH THE SCS MODE (RETRIEVING THE FLASH CODES)

NOTE: The preferred method is to use the HDS to retrieve the DTCs.

When the PCM senses an abnormality in the input or output system, the D indicator (A) in the gauge control module (B) will usually blink.

GETtheMANUALS.org

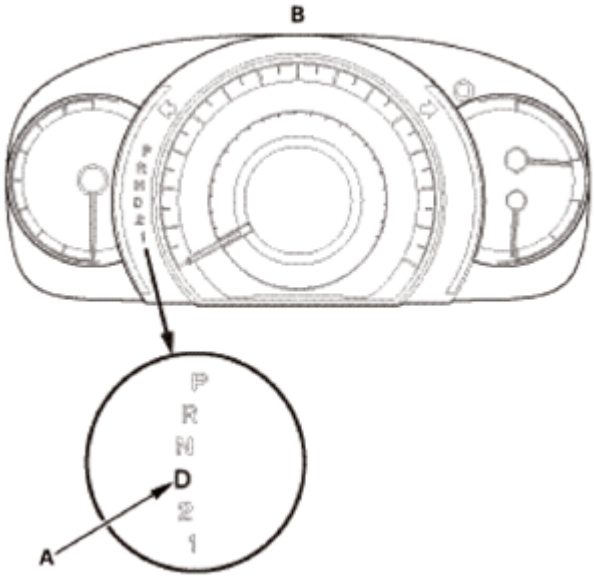

Fig. 3: Identifying D Indicator And Gauge Control Module
Courtesy of AMERICAN HONDA MOTOR CO., INC.

When the D indicator has been reported on, connect the HDS to the DLC (A) located under the driver's side of the dashboard. Turn the ignition switch to ON (II), select SCS mode, then the D indicator will indicate (blink) the DTC.

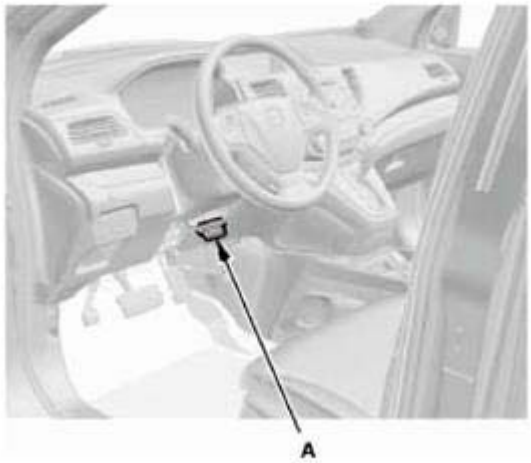

Fig. 4: Locating Data Link Connector
Courtesy of AMERICAN HONDA MOTOR CO., INC.

If the D indicator and the MIL come on at the same time, or if a driveability problem is suspected, follow this procedure:

1. Connect the HDS to the DLC. (See the HDS user's manual for specific instructions.)
2. Turn the ignition switch to ON (II). Make sure the HDS communicates with the PCM. If it does not, **GO TO THE DLC CIRCUIT TROUBLESHOOTING.**

GETtheMANUALS.org

3. Select SCS mode, then observe the D indicator in the gauge control module. Codes 1 through 9 are indicated by individual short blinks. Code 10 and above are indicated by a series of long and short blinks. One long blink equals 10 short blinks. Add the long and short blinks together to determine the code.

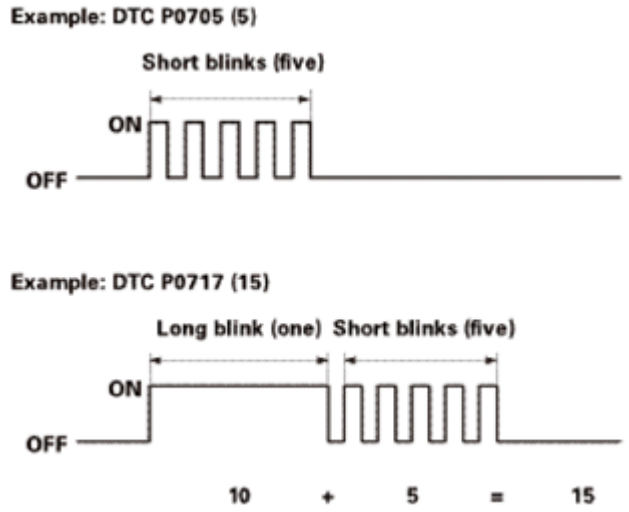

Fig. 5: Identifying D Indicator Long And Short Blinks
Courtesy of AMERICAN HONDA MOTOR CO., INC.

4. Record all fuel and emissions DTCs and A/T DTCs.
5. If there is a fuel and emissions DTC, first check the fuel and emissions system as indicated by the DTC.
6. Clear the DTC.
7. If the freeze data is available, drive the vehicle for several minutes with periods of wide open throttle, steady cruise, and stop and go, and then recheck for DTCs. If the A/T DTC returns, go to the indicated DTC's troubleshooting. If the DTC does not return, there was an intermittent problem within the circuit. Make sure all pins and terminals in the circuit are tight.

HOW TO TROUBLESHOOT CIRCUITS AT THE PCM CONNECTORS

NOTE: **The PCM stays on about an hour after the ignition switch is turned to LOCK (0). Jumping the SCS line after turning the ignition switch to LOCK (0) cancels this function. Disconnecting the PCM during this function, without jumping the SCS line first, can damage the PCM.**

1. Jump the SCS line with the HDS.
2. Remove the cover (A).

GETtheMANUALS.org

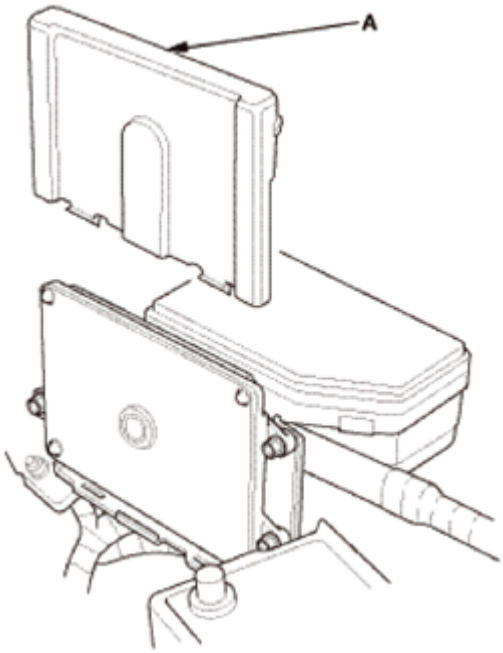

Fig. 6: Identifying PCM Cover
Courtesy of AMERICAN HONDA MOTOR CO., INC.

3. Disconnect PCM connectors A, B, and C.

NOTE: **PCM connectors A, B, and C have symbols (A=[], B=[], C=o) embossed on them for identification.**

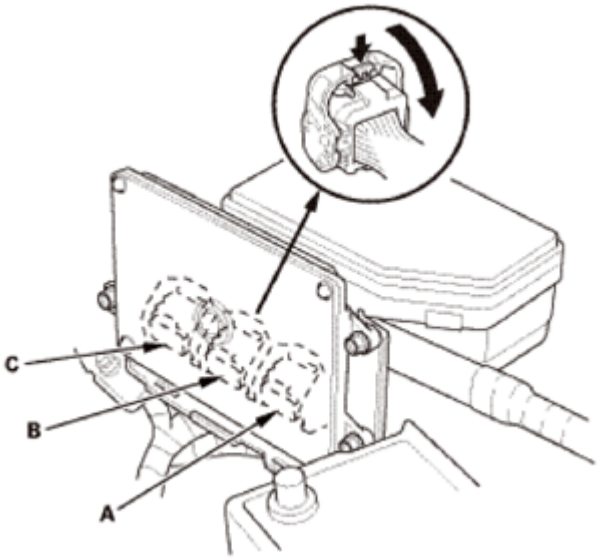

Fig. 7: Disconnecting PCM Connectors A, B, And C
Courtesy of AMERICAN HONDA MOTOR CO., INC.

GETtheMANUALS.org

4. When diagnosis/troubleshooting is done at the PCM connector, use the terminal test port (A) above the terminal you need to check.

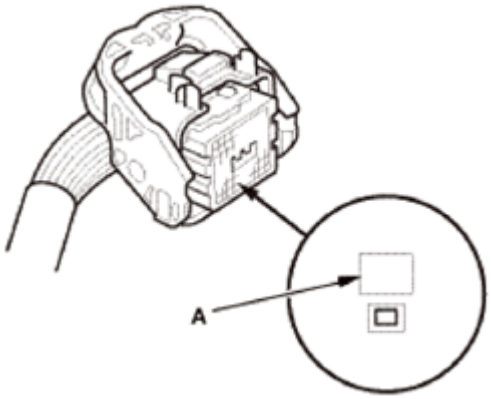

Fig. 8: Identifying Terminal Test Port
Courtesy of AMERICAN HONDA MOTOR CO., INC.

5. Connect one side of the patch cord terminals (A) to a commercially available digital multimeter (B), and connect the other side of the terminals (C) to a commercially available banana jack (Pomona Electronics Tool No. 3563 or equivalent) (D).

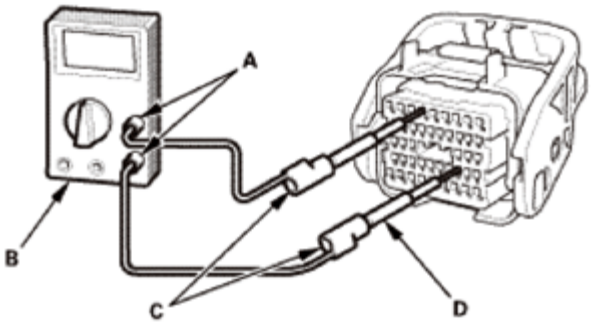

Fig. 9: Connecting Other Side Of Terminals To Commercially Available Banana Jack (Pomona Electronics Tool No. 3563 Or Equivalent)
Courtesy of AMERICAN HONDA MOTOR CO., INC.

6. Gently contact the pin probe (male) at the terminal test port from the terminal side. Do not force the tips into the terminals.

NOTE:

- **For accurate results, always use the pin probe (male).**
- **To prevent damage to the connector terminals, do not insert test equipment probes, paper clips, or other substitutes as they can damage the terminals. Damaged terminals cause a poor connection and an incorrect measurement.**
- **Do not puncture the insulation on a wire. Punctures can cause or eventually lead to poor or intermittent electrical connections.**

GETtheMANUALS.org

CLEAR A/T DTCS PROCEDURE

1. Connect the HDS to the DLC (A) located under the driver's side of the dashboard.

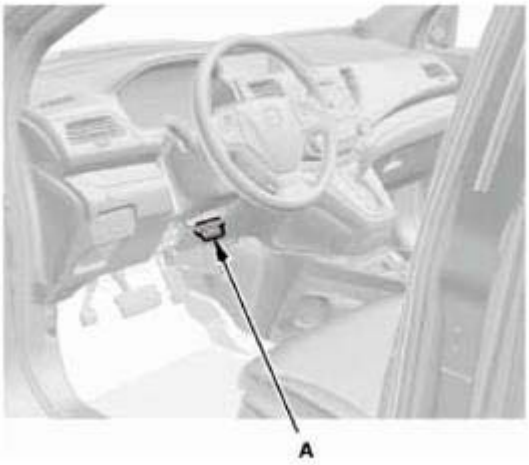

Fig. 10: Locating Data Link Connector
Courtesy of AMERICAN HONDA MOTOR CO., INC.

2. Turn the ignition switch to ON (II).
3. Make sure the HDS communicates with the PCM. If it does not, **GO TO THE DLC CIRCUIT TROUBLESHOOTING.**
4. Clear the DTC(s) on the HDS screen.

OBD STATUS

The OBD STATUS shows the current system status of each DTC and all of the parameters. This function is used to see if the repair was successfully completed. The results of diagnostic tests for the DTC are displayed as:

- PASSED: The on-board diagnosis is successfully completed.
- FAILED: The on-board diagnosis has completed but failed.
- NOT COMPLETED: The on-board diagnosis was running but is out of the enable conditions of the DTC.

HOW TO END A TROUBLESHOOTING SESSION (REQUIRED AFTER ANY TROUBLESHOOTING)

NOTE: Reset the PCM/TCM with the HDS while the engine is stopped.

1. Turn the ignition switch to LOCK (0).
2. Turn the ignition switch to ON (II), and wait for 30 seconds, then disconnect the HDS from the DLC.
3. Start the engine with the shift lever in P or N, and warm it up to normal operating temperature (the radiator fan comes on).

GETtheMANUALS.org

4. To verify that the problem is repaired, test-drive the vehicle for several minutes at speeds over 31 mph (50 km/h) or under the same conditions as those indicated by the freeze data.

PCM/TCM RESET

NOTE: To reset the PCM/TCM, initialize only the automatic transmission memory stored in the PCM or the TCM.

1. Select the A/T system with the HDS.
2. Reset the PCM/TCM with the HDS while the engine is stopped.
3. Turn the ignition switch to LOCK (0).
4. Turn the ignition switch to ON (II), and wait for 30 seconds, then disconnect the HDS from the DLC.

FAILURE REPRODUCTION TECHNIQUE

NOTE: Make sure to follow these points while the vehicle is raised on a lift for the test-drive.

- Disable the VSA (if equipped) by pressing the VSA OFF button.
- ABS or VSA DTC(s) may come on when test-driving on a lift. If the ABS or VSA DTC(s) come on, clear the DTC(s) with the HDS.

SELF-DIAGNOSIS

If the PCM detects the failure of a signal from a sensor, a switch, a solenoid valve, or from another control unit, it stores a Pending or Confirmed DTC. Depending on the failure, a DTC is stored in either the first or second drive cycle. When a Confirmed DTC is stored, the PCM blinks the D indicator and/or turns on the MIL by a signal sent to the gauge control module via F-CAN.

- One Drive Cycle Detection Method:

  When an abnormality occurs in the signal from a sensor, a switch, a solenoid valve, or from another control unit, the PCM stores a Pending or Confirmed DTC for the failure and blinks the D indicator and/or turns on the MIL immediately.

- Two Drive Cycle Detection Method:

  When an abnormality occurs in the signal from a sensor, a switch, a solenoid valve, or from another control unit in the first drive cycle, the PCM stores a Pending DTC. The D indicator and the MIL do not turn on at this time. If the failure continues in the second drive cycle, the PCM stores a Confirmed DTC and blinks the D indicator and/or turns on the MIL.

FAIL-SAFE FUNCTION

When an abnormality occurs in the signal from a sensor, a switch, a solenoid valve, or from another control

GETtheMANUALS.org

unit, the PCM ignores that signal and substitutes a pre-programmed value for that signal to allow the automatic transmission to continue operating. This causes a DTC to be stored and the D indicator to blink and/or the MIL to come on. The transmission may not shift normally during fail-safe operation. Do not run the test-driving diagnosis when the MIL is ON, or the D indicator is blinking.

AUTOMATIC TRANSMISSION SYMPTOM TROUBLESHOOTING INDEX

NOTE: Do an all DTC check with the HDS and troubleshoot those first before following the repair procedures listed in the index.

Symptom	Probable cause(s)	Notes
When you turn the ignition switch to ON (II), the D indicator comes on and stays on in all shift lever positions, or it never comes on at all	• F-CAN communication line error • Gauge control module defective • PCM defective	• **CHECK THE F-CAN COMMUNICATION LINE.** • **CHECK THE A/T GEAR POSITION INDICATOR DRIVE CIRCUIT IN THE GAUGE CONTROL MODULE BY USING THE GAUGE CONTROL MODULE SELF-DIAGNOSTIC FUNCTION.**
A/T gear position indicator does not come on with the shift lever in that position	• F-CAN communication line error • Gauge control module defective • PCM defective • Transmission range switch defective or out of adjustment	• **CHECK THE F-CAN COMMUNICATION LINE.** • **CHECK THE A/T GEAR POSITION INDICATOR DRIVE CIRCUIT IN THE GAUGE CONTROL MODULE BY USING THE GAUGE CONTROL MODULE SELF-DIAGNOSTIC FUNCTION.** • **INSPECT THE TRANSMISSION RANGE SWITCH.**
Shift lever cannot be moved from P while	• Accelerator pedal position sensor circuit • Accelerator pedal position sensor defective • Brake pedal position switch circuit • Brake pedal position switch defective • Shift lock solenoid defective • Shift lock solenoid control circuit	• **INSPECT THE APP SENSOR SIGNAL.** • **TROUBLESHOOT THE SHIFT LOCK SYSTEM CIRCUIT.** • **TEST THE SHIFT LOCK SOLENOID.** • **INSPECT THE TRANSMISSION RANGE**

GETtheMANUALS.org

pressing on the brake pedal	• Shift lock mechanism defective • Throttle body defective • Transmission range switch ATP P switch stuck OFF • Transmission range switch ATP P switch circuit opened • PCM defective • Relative throttle position sensor value too high	**SWITCH.** • **Reset the PCM** . See **HOW TO TROUBLESHOOT THE A/T SYSTEM** or **HOW TO TROUBLESHOOT THE FUEL AND EMISSIONS SYSTEMS**
Ignition switch cannot be moved from ACCESSORY (I) to LOCK (0) (key is pushed in, the shift lever in P)	• Interlock control system circuit • Key interlock solenoid stuck ON • Park pin switch stuck OFF • Transmission range switch defective or out of adjustment	• **TROUBLESHOOT THE KEY INTERLOCK SYSTEM CIRCUIT.** • **INSPECT THE TRANSMISSION RANGE SWITCH.**
Transmission still shifts into 4th or 5th gear in D even though D3 button is pressed	• D3 switch defective • D3 switch circuit defective • Transmission range switch defective or out of adjustment	• **CHECK THE D3 SWITCH CIRCUIT.** • **CHECK THE D3 SWITCH.** • **INSPECT THE TRANSMISSION RANGE SWITCH.**
When you turn ignition switch to ON (II), D3 indicator comes on and stays on in all shift lever positions, or it never comes on at all	• F-CAN communication line error • Gauge control module (tach) defective • PCM defective	• **CHECK THE F-CAN COMMUNICATION LINE.** • **CHECK THE A/T GEAR POSITION INDICATOR DRIVE CIRCUIT IN THE GAUGE CONTROL MODULE BY USING THE GAUGE CONTROL MODULE SELF-DIAGNOSTIC FUNCTION.**
D3 indicator does not	• F-CAN communication line error • Gauge control	• **CHECK THE F-CAN COMMUNICATION LINE.** • **CHECK THE A/T GEAR POSITION INDICATOR DRIVE CIRCUIT IN THE**

GETtheMANUALS.org

come on in D3 driving mode	module (tach) defective • D3 switch defective • D3 switch circuit defective • PCM defective	**GAUGE CONTROL MODULE BY USING THE GAUGE CONTROL MODULE SELF-DIAGNOSTIC FUNCTION.** • **CHECK THE D3 SWITCH CIRCUIT.** • **CHECK THE D3 SWITCH.**
Speedometer and odometer do not work	Output shaft (countershaft) speed sensor defective	Check the output shaft (countershaft) speed sensor installation. Inspect the sensor O-ring for wear and damage.
HDS does not communicate with the PCM	DLC circuit error	**TROUBLESHOOT THE DLC CIRCUIT.**
Engine runs, but vehicle does not move in any gear	• Low ATF level • Shift cable broken or out of adjustment • Connection between shift cable and transmission or body is worn • ATF pump worn or binding • Regulator valve stuck or spring worn • ATF strainer clogged • Mainshaft worn or damaged • Final gears worn or damaged	• Check the ATF level, and check the ATF lines for leakage and loose connections. If necessary, clean the ATF lines. • Check for a loose shift cable at the shift lever and the selector control shaft. • **CHECK THE LINE PRESSURE.** • Improper alignment of the ATF pump and the torque converter housing may cause ATF pump seizure. The symptoms are mostly an rpm-related ticking noise or a high pitched squeak. • Be careful not to damage the torque converter housing when replacing the main ball bearing. You may also damage the ATF pump when you torque down the main valve body. This will cause ATF pump seizure. • Install the main seal flush with the torque converter housing when replacing the main seal. If you push it into the torque converter housing until it bottoms out, it will block the fluid return passage and result in damage. • Check the regulator valve in the regulator valve body. • Check the ATF strainer for debris. If the strainer is clogged, find the damaged components that caused the debris. • Inspect the mainshaft for wear and damage. • Inspect the final drive gear and the final driven gear for wear and damage. • Check the axles.
		• Check the 1st accumulator in the regulator valve body.

GETtheMANUALS.org

Vehicle does not move in 1st	• 1st accumulator defective • 1st gears worn or damaged • 1st clutch defective	• Inspect the countershaft 1st gear and the secondary shaft 1st gear for wear and damage. • **CHECK THE 1ST CLUTCH PRESSURE.** • Inspect the clearance between the clutch end-plate and the top disc. If the clearance is out of tolerance, replace the 1st clutch. • Inspect the 1st clutch feed pipe. If the 1st clutch feed pipe is scored, replace the end cover. • Replace the secondary shaft if the bushing for the 1st clutch feed pipe is loose or damaged.
Vehicle does not move in 2nd	• 2nd accumulator defective • 2nd gears worn or damaged • 2nd clutch defective	• Check the 2nd accumulator in the servo body. • Inspect the countershaft 2nd gear and the secondary shaft 2nd gear for wear and damage. • **CHECK THE 2ND CLUTCH PRESSURE.** • Inspect the clearance between the clutch end-plate and the top disc. If the clearance is out of tolerance, replace the 2nd clutch.
Vehicle does not move in R	• Shift solenoid valve E defective • Shift fork shaft stuck • Shift valve E defective • 4th/reverse accumulator defective • 4th clutch defective • Reverse gears worn or damaged	• Test the solenoid valve function with the HDS. • Inspect shift solenoid valve E for seizure, and the O-rings for wear and damage. • Check for a missing shift fork bolt on the shift fork shaft. • Check the shift fork shaft detent for wear and damage. • Check shift valve E in the main valve body. • Check the 4th accumulator in the servo body. • **CHECK THE 4TH CLUTCH PRESSURE.** • Inspect the clearance between the clutch end-plate and the top disc. If the clearance is out of tolerance, replace the 4th clutch. • Inspect the reverse selector gear teeth chamfers, and inspect the engagement teeth chamfers of the countershaft 4th gear and the reverse gear. Replace the reverse gears and the reverse selector if they are worn or damaged. If the transmission makes clicking, grinding, whirring noise, also replace the mainshaft 4th gear, the reverse idler gear, and the countershaft 4th gear.
		• Check the ATF level, and check the ATF lines for leakage and loose connections. If necessary, clean the ATF lines. • Check for a loose shift cable at the shift lever

GETtheMANUALS.org

Poor acceleration; engine revs up abnormally high when starting off in all shift lever positions; stall speed high in 1st and 2nd	• Low ATF level • Shift cable broken or out of adjustment • ATF pump worn or binding • Regulator valve stuck or spring worn • ATF strainer clogged • Torque converter check valve defective	and the selector control shaft. • **CHECK THE LINE PRESSURE.** • Improper alignment of the ATF pump and the torque converter housing may cause ATF pump seizure. The symptoms are mostly an rpm-related ticking noise or a high pitched squeak. • Be careful not to damage the torque converter housing when replacing the main ball bearing. You may also damage the ATF pump when you torque down the main valve body. This will cause ATF pump seizure. • Install the main seal flush with the torque converter housing when replacing the main seal. If you push it into the torque converter housing until it bottoms out, it will block the fluid return passage and result in damage. • Check the regulator valve in the regulator valve body. • Check the ATF strainer for debris. If the strainer is clogged, find the damaged components that caused the debris. • Check the torque converter check valve in the regulator valve body.
Poor acceleration; engine revs up abnormally high when starting off in all shift lever positions; stall speed high when starting off in 2nd	2nd clutch defective	• **CHECK THE 2ND CLUTCH PRESSURE.** • Inspect the clearance between the clutch end-plate and the top disc. If the clearance is out of tolerance, replace the 2nd clutch.
Poor acceleration; engine revs up abnormally high when starting off in all shift lever positions; stall speed high in R	• Shift cable broken or out of adjustment • 4th clutch defective	• Check for a loose shift cable at the shift lever and the selector control shaft. • **CHECK THE 4TH CLUTCH PRESSURE.** • Inspect the clearance between the clutch end-plate and the top disc. If the clearance is out of tolerance, replace the 4th clutch.
Poor acceleration; stall speed low in 1st and 2nd	• Shift solenoid valve E defective • Torque converter one-way clutch defective • Engine output low • Torque converter	• Test the solenoid valve function with the HDS. • Inspect shift solenoid valve E for seizure, and the O-rings for wear and damage. • Replace the torque converter. • Check the engine control system.

GETtheMANUALS.org

	clutch piston defective • Lock-up shift valve defective	• Check the lock-up shift valve in the regulator valve body.
Poor acceleration; stall speed low in R	• Torque converter one-way clutch defective • Engine output low • Torque converter clutch piston defective • Lock-up shift valve defective	• Replace the torque converter. • Check the engine control system. • Check the lock-up shift valve in the regulator valve body.
Engine idle vibration	• Low ATF level • Shift solenoid valve E defective • Drive plate defective or transmission misassembled • Engine output low • Torque converter clutch piston defective • ATF pump worn or damaged • Lock-up shift valve defective	• Check the ATF level, and check the ATF lines for leakage and loose connections. If necessary, clean the ATF lines. • Test the solenoid valve function with the HDS. • Inspect shift solenoid valve E for seizure, and the O-rings for wear and damage. • Check the transmission and drive plate installation. • Check the drive plate for wear and damage, if the drive plate is worn or damaged, replace the drive plate. • Adjust the transmission and engine mounts by loosening and retightening the mount bolts. • Check the engine control system. • Replace the torque converter. • **CHECK THE LINE PRESSURE.** • Improper alignment of the ATF pump and the torque converter housing may cause ATF pump seizure. The symptoms are mostly an rpm-related ticking noise or a high pitched squeak. • Be careful not to damage the torque converter housing when replacing the main ball bearing. You may also damage the ATF pump when you torque down the main valve body. This will cause ATF pump seizure. • Install the main seal flush with the torque converter housing when replacing the main seal. If you push it into the torque converter housing until it bottoms out, it will block the fluid return passage and result in damage.

GETtheMANUALS.org

		• Check the lock-up shift valve in the regulator valve body.
Vehicle moves in N	• Excessive ATF • Foreign material in separator plate orifice • Relief valve defective • 1st clutch defective • 2nd clutch defective • 3rd clutch defective • 4th clutch defective • 5th clutch defective • Clearance between clutch end-plate and top disc incorrect • Needle bearing seized, worn, or damaged • Thrust washer seized, worn, or damaged	• Check the ATF level, and drain the ATF if it is overfilled. • Check for a clogged orifice in the separator plate. If the orifice is clogged, remove it, and clean the separator plate orifice. • Check the ATF strainer for debris. If the strainer is clogged with particles of steel or aluminum, inspect the ATF pump. If the ATF pump is OK, find the damaged components that caused the debris. If no cause for contamination is found, replace the torque converter. • Check the relief valve in the main valve body. • **CHECK THE ALL CLUTCH PRESSURES.** • Inspect the clearance between the clutch end-plate and the top disc. If the clearance is out of tolerance, replace faulty clutch. • Inspect the 1st clutch feed pipe. If the 1st clutch feed pipe is scored, replace the end cover. • Replace the secondary shaft if the bushing for the 1st clutch feed pipe is loose or damaged. • Inspect the 3rd clutch feed pipe. If the 3rd clutch feed pipe is scored, replace the end cover. • Replace the secondary shaft if the bushing for the 3rd clutch feed pipe is loose or damaged. • Inspect the 5th clutch feed pipe. If the 5th clutch feed pipe is scored, replace the end cover. • Replace the mainshaft if the bushing for the 5th clutch feed pipe is loose or damaged. • Check the needle bearings on the mainshaft, the countershaft, and the secondary shaft for wear and damage. • Inspect the thrust washers on the mainshaft and the secondary shaft.
	• Shift solenoid valve E defective • A/T clutch pressure control solenoid valve A defective • A/T clutch pressure control solenoid valve B defective	• Test the solenoid valve function with the HDS. • Inspect shift solenoid valve E for seizure, and the O-rings for wear and damage. • Inspect the A/T clutch pressure control solenoid valve body gasket, the ATF feed pipes, and the O-rings, for wear and damage. • Check for a loose shift cable at the shift lever

GETtheMANUALS.org

Delayed engagement after shifting from N to D or excessive shock when shifted into D	• A/T clutch pressure control solenoid valve C defective • Shift cable broken or out of adjustment • Connection between shift cable and transmission or body is worn • Input shaft (mainshaft) speed sensor defective • Output shaft (countershaft) speed sensor defective • ATF temperature sensor defective • Foreign material in separator plate orifice • Servo control valve defective • 1st accumulator defective • 1st check ball stuck • Lock-up shift valve defective • 1st clutch defective	and the selector control shaft. • Check the input shaft (mainshaft) speed sensor and output shaft (countershaft) speed sensor installation. Inspect the sensor O-rings for wear and damage. • Check for a clogged orifice in the separator plate. If the orifice is clogged, remove it, and clean the separator plate orifice. • Check the ATF strainer for debris. If the strainer is clogged with particles of steel or aluminum, inspect the ATF pump. If the ATF pump is OK, find the damaged components that caused the debris. If no cause for contamination is found, replace the torque converter. • Check the servo control valve in the main valve body. • Check the 1st accumulator in the regulator valve body. • Check that the 1st check ball is not stuck in the main valve body. • Check the lock-up shift valve in the regulator valve body. • **CHECK THE 1ST CLUTCH PRESSURE.** • Inspect the clearance between the clutch end-plate and the top disc. If the clearance is out of tolerance, replace the 1st clutch. • Inspect the 1st clutch feed pipe. If the 1st clutch feed pipe is scored, replace the end cover. • Replace the secondary shaft if the bushing for the 1st clutch feed pipe is loose or damaged.
	• Shift solenoid valve E defective • A/T clutch pressure control solenoid valve A defective • Shift cable broken or out of adjustment • Connection between shift cable and transmission or body is worn • Input shaft	• Test the solenoid valve function with the HDS. • Inspect shift solenoid valve E for seizure, and the O-rings for wear and damage. • Inspect the A/T clutch pressure control solenoid valve body gasket, the ATF feed pipes, and the O-rings, for wear and damage. • Check for a loose shift cable at the shift lever and the selector control shaft. • Check the input shaft (mainshaft) speed sensor and output shaft (countershaft) speed sensor installation. Inspect the sensor O-rings for wear and damage.

GETtheMANUALS.org

Delayed engagement after shifting from N to R, or excessive shock when shifted into R	(mainshaft) speed sensor defective • Output shaft (countershaft) speed sensor defective • ATF temperature sensor defective • Shift fork shaft stuck • Foreign material in separator plate orifice • Shift valve E defective • 4th/reverse accumulator defective • Lock-up shift valve defective • 4th clutch defective	• Check for a missing shift fork bolt on the shift fork shaft. • Check the shift fork shaft detent for wear and damage. • Check for a clogged orifice in the separator plate. If the orifice is clogged, remove it, and clean the separator plate orifice. • Check the ATF strainer for debris. If the strainer is clogged with particles of steel or aluminum, inspect the ATF pump. If the ATF pump is OK, find the damaged components that caused the debris. If no cause for contamination is found, replace the torque converter. • Check shift valve E in the main valve body. • Check the 4th accumulator in the servo body. • Check the lock-up shift valve in the regulator valve body. • **CHECK THE 4TH CLUTCH PRESSURE.** • Inspect the clearance between the clutch end-plate and the top disc. If the clearance is out of tolerance, replace the 4th clutch.
Transmission does not shift	• Input shaft (mainshaft) speed sensor defective • Output shaft (countershaft) speed sensor defective	Check the input shaft (mainshaft) speed sensor and output shaft (countershaft) speed sensor installation. Inspect the sensor O-rings for wear and damage.
Excessive shock or engine revs up abnormally high on all upshifts and downshifts	• A/T clutch pressure control solenoid valve B defective • A/T clutch pressure control solenoid valve C defective • Input shaft (mainshaft) speed sensor defective • Output shaft (countershaft) speed sensor defective • ATF temperature sensor defective	• Test the solenoid valve function with the HDS. • Inspect the A/T clutch pressure control solenoid valve body gasket, the ATF feed pipes, and the O-rings for wear and damage. • Check the input shaft (mainshaft) speed sensor and output shaft (countershaft) speed sensor installation. Inspect the sensor O-rings for wear and damage. • Check for a clogged orifice in the separator plate. If the orifice is clogged, remove it, and clean the separator plate orifice. • Check the ATF strainer for debris. If the strainer is clogged with particles of steel or aluminum, inspect the ATF pump. If the ATF pump is OK,

GETtheMANUALS.org

	• Foreign material in separator plate orifice	find the damaged components that caused the debris. If no cause for contamination is found, replace the torque converter.
Excessive shock or engine revs up abnormally high on 1-2 upshift or 2-1 downshift	• Shift solenoid valve E defective • A/T clutch pressure control solenoid valve A defective • A/T clutch pressure control solenoid valve B defective • A/T clutch pressure control solenoid valve C defective • Transmission fluid pressure switch A (2nd clutch) defective • Foreign material in separator plate orifice • 1st accumulator defective • 2nd accumulator defective • 1st check ball stuck • 2nd check ball stuck • Lock-up shift valve defective • 1st clutch defective • 2nd clutch defective	• Test the solenoid valve function with the HDS. • Inspect shift solenoid valve E for seizure, and the O-rings for wear and damage. • Inspect the A/T clutch pressure control solenoid valve body gasket, the ATF feed pipes, and the O-rings for wear and damage. • Check for a clogged orifice in the separator plate. If the orifice is clogged, remove it, and clean the separator plate orifice. • Check the ATF strainer for debris. If the strainer is clogged with particles of steel or aluminum, inspect the ATF pump. If the ATF pump is OK, find the damaged components that caused the debris. If no cause for contamination is found, replace the torque converter. • Inspect the 1st accumulator in the regulator valve body. • Inspect the 2nd accumulator in the servo body. • Check that the 1st and 2nd check balls are not stuck in the main valve body. • **CHECK THE 1ST AND 2ND CLUTCH PRESSURES.** • Inspect the clearance between the clutch end-plate and the top disc. If the clearance is out of tolerance, replace faulty clutch. • Inspect the 1st clutch feed pipe. If the 1st clutch feed pipe is scored, replace the end cover. • Replace the secondary shaft if the bushing for the 1st clutch feed pipe is loose or damaged.
	• A/T clutch pressure control solenoid valve B defective • A/T clutch pressure control solenoid valve C defective • Transmission fluid	• Test the solenoid valve function with the HDS. • Inspect the A/T clutch pressure control solenoid valve body gasket, the ATF feed pipes, and the O-rings for wear and damage. • Check for a clogged orifice in the separator plate. If the orifice is clogged, remove it, and clean the separator plate orifice. • Check the ATF strainer for debris. If the strainer is clogged with particles of steel or aluminum, inspect the ATF pump. If the ATF pump is OK,

GETtheMANUALS.org

Excessive shock or engine revs up abnormally high on 2-3 upshift or 3-2 downshift	pressure switch B (3rd clutch) defective • Foreign material in separator plate orifice • 2nd accumulator defective • 3rd accumulator defective • 2nd check ball stuck • 2nd clutch defective • 3rd clutch defective	find the damaged components that caused the debris. If no cause for contamination is found, replace the torque converter. • Check the 2nd accumulator in the servo body. • Check the 3rd accumulator in the regulator valve body. • Check that the 2nd check ball is not stuck in the main valve body. • **CHECK THE 2ND AND 3RD CLUTCH PRESSURES.** • Inspect the clearance between the clutch end-plate and the top disc. If the clearance is out of tolerance, replace faulty clutch. • Inspect the 3rd clutch feed pipe. If the 3rd clutch feed pipe is scored, replace the end cover. • Replace the secondary shaft if the bushing for the 3rd clutch feed pipe is loose or damaged.
Excessive shock or engine revs up abnormally high on 3-4 upshift or 4-3 downshift	• A/T clutch pressure control solenoid valve B defective • A/T clutch pressure control solenoid valve C defective • Foreign material in separator plate orifice • 3rd accumulator defective • 4th accumulator defective • 3rd clutch defective • 4th clutch defective	• Test the solenoid valve function with the HDS. • Inspect the A/T clutch pressure control solenoid valve body gasket, the ATF feed pipes, and the O-rings for wear and damage. • Check for a clogged orifice in the separator plate. If the orifice is clogged, remove it, and clean the separator plate orifice. • Check the ATF strainer for debris. If the strainer is clogged with particles of steel or aluminum, inspect the ATF pump. If the ATF pump is OK, find the damaged components that caused the debris. If no cause for contamination is found, replace the torque converter. • Check the 3rd accumulator in the regulator valve body. • Check the 4th accumulator in the servo body. • **CHECK THE 3RD AND 4TH CLUTCH PRESSURES.** • Inspect the clearance between the clutch end-plate and the top disc. If the clearance is out of tolerance, replace faulty clutch. • Inspect the 3rd clutch feed pipe. If the 3rd clutch feed pipe is scored, replace the end cover. • Replace the secondary shaft if the bushing for the 3rd clutch feed pipe is loose or damaged.
		• Test the solenoid valve function with the HDS.

GETtheMANUALS.org

Excessive shock or engine revs up abnormally high on 4-5 upshift or 5-4 downshift	• A/T clutch pressure control solenoid valve B defective • A/T clutch pressure control solenoid valve C defective • Foreign material in separator plate orifice • 4th accumulator defective • 5th accumulator defective • 4th clutch defective • 5th clutch defective	• Inspect the A/T clutch pressure control solenoid valve body gasket, the ATF feed pipes, and the O-rings for wear and damage. • Check for a clogged orifice in the separator plate. If the orifice is clogged, remove it, and clean the separator plate orifice. • Check the ATF strainer for debris. If the strainer is clogged with particles of steel or aluminum, inspect the ATF pump. If the ATF pump is OK, find the damaged components that caused the debris. If no cause for contamination is found, replace the torque converter. • Check the 4th and 5th accumulators in the servo body. • **CHECK THE 4TH AND 5TH CLUTCH PRESSURES.** • Inspect the clearance between the clutch end-plate and the top disc. If the clearance is out of tolerance, replace faulty clutch. • Inspect the 5th clutch feed pipe. If the 5th clutch feed pipe is scored, replace the end cover. • Replace the mainshaft if the bushing for the 5th clutch feed pipe is loose or damaged.
Noise from transmission in all shift lever positions	• ATF pump worn or damaged • Mainshaft bearing, countershaft bearing, or secondary shaft bearing defective	• **CHECK THE LINE PRESSURE.** • Improper alignment of the ATF pump and the torque converter housing may cause ATF pump seizure. The symptoms are mostly an rpm-related ticking noise or a high pitched squeak. • Be careful not to damage the torque converter housing when replacing the main ball bearing. You may also damage the ATF pump when you torque down the main valve body. This will cause ATF pump seizure. • Install the main seal flush with the torque converter housing when replacing the main seal. If you push it into the torque converter housing until it bottoms out, it will block the fluid return passage and result in damage. • Inspect the mainshaft, countershaft, and secondary shaft bearing for wear and damage.
Vehicle does not accelerate above 31 mph (50 km/h)	Torque converter one-way clutch defective	Replace the torque converter.

GETtheMANUALS.org

Vibration in all shift lever positions	Drive plate defective or transmission misassembled	• Check the transmission and drive plate installation. • Check the drive plate for wear and damage, if the drive plate is worn or damaged, replace the drive plate. • Adjust the transmission and engine mounts by loosening and retightening the mount bolts.
Shift lever does not operate smoothly	• Transmission range switch defective or out of adjustment • Shift cable broken or out of adjustment • Connection between shift cable and transmission or body is worn	• Inspect the transmission range switch. If the transmission range switch is faulty, replace it. If the transmission range switch is out of adjustment, adjust it and the shift cable. • Check for a loose shift cable at the shift lever and the selector control shaft.
Transmission does not shift into P	• Shift cable broken or out of adjustment • Connection between shift cable and transmission or body is worn • Park mechanism defective	• Check for a loose shift cable at the shift lever and the selector control lever. • Check the park pawl spring installation and the park lever spring installation. If installation is incorrect, install the spring correctly. Make sure that the park lever stop is not installed upside down. Check the distance between the park pawl shaft and the park lever pin. If the distance is out of tolerance, adjust the distance with the park lever stop.
Torque converter clutch does not disengage; engine stalls easily	• Shift solenoid valve E defective • A/T clutch pressure control solenoid valve A defective • Torque converter clutch piston defective • Lock-up shift valve defective • Lock-up control valve defective	• Test the solenoid valve function with the HDS. • Inspect shift solenoid valve E for seizure, and the O-rings for wear and damage. • Inspect the A/T clutch pressure control solenoid valve body gasket, the ATF feed pipes, and the O-rings for wear and damage. • Replace the torque converter. • Check the lock-up shift valve in the regulator valve body. • Check the lock-up control valve in the main valve body.
	• Shift solenoid valve E defective • A/T clutch pressure control solenoid	• Test the solenoid valve function with the HDS. • Inspect shift solenoid valve E for seizure, and the O-rings for wear and damage.

GETtheMANUALS.org

Torque converter clutch does not disengage; no power at low to medium speed	valve A defective • Torque converter clutch piston defective • Lock-up shift valve defective • Lock-up control valve defective	• Inspect the A/T clutch pressure control solenoid valve body gasket, the ATF feed pipes, and the O-rings for wear and damage. • Replace the torque converter. • Check the lock-up shift valve in the regulator valve body. • Check the lock-up control valve in the main valve body.
Torque converter clutch does not disengage; booming noise or vibration at low to medium speed	• Shift solenoid valve E defective • A/T clutch pressure control solenoid valve A defective • Torque converter clutch piston defective • Lock-up shift valve defective • Lock-up control valve defective	• Test the solenoid valve function with the HDS. • Inspect shift solenoid valve E for seizure, and the O-rings for wear and damage. • Inspect the A/T clutch pressure control solenoid valve body gasket, the ATF feed pipes, and the O-rings for wear and damage. • Replace the torque converter. • Check the lock-up shift valve in the regulator valve body. • Check the lock-up control valve in the main valve body.
Torque converter clutch does not disengage; excessive shift shock	• Shift solenoid valve E defective • A/T clutch pressure control solenoid valve A defective • Torque converter clutch piston defective • Lock-up shift valve defective • Lock-up control valve defective	• Test the solenoid valve function with the HDS. • Inspect shift solenoid valve E for seizure, and the O-rings for wear and damage. • Inspect the A/T clutch pressure control solenoid valve body gasket, the ATF feed pipes, and the O-rings for wear and damage. • Replace the torque converter. • Check the lock-up shift valve in the regulator valve body. • Check the lock-up control valve in the main valve body.
Torque converter clutch does not operate smoothly	• Shift solenoid valve E defective • A/T clutch pressure control solenoid valve A defective • Torque converter clutch piston defective • Torque converter check valve	• Test the solenoid valve function with the HDS. • Inspect shift solenoid valve E for seizure, and the O-rings for wear and damage. • Inspect the A/T clutch pressure control solenoid valve body gasket, the ATF feed pipes, and the O-rings for wear and damage. • Replace the torque converter. • Check the torque converter check valve in the regulator valve body.

GETtheMANUALS.org

	defective • Lock-up shift valve defective • Lock-up control valve defective	• Check the lock-up shift valve in the regulator valve body. • Check the lock-up control valve in the main valve body.
Torque converter clutch does not engage	• Shift solenoid valve E defective • A/T clutch pressure control solenoid valve A defective • Input shaft (mainshaft) speed sensor defective • Output shaft (countershaft) speed sensor defective • Torque converter clutch piston defective • Torque converter check valve defective • Lock-up shift valve defective • Lock-up control valve defective	• Test the solenoid valve function with the HDS. • Inspect shift solenoid valve E for seizure, and the O-rings for wear and damage. • Inspect the A/T clutch pressure control solenoid valve body gasket, the ATF feed pipes, and the O-rings for wear and damage. • Check the input shaft (mainshaft) speed sensor and output shaft (countershaft) speed sensor installation. Inspect the sensor O-rings for wear and damage. • Replace the torque converter. • Check the torque converter check valve in the regulator valve body. • Check the lock-up shift valve in the regulator valve body. • Check the lock-up control valve in the main valve body.
A/T gear position indicator does not indicate shift lever positions	• Transmission range switch defective or out of adjustment • Shift cable broken or out of adjustment • Connection between shift cable and transmission or body is worn	• Inspect the transmission range switch. If the transmission range switch is faulty, replace it. If the transmission range switch is out of adjustment, adjust it and the shift cable. • Check for a loose shift cable at the shift lever and the selector control lever.
Engine does not rev to high rpm, and the transmission upshifts at low rpm (engine at normal operating temperature)	• Engine rocker arm defective • Low fuel pressure • Engine low on power	• CHECK THE ENGINE ROCKER ARMS • Monitor fuel pressure when problem occurs • Check compression • Check for a restricted exhaust

GETtheMANUALS.org

A/T CLUTCH PRESSURE CONTROL SOLENOID VALVE A TEST

TEST

1. HDS DLC - Connection
    1. Connect the HDS to the data link connector (DLC) (A) located under the driver's side of the dashboard.
    2. Turn the ignition switch to ON (II).
    3. Make sure the HDS communicates with the vehicle. If it does not communicate, go to the DLC circuit troubleshooting.

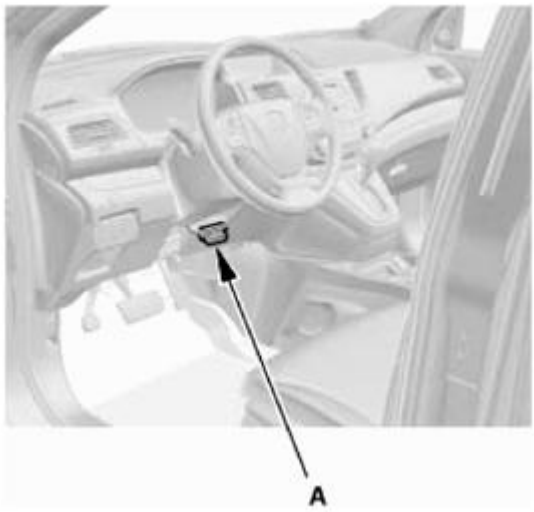

Fig. 11: Locating Data Link Connector
Courtesy of AMERICAN HONDA MOTOR CO., INC.

2. A/T Clutch Pressure Control Solenoid Valve A - HDS Test
    1. Select Clutch Pressure Control (Linear) Solenoid Valve A in the Miscellaneous Test Menu with the HDS.
    2. Test A/T clutch pressure control solenoid valve A with the HDS.
        - If the valve tests OK, the test is complete. Disconnect the HDS.
        - If the valve does not test OK, follow the instructions on the HDS.
        - If the valve does not test OK, and the HDS does not determine the cause, go to the next procedure.

REMOVAL

1. Air Cleaner Assembly
    1. Disconnect the MAF sensor/IAT sensor connector (A).
    2. Remove the harness clamp (B).
    3. Disconnect the intake air duct (C) and the intake air pipe (D).

GETtheMANUALS.org

4. Remove the air cleaner (E).

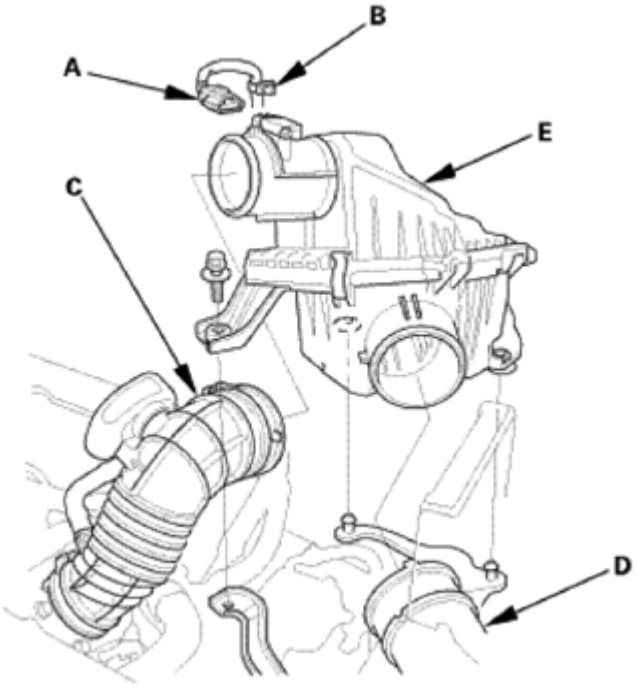

Fig. 12: Identifying MAF Sensor/IAT Sensor Connector, Harness Clamp, Intake Air Duct, Intake Air Pipe And Air Cleaner
Courtesy of AMERICAN HONDA MOTOR CO., INC.

2. Intake Air Duct
    1. Remove the intake air duct.

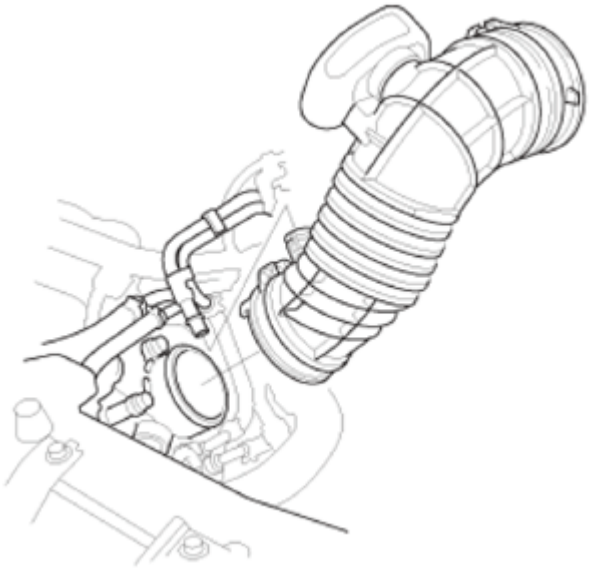

Fig. 13: Identifying Intake Air Duct

GETtheMANUALS.org

Courtesy of AMERICAN HONDA MOTOR CO., INC.

TEST

1. A/T Clutch Pressure Control Solenoid Valve A - Resistance Test
    1. Disconnect the connector.
    2. Measure the resistance between terminals No. 1 and No. 2 for A/T clutch pressure control solenoid valve A.

       Standard: 4.8 - 6.0 ohms

       - If the resistance is out of the standard, replace A/T clutch pressure control solenoid valve A.
       - If the resistance is within the standard, go to the next step.
    3. Connect a jumper wire from the negative battery terminal to A/T clutch pressure control solenoid valve A 2P connector terminal No. 1, and connect another jumper wire from the positive battery terminal to connector terminal No. 2.
       - If a clicking sound is heard, the solenoid valve is OK, and the test is complete.
       - If no clicking sound is heard, go to the next procedure and check the valve movement.

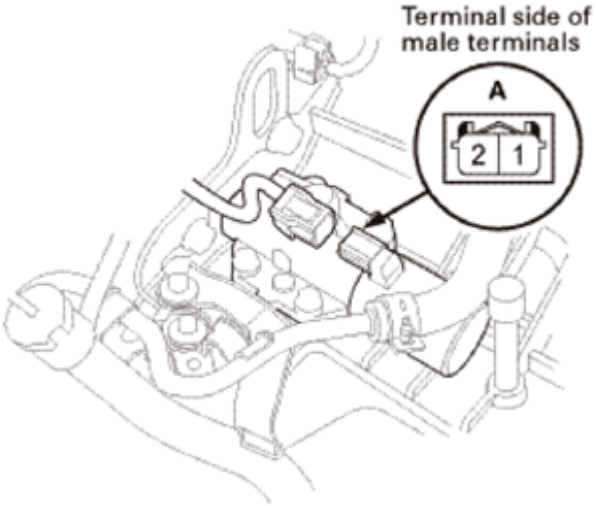

Fig. 14: Identifying A/T Clutch Pressure Control Solenoid Valve A 2P Connector Terminals
Courtesy of AMERICAN HONDA MOTOR CO., INC.

REMOVAL

1. A/T Clutch Pressure Control Solenoid Valve A
    1. Remove A/T clutch pressure control solenoid valve A.
    2. Remove the 35 mm ATF pipe (B), the ATF joint pipes (C), the O-rings (D), and the gasket (E).
    3. Check the fluid passage for contamination.

GETtheMANUALS.org

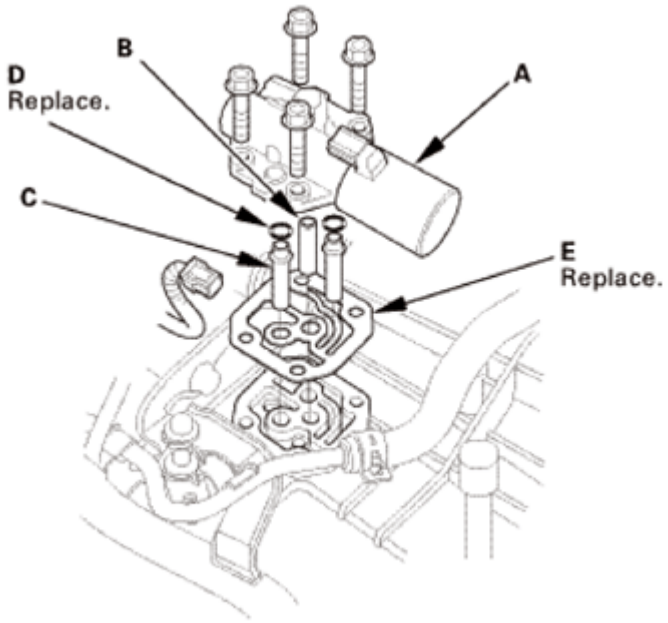

Fig. 15: Locating A/T Clutch Pressure Control Solenoid Valve A, 35 mm ATF Pipe, ATF Joint Pipes, O-Rings And Gasket
Courtesy of AMERICAN HONDA MOTOR CO., INC.

TEST

1. A/T Clutch Pressure Control Solenoid Valve A - Test
    1. Connect a jumper wire from the negative battery terminal to A/T clutch pressure control solenoid valve A 2P connector terminal No. 1, and connect another jumper wire from the positive battery terminal to connector terminal No. 2. Make sure A/T clutch pressure control solenoid valve A moves.
    2. Disconnect one of the jumper wires, and check the valve movement (B) at the fluid passage. If the valve binds or moves sluggishly, or if the solenoid valve does not operate, replace A/T clutch pressure control solenoid valve A.

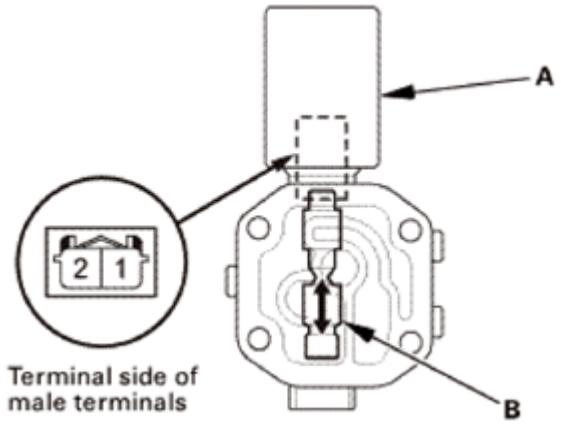

Fig. 16: Checking Valve Movement At Fluid Passage

GETtheMANUALS.org

Courtesy of AMERICAN HONDA MOTOR CO., INC.

INSTALLATION

1. A/T Clutch Pressure Control Solenoid Valve A
    1. Clean the mounting surfaces and the fluid passages of the solenoid valve body and the transmission housing.
    2. Install a new gasket (B) with its blue side toward the transmission housing, and install the 35 mm ATF pipe (C) and the ATF joint pipes (D).
    3. Install new O-rings (E) over the ATF joint pipes.
    4. Install A/T clutch pressure control solenoid valve A.
    5. Check the connector (F) for corrosion, dirt, or oil, and clean or repair if necessary, then connect the connector securely.

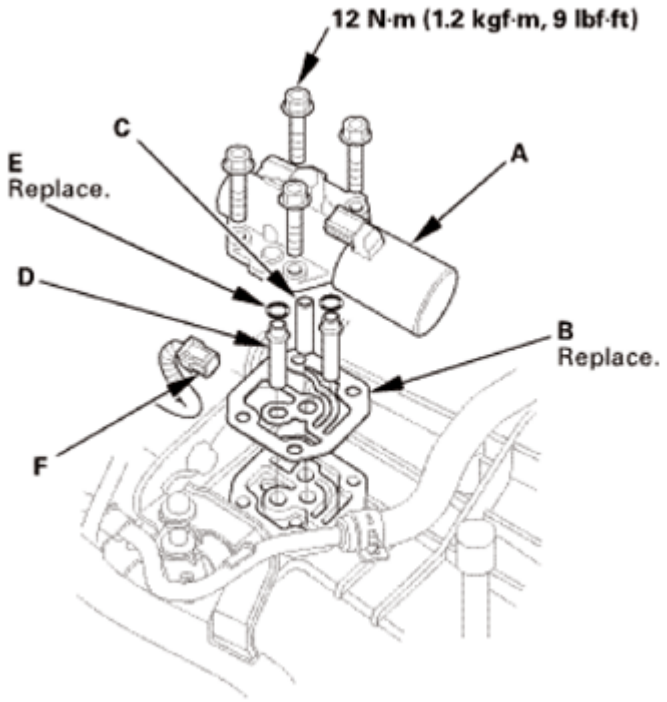

Fig. 17: Locating A/T Clutch Pressure Control Solenoid Valve A, 35 mm ATF Pipe, ATF Joint Pipes, O-Rings And Gasket
Courtesy of AMERICAN HONDA MOTOR CO., INC.

2. Intake Air Duct
    1. Install the intake air duct.

GETtheMANUALS.org

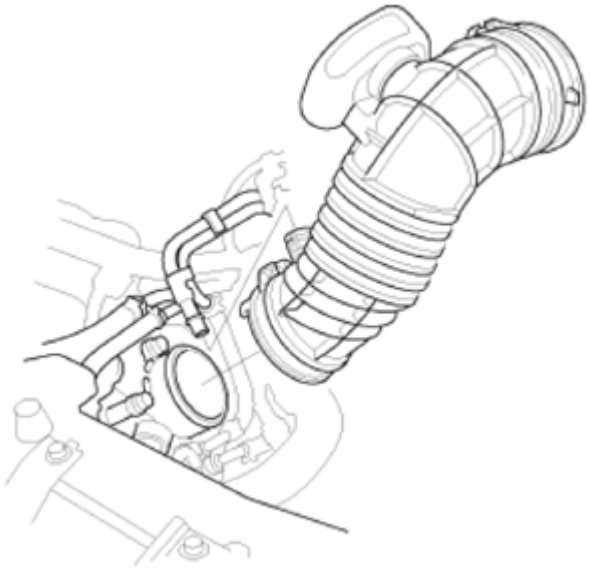

Fig. 18: Identifying Intake Air Duct
Courtesy of AMERICAN HONDA MOTOR CO., INC.

3. Air Cleaner Assembly
    1. Install the air cleaner (A).
    2. Connect the intake air pipe (B) and the intake air duct (C).
    3. Install the harness clamp (D).
    4. Connect the MAF sensor/IAT sensor connector (E).

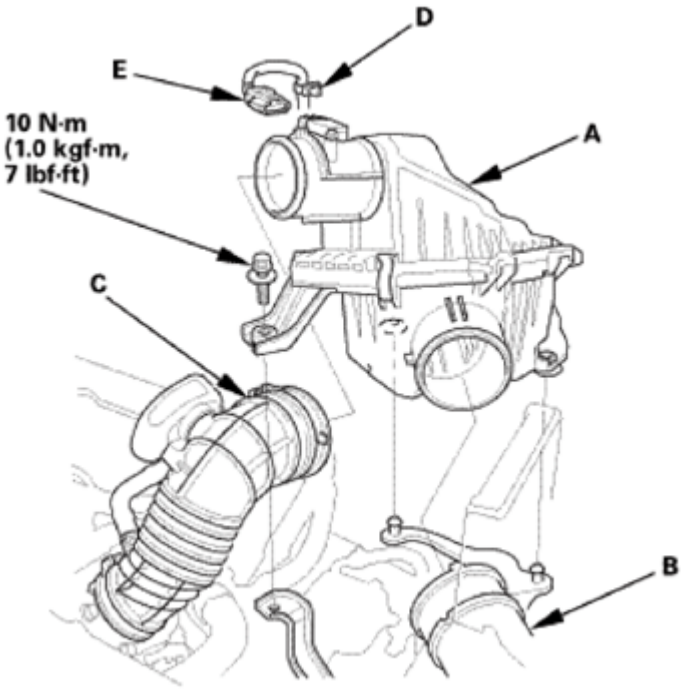

GETtheMANUALS.org

Fig. 19: Identifying MAF Sensor/IAT Sensor Connector, Harness Clamp, Intake Air Duct, Intake Air Pipe And Air Cleaner
Courtesy of AMERICAN HONDA MOTOR CO., INC.

A/T CLUTCH PRESSURE CONTROL SOLENOID VALVE B AND C TEST

TEST

1. HDS DLC - Connection
    1. Connect the HDS to the data link connector (DLC) (A) located under the driver's side of the dashboard.
    2. Turn the ignition switch to ON (II).
    3. Make sure the HDS communicates with the vehicle. If it does not communicate, go to the DLC circuit troubleshooting.

Fig. 20: Locating Data Link Connector
Courtesy of AMERICAN HONDA MOTOR CO., INC.

2. A/T Clutch Pressure Control Solenoid Valve B and C - HDS Test
    1. Select Clutch Pressure Control (Linear) Solenoid Valve B and C individually in the Miscellaneous Test Menu with the HDS.
    2. Test A/T clutch pressure control solenoid valve B and C individually with the HDS.
        - If the valve tests OK, the test is complete. Disconnect the HDS.
        - If any of the valves does not test OK, follow the instructions on the HDS.
        - If any of the valves does not test OK, and the HDS does not determine the cause, go to the next procedure.

REMOVAL

1. Vehicle Lift

GETtheMANUALS.org

    1. Raise the vehicle on a lift, and make sure it is securely supported.
2. Front Splash Shield
    1. Remove the bolts (A), then remove the clips (B) that secure the front inner fender and the front splash shield (C) to the body.
    2. From under the front bumper (D), remove the clips (E).
    3. From under the body, remove the clips (F), then pull out the front splash shield.

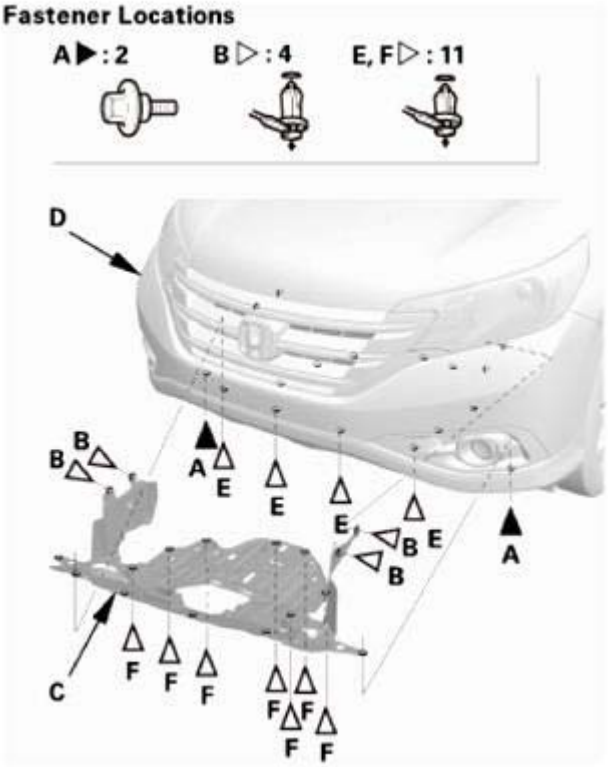

Fig. 21: Identifying Front Inner Fender And Front Splash Shield Bolts And Clips Location
Courtesy of AMERICAN HONDA MOTOR CO., INC.

TEST

1. A/T Clutch Pressure Control Solenoid Valve B and C - Resistance Test
    1. Disconnect the connectors.
    2. Measure the resistance between terminals No. 1 and No. 2 for each A/T clutch pressure control solenoid valve B and C.

        Standard: 4.9 - 6.4 ohms

        - If the resistance is out of the standard, replace A/T clutch pressure control solenoid valves B and C.
        - If the resistance is within the standard, go to the next step.
    3. Connect a jumper wire from the negative battery terminal to A/T clutch pressure control solenoid

GETtheMANUALS.org

valve B or C 2P connector terminal No. 1, and connect another jumper wire from the positive battery terminal to connector terminal No. 2.

- If a clicking sound is heard, the valve is OK, and the test is complete.
- If no clicking sound is heard, go to the next procedure and check the valve movement.

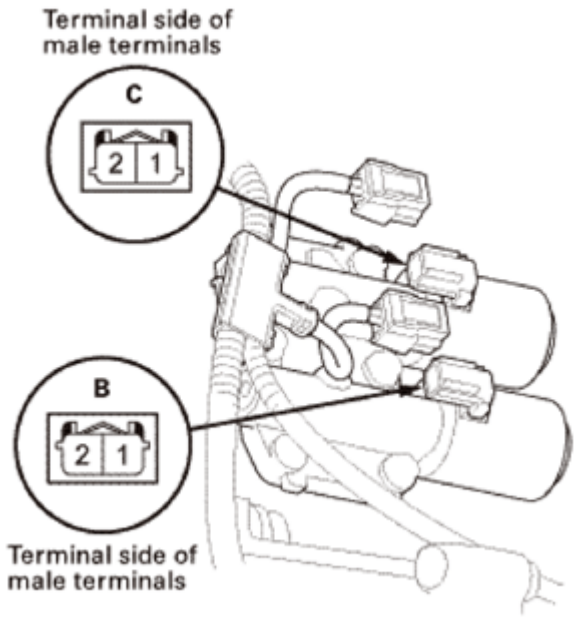

Fig. 22: Identifying A/T Clutch Pressure Control Solenoid Valve B And C Terminals
Courtesy of AMERICAN HONDA MOTOR CO., INC.

REMOVAL

1. A/T Clutch Pressure Control Solenoid Valve B and C
    1. Remove A/T clutch pressure control solenoid valves B and C.
    2. Remove the ATF joint pipes (A), the O-rings (D), and the gasket (E).
    3. Check the fluid passage for contamination.

GETtheMANUALS.org

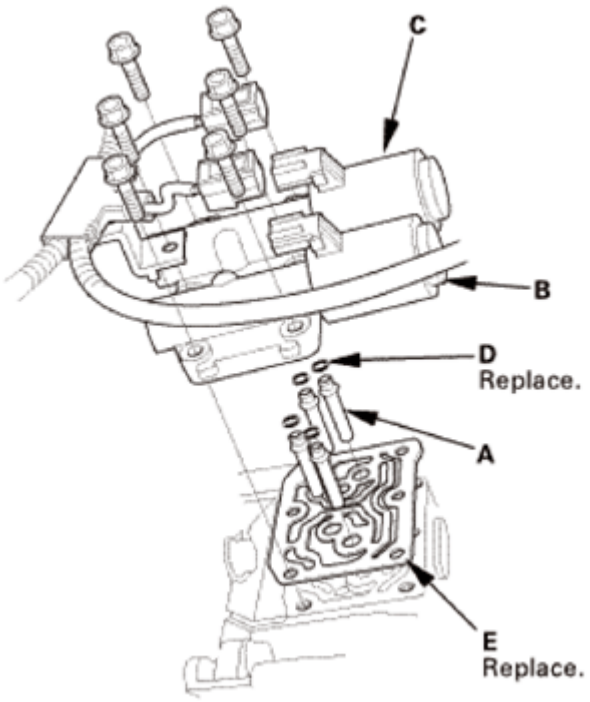

Fig. 23: Locating A/T Clutch Pressure Control Solenoid Valves B And C, ATF Joint Pipes, O-Rings And Gasket
Courtesy of AMERICAN HONDA MOTOR CO., INC.

TEST

1. A/T Clutch Pressure Control Solenoid Valve B and C - Test
    1. Connect a jumper wire from the negative battery terminal to A/T clutch pressure control solenoid valve B or C 2P connector terminal No. 1, and connect another jumper wire from the positive battery terminal to connector terminal No. 2. Make sure A/T clutch pressure control solenoid valve B or C moves.
    2. Disconnect one of the jumper wires, and check the valve movement (A and D) at the fluid passage. If the valve binds or moves sluggishly, or if the solenoid valve does not operate, replace A/T clutch pressure control solenoid valves B and C.

    A/T Clutch Pressure Control Solenoid Valve B

GETtheMANUALS.org

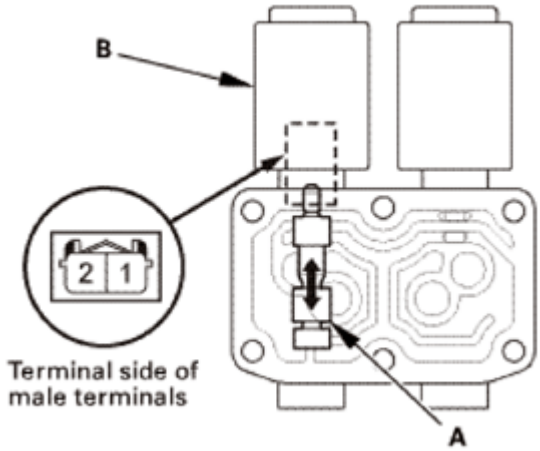

Fig. 24: Checking Valve Movement (A) At Fluid Passage
Courtesy of AMERICAN HONDA MOTOR CO., INC.

A/T Clutch Pressure Control Solenoid Valve C

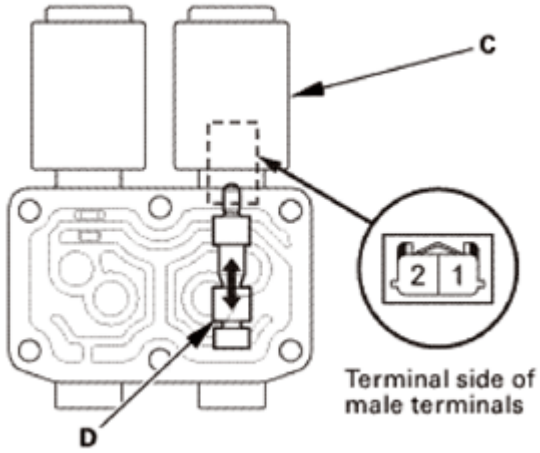

Fig. 25: Checking Valve Movement (D) At Fluid Passage
Courtesy of AMERICAN HONDA MOTOR CO., INC.

INSTALLATION

1. A/T Clutch Pressure Control Solenoid Valve B and C
    1. Clean the mounting surfaces and the fluid passages of the solenoid valve body and the transmission housing.
    2. Install a new gasket (A) with its blue side toward the transmission housing, and install the ATF joint pipes (D).
    3. Install new O-rings (E) over the ATF joint pipes.
    4. Install A/T clutch pressure control solenoid valves B and C.
    5. Check the connectors (F) for corrosion, dirt, or oil, and clean or repair if necessary, then connect the connectors securely.

GETtheMANUALS.org

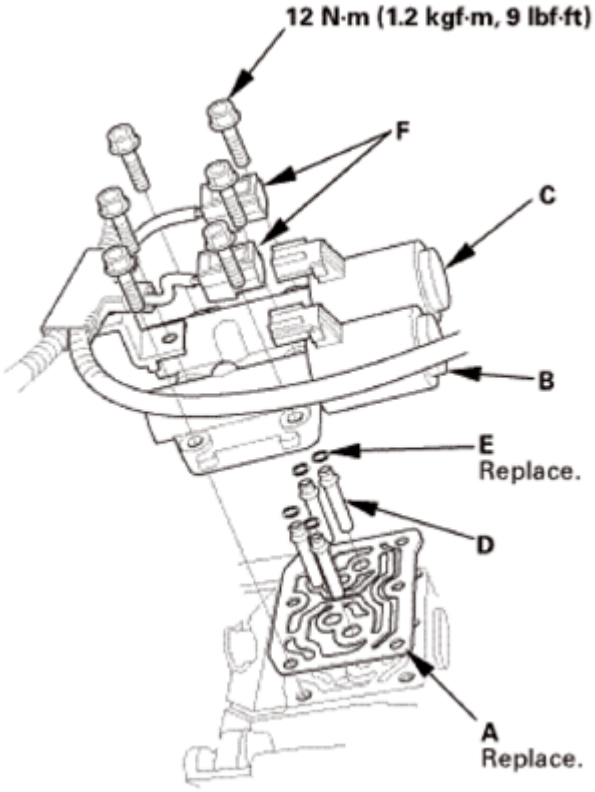

Fig. 26: Locating A/T Clutch Pressure Control Solenoid Valves B And C, Gasket, ATF Joint Pipes, O-Rings And Connectors
Courtesy of AMERICAN HONDA MOTOR CO., INC.

2. Front Splash Shield
    1. Install the front splash shield (A), then install the bolts (B) and the clips (C, D). Make sure the clips snap into place securely.

GETtheMANUALS.org

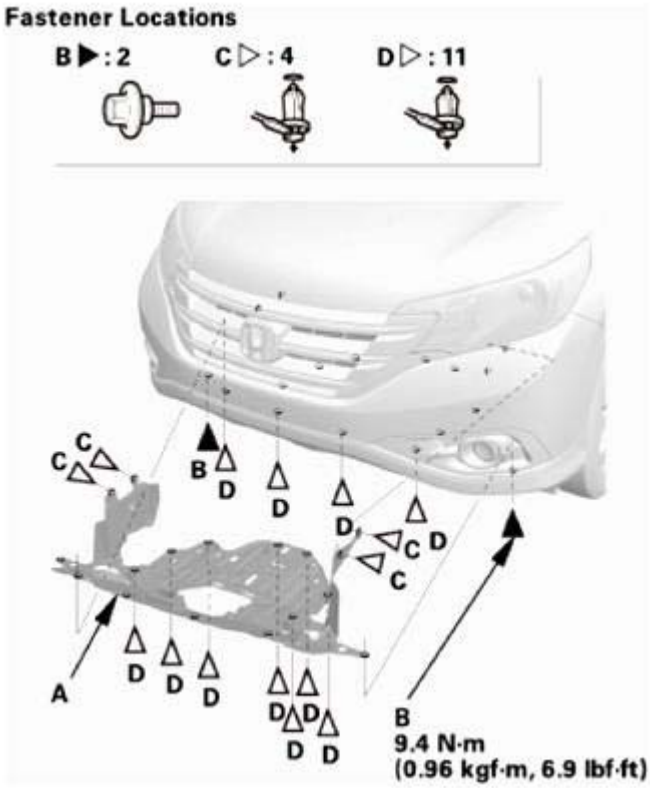

Fig. 27: Identifying Front Splash Shield, Bolts And Clips
Courtesy of AMERICAN HONDA MOTOR CO., INC.

A/T PRESSURE TEST

SPECIAL TOOL REQUIRED

Image	Description/Tool Number
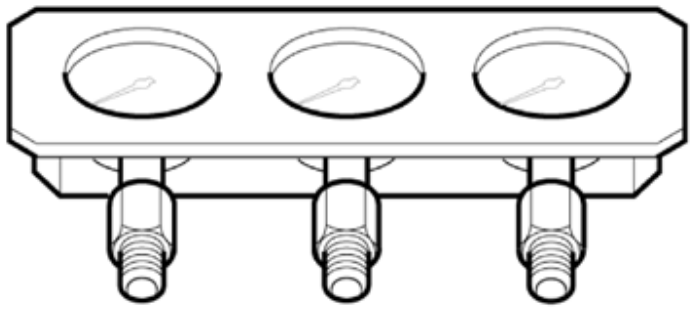	A/T Oil Pressure Gauge Set 07406-0020401 or 07406-0020400

GETtheMANUALS.org

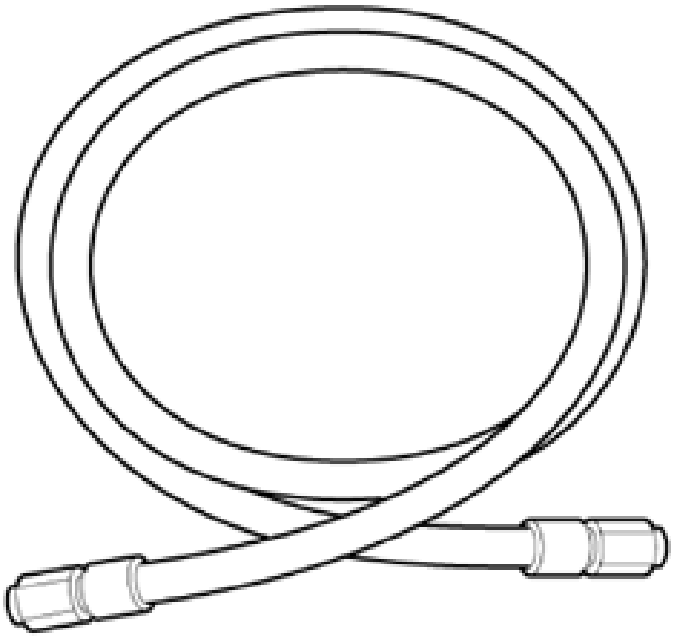	A/T Pressure Test Hose 07AAJ-PY4A100
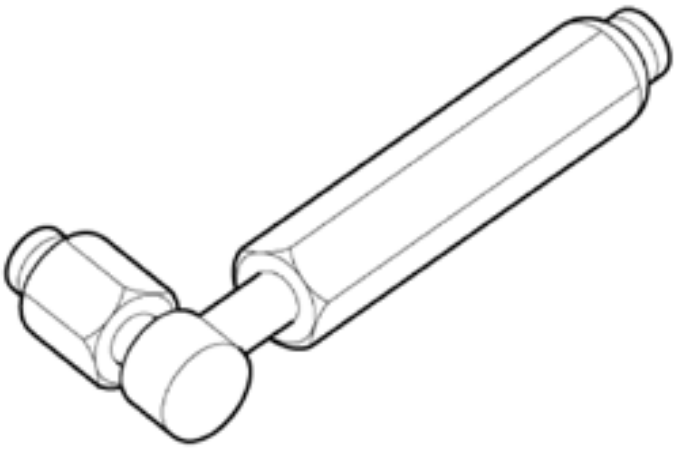	A/T Pressure Adapter 07MAJ-PY40120

REMOVAL

1. Vehicle Lift
    1. Raise the vehicle on a lift, and make sure it is securely supported.
2. Warm Up The Engine
    1. Start the engine. Hold the engine speed at 3, 000 rpm without load in P or N until the radiator fan comes on.
    2. Park the vehicle on level ground.
    3. Turn the ignition switch to LOCK (0).
3. ATF Level Check

GETtheMANUALS.org

NOTE:

- **Keep all foreign particles out of the transmission.**
- **Check the fluid level within 60 - 90 seconds after turning the engine off.**
- **Higher fluid level may be indicated if the radiator fan comes on twice or more.**

1. Remove the ATF dipstick (yellow loop) (A), and wipe it with a clean cloth.
2. Insert the dipstick into the guide tube aligning the notch (B) with the guide tab (C).

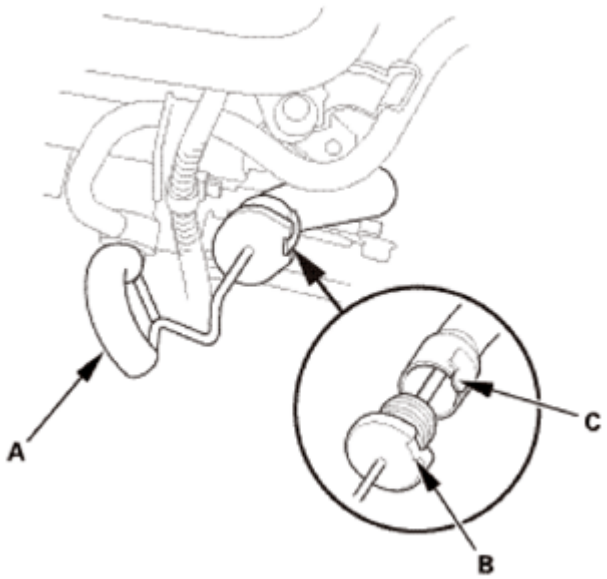

Fig. 28: Inserting Dipstick Into Guide Tube Aligning Notch With Guide Tab
Courtesy of AMERICAN HONDA MOTOR CO., INC.

3. Remove the dipstick, and check the ATF level. It should be between the upper mark (A) and the lower mark (B).
4. If the ATF level is below the lower mark, check for fluid leaks at the transmission, the hoses, and the line joints. If a problem is found, fix it before filling the transmission with ATF.

NOTE: **If the vehicle is driven when the ATF level is below the lower mark, one or more of these symptoms may occur:**

- **Transmission damage.**
- **Vehicle does not move in any gear.**
- **Vehicle accelerates poorly, and engine rpm abnormally rises when starting off in forward and reverse positions.**
- **Engine vibrates at idle.**

GETtheMANUALS.org

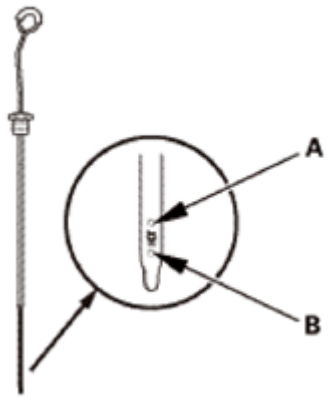

Fig. 29: Locating ATF Level Upper Mark And Lower Mark On Dipstick
Courtesy of AMERICAN HONDA MOTOR CO., INC.

5. If the ATF level is above the upper mark, drain the ATF to proper level.

NOTE: **If the vehicle is driven when the ATF level is above the upper mark, the vehicle may creep forward while in N, or have shifting problems.**

6. If necessary, fill the transmission with ATF through the dipstick guide tube opening (A) to bring the fluid level between the upper mark and the lower mark of the dipstick. Do not fill the fluid above the upper mark. Always use ATF DW-1 (genuine Honda automatic transmission fluid). Using a non-Honda ATF can affect shift quality.
7. Insert the dipstick into the guide tube aligning the notch with the guide tab.

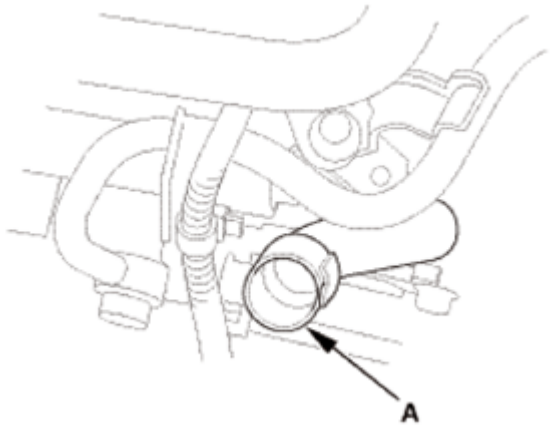

Fig. 30: Locating Dipstick Guide Tube Opening
Courtesy of AMERICAN HONDA MOTOR CO., INC.

4. Front Splash Shield
    1. Remove the bolts (A), then remove the clips (B) that secure the front inner fender and the front splash shield (C) to the body.
    2. From under the front bumper (D), remove the clips (E).

GETtheMANUALS.org

3. From under the body, remove the clips (F), then pull out the front splash shield.

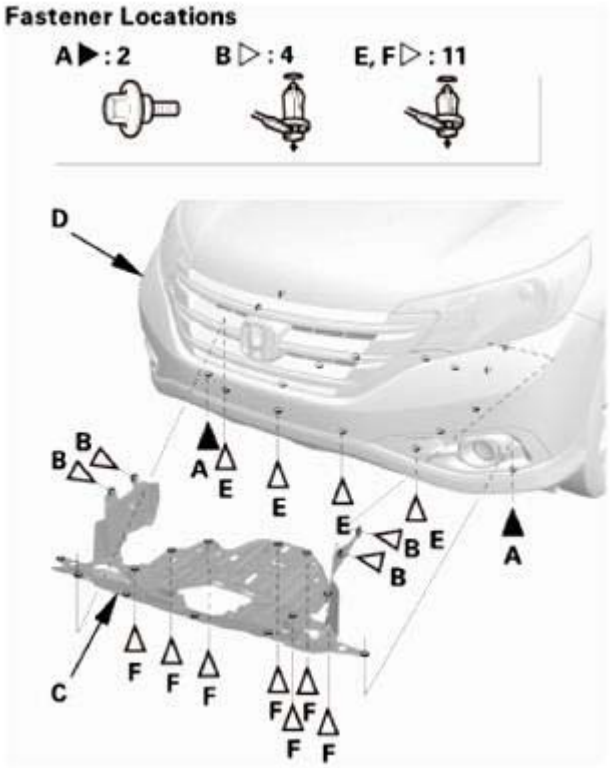

Fig. 31: Identifying Front Inner Fender And Front Splash Shield Bolts And Clips Location
Courtesy of AMERICAN HONDA MOTOR CO., INC.

5. HDS DLC - Connection
    1. Connect the HDS to the data link connector (DLC) (A) located under the driver's side of the dashboard.
    2. Turn the ignition switch to ON (II).
    3. Make sure the HDS communicates with the vehicle. If it does not communicate, go to the DLC circuit troubleshooting.

GETtheMANUALS.org

Fig. 32: Locating Data Link Connector
Courtesy of AMERICAN HONDA MOTOR CO., INC.

TEST

NOTE:

- **Check for DTCs. If any DTCs are stored, troubleshoot and clear them first.**
- **Do not allow dust or other foreign particles to enter the port while installing the A/T oil pressure gauge.**
- **Be sure to check the ATF level after each pressure port test. When installing or removing the A/T oil pressure gauge, ATF may run out of the pressure inspection ports.**
- **Disable the VSA by pressing the VSA OFF button.**
- **VSA DTC(s) may appear when running the wheels off the ground. If the VSA DTC(s) appears, clear the DTC (s) with the HDS after pressure testing.**

1. A/T Line Pressure - Test

   Line Pressure Test

   1. Connect the A/T oil pressure gauge to the line pressure inspection port (A).

GETtheMANUALS.org

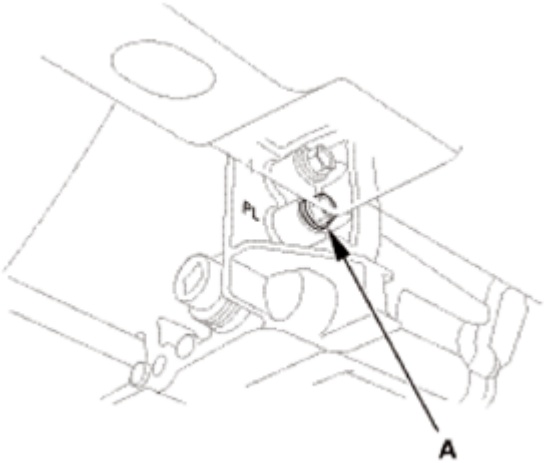

Fig. 33: Locating Line Pressure Inspection Port
Courtesy of AMERICAN HONDA MOTOR CO., INC.

2. Start the engine, and warm it up to normal operating temperature (the radiator fan comes on).
3. Measure the line pressure from the A/T oil pressure gauge while holding the engine speed at 2, 000 rpm with the shift lever in P or N.

NOTE: **Do not measure the line pressure with the shift lever in other than P or N.**

Pressure	Fluid Pressure	
	Standard	Service Limit
Line	926.6 - 985.4 kPa (9.449 - 10.048 kgf/cm^2 , 134.39 - 142.92 psi)	877 kPa (8.94 kgf/cm^2 , 127.1 psi)

4. If the line pressure is out of the service limit, refer to the problem and probable causes listed in the table.

Problem	Probable causes
No or low line pressure	• Torque converter • ATF pump • Regulator valve • Torque converter check valve • Clogged ATF strainer

5. Turn the engine off, then disconnect the A/T oil pressure gauge from the line pressure inspection port.
6. Install the sealing bolt to the line pressure inspection port using a new sealing washer, and tighten the bolt to 18 N.m (1.8 kgf.m, 13 lbf.ft).

GETtheMANUALS.org

NOTE: **Do not reuse the old sealing washer.**

2. A/T 1st Clutch Pressure - Test

1st Clutch Pressure Test

1. Connect the A/T oil pressure gauge to the 1st clutch pressure inspection port (A).

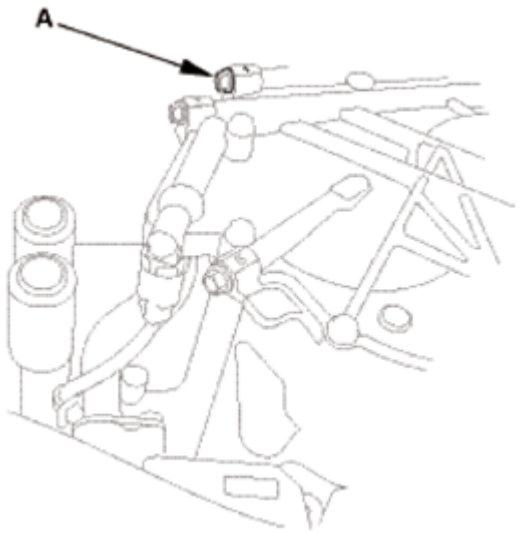

Fig. 34: Locating 1st Clutch Pressure Inspection Port
Courtesy of AMERICAN HONDA MOTOR CO., INC.

2. Start the engine, and run the vehicle in 1st gear.
3. Measure the 1st clutch pressure from the A/T oil pressure gauge while holding the engine speed at 2, 000 rpm.

Pressure	Fluid Pressure	
	Standard	Service Limit
1st Clutch	916.8 - 995.2 kPa (9.349 - 10.148 kgf/cm^2 , 132.97 - 144.34 psi)	867 kPa (8.84 kgf/cm^2 , 125.7 psi)

4. If the 1st clutch pressure is out of the service limit, refer to the problem and probable cause listed in the table.

Problem	Probable cause
No or low 1st clutch pressure	1st clutch

5. Turn the engine off, then disconnect the A/T oil pressure gauge from the 1st clutch pressure inspection port.
6. Install the sealing bolt to the 1st clutch pressure inspection port using a new sealing washer, and tighten the bolt to 18 N.m (1.8 kgf.m, 13 lbf.ft).

GETtheMANUALS.org

NOTE: **Do not reuse the old sealing washer.**

3. A/T 3rd Clutch Pressure - Test

3rd Clutch Pressure Test

1. Connect the A/T oil pressure gauge to the 3rd clutch pressure inspection port (A).

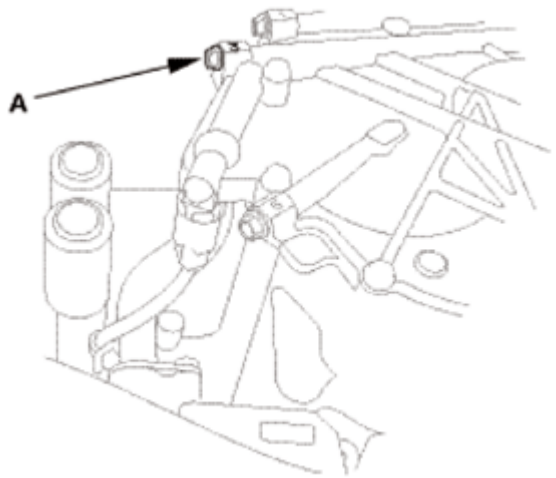

Fig. 35: Locating 3rd Clutch Pressure Inspection Port
Courtesy of AMERICAN HONDA MOTOR CO., INC.

2. Start the engine, and run the vehicle in 3rd gear.
3. Measure the 3rd clutch pressure from the A/T oil pressure gauge while holding the engine speed at 2, 000 rpm.

Pressure	Fluid Pressure	
	Standard	Service Limit
3rd Clutch	916.8 - 995.2 kPa (9.349 - 10.148 kgf/cm^2 , 132.97 - 144.34 psi)	867 kPa (8.84 kgf/cm^2 , 125.7 psi)

4. If the 3rd clutch pressure is out of the service limit, refer to the problem and probable cause listed in the table.

Problem	Probable cause
No or low 3rd clutch pressure	3rd clutch

5. Turn the engine off, then disconnect the A/T oil pressure gauge from the 3rd clutch pressure inspection port.
6. Install the sealing bolt to the 3rd clutch pressure inspection port using a new sealing washer, and tighten the bolt to 18 N.m (1.8 kgf.m, 13 lbf.ft).

GETtheMANUALS.org

NOTE: **Do not reuse the old sealing washer.**

4. A/T 4th Clutch Pressure - Test

4th Clutch Pressure Test - Engaging 4th Gear

1. Connect the A/T oil pressure gauge to the 4th clutch pressure inspection port (A).

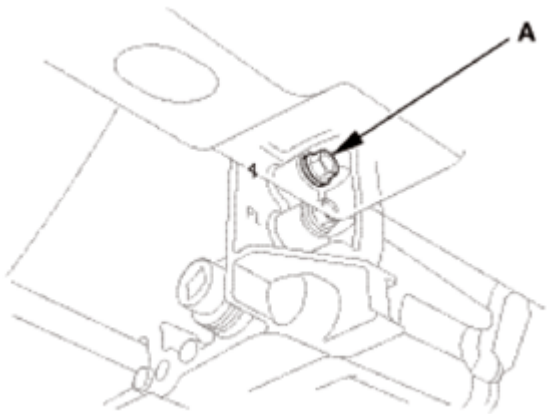

Fig. 36: Locating 4th Clutch Pressure Inspection Port
Courtesy of AMERICAN HONDA MOTOR CO., INC.

2. Start the engine, and run the vehicle in 4th gear.
3. Measure the 4th clutch pressure from the A/T oil pressure gauge while holding the engine speed at 2, 000 rpm.

Pressure	Fluid Pressure	
	Standard	Service Limit
4th Clutch	916.8 - 995.2 kPa (9.349 - 10.148 kgf/cm^2 , 132.97 - 144.34 psi)	867 kPa (8.84 kgf/cm^2 , 125.7 psi)

4. If the 4th clutch pressure is out of the service limit, refer to the problem and probable cause listed in the table.

Problem	Probable cause
No or low 4th clutch pressure	4th clutch

5. Bring the engine back to an idle, then apply the brake to stop the wheels from rotating.

4th Clutch Pressure Test - Engaging Reverse Gear

6. Shift to R, then release the brake pedal.
7. Measure the 4th clutch pressure from the A/T oil pressure gauge while holding the engine speed at 2, 000 rpm.

GETtheMANUALS.org

Pressure	Fluid Pressure	
	Standard	Service Limit
4th Clutch in R	916.8 - 995.2 kPa (9.349 - 10.148 kgf/cm^2 , 132.97 - 144.34 psi)	867 kPa (8.84 kgf/cm^2 , 125.7 psi)

8. If the 4th clutch pressure is out of the service limit, refer to the problem and probable causes listed in the table.

Problem	Probable causes
No or low 4th clutch pressure in R	• Servo valve • 4th clutch

9. Turn the engine off, then disconnect the A/T oil pressure gauge from the 4th clutch pressure inspection port.
10. Install the sealing bolt to the 4th clutch pressure inspection port using a new sealing washer, and tighten the bolt to 18 N.m (1.8 kgf.m, 13 lbf.ft).

NOTE: Do not reuse the old sealing washer.

5. A/T 5th Clutch Pressure - Test

5th Clutch Pressure Test

1. Connect the A/T oil pressure gauge to the 5th clutch pressure inspection port (A).

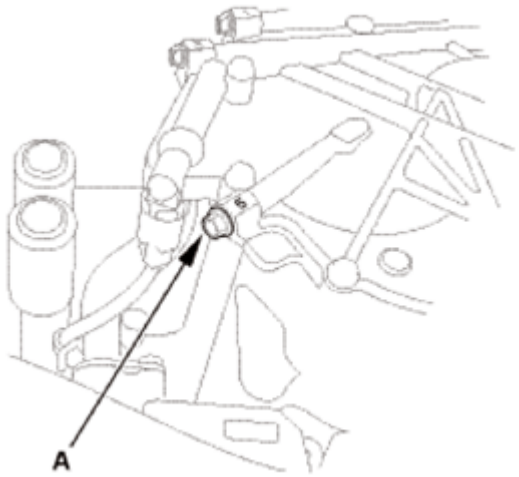

Fig. 37: Locating 5th Clutch Pressure Inspection Port
Courtesy of AMERICAN HONDA MOTOR CO., INC.

2. Start the engine, and run the vehicle in 5th gear.
3. Measure the 5th clutch pressure from the A/T oil pressure gauge while holding the engine speed at

GETtheMANUALS.org

2, 000 rpm.

Pressure	Fluid Pressure	
	Standard	Service Limit
5th Clutch	916.8 - 995.2 kPa (9.349 - 10.148 kgf/cm^2 , 132.97 - 144.34 psi)	867 kPa (8.84 kgf/cm^2 , 125.7 psi)

4. If the 5th clutch pressure is out of the service limit, refer to the problem and probable cause listed in the table.

Problem	Probable cause
No or low 5th clutch pressure	5th clutch

5. Turn the engine off, then disconnect the A/T oil pressure gauge from the 5th clutch pressure inspection port.
6. Install the sealing bolt to the 5th clutch pressure inspection port using a new sealing washer, and tighten the bolt to 18 N.m (1.8 kgf.m, 13 lbf.ft).

NOTE: Do not reuse the old sealing washer.

REMOVAL

1. Air Cleaner Assembly
    1. Disconnect the MAF sensor/IAT sensor connector (A).
    2. Remove the harness clamp (B).
    3. Disconnect the intake air duct (C) and the intake air pipe (D).
    4. Remove the air cleaner (E).

GETtheMANUALS.org

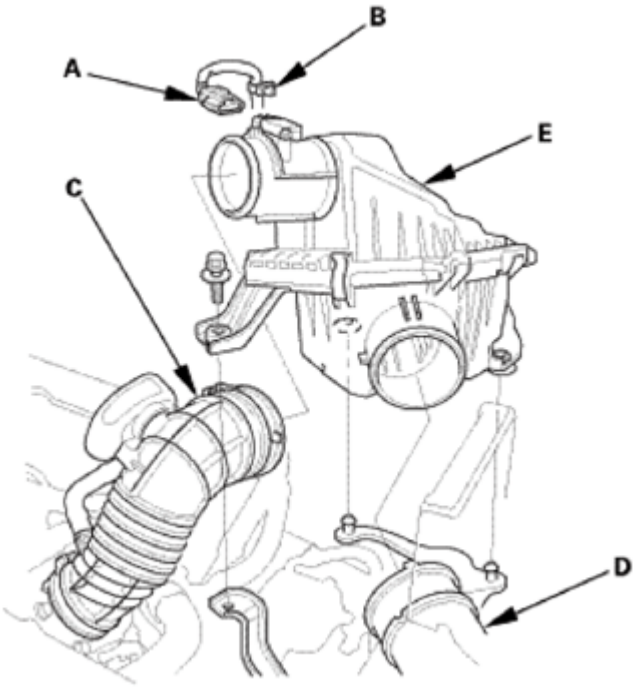

Fig. 38: Identifying MAF Sensor/IAT Sensor Connector, Harness Clamp, Intake Air Duct, Intake Air Pipe And Air Cleaner
Courtesy of AMERICAN HONDA MOTOR CO., INC.

2. Intake Air Duct
    1. Remove the intake air duct.

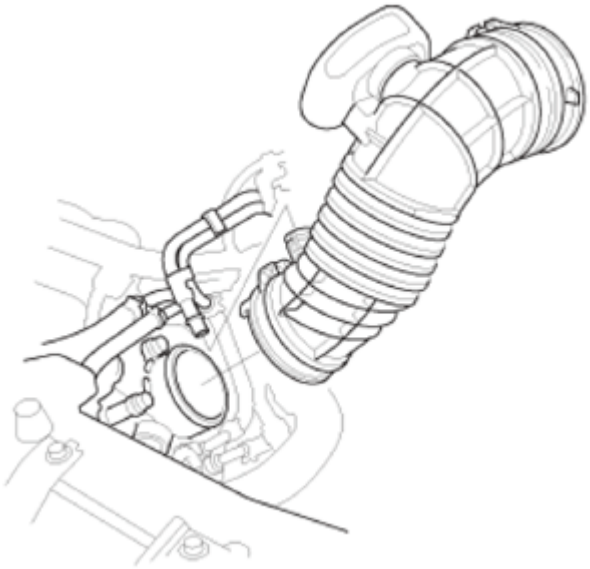

Fig. 39: Identifying Intake Air Duct
Courtesy of AMERICAN HONDA MOTOR CO., INC.

GETtheMANUALS.org

TEST

NOTE:

- **Check for DTCs. If any DTCs are stored, troubleshoot and clear them first.**
- **Do not allow dust or other foreign particles to enter the port while installing the A/T oil pressure gauge.**
- **Be sure to check the ATF level after each pressure port test. When installing or removing the A/T oil pressure gauge, ATF may run out of the pressure inspection ports.**
- **Disable the VSA by pressing the VSA OFF button.**
- **VSA DTC(s) may appear when running the wheels off the ground. If the VSA DTC(s) appears, clear the DTC (s) with the HDS after pressure testing.**

1. A/T 2nd Clutch Pressure - Test

2nd Clutch Pressure Test

1. Connect the A/T oil pressure gauge to the 2nd clutch pressure inspection port (A).

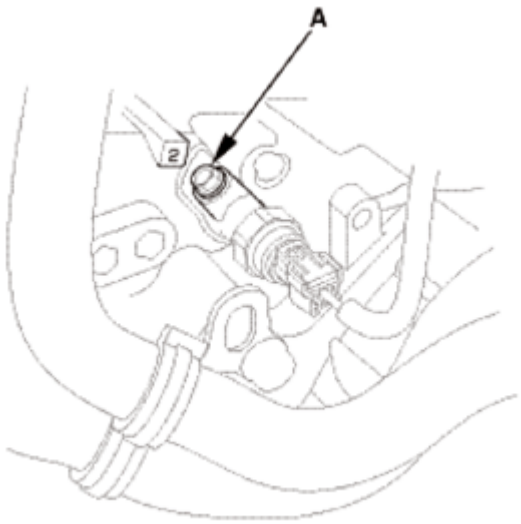

Fig. 40: Locating 2nd Clutch Pressure Inspection Port
Courtesy of AMERICAN HONDA MOTOR CO., INC.

2. Temporarily install the intake air duct and the air cleaner assembly, and reconnect the MAF sensor/IAT sensor connector.
3. Start the engine, and run the vehicle in 2nd gear.
4. Measure the 2nd clutch pressure from the A/T oil pressure gauge while holding the engine speed at 2, 000 rpm.

Pressure	Fluid Pressure	
	Standard	Service Limit

GETtheMANUALS.org

2nd Clutch	916.8 - 995.2 kPa (9.349 - 10.148 kgf/cm^2 , 132.97 - 144.34 psi)	867 kPa (8.84 kgf/cm^2 , 125.7 psi)

5. If the 2nd clutch pressure is out of the service limit, refer to the problem and probable cause listed in the table.

Problem	Probable cause
No or low 2nd clutch pressure	2nd clutch

6. Turn the engine off, remove the air cleaner assembly and the intake air duct.
7. Disconnect the A/T oil pressure gauge from the 2nd clutch pressure inspection port.
8. Install the sealing bolt to the 2nd clutch pressure inspection port using a new sealing washer, and tighten the bolt to 18 N.m (1.8 kgf.m, 13 lbf.ft).

NOTE: Do not reuse the old sealing washer.

INSTALLATION

1. Intake Air Duct
    1. Install the intake air duct.

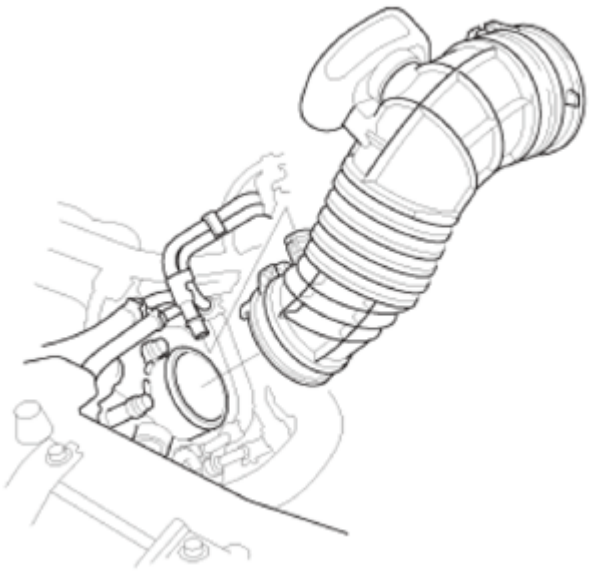

Fig. 41: Identifying Intake Air Duct
Courtesy of AMERICAN HONDA MOTOR CO., INC.

2. Air Cleaner Assembly
    1. Install the air cleaner (A).
    2. Connect the intake air pipe (B) and the intake air duct (C).
    3. Install the harness clamp (D).

GETtheMANUALS.org

4. Connect the MAF sensor/IAT sensor connector (E).

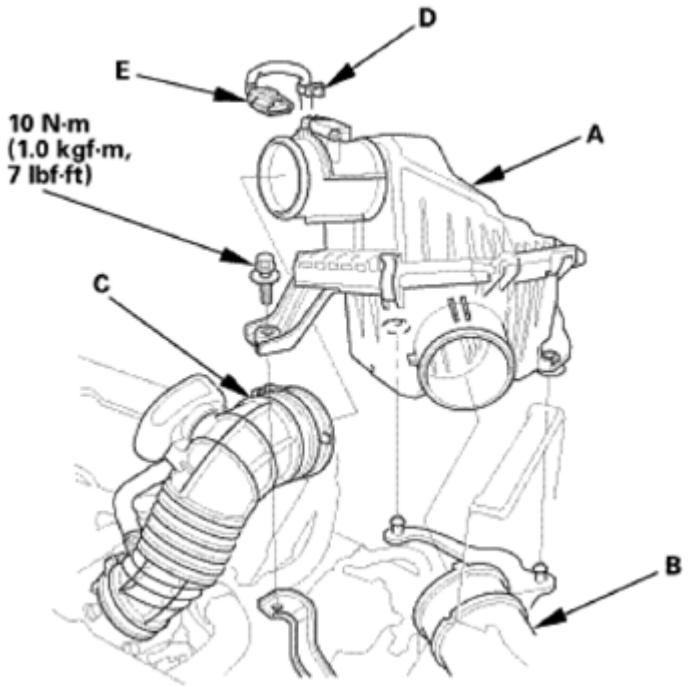

Fig. 42: Identifying MAF Sensor/IAT Sensor Connector, Harness Clamp, Intake Air Duct, Intake Air Pipe And Air Cleaner
Courtesy of AMERICAN HONDA MOTOR CO., INC.

3. Front Splash Shield
    1. Install the front splash shield (A), then install the bolts (B) and the clips (C, D). Make sure the clips snap into place securely.

GETtheMANUALS.org

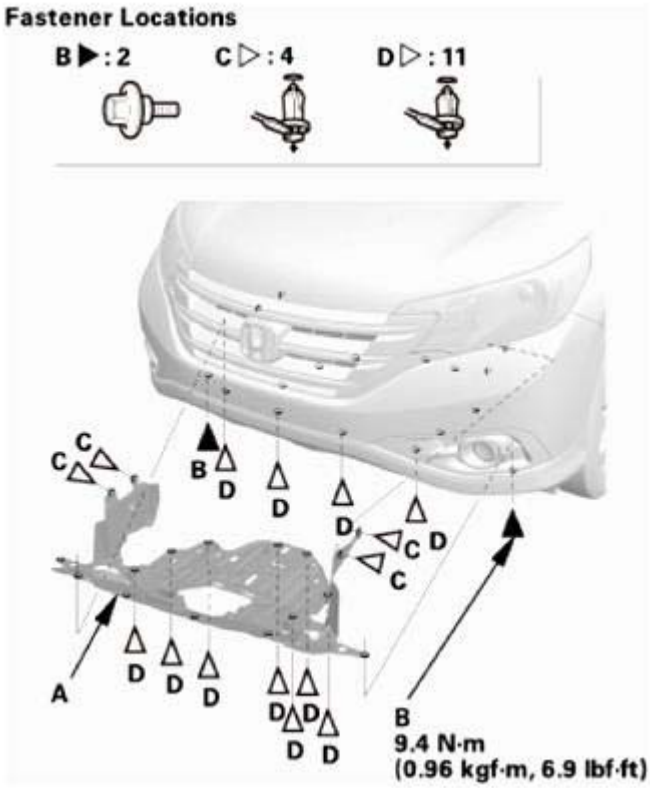

Fig. 43: Identifying Front Splash Shield, Bolts And Clips
Courtesy of AMERICAN HONDA MOTOR CO., INC.

A/T ROAD TEST

TEST

1. Warm Up The Engine
    1. Start the engine. Hold the engine speed at 3, 000 rpm without load in P or N until the radiator fan comes on.
    2. Park the vehicle on level ground.
    3. Turn the ignition switch to LOCK (0).
2. HDS DLC - Connection
    1. Connect the HDS to the data link connector (DLC) (A) located under the driver's side of the dashboard.
    2. Turn the ignition switch to ON (II).
    3. Make sure the HDS communicates with the vehicle. If it does not communicate, go to the DLC circuit troubleshooting.

GETtheMANUALS.org

Fig. 44: Locating Data Link Connector
Courtesy of AMERICAN HONDA MOTOR CO., INC.

3. Automatic Transmission Road - Test
    1. Apply the parking brake, and block all four wheels.
    2. Start the engine.
    3. Shift to D while pressing the brake pedal. Press the accelerator pedal, and release it suddenly. The engine should not stall.
    4. Repeat step 3 in all shift lever positions.
    5. Prepare the HDS and the MVCI to take a SNAPSHOT (refer to the user's guide for more details if needed):
        - Set the Trigger Type to Parameter.
        - Adjust the Parameter setting to APP Sensor A (V) above 1.2 V.
        - Set the recording time to 60 seconds.
        - Set the trigger point to (Negative) - 30 seconds.
    6. Find a suitable level road.
    7. When you are ready to do the test, press OK on the HDS.
    8. Accelerate quickly until APP Sensor A reads 1.3 V. Maintain a steady throttle until the transmission shifts to 5th gear, then slow the vehicle and come to a stop.
    9. Save the snapshot if the entire event was recorded or increase the recording time setting as necessary, and repeat step 8.
    10. Adjust the APP Sensor A parameter setting to 2.4 V.
    11. Test-drive the vehicle again. Accelerate quickly until APP Sensor A reads 2.5 V. Maintain a steady throttle until the transmission shifts to 5th gear (or a reasonable speed), then slow the vehicle and come to a stop.
    12. Save the snapshot if the entire event was recorded or increase the recording time setting as necessary, and repeat step 11.
    13. Adjust the APP Sensor A parameter setting to 4.5 V.

GETtheMANUALS.org

14. Accelerate quickly until the accelerator pedal is to the floor. Maintain a steady pedal until the transmission shifts to 4th gear, then slow to a stop, and save the snapshot.
15. Review each snapshot individually, and compare the Shift Control, APP Sensor A (V), and the Vehicle Speed to the following table.

KA (2WD), KC (2WD) - SHIFT CONTROL, APP SENSOR A (V), AND VEHICLE SPEED

Upshift: D Position	**APP Sensor A (V): 1.3 V**	
	1st-->2nd	9 - 11 mph (14 - 18 km/h)
	2nd-->3rd	18 - 22 mph (29 - 35 km/h)
	3rd-->4th	26 - 31 mph (42 - 50 km/h)
	4th-->5th	38 - 44 mph (61 - 71 km/h)
	Lock-up ON	34 - 39 mph (54 - 62 km/h)
	APP Sensor A (V): 2.5 V	
	1st-->2nd	24 - 27 mph (38 - 44 km/h)
	2nd-->3rd	44 - 50 mph (70 - 80 km/h)
	3rd-->4th	65 - 73 mph (105 - 117 km/h)
	4th-->5th	109 - 119 mph (175 - 191 km/h)
	Lock-up ON	83 - 91 mph (133 - 147 km/h)
	APP Sensor A (V): 4.5 V (Fully-opened throttle)	
	1st-->2nd	44 - 50 mph (71 - 81 km/h)
	2nd-->3rd	76 - 85 mph (122 - 136 km/h)
	3rd-->4th	113 - 123 mph (182 - 198 km/h)
Downshift: D Position	**APP Sensor A (V): 1.3 V**	
	Lock-up OFF	33 - 38 mph (53 - 61 km/h)
	5th-->4th	33 - 39 mph (53 - 63 km/h)
	4th-->3rd	24 - 29 mph (38 - 46 km/h)
	3rd-->1st	4 - 8 mph (7 - 13 km/h)
	APP Sensor A (V): 2.5 V	
	Lock-up OFF	62 - 69 mph (99 - 111 km/h)
	APP Sensor A (V): 4.5 V (Fully-opened throttle)	
	Lock-up OFF	112 - 122 mph (181 - 197 km/h)
	5th-->4th	113 - 123 mph (182 - 198 km/h)
	4th-->3rd	89 - 98 mph (143 - 157 km/h)
	3rd-->2nd	54 - 62 mph (87 - 99 km/h)
	2nd-->1st	25 - 31 mph (40 - 50 km/h)

KA (AWD), KC (AWD) - SHIFT CONTROL, APP SENSOR A (V), AND VEHICLE SPEED

	APP Sensor A (V): 1.3 V	
	1st-->2nd	9 - 11 mph (14 - 18 km/h)
	2nd-->3rd	17 - 21 mph (27 - 33 km/h)
	3rd-->4th	26 - 31 mph (42 - 50 km/h)
	4th-->5th	37 - 43 mph (59 - 69 km/h)

GETtheMANUALS.org

Upshift: D Position	Lock-up ON	31 - 36 mph (50 - 58 km/h)
	APP Sensor A (V): 2.5 V	
	1st-->2nd	23 - 27 mph (37 - 43 km/h)
	2nd-->3rd	42 - 48 mph (67 - 77 km/h)
	3rd-->4th	64 - 71 mph (103 - 115 km/h)
	4th-->5th	106 - 116 mph (170 - 186 km/h)
	Lock-up ON	83 - 92 mph (134 - 148 km/h)
	APP Sensor A (V): 4.5 V (Fully-opened throttle)	
	1st-->2nd	42 - 48 mph (68 - 78 km/h)
	2nd-->3rd	71 - 80 mph (115 - 129 km/h)
	3rd-->4th	109 - 119 mph (175 - 191 km/h)
Downshift: D Position	**APP Sensor A (V): 1.3 V**	
	Lock-up OFF	30 - 35 mph (49 - 57 km/h)
	5th-->4th	30 - 37 mph (49 - 59 km/h)
	4th-->3rd	22 - 25 mph (35 - 41 km/h)
	3rd-->1st	4 - 8 mph (7 - 13 km/h)
	APP Sensor A (V): 2.5 V	
	Lock-up OFF	62 - 70 mph (100 - 112 km/h)
	APP Sensor A (V): 4.5 V (Fully-opened throttle)	
	Lock-up OFF	112 - 122 mph (181 - 197 km/h)
	5th-->4th	113 - 123 mph (182 - 198 km/h)
	4th-->3rd	89 - 98 mph (143 - 157 km/h)
	3rd-->2nd	54 - 62 mph (87 - 99 km/h)
	2nd-->1st	25 - 31 mph (40 - 50 km/h)

KX (2WD) - SHIFT CONTROL, APP SENSOR A (V), AND VEHICLE SPEED

Upshift: D Position	**APP Sensor A (V): 1.3 V**	
	1st-->2nd	9 - 11 mph (14 - 18 km/h)
	2nd-->3rd	18 - 22 mph (29 - 35 km/h)
	3rd-->4th	26 - 31 mph (42 - 50 km/h)
	4th-->5th	38 - 44 mph (61 - 71 km/h)
	Lock-up ON	34 - 39 mph (54 - 62 km/h)
	APP Sensor A (V): 2.5 V	
	1st-->2nd	24 - 27 mph (38 - 44 km/h)
	2nd-->3rd	44 - 50 mph (70 - 80 km/h)
	3rd-->4th	65 - 73 mph (105 - 117 km/h)
	4th-->5th	109 - 119 mph (175 - 191 km/h)
	Lock-up ON	83 - 91 mph (133 - 147 km/h)
	APP Sensor A (V): 4.5 V (Fully-opened throttle)	
	1st-->2nd	41 - 47 mph (66 - 76 km/h)
	2nd-->3rd	69 - 76 mph (111 - 123 km/h)

GETtheMANUALS.org

	3rd-->4th	107 - 117 mph (172 - 188 km/h)
Downshift: D Position	**APP Sensor A (V): 1.3 V**	
	Lock-up OFF	33 - 38 mph (53 - 61 km/h)
	5th-->4th	33 - 39 mph (53 - 63 km/h)
	4th-->3rd	24 - 29 mph (38 - 46 km/h)
	3rd-->1st	4 - 8 mph (7 - 13 km/h)
	APP Sensor A (V): 2.5 V	
	Lock-up OFF	62 - 69 mph (99 - 111 km/h)
	APP Sensor A (V): 4.5 V (Fully-opened throttle)	
	Lock-up OFF	112 - 122 mph (181 - 197 km/h)
	5th-->4th	113 - 123 mph (182 - 198 km/h)
	4th-->3rd	83 - 91 mph (133 - 147 km/h)
	3rd-->2nd	51 - 58 mph (82 - 94 km/h)
	2nd-->1st	25 - 31 mph (40 - 50 km/h)

KX (4WD) - SHIFT CONTROL, APP SENSOR A (V), AND VEHICLE SPEED

Upshift: D Position	**APP Sensor A (V): 1.3 V**	
	1st-->2nd	9 - 11 mph (14 - 18 km/h)
	2nd-->3rd	17 - 21 mph (27 - 33 km/h)
	3rd-->4th	26 - 31 mph (42 - 50 km/h)
	4th-->5th	37 - 43 mph (59 - 69 km/h)
	Lock-up ON	31 - 36 mph (50 - 58 km/h)
	APP Sensor A (V): 2.5 V	
	1st-->2nd	23 - 27 mph (37 - 43 km/h)
	2nd-->3rd	42 - 48 mph (67 - 77 km/h)
	3rd-->4th	64 - 71 mph (103 - 115 km/h)
	4th-->5th	106 - 116 mph (170 - 186 km/h)
	Lock-up ON	83 - 92 mph (134 - 148 km/h)
	APP Sensor A (V): 4.5 V (Fully-opened throttle)	
	1st-->2nd	39 - 45 mph (63 - 73 km/h)
	2nd-->3rd	65 - 72 mph (104 - 116 km/h)
	3rd-->4th	103 - 112 mph (165 - 181 km/h)
Downshift: D Position	**APP Sensor A (V): 1.3 V**	
	Lock-up OFF	30 - 35 mph (49 - 57 km/h)
	5th-->4th	30 - 37 mph (49 - 59 km/h)
	4th-->3rd	22 - 25 mph (35 - 41 km/h)
	3rd-->1st	4 - 8 mph (7 - 13 km/h)
	APP Sensor A (V): 2.5 V	
	Lock-up OFF	60 - 67 mph (96 - 108 km/h)
	APP Sensor A (V): 4.5 V (Fully-opened throttle)	
	Lock-up OFF	112 - 122 mph (181 - 197 km/h)

GETtheMANUALS.org

	5th-->4th	113 - 123 mph (182 - 198 km/h)
	4th-->3rd	83 - 91 mph (133 - 147 km/h)
	3rd-->2nd	51 - 58 mph (82 - 94 km/h)
	2nd-->1st	25 - 31 mph (40 - 50 km/h)

16. Drive the vehicle in 4th or 5th gear, then shift to 2nd gear. The vehicle should immediately begin to slow down from engine braking.
17. Shift to 1, accelerate from a stop at full throttle, and check for abnormal noise and clutch slippage. Upshifts should not occur in this position.
18. Shift to 2, accelerate from a stop at full throttle, and check for abnormal noise and clutch slippage. Upshifts and downshifts should not occur in this position.
19. Shift to R, accelerate from a stop at to full throttle momentarily, and check for abnormal noise and clutch slippage.
20. Park the vehicle on an upward slope (about 16 degrees), apply the parking brake, and shift into P. Release the brake; the vehicle should not move.

NOTE: **Always use the parking brake to hold the vehicle when stopped on an incline in gear. Depending on the grade of the incline, the vehicle could roll if the brake is released.**

A/T STALL SPEED TEST

TEST

1. Warm Up The Engine
    1. Start the engine. Hold the engine speed at 3, 000 rpm without load in P or N until the radiator fan comes on.
    2. Park the vehicle on level ground.
    3. Turn the ignition switch to LOCK (0).
2. ATF Level Check

NOTE:

- **Keep all foreign particles out of the transmission.**
- **Check the fluid level within 60 - 90 seconds after turning the engine off.**
- **Higher fluid level may be indicated if the radiator fan comes on twice or more.**

1. Remove the ATF dipstick (yellow loop) (A), and wipe it with a clean cloth.
2. Insert the dipstick into the guide tube aligning the notch (B) with the guide tab (C).

GETtheMANUALS.org

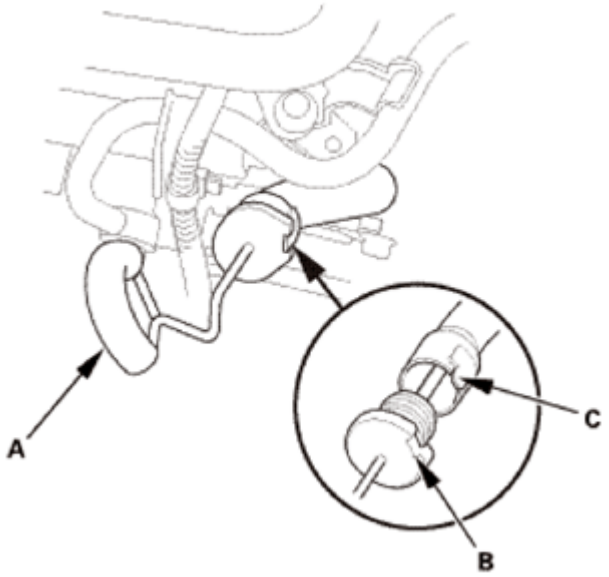

Fig. 45: Inserting Dipstick Into Guide Tube Aligning Notch With Guide Tab
Courtesy of AMERICAN HONDA MOTOR CO., INC.

3. Remove the dipstick, and check the ATF level. It should be between the upper mark (A) and the lower mark (B).
4. If the ATF level is below the lower mark, check for fluid leaks at the transmission, the hoses, and the line joints. If a problem is found, fix it before filling the transmission with ATF.

NOTE: **If the vehicle is driven when the ATF level is below the lower mark, one or more of these symptoms may occur:**

- **Transmission damage.**
- **Vehicle does not move in any gear.**
- **Vehicle accelerates poorly, and engine revs up abnormally high when starting off in forward and reverse positions.**
- **Engine vibrates at idle.**

5. If the ATF level is above the upper mark, drain the ATF to proper level.

NOTE: **If the vehicle is driven when the ATF level is above the upper mark, the vehicle may creep forward while in N, or have shifting problems.**

GETtheMANUALS.org

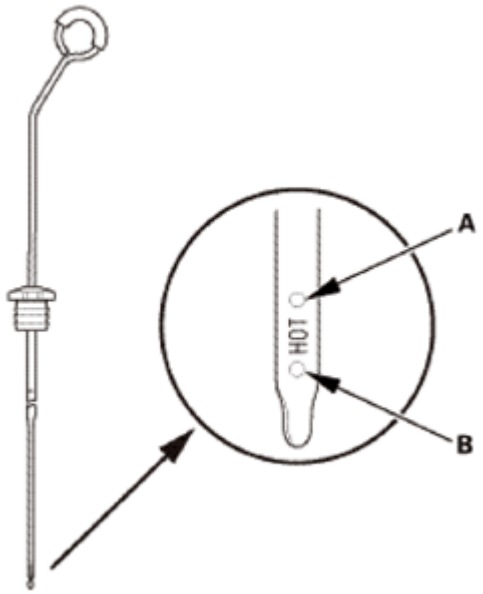

Fig. 46: Locating ATF Level Upper Mark And Lower Mark
Courtesy of AMERICAN HONDA MOTOR CO., INC.

6. If necessary, fill the transmission with ATF through the dipstick guide tube opening (A) to bring the fluid level between the upper mark and the lower mark of the dipstick. Do not fill the fluid above the upper mark. Always use ATF DW-1 (genuine Honda automatic transmission fluid). Using a non-Honda ATF can affect shift quality.
7. Insert the dipstick into the guide tube aligning the notch with the guide tab.

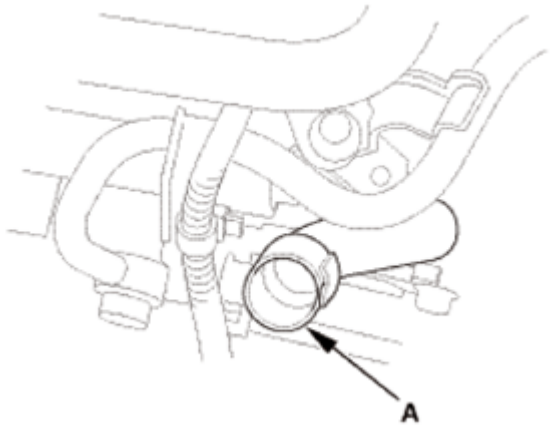

Fig. 47: Locating Dipstick Guide Tube Opening
Courtesy of AMERICAN HONDA MOTOR CO., INC.

3. HDS DLC - Connection
    1. Connect the HDS to the data link connector (DLC) (A) located under the driver's side of the dashboard.
    2. Turn the ignition switch to ON (II).

GETtheMANUALS.org

3. Make sure the HDS communicates with the vehicle. If it does not communicate, go to the DLC circuit troubleshooting.

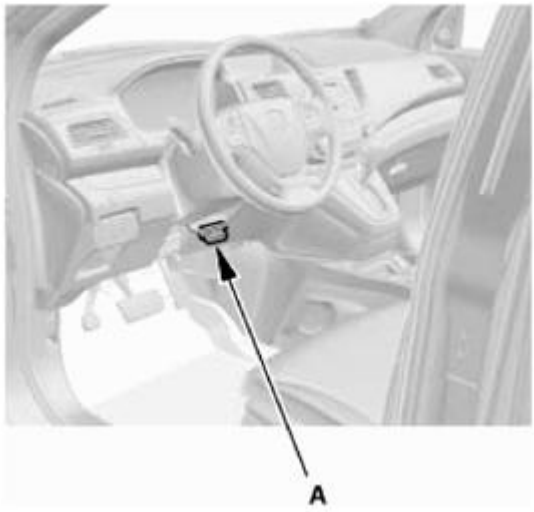

Fig. 48: Locating Data Link Connector
Courtesy of AMERICAN HONDA MOTOR CO., INC.

4. Automatic Transmission Stall Speed - Test
   1. Make sure the A/C switch is OFF.
   2. Shift to D while pressing the brake pedal firmly, then press the accelerator pedal for 6 to 8 seconds, and note the engine speed.

      NOTE: **Do not move the shift lever or remove your foot off the brake pedal, while raising the engine speed.**

   3. Allow 2 minutes for cooling, then repeat the test in the all shift lever positions.

      NOTE:
      - **Do not test stall speed for more than 10 seconds at a time.**
      - **Record the engine speed at 6 to 8 seconds after pressing the accelerator pedal. Higher engine speed will be indicated for 5 seconds.**
      - **Stall speed tests should be used for diagnostic purposes only.**
      - **The stall speed should be the same in the all shift lever positions.**
      - **Do not test stall speed with A/T pressure gauges installed.**

      Stall Speed rpm

      Specification: 2, 200 rpm

GETtheMANUALS.org

Service Limit: 2, 050 - 2, 350 rpm

4. If any of the stall speeds are out of the service limit, refer to the problems and probable causes listed in the table.

Problem	Probable Causes
Stall speed rpm high in D, 2, 1, and R	• ATF pump output low • Clogged ATF strainer • Regulator valve stuck • Slipping clutch
Stall speed rpm high in 2	Slippage of 2nd clutch
Stall speed rpm high in 1	Slippage of 1st clutch
Stall speed rpm high in R	Slippage of 4th clutch
Stall speed rpm low in D, 2, 1, and R	• Engine output low • Engine throttle valve closed • Torque converter one-way clutch slipping

ATF TEMPERATURE SENSOR TEST

REMOVAL

1. Vehicle Lift
    1. Raise the vehicle on a lift, and make sure it is securely supported.
2. Front Splash Shield
    1. Remove the bolts (A), then remove the clips (B) that secure the front inner fender and the front splash shield (C) to the body.
    2. From under the front bumper (D), remove the clips (E).
    3. From under the body, remove the clips (F), then pull out the front splash shield.

GETtheMANUALS.org

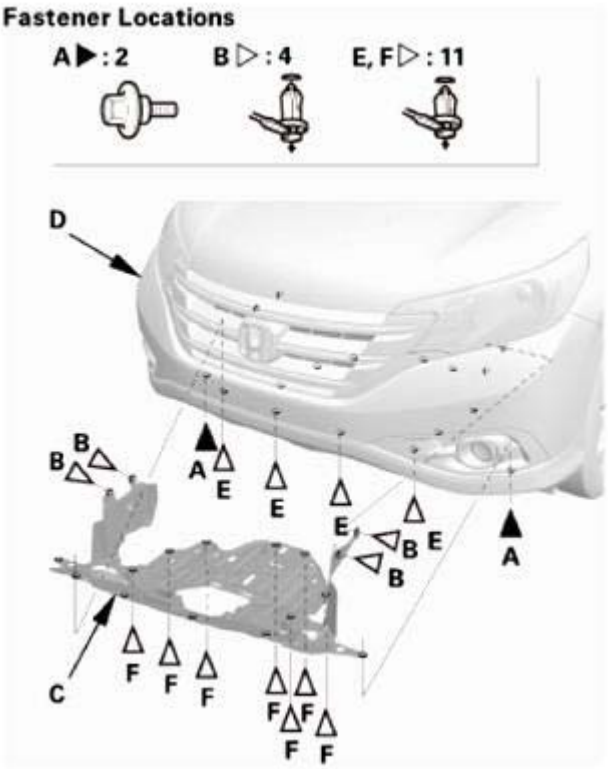

Fig. 49: Identifying Front Inner Fender And Front Splash Shield Bolts And Clips Location
Courtesy of AMERICAN HONDA MOTOR CO., INC.

TEST

1. ATF Temperature Sensor - Test
    1. Disconnect the connector.
    2. Measure the resistance between shift solenoid wire harness 7P connector (A) terminals No. 5 and No. 6 for ATF temperature sensor.

       Standard: 50 ohms - 25 kohms

       - If the resistance is out of the standard, replace the ATF temperature sensor and the solenoid wire harness.

       NOTE: The ATF temperature sensor is not available separately from the shift solenoid wire harness.

       - If the resistance is within the standard, the test is complete.
    3. Check the connector for corrosion, dirt, or oil, and clean or repair if necessary, then connect the connector securely.

GETtheMANUALS.org

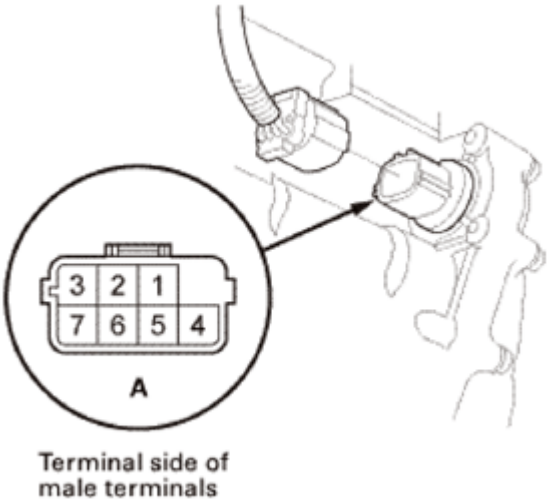

Fig. 50: Identifying Shift Solenoid Wire Harness 7P Connector Terminals
Courtesy of AMERICAN HONDA MOTOR CO., INC.

INSTALLATION

1. Front Splash Shield
    1. Install the front splash shield (A), then install the bolts (B) and the clips (C, D). Make sure the clips snap into place securely.

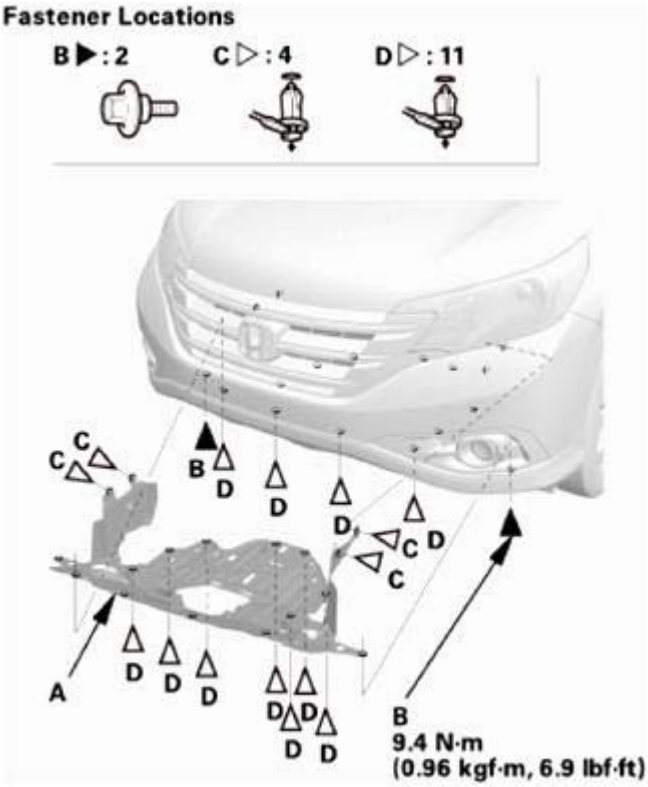

GETtheMANUALS.org

Fig. 51: Identifying Front Splash Shield, Bolts And Clips
Courtesy of AMERICAN HONDA MOTOR CO., INC.

AUTOMATIC TRANSMISSION DTC TROUBLESHOOTING INDEX

Before you troubleshoot, record all freeze data and any on-board snapshot with the HDS, and **review the General Troubleshooting Information** . See **HOW TO TROUBLESHOOT THE A/T SYSTEM** or **HOW TO TROUBLESHOOT THE FUEL AND EMISSIONS SYSTEMS**

DTC(1)	Two Drive Cycle Detection	D Indicator	MIL	Detection Item
P0705 (5) (2)	---------	Blinks	ON	Transmission Range Switch (Multiple Shift - Position Input)
P0706 (6) (2)	o	OFF	ON	Transmission Range Switch (Open)
P0711 (28) (2)	o	Blinks	OFF	ATF Temperature Sensor (Range/Performance)
P0712 (28) (2)	o	Blinks	OFF	ATF Temperature Sensor (Short)
P0713 (28) (2)	o	Blinks	OFF	ATF Temperature Sensor (Open)
P0714 (28) (2)	o	Blinks	OFF	ATF Temperature Sensor (Intermittent Failure)
P0716 (15) (2)	---------	Blinks	ON	Input Shaft (Mainshaft) Speed Sensor (Range/Performance)
P0717 (15) (2)	---------	Blinks	ON	Input Shaft (Mainshaft) Speed Sensor (No Signal Input)
P0718 (15) (2)	o	Blinks	ON	Input Shaft (Mainshaft) Speed Sensor (Intermittent Failure)
P0721 (9) (2)	---------	Blinks	ON	Output Shaft (Countershaft) Speed Sensor (Range/Performance)
P0722 (9) (2)	---------	Blinks	ON	Output Shaft (Countershaft) Speed Sensor (No Signal Input)

GETtheMANUALS.org

P0723 (9) (2)	o	Blinks	ON	Output Shaft (Countershaft) Speed Sensor (Intermittent Failure)
P0731 (64)	o	Blinks	OFF	1st Gear Incorrect Ratio
P0732 (64)	o	Blinks	OFF	2nd Gear Incorrect Ratio
P0733 (64)	o	Blinks	OFF	3rd Gear Incorrect Ratio
P0734 (64)	o	Blinks	OFF	4th Gear Incorrect Ratio
P0735 (64)	o	Blinks	OFF	5th Gear Incorrect Ratio
P0741 (40)	o	Blinks	OFF	Torque Converter Clutch Circuit Performance or Stuck OFF
P0747 (76)	o	Blinks	ON	A/T Clutch Pressure Control Solenoid Valve A Stuck ON
P0752 (70)	o	Blinks	ON	Shift Solenoid Valve A Stuck ON
P0756 (71)	o	Blinks	ON	Shift Solenoid Valve B Stuck OFF
P0757 (71)	o	Blinks	ON	Shift Solenoid Valve B Stuck ON
P0761 (72)	o	Blinks	ON	Shift Solenoid Valve C Stuck OFF
P0771 (74)	o	Blinks	ON	Shift Solenoid Valve E Stuck OFF
P0776 (77)	o	Blinks	ON	A/T Clutch Pressure Control Solenoid Valve B Stuck OFF
P0777 (77)	o	Blinks	ON	A/T Clutch Pressure Control Solenoid Valve B Stuck ON
P0780 (45)	o	Blinks	ON	Shift Error
P0796 (78)	o	Blinks	ON	A/T Clutch Pressure Control Solenoid Valve C Stuck OFF
P0797 (78)	o	Blinks	ON	A/T Clutch Pressure Control Solenoid Valve C Stuck ON
P0842 (25) (2)	o	Blinks	ON	Transmission Fluid

GETtheMANUALS.org

				Pressure Switch A (2nd Clutch) Circuit Low
P0843 (25)	o	Blinks	ON	Transmission Fluid Pressure Switch A (2nd Clutch) Circuit High
P0847 (26) (2)	o	Blinks	OFF	Transmission Fluid Pressure Switch B (3rd Clutch) Circuit Low
P0848 (26)	o	Blinks	OFF	Transmission Fluid Pressure Switch B (3rd Clutch) Circuit High
P0962 (16) (2)	---------	Blinks	ON	A/T Clutch Pressure Control Solenoid Valve A (Open or Short)
P0963 (16) (2)	---------	Blinks	ON	A/T Clutch Pressure Control Solenoid Valve A
P0966 (23) (2)	---------	Blinks	ON	A/T Clutch Pressure Control Solenoid Valve B (Open or Short)
P0967 (23) (2)	---------	Blinks	ON	A/T Clutch Pressure Control Solenoid Valve B
P0970 (29) (2)	---------	Blinks	ON	A/T Clutch Pressure Control Solenoid Valve C (Open or Short)
P0971 (29) (2)	---------	Blinks	ON	A/T Clutch Pressure Control Solenoid Valve C
P0973 (7) (2)	---------	Blinks	ON	Shift Solenoid Valve A (Short)
P0974 (7) (2)	---------	Blinks	ON	Shift Solenoid Valve A (Open)
P0976 (8) (2)	---------	Blinks	ON	Shift Solenoid Valve B (Short)
P0977 (8) (2)	---------	Blinks	ON	Shift Solenoid Valve B (Open)
P0979 (22) (2)	---------	Blinks	ON	Shift Solenoid Valve C (Short)
P0980 (22) (2)	---------	Blinks	ON	Shift Solenoid Valve C

GETtheMANUALS.org

				(Open)
P0982 (60) (2)	---------	Blinks	ON	Shift Solenoid Valve D (Short)
P0983 (60) (2)	---------	Blinks	ON	Shift Solenoid Valve D (Open)
P0985 (61) (2)	---------	Blinks	ON	Shift Solenoid Valve E (Short)
P0986 (61) (2)	---------	Blinks	ON	Shift Solenoid Valve E (Open)
P1717 (62) (2)	o	Blinks	OFF	Transmission Range Switch ATP RVS Switch (Open or Short)
P1730 (45)	o	Blinks	ON	Shift Error B
P1731 (45)	o	Blinks	ON	Shift Error C
P1732 (45)	o	Blinks	ON	Shift Error D
P1733 (45)	o	Blinks	ON	Shift Error E
P1734 (45)	o	Blinks	ON	Shift Error F

(1) The DTC in parentheses is the flash code the D indicator indicates when the data link connector (DLC) is connected to the HDS, and in the SCS mode.

(2) This code is caused by an electrical circuit problem and cannot be caused by a mechanical problem in the transmission.

D3 SWITCH CIRCUIT TROUBLESHOOTING

GETtheMANUALS.org

D3 Switch Circuit Troubleshooting

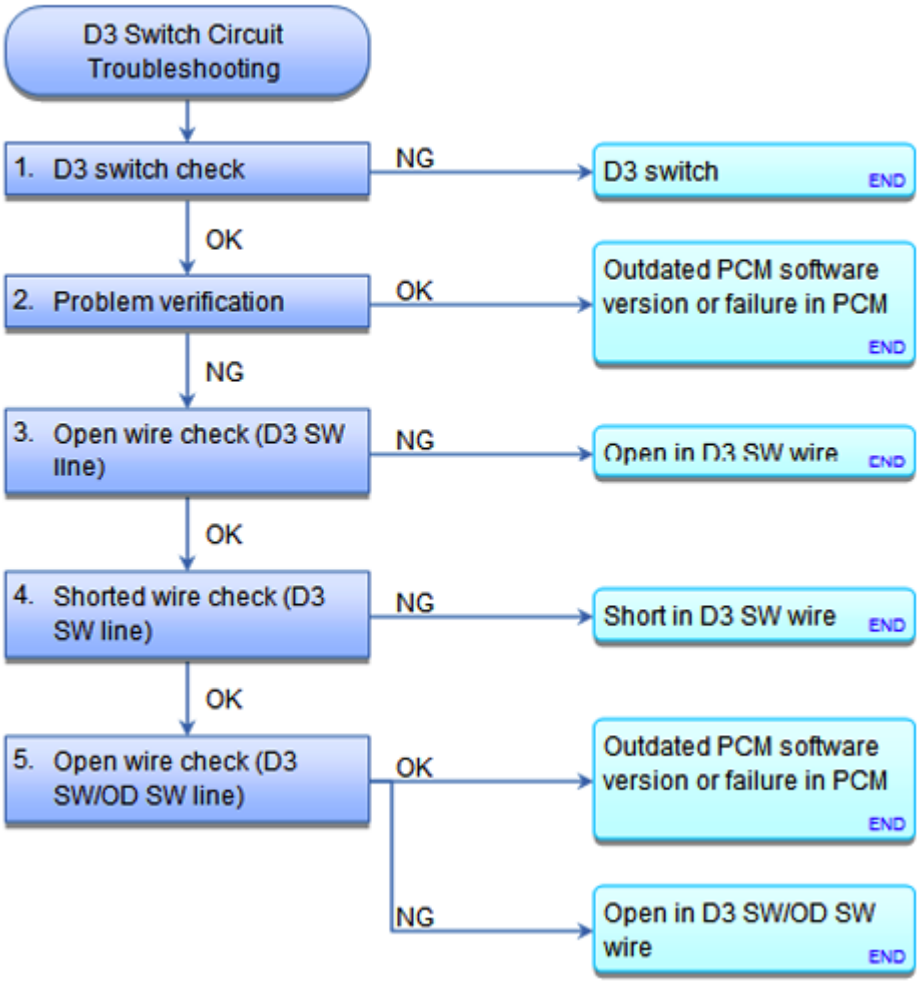

Fig. 52: D3 Switch Circuit Troubleshooting Flowchart
Courtesy of AMERICAN HONDA MOTOR CO., INC.

1. D3 switch check:
   - 1. Turn the ignition switch to LOCK (0).
   - 2. Disconnect the following connector.

     D3 switch 2P connector

   - 3. **TEST THE D3 SWITCH**.

Does the switch test OK?

YES : The D3 switch is OK. Go to step 2.

NO : **REPLACE THE D3 SWITCH.**

GETtheMANUALS.org

2. Problem verification:
    - 1. Turn the ignition switch to ON (II).
    - 2. Measure the voltage between test points 1 and 2.

    Test condition IG ON (II)

    D3 switch 2P connector: disconnected

    Test circuit D3 SW, D3 SW

    Test point 1 D3 switch 2P connector No. 1 (WHT)

    Test point 2 D3 switch 2P connector No. 2 (WHT)

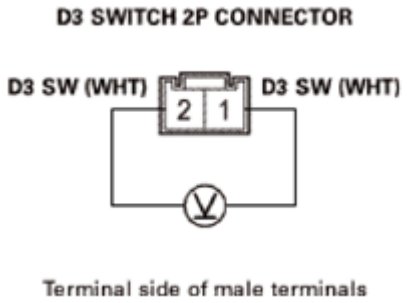

Fig. 53: Measuring Voltage Between D3 Switch 2P Connector No. 1 (WHT) And D3 Switch 2P Connector No. 2 (WHT)
Courtesy of AMERICAN HONDA MOTOR CO., INC.

Is there battery voltage?

YES : **Update the PCM if it does not have the latest software** See **PCM REMOVAL AND INSTALLATION** or **PCM UPDATE** , or **substitute a known-good PCM** See **PCM REMOVAL AND INSTALLATION** or **PCM UPDATE** , and recheck. If the symptom goes away with a known-good PCM, **replace the original PCM** See **PCM REMOVAL AND INSTALLATION** or **PCM UPDATE** .

NO : The failure is duplicated. Go to step 3.

3. Open wire check (D3 SW line):
    - 1. Turn the ignition switch to LOCK (0).
    - 2. Check for continuity between test points 1 and 2.

    Test condition IG LOCK (0)

    D3 switch 2P connector: disconnected

    Test circuit D3 SW

GETtheMANUALS.org

Test point 1 D3 switch 2P connector No. 1 (WHT)

Test point 2 Body ground

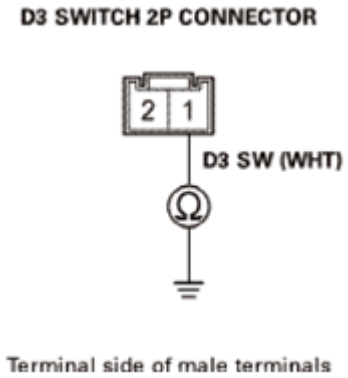

Fig. 54: Checking For Continuity Between D3 Switch 2P Connector No. 1 (WHT) And Body Ground
Courtesy of AMERICAN HONDA MOTOR CO., INC.

Is there continuity?

YES : The D3 SW wire is OK. Go to step 4.

NO : Repair an open in the D3 SW wire between the D3 switch 2P connector and ground (G502), or repair poor ground (G502).

4. Shorted wire check (D3 SW line):
   - 1. Jump the SCS line with the HDS.
   - 2. Disconnect the following connector.

     PCM connector A (49P)

   - 3. Check for continuity between test points 1 and 2.

     Test condition IG LOCK (0)

     D3 switch 2P connector: disconnected

     PCM connector A (49P): disconnected

     Test circuit D3 SW

     Test point 1 D3 switch 2P connector No. 2 (WHT)

     Test point 2 Body ground

GETtheMANUALS.org

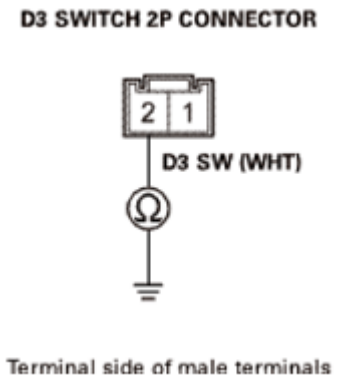

Fig. 55: Checking For Continuity Between D3 Switch 2P Connector No. 2 (WHT) And Body Ground
Courtesy of AMERICAN HONDA MOTOR CO., INC.

Is there continuity?

YES : Repair a short to ground in the D3 SW wire between the D3 switch 2P connector and the PCM.

NO : The D3 SW wire is not shorted. Go to step 5.

5. Open wire check (D3 SW/OD SW line):
   - 1. Check for continuity between test points 1 and 2.

     Test condition IG LOCK (0)

     D3 switch 2P connector: disconnected

     PCM connector A (49P): disconnected

     Test circuit D3 SW/OD SW

     Test point 1 D3 switch 2P connector No. 2 (WHT)

     Test point 2 PCM connector A (49P) No. 14 (RED)

GETtheMANUALS.org

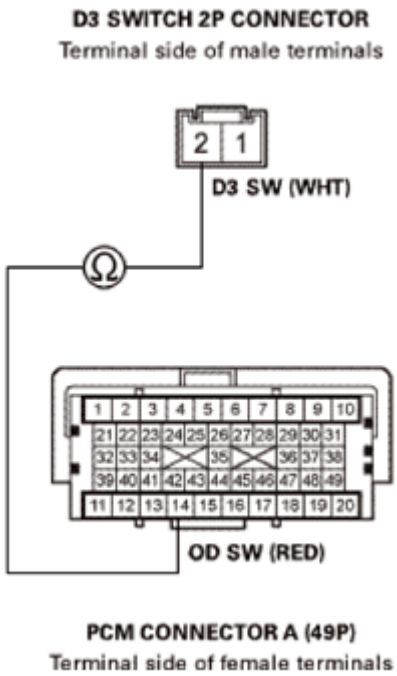

Fig. 56: Checking For Continuity Between D3 Switch 2P Connector No. 2 (WHT) And PCM Connector A (49P) No. 14 (RED)
Courtesy of AMERICAN HONDA MOTOR CO., INC.

Is there continuity?

YES : The D3 SW/OD SW wire is OK. **Update the PCM if it does not have the latest software** See **PCM REMOVAL AND INSTALLATION** or **PCM UPDATE** , or **substitute a known-good PCM** See **PCM REMOVAL AND INSTALLATION** or **PCM UPDATE** , and recheck. If the symptom goes away with a known-good PCM, **replace the original PCM** See **PCM REMOVAL AND INSTALLATION** or **PCM UPDATE** .

NO : Repair an open in the D3 SW/OD SW wire between the D3 switch 2P connector and the PCM.

D3 SWITCH REMOVAL AND INSTALLATION

REMOVAL

1. Shift Lever Panel (AT)
    1. Carefully pry out the shift lever panel (A) with the appropriate trim tool to detach the clips (B, C) and the hooks (D), then remove the shift lever panel.

GETtheMANUALS.org

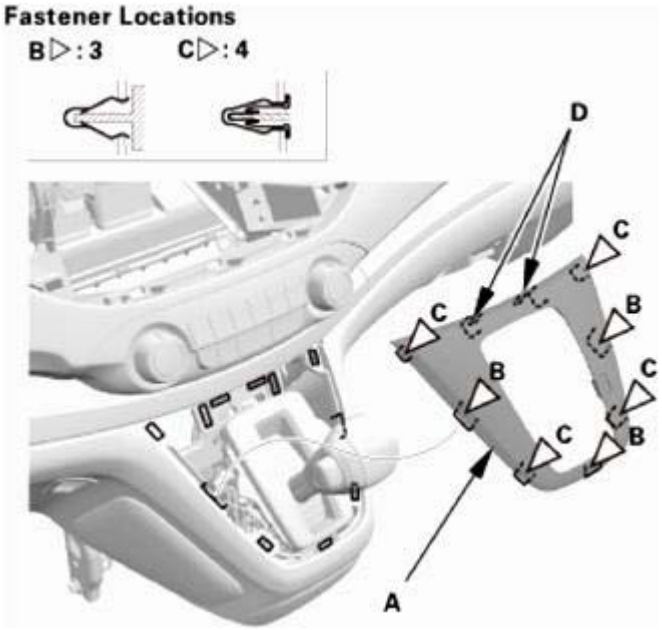

Fig. 57: Locating Shift Lever Panel, Clips And Hooks
Courtesy of AMERICAN HONDA MOTOR CO., INC.

2. Center Maintenance Cover
    1. Remove the maintenance cover (A).

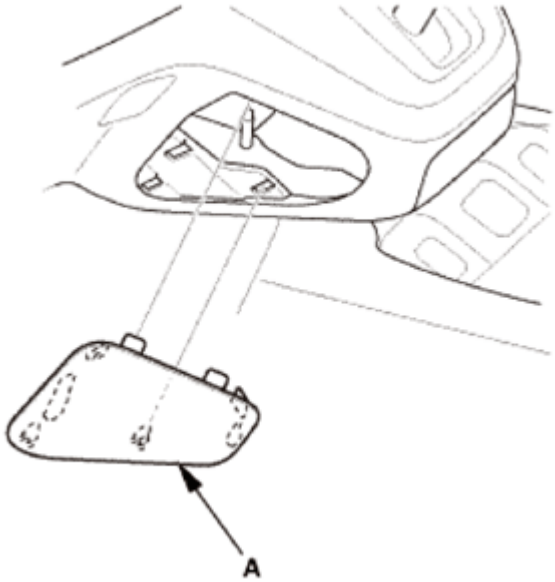

Fig. 58: Locating Maintenance Cover
Courtesy of AMERICAN HONDA MOTOR CO., INC.

3. D3 Switch Harness - Disconnection
    1. Remove the harness wire tie (A).

GETtheMANUALS.org

2. Disconnect the D3 switch connector (B).

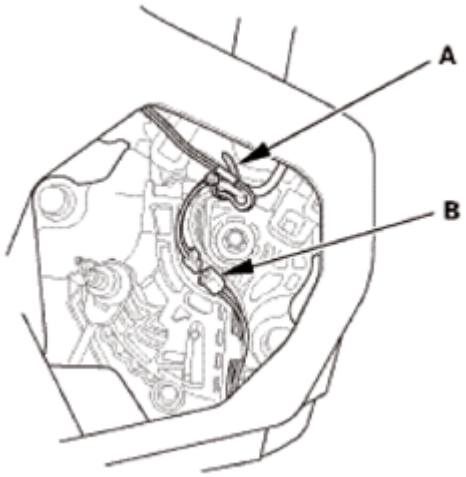

Fig. 59: Locating Harness Wire Tie And D3 Switch Connector
Courtesy of AMERICAN HONDA MOTOR CO., INC.

4. Shift Lever Knob/Shift Lever Knob Ring Assembly

NOTE: **Do not wipe off the special grease applied to the area of the shift lever marked with an asterisk (*) when you disassemble or assemble it.**

1. Unhook the D3 switch harness (A) from the harness guide (B).
2. Remove the shift lever knob/shift lever knob ring assembly (C).

GETtheMANUALS.org

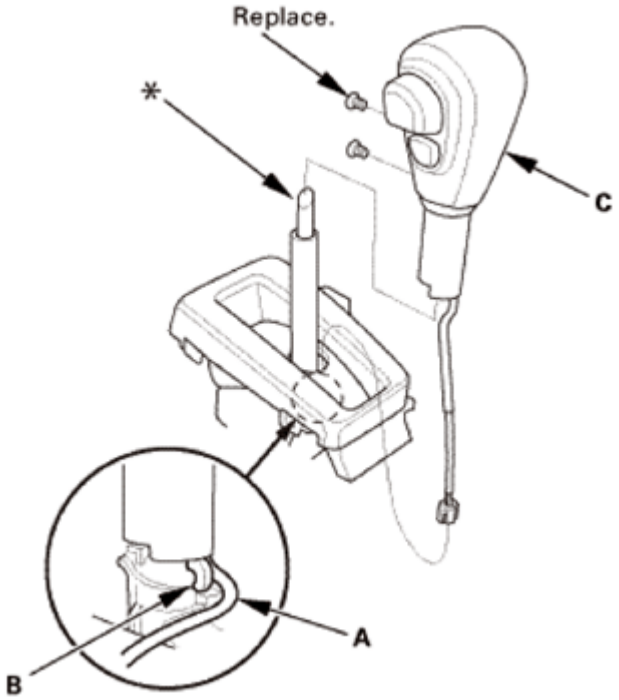

Fig. 60: Locating D3 Switch Harness, Harness Guide And Shift Lever Knob/Shift Lever Knob Ring Assembly
Courtesy of AMERICAN HONDA MOTOR CO., INC.

5. Shift Lever Knob Ring

NOTE: Do not wipe off the special grease applied to the area of the shift lever marked with an asterisk (*) when you disassemble or assemble it.

1. Remove the shift lever ring (A).

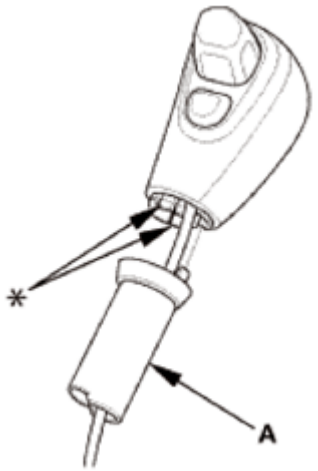

Fig. 61: Locating Shift Lever Ring
Courtesy of AMERICAN HONDA MOTOR CO., INC.

GETtheMANUALS.org

6. Shift Lever Knob Cover - Driver's Side

NOTE: **Do not wipe off the special grease applied to the area of the shift lever marked with an asterisk (*) when you disassemble or assemble it.**

1. Wrap the end of a flat-tip screwdriver (A) with tape, remove the shift lever knob cover (B) using the screwdriver.
2. Remove the shift lever button (C) and the spring (D).

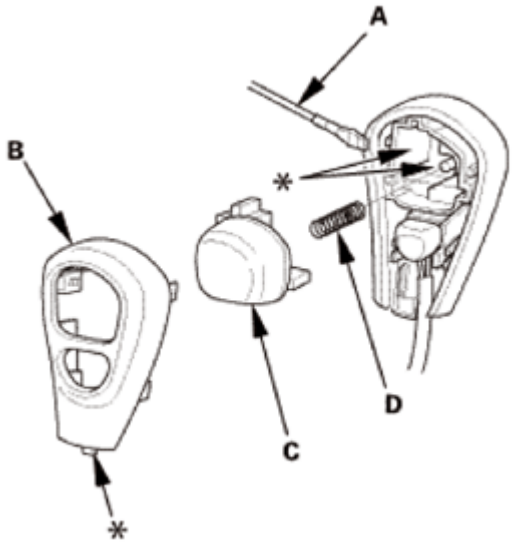

Fig. 62: Removing Shift Lever Knob Cover Using Screwdriver
Courtesy of AMERICAN HONDA MOTOR CO., INC.

7. D3 Switch

NOTE: **Do not wipe off the special grease applied to the area of the shift lever marked with an asterisk (*) when you disassemble or assemble it.**

1. Remove the D3 switch (A) by expanding the lock tabs (B).

GETtheMANUALS.org

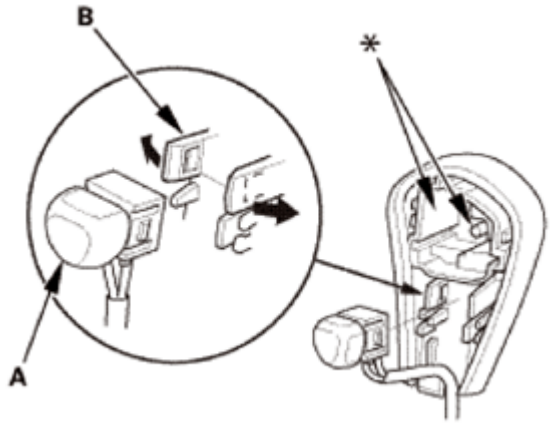

Fig. 63: Locating D3 Switch And Lock Tabs
Courtesy of AMERICAN HONDA MOTOR CO., INC.

INSTALLATION

1. D3 Switch

NOTE: **Do not wipe off the special grease applied to the area of the shift lever marked with an asterisk (*) when you disassemble or assemble it.**

1. Install the D3 switch (A).

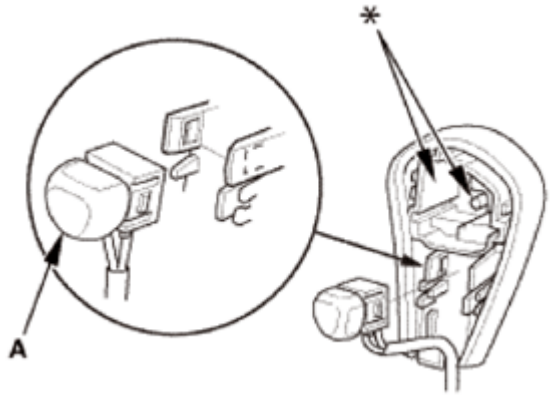

Fig. 64: Locating D3 Switch
Courtesy of AMERICAN HONDA MOTOR CO., INC.

2. Shift Lever Knob Cover - Driver's Side

NOTE: **Do not wipe off the special grease applied to the area of the shift lever marked with an asterisk (*) when you disassemble or assemble it.**

1. Install the spring (A) and the shift lever button (B).
2. Install the shift lever knob cover (C).

GETtheMANUALS.org

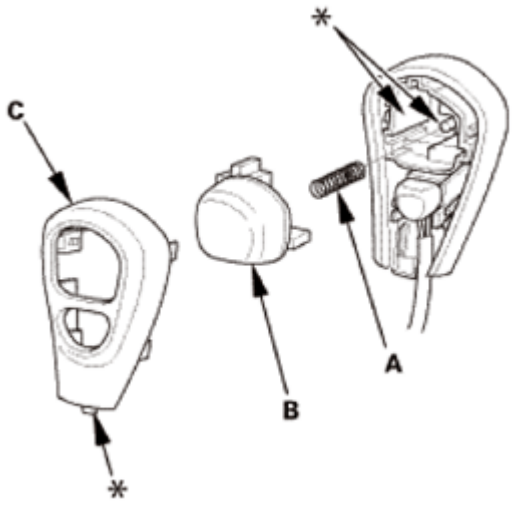

Fig. 65: Locating Spring, Shift Lever Button And Shift Lever Knob Cover
Courtesy of AMERICAN HONDA MOTOR CO., INC.

3. Shift Lever Knob Ring

NOTE: **Do not wipe off the special grease applied to the area of the shift lever marked with an asterisk (*) when you disassemble or assemble it.**

1. Install the shift lever ring (A).

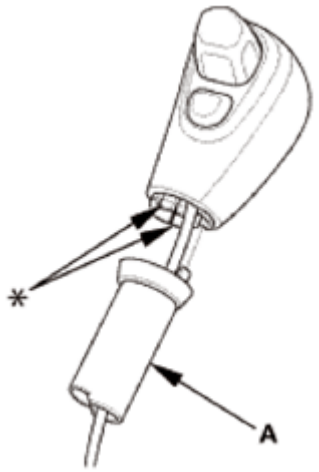

Fig. 66: Locating Shift Lever Ring
Courtesy of AMERICAN HONDA MOTOR CO., INC.

4. Shift Lever Knob/Shift Lever Knob Ring Assembly

NOTE: **Do not wipe off the special grease applied to the area of the shift lever marked with an asterisk (*) when you disassemble or assemble it.**

GETtheMANUALS.org

1. Install the shift lever knob/shift lever knob ring assembly (A).
2. Hook the D3 switch harness (B) to the harness guide (C).

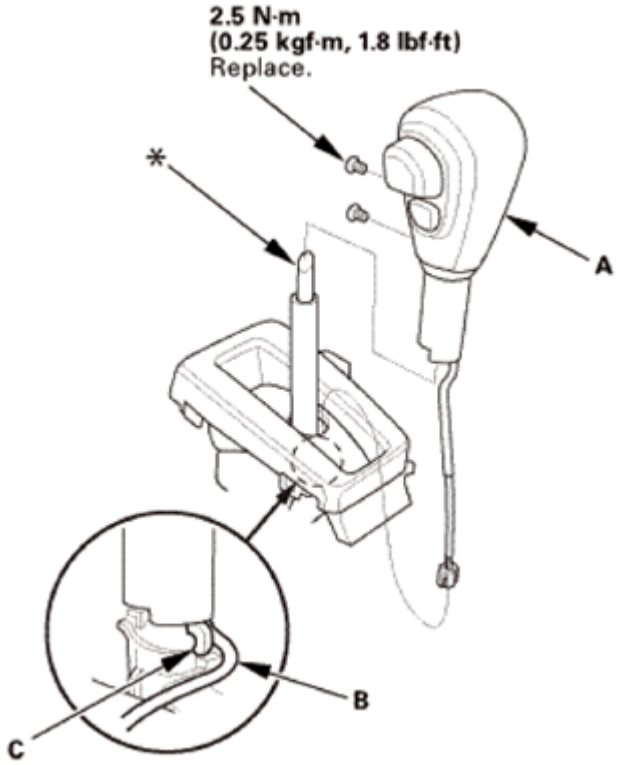

Fig. 67: Locating Shift Lever Knob/Shift Lever Knob Ring Assembly, D3 Switch Harness And Harness Guide
Courtesy of AMERICAN HONDA MOTOR CO., INC.

5. D3 Switch Harness - Reconnection
    1. Connect the D3 switch connector (A).
    2. Route the D3 switch harness (B) along with the shift lever assembly, and tie the harnesses at the guide (C) with the harness wire tie (D).

GETtheMANUALS.org

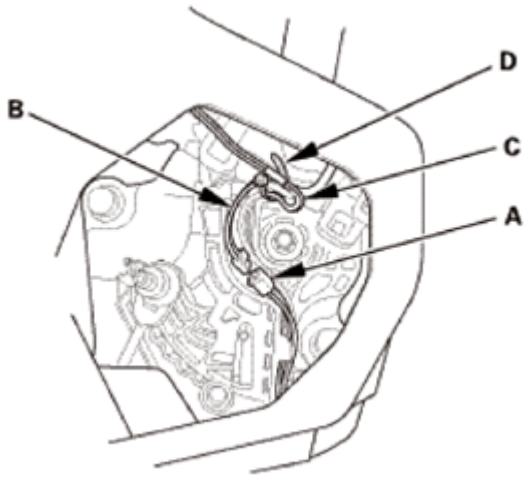

Fig. 68: Locating D3 Switch Connector, D3 Switch Harness, Guide And Harness Wire Tie
Courtesy of AMERICAN HONDA MOTOR CO., INC.

6. Center Maintenance Cover
    1. Install the maintenance cover (A).

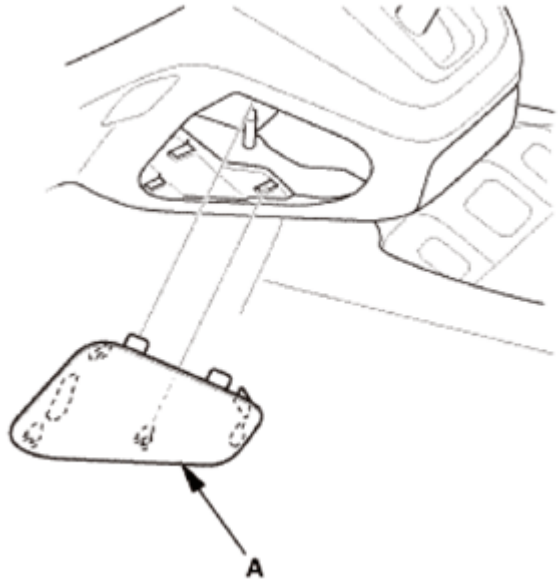

Fig. 69: Locating Maintenance Cover
Courtesy of AMERICAN HONDA MOTOR CO., INC.

7. Shift Lever Panel (AT)
    1. Install the shift lever panel (A). Make sure the clips (B, C) and the hooks (D) snap into place securely.

GETtheMANUALS.org

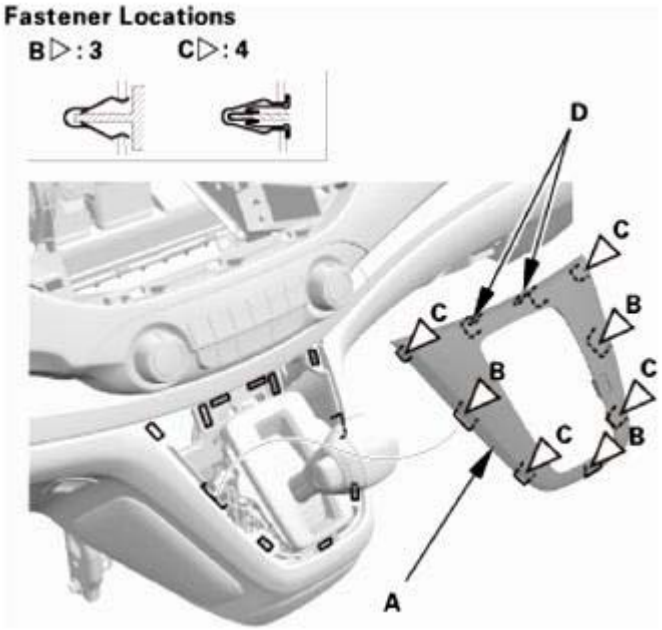

Fig. 70: Identifying Shift Lever Panel, Clips And Hooks
Courtesy of AMERICAN HONDA MOTOR CO., INC.

D3 SWITCH TEST

REMOVAL

1. Center Maintenance Cover
    1. Remove the maintenance cover (A).

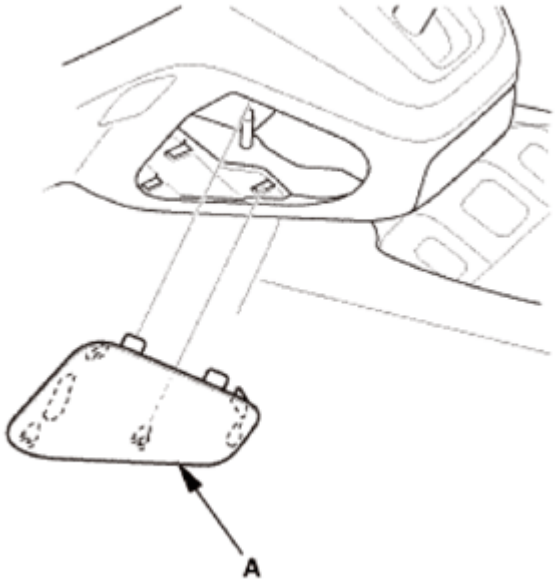

Fig. 71: Locating Maintenance Cover

GETtheMANUALS.org

Courtesy of AMERICAN HONDA MOTOR CO., INC.

TEST

1. D3 Switch - Continuity Test
    1. Disconnect the connector (A).
    2. Check for continuity between D3 switch connector terminals No. 1 and No. 2. There should be continuity while pressing the D3 button and no continuity when the D3 button is released.
        - If the D3 switch test is OK, the test is finished.
        - If the D3 switch test fails, replace the D3 switch.

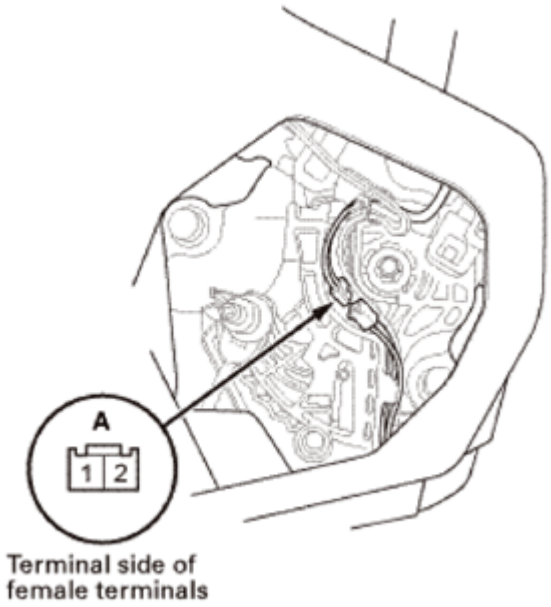

Fig. 72: Identifying D3 Switch Connector Terminals
Courtesy of AMERICAN HONDA MOTOR CO., INC.

INSTALLATION

1. Center Maintenance Cover
    1. Install the maintenance cover (A).

GETtheMANUALS.org

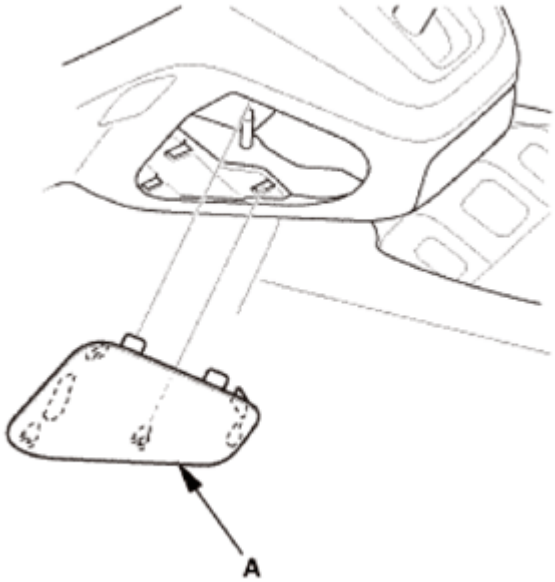

Fig. 73: Locating Maintenance Cover
Courtesy of AMERICAN HONDA MOTOR CO., INC.

PARK PIN SWITCH TEST

REMOVAL

1. Front Console Cover - Both Sides
    1. Remove the clips (A).
    2. Detach the clips (B), then remove the front console covers (C).

    Left side

GETtheMANUALS.org

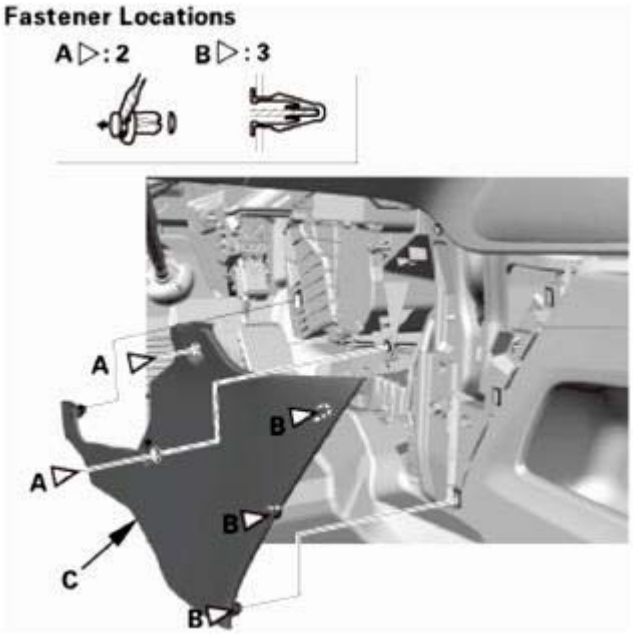

Fig. 74: Identifying Clips And Front Console Covers - Left Side
Courtesy of AMERICAN HONDA MOTOR CO., INC.

Right side

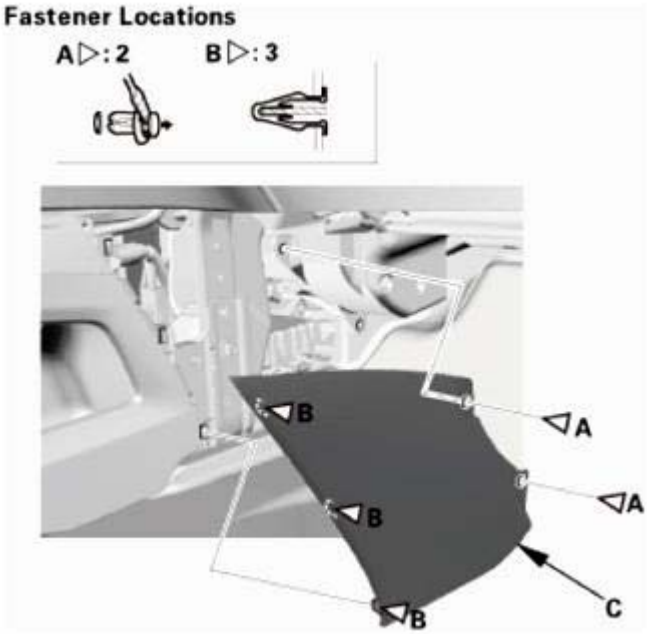

Fig. 75: Identifying Clips And Front Console Covers - Right Side
Courtesy of AMERICAN HONDA MOTOR CO., INC.

2. Center Console Rear Trim
    1. Carefully pry out the center console rear trim (A) with the appropriate trim tool to detach the clips

GETtheMANUALS.org

(B) and the hooks (C), then remove the center console rear trim.

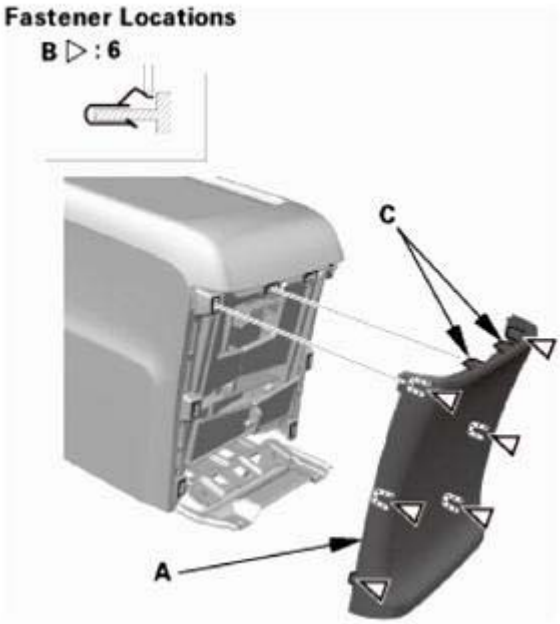

Fig. 76: Identifying Center Console Rear Trim, Clips And Hooks
Courtesy of AMERICAN HONDA MOTOR CO., INC.

3. Center Console
    1. Carefully pry out the center lower cover (A) with the appropriate trim tool to detach the clips (B), then remove the center lower cover.
    2. Remove the bolt (C).

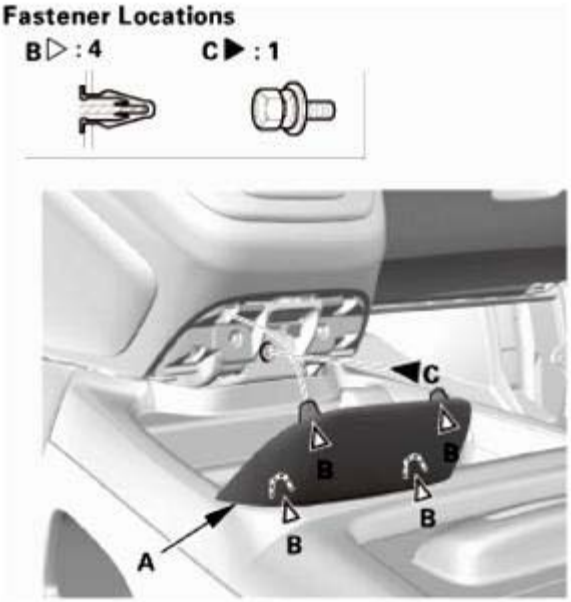

Fig. 77: Identifying Center Lower Cover, Clips And Bolt

GETtheMANUALS.org

Courtesy of AMERICAN HONDA MOTOR CO., INC.

3. Remove the bolts (A).

Fig. 78: Locating Bolts
Courtesy of AMERICAN HONDA MOTOR CO., INC.

4. Remove the console box mat (A), then remove the bolts (B).

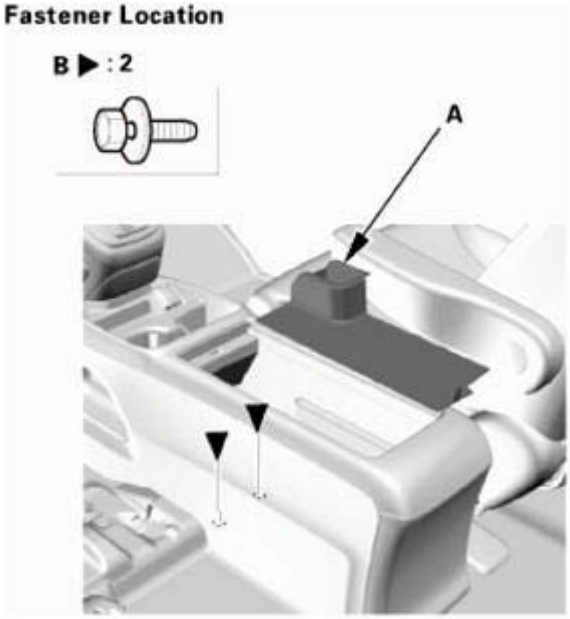

Fig. 79: Locating Console Box Mat And Bolts
Courtesy of AMERICAN HONDA MOTOR CO., INC.

GETtheMANUALS.org

5. Disconnect the connectors (A), and remove the clips (B).

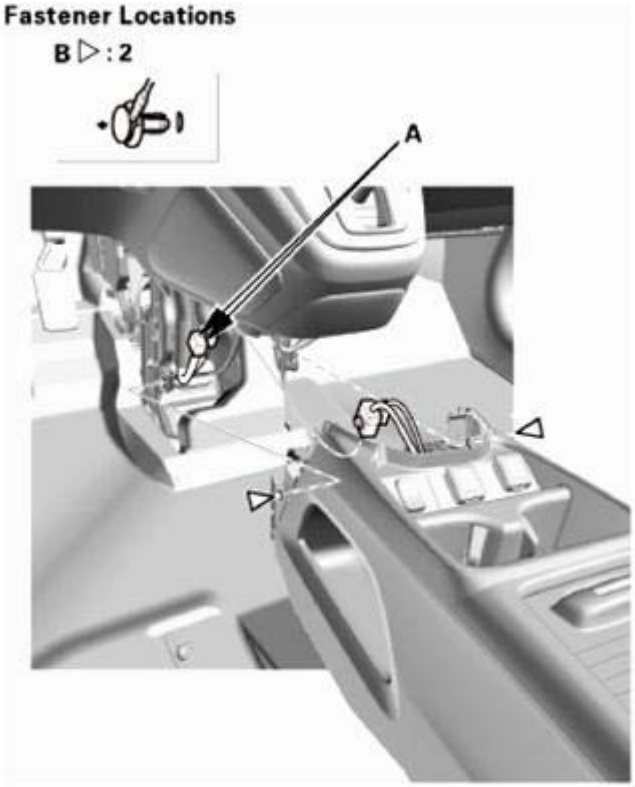

Fig. 80: Locating Connectors And Clips
Courtesy of AMERICAN HONDA MOTOR CO., INC.

6. Slide both front seats fully rearward, and recline the seatbacks around two thirds to the rear.
7. Remove the center console (A).

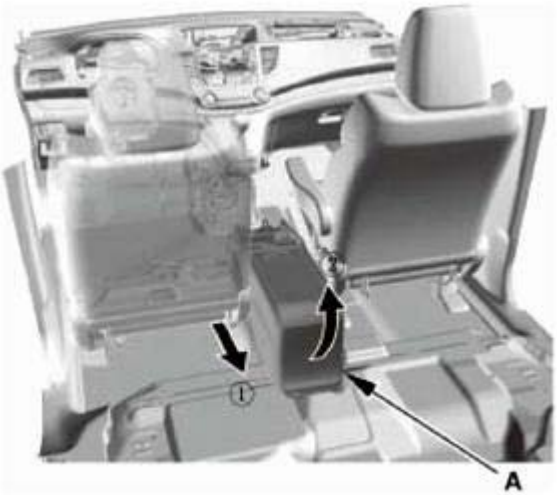

Fig. 81: Locating Center Console

GETtheMANUALS.org

Courtesy of AMERICAN HONDA MOTOR CO., INC.

TEST

1. Park Pin Switch - Test
    1. Disconnect the connector.
    2. Check for continuity between connector terminals No. 6 and No. 9.
        - There should be no continuity when the shift lever is moved to P and the shift lever button is released.
        - There should be continuity when the shift lever button is pressed or the shift lever is moved out of P.
    3. If the continuity is not as specified, the park pin switch is faulty, replace the shift lever/shift cable bracket assembly.
    4. Connect the connector.

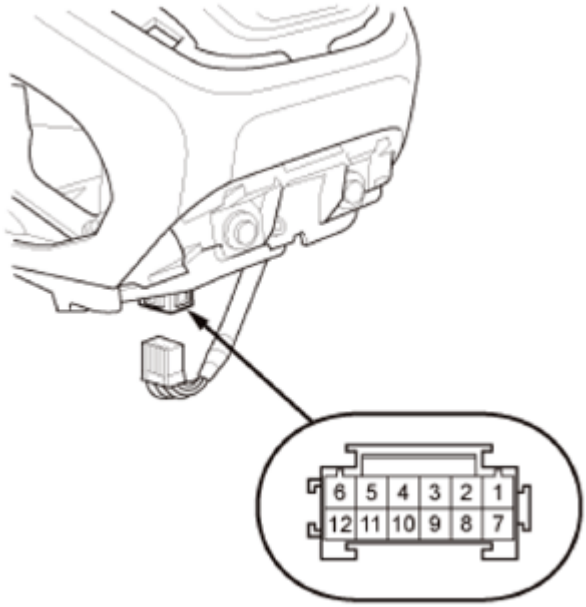

Fig. 82: Identifying Park Pin Switch Connector Terminals
Courtesy of AMERICAN HONDA MOTOR CO., INC.

INSTALLATION

1. Center Console
    1. Install the center console (A).

GETtheMANUALS.org

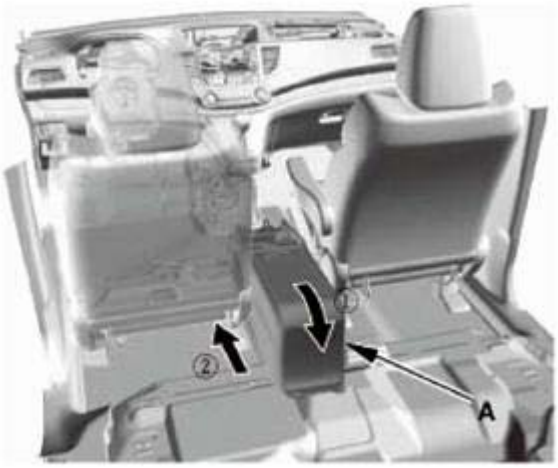

Fig. 83: Locating Center Console
Courtesy of AMERICAN HONDA MOTOR CO., INC.

2. Connect the connectors (A), and install the clips (B).

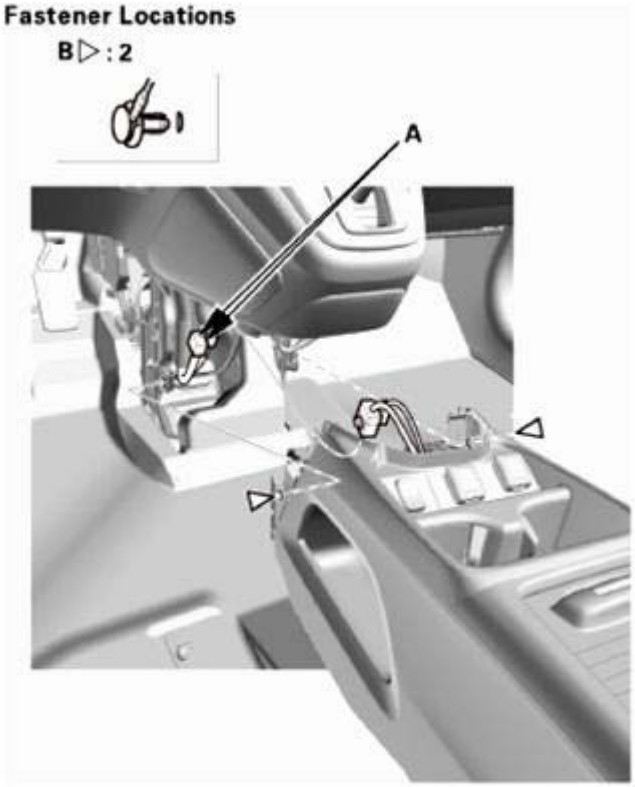

Fig. 84: Locating Connectors And Clips
Courtesy of AMERICAN HONDA MOTOR CO., INC.

3. Install the bolts (A), then install the console box mat (B).

GETtheMANUALS.org

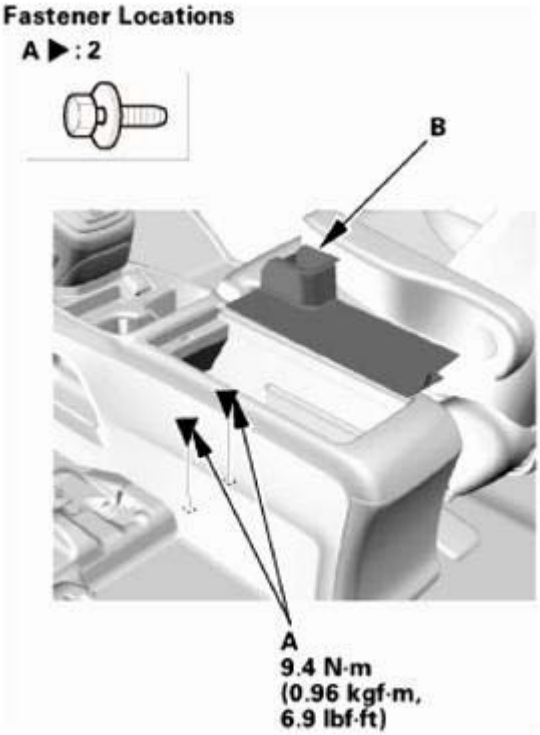

Fig. 85: Locating Bolts And Console Box Mat
Courtesy of AMERICAN HONDA MOTOR CO., INC.

4. Install the bolts (A).

Fig. 86: Locating Bolts
Courtesy of AMERICAN HONDA MOTOR CO., INC.

GETtheMANUALS.org

5. Install the bolt (A), then install the center lower cover (B). Make sure the clips (C) snap into place securely.

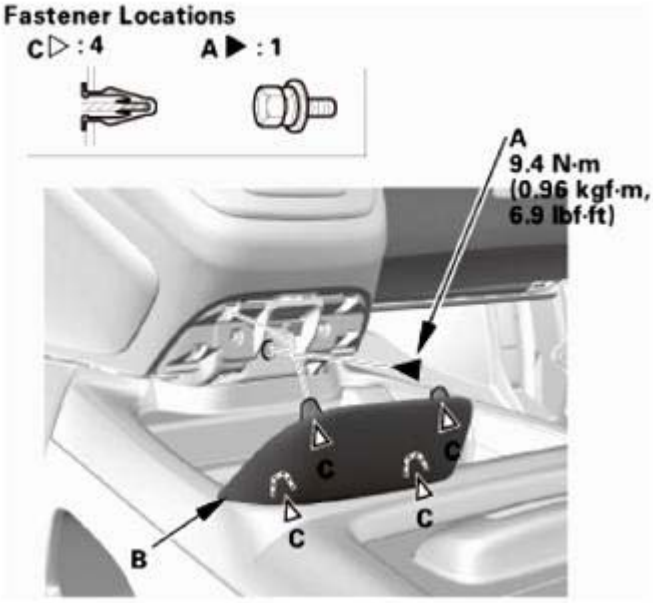

Fig. 87: Locating Bolt, Center Lower Cover And Clips
Courtesy of AMERICAN HONDA MOTOR CO., INC.

2. Center Console Rear Trim
    1. Install the center console rear trim (A). Make sure the clips (B) and the hooks (C) snap into place securely.

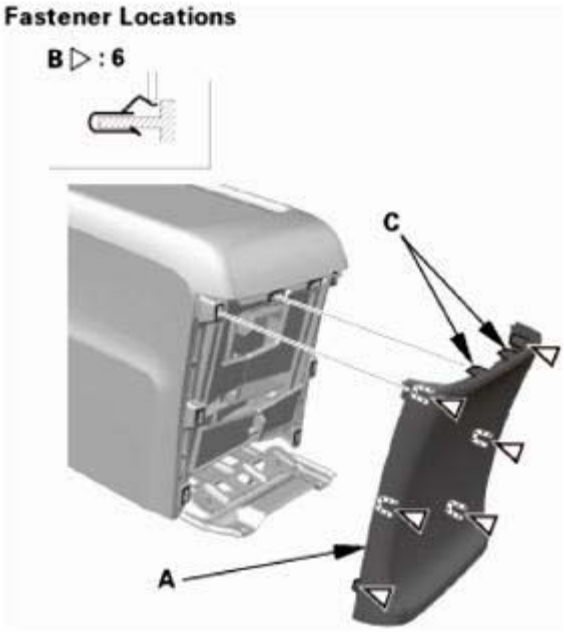

Fig. 88: Locating Center Console Rear Trim, Clips And Hooks

GETtheMANUALS.org

Courtesy of AMERICAN HONDA MOTOR CO., INC.

3. Front Console Cover - Both Sides
    1. Install the front console covers (A). Make sure the clips (B, C) snap into place securely.

Left side

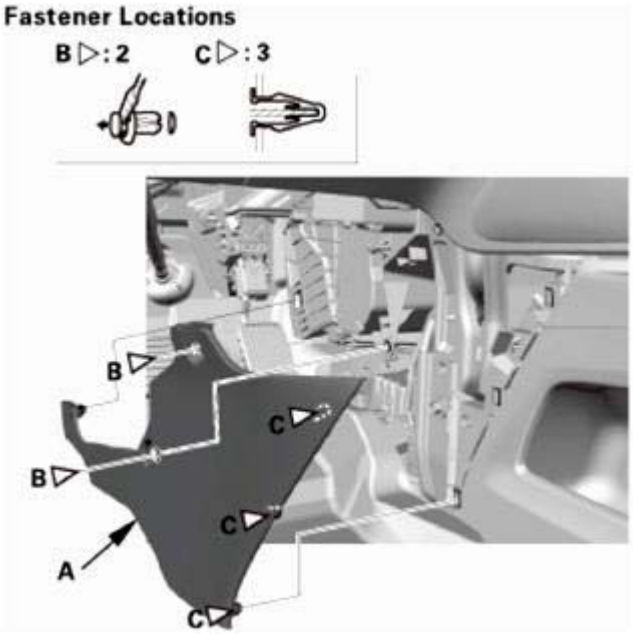

Fig. 89: Identifying Front Console Covers And Clips - Left Side
Courtesy of AMERICAN HONDA MOTOR CO., INC.

Right side

GETtheMANUALS.org

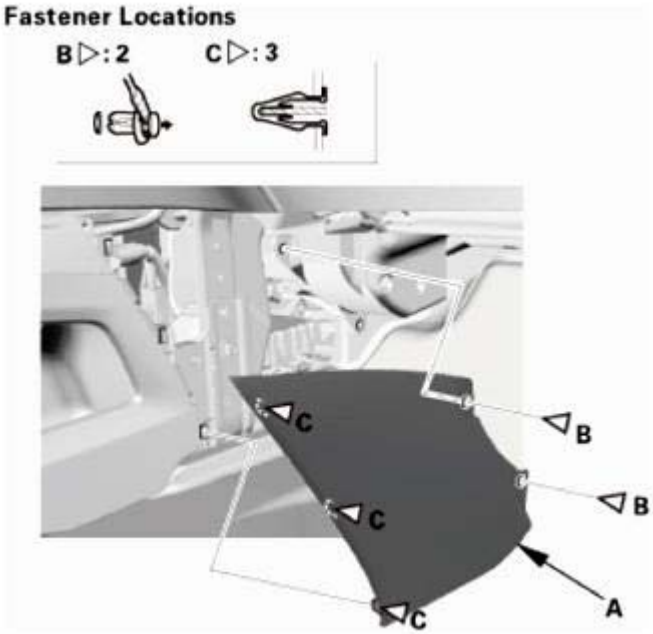

Fig. 90: Identifying Front Console Covers And Clips - Right Side
Courtesy of AMERICAN HONDA MOTOR CO., INC.

PCM A/T CONTROL SYSTEM PCM INPUTS AND OUTPUTS

PCM A/T CONTROL SYSTEM INPUTS AND OUTPUTS AT PCM CONNECTOR A ([]) (49P)

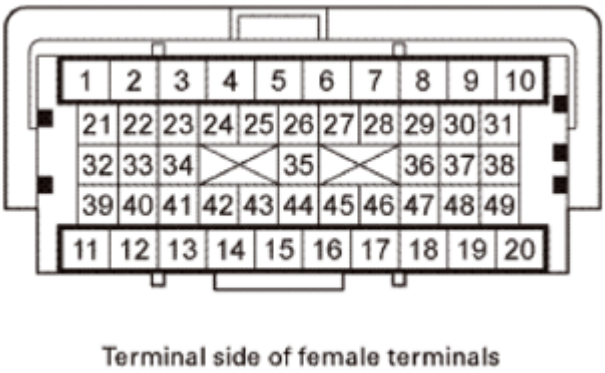

Fig. 91: Identifying PCM Connector A (49P)
Courtesy of AMERICAN HONDA MOTOR CO., INC.

PCM CONNECTOR A ([]) (49P) DESCRIPTION

Terminal number	Wire color	Terminal name	Description	Signal
A1	BLU	IG1_FI-ECU (POWER SOURCE FOR SOLENOID VALVES)	Power source for solenoid valves	With ignition switch ON (II): battery voltage
		F_CAN-H (CAN	Sends and receives	

GETtheMANUALS.org

A3	WHT	COMMUNICATION SIGNAL HIGH)	communication signal	With ignition switch ON (II): pulses
A4	RED	F_CAN-L (CAN COMMUNICATION SIGNAL LOW)	Sends and receives communication signal	With ignition switch ON (II): pulses
A7	GRY	FI_MAIN_RLY_CL - (PGM-FI MAIN RELAY 1)	Drives PGM-FI main relay 1	With ignition switch ON (II): about 0 V With ignition switch in LOCK (0): battery voltage
A9	BRN	FI_MAIN_RLY_OUT (POWER SOURCE)	Power source for PCM	With ignition switch ON (II): battery voltage
A13	BLU	STOP_SW (BRAKE PEDAL POSITION SWITCH)	Detects brake pedal position switch signal	With brake pedal released: about 0 V With brake pedal pressed: battery voltage
A14	RED	OD_SW (D3 SWITCH)	Detects D3 switch signal	With ignition switch ON (II): • D3 switch ON (pressed): about 0 V • D3 switch OFF (released): battery voltage
A21	WHT	SHIFT_LOCK_SOL (SHIFT LOCK SOLENOID)	Drives shift lock solenoid	With ignition switch ON (II), in P, brake pedal pressed, and accelerator pedal released: about 0 V
A28	ORN	APS1 (ACCELERATOR PEDAL POSITION (APP) SENSOR A)	Detects APP sensor A signal	With ignition switch ON (II) and accelerator pedal pressed: about 4.7 V With ignition switch ON (II) and accelerator pedal released: about 1.0 V
A29	PUR	APS2 (ACCELERATOR PEDAL POSITION (APP) SENSOR B)	Detects APP sensor B signal	With ignition switch ON (II) and accelerator pedal pressed: about 2.4 V With ignition switch ON (II) and accelerator pedal released: about 0.5 V
A35	LT GRN	VCC5 (SENSOR VOLTAGE)	Provides sensor reference voltage	With ignition switch ON (II): about 5.0 V
A36	BRN	VCC4 (SENSOR VOLTAGE)	Provides sensor reference voltage	With ignition switch ON (II): about 5.0 V
A45	YEL	SG5 (SENSOR GROUND)	Sensor ground	Less than 0.2 V at all times
A46	LT BLU	SG4 (SENSOR GROUND)	Sensor ground	Less than 0.2 V at all times

PCM A/T CONTROL SYSTEM INPUTS AND OUTPUTS AT PCM CONNECTOR B () (49P)

GETtheMANUALS.org

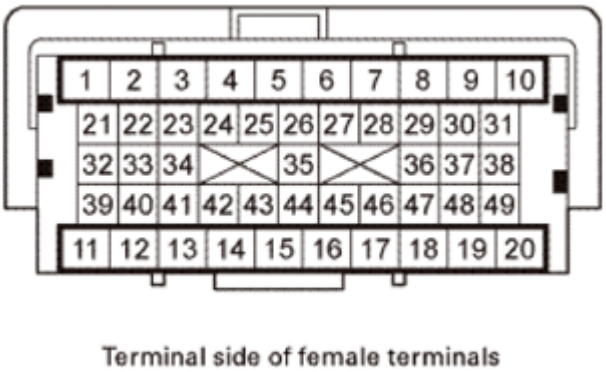

Fig. 92: Identifying PCM Connector B (49P)
Courtesy of AMERICAN HONDA MOTOR CO., INC.

PCM CONNECTOR B ([]) (49P) DESCRIPTION

Terminal number	Wire color	Terminal name	Description	Signal
B1	BLK	PG2 (POWER GROUND)	Ground circuit for PCM	Less than 0.2 V at all times
B8	LT BLU	LINEAR_A+ (A/T CLUTCH PRESSURE CONTROL SOLENOID VALVE A)	Drives A/T clutch pressure control solenoid valve A	With ignition switch ON (II): current controlled
B9	BLU	OP_3_SW (TRANSMISSION FLUID PRESSURE SWITCH B (3RD CLUTCH))	Detects transmission fluid pressure switch B (3rd clutch) signal	With engine running: • Without 3rd clutch pressure: about 5.0 V • With 3rd clutch pressure: about 0 V
B10	BLK	PG1 (POWER GROUND)	Ground circuit for PCM	Less than 0.2 V at all times
B11	PUR	LINEAR_B+ (A/T CLUTCH PRESSURE CONTROL SOLENOID VALVE B)	Drives A/T clutch pressure control solenoid valve B	With ignition switch ON (II): current controlled
B19	RED	OP_2_SW (TRANSMISSION FLUID PRESSURE SWITCH A (2ND CLUTCH))	Detects transmission fluid pressure switch A (2nd clutch) signal	With engine running: • Without 2nd clutch pressure: about 5.0 V • With 2nd clutch pressure: about 0 V
B21	PUR	SHA (SHIFT SOLENOID VALVE A)	Drives shift solenoid valve A	With engine running in R, D (in 1st, 4th, and 5th gears), D3 (in 1st gear), and 1: battery voltage With engine running in P, N, D (in 2nd and 3rd gears), D3 (in 2nd and 3rd gears),

GETtheMANUALS.org

				and 2: about 0 V
B23	WHT	ATP-N (TRANSMISSION RANGE SWITCH N POSITION)	Detects transmission range switch N position signal	With ignition switch ON (II) in N: about 0 V With ignition switch ON (II) in any position other than N: about 5.0 V
B24	PUR	ATP-P (TRANSMISSION RANGE SWITCH P POSITION)	Detects transmission range switch P position signal	With ignition switch ON (II) in P: about 0 V With ignition switch ON (II) in any position other than P: more than 5.0 V
B25	TAN	ATP-R (TRANSMISSION RANGE SWITCH R POSITION)	Detects transmission range switch R position signal	With ignition switch ON (II) in R: about 0 V With ignition switch ON (II) in any position other than R: battery voltage
B26	PUR	ATP-1 (TRANSMISSION RANGE SWITCH 1 POSITION)	Detects transmission range switch 1 position signal	With ignition switch ON (II) in 1: about 0 V With ignition switch ON (II) in any position other than 1: battery voltage
B27	RED	ATP-D3 (TRANSMISSION RANGE SWITCH 2 POSITION)	Detects transmission range switch 2 position signal	With ignition switch ON (II) in 2: about 0 V With ignition switch ON (II) in any position other than 2: battery voltage
B28	WHT	NM (INPUT SHAFT (MAINSHAFT) SPEED SENSOR)	Detects input shaft (mainshaft) speed sensor signals	With ignition switch ON (II): about 0 V or about 5.0 V With engine running in N: about 2.5 V (pulses)
B29	PNK	VCC2 (SENSOR VOLTAGE)	Provides sensor reference voltage	With ignition switch ON (II): about 5.0 V
B32	WHT	SHB (SHIFT SOLENOID VALVE B)	Drives shift solenoid valve B	With engine running in P, R, N, D (in 1st and 2nd gears), D3 (in 1st and 2nd gears), 2, and 1: battery voltage With engine running in D (in 3rd, 4th, and 5th gears), and D3 (in 3rd gear): about 0 V
B35	YEL	ATP-D (TRANSMISSION RANGE SWITCH D POSITION)	Detects transmission range switch D position signal	With ignition switch ON (II) in D: about 0 V With ignition switch ON (II) in any position other than D: battery voltage
B36	BLU	LINEAR_C+ (A/T CLUTCH PRESSURE CONTROL SOLENOID VALVE C)	Drives A/T clutch pressure control solenoid valve C	With ignition switch ON (II): current controlled
B38	RED	TATF (ATF TEMPERATURE SENSOR)	Detects ATF temperature signal	With ignition switch ON (II): about 0.2 - 4.8 V (depending on ATF temperature)
				With ignition switch ON (II) in D, 2,

GETtheMANUALS.org

B39	LT GRN	ATP-FWD (TRANSMISSION RANGE SWITCH FWD POSITION)	Detects transmission range switch FWD position signal	and 1: about 0 V With ignition switch ON (II) in any position other than D, 2, and 1: battery voltage
B40	YEL	SHE (SHIFT SOLENOID VALVE E)	Drives shift solenoid valve E	With engine running in P and R, and lock-up condition (in D): battery voltage With engine running in N, and no lock-up condition (in D, D3, 2, and 1): about 0 V
B44	GRY	SG2 (SENSOR GROUND)	Sensor ground	Less than 0.2 V at all times
B45	PNK	ATP-RVS (TRANSMISSION RANGE SWITCH RVS POSITION)	Detects transmission range switch RVS position signal	With ignition switch ON (II) in R: about 0 V With ignition switch ON (II) in any position other than R: battery voltage
B48	LT GRN	NC (OUTPUT SHAFT (COUNTERSHAFT) SPEED SENSOR)	Detects output shaft (countershaft) speed sensor signal	With ignition switch ON (II): about 0 V or about 5.0 V With driving: about 2.5 V (pulses)

PCM A/T CONTROL SYSTEM INPUTS AND OUTPUTS AT PCM CONNECTOR C (O) (49P)

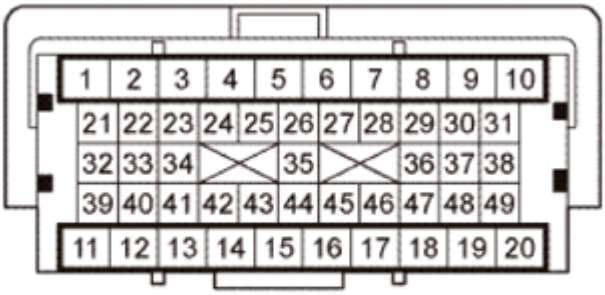

Terminal side of female terminals

Fig. 93: Identifying PCM Connector C (49P)
Courtesy of AMERICAN HONDA MOTOR CO., INC.

PCM CONNECTOR C (o) (49P) DESCRIPTION

Terminal number	Wire color	Terminal name	Description	Signal
C10	WHT	IG1 (F/P) (IGNITION SIGNAL)	Detects ignition signal	With ignition switch ON (II): battery voltage
C15	BRN	PG1 (POWER GROUND)	Ground circuit for PCM	Less than 0.2 V at all times
C20	BRN	LG2 (LOGIC GROUND)	Ground circuit for PCM	Less than 0.2 V at all times
				With engine running in N, D, and S (in

GETtheMANUALS.org

C21	GRN	SHC (SHIFT SOLENOID VALVE C)	Drives shift solenoid valve C	1st, 3rd, and 5th gears), D3 (in 1st and 3rd gears), and 1: battery voltage With engine running in P, R, D (in 2nd and 4th gears), D3 (in 2nd gear), and 2: about 0 V
C23	PNK	VCC1 (SENSOR VOLTAGE)	Provides sensor reference voltage	With ignition switch ON (II): about 5.0 V
C24	GRY	SG1 (SENSOR GROUND)	Sensor ground	Less than 0.2 V at all times
C32	PNK	SHD (SHIFT SOLENOID VALVE D)	Drives shift solenoid valve D	With engine running in D (in 2nd and 5th gears), D3 (in 2nd gear), and 2: battery voltage With engine running in P, R, N, D (in 1st, 3rd, and 4th gears), D3 (in 1st and 3rd gears), and 1: about 0 V

SHIFT SOLENOID VALVE TEST

TEST

1. HDS DLC - Connection
    1. Connect the HDS to the data link connector (DLC) (A) located under the driver's side of the dashboard.
    2. Turn the ignition switch to ON (II).
    3. Make sure the HDS communicates with the vehicle. If it does not communicate, go to the DLC circuit troubleshooting.

Fig. 94: Locating Data Link Connector
Courtesy of AMERICAN HONDA MOTOR CO., INC.

2. Shift Solenoid Valve - HDS Test

GETtheMANUALS.org

1. Select Shift Solenoid Valve A, B, C, D, and E individually in the Miscellaneous Test Menu with the HDS.
2. Check that shift solenoid valve A, B, C, D, or E operate with the HDS. A clicking sound should be heard.
    - If a clicking sound is heard, the solenoid valve is OK. The test is complete.
    - If no clicking sound is heard, go to the next procedure and check the solenoid valve resistance.

REMOVAL

1. Vehicle Lift
    1. Raise the vehicle on a lift, and make sure it is securely supported.
2. Front Splash Shield
    1. Remove the bolts (A), then remove the clips (B) that secure the front inner fender and the front splash shield (C) to the body.
    2. From under the front bumper (D), remove the clips (E).
    3. From under the body, remove the clips (F), then pull out the front splash shield.

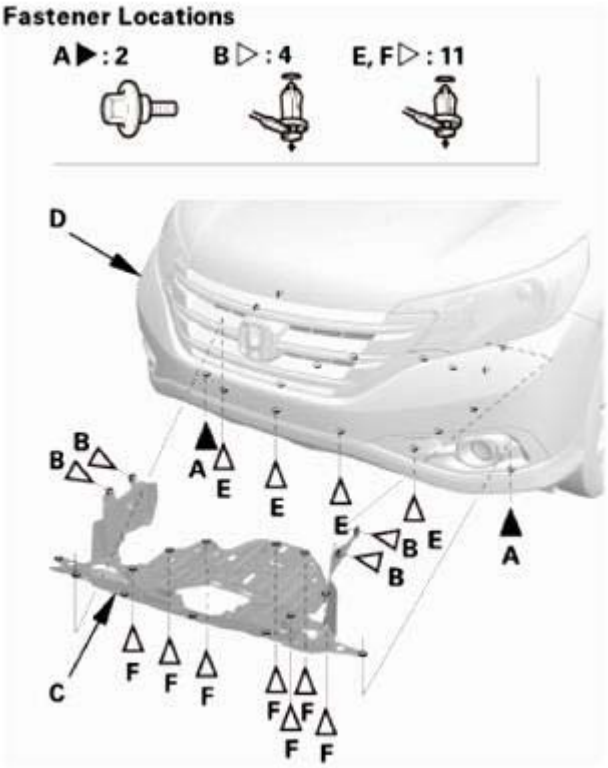

Fig. 95: Identifying Front Inner Fender And Front Splash Shield Bolts And Clips Location
Courtesy of AMERICAN HONDA MOTOR CO., INC.

TEST

GETtheMANUALS.org

1. Shift Solenoid Wire Harness - Resistance Check
    1. Disconnect the connector.
    2. Measure the resistance between following terminal and body ground for each shift solenoid valve A, B, C, D, and E.
        - Shift solenoid valve A: No. 7
        - Shift solenoid valve B: No. 2
        - Shift solenoid valve C: No. 3
        - Shift solenoid valve D: No. 4
        - Shift solenoid valve E: No. 1

        Standard: 13.8 - 17.1 ohms

        - If the resistance is within the standard, go to the next step and check the solenoid valve for a clicking sound.
        - If the resistance is out of the standard, go to the next procedure and check the solenoid valve operation.
    3. Connect a jumper wire from the battery positive terminal to each shift solenoid wire harness connector terminal individually. A clicking sound should be heard.
        - If a clicking sound is heard, the valves are OK, and the test is complete.
        - If no clicking sound is heard, go to the next procedure and check the solenoid valve operation.

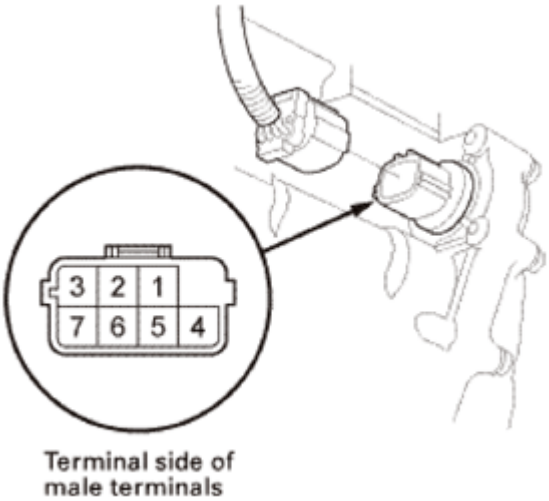

Fig. 96: Identifying Shift Solenoid Wire Harness Connector Terminals
Courtesy of AMERICAN HONDA MOTOR CO., INC.

REMOVAL

1. ATF - Replacement
    1. Remove the drain plug (A), and drain the ATF.

GETtheMANUALS.org

2. Reinstall the drain plug using a new sealing washer (B).

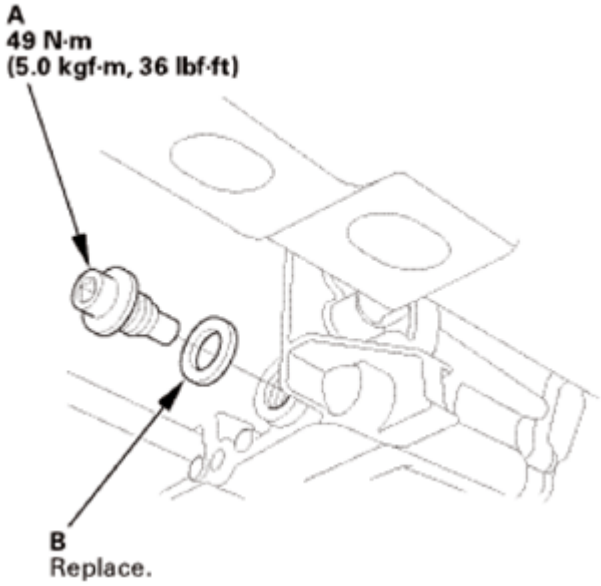

Fig. 97: Locating Drain Plug And Sealing Washer
Courtesy of AMERICAN HONDA MOTOR CO., INC.

2. Dipstick Guide Tube
    1. Remove the ATF dipstick (yellow loop) (A).
    2. Remove the harness clamp (B).
    3. Remove the ATF dipstick guide tube (C).
    4. Remove the O-ring (D) from the ATF dipstick guide tube.

GETtheMANUALS.org

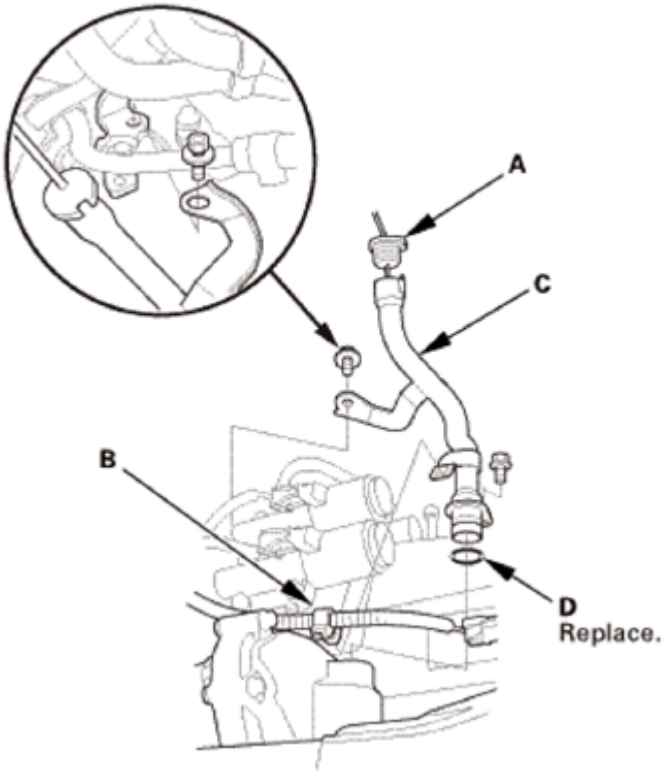

Fig. 98: Locating ATF Dipstick (Yellow Loop), Harness Clamp, ATF Dipstick Guide Tube And O-Ring
Courtesy of AMERICAN HONDA MOTOR CO., INC.

3. A/T Shift Solenoid Cover
    1. Remove the shift solenoid valve cover (A), the dowel pins (B), and the gasket (C).

GETtheMANUALS.org

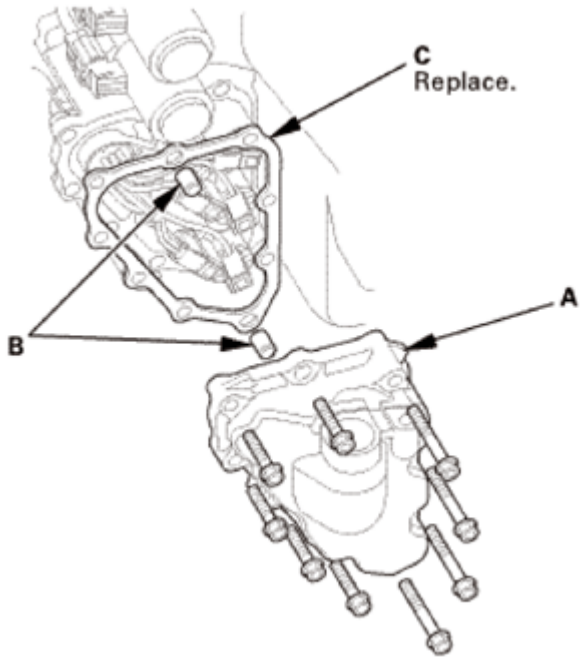

Fig. 99: Locating Shift Solenoid Valve Cover, Dowel Pins And Gasket
Courtesy of AMERICAN HONDA MOTOR CO., INC.

TEST

1. Shift Solenoid Valve - Operation Check
    1. Disconnect the shift solenoid valve connectors:
        - BLU wire from shift solenoid valve A.
        - ORN wire from shift solenoid valve B.
        - GRN wire from shift solenoid valve C.
        - YEL, WHT, and WHT wires from shift solenoid valve D.
        - RED wire from shift solenoid valve E.
    2. Measure the resistance of the solenoid valve that was out of the standard between the connector terminal and body ground.

       Standard: 13.8 - 17.1 ohms

        - If the resistance is out of the standard, replace faulty shift solenoid valve.
        - If the resistance is within the standard, go to the next step and check the solenoid valve for a clicking sound.
    3. Connect a jumper wire from the battery positive terminal to each connector terminal individually. A clicking sound should be heard.
        - If a clicking sound is heard, replace faulty shift solenoid wire harness.
        - If no clicking sound is heard, replace faulty shift solenoid valve.

GETtheMANUALS.org

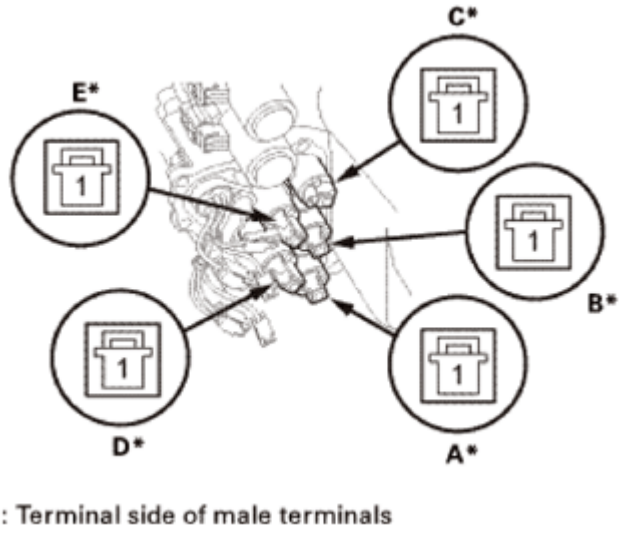

Fig. 100: Identifying Shift Solenoid Valve Connectors Terminals
Courtesy of AMERICAN HONDA MOTOR CO., INC.

INSTALLATION

1. A/T Shift Solenoid Cover
    1. Install the shift solenoid valve cover (A) with the dowel pins (B) and a new gasket (C).

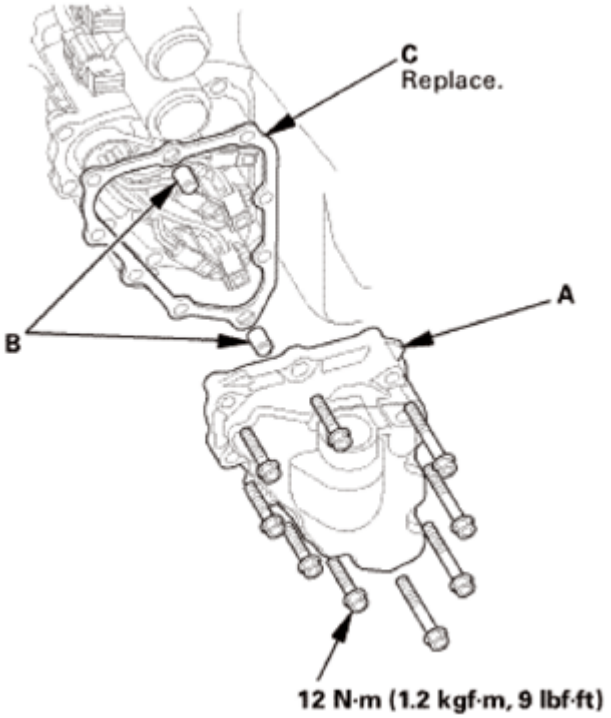

Fig. 101: Locating Shift Solenoid Valve Cover, Dowel Pins And Gasket
Courtesy of AMERICAN HONDA MOTOR CO., INC.

GETtheMANUALS.org

2. Dipstick Guide Tube
    1. Install a new O-ring (A) on the ATF dipstick guide tube (B).
    2. Install the ATF dipstick guide tube.
    3. Install the harness clamp (C).
    4. Install the ATF dipstick (D).

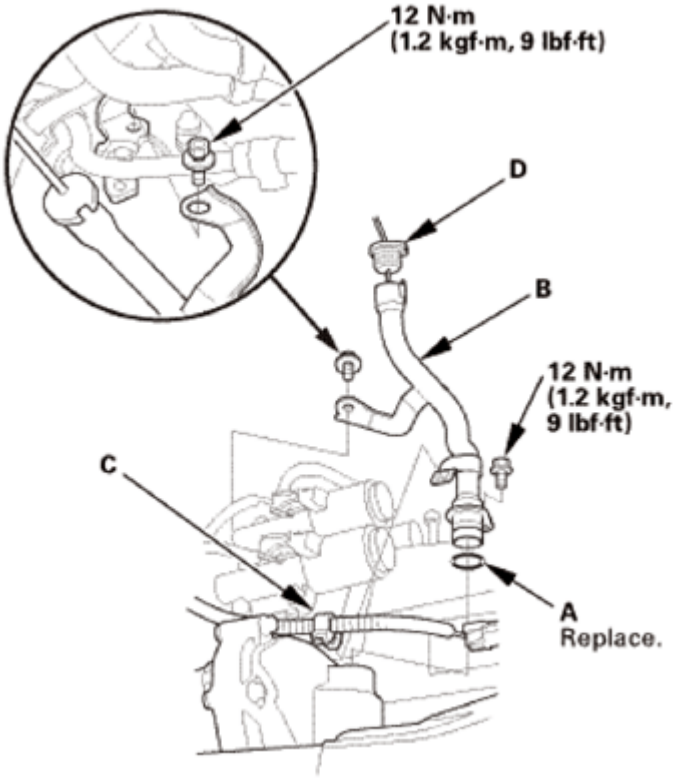

Fig. 102: Locating O-Ring, ATF Dipstick Guide Tube, Harness Clamp And ATF Dipstick
Courtesy of AMERICAN HONDA MOTOR CO., INC.

3. Front Splash Shield
    1. Install the front splash shield (A), then install the bolts (B) and the clips (C, D). Make sure the clips snap into place securely.

GETtheMANUALS.org

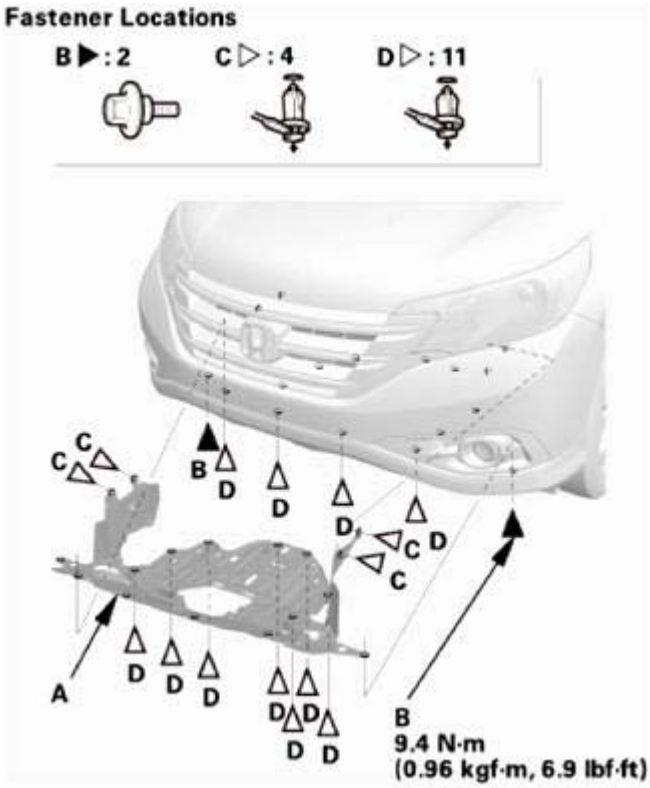

Fig. 103: Identifying Front Splash Shield, Bolts And Clips
Courtesy of AMERICAN HONDA MOTOR CO., INC.

4. ATF - Replacement
    1. Remove the ATF dipstick (yellow loop) (A), and wipe it with a clean cloth.

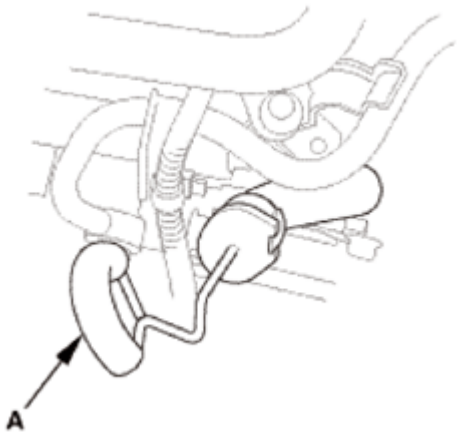

Fig. 104: Locating ATF Dipstick (Yellow Loop)
Courtesy of AMERICAN HONDA MOTOR CO., INC.

    2. Refill the transmission with the recommended fluid into the dipstick guide tube opening (A) to bring the fluid level between the upper mark and the lower mark of the dipstick. Always use ATF

GETtheMANUALS.org

DW-1 (genuine Honda automatic transmission fluid). Using a non-Honda ATF can affect shift quality.

Automatic Transmission Fluid Capacity

2WD:

2.2 L (2.3 US qt) at change

5.85 L (6.18 US qt) at overhaul

AWD/4WD:

2.6 L (2.7 US qt) at change

6.4 L (6.8 US qt) at overhaul

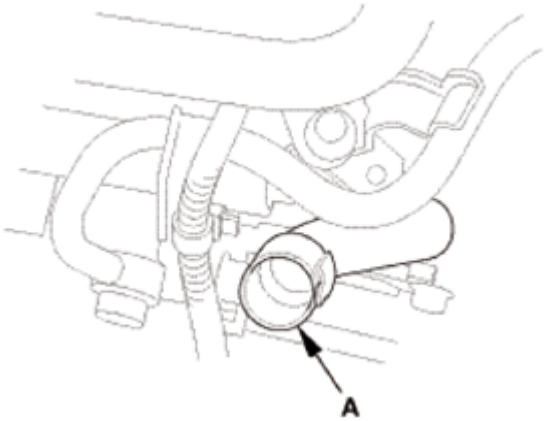

Fig. 105: Locating Dipstick Guide Tube Opening
Courtesy of AMERICAN HONDA MOTOR CO., INC.

3. Insert the dipstick (A) into the guide tube aligning the notch (B) with the guide tab (C).

GETtheMANUALS.org

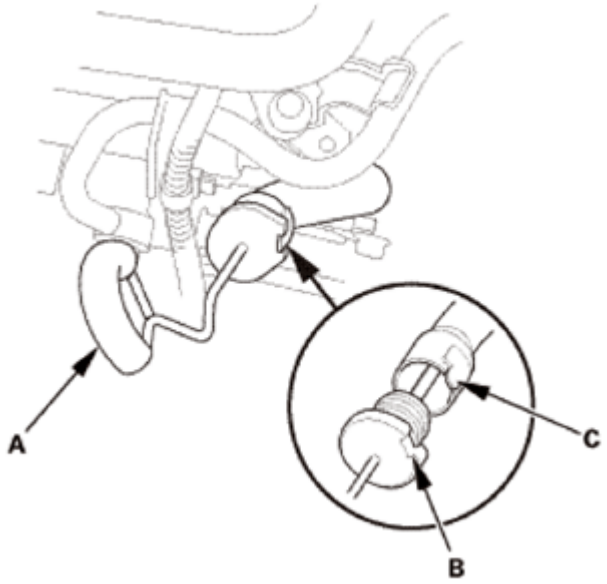

Fig. 106: Inserting Dipstick Into Guide Tube Aligning Notch With Guide Tab
Courtesy of AMERICAN HONDA MOTOR CO., INC.

4. Remove the dipstick.
5. Make sure the fluid level is between the upper mark (A) and the lower mark (B) on the dipstick.
6. Insert the dipstick into the guide tube aligning the notch with the guide tab.

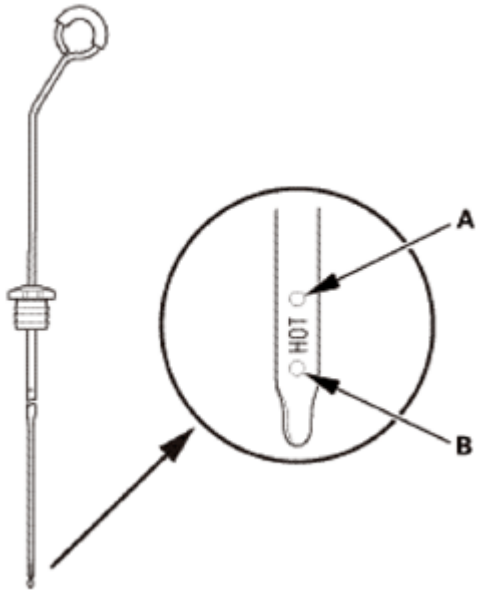

Fig. 107: Locating ATF Level Upper Mark And Lower Mark On Dipstick
Courtesy of AMERICAN HONDA MOTOR CO., INC.

5. Warm Up The Engine
    1. Start the engine. Hold the engine speed at 3, 000 rpm without load in P or N until the radiator fan

GETtheMANUALS.org

comes on.

2. Park the vehicle on level ground.
3. Turn the ignition switch to LOCK (0).

6. ATF Level Check

NOTE:

- **Keep all foreign particles out of the transmission.**
- **Check the fluid level within 60 - 90 seconds after turning the engine off.**
- **Higher fluid level may be indicated if the radiator fan comes on twice or more.**

1. Remove the ATF dipstick (yellow loop) (A), and wipe it with a clean cloth.
2. Insert the dipstick into the guide tube aligning the notch (B) with the guide tab (C).

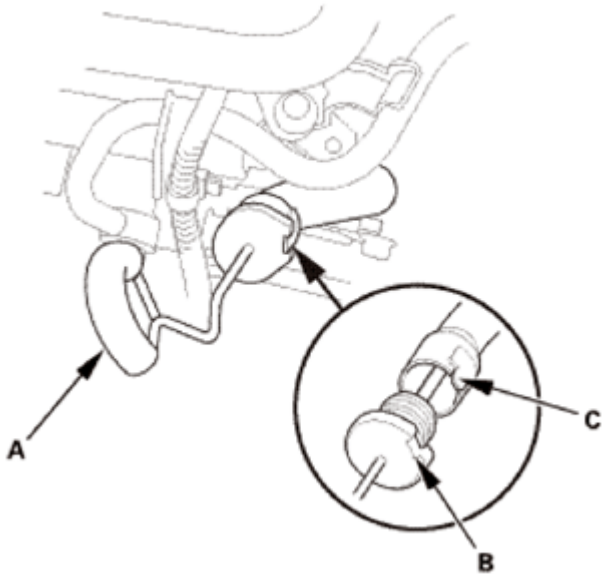

Fig. 108: Inserting Dipstick Into Guide Tube Aligning Notch With Guide Tab
Courtesy of AMERICAN HONDA MOTOR CO., INC.

3. Remove the dipstick, and check the ATF level. It should be between the upper mark (A) and the lower mark (B).
4. If the ATF level is below the lower mark, check for fluid leaks at the transmission, the hoses, and the line joints. If a problem is found, fix it before filling the transmission with ATF.

NOTE: **If the vehicle is driven when the ATF level is below the lower mark, one or more of these symptoms may occur:**

- **Transmission damage.**
- **Vehicle does not move in any gear.**

GETtheMANUALS.org

- **Vehicle accelerates poorly, and engine revs up abnormally high when starting off in forward and reverse positions.**
- **Engine vibrates at idle.**

5. If the ATF level is above the upper mark, drain the ATF to proper level.

NOTE: **If the vehicle is driven when the ATF level is above the upper mark, the vehicle may creep forward while in N, or have shifting problems.**

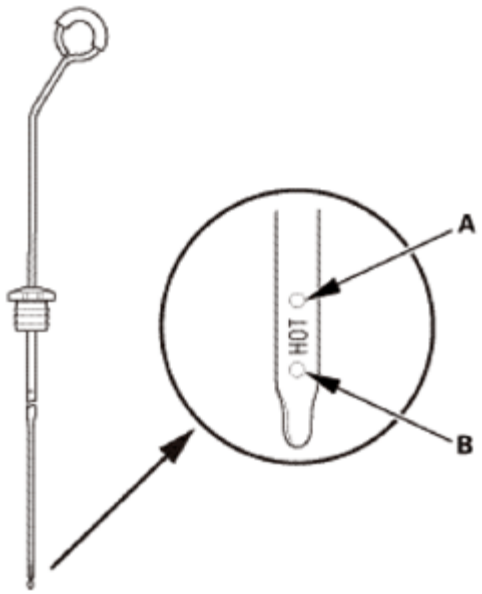

Fig. 109: Locating ATF Level Upper Mark And Lower Mark On Dipstick
Courtesy of AMERICAN HONDA MOTOR CO., INC.

6. If necessary, fill the transmission with ATF through the dipstick guide tube opening (A) to bring the fluid level between the upper mark and the lower mark of the dipstick. Do not fill the fluid above the upper mark. Always use ATF DW-1 (genuine Honda automatic transmission fluid). Using a non-Honda ATF can affect shift quality.
7. Insert the dipstick into the guide tube aligning the notch with the guide tab.

GETtheMANUALS.org

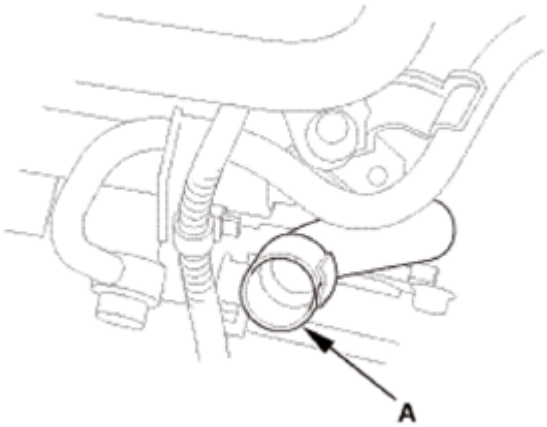

Fig. 110: Locating Dipstick Guide Tube Opening
Courtesy of AMERICAN HONDA MOTOR CO., INC.

7. Maintenance Minder Reset
    1. **RESET THE MAINTENANCE MINDER.**

TRANSMISSION RANGE SWITCH TEST

REMOVAL

1. Air Cleaner Assembly
    1. Disconnect the MAF sensor/IAT sensor connector (A).
    2. Remove the harness clamp (B).
    3. Disconnect the intake air duct (C) and the intake air pipe (D).
    4. Remove the air cleaner (E).

GETtheMANUALS.org

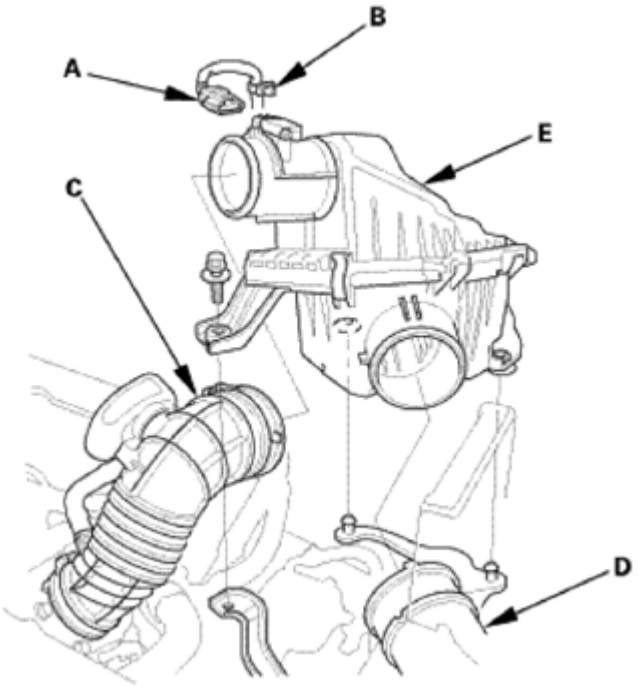

Fig. 111: Identifying MAF Sensor/IAT Sensor Connector, Harness Clamp, Intake Air Duct, Intake Air Pipe And Air Cleaner
Courtesy of AMERICAN HONDA MOTOR CO., INC.

2. ATF Warmer - Move
    1. Remove the bolts (A) securing the ATF warmer (B), and move it out of the way.

NOTE: **Be careful not to damage the lines and fin part of the ATF warmer when moving ATF warmer.**

GETtheMANUALS.org

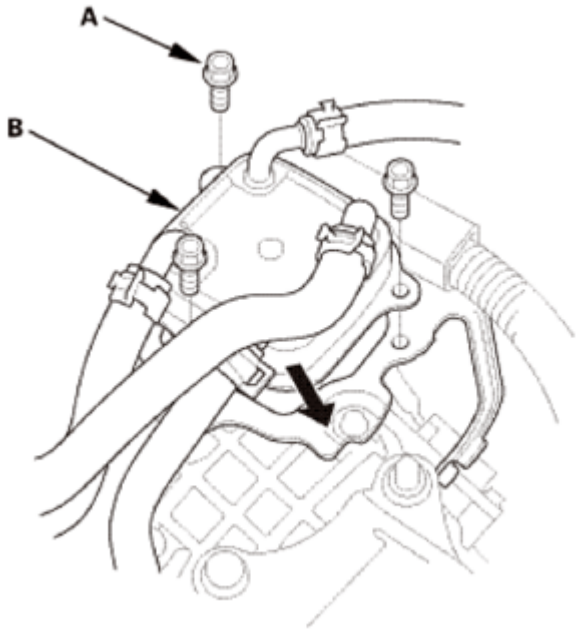

Fig. 112: Locating Bolts And ATF Warmer
Courtesy of AMERICAN HONDA MOTOR CO., INC.

TEST

1. Transmission Range Switch Subharness - Continuity Test
    1. Disconnect the connector (A), then remove the transmission range switch subharness 10P connector (B) from its bracket (C).

GETtheMANUALS.org

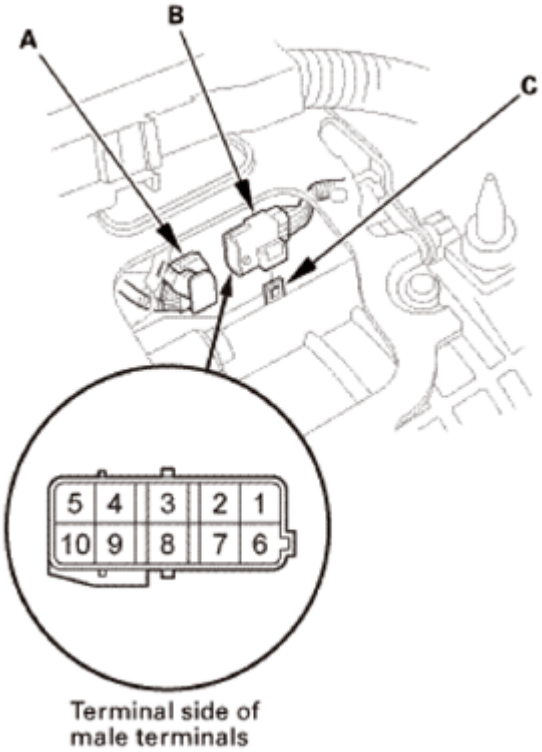

Fig. 113: Locating Connector, Transmission Range Switch Subharness 10P Connector And Bracket
Courtesy of AMERICAN HONDA MOTOR CO., INC.

2. Check for continuity between terminals at the transmission range switch subharness 10P connector. There should be continuity between the terminals in the table for each shift lever position.
   - The transmission range switch test is finished if the test results are OK. Reconnect the connector.
   - If there is no continuity between any terminals, go to the next procedure.

Position	Connector Terminal/Signal									
	1	2	3	4	5	6	7	8	9	10
	ATP P	ATP R	ATP D	ATP 1	GND	ATP RVS	ATP N	ATP 2	ATP NP	ATP FWD
P	○				○				○	
R		○			○	○				
N					○		○		○	
D			○		○					○
2					○			○		○
1				○	○					○

Fig. 114: Transmission Range Switch Subharness 10P Connector Terminals Continuity Chart

GETtheMANUALS.org

Courtesy of AMERICAN HONDA MOTOR CO., INC.

REMOVAL

1. Transmission Range Switch Cover
    1. Remove the transmission range switch cover (A).

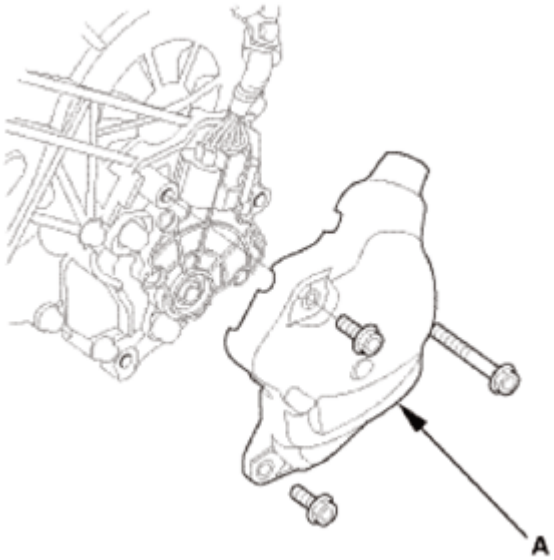

Fig. 115: Locating Transmission Range Switch Cover
Courtesy of AMERICAN HONDA MOTOR CO., INC.

TEST

1. Transmission Range Switch - Continuity Test
    1. Disconnect the connector (A).

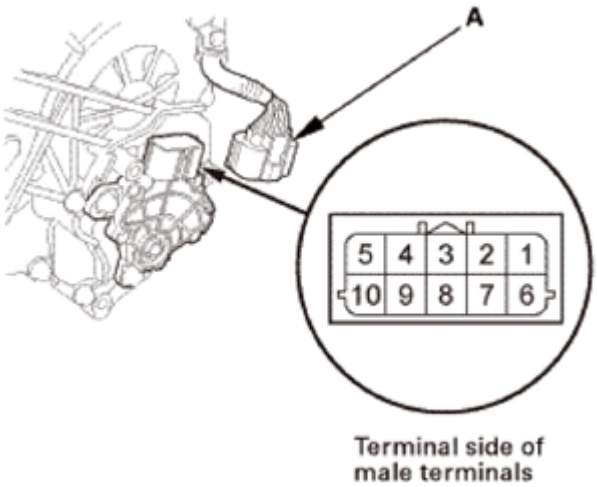

Fig. 116: Locating Transmission Range Switch Connector

GETtheMANUALS.org

Courtesy of AMERICAN HONDA MOTOR CO., INC.

2. Check for continuity between terminals at the transmission range switch 10P connector. There should be continuity between the terminals in the table for each shift lever position.
   - If the transmission range switch test is OK, replace the faulty transmission range switch subharness.
   - If there is no continuity between any terminals, go to the next step and check the selector control shaft.

Position	Connector Terminal/Signal									
	1	2	3	4	5	6	7	8	9	10
	ATP FWD	ATP NP	ATP 2	ATP N	ATP RVS	GND	ATP 1	ATP D	ATP R	ATP P
P		○				○				○
R					○	○			○	
N		○		○		○				
D	○					○		○		
2	○		○			○				
1	○					○	○			

Fig. 117: Transmission Range Switch 10P Connector Terminals Continuity Chart
Courtesy of AMERICAN HONDA MOTOR CO., INC.

3. Remove the transmission range switch (A).

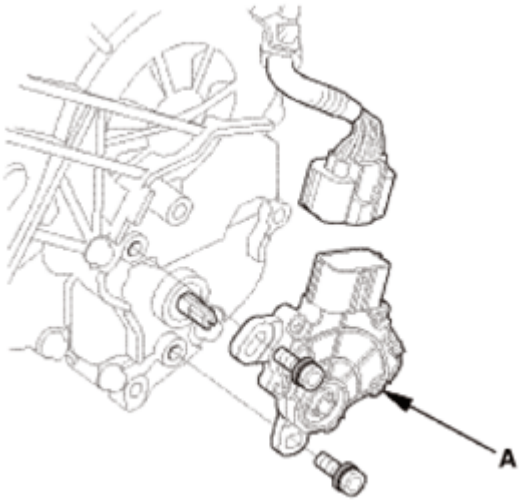

Fig. 118: Locating Transmission Range Switch
Courtesy of AMERICAN HONDA MOTOR CO., INC.

4. Check the end of the selector control shaft (A).

GETtheMANUALS.org

Selector Control Shaft Specification

Width (B): 6.1 - 6.2 mm (0.240 - 0.244 in)

End Gap (C): 1.8 - 2.0 mm (0.071 - 0.079 in)

- If the measurement at the end of the selector control shaft end is within the specification, replace the transmission range switch.
- If the measurement is out of the specification, repair the selector control shaft end, and recheck the transmission range switch continuity.

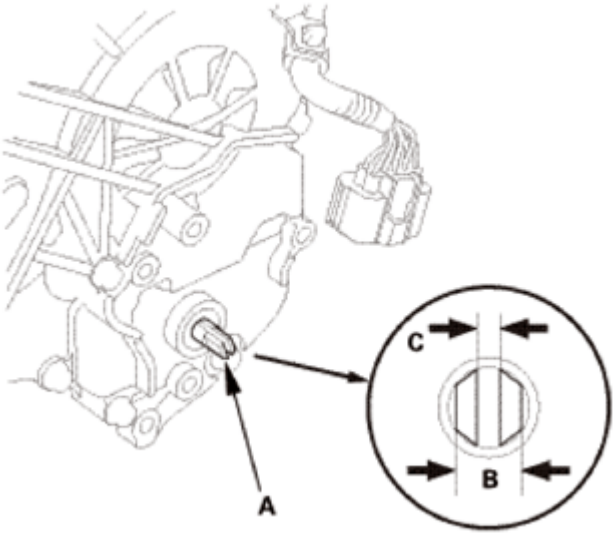

Fig. 119: Locating Selector Control Shaft
Courtesy of AMERICAN HONDA MOTOR CO., INC.

INSTALLATION

1. Transmission Range Switch
    1. Make sure the selector control shaft is in the N position. If necessary, move the selector control shaft to the N position.

NOTE: **Do not use the selector control shaft to adjust the shift position. If the selector control shaft tips are squeezed together it will cause a faulty signal or position due to play between the selector control shaft and switch.**

GETtheMANUALS.org

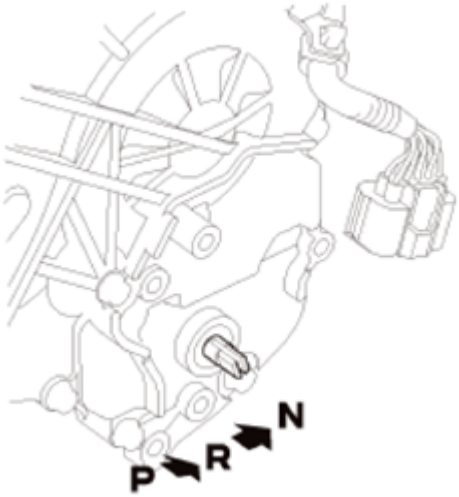

Fig. 120: Identifying Selector Control Shaft N Position
Courtesy of AMERICAN HONDA MOTOR CO., INC.

2. Align the cutouts (A) on the rotary-frame with the neutral positioning cutouts (B) on the transmission range switch (C), then put a 2.0 mm (0.079 in) feeler gauge blade (D) in the cutouts to hold the switch in the N position.

NOTE: **Be sure to use a 2.0 mm (0.079 in) blade or equivalent to hold the switch in the N position.**

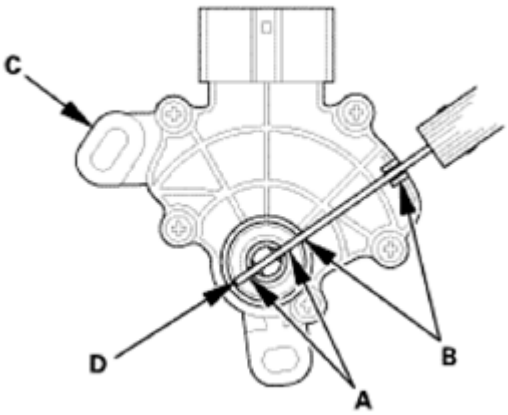

Fig. 121: Aligning Cutouts On Rotary-Frame With Neutral Positioning Cutouts On Transmission Range Switch
Courtesy of AMERICAN HONDA MOTOR CO., INC.

3. Install the transmission range switch (A) gently on the selector control shaft (B) while holding it in the N position with the 2.0 mm (0.079 in) blade (C).

GETtheMANUALS.org

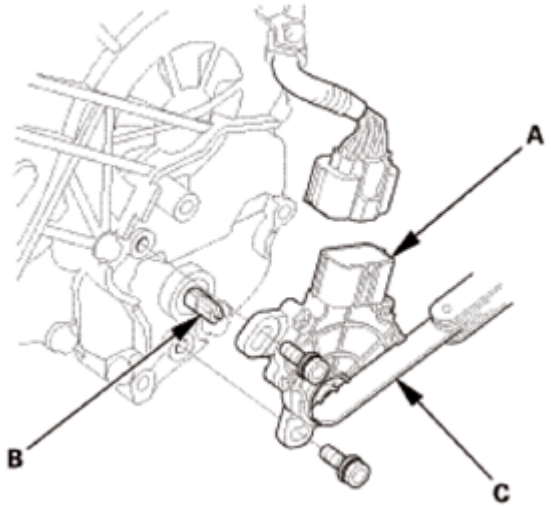

Fig. 122: Installing Transmission Range Switch On Selector Control Shaft
Courtesy of AMERICAN HONDA MOTOR CO., INC.

4. Tighten the bolts on the transmission range switch (A) while you continue holding the N position.

NOTE: Do not move the transmission range switch when tightening the bolts.

5. Remove the feeler gauge (B).
6. Check the connector (C) for corrosion, dirt, or oil, and clean or repair if necessary, then connect the connector securely.

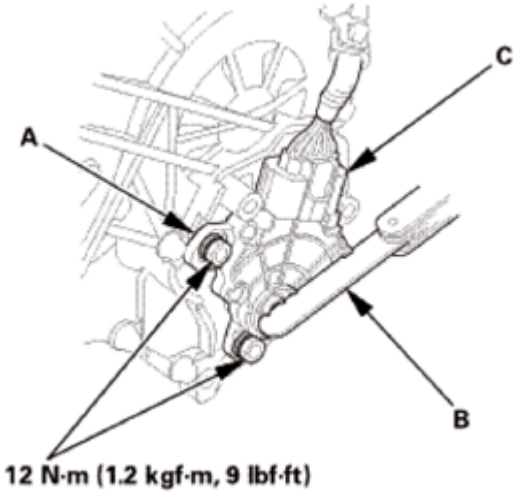

Fig. 123: Locating Bolts On Transmission Range Switch
Courtesy of AMERICAN HONDA MOTOR CO., INC.

2. Transmission Range Switch Cover
    1. Install the transmission range switch cover (A).

GETtheMANUALS.org

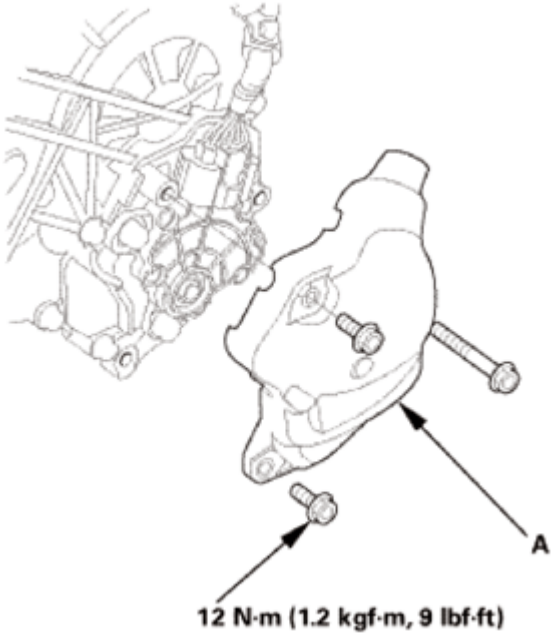

Fig. 124: Locating Transmission Range Switch Cover
Courtesy of AMERICAN HONDA MOTOR CO., INC.

3. ATF Warmer - Move
    1. Install the ATF warmer (A).

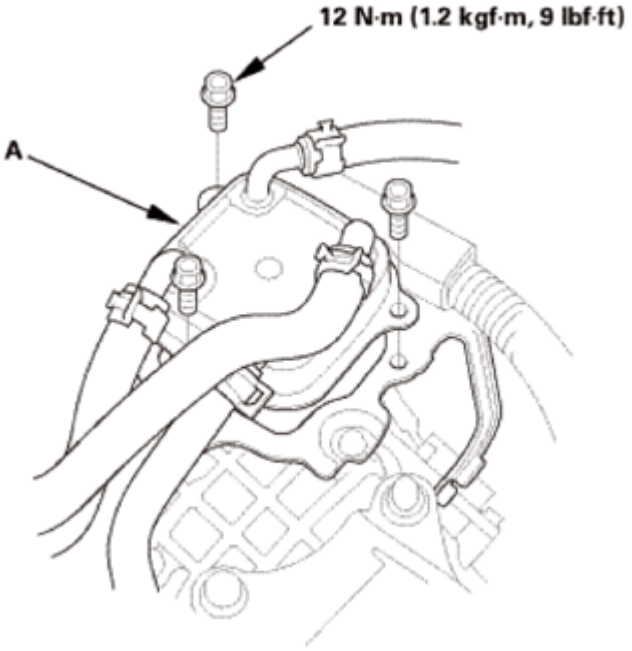

Fig. 125: Locating ATF Warmer And Bolt
Courtesy of AMERICAN HONDA MOTOR CO., INC.

GETtheMANUALS.org

4. Air Cleaner Assembly
    1. Install the air cleaner (A).
    2. Connect the intake air pipe (B) and the intake air duct (C).
    3. Install the harness clamp (D).
    4. Connect the MAF sensor/IAT sensor connector (E).

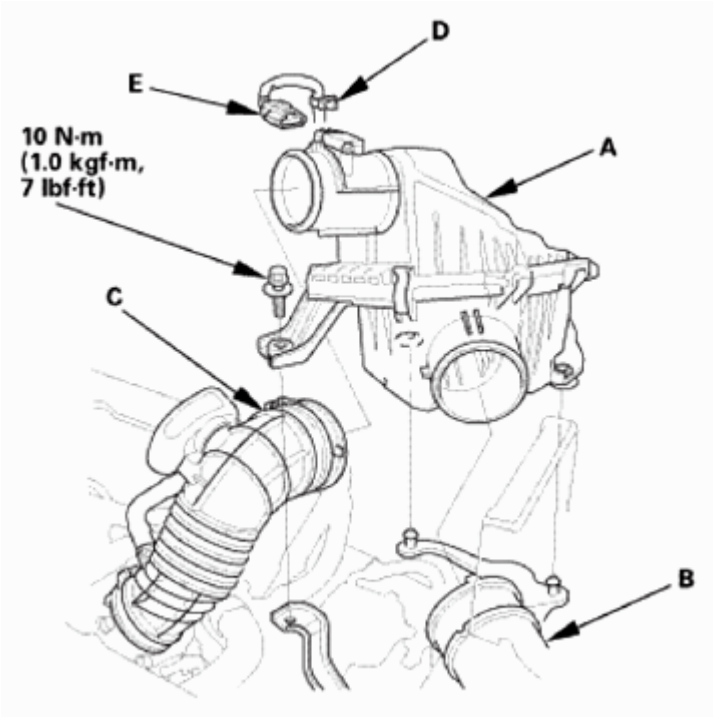

Fig. 126: Identifying MAF Sensor/IAT Sensor Connector, Harness Clamp, Intake Air Duct, Intake Air Pipe And Air Cleaner
Courtesy of AMERICAN HONDA MOTOR CO., INC.

5. After Installing Transmission Range Switch - Check
    1. Turn the ignition switch to ON (II), or press the engine start/stop button to select the ON mode.
    2. Move the shift lever through all positions, and check the transmission range switch synchronization with the A/T gear position indicator.
    3. Check that the engine will start with the shift lever in P and N, and will not start in any other shift lever position.
    4. Check that the back-up lights come on when the shift lever is in R.
    5. Raise the vehicle on a lift, and make sure it is securely supported.
    6. Start the engine, and check the shift lever operation.

GETtheMANUALS.org

AUDIO SYSTEM ERROR CODES

The audio system can display a few error codes when some problems are detected with the XM radio, the audio disc player and the audio disc. This is not a complete list of audio error codes. Refer to **SYMPTOM TROUBLESHOOTING**.

CD ERROR CODES (WITH NAVIGATION)

Error Code Displayed	Possible Cause	Solution
Bad Disc Please Check Owners Manual	There is a problem with the disc player. A common problem is paper disc labels coming off the disc while in the player.	Try to eject the disc and try another one. If there is still a problem, REPLACE THE AUDIO-NAVIGATION UNIT .
Heat Error	Disc player is hot. This can happen if the vehicle is parked out in the hot sun all day.	Park the vehicle in a cooler place for a while and try the disc player again. If the error code is still present, try another disc and remove the audio-navigation unit to make sure nothing is blocking the cooling fan on the back of the unit. If the error code is still present, REPLACE THE AUDIO-NAVIGATION UNIT.
Unsupported	• Track/File format not supported. • Scratched disc	• Current track is skipped. The next supported track of file plays automatically. • Verify that CD, CD-R, or CD-RW file names end in CD-DA or WAV. • Verify that CD, CD-R, or CD-RW with compressed music formats end in MP3 or WMA. • Other file formats like iTunes or Ogg are not recognized. • WMA files may have (DRM) copy protection and cannot be read.
Unplayable File		
Check Disc	• CD label jammed in the mechanism. • CD eject mechanism or motor is inoperative. • Scratched disc • CD spindle motor won't spin up the CD.	Press the EJECT button and hold it for 5 seconds. If the CD does not eject, try again. If the CD still won't eject, go to **AUDIO DISC DOES NOT EJECT TROUBLESHOOTING**.
Mech Error		

CD ERROR CODES (WITHOUT NAVIGATION)

Error Code Displayed	Possible Cause	Solution

GETtheMANUALS.org

BAD DISC PLEASE CHECK OWNERS MANUAL PUSH EJECT	• There is a problem with the disc player. A common problem is paper disc labels coming off the disc while in the player. • Scratched disc	Try to eject the disc and try another one. If there is still a problem, REPLACE THE AUDIO UNIT .
HEAT ERROR	Disc player is hot. This can happen if the vehicle is parked out in the hot sun all day.	Park the vehicle in a cooler place for a while and try the disc player again. If the error code is still present, REPLACE THE AUDIO UNIT .
UNPLAYABLE FILE	• Track/File format not supported. • Scratched disc	• Current track is skipped. The next supported track of file plays automatically. • Verify that CD, CD-R, or CD-RW file names end in CD-DA or WAV. • Verify that CD, CD-R, or CD-RW with compressed music formats end in MP3 or WMA. • Other file formats like iTunes or Ogg are not recognized. • WMA files may have (DRM) copy protection and cannot be read.
CHECK DISC	• CD label jammed in the mechanism. • CD eject mechanism or motor is inoperative. • Scratched disc • CD spindle motor won't spin up the CD.	Press the EJECT button and hold it for 5 seconds. If the CD does not eject, try again. If the CD still won't eject, go to **AUDIO DISC DOES NOT EJECT TROUBLESHOOTING**.
MECH ERROR		

XM ERROR CODES

Error Code Displayed	Possible Cause	Solution
Loading	XM radio is acquiring audio or program information.	Wait until the XM radio receives the information. Compare the vehicle against a known-good vehicle in the same area under the same conditions.
Channel Off Air	XM channel not in service.	Try another XM channel.
No Signal	Loss of signal.	Both terrestrial and satellite antennas have lost the signal. Park the vehicle outside with a clear view of the southern horizon. Compare the vehicle against a known-good vehicle in the same area under the same conditions.
Check		Go to **ERROR CODE: CHECK ANTENNA IS DISPLAYED TROUBLESHOOTING**:

GETtheMANUALS.org

Antenna	XM antenna error.	• WITH NAVIGATION • WITHOUT NAVIGATION
NOTE: **do these checks with the vehicle parked outside with a clear view of the southern horizon.**		

AUDIO SYSTEM SELF-DIAGNOSTIC FUNCTION

HOW TO OBTAIN THE AUDIO UNIT SERIAL NUMBER

The audio-navigation unit (with navigation) does not support this function.

This procedure can only be done after the power has been disconnected and reconnected to the audio unit, and the audio unit displays Push and hold POWER for more than two seconds to start. when the audio unit is turned on.

1. Turn the ignition switch to ON (II).
2. Make sure the audio unit is turned off.
3. Use the DISPLAY button on the steering wheel to select the screen that displays Audio Off.
4. Press and hold the preset No. 1 and No. 6 buttons.
5. While holding the buttons, press the POWER button.
6. Release the buttons, and displays an 8-digit serial number.

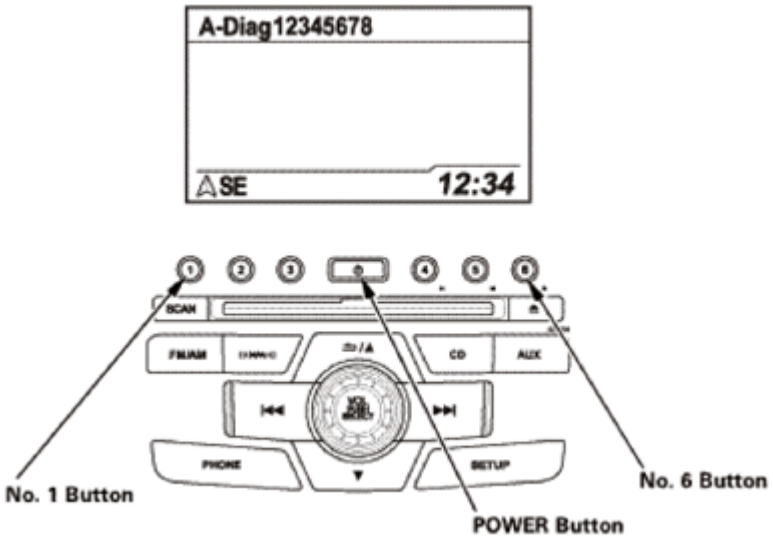

Fig. 1: Locating Audio Unit POWER Button, No. 1 And No. 6 Buttons
Courtesy of AMERICAN HONDA MOTOR CO., INC.

7. Use all 8 numbers as the serial number when using the Interactive Network (iN) to retrieve the 5-digit anti-theft code.
8. To end the function, turn the audio system off, or turn the ignition switch to LOCK (0).

GETtheMANUALS.org

HOW TO CHECK THE AUDIO SYSTEM CONDITION

The audio-navigation unit (with navigation) does not support this diagnosis.

The audio system has a self-diagnostic function to help find problems with the audio system. To run the self-diagnostic function, do the following:

NOTE:

- **CHECK THE VEHICLE BATTERY CONDITION FIRST.**
- **Not all self-diagnostic functions appear on all models.**
- **There may be other self-diagnostic functions that are for factory use only.**
- **The self-diagnostic function does not find every problem with the audio system.**

1. Turn the ignition switch to ON (II).
2. Make sure the audio unit is turned off.
3. With multi-information display, use the DISPLAY button on the steering wheel to select the screen that displays Audio Off.
4. Press and hold the preset No. 1 and No. 6 buttons.
5. While holding the buttons, press the POWER button.
6. Release the buttons, and the self-diagnosis begins.

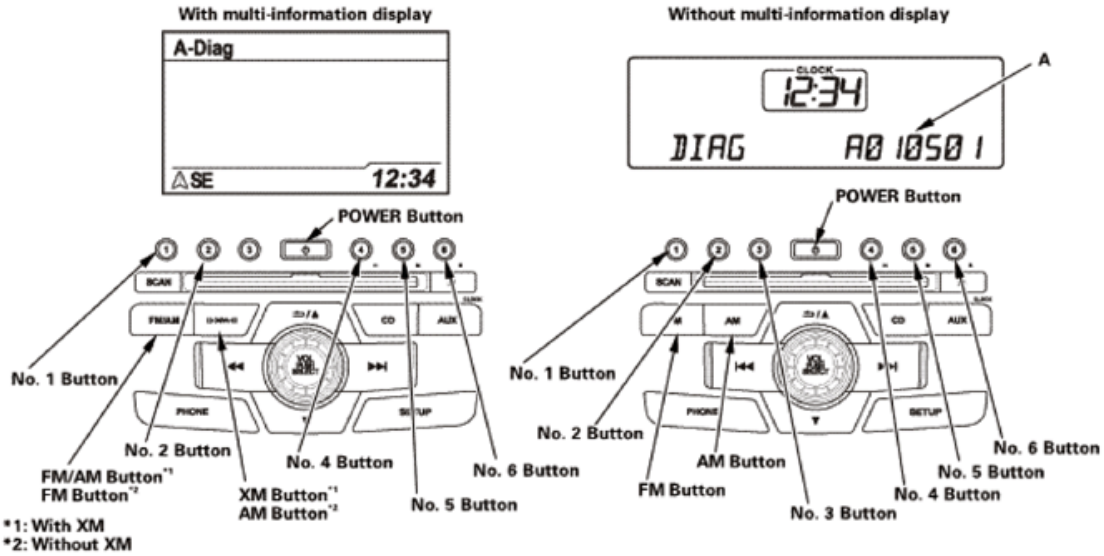

Fig. 2: Locating Audio Unit Buttons And Multi-Information Display
Courtesy of AMERICAN HONDA MOTOR CO., INC.

7. When you are in the self-diagnostic mode, pressing a preset button starts the diagnostic mode that is assigned to that preset button. To exit this mode, go to step 8. Once you exit this test, you must start again at step 1.

GETtheMANUALS.org

NOTE: **The segments (A) change to the illumination duty when you turn the headlights switch is in parking light position.**

- No. 2 button: Audio button, knob, and audio remote switch detection mode
- No. 3 button*1 : Entire LCD lighting/light-out mode
- No. 4 button: Duty indication mode (for the Illumination dim)
- No. 5 button: Vehicle speed pulse (VSP) indication mode
- FM/AM button*2 , FM button*3 or AM button*3 (Press and hold 5 sec): Reception level indication mode

*1: Without multi-information display

*2: With XM

*3: Without XM

8. To end the self-diagnostic mode, turn the audio system off, or turn the ignition switch to LOCK (0).

AUDIO BUTTON, KNOB, AND AUDIO REMOTE SWITCH DETECTION MODE (PRESS NO. 2 BUTTON)

This test allows you to manually check all the audio switch panel buttons and knobs, and the audio remote switch buttons. When the button, the knob, or the switch is properly detected, the name or value of the input appears on the display.

NOTE:

- **The POWER button does not support this diagnosis.**
- **The DISPLAY button and the MENU button on the audio remote/multi-information display switch are not supported with this diagnosis.**

ENTIRE LCD LIGHTING/LIGHTS-OUTS MODE (PRESS NO. 3 BUTTON)

This diagnostic screen checks for segments that may be dead (off) or stuck on.

NOTE: **The multi-information display unit does not support this diagnosis.**

All the display segments should be on. If any segments are dead (off), **REPLACE THE CENTER DISPLAY UNIT** . With all the segments on, press the No. 3 button a second time. The entire display must turn black. If any segments are stuck on, **REPLACE THE CENTER DISPLAY UNIT** .

GETtheMANUALS.org

Fig. 3: Identifying Display Segments
Courtesy of AMERICAN HONDA MOTOR CO., INC.

ILLUMINATION LEVEL (FOR THE GAUGE ILLUMINATION) INDICATION (PRESS NO. 4 BUTTON)

This diagnostic screen checks the gauge illumination input.

With the headlights on, use the dimmer knob to dim and brighten the gauge. You should see the value change from 1 (max low) to 22 (max high). If it does not change, go to **DISPLAY DOES NOT DIM OR BRIGHTEN WITH DIMMER TROUBLESHOOTING** .

Display Message	State	Remarks
A-Diag 22	Headlights switch is in parking light position and dashlights brightness is max high.	With multi-information display
21 MAX 22	Headlights switch is in parking light position and dashlights brightness is max high.	Without multi-information display
A-Diag -(1)	Headlights switch is in parking light position and dashlights brightness is max low.	With multi-information display
00 248 01	Headlights switch is in parking light position and dashlights brightness is max low.	Without multi-information display
(1) The display screen is black when the dashlight brightness is max low.		

Vehicle Speed Pulse Indication (press No. 5 button)

This diagnostic screen checks that the audio unit is receiving the VSP indication.

When you test drive the vehicle, the VSP indicates the vehicle speed in km/h.

Display Message	State	Remarks
A-Diag VSP 0	When the vehicle is stopped.	With multi-information display
VSP 000	When the vehicle is stopped.	Without multi-information display

RECEPTION LEVEL INDICATION MODE (PRESS AND HOLD FM/AM BUTTON, FM BUTTON OR AM BUTTON FOR 5 SEC)

GETtheMANUALS.org

This diagnostic screen checks the audio unit's reception level in decibels (dB). This level then can be used in the diagnosis of audio unit reception quality.

Display Message	State	Remarks
A-Diag 0 12.3	Antenna power supply (SWD +B) is on (radio reception level is 12.3 dB).	With multi-information display
006	Antenna power supply (SWD +B) is on (radio signal meter value is 6).	Without multi-information display
A-Diag A	Antenna power supply (SWD +B) is off.	With multi-information display
A 001	Antenna power supply (SWD +B) is off (radio signal meter value is 1).	Without multi-information display

Preparation:

- Park the vehicle outside in a good location away from tall buildings, mountains, high-voltage power line or any other object that may interfere with reception.
- Tune to a powerful local FM radio station then write down the radio station number.
- Tune to a powerful local AM radio station then write down the radio station number.

1. Enter the reception level indication mode in the self-diagnostic function.
2. Tune to the FM radio station you wrote down in Preparation using the tuning button, and note the decibel level of that station when you release the button.
3. Press and release the SETUP button to turn the AM/FM antenna amplifier off.
4. Note the decibel level of that station with the AM/FM antenna amplifier off.
5. Press and release the SETUP button to turn the AM/FM antenna amplifier back on.
6. Press and hold the FM/AM button (with XM) or the AM button (without XM) for more than 5 seconds to enter the AM reception mode.
7. Tune to the AM radio station you wrote down in preparation using the tuning button, and note the decibel level of that station.
8. Press and release the SETUP button to turn the AM/FM antenna amplifier off.
9. Note the decibel level of that station with the AM/FM antenna amplifier off.
10. Press and release the SETUP button to turn the AM/FM antenna amplifier back on.
11. To end the self-diagnostic mode, turn the audio system off, or turn the ignition switch to LOCK (0).
12. Compare your results to a known-good, (make sure it is the same year and trim level) in the same location and direction, and under the same environmental conditions.
    - If the reception level is within 10 % of the known-good vehicle, no repair is needed at this time.
    - If the reception level is at least 10 % less than the known good vehicle, go to **POOR AM OR FM RADIO RECEPTION OR INTERFERENCE TROUBLESHOOTING**.

SPEAKER CHECK MODE

GETtheMANUALS.org

NOTE:

- **<u>CHECK THE VEHICLE BATTERY CONDITION FIRST.</u>**
- **Not all self-diagnostic functions appear on all models.**

1. Turn the ignition switch to ON (II).
2. Make sure the audio unit is turned off.
3. With multi-information display, use the DISPLAY button on the steering wheel to select the screen that displays Audio Off.
4. Press and hold the preset No. 1 and No. 3 buttons.
5. While holding the buttons, press the POWER button.
6. Release the buttons, and the speaker check mode begins.

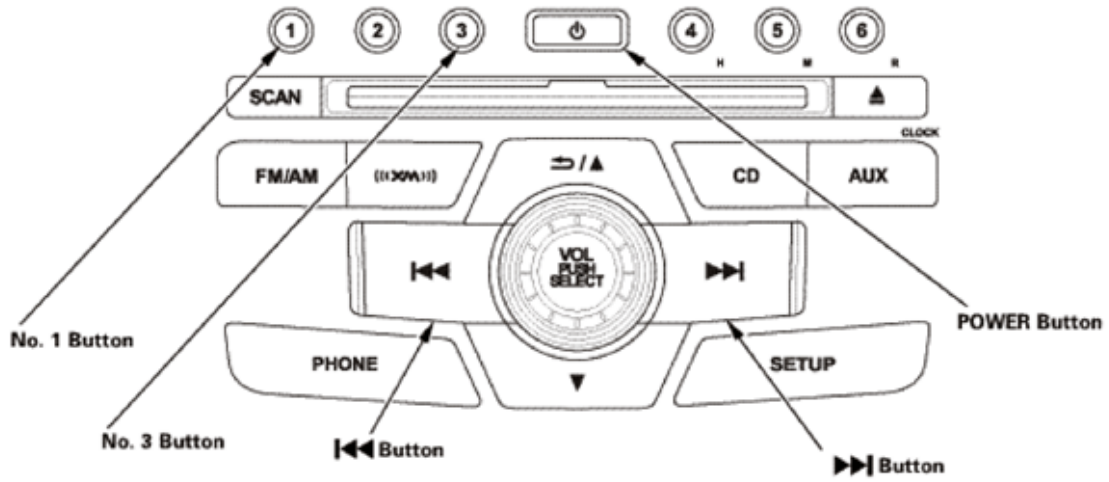

<u>Fig. 4: Locating Audio Unit Buttons</u>
Courtesy of AMERICAN HONDA MOTOR CO., INC.

Display Specifications (with multi-information display)

When you press the FORWARD button, the system checks the speakers in this order: 1-->2-->3-->4-->5-->6

When you press the BACK button, the system checks the speakers in this order: 6-->5-->4-->3-->2-->1

	Display Message	Status	Remarks
(1)	A-Diag SPK FR-L	You should hear a tone from the driver's door speaker and the left tweeter.	
(2)	A-Diag SPK FR-R	You should hear a tone from the front passenger's door speaker and the right tweeter.	
(3)	A-Diag SPK RR-R	You should hear a tone from the right rear door speaker.	
(4)	A-Diag SPK	You should hear a tone from the subwoofer.	With stereo

GETtheMANUALS.org

	SUBW		amplifier
(5)	A-Diag SPK RR-L	You should hear a tone from the left rear door speaker.	
(6)	A-Diag SPK ALL	You should hear a tone from the all speakers.	

Display Specifications (without multi-information display)

When you press the FORWARD button, the system checks the speakers in this order: 1-->2-->3-->4-->5-->6-->7

When you press the REVERSE button, the system checks the speakers in this order: 7-->6-->5-->4-->3-->2-->1

	Display Message	Status	Remarks
(1)	SPK FR-L	You should hear a tone from the driver's door speaker.	
(2)	SPK FR-R	You should hear a tone from the front passenger's door speaker.	
(3)	SPK RR-R	You should hear a tone from the right rear door speaker.	
(4)	SPK RR-L	You should hear a tone from the left rear door speaker.	
(5)	SPK FTWL	You should hear a tone from the driver's door speaker and the left tweeter (outputs 8kHz tone).	
(6)	SPK FTWR	You should hear a tone from the front passenger's door speaker and the right tweeter (outputs 8kHz tone).	
(7)	SPK ALL	You should hear a tone from the all speakers.	

7. To end the speaker check mode, turn the audio system off, or turn the ignition switch to LOCK (0).

XM SELF-DIAGNOSIS

NOTE:

- **CHECK THE VEHICLE BATTERY CONDITION FIRST.**
- **This diagnostic screen checks the audio unit's XM radio reception level. To check the XM reception, do the following:**

1. Turn the ignition switch to ON (II).
2. Select XM1 mode.
3. Turn off the audio system.
4. Press and hold the preset No. 3 and No. 6 buttons.
5. While holding the buttons, press the POWER button. Continue holding the buttons for about 5 seconds, then release the buttons.
6. Press and release preset No. 1 button to read the error code.

GETtheMANUALS.org

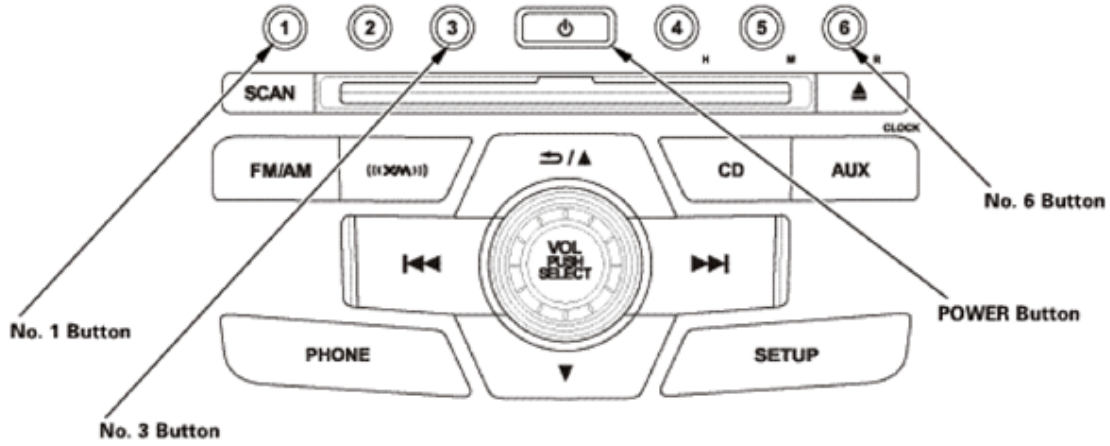

Fig. 5: Locating Audio Unit Buttons
Courtesy of AMERICAN HONDA MOTOR CO., INC.

NOTE: **There may be other error codes that are for factory use only.**

Error Code No. Displayed	Error Code Title	Solution
ER 00	NO ERROR	System is normal.
ER 04	NO SIGNAL	Move the vehicle to an open area, and recheck.
ER 05	NO XM ACTIVATION	The subscription may have expired. Contact XM Radio at 800-852-9696.
ER 06	NO XM AUTHORIZATION	Contact XM Radio at 800-852-9696.
ER 14	ANTENNA NOT CONNECTED/NO SIGNAL	Refer to **ERROR CODE: CHECK ANTENNA IS DISPLAYED TROUBLESHOOTING**.
ER 24	ANTENNA SHORTED/NO SIGNAL	Refer to **ERROR CODE: CHECK ANTENNA IS DISPLAYED TROUBLESHOOTING**.
ER 55	HARDWARE FAILURE (CONDITIONAL ACCESS FAILURE)	There is an internal failure. REPLACE THE XM RECEIVER .
ER 65	HARDWARE FAILURE (CONDITIONAL ACCESS FAILURE)	There is an internal failure. REPLACE THE XM RECEIVER .

7. To end the XM self-diagnosis, turn the audio system off, or turn the ignition switch to LOCK (0).

DISPLAY DIAGNOSIS

Service Diag

NOTE:

- **CHECK THE VEHICLE BATTERY CONDITION FIRST.**
- **This diagnosis is applied to the multi-information display unit only.**

GETtheMANUALS.org

- **Not all self-diagnostic functions appear on all models.**
- **There may be other self-diagnostic functions that are for factory use only.**
- **If you run this diagnosis with a door open, press the INFO button to exit the door open screen.**

1. Turn the ignition switch to ON (II).
2. Press the MENU button to display the Vehicle Menu.
3. Press and hold the MENU button (A) and then the SOURCE button (B) on the audio remote switch for about 10 seconds. The Service Diag menu screen appears.

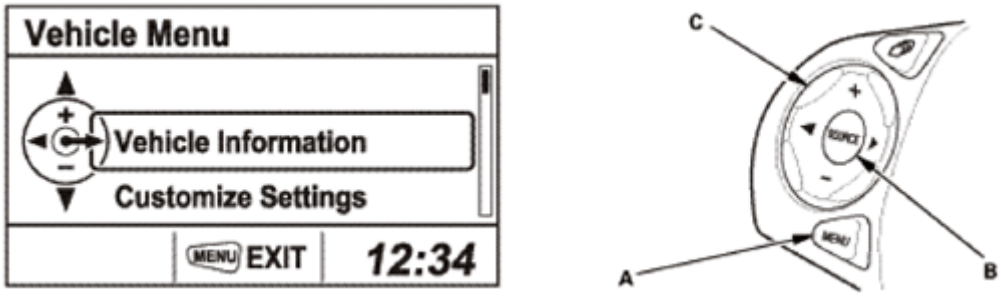

Fig. 6: Screen Display - Vehicle Menu
Courtesy of AMERICAN HONDA MOTOR CO., INC.

4. Use the directional pad (C) to select the diagnosis, then press the SOURCE button to enter your selection.

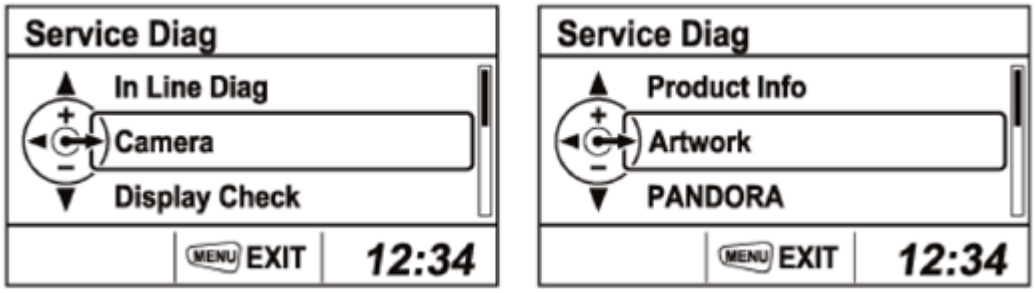

Fig. 7: Screen Display - Service Diag Menu
Courtesy of AMERICAN HONDA MOTOR CO., INC.

5. To end the self-diagnostic function, turn the audio system off, press the MENU button, or turn the ignition switch to LOCK (0).

In Line Diag (i-MID)

NOTE: **If the vehicle left the factory in the factory diagnostic mode, you will see this screen every time you turn the ignition switch to ON (II). You may also see this screen if you recently replaced the multi-information display unit.**

GETtheMANUALS.org

When the multi-information display unit is powered up for the first time at the factory or sometimes when a remanufactured multi-information display unit is installed, the factory diagnostic screen (In Line Diag) appears. Normally the factory does the steps necessary to verify proper operation and terminate the factory diagnosis. Until the proper confirmation sequence is done, the screen appears every time the vehicle is started. Also, the In Line Diag function can be performed from the Service Diag menu.

Select the In Line Diag in the Service Diag menu, then select the Diagnostic Result.

Terminal / Position	7	9	10
LOCK	○	○	
NEUTRAL			
UNLOCK	○		○

Fig. 8: Screen Display - In Line Diag Menu
Courtesy of AMERICAN HONDA MOTOR CO., INC.

The In Line Diag function runs automatically. When the diagnosis finishes, the icons turn different colors based on their test status (OK or NG).

NOTE: **The Result (A) indicates NG until the audio remote switch buttons (the DISPLAY button or the MENU button and the SOURCE button or the directional pad) are pressed.**

Icon Colors	Description
Green	The system run a diagnosis and the results are OK.
Red	Errors that require replacement of hardware or harness.
Yellow	Errors that do not require hardware replacement, such as a missing optional systems (audio unit or rearview camera).
White	The diagnosis is running. The screen functions are locked out while the diagnosis runs.

After the test is complete, press the SOURCE button to exit.

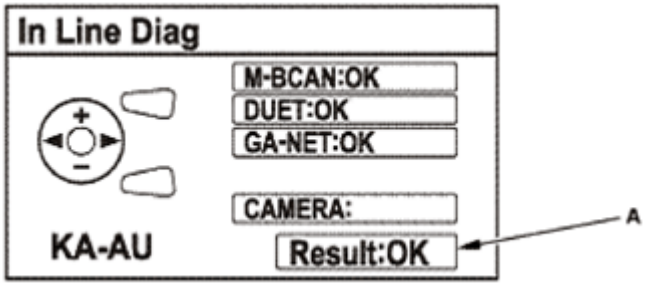

Fig. 9: Locating Result On In Line Diag Menu Screen

GETtheMANUALS.org

Courtesy of AMERICAN HONDA MOTOR CO., INC.

Camera

Wide View Normal View Top Down View

This screen adjusts the rearview camera image guide lines. Press the audio unit selector knob to select the rear view mode (wide, normal, top down). If you need to adjust a guide line, select the point you want to adjust using the SOURCE button, and use the directional pad, and you can move the guide line.

The coordinate of the guide line (A) indicates the selected point position on the screen.

If you need to reset the guide line to the factory settings, press and hold the MENU button for more than 2 seconds.

Wide View

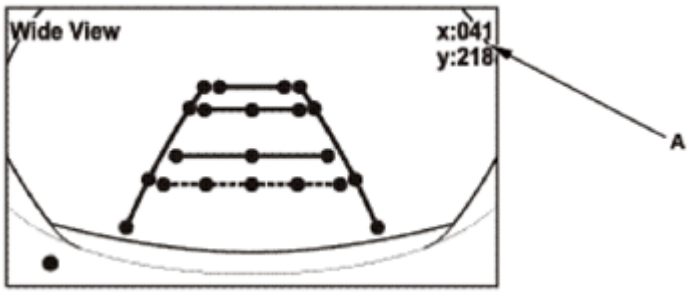

Fig. 10: Locating Coordinate Of Rearview Camera Image Guide Line (Wide View)
Courtesy of AMERICAN HONDA MOTOR CO., INC.

Normal View

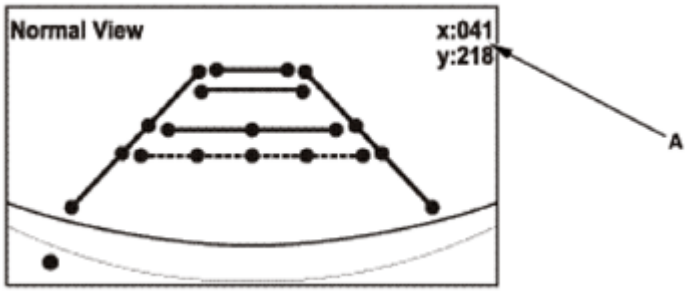

Fig. 11: Locating Coordinate Of Rearview Camera Image Guide Line (Normal View)
Courtesy of AMERICAN HONDA MOTOR CO., INC.

Top Down View

GETtheMANUALS.org

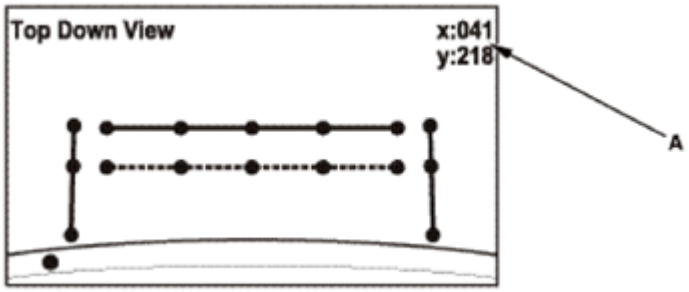

Fig. 12: Locating Coordinate Of Rearview Camera Image Guide Line (Top Down View)
Courtesy of AMERICAN HONDA MOTOR CO., INC.

After the setting is complete, press the MENU button to exit.

Display Check

These diagnostic screens allow you to troubleshoot the display unit. Select the item you want to troubleshoot, and follow the diagnostic instructions.

- Color Bar
- Black
- White
- Red
- Green
- Blue
- Gray Bar
- Point

Color Bar

This screen shows the colors being used for the multi-information display unit. This is for factory use only.

The colors should appear in the following order: White, Yellow, Light Blue, Green, Purple, Red, Blue, Black

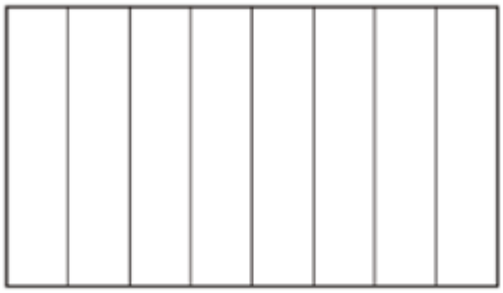

Fig. 13: Multi-Information Display Unit Screen - Color Bar
Courtesy of AMERICAN HONDA MOTOR CO., INC.

GETtheMANUALS.org

Black

This screen checks for pixels that may be stuck on. The entire display must be black. If pixels are stuck on, **REPLACE THE MULTI-INFORMATION DISPLAY UNIT.**

Fig. 14: Multi-Information Display Unit Screen - Black
Courtesy of AMERICAN HONDA MOTOR CO., INC.

White

This screen checks for pixels that may be dead (off). The entire display must be white. If there are dead pixels, **REPLACE THE MULTI-INFORMATION DISPLAY UNIT.**

Fig. 15: Multi-Information Display Unit Screen - White
Courtesy of AMERICAN HONDA MOTOR CO., INC.

Red, Green, Blue

These screens checks that the multi-information display unit is displaying red, green, and blue colors properly. If any of the colors are missing, **REPLACE THE MULTI-INFORMATION DISPLAY UNIT.**

GETtheMANUALS.org

The display changes the color by your selection (Red, Green, Blue).

Fig. 16: Multi-Information Display Unit Screen - Red, Green, Blue
Courtesy of AMERICAN HONDA MOTOR CO., INC.

Gray Bar

This screen checks problems with contrast. You should be able to see the changes from bar to bar across the scale. It is normal for the two bars on either side to appear the same. If you cannot see changes from bar to bar, **REPLACE THE MULTI-INFORMATION DISPLAY UNIT** .

Fig. 17: Multi-Information Display Unit Screen - Gray Bar
Courtesy of AMERICAN HONDA MOTOR CO., INC.

Point

This screen is for factory use only.

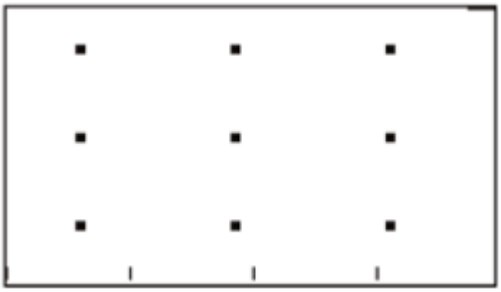

Fig. 18: Multi-Information Display Unit Screen - Point
Courtesy of AMERICAN HONDA MOTOR CO., INC.

GETtheMANUALS.org

Product Info

This screen displays the parts number (A), the product number (PN), and the serial number (S/N) about the multi-information display unit. This is for factory use only.

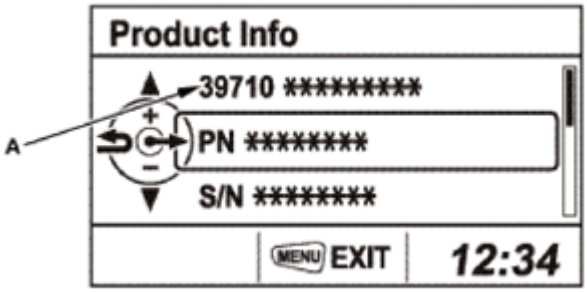

Fig. 19: Screen Display - Product Info
Courtesy of AMERICAN HONDA MOTOR CO., INC.

Artwork

This screen allows you to select the iPod album art function on or off. Refer to the Owner's Manual for the album art function.

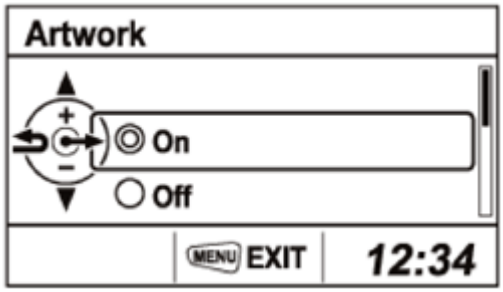

Fig. 20: Screen Display - Artwork Function
Courtesy of AMERICAN HONDA MOTOR CO., INC.

PANDORA

This screen allows you to select the PANDORA function on or off. Refer to the Owner's Manual for the PANDORA function.

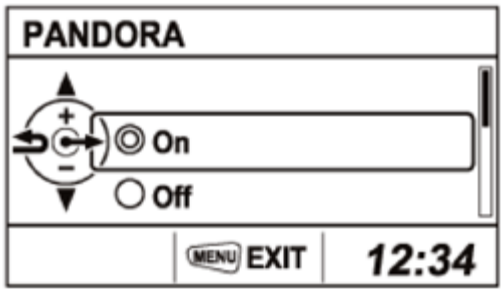

GETtheMANUALS.org

Fig. 21: Screen Display - PANDORA Function
Courtesy of AMERICAN HONDA MOTOR CO., INC.

HOW TO TROUBLESHOOT THE AUDIO SYSTEM

ANTI-THEFT FEATURE

The audio-navigation unit or the audio unit (with multi-information display) has an anti-theft protection circuit. When one of the following occurs, the unit enters the anti-theft mode.

- Disconnecting the battery.
- Disconnecting audio-navigation unit connector A (24P), connector B (20P), or audio unit connector A (24P).
- With navigation: Removing the No. A1-6 (100 A) fuse or the No. A29 (10 A) fuse from the under-hood fuse/relay box.
- Without navigation: Removing the No. A1-6 (100 A) fuse or the No. A2-2 (60 A) fuse from the under-hood fuse/relay box or the No. B25 (10 A) fuse from the under-dash fuse/relay box.

After service, reconnect power to the audio-navigation unit or the audio unit, and turn the ignition switch to ON (II). There are two ways to exit the anti-theft mode:

- Press and hold the VOLUME/POWER knob or the POWER button for at least 2 seconds. The audio-navigation unit or the audio unit automatically exits the anti-theft mode. If the audio-navigation unit or the audio unit does not exit anti-theft mode, like in cases where a known-good unit was substituted for testing, enter the anti-theft code.
- Enter the 5-digit anti-theft code.

There are no anti-theft cards included with the vehicle. If you need the code, you can get the code from the Interactive Network (iN) using the audio-navigation unit or the audio unit serial number. The unit serial number can easily be obtained without removing the audio-navigation unit or the audio unit, do the following:

- With navigation: **Go to Anti-Theft Future in How to Troubleshoot the Navigation System** See **HOW TO TROUBLESHOOT THE NAVIGATION SYSTEM** or **HOW TO TROUBLESHOOT THE NAVIGATION SYSTEM** .
- Without navigation: **GO TO HOW TO OBTAIN THE AUDIO UNIT SERIAL NUMBER IN SELF-DIAGNOSTIC FUNCTION**.

After you retrieve the serial number, go to the iN, select Service, Vehicle Information, Anti-Theft Code Inquiry, and fill out the form.

When the audio-navigation unit or the audio unit is installed in another vehicle (same Year/Model/Trim), you have to enter the 5-digit anti-theft security code. After that, you can release the anti-theft mode by pressing and holding the VOLUME/POWER knob or the POWER button.

LEVER-LOCKED CONNECTOR

GETtheMANUALS.org

Disconnecting

To disconnect the connector, pull the lever (A) while pushing the lock tab (B) down, then pull the connector (C).

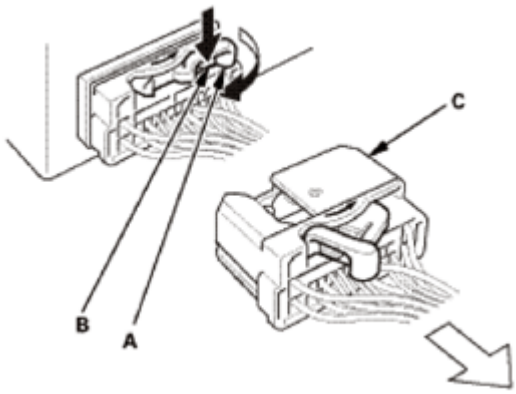

Fig. 22: Disconnecting Lever-Locked Connector
Courtesy of AMERICAN HONDA MOTOR CO., INC.

Connecting

To connect the connector, push the connector into the connector sleeve (A). As the connector is pressed in, the lever (B) moves to the locked position.

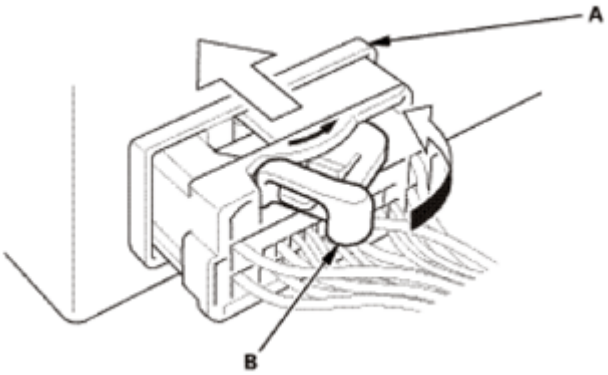

Fig. 23: Connecting Lever-Locked Connector
Courtesy of AMERICAN HONDA MOTOR CO., INC.

HOW TO TROUBLESHOOT THE REAR ENTERTAINMENT SYSTEM

REAR SCREEN OPERATION

The rear screen power and the back light on/off depends on the screen panel opening angle.

- When the rear screen panel opened more than 15°, the rear screen turns on.
- When the rear screen panel opened more than 130°, the screen back light is off (power is still on).

GETtheMANUALS.org

AUTO DIAGNOSIS

When a new DVD player unit is powered up after installing into a vehicle for the first time, the self-diagnostic screen appears.

When check status and the DVD player unit connection was OK, press the REAR POWER button and the diagnostic screen should not appear again.

LEVER-LOCKED CONNECTOR

Disconnecting

To disconnect the connector, pull the lever (A) while pushing the lock tab (B) down, then pull the connector (C).

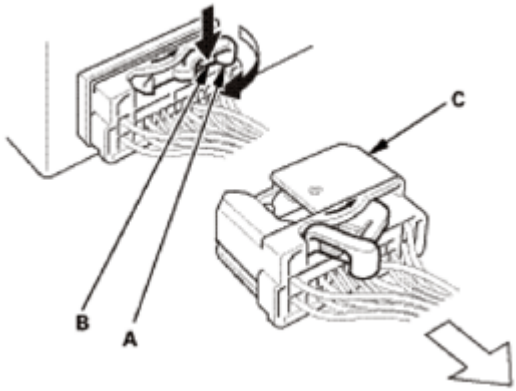

Fig. 24: Disconnecting Lever-Locked Connector
Courtesy of AMERICAN HONDA MOTOR CO., INC.

Connecting

To connect the connector, push the connector into the connector sleeve (A). As the connector is pressed in, the lever (B) moves to the locked position.

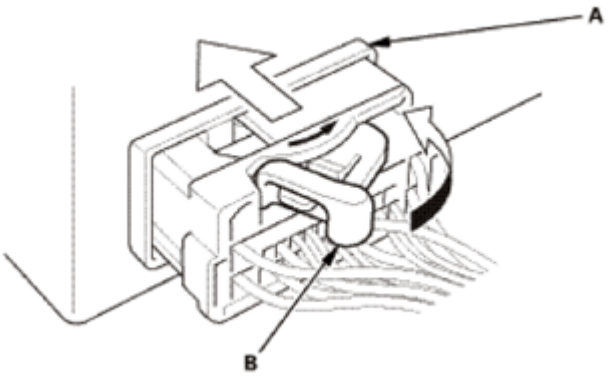

Fig. 25: Connecting Lever-Locked Connector

GETtheMANUALS.org

Courtesy of AMERICAN HONDA MOTOR CO., INC.

REAR ENTERTAINMENT SYSTEM SELF-DIAGNOSTIC FUNCTION

How to Check the Rear Entertainment System Condition

The rear entertainment system has a self-diagnostic function that appears on the rear screen.

NOTE:

- **CHECK THE VEHICLE BATTERY CONDITION FIRST.**
- **Do not check the headphones when you are doing the self-diagnostic function because the sound may be intermittent.**
- **The self-diagnostic function does not find every problem with the rear entertainment system.**

There are two ways to enter the diagnostic mode:

HOW TO ENTER THE SELF-DIAGNOSTIC FUNCTION USING THE DVD PLAYER UNIT

1. Turn the ignition switch to ON (II).
2. Open the rear display, then turn the REAR POWER off.
3. Press and hold the REAR POWER button for one second, then press it 3 more times within 3 seconds. On the last press, hold the REAR POWER button until the diagnostic screen appears.

NOTE:

- **The wireless headphones LED blinks at one second intervals when in the se diagnostic mode. This indicates the RES is in the diagnostic mode, even wh nothing appears on the screen because of a display problem.**
- **The DVD player unit LED blinks every 0.5 seconds. When the RES is running the self-diagnostic, the REAR POWER button LED blinks. When the self-diagnostic function is complete, you will see one of the two following results**
  - **During check: The REAR POWER button LED blinks.**
  - **If the diagnosis result is OK: The REAR POWER button LED first blinks and then stays on.**
  - **If the diagnosis result is NG: All the buttons and indicator LEDs blink.**

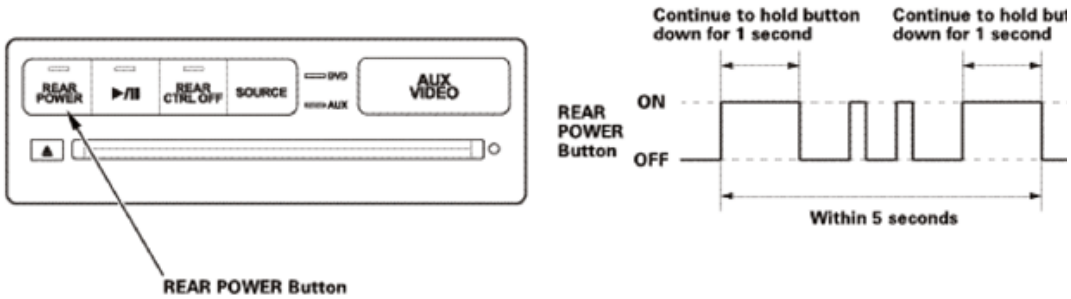

Fig. 26: Identifying REAR POWER Button LED Blinks

GETtheMANUALS.org

Courtesy of AMERICAN HONDA MOTOR CO., INC.

4. To end the self-diagnostic function, turn the REAR POWER button off, or turn the ignition switch to LOCK (0). After completing the repair work, run the self-diagnostic function again to make sure that there are no other malfunctions.

HOW TO ENTER THE SELF-DIAGNOSTIC FUNCTION USING THE WIRELESS REMOTE CONTROL

1. Turn the ignition switch to ON (II).
2. Open the rear display.
3. Press each of these buttons in the order listed within 2 seconds of each other: DVD, AUX, FAST FOWARD, AUX to enter the self-diagnostic function mode.

NOTE:

- **The wireless headphones LED blinks every 1 second when in self-diagnostic function. This indicates the RES is in the diagnostic mode, even when nothing appears on the screen because of a display problem.**
- **The DVD player unit LED blinks every 0.5 seconds. When the RES is running the self-diagnostic, the REAR POWER button LED blinks. When the self-diagnostic function is complete, you will see one of the two following results:**
  - **During check: The REAR POWER button LED blinks.**
  - **If the diagnosis result is OK: The REAR POWER button LED blinks.**
  - **If the diagnosis result is NG: The all buttons and the all indicators LED blinks.**

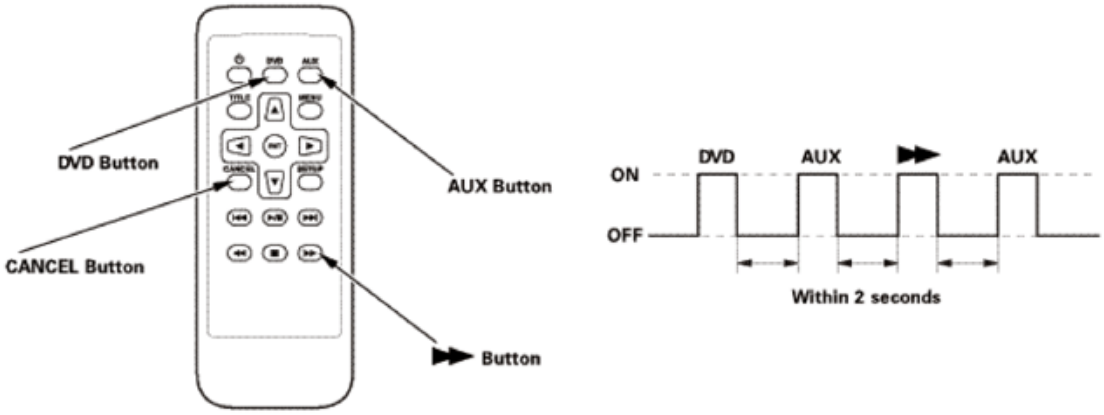

Fig. 27: Identifying Wireless Remote Control LED Blinks
Courtesy of AMERICAN HONDA MOTOR CO., INC.

4. To end the self-diagnostic function, turn the DVD player unit REAR POWER button off, or turn the ignition switch to LOCK (0). After completing the repair work, run the self-diagnostic function again to

GETtheMANUALS.org

make sure that there are no other malfunctions.

DIAGNOSIS MENU

Use the DVD player unit SOURCE button or the wireless remote control LEFT or RIGHT buttons to select the diagnosis.

CONNECT

This screen shows the connection check status for each units.

- If Connection shows NG (red color), check the connection between faulty units.
- **IF RAM CHECK SHOWS NG (RED COLOR), REPLACE THE REAR CONTROLLER AND SCREEN.**

Terminal / Position	1	4
LOCK	⊖	⊕
UNLOCK	⊕	⊖

Fig. 28: Screen Display - Connection Check Status For Each Units
Courtesy of AMERICAN HONDA MOTOR CO., INC.

UNIT CHECK

This screen shows the rear screen status.

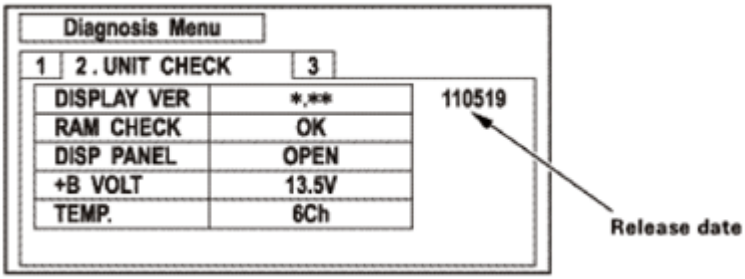

Fig. 29: Screen Display - Rear Screen Status
Courtesy of AMERICAN HONDA MOTOR CO., INC.

Category	Check Item or Information	Display Results
DISPLAY VER	Displays the rear screen version and release date.	Software version and release date are always displayed
RAM CHECK	Displays the result of RAM check.	• OK (green): RAM is OK • NG (red): RAM is NG • -- (white): Checking

GETtheMANUALS.org

DISP PANEL	Displays the screen panel tilt status.	• OPEN (green): Detects the screen panel open • CLOSE (red): Detects the screen panel close • OPEN TOO FAR (yellow): Detects the screen panel too much opened more than 130°(1)
+B VOLT	Displays the power supply voltage (-B) at the rear screen.	1. (Detected voltage) (green): BK 2. Err (red): The A/D converter of microcomputer is failure
TEMP.	Displays the rear screen temperature value.	• (A/D value of detected temperature) (green): OK • Err (red): The A/D converter of microcomputer is failure
(1) The screen back light turns off when the screen panel is opened more than 130°.		

DVD INFO

This screen shows the DVD player unit status.

Terminal / Position	1	4
LOCK	⊖	⊕
UNLOCK	⊕	⊖

Fig. 30: Screen Display - DVD Player Unit Status
Courtesy of AMERICAN HONDA MOTOR CO., INC.

Category	Check Item or Information	Display Results
DVD VER	Displays the DVD player unit version.	Software version is always displayed
FIRMWARE VER	Displays the DVD mech firmware version.	Firmware version is always displayed
ILL+	Displays the ILL+ status.	• ON (green): Headlights switch is in parking light position • OFF (red): Headlights switch is in off position
ILL - LED	Displays the duty of the ILL - LED (%).	100 %-0.0 % (depends on dashlights brightness)

AUDIO SYSTEM CENTER DISPLAY UNIT CONNECTOR FOR INPUTS AND OUTPUTS

CENTER DISPLAY UNIT CONNECTOR FOR INPUTS AND OUTPUTS

GETtheMANUALS.org

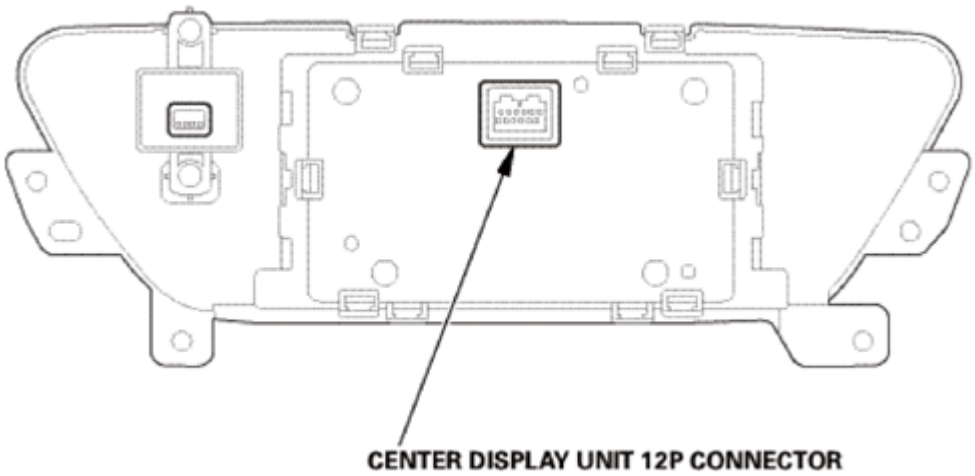

Fig. 31: Locating Center Display Unit 12P Connector
Courtesy of AMERICAN HONDA MOTOR CO., INC.

CENTER DISPLAY UNIT 12P CONNECTOR

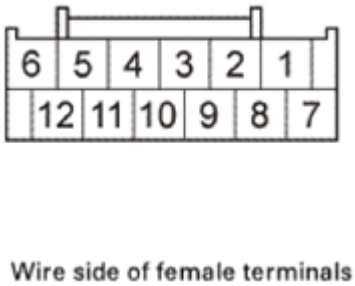

Fig. 32: Identifying Center Display Unit 12P Connector
Courtesy of AMERICAN HONDA MOTOR CO., INC.

CENTER DISPLAY UNIT 12P CONNECTOR DESCRIPTION

Cavity	Wire Color	Terminal Name	Description
1	RED	+B_BACK_UP	Continuous power source
2	Not Used	Not Used	-
3	LT GRN	DUET_CONT	DUET control signal
4	Not Used	Not Used	-
5	GRN	DUET_TX	Communication signal to audio unit
6	RED	DUET_RX	Communication signal to audio unit
7	GRY	ILLUMI+	Detects parking light on signal
8	Not Used	Not Used	-
9	RED	ILLUMI-(BULB)	Detects illumination control signal
10	BRN	GND	Ground for center display unit (G502)
11	Not Used	Not Used	-
12	Not Used	Not Used	-

GETtheMANUALS.org

AUDIO SYSTEM SOUND QUALITY DIAGNOSIS

Special Tools Required

Diagnostic CD 07AAZ-SDBA100

Use the following tests to check sound quality.

NOTE:

- **Before beginning the following tests, write down the bass, the treble, the fader and the balance settings, and then set them to their center positions for testing.**
- **Always verify the customer's complaint, and compare it a known-good vehicle of the same model and trim under the same conditions using the same inputs (iPod, USB device, etc.). If the complaint is the same on the known-good vehicle, it is a system characteristic.**

LEFT/RIGHT CHANNEL ID

Do this test to confirm proper channel routing.

1. Insert the audio diagnostic CD (T/N 07AAZ-SDBA100) into the audio-navigation unit or the audio unit.
2. Play track No. 1 (left, both, right channel ID) at a normal, or slightly higher than normal, volume level.
3. The voice should be audible only from the channel or channels when indicated.
    - If the channel ID is correct for each side, go to **PHASE TEST**.
    - If the channel ID is not correct, check for:
        - Shorted speaker wire
        - Faulty audio-navigation unit or audio unit
        - Faulty stereo amplifier
        - Shorted speaker
        - Open in speaker wire
        - Loose pins or poor pin fit in the speaker circuit

PHASE TEST

Do this test to confirm proper speaker phasing.

1. Insert the audio diagnostic CD (T/N 07AAZ-SDBA100) into the audio-navigation unit or the audio unit.
2. Play track No. 2 (phase) at a normal, or slightly higher than normal, volume level.
3. The voice should sound centered and focused when it indicates it is in-phase.
4. The voice should sound diffused, and have less bass when it indicates it is out of phase.
    - If the voice changes from in-phase to out of phase as indicated by the prompt, the phasing is correct. Go to **ELECTRICAL NOISE TEST**.

GETtheMANUALS.org

- If the voice always sounds out of phase, phasing is not correct. Check for:
  - Shorted speaker wire
  - Faulty audio-navigation unit or audio unit
  - Faulty stereo amplifier
  - Shorted speaker
  - Open in speaker wire
  - Loose pins or poor pin fit in the speaker circuit
  - Aftermarket audio components like amplifiers, speakers, etc.

ELECTRICAL NOISE TEST

Do this test to check for electrical noise being induced into the audio system.

NOTE: **Electrical noise may be caused by outside sources that cannot be handled by the audio system. Make sure you remove any cell phones and/or turn off any aftermarket devices before beginning this test.**

1. Insert the audio diagnostic CD (T/N 07AAZ-SDBA100) into the audio-navigation unit or the audio unit.
2. Play track No. 4 (digital zero) at a normal, or slightly higher than normal, volume level.
3. Operate any electrical device that may create electrical noise in the audio system, including starting the engine, operating the power door locks, turning on the rear window defroster, etc.
4. Play track No. 5 (near digital zero) at a normal, or slightly higher than normal, volume level.
5. Operate any electrical device that may create electrical noise in the audio system, including starting the engine, operating the power door locks, turning on the rear window defroster, etc.
6. Play track No. 6 (SNR) at a normal, or slightly higher than normal, volume level.
7. Operate any electrical device that may create electrical noise in the audio system, including starting the engine, operating the power door locks, turning on the rear window defroster, etc.
   - If no abnormal noise is heard, go to **INDIVIDUAL SPEAKER TEST**.
   - If the noise is present only during the SNR track, replace the audio-navigation unit or the audio unit.
   - If the noise is heard during the digital zero or near digital zero track, check for:
     - Poor ground for audio-navigation unit or audio unit, engine or battery cable
     - Pinched or shorted speaker wire
     - Faulty audio-navigation unit or audio unit
     - Faulty stereo amplifier
     - Aftermarket devices or aftermarket window tint
     - Other faulty components causing excessive electrical noise (ignition coils, alternator, door lock actuators, etc.). Disconnect or remove any suspect components, and then replay the tracks that were originally noisy. If the noise goes away, check the component and its circuit

INDIVIDUAL SPEAKER TEST

GETtheMANUALS.org

NOTE: **Check the vehicle for aftermarket speakers, amplifiers, etc. that may affect sound quality.**

Do this test to identify a faulty speaker.

1. Insert the audio diagnostic CD (T/N 07AAZ-SDBA100) into the audio-navigation unit or the audio unit.
2. Play track No. 30 (steady 300 Hz tone) at a normal, or slightly higher than normal, volume level.
3. Listen to each speaker for poor sound compared to the other speakers. Use the audio-navigation unit's or the audio unit's fader and balance settings to help isolate the channel with the problem.
   - If the sound quality produced by a specific speaker is poor, substitute it with a known-good speaker. If substituting a known-good speaker solves the problem, the speaker should be replaced. If the poor sound quality continues, go to Sound Balance Test.
   - If the sound quality is OK, go to Sound Balance Test.

SOUND BALANCE TEST

Do this test to identify a faulty channel or speaker.

1. Insert the audio diagnostic CD (T/N 07AAZ-SDBA100) into the audio-navigation unit or the audio unit.
2. Confirm the bass and treble are set to the center positions.
3. Play track No. 3 (pink noise) at a normal, or slightly higher then normal, volume level.
4. A static type sound should be heard through all speakers.
5. Insert the audio diagnostic CD (T/N 07AAZ-SDBA100) into the audio-navigation unit or the audio unit of a known-good vehicle.
6. Set the bass and treble to the center position.
7. Play track No. 3 (pink noise) all the same level as was played in step 3.
8. Compare the sounds made by the two vehicles.
   - If the sounds made by the two vehicles are very similar, go to **FREQUENCY SWEEP TEST**.
   - If the sound does not have as much bass, check the subwoofer and its circuit.
   - If the sound does not have enough hiss, check the tweeters and their circuits.

FREQUENCY SWEEP

NOTE: **If possible, have the customer demonstrate their complaint, and record the conditions under which the complaint occurred. Try to reproduce the complaint in a known-good vehicle.**

Do this test to find rattles or reverberations that may cause a perception of poor sound quality.

1. Insert the audio diagnostic CD (T/N 07AAZ-SDBA100) into the audio-navigation unit or the audio unit.
2. Play track No. 13 (sweep from 500 Hz to 35 Hz) at a normal, or slightly higher than normal, volume level.
3. Listen to each speaker for poor sound quality or reverberations caused by specific frequencies. Use the

GETtheMANUALS.org

voice-over to estimate the frequency that causes the vibration. Use the audio-navigation unit's or the audio unit's fader and balance settings to help isolate the channel with the problem.

- If vibrations or poor sound quality are heard, go to step 4.
- If no vibrations or poor sound quality are heard, go to Sound Judging.

4. Choose the appropriate track from No. 14 to 25 (small range frequency sweep) or 26 to 53 (single frequencies) to recreate the frequency that caused the poor sound quality or vibration located in step 3; this aids in diagnosis of the cause.

NOTE: When you get to the track that recreates the problem, select the repeat function on the audio-navigation unit or the audio unit, this will help you isolate the cause.

5. Replace or insulate the source of the vibrations or, if the speaker is the source of the poor sound quality, substitute a known-good speaker and retest.

SOUND JUDGING

Do this test to compare overall sound quality, imaging, and dynamics between the customer's vehicle and a known-good vehicle. Only use a vehicle of the same model and trim level for this test. If possible, have the customer demonstrate the problem.

Make sure the vehicle is using only OEM speakers, amplifiers, etc.

1. In the customer vehicle, set the bass, treble, fader, and balance settings to the customer's normal settings that were written down before beginning testing.
2. Insert the audio diagnostic CD (T/N 07AAZ-SDBA100) into the audio-navigation unit or the audio unit.
3. Play tracks No. 7 to 12 (sound quality, midland, dynamics, and imaging demonstration tracks) at a normal, or slightly higher than normal, volume level. Write down the volume setting being used.
4. Listen to the areas of the track that stand out as being either very clear or poorer than other areas of the track.
5. Insert the audio diagnostic CD (T/N 07AAZ-SDBA100) into the audio-navigation unit or the audio unit of a known-good vehicle.
6. Play the tracks at the same volume level and the same bass, treble, balance, and fader settings as used in step 3 in the customer's vehicle.
7. Listen to the same area of the track that stood out as being either very clear or poorer than other areas of the track.
8. Compare the customer vehicle's sound quality results to the known-good vehicle's results.
    - If the sound quality in the customer vehicle is comparable to the sound quality in the known-good vehicle, then the customer's vehicle is operating as designed.
    - If the sound quality is not comparable, check these items in order.
        - Loose or improperly installed speakers or other hardware that may become excited by the vibrations generated by the speakers
        - Damaged speaker(s)

GETtheMANUALS.org

- Faulty audio-navigation unit or audio unit
- Faulty stereo amplifier
- Aftermarket accessories

SEEK STOP TEST

Do this test to check the performance of the audio-navigation unit's or the audio unit's AM and FM reception. Refer to **SYMPTOM TROUBLESHOOTING** before continuing with this test:

- Audio system sound is weak or distorted (display is normal)
- No sound is heard from the speakers (display is normal) (with navigation)
- No sound is heard from the speakers (display is normal) (without navigation, with stereo amplifier)
- No sound is heard from the speakers (display is normal) (without navigation and stereo amplifier)

NOTE:

- **Aftermarket window tint, aftermarket theft-recovery devices and other aftermarket accessories may reduce radio reception.**
- **Changes in cloud cover and other atmosphere conditions will affect the ability of the audio-navigation unit or the audio unit to receive radio signals.**

1. Park the customer's vehicle in an open area away from buildings or other obstructions.
2. Park a known-good vehicle (same year, model, and trim level) next to the customer's vehicle, facing the same direction.
3. Start the engine in the customer's vehicle, and turn on the radio.
4. Set the FM receiver to 87.7 MHz.
5. Press the Seek + button and record the first station that the audio-navigation unit or the audio unit locks onto.
6. Press the Seek + button repeatedly, and write down each station that the audio-navigation unit or the audio unit locks onto until the station recorded in step 5 is reached again.
7. Set the AM receiver to 530 kHz.
8. Press the Seek + button, and record the first station that the audio-navigation unit or the audio unit locks on to.
9. Press the Seek + button repeatedly, and write down each station that the audio-navigation unit or the audio unit locks onto until the station recorded in step 8 is reached again.
10. Turn the ignition switch to LOCK (0).
11. Start the engine in the known-good vehicle, and then do steps 4 thru 10 on the known-good vehicle.
12. Compare the number of stations received in steps 6 and 9 in the customer's vehicle with the number of stations received in the known-good vehicle.
    - If the number of stations received is the same, or within 10 %, the audio-navigation unit's or the audio unit's tuner performance is OK. The problem may be atmospheric conditions, multi path interference, or other obstructions to the radio signal.
    - If the customer's vehicle receives fewer stations by at least 10 %, go to **POOR AM OR FM**

GETtheMANUALS.org

RADIO RECEPTION OF INTERFERENCE TROUBLESHOOTING .

SYMPTOM TESTS

AUDIO DISC DOES NOT EJECT

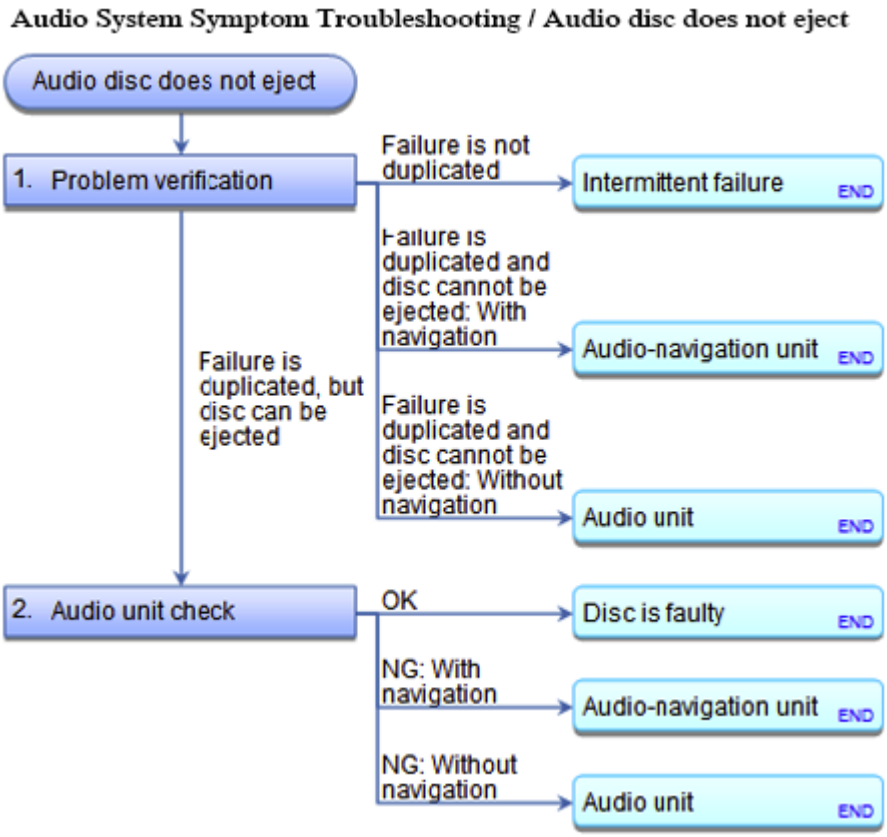

Fig. 33: Audio System Symptom Troubleshooting Flowchart - Audio Disc Does Not Eject
Courtesy of AMERICAN HONDA MOTOR CO., INC.

NOTE:

- **CHECK THE VEHICLE BATTERY CONDITION FIRST .**
- **Disc labels should not be used in the audio unit. They may jam and damage the player mechanism.**
- **Check the connectors for poor connections or loose terminals.**

1. Problem verification:
   - 1. Turn the ignition switch to ON (II).
   - 2. Check to see if the disc ejects correctly with no binding by pushing the EJECT button.

Does the disc eject normally?

YES : Intermittent failure, the system is OK at this time.

GETtheMANUALS.org

NO : The failure is duplicated, but the disc can be ejected, go to step 2.

NO : REPLACE THE AUDIO-NAVIGATION UNIT .

NO : REPLACE THE AUDIO UNIT .

2. Audio unit check:
    - 1. Insert another disc.

Does the disc eject normally?

YES : The original disc is faulty.

NO : REPLACE THE AUDIO-NAVIGATION UNIT .

NO : REPLACE THE AUDIO UNIT .

AUDIO DISC DOES NOT LOAD

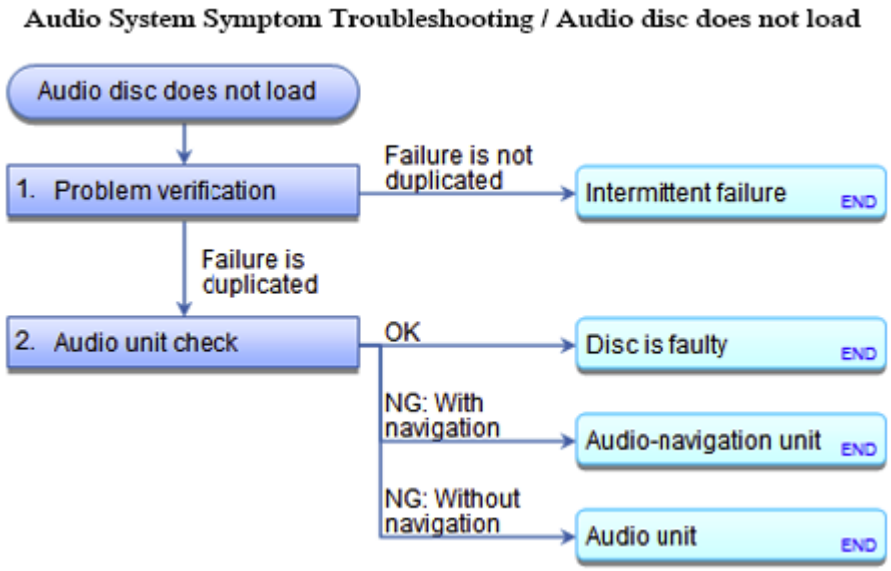

Fig. 34: Audio System Symptom Troubleshooting Flowchart - Audio Disc Does Not Load
Courtesy of AMERICAN HONDA MOTOR CO., INC.

NOTE:

- **CHECK THE VEHICLE BATTERY CONDITION FIRST .**
- **Disc labels should not be used in the audio-navigation unit or the audio unit. They may jam and damage the player mechanism.**
- **Make sure the disc is compatible with the system (see the Owner's Manual for more information).**
- **Check the connectors for poor connections or loose terminals.**

GETtheMANUALS.org

1. Problem verification:
    - 1. Turn the ignition switch to ON (II).
    - 2. Try loading a disc.

    Does the disc load?

    YES : Intermittent failure, the system is OK at this time. If the disc loads normally, but will not play, go to **AUDIO DISC DOES NOT PLAY TROUBLESHOOTING**.

    NO : The failure is duplicated, go to step 2.

2. Audio unit check:
    - 1. Insert another disc.

    Does the disc load?

    YES : The original disc is faulty.

    NO : REPLACE THE AUDIO-NAVIGATION UNIT .

    NO : REPLACE THE AUDIO UNIT .

AUDIO DISC DOES NOT PLAY

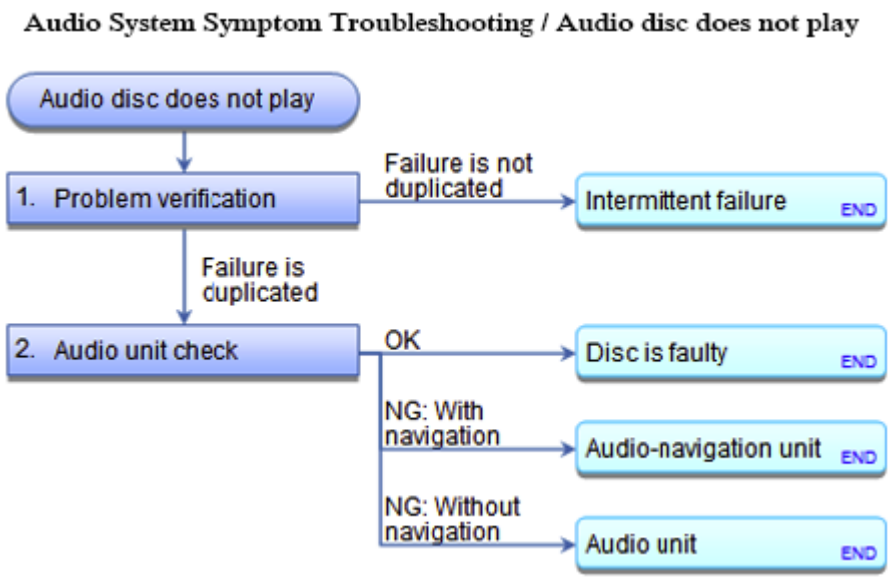

Fig. 35: Audio System Symptom Troubleshooting Flowchart - Audio Disc Does Not Play
Courtesy of AMERICAN HONDA MOTOR CO., INC.

Special Tools Required

GETtheMANUALS.org

Diagnostic CD 07AAZ-SDBA100

NOTE:

- **CHECK THE VEHICLE BATTERY CONDITION FIRST .**
- **Disc labels should not be used in the audio-navigation unit or the audio unit. They may jam and damage the player mechanism.**
- **Make sure the disc is compatible with the system (see the Owner's Manual for more information).**
- **Check the connectors for poor connections or loose terminals.**

1. Problem verification:
   - 1. Turn the ignition switch to ON (II).
   - 2. Insert a disc to see if the symptom can be duplicated.

   Does the disc play?

   YES : Intermittent failure, the system is OK at this time.

   NO : The failure is duplicated, go to step 2.

2. Audio unit check:
   - 1. Insert the audio diagnostic CD (T/N: 07AAZ-SDBA100) in the audio-navigation unit or the audio unit.

   Does the disc play?

   YES : The original disc is faulty, or has an unreadable format.

   NO : REPLACE THE AUDIO-NAVIGATION UNIT .

   NO : REPLACE THE AUDIO UNIT .

AUDIO DISC SKIPS

GETtheMANUALS.org

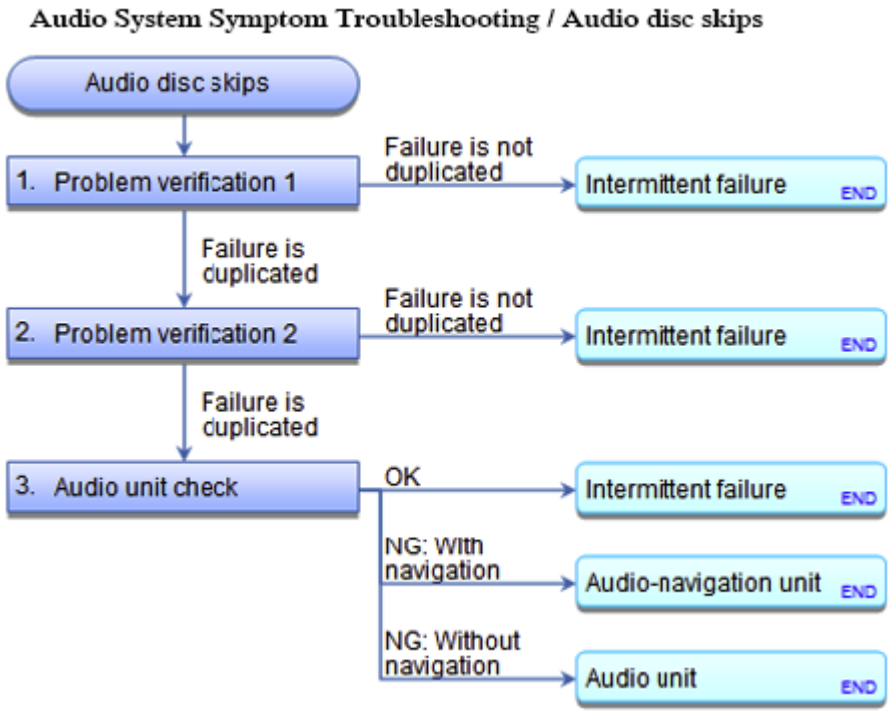

Fig. 36: Audio System Symptom Troubleshooting Flowchart - Audio Disc Skips
Courtesy of AMERICAN HONDA MOTOR CO., INC.

Special Tools Required

- **Diagnostic CD 07AAZ-SDBA100**
- **Skip Test CD 07AAZ-SDBA200**
- **Skip Test CD 07AAZ-SDBA300**

NOTE:

- **CHECK THE VEHICLE BATTERY CONDITION FIRST .**
- **Disc labels should not be used in the audio-navigation unit or the audio unit. They may jam and damage the player mechanism.**
- **Make sure the disc is compatible with the system (see the Owner's Manual for more information).**
- **Check the connectors for poor connections or loose terminals.**

1. Problem verification 1:
   - 1. Confirm the vehicle's tires are properly inflated.
   - 2. Check the customers disc for scratches, fingerprints, and marks.

NOTE: **Do the following test with the audio-navigation unit or the audio unit bass and the treble set to customer's listening performance. When comparing to a known-good vehicle, do the comparison on the same model and trim level.**

GETtheMANUALS.org

- 3. Test drive the vehicle to identify when the disc skips. The audio diagnostic CD (T/N: 07AAZ-SDBA100) can be used if the customers disc is not available. Use tracks 10 to 12.

Does the disc skip?

YES : The failure is duplicated, go to step 2.

NO : Intermittent failure, the system is OK at this time.

2. Problem verification 2:
   1. The vehicle parked and engine running.
   2. Eject the CD, and insert the diagnostic skip test CD (T/N: 07AAZSDBA300) (ABEX TCD 721). Play tracks 2 to 11 and note the track number(s) where the CD starts skipping. Do the same test on a known-good vehicle.

Does the CD skip on the same track number(s) on both vehicles?

YES : Intermittent failure, the system is OK at this time.

NO : The failure is duplicated, go to step 3.

3. Audio unit check:
   - 1. Eject the CD, and insert the diagnostic skip test CD (T/N: 07AAZSDBA200) (ABEX TCD 725B) play tracks 7 to 11 and tracks 13 to 15 and note the track number(s) where the CD starts skipping. Do the same test on a known-good vehicle.

Does the CD skip on the same track number(s) on both vehicles?

YES : Intermittent failure, the system is OK at this time.

NO : REPLACE THE AUDIO-NAVIGATION UNIT .

NO : REPLACE THE AUDIO UNIT .

AUDIO REMOTE SWITCH DOES NOT WORK PROPERLY (AUDIO UNIT BUTTONS WORK) (KA, KC MODELS WITH NAVIGATION)

GETtheMANUALS.org

Audio System Symptom Troubleshooting - Audio remote switch does not work properly (audio unit buttons work)

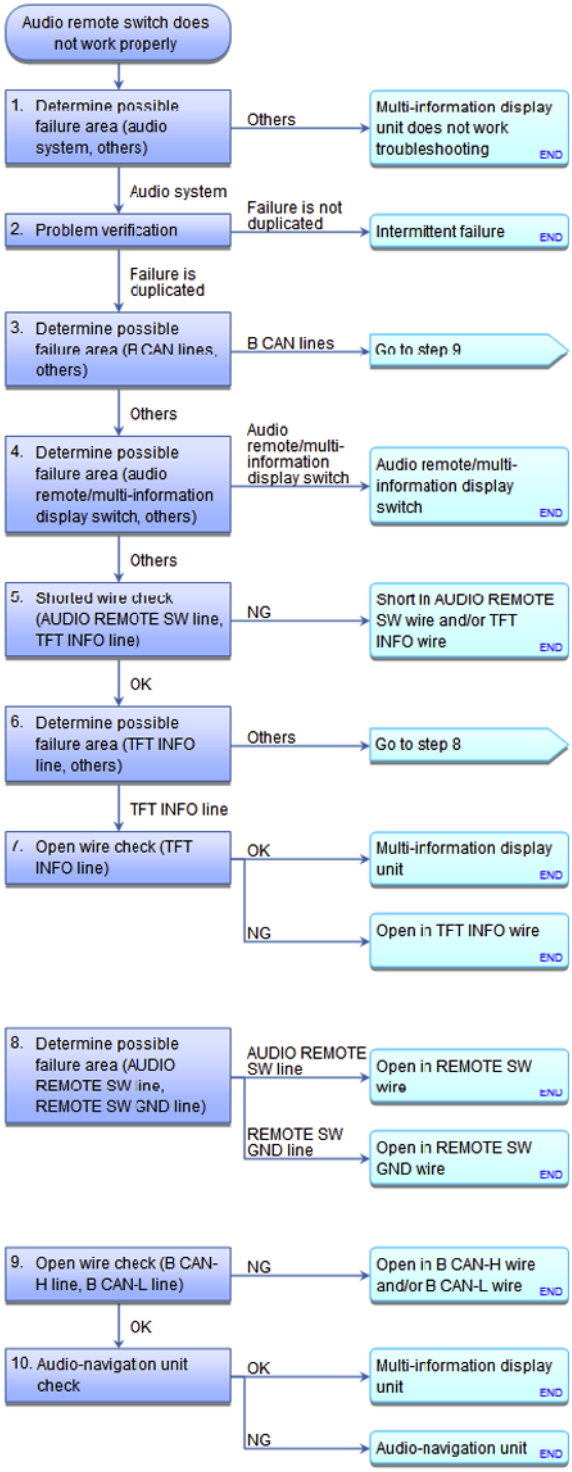

Fig. 37: Audio System Symptom Troubleshooting Flowchart - Audio Remote Switch Does Not Work Properly
Courtesy of AMERICAN HONDA MOTOR CO., INC.

GETtheMANUALS.org

NOTE:

- **CHECK THE VEHICLE BATTERY CONDITION FIRST .**
- **Check the connectors for poor connections or loose terminals.**

1. Determine possible failure area (audio system, others):
   - 1. Turn the ignition switch to ON (II).
   - 2. Check if any MID information appears on the multi-information display unit.

   Is there any information displayed?

   YES : Go to step 2.

   NO : Go to **MULTI-INFORMATION DISPLAY UNIT DOES NOT WORK TROUBLESHOOTING**.

2. Problem verification:
   - 1. Turn on the audio system, and using the audio remote switch buttons, check if the multi-information display operates properly.

   Is the display operation OK?

   YES : Intermittent failure, the system is OK at this time.

   NO : The failure is duplicated, go to step 3.

3. Determine possible failure area (B CAN lines, others):
   - 1. **DO THE SELF-DIAGNOSTIC FUNCTION, AND USE THE IN LINE DIAG IN THE DISPLAY DIAGNOSIS**.

     NOTE: **When specific button(s) does not work normally, try with the specific button(s).**

   Does the Display Diagnosis start, and is the audio remote switch connection OK?

   YES : Go to step 9.

   NO : Go to step 4.

4. Determine possible failure area (audio remote/multi-information display switch, others):
   - 1. Turn the ignition switch to LOCK (0).
   - 2. Disconnect the following connector.

     Audio remote/multi-information display switch 12P connector

   - 3. DO THE AUDIO REMOTE/MULTI-INFORMATION DISPLAY SWITCH TEST .

GETtheMANUALS.org

Is the audio remote/multi-information display switch OK?

YES : Go to step 5.

NO : REPLACE THE AUDIO REMOTE/MULTI-INFORMATION DISPLAY SWITCH .

5. Shorted wire check (AUDIO REMOTE SW line, TFT INFO line):
   - 1. Disconnect the following connector.

     Multi-information display unit connector A (32P)

   - 2. Check for continuity between test points 1 and 2.

     Test condition IG LOCK (0)

     Audio remote/multi-information display switch 12P connector: disconnected Multi-information display unit connector A (32P): disconnected

     Test circuit AUDIO REMOTE SW

     Test point 1 Multi-information display unit connector A (32P) No. 6 (PNK)

     Test point 2 Body ground

     Test circuit TFT INFO

     Test point 1 Multi-information display unit connector A (32P) No. 7 (PUR)

     Test point 2 Body ground

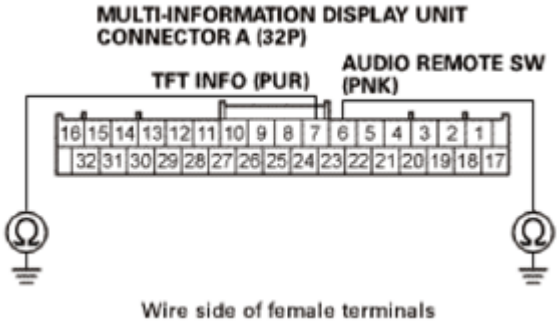

Fig. 38: Checking For Continuity Between Test Point Multi-Information Display Unit Connector A (32P) No. 6 (PNK) And No. 7 (PUR)
Courtesy of AMERICAN HONDA MOTOR CO., INC.

Is there continuity?

YES : Repair a short to body ground in the wire(s) between the multi-information display unit and the

GETtheMANUALS.org

audio remote switch. If the wires are OK, **REPLACE THE CABLE REEL** .

NO : The AUDIO REMOTE SW and the TFT INFO wires are not shorted to ground. Go to step 6.

6. Determine possible failure area (TFT INFO line, others):
    1. Reconnect the audio remote/multi-information display switch, and measure the resistance between test points 1 and 2 as specified in the table.

       Test condition IG LOCK (0)

       Multi-information display unit connector A (32P): disconnected

       Test circuit AUDIO REMOTE SW, REMOTE SW GND

       Test point 1 Multi-information display unit connector A (32P) No. 6 (PNK)

       Test point 2 Multi-information display unit connector A (32P) No. 23 (BRN)

Button held down	VOL DOWN	VOL UP	LEFT	RIGHT	SOURCE	No button pressed
Resistance	About 99 ohms	About 357 ohms	About 775 ohms	About 1.7 kohms	About 3.7 kohms	About 10 kohms

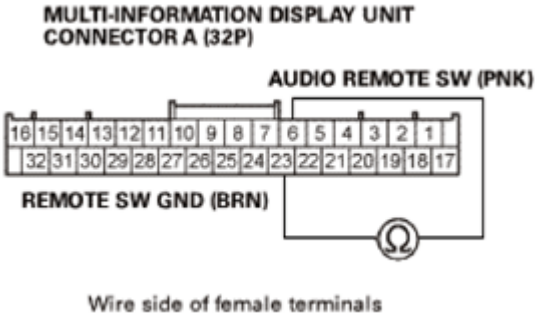

Fig. 39: Measuring Resistance Between Test Point Multi-Information Display Unit Connector A (32P) No. 6 (PNK) And No. 23 (BRN)
Courtesy of AMERICAN HONDA MOTOR CO., INC.

Is the resistance OK?

YES : Go to step 7.

NO : Go to step 8.

7. Open wire check (TFT INFO line):
    1. Measure the resistance between test points 1 and 2 as specified in the table.

       Test condition IG LOCK (0)

GETtheMANUALS.org

Multi-information display unit connector A (32P): disconnected

Test circuit TFT INFO, REMOTE SW GND

Test point 1 Multi-information display unit connector A (32P) No. 7 (PUR)

Test point 2 Multi-information display unit connector A (32P) No. 23 (BRN)

Button held down	MENU	DISPLAY	No button pressed
Resistance	About 33 ohms	About 363 ohms	No continuity

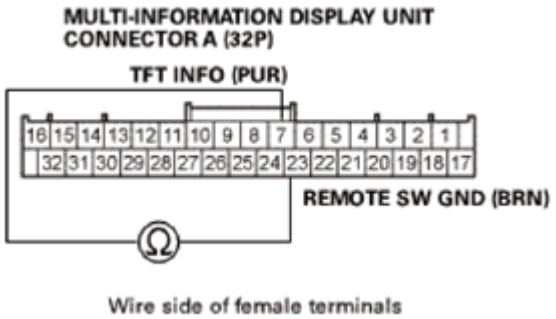

Fig. 40: Measuring Resistance Between Test Point Multi-Information Display Unit Connector A (32P) No. 7 (PUR) And No. 23 (BRN)
Courtesy of AMERICAN HONDA MOTOR CO., INC.

Is the resistance OK?

YES : **REPLACE THE MULTI-INFORMATION DISPLAY UNIT** .

NO : Repair an open in the wire between the multi-information display unit and the audio remote switch. If the wires are OK, **REPLACE THE CABLE REEL** .

8. Determine possible failure area (AUDIO REMOTE SW line, REMOTE SW GND line):
   1. Measure the resistance between test points 1 and 2 as specified in the table.

      Test condition IG LOCK (0)

      Multi-information display unit connector A (32P): disconnected

      Test circuit TFT INFO, REMOTE SW GND

      Test point 1 Multi-information display unit connector A (32P) No. 7 (PUR)

      Test point 2 Multi-information display unit connector A (32P) No. 23 (BRN)

Button held down	MENU	DISPLAY	No button pressed

GETtheMANUALS.org

Resistance	About 33 ohms	About 363 ohms	No continuity

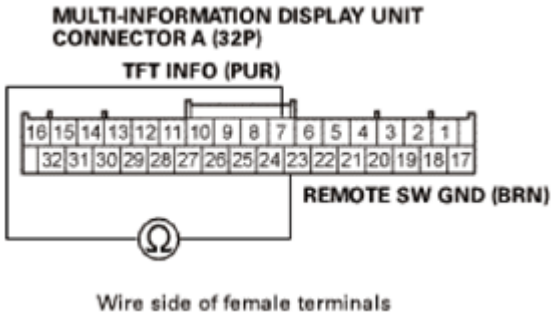

Fig. 41: Measuring Resistance Between Test Point Multi-Information Display Unit Connector A (32P) No. 7 (PUR) And No. 23 (BRN)
Courtesy of AMERICAN HONDA MOTOR CO., INC.

Is the resistance OK?

YES : Repair an open in the wire between the multi-information display unit and the audio remote switch. If the wires are OK, **REPLACE THE CABLE REEL** .

NO : Repair an open in the wire between the multi-information display unit and the audio remote switch. If the wires are OK, **REPLACE THE CABLE REEL** .

9. Open wire check (B CAN-H line, B CAN-L line):
   - 1. Turn the ignition switch to LOCK (0).
   - 2. Disconnect the following connectors.

     Audio-navigation unit connector E (16P)

     Multi-information display unit connector A (32P)

   - 3. Check for continuity between test points 1 and 2.

     Test condition IG LOCK (0)

     Audio-navigation unit connector E (16P): disconnected Multi-information display unit connector A (32P): disconnected

     Test circuit B CAN-H

     Test point 1 Audio-navigation unit connector E (16P) No. 1 (PNK)

     Test point 2 Multi-information display unit connector A (32P) No. 31 (PNK)

     Test circuit B CAN-L

GETtheMANUALS.org

Test point 1 Audio-navigation unit connector E (16P) No. 9 (BLU)

Test point 2 Multi-information display unit connector A (32P) No. 15 (BLU)

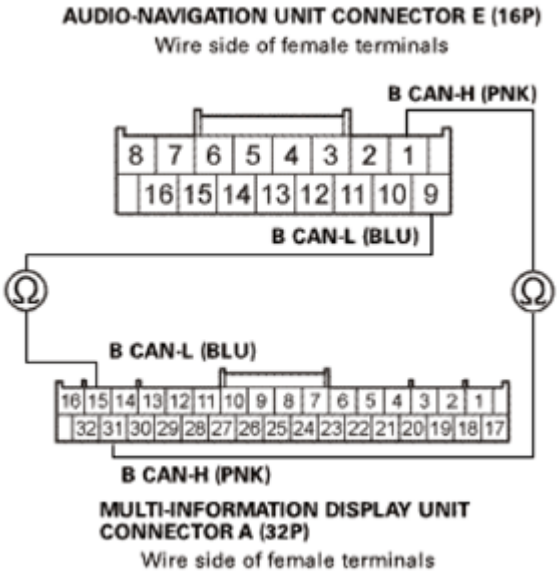

Fig. 42: Checking For Continuity Between Test Point Audio-Navigation Unit Connector E (16P) No. 9 (BLU) And Multi-Information Display Unit Connector A (32P) No. 15 (BLU)
Courtesy of AMERICAN HONDA MOTOR CO., INC.

Is there continuity?

YES : The B CAN-H and the B CAN-L wires are OK. Go to step 10.

NO : Repair an open in the wire(s) between the audio-navigation unit and the multi-information display unit.

10. Audio-navigation unit check:
    - 1. **SUBSTITUTE A KNOWN-GOOD MULTI-INFORMATION DISPLAY UNIT** , and recheck.

Does the symptom go away?

YES : Replace the original multi-information display unit.

NO : REPLACE THE AUDIO-NAVIGATION UNIT .

AUDIO REMOTE SWITCH DOES NOT WORK PROPERLY (AUDIO UNIT BUTTONS WORK) (WITH MULTI-INFORMATION DISPLAY WITHOUT NAVIGATION)

GETtheMANUALS.org

Audio System Symptom Troubleshooting - Audio remote switch does not work properly (audio unit buttons work)

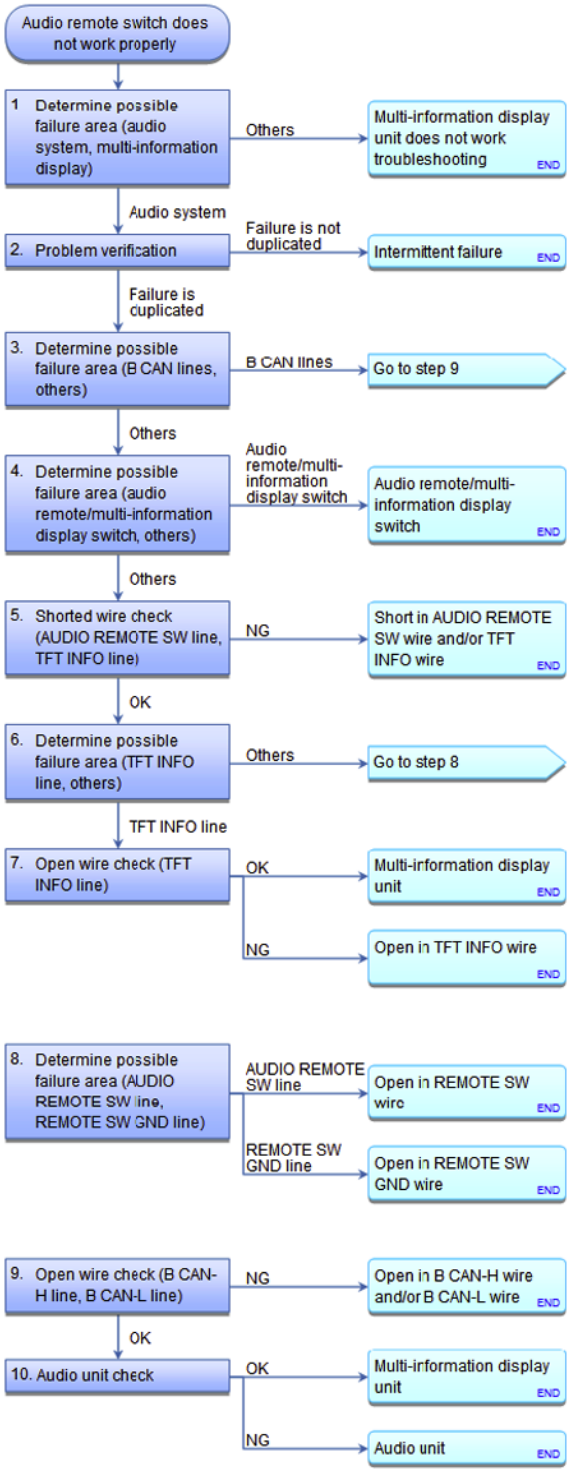

Fig. 43: Audio System Symptom Troubleshooting Flowchart - Audio Remote Switch Does Not Work Properly

Courtesy of AMERICAN HONDA MOTOR CO., INC.

GETtheMANUALS.org

NOTE:

- **<u>CHECK THE VEHICLE BATTERY CONDITION FIRST</u> .**
- **Check for B-CAN DTCs and resolve them before troubleshooting.**
- **Check the connectors for poor connections or loose terminals.**

1. Determine possible failure area (audio system, others):
   - 1. Turn the ignition switch to ON (II).
   - 2. Check if any MID information appears on the multi-information display unit.

   Is there any information displayed?

   YES : Go to step 2.

   NO : Go to **<u>MULTI-INFORMATION DISPLAY UNIT DOES NOT WORK TROUBLESHOOTING</u>**.

2. Problem verification:
   - 1. Turn on the audio unit, and using the audio remote switch buttons, check if the multi-information display operates properly.

   Is the display operation OK?

   YES : Intermittent failure, the system is OK at this time.

   NO : The failure is duplicated, go to step 3.

3. Determine possible failure area (B CAN lines, others):
   - 1. **<u>DO THE SELF-DIAGNOSTIC FUNCTION, AND USE THE IN LINE DIAG IN THE DISPLAY DIAGNOSIS</u>**.

     NOTE: **When specific button(s) does not work normally, try with the specific button(s).**

   Does the Display Diagnosis start, and is the audio remote switch connection OK?

   YES : Go to step 9.

   NO : Go to step 4.

4. Determine possible failure area (audio remote/multi-information display switch, others):
   - 1. Turn the ignition switch to LOCK (0).
   - 2. Disconnect the following connector.

     Audio remote/multi-information display switch 12P connector

GETtheMANUALS.org

- 3. DO THE AUDIO REMOTE/MULTI-INFORMATION DISPLAY SWITCH TEST .

Is the audio remote/multi-information display switch OK?

YES : Go to step 5.

NO : REPLACE THE AUDIO REMOTE/MULTI-INFORMATION DISPLAY SWITCH .

5. Shorted wire check (AUDIO REMOTE SW line, TFT INFO line):
   - 1. Disconnect the following connector.

     Multi-information display unit connector A (32P)

   - 2. Check for continuity between test points 1 and 2.

     Test condition IG LOCK (0)

     Audio remote/multi-information display switch 12P connector: disconnected

     Multi-information display unit connector A (32P): disconnected

     Test circuit AUDIO REMOTE SW

     Test point 1 Multi-information display unit connector A (32P) No. 6 (PNK)

     Test point 2 Body ground

     Test circuit TFT INFO

     Test point 1 Multi-information display unit connector A (32P) No. 7 (PUR)

     Test point 2 Body ground

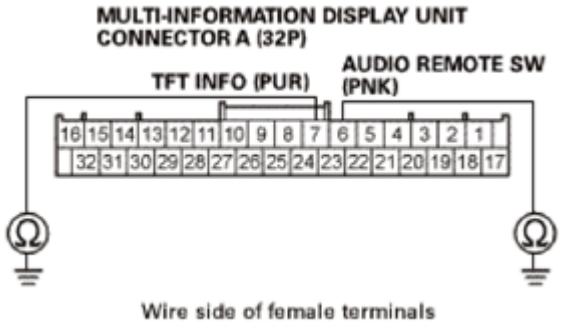

Fig. 44: Checking For Continuity Between Test Point Multi-Information Display Unit Connector A (32P) No. 7 (PUR) And Body Ground
Courtesy of AMERICAN HONDA MOTOR CO., INC.

GETtheMANUALS.org

Is there continuity?

YES : Repair a short to body ground in the wire(s) between the multi-information display unit and the audio remote switch. If the wires are OK, **REPLACE THE CABLE REEL** .

NO : The AUDIO REMOTE SW and the TFT INFO wires are not shorted to ground. Go to step 6.

6. Determine possible failure area (TFT INFO line, others):
   1. Reconnect the audio remote/multi-information display switch, and measure the resistance between test points 1 and 2 as specified in the table.

      Test condition IG LOCK (0)

      Multi-information display unit connector A (32P): disconnected

      Test circuit AUDIO REMOTE SW, REMOTE SW GND

      Test point 1 Multi-information display unit connector A (32P) No. 6 (PNK)

      Test point 2 Multi-information display unit connector A (32P) No. 23 (BRN)

Button held down	VOL DOWN	VOL UP	LEFT	RIGHT	SOURCE	No button pressed
Resistance	About 99 ohms	About 357 ohms	About 775 ohms	About 1.7 kohms	About 3.7 kohms	About 10 kohms

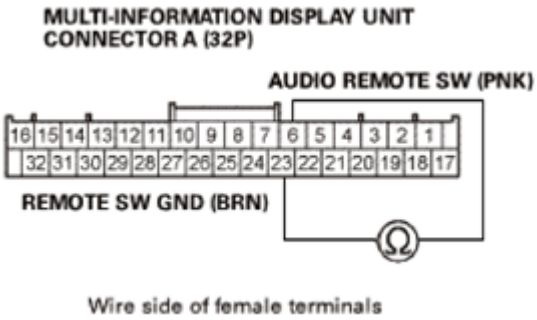

Fig. 45: Measuring Resistance Between Test Point Multi-Information Display Unit Connector A (32P) No. 6 (PNK) And No. 23 (BRN)
Courtesy of AMERICAN HONDA MOTOR CO., INC.

Is the resistance OK?

YES : Go to step 7.

NO : Go to step 8.

7. Open wire check (TFT INFO line):

GETtheMANUALS.org

1. Measure the resistance between test points 1 and 2 as specified in the table.

   Test condition IG LOCK (0)

   Multi-information display unit connector A (32P): disconnected

   Test circuit TFT INFO, REMOTE SW GND

   Test point 1 Multi-information display unit connector A (32P) No. 7 (PUR)

   Test point 2 Multi-information display unit connector A (32P) No. 23 (BRN)

Button held down	MENU	DISPLAY	No button pressed
Resistance	About 33 ohms	About 363 ohms	No continuity

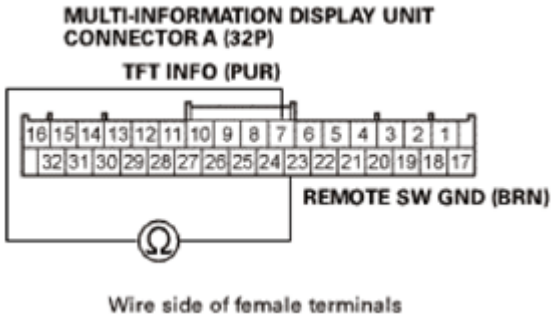

Fig. 46: Measuring Resistance Between Test Point Multi-Information Display Unit Connector A (32P) No. 7 (PUR) And No. 23 (BRN)
Courtesy of AMERICAN HONDA MOTOR CO., INC.

Is the resistance OK?

YES : **REPLACE THE MULTI-INFORMATION DISPLAY UNIT** .

NO : Repair an open in the wire between the multi-information display unit and the audio remote switch. If the wire is OK, **REPLACE THE CABLE REEL** .

8. Determine possible failure area (AUDIO REMOTE SW line, REMOTE SW GND line):
   1. Measure the resistance between test points 1 and 2 as specified in the table.

      Test condition IG LOCK (0)

      Multi-information display unit connector A (32P): disconnected

      Test circuit TFT INFO, REMOTE SW GND

      Test point 1 Multi-information display unit connector A (32P) No. 7 (PUR)

GETtheMANUALS.org

Test point 2 Multi-information display unit connector A (32P) No. 23 (BRN)

Button held down	MENU	DISPLAY	No button pressed
Resistance	About 33 ohms	About 363 ohms	No continuity

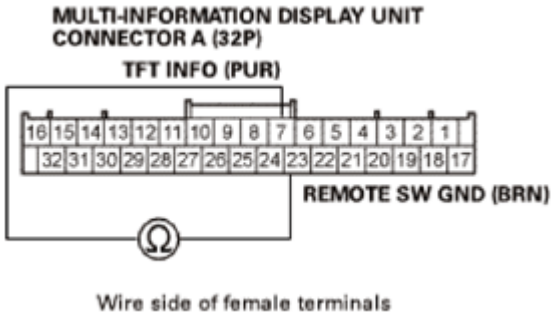

Fig. 47: Measuring Resistance Between Test Point Multi-Information Display Unit Connector A (32P) No. 7 (PUR) And No. 23 (BRN)
Courtesy of AMERICAN HONDA MOTOR CO., INC.

Is the resistance OK?

YES : Repair an open in the wire between the multi-information display unit and the audio remote switch. If the wire is OK, **REPLACE THE CABLE REEL** .

NO : Repair an open in the wire between the multi-information display unit and the audio remote switch. If the wire is OK, **REPLACE THE CABLE REEL** .

9. Open wire check (B CAN-H line, B CAN-L line):
   - 1. Turn the ignition switch to LOCK (0).
   - 2. Disconnect the following connectors.

     Audio unit connector B (20P)

     Multi-information display unit connector A (32P)

   - 3. Check for continuity between test points 1 and 2.

     Test condition IG LOCK (0)

     Audio unit connector B (20P): disconnected

     Multi-information display unit connector A (32P): disconnected

     Test circuit B CAN-H

     Test point 1 Audio unit connector B (20P) No. 13 (PNK)

GETtheMANUALS.org

Test point 2 Multi-information display unit connector A (32P) No. 31 (PNK)

Test circuit B CAN-L

Test point 1 Audio unit connector B (20P) No. 3 (BLU)

Test point 2 Multi-information display unit connector A (32P) No. 15 (BLU)

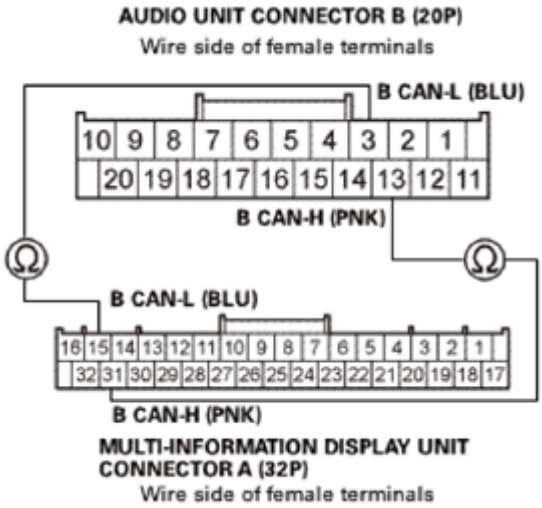

Fig. 48: Checking For Continuity Between Test Point Audio Unit Connector B (20P) No. 3 (BLU) And Multi-Information Display Unit Connector A (32P) No. 15 (BLU)
Courtesy of AMERICAN HONDA MOTOR CO., INC.

Is there continuity?

YES : The B CAN-H and the B CAN-L wires are OK. Go to step 10.

NO : Repair an open in the wire(s) between the audio unit and the multi-information display unit.

10. Audio unit check:
    - 1. **SUBSTITUTE A KNOWN-GOOD MULTI-INFORMATION DISPLAY UNIT** , and recheck.

Does the symptom go away?

YES : Replace the original multi-information display unit.

NO : REPLACE THE AUDIO UNIT .

AUDIO REMOTE SWITCH DOES NOT WORK PROPERLY (AUDIO UNIT BUTTONS WORK) (WITHOUT MULTI-INFORMATION DISPLAY AND NAVIGATION)

GETtheMANUALS.org

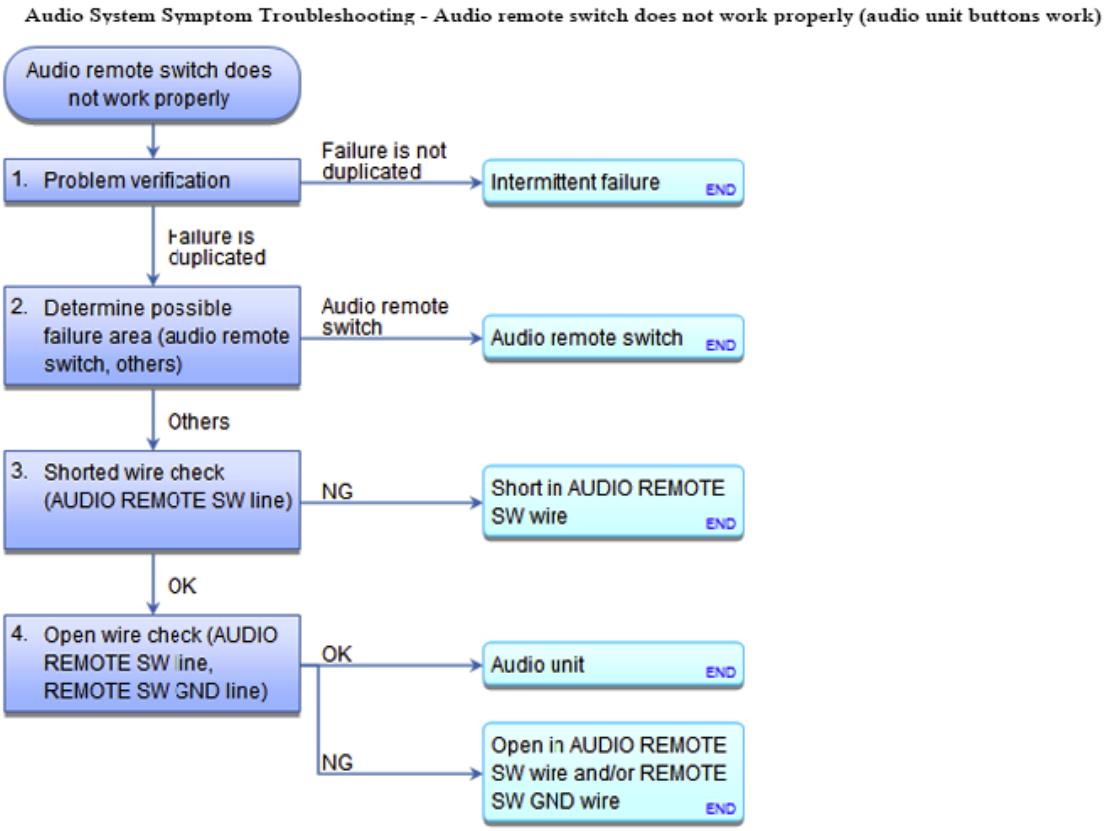

Fig. 49: Audio System Symptom Troubleshooting Flowchart - Audio Remote Switch Does Not Work Properly
Courtesy of AMERICAN HONDA MOTOR CO., INC.

NOTE:

- **CHECK THE VEHICLE BATTERY CONDITION FIRST .**
- **Check the connectors for poor connections or loose terminals.**

1. Problem verification:
   - 1. Turn on the audio unit, and using the audio remote switch buttons, check if the audio unit operates properly.

   Is the audio unit operation OK?

   YES : Intermittent failure, the system is OK at this time.

   NO : The failure is duplicated, go to step 2.

2. Determine possible failure area (audio remote switch, others):
   - 1. Turn the ignition switch to LOCK (0).
   - 2. Disconnect the following connector.

     Audio remote switch 12P connector

GETtheMANUALS.org

- 3. DO THE AUDIO REMOTE SWITCH TEST .

Is the audio remote switch OK?

YES : Go to step 3.

NO : REPLACE THE AUDIO REMOTE SWITCH .

3. Shorted wire check (AUDIO REMOTE SW line):
   - 1. Disconnect the following connector.

     NOTE: Eject all the discs before disconnecting the audio unit to prevent damaging the CD player's load mechanism.

     Audio unit connector A (24P)

   - 2. Check for continuity between test points 1 and 2.

     Test condition IG LOCK (0)

     Audio remote switch 12P connector: disconnected

     Audio unit connector A (24P): disconnected

     Test circuit AUDIO REMOTE SW

     Test point 1 Audio unit connector A (24P) No. 22 (PNK)

     Test point 2 Body ground

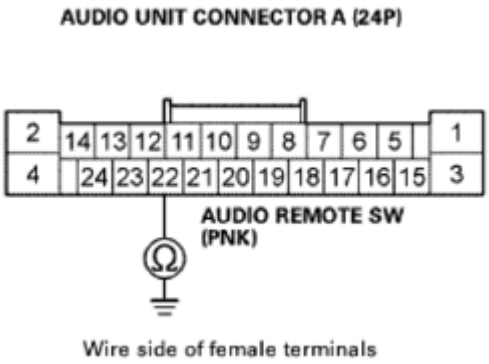

Fig. 50: Checking For Continuity Between Test Point Audio Unit Connector A (24P) No. 22 (PNK) And Body Ground
Courtesy of AMERICAN HONDA MOTOR CO., INC.

Is there continuity?

GETtheMANUALS.org

YES : Repair a short to body ground in the wire between the audio unit and the audio remote switch. If the wire is OK, **REPLACE THE CABLE REEL** .

NO : The AUDIO REMOTE SW wire is not shorted to ground. Go to step 4.

4. Open wire check (AUDIO REMOTE SW line, REMOTE SW GND line):
   - 1. Reconnect the audio remote switch, and measure the resistance between test points 1 and 2 as specified in the table.

     Test condition IG LOCK (0)

     Audio unit connector A (24P): disconnected

     Test circuit AUDIO REMOTE SW, REMOTE SW GND

     Test point 1 Audio unit connector A (24P) No. 22 (PNK)

     Test point 2 Audio unit connector A (24P) No. 11 (BRN)

Button held down	VOL DOWN	VOL UP	LEFT	RIGHT	SOURCE	No button pressed
Resistance	About 99 ohms	About 357 ohms	About 775 ohms	About 1.7 kohms	About 3.7 kohms	About 10 kohms

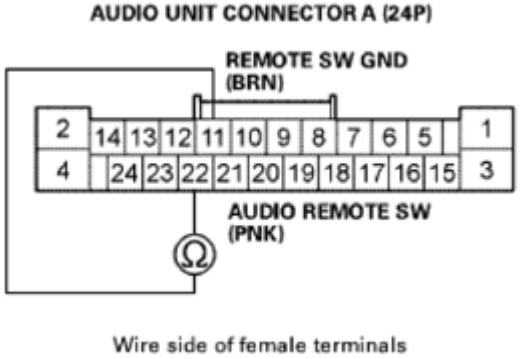

Fig. 51: Measuring Resistance Between Test Point Audio Unit Connector A (24P) No. 22 (PNK) And No. 11 (BRN)
Courtesy of AMERICAN HONDA MOTOR CO., INC.

Is the resistance OK?

YES : REPLACE THE AUDIO UNIT .

NO : Repair an open in the wire(s) between the audio unit and the audio remote switch. If the wires are OK, **REPLACE THE CABLE REEL** .

AUDIO SYSTEM INFORMATION DOES NOT DISPLAY ON THE CENTER DISPLAY

GETtheMANUALS.org

Audio System Symptom Troubleshooting - Audio system information does not display on the center display

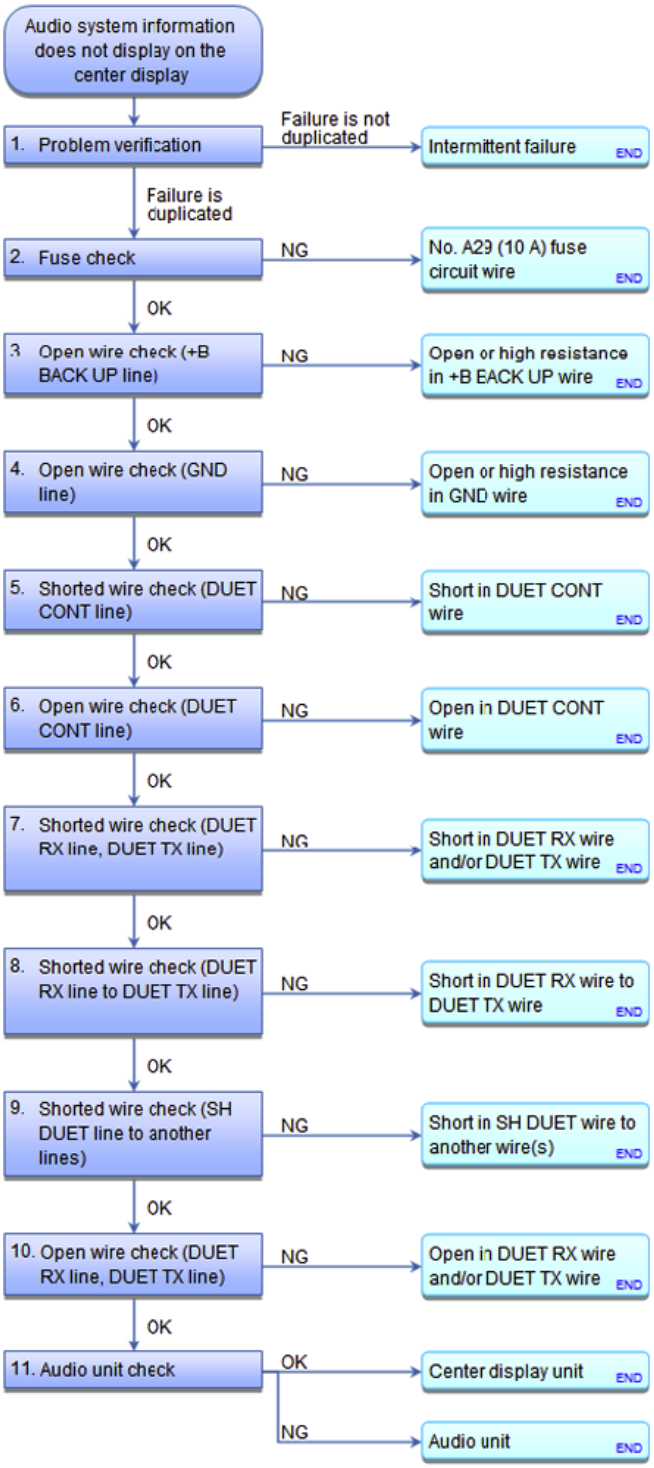

Fig. 52: Audio System Symptom Troubleshooting Flowchart - Audio System Information Does Not Display On Center Display
Courtesy of AMERICAN HONDA MOTOR CO., INC.

GETtheMANUALS.org

NOTE:

- **<u>CHECK THE VEHICLE BATTERY CONDITION FIRST</u> .**
- **Check the connectors for poor connections or loose terminals.**

1. Problem verification:
   - 1. Turn the ignition switch to ON (II).
   - 2. Turn on the audio unit, and check the audio information on the center display unit.

   Does the audio information display properly?

   YES : Intermittent failure, the system is OK at this time.

   NO : The failure is duplicated, go to step 2.

2. Fuse check:
   - 1. Turn the ignition switch to LOCK (0).
   - 2. Check the following fuse.

     Fuse No. A29 (10 A)

     Location Under-hood fuse/relay box

   Is the fuse OK?

   YES : Go to step 3.

   NO : Replace the fuse, and recheck. If the fuse blows again, check for a short in the No. A29 (10 A) fuse circuit.

3. Open wire check (+B BACK UP line):
   - 1. Measure the voltage between test points 1 and 2.

     Test condition IG LOCK (0)

     Test circuit +B BACK UP

     Test point 1 Center display unit 12P connector No. 1 (RED)

     Test point 2 Body ground

GETtheMANUALS.org

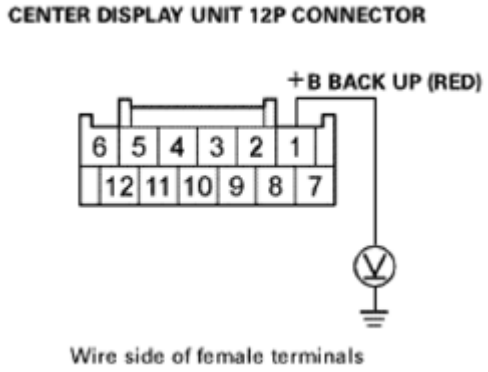

Fig. 53: Measuring Voltage Between Test Point 1 Center Display Unit 12P Connector No. 1 (RED) And Body Ground
Courtesy of AMERICAN HONDA MOTOR CO., INC.

Is there battery voltage?

YES : The +B BACK UP wire is OK. Go to step 4.

NO : Repair an open or high resistance in the wire between the No. A29 (10 A) fuse in the under-hood fuse/relay box and the center display unit.

4. Open wire check (GND line):
   - 1. Turn the ignition switch to ON (II).
   - 2. Measure the voltage between test points 1 and 2.

     Test condition IG ON (II)

     Test circuit GND

     Test point 1 Center display unit 12P connector No. 10 (BRN)

     Test point 2 Body ground

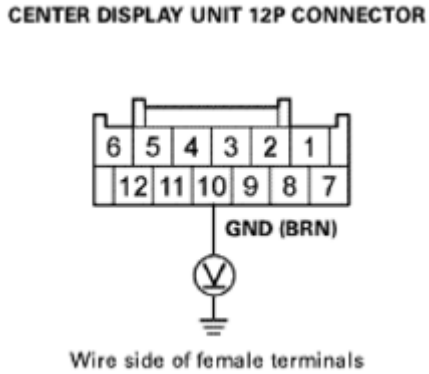

Fig. 54: Measuring Voltage Between Test Point Center Display Unit 12P Connector No. 10

GETtheMANUALS.org

(BRN) And Body Ground
Courtesy of AMERICAN HONDA MOTOR CO., INC.

Is there less than 0.2 V?

YES : The GND wire is OK. Go to step 5.

NO : Repair an open or high resistance in the wire between the center display unit and body ground (G502).

5. Shorted wire check (DUET CONT line):
   - 1. Turn the ignition switch to LOCK (0).
   - 2. Disconnect the following connectors.

     Audio unit connector B (20P)

     Center display unit 12P connector

   - 3. Check for continuity between test points 1 and 2.

     Test condition IG LOCK (0)

     Audio unit connector B (20P): disconnected

     Center display unit 12P connector: disconnected

     Test circuit DUET CONT

     Test point 1 Center display unit 12P connector No. 3 (LT GRN)

     Test point 2 Body ground

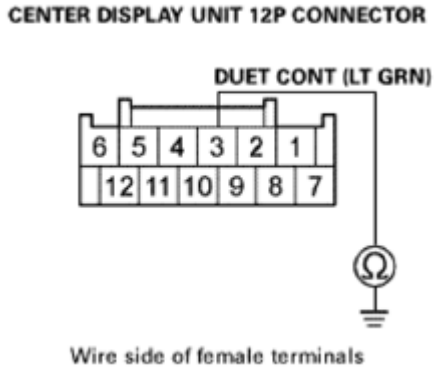

Fig. 55: Checking For Continuity Between Test Point Center Display Unit 12P Connector No. 3 (LT GRN) And Body Ground
Courtesy of AMERICAN HONDA MOTOR CO., INC.

GETtheMANUALS.org

Is there continuity?

YES : Repair a short to body ground in the wire between the center display unit and the audio unit.

NO : The DUET CONT wire is not shorted to ground. Go to step 6.

6. Open wire check (DUET CONT line):
    - 1. Check for continuity between test points 1 and 2.

      Test condition IG LOCK (0)

      Audio unit connector B (20P): disconnected

      Center display unit 12P connector: disconnected

      Test circuit DUET CONT

      Test point 1 Audio unit connector B (20P) No. 14 (LT GRN)

      Test point 2 Center display unit 12P connector No. 3 (LT GRN)

Terminal / Position	5	6	7
LOCK		○——	——○
UNLOCK	○——	——	——○

Fig. 56: Checking For Continuity Between Audio Unit Connector B (20P) No. 14 (LT GRN) And Center Display Unit 12P Connector No. 3 (LT GRN)
Courtesy of AMERICAN HONDA MOTOR CO., INC.

Is there continuity?

YES : The DUET CONT wire is OK. Go to step 7.

NO : Repair an open in the wire between the audio unit and the center display unit.

7. Shorted wire check (DUET RX line, DUET TX line):
    - 1. Check for continuity between test points 1 and 2.

      Test condition IG LOCK (0)

      Audio unit connector B (20P): disconnected

      Center display unit 12P connector: disconnected

GETtheMANUALS.org

Test circuit DUET RX

Test point 1 Audio unit connector B (20P) No. 4 (RED)

Test point 2 Body ground

Test circuit DUET TX

Test point 1 Audio unit connector B (20P) No. 5 (GRN)

Test point 2 Body ground

Terminal / Position	8	10
LOCK		
UNLOCK	○——	——○

Fig. 57: Checking For Continuity Between Test Point Audio Unit Connector B (20P) No. 5 (GRN) And Body Ground
Courtesy of AMERICAN HONDA MOTOR CO., INC.

Is there continuity?

YES : There is a short to body ground in the wire(s) between the audio unit and the center display unit. Replace the affected shielded harness.

NO : The DUET RX and the DUET TX wires are not shorted to ground. Go to step 8.

8. Shorted wire check (DUET RX line to DUET TX line):
   - 1. Check for continuity between test points 1 and 2.

     Test condition IG LOCK (0)

     Audio unit connector B (20P): disconnected

     Center display unit 12P connector: disconnected

     Test circuit DUET RX, DUET TX

     Test point 1 Audio unit connector B (20P) No. 4 (RED)

     Test point 2 Audio unit connector B (20P) No. 5 (GRN)

GETtheMANUALS.org

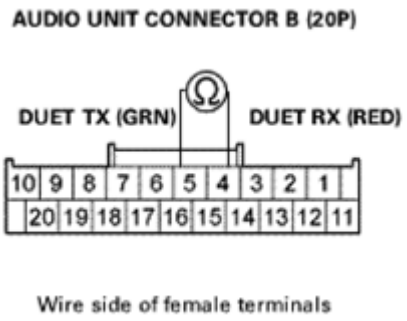

Fig. 58: Checking For Continuity Between Test Point Audio Unit Connector B (20P) No. 4 (RED) And No. 5 (GRN)
Courtesy of AMERICAN HONDA MOTOR CO., INC.

Is there continuity?

YES : There is a short in the wires between the audio unit and the center display unit. Replace the affected shielded harness.

NO : The DUET RX and the DUET TX wires are not shorted. Go to step 9.

9. Shorted wire check (SH DUET line to another lines):
   - 1. Check for continuity between test points 1 and 2.

     Test condition IG LOCK (0)

     Audio unit connector B (20P): disconnected

     Center display unit 12P connector: disconnected

     Test circuit SH DUET, DUET RX

     Test point 1 Audio unit connector B (20P) No. 15 (GRY)

     Test point 2 Audio unit connector B (20P) No. 4 (RED)

     Test circuit SH DUET, DUET TX

     Test point 1 Audio unit connector B (20P) No. 15 (GRY)

     Test point 2 Audio unit connector B (20P) No. 5 (GRN)

GETtheMANUALS.org

Position \ Terminal	6 [9]	9 [6]
LOCK		
UNLOCK	○	○

[ ]: Right side

Fig. 59: Checking For Continuity Between Test Point 1 Audio Unit Connector B (20P) No. 15 (GRY) And No. 5 (GRN)
Courtesy of AMERICAN HONDA MOTOR CO., INC.

Is there continuity?

YES : There is a short in the wires between the audio unit and the center display unit. Replace the affected shielded harness.

NO : The SH DUET wire is OK. Go to step 10.

10. Open wire check (DUET RX line, DUET TX line):
    - 1. Check for continuity between test points 1 and 2.

      Test condition IG LOCK (0)

      Audio unit connector B (20P): disconnected

      Center display unit 12P connector: disconnected

      Test circuit DUET RX

      Test point 1 Audio unit connector B (20P) No. 4 (RED)

      Test point 2 Center display unit 12P connector No. 6 (RED)

      Test circuit DUET TX

      Test point 1 Audio unit connector B (20P) No. 5 (GRN)

      Test point 2 Center display unit 12P connector No. 5 (GRN)

GETtheMANUALS.org

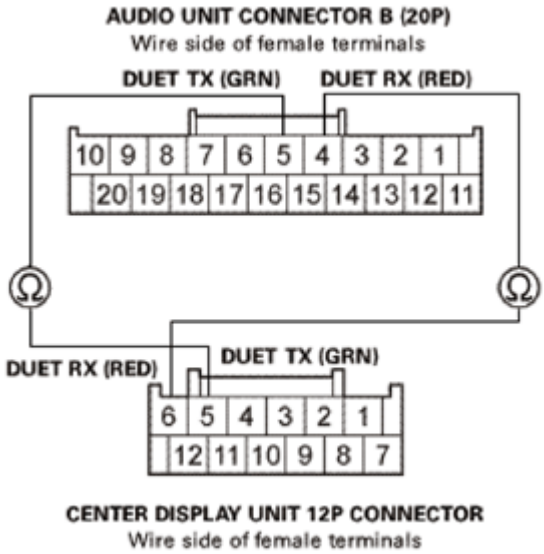

Fig. 60: Checking For Continuity Between Test Point Audio Unit Connector B (20P) No. 5 (GRN) And Center Display Unit 12P Connector No. 5 (GRN)
Courtesy of AMERICAN HONDA MOTOR CO., INC.

Is there continuity?

YES : The DUET RX and the DUET TX wires are OK. Go to step 11.

NO : There is an open in the wire(s) between the audio unit and the center display unit. Replace the affected shielded harness.

11. Audio unit check:
    - 1. **SUBSTITUTE A KNOWN-GOOD CENTER DISPLAY UNIT, AND RECHECK.**

Does the symptom go away?

YES : Replace the original center display unit.

NO : REPLACE THE AUDIO UNIT .

AUDIO SYSTEM INFORMATION DOES NOT DISPLAY ON THE MULTI-INFORMATION DISPLAY UNIT (WITH NAVIGATION)

GETtheMANUALS.org

Audio System Symptom Troubleshooting - Audio system information does not display on the multi-information display

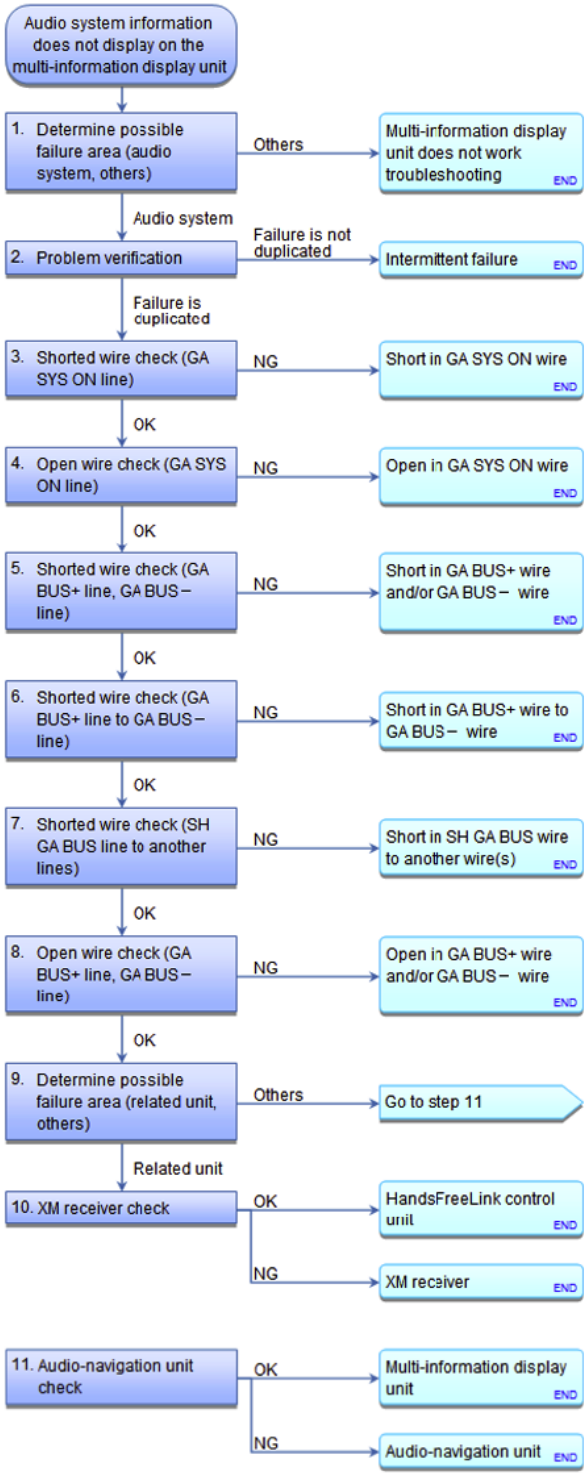

Fig. 61: Audio System Symptom Troubleshooting Flowchart - Audio System Information Does Not Display On Multi-Information Display Unit
Courtesy of AMERICAN HONDA MOTOR CO., INC.

GETtheMANUALS.org

NOTE:

- **<u>CHECK THE VEHICLE BATTERY CONDITION FIRST</u> .**
- **Check the connectors for poor connections or loose terminals.**
- **The climate control unit 32P (black) connector and the HFL control unit 32P (grey) connector are the same shape. Make sure the correct connector is connected to the applicable unit.**

1. Determine possible failure area (audio system, others):
   - 1. Turn the ignition switch to ON (II).
   - 2. Check if any MID information appears on the multi-information display unit.

   Is there any information displayed?

   YES : Go to step 2.

   NO : Go to **<u>MULTI-INFORMATION DISPLAY UNIT DOES NOT WORK TROUBLESHOOTING</u>**.

2. Problem verification:
   - 1. Turn on the audio system, and press the AUDIO button to check if the multi-information display changes to the audio information screen.

   Is the audio information displayed?

   YES : Intermittent failure, the system is OK at this time.

   NO : The failure is duplicated, go to step 3.

3. Shorted wire check (GA SYS ON line):
   - 1. Turn the ignition switch to LOCK (0).
   - 2. Disconnect the following connectors.

     Audio-navigation unit connector C (14P)

     XM receiver connector A (14P)

     Multi-information display unit connector A (32P)

   - 3. Check for continuity between test points 1 and 2.

     Test condition IG LOCK (0)

     Audio-navigation unit connector C (14P): disconnected

     XM receiver connector A (14P): disconnected

GETtheMANUALS.org

Multi-information display unit connector A (32P): disconnected

Test circuit GA SYS ON

Test point 1 Multi-information display unit connector A (32P) No. 32 (PNK)

Test point 2 Body ground

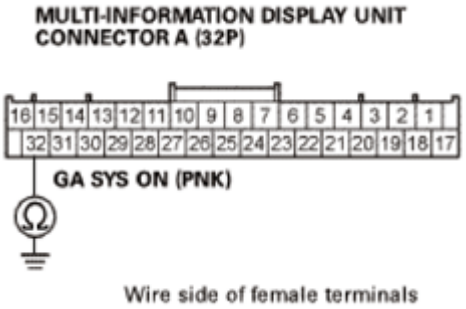

Fig. 62: Checking For Continuity Between Test Point Multi-Information Display Unit Connector A (32P) No. 32 (PNK) And Body Ground
Courtesy of AMERICAN HONDA MOTOR CO., INC.

Is there continuity?

YES : Repair a short to body ground in the wire between the multi-information display unit and the audio-navigation unit.

NO : The GA SYS ON wire is not shorted to ground. Go to step 4.

4. Open wire check (GA SYS ON line):
   - 1. Check for continuity between test points 1 and 2.

     Test condition IG LOCK (0)

     Audio-navigation unit connector C (14P): disconnected

     XM receiver connector A (14P): disconnected

     Multi-information display unit connector A (32P): disconnected

     Test circuit GA SYS ON

     Test point 1 Audio-navigation unit connector C (14P) No. 5 (PNK)

     Test point 2 Multi-information display unit connector A (32P) No. 32 (PNK)

GETtheMANUALS.org

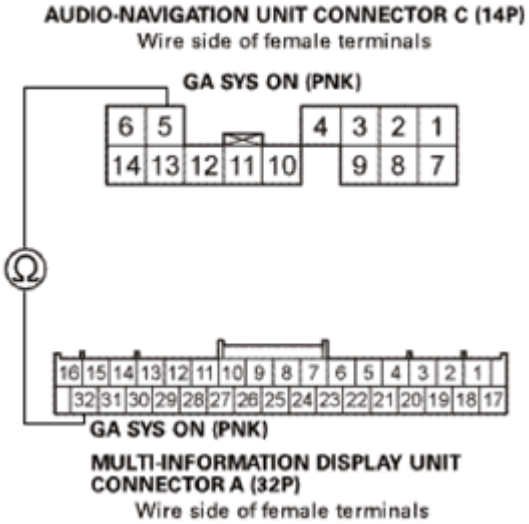

Fig. 63: Checking For Continuity Between Audio-Navigation Unit Connector C (14P) No. 5 (PNK) And Multi-Information Display Unit Connector A (32P) No. 32 (PNK)
Courtesy of AMERICAN HONDA MOTOR CO., INC.

Is there continuity?

YES : The GA SYS ON wire is OK. Go to step 5.

NO : Repair an open in the wire between the audio-navigation unit and the multi-information display unit.

5. Shorted wire check (GA BUS+ line, GA BUS- line):
   - 1. Disconnect the following connector.

     HandsFreeLink control unit 32P connector

   - 2. Check for continuity between test points 1 and 2.

     Test condition IG LOCK (0)

     Audio-navigation unit connector C (14P): disconnected

     XM receiver connector A (14P): disconnected

     Multi-information display unit connector A (32P): disconnected

     HandsFreeLink control unit 32P connector: disconnected

     Test circuit GA BUS-

     Test point 1 Audio-navigation unit connector C (14P) No. 11 (PNK)

GETtheMANUALS.org

Test point 2 Body ground

Test circuit GA BUS+

Test point 1 Audio-navigation unit connector C (14P) No. 12 (BLU)

Test point 2 Body ground

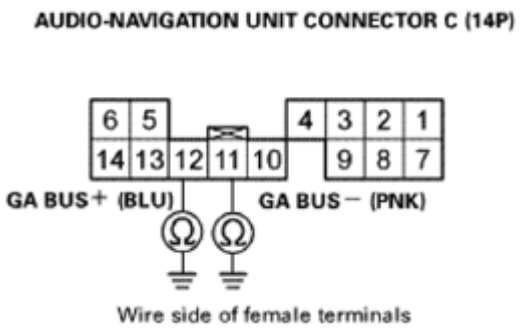

Fig. 64: Checking For Continuity Between Test Point Audio-Navigation Unit Connector C (14P) No. 12 (BLU) And Body Ground
Courtesy of AMERICAN HONDA MOTOR CO., INC.

Is there continuity?

YES : There is a short to body ground in the wire(s) between the audio-navigation unit and the multi-information display unit. Replace the affected shielded harness.

NO : The GA BUS+ and the GA BUS- wires are not shorted to ground. Go to step 6.

6. Shorted wire check (GA BUS+ line to GA BUS- line):
   - 1. Check for continuity between test points 1 and 2.

     Test condition IG LOCK (0)

     Audio-navigation unit connector C (14P): disconnected

     XM receiver connector A (14P): disconnected

     Multi-information display unit connector A (32P): disconnected

     HandsFreeLink control unit 32P connector: disconnected

     Test circuit GA BUS-, GA BUS+

     Test point 1 Audio-navigation unit connector C (14P) No. 11 (PNK)

     Test point 2 Audio-navigation unit connector C (14P) No. 12 (BLU)

GETtheMANUALS.org

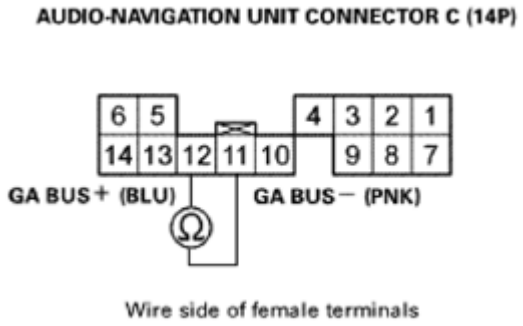

Fig. 65: Checking For Continuity Between Test Point Audio-Navigation Unit Connector C (14P) No. 11 (PNK) And No. 12 (BLU)
Courtesy of AMERICAN HONDA MOTOR CO., INC.

Is there continuity?

YES : There is a short in the wires between the audio-navigation unit and the multi-information display unit. Replace the affected shielded harness.

NO : The GA BUS+ and the GA BUS- wires are not shorted. Go to step 7.

7. Shorted wire check (SH GA BUS line to another lines):
   - 1. Check for continuity between test points 1 and 2.

     Test condition IG LOCK (0)

     Audio-navigation unit connector C (14P): disconnected

     XM receiver connector A (14P): disconnected

     Multi-information display unit connector A (32P): disconnected

     HandsFreeLink control unit 32P connector: disconnected

     Test circuit SH GA BUS, GA BUS+

     Test point 1 Audio-navigation unit connector C (14P) No. 4 (GRY)

     Test point 2 Audio-navigation unit connector C (14P) No. 12 (BLU)

     Test circuit SH GA BUS, GA BUS-

     Test point 1 Audio-navigation unit connector C (14P) No. 4 (GRY)

     Test point 2 Audio-navigation unit connector C (14P) No. 11 (PNK)

GETtheMANUALS.org

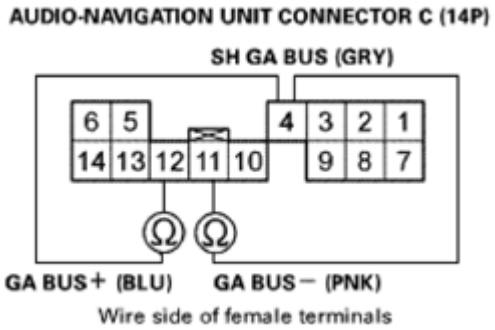

Fig. 66: Checking For Continuity Between Test Point Audio-Navigation Unit Connector C (14P) No. 4 (GRY) And No. 11 (PNK)
Courtesy of AMERICAN HONDA MOTOR CO., INC.

Is there continuity?

YES : There is a short in the wires between the audio-navigation unit and the multi-information display unit. Replace the affected shielded harness.

NO : The SH GA BUS wire is OK. Go to step 8.

8. Open wire check (GA BUS+ line, GA BUS- line):
   - 1. Check for continuity between test points 1 and 2.

     Test condition IG LOCK (0)

     Audio-navigation unit connector C (14P): disconnected

     XM receiver connector A (14P): disconnected

     Multi-information display unit connector A (32P): disconnected

     HandsFreeLink control unit 32P connector: disconnected

     Test circuit GA BUS-

     Test point 1 Audio-navigation unit connector C (14P) No. 11 (PNK)

     Test point 2 Multi-information display unit connector A (32P) No. 11 (PNK)

     Test circuit GA BUS+

     Test point 1 Audio-navigation unit connector C (14P) No. 12 (BLU)

     Test point 2 Multi-information display unit connector A (32P) No. 27 (BLU)

GETtheMANUALS.org

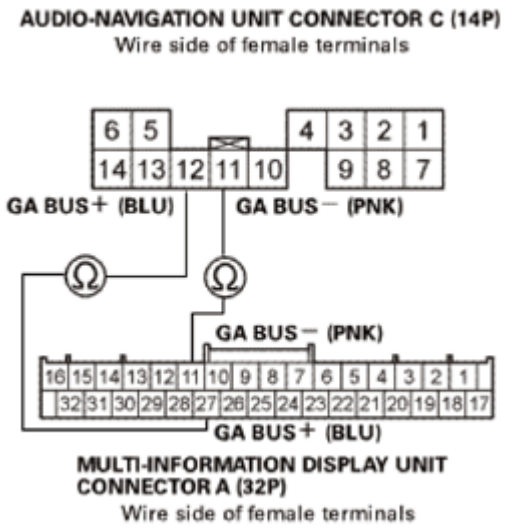

Fig. 67: Checking For Continuity Between Test Point 1 Audio-Navigation Unit Connector C (14P) No. 12 (BLU) And Multi-Information Display Unit Connector A (32P) No. 27 (BLU)
Courtesy of AMERICAN HONDA MOTOR CO., INC.

Is there continuity?

YES : The GA BUS+ and the GA BUS- wires are OK. Go to step 9.

NO : There is an open in the wire(s) between the audio-navigation unit and the multi-information display unit. Replace affected shielded harness.

9. Determine possible failure area (related unit, others):
   - 1. Reconnect audio-navigation unit connector C (14P) and multi-information display unit connector A (32P).
   - 2. Turn the ignition switch to ON (II).
   - 3. Turn on the audio system, and press the AUDIO button to check if the multi-information display changes to the audio information screen.

Is the audio information displayed?

YES : Go to step 10.

NO : Go to step 11.

10. XM receiver check:
    - 1. Turn the ignition switch to LOCK (0).
    - 2. Reconnect XM receiver connector A (14P).
    - 3. Turn the ignition switch to ON (II).
    - 4. Turn on the audio system, and press the CD/XM button to check if the multi-information display changes to the XM information screen.

GETtheMANUALS.org

Is the XM information displayed on the multi-information display unit?

YES : **Replace the HandsFreeLink control unit** See **HANDSFREELINK CONTROL UNIT REMOVAL AND INSTALLATION** or **HANDSFREELINK CONTROL UNIT UPDATE** .

NO : REPLACE THE XM RECEIVER .

11. Audio-navigation unit check:
    - 1. Turn the ignition switch to LOCK (0).
    - 2. **SUBSTITUTE A KNOWN-GOOD MULTI-INFORMATION DISPLAY UNIT** , and recheck.

Does the symptom go away?

YES : Replace the original multi-information display unit.

NO : REPLACE THE AUDIO-NAVIGATION UNIT .

AUDIO SYSTEM INFORMATION DOES NOT DISPLAY ON THE MULTI-INFORMATION DISPLAY (WITHOUT NAVIGATION)

GETtheMANUALS.org

Audio System Symptom Troubleshooting - Audio system information does not display on the multi-information display

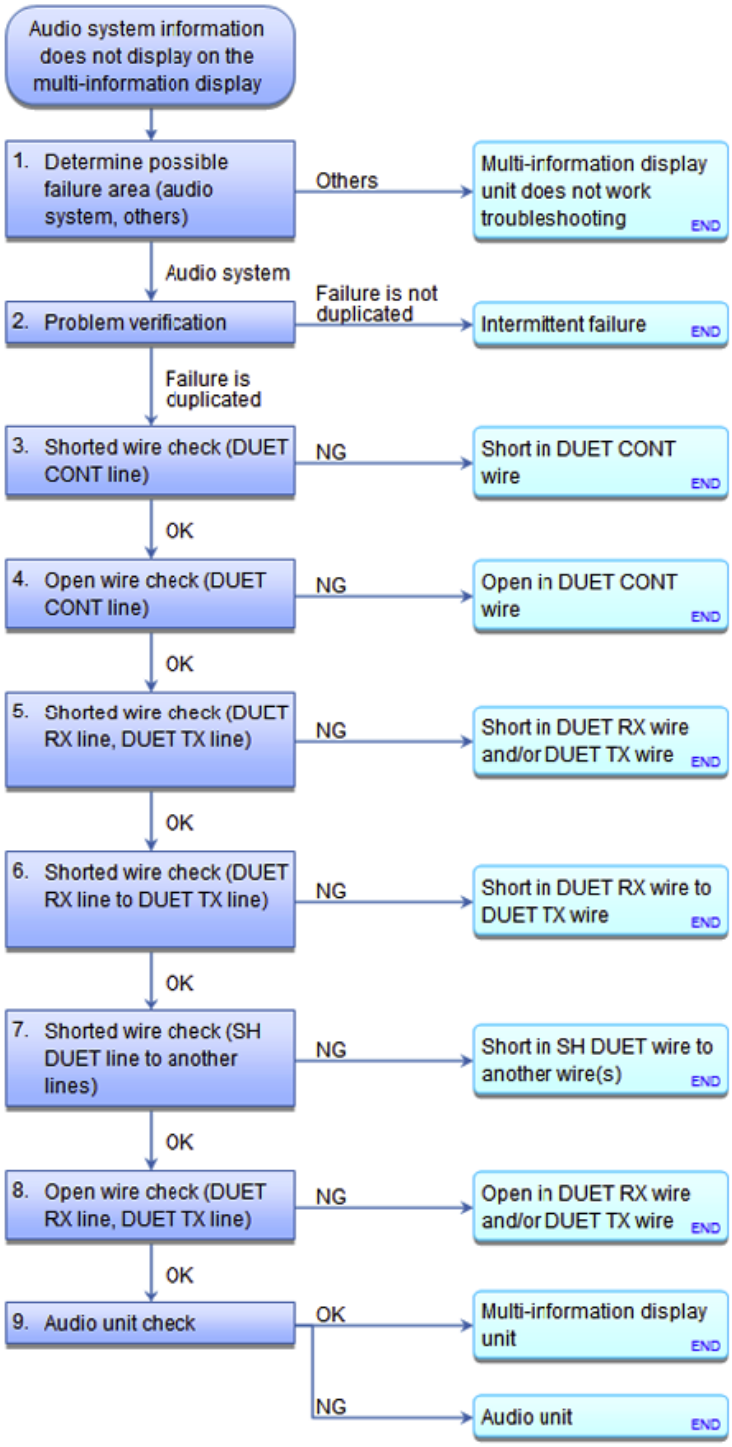

Fig. 68: Audio System Symptom Troubleshooting Flowchart - Audio System Information Does Not Display On Multi-Information Display
Courtesy of AMERICAN HONDA MOTOR CO., INC.

NOTE:

- **CHECK THE VEHICLE BATTERY CONDITION FIRST .**

GETtheMANUALS.org

- **Check the connectors for poor connections or loose terminals.**
- **The climate control unit 32P (black) connector and the HFL control unit 32P (grey) connector are the same shape. Make sure the correct connector is connected to the applicable unit.**

1. Determine possible failure area (audio system, others):
   - 1. Turn the ignition switch to ON (II).
   - 2. Check if any MID information appears on the multi-information display unit.

   Is there any information displayed?

   YES : Go to step 2.

   NO : Go to **MULTI-INFORMATION DISPLAY UNIT DOES NOT WORK TROUBLESHOOTING**.

2. Problem verification:
   - 1. Turn on the audio unit, and check the audio information on the multi-information display unit.

   Does the audio information display properly?

   YES : Intermittent failure, the system is OK at this time.

   NO : The failure is duplicated, go to step 3.

3. Shorted wire check (DUET CONT line):
   - 1. Turn the ignition switch to LOCK (0).
   - 2. Disconnect the following connectors.

     Audio unit connector B (20P)

     Multi-information display unit connector A (32P)

   - 3. Check for continuity between test points 1 and 2.

     Test condition IG LOCK (0)

     Audio unit connector B (20P): disconnected

     Multi-information display unit connector A (32P): disconnected

     Test circuit DUET CONT

     Test point 1 Multi-information display unit connector A (32P) No. 30 (LT GRN)

GETtheMANUALS.org

Test point 2 Body ground

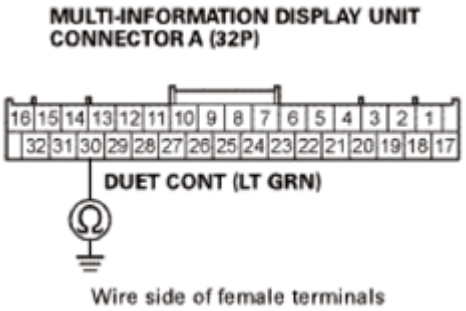

Fig. 69: Checking For Continuity Between Test Point Multi-Information Display Unit Connector A (32P) No. 30 (LT GRN) And Body Ground
Courtesy of AMERICAN HONDA MOTOR CO., INC.

Is there continuity?

YES : Repair a short to body ground in the wire between the multi-information display unit and the audio unit.

NO : The DUET CONT wire is not shorted to ground. Go to step 4.

4. Open wire check (DUET CONT line):
   - 1. Check for continuity between test points 1 and 2.

     Test condition IG LOCK (0)

     Audio unit connector B (20P): disconnected

     Multi-information display unit connector A (32P): disconnected

     Test circuit DUET CONT

     Test point 1 Audio unit connector B (20P) No. 14 (LT GRN)

     Test point 2 Multi-information display unit connector A (32P) No. 30 (LT GRN)

GETtheMANUALS.org

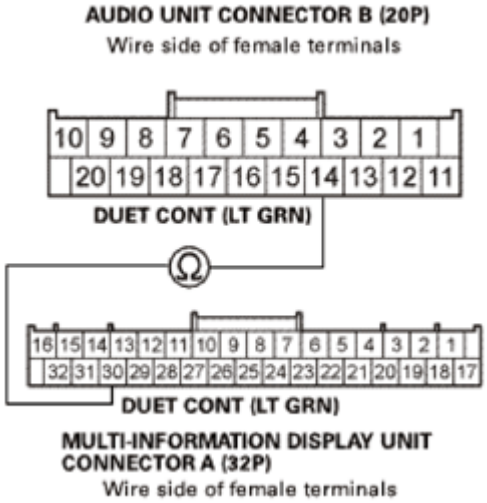

Fig. 70: Checking For Continuity Between Test Point Audio Unit Connector B (20P) No. 14 (LT GRN) And Multi-Information Display Unit Connector A (32P) No. 30 (LT GRN)
Courtesy of AMERICAN HONDA MOTOR CO., INC.

Is there continuity?

YES : The DUET CONT wire is OK. Go to step 5.

NO : Repair an open in the wire between the audio unit and the multi-information display unit.

5. Shorted wire check (DUET RX line, DUET TX line):
   - 1. Check for continuity between test points 1 and 2.

     Test condition IG LOCK (0)

     Audio unit connector B (20P): disconnected

     Multi-information display unit connector A (32P): disconnected

     Test circuit DUET RX

     Test point 1 Audio unit connector B (20P) No. 4 (RED)

     Test point 2 Body ground

     Test circuit DUET TX

     Test point 1 Audio unit connector B (20P) No. 5 (GRN)

     Test point 2 Body ground

GETtheMANUALS.org

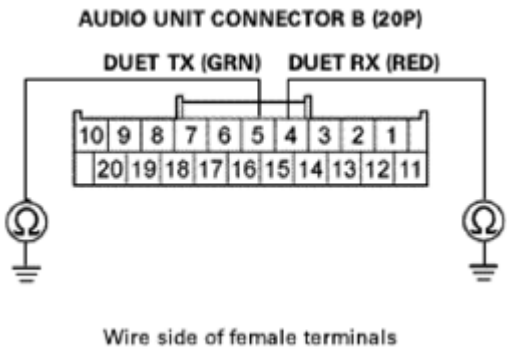

Fig. 71: Checking For Continuity Between Audio Unit Connector B (20P) No. 5 (GRN) And Body Ground
Courtesy of AMERICAN HONDA MOTOR CO., INC.

Is there continuity?

YES : There is a short to body ground in the wire(s) between the audio unit and the multi-information display unit. Replace the affected shielded harness.

NO : The DUET RX and the DUET TX wires are not shorted to ground. Go to step 6.

6. Shorted wire check (DUET RX line to DUET TX line):
   - 1. Check for continuity between test points 1 and 2.

     Test condition IG LOCK (0)

     Audio unit connector B (20P): disconnected

     Multi-information display unit connector A (32P): disconnected

     Test circuit DUET RX, DUET TX

     Test point 1 Audio unit connector B (20P) No. 4 (RED)

     Test point 2 Audio unit connector B (20P) No. 5 (GRN)

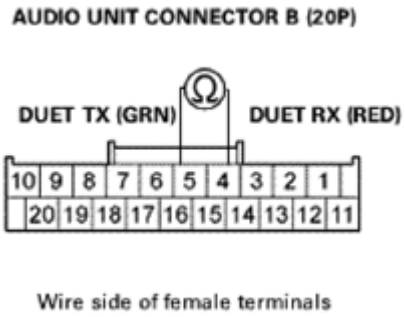

Fig. 72: Checking For Continuity Between Test Point Audio Unit Connector B (20P) No. 4

GETtheMANUALS.org

(RED) And No. 5 (GRN)
Courtesy of AMERICAN HONDA MOTOR CO., INC.

Is there continuity?

YES : There is a short in the wires between the audio unit and the multi-information display unit. Replace the affected shielded harness.

NO : The DUET RX and the DUET TX wires are not shorted. Go to step 7.

7. Shorted wire check (SH DUET line to another lines):
   - 1. Check for continuity between test points 1 and 2.

     Test condition IG LOCK (0)

     Audio unit connector B (20P): disconnected

     Multi-information display unit connector A (32P): disconnected

     Test circuit SH DUET, DUET RX

     Test point 1 Audio unit connector B (20P) No. 15 (GRY)

     Test point 2 Audio unit connector B (20P) No. 4 (RED)

     Test circuit SH DUET, DUET TX

     Test point 1 Audio unit connector B (20P) No. 15 (GRY)

     Test point 2 Audio unit connector B (20P) No. 5 (GRN)

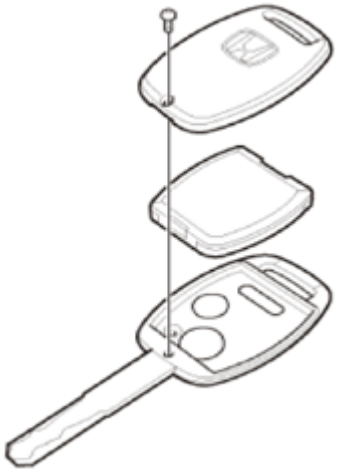

Fig. 73: Checking For Continuity Between Test Point Audio Unit Connector B (20P) No. 15 (GRY) And No. 5 (GRN)

GETtheMANUALS.org

Courtesy of AMERICAN HONDA MOTOR CO., INC.

Is there continuity?

YES : There is a short in the wires between the audio unit and the multi-information display unit. Replace the affected shielded harness.

NO : The SH DUET wire is OK. Go to step 8.

8. Open wire check (DUET RX line, DUET TX line):
   - 1. Check for continuity between test points 1 and 2.

     Test condition IG LOCK (0)

     Audio unit connector B (20P): disconnected

     Multi-information display unit connector A (32P): disconnected

     Test circuit DUET RX

     Test point 1 Audio unit connector B (20P) No. 4 (RED)

     Test point 2 Multi-information display unit connector A (32P) No. 13 (RED)

     Test circuit DUET TX

     Test point 1 Audio unit connector B (20P) No. 5 (GRN)

     Test point 2 Multi-information display unit connector A (32P) No. 29 (GRN)

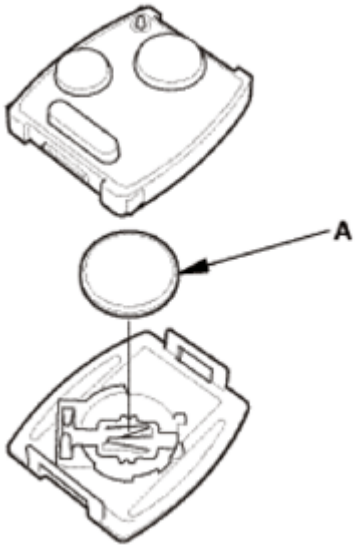

Fig. 74: Checking For Continuity Between Test Point Audio Unit Connector B (20P) No. 5

GETtheMANUALS.org

(GRN) And Multi-Information Display Unit Connector A (32P) No. 29 (GRN)
Courtesy of AMERICAN HONDA MOTOR CO., INC.

Is there continuity?

YES : The DUET RX and the DUET TX wires are OK. Go to step 9.

NO : There is an open in the wire(s) between the audio unit and the multi-information display unit. Replace the affected shielded harness.

9. Audio unit check:
   - 1. **SUBSTITUTE A KNOWN-GOOD MULTI-INFORMATION DISPLAY UNIT** , and recheck.

Does the symptom go away?

YES : Replace the original multi-information display unit.

NO : REPLACE THE AUDIO UNIT .

AUDIO SYSTEM SOUND IS WEAK OR DISTORTED (DISPLAY IS NORMAL)

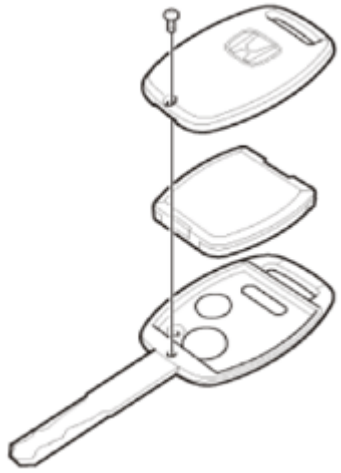

Fig. 75: Audio System Symptom Troubleshooting Flowchart - Audio System Sound Is Weak Or Distorted (Display Is Normal)
Courtesy of AMERICAN HONDA MOTOR CO., INC.

NOTE:

- **CHECK THE VEHICLE BATTERY CONDITION FIRST .**
- **Check the connectors for poor connections or loose terminals.**

1. Problem verification:
   - 1. Turn the ignition switch to ON (II).
   - 2. Turn on the audio unit, and check for sound in each mode (AM/FM and CD).

GETtheMANUALS.org

Is there sound from the speakers, and is the sound quality normal in each mode?

YES : Intermittent failure. The system is OK at this time. Check for loose connections at the audio unit and each speaker.

NO : Go to **Poor AM or FM radio reception or interference (With Navigation)** troubleshooting.

NO : Go to **Poor AM or FM radio reception or interference (without navigation)** troubleshooting.

NO : Go to **AUDIO DISC DOES NOT PLAY TROUBLESHOOTING**.

NO : **GO TO SOUND QUALITY DIAGNOSIS** .

AUDIO UNIT BUTTON ILLUMINATION DOES NOT WORK

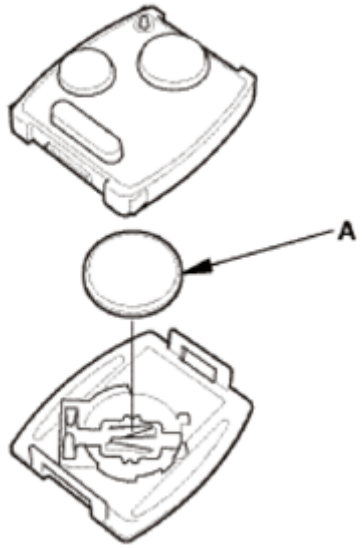

Fig. 76: Audio System Symptom Troubleshooting Flowchart - Audio Unit Button Illumination Does Not Work
Courtesy of AMERICAN HONDA MOTOR CO., INC.

- **CHECK THE VEHICLE BATTERY CONDITION FIRST** .
- Check for B-CAN DTCs and resolve them before troubleshooting.
- Check the connectors for poor connections or loose terminals.
- The climate control unit 32P (black) connector and the HFL control unit 32P (grey) connector are the same shape. Make sure the correct connector is connected to the applicable unit.

1. Problem verification:
    - 1. Turn the ignition switch to ON (II).
    - 2. Turn the combination lighting switch to the parking light position.
    - 3. Check if the audio unit buttons are illuminated.

GETtheMANUALS.org

Are the buttons illuminated?

YES : Intermittent failure, the audio unit is OK at this time.

NO : The failure is duplicated, go to step 2.

2. Determine possible failure area (interior lights circuit, others):
    - 1. Check if several other buttons that are not related to the audio system are illuminated.

Are the buttons illuminated?

YES : Go to step 3.

NO : Troubleshoot the interior lights.

3. Open wire check (B CAN-H line, B CAN-L line):
    - 1. Turn the combination lighting switch off.
    - 2. Turn the ignition switch to LOCK (0).
    - 3. Disconnect the following connectors.

      Audio unit connector B (20P)

      Gauge control module 32P connector

    - 4. Check for continuity between test points 1 and 2.

      Test condition IG LOCK (0)

      Audio unit connector B (20P): disconnected

      Gauge control module 32P connector: disconnected

      Test circuit B CAN-H

      Test point 1 Audio unit connector B (20P) No. 13 (PNK)

      Test point 2 Gauge control module 32P connector No. 30 (PNK)

      Test circuit B CAN-L

      Test point 1 Audio unit connector B (20P) No. 3 (BLU)

      Test point 2 Gauge control module 32P connector No. 31 (BLU)

GETtheMANUALS.org

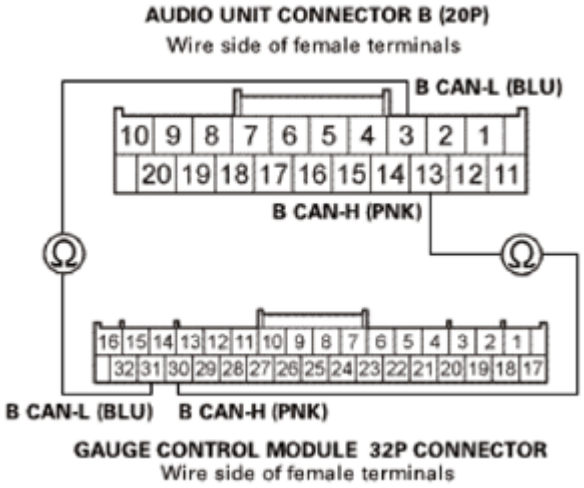

Fig. 77: Checking For Continuity Between Test Point Audio Unit Connector B (20P) No. 3 (BLU) And Gauge Control Module 32P Connector No. 31 (BLU)
Courtesy of AMERICAN HONDA MOTOR CO., INC.

Is there continuity?

YES : REPLACE THE AUDIO UNIT .

NO : Repair an open in the wire(s) between the audio unit and the gauge control module.

AUDIO UNIT DOES NOT EXIT ANTI-THEFT MODE

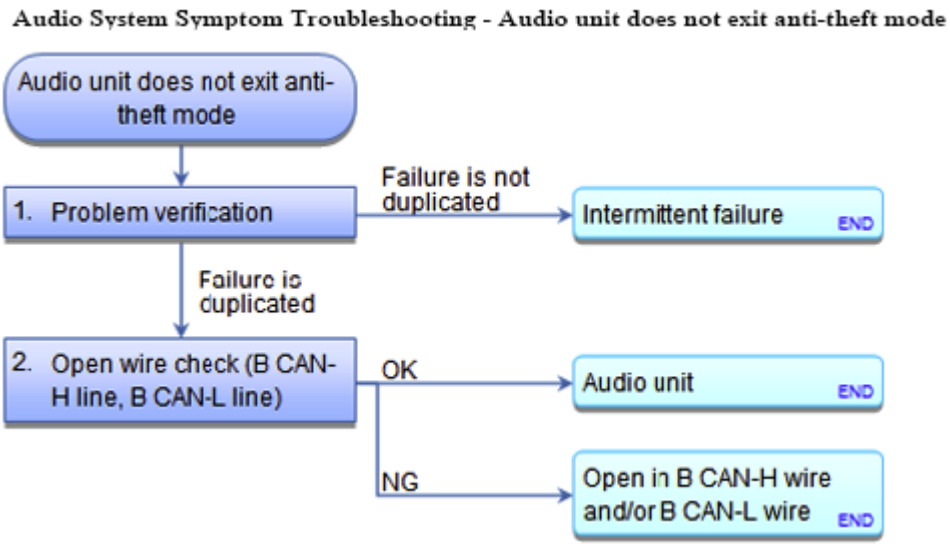

Fig. 78: Audio System Symptom Troubleshooting Flowchart - Audio Unit Does Not Exit Anti-Theft Mode
Courtesy of AMERICAN HONDA MOTOR CO., INC.

NOTE:

- **CHECK THE VEHICLE BATTERY CONDITION FIRST** .

GETtheMANUALS.org

- **Check for B-CAN and F-CAN DTCs and resolve them before troubleshooting.**
- **Check the connectors for poor connections or loose terminals.**

1. Problem verification:
   - 1. Turn the ignition switch to ON (II).
   - 2. Press and hold the POWER button more than 2 seconds to release the anti-theft mode.

   Is the anti-theft mode released?

   YES : Intermittent failure, the system is OK at this time.

   NO : The failure is duplicated, go to step 2.

2. Open wire check (B CAN-H line, B CAN-L line):
   - 1. Turn the ignition switch to LOCK (0).
   - 2. Disconnect the following connectors.

     Audio unit connector B (20P)

     Gauge control module 32P connector

   - 3. Check for continuity between test points 1 and 2.

     Test condition IG LOCK (0)

     Audio unit connector B (20P): disconnected

     Gauge control module 32P connector: disconnected

     Test circuit B CAN-H

     Test point 1 Audio unit connector B (20P) No. 13 (PNK)

     Test point 2 Gauge control module 32P connector No. 30 (PNK)

     Test circuit B CAN-L

     Test point 1 Audio unit connector B (20P) No. 3 (BLU)

     Test point 2 Gauge control module 32P connector No. 31 (BLU)

GETtheMANUALS.org

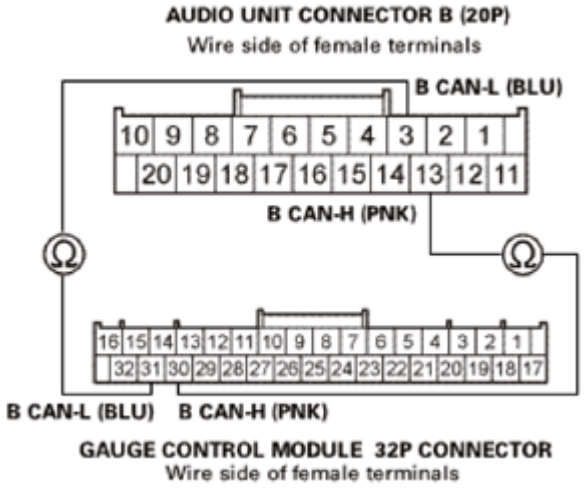

Fig. 79: Checking For Continuity Between Test Point Audio Unit Connector B (20P) No. 3 (BLU) And Gauge Control Module 32P Connector No. 31 (BLU)
Courtesy of AMERICAN HONDA MOTOR CO., INC.

Is there continuity?

YES : REPLACE THE AUDIO UNIT .

NO : Repair an open in the wire(s) between the audio unit and the gauge control module.

AUDIO UNIT POWER SWITCH WILL NOT TURN OFF

GETtheMANUALS.org

Keyless/Power Door Locks/Security System Symptom Troubleshooting - Auto door unlock does not work

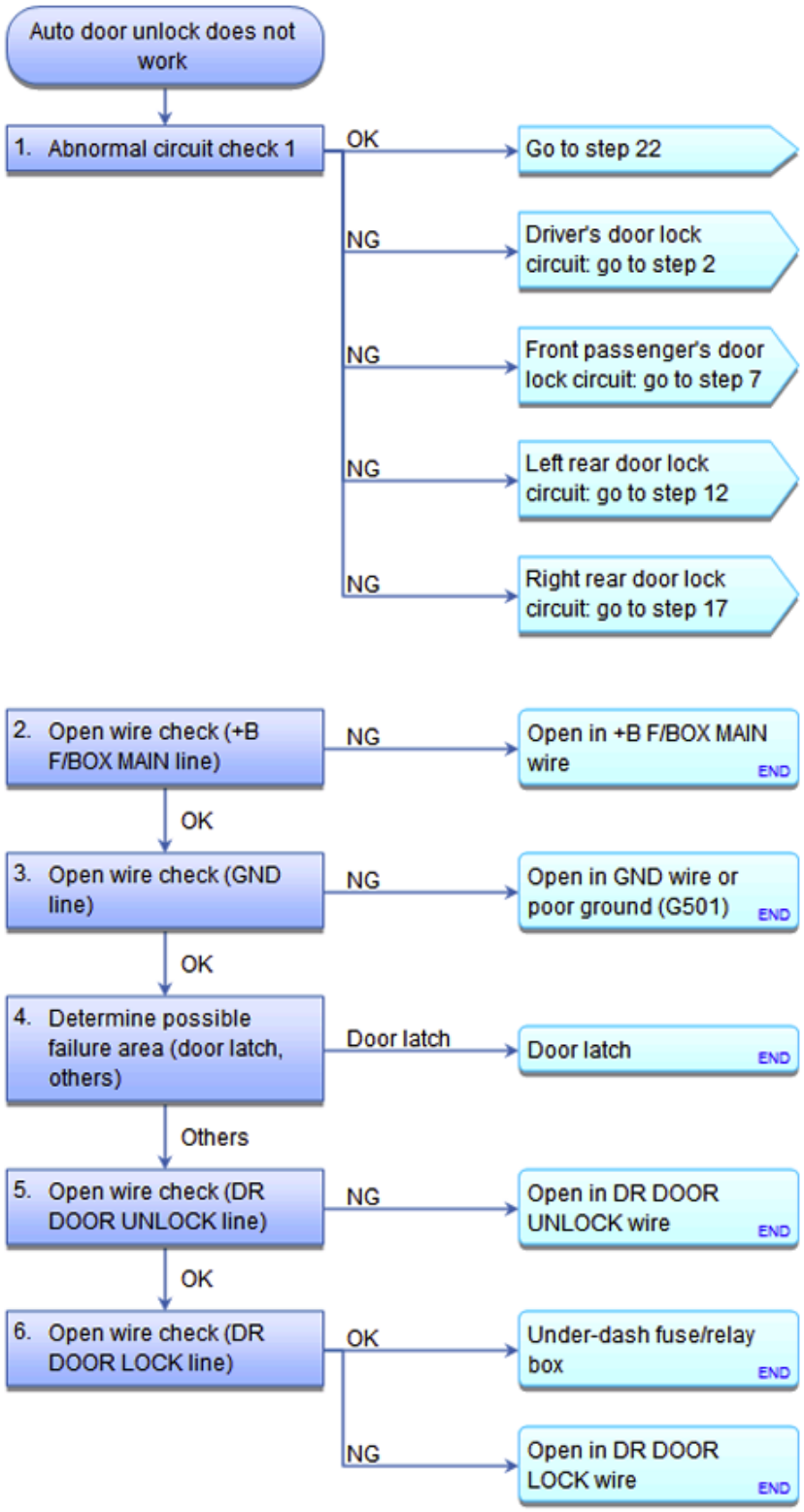

Fig. 80: Audio System Symptom Troubleshooting Flowchart - Audio Unit Power Switch Will Not Turn Off

GETtheMANUALS.org

Courtesy of AMERICAN HONDA MOTOR CO., INC.

NOTE: Check the connectors for poor connections or loose terminals.

1. Problem verification:
   - 1. Turn the ignition switch to ON (II).
   - 2. Press the POWER button off to see if the audio unit turns off.

   Does the audio unit turn off?

   YES : Intermittent failure, the system is OK at this time.

   NO : The failure is duplicated, go to step 2.

2. Determine possible failure area (ACC line, others):
   - 1. Turn the ignition switch to LOCK (0).

   Does the audio unit turn off?

   YES : Go to step 4.

   NO : Go to step 3.

3. Shorted wire check (ACC line to power):
   - 1. Measure the voltage between test points 1 and 2.

     Test condition IG LOCK (0)

     Test circuit ACC

     Test point 1 Audio unit connector A (24P) No. 24 (PUR)

     Test point 2 Body ground

GETtheMANUALS.org

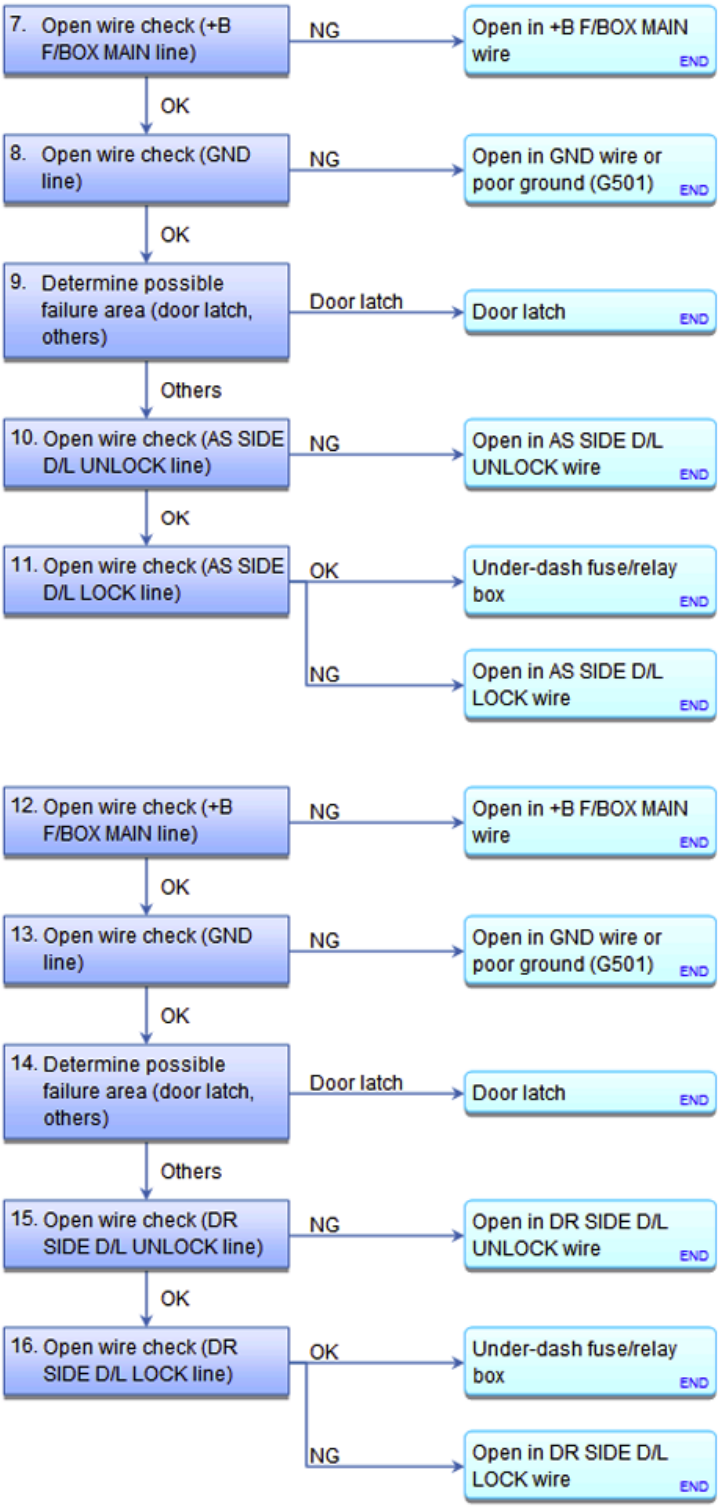

Fig. 81: Measuring Voltage Between Test Point Audio Unit Connector A (24P) No. 24 (PUR) And Body Ground
Courtesy of AMERICAN HONDA MOTOR CO., INC.

Is there battery voltage?

GETtheMANUALS.org

YES : Repair a short to power in the wire between the No. B19 (7.5 A) fuse in the under-dash fuse/relay box and the audio unit.

NO : REPLACE THE AUDIO UNIT .

4. Audio unit check:
    - 1. SUBSTITUTE A KNOWN-GOOD AUDIO SWITCH PANEL , and recheck.

Does the symptom go away?

YES : Replace the original audio switch panel.

NO : REPLACE THE AUDIO UNIT .

AUDIO UNIT POWER SWITCH WILL NOT TURN ON (NO INFORMATION DISPLAY AND NO SOUND)

GETtheMANUALS.org

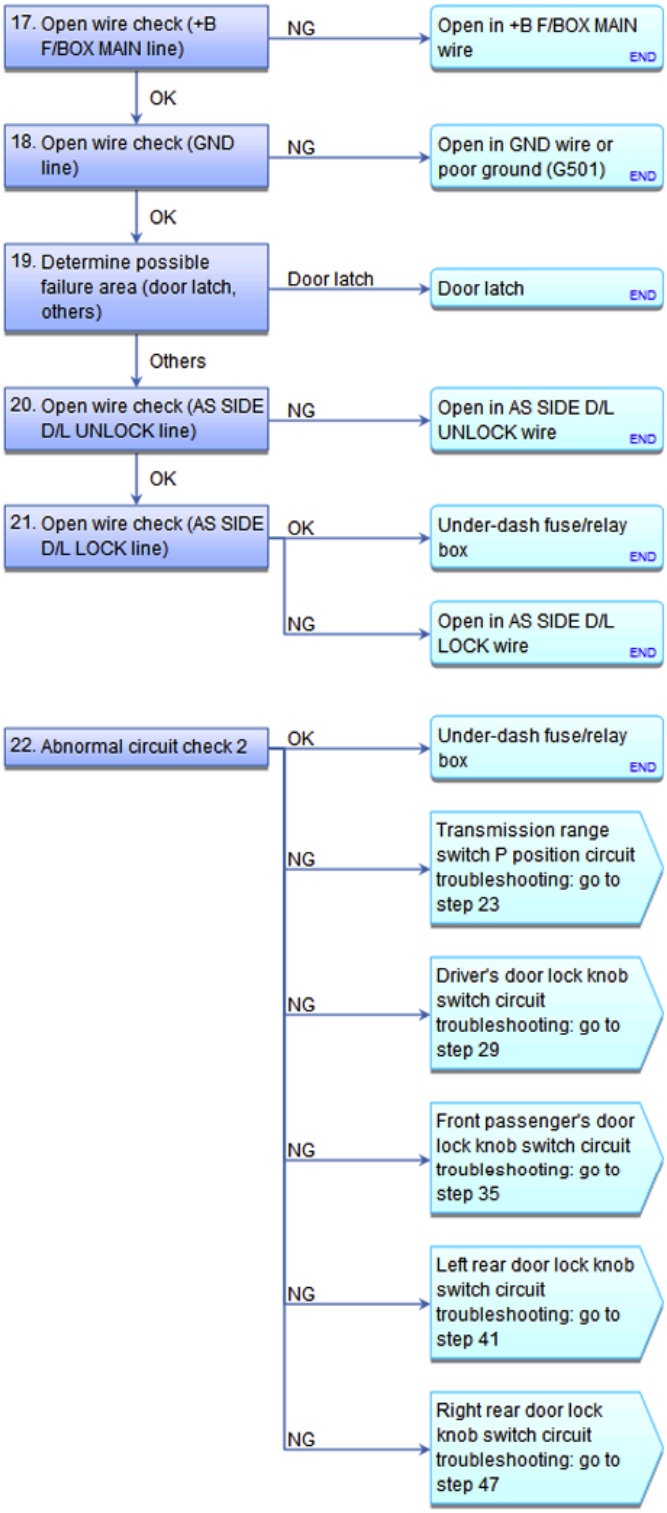

Fig. 82: Audio System Symptom Troubleshooting Flowchart - Audio Unit Power Switch Will Not Turn On (No Information Display And No Sound)
Courtesy of AMERICAN HONDA MOTOR CO., INC.

GETtheMANUALS.org

NOTE:

- **<u>CHECK THE VEHICLE BATTERY CONDITION FIRST</u> .**
- **Check the connectors for poor connections or loose terminals.**

1. Problem verification:
   - 1. Turn the ignition switch to ON (II).
   - 2. Press the POWER button on to see if the audio unit turns on.

   Does the audio system operate properly, and does the audio sound normal?

   YES : Intermittent failure, the system is OK at this time.

   NO : The failure is duplicated, go to step 2.

2. Fuse check:
   - 1. Turn the ignition switch to LOCK (0).
   - 2. Check the following fuses.

     Fuse No. B19 (7.5 A)

     Location Under-dash fuse/relay box

     Fuse No. B25 (10 A)

     Location Under-dash fuse/relay box

   Are the fuses OK?

   YES : Go to step 3.

   NO : Replace the fuse(s), and recheck. If the fuse(s) blows again, check for a short in the No. B19 (7.5 A) fuse and/or the No. B25 (10 A) fuse circuit(s).

3. Open wire check (+B AUDIO line, ACC line):
   - 1. Turn the ignition switch to ON (II).
   - 2. Measure the voltage between test points 1 and 2.

     Test condition IG ON (II)

     Test circuit +B AUDIO

     Test point 1 Audio unit connector A (24P) No. 3 (RED)

     Test point 2 Body ground

     Test circuit ACC

GETtheMANUALS.org

Test point 1 Audio unit connector A (24P) No. 24 (PUR)

Test point 2 Body ground

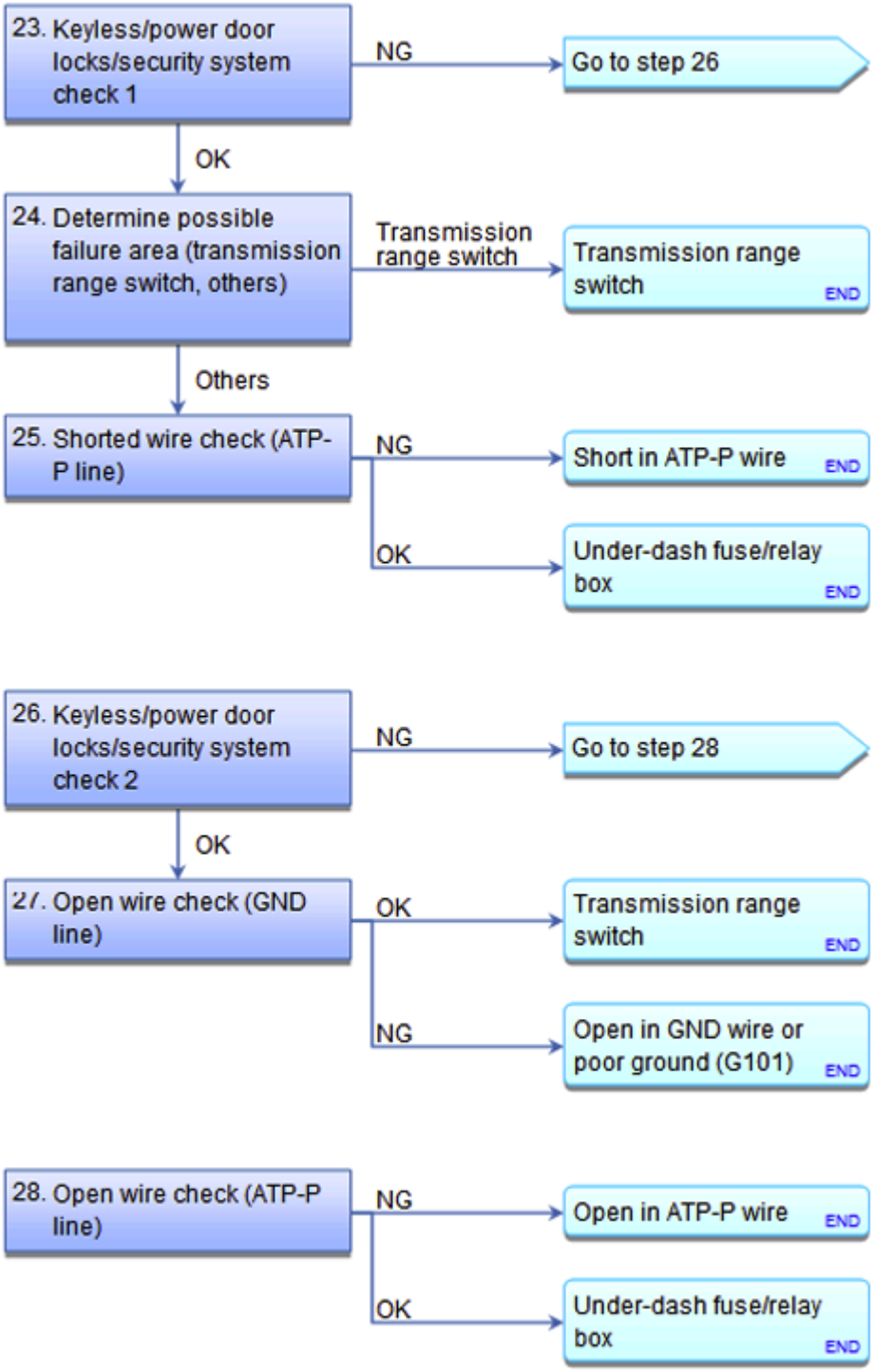

Fig. 83: Measuring Voltage Between Test Point Audio Unit Connector A (24P) No. 24 (PUR) And Body Ground

GETtheMANUALS.org

Courtesy of AMERICAN HONDA MOTOR CO., INC.

Is there battery voltage?

YES : The +B AUDIO and the ACC wires are OK. Go to step 4.

NO : Repair an open or high resistance in the wire(s) between the No. B19 (7.5 A) fuse in the under-dash fuse/relay box and/or the No. B25 (10 A) fuse in the under-dash fuse/relay box and the audio unit.

4. Open wire check (GND line):
   - 1. Measure the voltage between test points 1 and 2.

     Test condition IG ON (II)

     Test circuit GND

     Test point 1 Audio unit connector A (24P) No. 1 (BLK)

     Test point 2 Body ground

GETtheMANUALS.org

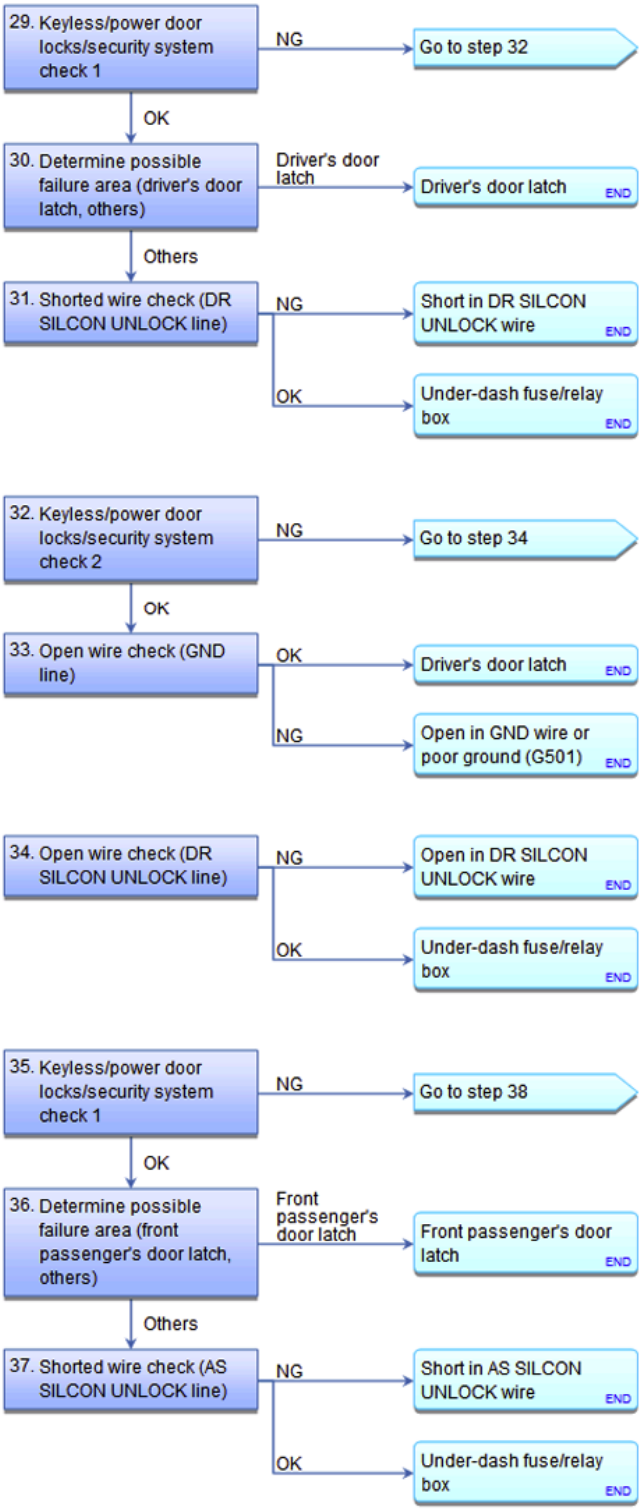

<u>Fig. 84: Measuring Voltage Between Test Point Audio Unit Connector A (24P) No. 1 (BLK) And Body Ground</u>
Courtesy of AMERICAN HONDA MOTOR CO., INC.

Is there less than 0.2 V?

GETtheMANUALS.org

YES : The GND wire is OK. Go to step 5.

NO : Repair an open or high resistance in the wire between the audio unit and body ground (G503).

5. Audio unit check:
    - 1. Turn the ignition switch to LOCK (0).
    - 2. SUBSTITUTE A KNOWN-GOOD AUDIO SWITCH PANEL , and recheck.

Does the symptom go away?

YES : Replace the original audio switch panel.

NO : REPLACE THE AUDIO UNIT .

AUDIO-NAVIGATION UNIT BUTTON ILLUMINATION DOES NOT WORK

GETtheMANUALS.org

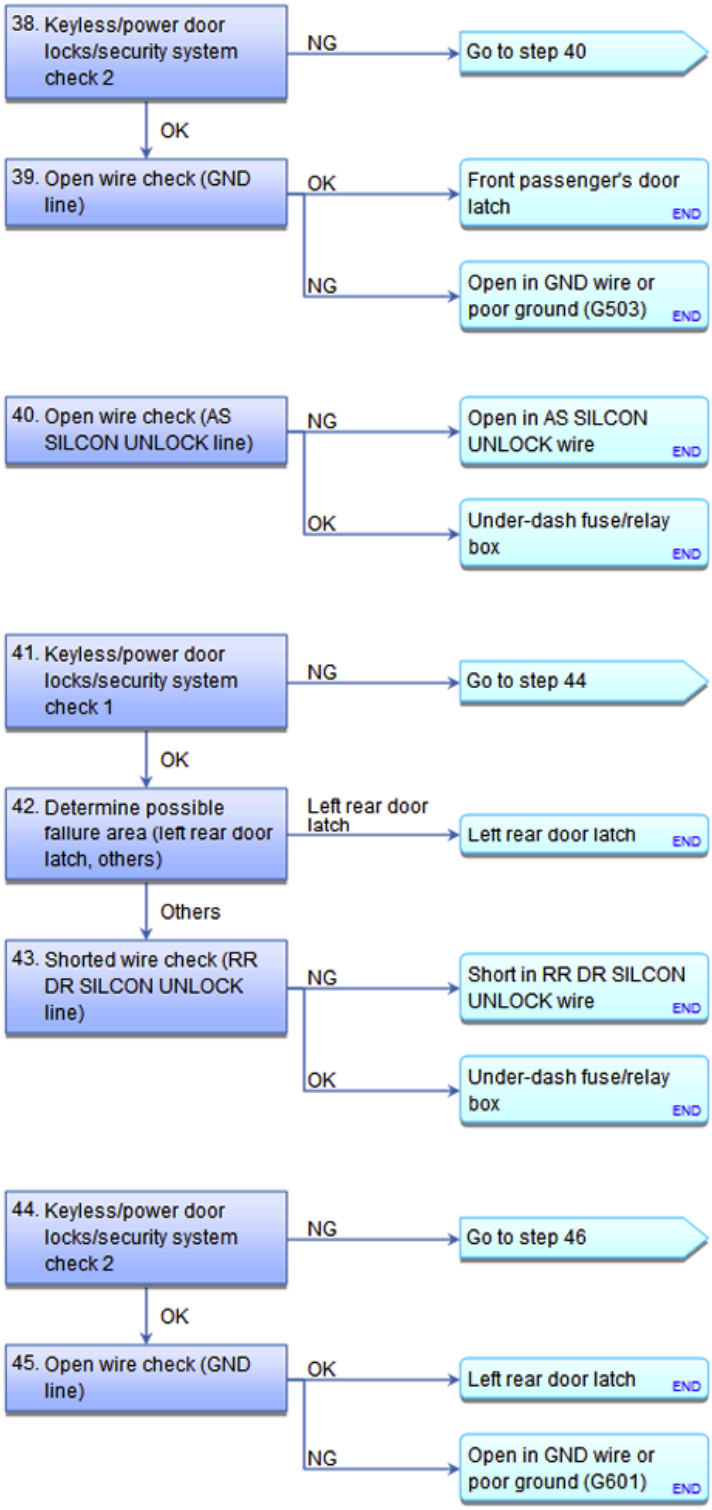

Fig. 85: Audio System Symptom Troubleshooting Flowchart - Audio-Navigation Unit Button Illumination Does Not Work
Courtesy of AMERICAN HONDA MOTOR CO., INC.

GETtheMANUALS.org

NOTE:

- **<u>CHECK THE VEHICLE BATTERY CONDITION FIRST</u> .**
- **Check for B-CAN DTCs and resolve them before troubleshooting.**
- **Check the connectors for poor connections or loose terminals.**
- **The climate control unit 32P (black) connector and the HFL control unit 32P (grey) connector are the same shape. Make sure the correct connector is connected to the applicable unit.**

1. Problem verification:
   - 1. Turn the ignition switch to ON (II).
   - 2. Turn the combination lighting switch to the parking light position.
   - 3. Check if the audio-navigation unit buttons are illuminated.

   Are the buttons illuminated?

   YES : Intermittent failure, the audio-navigation unit is OK at this time.

   NO : The failure is duplicated, go to step 2.

2. Determine possible failure area (interior lights circuit, others):
   - 1. Check if several other buttons that are not related to the audio system are illuminated.

   Are the buttons illuminated?

   YES : Go to step 3.

   NO : Troubleshoot the interior lights.

3. Open wire check (B CAN-H line, B CAN-L line):
   - 1. Turn the combination lighting switch off.
   - 2. Turn the ignition switch to LOCK (0).
   - 3.

     Disconnect the following connectors.

     Audio-navigation unit connector E (16P)

     Gauge control module 32P connector

   - 4. Check for continuity between test points 1 and 2.

     Test condition IG LOCK (0)

     Audio-navigation unit connector E (16P): disconnected

GETtheMANUALS.org

Gauge control module 32P connector: disconnected

Test circuit B CAN-H

Test point 1 Audio-navigation unit connector E (16P) No. 1 (PNK)

Test point 2 Gauge control module 32P connector No. 30 (PNK)

Test circuit B CAN-L

Test point 1 Audio-navigation unit connector E (16P) No. 9 (BLU)

Test point 2 Gauge control module 32P connector No. 31 (BLU)

GETtheMANUALS.org

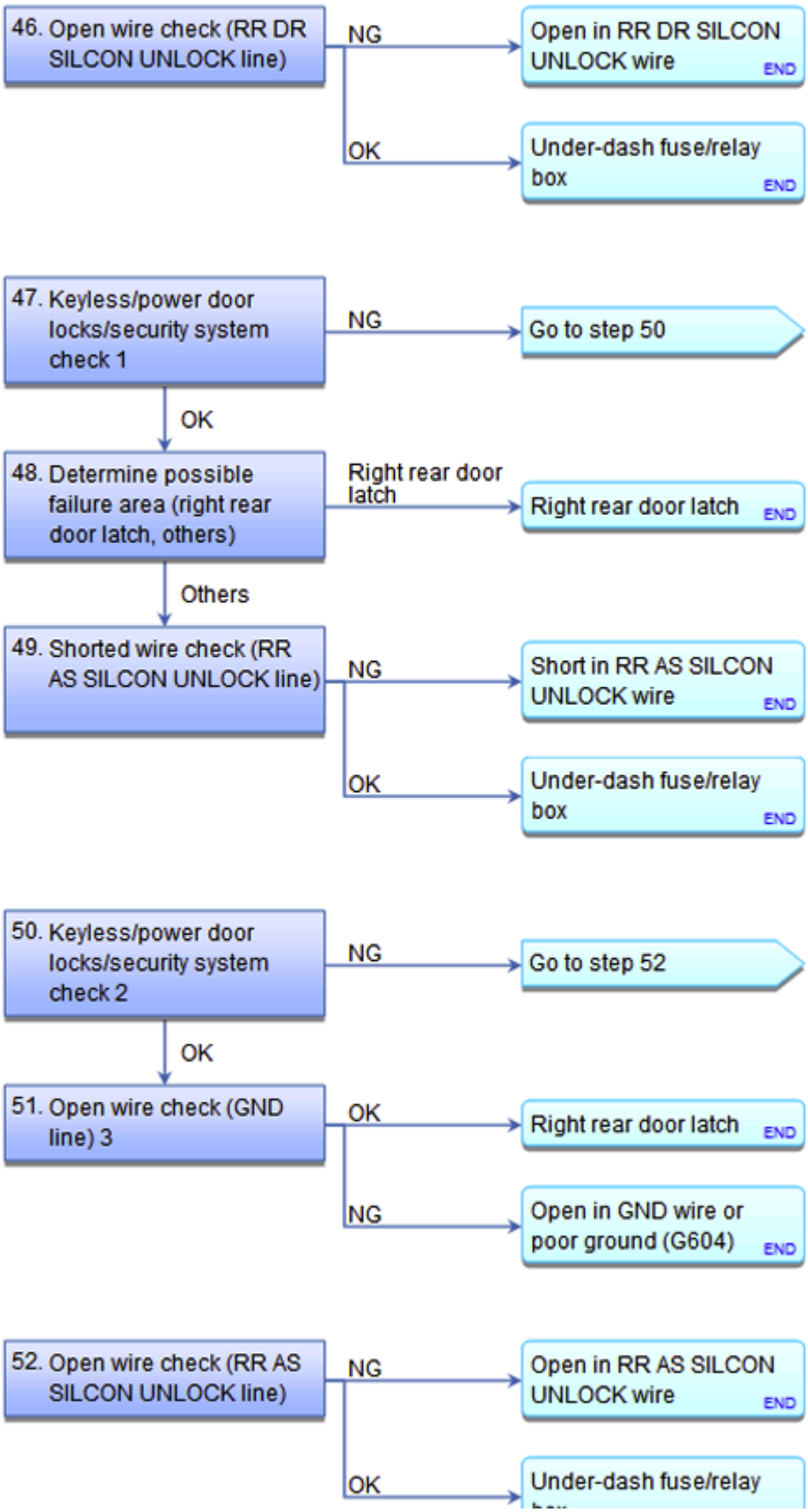

GETtheMANUALS.org

Fig. 86: Checking For Continuity Between Test Point Audio-Navigation Unit Connector E (16P) No. 9 (BLU) And Gauge Control Module 32P Connector No. 31 (BLU)
Courtesy of AMERICAN HONDA MOTOR CO., INC.

Is there continuity?

YES : REPLACE THE AUDIO-NAVIGATION UNIT .

NO : Repair an open in the wire(s) between the audio-navigation unit and the gauge control module.

AUDIO-NAVIGATION UNIT DOES NOT EXIT ANTI-THEFT MODE

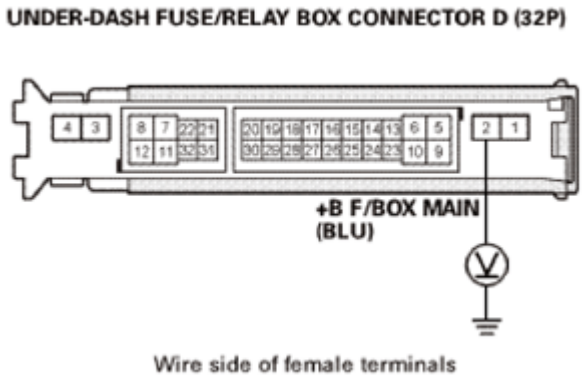

Fig. 87: Audio System Symptom Troubleshooting Flowchart - Audio-Navigation Unit Does Not Exit Anti-Theft Mode
Courtesy of AMERICAN HONDA MOTOR CO., INC.

NOTE:

- **CHECK THE VEHICLE BATTERY CONDITION FIRST .**
- **Check for B-CAN and F-CAN DTCs and resolve them before troubleshooting.**
- **Check the connectors for poor connections or loose terminals.**

1. Problem verification:
   - 1. Turn the ignition switch to ON (II).
   - 2. Press and hold the VOLUME/POWER knob more than 2 seconds to release the anti-theft mode.

   Is the anti-theft mode released?

   YES : Intermittent failure, the system is OK at this time.

   NO : The failure is duplicated, go to step 2.

2. Open wire check (B CAN-H line, B CAN-L line):
   - 1. Turn the ignition switch to LOCK (0).
   - 2. Disconnect the following connectors.

GETtheMANUALS.org

Audio-navigation unit connector E (16P)

Gauge control module 32P connector

- 3. Check for continuity between test points 1 and 2.

Test condition IG LOCK (0)

Audio-navigation unit connector E (16P): disconnected

Gauge control module 32P connector: disconnected

Test circuit B CAN-H

Test point 1 Audio-navigation unit connector E (16P) No. 1 (PNK)

Test point 2 Gauge control module 32P connector No. 30 (PNK)

Test circuit B CAN-L

Test point 1 Audio-navigation unit connector E (16P) No. 9 (BLU)

Test point 2 Gauge control module 32P connector No. 31 (BLU)

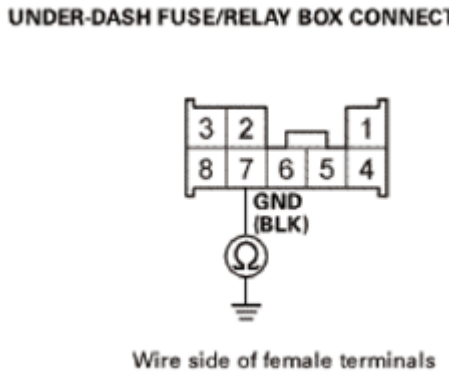

Fig. 88: Checking For Continuity Between Test Point Audio-Navigation Unit Connector E (16P) No. 9 (BLU) And Gauge Control Module 32P Connector No. 31 (BLU)
Courtesy of AMERICAN HONDA MOTOR CO., INC.

Is there continuity?

YES : REPLACE THE AUDIO-NAVIGATION UNIT .

NO : Repair an open in the wire(s) between the audio-navigation unit and the gauge control module.

AUDIO-NAVIGATION UNIT POWER SWITCH WILL NOT TURN ON (NO AUDIO INFORMATION DISPLAY AND NO SOUND)

GETtheMANUALS.org

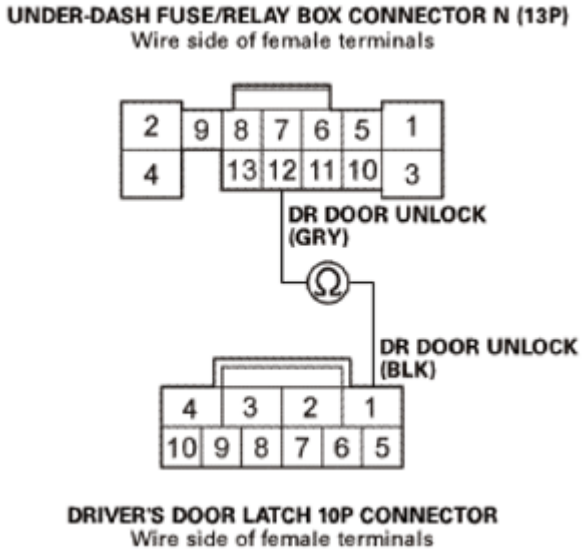

Fig. 89: Audio System Symptom Troubleshooting Flowchart - Audio-Navigation Unit Power Switch Will Not Turn On (No Audio Information Display And No Sound)
Courtesy of AMERICAN HONDA MOTOR CO., INC.

NOTE:

- **CHECK THE VEHICLE BATTERY CONDITION FIRST .**
- **Check if the Day/Night button was pressed and turned off the display. See the Navigation Manual for more information.**
- **Check the connectors for poor connections or loose terminals.**

1. Determine possible failure area (navigation system, others):
   - 1. Turn the ignition switch to ON (II).
   - 2. Check if the audio-navigation unit displays the Honda globe screen.

   Is the Honda globe screen displayed?

   YES : Go to step 2.

   NO : Go to **NO PICTURE IS DISPLAYED** troubleshooting.

2. Problem verification:
   - 1. Press the VOLUME/POWER knob on to see if audio system turns on.

   Does the audio system operate properly, and does the audio sound normal?

   YES : Intermittent failure, the system is OK at this time.

   NO : The failure is duplicated, go to step 3.

3. Open wire check (GND line):

GETtheMANUALS.org

- 1. Measure the voltage between test points 1 and 2.

  Test condition IG ON (II)

  Test circuit GND

  Test point 1 Audio-navigation unit connector A (24P) No. 1 (BLK)

  Test point 2 Body ground

  Test circuit GND

  Test point 1 Audio-navigation unit connector B (20P) No. 20 (BLK)

  Test point 2 Body ground

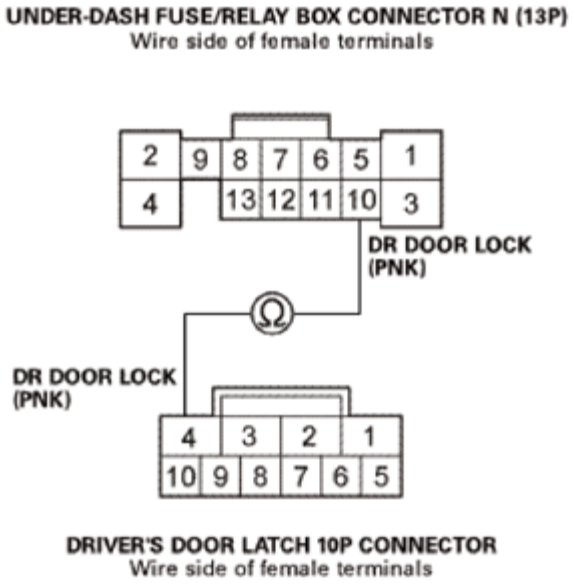

Fig. 90: Measuring Voltage Between Test Point Audio-Navigation Unit Connector A (24P) No. 1 (BLK) And Body Ground
Courtesy of AMERICAN HONDA MOTOR CO., INC.

GETtheMANUALS.org

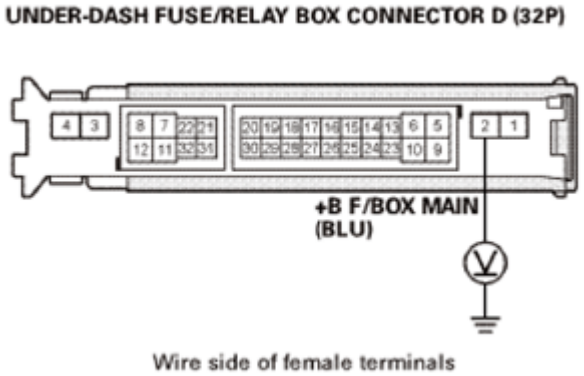

Fig. 91: Measuring Resistance Between Test Point Audio-Navigation Unit Connector B (20P) No. 20 (BLK) And Body Ground
Courtesy of AMERICAN HONDA MOTOR CO., INC.

Is there less than 0.2 V?

YES : REPLACE THE AUDIO-NAVIGATION UNIT .

NO : Repair an open or high resistance in the wire(s) between the audio-navigation unit and body ground (G502) and/or body ground (G503).

AUXILIARY INPUT SOUND IS LOW OR CANNOT BE HEARD (WITH NAVIGATION)

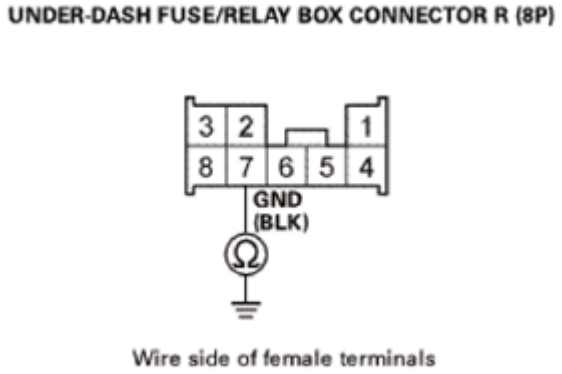

Fig. 92: Audio System Symptom Troubleshooting Flowchart - Auxiliary Input Sound Is Low Or Cannot Be Heard
Courtesy of AMERICAN HONDA MOTOR CO., INC.

NOTE:

- **CHECK THE VEHICLE BATTERY CONDITION FIRST .**
- **Use auxiliary stereo cables with 3.5 mm ends only.**
- **Auxiliary accessories may be played on the audio-navigation unit using the auxiliary input.**
- **Check the connectors for poor connections or loose terminals.**

GETtheMANUALS.org

1. Problem verification:
    - 1. Turn the ignition switch to ON (II).
    - 2. Turn on the audio system, and connect an auxiliary accessory to the auxiliary input jack.
    - 3. Press the AUDIO button, and check the auxiliary audio source sound.

    Is the sound normal?

    YES : Intermittent failure, the system is OK at this time.

    NO : The failure is duplicated, go to step 2.

2. Determine possible failure area (volume level, others):
    - 1. Make sure the auxiliary accessory volume is set to high.

    Is the volume set to high?

    YES : Go to step 3.

    NO : Raise the auxiliary accessory volume to high. Make sure the audio-navigation unit volume is turned down before rechecking.

3. Determine possible failure area (auxiliary audio accessory, others):
    - 1. Substitute a known-good auxiliary audio accessory and/or auxiliary stereo cable, and recheck.

    Does the auxiliary audio accessory operate properly?

    YES : Original auxiliary audio accessory or auxiliary stereo cable is faulty.

    NO : Go to step 4.

4. Shorted wire check (AUX lines):
    - 1. Turn the ignition switch to LOCK (0).
    - 2. Disconnect the following connectors.

      Audio-navigation unit connector E (16P)

      Auxiliary jack assembly 5P connector

    - 3. Check for continuity between these test points and body ground individually.

      Test condition IG LOCK (0)

      Audio-navigation unit connector E (16P): disconnected

      Auxiliary jack assembly 5P connector: disconnected

GETtheMANUALS.org

Connector	Test circuit	Terminal
Audio-navigation unit connector E (16P)	AUX R CH	No. 6 (RED)
	AUX SGND	No. 7 (BLK)
	AUX L CH	No. 8 (WHT)
	AUX GND	No. 15 (LT GRN)
	AUX DET	No. 16 (LT BLU)

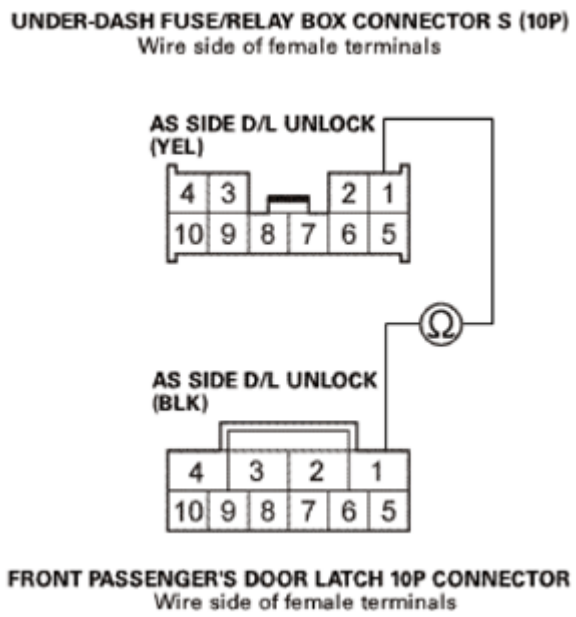

Fig. 93: Identifying Audio-Navigation Unit Connector E (16P)
Courtesy of AMERICAN HONDA MOTOR CO., INC.

Is there continuity?

YES : There is a short to body ground in the wire(s) between the audio-navigation unit and the auxiliary jack assembly. Repair or replace the affected harness.

NO : The AUX wires are not shorted to ground. Go to step 5.

5. Shorted wire check (SH AUX line to another lines):
   - 1. Check for continuity between test points 1 and 2.

     Test condition IG LOCK (0)

     Audio-navigation unit connector E (16P): disconnected

     Auxiliary jack assembly 5P connector: disconnected

     Test circuit AUX R CH, SH AUX

GETtheMANUALS.org

Test point 1 Audio-navigation unit connector E (16P) No. 6 (RED)

Test point 2 Audio-navigation unit connector E (16P) No. 14 (GRY)

Test circuit AUX L CH, SH AUX

Test point 1 Audio-navigation unit connector E (16P) No. 8 (WHT)

Test point 2 Audio-navigation unit connector E (16P) No. 14 (GRY)

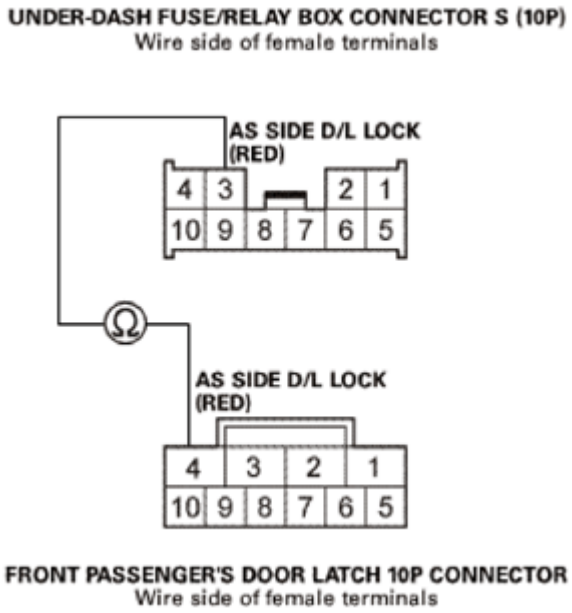

Fig. 94: Checking For Continuity Between Test Point Audio-Navigation Unit Connector E (16P) No. 8 (WHT) And No. 14 (GRY)
Courtesy of AMERICAN HONDA MOTOR CO., INC.

Is there continuity?

YES : There is a short in the wires between the audio-navigation unit and the auxiliary jack assembly. Replace the affected shielded harness.

NO : The SH AUX wire is OK. Go to step 6.

6. Shorted wire check (AUX SGND line to another lines):
   - 1. Check for continuity between test points 1 and 2.

     Test condition IG LOCK (0)

     Audio-navigation unit connector E (16P): disconnected

     Auxiliary jack assembly 5P connector: disconnected

GETtheMANUALS.org

Test circuit AUX R CH, AUX SGND

Test point 1 Audio-navigation unit connector E (16P) No. 6 (RED)

Test point 2 Audio-navigation unit connector E (16P) No. 7 (BLK)

Test circuit AUX L CH, AUX SGND

Test point 1 Audio-navigation unit connector E (16P) No. 8 (WHT)

Test point 2 Audio-navigation unit connector E (16P) No. 7 (BLK)

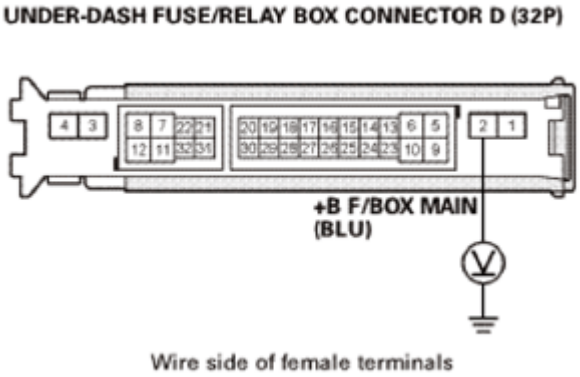

Fig. 95: Checking For Continuity Between Test Point Audio-Navigation Unit Connector E (16P) No. 8 (WHT) And No. 7 (BLK)
Courtesy of AMERICAN HONDA MOTOR CO., INC.

Is there continuity?

YES : There is a short in the wires between the audio-navigation unit and the auxiliary jack assembly. Replace the affected shielded harness.

NO : The AUX SGND wire is not shorted. Go to step 7.

7. Open wire check (AUX line):
   - 1. Check for continuity between test points 1 and 2.

Test condition IG LOCK (0)

Audio-navigation unit connector E (16P): disconnected

Auxiliary jack assembly 5P connector: disconnected

Test circuit	Test point 1: Audio-navigation unit connector E (16P)	Test point 2: Auxiliary jack assembly 5P connector
AUX R	No. 6 (RED)	No. 1 (RED)

GETtheMANUALS.org

CH		
AUX SGND	No. 7 (BLK)	No. 3 (BLK)
AUX L CH	No. 8 (WHT)	No. 2 (WHT)
AUX GND	No. 15 (LT GRN)	No. 4 (LT GRN)
AUX DET	No. 16 (LT BLU)	No. 5 (LT BLU)

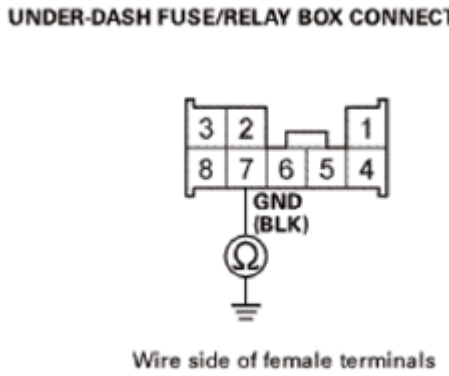

Fig. 96: Identifying Audio-Navigation Unit Connector E (16P)
Courtesy of AMERICAN HONDA MOTOR CO., INC.

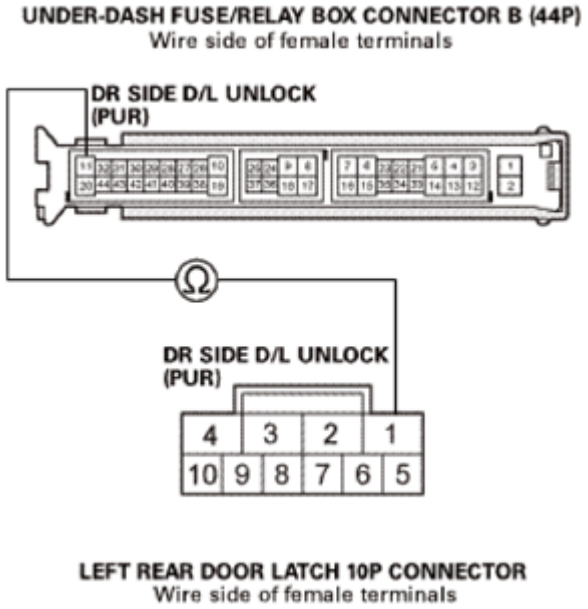

Fig. 97: Identifying Auxiliary Jack Assembly 5P Connector
Courtesy of AMERICAN HONDA MOTOR CO., INC.

Is there continuity?

GETtheMANUALS.org

YES : The AUX wires are OK. Go to step 8.

NO : There is an open in the wire(s) between the audio-navigation unit and the auxiliary jack assembly. Repair or replace the affected harness.

8. Audio-navigation unit check:
    - 1. SUBSTITUTE A KNOWN-GOOD AUXILIARY JACK ASSEMBLY , and recheck.

Does the symptom go away?

YES : Replace the original auxiliary jack assembly.

NO : REPLACE THE AUDIO-NAVIGATION UNIT .

AUXILIARY INPUT SOUND IS LOW OR CANNOT BE HEARD (WITHOUT NAVIGATION)

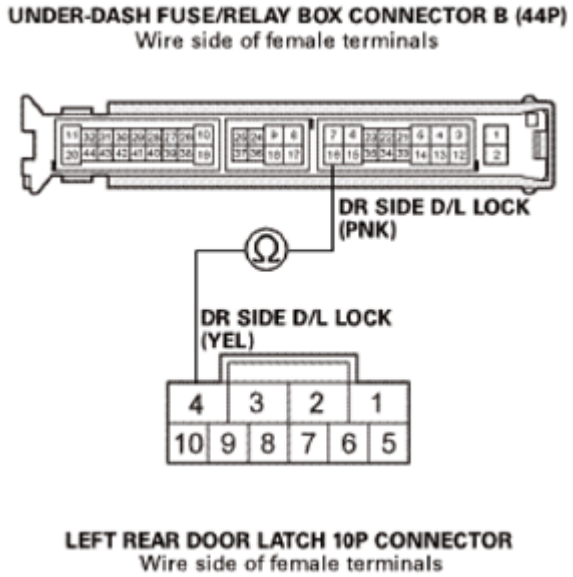

Fig. 98: Audio System Symptom Troubleshooting Flowchart - Auxiliary Input Sound Is Low Or Cannot Be Heard
Courtesy of AMERICAN HONDA MOTOR CO., INC.

NOTE:

- **CHECK THE VEHICLE BATTERY CONDITION FIRST .**
- **Use auxiliary stereo cables with 3.5 mm ends only.**
- **Auxiliary accessories may be played on the audio unit using the auxiliary input.**
- **Check the connectors for poor connections or loose terminals.**

1. Problem verification:
    - 1. Turn the ignition switch to ON (II).

GETtheMANUALS.org

- 2. Turn on the audio unit, and connect an auxiliary accessory to the auxiliary input jack.
- 3. Press the AUX button, and check the auxiliary audio source sound.

Is the sound normal?

YES : Intermittent failure, the system is OK at this time.

NO : The failure is duplicated, go to step 2.

2. Determine possible failure area (volume level, others):
   - 1. Make sure the auxiliary accessory volume is set to high.

Is the volume set to high?

YES : Go to step 3.

NO : Raise the auxiliary accessory volume to high. Make sure the audio unit volume is turned down before rechecking.

3. Determine possible failure area (auxiliary audio accessory, others):
   - 1. Substitute a known-good auxiliary audio accessory and/or auxiliary stereo cable, and recheck.

Does the auxiliary audio accessory operate properly?

YES : Original auxiliary audio accessory or auxiliary stereo cable is faulty.

NO : Go to step 4.

4. Shorted wire check (AUX lines):
   - 1. Turn the ignition switch to LOCK (0).
   - 2. Disconnect the following connectors.

     Audio unit connector B (20P)

     Auxiliary jack assembly 5P connector

   - 3. Check for continuity between these test points and body ground individually.

     Test condition IG LOCK (0)

     Audio unit connector B (20P): disconnected

     Auxiliary jack assembly 5P connector: disconnected

Connector	Test circuit	Terminal

GETtheMANUALS.org

Audio unit connector B (20P)	AUX GND	No. 6 (LT GRN)
	AUX SGND	No. 8 (BLK)
	AUX DET	No. 16 (LT BLU)
	AUX R CH	No. 17 (RED)
	AUX L CH	No. 18 (WHT)

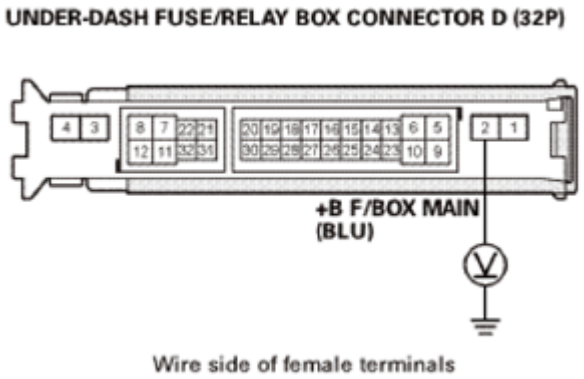

Fig. 99: Identifying Audio Unit Connector B (20P)
Courtesy of AMERICAN HONDA MOTOR CO., INC.

Is there continuity?

YES : There is a short to body ground in the wire(s) between the audio unit and the auxiliary jack assembly. Repair or replace the affected harness.

NO : The AUX wires are not shorted to ground. Go to step 5.

5. Shorted wire check (SH AUX line to another lines):
   - 1. Check for continuity between test points 1 and 2.

     Test condition IG LOCK (0)

     Audio unit connector B (20P): disconnected

     Auxiliary jack assembly 5P connector: disconnected

     Test circuit AUX R CH, SH AUX

     Test point 1 Audio unit connector B (20P) No. 17 (RED)

     Test point 2 Audio unit connector B (20P) No. 7 (GRY)

     Test circuit AUX L CH, SH AUX

     Test point 1 Audio unit connector B (20P) No. 18 (WHT)

GETtheMANUALS.org

Test point 2 Audio unit connector B (20P) No. 7 (GRY)

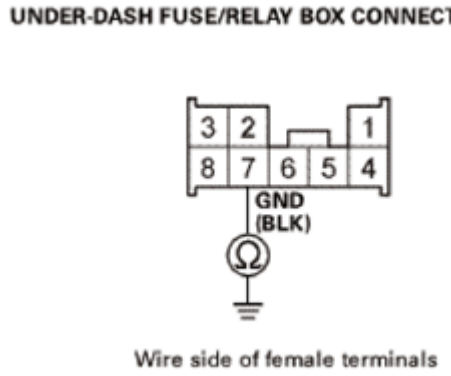

Fig. 100: Checking For Continuity Between Test Point Audio Unit Connector B (20P) No. 18 (WHT) And No. 7 (GRY)
Courtesy of AMERICAN HONDA MOTOR CO., INC.

Is there continuity?

YES : There is a short in the wires between the audio unit and the auxiliary jack assembly. Replace the affected shielded harness.

NO : The SH AUX wire is OK. Go to step 6.

6. Shorted wire check (AUX SGND line to another lines):
   - 1. Check for continuity between test points 1 and 2.

     Test condition IG LOCK (0)

     Audio unit connector B (20P): disconnected

     Auxiliary jack assembly 5P connector: disconnected

     Test circuit AUX R CH, AUX SGND

     Test point 1 Audio unit connector B (20P) No. 17 (RED)

     Test point 2 Audio unit connector B (20P) No. 8 (BLK)

     Test circuit AUX L CH, AUX SGND

     Test point 1 Audio unit connector B (20P) No. 18 (WHT)

     Test point 2 Audio unit connector B (20P) No. 8 (BLK)

GETtheMANUALS.org

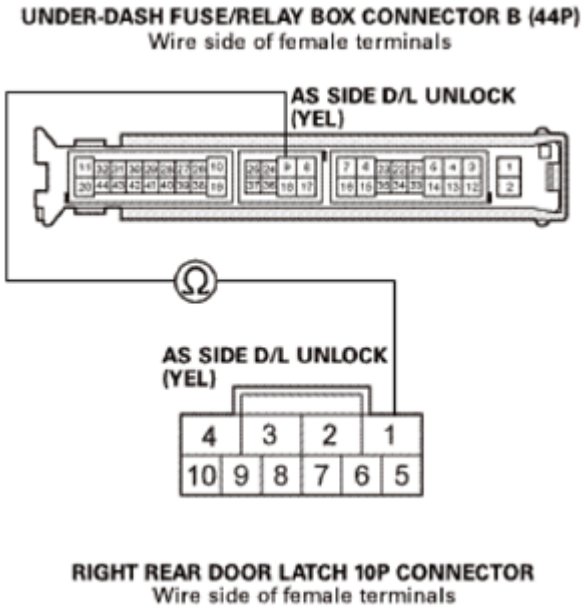

Fig. 101: Checking For Continuity Between Test Point Audio Unit Connector B (20P) No. 18 (WHT) And No. 8 (BLK)
Courtesy of AMERICAN HONDA MOTOR CO., INC.

Is there continuity?

YES : There is a short in the wires between the audio unit and the auxiliary jack assembly. Replace the affected shielded harness.

NO : The AUX SGND wire is not shorted. Go to step 7.

7. Open wire check (AUX lines):
   - 1. Check for continuity between test points 1 and 2.

     Test condition IG LOCK (0)

     Audio unit connector B (20P): disconnected

     Auxiliary jack assembly 5P connector: disconnected

Test circuit	Test point 1: Audio unit connector B (20P)	Test point 2: Auxiliary jack assembly 5P connector
AUX GND	No. 6 (LT GRN)	No. 4 (LT GRN)
AUX SGND	No. 8 (BLK)	No. 3 (BLK)
AUX DET	No. 16 (LT BLU)	No. 5 (LT BLU)
AUX R CH	No. 17 (RED)	No. 1 (RED)
AUX L CH	No. 18 (WHT)	No. 2 (WHT)

GETtheMANUALS.org

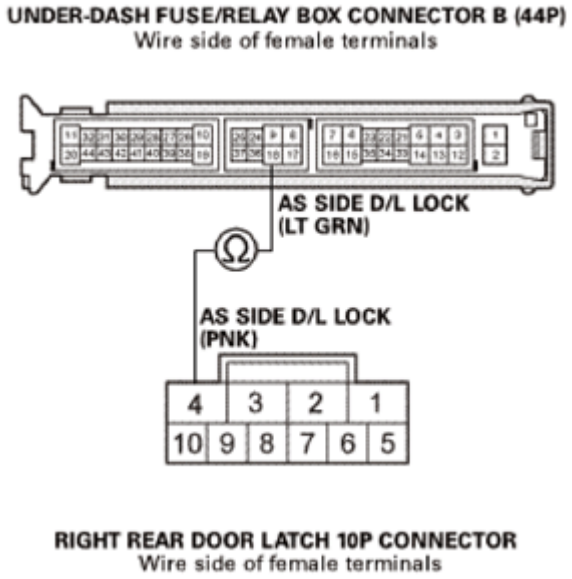

Fig. 102: Identifying Audio Unit Connector B (20P)
Courtesy of AMERICAN HONDA MOTOR CO., INC.

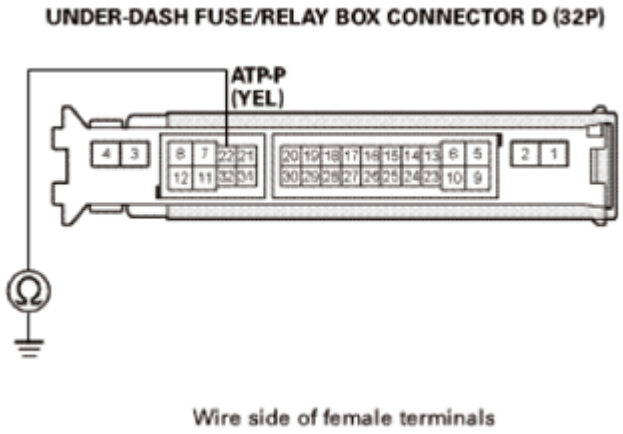

Fig. 103: Identifying Auxiliary Jack Assembly 5P Connector
Courtesy of AMERICAN HONDA MOTOR CO., INC.

Is there continuity?

YES : The AUX wires are OK. Go to step 8.

NO : There is an open in the wire(s) between the audio unit and the auxiliary jack assembly. Repair or replace the affected harness.

8. Audio unit check:
   - 1. SUBSTITUTE A KNOWN-GOOD AUXILIARY JACK ASSEMBLY , and recheck.

Does the symptom go away?

GETtheMANUALS.org

YES : Replace the original auxiliary jack assembly.

NO : **REPLACE THE AUDIO UNIT** .

DISPLAY DOES NOT DIM OR BRIGHTEN WITH DIMMER (WITH MULTI-INFORMATION DISPLAY)

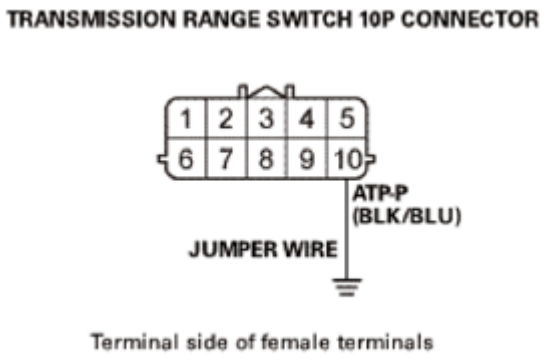

Fig. 104: Audio System Symptom Troubleshooting Flowchart - Display Does Not Dim Or Brighten With Dimmer
Courtesy of AMERICAN HONDA MOTOR CO., INC.

NOTE:

- **CHECK THE VEHICLE BATTERY CONDITION FIRST .**
- **Check for B-CAN DTCs and resolve them before troubleshooting.**
- **Check the connectors for poor connections or loose terminals.**
- **The climate control unit 32P (black) connector and the HFL control unit 32P (grey) connector are the same shape. Make sure the correct connector is connected to the applicable unit.**

1. Problem verification:
   - 1. Turn the ignition switch to ON (II).
   - 2. Turn the combination lighting switch to the parking light position.
   - 3. Rotate the dashlights brightness controller knob several times.

   Does the multi-information display brightness change?

   YES : Intermittent failure, the system is OK at this time.

   NO : The failure is duplicated, go to step 2.

2. Open wire check (B CAN-H line, B CAN-L line):
   - 1. Turn the combination lighting switch off.
   - 2. Turn the ignition switch to LOCK (0).
   - 3. Disconnect the following connectors.

GETtheMANUALS.org

Multi-information display unit connector A (32P)

Gauge control module 32P connector

- 4. Check for continuity between test points 1 and 2.

Test condition IG LOCK (0)

Multi-information display unit connector A (32P): disconnected

Gauge control module 32P connector: disconnected

Test circuit B CAN-H

Test point 1 Multi-information display unit connector A (32P) No. 31 (PNK)

Test point 2 Gauge control module 32P connector No. 30 (PNK)

Test circuit B CAN-L

Test point 1 Multi-information display unit connector A (32P) No. 15 (BLU)

Test point 2 Gauge control module 32P connector No. 31 (BLU)

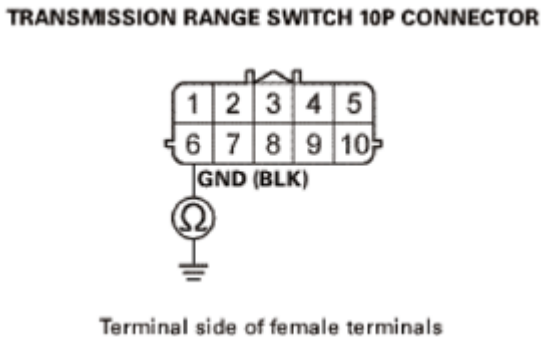

Fig. 105: Checking For Continuity Between Test Point Multi-Information Display Unit Connector A (32P) No. 15 (BLU) And Gauge Control Module 32P Connector No. 31 (BLU)
Courtesy of AMERICAN HONDA MOTOR CO., INC.

Is there continuity?

YES : **REPLACE THE MULTI-INFORMATION DISPLAY UNIT** .

NO : Repair an open in the wire(s) between the multi-information display unit and the gauge control module.

DISPLAY DOES NOT DIM OR BRIGHTEN WITH DIMMER (WITHOUT MULTI-INFORMATION DISPLAY)

GETtheMANUALS.org

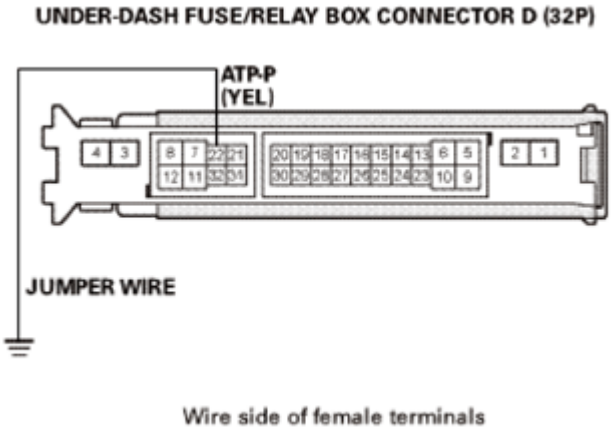

Fig. 106: Audio System Symptom Troubleshooting Flowchart - Display Does Not Dim Or Brighten With Dimmer
Courtesy of AMERICAN HONDA MOTOR CO., INC.

NOTE:

- **CHECK THE VEHICLE BATTERY CONDITION FIRST .**
- **Check the connectors for poor connections or loose terminals.**
- **The climate control unit 32P (black) connector and the HFL control unit 32P (grey) connector are the same shape. Make sure the correct connector is connected to the applicable unit.**

1. Problem verification:
   - 1. Turn the ignition switch to ON (II).
   - 2. Turn the combination lighting switch to the parking light position.
   - 3. Rotate the dashlights brightness controller knob several times.

   Does the audio display brightness change?

   YES : Intermittent failure, the system is OK at this time.

   NO : The failure is duplicated, go to step 2.

2. Gauge control module check:
   - 1. Turn the combination lighting switch off.
   - 2. Turn the ignition switch to LOCK (0).
   - 3. Disconnect the following connector.

     Center display unit 12P connector

   - 4. Turn the ignition switch to ON (II).
   - 5. Turn the combination lighting switch to the parking light position.
   - 6. Measure the voltage between test points 1 and 2 while rotating the dashlights brightness

GETtheMANUALS.org

controller knob several times.

Test condition IG ON (II), while rotating the dashlights brightness controller knob Center display unit 12P connector: disconnected

Test circuit ILLUMI+, ILLUMI- (BULB)

Test point 1 Center display unit 12P connector No. 7 (GRY)

Test point 2 Center display unit 12P connector No. 9 (RED)

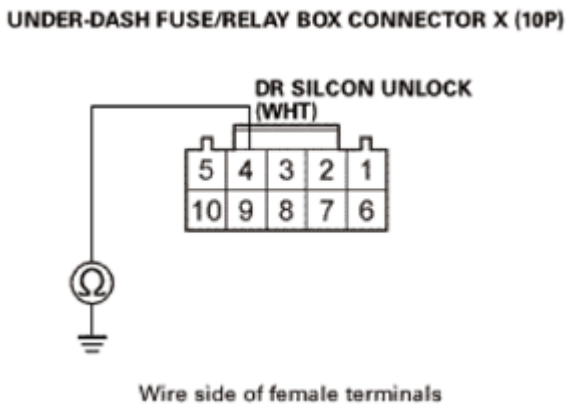

Fig. 107: Measuring Voltage Between Test Point Center Display Unit 12P Connector No. 7 (GRY) And No. 9 (RED)
Courtesy of AMERICAN HONDA MOTOR CO., INC.

Does the voltage change?

YES : **REPLACE THE CENTER DISPLAY UNIT** .

NO : **REPLACE THE GAUGE CONTROL MODULE** .

ERROR CODE: CHECK ANTENNA IS DISPLAYED (WITH NAVIGATION)

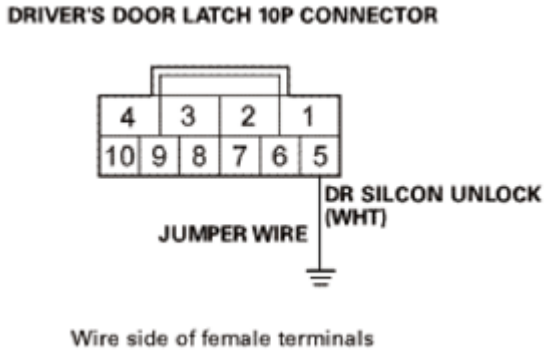

Fig. 108: Audio System Symptom Troubleshooting Flowchart - Error Code: Check Antenna Is Displayed

GETtheMANUALS.org

Courtesy of AMERICAN HONDA MOTOR CO., INC.

NOTE:

- **CHECK THE VEHICLE BATTERY CONDITION FIRST .**
- **Check XM radio reception in an open area. Poor reception/interference can be caused by tall buildings, mountains, or high-voltage power lines.**
- **Check the connectors for poor connections or loose terminals.**

1. Problem verification:
   - 1. Park the vehicle outside with a clear view of the southern horizon.
   - 2. Turn the ignition switch to ON (II).
   - 3. Turn on the audio system, and press the CD/XM button to select the XM radio.

   Is Check Antenna displayed?

   YES : The failure is duplicated, go to step 2.

   NO : Intermittent failure, the system is OK at this time.

2. Determine possible failure area (XM antenna, others):
   - 1. Turn the ignition switch to LOCK (0).
   - 2. SUBSTITUTE A KNOWN-GOOD AM/FM/XM ANTENNA .
   - 3. Turn the ignition switch to ON (II).
   - 4. Turn on the audio system, and press the CD/XM button to select the XM radio.

   Is Check Antenna displayed?

   YES : Go to step 3.

   NO : Replace the original AM/FM/XM antenna.

3. XM receiver check:
   - 1. Turn the ignition switch to LOCK (0).
   - 2. Substitute a known-good XM antenna lead, and recheck.

   Does the symptom/indication go away?

   YES : Replace the original XM antenna lead.

   NO : REPLACE THE XM RECEIVER .

ERROR CODE: CHECK ANTENNA IS DISPLAYED (WITHOUT NAVIGATION)

GETtheMANUALS.org

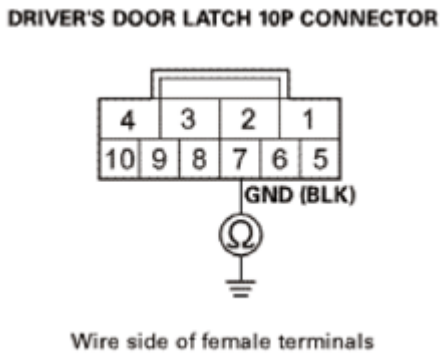

Fig. 109: Audio System Symptom Troubleshooting Flowchart - Error Code: Check Antenna Is Displayed
Courtesy of AMERICAN HONDA MOTOR CO., INC.

NOTE:

- **CHECK THE VEHICLE BATTERY CONDITION FIRST .**
- **Check XM radio reception in an open area. Poor reception/interference can be caused by tall buildings, mountains, or high-voltage power lines.**
- **Check the connectors for poor connections or loose terminals.**

1. Problem verification:
   - 1. Park the vehicle outside with a clear view of the southern horizon.
   - 2. Turn the ignition switch to ON (II).
   - 3. Turn on the audio unit, and press the XM button to select the XM radio.

   Is CHECK ANTENNA displayed?

   YES : The failure is duplicated, go to step 2.

   NO : Intermittent failure, the system is OK at this time.

2. Determine possible failure area (XM antenna, others):
   - 1. Turn the ignition switch to LOCK (0).
   - 2. SUBSTITUTE A KNOWN-GOOD AM/FM/XM ANTENNA .
   - 3. Turn the ignition switch to ON (II).
   - 4. Turn on the audio unit, and press the XM button to select the XM radio.

   Is Check Antenna displayed?

   YES : Go to step 3.

   NO : Replace the original AM/FM/XM antenna.

3. XM receiver check:
   - 1. Turn the ignition switch to LOCK (0).

GETtheMANUALS.org

- 2. Substitute a known-good XM antenna lead, and recheck.

Does the symptom/indication go away?

YES : Replace the original XM antenna lead.

NO : REPLACE THE XM RECEIVER .

MULTI-INFORMATION DISPLAY UNIT DOES NOT WORK

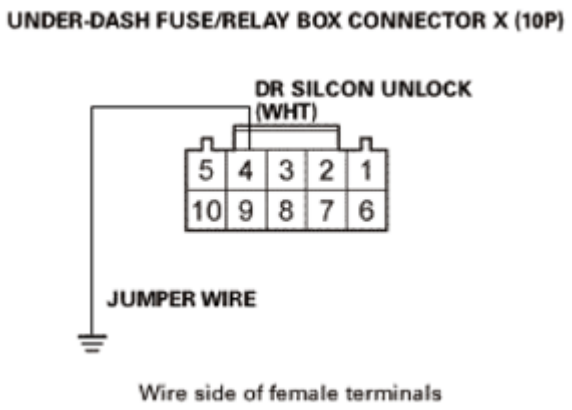

Fig. 110: Audio System Symptom Troubleshooting Flowchart - Multi-Information Display Unit Does Not Work
Courtesy of AMERICAN HONDA MOTOR CO., INC.

NOTE:

- **CHECK THE VEHICLE BATTERY CONDITION FIRST .**
- **Check for B-CAN DTCs and resolve them before troubleshooting.**
- **Check the connectors for poor connections or loose terminals.**

1. Problem verification:
   - 1. Turn the ignition switch to ON (II).
   - 2. Check if any MID information appears on the multi-information display unit.

   Is there any information displayed?

   YES : Intermittent failure, the system is OK at this time.

   NO : The failure is duplicated, go to step 2.

2. Fuse check:
   - 1. Turn the ignition switch to LOCK (0).
   - 2. Check the following fuse.

     Fuse No. A29 (10 A)

GETtheMANUALS.org

Location Under-hood fuse/relay box

Is the fuse OK?

YES : Go to step 3.

NO : Replace the fuse, and recheck. If the fuse blows again, check for a short in the No. A29 (10 A) fuse circuit.

3. Open wire check (+B BACK UP line):
   - 1. Turn the ignition switch to LOCK (0).
   - 2. Measure the voltage between test points 1 and 2.

   Test condition IG LOCK (0)

   Test circuit +B BACK UP

   Test point 1 Multi-information display unit connector A (32P) No. 16 (RED)

   Test point 2 Body ground

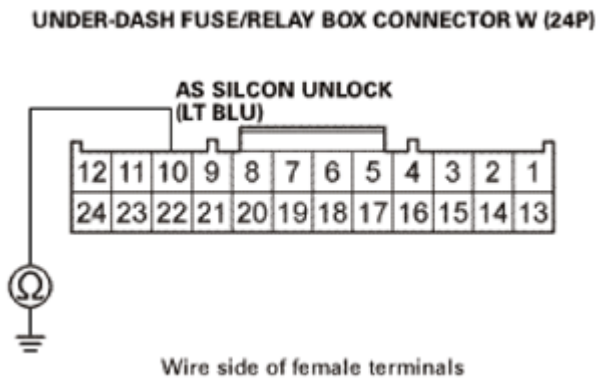

Fig. 111: Measuring Voltage Between Test Point Multi-Information Display Unit Connector A (32P) No. 16 (RED) And Body Ground
Courtesy of AMERICAN HONDA MOTOR CO., INC.

Is there battery voltage?

YES : The +B BACK UP wire is OK. Go to step 4.

NO : Repair an open or high resistance in the wire between the No. A29 (10 A) fuse in the under-hood fuse/relay box and the multi-information display unit.

4. Open wire check (GND line):
   - 1. Turn the ignition switch to ON (II).
   - 2. Measure the voltage between test points 1 and 2.

GETtheMANUALS.org

Test condition IG ON (II)

Test circuit GND

Test point 1 Multi-information display unit connector A (32P) No. 10 (BRN)

Test point 2 Body ground

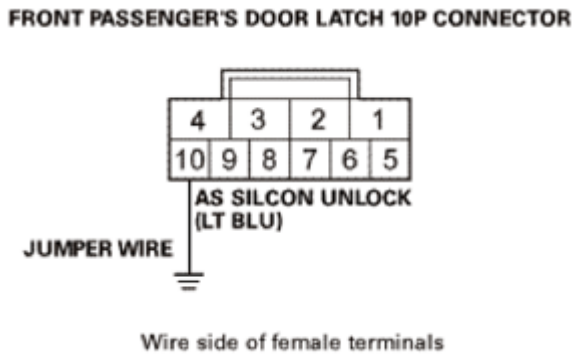

Fig. 112: Measuring Voltage Between Test Point Multi-Information Display Unit Connector A (32P) No. 10 (BRN) And Body Ground
Courtesy of AMERICAN HONDA MOTOR CO., INC.

Is there less than 0.2 V?

YES : The GND wire is OK. Go to step 5.

NO : Repair an open or high resistance in the wire between the multi-information display unit and body ground (G502).

5. Open wire check (B CAN-H line, B CAN-L line):
   - 1. Turn the ignition switch to LOCK (0).
   - 2. Disconnect the following connectors.

     Multi-information display unit connector A (32P)

     Gauge control module 32P connector

   - 3. Check for continuity between test points 1 and 2.

     Test condition IG LOCK (0)

     Multi-information display unit connector A (32P): disconnected

     Gauge control module 32P connector: disconnected

     Test circuit B CAN-H

GETtheMANUALS.org

Test point 1 Multi-information display unit connector A (32P) No. 31 (PNK)

Test point 2 Gauge control module 32P connector No. 30 (PNK)

Test circuit B CAN-L

Test point 1 Multi-information display unit connector A (32P) No. 15 (BLU)

Test point 2 Gauge control module 32P connector No. 31 (BLU)

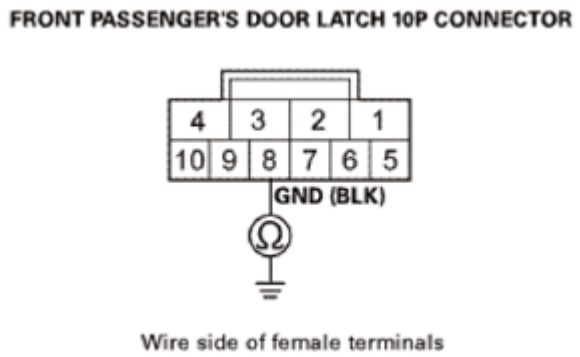

Fig. 113: Checking For Continuity Between Test Point Multi-Information Display Unit Connector A (32P) No. 15 (BLU) And Gauge Control Module 32P Connector No. 31 (BLU)
Courtesy of AMERICAN HONDA MOTOR CO., INC.

Is there continuity?

YES : **REPLACE THE MULTI-INFORMATION DISPLAY UNIT** .

NO : Repair an open in the wire(s) between the multi-information display unit and the gauge control module.

NO SOUND IS HEARD FROM THE SPEAKER(S) (DISPLAY IS NORMAL) (KA, KC MODELS WITH NAVIGATION)

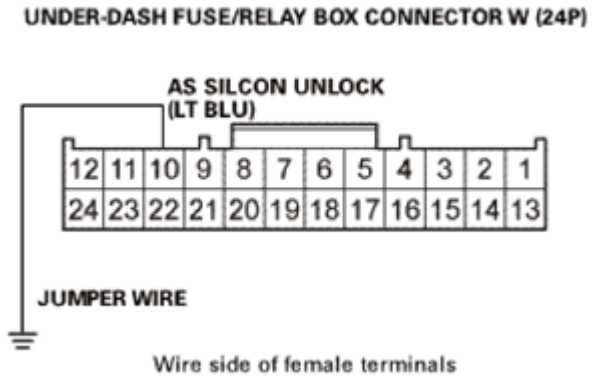

Fig. 114: Audio System Symptom Troubleshooting Flowchart - No Sound Is Heard From Speaker(s)

GETtheMANUALS.org

[Display Is Normal] (1 Of 2)
Courtesy of AMERICAN HONDA MOTOR CO., INC.

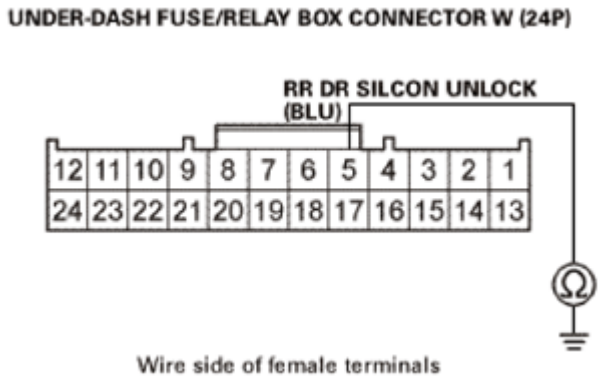

Fig. 115: Audio System Symptom Troubleshooting Flowchart - No Sound Is Heard From Speaker(s) [Display Is Normal] (2 Of 2)
Courtesy of AMERICAN HONDA MOTOR CO., INC.

NOTE:

- **CHECK THE VEHICLE BATTERY CONDITION FIRST .**
- **Set the fader and the balance positions to the center.**
- **Before doing this troubleshooting, go to AUDIO-NAVIGATION UNIT POWER SWITCH WILL NOT TURN ON (NO AUDIO INFORMATION DISPLAY AND NO SOUND) TROUBLESHOOTING.**
- **Check the connectors for poor connections or loose terminals.**

1. Problem verification:
   - 1. Turn the ignition switch to ON (II).
   - 2. Turn on the audio system, and check for sound in each mode (AM/FM, USB, XM, and CD).

   Is the sound OK in each mode?

   YES : Intermittent failure, the system is OK at this time. Check for loose connections at the audio-navigation unit and speaker(s).

   NO : The failure is duplicated in all modes, go to step 2.

   NO : Go to **Poor AM or FM radio reception or interference (With Navigation)** troubleshooting.

   NO : Go to **Poor AM or FM radio reception or interference (without navigation)** troubleshooting.

   NO : Go to **USB INPUT SOUND IS LOW OR CANNOT BE HEARD TROUBLESHOOTING**.

   NO : Go to **POOR OR NO SOUND WITH XM RADIO (AUDIO-NAVIGATION UNIT DOES DISPLAY XM CHANNELS) TROUBLESHOOTING**.

GETtheMANUALS.org

NO : Go to **AUDIO DISC DOES NOT PLAY TROUBLESHOOTING**.

2. Determine possible failure area (volume level, others):
    - 1. Check that the volume knob is not set to the MIN level.

Is it at the MIN level?

YES : Raise the volume level, and recheck the function.

NO : Go to step 3.

3. Fuse check:
    - 1. Turn the ignition switch to LOCK (0).
    - 2. Check the following fuse.

      Fuse No. A13 (20 A)

      Location Under-hood fuse/relay box

Is the fuse OK?

YES : Go to step 4.

NO : Replace the fuse, and recheck. If the fuse blows again, check for a short in the No. A13 (20 A) fuse circuit.

4. Open wire check (+B AUDIO AMP line):
    - 1. Measure the voltage between test points 1 and 2.

      Test condition IG LOCK (0)

      Test circuit +B AUDIO AMP

      Test point 1 Stereo amplifier connector A (18P) No. 3 (RED)

      Test point 2 Body ground

GETtheMANUALS.org

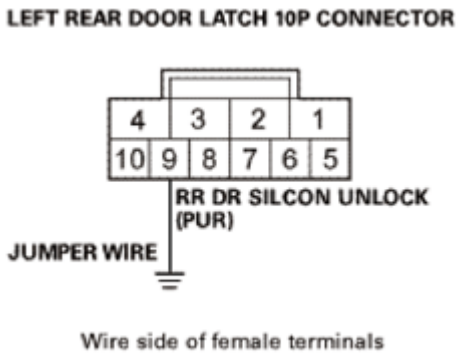

Fig. 116: Measuring Voltage Between Test Point Stereo Amplifier Connector A (18P) No. 3 (RED) And Body Ground
Courtesy of AMERICAN HONDA MOTOR CO., INC.

Is there battery voltage?

YES : The +B AUDIO AMP wire is OK. Go to step 5.

NO : Repair an open or high resistance in the wire between the No. A13 (20 A) fuse in the under-hood fuse/relay box and the stereo amplifier.

5. Determine possible failure area (SWD +B line, others):
   - 1. Turn the ignition switch to ON (II).
   - 2. Measure the voltage between test points 1 and 2.

     Test condition IG ON (II)

     Test circuit SWD +B

     Test point 1 Stereo amplifier connector B (24P) No. 13 (RED)

     Test point 2 Body ground

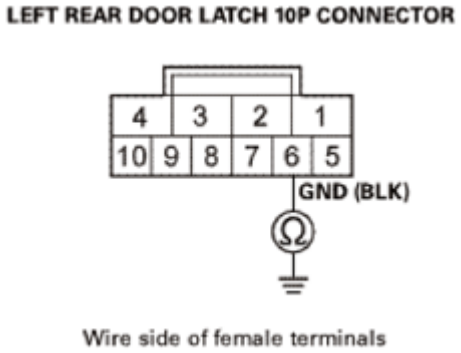

Fig. 117: Measuring Resistance Between Test Point Stereo Amplifier Connector B (24P) No. 13 (RED) And Body Ground

GETtheMANUALS.org

Courtesy of AMERICAN HONDA MOTOR CO., INC.

Is there battery voltage?

YES : Go to step 7.

NO : Go to step 6.

6. Open wire check (SWD +B line):
   - 1. Measure the voltage between test points 1 and 2.

     Test condition IG ON (II)

     Test circuit SWD +B

     Test point 1 Audio-navigation unit connector A (24P) No. 21 (RED)

     Test point 2 Body ground

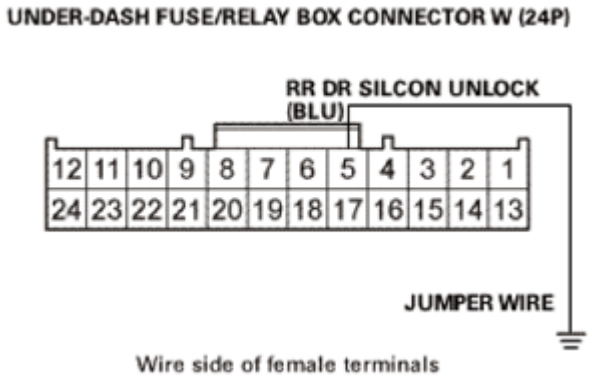

Fig. 118: Measuring Voltage Between Test Point Audio-Navigation Unit Connector A (24P) No. 21 (RED) And Body Ground
Courtesy of AMERICAN HONDA MOTOR CO., INC.

Is there battery voltage?

YES : Repair an open or high resistance in the wire between the stereo amplifier and the audio-navigation unit.

NO : REPLACE THE AUDIO-NAVIGATION UNIT .

7. Open wire check (GND line):
   - 1. Measure the voltage between test points 1 and 2.

     Test condition IG ON (II)

GETtheMANUALS.org

Test circuit GND

Test point 1 Stereo amplifier connector A (18P) No. 1 (BLK)

Test point 2 Body ground

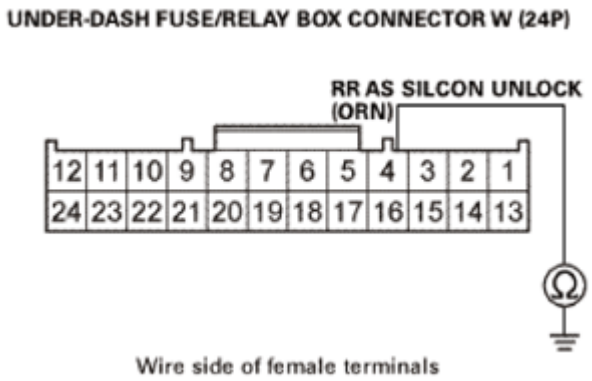

Fig. 119: Measuring Voltage Between Test Point Stereo Amplifier Connector A (18P) No. 1 (BLK) And Body Ground
Courtesy of AMERICAN HONDA MOTOR CO., INC.

Is there less than 0.2 V?

YES : The GND wire is OK. Go to step 8.

NO : Repair an open or high resistance in the wire between the stereo amplifier and body ground (G503).

8. Shorted wire check (SPKR lines, TWEETER lines, SUB WOOFER lines):
   - 1. Turn the ignition switch to LOCK (0).
   - 2. Disconnect the following connector.

     Stereo amplifier connector A (18P)

   - 3. Check for continuity between these test points and body ground individually.

     Test condition IG LOCK (0)

     Stereo amplifier connector A (18P): disconnected

Connector	Test circuit	Terminal
	FL SPKR+	No. 13 (WHT)
	FL SPKR-	No. 6 (BLK)
	FL TWEETER+	No. 12 (PUR)
	FL TWEETER-	No. 5 (PNK)
	FR SPKR+	No. 14 (RED)

GETtheMANUALS.org

Stereo amplifier connector A (18P)	FR SPKR-	No. 7 (GRN)
	FR TWEETER+	No. 15 (RED)
	FR TWEETER-	No. 8 (BLU)
	RL SPKR+	No. 16 (BLU)
	RL SPKR-	No. 9 (PNK)
	RR SPKR+	No. 17 (BLU)
	RR SPKR-	No. 10 (PNK)
	SUB WOOFER+	No. 4 (GRN)
	SUB WOOFER-	No. 2 (BLK)

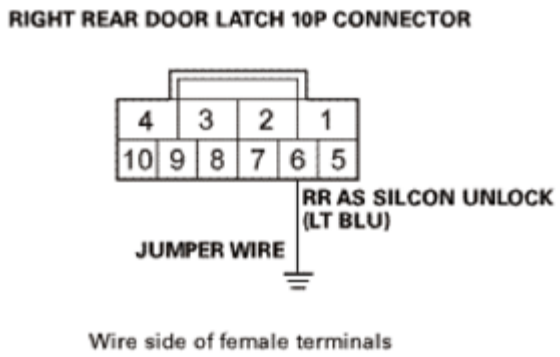

Fig. 120: Identifying Stereo Amplifier Connector A (18P)
Courtesy of AMERICAN HONDA MOTOR CO., INC.

Is there continuity?

YES : Repair a short to body ground in the wire(s) between the audio unit and the speaker(s).

NO : The SPKR, the TWEETER, and the SUB WOOFER wires are not shorted to ground. Go to step 9.

9. Determine possible failure area (speaker, others) 1:
   - 1. Check the speaker(s) with no sound for any damage.

Is there any damage?

YES : REPLACE THE FAULTY SPEAKER(S) .

NO : Go to step 10.

10. Determine possible failure area (speaker, others) 2:
    - 1. Disconnect the following connector(s).

      Front door speaker 2P connector

      Rear door speaker 2P connector

GETtheMANUALS.org

Tweeter 2P connector

Subwoofer 2P connector

- 2. TEST THE SPEAKER(S) .

Is the speaker(s) OK?

YES : Go to step 11.

NO : REPLACE THE FAULTY SPEAKER(S) .

11. Open wire check (SPKR lines, SUB WOOFER lines):
    - 1. Reconnect the front door speaker 2P connector(s), the rear door speaker 2P connector(s), and the subwoofer 2P connector.
    - 2. Measure the resistance between test points 1 and 2.

    Test condition IG LOCK (0)

    Stereo amplifier connector A (18P): disconnected

Test circuits	Test point 1: Stereo amplifier connector A (18P)	Test point 2: Stereo amplifier connector A (18P)	Resistance
FL SPKR+, FL SPKR-	No. 13 (WHT)	No. 6 (BLK)	About 4 ohms
FR SPKR+, FR SPKR-	No. 14 (RED)	No. 7 (GRN)	About 4 ohms
RL SPKR+, RL SPKR-	No. 16 (BLU)	No. 9 (PNK)	About 4 ohms
RR SPKR+, RR SPKR-	No. 17 (BLU)	No. 10 (PNK)	About 4 ohms
SUB WOOFER+, SUB WOOFER-	No. 4 (GRN)	No. 2 (BLK)	About 2 ohms

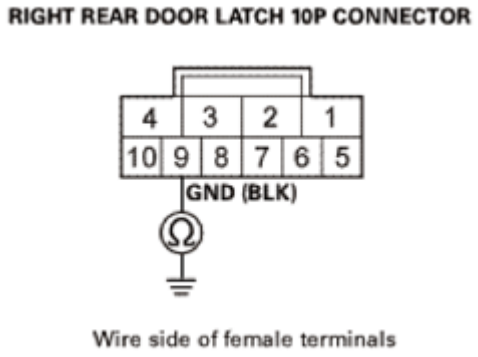

Fig. 121: Identifying Stereo Amplifier Connector A (18P)

GETtheMANUALS.org

Courtesy of AMERICAN HONDA MOTOR CO., INC.

Is the resistance OK?

YES : The SPKR and the SUB WOOFER wires are OK. Go to step 12.

NO : Repair an open in the wire(s) between the audio unit and the speaker(s).

12. Open wire check (TWEETER lines):
    - 1. Connect terminals A and B with jumper wires.

      Terminal A Stereo amplifier connector A (18P) No. 5 (PNK)

      Terminal B Stereo amplifier connector A (18P) No. 12 (PUR)

      Terminal A Stereo amplifier connector A (18P) No. 8 (BLU)

      Terminal B Stereo amplifier connector A (18P) No. 15 (RED)

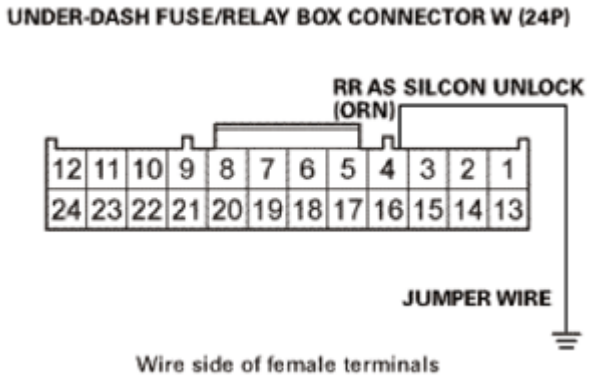

Fig. 122: Connecting Terminals Stereo Amplifier Connector A (18P) No. 5 (PNK) And No. 12 (PUR) With Jumper Wires
Courtesy of AMERICAN HONDA MOTOR CO., INC.

GETtheMANUALS.org

Keyless/Power Door Locks/Security System Symptom Troubleshooting - Doors automatically relock 30 seconds after being unlocked with the transmitter even though a door has been opened

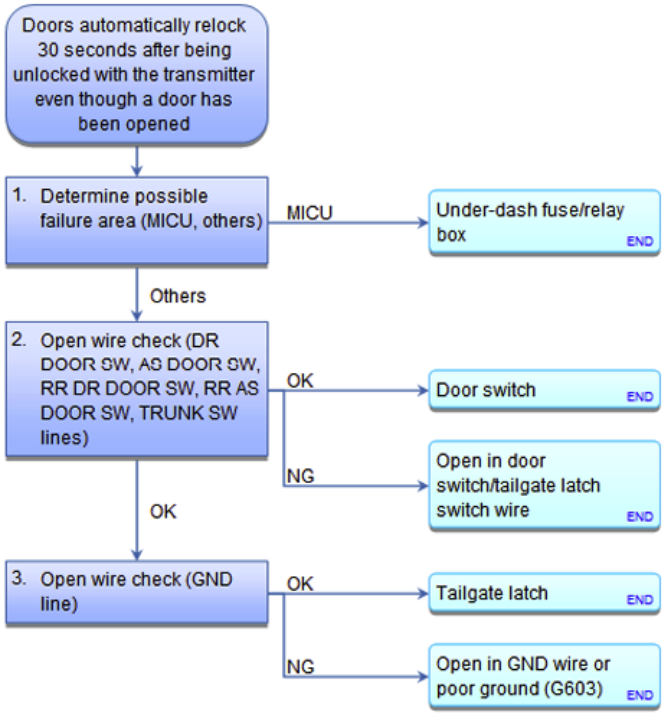

Fig. 123: Connecting Terminals Stereo Amplifier Connector A (18P) No. 8 (BLU) And No. 15 (RED) With Jumper Wires
Courtesy of AMERICAN HONDA MOTOR CO., INC.

- 2. Check for continuity between test points 1 and 2.

  Test condition IG LOCK (0)

  Stereo amplifier connector A (18P): disconnected

  Left (Right) front door speaker 2P connector: disconnected

  Left (Right) tweeter 2P connector: disconnected

  Stereo amplifier connector A (18P) terminals No. 5 and No. 12: jumped

  Stereo amplifier connector A (18P) terminals No. 8 and No. 15: jumped

  Test circuit FL TWEETER+, FL TWEETER-

  Test point 1 Left tweeter 2P connector No. 1 (PNK)

  Test point 2 Left tweeter 2P connector No. 2 (PUR)

  Test circuit FR TWEETER+, FR TWEETER-

GETtheMANUALS.org

Test point 1 Right tweeter 2P connector No. 1 (BLU)

Test point 2 Right tweeter 2P connector No. 2 (RED)

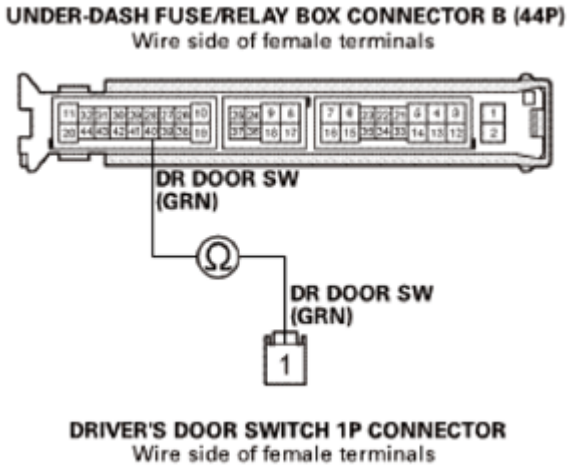

Fig. 124: Checking For Continuity Between Test Point Left Tweeter 2P Connector No. 1 (PNK) And No. 2 (PUR)
Courtesy of AMERICAN HONDA MOTOR CO., INC.

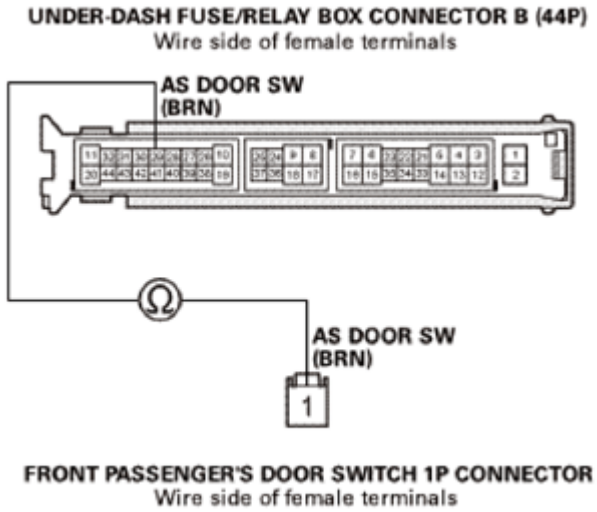

Fig. 125: Checking For Continuity Between Test Point Right Tweeter 2P Connector No. 1 (BLU) And No. 2 (RED)
Courtesy of AMERICAN HONDA MOTOR CO., INC.

Is there continuity?

YES : The TWEETER wires are OK. Go to step 13.

NO : Repair an open in the wire(s) between the stereo amplifier and the tweeter.

GETtheMANUALS.org

13. Open wire check (PRE lines):
    - 1. Disconnect the following connectors.

NOTE: **Eject all the discs before disconnecting the audio-navigation unit to prevent damaging the CD player's load mechanism.**

Stereo amplifier connector B (24P)

Audio-navigation unit connector A (24P)

Audio-navigation unit connector E (16P)

- 2. Check for continuity between test points 1 and 2.

Test condition IG LOCK (0)

Left (Right) tweeter 2P connector: disconnected

Stereo amplifier connector A (18P): disconnected

Stereo amplifier connector B (24P): disconnected

Audio-navigation unit connector A (24P): disconnected

Audio-navigation unit connector E (16P): disconnected

Test circuits	Test point 1: Audio-navigation unit connector A (24P)	Test point 2: Stereo amplifier connector B (24P)
FL PRE+	No. 15 (BRN)	No. 23 (BRN)
FL PRE	No. 16 (YEL)	No. 11 (YEL)
FR PRE+	No. 19 (RED)	No. 20 (RED)
FR PRE	No. 20 (GRN)	No. 8 (GRN)
RL PRE+	No. 5 (BLU)	No. 21 (BLU)
RL PRE	No. 6 (PNK)	No. 9 (PNK)
RR PRE+	No. 9 (LT BLU) No.	18 (LT BLU)
RR PRE	No. 10 (PUR)	No. 6 (PUR)

Test circuits	Test point 1: Audio-navigation unit connector E (16P)	Test point 2: Stereo amplifier connector B (24P)
SUB W PRE+	No. 3 (LT BLU)	No. 17 (LT BLU)
SUB W PRE	No. 11 (PUR)	No. 5 (PUR)

GETtheMANUALS.org

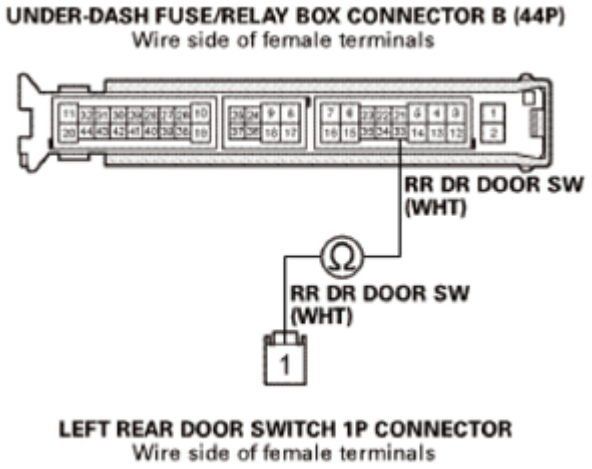

Fig. 126: Identifying Audio-Navigation Unit Connector A (24P)
Courtesy of AMERICAN HONDA MOTOR CO., INC.

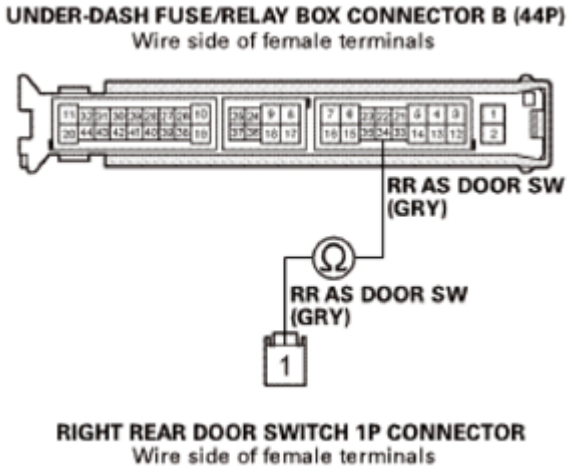

Fig. 127: Identifying Audio-Navigation Unit Connector E (16P)
Courtesy of AMERICAN HONDA MOTOR CO., INC.

GETtheMANUALS.org

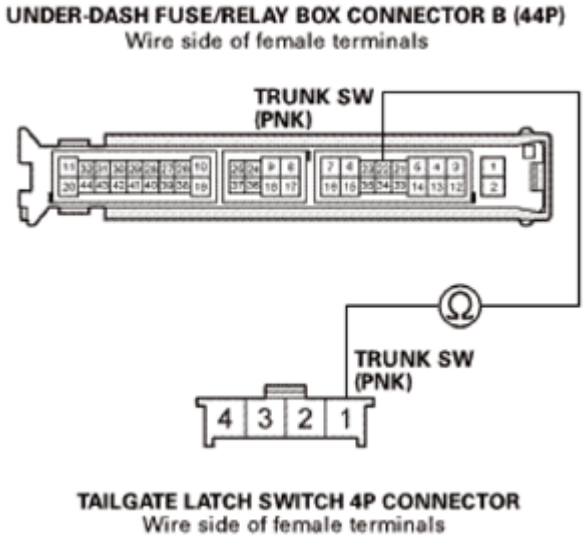

Fig. 128: Identifying Stereo Amplifier Connector B (24P)
Courtesy of AMERICAN HONDA MOTOR CO., INC.

Is there continuity

YES : The PRE wires are not open. Go to step 14.

NO : There is an open in the wire(s) between the audio-navigation unit and the stereo amplifier. Replace the affected shielded harness.

14. Shorted wire check (PRE lines):
    - 1. Check for continuity between these test points and body ground individually.

      Test condition IG LOCK (0)

      Left (Right) tweeter 2P connector: disconnected

      Stereo amplifier connector A (18P): disconnected

      Stereo amplifier connector B (24P): disconnected

      Audio-navigation unit connector A (24P): disconnected

      Audio-navigation unit connector E (16P): disconnected

Connector	Test circuits	Terminal
	FL PRE+	No. 23 (BRN)
	FL PRE-	No. 11 (YEL)
	FR PRE+	No. 20 (RED)
	FR PRE-	No. 8 (GRN)

GETtheMANUALS.org

Stereo amplifier connector B (24P)	RL PRE+	No. 21 (BLU)
	RL PRE-	No. 9 (PNK)
	RR PRE+	No. 18 (LT BLU)
	RR PRE-	No. 6 (PUR)
	SUB W PRE+	No. 17 (LT BLU)
	SUB W PRE-	No. 5 (PUR)

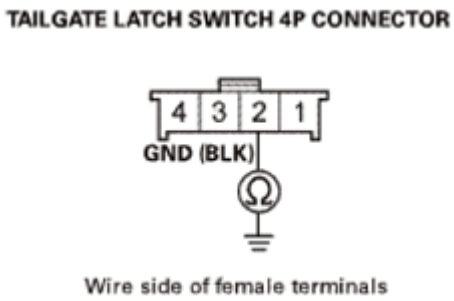

Fig. 129: Identifying Stereo Amplifier Connector B (24P)
Courtesy of AMERICAN HONDA MOTOR CO., INC.

Is there continuity?

YES : There is a short to body ground in the wire(s) between the stereo amplifier and the audio-navigation unit. Replace the affected shielded harness.

NO : The PRE wires are not shorted to ground. Go to step 15.

15. Shorted wire check (SH PRE line to another lines)
    - 1. Check for continuity between test points 1 and 2.

      Test condition IG LOCK (0)

      Left (Right) tweeter 2P connector: disconnected

      Stereo amplifier connector A (18P): disconnected

      Stereo amplifier connector B (24P): disconnected

      Audio-navigation unit connector A (24P): disconnected

      Audio-navigation unit connector E (16P): disconnected

Test circuits	Connector: Stereo amplifier connector B (24P)	
	Test point 1	Test points 2
SH FL PRE to FL PRE+, FL PRE-	No. 10 (GRY)	No. 23 (BRN), No. 11 (YEL)
SH FR PRE to FR PRE+, FR PRE-	No. 7 (GRY)	No. 20 (RED), No. 8 (GRN)

GETtheMANUALS.org

SH RL PRE to RL PRE+, RL PRE-	No. 22 (GRY)	No. 21 (BLU), No. 9 (PNK)
SH RR PRE to RR PRE+, RR PRE-	No. 19 (GRY)	No. 18 (LT BLU), No. 6 (PUR)
SH SUB W to SUB W PRE+, SUB W PRE-	No. 4 (GRY)	No. 17 (LT BLU), No. 5 (PUR)

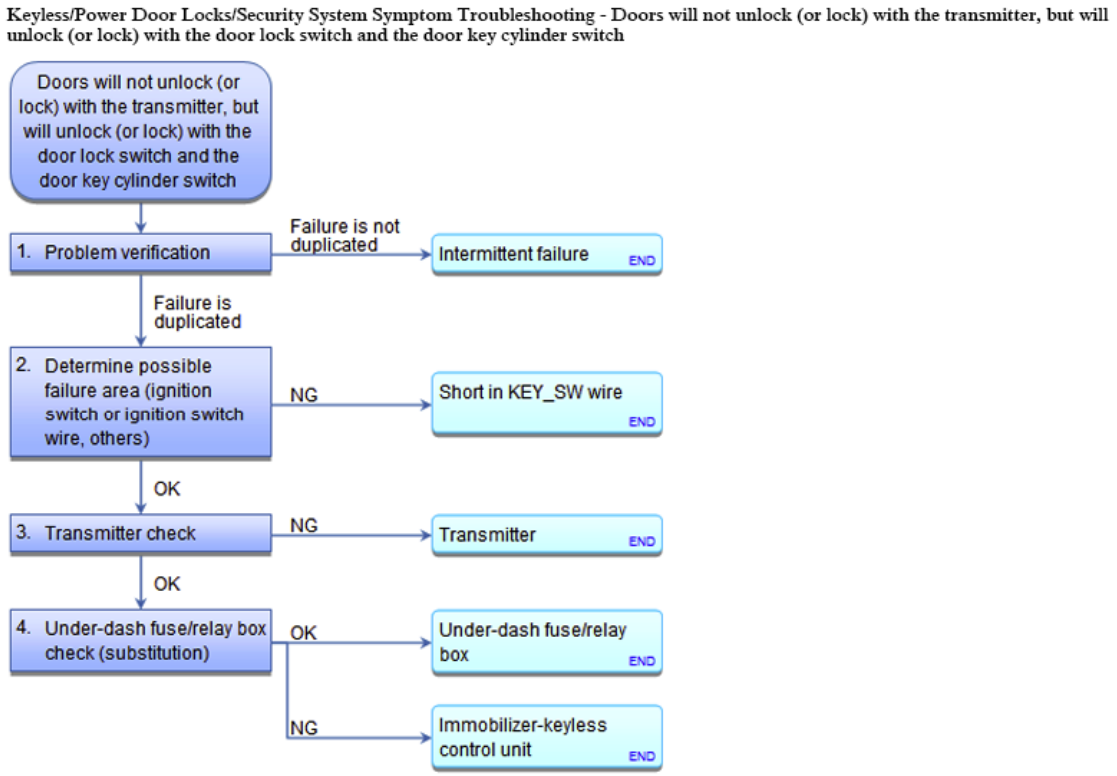

Fig. 130: Identifying Stereo Amplifier Connector B (24P)
Courtesy of AMERICAN HONDA MOTOR CO., INC.

Is there continuity between any of the terminals?

YES : There is a short in the wires between the stereo amplifier and the audio-navigation unit. Replace the affected shielded harness.

NO : The SH PRE wires and the PRE wires are OK. Go to step 16.

16. Audio-navigation unit check:
    - 1. SUBSTITUTE A KNOWN-GOOD STEREO AMPLIFIER , and recheck.

Does the symptom go away?

YES : Replace the original stereo amplifier.

NO : REPLACE THE AUDIO-NAVIGATION UNIT .

NO SOUND IS HEARD FROM THE SPEAKER(S) (DISPLAY IS NORMAL) (WITH STEREO

GETtheMANUALS.org

AMPLIFIER WITHOUT NAVIGATION)

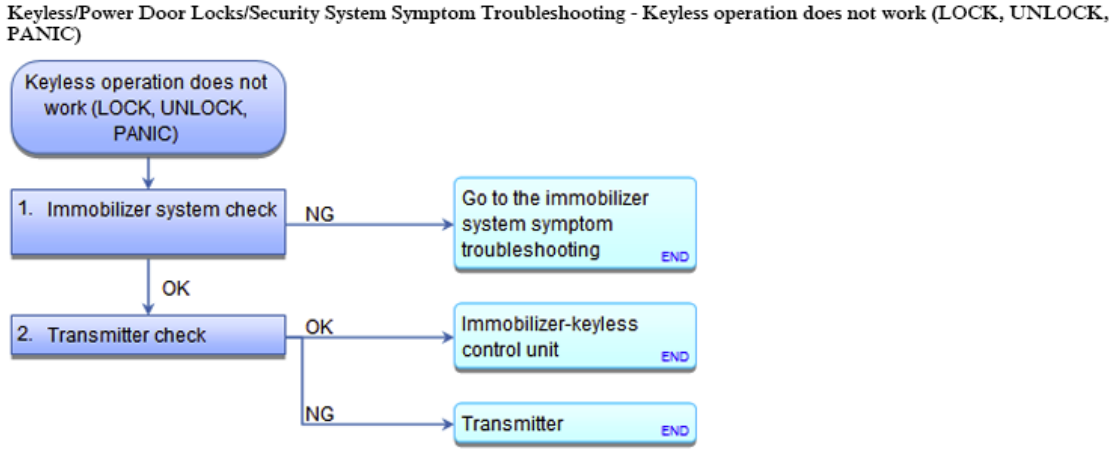

Fig. 131: Audio System Symptom Troubleshooting Flowchart - No Sound Is Heard From Speaker(s) [Display Is Normal] (1 Of 2)
Courtesy of AMERICAN HONDA MOTOR CO., INC.

GETtheMANUALS.org

Keyless/Power Door Locks/Security System Symptom Troubleshooting - Security alarm system will not arm

Fig. 132: Audio System Symptom Troubleshooting Flowchart - No Sound Is Heard From Speaker(s) [Display Is Normal] (2 Of 2)
Courtesy of AMERICAN HONDA MOTOR CO., INC.

GETtheMANUALS.org

NOTE:

- **CHECK THE VEHICLE BATTERY CONDITION FIRST .**
- **Set the fader and the balance positions to the center.**
- **Before doing this troubleshooting, go to AUDIO UNIT POWER SWITCH WILL NOT TURN ON (NO INFORMATION DISPLAY AND NO SOUND) TROUBLESHOOTING.**
- **Check the connectors for poor connections or loose terminals.**

1. Problem verification:
   - 1. Turn the ignition switch to ON (II).
   - 2. Turn on the audio system, and check for sound in each mode (AM/FM, USB, and CD).

   Is the sound OK in each mode?

   YES : Intermittent failure, the system is OK at this time. Check for loose connections at the audio unit and speaker (s).

   NO : The failure is duplicated in all modes, go to step 2.

   NO : **GO TO POOR AM OR FM RADIO RECEPTION INTERFERENCE (WITHOUT NAVIGATION) TROUBLESHOOTING**.

   NO : Go to **USB INPUT SOUND IS LOW OR CANNOT BE HEARD (WITHOUT NAVIGATION, WITH MULTI-INFORMATION DISPLAY) TROUBLESHOOTING**.

   NO : Go to **AUDIO DISC DOES NOT PLAY TROUBLESHOOTING**.

2. Determine possible failure area (volume level, others):
   - 1. Check that the volume knob is not set to the MIN level.

   Is it at the MIN level?

   YES : Raise the volume level, and recheck the function.

   NO : Go to step 3.

3. Determine possible failure area (audio unit, others):
   - 1. **DO THE SELF-DIAGNOSTIC FUNCTION, AND USE THE SPEAKER CHECK MODE**.

   Did all speakers produce a tone?

   YES : REPLACE THE AUDIO UNIT .

   NO : Go to step 4.

4. Fuse check:

GETtheMANUALS.org

- 1. Turn the ignition switch to LOCK (0).
- 2. Check the following fuse.

  Fuse No. A13 (20 A)

  Location Under-hood fuse/relay box

Is the fuse OK?

YES : Go to step 5.

NO : Replace the fuse, and recheck. If the fuse blows again, check for a short in the No. A13 (20 A) fuse circuit.

5. Open wire check (+B AUDIO AMP line):
   - 1. Measure the voltage between test points 1 and 2.

     Test condition IG LOCK (0)

     Test circuit +B AUDIO AMP

     Test point 1 Stereo amplifier connector A (18P) No. 3 (RED)

     Test point 2 Body ground

GETtheMANUALS.org

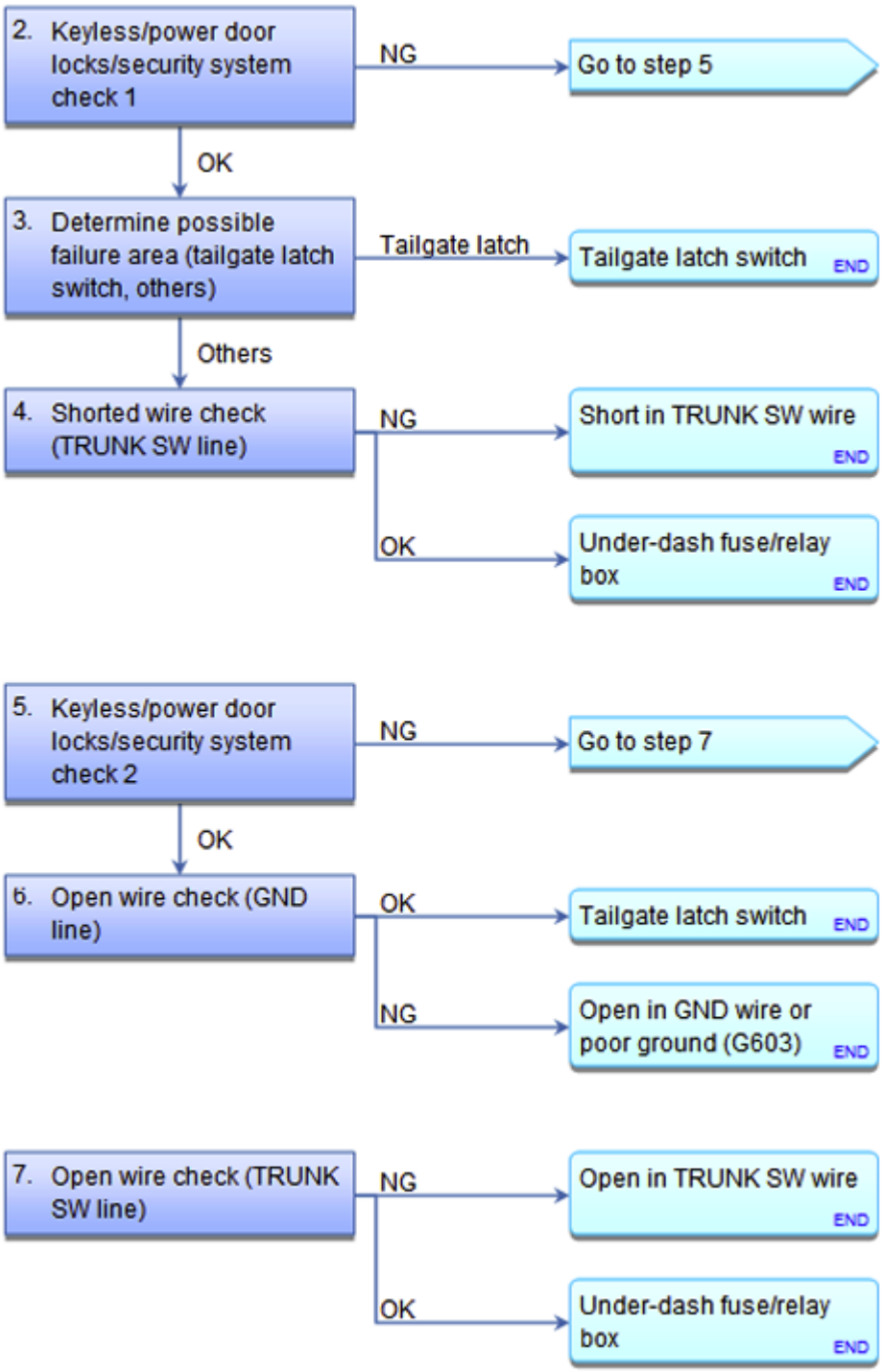

Fig. 133: Measuring Voltage Between Test point Stereo Amplifier Connector A (18P) No. 3 (RED) And Body Ground
Courtesy of AMERICAN HONDA MOTOR CO., INC.

Is there battery voltage?

YES : The +B AUDIO AMP wire is OK. Go to step 6.

GETtheMANUALS.org

NO : Repair an open or high resistance in the wire between the No. A13 (20 A) fuse in the under-hood fuse/relay box and the stereo amplifier.

6. Determine possible failure area (SWD +B line, others):
    - 1. Turn the ignition switch to ON (II).
    - 2. Measure the voltage between test points 1 and 2.

    Test condition IG ON (II)

    Test circuit SWD +B

    Test point 1 Stereo amplifier connector B (24P) No. 13 (RED)

    Test point 2 Body ground

GETtheMANUALS.org

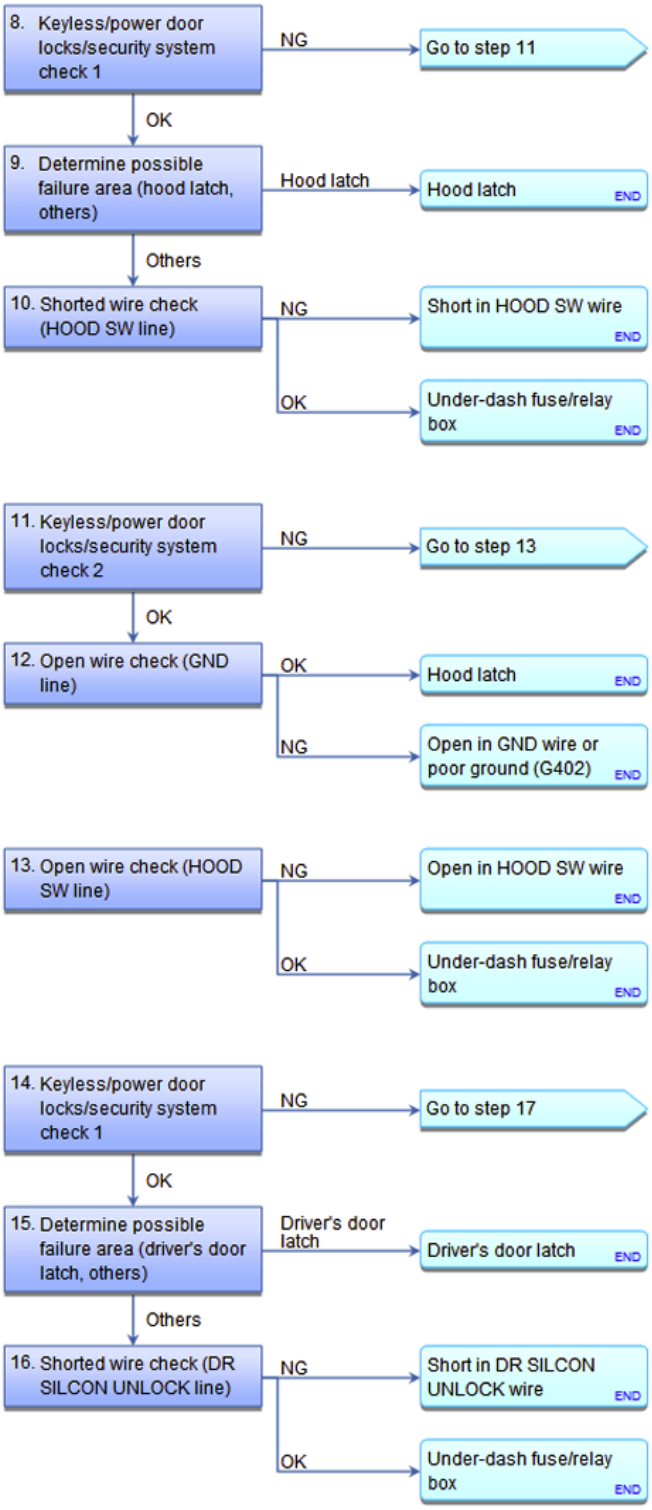

<u>Fig. 134: Measuring Voltage Between Test Point Stereo Amplifier Connector B (24P) No. 13 (RED) And Body Ground</u>
Courtesy of AMERICAN HONDA MOTOR CO., INC.

Is there battery voltage?

GETtheMANUALS.org

YES : Go to step 8.

NO : Go to step 7.

7. Open wire check (SWD +B line):
    - 1. Measure the voltage between test points 1 and 2.

      Test condition IG ON (II)

      Test circuit SWD +B

      Test point 1 Audio unit connector A (24P) No. 21 (RED)

      Test point 2 Body ground

GETtheMANUALS.org

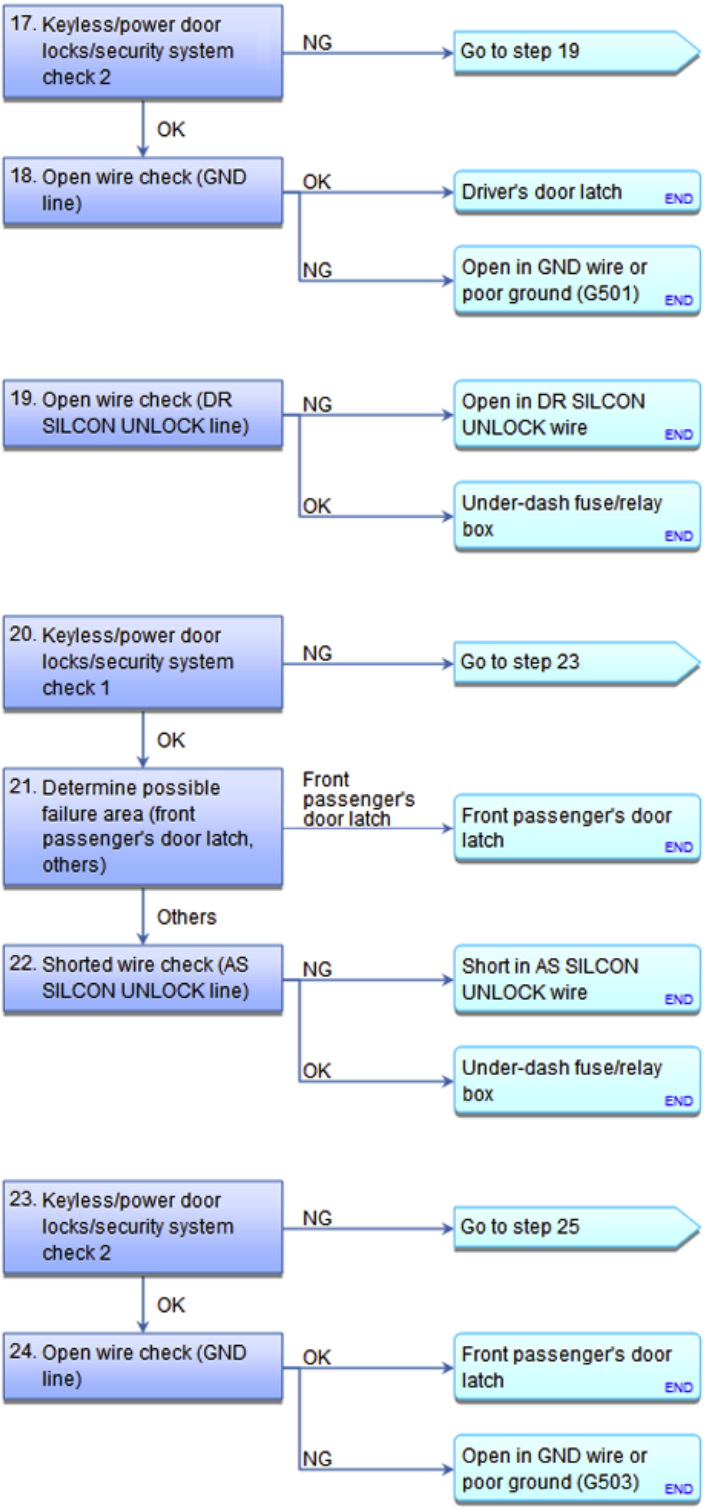

Fig. 135: Measuring Resistance Between Test Point Audio Unit Connector A (24P) No. 21 (RED) And Body Ground
Courtesy of AMERICAN HONDA MOTOR CO., INC.

Is there battery voltage?

GETtheMANUALS.org

YES : Repair an open or high resistance in the wire between the stereo amplifier and the audio unit.

NO : REPLACE THE AUDIO UNIT .

8. Open wire check (GND line):
    - 1. Measure the voltage between test points 1 and 2.

      Test condition IG ON (II)

      Test circuit GND

      Test point 1 Stereo amplifier connector A (18P) No. 1 (BLK)

      Test point 2 Body ground

GETtheMANUALS.org

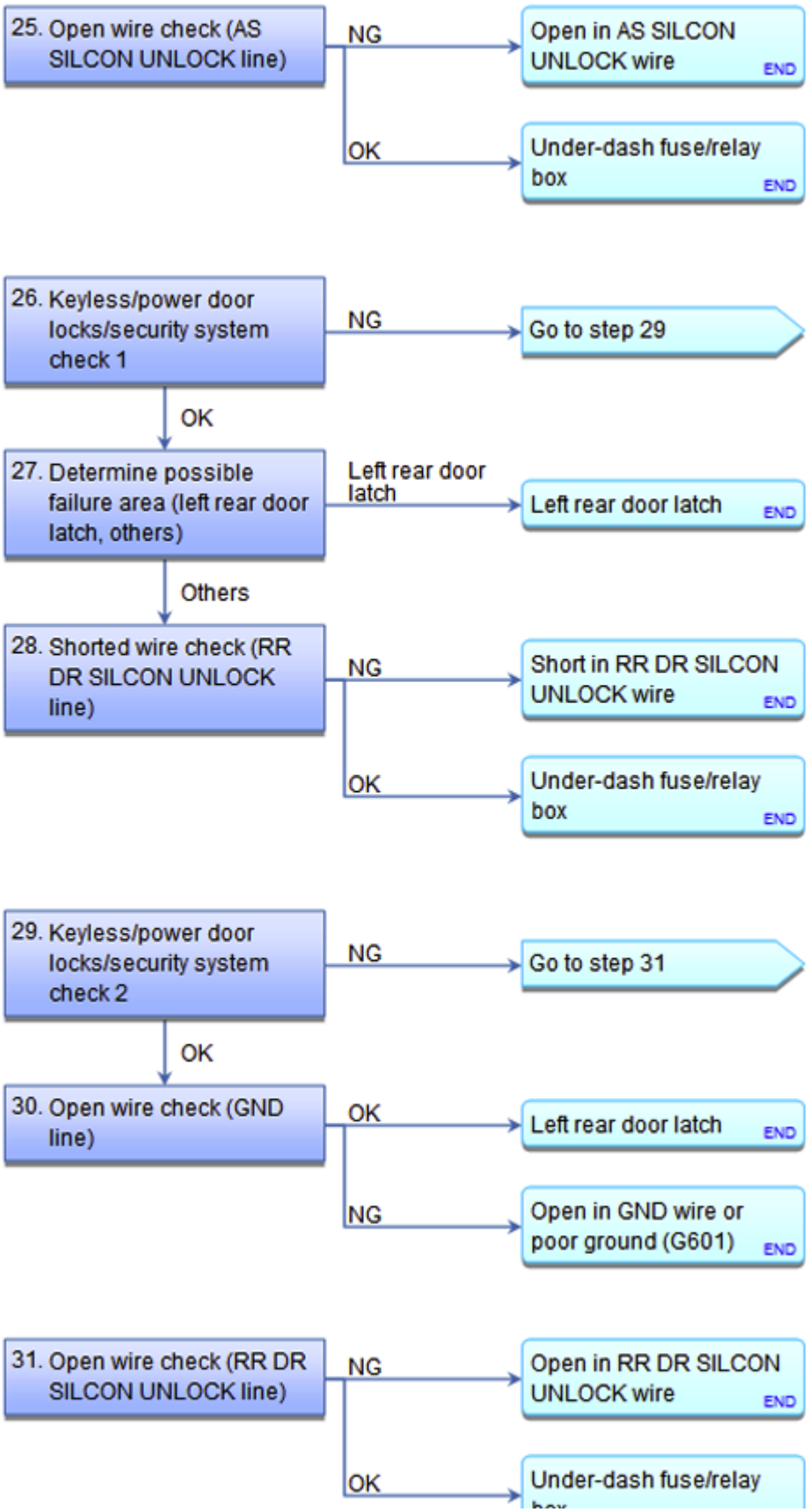

GETtheMANUALS.org

Fig. 136: Measuring Voltage Between Test Point Stereo Amplifier Connector A (18P) No. 1 (BLK) And Body Ground
Courtesy of AMERICAN HONDA MOTOR CO., INC.

Is there less than 0.2 V?

YES : The GND wire is OK. Go to step 9.

NO : Repair an open or high resistance in the wire between the stereo amplifier and body ground (G503).

9. Shorted wire check (SPKR lines, TWEETER lines, SUB WOOFER lines):
   - 1. Turn the ignition switch to LOCK (0).
   - 2. Disconnect the following connector.

     Stereo amplifier connector A (18P)

   - 3. Check for continuity between these test points and body ground individually.

     Test condition IG LOCK (0)

     Stereo amplifier connector A (18P): disconnected

Connector	Test circuit	Terminal
Stereo amplifier connector A (18P)	FL SPKR+	No. 13 (WHT)
	FL SPKR-	No. 6 (BLK)
	FL TWEETER+	No. 12 (PUR)
	FL TWEETER-	No. 5 (PNK)
	FR SPKR+	No. 14 (RED)
	FR SPKR-	No. 7 (GRN)
	FR TWEETER+	No. 15 (RED)
	FR TWEETER-	No. 8 (BLU)
	RL SPKR+	No. 16 (BLU)
	RL SPKR-	No. 9 (PNK)
	RR SPKR+	No. 17 (BLU)
	RR SPKR-	No. 10 (PNK)
	SUB WOOFER+	No. 4 (GRN)
	SUB WOOFER	No. 2 (BLK)

GETtheMANUALS.org

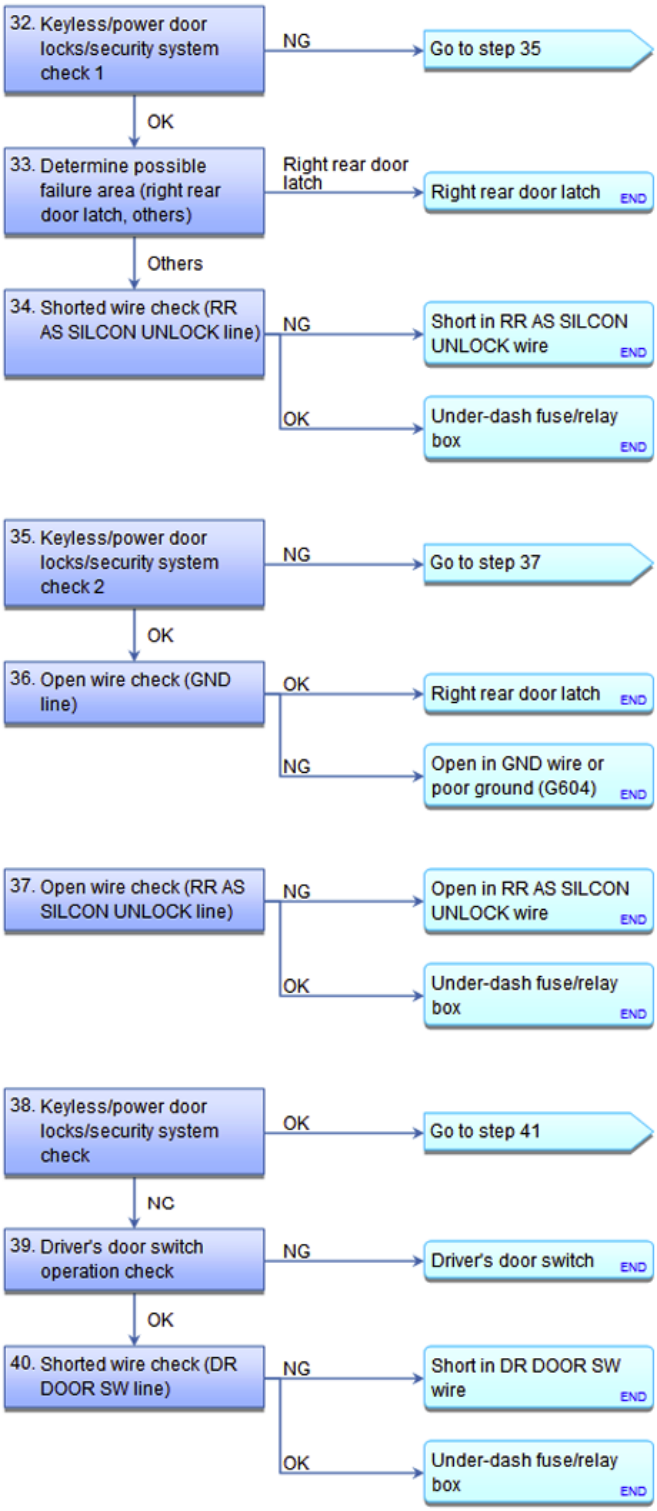

<u>Fig. 137: Identifying Stereo Amplifier Connector A (18P)</u>
Courtesy of AMERICAN HONDA MOTOR CO., INC.

Is there continuity?

GETtheMANUALS.org

YES : Repair a short to body ground in the wire(s) between the audio unit and the speaker(s).

NO : The SPKR, the TWEETER, and the SUB WOOFER wires are not shorted to ground. Go to step 10.

10. Determine possible failure area (speaker, others) 1:
    - 1. Check the speaker(s) with no sound for any damage.

Is there any damage?

YES : REPLACE THE FAULTY SPEAKER(S) .

NO : Go to step 11.

11. Determine possible failure area (speaker, others) 2:
    - 1. Disconnect the following connector(s).

      Front door speaker 2P connector

      Rear door speaker 2P connector

      Tweeter 2P connector

      Subwoofer 2P connector

    - 2. TEST THE SPEAKER(S) .

Is the speaker(s) OK?

YES : Go to step 12.

NO : REPLACE THE FAULTY SPEAKER(S) .

12. Open wire check (SPKR lines, SUB WOOFER lines):
    - 1. Reconnect the front door speaker 2P connector(s), the rear door speaker 2P connector(s), and the subwoofer 2P connector.
    - 2. Measure the resistance between test points 1 and 2.

      Test condition IG LOCK (0)

      Stereo amplifier connector A (18P): disconnected

Test circuits	Test point 1: Stereo amplifier connector A (18P)	Test point 2: Stereo amplifier connector A (18P)	Resistance
FL SPKR+, FL SPKR-	No. 13 (WHT)	No. 6 (BLK)	About 4 ohms
			About 4

GETtheMANUALS.org

FR SPKR+, FR SPKR-	No. 14 (RED)	No. 7 (GRN)	ohms
RL SPKR+, RL SPKR-	No. 16 (BLU)	No. 9 (PNK)	About 4 ohms
RR SPKR+, RR SPKR-	No. 17 (BLU)	No. 10 (PNK)	About 4 ohms
SUB WOOFER+, SUB WOOFER-	No. 4 (GRN)	No. 2 (BLK)	About 2 ohms

GETtheMANUALS.org

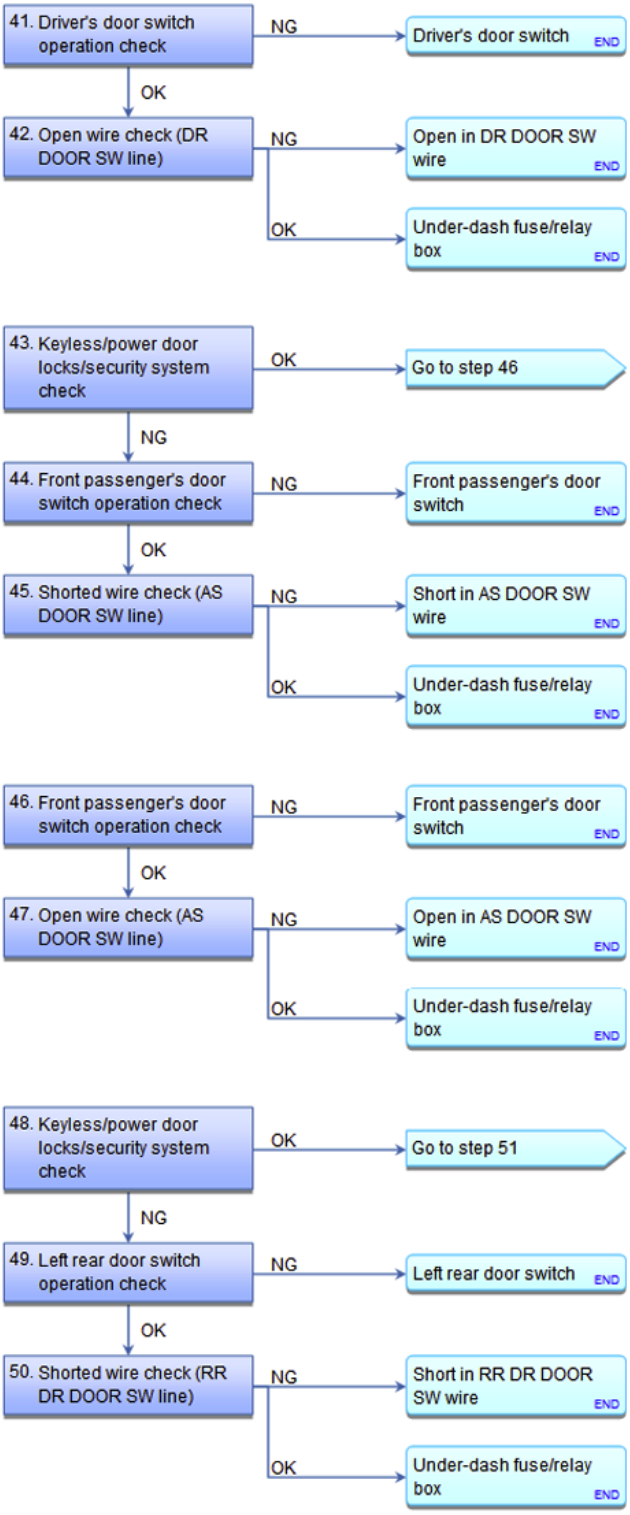

Fig. 138: Identifying Stereo Amplifier Connector A (18P)
Courtesy of AMERICAN HONDA MOTOR CO., INC.

Is the resistance OK?

GETtheMANUALS.org

YES : The SPKR and the SUB WOOFER wires are OK. Go to step 13.

NO : Repair an open in the wire(s) between the audio unit and the speaker(s).

13. Open wire check (TWEETER lines):
    - 1. Connect terminals A and B with jumper wires.

      Terminal A Stereo amplifier connector A (18P) No. 5 (PNK)

      Terminal B Stereo amplifier connector A (18P) No. 12 (PUR)

      Terminal A Stereo amplifier connector A (18P) No. 8 (BLU)

      Terminal B Stereo amplifier connector A (18P) No. 15 (RED)

GETtheMANUALS.org

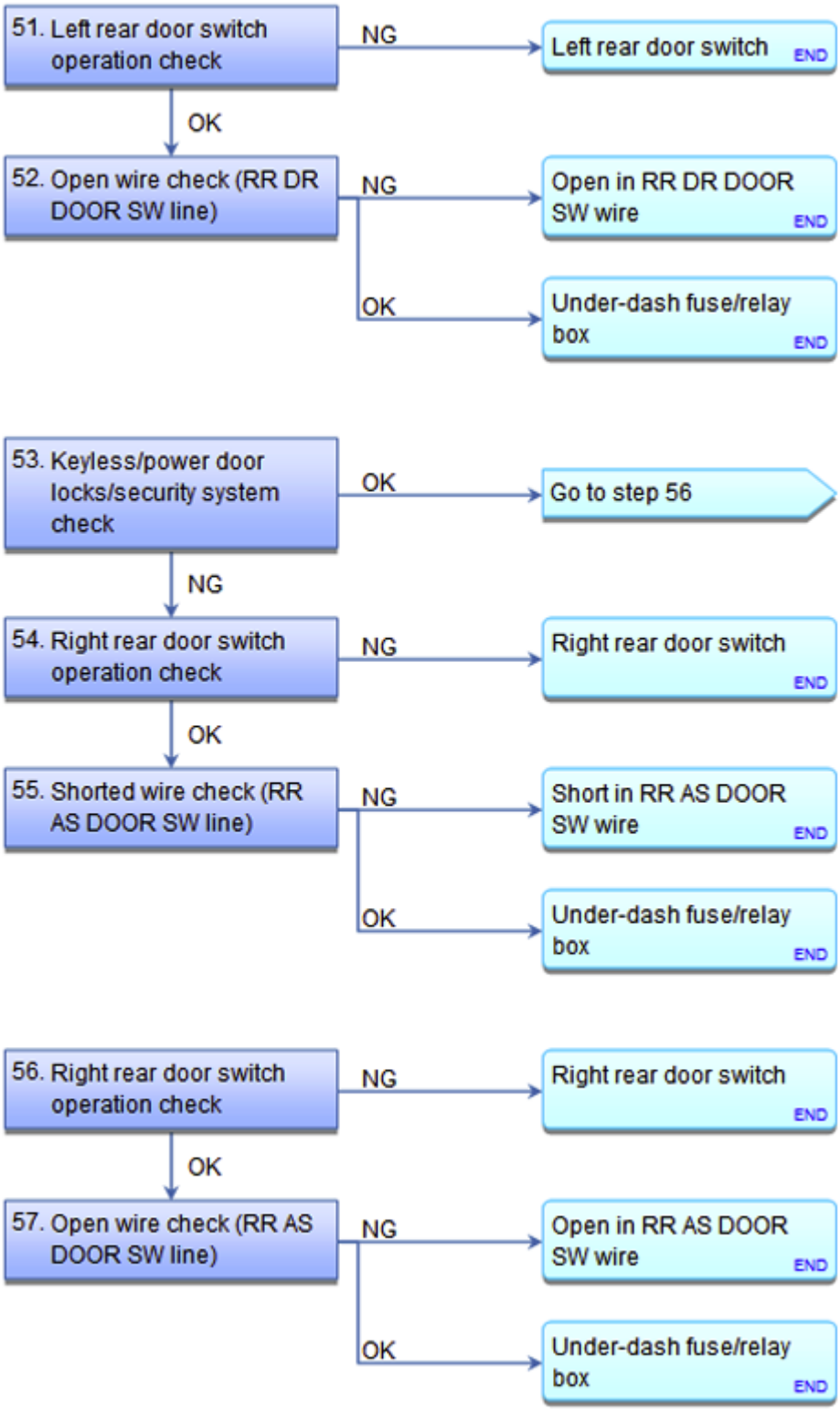

Fig. 139: Connecting Terminals Stereo Amplifier Connector A (18P) No. 5 (PNK) And No. 12 (PUR) With Jumper Wires
Courtesy of AMERICAN HONDA MOTOR CO., INC.

GETtheMANUALS.org

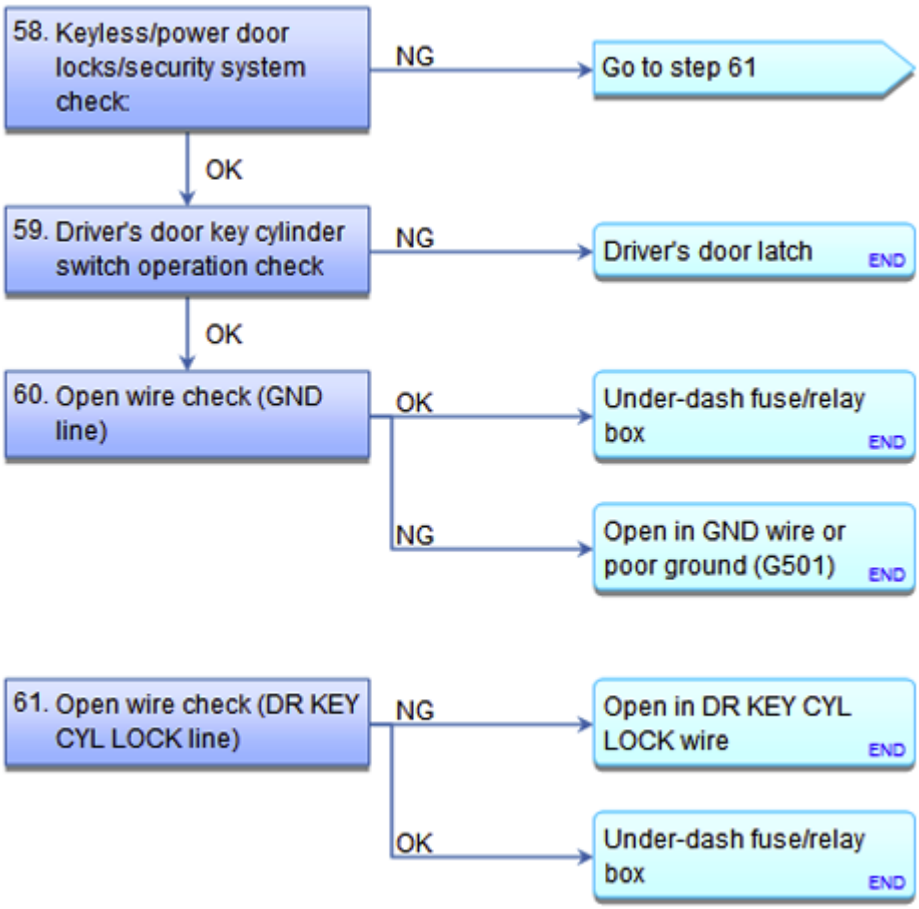

Fig. 140: Connecting Terminals Stereo Amplifier Connector A (18P) No. 8 (BLU) And No. 15 (RED) With Jumper Wires
Courtesy of AMERICAN HONDA MOTOR CO., INC.

- 2. Check for continuity between test points 1 and 2.

  Test condition IG LOCK (0)

  Stereo amplifier connector A (18P): disconnected

  Left (Right) front door speaker 2P connector: disconnected

  Left (Right) tweeter 2P connector: disconnected

  Stereo amplifier connector A (18P) terminals No. 5 and No. 12: jumped

  Stereo amplifier connector A (18P) terminals No. 8 and No. 15: jumped

  Test circuit FL TWEETER+, FL TWEETER-

  Test point 1 Left tweeter 2P connector No. 1 (PNK)

GETtheMANUALS.org

Test point 2 Left tweeter 2P connector No. 2 (PUR)

Test circuit FR TWEETER+, FR TWEETER-

Test point 1 Right tweeter 2P connector No. 1 (BLU)

Test point 2 Right tweeter 2P connector No. 2 (RED)

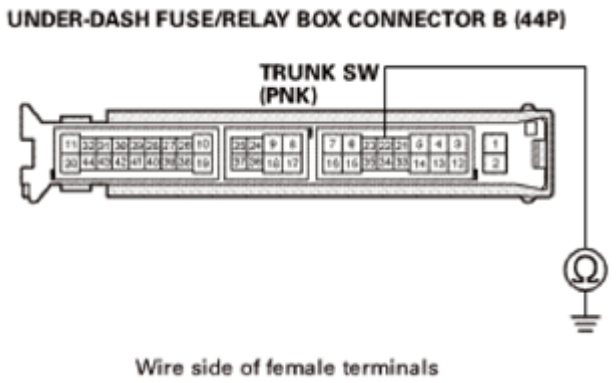

Fig. 141: Checking For Continuity Between Test Point Left Tweeter 2P Connector No. 1 (PNK) And No. 2 (PUR)
Courtesy of AMERICAN HONDA MOTOR CO., INC.

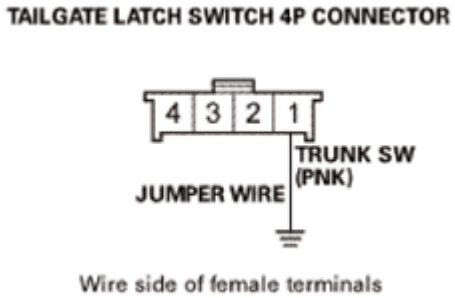

Fig. 142: Checking For Continuity Between Test Point Right Tweeter 2P Connector No. 1 (BLU) And No. 2 (RED)
Courtesy of AMERICAN HONDA MOTOR CO., INC.

Is there continuity?

YES : The TWEETER wires are OK. Go to step 14.

NO : Repair an open in the wire(s) between the stereo amplifier and the tweeter.

14. Open wire check (PRE lines):
    - 1. Disconnect the following connectors.

NOTE: **Eject all the discs before disconnecting the audio unit to prevent**

GETtheMANUALS.org

damaging the CD player's load mechanism.

Stereo amplifier connector B (24P)

Audio unit connector A (24P)

Audio unit connector E (8P)

- 2. Check for continuity between test points 1 and 2.

Test condition IG LOCK (0)

Left (Right) tweeter 2P connector: disconnected

Stereo amplifier connector A (18P): disconnected

Stereo amplifier connector B (24P): disconnected

Audio unit connector A (24P): disconnected

Audio unit connector E (8P): disconnected

Test circuits	Test point 1: Audio unit connector A (24P)	Test point 2: Stereo amplifier connector B (24P)
FL PRE+	No. 15 (BRN)	No. 23 (BRN)
FL PRE-	No. 16 (YEL)	No. 11 (YEL)
FR PRE+	No. 19 (RED)	No. 20 (RED)
FR PRE-	No. 20 (GRN)	No. 8 (GRN)
RL PRE+	No. 5 (BLU)	No. 21 (BLU)
RL PRE-	No. 6 (PNK)	No. 9 (PNK)
RR PRE+	No. 9 (LT BLU)	No. 18 (LT BLU)
RR PRE-	No. 10 (PUR)	No. 6 (PUR)

Test circuits	Test point 1: Audio unit connector E (8P)	Test point 2: Stereo amplifier connector B (24P)
SUB W PRE+	No. 5 (LT BLU)	No. 17 (LT BLU)
SUB W PRE-	No. 7 (PUR)	No. 5 (PUR)

GETtheMANUALS.org

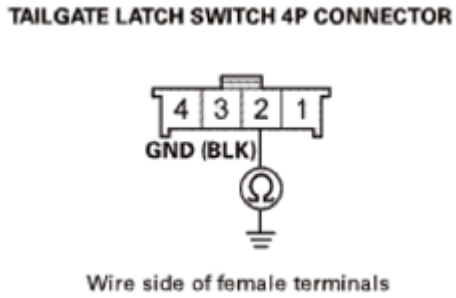

Fig. 143: Identifying Audio Unit Connector A (24P)
Courtesy of AMERICAN HONDA MOTOR CO., INC.

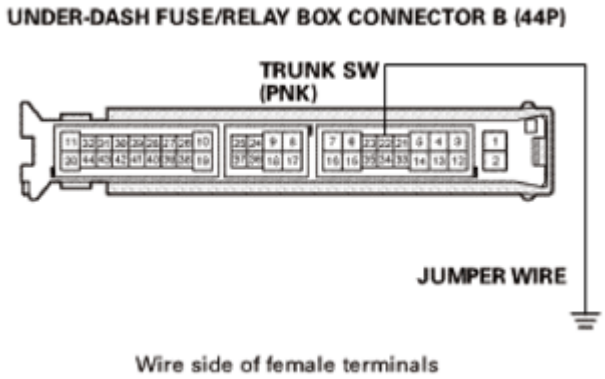

Fig. 144: Identifying Audio Unit Connector E (8P)
Courtesy of AMERICAN HONDA MOTOR CO., INC.

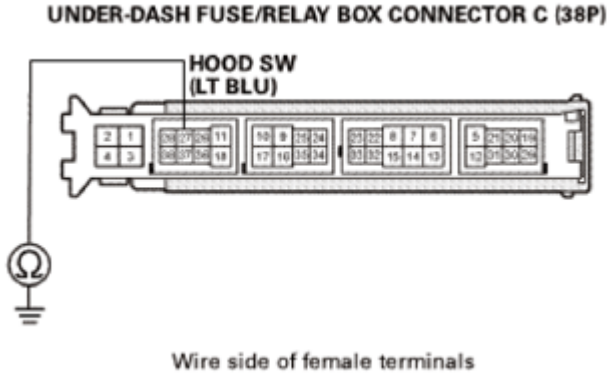

Fig. 145: Identifying Stereo Amplifier Connector B (24P)
Courtesy of AMERICAN HONDA MOTOR CO., INC.

Is there continuity

YES : The PRE wires are not open. Go to step 15.

NO : There is an open in the wire(s) between the audio unit and the stereo amplifier. Replace the affected shielded harness.

GETtheMANUALS.org

15. Shorted wire check (PRE lines):
    - 1. Check for continuity between these test points and body ground individually.

      Test condition IG LOCK (0)

      Left (Right) tweeter 2P connector: disconnected

      Stereo amplifier connector A (18P): disconnected

      Stereo amplifier connector B (24P): disconnected

      Audio unit connector A (24P): disconnected

      Audio unit connector E (8P): disconnected

Connector	Test circuits	Terminal
Stereo amplifier connector B (24P)	FL PRE+	No. 23 (BRN)
	FL PRE-	No. 11 (YEL)
	FR PRE+	No. 20 (RED)
	FR PRE-	No. 8 (GRN)
	RL PRE+	No. 21 (BLU)
	RL PRE-	No. 9 (PNK)
	RR PRE+	No. 18 (LT BLU)
	RR PRE-	No. 6 (PUR)
	SUB W PRE+	No. 17 (LT BLU)
	SUB W PRE-	No. 5 (PUR)

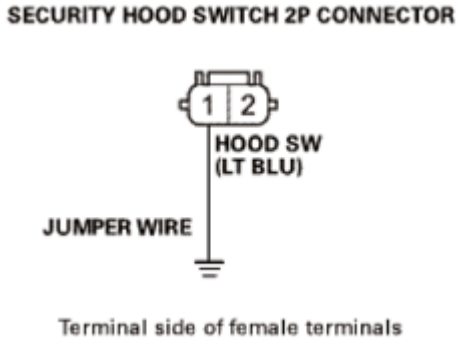

Fig. 146: Identifying Stereo Amplifier Connector B (24P)
Courtesy of AMERICAN HONDA MOTOR CO., INC.

Is there continuity?

YES : There is a short to body ground in the wire(s) between the stereo amplifier and the audio unit. Replace the affected shielded harness.

GETtheMANUALS.org

NO : The PRE wires are not shorted to ground. Go to step 16.

16. Shorted wire check (SH PRE line to another lines)
    - 1. Check for continuity between test points 1 and 2.

      Test condition IG LOCK (0)

      Left (Right) tweeter 2P connector: disconnected

      Stereo amplifier connector A (18P): disconnected

      Stereo amplifier connector B (24P): disconnected

      Audio unit connector A (24P): disconnected

      Audio unit connector E (8P): disconnected

Test circuits	Connector: Stereo amplifier connector B (24P)	
	Test point 1	Test points 2
SH FL PRE to FL PRE+, FL PRE-	No. 10 (GRY)	No. 23 (BRN), No. 11 (YEL)
SH FR PRE to FR PRE+, FR PRE-	No. 7 (GRY)	No. 20 (RED), No. 8 (GRN)
SH RL PRE to RL PRE+, RL PRE-	No. 22 (GRY)	No. 21 (BLU), No. 9 (PNK)
SH RR PRE to RR PRE+, RR PRE-	No. 19 (GRY)	No. 18 (LT BLU), No. 6 (PUR)
SH SUB W to SUB W PRE+, SUB W PRE-	No. 4 (GRY)	No. 17 (LT BLU), No. 5 (PUR)

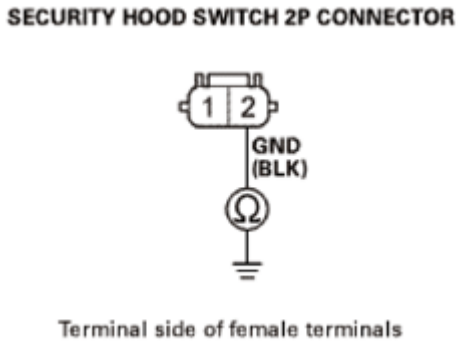

Fig. 147: Identifying Stereo Amplifier Connector B (24P)
Courtesy of AMERICAN HONDA MOTOR CO., INC.

Is there continuity between any of the terminals?

YES : There is a short in the wires between the stereo amplifier and the audio unit. Replace the affected shielded harness.

NO : The SH PRE wires and the PRE wires are OK. Go to step 17.

GETtheMANUALS.org

17. Audio unit check:
    - 1. SUBSTITUTE A KNOWN-GOOD STEREO AMPLIFIER, AND RECHECK .

    Does the symptom go away?

    YES : Replace the original stereo amplifier.

    NO : REPLACE THE AUDIO UNIT .

NO SOUND IS HEARD FROM THE SPEAKER(S) (DISPLAY IS NORMAL) (WITHOUT NAVIGATION AND STEREO AMPLIFIER)

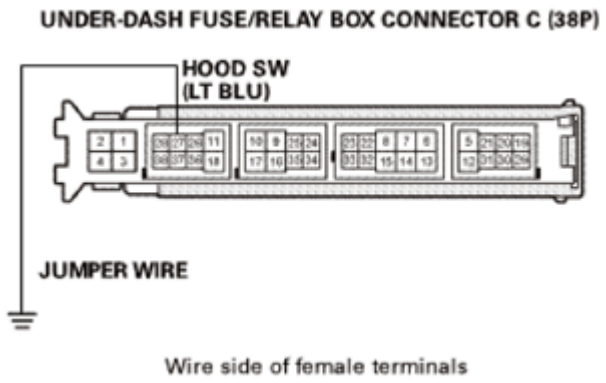

Fig. 148: Audio System Symptom Troubleshooting Flowchart - No Sound Is Heard From Speaker(s) (Display Is Normal)
Courtesy of AMERICAN HONDA MOTOR CO., INC.

NOTE:

- **CHECK THE VEHICLE BATTERY CONDITION FIRST .**
- **Set the fader and the balance positions to the center.**
- **Before doing this troubleshooting, go to AUDIO UNIT POWER SWITCH WILL NOT TURN ON (NO INFORMATION DISPLAY AND NO SOUND) TROUBLESHOOTING.**
- **Check the connectors for poor connections or loose terminals.**

1. Problem verification:
    - 1. Turn the ignition switch to ON (II).
    - 2. Turn on the audio unit, and check for sound in each mode (AM/FM, USB, and CD).

    Is the sound OK in each mode?

    YES : Intermittent failure, the system is OK at this time. Check for loose connections at the audio unit and speaker(s).

    NO : The failure is duplicated in all modes, go to step 2.

GETtheMANUALS.org

NO : Go to **POOR AM OR FM RADIO RECEPTION INTERFERENCE (WITH NAVIGATION) TROUBLESHOOTING**.

NO : Go to **USB INPUT SOUND IS LOW OR CANNOT BE HEARD (WITHOUT NAVIGATION, WITH MULTI-INFORMATION DISPLAY) TROUBLESHOOTING**.

NO : Go to **USB INPUT SOUND IS LOW OR CANNOT BE HEARD (WITHOUT NAVIGATION AND MULTI-INFORMATION DISPLAY) TROUBLESHOOTING**.

NO : Go to **AUDIO DISC DOES NOT PLAY TROUBLESHOOTING**.

2. Determine possible failure area (volume level, others):
   - 1. Check that the volume button is not set to the MIN level.

Is it at the MIN level?

YES : Raise the volume level, and recheck the function.

NO : Go to step 3.

3. Determine possible failure area (audio unit, others):
   - 1. **DO THE SELF-DIAGNOSTIC FUNCTION, AND USE THE SPEAKER CHECK MODE**.

Did all speakers produce a tone?

YES : REPLACE THE AUDIO UNIT .

NO : Go to step 4.

4. Shorted wire check (SPKR lines):
   - 1. Turn the ignition switch to LOCK (0).
   - 2. Disconnect the following connector.

NOTE: **Eject all the discs before disconnecting the audio unit to prevent damaging the CD player's load mechanism.**

Audio unit connector A (24P)

- 3. Check for continuity between these test points and body ground individually.

Test condition IG LOCK (0)

Audio unit connector A (24P): disconnected

Connector	Test circuit	Terminal

GETtheMANUALS.org

Audio unit connector A (24P)	RL SPKR+	No. 5 (BLU)
	RL SPKR-	No. 6 (PNK)
	RR SPKR+	No. 9 (BLU)
	RR SPKR-	No. 10 (PNK)
	FL SPKR+	No. 15 (WHT)
	FL SPKR-	No. 16 (BLK)
	FR SPKR+	No. 19 (RED)
	FR SPKR-	No. 20 (GRN)

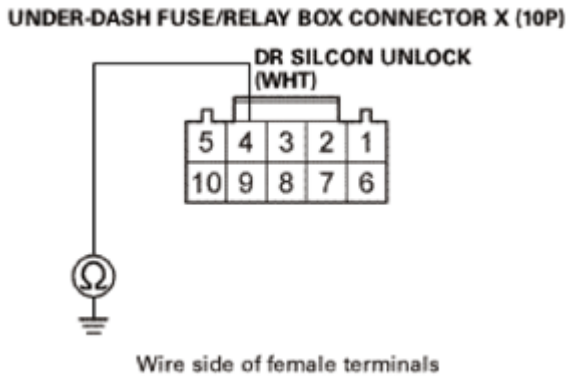

Fig. 149: Identifying Audio Unit Connector A (24P)
Courtesy of AMERICAN HONDA MOTOR CO., INC.

Is there continuity?

YES : Repair a short to body ground in the wire(s) between the audio unit and the speaker(s).

NO : The SPKR wires are not shorted to ground. Go to step 5.

5. Determine possible failure area (speaker, others) 1:
   - 1. Check the speaker(s) with no sound for any damage.

Is there any damage?

YES : REPLACE THE FAULTY SPEAKER(S) .

NO : Go to step 6.

6. Determine possible failure area (speaker, others) 2:
   - 1. Disconnect the following connector(s).

     Front door speaker 2P connector

     Rear door speaker 2P connector

GETtheMANUALS.org

Tweeter 2P connector (with tweeter)

- 2. TEST THE SPEAKER(S) .

Is the speaker(s) OK?

YES : Go to step 7.

NO : REPLACE THE FAULTY SPEAKER(S) .

7. Open wire check (SPKR lines):
   - 1. Reconnect the front door speaker 2P connector(s) and the rear door speaker 2P connector(s).
   - 2. Measure the resistance between test points 1 and 2.

   Test condition IG LOCK (0)

   Audio unit connector A (24P): disconnected

Test circuits	Test point 1: Audio unit connector A (24P)	Test point 2: Audio unit connector A (24P)	Resistance
RL SPKR+, RL SPKR-	No. 5 (BLU)	No. 6 (PNK)	About 4 ohms
RR SPKR+, RR SPKR-	No. 9 (BLU)	No. 10 (PNK)	About 4 ohms
FL SPKR+, FL SPKR-	No. 15 (WHT)	No. 16 (BLK)	About 4 ohms
FR SPKR+, FR SPKR-	No. 19 (RED)	No. 20 (GRN)	About 4 ohms

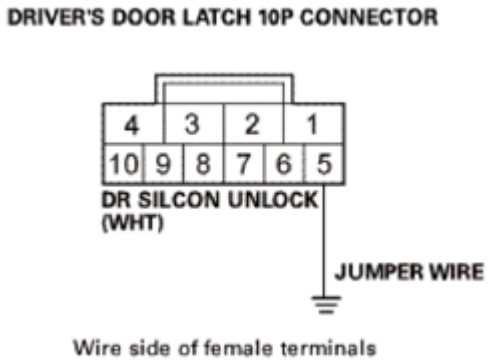

Fig. 150: Identifying Audio Unit Connector A (24P)
Courtesy of AMERICAN HONDA MOTOR CO., INC.

Is the resistance OK?

YES : The SPKR wires are not open. Go to step 8.

GETtheMANUALS.org

YES : REPLACE THE AUDIO UNIT .

NO : Repair an open in the wire(s) between the audio unit and the speaker(s).

8. Open wire check (FR SPKR (Tweeter) lines):
   - 1. Connect terminals A and B with jumper wires.

     Terminal A Audio unit connector A (24P) No. 15 (WHT)

     Terminal B Audio unit connector A (24P) No. 16 (BLK)

     Terminal A Audio unit connector A (24P) No. 19 (RED)

     Terminal B Audio unit connector A (24P) No. 20 (GRN)

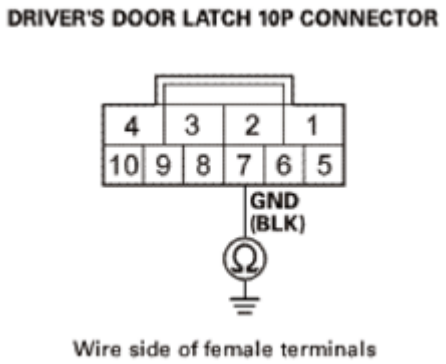

Fig. 151: Connecting Terminals Audio Unit Connector A (24P) No. 15 (WHT) And No. 16 (BLK) With Jumper Wires
Courtesy of AMERICAN HONDA MOTOR CO., INC.

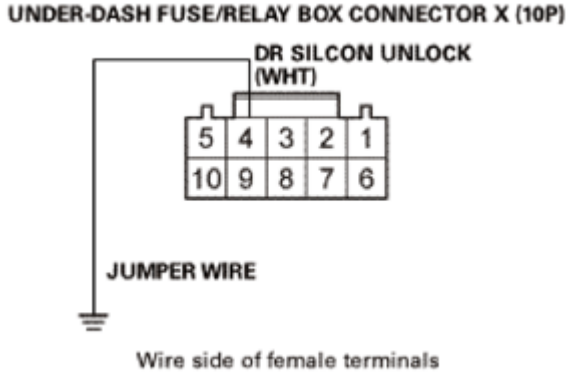

Fig. 152: Connecting Terminals Audio Unit Connector A (24P) No. 19 (RED) And No. 20 (GRN) With Jumper Wires
Courtesy of AMERICAN HONDA MOTOR CO., INC.

   - 2. Check for continuity between test points 1 and 2.

GETtheMANUALS.org

Test condition IG LOCK (0)

Audio unit connector A (24P): disconnected

Left (Right) front door speaker 2P connector: disconnected

Audio unit connector A (24P) terminals No. 15 and No. 16: jumped

Audio unit connector A (24P) terminals No. 19 and No. 20: jumped

Test circuit FL SPKR+, FL SPKR-

Test point 1 Left tweeter 2P connector No. 1 (BLK)

Test point 2 Left tweeter 2P connector No. 2 (WHT)

Test circuit FR SPKR+, FR SPKR-

Test point 1 Right tweeter 2P connector No. 1 (GRN)

Test point 2 Right tweeter 2P connector No. 2 (RED)

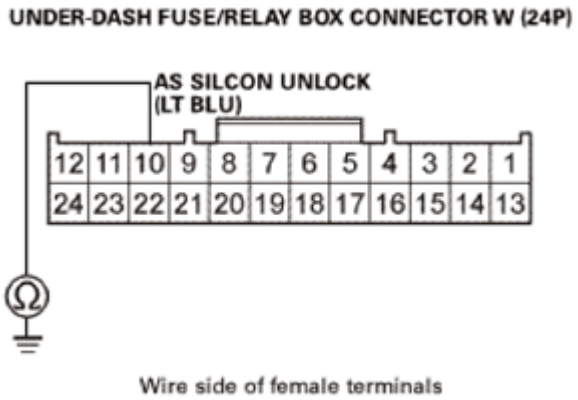

Fig. 153: Checking For Continuity Between Test Point Left Tweeter 2P Connector No. 1 (BLK) And No. 2 (WHT)
Courtesy of AMERICAN HONDA MOTOR CO., INC.

GETtheMANUALS.org

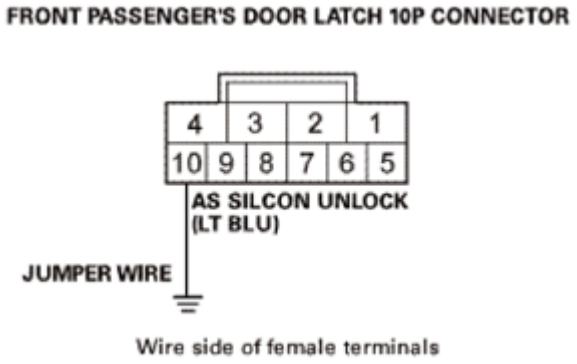

Fig. 154: Checking For Continuity Between Test Point Right Tweeter 2P Connector No. 1 (GRN) And No. 2 (RED)
Courtesy of AMERICAN HONDA MOTOR CO., INC.

Is there continuity?

YES : REPLACE THE AUDIO UNIT .

NO : Repair an open in the wire(s) between the audio unit and the tweeter.

POOR AM OR FM RADIO RECEPTION OR INTERFERENCE (WITH NAVIGATION)

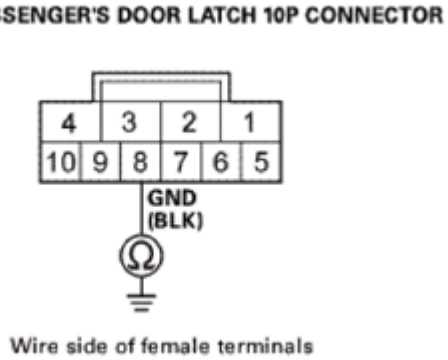

Fig. 155: Audio System Symptom Troubleshooting Flowchart - Poor AM Or FM Radio Reception Or Interference (1 Of 2)
Courtesy of AMERICAN HONDA MOTOR CO., INC.

GETtheMANUALS.org

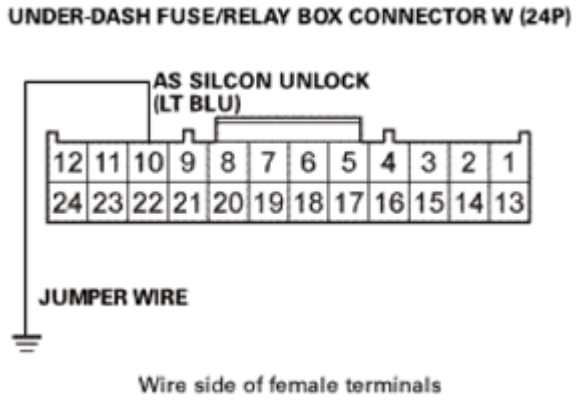

Fig. 156: Audio System Symptom Troubleshooting Flowchart - Poor AM Or FM Radio Reception Or Interference (2 Of 2)
Courtesy of AMERICAN HONDA MOTOR CO., INC.

NOTE:

- **CHECK THE VEHICLE BATTERY CONDITION FIRST .**
- **Check for aftermarket accessories plugged into the vehicle accessory power sockets.**
- **Check for any radio frequency modulators that are plugged into the FM antenna lead. These modulators allow customers to play audio from accessories like CD players or game consoles using the audio system, but they can create interference issues.**
- **Check the radio reception in an open area. Compare it to a known-good vehicle whenever possible. Poor reception/interference can be caused by the following:**
  - **The radio station is far away**
  - **Atmospheric conditions are unfavorable**
  - **Tall buildings, mountains, or high-voltage power lines are nearby**
  - **Electrical loads like the rear window defroster, seat heaters, game consoles, etc.**
- **Check the connectors for poor connections or loose terminals.**

1. Problem verification:
   - 1. Turn the ignition switch to ON (II).
   - 2. **DO THE SEEK STOP TEST IN THE SOUND QUALITY DIAGNOSIS** .

   Is the test vehicle within 10 % of the known-good vehicle?

   YES : Multipath interference or weak station. Operation is normal.

   NO : The failure is duplicated, go to step 2.

2. Determine possible failure area (charging system and ignition system, others):

GETtheMANUALS.org

- 1. Start the engine, and turn on the electrical loads one at a time (defrosters, seat heaters, blower motor, etc.).
- 2. Check the reception/interference while the engine is running.

Is there noise (static or whine) only with the engine running?

YES : Check the antenna, the antenna mounting nut, and radio grounds. If OK, check the charging system and the ignition system.

NO : Go to step 3.

3. Determine possible failure area (AM/FM antenna mast, others):
   - 1. Turn the ignition switch to LOCK (0).
   - 2. Check the AM/FM antenna mast for cracks or other damage. Verify that the AM/FM antenna mast is not loose.

NOTE: Do not use any tools to tighten the AM/FM antenna mast.

Is there any damage?

YES : Replace the AM/FM antenna mast.

NO : Go to step 4.

4. Determine possible failure area (SWD +B line, AM/FM line):
   - 1. Disconnect the following connector.

     AM/FM antenna 3P connector

   - 2. Turn the ignition switch to ON (II).
   - 3. Turn on the audio system, and select AM or FM.
   - 4. Measure the voltage between test points 1 and 2.

     Test condition IG ON (II)

     AM/FM antenna 3P connector: disconnected

     Test circuit SWD +B

     Test point 1 AM/FM antenna 3P connector No. 1

     Test point 2 Body ground

GETtheMANUALS.org

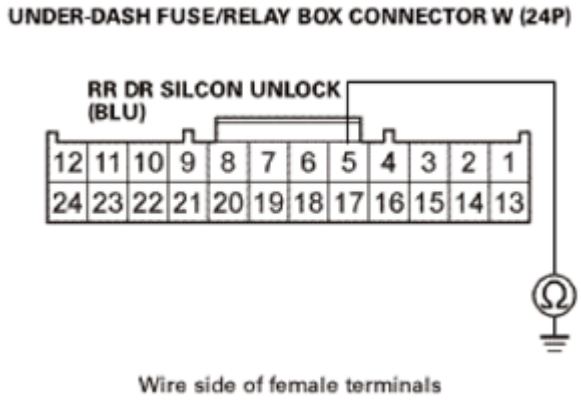

Fig. 157: Measuring Voltage Between Test point AM/FM antenna 3P connector No. 1 and Body ground
Courtesy of AMERICAN HONDA MOTOR CO., INC.

Is there battery voltage?

YES : Go to step 5.

NO : Go to step 14.

5. Open wire check (AM/FM line):
   - 1. Turn the ignition switch to LOCK (0).
   - 2. Disconnect the following connector.

     Audio-navigation unit connector D (3P)

   - 3. Check for continuity between test points 1 and 2.

     Test condition IG LOCK (0)

     AM/FM antenna 3P connector: disconnected

     Audio-navigation unit connector D (3P): disconnected

     Test circuit AM/FM

     Test point 1 Audio-navigation unit connector D (3P) No. 2

     Test point 2 AM/FM antenna 3P connector No. 2

GETtheMANUALS.org

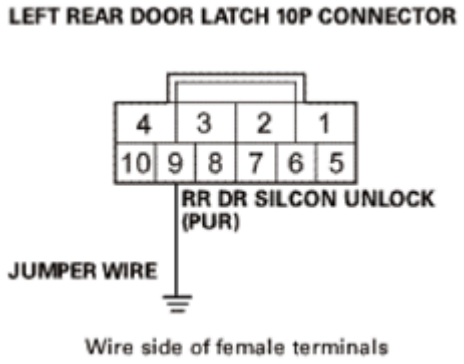

Fig. 158: Checking For Continuity Between Test Point Audio-Navigation Unit Connector D (3P) No. 2 And AM/FM Antenna 3P Connector No. 2
Courtesy of AMERICAN HONDA MOTOR CO., INC.

Is there continuity?

YES : The AM/FM wire is not open. Go to step 7.

NO : Go to step 6.

6. FM distributor check:
    1. Disconnect the following connector.

       FM distributor 3P connector

    2. Check for continuity between test points 1 and 2.

       Test condition IG LOCK (0)

       AM/FM antenna 3P connector: disconnected

       Audio-navigation unit connector D (3P): disconnected

       FM distributor 3P connector: disconnected

       Test circuit AM/FM

       Test point 1 FM distributor 3P connector No. 2

       Test point 2 AM/FM antenna 3P connector No. 2

GETtheMANUALS.org

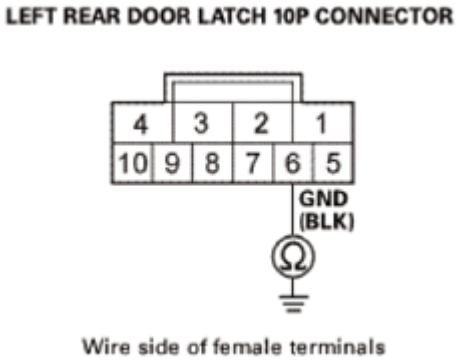

Fig. 159: Checking For Continuity Between Test Point FM Distributor 3P Connector No. 2 And AM/FM Antenna 3P Connector No. 2
Courtesy of AMERICAN HONDA MOTOR CO., INC.

Is there continuity?

YES : REPLACE THE FM DISTRIBUTOR .

NO : Replace the AM/FM antenna lead and/or the sublead.

7. Shorted wire check (AM/FM line):
   - 1. Check for continuity between test points 1 and 2.

     Test condition IG LOCK (0)

     AM/FM antenna 3P connector: disconnected

     Audio-navigation unit connector D (3P): disconnected

     Test circuit AM/FM

     Test point 1 Audio-navigation unit connector D (3P) No. 2

     Test point 2 Body ground

GETtheMANUALS.org

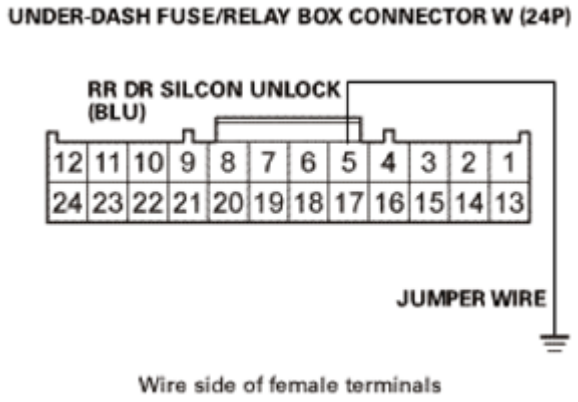

Fig. 160: Checking For Continuity Between Audio-Navigation Unit Connector D (3P) No. 2 And Body Ground
Courtesy of AMERICAN HONDA MOTOR CO., INC.

Is there continuity?

YES : Go to step 8.

NO : The AM/FM wire is not shorted to ground. Go to step 9.

8. FM distributor check:
   - 1. Disconnect the following connector.

     FM distributor 3P connector

   - 2. Check for continuity between test points 1 and 2.

     Test condition IG LOCK (0)

     AM/FM antenna 3P connector: disconnected

     Audio-navigation unit connector D (3P): disconnected

     FM distributor 3P connector: disconnected

     Test circuit AM/FM

     Test point 1 FM distributor 3P connector No. 2

     Test point 2 Body ground

GETtheMANUALS.org

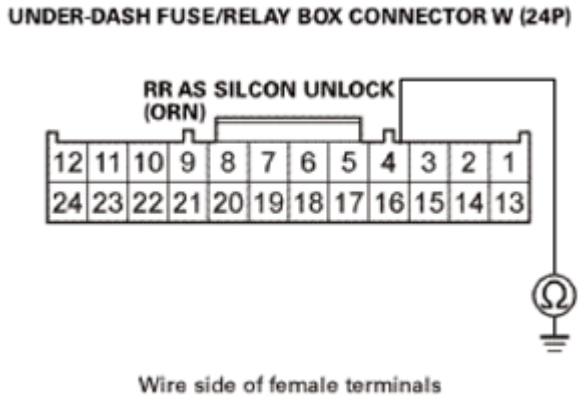

Fig. 161: Checking For Continuity Between FM Distributor 3P Connector No. 2 And Body Ground
Courtesy of AMERICAN HONDA MOTOR CO., INC.

Is there continuity?

YES : Replace the AM/FM antenna lead and/or the sublead.

NO : REPLACE THE FM DISTRIBUTOR .

9. Open wire check (SH (AM/FM) line):
   - 1. Check for continuity between test points 1 and 2.

     Test condition IG LOCK (0)

     AM/FM antenna 3P connector: disconnected

     Audio-navigation unit connector D (3P): disconnected

     Test circuit SH (AM/FM)

     Test point 1 Audio-navigation unit connector D (3P) No. 3

     Test point 2 AM/FM antenna 3P connector No. 3

GETtheMANUALS.org

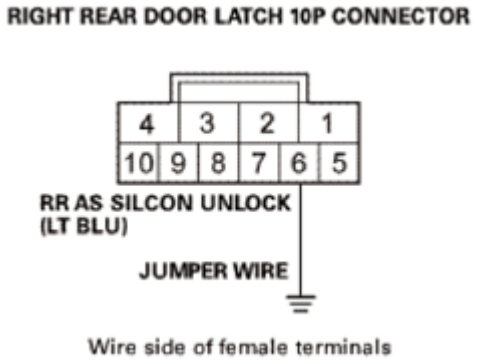

Fig. 162: Checking For Continuity Between Test Point Audio-Navigation Unit Connector D (3P) No. 3 And AM/FM Antenna 3P Connector No. 3
Courtesy of AMERICAN HONDA MOTOR CO., INC.

Is there continuity?

YES : The SH (AM/FM) wire is not open. Go to step 11.

NO : Go to step 10.

10. FM distributor check:
    - 1. Disconnect the following connector.

      FM distributor 3P connector

    - 2. Check for continuity between test points 1 and 2.

      Test condition IG LOCK (0)

      AM/FM antenna 3P connector: disconnected

      Audio-navigation unit connector D (3P): disconnected

      FM distributor 3P connector: disconnected

      Test circuit SH (AM/FM)

      Test point 1 FM distributor 3P connector No. 3

      Test point 2 AM/FM antenna 3P connector No. 3

GETtheMANUALS.org

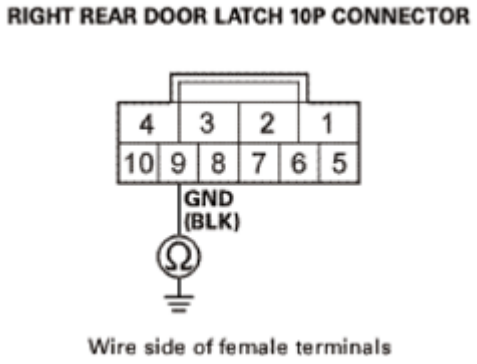

Fig. 163: Checking For Continuity Between Test Point FM Distributor 3P Connector No. 3 And AM/FM Antenna 3P Connector No. 3
Courtesy of AMERICAN HONDA MOTOR CO., INC.

Is there continuity?

YES : REPLACE THE FM DISTRIBUTOR .

NO : Replace the AM/FM antenna lead and/or the sublead.

11. Shorted wire check (AM/FM line to SH (AM/FM) line):
    - 1. Check for continuity between test points 1 and 2.

      Test condition IG LOCK (0)

      AM/FM antenna 3P connector: disconnected

      Audio-navigation unit connector D (3P): disconnected

      Test circuit AM/FM, SH (AM/FM)

      Test point 1 Audio-navigation unit connector D (3P) No. 2

      Test point 2 Audio-navigation unit connector D (3P) No. 3

GETtheMANUALS.org

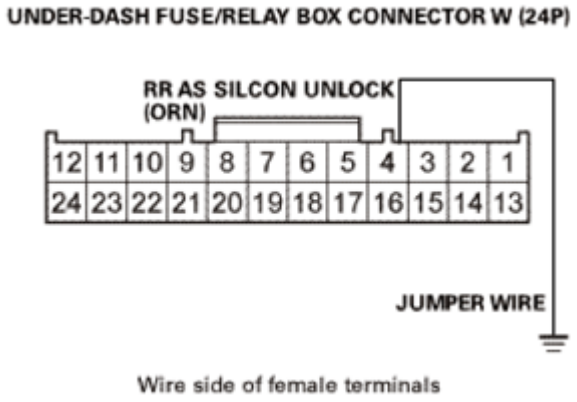

Fig. 164: Checking For Continuity Between Test Point Audio-Navigation Unit Connector D (3P) No. 2 And No. 3
Courtesy of AMERICAN HONDA MOTOR CO., INC.

Is there continuity?

YES : Go to step 13.

NO : Go to step 12.

12. Audio-navigation unit check:
    - 1. SUBSTITUTE A KNOWN-GOOD AM/FM ANTENNA , and recheck.

Does the symptom go away?

YES : Replace the original AM/FM antenna.

NO : REPLACE THE AUDIO-NAVIGATION UNIT .

13. FM distributor check:
    - 1. Disconnect the following connector.

      FM distributor 3P connector

    - 2. Check for continuity between test points 1 and 2.

      Test condition IG LOCK (0)

      AM/FM antenna 3P connector: disconnected

      Audio-navigation unit connector D (3P): disconnected

      FM distributor 3P connector: disconnected

      Test circuit AM/FM, SH (AM/FM)

GETtheMANUALS.org

Test point 1 FM distributor 3P connector No. 2

Test point 2 FM distributor 3P connector No. 3

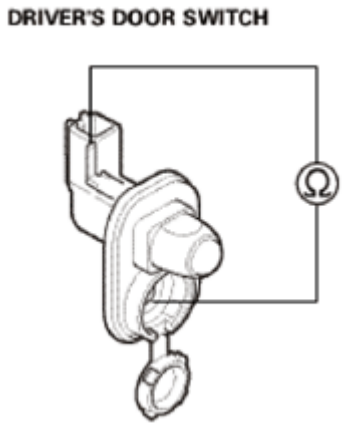

Fig. 165: Checking For Continuity Between Test Point FM Distributor 3P Connector No. 2 And No. 3
Courtesy of AMERICAN HONDA MOTOR CO., INC.

Is there continuity?

YES : Replace the AM/FM antenna lead and/or the sublead.

NO : REPLACE THE FM DISTRIBUTOR .

14. Open wire check (SWD +B line):
    - 1. Turn the ignition switch to LOCK (0).
    - 2. Disconnect the following connector.

      Audio-navigation unit connector D (3P)

    - 3. Check for continuity between test points 1 and 2.

      Test condition IG LOCK (0)

      AM/FM antenna 3P connector: disconnected

      Audio-navigation unit connector D (3P): disconnected

      Test circuit SWD +B

      Test point 1 Audio-navigation unit connector D (3P) No. 1

      Test point 2 AM/FM antenna 3P connector No. 1

GETtheMANUALS.org

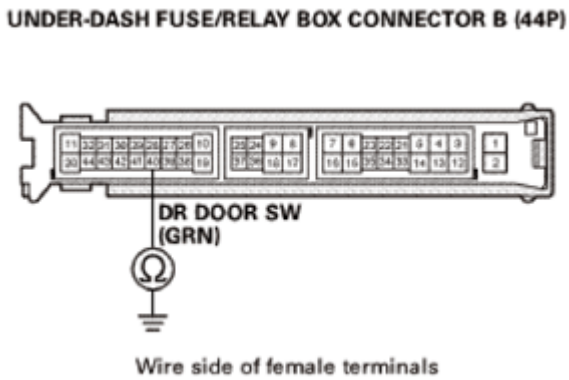

Fig. 166: Checking For Continuity Between Test Point Audio-Navigation Unit Connector D (3P) No. 1 And AM/FM Antenna 3P Connector No. 1
Courtesy of AMERICAN HONDA MOTOR CO., INC.

Is there continuity?

YES : The SWD +B wire is not open. Go to step 16.

NO : Go to step 15.

15. FM distributor check:
    - 1. Disconnect the following connector.

      FM distributor 3P connector

    - 2. Check for continuity between test points 1 and 2.

      Test condition IG LOCK (0)

      AM/FM antenna 3P connector: disconnected

      Audio-navigation unit connector D (3P): disconnected

      FM distributor 3P connector: disconnected

      Test circuit SWD +B

      Test point 1 FM distributor 3P connector No. 1

      Test point 2 AM/FM antenna 3P connector No. 1

GETtheMANUALS.org

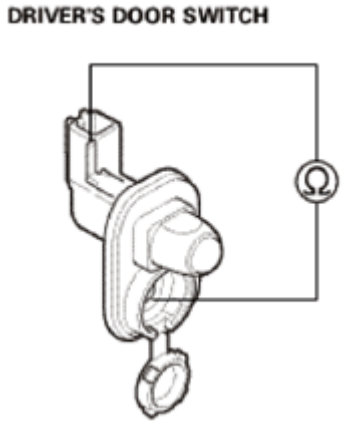

Fig. 167: Checking For Continuity Between Test Point FM Distributor 3P Connector No. 1 And AM/FM Antenna 3P Connector No. 1
Courtesy of AMERICAN HONDA MOTOR CO., INC.

Is there continuity?

YES : REPLACE THE FM DISTRIBUTOR .

NO : Replace the AM/FM antenna lead and/or the sublead.

16. Shorted wire check (SWD +B line):
    - 1. Check for continuity between test points 1 and 2.

      Test condition IG LOCK (0)

      AM/FM antenna 3P connector: disconnected

      Audio-navigation unit connector D (3P): disconnected

      Test circuit SWD +B

      Test point 1 Audio-navigation unit connector D (3P) No. 1

      Test point 2 Body ground

GETtheMANUALS.org

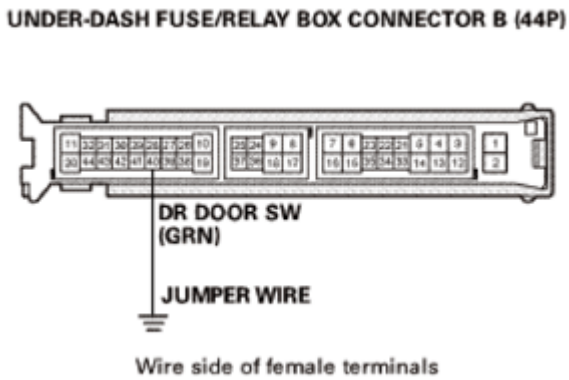

Fig. 168: Checking For Continuity Between Test Point Audio-Navigation Unit Connector D (3P) No. 1 And Body Ground
Courtesy of AMERICAN HONDA MOTOR CO., INC.

Is there about 7 m ohms resistance?

YES : Go to step 17.

NO : REPLACE THE AUDIO-NAVIGATION UNIT .

17. FM distributor check:
    - 1. Disconnect the following connector.

      FM distributor 3P connector

    - 2. Check for continuity between test points 1 and 2.

      Test condition IG LOCK (0)

      AM/FM antenna 3P connector: disconnected

      Audio-navigation unit connector D (3P): disconnected

      FM distributor 3P connector: disconnected

      Test circuit SWD +B

      Test point 1 FM distributor 3P connector No. 1

      Test point 2 Body ground

GETtheMANUALS.org

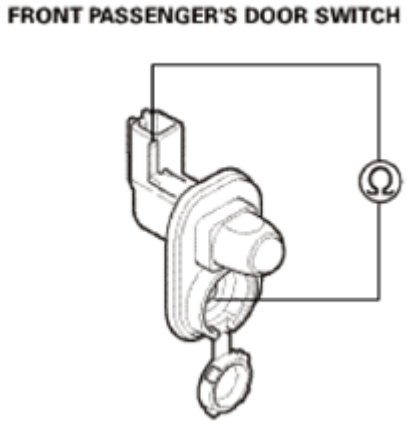

Fig. 169: Checking For Continuity Between Test Point FM Distributor 3P Connector No. 1 And Body Ground
Courtesy of AMERICAN HONDA MOTOR CO., INC.

Is there continuity?

YES : Replace the AM/FM antenna lead and/or the sublead.

NO : REPLACE THE FM DISTRIBUTOR .

POOR AM OR FM RADIO RECEPTION OR INTERFERENCE (WITHOUT NAVIGATION)

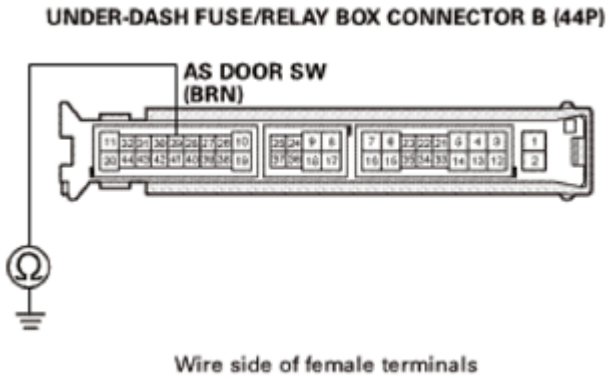

Fig. 170: Audio System Symptom Troubleshooting Flowchart - Poor AM Or FM Radio Reception Or Interference
Courtesy of AMERICAN HONDA MOTOR CO., INC.

NOTE:

- **CHECK THE VEHICLE BATTERY CONDITION FIRST .**
- **Check for aftermarket accessories plugged into the vehicle accessory power sockets.**
- **Check for any radio frequency modulators that are plugged into the FM antenna lead. These modulators allow customers to play audio from accessories like CD players or game consoles using the audio system, but**

GETtheMANUALS.org

they can create interference issues.

- **Check the radio reception in an open area. Compare it to a known-good vehicle whenever possible. Poor reception/interference can be caused by the following:**
  - **The radio station is far away**
  - **Atmospheric conditions are unfavorable**
  - **Tall buildings, mountains, or high-voltage power lines are nearby**
  - **Electrical loads like the rear window defroster, seat heaters, game consoles, etc.**
- **Check the connectors for poor connections or loose terminals.**

1. Problem verification:
   - 1. Turn the ignition switch to ON (II).
   - 2. **DO THE SEEK STOP TEST IN THE SOUND QUALITY DIAGNOSIS** .

   Is the test vehicle within 10 % of the known-good vehicle?

   YES : Multipath interference or weak station. Operation is normal.

   NO : The failure is duplicated, go to step 2.

2. Determine possible failure area (charging system and ignition system, others):
   - 1. Start the engine, and turn on the electrical loads one at a time (defrosters, seat heaters, blower motor, etc.)
   - 2. Check the reception/interference while the engine is running.

   Is there noise (static or whine) only with the engine running?

   YES : Check the antenna, the antenna mounting nut, and radio grounds. If OK, check the charging system and the ignition system.

   NO : Go to step 3.

   Is there any damage?

3. Determine possible failure area (AM/FM antenna mast, others):
   - 1. Turn the ignition switch to LOCK (0).
   - 2. Check the AM/FM antenna mast for cracks or other damage. Verify that the AM/FM antenna mast is not loose.

   NOTE: Do not use any tools to tighten the AM/FM antenna mast.

   Is there any damage?

GETtheMANUALS.org

YES : Replace the AM/FM antenna mast.

NO : Go to step 4.

4. Determine possible failure area (SWD +B line, AM/FM line):
   - 1. Disconnect the following connector.

     AM/FM antenna 3P connector

   - 2. Turn the ignition switch to ON (II).
   - 3. Turn on the audio system, and select AM or FM.
   - 4. Measure the voltage between test points 1 and 2.

     Test condition IG ON (II)

     AM/FM antenna 3P connector: disconnected

     Test circuit SWD +B

     Test point 1 AM/FM antenna 3P connector No. 1

     Test point 2 Body ground

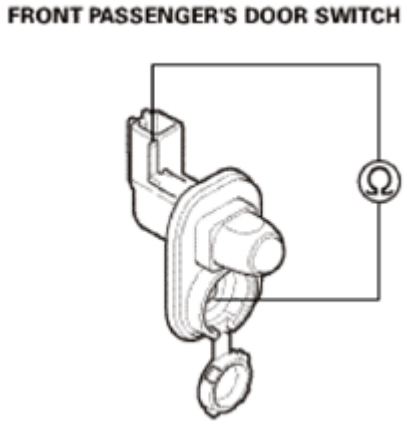

Fig. 171: Measuring Voltage Between Test Point AM/FM Antenna 3P Connector No. 1 And Body Ground
Courtesy of AMERICAN HONDA MOTOR CO., INC.

Is there battery voltage?

YES : Go to step 5.

NO : Go to step 10.

5. Open wire check (AM/FM line):

GETtheMANUALS.org

- 1. Turn the ignition switch to LOCK (0).
- 2. Disconnect the following connector.

  Audio unit connector D (3P)

- 3. Check for continuity between test points 1 and 2.

  Test condition IG LOCK (0)

  AM/FM antenna 3P connector: disconnected

  Audio unit connector D (3P): disconnected

  Test circuit AM/FM

  Test point 1 Audio unit connector D (3P) No. 2

  Test point 2 AM/FM antenna 3P connector No. 2

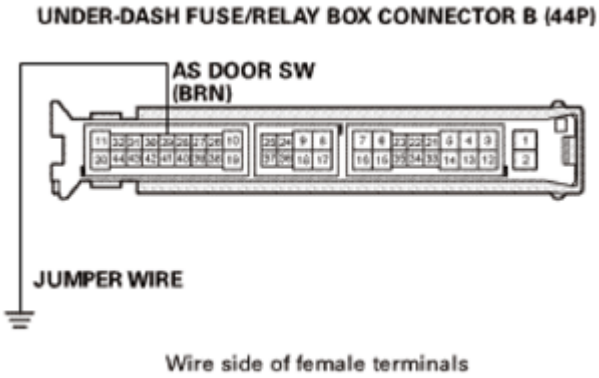

Fig. 172: Checking For Continuity Between Test Point Audio Unit Connector D (3P) No. 2 And AM/FM Antenna 3P Connector No. 2
Courtesy of AMERICAN HONDA MOTOR CO., INC.

Is there continuity?

YES : The AM/FM wire is not open. Go to step 6.

NO : Replace the AM/FM antenna lead and/or the sublead.

6. Shorted wire check (AM/FM line):
   - 1. Check for continuity between test points 1 and 2.

     Test condition IG LOCK (0)

     AM/FM antenna 3P connector: disconnected

GETtheMANUALS.org

Audio unit connector D (3P): disconnected

Test circuit AM/FM

Test point 1 Audio unit connector D (3P) No. 2

Test point 2 Body ground

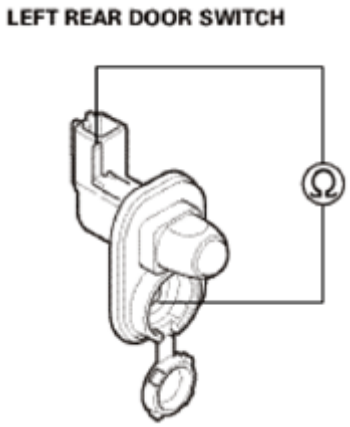

Fig. 173: Checking For Continuity Between Test Point Audio Unit Connector D (3P) No. 2 And Body Ground
Courtesy of AMERICAN HONDA MOTOR CO., INC.

Is there continuity?

YES : Replace the AM/FM antenna lead and/or the sublead.

NO : The AM/FM wire is not shorted to ground. Go to step 7.

7. Open wire check (SH (AM/FM) line):
   - 1. Check for continuity between test points 1 and 2.

     Test condition IG LOCK (0)

     AM/FM antenna 3P connector: disconnected

     Audio unit connector D (3P): disconnected

     Test circuit SH (AM/FM)

     Test point 1 Audio unit connector D (3P) No. 3

     Test point 2 AM/FM antenna 3P connector No. 3

GETtheMANUALS.org

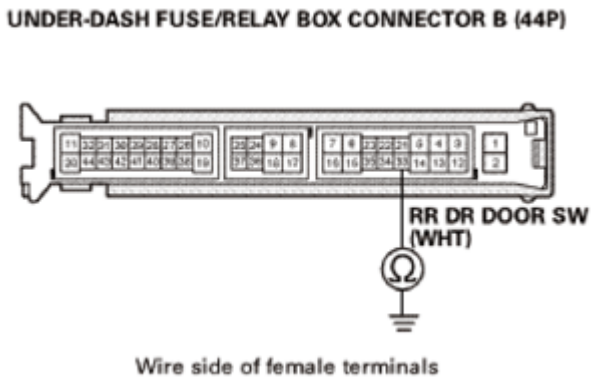

Fig. 174: Checking For Continuity Between Audio Unit Connector D (3P) No. 3 And AM/FM Antenna 3P Connector No. 3
Courtesy of AMERICAN HONDA MOTOR CO., INC.

Is there continuity?

YES : The SH (AM/FM) wire is not open. Go to step 8.

NO : Replace the AM/FM antenna lead and/or the sublead.

8. Shorted wire check (AM/FM line to SH (AM/FM) line):
   - 1. Check for continuity between test points 1 and 2.

     Test condition IG LOCK (0)

     AM/FM antenna 3P connector: disconnected

     Audio unit connector D (3P): disconnected

     Test circuit AM/FM, SH (AM/FM)

     Test point 1 Audio unit connector D (3P) No. 2

     Test point 2 Audio unit connector D (3P) No. 3

GETtheMANUALS.org

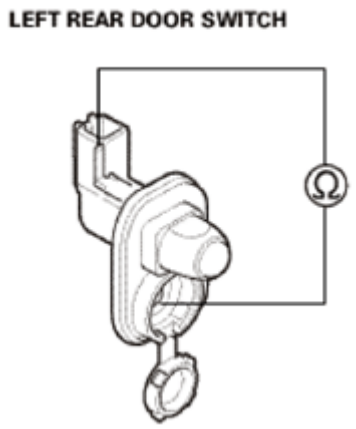

Fig. 175: Checking For Continuity Between Test Point Audio Unit Connector D (3P) No. 2 And No. 3
Courtesy of AMERICAN HONDA MOTOR CO., INC.

Is there continuity?

YES : Replace the AM/FM antenna lead and/or the sublead.

NO : Go to step 9.

9. Audio unit check:
   - 1. SUBSTITUTE A KNOWN-GOOD AM/FM ANTENNA , and recheck.

Does the symptom go away?

YES : Replace the original AM/FM antenna.

NO : REPLACE THE AUDIO UNIT .

10. Open wire check (SWD +B line):
    - 1. Turn the ignition switch to LOCK (0).
    - 2. Disconnect the following connector.

      Audio unit connector D (3P)

    - 3. Check for continuity between test points 1 and 2.

      Test condition IG LOCK (0)

      AM/FM antenna 3P connector: disconnected

      Audio unit connector D (3P): disconnected

      Test circuit SWD +B

GETtheMANUALS.org

Test point 1 Audio unit connector D (3P) No. 1

Test point 2 AM/FM antenna 3P connector No. 1

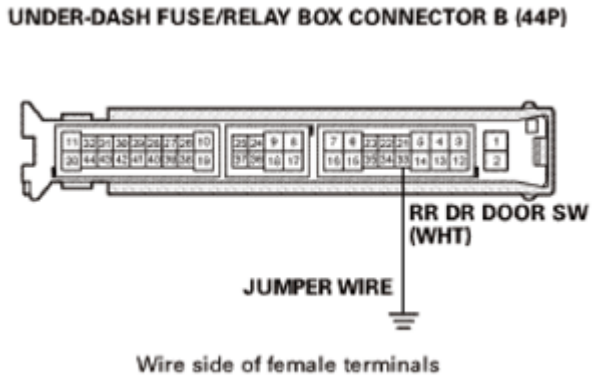

Fig. 176: Checking For Continuity Between Test Point Audio Unit Connector D (3P) No. 1 And AM/FM Antenna 3P Connector No. 1
Courtesy of AMERICAN HONDA MOTOR CO., INC.

Is there continuity?

YES : The SWD +B wire is not open. Go to step 11.

NO : Repair an open in the wire between the audio unit and the AM/FM antenna.

11. Shorted wire check (SWD +B line):
    - 1. Check for continuity between test points 1 and 2.

      Test condition IG LOCK (0)

      AM/FM antenna 3P connector: disconnected

      Audio unit connector D (3P): disconnected

      Test circuit SWD +B

      Test point 1 AM/FM antenna 3P connector No. 1

      Test point 2 Body ground

GETtheMANUALS.org

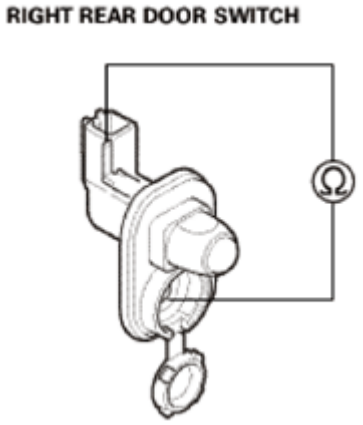

Fig. 177: Checking For Continuity Between Test Point AM/FM Antenna 3P Connector No. 1 And Body Ground
Courtesy of AMERICAN HONDA MOTOR CO., INC.

Is there continuity?

YES : Repair a short to body ground in the wire between the audio unit and the AM/FM antenna.

NO : REPLACE THE AUDIO UNIT .

POOR OR NO SOUND WITH XM RADIO (AUDIO UNIT DOES DISPLAY XM CHANNELS)

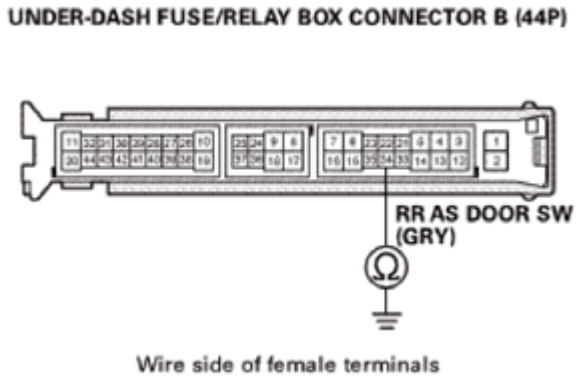

Fig. 178: Audio System Symptom Troubleshooting Flowchart - Poor Or No Sound With XM Radio (Audio Unit Does Display XM Channels)
Courtesy of AMERICAN HONDA MOTOR CO., INC.

NOTE:

- **CHECK THE VEHICLE BATTERY CONDITION FIRST .**
- **Check the radio reception in an open area. Poor reception/interference can be caused by tall buildings, mountains, or high-voltage power lines are nearby.**
- **If you can only tune to channel 000, 001, and 174, make sure the audio unit is set to channel mode (see the Owner's Manual), if it is set to channel**

GETtheMANUALS.org

mode, call XM Radio customer support at 800-852-9696, and check the account activation status.

- **Check the connectors for poor connections or loose terminals.**

1. Problem verification:
   - 1. Park the vehicle outside with a clear view of the southern horizon.
   - 2. Turn the ignition switch to ON (II).
   - 3. Turn on the audio unit, and set the proper XM radio station.

   Does the XM radio play?

   YES : Intermittent failure, the system is OK at this time.

   NO : The failure is duplicated, go to step 2.

2. Disconnect the HFL unit and recheck:
   - 1. Turn the ignition switch to LOCK (0).
   - 2. **Disconnect the HFL unit** See **HANDSFREELINK CONTROL UNIT REMOVAL AND INSTALLATION** or **HANDSFREELINK CONTROL UNIT UPDATE** and recheck.

   Does the symptom go away?

   YES : Replace the HFL control unit.

   NO : Go to step 3.

3. Disconnect the multi-information display and retest:
   - 1. Turn the ignition switch to LOCK (0).
   - 2. **DISCONNECT THE MULTI-INFORMATION DISPLAY** and retest.

   Does the symptom go away?

   YES : Replace the multi-information display.

   NO : Go to step 4.

4. Shorted wire check (GA AUDIO lines):
   - 1. Turn the ignition switch to LOCK (0).
   - 2. Disconnect the following connectors.

     Audio unit connector C (14P)

     XM receiver connector A (14P)

GETtheMANUALS.org

Multi-information display unit connector A (32P)

HandsFreeLink control unit 32P connector

- 3. Check for continuity between these test points and body ground individually.

Test condition IG LOCK (0)

Audio unit connector C (14P): disconnected

XM receiver connector A (14P): disconnected

Multi-information display unit connector A (32P): disconnected

HandsFreeLink control unit 32P connector: disconnected

Connector	Test circuit	Terminal
Audio unit connector C (14P)	GA AUDIO L+	No. 1 (RED)
	GA AUDIO R+	No. 2 (GRN)
	GA AUDIO L-	No. 7 (WHT)
	GA AUDIO R-	No. 8 (BLK)

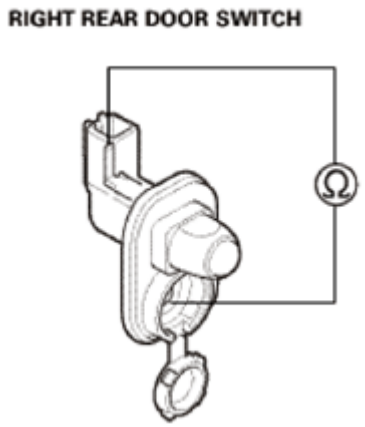

Fig. 179: Identifying Audio Unit Connector C (14P)
Courtesy of AMERICAN HONDA MOTOR CO., INC.

Is there continuity?

YES : There is a short to body ground in the wire(s) between the audio unit and the XM receiver. Replace the affected shielded harness.

NO : The GA AUDIO wires are not shorted to ground. Go to step 5.

5. Shorted wire check (SH GA AUDIO line to another lines):

GETtheMANUALS.org

- 1. Check for continuity between test points 1 and 2.

  Test condition IG LOCK (0)

  Audio unit connector C (14P): disconnected

  XM receiver connector A (14P): disconnected

  Multi-information display unit connector A (32P): disconnected

  HandsFreeLink control unit 32P connector: disconnected

Test circuits	Connector: Audio unit connector C (14P)	
	Test point 1	Test points 2
SH GA AUDIO to GA AUDIO L+, GA AUDIO R+, GA AUDIO L-, GA AUDIO R-	No. 3 (GRY)	No. 1 (RED), No. 2 (GRN), No. 7 (WHT), No. 8 (BLK)

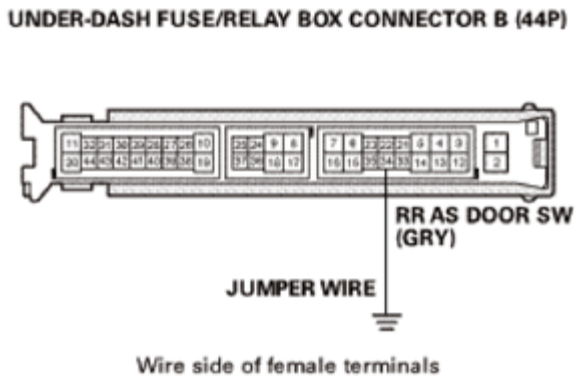

Fig. 180: Identifying Audio Unit Connector C (14P)
Courtesy of AMERICAN HONDA MOTOR CO., INC.

Is there continuity between any of the terminals?

YES : There is a short in the wires between the audio unit and the XM receiver. Replace the affected shielded harness.

NO : The SH GA AUDIO wire is OK. Go to step 6.

6. Open wire check (GA AUDIO lines):
   - 1. Check for continuity between test points 1 and 2.

     Test condition IG LOCK (0)

     Audio unit connector C (14P): disconnected

GETtheMANUALS.org

XM receiver connector A (14P): disconnected

Multi-information display unit connector A (32P): disconnected

HandsFreeLink control unit 32P connector: disconnected

Test circuit	Test point 1: Audio unit connector C (14P)	Test point 2: XM receiver connector A (14P)
GA AUDIO L+	No. 1 (RED)	No. 1 (RED)
GA AUDIO R+	No. 2 (GRN)	No. 2 (GRN)
GA AUDIO L-	No. 7 (WHT)	No. 7 (WHT)
GA AUDIO R-	No. 8 (BLK)	No. 8 (BLK)

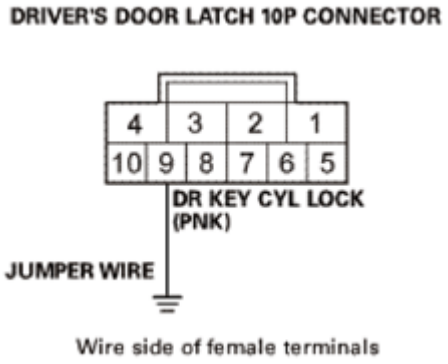

Fig. 181: Identifying Audio Unit Connector C (14P)
Courtesy of AMERICAN HONDA MOTOR CO., INC.

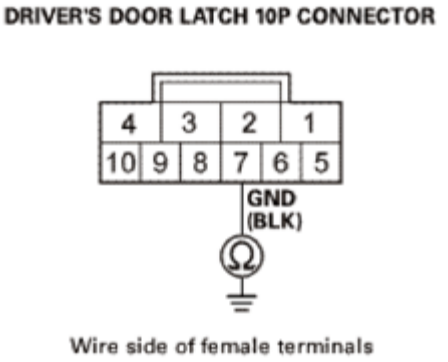

Fig. 182: Identifying XM Receiver Connector A (14P)
Courtesy of AMERICAN HONDA MOTOR CO., INC.

Is there continuity?

GETtheMANUALS.org

YES : The GA AUDIO wires are OK. Go to step 7.

NO : There is an open in the wire(s) between the audio unit and the XM receiver. Replace the affected shielded harness.

7. Audio unit check:
    - 1. SUBSTITUTE A KNOWN-GOOD XM RECEIVER , and recheck.

Does the symptom go away?

YES : Replace the original XM receiver.

NO : REPLACE THE AUDIO UNIT .

POOR OR NO SOUND WITH XM RADIO (AUDIO-NAVIGATION UNIT DOES DISPLAY XM CHANNELS)

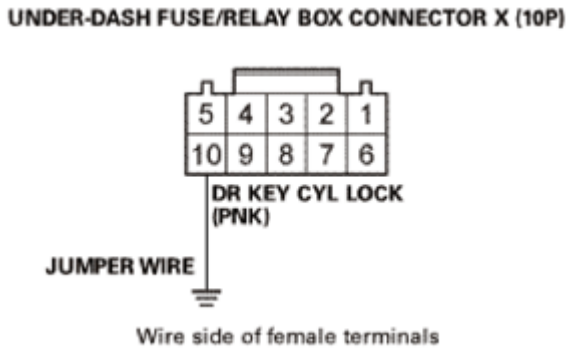

Fig. 183: Audio System Symptom Troubleshooting Flowchart - Poor Or No Sound With XM Radio (Audio-Navigation Unit Does Display XM Channels)
Courtesy of AMERICAN HONDA MOTOR CO., INC.

NOTE:

- **CHECK THE VEHICLE BATTERY CONDITION FIRST .**
- **Check the radio reception in an open area. Poor reception/interference can be caused by tall buildings, mountains, or high-voltage power lines are nearby.**
- **If you can only tune to channel 000, 001, and 174, make sure the audio-navigation unit is set to channel mode (see the Owner's Manual), if it is set to channel mode, call XM Radio customer support at 800-852-9696, and check the account activation status.**
- **Check the connectors for poor connections or loose terminals.**

1. Problem verification:
    - 1. Park the vehicle outside with a clear view of the southern horizon.
    - 2. Turn the ignition switch to ON (II).

GETtheMANUALS.org

- 3. Turn on the audio system, and set the proper XM radio station.

Does the XM radio play?

YES : Intermittent failure, the system is OK at this time.

NO : The failure is duplicated, go to step 2.

2. Disconnect the HFL unit and recheck:
   - 1. Turn the ignition switch to LOCK (0).
   - 2. **Disconnect the HFL unit** See **HANDSFREELINK CONTROL UNIT REMOVAL AND INSTALLATION** or **HANDSFREELINK CONTROL UNIT UPDATE** and recheck.

Does the symptom go away?

YES : Replace the HFL control unit.

NO : Go to step 3.

3. Disconnect the multi-information display and retest:
   - 1. Turn the ignition switch to LOCK (0).
   - 2. **DISCONNECT THE MULTI-INFORMATION DISPLAY** and retest.

Does the symptom go away?

YES : Replace the multi-information display.

NO : Go to step 4.

4. Shorted wire check (GA AUDIO lines):
   - 1. Turn the ignition switch to LOCK (0).
   - 2. Disconnect the following connectors.

     Audio-navigation unit connector C (14P)

     XM receiver connector A (14P)

     Multi-information display unit connector A (32P)

     HandsFreeLink control unit 32P connector

   - 3. Check for continuity between these test points and body ground individually.

     Test condition IG LOCK (0)

GETtheMANUALS.org

Audio-navigation unit connector C (14P): disconnected

XM receiver connector A (14P): disconnected

Multi-information display unit connector A (32P): disconnected

HandsFreeLink control unit 32P connector: disconnected

Connector	Test circuit	Terminal
Audio-navigation unit connector C (14P)	GA AUDIO L+	No. 1 (RED)
	GA AUDIO R+	No. 2 (GRN)
	GA AUDIO L-	No. 7 (WHT)
	GA AUDIO R-	No. 8 (BLK)

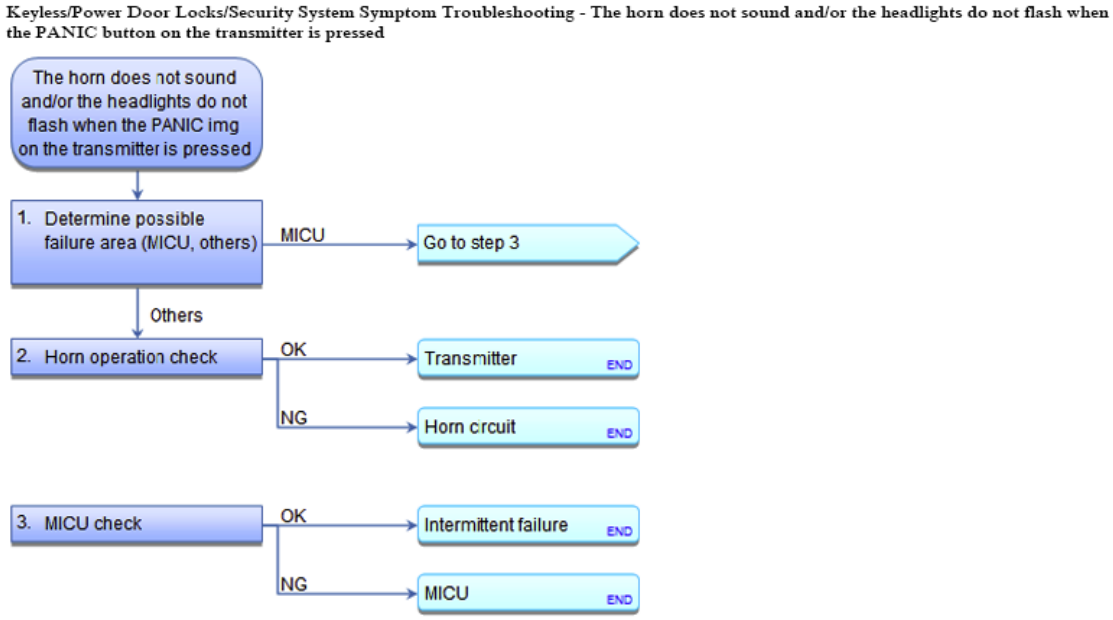

Fig. 184: Identifying Audio-Navigation Unit Connector C (14P)
Courtesy of AMERICAN HONDA MOTOR CO., INC.

Is there continuity?

YES : There is a short to body ground in the wire(s) between the audio-navigation unit and the XM receiver. Replace the affected shielded harness.

NO : The GA AUDIO wires are not shorted to ground. Go to step 5.

5. Shorted wire check (SH GA AUDIO line to another lines):
   - 1. Check for continuity between test points 1 and 2.

     Test condition IG LOCK (0)

GETtheMANUALS.org

Audio-navigation unit connector C (14P): disconnected

XM receiver connector A (14P): disconnected

Multi-information display unit connector A (32P): disconnected

HandsFreeLink control unit 32P connector: disconnected

Test circuits	Connector: Audio-navigation unit connector C (14P)	
	Test point 1	Test points 2
SH GA AUDIO to GA AUDIO L+, GA AUDIO R+, GA AUDIO L-, GA AUDIO R--	No. 3 (GRY)	No. 1 (RED), No. 2 (GRN), No. 7 (WHT), No. 8 (BLK)

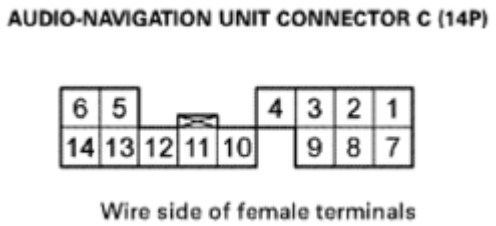

Fig. 185: Identifying Audio-Navigation Unit Connector C (14P)
Courtesy of AMERICAN HONDA MOTOR CO., INC.

Is there continuity between any of the terminals?

YES : There is a short in the wires between the audio-navigation unit and the XM receiver. Replace the affected shielded harness.

NO : The SH GA AUDIO wire is OK. Go to step 6.

6. Open wire check (GA AUDIO lines):
   - 1. Check for continuity between test points 1 and 2.

     Test condition IG LOCK (0)

     Audio-navigation unit connector C (14P): disconnected

     XM receiver connector A (14P): disconnected

     Multi-information display unit connector A (32P): disconnected

     HandsFreeLink control unit 32P connector: disconnected

	Test point 1: Audio-navigation unit	Test point 2: XM receiver

GETtheMANUALS.org

Test circuit	connector C (14P)	connector A (14P)
GA AUDIO L+	No. 1 (RED)	No. 1 (RED)
GA AUDIO R+	No. 2 (GRN)	No. 2 (GRN)
GA AUDIO L-	No. 7 (WHT)	No. 7 (WHT)
GA AUDIO R-	No. 8 (BLK)	No. 8 (BLK)

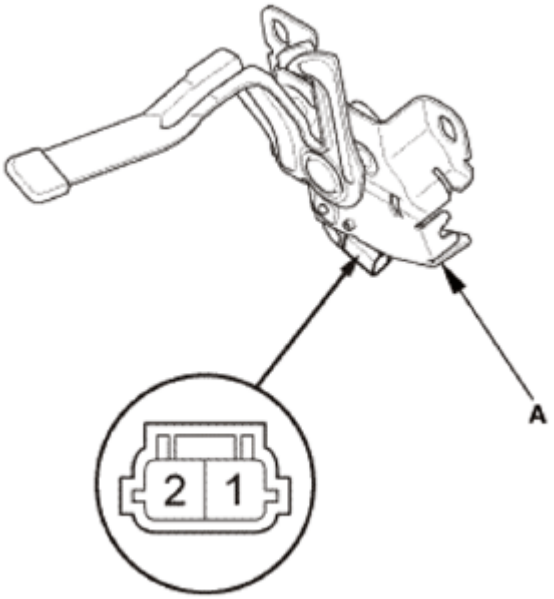

Fig. 186: Identifying Audio-Navigation Unit Connector C (14P)
Courtesy of AMERICAN HONDA MOTOR CO., INC.

Terminal / Position	1	2
RELEASE (Open)	○	○
LOCK (Close)		

Fig. 187: Identifying XM Receiver Connector A (14P)
Courtesy of AMERICAN HONDA MOTOR CO., INC.

Is there continuity?

YES : The GA AUDIO wires are OK. Go to step 7.

NO : There is an open in the wire(s) between the audio-navigation unit and the XM receiver. Replace the affected shielded harness.

7. Audio-navigation unit check:

GETtheMANUALS.org

- 1. SUBSTITUTE A KNOWN-GOOD XM RECEIVER , and recheck.

Does the symptom go away?

YES : Replace the original XM receiver.

NO : REPLACE THE AUDIO-NAVIGATION UNIT .

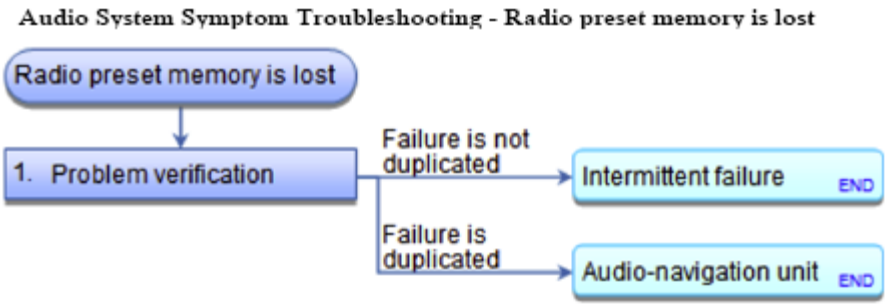

Fig. 188: Audio System Symptom Troubleshooting Flowchart - Radio Preset Memory Is Lost
Courtesy of AMERICAN HONDA MOTOR CO., INC.

RADIO PRESET MEMORY IS LOST (WITH NAVIGATION)

1. Problem verification:
    - 1. Turn the ignition switch to ON (II).
    - 2. Turn on the audio system, and set the audio system presets.
    - 3. Turn the ignition switch to LOCK (0) for 1 minute, then turn it back to ON (II).
    - 4. Turn on the audio system, and test the preset buttons for proper recall operation.

Do the preset buttons recall the set radio stations?

YES : Intermittent failure. The system is OK at this time.

NO : REPLACE THE AUDIO-NAVIGATION UNIT .

RADIO PRESET MEMORY IS LOST (WITHOUT NAVIGATION)

GETtheMANUALS.org

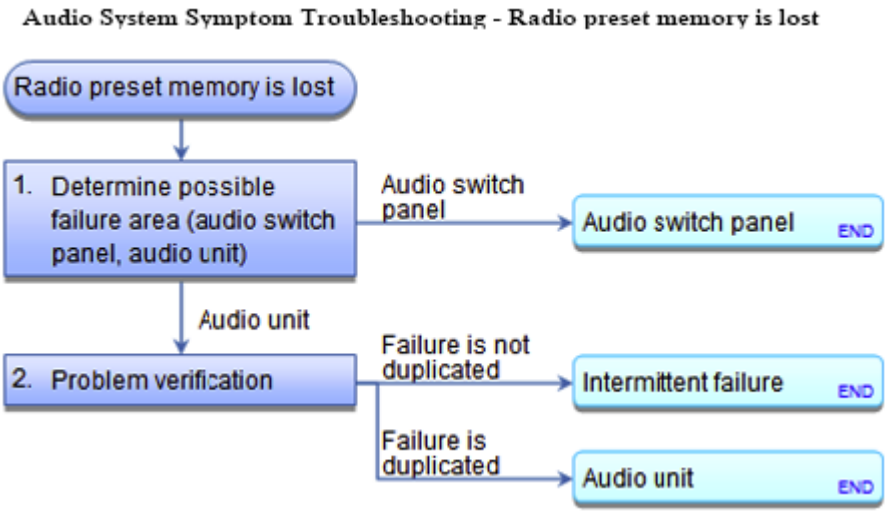

Fig. 189: Audio System Symptom Troubleshooting Flowchart - Radio Preset Memory Is Lost
Courtesy of AMERICAN HONDA MOTOR CO., INC.

1. Determine possible failure area (audio switch panel, audio unit):
   - 1. Turn the ignition switch to ON (II).
   - 2. Turn on the audio unit, and set each of the radio station preset buttons.

   Does each button set properly?

   YES : Go to step 2.

   NO : REPLACE THE AUDIO SWITCH PANEL .

2. Problem verification:
   - 1. Turn the ignition switch to LOCK (0) for 1 minute, then turn it back to ON (II).
   - 2. Turn on the audio unit, and test the preset buttons for proper recall operation.

   Do the preset buttons recall the set radio stations?

   YES : Intermittent failure. The system is OK at this time.

   NO : REPLACE THE AUDIO UNIT .

RADIO TUNER DOES NOT CHANGE STATIONS

GETtheMANUALS.org

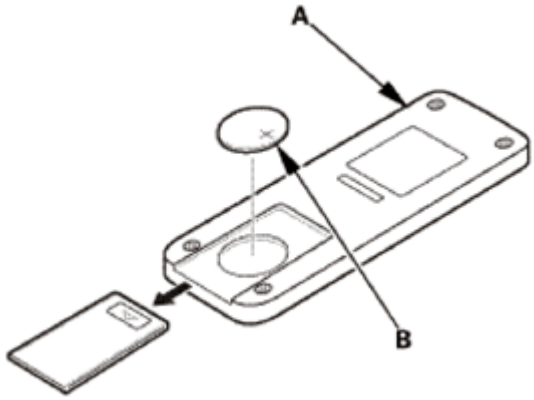

Fig. 190: Audio System Symptom Troubleshooting Flowchart - Radio Tuner Does Not Change Stations
Courtesy of AMERICAN HONDA MOTOR CO., INC.

Does the radio station change?

1. Problem verification:
    - 1. Turn the ignition switch to ON (II).
    - 2. Turn on the audio system, and select AM or FM.
    - 3. Operate the tuning knob to see if the radio station changes.

YES : Intermittent failure, the tuning knob is OK at this time.

NO : REPLACE THE AUDIO-NAVIGATION UNIT .

NO : REPLACE THE AUDIO UNIT .

REARVIEW CAMERA IMAGE DOES NOT CHANGE

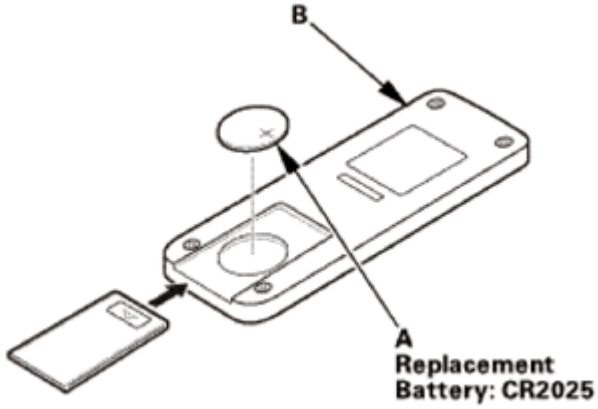

Fig. 191: Audio System Symptom Troubleshooting Flowchart - Rearview Camera Image Does Not Change
Courtesy of AMERICAN HONDA MOTOR CO., INC.

GETtheMANUALS.org

NOTE:

- **You can select three different rearview camera angles for backing up. If there is no camera image on the display, go to REARVIEW CAMERA IMAGE DOES NOT COME ON OR WORK PROPERLY TROUBLESHOOTING.**
- **Check the connectors for poor connections or loose terminals.**

1. Problem verification:
   - 1. Turn the ignition switch to ON (II).
   - 2. Move the shift lever to R.
   - 3. Press the selector knob to see if the rearview image changes between the wide view, the normal view, and the top down view in this order.

   Does the rearview camera image change properly?

   YES : Intermittent failure, the system is OK at this time.

   NO : The failure is duplicated, go to step 2.

2. Shorted wire check (CAMERA BIT0 line, CAMERA BIT1 line):
   - 1. Move the shift lever to P or N.
   - 2. Turn the ignition switch to LOCK (0).
   - 3. Disconnect the following connector.

     Multi-information display unit connector A (32P)

     Rearview camera 12P connector

   - 4. Check for continuity between test points 1 and 2.

     Test condition IG LOCK (0)

     Multi-information display unit connector A (32P): disconnected

     Rearview camera 12P connector: disconnected

     Test circuit CAMERA BIT0

     Test point 1 Rearview camera 12P connector No. 2 (GRN)

     Test point 2 Body ground

     Test circuit CAMERA BIT1

     Test point 1 Rearview camera 12P connector No. 1 (BLU)

     Test point 2 Body ground

GETtheMANUALS.org

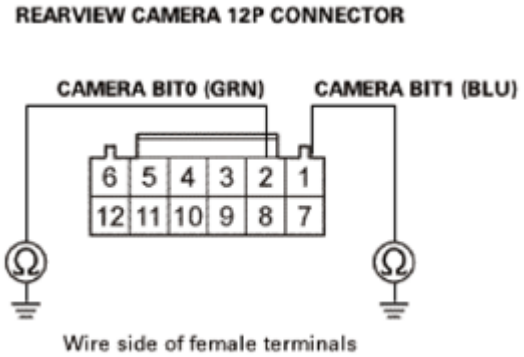

Fig. 192: Checking For Continuity Between Test Point Rearview Camera 12P Connector No. 1 (BLU) And Body Ground
Courtesy of AMERICAN HONDA MOTOR CO., INC.

Is there continuity?

YES : Repair a short to body ground in the wire(s) between the rearview camera and the multi-information display unit.

NO : The CAMERA BIT0 and the CAMERA BIT1 wires are not shorted to ground. Go to step 3.

3. Shorted wire check (CAMERA BIT0 line, CAMERA BIT1 line):
   - 1. Check for continuity between test points 1 and 2.

     Test condition IG LOCK (0)

     Multi-information display unit connector A (32P): disconnected

     Rearview camera 12P connector: disconnected

     Test circuit CAMERA BIT0, CAMERA BIT1

     Test point 1 Rearview camera 12P connector No. 2 (GRN)

     Test point 2 Rearview camera 12P connector No. 1 (BLU)

GETtheMANUALS.org

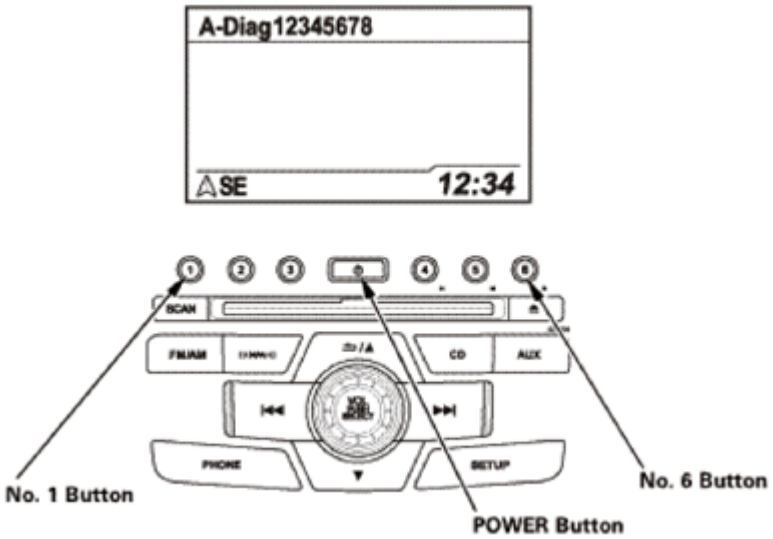

Fig. 193: Checking For Continuity Between Test Point Rearview Camera 12P Connector No. 2 (GRN) And No. 1 (BLU)
Courtesy of AMERICAN HONDA MOTOR CO., INC.

Is there continuity?

YES : Repair a short in the wires between the rearview camera and the multi-information display unit.

NO : The CAMERA BIT0 and the CAMERA BIT1 wires are not shorted. Go to step 4.

4. Open wire check (CAMERA BIT0 line, CAMERA BIT1 line):
   - 1. Check for continuity between test points 1 and 2.

     Test condition IG LOCK (0)

     Multi-information display unit connector A (32P): disconnected

     Rearview camera 12P connector: disconnected

     Test circuit CAMERA BIT0

     Test point 1 Multi-information display unit connector A (32P) No. 4 (GRN)

     Test point 2 Rearview camera 12P connector No. 2 (GRN)

     Test circuit CAMERA BIT1

     Test point 1 Multi-information display unit connector A (32P) No. 5 (BLU)

     Test point 2 Rearview camera 12P connector No. 1 (BLU)

GETtheMANUALS.org

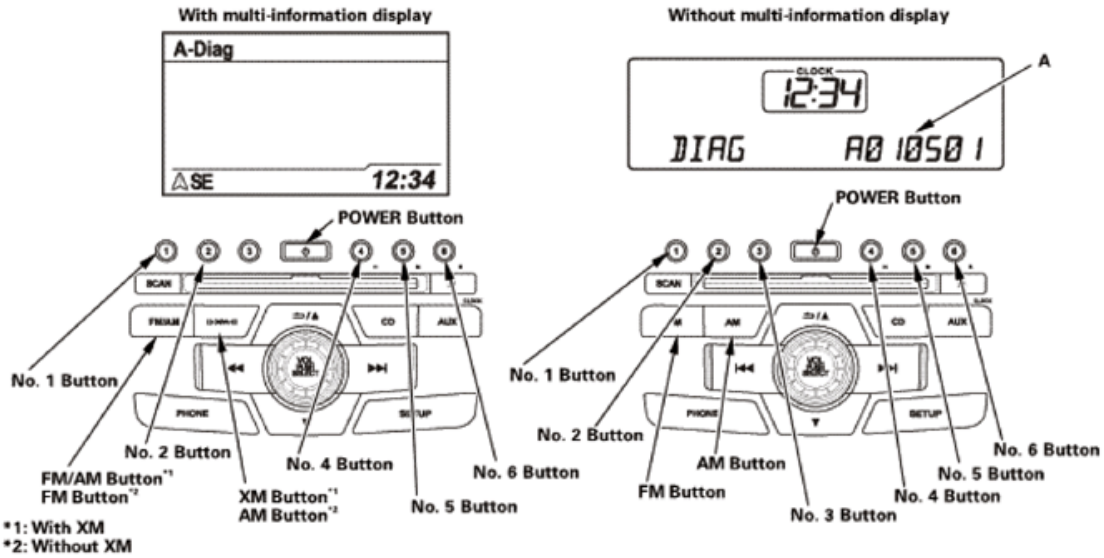

Fig. 194: Checking For Continuity Between Test Point Multi-Information Display Unit Connector A (32P) No. 5 (BLU) And Rearview Camera 12P Connector No. 1 (BLU)
Courtesy of AMERICAN HONDA MOTOR CO., INC.

Is there continuity?

YES : The CAMERA BIT0 and the CAMERA BIT1 wires are OK. Go to step 5.

NO : Repair an open in the wire(s) between the rearview camera and the multi-information display unit.

5. Multi-information display unit check:
   - 1. **SUBSTITUTE A KNOWN-GOOD REARVIEW CAMERA** , and recheck.

YES : Replace the original rearview camera.

NO : **REPLACE THE MULTI-INFORMATION DISPLAY UNIT** .

Does the symptom go away?

REARVIEW CAMERA IMAGE DOES NOT COME ON OR WORK PROPERLY

Fig. 195: Audio System Symptom Troubleshooting Flowchart - Rearview Camera Image Does Not Come

GETtheMANUALS.org

On Or Work Properly
Courtesy of AMERICAN HONDA MOTOR CO., INC.

NOTE:

- **CHECK THE VEHICLE BATTERY CONDITION FIRST .**
- **Check the connectors for poor connections or loose terminals.**

1. Problem verification:
   - 1. Turn the ignition switch to ON (II).
   - 2. Make sure the multi-information display comes on.
   - 3. Move the shift lever to R.

   Does the multi-information display unit image change when the shift lever is in R?

   YES : Intermittent failure, the system is OK at this time.

   NO : The failure is duplicated, go to step 2.

2. Determine possible failure area (BACK LT line, others):
   - 1. Move the shift lever to P or N.
   - 2. **DO THE SELF-DIAGNOSTIC FUNCTION**, and use the Camera in the Display Diagnosis.

   Does the rearview image appear?

   YES : Go to step 3.

   NO : Go to step 4.

3. Open wire check (BACK LT line):
   - 1. Turn the ignition switch to LOCK (0).
   - 2. Disconnect the following connector.

     Multi-information display unit connector A (32P)

   - 3. Turn the ignition switch to ON (II).
   - 4. Move the shift lever to R.
   - 5. Measure the voltage between test points 1 and 2.

     Test condition IG ON (II)

     Multi-information display unit connector A (32P): disconnected

     Test circuit BACK LT

     Test point 1 Multi-information display unit connector A (32P) No. 14 (BRN)

GETtheMANUALS.org

Test point 2 Body ground

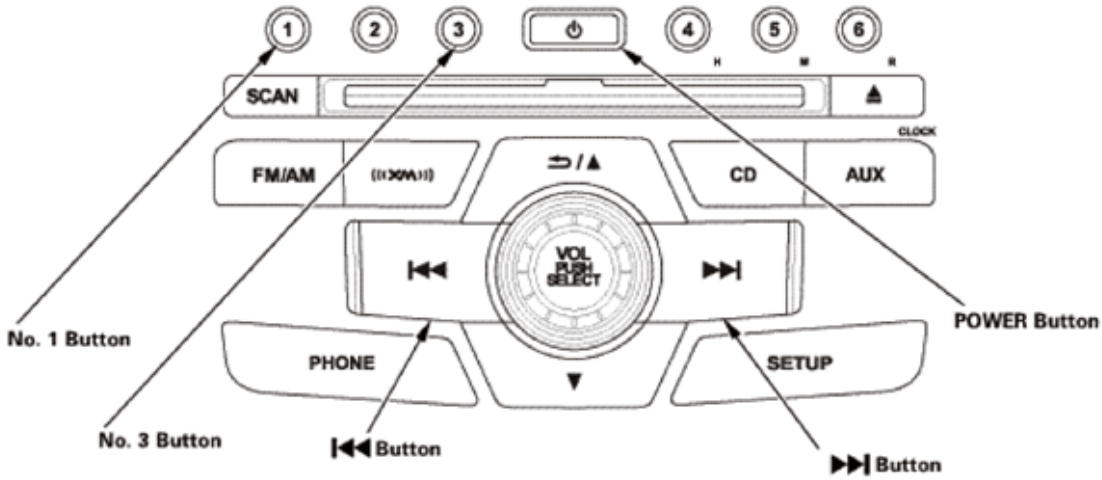

Fig. 196: Checking For Continuity Between Test Point Multi-Information Display Unit Connector A (32P) No. 14 (BRN) And Body Ground
Courtesy of AMERICAN HONDA MOTOR CO., INC.

Is there battery voltage?

YES : **REPLACE THE MULTI-INFORMATION DISPLAY UNIT** .

NO : Repair an open in the wire between the multi-information display unit and the under-dash fuse/relay box.

4. Determine possible failure area (CAMERA ADPT line, others):
   - 1. Turn the ignition switch to LOCK (0).
   - 2. Disconnect the following connector.

     Rearview camera 12P connector

   - 3. Turn the ignition switch to ON (II).
   - 4. Measure the voltage between test points 1 and 2.

     Test condition IG ON (II)

     Rearview camera 12P connector: disconnected

     Test circuit CAMERA ADPT

     Test point 1 Rearview camera 12P connector No. 11 (YEL)

     Test point 2 Body ground

GETtheMANUALS.org

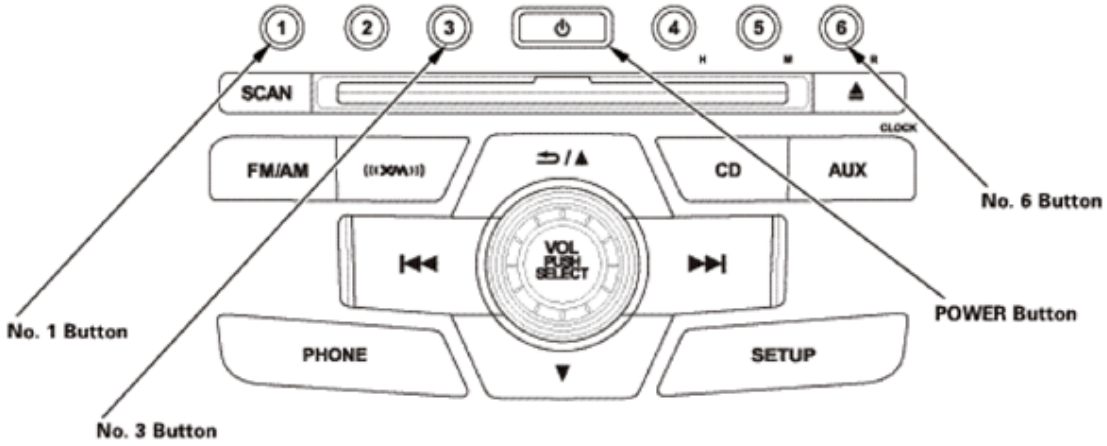

Fig. 197: Measuring Voltage Between Test Point Rearview Camera 12P Connector No. 11 (YEL) And Body Ground
Courtesy of AMERICAN HONDA MOTOR CO., INC.

Is there about 3.0 V?

YES : The CAMERA ADPT wire is OK. Go to step 6.

NO : Go to step 5.

5. Open wire check (CAMERA ADPT line):
   - 1. Measure the voltage between test points 1 and 2.

     Test condition IG ON (II)

     Rearview camera 12P connector: disconnected

     Test circuit CAMERA ADPT

     Test point 1 Multi-information display unit connector A (32P) No. 21 (BLK)

     Test point 2 Body ground

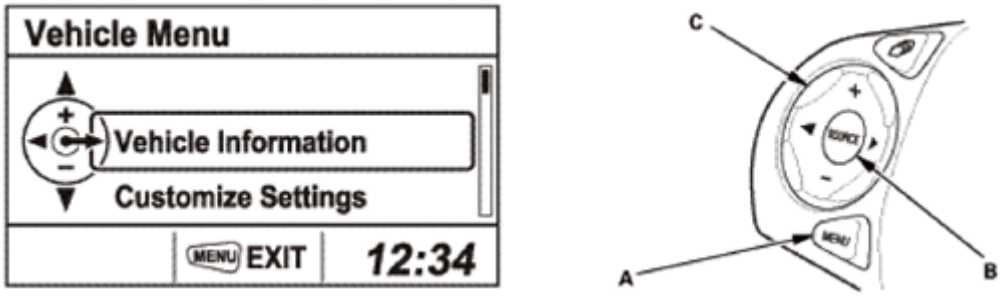

Fig. 198: Measuring Voltage Between Test Point Multi-Information Display Unit Connector A (32P) No. 21 (BLK) And Body Ground

GETtheMANUALS.org

Courtesy of AMERICAN HONDA MOTOR CO., INC.

Is there about 3.0 V?

YES : Repair an open in the wire between the multi-information display unit and the rearview camera.

NO : **REPLACE THE MULTI-INFORMATION DISPLAY UNIT** .

6. Open wire check (CAMERA lines):
   - 1. Turn the ignition switch to LOCK (0).
   - 2. Disconnect the following connector.

     Multi-information display unit connector A (32P)

   - 3. Check for continuity between test points 1 and 2.

     Test condition IG LOCK (0)

     Rearview camera 12P connector: disconnected

     Multi-information display unit connector A (32P): disconnected

Test circuit	Test point 1: Multi-information display unit connector A (32P)	Test point 2: Rearview camera 12P connector
SH CAMERA	No. 2 (GRY)	No. 12 (GRY)
CAMERA V GND	No. 3 (WHT)	No. 6 (WHT)
CAMERA GND	No. 18 (GRN)	No. 7 (BLK)
CAMERA V	No. 19 (RED)	No. 9 (RED)
CAMERA VCC	No. 20 (YEL)	No. 4 (GRN)

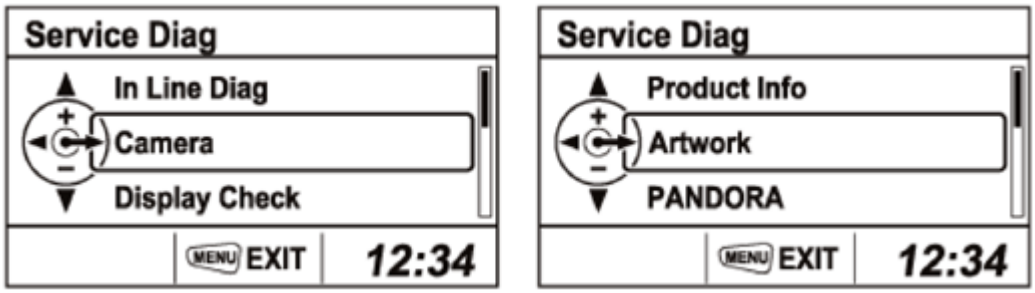

Fig. 199: Identifying Multi-Information Display Unit Connector A (32P)
Courtesy of AMERICAN HONDA MOTOR CO., INC.

GETtheMANUALS.org

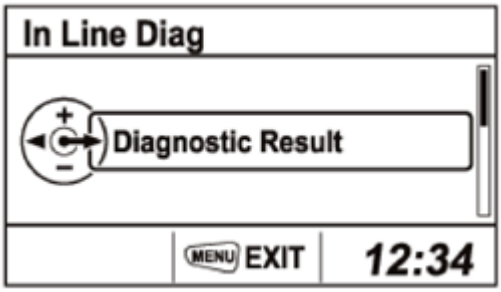

Fig. 200: Identifying Rearview Camera 12P Connector
Courtesy of AMERICAN HONDA MOTOR CO., INC.

Is there continuity?

YES : The CAMERA wires are not open. Go to step 7.

NO : There is an open in the wire(s) between the multi-information display unit and the rearview camera. Replace affected shielded harness.

7. Shorted wire check (CAMERA lines) 1:
   - 1. Check for continuity between test points 1 and 2.

     Test condition IG LOCK (0)

     Rearview camera 12P connector: disconnected

     Multi-information display unit connector A (32P): disconnected

Test circuits	Connector: Multi-information display unit connector A (32P)	
	Test point 1	Test points 2
SH CAMERA to CAMERA V GND, CAMERA GND, CAMERA V, CAMERA VCC No. 2 (GRY)	No. 3 (WHT),	No. 18 (GRN), No. 19 (RED), No. 20 (YEL)
CAMERA V GND to CAMERA GND, CAMERA V, CAMERA VCC	No. 3 (WHT)	No. 18 (GRN), No. 19 (RED), No. 20 (YEL)
CAMERA GND to CAMERA V, CAMERA VCC	No. 18 (GRN)	No. 19 (RED), No. 20 (YEL)
CAMERA V to CAMERA VCC	No. 19 (RED)	No. 20 (YEL)

GETtheMANUALS.org

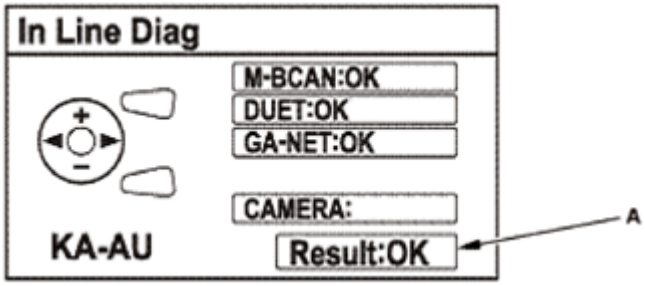

Fig. 201: Identifying Multi-Information Display Unit Connector A (32P)
Courtesy of AMERICAN HONDA MOTOR CO., INC.

Is there continuity between any of the terminals?

YES : There is a short in the wires between the multi-information display unit and the rearview camera. Replace the affected shielded harness.

NO : The CAMERA wires are not shorted in the wires. Go to step 8.

8. Shorted wire check (CAMERA lines) 2:
   - 1. Check for continuity between these test points and body ground individually.

     Test condition IG LOCK (0)

     Rearview camera 12P connector: disconnected

     Multi-information display unit connector A (32P): disconnected

Connector	Test circuit	Terminal
Multi-information display unit connector A (32P)	CAMERA V GND	No. 3 (WHT)
	CAMERA GND	No. 18 (GRN)
	CAMERA V	No. 19 (RED)
	CAMERA VCC	No. 20 (YEL)

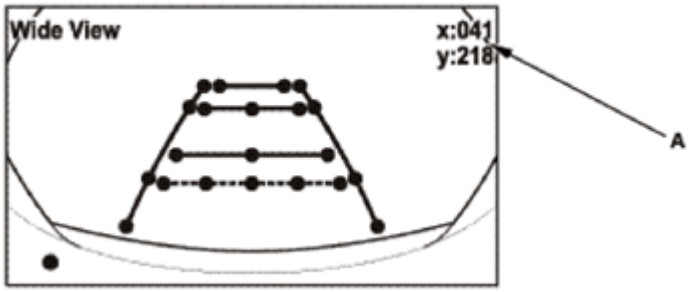

Fig. 202: Identifying Multi-Information Display Unit Connector A (32P)
Courtesy of AMERICAN HONDA MOTOR CO., INC.

GETtheMANUALS.org

Is there continuity?

YES : There is a short to body ground in the wire(s) between the multi-information display unit and the rearview camera. Replace the affected shielded harness.

NO : The CAMERA wires are OK. Go to step 9.

9. Multi-information display unit check:
    - 1. **SUBSTITUTE A KNOWN-GOOD REARVIEW CAMERA** , and recheck.

Does the symptom go away?

YES : Replace the original rearview camera.

NO : **REPLACE THE MULTI-INFORMATION DISPLAY UNIT** .

USB DEVICE DOES NOT FUNCTION

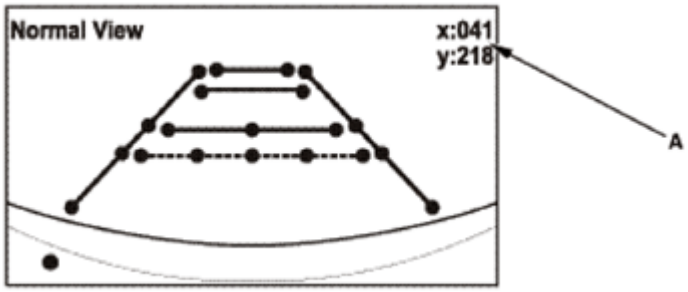

Fig. 203: Audio System Symptom Troubleshooting Flowchart - USB Device Does Not Function
Courtesy of AMERICAN HONDA MOTOR CO., INC.

NOTE:

- **CHECK THE VEHICLE BATTERY CONDITION FIRST .**
- **Check the USB's specifications:**
    - **Mass-storage class ready digital audio player with USB 2.0 port**
    - **More than 256 MB storage space**
    - **Supports MP3, WMA, and AAC (encoded with the iTunes) files, DRM files are not supported**
- **Not all players and player functions work with the USB adapter. Please see the Owner's Manual for more information. Always test the customer's USB device in a known-good vehicle of the same year and trim (if possible). Technologies change and are updated frequently which may result in USB devices working in newer vehicles, but not in older vehicles of the same model.**
- **If Unsupported Ver appears on the display, the vehicle is OK, there is a software problem with the USB device.**

GETtheMANUALS.org

- **Check the connectors for poor connections or loose terminals.**

1. Determine possible failure area (GA-NET circuit, others):
   - 1. Turn the ignition switch to ON (II).
   - 2. Turn on the audio system, and press the AUDIO button to select the USB mode.

   NOTE: Do not connect the USB device.

   Is No Data displayed in the multi-information display unit?

   YES : Go to step 2.

   NO : Go to **Audio system information does not display on the multi-information display unit (Navigation)** troubleshooting.

2. Determine possible failure area (USB device, others):
   - 1. Turn the ignition switch to LOCK (0).
   - 2. Connect the customer's USB device to a known-good vehicle (same year/trim) that is equipped with a USB adapter, and check the USB device operation.

   Does the USB device work properly in the known-good vehicle?

   YES : Go to step 3.

   NO : See the Owner's Manual for details about the USB device requirements and approved file types.

3. Problem verification:
   - 1. On the customer's vehicle, connect the customer's USB device to the USB port located in the center console.
   - 2. Turn the ignition switch to ON (II).
   - 3. Check the USB device operation in the customer's vehicle.

   Does the USB device work properly in the customer's vehicle?

   YES : Intermittent failure, the system is OK at this time. Inspect the connectors of the USB device, the USB port and the USB adapter for wear.

   NO : The failure is duplicated, go to step 4.

4. Determine possible failure area (USB lines, multi-information display unit):
   - 1. Turn the ignition switch to LOCK (0).
   - 2. On the customer's vehicle, disconnect the customer's USB device from the USB port.
   - 3. Disconnect the following connector.

GETtheMANUALS.org

Multi-information display unit connector B (5P)

- 4. Check for continuity between test points 1 and 2.

  Test condition IG LOCK (0)

  Multi-information display unit connector B (5P): disconnected

Test circuit	Connector: Multi-information display unit connector B (5P)	
	Test point 1	Test point 2
USB SH to USB GND, USB DATA+, USB DATA-, USB VBUS	No. 5	No. 1, No. 2, No. 3, No. 4

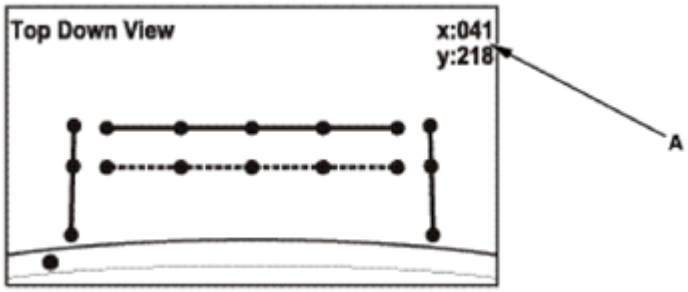

Fig. 204: Identifying Multi-Information Display Unit Connector B (5P)
Courtesy of AMERICAN HONDA MOTOR CO., INC.

Is there continuity between any of the terminals?

YES : Go to step 5.

NO : Go to step 6.

5. USB adapter check:
   - 1. Disconnect the following connector.

     USB adapter 5P connector

   - 2. Check for continuity between test points 1 and 2.

     Test condition IG LOCK (0)

     USB adapter 5P connector: disconnected

Test circuit	Connector: USB adapter 5P connector	
	Test point	

GETtheMANUALS.org

	1	Test point 2
USB SH to USB GND, USB DATA+, USB DATA-, USB VBUS	No. 5	No. 1, No. 2, No. 3, No. 4

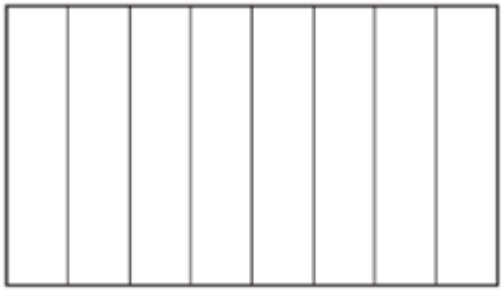

Fig. 205: Identifying USB Adapter 5P Connector
Courtesy of AMERICAN HONDA MOTOR CO., INC.

Is there continuity between any of the terminals?

YES : REPLACE THE USB ADAPTER , then recheck.

NO : Replace the USB main harness, then recheck.

6. Determine possible failure area (USB lines, multi-information display unit):
   - 1. Turn the ignition switch to LOCK (0).
   - 2. On the customer's vehicle, disconnect the customer's USB device from the USB port.
   - 3. Disconnect the following connector.

     Multi-information display unit connector B (5P)

   - 4. Check for continuity between test points 1 and 2.

     Test condition IG LOCK (0)

     Multi-information display unit connector B (5P): disconnected

Test circuit	Test point 1: Multi-information display unit connector B (5P)	Test point 2: USB port 5P connector
USB GND	No. 1	No. 4
USB DATA+	No. 2	No. 3
USB DATA-	No. 3	No. 2
USB VBUS	No. 4	No. 1

GETtheMANUALS.org

Fig. 206: Identifying Multi-Information Display Unit Connector B (5P)
Courtesy of AMERICAN HONDA MOTOR CO., INC.

Fig. 207: Identifying USB Port 5P Connector
Courtesy of AMERICAN HONDA MOTOR CO., INC.

Is there continuity?

YES : **REPLACE THE MULTI-INFORMATION DISPLAY UNIT** .

NO : Go to step 7.

7. USB adapter check:
   - 1. Disconnect the following connector.

     USB adapter 5P connector

   - 2. Check for continuity between test points 1 and 2.

     Test condition IG LOCK (0)

     USB adapter 5P connector: disconnected

     Multi-information display unit connector B (5P): disconnected

Test circuit	Test point 1: USB adapter 5P connector	Test point 2: USB port 5P connector
USB GND	No. 1	No. 4
USB DATA+	No. 2	No. 3

GETtheMANUALS.org

USB DATA-	No. 3	No. 2
USB VBUS	No. 4	No. 1

The display changes the color by your selection (Red, Green, Blue).

Fig. 208: Identifying USB Adapter 5P Connector
Courtesy of AMERICAN HONDA MOTOR CO., INC.

Fig. 209: Identifying USB Port 5P Connector
Courtesy of AMERICAN HONDA MOTOR CO., INC.

Is there continuity?

YES : Replace the USB main harness, then recheck.

NO : REPLACE THE USB ADAPTER , then recheck.

USB DEVICE DOES NOT FUNCTION (WITH NAVIGATION)

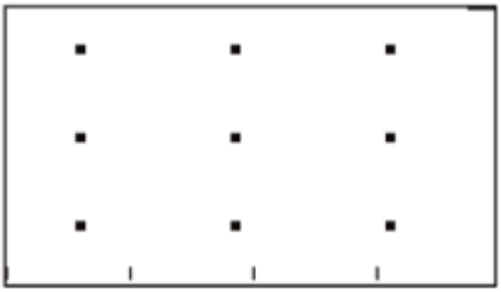

GETtheMANUALS.org

Fig. 210: Audio System Symptom Troubleshooting Flowchart - USB Device Does Not Function (1 Of 2)
Courtesy of AMERICAN HONDA MOTOR CO., INC.

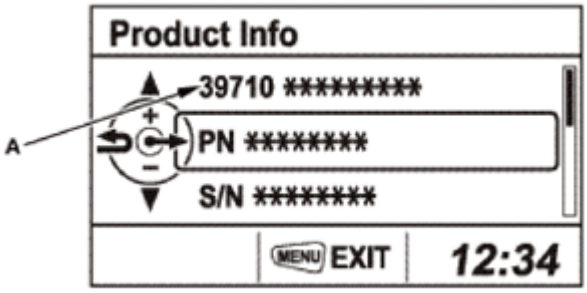

Fig. 211: Audio System Symptom Troubleshooting Flowchart - USB Device Does Not Function (2 Of 2)
Courtesy of AMERICAN HONDA MOTOR CO., INC.

NOTE:

- **CHECK THE VEHICLE BATTERY CONDITION FIRST .**
- **Check the USB's specifications:**
  - **Mass-storage class ready digital audio player with USB 2.0 port**
  - **More than 256 MB storage space**
  - **Supports MP3, WMA, and AAC (encoded with the iTunes) files, DRM files are not supported**
- **Not all players and player functions work with the USB adapter. Please see the Owner's Manual for more information. Always test the customer's USB device in a known-good vehicle of the same year and trim (if possible). Technologies change and are updated frequently which may result in USB devices working in newer vehicles, but not in older vehicles of the same model.**
- **If Unsupported Ver appears on the display, the vehicle is OK, there is a software problem with the USB device.**
- **Check the connectors for poor connections or loose terminals.**

1. Determine possible failure area (GA-NET circuit, others):
   - 1. Turn the ignition switch to ON (II).
   - 2. Turn on the audio unit, and press the AUX button to select the USB mode.

   NOTE: **Do not connect the USB device.**

   Is No Data displayed in the multi-information display unit?

   YES : Go to step 2.

   NO : Go to step 8.

2. Determine possible failure area (USB device, others):

GETtheMANUALS.org

- 1. Turn the ignition switch to LOCK (0).
- 2. Connect the customer's USB device to a known-good vehicle (same year/trim) that is equipped with a USB adapter, and check the USB device operation.

Is the USB device working properly in the known-good vehicle?

YES : Go to step 3.

NO : See the Owner's Manual for details about the USB device requirements and approved file types.

3. Problem verification:
   - 1. On the customer's vehicle, connect the customer's USB device to the USB port located in the center console.
   - 2. Turn the ignition switch to ON (II).
   - 3. Check the USB device operation in the customer's vehicle.

Does the USB device work properly in the customer's vehicle?

YES : Intermittent failure, the system is OK at this time. Inspect the connectors of the USB device, the USB port, and the USB adapter for wear.

NO : The failure is duplicated, go to step 4.

4. Determine possible failure area (USB lines, multi-information display unit):
   - 1. Turn the ignition switch to LOCK (0).
   - 2. On the customer's vehicle, disconnect the customer's USB device from the USB port.
   - 3. Disconnect the following connector.

     Multi-information display unit connector B (5P)

   - 4. Check for continuity between test points 1 and 2.

     Test condition IG LOCK (0)

     Multi-information display unit connector B (5P): disconnected

Test circuit	**Connector: Multi-information display unit connector B (5P)**	
	Test point 1	**Test point 2**
USB SH to USB GND, USB DATA+, USB DATA-, USB VBUS	No. 5	No. 1, No. 2, No. 3, No. 4

GETtheMANUALS.org

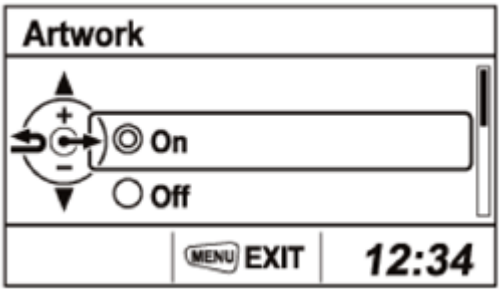

Fig. 212: Identifying Multi-Information Display Unit Connector B (5P)
Courtesy of AMERICAN HONDA MOTOR CO., INC.

Is there continuity between any of the terminals?

YES : Go to step 5.

NO : Go to step 6.

5. USB adapter check:
   - 1. Disconnect the following connector.

     USB adapter 5P connector

   - 2. Check for continuity between test points 1 and 2.

     Test condition IG LOCK (0)

     USB adapter 5P connector: disconnected

Test circuit	Connector: USB adapter 5P connector	
	Test point 1	Test point 2
USB SH to USB GND, USB DATA+, USB DATA-, USB VBUS	No. 5	No. 1, No. 2, No. 3, No. 4

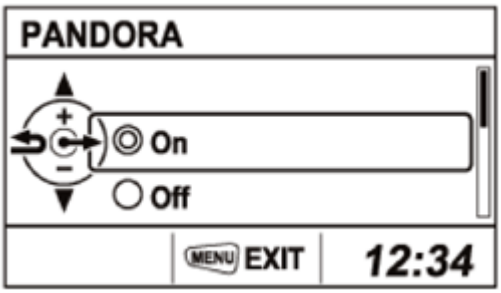

Fig. 213: Identifying USB Adapter 5P Connector

GETtheMANUALS.org

Courtesy of AMERICAN HONDA MOTOR CO., INC.

Is there continuity between any of the terminals?

YES : REPLACE THE USB ADAPTER , then recheck.

NO : Replace the USB main harness, then recheck.

6. Determine possible failure area (USB lines, multi-information display unit):
   - 1. Check for continuity between test points 1 and 2.

     Test condition IG LOCK (0)

     Multi-information display unit connector B (5P): disconnected

Test circuit	Test point 1: Multi-information display unit connector B (5P)	Test point 2: USB port 5P connector
USB GND	No. 1	No. 4
USB DATA+	No. 2	No. 3
USB DATA-	No. 3	No. 2
USB VBUS	No. 4	No. 1

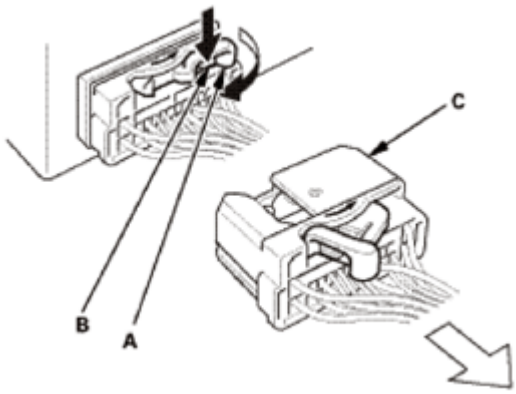

Fig. 214: Identifying Multi-Information Display Unit Connector B (5P)
Courtesy of AMERICAN HONDA MOTOR CO., INC.

GETtheMANUALS.org

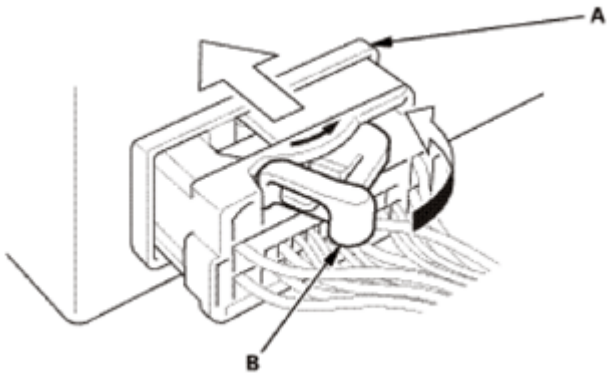

Fig. 215: Identifying USB Port 5P Connector
Courtesy of AMERICAN HONDA MOTOR CO., INC.

Is there continuity?

YES : **REPLACE THE MULTI-INFORMATION DISPLAY UNIT** .

NO : Go to step 7.

7. USB adapter check:
   - 1. Disconnect the following connector.

     USB adapter 5P connector

   - 2. Check for continuity between test points 1 and 2.

     Test condition IG LOCK (0)

     Multi-information display unit connector B (5P): disconnected

     USB adapter 5P connector: disconnected

Test circuit	Test point 1: USB adapter 5P connector	Test point 2: USB port 5P connector
USB GND	No. 1	No. 4
USB DATA+	No. 2	No. 3
USB DATA-	No. 3	No. 2
USB VBUS	No. 4	No. 1

GETtheMANUALS.org

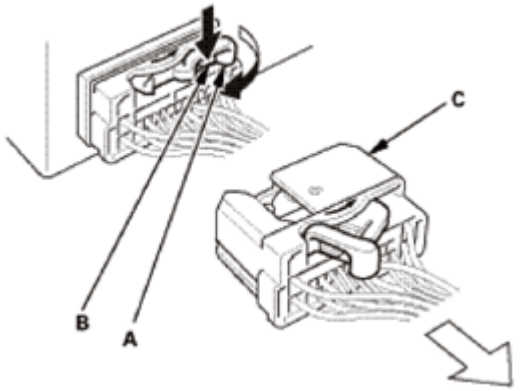

Fig. 216: Identifying USB Adapter 5P Connector
Courtesy of AMERICAN HONDA MOTOR CO., INC.

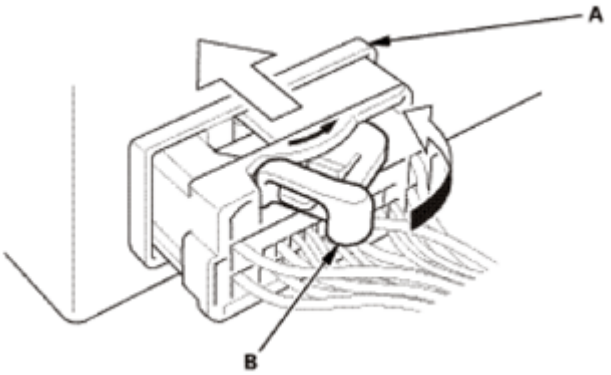

Fig. 217: Identifying USB Port 5P Connector
Courtesy of AMERICAN HONDA MOTOR CO., INC.

Is there continuity?

YES : Replace the USB main harness, then recheck.

NO : REPLACE THE USB ADAPTER , then recheck.

8. Open wire check (GA SYS ON line):
    - 1. Turn the ignition switch to LOCK (0).
    - 2. Disconnect the following connectors.

      Audio unit connector C (14P)

      Multi-information display unit connector A (32P)

    - 3. Check for continuity between test points 1 and 2.

      Test condition IG LOCK (0)

GETtheMANUALS.org

Audio unit connector C (14P): disconnected

Multi-information display unit connector A (32P): disconnected

Test circuit GA SYS ON

Test point 1 Audio unit connector C (14P) No. 5 (PNK)

Test point 2 Multi-information display unit connector A (32P) No. 32 (PNK)

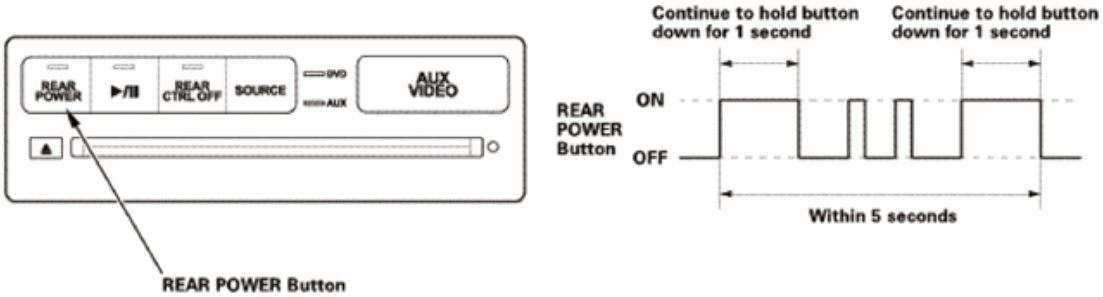

Fig. 218: Checking For Continuity Between Test Point Audio Unit Connector C (14P) No. 5 (PNK) And Multi-Information Display Unit Connector A (32P) No. 32 (PNK)
Courtesy of AMERICAN HONDA MOTOR CO., INC.

Is there continuity?

YES : The GA SYS ON wire is OK. Go to step 9.

NO : Repair an open in the wire between the audio unit and the multi-information display unit.

9. Shorted wire check (GA BUS+ line, GA BUS- line):
   - 1. Disconnect the following connectors.

     HandsFreeLink control unit 32P connector

     XM receiver connector A (14P) (with XM)

   - 2. Check for continuity between test points 1 and 2.

     Test condition IG LOCK (0)

     Audio unit connector C (14P): disconnected

     Multi-information display unit connector A (32P): disconnected

     HandsFreeLink control unit 32P connector: disconnected

     XM receiver connector A (14P) (with XM): disconnected

GETtheMANUALS.org

Test circuit GA BUS-

Test point 1 Audio unit connector C (14P) No. 11 (PNK)

Test point 2 Body ground

Test circuit GA BUS+

Test point 1 Audio unit connector C (14P) No. 12 (BLU)

Test point 2 Body ground

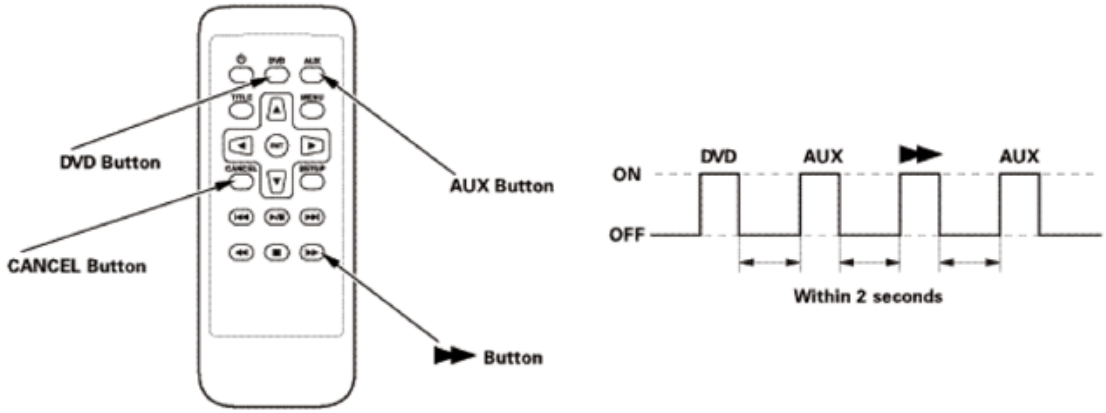

Fig. 219: Checking For Continuity Between Test Point Audio Unit Connector C (14P) No. 12 (BLU) And Body Ground
Courtesy of AMERICAN HONDA MOTOR CO., INC.

Is there continuity?

YES : There is a short to body ground in the wire(s) between the audio unit and the multi-information display unit. Replace the affected shielded harness.

NO : The GA BUS+ and the GA BUS- wires are not shorted to ground. Go to step 10.

10. Shorted wire check (GA BUS+ line to GA BUS- line):
    - 1. Check for continuity between test points 1 and 2.

      Test condition IG LOCK (0)

      Audio unit connector C (14P): disconnected

      Multi-information display unit connector A (32P): disconnected

      HandsFreeLink control unit 32P connector: disconnected

      XM receiver connector A (14P) (with XM): disconnected

GETtheMANUALS.org

Test circuit GA BUS-, GA BUS+

Test point 1 Audio unit connector C (14P) No. 11 (PNK)

Test point 2 Audio unit connector C (14P) No. 12 (BLU)

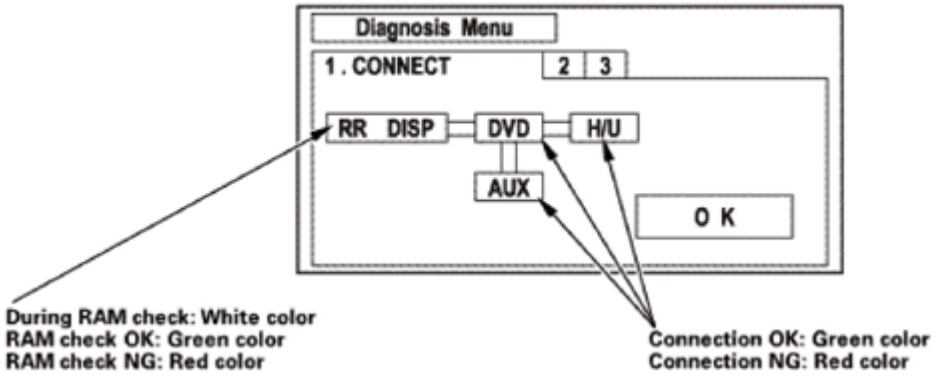

Fig. 220: Checking For Continuity Between Test Point Audio Unit Connector C (14P) No. 11 (PNK) And No. 12 (BLU)
Courtesy of AMERICAN HONDA MOTOR CO., INC.

Is there continuity?

YES : There is a short in the wire(s) between the audio unit and the multi-information display unit. Replace the affected shielded harness.

NO : The GA BUS+ and the GA BUS- wires are not shorted. Go to step 11.

11. Shorted wire check (SH GA BUS line to another lines):
    - 1. Check for continuity between test points 1 and 2.

      Test condition IG LOCK (0)

      Audio unit connector C (14P): disconnected

      Multi-information display unit connector A (32P): disconnected

      HandsFreeLink control unit 32P connector: disconnected

      XM receiver connector A (14P) (with XM): disconnected

      Test circuit SH GA BUS, GA BUS+

      Test point 1 Audio unit connector C (14P) No. 4 (GRY)

      Test point 2 Audio unit connector C (14P) No. 12 (BLU)

GETtheMANUALS.org

Test circuit SH GA BUS, GA BUS-

Test point 1 Audio unit connector C (14P) No. 4 (GRY)

Test point 2 Audio unit connector C (14P) No. 11 (PNK)

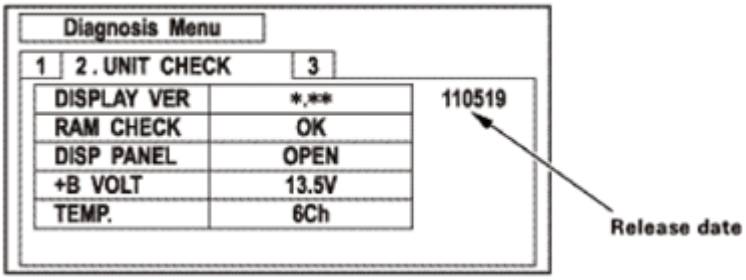

Fig. 221: Checking For Continuity Between Test Point Audio Unit Connector C (14P) No. 4 (GRY) And No. 11 (PNK)
Courtesy of AMERICAN HONDA MOTOR CO., INC.

Is there continuity?

YES : There is a short in the wires between the audio unit and the multi-information display unit. Replace the affected shielded harness.

NO : The SH GA BUS wire is OK. Go to step 12.

12. Open wire check (GA BUS+ line, GA BUS- line):
    - 1. Check for continuity between test points 1 and 2.

      Test condition IG LOCK (0)

      Audio unit connector C (14P): disconnected

      Multi-information display unit connector A (32P): disconnected

      HandsFreeLink control unit 32P connector: disconnected

      XM receiver connector A (14P) (with XM): disconnected

      Test circuit GA BUS-

      Test point 1 Audio unit connector C (14P) No. 11 (PNK)

      Test point 2 Multi-information display unit connector A (32P) No. 11 (PNK)

      Test circuit GA BUS+

GETtheMANUALS.org

Test point 1 Audio unit connector C (14P) No. 12 (BLU)

Test point 2 Multi-information display unit connector A (32P) No. 27 (BLU)

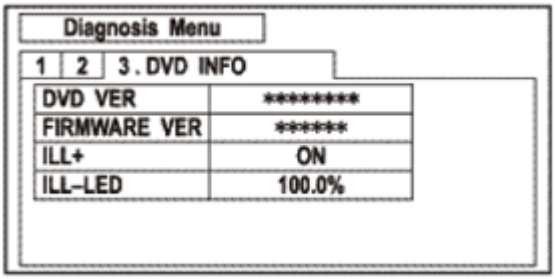

Fig. 222: Checking For Continuity Between Test Point Audio Unit Connector C (14P) No. 12 (BLU) And Multi-Information Display Unit Connector A (32P) No. 27 (BLU)
Courtesy of AMERICAN HONDA MOTOR CO., INC.

Is there continuity?

YES : The GA BUS+ and the GA BUS- wires are OK. Go to step 13.

NO : There is an open in the wire(s) between the audio unit and the multi-information display unit. Replace the affected shielded harness.

13. Determine possible failure area (related unit, others):
    - 1. Reconnect audio unit connector C (14P) and multi-information display unit connector A (32P).
    - 2. Turn the ignition switch to ON (II).
    - 3. Turn on the audio unit, and press the AUX button to select USB mode.

    NOTE: Do not connect the USB device.

Is No Data displayed in the multi-information display unit?

YES : Go to Step 14.

YES : **Replace the HandsFreeLink control unit** See **HANDSFREELINK CONTROL UNIT REMOVAL AND INSTALLATION** or **HANDSFREELINK CONTROL UNIT UPDATE** .

NO : Go to step 15.

14. XM receiver check:
    - 1. Turn the ignition switch to LOCK (0).
    - 2. SUBSTITUTE A KNOWN-GOOD XM RECEIVER, AND RECHECK .

Does the symptom go away?

GETtheMANUALS.org

YES : Replace the original XM receiver.

NO : **Replace the HandsFreeLink control unit** See **HANDSFREELINK CONTROL UNIT REMOVAL AND INSTALLATION** or **HANDSFREELINK CONTROL UNIT UPDATE** .

15. Audio unit check:
    - 1. Turn the ignition switch to LOCK (0).
    - 2. **SUBSTITUTE A KNOWN-GOOD MULTI-INFORMATION DISPLAY UNIT, AND RECHECK.**

Does the symptom go away?

YES : Replace the original multi-information display unit.

NO : REPLACE THE AUDIO UNIT .

USB DEVICE DOES NOT FUNCTION (WITHOUT NAVIGATION)

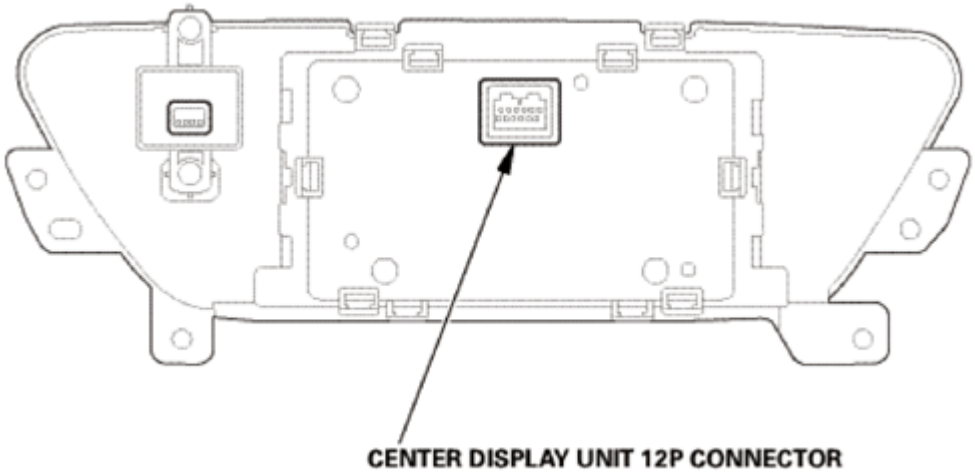

Fig. 223: Audio System Symptom Troubleshooting Flowchart - USB Device Does Not Function (1 Of 2)
Courtesy of AMERICAN HONDA MOTOR CO., INC.

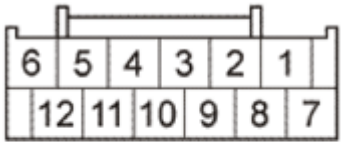

Wire side of female terminals

Fig. 224: Audio System Symptom Troubleshooting Flowchart - USB Device Does Not Function (2 Of 2)
Courtesy of AMERICAN HONDA MOTOR CO., INC.

GETtheMANUALS.org

NOTE:

- **<u>CHECK THE VEHICLE BATTERY CONDITION FIRST</u> .**
- **Check the USB's specifications:**
  - **Mass-storage class ready digital audio player with USB 2.0 port**
  - **More than 256 MB storage space**
  - **Supports MP3, WMA, and AAC (encoded with the iTunes) files, DRM files are not supported**
- **Not all players and player functions work with the USB adapter. Please see the Owner's Manual for more information. Always test the customer's USB device in a known-good vehicle of the same year and trim (if possible). Technologies change and are updated frequently which may result in USB devices working in newer vehicles, but not in older vehicles of the same model.**
- **If Unsupported Ver appears on the display, the vehicle is OK, there is a software problem with the USB device.**
- **Check the connectors for poor connections or loose terminals.**

1. Determine possible failure area (GA-NET circuit, others):
   - 1. Turn the ignition switch to ON (II).
   - 2. Turn on the audio unit, and press the AUX button to select the USB mode.

   NOTE: **Do not connect the USB device.**

   Is No Data displayed in the audio display unit?

   YES : Go to step 2.

   NO : Go to step 8.

2. Determine possible failure area (USB device, others):
   - 1. Turn the ignition switch to LOCK (0).
   - 2. Connect the customer's USB device to a known-good vehicle (same year/trim) that is equipped with a USB adapter, and check the USB device operation.

   Is the USB device working properly in the known-good vehicle?

   YES : Go to step 3.

   NO : See the Owner's Manual for details about the USB device requirements and approved file types.

3. Problem verification:
   - 1. On the customer's vehicle, connect the customer's USB device to the USB port located in the center console.
   - 2. Turn the ignition switch to ON (II).

GETtheMANUALS.org

- 3. Check the USB device operation in the customer's vehicle.

Does the USB device work properly in the customer's vehicle?

YES : Intermittent failure, the system is OK at this time. Inspect the connectors of the USB device, the USB port, and the USB adapter for wear.

NO : The failure is duplicated, go to step 4.

4. Determine possible failure area (USB lines, USB adapter control unit):
   - 1. Turn the ignition switch to LOCK (0).
   - 2. On the customer's vehicle, disconnect the customer's USB device from the USB port.
   - 3. Disconnect the following connector.

     USB adapter control unit connector B (5P)

   - 4. Check for continuity between test points 1 and 2.

     Test condition IG LOCK (0)

     USB adapter control unit connector B (5P): disconnected

Test circuit	**Connector: USB adapter control unit B (5P)**	
	Test point 1	**Test point 2**
USB SH to USB GND, USB DATA+, USB DATA-, USB VBUS	No. 5	No. 1, No. 2, No. 3, No. 4

GETtheMANUALS.org

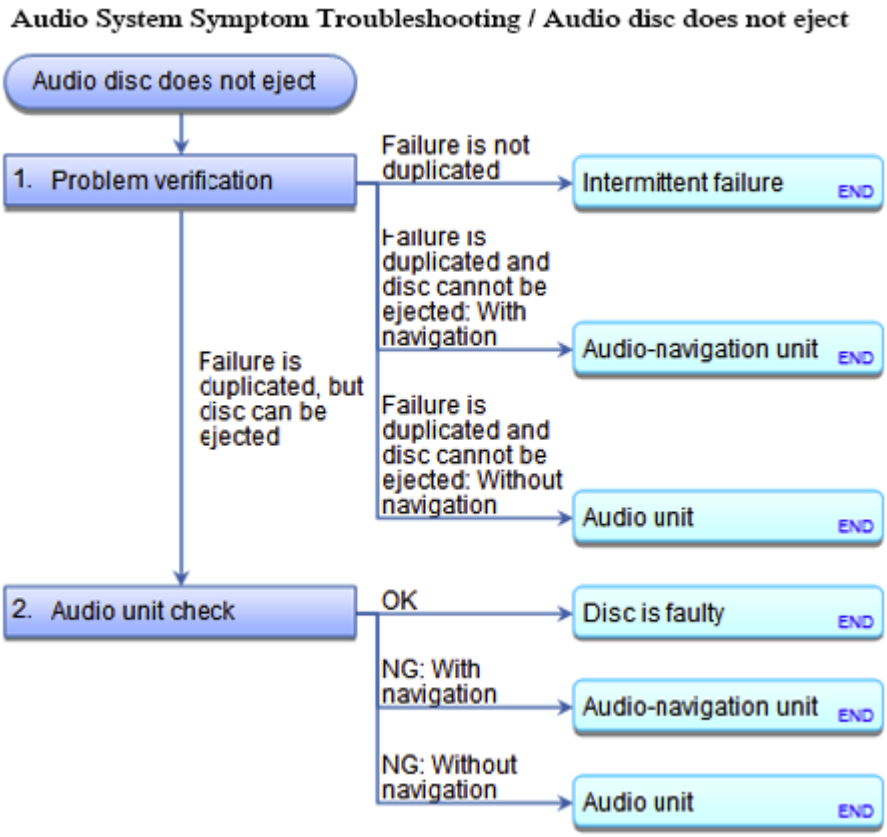

Fig. 225: Identifying USB Adapter Control Unit B (5P)
Courtesy of AMERICAN HONDA MOTOR CO., INC.

Is there continuity between any of the terminals?

YES : Go to step 5.

NO : Go to step 6.

5. USB adapter check:
   - 1. Disconnect the following connector.

     USB adapter 5P connector

   - 2. Check for continuity between test points 1 and 2.

     Test condition IG LOCK (0)

     - USB adapter control unit connector B (5P): disconnected

     USB adapter 5P connector: disconnected

	Connector: USB adapter 5P

GETtheMANUALS.org

Test circuit	connector	
	Test point 1	Test point 2
USB SH to USB GND, USB DATA+, USB DATA-, USB VBUS	No. 5	No. 1, No. 2, No. 3, No. 4

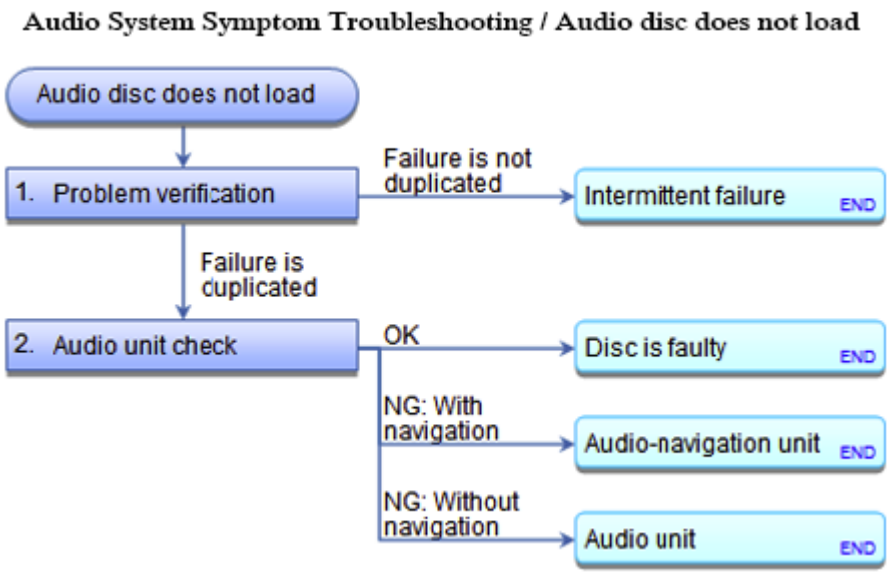

Fig. 226: Identifying USB Adapter 5P Connector
Courtesy of AMERICAN HONDA MOTOR CO., INC.

Is there continuity between any of the terminals?

YES : REPLACE THE USB ADAPTER , then recheck.

NO : Replace the USB main harness, then recheck.

6. Determine possible failure area (USB lines, USB adapter control unit):
   - 1. Check for continuity between test points 1 and 2.

     Test condition IG LOCK (0)

     USB adapter control unit connector B (5P): disconnected

Test circuit	Test point 1: USB adapter control unit connector B (5P)	Test point 2: USB port 5P connector
USB GND	No. 1	No. 4
USB DATA+	No. 2	No. 3
USB DATA-	No. 3	No. 2

GETtheMANUALS.org

USB VBUS	No. 4	No. 1

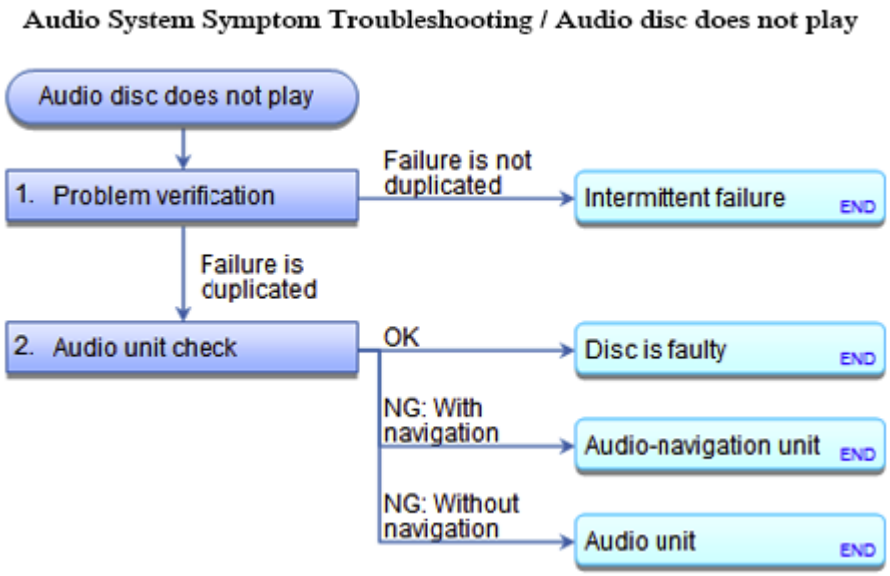

Fig. 227: Identifying USB Adapter Control Unit Connector B (5P)
Courtesy of AMERICAN HONDA MOTOR CO., INC.

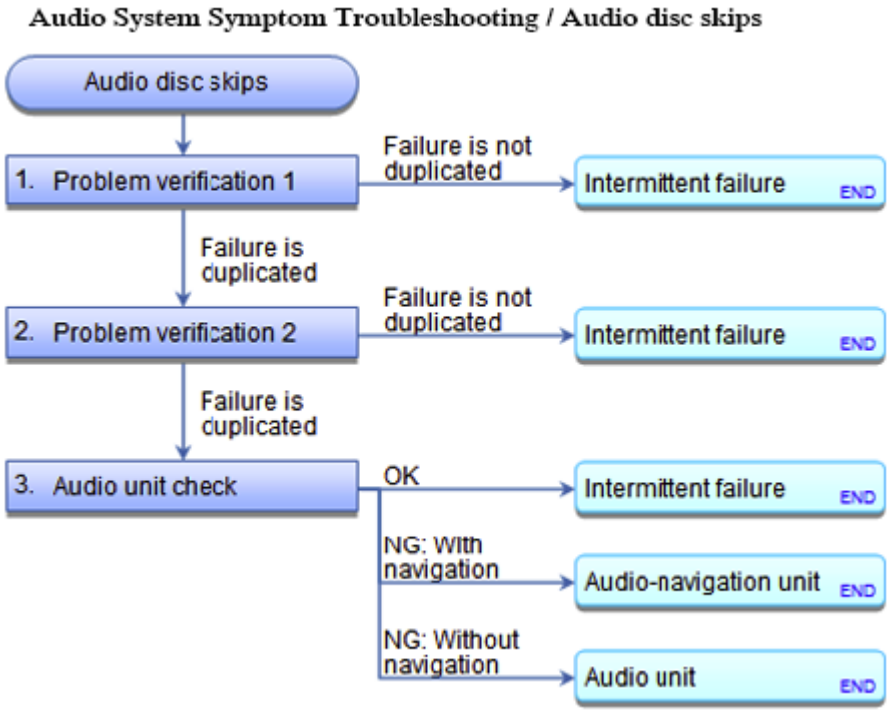

Fig. 228: Identifying USB Port 5P Connector
Courtesy of AMERICAN HONDA MOTOR CO., INC.

Is there continuity?

GETtheMANUALS.org

YES : REPLACE THE USB ADAPTER CONTROL UNIT .

NO : Go to step 7.

7. USB adapter check:
   - 1. Disconnect the following connector.

     USB adapter 5P connector

   - 2. Check for continuity between test points 1 and 2.

     Test condition IG LOCK (0)

     USB adapter control unit connector B (5P): disconnected

     USB adapter 5P connector: disconnected

Test circuit	Test point 1: USB adapter 5P connector	Test point 2: USB port 5P connector
USB GND	No. 1	No. 4
USB DATA+	No. 2	No. 3
USB DATA-	No. 3	No. 2
USB VBUS	No. 4	No. 1

GETtheMANUALS.org

Audio System Symptom Troubleshooting - Audio remote switch does not work properly (audio unit buttons work)

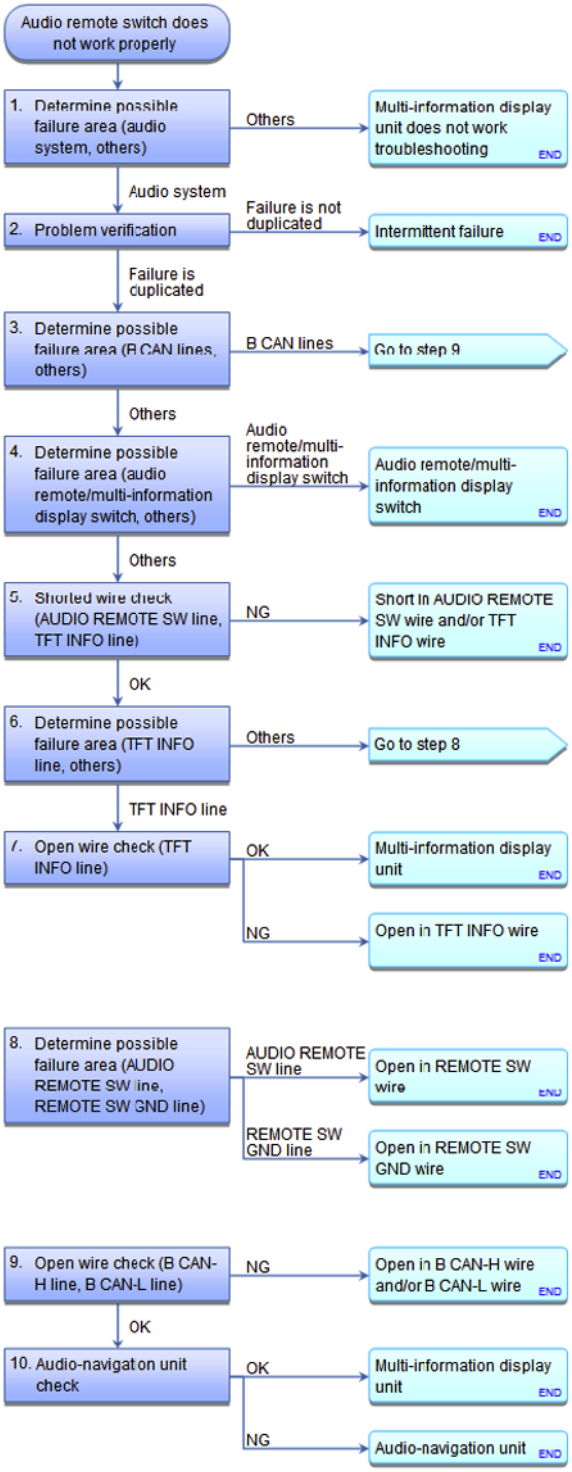

Fig. 229: Identifying USB Adapter 5P Connector
Courtesy of AMERICAN HONDA MOTOR CO., INC.

GETtheMANUALS.org

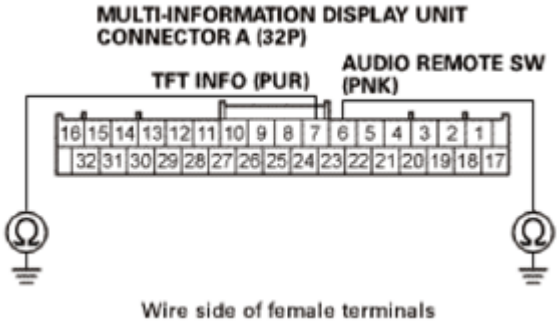

Fig. 230: Identifying USB Port 5P Connector
Courtesy of AMERICAN HONDA MOTOR CO., INC.

Is there continuity?

YES : Replace the USB main harness, then recheck.

NO : REPLACE THE USB ADAPTER , then recheck.

8. Determine possible failure area (GA +B line, others):
   - 1. Turn the ignition switch to LOCK (0).
   - 2. Measure the voltage between test points 1 and 2.

     Test condition IG LOCK (0)

     Test circuit GA +B

     Test point 1 USB adapter control unit connector A (14P) No. 6 (RED)

     Test point 2 Body ground

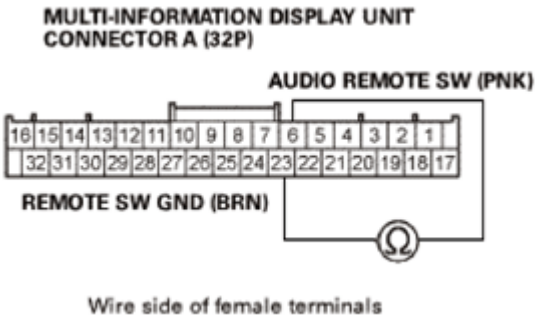

Fig. 231: Measuring Voltage Between Test Point USB Adapter Control Unit Connector A (14P) No. 6 (RED) And Body Ground
Courtesy of AMERICAN HONDA MOTOR CO., INC.

Is there battery voltage?

GETtheMANUALS.org

YES : The GA +B wire is OK. Go to step 10.

NO : Go to step 9.

9. Open wire check (GA +B line):
   - 1.

     Measure the voltage between test points 1 and 2.

     Test condition IG LOCK (0)

     Test circuit GA +B

     Test point 1 Audio unit connector C (14P) No. 6 (RED)

     Test point 2 Body ground

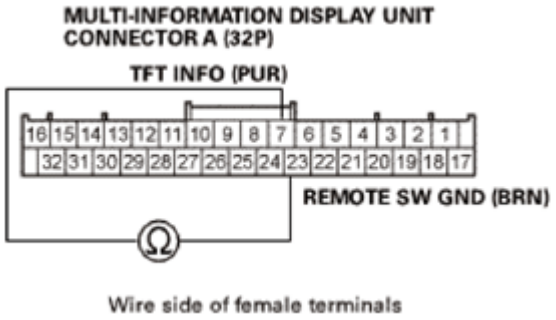

Fig. 232: Measuring Voltage Between Test Point Audio Unit Connector C (14P) No. 6 (RED) And Body Ground
Courtesy of AMERICAN HONDA MOTOR CO., INC.

Is there battery voltage?

YES : Repair an open or high resistance in the wire between the audio unit and the USB adapter control unit.

NO : REPLACE THE AUDIO UNIT .

10. Determine possible failure area (GA GND line, others):
    - 1. Turn the ignition switch to ON (II).
    - 2. Measure the voltage between test points 1 and 2.

      Test condition IG ON (II)

      Test circuit GA GND

      Test point 1 USB adapter control unit connector A (14P) No. 10 (BLK)

GETtheMANUALS.org

Test point 2 Body ground

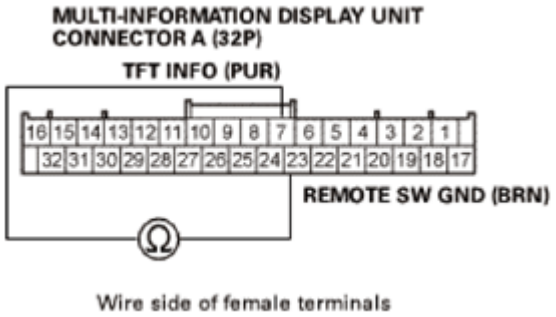

Fig. 233: Measuring Voltage Between Test Point USB Adapter Control Unit Connector A (14P) No. 10 (BLK) And Body Ground
Courtesy of AMERICAN HONDA MOTOR CO., INC.

Is there less than 0.2 V?

YES : The GA GND wire is OK. Go to step 12.

NO : Go to step 11.

11. Open wire check (GA GND line):
    - 1. Measure the voltage between test points 1 and 2.

      Test condition IG ON (II)

      Test circuit GA GND

      Test point 1 Audio unit connector C (14P) No. 10 (BLK)

      Test point 2 Body ground

GETtheMANUALS.org

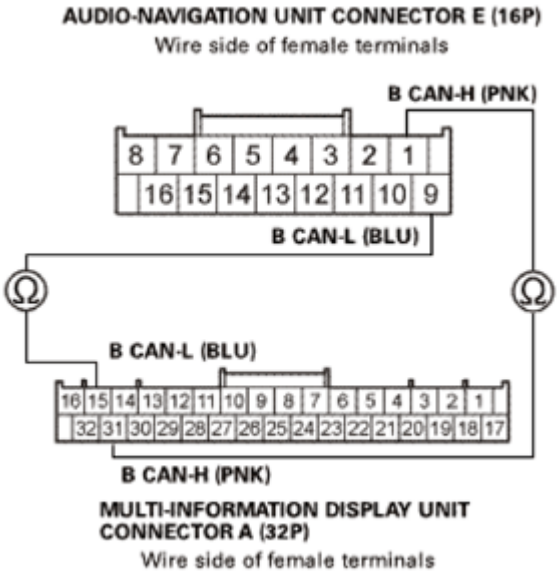

Fig. 234: Measuring Voltage Between Test Point Audio Unit Connector C (14P) No. 10 (BLK) And Body Ground
Courtesy of AMERICAN HONDA MOTOR CO., INC.

Is there any voltage?

YES : REPLACE THE AUDIO UNIT .

NO : Repair an open in the wire between the audio unit and the USB adapter control unit.

12. Open wire check (GA SYS ON line):
    - 1. Turn the ignition switch to LOCK (0).
    - 2. Disconnect the following connectors.

      Audio unit connector C (14P)

      USB adapter control unit connector A (14P)

    - 3. Check for continuity between test points 1 and 2.

      Test condition IG LOCK (0)

      Audio unit connector C (14P): disconnected

      USB adapter control unit connector A (14P): disconnected

      Test circuit GA SYS ON

      Test point 1 Audio unit connector C (14P) No. 5 (PNK)

GETtheMANUALS.org

Test point 2 USB adapter control unit connector A (14P) No. 5 (PNK)

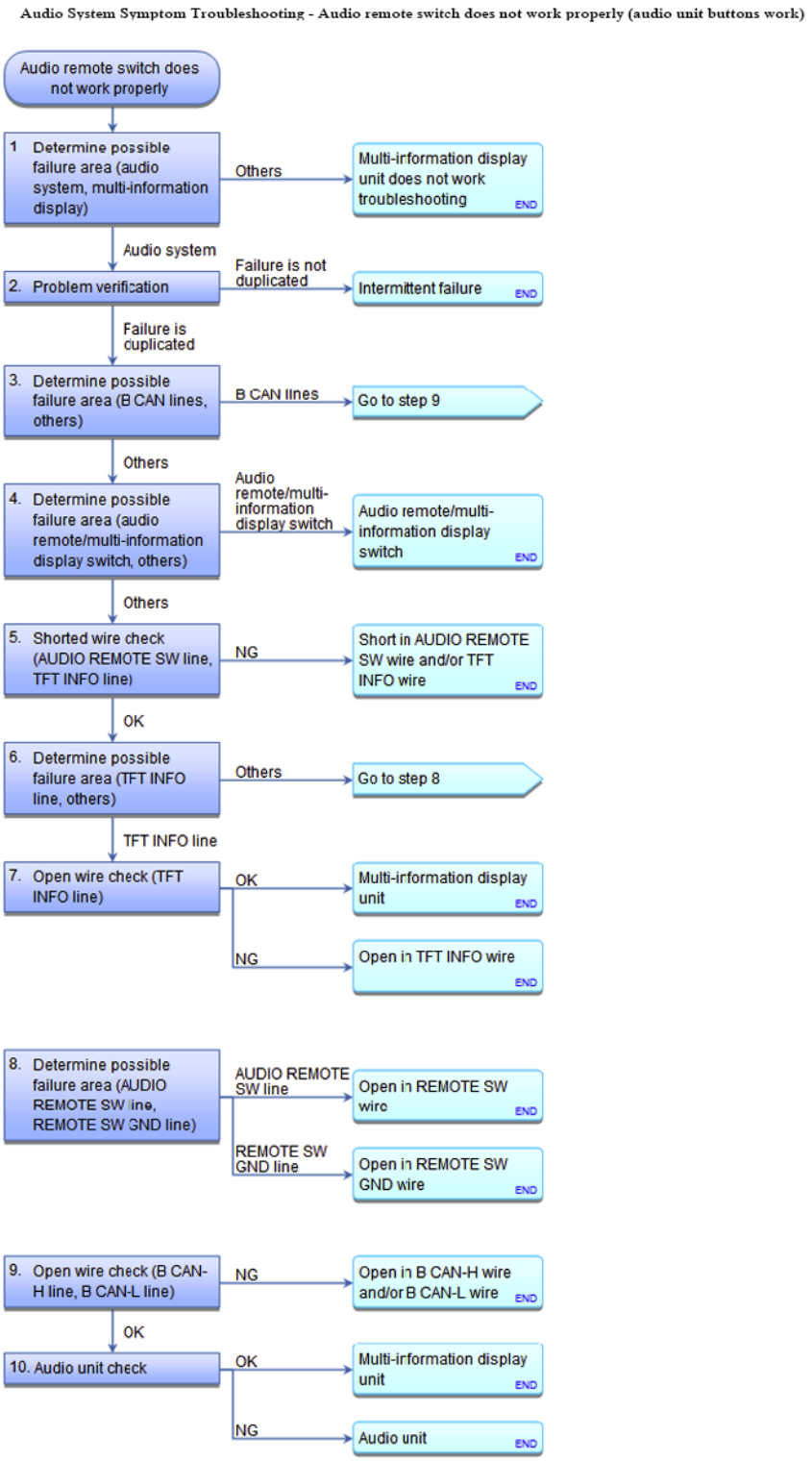

Fig. 235: Checking For Continuity Between Test Point Audio Unit Connector C (14P) No. 5 (PNK) And USB Adapter Control Unit Connector A (14P) No. 5 (PNK)
Courtesy of AMERICAN HONDA MOTOR CO., INC.

GETtheMANUALS.org

Is there continuity?

YES : The GA SYS ON wire is OK. Go to step 13.

NO : Repair an open in the wire between the audio unit and the USB adapter control unit.

13. Shorted wire check (GA BUS+ line, GA BUS- line):
    - 1. Check for continuity between test points 1 and 2.

      Test condition IG LOCK (0)

      Audio unit connector C (14P): disconnected

      USB adapter control unit connector A (14P): disconnected

      Test circuit GA BUS-

      Test point 1 Audio unit connector C (14P) No. 11 (PNK)

      Test point 2 Body ground

      Test circuit GA BUS+

      Test point 1 Audio unit connector C (14P) No. 12 (BLU)

      Test point 2 Body ground

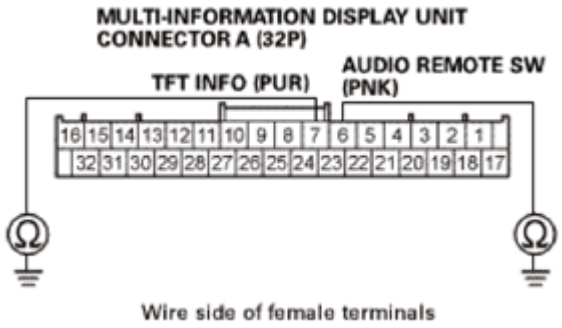

Fig. 236: Checking For Continuity Between Test Point Audio Unit Connector C (14P) No. 12 (BLU) And Body Ground
Courtesy of AMERICAN HONDA MOTOR CO., INC.

Is there continuity?

YES : There is a short to body ground in the wire(s) between the audio unit and the USB adapter control unit. Replace the affected shielded harness.

NO : The GA BUS+ and the GA BUS- wires are not shorted to ground. Go to step 14.

GETtheMANUALS.org

14. Shorted wire check (GA BUS+ line to GA BUS- line):
    - 1. Check for continuity between test points 1 and 2.

      Test condition IG LOCK (0)

      Audio unit connector C (14P): disconnected

      USB adapter control unit connector A (14P): disconnected

      Test circuit GA BUS-, GA BUS+

      Test point 1 Audio unit connector C (14P) No. 11 (PNK)

      Test point 2 Audio unit connector C (14P) No. 12 (BLU)

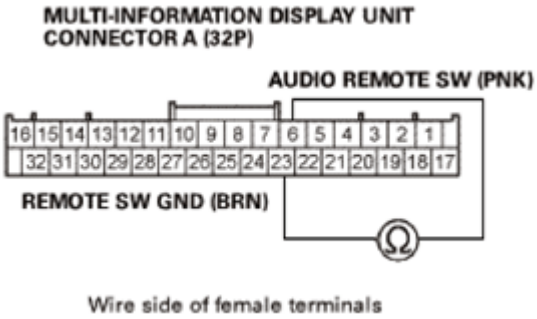

Fig. 237: Checking For Continuity Between Test Point Audio Unit Connector C (14P) No. 11 (PNK) And No. 12 (BLU)
Courtesy of AMERICAN HONDA MOTOR CO., INC.

Is there continuity?

YES : There is a short in the wires between the audio unit and the USB adapter control unit. Replace the affected shielded harness.

NO : The GA BUS+ and the GA BUS- wires are not shorted. Go to step 15.

15. Shorted wire check (SH GA BUS line to another lines):
    - 1. Check for continuity between test points 1 and 2.

      Test condition IG LOCK (0)

      Audio unit connector C (14P): disconnected

      USB adapter control unit connector A (14P): disconnected

      Test circuit SH GA BUS, GA BUS+

GETtheMANUALS.org

Test point 1 Audio unit connector C (14P) No. 4 (GRY)

Test point 2 Audio unit connector C (14P) No. 12 (BLU)

Test circuit SH GA BUS, GA BUS-

Test point 1 Audio unit connector C (14P) No. 4 (GRY)

Test point 2 Audio unit connector C (14P) No. 11 (PNK)

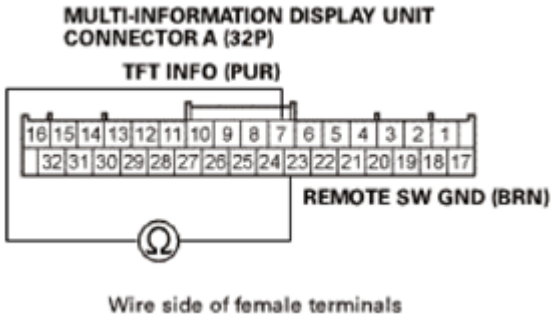

Fig. 238: Checking For Continuity Between Test Point Audio Unit Connector C (14P) No. 4 (GRY) And No. 11 (PNK)
Courtesy of AMERICAN HONDA MOTOR CO., INC.

Is there continuity?

YES : There is a short in the wires between the audio unit and the USB adapter control unit. Replace the affected shielded harness.

NO : The SH GA BUS wire is OK. Go to step 16.

16. Open wire check (GA BUS+ line, GA BUS- line):
    - 1. Check for continuity between test points 1 and 2.

      Test condition IG LOCK (0)

      Audio unit connector C (14P): disconnected

      USB adapter control unit A (14P): disconnected

      Test circuit GA BUS-

      Test point 1 Audio unit connector C (14P) No. 11 (PNK)

      Test point 2 USB adapter control unit connector A (14P) No. 11 (PNK)

      Test circuit GA BUS+

GETtheMANUALS.org

Test point 1 Audio unit connector C (14P) No. 12 (BLU)

Test point 2 USB adapter control unit connector A (14P) No. 12 (BLU)

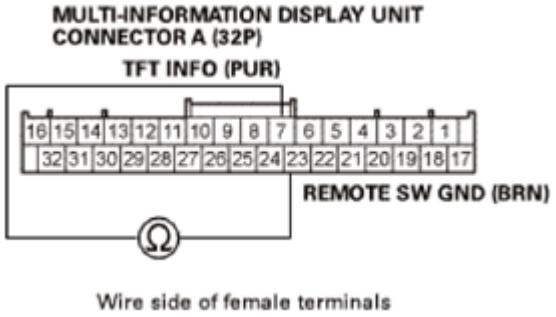

Fig. 239: Checking For Continuity Between Test Point Audio Unit Connector C (14P) No. 12 (BLU) And USB Adapter Control Unit Connector A (14P) No. 12 (BLU)
Courtesy of AMERICAN HONDA MOTOR CO., INC.

Is there continuity?

YES : The GA BUS+ and the GA BUS- wires are OK. Go to step 17.

NO : There is an open in the wire(s) between the audio unit and the USB adapter control unit. Replace the affected shielded harness.

17. Audio unit check:
    - 1. SUBSTITUTE A KNOWN-GOOD USB ADAPTER CONTROL UNIT, AND RECHECK.

Does the symptom go away?

YES : Replace the original USB adapter control unit.

NO : REPLACE THE AUDIO UNIT .

USB INPUT SOUND IS LOW OR CANNOT BE HEARD (WITH NAVIGATION)

GETtheMANUALS.org

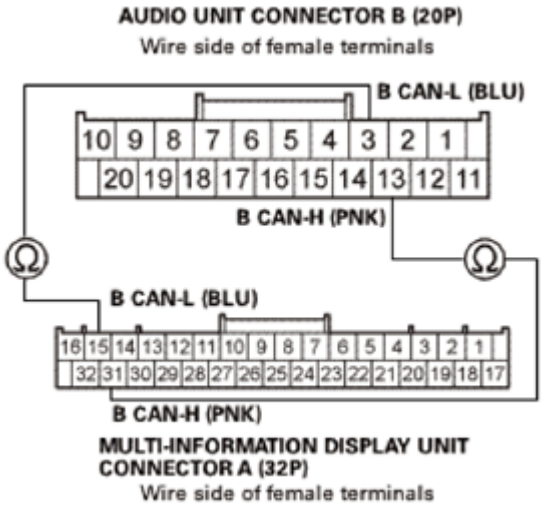

Fig. 240: Audio System Symptom Troubleshooting Flowchart - USB Input Sound Is Low Or Cannot Be Heard
Courtesy of AMERICAN HONDA MOTOR CO., INC.

NOTE:

- **CHECK THE VEHICLE BATTERY CONDITION FIRST .**
- **Not all players and player functions work with the USB adapter. Please see the Owner's Manual for more information. Always test the customer's USB device in a known-good vehicle of the same year and trim (if possible). Technologies change and are updated frequently which may result in USB devices working in newer vehicles, but not in older vehicles of the same model.**
- **Check the USB device's volume settings.**
- **Check the connectors for poor connections or loose terminals.**

1. Problem verification:
   - 1. On the customer's vehicle, connect the customer's USB device to the USB port located in the center console.
   - 2. Turn the ignition switch to ON (II).
   - 3. Turn on the audio system, and press the AUDIO button to select the USB mode.
   - 4. Check if the USB device can be operated with the audio-navigation unit (Folders or Files UP/DOWN, etc.).

   Can you operate the USB device, and is the sound normal?

   YES : Intermittent failure. The USB device is OK at this time.

   NO : The failure is duplicated, go to step 2.

   NO : Go to **USB device does not function** USB device does not function (with navigation) troubleshooting.

GETtheMANUALS.org

2. Determine possible failure area (USB device, others):
    - 1. Turn the ignition switch to LOCK (0).
    - 2. Connect the customer's USB device to a known-good vehicle (same year/trim) that is equipped with a USB adapter, and check the USB device operation.

    Does the USB work properly in the known-good vehicle?

    YES : Go to step 3.

    NO : USB device is faulty or not compatible.

3. Determine possible failure area (XM receiver).
    - 1. DISCONNECT THE XM RECEIVER and retest.

    Does the symptom go away?

    YES : Replace the XM receiver.

    NO : Go to step 4.

4. Determine possible failure area (HFL control unit)
    - 1. **Disconnect the HFL control unit** See **HANDSFREELINK CONTROL UNIT REMOVAL AND INSTALLATION** or **HANDSFREELINK CONTROL UNIT UPDATE** and retest.

    Does the symptom go away?

    YES : Replace the HFL control unit.

    NO : Go to step 5.

5. Shorted wire check (GA AUDIO lines):
    - 1. Return to the customer's vehicle.
    - 2. Disconnect the following connectors.

      Audio-navigation unit connector C (14P)

      Multi-information display unit connector A (32P)

      HandsFreeLink control unit 32P connector

      XM receiver connector A (14P)

    - 3. Check for continuity between these test points and body ground individually.

      Test condition IG LOCK (0)

GETtheMANUALS.org

Audio-navigation unit connector C (14P): disconnected

Multi-information display unit connector A (32P): disconnected

HandsFreeLink control unit 32P connector: disconnected

XM receiver connector A (14P): disconnected

Connector	Test circuit	Terminal
Audio-navigation unit connector C (14P)	GA AUDIO L+	No. 1 (RED)
	GA AUDIO R+	No. 2 (GRN)
	GA AUDIO L-	No. 7 (WHT)
	GA AUDIO R-	No. 8 (BLK)

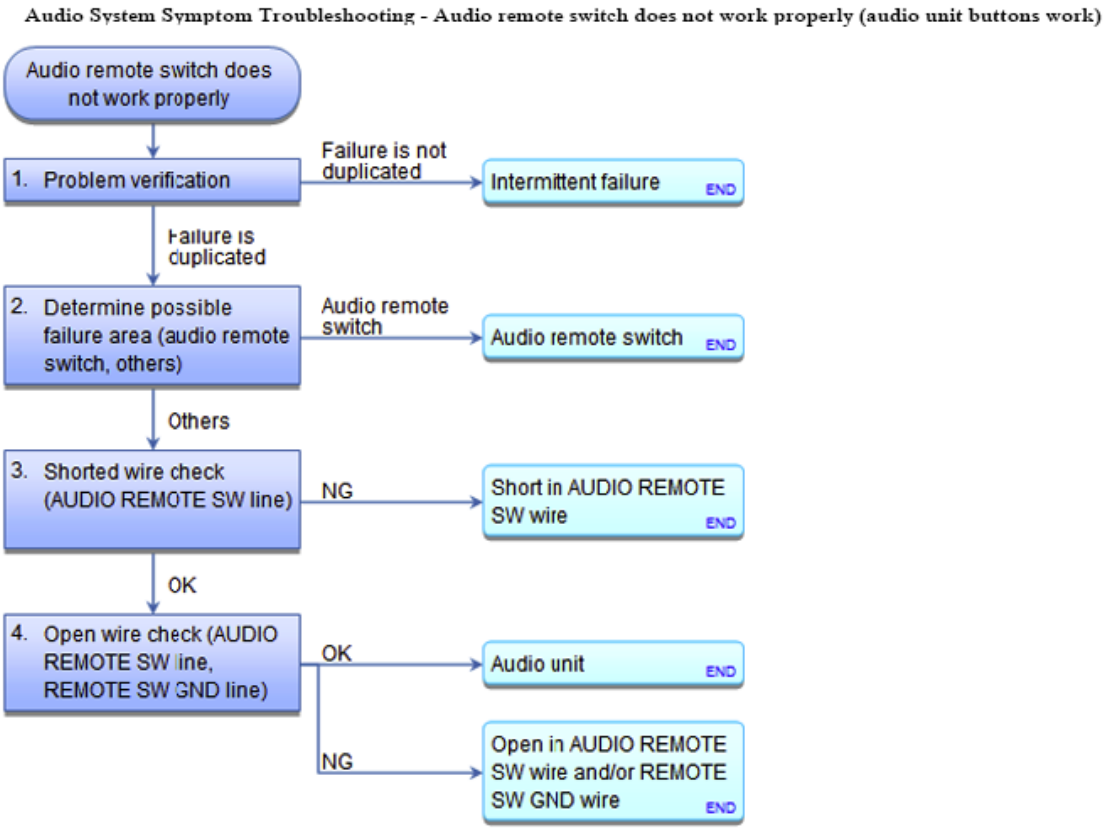

Fig. 241: Identifying Audio-Navigation Unit Connector C (14P)
Courtesy of AMERICAN HONDA MOTOR CO., INC.

Is there continuity?

YES : There is a short to body ground in the wire(s) between the audio-navigation unit and the multi-information display unit. Replace the affected shielded harness.

NO : The GA AUDIO wires are not shorted to ground. Go to step 6.

GETtheMANUALS.org

6. Shorted wire check (SH GA AUDIO line to another lines):
   - 1. Check for continuity between test points 1 and 2.

     Test condition IG LOCK (0)

     Audio-navigation unit connector C (14P): disconnected

     Multi-information display unit connector A (32P): disconnected

     HandsFreeLink control unit 32P connector: disconnected

     XM receiver connector A (14P): disconnected

Test circuits	Connector: Audio-navigation unit connector C (14P)	
	Test point 1	Test points 2
SH GA AUDIO to GA AUDIO L+, GA AUDIO R+, GA AUDIO L-, GA AUDIO R--	No. 3 (GRY)	No. 1 (RED), No. 2 (GRN), No. 7 (WHT), No. 8 (BLK)

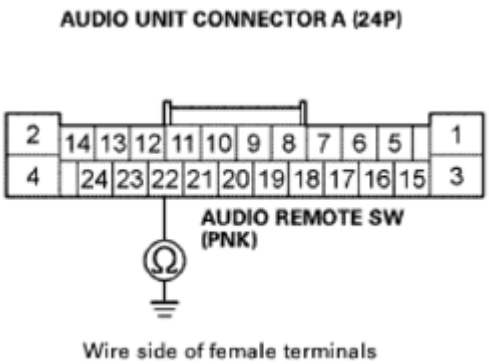

Fig. 242: Identifying Audio-Navigation Unit Connector C (14P)
Courtesy of AMERICAN HONDA MOTOR CO., INC.

Is there continuity between any of the terminals?

YES : There is a short in the wires between the audio-navigation unit and the multi-information display unit. Replace the affected shielded harness.

NO : The GA AUDIO wires are not shorted in the wires. Go to step 7.

7. Open wire check (GA AUDIO lines):
   - 1. Check for continuity between test points 1 and 2.

     Test condition IG LOCK (0)

GETtheMANUALS.org

Audio-navigation unit connector C (14P): disconnected

Multi-information display unit connector A (32P): disconnected

HandsFreeLink control unit 32P connector: disconnected

XM receiver connector A (14P): disconnected

Test circuit	Test point 1: Audio-navigation unit connector C (14P)	Test point 2: Multi-information display unit connector A (32P)
GA AUDIO L+	No. 1 (RED)	No. 9 (RED)
GA AUDIO R+	No. 2 (WHT)	No. 8 (WHT)
GA AUDIO L-	No. 7 (GRN)	No. 25 (GRN)
GA AUDIO R-	No. 8 (BLK)	No. 24 (BLK)

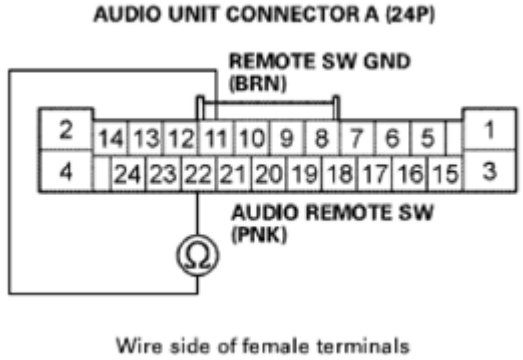

Fig. 243: Identifying Audio-Navigation Unit Connector C (14P)
Courtesy of AMERICAN HONDA MOTOR CO., INC.

GETtheMANUALS.org

Audio System Symptom Troubleshooting - Audio system information does not display on the center display

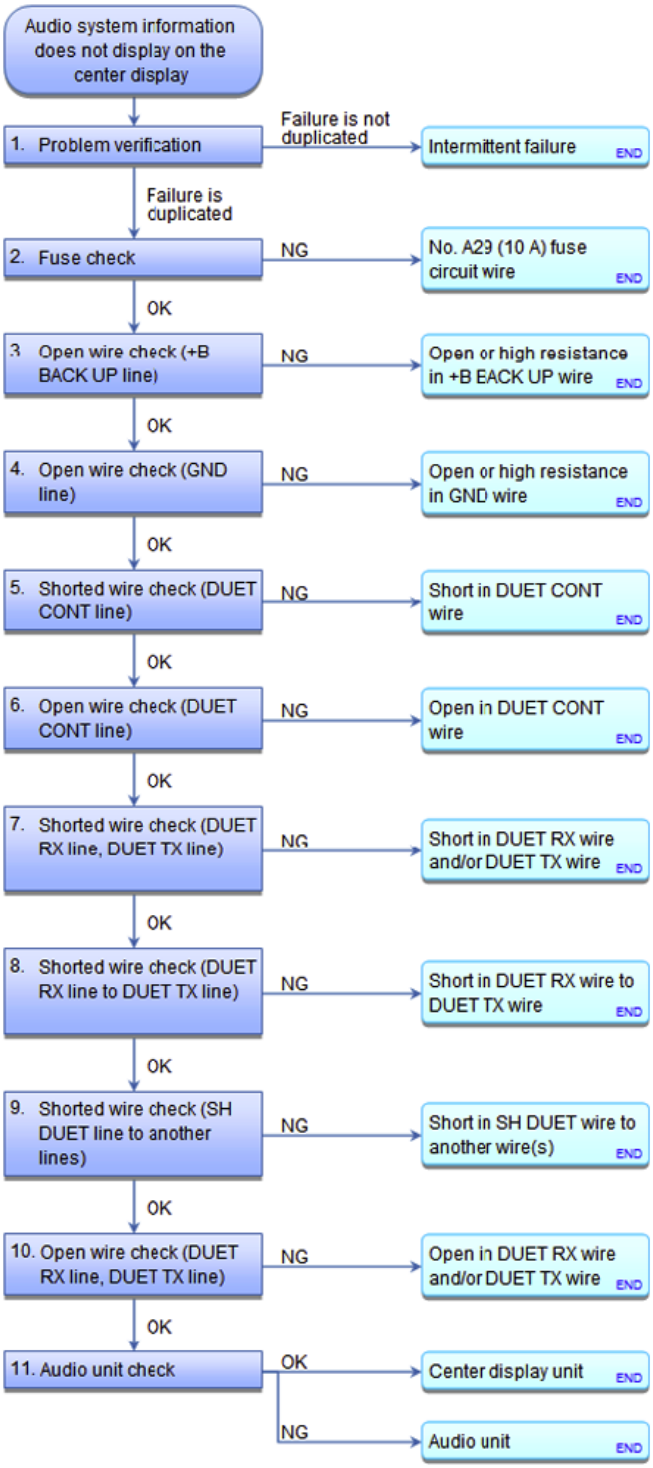

Fig. 244: Identifying Multi-Information Display Unit Connector A (32P)
Courtesy of AMERICAN HONDA MOTOR CO., INC.

Is there continuity?

GETtheMANUALS.org

YES : The GA AUDIO wires are OK. Go to step 8.

NO : There is an open in the wire(s) between the audio-navigation unit and the multi-information display unit. Replace the affected shielded harness.

8. Audio-navigation unit check:
    - 1. **SUBSTITUTE A KNOWN-GOOD MULTI-INFORMATION DISPLAY UNIT** , and recheck.

Does the symptom go away?

YES : Replace the original multi-information display unit.

NO : REPLACE THE AUDIO-NAVIGATION UNIT .

USB INPUT SOUND IS LOW OR CANNOT BE HEARD (WITH MULTI-INFORMATION DISPLAY, WITHOUT NAVIGATION)

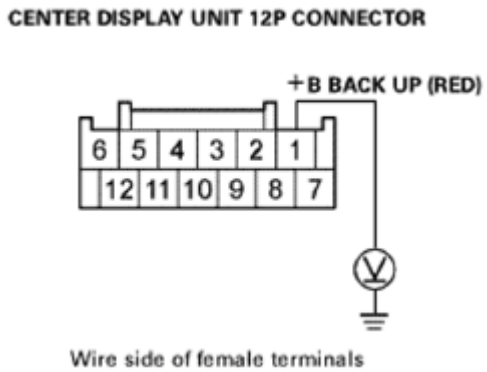

Fig. 245: Audio System Symptom Troubleshooting Flowchart - USB Input Sound Is Low Or Cannot Be Heard
Courtesy of AMERICAN HONDA MOTOR CO., INC.

NOTE:

- **CHECK THE VEHICLE BATTERY CONDITION FIRST.**
- **Not all players and player functions work with the USB adapter. Please see the Owner's Manual for more information. Always test the customer's USB device in a known-good vehicle of the same year and trim (if possible). Technologies change and are updated frequently which may result in USB devices working in newer vehicles, but not in older vehicles of the same model.**
- **Check the USB device's volume settings.**
- **Check the connectors for poor connections or loose terminals.**

1. Determine possible failure area (USB system, others):
    - 1. Turn the ignition switch to ON (II).

GETtheMANUALS.org

- 2. **DO THE SPEAKER CHECK MODE WITH THE SELF-DIAGNOSTIC FUNCTION**.

Do all speakers make a sound?

YES : Go to step 2.

NO : Go to **No sound is heard from the speaker(s) (display is normal) (With Stereo Amplifier without Navigation)** troubleshooting.

NO : Go to **No sound is heard from the speaker(s) (display is normal) (Without Navigation and Stereo Amplifier)** troubleshooting.

2. Problem verification:
   - 1. Turn the ignition switch to LOCK (0).
   - 2. On the customer's vehicle, connect the customer's USB device to the USB port located in the center console.
   - 3. Turn the ignition switch to ON (II).
   - 4. Turn on the audio unit, and press the AUX button to select the USB mode.
   - 5. Check if the USB device can be operated with the audio unit (Folders or Files UP/DOWN, etc.).

Can you operate the USB device, and is the sound normal?

YES : Intermittent failure. The USB device is OK at this time.

NO : The failure is duplicated, go to step 3.

3. Determine possible failure area (USB device, others):
   - 1. Turn the ignition switch to LOCK (0).
   - 2. Connect the customer's USB device to a known-good vehicle (same year/trim) that is equipped with a USB adapter, and check the USB device operation.

Does the USB device work properly in the known-good vehicle?

YES : Go to step 4.

NO : USB device is faulty or not compatible.

4. Determine possible failure area (XM receiver).
   - 1. DISCONNECT THE XM RECEIVER and retest.

Does the symptom go away?

YES : Replace the XM receiver.

NO : Go to step 5.

GETtheMANUALS.org

5. Determine possible failure area (HFL control unit)
    - 1. **Disconnect the HFL control unit** See **HANDSFREELINK CONTROL UNIT REMOVAL AND INSTALLATION** or **HANDSFREELINK CONTROL UNIT UPDATE** and retest.

    Does the symptom go away?

    YES : Replace the HFL control unit.

    NO : Go to step 6.

6. Shorted wire check (GA AUDIO lines):
    - 1. Return to the customer's vehicle.
    - 2. Disconnect the following connectors.

      Audio unit connector C (14P)

      Multi-information display unit connector A (32P)

      HandsFreeLink control unit 32P connector

      XM receiver connector A (14P) (with XM)

    - 3. Check for continuity between these test points and body ground individually.

      Test condition IG LOCK (0)

      Audio unit connector C (14P): disconnected

      Multi-information display unit connector A (32P): disconnected

      HandsFreeLink control unit 32P connector: disconnected

      XM receiver connector A (14P) (with XM): disconnected

Connector	Test circuit	Terminal
Audio unit connector C (14P)	GA AUDIO L+	No. 1 (RED)
	GA AUDIO R+	No. 2 (GRN)
	GA AUDIO L-	No. 7 (WHT)
	GA AUDIO R-	No. 8 (BLK)

GETtheMANUALS.org

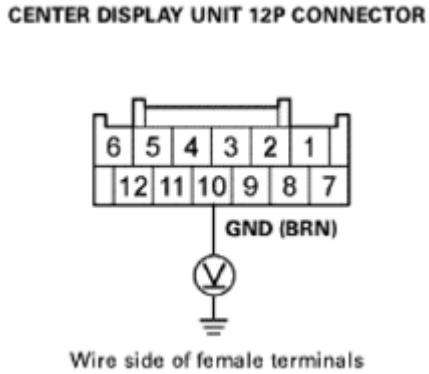

Fig. 246: Identifying Audio Unit Connector C (14P) No Sound Is Heard From The Speaker(S) (Display Is Normal) (Without Navigation And Stereo Amplifier)
Courtesy of AMERICAN HONDA MOTOR CO., INC.

Is there continuity?

YES : There is a short to body ground in the wire(s) between the audio unit and the multi-information display unit. Replace the affected shielded harness.

NO : The GA AUDIO wires are not shorted to ground. Go to step 7.

7. Shorted wire check (SH GA AUDIO line to another lines):
   - 1. Check for continuity between test points 1 and 2.

     Test condition IG LOCK (0)

     Audio unit connector C (14P): disconnected

     Multi-information display unit connector A (32P): disconnected

     HandsFreeLink control unit 32P connector: disconnected

     XM receiver connector A (14P) (with XM): disconnected

Test circuits	Connector: Audio unit connector C (14P)	
	Test point 1	Test points 2
SH GA AUDIO to GA AUDIO L+, GA AUDIO R+, GA AUDIO L-, GA AUDIO R--	No. 3 (GRY)	No. 1 (RED), No. 2 (GRN), No. 7 (WHT), No. 8 (BLK)

GETtheMANUALS.org

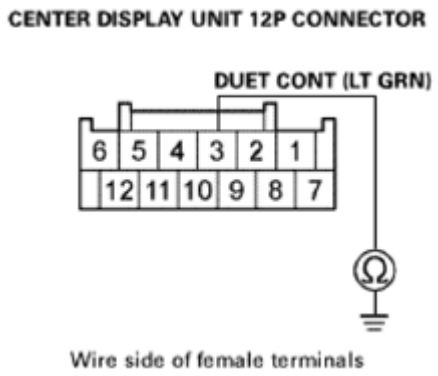

Fig. 247: Identifying Audio Unit Connector C (14P)
Courtesy of AMERICAN HONDA MOTOR CO., INC.

Is there continuity between any of the terminals?

YES : There is a short in the wires between the audio unit and the multi-information display unit. Replace the affected shielded harness.

NO : The SH GA AUDIO wire is OK. Go to step 8.

8. Open wire check (GA AUDIO lines):
   - 1. Check for continuity between test points 1 and 2.

     Test condition IG LOCK (0)

     Audio unit connector C (14P): disconnected

     Multi-information display unit connector A (32P): disconnected

     HandsFreeLink control unit 32P connector: disconnected

     XM receiver connector A (14P) (with XM): disconnected

Test circuit	Test point 1: Audio unit connector C (14P)	Test point 2: Multi-information display unit connector A (32P)
GA AUDIO L+	No. 1 (RED)	No. 9 (RED)
GA AUDIO R+	No. 2 (GRN)	No. 8 (GRN)
GA AUDIO L-	No. 7 (WHT)	No. 25 (WHT)
GA AUDIO R-	No. 8 (BLK)	No. 24 (BLK)

GETtheMANUALS.org

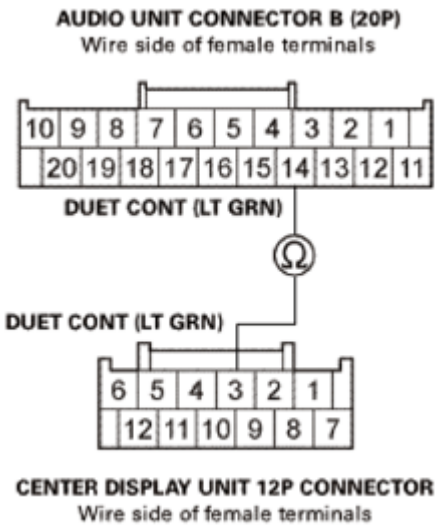

Fig. 248: Identifying Audio Unit Connector C (14P)
Courtesy of AMERICAN HONDA MOTOR CO., INC.

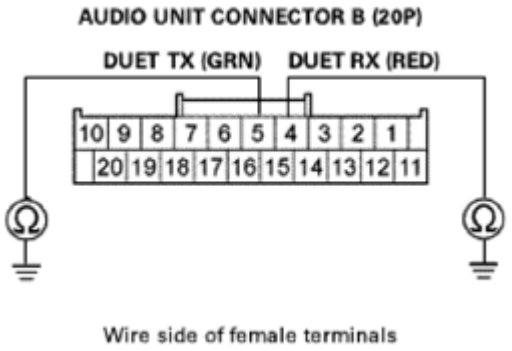

Fig. 249: Identifying Multi-Information Display Unit Connector A (32P)
Courtesy of AMERICAN HONDA MOTOR CO., INC.

Is there continuity?

YES : The GA AUDIO wires are OK. Go to step 9.

NO : There is an open in the wire(s) between the audio unit and the multi-information display unit. Replace the affected shielded harness.

9. Audio unit check:
   - 1. **SUBSTITUTE A KNOWN-GOOD MULTI-INFORMATION DISPLAY UNIT** , and recheck.

Does the symptom go away?

YES : Replace the original multi-information display unit.

GETtheMANUALS.org

NO : REPLACE THE AUDIO UNIT .

USB INPUT SOUND IS LOW OR CANNOT BE HEARD (WITH MULTI-INFORMATION DISPLAY & NAVIGATION)

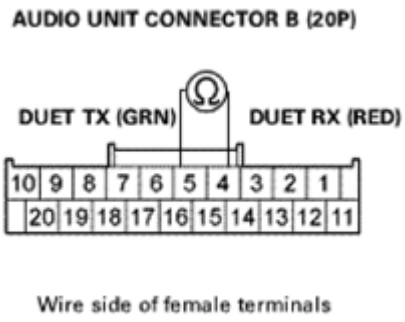

Fig. 250: Audio System Symptom Troubleshooting Flowchart - USB Input Sound Is Low Or Cannot Be Heard
Courtesy of AMERICAN HONDA MOTOR CO., INC.

NOTE:

- **CHECK THE VEHICLE BATTERY CONDITION FIRST .**
- **Not all players and player functions work with the USB adapter. Please see the Owner's Manual for more information. Always test the customer's USB device in a known-good vehicle of the same year and trim (if possible). Technologies change and are updated frequently which may result in USB devices working in newer vehicles, but not in older vehicles of the same model.**
- **Check the connectors for poor connections or loose terminals.**
- **Check the USB device's volume settings.**

1. Determine possible failure area (USB system, others):
   - 1. Turn the ignition switch to ON (II).
   - 2. **DO THE SPEAKER CHECK MODE WITH THE SELF-DIAGNOSTIC FUNCTION**.

   Do all speakers make a sound?

   YES : Go to step 2.

   NO : Go to **No sound is heard from the speaker(s) (display is normal) (Without Navigation and Stereo Amplifier)** troubleshooting.

2. Problem verification:
   - 1. Turn the ignition switch to LOCK (0).
   - 2. On the customer's vehicle, connect the customer's USB device to the USB port located in the center console.
   - 3. Turn the ignition switch to ON (II).

GETtheMANUALS.org

- 4. Turn on the audio unit, and press the AUX button to select the USB mode.
- 5. Check if the USB device can be operated with the audio unit (Folders or Files UP/DOWN, etc.).

Can you operate the USB device, and is the sound normal?

YES : Intermittent failure. The USB device is OK at this time.

NO : The failure is duplicated, go to step 3.

3. Determine possible failure area (USB device, others):
   - 1. Turn the ignition switch to LOCK (0).
   - 2. Connect the customer's USB device to a known-good vehicle (same year/trim) that is equipped with a USB adapter, and check the USB device operation.

Does the USB device work properly in the known-good vehicle?

YES : Go to step 4.

NO : USB device is faulty or not compatible.

4. Determine possible failure area (XM receiver).
   - 1. DISCONNECT THE XM RECEIVER and retest.

Does the symptom go away?

YES : Replace the XM receiver.

NO : Go to step 5.

5. Determine possible failure area (HFL control unit)
   - 1. **Disconnect the HFL control unit** See **HANDSFREELINK CONTROL UNIT REMOVAL AND INSTALLATION** or **HANDSFREELINK CONTROL UNIT UPDATE** and retest.

Does the symptom go away?

YES : Replace the HFL control unit.

NO : Go to step 6.

6. Shorted wire check (GA AUDIO lines):
   - 1. Return to the customer's vehicle.
   - 2. Disconnect the following connectors.

     Audio unit connector C (14P)

GETtheMANUALS.org

USB adapter control unit connector A (14P)

- 3. Check for continuity between these test points and body ground individually.

  Test condition IG LOCK (0)

  Audio unit connector C (14P): disconnected

  USB adapter control unit connector A (14P): disconnected

Connector	Test circuit	Terminal
Audio unit connector C (14P)	GA AUDIO L+	No. 1 (RED)
	GA AUDIO R+	No. 2 (GRN)
	GA AUDIO L-	No. 7 (WHT)
	GA AUDIO R-	No. 8 (BLK)

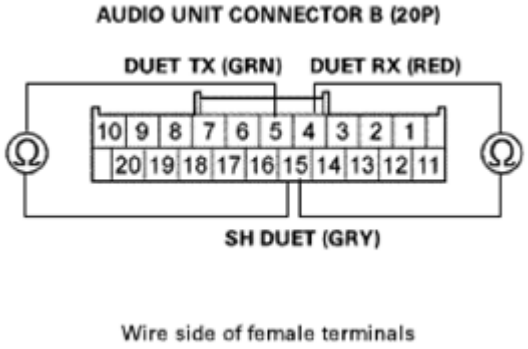

Fig. 251: Identifying Audio Unit Connector C (14P)
Courtesy of AMERICAN HONDA MOTOR CO., INC.

Is there continuity?

YES : There is a short to body ground in the wire(s) between the audio unit and the USB adapter control unit. Replace the affected shielded harness.

NO : The GA AUDIO wires are not shorted to ground. Go to step 7.

7. Shorted wire check (SH GA AUDIO line to another lines):
   - 1. Check for continuity between test points 1 and 2.

     Test condition IG LOCK (0)

     Audio unit connector C (14P): disconnected

     USB adapter control unit connector A (14P): disconnected

GETtheMANUALS.org

Test circuits	Connector: Audio unit connector C (14P)	
	Test point 1	Test points 2
SH GA AUDIO to GA AUDIO L+, GA AUDIO R+, GA AUDIO L-, GA AUDIO R--	No. 3 (GRY)	No. 1 (RED), No. 2 (GRN), No. 7 (WHT), No. 8 (BLK)

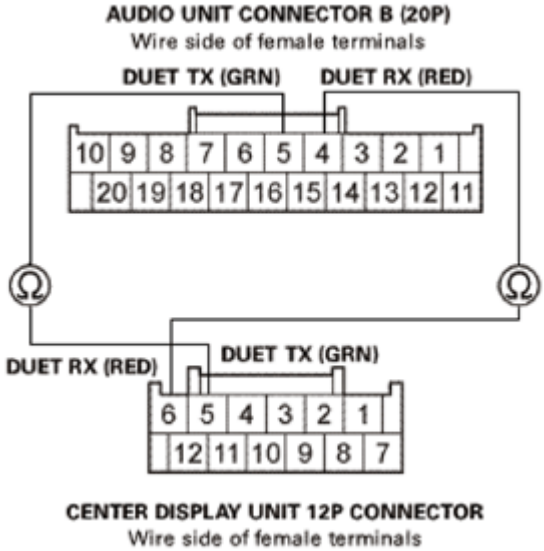

Fig. 252: Identifying Audio Unit Connector C (14P)
Courtesy of AMERICAN HONDA MOTOR CO., INC.

Is there continuity between any of the terminals?

YES : There is a short in the wires between the audio unit and the USB adapter control unit. Replace the affected shielded harness.

NO : The SH GA AUDIO wire is OK. Go to step 8.

8. Open wire check (GA AUDIO lines):
   - 1. Check for continuity between test points 1 and 2.

     Test condition IG LOCK (0)

     Audio unit connector C (14P): disconnected

     USB adapter control unit connector A (14P): disconnected

Test circuit	Test point 1: Audio unit connector C (14P)	Test point 2: USB adapter control unit connector A (14P)
GA AUDIO L+	No. 1 (RED)	No. 1 (RED)
GA AUDIO		

GETtheMANUALS.org

R+	No. 2 (GRN)	No. 2 (GRN)
GA AUDIO L-	No. 7 (WHT)	No. 7 (WHT)
GA AUDIO R-	No. 8 (BLK)	No. 8 (BLK)

GETtheMANUALS.org

Audio System Symptom Troubleshooting - Audio system information does not display on the multi-information display

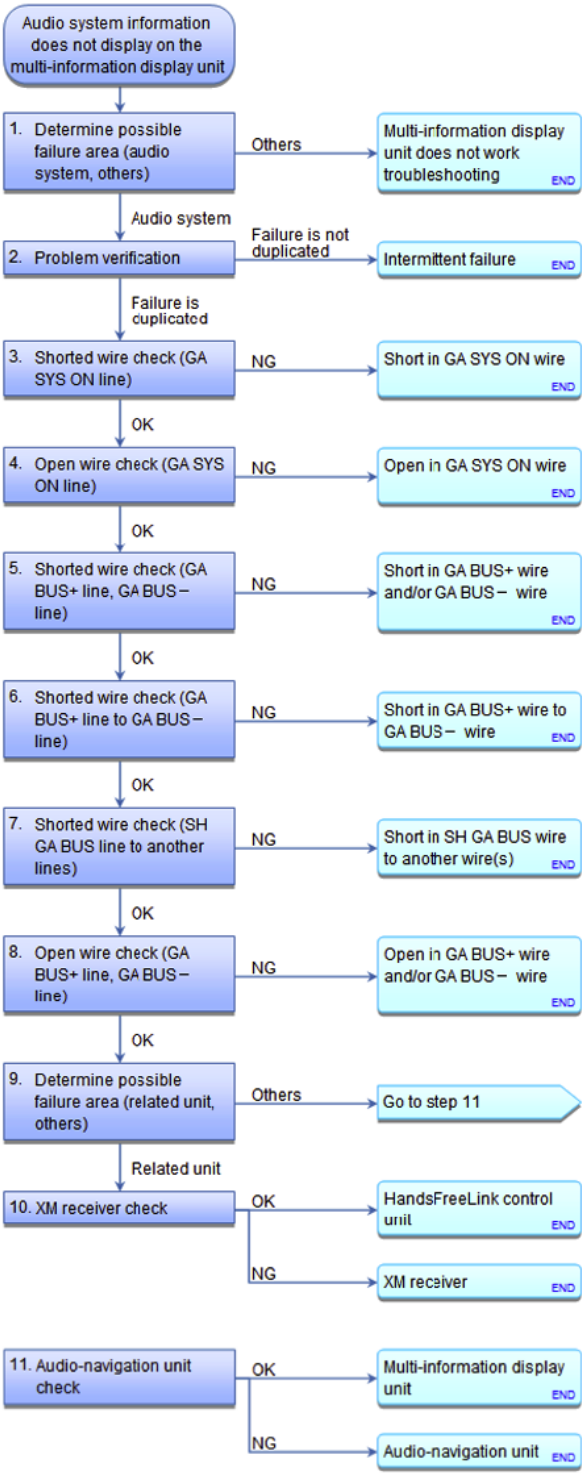

Fig. 253: Identifying Audio Unit Connector C (14P)
Courtesy of AMERICAN HONDA MOTOR CO., INC.

GETtheMANUALS.org

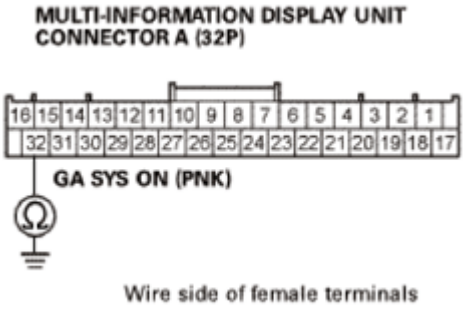

Fig. 254: Identifying USB Adapter Control Unit Connector A (14P)
Courtesy of AMERICAN HONDA MOTOR CO., INC.

Is there continuity?

YES : The GA AUDIO wires are OK. Go to step 9.

NO : There is an open in the wire(s) between the audio unit and the USB adapter control unit. Replace the affected shielded harness.

9. Audio unit check:
    - 1. SUBSTITUTE A KNOWN-GOOD USB ADAPTER CONTROL UNIT , and recheck.

Does the symptom go away?

YES : Replace the original USB adapter control unit.

NO : REPLACE THE AUDIO UNIT .

VOLUME DOES NOT CHANGE

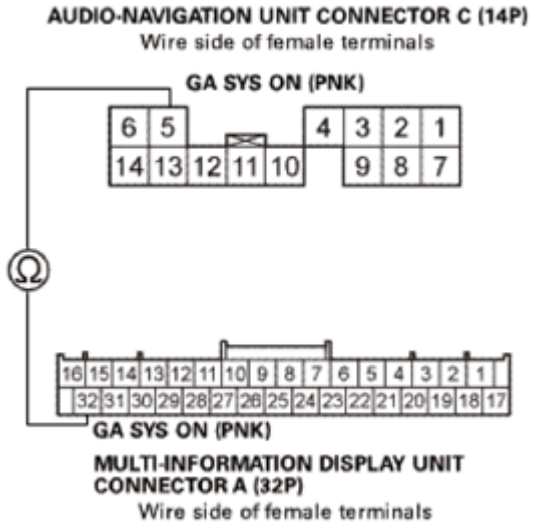

Fig. 255: Audio System Symptom Troubleshooting Flowchart - Volume Does Not Change

GETtheMANUALS.org

Courtesy of AMERICAN HONDA MOTOR CO., INC.

NOTE:

- **CHECK THE VEHICLE BATTERY CONDITION FIRST .**
- **Set the fader and the balance positions to the center.**
- **Check the connectors for poor connections or loose terminals.**

1. Problem verification:
   - 1. Turn the ignition switch to ON (II).
   - 2. Listen for sound from the speakers.
   - 3. Operate the volume knob to see if the volume changes.

   Does the volume change?

   YES : Intermittent failure. The system is OK at this time.

   NO : REPLACE THE AUDIO-NAVIGATION UNIT .

   NO : The failure is duplicated, go to step 2.

2. Audio unit check:
   - 1. Turn the ignition switch to LOCK (0).
   - 2. SUBSTITUTE A KNOWN-GOOD AUDIO SWITCH PANEL , and recheck.

   Does the symptom go away?

   YES : Replace the original audio switch panel.

   NO : REPLACE THE AUDIO UNIT .

VOLUME DOES NOT INCREASE WITH SPEED (WITH NAVIGATION)

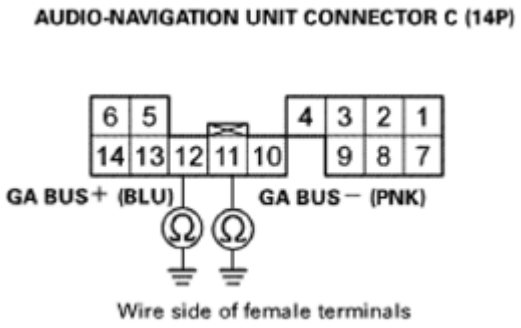

Fig. 256: Audio System Symptom Troubleshooting Flowchart - Volume Does Not Increase With Speed
Courtesy of AMERICAN HONDA MOTOR CO., INC.

NOTE:

GETtheMANUALS.org

- **CHECK THE VEHICLE BATTERY CONDITION FIRST .**
- **If possible, have the customer demonstrate their concern and compare it against a known-good vehicle.**
- **Check the connectors for poor connections or loose terminals.**

1. Problem verification:
   - 1. Test-drive the vehicle at freeway speeds, and monitor if the volume increases, then compare it to a known-good vehicle with the same SVC setting.

   Does the volume increase, and is it comparable to a known-good vehicle.?

   YES : Intermittent failure, the system is OK at this time. If the customer's concern is that the level of volume change is not enough, refer to the OM to change the SVC level setting.

   NO : The failure is duplicated, go to step 2.

2. Determine possible failure area (audio setting, others):
   - 1. Verify the SVC mode setting in the audio-navigation unit sound set-up.

   Is the SVC set to off?

   YES : Change the setting to SVC MID, and recheck.

   NO : Go to step 3.

3. Determine possible failure area (VSP signal):
   - 1. **Enter the system diagnostic mode** See **NAVIGATION SYSTEM DIAGNOSTIC MODE** or **NAVIGATION SYSTEM DIAGNOSTIC MODE** and check the car status.
   - 2. Drive the vehicle.

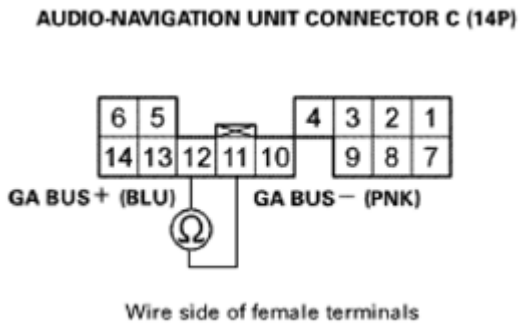

Fig. 257: Screen Display - Car Status
Courtesy of AMERICAN HONDA MOTOR CO., INC.

Does the VSP change from 0 (stopped) to 1 (driving) .

GETtheMANUALS.org

YES : REPLACE THE AUDIO-NAVIGATION UNIT .

NO : Go to step 4.

4. Determine possible failure area (VSP line, others):
   - 1. Turn the ignition switch to LOCK (0).
   - 2. Jump the SCS line with the HDS.
   - 3. Disconnect the following connector.

     PCM connector A (49P)

   - 4. Turn the ignition switch to ON (II).
   - 5. Move the shift lever to N.
   - 6. Measure the voltage between test points 1 and 2.

     Test condition IG ON (II)

     PCM connector A (49P): disconnected

     Test circuit VSP

     Test point 1 PCM connector A (49P) No. 26 (GRN)

     Test point 2 Body ground

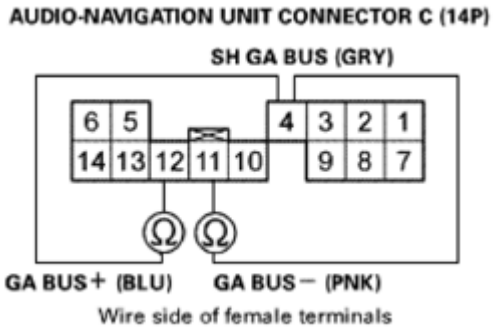

Fig. 258: Measuring Voltage Between Test Point PCM Connector A (49P) No. 26 (GRN) And Body Ground
Courtesy of AMERICAN HONDA MOTOR CO., INC.

Is there about 5 V?

YES : The VSP wire is OK. Go to step 6.

NO : Go to step 5.

5. Open wire check (VSP line):

GETtheMANUALS.org

- 1. Measure the voltage between test points 1 and 2.

  Test condition IG ON (II)

  PCM connector A (49P): disconnected

  Test circuit VSP

  Test point 1 Audio-navigation unit connector A (24P) No. 23 (GRN)

  Test point 2 Body ground

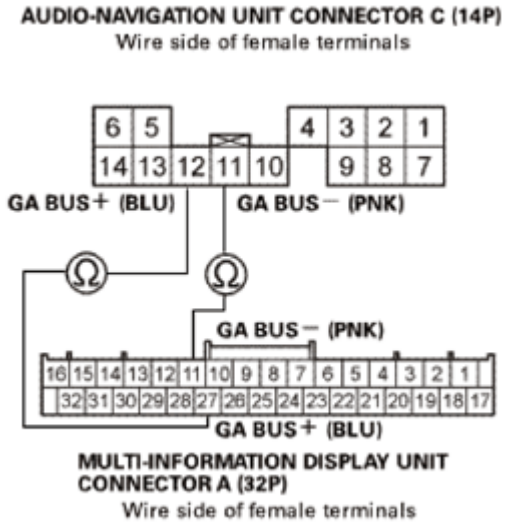

Fig. 259: Measuring Voltage Between Test Point Audio-Navigation Unit Connector A (24P) No. 23 (GRN) And Body Ground
Courtesy of AMERICAN HONDA MOTOR CO., INC.

Is there about 5 V?

YES : Repair an open in the wire between the audio-navigation unit and the PCM.

NO : REPLACE THE AUDIO-NAVIGATION UNIT .

6. PCM check:
   - 1. Turn the ignition switch to LOCK (0).
   - 2. Reconnect PCM connector A (49P).
   - 3. Raise the vehicle on a lift.
   - 4. Turn the ignition switch to ON (II).
   - 5. Move the shift lever to N.
   - 6. Measure the voltage between test points 1 and 2.

GETtheMANUALS.org

Test condition IG ON (II), with the tires slowly rotating

Test circuit VSP

Test point 1 Audio-navigation unit connector A (24P) No. 23 (GRN)

Test point 2 Body ground

GETtheMANUALS.org

Audio System Symptom Troubleshooting - Audio system information does not display on the multi-information display

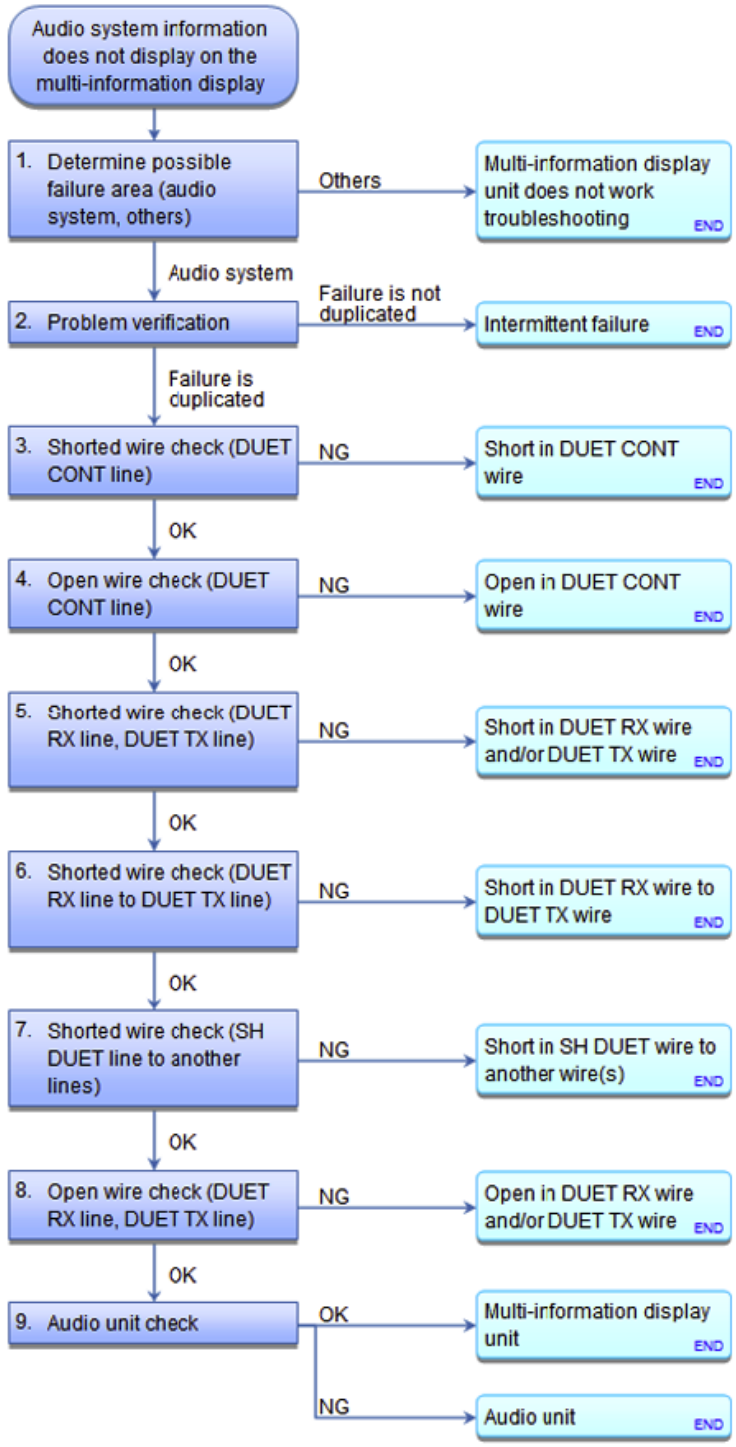

Fig. 260: Measuring Voltage Between Test Point Audio-Navigation Unit Connector A (24P) No. 23 (GRN) And Body Ground
Courtesy of AMERICAN HONDA MOTOR CO., INC.

Does the voltage pulse between 0 V and 5 V as you rotate the tires by hand?

GETtheMANUALS.org

YES : REPLACE THE AUDIO-NAVIGATION UNIT .

NO : **Update the PCM** See **PCM REMOVAL AND INSTALLATION** or **PCM UPDATE** if it does not have the latest software, or **substitute a known-good PCM** See **PCM REMOVAL AND INSTALLATION** or **PCM UPDATE** , and recheck.

VOLUME DOES NOT INCREASE WITH SPEED (WITHOUT NAVIGATION)

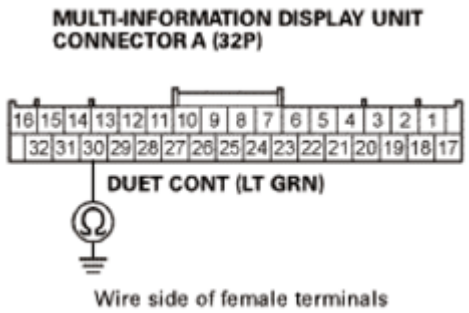

Fig. 261: Audio System Symptom Troubleshooting Flowchart - Volume Does Not Increase With Speed
Courtesy of AMERICAN HONDA MOTOR CO., INC.

- **CHECK THE VEHICLE BATTERY CONDITION FIRST** .
- Check for B-CAN DTCs and resolve them before troubleshooting.
- If possible, have the customer demonstrate their concern and compare it against a known-good vehicle.
- Check the connectors for poor connections or loose terminals.

1. Problem verification:
   - 1. Test-drive the vehicle at freeway speeds, and monitor if the volume increases, then compare it to a known-good vehicle.

   Does the volume increase and, is it comparable to a known-good vehicle?

   YES : Intermittent failure, the system is OK at this time. If the customer's concern is that the level of volume change is not enough, refer to the OM to change the SVC level setting.

   NO : The failure is duplicated, go to step 2.

2. Determine possible failure area (audio setting, others):
   - 1. Verify the SVC mode setting in the audio unit sound set-up.

   Is the SVC set to off?

   YES : Change the setting to SVC MID, and recheck.

   NO : Go to step 3.

GETtheMANUALS.org

3. Determine possible failure area (audio unit, others):
    - 1. **DO THE SELF-DIAGNOSTIC FUNCTION, AND USE THE VEHICLE SPEED PULSE INDICATION**.
    - 2. With the help of an assistant test-drive the vehicle, and watch the VSP signal.

    Does the self-diagnostic function indicate a VSP signal?

    YES : REPLACE THE AUDIO UNIT .

    NO : Go to step 4.

4. Open wire check (B CAN-H line, B CAN-L line):
    - 1. Turn the ignition switch to LOCK (0).
    - 2. Disconnect the following connectors.

      Audio unit connector B (20P)

      Gauge control module 32P connector

    - 3. Check for continuity between test points 1 and 2.

      Test condition IG LOCK (0)

      Audio unit connector B (20P): disconnected

      Gauge control module 32P connector: disconnected

      Test circuit B CAN-H

      Test point 1 Audio unit connector B (20P) No. 13 (PNK)

      Test point 2 Gauge control module 32P connector No. 30 (PNK)

      Test circuit B CAN-L

      Test point 1 Audio unit connector B (20P) No. 3 (BLU)

      Test point 2 Gauge control module 32P connector No. 31 (BLU)

GETtheMANUALS.org

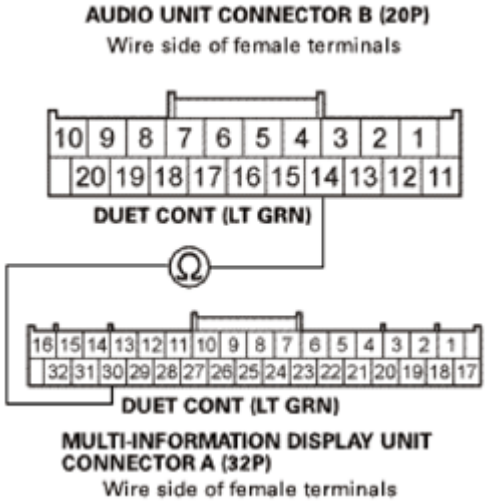

Fig. 262: Checking For Continuity Between Test Point Audio Unit Connector B (20P) No. 3 (BLU) And Gauge Control Module 32P Connector No. 31 (BLU)
Courtesy of AMERICAN HONDA MOTOR CO., INC.

Is there continuity?

YES : REPLACE THE AUDIO UNIT .

NO : Repair an open in the wire(s) between the audio unit and the gauge control module.

VOLUME IS TOO HIGH OR TOO LOW WHEN DRIVING AT FREEWAY SPEEDS

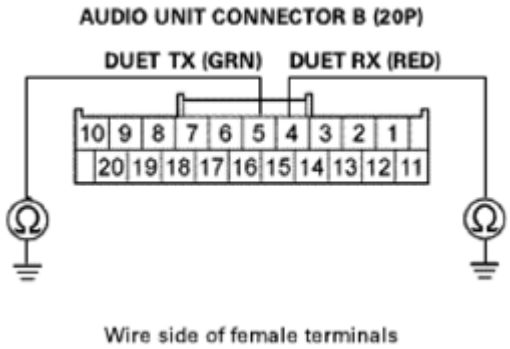

Fig. 263: Audio System Symptom Troubleshooting Flowchart - Volume Is Too High Or Too Low When Driving At Freeway Speeds
Courtesy of AMERICAN HONDA MOTOR CO., INC.

NOTE:

- **CHECK THE VEHICLE BATTERY CONDITION FIRST .**
- **If possible, have the customer demonstrate their concern and compare it against a known-good vehicle.**

1. Problem verification:

GETtheMANUALS.org

- 1. Test-drive the vehicle at freeway speeds and monitor the volume level.

Is the volume level too high, or too low?

YES : The failure is duplicated, go to step 2.

NO : Intermittent failure, the system is OK at this time.

2. Operation check:
   - 1. Change the SVC mode setting in sound set-up to SVC MID.

Is the volume level still too high, or too low?

YES : REPLACE THE AUDIO-NAVIGATION UNIT .

YES : REPLACE THE AUDIO UNIT .

NO : Improper SVC setting for the customers sound taste.

XM RADIO DISPLAY IS BLANK AND NO STATION INFORMATION IS DISPLAYED (NAVIGATION)

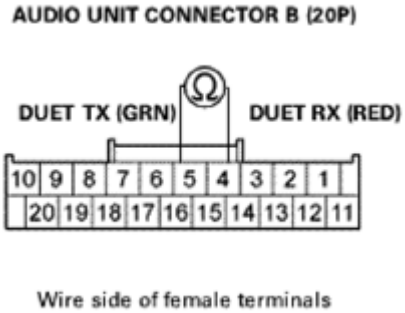

Fig. 264: Audio System Symptom Troubleshooting Flowchart - XM Radio Display Is Blank And No Station Information Is Displayed
Courtesy of AMERICAN HONDA MOTOR CO., INC.

NOTE:

- **CHECK THE VEHICLE BATTERY CONDITION FIRST .**
- **Check the connectors for poor connections or loose terminals.**

1. Determine possible failure area (related GA-NET circuit, others):
   - 1. Turn the ignition switch to ON (II).
   - 2. Turn on the audio system, and press the AUDIO button to check if the multi-information display changes to the audio information screen.

Is the audio information displayed?

GETtheMANUALS.org

YES : Go to step 2.

NO :Go to **Audio system information does not display on the multi-information display unit (With Navigation)** troubleshooting.

2. Problem verification:
   - 1. Press the CD/XM button to check if the navigation display changes to the XM radio information screen.

Is the XM radio information displayed?

YES : Intermittent failure, the system is OK at this time.

NO : The failure is duplicated, go to step 3.

3. Determine possible failure area (GA +B line, others):
   - 1. Turn the ignition switch to LOCK (0).
   - 2. Measure the voltage between test points 1 and 2.

Test condition IG LOCK (0)

Test circuit GA +B

Test point 1 XM receiver connector A (14P) No. 6 (RED)

Test point 2 Body ground

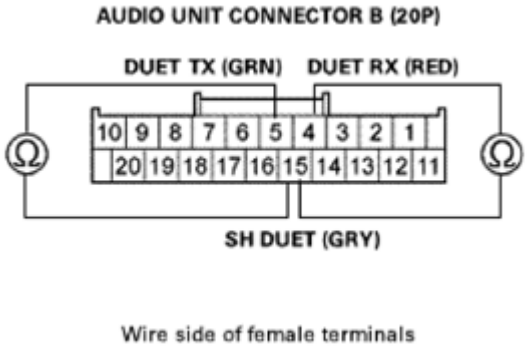

Fig. 265: Measuring Voltage Between Test Point XM Receiver Connector A (14P) No. 6 (RED) And Body Ground
Courtesy of AMERICAN HONDA MOTOR CO., INC.

Is there battery voltage?

YES : The GA +B wire is OK. Go to step 6.

NO

GETtheMANUALS.org

Go to step 4.

4. Open wire check (GA +B line):
    - 1. Measure the voltage between test points 1 and 2.

      Test condition IG LOCK (0)

      Test circuit GA +B

      Test point 1 Audio-navigation unit connector C (14P) No. 6 (RED)

      Test point 2 Body ground

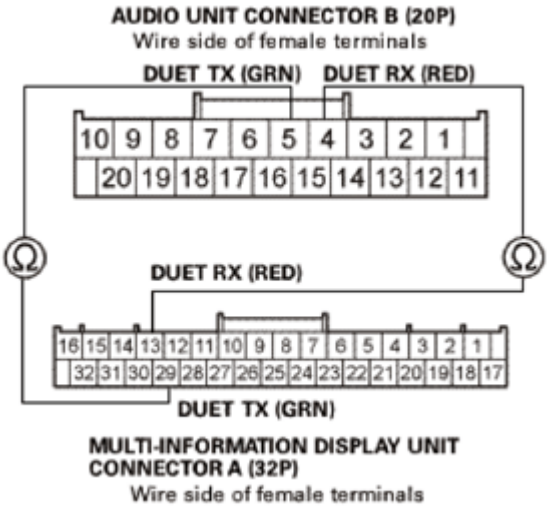

Fig. 266: Measuring Voltage Between Test Point Audio-Navigation Unit Connector C (14P) No. 6 (RED) And Body Ground
Courtesy of AMERICAN HONDA MOTOR CO., INC.

Is there battery voltage?

YES : Repair an open or high resistance in the wire between the audio-navigation unit and the XM receiver.

NO : Go to step 5.

5. Shorted wire check (GA +B line):
    - 1. Turn the ignition switch to LOCK (0).
    - 2. Disconnect the following connectors:

      Audio-navigation unit connector C (14P)

      XM receiver connector A (14P)

GETtheMANUALS.org

HandsFreeLink control unit connector (32P)

- 3. Check for continuity between test points 1 and 2.

  Test condition IG LOCK (0)

  Audio-navigation unit connector C (14P): disconnected

  XM receiver A (14) connector: disconnected

  HandsFreeLink control unit 32P connector: disconnected

  Test circuit GA +B

  Test point 1 Audio-navigation unit connector C (14P) No. 6 (RED)

  Test point 2 Body ground

Audio System Symptom Troubleshooting / Audio system sound is weak or distorted (display is normal)

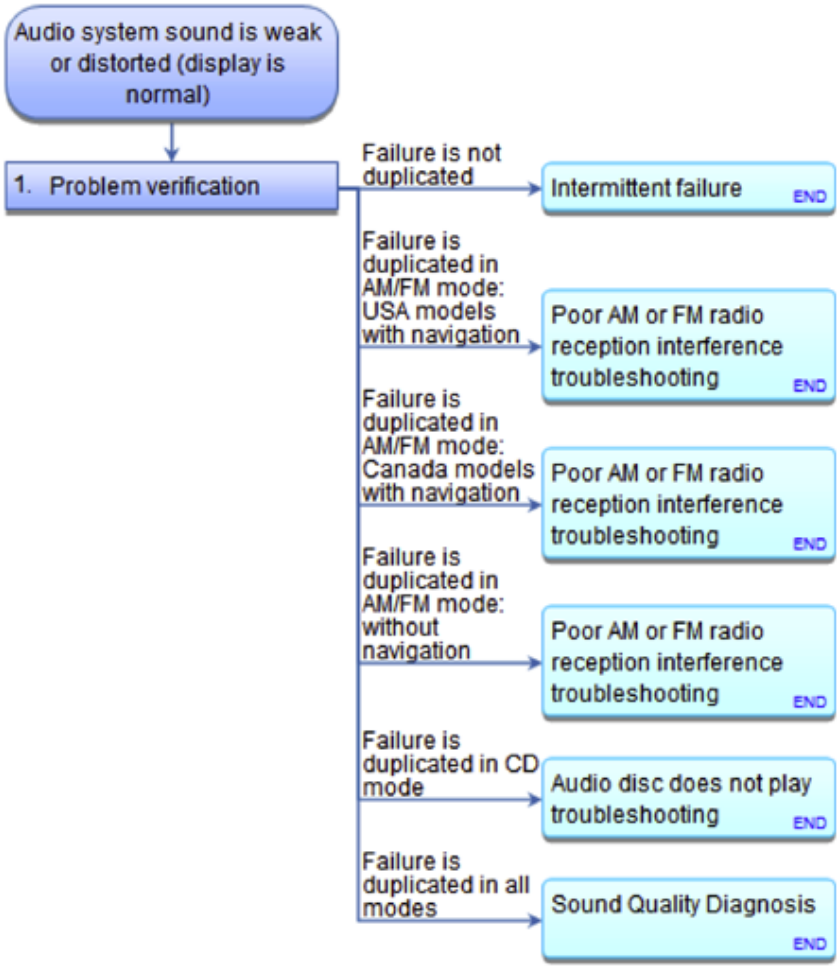

GETtheMANUALS.org

Fig. 267: Checking For Continuity Between Test Point Audio-Navigation Unit Connector C (14P) No. 6 (RED) And Body Ground
Courtesy of AMERICAN HONDA MOTOR CO., INC.

Is there continuity?

YES : Repair a short to ground in the wire between the audio-navigation unit and the XM receiver.

NO : REPLACE THE AUDIO-NAVIGATION UNIT .

6. Determine possible failure area (GA GND line, others):
   - 1. Turn the ignition switch to ON (II).
   - 2. Measure the voltage between test points 1 and 2.

   Test condition IG ON (II)

   Test circuit GA GND

   Test point 1 XM receiver connector A (14P) No. 10 (BLK)

   Test point 2 Body ground

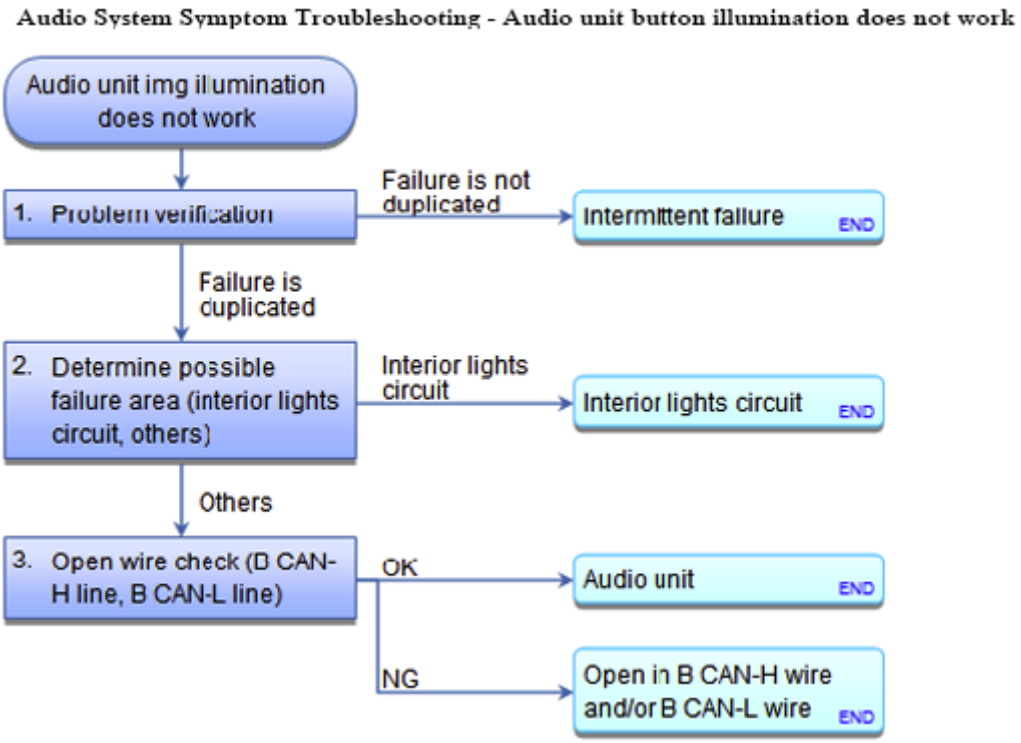

Fig. 268: Measuring Voltage Between Test Point XM Receiver Connector A (14P) No. 10 (BLK) And Body Ground
Courtesy of AMERICAN HONDA MOTOR CO., INC.

GETtheMANUALS.org

Is there less than 0.2 V?

YES : The GA GND wire is OK. Go to step 8.

NO : Go to step 7.

7. Open or high resistance wire check (GA GND line):
   - 1. Measure the voltage between test points 1 and 2.

     Test condition IG ON (II)

     Test circuit GA GND

     Test point 1 Audio unit connector C (14P) No. 10 (BLK)

     Test point 2 Body ground

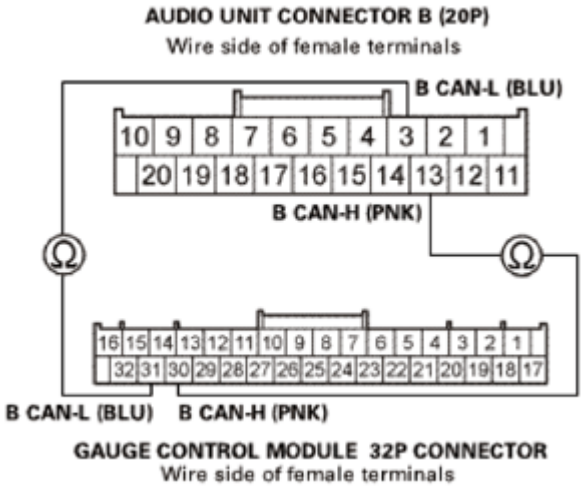

Fig. 269: Measuring Voltage Between Test Point Audio Unit Connector C (14P) No. 10 (BLK) And Body Ground
Courtesy of AMERICAN HONDA MOTOR CO., INC.

Is there any voltage?

YES : REPLACE THE AUDIO-NAVIGATION UNIT .

NO : Repair an open or high resistance in the wire between the audio unit and the XM receiver.

8. Open wire check (GA SYS ON line):
   - 1. Turn the ignition switch to LOCK (0).
   - 2. Disconnect the following connectors.

     Audio-navigation unit connector C (14P)

GETtheMANUALS.org

XM receiver connector A (14P)

- 3. Check for continuity between test points 1 and 2.

  Test condition IG LOCK (0)

  Audio-navigation unit connector C (14P): disconnected

  XM receiver connector A (14P): disconnected Test circuit GA SYS ON

  Test point 1 Audio-navigation unit connector C (14P) No. 5 (PNK)

  Test point 2 XM receiver connector A (14P) No. 5 (PNK)

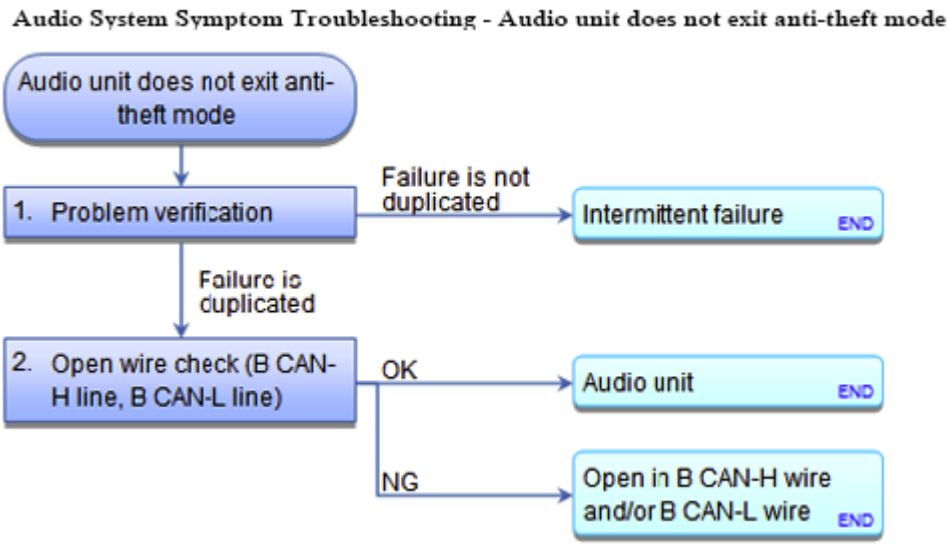

Fig. 270: Checking For Continuity Between Test Point Audio-Navigation Unit Connector C (14P) No. 5 (PNK) And XM Receiver Connector A (14P) No. 5 (PNK)
Courtesy of AMERICAN HONDA MOTOR CO., INC.

Is there continuity?

YES : The GA SYS ON wire is OK. Go to step 9.

NO : Repair an open in the wire between the audio-navigation unit and the XM receiver.

9. Open wire check (GA BUS+ line, GA BUS- line):
   - 1. Check for continuity between test points 1 and 2.

     Test condition IG LOCK (0)

     Audio-navigation unit connector C (14P): disconnected

GETtheMANUALS.org

XM receiver connector A (14P): disconnected

Test circuit GA BUS-

Test point 1 Audio-navigation unit connector C (14P) No. 11 (PNK)

Test point 2 XM receiver connector A (14P) No. 11 (PNK)

Test circuit GA BUS+

Test point 1 Audio-navigation unit connector C (14P) No. 12 (BLU)

Test point 2 XM receiver connector A (14P) No. 12 (BLU)

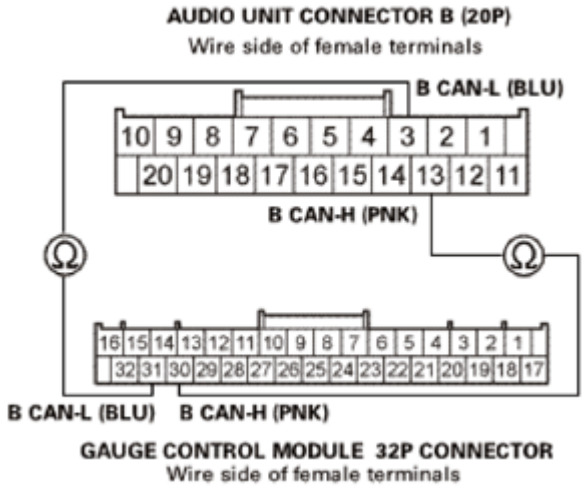

Fig. 271: Checking For Continuity Between Test Point Audio-Navigation Unit Connector C (14P) No. 12 (BLU) And XM Receiver Connector A (14P) No. 12 (BLU)
Courtesy of AMERICAN HONDA MOTOR CO., INC.

Is there continuity?

YES : The GA BUS+ and the GA BUS- wires are OK. Go to step 10.

NO : There is an open in the wire(s) between the audio-navigation unit and the XM receiver. Replace the affected shielded harness.

10. Audio-navigation unit check:
    - 1. SUBSTITUTE A KNOWN-GOOD XM RECEIVER , and recheck.

Does the symptom go away?

YES : Replace the original XM receiver.

NO : REPLACE THE AUDIO-NAVIGATION UNIT .

GETtheMANUALS.org

XM RADIO DISPLAY IS BLANK AND NO STATION INFORMATION IS DISPLAYED (WITHOUT NAVIGATION)

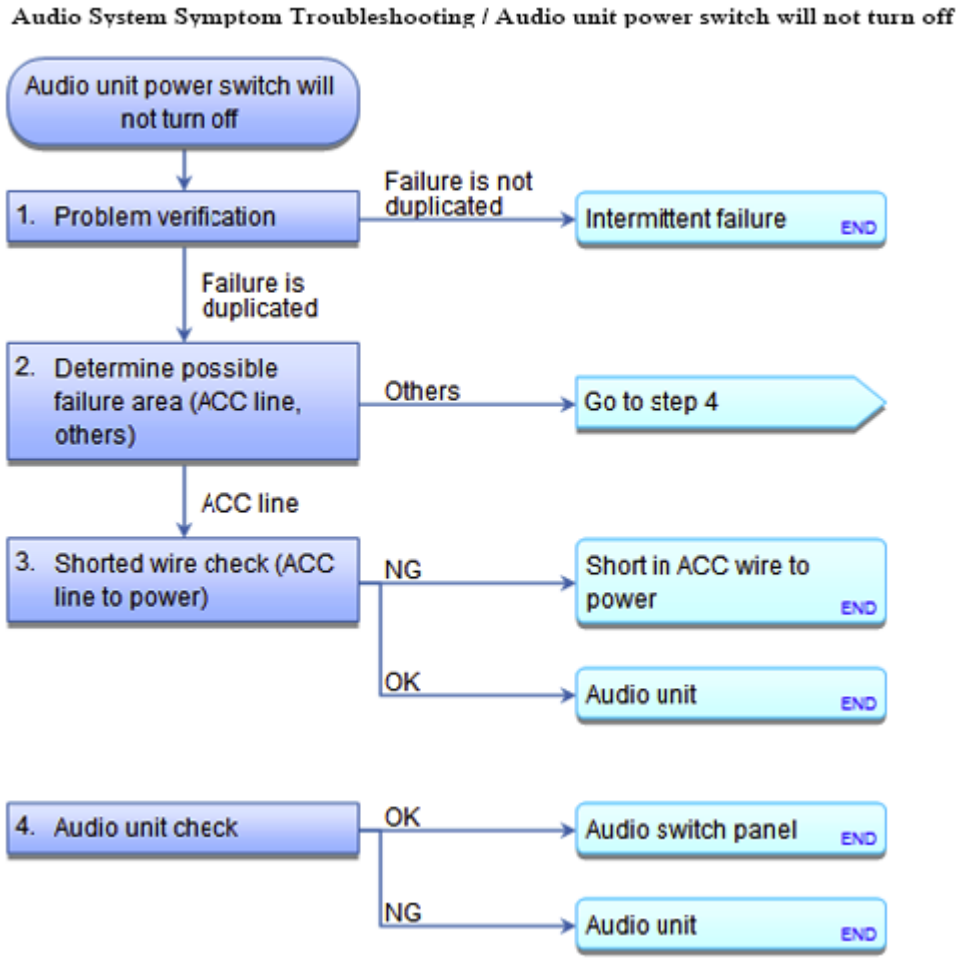

Fig. 272: Audio System Symptom Troubleshooting Flowchart - XM Radio Display Is Blank And No Station Information Is Displayed
Courtesy of AMERICAN HONDA MOTOR CO., INC.

NOTE:

- **CHECK THE VEHICLE BATTERY CONDITION FIRST .**
- **Check the connectors for poor connections or loose terminals.**

1. Problem verification:
   - 1. Turn the ignition switch to ON (II).
   - 2. Turn on the audio unit, and press the XM button to check if the multi-information display changes to the XM radio information screen.

Is the XM radio information displayed?

YES : Intermittent failure, the system is OK at this time.

GETtheMANUALS.org

NO : The failure is duplicated, go to step 2.

2. Determine possible failure area (GA +B line, others):
    - 1. Turn the ignition switch to LOCK (0).
    - 2. Measure the voltage between test points 1 and 2.

    Test condition IG LOCK (0)

    Test circuit GA +B

    Test point 1 XM receiver connector A (14P) No. 6 (RED)

    Test point 2 Body ground

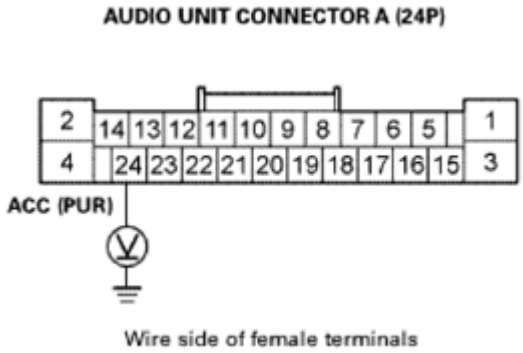

Fig. 273: Measuring Voltage Between Test Point XM Receiver Connector A (14P) No. 6 (RED) And Body Ground
Courtesy of AMERICAN HONDA MOTOR CO., INC.

Is there battery voltage?

YES : The GA +B wire is OK. Go to step 5.

NO : Go to step 3.

3. Open wire check (GA +B line):
    - 1. Measure the voltage between test points 1 and 2.

    Test condition IG LOCK (0)

    Test circuit GA +B

    Test point 1 Audio unit connector C (14P) No. 6 (RED)

    Test point 2 Body ground

GETtheMANUALS.org

Audio System Symptom Troubleshooting - Audio unit power switch will not turn on (No information display and no sound)

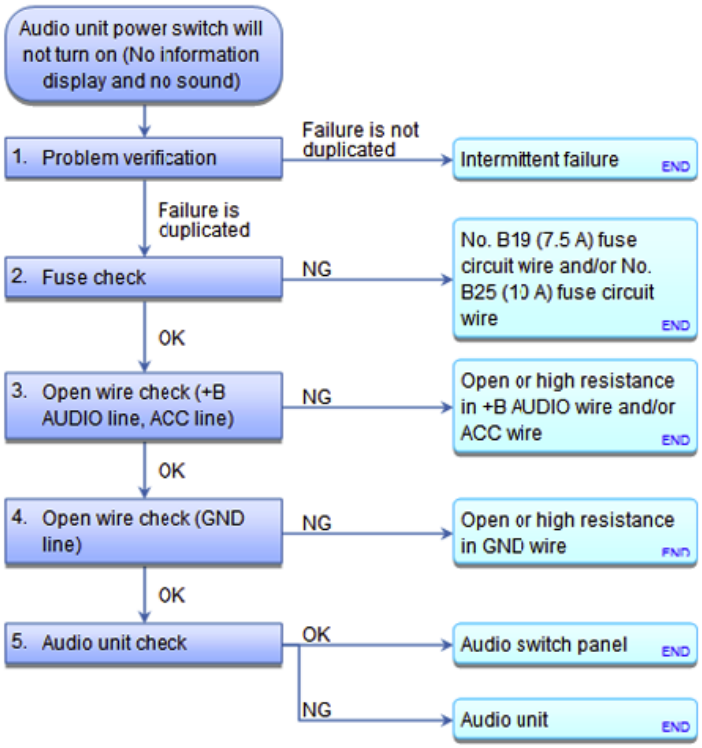

Fig. 274: Measuring Voltage Between Test Point Audio Unit Connector C (14P) No. 6 (RED) And Body Ground
Courtesy of AMERICAN HONDA MOTOR CO., INC.

Is there battery voltage?

YES : Repair an open or high resistance in the wires between the audio unit and the XM receiver.

NO : Go to step 4.

4. Shorted wire check (GA +B line):
   - 1. Turn the ignition switch to LOCK (0).
   - 2. Disconnect the following connectors:

     Audio unit connector C (14P)

     XM receiver connector A (14P)

     HandsFreeLink control unit connector (32P)

   - 3. Check for continuity between test points 1 and 2.

     Test condition IG LOCK (0)

GETtheMANUALS.org

Audio unit connector C (14P): disconnected

XM receiver A (14) connector: disconnected

HandsFreeLink control unit 32P connector: disconnected

Test circuit GA +B

Test point 1 Audio unit connector C (14P) No. 6 (RED)

Test point 2 Body ground

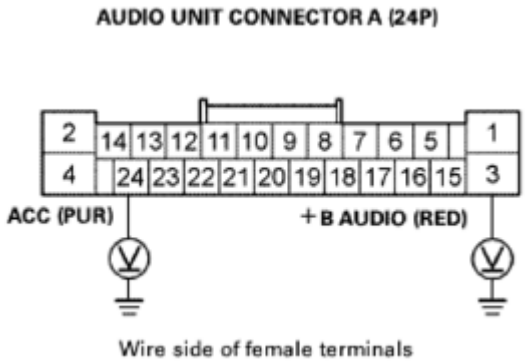

Fig. 275: Checking For Continuity Between Test Point Audio Unit Connector C (14P) No. 6 (RED) And Body Ground
Courtesy of AMERICAN HONDA MOTOR CO., INC.

Is there continuity?

YES : Repair a short to ground in the wire between the audio unit and the XM receiver.

NO : REPLACE THE AUDIO UNIT .

5. Determine possible failure area (GA GND line, others):
   - 1. Turn the ignition switch to ON (II).
   - 2. Measure the voltage between test points 1 and 2.

   Test condition IG ON (II)

   Test circuit GA GND

   Test point 1 XM receiver connector A (14P) No. 10 (BLK)

   Test point 2 Body ground

GETtheMANUALS.org

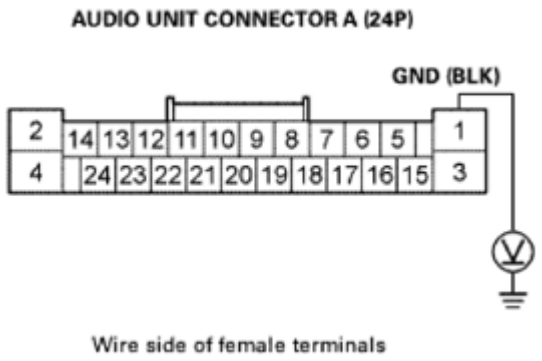

Fig. 276: Measuring Voltage Between Test Point XM Receiver Connector A (14P) No. 10 (BLK) And Body Ground
Courtesy of AMERICAN HONDA MOTOR CO., INC.

Is there less than 0.2 V?

YES : The GA GND wire is OK. Go to step 7.

NO : Go to step 6.

6. Open or high resistance wire check (GA GND line):
   - 1. Measure the voltage between test points 1 and 2.

     Test condition IG ON (II)

     Test circuit GA GND

     Test point 1 Audio unit connector C (14P) No. 10 (BLK)

     Test point 2 Body ground

GETtheMANUALS.org

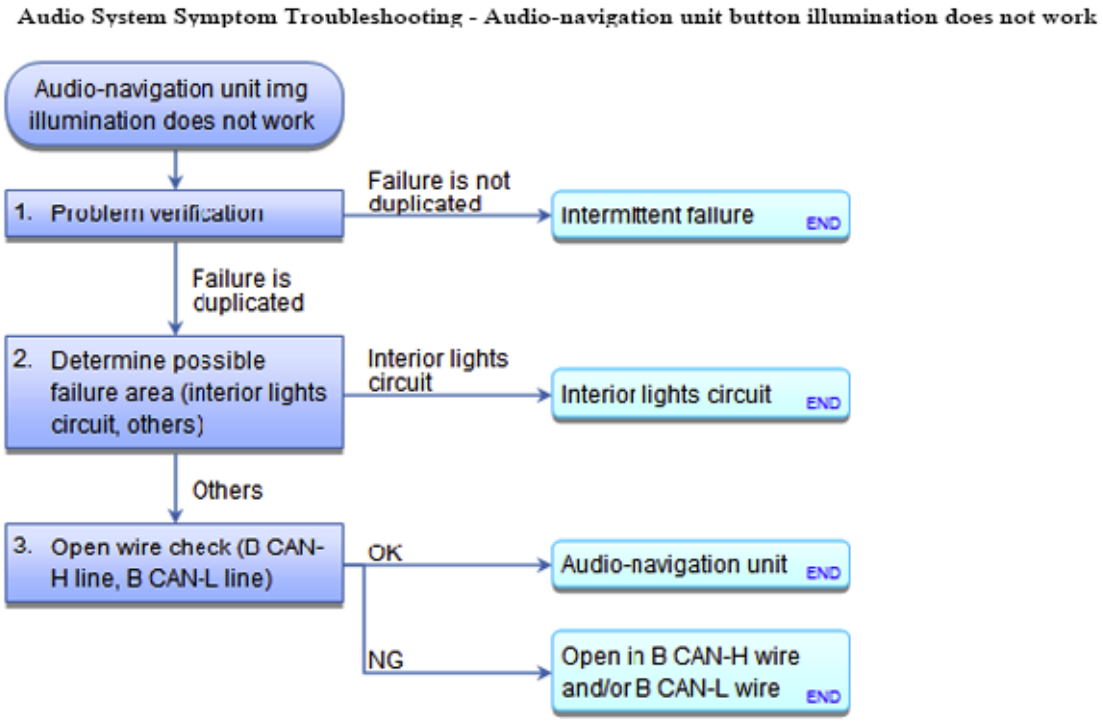

Fig. 277: Measuring Voltage Between Test Point Audio Unit Connector C (14P) No. 10 (BLK) And Body Ground
Courtesy of AMERICAN HONDA MOTOR CO., INC.

Is there any voltage?

YES : REPLACE THE AUDIO UNIT .

NO : Repair an open in the wire between the audio unit and the XM receiver.

7. Open wire check (GA SYS ON line):
   - 1. Check for continuity between test points 1 and 2.

     Test condition IG LOCK (0)

     Audio unit connector C (14P): disconnected

     XM receiver connector A (14P): disconnected

     HandsFreeLink control unit 32P connector: disconnected

     Multi-information display unit connector A (32P): disconnected

     Test circuit GA SYS ON

     Test point 1 Audio unit connector C (14P) No. 5 (PNK)

GETtheMANUALS.org

Test point 2 XM receiver connector A (14P) No. 5 (PNK)

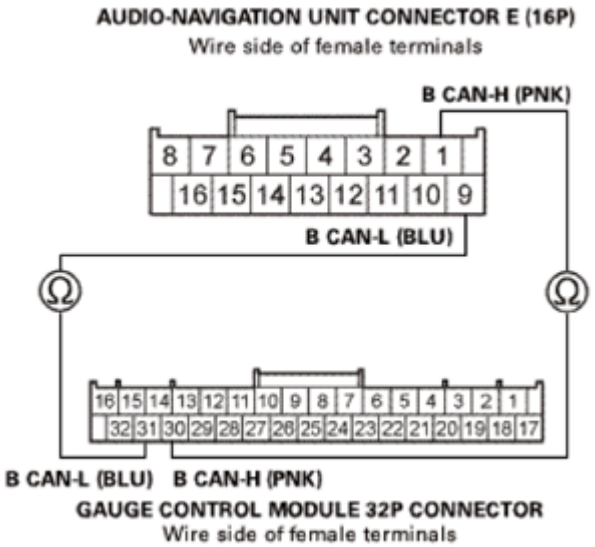

Fig. 278: Checking For Continuity Between Test Point Audio Unit Connector C (14P) No. 5 (PNK) And XM Receiver Connector A (14P) No. 5 (PNK)
Courtesy of AMERICAN HONDA MOTOR CO., INC.

Is there continuity?

YES : The GA SYS ON wire is OK. Go to step 8.

NO : Repair an open in the wire between the audio unit and the XM receiver.

8. Shorted wire check (GA BUS+ line, GA BUS- line):
   - 1. Check for continuity between test points 1 and 2.

     Test condition IG LOCK (0)

     Audio unit connector C (14P): disconnected

     XM receiver connector A (14P): disconnected

     Multi-information display unit connector A (32P): disconnected

     HandsFreeLink control unit 32P connector: disconnected

     Test circuit GA BUS-

     Test point 1 Audio unit connector C (14P) No. 11 (PNK)

     Test point 2 Body ground

GETtheMANUALS.org

Test circuit GA BUS+

Test point 1 Audio unit connector C (14P) No. 12 (BLU)

Test point 2 Body ground

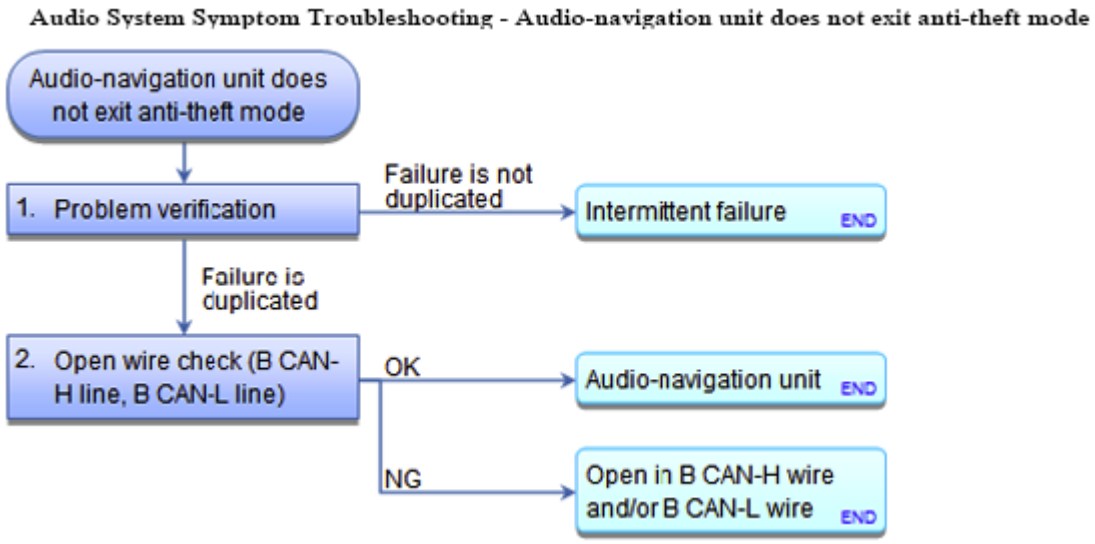

Fig. 279: Checking For Continuity Between Test Point Audio Unit Connector C (14P) No. 12 (BLU) And Body Ground
Courtesy of AMERICAN HONDA MOTOR CO., INC.

Is there continuity?

YES : There is a short to body ground in the wire(s) between the audio unit and the XM receiver. Replace the affected shielded harness.

NO : The GA BUS+ and the GA BUS- wires are not shorted to ground. Go to step 9.

9. Shorted wire check (GA BUS+ line to GA BUS- line):
   - 1. Check for continuity between test points 1 and 2.

     Test condition IG LOCK (0)

     Audio unit connector C (14P): disconnected

     XM receiver connector A (14P): disconnected

     Multi-information display unit connector A (32P): disconnected

     HandsFreeLink control unit 32P connector: disconnected

     Test circuit GA BUS-, GA BUS+

GETtheMANUALS.org

Test point 1 Audio unit connector C (14P) No. 11 (PNK)

Test point 2 Audio unit connector C (14P) No. 12 (BLU)

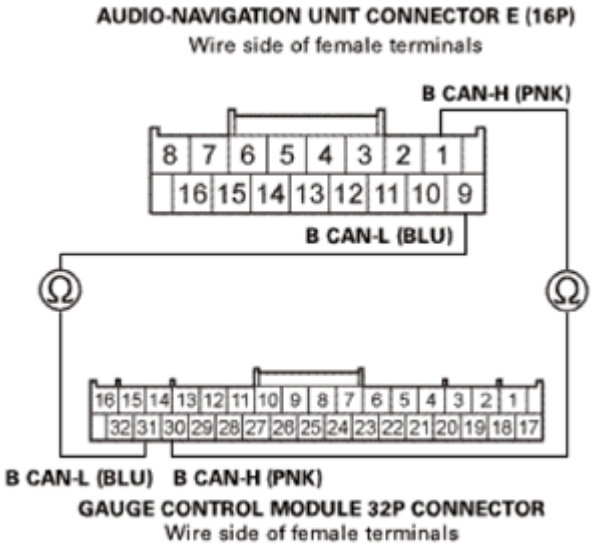

Fig. 280: Checking For Continuity Between Test Point Audio Unit Connector C (14P) No. 11 (PNK) And No. 12 (BLU)
Courtesy of AMERICAN HONDA MOTOR CO., INC.

Is there continuity?

YES : There is a short in the wires between the audio unit and the XM receiver. Replace the affected shielded harness.

NO : The GA BUS+ and the GA BUS- wires are not shorted. Go to step 10.

10. Shorted wire check (SH GA BUS line to another lines):
    - 1. Check for continuity between test points 1 and 2.

      Test condition IG LOCK (0)

      Audio unit connector C (14P): disconnected

      XM receiver connector A (14P): disconnected

      Multi-information display unit connector A (32P): disconnected

      HandsFreeLink control unit 32P connector: disconnected

      Test circuit SH GA BUS, GA BUS+

      Test point 1 Audio unit connector C (14P) No. 4 (GRY)

GETtheMANUALS.org

Test point 2 Audio unit connector C (14P) No. 12 (BLU)

Test circuit SH GA BUS, GA BUS-

Test point 1 Audio unit connector C (14P) No. 4 (GRY)

Test point 2 Audio unit connector C (14P) No. 11 (PNK)

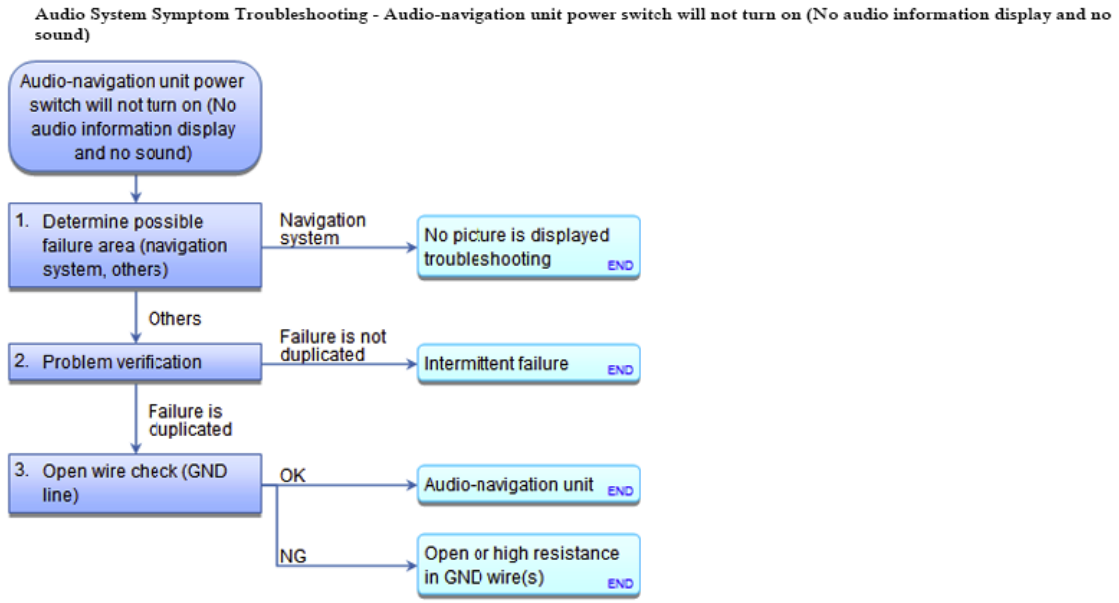

Fig. 281: Checking For Continuity Between Test Point Audio Unit Connector C (14P) No. 4 (GRY) And No. 11 (PNK)
Courtesy of AMERICAN HONDA MOTOR CO., INC.

Is there continuity?

YES : There is a short in the wires between the audio unit and the XM receiver. Replace the affected shielded harness.

NO : The SH GA BUS wire is OK. Go to step 11.

11. Open wire check (GA BUS+ line, GA BUS- line):
    - 1. Check for continuity between test points 1 and 2.

Test condition IG LOCK (0)

Audio unit connector C (14P): disconnected

XM receiver connector A (14P): disconnected

HandsFreeLink control unit 32P connector: disconnected

GETtheMANUALS.org

Multi-information display unit connector A (32P): disconnected

Test circuit GA BUS-

Test point 1 Audio unit connector C (14P) No. 11 (PNK)

Test point 2 XM receiver connector A (14P) No. 11 (PNK)

Test circuit GA BUS+

Test point 1 Audio unit connector C (14P) No. 12 (BLU)

Test point 2 XM receiver connector A (14P) No. 12 (BLU)

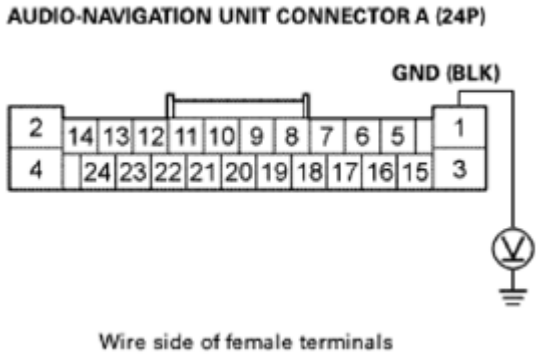

Fig. 282: Checking For Continuity Between Test Point Audio Unit Connector C (14P) No. 12 (BLU) And XM Receiver Connector A (14P) No. 12 (BLU)
Courtesy of AMERICAN HONDA MOTOR CO., INC.

Is there continuity?

YES : The GA BUS+ and the GA BUS- wires are OK. Go to step 12.

NO : There is an open in the wire(s) between the audio-navigation unit and the XM receiver. Replace the affected shielded harness.

12. Determine possible failure area (related unit, others):
    - 1. Reconnect audio unit connector C (14P) and multi-information display unit connector A (32P).
    - 2. Turn the ignition switch to ON (II).
    - 3. Turn on the audio unit, and press the AUX button to select the USB mode.

NOTE: Do not connect the USB device.

Is USB information (No Data) displayed in the multi-information display unit?

YES : Go to step 13.

GETtheMANUALS.org

NO : Go to step 14.

13. XM receiver check:
    - 1. Turn the ignition switch to LOCK (0).
    - 2. Reconnect XM receiver connector A (14P).
    - 3. Turn the ignition switch to ON (II).
    - 4. Turn on the audio unit, and press the XM button to check if the multi-information display changes to the XM radio information screen.

    Is the XM radio information displayed?

    YES : Replace the original HandsFreeLink control unit.

    NO : REPLACE THE XM RECEIVER .

14. Audio unit check:
    - 1. Turn the ignition switch to LOCK (0).
    - 2. **SUBSTITUTE A KNOWN-GOOD MULTI-INFORMATION DISPLAY UNIT** .
    - 3. Turn the ignition switch to ON (II).
    - 4. Turn on the audio unit, and press the AUX button to select the USB mode.

    NOTE: Do not connect the USB device.

    Is USB information (No Data) displayed in the multi-information display unit?

    YES : Replace the original multi-information display unit.

    NO : REPLACE THE AUDIO UNIT .

XM RADIO PRESET MEMORY IS LOST (WITH NAVIGATION)

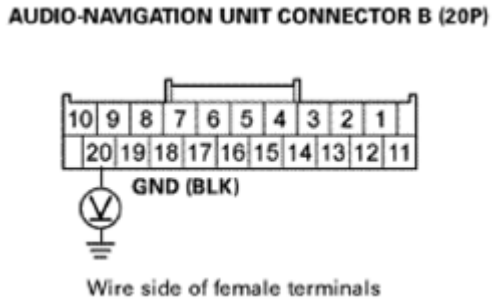

Fig. 283: Audio System Symptom Troubleshooting Flowchart - XM Radio Preset Memory Is Lost
Courtesy of AMERICAN HONDA MOTOR CO., INC.

NOTE:

- **If you can only tune to channel 000, 001, and 174, make sure the audio-**

GETtheMANUALS.org

navigation unit is set to channel mode (see the Owner's Manual), if it is set to channel mode, call XM Radio customer support at 800-852-9696, and check the account activation status.

- **Check the connectors for poor connections or loose terminals.**

1. Problem verification:
    - 1. Turn the ignition switch to ON (II).
    - 2. Turn on the audio system, and set the XM presets.
    - 3. Turn the ignition switch to LOCK (0) for 1 minute, then turn it back to ON (II).
    - 4. Turn on the audio system, and test the XM preset for proper recall operation.

Do the preset icons recall the set XM stations?

YES : Intermittent failure. The system is OK at this time.

NO : REPLACE THE XM RECEIVER .

XM RADIO PRESET MEMORY IS LOST (WITHOUT NAVIGATION)

GETtheMANUALS.org

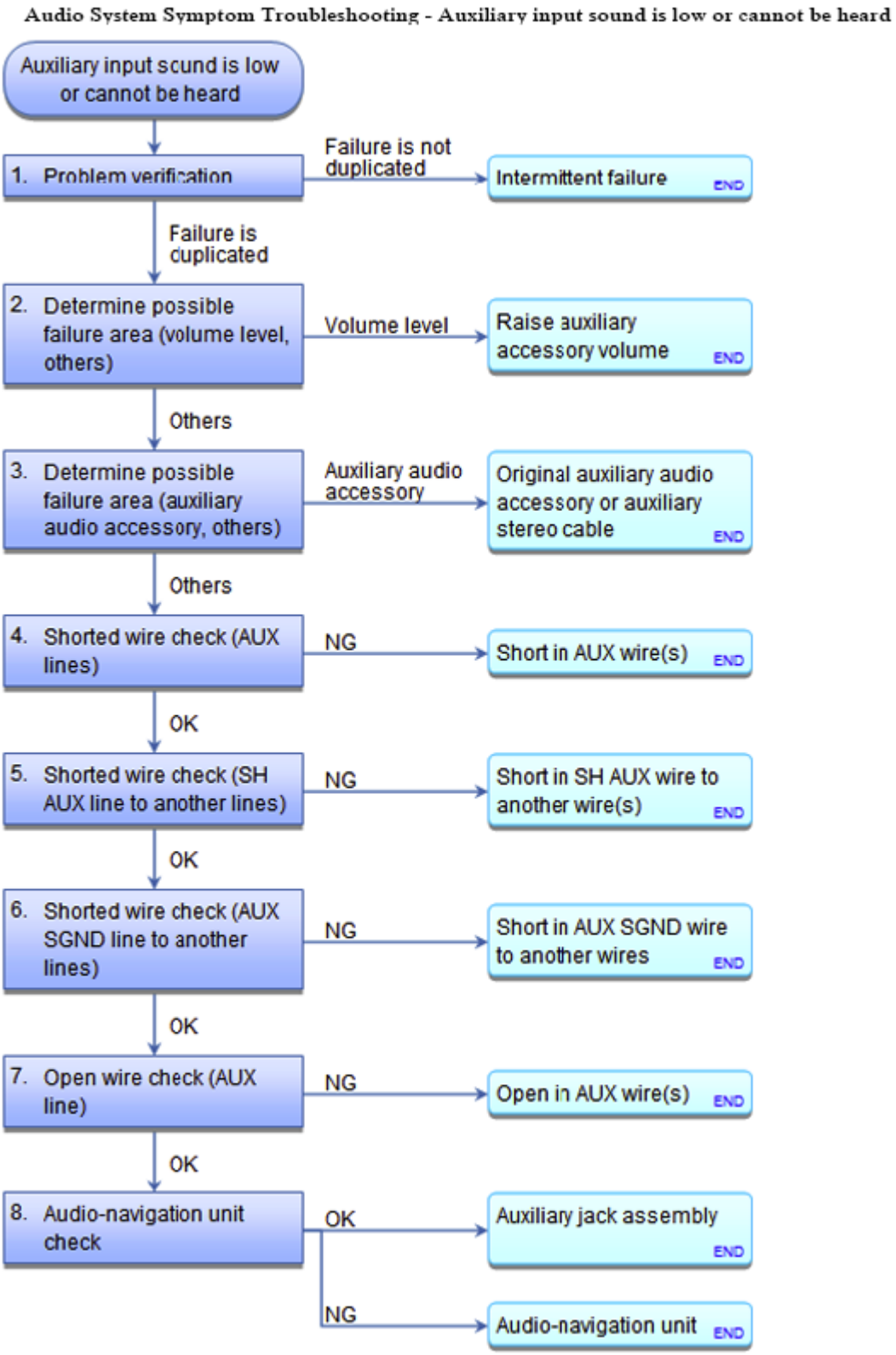

Fig. 284: Audio System Symptom Troubleshooting Flowchart - XM Radio Preset Memory Is Lost
Courtesy of AMERICAN HONDA MOTOR CO., INC.

GETtheMANUALS.org

NOTE:

- **If you can only tune to channel 000, 001, and 174, make sure the audio unit is set to channel mode (see the Owner's Manual), if it is set to channel mode, call XM Radio customer support at 800-852-9696, and check the account activation status.**
- **Check the connectors for poor connections or loose terminals.**

1. Problem verification:
   - 1. Turn the ignition switch to ON (II).
   - 2. Turn on the audio unit, and set the XM presets.
   - 3. Turn the ignition switch to LOCK (0) for 1 minute, then turn it back to ON (II).
   - 4. Turn on the audio unit, and test the XM preset for proper recall operation.

Do the preset icons recall the set XM stations?

YES : Intermittent failure. The system is OK at this time.

NO : REPLACE THE XM RECEIVER .

AUDIO UNIT CONNECTOR FOR INPUTS AND OUTPUTS

AUDIO-NAVIGATION UNIT CONNECTOR FOR INPUTS AND OUTPUTS (WITH NAVIGATION) (EXCEPT KX)

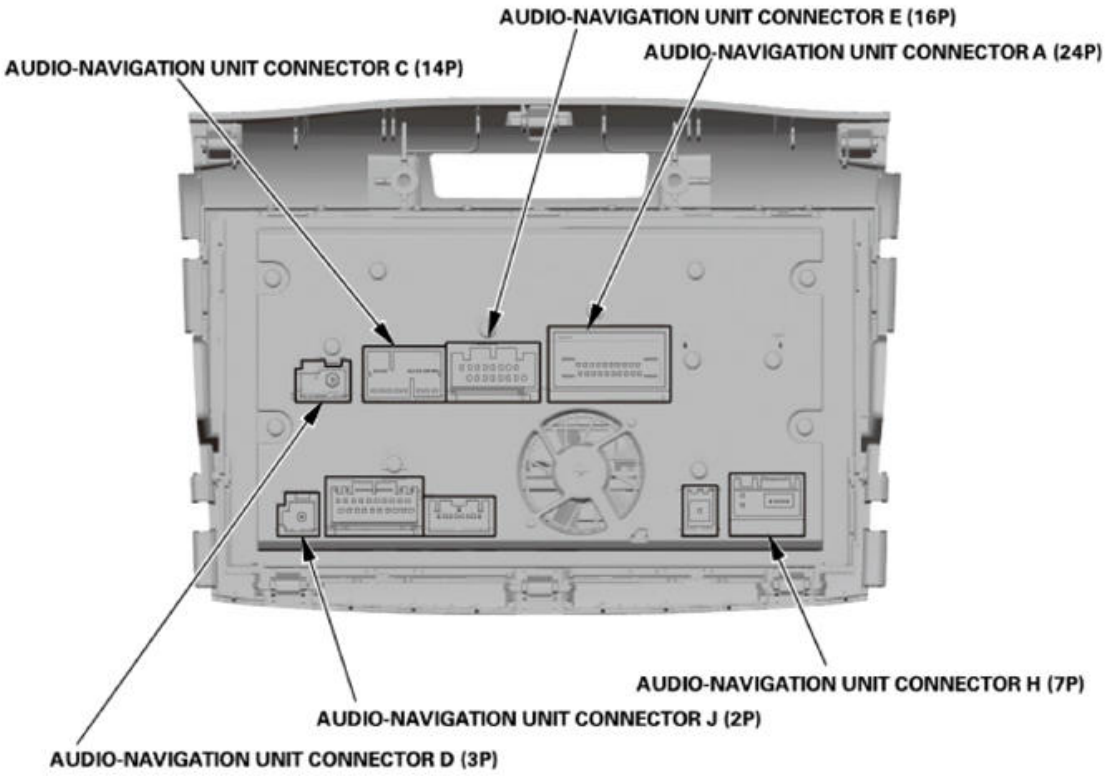

GETtheMANUALS.org

Fig. 285: Audio-Navigation Unit Connector For Inputs And Outputs (With Navigation) (Except KX)
Courtesy of AMERICAN HONDA MOTOR CO., INC.

AUDIO-NAVIGATION UNIT CONNECTOR A (24P)

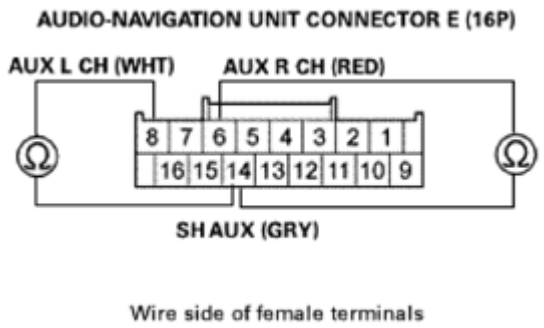

Fig. 286: Identifying Audio-Navigation Unit Connector A (24P)
Courtesy of AMERICAN HONDA MOTOR CO., INC.

Audio-Navigation Unit Connector A (24P)

Cavity	Wire Color	Terminal Name	Description
A1	BLK	GND	Ground for audio-navigation unit (G503)
A2	Not Used	Not Used	-
A3	RED	+B_BACK_UP	Continuous power source
A4	Not Used	Not Used	-
A5	BLU	RL_PRE+	Outputs sound signal for left rear door speaker
A6	PNK	RL_PRE-	Outputs sound signal for left rear door speaker
A7	GRY(1)	SH_RL_PRE	Shield for terminals No. 5 and No. 6
A8	GRY(1)	SH_RR_PRE	Shield for terminals No. 9 and No. 10
A9	LT BLU	RR_PRE+	Outputs sound signal for right rear door speaker
A10	PUR	RR_PRE-	Outputs sound signal for right rear door speaker
A11	Not Used	Not Used	-
A12	GRN	SCTY_RADIO_SW	Security signal from MICU
A13	LT BLU	K_LINE	Detects scan tool signal (serial data)
A14	Not Used	Not Used	-
A15	BRN	FL_PRE+	Outputs sound signal for left front speakers
A16	YEL	FL_PRE-	Outputs sound signal for left front speakers
A17	GRY(1)	SH_FL_PRE	Shield for terminals No. 15 and No. 16
A18	GRY(1)	SH_FR_PRE	Shield for terminals No. 19 and No. 20
A19	RED	FR_PRE+	Outputs sound signal for right front speakers
A20	GRN	FR_PRE-	Outputs sound signal for right front speakers
A21	RED	SWD+B	Outputs voltage for stereo amplifier switching ON/OFF

GETtheMANUALS.org

A22	Not Used	Not Used	-
A23	GRN	VSP	Detect vehicle speed pulse from PCM
A24	PUR	ACC	Power source for accessories

(1) The shielded wires have a heat-shrink tube insulating the outside of the wire. The color of the insulating tube, typically black or dark gray, may not match the color of the wire shown on the circuit diagram.

AUDIO-NAVIGATION UNIT CONNECTOR C (14P)

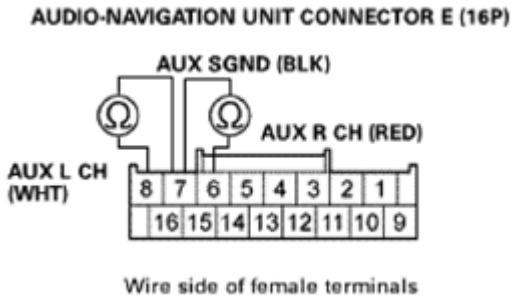

Fig. 287: Identifying Audio-Navigation Unit Connector C (14P)
Courtesy of AMERICAN HONDA MOTOR CO., INC.

Audio-Navigation Unit Connector C (14P)

Cavity	Wire Color	Terminal Name	Description
C1	RED	GA_AUDIO_L+	Inputs sound signal from GA-Net related units
C2	GRN	GA_AUDIO_R+	Inputs sound signal from GA-Net related units
C3	GRY(1)	SH_GA_AUDIO	Shield for terminals No. 1, No. 2, No. 7, and No. 8
C4	GRY(1)	SH_GA_BUS	Shield for terminals No. 11 and No. 12
C5	PNK	GA_SYS_ON	Outputs signal for GA-Net related unit(s) switching ON/OFF
C6	RED	GA+B	Power source for XM receiver and HandsFreeLink control unit
C7	WHT	GA_AUDIO_L-	Inputs sound signal from GA-Net related units
C8	BLK	GA_AUDIO_R-	Inputs sound signal from GA-Net related units
C9	Not Used	Not Used	-
C10	BLK	GA_GND	Ground for XM receiver and HandsFreeLink control unit
C11	PNK	GA_BUS-	GA-Net bus communication signal
C12	BLU	GA_BUS+	GA-Net bus communication signal
C13	Not Used	Not Used	-
C14	Not Used	Not Used	-

(1) The shielded wires have a heat-shrink tube insulating the outside of the wire. The color of the insulating tube, typically black or dark gray, may not match the color of the wire shown on the circuit diagram.

GETtheMANUALS.org

AUDIO-NAVIGATION UNIT CONNECTOR D (3P)

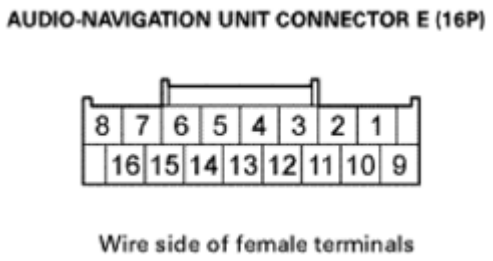

Fig. 288: Identifying Audio-Navigation Unit Connector D (3P)
Courtesy of AMERICAN HONDA MOTOR CO., INC.

Audio-Navigation Unit Connector D (3P)

Cavity	Wire Color	Terminal Name	Description
D1	-	SWD +B	Power source for AM/FM antenna amplifier
D2	-	AM/FM	Inputs AM/FM signal
D3	-	SH (AM/FM)	Shield for terminal No. 2

AUDIO-NAVIGATION UNIT CONNECTOR E (16P)

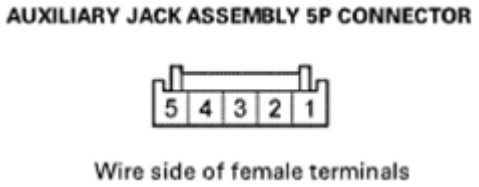

Fig. 289: Identifying Audio-Navigation Unit Connector E (16P)
Courtesy of AMERICAN HONDA MOTOR CO., INC.

AUDIO-NAVIGATION UNIT CONNECTOR E (16P) DESCRIPTION

Cavity	Wire Color	Terminal Name	Description
E1	PNK	B_CAN-H	Communication signal
E2	GRY(1)	SH_SUB_W	Shield for terminals No. 3 and No. 11
E3	LT BLU	SUB_W_PRE+	Outputs sound signal for subwoofer
E4	GRY(1)	SH_TELEM_SIG	Shield for terminals No. 5 and No. 13
E5	BRN	TELEM_SIG+	Inputs telephone sound signal from HandsFreeLink control unit
E6	RED	AUX_R_CH	Inputs sound signal from auxiliary jack assembly
E7	BLK	AUX_SGND	Ground for sound signal from auxiliary jack assembly
E8	WHT	AUX_L_CH	Inputs sound signal from auxiliary jack assembly
E9	BLU	B_CAN-L	Communication signal
E10	Not Used	Not Used	-

GETtheMANUALS.org

E11	PUR	SUB_W_PRE-	Outputs sound signal for subwoofer
E12	RED	AMP_MUTE	Outputs stereo amplifier mute signal
E13	YEL	TELEM_SIG-	Inputs telephone sound signal from HandsFreeLink control unit
E14	GRY(1)	SH_AUX	Shield for terminals No. 6, No. 7, and No. 8
E15	LT GRN	AUX_GND	Ground for auxiliary jack assembly
E16	LT BLU	AUX_DET	Detects connection signal for auxiliary jack assembly

(1) The shielded wires have a heat-shrink tube insulating the outside of the wire. The color of the insulating tube, typically black or dark gray, may not match the color of the wire shown on the circuit diagram.

AUDIO-NAVIGATION UNIT CONNECTOR H (7P)

GETtheMANUALS.org

Audio System Symptom Troubleshooting - Auxiliary input sound is low or cannot be heard

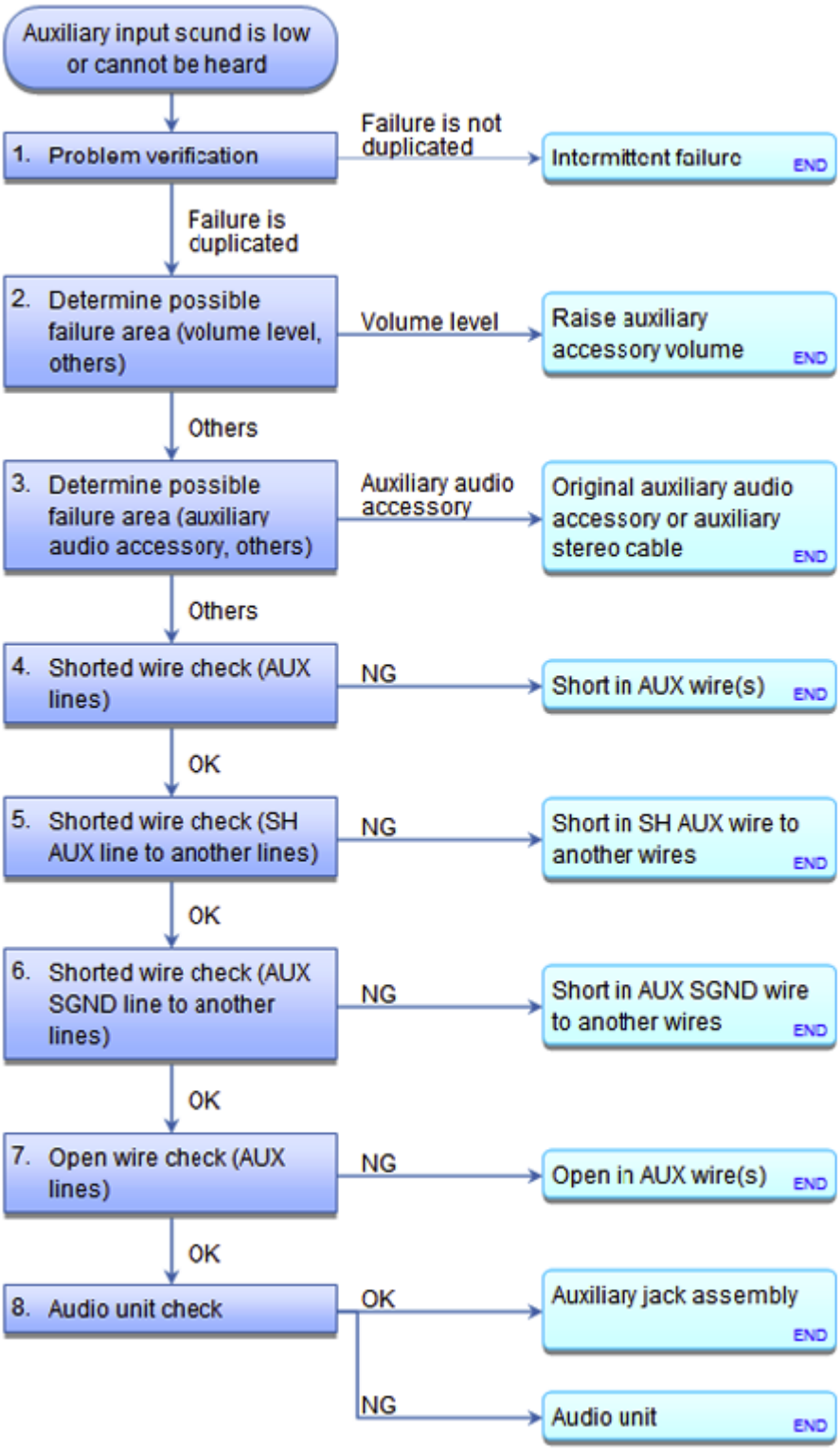

Fig. 290: Identifying Audio-Navigation Unit Connector H (7P)
Courtesy of AMERICAN HONDA MOTOR CO., INC.

GETtheMANUALS.org

AUDIO-NAVIGATION UNIT CONNECTOR H (7P) DESCRIPTION

Cavity	Wire Color	Terminal Name	Description
H1	-	USB GND	Ground for communication signal
H2	-	USB_DATA+	Communication signal
H3	-	USB_DATA-	Communication signal
H4	-	USB_VBUS	Outputs power source for USB device
H5	-	USB SH	Shield for terminals No. 1, No. 2, No. 3, and No. 4
H6	-	USB ADPT	Ground for connection signal
H7	-	USB ON	Detects connection signal
(1) The shielded wires have a heat-shrink tube insulating the outside of the wire. The color of the insulating tube, typically black or dark gray, may not match the color of the wire shown on the circuit diagram.			

AUDIO-NAVIGATION UNIT CONNECTOR J (2P) (USA models)

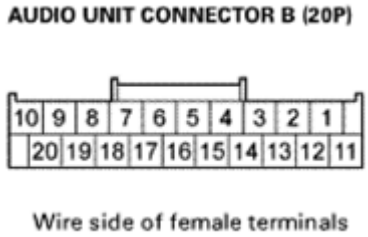

Fig. 291: Identifying Audio-Navigation Unit Connector J (2P) (USA Models)
Courtesy of AMERICAN HONDA MOTOR CO., INC.

AUDIO-NAVIGATION UNIT CONNECTOR J (2P) DESCRIPTION (USA MODELS)

Cavity	Wire Color	Terminal Name	Description
J1	-	TMC RF IN	Inputs FM signal
J2	-	TMC RF SH	Shield for terminal No. 1

AUDIO-NAVIGATION UNIT CONNECTOR FOR INPUTS AND OUTPUTS (WITH NAVIGATION) (KX)

GETtheMANUALS.org

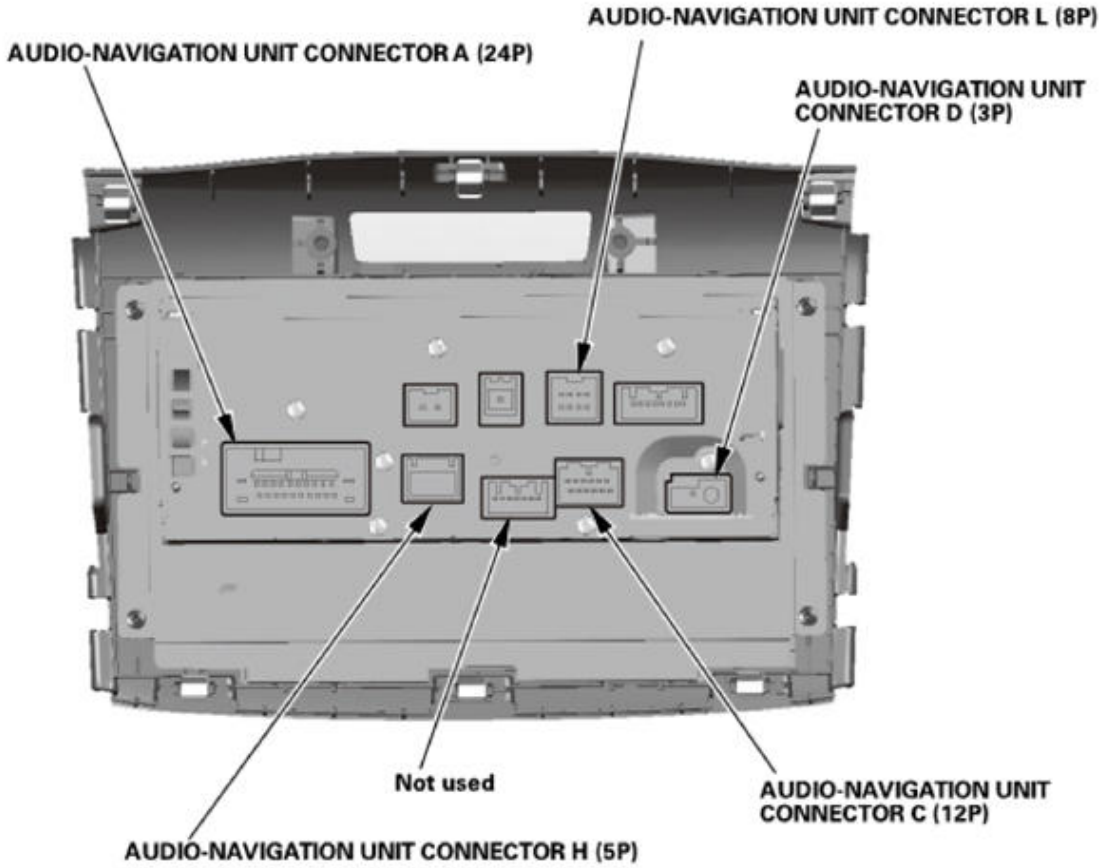

Fig. 292: Identifying Audio-Navigation Unit Connector For Inputs And Outputs (With Navigation) (KX)
Courtesy of AMERICAN HONDA MOTOR CO., INC.

AUDIO-NAVIGATION UNIT CONNECTOR A (24P)

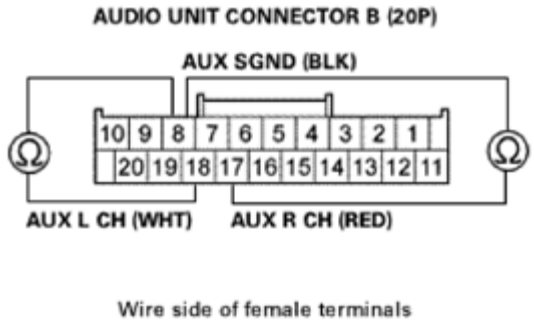

Fig. 293: Identifying Audio-Navigation Unit Connector A (24P)
Courtesy of AMERICAN HONDA MOTOR CO., INC.

AUDIO-NAVIGATION UNIT CONNECTOR A (24P) DESCRIPTION

Cavity	Wire Color	Terminal Name	Description
A1	BLK	GND	Ground for audio-navigation unit (G503)
A2	Not Used	Not Used	-

GETtheMANUALS.org

A3	RED	+B_BACK_UP	Continuous power source
A4	GRY	ILLUMI+	Power source for illumination
A5	BLU	RL_SPKR+	Outputs sound signal for left rear door speaker
A6	PNK	RL_SPKR-	Outputs sound signal for left rear door speaker
A7	Not Used	Not Used	-
A8	Not Used	Not Used	-
A9	BLU	RR_SPKR+	Outputs sound signal for right rear door speaker
A10	PNK	RR_SPKR-	Outputs sound signal for right rear door speaker
A11	Not Used	Not Used	-
A12	GRN	SCTY_RADIO_SW	Security signal from MICU
A13	Not Used	Not Used	-
A14	Not Used	Not Used	-
A15	WHT	FL_SPKR+	Outputs sound signal for driver's door speakers
A16	BLK	FL_SPKR-	Outputs sound signal for driver's door speakers
A17	Not Used	Not Used	-
A18	Not Used	Not Used	-
A19	RED	FR_SKPR+	Outputs sound signal for passenger's door speakers
A20	GRN	FR_SPKR-	Outputs sound signal for passenger's door speakers
A21	Not Used	Not Used	-
A22	Not Used	Not Used	-
A23	Not Used	Not Used	-
A24	PUR	ACC	Power source for accessories

AUDIO-NAVIGATION UNIT CONNECTOR C (12P)

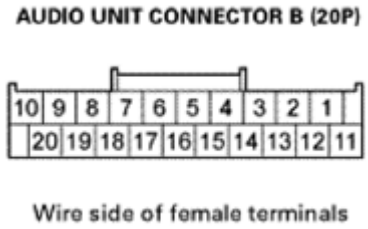

Fig. 294: Identifying Audio-Navigation Unit Connector C (12P)
Courtesy of AMERICAN HONDA MOTOR CO., INC.

AUDIO-NAVIGATION UNIT CONNECTOR C (12P) DESCRIPTION

Cavity	Wire Color	Terminal Name	Description
C1	BLU	GA_BUS+	GA-Net bus communication signal
C2	PNK	GA_BUS-	GA-Net bus communication signal
C3	GRY(1)	SH_GA_BUS	Shield for terminals No. 1 and No. 2
C4	YEL	HFT/NAVI_REMOTE_SW	Detects control signal from HFT switch
C5	Not Used	Not Used	-

GETtheMANUALS.org

C6	PNK	GA_SYS_ON	Outputs signal for multi-information display unit switching ON/OFF
C7	Not Used	Not Used	-
C8	Not Used	Not Used	-
C9	Not Used	Not Used	-
C10	Not Used	Not Used	-
C11	Not Used	Not Used	-
C12	Not Used	Not Used	-
(1) The shielded wires have a heat-shrink tube insulating the outside of the wire. The color of the insulating tube, typically black or dark gray, may not match the color of the wire shown on the circuit diagram.			

AUDIO-NAVIGATION UNIT CONNECTOR D (3P)

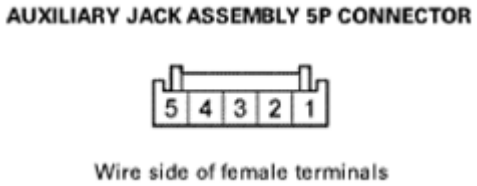

Fig. 295: Identifying Audio-Navigation Unit Connector D (3P)
Courtesy of AMERICAN HONDA MOTOR CO., INC.

AUDIO-NAVIGATION UNIT CONNECTOR D (3P) DESCRIPTION

Cavity	Wire Color	Terminal Name	Description
D1	-	SWD +B	Power source for AM/FM antenna amplifier
D2	-	AM/FM	Inputs AM/FM signal
D3	-	SH (AM/FM)	Shield for terminal No. 2

AUDIO-NAVIGATION UNIT CONNECTOR H (5P)

GETtheMANUALS.org

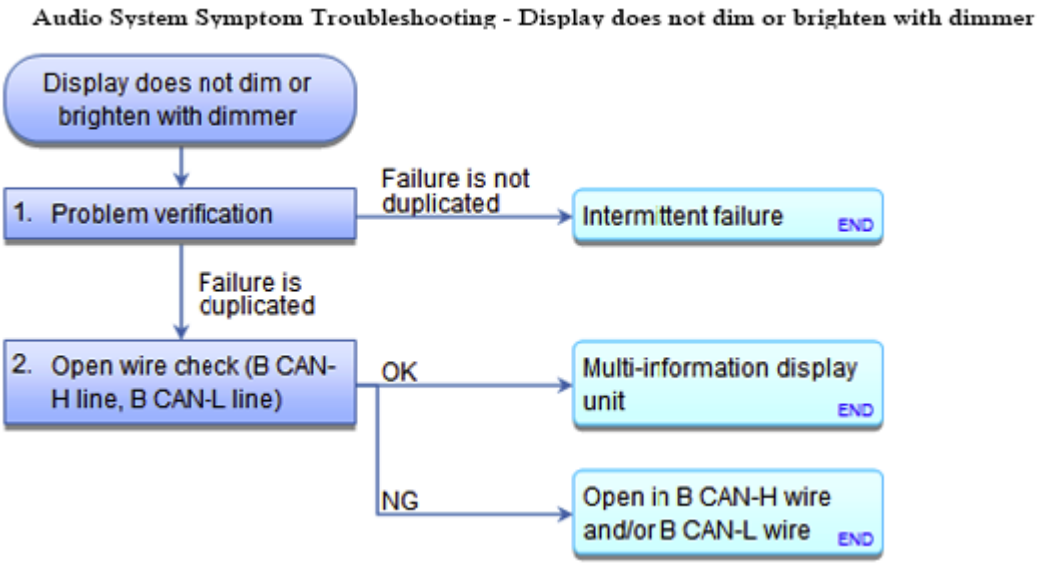

Fig. 296: Identifying Audio-Navigation Unit Connector H (5P)
Courtesy of AMERICAN HONDA MOTOR CO., INC.

AUDIO-NAVIGATION UNIT CONNECTOR H (5P) DESCRIPTION

Cavity	Wire Color	Terminal Name	Description
H1	-	USB GND	Ground for communication signal
H2	-	USB DATA+	Communication signal
H3	-	USB DATA-	Communication signal
H4	-	USB VBUS	Outputs power source for USB device
H5	-	USB SH	Shield for terminals No. 1, No. 2, No. 3, and No. 4

AUDIO-NAVIGATION UNIT CONNECTOR L (8P)

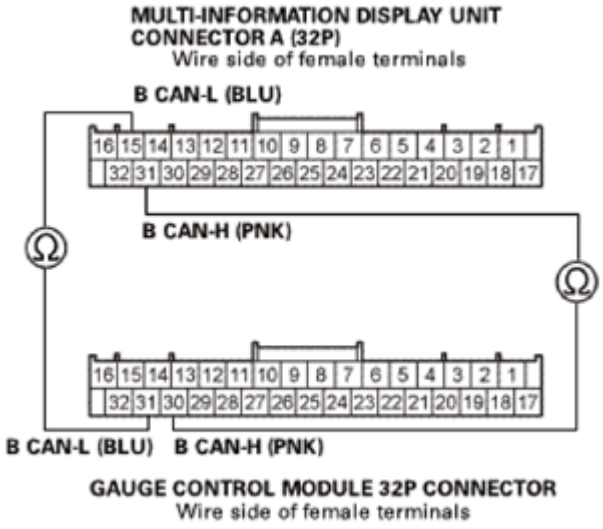

Fig. 297: Identifying Audio-Navigation Unit Connector L (8P)

GETtheMANUALS.org

Courtesy of AMERICAN HONDA MOTOR CO., INC.

AUDIO-NAVIGATION UNIT CONNECTOR L (8P) DESCRIPTION

Cavity	Wire Color	Terminal Name	Description
L1	BLK	AUX_SGND	Ground for sound signal from auxiliary jack assembly
L2	WHT	AUX_L_CH	Inputs sound signal from auxiliary jack assembly
L3	RED	AUX_R_CH	Inputs sound signal from auxiliary jack assembly
L4	Not used	Not used	-
L5	LT BLU	AUX_DET	Detects connection signal for auxiliary jack assembly
L6	Not used	Not used	-
L7	GRY()	AUX_GND	Ground for sound signal from auxiliary jack assembly
L8	Not used	Not used	-

AUDIO UNIT CONNECTOR FOR INPUTS AND OUTPUTS (WITH STEREO AMPLIFIER)

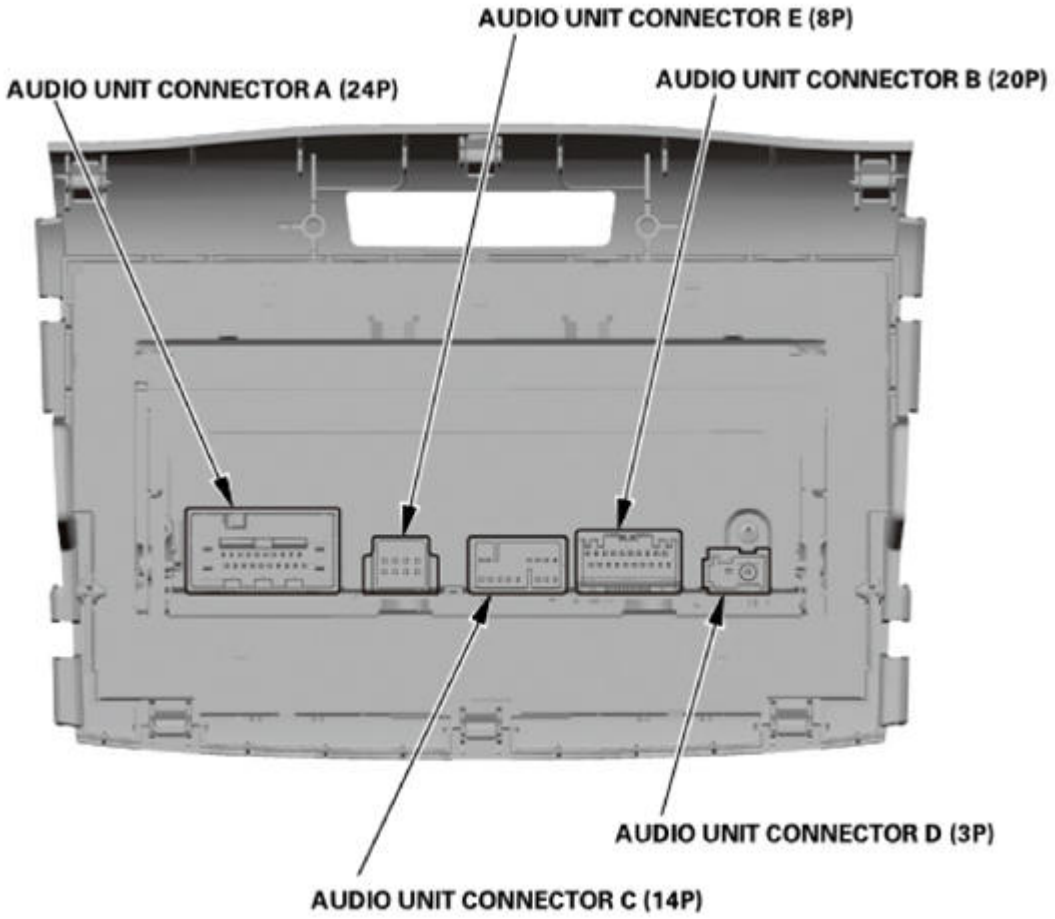

Fig. 298: Identifying Audio Unit Connector For Inputs And Outputs (With Stereo Amplifier)
Courtesy of AMERICAN HONDA MOTOR CO., INC.

AUDIO UNIT CONNECTOR A (24P)

GETtheMANUALS.org

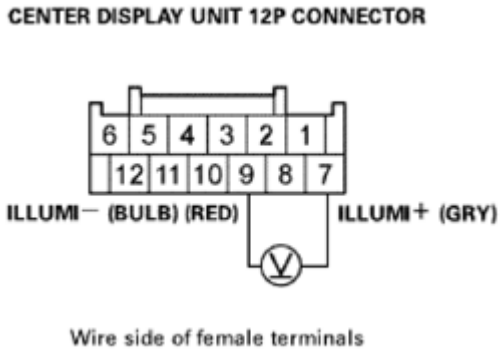

Fig. 299: Identifying Audio Unit Connector A (24P)
Courtesy of AMERICAN HONDA MOTOR CO., INC.

AUDIO UNIT CONNECTOR A (24P) DESCRIPTION

Cavity	Wire Color	Terminal Name	Description
A1	BLK	GND	Ground for audio unit (G503)
A2	Not Used	Not Used	-
A3	RED	+B_AUDIO	Continuous power source
A4	Not Used	Not Used	-
A5	BLU	RL_PRE+	Outputs sound signal for left rear door speaker
A6	PNK	RL_PRE-	Outputs sound signal for left rear door speaker
A7	GRY(1)	SH_RL_PRE	Shield for terminals No. 5 and No. 6
A8	GRY(1)	SH_RR_PRE	Shield for terminals No. 9 and No. 10
A9	LT BLU	RR_PRE+	Outputs sound signal for right rear door speaker
A10	PUR	RR_PRE-	Outputs sound signal for right rear door speaker
A11	Not Used	Not Used	-
A12	GRN	SCTY_RADIO_SW	Security signal from DVD player unit(2)
			Security signal from MICU(3)
A13	LT BLU	K_LINE	Detects scan tool signal (serial data)
A14	Not Used	Not Used	-
A15	BRN	FL_PRE+	Outputs sound signal for left front speakers
A16	YEL	FL_PRE-	Outputs sound signal for left front speakers
A17	GRY(1)	SH_FL_PRE	Shield for terminals No. 15 and No. 16
A18	GRY(1)	SH_FR_PRE	Shield for terminals No. 19 and No. 20
A19	RED	FR_PRE+	Outputs sound signal for right front speakers
A20	GRN	FR_PRE-	Outputs sound signal for right front speakers
A21	RED	SWD+B	Outputs voltage for stereo amplifier switching ON/OFF
A22	Not Used	Not Used	-
A23	Not Used	Not Used	-
A24	PUR	ACC	Power source for accessories

GETtheMANUALS.org

(1) The shielded wires have a heat-shrink tube insulating the outside of the wire. The color of the insulating tube, typically black or dark gray, may not match the color of the wire shown on the circuit diagram.

(2) With rear entertainment

(3) Without rear entertainment

AUDIO UNIT CONNECTOR B (20P)

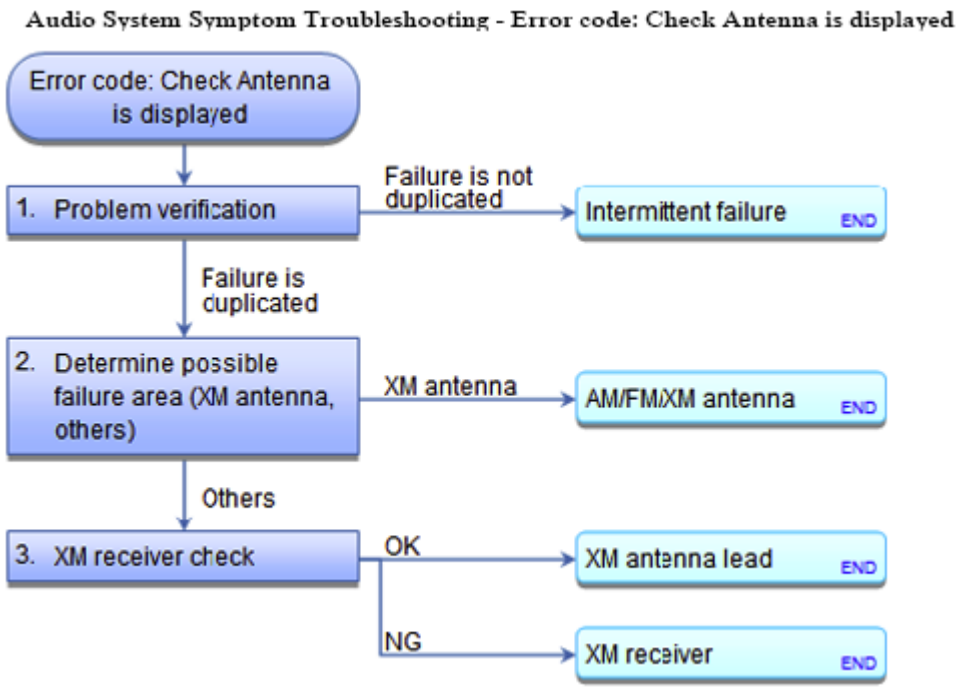

Fig. 300: Identifying Audio Unit Connector B (20P)
Courtesy of AMERICAN HONDA MOTOR CO., INC.

AUDIO UNIT CONNECTOR B (20P) DESCRIPTION

Cavity	Wire Color	Terminal Name	Description
B1	GRY(1)	SH_TELEM_SIG	Shield for terminals No. 2 and No. 12
B2	YEL	TELEM_SIG-	Inputs telephone sound signal from HandsFreeLink control unit
B3	BLU	B_CAN-L	Communication signal
B4	RED	DUET_RX	Communication signal to multi-information display unit
B5	GRN	DUET_TX	Communication signal to multi-information display unit
B6	LT GRN	AUX_GND	Ground for DVD player unit(2)
			Ground for auxiliary jack assembly(3)
B7	GRY(1)	SH_AUX	Shield for terminals No. 8, No. 17, and No. 18
B8	BLK	AUX_SGND	Ground for sound signal from DVD player unit(2)

GETtheMANUALS.org

			Ground for sound signal from auxiliary jack assembly(3)
B9	BLU	COMPASS_TX+	Communication signal to electrical compass unit
B10	GRY	COMPASS_TX-	Communication signal to electrical compass unit
B11	Not Used	Not Used	-
B12	BRN	TELEM_SIG+	Inputs telephone sound signal from HandsFreeLink control unit
B13	PNK	B_CAN-H	Communication signal
B14	LT GRN	DUET_CONT	DUET control signal
B15	GRY(1)	SH_DUET	Shield for terminals No. 4 and No. 5
B16	LT BLU	AUX_DET	Detects connection signal for DVD player unit(2)
			Detects connection signal for auxiliary jack assembly(3)
B17	RED	AUX_R_CH	Inputs sound signal from DVD player unit(2)
			Inputs sound signal from auxiliary jack assembly(3)
B18	WHT	AUX_L_CH	Inputs sound signal from DVD player unit(2)
			Inputs sound signal from auxiliary jack assembly(3)
B19	GRN	COMPASS_RX+	Communication signal to electrical compass unit
B20	PNK	COMPASS_RX-	Communication signal to electrical compass unit

(1) The shielded wires have a heat-shrink tube insulating the outside of the wire. The color of the insulating tube, typically black or dark gray, may not match the color of the wire shown on the circuit diagram.

(2) With rear entertainment

(3) Without rear entertainment

AUDIO UNIT CONNECTOR C (14P)

GETtheMANUALS.org

Audio System Symptom Troubleshooting - Error code: Check Antenna is displayed

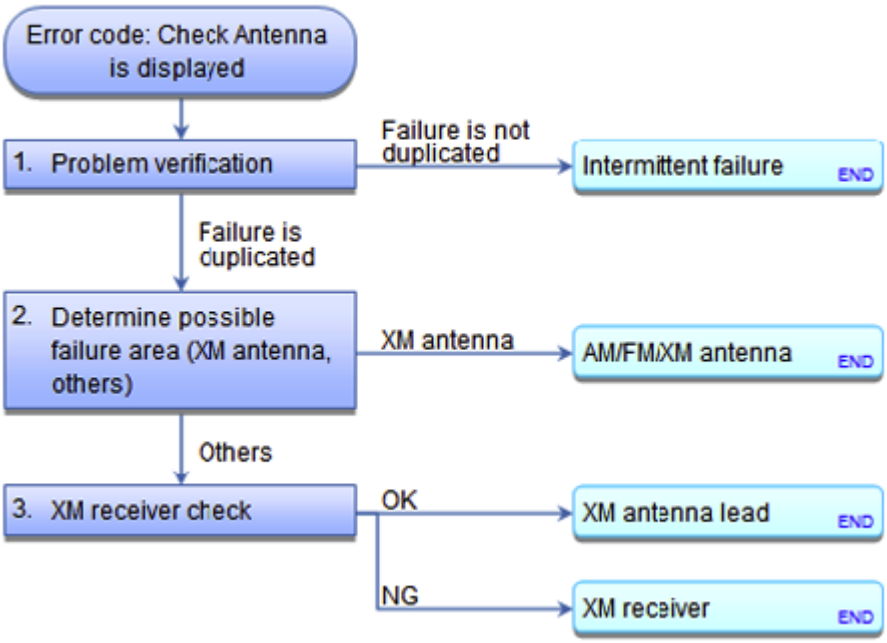

Fig. 301: Identifying Audio Unit Connector C (14P)
Courtesy of AMERICAN HONDA MOTOR CO., INC.

AUDIO UNIT CONNECTOR C (14P) DESCRIPTION

Cavity	Wire Color	Terminal Name	Description
C1	RED	GA_AUDIO_L+	Inputs sound signal from GA-Net related unit(s)
C2	GRN	GA_AUDIO_R+	Inputs sound signal from GA-Net related unit(s)
C3	GRY(1)	SH_GA_AUDIO	Shield for terminals No. 1, No. 2, No. 7, and No. 8
C4	GRY(1)	SH_GA_BUS	Shield for terminals No. 11 and No. 12
C5	PNK	GA_SYS_ON	Outputs signal for GA-Net related unit(s) switching ON/OFF
C6	RED	GA+B	Power source for XM receiver(2) and HandsFreeLink control unit(3)
C7	WHT	GA_AUDIO_L-	Inputs sound signal from GA-Net related unit(s)
C8	BLK	GA_AUDIO_R-	Inputs sound signal from GA-Net related unit(s)
C9	Not Used	Not Used	-
C10	BLK	GA_GND	Ground for XM receiver(2) and HandsFreeLink control unit(3)
C11	PNK	GA_BUS-	GA-Net bus communication signal
C12	BLU	GA_BUS+	GA-Net bus communication signal
C13	Not Used	Not Used	-
C14	Not Used	Not Used	-

(1) The shielded wires have a heat-shrink tube insulating the outside of the wire. The color of the

GETtheMANUALS.org

insulating tube, typically black or dark gray, may not match the color of the wire shown on the circuit diagram.

(2) With XM receiver

(3) USA and Canada models

AUDIO UNIT CONNECTOR D (3P)

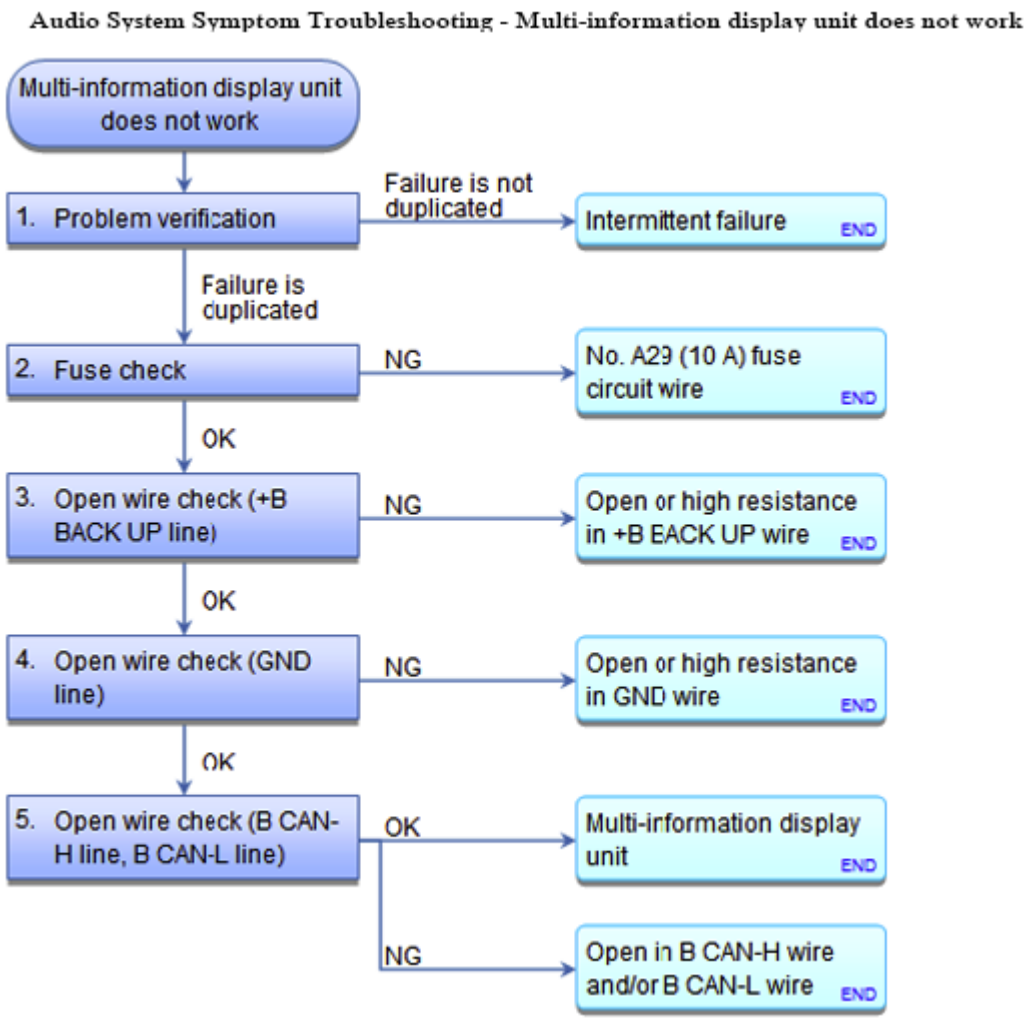

Fig. 302: Identifying Audio Unit Connector D (3P)
Courtesy of AMERICAN HONDA MOTOR CO., INC.

AUDIO UNIT CONNECTOR D (3P) DESCRIPTION

Cavity	Wire Color	Terminal Name	Description
D1	BLK	SWD+B	Power source for AM/FM antenna amplifier
D2	-	AM/FM	Inputs AM/FM signal
D3	BLK	SH (AM/FM)	Shield for terminal No. 2

GETtheMANUALS.org

AUDIO UNIT CONNECTOR E (8P)

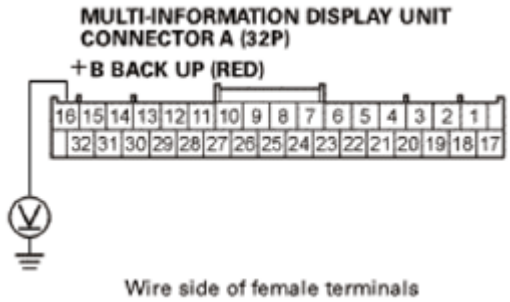

Fig. 303: Identifying Audio Unit Connector E (8P)
Courtesy of AMERICAN HONDA MOTOR CO., INC.

AUDIO UNIT CONNECTOR E (8P) DESCRIPTION

Cavity	Wire Color	Terminal Name	Description
E1	Not used	Not used	-
E2	Not used	Not used	-
E3	Not used	Not used	-
E4	Not used	Not used	-
E5	LT BLU	SUB_W_PRE+	Outputs sound signal for subwoofer
E6	GRY(1)	SH_SUB_W	Shield for terminals No. 5 and No. 7
E7	PUR	SUB_W_PRE-	Outputs sound signal for subwoofer
E8	RED	AMP_MUTE	Outputs stereo amplifier mute signal

(1) The shielded wires have a heat-shrink tube insulating the outside of the wire. The color of the insulating tube, typically black or dark gray, may not match the color of the wire shown on the circuit diagram.

AUDIO UNIT CONNECTOR FOR INPUTS AND OUTPUTS (WITHOUT STEREO AMPLIFIER)

GETtheMANUALS.org

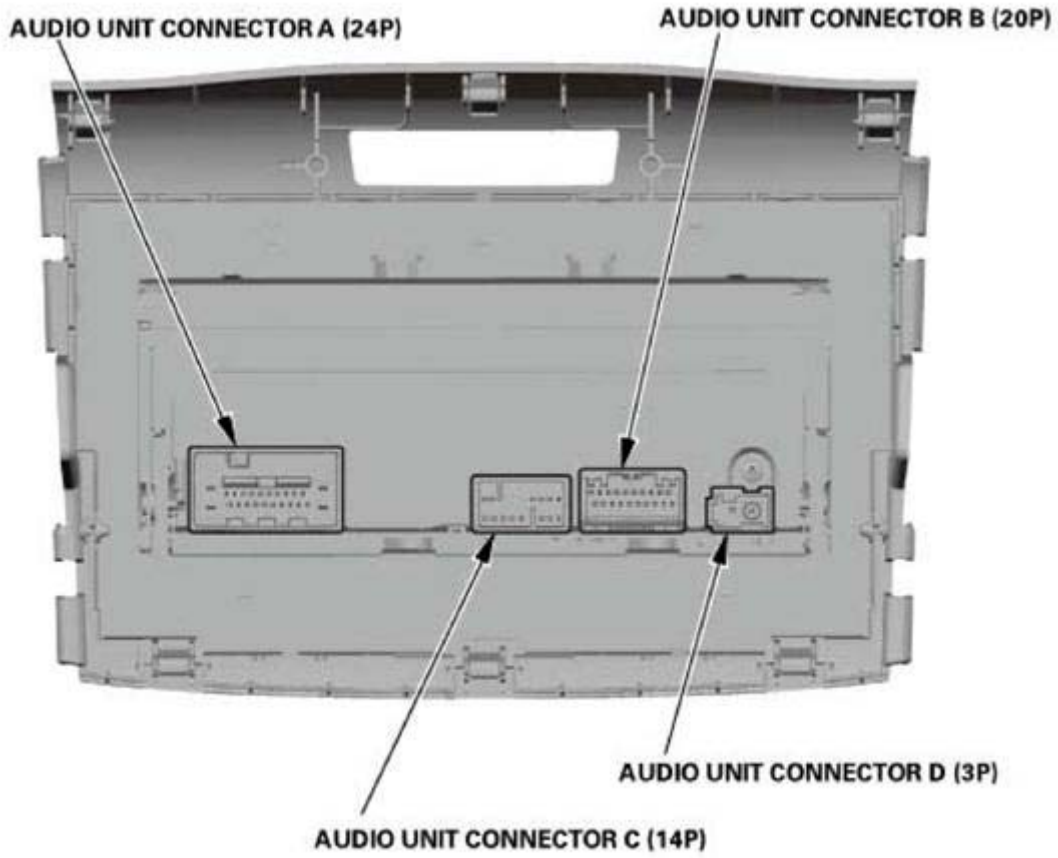

Fig. 304: Identifying Audio Unit Connector For Inputs And Outputs (Without Stereo Amplifier)
Courtesy of AMERICAN HONDA MOTOR CO., INC.

AUDIO UNIT CONNECTOR A (24P)

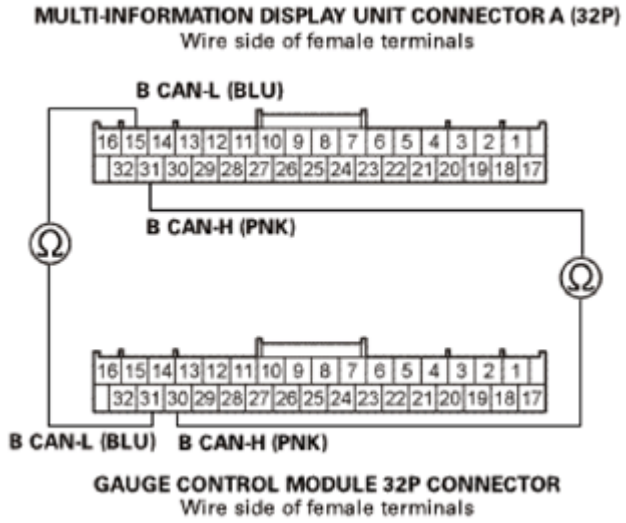

Fig. 305: Identifying Audio Unit Connector A (24P)
Courtesy of AMERICAN HONDA MOTOR CO., INC.

GETtheMANUALS.org

AUDIO UNIT CONNECTOR A (24P) DESCRIPTION

Cavity	Wire Color	Terminal Name	Description
A1	BLK	GND	Ground for audio unit (G503)
A2	Not Used	Not Used	-
A3	RED	+B_AUDIO	Continuous power source
A4	Not Used	Not Used	-
A5	BLU	RL_SPKR+	Outputs sound signal for left rear door speaker
A6	PNK	RL_SPKR-	Outputs sound signal for left rear door speaker
A7	Not Used	Not Used	-
A8	Not Used	Not Used	-
A9	BLU	RR_SPKR+	Outputs sound signal for right rear door speaker
A10	PNK	RR_SPKR-	Outputs sound signal for right rear door speaker
A11(2)	Not Used	Not Used	-
A11(3)	BRN	REMOTE_SW_GND	Audio remote/multi-information display switch ground
A12	GRN	SCTY_RADIO_SW	Security signal from MICU
A13	LT BLU	K_LINE	Detects scan tool signal (serial data)
A14	Not Used	Not Used	-
A15	WHT	FL_SPKR+	Outputs sound signal for driver's door speaker
A16	BLK	FL_SPKR-	Outputs sound signal for driver's door speaker
A17	Not Used	Not Used	-
A18	Not Used	Not Used	-
A19	RED	FR_SPKR+	Outputs sound signal for front passenger's door speaker
A20	GRN	FR_SPKR-	Outputs sound signal for front passenger's door speaker
A21	Not Used	Not Used	-
A22(2)	Not Used	Not Used	-
A22(3)	PNK	AUDIO_REMOTE_SW	Detects control signal from audio remote/multi-information display switch
A23	Not Used	Not Used	-
A24	PUR	ACC	Power source for accessories

(1) The shielded wires have a heat-shrink tube insulating the outside of the wire. The color of the insulating tube, typically black or dark gray, may not match the color of the wire shown on the circuit diagram.

(2) With multi-information display unit

(3) With center display unit

AUDIO UNIT CONNECTOR B (20P)

GETtheMANUALS.org

Audio System Symptom Troubleshooting - No sound is heard from the speaker(s) (display is normal)

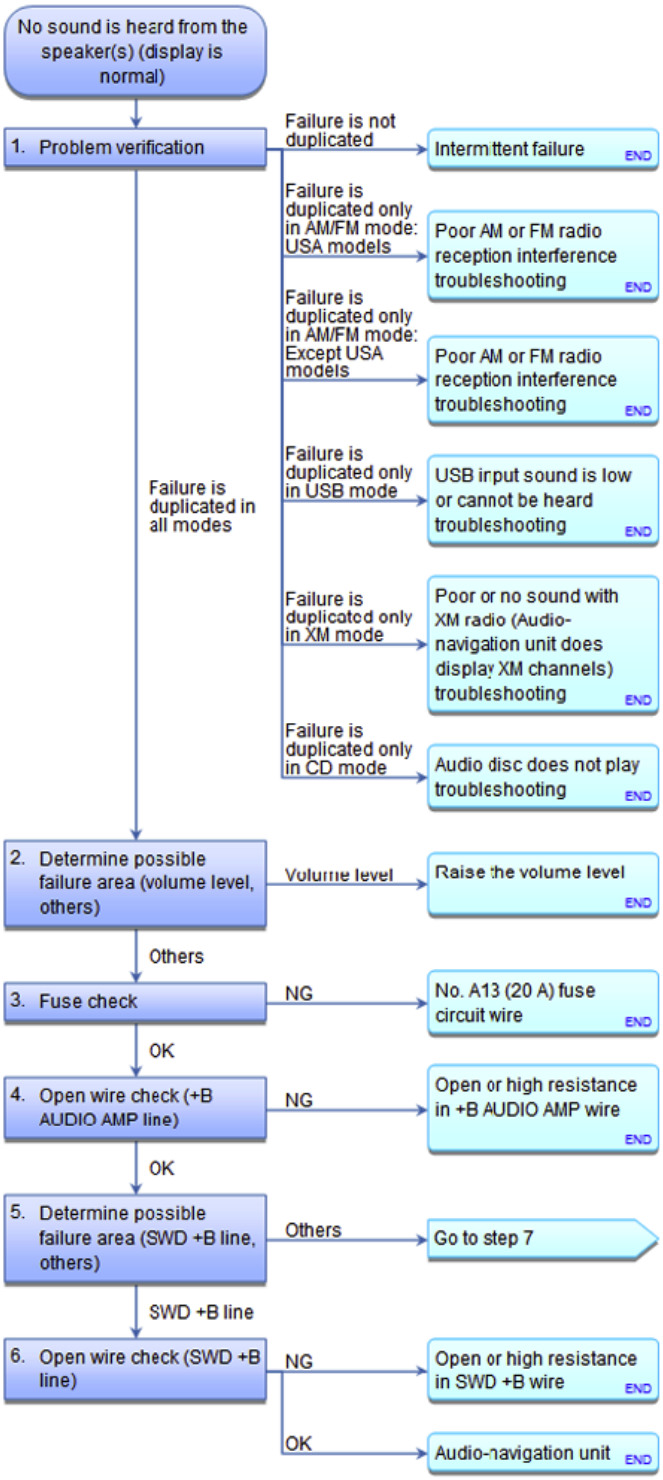

Fig. 306: Identifying Audio Unit Connector B (20P)
Courtesy of AMERICAN HONDA MOTOR CO., INC.

AUDIO UNIT CONNECTOR B (20P) DESCRIPTION (WITH MULTI-INFORMATION DISPLAY UNIT)

GETtheMANUALS.org

Cavity	Wire Color	Terminal Name	Description
B1(2)	GRY(1)	SH_TELEM_SIG	Shield for terminals No. 2 and No. 12
B2(2)	YEL	TELEM_SIG-	Inputs telephone sound signal from HandsFreeLink control unit
B3	BLU	B_CAN-L	Communication signal
B4	RED	DUET_RX	Communication signal to multi-information display unit
B5	GRN	DUET_TX	Communication signal to multi-information display unit
B6	LT GRN	AUX_GND	Ground for auxiliary jack assembly
B7	GRY(1)	SH_AUX	Shield for terminals No. 8, No. 17, and No. 18
B8	BLK	AUX_SGND	Ground for sound signal from auxiliary jack assembly
B9	BLU	COMPASS_TX+	Communication signal to electrical compass unit
B10	GRY	COMPASS_TX-	Communication signal to electrical compass unit
B11	Not Used	Not Used	-
B12(2)	BRN	TELEM_SIG+	Inputs telephone sound signal from HandsFreeLink control unit
B13	PNK	B_CAN-H	Communication signal
B14	LT GRN	DUET_CONT	DUET control signal
B15	GRY(1)	SH_DUET	Shield for terminals No. 4 and No. 5
B16	LT BLU	AUX_DET	Detects connection signal for auxiliary jack assembly
B17	RED	AUX_R_CH	Inputs sound signal from auxiliary jack assembly
B18	WHT	AUX_L_CH	Inputs sound signal from auxiliary jack assembly
B19	GRN	COMPASS_RX+	Communication signal to electrical compass unit
B20	PNK	COMPASS_RX-	Communication signal to electrical compass unit

(1) The shielded wires have a heat-shrink tube insulating the outside of the wire. The color of the insulating tube, typically black or dark gray, may not match the color of the wire shown on the circuit diagram.

(2) With HandsFreeLink

AUDIO UNIT CONNECTOR B (20P) DESCRIPTION (WITH CENTER DISPLAY UNIT)

Cavity	Wire Color	Terminal Name	Description
B1(2)	GRY(1)	SH_TELEM_SIG	Shield for terminals No. 2 and No. 12
B2(2)	YEL	TELEM_SIG-	Inputs telephone sound signal from HandsFreeLink control unit
B3	BLU	B_CAN-L	Communication signal
B4	RED	DUET_RX	Communication signal to center display unit
B5	GRN	DUET_TX	Communication signal to center display unit
B6	LT GRN	AUX_GND	Ground for auxiliary jack assembly
B7	GRY(1)	SH_AUX	Shield for terminals No. 8, No. 17, and No. 18
B8	BLK	AUX_SGND	Ground for sound signal from auxiliary jack assembly
B9	Not Used	Not Used	-

GETtheMANUALS.org

B10	Not Used	Not Used	-
B11	Not Used	Not Used	-
B12(2)	BRN	TELEM_SIG+	Inputs telephone sound signal from HandsFreeLink control unit
B13	PNK	B_CAN-H	Communication signal
B14	LT GRN	DUET_CONT	DUET control signal
B15	GRY(1)	SH_DUET	Shield for terminals No. 4 and No. 5
B16	LT BLU	AUX_DET	Detects connection signal for auxiliary jack assembly
B17	RED	AUX_R_CH	Inputs sound signal from auxiliary jack assembly
B18	WHT	AUX_L_CH	Inputs sound signal from auxiliary jack assembly
B19	Not Used	Not Used	-
B20	Not Used	Not Used	-

(1) The shielded wires have a heat-shrink tube insulating the outside of the wire. The color of the insulating tube, typically black or dark gray, may not match the color of the wire shown on the circuit diagram.

(2) With HandsFreeLink

AUDIO UNIT CONNECTOR C (14P)

GETtheMANUALS.org

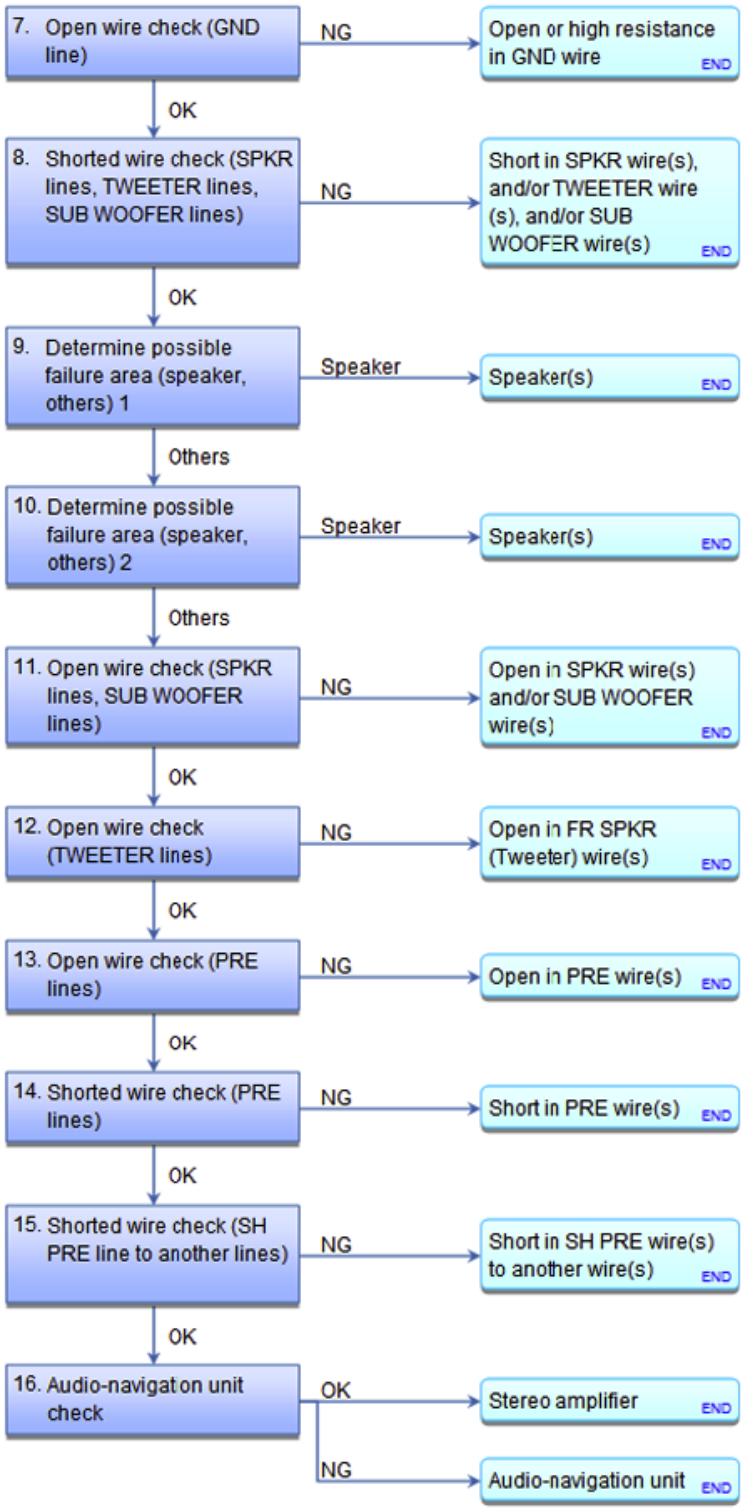

Fig. 307: Identifying Audio Unit Connector C (14P)
Courtesy of AMERICAN HONDA MOTOR CO., INC.

AUDIO UNIT CONNECTOR C (14P) DESCRIPTION

GETtheMANUALS.org

Cavity	Wire Color	Terminal Name	Description
C1	RED	GA_AUDIO_L+	Inputs sound signal from GA-Net related unit(s)
C2	GRN	GA_AUDIO_R+	Inputs sound signal from GA-Net related unit(s)
C3	GRY(1)	SH_GA_AUDIO	Shield for terminals No. 1, No. 2, No. 7, and No. 8
C4	GRY(1)	SH_GA_BUS	Shield for terminals No. 11 and No. 12
C5	PNK	GA_SYS_ON	Outputs signal for GA-Net related unit(s) switching ON/OFF
C6	RED	GA+B	Power source for USB adapter control unit(2) and HandsFreeLink control unit(3)
C7	WHT	GA_AUDIO_L-	Inputs sound signal from GA-Net related unit(s)
C8	BLK	GA_AUDIO_R-	Inputs sound signal from GA-Net related unit(s)
C9	Not Used	Not Used	-
C10	BLK	GA_GND	Ground for USB adapter control unit(2) and HandsFreeLink control unit(3)
C11	PNK	GA_BUS-	GA-Net bus communication signal
C12	BLU	GA_BUS+	GA-Net bus communication signal
C13	Not Used	Not Used	-
C14	Not Used	Not Used	-

(1) The shielded wires have a heat-shrink tube insulating the outside of the wire. The color of the insulating tube, typically black or dark gray, may not match the color of the wire shown on the circuit diagram.

(2) Without multi-information display unit

(3) With HandsFreeLink

AUDIO UNIT CONNECTOR D (3P)

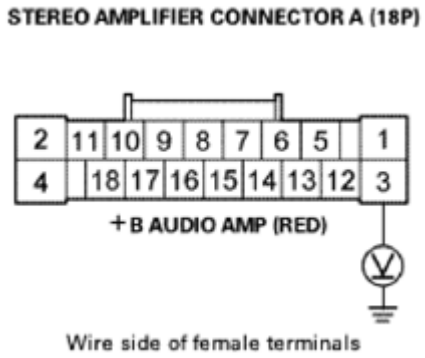

Fig. 308: Identifying Audio Unit Connector D (3P)
Courtesy of AMERICAN HONDA MOTOR CO., INC.

AUDIO UNIT CONNECTOR D (3P) DESCRIPTION

Cavity	Wire Color	Terminal Name	Description

GETtheMANUALS.org

D1	BLK	SWD+B	Power source for AM/FM antenna amplifier
D2	-	AM/FM	Inputs AM/FM signal
D3	BLK	SH (AM/FM)	Shield for terminal No. 2

AUDIO, ENTERTAINMENT, NAVIGATION, AND TELEMATICS SYMPTOM TROUBLESHOOTING INDEX

AUDIO SYSTEM SYMPTOM

Symptom	Also Check for	Refer to
Poor AM or FM radio reception or interference (USA models with navigation).	• Radio reception • Loose antenna mounting nut • Aftermarket FM modulator	**Symptom Tests**
Poor AM or FM radio reception or interference (Canada models with navigation)	• Radio reception • Loose antenna mounting nut • Aftermarket FM modulator	**Symptom Tests**
Poor AM or FM radio reception or interference (without navigation)	• Radio reception • Loose antenna mounting nut • Aftermarket FM modulator	**Symptom Tests**
Audio-navigation unit power switch will not turn on (No audio information display and no sound)		**Symptom Tests**
Audio unit power switch will not turn on (No information display and no sound)		**Symptom Tests**
Audio unit power switch will not turn off		**Symptom Tests**
No sound is heard from the speaker(s) (display is normal) (with navigation)	• Fader and balance positions • Aftermarket amplifier or speakers	**Symptom Tests**
No sound is heard from the speaker(s) (display is normal) (without navigation, with stereo amplifier)	• Fader and balance positions • Aftermarket amplifier or speakers	**Symptom Tests**
No sound is heard from the speaker(s) (display is normal) (without navigation and stereo amplifier)	• Fader and balance positions • Aftermarket amplifier or speakers	**Symptom Tests**
Auxiliary input sound is low or cannot be heard (with navigation)	• Auxiliary stereo cables compatibility • Auxiliary device volume is too low	**Symptom Tests**

GETtheMANUALS.org

Auxiliary input sound is low or cannot be heard (without navigation and rear entertainment)	• Auxiliary stereo cables compatibility • Auxiliary device volume is too low	**Symptom Tests**
Audio system sound is weak or distorted (display is normal)		**Symptom Tests**
Radio preset memory is lost (with navigation)	Internal error	**Symptom Tests**
Radio preset memory is lost (without navigation)	Internal error	**Symptom Tests**
Volume does not change	• Fader and balance positions • F-CAN DTCs	**Symptom Tests**
Volume does not increase with speed (with navigation)	• PCM (vehicle speed pulse) • Speed sensitive volume control setting (see O/M)	**Symptom Tests**
Volume does not increase with speed (without navigation)	• PCM (vehicle speed pulse) • Speed sensitive volume control setting (see O/M)	**Symptom Tests**
Volume is too high or too low when driving at freeway speeds Speed sensitive volume control setting (see O/M)		**Symptom Tests**
Radio tuner does not change stations		**Symptom Tests**
Audio system information does not display on the multi-information display (with navigation)		**Symptom Tests**
Audio system information does not display on the multi-information display (without navigation)		**Symptom Tests**
Audio system information does not display on the center display (without navigation)		**Symptom Tests**
Multi-information display unit does not work		**Symptom Tests**
Audio-navigation unit button illumination does not work (with navigation)	B-CAN DTCs	**Symptom Tests**
Audio unit button illumination does not work (without navigation)	B-CAN DTCs	**Symptom Tests**

GETtheMANUALS.org

Display does not dim or brighten with dimmer (with multi-information display)	B-CAN DTCs	**Symptom Tests**
Display does not dim or brighten with dimmer (without multi-information display)	B-CAN DTCs	**Symptom Tests**
Audio disc does not load	• **Error Codes** See **AUDIO SYSTEM ERROR CODES** or **AUDIO SYSTEM ERROR CODES** • Audio disc labels • Audio disc compatibility (see the Owner's Manual)	**Symptom Tests**
Audio disc does not eject	• **Error Codes** See **AUDIO SYSTEM ERROR CODES** or **AUDIO SYSTEM ERROR CODES** • Audio disc labels	**Symptom Tests**
Audio disc does not play	• **Error Codes** See **AUDIO SYSTEM ERROR CODES** or **AUDIO SYSTEM ERROR CODES** • Audio disc labels • Audio disc compatibility (see the Owner's Manual)	**Symptom Tests**
Audio disc skips	• Audio disc labels • Audio disc compatibility (see the Owner's Manual)	**Symptom Tests**
Audio remote switch does not work properly (with navigation)		**Symptom Tests**
Audio remote switch does not work properly (without navigation, with multi-information display)		**Symptom Tests**
Audio remote switch does not work properly (without navigation and multi-information display)		**Symptom Tests**
USB input sound is low or cannot be heard (with navigation)	• USB device compatibility (see the Owner's Manual) • Auxiliary device volume is too low	**Symptom Tests**
USB input sound is low or cannot be heard (without navigation, with	• USB device compatibility (see the Owner's Manual)	**Symptom Tests**

GETtheMANUALS.org

multi-information display)	• Auxiliary device volume is too low	
USB input sound is low or cannot be heard (without navigation and multi-information display)	• USB device compatibility (see the Owner's Manual) • Auxiliary device volume is too low	**Symptom Tests**
USB device does not function (with navigation)	• USB device compatibility (see the Owner's Manual) • Auxiliary device volume is too low	**Symptom Tests**
USB device does not function (without navigation, with multi-information display)	• USB device compatibility (see the Owner's Manual) • Auxiliary device volume is too low	**Symptom Tests**
USB device does not function (without navigation and multi-information display)	• USB device compatibility (see the Owner's Manual) • Auxiliary device volume is too low	**Symptom Tests**
Audio-navigation unit does not exit anti-theft mode		**Symptom Tests**
Audio unit does not exit anti-theft mode		**Symptom Tests**
Error code: Check Antenna is displayed (with navigation)	• XM radio reception • Loose antenna mounting nut	**Symptom Tests**
Error code: Check Antenna is displayed (without navigation)	• XM radio reception • Loose antenna mounting nut	**Symptom Tests**
XM radio display is blank and no station information is displayed (with navigation)		**Symptom Tests**
XM radio display is blank and no station information is displayed (without navigation)		**Symptom Tests**
XM radio preset memory is lost (with navigation)		**Symptom Tests**
XM radio preset memory is lost (without navigation)		**Symptom Tests**
Poor or no sound with XM radio (Audio-navigation unit does display XM channels) (with navigation)		**Symptom Tests**
Poor or no sound with XM radio (Audio-navigation unit does		**Symptom Tests**

GETtheMANUALS.org

display XM channels) (without navigation) XM radio reception		
Rearview camera image does not come on or work properly	• Dirty camera lens • Object blocking camera	**Symptom Tests**
Rearview camera image does not change		**Symptom Tests**

REAR ENTERTAINMENT SYSTEM SYMPTOM

Symptom	Also Check for	Refer to
RES disc does not load	• Peeled label stuck in player • Wrong type disc	**Symptom Tests**
• RES disc does not eject	• Peeled label stuck in player • Wrong type disc	**Symptom Tests**
RES disc does not play	• Peeled label stuck in player • Scratched disc • Wrong type disc	**Symptom Tests**
RES disc skips	• Peeled label stuck in player • Scratched disc • Wrong type disc • Rough road • Over-inflated tires	**Symptom Tests**
RES power will not turn on (No information display)		**Symptom Tests**
No video display appears on the rear screen		**Symptom Tests**
No RES sound is heard from the speaker(s) (rear display is normal)		**Symptom Tests**
No sound/no display with auxiliary video unit inputs	• Poor connections or disconnect device • Low batteries in accessory device, or disconnected from power source	**Symptom Tests**
Wireless headphone sound is weak, sound is distorted, there is static, volume does not change, or there is no sound in all modes	• **WIRELESS HEADPHONE BATTERIES** • Headphones worn backwards • Aftermarket headphones • Some seating positions may affect wireless reception	**Symptom Tests**
Wireless remote control does not work	**WIRELESS REMOTE CONTROL BATTERIES**	**Symptom Tests**

GETtheMANUALS.org

DVD player unit button illumination does not work		**Symptom Tests**
Rear screen backlight does not dim/remains dim		**Symptom Tests**

NAVIGATION SYSTEM SYMPTOM

Symptom	Also Check for	Refer to
No picture is displayed	• Navigation screen settings • **ERROR MESSAGES**	**SYMPTOM TESTS**
Address cannot be found or system gives poor routing	• Verify proper operation and system limitations using the Navigation Manual • **SEE HOW TO ANSWER CUSTOMER QUESTIONS ABOUT NAVIGATION COVERAGE** • Refer to Database limitation in the Navigation Manual to report database errors • Refer to the FAQs in the Navigation Manual	**SYMPTOM TESTS**
Navigation display stays on with ignition switch in LOCK (0)	• Aftermarket accessories improperly connected to to ACC circuit	**SYMPTOM TESTS**
Error messages are displayed	• **SEE ERROR MESSAGES**	**SYMPTOM TESTS**
Vehicle position icon constantly leaves road, moves erratically, or is displayed very far from actual vehicle position	• **SEE GLOBAL POSITIONING SYSTEM (GPS) LIMITATIONS** • Software not up to date • PCM (vehicle speed pulse)	**SYMPTOM TESTS**
GPS icon is white or not shown	• **SEE GLOBAL POSITIONING SYSTEM (GPS) LIMITATIONS**	**SYMPTOM TESTS**
Vehicle position icon wanders across the map when driving (does not follow a displayed road) or map vehicle ICON spins	• See Global Positioning System (GPS) Limitations • PCM (vehicle speed pulse)	**SYMPTOM TESTS**
Picture has lines/rolls/other issues or is an odd color	• Characteristic of the system • Navigation screen settings	**SYMPTOM TESTS**
Display day/night mode does not work or does not work properly	• The instrument (gauge) brightness setting is set to High in day or night mode	**SYMPTOM TESTS**

GETtheMANUALS.org

	• Gauge control module • B-CAN DTCs	
System locks up or freezes constantly	• Error message • Correct audio-navigation unit is installed for this model	**SYMPTOM TESTS**
Voice guidance cannot be heard, is broken up, or there is static	• Volume or voice feedback setting (see the Navigation Manual)	**SYMPTOM TESTS**
Voice control does not work/respond	• Software not up to date	**SYMPTOM TESTS**
Navigation display buttons do not work or respond properly	• **SEE LCD UNIT LIMITATIONS**	**SYMPTOM TESTS**
Navigation frequently asks for anti-theft code and/or needs GPS initialization	• Error message • **SEE GPS INITIALIZATION**	**SYMPTOM TESTS**
Poor RDS-TMC reception or interference	• RDS-TMC reception • Aftermarket metallic window tint	**SYMPTOM TESTS**
Rearview camera image does not come on or work properly	Software not up to date	**SYMPTOM TESTS**
Rearview camera image does not change		**SYMPTOM TESTS**
Navigation screen is darker than normal or takes time to brighten when it is cold	**SEE LCD UNIT LIMITATIONS**	**SYMPTOM TESTS**
The navigation clock is off by 1 to 3 hours after replacing the audio-navigation unit	**SEE SERVICE PRECAUTIONS**	**SYMPTOM TESTS**
A POI cannot be found	**SEE HOW TO ANSWER CUSTOMER QUESTIONS ABOUT NAVIGATION COVERAGE**	**SYMPTOM TESTS**
An In Line Diag screen appears every time vehicle is started	**SEE FACTORY DIAGNOSTIC SCREEN IN LINE DIAG**	**SYMPTOM TESTS**

ELECTRICAL COMPASS SYMPTOM

Symptom	Also Check for
Azimuth (direction) information is not shown on the display	• **ELECTRICAL COMPASS TROUBLESHOOTING** • Strong magnetic fields in vehicle • VSS signal
	• The display brightness setting

GETtheMANUALS.org

No picture is shown on the display	• Strong magnetic fields in vehicle • VSS signal • **Audio system information does not display on the multi-information display unit**
Compass shows wrong direction	• Check if the zone setting is correct for the vehicle geographical location • Audio unit (B-CAN) • Strong magnetic fields in vehicle • VSS signal
Compass does not calibrate	• **ELECTRICAL COMPASS TROUBLESHOOTING** • Audio unit (B-CAN) • Strong magnetic fields in vehicle • VSS signal
Self-test has failed (flashing the CAL and NW)	• Reboot the electrical compass unit • **ELECTRICAL COMPASS TROUBLESHOOTING** • Strong magnetic fields in vehicle • VSS signal

HANDSFREELINK SYSTEM SYMPTOM

Symptom	Also Check for
HFL DOES NOT RESPOND (WITH NAVIGATION)	**CHECK AND REPAIR ALL HFL RELATED DTCS**
HFL DOES NOT RESPOND (USA AND CANADA MODELS WITHOUT NAVIGATION)	**CHECK AND REPAIR ALL HFL RELATED DTCS**
HFL DOES NOT RESPOND (EXCEPT USA AND CANADA MODELS WITHOUT NAVIGATION)	**CHECK AND REPAIR ALL HFL RELATED DTCS**
The Bluetooth icon in the audio display is not displayed	Cell phone with Bluetooth compatibility (see the Owner's Manual)
The Honda approved cell phone with Bluetooth is having problems pairing to the vehicle	**HFL SYSTEM TROUBLESHOOTING**
The Honda approved cell phone with Bluetooth cannot use all its functions	**HFL SYSTEM TROUBLESHOOTING**
The Honda approved cell phone with Bluetooth does not place or receive calls using the HFL system	**HFL SYSTEM TROUBLESHOOTING**
THE HFL MESSAGES CANNOT BE HEARD OR ARE WEAK (WITH NAVIGATION)	
THE HFL MESSAGES CANNOT BE HEARD OR ARE WEAK (WITHOUT NAVIGATION)	
NO SOUND WHEN BLUETOOTH AUDIO IS USED (WITH NAVIGATION)	Cell phone with Bluetooth compatibility (see the Owner's Manual)
NO SOUND WHEN BLUETOOTH AUDIO IS USED	Cell phone with Bluetooth compatibility (see

GETtheMANUALS.org

(WITHOUT NAVIGATION)	the Owner's Manual)
BLUETOOTH AUDIO DOES NOT WORK (WITH NAVIGATION)	Cell phone with Bluetooth compatibility (see the Owner's Manual)
BLUETOOTH AUDIO DOES NOT WORK (WITHOUT NAVIGATION)	Cell phone with Bluetooth compatibility (see the Owner's Manual)
BLUETOOTH CELL PHONE CANNOT BE PAIRED	Cell phone with Bluetooth compatibility (see the Owner's Manual)

AUDIO-NAVIGATION UNIT CONNECTOR FOR INPUTS AND OUTPUTS

AUDIO-NAVIGATION UNIT CONNECTOR FOR INPUTS AND OUTPUTS (EXCEPT KX)

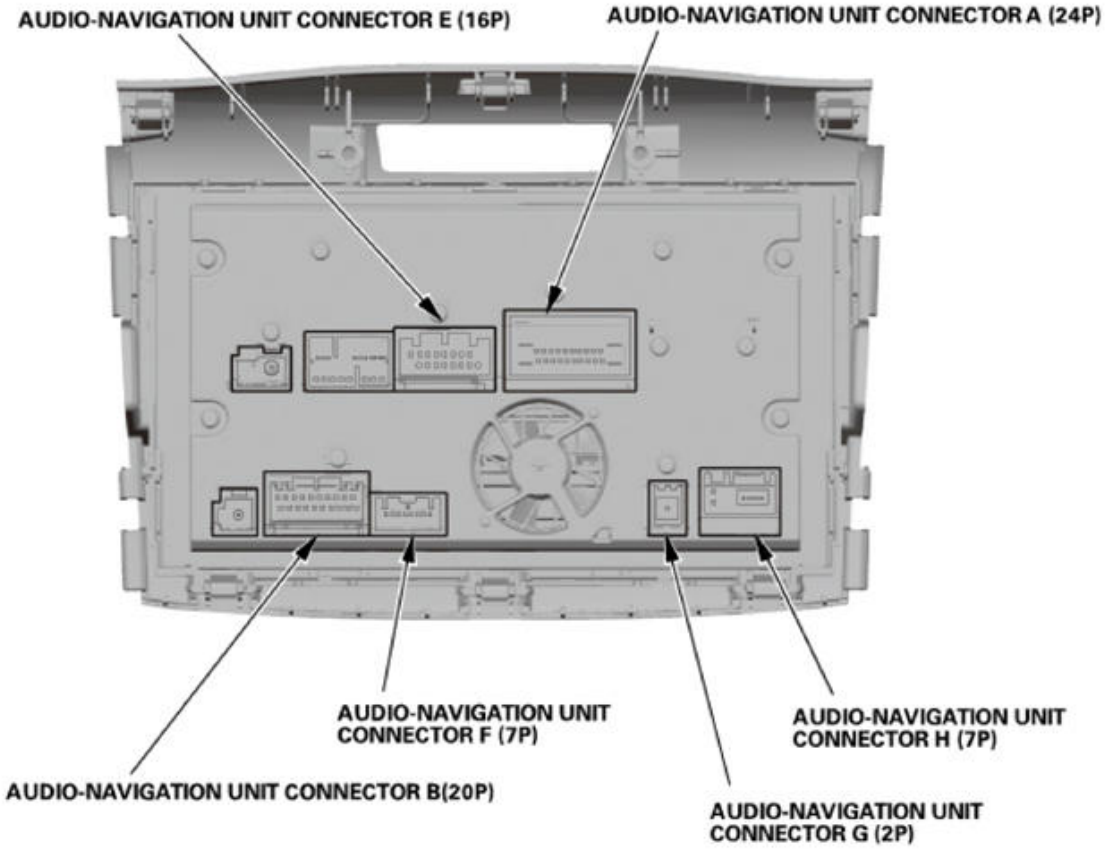

Fig. 309: Identifying Audio-Navigation Unit Connector For Inputs And Outputs (Except KX)
Courtesy of AMERICAN HONDA MOTOR CO., INC.

AUDIO-NAVIGATION UNIT CONNECTOR A (24P)

GETtheMANUALS.org

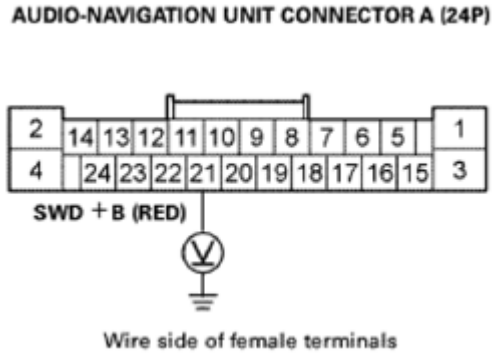

Fig. 310: Identifying Audio-Navigation Unit Connector A (24P)
Courtesy of AMERICAN HONDA MOTOR CO., INC.

AUDIO-NAVIGATION UNIT CONNECTOR A (24P) DESCRIPTION

Cavity	Wire Color	Terminal Name	Description	Voltage (about)	Symptom
A1	BLK	GND	Ground for audio-navigation unit (G503)	0V	If open: Display picture goes out. If short to ground: No effect on system.
A2	Not Used	Not Used	-	-	-
A3	RED	+B_BACK_UP	Continuous power source for audio system	Battery voltage	If open: Display picture goes out. If short to ground: Blows No. A29 (10 A) fuse in the under-hood fuse/relay box.
A4	Not Used	Not Used	-	-	-
A5	BLU	RL_PRE+	Outputs sound signal for left rear door speaker	Audio system on: Pulses (depends on audio output)	If open/short to ground: No sound is heard from left rear door speaker.
A6	PNK	RL_PRE-	Outputs sound signal for left rear door speaker	Audio system on: Pulses (depends on audio output)	If open/short to ground: No sound is heard from left rear door speaker.
A7	GRY (1)	SH_RL_PRE	Shield for terminals No. 5 and No. 6	-	-
A8	GRY (1)	SH_RR_PRE	Shield for terminals No. 9 and No. 10	-	-
A9	LT BLU	RR_PRE+	Outputs sound signal for right rear door speaker	Audio system on: Pulses (depends on audio output)	If open/short to ground: No sound is heard from right rear door speaker.
A10	PUR	RR_PRE-	Outputs sound signal for right rear door speaker	Audio system on: Pulses (depends on audio output)	If open/short to ground: No sound is heard from right rear door speaker.

GETtheMANUALS.org

A11	Not Used	Not Used	-	-	-
A12	GRN	SCTY_RADIO_SW	Security signal from MICU	-	If open: The security system sets, and does not trip when audio-navigation unit is removed. If short to ground: The security system sets, and does not trip when audio-navigation unit is removed.
A13	LT BLU	K_LINE	Detects scan tool signal (serial data)	-	-
A14	Not Used	Not Used	-	-	-
A15	BRN	FL_PRE+	Outputs sound signal for left front speaker(s)	Audio system on: Pulses (depends on audio output)	If open/short to ground: No sound is heard from left front speaker(s).
A16	YEL	FL_PRE-	Outputs sound signal for left front speaker(s)	Audio system on: Pulses (depends on audio output)	If open/short to ground: No sound is heard from left front speaker(s).
A17	GRY (1)	SH_FL_PRE	Shield for terminals No. 15 and No. 16	-	-
A18	GRY (1)	SH_FR_PRE	Shield for terminals No. 19 and No. 20	-	-
A19	RED	FR_PRE+	Outputs sound signal for right front speaker(s)	Audio system on: Pulses (depends on audio output)	If open/short to ground: No sound is heard from right front speaker(s).
A20	GRN	FR_PRE-	Outputs sound signal for right front speaker(s)	Audio system on: Pulses (depends on audio output)	If open/short to ground: No sound is heard from right front speaker(s).
A21	RED	SWD+B	Outputs voltage for stereo amplifier switching ON/OFF	Ignition switch ACC (I): 10.5 V	If open/short: No sound is heard from all speakers.
A22	Not Used	Not Used	-	-	-
A23	GRN	VSP	Detects vehicle speed pulse from PCM	Ignition switch ON (II): 0-5 V pulses, 2.5 V average (depends on vehicle speed)	If open/short: No vehicle speed pulse. Diagnostic screen Car Status, VSP = 0. If open: No vehicle speed pulse. Diagnostic screen Car Status, VSP = 0. If short to ground: No

GETtheMANUALS.org

					vehicle speed pulse. Diagnostic screen Vehicle Signal, VSP = 0.
A24	PUR	ACC	Power source for accessories	Ignition switch ACC (I): battery voltage	If open: Display picture goes out. If short to ground: Blows No. B19 (7.5 A) fuse in the under-dash fuse/relay box.
(1) The shielded wires have a heat-shrink tube insulating the outside of the wire. The color of the insulating tube, typically black or dark gray, may not match the color of the wire shown on the circuit diagram.					

AUDIO-NAVIGATION UNIT CONNECTOR B (20P)

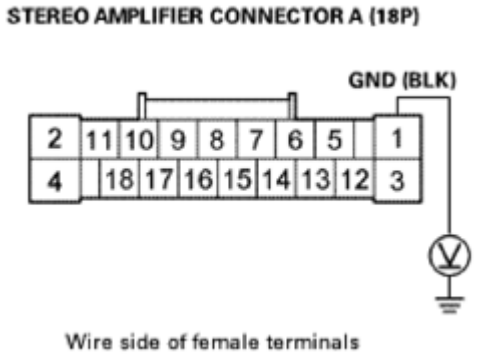

Fig. 311: Identifying Audio-Navigation Unit Connector B (20P)
Courtesy of AMERICAN HONDA MOTOR CO., INC.

AUDIO-NAVIGATION UNIT CONNECTOR B (20P) DESCRIPTION

Cavity	Wire Color	Terminal Name	Description	Voltage (about)	Symptom
B1	RED	F_CAN-L	Communication signal	Ignition switch ON (II): Pulses (depends on bus traffic)	If open: System Links F-CAN icon shown as red. If short: Same diagnostic conditions as when open, also sets the related units DTC (F-CAN BUS OFF).
B2	WHT	F_CAN-H	Communication signal	Ignition switch ON (II): Pulses (depends on bus traffic)	If open: System Links F-CAN icon shown as red. If short: Same diagnostic conditions as when open, also sets the related units DTC (F-CAN BUS OFF).
B3	Not Used	Not Used	-	-	-
					If open: No change to

GETtheMANUALS.org

B4	GRN	CAMERA_BIT0	Mode select signal for rearview camera	Normal view: 8V	rearview camera image. If short to ground: No change to rearview camera image.
B5	Not Used	Not Used	-	-	-
B6	Not Used	Not Used	-	-	-
B7	Not Used	Not Used	-	-	-
B8	Not Used	Not Used	-	-	-
B9	BRN	BACK_LT	Detects reverse signal of select lever from reverse relay circuit	In reverse: Battery voltage	If open/short to ground: Diagnostic screen Car Status, BACK = 0.
B10	RED	+B_BACK_UP	Continuous power source for navigation system	Battery voltage	If open: Display picture goes out. If short to ground: Blows No. A29 (10 A) fuse in the under-hood fuse/relay box.
B11	BRN	HFL_NAVI_MIC+	Inputs microphone signal positive	Ignition switch ACC (l): 2.3 V pulses (TALK button pressed)	If open/short to ground: Mic diag indicator do not work.
B12	YEL	HFL_NAVI_MIC-	Inputs microphone signal negative	0V	If open/short to ground: Mic diag indicator do not work.
B13	GRY (1)	SH_HFL_NAVI_MIC	Shield for terminals No. 11 and No. 12	-	-
B14	Not Used	Not Used	-	-	-
B15	BLU	CAMERA_BIT1	Mode select signal for rearview camera	Top down view: 8V	If open: No change to rearview camera image. If short to ground: No change to rearview camera image.
B16	Not Used	Not Used	-	-	-
B17	Not Used	Not Used	-	-	-
B18	Not Used	Not Used	-	-	-
B19	Not Used	Not Used	-	-	-

GETtheMANUALS.org

B20	BLK	GND	Ground for audio-navigation unit (G503)	0V	If open: Display picture goes out. If short to ground: No effect on system.
(1) The shielded wires have a heat-shrink tube insulating the outside of the wire. The color of the insulating tube, typically black or dark gray, may not match the color of the wire shown on the circuit diagram.					

AUDIO-NAVIGATION UNIT CONNECTOR E (16P)

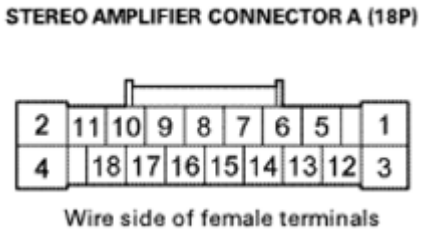

Fig. 312: Identifying Audio-Navigation Unit Connector E (16P)
Courtesy of AMERICAN HONDA MOTOR CO., INC.

Audio-Navigation Unit Connector E (16P)

Cavity	Wire Color	Terminal Name	Description	Voltage (about)	Symptom
E1	PNK	B_CAN-H	Communication signal	Ignition switch ON (II): Pulses (depends on bus traffic)	If open: System Links B-CAN icon shown as red. If short: Same diagnostic conditions as when open, also sets the related units DTC (B-CAN BUS OFF).
E2	GRY (1)	SH_SUB_W	Shield for terminals No. 3 and No. 11	-	-
E3	LT BLU	SUB_W_PRE+	Outputs sound signal for subwoofer	Audio system on: Pulses (depends on audio output)	If open/short to ground: No sound is heard from subwoofer.
E4	GRY (1)	SH_TELEM_SIG	Shield for terminals No. 5 and No. 13	-	-
E5	BRN	TELEM_SIG+	Inputs telephone sound signal from HandsFreeLink control unit	-	-
E6	RED	AUX_R_CH	Inputs sound signal from auxiliary jack assembly	-	-
E7	BLK	AUX_SGND	Ground for sound signal from auxiliary jack	-	-

GETtheMANUALS.org

			assembly		
E8	WHT	AUX_L_CH	Inputs sound signal from auxiliary jack assembly	-	-
E9	BLU	B_CAN-L	Communication signal	Ignition switch ON (II): Pulses (depends on bus traffic)	If open: System Links B-CAN icon shown as red. If short: Same diagnostic conditions as when open, also sets the related units DTC (B-CAN BUS OFF).
E10	Not Used	Not Used	-	-	-
E11	PUR	SUB_W_PRE-	Outputs sound signal for subwoofer	Audio system on: Pulses (depends on audio output)	If open/short to ground: No sound is heard from subwoofer.
E12	RED	AMP_MUTE	Outputs stereo amplifier mute signal	-	-
E13	YEL	TELEM_SIG-	Inputs telephone sound signal from HandsFreeLink control unit	-	-
E14	GRY (1)	SH_AUX	Shield for terminals No. 6, No. 7, and No. 8	-	-
E15	LT GRN	AUX_GND	Ground for auxiliary jack assembly	-	-
E16	LT BLU	AUX_DET	Detects connection signal for auxiliary jack assembly	-	-
(1) The shielded wires have a heat-shrink tube insulating the outside of the wire. The color of the insulating tube, typically black or dark gray, may not match the color of the wire shown on the circuit diagram.					

AUDIO-NAVIGATION UNIT CONNECTOR F (7P)

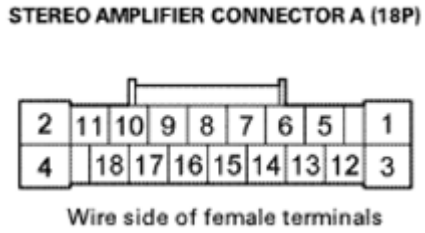

Fig. 313: Identifying Audio-Navigation Unit Connector F (7P)
Courtesy of AMERICAN HONDA MOTOR CO., INC.

AUDIO-NAVIGATION UNIT CONNECTOR F (7P) DESCRIPTION

	Wire			Voltage	

GETtheMANUALS.org

Cavity	Color	Terminal Name	Description	(about)	Symptom
F1	BLK	CAMERA_ADPT	Control signal for rearview camera	0V	If open: No change to display. If short to ground: No effect on system.
F2	GRY (1)	SH_CAMERA	Shield for terminals No. 1, No. 3, No. 4, No. 6, and No. 7	-	-
F3	RED	CAMERA_V	Video signal for rearview camera	0.3V	If open: No change to rearview camera image. If short to ground: No change to rearview camera image.
F4	WHT	CAMERA_V_GND	Ground for rearview camera	0V	If open: No change to rearview camera image. If short to ground: No change to rearview camera image.
F5	Not Used	Not Used	-	-	-
F6	GRN	CAMERA_GND	Ground for rearview camera	In reverse: battery voltage	If open: No change to rearview camera image. If short to ground: No change to rearview camera image.
F7	YEL	CAMERA_VCC	Power source for rearview camera	8V	If open: When put into reverse, the navigation screen goes black (backlight still operation) If short to ground: When put into reverse, the navigation screen goes black (backlight still operative).

(1) The shielded wires have a heat-shrink tube insulating the outside of the wire. The color of the insulating tube, typically black or dark gray, may not match the color of the wire shown on the circuit diagram.

AUDIO-NAVIGATION UNIT CONNECTOR G (2P)

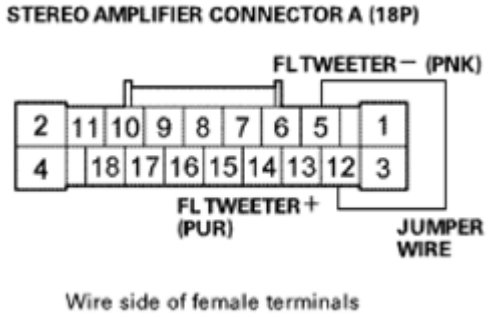

Fig. 314: Identifying Audio-Navigation Unit Connector G (2P)
Courtesy of AMERICAN HONDA MOTOR CO., INC.

GETtheMANUALS.org

AUDIO-NAVIGATION UNIT CONNECTOR G (2P) DESCRIPTION

Cavity	Wire Color	Terminal Name	Description	Voltage (about)	Symptom
G1	-	GPS	Inputs GPS signal	Ignition switch ACC (l): 5V	If open/short to ground: GPS icon on screen is not shown, System Links screen GPS Ant. shows red.
G2	-	SH (GPS)	Shield for terminal No. 1	-	If open/short to ground: GPS icon on screen is not shown, System Links screen GPS Ant. shows red.

AUDIO-NAVIGATION UNIT CONNECTOR H (7P)

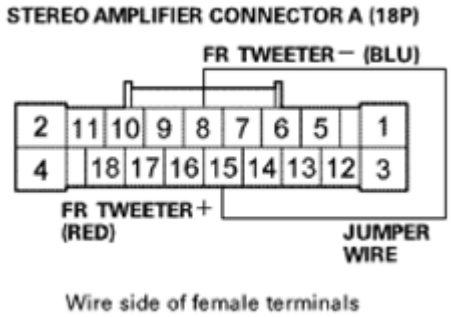

Fig. 315: Identifying Audio-Navigation Unit Connector H (7P)
Courtesy of AMERICAN HONDA MOTOR CO., INC.

AUDIO-NAVIGATION UNIT CONNECTOR H (7P) DESCRIPTION

Cavity	Wire Color	Terminal Name	Description	Voltage (about)	Symptom
H1	-	USB GND	Ground for communication signal	0V	-
H2	-	USB_DATA +	Communication signal	-	-
H3	-	USB_DATA -	Communication signal	-	-
H4	-	USB_VBUS	Outputs power source for USB device	Ignition switch ACC (I): 5V	-
H5	-	USB SH	Shield for terminals No. 1, No. 2, No. 3, and No. 4	-	-
H6	-	USB ADPT	Ground for connection signal	0V	If open: System Links USB icon shown as red. If short to ground: No effect on system.
H7	-	USB ON	Detects connection signal	Connector H connected: 2V or less Connector H disconnected: Open	If open: System Links USB icon shown as red. If short to ground: No effect on system.

GETtheMANUALS.org

(1) The shielded wires have a heat-shrink tube insulating the outside of the wire. The color of the insulating tube, typically black or dark gray, may not match the color of the wire shown on the circuit diagram.

AUDIO-NAVIGATION UNIT CONNECTOR FOR INPUTS AND OUTPUTS (KX)

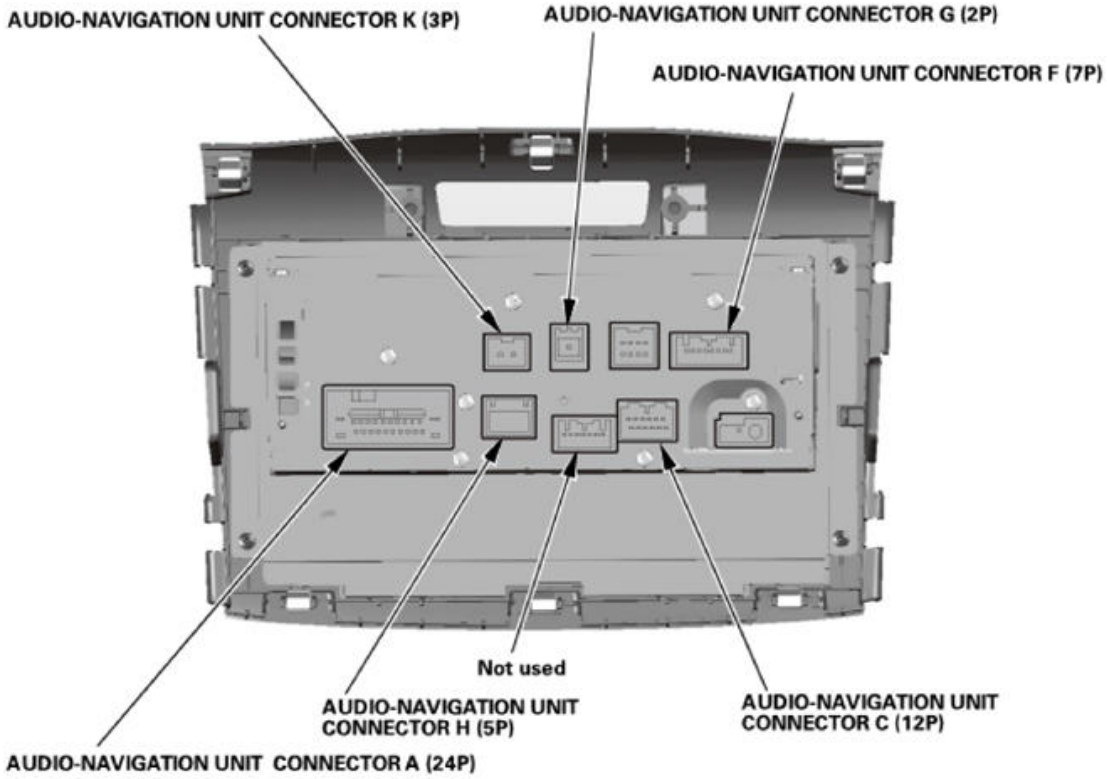

Fig. 316: Identifying Audio-Navigation Unit Connector For Inputs And Outputs (KX)
Courtesy of AMERICAN HONDA MOTOR CO., INC.

AUDIO-NAVIGATION UNIT CONNECTOR A (24P)

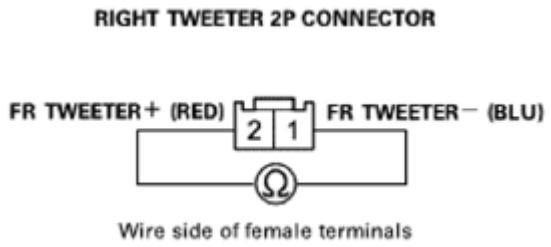

Fig. 317: Identifying Audio-Navigation Unit Connector A (24P)
Courtesy of AMERICAN HONDA MOTOR CO., INC.

AUDIO-NAVIGATION UNIT CONNECTOR A (24P) DESCRIPTION

Cavity	Wire	Terminal Name	Description	Voltage	Symptom

GETtheMANUALS.org

	Color			(about)	
A1	BLK	GND	Ground	for audio-navigation unit (G503)	0V If open: Display picture goes out. If short to ground: No effect on system.
A2	Not Used	Not Used	-	-	-
A3	RED	+ B_BACK_UP	Continuous power source for audio system	Battery voltage	If open: Display picture goes out. If short to ground: Blows fuse No. A29 (10 A) in the under-hood fuse/relay box.
A4	GRY	ILLUMI+	Detects parking light on signal	Light ON: Battery voltage Light OFF: 0V	If open: When brightness=Auto, night mode for me display is inoperative when light on. If short to ground: Blows No. B35 (7.5A) fuse in the under-dash fuse/relay box.
A5	BLU	RL_SPKR+	Outputs sound signal for left rear door speaker	Audio system on: Pulses (depends on audio output)	If open/short to ground: No sound is heard from left rear door speaker.
A6	PNK	RL_SPKR-	Outputs sound signal for left rear door speaker	Audio system on: Pulses (depends on audio output)	If open/short to ground: No sound is heard from left rear door speaker.
A7	Not Used	Not Used	-	-	-
A8	Not Used	Not Used	-	-	-
A9	BLU	RR_SPKR+	Outputs sound signal for right rear door speaker	Audio system on: Pulses (depends on audio output)	If open/short to ground: No sound is heard from right rear door speaker.
A10	PUR	RR_SPKR-	Outputs sound signal for right rear door speaker	Audio system on: Pulses (depends on audio output)	If open/short to ground: No sound is heard from right rear door speaker.
A11	Not Used	Not Used	-	-	-
A12	GRN	SCTY_RADIO_SW	Security signal from MICU	-	If open: The security system sets, and does not trip when audio-navigation unit is removed. If short to ground: The security system sets, and does not trip when audio-

GETtheMANUALS.org

					navigation unit is removed.
A13	Not Used	Not Used	-	-	-
A14	Not Used	Not Used	-	-	-
A15	WHT	FL_SPKR+	Outputs sound signal for left front speaker(s)	Audio system on: Pulses (depends on audio output)	If open/short to ground: No sound is heard from left front speaker(s).
A16	BLK	FL_SPKR-	Outputs sound signal for left front speaker(s)	Audio system on: Pulses (depends on audio output)	If open/short to ground: No sound is heard from left front speaker(s).
A17	Not Used	Not Used	-	-	-
A18	Not Used	Not Used	-	-	-
A19	RED	FR_SPKR+	Outputs sound signal for right front speaker(s)	Audio system on: Pulses (depends on audio output)	If open/short to ground: No sound is heard from right front speaker(s).
A20	GRN	FR_SPKR-	Outputs sound signal for right front speaker(s)	Audio system on: Pulses (depends on audio output)	If open/short to ground: No sound is heard from right front speaker(s).
A21	Not Used	Not Used	-	-	-
A22	Not Used	Not Used	-	-	-
A23	Not Used	Not Used	-	-	-
A24	PUR	ACC	Power source for accessories	Ignition switch ACC (I)/vehicle in ACC mode: battery voltage	If open: Display picture goes out. If short to ground: Blows No. B19 (7.5 A) fuse in the under-dash fuse/relay box.

AUDIO-NAVIGATION UNIT CONNECTOR C (12P)

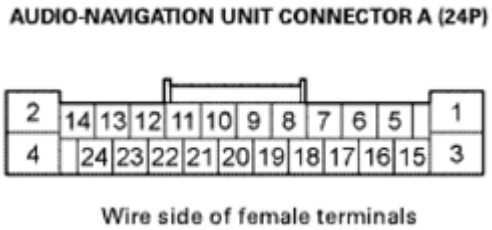

GETtheMANUALS.org

Fig. 318: Identifying Audio-Navigation Unit Connector C (12P)
Courtesy of AMERICAN HONDA MOTOR CO., INC.

AUDIO-NAVIGATION UNIT CONNECTOR C (12P) DESCRIPTION

Cavity	Wire Color	Terminal Name	Description	Voltage (about)	Symptom
C1	BLU	GA_BUS+	GA-Net bus communication signal	Ignition switch ACC (I)/vehicle in ACC mode: Pulses (depends on bus traffic)	If open/short to ground: MID do not display audio infomation.
C2	PNK	GA_BUS-	GA-Net bus communication signal	Ignition switch ACC (I)/vehicle in ACC mode: Pulses (depends on bus traffic)	If open/short to ground: MID do not display audio infomation.
C3	GRY (1)	SH_GA_BUS	Shield for terminals No. 1 and No. 2	-	-
C4	YEL	HFT/NAVI_REMOT_SW	Detects control signal from HFT switch	-	-
C5	Not Used	Not Used	-	-	-
C6	PNK	GA_SYS_ON	Outputs signal for multi-information display unit switching on/off	-	-
C7	Not Used	Not Used	-	-	-
C8	Not Used	Not Used	-	-	-
C9	Not Used	Not Used	-	-	-
C10	Not Used	Not Used	-	-	-
C11	Not Used	Not Used	-	-	-
C12	Not Used	Not Used	-	-	-

(1) The shielded wires have a heat-shrink tube insulating the outside of the wire. The color of the insulating tube, typically black or dark gray, may not match the color of the wire shown on the circuit diagram.

AUDIO-NAVIGATION UNIT CONNECTOR F (7P)

GETtheMANUALS.org

AUDIO-NAVIGATION UNIT CONNECTOR E (16P)

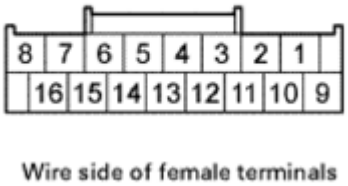

Fig. 319: Identifying Audio-Navigation Unit Connector F (7P)
Courtesy of AMERICAN HONDA MOTOR CO., INC.

AUDIO-NAVIGATION UNIT CONNECTOR F (7P) DESCRIPTION

Cavity	Wire Color	Terminal Name	Description	Voltage (about)	Symptom
F1	BLK	CAMERA_ADPT	Control signal for rearview camera	0V	If open: No change to display. If short to ground: No effect on system.
F2	GRY (1)	SH_CAMERA	Shield for terminals No. 1, No. 3, No. 4, No. 6, and No. 7	-	-
F3	RED	CAMERA_V	Video signal for rearview camera	0.3V	If open: No change to rearview camera image. If short to ground: No change to rearview camera image.
F4	WHT	CAMERA_V_GND	Ground for rearview camera	0V	If open: No change to rearview camera image. If short to ground: No change to rearview camera image.
F5	Not Used	Not Used	-	-	-
F6	GRN	CAMERA_GND	Ground for rearview camera	In reverse: battery voltage	If open: No change to rearview camera image. If short to ground: No change to rearview camera image.
F7	YEL	CAMERA_VCC	Power source for rearview camera	Ignition switch ON (II)/vehicle in ON mode, in reverse: 5V-8V	If open: When put into reverse, the navigation screen goes black (backlight still operation) If short to ground: When put into reverse, the navigation screen goes black (backlight still operative).

(1) The shielded wires have a heat-shrink tube insulating the outside of the wire. The color of the insulating tube, typically black or dark gray, may not match the color of the wire shown on the circuit diagram.

GETtheMANUALS.org

AUDIO-NAVIGATION UNIT CONNECTOR G (2P)

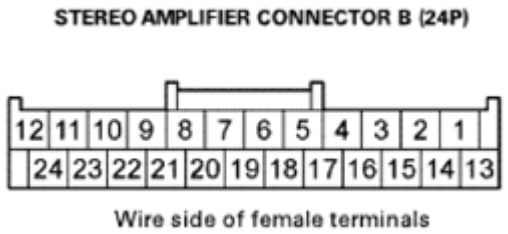

Fig. 320: Identifying Audio-Navigation Unit Connector G (2P)
Courtesy of AMERICAN HONDA MOTOR CO., INC.

AUDIO-NAVIGATION UNIT CONNECTOR G (2P) DESCRIPTION

Cavity	Wire Color	Terminal Name	Description	Voltage (about)	Symptom
G1	-	GPS	Inputs GPS signal	Ignition switch ACC (I)/vehicle in ACC mode: 5V	If open/short to ground: No GPS reception Diagnostic screen GPS information GPS ant: OFF
G2	-	SH (GPS)	Shield for terminal No. 1	-	If open/short to ground: No GPS reception Diagnostic screen GPS information GPS ant: OFF

AUDIO-NAVIGATION UNIT CONNECTOR H (5P)

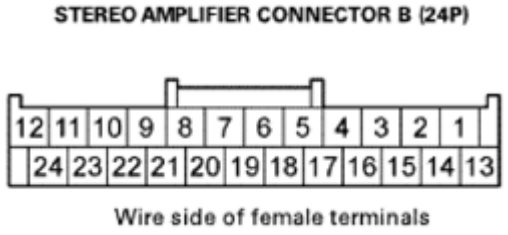

Fig. 321: Identifying Audio-Navigation Unit Connector H (5P)
Courtesy of AMERICAN HONDA MOTOR CO., INC.

AUDIO-NAVIGATION UNIT CONNECTOR H (5P) DESCRIPTION

Cavity	Wire Color	Terminal Name	Description	Voltage (about)	Symptom
H1	-	USB GND	Ground for communication signal	0V	-
H2	-	USB_DATA +	Communication signal	-	-
H3	-	USB_DATA -	Communication signal	-	-
H4	-	USB_VBUS	Outputs power source for USB device	Ignition switch ACC (I)/vehicle in ACC mode: 5V	-
H5	-	USB SH	Shield for terminals No. 1, No.	-	-

GETtheMANUALS.org

			2, No. 3, and No. 4		

AUDIO-NAVIGATION UNIT CONNECTOR K (3P)

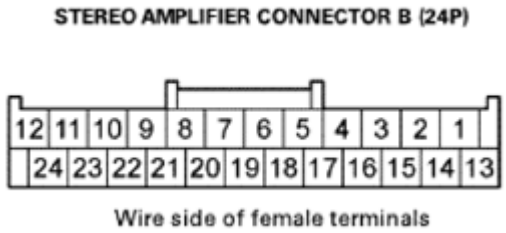

Fig. 322: Identifying Audio-Navigation Unit Connector K (3P)
Courtesy of AMERICAN HONDA MOTOR CO., INC.

AUDIO-NAVIGATION UNIT CONNECTOR K (3P) DESCRIPTION

Cavity	Wire Color	Terminal Name	Description	Voltage (about)	Symptom
K1	BLU	PARKING_RAKE_SW	Detects parking brake switch on signal	-	-
K2	BRN	BACK_LT	Detects reverse signal of select lever from reverse relay	In reverse: Battery voltage Otherwise: Below 2 V	If open/short: Diagnostic screen vehicle signal Check mode, REV= OFF
K3	GRN	VSP	Detects vehicle speed pulse from PCM	Ignition switch ON (II)/vehicle in ON mode: 0-5 V pulses, 2.5 V average (depends on vehicle speed)	If open/short: No vehicle speed pulse. Diagnostic screen Car Status, VSP = 0. If open: No vehicle speed pulse. Diagnostic screen Car Status, VSP = 0. If short to ground: No vehicle speed pulse. Diagnostic screen Vehicle Signal, VSP = 0.

AUXILIARY JACK ASSEMBLY CONNECTOR FOR INPUTS AND OUTPUTS

GETtheMANUALS.org

Audio System Symptom Troubleshooting - No sound is heard from the speaker(s) (display is normal)

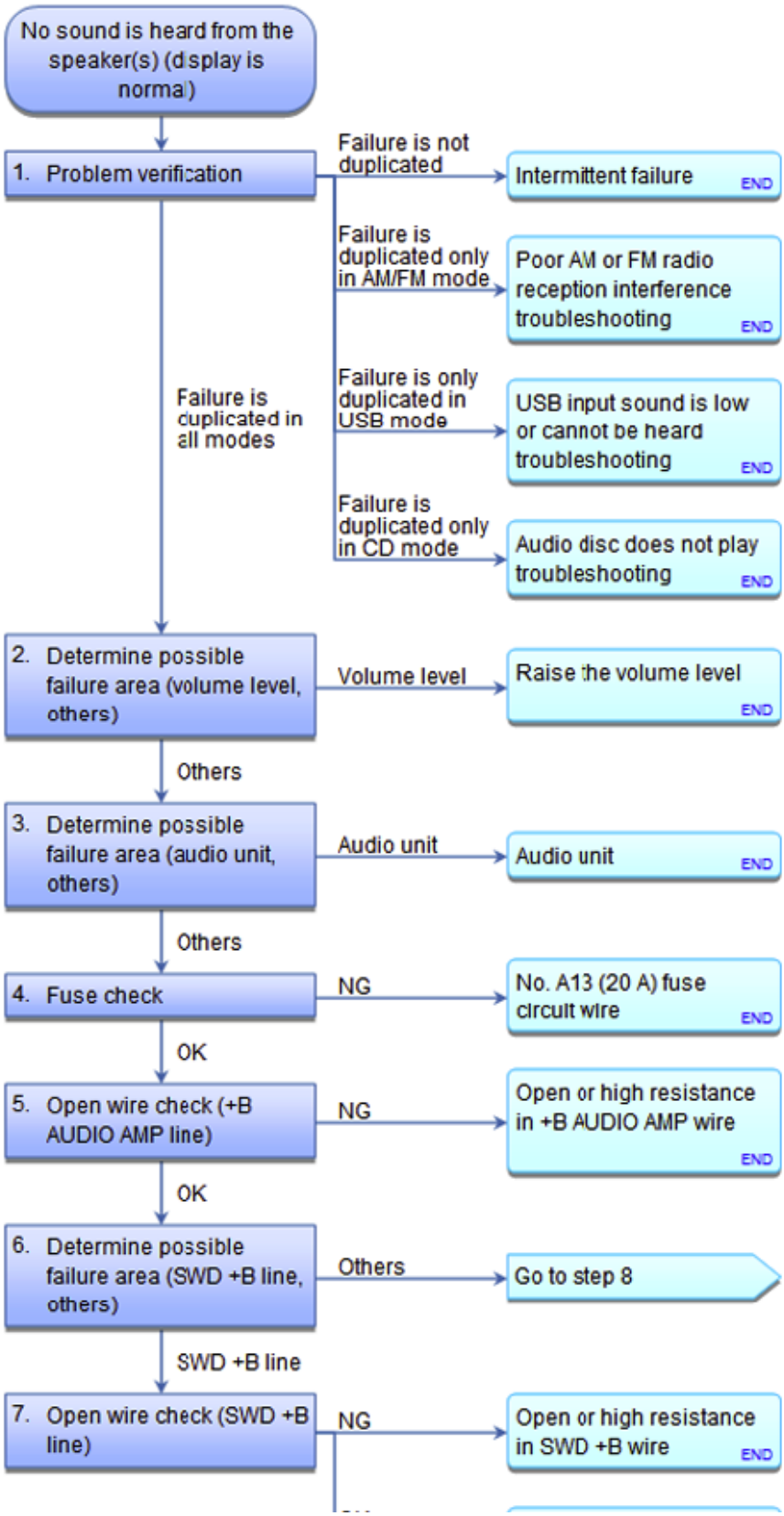

GETtheMANUALS.org

Fig. 323: Identifying Auxiliary Jack Assembly Connector For Inputs And Outputs
Courtesy of AMERICAN HONDA MOTOR CO., INC.

AUXILIARY JACK ASSEMBLY 5P CONNECTOR

GETtheMANUALS.org

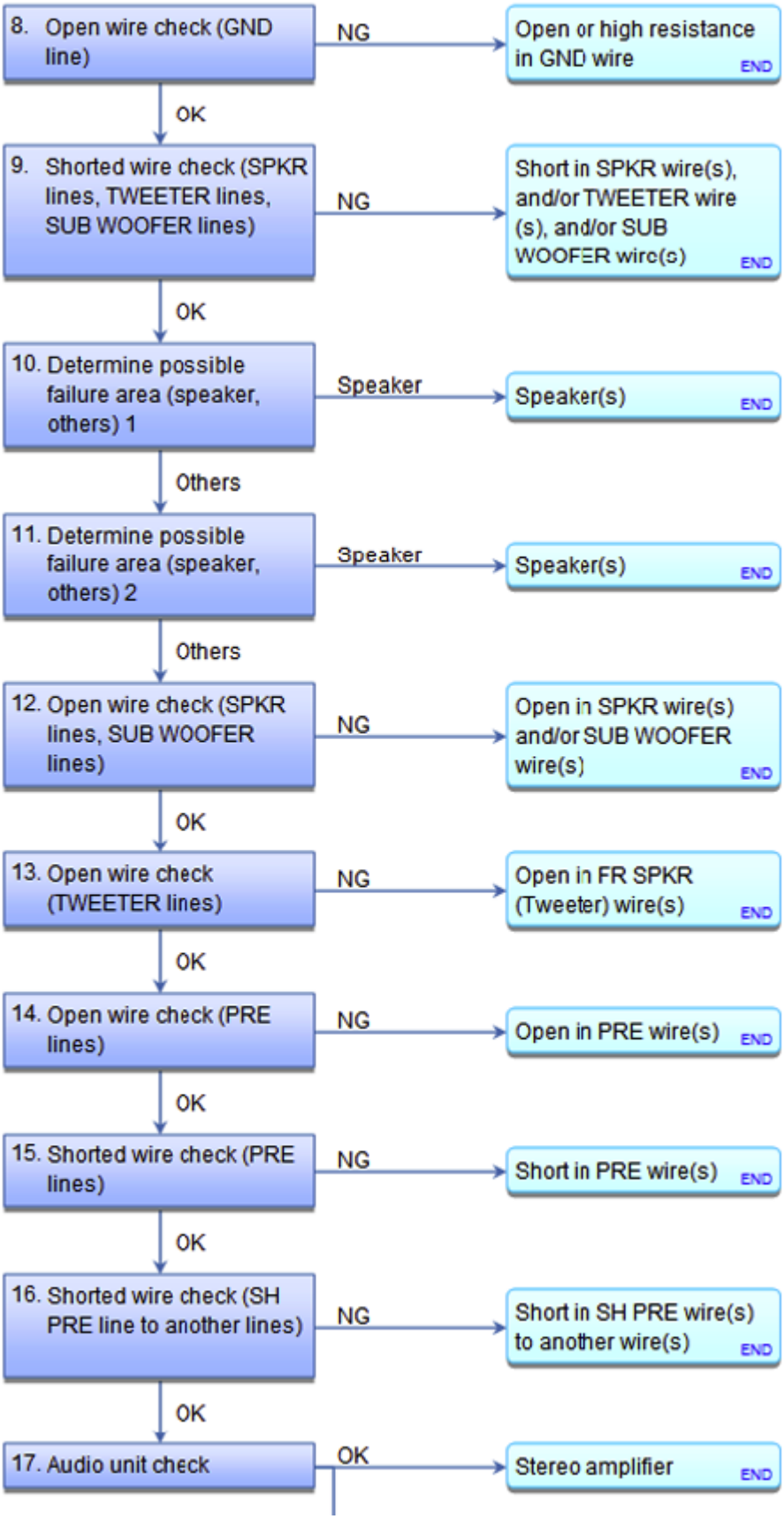

GETtheMANUALS.org

Fig. 324: Identifying Auxiliary Jack Assembly 5P Connector
Courtesy of AMERICAN HONDA MOTOR CO., INC.

AUXILIARY JACK ASSEMBLY 5P CONNECTOR DESCRIPTION

Cavity	Wire Color	Terminal Name	Description
1	RED	AUX_R_CH	Outputs sound signal
2	WHT	AUX_L_CH	Outputs sound signal
3	BLK	AUX_SGND	Ground for sound signal
4	LT GRN	AUX_GND	Ground for auxiliary jack assembly
5	LT BLU	AUX_DET	Inputs connection signal for auxiliary jack assembly

STEREO AMPLIFIER CONNECTOR FOR INPUTS AND OUTPUTS

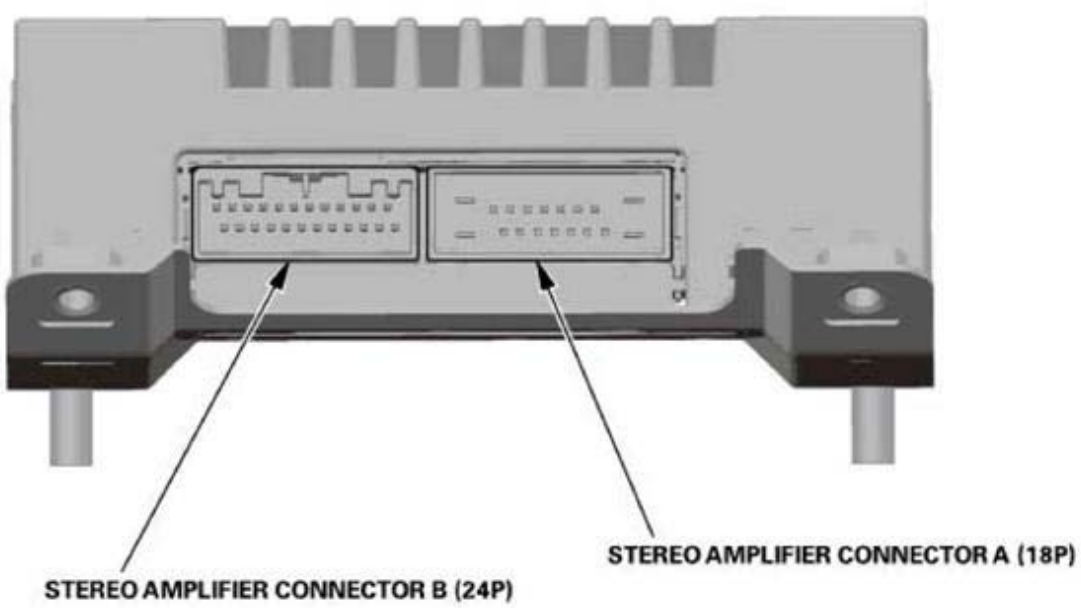

Fig. 325: Identifying Stereo Amplifier Connector For Inputs And Outputs
Courtesy of AMERICAN HONDA MOTOR CO., INC.

STEREO AMPLIFIER CONNECTOR A (18P)

GETtheMANUALS.org

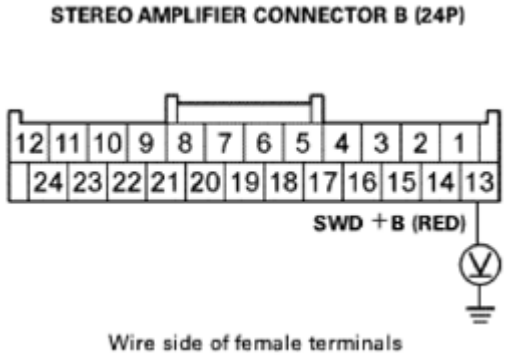

Fig. 326: Identifying Stereo Amplifier Connector A (18P)
Courtesy of AMERICAN HONDA MOTOR CO., INC.

STEREO AMPLIFIER CONNECTOR A (18P) DESCRIPTION

Cavity	Wire Color	Terminal Name	Description
A1	BLK	GND	Ground or stereo amplifier (G503)
A2	BLK	SUB_WOOFER-	Outputs sound signal for subwoofer
A3	RED	+B_AUDIO_AMP	Continuous power source
A4	GRN	SUB_WOOFER+	Outputs sound signal for subwoofer
A5	PNK	FL_TWEETER-	Outputs sound signal for left tweeter
A6	BLK	FL_SPKR-	Outputs sound signal for driver's door speaker
A7	GRN	FR_SPKR-	Outputs sound signal for front passenger's door speaker
A8	BLU	FR_TWEETER-	Outputs sound signal for right tweeter
A9	PNK	RL_SPKR-	Outputs sound signal for left rear door speaker
A10	PNK	RR_SPKR-	Outputs sound signal for right rear door speaker
A11	Not used	Not used	-
A12	PUR	FL_TWEETER+	Outputs sound signal for left tweeter
A13	WHT	FL_SPKR+	Outputs sound signal for driver's door speaker
A14	RED	FR_SPKR+	Outputs sound signal for front passenger's door speaker
A15	RED	FR_TWEETER+	Outputs sound signal for right tweeter
A16	BLU	RL_SPKR+	Outputs sound signal for left rear door speaker
A17	BLU	RR_SPKR+	Outputs sound signal for right rear door speaker
A18	Not used	Not used	-

STEREO AMPLIFIER CONNECTOR B (24P)

GETtheMANUALS.org

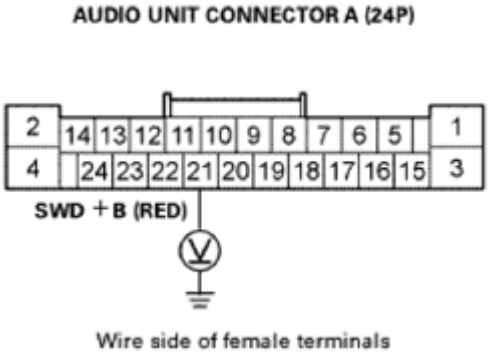

Fig. 327: Identifying Stereo Amplifier Connector B (24P)
Courtesy of AMERICAN HONDA MOTOR CO., INC.

STEREO AMPLIFIER CONNECTOR B (24P) DESCRIPTION

Cavity	Wire Color	Terminal Name	Description
B1	Not used	Not used	-
B2	Not used	Not used	-
B3	Not used	Not used	-
B4	GRY(1)	SH_SUB_W	Shield for terminals No. 5 and No. 17
B5	PUR	SUB_W_PRE-	Inputs sound signal for subwoofer
B6	PUR	RR_PRE-	Inputs sound signal for right rear door speaker
B7	GRY(1)	SH_FR_PRE	Shield for terminals No. 8 and No. 20
B8	GRN	FR_PRE-	Inputs sound signal for right front speakers
B9	PNK	RL_PRE-	Inputs sound signal for left rear door speaker
B10	GRY(1)	SH_FL_PRE	Shield for terminals No. 11 and No. 23
B11	YEL	FL_PRE-	Inputs sound signal for left front speakers
B12	Not used	Not used	-
B13	RED	SWD+B	Inputs signal for stereo amplifier switching ON/OFF
B14	Not used	Not used	-
B15	Not used	Not used	-
B16	Not used	Not used	-
B17	LT BLU	SUB_W_PRE+	Inputs sound signal for subwoofer
B18	LT BLU	RR_PRE+	Inputs sound signal for right rear door speaker
B19	GRY(1)	SH_RR_PRE	Shield for terminals No. 6 and No. 18
B20	RED	FR_PRE+	Inputs sound signal for right front speakers
B21	BLU	RL_PRE+	Inputs sound signal for left rear door speaker
B22	GRY(1)	SH_RL_PRE	Shield for terminals No. 9 and No. 21
B23	BRN	FL_PRE+	Inputs sound signal for left front speakers
B24	RED	AMP_MUTE	Inputs stereo amplifier mute signal

(1) The shielded wires have a heat-shrink tube insulating the outside of the wire. The color of the insulating tube, typically black or dark gray, may not match the color of the wire shown on the circuit

GETtheMANUALS.org

diagram.

XM RECEIVER CONNECTOR FOR INPUTS AND OUTPUTS

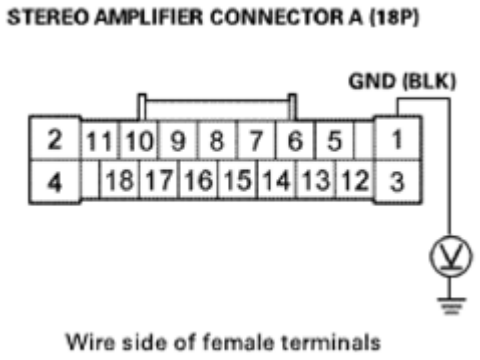

Fig. 328: Identifying XM Receiver Connector For Inputs And Outputs
Courtesy of AMERICAN HONDA MOTOR CO., INC.

XM RECEIVER CONNECTOR A (14P)

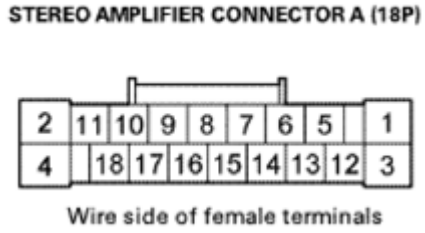

Fig. 329: Identifying XM Receiver Connector A (14P)
Courtesy of AMERICAN HONDA MOTOR CO., INC.

XM RECEIVER CONNECTOR A (14P) DESCRIPTION

Cavity	Wire Color	Terminal Name	Description
A1	RED	GA_AUDIO_L+	Outputs sound signal
A2	GRN	GA_AUDIO_R+	Outputs sound signal
A3(2)	GRY(1)	SH_GA_AUDIO	Shield for terminals No. 1, No. 2, No. 7, and No. 8
A4	GRY(1)	SH_GA_BUS	Shield for terminals No. 11 and No. 12
A5	PNK	GA_SYS_ON	Inputs signal for XM receiver switching ON/OFF
A6	RED	GA+B	Continuous power source for XM receiver
A7	WHT	GA_AUDIO_L-	Outputs sound signal
A8	BLK	GA_AUDIO_R-	Outputs sound signal
A9	Not Used	Not Used	-
A10	BLK	GA_GND	Ground for GA audio
A11	PNK	GA_BUS-	GA-Net bus communication signal
A12	BLU	GA_BUS+	GA-Net bus communication signal

GETtheMANUALS.org

A13	Not Used	Not Used	-
A14	Not Used	Not Used	-

(1) The shielded wires have a heat-shrink tube insulating the outside of the wire. The color of the insulating tube, typically black or dark gray, may not match the color of the wire shown on the circuit diagram.

(2) 12 model

XM RECEIVER CONNECTOR B (2P)

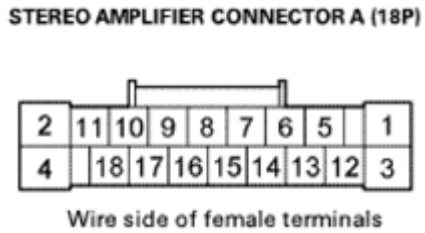

Fig. 330: Identifying XM Receiver Connector B (2P)
Courtesy of AMERICAN HONDA MOTOR CO., INC.

XM RECEIVER CONNECTOR B (2P) DESCRIPTION

Cavity	Wire Color	Terminal Name	Description
B1	-	XM (SAT/TER)	Inputs satellite/terrestrial signal
B2	BLK	SH XM (SAT/TER)	Shield for terminals No. 1

GETtheMANUALS.org

BATTERY MANAGEMENT SYSTEM COMPONENT LOCATION INDEX

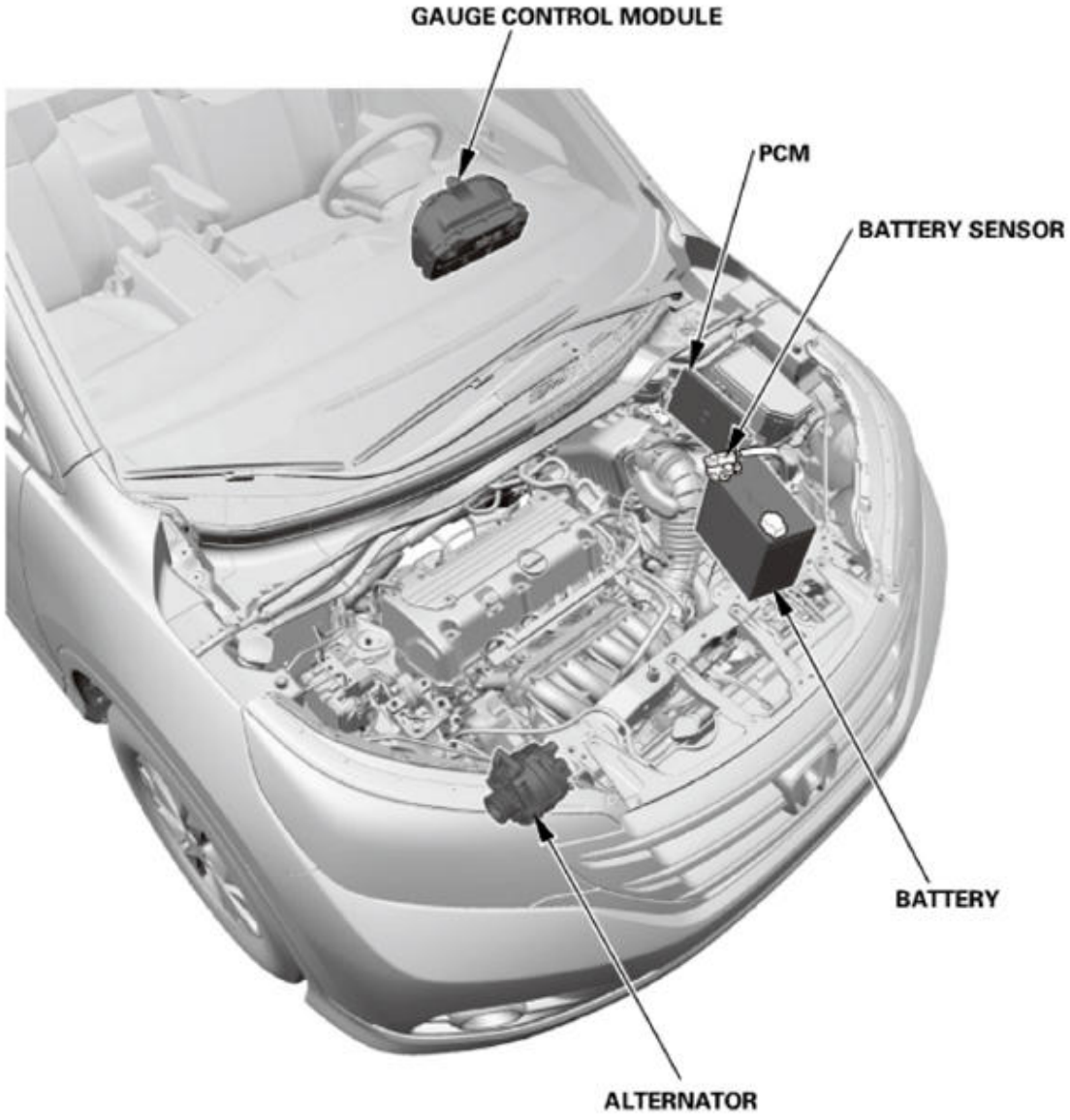

Fig. 1: Identifying Battery, Alternator, Sensor And PCM
Courtesy of AMERICAN HONDA MOTOR CO., INC.

GETtheMANUALS.org

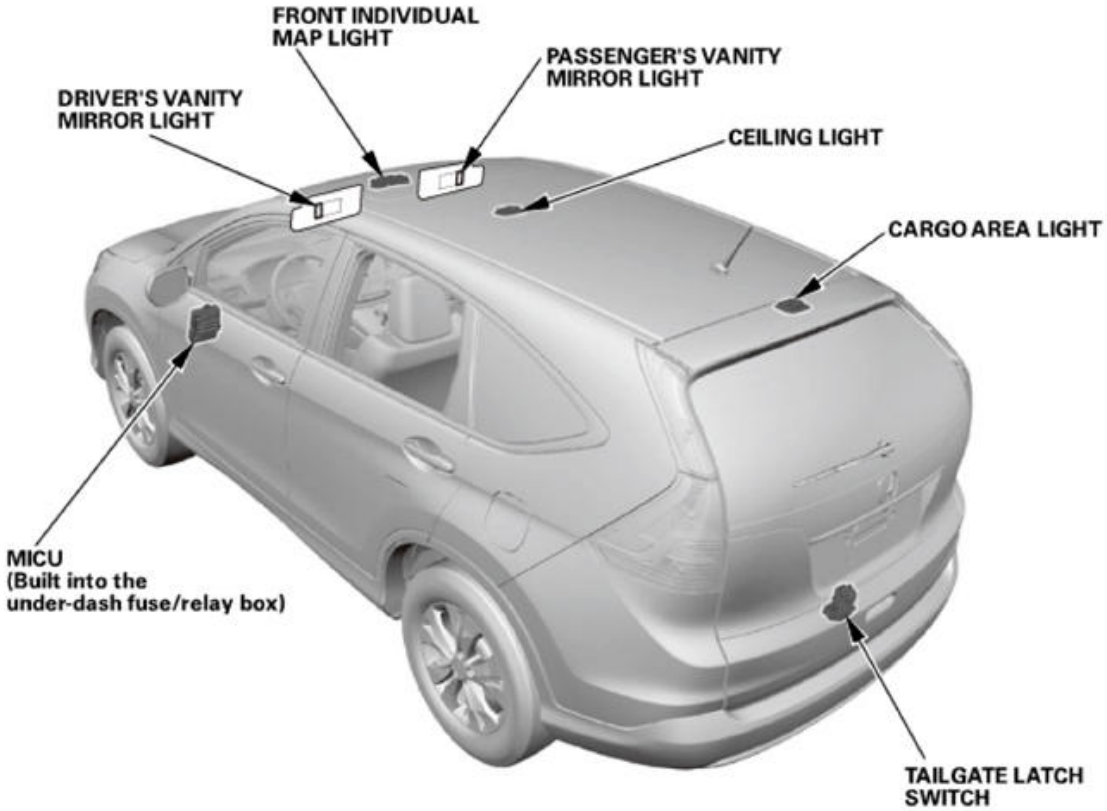

Fig. 2: Identifying Front Individual Map Light, Ceiling Light And Related Components
Courtesy of AMERICAN HONDA MOTOR CO., INC.

ALTERNATOR	**SYMPTOM TROUBLESHOOTING**
AMBIENT LIGHT	**REMOVAL, INSTALLATION, AND TEST**
BATTERY	**MEASUREMENT PARASITIC DRAW**
	SYMPTOM TROUBLESHOOTING
	TEST
BATTERY SENSOR	**REMOVAL AND INSTALLATION**
CARGO AREA LIGHT	**REMOVAL, INSTALLATION, AND TEST**
CEILING LIGHT	**REMOVAL, INSTALLATION, AND TEST**
FRONT INDIVIDUAL MAP LIGHT	**REMOVAL AND INSTALLATION**
MICU (Built into the under-dash fuse/relay box)	**REMOVAL AND INSTALLATION**
TAILGATE LATCH SWITCH (Built into the tailgate latch)	**REMOVAL AND INSTALLATION**
	TEST
VANITY MIRROR LIGHT	**TEST**

BATTERY REMOVAL AND INSTALLATION

GETtheMANUALS.org

REMOVAL

1. Battery Terminal - Disconnection
    1. Make sure the ignition switch is in LOCK (0).
    2. Disconnect and isolate the negative cable (A) from the battery.

    NOTE: Always disconnect the negative side first.

    3. Disconnect the positive cable (B) from the battery.

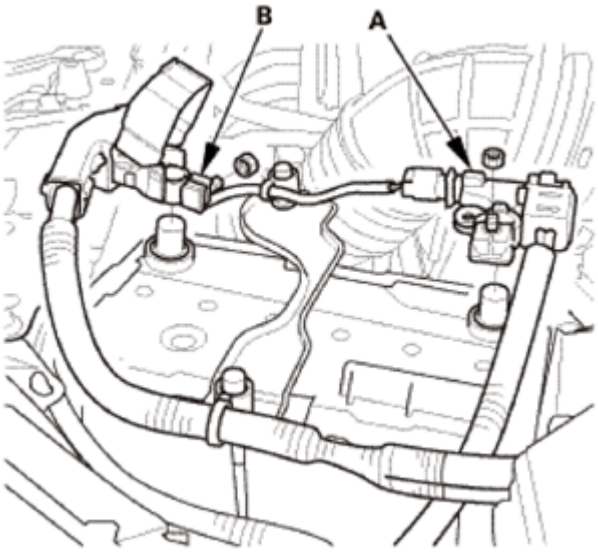

Fig. 3: Identifying Battery Negative And Positive Cable
Courtesy of AMERICAN HONDA MOTOR CO., INC.

2. Battery
    1. Remove the battery setting plate (A) and the battery (B).

GETtheMANUALS.org

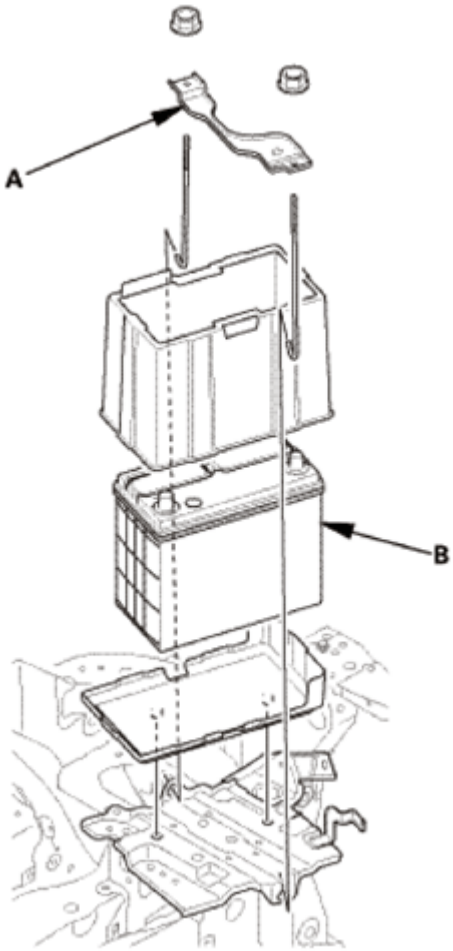

Fig. 4: Identifying Battery And Setting Plate
Courtesy of AMERICAN HONDA MOTOR CO., INC.

INSTALLATION

1. Battery
    1. Install the battery (A) and the battery setting plate (B).

NOTE: **Do not deform the battery setting plate by over-tightening the nuts.**

GETtheMANUALS.org

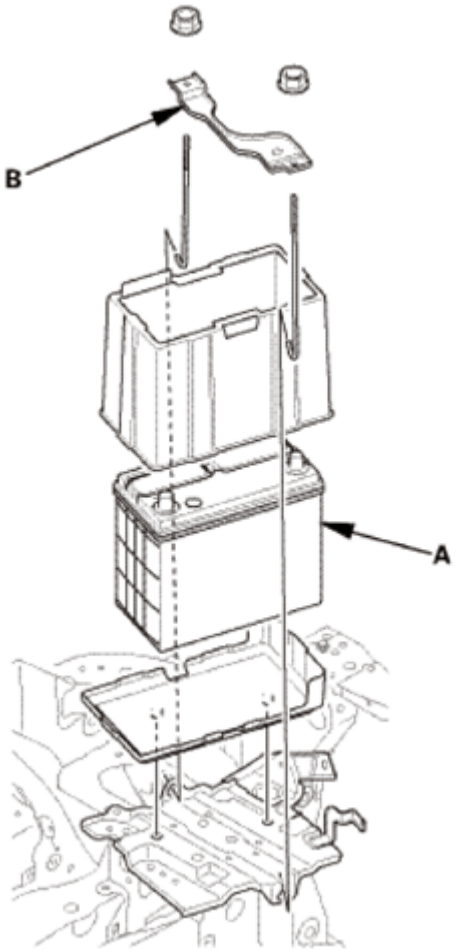

Fig. 5: Identifying Battery And Setting Plate
Courtesy of AMERICAN HONDA MOTOR CO., INC.

2. Battery Terminal - Reconnection

NOTE: If the battery performance is abnormal, test the battery.

1. Clean the battery terminals.
2. Connect the positive cable (A) to the battery.

NOTE: Always connect the positive side first.

3. Connect the negative cable (B) to the battery.
4. Apply multipurpose grease to the terminals to prevent corrosion.

GETtheMANUALS.org

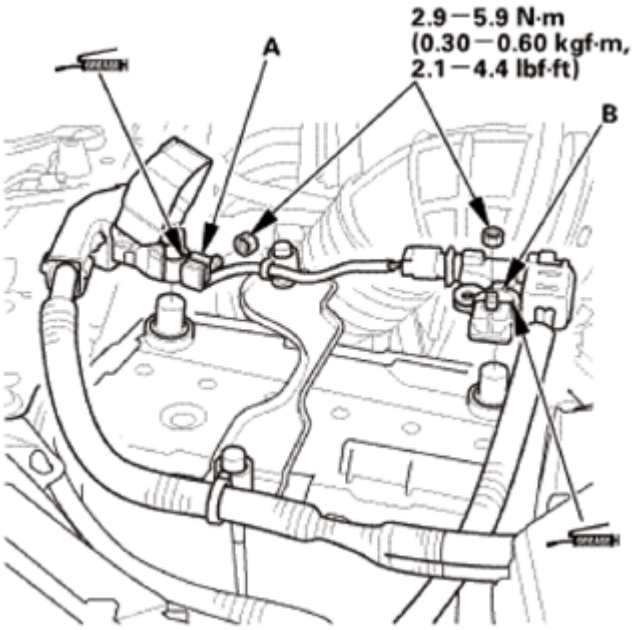

Fig. 6: Connecting Battery Terminals With Torque Specifications
Courtesy of AMERICAN HONDA MOTOR CO., INC.

BATTERY SENSOR REMOVAL AND INSTALLATION

REMOVAL

1. Battery Sensor
    1. Make sure the ignition switch is in LOCK (0).
    2. Disconnect the connector from the battery sensor (A).
    3. Remove the battery sensor from the battery.
    4. Remove the cover (B).
    5. Remove the negative terminal (C).

NOTE: **Do not hold the battery sensor connector (D), for protecting from damage when removing the negative terminal.**

GETtheMANUALS.org

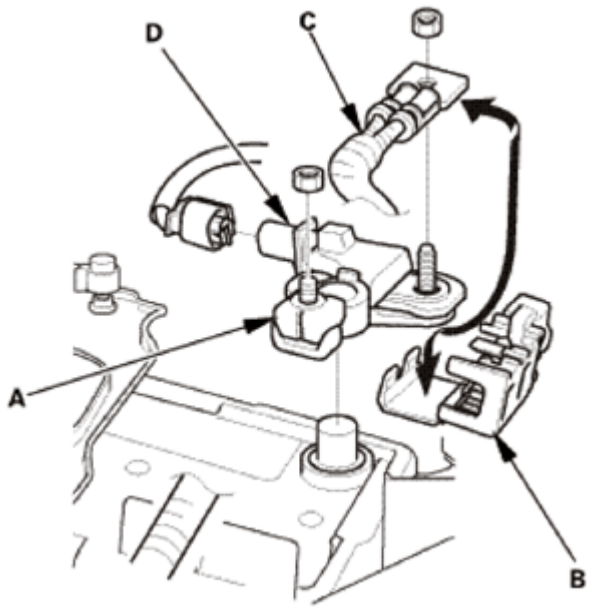

Fig. 7: Identifying Battery Sensor And Connector, Cover And Negative Terminal
Courtesy of AMERICAN HONDA MOTOR CO., INC.

INSTALLATION

1. Battery Sensor
    1. Install the negative terminal (A) on the battery sensor (B).

    NOTE:

    - **Make sure between the nagative terminal and battery sensor are clean.**
    - **Do not hold the battery sensor connector (D), for protecting from damage when installing the negative terminal.**

    2. Install the cover (C).
    3. Install the battery sensor to the battery.
    4. Connect the connector to the battery sensor.
    5. Apply multipurpose grease to the terminal to prevent corrosion.

GETtheMANUALS.org

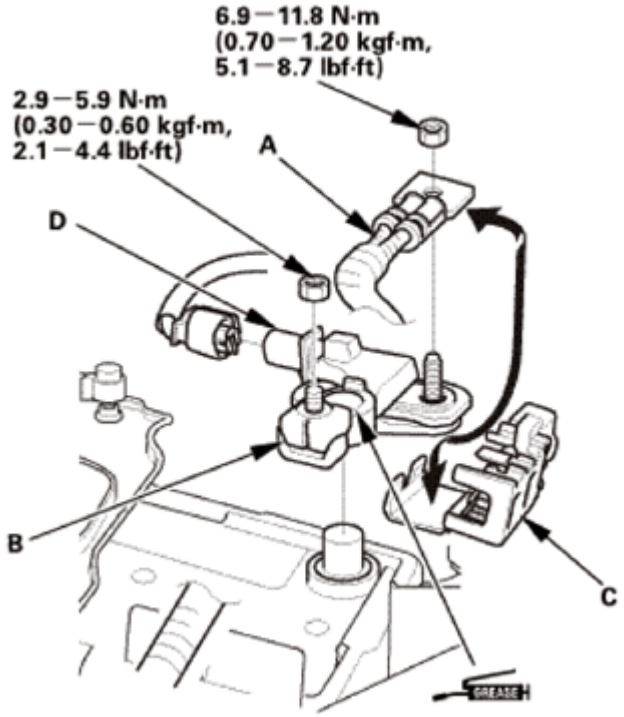

Fig. 8: Connecting Battery Sensor With Torque Specifications
Courtesy of AMERICAN HONDA MOTOR CO., INC.

BATTERY SYMPTOM TROUBLESHOOTING

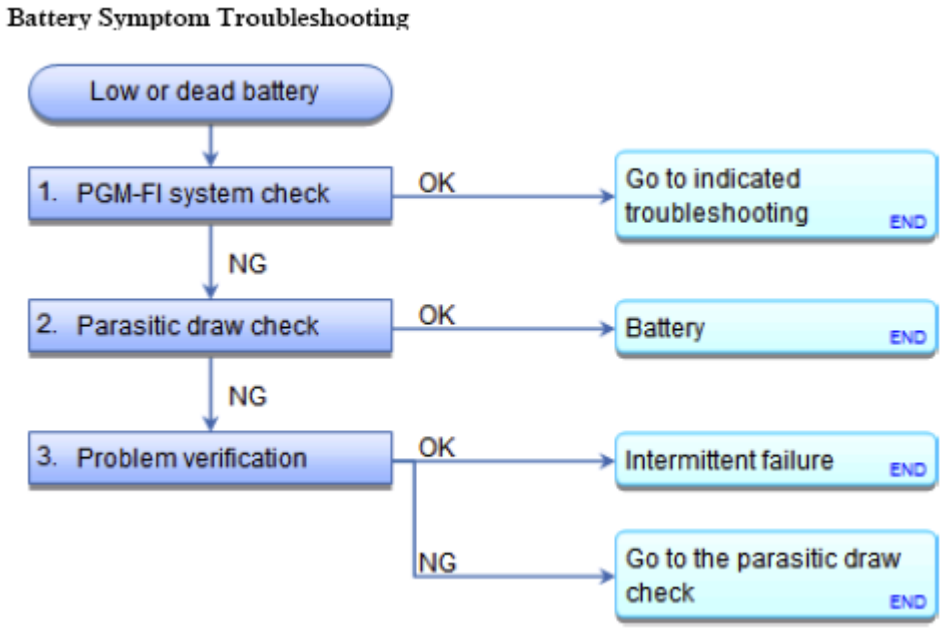

Fig. 9: Battery Symptom Troubleshooting Chart
Courtesy of AMERICAN HONDA MOTOR CO., INC.

GETtheMANUALS.org

LOW OR DEAD BATTERY

NOTE:

- **A battery might be discharged under these conditions:**
  - **Driving a vehicle 6 miles (10 km) or less per day.**
  - **Leaving a vehicle parked without removing the ignition key from the ignition switch.**
  - **Leaving a vehicle idling with high electrical loads such as headlight, seat heaters, wipers, rear window defogger, etc.**
- **When doing the following operation during the measurement of the parasitic draw, it may not be measured accurate:**
  - **With keyless access system: Approaching a vehicle with remote.**
  - **Locking or unlocking a door.**

Indication Example

- Latest History -

Duration: 72* hours

Discharge: 2.03 Ah

Data	Value
IG-OFF	-439.65 mA
1 hour later	-19.54 mA
2 hours later	-29.31 mA
72(1) hours later	-19.54 mA
(1) The value that just before the ignition switch is turned to ON (II) is shown. The value varies depending on when the ignition switch is turned to ON (II).	

1. PGM-FI system check:
   - 1. Check for PGM-FI DTCs.

DTC Description	Confirmed DTC	Pending DTC
P0562 CHARGING SYSTEM LOW VOLTAGE		
P065A ACG NO CHARGING MALFUNCTION		
P16BB ALTERNATOR B TERMINAL CIRCUIT LOW VOLTAGE		

Are DTCs P0562, P065A, and/or P16BB indicated?

YES : Go to indicated troubleshooting.

GETtheMANUALS.org

NO : Go to step 2.

2. Parasitic draw check:
    - 1. Turn the ignition switch to ON (II).
    - 2. Check all the battery consumption current history with the HDS.

Are all the values of 1 hour later -29.31 mA or less?

YES : Check the battery.

NO : Go to step 3.

3. Problem verification:
    - 1. Turn the ignition switch to LOCK (0).
    - 2. Without keyless access system: remove the ignition key from the ignition switch.
    - 3. Get out of the vehicle, and close all doors and tailgate securely.
    - 4. Lock the doors with the keyless transmitter.
    - 5. Make sure the individual map lights are turned off and the security alarm system is armed.
    - 6. Wait 70 minutes or more.
    - 7. Turn the ignition switch to ON (II).
    - 8. Check the latest battery consumption current history with the HDS.

Is the value of 1 hour later -29.31 mA or less?

YES Intermittent failure, the system is OK at this time.

The possible cause that an incorrect parasitic draw value was recorded:

- When you have forgotten to turn off a switch.
- When you operated a vehicle with the ignition switch in ACCESSORY (I) for a long time.

NO : **GO TO THE PARASITIC DRAW CHECK** .

BATTERY TERMINAL DISCONNECTION AND RECONNECTION

REMOVAL

1. Battery Terminal - Disconnection
    1. Make sure the ignition switch is in LOCK (0).
    2. Disconnect and isolate the negative cable (A) from the battery.

NOTE: Always disconnect the negative side first.

GETtheMANUALS.org

3. Disconnect the positive cable (B) from the battery.

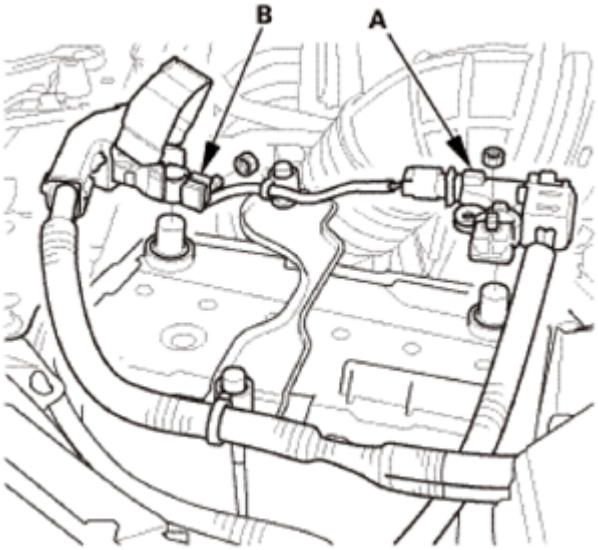

Fig. 10: Identifying Battery Negative And Positive Cable
Courtesy of AMERICAN HONDA MOTOR CO., INC.

INSTALLATION

1. Battery Terminal - Reconnection

NOTE: If the battery performance is abnormal, test the battery.

1. Clean the battery terminals.
2. Connect the positive cable (A) to the battery.

NOTE: Always connect the positive side first.

3. Connect the negative cable (B) to the battery.
4. Apply multipurpose grease to the terminals to prevent corrosion.

GETtheMANUALS.org

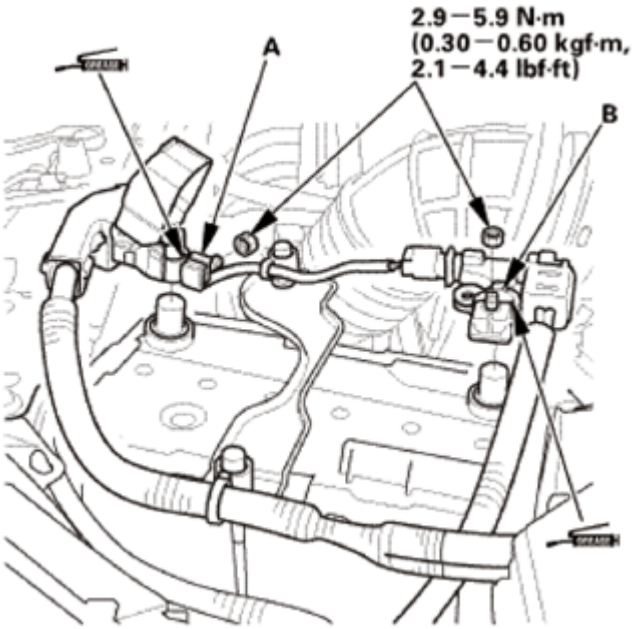

Fig. 11: Connecting Battery Terminals With Torque Specifications
Courtesy of AMERICAN HONDA MOTOR CO., INC.

BATTERY TEST

SPECIAL TOOL DESCRIPTION

Image	Description/Tool Number
	Honda battery diagnostic station (GR8): Model Number MTRGR81100P(1)

GETtheMANUALS.org

	Honda electrical system analyzer (ED-18 battery tester): Model Number INB17191840[1]

GETtheMANUALS.org

(1) Available through the Honda Tool and Equipment Program 888-424-6857	

TEST

1. Battery - Test

WARNING: A battery can explode if you do not follow the proper procedure, causing serious injury to anyone nearby. Follow all procedures carefully and keep sparks and open flames away from the battery.

Software Version

Make sure you have the latest software for the ED-18 and GR8.

To check the version on the ED-18, do this:

- Press the POWER button.
- Read the version number on the screen. It should appear for about 3 seconds.
- Or you can select: Language> Options> Info> Version. The version number will appear near the top of the screen.

Write down the version number, then call Midtronics at 800-776-1995 to verify you have the latest software version.

To check the version on the GR8, do this:

- Press the POWER button.
- Read the version number on the screen. It should appear for about 5 seconds.
- Or from the Main Menu, select: Options> Info> Version. The version number will appear on the screen.

Write down the version number, then call Midtronics at 800-776-1995 to verify you have the latest software version.

Using the ED-18 Battery Tester

NOTE: For setup, customization, and other available features, refer to the ED-18 user's manual.

GETtheMANUALS.org

1. Connect the leads to the positive and negative terminal of the battery.
2. Use the arrow keys to select the Battery Test, then press ENTER, then follow the prompts:
   - Make sure to enter the correct cold cranking ampere (CCA) rating of the battery. You can find the CCA printed on the label on the top of the battery. If the CCA rating is not entered correctly, the test result will not be accurate.
   - Make sure you select FLOODED for the battery type.
3. Here are the four possible battery conditions:
   - Good Battery: The battery has at least 60 percent of its charge and required no action.
   - GR8 Diagnostic Needed: The battery voltage is below 60 percent of its state-of-charge, and the condition of the battery is unknown. Use the GR8 to charge the battery and properly diagnose it.
   - Replace Battery: The battery condition is poor. Replace it.
   - Bad Cell: There is an internal problem with the battery. Replace it.

Using the GR8 Battery Diagnostic Station

NOTE:

- **For set up, customization, and other available features, refer to the GR8 user's manual.**
- **On the GR8, you can select two modes: DEALER INVENTORY or CUSTOMER VEHICLE:**
  - **DEALER INVENTORY: Use this mode for vehicles in dealer inventory. The GR8 charges the battery to 80% of its state-of-charge. If the battery condition is OK, the GR8 states the battery is GOOD. If you leave the GR8 attached to the battery, it changes to Top Off mode, and continues to charge the battery until it is at 100% of its state-of-charge.**
  - **CUSTOMER VEHICLE: In order to give a waiting customer quicker service, the GR8 charges the battery to 60% of its state-of-charge. If the battery condition is OK, the GR8 states the battery is GOOD. If you leave the GR8 attached to the battery, it changes to Top Off mode, and continues to charge the battery until it is at 100% of its state-of-charge.**

1. Connect the leads to the positive and negative terminal of the battery.
2. Use the arrow keys to select Diagnostic, and follow the prompts:
   - Make sure to enter the correct cold cranking ampere (CCA) rating of the battery. You can find the CCA printed on the label on the top of the battery. If the CCA rating is not entered correctly, the test result will not be accurate.
   - Make sure you select FLOODED for the battery type.
3. Here are the three possible battery conditions:
   - Good Battery: The battery state of health is good and state-of-charge is at least 60%.
   - Replace Battery: The battery condition is poor. Replace it.
   - Bad Cell: There is a problem with the battery. Replace it.

GETtheMANUALS.org

DTC B1002: MICU INTERNAL (EEPROM) ERROR

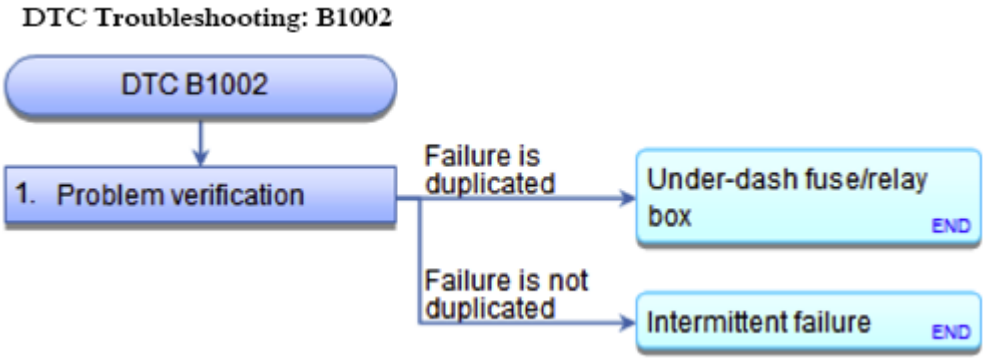

Fig. 1: DTC Troubleshooting Chart (B1002)
Courtesy of AMERICAN HONDA MOTOR CO., INC.

DTC Description	DTC
B1002 MICU Internal (EEPROM) Error	

1. Problem verification:
   - 1. Clear the DTCs with the HDS.
   - 2. Turn the ignition switch to LOCK (0) and then back to ON (II).
   - 3. Wait for at least 6 seconds.
   - 4. Check for DTCs with the HDS.

DTC Description	DTC
B1002 MICU Internal (EEPROM) Error	

Is DTC B1002 indicated?

YES : Faulty MICU; **REPLACE THE UNDER-DASH FUSE/RELAY BOX** .

NO : Intermittent failure, the MICU is OK at this time.

DTC B1003: MICU PROGRAM UPDATE ERROR

GETtheMANUALS.org

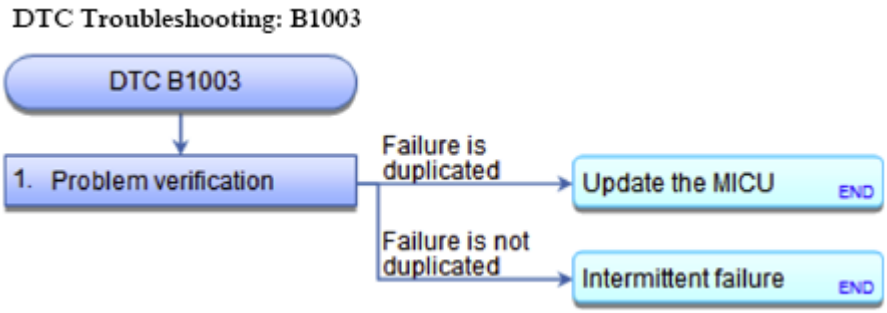

Fig. 2: DTC Troubleshooting Chart (B1003)
Courtesy of AMERICAN HONDA MOTOR CO., INC.

DTC Description	DTC
B1003 MICU Program Update Error	

NOTE:

- **This DTC is indicated when a MICU update is not completed properly.**
- **Before updating the MICU, make sure the battery in the vehicle is fully charged, and connect a jumper battery (not a battery charger) to maintain system voltage.**
- **Never turn the ignition switch to ACC (I) or LOCK (0) during the update. If there is a problem with the update, leave the ignition switch in ON (II).**

1. Problem verification:
   - 1. Clear the DTCs with the HDS.
   - 2. Turn the ignition switch to LOCK (0) and then back to ON (II).
   - 3. Check for DTCs with the HDS.

DTC Description	DTC
B1003 MICU Program Update Error	

Is DTC B1003 indicated?

YES : Update the MICU.

NO : Intermittent failure, the system is OK at this time.

DTC B1026: PASSENGER'S DOOR LOCK SWITCH MALFUNCTION

GETtheMANUALS.org

DTC Troubleshooting: B1026

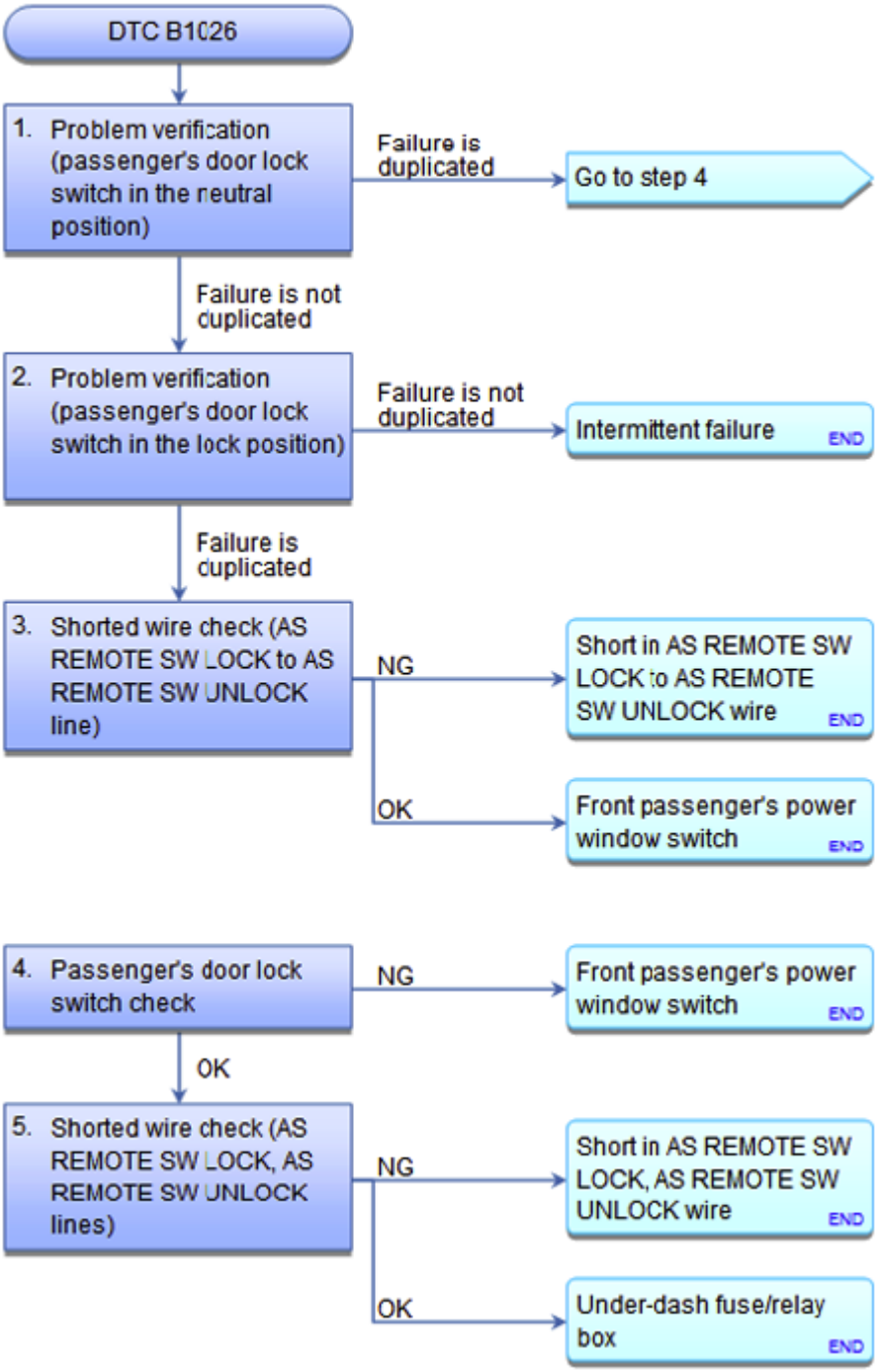

Fig. 3: DTC Troubleshooting Chart (B1026)
Courtesy of AMERICAN HONDA MOTOR CO., INC.

DTC Description	DTC
B1026 Passenger's Door Lock Switch Malfunction	

GETtheMANUALS.org

NOTE: **Refer to the Electrical Wiring Diagrams for the location of the under-dash fuse/relay box connectors.**

1. Problem verification (passenger's door lock switch in the neutral position):
   - 1. With the front passenger's door lock switch in the neutral position, check the parameter(s) below with the HDS.

Signal	Current conditions	
	Values	Unit
Front Passenger's Door Lock Sw. (LOCK)		
Front Passenger's Door Lock Sw. (UNLOCK)		

Is either information indicator ON?

YES : Go to step 4.

NO : Go to step 2.

2. Problem verification (passenger's door lock switch in the lock position):
   - 1. With the front passenger's door lock switch in the lock position, check the parameter(s) below with the HDS.

Signal	Current conditions	
	Values	Unit
Front Passenger's Door Lock Sw. (LOCK)		
Front Passenger's Door Lock Sw. (UNLOCK)		

Are both information indicators ON?

YES : Go to step 3.

NO : Intermittent failure, the system is OK at this time.

3. Shorted wire check (AS REMOTE SW LOCK to AS REMOTE SW UNLOCK line):
   - 1. Turn the ignition switch to LOCK (0).
   - 2. Disconnect the following connector.

     Front passenger's power window switch 10P connector

   - 3. Connect terminals A and B with a jumper wire.

     Terminal A Front passenger's power window switch 10P connector No. 3 (RED)

     Terminal B Body ground

GETtheMANUALS.org

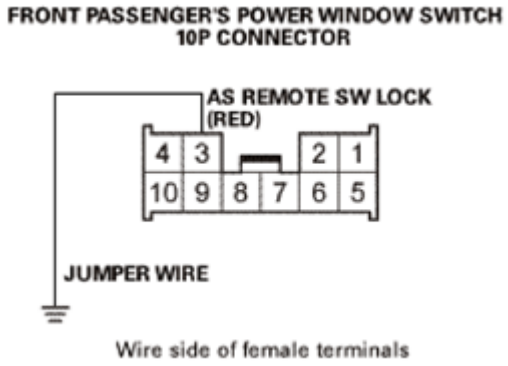

Fig. 4: Identifying Front Passenger's Power Window Switch 10P Connector Terminals
Courtesy of AMERICAN HONDA MOTOR CO., INC.

- 4. Check the parameter(s) below with the HDS.

Signal	Current conditions	
	Values	Unit
Front Passenger's Door Lock Sw. (LOCK)		
Front Passenger's Door Lock Sw. (UNLOCK)		

Are both information indicators ON?

YES : Repair a short between the wires.

NO : The AS REMOTE SW LOCK to AS REMOTE SW UNLOCK wire is OK. Faulty door lock switch; **replace the front passenger's power window switch** See **FRONT PASSENGER'S POWER WINDOW SWITCH REMOVAL AND INSTALLATION** or **REAR POWER WINDOW SWITCH REMOVAL AND INSTALLATION** .

4. Passenger's door lock switch check:
   - 1. Turn the ignition switch to LOCK (0).
   - 2. Disconnect the following connector.

     Front passenger's power window switch 10P connector

   - 3. Check the parameter(s) below with the HDS.

Signal	Current conditions	
	Values	Unit
Front Passenger's Door Lock Sw. (LOCK)		
Front Passenger's Door Lock Sw. (UNLOCK)		

Is either information indicator ON?

GETtheMANUALS.org

YES : Go to step 5.

NO : Faulty door lock switch; **replace the front passenger's power window switch** See **FRONT PASSENGER'S POWER WINDOW SWITCH REMOVAL AND INSTALLATION** or **REAR POWER WINDOW SWITCH REMOVAL AND INSTALLATION** .

5. Shorted wire check (AS REMOTE SW LOCK, AS REMOTE SW UNLOCK lines):
   - 1. Turn the ignition switch to LOCK (0).
   - 2. Disconnect the following connector.

     Under-dash fuse/relay box connector W (24P)

   - 3. Check for continuity between test points 1 and 2 individually.

     Test condition IG LOCK (0)

     Front passenger's power window switch 10P connector: disconnected

     Under-dash fuse/relay box connector W (24P): disconnected

     Test circuit AS REMOTE SW LOCK

     Test point 1 Under-dash fuse/relay box connector W (24P) No. 7 (LT GRN)

     Test point 2 Body ground

     Test circuit AS REMOTE SW UNLOCK

     Test point 1 Under-dash fuse/relay box connector W (24P) No. 8 (ORN)

     Test point 2 Body ground

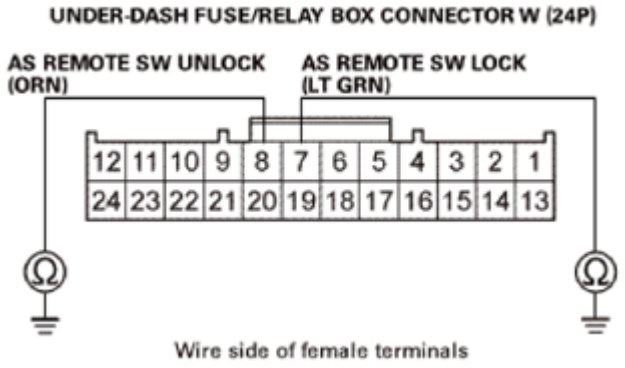

Fig. 5: Under-Dash Fuse/Relay Box Connector W Terminals
Courtesy of AMERICAN HONDA MOTOR CO., INC.

Is there continuity?

GETtheMANUALS.org

YES : Repair a short to ground in the wire.

NO : The AS REMOTE SW LOCK and AS REMOTE SW UNLOCK wires are OK. Faulty MICU; **REPLACE THE UNDER-DASH FUSE/RELAY BOX** .

DTC B1028: REAR WIPER AUTO STOP SWITCH MALFUNCTION

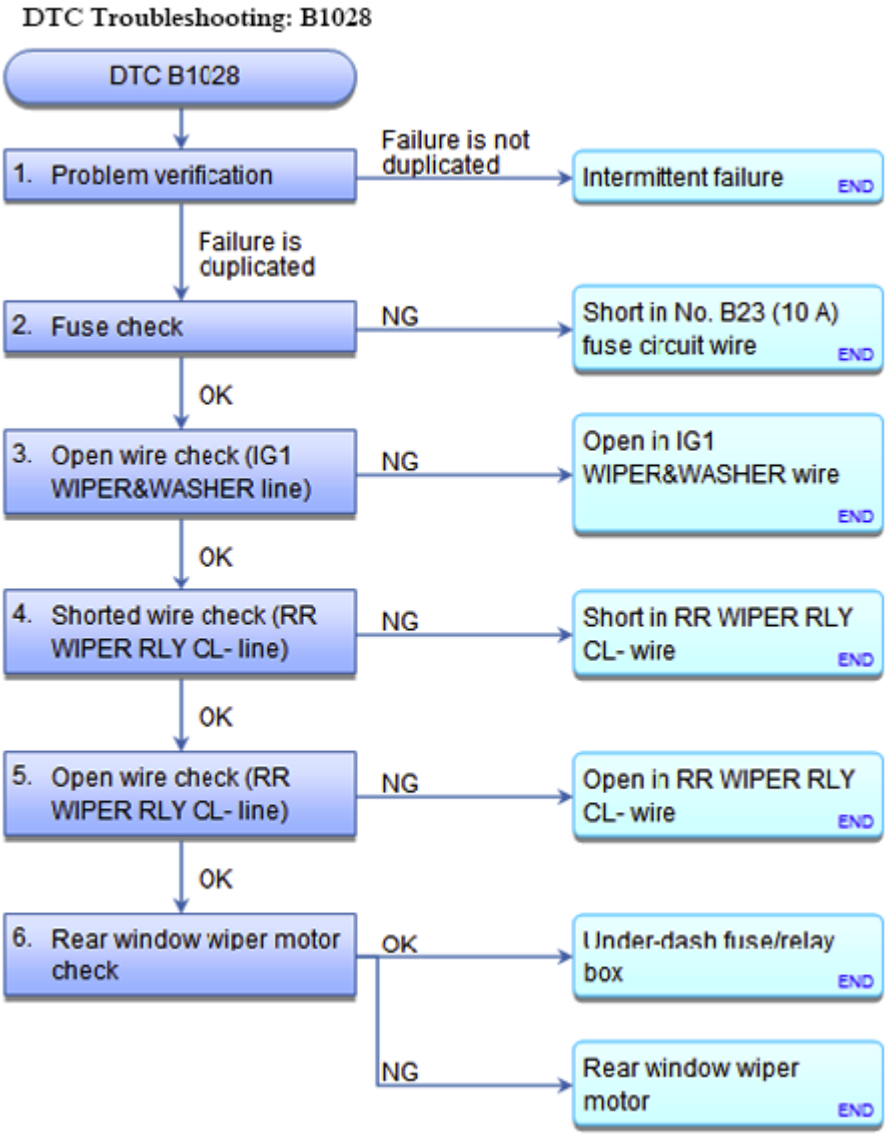

Fig. 6: DTC Troubleshooting Flow Chart (B1028)
Courtesy of AMERICAN HONDA MOTOR CO., INC.

DTC Description	DTC
B1028 Rear Wiper Auto Stop Switch Malfunction	

NOTE: **Refer to the Electrical Wiring Diagrams for the location of the under-dash**

GETtheMANUALS.org

fuse/relay box connectors.

1. Problem verification:
   - 1. Clear the DTCs with the HDS.
   - 2. Turn the ignition switch to LOCK (0) and then back to ON (II).
   - 3. Turn the rear window wiper switch to INT for 15 seconds or more, then turn the switch OFF.
   - 4. Check for DTCs with the HDS.

DTC Description	DTC
B1028 Rear Wiper Auto Stop Switch Malfunction	

Is DTC B1028 indicated?

YES : Go to step 2.

NO : Intermittent failure, the system is OK at this time.

2. Fuse check:
   - 1. Check the following fuse.

     Fuse No. B23 (10 A)

     Location Under-dash fuse/relay box

Is the fuse OK?

YES : Go to step 3.

NO : Replace the fuse. If the fuse blows again, repair the short to ground in the No. B23 (10 A) fuse circuit.

3. Open wire check (IG1 WIPER&WASHER line):
   - 1. Disconnect the following connector.

     Rear window wiper motor 4P connector

   - 2. Turn the ignition switch to ON (II).
   - 3. Measure the voltage between test points 1 and 2.

     Test condition IG ON (II)

     Rear window wiper motor 4P connector: disconnected

     Test circuit IG1 WIPER&WASHER

GETtheMANUALS.org

Test point 1 Rear window wiper motor 4P connector No. 2 (GRN)

Test point 2 Body ground

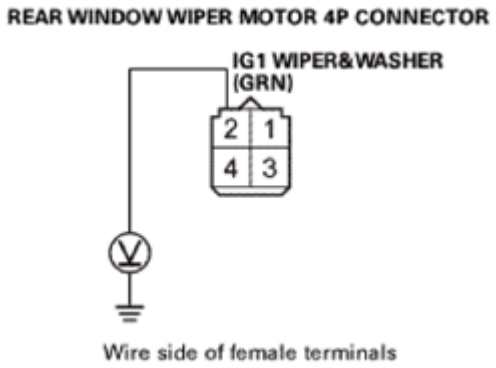

Fig. 7: Rear Window Wiper Motor - Circuit Diagram (4P)
Courtesy of AMERICAN HONDA MOTOR CO., INC.

Is there battery voltage?

YES : The IG1 WIPER&WASHER wire is OK. Go to step 4.

NO : Repair an open or high resistance in the wire.

4. Shorted wire check (RR WIPER RLY CL- line):
   - 1. Disconnect the following connector.

     Under-dash fuse/relay box connector T (20P)

   - 2. Check for continuity between test points 1 and 2.

     Test condition IG LOCK (0)

     Rear window wiper motor 4P connector: disconnected

     Under-dash fuse/relay box connector T (20P): disconnected

     Test circuit RR WIPER RLY CL-

     Test point 1 Rear window wiper motor 4P connector No. 4 (BRN)

     Test point 2 Body ground

GETtheMANUALS.org

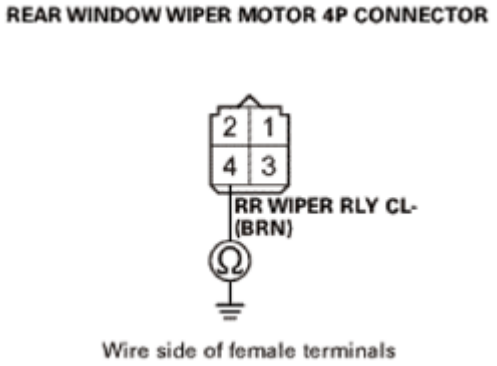

Fig. 8: Rear Window Wiper Motor - Circuit Diagram
Courtesy of AMERICAN HONDA MOTOR CO., INC.

Is there continuity?

YES : Repair a short to ground in the wire.

NO : The RR WIPER RLY CL- wire is not shorted. Go to step 5.

5. Open wire check (RR WIPER RLY CL- line):
   - 1. Check for continuity between test points 1 and 2.

     Test condition IG LOCK (0)

     Rear window wiper motor 4P connector: disconnected

     Under-dash fuse/relay box connector T (20P): disconnected

     Test circuit RR WIPER RLY CL-

     Test point 1 Rear window wiper motor 4P connector No. 4 (BRN)

     Test point 2 Under-dash fuse/relay box connector T (20P) No. 20 (BRN)

GETtheMANUALS.org

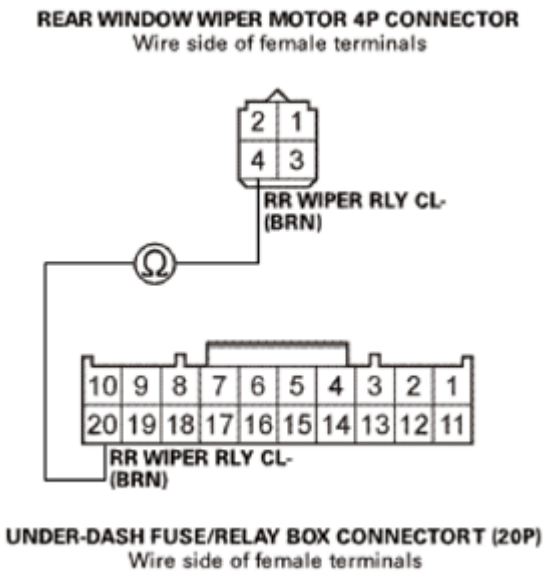

Fig. 9: Rear Window Wiper Motor - Circuit Diagram
Courtesy of AMERICAN HONDA MOTOR CO., INC.

Is there continuity?

YES : The RR WIPER RLY CL- wire is OK. Go to step 6.

NO : Repair an open or high resistance in the wire.

6. Rear window wiper motor check:
   - 1. **DO THE REAR WINDOW WIPER MOTOR TEST** .

Does the wiper motor run and does it pulse normally?

YES : Faulty MICU; **REPLACE THE UNDER-DASH FUSE/RELAY BOX** .

NO : **REPLACE THE REAR WINDOW WIPER MOTOR** .

DTC B1036: IG1 POWER SUPPLY CIRCUIT MALFUNCTION

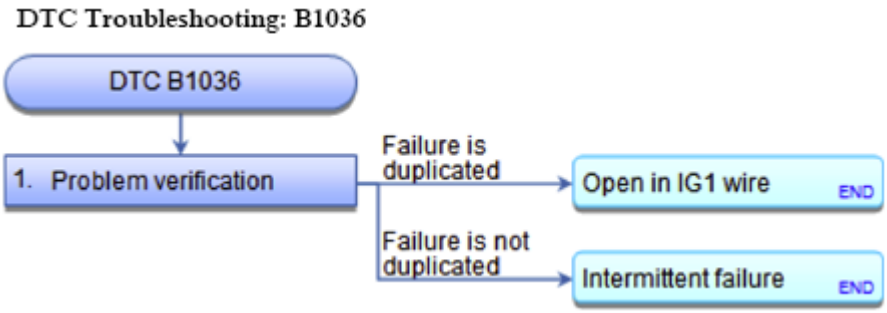

GETtheMANUALS.org

Fig. 10: DTC Troubleshooting Flow Chart (B1036)
Courtesy of AMERICAN HONDA MOTOR CO., INC.

DTC Description	DTC
B1036 IG1 Power Supply Circuit Malfunction	

1. Problem verification:
    - 1. Clear the DTCs with the HDS.
    - 2. Turn the ignition switch to LOCK (0) and then back to ON (II).
    - 3. Wait for at least 6 seconds.
    - 4. Check for DTCs with the HDS.

DTC Description	DTC
B1036 IG1 Power Supply Circuit Malfunction	

Is DTC B1036 indicated?

YES : Repair an open or high resistance in the wire between the under-dash fuse/relay box and the gauge control module.

NO : Intermittent failure, the system is OK at this time. Check for loose or poor connections.

DTC B1077: WIPER SWITCH (AS) MALFUNCTION

GETtheMANUALS.org

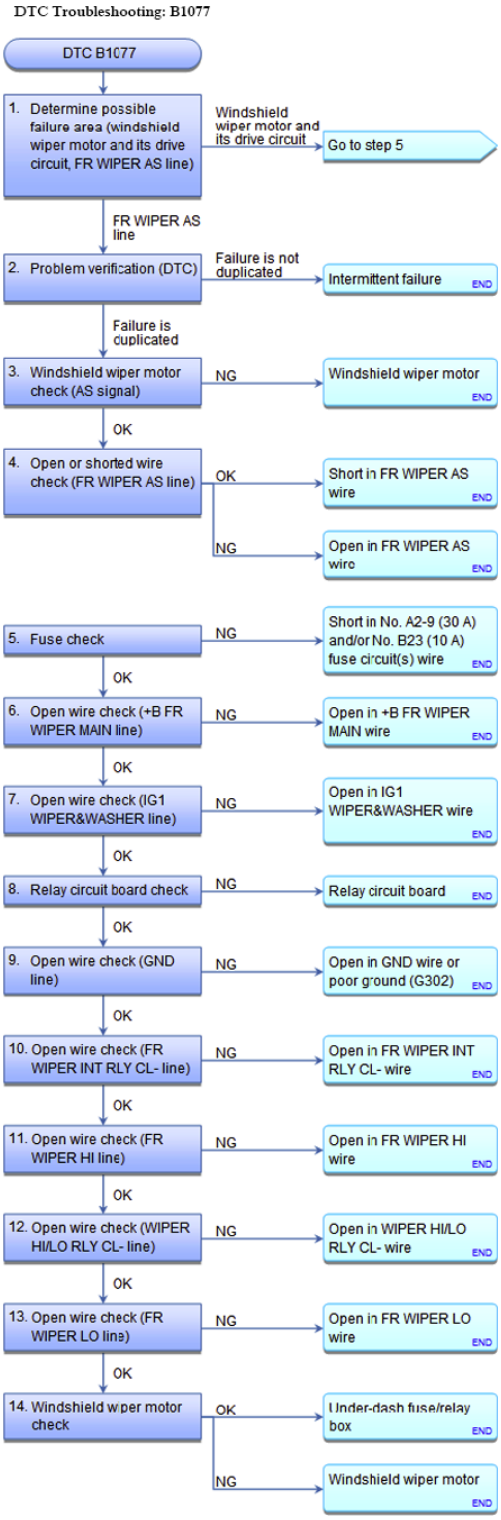

Fig. 11: DTC B1077 Wiper Switch Malfunction Flowchart
Courtesy of AMERICAN HONDA MOTOR CO., INC.

DTC Description	DTC

GETtheMANUALS.org

B1077 Wiper Switch (As) Malfunction	

NOTE: **Refer to the Electrical Wiring Diagrams for the location of the under-dash fuse/relay box connectors.**

1. Determine possible failure area (windshield wiper motor and its drive circuit, FR WIPER AS line):
   - 1. Clear the DTCs with the HDS.
   - 2. Turn the ignition switch to LOCK (0) and then back to ON (II).
   - 3. Turn the windshield wiper switch to LOW or HIGH for 15 seconds or more, then turn the switch OFF.

   Does the wiper motor work?

   YES : FR WIPER AS line: go to step 2.

   NO : Windshield wiper motor and its drive circuit: go to step 5.

2. Problem verification (DTC):
   - 1. Check for DTCs with the HDS.

DTC Description	DTC
B1077 Wiper Switch (As) Malfunction	

   Is DTC B1077 indicated?

   YES : Go to step 3.

   NO : Intermittent failure, the system is OK at this time.

3. Windshield wiper motor check (AS signal):
   - 1. Turn the ignition switch to LOCK (0).
   - 2. **DO THE WINDSHIELD WIPER MOTOR TEST** .

   Does the wiper motor run and does it pulse normally?

   YES : Go to step 4.

   NO : **REPLACE THE WINDSHIELD WIPER MOTOR** .

4. Open or shorted wire check (FR WIPER AS line):
   - 1. Disconnect the following connectors.

     Windshield wiper motor 4P connector

GETtheMANUALS.org

Under-dash fuse/relay box connector C (38P)

- 2. Check for continuity between test points 1 and 2.

  Test condition IG LOCK (0)

  Windshield wiper motor 4P connector: disconnected

  Under-dash fuse/relay box connector C (38P): disconnected

  Test circuit FR WIPER AS

  Test point 1 Windshield wiper motor 4P connector No. 4 (YEL)

  Test point 2 Under-dash fuse/relay box connector C (38P) No. 23 (GRY)

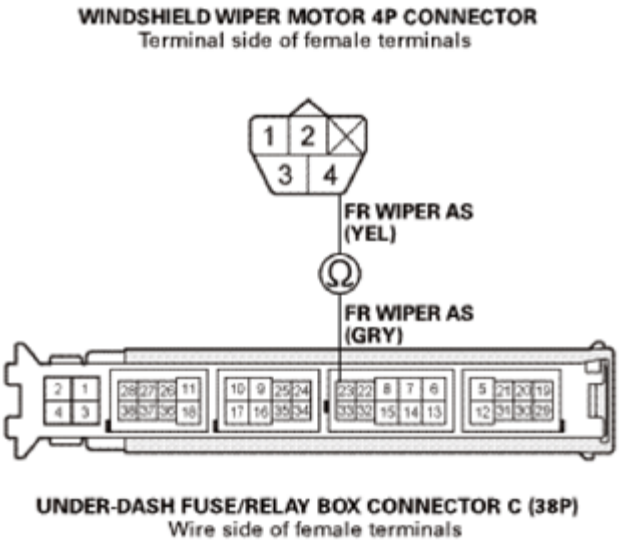

Fig. 12: Identifying Windshield Wiper Motor 4P Connector Terminals
Courtesy of AMERICAN HONDA MOTOR CO., INC.

Is there continuity?

YES : The FR WIPER AS wire is OK. Repair a short to ground in the wire.

NO : Repair an open or high resistance in the wire.

5. Fuse check:
   - 1. Check the following fuses.

     Fuse No. A2-9 (30 A)

     Location Under-hood fuse/relay box

GETtheMANUALS.org

Fuse No. B23 (10 A)

Location Under-dash fuse/relay box

Is each fuse OK?

YES : Go to step 6.

NO : Replace the fuse. If the fuse blows again, repair the short to ground in the No. A2-9 (30 A) and/or No. B23 (10 A) fuse circuit(s).

6. Open wire check (+B FR WIPER MAIN line):
   - 1. Turn the ignition switch to LOCK (0).
   - 2. Disconnect the following connectors.

     Relay circuit board connector A (16P)

     Relay circuit board connector B (10P)

   - 3. Measure the voltage between test points 1 and 2.

     Test condition IG LOCK (0)

     Relay circuit board connector A (16P): disconnected

     Relay circuit board connector B (10P): disconnected

     Test circuit +B FR WIPER MAIN

     Test point 1 Relay circuit board connector A (16P) No. 16 (RED)

     Test point 2 Body ground

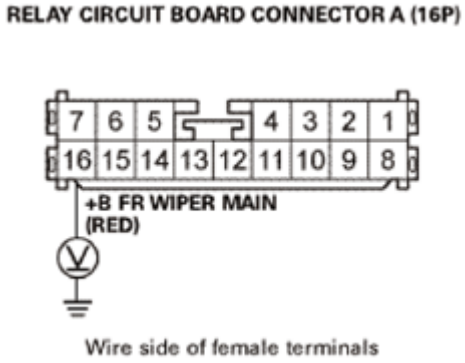

Fig. 13: Identifying Relay Circuit Board Connector Terminals
Courtesy of AMERICAN HONDA MOTOR CO., INC.

GETtheMANUALS.org

Is there battery voltage?

YES : The +B FR WIPER MAIN wire is OK. Go to step 7.

NO : Repair an open or high resistance in the wire.

7. Open wire check (IG1 WIPER&WASHER line):
    - 1. Turn the ignition switch to ON (II).
    - 2. Measure the voltage between test points 1 and 2.

    Test condition IG ON (II)

    Relay circuit board connector A (16P): disconnected

    Relay circuit board connector B (10P): disconnected

    Test circuit IG1 WIPER&WASHER

    Test point 1 Relay circuit board connector A (16P) No. 9 (LT BLU)

    Test point 2 Body ground

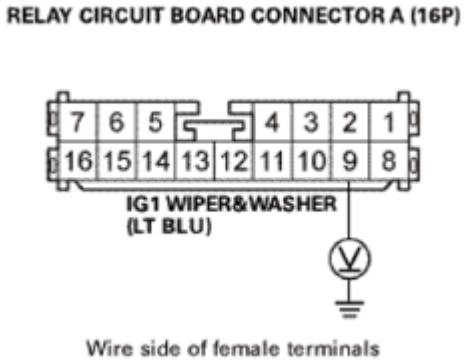

Fig. 14: Measuring Voltage Between Relay Circuit Board Connector Terminals 1 And 2
Courtesy of AMERICAN HONDA MOTOR CO., INC.

Is there battery voltage?

YES : The IG1 WIPER&WASHER wire is OK. Go to step 8.

NO : Repair an open or high resistance in the wire.

8. Relay circuit board check:
    - 1. Turn the ignition switch to LOCK (0).
    - 2. **DO THE RELAY CIRCUIT BOARD TEST** .

GETtheMANUALS.org

Is the relay circuit board OK?

YES : Go to step 9.

NO : **REPLACE THE RELAY CIRCUIT BOARD** .

9. Open wire check (GND line):
   - 1. Check for continuity between test points 1 and 2.

     Test condition IG LOCK (0)

     Relay circuit board connector A (16P): disconnected

     Relay circuit board connector B (10P): disconnected

     Test circuit GND

     Test point 1 Relay circuit board connector B (10P) No. 1 (GRY)

     Test point 2 Body ground

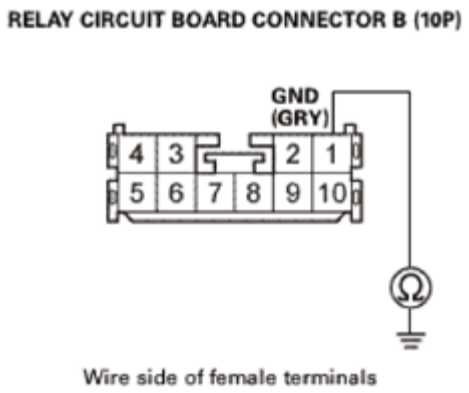

Fig. 15: Checking Continuity Between Relay Circuit Board Connector Terminals 1 And 2 (10P)
Courtesy of AMERICAN HONDA MOTOR CO., INC.

Is there continuity?

YES : GND wire is OK. Go to step 10.

NO : Repair an open or high resistance in the ground wire or poor ground (G302).

10. Open wire check (FR WIPER INT RLY CL- line):
    - 1. Disconnect the following connector.

      Under-dash fuse/relay box connector C (38P)

GETtheMANUALS.org

- 2. Check for continuity between test points 1 and 2.

  Test condition IG LOCK (0)

  Relay circuit board connector A (16P): disconnected

  Relay circuit board connector B (10P): disconnected

  Under-dash fuse/relay box connector C (38P): disconnected

  Test circuit FR WIPER INT RLY CL-

  Test point 1 Relay circuit board connector A (16P) No. 6 (WHT)

  Test point 2 Under-dash fuse/relay box connector C (38P) No. 22 (WHT)

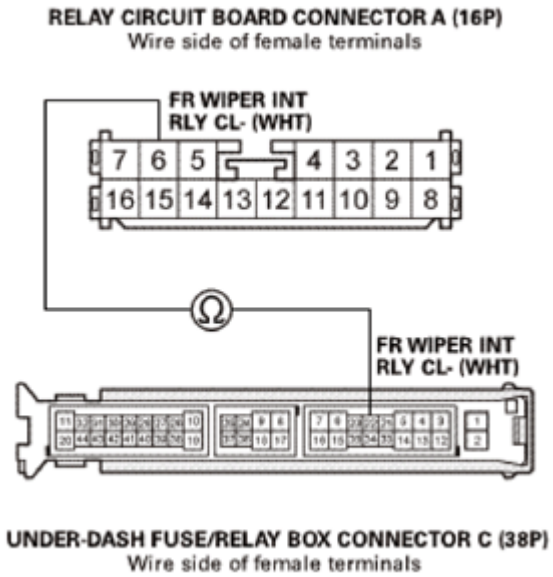

Fig. 16: Checking Continuity Between Relay Circuit Board Connector Terminals 1 And 2 (16P)
Courtesy of AMERICAN HONDA MOTOR CO., INC.

Is there continuity?

YES : The FR WIPER INT RLY CL- wire is OK. Go to step 11.

NO : Repair an open or high resistance in the wire.

11. Open wire check (FR WIPER HI line):
    - 1. Disconnect the following connector.

      Windshield wiper motor 4P connector

GETtheMANUALS.org

- 2. Check for continuity between test points 1 and 2.

  Test condition IG LOCK (0)

  Relay circuit board connector A (16P): disconnected

  Relay circuit board connector B (10P): disconnected

  Under-dash fuse/relay box connector C (38P): disconnected

  Windshield wiper motor 4P connector: disconnected

  Test circuit FR WIPER HI

  Test point 1 Relay circuit board connector A (16P) No. 12 (YEL)

  Test point 2 Windshield wiper motor 4P connector No. 3 (WHT)

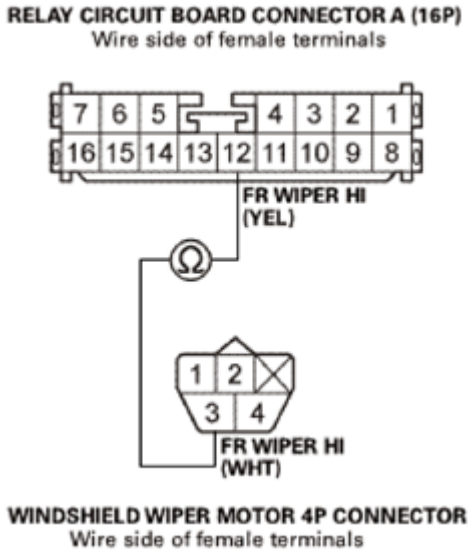

Fig. 17: Checking Continuity Between Relay Circuit Board Connector Terminals (16P)
Courtesy of AMERICAN HONDA MOTOR CO., INC.

Is there continuity?

YES : FR WIPER HI wire is OK. Go to step 12.

NO : Repair an open or high resistance in the wire.

12. Open wire check (WIPER HI/LO RLY CL- line):
    - 1. Check for continuity between test points 1 and 2.

GETtheMANUALS.org

Test condition IG LOCK (0)

Relay circuit board connector A (16P): disconnected

Relay circuit board connector B (10P): disconnected

Under-dash fuse/relay box connector C (38P): disconnected

Windshield wiper motor 4P connector: disconnected

Test circuit WIPER HI/LO RLY CL-

Test point 1 Relay circuit board connector A (16P) No. 3 (BLU)

Test point 2 Under-dash fuse/relay box connector C (38P) No. 32 (BLU)

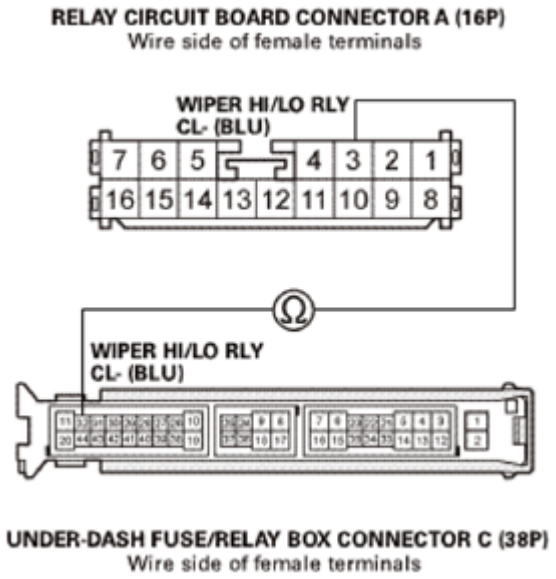

Fig. 18: Checking Continuity Between Under-Dash Fuse/Relay Box Connector Terminals 1 And 2 (38P)
Courtesy of AMERICAN HONDA MOTOR CO., INC.

Is there continuity?

YES : The WIPER HI/LO RLY CL- wire is OK. Go to step 13.

NO : Repair an open or high resistance in the wire.

13. Open wire check (FR WIPER LO line):
    - 1. Check for continuity between test points 1 and 2.

      Test condition IG LOCK (0)

GETtheMANUALS.org

Relay circuit board connector A (16P): disconnected

Relay circuit board connector B (10P): disconnected

Under-dash fuse/relay box connector C (38P): disconnected

Windshield wiper motor 4P connector: disconnected

Test circuit FR WIPER LO

Test point 1 Relay circuit board connector A (16P) No. 13 (BLU)

Test point 2 Windshield wiper motor 4P connector No. 1 (BLU)

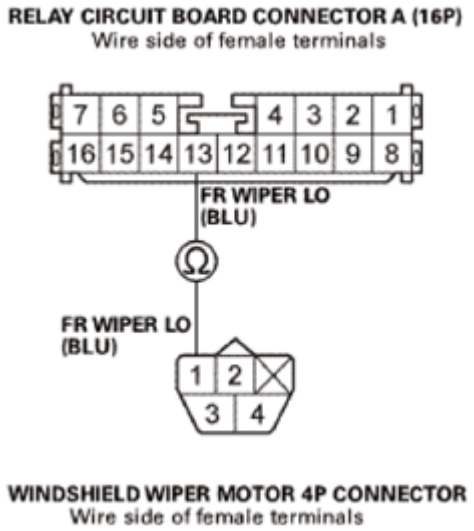

Fig. 19: Checking Continuity Between Windshield Wiper Motor 4P Connector Terminals 1 And 2
Courtesy of AMERICAN HONDA MOTOR CO., INC.

Is there continuity?

YES : The FR WIPER LO wire is OK. Go to step 14.

NO : Repair an open or high resistance in the wire.

14. Windshield wiper motor check:
    - 1. **DO THE WINDSHIELD WIPER MOTOR TEST** .

Does the wiper motor run and does it pulse normally?

YES : Faulty MICU; **REPLACE THE UNDER-DASH FUSE/RELAY BOX** .

GETtheMANUALS.org

NO : **REPLACE THE WINDSHIELD WIPER MOTOR** .

DTC B1079: DAYTIME RUNNING LIGHT MALFUNCTION

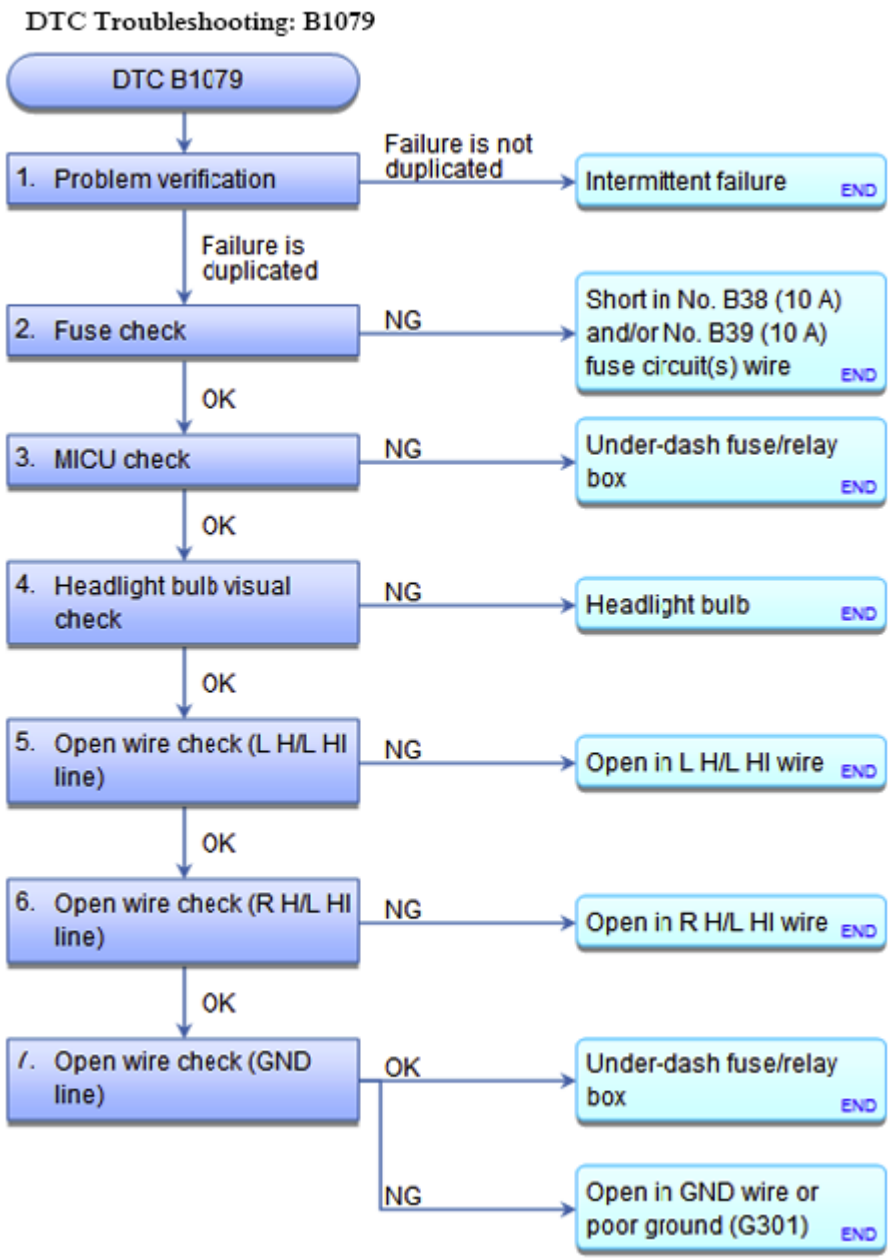

Fig. 20: DTC Troubleshooting Chart (B1079)
Courtesy of AMERICAN HONDA MOTOR CO., INC.

DTC Description	DTC
B1079 Daytime Running Light Malfunction	

NOTE: **Refer to the Electrical Wiring Diagrams for the location of the under-dash**

GETtheMANUALS.org

fuse/relay box connectors.

1. Problem verification:
   - 1. Turn the headlights switch OFF, and apply the parking brake.
   - 2. Clear the DTCs with the HDS.
   - 3. Release the parking brake.
   - 4. Turn the ignition switch to LOCK (0) and then back to ON (II).
   - 5. Check for DTCs with the HDS.

DTC Description	DTC
B1079 Daytime Running Light Malfunction	

Is DTC B1079 indicated?

YES : Go to step 2.

NO : Intermittent failure, the system is OK at this time. Check for loose or poor connections.

2. Fuse check:
   - 1. Turn the ignition switch to LOCK (0).
   - 2. Check the following fuses.

     Fuse No. B38 (10 A)

     No. B39 (10 A)

     Location Under-dash fuse/relay box

Is each fuse OK?

YES : Go to step 3.

NO : Replace the fuse. If the fuse blows again, repair a short to ground in the No. B38 (10 A) and/or No. B39 (10 A) fuse circuit(s).

3. MICU check:
   - 1. Turn the headlight (high beam) ON.

Do both headlights (high beam) come on?

YES : Faulty MICU; **REPLACE THE UNDER-DASH FUSE/RELAY BOX** .

NO : Go to step 4.

GETtheMANUALS.org

4. Headlight bulb visual check:
    - 1. Check the headlight (high beam) bulbs.

    Are the headlight (high beam) bulbs OK?

    YES : Go to step 5.

    NO : Replace the faulty bulb.

5. Open wire check (L H/L HI line):
    - 1. Disconnect the following connectors.

      Under-dash fuse/relay box connector C (38P)

      Left headlight 3P connector

      Right headlight 3P connector

    - 2. Check for continuity between test points 1 and 2.

      Test condition IG LOCK (0)

      Under-dash fuse/relay box connector C (38P): disconnected

      Left headlight 3P connector: disconnected

      Right headlight 3P connector: disconnected

      Test circuit L H/L HI

      Test point 1 Under-dash fuse/relay box connector C (38P) No. 18 (WHT)

      Test point 2 Left headlight 3P connector No. 3 (WHT)

GETtheMANUALS.org

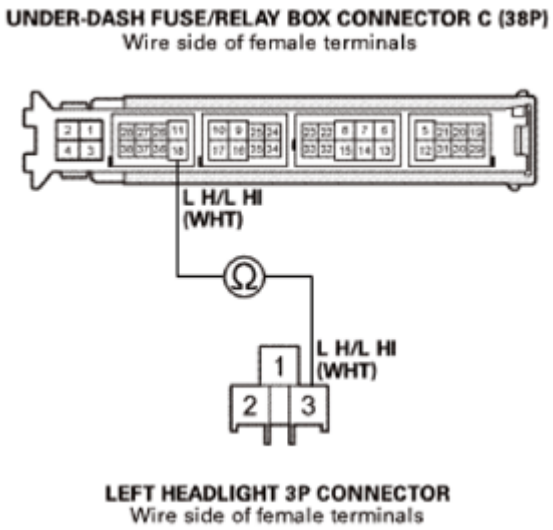

Fig. 21: Checking Continuity Between Left Headlight 3P Connector Terminals 1 And 2
Courtesy of AMERICAN HONDA MOTOR CO., INC.

Is there continuity?

YES : The L H/L HI wire is OK. Go to step 6.

NO : Repair an open or high resistance in the wire.

6. Open wire check (R H/L HI line):
   - 1. Check for continuity between test points 1 and 2.

     Test condition IG LOCK (0)

     Under-dash fuse/relay box connector C (38P): disconnected

     Left headlight 3P connector: disconnected

     Right headlight 3P connector: disconnected

     Test circuit R H/L HI

     Test point 1 Under-dash fuse/relay box connector C (38P) No. 14 (YEL)

     Test point 2 Right headlight 3P connector No. 3 (YEL)

GETtheMANUALS.org

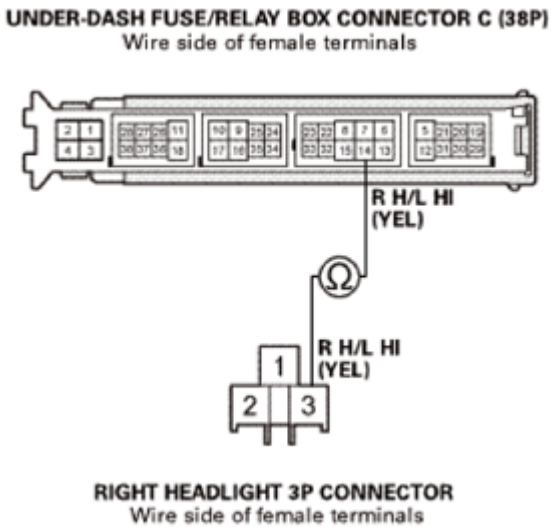

Fig. 22: Checking Continuity Between Right Headlight 3P Connector Terminals 1 And 2
Courtesy of AMERICAN HONDA MOTOR CO., INC.

Is there continuity?

YES : The R H/L HI wire is OK. Go to step 7.

NO : Repair an open or high resistance in the wire.

7. Open wire check (GND line):
   - 1. Check for continuity between test points 1 and 2 individually.

     Test condition IG LOCK (0)

     Under-dash fuse/relay box connector C (38P): disconnected

     Left headlight 3P connector: disconnected

     Right headlight 3P connector: disconnected

     Test circuit GND

     Test point 1 Left/Right headlight 3P connector No. 2 (BLK)

     Test point 2 Body ground

GETtheMANUALS.org

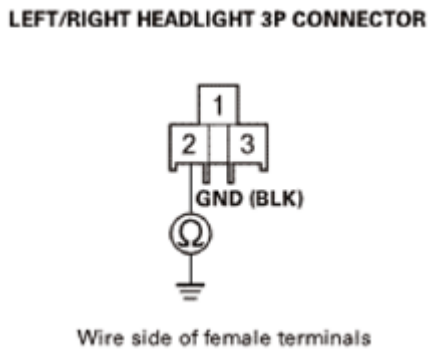

Fig. 23: Checking Continuity Between Left/Right Headlight 3P Connector Terminals 1 And 2
Courtesy of AMERICAN HONDA MOTOR CO., INC.

Is there continuity?

YES : The GND wire is OK. Faulty MICU; **REPLACE THE UNDER-DASH FUSE/RELAY BOX** .

NO : Repair an open or high resistance in the ground wire or poor ground (G301).

DTC B1127: DRIVER'S DOOR KEY CYLINDER SWITCH INPUT CIRCUIT MALFUNCTION (SIMULTANEOUS INPUT OF LOCK AND UNLOCK SIGNAL)

GETtheMANUALS.org

DTC Troubleshooting: B1127

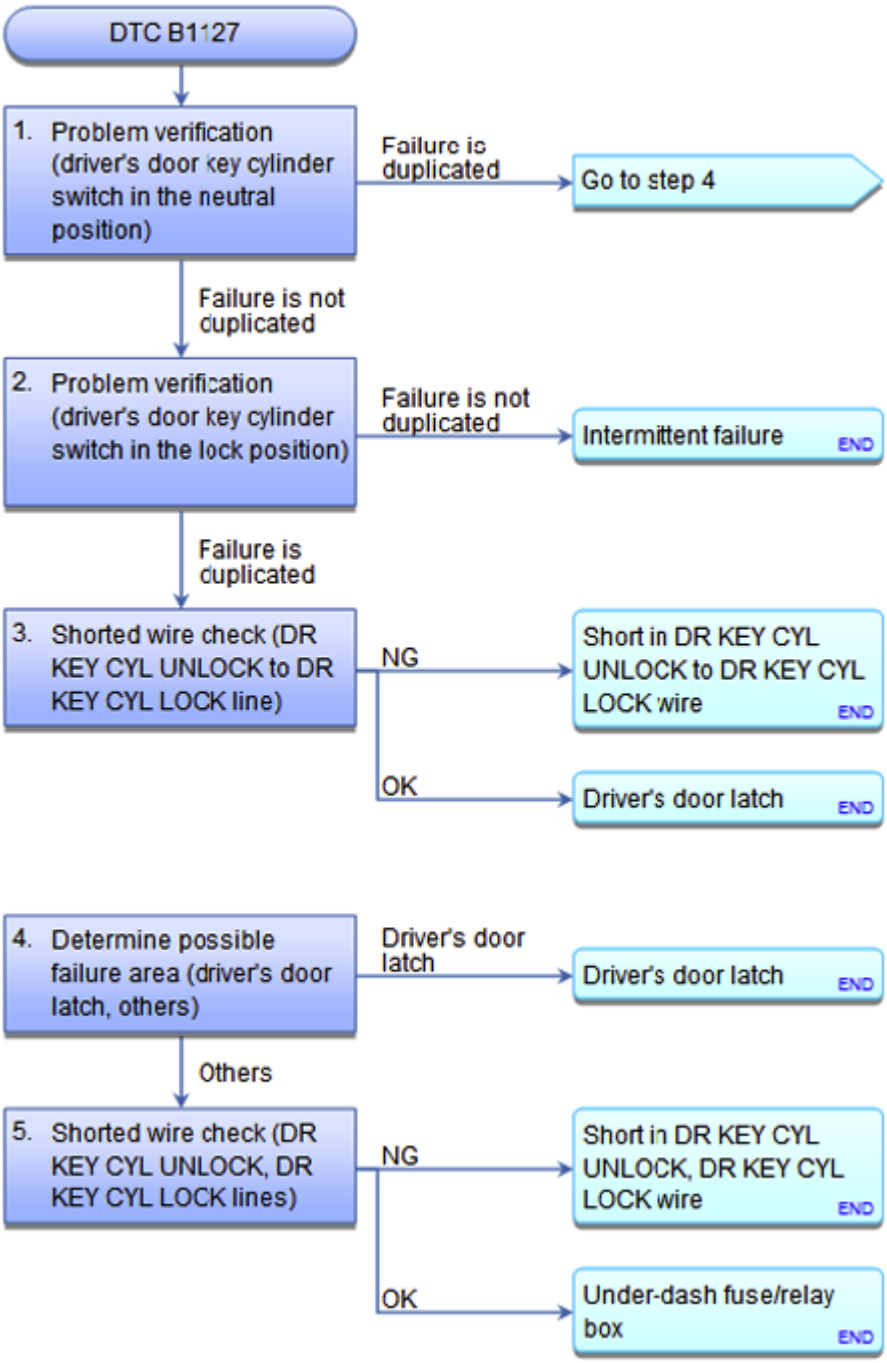

Fig. 24: DTC Troubleshooting Chart (B1127)
Courtesy of AMERICAN HONDA MOTOR CO., INC.

DTC Description	DTC
B1127 Driver's Door Key Cylinder Switch Input Circuit Malfunction (Simultaneous Input of Lock and Unlock Signal)	

GETtheMANUALS.org

NOTE: **Refer to the Electrical Wiring Diagrams for the location of the under-dash fuse/relay box connectors.**

1. Problem verification (driver's door key cylinder switch in the neutral position):
   - 1. With the driver's door key cylinder in the neutral position, check the parameter(s) below with the HDS.

Signal	Current conditions	
	Values	Unit
Driver's Door Key Cylinder Switch (LOCK)		
Driver's Door Key Cylinder Switch (UNLOCK)		

Is either information indicator ON?

YES : Go to step 4.

NO : Go to step 2.

2. Problem verification (driver's door key cylinder switch in the lock position):
   - 1. With the driver's door key cylinder in the lock position, check the parameter(s) below with the HDS.

Signal	Current conditions	
	Values	Unit
Driver's Door Key Cylinder Switch (LOCK)		
Driver's Door Key Cylinder Switch (UNLOCK)		

Are both information indicators ON?

YES : Go to step 3.

NO : Intermittent failure, the system is OK at this time.

3. Shorted wire check (DR KEY CYL UNLOCK to DR KEY CYL LOCK line):
   - 1. Turn the ignition switch to LOCK (0).
   - 2. Disconnect the following connector.

     Driver's door latch 10P connector

   - 3. Connect terminals A and B with a jumper wire.

     Terminal A Under-dash fuse/relay box connector X (10P) No. 10 (PNK)

     Terminal B Body ground

GETtheMANUALS.org

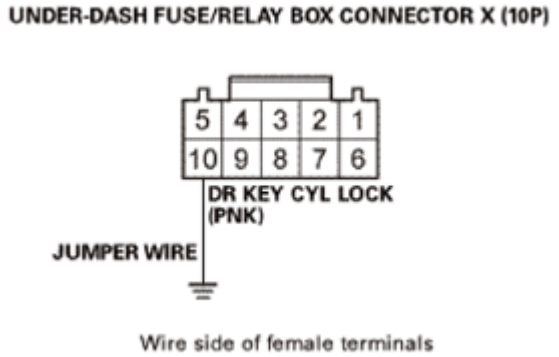

Fig. 25: Identifying Under-Dash Fuse/Relay Box Connector Terminals (10P)
Courtesy of AMERICAN HONDA MOTOR CO., INC.

- 4. Check the parameter(s) below with the HDS.

Signal	Current conditions	
	Values	Unit
Driver's Door Key Cylinder Switch (LOCK)		
Driver's Door Key Cylinder Switch (UNLOCK)		

Are both information indicators ON?

YES : Repair a short between the wires.

NO : The DR KEY CYL UNLOCK to DR KEY CYL LOCK wire is OK. Faulty driver's door key cylinder switch; **REPLACE THE DRIVER'S DOOR LATCH** .

4. Determine possible failure area (driver's door latch, others):
   - 1. Turn the ignition switch to LOCK (0).
   - 2. Disconnect the following connector.

     Driver's door latch 10P connector

   - 3. Check the parameter(s) below with the HDS.

Signal	Current conditions	
	Values	Unit
Driver's Door Key Cylinder Switch (LOCK)		
Driver's Door Key Cylinder Switch (UNLOCK)		

Is either information indicator ON?

YES : Go to step 5.

GETtheMANUALS.org

NO : Faulty driver's door key cylinder switch; **REPLACE THE DRIVER'S DOOR LATCH** .

5. Shorted wire check (DR KEY CYL UNLOCK, DR KEY CYL LOCK lines):
   - 1. Turn the ignition switch to LOCK (0).
   - 2. Disconnect the following connector.

     Under-dash fuse/relay box connector X (10P)

   - 3. Check for continuity between test points 1 and 2 individually.

     Test condition IG LOCK (0)

     Driver's door latch 10P connector: disconnected

     Under-dash fuse/relay box connector X (10P): disconnected

     Test circuit DR KEY CYL UNLOCK

     Test point 1 Under-dash fuse/relay box connector X (10P) No. 9 (BRN)

     Test point 2 Body ground

     Test circuit DR KEY CYL LOCK

     Test point 1 Under-dash fuse/relay box connector X (10P) No. 10 (PNK)

     Test point 2 Body ground

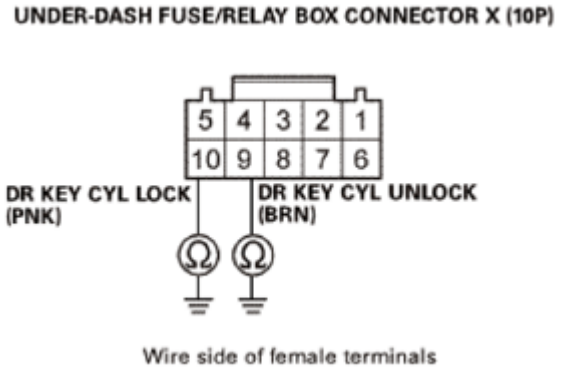

Fig. 26: Checking Continuity Between Under-Dash Fuse/Relay Box Connector Terminals 1 And 2 (10P)
Courtesy of AMERICAN HONDA MOTOR CO., INC.

Is there continuity?

YES : Repair a short to ground in the wire.

GETtheMANUALS.org

NO : The DR KEY CYL UNLOCK and DR KEY CYL LOCK wires are OK. Faulty MICU; **REPLACE THE UNDER-DASH FUSE/RELAY BOX** .

DTC B1128: DRIVER'S DOOR REMOTE SWITCH INPUT CIRCUIT MALFUNCTION (SIMULTANEOUS INPUT OF LOCK AND UNLOCK SIGNAL)

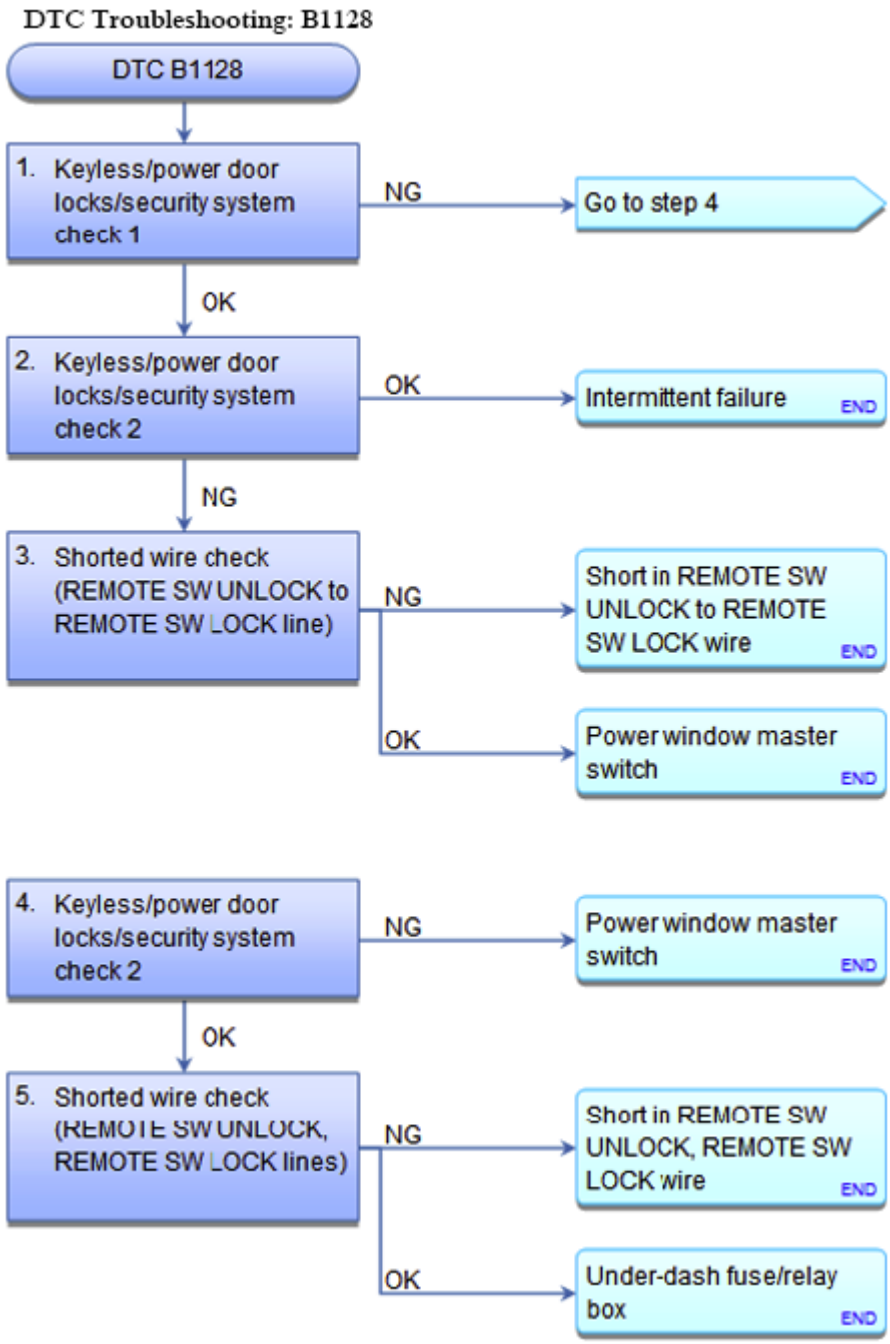

Fig. 27: DTC Troubleshooting Chart (B1128)
Courtesy of AMERICAN HONDA MOTOR CO., INC.

GETtheMANUALS.org

DTC Description	DTC
B1128 Driver's Door Remote Switch Input Circuit Malfunction (Simultaneous Input of Lock and Unlock Signal)	

NOTE: **Refer to the Electrical Wiring Diagrams for the location of the under-dash fuse/relay box connectors.**

1. Keyless/power door locks/security system check 1:
   - 1. With the driver's door lock switch in the neutral position, check the parameter(s) below with the HDS.

Signal	Current conditions	
	Values	Unit
Driver's Door Lock Switch (LOCK)		
Driver's Door Lock Switch (UNLOCK)		

Is either information indicator ON?

YES : Go to step 4.

NO : Go to step 2.

2. Keyless/power door locks/security system check 2:
   - 1. With the driver's door lock switch in the lock position, check the parameter(s) below with the HDS.

Signal	Current conditions	
	Values	Unit
Driver's Door Lock Switch (LOCK)		
Driver's Door Lock Switch (UNLOCK)		

Are both information indicators ON?

YES : Go to step 3.

NO : Intermittent failure, the system is OK at this time.

3. Shorted wire check (REMOTE SW UNLOCK to REMOTE SW LOCK line):
   - 1. Turn the ignition switch to LOCK (0).
   - 2. Disconnect the following connector.

     Power window master switch 26P connector

   - 3. Connect terminals A and B with a jumper wire.

GETtheMANUALS.org

Terminal A Under-dash fuse/relay box connector X (10P) No. 8 (GRN)

Terminal B Body ground

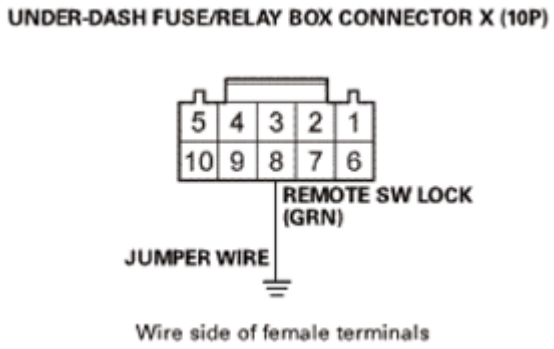

Fig. 28: Under-Dash Fuse/Relay Box - Circuit Diagram
Courtesy of AMERICAN HONDA MOTOR CO., INC.

- 4. Check the parameter(s) below with the HDS.

Signal	Current conditions	
	Values	Unit
Driver's Door Lock Switch (LOCK)		
Driver's Door Lock Switch (UNLOCK)		

Are both information indicators ON?

YES : Repair a short between the wires.

NO : The REMOTE SW UNLOCK to REMOTE SW LOCK wire is OK. Faulty door lock switch; **REPLACE THE POWER WINDOW MASTER SWITCH** .

4. Keyless/power door locks/security system check 2:
   - 1. Turn the ignition switch to LOCK (0).
   - 2. Disconnect the following connector.

     Power window master switch 26P connector

   - 3. Check the parameter(s) below with the HDS.

Signal	Current conditions	
	Values	Unit
Driver's Door Lock Switch (LOCK)		
Driver's Door Lock Switch (UNLOCK)		

Is either information indicator ON?

GETtheMANUALS.org

YES : Go to step 5.

NO : Faulty door lock switch; **REPLACE THE POWER WINDOW MASTER SWITCH** .

5. Shorted wire check (REMOTE SW UNLOCK, REMOTE SW LOCK lines):
   - 1. Turn the ignition switch to LOCK (0).
   - 2. Disconnect the following connector.

     Under-dash fuse/relay box connector X (10P)

   - 3. Check for continuity between test points 1 and 2 individually.

     Test condition IG LOCK (0)

     Power window master switch 26P connector: disconnected

     Under-dash fuse/relay box connector X (10P): disconnected

     Test circuit REMOTE SW UNLOCK

     Test point 1 Under-dash fuse/relay box connector X (10P) No. 7 (GRY)

     Test point 2 Body ground

     Test circuit REMOTE SW LOCK

     Test point 1 Under-dash fuse/relay box connector X (10P) No. 8 (GRN)

     Test point 2 Body ground

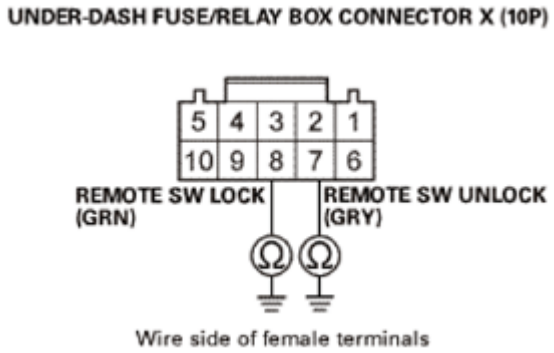

Fig. 29: Under-Dash Fuse/Relay Box - Circuit Diagram (10P)
Courtesy of AMERICAN HONDA MOTOR CO., INC.

Is there continuity?

YES : Repair a short to ground in the wire.

GETtheMANUALS.org

NO : The REMOTE SW UNLOCK and REMOTE SW LOCK wires are OK. Faulty MICU; **REPLACE THE UNDER-DASH FUSE/RELAY BOX** .

DTC B1129: DRIVER'S DOOR LOCK KNOB SWITCH INPUT CIRCUIT MALFUNCTION (SIMULTANEOUS INPUT OF LOCK AND UNLOCK SIGNAL)

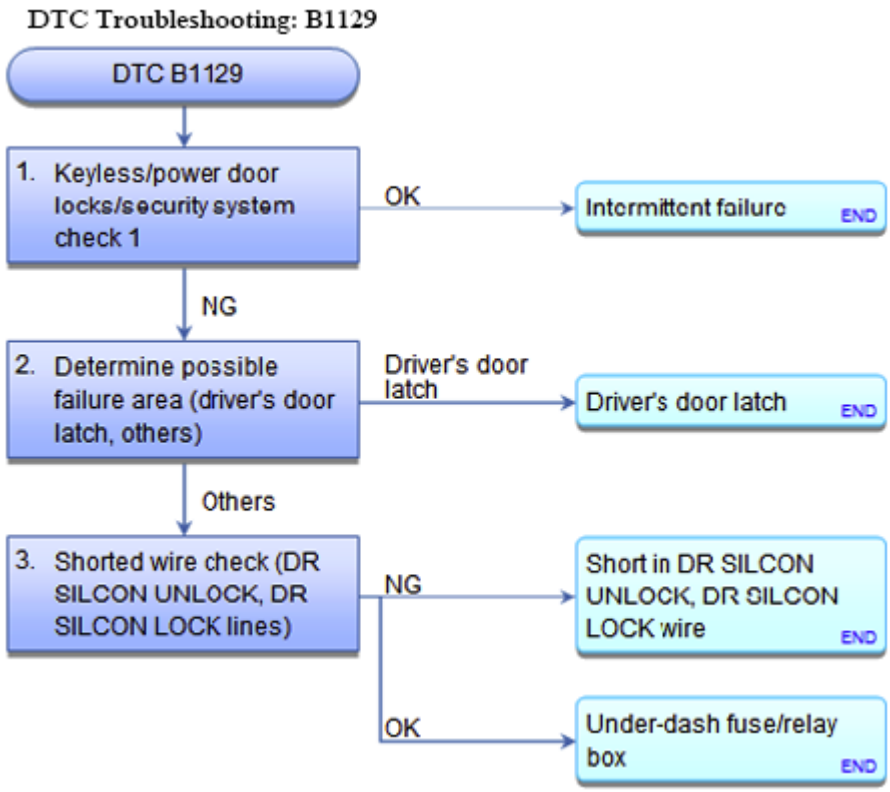

Fig. 30: DTC Troubleshooting Flowchart (B1129)
Courtesy of AMERICAN HONDA MOTOR CO., INC.

DTC Description	DTC
B1129 Driver's Door Lock Knob Switch Input Circuit Malfunction (Simultaneous Input of Lock and Unlock Signal)	

NOTE: **Refer to the Electrical Wiring Diagrams for the location of the under-dash fuse/relay box connectors.**

1. Keyless/power door locks/security system check 1:
   - 1. With the driver's door lock knob switch in the lock position, check the parameter(s) below with the HDS.

Signal	Current conditions	
	Values	Unit

GETtheMANUALS.org

Driver's Door Lock Knob Switch (LOCK)		
Driver's Door Lock Knob Switch (UNLOCK)		

Are both information indicators ON?

YES : Go to step 2.

NO : Intermittent failure, the system is OK at this time.

2. Determine possible failure area (driver's door latch, others):
   - 1. Turn the ignition switch to LOCK (0).
   - 2. Disconnect the following connector.

     Driver's door latch 10P connector

   - 3.

     Check the parameter(s) below with the HDS.

Signal	Current conditions	
	Values	Unit
Driver's Door Lock Knob Switch (LOCK)		
Driver's Door Lock Knob Switch (UNLOCK)		

Is either information indicator ON?

YES : Go to step 3.

NO : Faulty driver's door knob switch; **REPLACE THE DRIVER'S DOOR LATCH** .

3. Shorted wire check (DR SILCON UNLOCK, DR SILCON LOCK lines):
   - 1. Turn the ignition switch to LOCK (0).
   - 2. Disconnect the following connector.

     Under-dash fuse/relay box connector X (10P)

   - 3. Check for continuity between test points 1 and 2 individually.

     Test condition IG LOCK (0)

     Driver's door latch 10P connector: disconnected

     Under-dash fuse/relay box connector X (10P): disconnected

     Test circuit DR SILCON UNLOCK

GETtheMANUALS.org

Test point 1 Under-dash fuse/relay box connector X (10P) No. 4 (WHT)

Test point 2 Body ground

Test circuit DR SILCON LOCK

Test point 1 Under-dash fuse/relay box connector X (10P) No. 5 (LT GRN)

Test point 2 Body ground

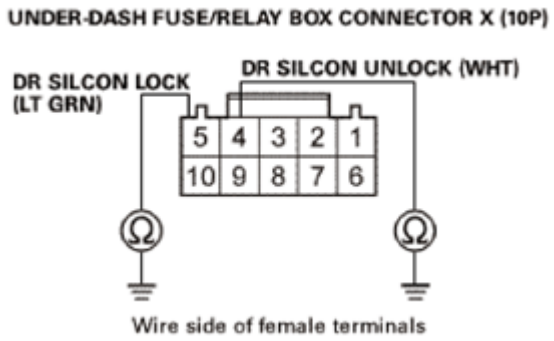

Fig. 31: Under-Dash Fuse/Relay Box - Circuit Diagram
Courtesy of AMERICAN HONDA MOTOR CO., INC.

Is there continuity?

YES : Repair a short to ground in the wire.

NO : The DR SILCON UNLOCK and DR SILCON LOCK wires are OK. Faulty MICU; **REPLACE THE UNDER-DASH FUSE/RELAY BOX** .

DTC B1175: FUEL LEVEL SENSOR (FUEL GAUGE SENDING UNIT) CIRCUIT MALFUNCTION

GETtheMANUALS.org

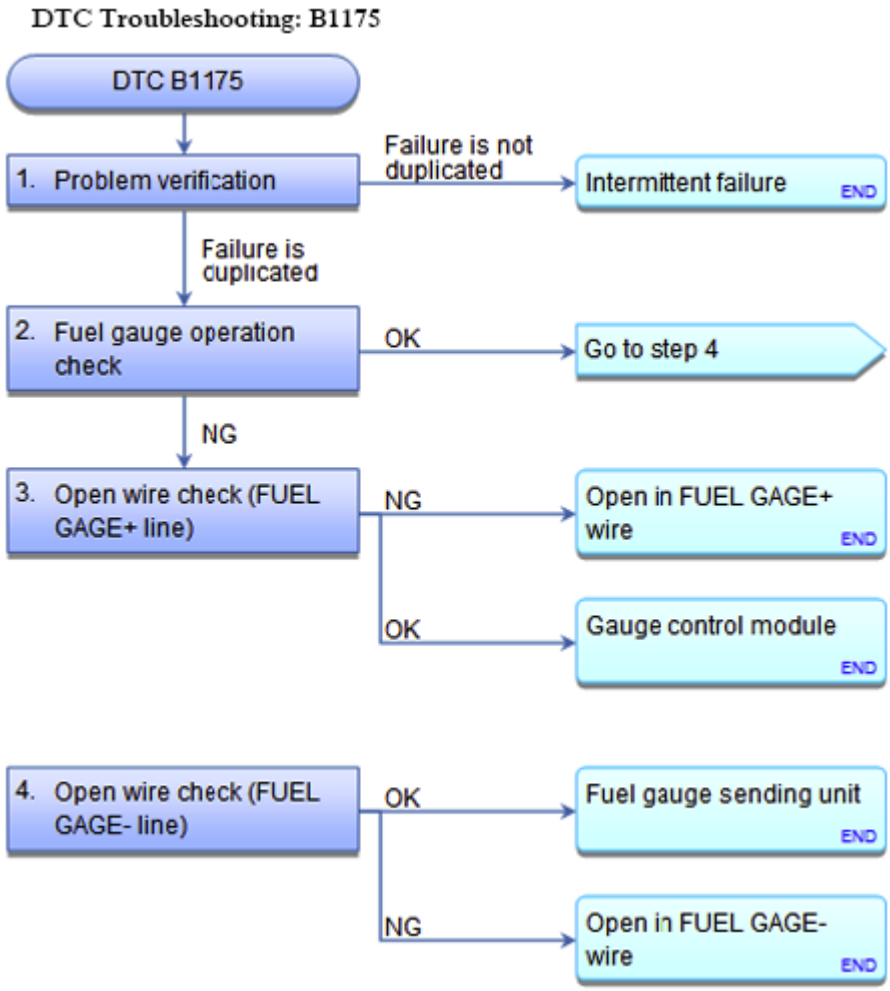

Fig. 32: DTC Troubleshooting Flow Chart (B1175)
Courtesy of AMERICAN HONDA MOTOR CO., INC.

DTC Description	DTC
B1175 Fuel Level Sensor (Fuel Gauge Sending Unit) Circuit Malfunction	

1. Problem verification:
   - 1. Check the fuel gauge.

   Does the gauge move to the empty position and the low fuel indicator blink?

   YES : Go to step 2.

   NO : Intermittent failure, the system is OK at this time. Check for loose or poor connections.

2. Fuel gauge operation check:
   - 1. Turn the ignition switch to LOCK (0).
   - 2. Disconnect the following connector.

GETtheMANUALS.org

Fuel gauge sending unit 4P connector

- 3. Connect terminals A and B with a 2 ohms resistor and a jumper wire.

  Terminal A Fuel gauge sending unit 4P connector No. 2 (YEL)

  Terminal B Body ground

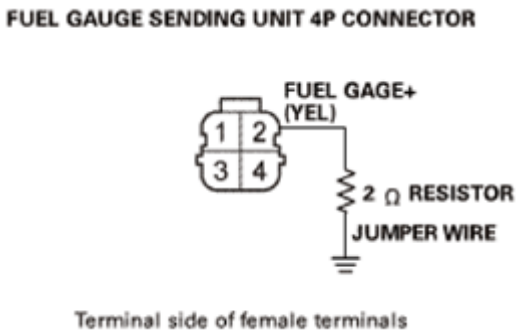

Fig. 33: Connecting Fuel Gauge Sensding Unit Terminals A And B Using 2 ohms Resistor And Jumper Wire
Courtesy of AMERICAN HONDA MOTOR CO., INC.

- 4. Remove the No. A29 (10 A) fuse from the under-hood fuse/relay box for at least 10 seconds, then reinstall it.
- 5. Turn the ignition switch to ON (II).
- 6. Check the fuel gauge.

Does the gauge move to the full position?

YES : Go to step 4.

NO : Go to step 3.

3. Open wire check (FUEL GAGE+ line):
   - 1. Measure the voltage between test points 1 and 2.

     Test condition IG ON (II)

     Fuel gauge sending unit 4P connector: disconnected

     Test circuit FUEL GAGE+

     Test point 1 Gauge control module 32P connector No. 22 (BLU)

     Test point 2 Body ground

GETtheMANUALS.org

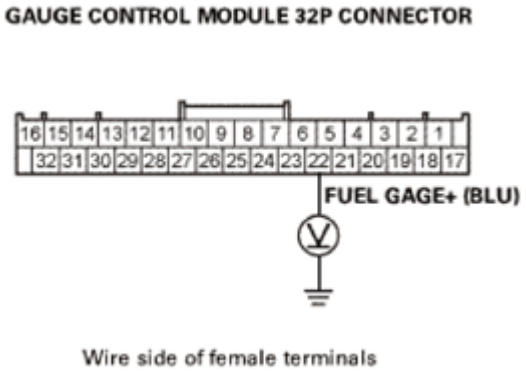

Fig. 34: Measuring Voltage Between Gauge Control Module 32P Connector Terminals 1 And 2
Courtesy of AMERICAN HONDA MOTOR CO., INC.

Is there battery voltage?

YES : Repair an open or high resistance in the wire.

NO : The FUEL GAGE+ wire is OK. **REPLACE THE GAUGE CONTROL MODULE** .

4. Open wire check (FUEL GAGE- line):
   - 1. Turn the ignition switch to LOCK (0).
   - 2. Disconnect the following connector.

     Gauge control module 32P connector

   - 3. Check for continuity between test points 1 and 2.

     Test condition IG LOCK (0)

     Fuel gauge sending unit 4P connector: disconnected

     Gauge control module 32P connector: disconnected

     Test circuit FUEL GAGE-

     Test point 1 Gauge control module 32P connector No. 21 (BLK)

     Test point 2 Fuel gauge sending unit 4P connector No. 4 (PUR)

GETtheMANUALS.org

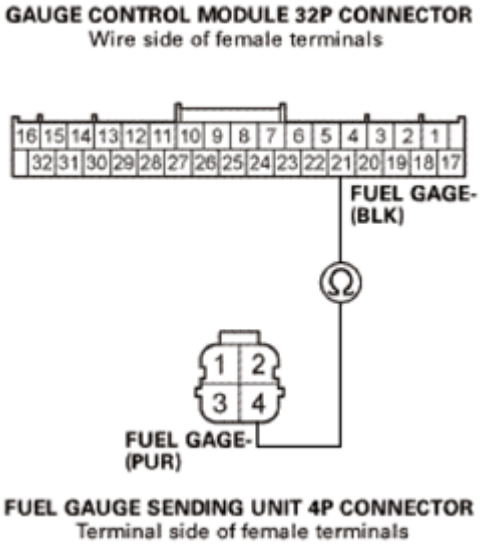

Fig. 35: Checking Continuity Between Gauge Control Module 32P Connector Terminals 1 And 2
Courtesy of AMERICAN HONDA MOTOR CO., INC.

Is there continuity?

YES : The FUEL GAGE- wire is OK. **Replace the fuel gauge sending unit** See FUEL TANK UNIT DISASSEMBLY AND REASSEMBLY or FUEL TANK UNIT REMOVAL AND INSTALLATION .

NO : Repair an open or high resistance in the wire.

DTC B1176: FUEL LEVEL SENSOR (FUEL GAUGE SENDING UNIT) CIRCUIT SHORT

GETtheMANUALS.org

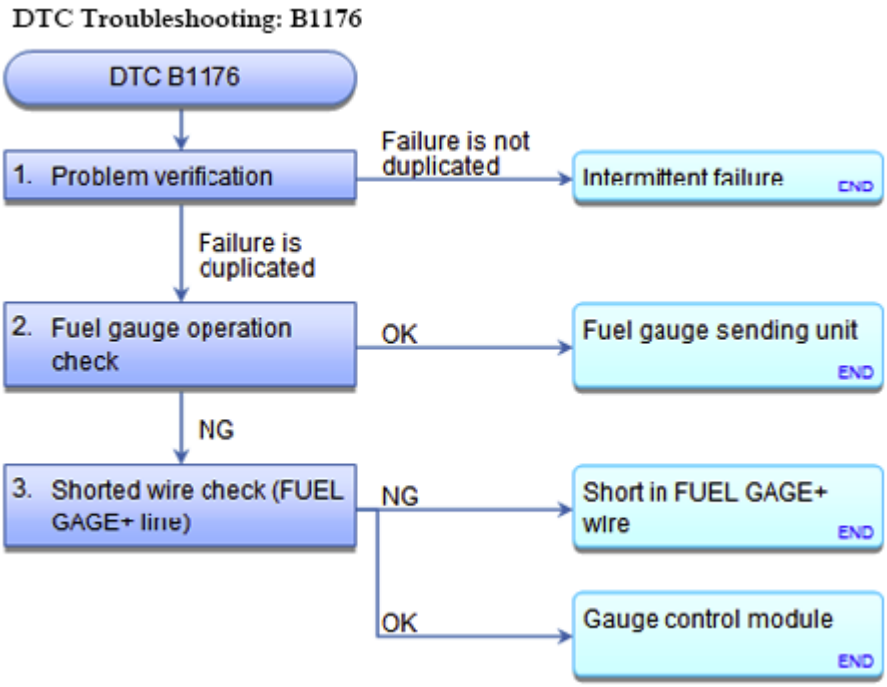

Fig. 36: DTC Troubleshooting Chart (B1176)
Courtesy of AMERICAN HONDA MOTOR CO., INC.

DTC Description	DTC
B1176 Fuel Level Sensor (Fuel Gauge Sending Unit) Circuit Short	

1. Problem verification:
   - 1. Check the fuel gauge.

   Does the gauge move to the full position and the low fuel indicator blink?

   YES : Go to step 2.

   NO : Intermittent failure, the system is OK at this time. Check for loose or poor connections.

2. Fuel gauge operation check:
   - 1. Turn the ignition switch to LOCK (0).
   - 2. Disconnect the following connector.

     Fuel gauge sending unit 4P connector

   - 3. Turn the ignition switch to ON (II).
   - 4. Check the fuel gauge.

   Does the gauge move to the empty position?

GETtheMANUALS.org

YES : REPLACE THE FUEL GAUGE SENDING UNIT .

NO : Go to step 3.

3. Shorted wire check (FUEL GAGE+ line):
   - 1. Turn the ignition switch to LOCK (0).
   - 2. Disconnect the following connector.

     Gauge control module 32P connector

   - 3. Check for continuity between test points 1 and 2.

     Test condition IG LOCK (0)

     Fuel gauge sending unit 4P connector: disconnected

     Gauge control module 32P connector: disconnected

     Test circuit FUEL GAGE+

     Test point 1 Gauge control module 32P connector No. 22 (BLU)

     Test point 2 Body ground

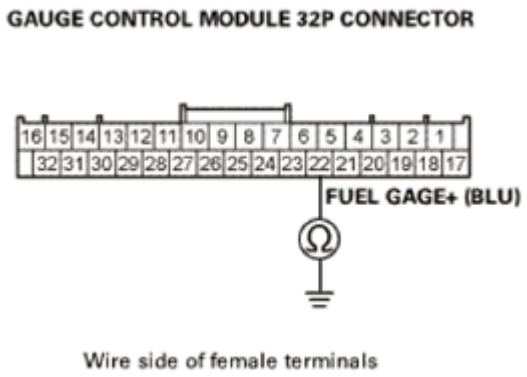

Fig. 37: Checking Continuity Between Gauge Control Module 32P Connector Terminals 1 And 2
Courtesy of AMERICAN HONDA MOTOR CO., INC.

Is there continuity?

YES : Repair a short to ground in the wire between the gauge control module and the fuel gauge sending unit.

NO : The FUEL GAGE+ wire is OK. **REPLACE THE GAUGE CONTROL MODULE** .

GETtheMANUALS.org

DTC B121A OR DTC INDICATOR 49: AN OPEN IN THE MODE CONTROL MOTOR CIRCUIT

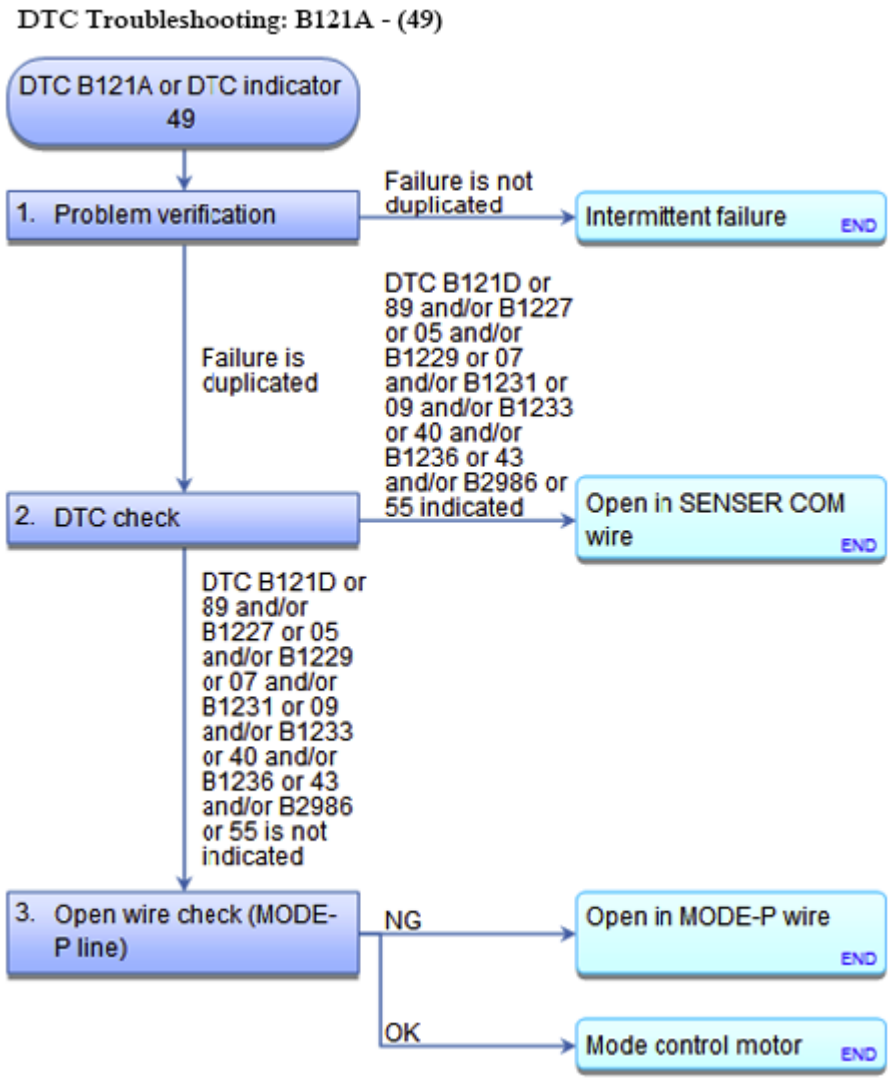

Fig. 38: DTC Troubleshooting Chart (B121A)
Courtesy of AMERICAN HONDA MOTOR CO., INC.

DTC Description	DTC
B121A An open in the mode control motor circuit	

1. Problem verification:
   - 1. Clear the DTCs with the HDS.
   - 2. Turn the ignition switch to LOCK (0), and then back to ON (II).
   - 3. **Do the Self-Diagnostic Function with the HDS or the climate control unit** See **HOW TO TROUBLESHOOT THE BODY ELECTRICAL** or **HOW TO TROUBLESHOOT THE CLIMATE CONTROL SYSTEM** .

GETtheMANUALS.org

- 4. Check for DTCs.

DTC Description	DTC
B121A An open in the mode control motor circuit	

Is DTC B121A or 49 indicated?

YES : Go to step 2.

NO : Intermittent failure. Check for loose wires or poor connections on the mode control motor circuit.

2. DTC check:
   - 1. Check for DTCs.

DTC Description	DTC
B121D Humidity/in-car temperature sensor communication error	
B1227 An open in the outside air temperature sensor circuit	
B1229 An open in the sunlight sensor circuit	
B1231 An open in the evaporator temperature sensor circuit	
B1233 An open in the air mix control motor circuit (driver's)	
B1236 An open in the passenger's air mix control motor circuit	
B2986 An open in the recirculation control motor circuit	

Is DTC B121D or 89 and/or B1227 or 05 and/or B1229 or 07 and/or B1231 or 09 and/or B1233 or 40 and/or B1236 or 43 and/or B2986 or 55 indicated?

YES : Repair an open in the wire between the climate control unit and the mode control motor.

NO : Go to step 3.

3. Open wire check (MODE-P line):
   - 1. Turn the ignition switch to LOCK (0).
   - 2. Connect terminals A and B with a jumper wire.

     Terminal A Mode control motor 7P connector No. 2 (BRN)

     Terminal B Body ground

GETtheMANUALS.org

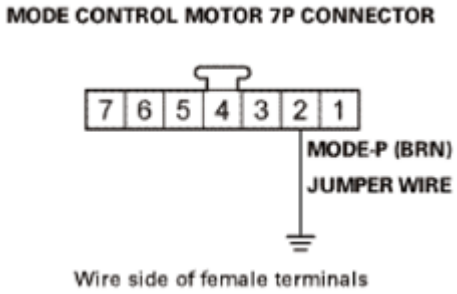

Fig. 39: Connecting Mode Control Motor 7P Connector Terminals A And B Using Jumper Wire
Courtesy of AMERICAN HONDA MOTOR CO., INC.

- 3. Turn the ignition switch to ON (II).
- 4. **Do the Self-Diagnostic Function with the HDS or the climate control unit** See **HOW TO TROUBLESHOOT THE BODY ELECTRICAL** or **HOW TO TROUBLESHOOT THE CLIMATE CONTROL SYSTEM** .
- 5. Check for DTCs.

DTC Description	DTC
B121A An open in the mode control motor circuit	

Is DTC B121A or 49 indicated?

YES : Repair an open in the wire between the climate control unit and the mode control motor.

NO : The MODE-P wire is OK. **REPLACE THE MODE CONTROL MOTOR** .

DTC B121B OR DTC INDICATOR 4A: A SHORT IN THE MODE CONTROL MOTOR CIRCUIT

GETtheMANUALS.org

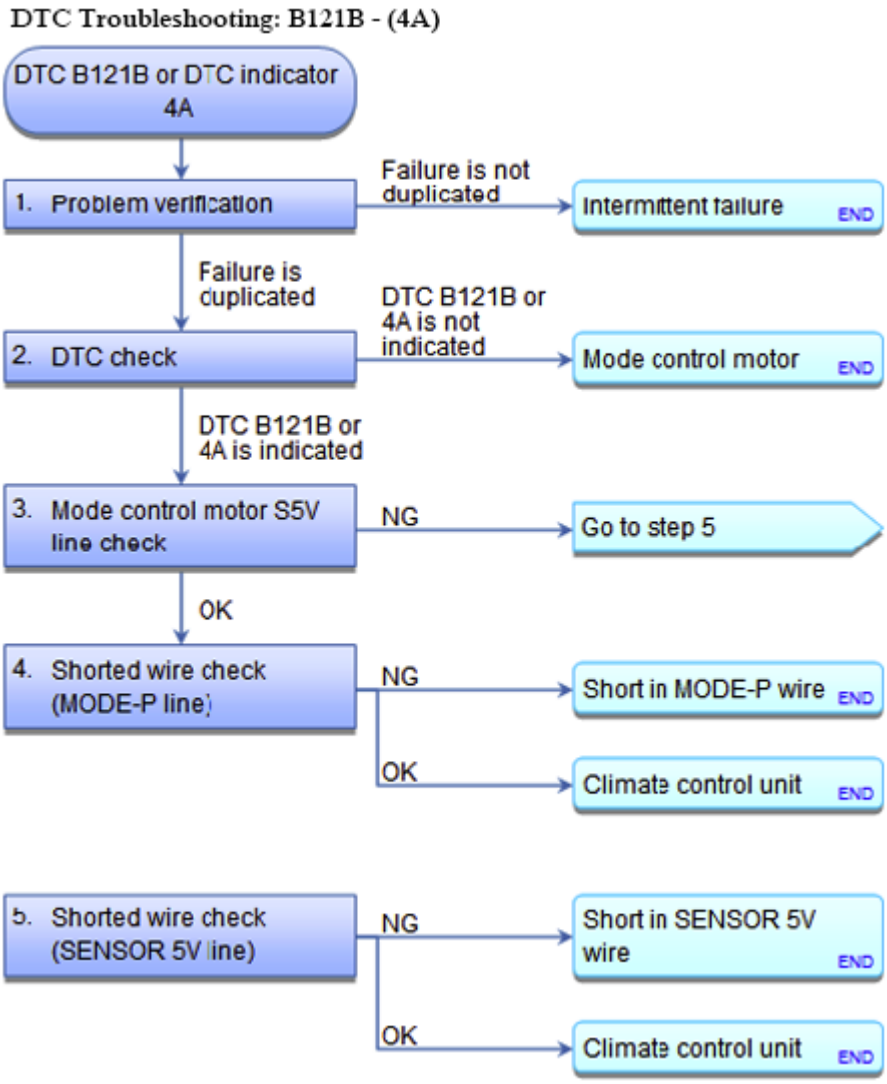

Fig. 40: DTC Troubleshooting Chart (B121B)
Courtesy of AMERICAN HONDA MOTOR CO., INC.

DTC Description	DTC
B121B A short in the mode control motor circuit	

1. Problem verification:
   - 1. Clear the DTCs with the HDS.
   - 2. Turn the ignition switch to LOCK (0), and then back to ON (II).
   - 3. **Do the Self-Diagnostic Function with the HDS or the climate control unit** See **HOW TO TROUBLESHOOT THE BODY ELECTRICAL** or **HOW TO TROUBLESHOOT THE CLIMATE CONTROL SYSTEM** .
   - 4. Check for DTCs.

DTC Description	DTC

GETtheMANUALS.org

B121B A short in the mode control motor circuit	

Is DTC B121B or 4A indicated?

YES : Go to step 2.

NO : Intermittent failure. Check for loose wires or poor connections on the mode control motor circuit.

2. DTC check:
   - 1. Turn the ignition switch to LOCK (0).
   - 2. Disconnect the following connector.

     Mode control motor 7P connector

   - 3. Turn the ignition switch to ON (II).
   - 4. **Do the Self-Diagnostic Function with the HDS or the climate control unit** See **HOW TO TROUBLESHOOT THE BODY ELECTRICAL** or **HOW TO TROUBLESHOOT THE CLIMATE CONTROL SYSTEM** .
   - 5. Check for DTCs with the HDS.

DTC Description	DTC
B121B A short in the mode control motor circuit	

Is DTC B121B or 4A indicated?

YES : Go to step 3.

NO : **REPLACE THE MODE CONTROL MOTOR** .

3. Mode control motor S5V line check:
   - 1. Measure the voltage between test points 1 and 2.

     Test condition IG ON (II)

     Mode control motor 7P connector: disconnected

     Test circuit S5V

     Test point 1 Mode control motor 7P connector No. 1 (BLK)

     Test point 2 Body ground

GETtheMANUALS.org

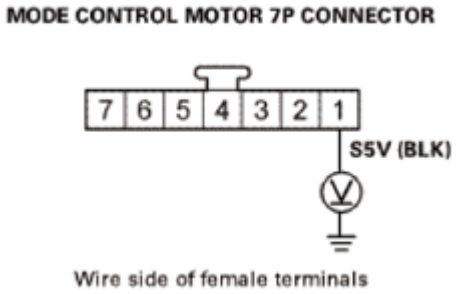

Fig. 41: Measuring Voltage Between Mode Control Motor 7P Connector Terminals
Courtesy of AMERICAN HONDA MOTOR CO., INC.

Is there 5 V?

YES : Go to step 4.

NO : Go to step 5.

4. Shorted wire check (MODE-P line):
   - 1. Turn the ignition switch to LOCK (0).
   - 2. Disconnect the following connector.

     Climate control unit 32P connector

   - 3. Check for continuity between test points 1 and 2.

     Test condition IG LOCK (0)

     Climate control unit 32P connector: disconnected

     Mode control motor 7P connector: disconnected

     Test circuit MODE-P

     Test point 1 Climate control unit 32P connector No. 22 (WHT)

     Test point 2 Body ground

GETtheMANUALS.org

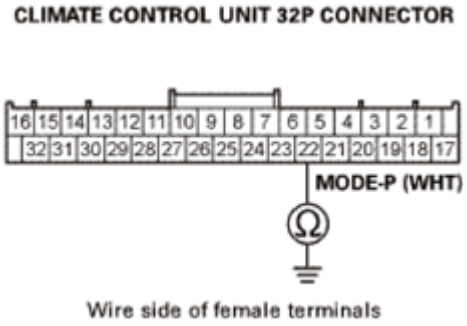

Fig. 42: Checking Continuity Between Climate Control Unit 32P Connector Terminals 1 And 2
Courtesy of AMERICAN HONDA MOTOR CO., INC.

Is there continuity?

YES : Repair a short in the wire between the climate control unit and the mode control motor.

NO : The MODE-P wire is OK. **REPLACE THE CLIMATE CONTROL UNIT** .

5. Shorted wire check (SENSOR 5V line):
   - 1. Turn the ignition switch to LOCK (0).
   - 2. Disconnect the following connector.

     Climate control unit 32P connector

   - 3. Check for continuity between test points 1 and 2.

     Test condition IG LOCK (0)

     Climate control unit 32P connector: disconnected

     Mode control motor 7P connector: disconnected

     Test circuit SENSOR 5V

     Test point 1 Climate control unit 32P connector No. 17 (LT BLU)

     Test point 2 Body ground

GETtheMANUALS.org

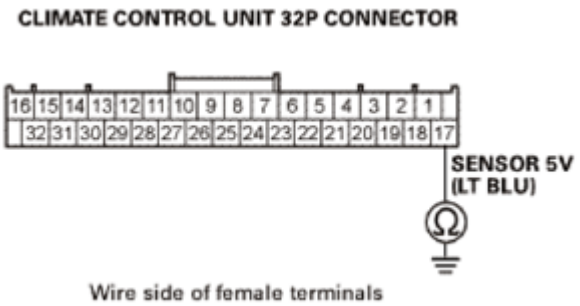

Fig. 43: Checking Continuity Between Climate Control Unit 32P Connector Terminals 1 And 2
Courtesy of AMERICAN HONDA MOTOR CO., INC.

Is there continuity?

YES : Repair a short in the wire between the climate control unit and the mode control motor.

NO : The SENSOR 5V wire is OK. **REPLACE THE CLIMATE CONTROL UNIT** .

DTC B121D OR DTC INDICATOR 89: HUMIDITY/IN-CAR TEMPERATURE SENSOR COMMUNICATION ERROR

GETtheMANUALS.org

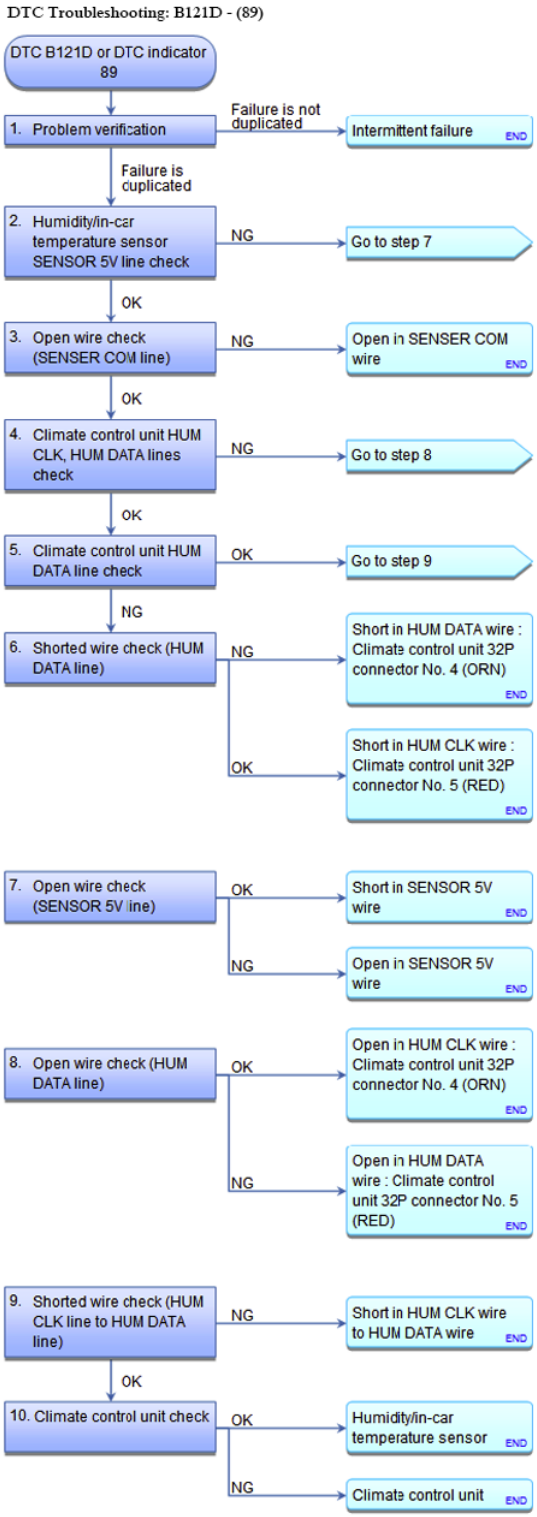

Fig. 44: DTC Troubleshooting Chart (B121D)
Courtesy of AMERICAN HONDA MOTOR CO., INC.

DTC Description	DTC

GETtheMANUALS.org

B121D Humidity/in-car temperature sensor communication error	

1. Problem verification:
   - 1. Clear the DTC with the HDS.
   - 2. Turn the ignition switch to LOCK (0) and then back to ON (II).
   - 3. **Do the Self-Diagnostic Function with the HDS or the climate control unit** See **HOW TO TROUBLESHOOT THE BODY ELECTRICAL** or **HOW TO TROUBLESHOOT THE CLIMATE CONTROL SYSTEM** .
   - 4. Check for DTCs.

DTC Description	DTC
B121D Humidity/in-car temperature sensor communication error	

Is DTC B121D or 89 indicated?

YES : Go to step 2.

NO : Intermittent failure. Check for loose wires or poor connections on the humidity/in-car temperature sensor.

2. Humidity/in-car temperature sensor SENSOR 5V line check:
   - 1. Turn the ignition switch to LOCK (0).
   - 2. Disconnect the following connector.

     Humidity/in-car temperature sensor 4P connector

   - 3. Turn the ignition switch to ON (II).
   - 4. Measure the voltage between test points 1 and 2.

     Test condition IG ON (II)

     Humidity/in-car temperature sensor 4P connector: disconnected

     Test circuit SENSOR 5V

     Test point 1 Humidity/in-car temperature sensor 4P connector No. 1 (LT BLU)

     Test point 2 Body ground

GETtheMANUALS.org

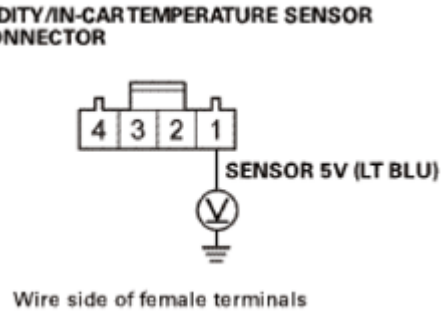

Fig. 45: Measuring Voltage Between Humidity/In-Car Temperature Sensor 4P Connector Terminals 1 And 2
Courtesy of AMERICAN HONDA MOTOR CO., INC.

Is there about 5 V?

YES : Go to step 3.

NO : Go to step 7.

3. Open wire check (SENSOR COM line):
   - 1. Turn the ignition switch to LOCK (0).
   - 2. Disconnect the following connector.

     Climate control unit 32P connector

   - 3. Check for continuity between test points 1 and 2.

     Test condition IG LOCK (0)

     Climate control unit 32P connector: disconnected

     Humidity/in-car temperature sensor 4P connector: disconnected

     Test circuit SENSOR COM

     Test point 1 Climate control unit 32P connector No. 23 (GRY)

     Test point 2 Humidity/in-car temperature sensor 4P connector No. 3 (GRY)

GETtheMANUALS.org

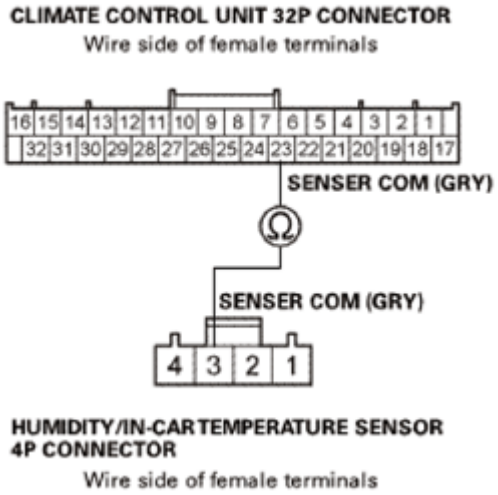

Fig. 46: Checking Continuity Between Humidity/In-Car Temperature Sensor 4P Connector Terminals 1 And 2
Courtesy of AMERICAN HONDA MOTOR CO., INC.

Is there continuity?

YES : The SENSOR COM wire is OK. Go to step 4.

NO : Repair an open in the wire between the climate control unit and the humidity/in-car temperature sensor.

4. Climate control unit HUM CLK, HUM DATA lines check:
   - 1. Connect terminals A and B with a jumper wire.

     Terminal A Humidity/in-car temperature sensor 4P connector No. 2 (ORN)

     Terminal B Humidity/in-car temperature sensor 4P connector No. 4 (RED)

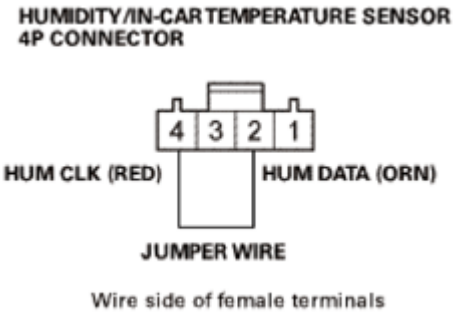

Fig. 47: Identifying Humidity/In-Car Temperature Sensor 4P Connector Terminals
Courtesy of AMERICAN HONDA MOTOR CO., INC.

   - 2. Check for continuity between test points 1 and 2.

GETtheMANUALS.org

Test condition IG LOCK (0)

Climate control unit 32P connector: disconnected

Humidity/in-car temperature sensor 4P connector: disconnected

Humidity/in-car temperature sensor 4P connector No. 2 and No. 4: jumped

Test circuit HUM CLK, HUM DATA

Test point 1 Climate control unit 32P connector No. 4 (ORN)

Test point 2 Climate control unit 32P connector No. 5 (RED)

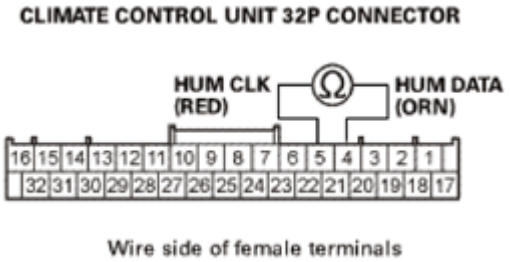

Fig. 48: Identifying Climate Control Unit 32P Connector Terminals
Courtesy of AMERICAN HONDA MOTOR CO., INC.

Is there continuity?

YES : Go to step 5.

NO : Go to step 8.

5. Climate control unit HUM DATA line check:
   - 1. Check for continuity between test points 1 and 2.

     Test condition IG LOCK (0)

     Climate control unit 32P connector: disconnected

     Humidity/in-car temperature sensor 4P connector: disconnected

     Humidity/in-car temperature sensor 4P connector No. 2 and No. 4: jumped

     Test circuit HUM DATA

     Test point 1 Climate control unit 32P connector No. 4 (ORN)

     Test point 2 Body ground

GETtheMANUALS.org

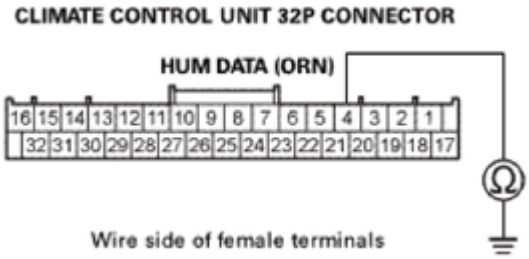

Fig. 49: Checking Continuity Between Climate Control Unit 32P Connector Terminals
Courtesy of AMERICAN HONDA MOTOR CO., INC.

Is there continuity?

YES : Go to step 6.

NO : Go to step 9.

6. Shorted wire check (HUM DATA line):
   - 1. Disconnect the jumper wire.
   - 2. Check for continuity between test points 1 and 2.

   Test condition IG LOCK (0)

   Climate control unit 32P connector: disconnected

   Humidity/in-car temperature sensor 4P connector: disconnected

   Test circuit HUM DATA

   Test point 1 Climate control unit 32P connector No. 4 (ORN)

   Test point 2 Body ground

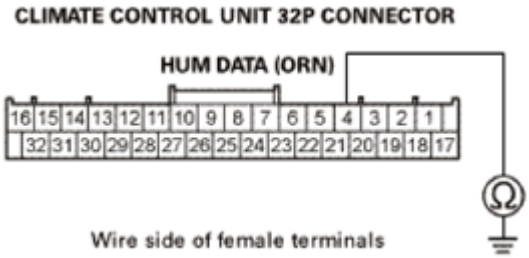

Fig. 50: Checking Continuity Between Climate Control Unit 32P Connector Terminals 1 And 2
Courtesy of AMERICAN HONDA MOTOR CO., INC.

Is there continuity?

GETtheMANUALS.org

YES : Repair a short to body ground in the wire between the climate control unit and the humidity/in-car temperature sensor.

NO : Repair a short to body ground in the wire between the climate control unit and the humidity/in-car temperature sensor.

7. Open wire check (SENSOR 5V line):
   - 1. Turn the ignition switch to LOCK (0).
   - 2. Disconnect the following connector.

     Climate control unit 32P connector

   - 3. Check for continuity between test points 1 and 2.

     Test condition IG LOCK (0)

     Climate control unit 32P connector: disconnected

     Humidity/in-car temperature sensor 4P connector: disconnected

     Test circuit SENSOR 5V

     Test point 1 Climate control unit 32P connector No. 17 (LT BLU)

     Test point 2 Humidity/in-car temperature sensor 4P connector No. 1 (LT BLU)

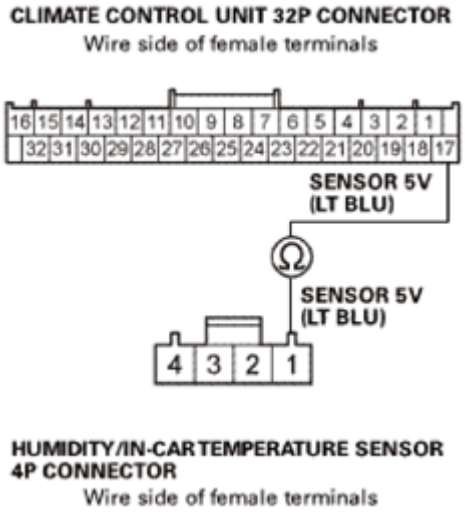

Fig. 51: Checking Continuity Between Humidity/In-Car Temperature Sensor 4P Connector Terminals 1 And 2
Courtesy of AMERICAN HONDA MOTOR CO., INC.

Is there continuity?

GETtheMANUALS.org

YES : Repair a short in the wire between the climate control unit and the humidity/in-car temperature sensor.

NO : Repair an open in the wire between the climate control unit and the humidity/in-car temperature sensor.

8. Open wire check (HUM DATA line):
   - 1. Disconnect the jumper wire.
   - 2. Check for continuity between test points 1 and 2.

     Test condition IG LOCK (0)

     Climate control unit 32P connector: disconnected

     Humidity/in-car temperature sensor 4P connector: disconnected

     Test circuit HUM DATA

     Test point 1 Climate control unit 32P connector No. 4 (ORN)

     Test point 2 Humidity/in-car temperature sensor 4P connector No. 2 (ORN)

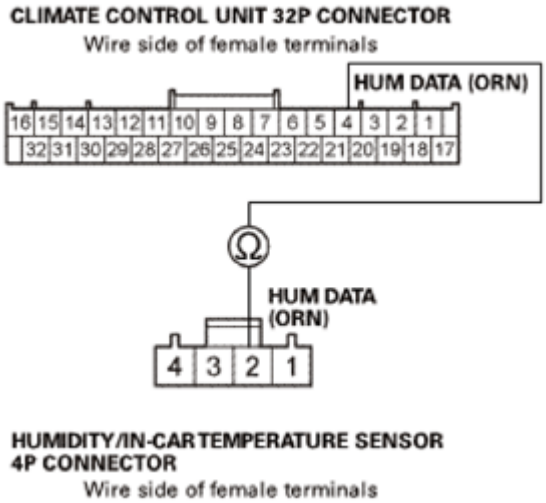

Fig. 52: Checking Continuity Between Humidity/In-Car Temperature Sensor 4P Connector Terminals 1 And 2
Courtesy of AMERICAN HONDA MOTOR CO., INC.

Is there continuity?

YES : Repair an open in the wire between the climate control unit and the humidity/in-car temperature sensor.

NO : Repair an open in the wire between the climate control unit and the humidity/in-car temperature

GETtheMANUALS.org

sensor.

9. Shorted wire check (HUM CLK line to HUM DATA line):
    - 1. Disconnect the jumper wire.
    - 2. Check for continuity between test points 1 and 2.

    Test condition IG LOCK (0)

    Climate control unit 32P connector: disconnected

    Humidity/in-car temperature sensor 4P connector: disconnected

    Test circuit HUM CLK, HUM DATA

    Test point 1 Climate control unit 32P connector No. 4 (ORN)

    Test point 2 Climate control unit 32P connector No. 5 (RED)

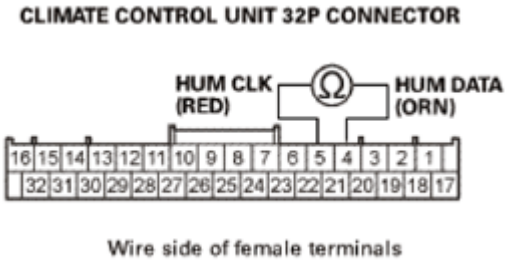

Fig. 53: Checking Continuity Between Climate Control Unit 32P Connector Terminals 1 And 2
Courtesy of AMERICAN HONDA MOTOR CO., INC.

Is there continuity?

YES : Repair a short in the wires between the climate control unit and the humidity/in-car temperature sensor.

NO : Go to step 10.

10. Climate control unit check:
    - 1. Reconnect the climate control unit 32P connector.
    - 2. Connect terminals A and B with a jumper wire.

    Terminal A Humidity/in-car temperature sensor 4P connector No. 2 (ORN)

    Terminal B Humidity/in-car temperature sensor 4P connector No. 4 (RED)

GETtheMANUALS.org

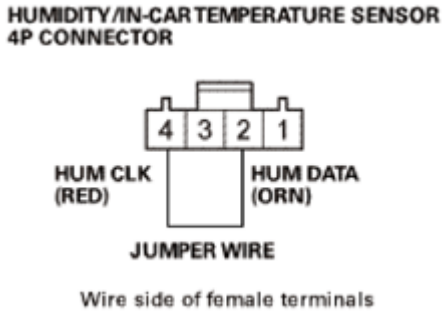

Fig. 54: Identifying Humidity/In-Car Temperature Sensor 4P Connector Terminals
Courtesy of AMERICAN HONDA MOTOR CO., INC.

- 3. Turn the ignition switch to ON (II).
- 4. Press and hold the AUTO and ON/OFF buttons.

Fig. 55: Identifying Mode Indicator
Courtesy of AMERICAN HONDA MOTOR CO., INC.

Does the mode indicator turn on?

YES : **REPLACE THE HUMIDITY/IN-CAR TEMPERATURE SENSOR** .

NO : **REPLACE THE CLIMATE CONTROL UNIT** .

DTC B1220 OR DTC INDICATOR 56: A SHORT IN THE RECIRCULATION CONTROL MOTOR CIRCUIT

GETtheMANUALS.org

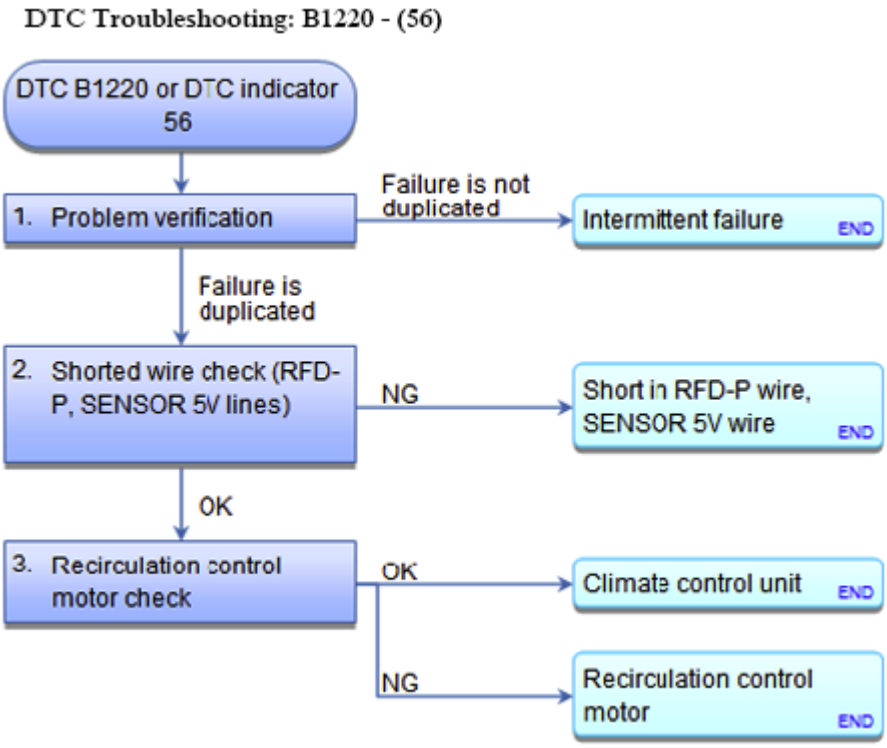

Fig. 56: DTC Troubleshooting Chart (B1220)
Courtesy of AMERICAN HONDA MOTOR CO., INC.

DTC Description	DTC
B1220 A Short in the recirculation control motor circuit	

1. Problem verification:
   - 1. Clear the DTC with the HDS.
   - 2. Turn the ignition switch to LOCK (0), and then back to ON (II).
   - 3. **Do the Self-Diagnostic Function with the HDS or the climate control unit** See **HOW TO TROUBLESHOOT THE BODY ELECTRICAL** or **HOW TO TROUBLESHOOT THE CLIMATE CONTROL SYSTEM** .
   - 4. Check for DTCs.

DTC Description	DTC
B1220 A Short in the recirculation control motor circuit	

Is DTC B1220 or 56 indicated?

YES : Go to step 2.

NO : Intermittent failure. Check for loose wires or poor connections on the recirculation control motor circuit.

GETtheMANUALS.org

2. Shorted wire check (RFD-P, SENSOR 5V lines):
    - 1. Turn the ignition switch to LOCK (0).
    - 2. Disconnect the following connectors.

      Climate control unit 32P connector

      Recirculation control motor 7P connector

    - 3. Check for continuity between test points 1 and 2 individually.

      Test condition IG LOCK (0)

      Climate control unit 32P connector: disconnected

      Recirculation control motor 7P connector: disconnected

      Test circuit RFD-P

      Test point 1 Climate control unit 32P connector No. 6 (PNK)

      Test point 2 Body ground

      Test circuit SENSOR 5V

      Test point 1 Climate control unit 32P connector No. 17 (LT BLU)

      Test point 2 Body ground

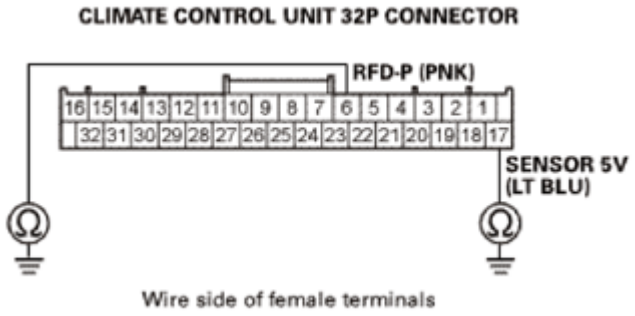

Fig. 57: Checking Continuity Between Climate Control Unit 32P Connector Terminals 1 And 2
Courtesy of AMERICAN HONDA MOTOR CO., INC.

Is there continuity?

YES : Repair a short to body ground in the wire(s) between the climate control unit and the recirculation control motor.

GETtheMANUALS.org

NO : The RFD-P and SENSOR 5V wires are OK. Go to step 3.

3. Recirculation control motor check:
   - 1. **TEST THE RECIRCULATION CONTROL MOTOR** .

Is the recirculation control motor OK?

YES : **REPLACE THE CLIMATE CONTROL UNIT** .

NO : **REPLACE THE RECIRCULATION CONTROL MOTOR** .

DTC B1227 OR DTC INDICATOR 05: AN OPEN IN THE OUTSIDE AIR TEMPERATURE SENSOR CIRCUIT

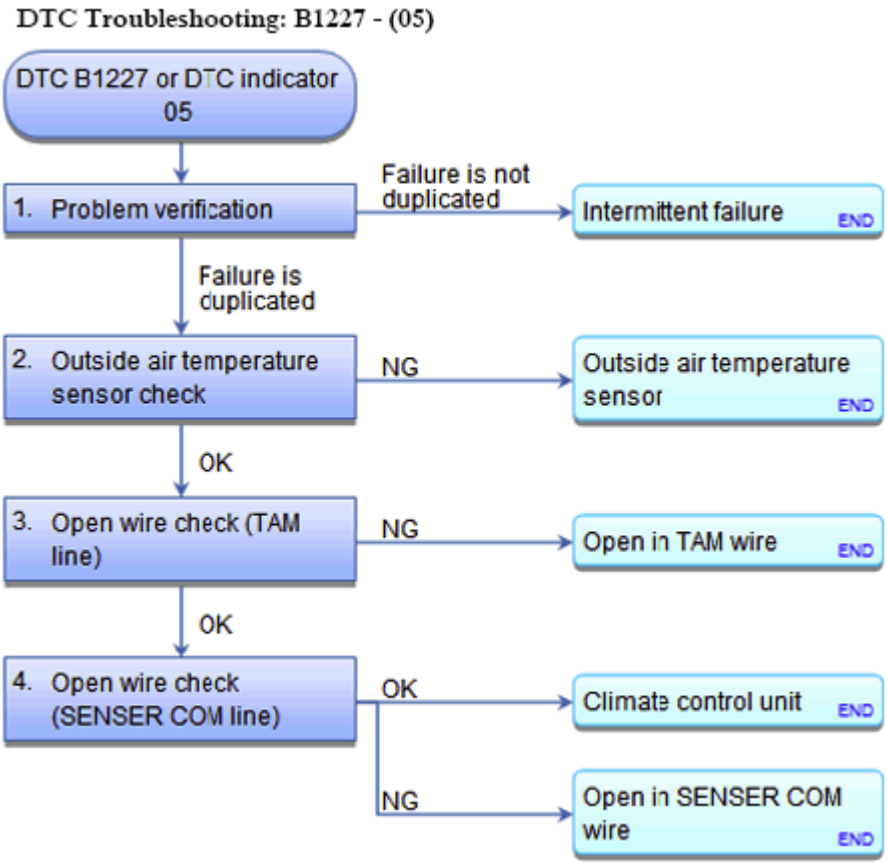

Fig. 58: DTC Troubleshooting Chart (B1227)
Courtesy of AMERICAN HONDA MOTOR CO., INC.

DTC Description	DTC
B1227 An open in the outside air temperature sensor circuit	

1. Problem verification:

GETtheMANUALS.org

- 1. Clear the DTC with the HDS.
- 2. Turn the ignition switch to LOCK (0), and then back to ON (II).
- 3. **Do the Self-Diagnostic Function with the HDS or the climate control unit** See **HOW TO TROUBLESHOOT THE BODY ELECTRICAL** or **HOW TO TROUBLESHOOT THE CLIMATE CONTROL SYSTEM** .
- 4. Check for DTCs.

DTC Description	DTC
B1227 An open in the outside air temperature sensor circuit	

Is DTC B1227 or 05 indicated?

YES : Go to step 2.

NO : Intermittent failure. Check for loose wires or poor connections on the outside air temperature sensor circuit.

2. Outside air temperature sensor check:
   - 1. Turn the ignition switch to LOCK (0).
   - 2. **REMOVE THE OUTSIDE AIR TEMPERATURE SENSOR, AND TEST IT** .

   Is the outside air temperature sensor OK?

   YES : With the outside air temperature sensor disconnected, go to step 3.

   NO : **REPLACE THE OUTSIDE AIR TEMPERATURE SENSOR** .

3. Open wire check (TAM line):
   - 1. Disconnect the following connector.

     Climate control unit 32P connector

   - 2. Check for continuity between test points 1 and 2.

     Test condition IG LOCK (0)

     Climate control unit 32P connector: disconnected

     Outside air temperature sensor 2P connector: disconnected

     Test circuit TAM

     Test point 1 Climate control unit 32P connector No. 19 (PNK)

     Test point 2 Outside air temperature sensor 2P connector No. 1 (BLU)

GETtheMANUALS.org

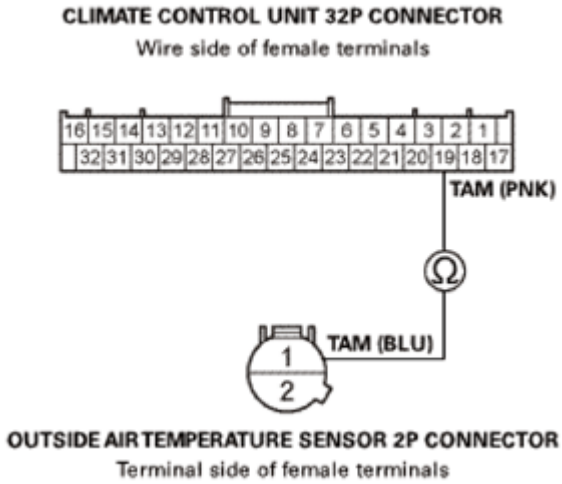

Fig. 59: Checking Continuity Between Climate Control Unit 32P Connector Terminals 1 And 2
Courtesy of AMERICAN HONDA MOTOR CO., INC.

Is there continuity?

YES : The TAM wire is OK. Go to step 4.

NO : Repair an open in the wire between the climate control unit and the outside air temperature sensor.

4. Open wire check (SENSOR COM line):
   - 1. Check for continuity between test points 1 and 2.

     Test condition IG LOCK (0)

     Climate control unit 32P connector: disconnected

     Outside air temperature sensor 2P connector: disconnected

     Test circuit SENSOR COM

     Test point 1 Climate control unit 32P connector No. 23 (GRY)

     Test point 2 Outside air temperature sensor 2P connector No. 2 (GRY)

GETtheMANUALS.org

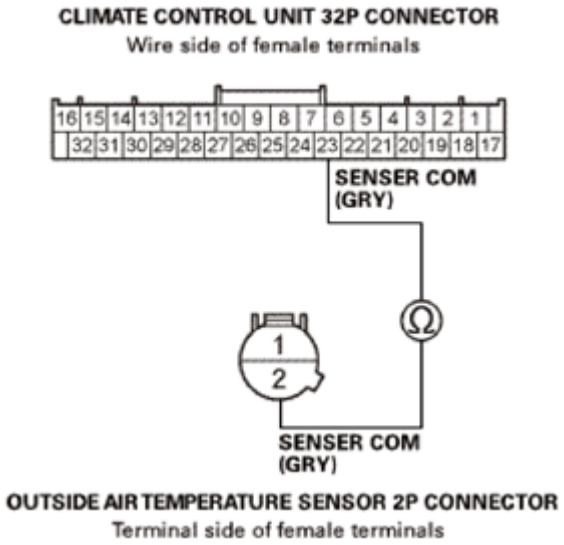

Fig. 60: Checking Continuity Between Climate Control Unit 32P Connector Terminals 1 And 2
Courtesy of AMERICAN HONDA MOTOR CO., INC.

Is there continuity?

YES : The SENSOR COM wire is OK. **REPLACE THE CLIMATE CONTROL UNIT** .

NO : Repair an open in the wire between the climate control unit and the outside air temperature sensor.

DTC B1228 OR DTC INDICATOR 06: A SHORT IN THE OUTSIDE AIR TEMPERATURE SENSOR CIRCUIT

GETtheMANUALS.org

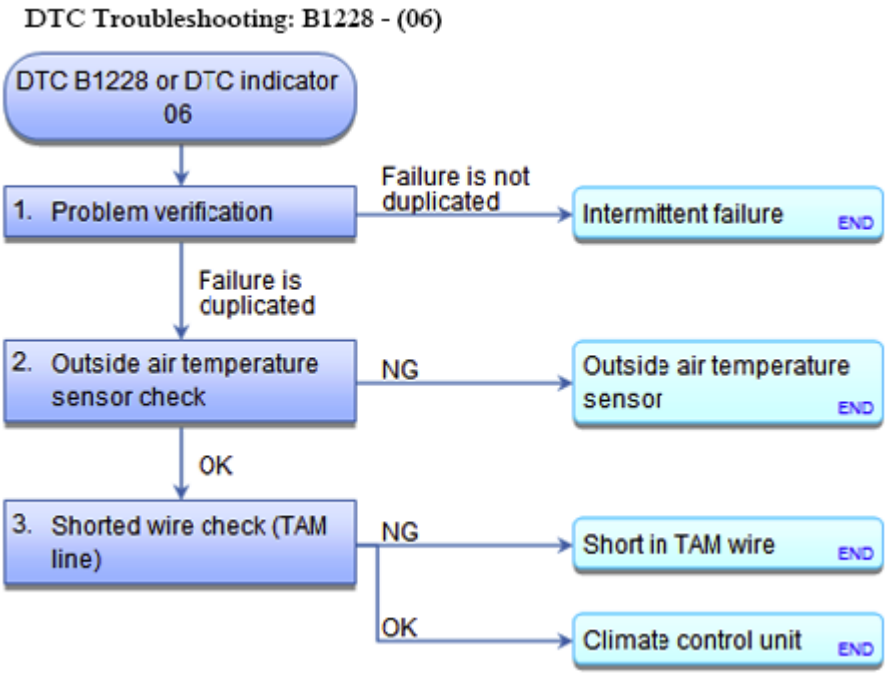

Fig. 61: DTC Troubleshooting Chart (B1228)
Courtesy of AMERICAN HONDA MOTOR CO., INC.

DTC Description	DTC
B1228 A short in the outside air temperature sensor circuit	

1. Problem verification:
   - 1. Clear the DTC with the HDS.
   - 2. Turn the ignition switch to LOCK (0), and then back to ON (II).
   - 3. **Do the Self-Diagnostic Function with the HDS or the climate control unit** See **HOW TO TROUBLESHOOT THE BODY ELECTRICAL** or **HOW TO TROUBLESHOOT THE CLIMATE CONTROL SYSTEM** .
   - 4. Check for DTCs.

DTC Description	DTC
B1228 A short in the outside air temperature sensor circuit	

Is DTC B1228 or 06 indicated?

YES : Go to step 2.

NO : Intermittent failure. Check for loose wires or poor connections on the outside air temperature circuit.

2. Outside air temperature sensor check:
   - 1. Turn the ignition switch to LOCK (0).

GETtheMANUALS.org

- 2. **REMOVE THE OUTSIDE AIR TEMPERATURE SENSOR, AND TEST IT** .

Is the outside air temperature sensor OK?

YES : With the outside air temperature sensor disconnected, go to step 3.

NO : **REPLACE THE OUTSIDE AIR TEMPERATURE SENSOR** .

3. Shorted wire check (TAM line):
   - 1. Disconnect the following connector.

     Climate control unit 32P connector

   - 2. Check for continuity between test points 1 and 2.

     Test condition IG LOCK (0)

     Climate control unit 32P connector: disconnected

     Outside air temperature sensor 2P connector: disconnected

     Test circuit TAM

     Test point 1 Climate control unit 32P connector No. 19 (PNK)

     Test point 2 Body ground

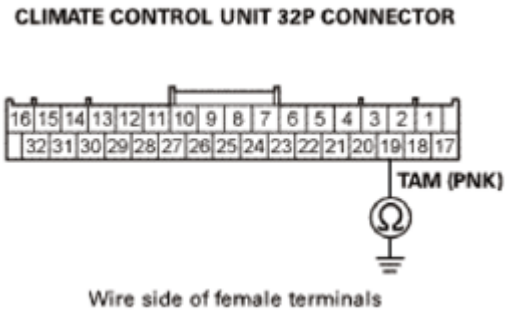

Fig. 62: Checking Continuity Between Climate Control Unit 32P Connector Terminals 1 And 2
Courtesy of AMERICAN HONDA MOTOR CO., INC.

Is there continuity?

YES : Repair a short to body ground in the wire between the climate control unit and the outside air temperature sensor.

NO : The TAM wire is OK. **REPLACE THE CLIMATE CONTROL UNIT** .

GETtheMANUALS.org

DTC B1229 OR DTC INDICATOR 07: AN OPEN IN THE SUNLIGHT SENSOR CIRCUIT

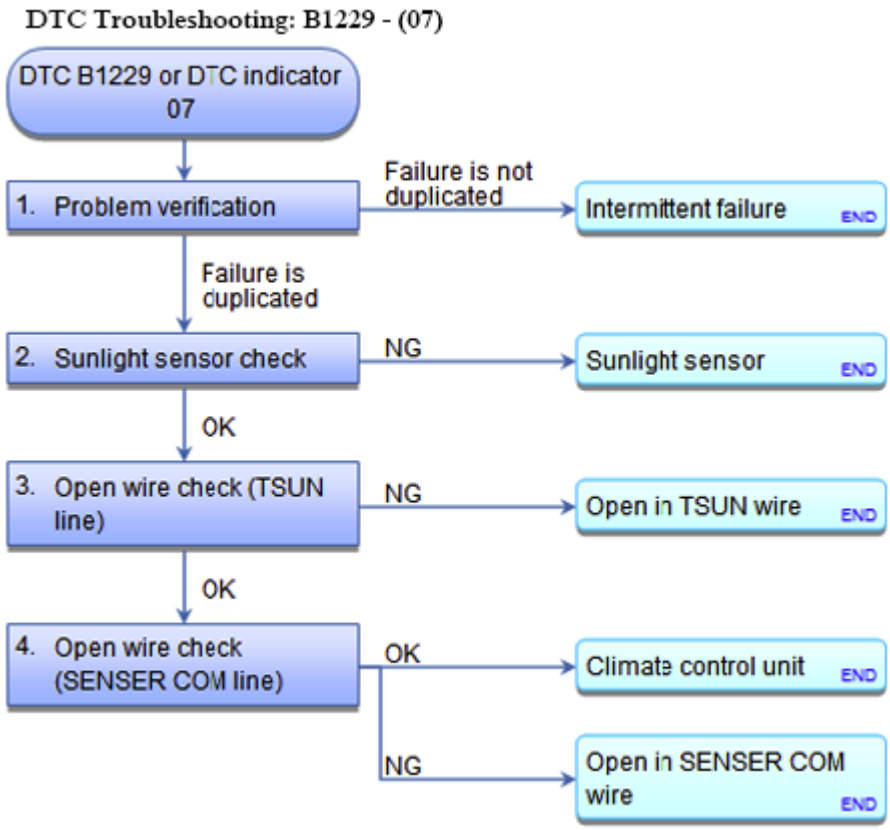

Fig. 63: DTC Troubleshooting Chart (B1229)
Courtesy of AMERICAN HONDA MOTOR CO., INC.

DTC Description	DTC
B1229 An open in the sunlight sensor circuit	

1. Problem verification:
   - 1. Clear the DTC with the HDS.
   - 2. Turn the ignition switch to LOCK (0) and then back to ON (II).
   - 3. **Do the Self-Diagnostic Function with the HDS or the climate control unit** See **HOW TO TROUBLESHOOT THE BODY ELECTRICAL** or **HOW TO TROUBLESHOOT THE CLIMATE CONTROL SYSTEM** .
   - 4. Check for DTCs.

DTC Description	DTC
B1229 An open in the sunlight sensor circuit	

Is DTC B1229 or 07 indicated?

GETtheMANUALS.org

YES : Go to step 2.

NO : Intermittent failure. Check for loose wires or poor connections on the sunlight sensor circuit.

2. Sunlight sensor check:
   - 1. Turn the ignition switch to LOCK (0).
   - 2. **TEST THE SUNLIGHT SENSOR** .

Is the sunlight sensor OK?

YES : With the automatic lighting/sunlight sensor disconnected, go to step 3.

NO : **REPLACE THE SUNLIGHT SENSOR** .

3. Open wire check (TSUN line):
   - 1. Disconnect the following connector.

     Climate control unit 32P connector

   - 2. Check for continuity between test points 1 and 2.

     Test condition IG LOCK (0)

     Climate control unit 32P connector: disconnected

     Automatic lighting/sunlight sensor 7P connector: disconnected

     Test circuit TSUN

     Test point 1 Climate control unit 32P connector No. 3 (PUR)

     Test point 2 Automatic lighting/sunlight sensor 7P connector No. 2 (PUR)

GETtheMANUALS.org

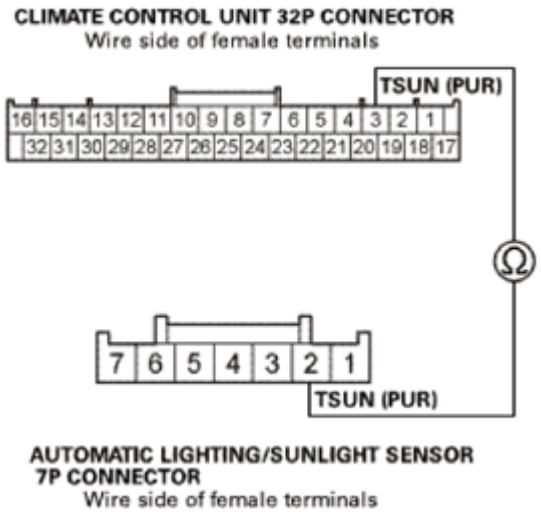

Fig. 64: Checking Continuity Between Automatic Lighting/Sunlight Sensor 7P Connector Terminals 1 And 2
Courtesy of AMERICAN HONDA MOTOR CO., INC.

Is there continuity?

YES : The TSUN wire is OK. Go to step 4.

NO : Repair an open in the wire between the climate control unit and the sunlight sensor.

4. Open wire check (SENSOR COM line):
   - 1. Check for continuity between test points 1 and 2.

     Test condition IG LOCK (0)

     Climate control unit 32P connector: disconnected

     Automatic lighting/sunlight sensor 7P connector: disconnected

     Test circuit SENSOR COM

     Test point 1 Climate control unit 32P connector No. 23 (GRY)

     Test point 2 Automatic lighting/sunlight sensor 7P connector No. 3 (GRY)

GETtheMANUALS.org

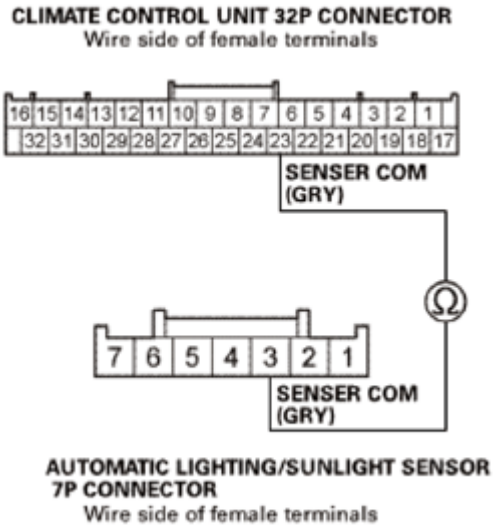

Fig. 65: Checking Continuity Between Automatic Lighting/Sunlight Sensor 7P Connector Terminals 1 And 2
Courtesy of AMERICAN HONDA MOTOR CO., INC.

Is there continuity?

YES : The SENSOR COM wire is OK. **REPLACE THE CLIMATE CONTROL UNIT** .

NO : Repair an open in the wire between the climate control unit and the sunlight sensor.

DTC B1230 OR DTC INDICATOR 08: A SHORT IN THE SUNLIGHT SENSOR CIRCUIT

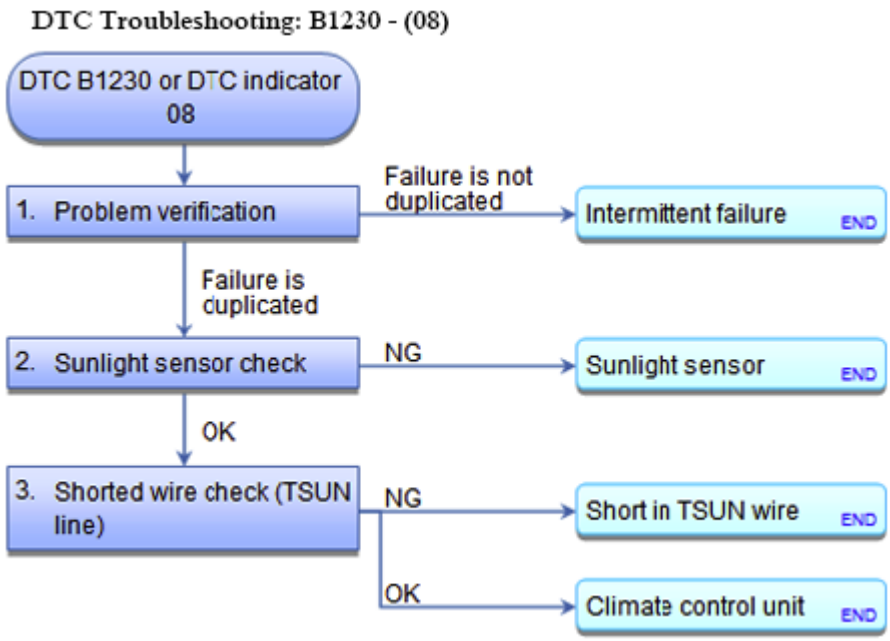

GETtheMANUALS.org

Fig. 66: DTC Troubleshooting Chart (B1230)
Courtesy of AMERICAN HONDA MOTOR CO., INC.

DTC Description	DTC
B1230 A short in the sunlight sensor circuit	

1. Problem verification:
   - 1. Clear the DTC with the HDS.
   - 2. Turn the ignition switch to LOCK (0), and then back to ON (II).
   - 3. **Do the Self-Diagnostic Function with the HDS or the climate control unit** See **HOW TO TROUBLESHOOT THE BODY ELECTRICAL** or **HOW TO TROUBLESHOOT THE CLIMATE CONTROL SYSTEM** .
   - 4. Check for DTCs.

DTC Description	DTC
B1230 A short in the sunlight sensor circuit	

   Is DTC B1230 or 08 indicated?

   YES : Go to step 2.

   NO : Intermittent failure. Check for loose wires or poor connections on the sunlight sensor circuit.

2. Sunlight sensor check:
   - 1. Turn the ignition switch to LOCK (0).
   - 2. **TEST THE SUNLIGHT SENSOR** .

   Is the sunlight sensor OK?

   YES : With the automatic lighting/sunlight sensor disconnected, go to step 3.

   NO : **REPLACE THE SUNLIGHT SENSOR** .

3. Shorted wire check (TSUN line):
   - 1. Disconnect the following connector.

     Climate control unit 32P connector

   - 2. Check for continuity between test points 1 and 2.

     Test condition IG LOCK (0)

     Climate control unit 32P connector: disconnected

GETtheMANUALS.org

Automatic lighting/sunlight sensor 7P connector: disconnected

Test circuit TSUN

Test point 1 Climate control unit 32P connector No. 3 (PUR)

Test point 2 Body ground

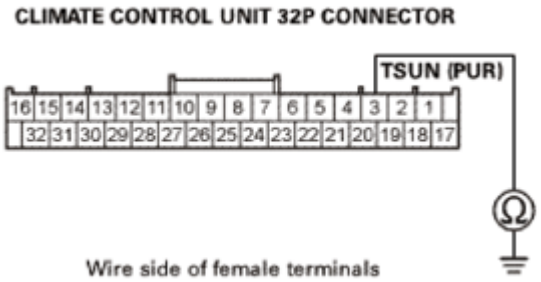

Fig. 67: Checking Continuity Between Climate Control Unit 32P Connector Terminals 1 And 2
Courtesy of AMERICAN HONDA MOTOR CO., INC.

Is there continuity?

YES : Repair a short to body ground in the wire between the climate control unit and the sunlight sensor.

NO : The TSUN wire is OK. **REPLACE THE CLIMATE CONTROL UNIT** .

DTC B1231 OR DTC INDICATOR 09: AN OPEN IN THE EVAPORATOR TEMPERATURE SENSOR CIRCUIT

GETtheMANUALS.org

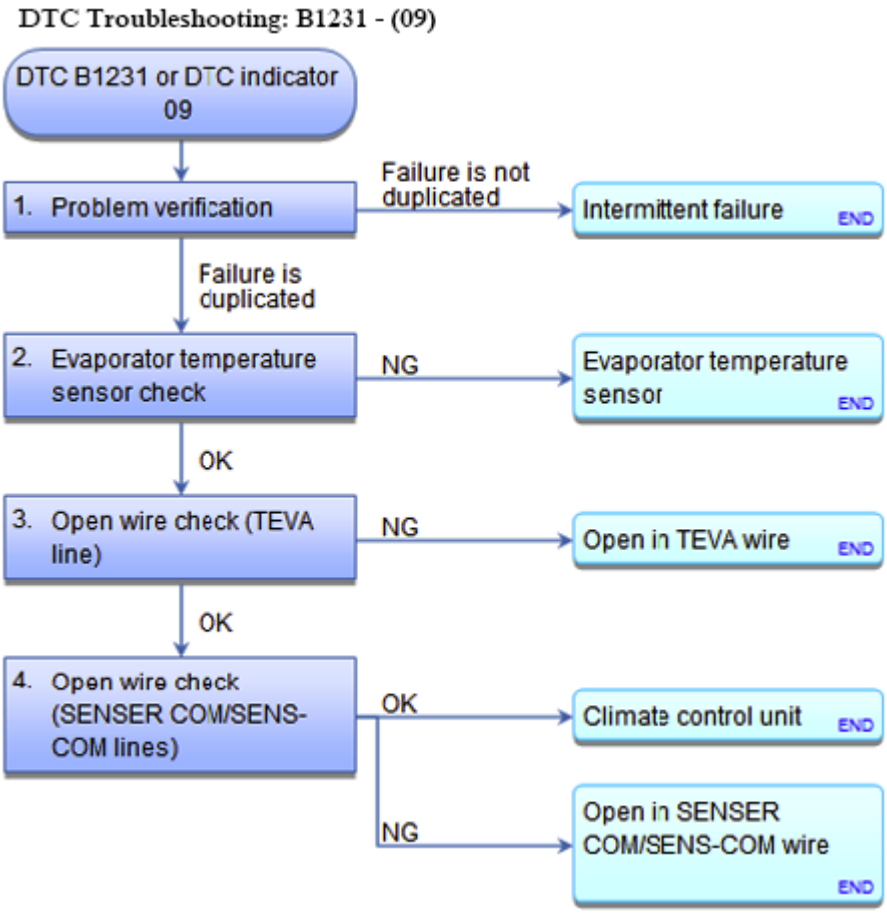

Fig. 68: DTC Troubleshooting Chart (B1231)
Courtesy of AMERICAN HONDA MOTOR CO., INC.

DTC Description	DTC
B1231 An open in the evaporator temperature sensor circuit	

1. Problem verification:
   - 1. Clear the DTC with the HDS.
   - 2. Turn the ignition switch to LOCK (0), and then back to ON (II).
   - 3. **Do the Self-Diagnostic Function with the HDS or the climate control unit** See **HOW TO TROUBLESHOOT THE BODY ELECTRICAL** or **HOW TO TROUBLESHOOT THE CLIMATE CONTROL SYSTEM** .
   - 4. Check for DTCs.

DTC Description	DTC
B1231 An open in the evaporator temperature sensor circuit	

Is DTC B1231 or 09 indicated?

GETtheMANUALS.org

YES : Go to step 2.

NO : Intermittent failure. Check for loose wires or poor connections on the evaporator temperature sensor circuit.

2. Evaporator temperature sensor check:
   - 1. Turn the ignition switch to LOCK (0).
   - 2. **REMOVE THE EVAPORATOR TEMPERATURE SENSOR, AND TEST IT** .

Is the evaporator temperature sensor OK?

YES : With the evaporator temperature sensor disconnected, go to step 3.

NO : **REPLACE THE EVAPORATOR TEMPERATURE SENSOR** .

3. Open wire check (TEVA line):
   - 1. Disconnect the following connector.

     Climate control unit 32P connector

   - 2. Check for continuity between test points 1 and 2.

     Test condition IG LOCK (0)

     Climate control unit 32P connector: disconnected

     Evaporator temperature sensor 2P connector: disconnected

     Test circuit TEVA

     Test point 1 Climate control unit 32P connector No. 18 (ORN)

     Test point 2 Evaporator temperature sensor 2P connector No. 1 (BRN)

GETtheMANUALS.org

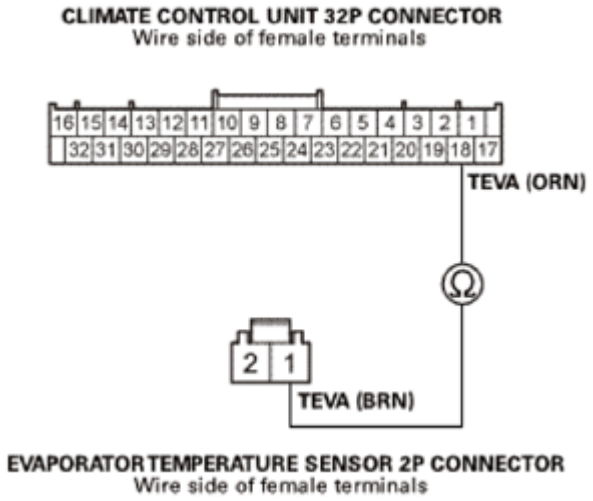

Fig. 69: Checking Continuity Between Evaporator Temperature Sensor 2P Connector Terminals 1 And 2
Courtesy of AMERICAN HONDA MOTOR CO., INC.

Is there continuity?

YES : The TEVA wire is OK. Go to step 4.

NO : Repair an open in the wire between the climate control unit and the evaporator temperature sensor.

4. Open wire check (SENSOR COM/SENS-COM lines):
   - 1. Check for continuity between test points 1 and 2.

     Test condition IG LOCK (0)

     Climate control unit 32P connector: disconnected

     Evaporator temperature sensor 2P connector: disconnected

     Test circuit SENSOR COM/SENS-COM

     Test point 1 Climate control unit 32P connector No. 23 (GRY)

     Test point 2 Evaporator temperature sensor 2P connector No. 2 (RED)

GETtheMANUALS.org

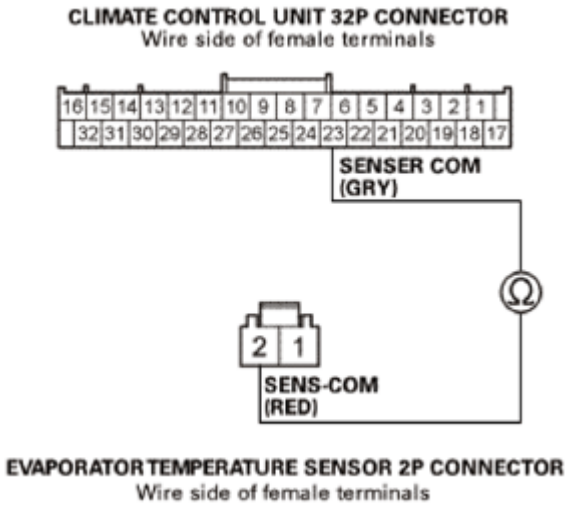

Fig. 70: Checking Continuity Between Evaporator Temperature Sensor 2P Connector Terminals 1 And 2
Courtesy of AMERICAN HONDA MOTOR CO., INC.

Is there continuity?

YES : The SENSOR COM/SENS-COM wires are OK. **REPLACE THE CLIMATE CONTROL UNIT** .

NO : Repair an open in the wire between the climate control unit and the evaporator temperature sensor.

DTC B1232 OR DTC INDICATOR 0A: A SHORT IN THE EVAPORATOR TEMPERATURE SENSOR CIRCUIT

GETtheMANUALS.org

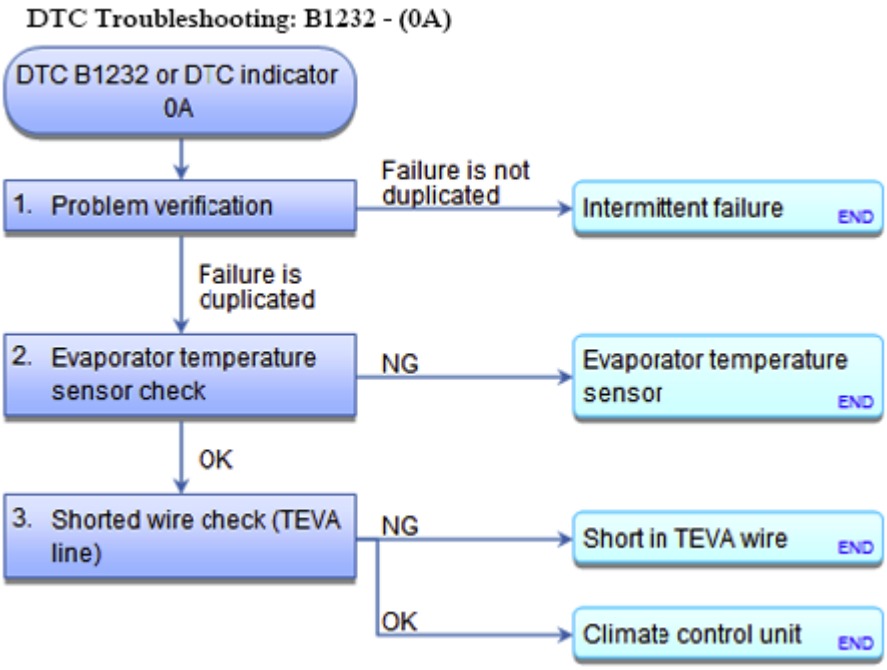

Fig. 71: DTC Troubleshooting Flowchart (B1232)
Courtesy of AMERICAN HONDA MOTOR CO., INC.

DTC Description	DTC
B1232 A short in the evaporator temperature sensor circuit	

1. Problem verification:
   - 1. Clear the DTC with the HDS.
   - 2. Turn the ignition switch to LOCK (0), and then back to ON (II).
   - 3. **Do the Self-Diagnostic Function with the HDS or the climate control unit** See **HOW TO TROUBLESHOOT THE BODY ELECTRICAL** or **HOW TO TROUBLESHOOT THE CLIMATE CONTROL SYSTEM** .
   - 4. Check for DTCs.

DTC Description	DTC
B1232 A short in the evaporator temperature sensor circuit	

Is DTC B1232 or 0A indicated?

YES : Go to step 2.

NO : Intermittent failure. Check for loose wires or poor connections on the evaporator temperature sensor circuit.

2. Evaporator temperature sensor check:
   - 1. Turn the ignition switch to LOCK (0).

GETtheMANUALS.org

- 2. **REMOVE THE EVAPORATOR TEMPERATURE SENSOR, AND TEST IT** .

Is the evaporator temperature sensor OK?

YES : With the evaporator temperature sensor disconnected, go to step 3.

NO : **REPLACE THE EVAPORATOR TEMPERATURE SENSOR** .

3. Shorted wire check (TEVA line):
   - 1. Disconnect the following connector.

     Climate control unit 32P connector

   - 2. Check for continuity between test points 1 and 2.

     Test condition IG LOCK (0)

     Climate control unit 32P connector: disconnected

     Evaporator temperature sensor 2P connector: disconnected

     Test circuit TEVA

     Test point 1 Climate control unit 32P connector No. 18 (ORN)

     Test point 2 Body ground

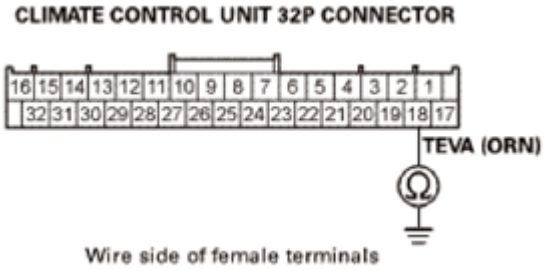

Fig. 72: Checking Continuity Between Climate Control Unit 32P Connector Terminals 1 And 2
Courtesy of AMERICAN HONDA MOTOR CO., INC.

Is there continuity?

YES : Repair a short to body ground in the wire between the climate control unit and the evaporator temperature sensor.

NO : The TEVA wire is OK. **REPLACE THE CLIMATE CONTROL UNIT** .

GETtheMANUALS.org

DTC B1233 OR DTC INDICATOR 40: AN OPEN IN THE AIR MIX CONTROL MOTOR CIRCUIT (DRIVER'S)

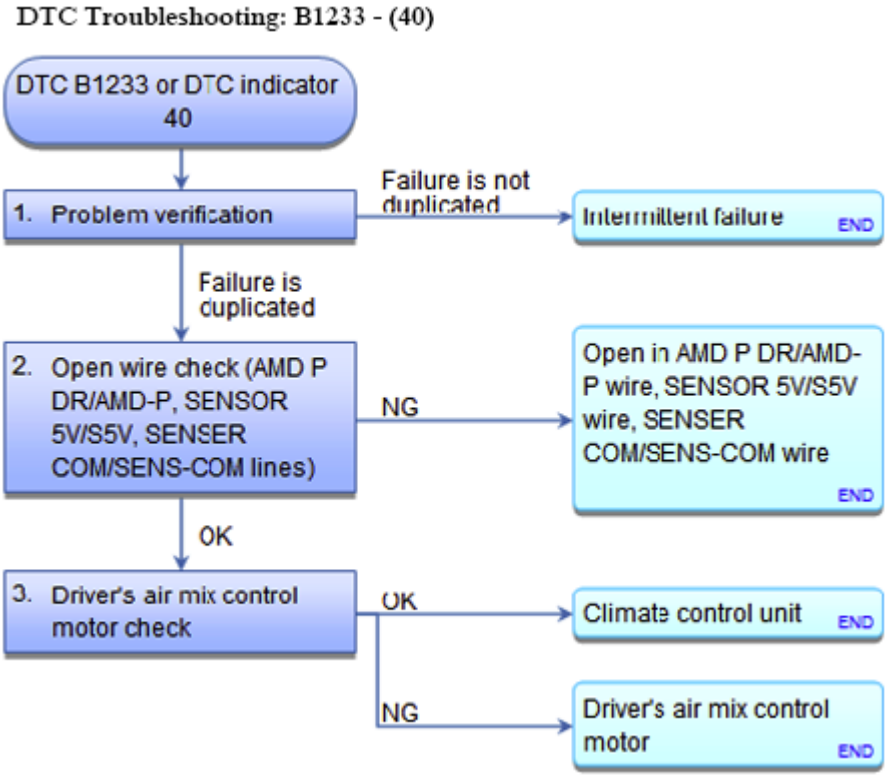

Fig. 73: DTC Troubleshooting Chart (B1233)
Courtesy of AMERICAN HONDA MOTOR CO., INC.

DTC Description	DTC
B1233 An open in the air mix control motor circuit (driver's)	

1. Problem verification:
   - 1. Clear the DTC with the HDS.
   - 2. Turn the ignition switch to LOCK (0), and then back to ON (II).
   - 3. **Do the Self-Diagnostic Function with the HDS or the climate control unit** See **HOW TO TROUBLESHOOT THE BODY ELECTRICAL** or **HOW TO TROUBLESHOOT THE CLIMATE CONTROL SYSTEM** .
   - 4. Check for DTCs.

DTC Description	DTC
B1233 An open in the air mix control motor circuit (driver's)	

Is DTC B1233 or 40 indicated?

GETtheMANUALS.org

YES : Go to step 2.

NO : Intermittent failure. Check for loose wires or poor connections on the driver's air mix control motor circuit.

2. Open wire check (AMD P DR/AMD-P, SENSOR 5V/S5V, SENSOR COM/SENS-COM lines):
   - 1. Turn the ignition switch to LOCK (0).
   - 2. Disconnect the following connectors.

     Climate control unit 32P connector

     Driver's air mix control motor 7P connector

   - 3. Check for continuity between test points 1 and 2 respectively.

     Test condition IG LOCK (0)

     Climate control unit 32P connector: disconnected

     Driver's air mix control motor 7P connector: disconnected

     Test circuit AMD P DR/AMD-P

     Test point 1 Climate control unit 32P connector No. 20 (LT GRN)

     Test point 2 Driver's air mix control motor 7P connector No. 2 (GRY)

     Test circuit SENSOR 5V/S5V

     Test point 1 Climate control unit 32P connector No. 17 (LT BLU)

     Test point 2 Driver's air mix control motor 7P connector No. 3 (BLK)

     Test circuit SENSOR COM/SENS-COM

     Test point 1 Climate control unit 32P connector No. 23 (GRY)

     Test point 2 Driver's air mix control motor 7P connector No. 1 (RED)

GETtheMANUALS.org

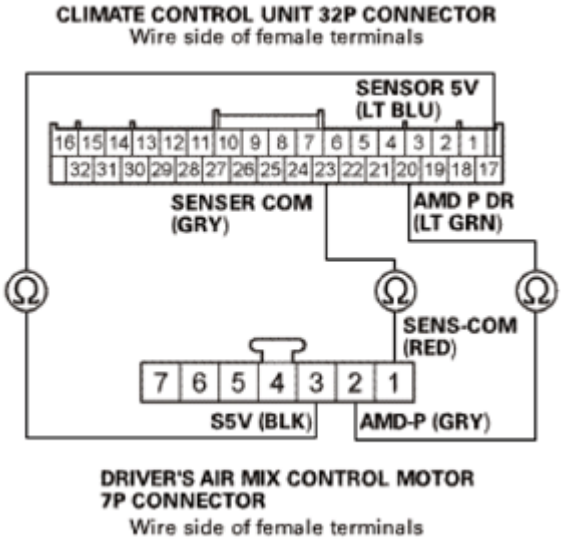

Fig. 74: Checking Continuity Between Driver's Air Mix Control Motor 7P Connector Terminals 1 And 2
Courtesy of AMERICAN HONDA MOTOR CO., INC.

Is there continuity?

YES : The AMD P DR/AMD-P, SENSOR 5V/S5V, and SENSOR COM/SENS-COM wires are OK. Go to step 3.

NO : Repair an open in the wire(s) between the climate control unit and the driver's air mix control motor.

3. Driver's air mix control motor check
   - 1. **Test the driver's air mix control motor** See **AIR MIX CONTROL MOTOR TEST** , **DRIVER'S AIR MIX CONTROL MOTOR TEST** or **PASSENGER'S AIR MIX CONTROL MOTOR TEST** .

Is the driver's air mix control motor OK?

YES : **REPLACE THE CLIMATE CONTROL UNIT** .

NO : **Replace the driver's air mix control motor** See **AIR MIX CONTROL MOTOR REMOVAL AND INSTALLATION** , **DRIVER'S AIR MIX CONTROL MOTOR REMOVAL AND INSTALLATION** or **PASSENGER'S AIR MIX CONTROL MOTOR REMOVAL AND INSTALLATION** .

DTC B1234 OR DTC INDICATOR 41: A SHORT IN THE AIR MIX CONTROL MOTOR CIRCUIT (DRIVER'S)

GETtheMANUALS.org

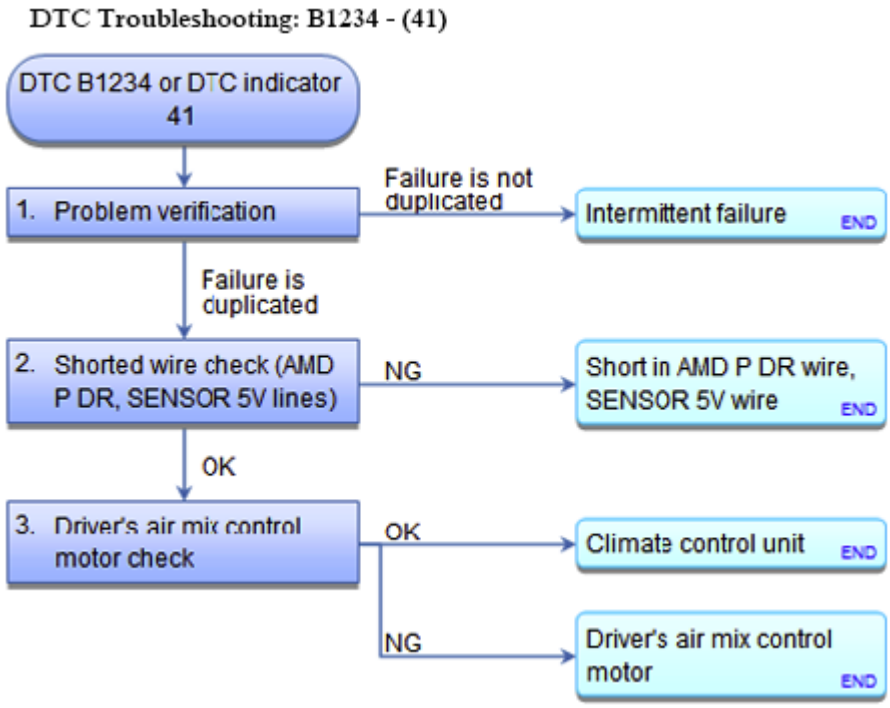

Fig. 75: DTC Troubleshooting Chart (B1234)
Courtesy of AMERICAN HONDA MOTOR CO., INC.

DTC Description	DTC
B1234 A short in the air mix control motor circuit (driver's)	

1. Problem verification:
   - 1. Clear the DTC with the HDS.
   - 2. Turn the ignition switch to LOCK (0), and then back to ON (II).
   - 3. **Do the Self-Diagnostic Function with the HDS or the climate control unit** See **HOW TO TROUBLESHOOT THE BODY ELECTRICAL** or **HOW TO TROUBLESHOOT THE CLIMATE CONTROL SYSTEM** .
   - 4. Check for DTCs.

DTC Description	DTC
B1234 A short in the air mix control motor circuit (driver's)	

Is DTC B1234 or 41 indicated?

YES : Go to step 2.

NO : Intermittent failure. Check for loose wires or poor connections on the driver's air mix control motor circuit.

2. Shorted wire check (AMD P DR, SENSOR 5V lines):

GETtheMANUALS.org

- 1. Turn the ignition switch to LOCK (0).
- 2. Disconnect the following connectors.

  Climate control unit 32P connector

  Driver's air mix control motor 7P connector

- 3. Check for continuity between test points 1 and 2 individually.

  Test condition IG LOCK (0)

  Climate control unit 32P connector: disconnected

  Driver's air mix control motor 7P connector: disconnected

  Test circuit AMD P DR

  Test point 1 Climate control unit 32P connector No. 20 (LT GRN)

  Test point 2 Body ground

  Test circuit SENSOR 5V

  Test point 1 Climate control unit 32P connector No. 17 (LT BLU)

  Test point 2 Body ground

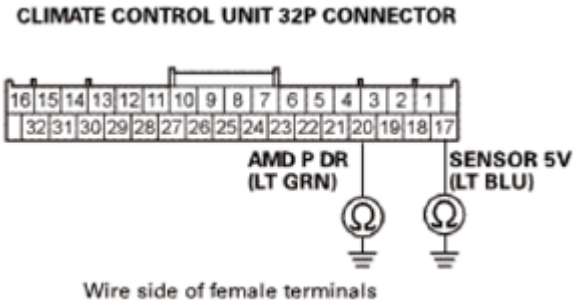

Fig. 76: Checking Continuity Between Climate Control Unit 32P Connector Terminals 1 And 2
Courtesy of AMERICAN HONDA MOTOR CO., INC.

Is there continuity?

YES : Repair a short to body ground in the wire(s) between the climate control unit and the driver's air mix control motor.

NO : The AMD P DR and SENSOR 5V wires are OK. Go to step 3.

GETtheMANUALS.org

3. Driver's air mix control motor check:
   - 1. **Test the driver's air mix control motor** See **AIR MIX CONTROL MOTOR TEST** , **DRIVER'S AIR MIX CONTROL MOTOR TEST** or **PASSENGER'S AIR MIX CONTROL MOTOR TEST** .

   Is the driver's air mix control motor OK?

   YES : **REPLACE THE CLIMATE CONTROL UNIT** .

   NO : **Replace the driver's air mix control motor** See **AIR MIX CONTROL MOTOR REMOVAL AND INSTALLATION** , **DRIVER'S AIR MIX CONTROL MOTOR REMOVAL AND INSTALLATION** or **PASSENGER'S AIR MIX CONTROL MOTOR REMOVAL AND INSTALLATION** .

DTC B1235 OR DTC INDICATOR 42: A PROBLEM IN THE AIR MIX CONTROL MOTOR CIRCUIT, LINKAGE, DOOR, OR MOTOR (DRIVER'S)

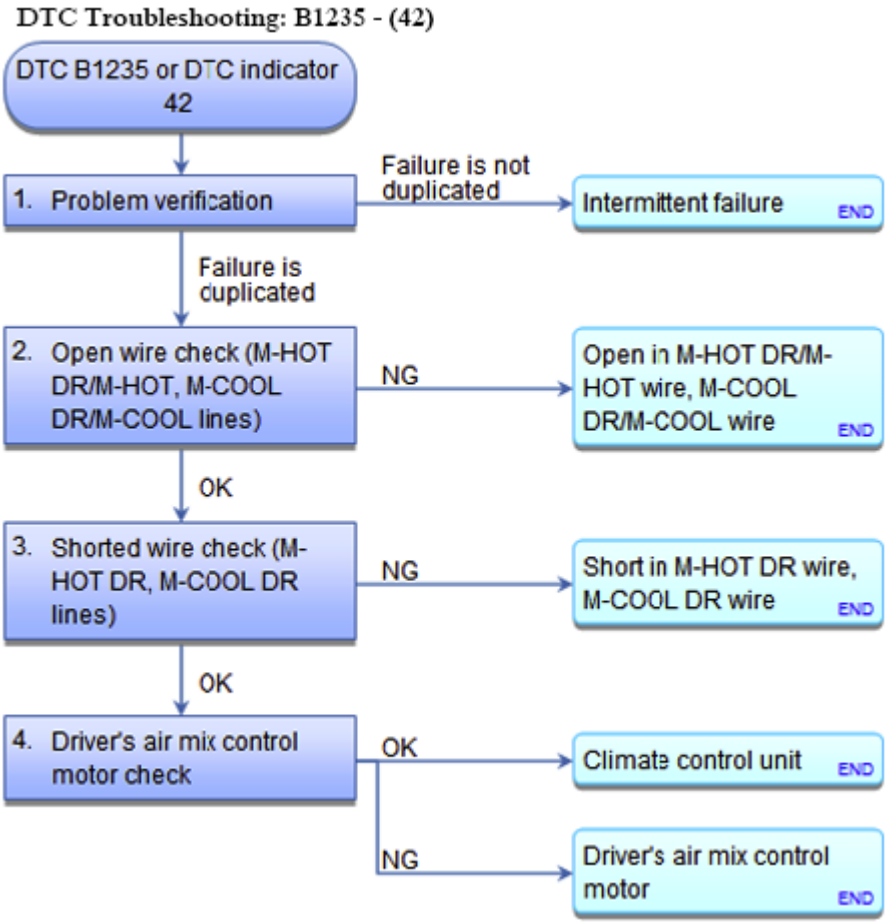

Fig. 77: DTC Troubleshooting Chart (B1235)
Courtesy of AMERICAN HONDA MOTOR CO., INC.

GETtheMANUALS.org

DTC Description	DTC
B1235 A problem in the air mix control motor circuit, linkage, door, or motor (driver's)	

1. Problem verification:
   - 1. Clear the DTCs with the HDS.
   - 2. Turn the ignition switch to LOCK (0), and then back to ON (II).
   - 3. **Do the Self-Diagnostic Function with the HDS or the climate control unit** See **HOW TO TROUBLESHOOT THE BODY ELECTRICAL** or **HOW TO TROUBLESHOOT THE CLIMATE CONTROL SYSTEM** .
   - 4. Check for DTCs.

DTC Description	DTC
B1235 A problem in the air mix control motor circuit, linkage, door, or motor (driver's)	

Is DTC B1235 or 42 indicated?

YES : Go to step 2.

NO : Intermittent failure. Check for loose wires or poor connections in the driver's air mix control motor circuit.

2. Open wire check (M-HOT DR/M-HOT, M-COOL DR/M-COOL lines):
   - 1. Turn the ignition switch to LOCK (0).
   - 2. Disconnect the following connectors.

     Climate control unit 32P connector

     Driver's air mix control motor 7P connector

   - 3. Check for continuity between test points 1 and 2 respectively.

     Test condition IG LOCK (0)

     Climate control unit 32P connector: disconnected

     Driver's air mix control motor 7P connector: disconnected

     Test circuit M-HOT DR/M-HOT

     Test point 1 Climate control unit 32P connector No. 13 (LT BLU)

     Test point 2 Driver's air mix control motor 7P connector No. 7 (LT GRN)

     Test circuit M-COOL DR/M-COOL

GETtheMANUALS.org

Test point 1 Climate control unit 32P connector No. 14 (GRN)

Test point 2 Driver's air mix control motor 7P connector No. 6 (BLU)

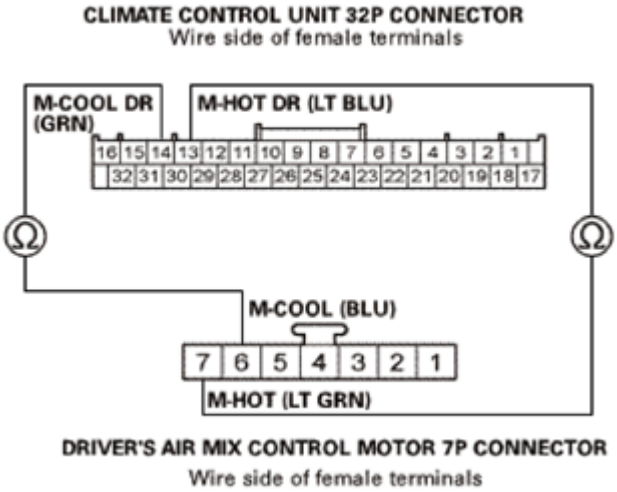

Fig. 78: Checking Continuity Between Driver's Air Mix Control Motor 7P Connector Terminals 1 And 2
Courtesy of AMERICAN HONDA MOTOR CO., INC.

Is there continuity?

YES : The M-HOT DR/M-HOT and M-COOL DR/M-COOL wires are not open. Go to step 3.

NO : Repair an open in the wire(s) between the climate control unit and the driver's air mix control motor.

3. Shorted wire check (M-HOT DR, M-COOL DR lines):
   - 1. Check for continuity between test points 1 and 2 individually.

     Test condition IG LOCK (0)

     Climate control unit 32P connector: disconnected

     Driver's air mix control motor 7P connector: disconnected

     Test circuit M-HOT DR

     Test point 1 Climate control unit 32P connector No. 13 (LT BLU)

     Test point 2 Body ground

     Test circuit M-COOL DR

     Test point 1 Climate control unit 32P connector No. 14 (GRN)

GETtheMANUALS.org

Test point 2 Body ground

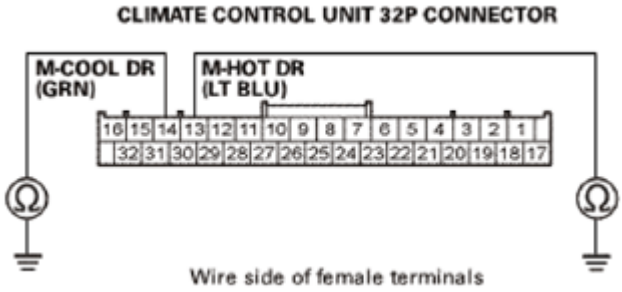

Fig. 79: Checking Continuity Between Climate Control Unit 32P Connector Terminals 1 And 2
Courtesy of AMERICAN HONDA MOTOR CO., INC.

Is there continuity?

YES : Repair a short to body ground in the wire(s) between the climate control unit and the driver's air mix control motor.

NO : The M-HOT and M-COOL wires are OK. Go to step 4.

4. Driver's air mix control motor check:
   - 1. **Test the driver's air mix control motor** See **AIR MIX CONTROL MOTOR TEST** , **DRIVER'S AIR MIX CONTROL MOTOR TEST** or **PASSENGER'S AIR MIX CONTROL MOTOR TEST** .

Is the driver's air mix control motor OK?

YES : **REPLACE THE CLIMATE CONTROL UNIT** .

NO : **Replace the driver's air mix control motor** See **AIR MIX CONTROL MOTOR REMOVAL AND INSTALLATION** , **DRIVER'S AIR MIX CONTROL MOTOR REMOVAL AND INSTALLATION** or **PASSENGER'S AIR MIX CONTROL MOTOR REMOVAL AND INSTALLATION** , or repair the air mix control linkage or door.

DTC B1236 OR DTC INDICATOR 43: AN OPEN IN THE PASSENGER'S AIR MIX CONTROL MOTOR CIRCUIT

GETtheMANUALS.org

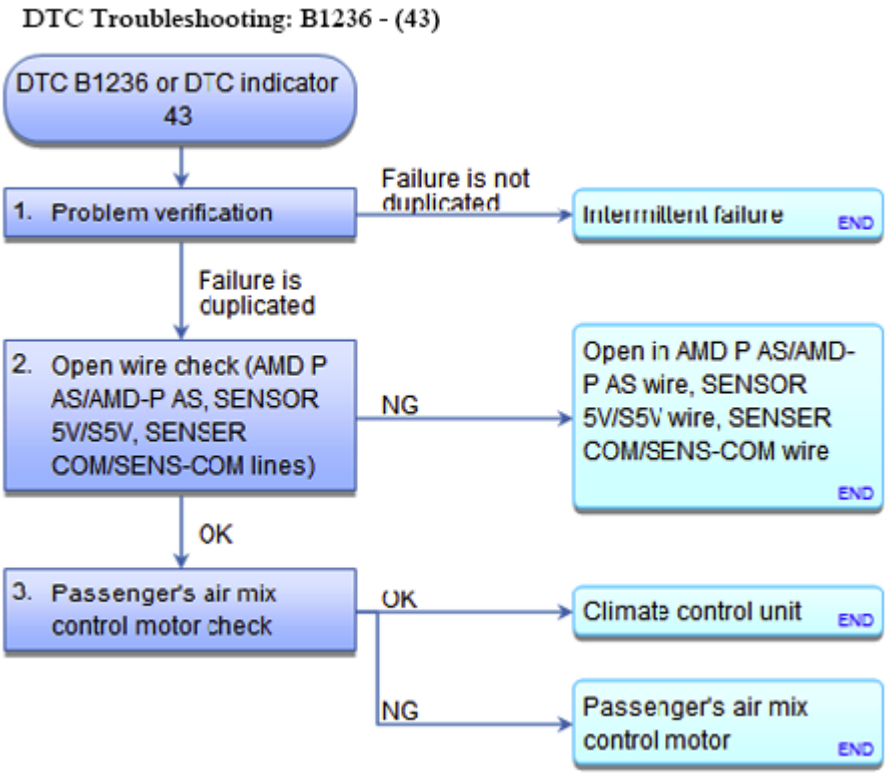

Fig. 80: DTC Troubleshooting Chart (B1236)
Courtesy of AMERICAN HONDA MOTOR CO., INC.

DTC Description	DTC
B1236 An open in the passenger's air mix control motor circuit	

1. Problem verification:
   - 1. Clear the DTC with the HDS.
   - 2. Turn the ignition switch to LOCK (0), and then back to ON (II).
   - 3. **Do the Self-Diagnostic Function with the HDS or the climate control unit** See **HOW TO TROUBLESHOOT THE BODY ELECTRICAL** or **HOW TO TROUBLESHOOT THE CLIMATE CONTROL SYSTEM** .
   - 4. Check for DTCs.

DTC Description	DTC
B1236 An open in the passenger's air mix control motor circuit	

Is DTC B1236 or 43 indicated?

YES : Go to step 2.

NO : Intermittent failure. Check for loose wires or poor connections on the passenger's air mix control motor circuit.

GETtheMANUALS.org

2. Open wire check (AMD P AS/AMD-P AS, SENSOR 5V/S5V, SENSOR COM/SENS-COM lines):
    - 1. Turn the ignition switch to LOCK (0).
    - 2. Disconnect the following connectors.

      Climate control unit 32P connector

      Passenger's air mix control motor 7P connector

    - 3. Check for continuity between test points 1 and 2 respectively.

      Test condition IG LOCK (0)

      Climate control unit 32P connector: disconnected

      Passenger's air mix control motor 7P connector: disconnected

      Test circuit AMD P AS/AMD-P AS

      Test point 1 Climate control unit 32P connector No. 21 (BRN)

      Test point 2 Passenger's air mix control motor 7P connector No. 2 (YEL)

      Test circuit SENSOR 5V/S5V

      Test point 1 Climate control unit 32P connector No. 17 (LT BLU)

      Test point 2 Passenger's air mix control motor 7P connector No. 1 (BLK)

      Test circuit SENSOR COM/SENS-COM

      Test point 1 Climate control unit 32P connector No. 23 (GRY)

      Test point 2 Passenger's air mix control motor 7P connector No. 3 (RED)

GETtheMANUALS.org

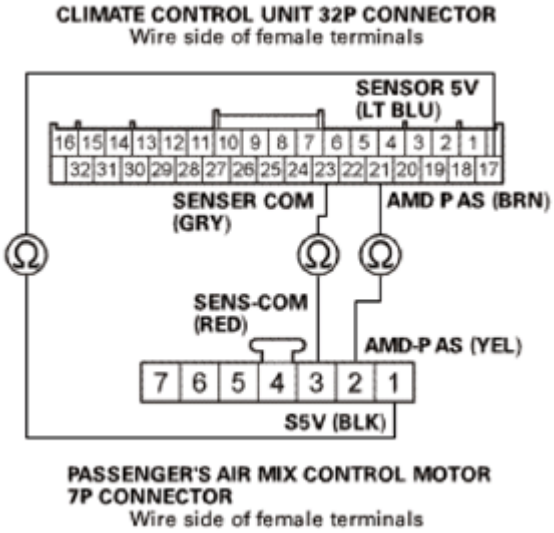

Fig. 81: Checking Continuity Between Passenger's Air Mix Control Motor 7P Connector Terminals 1 And 2
Courtesy of AMERICAN HONDA MOTOR CO., INC.

Is there continuity?

YES : The AMD P AS/AMD-P AS, SENSOR 5V/S5V, and SENSOR COM/SENS-COM wires are OK. Go to step 3.

NO : Repair an open in the wire(s) between the climate control unit and the passenger's air mix control motor.

3. Passenger's air mix control motor check:
   - 1. **Test the passenger's air mix control motor** See **AIR MIX CONTROL MOTOR TEST** , **DRIVER'S AIR MIX CONTROL MOTOR TEST** or **PASSENGER'S AIR MIX CONTROL MOTOR TEST** .

Is the passenger's air mix control motor OK?

YES : **REPLACE THE CLIMATE CONTROL UNIT** .

NO : **Replace the passenger's air mix control motor** See **AIR MIX CONTROL MOTOR REMOVAL AND INSTALLATION** , **DRIVER'S AIR MIX CONTROL MOTOR REMOVAL AND INSTALLATION** or **PASSENGER'S AIR MIX CONTROL MOTOR REMOVAL AND INSTALLATION** .

DTC B1237 OR DTC INDICATOR 44: A SHORT IN THE PASSENGER'S AIR MIX CONTROL MOTOR CIRCUIT

GETtheMANUALS.org

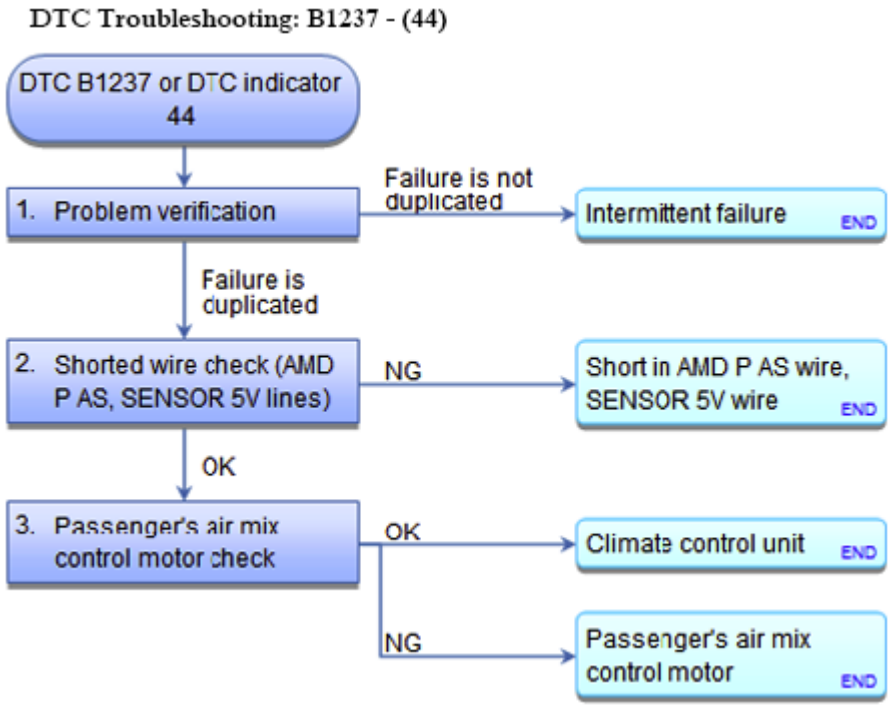

Fig. 82: DTC Troubleshooting Chart (B1237)
Courtesy of AMERICAN HONDA MOTOR CO., INC.

DTC Description	DTC
B1237 A short in the passenger's air mix control motor circuit	

1. Problem verification:
   - 1. Clear the DTC with the HDS.
   - 2. Turn the ignition switch to LOCK (0), and then back to ON (II).
   - 3. **Do the Self-Diagnostic Function with the HDS or the climate control unit** See **HOW TO TROUBLESHOOT THE BODY ELECTRICAL** or **HOW TO TROUBLESHOOT THE CLIMATE CONTROL SYSTEM** .
   - 4. Check for DTCs.

DTC Description	DTC
B1237 A short in the passenger's air mix control motor circuit	

Is DTC B1237 or 44 indicated?

YES : Go to step 2.

NO : Intermittent failure. Check for loose wires or poor connections on the passenger's air mix control motor circuit.

2. Shorted wire check (AMD P AS, SENSOR 5V lines):

GETtheMANUALS.org

- 1. Turn the ignition switch to LOCK (0).
- 2. Disconnect the following connectors.

  Climate control unit 32P connector

  Passenger's air mix control motor 7P connector

- 3. Check for continuity between test points 1 and 2 individually.

  Test condition IG LOCK (0)

  Climate control unit 32P connector: disconnected

  Passenger's air mix control motor 7P connector: disconnected

  Test circuit AMD P AS

  Test point 1 Climate control unit 32P connector No. 21 (BRN)

  Test point 2 Body ground

  Test circuit SENSOR 5V

  Test point 1 Climate control unit 32P connector No. 17 (LT BLU)

  Test point 2 Body ground

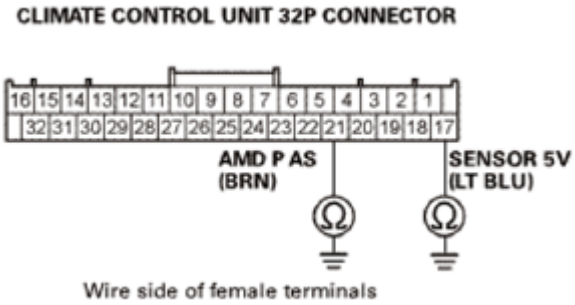

Fig. 83: Checking Continuity Between Climate Control Unit 32P Connector Terminals 1 And 2
Courtesy of AMERICAN HONDA MOTOR CO., INC.

Is there continuity?

YES : Repair a short to body ground in the wire(s) between the climate control unit and the passenger's air mix control motor.

NO : The AMD P AS and SENSOR 5V wires are OK. Go to step 3.

GETtheMANUALS.org

3. Passenger's air mix control motor check:
   - 1. **Test the passenger's air mix control motor** See **AIR MIX CONTROL MOTOR TEST** , **DRIVER'S AIR MIX CONTROL MOTOR TEST** or **PASSENGER'S AIR MIX CONTROL MOTOR TEST** .

Is the passenger's air mix control motor OK?

YES : **REPLACE THE CLIMATE CONTROL UNIT** .

NO : **Replace the passenger's air mix control motor** See **AIR MIX CONTROL MOTOR REMOVAL AND INSTALLATION** , **DRIVER'S AIR MIX CONTROL MOTOR REMOVAL AND INSTALLATION** or **PASSENGER'S AIR MIX CONTROL MOTOR REMOVAL AND INSTALLATION** .

DTC B1238 OR DTC INDICATOR 45: A PROBLEM IN THE PASSENGER'S AIR MIX CONTROL MOTOR CIRCUIT, LINKAGE, DOOR, OR MOTOR

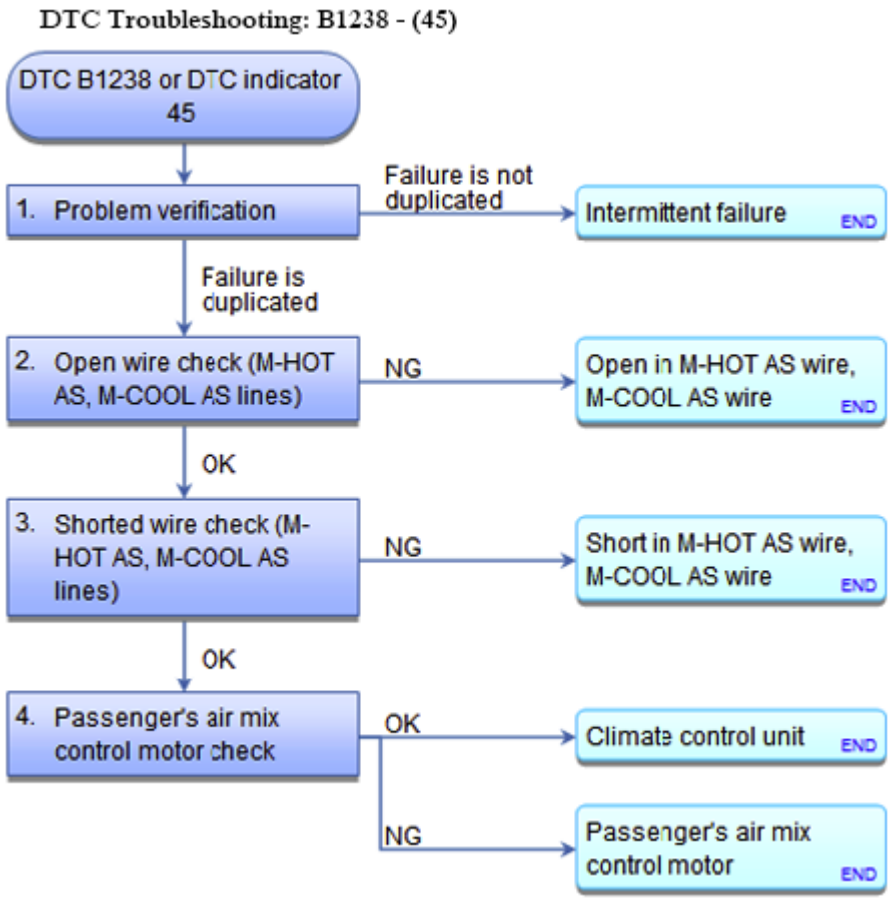

Fig. 84: DTC Troubleshooting Chart (B1238)
Courtesy of AMERICAN HONDA MOTOR CO., INC.

GETtheMANUALS.org

DTC Description	DTC
B1238 A problem in the passenger's air mix control motor circuit, linkage, door, or motor	

1. Problem verification:
   - 1. Clear the DTCs with the HDS.
   - 2. Turn the ignition switch to LOCK (0), and then back to ON (II).
   - 3. **Do the Self-Diagnostic Function with the HDS or the climate control unit** See **HOW TO TROUBLESHOOT THE BODY ELECTRICAL** or **HOW TO TROUBLESHOOT THE CLIMATE CONTROL SYSTEM** .
   - 4. Check for DTCs.

DTC Description	DTC
B1238 A problem in the passenger's air mix control motor circuit, linkage, door, or motor	

Is DTC B1238 or 45 indicated?

YES : Go to step 2.

NO : Intermittent failure. Check for loose wires or poor connections in the passenger's air mix control motor circuit.

2. Open wire check (M-HOT AS, M-COOL AS lines):
   - 1. Turn the ignition switch to LOCK (0).
   - 2. Disconnect the following connectors.

     Climate control unit 32P connector

     Passenger's air mix control motor 7P connector

   - 3. Check for continuity between test points 1 and 2 respectively.

     Test condition IG LOCK (0)

     Climate control unit 32P connector: disconnected

     Passenger's air mix control motor 7P connector: disconnected

     Test circuit M-HOT AS

     Test point 1 Climate control unit 32P connector No. 29 (WHT)

     Test point 2 Passenger's air mix control motor 7P connector No. 6 (PNK)

     Test circuit M-COOL AS

GETtheMANUALS.org

Test point 1 Climate control unit 32P connector No. 30 (PUR)

Test point 2 Passenger's air mix control motor 7P connector No. 7 (LT BLU)

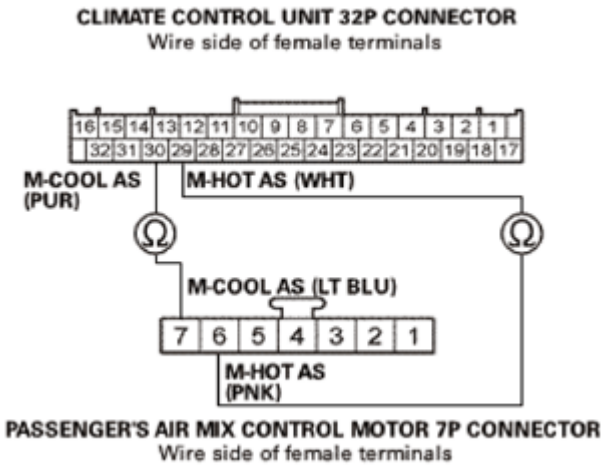

Fig. 85: Checking Continuity Between Passenger's Air Mix Control Motor 7P Connector Terminals 1 And 2
Courtesy of AMERICAN HONDA MOTOR CO., INC.

Is there continuity?

YES : The M-HOT AS and M-COOL AS wires are not open. Go to step 3.

NO : Repair an open in the wire(s) between the climate control unit and the passenger's air mix control motor.

3. Shorted wire check (M-HOT AS, M-COOL AS lines):
   - 1. Check for continuity between test points 1 and 2 individually.

     Test condition IG LOCK (0)

     Climate control unit 32P connector: disconnected

     Passenger's air mix control motor 7P connector: disconnected

     Test circuit M-HOT AS

     Test point 1 Climate control unit 32P connector No. 29 (WHT)

     Test point 2 Body ground

     Test circuit M-COOL AS

     Test point 1 Climate control unit 32P connector No. 30 (PUR)

GETtheMANUALS.org

Test point 2 Body ground

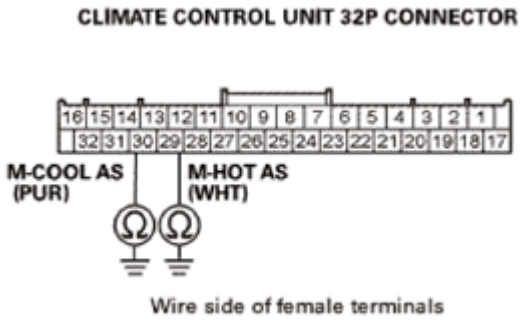

Fig. 86: Checking Continuity Between Climate Control Unit 32P Connector Terminals 1 And 2
Courtesy of AMERICAN HONDA MOTOR CO., INC.

Is there continuity?

YES : Repair a short to body ground in the wire(s) between the climate control unit and the passenger's air mix control motor.

NO : The M-HOT AS and M-COOL AS wires are OK. Go to step 4.

4. Passenger's air mix control motor check:
   - 1. **Test the passenger's air mix control motor** See **AIR MIX CONTROL MOTOR TEST** , **DRIVER'S AIR MIX CONTROL MOTOR TEST** or **PASSENGER'S AIR MIX CONTROL MOTOR TEST** .

Is the passenger's air mix control motor OK?

YES : **REPLACE THE CLIMATE CONTROL UNIT** .

NO : **Replace the passenger's air mix control motor** See **AIR MIX CONTROL MOTOR REMOVAL AND INSTALLATION** , **DRIVER'S AIR MIX CONTROL MOTOR REMOVAL AND INSTALLATION** or **PASSENGER'S AIR MIX CONTROL MOTOR REMOVAL AND INSTALLATION** , or repair the passenger's air mix control linkage or door.

DTC B1240 OR DTC INDICATOR 4B: A PROBLEM IN THE MODE CONTROL MOTOR CIRCUIT, LINKAGE, DOOR, OR MOTOR

GETtheMANUALS.org

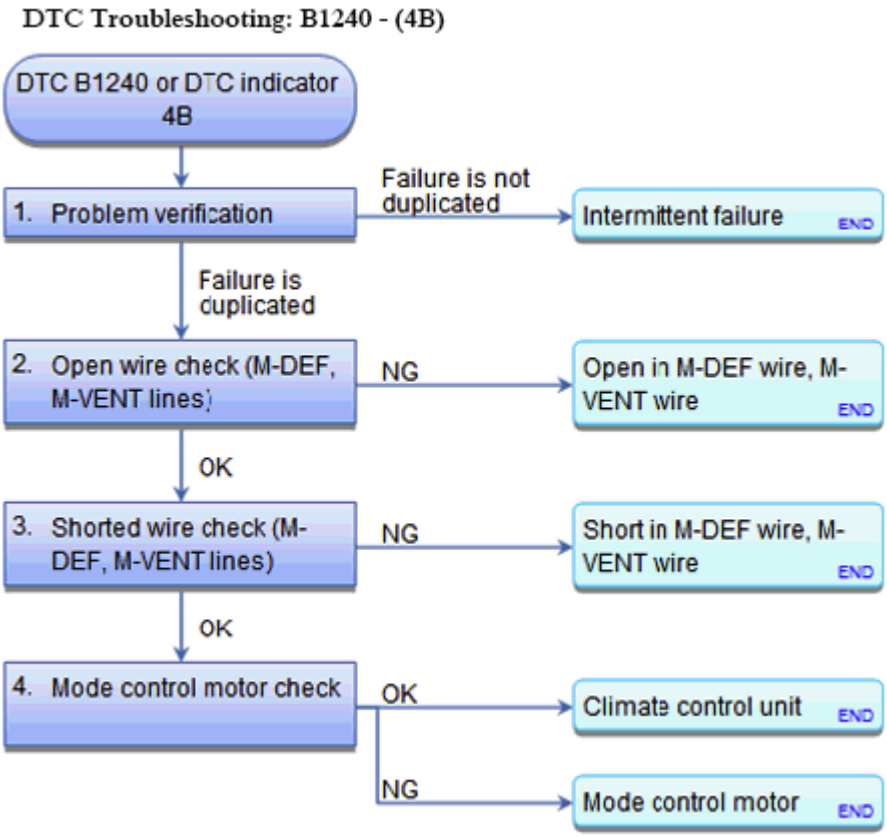

Fig. 87: DTC Troubleshooting Chart (B1240)
Courtesy of AMERICAN HONDA MOTOR CO., INC.

DTC Description	DTC
B1240 A problem in the mode control motor circuit, linkage, door, or motor	

1. Problem verification:
   - 1. Clear the DTCs with the HDS.
   - 2. Turn the ignition switch to LOCK (0), and then to ON (II).
   - 3. **Do the Self-Diagnostic Function with the HDS or the climate control unit** See **HOW TO TROUBLESHOOT THE BODY ELECTRICAL** or **HOW TO TROUBLESHOOT THE CLIMATE CONTROL SYSTEM** .
   - 4. Check for DTCs.

DTC Description	DTC
B1240 A problem in the mode control motor circuit, linkage, door, or motor	

Is DTC B1240 or 4B indicated?

YES : Go to step 2.

GETtheMANUALS.org

NO : Intermittent failure. Check for loose wires or poor connections on the mode control motor circuit.

2. Open wire check (M-DEF, M-VENT lines):
    - 1. Turn the ignition switch to LOCK (0).
    - 2. Disconnect the following connectors.

      Climate control unit 32P connector

      Mode control motor 7P connector

    - 3. Check for continuity between test points 1 and 2 respectively.

      Test condition IG LOCK (0)

      Climate control unit 32P connector: disconnected

      Mode control motor 7P connector: disconnected

      Test circuit M-DEF

      Test point 1 Climate control unit 32P connector No. 10 (YEL)

      Test point 2 Mode control motor 7P connector No. 6 (GRN)

      Test circuit M-VENT

      Test point 1 Climate control unit 32P connector No. 11 (PUR)

      Test point 2 Mode control motor 7P connector No. 7 (WHT)

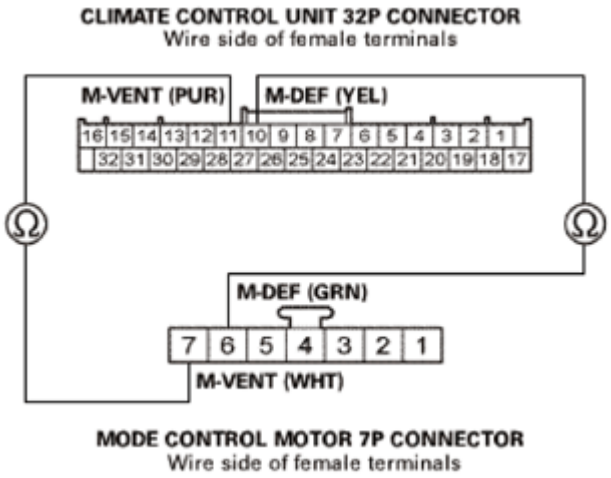

Fig. 88: Checking Continuity Between Mode Control Motor 7P Connector Terminals 1 And 2
Courtesy of AMERICAN HONDA MOTOR CO., INC.

GETtheMANUALS.org

Is there continuity?

YES : The M-DEF and M-VENT wires are not open. Go to step 3.

NO : Repair an open in the wire(s) between the climate control unit and the mode control motor.

3. Shorted wire check (M-DEF, M-VENT lines):
   - 1. Check for continuity between test points 1 and 2 individually.

     Test condition IG LOCK (0)

     Climate control unit 32P connector: disconnected

     Mode control motor 7P connector: disconnected

     Test circuit M-DEF

     Test point 1 Climate control unit 32P connector No. 10 (YEL)

     Test point 2 Body ground

     Test circuit M-VENT

     Test point 1 Climate control unit 32P connector No. 11 (PUR)

     Test point 2 Body ground

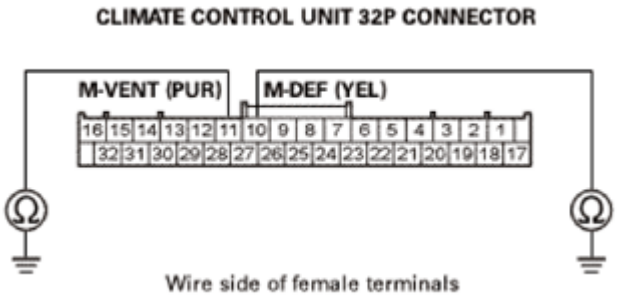

Fig. 89: Checking Continuity Between Climate Control Unit 32P Connector Terminals 1 And 2
Courtesy of AMERICAN HONDA MOTOR CO., INC.

Is there continuity?

YES : Repair a short to body ground in the wire(s) between the climate control unit and the mode control motor.

NO : The M-DEF and M-VENT wires are OK. Go to step 4.

GETtheMANUALS.org

4. Mode control motor check:
    - 1. **TEST THE MODE CONTROL MOTOR** .

    Is the mode control motor OK?

    YES : **REPLACE THE CLIMATE CONTROL UNIT** .

    NO : **REPLACE THE MODE CONTROL MOTOR** , or repair the mode control linkage or doors.

DTC B1241 OR DTC INDICATOR 59: A PROBLEM IN THE BLOWER MOTOR CIRCUIT

GETtheMANUALS.org

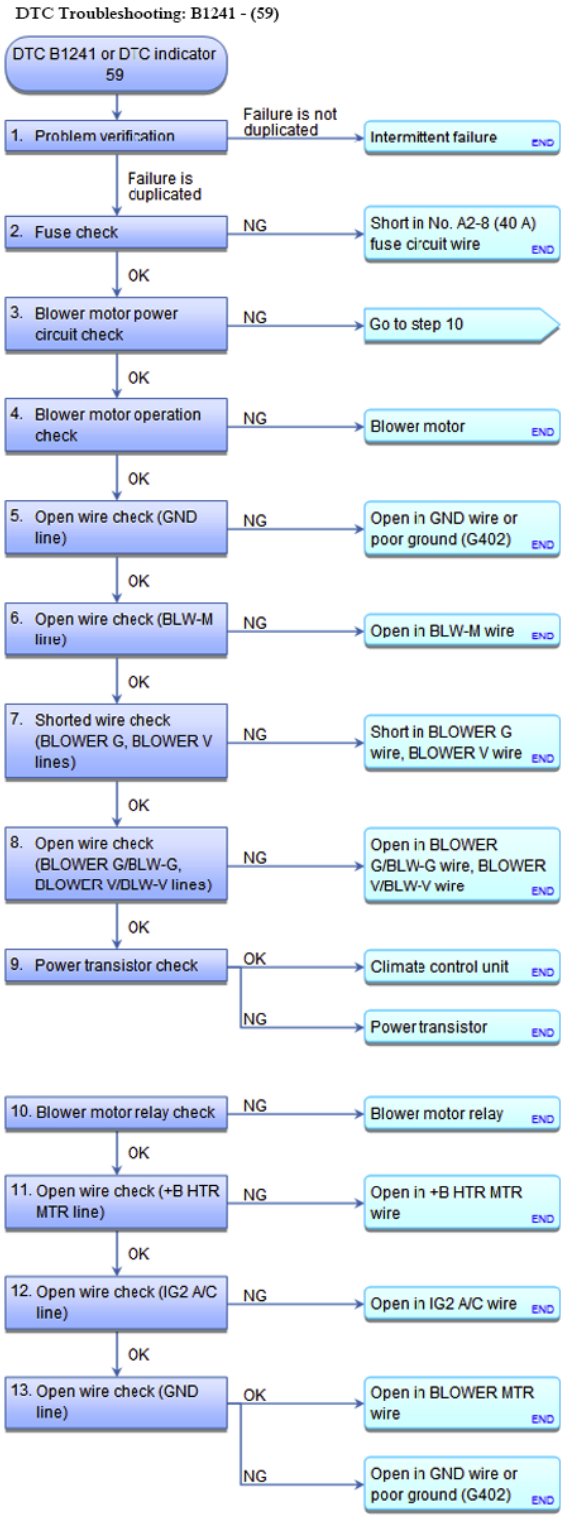

Fig. 90: DTC B1241 Description Chart
Courtesy of AMERICAN HONDA MOTOR CO., INC.

DTC Description	DTC

GETtheMANUALS.org

B1241 A problem in the blower motor circuit	

1. Problem verification:
   - 1. Clear the DTC with the HDS.
   - 2. Turn the ignition switch to LOCK (0) and then back to ON (II).
   - 3. **Do the Self-Diagnostic Function with the HDS or the climate control unit** See **HOW TO TROUBLESHOOT THE BODY ELECTRICAL** or **HOW TO TROUBLESHOOT THE CLIMATE CONTROL SYSTEM** .
   - 4. Check for DTCs.

DTC Description	DTC
B1241 A problem in the blower motor circuit	

Is DTC B1241 or 59 indicated?

YES : Go to step 2.

NO : Intermittent failure. Check for loose wires or poor connections on the blower motor circuit.

2. Fuse check:
   - 1. Turn the ignition switch to LOCK (0).
   - 2. Check the following fuses.

     Fuse No. A2-8 (40 A)

     Location Under-hood fuse/relay box

     Fuse No. B22 (7.5A)

     Location Under-dash fuse/relay box

Are the fuses OK?

YES : Go to step 3.

NO : Replace the fuse, and recheck. If fuse blows again, check for a short in the No. A2-8 (40 A) and or B22 (7.5A) fuse circuits.

3. Blower motor power circuit check:
   - 1. Disconnect the following connector.

     Blower motor 2P connector

   - 2. Turn the ignition switch to ON (II).

GETtheMANUALS.org

- 3. Measure the voltage between test points 1 and 2.

  Test condition IG ON (II)

  Blower motor 2P connector: disconnected

  Test circuit BLW-RLY

  Test point 1 Blower motor 2P connector No. 2 (WHT)

  Test point 2 Body ground

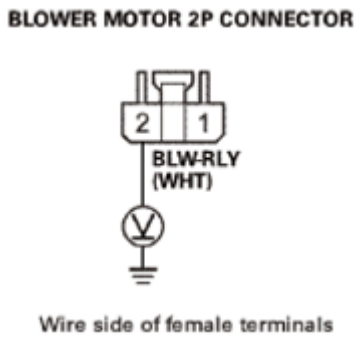

Fig. 91: Measuring Voltage Between Blower Motor 2P Connector Terminals 1 And 2
Courtesy of AMERICAN HONDA MOTOR CO., INC.

Is there battery voltage?

YES : Go to step 4.

NO : Go to step 10.

4. Blower motor operation check:
   - 1. Turn the ignition switch to LOCK (0).
   - 2. Reconnect the blower 2P connector.
   - 3. Connect terminals A and B with a jumper wire.

     Terminal A Blower motor 2P connector No. 1 (GRN)

     Terminal B Body ground

GETtheMANUALS.org

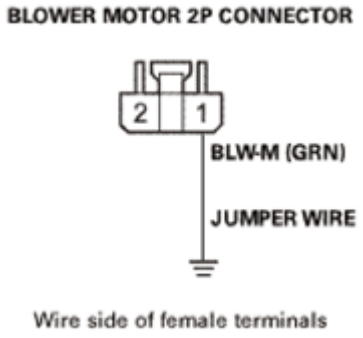

Fig. 92: Connecting Terminals A And B Using Jumper Wire
Courtesy of AMERICAN HONDA MOTOR CO., INC.

- 4. Turn the ignition switch to ON (II).

Does the blower motor run?

YES : Go to step 5.

NO : **REPLACE THE BLOWER MOTOR** .

5. Open wire check (GND line):
   - 1. Turn the ignition switch to LOCK (0).
   - 2. Disconnect the jumper wire.
   - 3. Disconnect the following connector.

     Power transistor 4P connector

   - 4. Check for continuity between test points 1 and 2.

     Test condition IG LOCK (0)

     Power transistor 4P connector: disconnected

     Test circuit GND

     Test point 1 Power transistor 4P connector No. 3 (BLK)

     Test point 2 Body ground

GETtheMANUALS.org

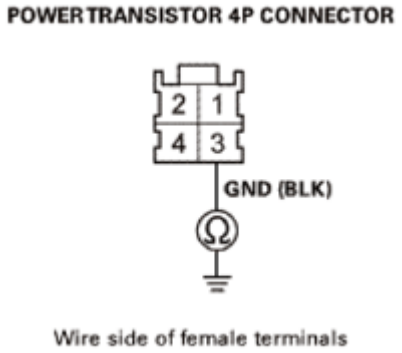

Fig. 93: Checking Continuity Between Power Transistor 4P Connector Terminals 1 And 2
Courtesy of AMERICAN HONDA MOTOR CO., INC.

Is there continuity?

YES : The GND wire is OK. Go to step 6.

NO : Check for an open in the wire between the power transistor and body ground. If the wire is OK, check for poor ground at G402.

6. Open wire check (BLW-M line):
   - 1. Connect terminals A and B with a jumper wire.

     Terminal A Power transistor 4P connector No. 3 (BLK)

     Terminal B Power transistor 4P connector No. 4 (GRN)

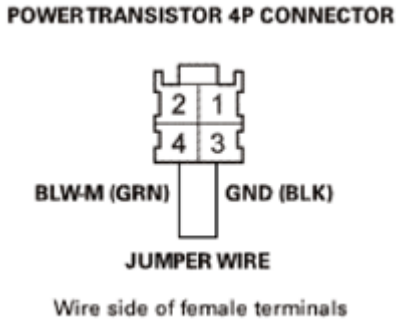

Fig. 94: Connecting Terminals A And B Using Jumper Wire
Courtesy of AMERICAN HONDA MOTOR CO., INC.

   - 2. Turn the ignition switch to ON (II).

Does the blower motor run at high speed?

YES : The BLW-M wire is OK. Go to step 7.

GETtheMANUALS.org

NO : Repair an open in the wire between the power transistor and the blower motor.

7. Shorted wire check (BLOWER G, BLOWER V lines):
    - 1. Turn the ignition switch to LOCK (0).
    - 2. Disconnect the jumper wire.
    - 3. Disconnect the following connector.

      Climate control unit 32P connector

    - 4. Check for continuity between test points 1 and 2 individually.

      Test condition IG LOCK (0)

      Climate control unit 32P connector: disconnected

      Power transistor 4P connector: disconnected

      Test circuit BLOWER G

      Test point 1 Climate control unit 32P connector No. 7 (GRN)

      Test point 2 Body ground

      Test circuit BLOWER V

      Test point 1 Climate control unit 32P connector No. 8 (RED)

      Test point 2 Body ground

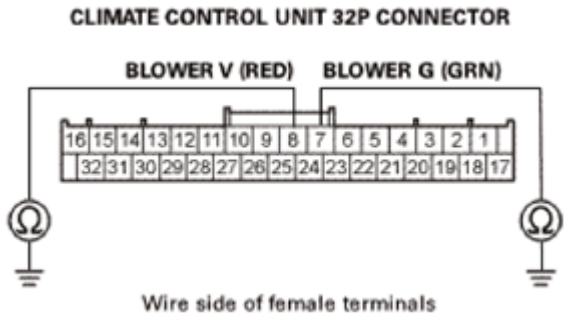

Fig. 95: Checking Continuity Between Climate Control Unit 32P Connector Terminals 1 And 2
Courtesy of AMERICAN HONDA MOTOR CO., INC.

Is there continuity?

YES : Repair a short to body ground in the wire(s) between the climate control unit and the power transistor.

GETtheMANUALS.org

NO : The BLOWER G and BLOWER V wires are not shorted to ground. Go to step 8.

8. Open wire check (BLOWER G/BLW-G, BLOWER V/BLW-V lines):
   - 1. Check for continuity between test points 1 and 2 respectively.

     Test condition IG LOCK (0)

     Climate control unit 32P connector: disconnected

     Power transistor 4P connector: disconnected

     Test circuit BLOWER G/BLW-G

     Test point 1 Climate control unit 32P connector No. 7 (GRN)

     Test point 2 Power transistor 4P connector No. 1 (YEL)

     Test circuit BLOWER V/BLW-V

     Test point 1 Climate control unit 32P connector No. 8 (RED)

     Test point 2 Power transistor 4P connector No. 2 (BLU)

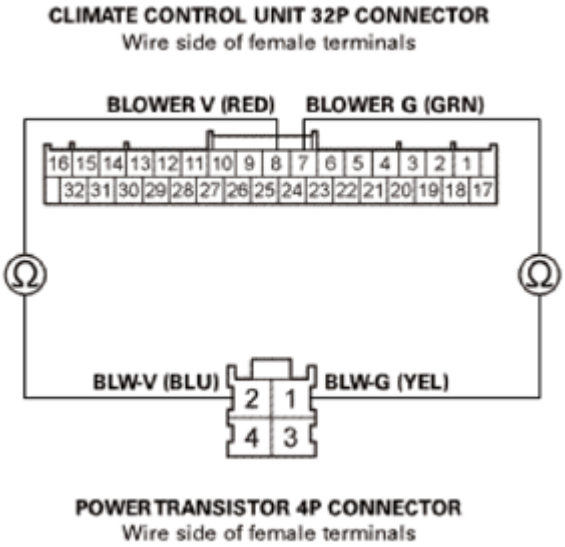

Fig. 96: Checking Continuity Between Power Transistor 4P Connector Terminals 1 And 2
Courtesy of AMERICAN HONDA MOTOR CO., INC.

Is there continuity?

YES : The BLOWER G/BLW-G and BLOWER V/BLW-V wires are OK. Go to step 9.

NO : Repair an open in the wire between the climate control unit and the power transistor.

GETtheMANUALS.org

9. Power transistor check:
    - 1. Reconnect the climate control unit 32P connector.
    - 2. **TEST THE POWER TRANSISTOR** .

    Is the power transistor OK?

    YES : **REPLACE THE CLIMATE CONTROL UNIT** .

    NO : **REPLACE THE POWER TRANSISTOR** .

    If the power transistor is faulty, check the blower motor for damage. If necessary, **REPLACE THE BLOWER MOTOR** .

10. Blower motor relay check:
    - 1. Turn the ignition switch to LOCK (0).
    - 2. Remove the blower motor relay from the under-hood fuse/relay box, and **TEST IT** .

    Is the relay OK?

    YES : Go to step 11.

    NO : Replace the blower motor relay.

11. Open wire check (+B HTR MTR line):
    - 1. Measure the voltage between test points 1 and 2.

      Test condition IG LOCK (0)

      Blower motor 2P connector: disconnected

      Blower motor relay: disconnected

      Test circuit +B HTR MTR

      Test point 1 Blower motor relay 5P socket No. 1 (Under-hood fuse/relay box)

      Test point 2 Body ground

GETtheMANUALS.org

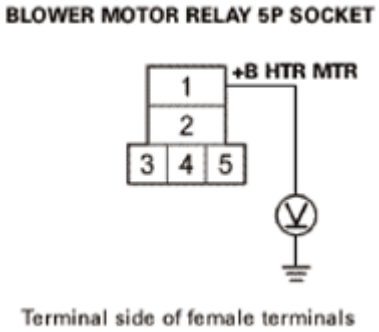

Fig. 97: Measuring Voltage Between Blower Motor Relay 5P Socket No. 1 Connector Terminals
Courtesy of AMERICAN HONDA MOTOR CO., INC.

Is there battery voltage?

YES : The +B HTR MTR wire is OK. Go to step 12.

NO : An open in +B HTR MTR wire. **REPLACE THE UNDER-HOOD FUSE/RELAY BOX** .

12. Open wire check (IG2 A/C line):
    - 1. Turn the ignition switch to ON (II).
    - 2. Measure the voltage between test points 1 and 2.

    Test condition IG ON (II)

    Blower motor 2P connector: disconnected

    Blower motor relay: disconnected

    Test circuit IG2 A/C

    Test point 1 Blower motor relay 5P socket No. 3 (PNK) (Under-hood fuse/relay box)

    Test point 2 Body ground

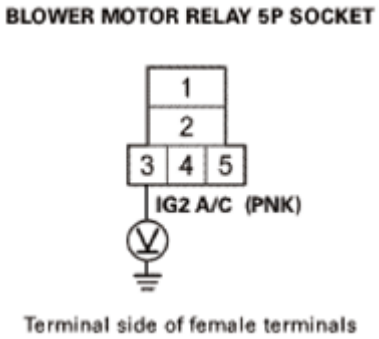

GETtheMANUALS.org

Fig. 98: Measuring Voltage Between Blower Motor Relay 5P Socket Terminals 1 And 2
Courtesy of AMERICAN HONDA MOTOR CO., INC.

Is there battery voltage?

YES : The IG2 A/C wire is OK. Go to step 13.

NO : Repair an open in the wire between the No. B22 (7.5 A) fuse in the under-dash fuse/relay box and the blower motor relay.

13. Open wire check (GND line):
    - 1. Turn the ignition switch to LOCK (0).
    - 2. Check for continuity between test points 1 and 2.

    Test condition IG LOCK (0)

    Blower motor 2P connector: disconnected

    Blower motor relay: disconnected

    Test circuit GND

    Test point 1 Blower motor relay 5P socket No. 5 (BRN) (Under-hood fuse/relay box)

    Test point 2 Body ground

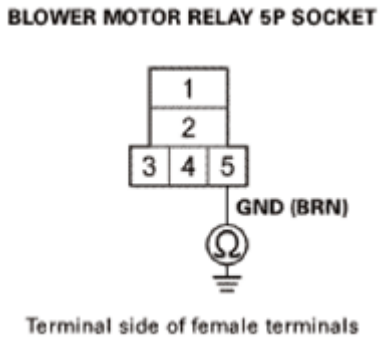

Fig. 99: Checking Continuity Between Blower Motor Relay 5P Socket Connector Terminals 1 And 2
Courtesy of AMERICAN HONDA MOTOR CO., INC.

Is there continuity?

YES : Repair an open in the wire between the blower motor relay and the blower motor.

NO : Check for an open in the wire between the blower motor relay and body ground. If the wire is OK, check for poor ground at G402.

GETtheMANUALS.org

DTC B1275: HEADLIGHT SWITCH OFF POSITION CIRCUIT MALFUNCTION; DTC B1276: HEADLIGHT SWITCH PARKING POSITION CIRCUIT MALFUNCTION; DTC B1277: HEADLIGHT SWITCH AUTO POSITION CIRCUIT MALFUNCTION; DTC B1278: HEADLIGHT SWITCH ON POSITION CIRCUIT MALFUNCTION

GETtheMANUALS.org

DTC Troubleshooting: B1275, B1276, B1277, B1278

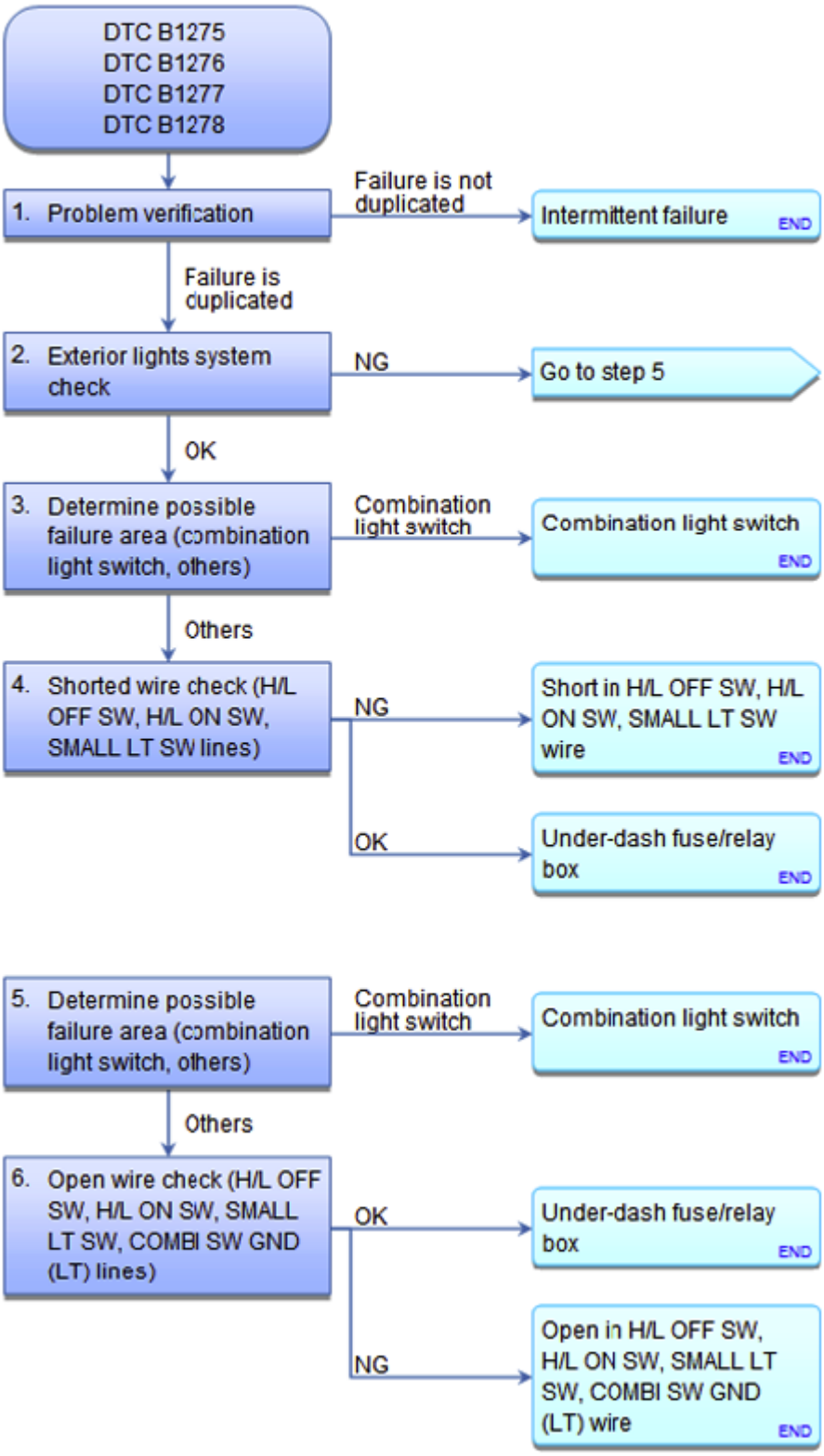

Fig. 100: DTC Troubleshooting Chart (B1275, B1276, B1277, B1278)
Courtesy of AMERICAN HONDA MOTOR CO., INC.

GETtheMANUALS.org

DTC Description	DTC
B1275 Headlight Switch OFF Position Circuit Malfunction	
B1276 Headlight Switch PARKING Position Circuit Malfunction	
B1277 Headlight Switch AUTO Position Circuit Malfunction	
B1278 Headlight Switch ON Position Circuit Malfunction	

NOTE: **Refer to the Electrical Wiring Diagrams for the location of the under-dash fuse/relay box connectors.**

1. Problem verification:
   - 1. Check the parameter(s) below with the HDS.

WHEN COMBINATION LIGHT SWITCH IS TURNED OFF

Signal	Threshold		Current conditions	
	Values	Unit	Values	Unit
Headlight Switch (OFF)	ON			
Headlight Switch (PARKING)	OFF			
Headlight Switch (AUTO)	OFF			
Headlight Switch (HEADLIGHT)	OFF			

WHEN COMBINATION LIGHT SWITCH IS TURNED TO PARKING POSITION

Signal	Threshold		Current conditions	
	Values	Unit	Values	Unit
Headlight Switch (OFF)	OFF			
Headlight Switch (PARKING)	ON			
Headlight Switch (AUTO)	OFF			
Headlight Switch (HEADLIGHT)	OFF			

WHEN COMBINATION LIGHT SWITCH IS TURNED TO AUTO

Signal	Threshold		Current conditions	
	Values	Unit	Values	Unit
Headlight Switch (OFF)	OFF			
Headlight Switch (PARKING)	OFF			
Headlight Switch (AUTO)	ON			
Headlight Switch (HEADLIGHT)	OFF			

WHEN COMBINATION LIGHT SWITCH IS TURNED ON (HEADLIGHT)

Signal	Threshold		Current conditions	
	Values	Unit	Values	Unit
Headlight Switch (OFF)	OFF			
Headlight Switch (PARKING)	ON			
Headlight Switch (AUTO)	OFF			

GETtheMANUALS.org

Headlight Switch (HEADLIGHT)	ON			

Do the current condition(s) match the threshold?

YES : Intermittent failure, the system is OK at this time. Check for loose or poor connections.

NO : Go to step 2.

2. Exterior lights system check:
   - 1. Check the parameter(s) below with the HDS.

Signal	Current conditions	
	Values	Unit
Headlight Switch (OFF)		
Headlight Switch (PARKING)		
Headlight Switch (AUTO)		
Headlight Switch (HEADLIGHT)		

Is data list value OFF, not ON?

YES : Go to step 5.

NO : Go to step 3.

3. Determine possible failure area (combination light switch, others):
   - 1. Turn the ignition switch to LOCK (0).
   - 2. Disconnect the following connector.

     Combination light switch 12P connector

   - 3. Check the parameter(s) below with the HDS.

Signal	Current conditions	
	Values	Unit
Headlight Switch (OFF)		
Headlight Switch (PARKING)		
Headlight Switch (AUTO)		
Headlight Switch (HEADLIGHT)		

Has the data list value changed from ON to OFF?

YES : Replace the combination light switch.

NO : Go to step 4.

GETtheMANUALS.org

4. Shorted wire check (H/L OFF SW, H/L ON SW, SMALL LT SW lines):
    - 1. Turn the ignition switch to LOCK (0).
    - 2. Disconnect the following connector.

      Under-dash fuse/relay box connector T (20P)

    - 3. Check for continuity between test points 1 and 2 individually.

      Test condition IG LOCK (0)

      Combination light switch 12P connector: disconnected

      Under-dash fuse/relay box connector T (20P): disconnected

      Test circuit H/L OFF SW

      Test point 1 Under-dash fuse/relay box connector T (20P) No. 1 (ORN)

      Test point 2 Body ground

      Test circuit H/L ON SW

      Test point 1 Under-dash fuse/relay box connector T (20P) No. 2 (WHT)

      Test point 2 Body ground

      Test circuit SMALL LT SW

      Test point 1 Under-dash fuse/relay box connector T (20P) No. 3 (BLU)

      Test point 2 Body ground

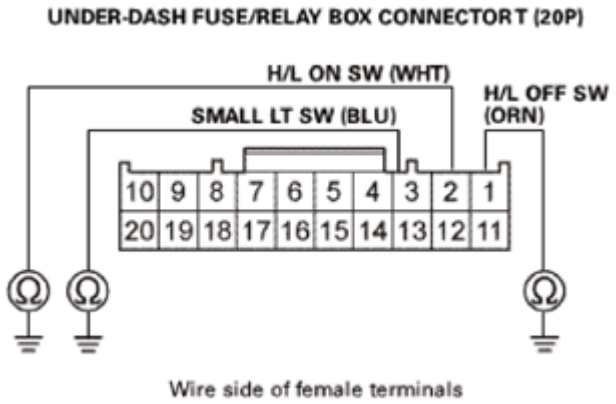

Fig. 101: Checking Continuity Between Under-Dash Fuse/Relay Box Connector T (20P) Terminals 1 And 2

GETtheMANUALS.org

Courtesy of AMERICAN HONDA MOTOR CO., INC.

Is there continuity?

YES : Repair a short to ground in the wire.

NO : The H/L OFF SW, H/L ON SW, and SMALL LT SW wires are OK. Faulty MICU; **REPLACE THE UNDER-DASH FUSE/RELAY BOX** .

5. Determine possible failure area (combination light switch, others):
   - 1. Turn the ignition switch to LOCK (0).
   - 2. Disconnect the following connector.

     Combination light switch 12P connector

   - 3. Connect terminals A and B with a jumper wire.

     Terminal A Combination light switch 12P connector No. 1 (ORN)

     Terminal B Body ground

     Terminal A Combination light switch 12P connector No. 7 (WHT)

     Terminal B Body ground

     Terminal A Combination light switch 12P connector No. 8 (BLU)

     Terminal B Body ground

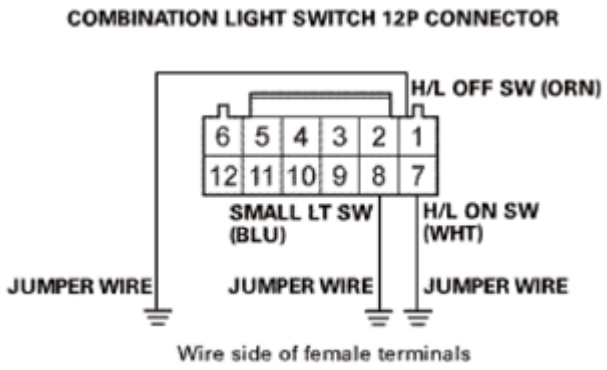

Fig. 102: Connecting Terminals A And B Using Jumper Wire
Courtesy of AMERICAN HONDA MOTOR CO., INC.

   - 4. Check the parameter(s) below with the HDS.

Signal	Current conditions	

GETtheMANUALS.org

	Values	Unit
Headlight Switch (OFF)		
Headlight Switch (PARKING)		
Headlight Switch (AUTO)		
Headlight Switch (HEADLIGHT)		

Has the data list value changed from OFF to ON?

YES : **<u>REPLACE THE COMBINATION LIGHT SWITCH</u>** .

NO : Go to step 6.

6. Open wire check (H/L OFF SW, H/L ON SW, SMALL LT SW, COMBI SW GND (LT) lines):
   - 1. Turn the ignition switch to LOCK (0).
   - 2. Disconnect the following connector.

     Under-dash fuse/relay box connector T (20P)

   - 3. Check for continuity test points 1 and 2.

     Test condition IG LOCK (0)

     Under-dash fuse/relay box connector T (20P): disconnected

     Combination light switch 12P connector: disconnected

     Test circuit H/L OFF SW

     Test point 1 Under-dash fuse/relay box connector T (20P) No. 1 (ORN)

     Test point 2 Combination light switch 12P connector No. 1 (ORN)

     Test circuit H/L ON SW

     Test point 1 Under-dash fuse/relay box connector T (20P) No. 2 (WHT)

     Test point 2 Combination light switch 12P connector No. 7 (WHT)

     Test circuit SMALL LT SW

     Test point 1 Under-dash fuse/relay box connector T (20P) No. 3 (BLU)

     Test point 2 Combination light switch 12P connector No. 8 (BLU)

     Test circuit COMBI SW GND (LT)

GETtheMANUALS.org

Test point 1 Under-dash fuse/relay box connector T (20P) No. 5 (BLK)

Test point 2 Combination light switch 12P connector No. 6 (BLK)

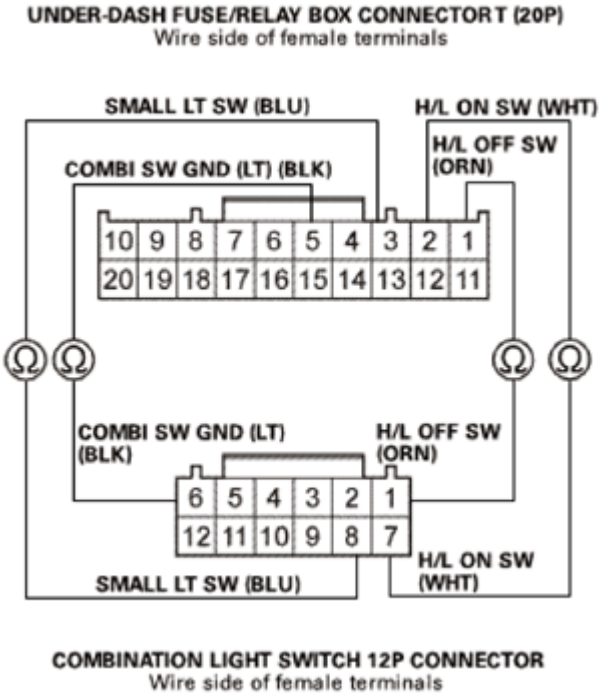

Fig. 103: Checking Continuity Between Under-Dash Fuse/Relay Box Connector T (20P) Terminals 1 And 2
Courtesy of AMERICAN HONDA MOTOR CO., INC.

Is there continuity?

YES : The H/L OFF SW, H/L ON SW, SMALL LT SW, and COMBI SW GND (LT) wires are OK. Faulty MICU; **REPLACE THE UNDER-DASH FUSE/RELAY BOX** .

NO : Repair an open or high resistance in the wire.

DTC B1279: DIMMER SWITCH CIRCUIT MALFUNCTION

GETtheMANUALS.org

DTC Troubleshooting: B1279

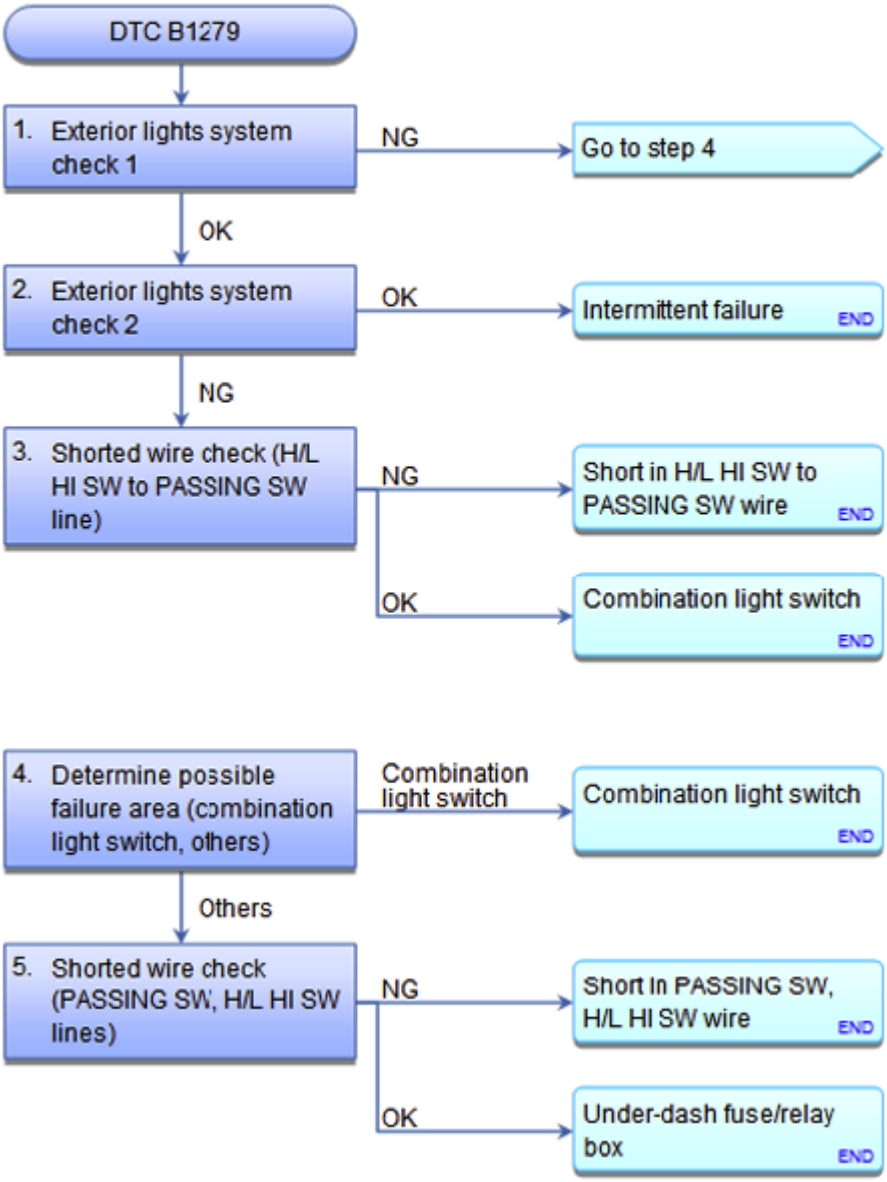

Fig. 104: DTC Troubleshooting Chart (B1279)
Courtesy of AMERICAN HONDA MOTOR CO., INC.

DTC Description	DTC
B1279 Dimmer Switch Circuit Malfunction	

NOTE: **Refer to the Electrical Wiring Diagrams for the location of the under-dash fuse/relay box connectors.**

1. Exterior lights system check 1:
   - 1. With the headlight dimmer switch in the neutral position, check the parameter(s) below with the

GETtheMANUALS.org

HDS.

Signal	Current conditions	
	Values	Unit
Headlight Switch (HIGH BEAM)		
Headlight Switch (PASSING)		

Is either information indicator ON?

YES : Go to step 4.

NO : Go to step 2.

2. Exterior lights system check 2:
   - 1. With the headlight dimmer switch in the high beam position, check the parameter(s) below with the HDS.

Signal	Current conditions	
	Values	Unit
Headlight Switch (HIGH BEAM)		
Headlight Switch (PASSING)		

Are both information indicators ON?

YES : Go to step 3.

NO : Intermittent failure, the system is OK at this time.

3. Shorted wire check (H/L HI SW to PASSING SW line):
   - 1. Turn the ignition switch to LOCK (0).
   - 2. Disconnect the following connector.

     Combination light switch 12P connector

   - 3. Connect terminals A and B with a jumper wire.

     Terminal A Under-dash fuse/relay box connector T (20P) No. 12 (LT BLU)

     Terminal B Body ground

   - 4. Check the parameter(s) below with the HDS.

GETtheMANUALS.org

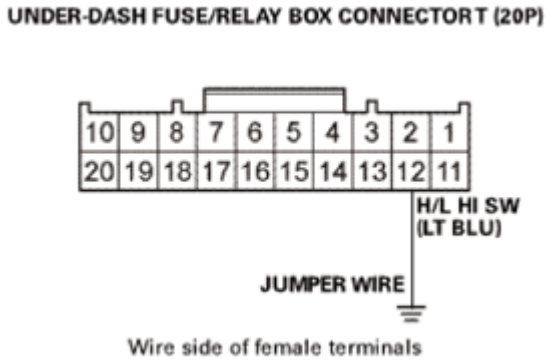

Fig. 105: Connecting Jumper Wire Between Under-Dash Fuse/Relay Box Connector (20P) Terminal And Body Ground
Courtesy of AMERICAN HONDA MOTOR CO., INC.

Signal	Current conditions	
	Values	Unit
Headlight Switch (HIGH BEAM)		
Headlight Switch (PASSING)		

Are both information indicators ON?

YES : Repair a short between the wires.

NO : The H/L HI SW to PASSING SW wire is OK. **REPLACE THE COMBINATION LIGHT SWITCH** .

4. Determine possible failure area (combination light switch, others):
   - 1. Turn the ignition switch to LOCK (0).
   - 2. Disconnect the following connector.

     Combination light switch 12P connector

   - 3. Check the parameter(s) below with the HDS.

Signal	Current conditions	
	Values	Unit
Headlight Switch (HIGH BEAM)		
Headlight Switch (PASSING)		

Is either information indicator ON?

YES : Go to step 5.

NO : **REPLACE THE COMBINATION LIGHT SWITCH** .

GETtheMANUALS.org

5. Shorted wire check (PASSING SW, H/L HI SW lines):
    - 1. Turn the ignition switch to LOCK (0).
    - 2. Disconnect the following connector.

      Under-dash fuse/relay box connector T (20P)

    - 3. Check for continuity between test points 1 and 2 individually.

      Test condition IG LOCK (0)

      Combination light switch 12P connector: disconnected

      Under-dash fuse/relay box connector T (20P): disconnected

      Test circuit PASSING SW

      Test point 1 Under-dash fuse/relay box connector T (20P) No. 11 (RED)

      Test point 2 Body ground

      Test circuit H/L HI SW

      Test point 1 Under-dash fuse/relay box connector T (20P) No. 12 (LT BLU)

      Test point 2 Body ground

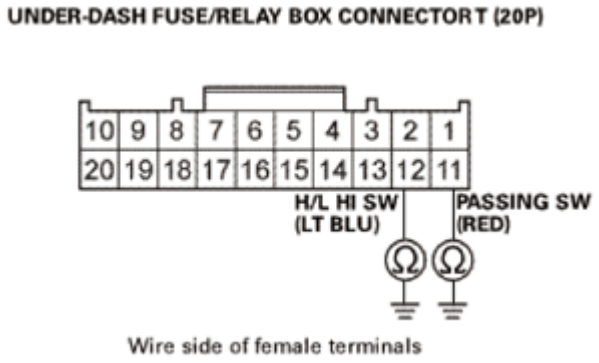

Fig. 106: Checking Continuity Between Under-Dash Fuse/Relay Box Connector (20P) Terminals 11, 12 And Body Ground
Courtesy of AMERICAN HONDA MOTOR CO., INC.

Are there continuity?

YES : Repair a short to ground in the wire.

NO : The PASSING SW and H/L HI SW wires are OK. Faulty MICU; **REPLACE THE UNDER-**

GETtheMANUALS.org

DASH FUSE/RELAY BOX .

DTC B1280: TURN SIGNAL SWITCH CIRCUIT MALFUNCTION

GETtheMANUALS.org

DTC Troubleshooting: B1280

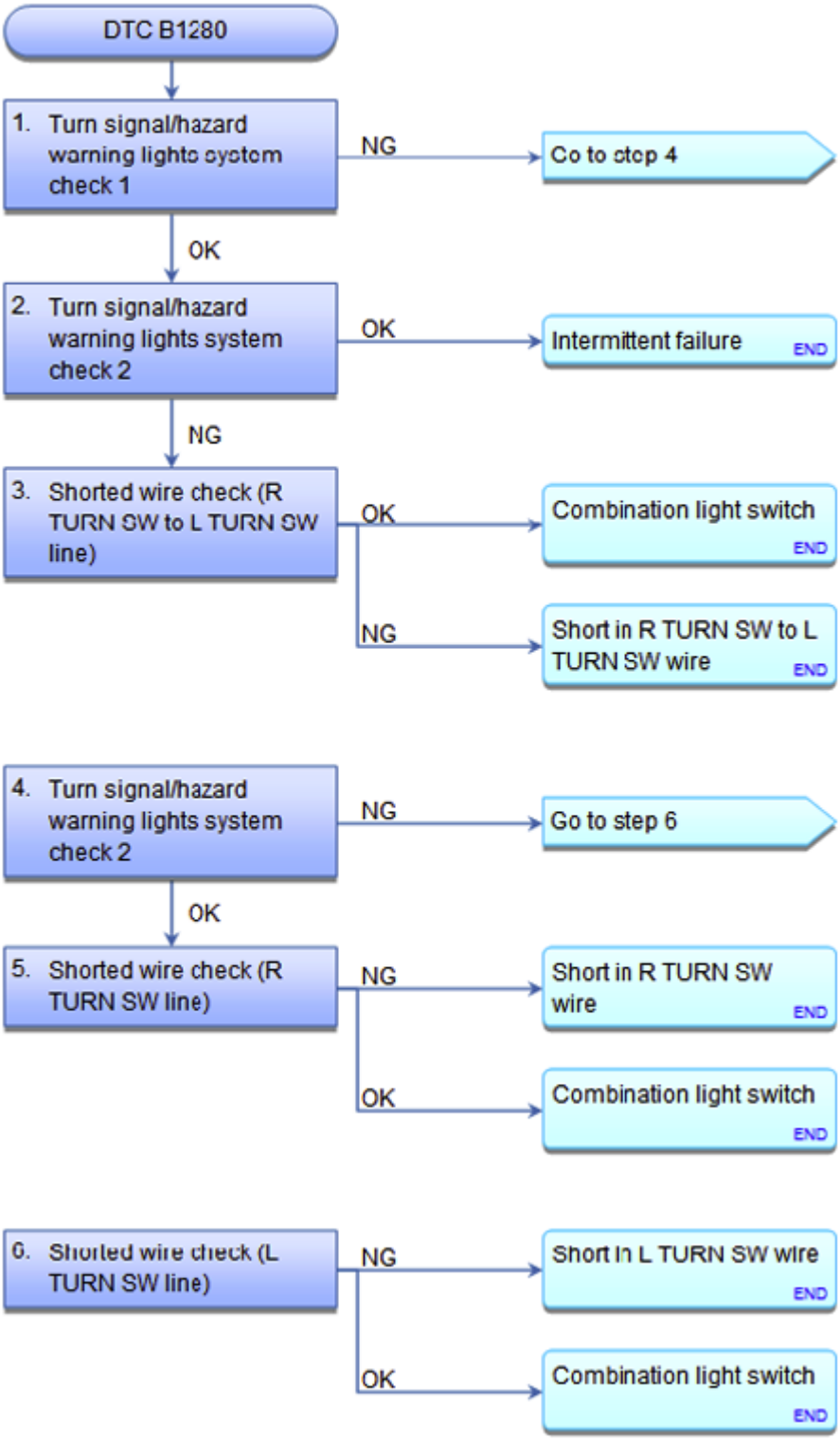

Fig. 107: DTC Troubleshooting Chart (B1280)
Courtesy of AMERICAN HONDA MOTOR CO., INC.

GETtheMANUALS.org

DTC Description	DTC
B1280 Turn Signal Switch Circuit Malfunction	

1. Turn signal/hazard warning lights system check 1:
   - 1. Check the parameter(s) below with the HDS.

Signal	Threshold		Current conditions	
	Values	Unit	Values	Unit
Turn Signal Switch (LEFT)	OFF			
Turn Signal Switch (RIGHT)	OFF			

Do the current condition(s) match the threshold?

YES : Go to step 2.

NO : Go to step 4.

2. Turn signal/hazard warning lights system check 2:
   - 1. Operate the turn signal switch to the left or right position.
   - 2. Check the parameter(s) below with the HDS.

Signal	Threshold		Current conditions	
	Values	Unit	Values	Unit
Turn Signal Switch (LEFT)	ON			
Turn Signal Switch (RIGHT)	ON			

Do the current condition(s) match the threshold?

YES : Go to step 3.

NO : Intermittent failure, the system is OK at this time.

3. Shorted wire check (R TURN SW to L TURN SW line):
   - 1. Turn the ignition switch to LOCK (0).
   - 2. Disconnect the following connector.

     Combination light switch 12P connector

   - 3. Connect terminals A and B with a jumper wire.

     Terminal A Combination light switch 12P connector No. 10 (LT GRN)

     Terminal B Body ground

GETtheMANUALS.org

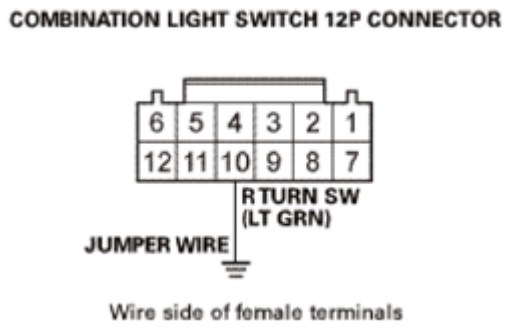

Fig. 108: Connecting Jumper Wire Between Combination Light Switch Connector (12P) Terminal 10 And Body Ground
Courtesy of AMERICAN HONDA MOTOR CO., INC.

- 4. Check the parameter(s) below with the HDS.

Signal	Threshold		Current conditions	
	Values	Unit	Values	Unit
Turn Signal Switch (LEFT)	OFF			
Turn Signal Switch (RIGHT)	ON			

Do the current condition(s) match the threshold?

YES : The R TURN SW to L TURN SW wire is OK. **REPLACE THE COMBINATION LIGHT SWITCH** .

NO : Repair a short between the wires.

4. Turn signal/hazard warning lights system check 2:
   - 1. Check the parameter(s) below with the HDS.

Signal	Threshold		Current conditions	
	Values	Unit	Values	Unit
Turn Signal Switch (LEFT)	ON			

Do the current condition(s) match the threshold?

YES : Go to step 6.

NO : Go to step 5.

5. Shorted wire check (R TURN SW line):
   - 1. Turn the ignition switch to LOCK (0).
   - 2. Disconnect the following connector.

GETtheMANUALS.org

Combination light switch 12P connector

- 3. Check the parameter(s) below with the HDS.

Signal	Threshold		Current conditions	
	Values	Unit	Values	Unit
Turn Signal Switch (RIGHT)	ON			

Do the current condition(s) match the threshold?

YES : Repair a short to ground in the wire.

NO : The R TURN SW wire is OK. **REPLACE THE COMBINATION LIGHT SWITCH** .

6. Shorted wire check (L TURN SW line):
   - 1. Turn the ignition switch to LOCK (0).
   - 2. Disconnect the following connector.

     Combination light switch 12P connector

   - 3. Check the parameter(s) below with the HDS.

Signal	Threshold		Current conditions	
	Values	Unit	Values	Unit
Turn Signal Switch (LEFT)	ON			

Do the current condition(s) match the threshold?

YES : Repair a short to ground in the wire.

NO : The L TURN SW wire is OK. **REPLACE THE COMBINATION LIGHT SWITCH** .

DTC B1281: FRONT WIPER MIST POSITION CIRCUIT MALFUNCTION; DTC B1282: FRONT WIPER INT (AUTO) POSITION CIRCUIT MALFUNCTION; DTC B1283: FRONT WIPER LOW POSITION CIRCUIT MALFUNCTION; DTC B1284: FRONT WIPER HIGH POSITION CIRCUIT MALFUNCTION

GETtheMANUALS.org

DTC Troubleshooting: B1281, B1282, B1283, B1284

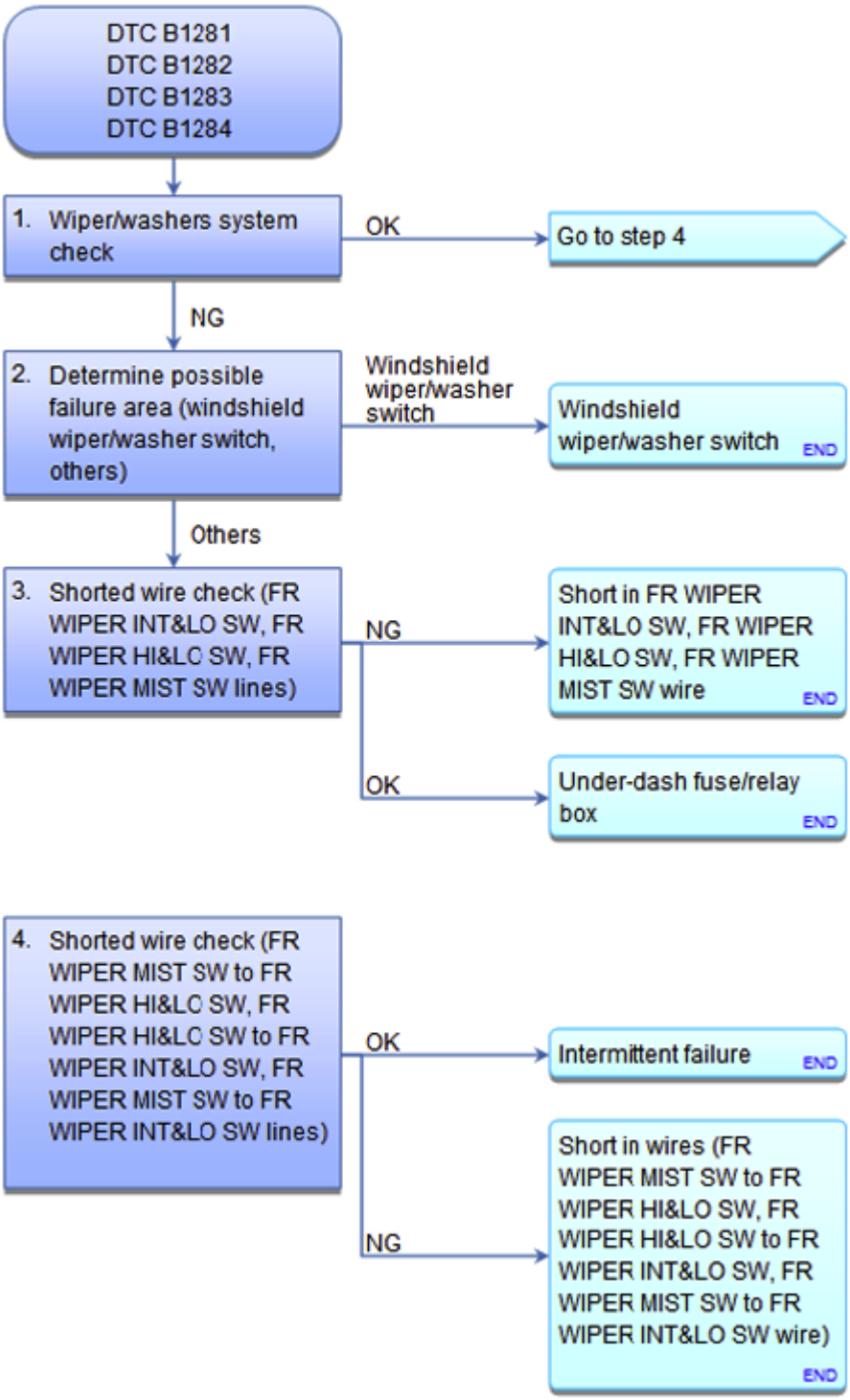

Fig. 109: DTC Troubleshooting Chart (B1281, B1282, B1283 And B1284)
Courtesy of AMERICAN HONDA MOTOR CO., INC.

DTC Description	DTC

GETtheMANUALS.org

B1281 Front Wiper MIST Position Circuit Malfunction	
B1282 Front Wiper INT (AUTO) Position Circuit Malfunction	
B1283 Front Wiper LOW Position Circuit Malfunction	
B1284 Front Wiper HIGH Position Circuit Malfunction	

NOTE: **Refer to the Electrical Wiring Diagrams for the location of the under-dash fuse/relay box connectors.**

1. Wiper/washers system check:
   - 1. Turn the windshield wiper switch to the OFF position, check the parameter(s) below with the HDS.

Signal	Threshold		Current conditions	
	Values	Unit	Values	Unit
Windshield Wiper Switch (LOW)	OFF			
Windshield Wiper Switch (HIGH)	OFF			
Windshield Wiper Switch (INT)	OFF			
Windshield Wiper Switch (MIST)	OFF			

Do the current condition(s) match the threshold?

YES : Go to step 4.

NO : Go to step 2.

2. Determine possible failure area (windshield wiper/washer switch, others):
   - 1. Turn the ignition switch to LOCK (0).
   - 2. Disconnect the following connector.

     Windshield wiper/washer switch 10P connector

   - 3. Check the parameter(s) below with the HDS.

Signal	Threshold		Current conditions	
	Values	Unit	Values	Unit
Windshield Wiper Switch (LOW)	OFF			
Windshield Wiper Switch (HIGH)	OFF			
Windshield Wiper Switch (INT)	OFF			
Windshield Wiper Switch (MIST)	OFF			

Do the current condition(s) match the threshold?

YES : Replace the windshield wiper/washer switch.

GETtheMANUALS.org

NO : Go to step 3.

3. Shorted wire check (FR WIPER INT&LO SW, FR WIPER HI&LO SW, FR WIPER MIST SW lines):
   - 1. Turn the ignition switch to LOCK (0).
   - 2. Disconnect the following connector.

     Under-dash fuse/relay box connector T (20P)

   - 3. Check for continuity between test points 1 and 2 individually.

     Test condition IG LOCK (0)

     Windshield wiper/washer switch 10P connector: disconnected

     Under-dash fuse/relay box connector T (20P): disconnected

     Test circuit FR WIPER INT&LO SW

     Test point 1 Under-dash fuse/relay box connector T (20P) No. 16 (ORN)

     Test point 2 Body ground

     Test circuit FR WIPER HI&LO SW

     Test point 1 Under-dash fuse/relay box connector T (20P) No. 17 (WHT)

     Test point 2 Body ground

     Test circuit FR WIPER MIST SW

     Test point 1 Under-dash fuse/relay box connector T (20P) No. 18 (GRN)

     Test point 2 Body ground

GETtheMANUALS.org

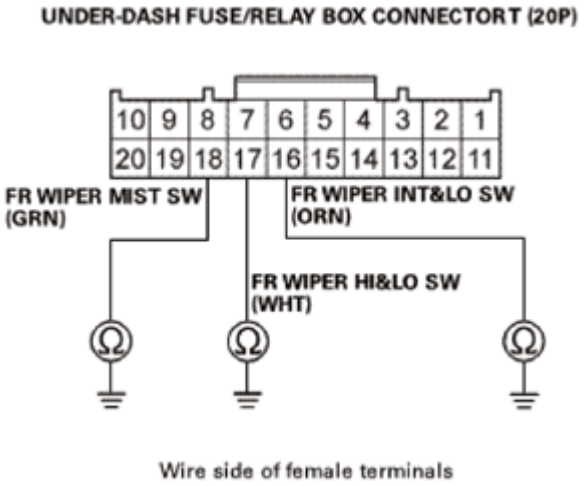

Fig. 110: Checking Continuity Between Under-Dash Fuse/Relay Box Connector (20P) Terminals 16, 17, 18 And Body Ground
Courtesy of AMERICAN HONDA MOTOR CO., INC.

Is there continuity?

YES : Repair a short to ground in the wire.

NO : The FR WIPER INT&LO SW, FR WIPER HI&LO SW, and FR WIPER MIST SW wires are OK. Faulty MICU; **REPLACE THE UNDER-DASH FUSE/RELAY BOX** .

4. Shorted wire check (FR WIPER MIST SW to FR WIPER HI&LO SW, FR WIPER HI&LO SW to FR WIPER INT&LO SW, FR WIPER MIST SW to FR WIPER INT&LO SW lines):
   - 1. Check the parameter(s) below with the HDS.

WHEN WINDSHIELD WIPER SWITCH IS TURNED TO HI

Signal	Threshold		Current conditions	
	Values	Unit	Values	Unit
Windshield Wiper Switch (LOW)	OFF			
Windshield Wiper Switch (HIGH)	ON			
Windshield Wiper Switch (INT)	OFF			
Windshield Wiper Switch (MIST)	OFF			

WHEN WINDSHIELD WIPER SWITCH IS TURNED TO LO

Signal	Threshold		Current conditions	
	Values	Unit	Values	Unit
Windshield Wiper Switch (LOW)	ON			
Windshield Wiper Switch (HIGH)	OFF			
Windshield Wiper Switch (INT)	ON			
Windshield Wiper Switch (MIST)	OFF			

GETtheMANUALS.org

WHEN WINDSHIELD WIPER SWITCH IS TURNED TO INT

Signal	Threshold		Current conditions	
	Values	Unit	Values	Unit
Windshield Wiper Switch (LOW)	OFF			
Windshield Wiper Switch (HIGH)	OFF			
Windshield Wiper Switch (INT)	ON			
Windshield Wiper Switch (MIST)	OFF			

WHEN WINDSHIELD WIPER SWITCH IS TURNED OFF

Signal	Threshold		Current conditions	
	Values	Unit	Values	Unit
Windshield Wiper Switch (LOW)	OFF			
Windshield Wiper Switch (HIGH)	OFF			
Windshield Wiper Switch (INT)	OFF			
Windshield Wiper Switch (MIST)	OFF			

WHEN WINDSHIELD WIPER SWITCH IS TURNED TO MIST

Signal	Threshold		Current conditions	
	Values	Unit	Values	Unit
Windshield Wiper Switch (LOW)	OFF			
Windshield Wiper Switch (HIGH)	OFF			
Windshield Wiper Switch (INT)	OFF			
Windshield Wiper Switch (MIST)	ON			

Do the current condition(s) match the threshold?

YES : The FR WIPER MIST SW to FR WIPER HI&LO SW, FR WIPER HI&LO SW to FR WIPER INT&LO SW, and FR WIPER MIST SW to FR WIPER INT&LO SW wires are OK. Intermittent failure, the system is OK at this time. Check for loose or poor connections.

NO : Repair a short between the wires.

DTC B1575: AUTO LIGHT SENSOR MALFUNCTION

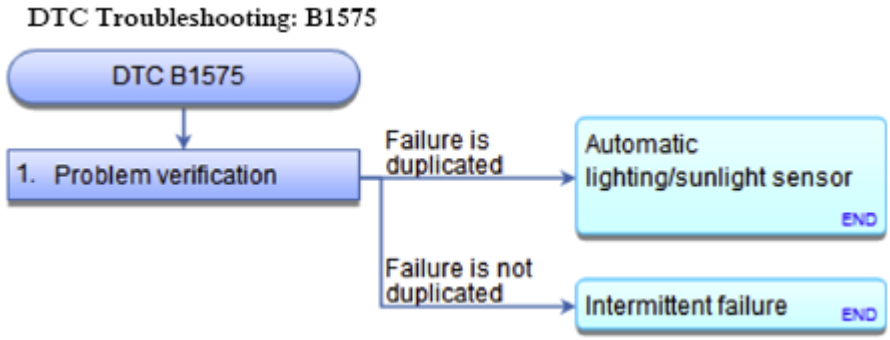

GETtheMANUALS.org

Fig. 111: DTC Troubleshooting Chart (B1575)
Courtesy of AMERICAN HONDA MOTOR CO., INC.

DTC Description	DTC
B1575 Auto Light Sensor Malfunction	

1. Problem verification:
    - 1. Clear the DTCs with the HDS.
    - 2. Turn the ignition switch to LOCK (0) and then back to ON (II).
    - 3. Check for DTCs with the HDS.

DTC Description	DTC
B1575 Auto Light Sensor Malfunction	

Is DTC B1575 indicated?

YES : **REPLACE THE AUTOMATIC LIGHTING/SUNLIGHT SENSOR** .

NO : Intermittent failure, the system is OK at this time.

DTC B1775: MICROPHONE INPUT/OUTPUT SHORTED TO POWER OR OPEN (WITH MOONROOF)

GETtheMANUALS.org

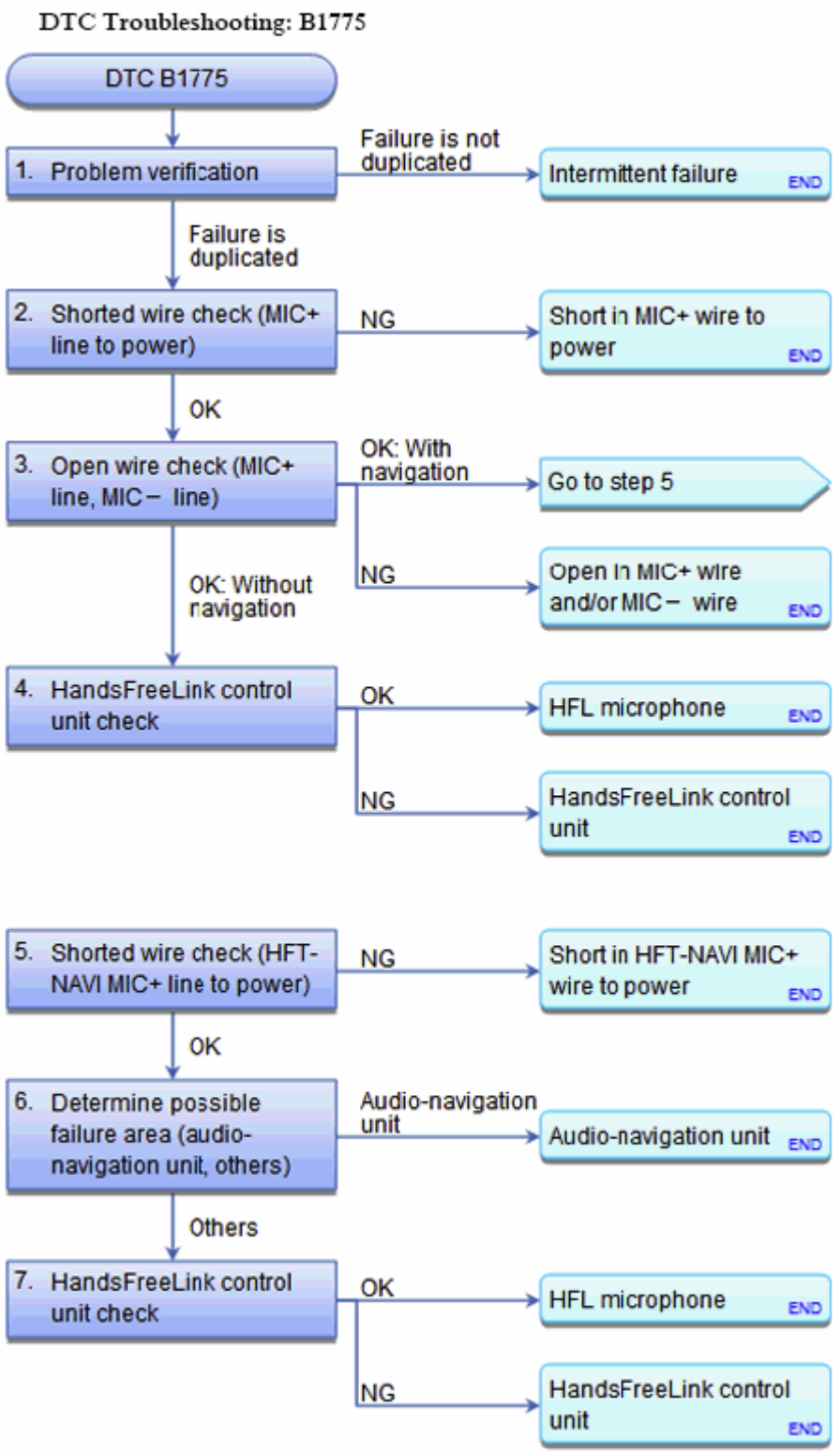

Fig. 112: DTC Troubleshooting Chart (B1775)
Courtesy of AMERICAN HONDA MOTOR CO., INC.

GETtheMANUALS.org

NOTE:

- **CHECK THE VEHICLE BATTERY CONDITION FIRST .**
- **BEFORE YOU TROUBLESHOOT, MAKE SURE TO FOLLOW THE HOW TO TROUBLESHOOT THE HANDSFREELINK SYSTEM .**
- **Check the connectors for poor connections or loose terminals.**

1. Problem verification:
   - 1. **CHECK FOR HFL DTCS** .

   Is DTC B1775 indicated?

   YES : The failure is duplicated, go to step 2.

   NO : Intermittent failure, the system is OK at this time.

2. Shorted wire check (MIC+ line to power):
   - 1. Turn the ignition switch to LOCK (0).
   - 2. Disconnect the following connectors.

     HandsFreeLink control unit 32P connector

     HFL microphone 3P connector

   - 3. Turn the ignition switch to ON (II).
   - 4. Measure the voltage between test points 1 and 2.

     Test condition IG ON (II)

     HandsFreeLink control unit 32P connector: disconnected

     HFL microphone 3P connector: disconnected

     Test circuit MIC+

     Test point 1 HandsFreeLink control unit 32P connector No. 2 (GRN)

     Test point 2 Body ground

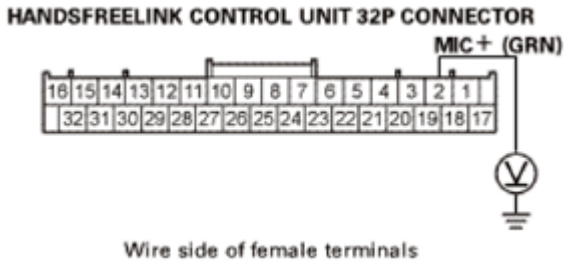

GETtheMANUALS.org

Fig. 113: Measuring Voltage Between Handsfreelink Control Unit 32P Connector And Body Ground
Courtesy of AMERICAN HONDA MOTOR CO., INC.

Is there any voltage?

YES : There is a short to power in the wire between the HandsFreeLink control unit and the HFL microphone. Replace the affected shielded harness.

NO : The MIC+ wire is not shorted to power. Go to step 3.

3. Open wire check (MIC+ line, MIC- line):
   - 1. Turn the ignition switch to LOCK (0).
   - 2. Check for continuity between test points 1 and 2.

   Test condition IG LOCK (0)

   HandsFreeLink control unit 32P connector: disconnected

   HFL microphone 3P connector: disconnected

   Test circuit MIC-

   Test point 1 HandsFreeLink control unit 32P connector No. 1 (RED)

   Test point 2 HFL microphone 3P connector No. 2 (RED)

   Test circuit MIC+

   Test point 1 HandsFreeLink control unit 32P connector No. 2 (GRN)

   Test point 2 HFL microphone 3P connector No. 3 (GRN)

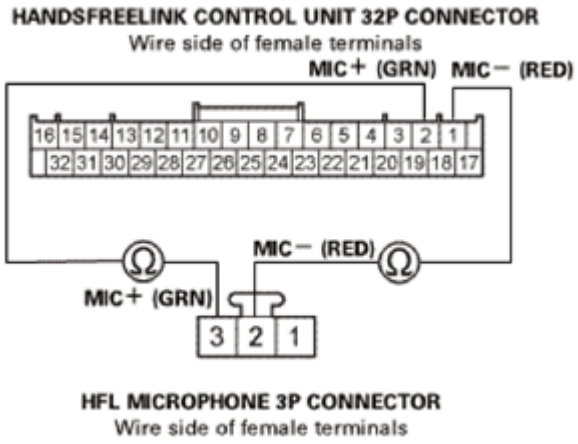

Fig. 114: Checking Continuity Between Handsfreelink Control Unit 32P Connector No. 1 And

GETtheMANUALS.org

Is there continuity?

YES : The MIC+ and the MIC- wires are OK. Go to step 5.

YES : The MIC+ and the MIC- wires are OK. Go to step 4.

NO : There is an open in the wire(s) between the HandsFreeLink control unit and the HFL microphone. Replace the affected shielded harness.

4. HandsFreeLink control unit check:
   - 1. **SUBSTITUTE A KNOWN-GOOD HFL MICROPHONE** , and recheck.

Does the symptom/indication go away?

YES : Replace the original HFL microphone.

NO : **Replace the HandsFreeLink control unit** See **HANDSFREELINK CONTROL UNIT REMOVAL AND INSTALLATION** or **HANDSFREELINK CONTROL UNIT UPDATE** .

5. Shorted wire check (HFT-NAVI MIC+ line to power):
   - 1. Disconnect the following connector.

     Audio-navigation unit connector B (20P)

   - 2. Turn the ignition switch to ON (II).
   - 3. Measure the voltage between test points 1 and 2.

     Test condition IG ON (II)

     HandsFreeLink control unit 32P connector: disconnected

     HFL microphone 3P connector: disconnected

     Audio-navigation unit connector B (20P): disconnected

     Test circuit HFT-NAVI MIC+

     Test point 1 HandsFreeLink control unit 32P connector No. 18 (BRN)

     Test point 2 Body ground

GETtheMANUALS.org

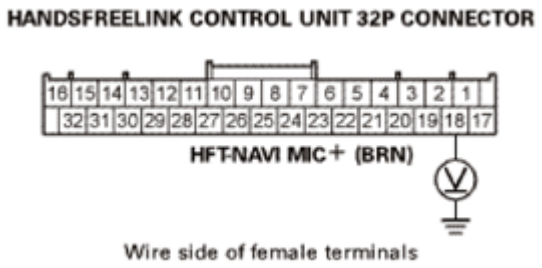

Fig. 115: Checking Voltage Between HandsFreeLink Control Unit 32P Connector No. 18 And Body Ground
Courtesy of AMERICAN HONDA MOTOR CO., INC.

Is there voltage?

YES : There is a short to power in the wire between the HandsFreeLink control unit and the audio-navigation unit. Replace the affected shielded harness.

NO : The HFT-NAVI MIC+ wire is OK. Go to step 6.

6. Determine possible failure area (audio-navigation unit, others):
   - 1. Turn the ignition switch to LOCK (0).
   - 2. Reconnect the HandsFreeLink control unit 32P connector and the HFL microphone 3P connector.
   - 3. Turn the ignition switch to ON (II).
   - 4. **DO THE HFL SELF-DIAGNOSTIC FUNCTION** .

Do you hear, "The HFT is OK"?

YES : REPLACE THE AUDIO-NAVIGATION UNIT .

NO : Go to step 7.

7. HandsFreeLink control unit check:
   - 1. Turn the ignition switch to LOCK (0).
   - 2. **SUBSTITUTE A KNOWN-GOOD HFL MICROPHONE** , and recheck.

Does the symptom/indication go away?

YES : Replace the original HFL microphone.

NO : **Replace the HandsFreeLink control unit** See **HANDSFREELINK CONTROL UNIT REMOVAL AND INSTALLATION** or **HANDSFREELINK CONTROL UNIT UPDATE** .

DTC B1775: MICROPHONE INPUT/OUTPUT SHORTED TO POWER OR OPEN (WITHOUT MOONROOF)

GETtheMANUALS.org

DTC Troubleshooting: B1775

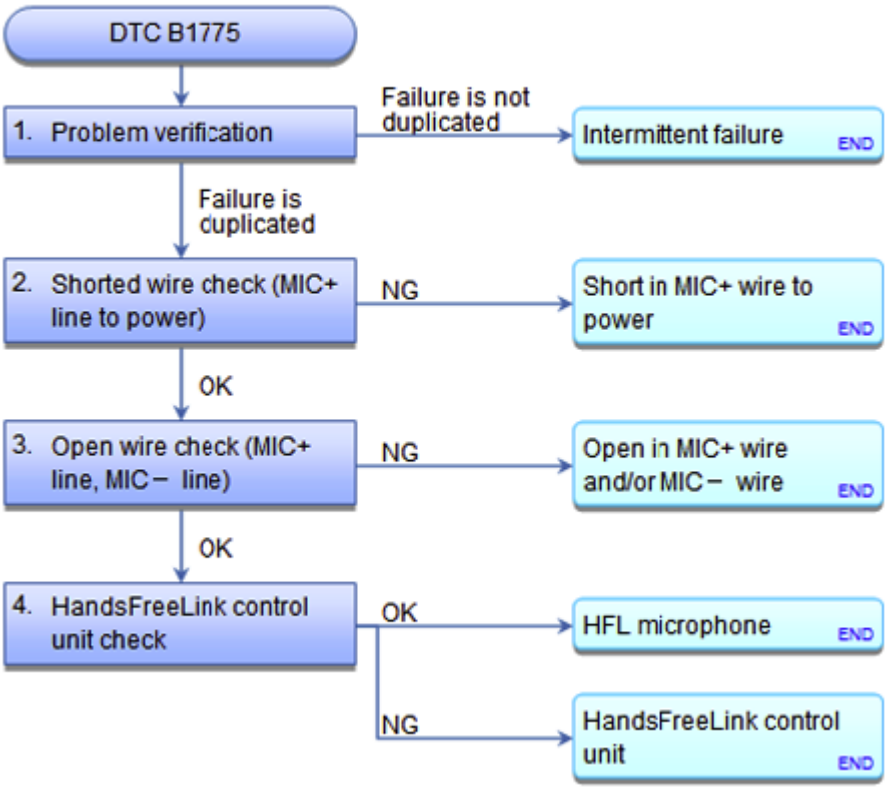

Fig. 116: DTC Troubleshooting Chart (B1775)
Courtesy of AMERICAN HONDA MOTOR CO., INC.

NOTE:

- **CHECK THE VEHICLE BATTERY CONDITION FIRST .**
- **BEFORE YOU TROUBLESHOOT, MAKE SURE TO FOLLOW THE HOW TO TROUBLESHOOT THE HANDSFREELINK SYSTEM .**
- **Check the connectors for poor connections or loose terminals.**

1. Problem verification:
   - 1. **CHECK FOR HFL DTCS** .

   Is DTC B1775 indicated?

   YES : The failure is duplicated, go to step 2.

   NO : Intermittent failure, the system is OK at this time.

2. Shorted wire check (MIC+ line to power):
   - 1. Turn the ignition switch to LOCK (0).
   - 2. Disconnect the following connectors.

GETtheMANUALS.org

HandsFreeLink control unit 32P connector

HFL microphone 10P connector

- 3. Turn the ignition switch to ON (II).
- 4. Measure the voltage between test points 1 and 2.

Test condition IG ON (II)

HandsFreeLink control unit 32P connector: disconnected

HFL microphone 10P connector: disconnected

Test circuit MIC+

Test point 1 HandsFreeLink control unit 32P connector No. 2 (GRN)

Test point 2 Body ground

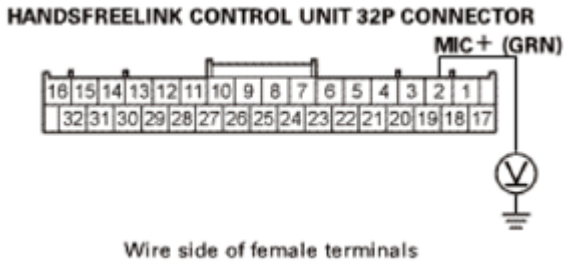

Fig. 117: Measuring Voltage Between Handsfreelink Control Unit 32P Connector No. 2 And Body Ground
Courtesy of AMERICAN HONDA MOTOR CO., INC.

Is there any voltage?

YES : There is a short to power in the wire between the HandsFreeLink control unit and the HFL microphone. Replace the affected shielded harness.

NO : The MIC+ wire is not shorted to power. Go to step 3.

3. Open wire check (MIC+ line, MIC- line):
   - 1. Turn the ignition switch to LOCK (0).
   - 2. Check for continuity between test points 1 and 2.

   Test condition IG LOCK (0)

   HandsFreeLink control unit 32P connector: disconnected

GETtheMANUALS.org

HFL microphone 10P connector: disconnected

Test circuit MIC-

Test point 1 HandsFreeLink control unit 32P connector No. 1 (RED)

Test point 2 HFL microphone 10P connector No. 4 (RED)

Test circuit MIC+

Test point 1 HandsFreeLink control unit 32P connector No. 2 (GRN)

Test point 2 HFL microphone 10P connector No. 5 (GRN)

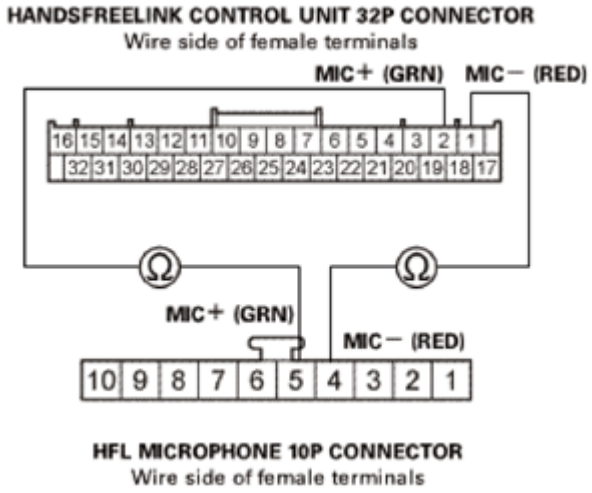

Fig. 118: Checking Continuity Between Handsfreelink Control Unit 32P Connector No. 1 And 2
Courtesy of AMERICAN HONDA MOTOR CO., INC.

Is there continuity?

YES : The MIC+ and the MIC- wires are OK. Go to step 4.

NO : There is an open in the wire(s) between the HandsFreeLink control unit and the HFL microphone. Replace the affected shielded harness.

4. HandsFreeLink control unit check:
   - 1. **SUBSTITUTE A KNOWN-GOOD HFL MICROPHONE** , and recheck.

Does the symptom/indication go away?

YES : Replace the original HFL microphone.

GETtheMANUALS.org

NO : **Replace the HandsFreeLink control unit** See **HANDSFREELINK CONTROL UNIT REMOVAL AND INSTALLATION** or **HANDSFREELINK CONTROL UNIT UPDATE** .

DTC B1776: MICROPHONE INPUT/OUTPUT SHORTED TO GROUND

GETtheMANUALS.org

DTC Troubleshooting: B1776

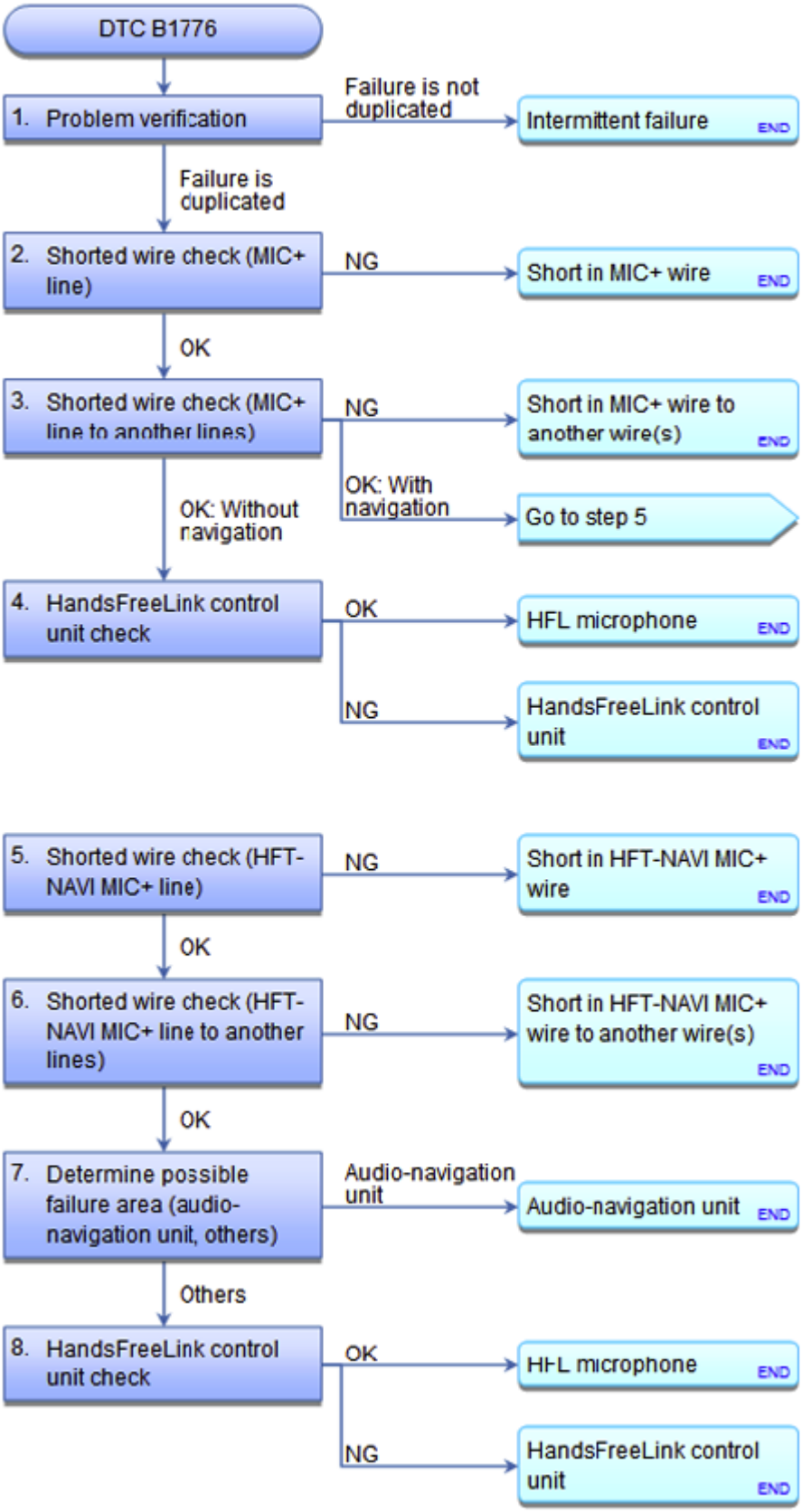

GETtheMANUALS.org

Fig. 119: DTC Troubleshooting Chart (B1776)
Courtesy of AMERICAN HONDA MOTOR CO., INC.

NOTE:

- **CHECK THE VEHICLE BATTERY CONDITION FIRST .**
- **BEFORE YOU TROUBLESHOOT, MAKE SURE TO FOLLOW THE HOW TO TROUBLESHOOT THE HANDSFREELINK SYSTEM .**
- **Check the connectors for poor connections or loose terminals.**

1. Problem verification:
   - 1. **CHECK FOR HFL DTCS** .

   Is DTC B1776 indicated?

   YES : The failure is duplicated, go to step 2.

   NO : Intermittent failure, the system is OK at this time.

2. Shorted wire check (MIC+ line):
   - 1. Turn the ignition switch to LOCK (0).
   - 2. Disconnect the following connectors.

     HandsFreeLink control unit 32P connector

     HFL microphone 3P connector (with moonroof)

     HFL microphone 10P connector (without moonroof)

   - 3. Check for continuity between test points 1 and 2.

     Test condition IG LOCK (0)

     HandsFreeLink control unit 32P connector: disconnected

     HFL microphone 3P connector (with moonroof): disconnected

     HFL microphone 10P connector (without moonroof): disconnected

     Test circuit MIC+

     Test point 1 HandsFreeLink control unit 32P connector No. 2 (GRN)

     Test point 2 Body ground

GETtheMANUALS.org

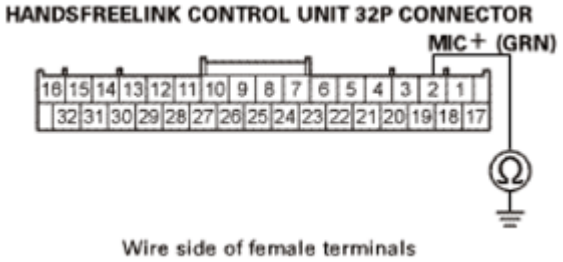

Fig. 120: Checking Continuity Between Handsfreelink Control Unit 32P Connector No. 2 And Body Ground
Courtesy of AMERICAN HONDA MOTOR CO., INC.

Is there continuity?

YES : There is a short to body ground in the wire between the HandsFreeLink control unit and the HFL microphone. Replace the affected shielded harness.

NO : The MIC+ wire is not shorted to ground. Go to step 3.

3. Shorted wire check (MIC+ line to another lines):
   - 1. Check for continuity between test points 1 and 2.

     Test condition IG LOCK (0)

     HandsFreeLink control unit 32P connector: disconnected

     HFL microphone 3P connector (with moonroof): disconnected

     HFL microphone 10P connector (without moonroof): disconnected

     Test circuit MIC+, MIC-

     Test point 1 HandsFreeLink control unit 32P connector No. 2 (GRN)

     Test point 2 HandsFreeLink control unit 32P connector No. 1 (RED)

     Test circuit MIC+, SH MIC

     Test point 1 HandsFreeLink control unit 32P connector No. 2 (GRN)

     Test point 2 HandsFreeLink control unit 32P connector No. 3 (GRY)

GETtheMANUALS.org

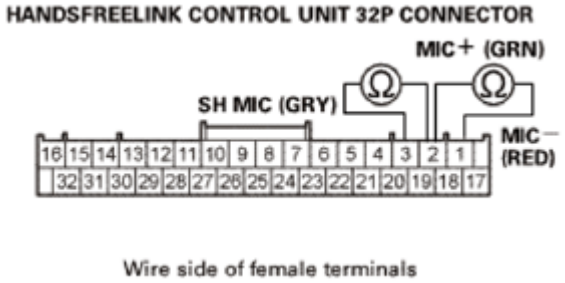

Fig. 121: Checking Continuity Between Handsfreelink Control Unit 32P Connector No. 1, 2 And 3
Courtesy of AMERICAN HONDA MOTOR CO., INC.

Is there continuity?

YES : There is a short in the wires between the HandsFreeLink control unit and the HFL microphone. Replace the affected shielded harness.

NO : The MIC+ wire is OK. Go to step 5.

NO : The MIC+ wire is OK. Go to step 4.

4. HandsFreeLink control unit check:
   - 1. **SUBSTITUTE A KNOWN-GOOD HFL MICROPHONE** , and recheck.

Does the symptom/indication go away?

YES : Replace the original HFL microphone.

NO : **Replace the HandsFreeLink control unit** See **HANDSFREELINK CONTROL UNIT REMOVAL AND INSTALLATION** or **HANDSFREELINK CONTROL UNIT UPDATE** .

5. Shorted wire check (HFT-NAVI MIC+ line):
   - 1. Disconnect the following connector.

     Audio-navigation unit connector B (20P)

   - 2. Check for continuity between test points 1 and 2.

     Test condition IG LOCK (0)

     HandsFreeLink control unit 32P connector: disconnected

     HFL microphone 3P connector: disconnected

     Audio-navigation unit connector B (20P): disconnected

GETtheMANUALS.org

Test circuit HFT-NAVI MIC+

Test point 1 HandsFreeLink control unit 32P connector No. 18 (BRN)

Test point 2 Body ground

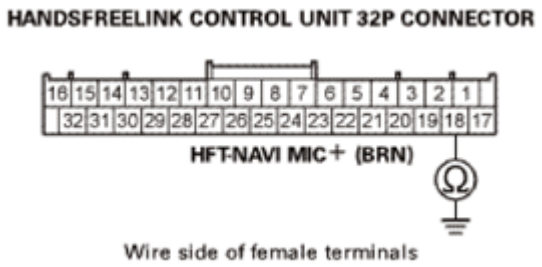

Fig. 122: Checking Continuity Between Handsfreelink Control Unit 32P Connector No. 18 And Body Ground
Courtesy of AMERICAN HONDA MOTOR CO., INC.

Is there continuity?

YES : There is a short to body ground in the wire between the HandsFreeLink control unit and the audio-navigation unit. Replace the affected shielded harness.

NO : The HFT-NAVI MIC+ wire is not shorted to ground. Go to step 6.

6. Shorted wire check (HFT-NAVI MIC+ line to another lines):
   - 1. Check for continuity between test points 1 and 2.

     Test condition IG LOCK (0)

     HandsFreeLink control unit 32P connector: disconnected

     HFL microphone 3P connector: disconnected

     Audio-navigation unit connector B (20P): disconnected

     Test circuit HFT-NAVI MIC+, HFT-NAVI MIC-

     Test point 1 Audio-navigation unit connector B (20P) No. 11 (BRN)

     Test point 2 Audio-navigation unit connector B (20P) No. 12 (YEL)

     Test circuit HFT-NAVI MIC+, SH HFT-NAVI MIC

     Test point 1 Audio-navigation unit connector B (20P) No. 11 (BRN)

     Test point 2 Audio-navigation unit connector B (20P) No. 13 (GRY)

GETtheMANUALS.org

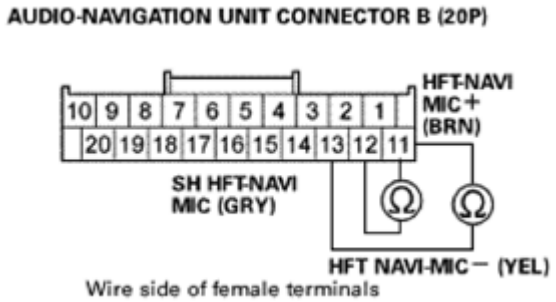

Fig. 123: Checking Continuity Between Handsfreelink Control Unit 20P Connector No. 11, 12 And 13
Courtesy of AMERICAN HONDA MOTOR CO., INC.

Is there continuity?

YES : There is a short in the wires between the HandsFreeLink control unit and the audio-navigation unit. Replace the affected shielded harness.

NO : The HFT-NAVI MIC+ wire is OK. Go to step 7.

7. Determine possible failure area (audio-navigation unit, others):
   - 1. Reconnect the HandsFreeLink control unit 32P connector and the HFL microphone 3P connector.
   - 2. Turn the ignition switch to ON (II).
   - 3. **DO THE HFL SELF-DIAGNOSTIC FUNCTION** .

Do you hear, "The HFT is OK"?

YES : REPLACE THE AUDIO-NAVIGATION UNIT .

NO : Go to step 8.

8. HandsFreeLink control unit check:
   - 1. Turn the ignition switch to LOCK (0).
   - 2. Substitute a known-good **HFL MICROPHONE** , and recheck.

Does the symptom/indication go away?

YES : Replace the original HFL microphone.

NO : **Replace the HandsFreeLink control unit** See **HANDSFREELINK CONTROL UNIT REMOVAL AND INSTALLATION** or **HANDSFREELINK CONTROL UNIT UPDATE** .

DTC B1779: HANDSFREELINK STEERING WHEEL SWITCH FAILURE

GETtheMANUALS.org

DTC Troubleshooting: B1779

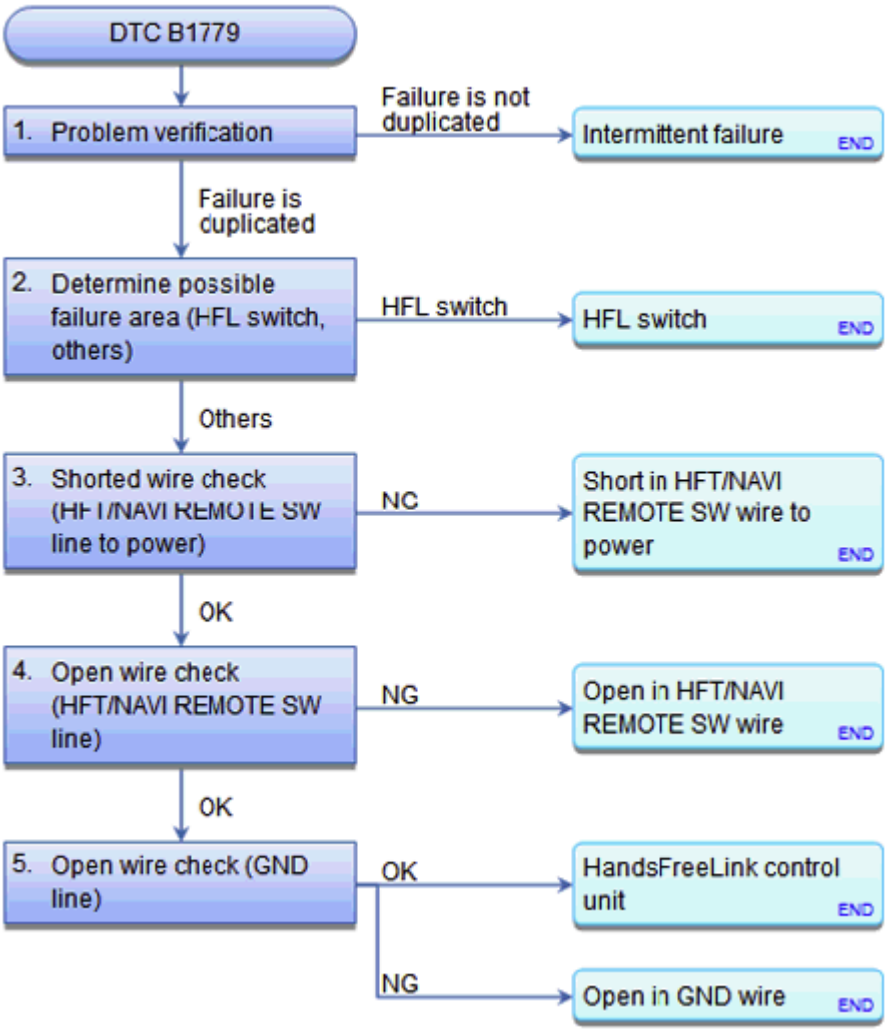

Fig. 124: DTC Troubleshooting Chart (B1779)
Courtesy of AMERICAN HONDA MOTOR CO., INC.

NOTE:

- **CHECK THE VEHICLE BATTERY CONDITION FIRST .**
- **BEFORE YOU TROUBLESHOOT, MAKE SURE TO FOLLOW THE HOW TO TROUBLESHOOT THE HANDSFREELINK SYSTEM .**
- **Check the connectors for poor connections or loose terminals.**

1. Problem verification:
   - 1. **CHECK FOR HFL DTCS** .

   Is DTC B1779 indicated?

   YES : The failure is duplicated, go to step 2.

GETtheMANUALS.org

NO : Intermittent failure, the system is OK at this time.

2. Determine possible failure area (HFL switch, others):
   - 1. Turn the ignition switch to LOCK (0).
   - 2. **DO THE HFL SWITCH TEST** .

Is the switch OK?

YES : Go to step 3.

NO : **REPLACE THE HFL SWITCH** .

3. Shorted wire check (HFT/NAVI REMOTE SW line to power):
   - 1. Disconnect the following connectors.

     HandsFreeLink control unit 32P connector

     HFL switch 7P connector

   - 2. Turn the ignition switch to ON (II).
   - 3. Measure the voltage between test points 1 and 2.

     Test condition IG ON (II)

     HandsFreeLink control unit 32P connector: disconnected

     HFL switch 7P connector: disconnected

     Test circuit HFT/NAVI REMOTE SW

     Test point 1 HandsFreeLink control unit 32P connector No. 15 (YEL)

     Test point 2 Body ground

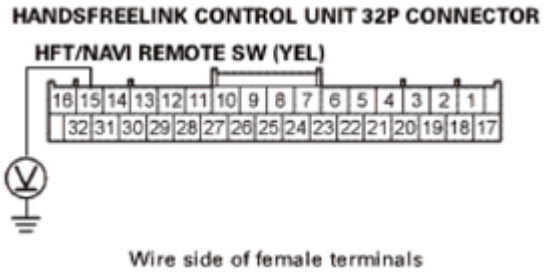

Fig. 125: Measuring Voltage Between Handsfreelink Control Unit 32P Connector No. 15 And Body Ground
Courtesy of AMERICAN HONDA MOTOR CO., INC.

GETtheMANUALS.org

Is there any voltage?

YES : Repair a short to power in the wire between the HandsFreeLink control unit and the HFL switch. If the wire is OK, **REPLACE THE CABLE REEL** .

NO : The HFT/NAVI REMOTE SW wire is not shorted to power. Go to step 4.

4. Open wire check (HFT/NAVI REMOTE SW line):
   - 1. Turn the ignition switch to LOCK (0).
   - 2. Check for continuity between test points 1 and 2.

   Test condition IG LOCK (0)

   HandsFreeLink control unit 32P connector: disconnected

   HFL switch 7P connector: disconnected

   Test circuit HFT/NAVI REMOTE SW

   Test point 1 HandsFreeLink control unit 32P connector No. 15 (YEL)

   Test point 2 HFL switch 7P connector No. 3 (PUR)

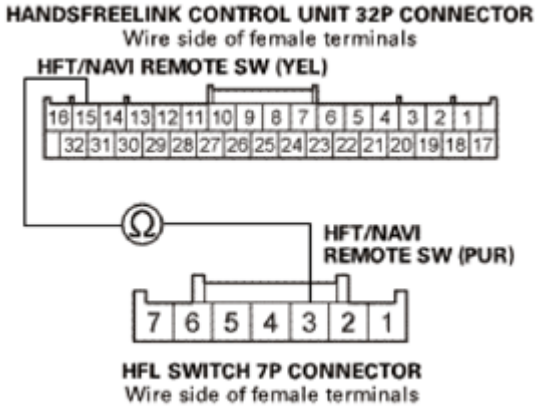

Fig. 126: Checking Continuity Between Handsfreelink Control Unit 32P Connector No. 15 And HFL Switch 7P Connector No. 3
Courtesy of AMERICAN HONDA MOTOR CO., INC.

Is there continuity?

YES : The HFT/NAVI REMOTE SW wire is OK. Go to step 5.

NO : Repair an open in the wire between the HandsFreeLink control unit and the HFL switch. If the wire is OK, **REPLACE THE CABLE REEL** .

GETtheMANUALS.org

5. Open wire check (GND line):
    - 1. Check for continuity between test points 1 and 2.

      Test condition IG LOCK (0)

      HandsFreeLink control unit 32P connector: disconnected

      HFL switch 7P connector: disconnected

      Test circuit GND

      Test point 1 HFL switch 7P connector No. 5 (BLK)

      Test point 2 Body ground

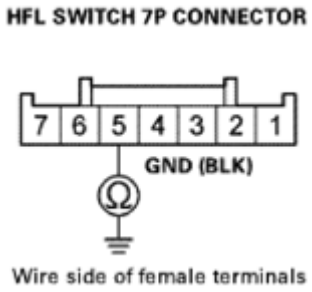

Fig. 127: Checking Continuity Between HFL Switch 7P Connector No. 5 And Body Ground
Courtesy of AMERICAN HONDA MOTOR CO., INC.

Is there continuity?

YES : **Replace the HandsFreeLink control unit** See **HANDSFREELINK CONTROL UNIT REMOVAL AND INSTALLATION** or **HANDSFREELINK CONTROL UNIT UPDATE** .

NO : Repair an open in the wire between the HFL switch and body ground (T6).

DTC B1780: HANDSFREELINK STEERING WHEEL SWITCH LINE SHORT

GETtheMANUALS.org

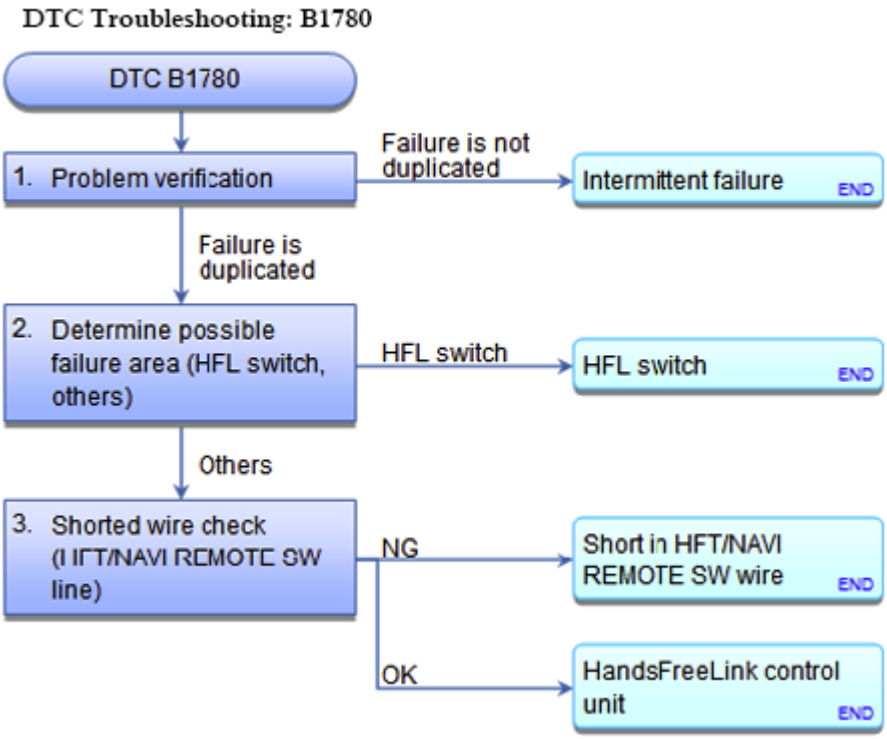

Fig. 128: DTC Troubleshooting Chart (B1780)
Courtesy of AMERICAN HONDA MOTOR CO., INC.

NOTE:

- **CHECK THE VEHICLE BATTERY CONDITION FIRST .**
- **BEFORE YOU TROUBLESHOOT, MAKE SURE TO FOLLOW THE HOW TO TROUBLESHOOT THE HANDSFREELINK SYSTEM .**
- **Check the connectors for poor connections or loose terminals.**

1. Problem verification:
   - 1. **CHECK FOR HFL DTCS** .

   Is DTC B1780 indicated?

   YES : The failure is duplicated, go to step 2.

   NO : Intermittent failure, the system is OK at this time.

2. Determine possible failure area (HFL switch, others):
   - 1. Turn the ignition switch to LOCK (0).
   - 2. **DO THE HFL SWITCH TEST** .

   Is the switch OK?

   YES : Go to step 3.

GETtheMANUALS.org

NO : **REPLACE THE HFL SWITCH** .

3. Shorted wire check (HFT/NAVI REMOTE SW line):
   - 1. Disconnect the following connectors.

     HandsFreeLink control unit 32P connector

     HFL switch 7P connector

   - 2. Check for continuity between test points 1 and 2.

     Test condition IG LOCK (0)

     HandsFreeLink control unit 32P connector: disconnected

     HFL switch 7P connector: disconnected

     Test circuit HFT/NAVI REMOTE SW

     Test point 1 HandsFreeLink control unit 32P connector No. 15 (YEL)

     Test point 2 Body ground

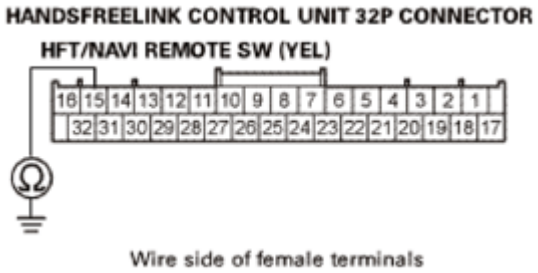

Fig. 129: Checking Continuity Between Handsfreelink Control Unit 32P Connector No. 15 And Body Ground
Courtesy of AMERICAN HONDA MOTOR CO., INC.

Is there continuity?

YES : Repair a short to body ground in the wire between the HandsFreeLink control unit and the HFL switch. If the wire is OK, **REPLACE THE CABLE REEL** .

NO : **Replace the HandsFreeLink control unit** See **HANDSFREELINK CONTROL UNIT REMOVAL AND INSTALLATION** or **HANDSFREELINK CONTROL UNIT UPDATE** .

DTC B1792: HANDSFREELINK CONTROL MODULE ERROR

GETtheMANUALS.org

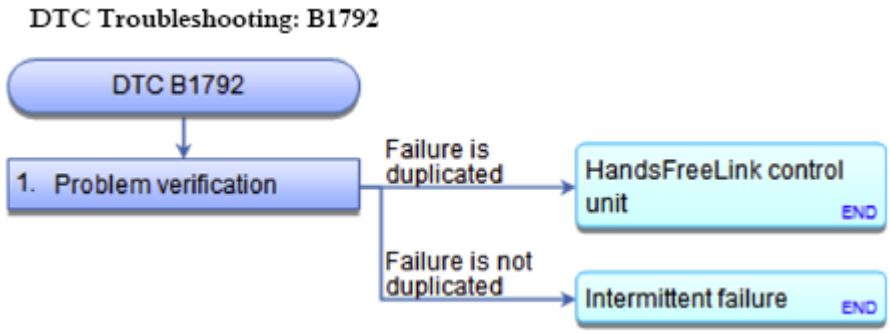

Fig. 130: DTC Troubleshooting Chart (B1792)
Courtesy of AMERICAN HONDA MOTOR CO., INC.

NOTE:

- **CHECK THE VEHICLE BATTERY CONDITION FIRST .**
- **BEFORE YOU TROUBLESHOOT, MAKE SURE TO FOLLOW THE HOW TO TROUBLESHOOT THE HANDSFREELINK SYSTEM .**
- **Check the connectors for poor connections or loose terminals.**

1. Problem verification:
   - 1. **CHECK FOR HFL DTCS** .

   Is DTC B1792 indicated?

   YES : **Replace the HandsFreeLink control unit** See **HANDSFREELINK CONTROL UNIT REMOVAL AND INSTALLATION** or **HANDSFREELINK CONTROL UNIT UPDATE** .

   NO : Intermittent failure, the system is OK at this time.

DTC B2969: CLIMATE CONTROL UNIT LOST COMMUNICATION WITH MICU (WIPSW MESSAGE)

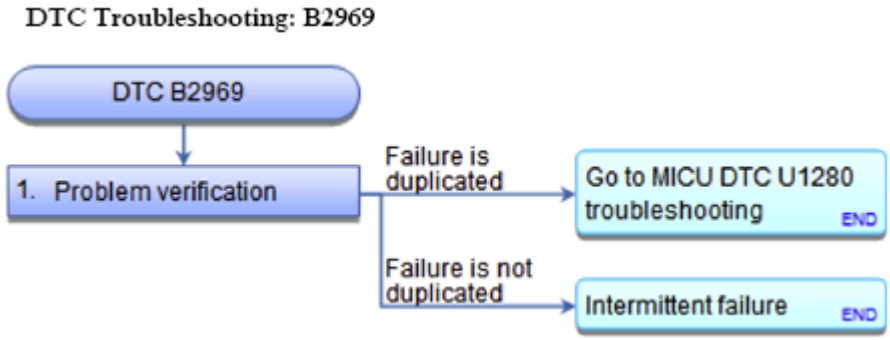

Fig. 131: DTC Troubleshooting Chart (B2969)
Courtesy of AMERICAN HONDA MOTOR CO., INC.

DTC Description	DTC

GETtheMANUALS.org

B2969 Climate control unit lost communication with MICU (WIPSW message)	

1. Problem verification:
   - 1. Clear the DTCs with the HDS.
   - 2. Turn the ignition switch to LOCK (0), and then back to ON (II).
   - 3. **Do the Self-Diagnostic Function with the HDS** See **HOW TO TROUBLESHOOT THE BODY ELECTRICAL** or **HOW TO TROUBLESHOOT THE CLIMATE CONTROL SYSTEM** .
   - 4. Check the DTCs.

DTC Description	DTC
B2969 Climate control unit lost communication with MICU (WIPSW message)	

Is DTC B2969 indicated?

YES : Go to **MICU DTC U1280 TROUBLESHOOTING** .

NO : The system is OK at this time. Check for loose wires or poor connections on the MICU and the climate control unit circuit.

DTC B2983 OR DTC INDICATOR 57: A PROBLEM IN THE RECIRCULATION CONTROL MOTOR CIRCUIT, LINKAGE, DOOR, OR MOTOR

GETtheMANUALS.org

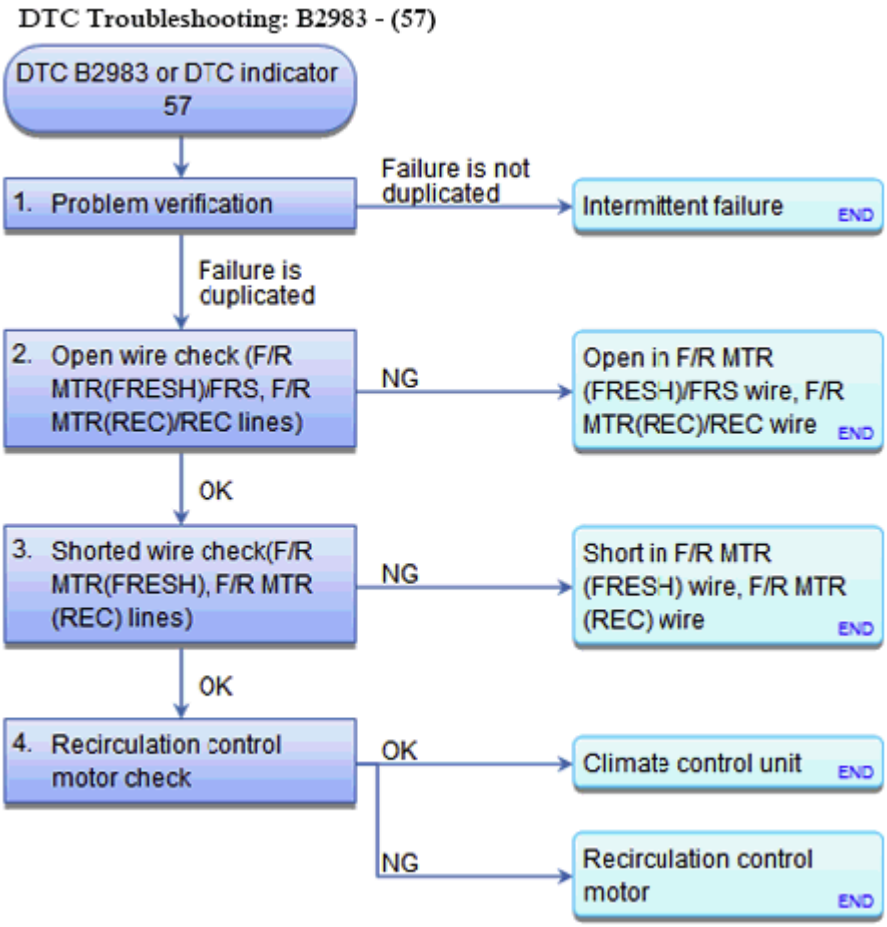

Fig. 132: DTC Troubleshooting Chart (DTC B2983 Or DTC Indicator 57)
Courtesy of AMERICAN HONDA MOTOR CO., INC.

DTC Description	DTC
B2983 A problem in the recirculation control motor circuit, linkage, door, or motor	

1. Problem verification:
   - 1. Clear the DTCs with the HDS.
   - 2. Turn the ignition switch to LOCK (0), and then back to ON (II).
   - 3. **Do the Self-Diagnostic Function with the HDS or the climate control unit** See **HOW TO TROUBLESHOOT THE BODY ELECTRICAL** or **HOW TO TROUBLESHOOT THE CLIMATE CONTROL SYSTEM** .
   - 4. Check for DTCs.

DTC Description	DTC
B2983 A problem in the recirculation control motor circuit, linkage, door, or motor	

Is DTC B2983 or 57 indicated?

GETtheMANUALS.org

YES : Go to step 2.

NO : Intermittent failure. Check for loose wires or poor connections on the recirculation control motor circuit.

2. Open wire check (F/R MTR(FRESH)/FRS, F/R MTR(REC)/REC lines):
   - 1. Turn the ignition switch to LOCK (0).
   - 2. Disconnect the following connectors.

     Climate control unit 32P connector

     Recirculation control motor 7P connector

   - 3. Check for continuity between test points 1 and 2 respectively.

     Test condition IG LOCK (0)

     Climate control unit 32P connector: disconnected

     Recirculation control motor 7P connector: disconnected

     Test circuit F/R MTR(FRESH)/FRS

     Test point 1 Climate control unit 32P connector No. 27 (BLU)

     Test point 2 Recirculation control motor 7P connector No. 6 (RED)

     Test circuit F/R MTR(REC)/REC

     Test point 1 Climate control unit 32P connector No. 28 (BLK)

     Test point 2 Recirculation control motor 7P connector No. 7 (ORN)

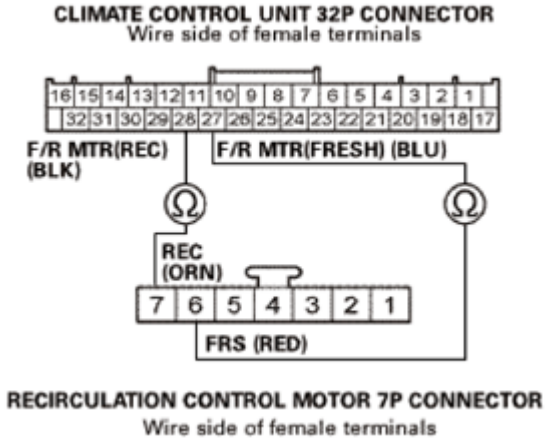

GETtheMANUALS.org

Fig. 133: Checking Continuity Between Climate Control Unit 32P Connector No. 27 And Recirculation Control Motor 7P Connector No. 6
Courtesy of AMERICAN HONDA MOTOR CO., INC.

Is there continuity?

YES : The F/R MTR(FRESH)/FRS and F/R MTR(REC)/REC wires are not open. Go to step 3.

NO : Repair an open in the wire(s) between the climate control unit and the recirculation control motor.

3. Shorted wire check (F/R MTR(FRESH), F/R MTR(REC) lines):
   - 1. Check for continuity between test points 1 and 2 individually.

     Test condition IG LOCK (0)

     Climate control unit 32P connector: disconnected

     Recirculation control motor 7P connector: disconnected

     Test circuit F/R MTR(FRESH)

     Test point 1 Climate control unit 32P connector No. 27 (BLU)

     Test point 2 Body ground

     Test circuit F/R MTR(REC)

     Test point 1 Climate control unit 32P connector No. 28 (BLK)

     Test point 2 Body ground

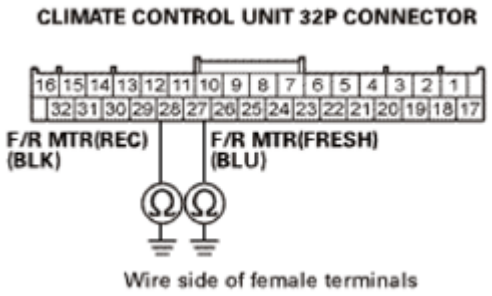

Fig. 134: Checking Continuity Between Climate Control Unit 32P Connector No. 27, 28 And Body Ground
Courtesy of AMERICAN HONDA MOTOR CO., INC.

Is there continuity?

YES : Repair a short to body ground in the wire(s) between the climate control unit and the recirculation

GETtheMANUALS.org

control motor.

NO : The F/R MTR(FRESH) and F/R MTR(REC) wires are OK. Go to step 4.

4. Recirculation control motor check:
   - 1. **TEST THE RECIRCULATION CONTROL MOTOR** .

Is the recirculation control motor OK?

YES : **REPLACE THE CLIMATE CONTROL UNIT** .

NO : **REPLACE THE RECIRCULATION CONTROL MOTOR** , or repair the recirculation control linkage or door.

DTC B2986 OR DTC INDICATOR 55: AN OPEN IN THE RECIRCULATION CONTROL MOTOR CIRCUIT

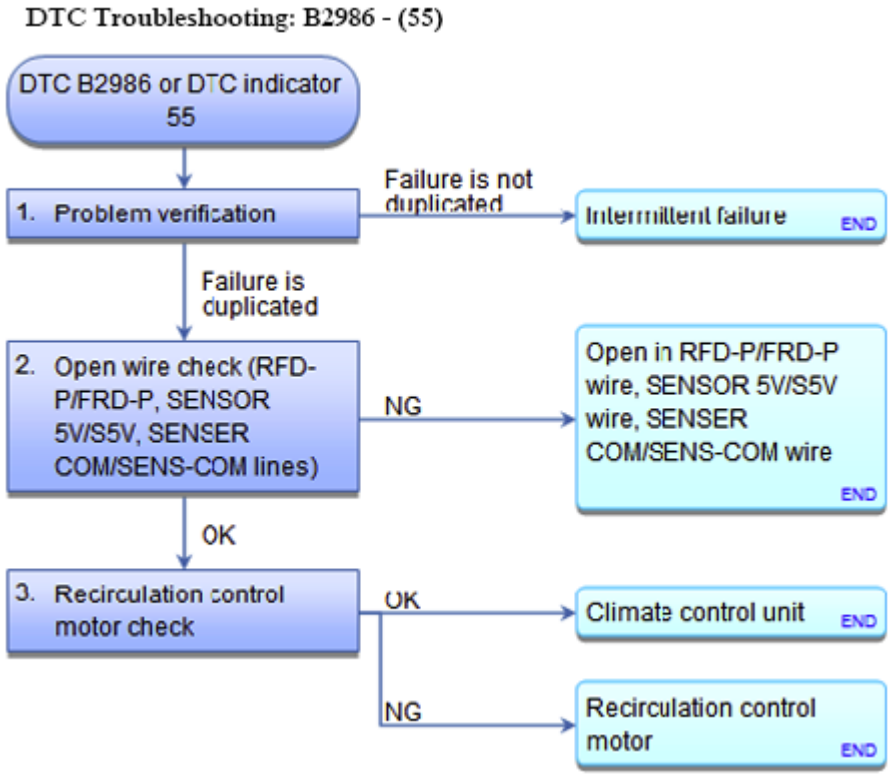

Fig. 135: DTC Troubleshooting Chart (DTC B2986 Or DTC Indicator 55)
Courtesy of AMERICAN HONDA MOTOR CO., INC.

DTC Description	DTC
B2986 An open in the recirculation control motor circuit	

1. Problem verification:

GETtheMANUALS.org

- 1. Clear the DTC with the HDS.
- 2. Turn the ignition switch to LOCK (0) and then back to ON (II).
- 3. **Do the Self-Diagnostic Function with the HDS or the climate control unit** See **HOW TO TROUBLESHOOT THE BODY ELECTRICAL** or **HOW TO TROUBLESHOOT THE CLIMATE CONTROL SYSTEM** .
- 4. Check for DTCs.

DTC Description	DTC
B2986 An open in the recirculation control motor circuit	

Is DTC B2986 or 55 indicated?

YES : Go to step 2.

NO : Intermittent failure. Check for loose wires or poor connections on the recirculation control motor circuit.

2. Open wire check (RFD-P/FRD-P, SENSOR 5V/S5V, SENSOR COM/SENS-COM lines):
   - 1. Turn the ignition switch to LOCK (0).
   - 2. Disconnect the following connectors.

     Climate control unit 32P connector

     Recirculation control motor 7P connector

   - 3. Check for continuity between test points 1 and 2 respectively.

     Test condition IG LOCK (0)

     Climate control unit 32P connector: disconnected

     Recirculation control motor 7P connector: disconnected

     Test circuit RFD-P/FRD-P

     Test point 1 Climate control unit 32P connector No. 6 (PNK)

     Test point 2 Recirculation control motor 7P connector No. 2 (PUR)

     Test circuit SENSOR 5V/S5V

     Test point 1 Climate control unit 32P connector No. 17 (LT BLU)

     Test point 2 Recirculation control motor 7P connector No. 3 (BLK)

GETtheMANUALS.org

Test circuit SENSOR COM/SENS-COM

Test point 1 Climate control unit 32P connector No. 23 (GRY)

Test point 2 Recirculation control motor 7P connector No. 1 (RED)

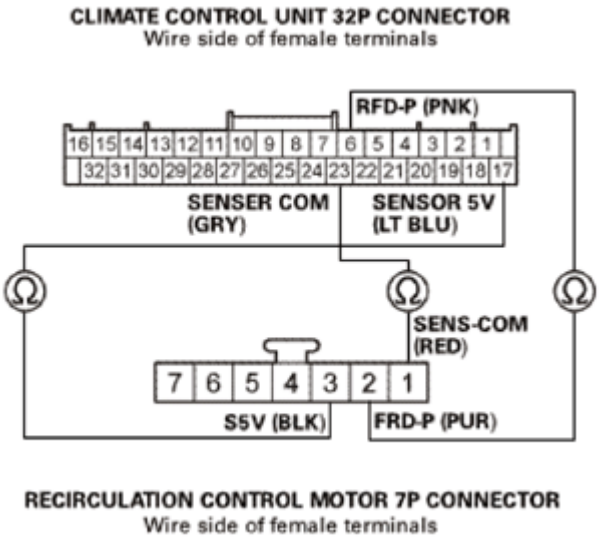

Fig. 136: Checking Continuity Between Climate Control Unit 32P Connector No. 6 And Recirculation Control Motor 7P Connector No. 2
Courtesy of AMERICAN HONDA MOTOR CO., INC.

Is there continuity?

YES : The RFD-P/FRD-P, SENSOR 5V/S5V, and SENSOR COM/SENS-COM wires are OK. Go to step 3.

NO : Repair an open in the wire(s) between the climate control unit and the recirculation control motor.

3. Recirculation control motor check
   - 1. **TEST THE RECIRCULATION CONTROL MOTOR** .

Is the recirculation control motor OK?

YES : **REPLACE THE CLIMATE CONTROL UNIT** .

NO : **REPLACE THE RECIRCULATION CONTROL MOTOR** .

GETtheMANUALS.org

HOW TO TROUBLESHOOT THE BODY ELECTRICAL SYSTEM

TIPS AND PRECAUTIONS

Special Tools Required

Back Probe Adapter, 17 mm 07TAZ-001020A

Before Troubleshooting

1. Check applicable fuses in the appropriate fuse/relay box.
2. Check the battery for damage, state of charge, and clean and tight connections.

NOTE:

- **Do not quick-charge a battery unless the battery ground cable has been disconnected; otherwise you will damage the alternator diodes.**
- **Do not attempt to crank the engine with the battery ground cable loosely connected, or you will severely damage the wiring.**

Handling Connectors

- Make sure the connectors are clean and have no loose wire terminals.
- Make sure multiple cavity connectors are packed with dielectric grease (except waterproof connectors).
- All connectors have push-down release type locks (A).

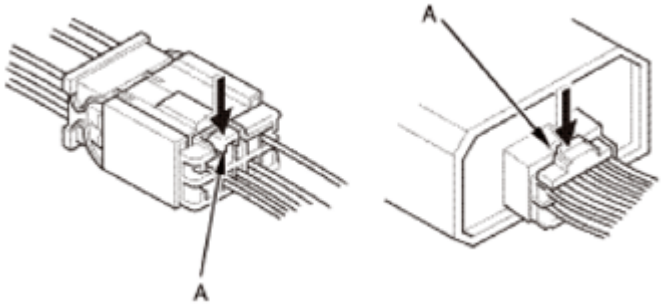

Fig. 1: Pushing Down Release Type Locks
Courtesy of AMERICAN HONDA MOTOR CO., INC.

- Some connectors have a clip on their side used to attach them to a mount bracket on the body or on another component. This clip has a pull type lock.
- Some mounted connectors cannot be disconnected unless you first release the lock and remove the connector from its mount bracket (A).

GETtheMANUALS.org

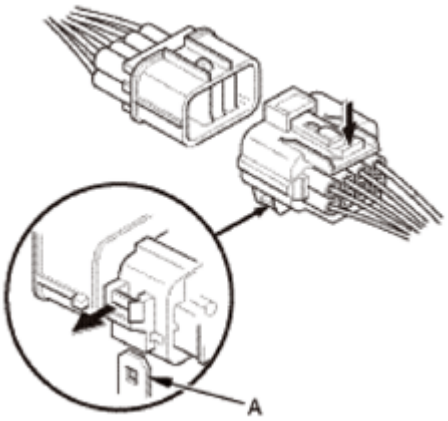

Fig. 2: Disconnecting Connector From Mount Bracket
Courtesy of AMERICAN HONDA MOTOR CO., INC.

- Never try to disconnect connectors by pulling on their wires; pull on the connector halves instead.
- Always reinstall plastic covers.

Fig. 3: Installing Plastic Covers
Courtesy of AMERICAN HONDA MOTOR CO., INC.

- Before connecting connectors, make sure the terminals are in place and not bent (A).

GETtheMANUALS.org

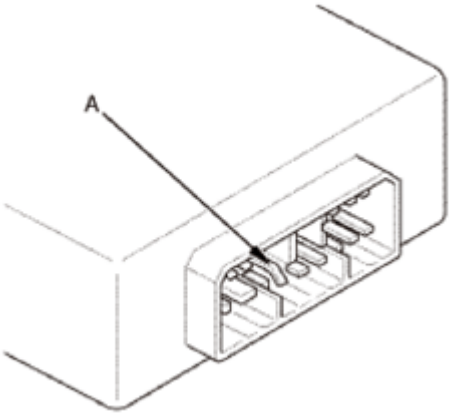

Fig. 4: Identifying Bent Connector Terminals
Courtesy of AMERICAN HONDA MOTOR CO., INC.

- Check for loose retainers (A) and rubber seals (B).

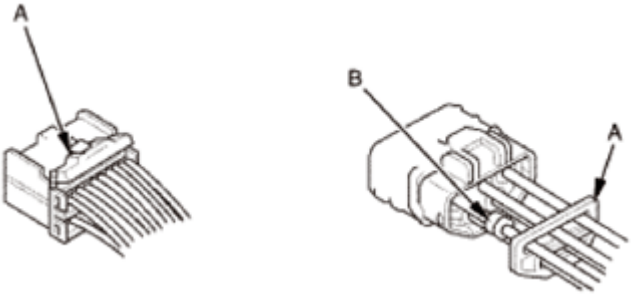

Fig. 5: Identifying Retainers And Rubber Seals
Courtesy of AMERICAN HONDA MOTOR CO., INC.

- The backs of some connectors are packed with dielectric grease. Add grease if necessary. If the grease is contaminated, replace it.

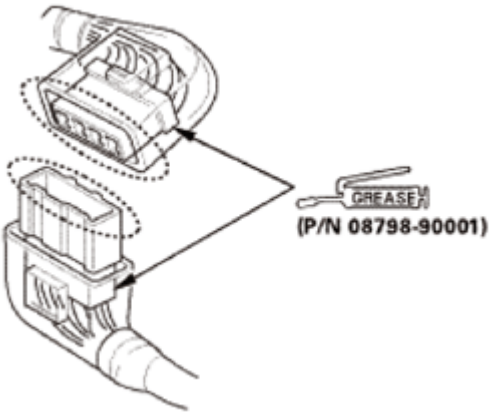

Fig. 6: Identifying Grease Applying Areas On Connectors
Courtesy of AMERICAN HONDA MOTOR CO., INC.

GETtheMANUALS.org

- Insert the connector all the way and make sure it is securely locked.
- Position wires so that the open end of the cover faces down.

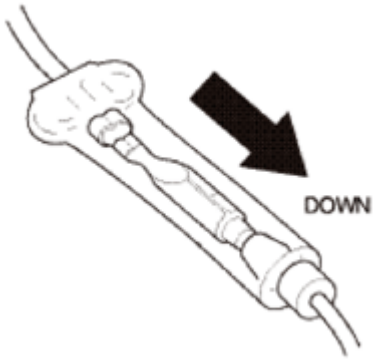

Fig. 7: Removing Connector Cover Faces
Courtesy of AMERICAN HONDA MOTOR CO., INC.

Handling Wires and Harnesses

- Secure wires and wire harnesses to the frame with their respective wire ties at the designated locations.
- Remove clips carefully; do not damage their locks (A).

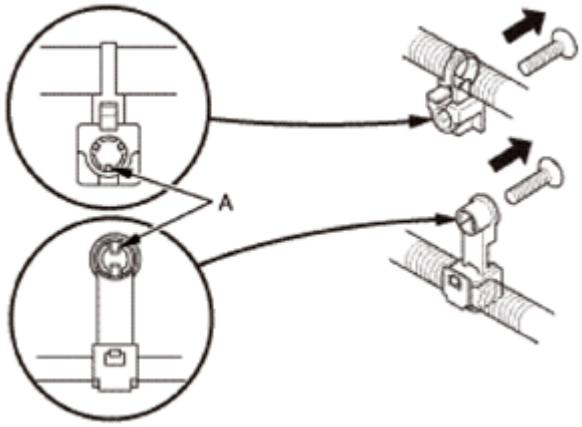

Fig. 8: Removing Wires And Harnesses Clips
Courtesy of AMERICAN HONDA MOTOR CO., INC.

- After installing harness clips, make sure the harness does not interfere with any moving parts.
- Keep wire harnesses away from exhaust components and other hot parts, from sharp edges of brackets and holes, and from exposed screws and bolts.
- Seat grommets in their grooves properly (A). Do not leave grommets distorted (B).

GETtheMANUALS.org

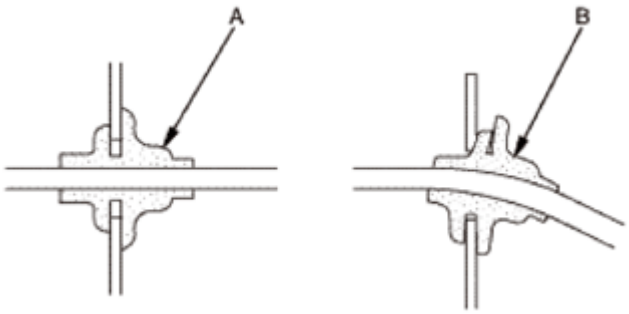

Fig. 9: Identifying Proper And Improper Grommet Fitting Into Grooves
Courtesy of AMERICAN HONDA MOTOR CO., INC.

Testing and Repairs

- Do not use wires or harnesses with broken insulation. Replace them or repair them by wrapping the break with electrical tape or shrink tubing.
- Never attempt to modify, splice, or repair SRS wiring. If there is an open or damage in SRS wiring or terminals, replace the harness.
- After installing parts, make sure that no wires are pinched under them.
- When using electrical test equipment, follow the manufacturer's instructions and those described in this service information.
- If possible, insert the probe of the tester from the wire side (except waterproof connectors).

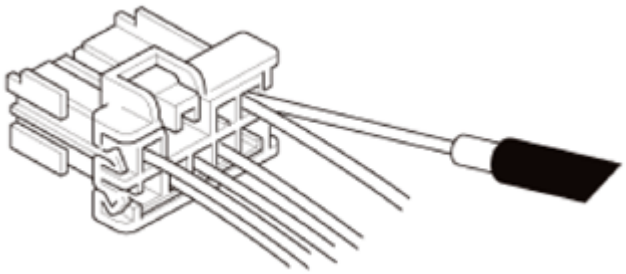

Fig. 10: Inserting Tester Probe Into Connectors (Except Waterproof Connectors)
Courtesy of AMERICAN HONDA MOTOR CO., INC.

- Use back probe adapter, 17mm 07TAZ-001020A.

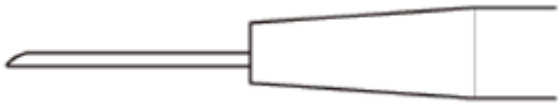

Fig. 11: Identifying Back Probe Adapter
Courtesy of AMERICAN HONDA MOTOR CO., INC.

- Refer to the instructions in the Honda Terminal Kit for identification and replacement of connector terminals.

GETtheMANUALS.org

FIVE-STEP TROUBLESHOOTING

1. Verify The Complaint:

   Turn on all the components in the problem circuit to verify the customer complaint. Note the symptoms. Do not begin disassembly or testing until you have narrowed down the problem area.

2. Analyze The Schematic:

   Look up the schematic for the problem circuit. Determine how the circuit is supposed to work by tracing the current paths from the power feed through the circuit components to ground. If several circuits fail at the same time, the fuse or a ground is a likely cause.

   Based on the symptoms and your understanding of the circuit operation, identify one or more possible causes of the problem.

3. Isolate The Problem By Testing The Circuit:

   Make circuit tests to check the diagnosis you made in step 2. Keep in mind that a logical, simple procedure is the key to efficient troubleshooting. Test for the most likely cause of failure first. Try to make tests at points that are easily accessible.

4. Fix The Problem:

   Once the specific problem is identified, make the repair. Be sure to use proper tools and safe procedures.

5. Make Sure The Circuit Works:

   Turn on all components in the repaired circuit in all modes to make sure you've fixed the entire problem. If the problem was a blown fuse, be sure to test all of the circuits on the fuse. Make sure no new problems turn up and the original problem does not recur.

WIRE COLOR CODES

The following abbreviations are used to identify wire colors in the circuit schematics:

WHT	White
YEL	Yellow
BLK	Black
BLU	Blue
GRN	Green
RED	Red
ORN	Orange
PNK	Pink
BRN	Brown
GRY	Gray

GETtheMANUALS.org

PUR	Purple
TAN	Tan
LT BLU	Light Blue
LT GRN	Light Green

The wire insulation has one color or one color with another color stripe. The second color is the stripe.

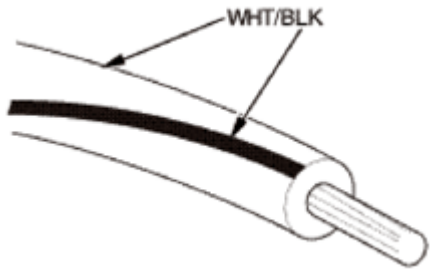

Fig. 12: Identifying Wire Insulation Color And Color Stripe
Courtesy of AMERICAN HONDA MOTOR CO., INC.

TROUBLESHOOT THE B-CAN CIRCUIT RELATED PROBLEMS

Check the PCM for DTCs and troubleshoot PCM or F-CAN loss of communication errors first.

HOW TO CHECK FOR DTCS WITH THE HDS (PREFERRED METHOD)

The HDS can check F-CAN and B-CAN communication status, read and clear DTCs, display data list, and perform function tests.

Check for DTCs

1. Connect the HDS to the data link connector (DLC) (A) located under the driver's side of the dashboard.

Fig. 13: Identifying Data Link Connector
Courtesy of AMERICAN HONDA MOTOR CO., INC.

GETtheMANUALS.org

2. Turn the ignition switch to ON (II).
3. Make sure the HDS communicates with the vehicle.

NOTE: **If the HDS does not communicate with the vehicle, TROUBLESHOOT THE DLC CIRCUIT .**

4. Select BODY ELECTRICAL, then select the desired MODE MENU, and check for DTCs. If the DTCs do not pertain to the select menu, select the ALL DTC Check icon to view all Body Electrical DTCs.

NOTE: **For specific operations, refer to the HDS user's manual.**

5. If any DTCs are indicated, go to the indicated DTCs troubleshooting.

NOTE: **If DTC U1280 is stored, troubleshoot DTC U1280 first.**

HOW TO CHECK FOR DTCS WITHOUT THE HDS (USE ONLY IF THE HDS IS UNAVAILABLE)

If the HDS is unavailable, you can use the following method to check B-CAN communication status, DTCs, and some F-CAN communication status related with the gauge control module, and interior lights. Refer to Troubleshooting Test Mode 1. See **BODY ELECTRICAL TROUBLESHOOTING - B-CAN SYSTEM DIAGNOSIS TEST MODE 1 AND TEST MODE 2 (WITHOUT THE HDS)** .

HOW TO CLEAR DTCS WITH THE HDS

1. Connect the HDS to the data link connector (DLC) (A) located under the driver's side of the dashboard.

Fig. 14: Identifying Data Link Connector
Courtesy of AMERICAN HONDA MOTOR CO., INC.

2. Turn the ignition switch to ON (II).
3. Clear the DTCs with the HDS.
4. Turn the ignition switch to LOCK (0), and disconnect the HDS from the DLC.

GETtheMANUALS.org

HOW TO CLEAR DTCS WITHOUT THE HDS

1. While in DTCs Indication Status, press and hold the SEL/RESET button for at least 10 seconds.
2. Turn the ignition switch to LOCK (0).

B-CAN CIRCUIT TROUBLESHOOTING INFORMATION

1. Connect the HDS to the data link connector (DLC).
2. From the BODY ELECTRICAL SYSTEM SELECT menu, select B-CAN CONTROL UNITS INFORMATION, and then select CHECK CONNECTED CONTROL UNITS.
3. Check that the electronic control units (ECU) are communicating with the HDS.

NOTE:

- **If an ECU is communicating with the HDS, "DETECT" will be displayed.**
- **If an ECU is not communicating, or the vehicle is not equipped with that ECU, "NOT AVAILABLE" will be displayed.**

4. If a control unit is not communicating, confirm which ECUs are communicating, then refer to the B-CAN Communication Line from the Electrical Wiring Diagrams to find the malfunction point.

   For example, when unit "K" is communicating, but units "G", "M", and "N" are not communicating, that will direct you to the malfunction point (A).

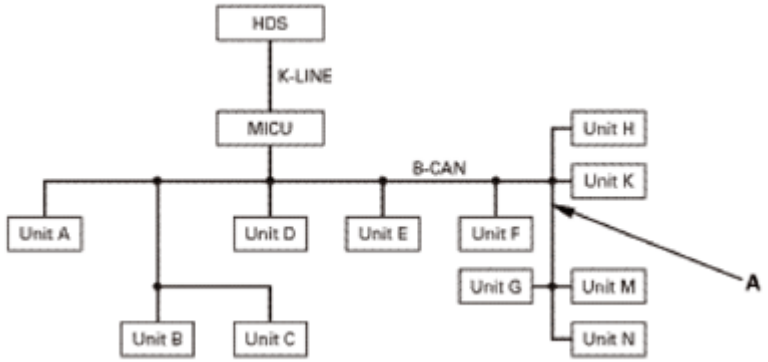

Fig. 15: B-CAN Communication Diagram
Courtesy of AMERICAN HONDA MOTOR CO., INC.

LOSS OF COMMUNICATION DTC CROSS-REFERENCE CHART

When an ECU on the CAN circuit is unable to communicate with other ECUs on the CAN circuit, the other control units will set loss of communication DTCs. Use this chart to find the ECU that is not communicating with the other ECUs on the CAN circuit.

1. Find the Transmitting Control Unit that is in the same row as all of the loss of communication DTCs that you retrieved.

GETtheMANUALS.org

2. Do the input test for the transmitting control unit.

BUS OFF AND INTERNAL ERROR CODES

DTC Type	Related Unit				
	MICU	Gauge Control Module	Climate Control Unit	Automatic Lighting/Sunlight Sensor	Immobilizer-Keyless Control Unit
BUS OFF	U1280	U1280	U1280	U1280	U1280
ECU (EEPROM) Error	B1002	U3000		B1575	

LOSS OF COMMUNICATION

Transmitting Control Unit	Receiving Unit/Loss of Communication DTC				
	MICU	Gauge Control Module	Climate Control Unit	Automatic Lighting/Sunlight Sensor	Immobilizer-Keyless Control Unit
MICU	TX		U1281	U1281	U1281
Gauge Control Module	U128D	TX	U128D	U128D	U128D
Climate Control Unit			TX		
Automatic Lighting/Sunlight Sensor				TX	
Immobilizer-Keyless Control Unit					TX
PCM		U0100			
SRS Unit		U0151			
VSA Modulator-Control Unit		U0122			
TPMS Control Unit		U0127			
EPS Control Unit		U0131			
Real Time AWD Control Unit		U0114			
TX: Transmitting units do not set loss of communication DTCs.					

GETtheMANUALS.org

BRAKE BOOSTER REMOVAL AND INSTALLATION

REMOVAL

NOTE:

- **Press the brake pedal several times to deplete the vacuum in the brake booster.**
- **Be careful when handling the master cylinder. Do not hold it at the piston, or the piston may separate from the body. If the piston separates from the body, then the master cylinder must be replaced. Do not reinsert the piston back into the master cylinder body.**

1. Vehicle Lift
    1. Raise the vehicle on a lift, and make sure it is securely supported.
2. Air Cleaner Assembly
    1. Disconnect the MAF sensor/IAT sensor connector (A).
    2. Remove the harness clamp (B).
    3. Disconnect the intake air duct (C) and the intake air pipe (D).
    4. Remove the air cleaner (E).

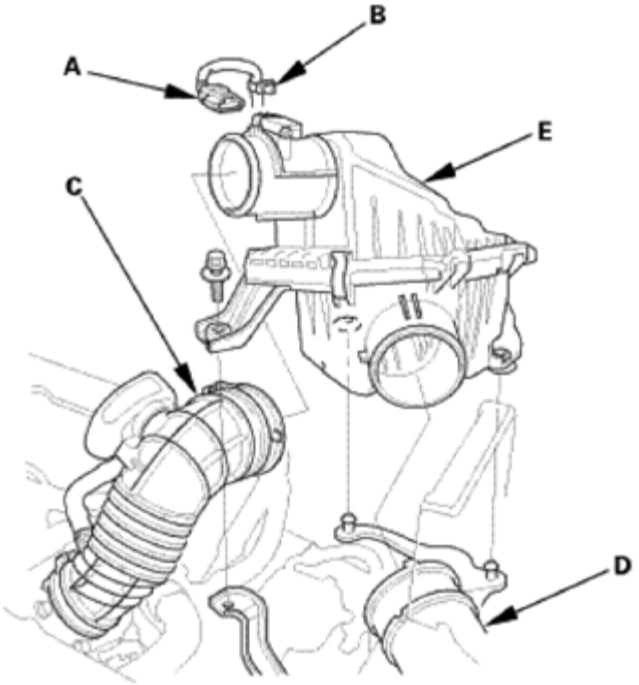

Fig. 1: Identifying MAF Sensor/IAT Sensor Connector, Air Cleaner, Intake Air Pipe And Harness Clamp

GETtheMANUALS.org

Courtesy of AMERICAN HONDA MOTOR CO., INC.

3. Brake Fluid - Remove
    1. Pull out the hood rear seal, then remove the master cylinder maintenance lid (A).
    2. Remove the reservoir cap (B).
    3. Remove the brake fluid from the master cylinder reservoir with a syringe.

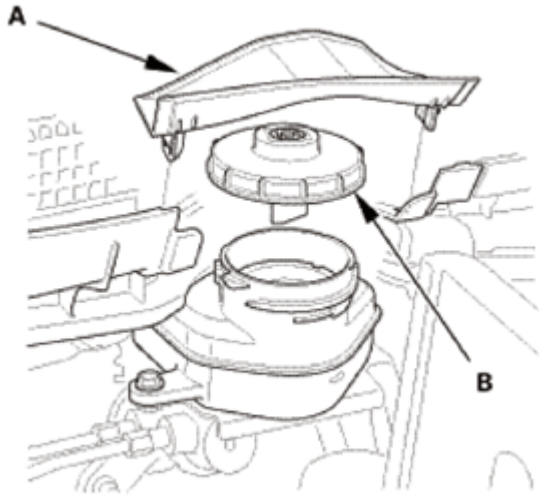

Fig. 2: Identifying Master Cylinder Maintenance Lid And Reservoir Cap
Courtesy of AMERICAN HONDA MOTOR CO., INC.

4. Brake Master Cylinder

NOTE: **Do not spill brake fluid on the vehicle; it may damage the paint. If brake fluid does contact the paint, wash it off immediately with water.**

NOTE:

- **Be careful not to damage or bend the brake lines during removal and installation.**
- **After removal, plug the ends of the hoses and the joints to prevent spilling brake fluid.**
- **Make sure not to get any silicone grease on the terminal part of the connectors and switches, especially if you have silicone grease on your hands or gloves.**

1. Disconnect the connector (A).
2. Remove the reservoir tank (B) and the reservoir tank bracket (C).

GETtheMANUALS.org

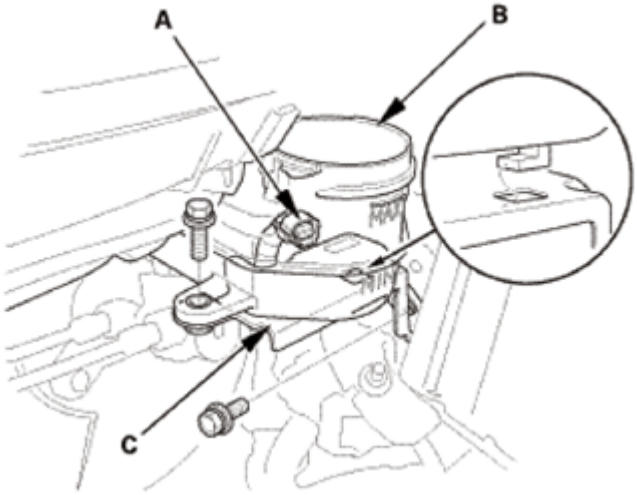

Fig. 3: Identifying Connector, Reservoir Tank And Reservoir Tank Bracket
Courtesy of AMERICAN HONDA MOTOR CO., INC.

3. Disconnect the brake lines (A) from the master cylinder (B).
4. Remove the master cylinder from the brake booster (C).
5. Remove the O-ring (D) from the master cylinder.

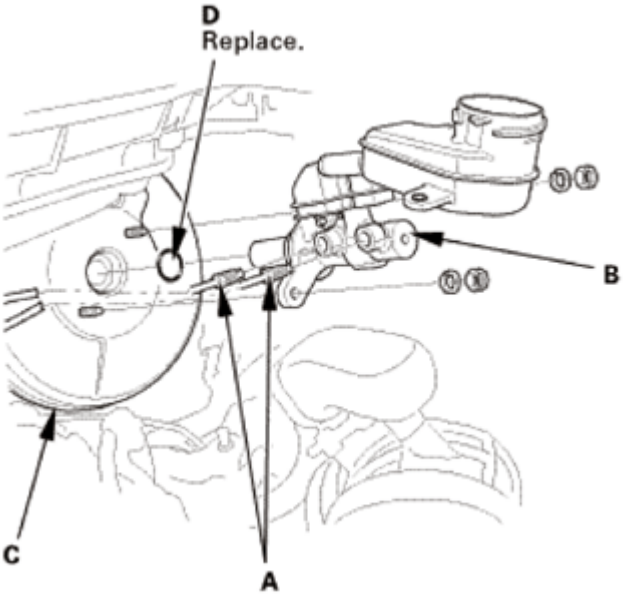

Fig. 4: Identifying Master Cylinder, Brake Booster, O-Ring And Brake Lines
Courtesy of AMERICAN HONDA MOTOR CO., INC.

5. Brake Booster Items
    1. Disconnect the brake booster vacuum hose (A) from the brake booster (B).

GETtheMANUALS.org

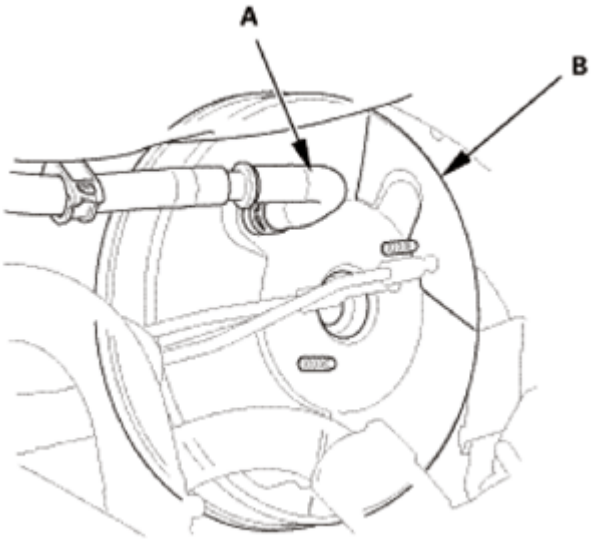

Fig. 5: Identifying Brake Booster Vacuum Hose And Brake Booster
Courtesy of AMERICAN HONDA MOTOR CO., INC.

2. Remove the brake lines (A) from the clamps (B).

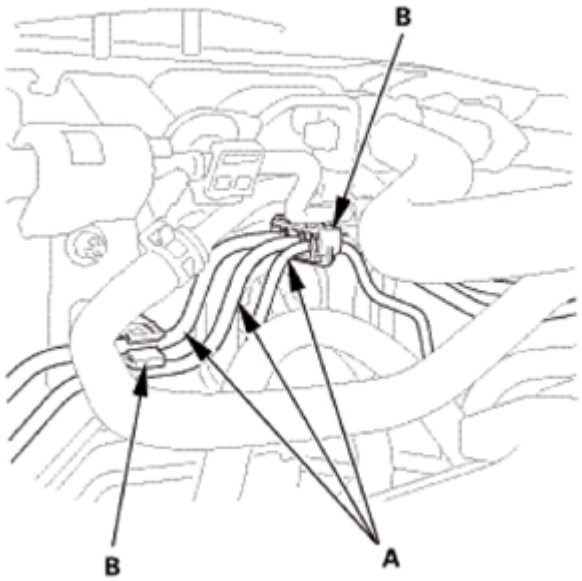

Fig. 6: Identifying Brake Lines And Clamps
Courtesy of AMERICAN HONDA MOTOR CO., INC.

6. Engine Control Module - Move
    1. Remove the bolts (A).
    2. Move the PCM (B) aside.

GETtheMANUALS.org

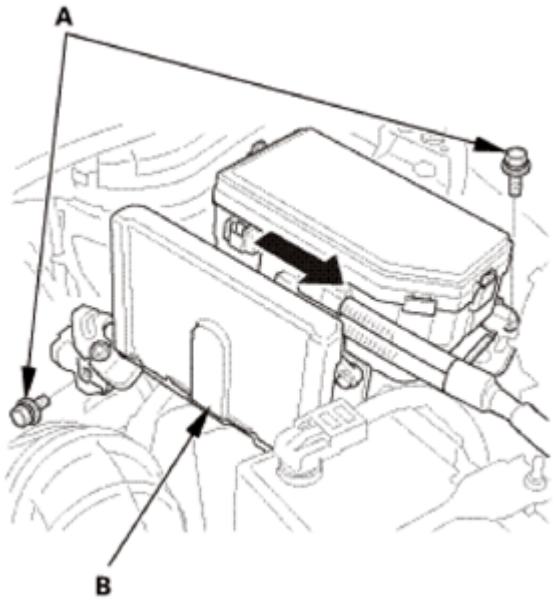

Fig. 7: Moving PCM
Courtesy of AMERICAN HONDA MOTOR CO., INC.

7. Brake Booster
    1. Remove the lock pin (A) and the clevis pin (B).
    2. Disconnect the yoke (C) from the brake pedal.
    3. Remove the brake booster mounting nuts (D).

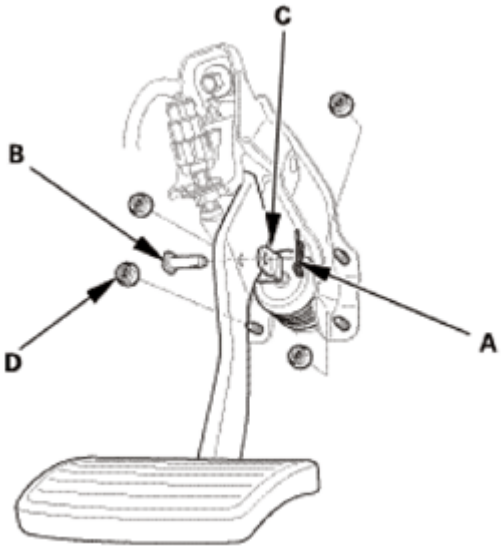

Fig. 8: Identifying Brake Booster Mounting Nuts, Yoke, Lock Pin And Clevis Pin
Courtesy of AMERICAN HONDA MOTOR CO., INC.

4. Remove the brake booster (A) from the engine compartment.

GETtheMANUALS.org

NOTE: **Be careful not to bend or damage the brake lines.**

5. Remove the brake booster gasket (B).

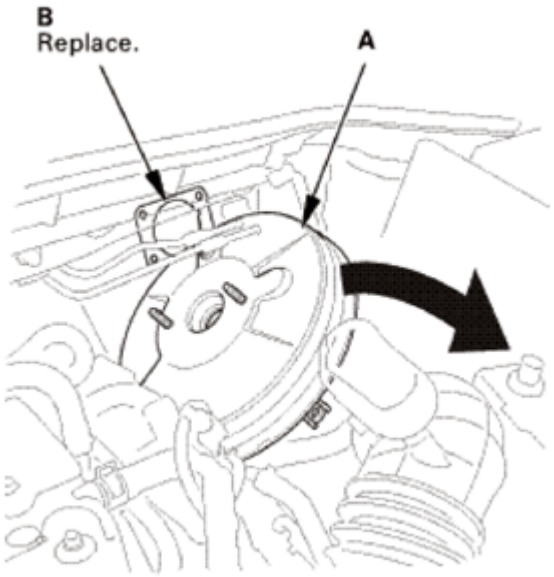

Fig. 9: Removing Brake Booster From Engine Compartment
Courtesy of AMERICAN HONDA MOTOR CO., INC.

INSTALLATION

1. Brake Booster
    1. Install the brake booster (A) with the new brake booster gasket (B).

NOTE: **Be careful not to bend or damage the brake lines.**

GETtheMANUALS.org

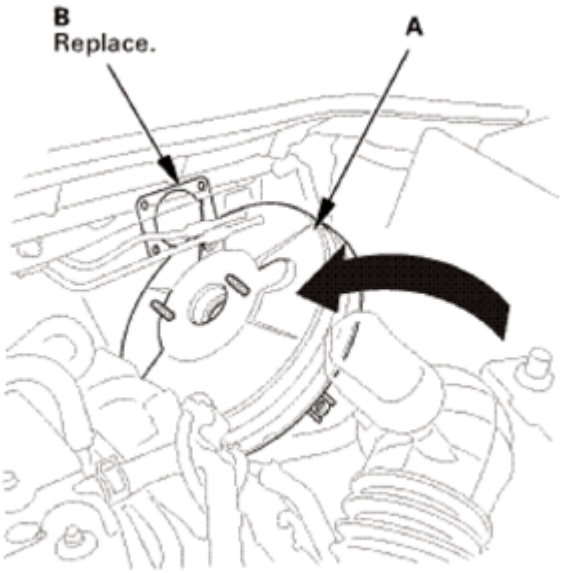

Fig. 10: Installing Brake Booster
Courtesy of AMERICAN HONDA MOTOR CO., INC.

2. Install the brake booster mounting nuts (A).
3. Connect the yoke (B) to the brake pedal.
4. Install the lock pin (C) and the clevis pin (D).

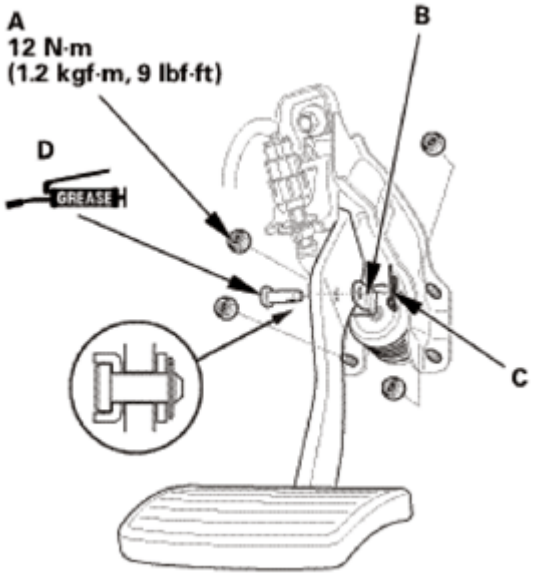

Fig. 11: Identifying Brake Booster, Yoke, Lock Pin, Clevis Pin And Mounting Nut With Torque Specification
Courtesy of AMERICAN HONDA MOTOR CO., INC.

2. Engine Control Module - Move
    1. Install the PCM (A).

GETtheMANUALS.org

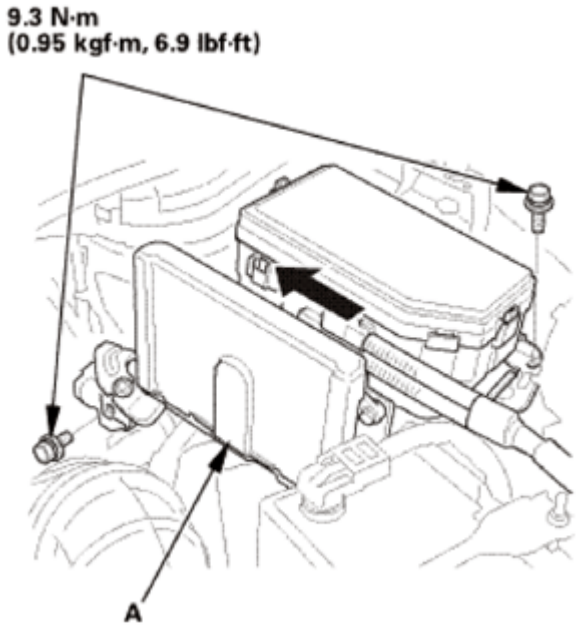

Fig. 12: Installing PCM
Courtesy of AMERICAN HONDA MOTOR CO., INC.

3. Brake Booster Items
    1. Install the brake lines (A) to the clamps (B).

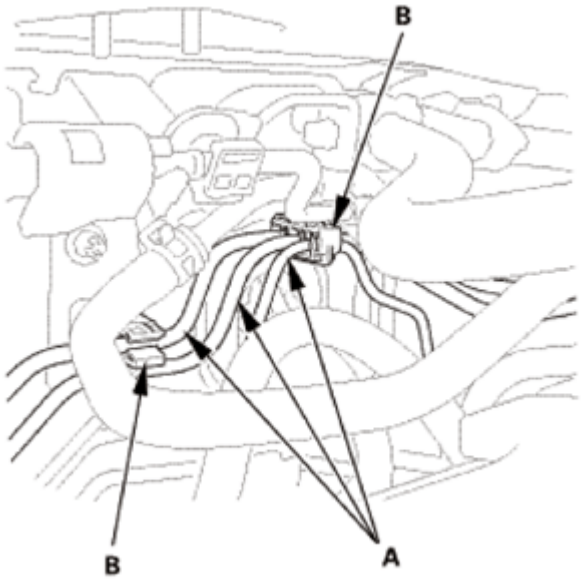

Fig. 13: Identifying Brake Line And Clamps
Courtesy of AMERICAN HONDA MOTOR CO., INC.

    2. Connect the brake booster vacuum hose (A) to the brake booster (B).

GETtheMANUALS.org

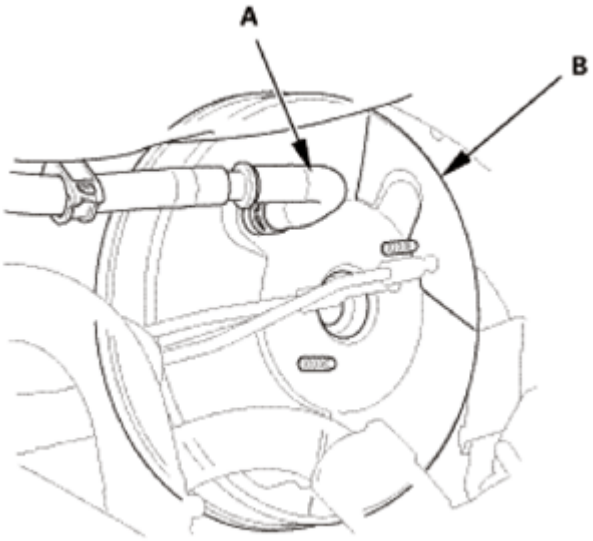

Fig. 14: Identifying Brake Booster And Vacuum Hose
Courtesy of AMERICAN HONDA MOTOR CO., INC.

4. Brake Master Cylinder
    1. Install the new O-ring (A) to the master cylinder.

    NOTE: Coat the O-ring with silicone grease (Shin-Etsu G40M).

    2. Install the master cylinder (B) to the brake booster (C).
    3. Connect the brake lines (D) to the master cylinder.

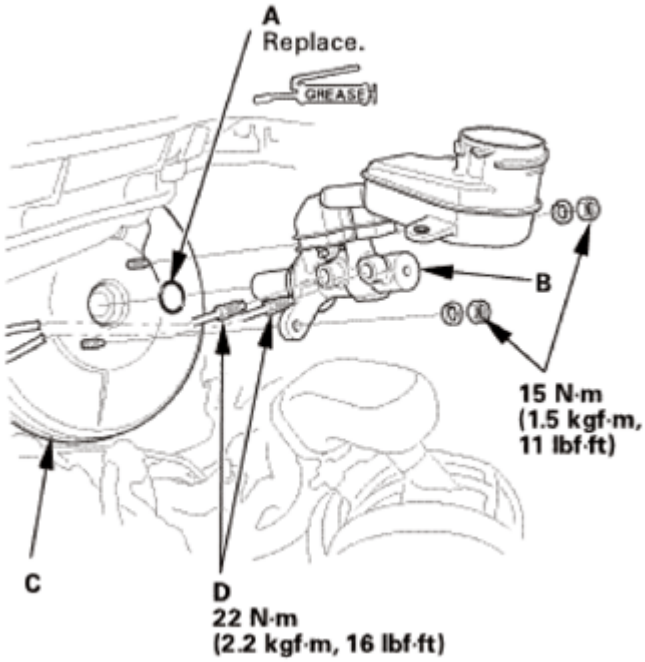

GETtheMANUALS.org

Fig. 15: Identifying Master Cylinder, Brake Booster, Brake Lines, O-Ring And Mounting Bolts With Torque Specifications
Courtesy of AMERICAN HONDA MOTOR CO., INC.

4. Install the reservoir tank (A) and the reservoir tank bracket (B).
5. Connect the connector (C).

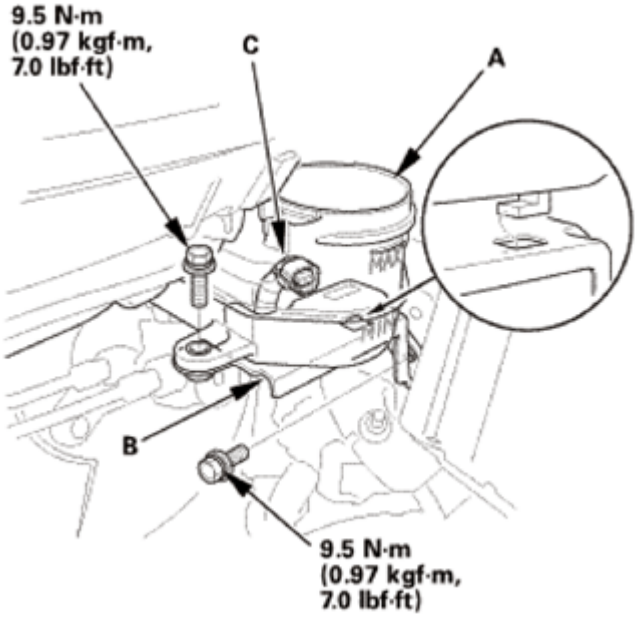

Fig. 16: Identifying Reservoir Tank, Bracket, Connector And Mounting Bolts With Torque Specifications
Courtesy of AMERICAN HONDA MOTOR CO., INC.

5. Air Cleaner Assembly
    1. Install the air cleaner (A).
    2. Connect the intake air pipe (B) and the intake air duct (C).
    3. Install the harness clamp (D).
    4. Connect the MAF sensor/IAT sensor connector (E).

GETtheMANUALS.org

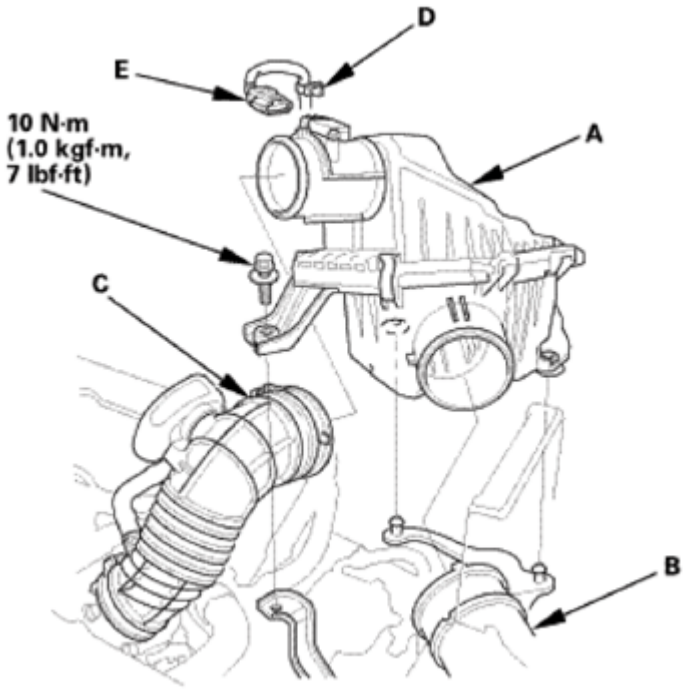

Fig. 17: Identifying MAF Sensor/IAT Sensor Connector, Air Cleaner, Intake Air Pipe, Duct And Harness Clamp With Torque Specifications
Courtesy of AMERICAN HONDA MOTOR CO., INC.

6. Brake Pedal Height - Inspection
    1. Pull back the carpet, and find the cutout (A) in the insulation.
    2. Measure the pedal height (B) from the left side middle of the pedal pad (C) to the floor (D) without the insulation.

       Standard pedal height: 216±7 mm (8.50±0.28 in)

    3. If the pedal height is not as specified, adjust the pedal height.

GETtheMANUALS.org

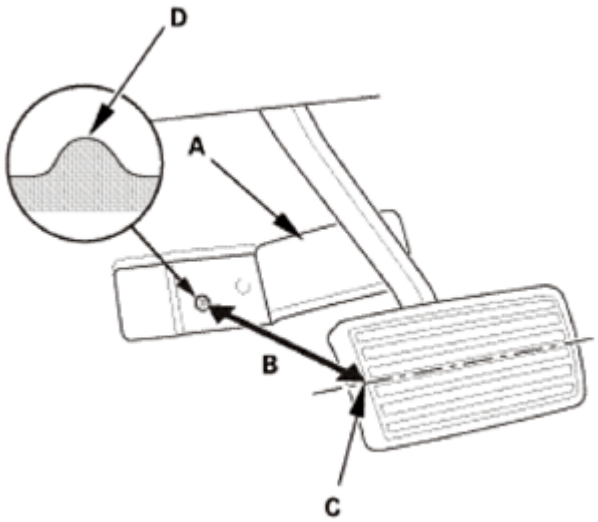

Fig. 18: Identifying Pedal Height From Left Side Middle Of Pedal Pad To Floor
Courtesy of AMERICAN HONDA MOTOR CO., INC.

7. Brake Pedal Free Play - Check
    1. Turn the ignition switch to LOCK (0).
    2. Inspect the free play (A) at the brake pedal pad (B) by pushing the brake pedal by hand. If the brake pedal free play is out of specification, adjust the brake pedal position switch (C). If the brake pedal free play is insufficient, it may result in brake drag.

    Free play: 1-5 mm (0.04-0.20 in)

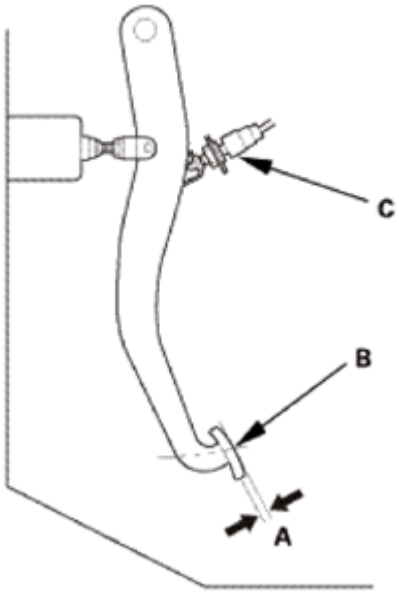

Fig. 19: Identifying Brake Pedal Free Play
Courtesy of AMERICAN HONDA MOTOR CO., INC.

GETtheMANUALS.org

8. Brake System - Bleeding.

NOTE: **Do not spill brake fluid on the vehicle; it may damage the paint. If brake fluid does contact the paint, wash it off immediately with water.**

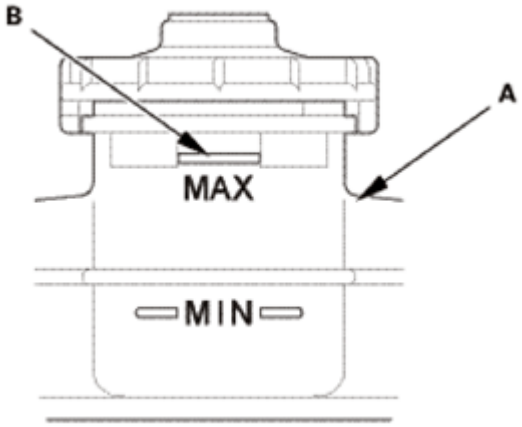

Fig. 20: Identifying MAX (Upper) Level Line On Reservoir Tank
Courtesy of AMERICAN HONDA MOTOR CO., INC.

NOTE:

- **Do not reuse the drained fluid. Use only new Honda DOT 3 Brake Fluid from an unopened container. Using a non-Honda brake fluid can cause corrosion and shorten the life of the system.**
- **Make sure no dirt or other foreign matter gets in the brake fluid.**
- **The reservoir connected to the master cylinder must be at the MAX (upper) level mark at the start of the bleeding procedure and checked after bleeding each wheel. Add fluid as required.**
- **There are three different methods used for bleeding brake systems. The method shown here is the preferred manual method for removing the air from the system. For pressure or vacuum bleeding, refer to tool manufacturer's instructions included with the tool.**

1. Make sure the brake fluid level in the reservoir tank (A) is at the MAX (upper) level line (B).
2. Start the bleeding at the driver's side of the front brake system.

NOTE: **Bleed the calipers in the sequence shown.**

GETtheMANUALS.org

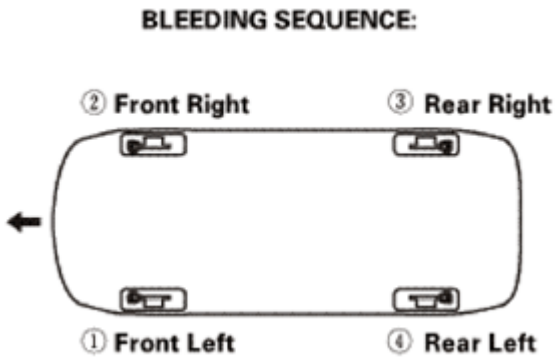

Fig. 21: Identifying Bleeding Sequence Of Front Brake System
Courtesy of AMERICAN HONDA MOTOR CO., INC.

Front

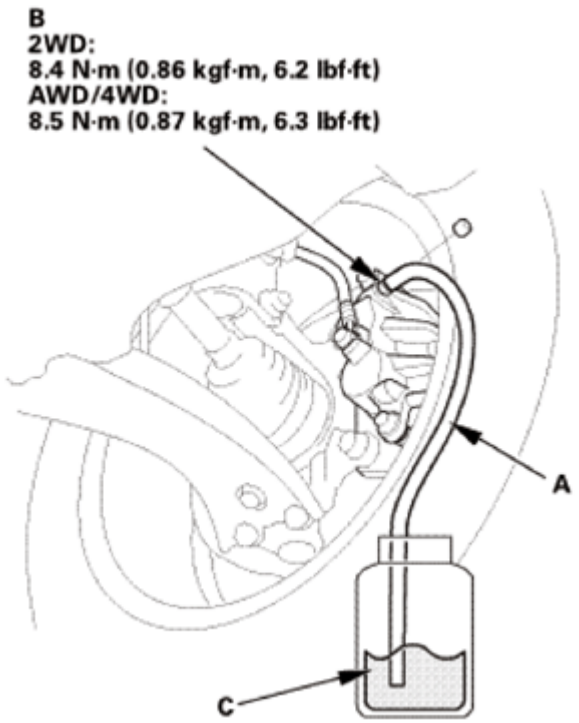

Fig. 22: Bleeding Brake Fluid To Plastic Catch Bottle Using Hose (Front)
Courtesy of AMERICAN HONDA MOTOR CO., INC.

3. Attach a length of clear drain tube (A) to the bleed screw (B).
4. Submerge the other end of the drain tube into a clear plastic catch bottle of brake fluid (C).
5. Have an assistant slowly pump the brake pedal several times then apply steady continuous pressure.
6. Loosen the bleed screw slowly to bleed the fluid into the plastic catch bottle. The brake pedal will travel toward the floor as the fluid is bled from the system.
7. When the brake pedal reaches the floor, have the assistant hold the pedal in that position, then tighten the bleed screw. The brake pedal can now be released.

GETtheMANUALS.org

8. Check and refill the master cylinder reservoir tank to the MAX (upper) level line. Be sure to reinstall the master cylinder reservoir cap.
9. Repeat steps 5 thru 8 until the brake fluid in the clear drain tube appears fresh and there are no air bubbles in the fluid.
10. Repeat this procedure for each brake in the bleeding sequence.

Rear

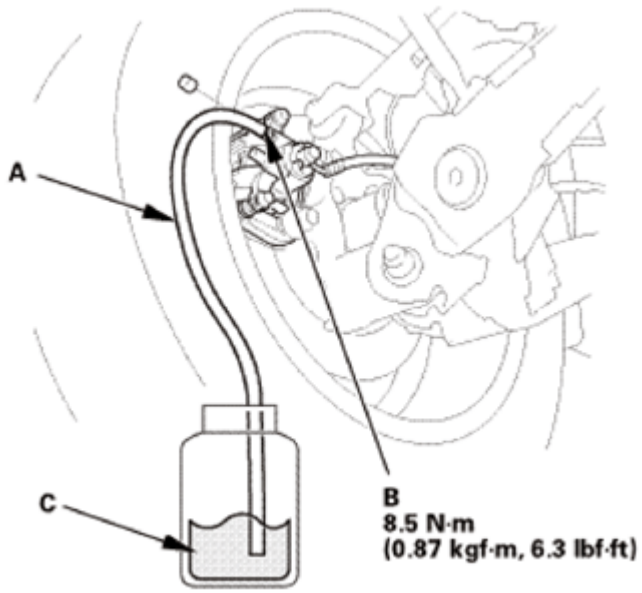

Fig. 23: Bleeding Brake Fluid To Plastic Catch Bottle Using Hose (Rear)
Courtesy of AMERICAN HONDA MOTOR CO., INC.

9. Brake Drag - Check
    1. Spin the wheels to check for brake drag.

BRAKE SYSTEM BLEEDING

NOTE: **Do not spill brake fluid on the vehicle; it may damage the paint. If brake fluid does contact the paint, wash it off immediately with water.**

GETtheMANUALS.org

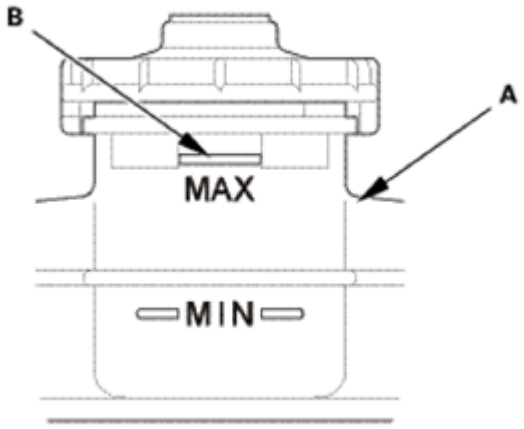

Fig. 24: Identifying MAX (Upper) Level Line On Reservoir Tank
Courtesy of AMERICAN HONDA MOTOR CO., INC.

NOTE:

- **Do not reuse the drained fluid. Use only new Honda DOT 3 Brake Fluid from an unopened container. Using a non-Honda brake fluid can cause corrosion and shorten the life of the system.**
- **Make sure no dirt or other foreign matter gets in the brake fluid.**
- **The reservoir connected to the master cylinder must be at the MAX (upper) level mark at the start of the bleeding procedure and checked after bleeding each wheel. Add fluid as required.**
- **There are three different methods used for bleeding brake systems. The method shown here is the preferred manual method for removing the air from the system. For pressure or vacuum bleeding, refer to tool manufacturer's instructions included with the tool.**

1. Make sure the brake fluid level in the reservoir tank (A) is at the MAX (upper) level line (B).
2. Start the bleeding at the driver's side of the front brake system.

NOTE: **Bleed the calipers in the sequence shown.**

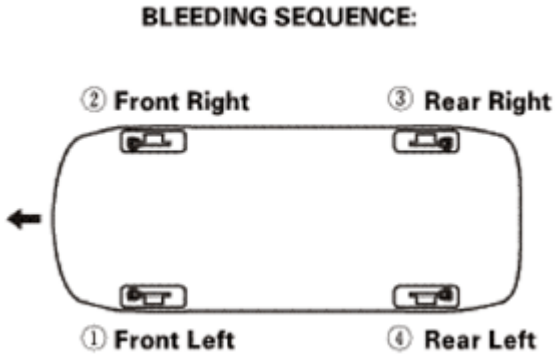

Fig. 25: Identifying Bleeding Sequence Of Front Brake System
Courtesy of AMERICAN HONDA MOTOR CO., INC.

GETtheMANUALS.org

Front

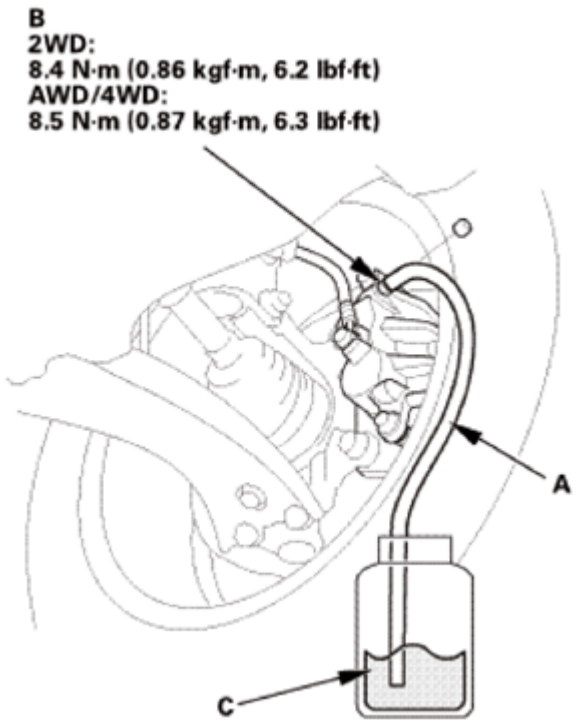

Fig. 26: Bleeding Brake Fluid To Plastic Catch Bottle Using Hose (Front)
Courtesy of AMERICAN HONDA MOTOR CO., INC.

3. Attach a length of clear drain tube (A) to the bleed screw (B).
4. Submerge the other end of the drain tube into a clear plastic catch bottle of brake fluid (C).
5. Have an assistant slowly pump the brake pedal several times then apply steady continuous pressure.
6. Loosen the bleed screw slowly to bleed the fluid into the plastic catch bottle. The brake pedal will travel toward the floor as the fluid is bled from the system.
7. When the brake pedal reaches the floor, have the assistant hold the pedal in that position, then tighten the bleed screw. The brake pedal can now be released.
8. Check and refill the master cylinder reservoir tank to the MAX (upper) level line. Be sure to reinstall the master cylinder reservoir cap.
9. Repeat steps 5 thru 8 until the brake fluid in the clear drain tube appears fresh and there are no air bubbles in the fluid.
10. Repeat this procedure for each brake in the bleeding sequence.

Rear

GETtheMANUALS.org

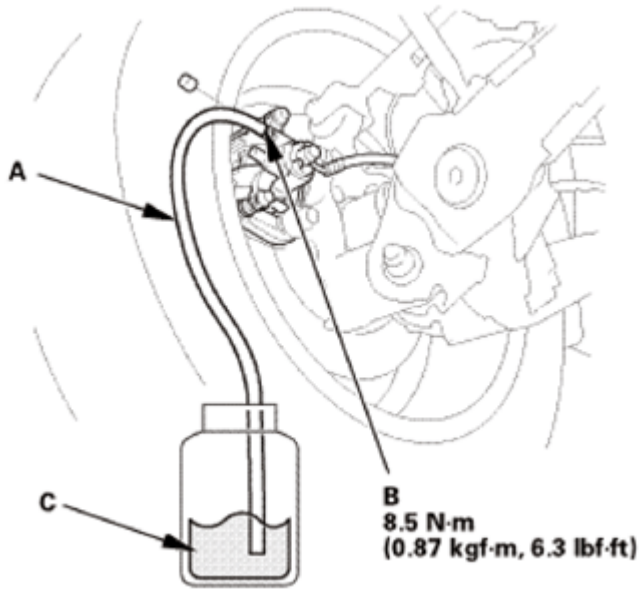

Fig. 27: Bleeding Brake Fluid To Plastic Catch Bottle Using Hose (Rear)
Courtesy of AMERICAN HONDA MOTOR CO., INC.

BRAKE MASTER CYLINDER REMOVAL AND INSTALLATION

REMOVAL

NOTE:

- **Press the brake pedal several times to deplete the vacuum in the brake booster.**
- **Be careful when handling the master cylinder. Do not hold it at the piston, or the piston may separate from the body. If the piston separates from the body, then the master cylinder must be replaced. Do not reinsert the piston back into the master cylinder body.**

1. Vehicle Lift
    1. Raise the vehicle on a lift, and make sure it is securely supported.
2. Air Cleaner Assembly
    1. Disconnect the MAF sensor/IAT sensor connector (A).
    2. Remove the harness clamp (B).
    3. Disconnect the intake air duct (C) and the intake air pipe (D).
    4. Remove the air cleaner (E).

GETtheMANUALS.org

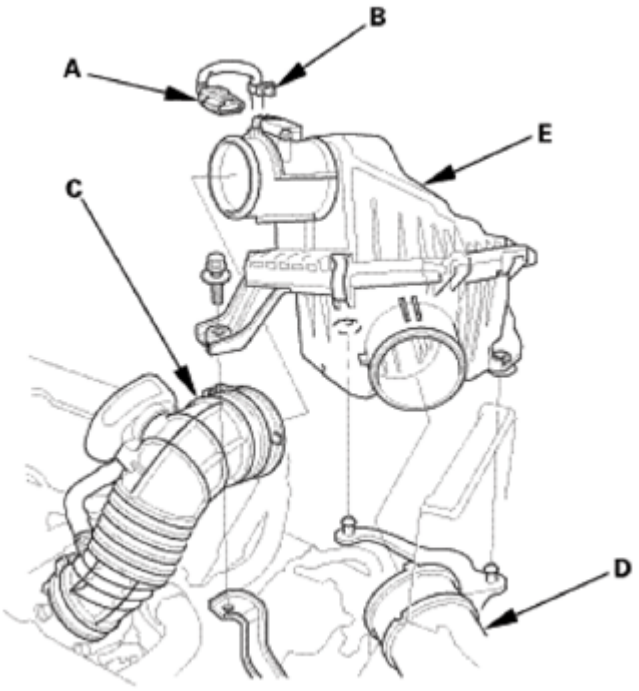

Fig. 28: Identifying MAF Sensor/IAT Sensor Connector, Air Cleaner, Intake Air Pipe And Harness Clamp
Courtesy of AMERICAN HONDA MOTOR CO., INC.

3. Brake Fluid - Remove
    1. Pull out the hood rear seal, then remove the master cylinder maintenance lid (A).
    2. Remove the reservoir cap (B).
    3. Remove the brake fluid from the master cylinder reservoir with a syringe.

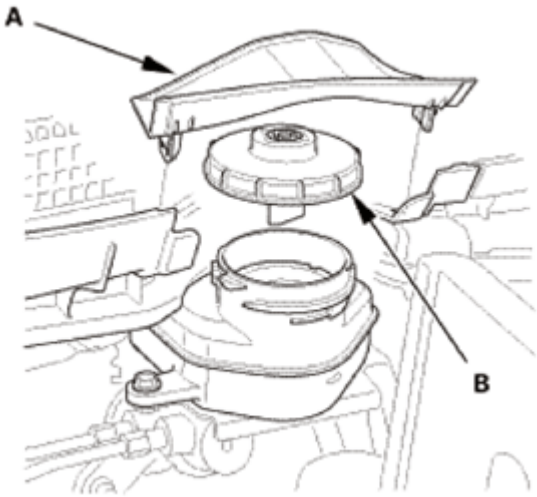

Fig. 29: Identifying Master Cylinder Maintenance Lid And Reservoir Cap
Courtesy of AMERICAN HONDA MOTOR CO., INC.

GETtheMANUALS.org

4. Brake Master Cylinder

NOTE: **Do not spill brake fluid on the vehicle; it may damage the paint. If brake fluid does contact the paint, wash it off immediately with water.**

NOTE:

- **Be careful not to damage or bend the brake lines during removal and installation.**
- **After removal, plug the ends of the hoses and the joints to prevent spilling brake fluid.**
- **Make sure not to get any silicone grease on the terminal part of the connectors and switches, especially if you have silicone grease on your hands or gloves.**

1. Disconnect the connector (A).
2. Remove the reservoir tank (B) and the reservoir tank bracket (C).

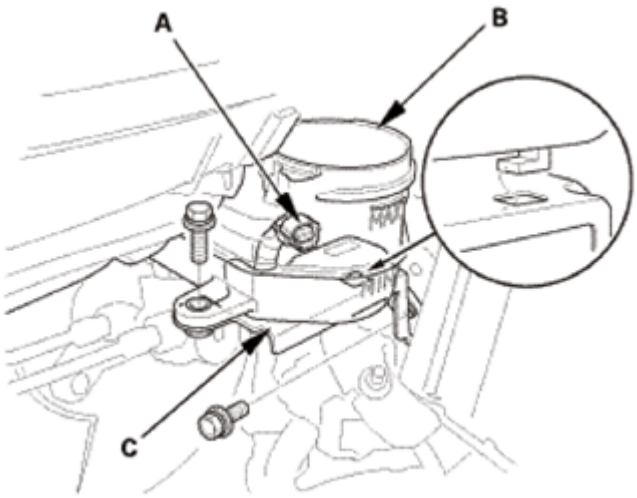

Fig. 30: Identifying Connector, Reservoir Tank And Reservoir Tank Bracket
Courtesy of AMERICAN HONDA MOTOR CO., INC.

3. Disconnect the brake lines (A) from the master cylinder (B).
4. Remove the master cylinder from the brake booster (C).
5. Remove the O-ring (D) from the master cylinder.

GETtheMANUALS.org

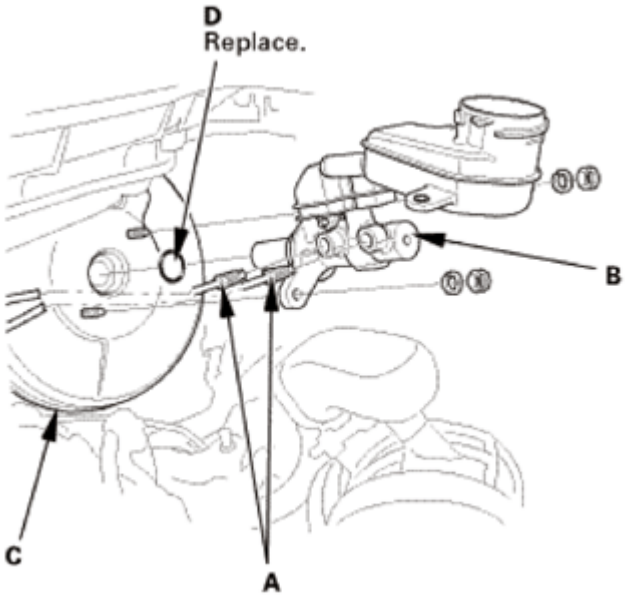

Fig. 31: Identifying Master Cylinder, Brake Booster, O-Ring And Brake Lines
Courtesy of AMERICAN HONDA MOTOR CO., INC.

INSTALLATION

1. Brake Master Cylinder
    1. Install the new O-ring (A) to the master cylinder.

        NOTE: Coat the O-ring with silicone grease (Shin-Etsu G40M).

    2. Install the master cylinder (B) to the brake booster (C).
    3. Connect the brake lines (D) to the master cylinder.
    4. Install the reservoir tank (A) and the reservoir tank bracket (B).

GETtheMANUALS.org

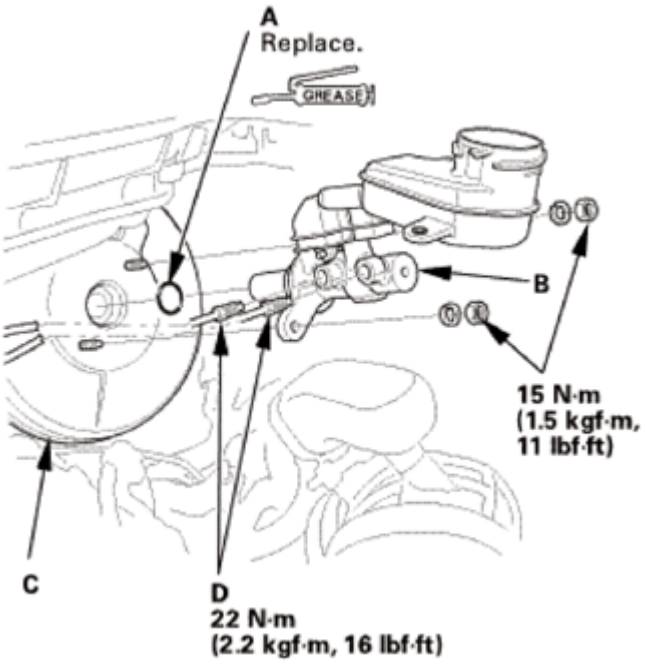

Fig. 32: Identifying Master Cylinder, Brake Booster, Brake Lines And O-Ring With Torque Specifications
Courtesy of AMERICAN HONDA MOTOR CO., INC.

5. Connect the connector (C).

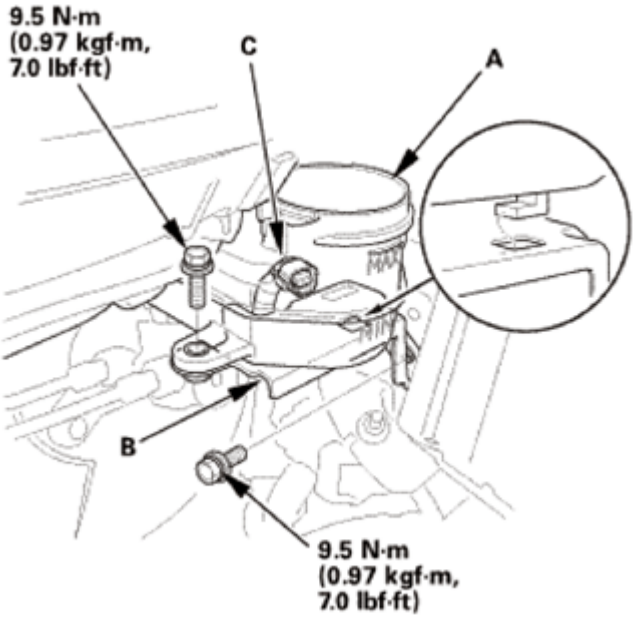

Fig. 33: Identifying Reservoir Tank, Bracket, Connector And Mounting Bolts With Torque Specifications
Courtesy of AMERICAN HONDA MOTOR CO., INC.

GETtheMANUALS.org

2. Air Cleaner Assembly
    1. Install the air cleaner (A).
    2. Connect the intake air pipe (B) and the intake air duct (C).
    3. Install the harness clamp (D).
    4. Connect the MAF sensor/IAT sensor connector (E).

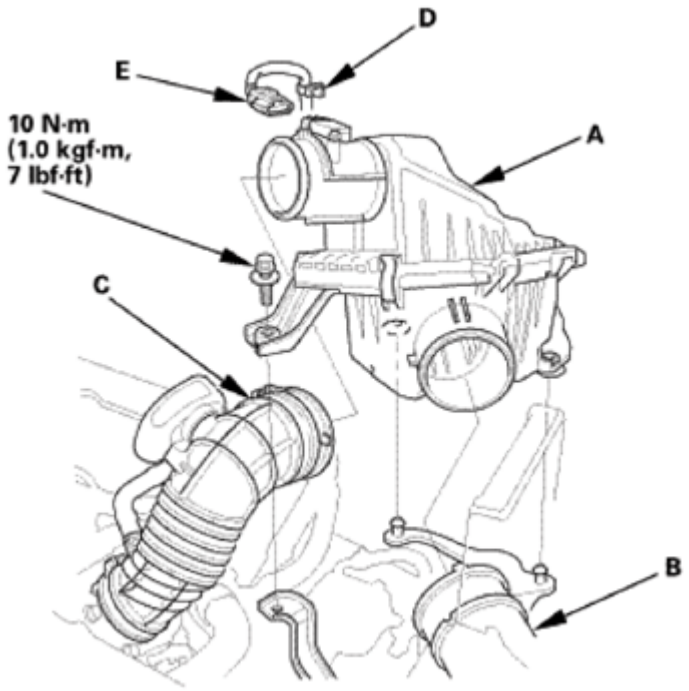

Fig. 34: Identifying MAF Sensor/IAT Sensor Connector, Air Cleaner, Intake Air Pipe, Duct And Harness Clamp With Torque Specifications
Courtesy of AMERICAN HONDA MOTOR CO., INC.

3. Brake System - Bleeding

NOTE: **Do not spill brake fluid on the vehicle; it may damage the paint. If brake fluid does contact the paint, wash it off immediately with water.**

NOTE:

- **Do not reuse the drained fluid. Use only new Honda DOT 3 Brake Fluid from an unopened container. Using a non-Honda brake fluid can cause corrosion and shorten the life of the system.**
- **Make sure no dirt or other foreign matter gets in the brake fluid.**
- **The reservoir connected to the master cylinder must be at the MAX (upper) level mark at the start of the bleeding procedure and checked after bleeding each wheel. Add fluid as required.**
- **There are three different methods used for bleeding brake systems. The method shown here is the preferred manual method for removing**

GETtheMANUALS.org

the air from the system. For pressure or vacuum bleeding, refer to tool manufacturer's instructions included with the tool.

1. Make sure the brake fluid level in the reservoir tank (A) is at the MAX (upper) level line (B).

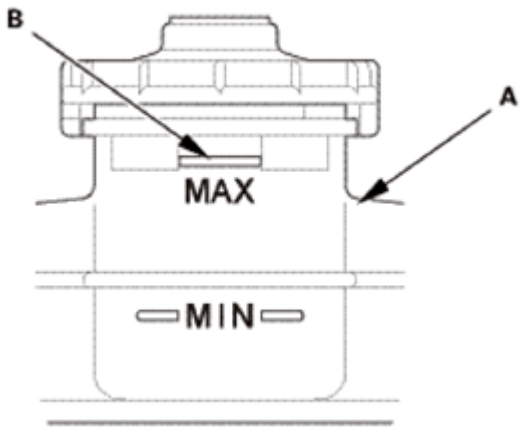

Fig. 35: Identifying MAX (Upper) Level Line On Reservoir Tank
Courtesy of AMERICAN HONDA MOTOR CO., INC.

2. Start the bleeding at the driver's side of the front brake system.

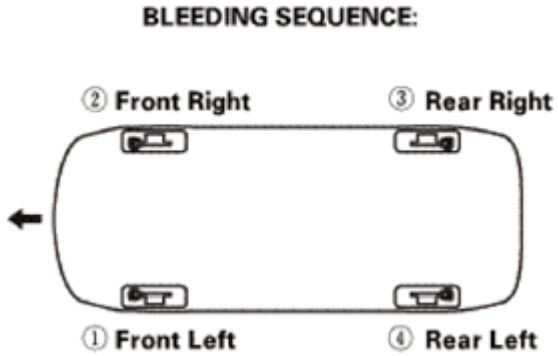

Fig. 36: Identifying Bleeding Sequence Of Front Brake System
Courtesy of AMERICAN HONDA MOTOR CO., INC.

NOTE: Bleed the calipers in the sequence shown.

Front

GETtheMANUALS.org

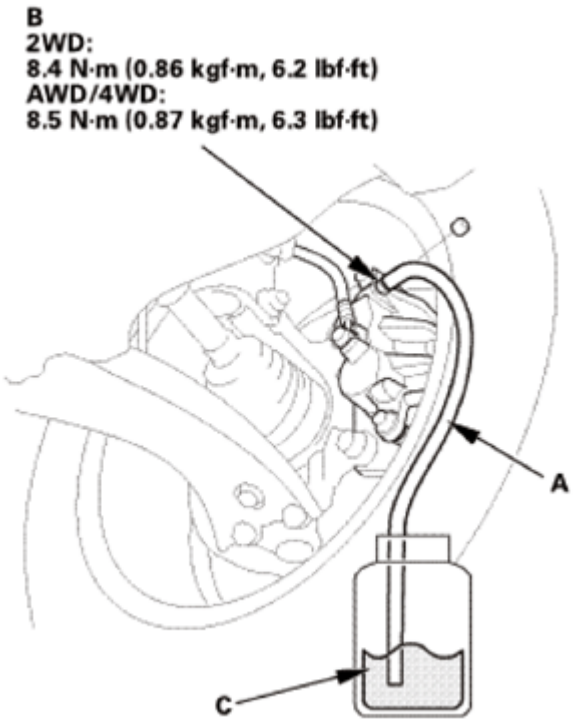

Fig. 37: Bleeding Brake Fluid To Plastic Catch Bottle Using Hose (Front)
Courtesy of AMERICAN HONDA MOTOR CO., INC.

3. Attach a length of clear drain tube (A) to the bleed screw (B).
4. Submerge the other end of the drain tube into a clear plastic catch bottle of brake fluid (C).
5. Have an assistant slowly pump the brake pedal several times then apply steady continuous pressure.
6. Loosen the bleed screw slowly to bleed the fluid into the plastic catch bottle. The brake pedal will travel toward the floor as the fluid is bled from the system.
7. When the brake pedal reaches the floor, have the assistant hold the pedal in that position, then tighten the bleed screw. The brake pedal can now be released.
8. Check and refill the master cylinder reservoir tank to the MAX (upper) level line. Be sure to reinstall the master cylinder reservoir cap.
9. Repeat steps 5 thru 8 until the brake fluid in the clear drain tube appears fresh and there are no air bubbles in the fluid.
10. Repeat this procedure for each brake in the bleeding sequence.

Rear

GETtheMANUALS.org

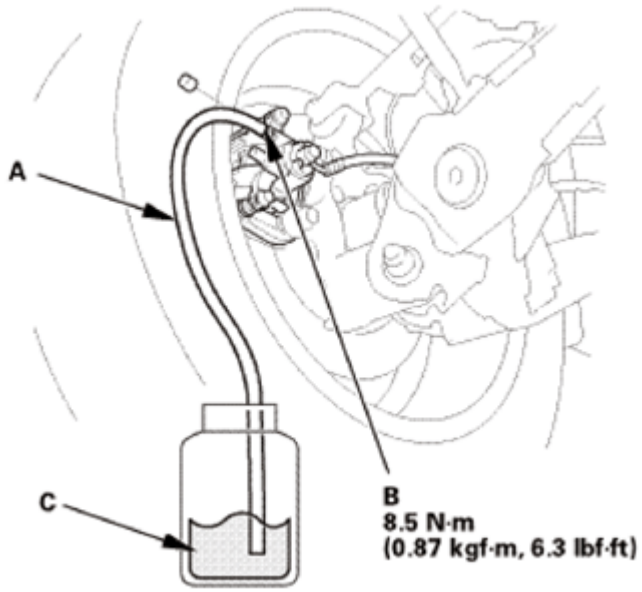

Fig. 38: Bleeding Brake Fluid To Plastic Catch Bottle Using Hose (Rear)
Courtesy of AMERICAN HONDA MOTOR CO., INC.

4. Brake Pedal Height - Inspection
    1. Pull back the carpet, and find the cutout (A) in the insulation.
    2. Measure the pedal height (B) from the left side middle of the pedal pad (C) to the floor (D) without the insulation.

       Standard pedal height: 216±7 mm (8.50±0.28 in)

    3. If the pedal height is not as specified, adjust the pedal height.

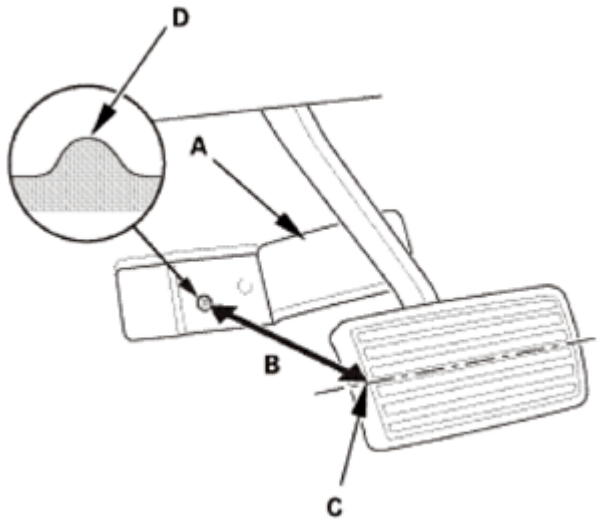

Fig. 39: Identifying Pedal Height From Left Side Middle Of Pedal Pad To Floor
Courtesy of AMERICAN HONDA MOTOR CO., INC.

GETtheMANUALS.org

5. Brake Pedal Free Play - Check
    1. Turn the ignition switch to LOCK (0).
    2. Inspect the free play (A) at the brake pedal pad (B) by pushing the brake pedal by hand. If the brake pedal free play is out of specification, adjust the brake pedal position switch (C). If the brake pedal free play is insufficient, it may result in brake drag.

       Free play: 1-5 mm (0.04-0.20 in)

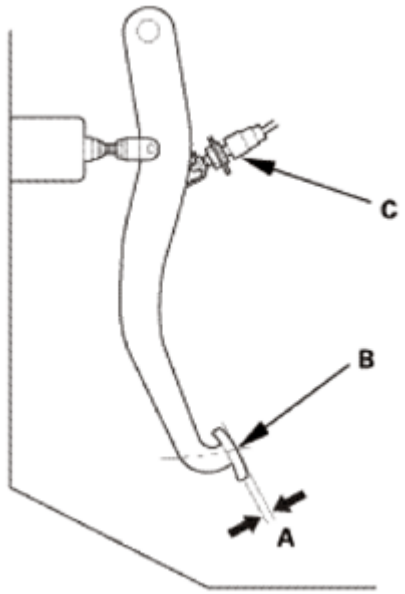

Fig. 40: Identifying Brake Pedal Free Play
Courtesy of AMERICAN HONDA MOTOR CO., INC.

6. Brake Drag - Check
    1. Spin the wheels to check for brake drag.

BRAKE PEDAL FREE PLAY CHECK

CHECK

1. Brake Pedal Free Play - Check
    1. Turn the ignition switch to LOCK (0).
    2. Inspect the free play (A) at the brake pedal pad (B) by pushing the brake pedal by hand. If the brake pedal free play is out of specification, adjust the brake pedal position switch (C). If the brake pedal free play is insufficient, it may result in brake drag.

       Free play: 1-5 mm (0.04-0.20 in)

GETtheMANUALS.org

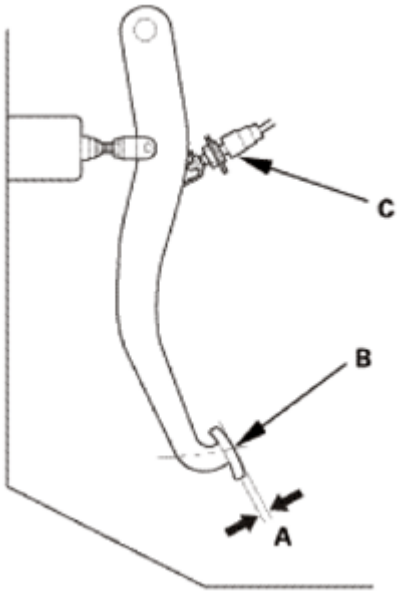

Fig. 41: Identifying Brake Pedal Free Play
Courtesy of AMERICAN HONDA MOTOR CO., INC.

BRAKE PEDAL AND BRAKE PEDAL POSITION SWITCH ADJUSTMENT

REMOVAL

1. Steering Joint Cover
    1. Remove the steering joint cover (A).

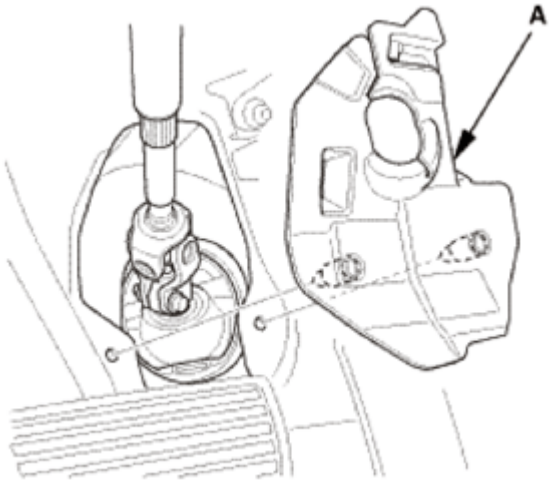

Fig. 42: Identifying Steering Joint Cover
Courtesy of AMERICAN HONDA MOTOR CO., INC.

INSPECTION

GETtheMANUALS.org

1. Brake Pedal Height - Inspection
    1. Pull back the carpet, and find the cutout (A) in the insulation.
    2. Measure the pedal height (B) from the left side middle of the pedal pad (C) to the floor (D) without the insulation.

       Standard pedal height: 216±7 mm (8.50±0.28 in)

    3. If the pedal height is not as specified, adjust the pedal height.

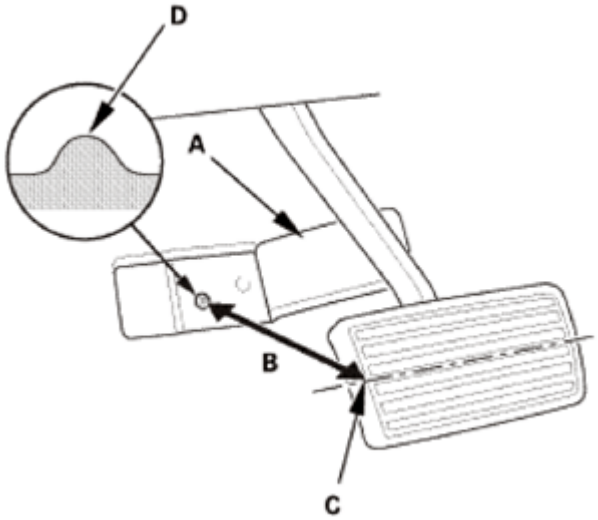

Fig. 43: Identifying Pedal Height From Left Side Middle Of Pedal Pad To Floor
Courtesy of AMERICAN HONDA MOTOR CO., INC.

ADJUSTMENT

1. Brake Pedal - Adjustment
    1. Turn the brake pedal position switch (A) 45 ° counterclockwise, and pull it back until it is no longer touching the brake pedal (B).

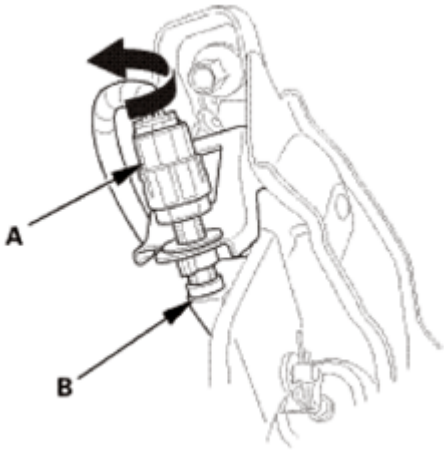

GETtheMANUALS.org

Fig. 44: Turning Brake Pedal Position Switch To 45 ° Counterclockwise
Courtesy of AMERICAN HONDA MOTOR CO., INC.

2. Loosen the pushrod locknut (A), and screw the pushrod (B) in or out with pliers until the standard pedal height from the floor is reached. After adjustment, tighten the locknut firmly. Do not adjust the pedal height with the pushrod pressed.

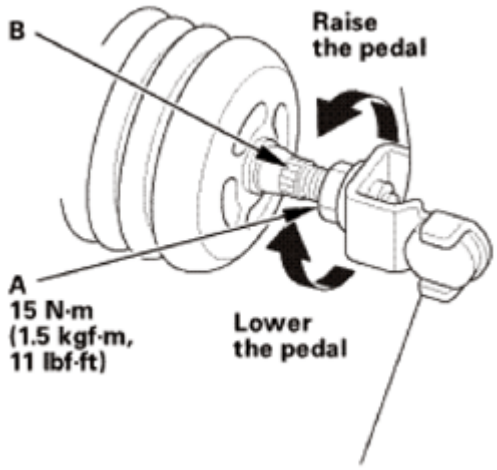

Fig. 45: Loosening Pushrod Locknut
Courtesy of AMERICAN HONDA MOTOR CO., INC.

2. Brake Pedal Position Switch - Adjustment
    1. Lift up on the brake pedal by hand. Push in the brake pedal position switch until its plunger is fully pressed (threaded end (A) touching the pad (B) on the pedal arm).
    2. Turn the switch 45 ° clockwise to lock it. The gap between the brake pedal position switch and the pad is automatically adjusted to 0.7 mm (0.028 in) by locking the switch. Make sure the brake lights go off when the pedal is released.

GETtheMANUALS.org

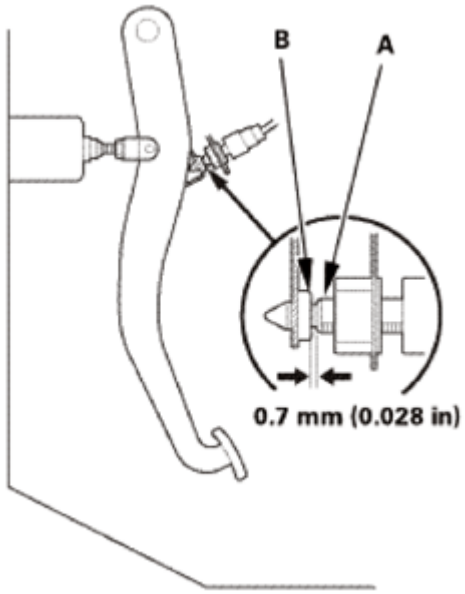

Fig. 46: Identifying Gap Between Brake Pedal Position Switch And Pad
Courtesy of AMERICAN HONDA MOTOR CO., INC.

3. Brake Pedal Free Play - Check
    1. Turn the ignition switch to LOCK (0).
    2. Inspect the free play (A) at the brake pedal pad (B) by pushing the brake pedal by hand. If the brake pedal free play is out of specification, adjust the brake pedal position switch (C). If the brake pedal free play is insufficient, it may result in brake drag.

    Free play: 1-5 mm (0.04-0.20 in)

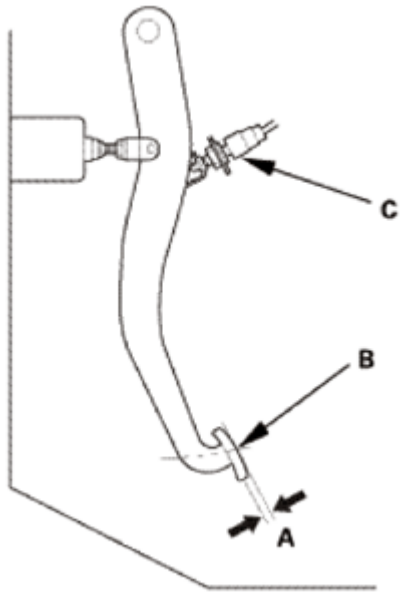

Fig. 47: Identifying Brake Pedal Free Play

GETtheMANUALS.org

Courtesy of AMERICAN HONDA MOTOR CO., INC.

INSTALLATION

1. Steering Joint Cover
    1. Install the steering joint cover (A).

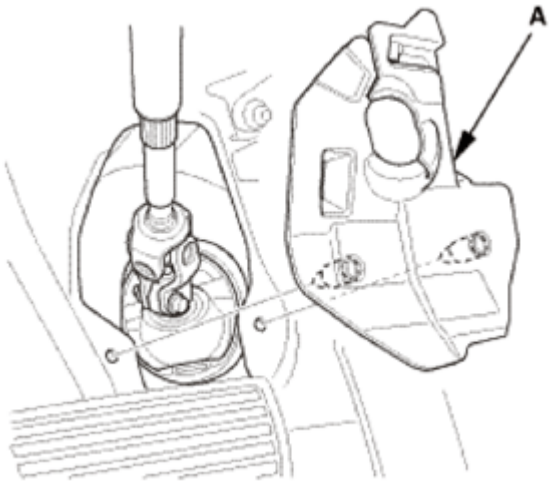

Fig. 48: Identifying Steering Joint Cover
Courtesy of AMERICAN HONDA MOTOR CO., INC.

BRAKE PEDAL POSITION SWITCH REMOVAL AND INSTALLATION

REMOVAL

1. Brake Pedal Position Switch
    1. Disconnect the connector.
    2. Turn the brake pedal position switch (A) 45 ° counterclockwise to remove it.

GETtheMANUALS.org

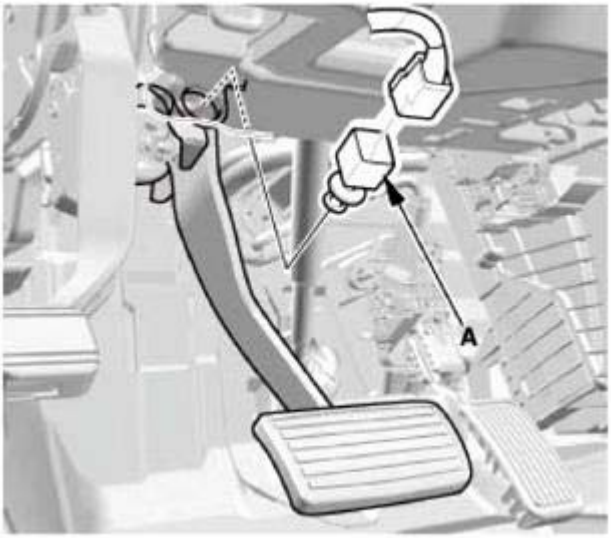

Fig. 49: Identifying Brake Pedal Position Switch
Courtesy of AMERICAN HONDA MOTOR CO., INC.

INSTALLATION

1. Brake Pedal Position Switch
    1. Turn the brake pedal position switch (A) 45 ° clockwise to install it.
    2. Connect the connector.

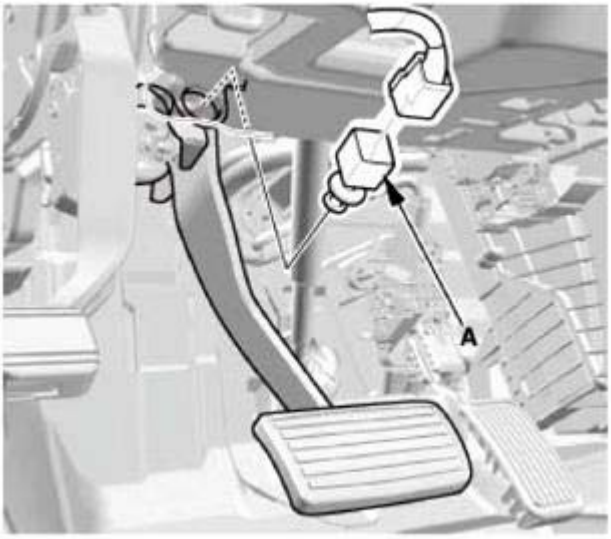

Fig. 50: Identifying Brake Pedal Position Switch
Courtesy of AMERICAN HONDA MOTOR CO., INC.

2. Brake Pedal Position Switch - Adjustment
    1. **Adjust the brake pedal position switch** See **BRAKE PEDAL AND BRAKE PEDAL POSITION SWITCH ADJUSTMENT** or **BRAKE PEDAL REMOVAL AND**

GETtheMANUALS.org

INSTALLATION.

BRAKE PEDAL REMOVAL AND INSTALLATION

REMOVAL

1. Steering Joint Cover
    1. Remove the steering joint cover (A).

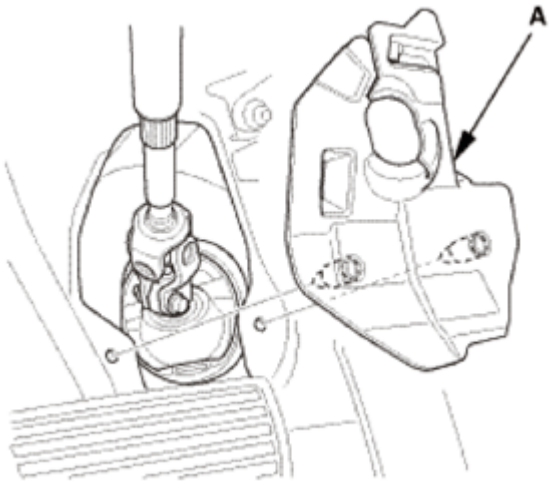

Fig. 51: Identifying Steering Joint Cover
Courtesy of AMERICAN HONDA MOTOR CO., INC.

2. Driver's Dashboard Undercover
    1. Turn the lock knob (A) 90 °, then gently pull down the front edge of the driver's dashboard undercover (B) to detach the clip (C).
    2. Pull away the undercover to release the pin (D) from the holder (E), then remove the driver's dashboard undercover.

GETtheMANUALS.org

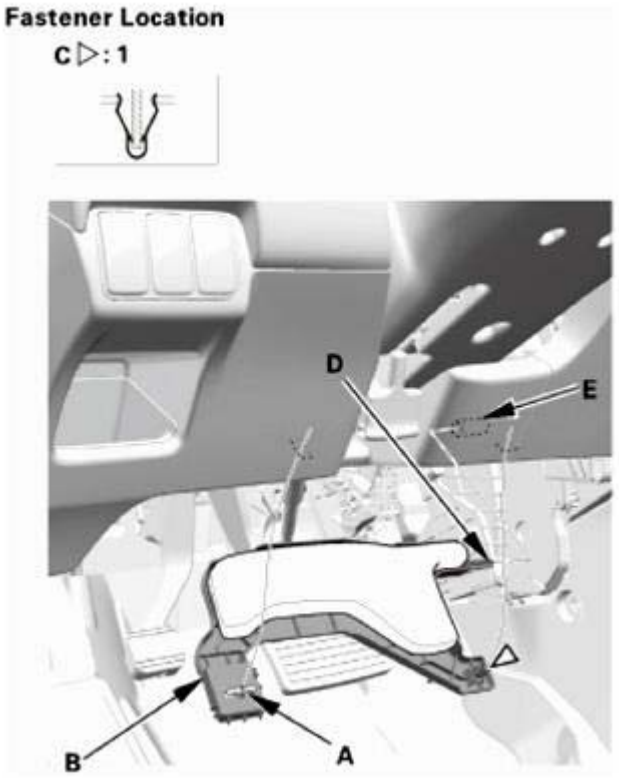

Fig. 52: Identifying Driver's Dashboard Undercover, Holder, Pin, Lock Knob And Clip
Courtesy of AMERICAN HONDA MOTOR CO., INC.

3. Brake Pedal Assembly
    1. Disconnect the connector (A).
    2. Remove the harness clip (B).
    3. Remove the brake pedal position switch (C) by turning it 45 ° counterclockwise.
    4. Remove the lock pin (D) and the clevis pin (E).
    5. Remove the brake pedal with the bracket (F).

GETtheMANUALS.org

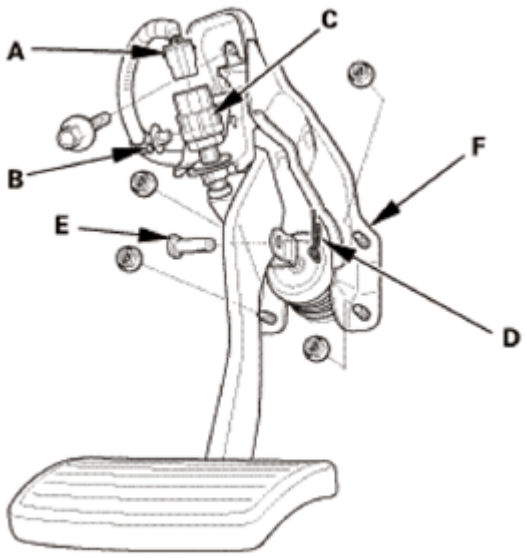

Fig. 53: Identifying Brake Pedal Assembly Components
Courtesy of AMERICAN HONDA MOTOR CO., INC.

INSTALLATION

1. Brake Pedal Assembly
    1. Install the brake pedal with the bracket (A).
    2. Install the lock pin (B) and the clevis pin (C).
    3. Install the brake pedal position switch (D) by turning it 45 ° clockwise.
    4. Install the harness clip (E).
    5. Connect the connector (F).

GETtheMANUALS.org

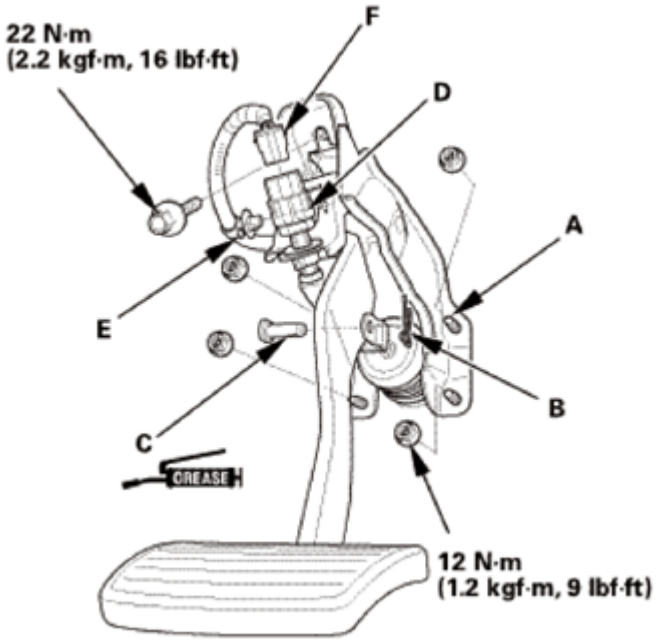

Fig. 54: Identifying Brake Pedal Assembly Components And Mounting Bolts With Torque Specifications
Courtesy of AMERICAN HONDA MOTOR CO., INC.

2. Brake Pedal Height - Inspection
    1. Pull back the carpet, and find the cutout (A) in the insulation.
    2. Measure the pedal height (B) from the left side middle of the pedal pad (C) to the floor (D) without the insulation.

       Standard pedal height: 216±7 mm (8.50±0.28 in)

    3. If the pedal height is not as specified, adjust the pedal height.

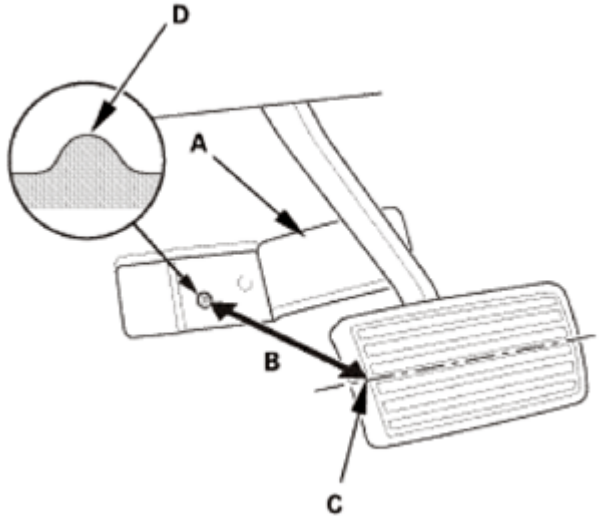

GETtheMANUALS.org

Fig. 55: Identifying Pedal Height From Left Side Middle Of Pedal Pad To Floor
Courtesy of AMERICAN HONDA MOTOR CO., INC.

3. Brake Pedal Position Switch - Adjustment
    1. Lift up on the brake pedal by hand. Push in the brake pedal position switch until its plunger is fully pressed (threaded end (A) touching the pad (B) on the pedal arm).
    2. Turn the switch 45 ° clockwise to lock it. The gap between the brake pedal position switch and the pad is automatically adjusted to 0.7 mm (0.028 in) by locking the switch. Make sure the brake lights go off when the pedal is released.

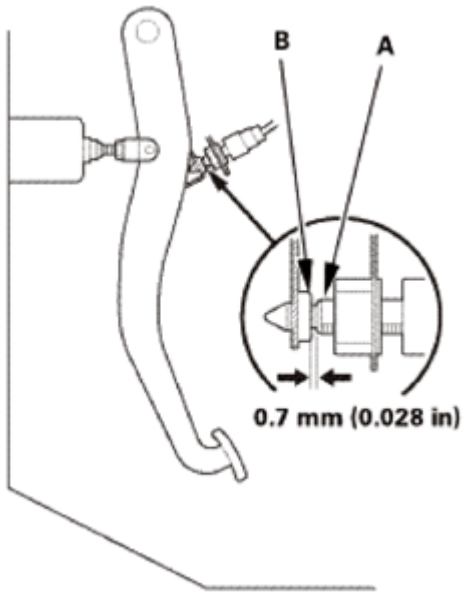

Fig. 56: Identifying Gap Between Brake Pedal Position Switch And Pad
Courtesy of AMERICAN HONDA MOTOR CO., INC.

4. Brake Pedal Free Play - Check
    1. Turn the ignition switch to LOCK (0).
    2. Inspect the free play (A) at the brake pedal pad (B) by pushing the brake pedal by hand. If the brake pedal free play is out of specification, adjust the brake pedal position switch (C). If the brake pedal free play is insufficient, it may result in brake drag.

    Free play: 1-5 mm (0.04-0.20 in)

GETtheMANUALS.org

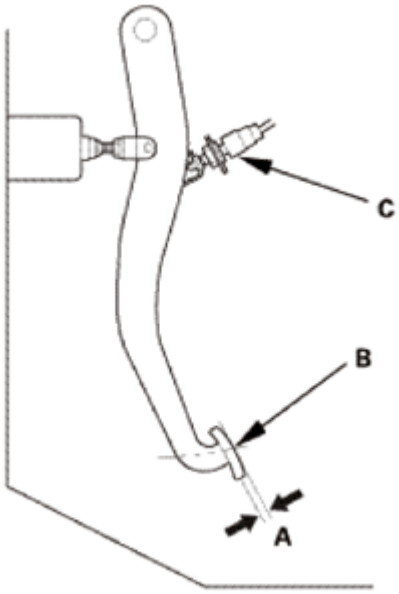

Fig. 57: Identifying Brake Pedal Free Play
Courtesy of AMERICAN HONDA MOTOR CO., INC.

5. Driver's Dashboard Undercover
    1. Install the driver's dashboard undercover (A). Make sure the clip (B) snap into place securely, and the pin (C) into the holder (D) securely.
    2. Turn the lock knob (E) 90 °.

GETtheMANUALS.org

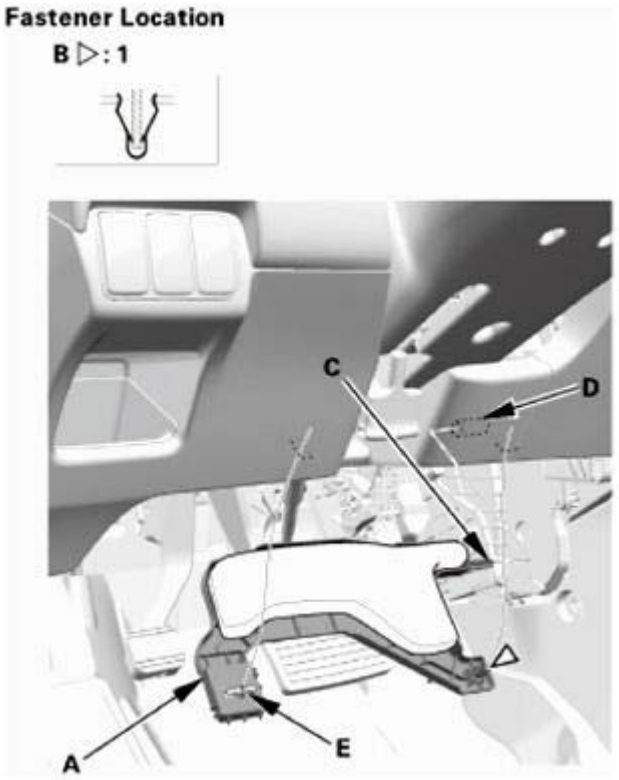

Fig. 58: Identifying Driver's Dashboard Undercover, Holder, Pin, Clip And Lock Knob
Courtesy of AMERICAN HONDA MOTOR CO., INC.

6. Steering Joint Cover
    1. Install the steering joint cover (A).

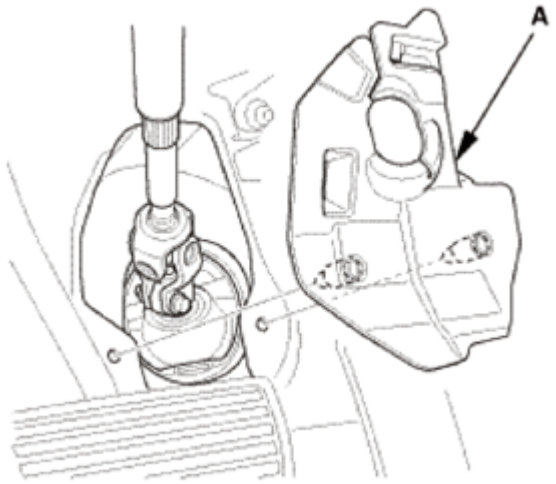

Fig. 59: Identifying Steering Joint Cover
Courtesy of AMERICAN HONDA MOTOR CO., INC.

FRONT BRAKE CALIPER OVERHAUL

GETtheMANUALS.org

SPECIAL TOOL DESCRIPTION

Image	Description/Tool Number
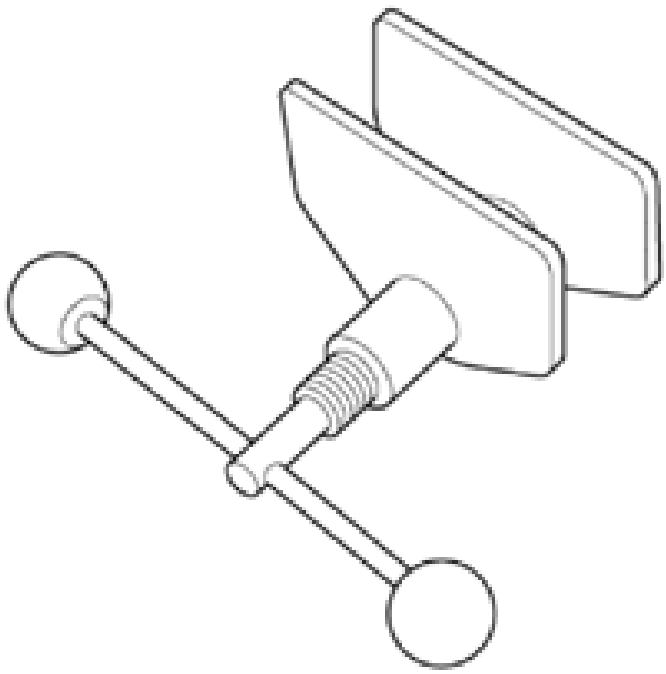	Brake Caliper Piston Compressor 07AAE-SEPA101

EXPLODED VIEW

1. Front Brake Caliper Exploded View

   Exploded View

   2WD

GETtheMANUALS.org

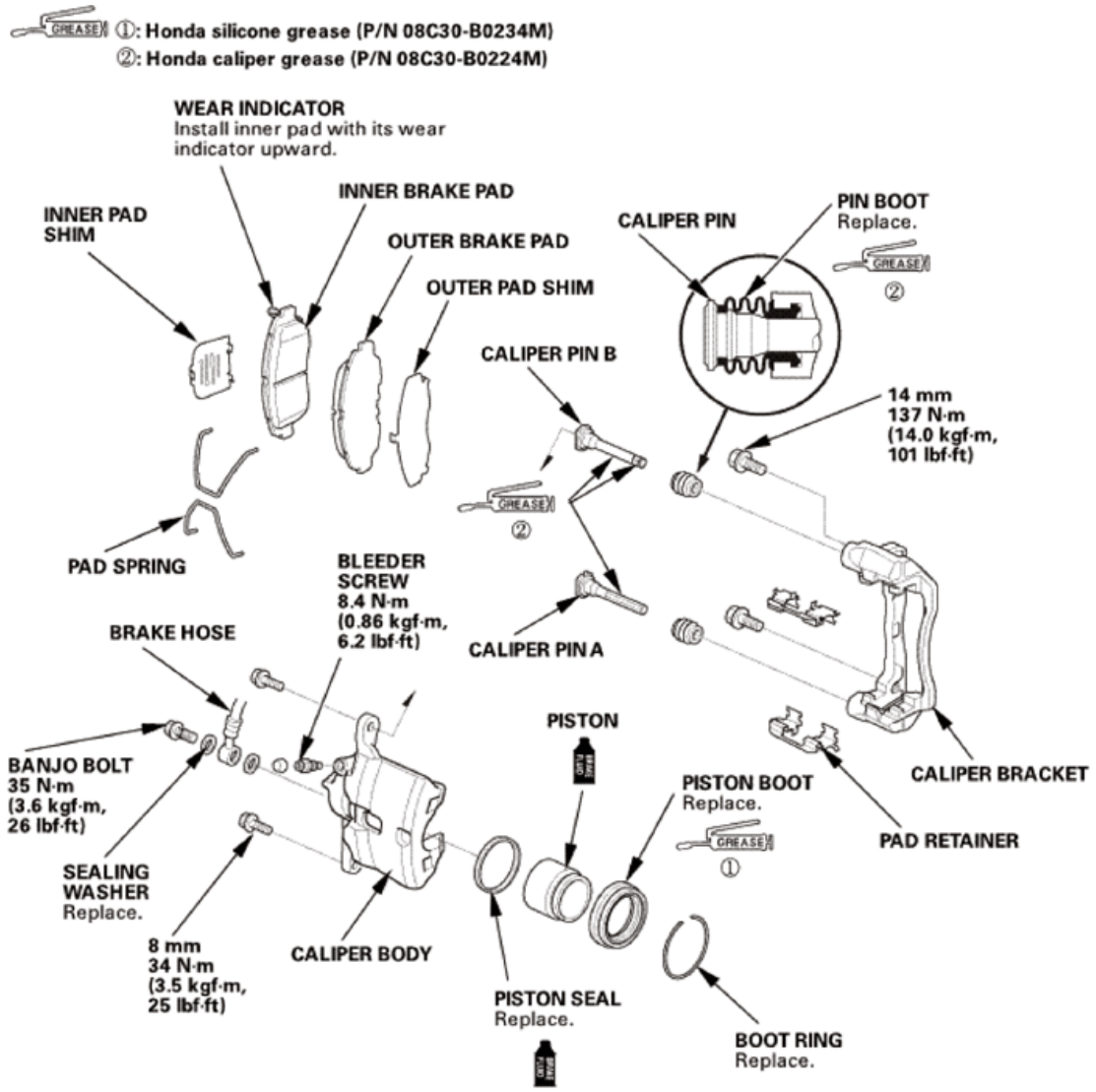

Fig. 60: Exploded View Of Front Brake Caliper (2WD)
Courtesy of AMERICAN HONDA MOTOR CO., INC.

AWD/4WD

GETtheMANUALS.org

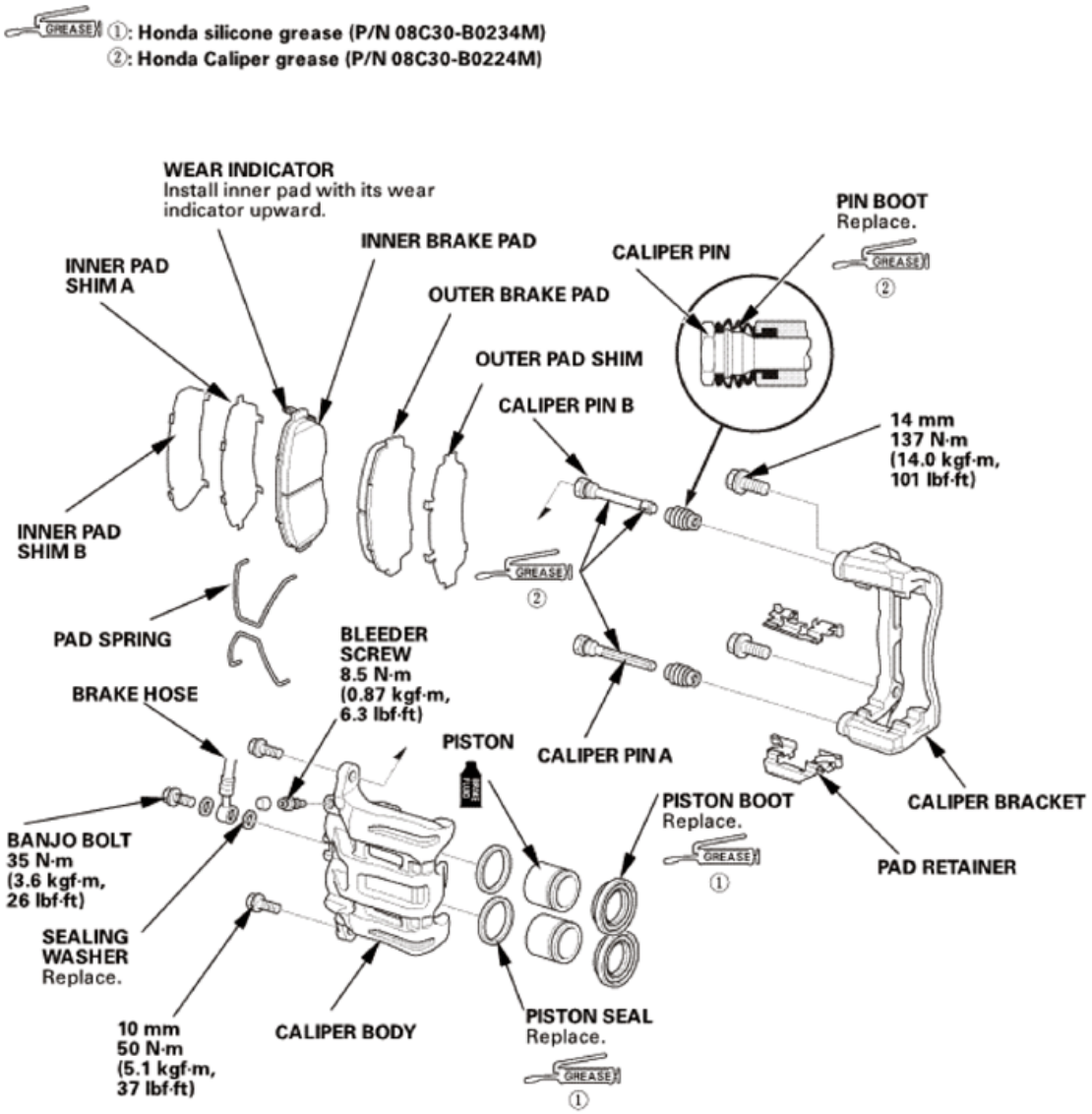

Fig. 61: Exploded View Of Front Brake Caliper (AWD/4WD)
Courtesy of AMERICAN HONDA MOTOR CO., INC.

DISASSEMBLY

CAUTION: Frequent inhalation of brake pad dust, regardless of material composition, could be hazardous to your health.

- **Avoid breathing dust particles.**
- **Never use an air hose or brush to clean brake assemblies. Use an OSHA-approved vacuum cleaner.**

NOTE:

- **Clean all parts in brake fluid and air dry; blow out all passages with compressed air.**

GETtheMANUALS.org

- **Make sure no dirt or other foreign matter gets in the brake fluid.**
- **Make sure no grease or oil gets on the brake discs or pads.**
- **Do not reuse drained brake fluid. Use only new Honda DOT 3 Brake Fluid from an unopened container. Using a non-Honda brake fluid can cause corrosion and shorten the life of the system.**
- **Refer to the EXPLODED VIEW as needed during this procedure.**

1. Front Brake Caliper - Disassembly

2WD

1. Set the wooden block (A) or several shop towels to the caliper body (B) as shown.
2. Blow out the piston with compressed air gradually, and remove the piston from the caliper body.

NOTE: **Do not put the hand into the caliper body because the piston will come out forcibly from the caliper body.**

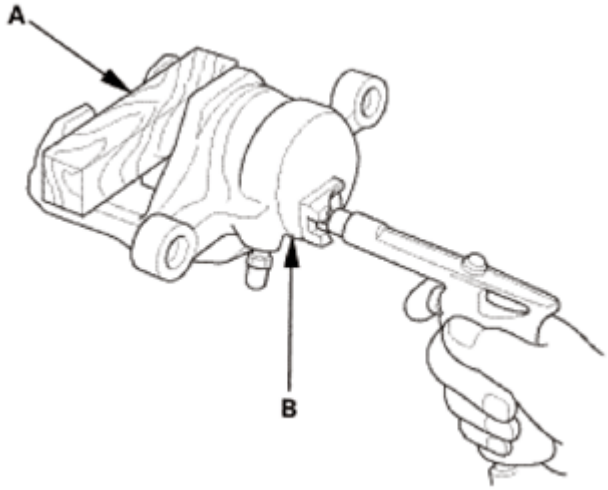

Fig. 62: Removing Piston From Caliper Body
Courtesy of AMERICAN HONDA MOTOR CO., INC.

3. Remove the boot rings (A).
4. Remove the piston boot (B).
5. Remove the piston seal (C).

GETtheMANUALS.org

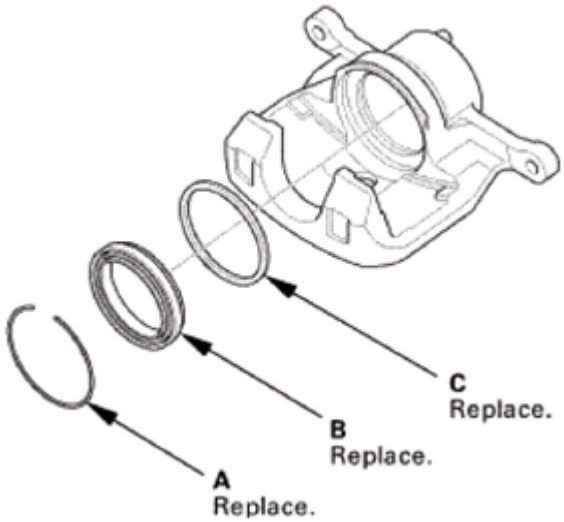

Fig. 63: Identifying Boot Rings, Piston Boot And Piston Seal
Courtesy of AMERICAN HONDA MOTOR CO., INC.

NOTE: **Be careful not to damage the inner surface of the cylinder wall with the tool.**

6. Remove the caliper pins (A).

NOTE: **The upper and lower caliper pins are different. During installation, make sure the caliper pins are in the proper positions.**

7. Remove the pin boots (B).

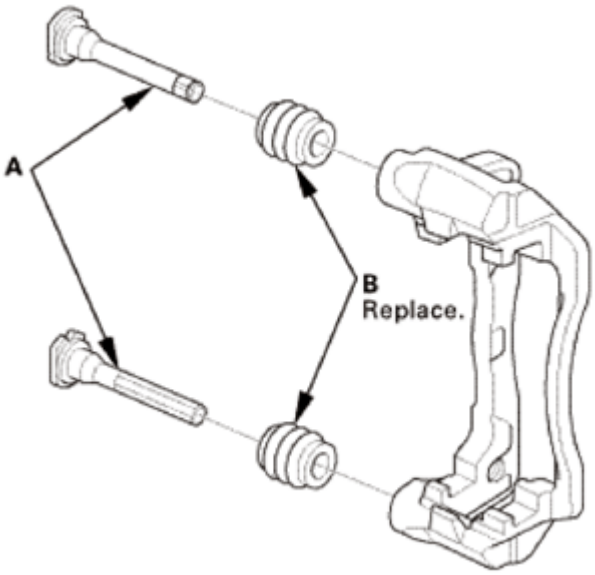

Fig. 64: Identifying Caliper Pins And Pin Boots

GETtheMANUALS.org

Courtesy of AMERICAN HONDA MOTOR CO., INC.

AWD/4WD

1. Set the wooden block (A) or several shop towels to the caliper body (B) as shown.
2. Blow out the piston with compressed air gradually, and remove the piston from the caliper body.

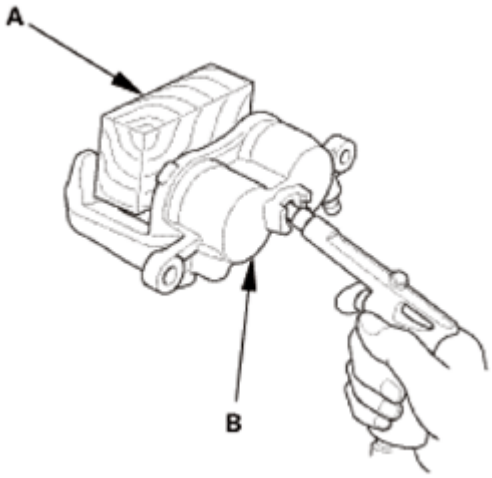

Fig. 65: Removing Piston From Caliper Body
Courtesy of AMERICAN HONDA MOTOR CO., INC.

NOTE: **Do not put the hand into the caliper body because the piston will come out hardly from the caliper body.**

3. Remove the piston boots (A).
4. Remove the piston seals (B).

NOTE: **Be careful not to damage the inner surface of the cylinder wall with the tool.**

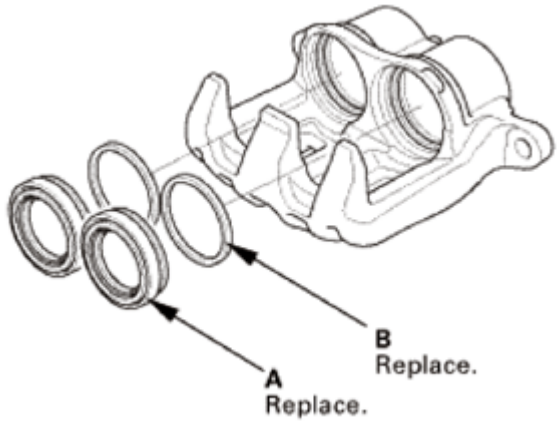

GETtheMANUALS.org

Fig. 66: Identifying Piston Boots And Piston Seals
Courtesy of AMERICAN HONDA MOTOR CO., INC.

5. Remove the caliper pins (A).

NOTE: **The upper and lower caliper pins are different. During installation, make sure the caliper pins are in the proper positions.**

6. Remove the pin boots (B).

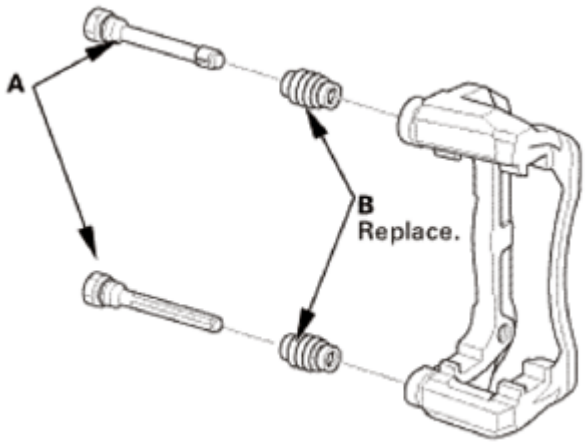

Fig. 67: Identifying Caliper Pins And Pin Boots
Courtesy of AMERICAN HONDA MOTOR CO., INC.

REASSEMBLY

CAUTION: **Frequent inhalation of brake pad dust, regardless of material composition, could be hazardous to your health.**

- **Avoid breathing dust particles.**
- **Never use an air hose or brush to clean brake assemblies. Use an OSHA-approved vacuum cleaner.**

NOTE:

- **Clean all parts in brake fluid and air dry; blow out all passages with compressed air.**
- **Before reassembling, check that all parts are free of dirt and other foreign particles.**
- **Make sure no dirt or other foreign matter gets in the brake fluid.**
- **Make sure no grease or oil gets on the brake discs or pads.**
- **Do not reuse drained brake fluid. Use only new Honda DOT 3 Brake Fluid from an unopened container. Using a non-Honda brake fluid can cause corrosion and shorten the life of the system.**

GETtheMANUALS.org

- **Coat the piston, the piston seal groove, and the caliper bore with clean brake fluid.**
- **Use recommended greases in the front caliper set.**
- **After installing the caliper, check the brake hose and line for leaks, interference, and twisting.**
- **Refer to the EXPLODED VIEW as needed during this procedure.**

1. Front Brake Caliper - Reassembly

2WD

1. Apply a thin coat of Honda caliper grease (P/N 08C30-B0224M) to the caliper pins (A) and the new pin boots (B).
2. Install the pin boots.
3. Install the caliper pins.

NOTE:

- **Make sure that the caliper pins are installed correctly. The upper caliper pin and the lower caliper pin are different. If these caliper pins are installed in the wrong location, it will cause vibration, uneven or rapid brake pad wear, and possibly uneven tire wear.**
- **Remove air with the inside of the boots.**

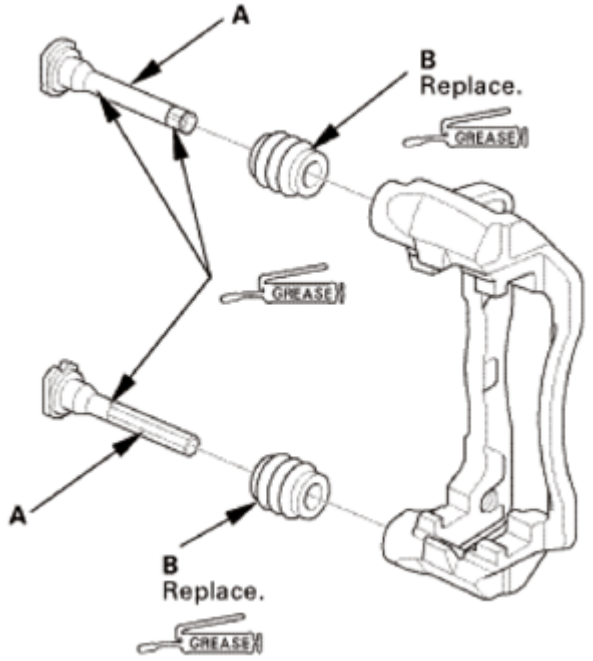

Fig. 68: Identifying Thin Coat Of Honda Caliper Grease Applying Area On Caliper Pins And Pin Boots
Courtesy of AMERICAN HONDA MOTOR CO., INC.

GETtheMANUALS.org

4. Apply the brake fluid to the new piston seal (A).
5. Install the piston seal.
6. Apply a thin coat of Honda silicone grease (P/N 08C30-B0234M) to the new piston boot (B).
7. Install the piston boot.
8. Install the new boot rings (C).

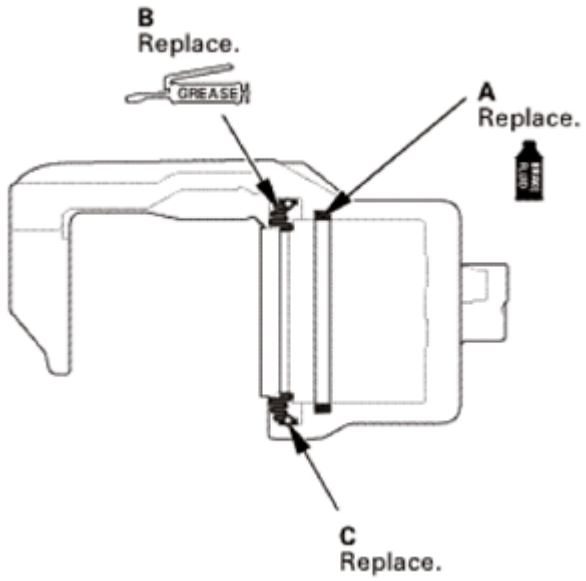

Fig. 69: Identifying Thin Coat Of Honda Silicone Grease Applying Area On Piston Boot
Courtesy of AMERICAN HONDA MOTOR CO., INC.

9. Apply the brake fluid to the outer surface of the piston, then set the piston in place on the caliper body.
10. Press in the piston with the brake caliper piston compressor tool.

NOTE:

- **Make sure that the piston boot is properly positioned into the groove of the piston.**
- **Do not press the piston diagonally, and do not press it forcibly.**
- **Be careful not to damage the piston boot when pressing the piston.**

GETtheMANUALS.org

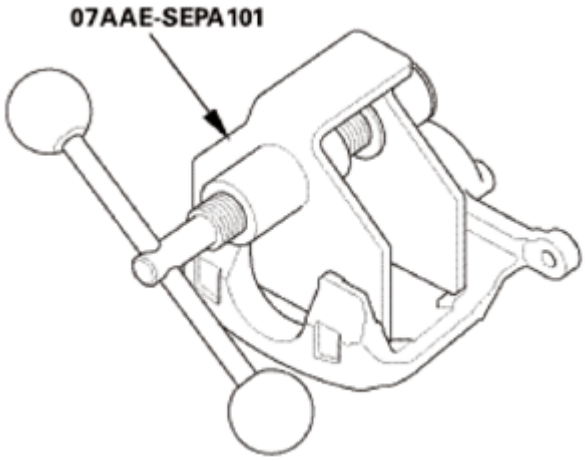

Fig. 70: Pressing Piston Using Brake Caliper Piston Compressor Tool
Courtesy of AMERICAN HONDA MOTOR CO., INC.

AWD/4WD

1. Apply a thin coat of Honda caliper grease (P/N 08C30-B0224M) to the caliper pins (A) and the new pin boots (B).
2. Install the pin boots.
3. Install the caliper pins.

NOTE:

- **Make sure that the caliper pins are installed correctly. The upper caliper pin and the lower caliper pin are different. If these caliper pins are installed in the wrong location, it will cause vibration, uneven or rapid brake pad wear, and possibly uneven tire wear.**
- **Remove air from within the pin boots.**

GETtheMANUALS.org

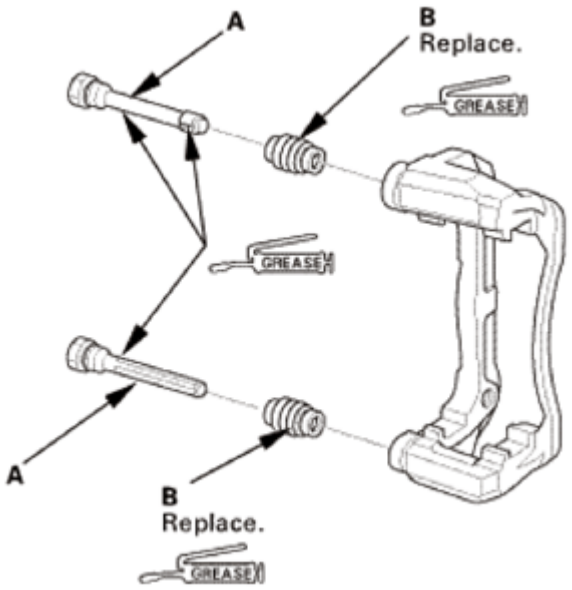

Fig. 71: Identifying Thin Coat Of Honda Caliper Grease Applying Area On Caliper Pins And Pin Boots
Courtesy of AMERICAN HONDA MOTOR CO., INC.

4. Apply a thin coat of Honda silicone grease (P/N 08C30-B0234M) to the new piston seals (A).
5. Install the piston seals.
6. Apply a thin coat of Honda silicone grease (P/N 08C30-B0234M) to the new piston boots (B).
7. Install the piston boots.

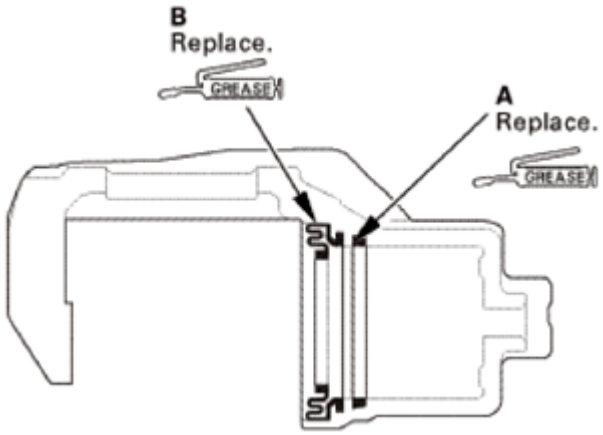

Fig. 72: Identifying Thin Coat Of Honda Silicone Grease Applying Area On Piston Boot
Courtesy of AMERICAN HONDA MOTOR CO., INC.

8. Apply the brake fluid to the outer surface of the pistons, then set the pistons in place on the caliper body.
9. Press in the pistons with the brake caliper piston compressor tool.

NOTE:

GETtheMANUALS.org

- **Make sure that the piston boots is properly positioned into the grooves of the piston.**
- **Do not press the piston diagonally, and do not press it forcibly.**
- **Be careful not to damage the piston boot when pressing in the piston.**

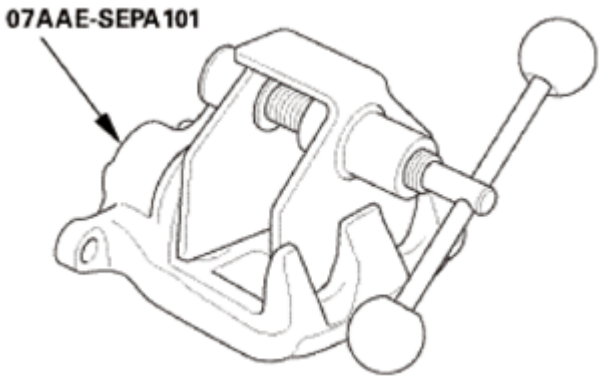

Fig. 73: Pressing Pistons Using Brake Caliper Piston Compressor Tool
Courtesy of AMERICAN HONDA MOTOR CO., INC.

FRONT BRAKE CALIPER REMOVAL AND INSTALLATION

REMOVAL

CAUTION: Frequent inhalation of brake pad dust, regardless of material composition, could be hazardous to your health.

- **Avoid breathing dust particles.**
- **Never use an air hose or brush to clean brake assemblies. Use an OSHA-approved vacuum cleaner.**

1. Vehicle Lift
    1. Raise the vehicle on a lift, and make sure it is securely supported.
2. Front Wheel
    1. Remove the front wheel.

GETtheMANUALS.org

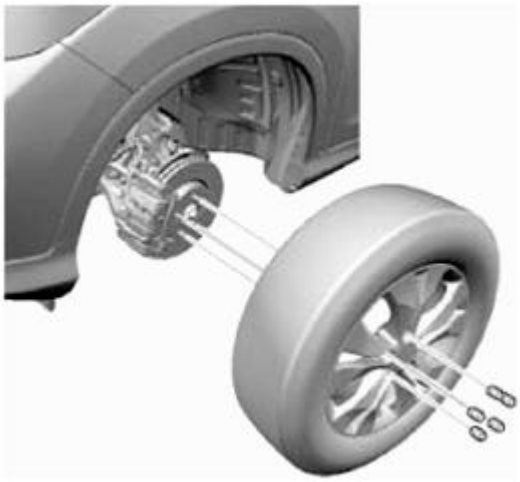

Fig. 74: Identifying Front Wheel And Mounting Bolts
Courtesy of AMERICAN HONDA MOTOR CO., INC.

3. Brake Fluid - Remove
    1. Pull out the hood rear seal, then remove the master cylinder maintenance lid (A).
    2. Remove the reservoir cap (B).
    3. Remove the brake fluid from the master cylinder reservoir with a syringe.

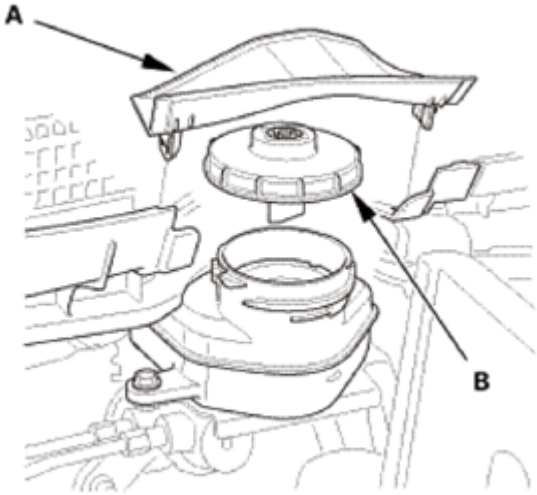

Fig. 75: Identifying Master Cylinder Maintenance Lid And Reservoir Cap
Courtesy of AMERICAN HONDA MOTOR CO., INC.

4. Front Brake Caliper Body

NOTE: **Do not spill brake fluid on the vehicle; it may damage the paint. If brake fluid does contact the paint, wash it off immediately with water.**

1. Remove the banjo bolt (A), and disconnect the brake hose (B) from the caliper body.

GETtheMANUALS.org

2. Remove the flange bolts (C) while holding respective caliper pins (D) with a wrench.
3. Remove the caliper body (E).

NOTE: **Be careful when removing the caliper body or the spring could pop out of position.**

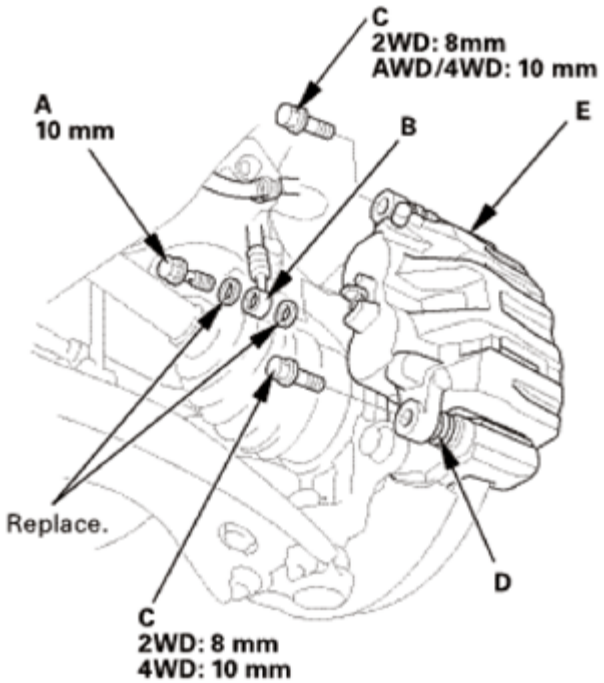

Fig. 76: Identifying Front Brake Caliper Body Components
Courtesy of AMERICAN HONDA MOTOR CO., INC.

5. Front Brake Pad
    1. Remove the pad return springs (A) while holding the brake pads.

GETtheMANUALS.org

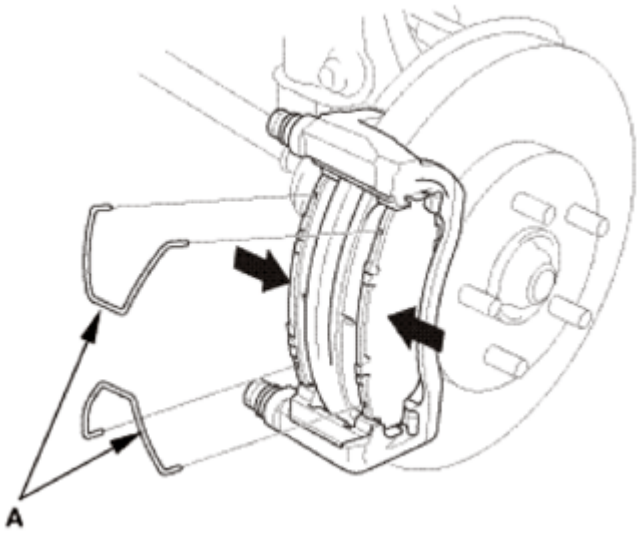

Fig. 77: Holding Brake Pads
Courtesy of AMERICAN HONDA MOTOR CO., INC.

2. Remove the pad shims (A) and the brake pads (B).

2WD

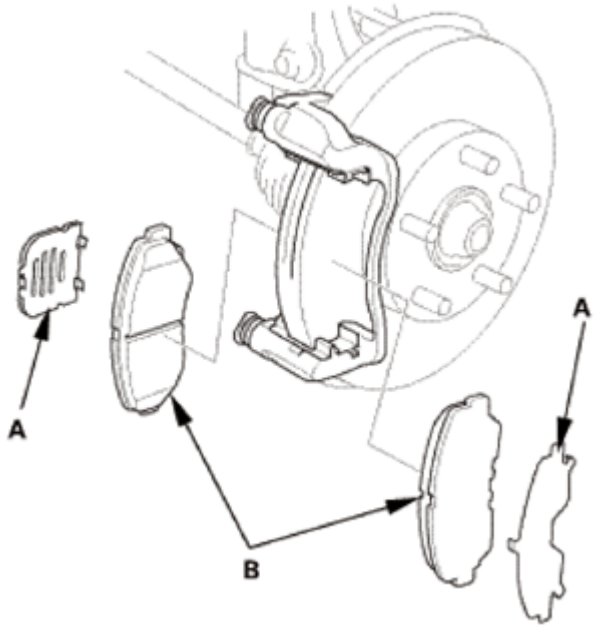

Fig. 78: Identifying Pad Shims And Brake Pads (2WD)
Courtesy of AMERICAN HONDA MOTOR CO., INC.

AWD/4WD

GETtheMANUALS.org

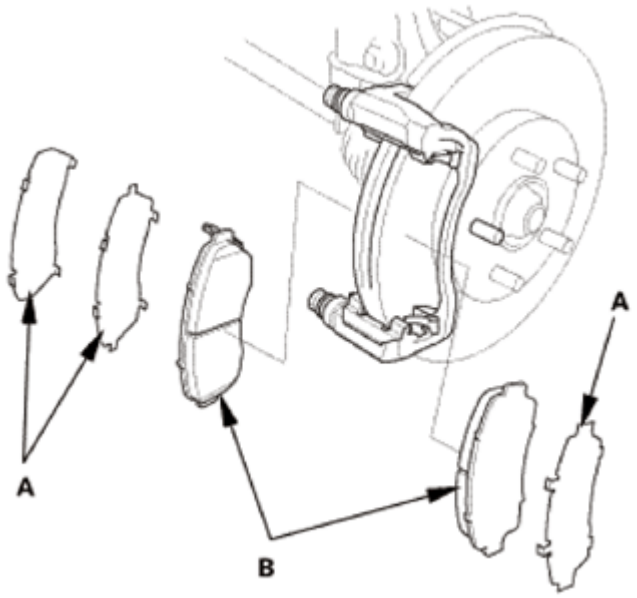

Fig. 79: Identifying Pad Shims And Brake Pads (AWD/4WD)
Courtesy of AMERICAN HONDA MOTOR CO., INC.

6. Front Brake Caliper Pin and Boot
    1. Remove the caliper pins (A).

    NOTE: **The upper and lower caliper pins are different. During installation, make sure the caliper pins are in the proper positions.**

    2. Remove the pin boots (B).

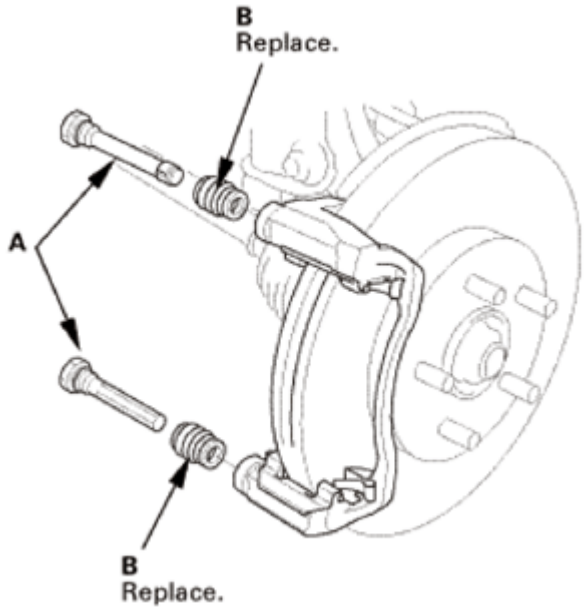

GETtheMANUALS.org

Fig. 80: Identifying Caliper Pins And Pin Boots
Courtesy of AMERICAN HONDA MOTOR CO., INC.

INSTALLATION

CAUTION: Frequent inhalation of brake pad dust, regardless of material composition, could be hazardous to your health.

- **Avoid breathing dust particles.**
- **Never use an air hose or brush to clean brake assemblies. Use an OSHA-approved vacuum cleaner.**

1. Front Brake Caliper Pin and Boot
    1. Apply a thin coat of Honda caliper grease (P/N 08C30-B0224M) to the caliper pins (A) and the new pin boots (B).
    2. Install the pin boots.
    3. Install the caliper pins.

NOTE:

- **Make sure that the caliper pins are installed correctly. The upper caliper pin and the lower caliper pin are different. If these caliper pins are installed in the wrong location, it will cause vibration, uneven or rapid brake pad wear, and possibly uneven tire wear.**
- **Make sure that the pin boots are properly positioned into the grooves (C) of the caliper pin and the grooves (D) of the caliper body.**
- **Remove air from the inside of the pin boots by gently squeezing them.**

GETtheMANUALS.org

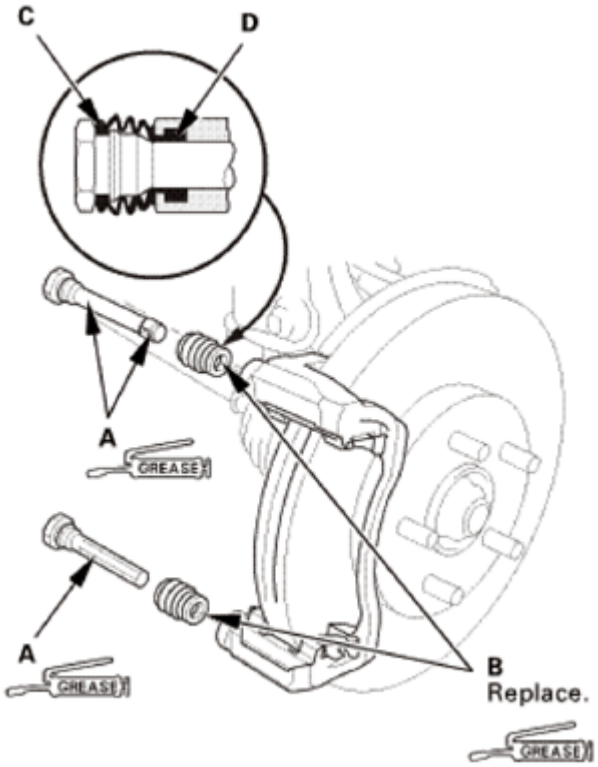

Fig. 81: Identifying Thin Coat Of Honda Caliper Grease Applying Area On Caliper Pins And Pin Boots
Courtesy of AMERICAN HONDA MOTOR CO., INC.

2. Front Brake Pad

2WD

GETtheMANUALS.org

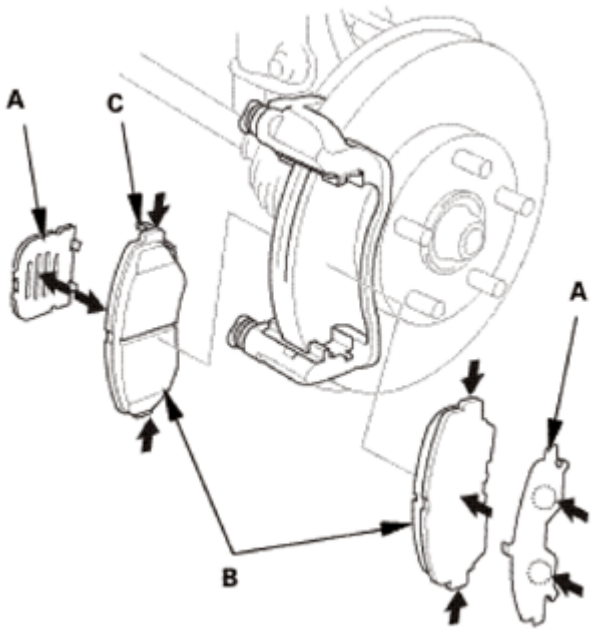

Fig. 82: Locating Thin Coat Of Assembly Paste Applying Area On Shim Pad Side And Back Of Brake Pads (2WD)
Courtesy of AMERICAN HONDA MOTOR CO., INC.

AWD/4WD

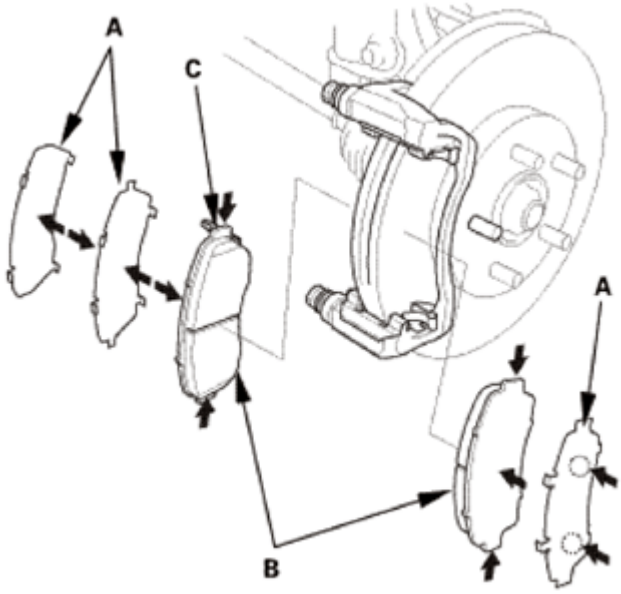

Fig. 83: Locating Thin Coat Of Assembly Paste Applying Area On Shim Pad Side And Back Of Brake Pads (AWD/4WD)
Courtesy of AMERICAN HONDA MOTOR CO., INC.

1. Apply a thin coat of M-77 assembly paste (P/N 08798-9010) to the pad side of the shims (A), the

GETtheMANUALS.org

back of the brake pads (B), and the other areas indicated by the arrows.

NOTE: **Wipe off the excess assembly paste from the pad shims and brake pads friction material.**

2. Install the brake pads and pad the shims.

NOTE: **Install the brake pad with the wear indicator (C) on the upper inside position.**

3. Install the pad return springs (A) while holding the brake pads

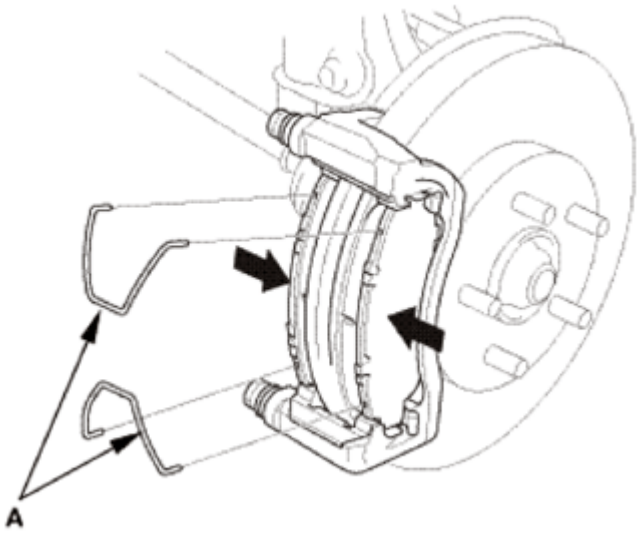

Fig. 84: Installing Brake Pads
Courtesy of AMERICAN HONDA MOTOR CO., INC.

3. Front Brake Caliper Body
    1. Apply a thin coat of M-77 assembly paste (P/N 08798-9010) to the pistons (A).
    2. Install the caliper body (B).
    3. Install the flange bolts (C) while holding respective caliper pins (D) with a wrench.
    4. Connect the brake hose (E) to the caliper body with the banjo bolt (F) and new sealing washers (G).

GETtheMANUALS.org

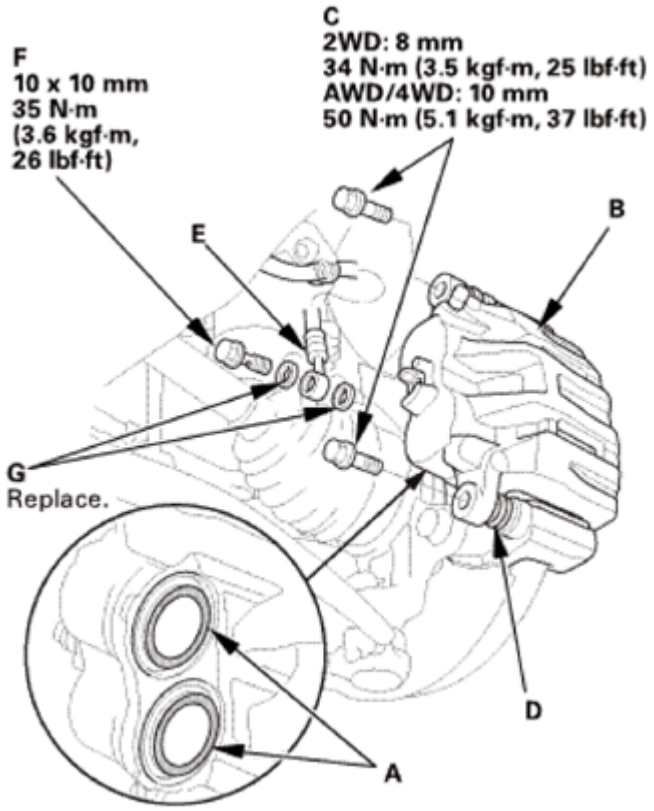

Fig. 85: Identifying Front Brake Caliper Body And Related Components With Torque Specifications
Courtesy of AMERICAN HONDA MOTOR CO., INC.

4. Brake System - Bleeding

NOTE: **Do not spill brake fluid on the vehicle; it may damage the paint. If brake fluid does contact the paint, wash it off immediately with water.**

NOTE:

- **Do not reuse the drained fluid. Use only new Honda DOT 3 Brake Fluid from an unopened container. Using a non-Honda brake fluid can cause corrosion and shorten the life of the system.**
- **Make sure no dirt or other foreign matter gets in the brake fluid.**
- **The reservoir connected to the master cylinder must be at the MAX (upper) level mark at the start of the bleeding procedure and checked after bleeding each wheel. Add fluid as required.**
- **There are three different methods used for bleeding brake systems. The method shown here is the preferred manual method for removing the air from the system. For pressure or vacuum bleeding, refer to tool manufacturer's instructions included with the tool.**

GETtheMANUALS.org

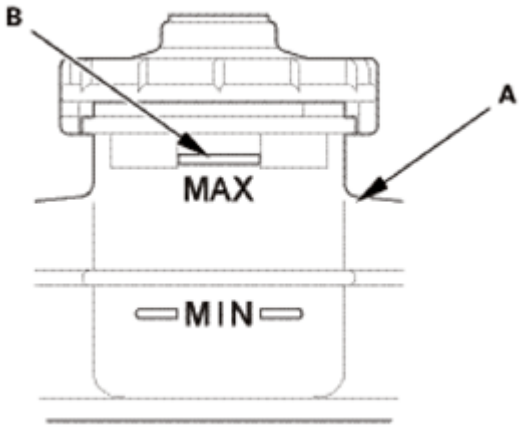

Fig. 86: Identifying MAX (Upper) Level Line On Reservoir Tank
Courtesy of AMERICAN HONDA MOTOR CO., INC.

1. Make sure the brake fluid level in the reservoir tank (A) is at the MAX (upper) level line (B).
2. Start the bleeding at the driver's side of the front brake system.

NOTE: Bleed the calipers in the sequence shown.

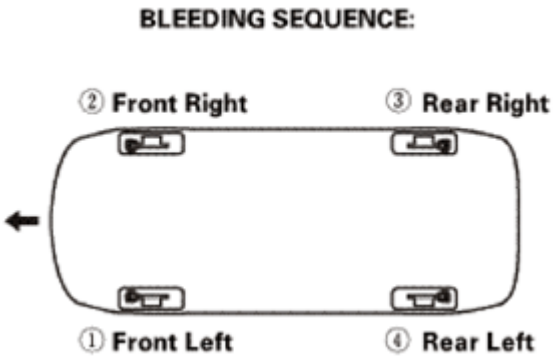

Fig. 87: Identifying Bleeding Sequence Of Front Brake System
Courtesy of AMERICAN HONDA MOTOR CO., INC.

3. Attach a length of clear drain tube (A) to the bleed screw (B).
4. Submerge the other end of the drain tube into a clear plastic catch bottle of brake fluid (C).
5. Have an assistant slowly pump the brake pedal several times then apply steady continuous pressure.
6. Loosen the bleed screw slowly to bleed the fluid into the plastic catch bottle. The brake pedal will travel toward the floor as the fluid is bled from the system.
7. When the brake pedal reaches the floor, have the assistant hold the pedal in that position, then tighten the bleed screw. The brake pedal can now be released.
8. Check and refill the master cylinder reservoir tank to the MAX (upper) level line. Be sure to reinstall the master cylinder reservoir cap.
9. Repeat steps 5 thru 8 until the brake fluid in the clear drain tube appears fresh and there are no air bubbles in the fluid.

GETtheMANUALS.org

Front

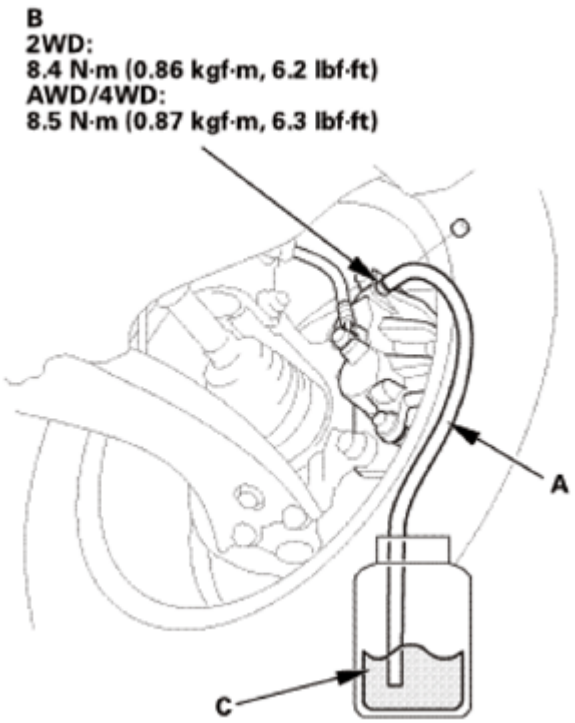

Fig. 88: Bleeding Brake Fluid To Plastic Catch Bottle Using Hose (Front)
Courtesy of AMERICAN HONDA MOTOR CO., INC.

Rear

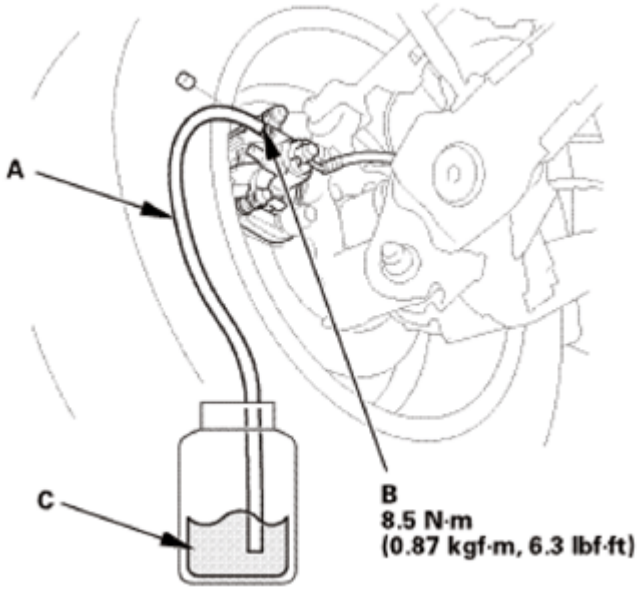

Fig. 89: Bleeding Brake Fluid To Plastic Catch Bottle Using Hose (Rear)
Courtesy of AMERICAN HONDA MOTOR CO., INC.

GETtheMANUALS.org

10. Repeat this procedure for each brake in the bleeding sequence.

5. Front Wheel
    1. Install the front wheel.

NOTE: Before installing the wheel, clean the mating surfaces between the brake disc and the inside of the wheel.

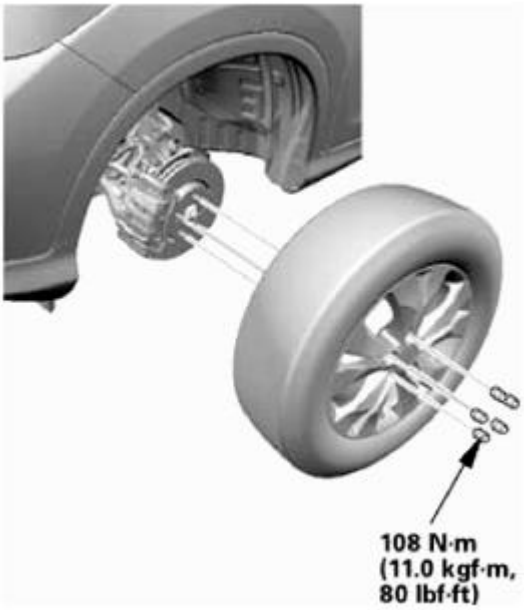

Fig. 90: Identifying Front Wheel And Mounting Bolts With Torque Specifications
Courtesy of AMERICAN HONDA MOTOR CO., INC.

FRONT BRAKE DISC INSPECTION

REMOVAL

CAUTION: Frequent inhalation of brake pad dust, regardless of material composition, could be hazardous to your health.

- **Avoid breathing dust particles.**
- **Never use an air hose or brush to clean brake assemblies. Use an OSHA-approved vacuum cleaner.**

1. Vehicle Lift
    1. Raise the vehicle on a lift, and make sure it is securely supported.
2. Front Wheel - Both Side
    1. Remove both front wheels.

GETtheMANUALS.org

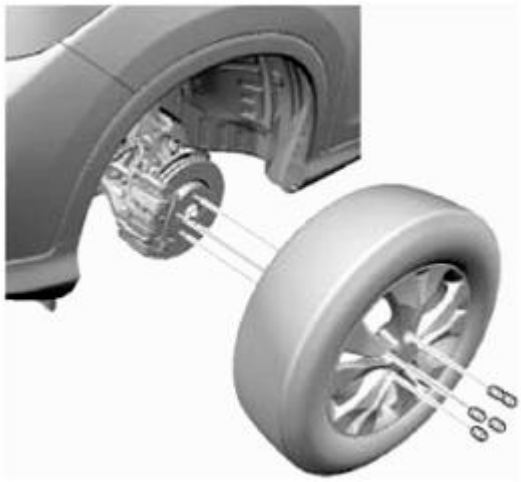

Fig. 91: Identifying Front Wheel And Mounting Bolts
Courtesy of AMERICAN HONDA MOTOR CO., INC.

3. Front Brake Pad
    1. Remove the flange bolt (A) while holding caliper pins (B) with a wrench
    2. Pivot the caliper body (C) up out of the way.

NOTE:

- **Be careful when pivoting the caliper body up or the spring could pop out of position.**
- **Check the hose and pin boots for damage and deterioration.**

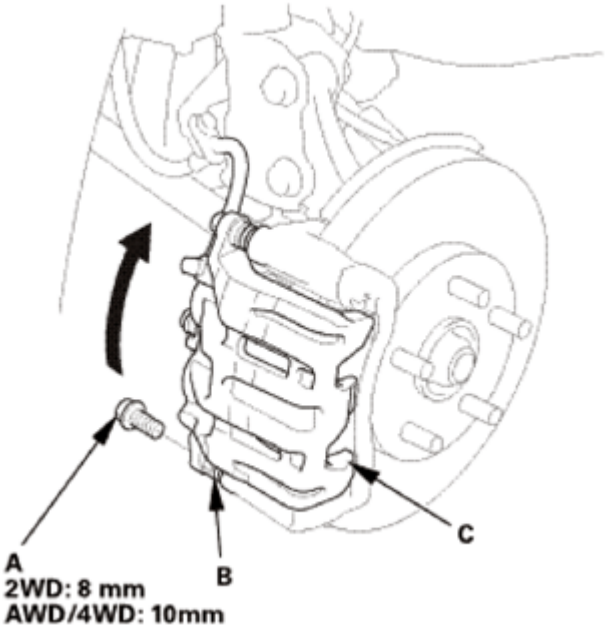

Fig. 92: Pivoting Caliper Body
Courtesy of AMERICAN HONDA MOTOR CO., INC.

GETtheMANUALS.org

3. Remove the pad return springs (A).

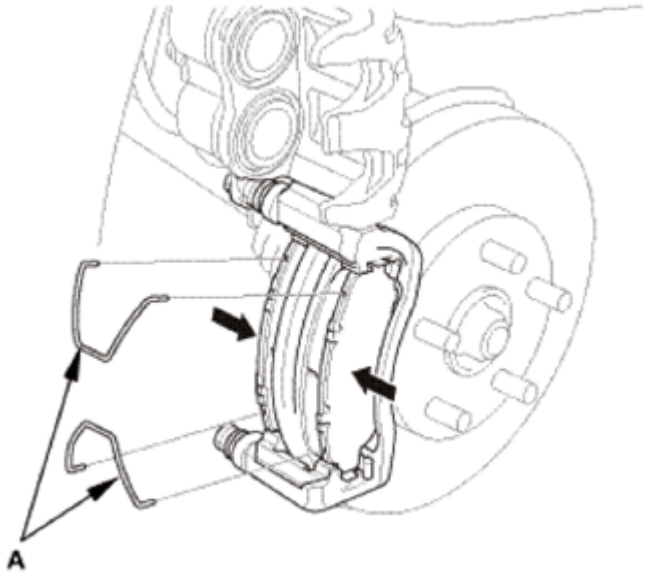

Fig. 93: Removing Pad Return Springs
Courtesy of AMERICAN HONDA MOTOR CO., INC.

4. Remove the pad shims (A) and the brake pads (B).

2WD

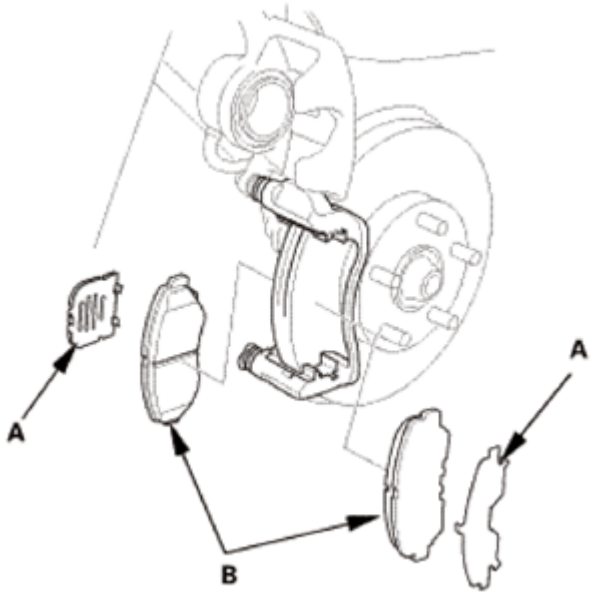

Fig. 94: Identifying Pad Shims And Brake Pads (2WD)
Courtesy of AMERICAN HONDA MOTOR CO., INC.

AWD/4WD

GETtheMANUALS.org

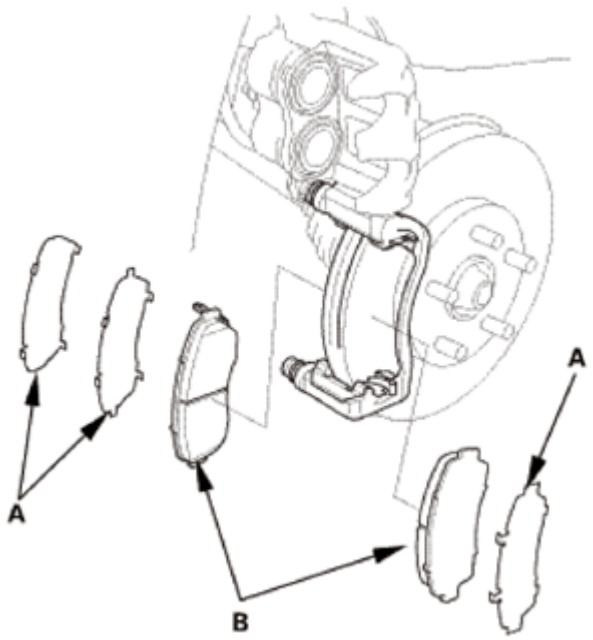

Fig. 95: Identifying Pad Shims And Brake Pads (AWD/4WD)
Courtesy of AMERICAN HONDA MOTOR CO., INC.

INSPECTION

1. Front Brake Disc Thickness and Parallelism - Inspection
    1. Using a micrometer (A), measure the brake disc thickness at eight points, about 45 ° apart and 10 mm (0.39 in) in from the outer edge of the brake disc.

       Replace the brake disc if the smallest measurement is less than the maximum refinishing limit.

       Brake disc thickness:

       Standard:

       2WD: 25.0 mm (0.984 in)

       AWD/4WD: 28.0 mm (1.102 in)

       Maximum refinishing limit:

       2WD: 23.0 mm (0.906 in)

       AWD/4WD: 26.0 mm (1.024 in)

       Brake disc parallelism*: 0.015 mm (0.00059 in) max .

       *: This is the maximum allowable difference between the thickness measurements.

GETtheMANUALS.org

2. If the brake disc is beyond the service limit for parallelism, refinish the brake disc with a Honda-approved commercially available on-car brake lathe.

NOTE: If the brake disc is beyond the service limit for refinishing, replace it.

3. Inspect the brake disc runout.

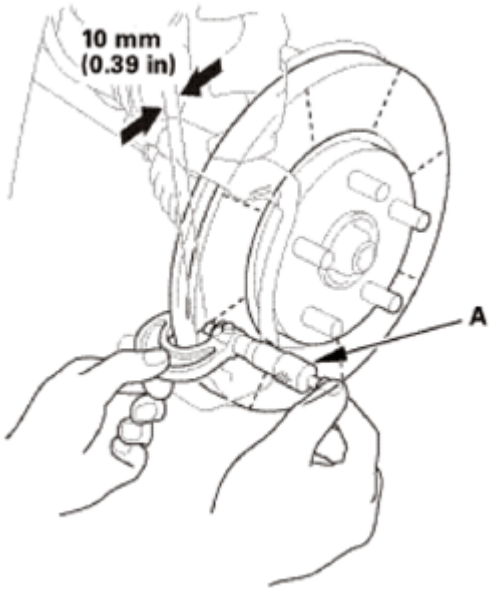

Fig. 96: Measuring Brake Disc Runout Using Micrometer
Courtesy of AMERICAN HONDA MOTOR CO., INC.

2. Front Brake Disc Runout - Inspection
    1. Inspect the brake disc to wheel surface for damage and cracks.
    2. Clean the brake disc thoroughly, and remove all rust.
    3. Install suitable flat washers (A) and the wheel nuts (B).
    4. Tighten the wheel nuts to the specified torque to hold the brake disc securely against the hub.
    5. Set up the dial gauge (C) as shown.
    6. Measure the runout at 10 mm (0.39 in) from the outer edge of the brake disc.

    Brake disc runout:

    Service limit: 0.04 mm (0.0016 in)

    7. If the brake disc is beyond the service limit, refinish the brake disc with a Honda-approved commercially available on-car brake lathe.

    Maximum refinishing limit:

    2WD: 23.0 mm (0.906 in)

GETtheMANUALS.org

AWD/4WD: 26.0 mm (1.024 in)

NOTE:

- **If the brake disc is beyond the service limit for refinishing, replace it.**
- **If the brake disc is replaced with a new one, check the new disc for runout. If the new disc is out of specification, refinish the disc.**

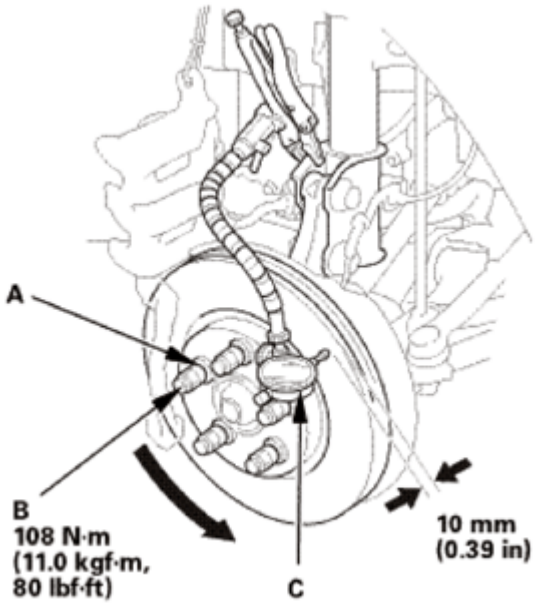

Fig. 97: Measuring Brake Disc Outer Edge Runout Using Dial Gauge
Courtesy of AMERICAN HONDA MOTOR CO., INC.

INSTALLATION

CAUTION: Frequent inhalation of brake pad dust, regardless of material composition, could be hazardous to your health.

- **Avoid breathing dust particles.**
- **Never use an air hose or brush to clean brake assemblies. Use an OSHA-approved vacuum cleaner.**

1. Front Brake Pad

2WD

GETtheMANUALS.org

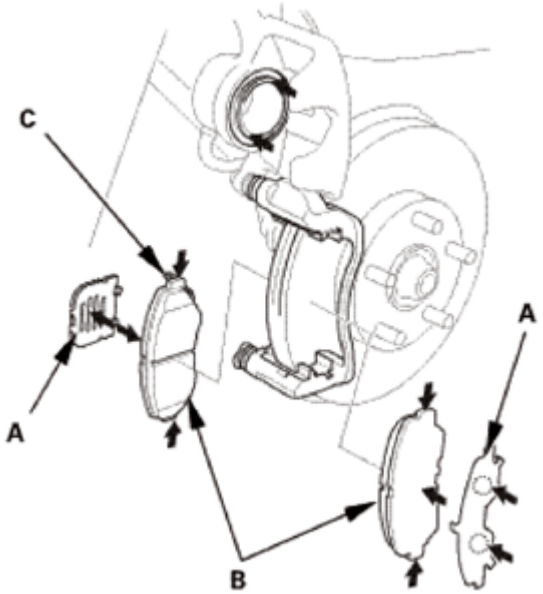

Fig. 98: Locating Thin Coat Of Assembly Paste Applying Area On Shim Pad Side And Back Of Brake Pads (2WD)
Courtesy of AMERICAN HONDA MOTOR CO., INC.

AWD/4WD

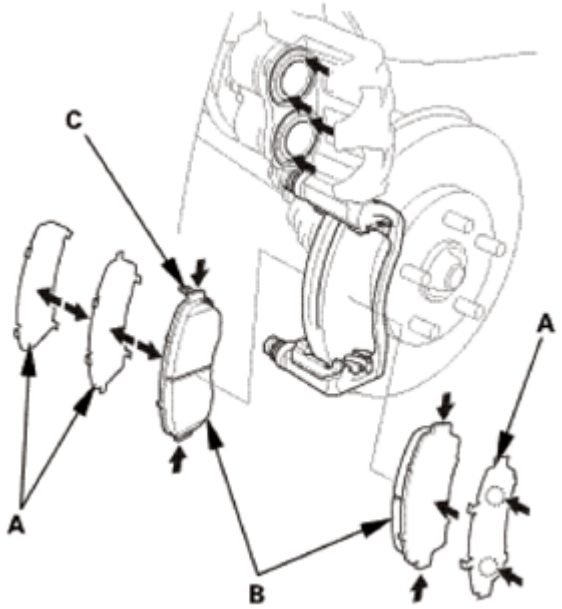

Fig. 99: Locating Thin Coat Of Assembly Paste Applying Area On Shim Pad Side And Back Of Brake Pads (AWD/4WD)
Courtesy of AMERICAN HONDA MOTOR CO., INC.

1. Apply a thin coat of M-77 assembly paste (P/N 08798-9010) to the pad side of the shims (A), the back of the brake pads (B), and the other areas indicated by the arrows.

GETtheMANUALS.org

NOTE: **Wipe off the excess assembly paste from the pad shims and brake pads friction material.**

2. Install the brake pads and pad shims.

NOTE: **Install the brake pad with the wear indicator (C) on the upper inside position.**

3. Install the pad return springs (A).

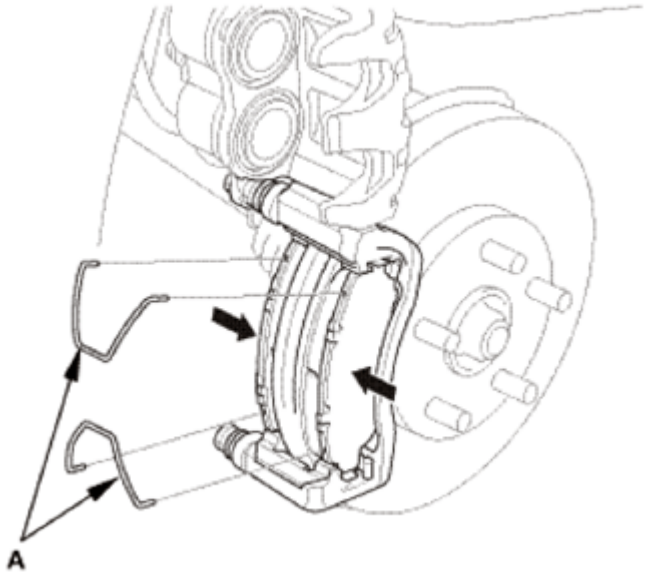

Fig. 100: Installing Pad Return Springs
Courtesy of AMERICAN HONDA MOTOR CO., INC.

4. Pivot the caliper body (A) down into position.
5. Install the flange bolt (B).
6. Press the brake pedal several times to make sure the brakes work.

NOTE: **Engagement may require a greater pedal stroke immediately after the brake pads have been replaced as a set. Several applications of the brake pedal will restore the normal pedal stroke.**

GETtheMANUALS.org

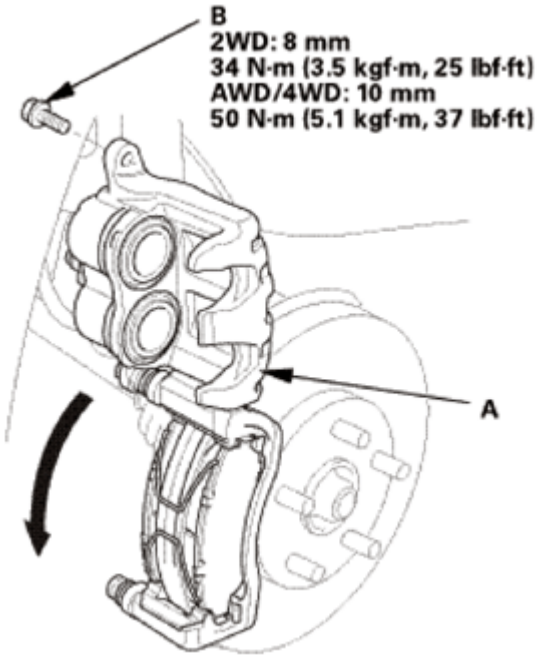

Fig. 101: Pivoting Caliper Body
Courtesy of AMERICAN HONDA MOTOR CO., INC.

2. Front Wheel - Both Side
    1. Install both front wheels.

NOTE: **Before installing the wheel, clean the mating surfaces between the brake disc and the inside of the wheel.**

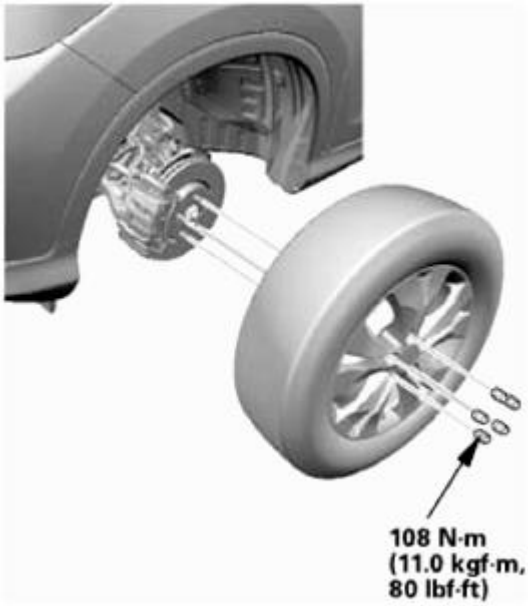

Fig. 102: Identifying Front Wheel And Mounting Bolts With Torque Specification

GETtheMANUALS.org

Courtesy of AMERICAN HONDA MOTOR CO., INC.

FRONT BRAKE DISC REMOVAL AND INSTALLATION

REMOVAL

NOTE: Keep grease away from the brake disc and the brake pads.

1. Vehicle Lift
    1. Raise the vehicle on a lift, and make sure it is securely supported.
2. Front Wheel
    1. Remove the front wheel.

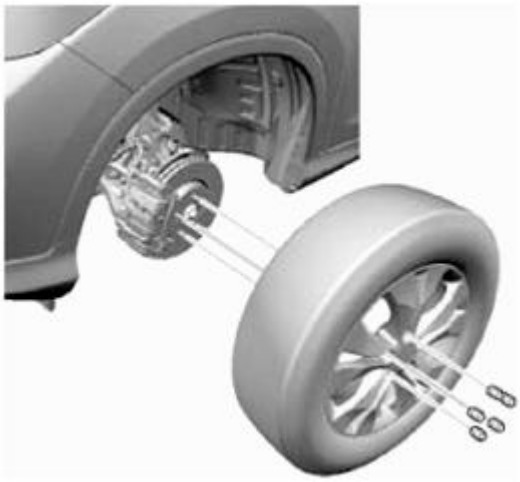

Fig. 103: Identifying Front Wheel And Mounting Bolts
Courtesy of AMERICAN HONDA MOTOR CO., INC.

3. Front Brake Caliper - Detach
    1. Remove the brake hose mounting bolt (A).
    2. Remove the caliper assembly (B).

NOTE:

- **To prevent damage to the caliper assembly or brake hose, use a short piece of wire to hang the caliper assembly from the undercarriage.**
- **Do not twist the brake hose excessively.**

GETtheMANUALS.org

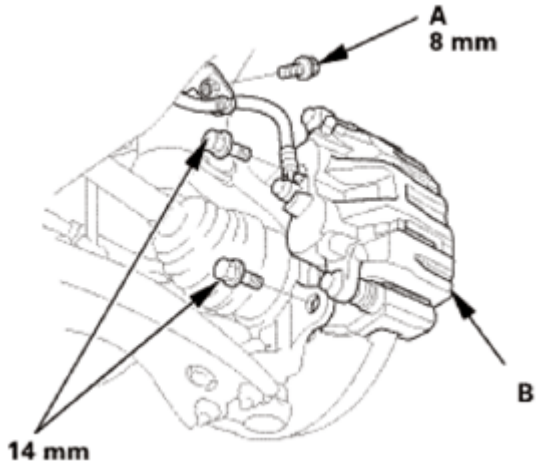

Fig. 104: Identifying Caliper Assembly And Brake Hose Mounting Bolt With Torque Specifications
Courtesy of AMERICAN HONDA MOTOR CO., INC.

4. Front Brake Disc
    1. Remove the brake disc (A).

NOTE: **If the brake disc is stuck to the front hub, thread two 8 x 1.25 mm bolts (B) into the brake disc to push it away from the front hub. Turn each bolt 90 degrees at a time to prevent the brake disc from binding.**

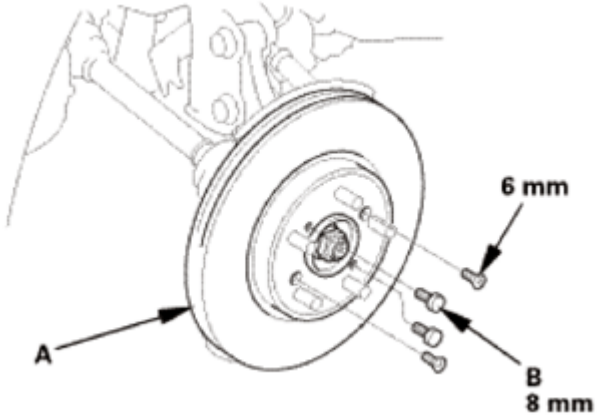

Fig. 105: Identifying Brake Disc And Mounting Bolts
Courtesy of AMERICAN HONDA MOTOR CO., INC.

INSTALLATION

NOTE: **Keep grease away from the brake disc and the brake pads.**

1. Front Brake Disc
    1. Install the brake disc (A).

GETtheMANUALS.org

NOTE: **Before installing the brake disc, clean the mating surfaces between the front hub and the inside of the brake disc.**

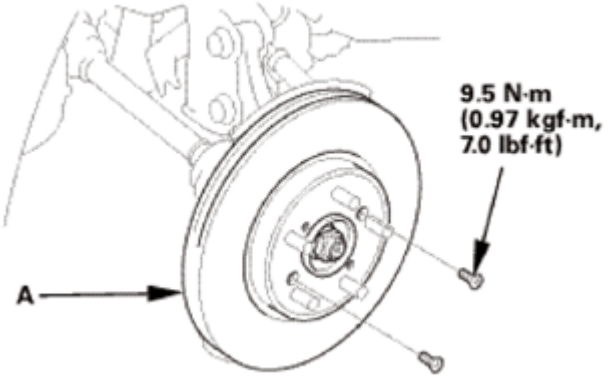

Fig. 106: Identifying Brake Disc And Mounting Bolt With Torque Specification
Courtesy of AMERICAN HONDA MOTOR CO., INC.

2. Front Brake Disc Runout - Inspection
    1. Inspect the brake disc to wheel surface for damage and cracks.
    2. Clean the brake disc thoroughly, and remove all rust.
    3. Install suitable flat washers (A) and the wheel nuts (B).
    4. Tighten the wheel nuts to the specified torque to hold the brake disc securely against the hub.
    5. Set up the dial gauge (C) as shown.
    6. Measure the runout at 10 mm (0.39 in) from the outer edge of the brake disc.

    Brake disc runout:

    Service limit: 0.04 mm (0.0016 in)

    7. If the brake disc is beyond the service limit, refinish the brake disc with a Honda-approved commercially available on-car brake lathe.

    Maximum refinishing limit:

    2WD: 23.0 mm (0.906 in)

    AWD/4WD: 26.0 mm (1.024 in)

NOTE:
- **If the brake disc is beyond the service limit for refinishing, replace it.**
- **If the brake disc is replaced with a new one, check the new disc for runout. If the new disc is out of specification, refinish the disc.**

GETtheMANUALS.org

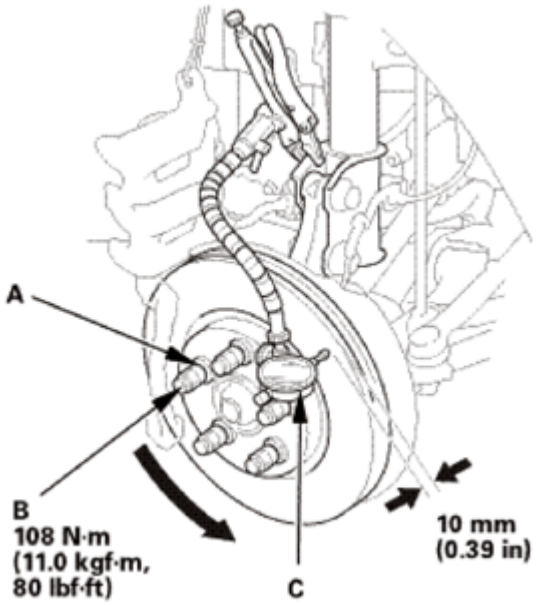

Fig. 107: Measuring Brake Disc Outer Edge Runout Using Dial Gauge
Courtesy of AMERICAN HONDA MOTOR CO., INC.

3. Front Brake Caliper - Reattach
    1. Install the caliper assembly (A).
    2. Install the brake hose mounting bolt (B).

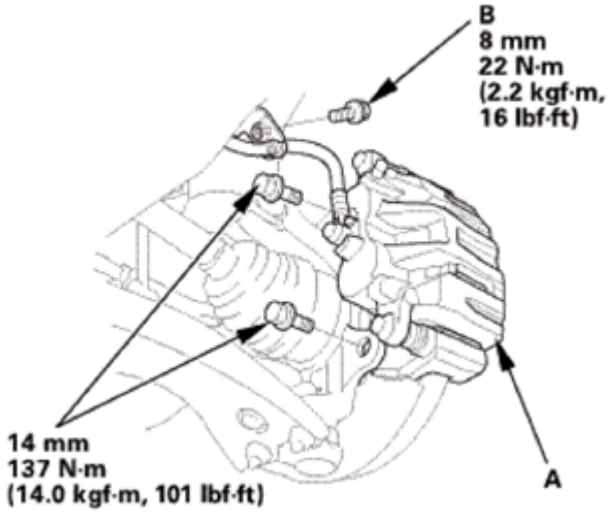

Fig. 108: Identifying Caliper Assembly And Brake Hose Mounting Bolt With Torque Specification
Courtesy of AMERICAN HONDA MOTOR CO., INC.

4. Front Wheel
    1. Install the front wheel.

GETtheMANUALS.org

NOTE: **Before installing the wheel, clean the mating surfaces between the brake disc and the inside of the wheel.**

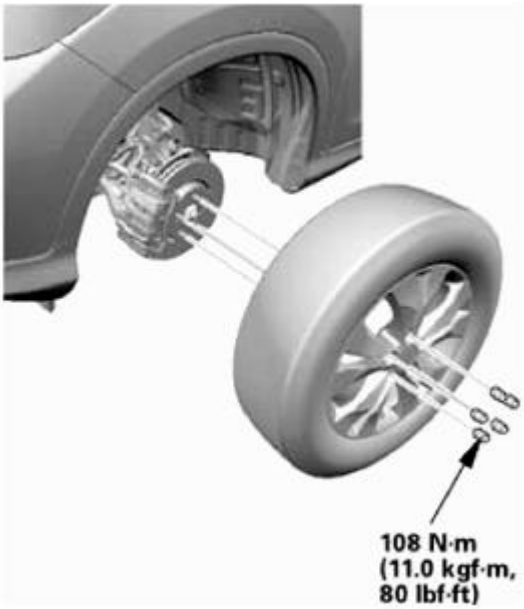

Fig. 109: Identifying Front Wheel And Mounting Bolts With Torque Specifications
Courtesy of AMERICAN HONDA MOTOR CO., INC.

FRONT BRAKE HOSE REMOVAL AND INSTALLATION

REMOVAL

1. Vehicle Lift
    1. Raise the vehicle on a lift, and make sure it is securely supported.
2. Front Wheel
    1. Remove the front wheel.

GETtheMANUALS.org

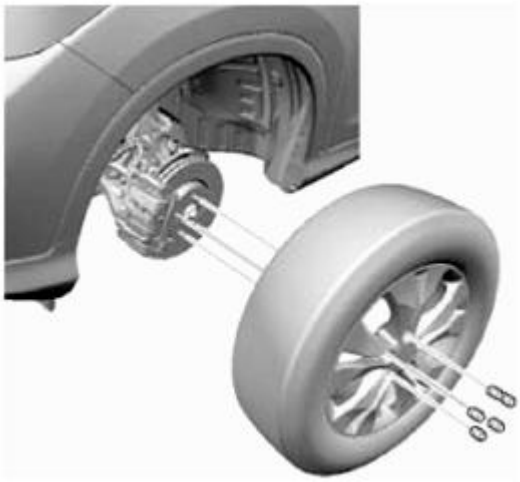

Fig. 110: Identifying Front Wheel And Mounting Bolts
Courtesy of AMERICAN HONDA MOTOR CO., INC.

3. Brake Fluid - Remove
    1. Pull out the hood rear seal, then remove the master cylinder maintenance lid (A).
    2. Remove the reservoir cap (B).
    3. Remove the brake fluid from the master cylinder reservoir with a syringe.

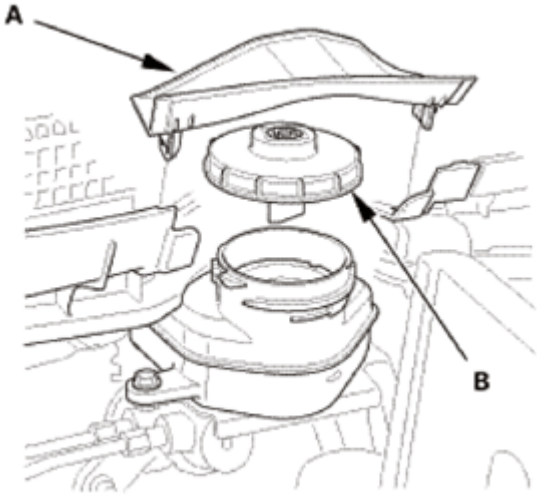

Fig. 111: Identifying Master Cylinder Maintenance Lid And Reservoir Cap
Courtesy of AMERICAN HONDA MOTOR CO., INC.

4. Front Brake Hose

NOTE: **Do not spill brake fluid on the vehicle; it may damage the paint. If brake fluid gets on the paint, wash it off immediately with water.**

NOTE: **After removal, plug the ends of the hoses and the joints to prevent spilling**

GETtheMANUALS.org

brake fluid.

1. Disconnect the brake line (A) from the brake hose (B).
2. Remove the brake hose clip (C).

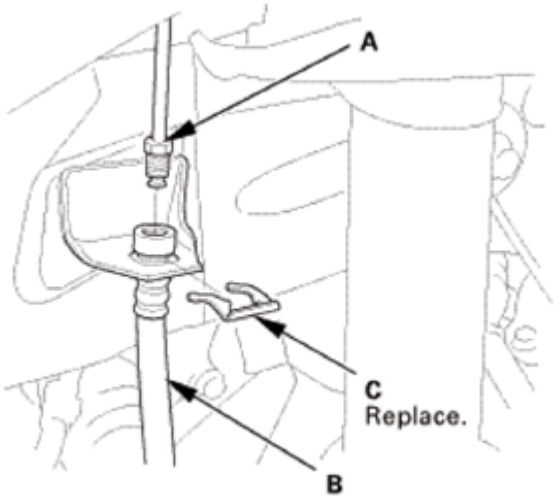

Fig. 112: Identifying Brake Line, Brake Hose And Clip
Courtesy of AMERICAN HONDA MOTOR CO., INC.

3. Remove the banjo bolt (A), and disconnect the brake hose (B) from the caliper body.
4. Remove the brake hose mounting bolt (C).
5. Remove the brake hose.

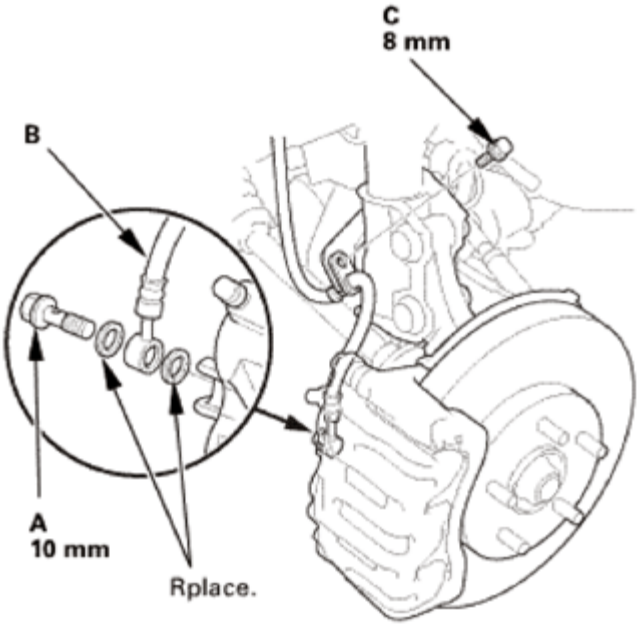

Fig. 113: Identifying Brake Hose, Mounting Bolt And Banjo Bolt

GETtheMANUALS.org

Courtesy of AMERICAN HONDA MOTOR CO., INC.

INSTALLATION

1. Front Brake Hose

NOTE: **Do not spill brake fluid on the vehicle; it may damage the paint. If brake fluid gets on the paint, wash it off immediately with water.**

NOTE: **Check that all parts are free of dirt and other foreign particles.**

1. Install the brake hose (A) with the mounting bolt (B).
2. Connect the brake hose to the caliper body with the banjo bolt (C) and new sealing washers (D).

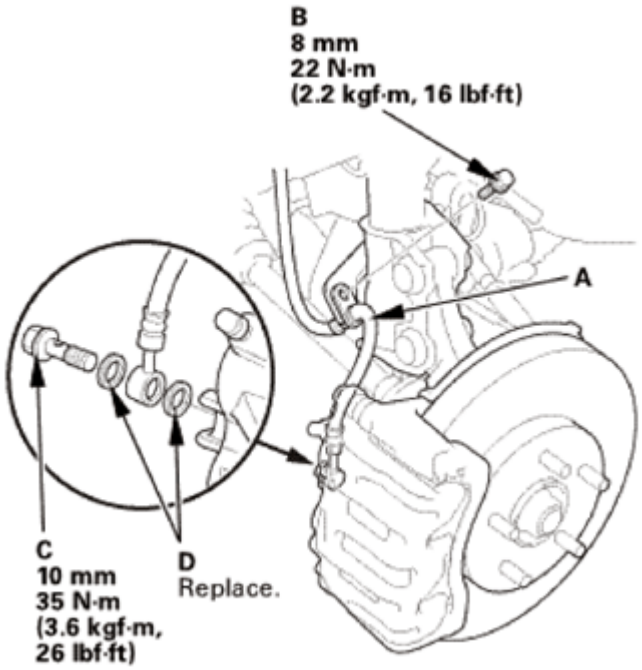

Fig. 114: Identifying Brake Line, Brake Hose, Washer, Clip And Banjo Bolt
Courtesy of AMERICAN HONDA MOTOR CO., INC.

3. Connect the brake line (A) to the brake hose (B).
4. Install the brake hose clip (C).

GETtheMANUALS.org

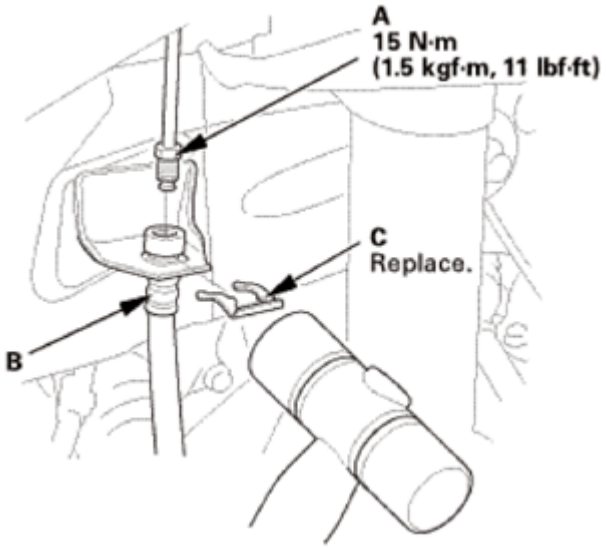

Fig. 115: Installing Brake Hose Clip Using Hammer
Courtesy of AMERICAN HONDA MOTOR CO., INC.

2. Brake System - Bleeding

NOTE: **Do not spill brake fluid on the vehicle; it may damage the paint. If brake fluid does contact the paint, wash it off immediately with water.**

NOTE:

- **Do not reuse the drained fluid. Use only new Honda DOT 3 Brake Fluid from an unopened container. Using a non-Honda brake fluid can cause corrosion and shorten the life of the system.**
- **Make sure no dirt or other foreign matter gets in the brake fluid.**
- **The reservoir connected to the master cylinder must be at the MAX (upper) level mark at the start of the bleeding procedure and checked after bleeding each wheel. Add fluid as required.**
- **There are three different methods used for bleeding brake systems. The method shown here is the preferred manual method for removing the air from the system. For pressure or vacuum bleeding, refer to tool manufacturer's instructions included with the tool.**

1. Make sure the brake fluid level in the reservoir tank (A) is at the MAX (upper) level line (B).

GETtheMANUALS.org

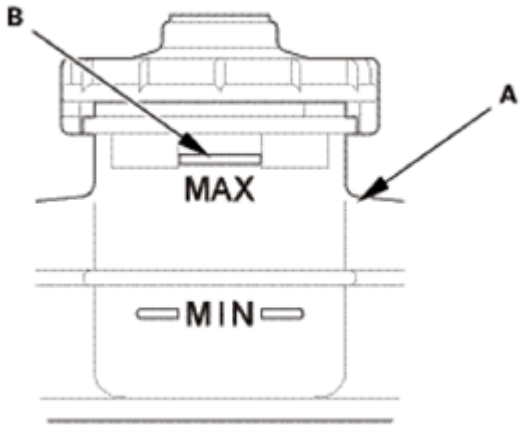

Fig. 116: Identifying MAX (Upper) Level Line On Reservoir Tank
Courtesy of AMERICAN HONDA MOTOR CO., INC.

2. Start the bleeding at the driver's side of the front brake system.

NOTE: Bleed the calipers in the sequence shown.

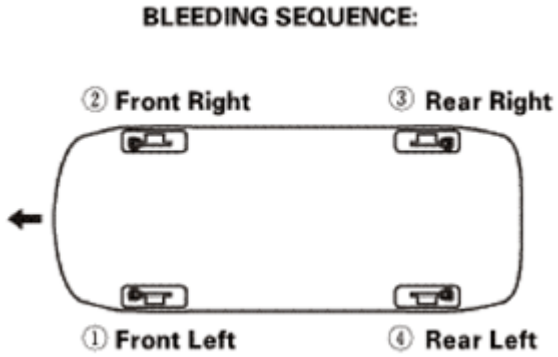

Fig. 117: Identifying Bleeding Sequence Of Front Brake System
Courtesy of AMERICAN HONDA MOTOR CO., INC.

3. Attach a length of clear drain tube (A) to the bleed screw (B).
4. Submerge the other end of the drain tube into a clear plastic catch bottle of brake fluid (C).
5. Have an assistant slowly pump the brake pedal several times then apply steady continuous pressure.
6. Loosen the bleed screw slowly to bleed the fluid into the plastic catch bottle. The brake pedal will travel toward the floor as the fluid is bled from the system.
7. When the brake pedal reaches the floor, have the assistant hold the pedal in that position, then tighten the bleed screw. The brake pedal can now be released.
8. Check and refill the master cylinder reservoir tank to the MAX (upper) level line. Be sure to reinstall the master cylinder reservoir cap.
9. Repeat steps 5 thru 8 until the brake fluid in the clear drain tube appears fresh and there are no air bubbles in the fluid.

GETtheMANUALS.org

Front

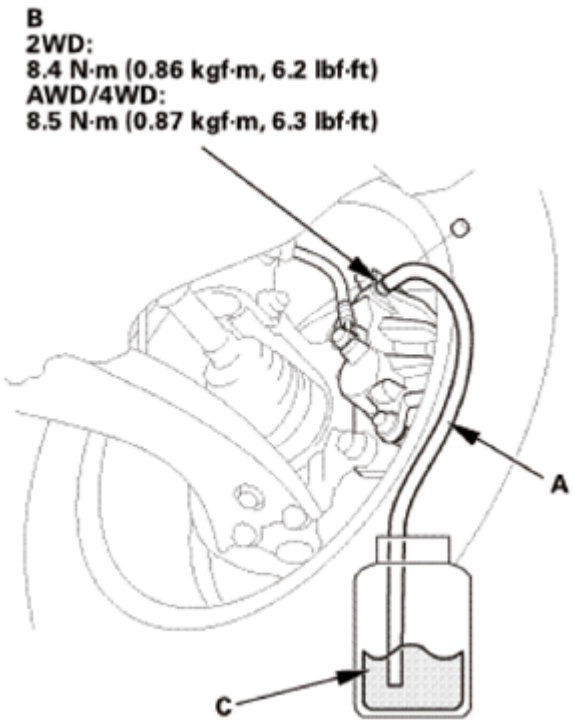

Fig. 118: Bleeding Brake Fluid To Plastic Catch Bottle Using Hose (Front)
Courtesy of AMERICAN HONDA MOTOR CO., INC.

Rear

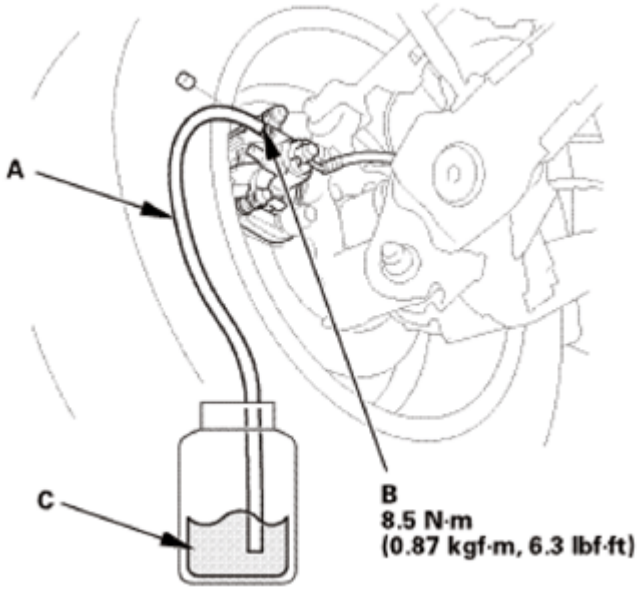

Fig. 119: Bleeding Brake Fluid To Plastic Catch Bottle Using Hose (Rear)
Courtesy of AMERICAN HONDA MOTOR CO., INC.

GETtheMANUALS.org

10. Repeat this procedure for each brake in the bleeding sequence.

3. Brake Hose After Install - Check
    1. Do the following checks:
        - Check the brake hose and line joint for leaks, and tighten if necessary.
        - Check the brake hoses for interference and twisting.
4. Front Wheel
    1. Install the front wheel.

NOTE: **Before installing the wheel, clean the mating surfaces between the brake disc and the inside of the wheel.**

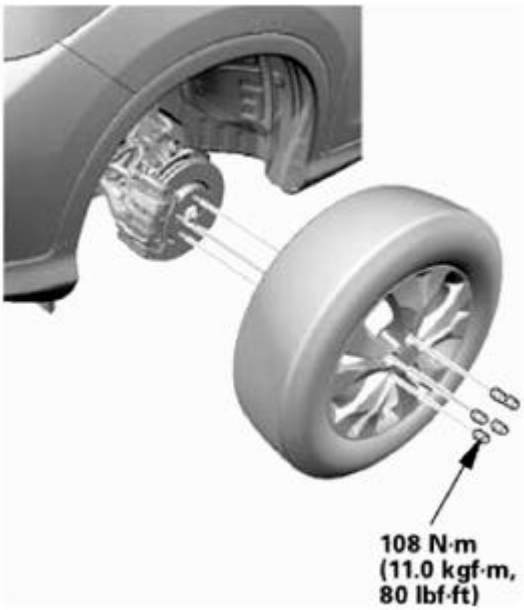

Fig. 120: Identifying Front Wheel And Mounting Bolts With Torque Specifications
Courtesy of AMERICAN HONDA MOTOR CO., INC.

FRONT BRAKE PAD INSPECTION

REMOVAL

1. Vehicle Lift
    1. Raise the vehicle on a lift, and make sure it is securely supported.
2. Front Wheel - Both Side
    1. Remove both front wheels.

GETtheMANUALS.org

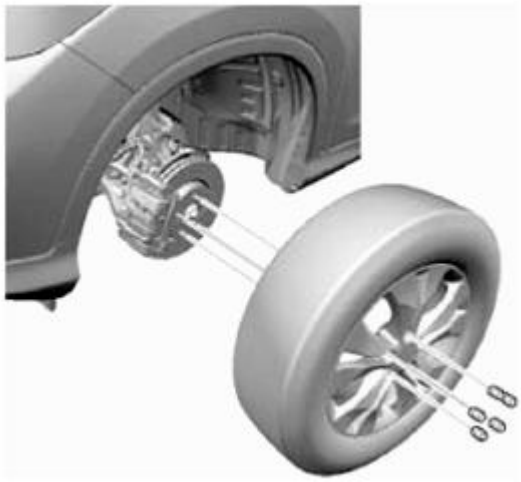

Fig. 121: Identifying Front Wheel And Mounting Bolts
Courtesy of AMERICAN HONDA MOTOR CO., INC.

INSPECTION

1. Front Brake Pad - Inspection

2WD: Inner pad

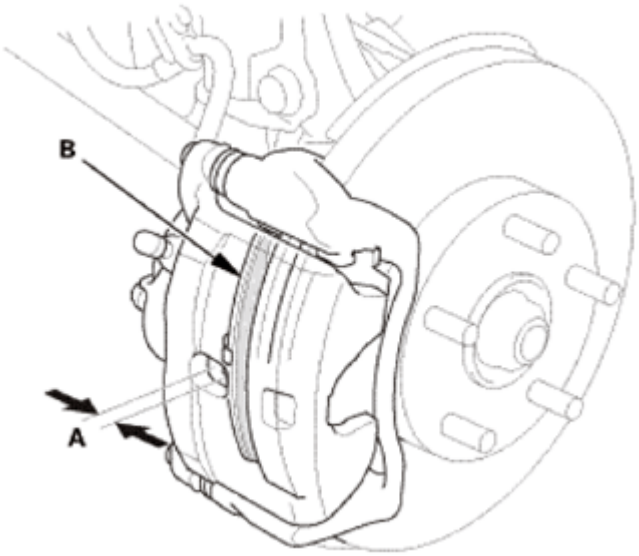

Fig. 122: Identifying Inner Pad Thickness (2WD)
Courtesy of AMERICAN HONDA MOTOR CO., INC.

CAUTION: Frequent inhalation of brake pad dust, regardless of material composition, could be hazardous to your health.

- **Avoid breathing dust particles.**

GETtheMANUALS.org

- **Never use an air hose or brush to clean brake assemblies. Use an OSHA-approved vacuum cleaner.**

1. Check the thickness (A) of the inner pad (B) and the outer pad (C). Do not include the thickness of the backing plate.

   Brake pad thickness:

   Standard limit:

   2WD: 11.0 mm (0.433 in)

   AWD/4WD: 12.0 mm (0.472 in)

   Service limit: 1.6 mm (0.063 in)

2. If any part of the brake pad thickness is less than the service limit, replace the brake pads as a set.

   2WD: Outer pad

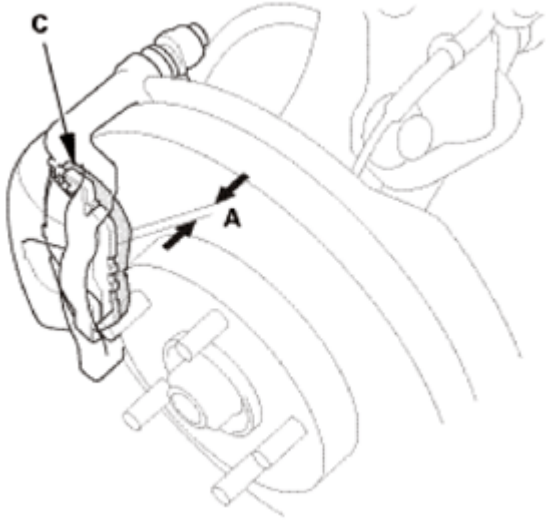

Fig. 123: Identifying Outer Pad Thickness (2WD)
Courtesy of AMERICAN HONDA MOTOR CO., INC.

AWD/4WD

GETtheMANUALS.org

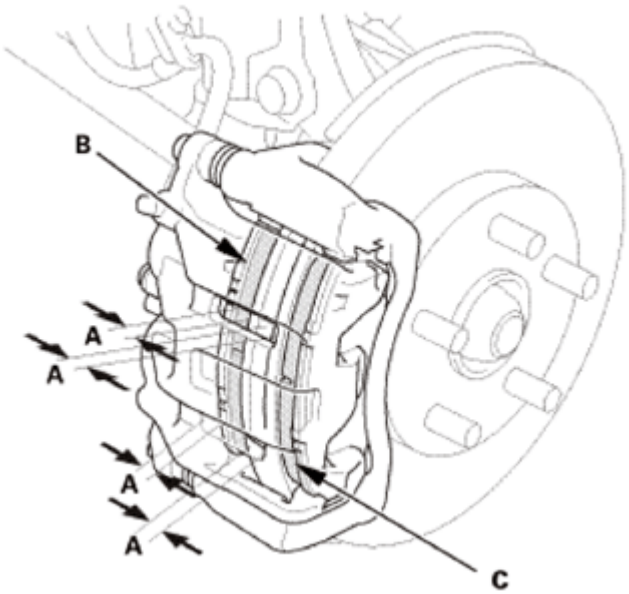

Fig. 124: Identifying Pad Thickness (AWD/4WD)
Courtesy of AMERICAN HONDA MOTOR CO., INC.

INSTALLATION

1. Front Wheel - Both Side
    1. Install both front wheels.

NOTE: **Before installing the wheel, clean the mating surfaces between the brake disc and the inside of the wheel.**

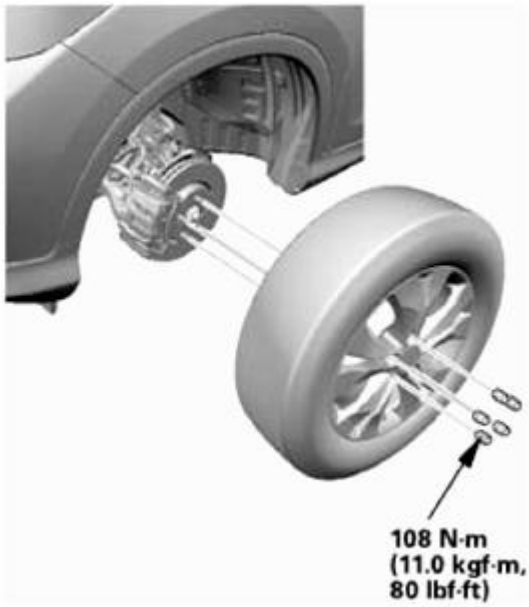

Fig. 125: Identifying Front Wheel And Mounting Bolt With Torque Specifications

GETtheMANUALS.org

Courtesy of AMERICAN HONDA MOTOR CO., INC.

FRONT BRAKE PAD REMOVAL AND INSTALLATION

SPECIAL TOOL DESCRIPTION

Image	Description/Tool Number
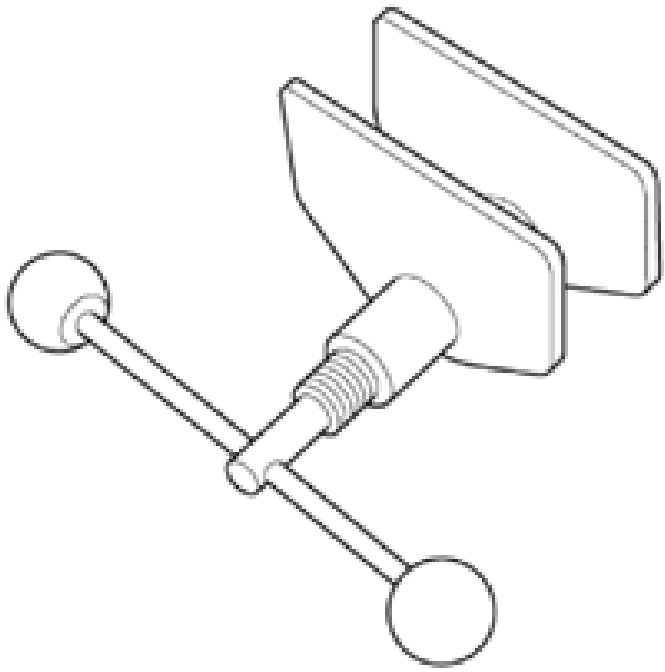	Brake Caliper Piston Compressor 07AAE-SEPA101

REMOVAL

CAUTION: Frequent inhalation of brake pad dust, regardless of material composition, could be hazardous to your health.

- **Avoid breathing dust particles.**
- **Never use an air hose or brush to clean brake assemblies. Use an OSHA-approved vacuum cleaner.**

1. Vehicle Lift
    1. Raise the vehicle on a lift, and make sure it is securely supported.
2. Brake Fluid - Remove
    1. Pull out the hood rear seal, then remove the master cylinder maintenance lid (A).
    2. Remove the reservoir cap (B).
    3. Remove some brake fluid from the master cylinder reservoir with a syringe.

GETtheMANUALS.org

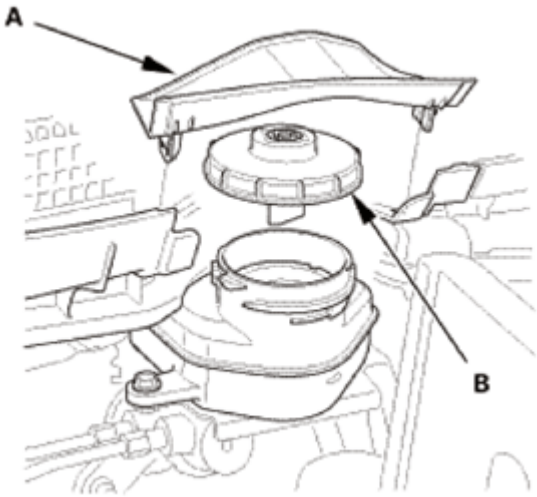

Fig. 126: Identifying Master Cylinder Maintenance Lid And Reservoir Cap
Courtesy of AMERICAN HONDA MOTOR CO., INC.

3. Front Wheel - Both Side
    1. Remove both front wheels.

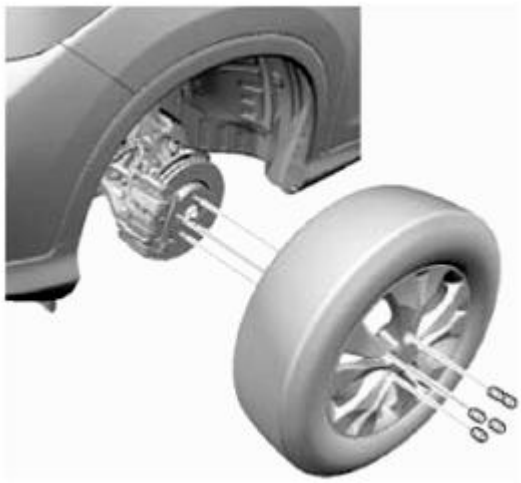

Fig. 127: Identifying Front Wheel And Mounting Bolts
Courtesy of AMERICAN HONDA MOTOR CO., INC.

4. Front Brake Pad
    1. Remove the flange bolt (A) while holding caliper pins (B) with a wrench
    2. Pivot the caliper body (C) up out of the way.

NOTE:

- **Be careful when pivoting the caliper body up or the spring could pop out of position.**
- **Check the hose and pin boots for damage and deterioration.**

GETtheMANUALS.org

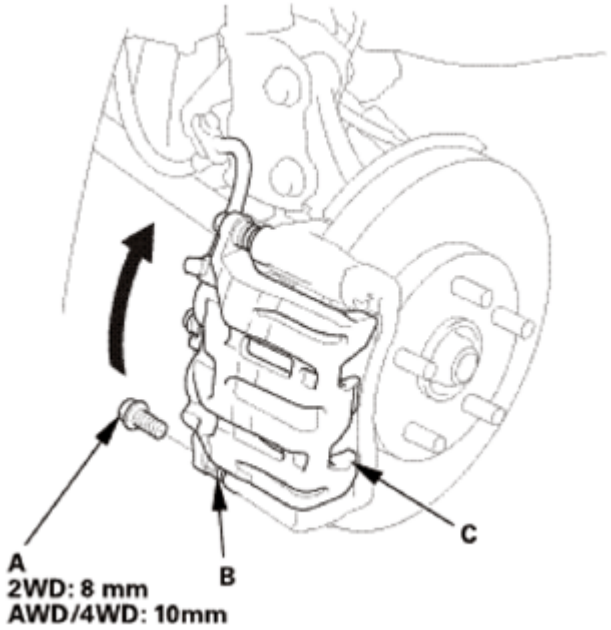

Fig. 128: Pivoting Caliper Body
Courtesy of AMERICAN HONDA MOTOR CO., INC.

3. Remove the pad return springs (A).

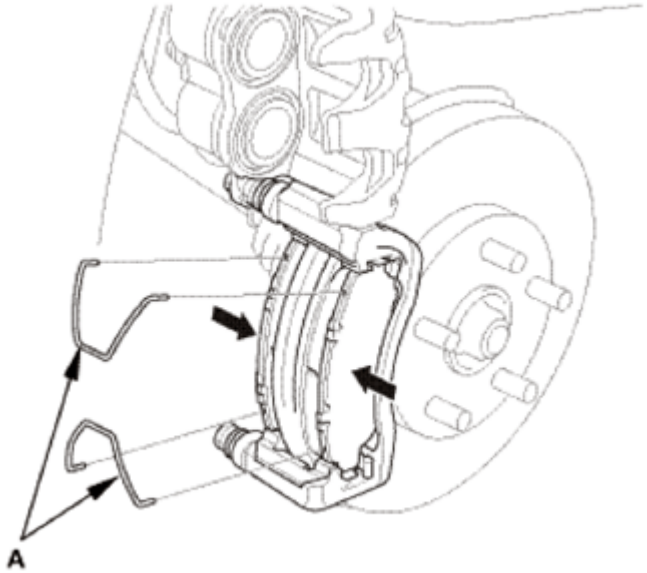

Fig. 129: Removing Pad Return Springs
Courtesy of AMERICAN HONDA MOTOR CO., INC.

4. Remove the pad shims (A) and the brake pads (B).

2WD

GETtheMANUALS.org

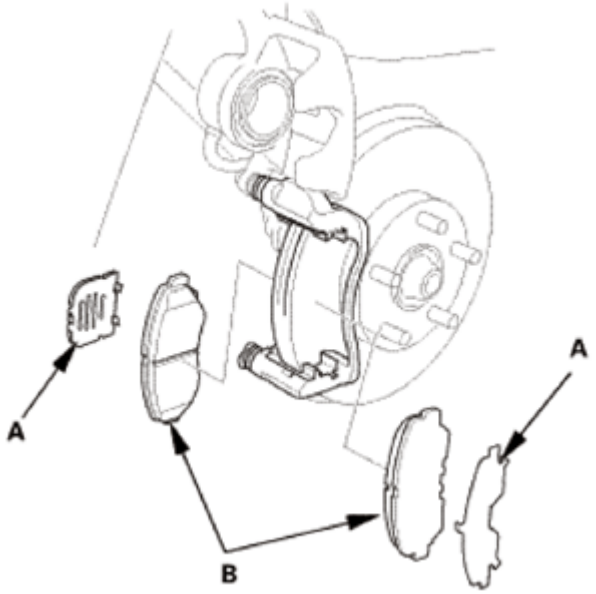

Fig. 130: Identifying Pad Shims And Brake Pads (2WD)
Courtesy of AMERICAN HONDA MOTOR CO., INC.

AWD/4WD

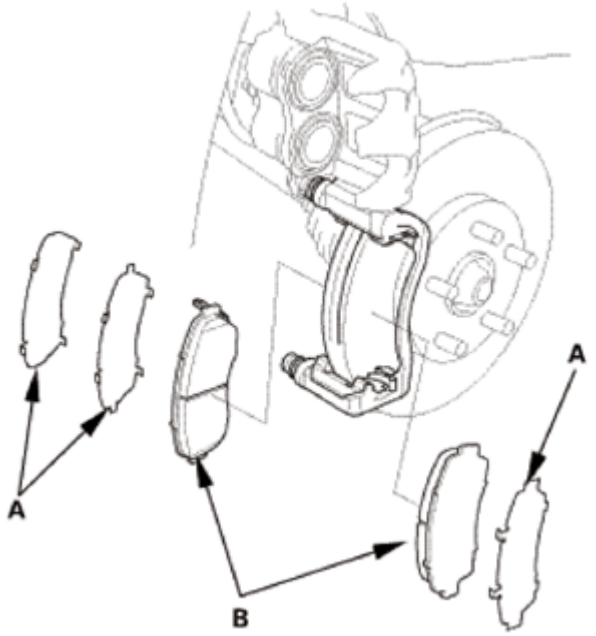

Fig. 131: Identifying Pad Shims And Brake Pads (AWD/4WD)
Courtesy of AMERICAN HONDA MOTOR CO., INC.

5. Front Brake Pad Retainer and Caliper Bracket Clean and Check
    1. Remove the pad retainers (A).

GETtheMANUALS.org

NOTE: **The upper and lower pad retainers are different. During installation, make sure the pad retainers are in the proper positions (2WD).**

2. Clean the caliper bracket (B) thoroughly; remove any rust, and check for grooves and cracks.
3. Verify that the caliper pins (C) move in and out smoothly. Clean and lube the pins if needed.

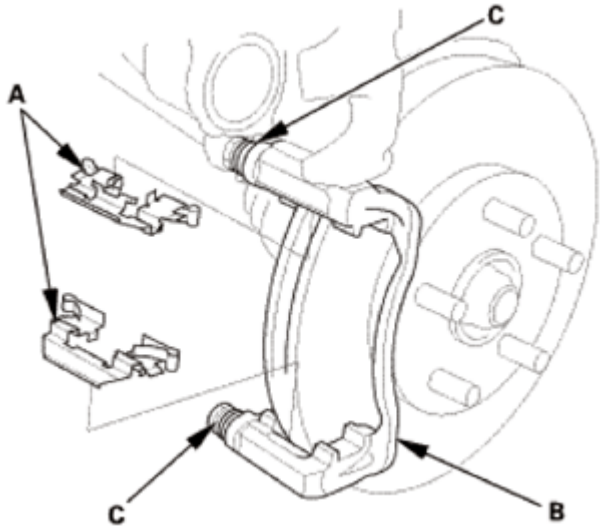

Fig. 132: Identifying Pad Retainers, Caliper Bracket And Caliper Pins
Courtesy of AMERICAN HONDA MOTOR CO., INC.

INSTALLATION

CAUTION: **Frequent inhalation of brake pad dust, regardless of material composition, could be hazardous to your health.**

- **Avoid breathing dust particles.**
- **Never use an air hose or brush to clean brake assemblies. Use an OSHA-approved vacuum cleaner.**

1. Front Brake Pad Retainer and Caliper Bracket Clean and Check
   1. Apply a thin coat of M-77 assembly paste (P/N 08798-9010) to the retainer mating surface of the caliper bracket (indicated by the arrows).
   2. Install the pad retainers (A).

NOTE:

- **Wipe off the excess assembly paste from the retainers. Keep the assembly paste away from the brake disc and the brake pads.**
- **2WD: Make sure that the pad retainers are installed correctly.**

GETtheMANUALS.org

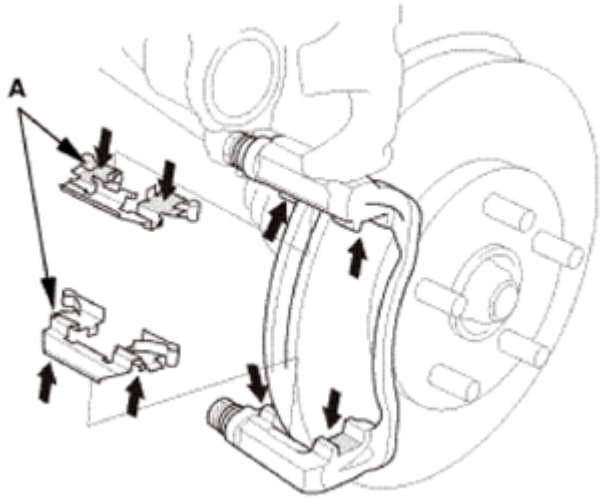

Fig. 133: Locating Thin Coat Assembly Paste Applying Area On Caliper Bracket Retainer Mating Surface
Courtesy of AMERICAN HONDA MOTOR CO., INC.

3. Press in the piston with the brake caliper piston compressor tool.

NOTE: **Be careful when pressing in the piston; brake fluid might overflow from the master cylinder's reservoir. If brake fluid gets on any painted surface, wash it off immediately with water.**

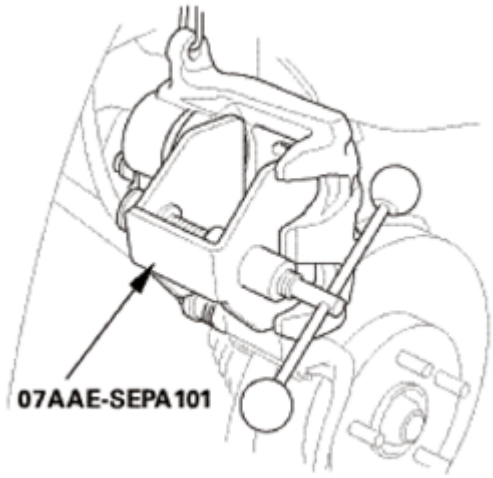

Fig. 134: Pressing Piston Using Brake Caliper Piston Compressor Tool
Courtesy of AMERICAN HONDA MOTOR CO., INC.

2. Front Brake Pad

2WD

GETtheMANUALS.org

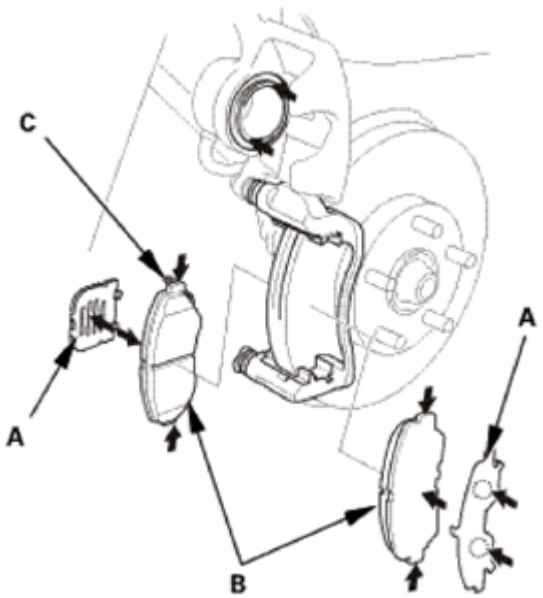

Fig. 135: Locating Thin Coat Of Assembly Paste Applying Area On Shim Pad Side And Back Of Brake Pads (2WD)
Courtesy of AMERICAN HONDA MOTOR CO., INC.

1. Apply a thin coat of M-77 assembly paste (P/N 08798-9010) to the pad side of the shims (A), the back of the brake pads (B), and the other areas indicated by the arrows.

   NOTE: Wipe off the excess assembly paste from the pad shims and brake pads friction material.

2. Install the brake pads and pad shims.

   NOTE: Install the brake pad with the wear indicator (C) on the upper inside position.

   AWD/4WD

GETtheMANUALS.org

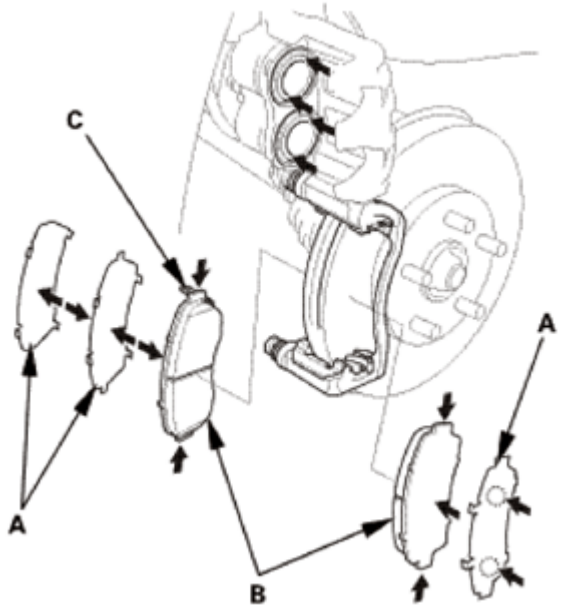

Fig. 136: Locating Thin Coat Of Assembly Paste Applying Area On Shim Pad Side And Back Of Brake Pads (AWD/4WD)
Courtesy of AMERICAN HONDA MOTOR CO., INC.

3. Install the pad return springs (A).

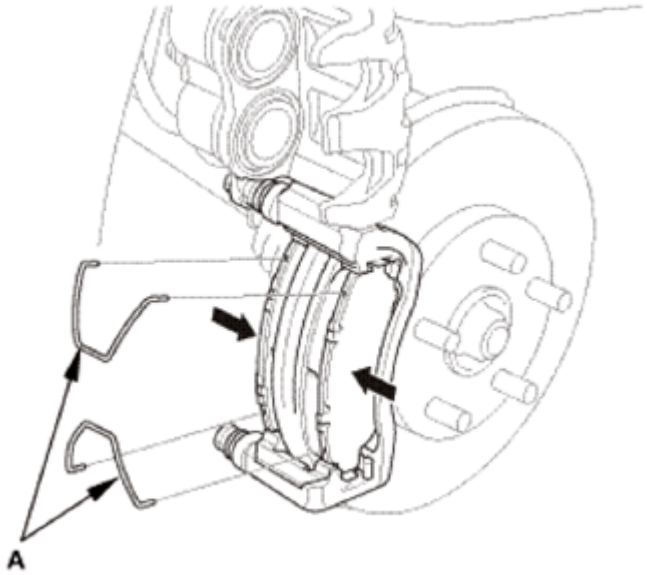

Fig. 137: Installing Pad Return Springs
Courtesy of AMERICAN HONDA MOTOR CO., INC.

4. Pivot the caliper body (A) down into position.
5. Install the flange bolt (B).
6. Press the brake pedal several times to make sure the brakes work.

GETtheMANUALS.org

NOTE: **Engagement may require a greater pedal stroke immediately after the brake pads have been replaced as a set. Several applications of the brake pedal will restore the normal pedal stroke.**

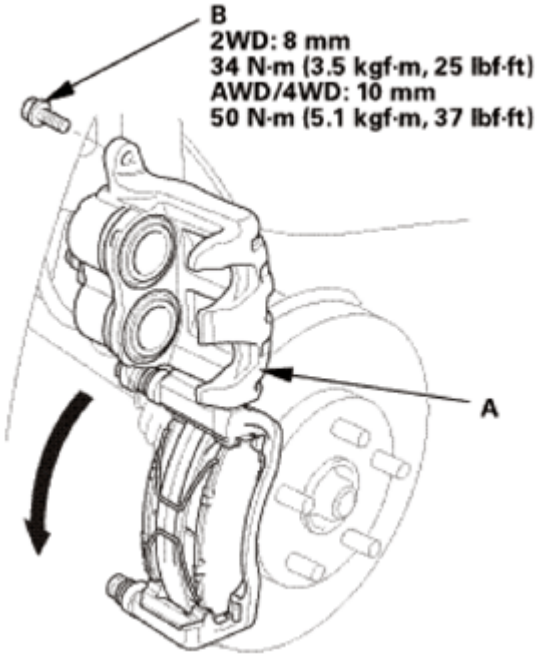

Fig. 138: Pivoting Caliper Body
Courtesy of AMERICAN HONDA MOTOR CO., INC.

3. Front Wheel - Both Side
    1. Install both front wheels.

NOTE: **Before installing the wheel, clean the mating surfaces between the brake disc and the inside of the wheel.**

GETtheMANUALS.org

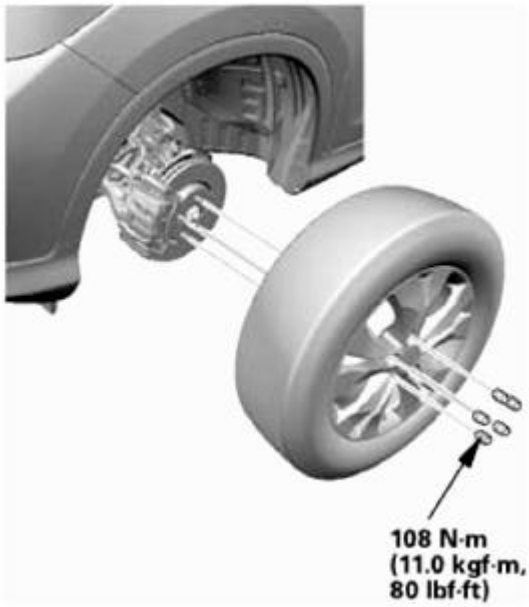

Fig. 139: Identifying Front Wheel And Mounting Bolts With Torque Specifications
Courtesy of AMERICAN HONDA MOTOR CO., INC.

4. Brake Fluid - Refill
    1. Add brake fluid as needed.
    2. Install the reservoir cap (A).
    3. Install the master cylinder maintenance lid (B).

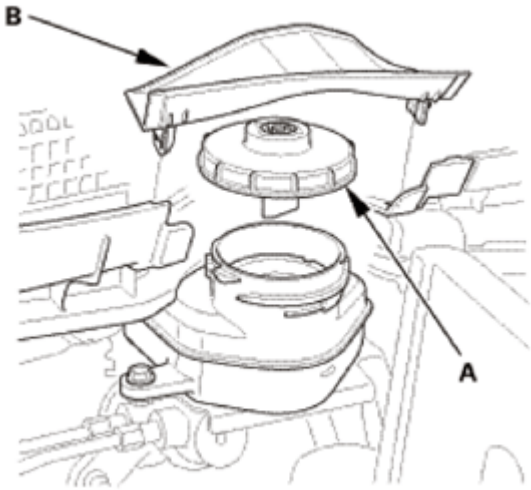

Fig. 140: Identifying Master Cylinder Maintenance Lid And Reservoir Cap
Courtesy of AMERICAN HONDA MOTOR CO., INC.

FRONT WHEEL SPEED SENSOR REMOVAL AND INSTALLATION

REMOVAL

GETtheMANUALS.org

1. Vehicle Lift
    1. Raise the vehicle on a lift, and make sure it is securely supported.
2. Front Wheel
    1. Remove the front wheel.

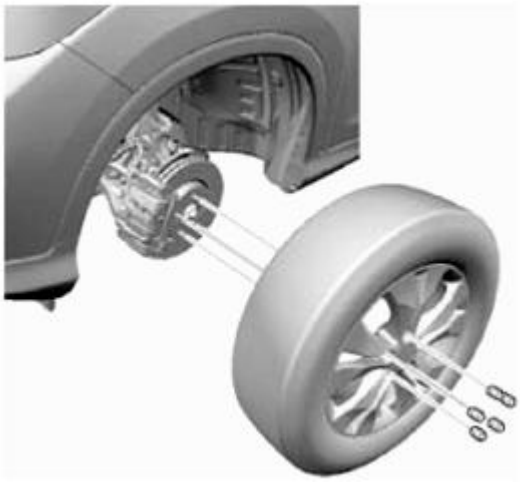

Fig. 141: Identifying Front Wheel And Mounting Bolts
Courtesy of AMERICAN HONDA MOTOR CO., INC.

3. Front Wheel Speed Sensor
    1. Turn the ignition switch to LOCK (0).
    2. Release the connector holding clamps (A).

GETtheMANUALS.org

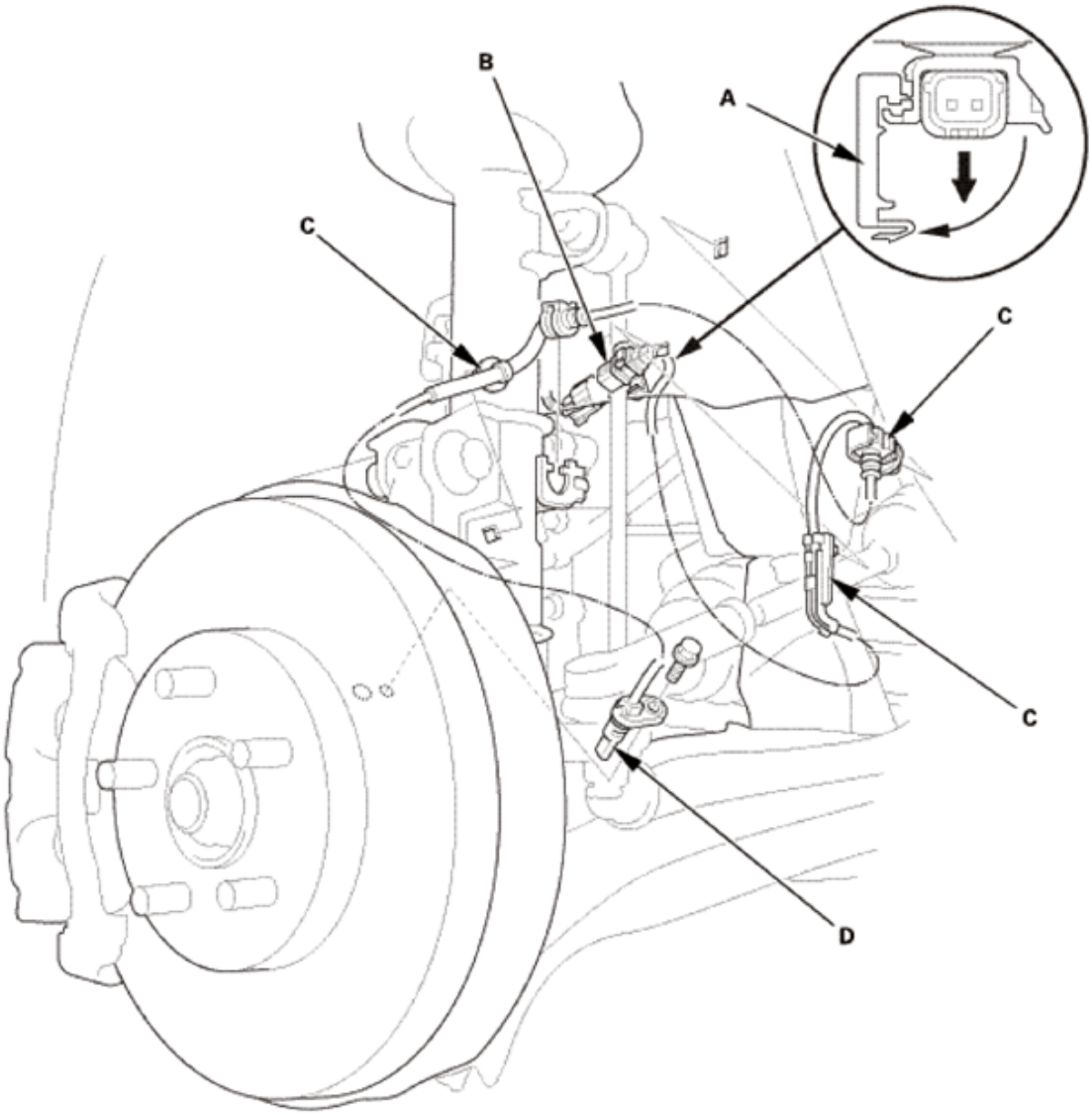

Fig. 142: Removing Front Wheel Speed Sensor
Courtesy of AMERICAN HONDA MOTOR CO., INC.

3. Disconnect the connector (B).
4. Remove the clips (C).
5. Remove the wheel speed sensor (D).

INSTALLATION

1. Front Wheel Speed Sensor
    1. Install the wheel speed sensor (A).

NOTE:

- **Do not twist the sensor wires.**
- **If the wheel speed sensor comes in contact with the wheel**

GETtheMANUALS.org

bearing, it is faulty.

- **Make sure there is no debris in the sensor mounting hole.**

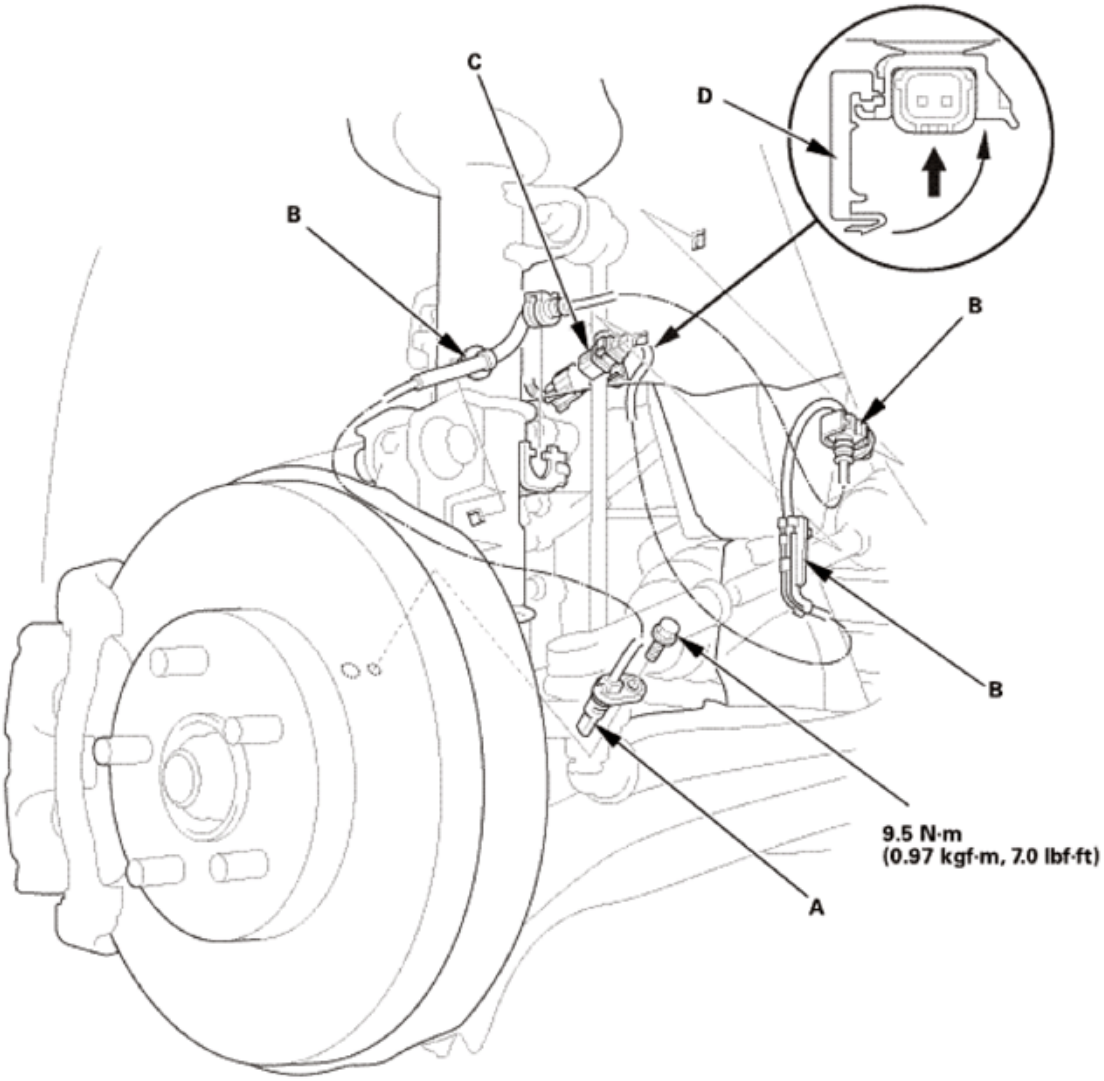

Fig. 143: Installing Wheel Speed Sensor
Courtesy of AMERICAN HONDA MOTOR CO., INC.

2. Install the harness clips (B).
3. Connect the connector (C).
4. Connect the connector holding clamps (D).

2. Front Wheel
   1. Install the front wheel.

NOTE: **Before installing the wheel, clean the mating surfaces between the brake disc and the inside of the wheel.**

GETtheMANUALS.org

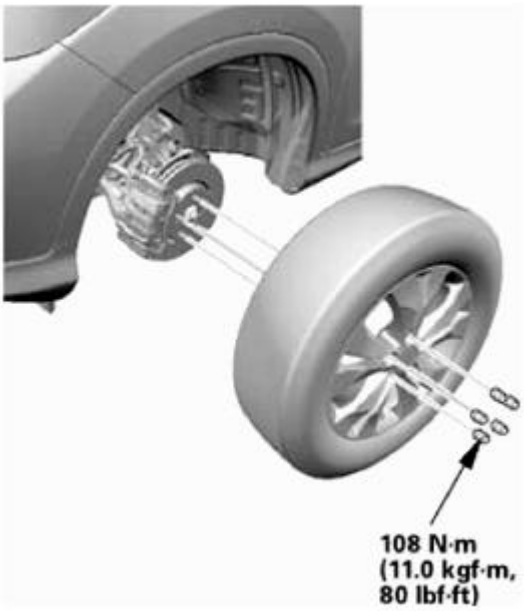

Fig. 144: Identifying Front Wheel And Mounting Bolts With Torque Specifications
Courtesy of AMERICAN HONDA MOTOR CO., INC.

PARKING BRAKE CABLE REMOVAL AND INSTALLATION

EXPLODED VIEW

1. Parking Brake Cable Exploded View

   Exploded View

GETtheMANUALS.org

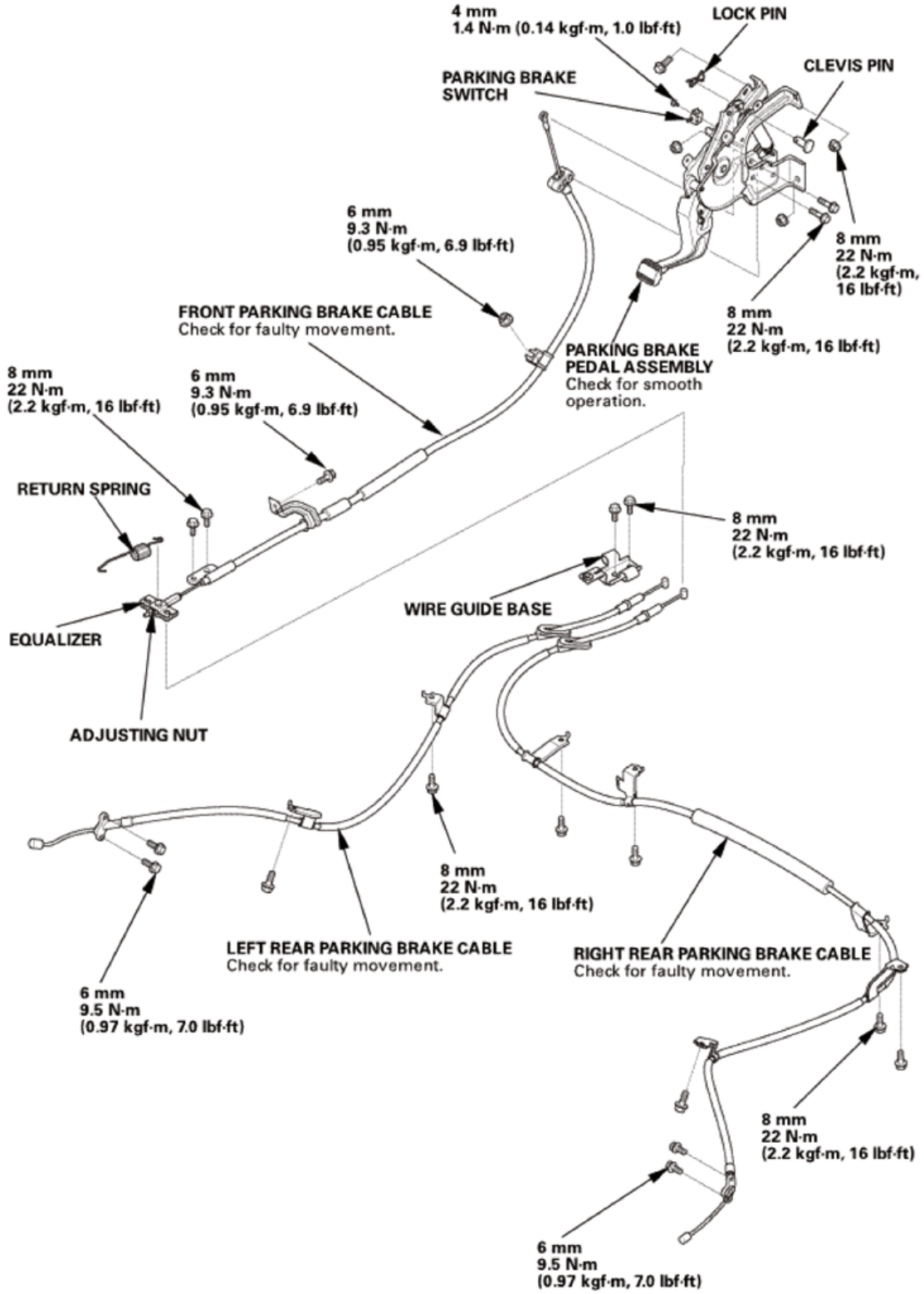

Fig. 145: Exploded View Of Parking Brake Cable With Torque Specifications
Courtesy of AMERICAN HONDA MOTOR CO., INC.

GETtheMANUALS.org

REMOVAL

NOTE:

- **Refer to the EXPLODED VIEW as needed during this procedure.**
- **For the front parking brake cable, go to step 1-11.**
- **For the Rear parking brake cable, go to step 12-21.**

1. Vehicle Lift
    1. Raise the vehicle on a lift, and make sure it is securely supported.
2. Rear Wheel - Both Side
    1. Remove both rear wheels.

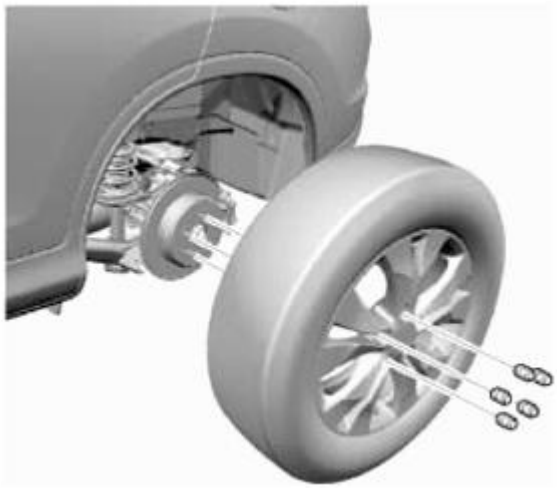

Fig. 146: Identifying Rear Wheel With Torque Specifications
Courtesy of AMERICAN HONDA MOTOR CO., INC.

3. Equalizer Cover
    1. Pull back the left rear carpet/cutout/insulation, under the driver's seat.
    2. Remove the equalizer cover (A).

GETtheMANUALS.org

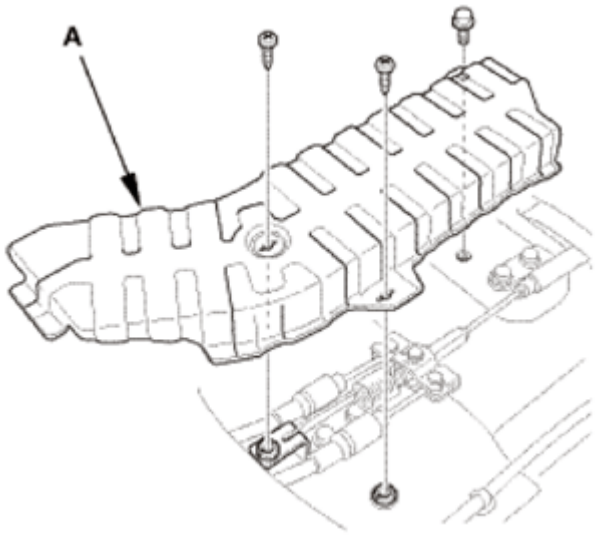

Fig. 147: Identifying Equalizer Cover And Mounting Bolts
Courtesy of AMERICAN HONDA MOTOR CO., INC.

4. Parking Brake Adjusting Bolt - Loosen
    1. Release the parking brake pedal fully.
    2. Disconnect and remove the return spring (A).
    3. Loosen the adjusting nut (B).

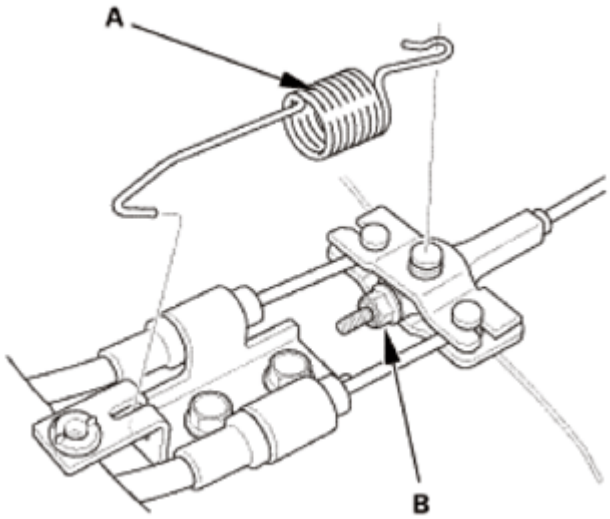

Fig. 148: Identifying Return Spring And Adjusting Nut
Courtesy of AMERICAN HONDA MOTOR CO., INC.

5. Kick Panel
    1. Pull out the front door opening seal (A) as needed from the kick panel hooks and the door opening flange.
    2. Pull back the kick panel by hand to detach the clips (B), then remove the driver's side kick panel

GETtheMANUALS.org

(C).

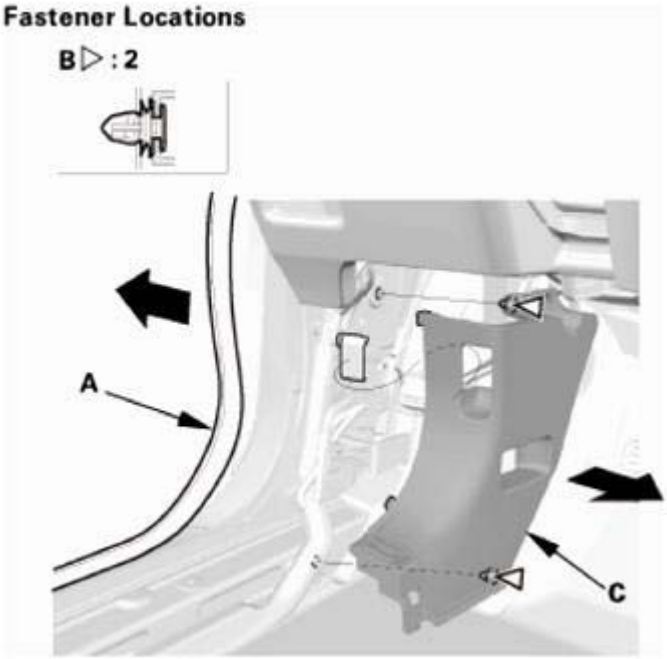

Fig. 149: Removing Driver's Side Kick Panel
Courtesy of AMERICAN HONDA MOTOR CO., INC.

6. Front Door Sill Trim
    1. Detach the hooks (A) and the tabs (B) from the kick panel (C) and the B-pillar lower trim (D), and pull up the front door inner sill trim (E) by hand to detach the clips (F), then remove the trim.

GETtheMANUALS.org

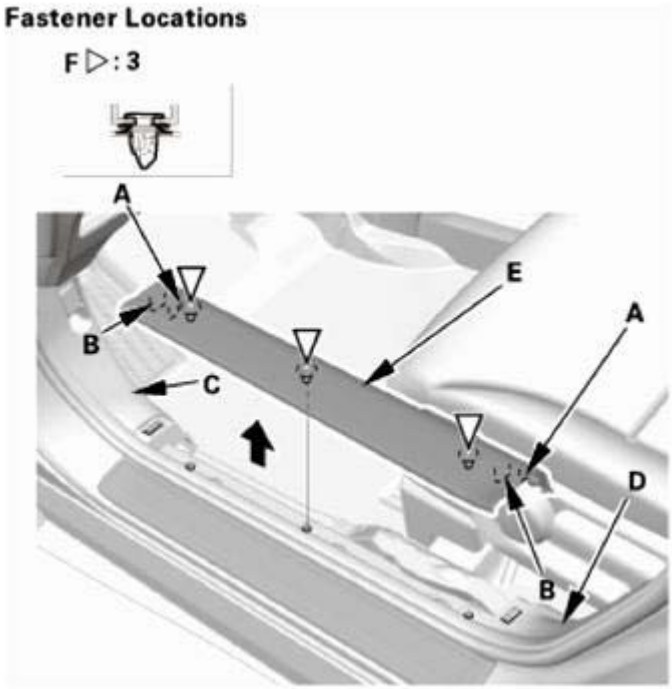

Fig. 150: Removing Front Door Sill Trim
Courtesy of AMERICAN HONDA MOTOR CO., INC.

7. Driver's Dashboard Panel Assembly
    1. Carefully pry out the driver's dashboard panel assembly (A) with the appropriate trim tool to detach the clips (B).
    2. Disconnect the connector (C), then remove the driver's dashboard panel assembly.

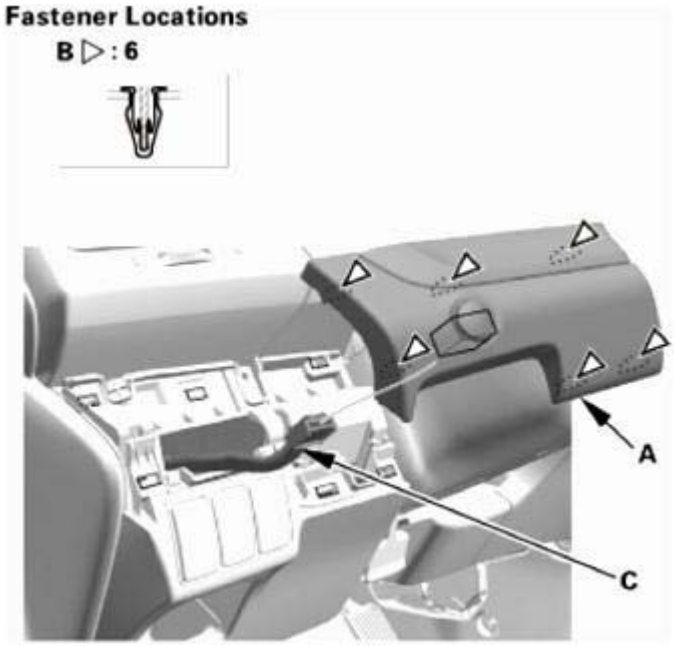

GETtheMANUALS.org

Fig. 151: Identifying Driver's Dashboard Panel Assembly, Connector And Clips
Courtesy of AMERICAN HONDA MOTOR CO., INC.

8. Driver's Dashboard Undercover
    1. Turn the lock knob (A) 90 °, then gently pull down the front edge of the driver's dashboard undercover (B) to detach the clip (C)
    2. Pull away the undercover to release the pin (D) from the holder (E), then remove the driver's dashboard undercover.

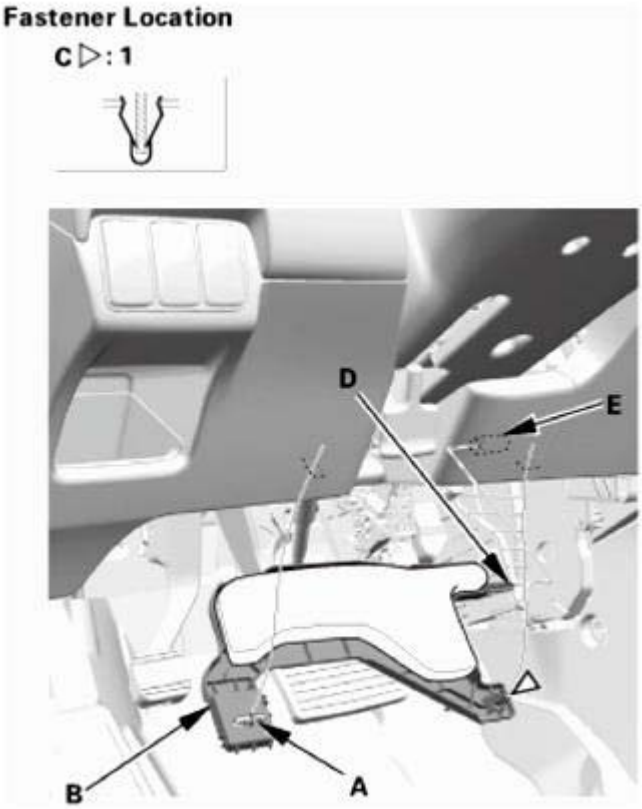

Fig. 152: Identifying Driver's Dashboard Undercover, Holder, Pin, Lock Knob And Clip
Courtesy of AMERICAN HONDA MOTOR CO., INC.

9. Driver's Dashboard Lower Cover
    1. Carefully pry out the driver's dashboard lower cover (A) with the appropriate trim tool to detach the clips (B).
    2. Disconnect the connector (C), then remove the driver's dashboard lower cover.

GETtheMANUALS.org

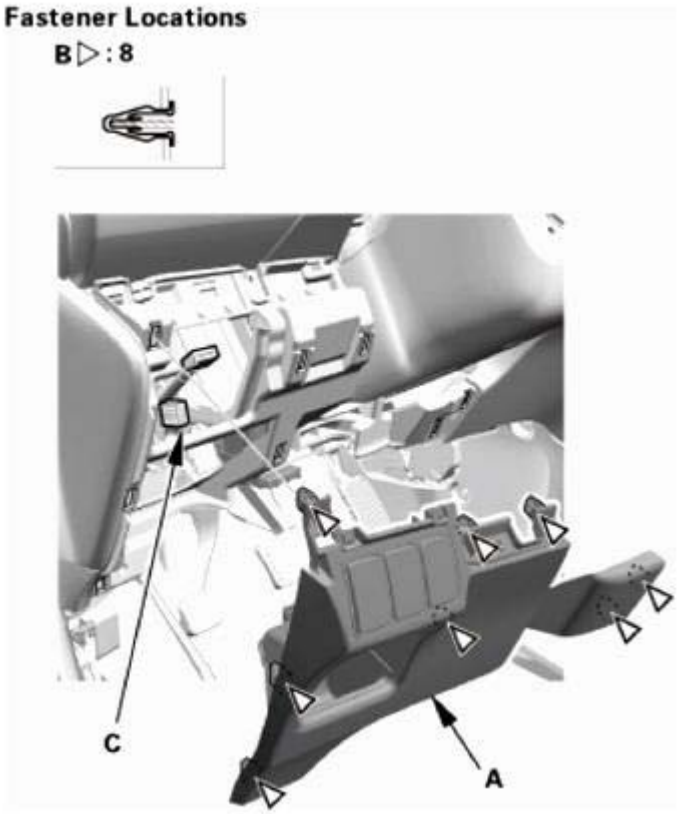

Fig. 153: Identifying Driver's Dashboard Lower Cover, Connector And Clips
Courtesy of AMERICAN HONDA MOTOR CO., INC.

10. Front Parking Brake Cable - Pedal Side
    1. Remove the lock pin (A) and the clevis pin (B).
    2. Remove the parking brake cable mounting bolts (C).

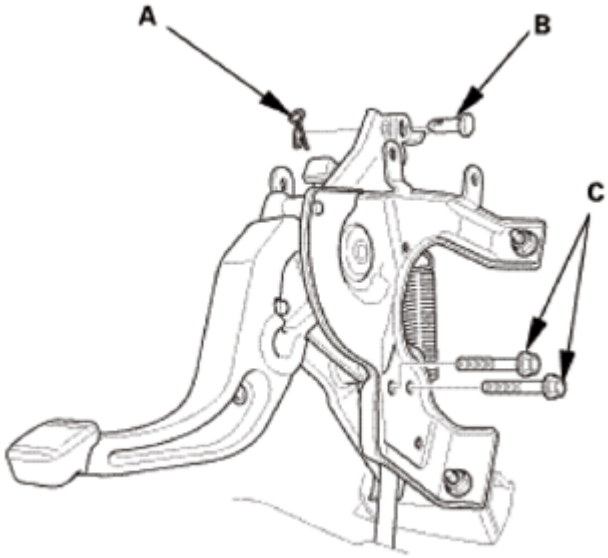

GETtheMANUALS.org

Fig. 154: Identifying Lock Pin, Clevis Pin And Parking Brake Cable Mounting Bolts
Courtesy of AMERICAN HONDA MOTOR CO., INC.

11. Front Parking Brake Cable
    1. Remove the wire guide base (A).
    2. Remove the front parking brake cable mounting bolts (B).
    3. Disconnect the rear parking brake cables (C) from the equalizer (D).

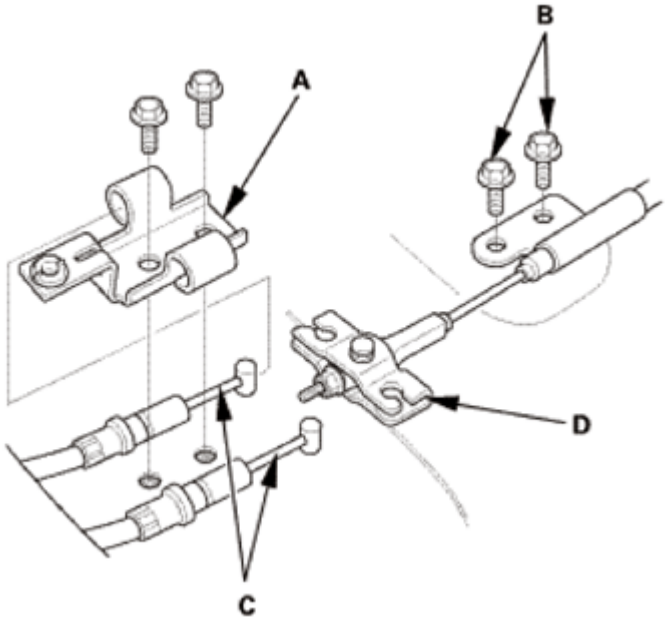

Fig. 155: Identifying Rear Parking Brake Cables, Equalizer, Wire Guide Base And Front Parking Brake Cable Mounting Bolts
Courtesy of AMERICAN HONDA MOTOR CO., INC.

    4. Remove the front parking brake cable mounting nut (A).

GETtheMANUALS.org

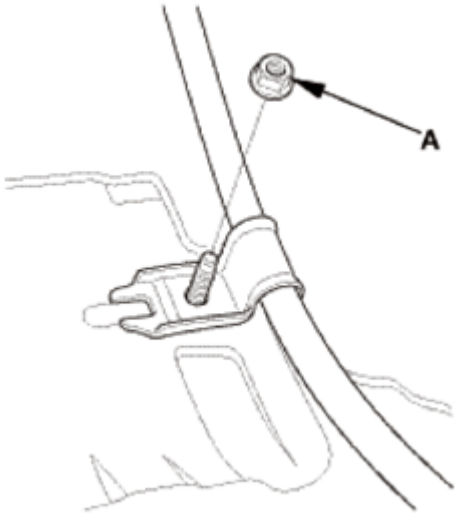

Fig. 156: Identifying Front Parking Brake Cable Mounting Nut
Courtesy of AMERICAN HONDA MOTOR CO., INC.

5. Remove the front parking brake cable mounting bolt (A).
6. Pull the front parking brake cable (B) and remove it from the body.

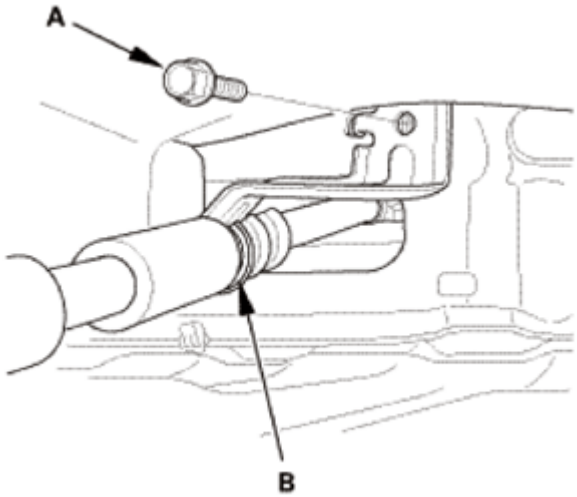

Fig. 157: Identifying Front Parking Brake Cable And Mounting Bolt
Courtesy of AMERICAN HONDA MOTOR CO., INC.

12. Vehicle Lift
    1. Raise the vehicle on a lift, and make sure it is securely supported.
13. Rear Wheel - Both Side
    1. Remove both rear wheels.

GETtheMANUALS.org

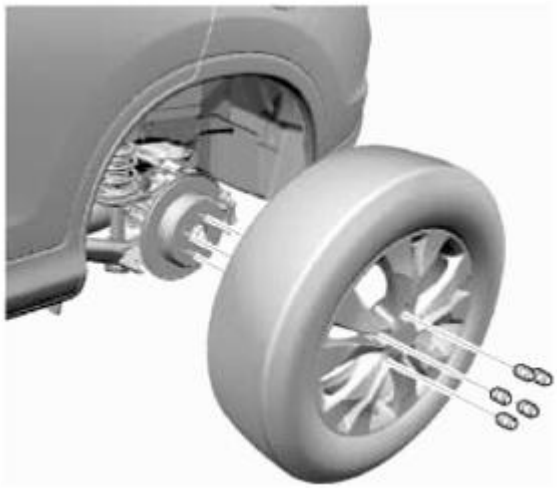

Fig. 158: Identifying Rear Wheel And Mounting Bolts
Courtesy of AMERICAN HONDA MOTOR CO., INC.

14. Equalizer Cover
    1. Pull back the left rear carpet/cutout/insulation, under the driver's seat.
    2. Remove the equalizer cover (A).

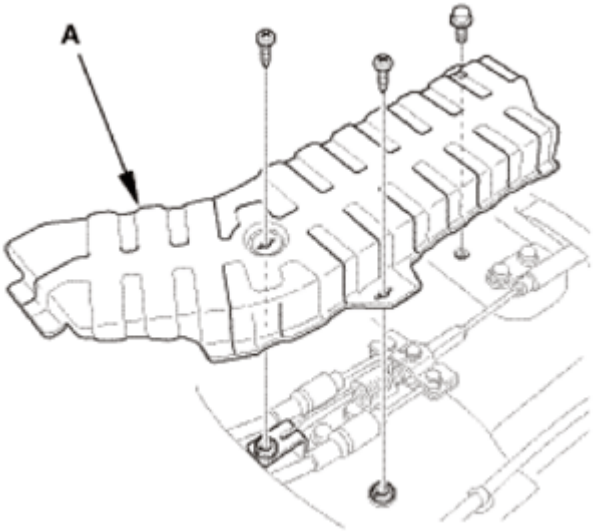

Fig. 159: Identifying Equalizer Cover And Mounting Bolts
Courtesy of AMERICAN HONDA MOTOR CO., INC.

15. Parking Brake Adjusting Bolt - Loosen
    1. Release the parking brake pedal fully.
    2. Disconnect and remove the return spring (A).
    3. Loosen the adjusting nut (B).

GETtheMANUALS.org

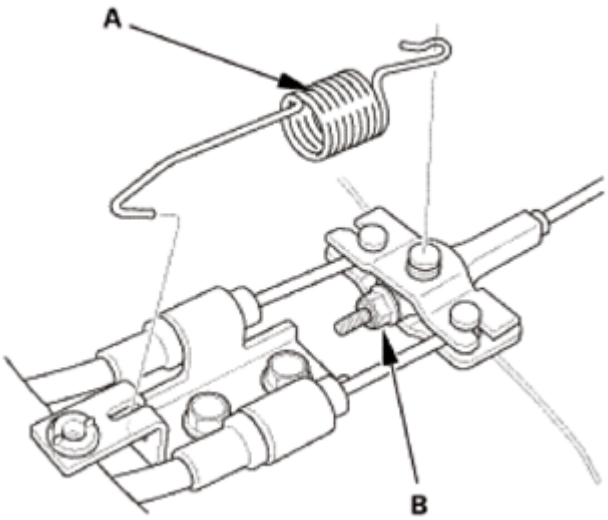

Fig. 160: Identifying Return Spring And Adjusting Nut
Courtesy of AMERICAN HONDA MOTOR CO., INC.

16. Rear Parking Brake Cable - Equalizer Side
    1. Remove the wire guide base (A).
    2. Remove the front parking brake cable mounting bolts (B).
    3. Disconnect the rear parking brake cables (C) from the equalizer (D).

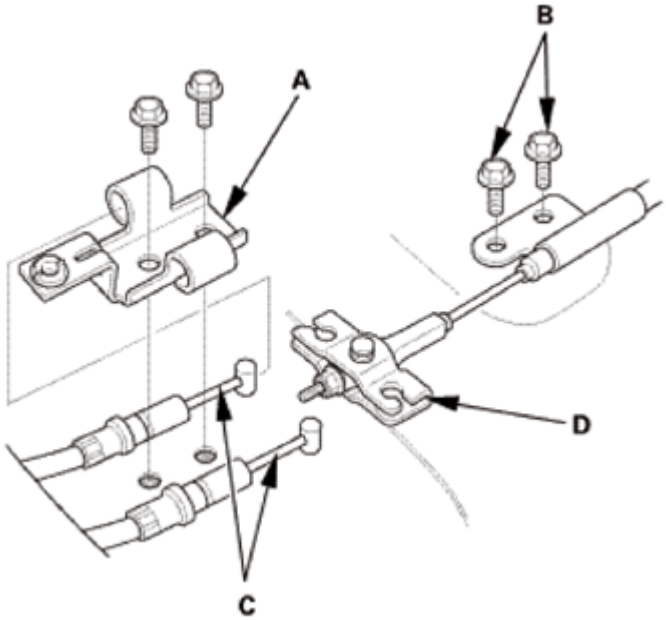

Fig. 161: Identifying Rear Parking Brake Cables, Equalizer, Wire Guide Base And Front Parking Brake Cable Mounting Bolts
Courtesy of AMERICAN HONDA MOTOR CO., INC.

17. Middle Floor Undercover

GETtheMANUALS.org

Left side

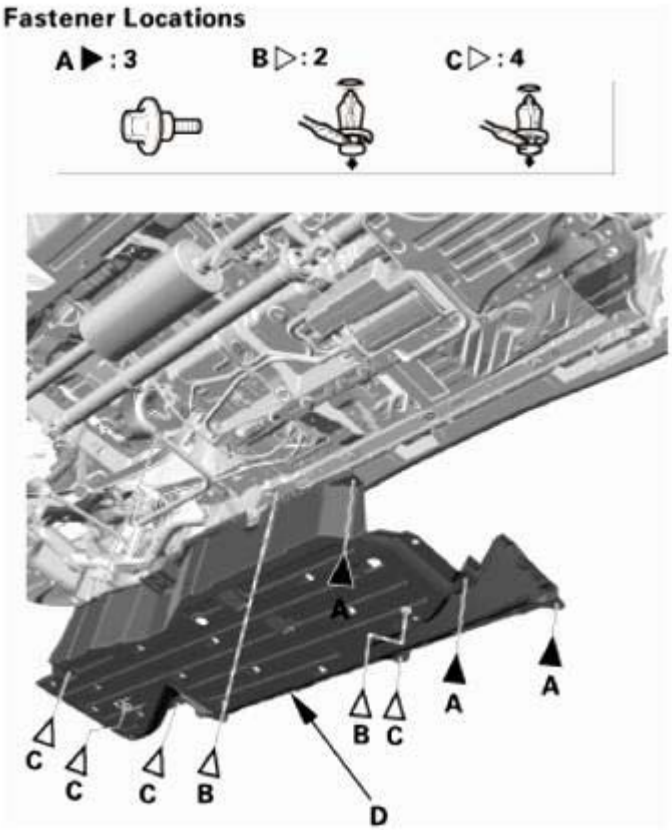

Fig. 162: Identifying Middle Floor Undercover And Fasteners (Left Side)
Courtesy of AMERICAN HONDA MOTOR CO., INC.

1. Remove the bolts (A) and the clips (B, C), then remove the left middle floor undercover (D) or the right middle floor undercover (E).

   Right side

GETtheMANUALS.org

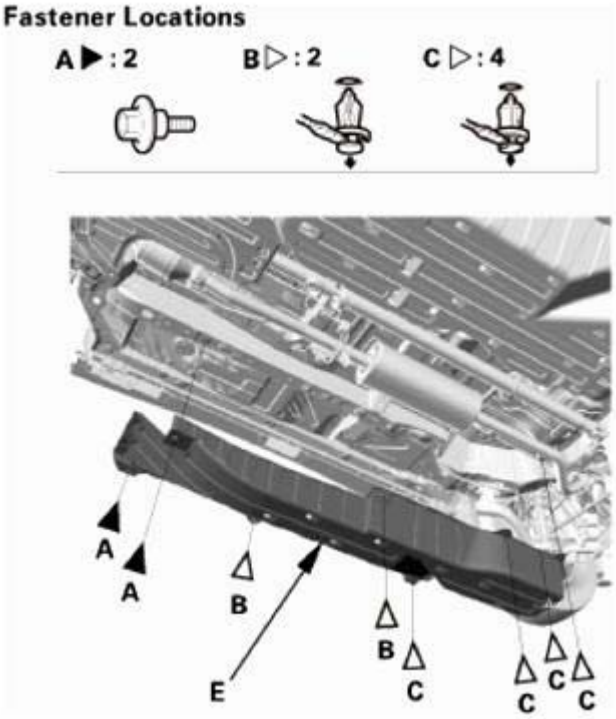

Fig. 163: Identifying Middle Floor Undercover And Fasteners (Right Side)
Courtesy of AMERICAN HONDA MOTOR CO., INC.

18. Rear Brake Caliper - Detach
    1. Remove the brake hose mounting bolt (A).
    2. Remove the caliper assembly (B).

NOTE:

- **To prevent damage to the caliper assembly or brake hose, use a short piece of wire to hang the caliper assembly from the undercarriage.**
- **Do not twist the brake hose and the parking brake cable excessively.**

GETtheMANUALS.org

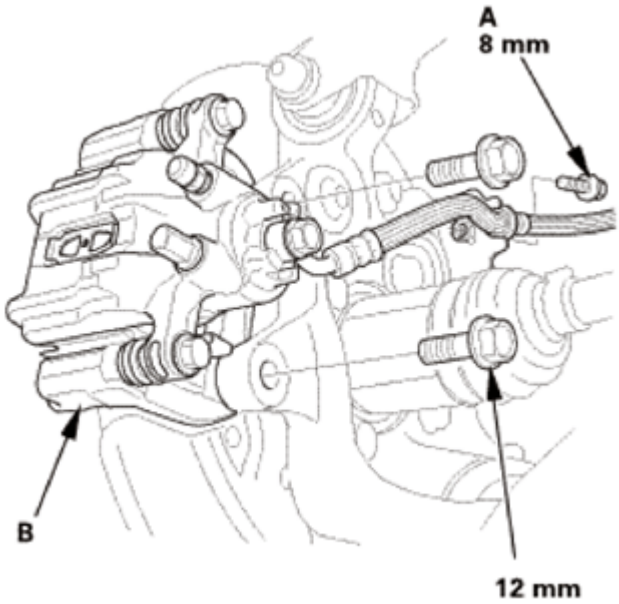

Fig. 164: Identifying Caliper Assembly And Brake Hose Mounting Bolt With Torque Specification
Courtesy of AMERICAN HONDA MOTOR CO., INC.

19. Rear Brake Disc
    1. Remove the brake disc/drum flathead screws (A).
    2. Remove the brake disc/drum (B).

NOTE:

- **Remove the adjuster plug (C), then if necessary, turn the adjuster bolt (D) with a flat-tip screwdriver until the shoes become loose.**
- **If the brake disc/drum is stuck to the hub bearing unit, thread two 8 x 1.25 mm bolts (E) into the brake disc/drum to push it away from the hub bearing unit. Turn each bolt 90 degrees at a time to prevent the brake disc/drum from binding.**

GETtheMANUALS.org

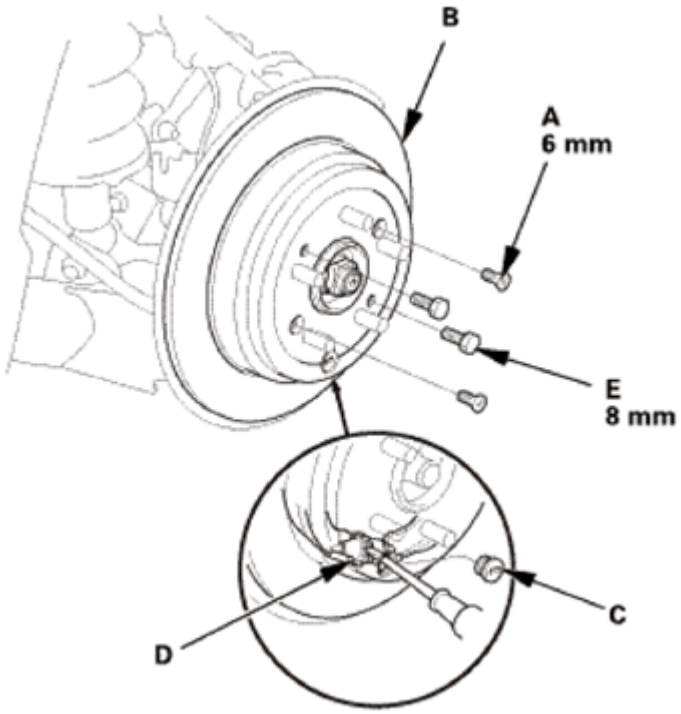

Fig. 165: Turning Adjuster Bolt Using Flat-Tip Screwdriver
Courtesy of AMERICAN HONDA MOTOR CO., INC.

20. Parking Brake Shoe
    1. Disconnect and remove brake spring A.
    2. Disconnect and remove the upper return spring (B).

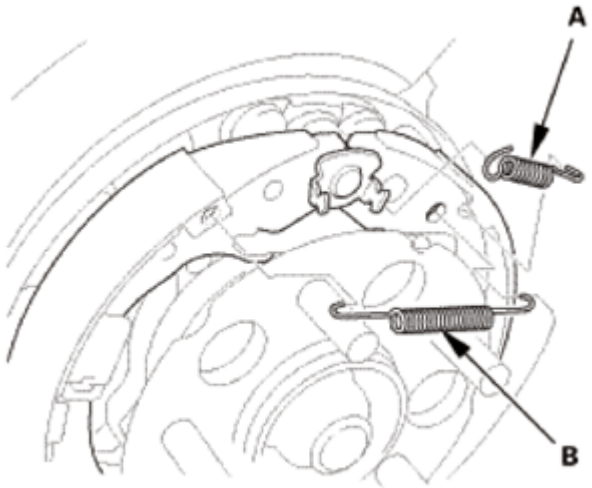

Fig. 166: Identifying Brake Spring And Upper Return Spring
Courtesy of AMERICAN HONDA MOTOR CO., INC.

    3. Disconnect and remove the lower return spring (A).

GETtheMANUALS.org

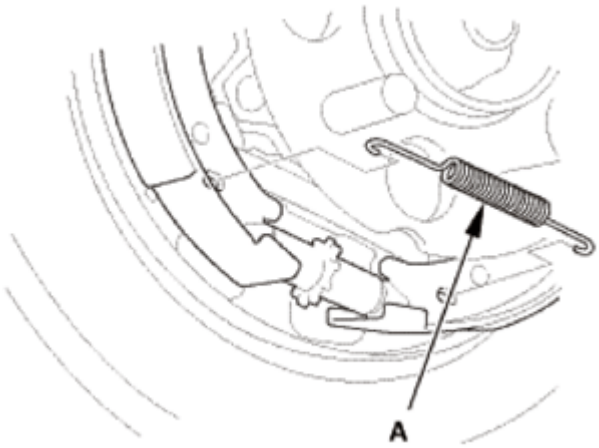

Fig. 167: Identifying Lower Return Spring
Courtesy of AMERICAN HONDA MOTOR CO., INC.

4. Remove the tension pins (A) by pushing the respective retainer springs (B), and turning the pin.
5. Remove the adjuster assembly (C) by moving forward brake shoe (D).

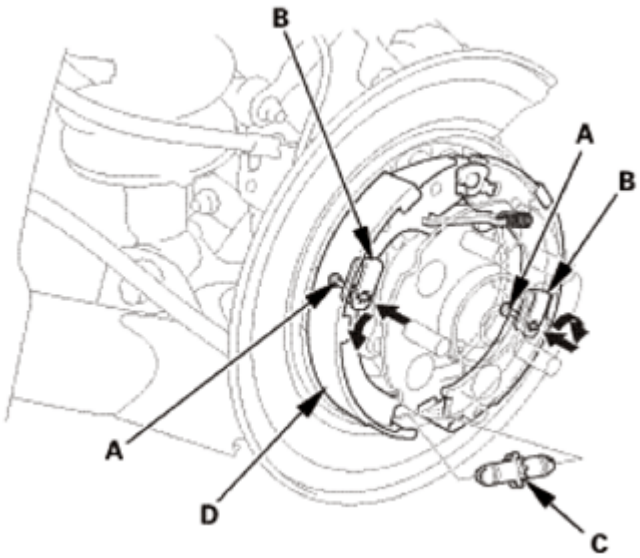

Fig. 168: Removing Tension Pins
Courtesy of AMERICAN HONDA MOTOR CO., INC.

6. Disconnect the rod spring (A), and remove the strut (B).

GETtheMANUALS.org

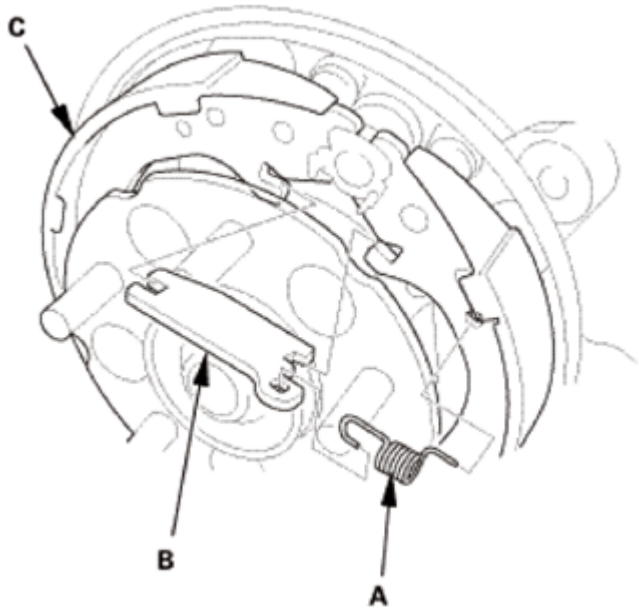

Fig. 169: Identifying Forward Brake Shoe, Rod Spring And Strut
Courtesy of AMERICAN HONDA MOTOR CO., INC.

7. Remove the forward brake shoe (C).
8. Remove the rearward brake shoe (A) by disconnecting the rear parking brake cable (B) from the parking brake lever (C).

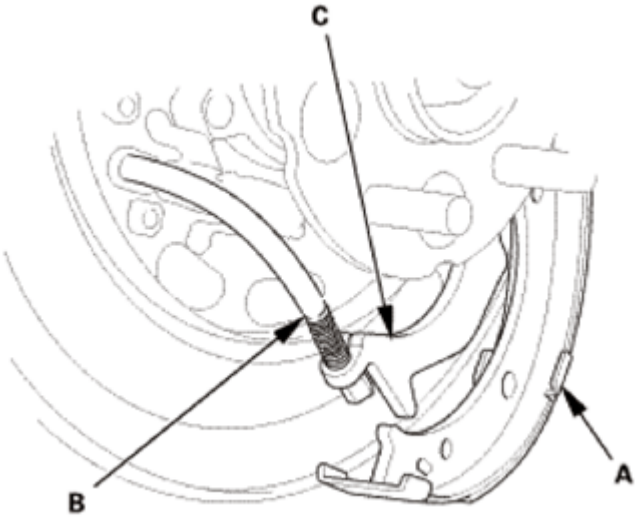

Fig. 170: Identifying Rearward Brake Shoe, Rear Parking Brake Cable And Parking Brake Lever
Courtesy of AMERICAN HONDA MOTOR CO., INC.

21. Rear Parking Brake Cable
    1. Remove the rear parking brake cable mounting bolts (A) from backing plate (B).

GETtheMANUALS.org

2. Pull the rear parking brake cable (C) and remove it from the backing plate.

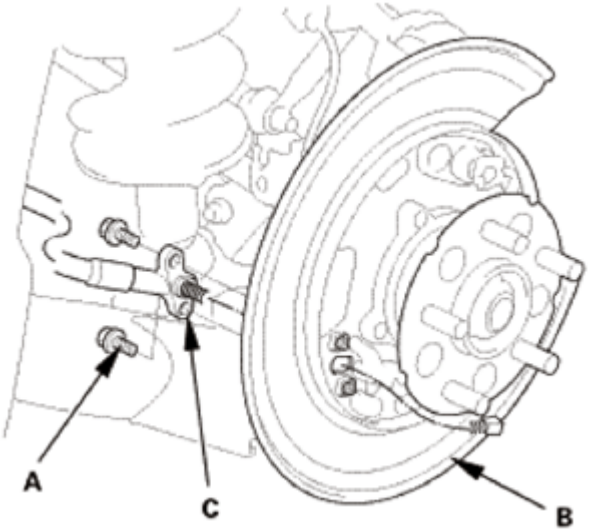

Fig. 171: Identifying Backing Plate, Rear Parking Brake Cable And Mounting Bolts
Courtesy of AMERICAN HONDA MOTOR CO., INC.

3. Remove the rear parking brake cable grommets (A), and pull out the rear parking brake cables from the body floor.

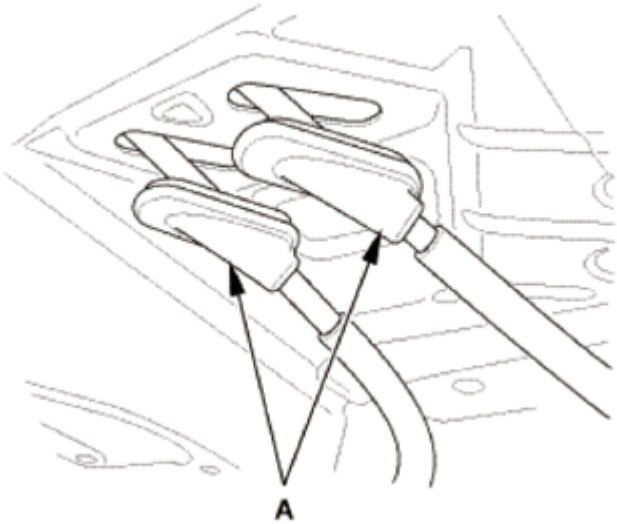

Fig. 172: Identifying Rear Parking Brake Cable Grommets
Courtesy of AMERICAN HONDA MOTOR CO., INC.

Left side cable

GETtheMANUALS.org

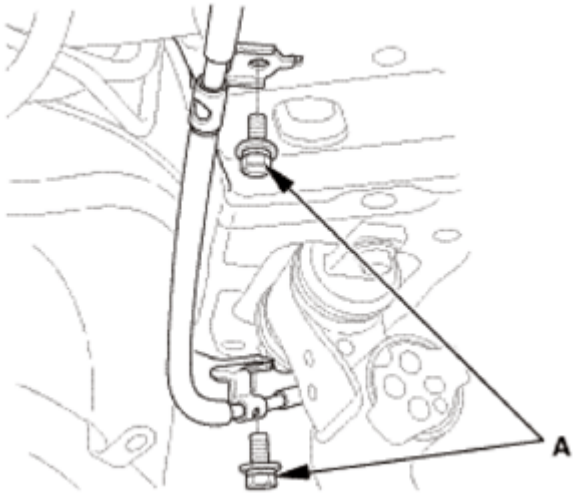

Fig. 173: Identifying Rear Parking Brake Cable Mounting Bolts (Left Side Cable)
Courtesy of AMERICAN HONDA MOTOR CO., INC.

Right side cable

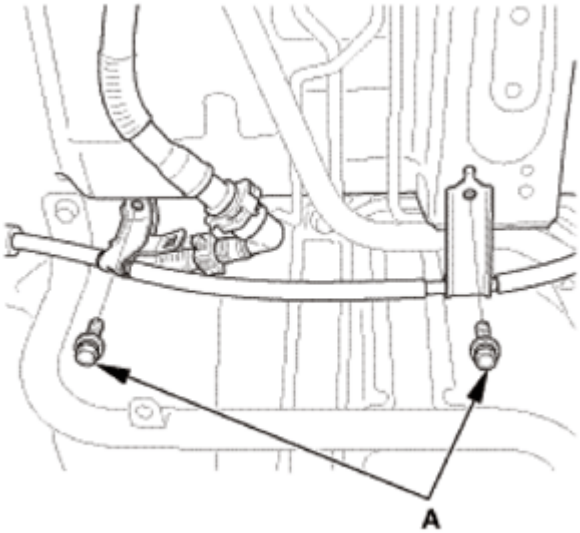

Fig. 174: Identifying Rear Parking Brake Cable Mounting Bolts (Right Side Cable)
Courtesy of AMERICAN HONDA MOTOR CO., INC.

4. Remove the rear parking brake cable mounting bolts (A) then, remove the rear parking brake cables.

Right side cable

GETtheMANUALS.org

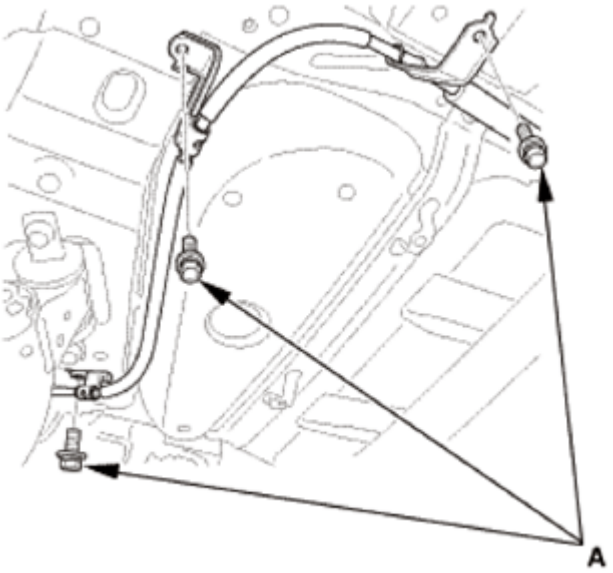

Fig. 175: Identifying Rear Parking Brake Cable Mounting Bolts (Right Side Cable)
Courtesy of AMERICAN HONDA MOTOR CO., INC.

INSTALLATION

NOTE:

- **Refer to the EXPLODED VIEW as needed during this procedure.**
- **For the front parking brake cable, go to step 1-12.**
- **For the Rear parking brake cable, go to step 13-23.**

1. Front Parking Brake Cable
    1. Install the front parking brake cable (A).

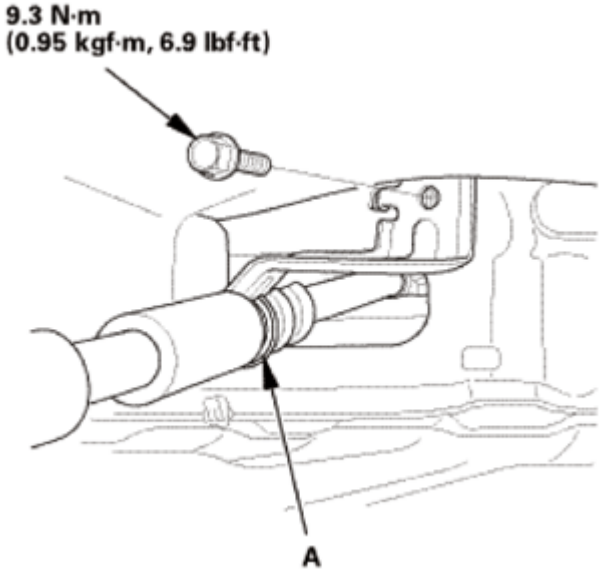

GETtheMANUALS.org

Fig. 176: Identifying Front Parking Brake Cable And Mounting Bolts With Torque Specification
Courtesy of AMERICAN HONDA MOTOR CO., INC.

2. Install the front parking brake cable mounting nut (A).

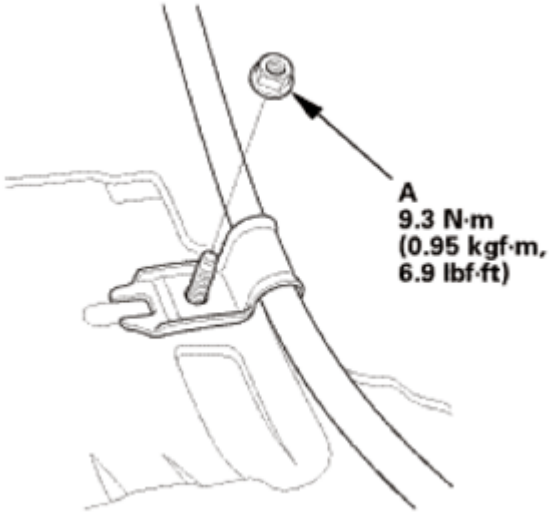

Fig. 177: Identifying Front Parking Brake Cable Mounting Nut With Torque Specification
Courtesy of AMERICAN HONDA MOTOR CO., INC.

3. Connect the rear parking brake cables (A) to the equalizer (B).
4. Install the wire guide base (C).

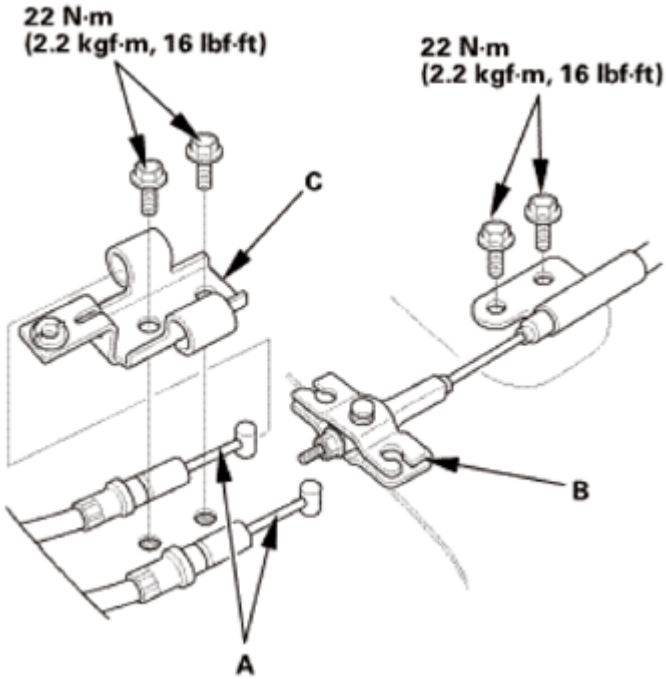

GETtheMANUALS.org

Fig. 178: Identifying Rear Parking Brake Cables, Equalizer And Wire Guide Base And Mounting Bolts With Torque Specifications
Courtesy of AMERICAN HONDA MOTOR CO., INC.

2. Front Parking Brake Cable - Pedal Side
    1. Install the front parking brake cable (A) by aligning the tab (B) with the groove (C).
    2. Install the lock pin (D) and the clevis pin (E).

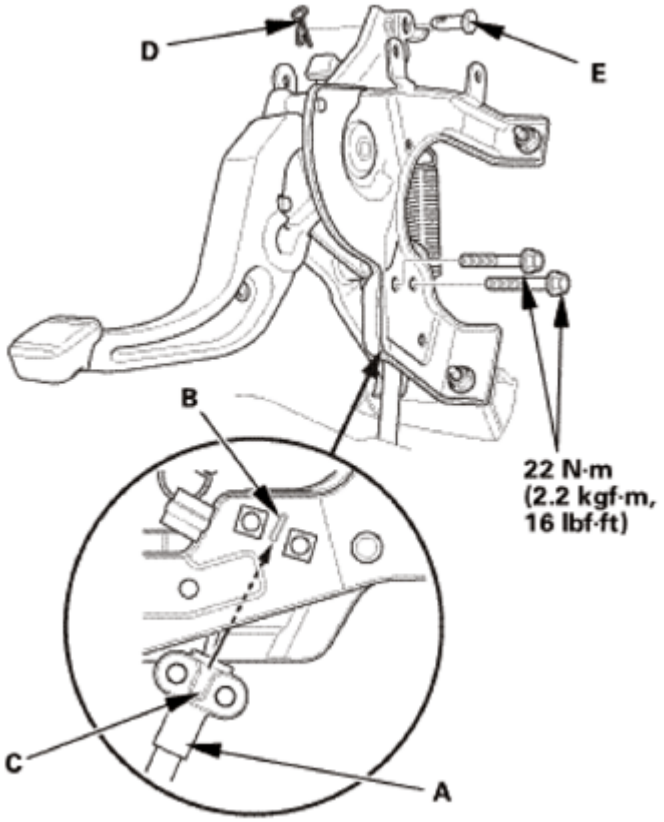

Fig. 179: Identifying Front Parking Brake Cable, Tab, Groove Lock, Pin And Clevis Pin With Torque Specification
Courtesy of AMERICAN HONDA MOTOR CO., INC.

3. Major Parking Brake - Adjustment
    1. Remove the access plug (A).
    2. Turn the ratchet teeth on the adjuster nut (B) with a brake adjuster tool or a flat-tip screwdriver (C) until the shoes lock against the parking brake drum. Then back off the adjuster 7 clicks, an install the access plug.

GETtheMANUALS.org

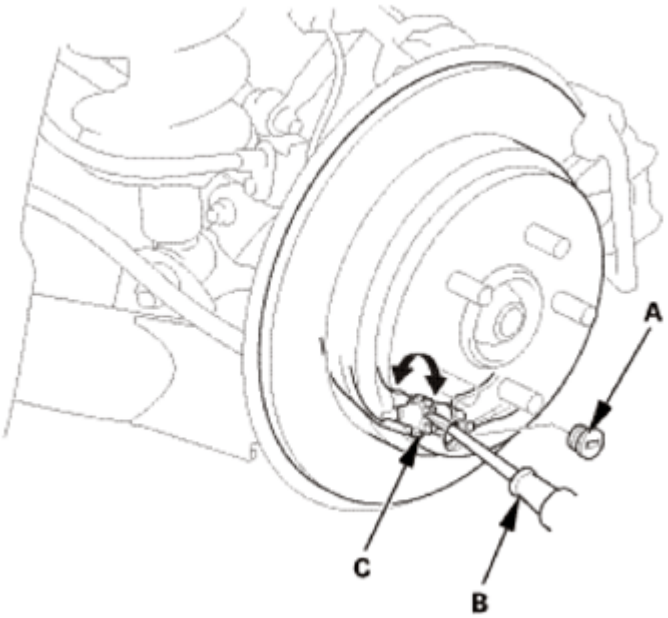

Fig. 180: Turning Ratchet Teeth On Adjuster Nut Using Brake Adjuster Tool Or Flat-Tip Screwdriver
Courtesy of AMERICAN HONDA MOTOR CO., INC.

4. Rear Wheel - Both Side
    1. Install both rear wheels.

NOTE: **Before installing the wheel, clean the mating surface between the brake disc/drum and the inside of the wheel.**

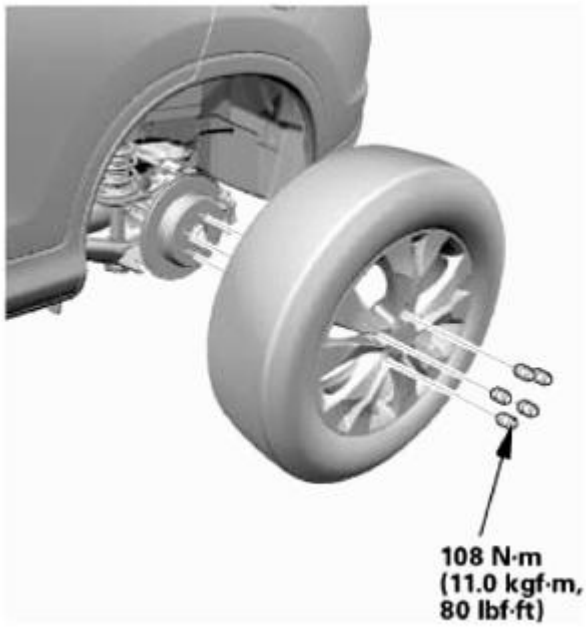

GETtheMANUALS.org

Fig. 181: Identifying Rear Wheel And Mounting Bolts With Torque Specifications
Courtesy of AMERICAN HONDA MOTOR CO., INC.

5. Minor Parking Brake - Adjustment
    1. Release the parking brake pedal fully.
    2. Press the parking brake pedal 1 click.
    3. Tighten the adjusting nut (A) until the parking brakes drag slightly when the rear wheels are turned.
    4. Release the parking brake pedal fully.
    5. Check that the parking brakes do not drag when the rear wheels are turned. Readjust if necessary.

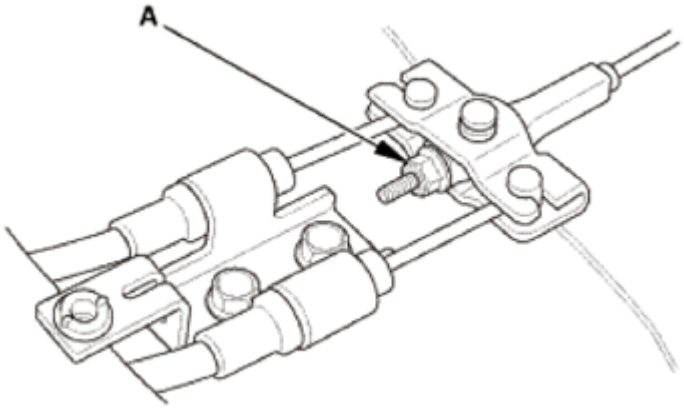

Fig. 182: Identifying Parking Brake Adjusting Nut
Courtesy of AMERICAN HONDA MOTOR CO., INC.

6. Press the parking brake pedal (A) with 294 N (30.0 kgf, 66 1 lbf) of force to fully apply the parking brake.
7. Make sure the parking brake pedal is within the specified number of clicks.

    Pedal locked clicks: 5 to 6 clicks

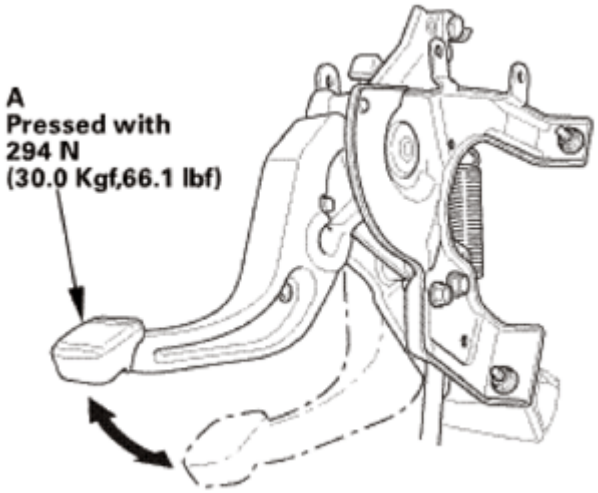

GETtheMANUALS.org

Fig. 183: Pressing Parking Brake Pedal
Courtesy of AMERICAN HONDA MOTOR CO., INC.

6. Parking Brake Return Spring
    1. Install the return spring (A).

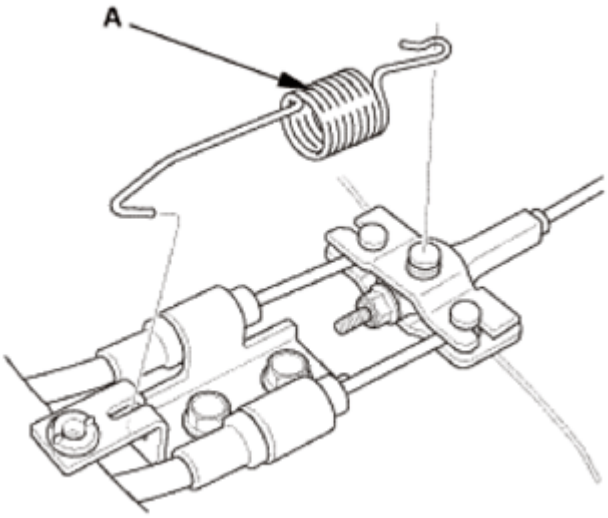

Fig. 184: Identifying Return Spring
Courtesy of AMERICAN HONDA MOTOR CO., INC.

7. Equalizer Cover
    1. Install the equalizer cover (A).
    2. Fold back into place the left rear carpet/cutout/insulation.

GETtheMANUALS.org

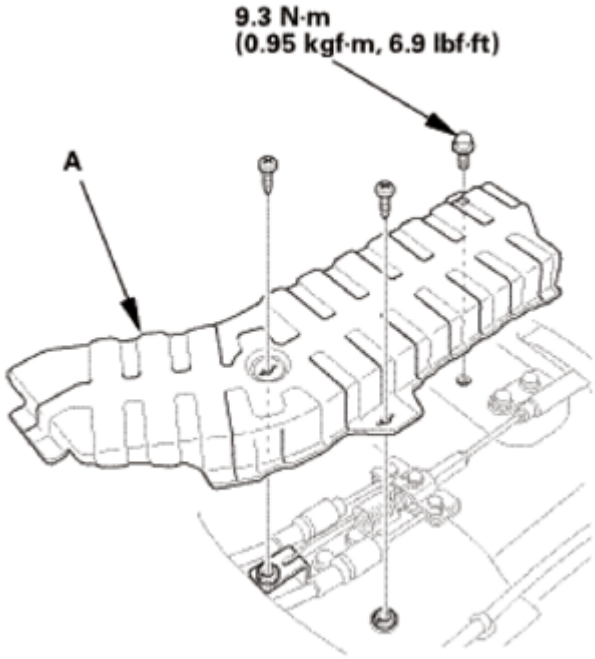

Fig. 185: Identifying Equalizer Cover And Mounting Bolts With Torque Specifications
Courtesy of AMERICAN HONDA MOTOR CO., INC.

8. Driver's Dashboard Lower Cover
    1. Connect the connector (A), then install the driver's dashboard lower cover (B). Make sure the clips (C) snap into place securely.

GETtheMANUALS.org

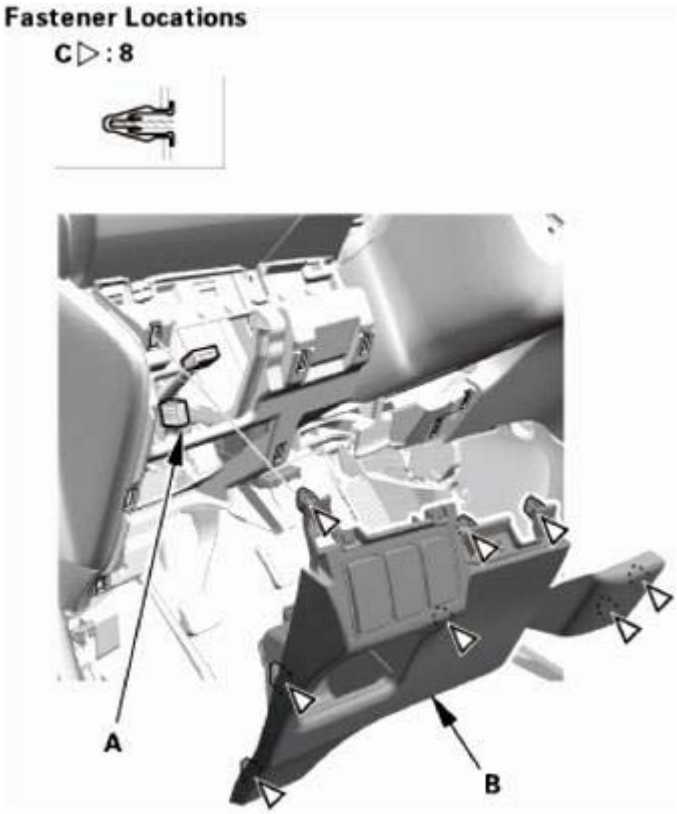

Fig. 186: Identifying Driver's Dashboard Lower Cover, Connector And Clips
Courtesy of AMERICAN HONDA MOTOR CO., INC.

9. Driver's Dashboard Undercover
    1. Install the driver's dashboard undercover (A). Make sure the clip (B) snap into place securely, and the pin (C) into the holder securely.
    2. Turn the lock knob (E) 90 °.

GETtheMANUALS.org

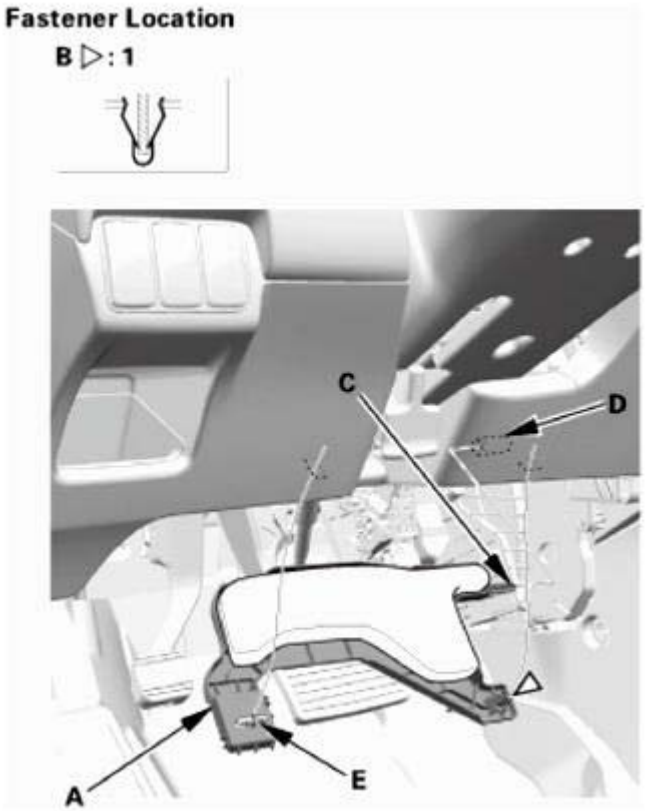

Fig. 187: Identifying Driver's Dashboard Undercover, Holder, Pin, Clip And Lock Knob
Courtesy of AMERICAN HONDA MOTOR CO., INC.

10. Driver's Dashboard Panel Assembly
    1. Connect the connector (A), then install the driver's dashboard panel assembly (B). Make sure the clips (C) snap into place securely.

GETtheMANUALS.org

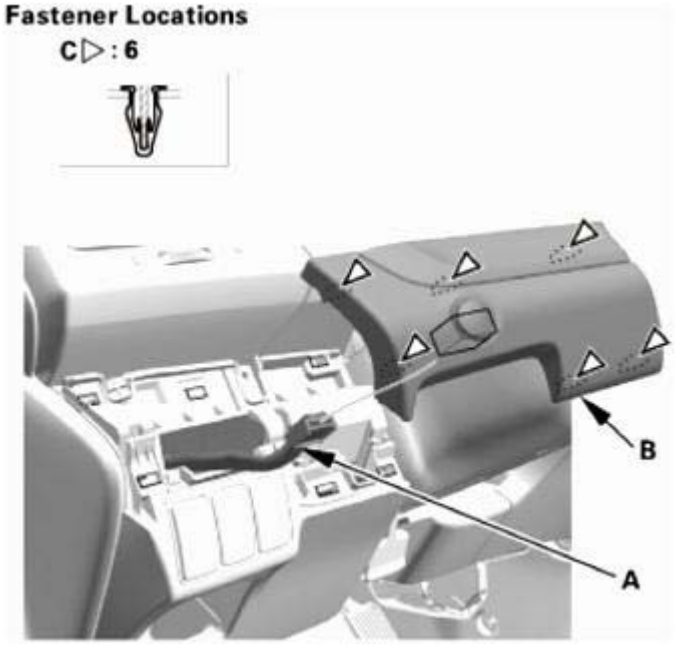

Fig. 188: Identifying Driver's Dashboard Panel Assembly, Connector And Clips
Courtesy of AMERICAN HONDA MOTOR CO., INC.

11. Kick Panel
    1. Install the driver's side kick panel (A). Make sure the clips snap into place securely.
    2. Install the front door opening seal (C).

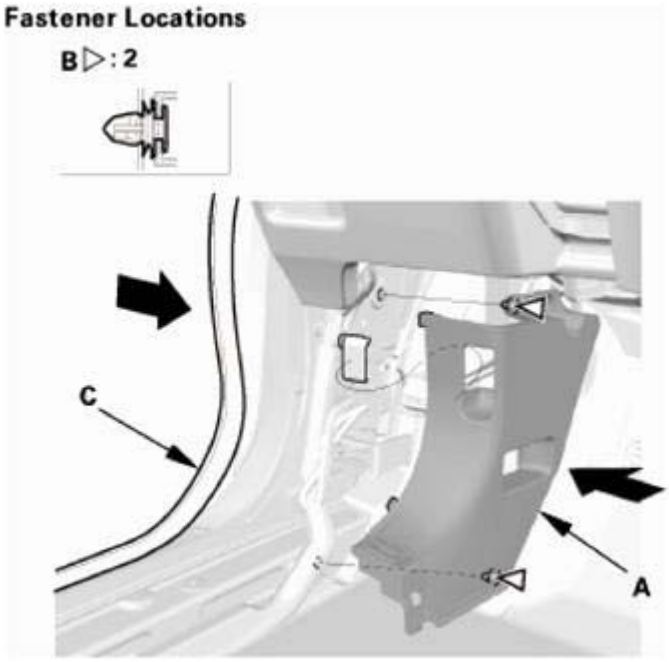

Fig. 189: Installing Driver's Side Kick Panel
Courtesy of AMERICAN HONDA MOTOR CO., INC.

GETtheMANUALS.org

12. Front Door Sill Trim
    1. Install the front door inner sill trim (A). Make sure the clips(B), the hooks (C), and the tabs (D) snap into place securely.

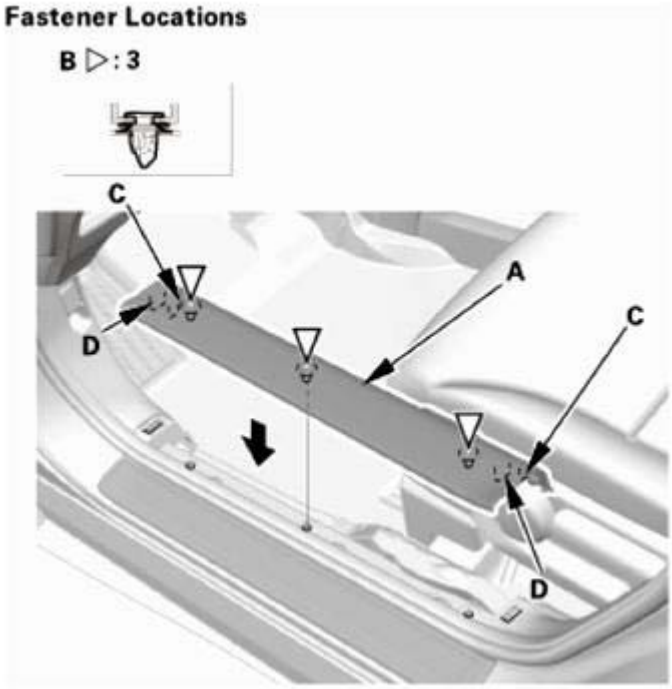

Fig. 190: Installing Front Door Inner Sill Trim
Courtesy of AMERICAN HONDA MOTOR CO., INC.

13. Rear Parking Brake Cable
    1. Install the rear parking brake cables.
    2. Install the rear parking brake cable mounting bolts (A).

    Left side cable

GETtheMANUALS.org

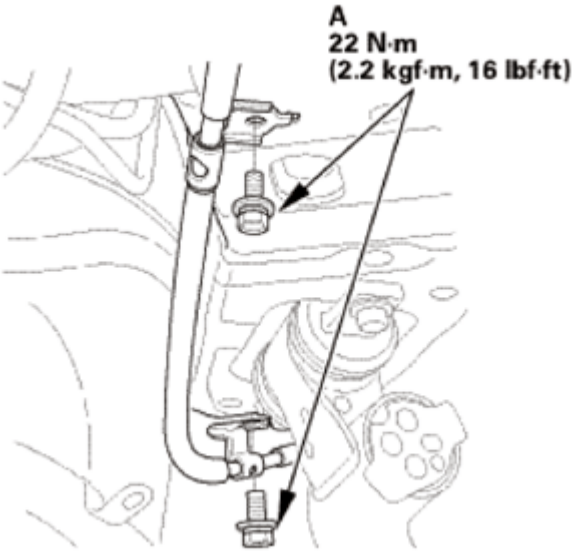

Fig. 191: Identifying Rear Parking Brake Cable Mounting Bolts With Torque Specifications (Left Side Cable)
Courtesy of AMERICAN HONDA MOTOR CO., INC.

Right side cable

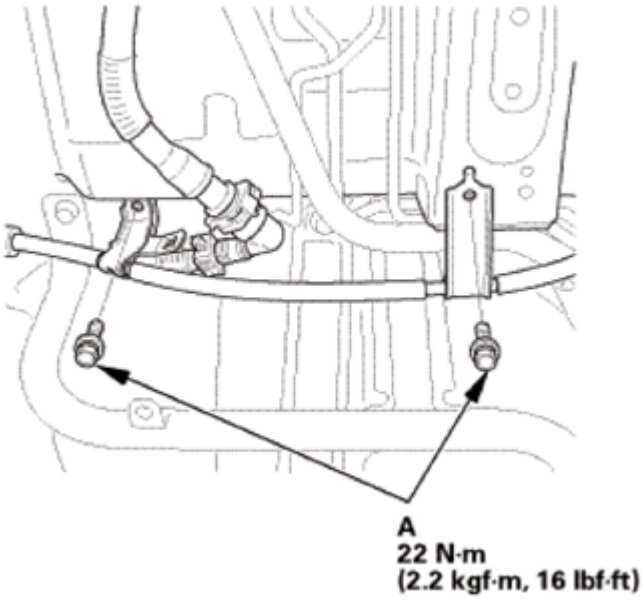

Fig. 192: Identifying Rear Parking Brake Cable Mounting Bolts With Torque Specifications (Right Side Cable)
Courtesy of AMERICAN HONDA MOTOR CO., INC.

Right side cable

GETtheMANUALS.org

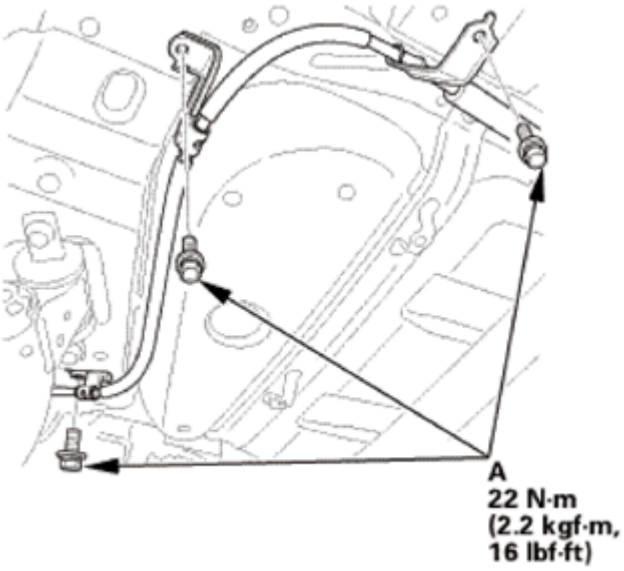

Fig. 193: Identifying Rear Parking Brake Cable Mounting Bolts With Torque Specifications (Right Side Cable)
Courtesy of AMERICAN HONDA MOTOR CO., INC.

3. Install the parking brake cable grommets (A).

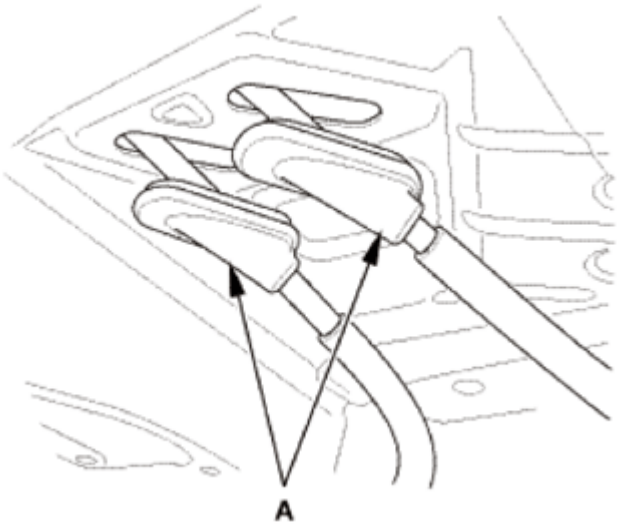

Fig. 194: Identifying Parking Brake Cable Grommets
Courtesy of AMERICAN HONDA MOTOR CO., INC.

4. Install the rear parking brake cable (A) to the backing plate (B).

NOTE: Be careful not to bend or distort the cable.

GETtheMANUALS.org

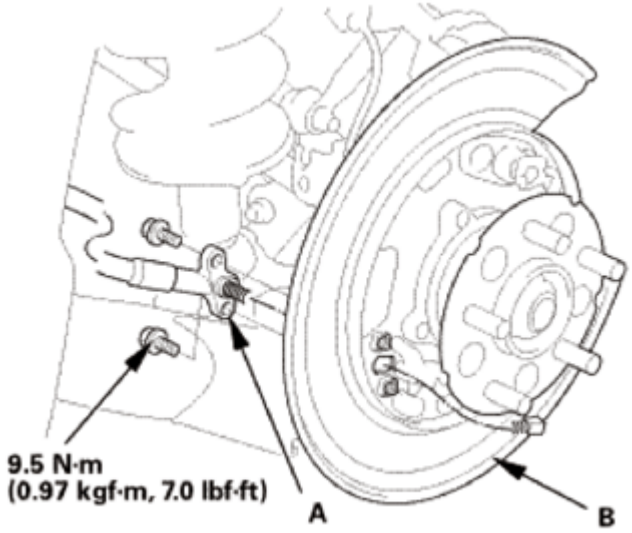

Fig. 195: Identifying Rear Parking Brake Cable And Backing Plate With Torque Specifications
Courtesy of AMERICAN HONDA MOTOR CO., INC.

14. Parking Brake Shoe
    1. Connect the rear parking brake cable (A) to the parking brake lever (B).
    2. Apply Molykote 44MA grease to the cable contact surface (C) on the backing plate.

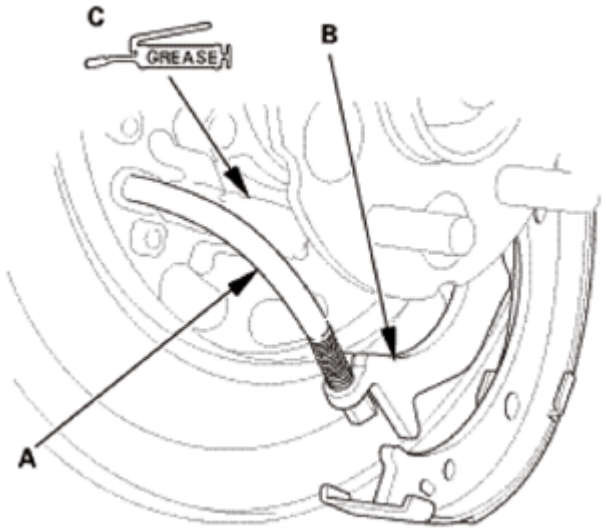

Fig. 196: Identifying Molykote Grease Applying Area On Backing Plate Cable Contact Surface
Courtesy of AMERICAN HONDA MOTOR CO., INC.

    3. Apply a thin coat of Molykote 44MA grease to the brake shoe ends and strut ends (A), sliding surfaces of the parking brake shoe (B), and the pivot of the parking brake lever (C) as shown. Wipe off any excess. Keep grease off the brake linings.

GETtheMANUALS.org

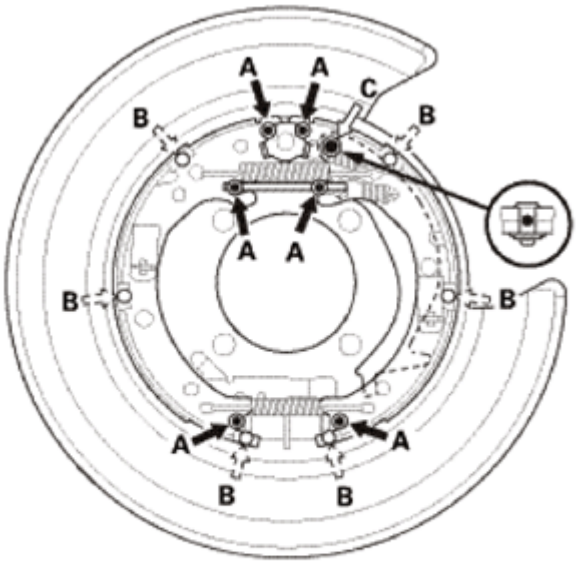

Greasing symbols:

A ➡ ◉ Brake shoe ends and strut ends

B ⇨ ○ Sliding surface of the shoe

C ⇨ ● Opposite edge of the shoe

Fig. 197: Locating Thin Coat Of Molykote Grease Applying Area On Brake Shoe Ends And Strut Ends

Courtesy of AMERICAN HONDA MOTOR CO., INC.

4. Position the parking brake shoes (A), then hook the rod spring (B) on the strut (C) first with the spring end (D) pointing downward. Then hook the rod spring to the parking brake shoe, and install the strut on the parking brake shoes.

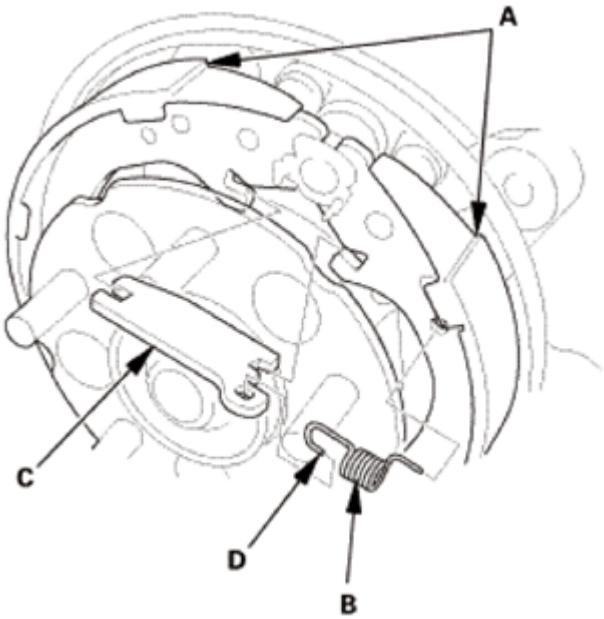

Fig. 198: Identifying Parking Brake Shoes, Rod Spring, Strut And Spring End

GETtheMANUALS.org

Courtesy of AMERICAN HONDA MOTOR CO., INC.

5. Install the tension pins (C) and retainer springs (D). Make sure the tension pin does not contact the parking brake lever.
6. Install connecting rods A and B on the adjuster nut (E).

NOTE:

- **Clean the threaded portions of connecting rod A and the sliding surface of connecting rod B, then coat them with Molykote 44MA grease.**
- **Shorten connecting rod A by fully turning the adjuster nut.**

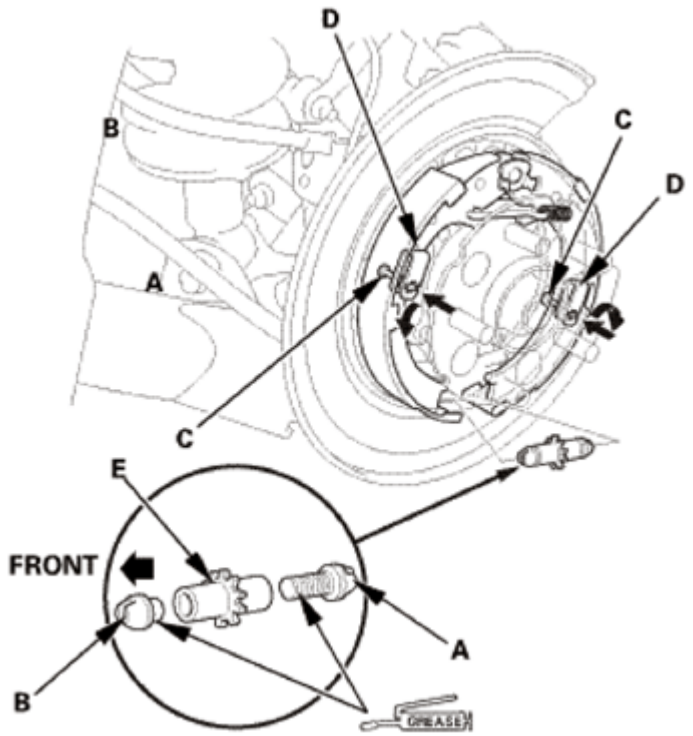

Fig. 199: Installing Tension Pins And Retainer Springs
Courtesy of AMERICAN HONDA MOTOR CO., INC.

7. Install the lower return spring (A).

GETtheMANUALS.org

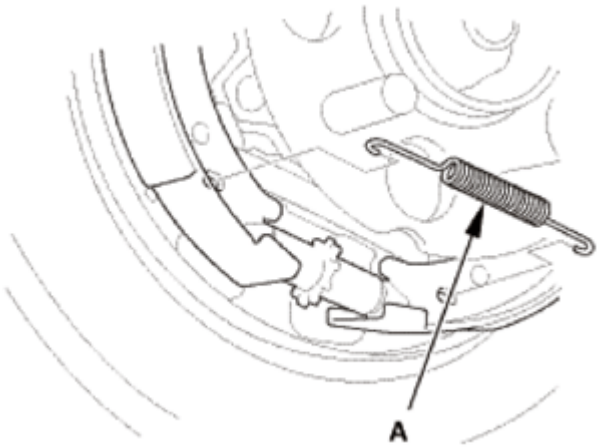

Fig. 200: Identifying Lower Return Spring
Courtesy of AMERICAN HONDA MOTOR CO., INC.

8. Install the upper return spring (B).
9. Install brake spring A.

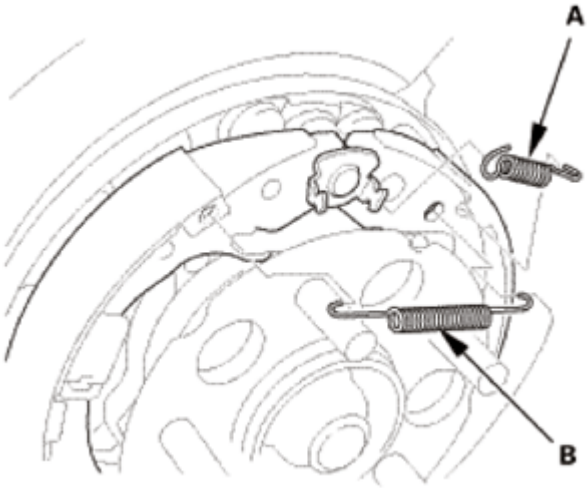

Fig. 201: Identifying Upper Return Spring And Brake Spring
Courtesy of AMERICAN HONDA MOTOR CO., INC.

15. Rear Brake Disc
    1. Install the brake disc (A).

NOTE: **Before installing the brake disc, clean the mating surface between the hub bearing unit and the inside of the brake disc.**

GETtheMANUALS.org

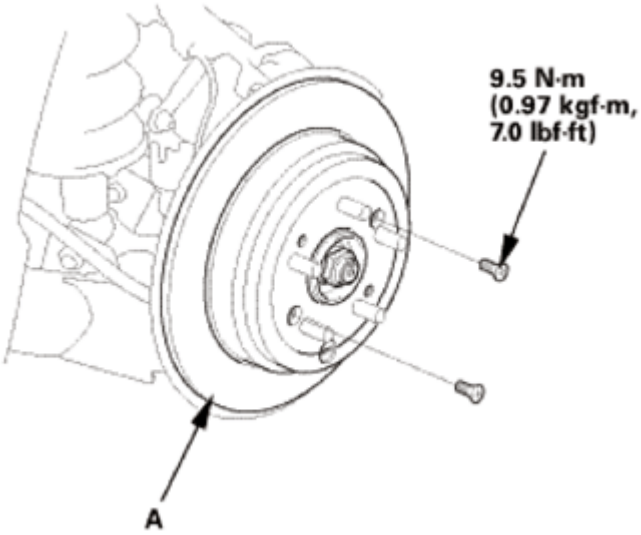

Fig. 202: Identifying Brake Disc And Mounting Bolts With Torque Specifications
Courtesy of AMERICAN HONDA MOTOR CO., INC.

16. Rear Brake Caliper - Reattach
    1. Install the caliper assembly (A).
    2. Install the brake hose mounting bolt (B).

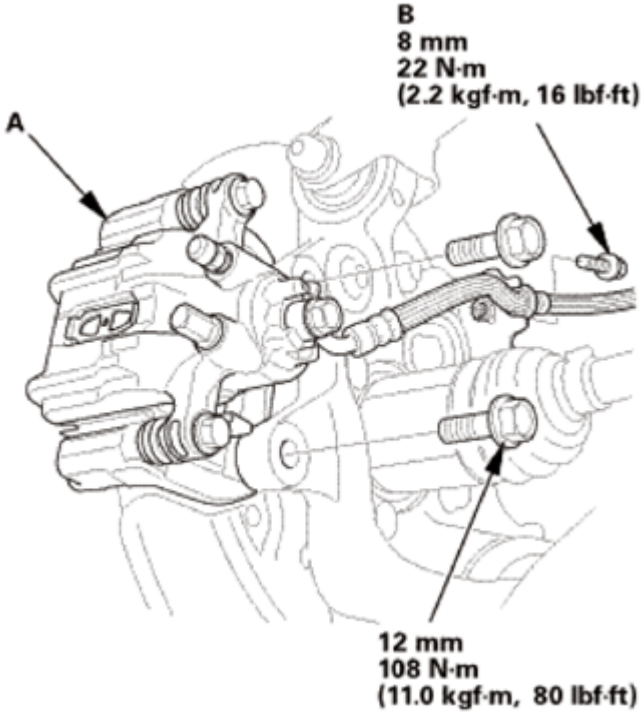

Fig. 203: Identifying Caliper Assembly And Brake Hose Mounting Bolt With Torque Specifications
Courtesy of AMERICAN HONDA MOTOR CO., INC.

GETtheMANUALS.org

17. Middle Floor Undercover

Left side

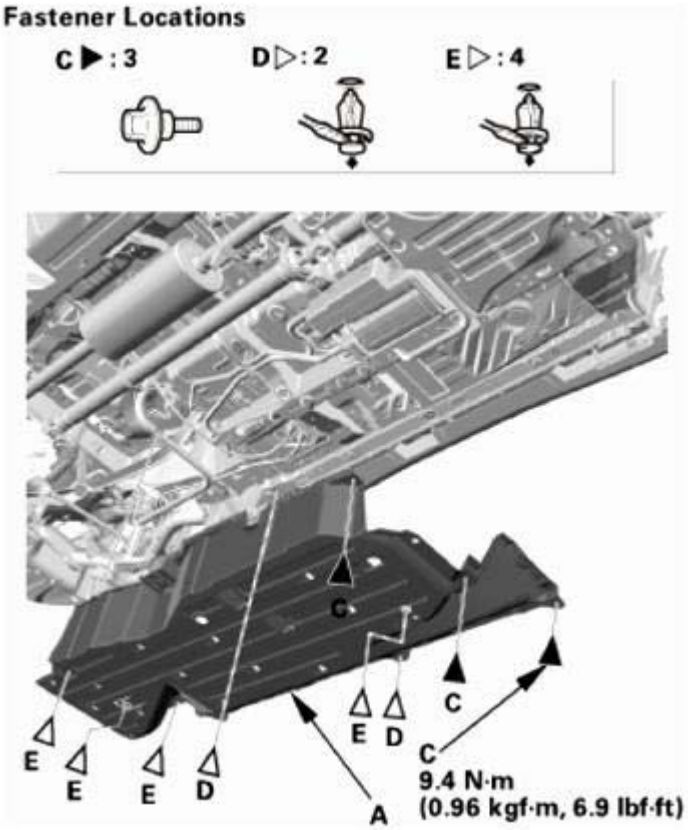

Fig. 204: Identifying Middle Floor Undercover And Fasteners (Left Side)
Courtesy of AMERICAN HONDA MOTOR CO., INC.

1. Install the left middle floor undercover (A) or the right middle floor undercover (B), then install the bolts (C) and the clips (D, E). Make sure the clips snap into place securely.

   Right side

GETtheMANUALS.org

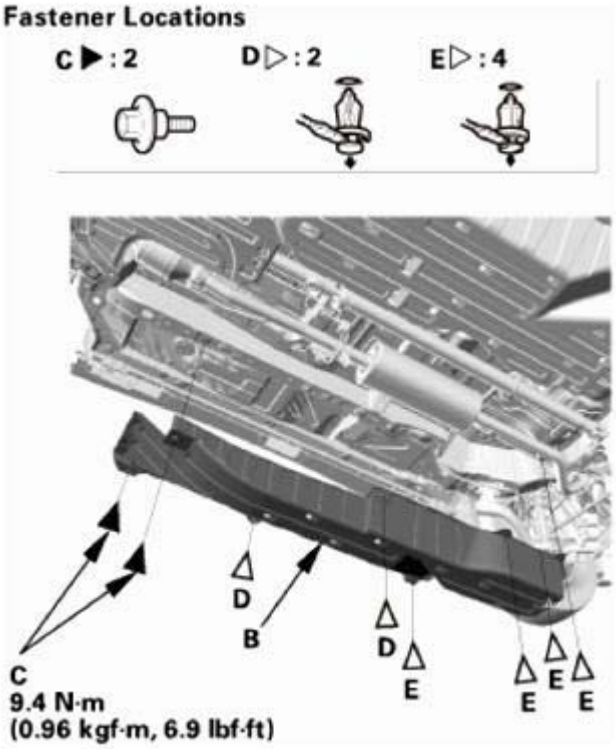

Fig. 205: Identifying Middle Floor Undercover And Fasteners (Right Side)
Courtesy of AMERICAN HONDA MOTOR CO., INC.

18. Rear Parking Brake Cable - Equalizer Side
    1. Connect the rear parking brake cables (A) to the equalizer (B).
    2. Install the wire guide base (C).

GETtheMANUALS.org

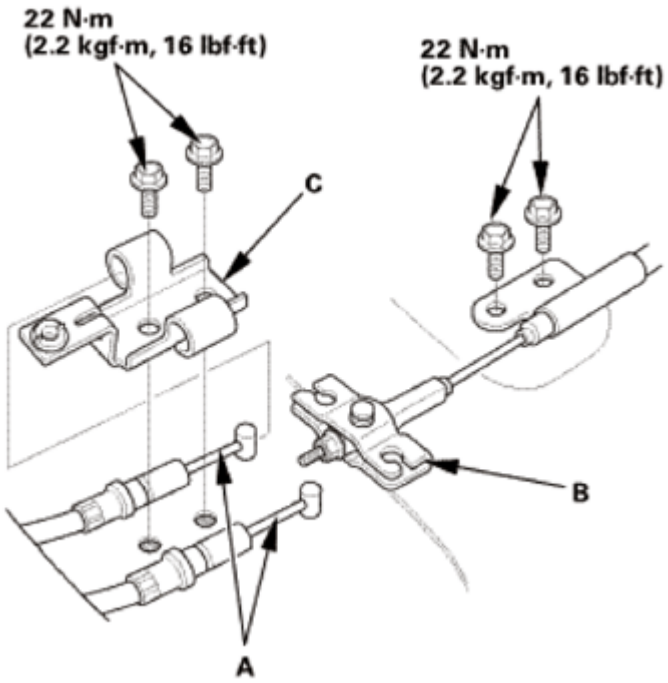

Fig. 206: Identifying Rear Parking Brake Cables, Equalizer And Wire Guide Base And Mounting Bolts With Torque Specifications
Courtesy of AMERICAN HONDA MOTOR CO., INC.

19. Major Parking Brake - Adjustment
    1. Remove the access plug (A).
    2. Turn the ratchet teeth on the adjuster nut (B) with a brake adjuster tool or a flat-tip screwdriver (C) until the shoes lock against parking brake drum. Then back off the adjuster 7 clicks, an install the access plug.

GETtheMANUALS.org

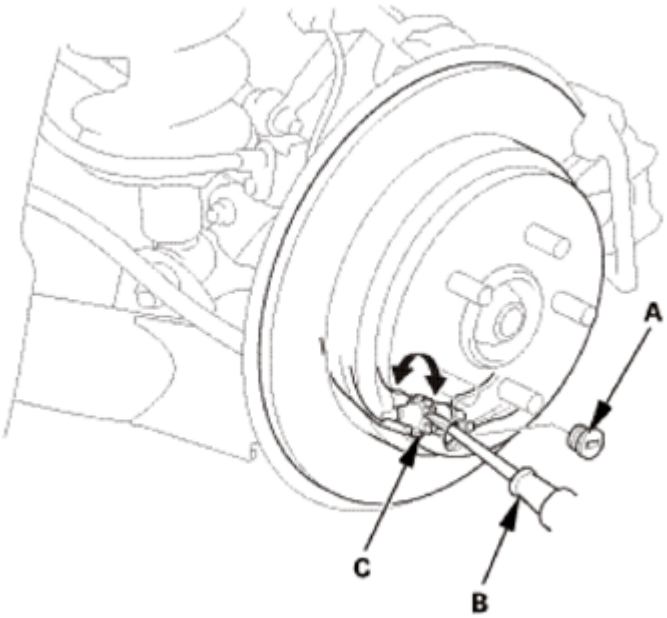

Fig. 207: Turning Ratchet Teeth On Adjuster Nut Using Brake Adjuster Tool Or Flat-Tip Screwdriver
Courtesy of AMERICAN HONDA MOTOR CO., INC.

20. Rear Wheel - Both Side
    1. Install both rear wheels.

NOTE: **Before installing the wheel, clean the mating surfaces between the brake disc/drum and the inside of the wheel.**

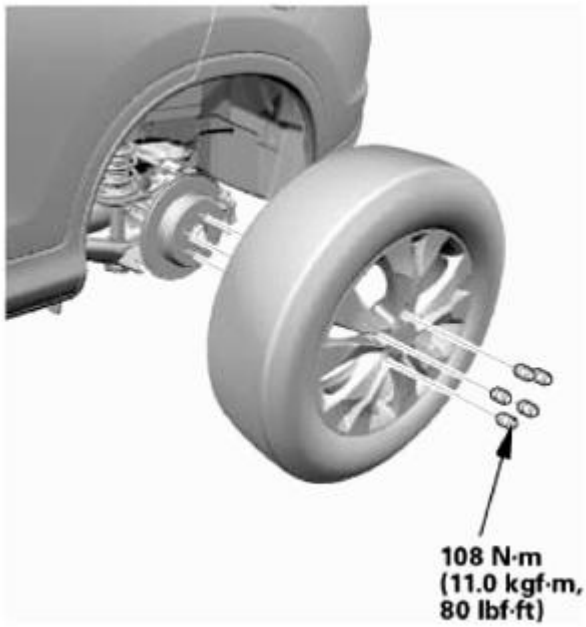

GETtheMANUALS.org

Fig. 208: Identifying Rear Wheel And Mounting Bolts With Torque Specifications
Courtesy of AMERICAN HONDA MOTOR CO., INC.

21. Minor Parking Brake - Adjustment
    1. Release the parking brake pedal fully.
    2. Press the parking brake pedal 1 click.
    3. Tighten the adjusting nut (A) until the parking brakes drag slightly when the rear wheels are turned.
    4. Release the parking brake pedal fully.
    5. Check that the parking brakes do not drag when the rear wheels are turned. Readjust if necessary.

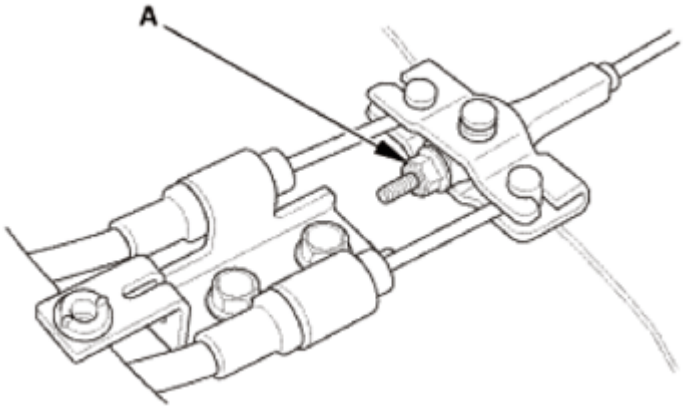

Fig. 209: Identifying Parking Brake Adjusting Nut
Courtesy of AMERICAN HONDA MOTOR CO., INC.

    6. Press the parking brake pedal (A) with 294 N (30.0 kgf, 66.1 lbf) of force to fully apply the parking brake.
    7. Make sure the parking brake pedal is within the specified number of clicks.

    Pedal locked clicks: 5 to 6 clicks

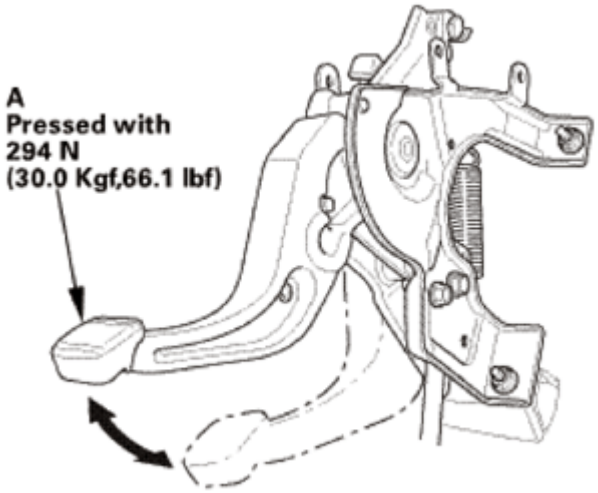

GETtheMANUALS.org

Fig. 210: Pressing Parking Brake Pedal
Courtesy of AMERICAN HONDA MOTOR CO., INC.

22. Parking Brake Return Spring
    1. Install the return spring (A).

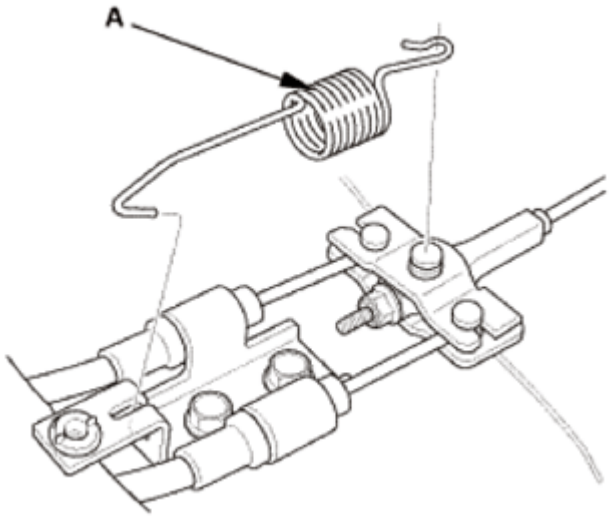

Fig. 211: Identifying Return Spring
Courtesy of AMERICAN HONDA MOTOR CO., INC.

23. Equalizer Cover
    1. Install the equalizer cover (A).
    2. Fold back into place the left rear carpet/cutout/insulation.

GETtheMANUALS.org

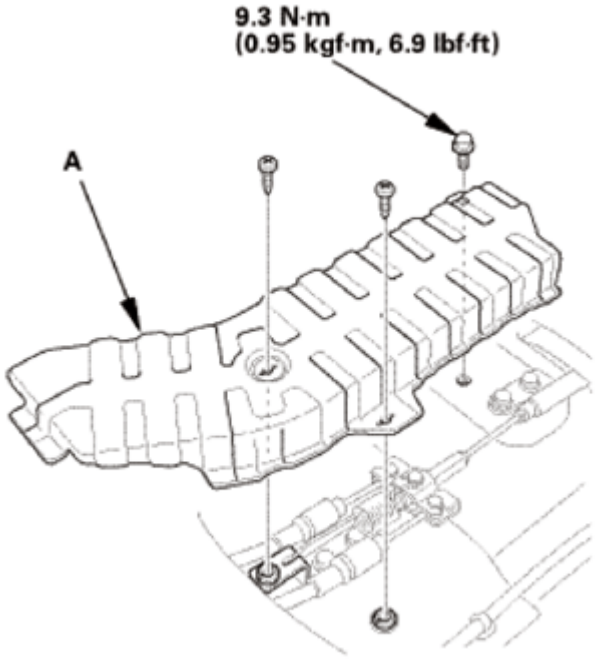

Fig. 212: Identifying Equalizer Cover And Mounting Bolts With Torque Specifications
Courtesy of AMERICAN HONDA MOTOR CO., INC.

PARKING BRAKE INSPECTION

REMOVAL

1. Vehicle Lift
    1. Raise the vehicle on a lift, and make sure it is securely supported.
2. Rear Wheel - Both Side
    1. Remove both rear wheels.

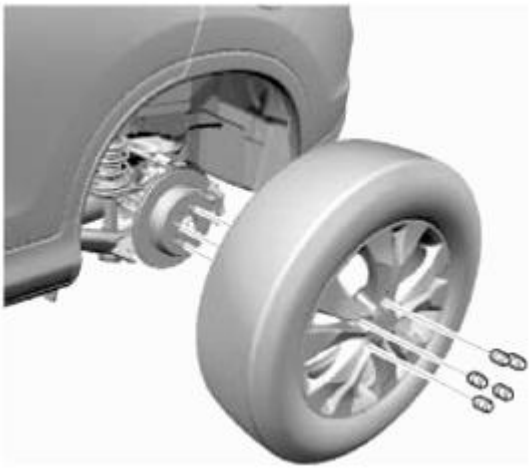

Fig. 213: Identifying Rear Wheel And Mounting Bolts

GETtheMANUALS.org

Courtesy of AMERICAN HONDA MOTOR CO., INC.

3. Equalizer Cover
    1. Pull back the left rear carpet/cutout/insulation, under the driver's seat.
    2. Remove the equalizer cover (A).

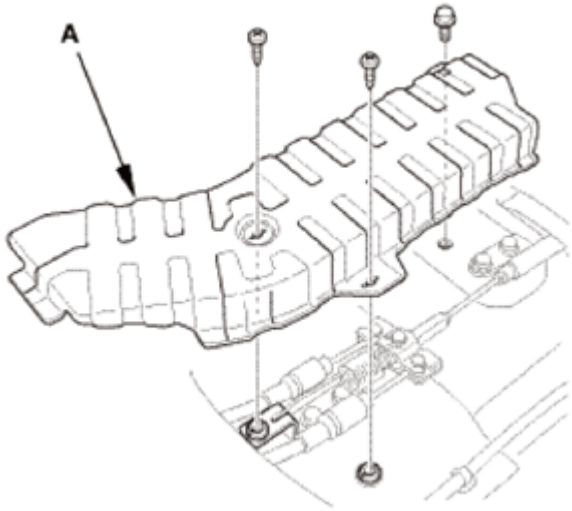

Fig. 214: Identifying Equalizer Cover And Mounting Bolts
Courtesy of AMERICAN HONDA MOTOR CO., INC.

4. Parking Brake Adjusting Bolt - Loosen
    1. Release the parking brake pedal fully.
    2. Disconnect and remove the return spring (A).
    3. Loosen the adjusting nut (B).

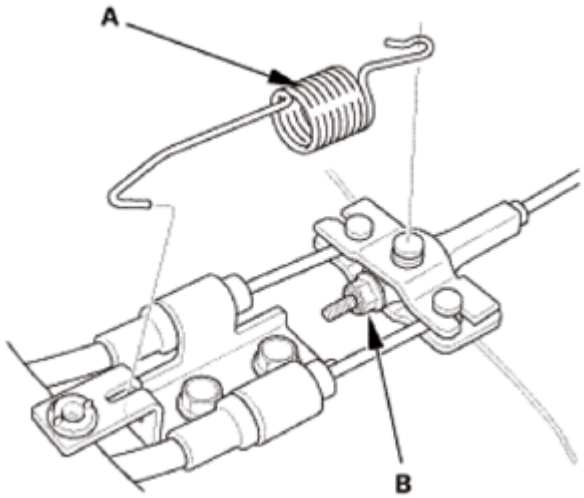

Fig. 215: Identifying Return Spring And Adjusting Nut
Courtesy of AMERICAN HONDA MOTOR CO., INC.

GETtheMANUALS.org

5. Rear Brake Caliper - Detach
    1. Remove the brake hose mounting bolt (A).
    2. Remove the caliper assembly (B).

NOTE:

- **To prevent damage to the caliper assembly or brake hose, use a short piece of wire to hang the caliper assembly from the undercarriage.**
- **Do not twist the brake hose and the parking brake cable excessively.**

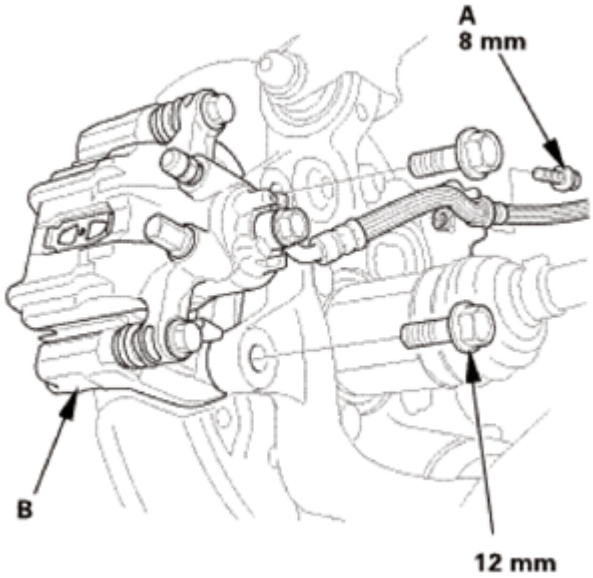

Fig. 216: Identifying Caliper Assembly And Brake Hose Mounting Bolt With Torque Specification
Courtesy of AMERICAN HONDA MOTOR CO., INC.

6. Rear Brake Disc
    1. Remove the brake disc/drum flathead screws (A).
    2. Remove the brake disc/drum (B).

NOTE:

- **Remove the adjuster plug (C), then if necessary, turn the adjuster bolt (D) with a flat-tip screwdriver until the shoes become loose.**
- **If the brake disc/drum is stuck to the hub bearing unit, thread two 8 x 1.25 mm bolts (E) into the brake disc/drum to push it away from the hub bearing unit. Turn each bolt 90 degrees at a time to prevent the brake disc/drum from binding.**

GETtheMANUALS.org

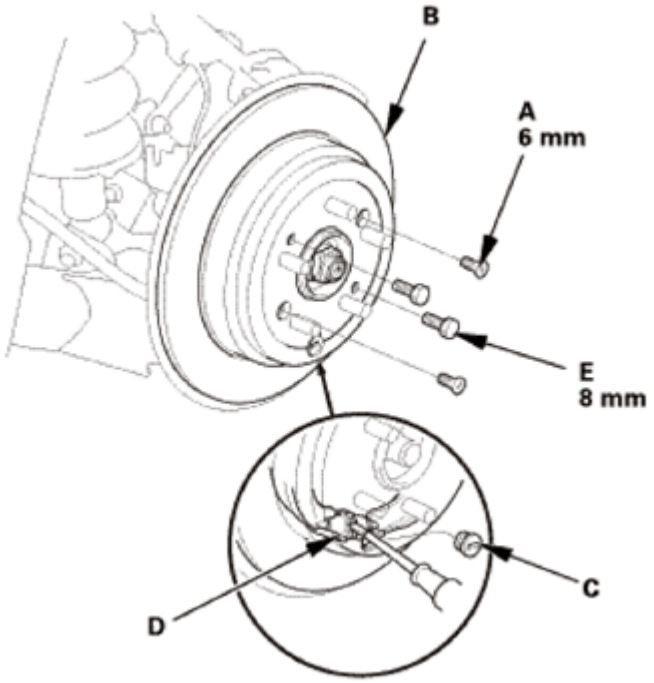

Fig. 217: Turning Adjuster Bolt Using Flat-Tip Screwdriver
Courtesy of AMERICAN HONDA MOTOR CO., INC.

INSPECTION

1. Parking Brake Inspection
    1. Check the parking brake linings (A) for cracking, glazing, wear, and contamination.
    2. Measure the parking brake lining thickness (B). Measurement does not include brake shoe thickness.

       Parking brake lining thickness:

       Standard: 1.7-3.0 mm (0.067-0.118 in)

       Service limit: 1.0 mm (0.039 in)

    3. If any part of the parking brake lining thickness is less than the service limit, replace all of the parking brake shoes as a set.
    4. Check the hub (C) for smooth operation. If it requires servicing, replace the hub bearing unit.

GETtheMANUALS.org

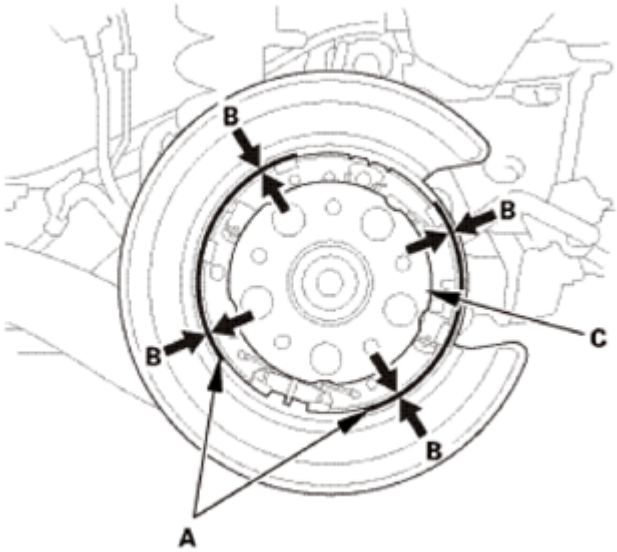

Fig. 218: Identifying Parking Brake Lining Thickness
Courtesy of AMERICAN HONDA MOTOR CO., INC.

5. Measure the inside diameter of the parking brake drum with an inside vernier caliper.

   Parking brake drum inside diameter:

   Standard: 200 mm (7.874 in)

   Service limit: 201 mm (7.913 in)

6. If the inside diameter of the parking brake drum is more than the service limit, replace the brake disc/drum.
7. Check the parking brake disc/drum for scoring, grooves, and cracks.

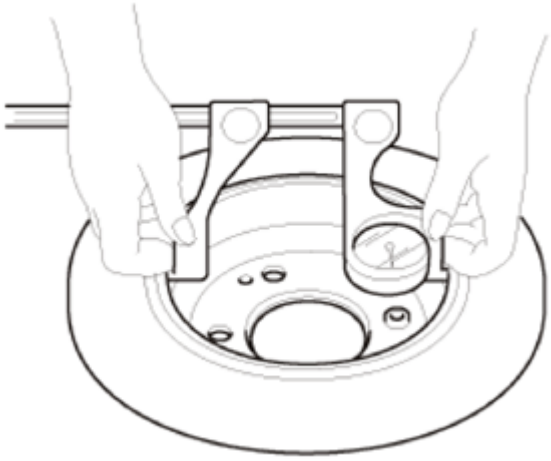

Fig. 219: Measuring Inside Diameter Of Parking Brake Drum Using Inside Vernier Caliper
Courtesy of AMERICAN HONDA MOTOR CO., INC.

GETtheMANUALS.org

INSTALLATION

1. Rear Brake Disc
    1. Install the brake disc (A).

NOTE: **Before installing the brake disc, clean the mating surfaces between the hub bearing unit and the inside of the brake disc.**

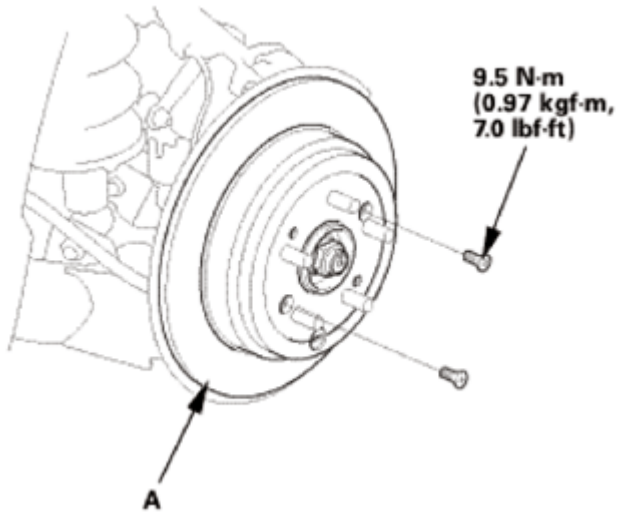

Fig. 220: Identifying Brake Disc And Mounting Bolts With Torque Specifications
Courtesy of AMERICAN HONDA MOTOR CO., INC.

2. Rear Brake Caliper - Reattach
    1. Install the caliper assembly (A).
    2. Install the brake hose mounting bolt (B).

GETtheMANUALS.org

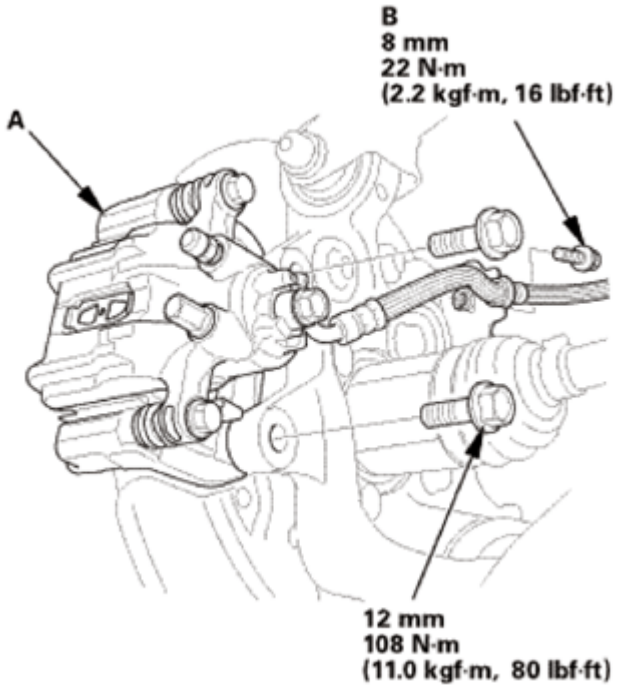

Fig. 221: Identifying Caliper Assembly And Brake Hose Mounting Bolts With Torque Specifications
Courtesy of AMERICAN HONDA MOTOR CO., INC.

3. Major Parking Brake - Adjustment
    1. Remove the access plug (A).
    2. Turn the ratchet teeth on the adjuster nut (B) with a brake adjuster tool or a flat-tip screwdriver (C) until the shoes lock against the parking brake drum. Then back off the adjuster 7 clicks, and install the access plug.

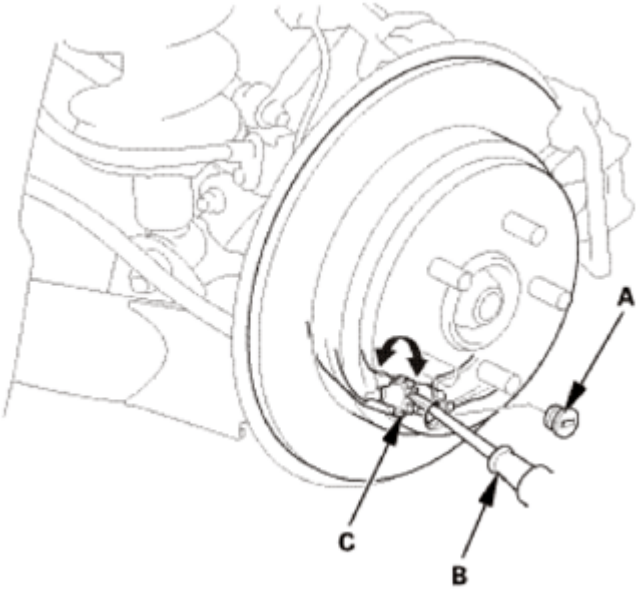

GETtheMANUALS.org

Fig. 222: Turning Ratchet Teeth On Adjuster Nut Using Brake Adjuster Tool Or Flat-Tip Screwdriver
Courtesy of AMERICAN HONDA MOTOR CO., INC.

4. Rear Wheel - Both Side
    1. Install both rear wheels.

NOTE: **Before installing the wheel, clean the mating surfaces between the brake disc/drum and the inside of the wheel.**

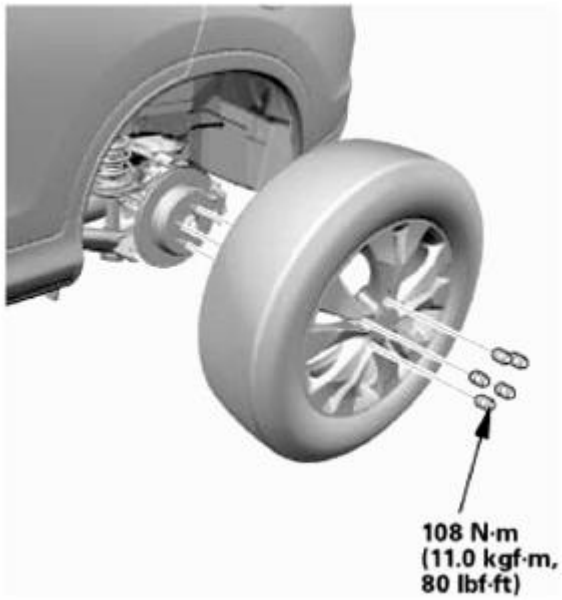

Fig. 223: Identifying Rear Wheel And Mounting Bolts With Torque Specifications
Courtesy of AMERICAN HONDA MOTOR CO., INC.

5. Minor Parking Brake - Adjustment
    1. Release the parking brake pedal fully.
    2. Press the parking brake pedal 1 click.
    3. Tighten the adjusting nut (A) until the parking brakes drag slightly when the rear wheels are turned.
    4. Release the parking brake pedal fully.
    5. Check that the parking brakes do not drag when the rear wheels are turned. Readjust if necessary.

GETtheMANUALS.org

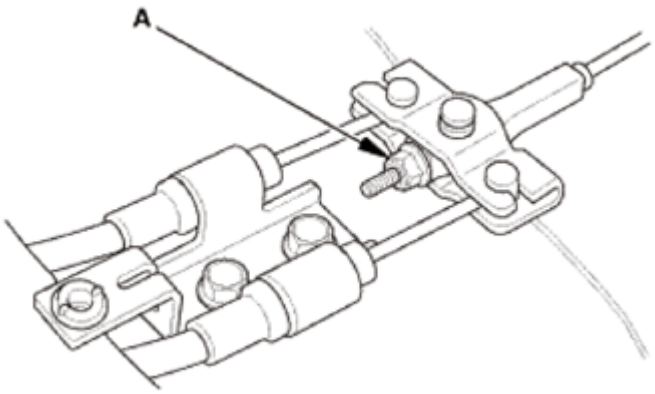

Fig. 224: Identifying Parking Brake Adjusting Nut
Courtesy of AMERICAN HONDA MOTOR CO., INC.

6. Press the parking brake pedal (A) with 294 N (30.0 kgf, 66.1 lbf) of force to fully apply the parking brake.
7. Make sure the parking brake pedal is within the specified number of clicks.

   Pedal locked clicks: 5 to 6 clicks

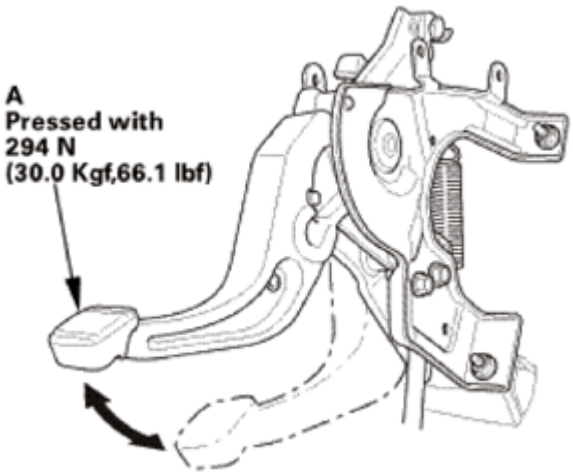

Fig. 225: Pressing Parking Brake Pedal
Courtesy of AMERICAN HONDA MOTOR CO., INC.

6. Parking Brake Return Spring
   1. Install the return spring (A).

GETtheMANUALS.org

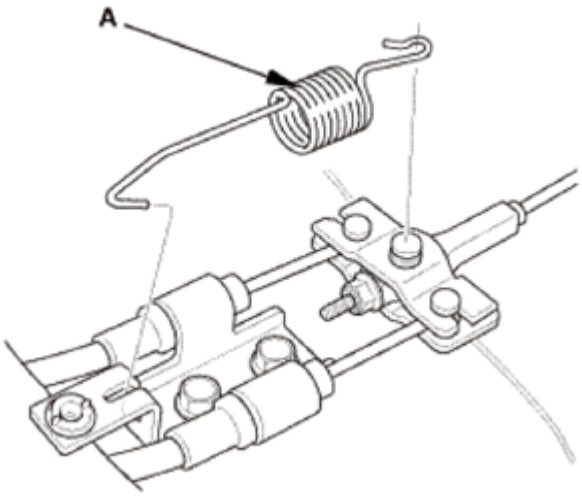

Fig. 226: Identifying Return Spring
Courtesy of AMERICAN HONDA MOTOR CO., INC.

7. Equalizer Cover
    1. Install the equalizer cover (A).
    2. Fold back into place the left rear carpet/cutout/insulation.

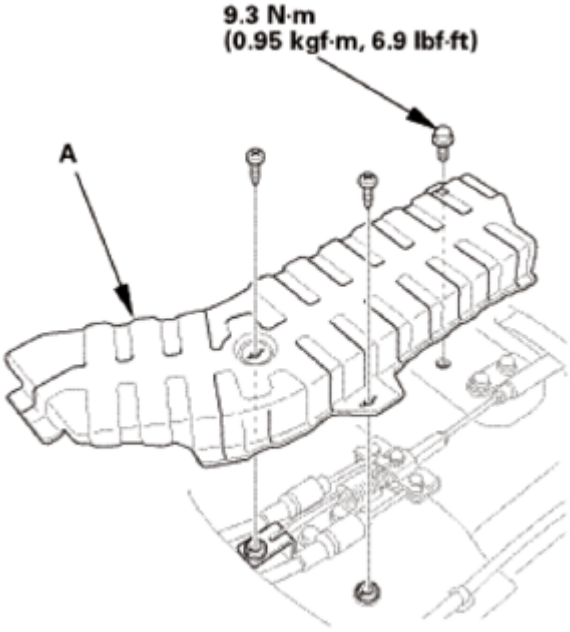

Fig. 227: Identifying Equalizer Cover And Mounting Bolts With Torque Specifications
Courtesy of AMERICAN HONDA MOTOR CO., INC.

PARKING BRAKE INSPECTION AND ADJUSTMENT

INSPECTION

GETtheMANUALS.org

1. Parking Brake Pedal - Inspection
    1. Press the parking brake pedal (A) with 294 N (30.0 kgf, 66.1 lbf) of force to fully apply the parking brake.
    2. The parking brake pedal should be locked within the specified number of clicks.

       Pedal locked clicks: 5 to 6 clicks

    3. Adjust the parking brake if the pedal clicks are not within the specification.

       NOTE: **Minor parking brake pedal adjustments (1 to 2 clicks) can be made with the adjusting nut (see parking brake minor adjustment). If a larger adjustment is required, follow the major adjustment procedure using the adjuster nut at the parking brake drum (see parking brake major adjustment). After installing new parking brake shoes and/or new brake disc/drum, make sure you drive the vehicle for "break-in"**

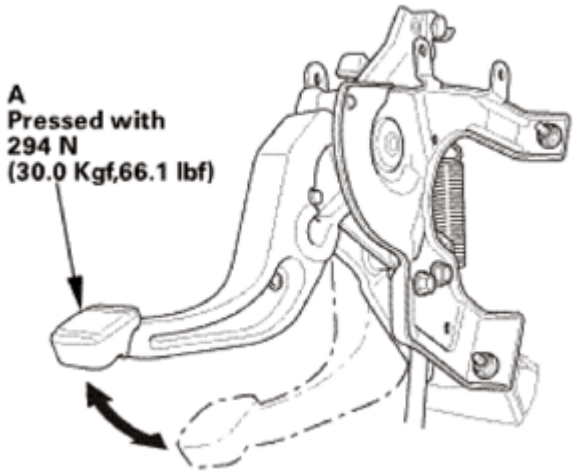

Fig. 228: Pressing Parking Brake Pedal
Courtesy of AMERICAN HONDA MOTOR CO., INC.

REMOVAL

NOTE:
- **For the parking brake minor adjustment, go to steps 1-2.**
- **For the parking brake major adjustment, go to step 3-6.**

1. Equalizer Cover
    1. Pull back the left rear carpet/cutout/insulation, under the driver's seat.
    2. Remove the equalizer cover (A).

GETtheMANUALS.org

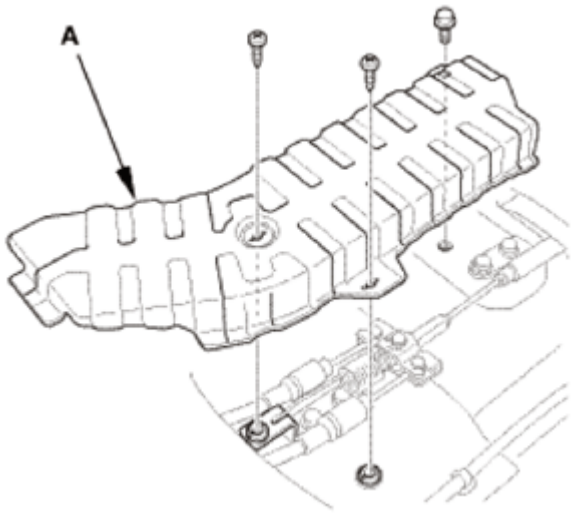

Fig. 229: Identifying Equalizer Cover And Mounting Bolts
Courtesy of AMERICAN HONDA MOTOR CO., INC.

2. Parking Brake Return Spring
    1. Disconnect and remove the return spring (A).

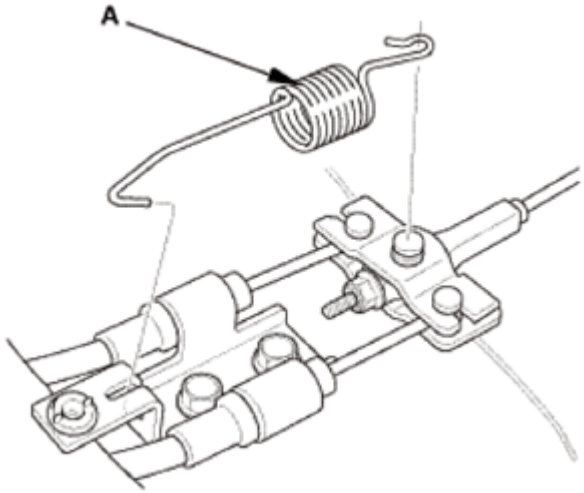

Fig. 230: Identifying Return Spring And Adjusting Nut
Courtesy of AMERICAN HONDA MOTOR CO., INC.

3. Vehicle Lift
    1. Raise the vehicle on a lift, and make sure it is securely supported.
4. Rear Wheel - Both Side
    1. Remove both rear wheels.

GETtheMANUALS.org

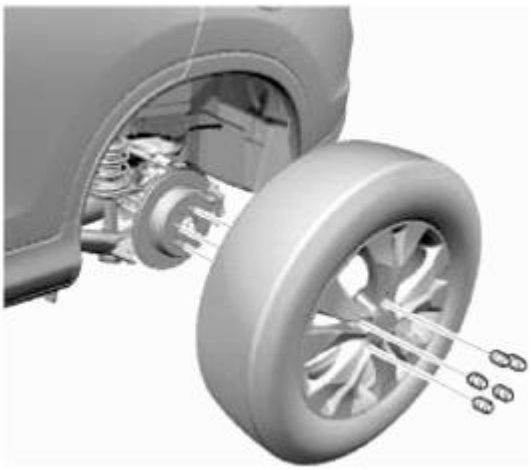

Fig. 231: Identifying Rear Wheel And Mounting Bolts
Courtesy of AMERICAN HONDA MOTOR CO., INC.

5. Equalizer Cover
    1. Pull back the left rear carpet/cutout/insulation, under the driver's seat.
    2. Remove the equalizer cover (A).

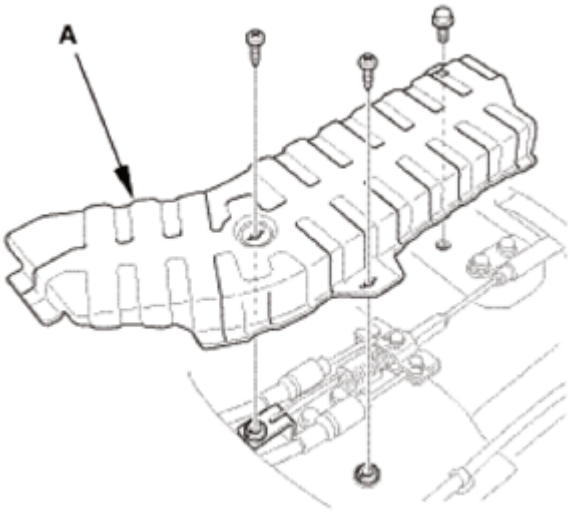

Fig. 232: Identifying Equalizer Cover And Mounting Bolts
Courtesy of AMERICAN HONDA MOTOR CO., INC.

6. Parking Brake Adjusting Bolt - Loosen
    1. Release the parking brake pedal fully.
    2. Disconnect and remove the return spring (A).
    3. Loosen the adjusting nut (B).

GETtheMANUALS.org

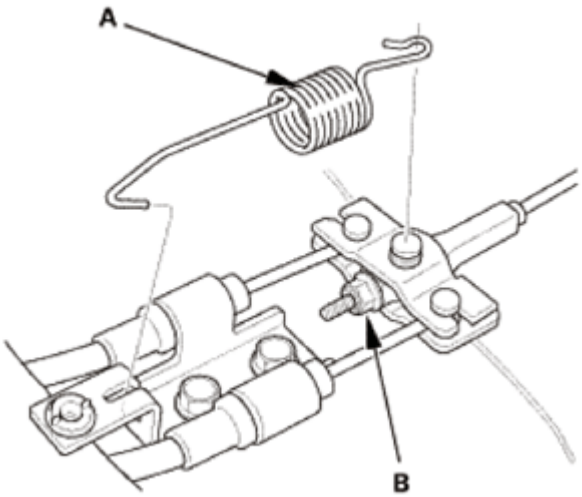

Fig. 233: Identifying Return Spring And Adjusting Nut
Courtesy of AMERICAN HONDA MOTOR CO., INC.

ADJUSTMENT

NOTE:

- **For the parking brake minor adjustment, go to step 1.**
- **For the parking brake major adjustment, go to step 2.**

1. Minor Parking Brake - Adjustment
    1. Release the parking brake pedal fully.
    2. Press the parking brake pedal 1 click.
    3. Tighten the adjusting nut (A) until the parking brakes drag slightly when the rear wheels are turned.
    4. Release the parking brake pedal fully.
    5. Check that the parking brakes do not drag when the rear wheels are turned. Readjust if necessary.

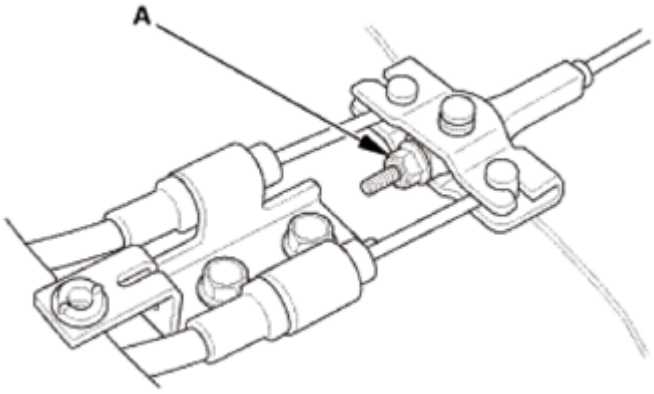

Fig. 234: Identifying Parking Brake Adjusting Nut
Courtesy of AMERICAN HONDA MOTOR CO., INC.

6. Press the parking brake pedal (A) with 294 N (30.0 kgf, 66.1 lbf) of force to fully apply the parking

GETtheMANUALS.org

brake.

7. Make sure the parking brake pedal is within the specified number of clicks.

Pedal locked clicks: 5 to 6 clicks

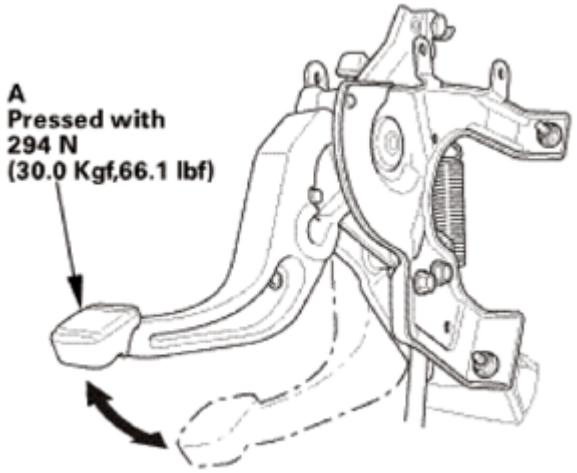

Fig. 235: Pressing Parking Brake Pedal
Courtesy of AMERICAN HONDA MOTOR CO., INC.

2. Major Parking Brake - Adjustment
    1. Remove the access plug (A).
    2. Turn the ratchet teeth on the adjuster nut (B) with a brake adjuster tool or a flat-tip screwdriver (C) until the shoes lock against the parking brake drum. Then back off the adjuster 7 clicks, and install the access plug.

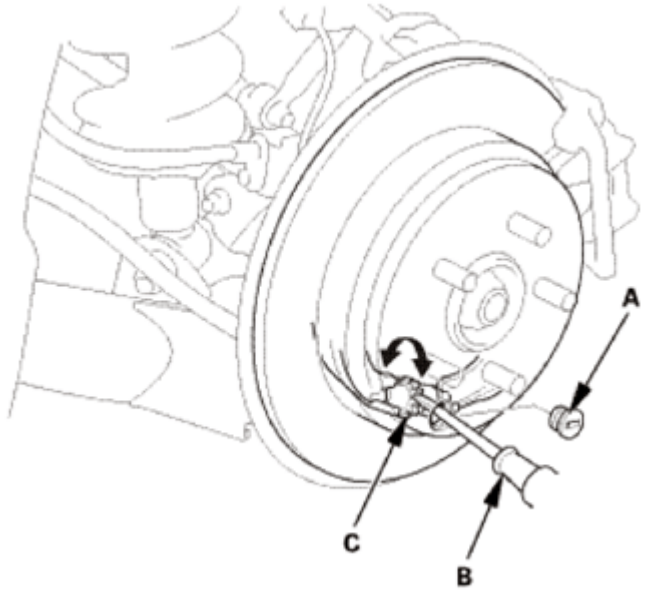

Fig. 236: Turning Ratchet Teeth On Adjuster Nut Using Brake Adjuster Tool Or Flat-Tip

GETtheMANUALS.org

Screwdriver
Courtesy of AMERICAN HONDA MOTOR CO., INC.

3. Install the rear wheel on both sides.

NOTE: **Before installing the wheel, clean the mating surfaces between the brake disc or the brake drum and the inside of the wheel.**

4. Release the parking brake pedal fully.
5. Press the parking brake pedal 1 click.

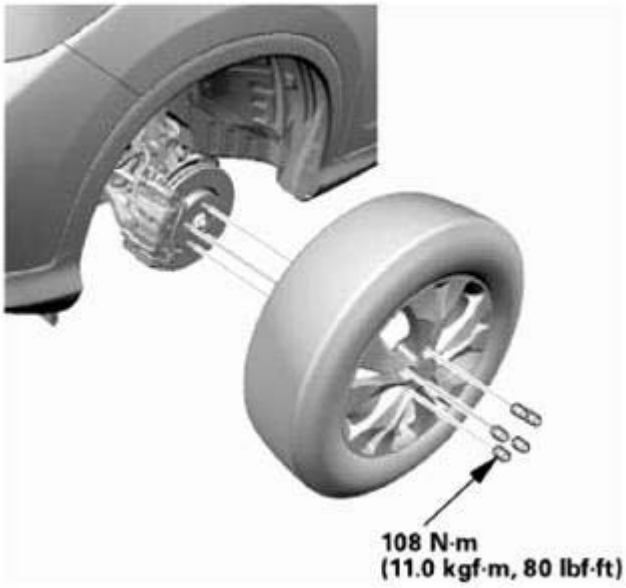

Fig. 237: Pressing Parking Brake Pedal
Courtesy of AMERICAN HONDA MOTOR CO., INC.

6. Tighten the adjusting nut (A) until the parking brakes drag slightly when the rear wheels are turned.
7. Release the parking brake pedal fully.
8. Check that the parking brakes do not drag when the rear wheels are turned. Readjust if necessary.

GETtheMANUALS.org

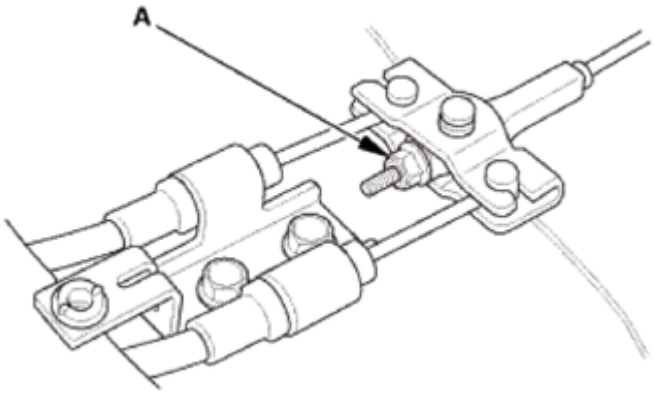

Fig. 238: Identifying Parking Brake Adjusting Nut
Courtesy of AMERICAN HONDA MOTOR CO., INC.

9. Press the parking brake pedal (A) with 294 N (30.0 kgf, 66.1 lbf) of force to fully apply the parking brake.
10. Make sure the parking brake pedal is within the specified number of clicks.

    Pedal locked clicks: 5 to 6 clicks

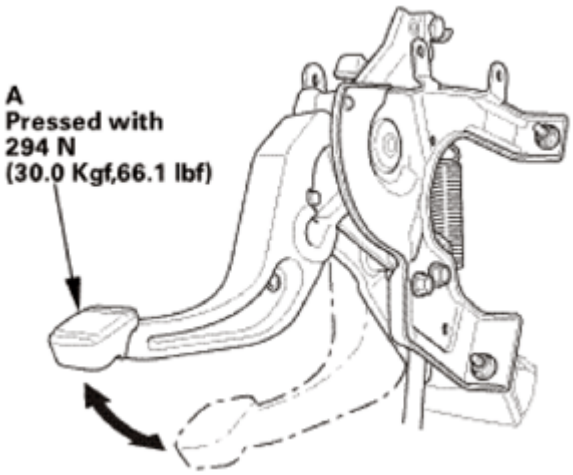

Fig. 239: Pressing Parking Brake Pedal
Courtesy of AMERICAN HONDA MOTOR CO., INC.

INSTALLATION

1. Parking Brake Return Spring
    1. Install the return spring (A).

GETtheMANUALS.org

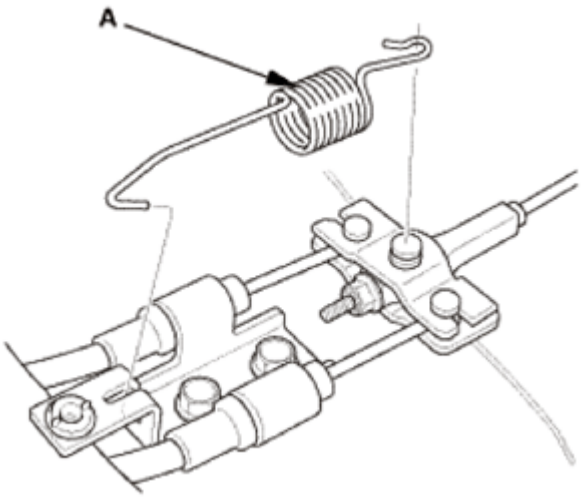

Fig. 240: Identifying Return Spring
Courtesy of AMERICAN HONDA MOTOR CO., INC.

2. Equalizer Cover
    1. Install the equalizer cover (A).
    2. Fold back into place the left rear carpet/cutout/insulation.

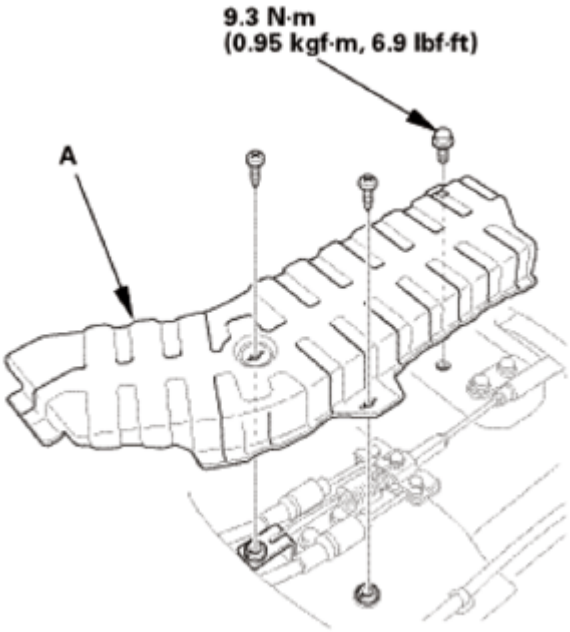

Fig. 241: Identifying Equalizer Cover And Mounting Bolts With Torque Specifications
Courtesy of AMERICAN HONDA MOTOR CO., INC.

PARKING BRAKE PEDAL REMOVAL AND INSTALLATION

REMOVAL

GETtheMANUALS.org

1. Vehicle Lift
    1. Raise the vehicle on a lift, and make sure it is securely supported.
2. Rear Wheel - Both Side
    1. Remove both rear wheels.

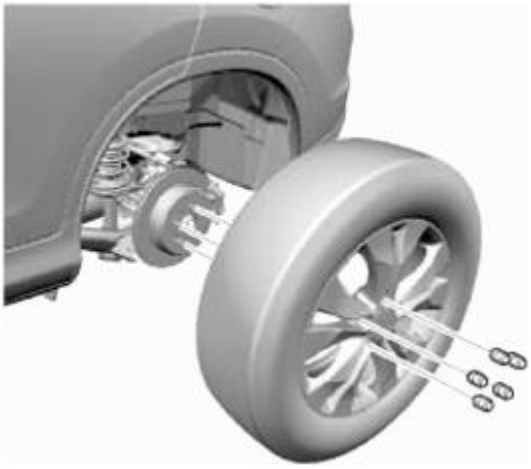

Fig. 242: Identifying Rear Wheel And Mounting Bolts
Courtesy of AMERICAN HONDA MOTOR CO., INC.

3. Equalizer Cover
    1. Pull back the left rear carpet/cutout/insulation, under the driver's seat.
    2. Remove the equalizer cover (A).

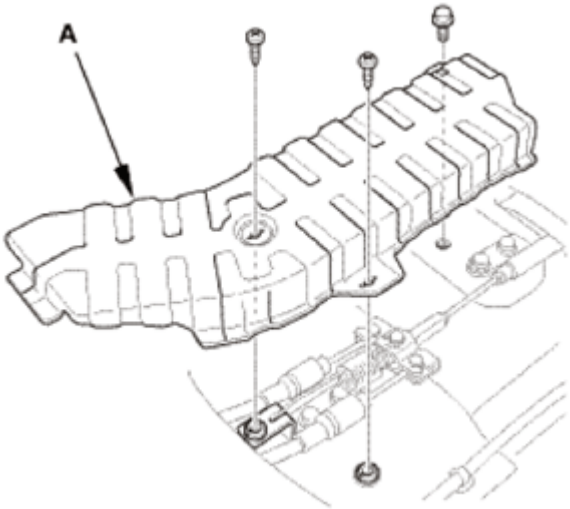

Fig. 243: Identifying Equalizer Cover And Mounting Bolts
Courtesy of AMERICAN HONDA MOTOR CO., INC.

4. Parking Brake Adjusting Bolt - Loosen

GETtheMANUALS.org

1. Release the parking brake pedal fully.
2. Disconnect and remove the return spring (A).
3. Loosen the adjusting nut (B).

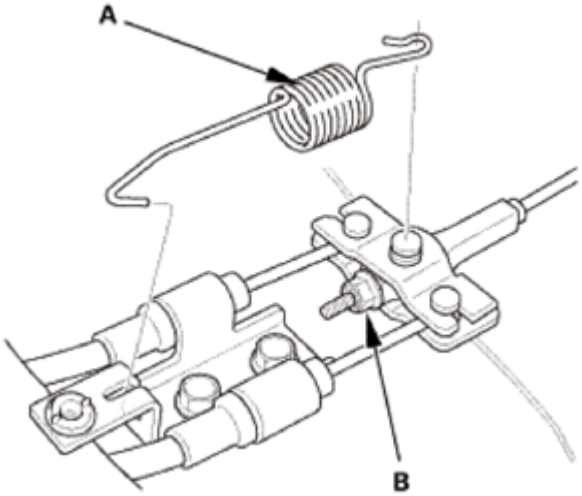

Fig. 244: Identifying Return Spring And Adjusting Nut
Courtesy of AMERICAN HONDA MOTOR CO., INC.

5. Driver's Dashboard Panel Assembly
    1. Carefully pry out the driver's dashboard panel assembly (A) with the appropriate trim tool to detach the clips (B).
    2. Disconnect the connector (C), then remove the driver's dashboard panel assembly.

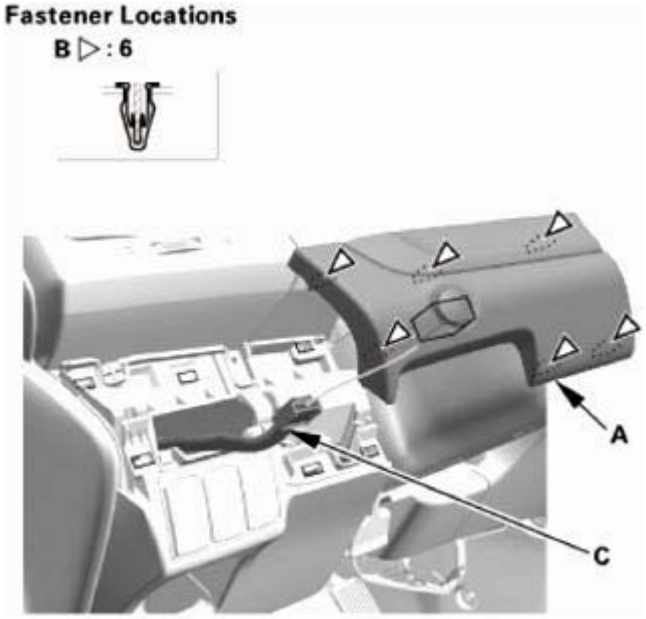

Fig. 245: Identifying Driver's Dashboard Panel Assembly, Connector And Clips

GETtheMANUALS.org

Courtesy of AMERICAN HONDA MOTOR CO., INC.

6. Driver's Dashboard Undercover
    1. Turn the lock knob (A) 90 °, then gently pull down the front edge of the driver's dashboard undercover (B) to detach the clip (C).
    2. Pull away the undercover to release the pin (D) from the holder (E), then remove the driver's dashboard undercover.

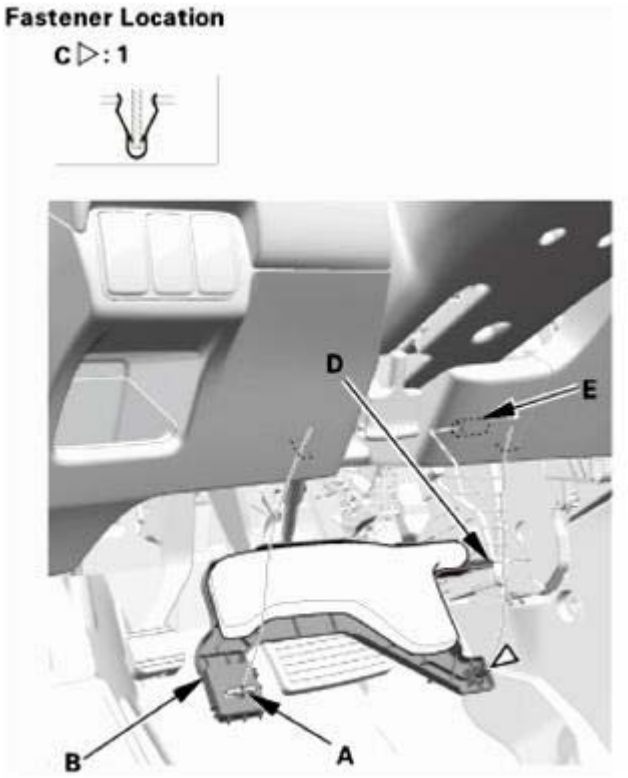

Fig. 246: Identifying Driver's Dashboard Undercover, Holder, Pin, Lock Knob And Clip
Courtesy of AMERICAN HONDA MOTOR CO., INC.

7. Driver's Dashboard Lower Cover
    1. Carefully pry out the driver's dashboard lower cover (A) with the appropriate trim tool to detach the clips (B).
    2. Disconnect the connector (C), then remove the driver's dashboard lower cover.

GETtheMANUALS.org

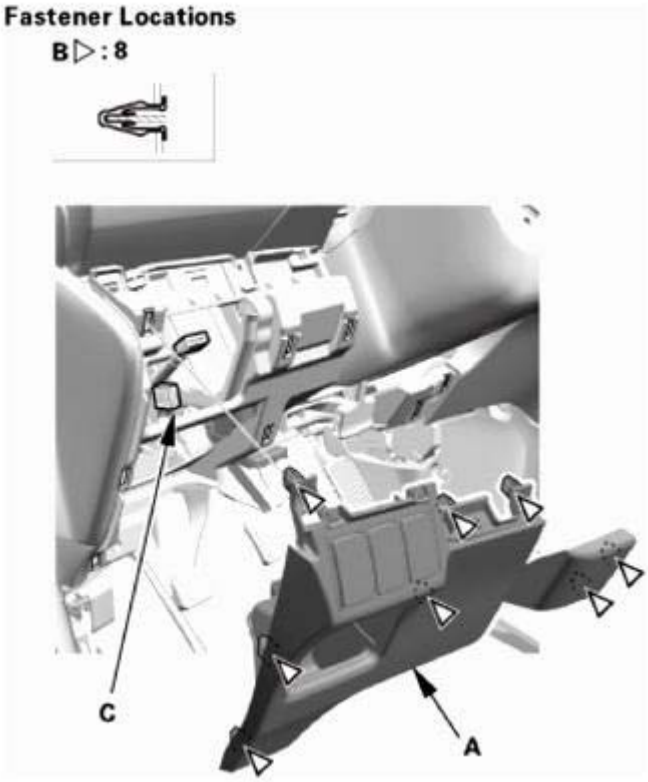

Fig. 247: Identifying Driver's Dashboard Lower Cover, Connector And Clips
Courtesy of AMERICAN HONDA MOTOR CO., INC.

8. Front Parking Brake Cable - Pedal Side
    1. Remove the lock pin (A) and the clevis pin (B).
    2. Remove the parking brake cable mounting bolts (C).

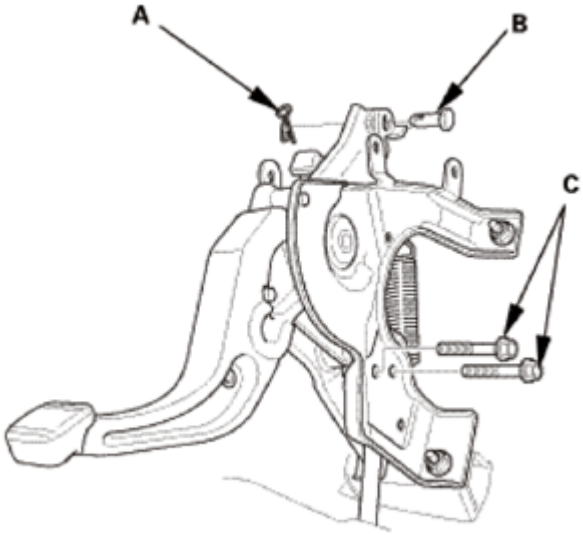

Fig. 248: Identifying Lock Pin, Clevis Pin And Parking Brake Cable Mounting Bolts

GETtheMANUALS.org

Courtesy of AMERICAN HONDA MOTOR CO., INC.

9. Parking Brake Pedal Assembly
    1. Disconnect the connector (A).
    2. Remove the harness clip (B).
    3. Remove the parking brake pedal bracket mounting bolt (C) and nuts (D).
    4. Remove the parking brake pedal assembly (E).

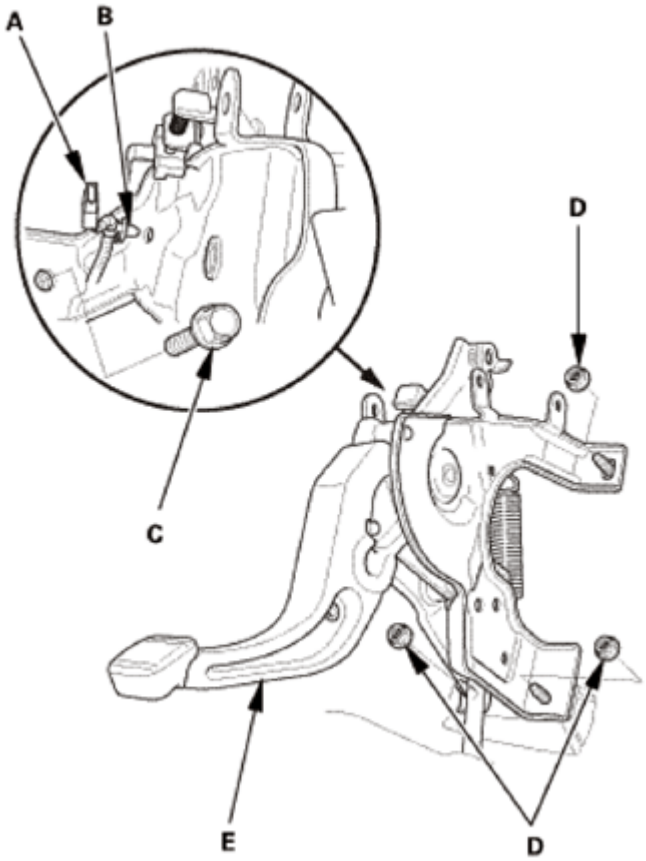

Fig. 249: Identifying Parking Brake Pedal Assembly Components With Torque Specifications
Courtesy of AMERICAN HONDA MOTOR CO., INC.

10. Parking Brake Switch
    1. Remove the parking brake switch (A).

GETtheMANUALS.org

Fig. 250: Identifying Parking Brake Switch
Courtesy of AMERICAN HONDA MOTOR CO., INC.

INSTALLATION

1. Parking Brake Switch
    1. Install the parking brake switch (A).

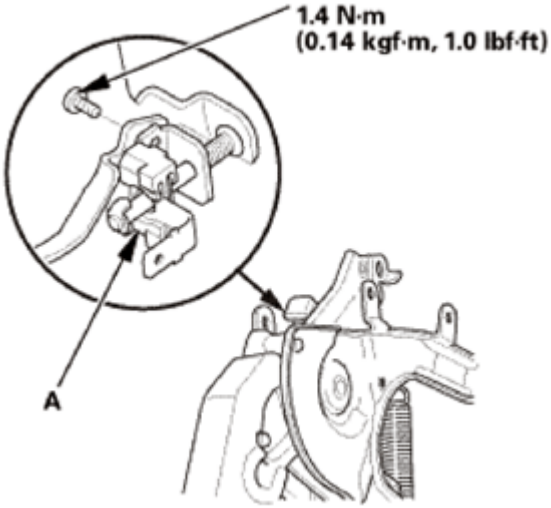

Fig. 251: Identifying Parking Brake Switch And Mounting Bolt With Torque Specification
Courtesy of AMERICAN HONDA MOTOR CO., INC.

2. Parking Brake Pedal Assembly
    1. Install the parking brake pedal assembly (A).
    2. Install the harness clip (B).
    3. Connect the connector (C).

GETtheMANUALS.org

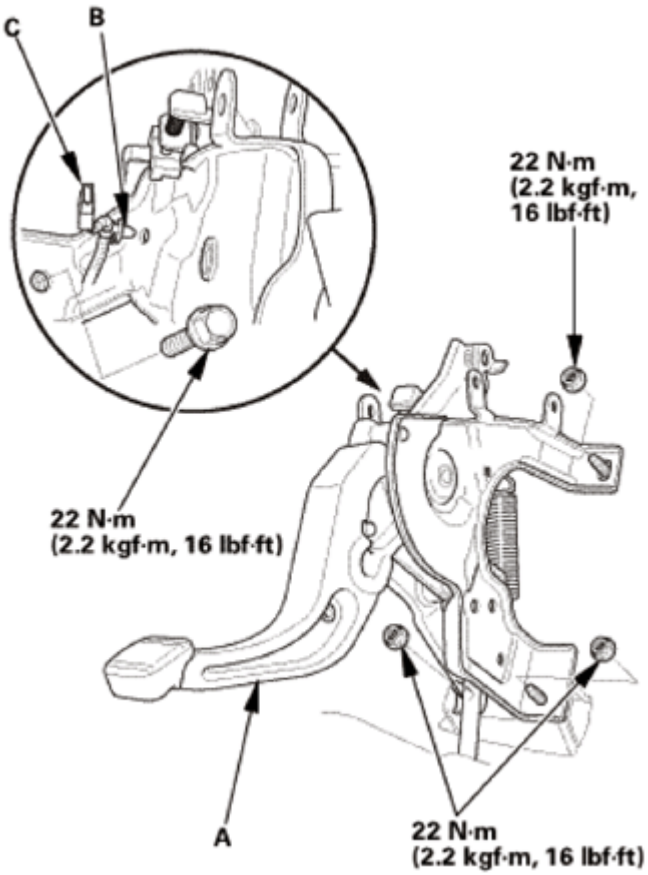

Fig. 252: Identifying Parking Brake Pedal Assembly Components With Torque Specifications
Courtesy of AMERICAN HONDA MOTOR CO., INC.

3. Front Parking Brake Cable - Pedal Side
    1. Install the front parking brake cable (A) by aligning the tab (B) with the groove (C).
    2. Install the lock pin (D) and the clevis pin (E).

GETtheMANUALS.org

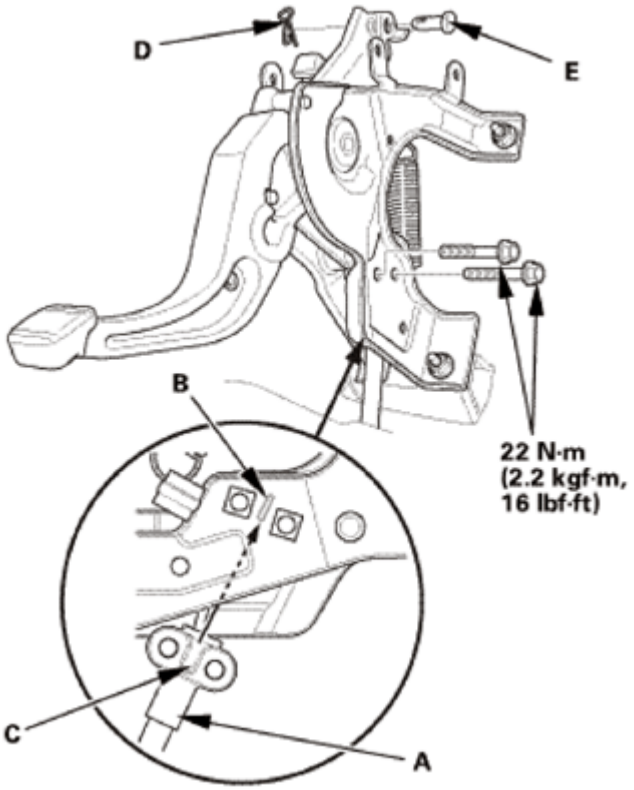

Fig. 253: Identifying Lock Pin, Clevis Pin And Parking Brake Cable Mounting Bolts
Courtesy of AMERICAN HONDA MOTOR CO., INC.

4. Major Parking Brake - Adjustment
    1. Remove the access plug (A).
    2. Turn the ratchet teeth on the adjuster nut (B) with a brake adjuster tool or a flat-tip screwdriver (C) until the shoes lock against the parking brake drum. Then back off the adjuster 7 clicks, and install the access plug.

GETtheMANUALS.org

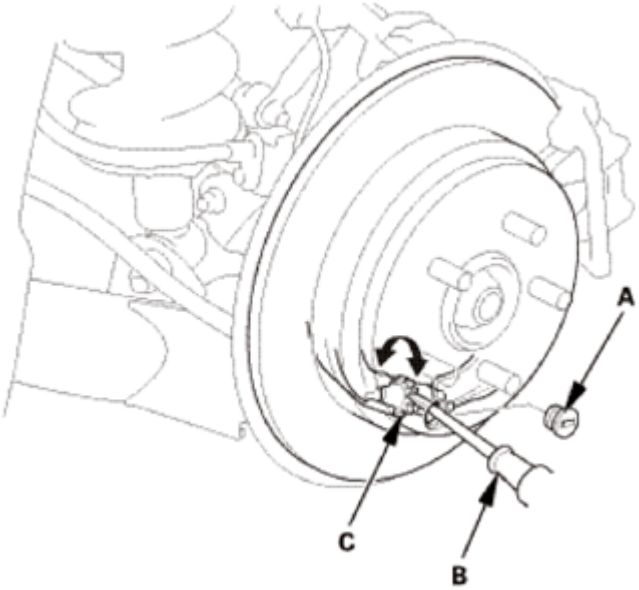

Fig. 254: Turning Ratchet Teeth On Adjuster Nut Using Brake Adjuster Tool Or Flat-Tip Screwdriver
Courtesy of AMERICAN HONDA MOTOR CO., INC.

5. Rear Wheel - Both Side
    1. Install both rear wheels.

NOTE: **Before installing the wheel, clean the mating surfaces between the brake disc/drum and the inside of the wheel.**

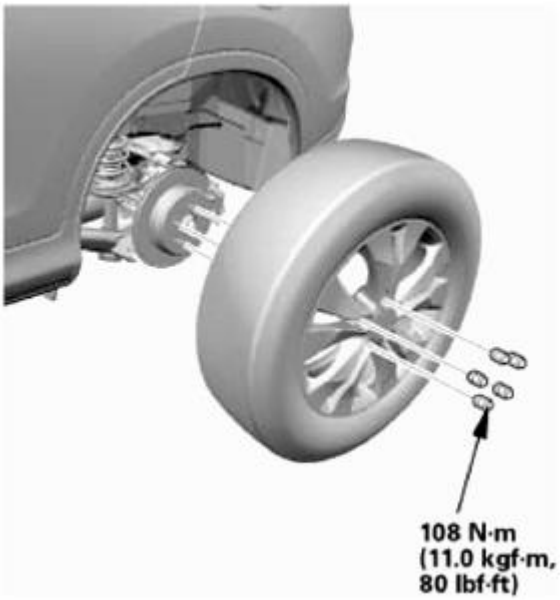

Fig. 255: Identifying Rear Wheel And Mounting Bolts With Torque Specifications
Courtesy of AMERICAN HONDA MOTOR CO., INC.

GETtheMANUALS.org

6. Minor Parking Brake - Adjustment
    1. Release the parking brake pedal fully.
    2. Press the parking brake pedal 1 click.
    3. Tighten the adjusting nut (A) until the parking brakes drag slightly when the rear wheels are turned.
    4. Release the parking brake pedal fully.
    5. Check that the parking brakes do not drag when the rear wheels are turned. Readjust if necessary.

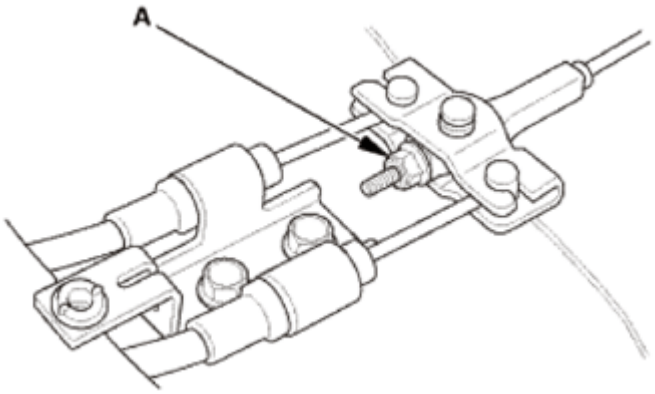

Fig. 256: Identifying Parking Brake Adjusting Nut
Courtesy of AMERICAN HONDA MOTOR CO., INC.

    6. Press the parking brake pedal (A) with 294 N (30.0 kgf, 66.1 lbf) of force to fully apply the parking brake.
    7. Make sure the parking brake pedal is within the specified number of clicks.

    Pedal locked clicks: 5 to 6 clicks

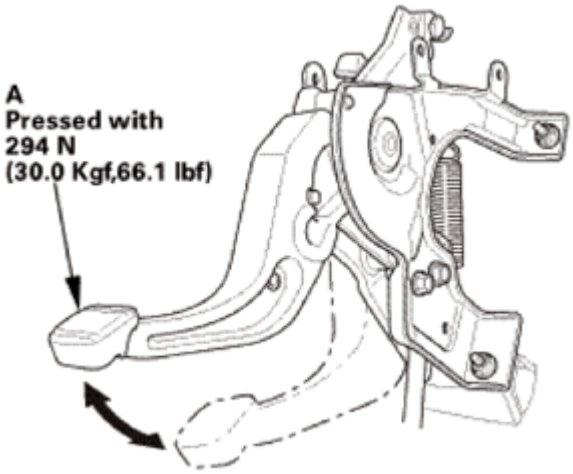

Fig. 257: Pressing Parking Brake Pedal
Courtesy of AMERICAN HONDA MOTOR CO., INC.

7. Parking Brake Return Spring

GETtheMANUALS.org

1. Install the return spring (A).

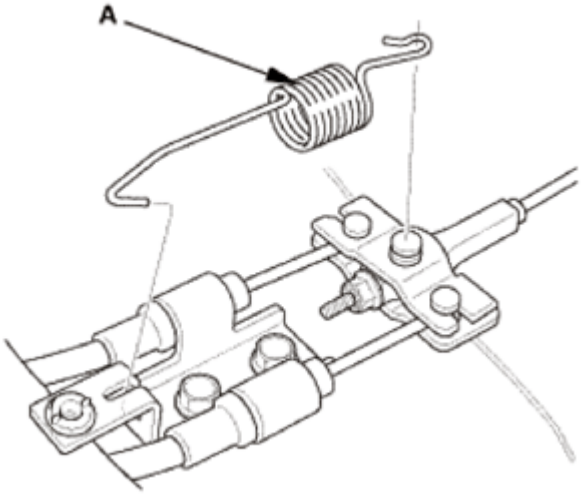

Fig. 258: Identifying Return Spring
Courtesy of AMERICAN HONDA MOTOR CO., INC.

8. Equalizer Cover
    1. Install the equalizer cover (A).
    2. Fold back into place the left rear carpet/cutout/insulation.

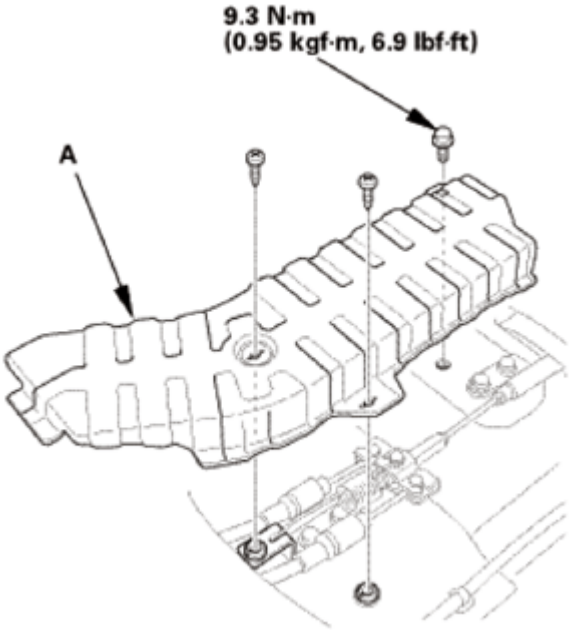

Fig. 259: Identifying Equalizer Cover And Mounting Bolts With Torque Specifications
Courtesy of AMERICAN HONDA MOTOR CO., INC.

9. Driver's Dashboard Lower Cover

GETtheMANUALS.org

1. Connect the connector (A), then install the driver's dashboard lower cover (B). Make sure the clips (C) snap into place securely.

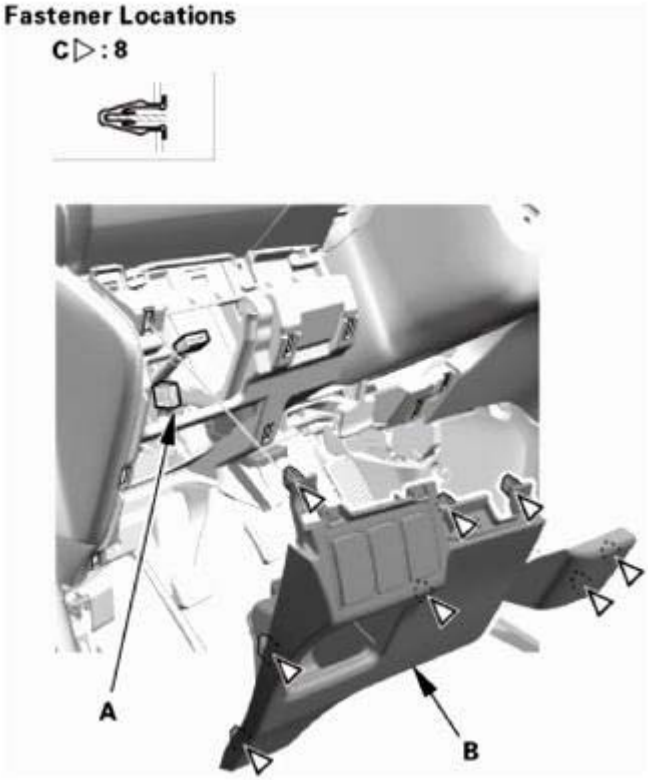

Fig. 260: Identifying Driver's Dashboard Lower Cover, Connector And Clips
Courtesy of AMERICAN HONDA MOTOR CO., INC.

10. Driver's Dashboard Undercover
    1. Install the driver's dashboard undercover (A). Make sure the clip (B) snap into place securely, and the pin (C) into the holder (D) securely.
    2. Turn the lock knob (E) 90 °.

GETtheMANUALS.org

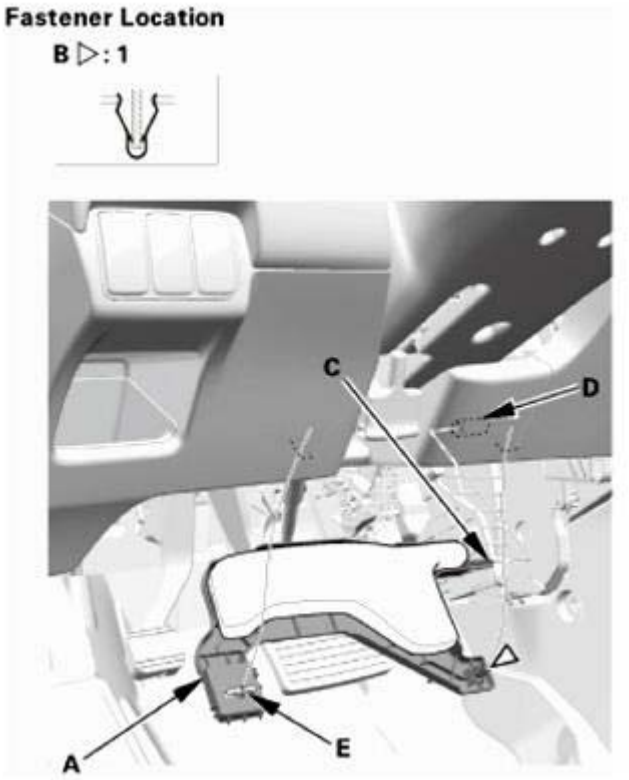

Fig. 261: Identifying Driver's Dashboard Undercover, Holder, Pin, Clip And Lock Knob
Courtesy of AMERICAN HONDA MOTOR CO., INC.

11. Driver's Dashboard Panel Assembly
    1. Connect the connector (A), then install the driver's dashboard panel assembly (B). Make sure the clips (C) snap into place securely.

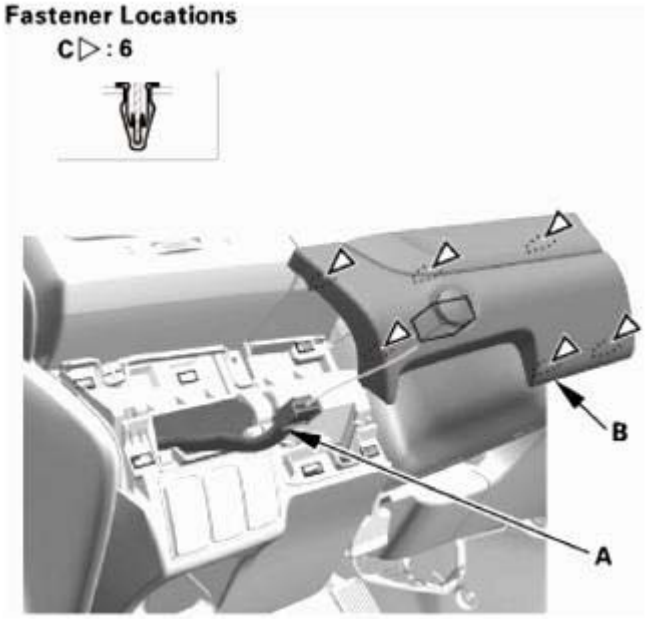

GETtheMANUALS.org

Fig. 262: Identifying Driver's Dashboard Panel Assembly, Connector And Clips
Courtesy of AMERICAN HONDA MOTOR CO., INC.

PARKING BRAKE SHOE LINING BREAK-IN

INSPECTION

1. Parking Brake Shoe Lining Break-in

WARNING: Do this operation in a safe area.

NOTE:

- **Do the brake lining surface break-in when replacing shoes with new brake linings and/or new rear brake disc/drum.**
- **Check the number of parking brake pedal clicks. Adjust the parking brake before lining surface break-in**

1. Park the vehicle on a firm, level surface.
2. Release the parking brake pedal.
3. Press the parking brake pedal 4 clicks.
4. Drive the vehicle for 0.25 mile (400 m) at about 31 mph (50 km/h).
5. Stop the vehicle, and release the parking brake for 5-10 minutes to allow the brake disc/drum to cool.
6. Repeat steps 3 through 5 two more times.
7. Check the parking brake pedal adjustment.

PARKING BRAKE SHOE REMOVAL AND INSTALLATION

EXPLODED VIEW

1. Parking Brake Shoe Exploded View

Exploded View

GETtheMANUALS.org

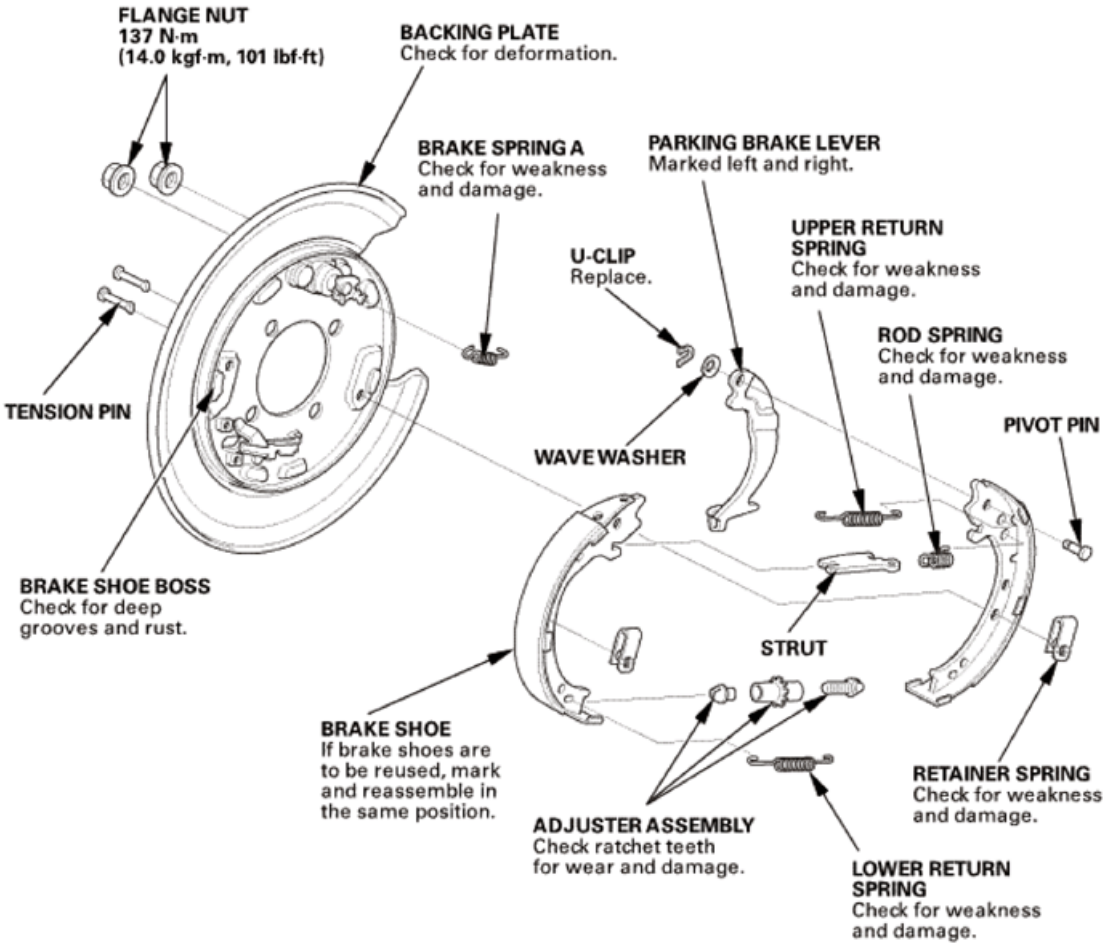

Fig. 263: Exploded View Of Parking Brake Shoe Components
Courtesy of AMERICAN HONDA MOTOR CO., INC.

REMOVAL

1. Vehicle Lift
    1. Raise the vehicle on a lift, and make sure it is securely supported.
2. Rear Wheel - Both Side
    1. Remove both rear wheels.

GETtheMANUALS.org

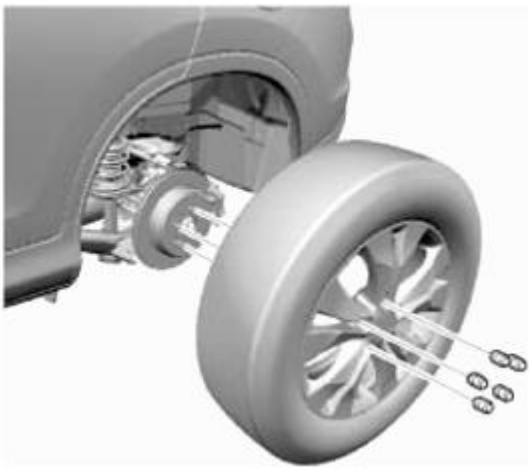

Fig. 264: Identifying Rear Wheel And Mounting Bolts
Courtesy of AMERICAN HONDA MOTOR CO., INC.

3. Equalizer Cover
    1. Pull back the left rear carpet/cutout/insulation, under the driver's seat.
    2. Remove the equalizer cover (A).

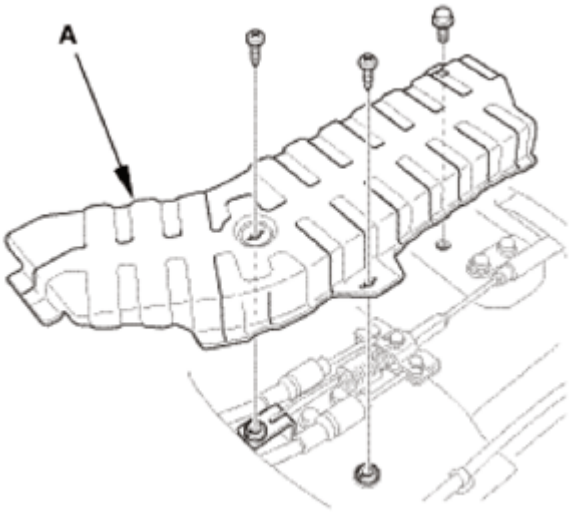

Fig. 265: Identifying Equalizer Cover And Mounting Bolts
Courtesy of AMERICAN HONDA MOTOR CO., INC.

4. Parking Brake Adjusting Bolt - Loosen
    1. Release the parking brake pedal fully.
    2. Disconnect and remove the return spring (A).
    3. Loosen the adjusting nut (B).

GETtheMANUALS.org

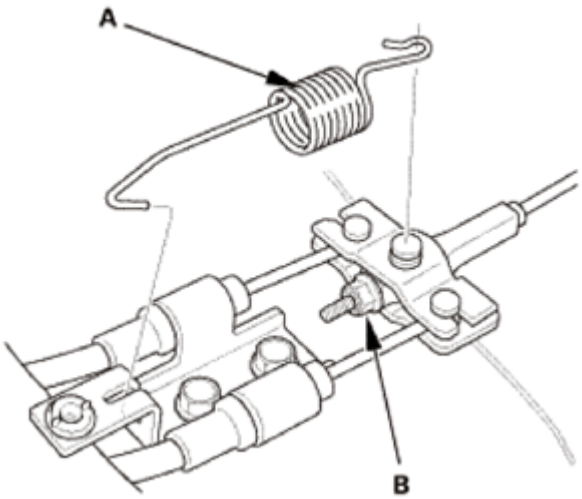

Fig. 266: Identifying Return Spring And Adjusting Nut
Courtesy of AMERICAN HONDA MOTOR CO., INC.

5. Rear Brake Caliper - Detach
    1. Remove the brake hose mounting bolt (A).
    2. Remove the caliper assembly (B).

NOTE:

- **To prevent damage to the caliper assembly or brake hose, use a short piece of wire to hang the caliper assembly from the undercarriage.**
- **Do not twist the brake hose and the parking brake cable excessively.**

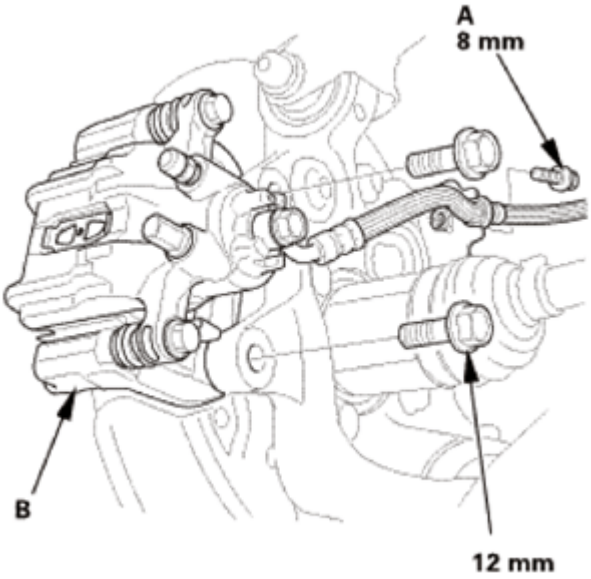

Fig. 267: Identifying Caliper Assembly And Brake Hose Mounting Bolt

GETtheMANUALS.org

Courtesy of AMERICAN HONDA MOTOR CO., INC.

6. Rear Brake Disc
    1. Remove the brake disc/drum flathead screws (A).
    2. Remove the brake disc/drum (B).

NOTE:

- **Remove the adjuster plug (C), then if necessary, turn the adjuster bolt (D) with a flat-tip screwdriver until the shoes become loose.**
- **If the brake disc/drum is stuck to the hub bearing unit, thread two 8 x 1.25 mm bolts (E) into the brake disc/drum to push it away from the hub bearing unit. Turn each bolt 90 degrees at a time to prevent the brake disc/drum from binding.**

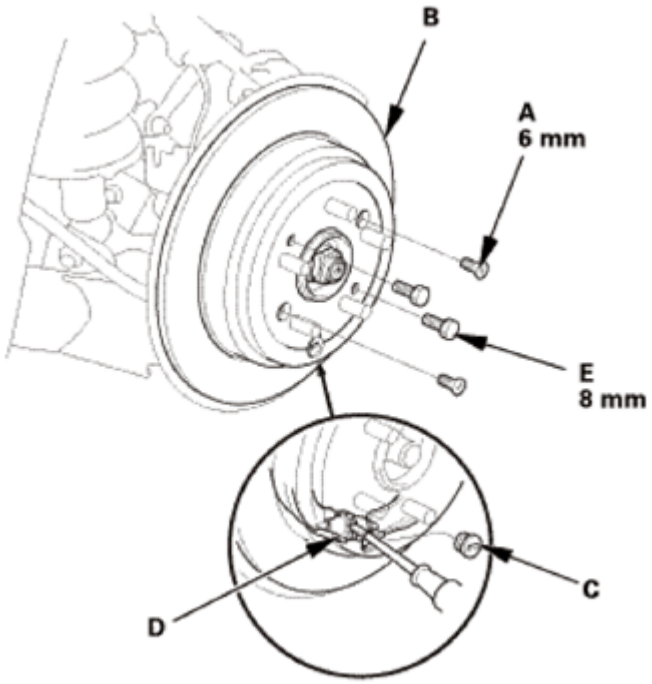

Fig. 268: Turning Adjuster Bolt Using Flat-Tip Screwdriver
Courtesy of AMERICAN HONDA MOTOR CO., INC.

7. Parking Brake Shoe
    1. Disconnect and remove brake spring A.
    2. Disconnect and remove the upper return spring (B).

GETtheMANUALS.org

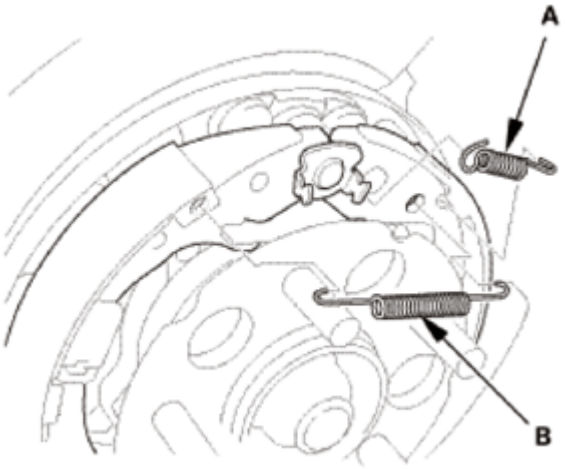

Fig. 269: Identifying Brake Spring And Upper Return Spring
Courtesy of AMERICAN HONDA MOTOR CO., INC.

3. Disconnect and remove the lower return spring (A).

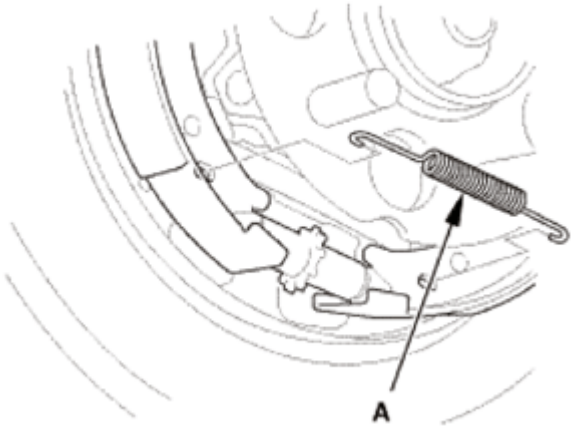

Fig. 270: Identifying Lower Return Spring
Courtesy of AMERICAN HONDA MOTOR CO., INC.

4. Remove the tension pins (A) by pushing the respective retainer springs (B), and turning the pin.
5. Remove the adjuster assembly (C) by moving forward brake shoe (D).

GETtheMANUALS.org

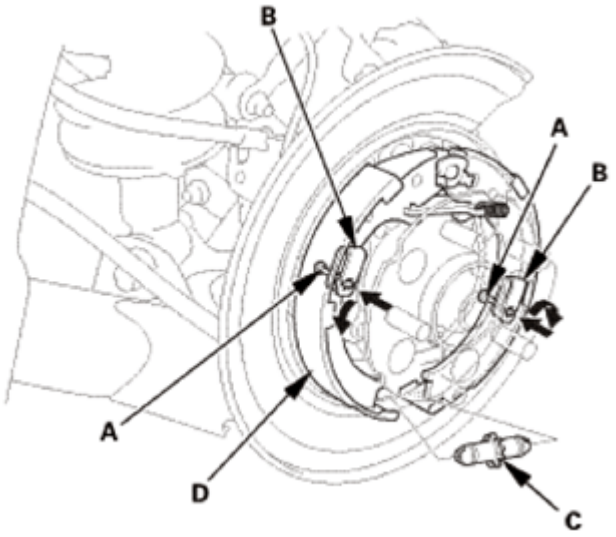

Fig. 271: Removing Tension Pins
Courtesy of AMERICAN HONDA MOTOR CO., INC.

6. Disconnect the rod spring (A), and remove the strut (B).
7. Remove the forward brake shoe (C).

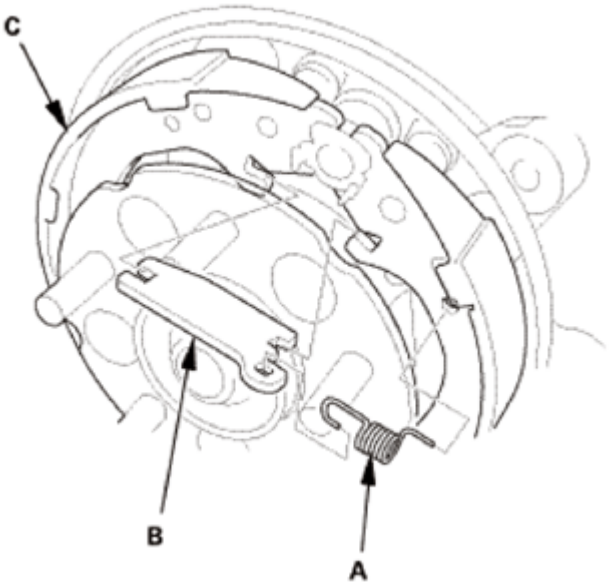

Fig. 272: Identifying Forward Brake Shoe, Rod Spring And Strut
Courtesy of AMERICAN HONDA MOTOR CO., INC.

8. Remove the rearward brake shoe (A) by disconnecting the rear parking brake cable (B) from the parking brake lever (C).

GETtheMANUALS.org

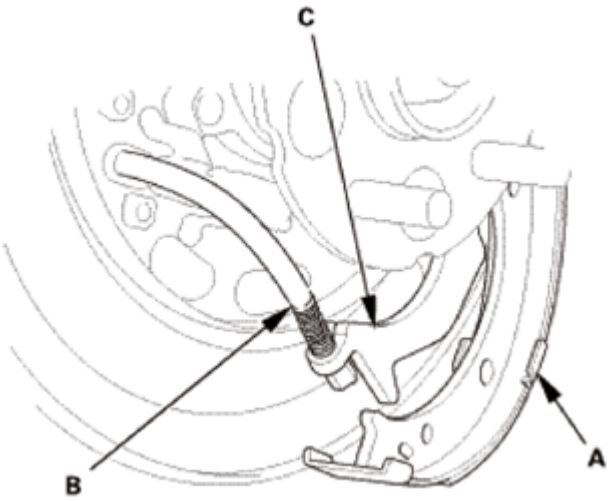

Fig. 273: Identifying Rearward Brake Shoe, Rear Parking Brake Cable And Parking Brake Lever
Courtesy of AMERICAN HONDA MOTOR CO., INC.

8. Parking Brake Lever
    1. Remove the U-clip (A), the wave washer (B), the parking brake lever (C) and the pivot pin (D) from the brake shoe (E).

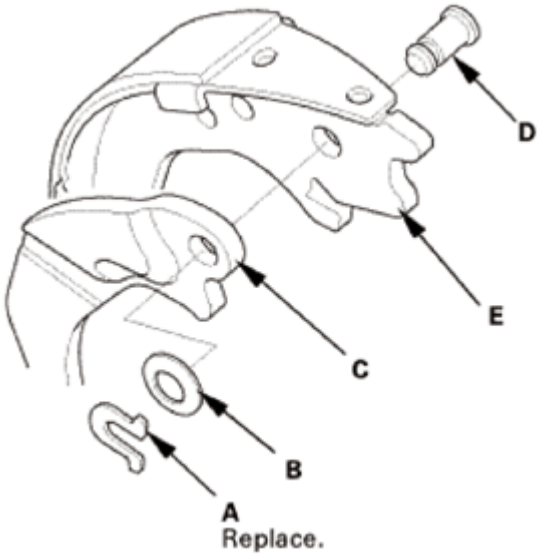

Fig. 274: Identifying U-Clip, Wave Washer, Parking Brake Lever, Pivot Pin And Brake Shoe
Courtesy of AMERICAN HONDA MOTOR CO., INC.

INSTALLATION

1. Parking Brake Lever
    1. Apply Molykote 44MA grease to the sliding surface of the pivot pin (A), and insert the pin into the rearward brake shoe (B) from the outside.

GETtheMANUALS.org

2. Install the parking brake lever (C) and wave washer (D) on the pivot pin, and secure with a new U-clip (E).
    - Install the wave washer with its convex side facing out.
    - Pinch the U-clip securely to prevent the parking brake lever from coming out of the brake shoe.

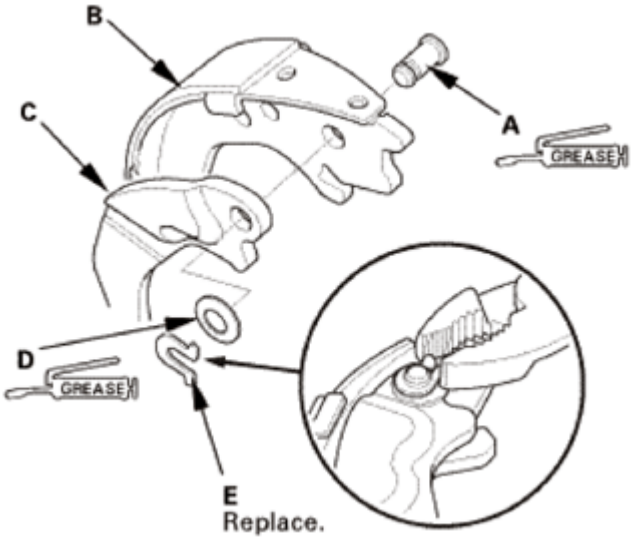

Fig. 275: Identifying Molykote Grease Applying Area On Sliding Surface Of Pivot Pin And Rearward Brake Shoe
Courtesy of AMERICAN HONDA MOTOR CO., INC.

2. Parking Brake Shoe
    1. Connect the rear parking brake cable (A) to the parking brake lever (B).
    2. Apply Molykote 44MA grease to the cable contact surface (C) on the backing plate.

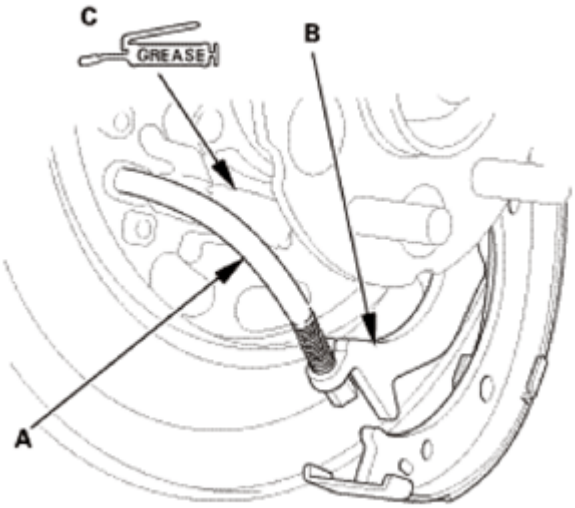

Fig. 276: Identifying Molykote Grease Applying Area On Backing Plate Cable Contact

GETtheMANUALS.org

Surface
Courtesy of AMERICAN HONDA MOTOR CO., INC.

3. Apply a thin coat of Molykote 44MA grease to the brake shoe ends and strut ends (A), sliding surfaces of the parking brake shoe (B), and the pivot of the parking brake lever (C) as shown. Wipe off any excess. Keep grease off the brake linings.

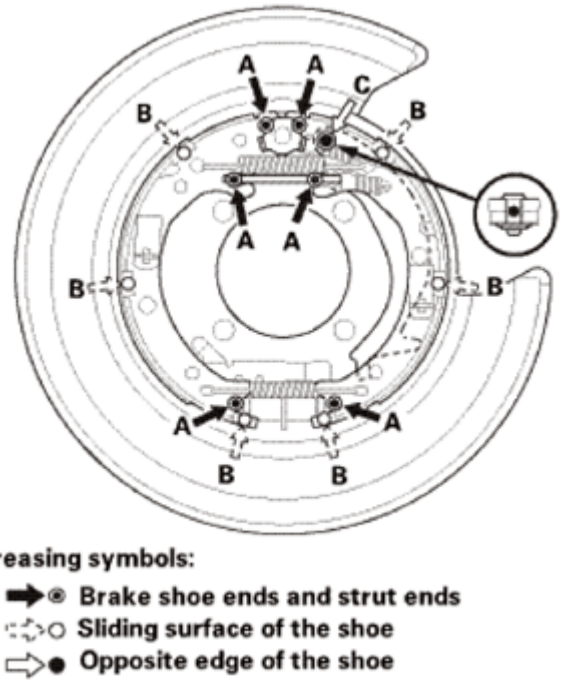

Fig. 277: Locating Thin Coat Of Molykote Grease Applying Area On Brake Shoe Ends And Strut Ends
Courtesy of AMERICAN HONDA MOTOR CO., INC.

4. Position the parking brake shoes (A), then hook the rod spring (B) on the strut (C) first with the spring end (D) pointing downward. Then hook the rod spring to the parking brake shoe, and install the strut on the parking brake shoes.

GETtheMANUALS.org

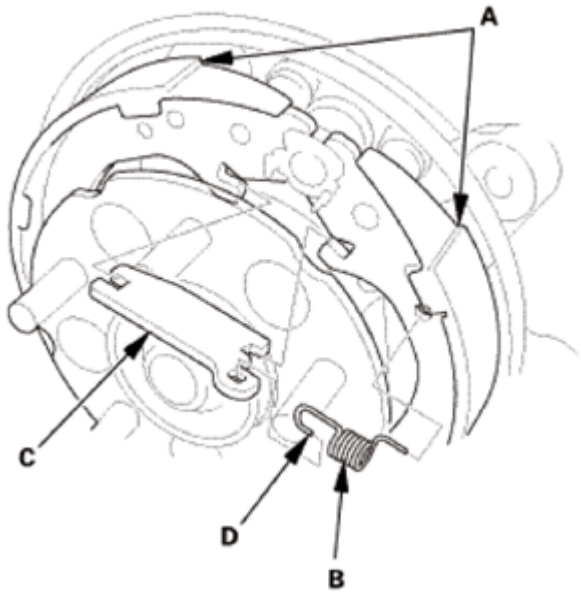

Fig. 278: Identifying Parking Brake Shoes, Rod Spring, Strut And Spring End
Courtesy of AMERICAN HONDA MOTOR CO., INC.

5. Install the tension pins (C) and retainer springs (D). Make sure the tension pin does not contact the parking brake lever.
6. Install connecting rods A and B on the adjuster nut (E).

NOTE:

- **Clean the threaded portions of connecting rod A and the sliding surface of connecting rod B, then coat them with Molykote 44MA grease.**
- **Shorten connecting rod A by fully turning the adjuster nut.**

GETtheMANUALS.org

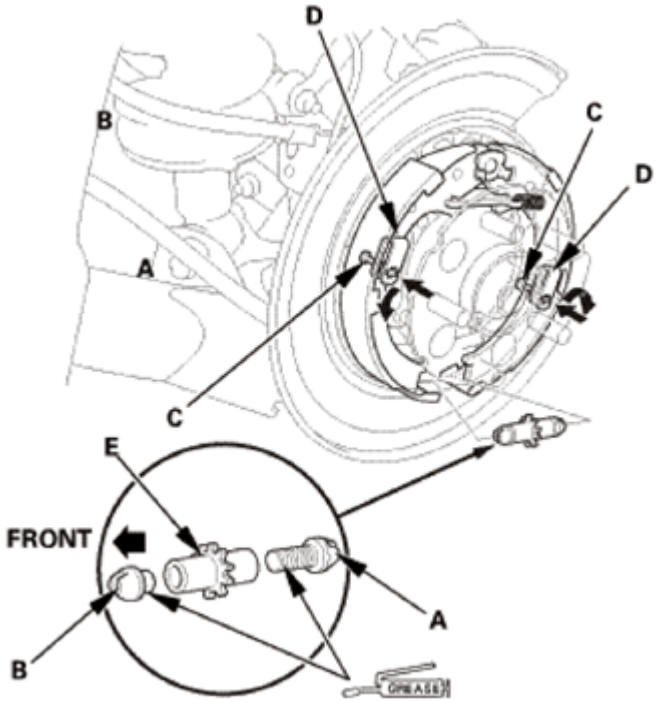

Fig. 279: Installing Tension Pins And Retainer Springs
Courtesy of AMERICAN HONDA MOTOR CO., INC.

7. Install the lower return spring (A).

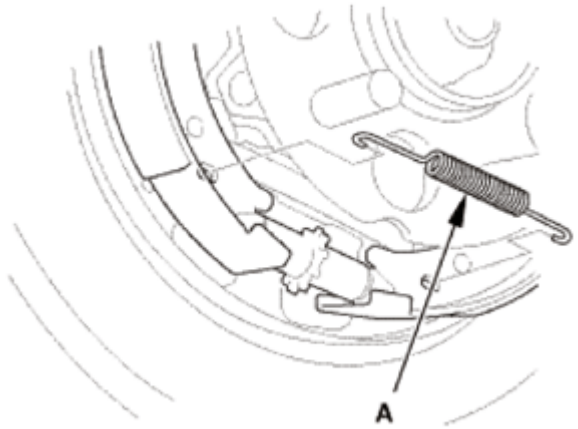

Fig. 280: Identifying Lower Return Spring
Courtesy of AMERICAN HONDA MOTOR CO., INC.

8. Install the upper return spring (B).
9. Install brake spring A.

GETtheMANUALS.org

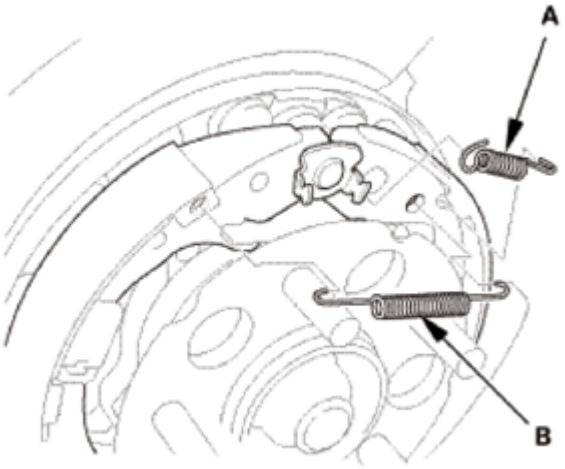

Fig. 281: Identifying Upper Return Spring And Brake Spring
Courtesy of AMERICAN HONDA MOTOR CO., INC.

3. Rear Brake Disc
    1. Install the brake disc (A).

NOTE: **Before installing the brake disc, clean the mating surfaces between the hub bearing unit and the inside of the brake disc.**

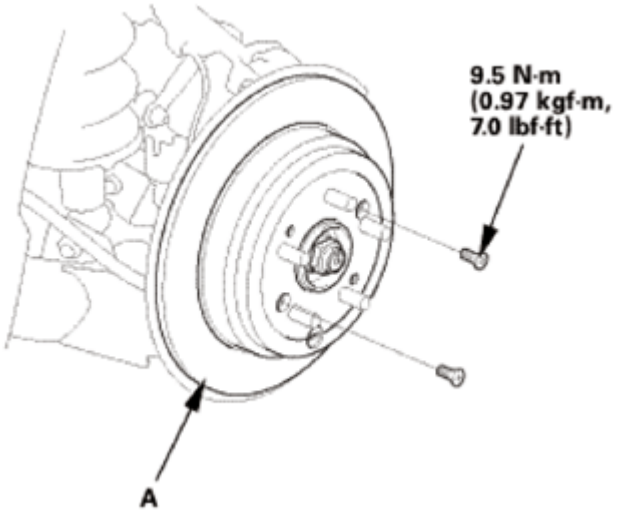

Fig. 282: Identifying Brake Disc And Mounting Bolts With Torque Specifications
Courtesy of AMERICAN HONDA MOTOR CO., INC.

4. Rear Brake Caliper - Reattach
    1. Install the caliper assembly (A).
    2. Install the brake hose mounting bolt (B).

GETtheMANUALS.org

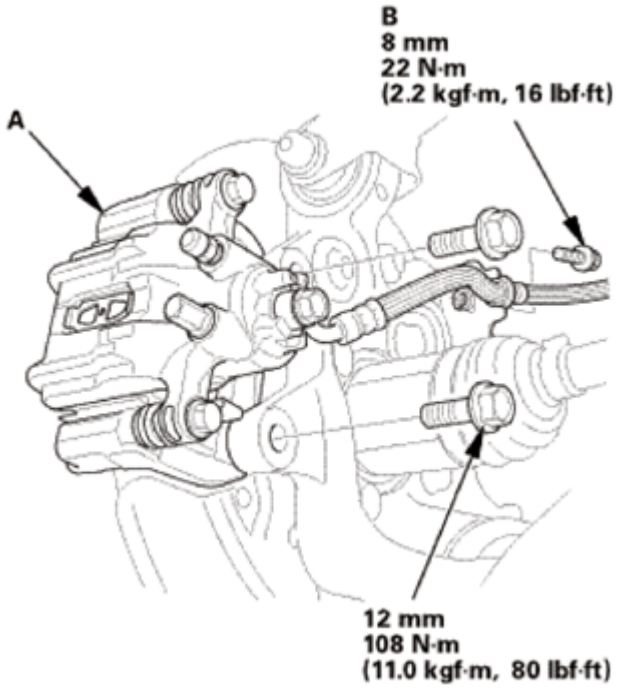

Fig. 283: Identifying Caliper Assembly And Brake Hose Mounting Bolts With Torque Specifications
Courtesy of AMERICAN HONDA MOTOR CO., INC.

5. Major Parking Brake - Adjustment
    1. Remove the access plug (A).
    2. Turn the ratchet teeth on the adjuster nut (B) with a brake adjuster tool or a flat-tip screwdriver (C) until the shoes lock against the parking brake drum. Then back off the adjuster 7 clicks, and install the access plug.

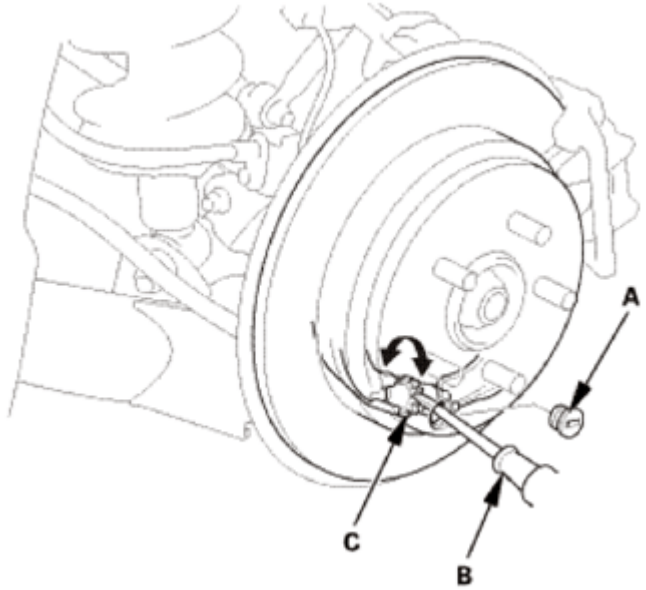

GETtheMANUALS.org

Fig. 284: Turning Ratchet Teeth On Adjuster Nut Using Brake Adjuster Tool Or Flat-Tip Screwdriver
Courtesy of AMERICAN HONDA MOTOR CO., INC.

6. Rear Wheel - Both Side
    1. Install both rear wheels.

NOTE: **Before installing the wheel, clean the mating surfaces between the brake disc/drum and the inside of the wheel.**

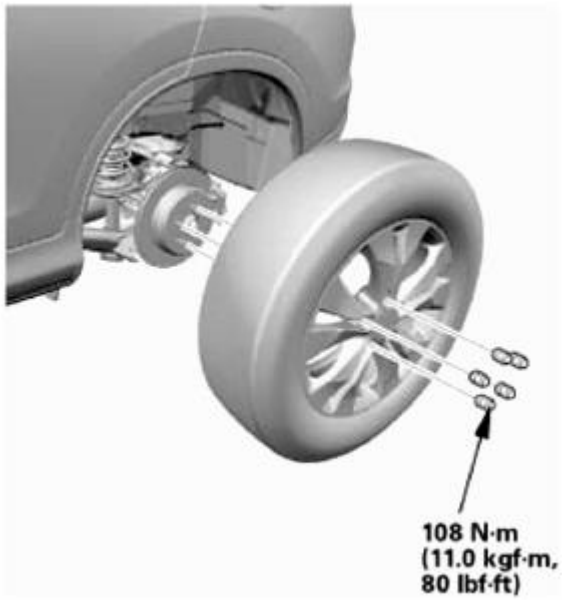

Fig. 285: Identifying Rear Wheel And Mounting Bolts With Torque Specifications
Courtesy of AMERICAN HONDA MOTOR CO., INC.

7. Minor Parking Brake - Adjustment
    1. Release the parking brake pedal fully.
    2. Press the parking brake pedal 1 click.
    3. Tighten the adjusting nut (A) until the parking brakes drag slightly when the rear wheels are turned.
    4. Release the parking brake pedal fully.
    5. Check that the parking brakes do not drag when the rear wheels are turned. Readjust if necessary.

GETtheMANUALS.org

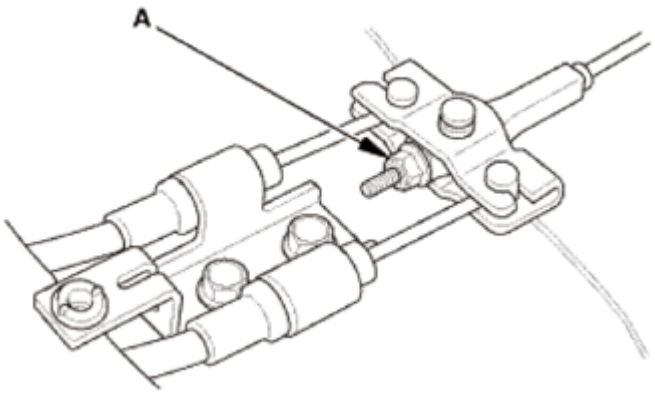

Fig. 286: Identifying Parking Brake Adjusting Nut
Courtesy of AMERICAN HONDA MOTOR CO., INC.

6. Press the parking brake pedal (A) with 294 N (30.0 kgf, 66.1 lbf) of force to fully apply the parking brake.
7. Make sure the parking brake pedal is within the specified number of clicks.

   Pedal locked clicks: 5 to 6 clicks

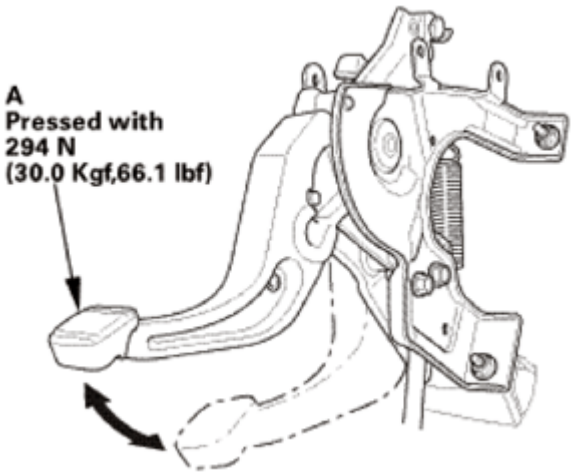

Fig. 287: Pressing Parking Brake Pedal
Courtesy of AMERICAN HONDA MOTOR CO., INC.

8. Parking Brake Return Spring
   1. Install the return spring (A).

GETtheMANUALS.org

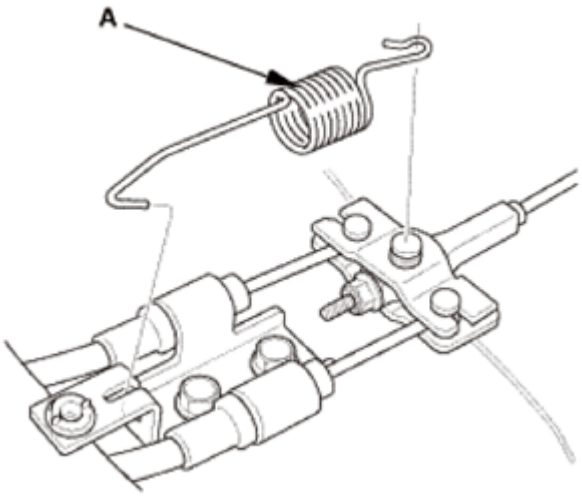

Fig. 288: Identifying Return Spring
Courtesy of AMERICAN HONDA MOTOR CO., INC.

9. Equalizer Cover
    1. Install the equalizer cover (A).
    2. Fold back into place the left rear carpet/cutout/insulation.

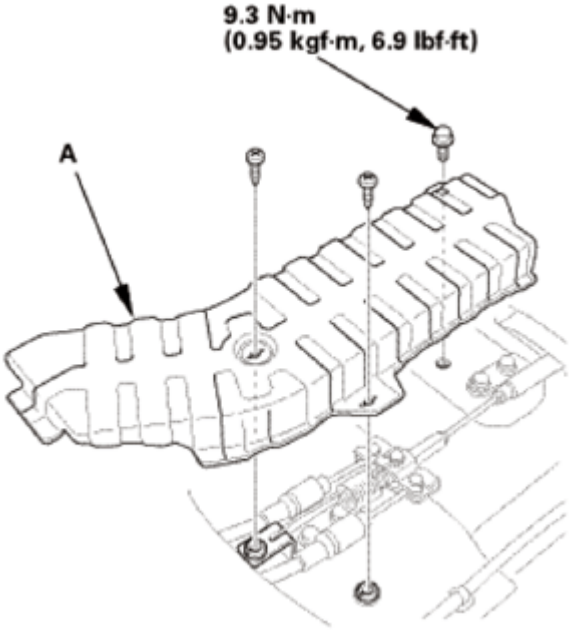

Fig. 289: Identifying Equalizer Cover And Mounting Bolts With Torque Specifications
Courtesy of AMERICAN HONDA MOTOR CO., INC.

REAR BRAKE CALIPER OVERHAUL

SPECIAL TOOL DESCRIPTION

GETtheMANUALS.org

Image	Description/Tool Number
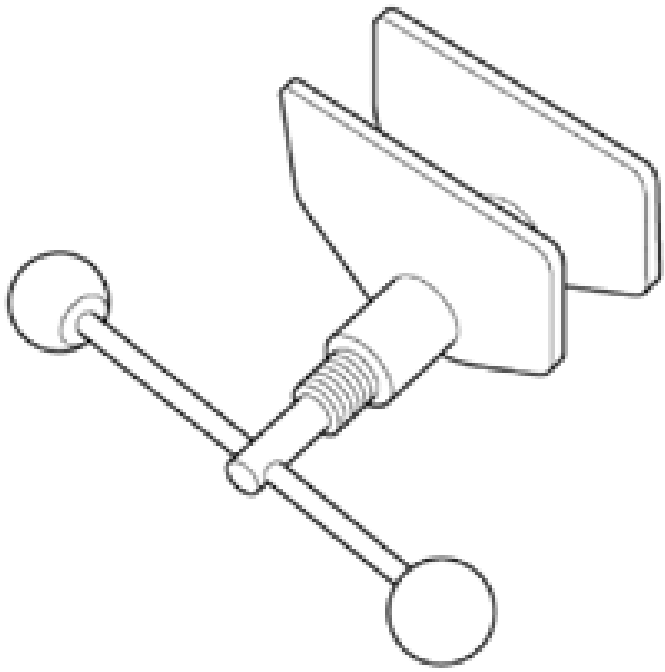	Brake Caliper Piston Compressor 07AAE-SEPA101

EXPLODED VIEW

1. Rear Brake Caliper Exploded View

   Exploded View

GETtheMANUALS.org

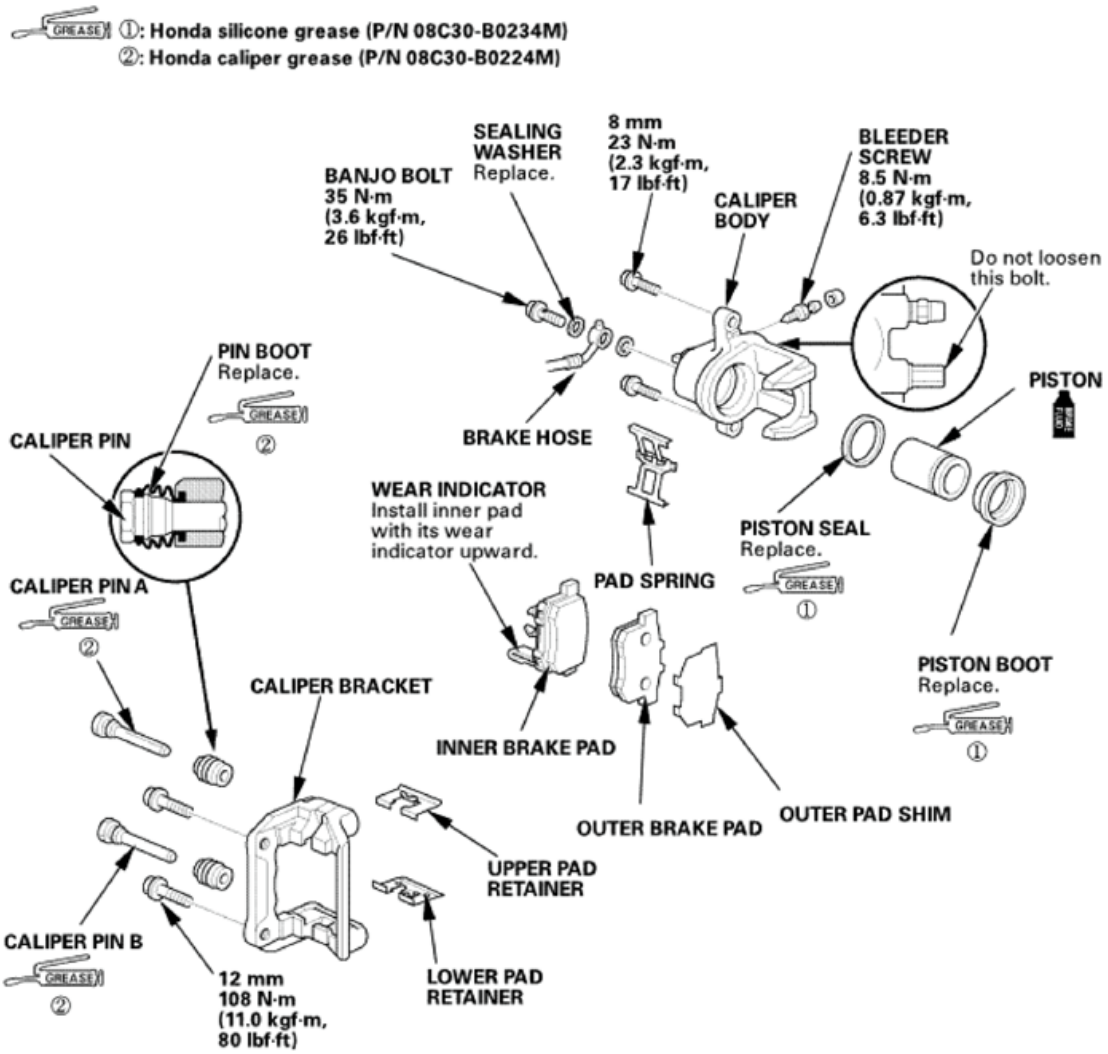

Fig. 290: Exploded View Of Rear Brake Caliper With Torque Specifications
Courtesy of AMERICAN HONDA MOTOR CO., INC.

DISASSEMBLY

CAUTION: Frequent inhalation of brake pad dust, regardless of material composition, could be hazardous to your health.

- **Avoid breathing dust particles.**
- **Never use an air hose or brush to clean brake assemblies. Use an OSHA-approved vacuum cleaner.**

NOTE:

- **Clean all parts in brake fluid and air dry; blow out all passages with compressed air.**
- **Make sure no dirt or other foreign matter gets in the brake fluid.**
- **Make sure no grease or oil gets on the brake discs or pads.**

GETtheMANUALS.org

- **Do not reuse drained brake fluid. Use only new Honda DOT 3 Brake Fluid from an unopened container. Using a non-Honda brake fluid can cause corrosion and shorten the life of the system.**
- **Refer to the EXPLODED VIEW as needed during this procedure.**

1. Rear Brake Caliper - Disassembly
    1. Remove the pad spring (A).

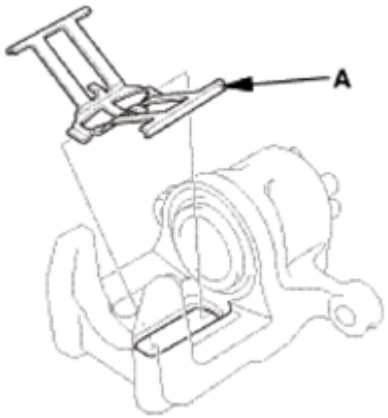

Fig. 291: Identifying Pad Spring
Courtesy of AMERICAN HONDA MOTOR CO., INC.

2. Set the wooden block (A) or several shop towels in the caliper body (B) as shown.
3. Blow out the piston with compressed air gradually, and remove the piston from the caliper body.

NOTE: **Do not put the hand into the caliper body because the piston will come out forcibly from the caliper body.**

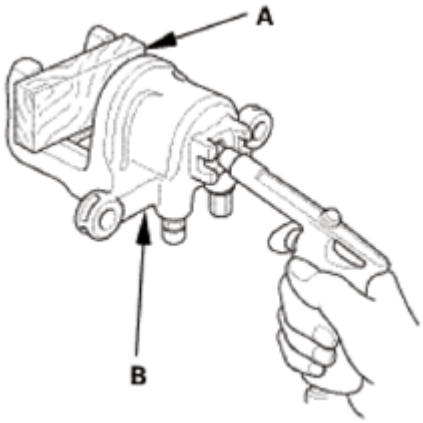

Fig. 292: Removing Piston From Caliper Body
Courtesy of AMERICAN HONDA MOTOR CO., INC.

GETtheMANUALS.org

4. Remove the piston boot (A).
5. Remove the piston seal (B).

NOTE: **Be careful not to damage the inner surface of the cylinder wall with the tool.**

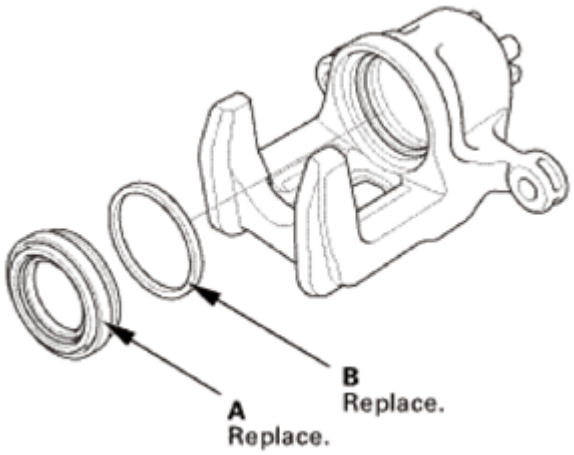

Fig. 293: Identifying Piston Boot And Piston Seal
Courtesy of AMERICAN HONDA MOTOR CO., INC.

6. Remove the caliper pins (A).

NOTE: **The upper and lower caliper pins are different. During installation, make sure the caliper pins are in the proper positions.**

7. Remove the pin boots (B).

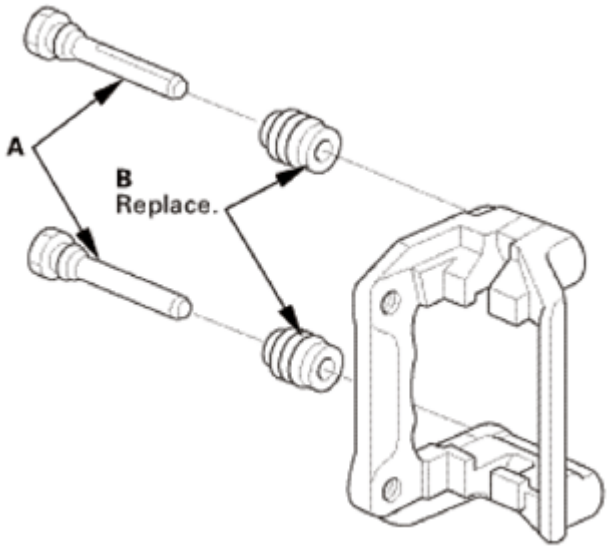

GETtheMANUALS.org

Fig. 294: Identifying Caliper Pins And Pin Boots
Courtesy of AMERICAN HONDA MOTOR CO., INC.

REASSEMBLY

CAUTION: Frequent inhalation of brake pad dust, regardless of material composition, could be hazardous to your health.

- **Avoid breathing dust particles.**
- **Never use an air hose or brush to clean brake assemblies. Use an OSHA-approved vacuum cleaner.**

NOTE:

- **Clean all parts in brake fluid and air dry; blow out all passages with compressed air.**
- **Before reassembling, check that all parts are free of dirt and other foreign particles.**
- **Make sure no dirt or other foreign matter gets in the brake fluid.**
- **Make sure no grease or oil gets on the brake discs or pads.**
- **Do not reuse drained brake fluid. Use only new Honda DOT 3 Brake Fluid from an unopened container. Using a non-Honda brake fluid can cause corrosion and shorten the life of the system.**
- **Coat the piston, the piston seal groove, and the caliper bore with clean brake fluid.**
- **Use recommended greases in the rear caliper set.**
- **After installing the caliper, check the brake hose and line for leaks, interference, and twisting.**
- **Refer to the EXPLODED VIEW as needed during this procedure.**

1. Rear Brake Caliper - Reassembly
    1. Apply a thin coat of Honda caliper grease (P/N 08C30-B0224M) to the caliper pins (A) and the new pin boots (B).
    2. Install the pin boots.
    3. Install the caliper pins.

NOTE:

- **Make sure that the caliper pins are installed correctly. The upper caliper pin and the lower caliper pin are different. If these caliper pins are installed in the wrong location, it will cause vibration, uneven or rapid brake pad wear, and possibly uneven tire wear.**
- **Remove air from within the pin boots.**

GETtheMANUALS.org

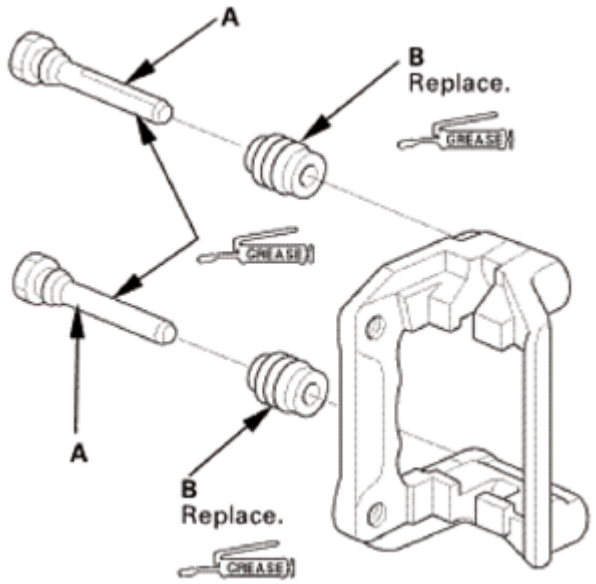

Fig. 295: Identifying Thin Coat Of Honda Caliper Grease Applying Area On Caliper Pins And Pin Boots
Courtesy of AMERICAN HONDA MOTOR CO., INC.

4. Apply a thin coat of Honda silicone grease (P/N 08C30-B0234M) to the new piston seal (A).
5. Install the piston seal.
6. Apply a thin coat of Honda silicone grease (P/N 08C30-B0234M) to the new piston boot (B).
7. Install the piston boot.

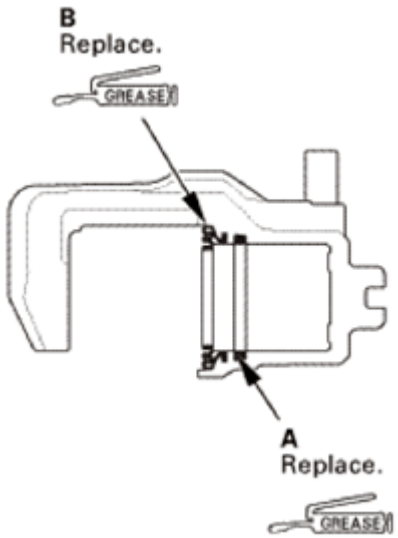

Fig. 296: Identifying Thin Coat Of Honda Silicone Grease Applying Area On Piston Boot
Courtesy of AMERICAN HONDA MOTOR CO., INC.

8. Apply the brake fluid to the outer surface of the piston, then set the piston in place on the caliper body.

GETtheMANUALS.org

9. Press in the piston with the brake caliper piston compressor tool.

NOTE:

- **Make sure that the piston boot is properly positioned into the groove of the piston.**
- **Do not press the piston diagonally, and do not press it forcibly.**
- **Be careful not to damage the piston boot when pressing the piston.**

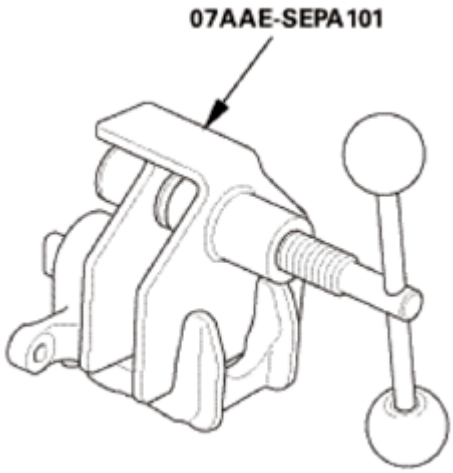

Fig. 297: Pressing Piston Using Brake Caliper Piston Compressor Tool
Courtesy of AMERICAN HONDA MOTOR CO., INC.

10. Install the pad spring (A).

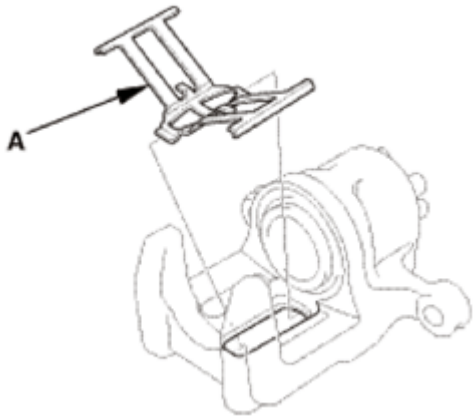

Fig. 298: Identifying Pad Spring
Courtesy of AMERICAN HONDA MOTOR CO., INC.

REAR BRAKE CALIPER REMOVAL AND INSTALLATION

REMOVAL

GETtheMANUALS.org

CAUTION: Frequent inhalation of brake pad dust, regardless of material composition, could be hazardous to your health.

- **Avoid breathing dust particles.**
- **Never use an air hose or brush to clean brake assemblies. Use an OSHA-approved vacuum cleaner.**

1. Vehicle Lift
    1. Raise the vehicle on a lift, and make sure it is securely supported.
2. Rear Wheel - Both Side
    1. Remove both rear wheels.

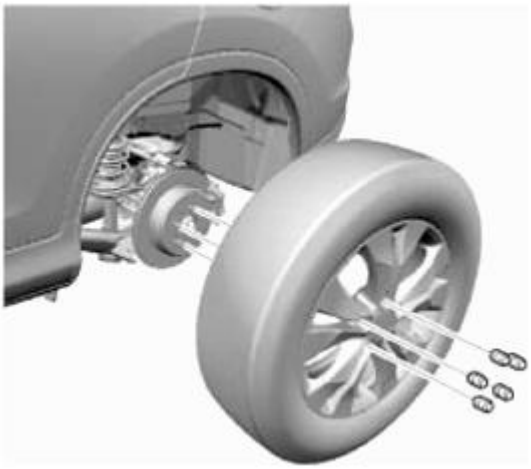

Fig. 299: Identifying Rear Wheel And Mounting Bolts
Courtesy of AMERICAN HONDA MOTOR CO., INC.

3. Brake Fluid - Remove
    1. Pull out the hood rear seal, then remove the master cylinder maintenance lid (A).
    2. Remove the reservoir cap (B).
    3. Remove the brake fluid from the master cylinder reservoir with a syringe.

GETtheMANUALS.org

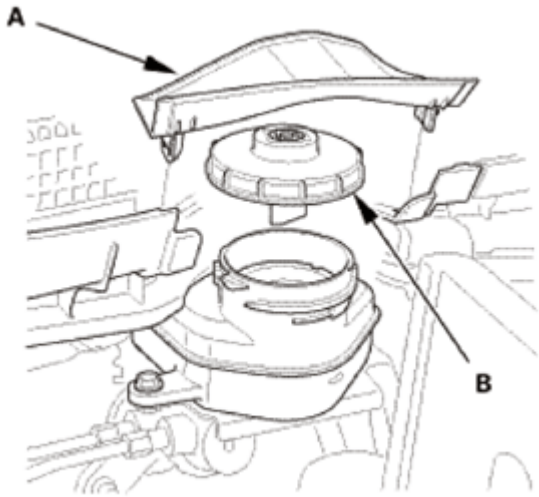

Fig. 300: Identifying Master Cylinder Maintenance Lid And Reservoir Cap
Courtesy of AMERICAN HONDA MOTOR CO., INC.

4. Rear Brake Caliper Body

NOTE: **Do not spill brake fluid on the vehicle; it may damage the paint. If brake fluid does contact the paint, wash it off immediately with water.**

1. Remove the banjo bolt (A), and disconnect the brake hose (B) from the caliper body (C).
2. Remove the flange bolts (D) while holding respective caliper pins (E) with a wrench.
3. Remove the brake caliper body.

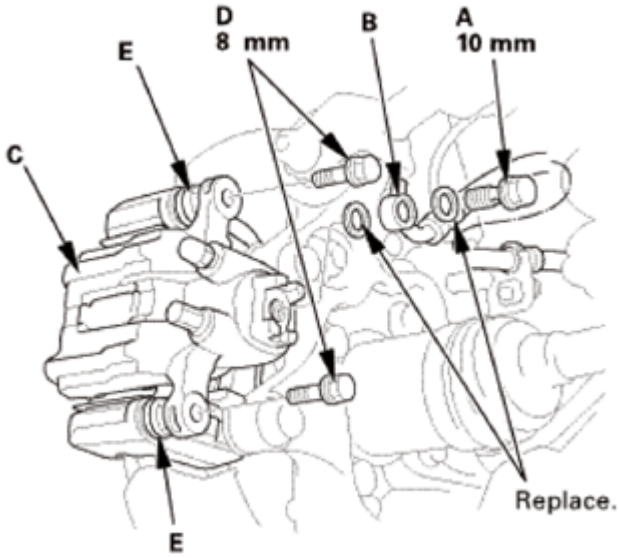

Fig. 301: Identifying Brake Hose, Caliper Body, Banjo Bolt, Flange Bolts And Caliper Pins
Courtesy of AMERICAN HONDA MOTOR CO., INC.

GETtheMANUALS.org

5. Rear Brake Pad
    1. Remove the outer pad shim (A) and the outer brake pad (B).

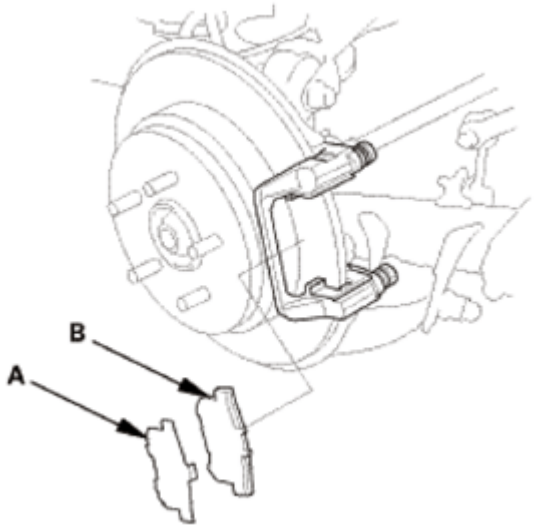

Fig. 302: Identifying Outer Pad Shim And Outer Brake Pad
Courtesy of AMERICAN HONDA MOTOR CO., INC.

    2. Remove the inner pad (A) from the caliper body (B).

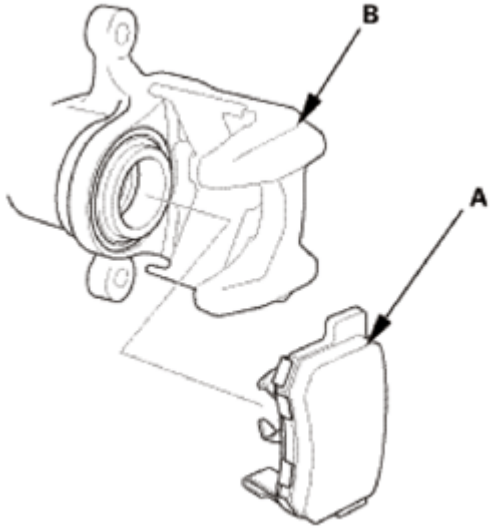

Fig. 303: Identifying Inner Pad And Caliper Body
Courtesy of AMERICAN HONDA MOTOR CO., INC.

6. Brake Caliper Pin and Boot
    1. Remove the caliper pins (A).

NOTE: **The upper and lower caliper pins are different. During installation,**

GETtheMANUALS.org

make sure the caliper pins are in the proper positions.

2. Remove the pin boots (B).

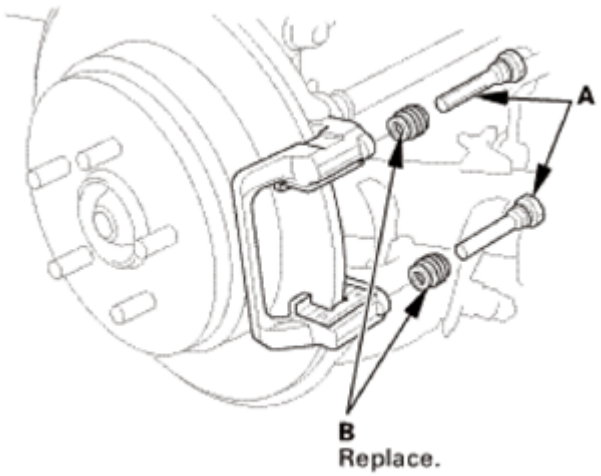

Fig. 304: Identifying Caliper Pins And Pin Boots
Courtesy of AMERICAN HONDA MOTOR CO., INC.

INSTALLATION

CAUTION: Frequent inhalation of brake pad dust, regardless of material composition, could be hazardous to your health.

- **Avoid breathing dust particles.**
- **Never use an air hose or brush to clean brake assemblies. Use an OSHA-approved vacuum cleaner.**

1. Brake Caliper Pin and Boot
   1. Apply a thin coat of Honda caliper grease (P/N 08C30-B0224M) to the caliper pins (A) and the new pin boots (B).
   2. Install the pin boots.
   3. Install the caliper pins.

NOTE:

- **Make sure that the caliper pins are installed correctly. The upper caliper pin and the lower caliper pin are different. If these caliper pins are installed in the wrong location, it will cause vibration, uneven or rapid brake pad wear, and possibly uneven tire wear.**
- **Make sure that the pin boots are properly positioned into the grooves (C) of the caliper pin and the grooves (D) of the caliper body.**
- **Remove air from within the pin boots.**

GETtheMANUALS.org

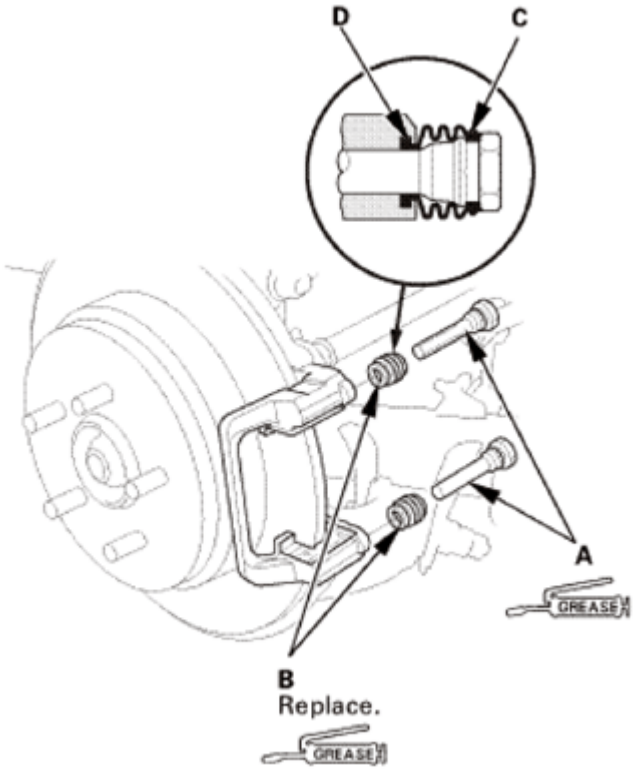

Fig. 305: Identifying Thin Coat Of Honda Caliper Grease Applying Area On Caliper Pins And Pin Boots
Courtesy of AMERICAN HONDA MOTOR CO., INC.

2. Rear Brake Pad

Outer pad

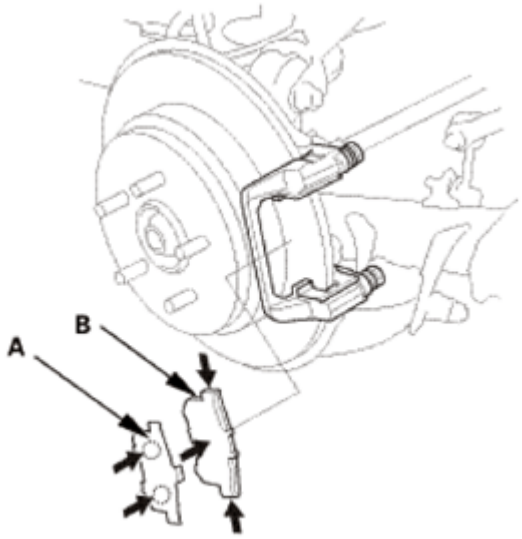

Fig. 306: Locating Thin Coat Of Assembly Paste Applying Area On Pad Side Shims And Brake

GETtheMANUALS.org

Pads (Outer Pad)
Courtesy of AMERICAN HONDA MOTOR CO., INC.

1. Apply a thin coat of M-77 assembly paste (P/N 08798-9010) to the pad side of the shims (A), the back of the brake pads (B), and the other areas indicated by the arrows.

   NOTE: Wipe off the excess assembly paste from the pad shims and brake pads friction material.

2. Install the brake pads and the pad shims.

   NOTE: Install the brake pad with the wear indicator (C) on the bottom inside position.

   Inner pad

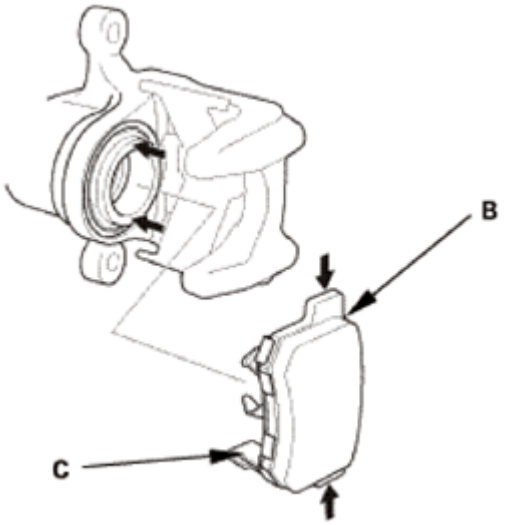

Fig. 307: Locating Thin Coat Of Assembly Paste Applying Area On Pad Side Shims And Brake Pads (Inner Pad)
Courtesy of AMERICAN HONDA MOTOR CO., INC.

3. Rear Brake Caliper Body
   1. Install the caliper body (A).
   2. Install the flange bolts (B) while holding respective caliper pins (C) with a wrench.
   3. Connect the brake hose (D) to the caliper body with the banjo bolt (E) and new sealing washers (F).

GETtheMANUALS.org

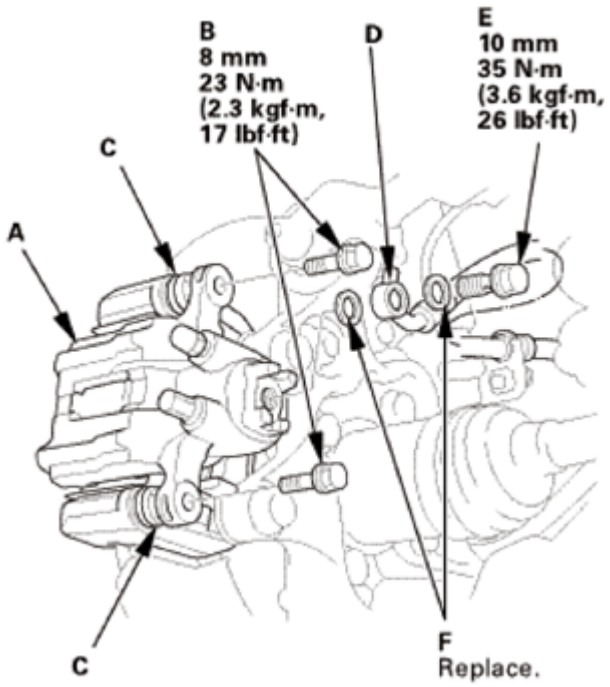

Fig. 308: Identifying Rear Brake Caliper Body Components With Torque Specifications
Courtesy of AMERICAN HONDA MOTOR CO., INC.

4. Brake System - Bleeding

NOTE: **Do not spill brake fluid on the vehicle; it may damage the paint. If brake fluid does contact the paint, wash it off immediately with water.**

NOTE:

- **Do not reuse the drained fluid. Use only new Honda DOT 3 Brake Fluid from an unopened container. Using a non-Honda brake fluid can cause corrosion and shorten the life of the system.**
- **Make sure no dirt or other foreign matter gets in the brake fluid.**
- **The reservoir connected to the master cylinder must be at the MAX (upper) level mark at the start of the bleeding procedure and checked after bleeding each wheel. Add fluid as required.**
- **There are three different methods used for bleeding brake systems. The method shown here is the preferred manual method for removing the air from the system. For pressure or vacuum bleeding, refer to tool manufacturer's instructions included with the tool.**

1. Make sure the brake fluid level in the reservoir tank (A) is at the MAX (upper) level line (B).

GETtheMANUALS.org

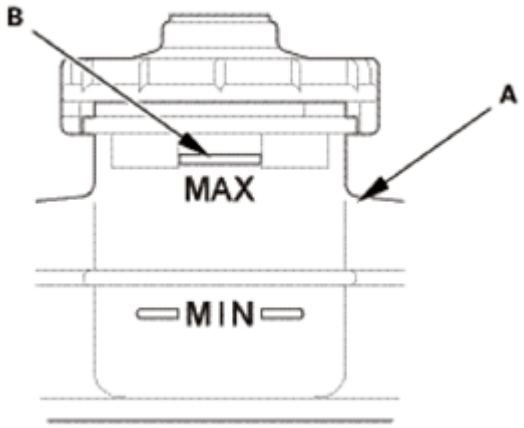

Fig. 309: Identifying MAX (Upper) Level Line On Reservoir Tank
Courtesy of AMERICAN HONDA MOTOR CO., INC.

2. Start the bleeding at the driver's side of the front brake system.

NOTE: Bleed the calipers in the sequence shown.

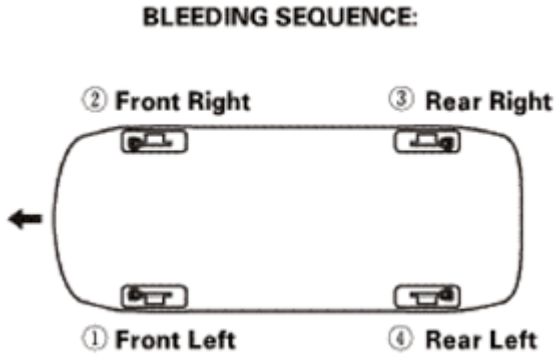

Fig. 310: Identifying Bleeding Sequence Of Front Brake System
Courtesy of AMERICAN HONDA MOTOR CO., INC.

Front

GETtheMANUALS.org

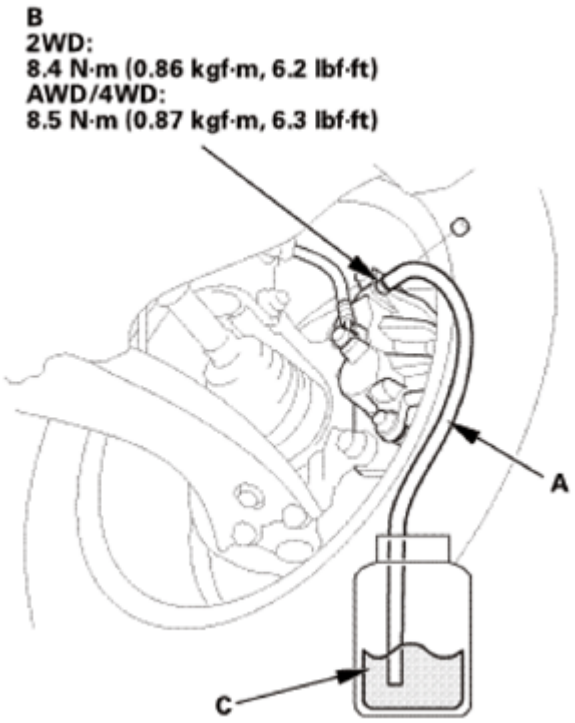

Fig. 311: Bleeding Brake Fluid To Plastic Catch Bottle Using Hose (Front)
Courtesy of AMERICAN HONDA MOTOR CO., INC.

3. Attach a length of clear drain tube (A) to the bleed screw (B).
4. Submerge the other end of the drain tube into a clear plastic catch bottle of brake fluid (C).
5. Have an assistant slowly pump the brake pedal several times then apply steady continuous pressure.
6. Loosen the bleed screw slowly to bleed the fluid into the plastic catch bottle. The brake pedal will travel toward the floor as the fluid is bled from the system.
7. When the brake pedal reaches the floor, have the assistant hold the pedal in that position, then tighten the bleed screw. The brake pedal can now be released.
8. Check and refill the master cylinder reservoir tank to the MAX (upper) level line. Be sure to reinstall the master cylinder reservoir cap.
9. Repeat steps 5 thru 8 until the brake fluid in the clear drain tube appears fresh and there are no air bubbles in the fluid.
10. Repeat this procedure for each brake in the bleeding sequence.

Rear

GETtheMANUALS.org

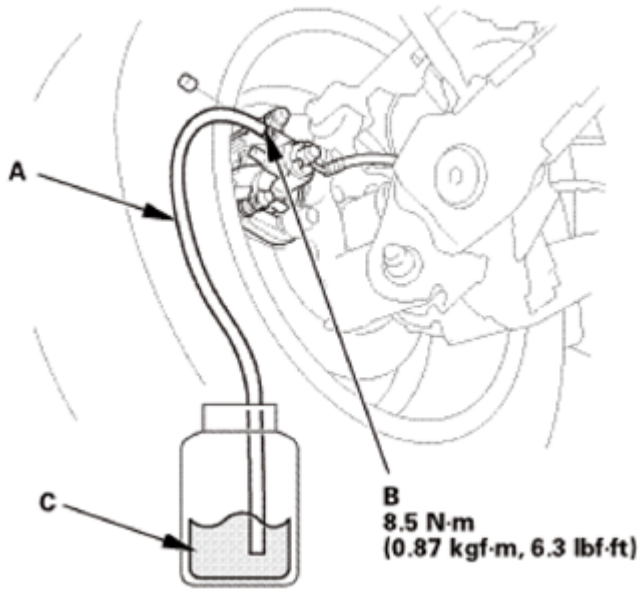

Fig. 312: Bleeding Brake Fluid To Plastic Catch Bottle Using Hose (Rear)
Courtesy of AMERICAN HONDA MOTOR CO., INC.

5. Rear Wheel - Both Side
    1. Install both rear wheels.

NOTE: **Before installing the wheel, clean the mating surfaces between the brake disc/drum and the inside of the wheel.**

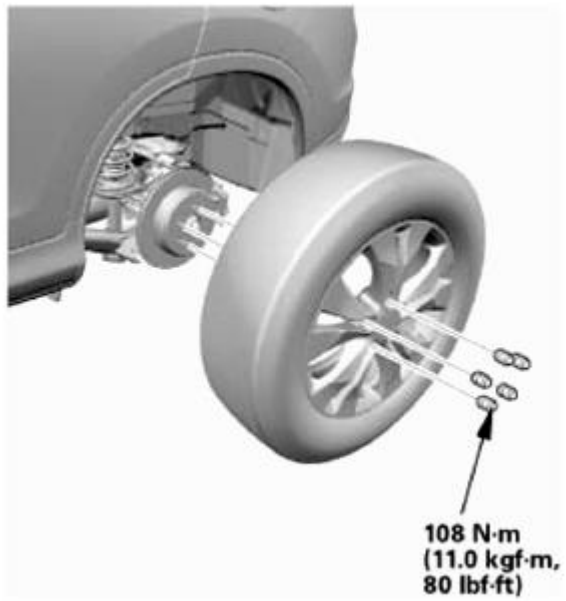

Fig. 313: Identifying Rear Wheel And Mounting Bolts With Torque Specifications
Courtesy of AMERICAN HONDA MOTOR CO., INC.

GETtheMANUALS.org

REAR BRAKE DISC INSPECTION

REMOVAL

CAUTION: Frequent inhalation of brake pad dust, regardless of material composition, could be hazardous to your health.

- **Avoid breathing dust particles.**
- **Never use an air hose or brush to clean brake assemblies. Use an OSHA-approved vacuum cleaner.**

1. Vehicle Lift
    1. Raise the vehicle on a lift, and make sure it is securely supported.
2. Rear Wheel - Both Side
    1. Remove both rear wheels.

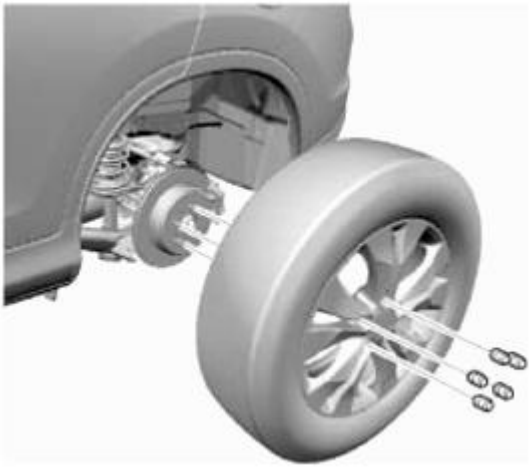

Fig. 314: Identifying Rear Wheel And Mounting Bolts With Torque Specifications
Courtesy of AMERICAN HONDA MOTOR CO., INC.

3. Rear Outer Brake Pad
    1. Remove the brake hose (A) from the brake hose bracket (B).
    2. Remove the flange bolts (C) while holding the caliper pin (D) with a wrench.
    3. Remove the caliper body (E).

NOTE: Do not twist the brake hose to prevent damage.

GETtheMANUALS.org

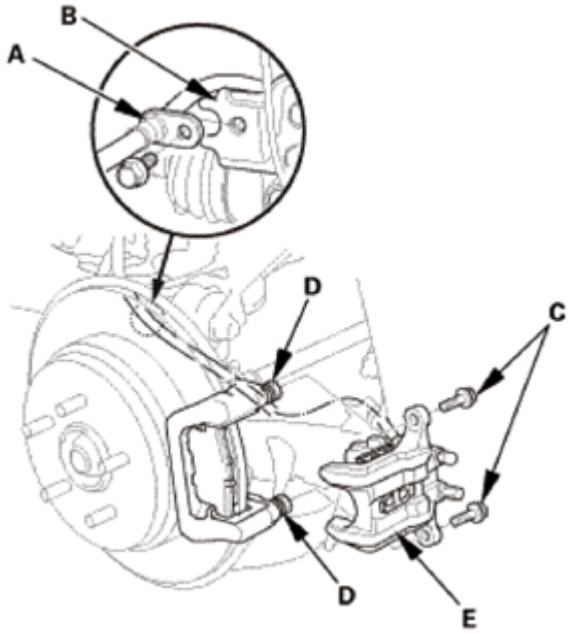

Fig. 315: Identifying Rear Wheel And Mounting Bolts
Courtesy of AMERICAN HONDA MOTOR CO., INC.

4. Remove the outer pad shim (A) and the outer brake pad (B).

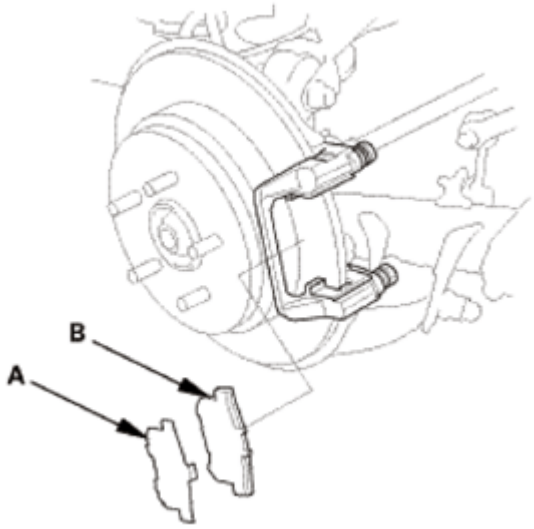

Fig. 316: Identifying Outer Pad Shim And Outer Brake Pad
Courtesy of AMERICAN HONDA MOTOR CO., INC.

INSPECTION

1. Rear Brake Disc Thickness and Parallelism - Inspection
    1. Using a micrometer (A), measure the brake disc thickness at eight points, about 45 ° apart and 10 mm (0.39 in) in from the outer edge of the brake disc.

GETtheMANUALS.org

Replace the brake disc if the smallest measurement is less than the maximum refinishing limit.

Brake disc thickness:

Standard: 9.0 mm (0.354 in)

Maximum refinishing limit: 7.5 mm (0.295 in)

Brake disc parallelism*: 0.015 mm (0.00059 in) max .

***: This is the maximum allowable difference between the thickness measurements** .

2. If the brake disc is beyond the service limit for parallelism, refinish the brake disc with a Honda-approved commercially available on-car brake lathe.

NOTE: If the brake disc is beyond the service limit for refinishing, replace it.

3. Inspect the brake disc runout.

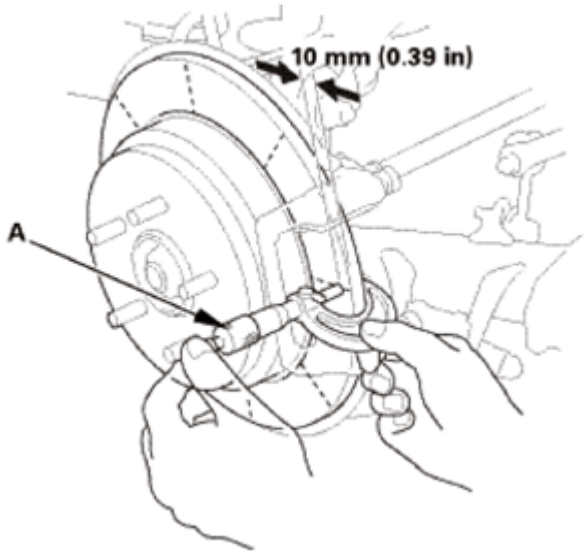

Fig. 317: Measuring Brake Disc Runout Using Micrometer
Courtesy of AMERICAN HONDA MOTOR CO., INC.

2. Rear Brake Disc Runout - Inspection
    1. Inspect the brake disc to wheel surface for damage and cracks.
    2. Clean the brake disc thoroughly, and remove all rust.
    3. Install suitable flat washers (A) and the wheel nuts (B).
    4. Tighten the wheel nuts to the specified torque to hold the brake disc securely against the hub.
    5. Set up the dial gauge (C) against the brake disc as shown.
    6. Measure the runout at 10 mm (0.39 in) from the outer edge of the brake disc.

GETtheMANUALS.org

Brake disc runout:

Service limit: 0.04 mm (0.0016 in)

7. If the brake disc is beyond the service limit, refinish the brake disc with a Honda-approved commercially available on-car brake lathe.

   Maximum refinishing limit: 7.5 mm (0.295 in)

NOTE:

- **If the brake disc is beyond the service limit for refinishing, replace it.**
- **If the brake disc is replaced with a new one, check the new disc for runout. If the new disc is out of specification, refinish the disc.**

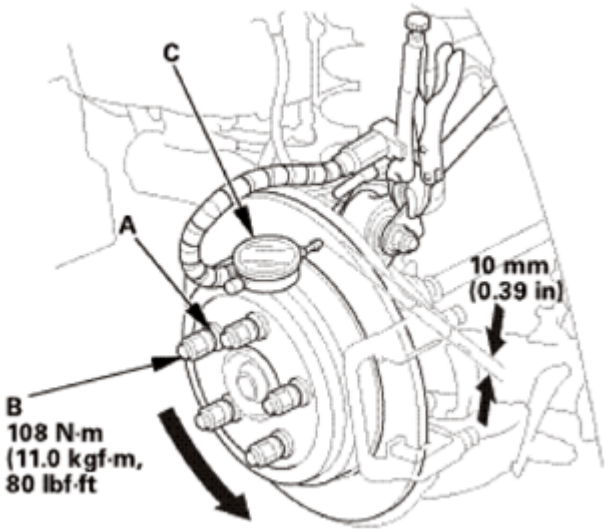

Fig. 318: Measuring Brake Disc Outer Edge Runout Using Dial Gauge
Courtesy of AMERICAN HONDA MOTOR CO., INC.

INSTALLATION

CAUTION: Frequent inhalation of brake pad dust, regardless of material composition, could be hazardous to your health.

- **Avoid breathing dust particles.**
- **Never use an air hose or brush to clean brake assemblies. Use an OSHA-approved vacuum cleaner.**

1. Rear Outer Brake Pad
   1. Apply a thin coat of M-77 assembly paste (P/N 08798-9010) to the pad side of the shim (A), the back of the brake pad (B), and the other areas indicated by the arrows.

GETtheMANUALS.org

NOTE: **Wipe off the excess assembly paste from the pad shims and brake pad friction material.**

2. Install the brake pad and the pad shim.

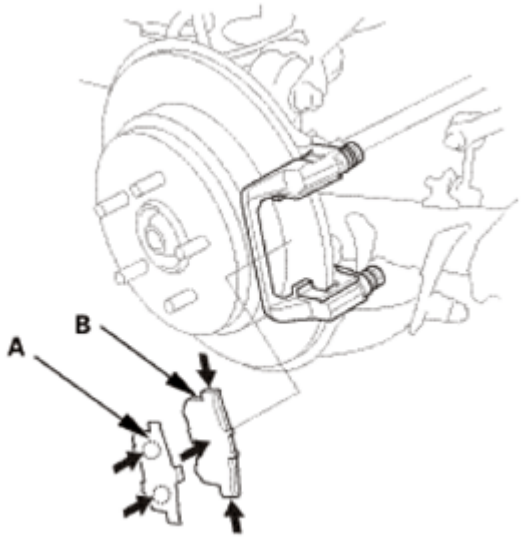

Fig. 319: Locating Thin Coat Of Assembly Paste Applying Area On Pad Side Shims And Brake Pads (Inner Pad)
Courtesy of AMERICAN HONDA MOTOR CO., INC.

3. Install the caliper body (A).
4. Install the flange bolts (B) while holding respective caliper pins (C) with a wrench.
5. Install the brake hose (D).

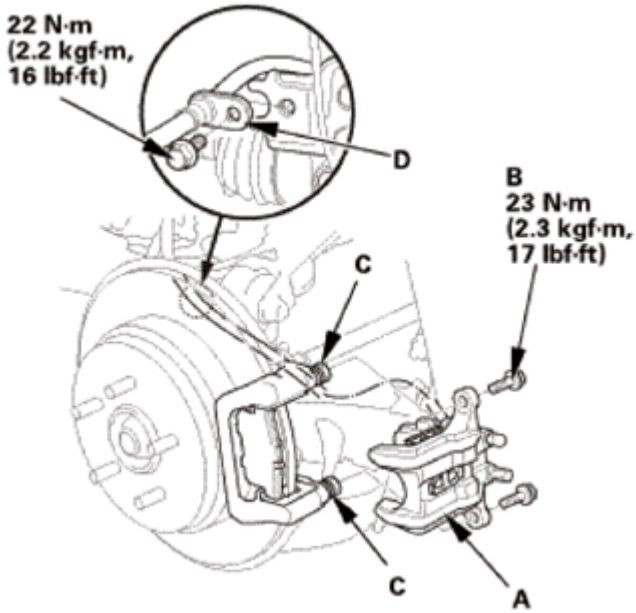

GETtheMANUALS.org

Fig. 320: Identifying Caliper Body, Brake Hose And Flange Bolts With Torque Specifications
Courtesy of AMERICAN HONDA MOTOR CO., INC.

2. Rear Wheel - Both Side
    1. Install both rear wheels.

NOTE: **Before installing the wheel, clean the mating surfaces between the brake disc/drum and the inside of the wheel.**

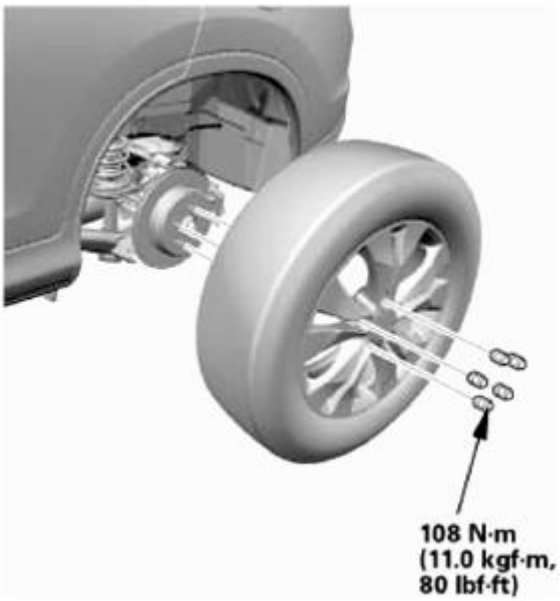

Fig. 321: Identifying Rear Wheel And Mounting Bolts With Torque Specifications
Courtesy of AMERICAN HONDA MOTOR CO., INC.

REAR BRAKE DISC REMOVAL AND INSTALLATION

REMOVAL

NOTE: **Keep grease away from the brake disc and the brake pads.**

1. Vehicle Lift
    1. Raise the vehicle on a lift, and make sure it is securely supported.
2. Rear Wheel - Both Side
    1. Remove both rear wheels.

GETtheMANUALS.org

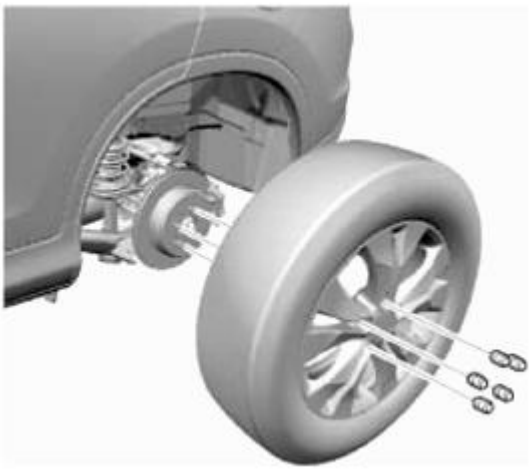

Fig. 322: Identifying Rear Wheel And Mounting Bolts
Courtesy of AMERICAN HONDA MOTOR CO., INC.

3. Equalizer Cover
    1. Pull back the left rear carpet/cutout/insulation, under the driver's seat.
    2. Remove the equalizer cover (A).

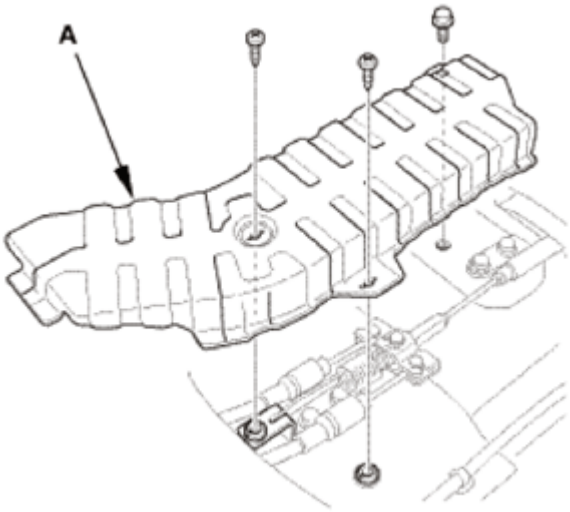

Fig. 323: Identifying Equalizer Cover And Mounting Bolts
Courtesy of AMERICAN HONDA MOTOR CO., INC.

4. Parking Brake Adjusting Bolt - Loosen
    1. Release the parking brake pedal fully.
    2. Disconnect and remove the return spring (A).
    3. Loosen the adjusting nut (B).

GETtheMANUALS.org

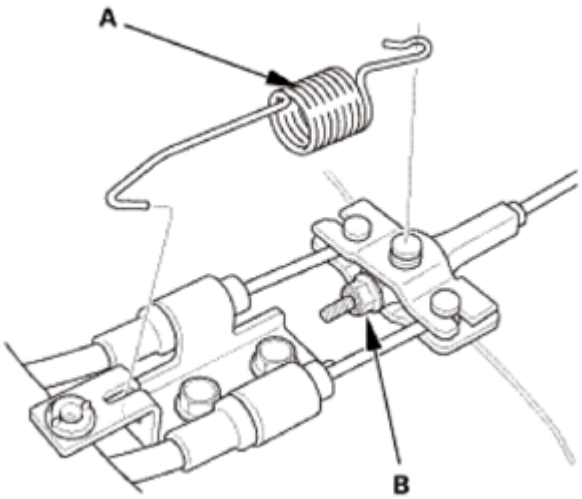

Fig. 324: Identifying Return Spring And Adjusting Nut
Courtesy of AMERICAN HONDA MOTOR CO., INC.

5. Rear Brake Caliper - Detach
    1. Remove the brake hose mounting bolt (A).
    2. Remove the caliper assembly (B).

NOTE:

- **To prevent damage to the caliper assembly or brake hose, use a short piece of wire to hang the caliper assembly from the undercarriage.**
- **Do not twist the brake hose and the parking brake cable excessively.**

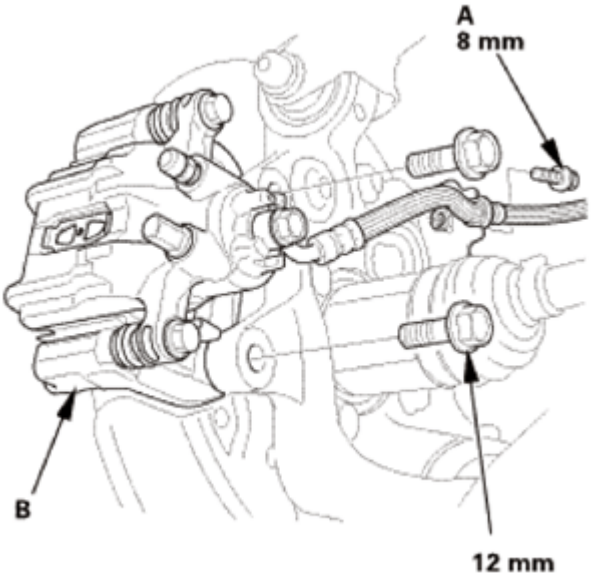

Fig. 325: Identifying Caliper Assembly And Brake Hose Mounting Bolt With Torque

GETtheMANUALS.org

Specification
Courtesy of AMERICAN HONDA MOTOR CO., INC.

6. Rear Brake Disc
    1. Remove the brake disc/drum flathead screws (A).
    2. Remove the brake disc/drum (B).

NOTE:

- **Remove the adjuster plug (C), then if necessary, turn the adjuster bolt (D) with a flat-tip screwdriver until the shoes become loose.**
- **If the brake disc/drum is stuck to the hub bearing unit, thread two 8 x 1.25 mm bolts (E) into the brake disc/drum to push it away from the hub bearing unit. Turn each bolt 90 degrees at a time to prevent the brake disc/drum from binding.**

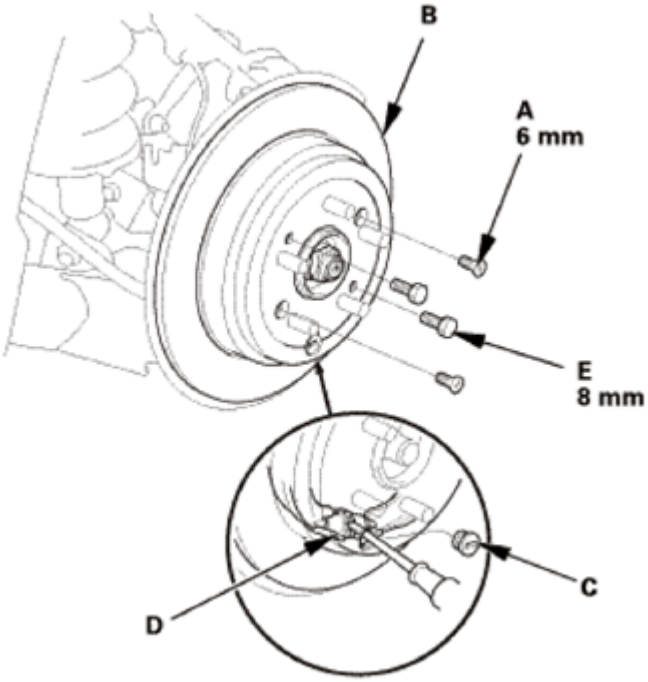

Fig. 326: Turning Adjuster Bolt Using Flat-Tip Screwdriver
Courtesy of AMERICAN HONDA MOTOR CO., INC.

INSTALLATION

NOTE: **Keep grease away from the brake disc and the brake pads.**

1. Rear Brake Disc
    1. Install the brake disc (A).

GETtheMANUALS.org

NOTE: **Before installing the brake disc, clean the mating surfaces between the hub bearing unit and the inside of the brake disc.**

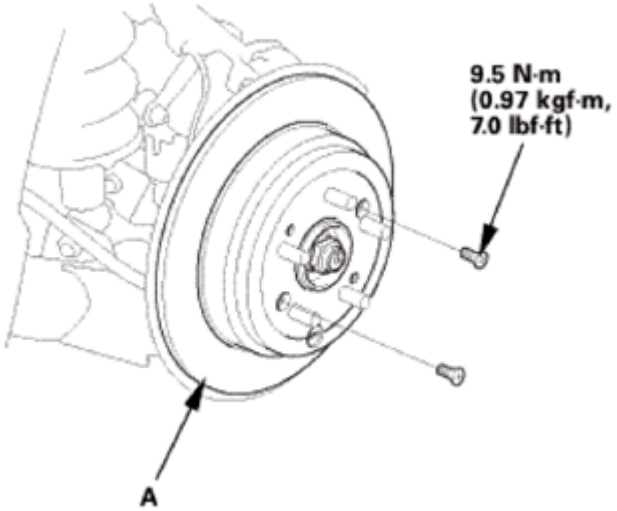

Fig. 327: Identifying Brake Disc And Mounting Bolts With Torque Specifications
Courtesy of AMERICAN HONDA MOTOR CO., INC.

2. Rear Brake Disc Runout - Inspection
    1. Inspect the brake disc to wheel surface for damage and cracks.
    2. Clean the brake disc thoroughly, and remove all rust.
    3. Install suitable flat washers (A) and the wheel nuts (B).
    4. Tighten the wheel nuts to the specified torque to hold the brake disc securely against the hub.
    5. Set up the dial gauge (C) against the brake disc as shown.
    6. Measure the runout at 10 mm (0.39 in) from the outer edge of the brake disc.

       Brake disc runout:

       Service limit: 0.04 mm (0.0016 in)

    7. If the brake disc is beyond the service limit, refinish the brake disc with a Honda-approved commercially available on-car brake lathe.

       Maximum refinishing limit: 7.5 mm (0.295 in)

NOTE:
- **If the brake disc is beyond the service limit for refinishing, replace it.**
- **If the brake disc is replaced with a new one, check the new disc for runout. If the new disc is out of specification, refinish the disc.**

GETtheMANUALS.org

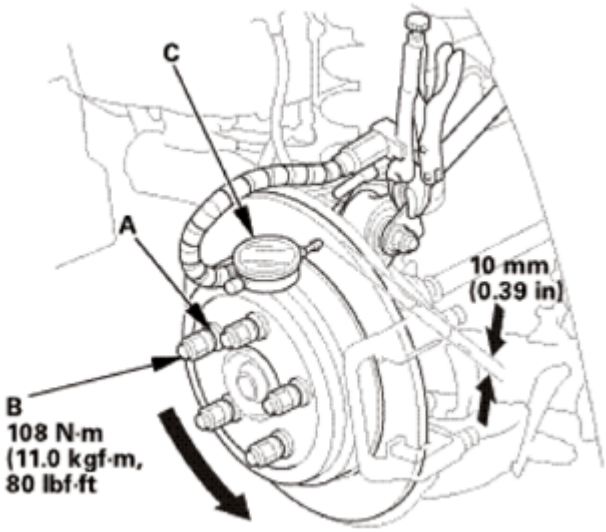

Fig. 328: Measuring Brake Disc Outer Edge Runout Using Dial Gauge
Courtesy of AMERICAN HONDA MOTOR CO., INC.

3. Rear Brake Caliper - Reattach
    1. Install the caliper assembly (A).
    2. Install the brake hose mounting bolt (B).

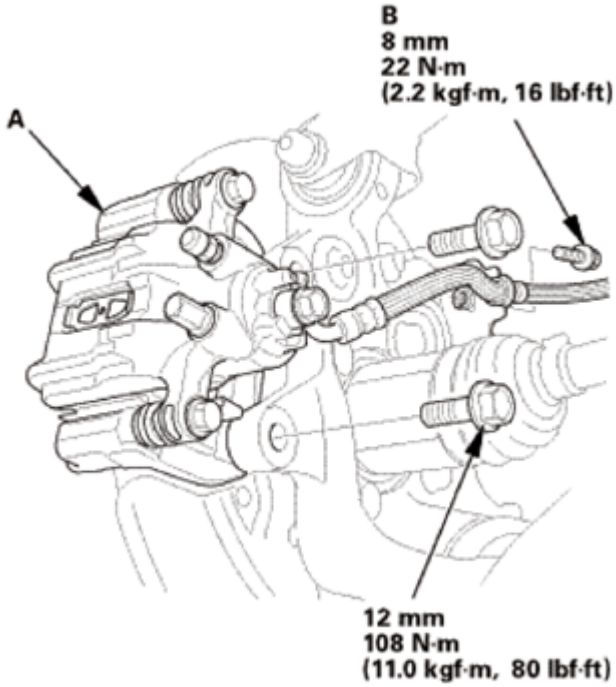

Fig. 329: Identifying Caliper Assembly And Brake Hose Mounting Bolt With Torque Specifications
Courtesy of AMERICAN HONDA MOTOR CO., INC.

GETtheMANUALS.org

4. Major Parking Brake - Adjustment
    1. Remove the access plug (A).
    2. Turn the ratchet teeth on the adjuster nut (B) with a brake adjuster tool or a flat-tip screwdriver (C) until the shoes lock against the parking brake drum. Then back off the adjuster 7 clicks, and install the access plug.

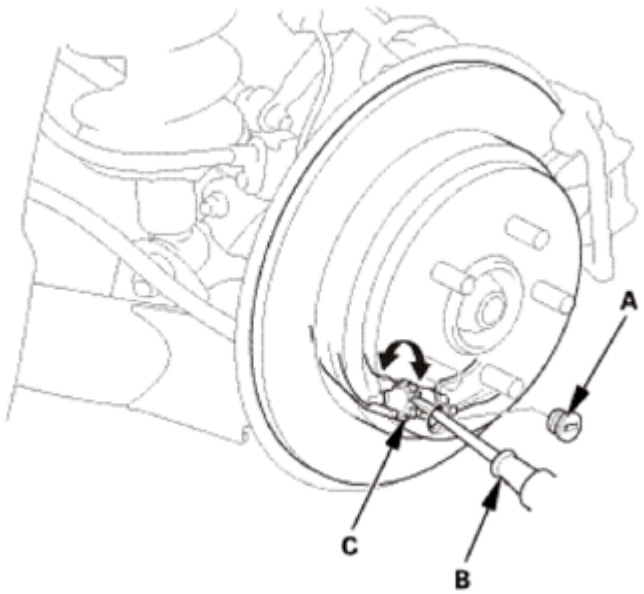

Fig. 330: Turning Ratchet Teeth On Adjuster Nut Using Brake Adjuster Tool Or Flat-Tip Screwdriver
Courtesy of AMERICAN HONDA MOTOR CO., INC.

5. Rear Wheel - Both Side
    1. Install both rear wheels.

NOTE: **Before installing the wheel, clean the mating surfaces between the brake disc/drum and the inside of the wheel.**

GETtheMANUALS.org

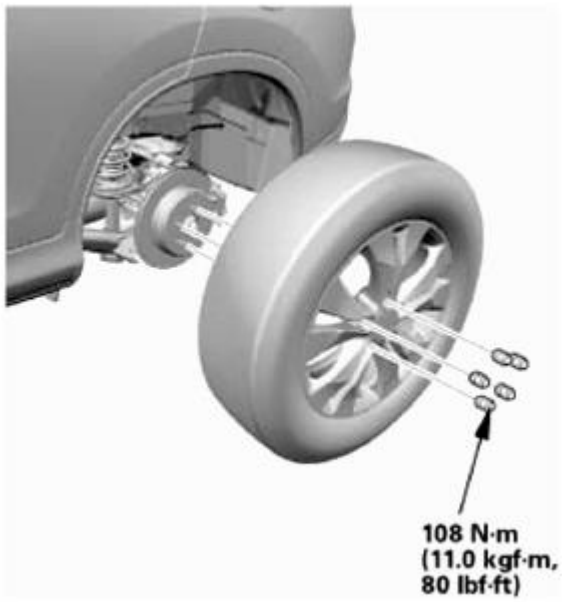

Fig. 331: Identifying Rear Wheel And Mounting Bolts With Torque Specifications
Courtesy of AMERICAN HONDA MOTOR CO., INC.

6. Minor Parking Brake - Adjustment
    1. Release the parking brake pedal fully.
    2. Press the parking brake pedal 1 click.
    3. Tighten the adjusting nut (A) until the parking brakes drag slightly when the rear wheels are turned.
    4. Release the parking brake pedal fully.
    5. Check that the parking brakes do not drag when the rear wheels are turned. Readjust if necessary.

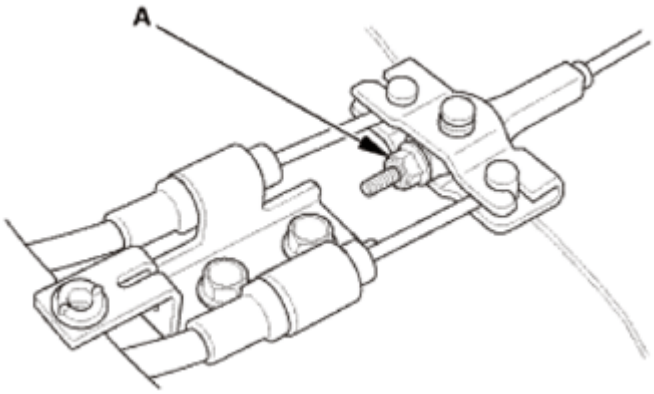

Fig. 332: Identifying Parking Brake Adjusting Nut
Courtesy of AMERICAN HONDA MOTOR CO., INC.

    6. Press the parking brake pedal (A) with 294 N (30.0 kgf, 66.1 lbf) of force to fully apply the parking brake.
    7. Make sure the parking brake pedal is within the specified number of clicks.

GETtheMANUALS.org

Pedal locked clicks: 5 to 6 clicks

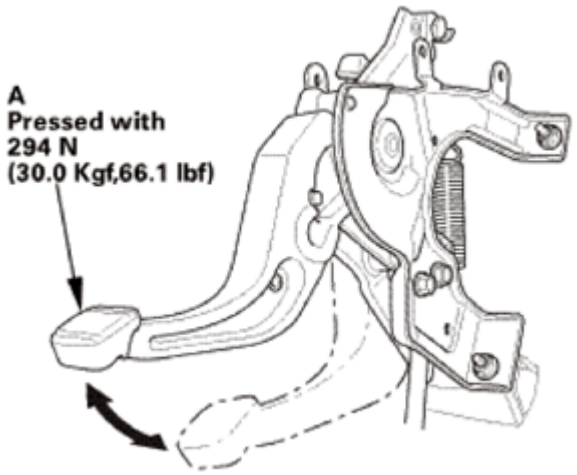

Fig. 333: Pressing Parking Brake Pedal
Courtesy of AMERICAN HONDA MOTOR CO., INC.

7. Parking Brake Return Spring
    1. Install the return spring (A).

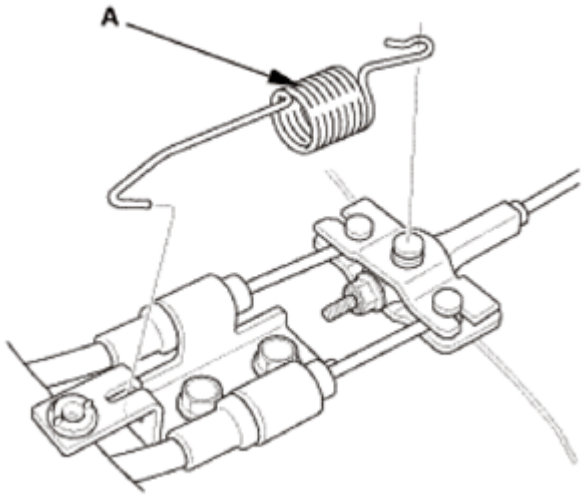

Fig. 334: Identifying Return Spring
Courtesy of AMERICAN HONDA MOTOR CO., INC.

8. Equalizer Cover
    1. Install the equalizer cover (A).
    2. Fold back into place the left rear carpet/cutout/insulation.

GETtheMANUALS.org

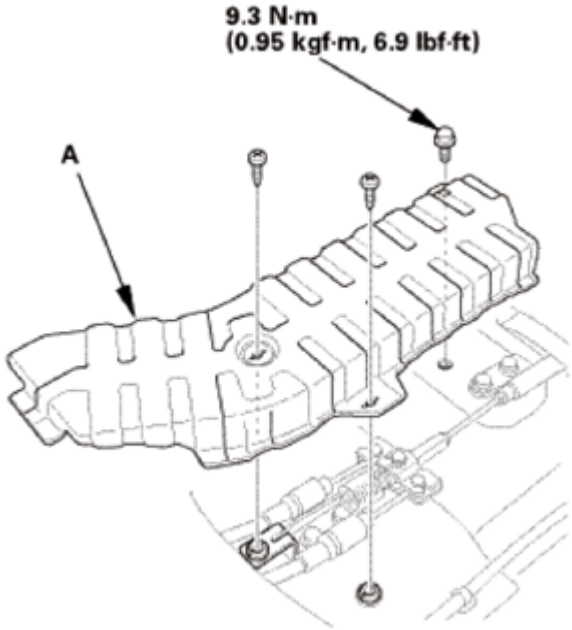

Fig. 335: Identifying Equalizer Cover And Mounting Bolts With Torque Specifications
Courtesy of AMERICAN HONDA MOTOR CO., INC.

REAR BRAKE HOSE REMOVAL AND INSTALLATION

REMOVAL

1. Vehicle Lift
    1. Raise the vehicle on a lift, and make sure it is securely supported.
2. Rear Wheel
    1. Remove the rear wheel.

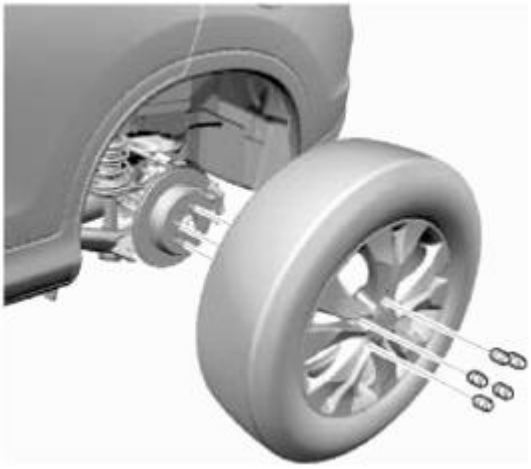

Fig. 336: Identifying Rear Wheel And Mounting Bolts With Torque Specifications
Courtesy of AMERICAN HONDA MOTOR CO., INC.

GETtheMANUALS.org

3. Brake Fluid - Remove
    1. Pull out the hood rear seal, then remove the master cylinder maintenance lid (A).
    2. Remove the reservoir cap (B).
    3. Remove the brake fluid from the master cylinder reservoir with a syringe.

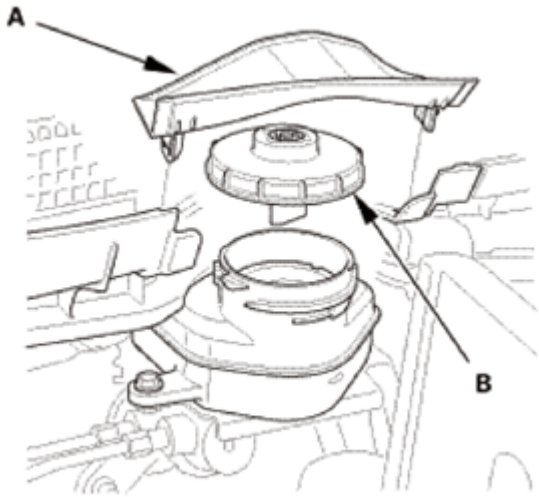

Fig. 337: Identifying Master Cylinder Maintenance Lid And Reservoir Cap
Courtesy of AMERICAN HONDA MOTOR CO., INC.

4. Rear Brake Hose

NOTE: **Do not spill brake fluid on the vehicle; it may damage the paint. If brake fluid gets on the paint, wash it off immediately with water.**

NOTE: **After removal, plug the ends of the hoses and the joints to prevent spilling brake fluid.**

    1. Disconnect the brake line (A) from the brake hose (B).
    2. Remove the brake hose clip (C).

GETtheMANUALS.org

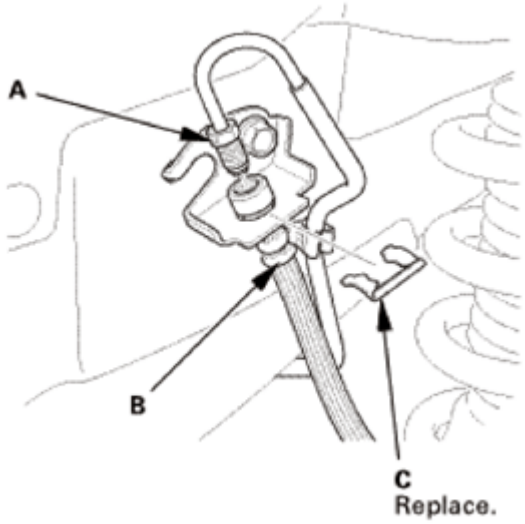

Fig. 338: Identifying Brake Line, Brake Hose And Clip
Courtesy of AMERICAN HONDA MOTOR CO., INC.

3. Remove the banjo bolt (A), and disconnect the brake hose (B) from the caliper body.
4. Remove the brake hose mounting bolt (C).
5. Remove the brake hose.

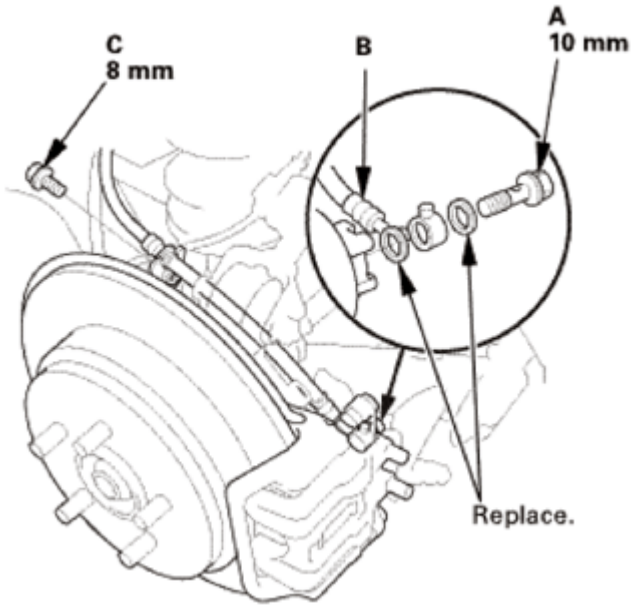

Fig. 339: Identifying Brake Hose, Mounting Bolt And Banjo Bolt
Courtesy of AMERICAN HONDA MOTOR CO., INC.

INSTALLATION

1. Rear Brake Hose

GETtheMANUALS.org

NOTE: **Do not spill brake fluid on the vehicle; it may damage the paint. If brake fluid gets on the paint, wash it off immediately with water.**

NOTE: **Check that all parts are free of dirt and other foreign particles.**

1. Install the brake hose (A) with the mounting bolt (B).
2. Connect the brake hose to the caliper body with the banjo bolt (C) and new sealing washers (D).

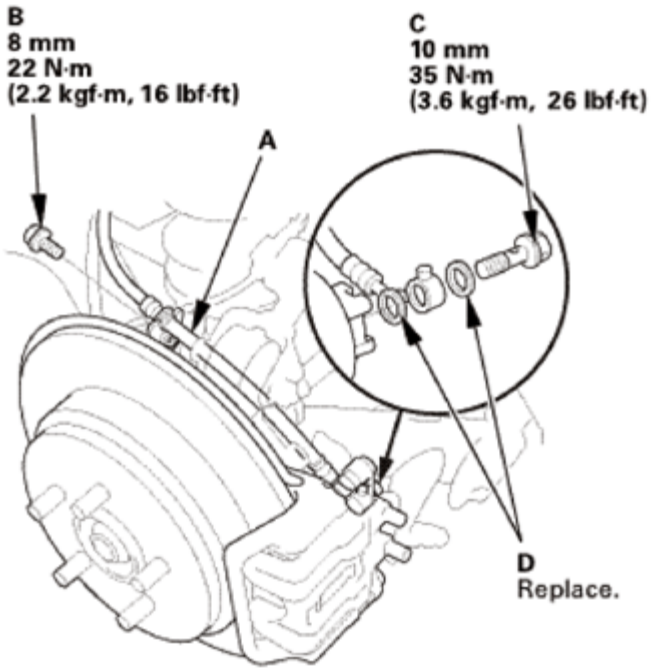

Fig. 340: Identifying Brake Line, Brake Hose, Washer, Clip And Banjo Bolt
Courtesy of AMERICAN HONDA MOTOR CO., INC.

3. Connect the brake line (A) to the brake hose (B).
4. Install the brake hose clip (C).

GETtheMANUALS.org

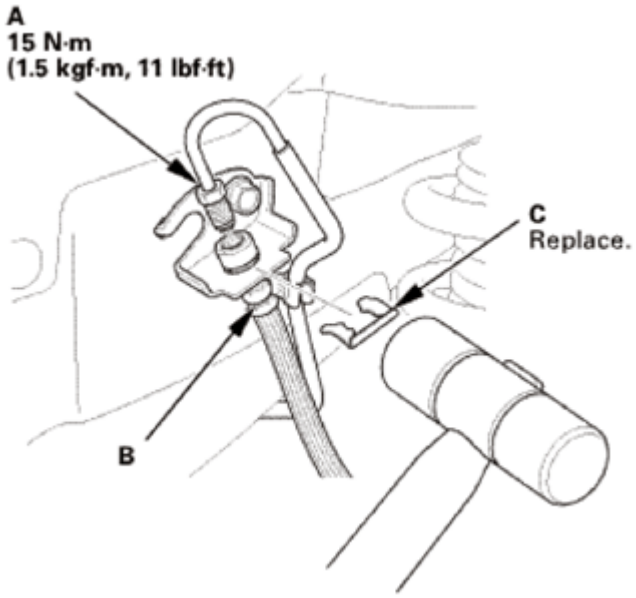

Fig. 341: Installing Brake Hose Clip
Courtesy of AMERICAN HONDA MOTOR CO., INC.

2. Brake System - Bleeding

NOTE: **Do not spill brake fluid on the vehicle; it may damage the paint. If brake fluid does contact the paint, wash it off immediately with water.**

NOTE:

- **Do not reuse the drained fluid. Use only new Honda DOT 3 Brake Fluid from an unopened container. Using a non-Honda brake fluid can cause corrosion and shorten the life of the system.**
- **Make sure no dirt or other foreign matter gets in the brake fluid.**
- **The reservoir connected to the master cylinder must be at the MAX (upper) level mark at the start of the bleeding procedure and checked after bleeding each wheel. Add fluid as required.**
- **There are three different methods used for bleeding brake systems. The method shown here is the preferred manual method for removing the air from the system. For pressure or vacuum bleeding, refer to tool manufacturer's instructions included with the tool.**

1. Make sure the brake fluid level in the reservoir tank (A) is at the MAX (upper) level line (B).

GETtheMANUALS.org

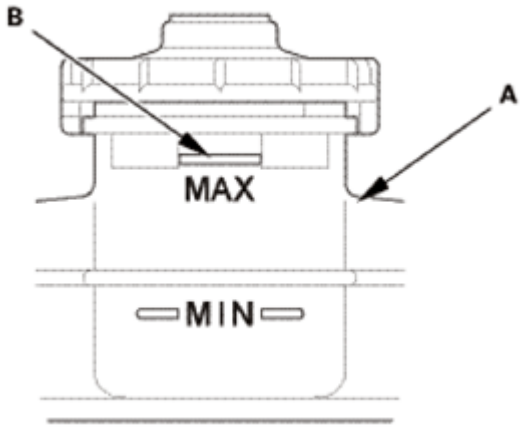

Fig. 342: Identifying MAX (Upper) Level Line On Reservoir Tank
Courtesy of AMERICAN HONDA MOTOR CO., INC.

2. Start the bleeding at the driver's side of the front brake system.

NOTE: Bleed the calipers in the sequence shown.

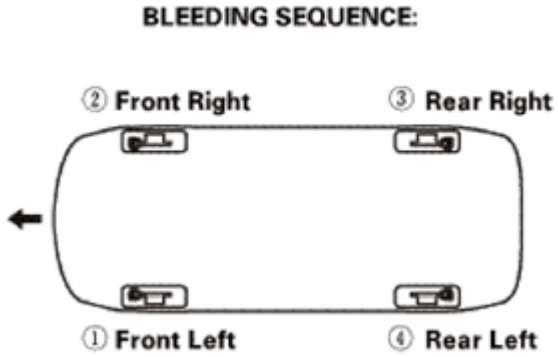

Fig. 343: Identifying Bleeding Sequence Of Front Brake System
Courtesy of AMERICAN HONDA MOTOR CO., INC.

3. Attach a length of clear drain tube (A) to the bleed screw (B).
4. Submerge the other end of the drain tube into a clear plastic catch bottle of brake fluid (C).
5. Have an assistant slowly pump the brake pedal several times then apply steady continuous pressure.
6. Loosen the bleed screw slowly to bleed the fluid into the plastic catch bottle. The brake pedal will travel toward the floor as the fluid is bled from the system.
7. When the brake pedal reaches the floor, have the assistant hold the pedal in that position, then tighten the bleed screw. The brake pedal can now be released.
8. Check and refill the master cylinder reservoir tank to the MAX (upper) level line. Be sure to reinstall the master cylinder reservoir cap.
9. Repeat steps 5 thru 8 until the brake fluid in the clear drain tube appears fresh and there are no air bubbles in the fluid.

GETtheMANUALS.org

Front

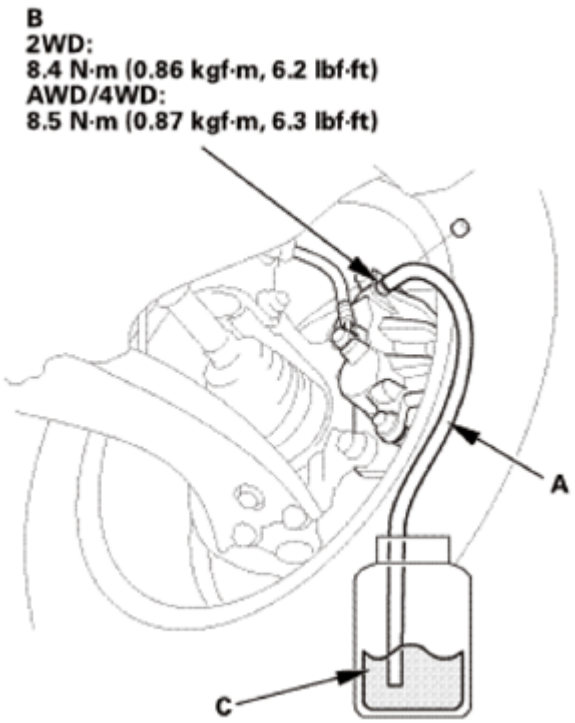

Fig. 344: Bleeding Brake Fluid To Plastic Catch Bottle Using Hose (Front)
Courtesy of AMERICAN HONDA MOTOR CO., INC.

Rear

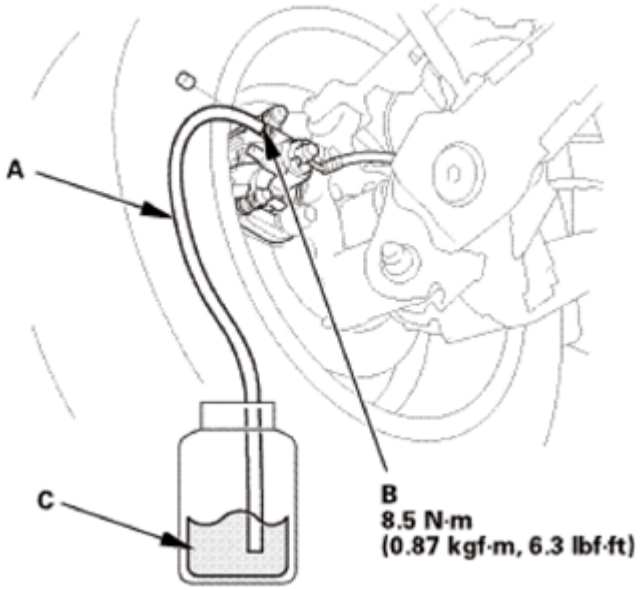

Fig. 345: Bleeding Brake Fluid To Plastic Catch Bottle Using Hose (Rear)
Courtesy of AMERICAN HONDA MOTOR CO., INC.

GETtheMANUALS.org

10. Repeat this procedure for each brake in the bleeding sequence.

3. Brake Hose After Install - Check
    1. Do the following checks:
        - Check the brake hose and line joint for leaks, and tighten if necessary.
        - Check the brake hoses for interference and twisting.
4. Rear Wheel
    1. Install the rear wheel.

NOTE: **Before installing the wheel, clean the mating surfaces between the brake disc/drum and the inside of the wheel.**

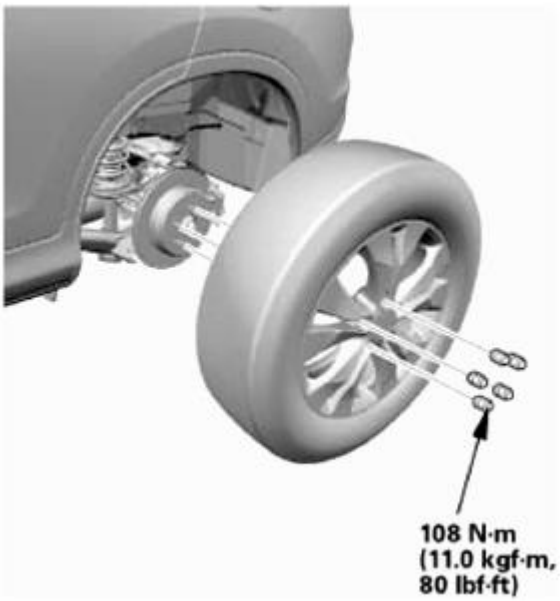

Fig. 346: Identifying Rear Wheel And Mounting Bolts With Torque Specifications
Courtesy of AMERICAN HONDA MOTOR CO., INC.

REAR BRAKE PAD INSPECTION

REMOVAL

1. Vehicle Lift
    1. Raise the vehicle on a lift, and make sure it is securely supported.
2. Rear Wheel - Both Side
    1. Remove both rear wheels.

GETtheMANUALS.org

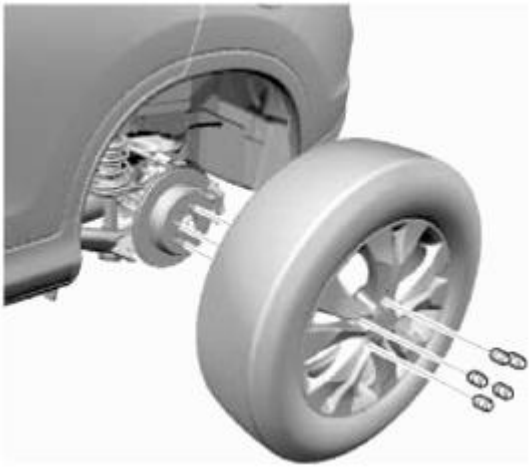

Fig. 347: Identifying Rear Wheel And Mounting Bolts
Courtesy of AMERICAN HONDA MOTOR CO., INC.

INSPECTION

1. Rear Brake Pad - Inspection

CAUTION: Frequent inhalation of brake pad dust, regardless of material composition, could be hazardous to your health.

- **Avoid breathing dust particles.**
- **Never use an air hose or brush to clean brake assemblies. Use an OSHA-approved vacuum cleaner.**

1. Check the thickness (A) of the inner pad (B) and the outer pad (C). Do not include the thickness of the backing plate.

   Brake pad thickness:

   Standard: 9.0 mm (0.354 in)

   Service limit: 1.6 mm (0.063 in)

2. If any part of the brake pad thickness is less than the service limit, replace the brake pads as a set.

GETtheMANUALS.org

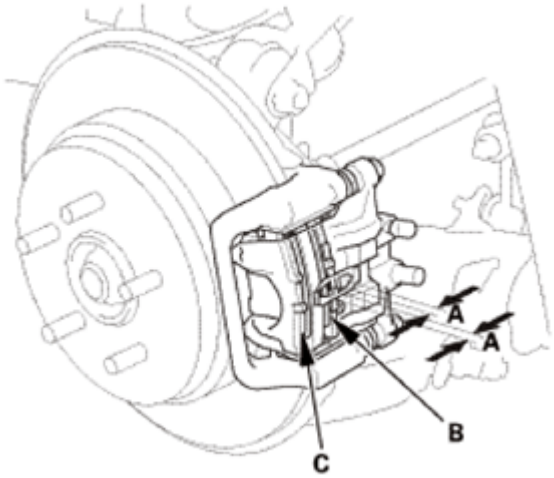

Fig. 348: Identifying Inner Pad And Outer Pad Thickness
Courtesy of AMERICAN HONDA MOTOR CO., INC.

INSTALLATION

1. Rear Wheel - Both Side
    1. Install both rear wheels.

NOTE: **Before installing the wheel, clean the mating surfaces between the brake disc/drum and the inside of the wheel.**

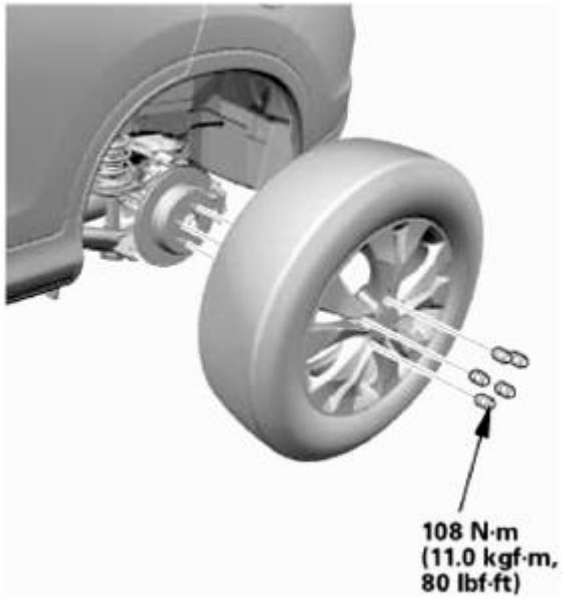

Fig. 349: Identifying Rear Wheel And Mounting Bolts With Torque Specifications
Courtesy of AMERICAN HONDA MOTOR CO., INC.

REAR BRAKE PAD REMOVAL AND INSTALLATION

GETtheMANUALS.org

REMOVAL

CAUTION: Frequent inhalation of brake pad dust, regardless of material composition, could be hazardous to your health.

- **Avoid breathing dust particles.**
- **Never use an air hose or brush to clean brake assemblies. Use an OSHA-approved vacuum cleaner.**

1. Vehicle Lift
    1. Raise the vehicle on a lift, and make sure it is securely supported.
2. Brake Fluid - Remove
    1. Pull out the hood rear seal, then remove the master cylinder maintenance lid (A).
    2. Remove the reservoir cap (B).
    3. Remove some brake fluid from the master cylinder reservoir with a syringe.

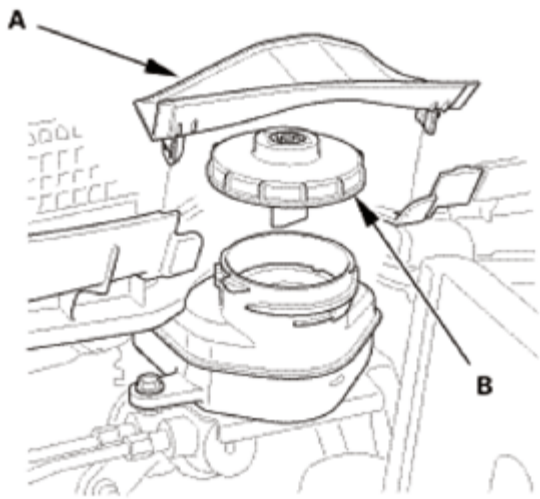

Fig. 350: Identifying Master Cylinder Maintenance Lid And Reservoir Cap
Courtesy of AMERICAN HONDA MOTOR CO., INC.

3. Rear Wheel - Both Side
    1. Remove both rear wheels.

GETtheMANUALS.org

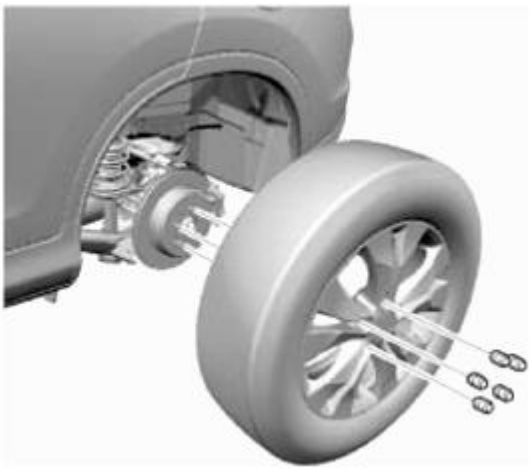

Fig. 351: Identifying Rear Wheel And Mounting Bolts
Courtesy of AMERICAN HONDA MOTOR CO., INC.

4. Rear Brake Pad
    1. Remove the brake hose (A) from the brake hose bracket (B).
    2. Remove the flange bolts (C) while holding the caliper pin (D) with a wrench.
    3. Remove the caliper body (E).

NOTE: Do not twist the brake hose to prevent damage.

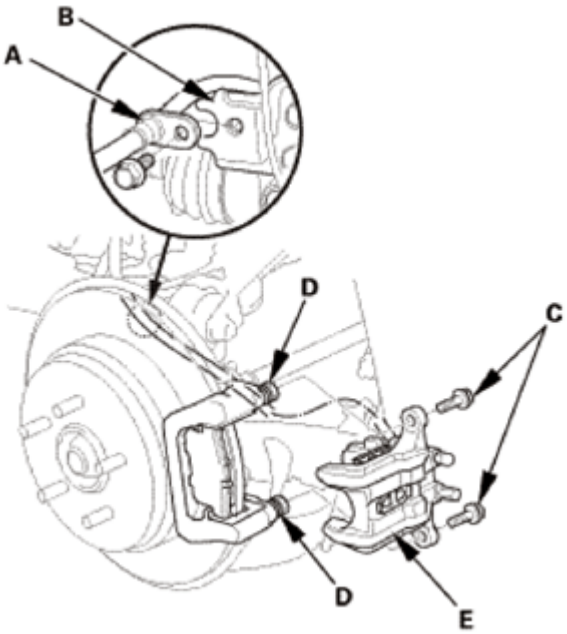

Fig. 352: Identifying Rear Wheel And Mounting Bolts
Courtesy of AMERICAN HONDA MOTOR CO., INC.

4. Remove the outer pad shim (A) and the outer brake pad (B).

GETtheMANUALS.org

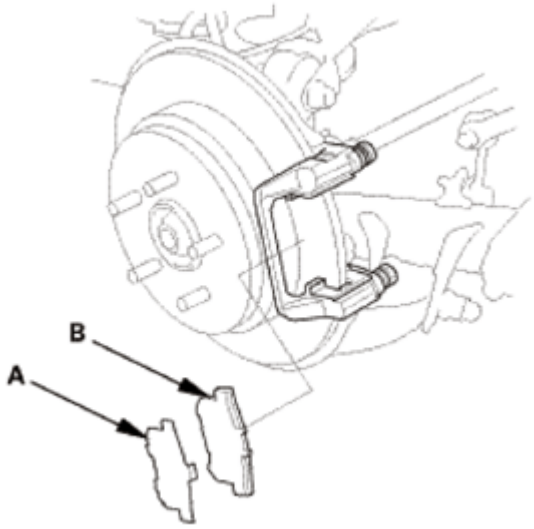

Fig. 353: Identifying Outer Pad Shim And Outer Brake Pad
Courtesy of AMERICAN HONDA MOTOR CO., INC.

5. Remove the inner pad (A) from the caliper body (B).

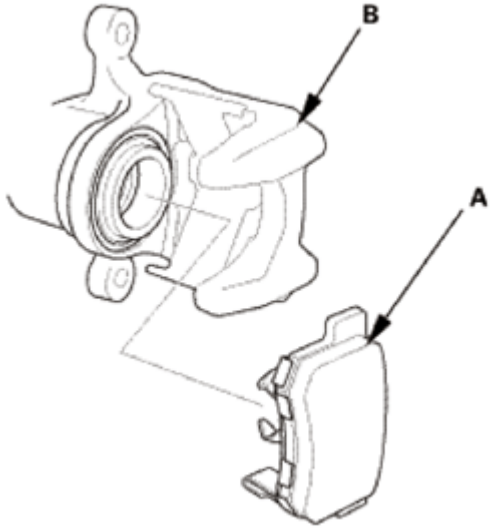

Fig. 354: Identifying Inner Pad And Caliper Body
Courtesy of AMERICAN HONDA MOTOR CO., INC.

5. Rear Brake Pad Retainer and Caliper Bracket Clean and Check
    1. Remove the pad retainers (A).
    2. Clean the caliper bracket (B) thoroughly; remove any rust, and check for grooves and cracks.
    3. Verify that the caliper pins (C) move in and out smoothly. Clean and lube if needed.

GETtheMANUALS.org

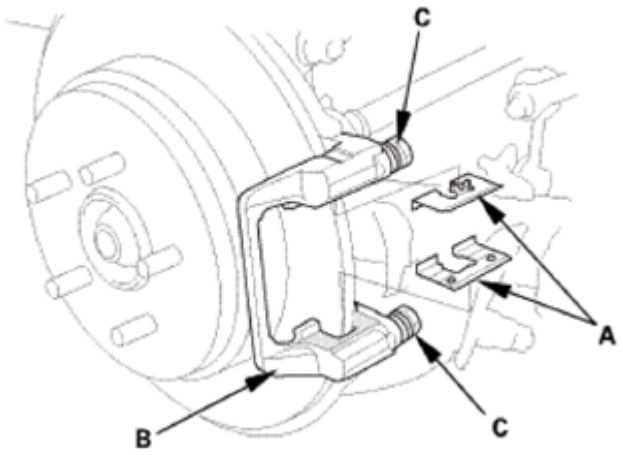

Fig. 355: Identifying Pad Retainers, Caliper Bracket And Caliper Pins
Courtesy of AMERICAN HONDA MOTOR CO., INC.

INSTALLATION

CAUTION: Frequent inhalation of brake pad dust, regardless of material composition, could be hazardous to your health.

- **Avoid breathing dust particles.**
- **Never use an air hose or brush to clean brake assemblies. Use an OSHA-approved vacuum cleaner.**

1. Rear Brake Pad Retainer and Caliper Bracket Clean and Check
    1. Apply a thin coat of M-77 assembly paste (P/N 08798-9010) to the retainer mating surface of the caliper bracket (indicated by the arrows).
    2. Install the pad retainers (A).

NOTE: Wipe off the excess assembly paste from the retainers. Keep the assembly paste away from the brake disc and the brake pads.

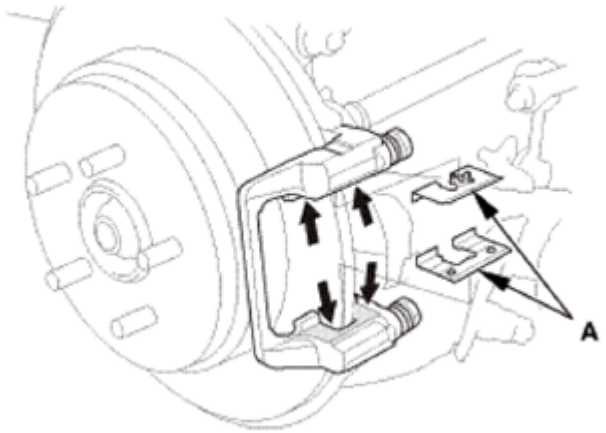

GETtheMANUALS.org

Fig. 356: Locating Thin Coat Assembly Paste Applying Area On Caliper Bracket Retainer Mating Surface
Courtesy of AMERICAN HONDA MOTOR CO., INC.

2. Rear Brake Pad

Outer pad

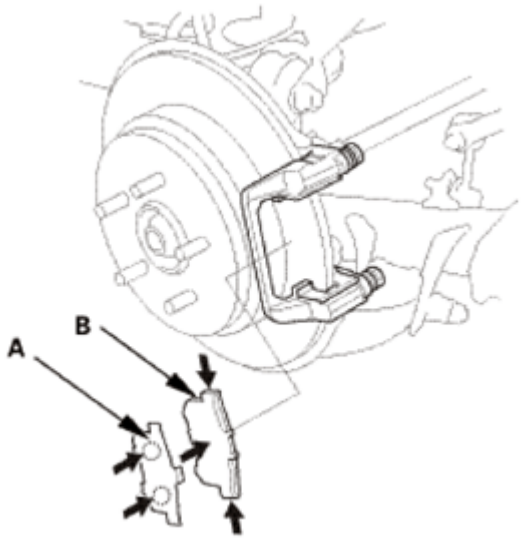

Fig. 357: Locating Thin Coat Of Assembly Paste Applying Area On Pad Side Shims And Brake Pads (Outer Pad)
Courtesy of AMERICAN HONDA MOTOR CO., INC.

1. Apply a thin coat of M-77 assembly paste (P/N 08798-9010) to the pad side of the shims (A), the back of the brake pads (B), and the other areas indicated by the arrows.

   NOTE: Wipe off the excess assembly paste from the pad shims and brake pads friction material.

2. Install the brake pads and the pad shims.

   NOTE: Install the brake pad with the wear indicator (C) on the bottom inside position.

Inner pad

GETtheMANUALS.org

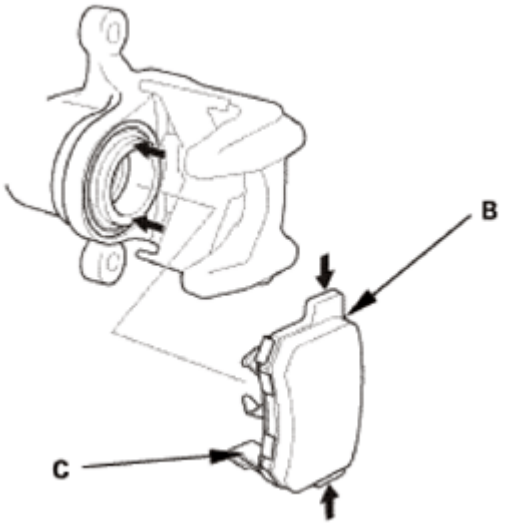

Fig. 358: Locating Thin Coat Of Assembly Paste Applying Area On Pad Side Shims And Brake Pads (Inner Pad)
Courtesy of AMERICAN HONDA MOTOR CO., INC.

3. Install the caliper body (A).
4. Install the flange bolts (B) while holding respective caliper pins (C) with a wrench.
5. Install the brake hose (D).

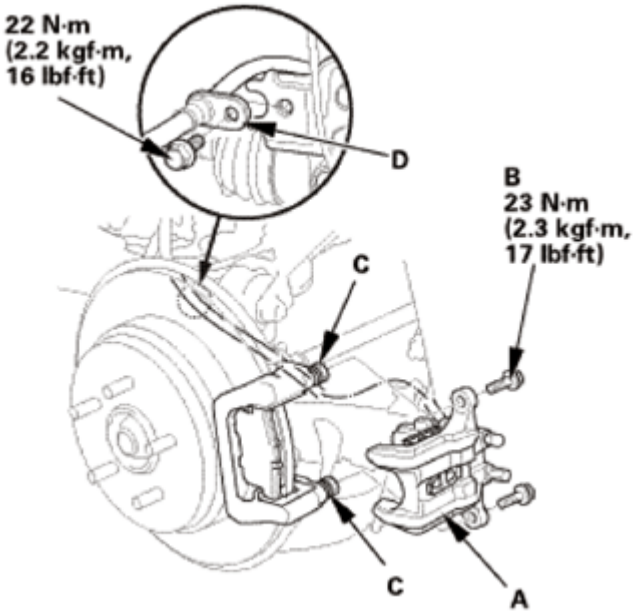

Fig. 359: Identifying Caliper Body, Brake Hose And Flange Bolts With Torque Specifications
Courtesy of AMERICAN HONDA MOTOR CO., INC.

3. Rear Wheel - Both Side
    1. Install both rear wheels.

GETtheMANUALS.org

NOTE: **Before installing the wheel, clean the mating surfaces between the brake disc/drum and the inside of the wheel.**

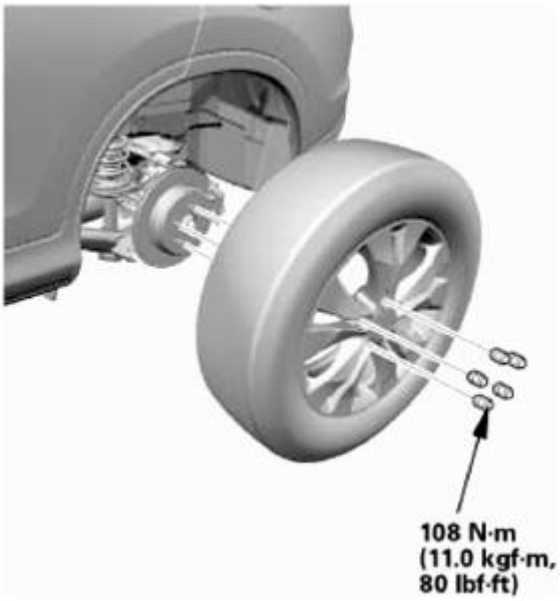

Fig. 360: Identifying Rear Wheel And Mounting Bolts With Torque Specifications
Courtesy of AMERICAN HONDA MOTOR CO., INC.

4. Brake Fluid - Refill
    1. Add brake fluid as needed.
    2. Install the reservoir cap (A).
    3. Install the master cylinder maintenance lid (B).

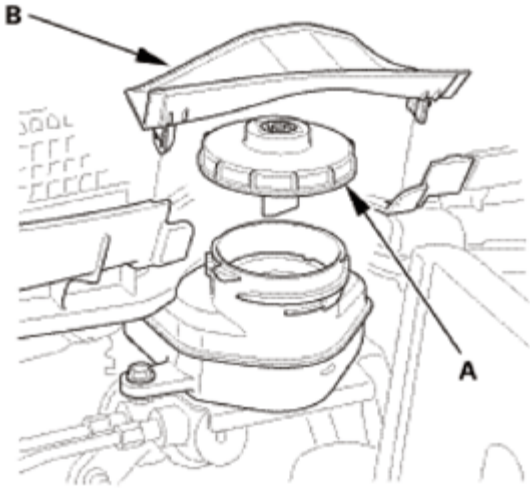

Fig. 361: Identifying Master Cylinder Maintenance Lid And Reservoir Cap
Courtesy of AMERICAN HONDA MOTOR CO., INC.

GETtheMANUALS.org

REAR WHEEL SPEED SENSOR REMOVAL AND INSTALLATION

REMOVAL

1. Vehicle Lift
    1. Raise the vehicle on a lift, and make sure it is securely supported.
2. Rear Wheel
    1. Remove the rear wheel.

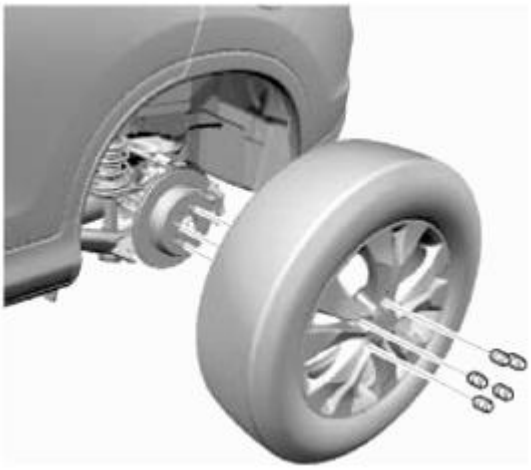

Fig. 362: Identifying Rear Wheel And Mounting Bolts
Courtesy of AMERICAN HONDA MOTOR CO., INC.

3. Rear Wheel Speed Sensor
    1. Turn the ignition switch to LOCK (0).
    2. Release the connector holding clamps (A).

GETtheMANUALS.org

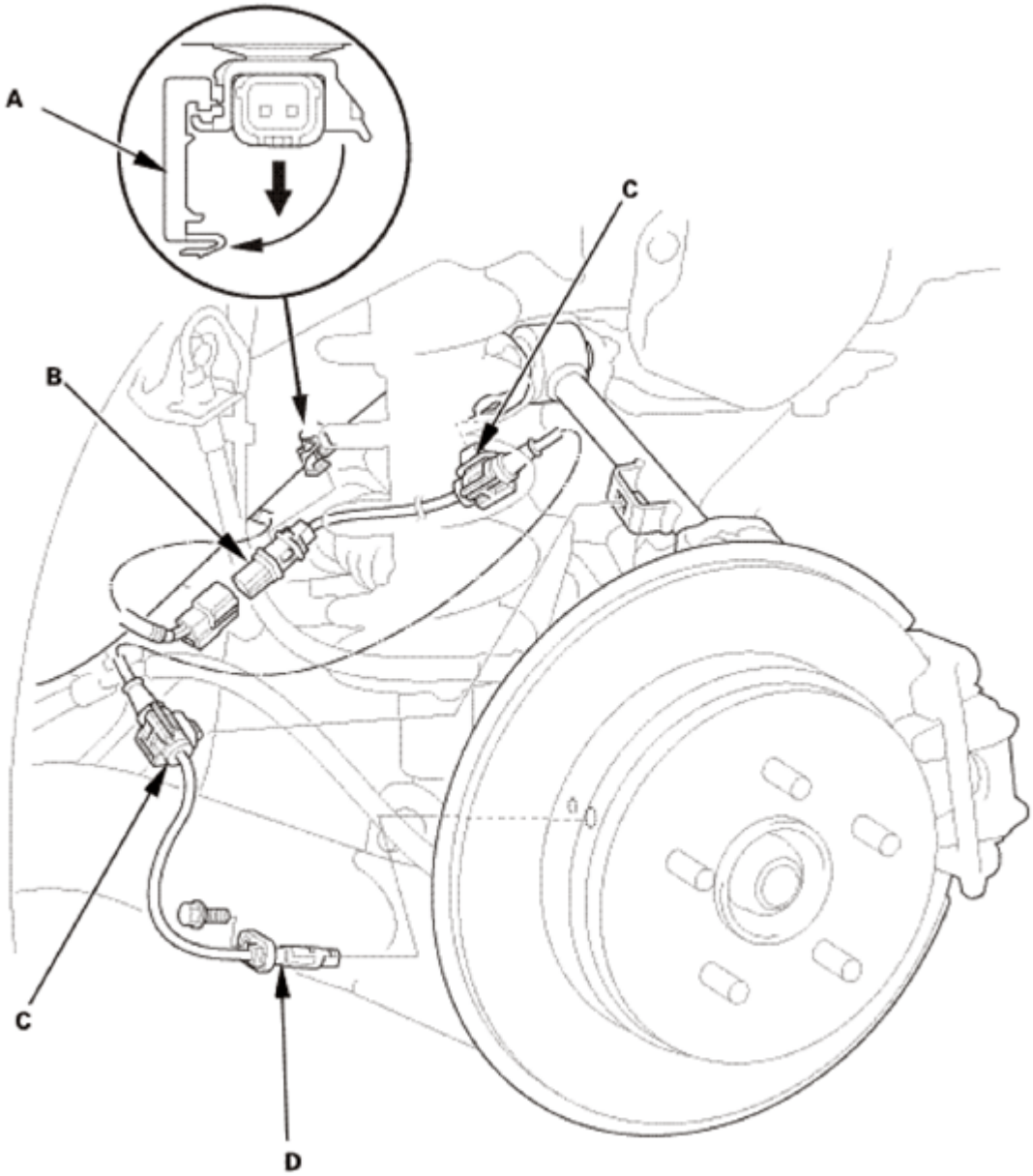

Fig. 363: Removing Wheel Speed Sensor
Courtesy of AMERICAN HONDA MOTOR CO., INC.

3. Disconnect the connector (B).
4. Remove the clips (C).
5. Remove the wheel speed sensor (D).

INSTALLATION

1. Rear Wheel Speed Sensor
    1. Install the wheel speed sensor (A).

GETtheMANUALS.org

NOTE:

- **Do not twist the sensor wires.**
- **If the wheel speed sensor comes in contact with the wheel bearing, it is faulty.**
- **Make sure there is no debris in the sensor mounting hole.**

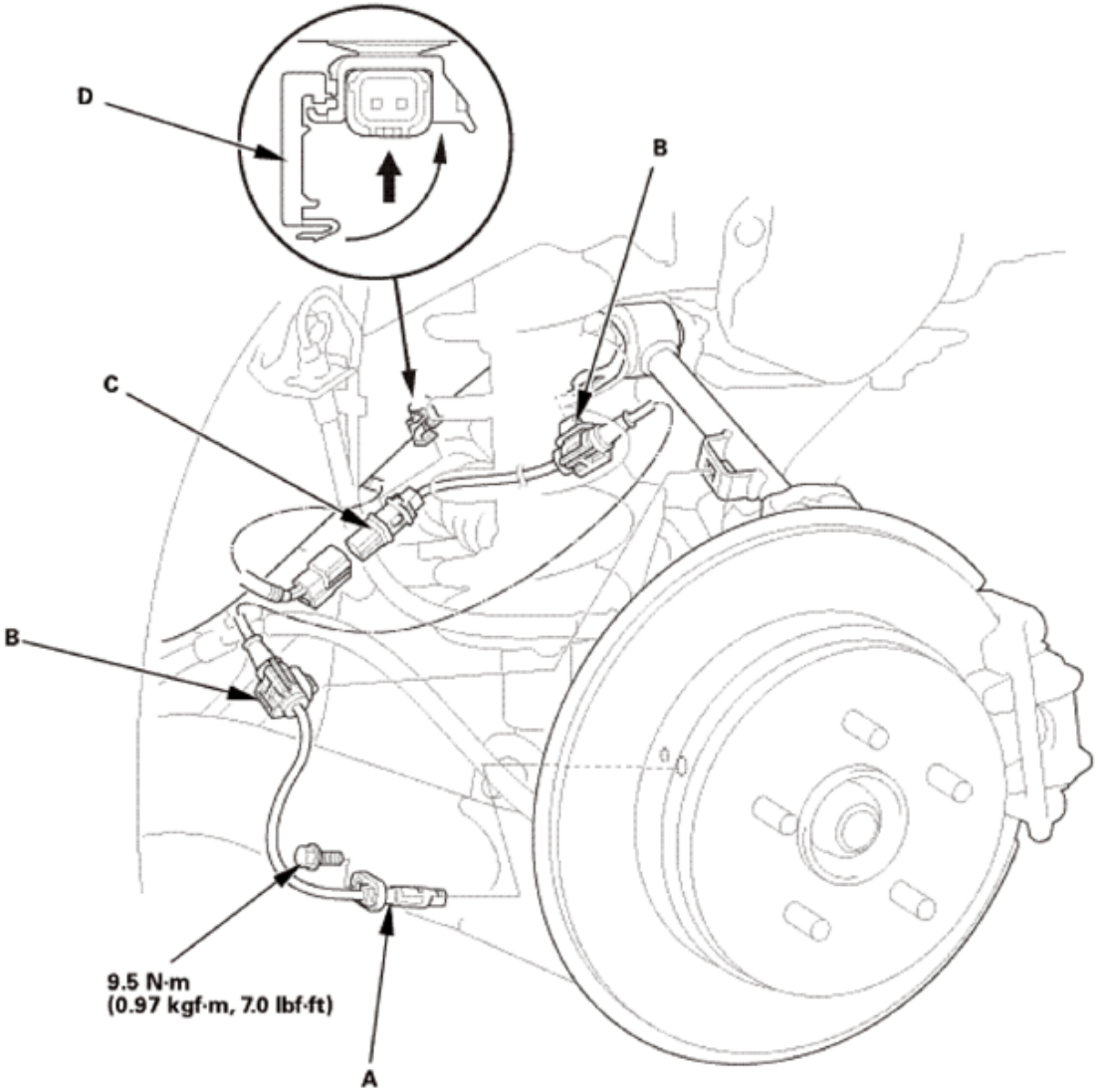

Fig. 364: Installing Wheel Speed Sensor With Torque Specifications
Courtesy of AMERICAN HONDA MOTOR CO., INC.

2. Install the harness clips (B).
3. Connect the connector (C).
4. Connect the connector holding clamps (D).

2. Rear Wheel
   1. Install the rear wheel.

GETtheMANUALS.org

NOTE: **Before installing the wheel, clean the mating surfaces between the brake disc/drum and the inside of the wheel.**

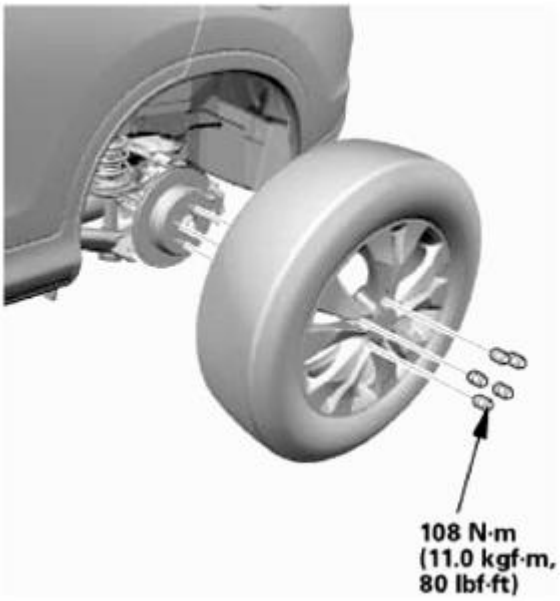

Fig. 365: Identifying Rear Wheel And Mounting Bolts With Torque Specifications
Courtesy of AMERICAN HONDA MOTOR CO., INC.

GETtheMANUALS.org

CONVENTIONAL BRAKE COMPONENT LOCATION INDEX

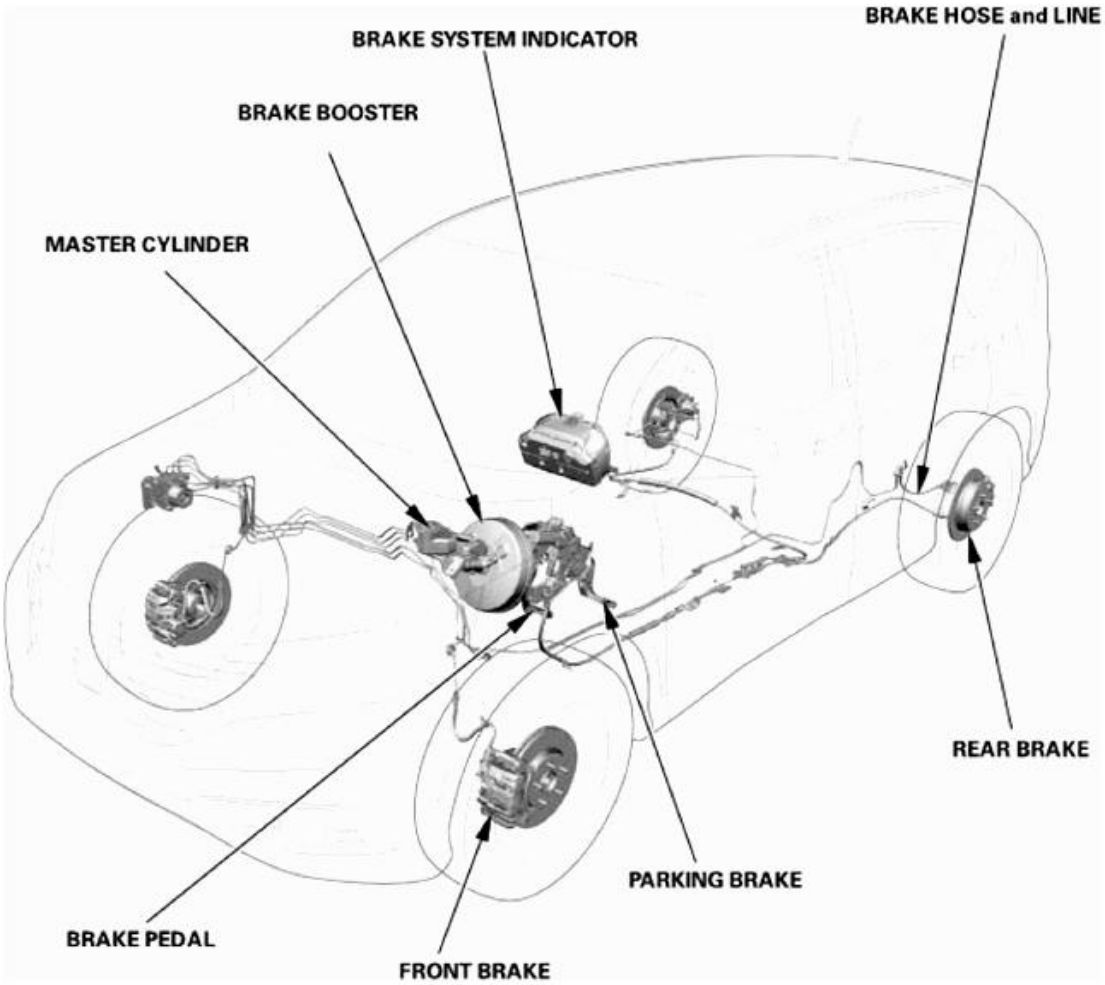

Fig. 1: Conventional Brake System Components Location
Courtesy of AMERICAN HONDA MOTOR CO., INC.

BRAKE SYSTEM	**INSPECTION AND TEST**
	Brake System Bleeding
BRAKE BOOSTER	**TEST**
	REMOVAL AND INSTALLATION
BRAKE HOSE and LINE	**FRONT BRAKE HOSE REMOVAL AND INSTALLATION**
	INSPECTION
	REAR BRAKE HOSE REMOVAL AND INSTALLATION
	Brake Pedal and Brake Pedal Position Switch Adjustment See **BRAKE PEDAL AND BRAKE PEDAL POSITION SWITCH ADJUSTMENT** or **BRAKE**

GETtheMANUALS.org

BRAKE PEDAL	**PEDAL REMOVAL AND INSTALLATION**
	BRAKE PEDAL FREE PLAY CHECK
	Removal and Installation See **BRAKE PEDAL AND BRAKE PEDAL POSITION SWITCH ADJUSTMENT** or **BRAKE PEDAL REMOVAL AND INSTALLATION**
BRAKE SYSTEM INDICATOR	**BRAKE FLUID LEVEL SWITCH TEST**
	PARKING BRAKE SWITCH TEST
FRONT BRAKE	**Caliper Overhaul** See **FRONT BRAKE CALIPER OVERHAUL** or **FRONT BRAKE CALIPER REMOVAL AND INSTALLATION**
	Caliper Removal and Installation See **FRONT BRAKE CALIPER OVERHAUL** or **FRONT BRAKE CALIPER REMOVAL AND INSTALLATION**
	DISC INSPECTION
	DISC REMOVAL AND INSTALLATION
	PAD INSPECTION
	Front Brake Pad Removal and Installation
MASTER CYLINDER	**Brake System Bleeding**
	Inspection See **BRAKE MASTER CYLINDER INSPECTION** or **BRAKE MASTER CYLINDER REMOVAL AND INSTALLATION**
	Removal and Installation See **BRAKE MASTER CYLINDER INSPECTION** or **BRAKE MASTER CYLINDER REMOVAL AND INSTALLATION**
PARKING BRAKE	**Inspection** See **PARKING BRAKE INSPECTION** or **PARKING BRAKE INSPECTION AND ADJUSTMENT**
	CABLE REMOVAL AND INSTALLATION
	Inspection and Adjustment See **PARKING BRAKE INSPECTION** or **PARKING BRAKE INSPECTION AND ADJUSTMENT**
	Shoe Lining Break-in See **PARKING BRAKE SHOE LINING BREAK-IN** or **PARKING BRAKE SHOE REMOVAL AND INSTALLATION**
	Shoe Removal and Installation See **PARKING BRAKE SHOE LINING BREAK-IN** or **PARKING BRAKE SHOE REMOVAL AND INSTALLATION**
	PEDAL REMOVAL AND INSTALLATION
REAR BRAKE	**Caliper Overhaul** See **REAR BRAKE CALIPER OVERHAUL** or **REAR BRAKE CALIPER REMOVAL AND INSTALLATION**
	Caliper Removal and Installation See **REAR BRAKE CALIPER OVERHAUL** or **REAR BRAKE CALIPER REMOVAL AND INSTALLATION**
	DISC INSPECTION
	DISC REMOVAL AND INSTALLATION
	PAD INSPECTION
	PAD REMOVAL AND INSTALLATION

HOW TO TROUBLESHOOT THE VSA SYSTEM

SYSTEM INDICATOR

GETtheMANUALS.org

This system has four indicators:

- ABS indicator (A)
- Brake system indicator (B)
- VSA indicator (C)
- VSA OFF indicator (D)

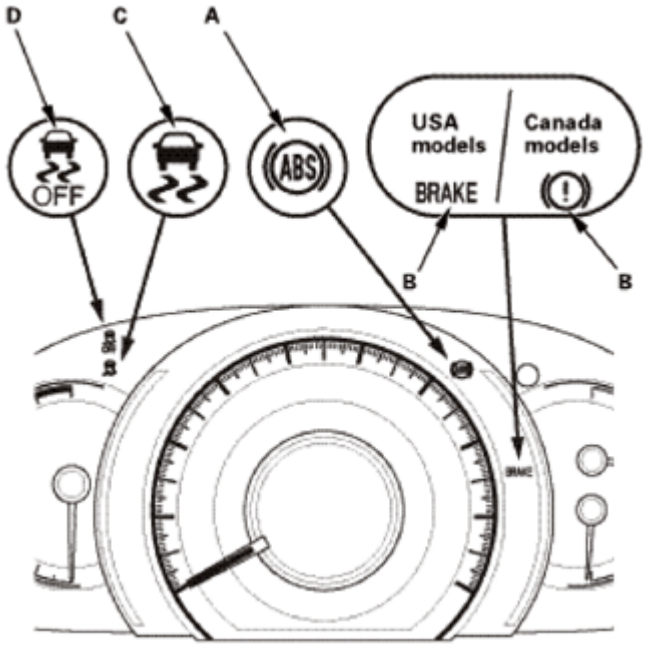

Fig. 2: Identifying ABS, Brake System And VSA Indicator
Courtesy of AMERICAN HONDA MOTOR CO., INC.

When the system is OK, each indicator comes on for about 2 seconds after turning the ignition switch to ON (II), then goes off.

When the system detects a problem, a DTC will set and depending upon the failure, the VSA modulator control unit determines which indicator(s) will turn on. If the problem goes away (system returns to normal), the indicator(s) will be controlled in the following way depending upon the DTC that was set:

- The indicator(s) will come on and stay on when the ignition switch is ON (II).
- The indicator(s) will automatically go off.
- The indicator(s) will go off after the vehicle is driven.

ABS INDICATOR

The ABS indicator comes on when the ABS function is lost. The brakes still work like a conventional system.

BRAKE SYSTEM INDICATOR

GETtheMANUALS.org

The brake system indicator comes on when the EBD function is lost, the parking brake is applied, and/or the brake fluid level is low.

NOTE: **If two or more wheel speed sensors fail, the brake system indicator will come on.**

VSA INDICATOR

The VSA indicator comes on when the VSA function is lost. The VSA indicator blinks when the VSA function is activating.

VSA OFF INDICATOR

The VSA OFF indicator comes on when the VSA is turned OFF by using the VSA OFF switch.

DIAGNOSTIC TROUBLE CODE (DTC)

- The memory can hold 10 DTCs. However, when the same DTC is detected more than once, the more recent DTC is written over the earlier one. Therefore, when the same problem is detected repeatedly, it is memorized as a single DTC.
- The DTCs are memorized in an EEPROM in the VSA modulator-control unit. Therefore, the memorized DTCs cannot be erased by disconnecting the battery. Do the specified procedures to clear the DTCs.

SELF-DIAGNOSIS

- Self-diagnosis can be classified into two categories:
  - Initial diagnosis: Done right after the ignition switch is turned to ON (II) and until the ABS and VSA indicators go off.
  - Regular diagnosis: Done right after the initial diagnosis until the ignition switch is turned to LOCK (0).
- When the system detects a problem, the VSA modulator-control unit shifts to fail-safe mode.

KICKBACK

The pump motor operates when the VSA modulator-control unit is functioning, and the fluid in the modulator is forced out to the master cylinder, causing kickback at the brake pedal.

PUMP MOTOR

- The pump motor operates when the VSA modulator-control unit is functioning.
- The VSA modulator-control unit checks the pump motor operation during the first acceleration after the vehicle starts driving.

BRAKE FLUID REPLACEMENT/AIR BLEEDING

Brake fluid replacement and air bleeding procedures are identical to the procedures used on vehicles without the

GETtheMANUALS.org

VSA System. See **Brake System Bleeding**

HOW TO TROUBLESHOOT DTCS

The troubleshooting procedures assume that the cause of the problem is still present and the ABS and/or VSA indicator is still on. Following a troubleshooting procedure for a DTC that has been cleared but does not reset can result in incorrect diagnosis.

1. Question the customer about the conditions when the problem occurred, and try to reproduce the same conditions for troubleshooting. Find out when the ABS and/or VSA indicator came on, such as during activation, after activation, when the vehicle was traveling at a certain speed, etc. If necessary, have the customer demonstrate the concern.
2. When the ABS and/or VSA indicators do not come on during the test-drive, but troubleshooting is done based on the DTC, check for loose connectors, poor contact of the terminals, etc. in the circuit indicated by the DTC.
3. After troubleshooting, or the repairs are done, clear the DTCs, and test-drive the vehicle under the same conditions that originally set the DTCs. Make sure the ABS and VSA indicators do not come on.

INTERMITTENT FAILURES

The term "intermittent failure" means a system may have had a failure, but it checks OK now. If you cannot reproduce the condition, check for loose connections and terminals. Also check ground and power connections related to the circuit that you are troubleshooting.

HOW TO USE THE HDS (HONDA DIAGNOSTIC SYSTEM)

NOTE: Make sure the battery is in good condition and fully charged.

1. If the system indicators stay on, connect the HDS to the data link connector (DLC) (A) located under the driver's side of the dashboard.

Fig. 3: Identifying Data Link Connector

GETtheMANUALS.org

Courtesy of AMERICAN HONDA MOTOR CO., INC.

2. Turn the ignition switch to ON (II).
3. Make sure the HDS communicates with the vehicle and the VSA modulator-control unit. If it does not, **GO TO THE DLC CIRCUIT TROUBLESHOOTING** .
4. Check the diagnostic trouble code (DTC) and the freeze data, for all systems, troubleshoot the powertrain DTCs first. Then refer to the indicated DTC's troubleshooting, and do the appropriate troubleshooting procedure.

NOTE:

- **Freeze data indicates the VSA conditions when the first system malfunction that activated the indicator was detected.**
- **The HDS communication will be stopped when the vehicle speed reaches the disconnect speed.**
- **The HDS can read the DTC, the freeze data, the current data, and other system data.**
- **For specific operations, refer to the Help menu that came with the HDS.**

HOW TO RETRIEVE DTCS

1. With the ignition switch in LOCK (0), connect the HDS to the data link connector (DLC) under the driver's side of the dashboard.
2. Turn the ignition switch to ON (II).
3. Make sure the HDS communicates with the vehicle and the VSA modulator-control unit. If it does not, **GO TO THE DLC CIRCUIT TROUBLESHOOTING** .
4. Follow the prompts on the HDS to display the DTC(s) on the screen. After determining the DTC, refer to the DTC troubleshooting. Do the all systems DTC check, and troubleshoot any powertrain DTCs first.
5. Turn the ignition switch to LOCK (0).

HOW TO CLEAR DTCS

1. With the ignition switch in LOCK (0), connect the HDS to the data link connector (DLC) under the driver's side of the dashboard.
2. Turn the ignition switch to ON (II).
3. Make sure the HDS communicates with the vehicle and the VSA modulator-control unit. If it does not, **GO TO THE DLC CIRCUIT TROUBLESHOOTING** .
4. Clear the DTC(s) by following the screen prompts on the HDS.
5. Turn the ignition switch to LOCK (0).

VSA SYSTEM SYMPTOM TROUBLESHOOTING INDEX

When the vehicle has one of these symptoms, check for VSA diagnostic trouble codes (DTCs) with the HDS. If there are no DTCs, do the diagnostic procedure for the symptom, in the sequence listed, until you find the

GETtheMANUALS.org

cause.

Symptom	Diagnostic procedure	Also check for
HDS does not communicate with the VSA modulator-control unit or the vehicle	**TROUBLESHOOT THE DLC CIRCUIT** .	Power and ground at the VSA modulator
ABS indicator, brake system indicator, VSA indicator, or VSA OFF indicator do not come on at start-up (bulb check)	1. **DO THE GAUGE CONTROL MODULE SELF-DIAGNOSTIC FUNCTION** . 2. **Update the VSA modulator-control unit if it does not have the latest software** See **VSA MODULATOR-CONTROL UNIT REMOVAL AND INSTALLATION** , **VSA MODULATOR-CONTROL UNIT UPDATE** or **VSA SENSOR NEUTRAL POSITION MEMORIZATION** . If the VSA modulator-control unit was updated and the symptom is still present, **replace the VSA modulator-control unit** See **VSA MODULATOR-CONTROL UNIT REMOVAL AND INSTALLATION** , **VSA MODULATOR-CONTROL UNIT UPDATE** or **VSA SENSOR NEUTRAL POSITION MEMORIZATION** .	
VSA cannot be turned OFF	1. **SYMPTOM TROUBLESHOOTING**. 2. **Update the VSA modulator-control unit if it does not have the latest software** See **VSA MODULATOR-CONTROL UNIT REMOVAL AND INSTALLATION** , **VSA MODULATOR-CONTROL UNIT UPDATE** or **VSA SENSOR NEUTRAL POSITION MEMORIZATION** . If the VSA modulator-control unit was updated and the symptom is still present, **replace the VSA modulator-control unit** See **VSA MODULATOR-CONTROL UNIT REMOVAL AND INSTALLATION** , **VSA MODULATOR-CONTROL UNIT UPDATE** or **VSA SENSOR NEUTRAL POSITION MEMORIZATION** .	
VSA OFF indicator does not go off	1. **Do the VSA sensor neutral position memorization** See **VSA MODULATOR-CONTROL UNIT REMOVAL AND INSTALLATION** , **VSA MODULATOR-CONTROL UNIT UPDATE** or **VSA SENSOR NEUTRAL POSITION MEMORIZATION** . 2. **DO THE GAUGE CONTROL MODULE SELF-DIAGNOSTIC FUNCTION** .	
ABS indicator, brake system indicator, and VSA indicator do not go off	1. **Check for F-CAN DTCs, and troubleshoot and repair those first** See **HOW TO TROUBLESHOOT THE A/T SYSTEM** or **HOW TO TROUBLESHOOT THE FUEL AND EMISSIONS SYSTEMS** . 2. **SYMPTOM TROUBLESHOOTING**.	

GETtheMANUALS.org

BRAKE BOOSTER TEST

TEST

1. Brake Booster Functional - Test
    1. With the ignition switch in LOCK (0), press the brake pedal several times to deplete the vacuum reservoir, then press the brake pedal hard and hold it for 15 seconds. If the brake pedal sinks, either the master cylinder is bypassing internally or the brake system is leaking. Inspect the brake hoses and lines.
    2. Start the engine with the brake pedal pressed. If the brake pedal sinks slightly, the vacuum booster is operating normally. If the brake pedal height does not vary, do the brake system test.
2. Brake Booster Leak - Test
    1. Press the brake pedal with the engine running, then turn the ignition switch to LOCK (0). The brake pedal height should not vary while pressed for 30 seconds.
        - If the pedal height rises, go to step 6.
        - If it does not rise, go to step 2.
    2. Start the engine, and let it idle for 30 seconds. Turn the ignition switch to LOCK (0), and wait 30 seconds. Press the brake pedal several times using normal pressure. When the pedal is first pressed, it should be low. On consecutive applications, the pedal height should gradually rise.
        - If it rises, the booster is OK.
        - If it does not rise, go to step 3.

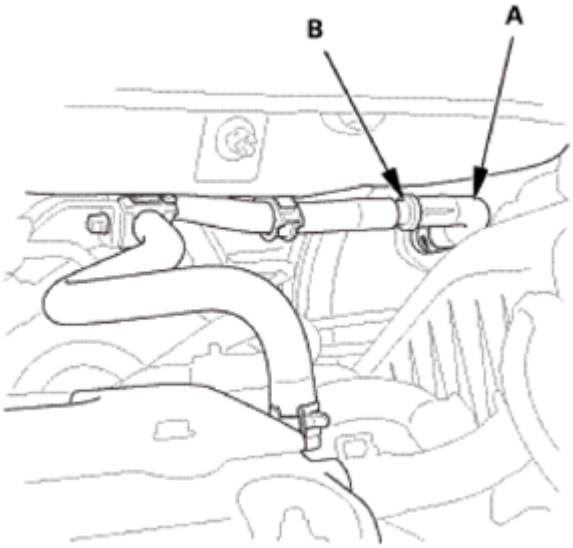

Fig. 4: Identifying Brake Booster Vacuum Hose And Check Valve
Courtesy of AMERICAN HONDA MOTOR CO., INC.

3. Disconnect the brake booster vacuum hose (A) at the booster. The check valve (B) is built into the hose.

GETtheMANUALS.org

NOTE: **If the check valve is faulty, replace the brake booster vacuum hose and the check valve as an assembly.**

4. Start the engine, and let it idle. There should be vacuum available.
   - If no vacuum is available, the check valve is not working properly. Replace the brake booster vacuum hose and the check valve as an assembly, and retest.
   - If vacuum is found, go to step 5.
5. Turn the ignition switch to LOCK (0), then reconnect the vacuum hose to the brake booster.
6. Start the engine, and then pinch the brake booster vacuum hose between the check valve and the booster.
7. Turn the ignition switch to LOCK (0), and wait 30 seconds. Press the brake pedal several times using normal pressure. When the pedal is first pressed, it should be low. On consecutive applications, the pedal height should gradually rise.
   - If the pedal position does not vary, inspect the O-ring between the master cylinder and booster. If the O-ring is OK, replace the brake booster.
   - If the pedal position varies, replace the brake booster vacuum hose and the check valve as an assembly.

BRAKE FLUID LEVEL SWITCH TEST

TEST

1. Brake Fluid Level Switch - Test

NOTE: **If both the ABS/VSA indicator and the brake system indicator come on at the same time, check the VSA system for DTCs first.**

1. Disconnect the brake fluid level switch connector.
2. Check for continuity between the terminals (1) and (2) with the float in the down position and in the up position.
   - Remove the brake fluid completely from the reservoir. With the float down, there should be continuity.
   - Fill the reservoir with brake fluid to the MAX (upper) level (A). With the float up, there should be no continuity.

NOTE: **If the parking brake switch and the brake fluid level switch are OK, but the brake system indicator does not function, do the gauge control module self-diagnostic function.**

3. Reconnect the brake fluid level switch connector.

GETtheMANUALS.org

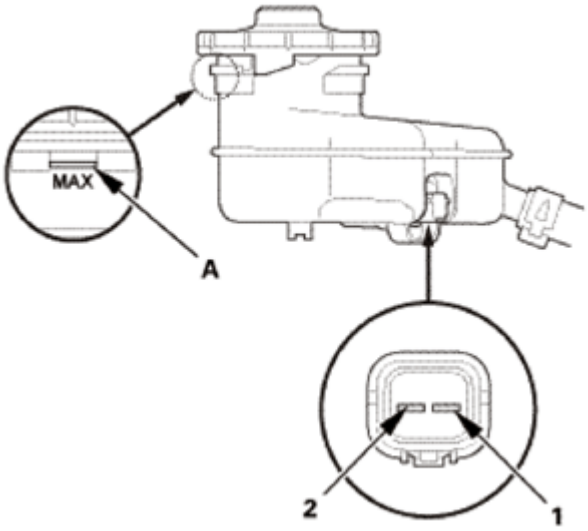

Fig. 5: Identifying Brake Fluid Level Switch Connector Terminals
Courtesy of AMERICAN HONDA MOTOR CO., INC.

BRAKE HOSE AND LINE INSPECTION

INSPECTION

1. Brake Hose and Line - Inspection
    1. Inspect the brake hoses for damage, deterioration, leaks, interference, and twisting.

GETtheMANUALS.org

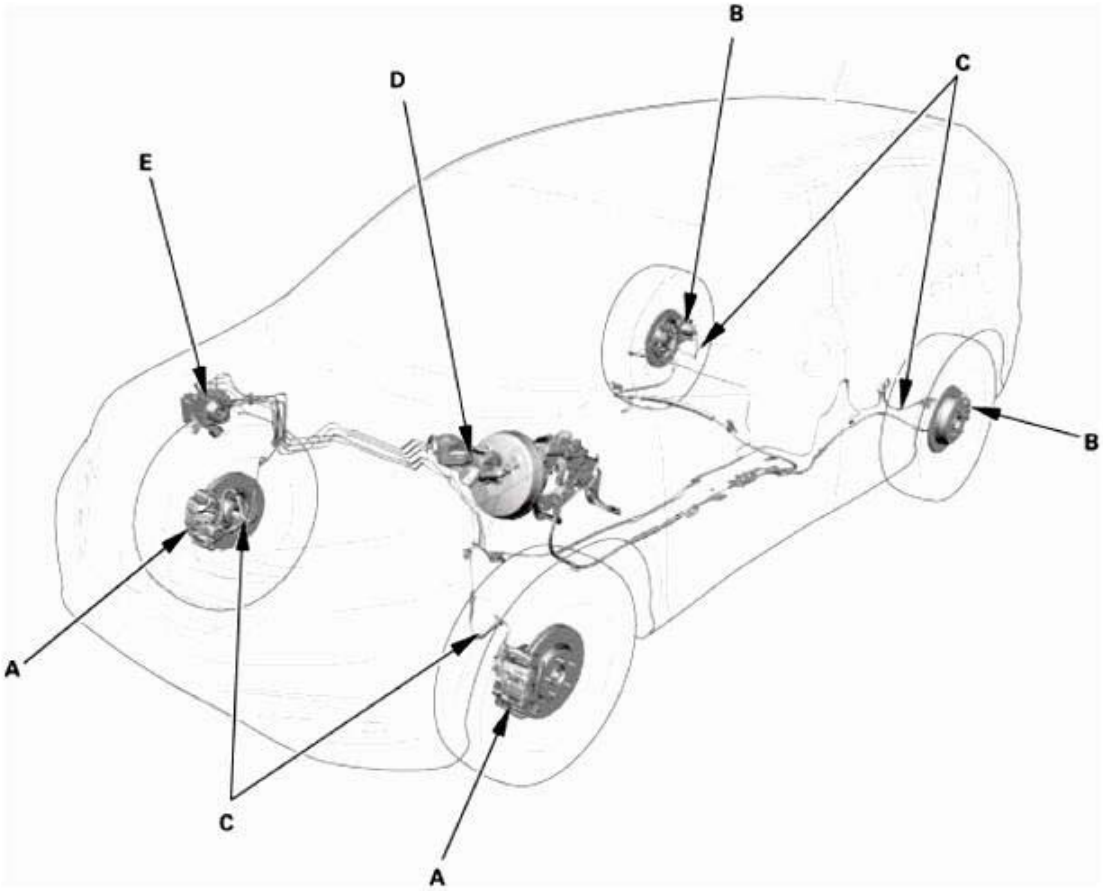

Fig. 6: Identifying Front Brake Caliper And Related Components
Courtesy of AMERICAN HONDA MOTOR CO., INC.

2. Check the brake lines for damage, rusting, and leaks. Also check for bent brake lines.
3. Check for leaks at hose and line joints and connections, and retighten if necessary.
4. Check the master cylinder and the VSA modulator-control unit for damage and leaks.

Connection Point	Component	Connected to	Specified Torque Value	Note
A	Front brake caliper	Brake hose	35 N.m (3.6 kgf.m, 26 lbf.ft)	Banjo bolt
		Bleed screw	8.4 N.m (0.86 kgf.m, 6.2 lbf.ft)	2WD
			8.5 N.m (0.87 kgf.m, 6.3 lbf.ft)	AWD/4WD
B	Rear brake caliper (rear disc brake)	Brake hose	35 N.m (3.6 kgf.m, 26 lbf.ft)	Banjo bolt
		Bleed screw	8.5 N.m (0.87 kgf.m, 6.3 lbf.ft)	
C	Brake hose	Brake line	15 N.m (1.5 kgf.m, 11	Flare nut

GETtheMANUALS.org

			lbf.ft)	
D	Master cylinder	Brake line	22 N.m (2.2 kgf.m, 16 lbf.ft)	Flare nut
E	VSA modulator-control unit	Brake line (10 mm nut)	15 N.m (1.5 kgf.m, 11 lbf.ft)	Flare nut
		Brake line (12 mm nut)	22 N.m (2.2 kgf.m, 16 lbf.ft)	

BRAKE MASTER CYLINDER INSPECTION

INSPECTION

1. Master Cylinder - Inspection
    1. Inspect and note these items:
        - Before reassembling, check that all parts are free of dirt and other foreign particles.
        - Do not try to disassemble the master cylinder assembly. Replace the master cylinder assembly with a new part if necessary.
        - Do not allow dirt or foreign matter to contaminate the brake fluid.

          USA and Canada models

GETtheMANUALS.org

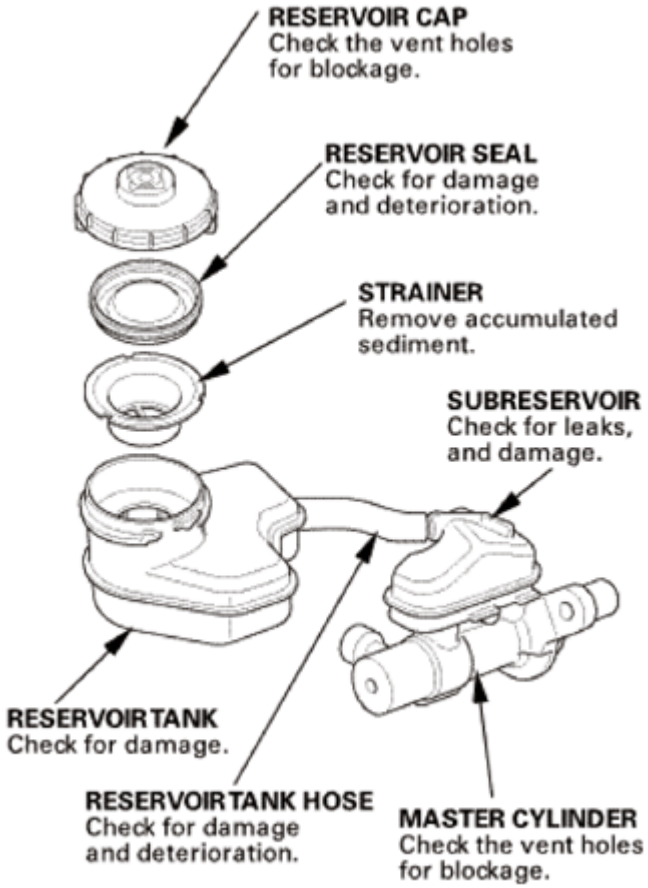

Fig. 7: Identifying Master Cylinder And Related Components (USA And Canada Models)
Courtesy of AMERICAN HONDA MOTOR CO., INC.

Mexico models

GETtheMANUALS.org

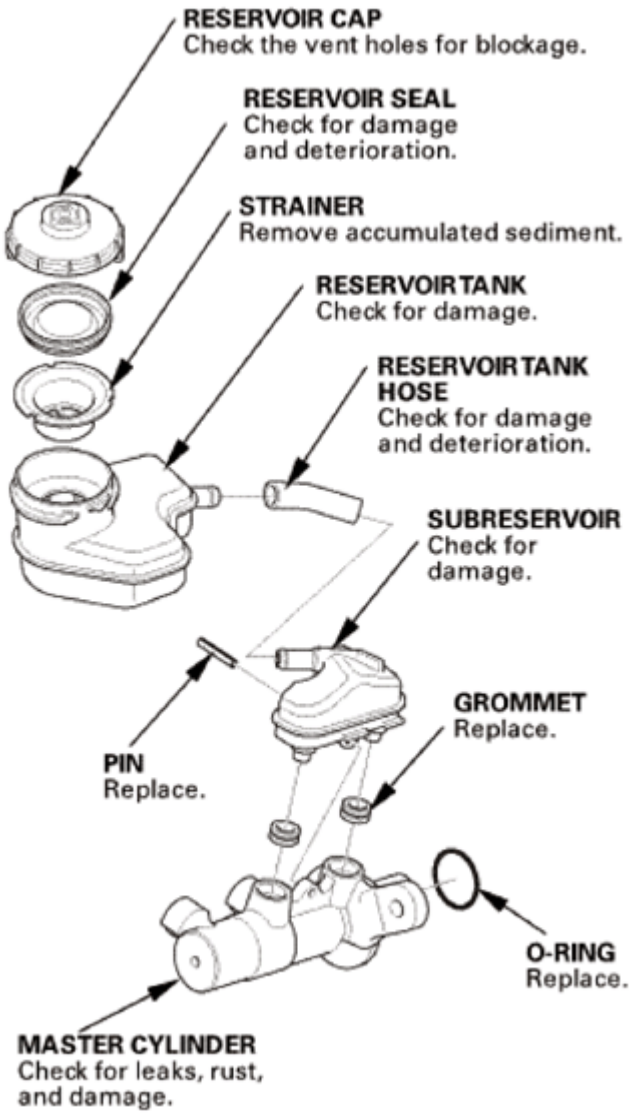

Fig. 8: Identifying Master Cylinder And Related Components (Mexico Models)
Courtesy of AMERICAN HONDA MOTOR CO., INC.

2. If the reservoir tank hose was disconnected, install the reservoir tank (A) and the reservoir tank hose (B) to the subreservoir (C).

NOTE: **Align the "delta" marks (D) on the reservoir tank and subreservoir with the paint marks (E) on the hose.**

GETtheMANUALS.org

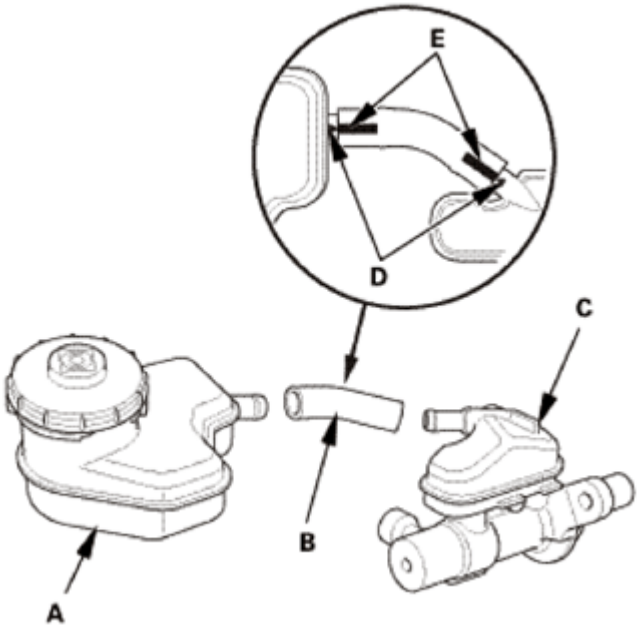

Fig. 9: Identifying Reservoir Tank And Subreservoir Align Marks
Courtesy of AMERICAN HONDA MOTOR CO., INC.

BRAKE PEDAL POSITION SWITCH SIGNAL CIRCUIT TROUBLESHOOTING

GETtheMANUALS.org

Brake Pedal Position Switch Signal Circuit Troubleshooting

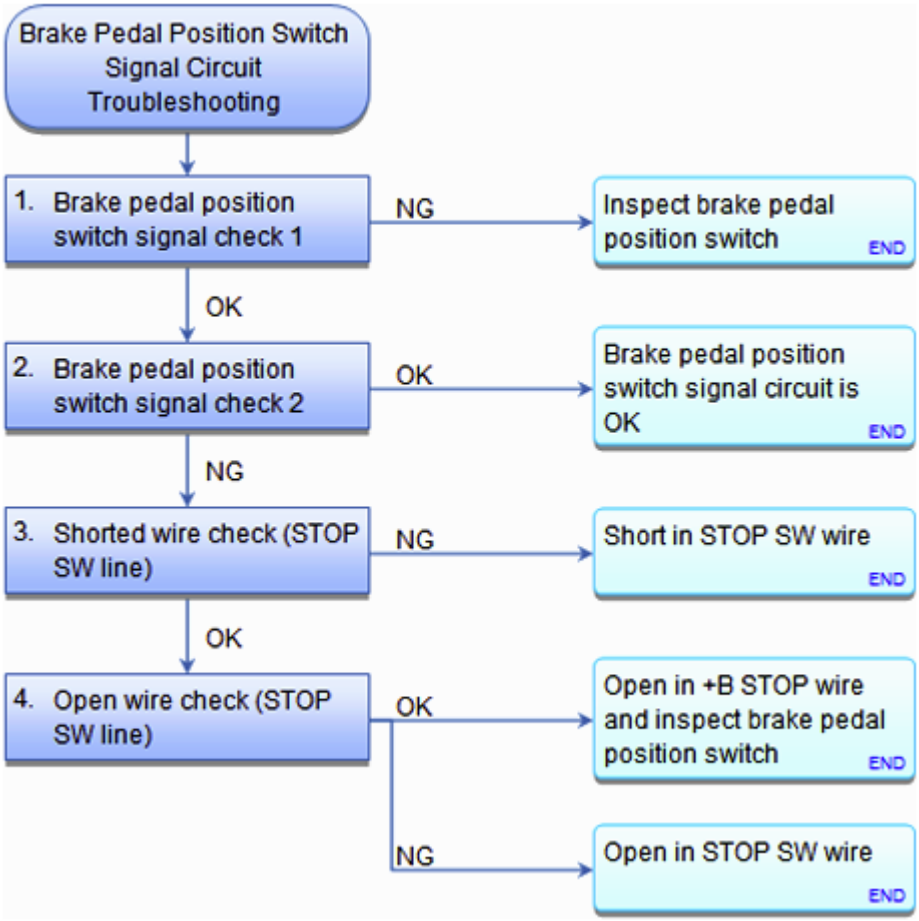

Fig. 10: Brake Pedal Position Switch Signal Circuit Troubleshooting Flowchart
Courtesy of AMERICAN HONDA MOTOR CO., INC.

1. Brake pedal position switch signal check 1:
   - 1. Turn the ignition switch to ON (II).
   - 2. Check the parameter(s) below with the HDS.

Signal	Threshold		Current conditions	
	Values	Unit	Values	Unit
BRAKE SWITCH	OFF			

Do the current condition(s) match the threshold?

YES : Go to step 2.

NO : **Inspect the brake pedal position switch** See **BRAKE PEDAL AND BRAKE PEDAL POSITION SWITCH ADJUSTMENT** or **BRAKE PEDAL REMOVAL AND INSTALLATION** .

GETtheMANUALS.org

2. Brake pedal position switch signal check 2:
   - 1. Press the brake pedal while checking the parameter(s) below with the HDS.

Signal	Threshold		Current conditions	
	Values	Unit	Values	Unit
BRAKE SWITCH	ON			

Do the current condition(s) match the threshold?

YES : The brake pedal position switch signal circuit (BKSW line) is OK.

NO : Go to step 3.

3. Shorted wire check (STOP SW line):
   - 1. Turn the ignition switch to LOCK (0).
   - 2. Jump the SCS line with the HDS.
   - 3. Disconnect the following connectors.

     PCM connector A (49P)

     Brake pedal position switch 4P connector

   - 4. Check for continuity between test points 1 and 2.

     Test condition IG LOCK (0)

     PCM connector A (49P): disconnected

     Brake pedal position switch 4P connector: disconnected

     Test circuit STOP SW

     Test point 1 PCM connector A (49P) No. 13 (BLU)

     Test point 2 Body ground

GETtheMANUALS.org

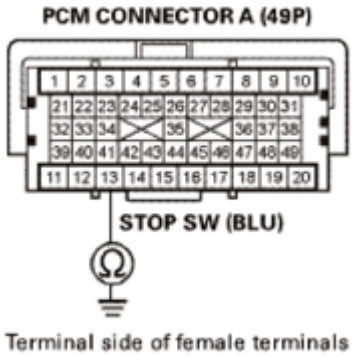

Fig. 11: PCM Connector A 49P Connector - Circuit Diagram
Courtesy of AMERICAN HONDA MOTOR CO., INC.

Is there continuity?

YES : Repair a short in the STOP SW wire between the PCM (A13) and the No. A16 (10 A) fuse. Also, replace the No. A16 (10 A) fuse.

NO : The STOP SW wire is not shorted. Go to step 4.

4. Open wire check (STOP SW line):
   - 1. Connect terminals A and B with a jumper wire.

     Terminal A Brake pedal position switch 4P connector No. 1 (BLU)

     Terminal B Body ground

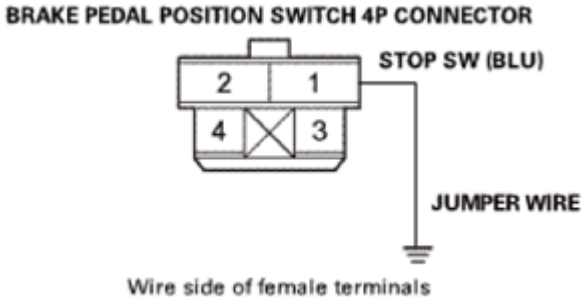

Fig. 12: Brake Pedal Position Switch 4P Connector - Circuit Diagram
Courtesy of AMERICAN HONDA MOTOR CO., INC.

   - 2. Check for continuity between test points 1 and 2.

     Test condition IG LOCK (0)

     PCM connector A (49P): disconnected

     Brake pedal position switch 4P connector: disconnected

GETtheMANUALS.org

Brake pedal position switch 4P connector terminal No. 1: jumped to body ground

Test circuit STOP SW

Test point 1 PCM connector A (49P) No. 13 (BLU)

Test point 2 Body ground

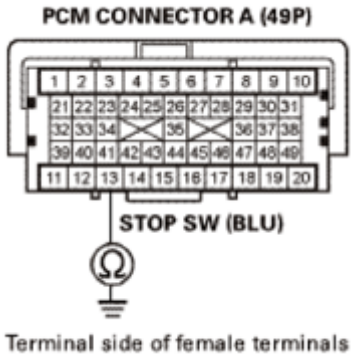

Fig. 13: PCM Connector A (49P) - Circuit Diagram
Courtesy of AMERICAN HONDA MOTOR CO., INC.

Is there continuity?

YES : The STOP SW wire is OK. Repair an open in the +B STOP wire between the brake pedal position switch and the No. A16 (10 A) fuse. **Inspect the brake pedal position switch** See **BRAKE PEDAL AND BRAKE PEDAL POSITION SWITCH ADJUSTMENT** or **BRAKE PEDAL REMOVAL AND INSTALLATION** .

NO : Repair an open in the STOP SW wire between the PCM (A13) and the brake pedal position switch.

BRAKE PEDAL POSITION SWITCH TEST

TEST

1. Brake Pedal Position Switch - Test
    1. Disconnect the connector.
    2. Check for continuity between the terminals in each switch position according to the table.
    3. If the test results are not as specified, adjust the pedal position switch (A), then check. If the results are still not as specified, replace the pedal position switch.
    4. Connect the connector.

GETtheMANUALS.org

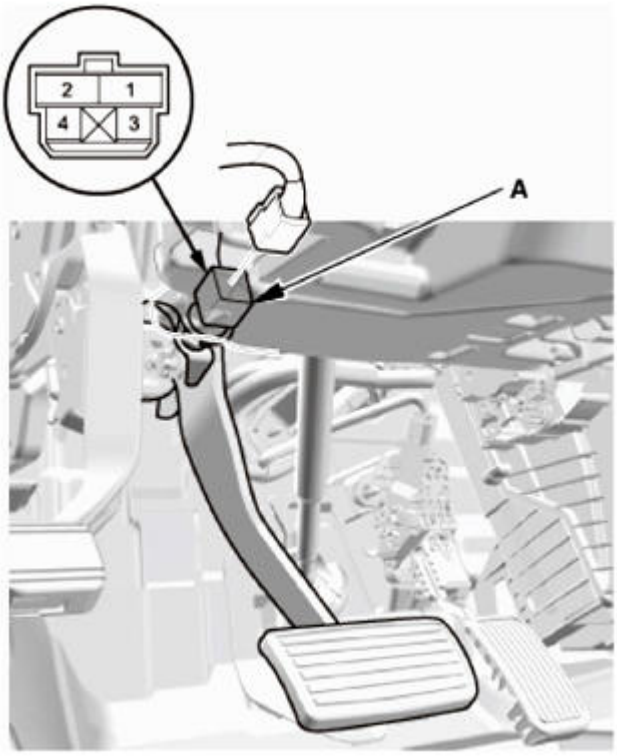

Fig. 14: Identifying Brake Pedal Position Switch Connector Terminals
Courtesy of AMERICAN HONDA MOTOR CO., INC.

Terminal / Position	1	2	3	4
Pressed			○—○	
Released	○—○			

Fig. 15: Brake Pedal Position Switch Continuity Reference Chart
Courtesy of AMERICAN HONDA MOTOR CO., INC.

BRAKE SYSTEM INSPECTION AND TEST

INSPECTION

1. Brake System - Inspection

   Inspect the brake system components listed. Repair or replace any parts that are leaking or damaged.

COMPONENT INSPECTIONS

Component	Procedure	Also check for
	Look for damage or signs of fluid leakage at:	

GETtheMANUALS.org

Master Cylinder	• Reservoir tank, subreservoir or master cylinder body. • Lines, reservoir tank hose and grommets, and their joints. • Between master cylinder and booster.	Bulging seal at reservoir cap. This is a sign of fluid contamination.
Brake Hoses	Look for damage or signs of fluid leakage at: • Line joints and banjo bolt connections. • Hoses and lines, also inspect for twisting or damage.	Bulging, twisted, or bent lines.
Caliper	Look for damage or signs of fluid leakage at: • Piston seal. • Banjo bolt connections. • Bleed screw.	Seized or sticking caliper pins.
VSA Modulator-Control Unit	Look for damage or signs of fluid leakage at: • Line joints. • Modulator-control unit.	

TEST

1. Brake System - Test

   Brake pedal sinks/fades when braking

   1. Set the parking brake, and start the engine, then turn off the A/C. Allow the engine to warm up to normal operating temperature (radiator fan comes on twice).
   2. Attach a 50 mm (1.97 in) piece of masking tape along the bottom of the steering wheel, and draw a horizontal reference mark across it.
   3. Make sure the steering column lock lever is in the locked position. With the transmission in P or N, press and hold the brake pedal lightly (about the same pressure needed to keep an A/T-equipped vehicle from creeping), then release the parking brake.
   4. While still holding the brake pedal, hook the end of the tape measure behind the brake pedal, then pull the tape up to the steering wheel. Note the measurement between the brake pedal and the reference mark on the steering wheel.
   5. Apply steady pressure to the brake pedal for 3 minutes.
   6. Watch the tape measure.

GETtheMANUALS.org

- If the measurement increases 10 mm (0.39 in) or less, the master cylinder is OK.
- If the measurement increases more than 10 mm (0.39 in), replace the master cylinder.

RAPID BRAKE PAD WEAR, VEHICLE VIBRATION (AFTER A LONG DRIVE), OR HIGH, HARD BRAKE PEDAL

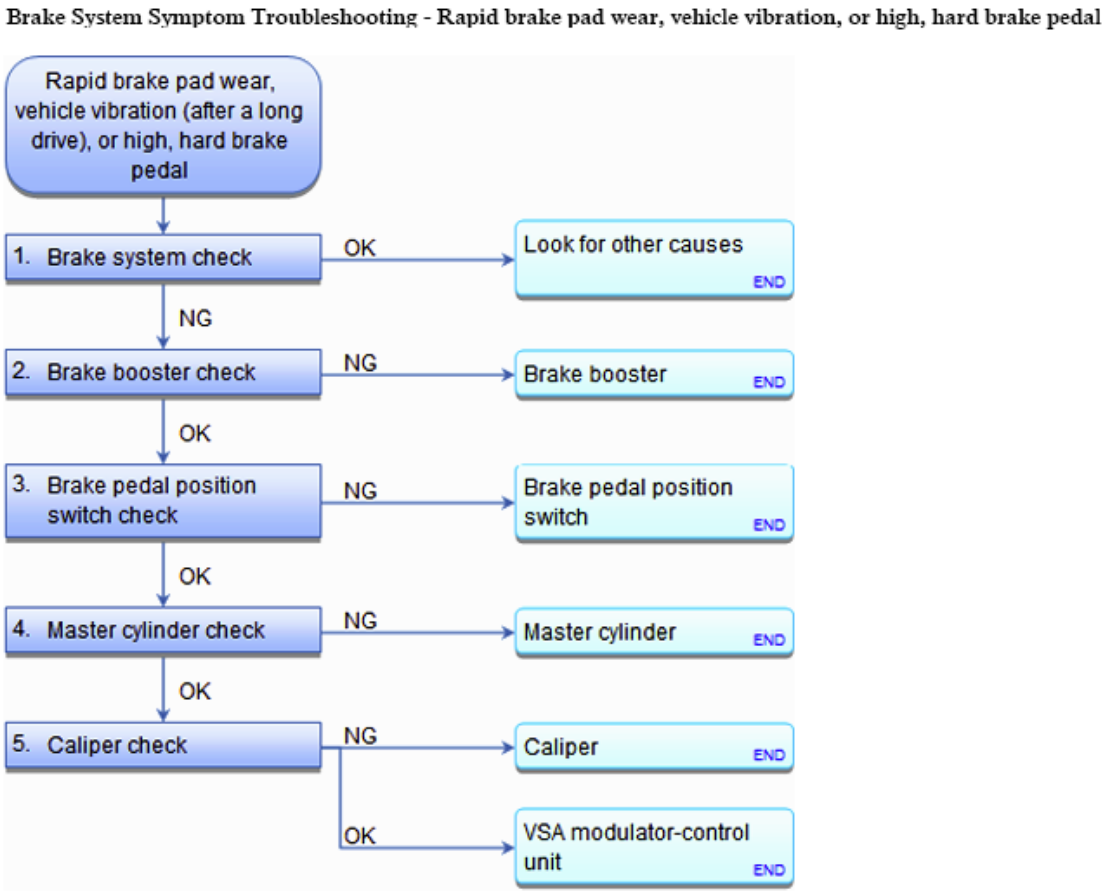

Fig. 16: Brake System Symptom Troubleshooting Flowchart (Rapid Brake Pad Wear, Vehicle Vibration, High And Hard Brake Pedal)
Courtesy of AMERICAN HONDA MOTOR CO., INC.

NOTE: **Make sure that the caliper pins are installed correctly. The upper caliper pin and the lower caliper pin are different. If these caliper pins are installed in the wrong location, it will cause vibration, uneven or rapid pad wear, and possibly uneven tire wear. See the proper caliper pin location:**

- **Front caliper** See **FRONT BRAKE CALIPER OVERHAUL** or **FRONT BRAKE CALIPER REMOVAL AND INSTALLATION**
- **Rear caliper** See **REAR BRAKE CALIPER OVERHAUL** or **REAR BRAKE CALIPER REMOVAL AND INSTALLATION**

GETtheMANUALS.org

1. Brake system check:
    - 1. Drive the vehicle to note if the brakes drag or the pedal becomes high and hard. This may take 20 or more brake pedal applications during an extended test-drive.
    - 2. With the engine running, raise and support the vehicle, and spin all four wheels by hand.

    Is there brake drag at any of the wheels?

    YES : Go to step 2.

    NO : Look for other causes of pad wear, high pedal, or vehicle vibration.

2. Brake booster check:
    - 1. Turn the ignition switch to LOCK (0), press the brake pedal several times to deplete the vacuum in the brake booster, and then spin the wheels again to check for brake drag.

    Is there brake drag at any of the wheels?

    YES : Go to step 3.

    NO : **REPLACE THE BRAKE BOOSTER** .

3. Brake pedal position switch check:
    - 1. Without removing the brake lines, unbolt and separate the master cylinder from the brake booster, then spin the wheels to check for brake drag.

    Is there brake drag at any of the wheels?

    YES : Go to step 4.

    NO : **Check the brake pedal position switch adjustment** See **BRAKE PEDAL AND BRAKE PEDAL POSITION SWITCH ADJUSTMENT** or **BRAKE PEDAL REMOVAL AND INSTALLATION** and **PEDAL FREE PLAY** .

4. Master cylinder check:
    - 1. Loosen the hydraulic lines at the master cylinder, then spin the wheels to check for brake drag.

    Is there brake drag at any of the wheels?

    YES : Go to step 5.

    NO : Check the master cylinder reservoir for contamination in the brake fluid. If you find contamination, flush the entire brake system of all contaminated fluid, then replace all rubber parts in the brake system that were exposed to contaminated fluid. If the brake fluid is OK, **replace the master cylinder** See **BRAKE MASTER CYLINDER INSPECTION** or **BRAKE MASTER CYLINDER REMOVAL AND INSTALLATION** .

GETtheMANUALS.org

5. Caliper check:
    - 1. Loosen the bleed screws at each caliper, then spin the wheels to check for brake drag.

    Is there brake drag at any of the wheels?

    YES : Check the master cylinder reservoir for contamination in the brake fluid. If you find contamination, flush the entire brake system of all contaminated fluid, then replace all rubber parts in the brake system that were exposed to contaminated fluid. If the brake fluid is OK, disassemble and repair the caliper on the wheel(s) with brake drag.

    NO : Look for and replace any damaged brake lines. If all brake lines are OK, **replace the VSA modulator-control unit** See **VSA MODULATOR-CONTROL UNIT REMOVAL AND INSTALLATION** , **VSA MODULATOR-CONTROL UNIT UPDATE** or **VSA SENSOR NEUTRAL POSITION MEMORIZATION** .

PARKING BRAKE SWITCH TEST

REMOVAL

1. Driver's Dashboard Panel Assembly
    1. Carefully pry out the driver's dashboard panel assembly (A) with the appropriate trim tool to detach the clips (B).
    2. Disconnect the connector (C), then remove the driver's dashboard panel assembly.

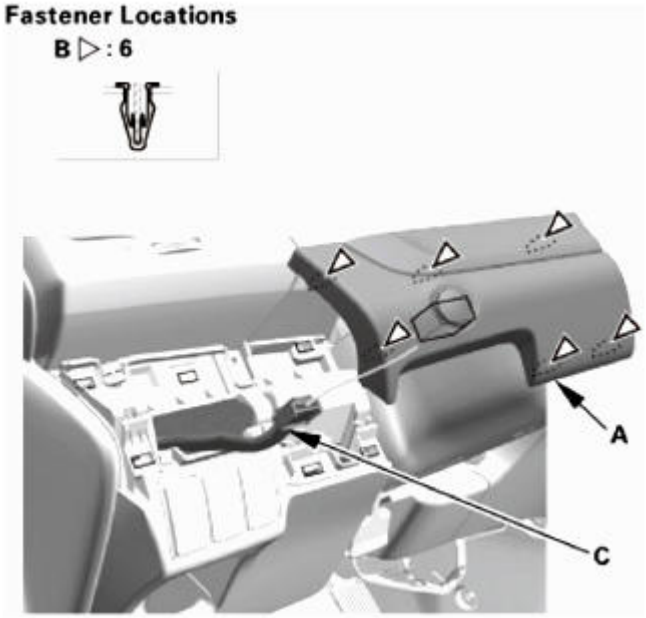

Fig. 17: Identifying Driver Dashboard Panel Assembly, Connector And Clips
Courtesy of AMERICAN HONDA MOTOR CO., INC.

2. Driver's Dashboard Undercover

GETtheMANUALS.org

1. Turn the lock knob (A) 90 °, then gently pull down the front edge of the driver's dashboard undercover (B) to detach the clip (C).
2. Pull away the undercover to release the pin (D) from the holder (E), then remove the driver's dashboard undercover.

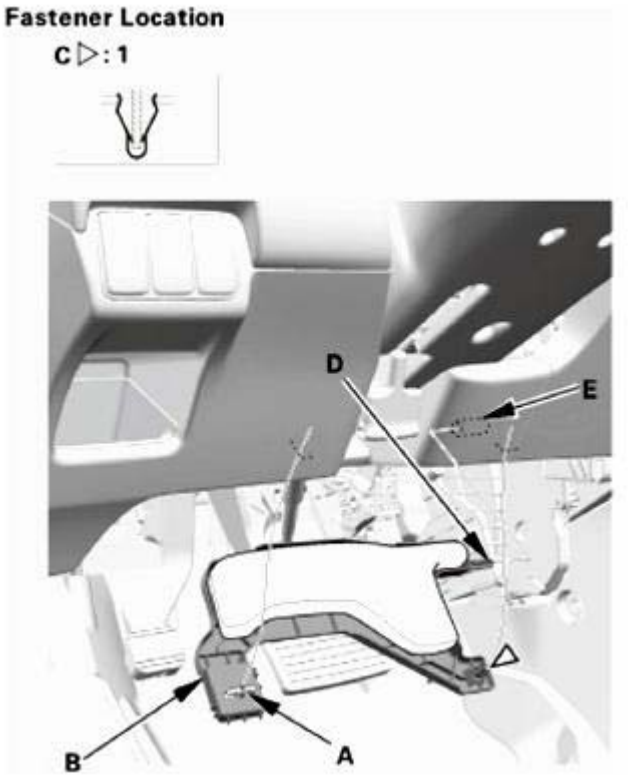

Fig. 18: Identifying Driver Dashboard Undercover, Lock Knob, Holder, Clip And Pin
Courtesy of AMERICAN HONDA MOTOR CO., INC.

3. Driver's Dashboard Lower Cover
    1. Carefully pry out the driver's dashboard lower cover (A) with the appropriate trim tool to detach the clips (B).
    2. Disconnect the connector (C), then remove the driver's dashboard lower cover.

GETtheMANUALS.org

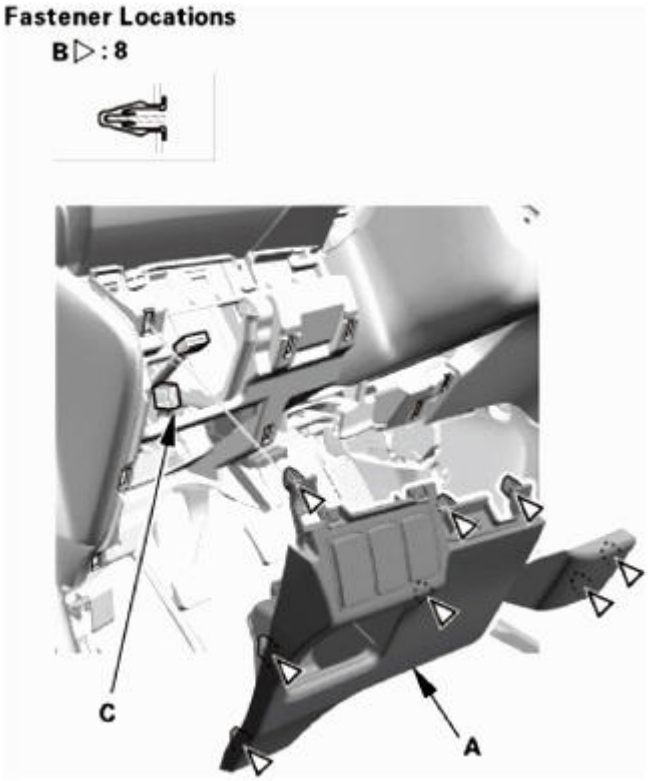

Fig. 19: Identifying Driver Dashboard Lower Cover, Connector And Clips
Courtesy of AMERICAN HONDA MOTOR CO., INC.

TEST

1. Parking Brake Switch - Test

NOTE: **If both the ABS/VSA indicator and the brake system indicator come on at the same time, check the VSA system for DTCs first.**

1. Disconnect the connector (A).
2. Check for continuity between the switch terminal (B) and body ground.
   - With the parking brake pedal pressed, there should be continuity.
   - With the parking brake pedal released, there should be no continuity.

NOTE: **If the parking brake switch and the brake fluid level switch are OK, but the brake system indicator does not function, do the gauge control module self-diagnostic function.**

3. Connect the connector.

GETtheMANUALS.org

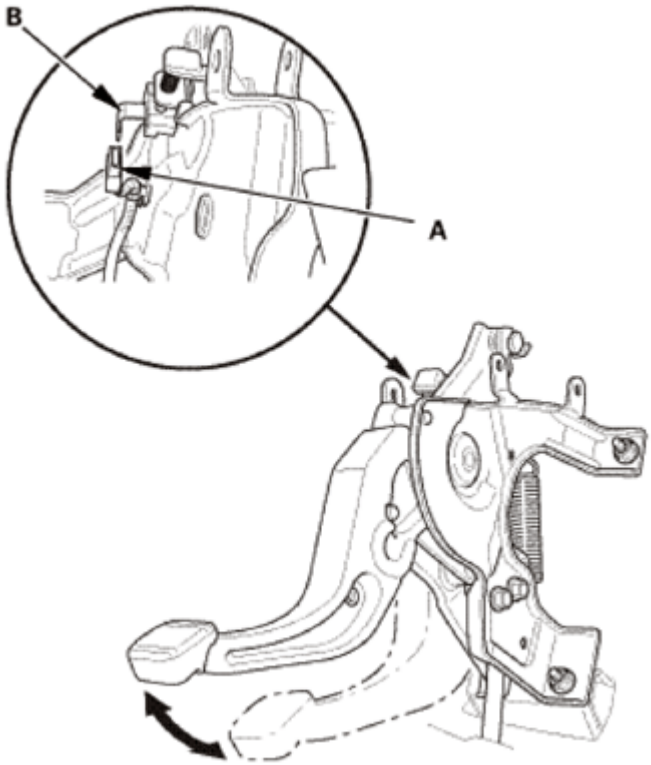

Fig. 20: Checking Continuity Between Switch Terminal And Body Ground
Courtesy of AMERICAN HONDA MOTOR CO., INC.

INSTALLATION

1. Driver's Dashboard Lower Cover
    1. Connect the connector (A), then install the driver's dashboard lower cover (B). Make sure the clips (C) snap into place securely.

GETtheMANUALS.org

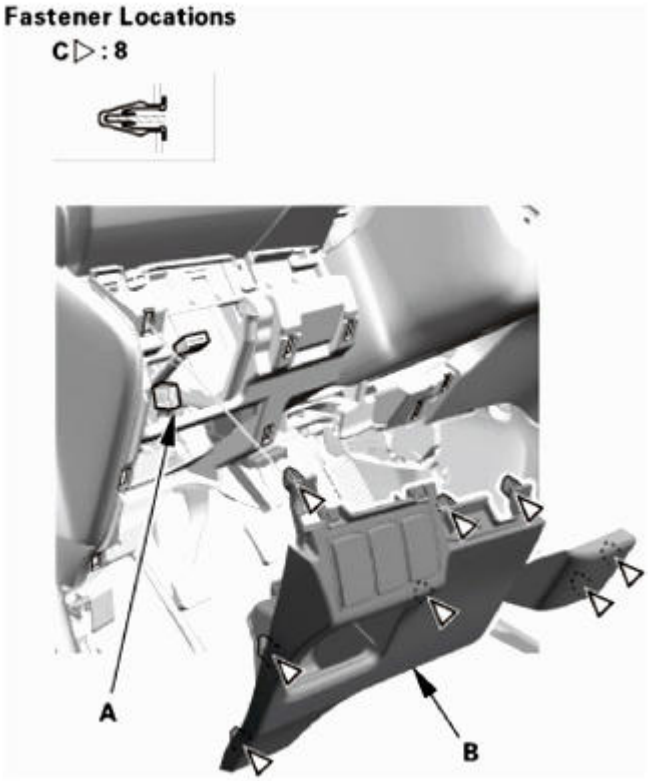

Fig. 21: Identifying Driver Dashboard Lower Cover, Connector And Clips
Courtesy of AMERICAN HONDA MOTOR CO., INC.

2. Driver's Dashboard Undercover
    1. Install the driver's dashboard undercover (A). Make sure the clip (B) snap into place securely, and the pin (C) into the holder (D) securely.
    2. Turn the lock knob (E) 90 °.

GETtheMANUALS.org

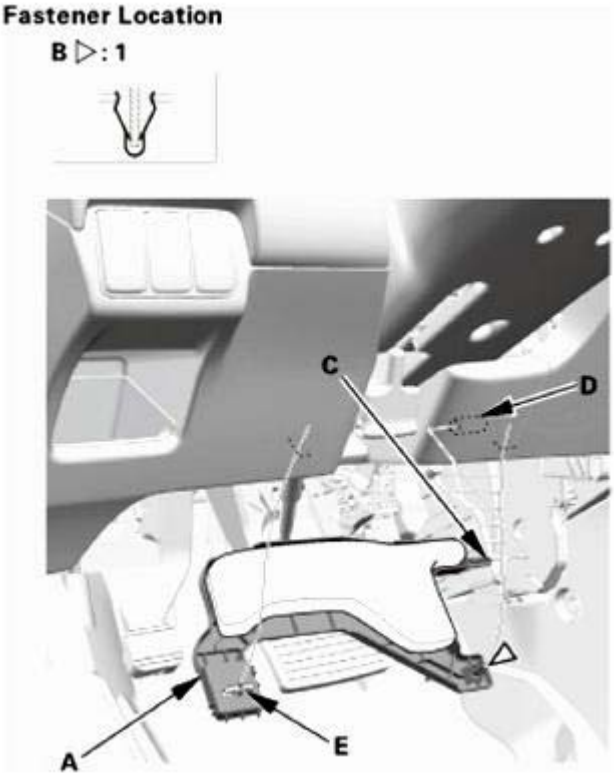

Fig. 22: Identifying Driver Dashboard Undercover, Lock Knob, Holder, Clip And Pin
Courtesy of AMERICAN HONDA MOTOR CO., INC.

3. Driver's Dashboard Panel Assembly
    1. Connect the connector (A), then install the driver's dashboard panel assembly (B). Make sure the clips (C) snap into place securely.

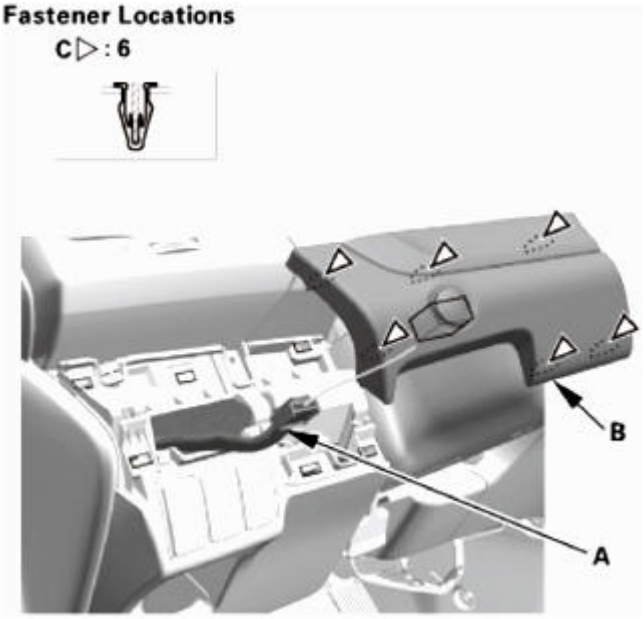

GETtheMANUALS.org

Fig. 23: Identifying Driver Dashboard Panel Assembly, Connector And Clips
Courtesy of AMERICAN HONDA MOTOR CO., INC.

YAW RATE-ACCELERATION NEUTRAL POSITION MEMORIZATION

PROCEDURE

NOTE: Whenever the VSA modulator-control unit is replaced, its neutral position memorization must be done.

1. HDS DLC - Connection
    1. Connect the HDS to the data link connector (DLC) (A) located under the driver's side of the dashboard.
    2. Turn the ignition switch to ON (II).
    3. Make sure the HDS communicates with the vehicle. If it does not communicate, go to the DLC circuit troubleshooting.

Fig. 24: Identifying Data Link Connector
Courtesy of AMERICAN HONDA MOTOR CO., INC.

2. Yaw Rate-Acceleration Neutral Position Memorization
    1. Select the ADJUSTMENT in the REAL TIME AWD SYSTEM with the HDS.
    2. Select the G SENSOR LEARNING in the ADJUSTMENT with the HDS.

NOTE: See the HDS Help menu for specific instructions.

GETtheMANUALS.org

CABIN AIR FILTER

Honda - Civic & CR-V

CABIN AIR FILTER REMOVAL & INSTALLATION

NOTE: **Manufacturer's terminology for this filter is dust and pollen filter.**

REMOVAL

Glove Box - Move

1. Detach the glove box damper hook (A), and release both glove box stops (B) by pushing them in, then let glove box (C) hang down.

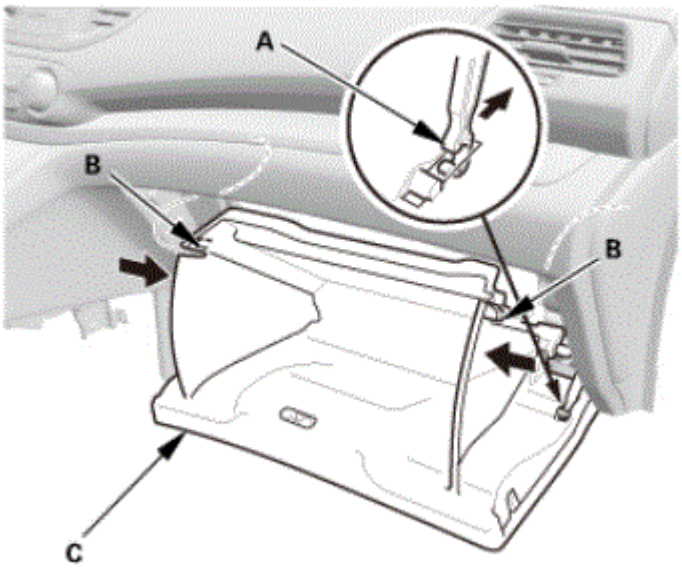

Fig. 1: Glove Box Damper Hook And Glove Box Stops
Courtesy of AMERICAN HONDA MOTOR CO., INC.

Cabin Air Filter

1. Remove the lid (A).
2. Pull out the dust and pollen filter (B).

GETtheMANUALS.org

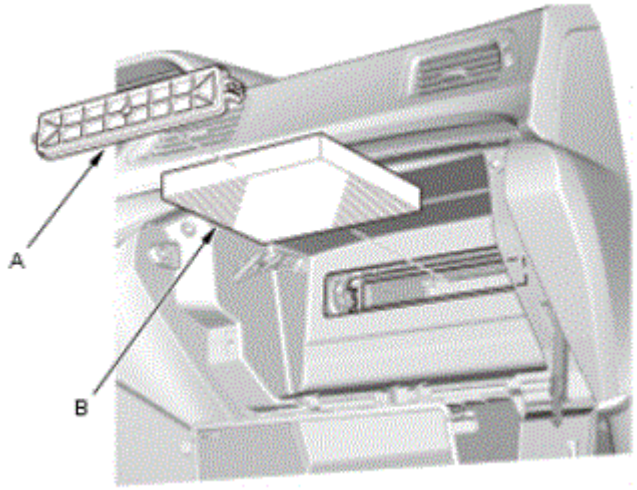

Fig. 2: Lid And Dust And Pollen Filter
Courtesy of AMERICAN HONDA MOTOR CO., INC.

INSTALLATION

Cabin Air Filter

1. Install the dust and pollen filter (A).
2. Install the lid (B).

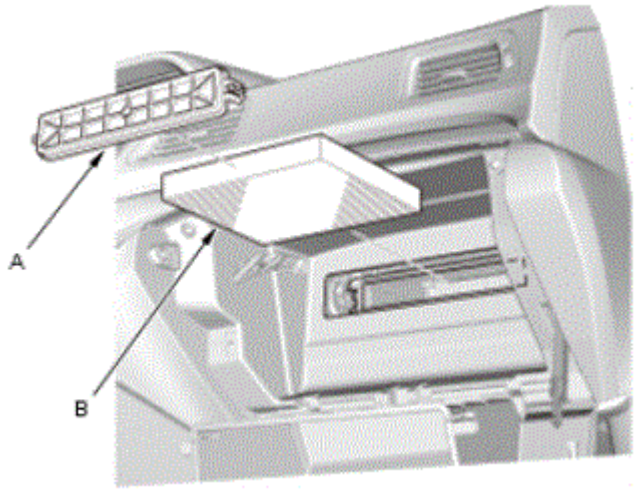

Fig. 3: Lid And Dust And Pollen Filter
Courtesy of AMERICAN HONDA MOTOR CO., INC.

Glove Box - Move

GETtheMANUALS.org

1. Install the glove box (A). Make sure the glove box stops (B) snap into place securely.
2. Install the glove box damper hook (C)

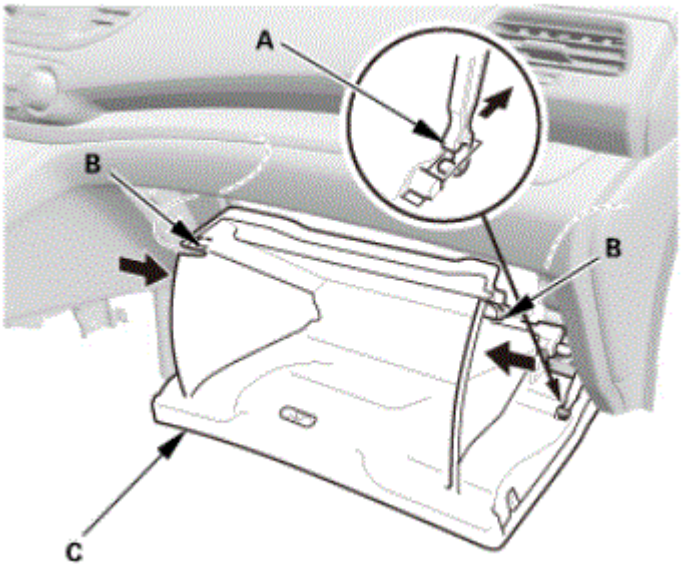

Fig. 4: Lid And Dust And Pollen Filter
Courtesy of AMERICAN HONDA MOTOR CO., INC.

Maintenance Minder - Reset (With Maintenance Minder System)

1. If the Maintenance Minder required to replace the dust and pollen filter, reset the Maintenance Minder with the gauge (see "Resetting the Maintenance Minder"). If the Maintenance Minder did not require to replace the dust and pollen filter, reset the Maintenance Minder with the HDS (see "Resetting the Individual Maintenance Items").

GETtheMANUALS.org

CHARGING SYSTEM COMPONENT LOCATION INDEX & DRIVE BELT ROUTING

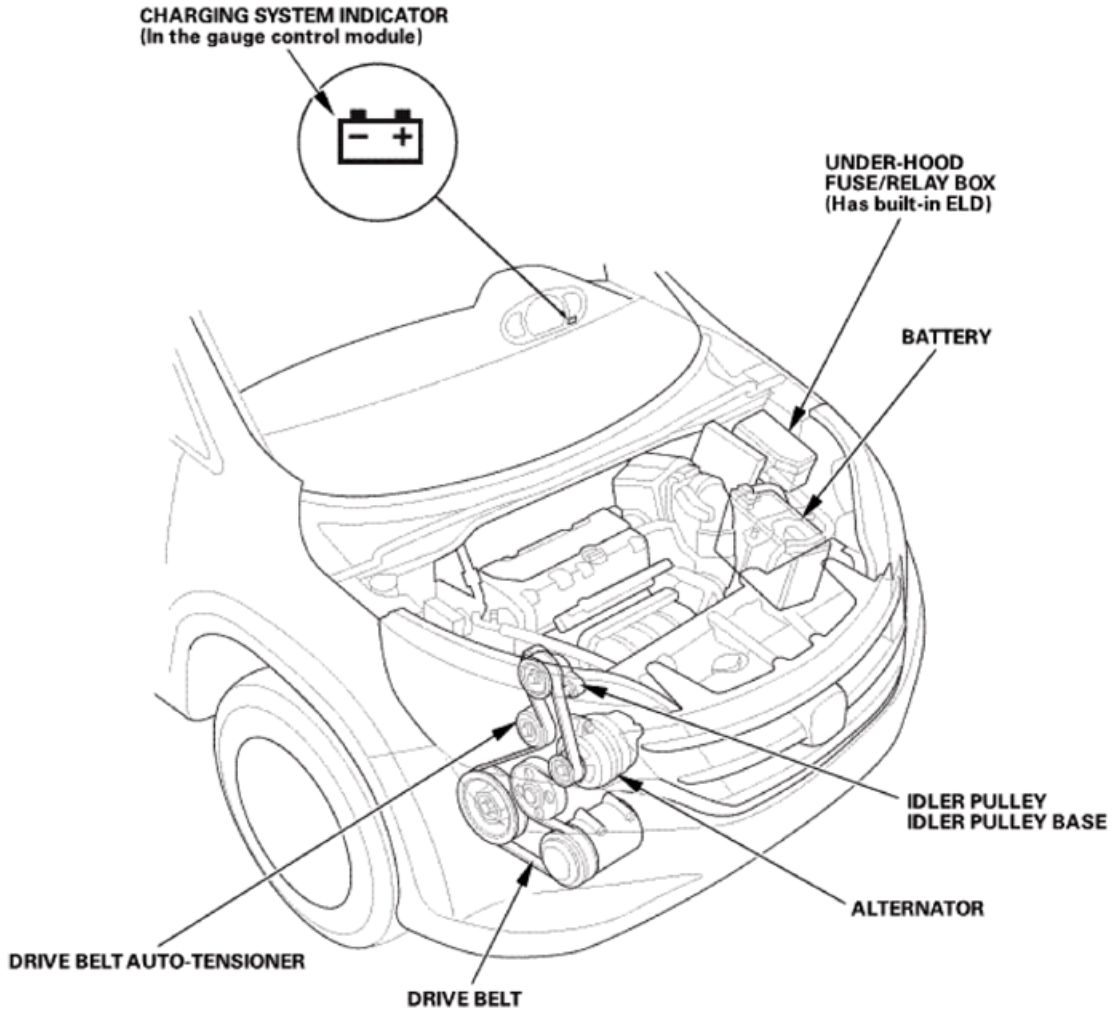

Fig. 1: Charging System Components Location
Courtesy of AMERICAN HONDA MOTOR CO., INC.

ALTERNATOR	**Removal and Installation** See **ALTERNATOR OVERHAUL** or **ALTERNATOR REMOVAL AND INSTALLATION**
	Overhaul See **ALTERNATOR OVERHAUL** or **ALTERNATOR REMOVAL AND INSTALLATION**
DRIVE BELT	**INSPECTION**
	REMOVAL AND INSTALLATION
DRIVE BELT AUTO-	**INSPECTION**

GETtheMANUALS.org

TENSIONER	**REMOVAL AND INSTALLATION**
	PULLEY REMOVAL AND INSTALLATION
DRIVE BELT IDLER PULLEY	**REMOVAL AND INSTALLATION**
DRIVE BELT IDLER PULLEY BASE	**REMOVAL AND INSTALLATION**

CHARGING SYSTEM SYMPTOM TROUBLESHOOTING INDEX

Symptom	Diagnostic procedure
Charging system indicator stays on	**DO THE GAUGE CONTROL MODULE SELF-DIAGNOSTIC FUNCTION PROCEDURE** .

PARASITIC DRAW CHECK

GETtheMANUALS.org

Parasitic Draw Check

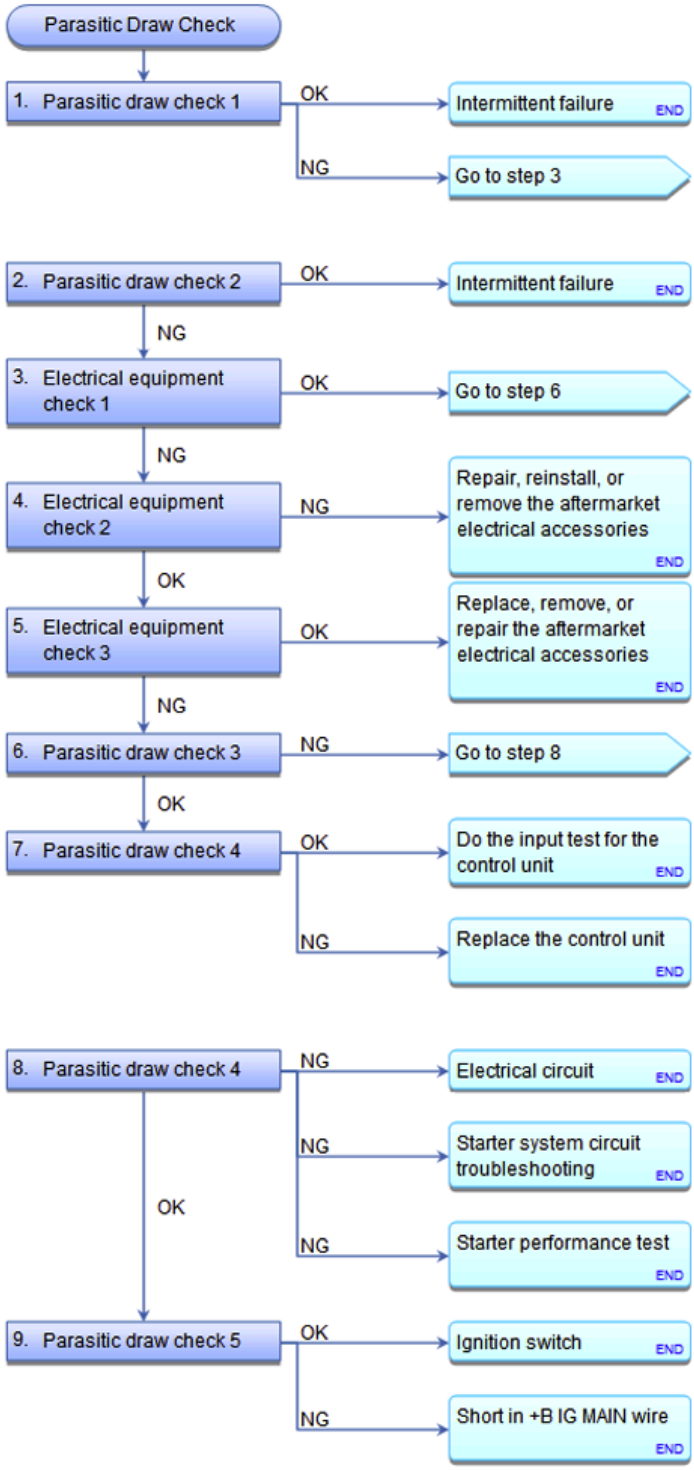

Fig. 2: Parasitic Draw Check Flowchart
Courtesy of AMERICAN HONDA MOTOR CO., INC.

Special Tools Required

GETtheMANUALS.org

LH41 AC/DC low current clamp meter, FLULH41A*

*: Available through the Honda Tool and Equipment Program, 888-424-6857

1. Parasitic draw check 1:
    - 1. Make sure the battery is fully charged, and that all the vehicle's electrical accessories are turned off.
        - With security, go to step 1-2.
        - Without security, go to step 1-4.
    - 2. To make the security alarm system recognize that the door is closed, open the hood, and disconnect the hood switch 2P connector.
    - 3. Connect the security hood switch 2P connector terminals No. 1 and No. 2 with a jumper wire.
    - 4. Turn the ignition switch to ON (II).
    - 5. Turn the ignition switch to LOCK (0).
    - 6. Remove the ignition key from the ignition switch.
    - 7. Get out of the vehicle, and close all doors and tailgate securely.
    - 8. Lock the doors with the keyless transmitter.
    - 9. Make sure the individual map lights are turned off, and the security alarm system is armed.
    - 10. Wait for at least 20 minutes.
    - 11. Attach the LH41 AC/DC low current clamp meter (A) to the battery ground cable (B).

    Follow the equipment manufacturer's instructions, then measure the parasitic draw.

    NOTE: If you are using a digital multimeter: go to step 2.

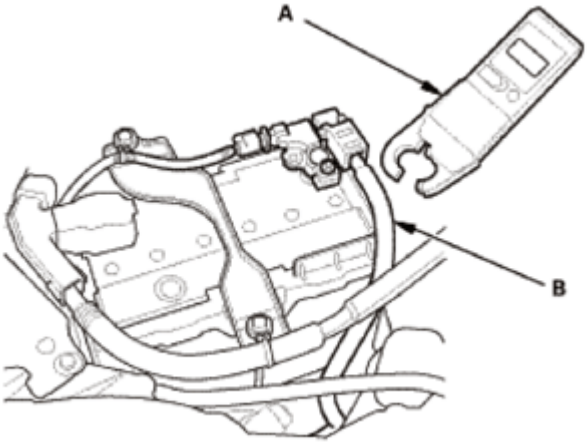

Fig. 3: Measuring Parasitic Draw Using Clamp Meter
Courtesy of AMERICAN HONDA MOTOR CO., INC.

Is the parasitic draw 27 mA or less?

GETtheMANUALS.org

YES : Intermittent failure, the system is normal at this time.

NO : Go to step 3.

2. Parasitic draw check 2:
   - 1. Check the following items before measuring:
     - Set the multimeter dial to the DCA (direct current amps) range.
     - Plug the red test probe into the red A (Amps) jack, and plug the black test probe into the COM jack.
     - To avoid blowing an input fuse, start by setting the range above 10 A.
   - 2. Loosen the nut (A) on the battery negative terminal.

NOTE: **Follow the instructions exactly to avoid disconnecting the battery ground cable terminal from the battery negative terminal.**

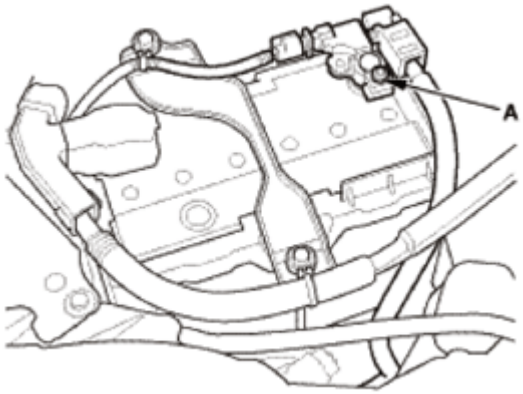

Fig. 4: Identifying Battery Negative Terminal Nut
Courtesy of AMERICAN HONDA MOTOR CO., INC.

   - 3. Connect the red (+) test lead (A) to the negative terminal (B) of the battery ground cable.

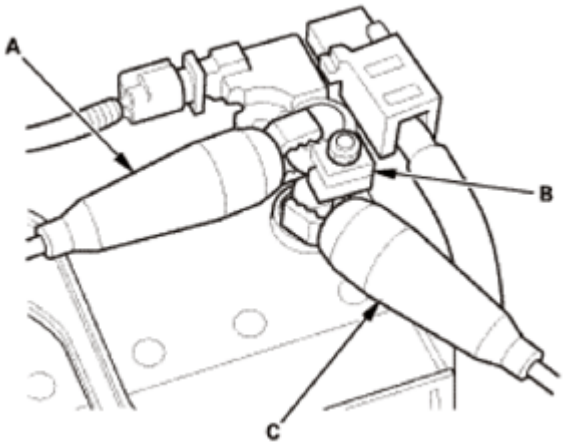

GETtheMANUALS.org

Fig. 5: Identifying Battery Ground Cable Test Lead (+) And Negative Terminal
Courtesy of AMERICAN HONDA MOTOR CO., INC.

- 4. Carefully slide the negative terminal of the battery ground cable upwards from the battery negative terminal post to maintain contact and avoid disconnection. Then connect the black (-) test lead (C) to the battery negative terminal post.
- 5. Disconnect the negative terminal (A) of the battery ground cable from the battery negative terminal.

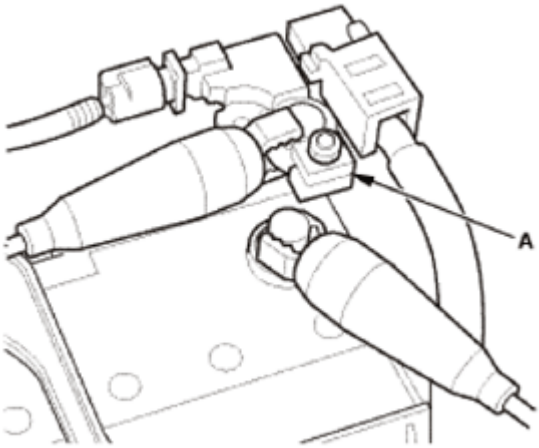

Fig. 6: Identifying Negative Terminal Of Battery Ground Cable
Courtesy of AMERICAN HONDA MOTOR CO., INC.

- 6. Measure the parasitic draw.

NOTE: **If the measured value is over the threshold, wait 10 minutes and recheck.**

Is the parasitic draw 27 mA or less?

YES : Intermittent failure, the system is normal at this time.

NO : Go to step 3.

3. Electrical equipment check 1:
   - 1. Check if there are any aftermarket electrical accessories installed on the vehicle.

Are there any aftermarket electrical accessories installed?

YES : Go to step 4.

NO : Go to step 6.

4. Electrical equipment check 2:

GETtheMANUALS.org

- 1. Make sure that the aftermarket electrical accessories have been properly installed.

NOTE: **Check that the harness connected with the ACC, IG1, or IG2 line is not connected with the +B line.**

Are the aftermarket electrical accessories installed correctly?

YES : Go to step 5.

NO : Repair, reinstall, or remove the aftermarket electrical accessories, then recheck.

5. Electrical equipment check 3:
   - 1. Disconnect the aftermarket electrical accessories one at a time.
   - 2. Turn the ignition switch to ON (II) and then back to LOCK (0).
   - 3. Get out of the vehicle, and close all the doors and tailgate securely.
   - 4. Wait for at least 40 seconds.
   - 5. Measure the parasitic draw.

   Is the parasitic draw 27 mA or less?

   YES : Replace, remove, or repair the aftermarket electrical accessories that reduced the parasitic draw to 27 mA or less when disconnected.

   NO : Go to step 6.

6. Parasitic draw check 3:
   - 1. Remove the back-up fuse while the test leads are connected, and measure the parasitic draw.

   Is the parasitic draw 14 mA or less?

   YES : Go to step 7.

   NO : Go to step 8.

7. Parasitic draw check 4:
   - 1. Install the back-up fuse.
   - 2. Short the B-CAN line to body ground with a jumper wire while the test leads are connected.
   - 3. Turn the ignition switch to ON (II) and then back to LOCK (0).
   - 4. Get out of the vehicle, and close all doors and tailgate securely.
   - 5. Wait for at least 40 seconds.
   - 6. Measure the parasitic draw.

   Is the parasitic draw 27 mA or less?

GETtheMANUALS.org

YES : Disconnect the control units from the B-CAN circuit one at a time, perform step 3-6 above, then measure the parasitic draw. Do the input test for the control unit that reduced the parasitic draw to 27 mA or less when disconnected.

NO : Disconnect the control units from the back-up fuse circuit one at a time, perform step 3-6 above, then measure the parasitic draw. Replace the control unit that reduced the parasitic draw to 27 mA or less when disconnected.

8. Parasitic draw check 4:
   - 1. Remove the No. A2-1 (50 A) fuse in the under-hood fuse/relay box while the test leads are connected.
   - 2. Turn the ignition switch to ON (II) and then back to LOCK (0).
   - 3. Get out of the vehicle, and close all doors and tailgate securely.
   - 4. Wait for at least 40 seconds.
   - 5. Measure the parasitic draw.

   Is the parasitic draw 27 mA or less?

   YES : Go to step 9.

   NO : Remove the fuses from the under-hood fuse/relay box one at a time, and identify the parts which excessively consume current.

   NO : If all electrical circuits are OK, check the starter system circuit.

   NO : Perform the starter performance test.

9. Parasitic draw check 5:
   - 1. Install the No. A2-1 (50 A) fuse in the under-hood fuse/relay box.
   - 2. Disconnect the 7P connector from the ignition switch while the test leads are connected, and measure the parasitic draw.

   Is the parasitic draw 27 mA or less?

   YES : **REPLACE THE IGNITION SWITCH** .

   NO : Repair a short to ground in the wire between the No. A2-1 (50 A) fuse in the under-hood fuse/relay box and ignition switch.

ALTERNATOR REMOVAL AND INSTALLATION

SPECIAL TOOL DESCRIPTION

Image	Description/Tool Number

GETtheMANUALS.org

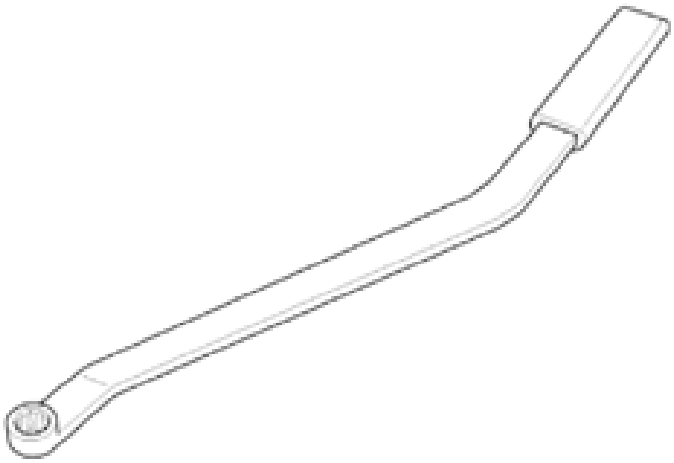	Belt Tension Release Tool Snap-on YA9317(1), commercially available
(1) Available through the Honda Tool and Equipment Program 888-424-6857	

REMOVAL

1. Battery Terminal - Disconnection
    1. Make sure the ignition switch is in LOCK (0).
    2. Disconnect and isolate the negative cable (A) from the battery.

    NOTE: Always disconnect the negative side first.

    3. Disconnect the positive cable (B) from the battery.

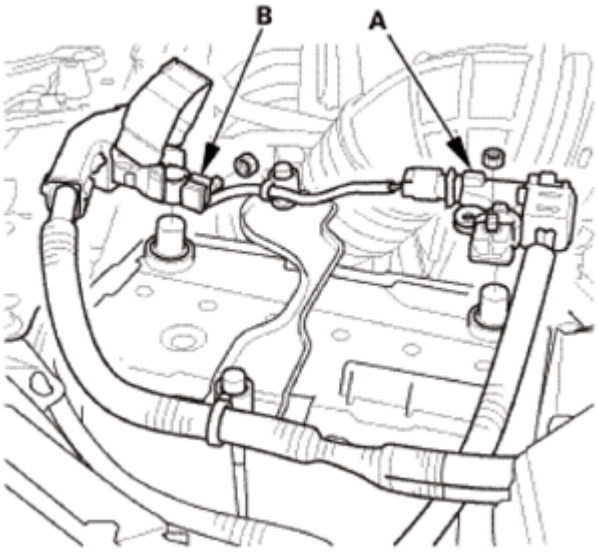

Fig. 7: Identifying Battery (+) And (-) Terminal
Courtesy of AMERICAN HONDA MOTOR CO., INC.

GETtheMANUALS.org

2. Drive Belt
    1. Move the auto-tensioner (A) using the belt tension release tool in the direction of the arrow to relieve tension from the drive belt, then remove the drive belt.

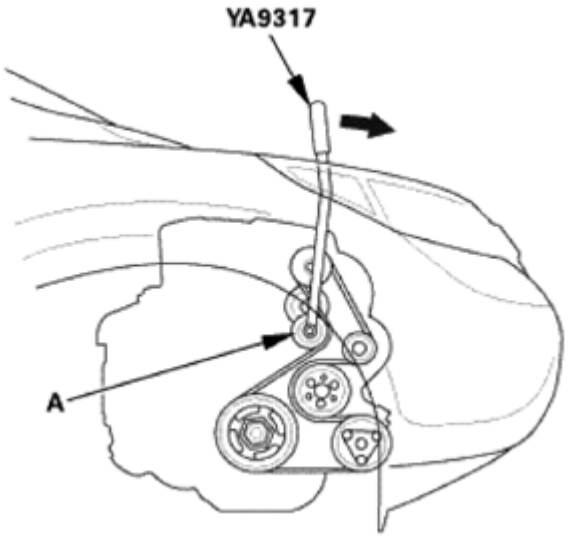

Fig. 8: Removing Drive Belt Using Belt Tension Release Tool
Courtesy of AMERICAN HONDA MOTOR CO., INC.

3. Idler Pulley Base Assembly
    1. Remove the idler pulley base.

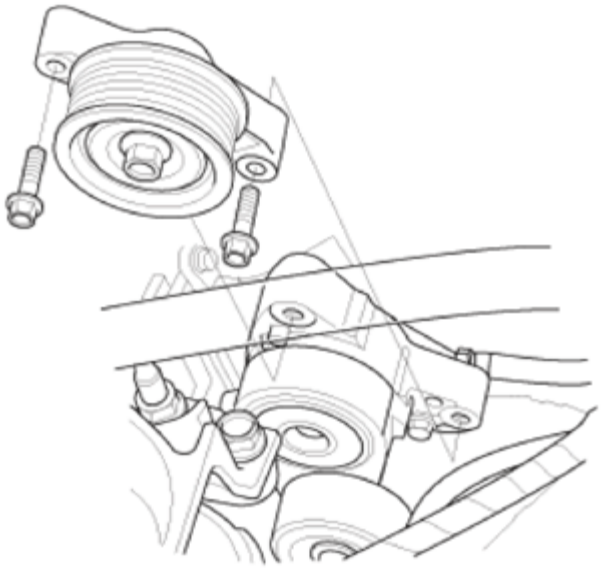

Fig. 9: Identifying Idler Pulley Base Assembly
Courtesy of AMERICAN HONDA MOTOR CO., INC.

4. Auto-Tensioner Assembly

GETtheMANUALS.org

1. Remove the auto-tensioner.

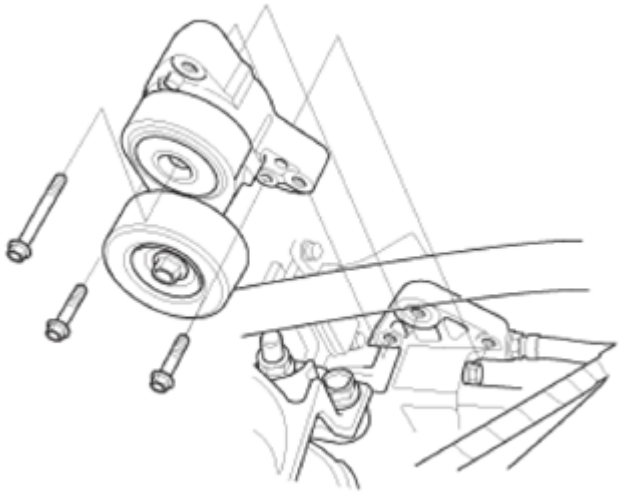

Fig. 10: Identifying Auto - Tensioner Assembly
Courtesy of AMERICAN HONDA MOTOR CO., INC.

5. Alternator
   1. Remove the three bolts securing the alternator.

Fig. 11: Identifying Alternator And Mounting Bolts
Courtesy of AMERICAN HONDA MOTOR CO., INC.

   2. Disconnect the connector and the cable.
   3. Remove the alternator.

GETtheMANUALS.org

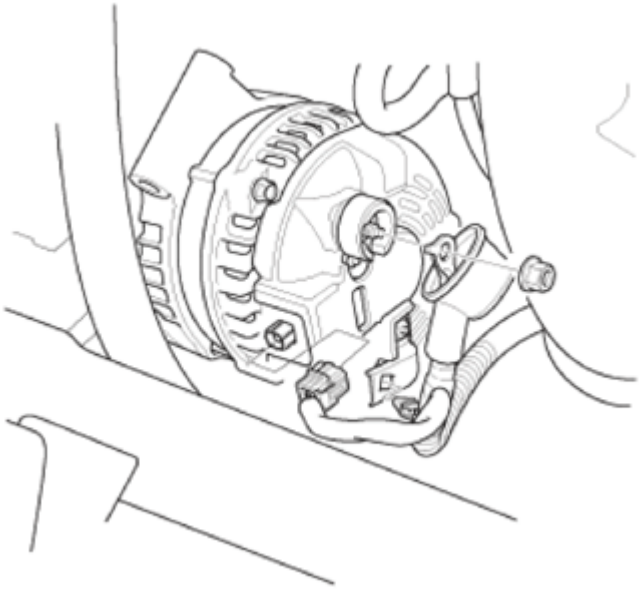

Fig. 12: Identifying Alternator
Courtesy of AMERICAN HONDA MOTOR CO., INC.

INSTALLATION

1. Alternator
    1. Connect the connector and the cable.
    2. Install the alternator.

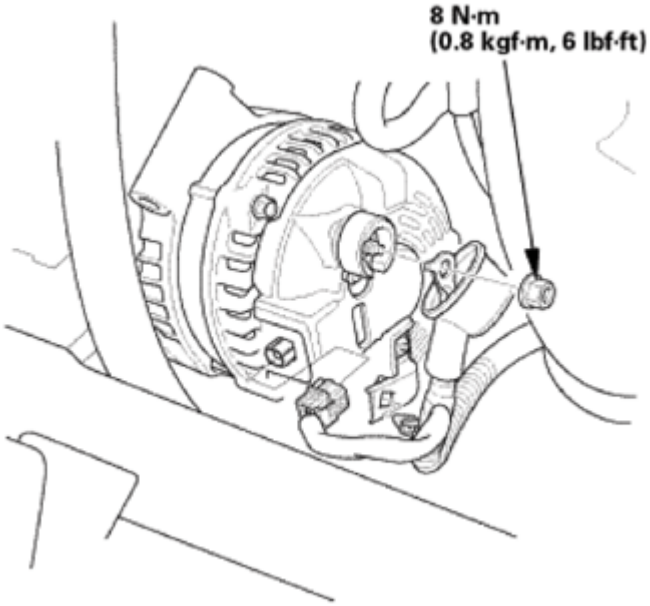

Fig. 13: Identifying Alternator Nut With Torque Specifications
Courtesy of AMERICAN HONDA MOTOR CO., INC.

GETtheMANUALS.org

3. Install the three bolts securing the alternator.

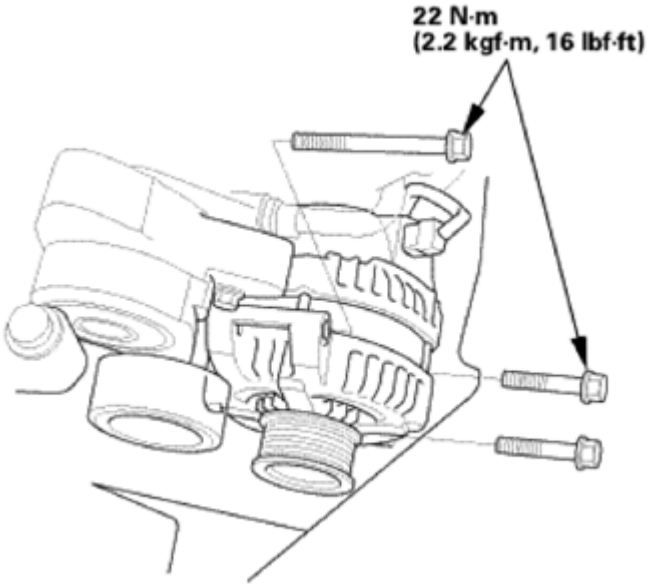

Fig. 14: Identifying Alternator Securing Bolts With Torque Specifications
Courtesy of AMERICAN HONDA MOTOR CO., INC.

2. Auto-Tensioner Assembly
    1. Install the auto-tensioner.

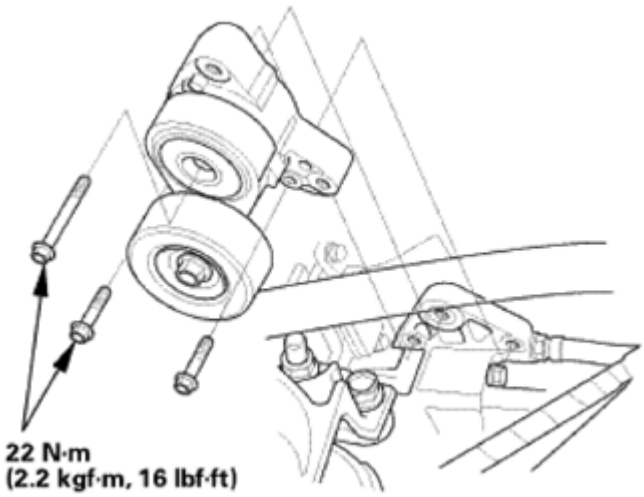

Fig. 15: Identifying Auto-Tensioner Assembly With Torque Specifications
Courtesy of AMERICAN HONDA MOTOR CO., INC.

3. Idler Pulley Base Assembly
    1. Install the idler pulley base.

GETtheMANUALS.org

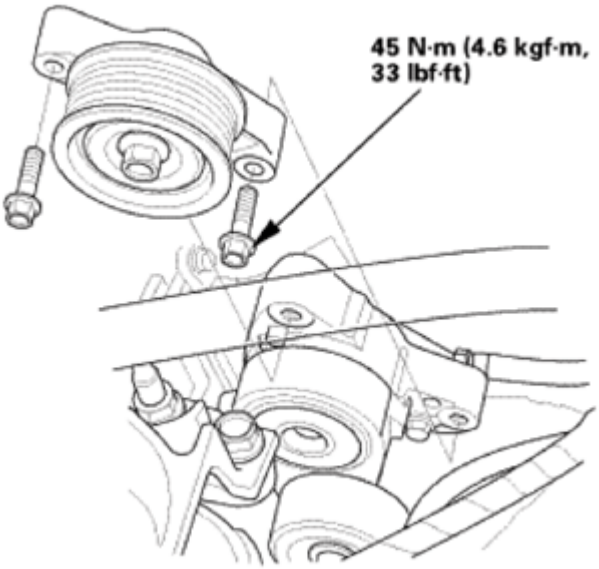

Fig. 16: Identifying Idler Pulley Base Assembly With Torque Specifications
Courtesy of AMERICAN HONDA MOTOR CO., INC.

4. Drive Belt
    1. Install the drive belt.

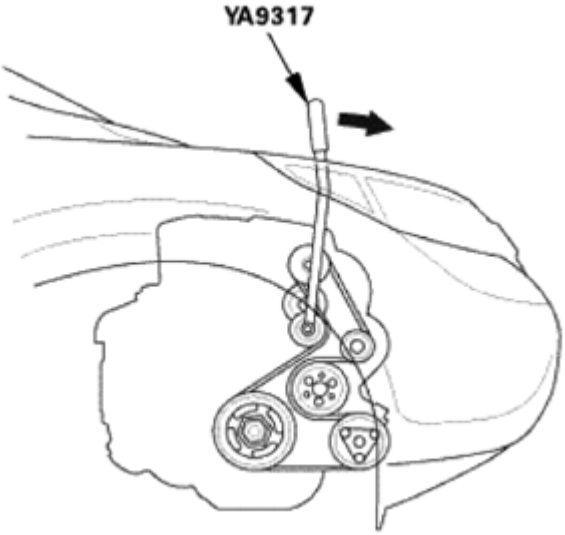

Fig. 17: Installing Drive Belt Using Tool
Courtesy of AMERICAN HONDA MOTOR CO., INC.

5. Battery Terminal - Reconnection

NOTE: If the battery performance is abnormal, test the battery.

    1. Clean the battery terminals.

GETtheMANUALS.org

2. Connect the positive cable (A) to the battery.

NOTE: Always connect the positive side first.

3. Connect the negative cable (B) to the battery.
4. Apply multipurpose grease to the terminals to prevent corrosion.

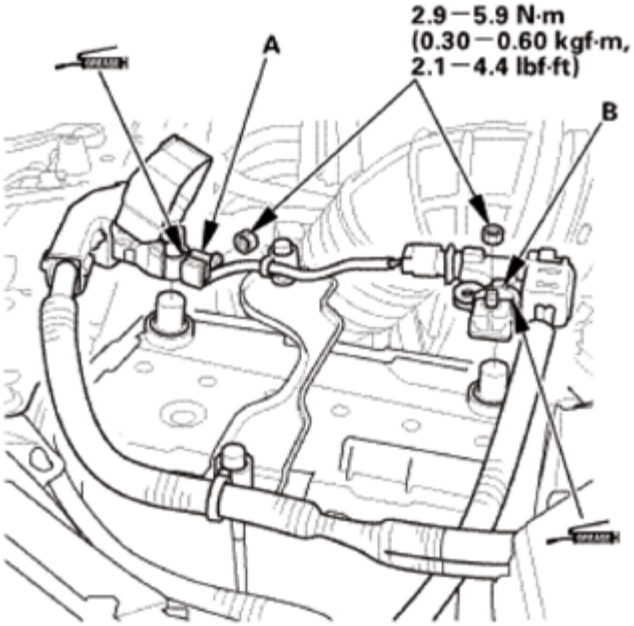

Fig. 18: Identifying Battery (+) And (-) Terminal With Torque Specifications
Courtesy of AMERICAN HONDA MOTOR CO., INC.

ALTERNATOR OVERHAUL

SPECIAL TOOL DESCRIPTION

Image	Description/Tool Number
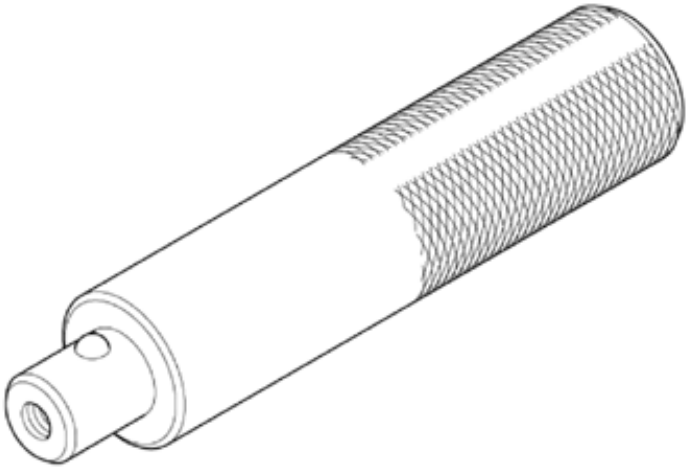	Driver Handle, 15 x 135L 07749-0010000

GETtheMANUALS.org

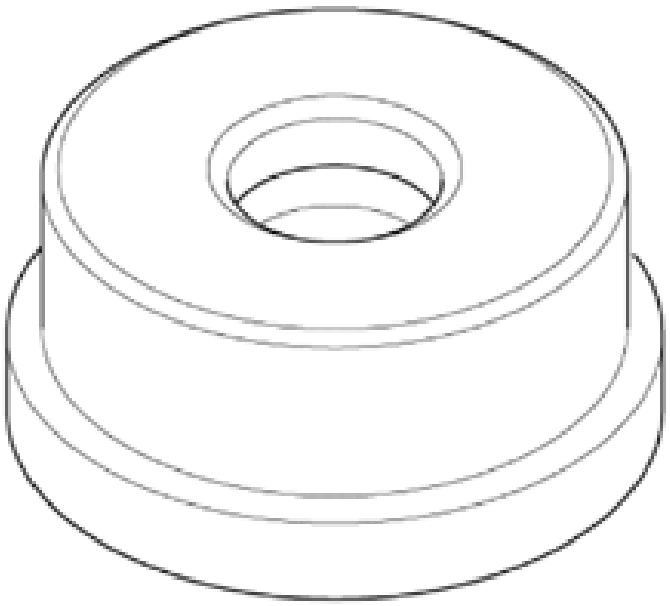	Bearing Driver Attachment, 42 x 47 mm 07746-0010300

VIEW

1. Alternator Exploded View

   Exploded View

GETtheMANUALS.org

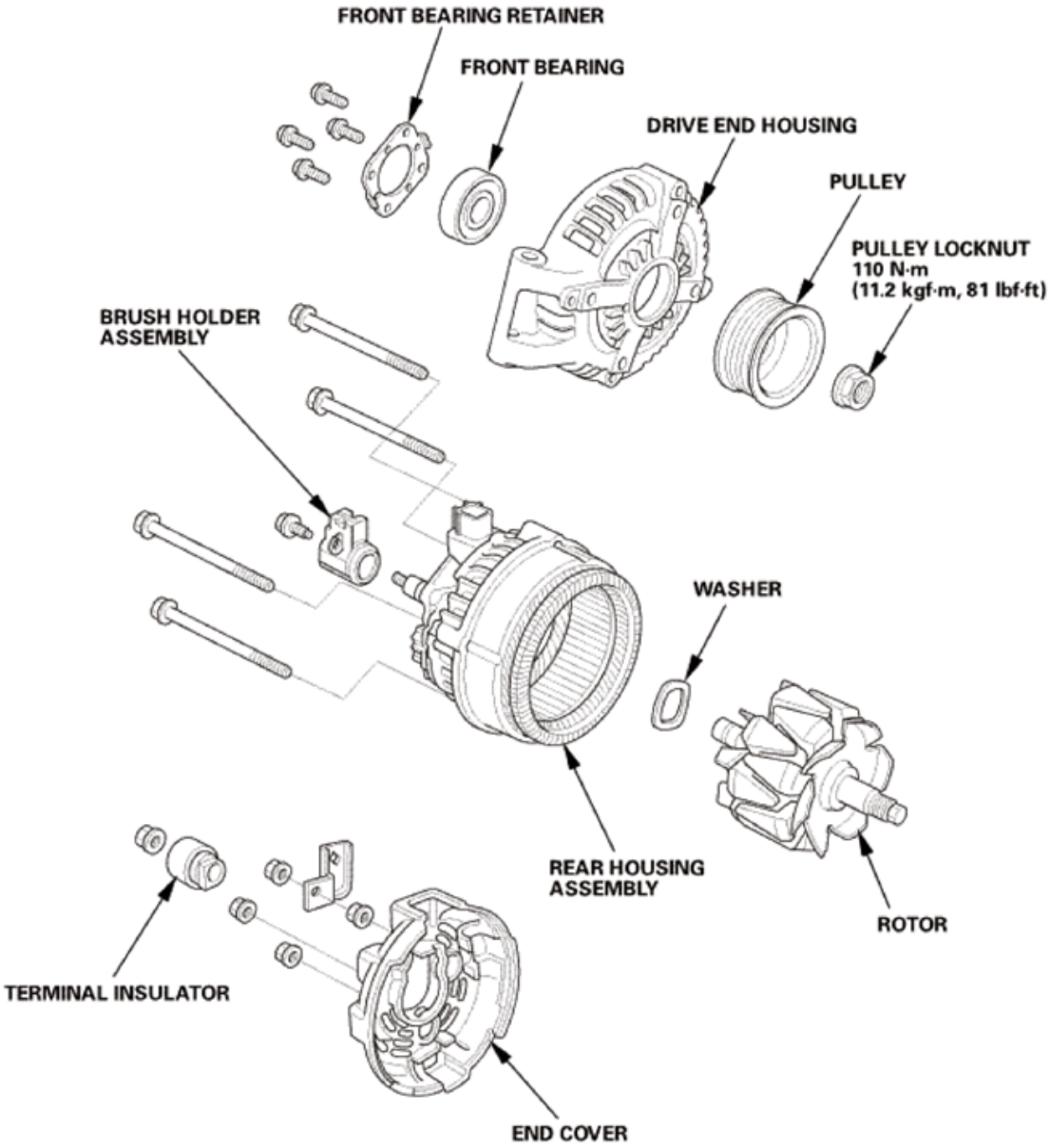

Fig. 19: Exploded View Of Alternator
Courtesy of AMERICAN HONDA MOTOR CO., INC.

DISASSEMBLY

NOTE: Refer to the Exploded View if needed during this procedure.

1. Alternator End Cover
    1. Remove the end cover (A).

GETtheMANUALS.org

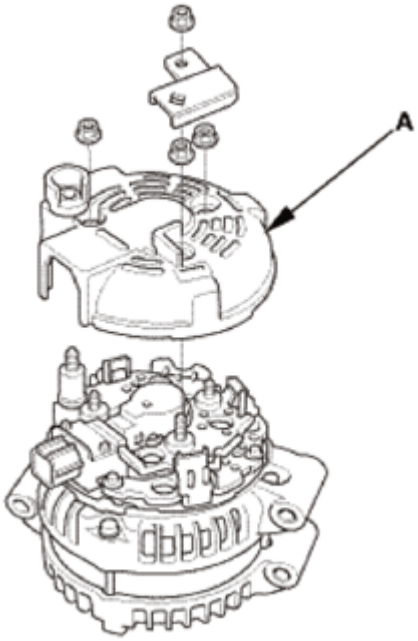

Fig. 20: Identifying Alternator End Cover
Courtesy of AMERICAN HONDA MOTOR CO., INC.

2. Alternator Brush Holder
    1. Remove the brush holder assembly.

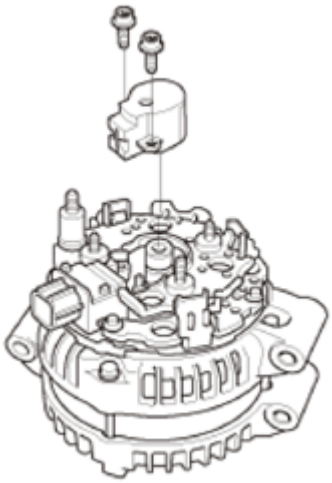

Fig. 21: Identifying Alternator Brush Holder
Courtesy of AMERICAN HONDA MOTOR CO., INC.

3. Alternator Brush - Inspection
    1. Measure the length of both brushes (A) with a vernier caliper (B).

        If either brush is shorter than the service limit, replace the brush holder assembly.

GETtheMANUALS.org

Alternator Brush Length

Standard (New): 10.5 mm(0.41 in)

Service Limit: 1.5 mm(0.06 in)

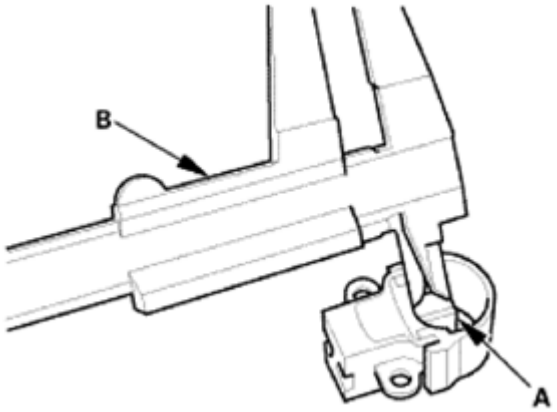

Fig. 22: Measuring Alternator Brush Length Using Vernier Caliper
Courtesy of AMERICAN HONDA MOTOR CO., INC.

4. Alternator Rear Housing Assembly
    1. Remove the rear housing assembly.

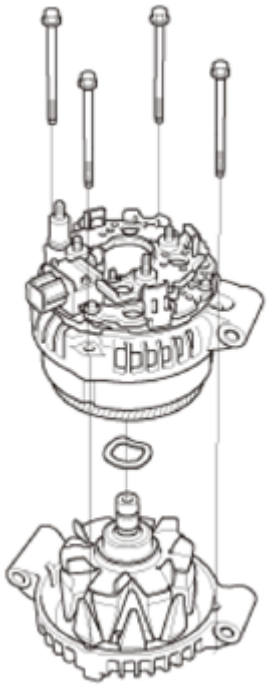

Fig. 23: Identifying Alternator Rear Housing Assembly
Courtesy of AMERICAN HONDA MOTOR CO., INC.

GETtheMANUALS.org

5. Alternator Pulley
    1. If the front bearing needs replacing, remove the pulley locknut with a 10 mm wrench (A) and a 22 mm wrench (B). If necessary, use an impact wrench.

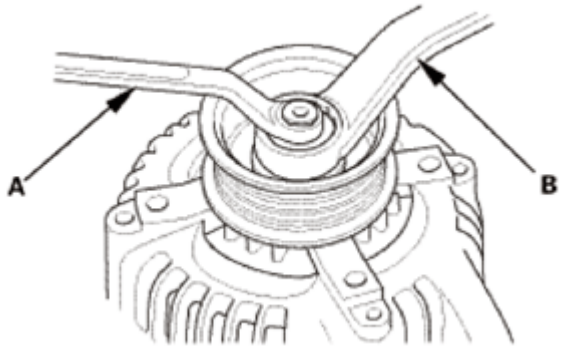

Fig. 24: Removing Alternator Pulley Locknut Using Wrench
Courtesy of AMERICAN HONDA MOTOR CO., INC.

6. Alternator Rotor
    1. Remove the drive-end housing.

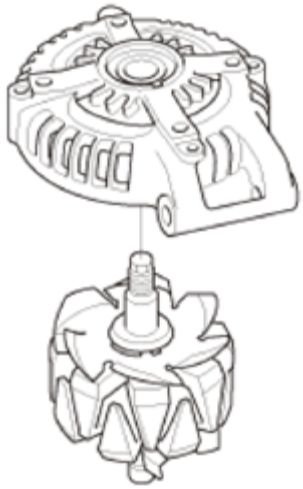

Fig. 25: Identifying Alternator Rotor
Courtesy of AMERICAN HONDA MOTOR CO., INC.

7. Alternator Rotor Slip Ring - Test
    1. Check for continuity between the slip rings (A).
    2. Check for continuity between each slip ring (A) and the rotor (B) and the rotor shaft (C).

    If there is continuity, replace the rotor assembly.

GETtheMANUALS.org

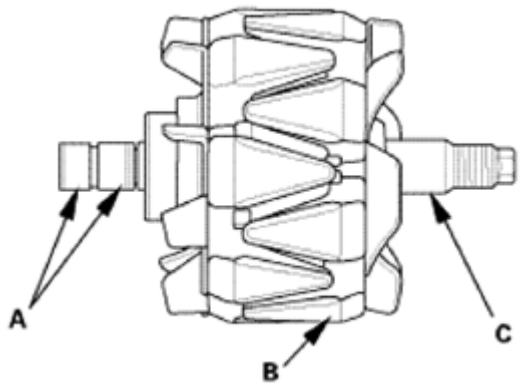

Fig. 26: Identifying Alternator Rotor Slip Ring, Rotor And Shaft
Courtesy of AMERICAN HONDA MOTOR CO., INC.

8. Front Alternator Bearing
    1. Remove the front bearing retainer.

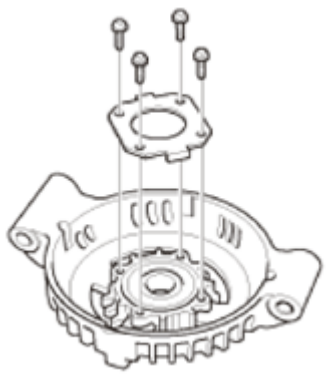

Fig. 27: Identifying Front Alternator Bearing
Courtesy of AMERICAN HONDA MOTOR CO., INC.

    2. Remove the front bearing.

GETtheMANUALS.org

Fig. 28: Removing Front Bearing Using Tool
Courtesy of AMERICAN HONDA MOTOR CO., INC.

REASSEMBLY

NOTE: Refer to the Exploded View if needed during this procedure.

1. Front Alternator Bearing
    1. Install a new front bearing in the driver-end housing with a hammer, the driver handle, 15 x 135L, and the bearing driver attachment, 42 x 47 mm.

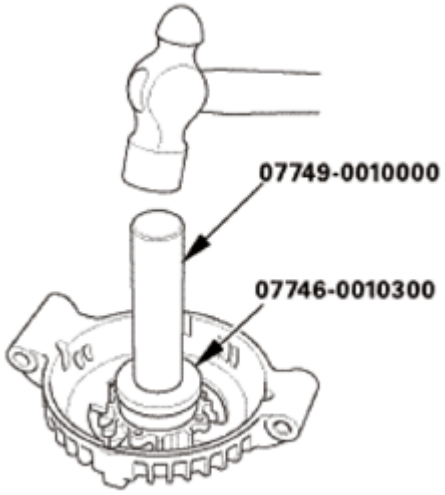

Fig. 29: Installing Front Bearing In Driver - End Housing Using Hammer
Courtesy of AMERICAN HONDA MOTOR CO., INC.

    2. Install the front bearing retainer.

GETtheMANUALS.org

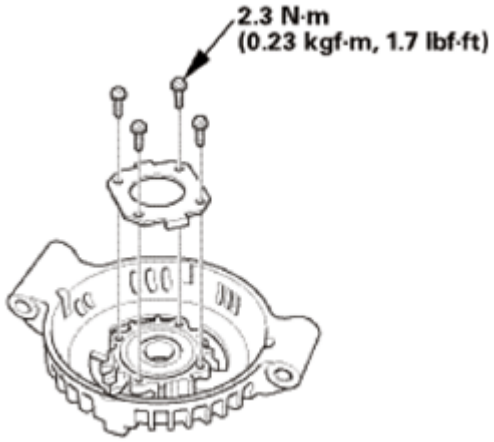

Fig. 30: Identifying Front Bearing Retainer With Torque Specifications
Courtesy of AMERICAN HONDA MOTOR CO., INC.

2. Alternator Rotor
    1. Install the drive-end housing.

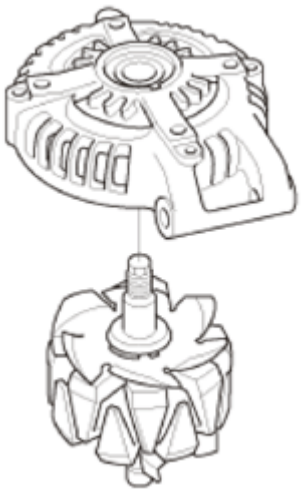

Fig. 31: Identifying Alternator Rotor
Courtesy of AMERICAN HONDA MOTOR CO., INC.

3. Alternator Pulley
    1. Install the pulley on the rotor and install the locknut, then torque the locknut to 110 N.m (11.2 kgf.m, 81 lbf.ft).

GETtheMANUALS.org

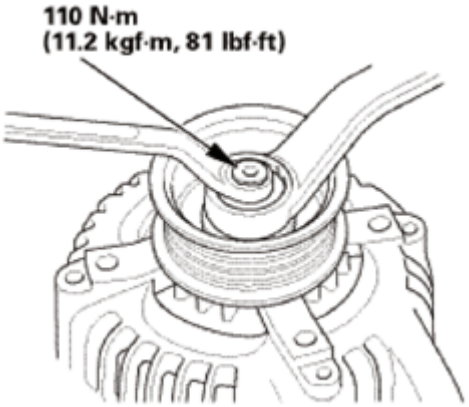

Fig. 32: Installing Alternator Pulley On Rotor Using Wrench With Torque Specifications
Courtesy of AMERICAN HONDA MOTOR CO., INC.

4. Alternator Rear Housing Assembly
    1. Install the rear housing assembly.

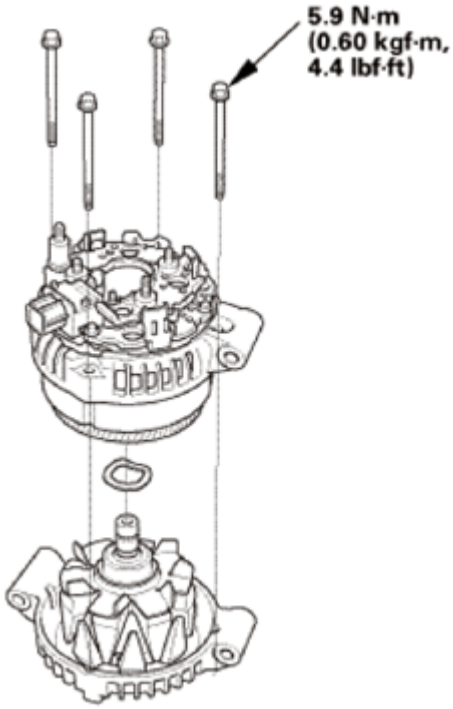

Fig. 33: Identifying Alternator Rear Housing Assembly With Torque Specifications
Courtesy of AMERICAN HONDA MOTOR CO., INC.

5. Alternator Brush Holder
    1. Push the brushes (A) in, then insert a pin or drill bit (B) (about 1.6 mm (1/16 in) diameter) to hold them there.

GETtheMANUALS.org

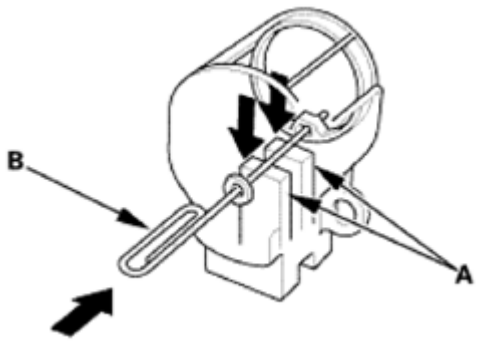

Fig. 34: Inserting Pin Or Drill Bit In Alternator Brush Holder
Courtesy of AMERICAN HONDA MOTOR CO., INC.

2. Install the brush holder, and pull out the pin.

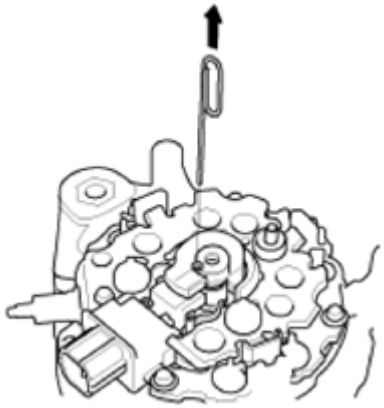

Fig. 35: Removing Pin Or Drill Bit From Alternator Brush Holder
Courtesy of AMERICAN HONDA MOTOR CO., INC.

6. Alternator End Cover
    1. Install the end cover (A).

GETtheMANUALS.org

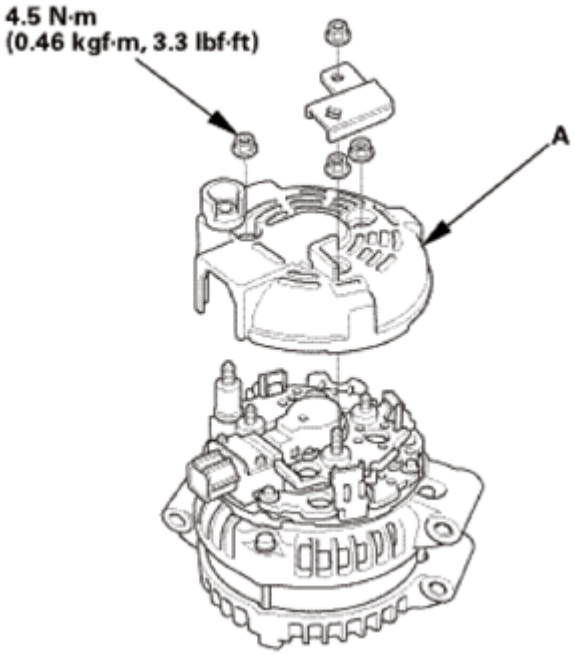

Fig. 36: Identifying Alternator End Cover With Torque Specifications
Courtesy of AMERICAN HONDA MOTOR CO., INC.

7. Alternator After Install - Check
    1. After assembling the alternator, turn the pulley by hand to make sure the rotor turns smoothly and without noise.

GETtheMANUALS.org

HOW TO TROUBLESHOOT THE ELECTRICAL COMPASS

STARTING OPERATION

When the ignition switch is turned to ACCESSORY (I), the electrical compass unit begins to communicate with the audio unit. Then turn the ignition switch to ON (II), the self-test mode begins automatically. The audio unit receives a speed signal from the PCM (VSS signal) via the CAN and UART circuits to the compass unit.

The self-test function checks for the current voltage, non-volatile memory (NVM), and ROM status in the electrical compass unit. If the unit detects a malfunction while in the self-test, it indicates a malfunction by flashing compass information segments (CAL and NW) in the audio display.

SELF-CALIBRATION

The electrical compass unit has a self-calibration function. It detects and compensates for magnetic anomalies caused by magnetized tires, bridges, subways and large steel structures. When the vehicle leaves an area with a strong magnetic interference field (2, 00 mG or more), the electrical compass unit automatically begins calibrating after it receives the VSS from the PCM. **IF NEEDED, YOU CAN MANUALLY CALIBRATE THE COMPASS**.

ZONE SELECTION

Zone selection is required to compensate for the difference between magnetic North and geographic North. This deviation is referred to as declination, the compass compensates for declination when you select the zone where the vehicle is located. **IF YOU REPLACED THE ELECTRICAL COMPASS UNIT, SET THE COMPASS ZONE**.

SYSTEM DIAGRAM

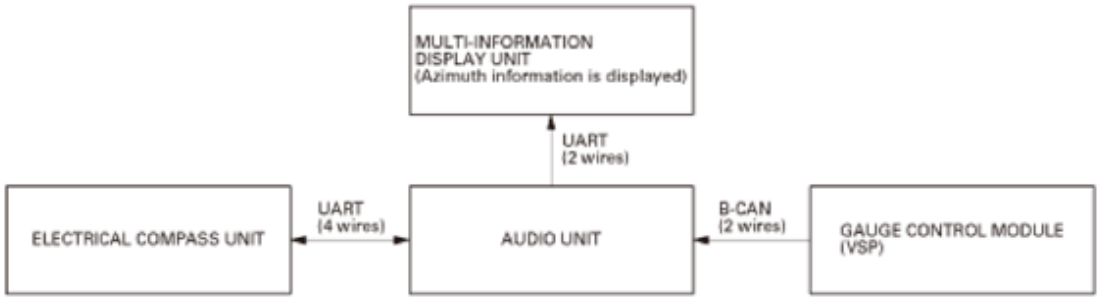

Fig. 1: Electrical Compass - System Diagram
Courtesy of AMERICAN HONDA MOTOR CO., INC.

ELECTRICAL COMPASS COMPONENT LOCATION INDEX

GETtheMANUALS.org

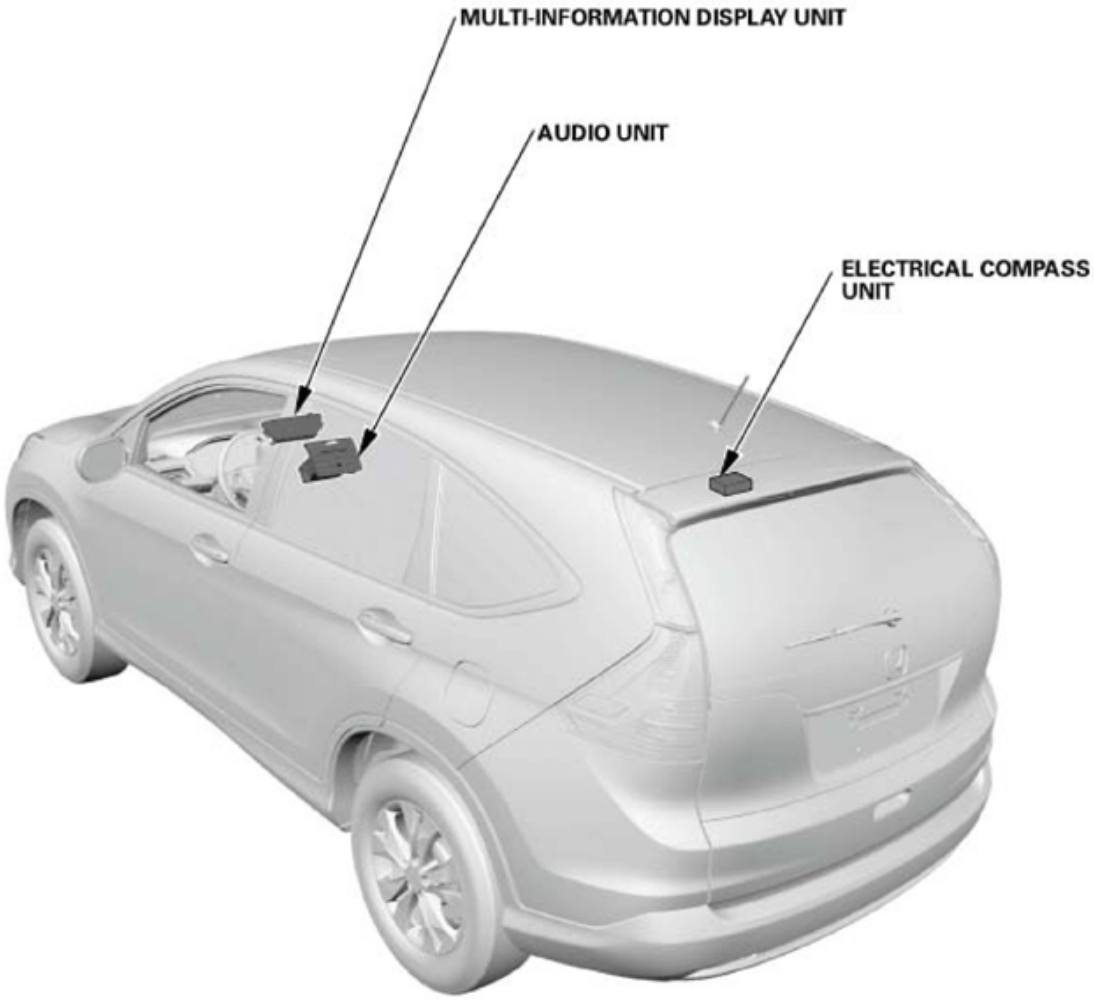

Fig. 2: Electrical Compass Component Locations
Courtesy of AMERICAN HONDA MOTOR CO., INC.

AUDIO UNIT	REMOVAL AND INSTALLATION
	SELF-DIAGNOSTIC FUNCTION
MULTI-INFORMATION DISPLAY UNIT	**REMOVAL AND INSTALLATION**
ELECTRICAL COMPASS UNIT	**REMOVAL AND INSTALLATION**
	ZONE SELECTION AND CALIBRATION

ELECTRICAL COMPASS TROUBLESHOOTING

GETtheMANUALS.org

Electrical Compass Troubleshooting

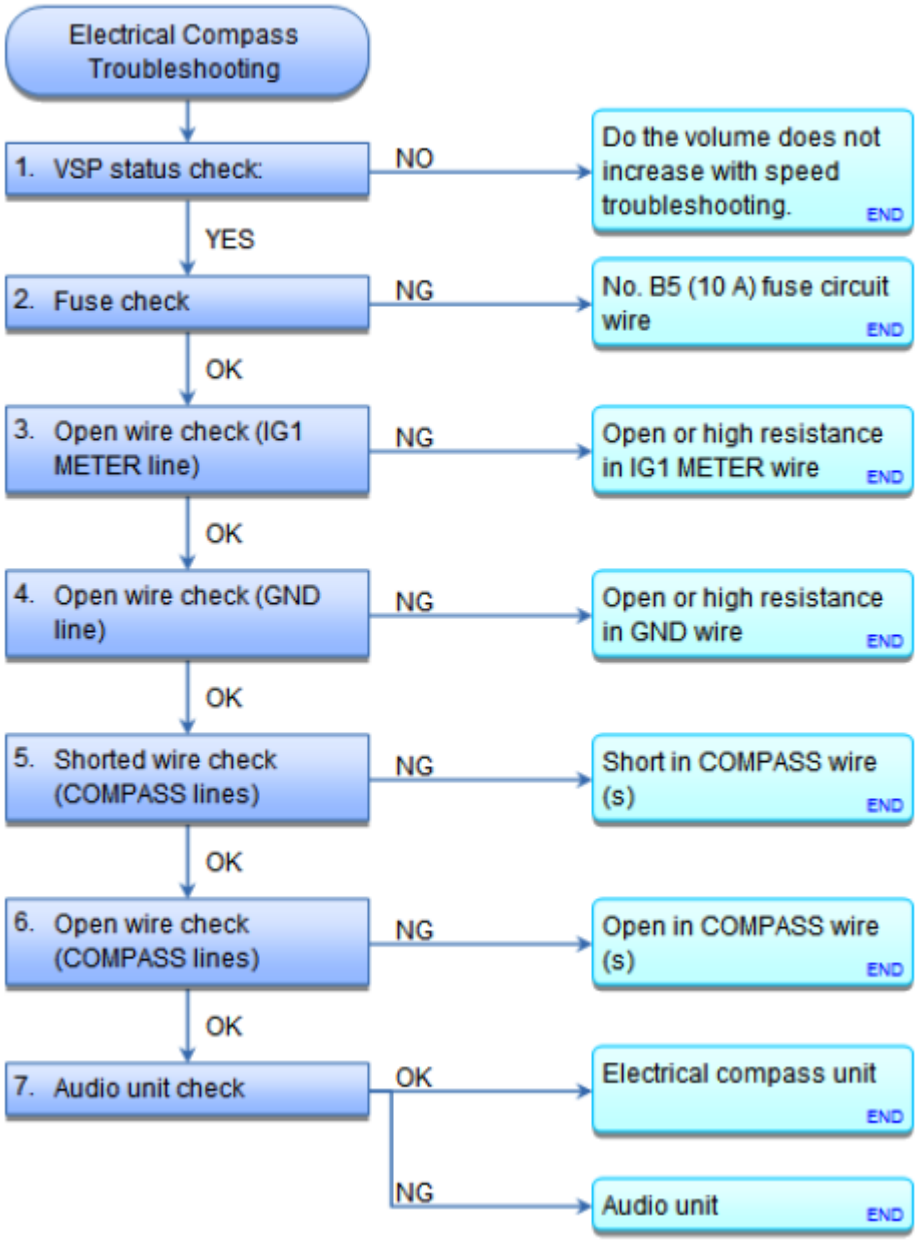

Fig. 3: Electrical Compass Troubleshooting Flow Chart
Courtesy of AMERICAN HONDA MOTOR CO., INC.

NOTE:

- **CHECK THE VEHICLE BATTERY CONDITION FIRST.**
- **Check the connectors for poor connections or loose terminals.**

1. VSP status check:
    - 1. **ENTER THE AUDIO SYSTEM DIAGNOSTIC MODE** and check the VSP status.

GETtheMANUALS.org

Does the VSP indicate when the vehicle is stopped, and when it is moving?

YES : Go to step 2.

NO : See appropiate symptom troubleshooting in **How to Troubleshoot the Audio System**

2. Fuse check:
   - 1. Turn the ignition switch to LOCK (0).
   - 2. Check the following fuse.

     Fuse No. B5 (10 A)

     Location Under-dash fuse/relay box

Is the fuse OK?

YES : Go to step 3.

NO : Replace the fuse, and recheck. If the fuse blows again, check for a short in the No. B5 (10 A) fuse circuit.

3. Open wire check (IG1 METER line):
   - 1. Turn the ignition switch to ON (II).
   - 2. Measure the voltage between test points 1 and 2.

     Test condition IG ON (II)

     Test circuit IG1 METER

     Test point 1 Electrical compass unit 6P connector No. 6 (LT GRN)

     Test point 2 Body ground

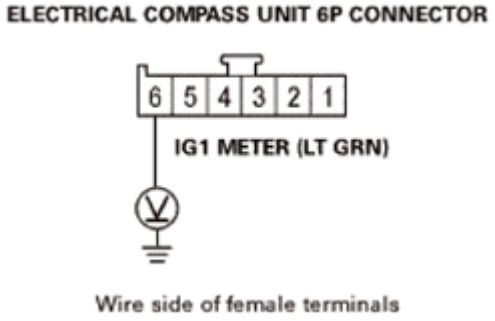

Fig. 4: Measuring Voltage Between Test Points 1 And 2
Courtesy of AMERICAN HONDA MOTOR CO., INC.

GETtheMANUALS.org

Is there battery voltage?

YES : The IG1 METER wire is OK. Go to step 4.

NO : Repair an open or high resistance in the wire between the No. B5 (10 A) fuse in the under-dash fuse/relay box and the electrical compass unit.

4. Open wire check (GND line):
   - 1. Measure the voltage between test points 1 and 2.

     Test condition IG ON (II)

     Test circuit GND

     Test point 1 Electrical compass unit 6P connector No. 5 (BLK)

     Test point 2 Body ground

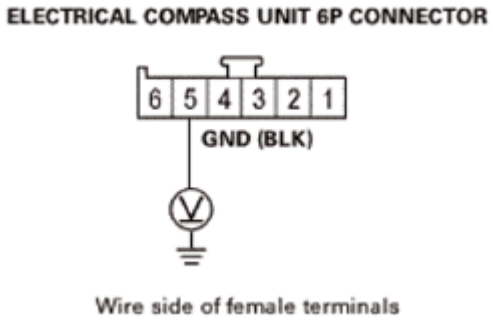

Fig. 5: Measure Voltage Between Test Points 1 And 2
Courtesy of AMERICAN HONDA MOTOR CO., INC.

Is there less than 0.2 V?

YES : The GND wire is OK. Go to step 5.

NO : Repair an open or high resistance in the wire between the electrical compass unit and body ground (G603).

5. Shorted wire check (COMPASS lines):
   - 1. Turn the ignition switch to LOCK (0).
   - 2. Disconnect the following connectors.

     Audio unit connector B (20P)

     Electrical compass unit 6P connector

   - 3. Check for continuity between these test points and body ground individually.

GETtheMANUALS.org

Test condition IG LOCK (0)

Audio unit connector B (20P): disconnected

Electrical compass unit 6P connector: disconnected

Connector	Test circuit	Terminal
Electrical compass unit 6P connector	COMPASS TX-	No. 1 (GRY)
	COMPASS TX+	No. 2 (BLU)
	COMPASS RX-	No. 3 (PNK)
	COMPASS RX+	No. 4 (GRN)

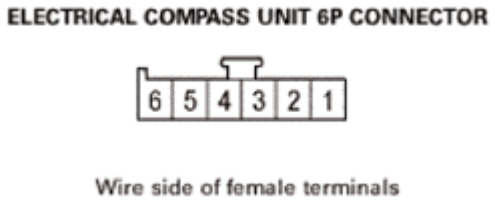

Fig. 6: Identifying Electrical Compass Unit 6P Connector Terminals
Courtesy of AMERICAN HONDA MOTOR CO., INC.

Is there continuity?

YES : Repair a short to body ground in the wire(s) between the electrical compass unit and the audio unit.

NO : The COMPASS wires are not shorted to ground. Go to step 6.

6. Open wire check (COMPASS lines):
   - 1. Check for continuity between test points 1 and 2.

     Test condition IG LOCK (0)

     Audio unit connector B (20P): disconnected

     Electrical compass unit 6P connector: disconnected

Test circuit	Test point 1: Audio unit connector B (20P)	Test point 2: Electrical compass unit 6P connector
COMPASS TX-	No. 10 (GRY)	No. 1 (GRY)
COMPASS TX+	No. 9 (BLU)	No. 2 (BLU)
COMPASS RX-	No. 20 (PNK)	No. 3 (PNK)
COMPASS		

GETtheMANUALS.org

RX+	No. 19 (GRN)	No. 4 (GRN)

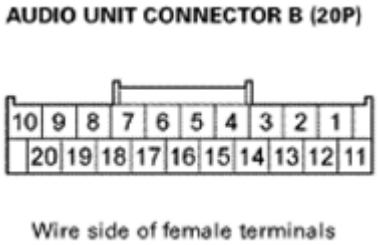

Fig. 7: Identifying Audio Unit Connector B (20P) Terminals
Courtesy of AMERICAN HONDA MOTOR CO., INC.

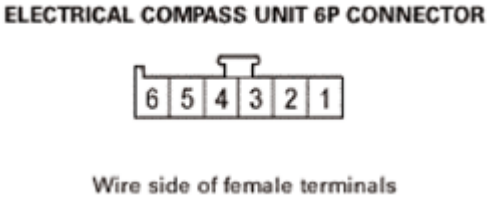

Fig. 8: Identifying Electrical Compass Unit 6P Connector Terminals
Courtesy of AMERICAN HONDA MOTOR CO., INC.

Is there continuity?

YES : The COMPASS wires are OK. Go to step 7.

NO : Repair an open in the wire(s) between the electrical compass unit and the audio unit.

7. Audio unit check:
   - 1. **SUBSTITUTE A KNOWN-GOOD ELECTRICAL COMPASS UNIT**, and recheck.

Does the symptom go away?

YES : Replace the original electrical compass unit.

NO : REPLACE THE AUDIO UNIT.

ELECTRICAL COMPASS UNIT CONNECTOR FOR INPUTS AND OUTPUTS

GETtheMANUALS.org

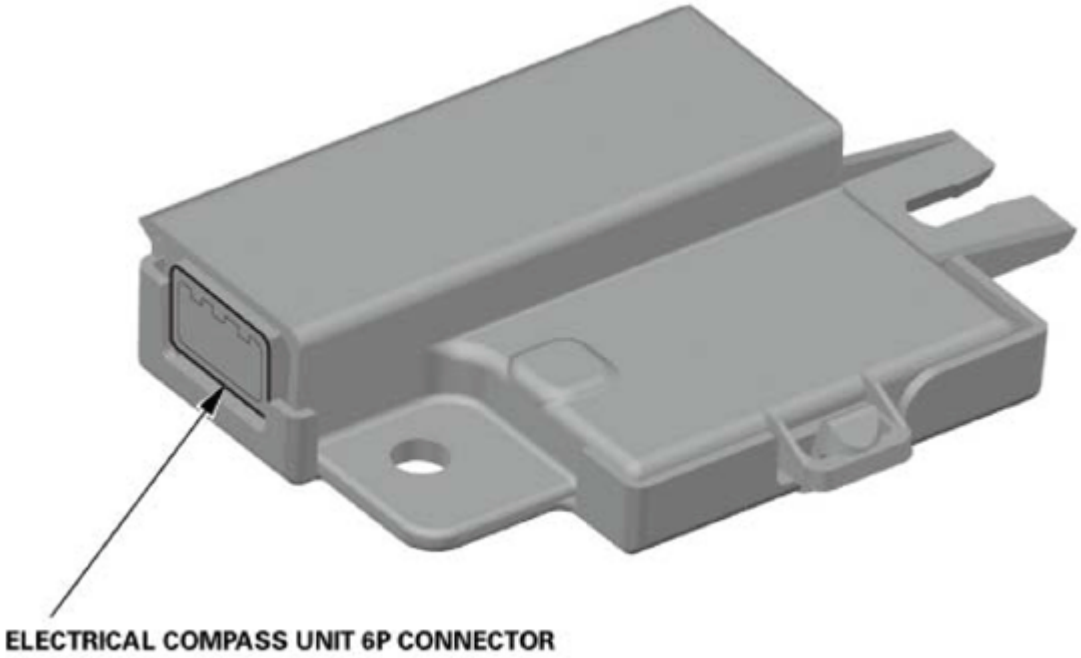

Fig. 9: Identifying Electrical Compass Unit 6P Connector
Courtesy of AMERICAN HONDA MOTOR CO., INC.

ELECTRICAL COMPASS UNIT 6P CONNECTOR

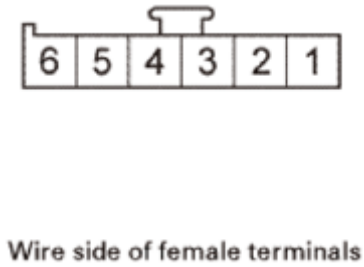

Fig. 10: Identifying Electrical Compass Unit 6P Connector Terminals
Courtesy of AMERICAN HONDA MOTOR CO., INC.

ELECTRICAL COMPASS UNIT 6P CONNECTOR DESCRIPTION

Cavity	Wire Color	Terminal Name	Description
1	GRY	COMPASS_TX-	Communication signal to audio unit
2	BLU	COMPASS_TX+	Communication signal to audio unit
3	PNK	COMPASS_RX-	Communication signal to audio unit
4	GRN	COMPASS_RX+	Communication signal to audio unit
5	BLK	GND	Ground for electrical compass unit (G603)
6	LT GRN	IG1_METER	IG1 power source

ELECTRICAL COMPASS UNIT REMOVAL AND INSTALLATION

GETtheMANUALS.org

SPECIAL TOOL DESCRIPTION

Image	Description/Tool Number
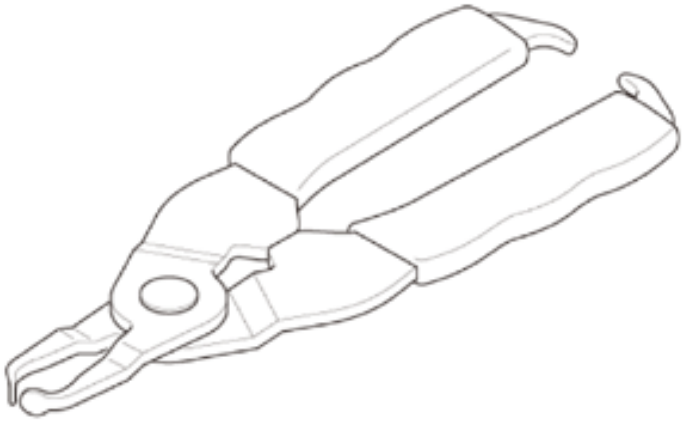	Push Pin/Grab Rail Cap Pliers 07AAC-001A100

REMOVAL

NOTE: SRS components are located in this area. Review the SRS COMPONENT LOCATIONS and the PRECAUTIONS AND PROCEDURES before doing repairs or service.

1. Battery Terminal (SRS) - Disconnection
    1. Make sure the ignition switch is in LOCK (0).
    2. Disconnect and isolate the negative cable (A) from the battery.

        NOTE: Always disconnect the negative side first.

    3. Disconnect the positive cable (B) from the battery.
    4. Wait at least 3 minutes before starting work.

GETtheMANUALS.org

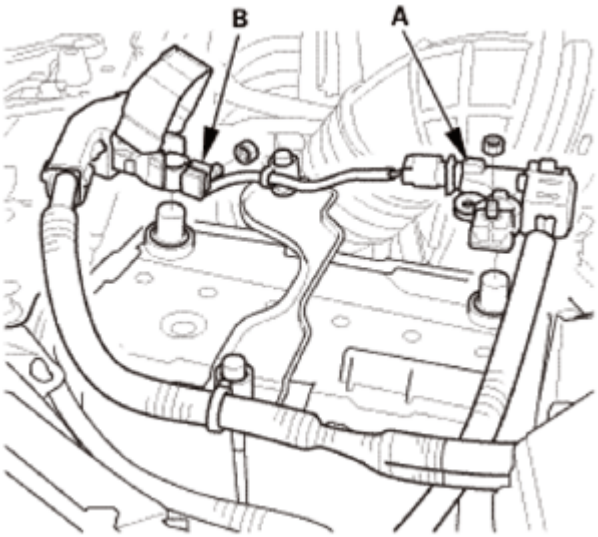

Fig. 11: Identifying Negative And Positive Cables Of Battery
Courtesy of AMERICAN HONDA MOTOR CO., INC.

2. Front Door Sill Trim - Both Sides

NOTE: Repeat on the opposite side.

1. Detach the hooks (A) and the tabs (B) from the kick panel (C) and the B-pillar lower trim (D), and pull up the front door inner sill trim (E) by hand to detach the clips (F), then remove the trim.

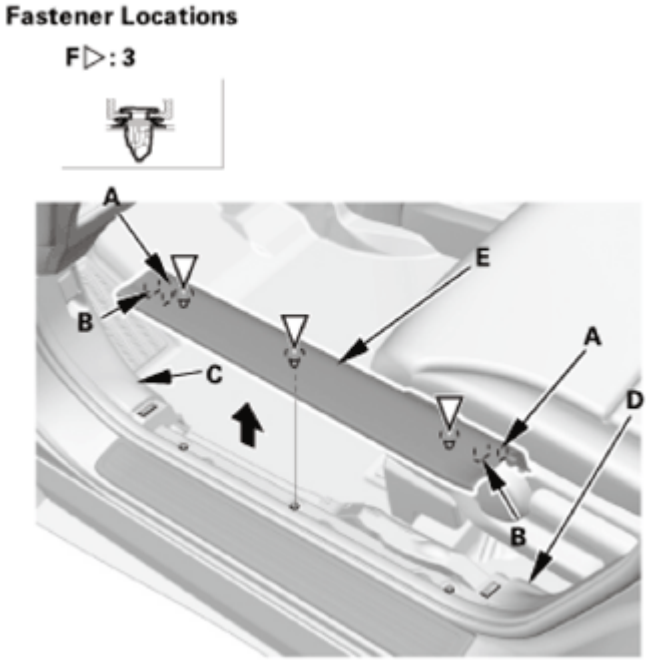

Fig. 12: Identifying Hooks And Tabs On Kick Panel And B-Pillar Lower Trim
Courtesy of AMERICAN HONDA MOTOR CO., INC.

GETtheMANUALS.org

3. Front Door Opening Seal As Needed - Both Sides

NOTE: Repeat on the opposite side.

1. Pull out the front door opening seal (A) from the trim hooks (B) around the front door opening flange, then detach the seal as needed.

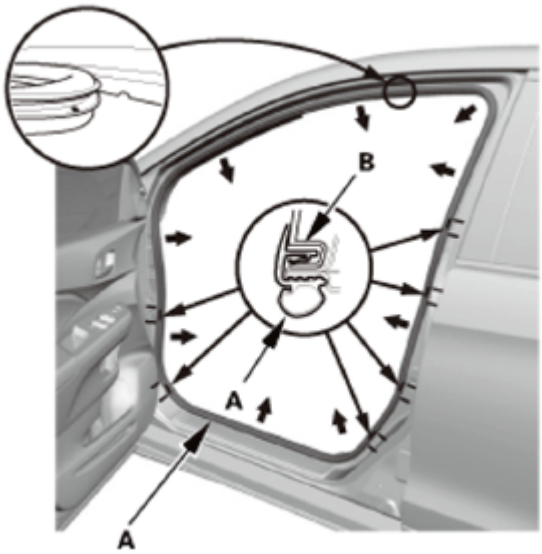

Fig. 13: Pulling Out Front Door Opening Seal From Trim Hooks
Courtesy of AMERICAN HONDA MOTOR CO., INC.

4. A-Pillar Trim - Both Sides

NOTE: Repeat this procedure on the opposite side.

1. Pull out the A-pillar trim (A) by hand to release the clips (B, C).

GETtheMANUALS.org

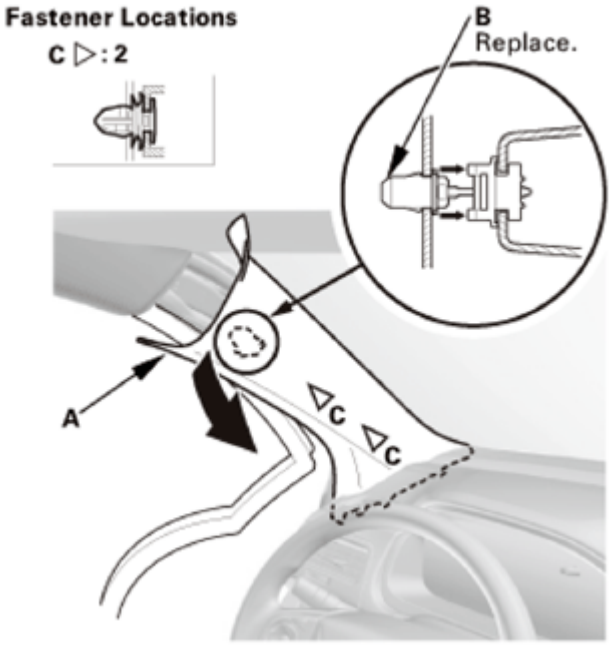

Fig. 14: Pulling Out A-Pillar Trim
Courtesy of AMERICAN HONDA MOTOR CO., INC.

2. Put a shop towel (A) in the opening between the A-pillar trim (B) and the dashboard to prevent dropping the A-pillar clips.

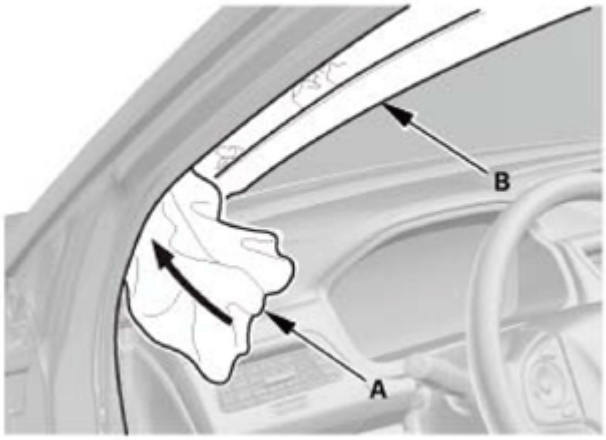

Fig. 15: Putting Shop Towel In Opening Between A-Pillar Trim And Dashboard
Courtesy of AMERICAN HONDA MOTOR CO., INC.

3. Pull out and up on the A-pillar trim (A) to release it from the dashboard.

NOTE: The upper clip will stay in the body.

GETtheMANUALS.org

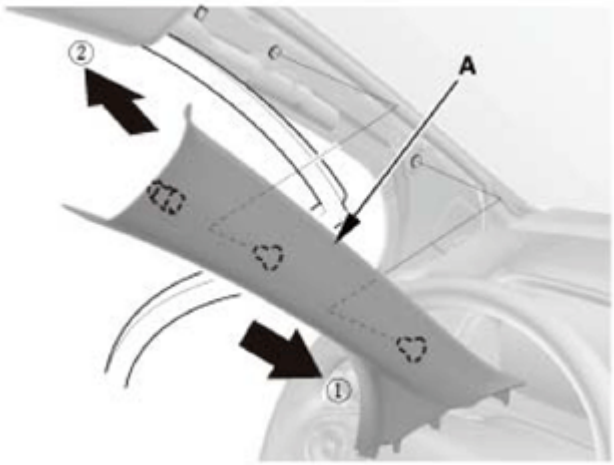

Fig. 16: Pulling Out And Up On A-Pillar Trim
Courtesy of AMERICAN HONDA MOTOR CO., INC.

4. Remove the upper clip (A) from the body.

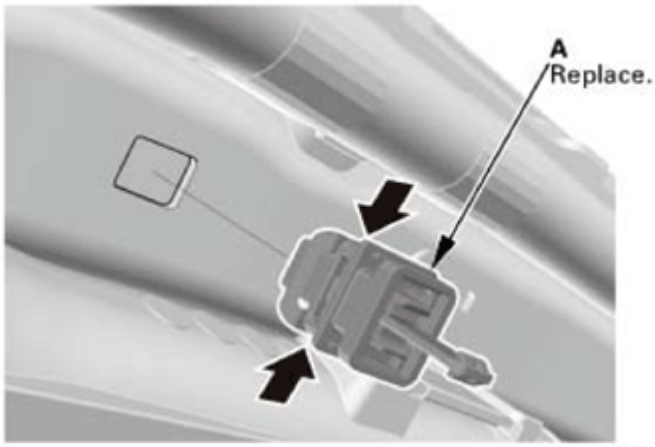

Fig. 17: Removing Upper Clip From Body
Courtesy of AMERICAN HONDA MOTOR CO., INC.

5. Rear Door Sill Trim - Both Sides

NOTE: Repeat this procedure on the opposite side.

1. Pull the release strap to fold down the rear seat, then lift-up and latch the rear seat-back in the upright position.
2. Detach the hooks (A) and the tab (B) from the B-pillar lower trim (C) and the rear side trim panel (D), and pull up the rear door inner sill trim (E) by hand to detach the clips (F, G), then remove the trim.

GETtheMANUALS.org

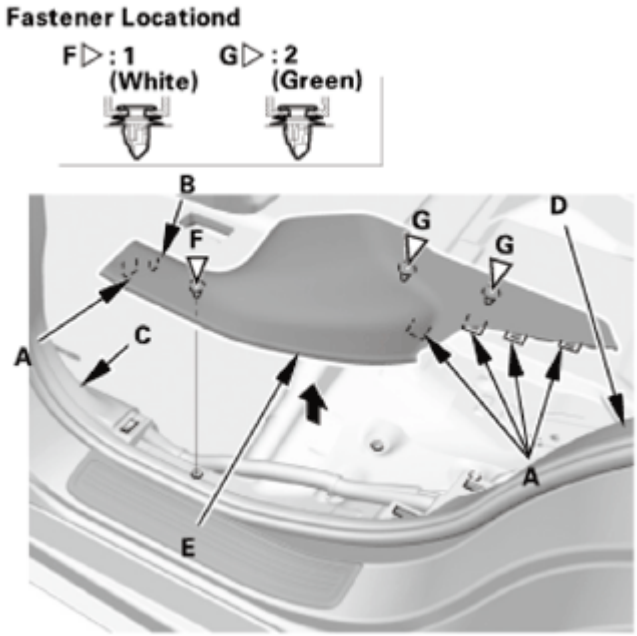

Fig. 18: Identifying Hooks And Tabs Of B-Pillar Lower Trim And Rear Side Trim Panel
Courtesy of AMERICAN HONDA MOTOR CO., INC.

6. Rear Door Opening Seal As Needed - Both Sides

NOTE: Repeat this procedure on the opposite side.

1. Pull out the rear door opening seal (A) from the trim hooks (B) around the rear door opening flange, then detach the seal as needed.

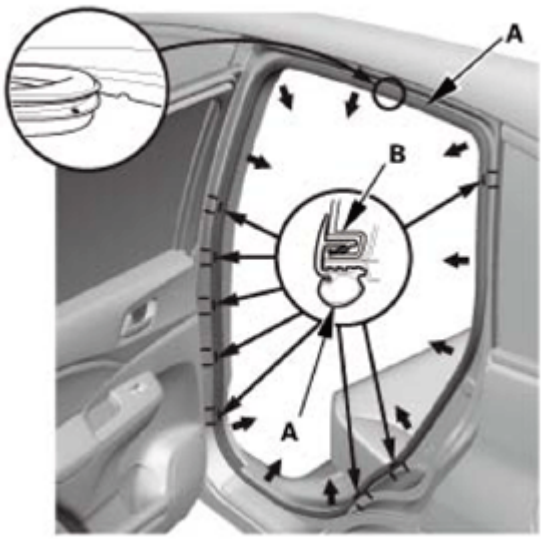

Fig. 19: Identifying Rear Door Opening Seal And Trim Hooks
Courtesy of AMERICAN HONDA MOTOR CO., INC.

GETtheMANUALS.org

7. B-Pillar Lower Trim - Both Sides

NOTE: Repeat this procedure on the opposite side.

1. Slide the front seat forward fully.
2. Pull back the bottom portion of the B-pillar lower trim (A) by hand to detach the clips (B).
3. Pull back the upper portion of the B-pillar lower trim to detach the upper hooks (C), then remove the B-pillar lower trim.

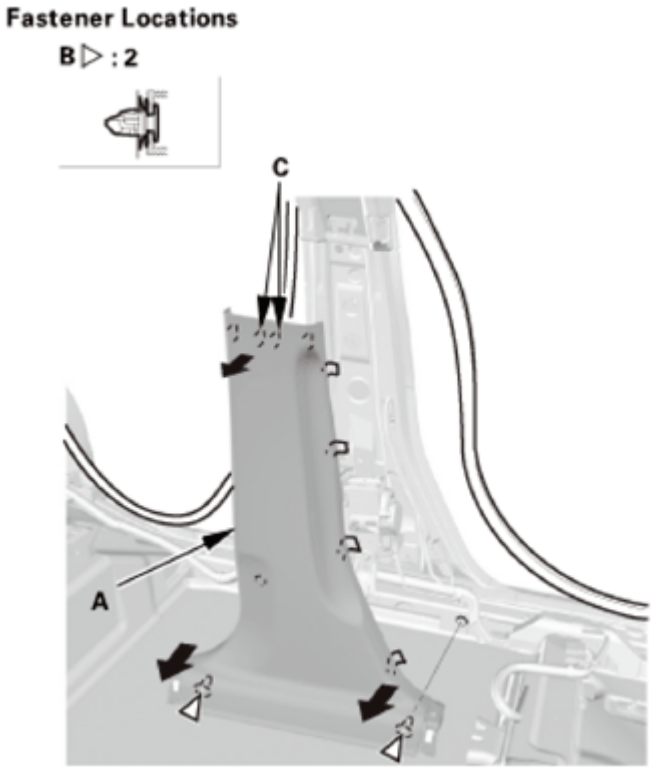

Fig. 20: Pulling Bottom Portion Of B-Pillar Lower Trim
Courtesy of AMERICAN HONDA MOTOR CO., INC.

8. Front Seat Belt Upper Anchor Bolt - Both Sides

NOTE: Repeat this procedure on the opposite side.

1. Remove the front seat belt shoulder anchor adjuster cap (A), then remove the front seat belt upper anchor bolt.

GETtheMANUALS.org

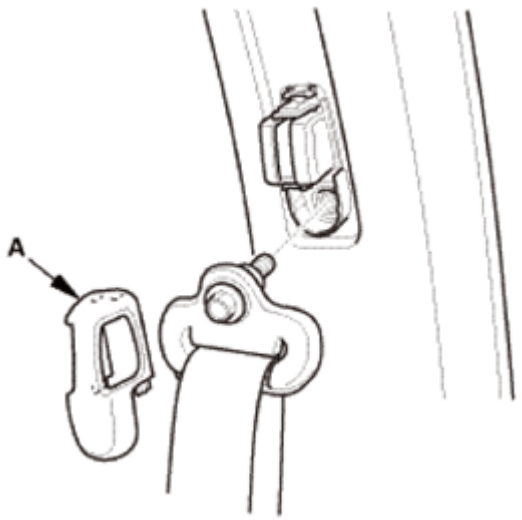

Fig. 21: Identifying Front Seat Belt Shoulder Anchor Adjuster Cap
Courtesy of AMERICAN HONDA MOTOR CO., INC.

9. B-Pillar Upper Trim - Both Sides

NOTE: Repeat this procedure on the opposite side.

1. Pull back the bottom portion of the B-pillar upper trim (A) by hand to detach the hooks (B). Pull down the trim to release the upper hook (C) from the hole (D) in the body, then remove the B-pillar upper trim.

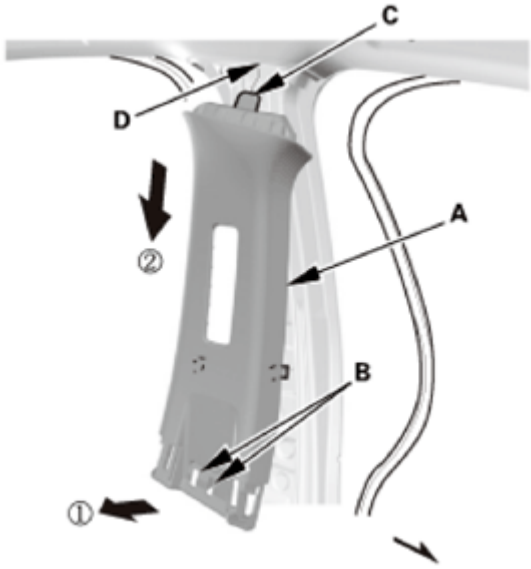

Fig. 22: Pulling Back Bottom Portion Of B-Pillar Upper Trim
Courtesy of AMERICAN HONDA MOTOR CO., INC.

10. Tonneau Cover (For Some Models)

GETtheMANUALS.org

1. Remove the tonneau cover (A).

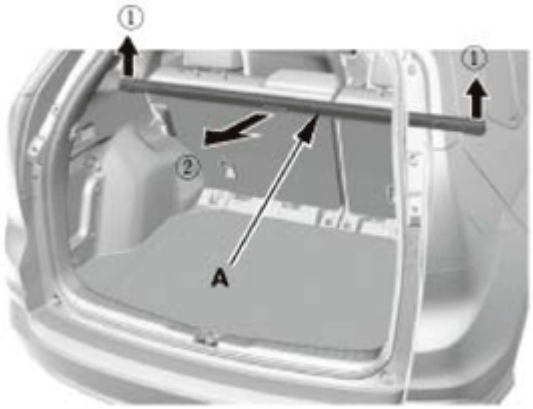

Fig. 23: Removing Tonneau Cover
Courtesy of AMERICAN HONDA MOTOR CO., INC.

11. Cargo Floor Cover
    1. Remove the cargo floor cover (A).

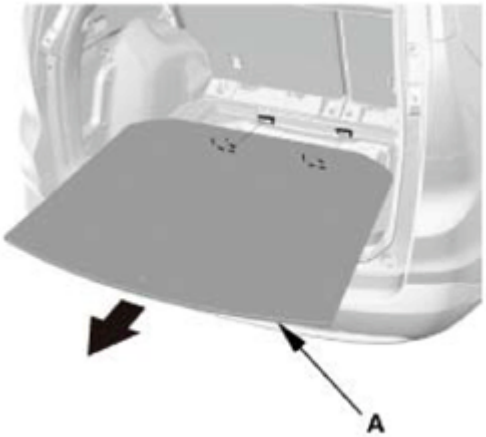

Fig. 24: Removing Cargo Floor Cover
Courtesy of AMERICAN HONDA MOTOR CO., INC.

12. Tailgate Weatherstrip As Needed
    1. Detach the tailgate weatherstrip (A) as needed.

GETtheMANUALS.org

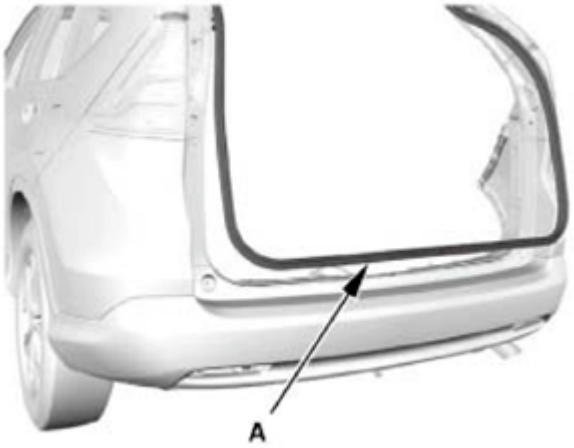

Fig. 25: Identifying Tailgate Weatherstrip
Courtesy of AMERICAN HONDA MOTOR CO., INC.

13. Rear Trim Panel
    1. Remove the clips (A).
    2. Detach the hooks (B) and the tabs (C) from the rear side trim panels (D), and pull up the rear trim panel (E) by hand to detach the clips (F, G), then remove the rear trim panel.

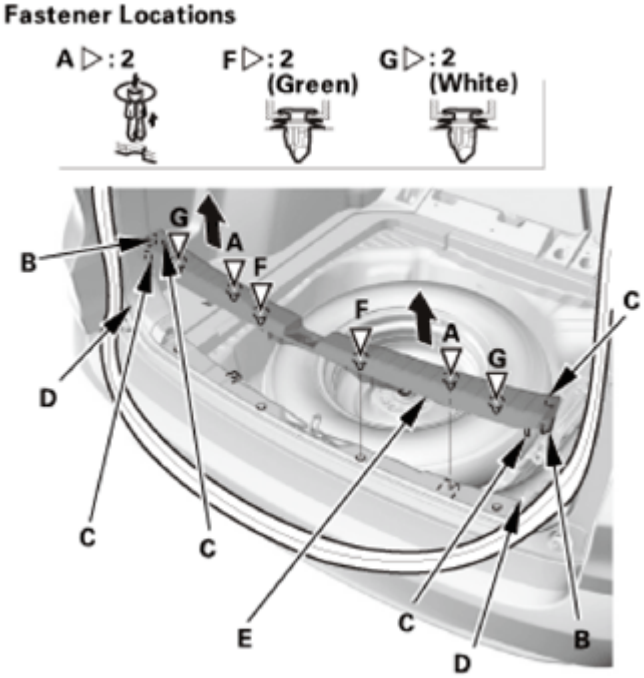

Fig. 26: Pulling Rear Trim Panel
Courtesy of AMERICAN HONDA MOTOR CO., INC.

14. Rear Damper Maintenance Cover - Both Sides

GETtheMANUALS.org

NOTE: **Repeat this procedure on the opposite side.**

1. Fold down the rear seat-back.
2. Pull up the rear damper maintenance cover (A) by hand to detach the hooks (B), then remove the rear damper maintenance cover.

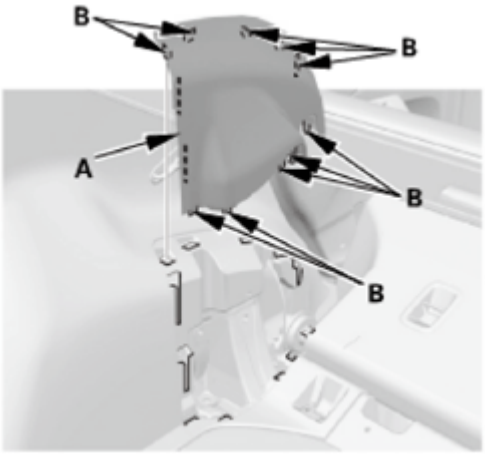

Fig. 27: Identifying Damper Maintenance Cover Hooks
Courtesy of AMERICAN HONDA MOTOR CO., INC.

15. Rear Carpet Trim - Both Sides
    1. Detach the clips (A), then tuck up the rear seat-back cover (B).

Left side

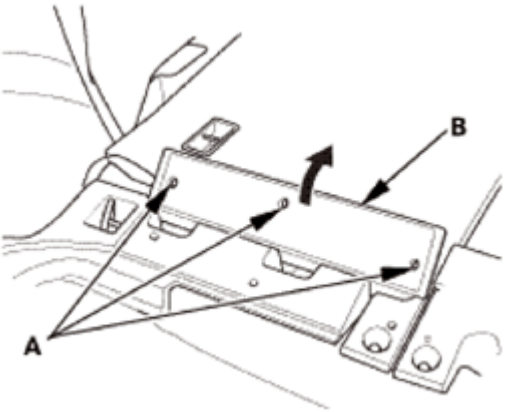

Fig. 28: Tucking Rear Seat-Back Cover (Left Side)
Courtesy of AMERICAN HONDA MOTOR CO., INC.

Right side

GETtheMANUALS.org

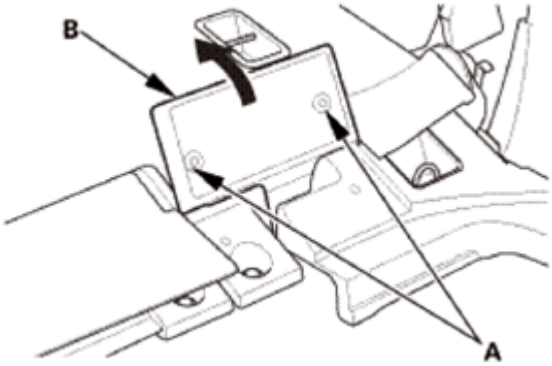

Fig. 29: Tucking Rear Seat-Back Cover (Right Side)
Courtesy of AMERICAN HONDA MOTOR CO., INC.

2. Detach the hooks (A) from the rear side trim panel (B), and pull up the rear carpet trims (C) by hand to detach the clips (D), then remove the rear carpet trims.

Left side

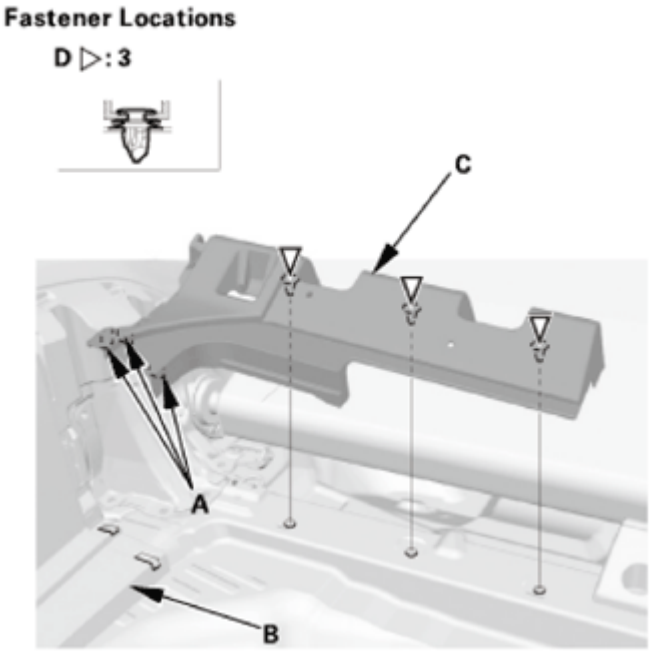

Fig. 30: Identifying Rear Carpet Trims Fasteners (Left Side)
Courtesy of AMERICAN HONDA MOTOR CO., INC.

Right side

GETtheMANUALS.org

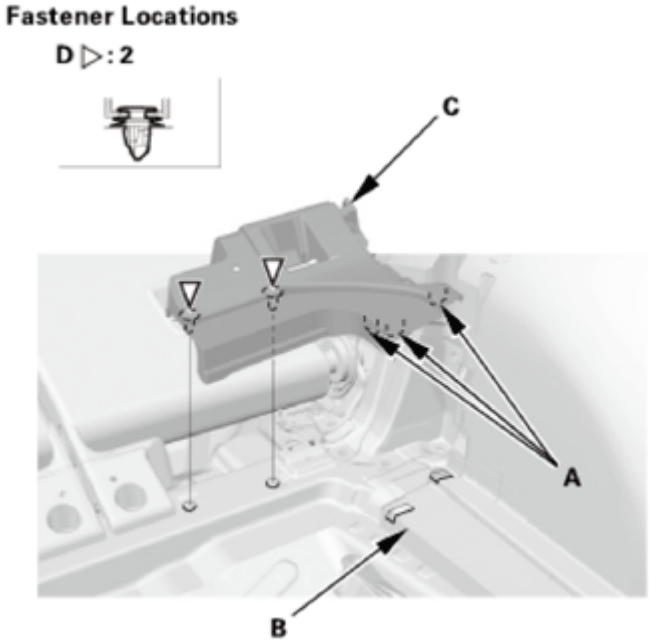

Fig. 31: Identifying Rear Carpet Trims Fasteners (Right Side)
Courtesy of AMERICAN HONDA MOTOR CO., INC.

16. Rear Seat Cushion Foot Cover - Both Sides (Remove The Outer Left Side Only)
    1. Pull up the rear seat cushion foot cover (A) by hand to detach the clips (B).
    2. Detach the hooks (C), then remove the rear seat cushion foot cover.

    Left side

GETtheMANUALS.org

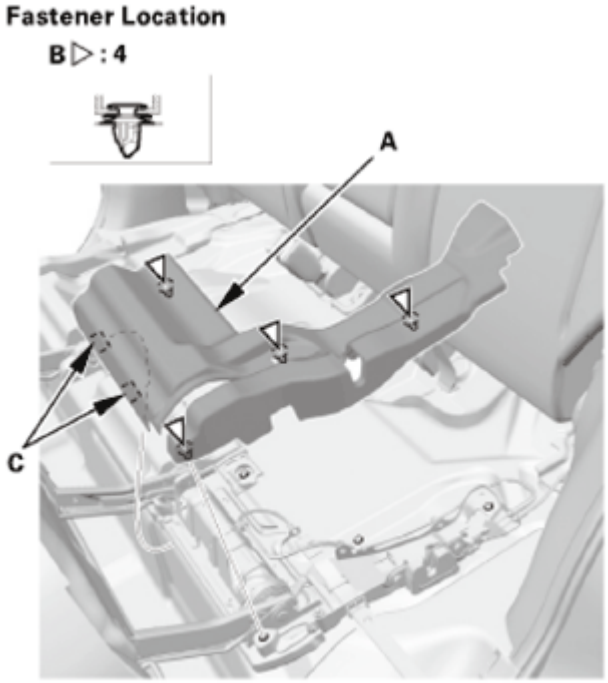

Fig. 32: Identifying Rear Seat Cushion Foot Cover Hooks (Left Side)
Courtesy of AMERICAN HONDA MOTOR CO., INC.

Right side

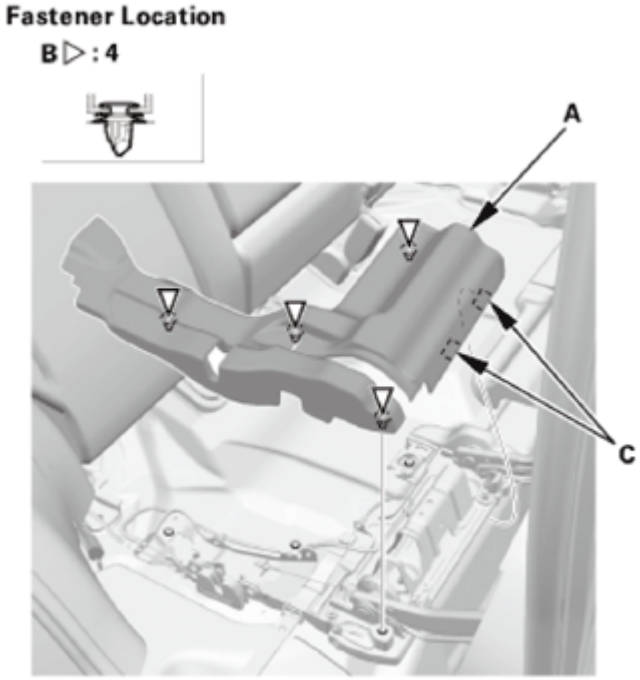

Fig. 33: Identifying Rear Seat Cushion Foot Cover Hooks (Right Side)
Courtesy of AMERICAN HONDA MOTOR CO., INC.

GETtheMANUALS.org

17. Rear Seat Belt Lower Anchor Bolt - Both Sides

NOTE: Repeat this procedure on the opposite side.

1. Remove the rear seat belt lower anchor bolt (A).

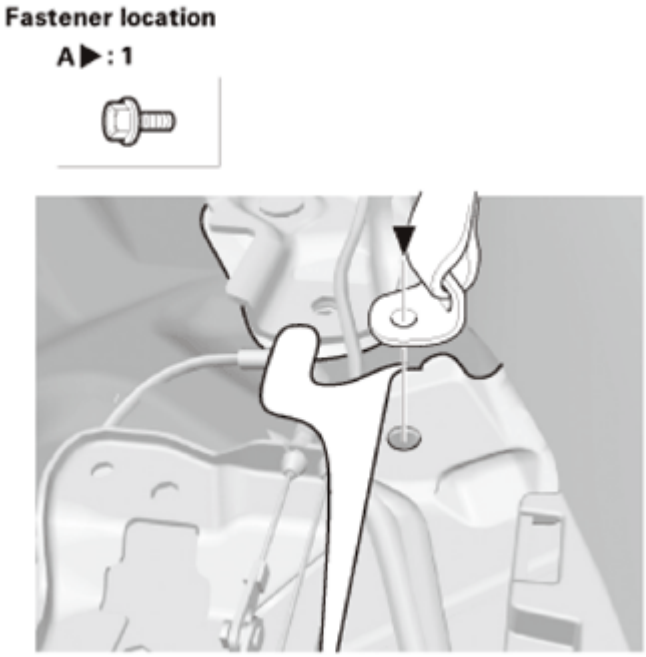

Fig. 34: Identifying Rear Seat Belt Lower Anchor Bolt
Courtesy of AMERICAN HONDA MOTOR CO., INC.

18. Rear Side Trim Panel - Both Sides

NOTE: Repeat this procedure on the opposite side.

1. Carefully pry out on the upper hook (A) in the rear seat release lever cap (B) with the appropriate trim tool, then pull back the rear seat release lever cap to remove it.
2. Remove the screws (C).

GETtheMANUALS.org

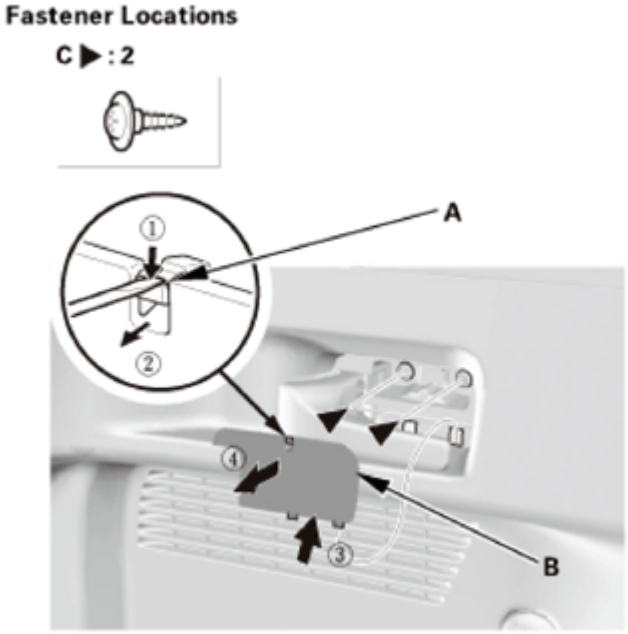

Fig. 35: Identifying Rear Seat Release Lever Cap
Courtesy of AMERICAN HONDA MOTOR CO., INC.

3. Push in the center pin (A), then remove the trunk hook (B).

Fig. 36: Identifying Center Pin And Trunk Hook
Courtesy of AMERICAN HONDA MOTOR CO., INC.

4. Remove the bolt (A), then remove the tie-down hook (B).

GETtheMANUALS.org

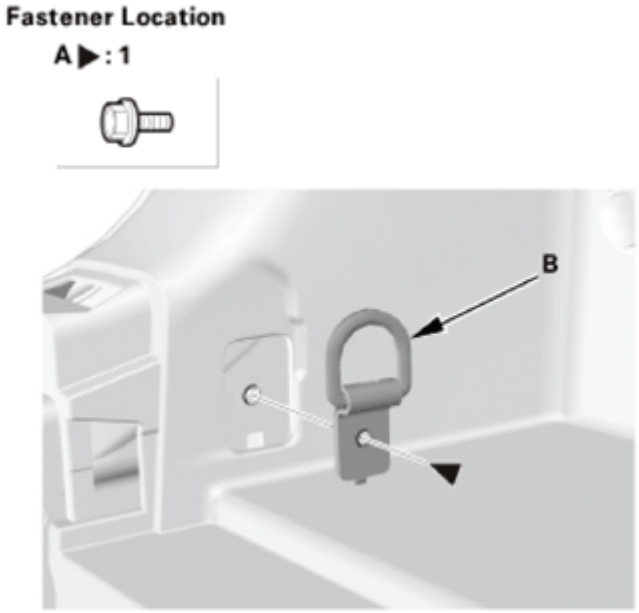

Fig. 37: Identifying Tie-Down Hook And Bolt
Courtesy of AMERICAN HONDA MOTOR CO., INC.

5. Detach the clips (A, B).
6. Detach the hooks (C) and the tabs (D) from the quarter pillar trim (E), and pull out the rear side trim panel (F) by hand to detach the clips (G, H).

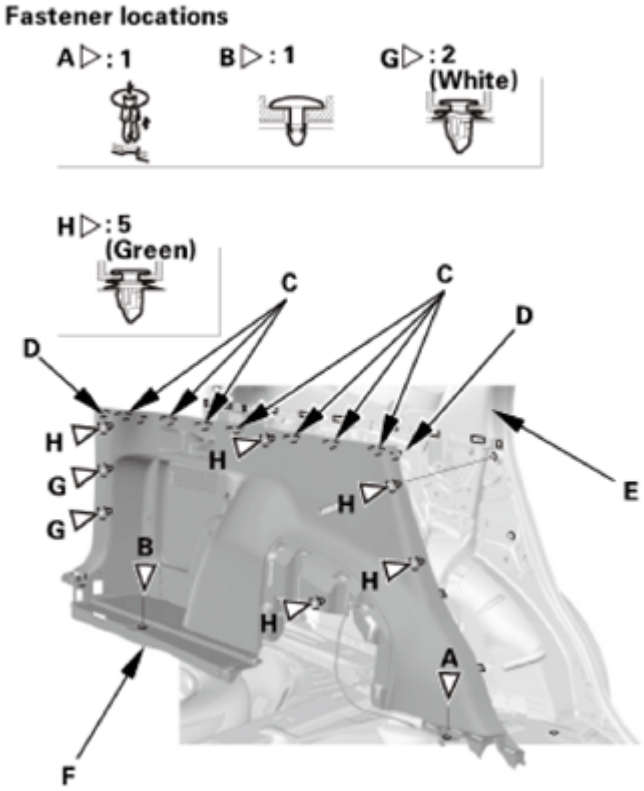

GETtheMANUALS.org

Fig. 38: Identifying Rear Side Trim Panel Hooks And Clips
Courtesy of AMERICAN HONDA MOTOR CO., INC.

7. Remove the rear seat release lever (A) from the rear side trim panel (B).

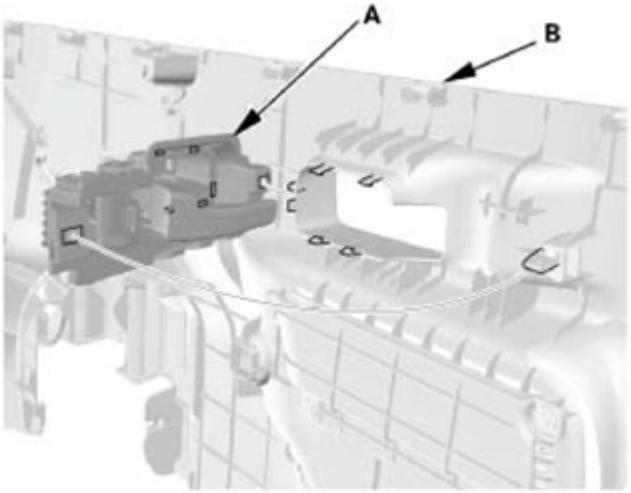

Fig. 39: Identifying Rear Seat Release Lever And Rear Side Trim Panel
Courtesy of AMERICAN HONDA MOTOR CO., INC.

8. Detach the rear seat release cable (A) from the clips of the rear side trim panel (B), then remove the rear side trim panel.

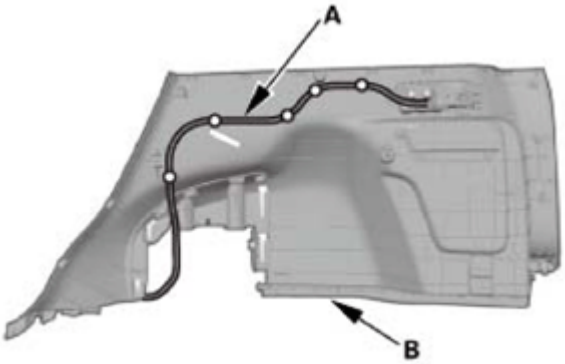

Fig. 40: Identifying Rear Seat Release Cable And Rear Side Trim Panel
Courtesy of AMERICAN HONDA MOTOR CO., INC.

19. Quarter Pillar Trim - Both Sides

NOTE: Repeat this procedure on the opposite side.

1. Pull out the quarter pillar trim (A) by hand to detach the clips (B, C, and D).
2. Pass the rear seat belt lower anchor (E) out through the hole in the quarter pillar trim, then remove

GETtheMANUALS.org

the quarter pillar trim.

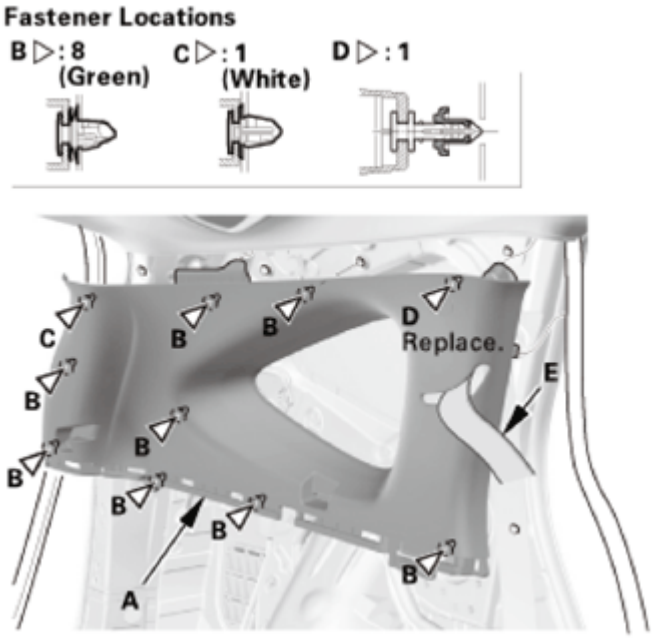

Fig. 41: Identifying Quarter Pillar Trim And Clips
Courtesy of AMERICAN HONDA MOTOR CO., INC.

20. Roof Console Assembly
    1. Remove the lenses (A), then remove the screws (B).
    2. Open the console, then remove the screws (C).
    3. Disconnect the connectors (D), then remove the roof console assembly (E).

GETtheMANUALS.org

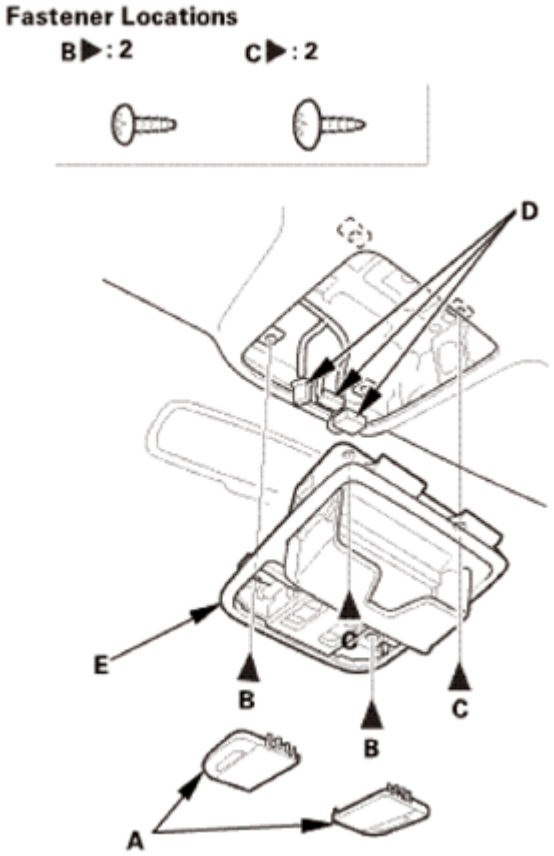

Fig. 42: Identifying Lense, Screws, Connectors And Roof Console Assembly
Courtesy of AMERICAN HONDA MOTOR CO., INC.

21. Ceiling Light (without RES)
    1. Turn the ceiling light switch OFF.
    2. Carefully pry off the lens (A).
    3. Remove the bulb.
    4. Remove the ceiling light (B).
    5. Disconnect the connector.

GETtheMANUALS.org

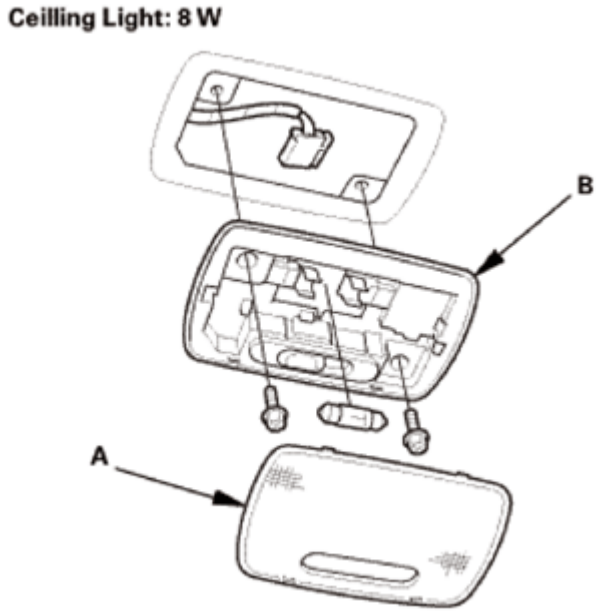

Fig. 43: Identifying Lens And Celing Light
Courtesy of AMERICAN HONDA MOTOR CO., INC.

22. Rear Display Cover (With RES)
    1. Turn the ceiling light switch OFF.
    2. Carefully pry off the lenses (A) with a flat-tip screwdriver.
    3. Remove the ceiling light (B).
    4. Disconnect the connector.

GETtheMANUALS.org

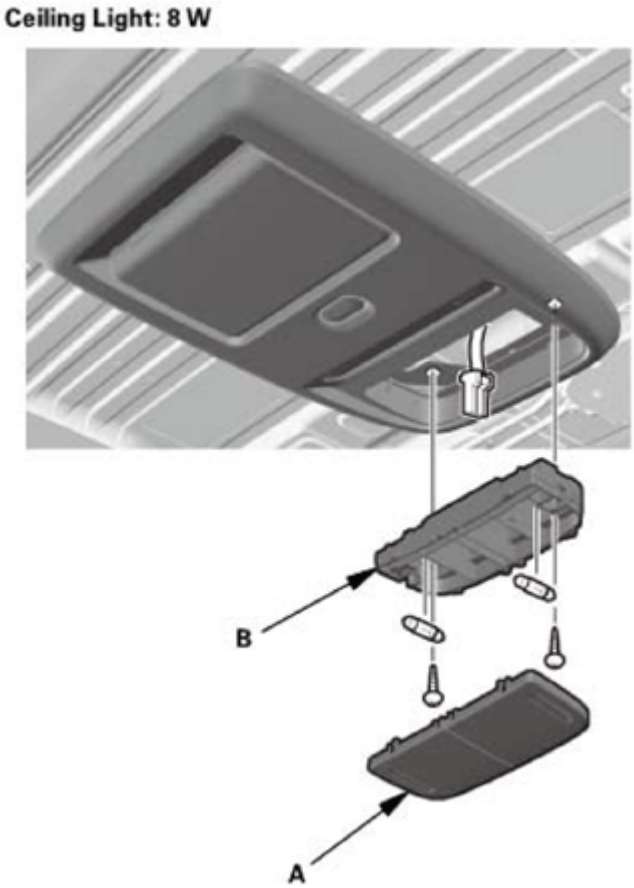

Fig. 44: Identifying Lenses And Ceiling Light
Courtesy of AMERICAN HONDA MOTOR CO., INC.

5. Remove the rear display cover (A).

GETtheMANUALS.org

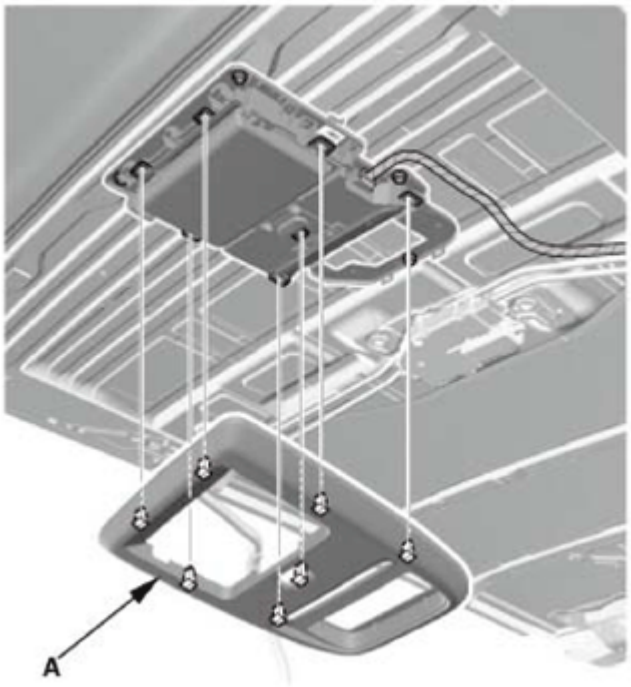

Fig. 45: Identifying Rear Display Cover
Courtesy of AMERICAN HONDA MOTOR CO., INC.

23. Rear Controller and Screen (With RES)
    1. Disconnect the connector.
    2. Remove the rear controller and screen (A).

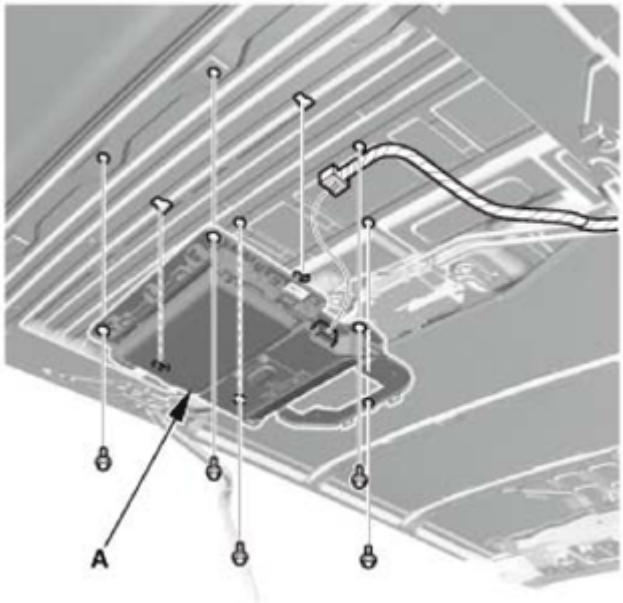

Fig. 46: Identifying Rear Controller Screen

GETtheMANUALS.org

Courtesy of AMERICAN HONDA MOTOR CO., INC.

24. Cargo Area Light
    1. Turn the cargo area light switch OFF.
    2. Carefully pry off the lens (A).
    3. Remove the bulb.
    4. Remove the cargo area light (B).
    5. Disconnect the connector.

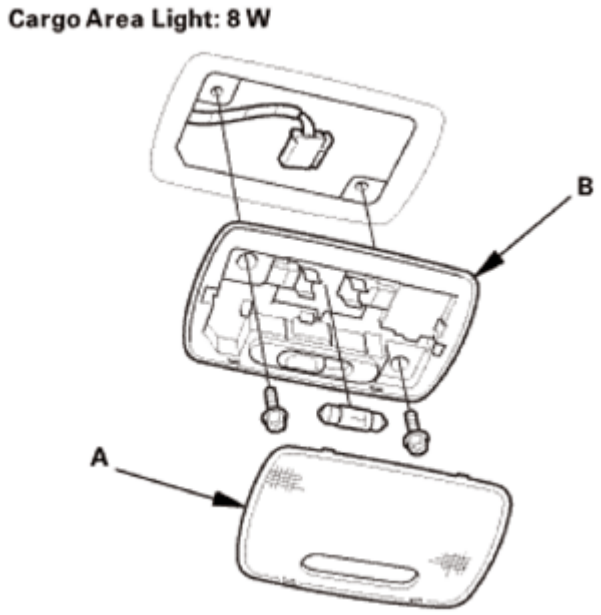

Fig. 47: Identifying Lens And Cargo Area Light
Courtesy of AMERICAN HONDA MOTOR CO., INC.

25. Grab Handles for One Vehicle
    1. Lower the grab handle (A).
    2. Insert the tips of the push pin/grab rail cap pliers (B) into the notch.

GETtheMANUALS.org

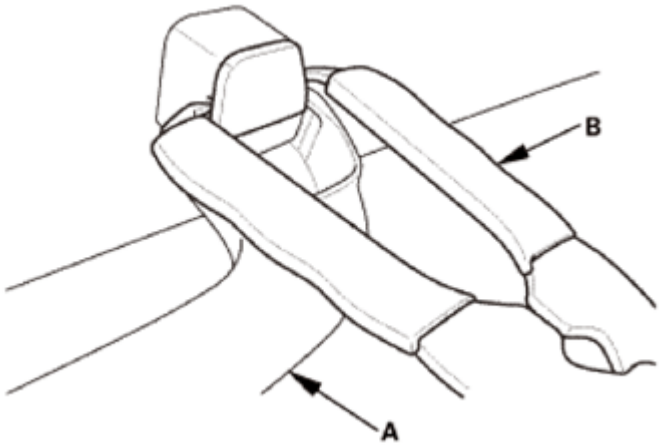

Fig. 48: Inserting Push Pin/Grab Rail Cap Pliers Into Notch
Courtesy of AMERICAN HONDA MOTOR CO., INC.

3. Gently squeeze the handles of the push pin/grab rail cap pliers (A), and pull the cap (B) straight out.

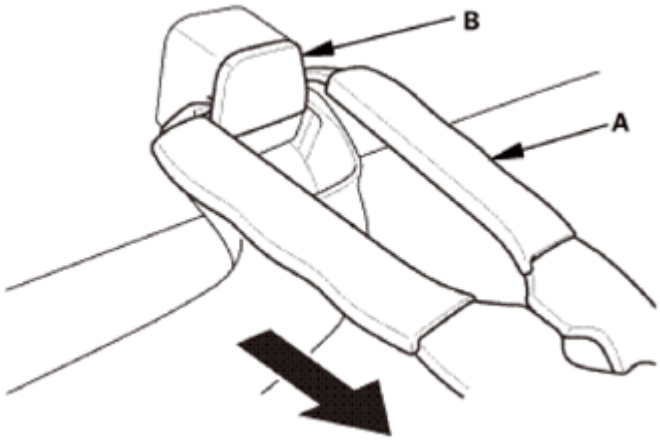

Fig. 49: Pulling Cap Out
Courtesy of AMERICAN HONDA MOTOR CO., INC.

4. Remove the grab handle (A).

GETtheMANUALS.org

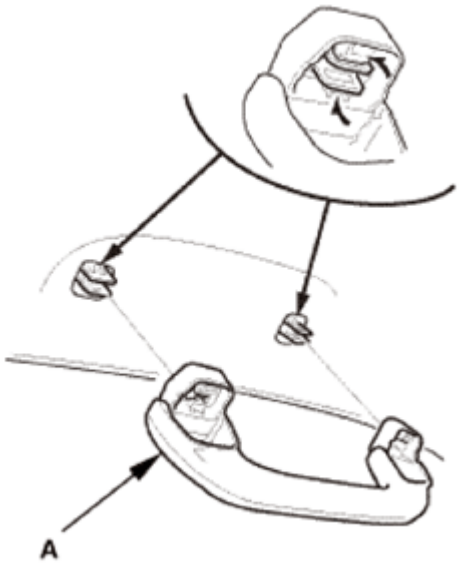

Fig. 50: Identifying Grab Handle
Courtesy of AMERICAN HONDA MOTOR CO., INC.

5. Remove the clips (A).

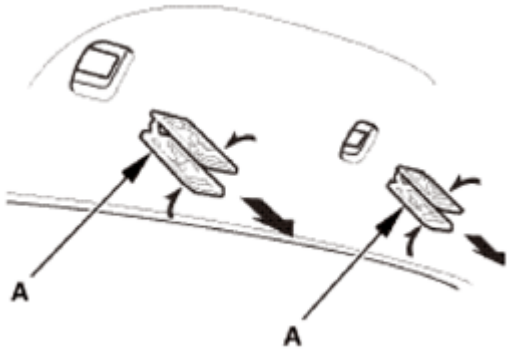

Fig. 51: Identifying Clips
Courtesy of AMERICAN HONDA MOTOR CO., INC.

26. Sunvisor - Both Sides

NOTE: Repeat this procedure on the opposite side.

1. Push the tab (A) with a flat-tip screwdriver through the hole in the front side of the bracket cover (B).

NOTE: Make sure the tab is unlocked.

GETtheMANUALS.org

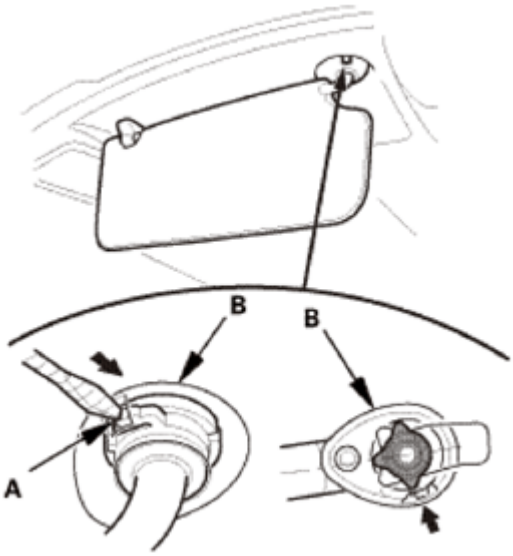

Fig. 52: Pushing Tab Using Flat-Tip Screwdriver
Courtesy of AMERICAN HONDA MOTOR CO., INC.

2. While pushing in the tab (A) with a flat-tip screwdriver, release the sunvisor (B) from the holder (C), and rotate the sunvisor backward 45 °.

NOTE: **Make sure the tab slides into the bracket cover as you rotate the sunvisor.**

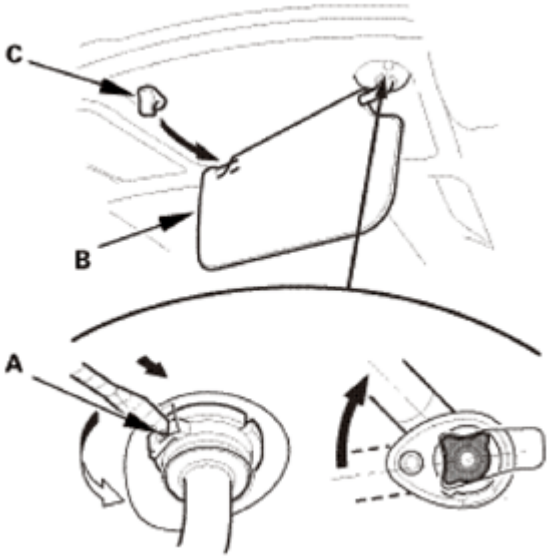

Fig. 53: Pushing Tab
Courtesy of AMERICAN HONDA MOTOR CO., INC.

3. Disconnect the connector (A), then remove the sunvisor (B).

GETtheMANUALS.org

NOTE: **If the sunvisor cannot be removed, the tab has not rotated into the bracket cover. Repeat step 2 to rotate the tab.**

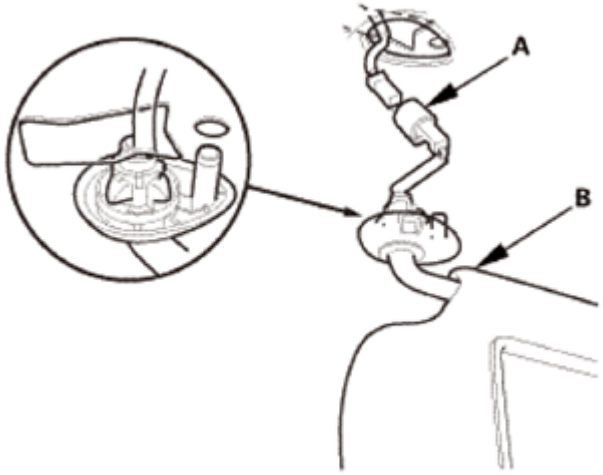

Fig. 54: Identifying Connector And Sunvisor
Courtesy of AMERICAN HONDA MOTOR CO., INC.

27. Headliner
    1. Without moonroof: Disconnect the connector (A), and detach the harness clips (B) from the driver's side A-pillar.

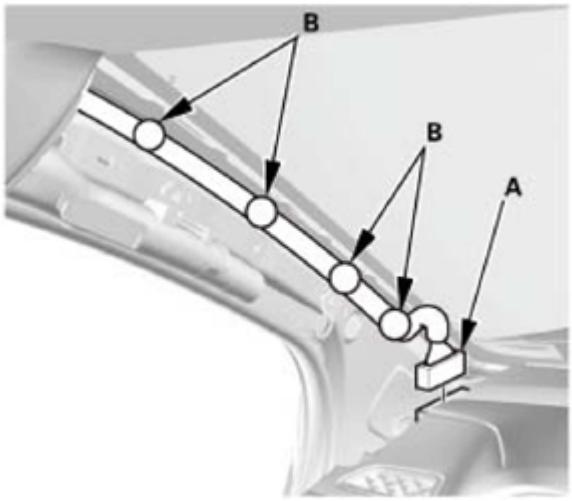

Fig. 55: Identifying Connector And Harness Clips Of Driver's Side A-Pillar
Courtesy of AMERICAN HONDA MOTOR CO., INC.

    2. Disconnect the connectors (A), and detach the harness clips (B) from the passenger's side A-pillar.

GETtheMANUALS.org

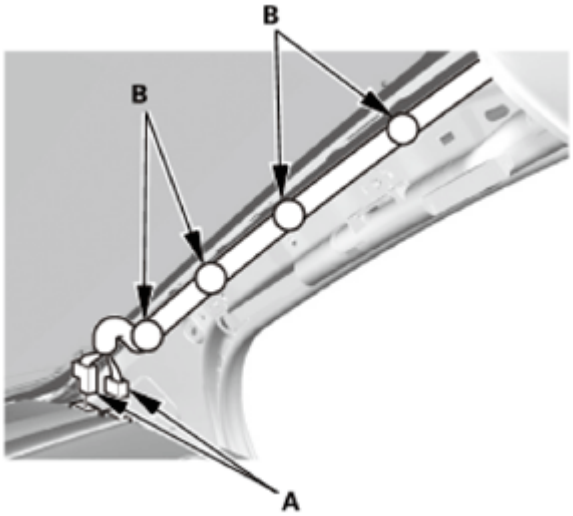

Fig. 56: Identifying Connector And Harness Clips Of Passenger's Side A-Pillar
Courtesy of AMERICAN HONDA MOTOR CO., INC.

3. Disconnect the connectors (A), and detach the connector clips (B) and the harness clip (C) from the right quarter pillar.

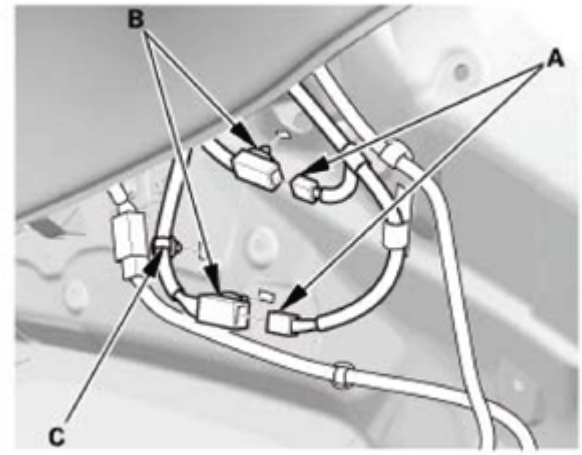

Fig. 57: Identifying Connectors, Clips And Harness Clip Of Right Quarter Pillar
Courtesy of AMERICAN HONDA MOTOR CO., INC.

4. Slide the front seats all the way back, and recline the seatback fully.
5. Fold down the rear seats.
6. Detach the clips (A) and release the fasteners (B) from the headliner (C) by pulling it down.
7. With the help of an assistant, lower the headliner.

Without moonroof

GETtheMANUALS.org

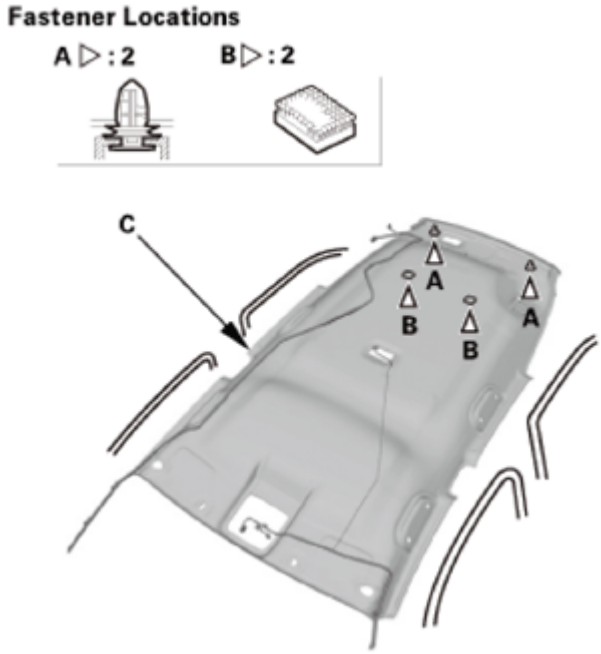

Fig. 58: Identifying Headliner (Without Manroof)
Courtesy of AMERICAN HONDA MOTOR CO., INC.

With moonroof

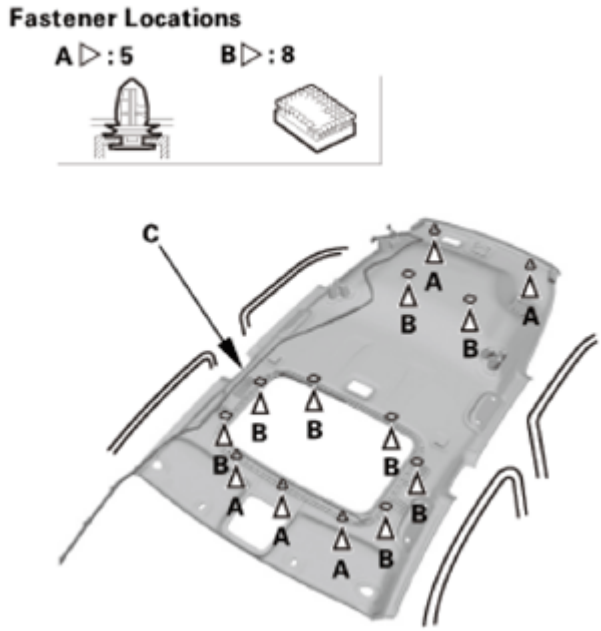

Fig. 59: Identifying Headliner (With Manroof)
Courtesy of AMERICAN HONDA MOTOR CO., INC.

8. With the help of an assistant, remove the headliner (A) through the tailgate opening.

GETtheMANUALS.org

NOTE: **Do not bend the headliner. Bending the headliner will crease and damage it.**

Fig. 60: Identifying Headliner
Courtesy of AMERICAN HONDA MOTOR CO., INC.

28. Electrical Compass Unit
    1. Remove the electrical compass unit (A).

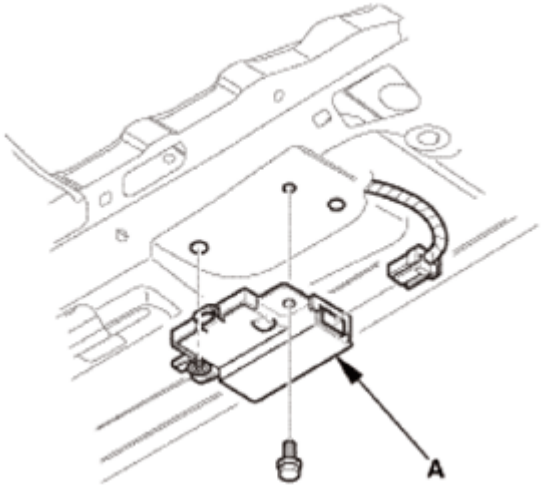

Fig. 61: Identifying Electrical Compass Unit
Courtesy of AMERICAN HONDA MOTOR CO., INC.

INSTALLATION

NOTE: **SRS components are located in this area. Review the SRS COMPONENT LOCATIONS and the PRECAUTIONS AND PROCEDURES before doing repairs or service.**

GETtheMANUALS.org

1. Electrical Compass Unit
    1. Install the electrical compass unit (A).

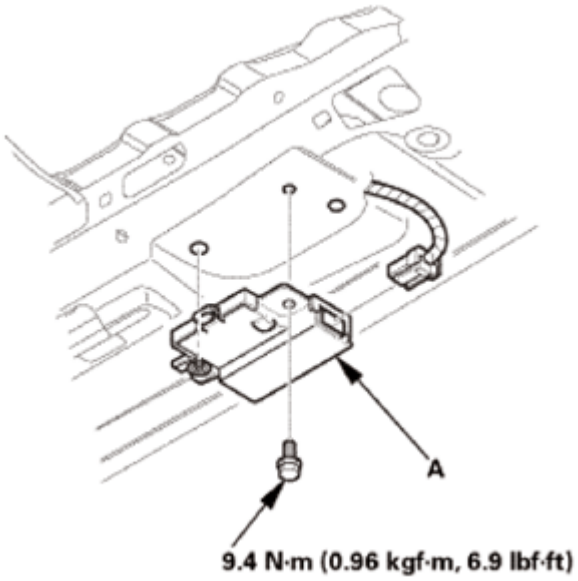

Fig. 62: Identifying Electrical Compass Unit And Bolt With Torque Specifications
Courtesy of AMERICAN HONDA MOTOR CO., INC.

2. Headliner - Check
    1. If the side curtain airbag has deployed, replace the headliner and removed trim pieces, along with the other parts listed for side curtain airbag deployment.
    2. To prevent the side curtain airbags from deploying improperly and possibly causing injury, inspect the headliner and all removed trim. Replace any pieces with the following damage:
        - Any creases or tears in the headliner (A)
        - Any damages around the grab handle holes (B) or the sunvisor holes (C) in the headliner
        - Any clip bases (D) which have come off the headliner
        - Any fasteners (E) or clip bases (F) which have come off the headliner

GETtheMANUALS.org

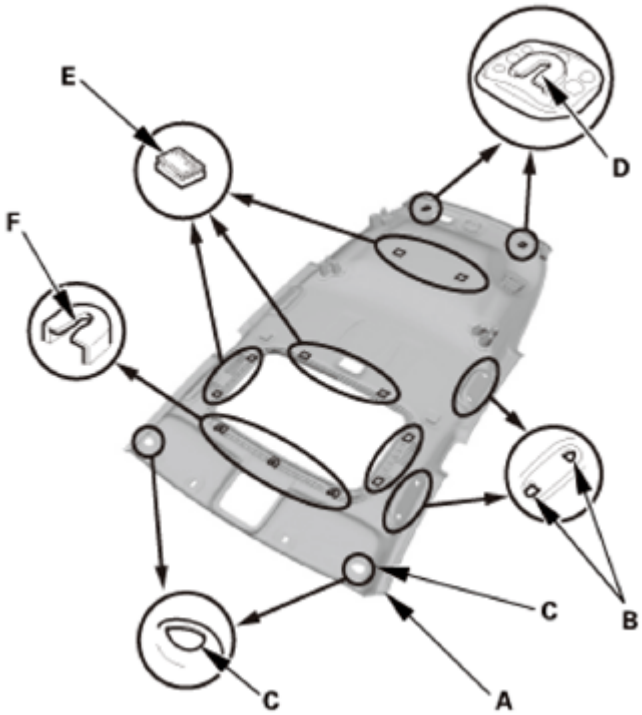

Fig. 63: Identifying Headliner, Grab Handle Holes, Survivor Holes, Clip Bases And Fasteners
Courtesy of AMERICAN HONDA MOTOR CO., INC.

3. Headliner
    1. With the help of an assistant, slide the headliner (A) through the tailgate opening.

NOTE: **Do not bend the headliner. Bending the headliner will crease and damage it.**

Fig. 64: Identifying Headliner

GETtheMANUALS.org

Courtesy of AMERICAN HONDA MOTOR CO., INC.

2. With the help of an assistant, install the headliner (A), then push on the clips (B) and the fasteners (C) which will snap into place securely.

Without moonroof

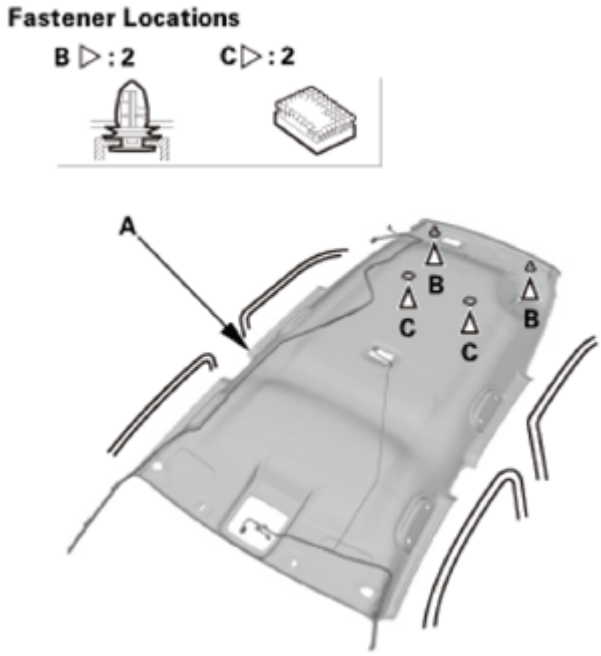

Fig. 65: Identifying Headliner, Clips And Fasteners (Without Moonroof)
Courtesy of AMERICAN HONDA MOTOR CO., INC.

With moonroof

GETtheMANUALS.org

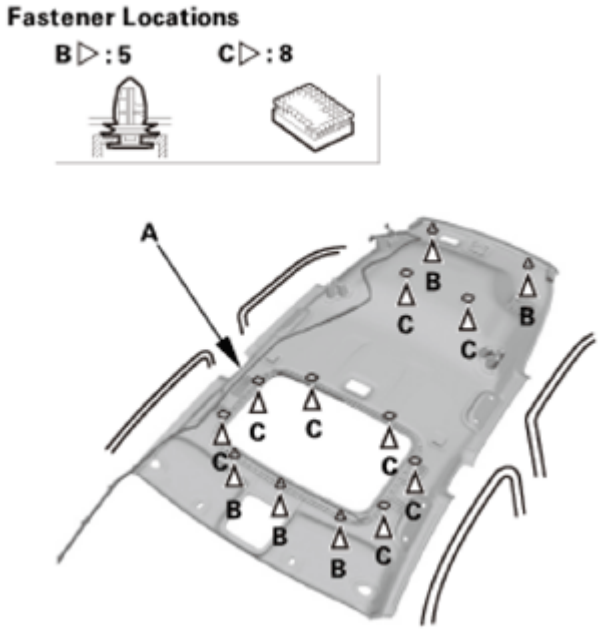

Fig. 66: Identifying Headliner, Clips And Fasteners (With Moonroof)
Courtesy of AMERICAN HONDA MOTOR CO., INC.

3. At the right quarter pillar, connect the connectors (A), and install the connector clips (B) and the harness clip (C).

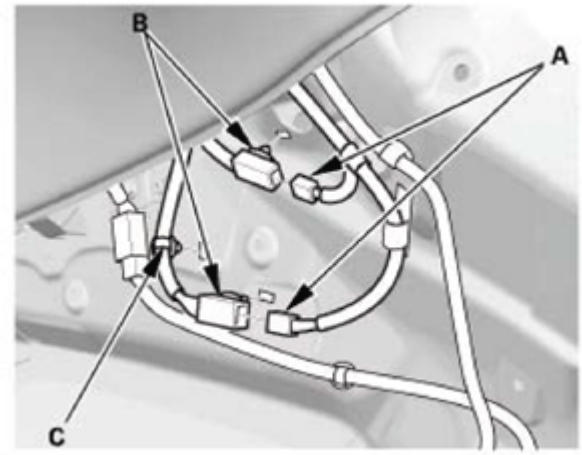

Fig. 67: Identifying Right Quarter Pillar Connectors, And Harness And Connector Clips
Courtesy of AMERICAN HONDA MOTOR CO., INC.

4. At the passenger's A-pillar, connect the connectors (A), and install the harness clips (B).

GETtheMANUALS.org

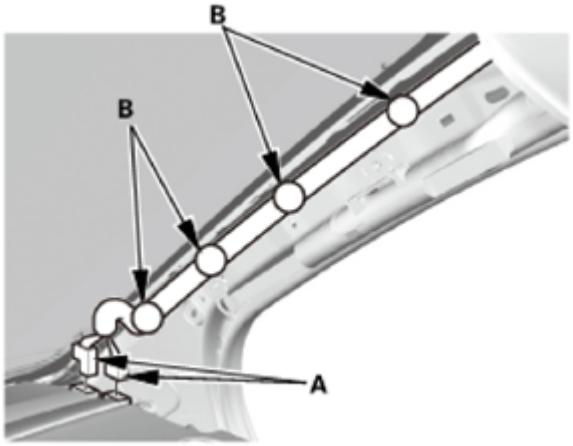

Fig. 68: Identifying Passenger's A-Pillar Connectors And Harness Clips
Courtesy of AMERICAN HONDA MOTOR CO., INC.

5. Without moonroof: At the driver's A-pillar, connect the connector (A), and install the harness clips (B).

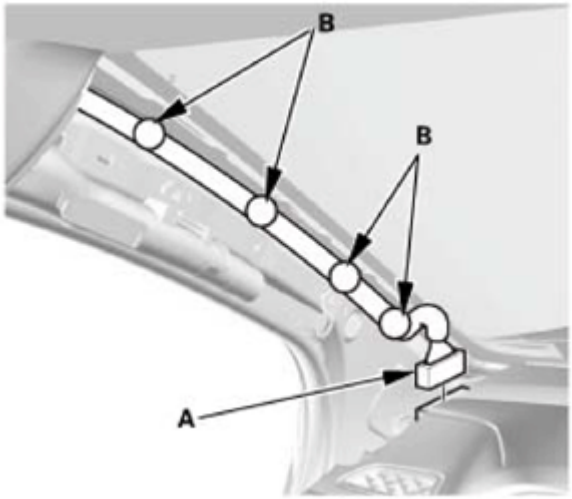

Fig. 69: Identifying Driver's A-Pillar Connector And Harness Clips (Without Moonroof)
Courtesy of AMERICAN HONDA MOTOR CO., INC.

4. Sunvisor - Check
    1. If the side curtain airbag has deployed, replace the sunvisor, along with the other parts listed for side curtain airbag deployment.
    2. If the side curtain airbag has not deployed, inspect the sunvisor for damage. A damaged sunvisor may cause the side curtain airbags to deploy improperly, possibly causing injury. Replace the sunvisor if it has any of the following damage:
        - Any cracks in the sunvisor bracket (A)
        - Any cracks in the sunvisor bracket cover (B)
        - Any bends or cracks in the sunvisor shaft (C)

GETtheMANUALS.org

- Any cracks in the sunvisor base (D)

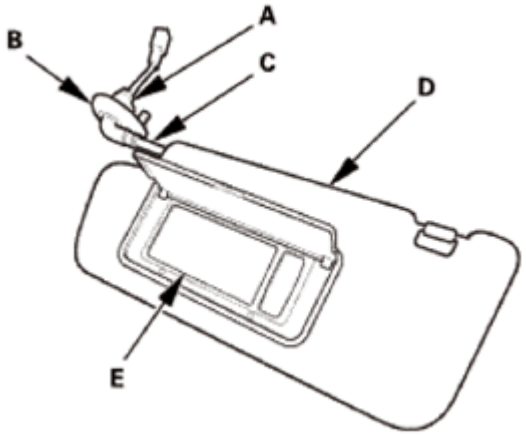

Fig. 70: Identifying Sunvisor Bracket, Cover, Shaft And Base
Courtesy of AMERICAN HONDA MOTOR CO., INC.

- Any cracks in the vanity mirror base (E)

3. If the holder grommet is damaged or stress-whitened, replace the holder grommet and the holder as an assembly.

5. Sunvisor - Both Sides

NOTE: Repeat this procedure on the opposite side.

1. Connect the connector (A), and install the sunvisor (B).

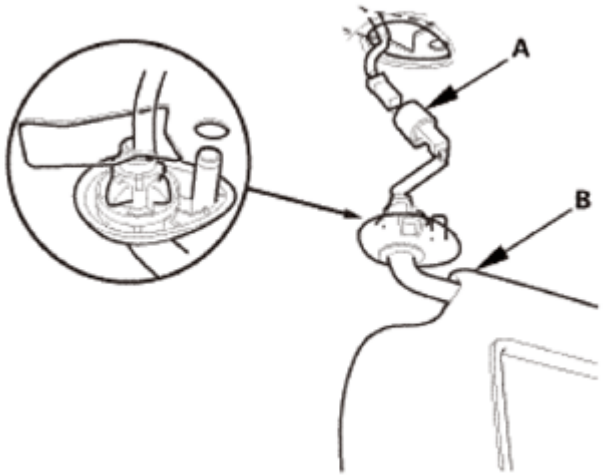

Fig. 71: Identifying Sunvisor And Connector
Courtesy of AMERICAN HONDA MOTOR CO., INC.

2. While holding the bracket cover (A), rotate the sunvisor (B) forward until the tab (C) snaps into place.

GETtheMANUALS.org

3. Gently pull down on the sunvisor to make sure it is properly secured in the body.
4. Rotate the sunvisor into the holder (D).

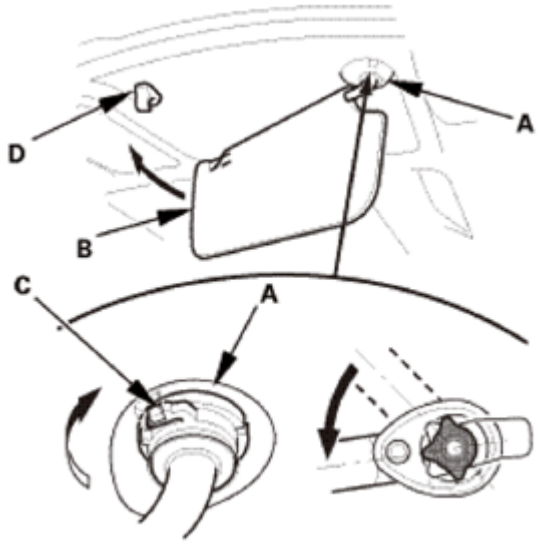

Fig. 72: Rotating Sunvisor
Courtesy of AMERICAN HONDA MOTOR CO., INC.

6. Grab Handle - Check
   1. If the side curtain airbag has not deployed, inspect the grab handle (A) for damage. A damaged grab handle may cause the side curtain airbag to deploy improperly, possibly causing injury. Replace the grab handle if it has any of the following damage:
      - Any cracks or breakage in the grab handle
      - Any cracks or stress-whitening in the caps (B)

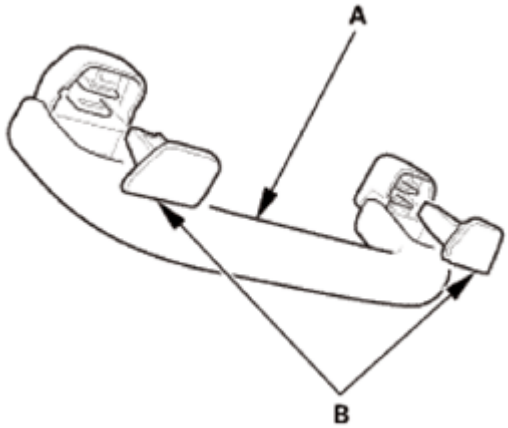

Fig. 73: Identifying Grab Handle And Caps
Courtesy of AMERICAN HONDA MOTOR CO., INC.

7. Grab Handles for One Vehicle

GETtheMANUALS.org

1. Install the clips (A) on the grab handle (B).
2. Install the caps (C) fully into the clips.

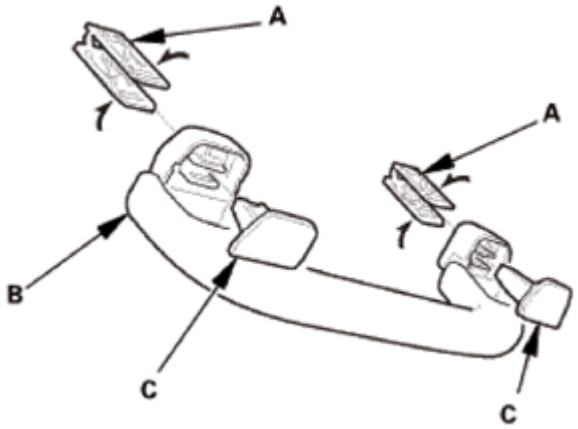

Fig. 74: Installing Clips On Grab Handle
Courtesy of AMERICAN HONDA MOTOR CO., INC.

3. Position the grab handle (A) on the grab handle bracket (B).
4. Push on the grab handle until the clips (C) snap into place securely.

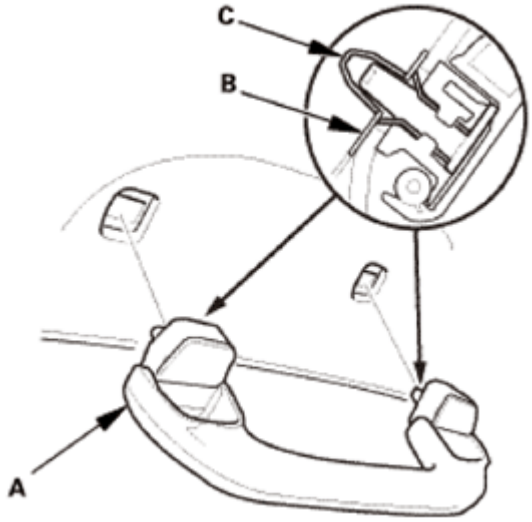

Fig. 75: Identifying Grab Handle, Bracket And Clips
Courtesy of AMERICAN HONDA MOTOR CO., INC.

8. Cargo Area Light
    1. Connect the connector.
    2. Install the cargo area light (A).
    3. Install the bulb.
    4. Carefully install the lens (B).

GETtheMANUALS.org

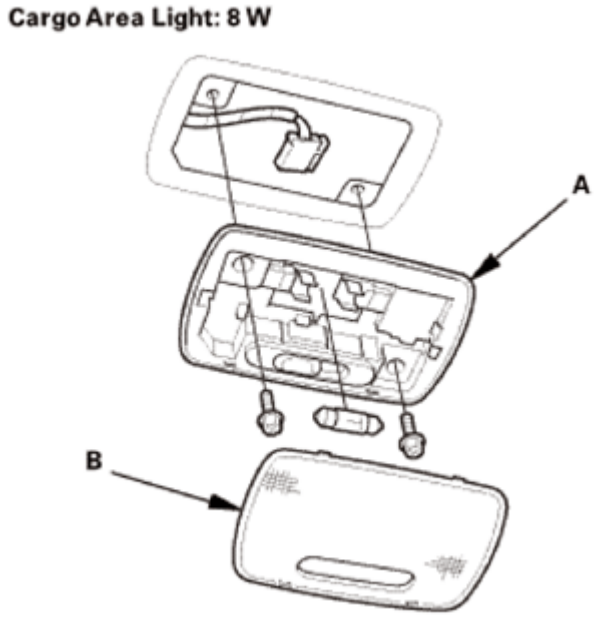

Fig. 76: Identifying Cargo Area Light And Lens
Courtesy of AMERICAN HONDA MOTOR CO., INC.

9. Rear Controller and Screen (With RES)
    1. Install the rear controller and screen (A).
    2. Connect the connector.

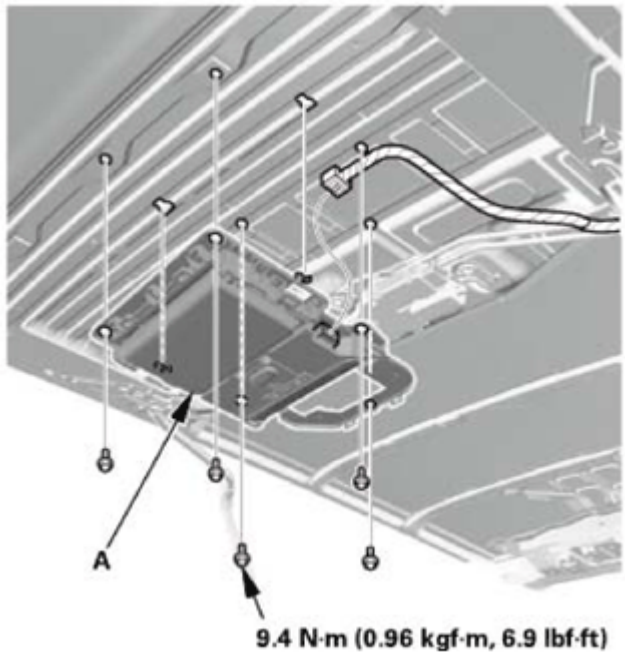

Fig. 77: Identifying Screen And Bolt With Torque Specifications
Courtesy of AMERICAN HONDA MOTOR CO., INC.

GETtheMANUALS.org

10. Rear Display Cover (With RES)
    1. Install the rear display cover (A).

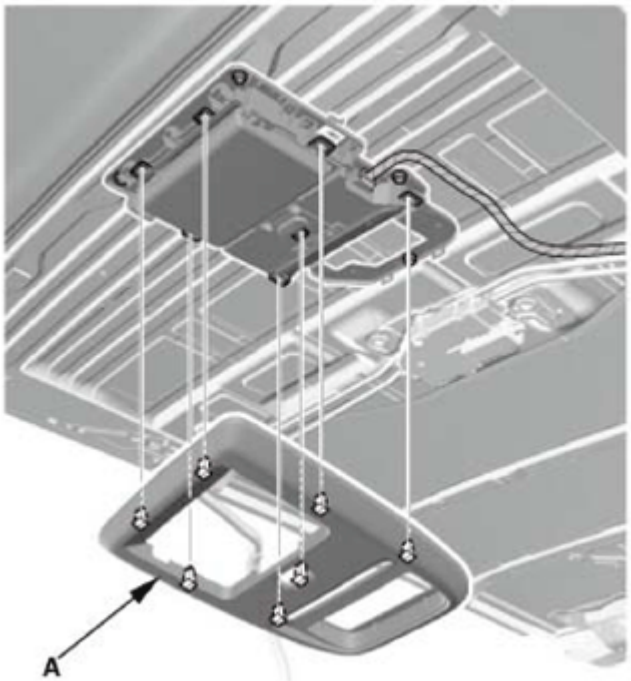

Fig. 78: Identifying Rear Display Cover
Courtesy of AMERICAN HONDA MOTOR CO., INC.

    2. Connect the connector.
    3. Install the ceiling light (B).
    4. Carefully install the lenses (C).

GETtheMANUALS.org

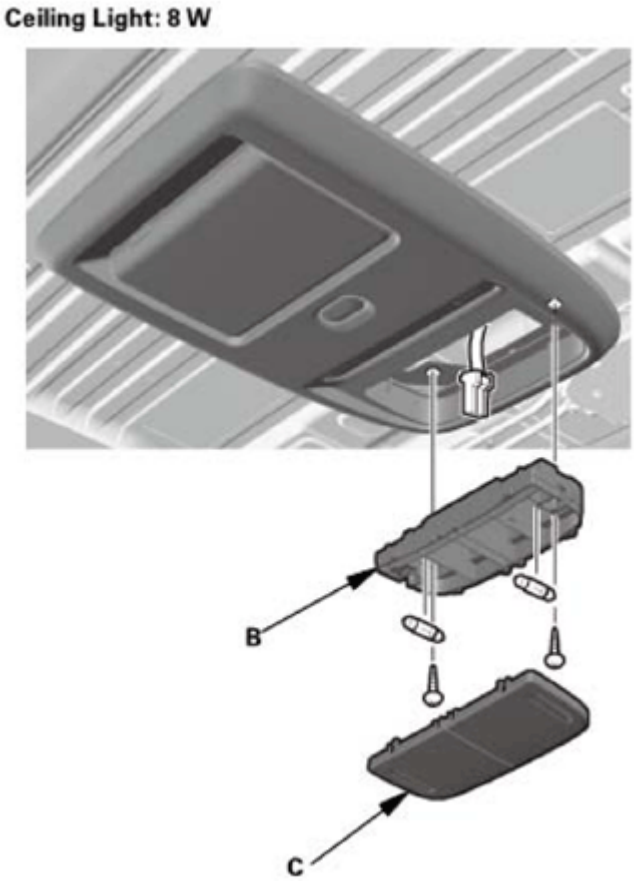

Fig. 79: Identifying Ceiling Light And Lenses
Courtesy of AMERICAN HONDA MOTOR CO., INC.

11. Ceiling Light (without RES)
    1. Connect the connector.
    2. Install the ceiling light (A).
    3. Install the bulb.
    4. Carefully install the lens (B).

GETtheMANUALS.org

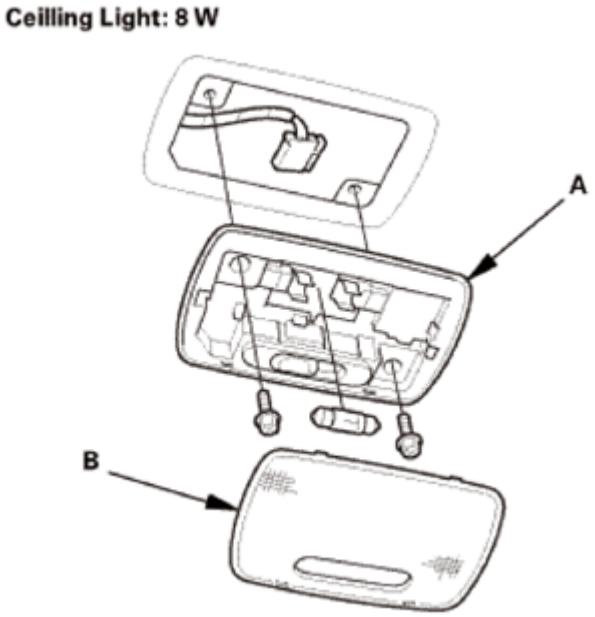

Fig. 80: Identifying Ceiling Light And Lens
Courtesy of AMERICAN HONDA MOTOR CO., INC.

12. Roof Console Assembly
    1. Connect the connectors (A), then install the roof console assembly (B).
    2. Install the screws (C, D), then install the lenses (E).

GETtheMANUALS.org

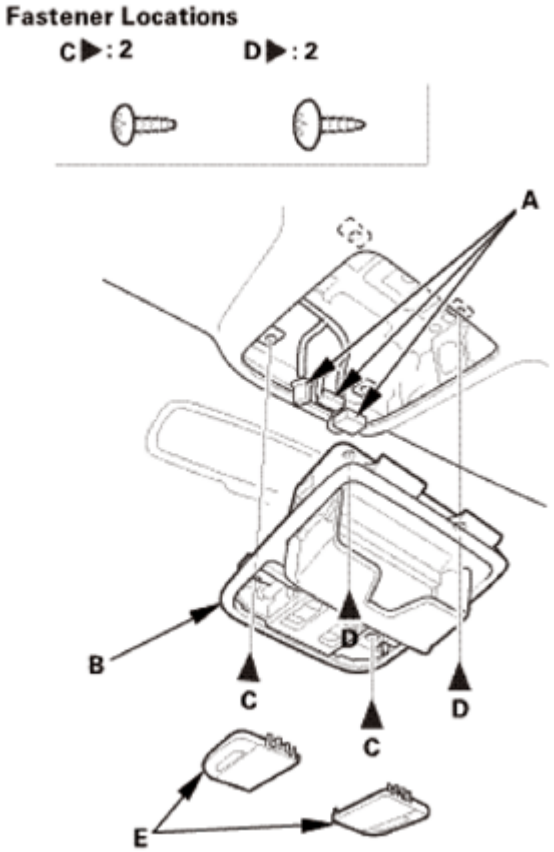

Fig. 81: Identifying Connectors, Roof Console Assembly, Screws And Lenses
Courtesy of AMERICAN HONDA MOTOR CO., INC.

13. Quarter Pillar Trim - Check
    1. If the side curtain airbag has deployed, replace the quarter pillar trim (A), along with the other parts listed for side curtain airbag deployment.
    2. If the side curtain airbag has not deployed, check the quarter pillar trim and note the following items:
        - To prevent the side curtain airbags from deploying improperly and possibly causing injury, inspect the quarter pillar trim and replace it with a new one if it has any of the following damage:
            - Any cracks, deformations, or stress-whitening in the quarter pillar trim
            - Any cracks or stress-whitened areas in the clip seating surfaces (B)
        - After checking and adjusting the overlap between the headliner and the quarter pillar trim, replace the upper clip (C) with a new one.
        - If the clips (D) are damaged or stress-whitened, replace them with new ones.

GETtheMANUALS.org

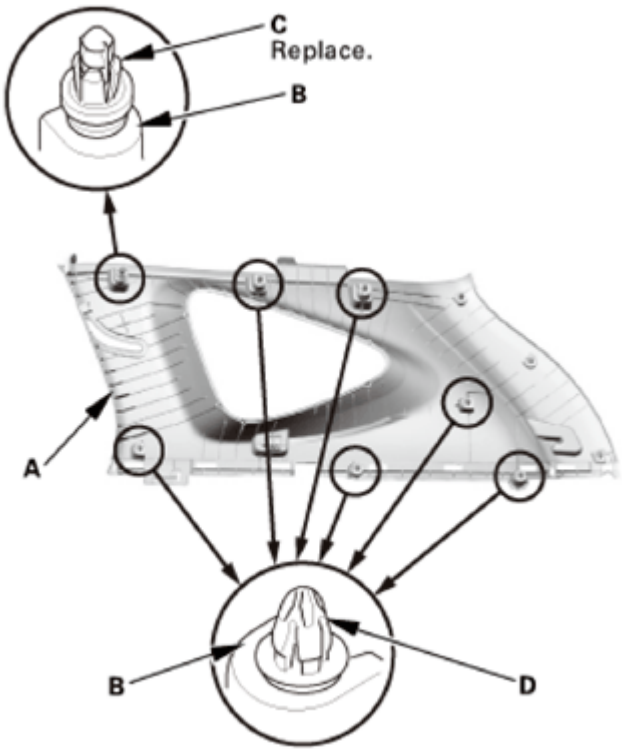

Fig. 82: Identifying Quarter Pillar Trim, Clip Seating Surfaces And Upper Clip
Courtesy of AMERICAN HONDA MOTOR CO., INC.

14. Headliner/Pillar Trim Overlap - Check

Checking and Adjusting the Headliner/Pillar Trim Overlap

To prevent the side curtain airbag from deploying and damaging the pillar trim (A-pillar trim, B-pillar trim, quarter pillar trim), the overlap between the headliner and pillar trim must be 8.0+0/-2.0 mm (0.31+0/-0.08 in). To check the overlap, do this:

1. Install the headliner (A) and the pillar trim (B).

GETtheMANUALS.org

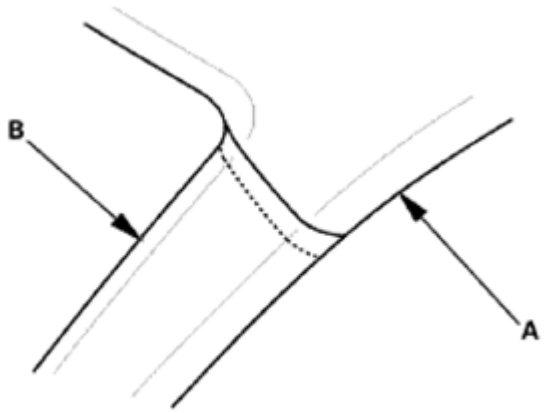

This illustration shows the A-pillar.

Fig. 83: Identifying Headliner And Pillar Trim
Courtesy of AMERICAN HONDA MOTOR CO., INC.

2. Apply masking tape (A) to the headliner (B) to mark the upper edge of the pillar trim (C).

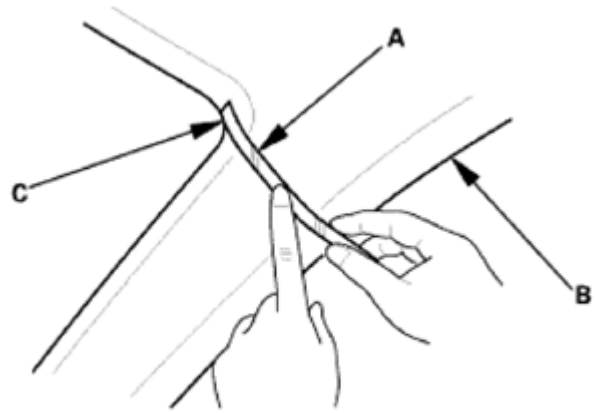

This illustration shows the A-pillar.

Fig. 84: Applying Masking Tape To Headliner
Courtesy of AMERICAN HONDA MOTOR CO., INC.

3. Remove the pillar trim, and measure the headliner overlap.
   - If the overlap is 8.0+0/-2.0 mm (0.31+0/-0.08 in), remove the tape, and install the pillar trim.
   - If the overlap is more than 8.0 mm (0.31 in), go to step 4.

GETtheMANUALS.org

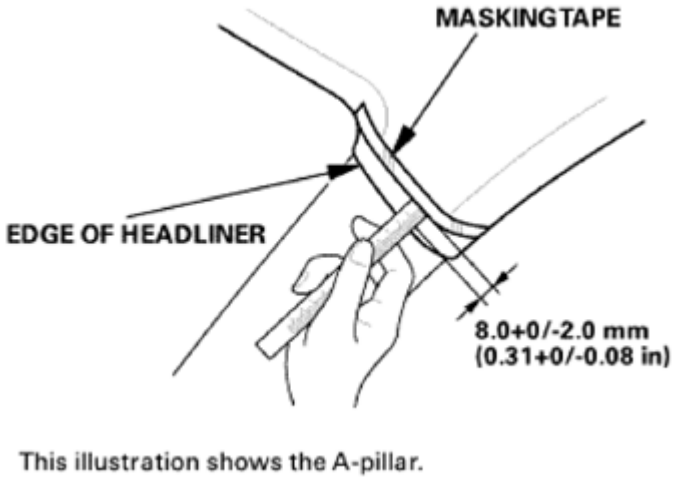

Fig. 85: Measuring Headliner Overlap
Courtesy of AMERICAN HONDA MOTOR CO., INC.

4. Carefully trim the headliner with a utility knife, reducing the overlap to 8.0+0/-2.0 mm (0.31+0/-0.08 in).
5. Remove the tape, and install the pillar trim.

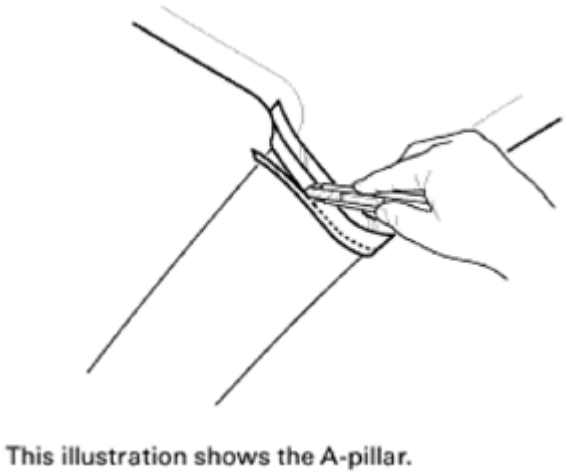

Fig. 86: Trimming Headliner Using Utility Knife
Courtesy of AMERICAN HONDA MOTOR CO., INC.

15. Quarter Pillar Trim - Both Sides
    1. Install a new clip (A) to the quarter pillar trim (B).

GETtheMANUALS.org

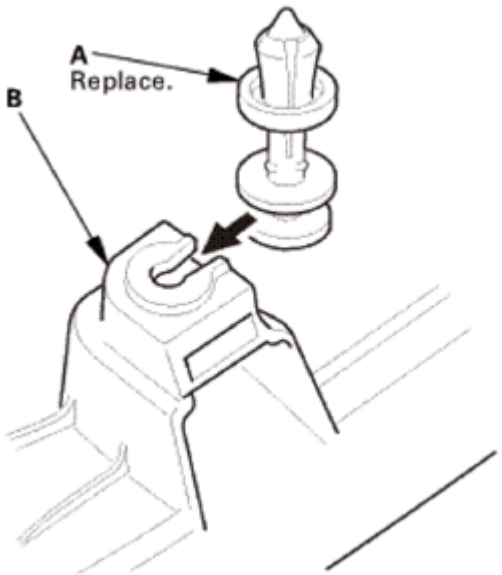

Fig. 87: Installing Clip To Quarter Pillar Trim
Courtesy of AMERICAN HONDA MOTOR CO., INC.

2. Pass the rear seat belt lower anchor (A) through the hole in the quarter pillar trim (B).
3. Fit the clips into the holes in the quarter pillar.
4. Lightly push the quarter pillar trim into place, then install the trim.

NOTE:

- **Make sure the side curtain airbag is not tucked under the clips or the ribs.**
- **Do not push too hard on the quarter pillar trim. If you push too hard, the clip will be damaged, and it will not hold the trim properly.**
- **Gently tug on the quarter pillar trim to verify that all clips are securely fastened.**
- **Make sure the clips (C, D, and E) snap into place securely.**

GETtheMANUALS.org

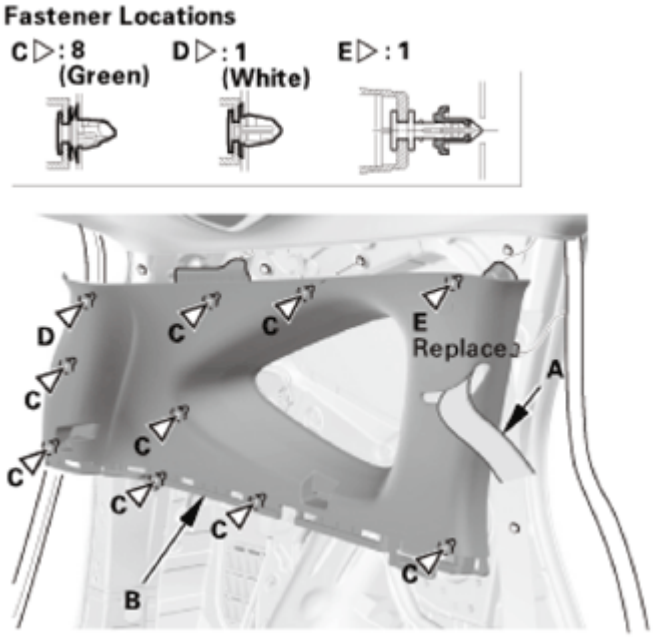

Fig. 88: Identifying Rear Seat Belt Lower Anchor, Quarter Pillar Trim And Clips
Courtesy of AMERICAN HONDA MOTOR CO., INC.

16. Rear Side Trim Panel - Both Sides

NOTE: Repeat this procedure on the opposite side.

1. Install the rear seat release cable (A) to the clips (B) of the rear side trim panel (C).

NOTE: Align the marks (D) with the clips as shown.

GETtheMANUALS.org

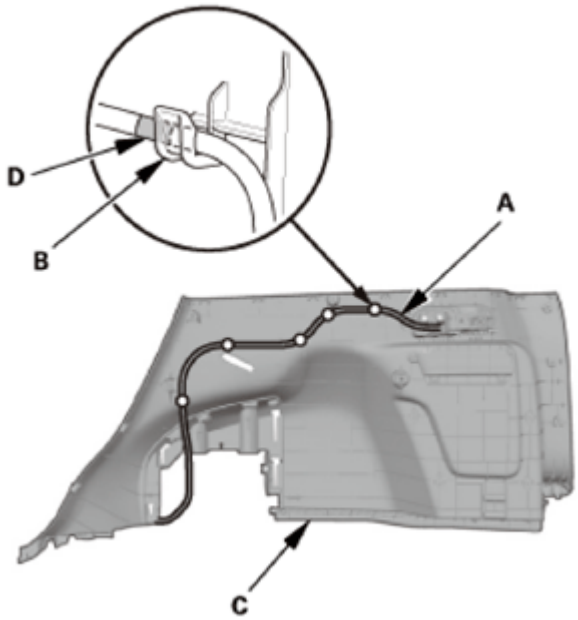

Fig. 89: Identifying Rear Seat Release Cable, Rear Side Trim Panel And Clips
Courtesy of AMERICAN HONDA MOTOR CO., INC.

2. Install the rear seat release lever (A) to the rear side trim panel (B).

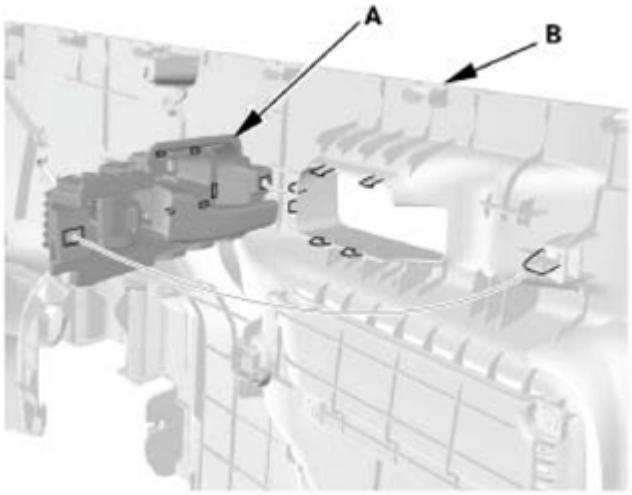

Fig. 90: Identifying Rear Seat Release Lever And Rear Side Trim Panel
Courtesy of AMERICAN HONDA MOTOR CO., INC.

3. Install the rear side trim panel (A). Make sure the hooks (B), the tabs (C), and the clips (D, E) snap into place securely.
4. Install the clips (F, G).

GETtheMANUALS.org

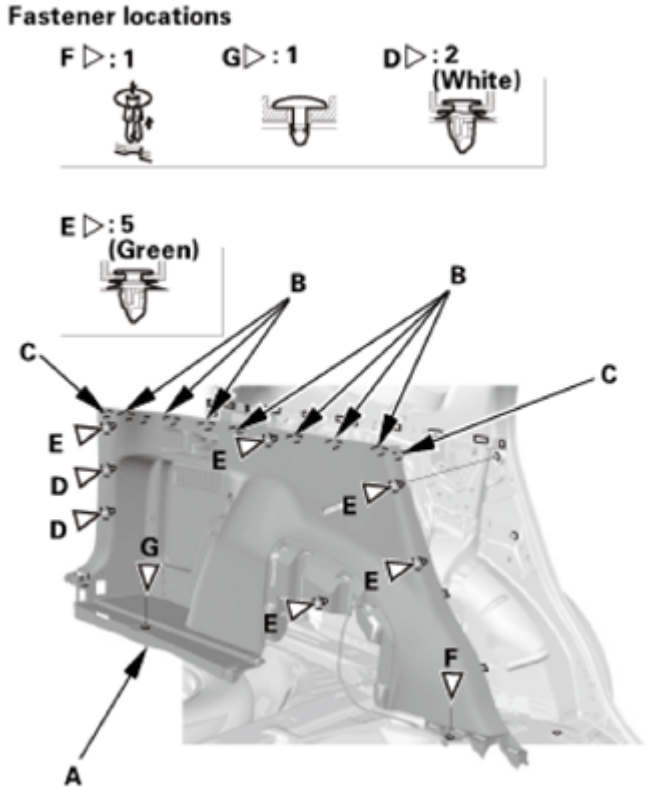

Fig. 91: Identifying Rear Side Trim Panel, Tabs And Clips
Courtesy of AMERICAN HONDA MOTOR CO., INC.

5. Install the tie-down hook (A), then install the bolt (B).

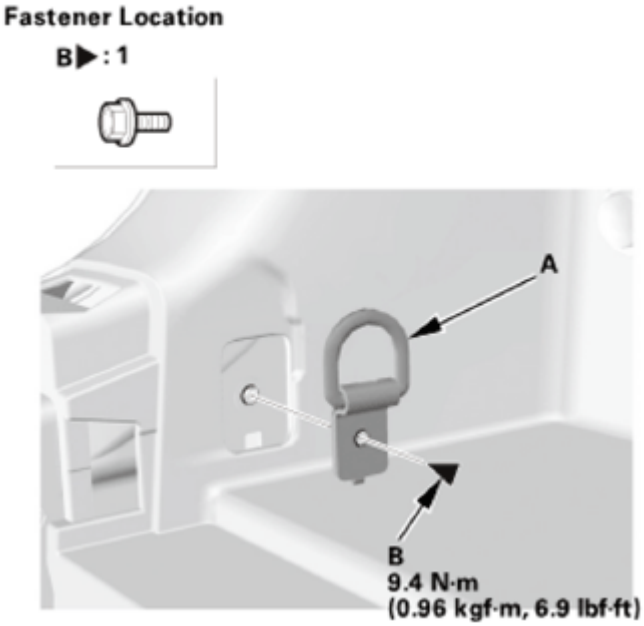

Fig. 92: Identifying Tie-Down Hook And Bolt With Torque Specifications

GETtheMANUALS.org

Courtesy of AMERICAN HONDA MOTOR CO., INC.

6. Install the trunk hook (A).

Fig. 93: Identifying Trunk Hook
Courtesy of AMERICAN HONDA MOTOR CO., INC.

7. Install the screws (A), then install the rear seat release lever cap (B). Make sure the upper hook (C) and the lower hooks (D) snap into place securely.

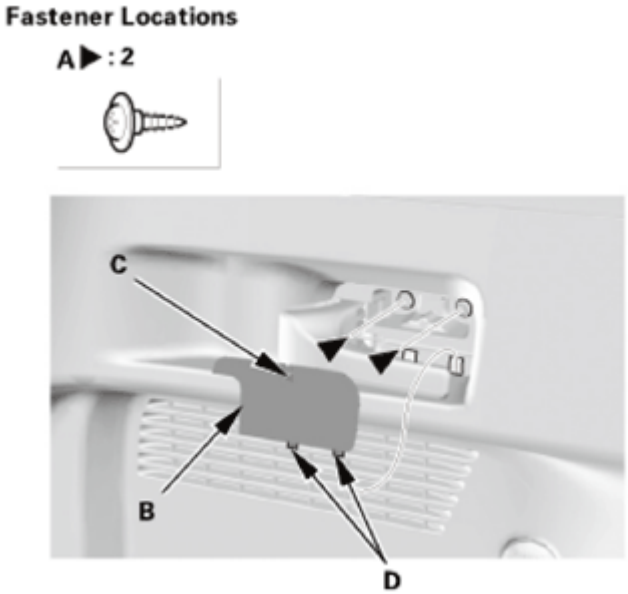

Fig. 94: Identifying Rear Seat Release Lever Cap, Upper And Lower Hooks
Courtesy of AMERICAN HONDA MOTOR CO., INC.

17. Rear Seat Belt Lower Anchor Bolt - Both Sides

NOTE: Repeat this procedure on the opposite side.

GETtheMANUALS.org

1. Install the rear seat belt lower anchor bolt (A).

NOTE: **Before installing the anchor bolt, make sure there are no twists or kinks in the seat belt.**

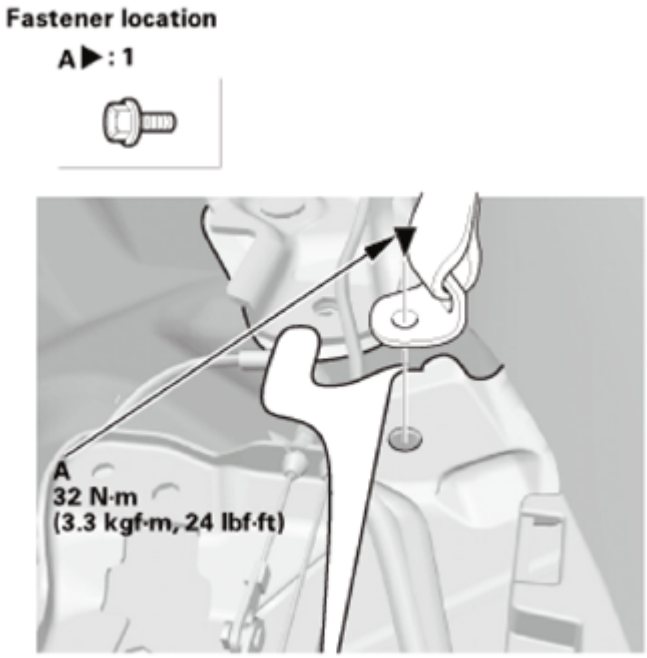

Fig. 95: Identifying Rear Seat Belt Lower Anchor Bolt With Torque Specifications
Courtesy of AMERICAN HONDA MOTOR CO., INC.

18. Rear Seat Cushion Foot Cover - Both Sides (Remove The Outer Left Side Only)
    1. Install the rear seat cushion foot cover (A). Make sure the clips (B) and the hooks (C) snap into place securely.

    Left side

GETtheMANUALS.org

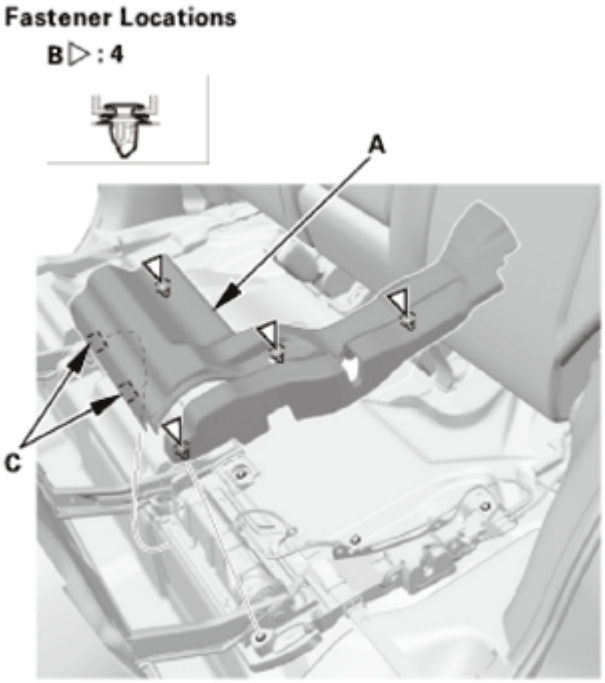

Fig. 96: Identifying Rear Seat Cushion Foot Cover, Clips And Hooks (Left Side)
Courtesy of AMERICAN HONDA MOTOR CO., INC.

Right side

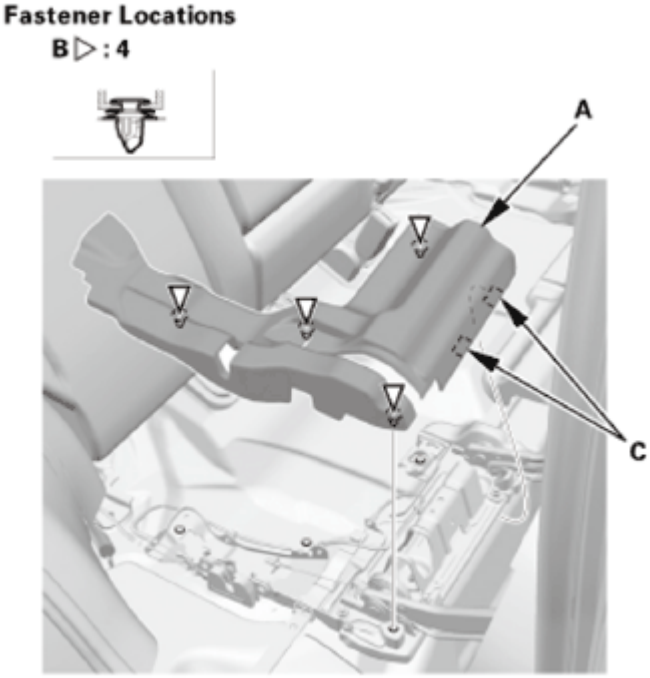

Fig. 97: Identifying Rear Seat Cushion Foot Cover, Clips And Hooks (Right Side)
Courtesy of AMERICAN HONDA MOTOR CO., INC.

GETtheMANUALS.org

19. Rear Carpet Trim - Both Sides
    1. Install the rear carpet trims (A). Make sure the clips (B) and the hooks (C) snap into place securely.

Left side

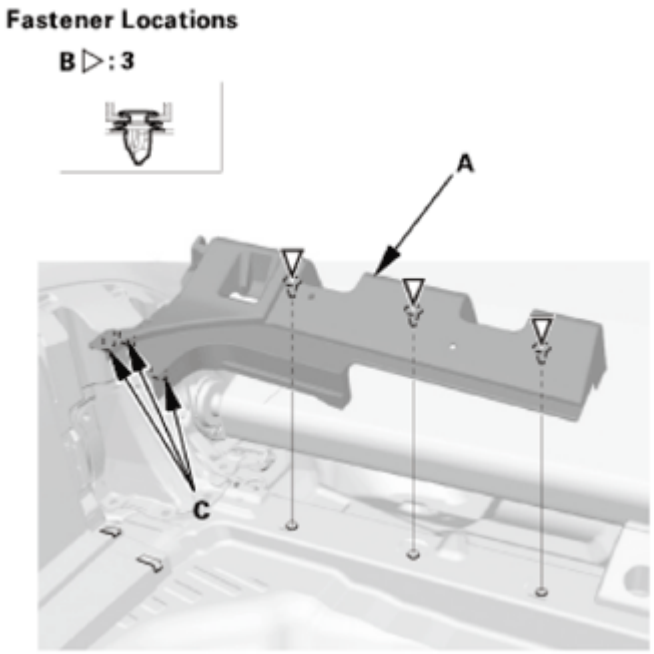

Fig. 98: Identifying Rear Carpet Trims, Clips And Hooks (Left Side)
Courtesy of AMERICAN HONDA MOTOR CO., INC.

Right side

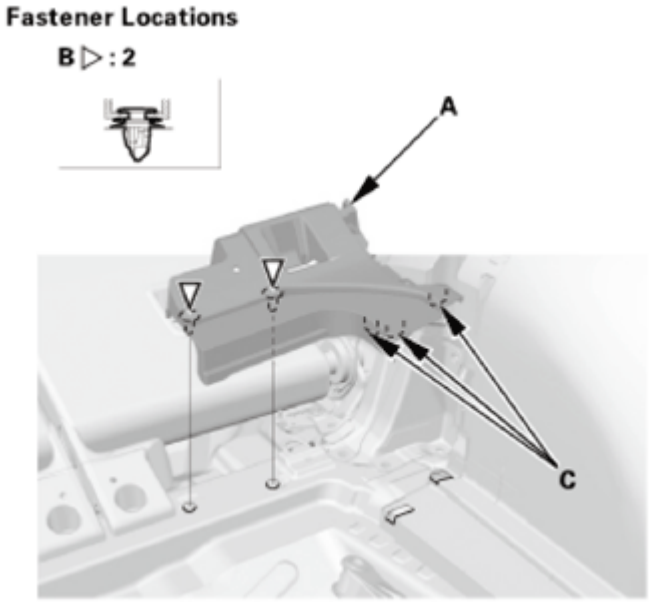

GETtheMANUALS.org

Fig. 99: Identifying Rear Carpet Trims, Clips And Hooks (Right Side)
Courtesy of AMERICAN HONDA MOTOR CO., INC.

2. Install the rear seat-back cover (A). Make sure the clips (B) snap into place securely.

Left side

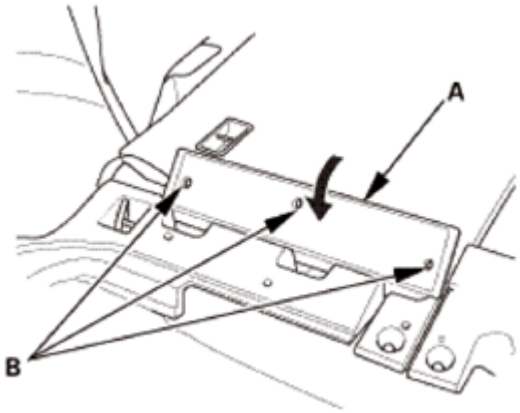

Fig. 100: Installing Rear Seat-Back Cover (Left Side)
Courtesy of AMERICAN HONDA MOTOR CO., INC.

Right side

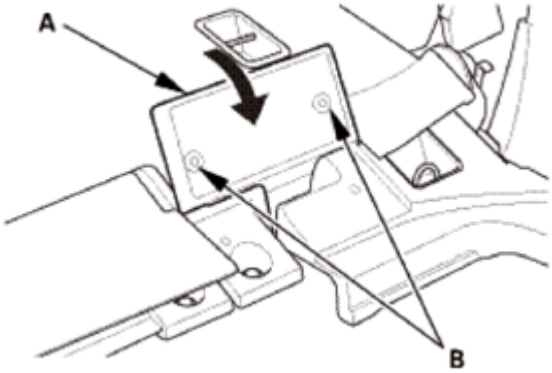

Fig. 101: Installing Rear Seat-Back Cover (Right Side)
Courtesy of AMERICAN HONDA MOTOR CO., INC.

20. Rear Damper Maintenance Cover - Both Sides

NOTE: Repeat this procedure on the opposite side.

1. Fold down the rear seat-back.
2. Install the rear damper maintenance cover (A). Make sure the hooks (B) snap into place securely.

GETtheMANUALS.org

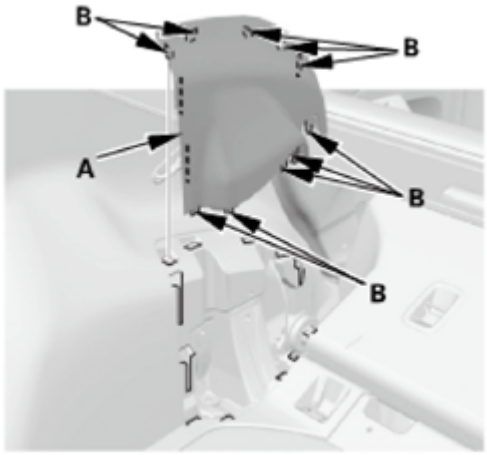

Fig. 102: Identifying Rear Damper Maintenance Cover And Hooks
Courtesy of AMERICAN HONDA MOTOR CO., INC.

21. Rear Trim Panel
    1. Install the rear trim panel (A). Make sure the clips (B, C), the hooks (D), and the tabs (E) snap into place securely.
    2. Install the clips (F).

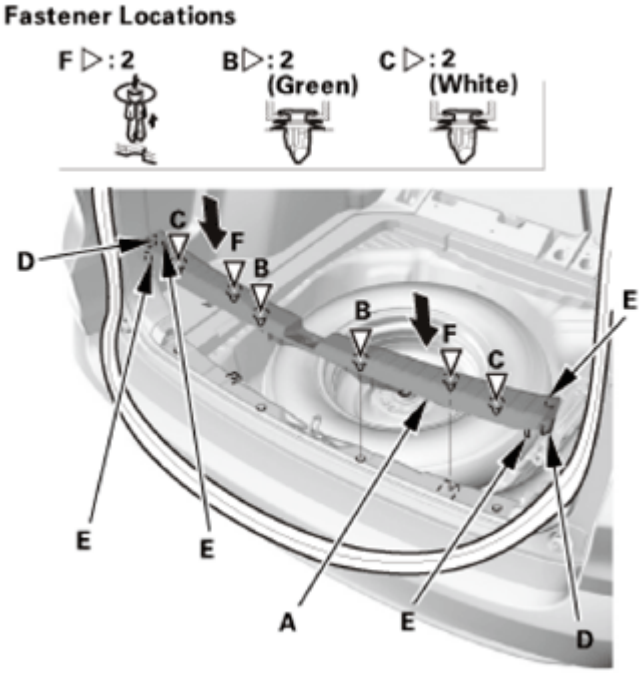

Fig. 103: Installing Rear Trim Panel
Courtesy of AMERICAN HONDA MOTOR CO., INC.

22. Tailgate Weatherstrip As Needed
    1. Locate the alignment mark (A) of the tailgate weatherstrip (B). Align the alignment mark (C) with

GETtheMANUALS.org

the center of the lower area on the tailgate opening, then install the tailgate weatherstrip all the way around.

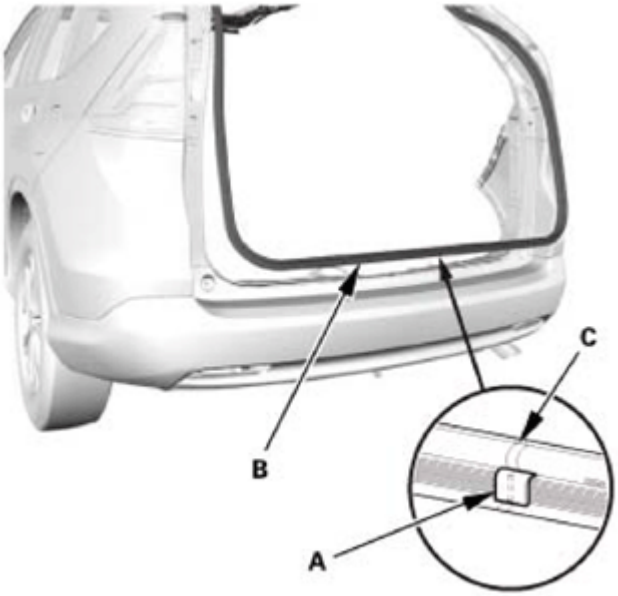

Fig. 104: Identifying Alignment Mark Of Tailgate Weatherstrip
Courtesy of AMERICAN HONDA MOTOR CO., INC.

23. Cargo Floor Cover
    1. Install the cargo floor cover (A).

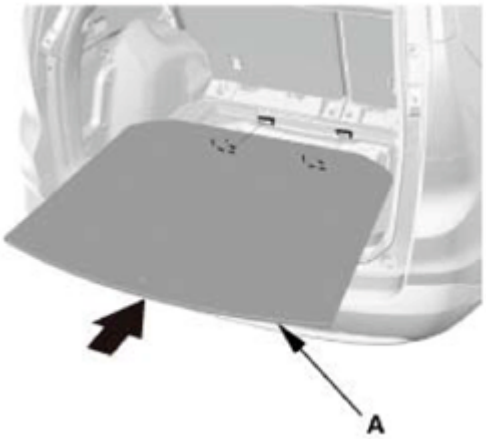

Fig. 105: Installing Cargo Floor Cover
Courtesy of AMERICAN HONDA MOTOR CO., INC.

24. Tonneau Cover (For Some Models)
    1. Install the tonneau cover (A).

GETtheMANUALS.org

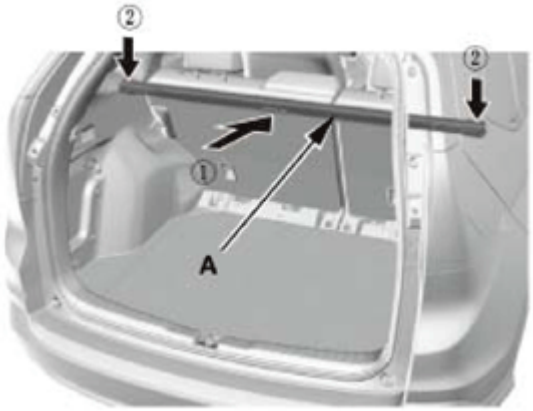

Fig. 106: Installing Tonneau Cover
Courtesy of AMERICAN HONDA MOTOR CO., INC.

25. B-Pillar Upper/Lower Trim - Check

Trim inspection

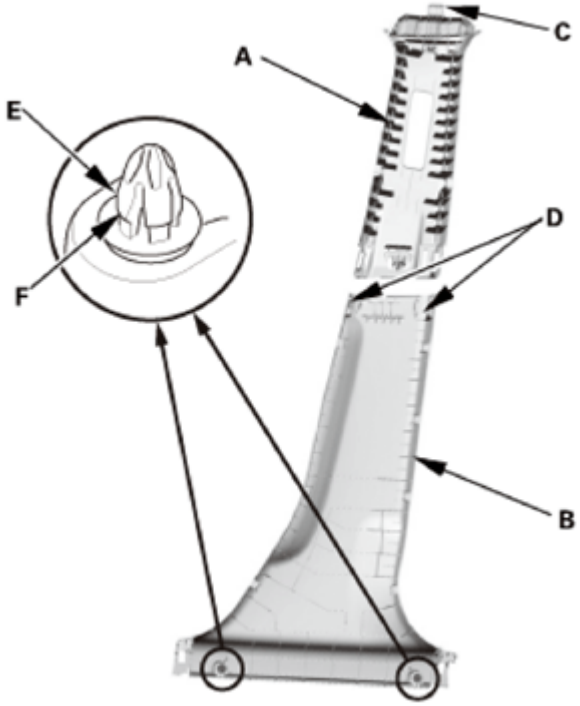

Fig. 107: Identifying B-Pillar Upper And Lower Trims, And Hooks
Courtesy of AMERICAN HONDA MOTOR CO., INC.

1. If the side curtain airbag has deployed, replace the B-pillar upper trim (A) and the B-pillar lower trim (B), along with the other parts listed for side curtain airbag deployment.
2. If the side curtain airbag has not deployed, check the B-pillar upper/lower trim and note the following items:

GETtheMANUALS.org

- To prevent the side curtain airbags from deploying improperly and possibly causing injury, inspect the trim and replace it with a new one if it has any of the following damage:
  - Any cracks or deformations in the B-pillar upper trim or the upper hooks (C), or any stress-whitened areas in the upper part of the trim
  - Any cracks or deformations in the B-pillar lower trim, or any breakages in the part (D) fitted with the B-pillar upper trim
  - Any cracks or stress-whitening areas in the clip seating surfaces (E)
- If the clips (F) are damaged or stress-whitened, replace them with new ones.

26. Headliner/Pillar Trim Overlap - Check

Checking and Adjusting the Headliner/Pillar Trim Overlap

To prevent the side curtain airbag from deploying and damaging the pillar trim (A-pillar trim, B-pillar trim, quarter pillar trim), the overlap between the headliner and pillar trim must be 8.0+0/-2.0 mm (0.31+0/-0.08 in). To check the overlap, do this:

1. Install the headliner (A) and the pillar trim (B).
2. Apply masking tape (A) to the headliner (B) to mark the upper edge of the pillar trim (C).

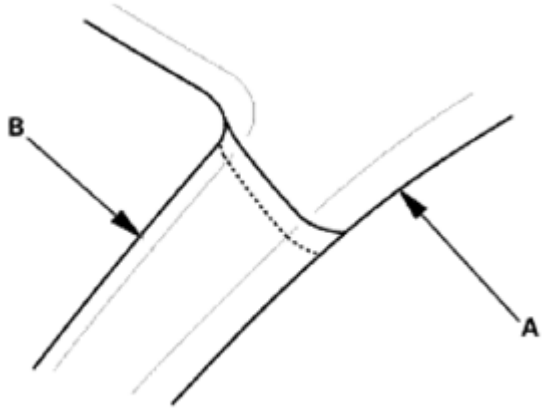

This illustration shows the A-pillar.

Fig. 108: Identifying Headliner And Pillar Trim
Courtesy of AMERICAN HONDA MOTOR CO., INC.

GETtheMANUALS.org

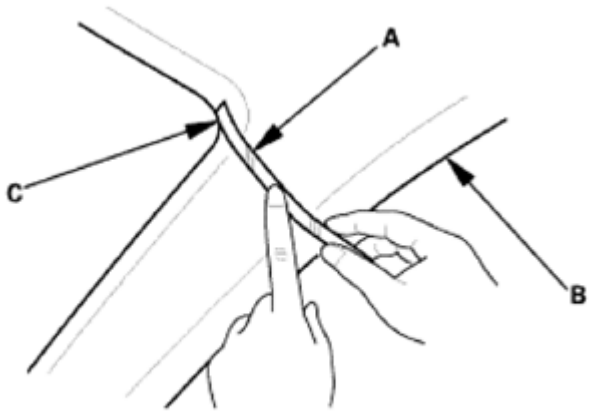

This illustration shows the A-pillar.

Fig. 109: Applying Masking Tape To Headliner
Courtesy of AMERICAN HONDA MOTOR CO., INC.

3. Remove the pillar trim, and measure the headliner overlap.
   - If the overlap is 8.0+0/-2.0 mm (0.31+0/-0.08 in), remove the tape, and install the pillar trim.
   - If the overlap is more than 8.0 mm (0.31 in), go to step 4.

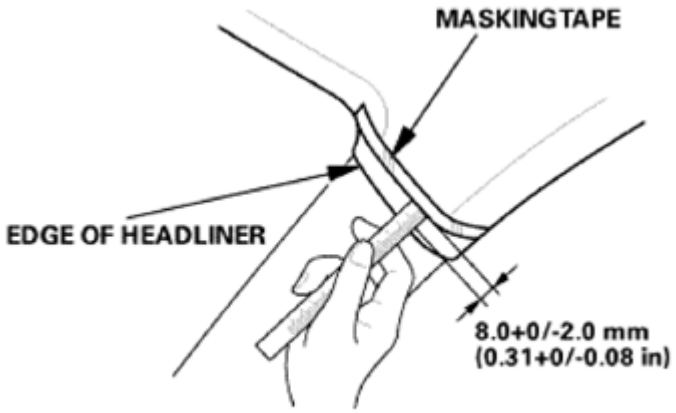

This illustration shows the A-pillar.

Fig. 110: Measuring Headliner Overlap
Courtesy of AMERICAN HONDA MOTOR CO., INC.

4. Carefully trim the headliner with a utility knife, reducing the overlap to 8.0+0/-2.0 mm (0.31+0/-0.08 in).
5. Remove the tape, and install the pillar trim.

GETtheMANUALS.org

This illustration shows the A-pillar.

Fig. 111: Trimming Headliner
Courtesy of AMERICAN HONDA MOTOR CO., INC.

27. B-Pillar Upper Trim - Both Sides

NOTE: Repeat this procedure on the opposite side.

1. Install the upper hook (A) of the B-pillar upper trim (B) to the hole in the body. Push the bottom portion of the B-pillar upper trim to install the lower hooks (C). Make sure the hooks snap into place securely.

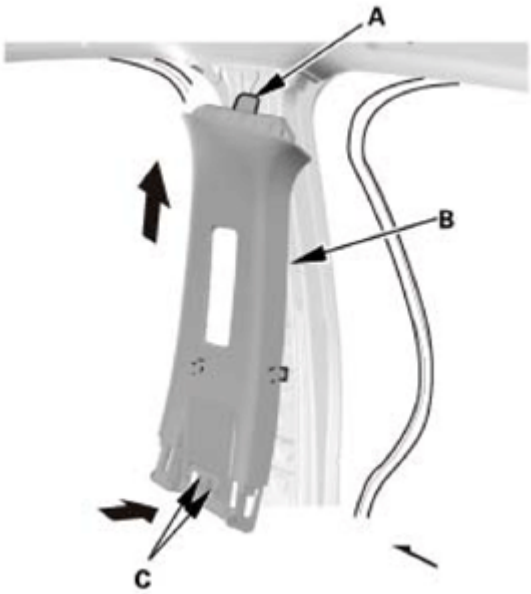

Fig. 112: Installing Upper Hook
Courtesy of AMERICAN HONDA MOTOR CO., INC.

28. Front Seat Belt Upper Anchor Bolt - Both Sides

GETtheMANUALS.org

NOTE: **Repeat this procedure on the opposite side.**

1. Install the front seat belt upper anchor bolt, then install the front seat belt shoulder anchor adjuster cap (A).

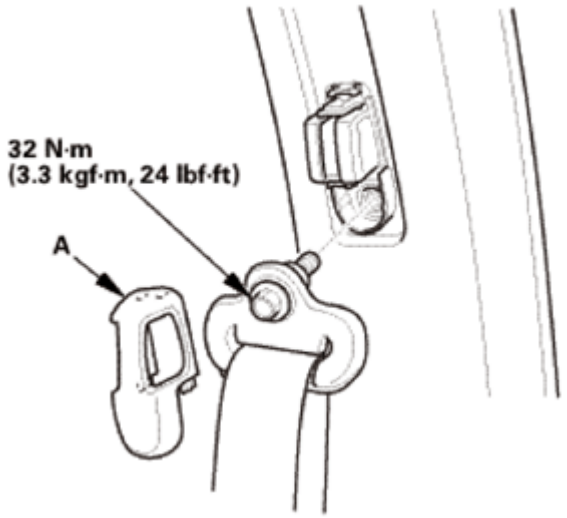

Fig. 113: Identifying Seat Belt Shoulder Anchor Adjuster Cap And Bolt With Torque Specifications
Courtesy of AMERICAN HONDA MOTOR CO., INC.

29. B-Pillar Lower Trim - Both Sides

NOTE: **Repeat this procedure on the opposite side.**

1. Install the B-pillar lower trim (A). Make sure the clips (B) and the hooks (C) snap into place securely.

GETtheMANUALS.org

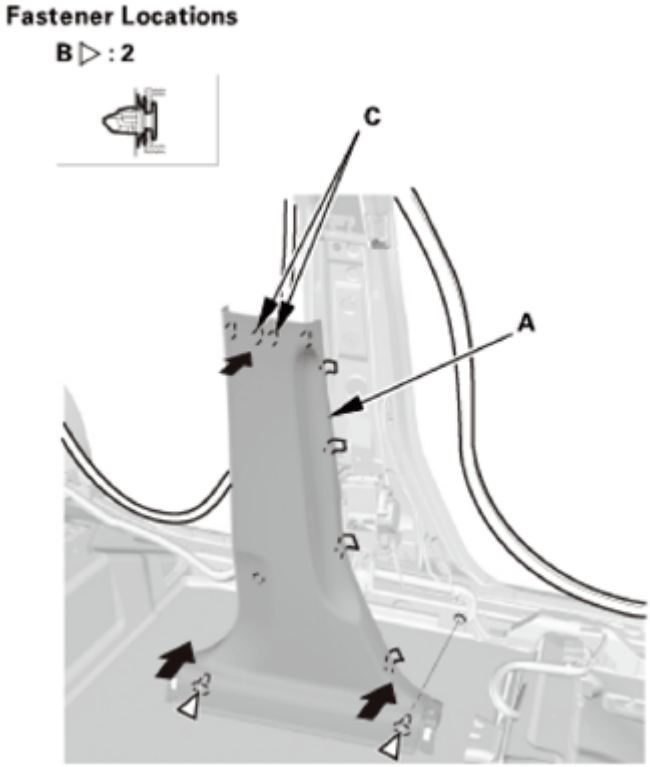

Fig. 114: Installing B-Pillar Lower Trim
Courtesy of AMERICAN HONDA MOTOR CO., INC.

30. Rear Door Opening Seal As Needed - Both Sides

NOTE: Repeat this procedure on the opposite side.

1. Install the rear door opening seal (A). Make sure the seal is installed securely into the hooks (B).

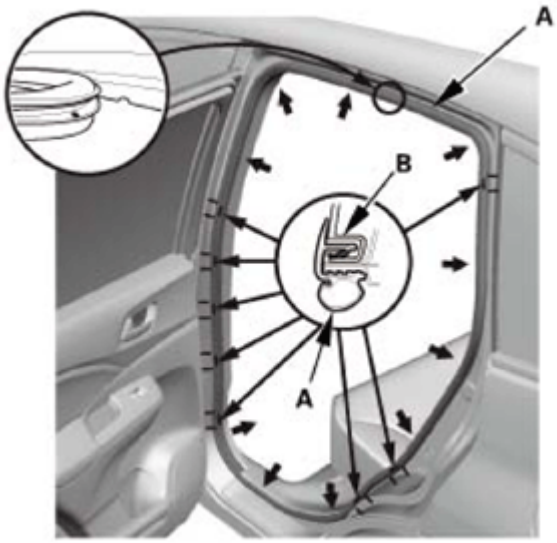

GETtheMANUALS.org

Fig. 115: Identifying Rear Door Opening Seal And Hooks
Courtesy of AMERICAN HONDA MOTOR CO., INC.

31. Rear Door Sill Trim - Both Sides

NOTE: Repeat this procedure on the opposite side.

1. Pull the release strap to fold down the rear seat, then lift-up and latch the rear seat-back in the upright position.
2. Install the rear door inner sill trim (A). Make sure the clips (B, C), the hooks (D), and the tab (E) snap into place securely.

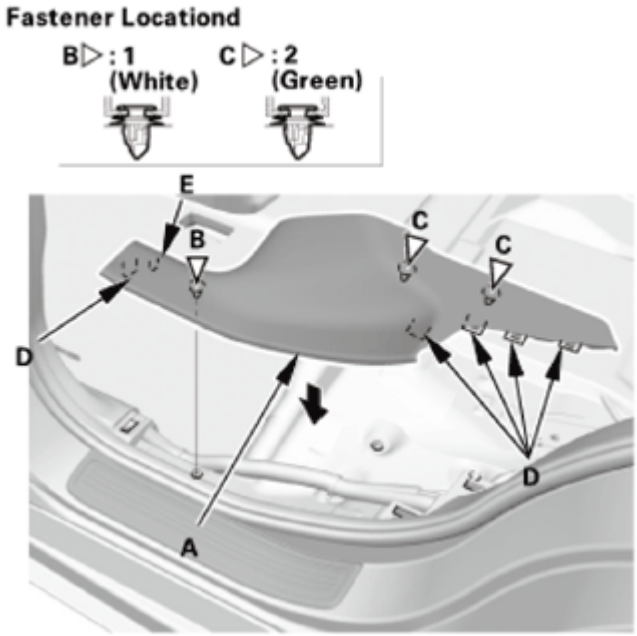

Fig. 116: Installing Rear Door Inner Sill Trim
Courtesy of AMERICAN HONDA MOTOR CO., INC.

32. A-Pillar Trim - Check
    1. If the side curtain airbag has deployed, replace the A-pillar trim (A), along with the other parts listed for side curtain airbag deployment.
    2. If the side curtain airbag has not deployed, check the A-pillar trim and note the following items:
        - To prevent the side curtain airbags from deploying improperly and possibly causing injury, inspect the A-pillar trim and replace it with a new one if it has any of the following damage:
            - Any cracks, deformations, or stress-whitened areas in the A-pillar trim
            - Any cracks or stress-whitening in the clip seating surfaces (B)
        - After checking and adjusting the overlap between the headliner and the A-pillar trim, replace the upper clip (C) with a new one.
        - If the clips (D) are damaged or stress-whitened, replace them with new ones.

GETtheMANUALS.org

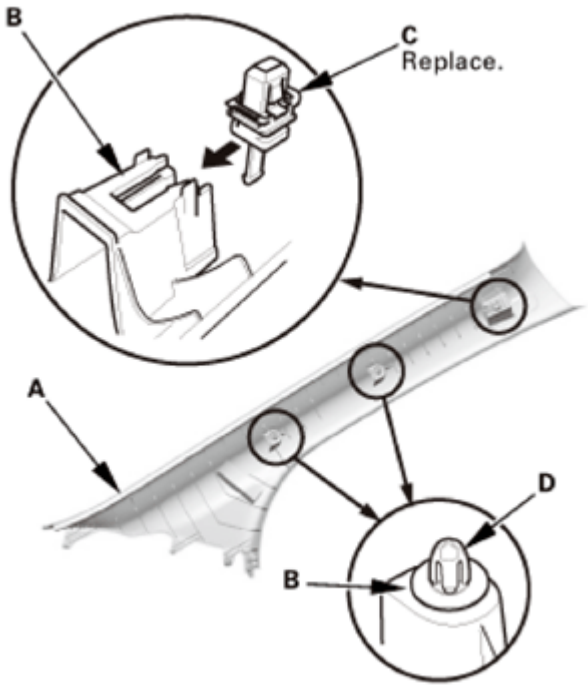

Fig. 117: Replacing Upper Clip
Courtesy of AMERICAN HONDA MOTOR CO., INC.

33. Headliner/Pillar Trim Overlap - Check

Checking and Adjusting the Headliner/Pillar Trim Overlap

To prevent the side curtain airbag from deploying and damaging the pillar trim (A-pillar trim, B-pillar trim, quarter pillar trim), the overlap between the headliner and pillar trim must be 8.0+0/-2.0 mm (0.31+0/-0.08 in). To check the overlap, do this:

1. Install the headliner (A) and the pillar trim (B).

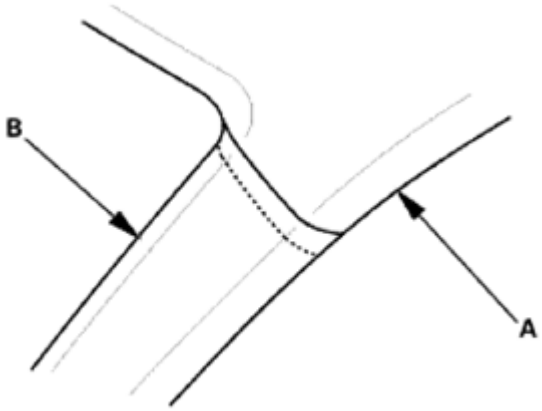

This illustration shows the A-pillar.

GETtheMANUALS.org

Fig. 118: Identifying Headliner And Pillar Trim
Courtesy of AMERICAN HONDA MOTOR CO., INC.

2. Apply masking tape (A) to the headliner (B) to mark the upper edge of the pillar trim (C).

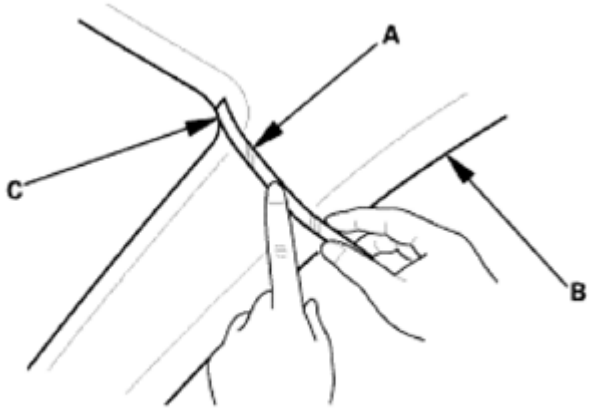

This illustration shows the A-pillar.

Fig. 119: Applying Masking Tape To Headliner
Courtesy of AMERICAN HONDA MOTOR CO., INC.

3. Remove the pillar trim, and measure the headliner overlap.
   - If the overlap is 8.0+0/-2.0 mm (0.31+0/-0.08 in), remove the tape, and install the pillar trim.
   - If the overlap is more than 8.0 mm (0.31 in), go to step 4.

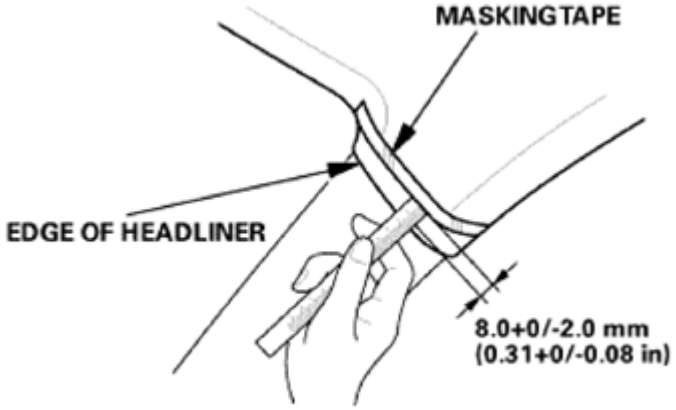

This illustration shows the A-pillar.

Fig. 120: Measuring Headliner Overlap
Courtesy of AMERICAN HONDA MOTOR CO., INC.

4. Carefully trim the headliner with a utility knife, reducing the overlap to 8.0+0/-2.0 mm (0.31+0/-0.08 in).
5. Remove the tape, and install the pillar trim.

GETtheMANUALS.org

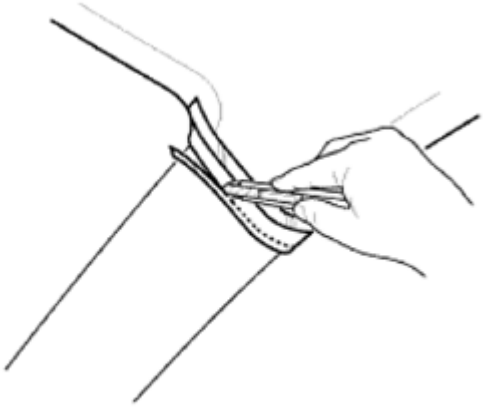

This illustration shows the A-pillar.

Fig. 121: Timing Headliner
Courtesy of AMERICAN HONDA MOTOR CO., INC.

34. A-Pillar Trim - Both Sides

NOTE: Repeat this procedure on the opposite side.

1. Carefully install a new upper clip (A) to the A-pillar trim (B).

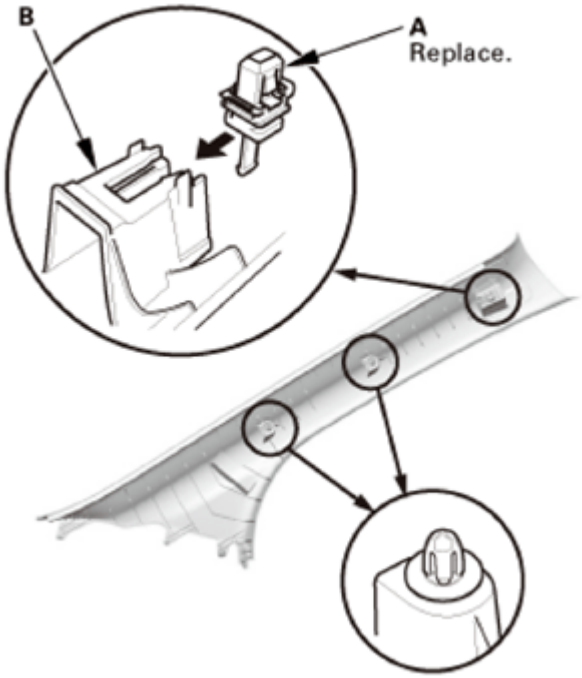

Fig. 122: Installing Upper Clip To A-Pillar Trim
Courtesy of AMERICAN HONDA MOTOR CO., INC.

2. Insert the bottom portion of the A-pillar trim (A) into the dashboard (B). Place the trim over the A-

GETtheMANUALS.org

pillar (C), and fit its upper clip (D) and the other clips (E) into the holes (F) in the A-pillar, then lightly push the trim into place.

NOTE:

- **Make sure the side curtain airbag is not tucked under the clips or the trim ribs.**
- **Do not push too hard on the A-pillar trim. If you push too hard, the clip will be damaged, and it will not hold the trim properly.**
- **Gently tug on the A-pillar trim to verify that all clips are securely fastened.**

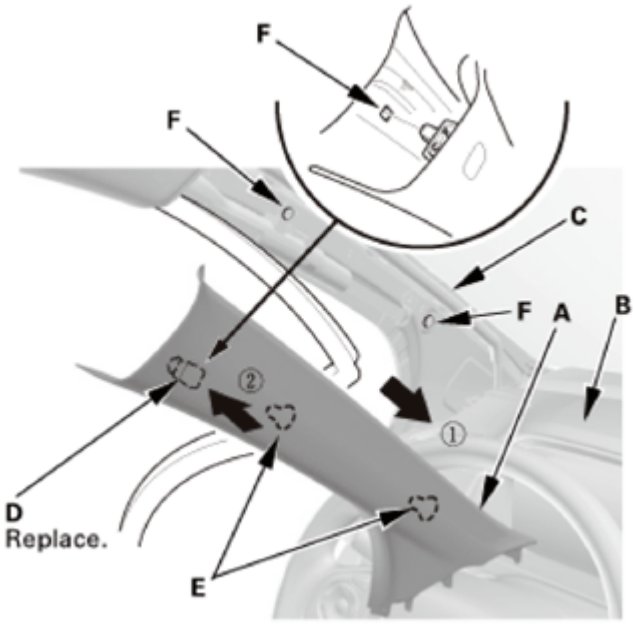

Fig. 123: Inserting Bottom Portion Of A-Pillar Trim Into Dashboard
Courtesy of AMERICAN HONDA MOTOR CO., INC.

35. Front Door Opening Seal As Needed - Both Sides

NOTE: **Repeat this procedure on the opposite side.**

1. Install the front door opening seal (A). Make sure the seal is installed securely into the hooks (B).

GETtheMANUALS.org

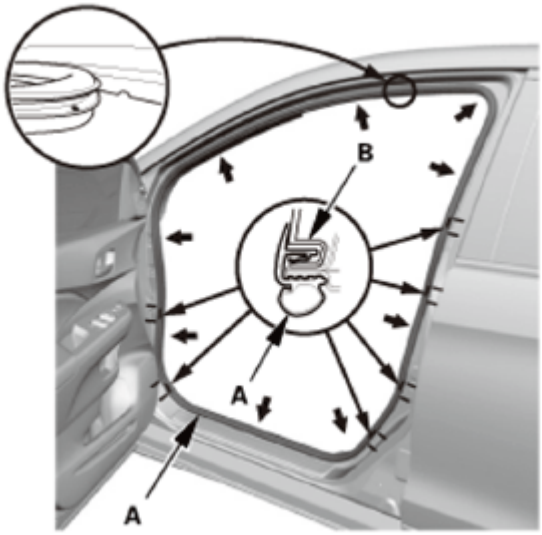

Fig. 124: Identifying Front Door Opening Seal And Hooks
Courtesy of AMERICAN HONDA MOTOR CO., INC.

36. Front Door Sill Trim - Both Sides

NOTE: Repeat this procedure on the opposite side.

1. Install the front door inner sill trim (A). Make sure the clips (B), the hooks (C), and the tabs (D) snap into place securely.

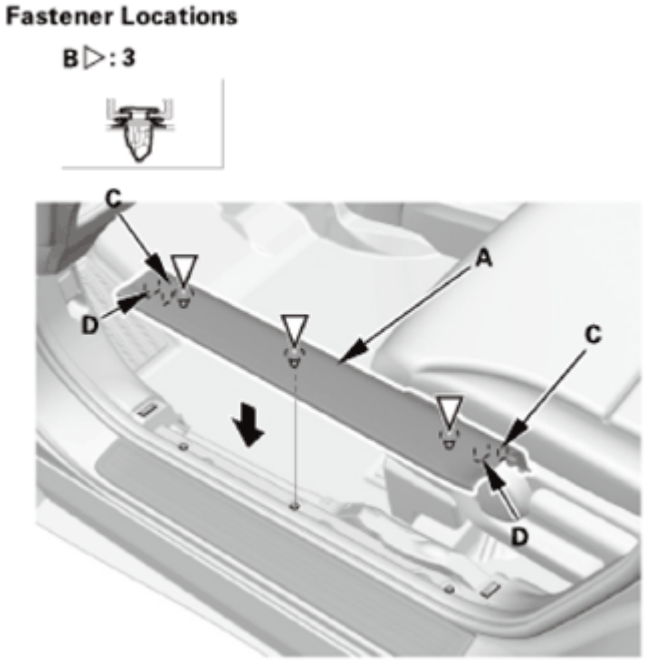

Fig. 125: Installing Front Door Inner Sill Trim
Courtesy of AMERICAN HONDA MOTOR CO., INC.

GETtheMANUALS.org

37. Battery Terminal (SRS) - Reconnection

NOTE: If the battery performance is abnormal, test the battery.

1. Clean the battery terminals.
2. Connect the positive cable (A) to the battery.

NOTE: Always connect the positive side first.

3. Connect the negative cable (B) to the battery.
4. Apply multipurpose grease to the terminals to prevent corrosion.

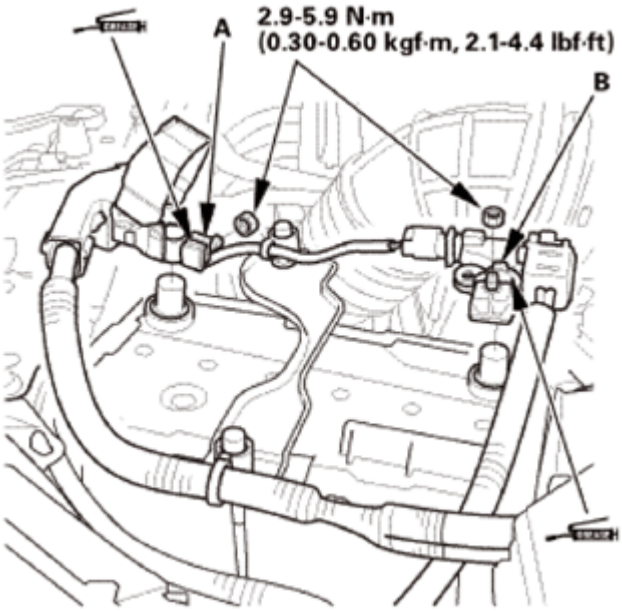

Fig. 126: Identifying Positive And Negative Cables Of Battery And Bolts With Torque Specifications
Courtesy of AMERICAN HONDA MOTOR CO., INC.

ELECTRICAL COMPASS ZONE SELECTION AND CALIBRATION

PROCEDURE

1. ELECTRICAL COMPASS ZONE SELECTION AND CALIBRATION

NOTE:

- **You should do this procedure any time the electrical compass unit is replaced.**
- **You should do this procedure in an open area away from buildings, power lines, other vehicles, and any other sources of strong magnetic fields.**

GETtheMANUALS.org

- **If you see "- -" and the CAL indicator is shown in the audio display, the electrical compass unit is self-calibrating.**
- **In most areas, there is a variation between magnetic north and true north. The compass zone needs to be set to your geographic zone to compensate for this variation.**
- **The electrical compass unit may need to be manually calibrated after exposure to a strong magnetic field. If the electrical compass unit seems to be continually showing the wrong direction, and is not self-calibrating, do the following.**

Zone Selection

1. Turn the ignition switch to ON (II).
2. Press and hold the SETUP button until you hear a beep (about 5 seconds). The display shows the electrical compass setting menu items.

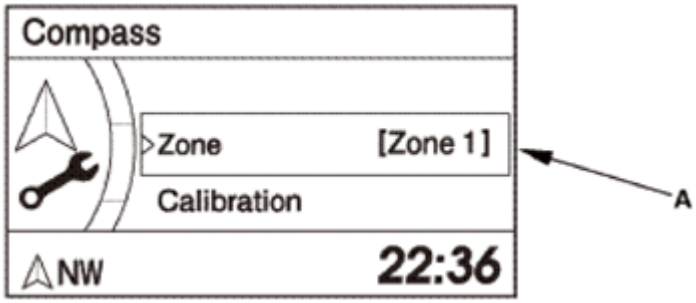

Fig. 127: Display Electrical Compass Setting Menu Items
Courtesy of AMERICAN HONDA MOTOR CO., INC.

GETtheMANUALS.org

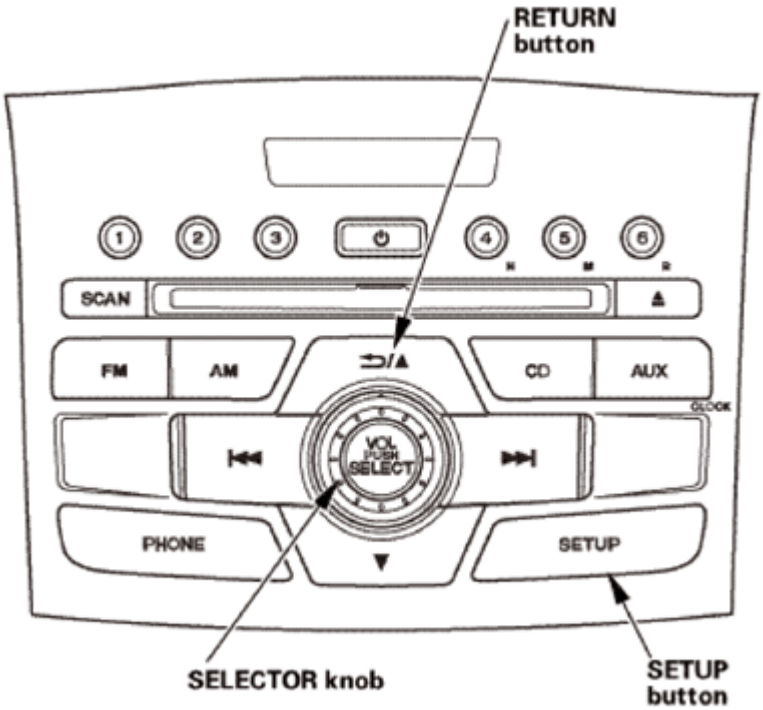

Fig. 128: Identifying Return And Setup Buttons And Selector Knob
Courtesy of AMERICAN HONDA MOTOR CO., INC.

3. Rotate the SELECTOR knob to select the Zone (A) and press the SELECTOR knob to enter the selection.

NOTE: **If necessary, press the RETURN button to return to the previous display. Pressing the SETUP button cancels the electrical compass setting mode.**

4. The display shows the currently selected zone number between from 1 to 15. Find the zone for your area on the zone map. If the correct zone is not shown, turn the selector knob to cycle the zone lists up or down.

GETtheMANUALS.org

Fig. 129: Display Zone Map
Courtesy of AMERICAN HONDA MOTOR CO., INC.

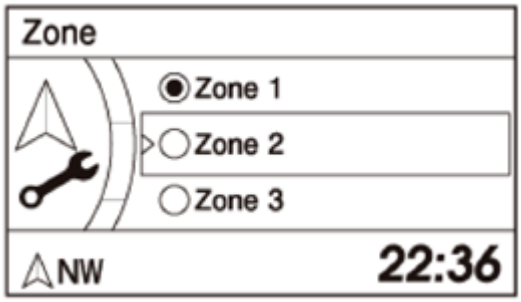

Fig. 130: Display Zone Value
Courtesy of AMERICAN HONDA MOTOR CO., INC.

GETtheMANUALS.org

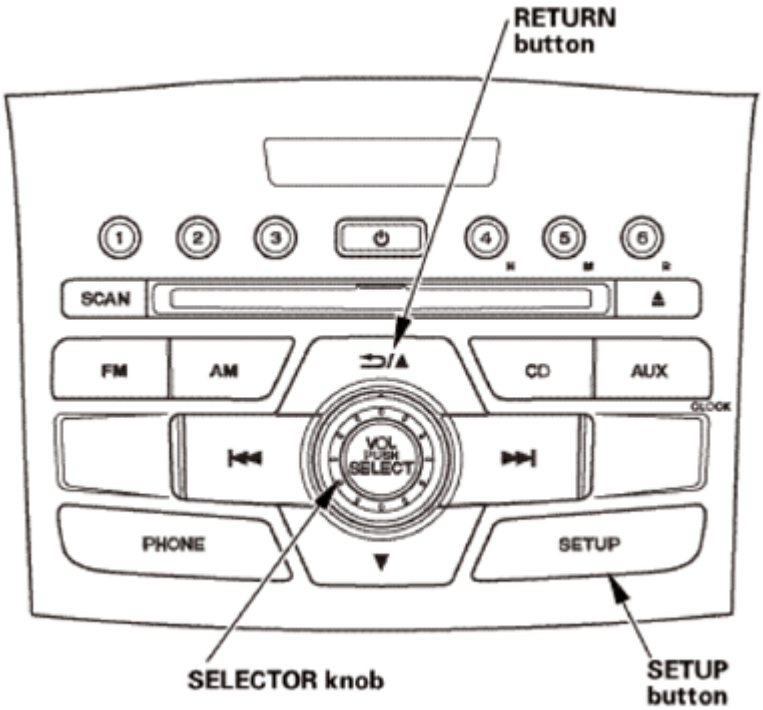

Fig. 131: Identifying Return And Setup Buttons And Selector Knob
Courtesy of AMERICAN HONDA MOTOR CO., INC.

5. Press the SELECTOR knob to decide the selected zone. Returning to the normal display, the zone selection mode ends.

Calibration

NOTE: **The electrical compass unit may need to be manually calibrated after exposure to a strong magnetic field. If the electrical compass unit seems to be continually showing the wrong direction, and is not self-calibrating, do the following.**

1. Check the No. A2-2 (F/B MAIN) (60A) fuse in the under-hood fuse/relay box and the No. B25 (10A), No. B19 (7.5 A) and the No. B5 (10A) fuses in the under-dash fuse/relay box.
2. Turn the ignition switch to ON (II).
3. Press and hold the SETUP button until you hear a beep (about 5 seconds). The display shows the electrical compass setting menu items.

GETtheMANUALS.org

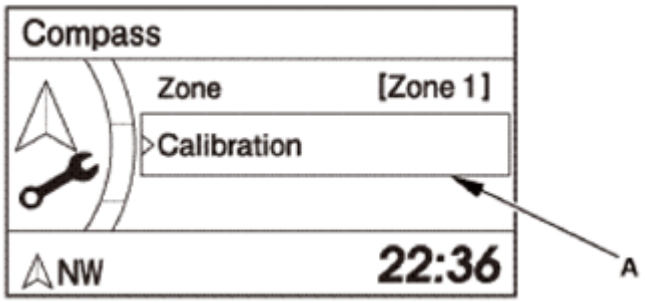

Fig. 132: Display Electrical Compass Setting Menu Items
Courtesy of AMERICAN HONDA MOTOR CO., INC.

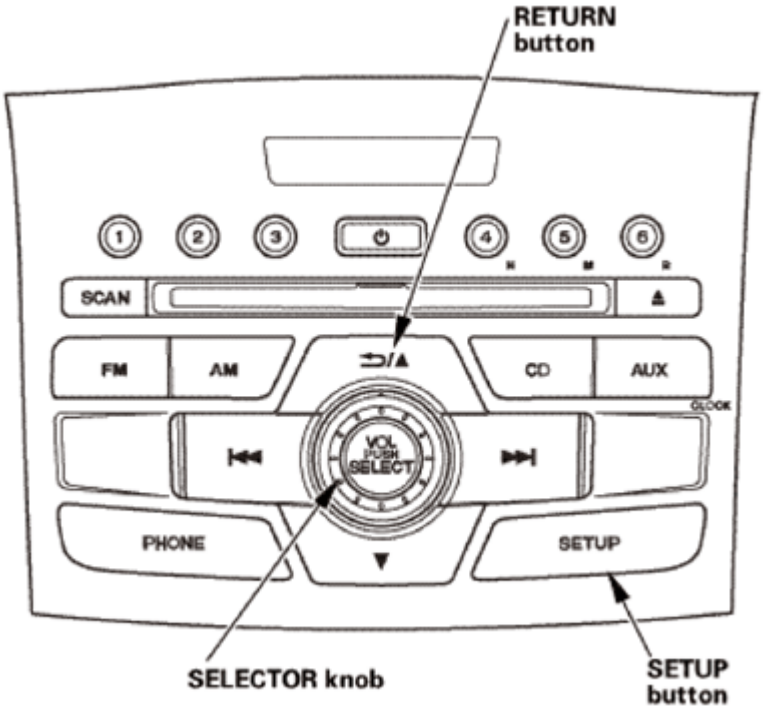

Fig. 133: Identifying Return And Setup Buttons And Selector Knob
Courtesy of AMERICAN HONDA MOTOR CO., INC.

4. Rotate the SELECTOR knob to select the Calibration (A) and press the SELECTOR knob to enter the selection.

NOTE: **If necessary, press the RETURN button to return to the previous display. Pressing the SETUP button cancels the electrical compass setting mode.**

5. Press the SELECTOR knob to enter the selection. The display shows the Calibration Start (A).

GETtheMANUALS.org

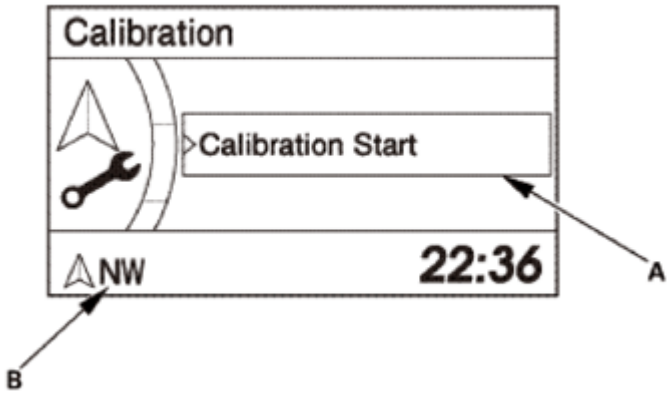

Fig. 134: Display Calibration Start
Courtesy of AMERICAN HONDA MOTOR CO., INC.

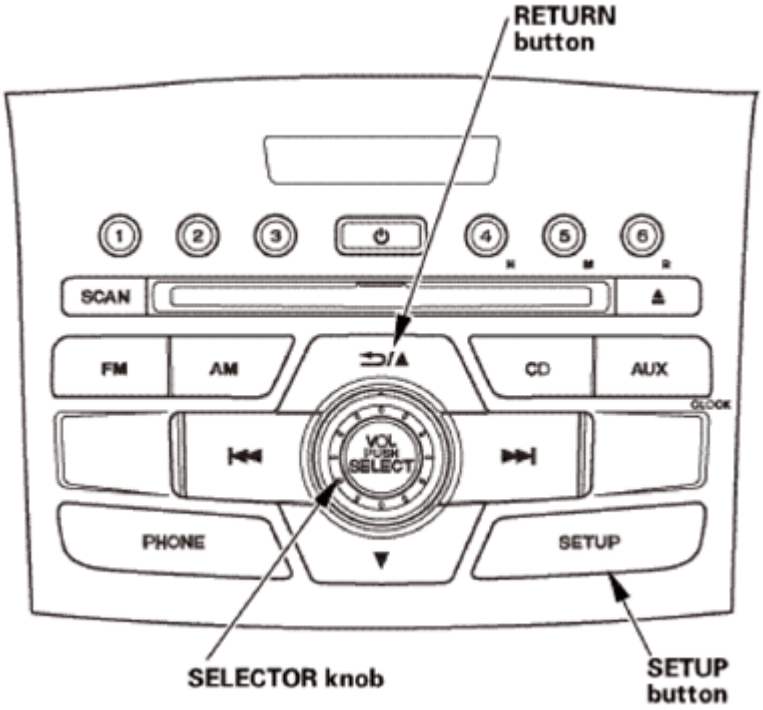

Fig. 135: Identifying Return And Setup Buttons And Selector Knob
Courtesy of AMERICAN HONDA MOTOR CO., INC.

6. When the display shows the Calibration Start, press the SELECTOR knob. The compass display blinks and the CAL indicator (B) comes on.
7. Drive the vehicle slowly in three complete circles (20 seconds or more per a circle). When the calibration is successfully completed, the compass display stops blinking and the CAL indicator goes off.

NOTE:

- **The audio system is not related to the electrical compass system. Even if the electrical compass system is calibrating, the display returns to the normal display which was last selected.**

GETtheMANUALS.org

- **If the calibration fails, try another location (an open area away from buildings, power lines, other vehicles, and any other sources of strong magnetic fields) and do the calibration procedure again.**

GETtheMANUALS.org

CONNECTOR AND HARNESS LOCATIONS BODY - ANTENNA

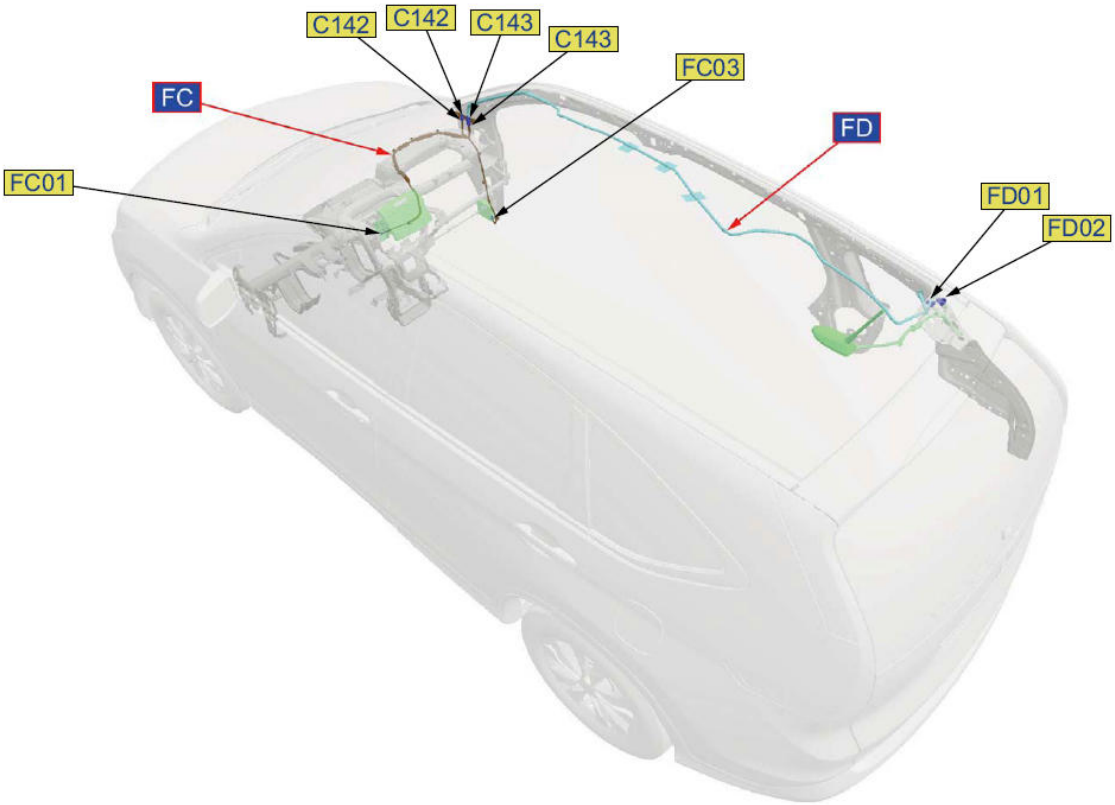

Fig. 1: Antenna Connector And Harness Locations
Courtesy of AMERICAN HONDA MOTOR CO., INC.

FC: AM/FM/XM ANTENNA SUBLEAD

Ref. No.	Connector Name	Male/Female	Connector Type	Notes
FC01	Audio-Navigation Unit Connector D (3P)/Audio Unit Connector D (3P)	Female	Component Connector	
FC03	XM Receiver Connector B (2P)	Female	Component Connector	
C142	C142		In-line Connector	
C143	C143		In-line Connector	

FD: AM/FM/XM ANTENNA LEAD

Ref. No.	Connector Name	Male/Female	Connector Type	Notes
FD01	AM/FM Antenna 3P Connector	Female	Component Connector	
FD02	XM Antenna 2P Connector	Male	Component Connector	

GETtheMANUALS.org

C142	C142		In-line Connector	
C143	C143		In-line Connector	

CONNECTOR AND HARNESS LOCATIONS BODY - ANTENNA (WITH NAVIGATION)

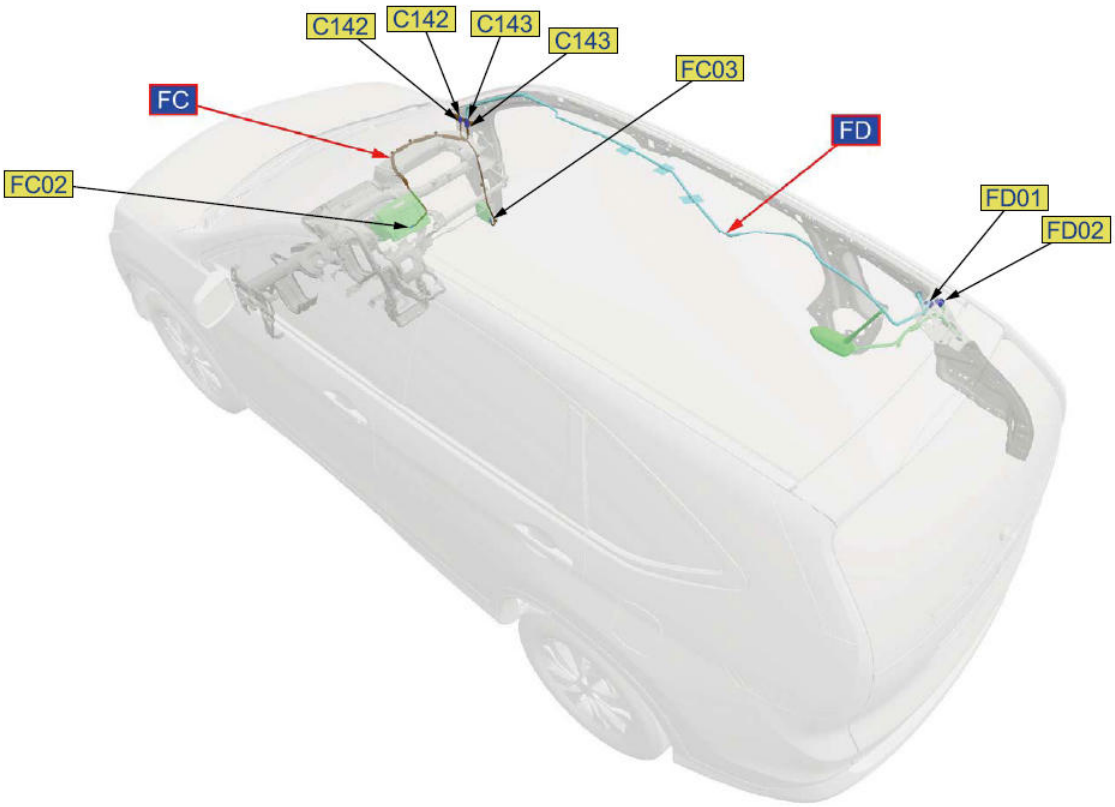

Fig. 2: Antenna (With Navigation) Connector And Harness Locations
Courtesy of AMERICAN HONDA MOTOR CO., INC.

FC: AM/FM/XM ANTENNA SUBLEAD

Ref. No.	Connector Name	Male/Female	Connector Type	Notes
FC02	FM Distributor 3P Connector	Female	Component Connector	
FC03	XM Receiver Connector B(2P)	Female	Component Connector	
C142	C142		In-line Connector	
C143	C143		In-line Connector	

FD: AM/FM/XM ANTENNA LEAD

Ref. No.	Connector Name	Male/Female	Connector Type	Notes
FD01	AM/FM Antenna 3P Connector	Female	Component Connector	
FD02	XM Antenna 2P Connector	Male	Component Connector	
C142	C142		In-line Connector	
C143	C143		In-line Connector	

GETtheMANUALS.org

CONNECTOR AND HARNESS LOCATIONS BODY - FLOOR

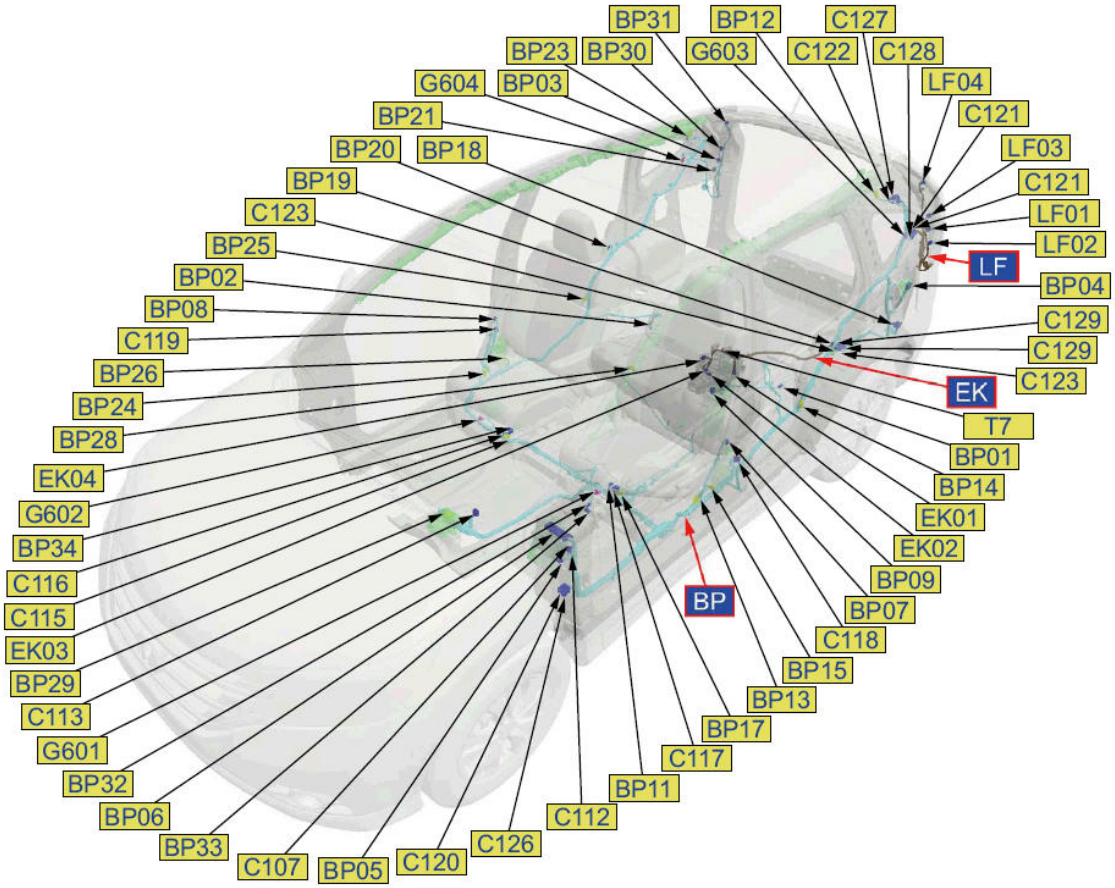

Fig. 3: Floor Connector And Harness Locations
Courtesy of AMERICAN HONDA MOTOR CO., INC.

BP: FLOOR WIRE HARNESS

Ref. No.	Connector Name	Male/Female	Connector Type	Notes
BP01	Left-Rear Wheel Speed Sensor 2P Connector	Female	Component Connector	
BP02	Right-Rear Wheel Speed Sensor 2P Connector	Female	Component Connector	
BP03	Right Back-Up Light 2P Connector	Female	Component Connector	
BP04	Real Time AWD Control Unit 24P Connector	Female	Component Connector	
BP05	Under-Dash Fuse/Relay Box Connector G (3P)	Female	Component Connector	
BP06	Under-Dash Fuse/Relay Box Connector B (44P)	Female	Component Connector	
BP07	Driver's Door Switch 1P Connector	Female	Component Connector	
BP08	Front Passenger's Door Switch 1P Connector	Female	Component Connector	
BP09	Fuel Tank Unit 4P Connector	Female	Component Connector	
BP11	Driver's Seat Belt Buckle Switch 2P Connector	Female	Component Connector	
BP12	Left Side Curtain Airbag Inflator 2P Connector	Female	Component Connector	
BP13	Left Side Impact Sensor (First) 4P Connector	Female	Component Connector	
BP14	Left Side Impact Sensor (Second) 2P Connector	Female	Component Connector	

GETtheMANUALS.org

BP15	Driver's Seat Belt Tensioner 4P Connector	Female	Component Connector	
BP17	Driver's Side Airbag Inflator 2P Connector	Female	Component Connector	
BP18	Rear Relay Holder	Female	Component Connector	
BP19	Left Rear Door Switch 1P Connector	Female	Component Connector	
BP20	Right Rear Door Switch 1P Connector	Female	Component Connector	
BP21	Right Rear Turn Signal Light 2P Connector	Female	Component Connector	
BP23	Right Side Curtain Airbag Inflator 2P Connector	Female	Component Connector	
BP24	Right Side Impact Sensor (First) 4P Connector	Female	Component Connector	
BP25	Right Side Impact Sensor (Second) 2P Connector	Female	Component Connector	
BP26	Front Passenger's Seat Belt Tensioner 4P Connector	Female	Component Connector	
BP28	Rear Safing Sensor 2P Connector	Female	Component Connector	
BP29	SRS Unit Connector B (39P)	Female	Component Connector	
BP30	Right Lower Taillight 3P Connector	Female	Component Connector	
BP31	Right Upper Taillight 2P Connector	Female	Component Connector	
BP32	FTP Sensor 3P Connector	Female	Component Connector	
BP33	EVAP Canister Vent Shut Valve 2P Connector	Female	Component Connector	
BP34	Subwoofer 2P Connector	Female	Component Connector	
C107	C107		In-line Connector	
C112	C112		In-line Connector	
C113	C113		In-line Connector	
C115	C115		In-line Connector	
C116	C116		In-line Connector	
C117	C117		In-line Connector	
C118	C118		In-line Connector	
C119	C119		In-line Connector	
C120	C120		In-line Connector	
C121	C121		In-line Connector	
C122	C122		In-line Connector	
C123	C123		In-line Connector	
C126	C126		In-line Connector	
C127	C127		In-line Connector	
C129	C129		In-line Connector	
C128	C128		Junction Connector	
G601	G601		Ground	
G602	G602		Ground	
G603	G603		Ground	
G604	G604		Ground	

EK: REAR DIFFERENTIAL SUBHARNESS

Ref. No.	Connector Name	Male/Female	Connector Type	Notes

GETtheMANUALS.org

EK01	Rear Differential Pump Motor 2P Connector	Female	Component Connector	
EK02	Rear Differential Fluid Temperature Sensor 2P Connector	Female	Component Connector	
EK03	Rear Differential Fluid Pressure Sensor 3P Connector	Female	Component Connector	
EK04	Rear Differential Solenoid Valve 1P Connector	Female	Component Connector	
C123	C123		In-line Connector	
C129	C129		In-line Connector	
T7	T7		Ground	

LF: LEFT TAILLIGHT WIRE HARNESS

Ref. No.	Connector Name	Male/Female	Connector Type	Notes
LF01	Left Back-Up Light 2P Connector	Female	Component Connector	
LF02	Left Rear Turn Signal Light 2P Connector	Female	Component Connector	
LF03	Left Lower Taillight 3P Connector	Female	Component Connector	
LF04	Left Upper Taillight 2P Connector	Female	Component Connector	
C121	C121		In-line Connector	

CONNECTOR AND HARNESS LOCATIONS BODY - ROOF

GETtheMANUALS.org

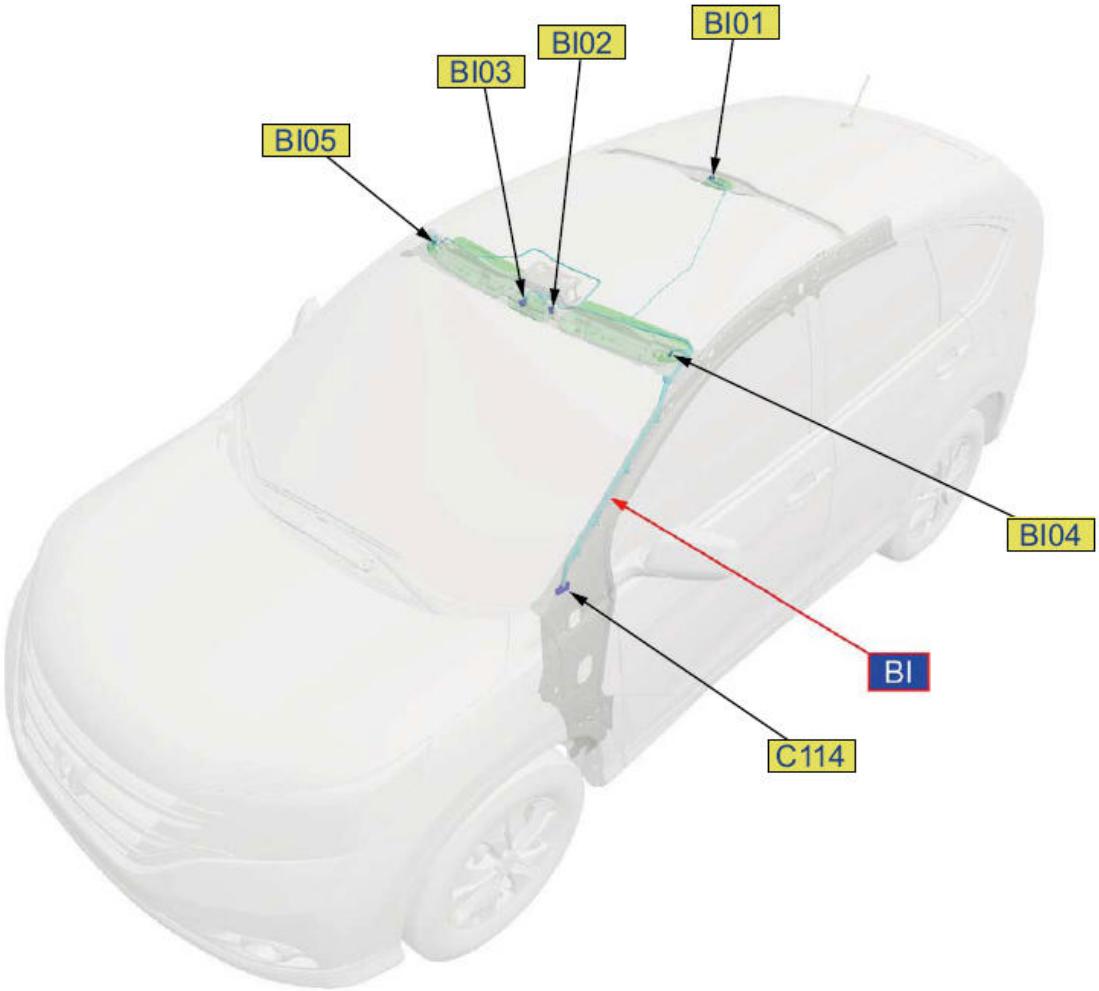

Fig. 4: Roof Connector And Harness Locations
Courtesy of AMERICAN HONDA MOTOR CO., INC.

BL: ROOF WIRE HARNESS

Ref. No.	Connector Name	Male/Female	Connector Type	Notes
BI01	Ceiling Light 3P Connector	Female	Component Connector	
BI02	Individual Map Light 3P Connector	Female	Component Connector	
BI03	Ambient Light/Microphone 10P Connector	Female	Component Connector	
BI04	Driver's Vanity Mirror Light 2P Connector	Female	Component Connector	
BIOS	Passenger's Vanity Mirror Light 2P Connector	Female	Component Connector	
C114	C114		In-line Connector	

CONNECTOR AND HARNESS LOCATIONS BODY - ROOF (WITH MOONROOF)

GETtheMANUALS.org

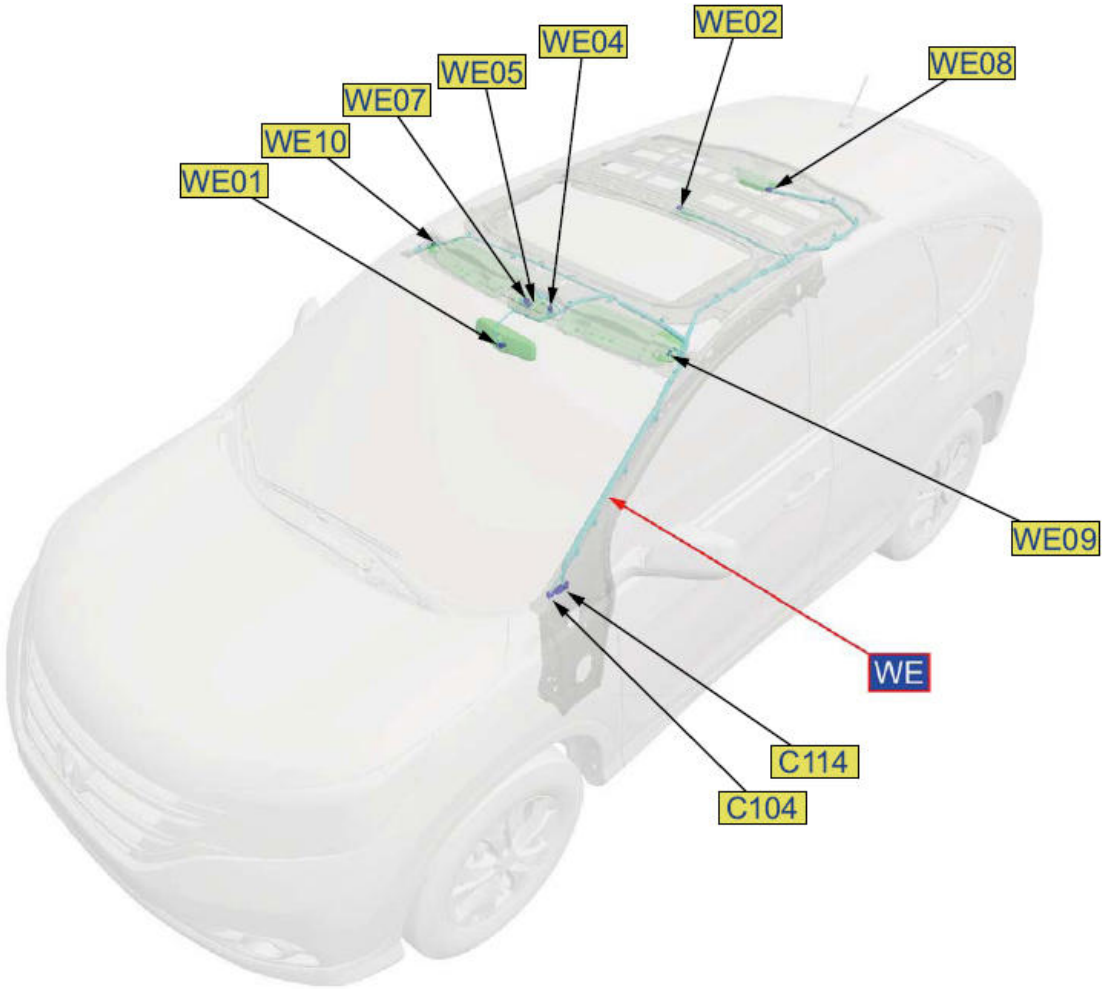

Fig. 5: Roof (With Moonroof) Connector And Harness Locations
Courtesy of AMERICAN HONDA MOTOR CO., INC.

WE: MOONROOF WIRE HARNESS

Ref. No.	Connector Name	Male/Female	Connector Type	Notes
WE01	Automatic Dimming Inside Mirror 7P Connector	Female	Component Connector	
WE02	Ceiling Light 3P Connector	Female	Component Connector	
WE04	Individual Map Light 3P Connector	Female	Component Connector	
WE05	Microphone 3P Connector	Female	Component Connector	
WE07	Moonroof Switch 12P Connector	Female	Component Connector	
WE08	Moonroof Control Unit/Motor 14P Connector	Female	Component Connector	
WE09	Driver's Vanity Mirror Light 2P Connector	Female	Component Connector	
WE10	Passenger's Vanity Mirror Light 2P Connector	Female	Component Connector	
C104	C104		In-line Connector	
C114	C114		In-line Connector	

CONNECTOR AND HARNESS LOCATIONS BODY - ROOF (WITH REAR

GETtheMANUALS.org

ENTERTAINMENT)

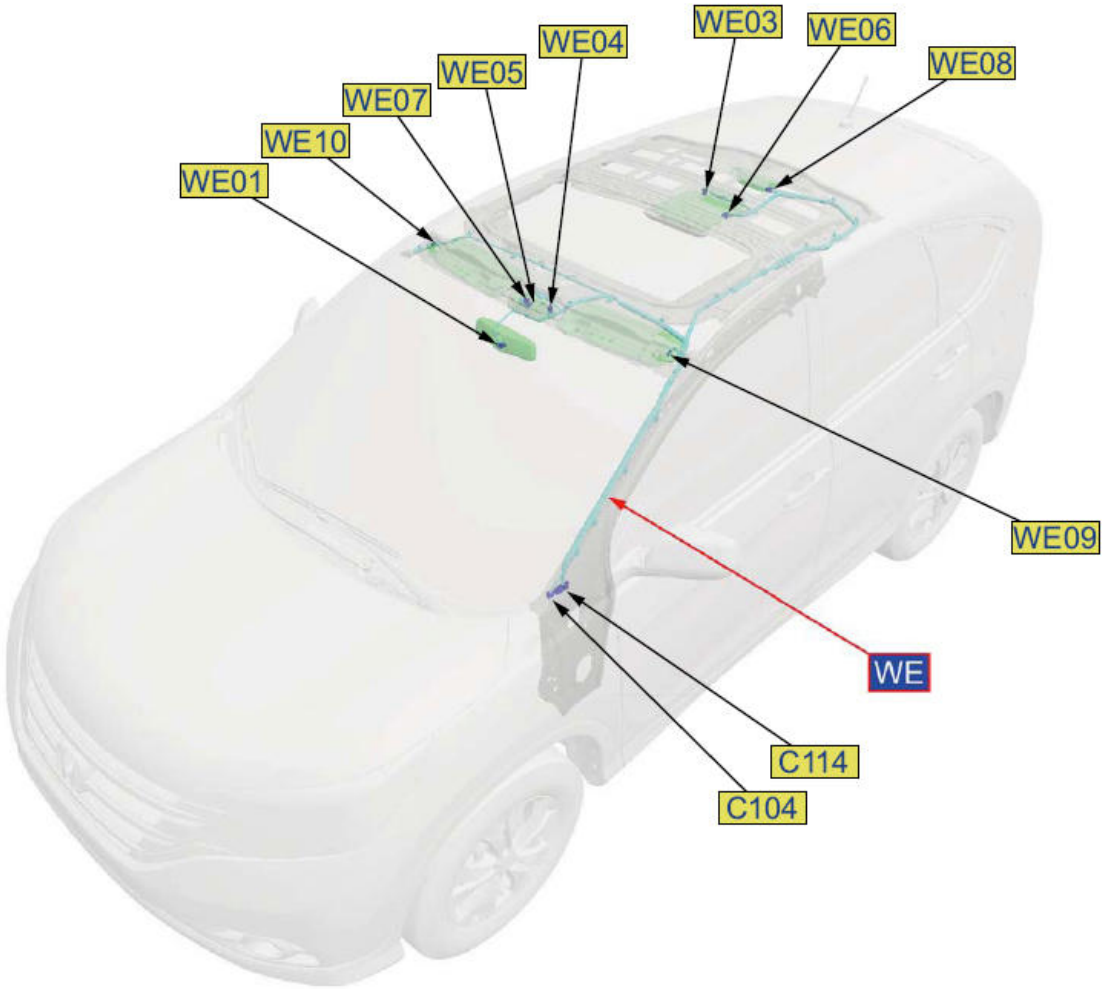

Fig. 6: Roof (With Rear Entertainment) Connector And Harness Locations
Courtesy of AMERICAN HONDA MOTOR CO., INC.

WE: MOONROOF WIRE HARNESS

Ref. No.	Connector Name	Male/Female	Connector Type	Notes
WE01	Automatic Dimming Inside Mirror 7P Connector	Female	Component Connector	
WE03	Ceiling Light 3P Connector	Female	Component Connector	
WE04	Individual Map Light 3P Connector	Female	Component Connector	
WE05	Microphone 3P Connector	Female	Component Connector	
WE06	Rear Controller and Screen 16P Connector	Female	Component Connector	
WE07	Moonroof Switch 12P Connector	Female	Component Connector	
WE08	Moonroof Control Unit/Motor 14P Connector	Female	Component Connector	
WE09	Driver's Vanity Mirror Light 2P Connector	Female	Component Connector	
WE10	Passenger's Vanity Mirror Light 2P Connector	Female	Component Connector	
C104	C104		In-line Connector	

GETtheMANUALS.org

C114	C114		In-line Connector	

CONNECTOR AND HARNESS LOCATIONS BODY - TAILGATE

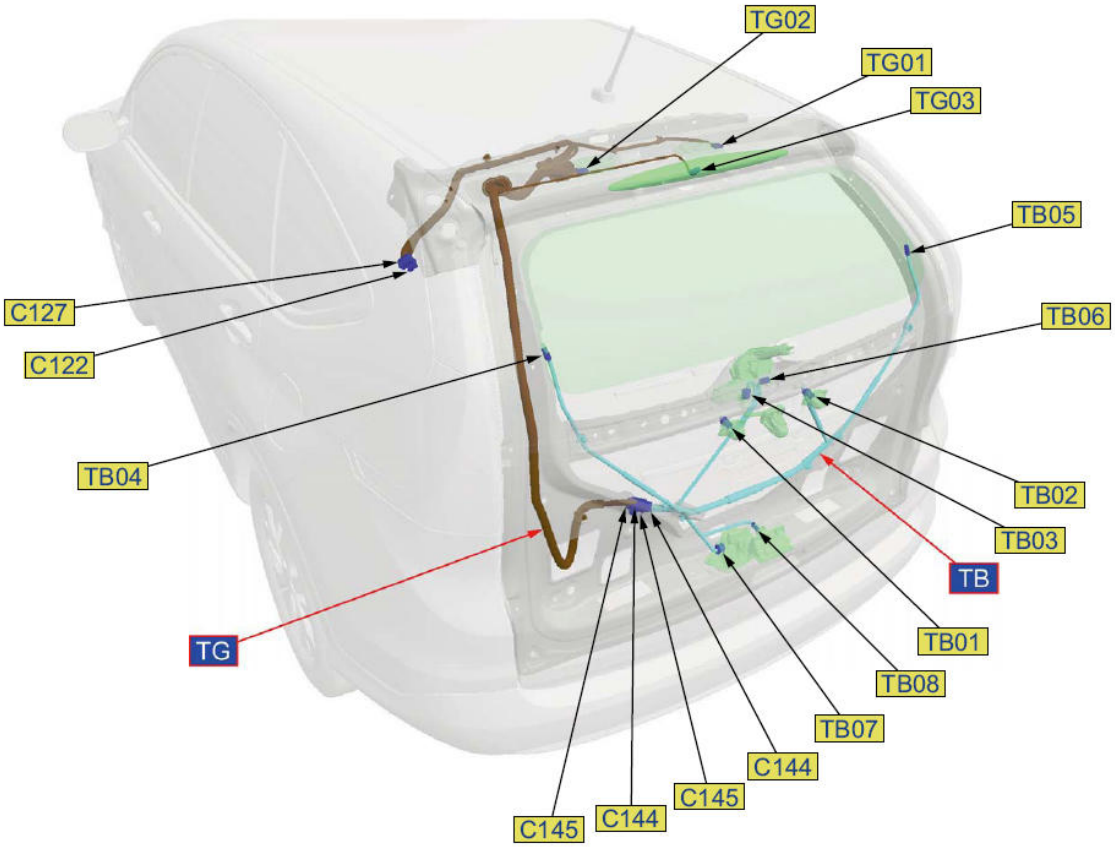

Fig. 7: Tailgate Connector And Harness Locations
Courtesy of AMERICAN HONDA MOTOR CO., INC.

TB: TAILGATE WIRE HARNESS

Ref. No.	Connector Name	Male/Female	Connector Type	Notes
TB01	Left License Plate Light 2P Connector	Female	Component Connector	
TB02	Right License Plate Light 2P Connector	Female	Component Connector	
TB03	Multi-View Rear Camera 12P Connector	Female	Component Connector	
TB04	Rear Window Defogger Connector (+)	Female	Component Connector	
TB05	Rear Window Defogger Connector (-)	Female	Component Connector	
TB06	Rear Window Wiper Motor 4P Connector	Female	Component Connector	

GETtheMANUALS.org

TB07	Tailgate Release Actuator/Latch Switch 4P Connector	Female	Component Connector	
TB08	Tailgate Outer Handle Switch 2P Connector	Female	Component Connector	
C144	C144		In-line Connector	
C145	C145		In-line Connector	

TG: TAILGATE SUBHARNESS

Ref. No.	Connector Name	Male/Female	Connector Type	Notes
TG01	Cargo Area Light 3P Connector	Female	Component Connector	
TG02	Electrical Compass Unit 6P Connector	Female	Component Connector	
TG03	High Mount Brake Light 2P Connector	Female	Component Connector	
C122	C122		In-line Connector	
C127	C127		In-line Connector	
C144	C144		In-line Connector	
C145	C145		In-line Connector	

CONNECTOR AND HARNESS LOCATIONS DASHBOARD - DASHBOARD (A/C WIRE HARNESS)

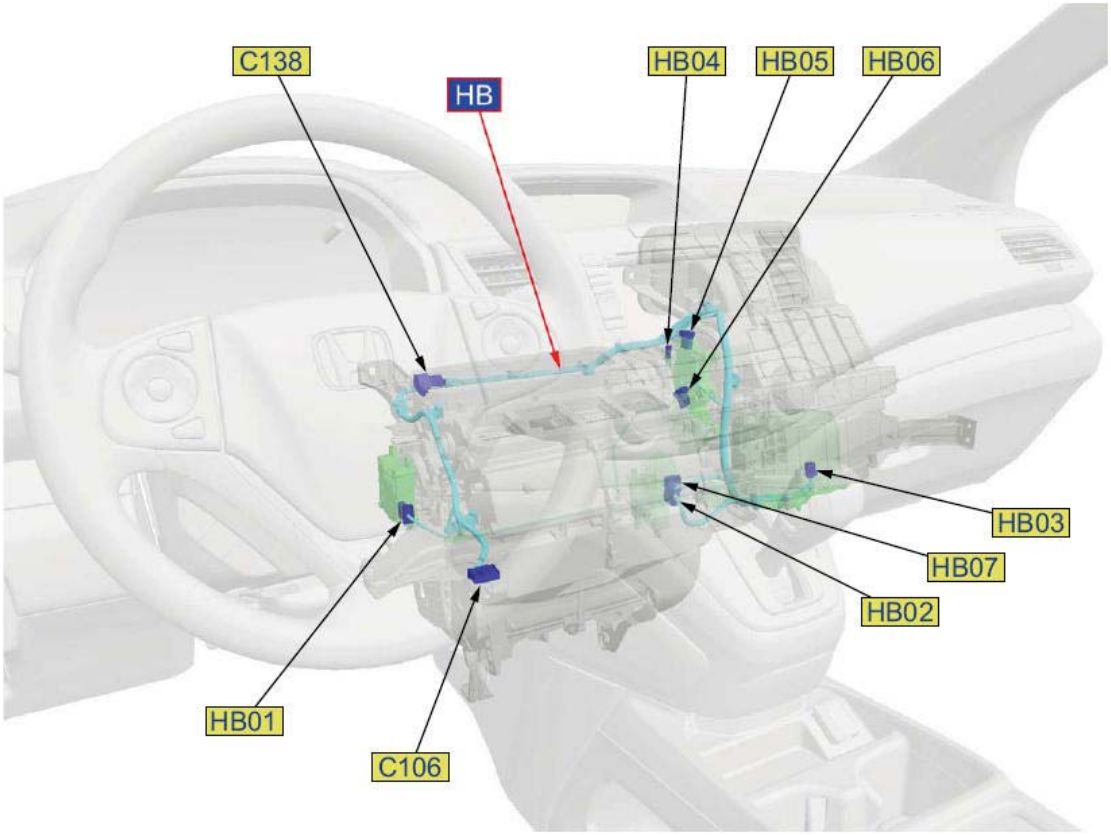

Fig. 8: Dashboard (A/C Wire) Connector And Harness Locations

GETtheMANUALS.org

Courtesy of AMERICAN HONDA MOTOR CO., INC.

HB: A/C WIRE HARNESS

Ref. No.	Connector Name	Male/Female	Connector Type	Notes
HB01	Driver's Air Mix Control Motor 7P Connector	Female	Component Connector	
HB02	Passenger's Air Mix Control Motor 7P Connector	Female	Component Connector	
HB03	Blower Motor 2P Connector	Female	Component Connector	
HB04	Evaporator Temperature Sensor 2P Connector	Female	Component Connector	
HB05	Recirculation Control Motor 7P Connector	Female	Component Connector	
HB06	Mode Control Motor 7P Connector	Female	Component Connector	
HB07	Power Transistor 4P Connector	Female	Component Connector	
C106	C106		In-line Connector	
C138	C138		In-line Connector	

CONNECTOR AND HARNESS LOCATIONS DASHBOARD - DASHBOARD (CONSOLE WITH USB UNIT)

GETtheMANUALS.org

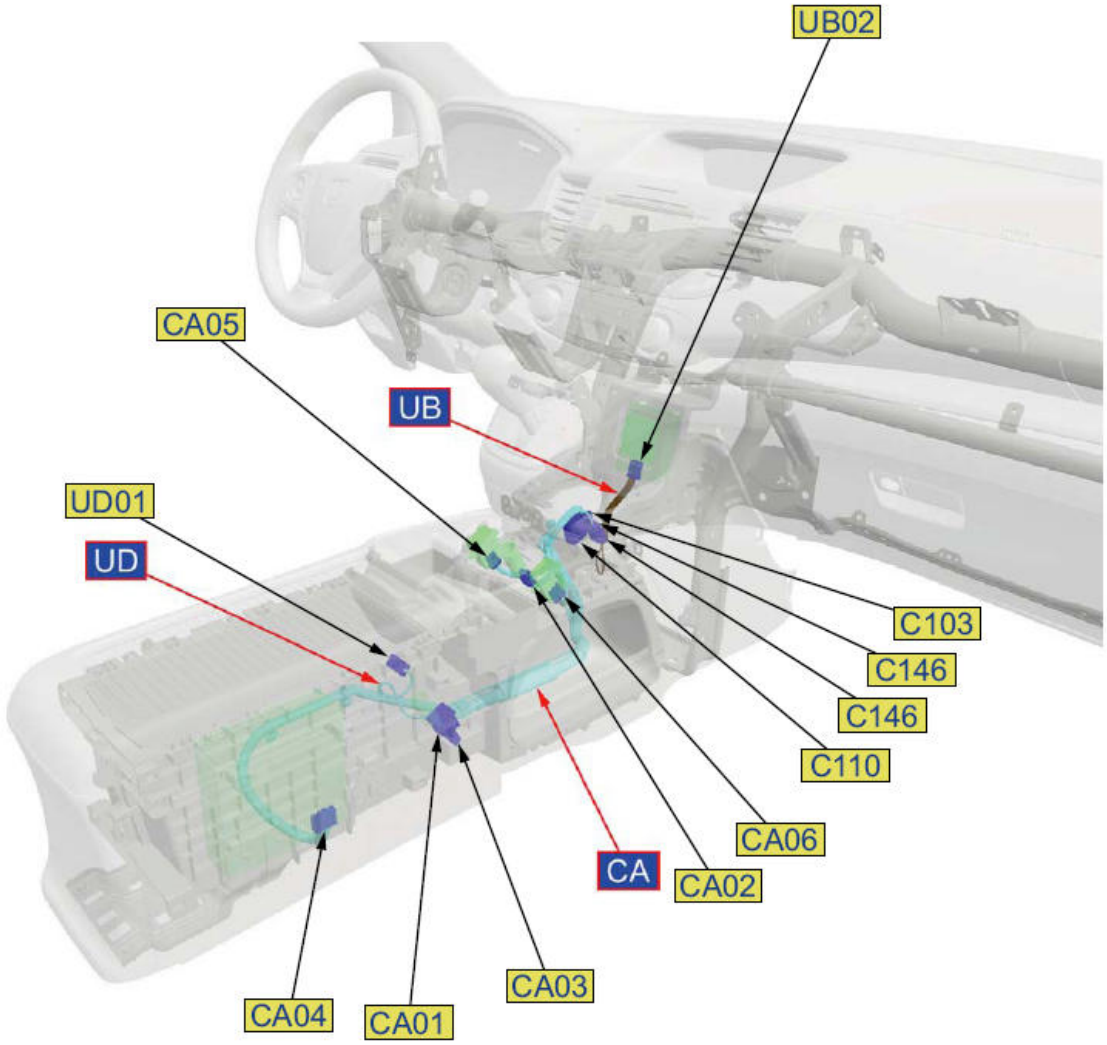

Fig. 9: Dashboard (Console With USB Unit) Connector And Harness Locations
Courtesy of AMERICAN HONDA MOTOR CO., INC.

CA: CONSOLE SUBHARNESS

Ref. No.	Connector Name	Male/Female	Connector Type	Notes
CA01	Console Accessory Power Socket 2P Connector	Female	Component Connector	
CA02	Front Accessory Power Socket 2P Connector	Female	Component Connector	
CA04	DVD Player Unit 24P Connector	Female	Component Connector	
CA05	Driver's Seat Heater Switch 6P Connector	Female	Component Connector	
CA06	Front Passenger's Seat Heater Switch 7P Connector	Female	Component Connector	
CA03	Auxiliary Jack Assembly 5P Connector	Female	YOP Connector (Optional Connector)	
C103	C103		In-line Connector	

GETtheMANUALS.org

C110	C110		In-line Connector	

UB: USB MAIN HARNESS

Ref. No.	Connector Name	Male/Female	Connector Type	Notes
UB02	USB Adapter Control Unit Connector B (5P)	Female	Component Connector	
C146	C146		In-line Connector	

UD: USB ADAPTER

Ref. No.	Connector Name	Male/Female	Connector Type	Notes
UD01	USB Port (console) 5P Connector	Female	YOP Connector (Optional Connector)	
C146	C146		In-line Connector	

CONNECTOR AND HARNESS LOCATIONS DASHBOARD - DASHBOARD (CONSOLE)

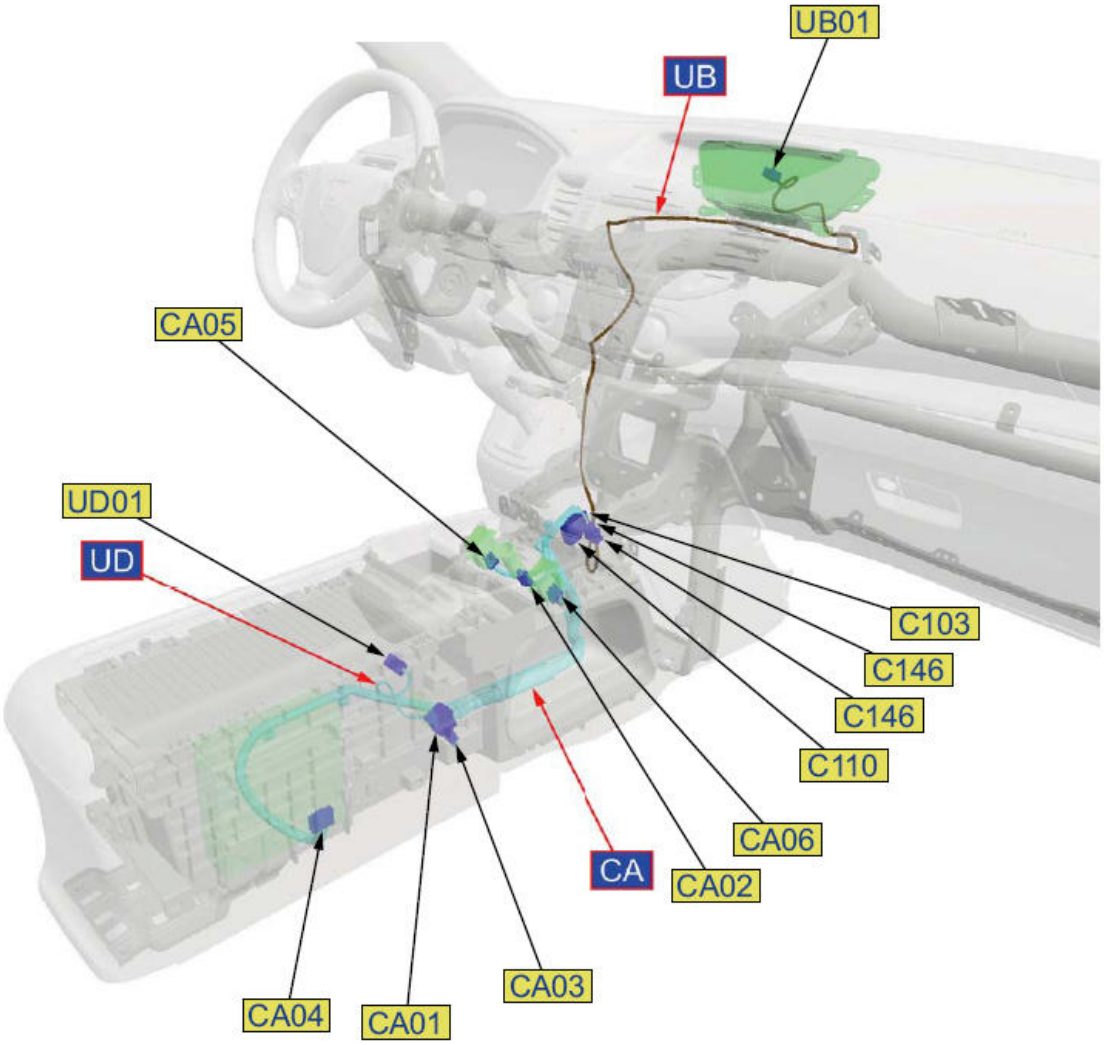

Fig. 10: Dashboard (Console) Connector And Harness Locations

GETtheMANUALS.org

Courtesy of AMERICAN HONDA MOTOR CO., INC.

CA: CONSOLE SUBHARNESS

Ref. No.	Connector Name	Male/Female	Connector Type	Notes
CA01	Console Accessory Power Socket 2P Connector	Female	Component Connector	
CA02	Front Accessory Power Socket 2P Connector	Female	Component Connector	
CA04	DVD Player Unit 24P Connector	Female	Component Connector	
CA05	Driver's Seat Heater Switch 6P Connector	Female	Component Connector	
CA06	Front Passenger's Seat Heater Switch 7P Connector	Female	Component Connector	
CA03	Auxiliary Jack Assembly 5P Connector	Female	YOP Connector (Optional Connector)	
C103	C103		In-line Connector	
C110	C110		In-line Connector	

UB: USB MAIN HARNESS

Ref. No.	Connector Name	Male/Female	Connector Type	Notes
UB01	Multi-Information Display Unit Connector B (5P)	Female	Component Connector	
C146	C146		In-line Connector	

UD: USB ADAPTER

Ref. No.	Connector Name	Male/Female	Connector Type	Notes
UD01	USB Port (console) 5P Connector	Female	YOP Connector (Optional Connector)	
C146	C146		In-line Connector	

CONNECTOR AND HARNESS LOCATIONS DASHBOARD - DASHBOARD MAIN (LEFT SIDE)

GETtheMANUALS.org

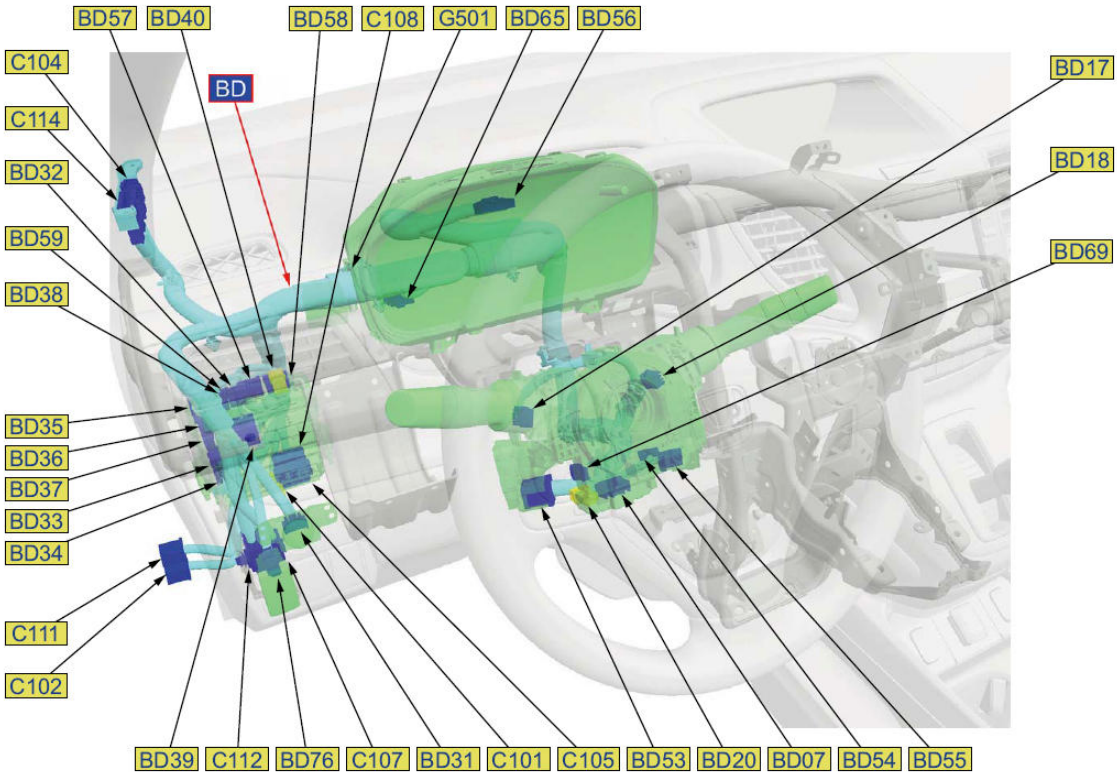

Fig. 11: Dashboard Main (Left Side) Connector And Harness Locations
Courtesy of AMERICAN HONDA MOTOR CO., INC.

BD: DASHBOARD WIRE HARNESS

Ref. No.	Connector Name	Male/Female	Connector Type	Notes
BD07	Cable Reel Connector A (20P)	Female	Component Connector	
BD17	Combination Light Switch 12P Connector	Female	Component Connector	
BD18	Wiper/Washer Switch 10P Connector	Female	Component Connector	
BD20	Cable Reel Connector B(4P)	Female	Component Connector	
BD31	ECON Switch 6P Connector	Female	Component Connector	
BD32	Under-Dash Fuse/Relay Box Connector K (12P)	Female	Component Connector	
BD33	Under-Dash Fuse/Relay Box Connector R (8P)	Female	Component Connector	
BD34	Under-Dash Fuse/Relay Box Connector S (10P)	Female	Component Connector	
BD35	Under-Dash Fuse/Relay Box Connector N (13P)	Female	Component Connector	
BD36	Under-Dash Fuse/Relay Box Connector P (20P)	Female	Component Connector	
BD37	Under-Dash Fuse/Relay Box Connector Q (16P)	Female	Component Connector	
BD38	Under-Dash Fuse/Relay Box Connector M (7P)	Female	Component Connector	
BD39	Under-Dash Fuse/Relay Box Connector A (5P)	Female	Component Connector	
BD40	Under-Dash Fuse/Relay Box Connector H (4P)	Female	Component Connector	
BD53	Ignition Switch 5P Connector	Female	Component Connector	
BD54	Immobilizer-Keyless Control Unit 7P Connector	Female	Component Connector	
BD55	Ignition Key Switch 7P Connector	Female	Component Connector	

GETtheMANUALS.org

BD56	Gauge Control Module 32P Connector	Female	Component Connector	
BD57	Under-Dash Fuse/Relay Box Connector W (24P)	Female	Component Connector	
BD58	Under-Dash Fuse/Relay Box Connector T (20P)	Female	Component Connector	
BD59	Under-Dash Fuse/Relay Box Connector X (1 OP)	Female	Component Connector	
BD65	Under-Dash Relay Holder		Component Connector	
BD69	Steering Angle Sensor 4P Connector	Female	Component Connector	
BD76	VSA OFF Switch 5P Connector	Female	Component Connector	
C101	C101		In-line Connector	
C102	C102		In-line Connector	
C104	C104		In-line Connector	
C105	C105		In-line Connector	
C107	C107		In-line Connector	
C108	C108		In-line Connector	
C111	C111		In-line Connector	
C112	C112		In-line Connector	
C114	C114		In-line Connector	
G501	G501		Ground	

CONNECTOR AND HARNESS LOCATIONS DASHBOARD - DASHBOARD MAIN (RIGHT SIDE WITH NAVIGATION)

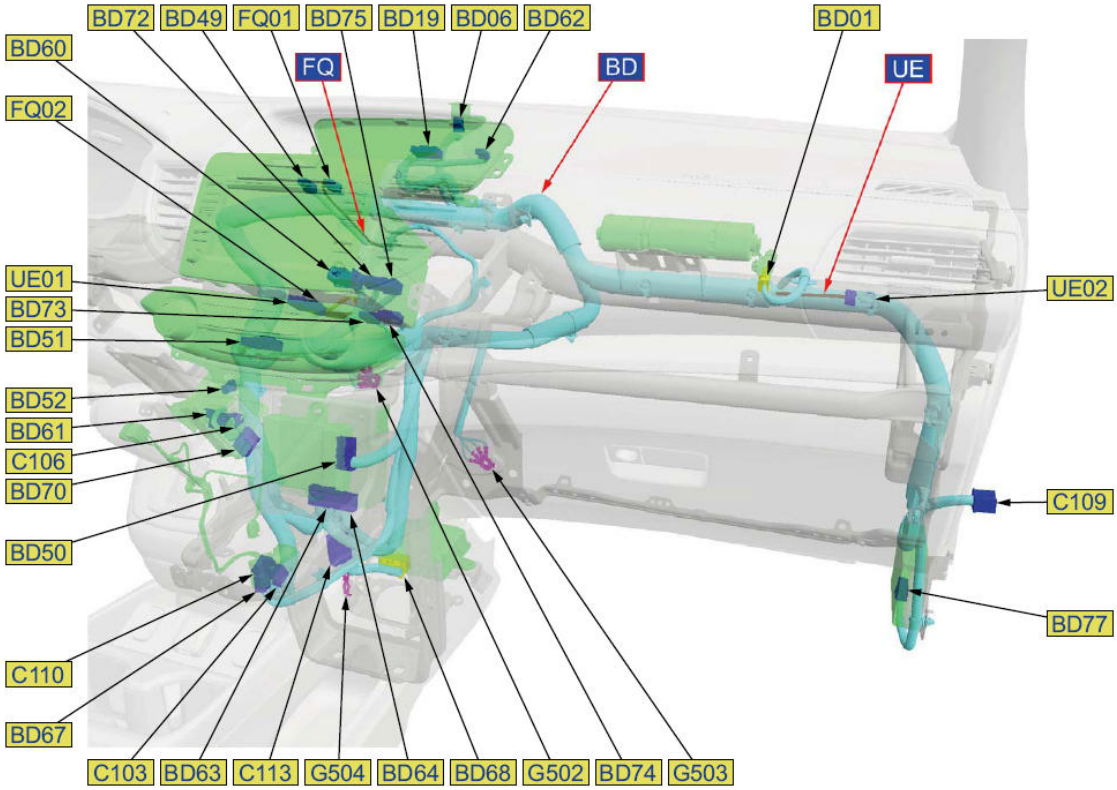

Fig. 12: Dashboard Main (Right Side With Navigation) Connector And Harness Locations

GETtheMANUALS.org

Courtesy of AMERICAN HONDA MOTOR CO., INC.

BD: DASHBOARD WIRE HARNESS

Ref. No.	Connector Name	Male/Female	Connector Type	Notes
BD01	Front Passenger's Airbag Inflator 4P Connector	Female	Component Connector	
BD06	Automatic Lighting/Sunlight Sensor 7P Connector	Female	Component Connector	
BD19	Multi-Information Display Unit Connector A (32P)	Female	Component Connector	
BD49	Hazard Warning Switch 4P Connector	Female	Component Connector	
BD50	HandsFreeLink Control Unit 32P Connector	Female	Component Connector	
BD51	HVAC Control Unit/Climate Control Unit 32P Connector	Female	Component Connector	
BD52	Humidity/In-Car Temperature Sensor 4P Connector	Female	Component Connector	
BD60	Audio-Navigation Unit Connector A (24P)	Female	Component Connector	
BD62	Front Passenger's Airbag Cutoff Indicator 4P Connector	Female	Component Connector	
BD63	Stereo Amplifier Connector A (24P)	Female	Component Connector	
BD64	Stereo Amplifier Connector B(18P)	Female	Component Connector	
BD67	Park Pin Switch/A/T Gear Position Indicator Panel Light 12P Connector	Female	Component Connector	
BD68	SRS Unit Connector A (39P)	Female	Component Connector	
BD70	TPMS Control Unit 20P Connector	Female	Component Connector	
BD72	Audio-Navigation Unit Connector E (16P)	Female	Component Connector	
BD73	Audio-Navigation Unit Connector F (7P)	Female	Component Connector	
BD74	Audio-Navigation Unit Connector B (20P)	Female	Component Connector	
BD75	Audio-Navigation Unit Connector C (14P)	Female	Component Connector	
BD77	XM Receiver Connector A (14P)	Female	Component Connector	
BD61	Data Link Connector (DLC)	Female	YOP Connector (Optional Connector)	
C103	C103		In-line Connector	
C106	C106		In-line Connector	
C109	C109		In-line Connector	
C110	C110		In-line Connector	
C113	C113		In-line Connector	
G502	G502		Ground	
G503	G503		Ground	
G504	G504		Ground	

FQ: GPS ANTENNA LEAD

Ref. No.	Connector Name	Male/Female	Connector Type	Notes

GETtheMANUALS.org

FQ01	GPS Antenna	Female	Component Connector	
FQ02	Audio-Navigation Unit Connector G (2P)	Female	Component Connector	

UE: NAVIGATION UPDATE HARNESS

Ref. No.	Connector Name	Male/Female	Connector Type	Notes
UE01	Audio-Navigation Unit Connector H (7P)	Female	Component Connector	
UE02	USB Port (passenger's dash) 5P Connector	Female	YOP Connector (Optional Connector)	

CONNECTOR AND HARNESS LOCATIONS DASHBOARD - DASHBOARD MAIN (RIGHT SIDE WITH USB UNIT)

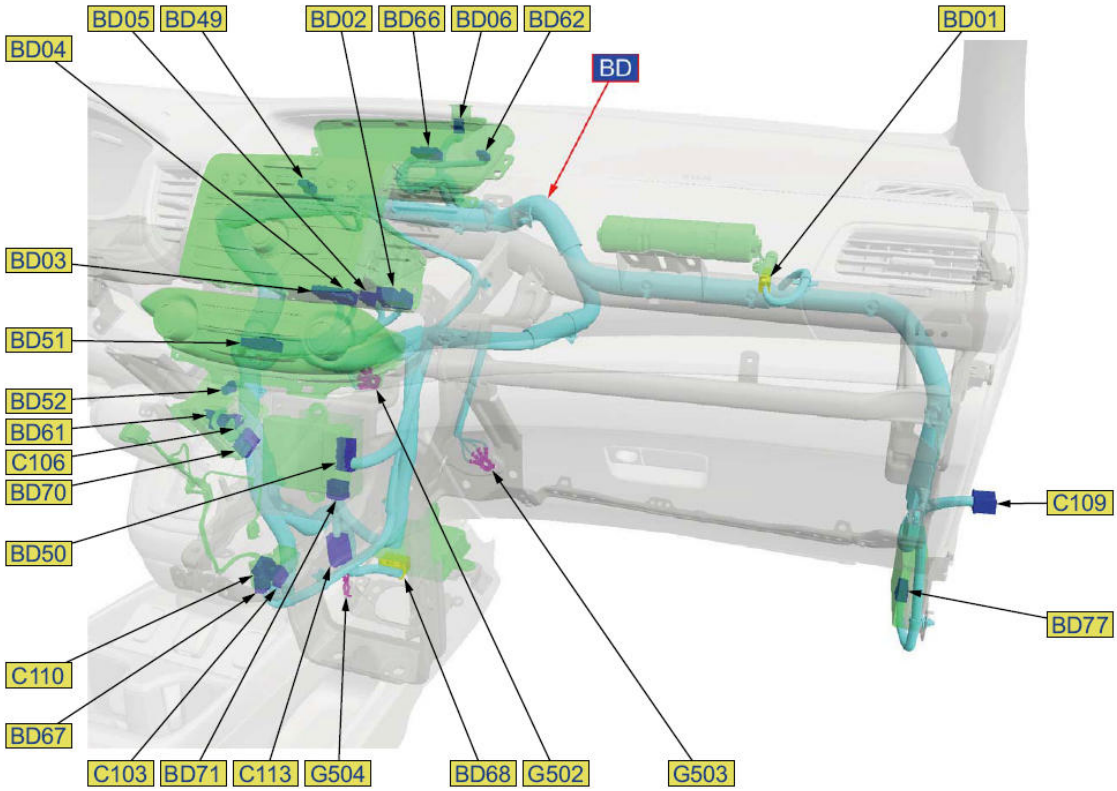

Fig. 13: Dashboard Main (Right Side With USB Unit) Connector And Harness Locations
Courtesy of AMERICAN HONDA MOTOR CO., INC.

BD: DASHBOARD WIRE HARNESS

Ref. No.	Connector Name	Male/Female	Connector Type	Notes
BD01	Front Passenger's Airbag Inflator 4P Connector	Female	Component Connector	
BD02	Audio Unit Connector A (24P)	Female	Component Connector	
BD03	Audio Unit Connector B (20P)	Female	Component Connector	

GETtheMANUALS.org

BD04	Audio Unit Connector C (14P)	Female	Component Connector	
BD05	Audio Unit Connector E(8P)	Female	Component Connector	
BD06	Automatic Lighting/Sunlight Sensor 7P Connector	Female	Component Connector	
BD49	Hazard Warning Switch 4P Connector	Female	Component Connector	
BD50	HandsFreeLink Control Unit 32P Connector	Female	Component Connector	
BD51	HVAC Control Unit/Climate Control Unit 32P Connector	Female	Component Connector	
BD52	Humidity/In-Car Temperature Sensor 4P Connector	Female	Component Connector	
BD62	Front Passenger's Airbag Cutoff Indicator 4P Connector	Female	Component Connector	
BD66	Information Display Unit 12P Connector	Female	Component Connector	
BD67	Park Pin Switch/A/T Gear Position Indicator Panel Light 12P Connector	Female	Component Connector	
BD68	SRS Unit Connector A (39P)	Female	Component Connector	
BD70	TPMS Control Unit 20P Connector	Female	Component Connector	
BD71	USB Adapter Control Unit Connector A (14P)	Female	Component Connector	
BD77	XM Receiver Connector A (14P)	Female	Component Connector	
BD61	Data Link Connector (DLC)	Female	YOP Connector (Optional Connector)	
C103	C103		In-line Connector	
C106	C106		In-line Connector	
C109	C109		In-line Connector	
C110	C110		In-line Connector	
C113	C113		In-line Connector	
G502	G502		Ground	
G503	G503		Ground	
G504	G504		Ground	

CONNECTOR AND HARNESS LOCATIONS DASHBOARD - DASHBOARD MAIN (RIGHT SIDE)

GETtheMANUALS.org

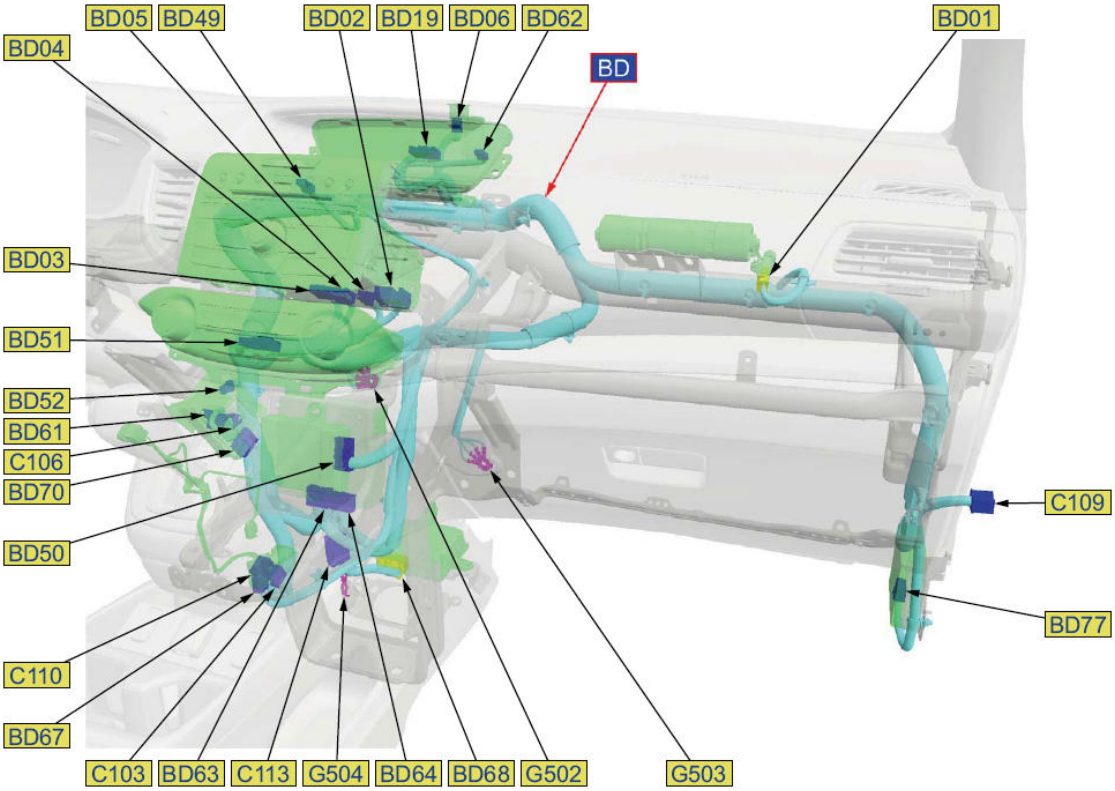

Fig. 14: Dashboard Main (Right Side) Connector And Harness Locations
Courtesy of AMERICAN HONDA MOTOR CO., INC.

BD: DASHBOARD WIRE HARNESS

Ref. No.	Connector Name	Male/Female	Connector Type	Notes
BD01	Front Passenger's Airbag Inflator 4P Connector	Female	Component Connector	
BD02	Audio Unit Connector A (24P)	Female	Component Connector	
BD03	Audio Unit Connector B (20P)	Female	Component Connector	
BD04	Audio Unit Connector C (14P)	Female	Component Connector	
BD05	Audio Unit Connector E(8P)	Female	Component Connector	
BD06	Automatic Lighting/Sunlight Sensor 7P Connector	Female	Component Connector	
BD19	Multi-Information Display Unit Connector A (32P)	Female	Component Connector	
BD49	Hazard Warning Switch 4P Connector	Female	Component Connector	
BD50	HandsFreeLink Control Unit 32P Connector	Female	Component Connector	
BD51	HVAC Control Unit/Climate Control Unit 32P Connector	Female	Component Connector	
BD52	Humidity/In-Car Temperature Sensor 4P Connector	Female	Component Connector	
BD62	Front Passenger's Airbag Cutoff Indicator 4P Connector	Female	Component Connector	

GETtheMANUALS.org

BD63	Stereo Amplifier Connector A (24P)	Female	Component Connector	
BD64	Stereo Amplifier Connector B(18P)	Female	Component Connector	
BD67	Park Pin Switch/A/T Gear Position Indicator Panel Light 12P Connector	Female	Component Connector	
BD68	SRS Unit Connector A (39P)	Female	Component Connector	
BD70	TPMS Control Unit 20P Connector	Female	Component Connector	
BD77	XM Receiver Connector A (14P)	Female	Component Connector	
BD61	Data Link Connector (DLC)	Female	YOP Connector (Optional Connector)	
C103	C103		In-line Connector	
C106	C106		In-line Connector	
C109	C109		In-line Connector	
C110	C110		In-line Connector	
C113	C113		In-line Connector	
G502	G502		Ground	
G503	G503		Ground	
G504	G504		Ground	

CONNECTOR AND HARNESS LOCATIONS DASHBOARD - STEERING

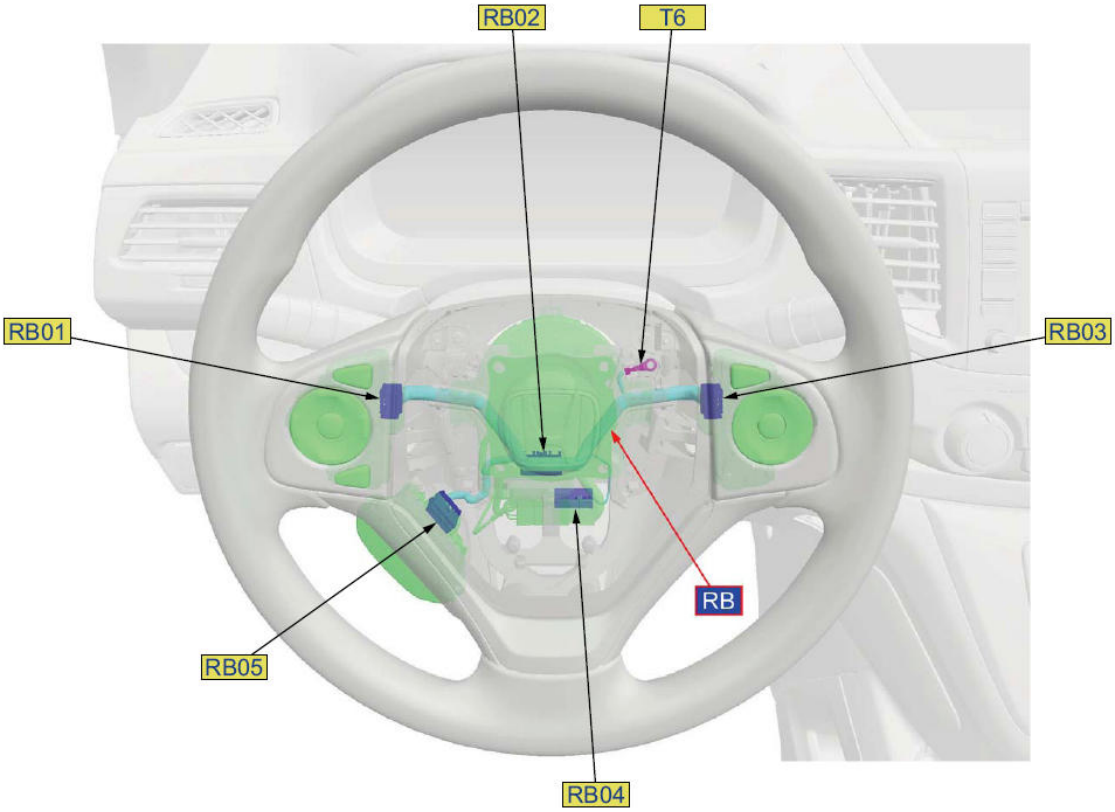

Fig. 15: Steering Connector And Harness Locations
Courtesy of AMERICAN HONDA MOTOR CO., INC.

GETtheMANUALS.org

RB: CABLE REEL SUBHARNESS

Ref. No.	Connector Name	Male/Female	Connector Type	Notes
RB01	Audio Remote/Multi-Information Display Switch 12P Connector	Female	Component Connector	
RB02	Cable Reel Connector C (20P)	Female	Component Connector	
RB03	Cruise Control Combination Switch 12P Connector	Female	Component Connector	
RB04	Horn Switch 1P Connector	Female	Component Connector	
RB05	HFL-Navigation Voice Control Switch 7P Connector	Female	Component Connector	
T6	T6		Ground	

CONNECTOR AND HARNESS LOCATIONS DOOR - DRIVER'S DOOR

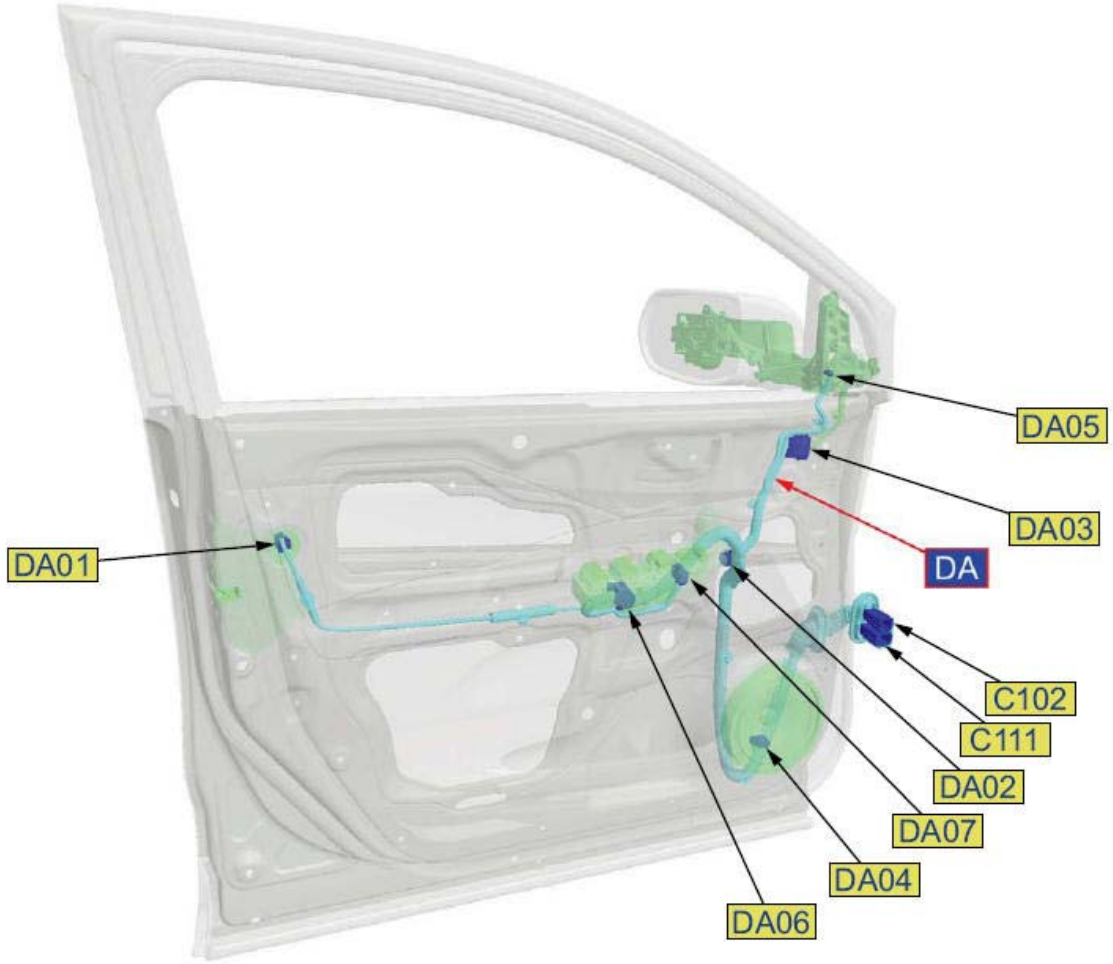

Fig. 16: Driver Door Connector And Harness Locations

GETtheMANUALS.org

Courtesy of AMERICAN HONDA MOTOR CO., INC.

DA: DRIVER'S DOOR WIRE HARNESS

Ref. No.	Connector Name	Male/Female	Connector Type	Notes
DA01	Driver's Door Lock Actuator/Knob Switch/Key Cylinder Switch 10P Connector	Female	Component Connector	
DA02	Driver's Power Window Motor 6P Connector	Female	Component Connector	
DA03	Left Power Mirror 13P Connector	Male	Component Connector	
DA04	Driver's Door Speaker 2P Connector	Female	Component Connector	
DA05	Left Tweeter 2P Connector	Female	Component Connector	
DA06	Power Window Master Switch 26P Connector	Female	Component Connector	
DA07	Power Mirror Switch 13P Connector	Female	Component Connector	
C102	C102		In-line Connector	
C111	C111		In-line Connector	

CONNECTOR AND HARNESS LOCATIONS DOOR - FRONT PASSENGER'S DOOR

GETtheMANUALS.org

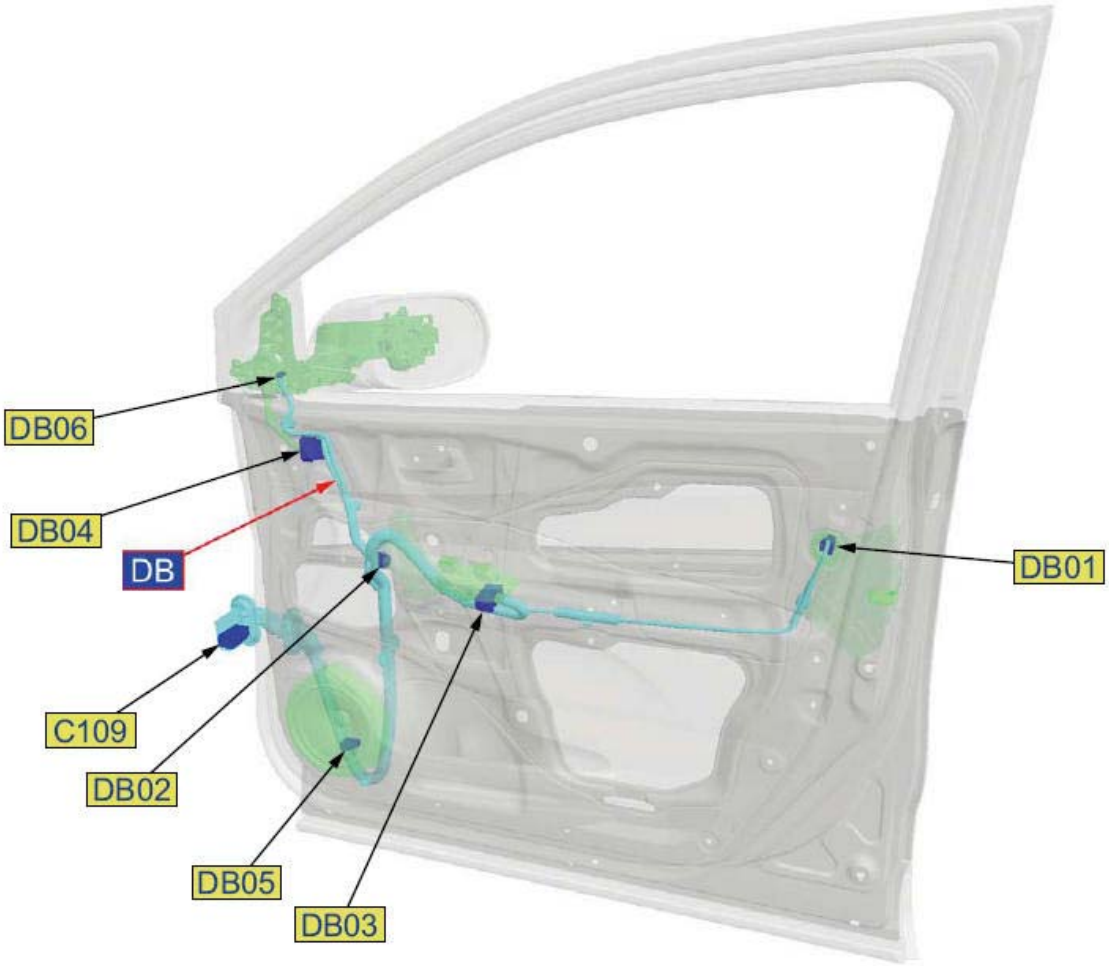

Fig. 17: Front Passenger Door Connector And Harness Locations
Courtesy of AMERICAN HONDA MOTOR CO., INC.

DB: FRONT PASSENGER'S DOOR WIRE HARNESS

Ref. No.	Connector Name	Male/Female	Connector Type	Notes
DB01	Front Passenger's Door Lock Actuator/Knob Switch 10P Connector	Female	Component Connector	
DB02	Front Passenger's Power Window Motor 2P Connector	Female	Component Connector	
DB03	Front Passenger's Power Window Switch 10P Connector	Female	Component Connector	
DB04	Right Power Mirror 13P Connector	Male	Component Connector	
DB05	Front Passenger's Door Speaker 2P Connector	Female	Component Connector	
DB06	Right Tweeter 2P Connector	Female	Component Connector	

GETtheMANUALS.org

C109	C109		In-line Connector	

CONNECTOR AND HARNESS LOCATIONS DOOR - LEFT REAR DOOR

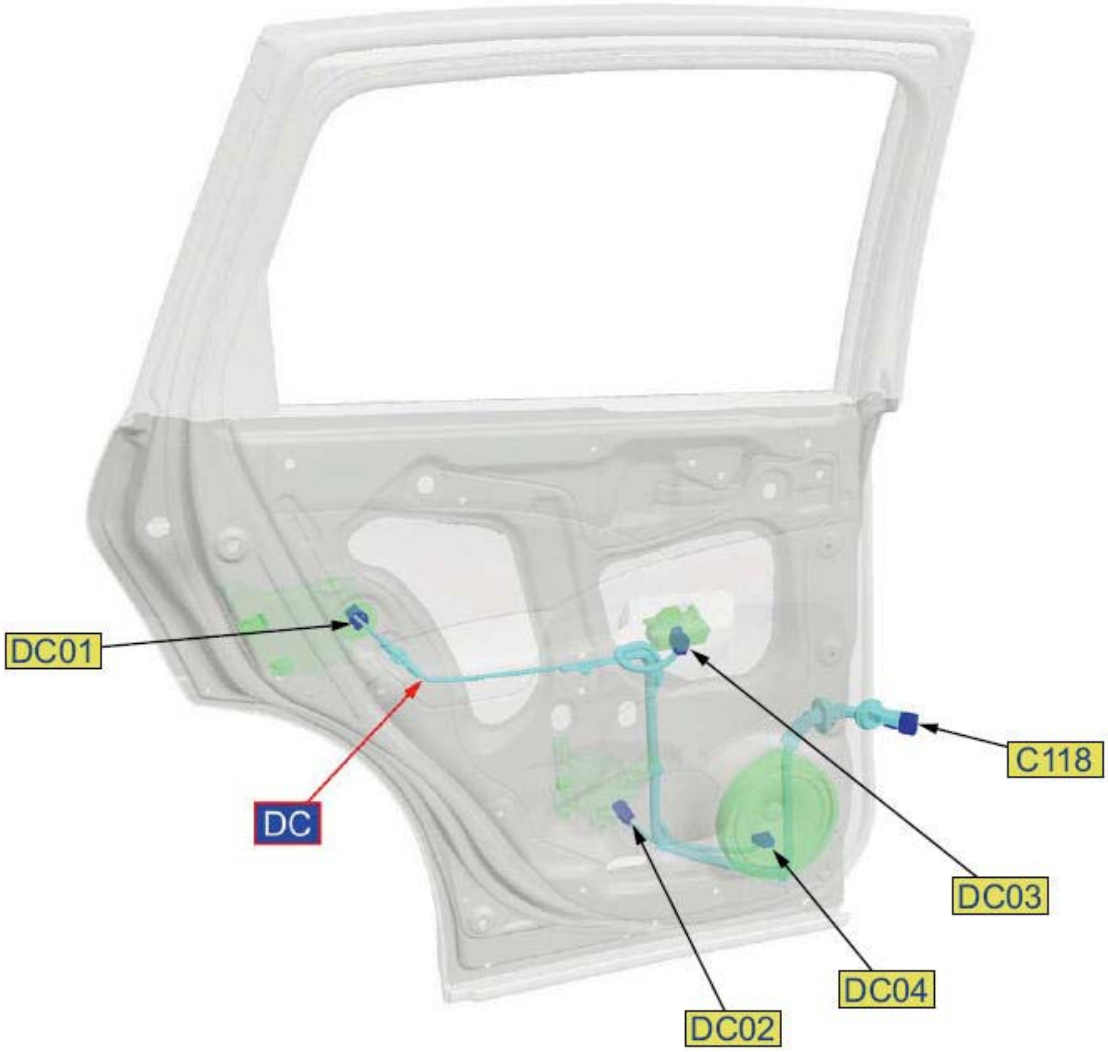

Fig. 18: Left Rear Door Connector And Harness Locations
Courtesy of AMERICAN HONDA MOTOR CO., INC.

DC: LEFT REAR DOOR WIRE HARNESS

Ref. No.	Connector Name	Male/Female	Connector Type	Notes
DC01	Left Rear Door Lock Actuator/Knob Switch 10P Connector	Female	Component Connector	
DC02	Left Rear Power Window Motor 2P Connector	Female	Component Connector	
DC03	Left Rear Power Window Switch 8P Connector	Female	Component Connector	

GETtheMANUALS.org

DC04	Left Rear Door Speaker 2P Connector	Female	Component Connector	
C118	C118		In-line Connector	

CONNECTOR AND HARNESS LOCATIONS DOOR - RIGHT REAR DOOR

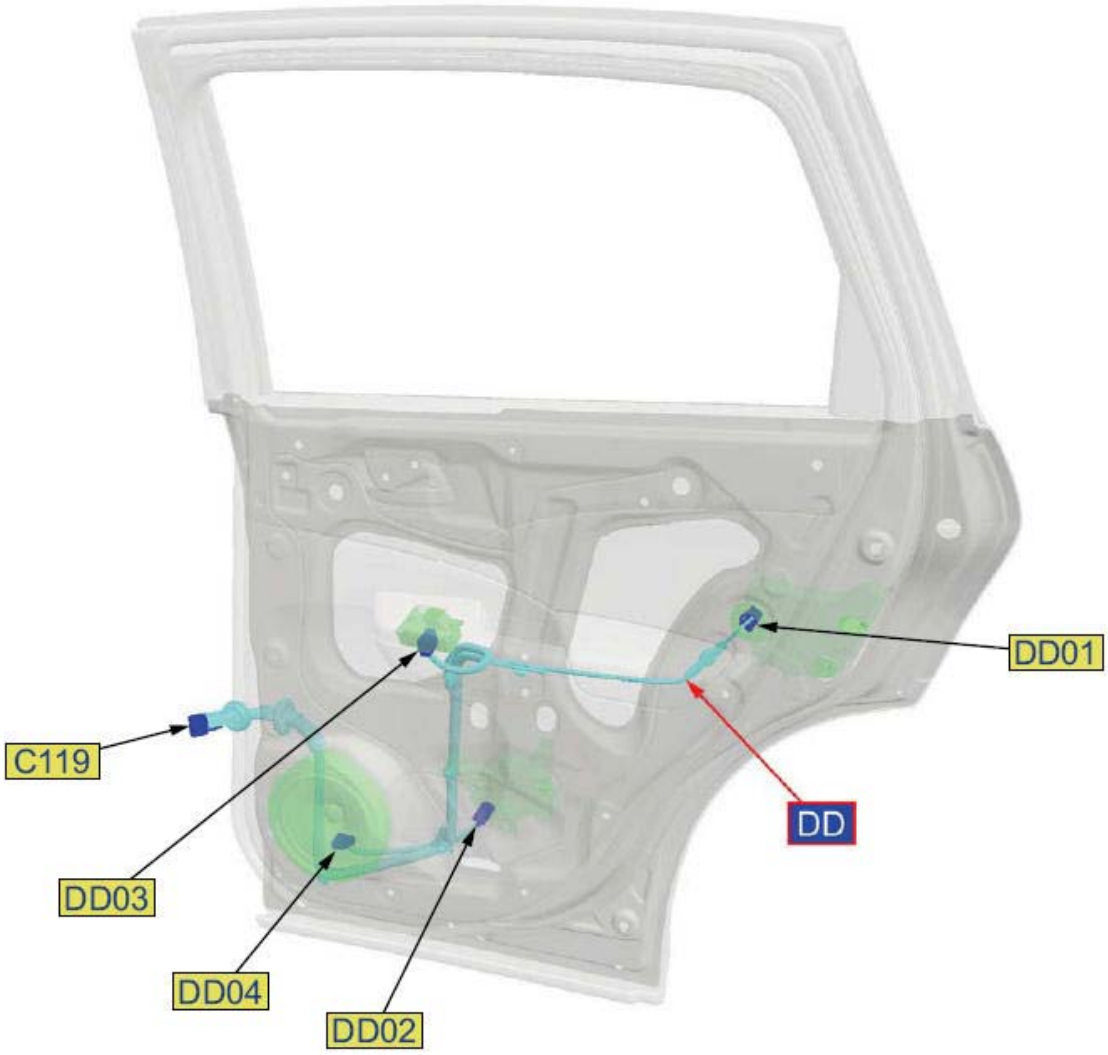

Fig. 19: Right Rear Door Connector And Harness Locations
Courtesy of AMERICAN HONDA MOTOR CO., INC.

DD: RIGHT REAR DOOR WIRE HARNESS

Ref. No.	Connector Name	Male/Female	Connector Type	Notes
DD01	Right Rear Door Lock Actuator/Knob Switch 10P Connector	Female	Component Connector	
DD02	Right Rear Power Window Motor 2P Connector	Female	Component Connector	

GETtheMANUALS.org

DD03	Right Rear Power Window Switch 8P Connector	Female	Component Connector	
DD04	Right Rear Door Speaker 2P Connector	Female	Component Connector	
C119	C119		In-line Connector	

CONNECTOR AND HARNESS LOCATIONS ENGINE COMPARTMENT - ENGINE (LEFT SIDE)

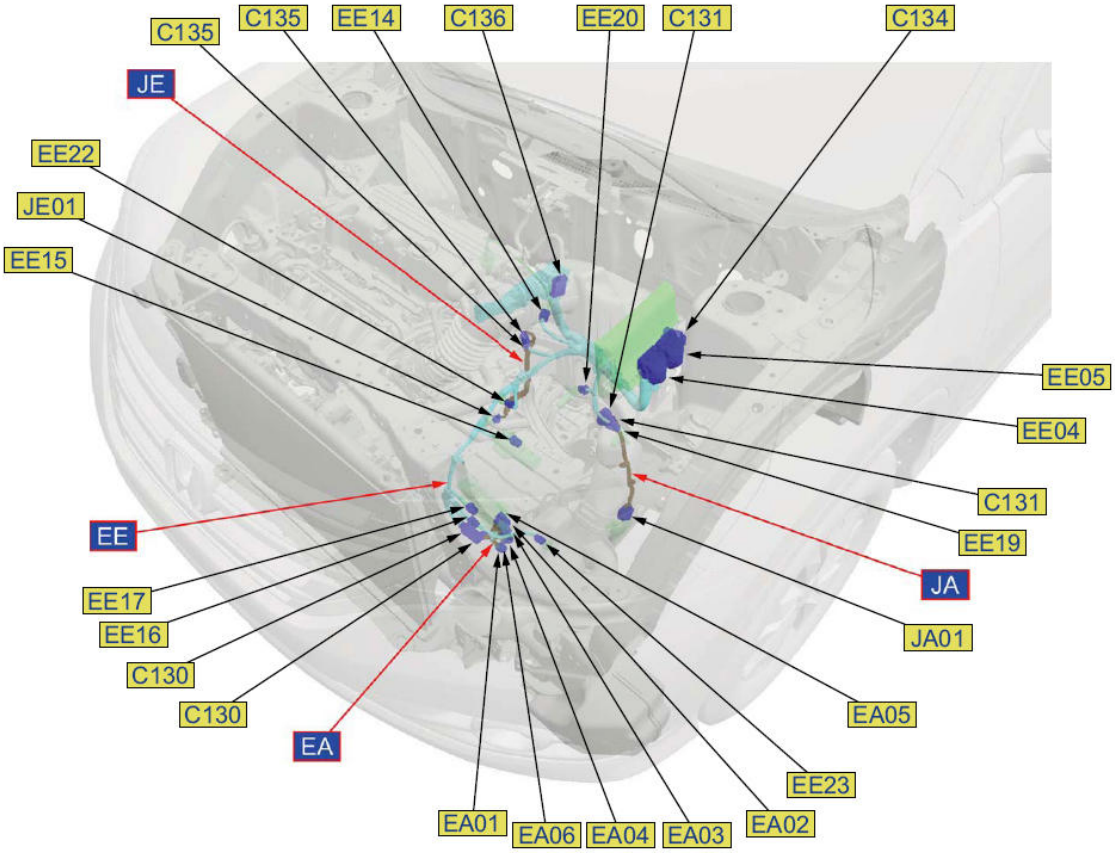

Fig. 20: Engine (Left Side) Connector And Harness Locations
Courtesy of AMERICAN HONDA MOTOR CO., INC.

EA: SHIFT SOLENOID WIRE HARNESS

Ref. No.	Connector Name	Male/Female	Connector Type	Notes
EA01	Shift Solenoid Valve A Connector	Female	Component Connector	
EA02	Shift Solenoid Valve B Connector	Female	Component Connector	
EA03	Shift Solenoid Valve C Connector	Female	Component Connector	
EA04	Shift Solenoid Valve D Connector	Female	Component Connector	
EA05	Shift Solenoid Valve E Connector	Female	Component Connector	
EA06	ATF Temperature Sensor Connector	Female	Component Connector	
C130	C130		In-line Connector	

GETtheMANUALS.org

EE: ENGINE WIRE HARNESS

Ref. No.	Connector Name	Male/Female	Connector Type	Notes
EE04	PCM Connector B (49P)	Female	Component Connector	
EE05	PCM Connector C (49P)	Female	Component Connector	
EE14	A/F Sensor (Sensor 1) 4P Connector	Female	Component Connector	
EE15	A/T Clutch Pressure Control Solenoid Valve A Connector	Female	Component Connector	
EE16	A/T Clutch Pressure Control Solenoid Valve B Connector	Female	Component Connector	
EE17	A/T Clutch Pressure Control Solenoid Valve C Connector	Female	Component Connector	
EE19	Output Shaft (Countershaft) Speed Sensor 3P Connector	Female	Component Connector	
EE20	Input Shaft (Mainshaft) Speed Sensor 3P Connector	Female	Component Connector	
EE22	Transmission Fluid Pressure Switch A (2nd Clutch) Connector	Female	Component Connector	
EE23	Transmission Fluid Pressure Switch B (3rd Clutch) Connector	Female	Component Connector	
C130	C130		In-line Connector	
C131	C131		In-line Connector	
C134	C134		In-line Connector	
C135	C135		In-line Connector	
C136	C136		Junction Connector	

JA: TRANSMISSION RANGE SWITCH SUBHARNESS

Ref. No.	Connector Name	Male/Female	Connector Type	Notes
JA01	Transmission Range Switch Connector	Female	Component Connector	
C131	C131		In-line Connector	

JE: CKP SENSOR SUBHARNESS

Ref. No.	Connector Name	Male/Female	Connector Type	Notes
JE01	CKP Sensor 3P Connector	Female	Component Connector	
C135	C135		In-line Connector	

CONNECTOR AND HARNESS LOCATIONS ENGINE COMPARTMENT - ENGINE (RIGHT SIDE)

GETtheMANUALS.org

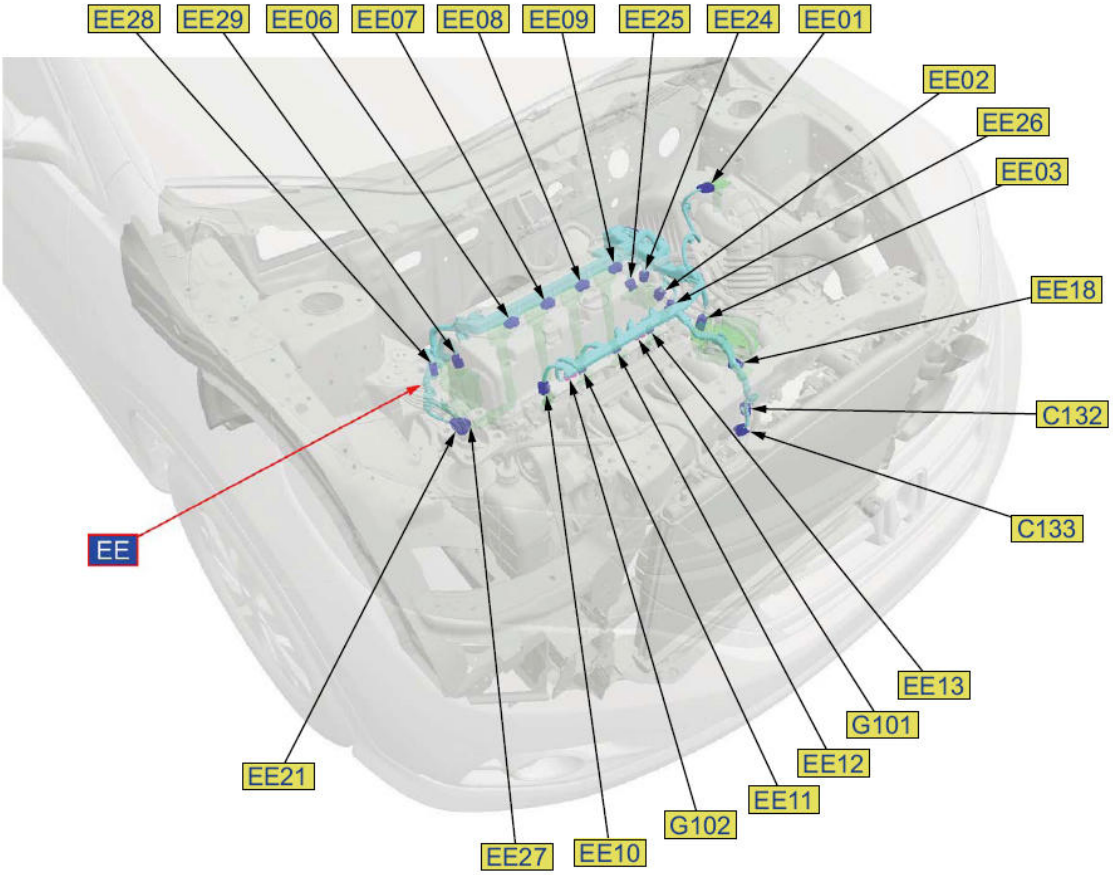

Fig. 21: Engine (Right Side) Connector And Harness Locations
Courtesy of AMERICAN HONDA MOTOR CO., INC.

EE: ENGINE WIRE HARNESS

Ref. No.	Connector Name	Male/Female	Connector Type	Notes
EE01	MAF Sensor/IAT Sensor 5P Connector	Female	Component Connector	
EE02	CMP Sensor A 3P Connector	Female	Component Connector	
EE03	Throttle Body 6P Connector	Female	Component Connector	
EE06	No. 1 Ignition Coil 3P Connector	Female	Component Connector	
EE07	No. 2 Ignition Coil 3P Connector	Female	Component Connector	
EE08	No. 3 Ignition Coil 3P Connector	Female	Component Connector	
EE09	No. 4 Ignition Coil 3P Connector	Female	Component Connector	
EE10	No. 1 Injector 2P Connector	Female	Component Connector	
EE11	No. 2 Injector 2P Connector	Female	Component Connector	
EE12	No. 3 Injector 2P Connector	Female	Component Connector	
EE13	No. 4 Injector 2P Connector	Female	Component Connector	
EE18	MAP Sensor 3P Connector	Female	Component Connector	
EE21	Oil Pressure Switch 1P Connector	Female	Component Connector	
EE24	EVAP Canister Purge Valve 2P Connector	Female	Component Connector	
EE25	CMP Sensor B3P Connector	Female	Component Connector	

GETtheMANUALS.org

EE26	ECT Sensor 12P Connector	Female	Component Connector	
EE27	VTC Oil Control Solenoid Valve 2P Connector	Female	Component Connector	
EE28	Rocker Arm Oil Control Solenoid 2P Connector	Female	Component Connector	
EE29	Rocker Arm Oil Pressure Switch 2P Connector	Female	Component Connector	
C132	C132		In-line Connector	
C133	C133		In-line Connector	
G101	G101		Ground	
G102	G102		Ground	

CONNECTOR AND HARNESS LOCATIONS ENGINE COMPARTMENT - LEFT SIDE

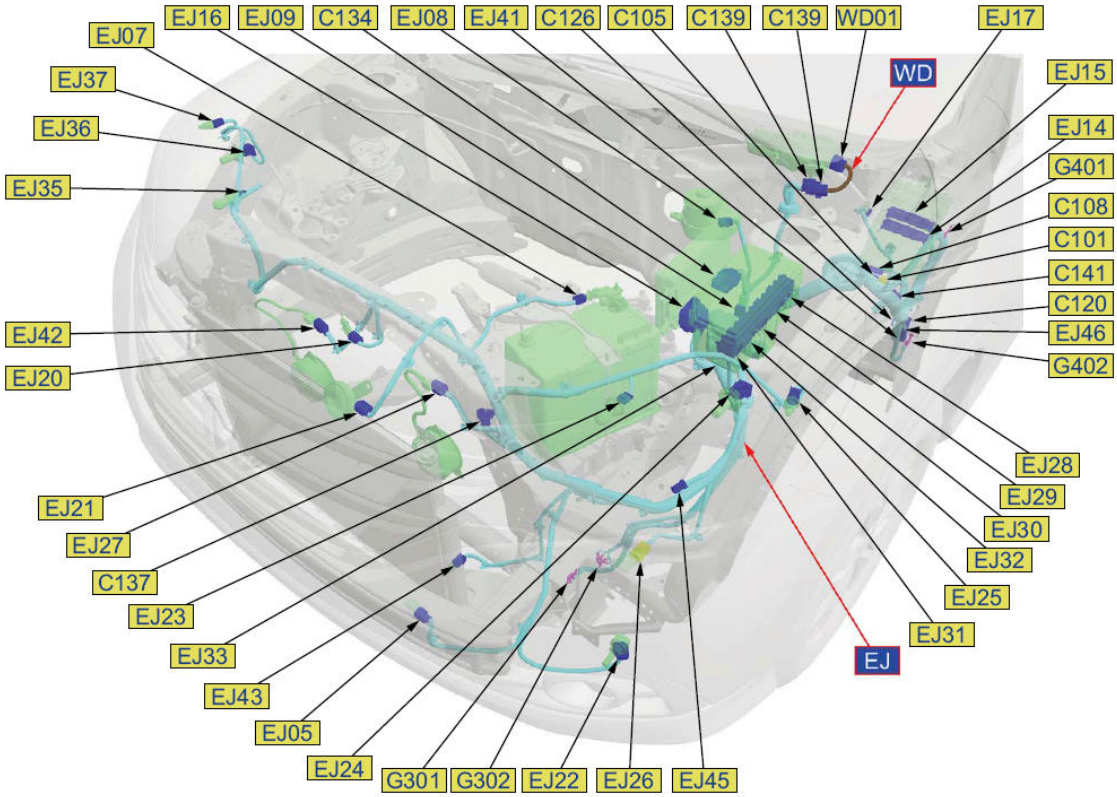

Fig. 22: Engine Compartment (Left Side) Connector And Harness Locations
Courtesy of AMERICAN HONDA MOTOR CO., INC.

EJ: ENGINE COMPARTMENT WIRE HARNESS

Ref. No.	Connector Name	Male/Female	Connector Type	Notes
EJ05	Outside Air Temperature Sensor 2P Connector	Female	Component Connector	
EJ07	Battery Sensor 2P Connector	Female	Component Connector	
EJ08	Brake Fluid Level Switch 2P Connector	Female	Component Connector	

GETtheMANUALS.org

EJ09	ELD 3P Connector	Female	Component Connector	
EJ14	Under-Dash Fuse/Relay Box Connector C (38P)	Female	Component Connector	
EJ15	Under-Dash Fuse/Relay Box Connector D (32P)	Female	Component Connector	
EJ16	PCM Connector A (49P)	Female	Component Connector	
EJ17	Parking Brake Switch 1P Connector	Female	Component Connector	
EJ20	Security Hood Switch 2P Connector	Female	Component Connector	
EJ21	Horn (Low) 1P Connector	Female	Component Connector	
EJ22	Left Fog Light 2P Connector	Female	Component Connector	
EJ23	Left Front Turn Signal/Parking Light 3P Connector	Female	Component Connector	
EJ24	Left Headlight (High, Low) 3P Connector	Female	Component Connector	
EJ25	Left Front Side Marker Light 2P Connector	Female	Component Connector	
EJ26	Left Front Impact Sensor 2P Connector	Female	Component Connector	
EJ27	Radiator Fan Motor 2P Connector	Female	Component Connector	
EJ28	Relay Holder A		Component Connector	
EJ29	Relay Holder B		Component Connector	
EJ30	Relay Holder C		Component Connector	
EJ31	Relay Circuit Board Connector A (16P)	Female	Component Connector	
EJ32	Relay Circuit Board Connector B (1 OP)	Female	Component Connector	
EJ33	Under-Hood Fuse/Relay Box		Component Connector	
EJ35	Right Front Turn Signal/Parking Light 3P Connector	Female	Component Connector	
EJ36	Right Headlight (High, Low) 3P Connector	Female	Component Connector	
EJ37	Right Front Side Marker Light 2P Connector	Female	Component Connector	
EJ41	Diode C2P Connector		Component Connector	
EJ42	A/C Condenser Fan Motor 2P Connector	Female	Component Connector	
EJ43	ECT Sensor 2 2P Connector	Female	Component Connector	
EJ45	Optional Connector	Male	YOP Connector (Optional Connector)	
EJ46	Optional Connector	Female	YOP Connector (Optional Connector)	
C101	C101		In-line Connector	
C105	C105		In-line Connector	
C108	C108		In-line Connector	
C120	C120		In-line Connector	
C126	C126		In-line Connector	
C134	C134		In-line Connector	
C137	C137		In-line Connector	
C139	C139		In-line Connector	

GETtheMANUALS.org

C141	C141		Junction Connector	
G301	G301		Ground	
G302	G302		Ground	
G401	G401		Ground	
G402	G402		Ground	

WD: WINDSHIELD WIPER MOTOR SUBHARNESS

Ref. No.	Connector Name	Male/Female	Connector Type	Notes
WD01	Windshield Wiper Motor 4P Connector	Female	Component Connector	
C139	C139		In-line Connector	

CONNECTOR AND HARNESS LOCATIONS ENGINE COMPARTMENT - RIGHT SIDE

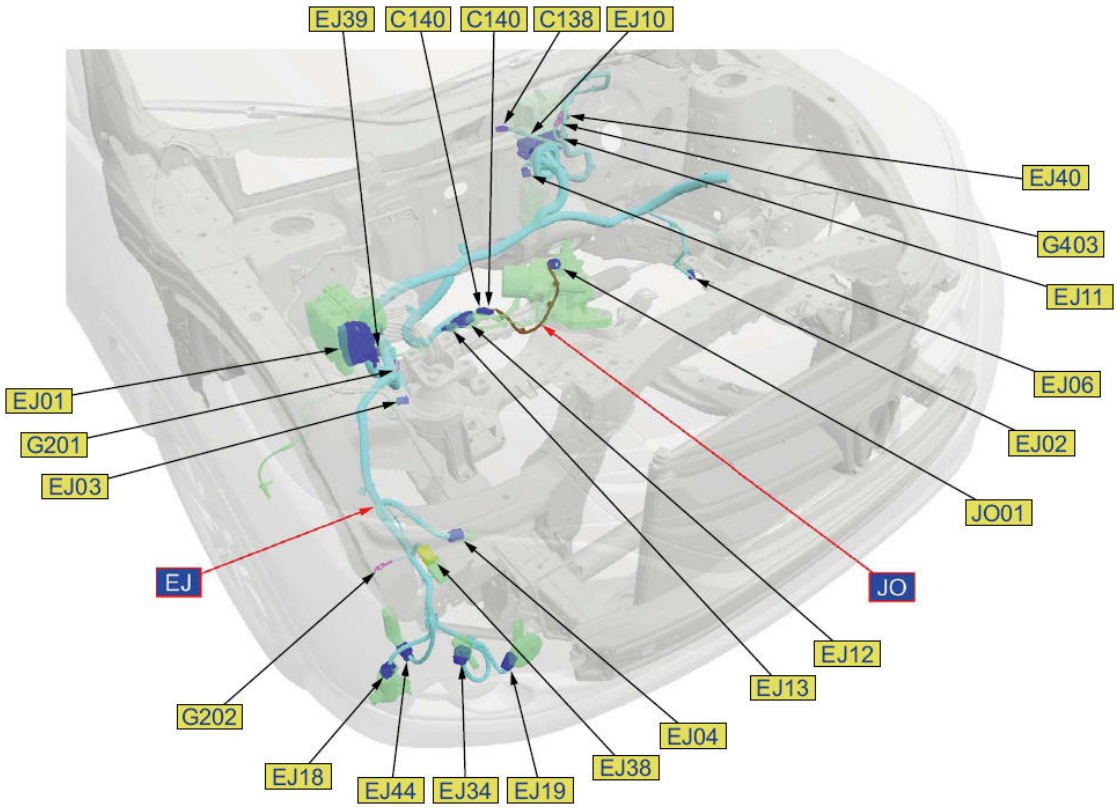

Fig. 23: Engine Compartment (Right Side) Connector And Harness Locations
Courtesy of AMERICAN HONDA MOTOR CO., INC.

EJ: ENGINE COMPARTMENT WIRE HARNESS

Ref. No.	Connector Name	Male/Female	Connector Type	Notes
EJ01	VSA Modulator-Control Unit 38P Connector	Female	Component Connector	

GETtheMANUALS.org

EJ02	Left-Front Wheel Speed Sensor 2P Connector	Female	Component Connector	
EJ03	Right-Front Wheel Speed Sensor 2P Connector	Female	Component Connector	
EJ04	A/C Pressure Sensor 3P Connector	Female	Component Connector	
EJ06	APP Sensor 6P Connector	Female	Component Connector	
EJ10	EPS Control Unit Connector A (11P)	Female	Component Connector	
EJ11	EPS Control Unit Connector B (16P)	Female	Component Connector	
EJ12	EPS Motor 3P Connector	Female	Component Connector	
EJ13	EPS Motor Angle Sensor 8P Connector	Male	Component Connector	
EJ18	Windshield/Rear Window Washer Motor 2P Connector	Female	Component Connector	
EJ19	Horn (High) 1P Connector	Female	Component Connector	
EJ34	Right Fog Light 2P Connector	Female	Component Connector	
EJ38	Right Front Impact Sensor 2P Connector	Female	Component Connector	
EJ39	Secondary HO2S (Sensor 2) 4P Connector	Male	Component Connector	
EJ40	Brake Pedal Position Switch 4P Connector	Female	Component Connector	
EJ44	Washer Fluid Level Switch 2P Connector	Female	Component Connector	
C138	C138		In-line Connector	
C140	C140		In-line Connector	
G201	G201		Ground	
G202	G202		Ground	
G403	G403		Ground	

JO: TORQUE SENSOR SUBHARNESS

Ref. No.	Connector Name	Male/Female	Connector Type	Notes
JO01	Torque Sensor 6P Connector	Female	Component Connector	
C140	C140		In-line Connector	

CONNECTOR AND HARNESS LOCATIONS ENGINE COMPARTMENT - STARTER/GROUND CABLE

GETtheMANUALS.org

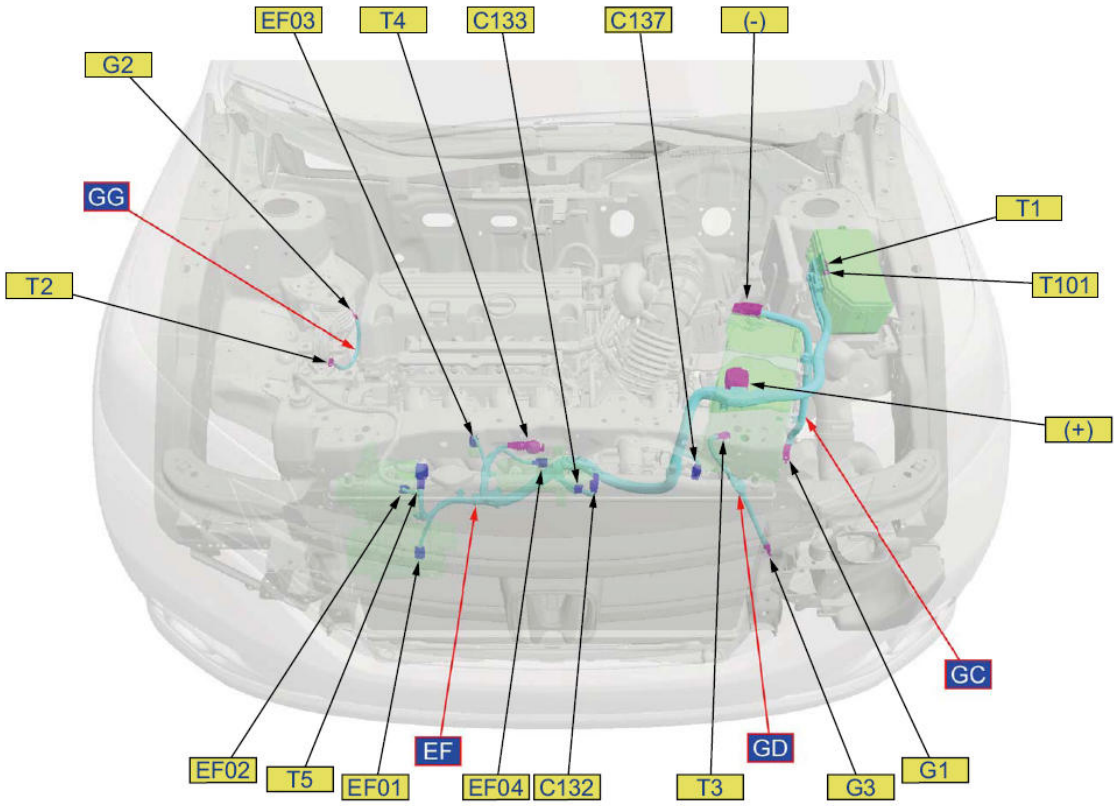

Fig. 24: Starter/Ground Cable Connector And Harness Locations
Courtesy of AMERICAN HONDA MOTOR CO., INC.

EF: STARTER SUBHARNESS

Ref. No.	Connector Name	Male/Female	Connector Type	Notes
(+)	(+)		Component Connector	
EF01	A/C Compressor (A/C Compressor Clutch/Thermal Protector) 3P Connector	Female	Component Connector	
EF02	Alternator 1P Connector	Female	Component Connector	
EF03	Knock Sensor 2P Connector	Female	Component Connector	
EF04	Starter 1P Connector	Female	Component Connector	
T1	T1		Component Connector	
T101	T101		Component Connector	
T4	T4		Component Connector	
T5	T5		Component	

GETtheMANUALS.org

			Connector	
C132	C132		In-line Connector	
C133	C133		In-line Connector	
C137	C137		In-line Connector	

GC: BATTERY GROUND CABLE

Ref. No.	Connector Name	Male/Female	Connector Type	Notes
(-)	(-)		Component Connector	
G1	G1		Ground	

GD: TRANSMISSION GROUND CABLE

Ref. No.	Connector Name	Male/Female	Connector Type	Notes
T3	T3		Component Connector	
G3	G3		Ground	

GG: ENGINE GROUND CABLE

Ref. No.	Connector Name	Male/Female	Connector Type	Notes
T2	T2		Component Connector	
G2	G2		Ground	

CONNECTOR AND HARNESS LOCATIONS SEAT - DRIVER'S SEAT

GETtheMANUALS.org

Fig. 25: Driver Seat Connector And Harness Locations
Courtesy of AMERICAN HONDA MOTOR CO., INC.

JL: DRIVER'S SEAT POSITION SENSOR SUBHARNESS

Ref. No.	Connector Name	Male/Female	Connector Type	Notes
JL01	Driver's Seat Position Sensor 2P Connector	Female	Component Connector	
C124	C124		In-line Connector	

CONNECTOR AND HARNESS LOCATIONS SEAT - DRIVER'S SEAT (EXL)

GETtheMANUALS.org

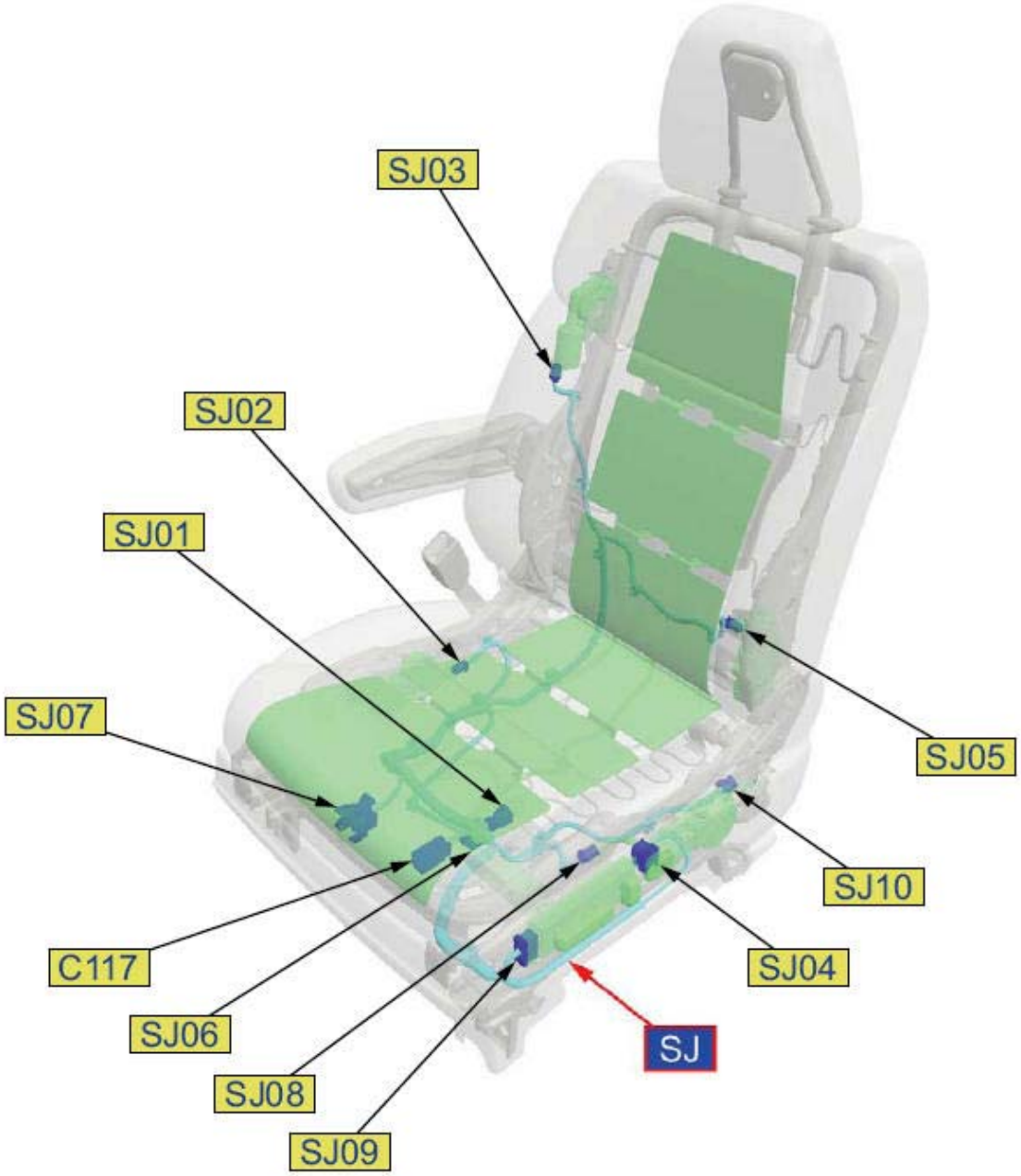

Fig. 26: Driver Seat (EXL) Connector And Harness Locations
Courtesy of AMERICAN HONDA MOTOR CO., INC.

SJ: DRIVER'S SEAT WIRE HARNESS

Ref. No.	Connector Name	Male/Female	Connector Type	Notes
SJ01	Driver's Seat Heater 3P Connector	Male	Component Connector	
SJ02	Driver's Seat Front Up-Down Motor 2P Connector	Female	Component Connector	

GETtheMANUALS.org

SJ03	Driver's Power Lumbar Support Motor 2P Connector	Female	Component Connector	
SJ04	Driver's Power Lumbar Support Switch 5P Connector	Female	Component Connector	
SJ05	Driver's Seat Recline Motor 2P Connector	Female	Component Connector	
SJ06	Driver's Seat Slide Motor 5P Connector	Female	Component Connector	
SJ07	Driver's Seat Heater Relay Holder 9P Connector		Component Connector	
SJ08	Driver's Seat Rear Up-Down Motor 2P Connector	Female	Component Connector	
SJ09	Driver's Power Seat Adjustment Switch 12P Connector	Female	Component Connector	
SJ10	Driver's Seat Position Sensor 2P Connector	Female	Component Connector	
C117	C117		In-line Connector	

CONNECTOR AND HARNESS LOCATIONS SEAT - FRONT PASSENGER'S SEAT

GETtheMANUALS.org

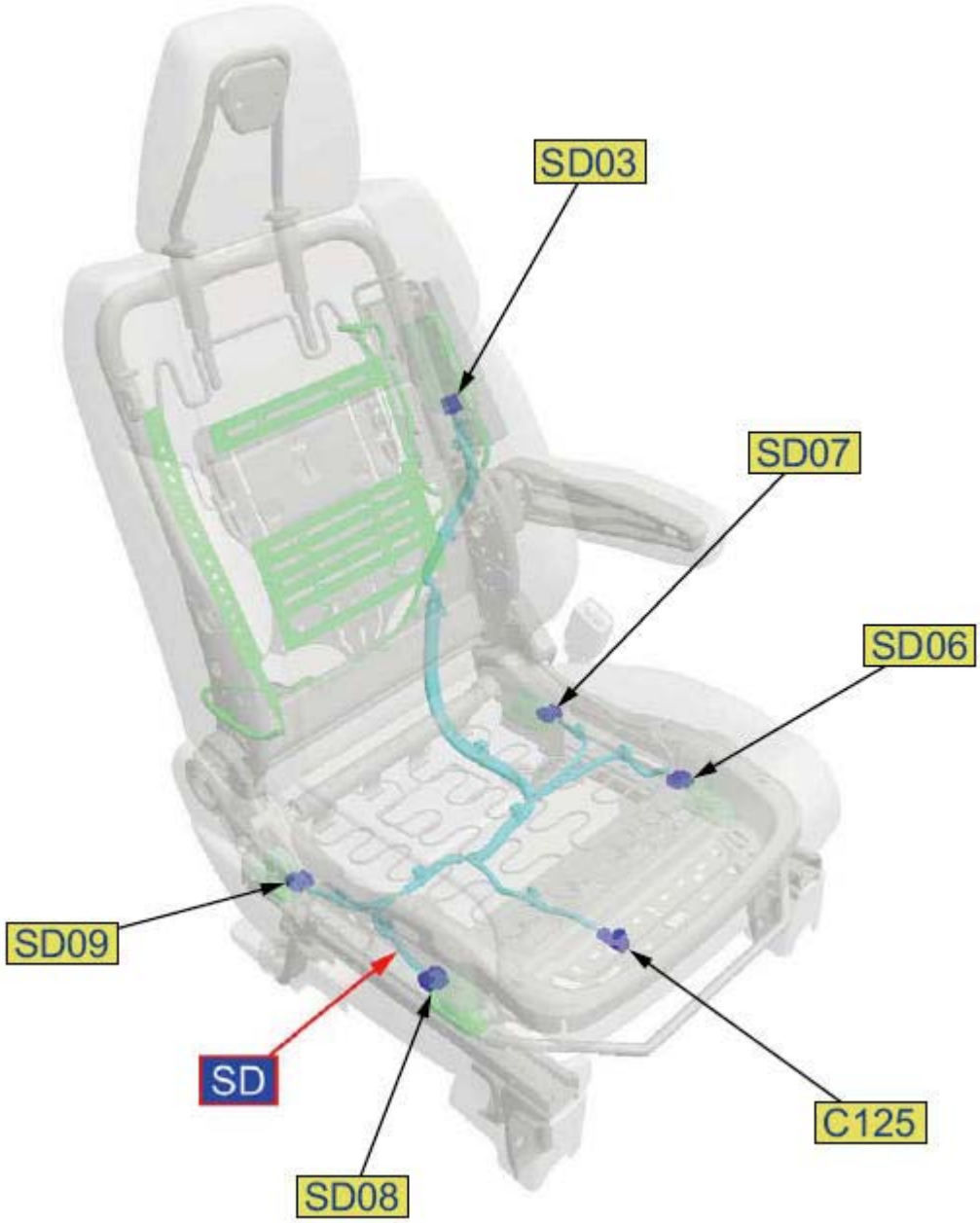

Fig. 27: Front Passenger Seat Connector And Harness Locations
Courtesy of AMERICAN HONDA MOTOR CO., INC.

SD: FRONT PASSENGER'S SEAT WIRE HARNESS

Ref. No.	Connector Name	Male/Female	Connector Type	Notes
SD03	ODS Unit 18P Connector	Female	Component Connector	
SD06	Front Passenger's Weight Sensor (Front Inner) 3P Connector	Female	Component Connector	
	Front Passenger's Weight Sensor (Rear Inner) 3P		Component	

GETtheMANUALS.org

SD07	Connector	Female	Connector	
SD08	Front Passenger's Weight Sensor (Front Outer) 3P Connector	Female	Component Connector	
SD09	Front Passenger's Weight Sensor (Rear Outer) 3P Connector	Female	Component Connector	
C125	C125		In-line Connector	

CONNECTOR AND HARNESS LOCATIONS SEAT - FRONT PASSENGER'S SEAT (EXL)

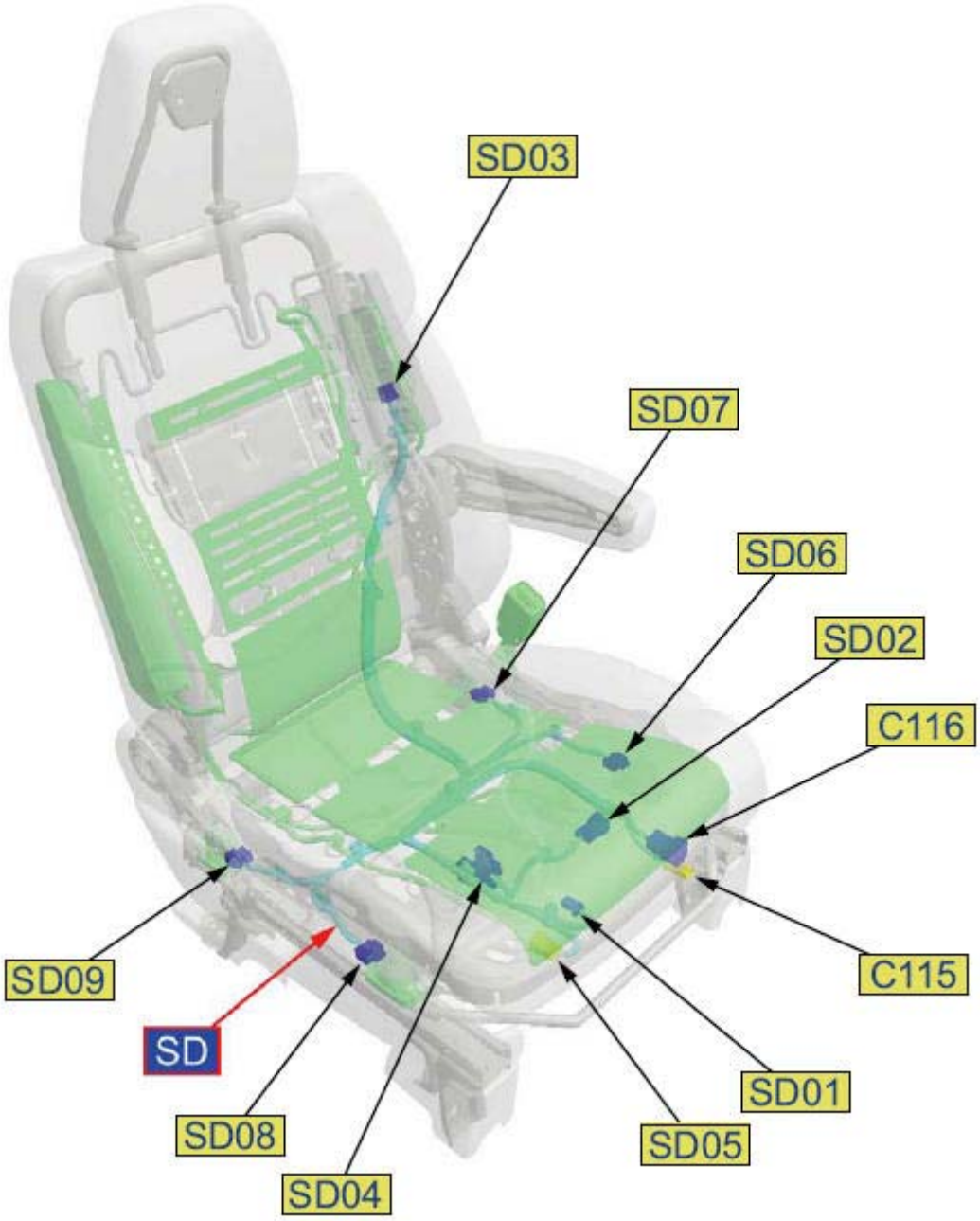

GETtheMANUALS.org

Fig. 28: Front Passenger Seat (EXL) Connector And Harness Locations
Courtesy of AMERICAN HONDA MOTOR CO., INC.

SD: FRONT PASSENGER'S SEAT WIRE HARNESS

Ref. No.	Connector Name	Male/Female	Connector Type	Notes
SD01	Front Passenger's Seat Belt Buckle Switch 2P Connector	Female	Component Connector	
SD02	Front Passenger's Seat Heater 4P Connector	Male	Component Connector	
SD03	ODS Unit 18P Connector	Female	Component Connector	
SD04	Front Passenger's Seat Heater Relay Holder 9P Connector		Component Connector	
SD05	Front Passenger's Side Airbag Inflator 2P Connector	Female	Component Connector	
SD06	Front Passenger's Weight Sensor (Front Inner) 3P Connector	Female	Component Connector	
SD07	Front Passenger's Weight Sensor (Rear Inner) 3P Connector	Female	Component Connector	
SD08	Front Passenger's Weight Sensor (Front Outer) 3P Connector	Female	Component Connector	
SD09	Front Passenger's Weight Sensor (Rear Outer) 3P Connector	Female	Component Connector	
C115	C115		In-line Connector	
C116	C116		In-line Connector	

GETtheMANUALS.org

CRUISE CONTROL SYMPTOM TROUBLESHOOTING INDEX

Symptom	Diagnostic procedure	Also check for
Cruise control cannot be set	1. **Check for PGM-FI DTCs** See **HOW TO TROUBLESHOOT THE A/T SYSTEM** or **HOW TO TROUBLESHOOT THE FUEL AND EMISSIONS SYSTEMS** . 2. Check the No. B2 (10 A) fuse in the under-dash fuse/relay box. 3. **DO THE CRUISE CONTROL COMBINATION SWITCH TEST.** 4. **DO THE CRUISE CONTROL INPUT TEST**.	• Open circuit, loose or disconnected terminals: LT BLU, WHT, BLU, or LT BLU wire between the cruise control combination switch and the gauge control module • Faulty gauge control module
Cruise control can be set, but the cruise main indicator does not come on	1. **DO THE GAUGE CONTROL MODULE SELF-DIAGNOSTIC FUNCTION PROCEDURE** . 2. **DO THE CRUISE CONTROL INPUT TEST**. Test the cruise control main switch signal input. 3. **Check for PGM-FI DTCs** See **HOW TO TROUBLESHOOT THE A/T SYSTEM** or **HOW TO TROUBLESHOOT THE FUEL AND EMISSIONS SYSTEMS** .	Faulty gauge control module
Cruise control can be set, but the cruise control indicator does not come on	1. **DO THE GAUGE CONTROL MODULE SELF-DIAGNOSTIC FUNCTION PROCEDURE** . 2. **DO THE CRUISE CONTROL INPUT TEST**. Test the cruise control indicator signal input. 3. **Check for PGM-FI DTCs** See **HOW TO TROUBLESHOOT THE A/T SYSTEM** or **HOW TO**	Faulty gauge control module

GETtheMANUALS.org

	TROUBLESHOOT THE FUEL AND EMISSIONS SYSTEMS .	
Vehicle does not accelerate accordingly when the res/+ button is pressed	1. **DO THE CRUISE CONTROL COMBINATION SWITCH TEST**. 2. **DO THE CRUISE CONTROL INPUT TEST**. Test the res/+ switch signal input. 3. **Check for PGM-FI DTCs** See **HOW TO TROUBLESHOOT THE A/T SYSTEM** or **HOW TO TROUBLESHOOT THE FUEL AND EMISSIONS SYSTEMS** .	
Set speed does not cancel when the brake pedal is pressed	1. **DO THE BRAKE PEDAL POSITION SWITCH TEST** . 2. **DO THE CRUISE CONTROL INPUT TEST**. Test the brake pedal position switch signal input. 3. **Check for PGM-FI DTCs** See **HOW TO TROUBLESHOOT THE A/T SYSTEM** or **HOW TO TROUBLESHOOT THE FUEL AND EMISSIONS SYSTEMS** .	Faulty brake pedal position switch
Set speed does not cancel when the cruise control main button is pressed	1. **DO THE CRUISE CONTROL COMBINATION SWITCH TEST**. 2. **DO THE CRUISE CONTROL INPUT TEST**. Test the cruise control main switch signal input. 3. **Check for PGM-FI DTCs** See **HOW TO TROUBLESHOOT THE A/T SYSTEM** or **HOW TO TROUBLESHOOT THE FUEL AND EMISSIONS SYSTEMS** .	
	1. **DO THE CRUISE CONTROL COMBINATION SWITCH TEST**.	

GETtheMANUALS.org

Set speed does not cancel when the cancel button is pressed	2. **DO THE CRUISE CONTROL INPUT TEST**. Test the cruise control cancel switch signal input. 3. **Check for PGM-FI DTCs** See **HOW TO TROUBLESHOOT THE A/T SYSTEM** or **HOW TO TROUBLESHOOT THE FUEL AND EMISSIONS SYSTEMS** .	
Set speed does not resume when the res/+ button is pressed (with the cruise control main switch turned on, and set speed temporarily canceled by pressing the brake pedal)	1. **DO THE CRUISE CONTROL COMBINATION SWITCH TEST**. 2. **DO THE CRUISE CONTROL INPUT TEST**. Test the res/+ switch signal input. 3. **Check for PGM-FI DTCs** See **HOW TO TROUBLESHOOT THE A/T SYSTEM** or **HOW TO TROUBLESHOOT THE FUEL AND EMISSIONS SYSTEMS** .	
Light switch turned on, the cruise control combination switch illumination does not come on	1. Check the No. B35 (7.5 A) fuse in the under-dash fuse/relay box. 2. **DO THE CRUISE CONTROL COMBINATION SWITCH TEST**. 3. Audio Remote/Multi-Information Display Switch Removal, Installation, and Test .	

CRUISE CONTROL COMBINATION SWITCH REMOVAL, INSTALLATION, AND TEST

REMOVAL

There are SRS components located in this area. **REVIEW THE SRS COMPONENT LOCATIONS** , and the **PRECAUTIONS AND PROCEDURES** , in the SRS before doing repairs or service.

1. Battery Terminal (SRS) - Disconnection
    1. Make sure the ignition switch is in LOCK (0).
    2. Disconnect and isolate the negative cable (A) from the battery.

GETtheMANUALS.org

NOTE: Always disconnect the negative side first.

3. Disconnect the positive cable (B) from the battery.
4. Wait at least 3 minutes before starting work.

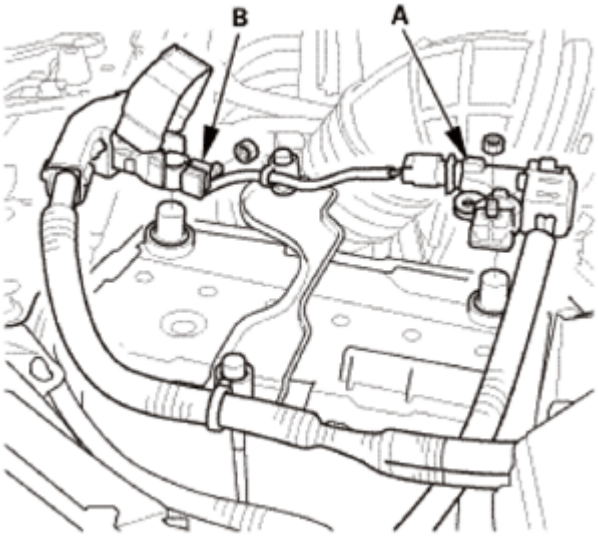

Fig. 1: Identifying Battery (+ And -) Terminal (SRS)
Courtesy of AMERICAN HONDA MOTOR CO., INC.

2. Driver's Airbag
    1. Remove the access panel (A).
    2. Disconnect the driver's airbag inflator connector (B) on the cable reel harness.
    3. Disconnect the horn switch connector (C).

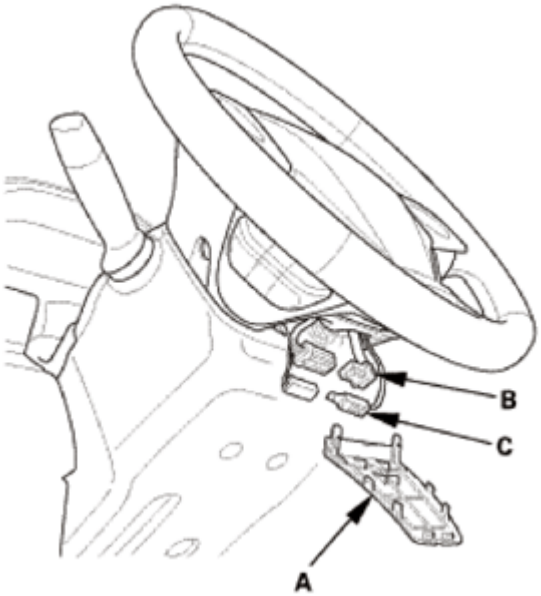

GETtheMANUALS.org

Fig. 2: Identifying Driver Airbag, Horn Switch Connector And Access Panel
Courtesy of AMERICAN HONDA MOTOR CO., INC.

4. Remove the TORX bolts using a TORX T30 bit.
5. Remove the driver's airbag (A).

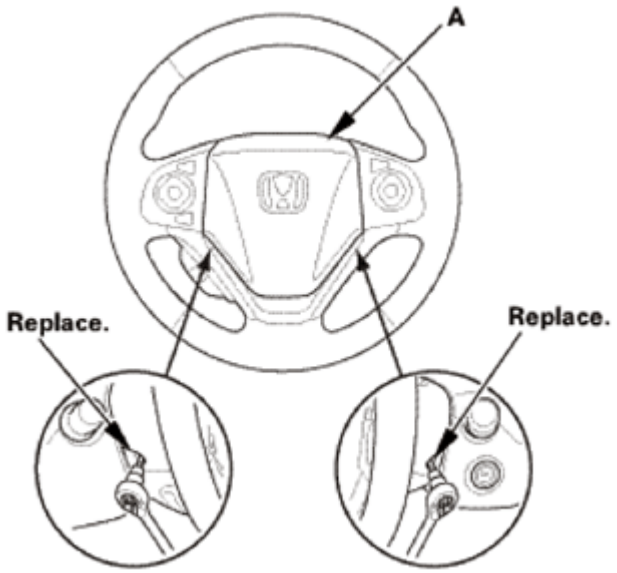

Fig. 3: Identifying Driver Airbag
Courtesy of AMERICAN HONDA MOTOR CO., INC.

3. Steering Wheel Assembly
    1. Set the front wheels in the straight ahead position.
    2. Disconnect the connector (A).
    3. Loosen the steering wheel bolt (B) three turns.

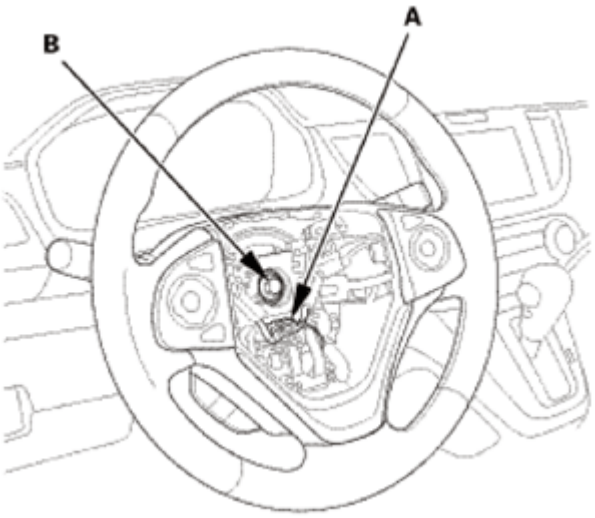

GETtheMANUALS.org

Fig. 4: Identifying Steering Wheel Connector And Bolt
Courtesy of AMERICAN HONDA MOTOR CO., INC.

4. Install a commercially available steering wheel puller (A) on the steering wheel (B).
5. Free the steering wheel from the steering column shaft by turning the pressure bolt (C) of the puller.

   Note these items when removing the steering wheel:

   - Do not tap on the steering wheel or the steering column shaft when removing the steering wheel.
   - If you thread the puller bolts (D) into the wheel hub more than five threads, the bolts will hit the cable reel and damage it. To prevent this, install a pair of jam nuts five threads up on each puller bolt.

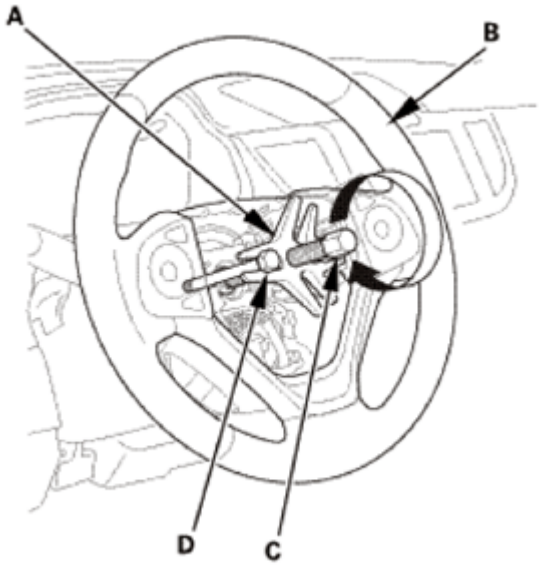

Fig. 5: Removing Steering Wheel Using Puller
Courtesy of AMERICAN HONDA MOTOR CO., INC.

6. Remove the steering wheel puller.
7. Remove the steering wheel (A) from the steering column.

GETtheMANUALS.org

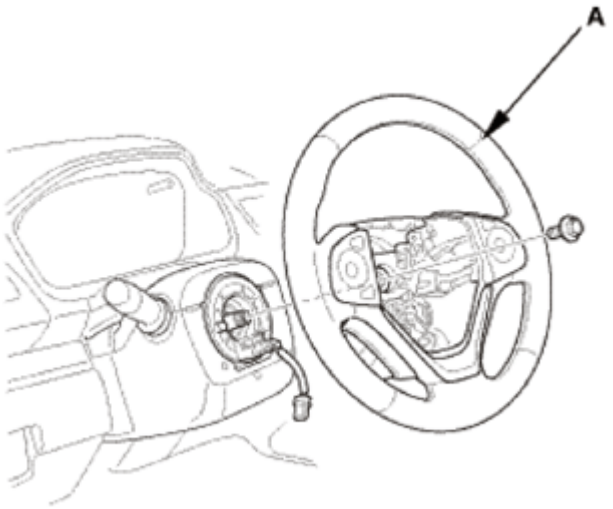

Fig. 6: Identifying Steering Wheel
Courtesy of AMERICAN HONDA MOTOR CO., INC.

4. Steering Wheel Rear Cover
    1. Remove the steering wheel rear cover (A).

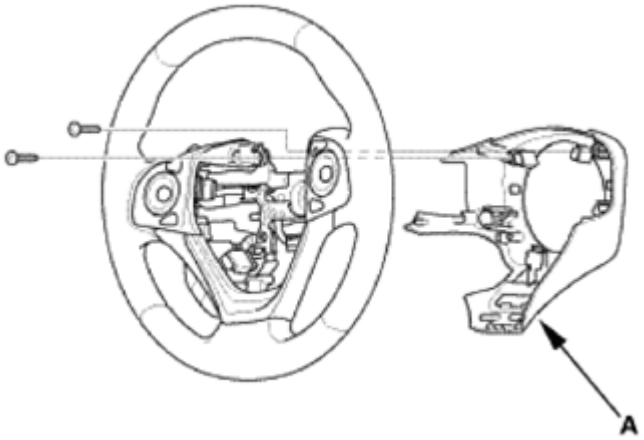

Fig. 7: Identifying Steering Wheel Rear Cover
Courtesy of AMERICAN HONDA MOTOR CO., INC.

5. HFL-Voice Control Switch
    1. Remove the switch cover (A).
    2. Remove the HFL - voice control switch (B).

GETtheMANUALS.org

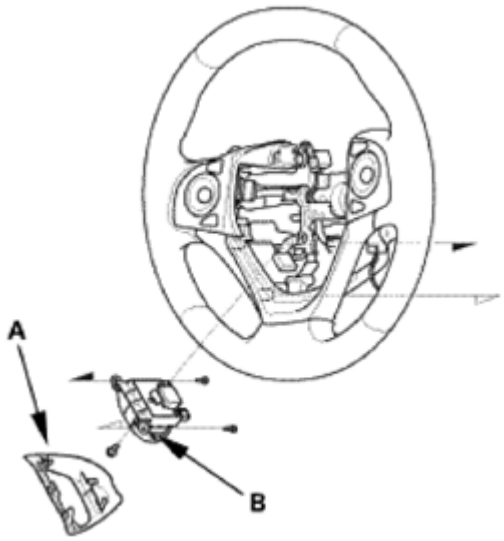

Fig. 8: Identifying HFL - Voice Control Switch And Cover
Courtesy of AMERICAN HONDA MOTOR CO., INC.

6. Steering Wheel Trim
    1. Remove the steering wheel trim (A).

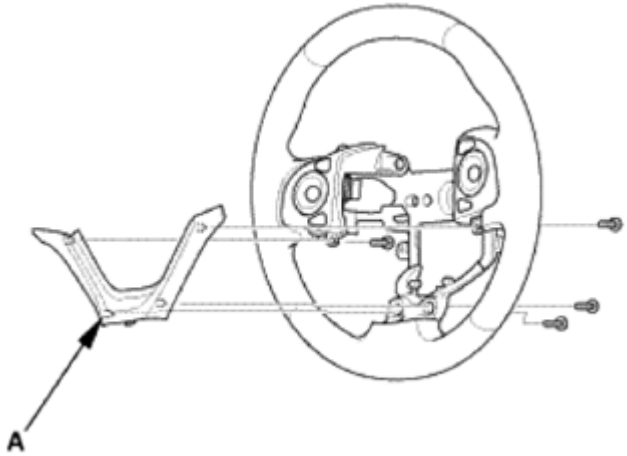

Fig. 9: Identifying Steering Wheel Trim
Courtesy of AMERICAN HONDA MOTOR CO., INC.

7. Cruise Control Combination Switch
    1. Remove the cruise control combination switch (A).

GETtheMANUALS.org

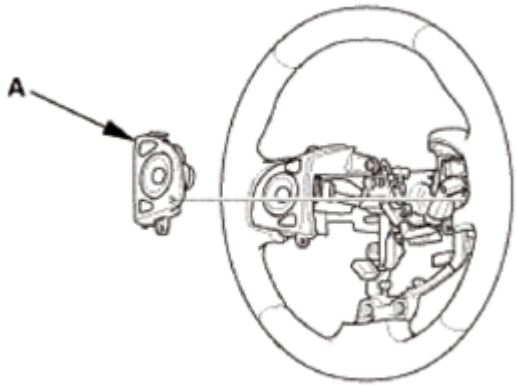

Fig. 10: Identifying Cruise Control Combination Switch
Courtesy of AMERICAN HONDA MOTOR CO., INC.

TEST

1. Cruise Control Combination Switch - Test
    1. Measure the resistance between cruise control combination switch 12P connector terminal No. 2 and No. 5 according to the table.

       If there is no resistance in one or more positions, replace the cruise control combination switch.

Position	Resistance
OFF	About 2.2 kohms
Cruise control main (PRESSED)	About 60 ohms
Cancel (PRESSED)	About 190 ohms
Set/- (PRESSED)	About 450 ohms
Res/+ (PRESSED)	About 900 ohms

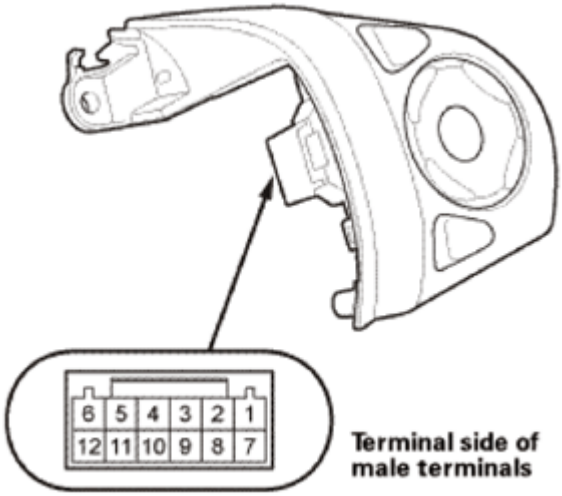

Fig. 11: Identifying Cruise Control Combination Switch Connector Terminals
Courtesy of AMERICAN HONDA MOTOR CO., INC.

GETtheMANUALS.org

2. Check for continuity between cruise control combination switch 12P connector terminal No. 1 and No. 6.

   If there is no continuity, replace the cruise control combination switch.

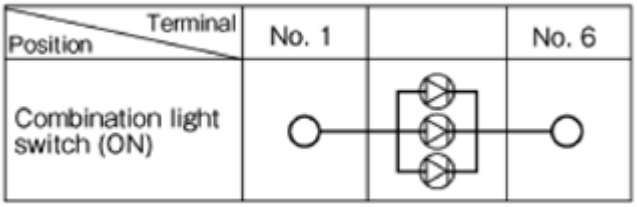

Fig. 12: Cruise Control Combination Switch Continuity Reference Chart
Courtesy of AMERICAN HONDA MOTOR CO., INC.

INSTALLATION

There are SRS components located in this area. **REVIEW THE SRS COMPONENT LOCATIONS** , and the **PRECAUTIONS AND PROCEDURES** , in the SRS before doing repairs or service.

1. Cruise Control Combination Switch
   1. Install the Install the cruise control combination switch (A).

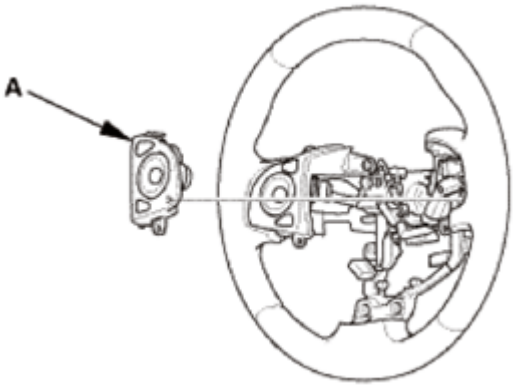

Fig. 13: Identifying Cruise Control Combination Switch
Courtesy of AMERICAN HONDA MOTOR CO., INC.

2. Steering Wheel Trim Assembly
   1. Install the steering wheel trim (A).

GETtheMANUALS.org

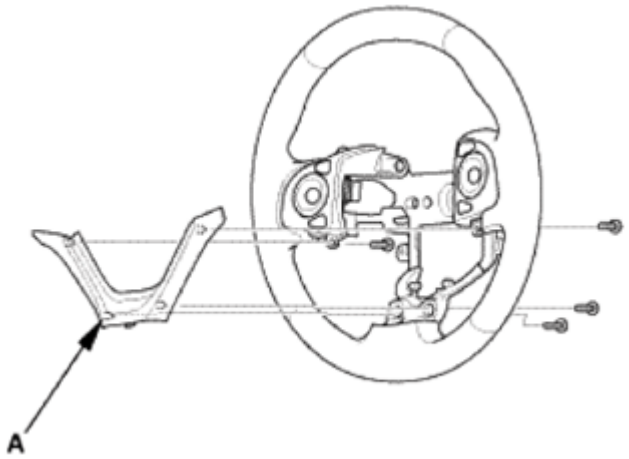

Fig. 14: Identifying Steering Wheel Trim
Courtesy of AMERICAN HONDA MOTOR CO., INC.

3. HFL-Voice Control Switch
    1. Install the HFL - voice control switch (A).
    2. Install the switch cover (B).

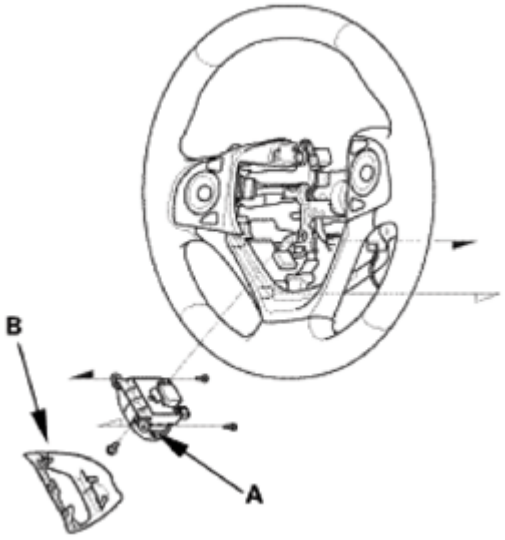

Fig. 15: Identifying HFL - Voice Control Switch And Cover
Courtesy of AMERICAN HONDA MOTOR CO., INC.

4. Steering Wheel Rear Cover
    1. Install the steering wheel rear cover (A).

GETtheMANUALS.org

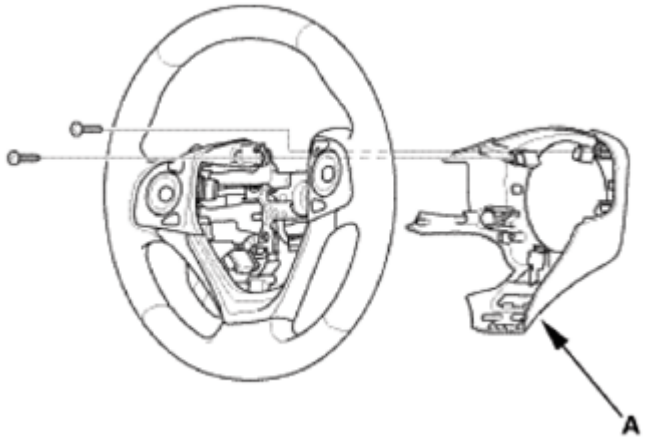

Fig. 16: Identifying Steering Wheel Rear Cover
Courtesy of AMERICAN HONDA MOTOR CO., INC.

5. Steering Wheel Assembly
    1. Make sure the front wheels are pointing straight ahead.
    2. Center the cable reel (A). Do this by first rotating the cable reel clockwise until it stops.
    3. Rotate the cable reel counterclockwise about three full turns. The arrow mark (B) on the cable reel label should point straight up.

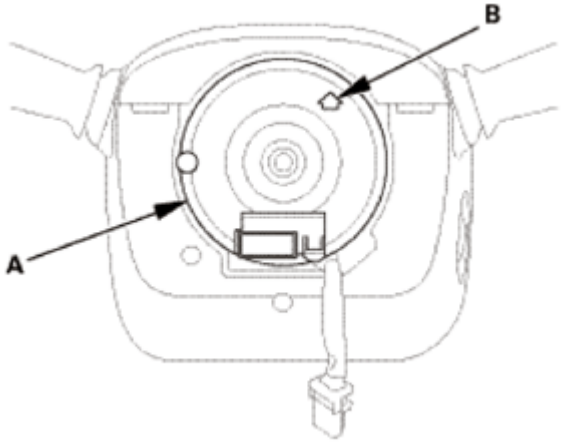

Fig. 17: Identifying Steering Wheel Assembly Cable Reel With Arrow Mark
Courtesy of AMERICAN HONDA MOTOR CO., INC.

    4. Position the steering wheel hub (A) so that it engages the pin (B) of the cable reel.
    5. Install the steering wheel (C) on to the steering column shaft.

NOTE: **Do not tap on the steering wheel or the steering column shaft when installing the steering wheel.**

GETtheMANUALS.org

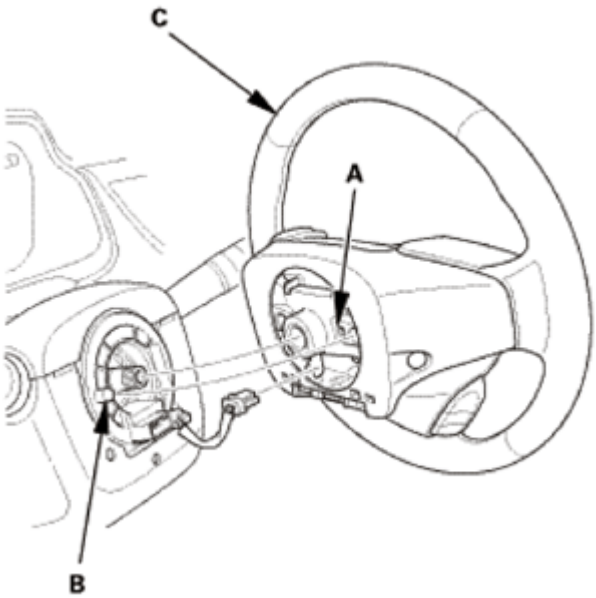

Fig. 18: Identifying Steering Wheel, Hub And Pin
Courtesy of AMERICAN HONDA MOTOR CO., INC.

6. Install the steering wheel bolt (A), and tighten it to the specified torque.
7. Connect the connector (B).
8. Make sure the wire harness is routed and fastened properly.

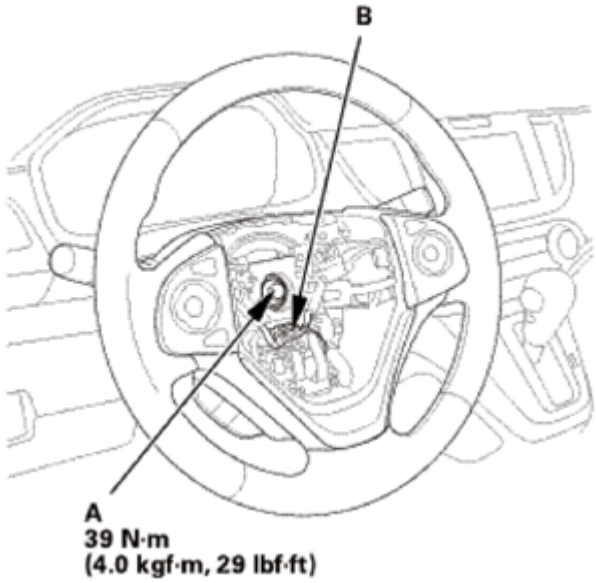

Fig. 19: Identifying Steering Wheel Connector And Bolt Witch Torque Specifications
Courtesy of AMERICAN HONDA MOTOR CO., INC.

6. Driver's Airbag

GETtheMANUALS.org

NOTE: **If you are replacing a deployed driver's airbag, inspect the cable reel for heat damage. If there is any damage, replace the cable reel.**

1. Place the driver's airbag (A) in the steering wheel.
2. Tighten the new TORX bolts using a TORX T30 bit.

NOTE: **Make sure the clearance (B) between the steering wheel and the horn pad is the specified value.**

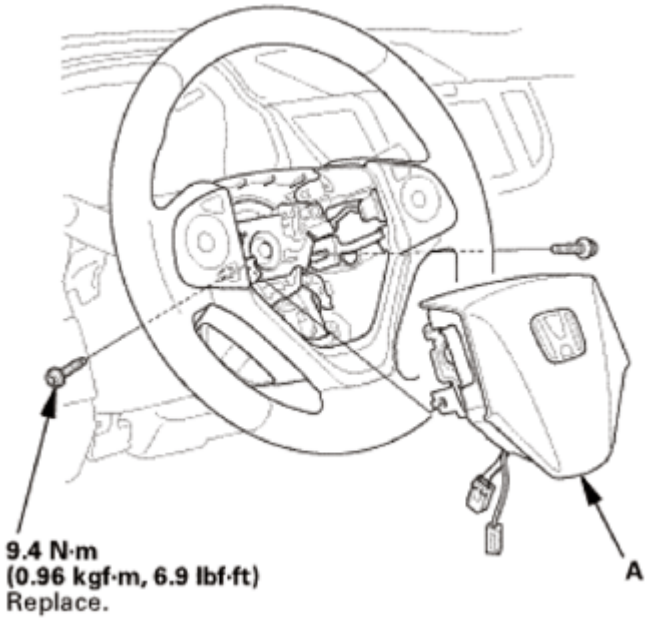

Fig. 20: Identifying Driver Airbag And Bolt With Torque Specifications
Courtesy of AMERICAN HONDA MOTOR CO., INC.

GETtheMANUALS.org

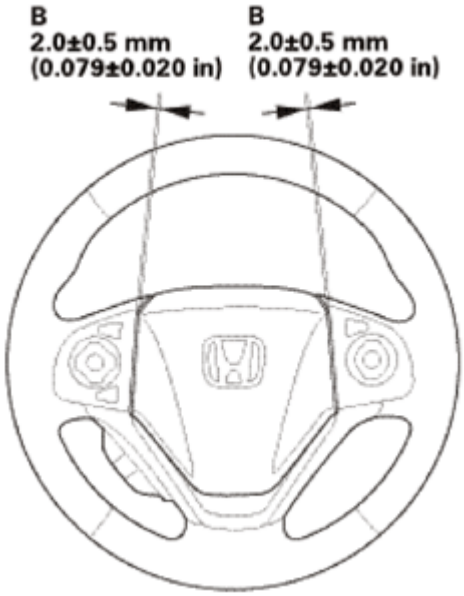

Fig. 21: Identifying Steering Wheel And Horn Pad Clearance Dimension
Courtesy of AMERICAN HONDA MOTOR CO., INC.

3. Connect the driver's airbag inflator connector (A) on the cable reel harness.
4. Connect the horn switch connector (B).

NOTE: **After reconnecting the negative cable to the battery, make sure the horn works properly.**

5. Install the access panel (C).

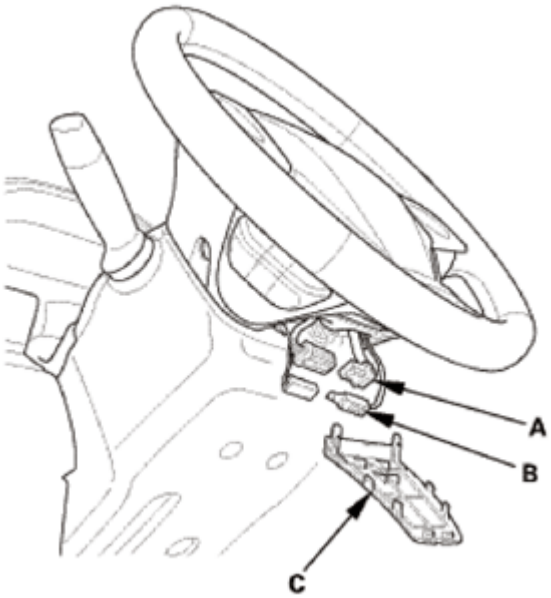

Fig. 22: Identifying Driver Airbag, Horn Switch Connector And Access Panel

GETtheMANUALS.org

Courtesy of AMERICAN HONDA MOTOR CO., INC.

7. Battery Terminal (SRS) - Reconnection

NOTE: If the battery performance is abnormal, test the battery.

1. Clean the battery terminals.
2. Connect the positive cable (A) to the battery.

NOTE: Always connect the positive side first.

3. Connect the negative cable (B) to the battery.
4. Apply multipurpose grease to the terminals to prevent corrosion.

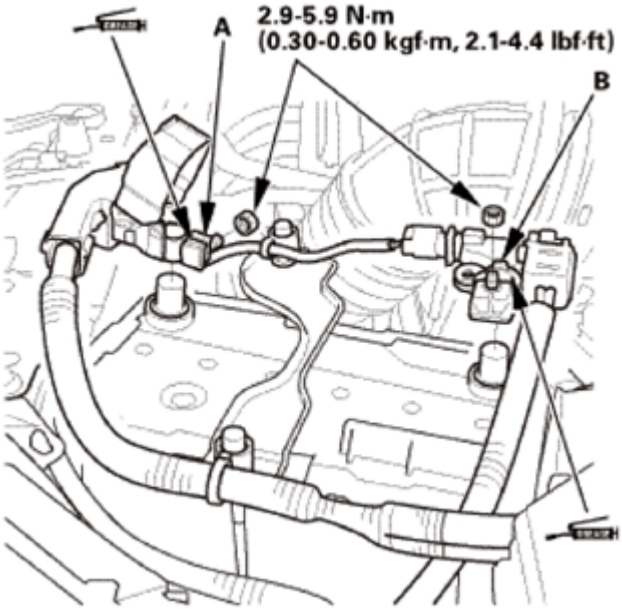

Fig. 23: Identifying Battery (+ And -) Terminal (SRS) With Torque Specifications
Courtesy of AMERICAN HONDA MOTOR CO., INC.

8. HDS DLC - Connection
   1. Connect the HDS to the data link connector (DLC) (A) located under the driver's side of the dashboard.
   2. Turn the ignition switch to ON (II).
   3. Make sure the HDS communicates with the vehicle. If it does not communicate, go to the DLC circuit troubleshooting.

GETtheMANUALS.org

Fig. 24: Identifying Data Link Connector
Courtesy of AMERICAN HONDA MOTOR CO., INC.

9. VSA Sensor Neutral Position - Memorization
    1. Park the vehicle on a flat and level surface, with the steering wheel in the straight ahead position.
    2. Select VSA ADJUSTMENT, then select ALL SENSORS with the HDS, and follow the screen prompts.

    NOTE: See the HDS Help menu for specific instructions.

10. Steering Angle Sensor Neutral Position - Clear
    1. Select EPS ADJUSTMENT, then select EPS STEERING ANGLE SENSOR VALUE CLEAR and follow the screen prompts on the HDS.

    NOTE: See the HDS Help menu for specific instructions.

11. Confirm Proper SRS Operation
    1. Turn the ignition switch to ON (II), and check that the SRS indicator comes on for about 6 seconds and then goes off.

CRUISE CONTROL COMPONENT LOCATION INDEX

GETtheMANUALS.org

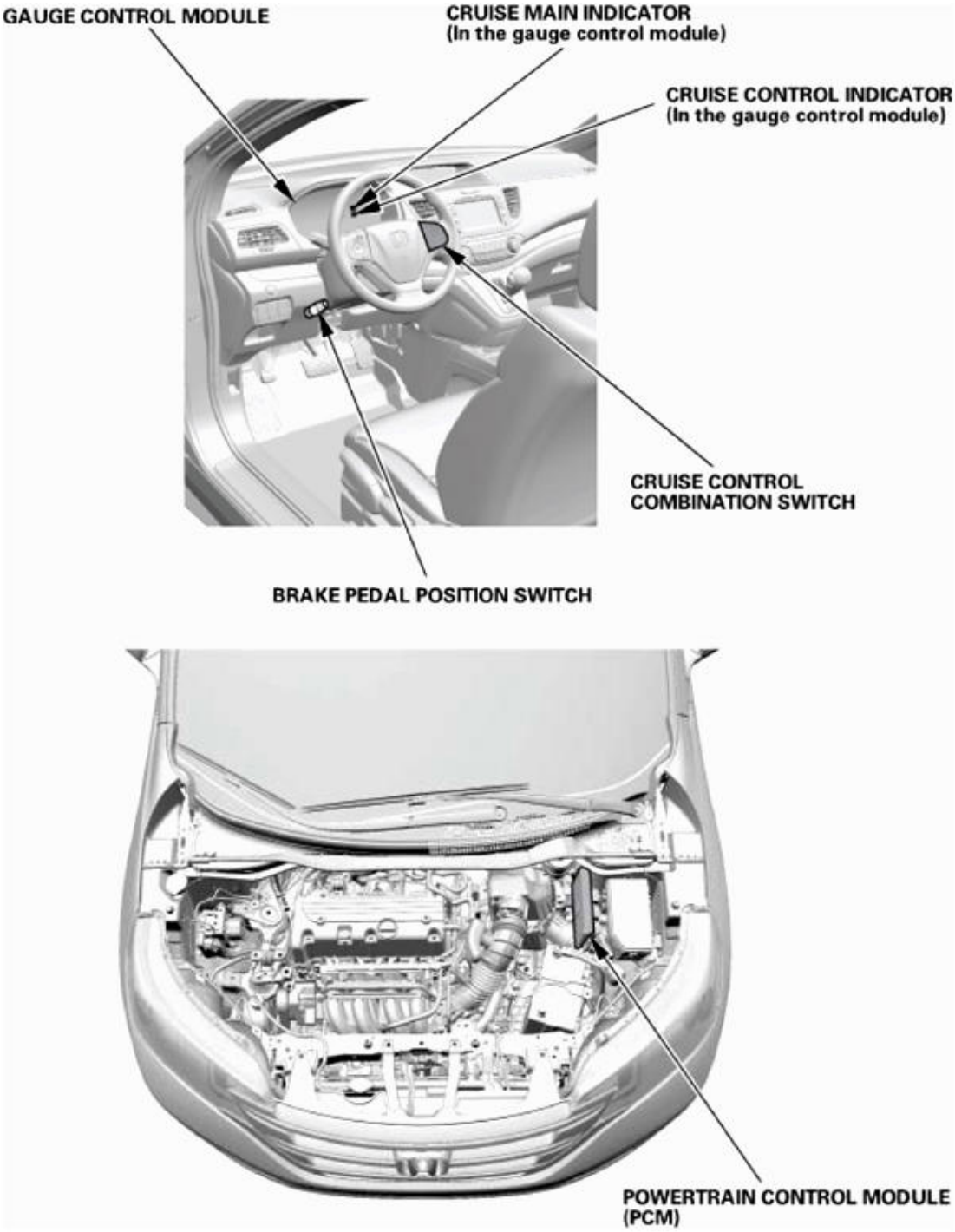

Fig. 25: Cruise Control System Components Location
Courtesy of AMERICAN HONDA MOTOR CO., INC.

CRUISE CONTROL COMBINATION SWITCH	**REMOVAL, TEST, AND INSTALLATION**
	TEST

GETtheMANUALS.org

BRAKE PEDAL POSITION SWITCH	**Pedal and Brake Pedal Position Switch Adjustment** See **BRAKE PEDAL AND BRAKE PEDAL POSITION SWITCH ADJUSTMENT** or **BRAKE PEDAL REMOVAL AND INSTALLATION**

CRUISE CONTROL (PCM) INPUT TEST

NOTE: Always make sure that you have the latest HDS software.

1. **Connect the HDS to the DLC** See **HOW TO TROUBLESHOOT THE A/T SYSTEM** or **HOW TO TROUBLESHOOT THE FUEL AND EMISSIONS SYSTEMS** .
2. Turn the ignition switch to ON (II).
3. Make sure the HDS communicates with the vehicle and the PCM. If it does not communicate, **TROUBLESHOOT THE DLC CIRCUIT** .
4. **Check for and troubleshoot any DTCs** See **HOW TO TROUBLESHOOT THE A/T SYSTEM** or **HOW TO TROUBLESHOOT THE FUEL AND EMISSIONS SYSTEMS** .
5. Do the following tests while monitoring parameters in the PGM-FI DATA LIST with the HDS.
6. If the input tests prove OK, **replace the PCM** See **PCM REMOVAL AND INSTALLATION** or **PCM UPDATE** .

NOTE: Intermittent failures are often caused by loose circuit connections. While monitoring cruise control inputs, flex the circuit wires, and note if any of the test results change.

Signal to be tested	Test condition	Parameter: Desired result	Possible cause if result is not obtained
	Cruise control combination switch buttons are not pressed	CRUISE CONTROL SYSTEM SWITCH STATUS in the HDS data list should indicate DEFAULT when the cruise control combination switch buttons are not pressed.	If the CRUISE CONTROL SYSTEM SWITCH STATUS in the HDS data list indicates SIGNAL LOST, check as shown. • Check for DTCs in the PGM-FI system and do the appropriate troubleshooting. • Faulty gauge control module • Faulty cruise control combination switch • An open in the wire between the gauge control module and the cruise control combination switch • A short to power in the wire between the gauge control module and the cruise control combination switch when the
	Cruise control main button is pressed	CRUISE CONTROL SYSTEM SWITCH STATUS in the HDS data list should indicate MAIN SW when the cruise control main button is pressed.	

GETtheMANUALS.org

Cruise control system switch status	Cancel button is pressed	CRUISE CONTROL SYSTEM SWITCH STATUS in the HDS data list should indicate CANCEL SW when the cancel button is pressed.	illumination switch is turned on If the CRUISE CONTROL SYSTEM SWITCH STATUS in the HDS data list indicates SIGNAL SHORT, check as shown. • Check for DTCs in the PGM-FI system and do the appropriate troubleshooting • Faulty gauge control module • Faulty cruise control combination switch • A short to ground in the wire between the gauge control module and the cruise control combination switch If the CRUISE CONTROL SYSTEM SWITCH STATUS in the HDS data list indicates a different status, check for a faulty cruise control combination switch.
	Set/- button is pressed	CRUISE CONTROL SYSTEM SWITCH STATUS in the HDS data list should indicate SET SW when the set/- button is pressed.	
	Res/+ button is pressed	CRUISE CONTROL SYSTEM SWITCH STATUS in the HDS data list should indicate RESUME SW when the res/+ button is pressed.	
Brake pedal position switch signal	Brake pedal pressed, then released	CRUISE BRAKE SW/IDLE STOP SW should indicate OPEN when the brake pedal is pressed and CLOSE when the brake pedal is released.	• Faulty brake pedal position switch • Blown No. B2 (10 A) fuse in the under-dash fuse/relay box • An open in the wire between the PCM and the brake pedal position switch • A wire shorted to ground or power between the PCM and the brake pedal position switch
Cruise control indicator signal	Start the engine, press the cruise control main button on, and drive the vehicle above 25 mph (40 km/h) with the cruise control set and cancel the cruise	CRUISE INDICATOR should indicate ON when the cruise control is set and OFF when the cruise control is canceled.	• Faulty gauge control module • Faulty cruise control combination switch • An open in the wire between the gauge control module and the cruise control combination switch

GETtheMANUALS.org

	control		• A short to ground in the wire between the gauge control module and the cruise control combination switch

GETtheMANUALS.org

CENTER CONSOLE DISASSEMBLY AND REASSEMBLY

DISASSEMBLY

1. Center Console - Disassembly
    1. Carefully pry up the center console upper trim (A) with the appropriate trim tool to detach the clips (B) and the hooks (C), then remove the center console upper trim.

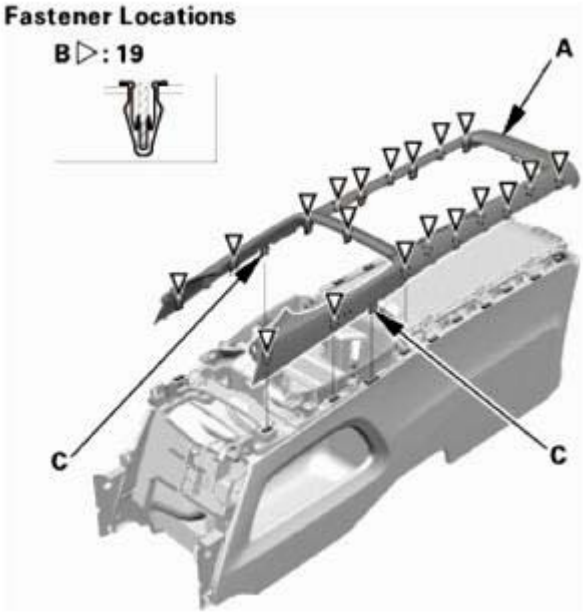

Fig. 1: Identifying Center Console Upper Trim, Hooks And Clips
Courtesy of AMERICAN HONDA MOTOR CO., INC.

2. Remove the screws (A), then pull out the console panels (B) to detach the clips (C).

GETtheMANUALS.org

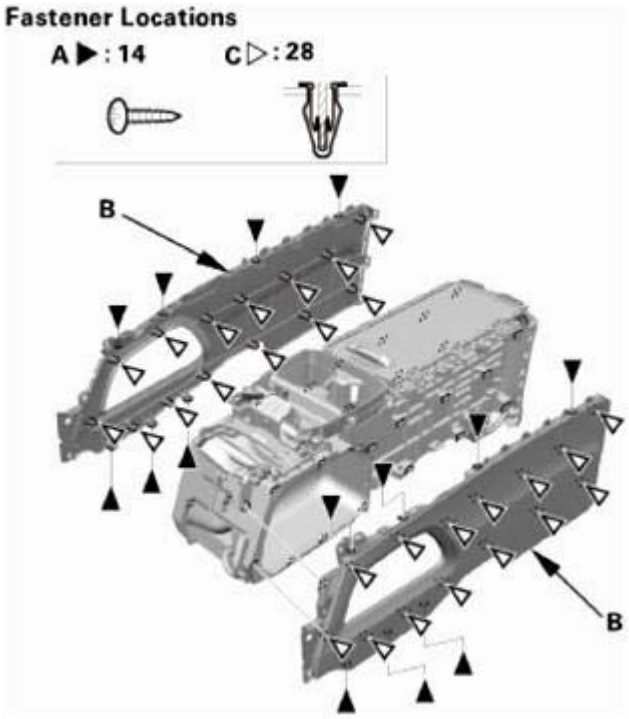

Fig. 2: Identifying Console Panels, Screws And Clips
Courtesy of AMERICAN HONDA MOTOR CO., INC.

3. Remove the screws (A), and disconnect the connectors (B).
4. Remove the beverage holder (C).

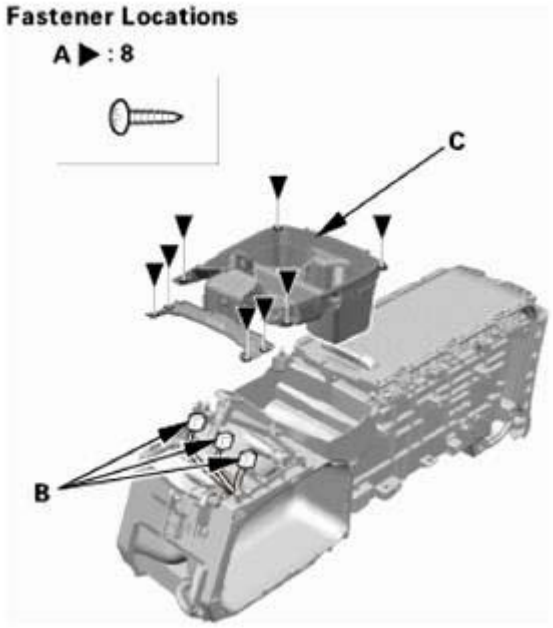

Fig. 3: Identifying Center Console Assembly Connector, Beverage Holder And Screws
Courtesy of AMERICAN HONDA MOTOR CO., INC.

GETtheMANUALS.org

REASSEMBLY

1. Center Console - Reassembly
    1. Connect the connectors (A), then install the beverage holder (B).

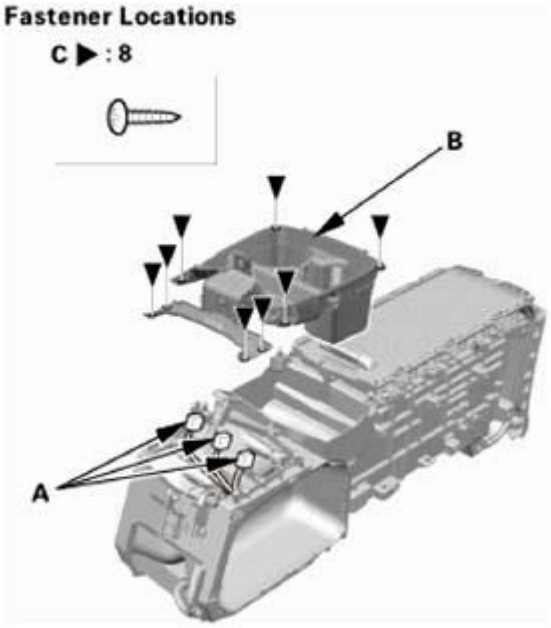

Fig. 4: Identifying Center Console Assembly Connector, Beverage Holder And Screws
Courtesy of AMERICAN HONDA MOTOR CO., INC.

2. Install the screws (C).
3. Install the console panels (A), then install the screws (B). Make sure the clips (C) snap into place securely.

GETtheMANUALS.org

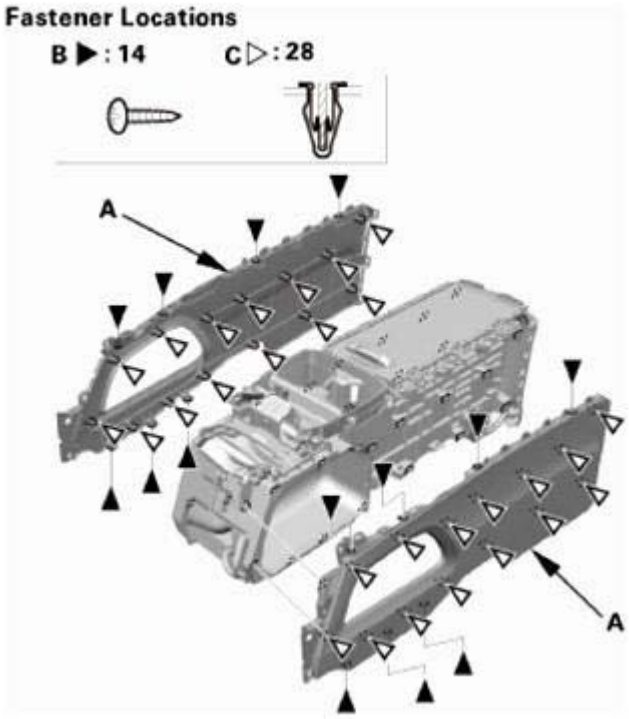

Fig. 5: Identifying Console Panels, Screws And Clips
Courtesy of AMERICAN HONDA MOTOR CO., INC.

4. Install the center console upper trim (A). Make sure the clips (B) and the hooks (C) snap into place securely.

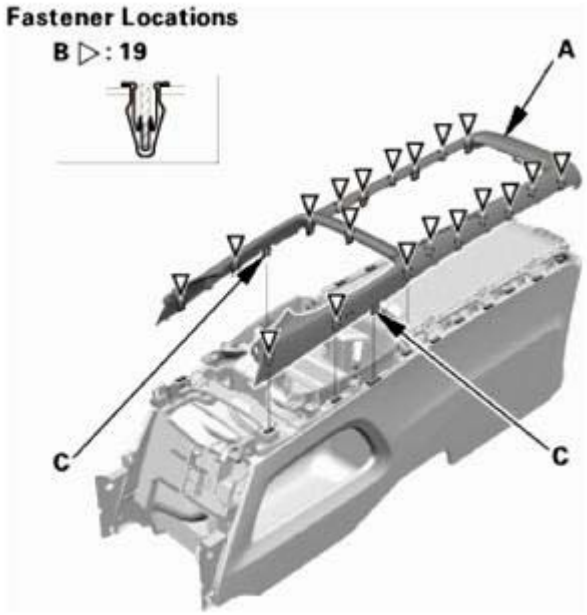

Fig. 6: Identifying Center Console Upper Trim, Hooks And Clips
Courtesy of AMERICAN HONDA MOTOR CO., INC.

GETtheMANUALS.org

CENTER CONSOLE REMOVAL AND INSTALLATION

REMOVAL

1. Front Console Cover - Both Sides
    1. Remove the clips (A).
    2. Detach the clips (B), then remove the front console covers (C).

Left side

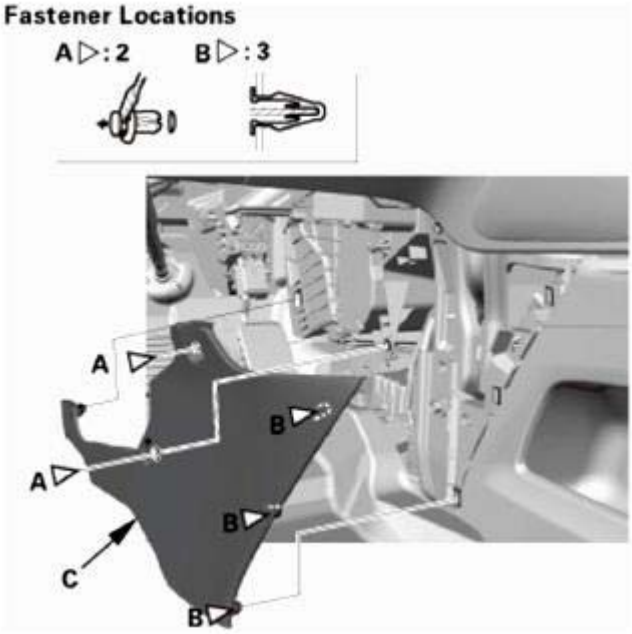

Fig. 7: Identifying Front Console Cover And Clips (Left Side)
Courtesy of AMERICAN HONDA MOTOR CO., INC.

Right side

GETtheMANUALS.org

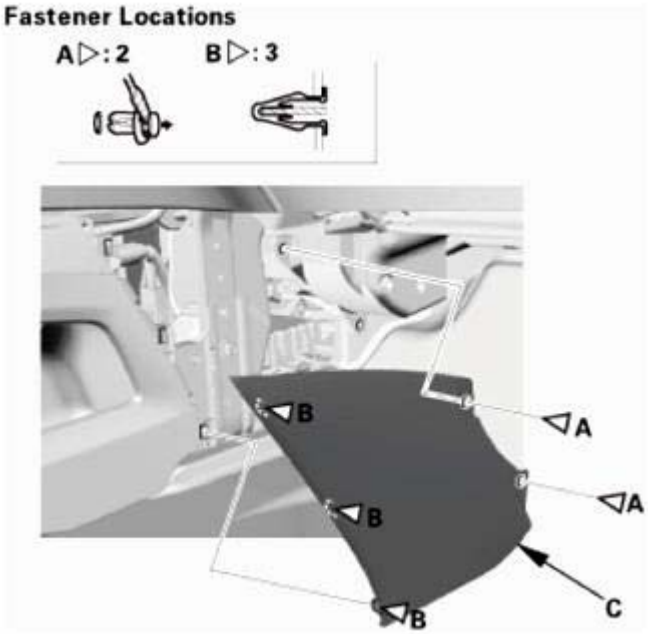

Fig. 8: Identifying Front Console Cover And Clips (Right Side)
Courtesy of AMERICAN HONDA MOTOR CO., INC.

2. Center Console Rear Trim
    1. Carefully pry out the center console rear trim (A) with the appropriate trim tool to detach the clips (B) and the hooks (C), then remove the center console rear trim.

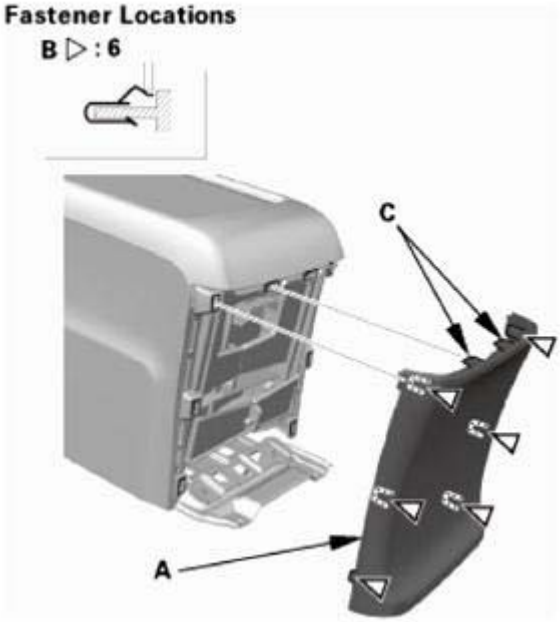

Fig. 9: Identifying Center Console Rear Trim, Hooks And Clips
Courtesy of AMERICAN HONDA MOTOR CO., INC.

GETtheMANUALS.org

3. Center Console
    1. Carefully pry out the center lower cover (A) with the appropriate trim tool to detach the clips (B), then remove the center lower cover.
    2. Remove the bolt (C).

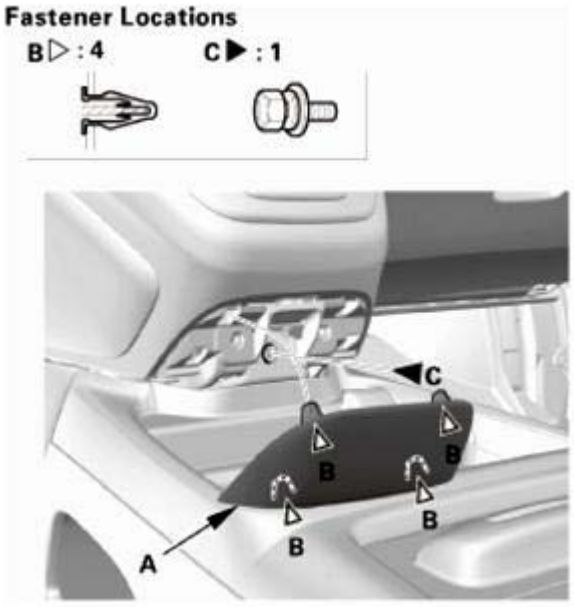

Fig. 10: Identifying Center Lower Cover, Bolt And Clips
Courtesy of AMERICAN HONDA MOTOR CO., INC.

3. Remove the bolts (A).

Fig. 11: Identifying Center Console Assembly Bolts
Courtesy of AMERICAN HONDA MOTOR CO., INC.

GETtheMANUALS.org

4. Remove the console box mat (A), then remove the bolts (B).

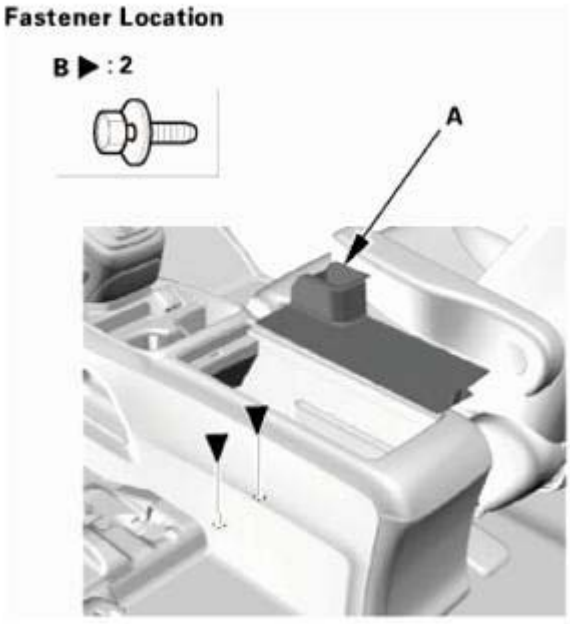

Fig. 12: Identifying Console Box Mat And Bolts
Courtesy of AMERICAN HONDA MOTOR CO., INC.

5. Disconnect the connectors (A), and remove the clips (B).

GETtheMANUALS.org

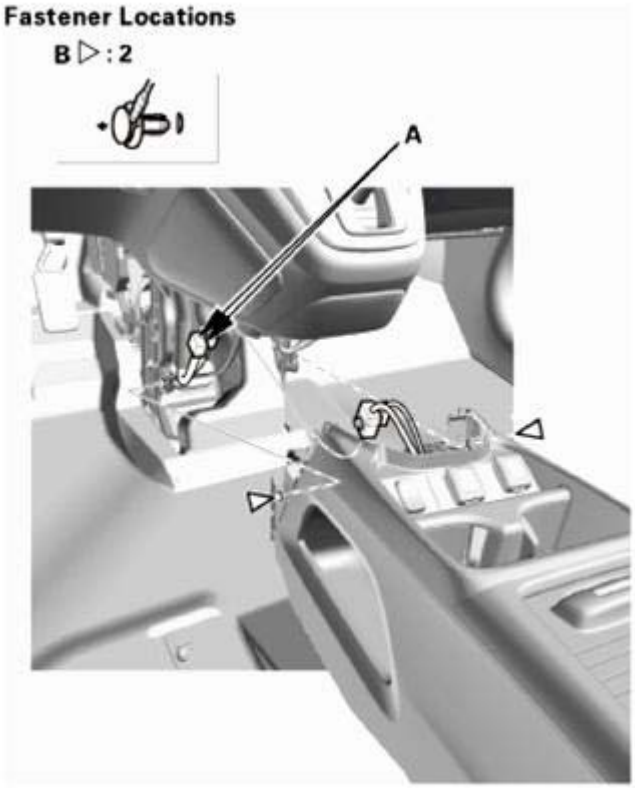

Fig. 13: Identifying Center Console Assembly, Connector And Clips
Courtesy of AMERICAN HONDA MOTOR CO., INC.

6. Slide both front seats fully rearward, and recline the seat-backs around two thirds to the rear.
7. Remove the center console (A).

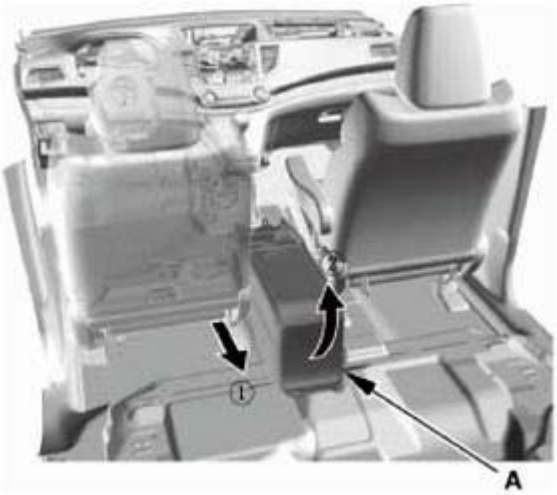

Fig. 14: Removing Center Console
Courtesy of AMERICAN HONDA MOTOR CO., INC.

INSTALLATION

GETtheMANUALS.org

1. Center Console
    1. Install the center console (A).

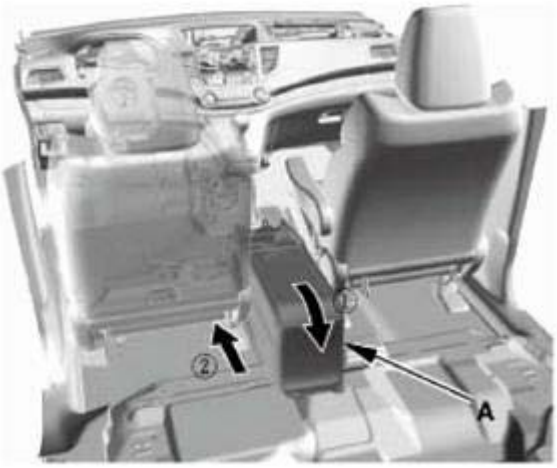

Fig. 15: Installing Center Console
Courtesy of AMERICAN HONDA MOTOR CO., INC.

    2. Connect the connectors (A), and install the clips (B).

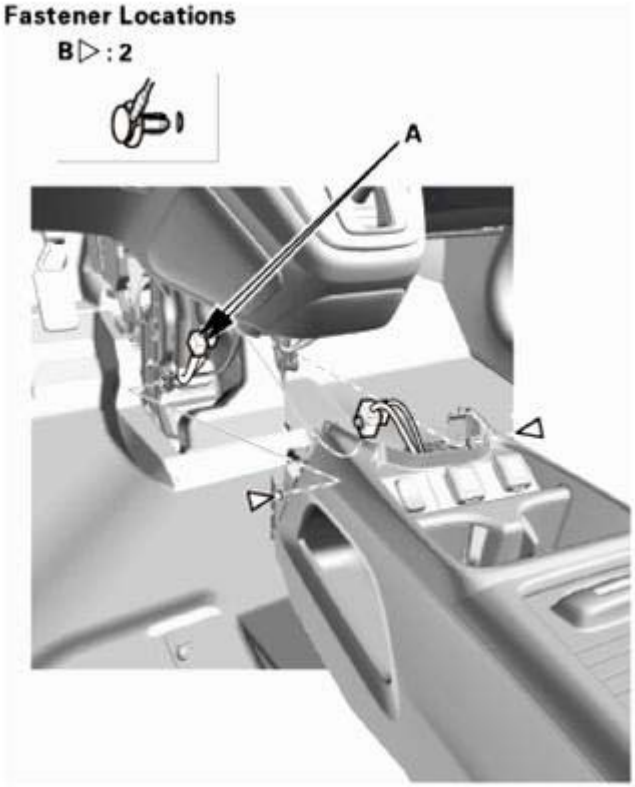

Fig. 16: Identifying Center Console Connector And Clips
Courtesy of AMERICAN HONDA MOTOR CO., INC.

GETtheMANUALS.org

3. Install the bolts (A), then install the console box mat (B).

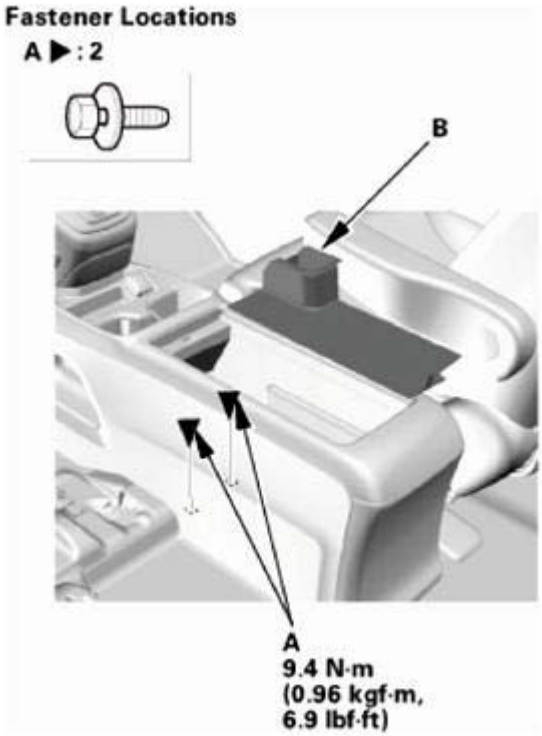

Fig. 17: Identifying Console Box Mat And Bolt With Torque Specifications
Courtesy of AMERICAN HONDA MOTOR CO., INC.

4. Install the bolts (A).

GETtheMANUALS.org

Fig. 18: Identifying Center Console Assembly Bolts With Torque Specifications
Courtesy of AMERICAN HONDA MOTOR CO., INC.

5. Install the bolt (A), then install the center lower cover (B). Make sure the clips (C) snap into place securely.

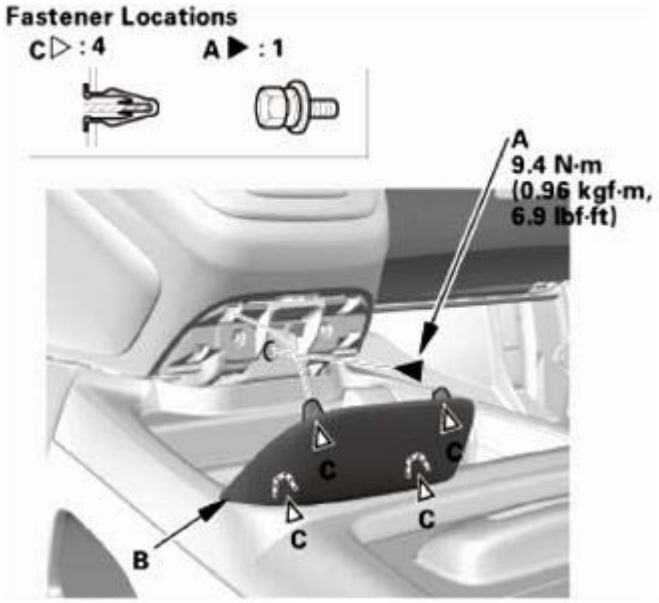

Fig. 19: Identifying Center Lower Cover, Bolt And Clips With Torque Specifications
Courtesy of AMERICAN HONDA MOTOR CO., INC.

2. Center Console Rear Trim
    1. Install the center console rear trim (A). Make sure the clips (B) and the hooks (C) snap into place securely.

GETtheMANUALS.org

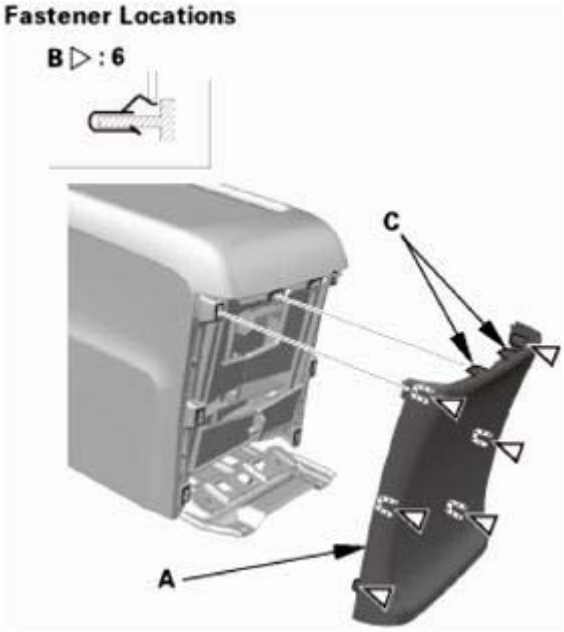

Fig. 20: Identifying Center Console Rear Trim, Hooks And Clips
Courtesy of AMERICAN HONDA MOTOR CO., INC.

3. Front Console Cover - Both Sides
    1. Install the front console covers (A). Make sure the clips (B, C) snap into place securely.

Left side

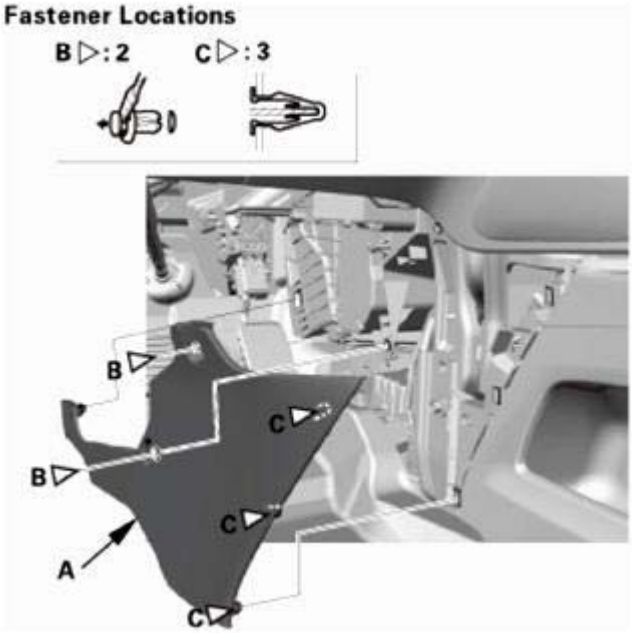

Fig. 21: Identifying Front Console Covers And Clips (Left Side)
Courtesy of AMERICAN HONDA MOTOR CO., INC.

GETtheMANUALS.org

Right side

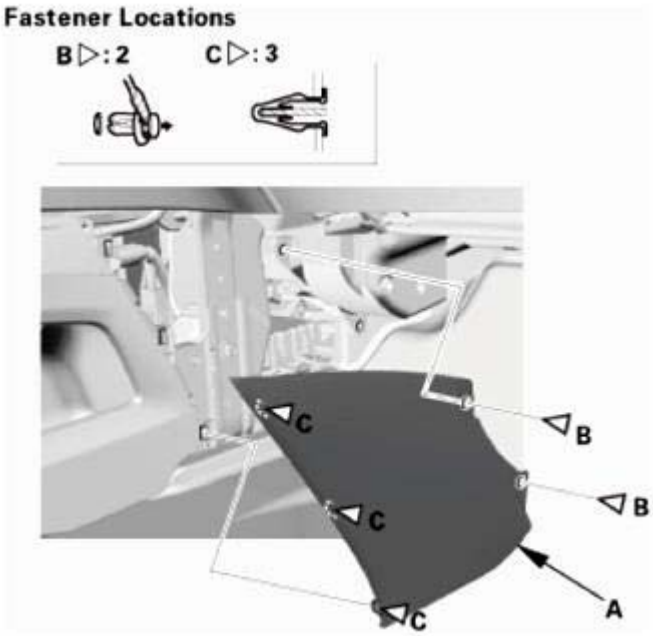

Fig. 22: Identifying Front Console Covers And Clips (Right Side)
Courtesy of AMERICAN HONDA MOTOR CO., INC.

CONSOLES COMPONENT LOCATION INDEX

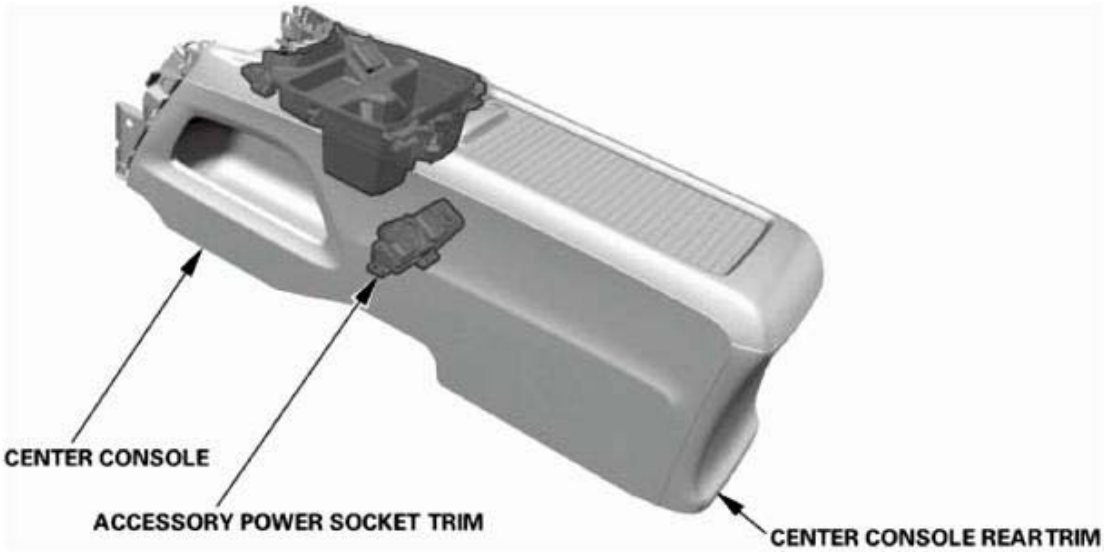

Fig. 23: Consoles Components Location
Courtesy of AMERICAN HONDA MOTOR CO., INC.

ACCESSORY POWER SOCKET TRIM	**REMOVAL AND INSTALLATION**

GETtheMANUALS.org

CENTER CONSOLE	**Disassembly and Reassembly** See **CENTER CONSOLE DISASSEMBLY AND REASSEMBLY** or **CENTER CONSOLE REMOVAL AND INSTALLATION**
CENTER CONSOLE	**Removal and Installation** See **CENTER CONSOLE DISASSEMBLY AND REASSEMBLY** or **CENTER CONSOLE REMOVAL AND INSTALLATION**
CENTER CONSOLE REAR TRIM	**Removal and Installation** See **CENTER CONSOLE DISASSEMBLY AND REASSEMBLY** or **CENTER CONSOLE REMOVAL AND INSTALLATION**

DASHBOARD CENTER DISPLAY VISOR REMOVAL AND INSTALLATION

REMOVAL

1. Inner Vent - Both Sides
    1. Carefully pry out the inner vents (A) with the appropriate trim tool to detach the clips (B), then remove the inner vents.

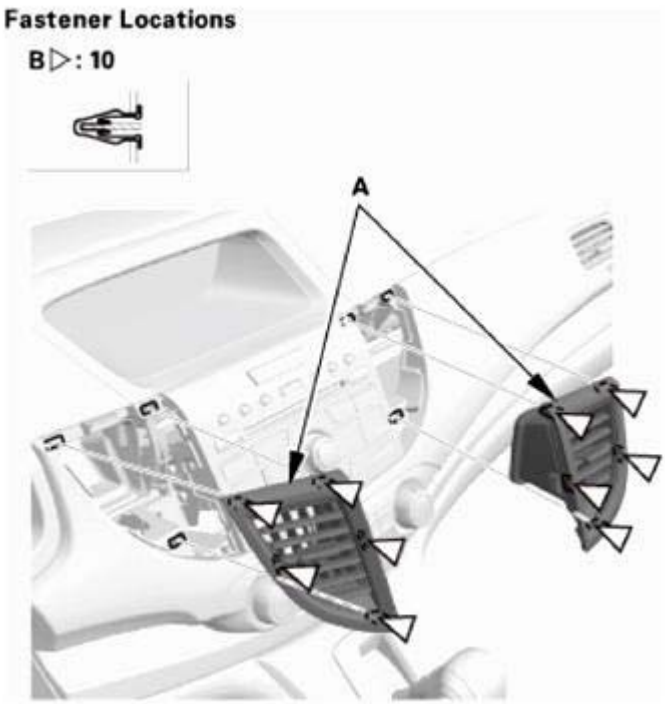

Fig. 24: Identifying Inner Vents And Clips
Courtesy of AMERICAN HONDA MOTOR CO., INC.

2. Audio-Navigation Unit Assembly (With Navigation)

NOTE:

- **Eject the discs before removing the audio-navigation unit to prevent damaging the CD/DVD player's load mechanism.**

GETtheMANUALS.org

- **If you are replacing the audio-navigation unit, write down the audio presets (if possible), then enter them into the new audio-navigation unit.**
- **If the audio-navigation unit is replaced or disconnected, Map Matching must be done.**
- **Lay a shop towel under the parts when working on them to protect the face panel from scratches or other damage.**
- **Do not work in a dusty or dirty place.**
- **Discharge static electricity from your body before and during the work.**
- **Do not touch the circuit board(s) with your bare hands.**
- **Do not work with dirty hands.**
- **Do not touch the terminal connector of the flat plate cable with your bare hands (If you have touched it, wipe it off thoroughly).**

1. Remove the bolts.
2. Disconnect the connectors, then pull out the audio-navigation unit (A).

Except KX

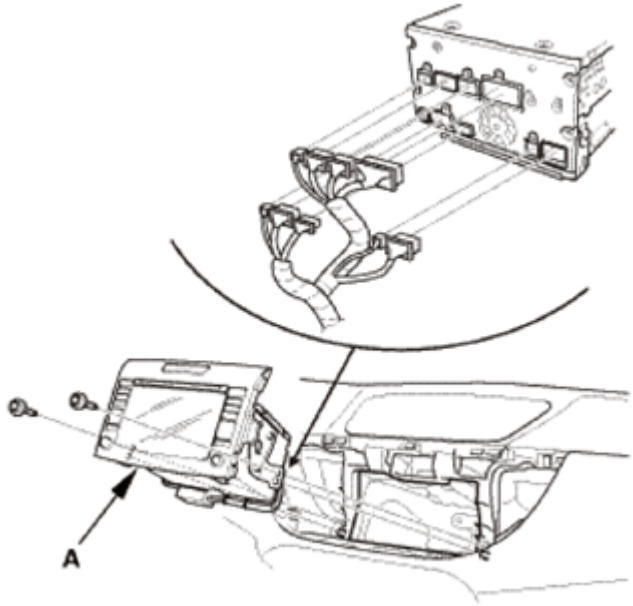

Fig. 25: Identifying Audio - Navigation Unit (With Navigation Except KX)
Courtesy of AMERICAN HONDA MOTOR CO., INC.

KX

GETtheMANUALS.org

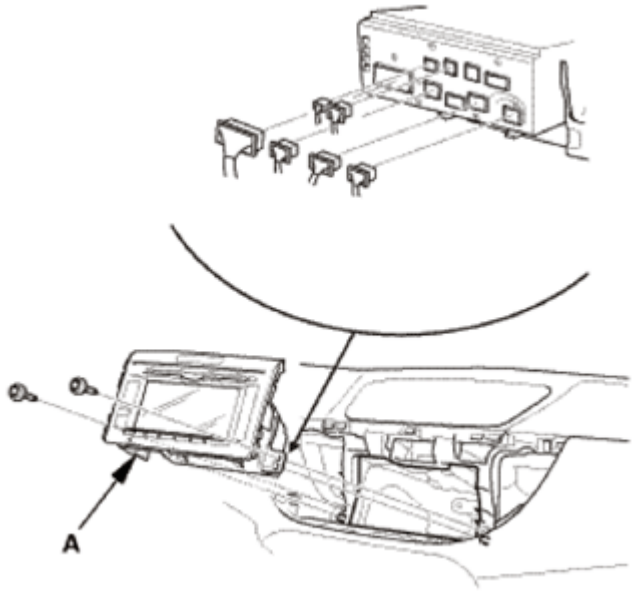

Fig. 26: Identifying Audio - Navigation Unit (With Navigation For KX)
Courtesy of AMERICAN HONDA MOTOR CO., INC.

3. Audio Unit Assembly (Without Navigation)

NOTE:

- **Eject the CD before disconnecting the audio unit to prevent damaging the CD player's load mechanism.**
- **If you are replacing the audio unit, write down the audio presets (if possible), and enter them into the new audio unit.**
- **Lay a shop towel under the parts when working on them to protect the face panel from scratches or other damage.**
- **Do not work in a dusty or dirty place.**
- **Discharge static electricity from your body before and during the work.**
- **Do not touch the circuit board(s) with your bare hands.**
- **Do not work with dirty hands.**
- **Do not touch the terminal connector of the flat plate cable with your bare hands (If you have touched it, wipe it off thoroughly.).**

1. Remove the bolts.
2. Disconnect the connectors, then pull out the audio unit (A).

GETtheMANUALS.org

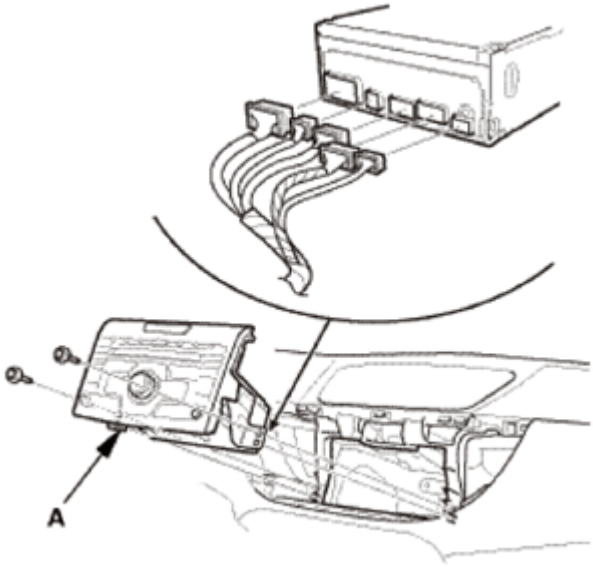

Fig. 27: Identifying Audio Unit Assembly (Without Navigation)
Courtesy of AMERICAN HONDA MOTOR CO., INC.

4. Dashboard Center Display Visor Assembly
    1. Remove the dashboard center display visor (A).

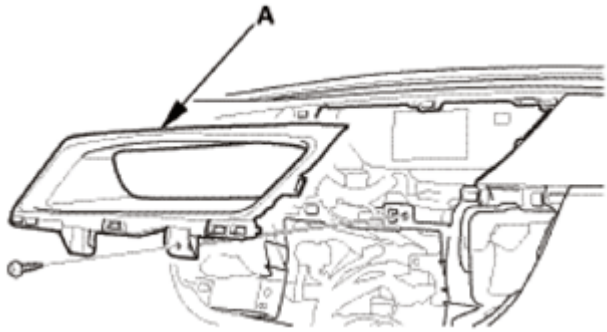

Fig. 28: Identifying Dashboard Center Display Visor
Courtesy of AMERICAN HONDA MOTOR CO., INC.

INSTALLATION

1. Dashboard Center Display Visor Assembly
    1. Install the dashboard center display visor (A).

GETtheMANUALS.org

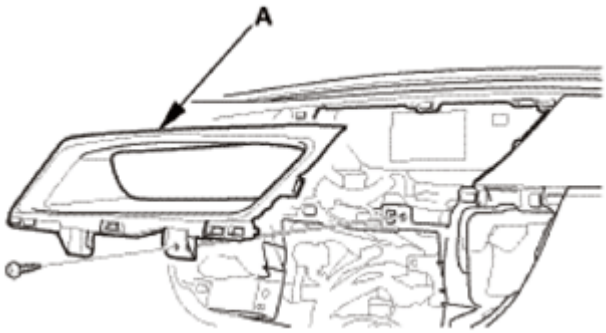

Fig. 29: Identifying Dashboard Center Display Visor
Courtesy of AMERICAN HONDA MOTOR CO., INC.

2. Audio Unit Assembly (Without Navigation)
    1. Connect the connectors, then install the audio unit (A).

    NOTE: **Make sure all the connectors and the antenna lead are secure.**

    2. Install the bolts (B).

    NOTE: **If the audio unit was replaced, enter the audio presets that you saved onto the new unit.**

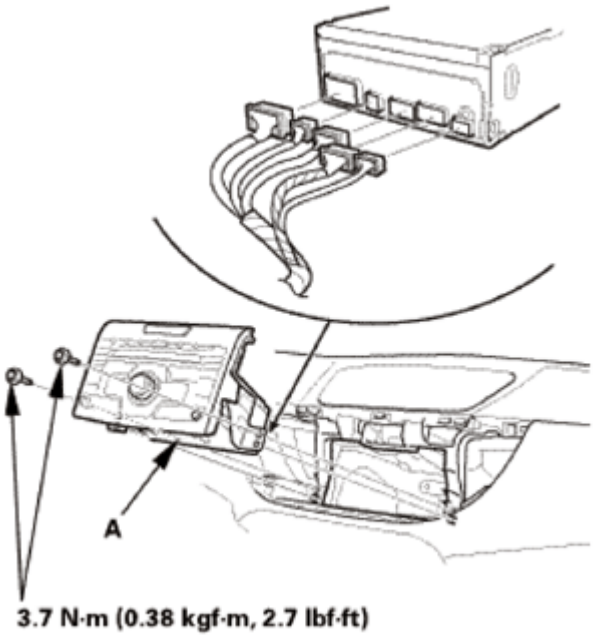

Fig. 30: Identifying Audio Unit And Bolts With Torque Specifications
Courtesy of AMERICAN HONDA MOTOR CO., INC.

3. Navigation Unit Assembly (With Navigation)

GETtheMANUALS.org

1. Connect the connectors, then install the audio-navigation unit (A).

NOTE: Make sure all the connectors and the antenna lead are secure.

2. Install the bolts (B).

4. Inner Vent - Both Sides
   1. Install the inner vents (A). Make sure the clips (B) snap into place securely.

Except KX

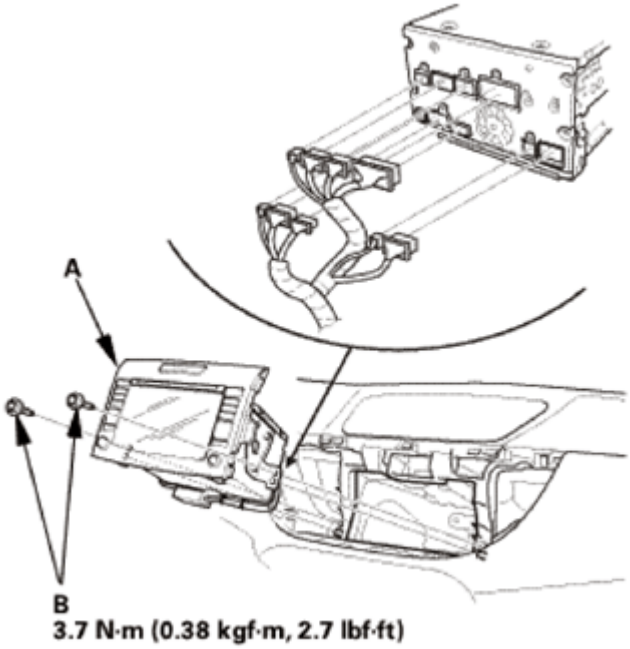

Fig. 31: Identifying Audio - Navigation Unit And Bolts With Torque Specifications (Except KX)
Courtesy of AMERICAN HONDA MOTOR CO., INC.

KX

GETtheMANUALS.org

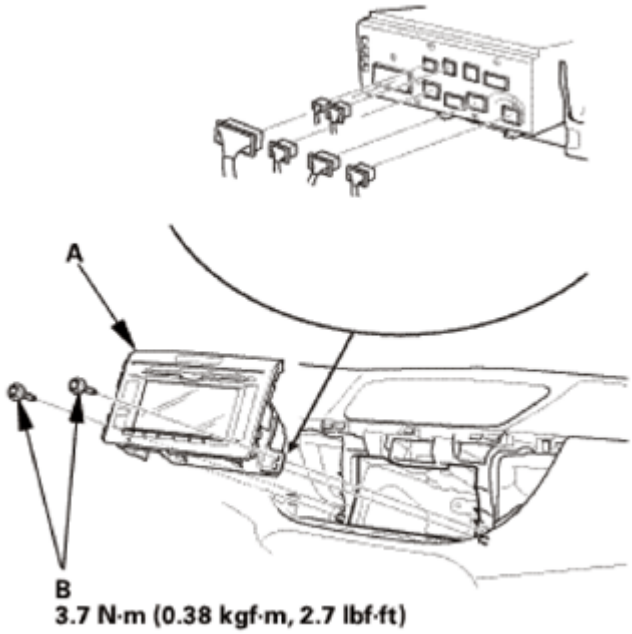

Fig. 32: Identifying Audio - Navigation Unit And Bolts With Torque Specifications (For KX)
Courtesy of AMERICAN HONDA MOTOR CO., INC.

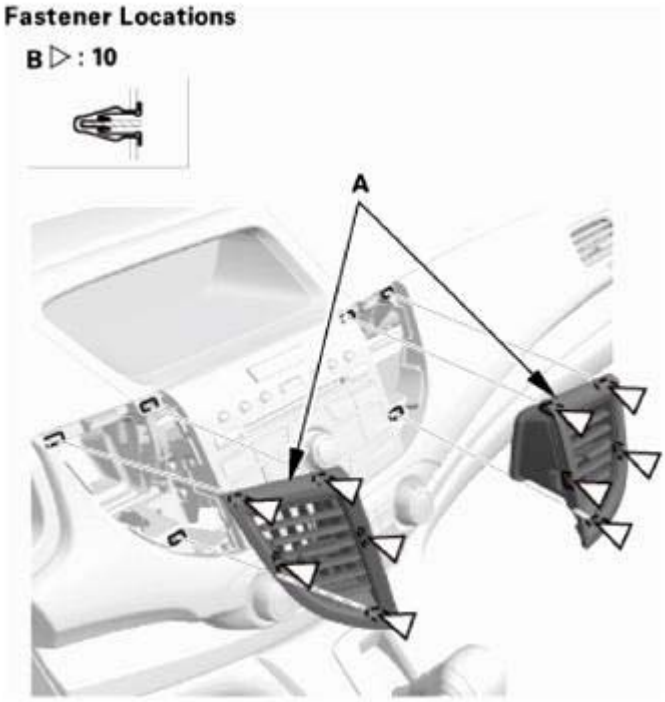

Fig. 33: Identifying Inner Vents And Clips
Courtesy of AMERICAN HONDA MOTOR CO., INC.

DASHBOARD COMPONENT LOCATION INDEX

GETtheMANUALS.org

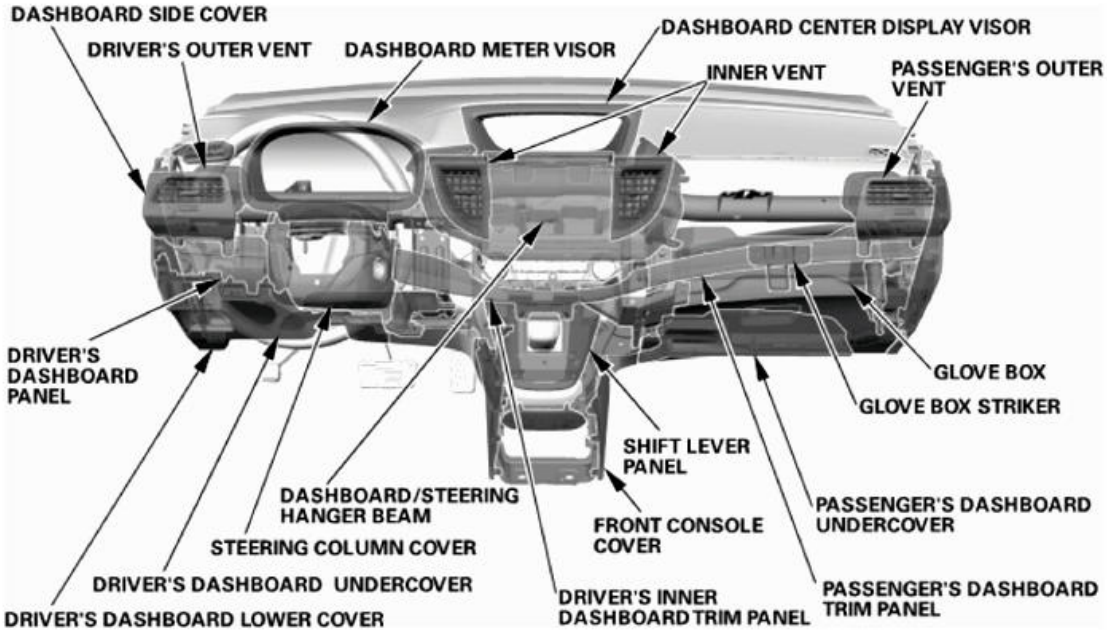

Fig. 34: Dashboard Components Location
Courtesy of AMERICAN HONDA MOTOR CO., INC.

DASHBOARD SIDE COVER	**REMOVAL AND INSTALLATION**
DASHBOARD/STEERING HANGER BEAM	**Disassembly and Reassembly** See **DASHBOARD/STEERING HANGER BEAM DISASSEMBLY AND REASSEMBLY** or **DASHBOARD/STEERING HANGER BEAM REMOVAL AND INSTALLATION**
	Removal and Installation See **DASHBOARD/STEERING HANGER BEAM DISASSEMBLY AND REASSEMBLY** or **DASHBOARD/STEERING HANGER BEAM REMOVAL AND INSTALLATION**
DASHBOARD METER VISOR	**REMOVAL AND INSTALLATION**
DASHBOARD CENTER DISPLAY VISOR	**REMOVAL AND INSTALLATION**
DRIVER'S DASHBOARD PANEL	**REMOVAL AND INSTALLATION**
DRIVER'S DASHBOARD UNDERCOVER	**Removal and Installation** See **DRIVER'S DASHBOARD UNDERCOVER REMOVAL AND INSTALLATION** or **PASSENGER'S DASHBOARD UNDERCOVER REMOVAL AND INSTALLATION**
PASSENGER'S DASHBOARD UNDERCOVER	**Removal and Installation** See **DRIVER'S DASHBOARD UNDERCOVER REMOVAL AND INSTALLATION** or **PASSENGER'S DASHBOARD UNDERCOVER REMOVAL AND INSTALLATION**
SHIFT LEVER PANEL	**REMOVAL AND INSTALLATION**
PASSENGER'S DASHBOARD TRIM PANEL	**REMOVAL AND INSTALLATION**

GETtheMANUALS.org

DRIVER'S INNER DASHBOARD TRIM PANEL	**REMOVAL AND INSTALLATION**
FRONT CONSOLE COVER	**REMOVAL AND INSTALLATION**
DRIVER'S DASHBOARD LOWER COVER	**REMOVAL AND INSTALLATION**
INNER VENT	**REMOVAL AND INSTALLATION**
DRIVER'S OUTER VENT	**REMOVAL AND INSTALLATION**
GLOVE BOX	**REMOVAL AND INSTALLATION**
GLOVE BOX STRIKER	**REMOVAL AND INSTALLATION**
PASSENGER'S OUTER VENT	**REMOVAL AND INSTALLATION**
STEERING COLUMN COVER	**REMOVAL AND INSTALLATION**

DASHBOARD DRIVER'S PANEL REMOVAL AND INSTALLATION

REMOVAL

1. Driver's Dashboard Panel Assembly
    1. Carefully pry out the driver's dashboard panel assembly (A) with the appropriate trim tool to detach the clips (B).
    2. Disconnect the connector (C), then remove the driver's dashboard panel assembly.

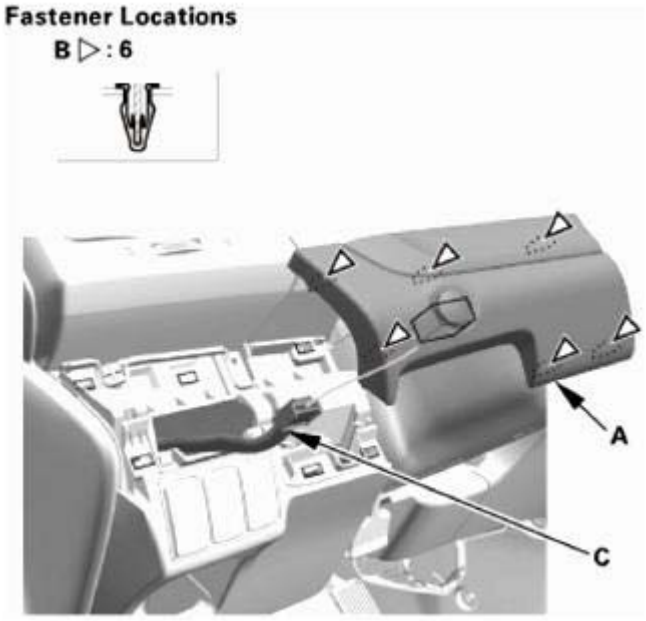

Fig. 35: Identifying Driver Dashboard Panel Assembly, Connector And Clips
Courtesy of AMERICAN HONDA MOTOR CO., INC.

2. Driver's Dashboard Panel Trim
    1. Detach the clips (A), then remove the driver's dashboard panel trim (B).

GETtheMANUALS.org

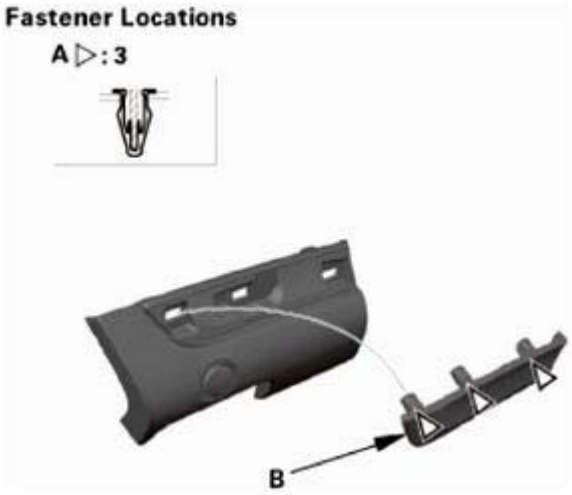

Fig. 36: Identifying Driver Dashboard Panel Trim And Clips
Courtesy of AMERICAN HONDA MOTOR CO., INC.

INSTALLATION

1. Driver's Dashboard Panel Trim
    1. Install the driver's dashboard panel trim (A). Make sure the clips (B) snap into place securely.

Fig. 37: Identifying Driver Dashboard Panel Trim And Clips
Courtesy of AMERICAN HONDA MOTOR CO., INC.

2. Driver's Dashboard Panel Assembly
    1. Connect the connector (A), then install the driver's dashboard panel assembly (B). Make sure the clips (C) snap into place securely.

GETtheMANUALS.org

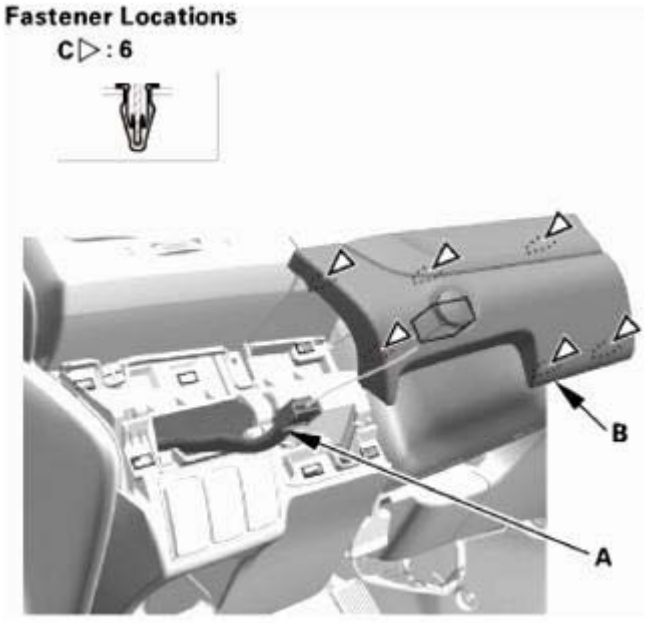

Fig. 38: Identifying Driver Dashboard Panel Assembly, Connector And Clips
Courtesy of AMERICAN HONDA MOTOR CO., INC.

DASHBOARD METER VISOR REMOVAL AND INSTALLATION

REMOVAL

1. Dashboard Meter Visor
    1. Carefully pry out the dashboard meter visor blind cover (A) with the appropriate trim tool to detach the clips (B) and the hook (C), then tuck up the dashboard meter visor blind cover.

GETtheMANUALS.org

Fig. 39: Identifying Dashboard Meter Visor Blind Cover, Hook And Clips
Courtesy of AMERICAN HONDA MOTOR CO., INC.

2. Pull out the dashboard meter visor assembly (A) with the appropriate trim tool to detach the clips (B, C) and the tabs (D), then remove the dashboard meter visor assembly.

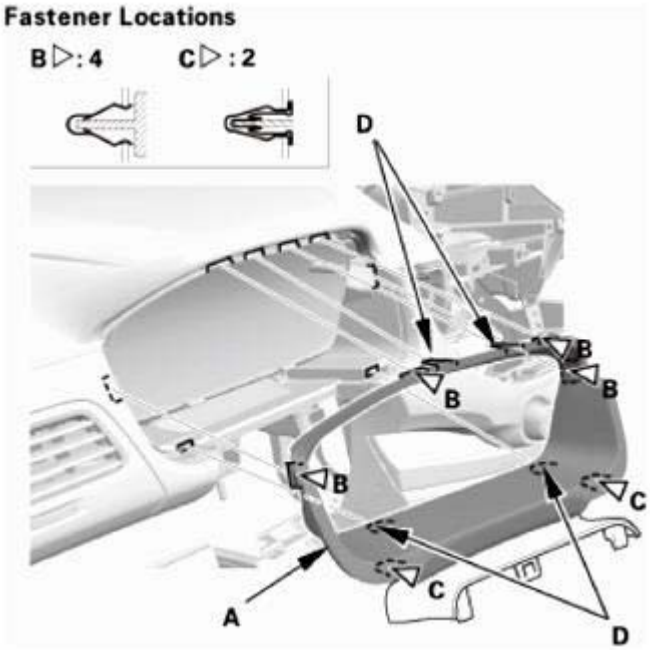

Fig. 40: Identifying Dashboard Meter Visor Assembly, Tabs And Clips
Courtesy of AMERICAN HONDA MOTOR CO., INC.

INSTALLATION

1. Dashboard Meter Visor
    1. Install the dashboard meter visor assembly (A). Make sure the clips (B, C) and the tabs (D) snap into place securely.

GETtheMANUALS.org

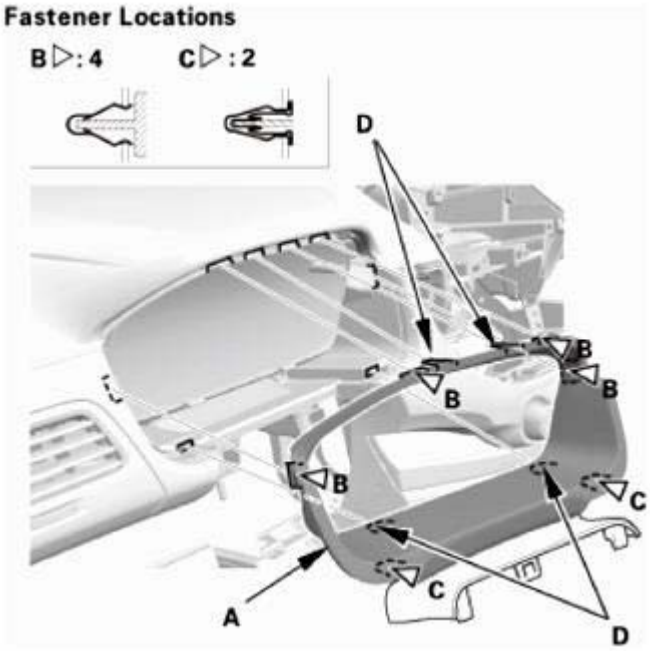

Fig. 41: Identifying Dashboard Meter Visor Assembly, Tabs And Clips
Courtesy of AMERICAN HONDA MOTOR CO., INC.

2. Install the dashboard meter visor blind cover (A). Make sure the clips (B) and the hook (C) snap into place securely.

Fig. 42: Identifying Dashboard Meter Visor Blind Cover, Hook And Clips
Courtesy of AMERICAN HONDA MOTOR CO., INC.

DASHBOARD SIDE COVER REMOVAL AND INSTALLATION

GETtheMANUALS.org

REMOVAL

1. Front Door Opening Seal As Needed
    1. Pull out the front door opening seal (A) from the trim hooks (B) around the front door opening flange as needed.

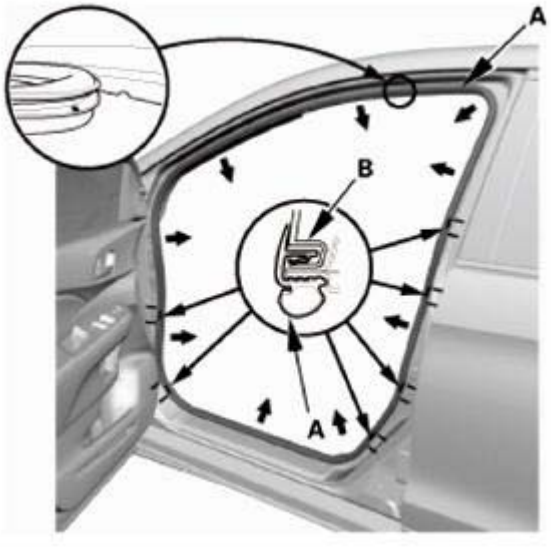

Fig. 43: Pulling Front Door Opening Seal From Trim Hook
Courtesy of AMERICAN HONDA MOTOR CO., INC.

2. Dashboard Side Cover
    1. Gently pry out the dashboard side cover (A) with the appropriate trim tool to detach the clips (B) and the hooks (C), then remove the dashboard side cover.

GETtheMANUALS.org

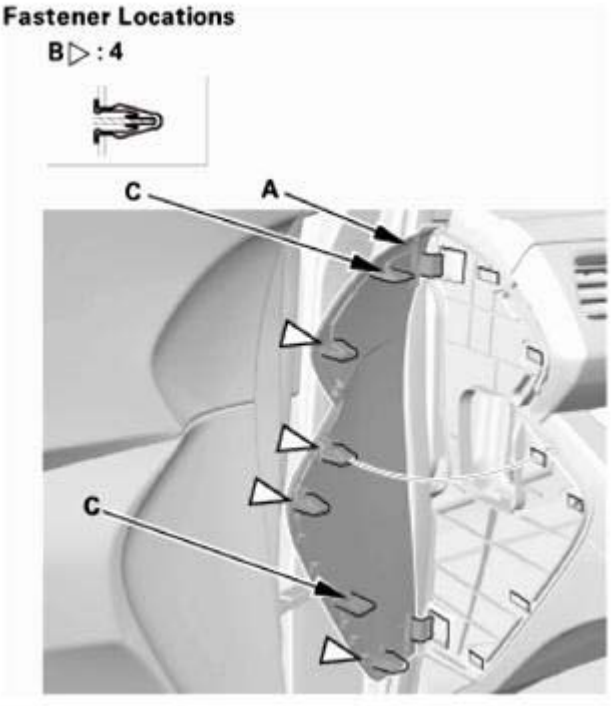

Fig. 44: Identifying Dashboard Side Cover, Hooks And Clips
Courtesy of AMERICAN HONDA MOTOR CO., INC.

INSTALLATION

1. Dashboard Side Cover
    1. Install the dashboard side cover (A). Make sure the clips (B) and the hooks (C) snap into place securely.

GETtheMANUALS.org

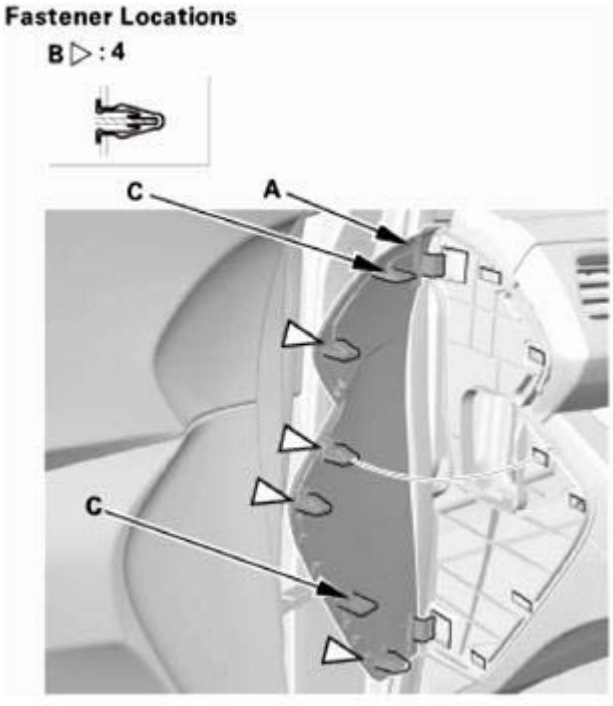

Fig. 45: Identifying Dashboard Side Cover, Hooks And Clips
Courtesy of AMERICAN HONDA MOTOR CO., INC.

2. Front Door Opening Seal As Needed
    1. Install the front door opening seal (A). Make sure the seal is installed securely into the hooks (B).

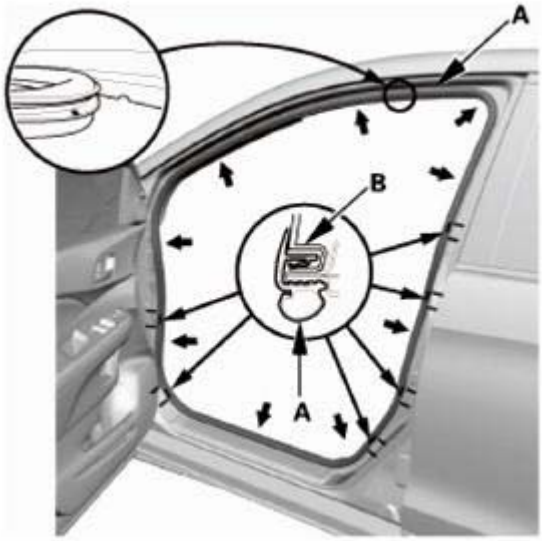

Fig. 46: Installing Front Door Opening Seal From Trim Hook
Courtesy of AMERICAN HONDA MOTOR CO., INC.

DASHBOARD TRIM PANEL REMOVAL AND INSTALLATION

GETtheMANUALS.org

REMOVAL

1. Shift Lever Panel (AT)
    1. Carefully pry out the shift lever panel (A) with the appropriate trim tool to detach the clips (B, C) and the hooks (D), then remove the shift lever panel.

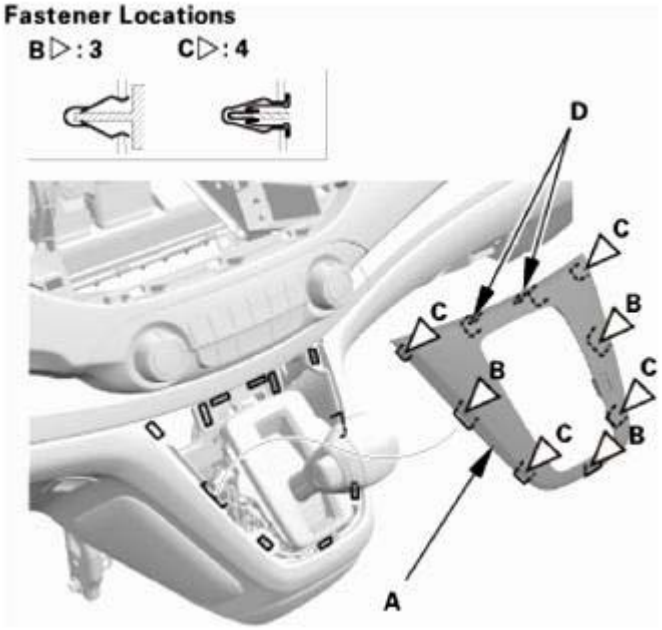

Fig. 47: Identifying Shift Lever Panel, Hooks And Clips
Courtesy of AMERICAN HONDA MOTOR CO., INC.

2. Driver's Inner Dashboard Trim Panel
    1. Carefully pry out the driver's inner dashboard trim panel (A) with the appropriate trim tool to detach the clips (B), then remove the driver's inner dashboard trim panel.

GETtheMANUALS.org

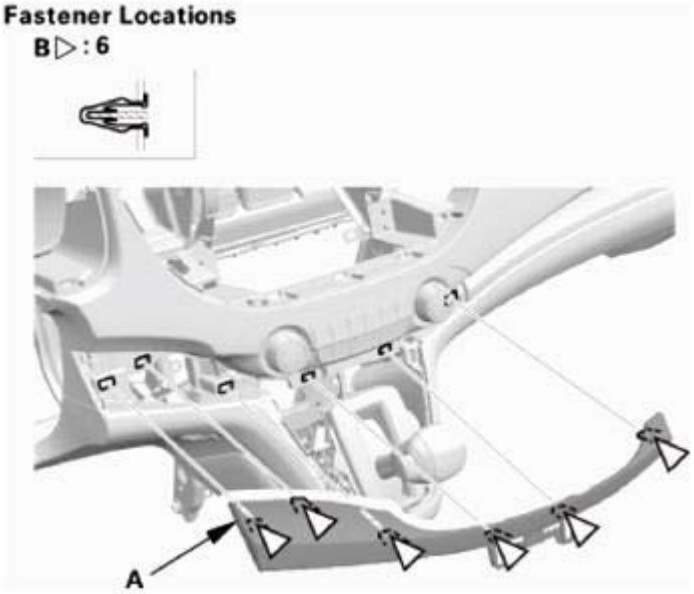

Fig. 48: Identifying Driver Inner Dashboard Trim Panel And Clips
Courtesy of AMERICAN HONDA MOTOR CO., INC.

3. Passenger's Dashboard Trim Panel
    1. Carefully pry out the passenger's dashboard trim panel (A) with the appropriate trim tool to detach the clips (B), then remove the passenger's dashboard trim panel.

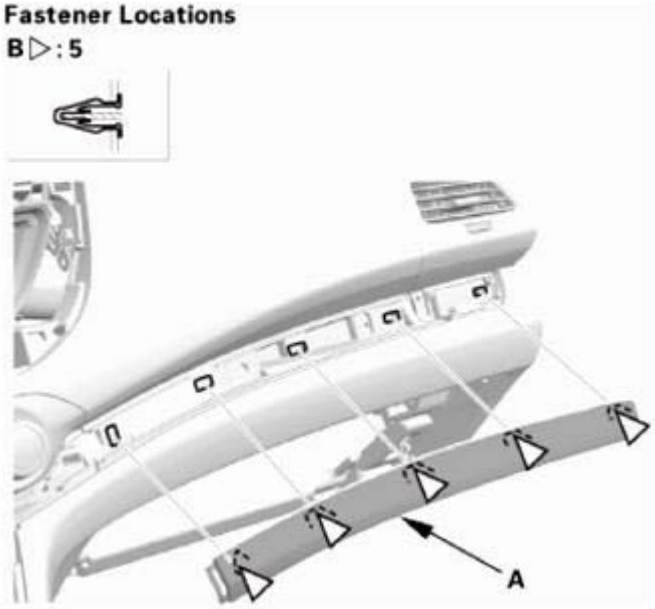

Fig. 49: Identifying Passenger Dashboard Trim Panel And Clips
Courtesy of AMERICAN HONDA MOTOR CO., INC.

INSTALLATION

GETtheMANUALS.org

1. Passenger's Dashboard Trim Panel
    1. Install the passenger's dashboard trim panel (A). Make sure the clips (B) snap into place securely.

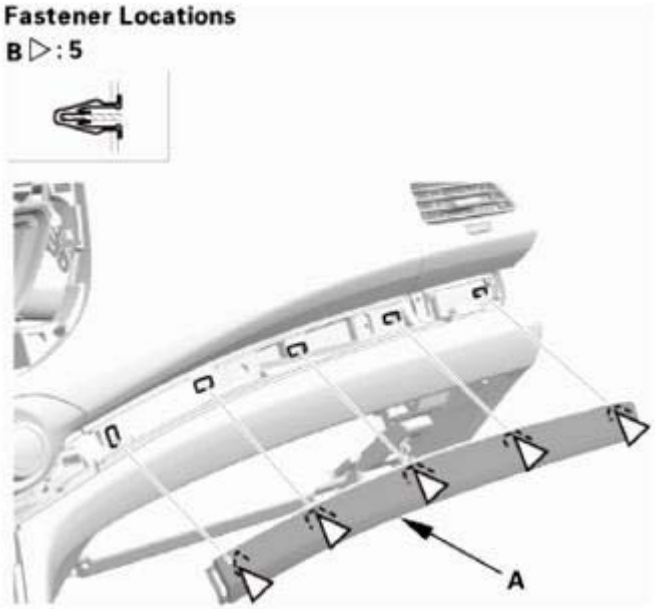

Fig. 50: Identifying Passenger Dashboard Trim Panel And Clips
Courtesy of AMERICAN HONDA MOTOR CO., INC.

2. Driver's Inner Dashboard Trim Panel
    1. Install the driver's inner dashboard trim panel (A). Make sure the clips (B) snap into place securely.

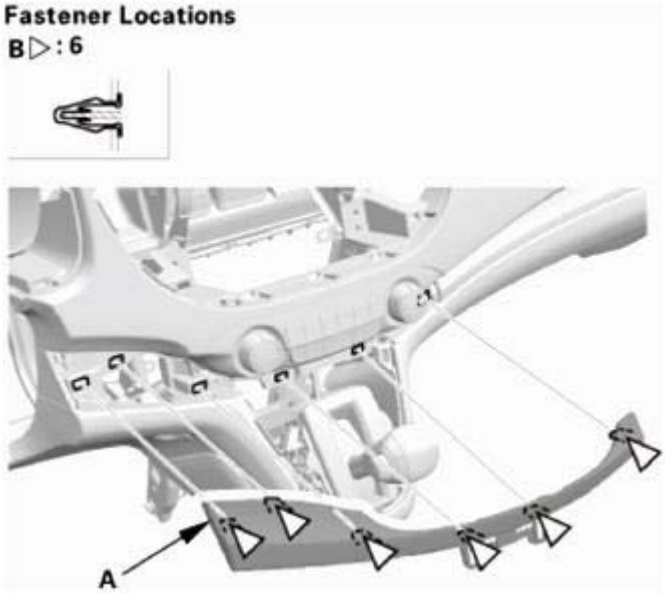

Fig. 51: Identifying Driver Inner Dashboard Trim Panel And Clips
Courtesy of AMERICAN HONDA MOTOR CO., INC.

GETtheMANUALS.org

3. Shift Lever Panel (AT)
    1. Install the shift lever panel (A). Make sure the clips (B, C) and the hooks (D) snap into place securely.

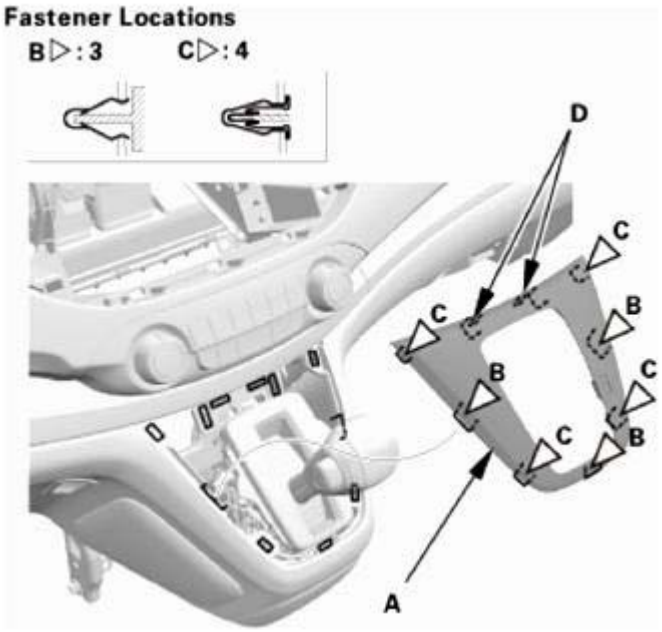

Fig. 52: Identifying Shift Lever Panel, Hooks And Clips
Courtesy of AMERICAN HONDA MOTOR CO., INC.

DASHBOARD VENT REMOVAL AND INSTALLATION

REMOVAL

1. Inner Vent - Both Sides
    1. Carefully pry out the inner vents (A) with the appropriate trim tool to detach the clips (B), then remove the inner vents.

GETtheMANUALS.org

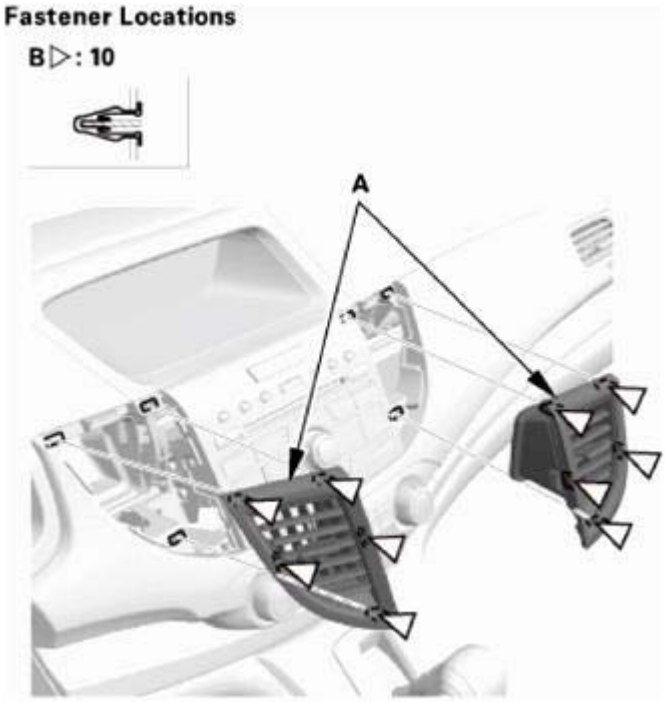

Fig. 53: Identifying Inner Vents And Clips
Courtesy of AMERICAN HONDA MOTOR CO., INC.

2. Driver's Dashboard Panel Assembly
    1. Carefully pry out the driver's dashboard panel assembly (A) with the appropriate trim tool to detach the clips (B).
    2. Disconnect the connector (C), then remove the driver's dashboard panel assembly.

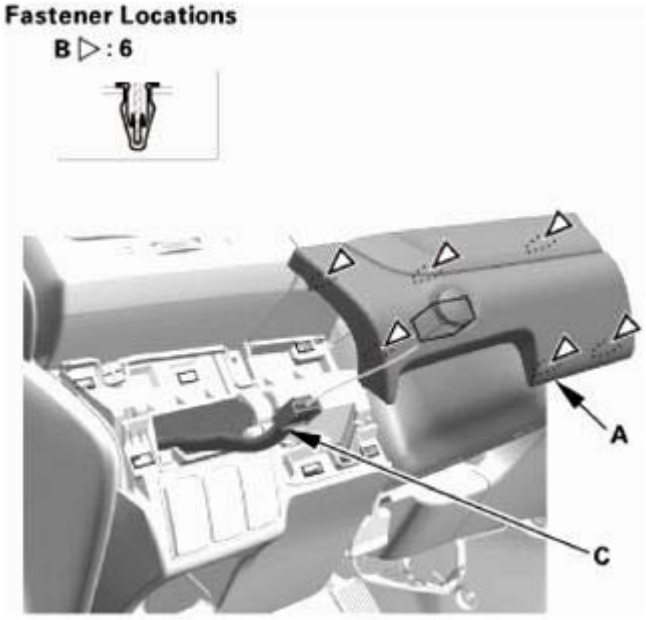

GETtheMANUALS.org

Fig. 54: Identifying Driver Dashboard Panel Assembly, Connector And Clips
Courtesy of AMERICAN HONDA MOTOR CO., INC.

3. Driver's Outer Vent
    1. Remove the screw (A).
    2. Pull out the driver's outer vent (B) to detach the clips (C, D), then remove the driver's outer vent.

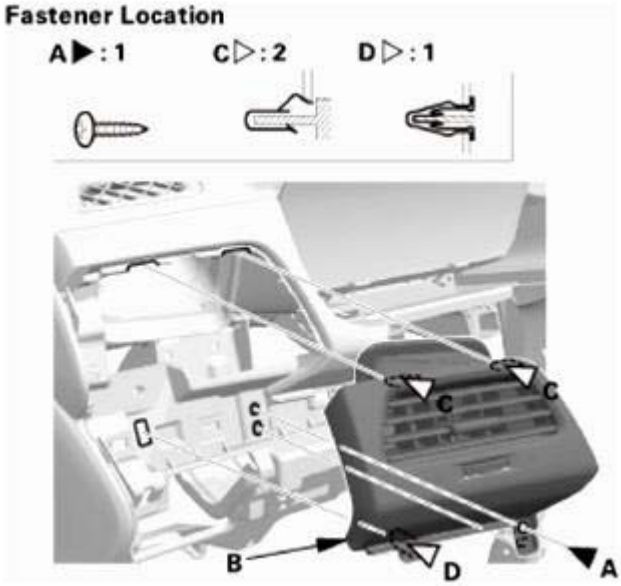

Fig. 55: Identifying Driver Outer Vent, Screw And Clips
Courtesy of AMERICAN HONDA MOTOR CO., INC.

4. Shift Lever Panel (AT)
    1. Carefully pry out the shift lever panel (A) with the appropriate trim tool to detach the clips (B, C) and the hooks (D), then remove the shift lever panel.

GETtheMANUALS.org

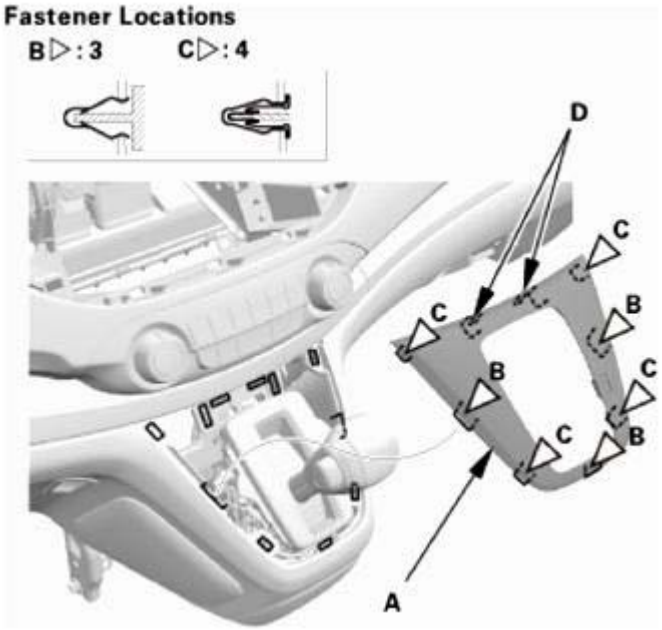

Fig. 56: Identifying Shift Lever Panel, Hooks And Clips
Courtesy of AMERICAN HONDA MOTOR CO., INC.

5. Driver's Inner Dashboard Trim Panel
    1. Carefully pry out the driver's inner dashboard trim panel (A) with the appropriate trim tool to detach the clips (B), then remove the driver's inner dashboard trim panel.

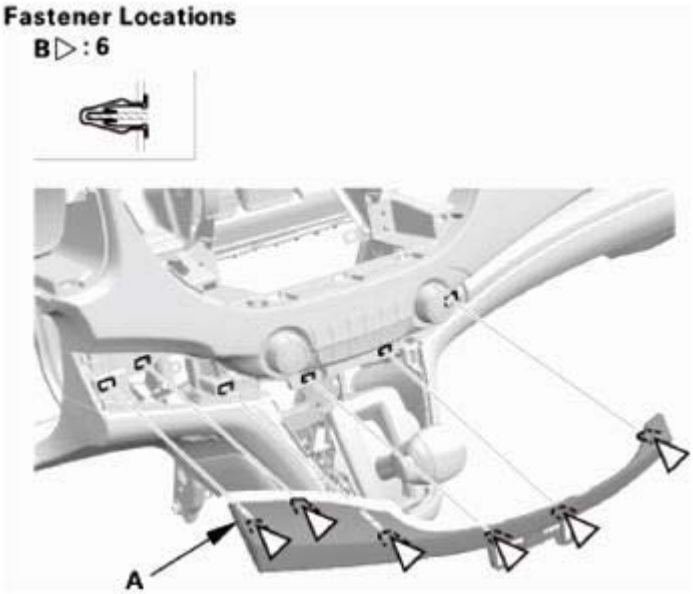

Fig. 57: Identifying Driver Inner Dashboard Trim Panel And Clips
Courtesy of AMERICAN HONDA MOTOR CO., INC.

6. Passenger's Dashboard Trim Panel

GETtheMANUALS.org

1. Carefully pry out the passenger's dashboard trim panel (A) with the appropriate trim tool to detach the clips (B), then remove the passenger's dashboard trim panel.

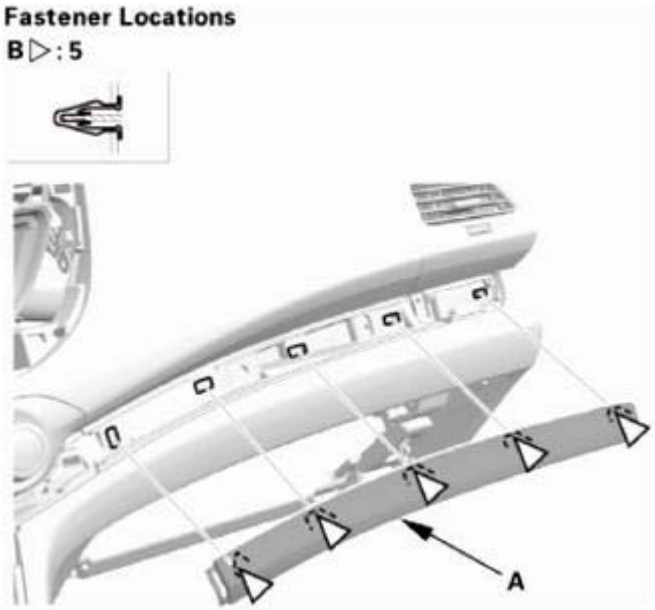

Fig. 58: Identifying Passenger Dashboard Trim Panel And Clips
Courtesy of AMERICAN HONDA MOTOR CO., INC.

7. Passenger's Outer Vent
    1. Remove the screw (A).
    2. Pull out the passenger's outer vent (B) to detach the clips (C, D), then remove the passenger's outer vent.

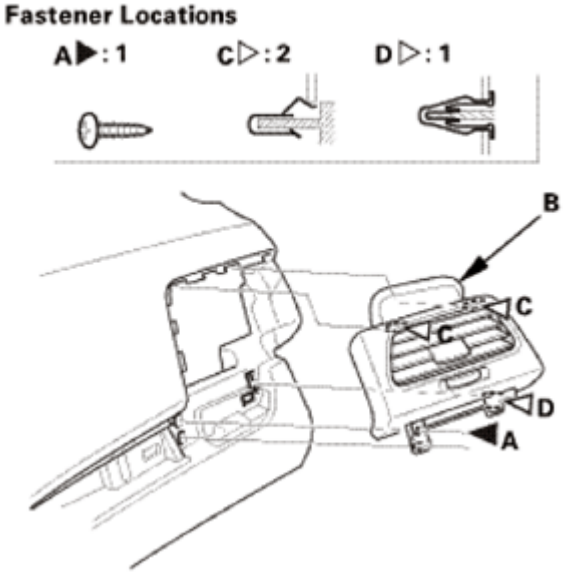

Fig. 59: Identifying Passenger Outer Vent, Screw And Clips

GETtheMANUALS.org

Courtesy of AMERICAN HONDA MOTOR CO., INC.

INSTALLATION

1. Passenger's Outer Vent
    1. Install the passenger's outer vent (A), then install the screw (B). Make sure the clips (C, D) snap into place securely.

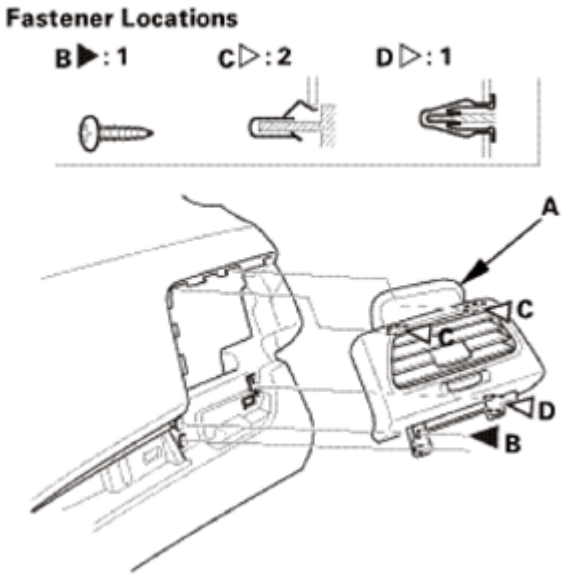

Fig. 60: Identifying Passenger Outer Vent, Screw And Clips
Courtesy of AMERICAN HONDA MOTOR CO., INC.

2. Passenger's Dashboard Trim Panel
    1. Install the passenger's dashboard trim panel (A). Make sure the clips (B) snap into place securely.

GETtheMANUALS.org

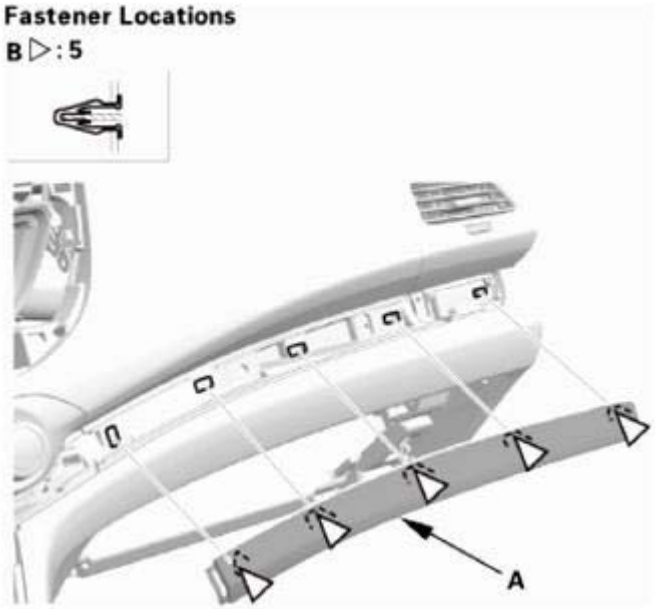

Fig. 61: Identifying Passenger Dashboard Trim Panel And Clips
Courtesy of AMERICAN HONDA MOTOR CO., INC.

3. Driver's Inner Dashboard Trim Panel
    1. Install the driver's inner dashboard trim panel (A). Make sure the clips (B) snap into place securely.

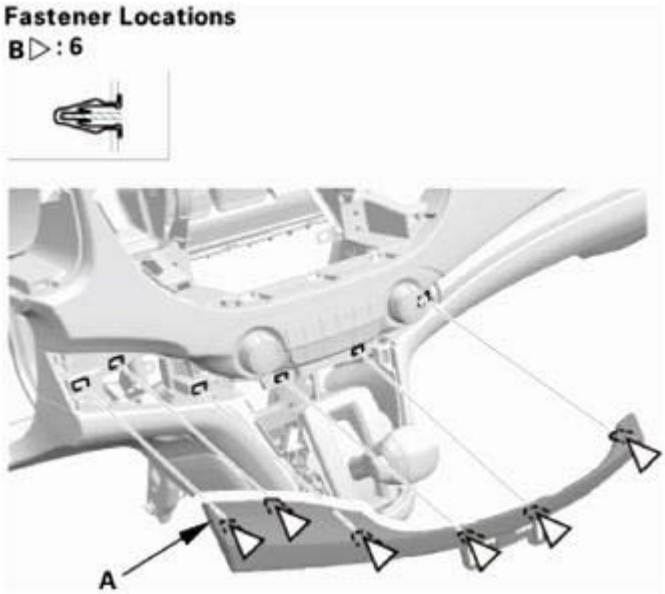

Fig. 62: Identifying Driver Inner Dashboard Trim Panel And Clips
Courtesy of AMERICAN HONDA MOTOR CO., INC.

4. Shift Lever Panel (AT)
    1. Install the shift lever panel (A). Make sure the clips (B, C) and the hooks (D) snap into place securely.

GETtheMANUALS.org

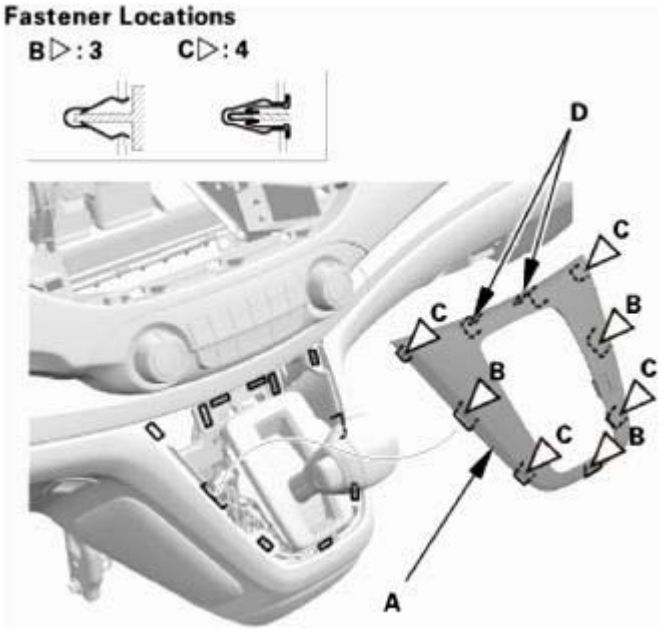

Fig. 63: Identifying Shift Lever Panel, Hooks And Clips
Courtesy of AMERICAN HONDA MOTOR CO., INC.

5. Driver's Outer Vent
    1. Install the driver's outer vent (A), then install the screw (B). Make sure the clips (C, D) snap into place securely.

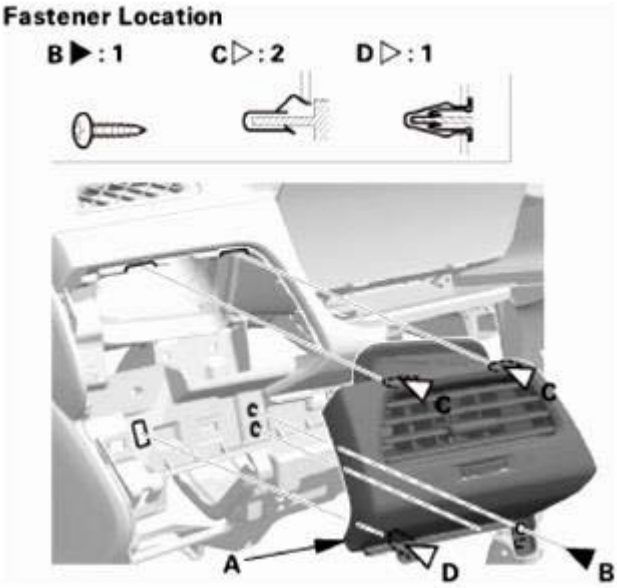

Fig. 64: Identifying Driver Outer Vent, Screw And Clips
Courtesy of AMERICAN HONDA MOTOR CO., INC.

6. Driver's Dashboard Panel Assembly

GETtheMANUALS.org

1. Connect the connector (A), then install the driver's dashboard panel assembly (B). Make sure the clips (C) snap into place securely.

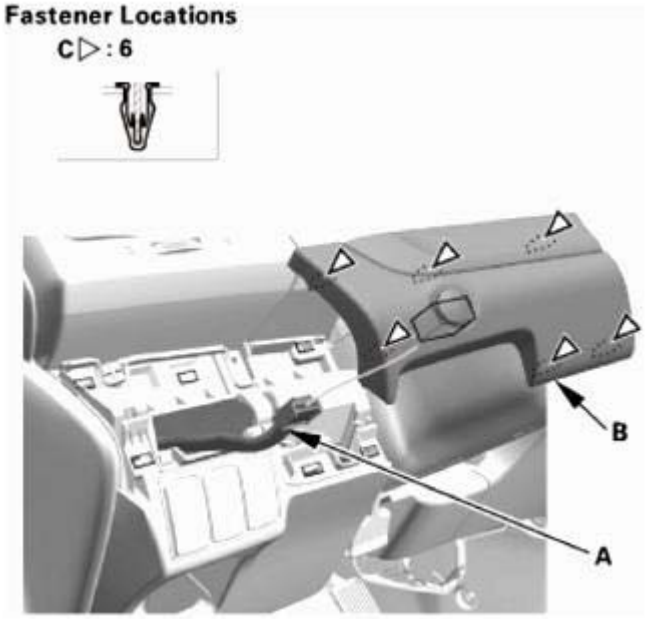

Fig. 65: Identifying Driver Dashboard Panel Assembly, Connector And Clips
Courtesy of AMERICAN HONDA MOTOR CO., INC.

7. Inner Vent - Both Sides
    1. Install the inner vents (A). Make sure the clips (B) snap into place securely.

GETtheMANUALS.org

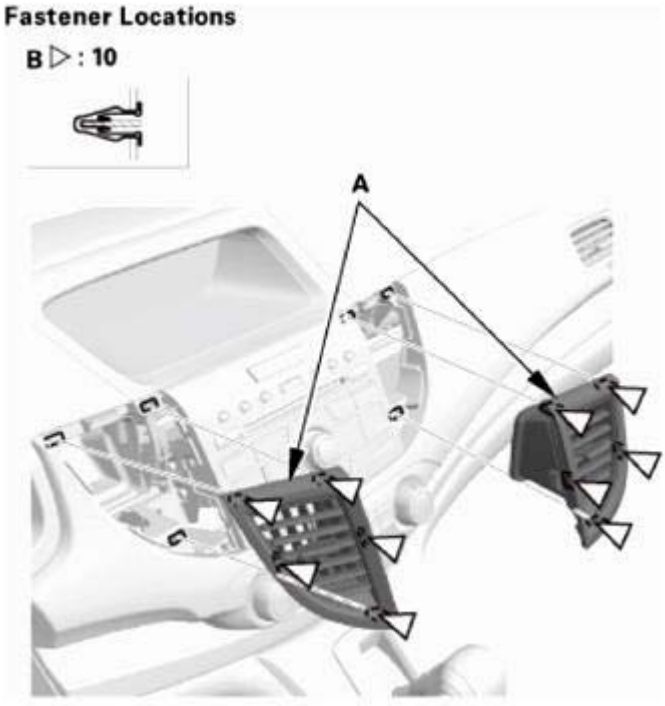

Fig. 66: Identifying Inner Vents And Clips
Courtesy of AMERICAN HONDA MOTOR CO., INC.

DASHBOARD/STEERING HANGER BEAM DISASSEMBLY AND REASSEMBLY

DISASSEMBLY

1. Inner Vent - Both Sides
    1. Carefully pry out the inner vents (A) with the appropriate trim tool to detach the clips (B), then remove the inner vents.

GETtheMANUALS.org

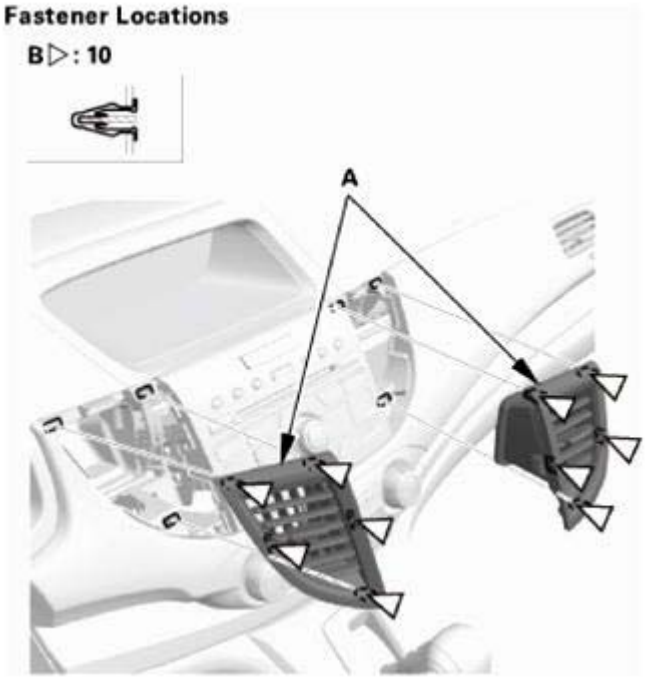

Fig. 67: Identifying Inner Vents And Clips
Courtesy of AMERICAN HONDA MOTOR CO., INC.

2. Audio-Navigation Unit Assembly (With Navigation)

NOTE:

- **Eject the discs before removing the audio-navigation unit to prevent damaging the CD/DVD player's load mechanism.**
- **If you are replacing the audio-navigation unit, write down the audio presets (if possible), then enter them into the new audio-navigation unit.**
- **If the audio-navigation unit is replaced or disconnected, Map Matching must be done.**
- **Lay a shop towel under the parts when working on them to protect the face panel from scratches or other damage.**
- **Do not work in a dusty or dirty place.**
- **Discharge static electricity from your body before and during the work.**
- **Do not touch the circuit board(s) with your bare hands.**
- **Do not work with dirty hands.**
- **Do not touch the terminal connector of the flat plate cable with your bare hands (If you have touched it, wipe it off thoroughly.).**

1. Remove the bolts.
2. Disconnect the connectors, then pull out the audio-navigation unit (A).

GETtheMANUALS.org

Except KX

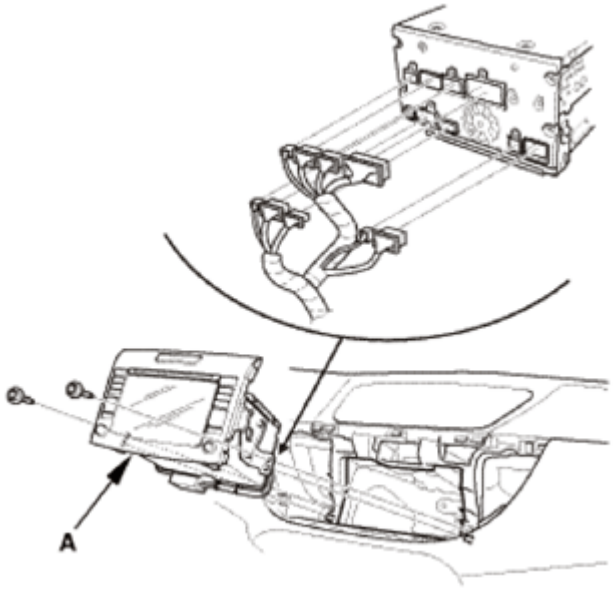

Fig. 68: Identifying Audio - Navigation Unit (With Navigation Except KX)
Courtesy of AMERICAN HONDA MOTOR CO., INC.

KX

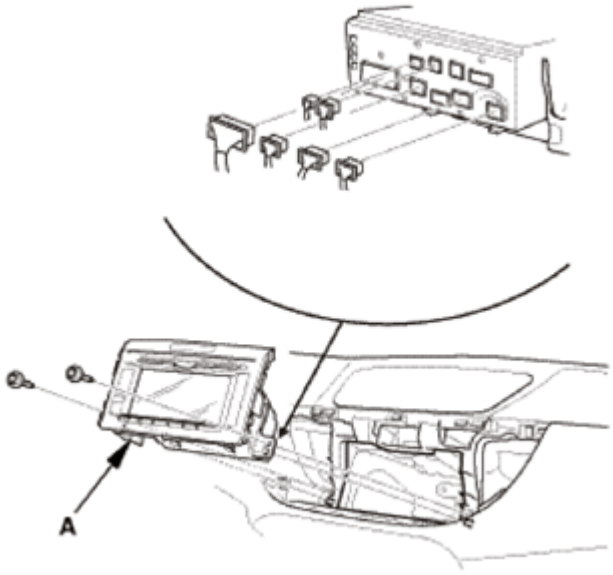

Fig. 69: Identifying Audio - Navigation Unit (With Navigation For KX)
Courtesy of AMERICAN HONDA MOTOR CO., INC.

3. Audio Unit Assembly (Without Navigation)

NOTE:

GETtheMANUALS.org

- **Eject the CD before disconnecting the audio unit to prevent damaging the CD player's load mechanism.**
- **If you are replacing the audio unit, write down the audio presets (if possible), and enter them into the new audio unit.**
- **Lay a shop towel under the parts when working on them to protect the face panel from scratches or other damage.**
- **Do not work in a dusty or dirty place.**
- **Discharge static electricity from your body before and during the work.**
- **Do not touch the circuit board(s) with your bare hands.**
- **Do not work with dirty hands.**
- **Do not touch the terminal connector of the flat plate cable with your bare hands (If you have touched it, wipe it off thoroughly.).**

1. Remove the bolts.
2. Disconnect the connectors, then pull out the audio unit (A).

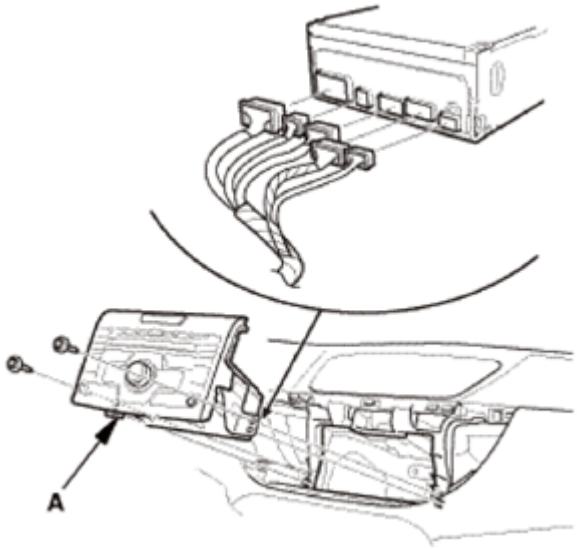

Fig. 70: Identifying Audio - Navigation Unit (Without Navigation)
Courtesy of AMERICAN HONDA MOTOR CO., INC.

4. Dashboard Center Display Visor Assembly
    1. Remove the dashboard center display visor (A).

GETtheMANUALS.org

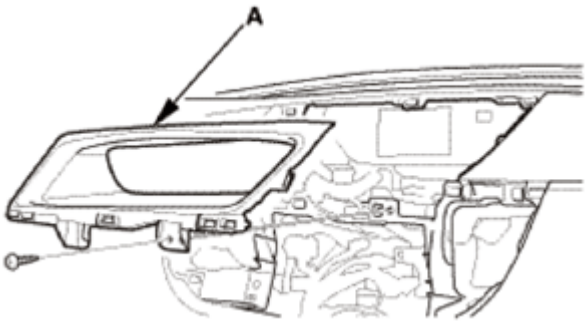

Fig. 71: Identifying Dashboard Center Display Visor
Courtesy of AMERICAN HONDA MOTOR CO., INC.

5. GPS Antenna (For Some Models)
    1. Disconnect the connector (A).
    2. Remove the screws, then remove the GPS antenna (B).

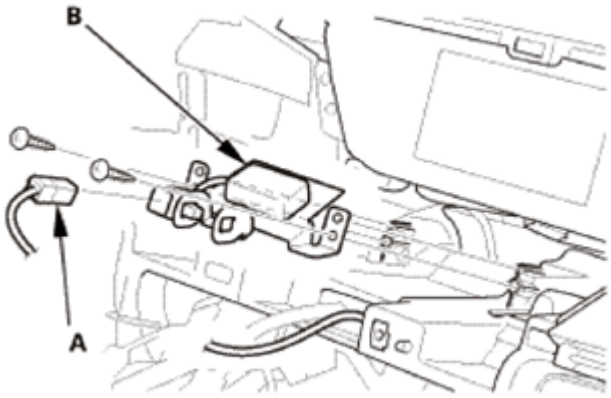

Fig. 72: Identifying GPS Antenna And Connector
Courtesy of AMERICAN HONDA MOTOR CO., INC.

    3. Detach the harness clip (A).

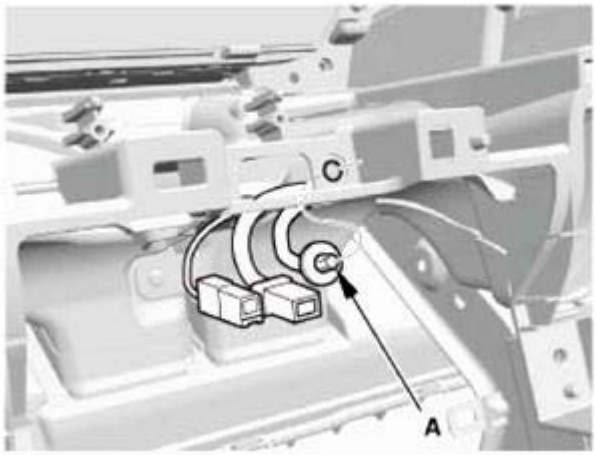

GETtheMANUALS.org

Fig. 73: Identifying GPS Antenna Harness Clips
Courtesy of AMERICAN HONDA MOTOR CO., INC.

6. Center Display Unit Assembly (For Some Model)
    1. Remove the center display unit assembly (A).
    2. Disconnect the connectors.

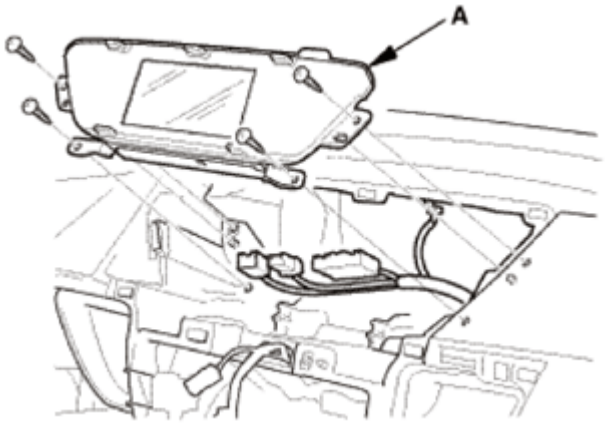

Fig. 74: Identifying Center Display Unit Assembly
Courtesy of AMERICAN HONDA MOTOR CO., INC.

7. Multi-Information Display Unit Assembly (For Some Model)
    1. Remove the multi-information display unit assembly (A).
    2. Disconnect the connectors from the multi-information display unit.

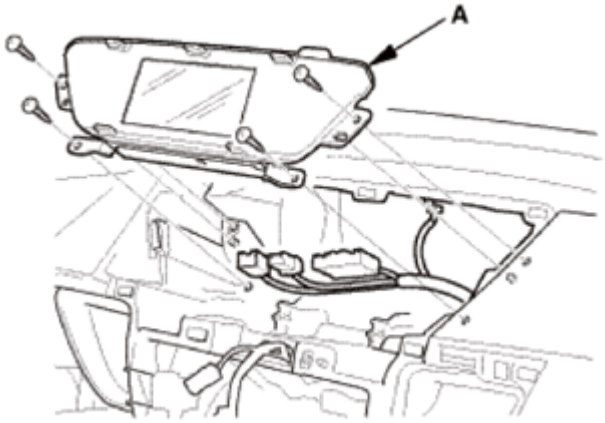

Fig. 75: Identifying Multi-Information Display Unit Assembly
Courtesy of AMERICAN HONDA MOTOR CO., INC.

8. Sunlight Sensor
    1. Using a flat-tip screwdriver wrapped with protective tape, pry up the sunlight sensor (A).
    2. Disconnect the sunlight sensor connector (B).

GETtheMANUALS.org

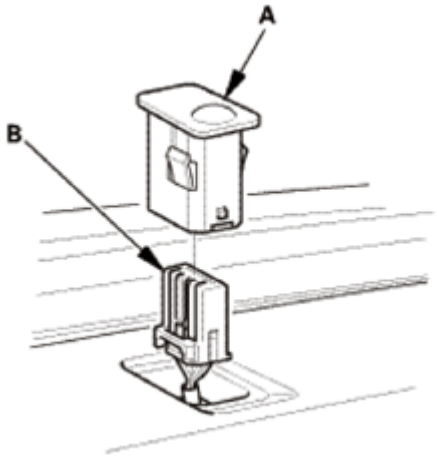

Fig. 76: Identifying Sunlight Sensor And Connector
Courtesy of AMERICAN HONDA MOTOR CO., INC.

9. Meter Visor Assembly (After Remove Blind Cover)
    1. Pull out the dashboard meter visor assembly (A) with the appropriate trim tool to detach the clips (B, C) and the tabs (D), then remove dashboard meter visor assembly.

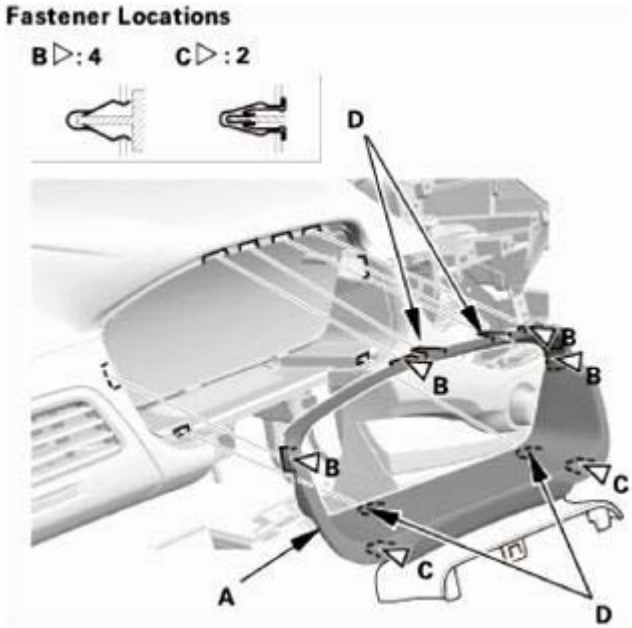

Fig. 77: Identifying Dashboard Meter Visor Assembly, Tabs And Clips
Courtesy of AMERICAN HONDA MOTOR CO., INC.

10. Gauge Control Module

NOTE: **Spread a protective cloth on the upper column cover for protect the upper column cover.**

GETtheMANUALS.org

1. Adjust the steering column to full tilt down position and to the full telescopic pull position.
2. Remove the gauge control module (A).
3. Disconnect the connector.

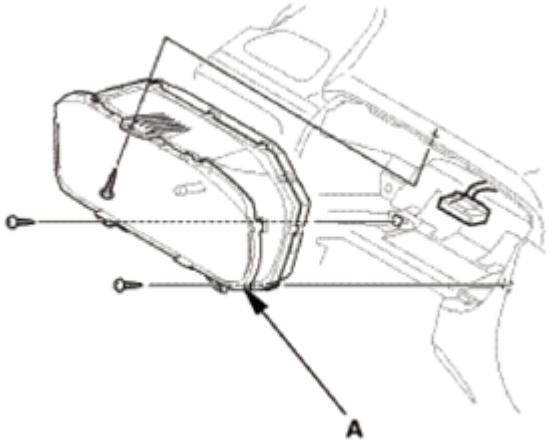

Fig. 78: Identifying Gauge Control Module
Courtesy of AMERICAN HONDA MOTOR CO., INC.

11. Driver's Inner Dashboard Trim Panel
    1. Carefully pry out the driver's inner dashboard trim panel (A) with the appropriate trim tool to detach the clips (B), then remove the driver's inner dashboard trim panel.

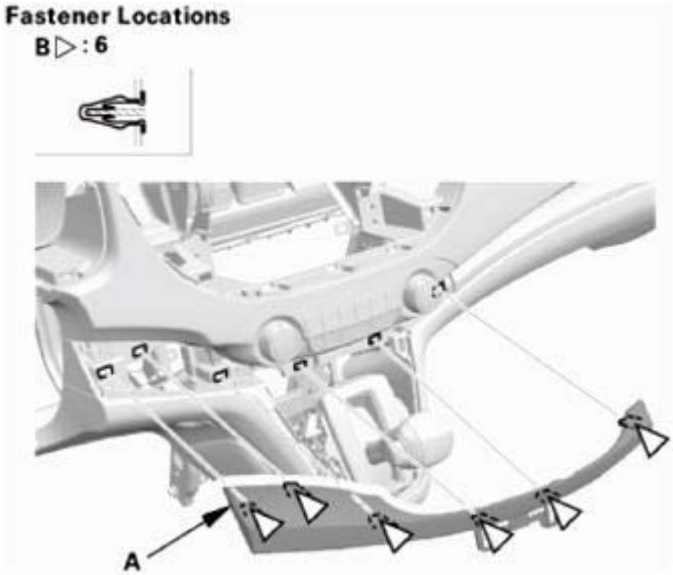

Fig. 79: Identifying Driver Inner Dashboard Trim Panel And Clips
Courtesy of AMERICAN HONDA MOTOR CO., INC.

12. Passenger's Dashboard Trim Panel
    1. Carefully pry out the passenger's dashboard trim panel (A) with the appropriate trim tool to detach

GETtheMANUALS.org

the clips (B), then remove the passenger's dashboard trim panel.

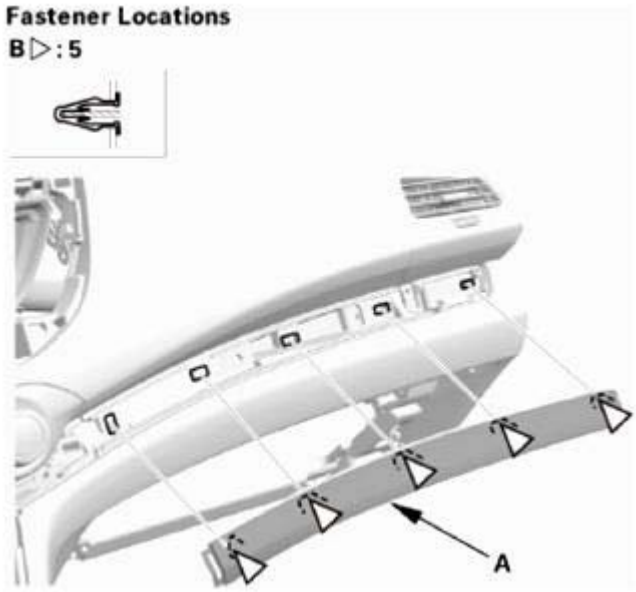

Fig. 80: Identifying Passenger Dashboard Trim Panel And Clips
Courtesy of AMERICAN HONDA MOTOR CO., INC.

13. Climate Control Panel Assembly (For Some Models)
    1. Remove the screws.
    2. Disconnect the connector (A), then remove the climate control panel assembly (B).

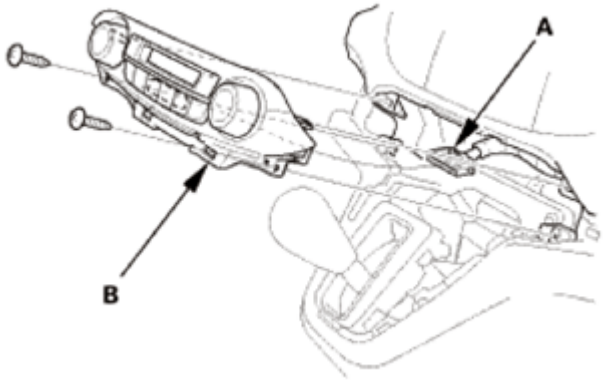

Fig. 81: Identifying Climate Control Panel Assembly And Connector
Courtesy of AMERICAN HONDA MOTOR CO., INC.

14. HVAC Control Unit Assembly (For Some Models)
    1. Remove the screws.
    2. Disconnect the connector (A), then remove the HVAC control unit assembly (B).

GETtheMANUALS.org

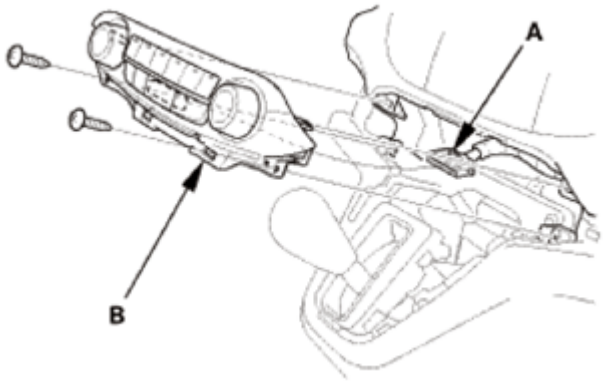

Fig. 82: Identifying HVAC Control Unit Assembly And Connector
Courtesy of AMERICAN HONDA MOTOR CO., INC.

15. Outer Vent - Both Sides
    1. Remove the screw (A).
    2. Pull out the driver's outer vent (B) to detach the clips (C, D), then remove the driver's outer vent.
    3. Repeat this step on the opposite side.

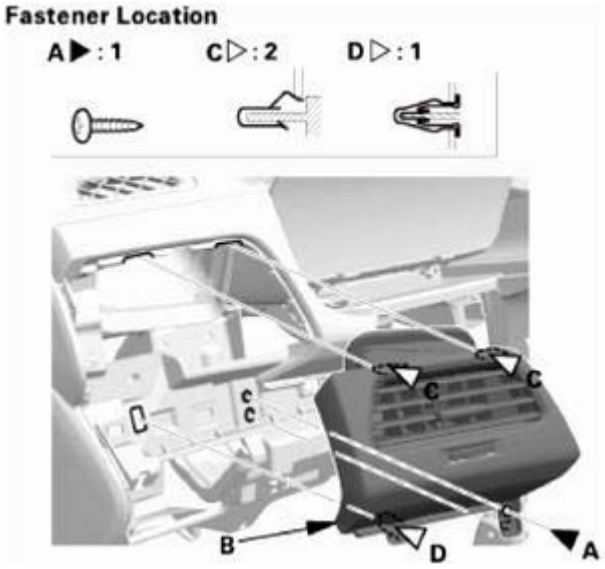

Fig. 83: Identifying Driver Outer Vent, Clips And Screw
Courtesy of AMERICAN HONDA MOTOR CO., INC.

16. Glove Box
    1. Remove the bolts (A).

GETtheMANUALS.org

Fig. 84: Identifying Glove Box Mounting Bolts
Courtesy of AMERICAN HONDA MOTOR CO., INC.

2. Release both glove box stops (A) by pushing them in, then let the glove box (B) hang down.

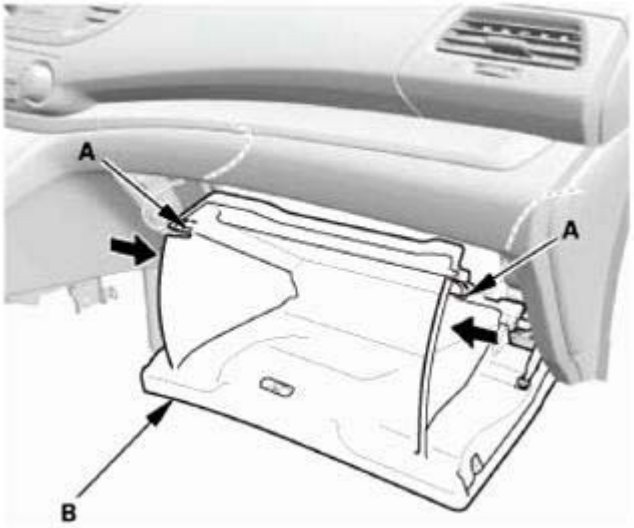

Fig. 85: Releasing Glove Box Stops To Hang Down Glove Box
Courtesy of AMERICAN HONDA MOTOR CO., INC.

3. Detach the glove box damper hook (A), then remove the glove box (B).

GETtheMANUALS.org

Fig. 86: Removing Glove Box
Courtesy of AMERICAN HONDA MOTOR CO., INC.

17. Front Passenger's Airbag Assembly
    1. Disconnect the front passenger's airbag inflator connector (A) on the dashboard wire harness.
    2. Remove the mounting nuts.

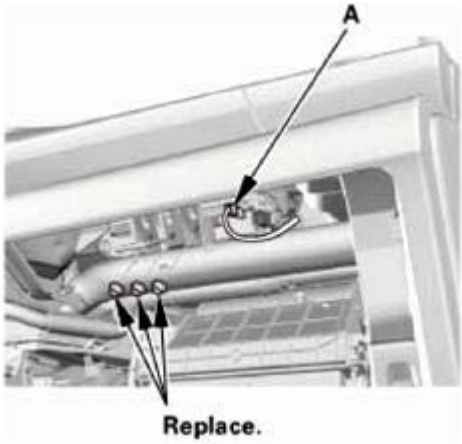

Fig. 87: Identifying Front Passenger Airbag Inflator Connector And Nuts
Courtesy of AMERICAN HONDA MOTOR CO., INC.

    3. Gently remove the front passenger's airbag and cover assembly (A).

NOTE: **The airbag cover has clips on each side where it attaches to the dashboard.**

GETtheMANUALS.org

Fig. 88: Removing Front Passenger Airbag And Cover Assembly
Courtesy of AMERICAN HONDA MOTOR CO., INC.

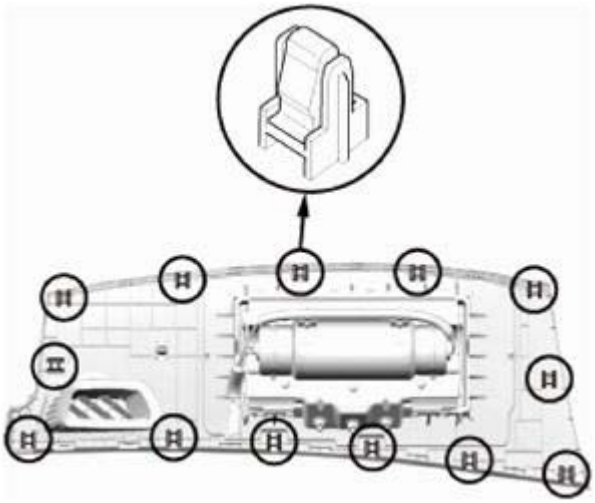

Fig. 89: Identifying Airbag Cover Clips
Courtesy of AMERICAN HONDA MOTOR CO., INC.

18. Glove Box Striker
    1. Remove the screws (A), then remove the glove box striker (B).

GETtheMANUALS.org

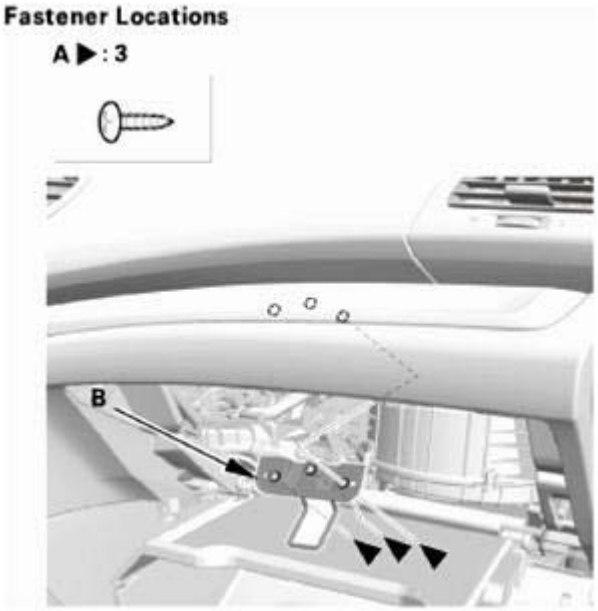

Fig. 90: Identifying Glove Box Striker And Screws
Courtesy of AMERICAN HONDA MOTOR CO., INC.

19. Steering Hanger Beam
    1. Remove the bolts (A).

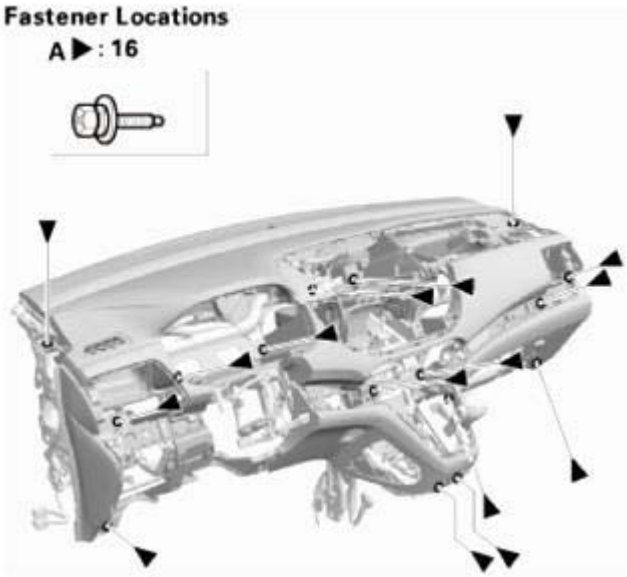

Fig. 91: Identifying Steering Hanger Beam Mounting Bolts
Courtesy of AMERICAN HONDA MOTOR CO., INC.

    2. Remove the screws (A).

GETtheMANUALS.org

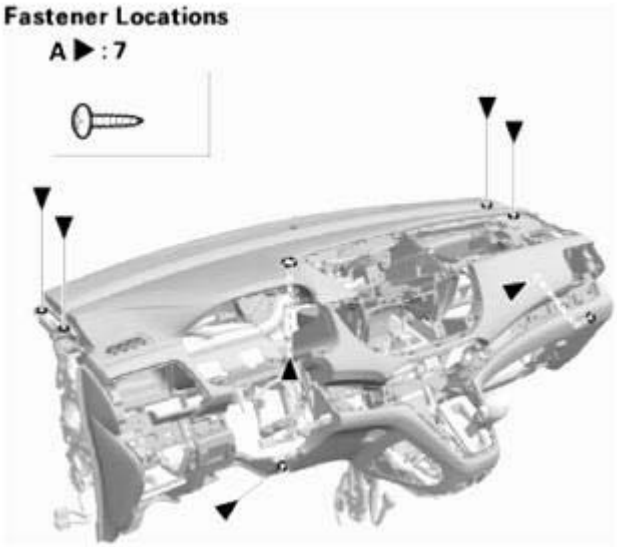

Fig. 92: Identifying Steering Hanger Beam Mounting Screws
Courtesy of AMERICAN HONDA MOTOR CO., INC.

3. Detach the harness clip(s) (A).

Left side

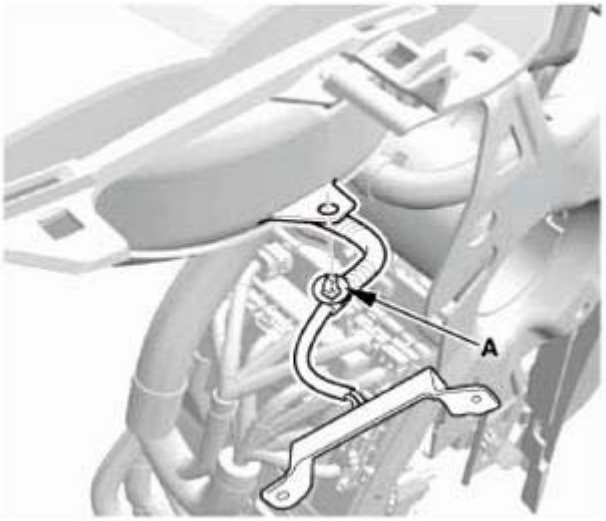

Fig. 93: Identifying Steering Hanger Beam Harness Clips (Left Side)
Courtesy of AMERICAN HONDA MOTOR CO., INC.

Right side

GETtheMANUALS.org

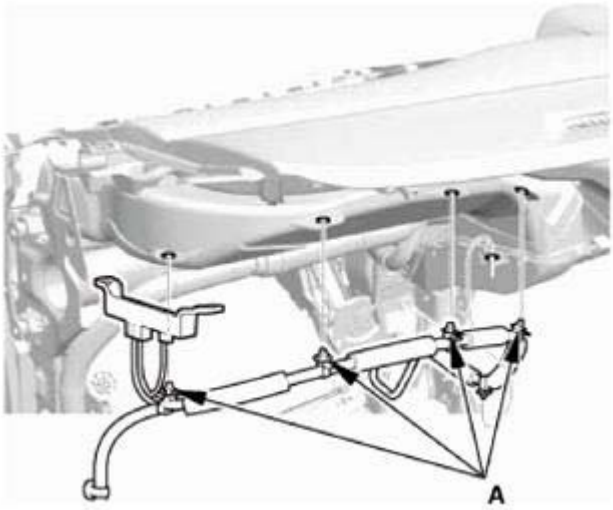

Fig. 94: Identifying Steering Hanger Beam Harness Clips (Right Side)
Courtesy of AMERICAN HONDA MOTOR CO., INC.

4. With climate control: Disconnect the connector (A).

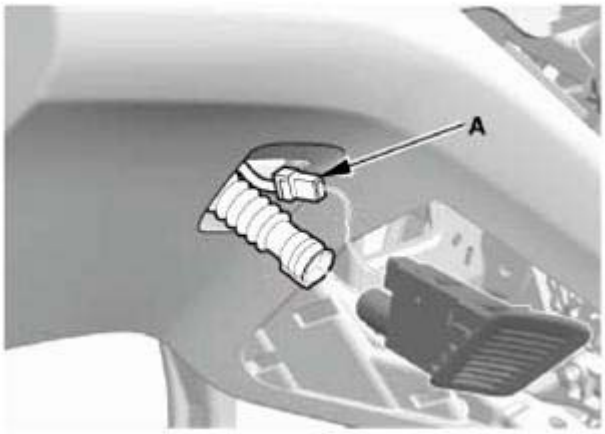

Fig. 95: Identifying Steering Hanger Beam Connector (With Climate Control)
Courtesy of AMERICAN HONDA MOTOR CO., INC.

5. Remove the dashboard (A) from the steering/hanger beam (B).

GETtheMANUALS.org

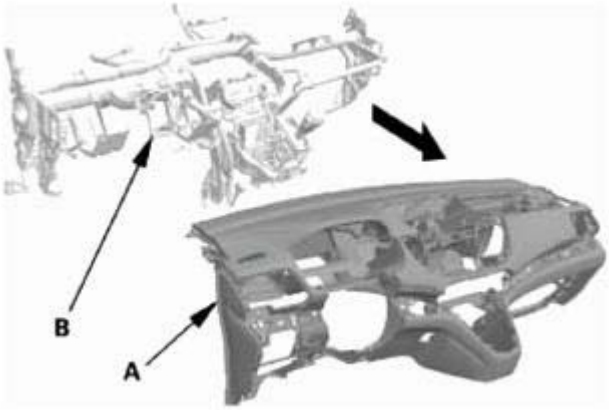

Fig. 96: Removing Dashboard From Steering/Hanger Beam
Courtesy of AMERICAN HONDA MOTOR CO., INC.

6. If necessary, remove the screw (A), then remove the center joint duct (B).

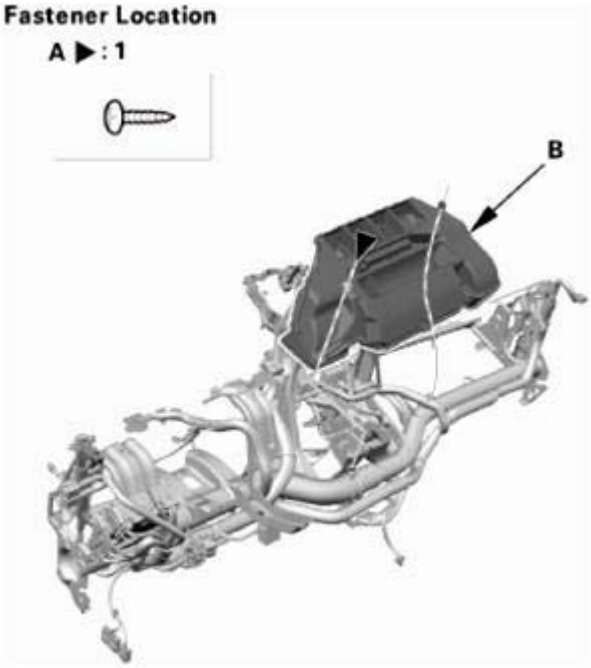

Fig. 97: Identifying Center Joint Duct And Screw
Courtesy of AMERICAN HONDA MOTOR CO., INC.

7. If necessary, remove the screws (A), then remove the glove box covers (B, C).

Left side

GETtheMANUALS.org

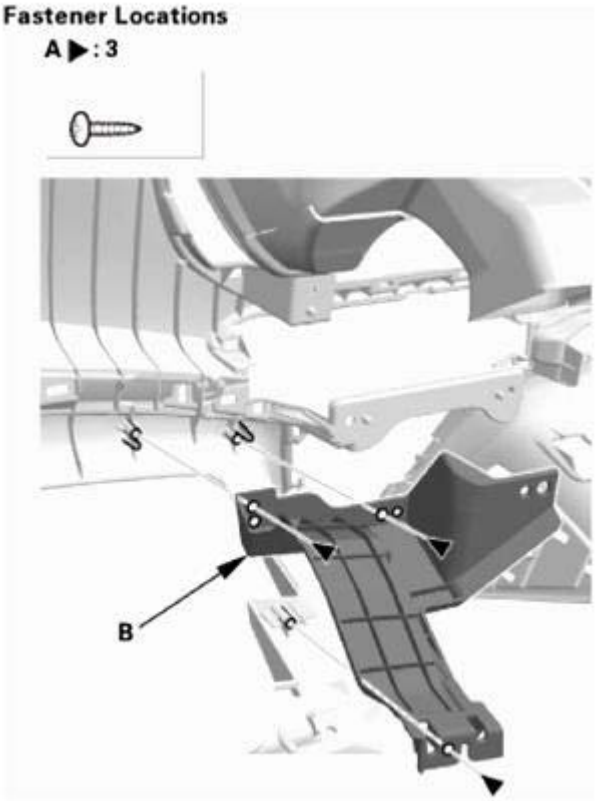

Fig. 98: Identifying Glove Box Cover And Screw (Left Side)
Courtesy of AMERICAN HONDA MOTOR CO., INC.

Right side

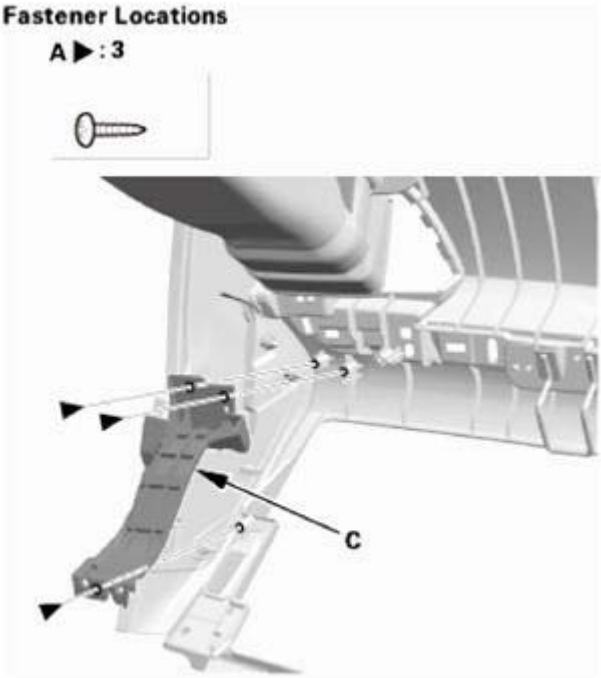

GETtheMANUALS.org

Fig. 99: Identifying Glove Box Cover And Screw (Right Side)
Courtesy of AMERICAN HONDA MOTOR CO., INC.

REASSEMBLY

1. Steering Hanger Beam
    1. Install the glove box covers (A, B), then install the screws (C).

Left side

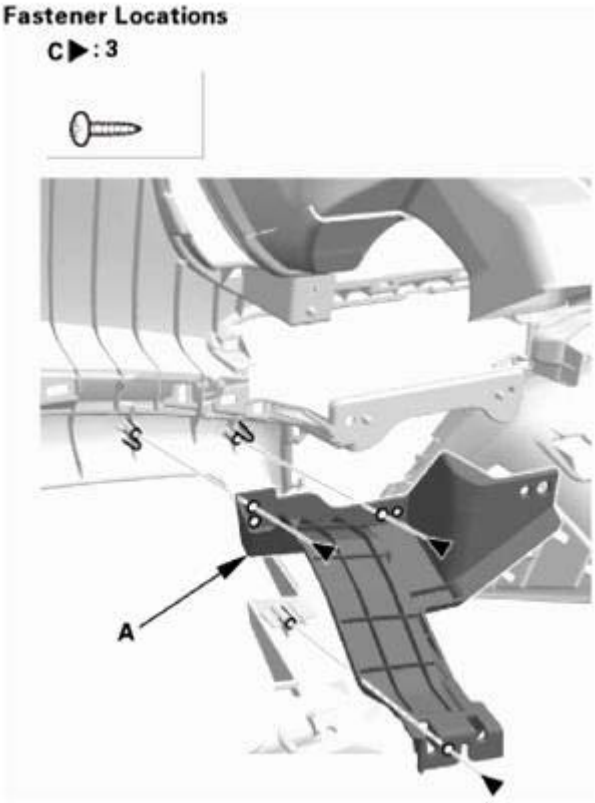

Fig. 100: Identifying Steering Hanger Beam Glove Box Cover And Screws (Left Side)
Courtesy of AMERICAN HONDA MOTOR CO., INC.

Right side

GETtheMANUALS.org

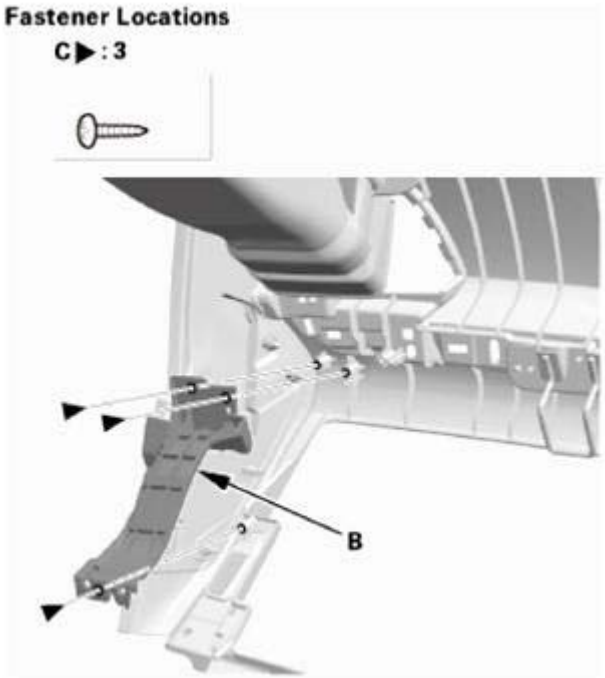

Fig. 101: Identifying Steering Hanger Beam Glove Box Cover And Screws (Right Side)
Courtesy of AMERICAN HONDA MOTOR CO., INC.

2. Install the center joint duct (A), then install the screw (B).

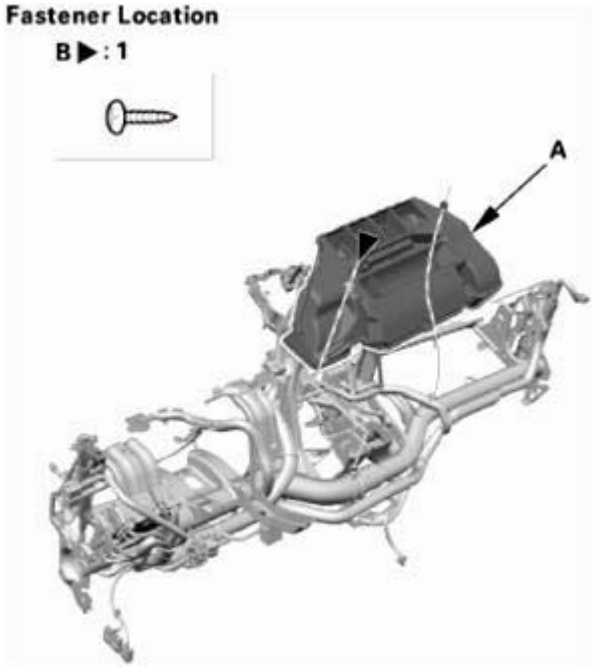

Fig. 102: Identifying Steering Hanger Beam Center Joint Duct And Screw
Courtesy of AMERICAN HONDA MOTOR CO., INC.

GETtheMANUALS.org

3. Install the dashboard (A) to the steering hanger beam (B).

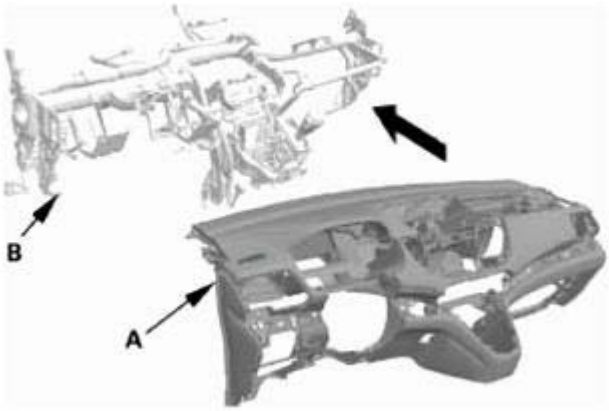

Fig. 103: Installing Dashboard To Steering Hanger Beam
Courtesy of AMERICAN HONDA MOTOR CO., INC.

4. With climate control: Connect the connector (A).

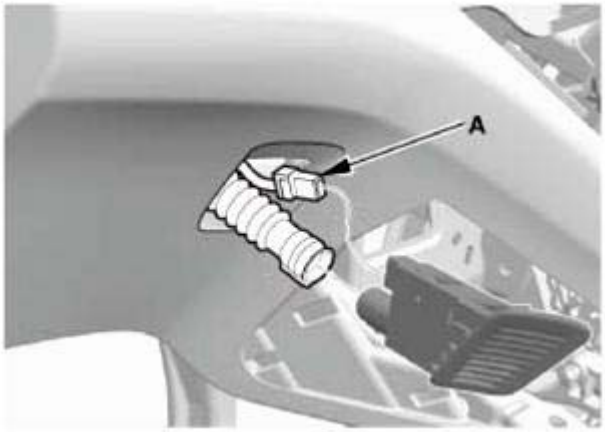

Fig. 104: Identifying Steering Hanger Beam Connector (With Climate Control)
Courtesy of AMERICAN HONDA MOTOR CO., INC.

5. Install the harness clip(s) (A).

Left side

GETtheMANUALS.org

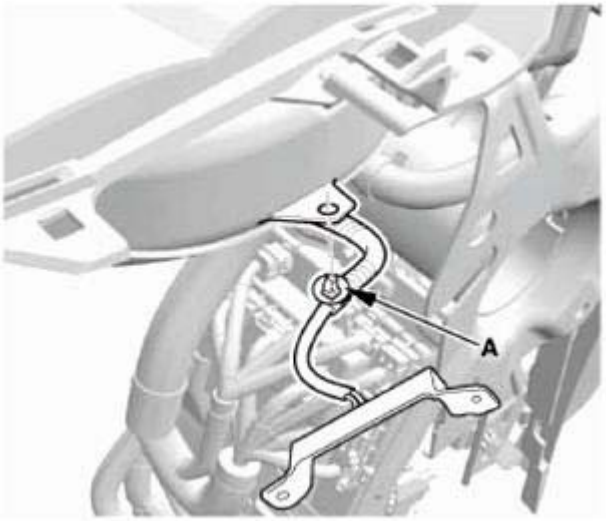

Fig. 105: Identifying Steering Hanger Beam Harness Clip (Left Side)
Courtesy of AMERICAN HONDA MOTOR CO., INC.

Right side

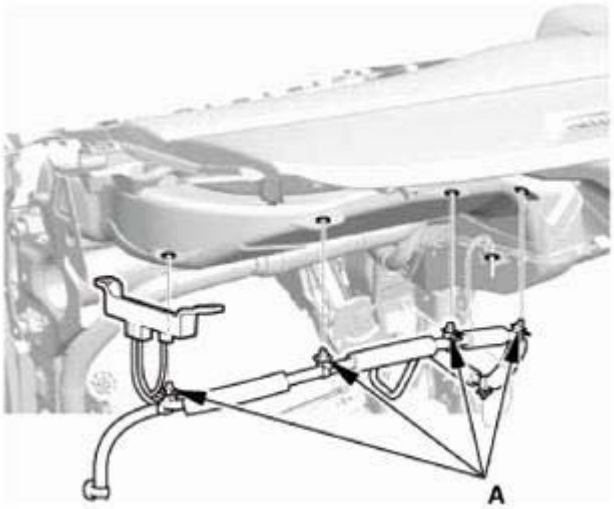

Fig. 106: Identifying Steering Hanger Beam Harness Clip (Right Side)
Courtesy of AMERICAN HONDA MOTOR CO., INC.

6. Install the screws (A).

GETtheMANUALS.org

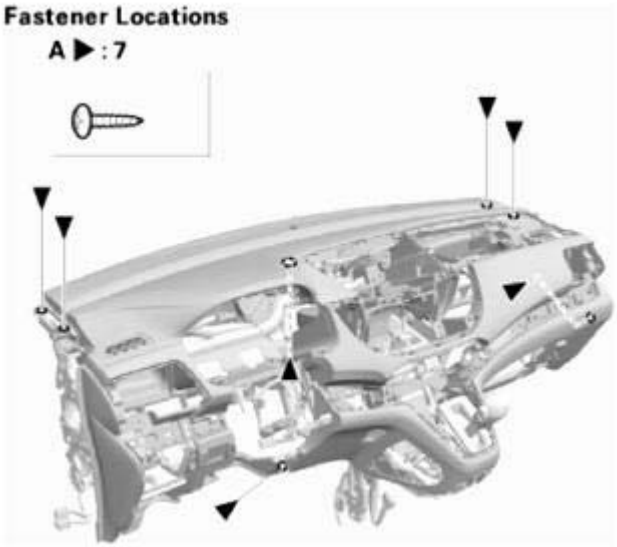

Fig. 107: Identifying Steering Hanger Beam Screws
Courtesy of AMERICAN HONDA MOTOR CO., INC.

7. Install the bolts (A).

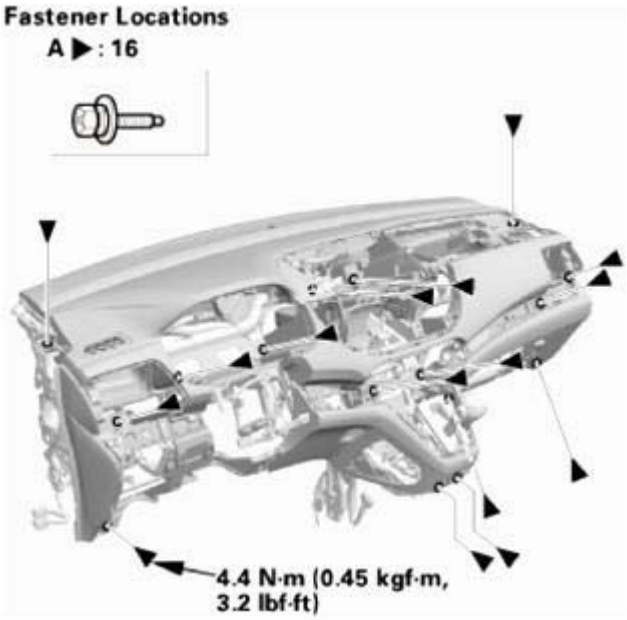

Fig. 108: Identifying Steering Hanger Beam Bolts
Courtesy of AMERICAN HONDA MOTOR CO., INC.

2. Glove Box Striker
    1. Install the glove box striker (A), then install the screws (B).

GETtheMANUALS.org

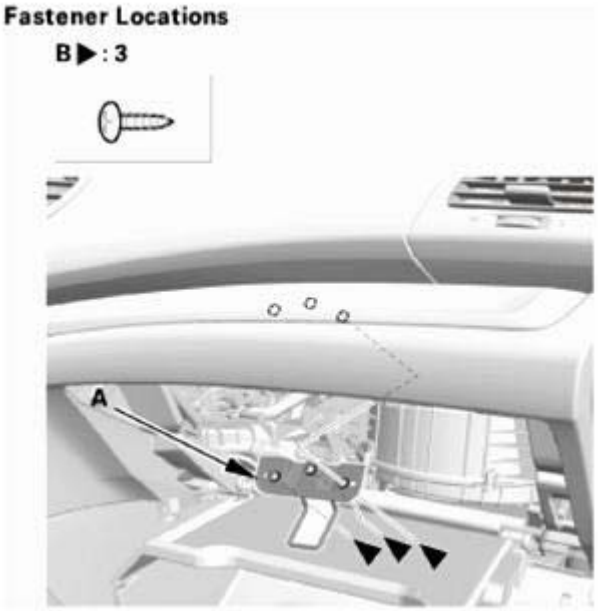

Fig. 109: Identifying Glove Box Striker And Screws
Courtesy of AMERICAN HONDA MOTOR CO., INC.

3. Front Passenger's Airbag Assembly
    1. Place the front passenger's airbag and cover as an assembly (A) into the dashboard.
    2. Tighten the front passenger's airbag new mounting nuts.

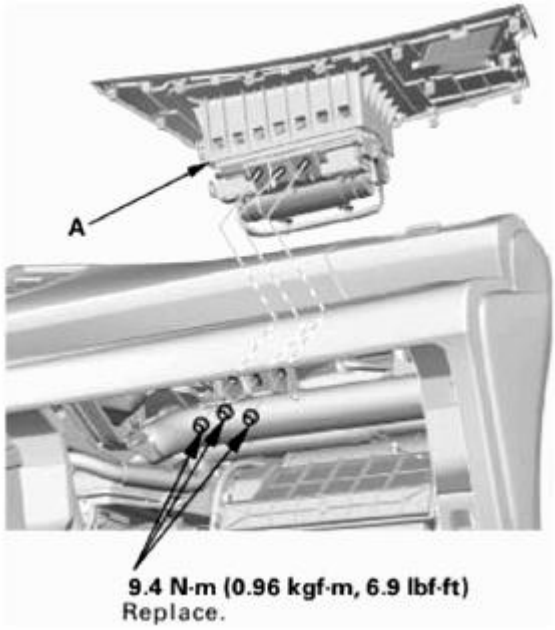

Fig. 110: Identifying Front Passenger Airbag, Cover And Mounting Bolts With Torque Specifications
Courtesy of AMERICAN HONDA MOTOR CO., INC.

GETtheMANUALS.org

3. Connect the front passenger's airbag inflator connector (A) on the dashboard wire harness.

Fig. 111: Identifying Front Passenger Airbag Inflator Connector
Courtesy of AMERICAN HONDA MOTOR CO., INC.

4. Glove Box
    1. Install the glove box (A), then install the glove box damper hook (B).

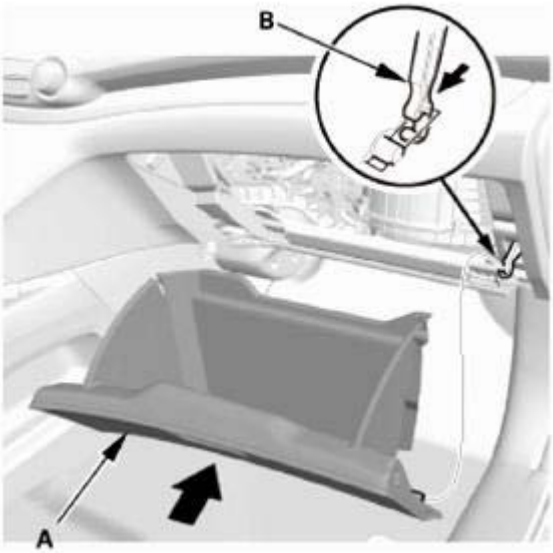

Fig. 112: Installing Glove Box With Damper Hook
Courtesy of AMERICAN HONDA MOTOR CO., INC.

2. Install the bolts (A).

GETtheMANUALS.org

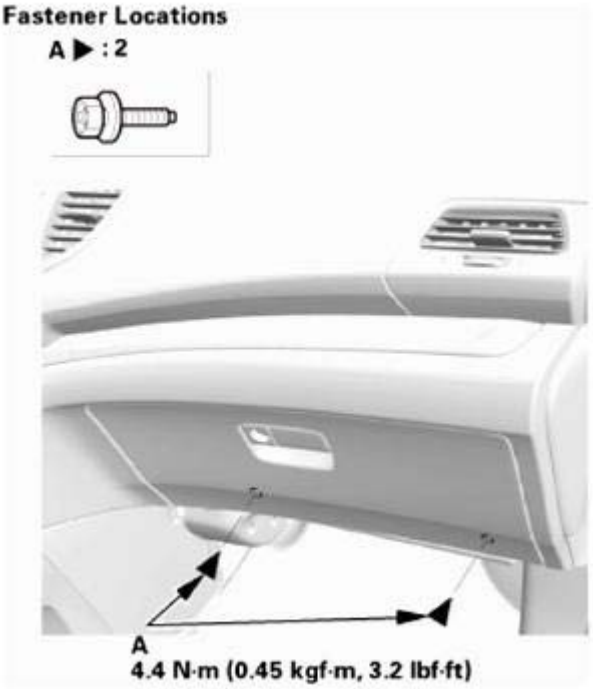

Fig. 113: Identifying Glove Box Mounting Bolts With Torque Specifications
Courtesy of AMERICAN HONDA MOTOR CO., INC.

5. Outer Vent - Both Sides
    1. Install the outer vent (A), then install the screw (B). Make sure the clips (C, D) snap into place securely.
    2. Repeat this step on the opposite side.

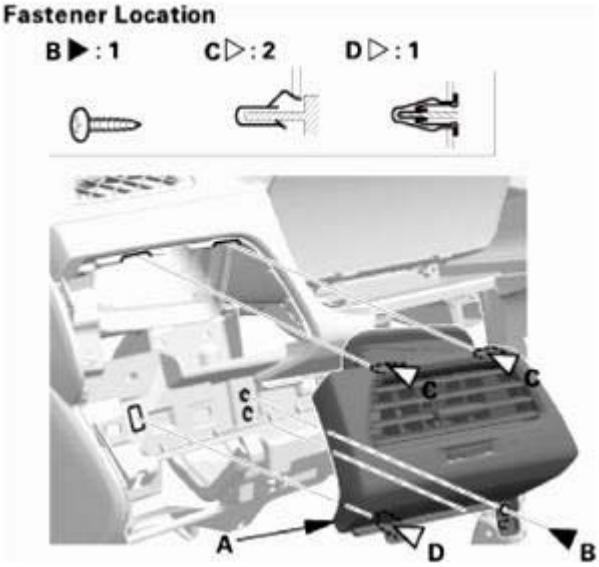

Fig. 114: Identifying Outer Vent, Screws And Clips
Courtesy of AMERICAN HONDA MOTOR CO., INC.

GETtheMANUALS.org

6. HVAC Control Unit Assembly (For Some Models)
    1. Connect the connector (A), then install the HVAC control unit assembly (B).
    2. Install the screws.

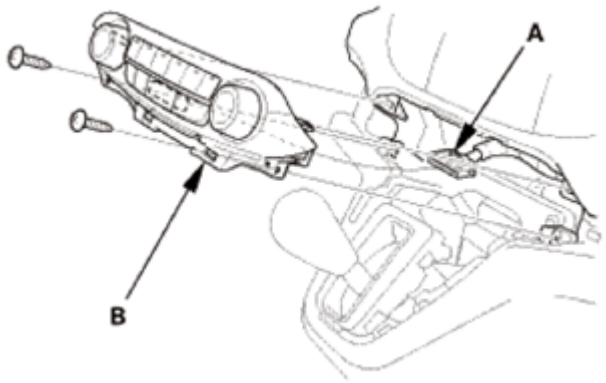

Fig. 115: Identifying HVAC Control Unit Assembly And Connector
Courtesy of AMERICAN HONDA MOTOR CO., INC.

7. Climate Control Panel Assembly (For Some Models)
    1. Connect the connector (A), then install the climate control panel assembly (B).
    2. Install the screws.

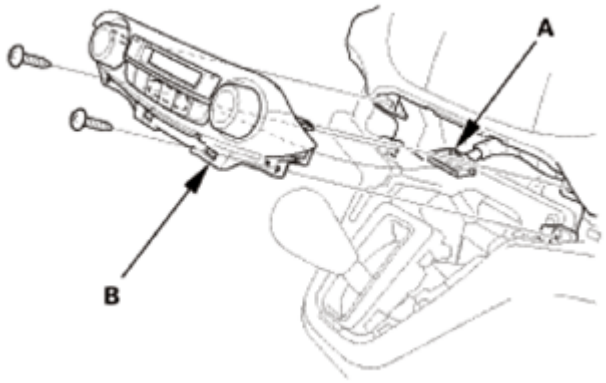

Fig. 116: Identifying Climate Control Panel Assembly And Connector
Courtesy of AMERICAN HONDA MOTOR CO., INC.

8. Passenger's Dashboard Trim Panel
    1. Install the passenger's dashboard trim panel (A). Make sure the clips (B) snap into place securely.

GETtheMANUALS.org

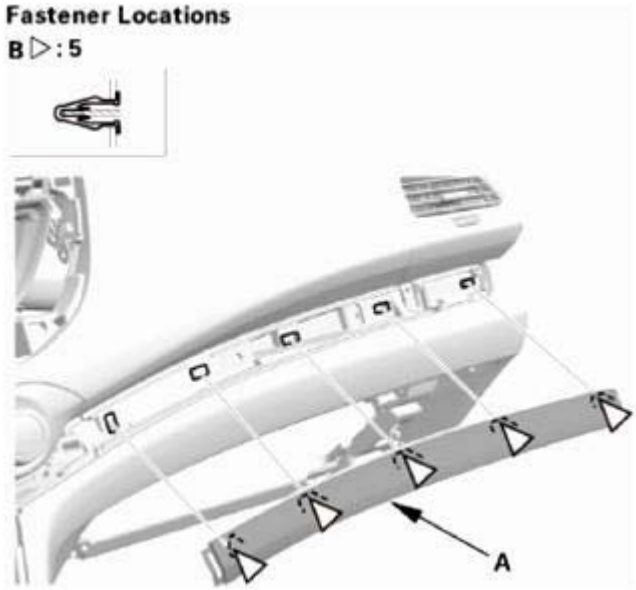

Fig. 117: Identifying Passenger Dashboard Trim Panel And Clips
Courtesy of AMERICAN HONDA MOTOR CO., INC.

9. Driver's Inner Dashboard Trim Panel
    1. Install the driver's inner dashboard trim panel (A). Make sure the clips (B) snap into place securely.

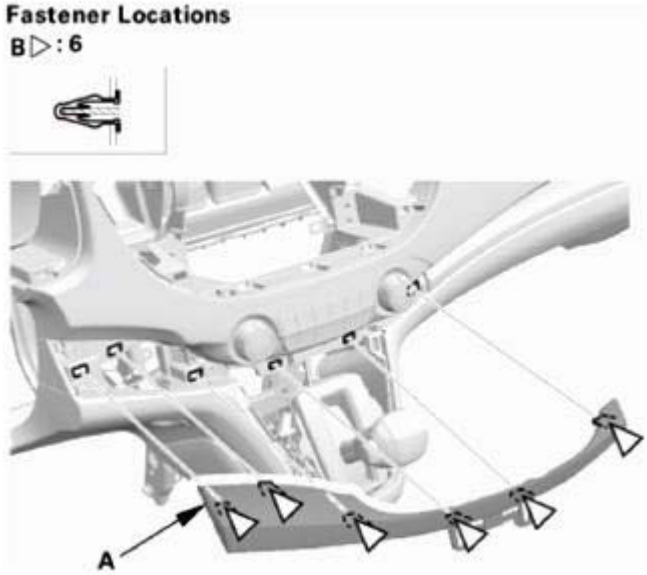

Fig. 118: Identifying Driver Inner Dashboard Trim Panel And Clips
Courtesy of AMERICAN HONDA MOTOR CO., INC.

10. Gauge Control Module

NOTE: **Spread a protective cloth on the upper column cover for protect the upper column cover.**

GETtheMANUALS.org

1. Connect the connector.
2. Install the gauge control module (A).

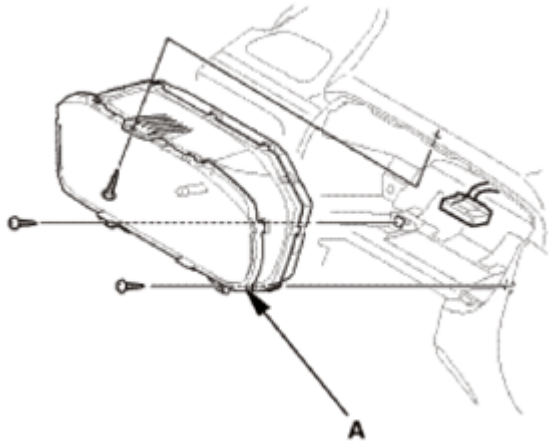

Fig. 119: Identifying Gauge Control Module
Courtesy of AMERICAN HONDA MOTOR CO., INC.

11. Meter Visor Assembly (After Remove Blind Cover)
    1. Install the dashboard meter visor assembly (A). Make sure the clips (B, C) and the tabs (D) snap into place securely.

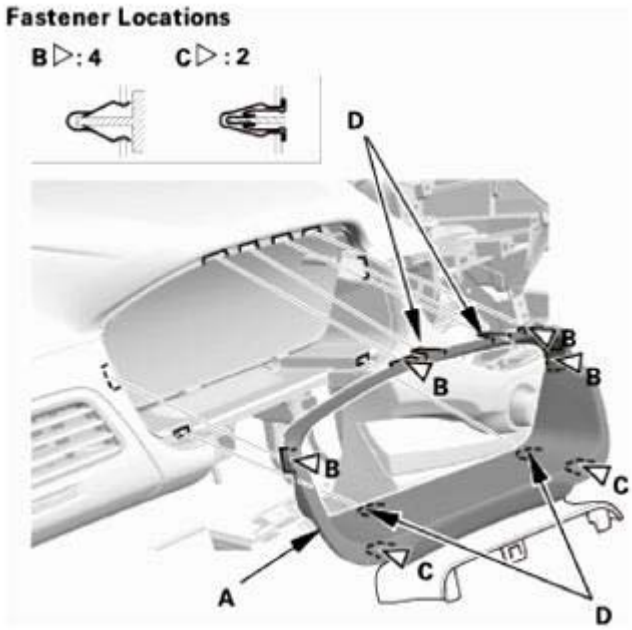

Fig. 120: Identifying Dashboard Meter Visor Assembly, Clips And Tabs
Courtesy of AMERICAN HONDA MOTOR CO., INC.

12. Sunlight Sensor
    1. Connect the sunlight sensor connector (A).

GETtheMANUALS.org

2. Install the sunlight sensor (B).

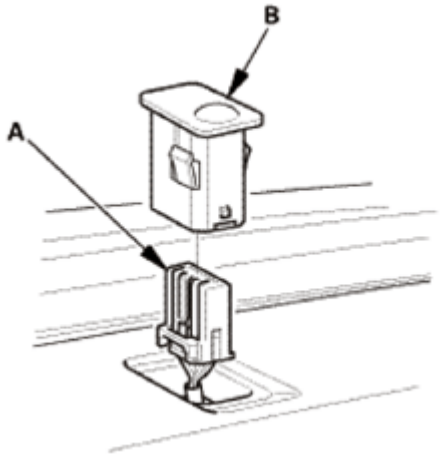

Fig. 121: Identifying Sunlight Sensor And Connector
Courtesy of AMERICAN HONDA MOTOR CO., INC.

13. Multi-Information Display Unit (For Some Model)
    1. Connect the connectors.
    2. Install the multi-information display unit assembly (A).

NOTE: **If you see the In Line Diag screen when it is turned on, refer to In Line Diag (i-MID) under Display Diagnosis to complete the diagnosis.**

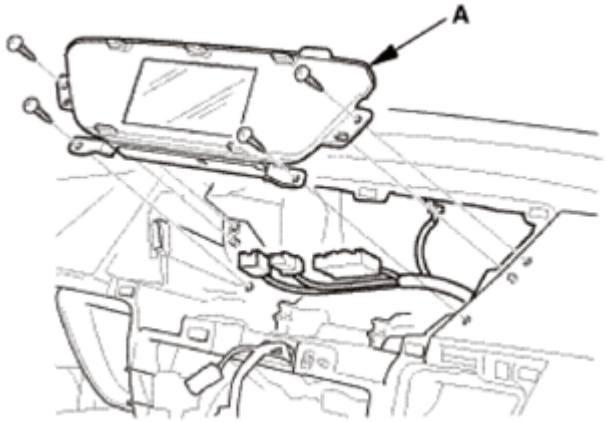

Fig. 122: Identifying Multi - Information Display Unit Assembly
Courtesy of AMERICAN HONDA MOTOR CO., INC.

14. Center Display Unit Assembly (For Some Model)
    1. Connect the connectors.
    2. Install the center display unit assembly (A).

GETtheMANUALS.org

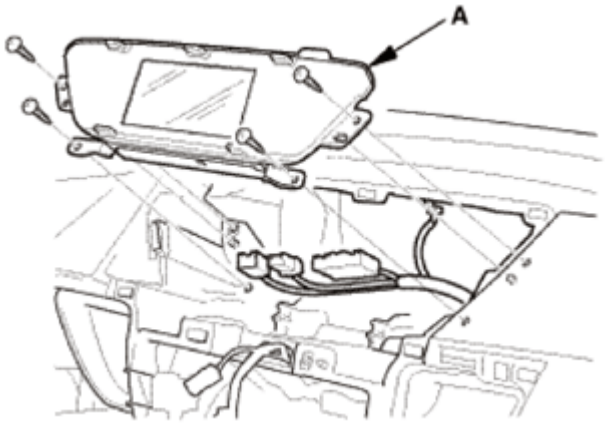

Fig. 123: Identifying Center Display Unit Assembly
Courtesy of AMERICAN HONDA MOTOR CO., INC.

15. GPS Antenna (For Some Models)
    1. Install the harness clip (A).

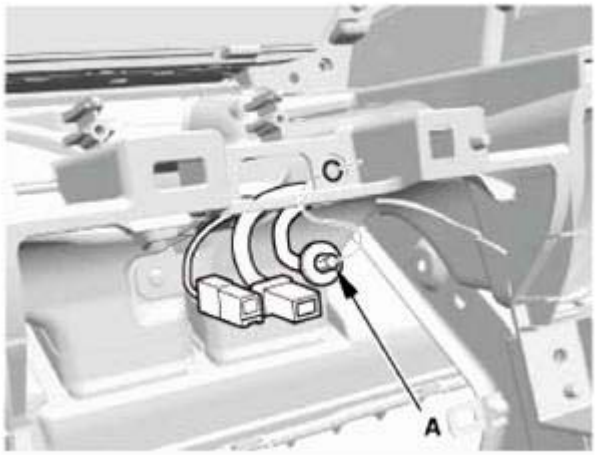

Fig. 124: Identifying GPS Antenna Harness Clips
Courtesy of AMERICAN HONDA MOTOR CO., INC.

    2. Install the GPS antenna (A), then install the screws.
    3. Connect the connector (B).

GETtheMANUALS.org

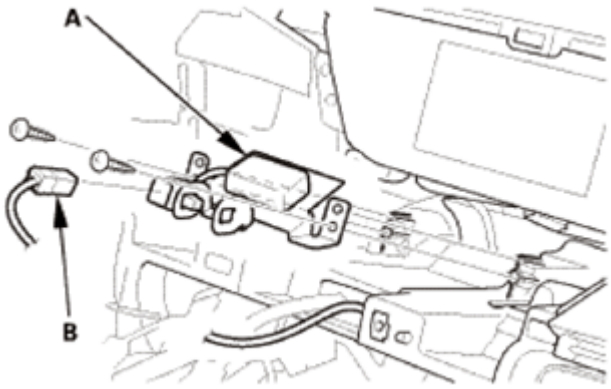

Fig. 125: Identifying GPS Antenna And Connector
Courtesy of AMERICAN HONDA MOTOR CO., INC.

16. Dashboard Center Display Visor Assembly
    1. Install the dashboard center display visor (A).

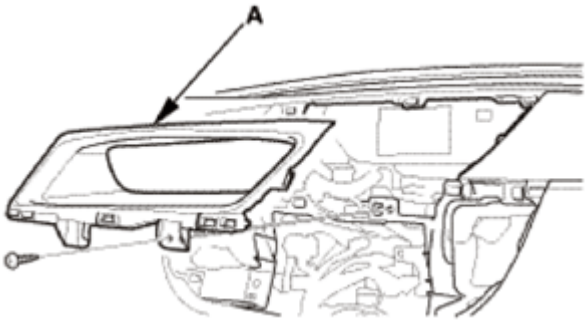

Fig. 126: Identifying Dashboard Center Display Visor
Courtesy of AMERICAN HONDA MOTOR CO., INC.

17. Audio Unit Assembly (Without Navigation)
    1. Connect the connectors, then install the audio unit (A).

NOTE: **Make sure all the connectors and the antenna lead are secure.**

    2. Install the bolts (B).

NOTE: **If the audio unit was replaced, enter the audio presets that you saved onto the new unit.**

GETtheMANUALS.org

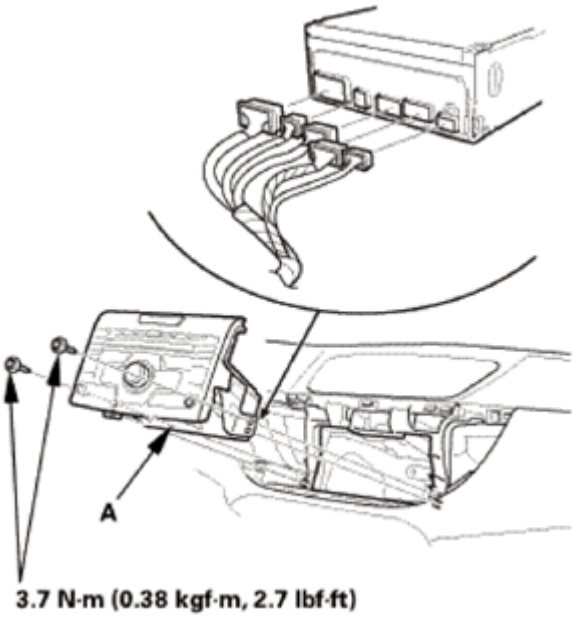

Fig. 127: Identifying Audio Unit (Without Navigation) And Bolts With Torque Specifications
Courtesy of AMERICAN HONDA MOTOR CO., INC.

18. Navigation Unit Assembly (With Navigation)
    1. Connect the connectors, then install the audio-navigation unit (A).

       NOTE: Make sure all the connectors and the antenna lead are secure.

    2. Install the bolts (B).

       Except KX

GETtheMANUALS.org

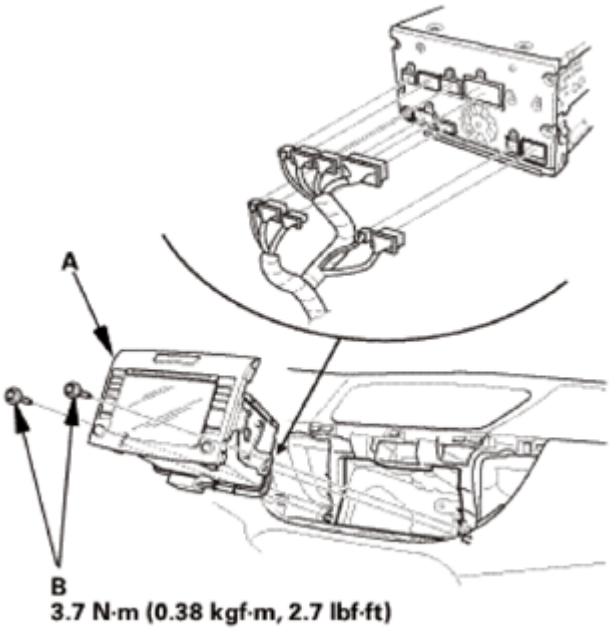

Fig. 128: Identifying Audio - Navigation Unit And Bolts With Torque Specifications (Except KX)
Courtesy of AMERICAN HONDA MOTOR CO., INC.

KX

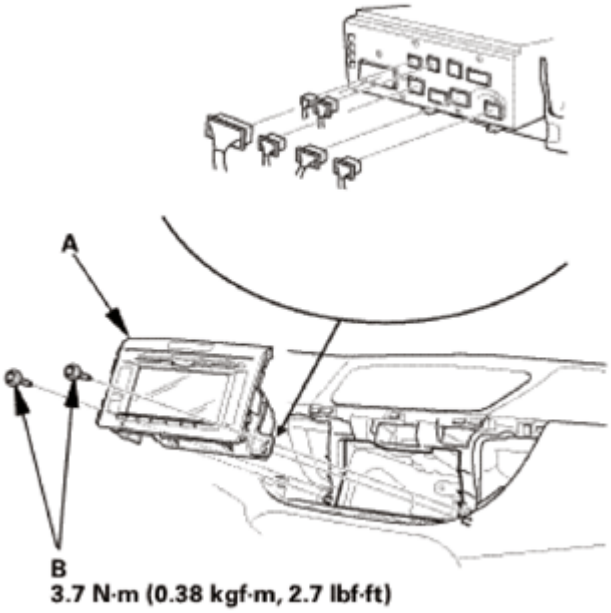

Fig. 129: Identifying Audio - Navigation Unit And Bolts With Torque Specifications (For KX)
Courtesy of AMERICAN HONDA MOTOR CO., INC.

19. Inner Vent - Both Sides
    1. Install the inner vents (A). Make sure the clips (B) snap into place securely.

GETtheMANUALS.org

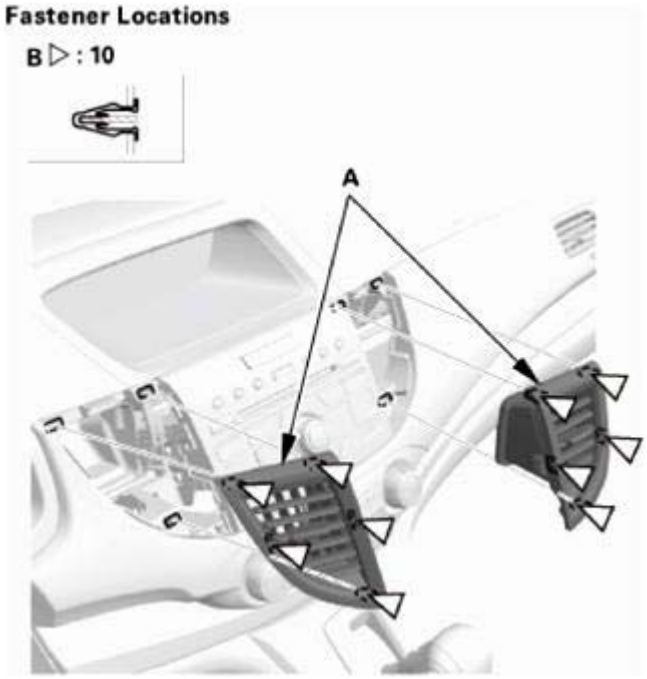

Fig. 130: Identifying Inner Vents And Clips
Courtesy of AMERICAN HONDA MOTOR CO., INC.

DASHBOARD/STEERING HANGER BEAM REMOVAL AND INSTALLATION

REMOVAL

SRS components are located in this area. Review the **SRS COMPONENT LOCATIONS** and the **PRECAUTIONS AND PROCEDURES** before doing repairs or service.

1. Battery Terminal (SRS) - Disconnection
    1. Make sure the ignition switch is in LOCK (0).
    2. Disconnect and isolate the negative cable (A) from the battery.

    NOTE: Always disconnect the negative side first.

    3. Disconnect the positive cable (B) from the battery.
    4. Wait at least 3 minutes before starting work.

GETtheMANUALS.org

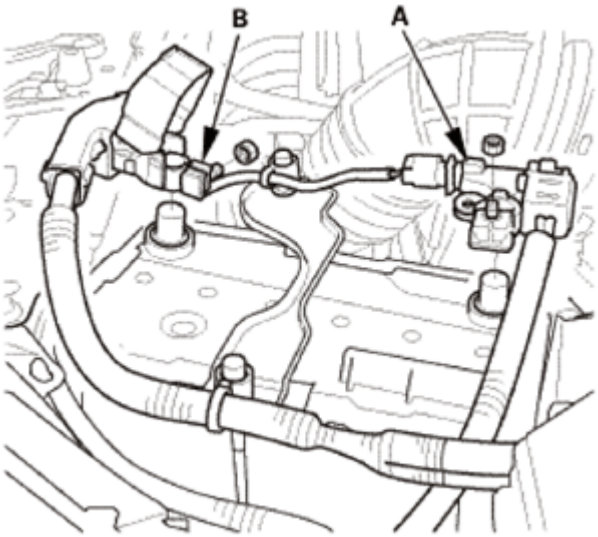

Fig. 131: Identifying Battery (+ And -) Terminal (SRS)
Courtesy of AMERICAN HONDA MOTOR CO., INC.

2. Front Door Opening Seal As Needed - Both Sides

NOTE: Repeat on the opposite side.

1. Pull out the front door opening seal (A) from the trim hooks (B) around the front door opening flange, then detach the seal as needed.

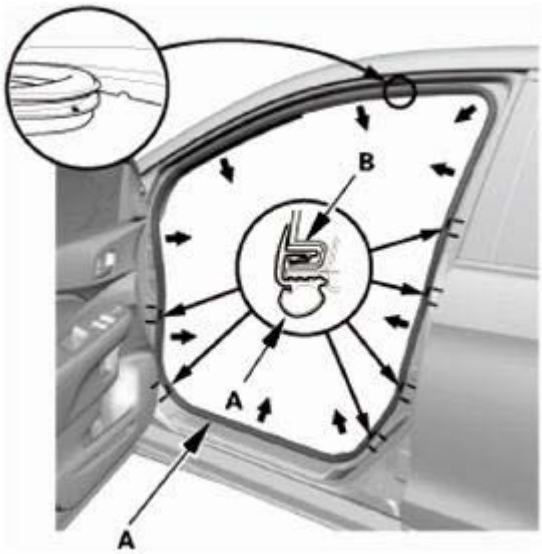

Fig. 132: Pulling Front Door Opening Seal From Trim Hooks
Courtesy of AMERICAN HONDA MOTOR CO., INC.

3. A-Pillar Trim - Both Sides

GETtheMANUALS.org

NOTE: **Repeat this procedure on the opposite side.**

1. Pull out the A-pillar trim (A) by hand to release the clips (B, C).

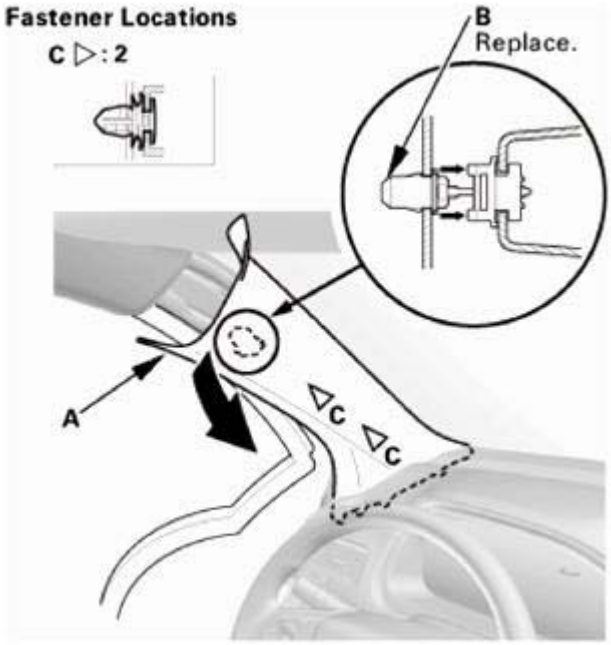

Fig. 133: Pulling Out A-Pillar Trim
Courtesy of AMERICAN HONDA MOTOR CO., INC.

2. Put a shop towel (A) in the opening between the A-pillar trim (B) and the dashboard to prevent dropping the A-pillar clips.

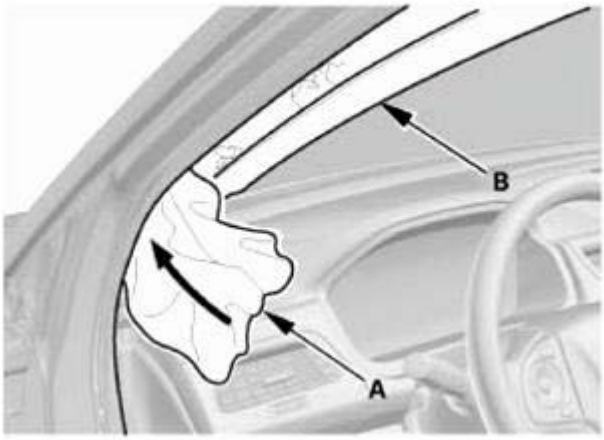

Fig. 134: Placing Shop Towel In Opening Between A-Pillar Trim And Dashboard
Courtesy of AMERICAN HONDA MOTOR CO., INC.

3. Pull out and up on the A-pillar trim (A) to release it from the dashboard.

GETtheMANUALS.org

NOTE: **The upper clip will stay in the body.**

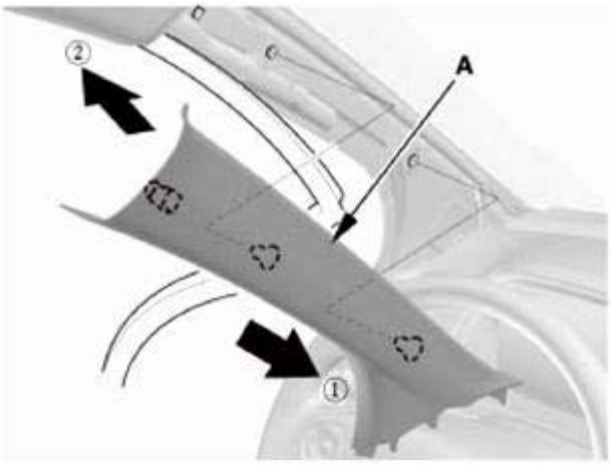

Fig. 135: Releasing A-Pillar Trim From Dashboard
Courtesy of AMERICAN HONDA MOTOR CO., INC.

4. Remove the upper clip (A) from the body.

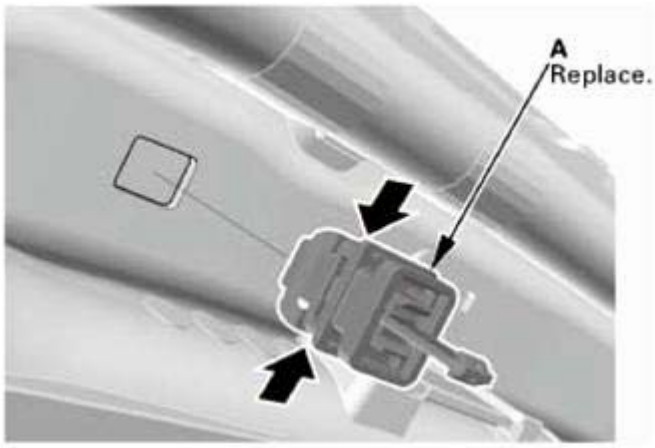

Fig. 136: Removing A-Pillar Trim Upper Clip
Courtesy of AMERICAN HONDA MOTOR CO., INC.

4. Driver's Dashboard Undercover
    1. Turn the lock knob (A) 90 °, then gently pull down the front edge of the driver's dashboard undercover (B) to detach the clip (C).
    2. Pull away the undercover to release the pin (D) from the holder (E), then remove the driver's dashboard undercover.

GETtheMANUALS.org

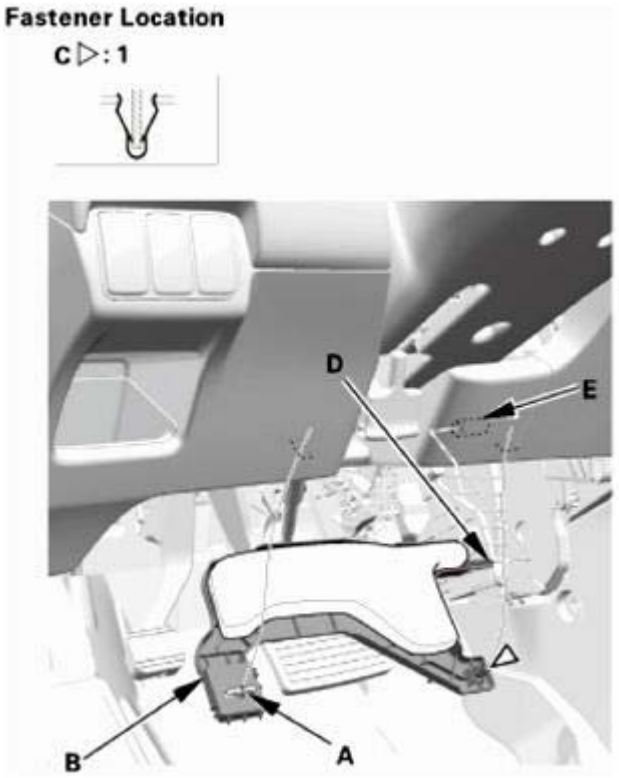

Fig. 137: Identifying Driver Dashboard Undercover, Lock Knob, Holder, Clip And Pin
Courtesy of AMERICAN HONDA MOTOR CO., INC.

5. Passenger's Dashboard Undercover
    1. Gently pull down the passenger's dashboard undercover (A) to detach the clips (B), then pull away the undercover to release the pins (C) from the holder (D).

GETtheMANUALS.org

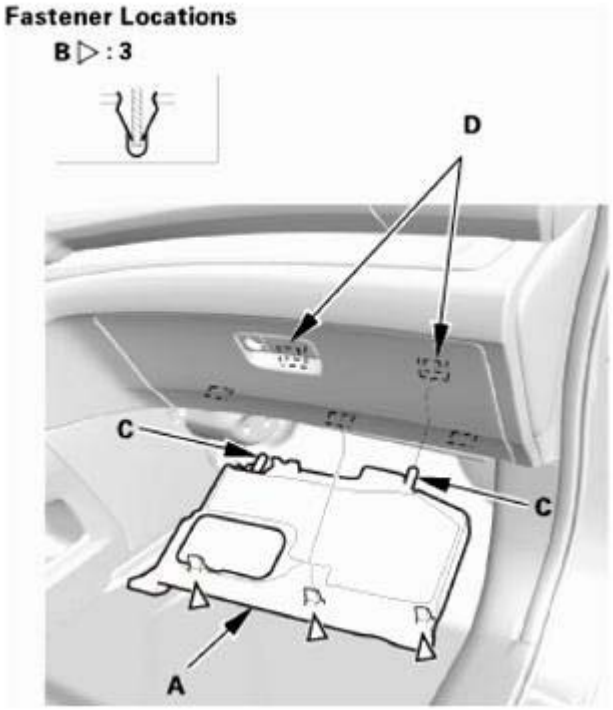

Fig. 138: Identifying Passenger Dashboard Undercover, Holder, Clips And Pins
Courtesy of AMERICAN HONDA MOTOR CO., INC.

6. Driver's Dashboard Panel Assembly
    1. Carefully pry out the driver's dashboard panel assembly (A) with the appropriate trim tool to detach the clips (B).
    2. Disconnect the connector (C), then remove the driver's dashboard panel assembly.

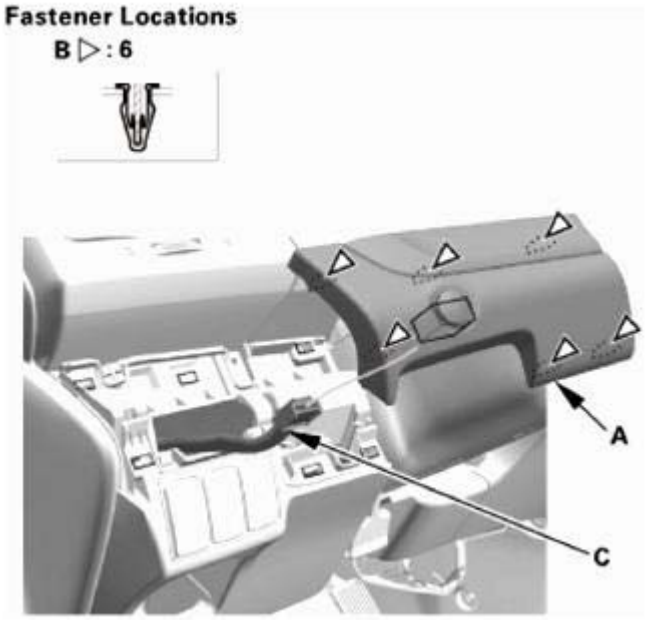

GETtheMANUALS.org

Fig. 139: Identifying Driver Dashboard Panel Assembly, Connector And Clips
Courtesy of AMERICAN HONDA MOTOR CO., INC.

7. Driver's Dashboard Lower Cover
    1. Carefully pry out the driver's dashboard lower cover (A) with the appropriate trim tool to detach the clips (B).
    2. Disconnect the connector (C), then remove the driver's dashboard lower cover.

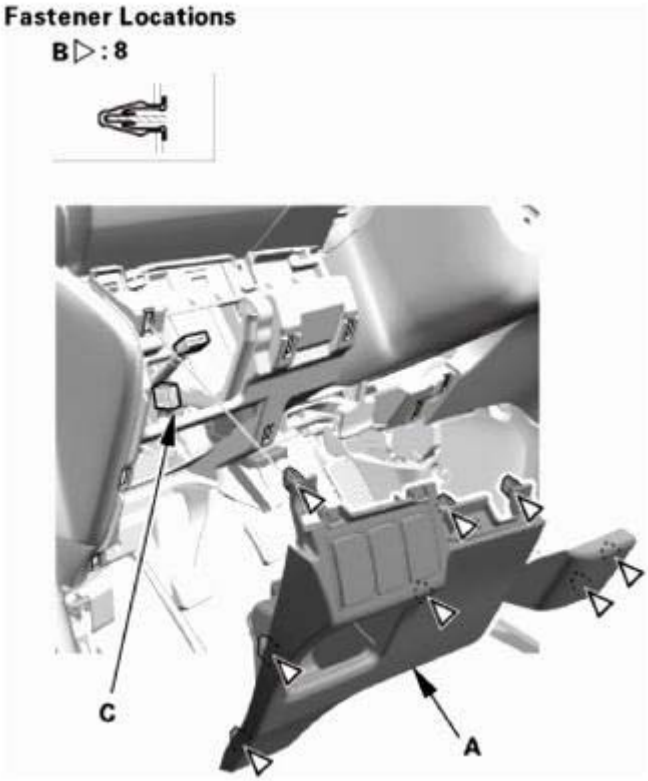

Fig. 140: Identifying Driver Dashboard Lower Cover, Connector And Clips
Courtesy of AMERICAN HONDA MOTOR CO., INC.

8. Kick Panel - Both Sides
    1. Pull out the front door opening seal (A) as needed from the kick panel hooks and the door opening flange.
    2. Pull back the kick panel by hand to detach the clips (B), then remove the driver's side kick panel (C) and the passenger's side kick panel (D).

    Driver's side

GETtheMANUALS.org

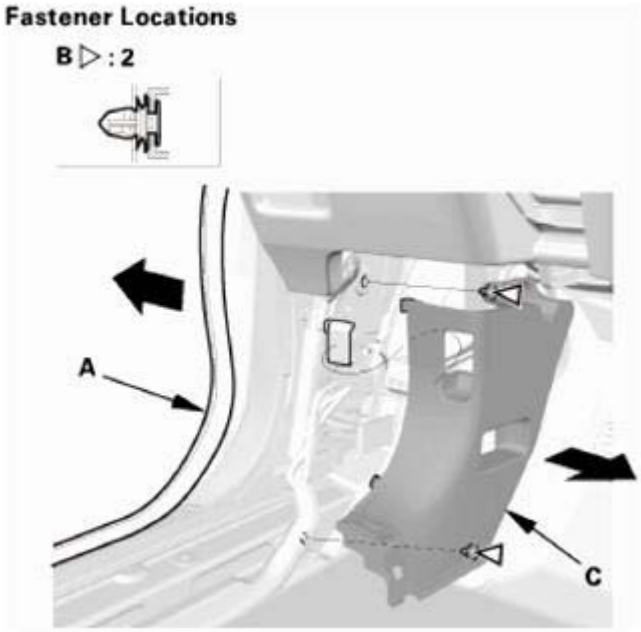

Fig. 141: Pulling Front Door Opening Seal From Kick Panel Hooks And Door Opening Flange (Driver Side)
Courtesy of AMERICAN HONDA MOTOR CO., INC.

Passenger's side

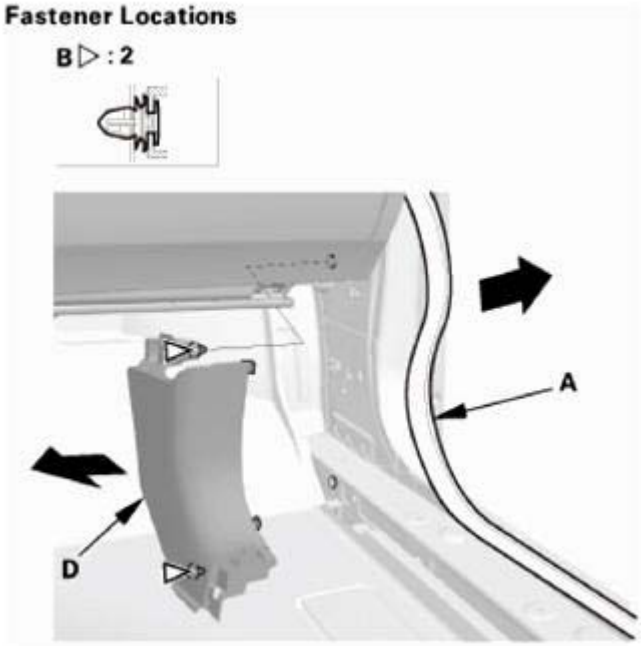

Fig. 142: Pulling Front Door Opening Seal From Kick Panel Hooks And Door Opening Flange (Passenger Side)
Courtesy of AMERICAN HONDA MOTOR CO., INC.

GETtheMANUALS.org

9. Glove Box - Move
    1. Detach the glove box damper hook (A), and release both glove box stops (B) by pushing them in, then let glove box (C) hang down.

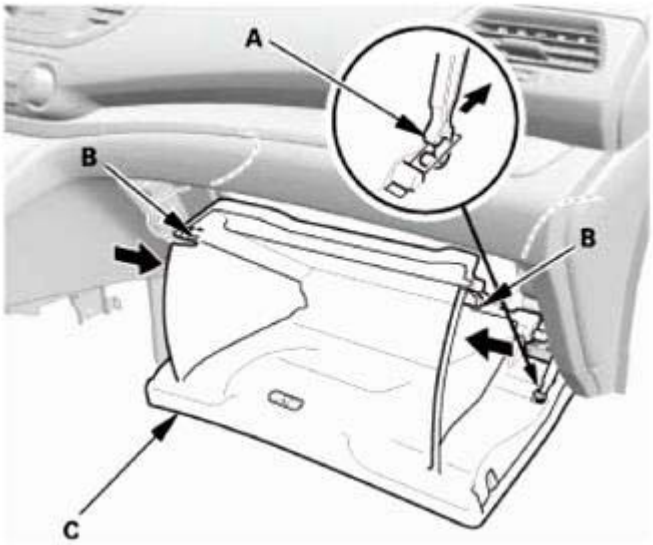

Fig. 143: Disconnecting Glove Box Damper Hook
Courtesy of AMERICAN HONDA MOTOR CO., INC.

10. Front Console Cover - Both Sides
    1. Remove the clips (A).
    2. Detach the clips (B), then remove the front console covers (C).

    Left side

GETtheMANUALS.org

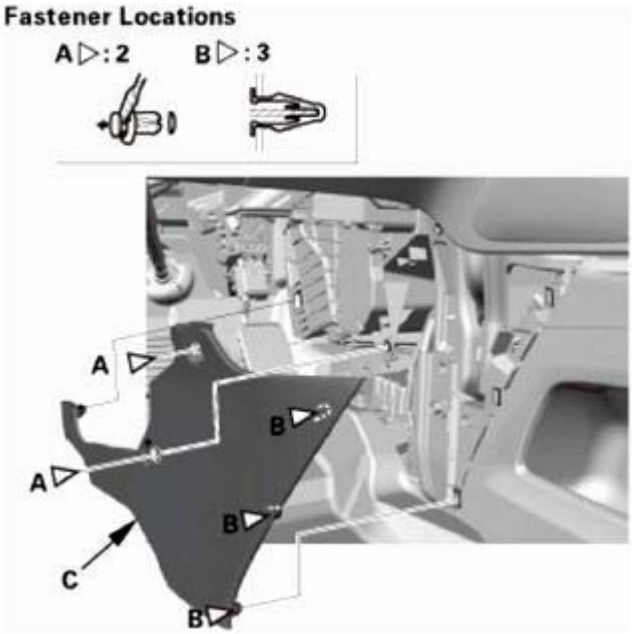

Fig. 144: Identifying Front Console Cover And Clips (Left Side)
Courtesy of AMERICAN HONDA MOTOR CO., INC.

Right side

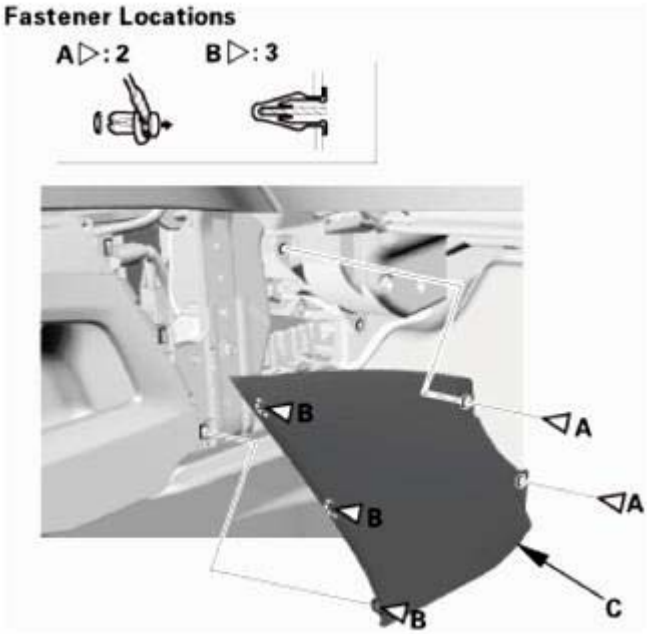

Fig. 145: Identifying Front Console Cover And Clips (Right Side)
Courtesy of AMERICAN HONDA MOTOR CO., INC.

11. Center Console Rear Trim
    1. Carefully pry out the center console rear trim (A) with the appropriate trim tool to detach the clips

GETtheMANUALS.org

(B) and the hooks (C), then remove the center console rear trim.

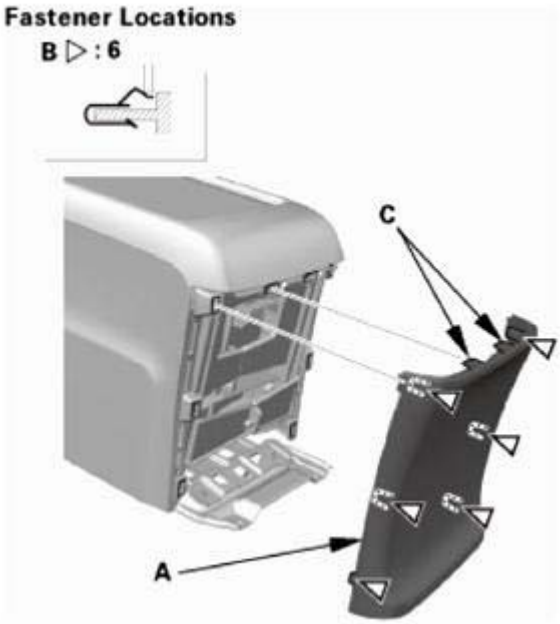

Fig. 146: Identifying Center Console Rear Trim, Hooks And Clips
Courtesy of AMERICAN HONDA MOTOR CO., INC.

12. Center Console
    1. Carefully pry out the center lower cover (A) with the appropriate trim tool to detach the clips (B), then remove the center lower cover.
    2. Remove the bolt (C).

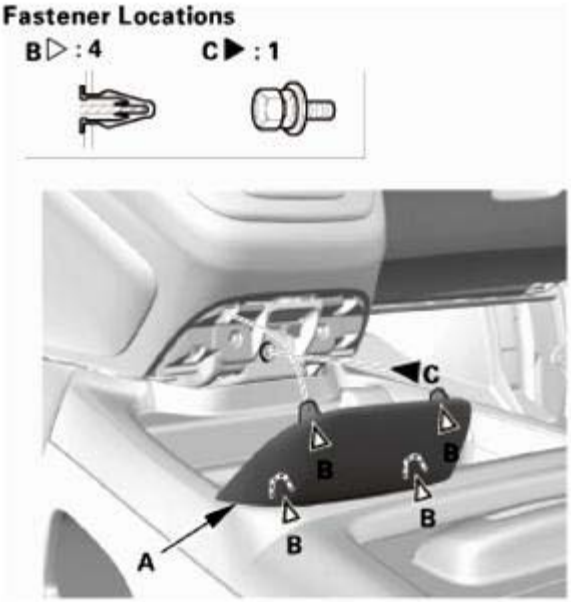

Fig. 147: Identifying Center Lower Cover, Clips And Bolts

GETtheMANUALS.org

Courtesy of AMERICAN HONDA MOTOR CO., INC.

3. Remove the bolts (A).

Fig. 148: Identifying Center Console Mounting Bolts
Courtesy of AMERICAN HONDA MOTOR CO., INC.

4. Remove the console box mat (A), then remove the bolts (B).

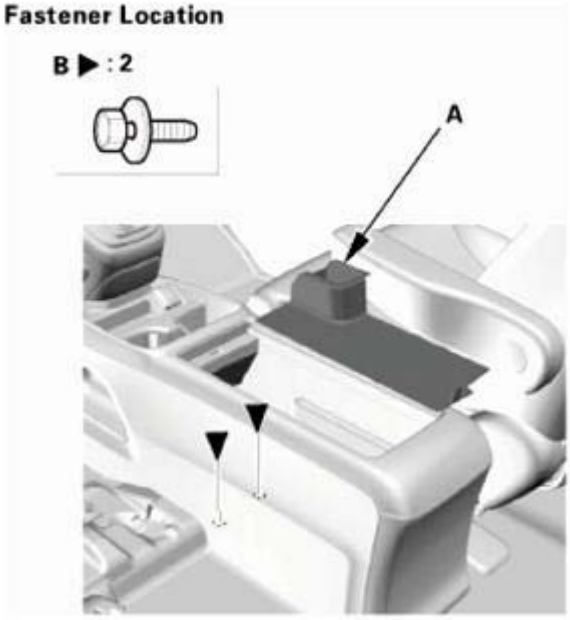

Fig. 149: Identifying Console Box Mat And Bolts
Courtesy of AMERICAN HONDA MOTOR CO., INC.

GETtheMANUALS.org

5. Disconnect the connectors (A), and remove the clips (B).

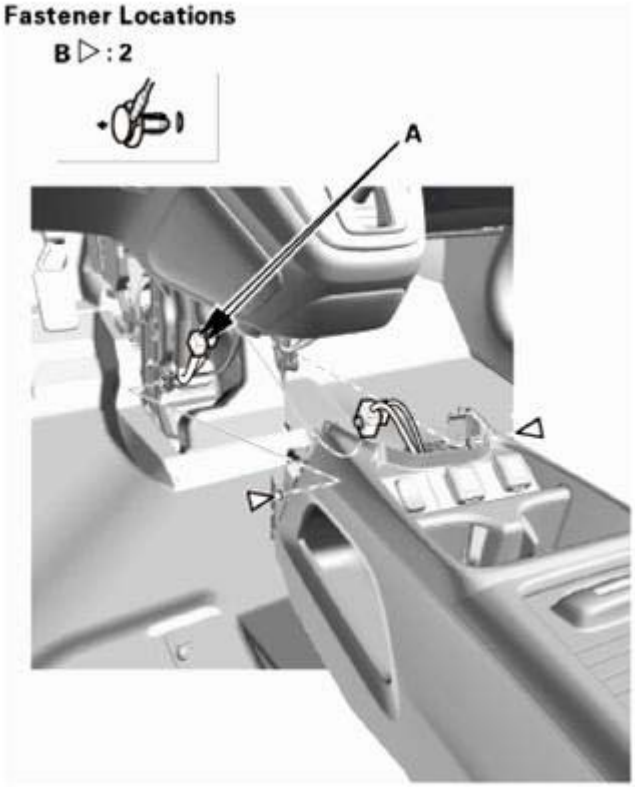

Fig. 150: Identifying Center Console Connectors And Clips
Courtesy of AMERICAN HONDA MOTOR CO., INC.

6. Slide both front seats fully rearward, and recline the seat-backs around two thirds to the rear.
7. Remove the center console (A).

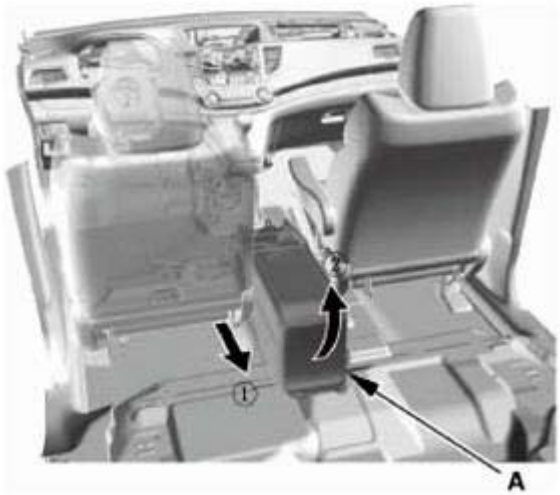

Fig. 151: Removing Center Console

GETtheMANUALS.org

Courtesy of AMERICAN HONDA MOTOR CO., INC.

13. Driver's Airbag
    1. Remove the access panel (A).
    2. Disconnect the driver's airbag inflator connector (B) on the cable reel harness.
    3. Disconnect the horn switch connector (C).

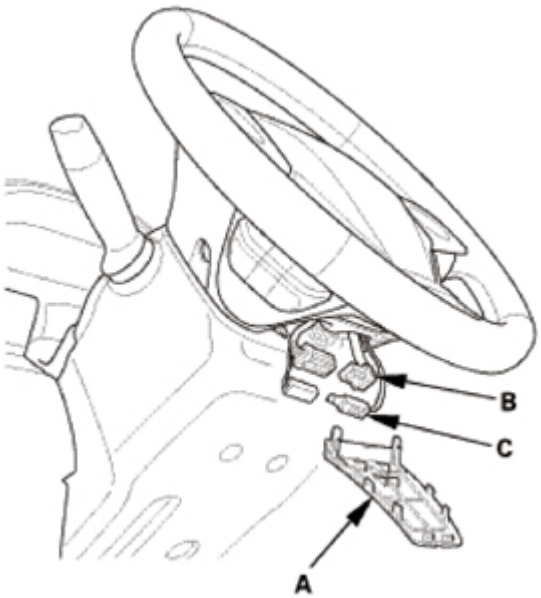

Fig. 152: Identifying Driver Airbag Inflator, Horn Switch Connector And Access Panel
Courtesy of AMERICAN HONDA MOTOR CO., INC.

    4. Remove the TORX bolts using a TORX T30 bit.
    5. Remove the driver's airbag (A).

GETtheMANUALS.org

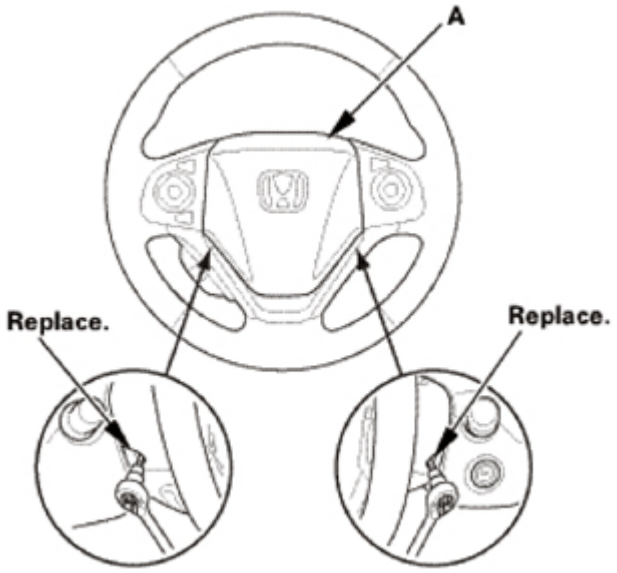

Fig. 153: Identifying Driver Airbag
Courtesy of AMERICAN HONDA MOTOR CO., INC.

14. Steering Wheel Assembly
    1. Set the front wheels in the straight ahead position.
    2. Disconnect the connector (A).
    3. Loosen the steering wheel bolt (B) three turns.

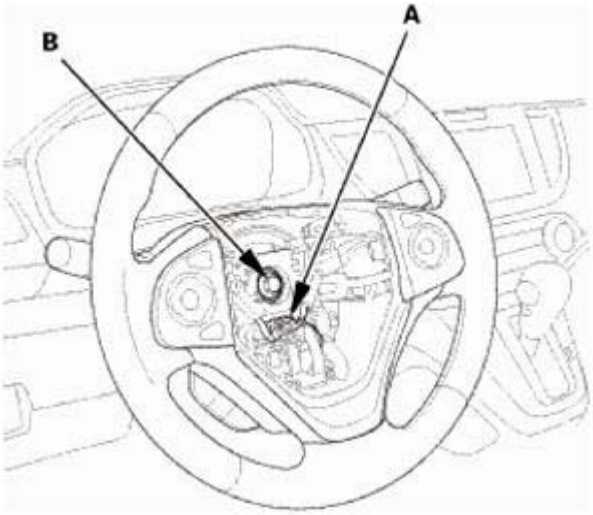

Fig. 154: Identifying Steering Wheel Connector And Bolt
Courtesy of AMERICAN HONDA MOTOR CO., INC.

    4. Install a commercially available steering wheel puller (A) on the steering wheel (B).
    5. Free the steering wheel from the steering column shaft by turning the pressure bolt (C) of the puller.

GETtheMANUALS.org

Note these items when removing the steering wheel:

- Do not tap on the steering wheel or the steering column shaft when removing the steering wheel.
- If you thread the puller bolts (D) into the wheel hub more than five threads, the bolts will hit the cable reel and damage it. To prevent this, install a pair of jam nuts five threads up on each puller bolt.

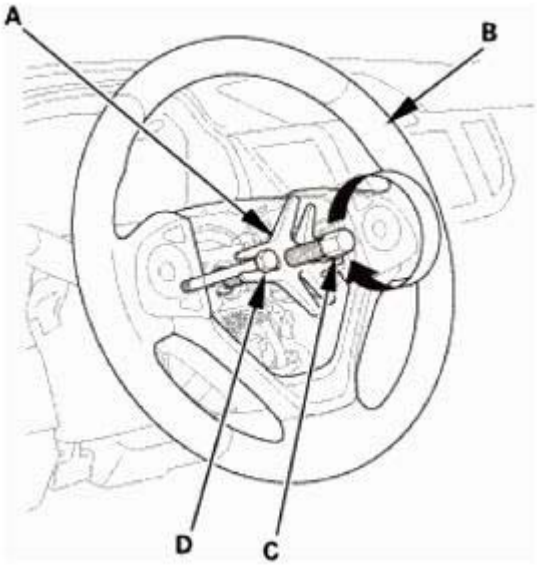

Fig. 155: Removing Steering Wheel Using Tool
Courtesy of AMERICAN HONDA MOTOR CO., INC.

6. Remove the steering wheel puller.
7. Remove the steering wheel (A) from the steering column.

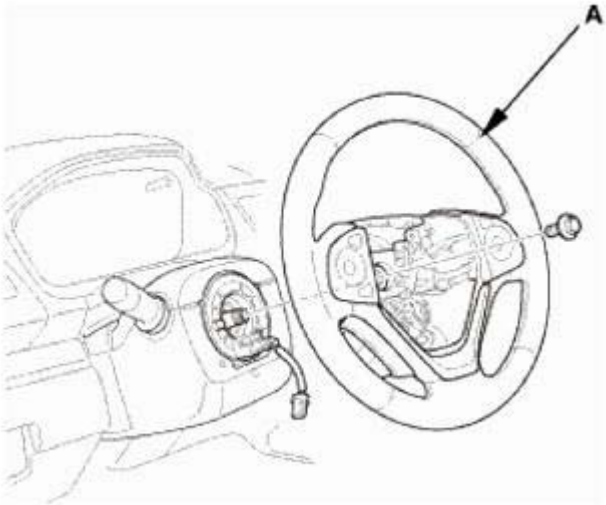

Fig. 156: Identifying Steering Wheel

GETtheMANUALS.org

Courtesy of AMERICAN HONDA MOTOR CO., INC.

15. Upper Column Cover
    1. Carefully pry out the dashboard meter visor blind cover (A) with the appropriate trim tool to detach the clips (B) and the hook (C), then tuck up the dashboard meter visor blind cover.

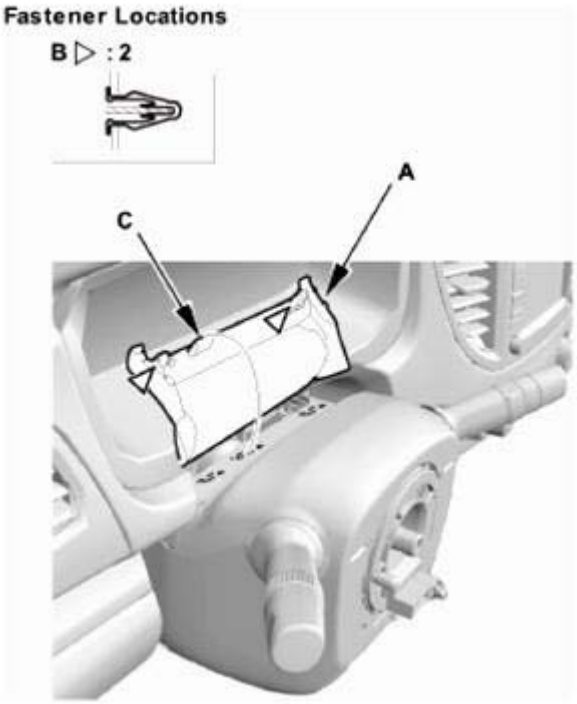

Fig. 157: Identifying Dashboard Meter Visor Blind Cover, Hooks And Clips
Courtesy of AMERICAN HONDA MOTOR CO., INC.

    2. Remove the upper column cover (A).

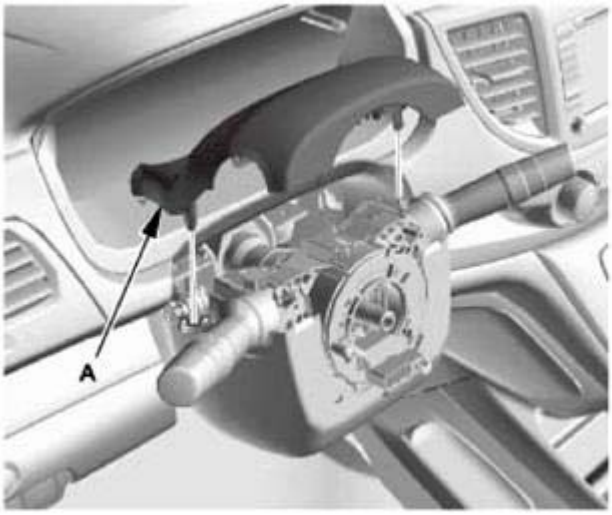

GETtheMANUALS.org

Fig. 158: Identifying Upper Column Cover
Courtesy of AMERICAN HONDA MOTOR CO., INC.

16. Lower Column Cover
    1. Remove the screws (A) securing the lower column cover (B) from the front side.

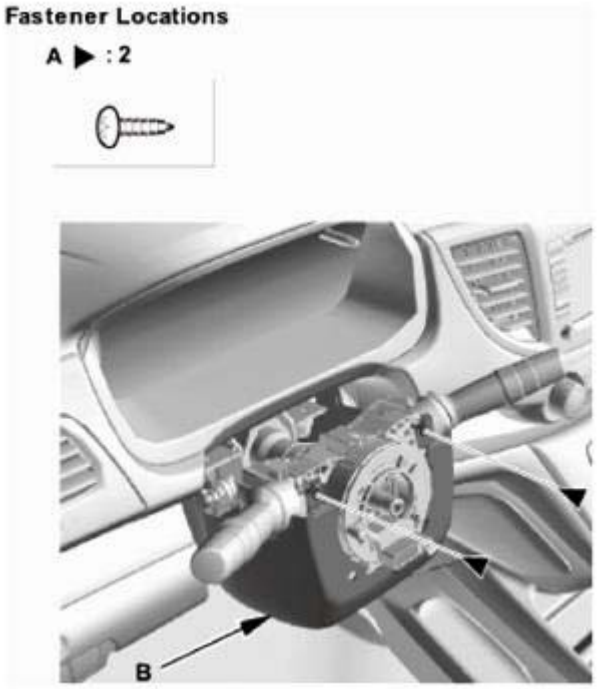

Fig. 159: Identifying Lower Column Cover And Screws (From Front Side)
Courtesy of AMERICAN HONDA MOTOR CO., INC.

    2. Remove the screw (A), then remove the lower column cover (B).

GETtheMANUALS.org

Fig. 160: Identifying Lower Column Cover And Screws
Courtesy of AMERICAN HONDA MOTOR CO., INC.

17. Combination Switch Body Assembly
    1. Disconnect the connectors (A).
    2. Remove the clip (B).

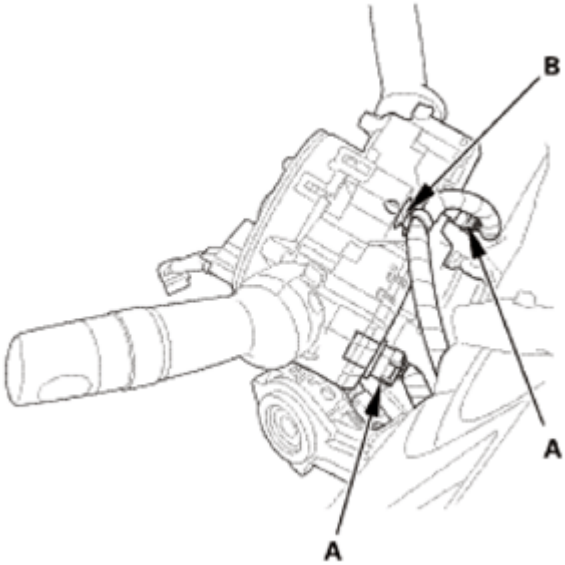

Fig. 161: Identifying Combination Switch Connector And Clips

GETtheMANUALS.org

Courtesy of AMERICAN HONDA MOTOR CO., INC.

3. Disconnect the connectors (A).

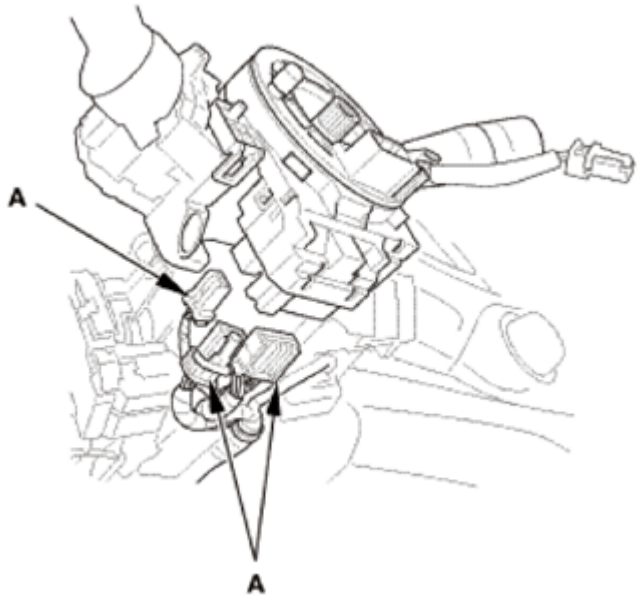

Fig. 162: Identifying Combination Switch Connectors
Courtesy of AMERICAN HONDA MOTOR CO., INC.

4. Remove the combination switch body assembly (A) from the steering column shaft.

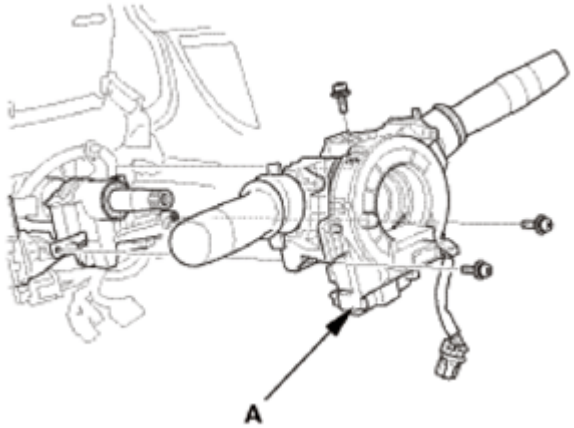

Fig. 163: Identifying Combination Switch Body Assembly
Courtesy of AMERICAN HONDA MOTOR CO., INC.

18. Steering Joint Cover
    1. Remove the steering joint cover (A).

GETtheMANUALS.org

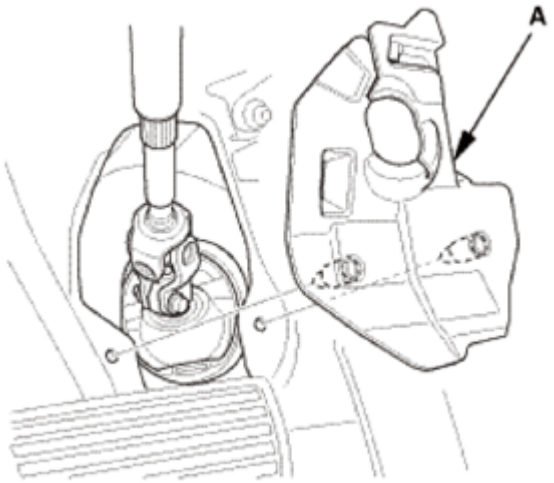

Fig. 164: Identifying Steering Joint Cover
Courtesy of AMERICAN HONDA MOTOR CO., INC.

19. Steering Column Lower Slide Shaft - Hold
    1. Set the steering column to the center tilt position, and to the center telescopic position.
    2. Hold the lower slide shaft (A) on the column with a piece of wire (B) between the joint yoke (C) of the lower slide shaft and the joint yoke (D) of the upper shaft to prevent the lower slider shaft from pulling out.

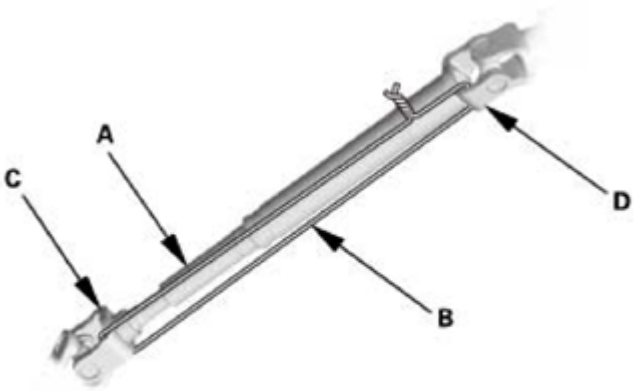

Fig. 165: Identifying Steering Column Lower Slide Shaft, Joint Yoke And Wire
Courtesy of AMERICAN HONDA MOTOR CO., INC.

20. Steering Joint - Disconnection
    1. Remove the steering joint bolt (A).
    2. Disconnect the steering joint (B) from the pinion shaft.

NOTE:

- **If the center guide (C) is in place and has not moved, leave it in**

GETtheMANUALS.org

place.

- **If the center guide has come off, discard it.**

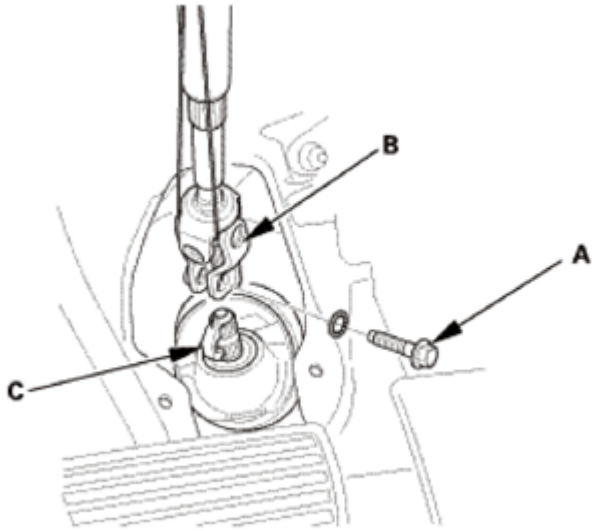

Fig. 166: Identifying Steering Joint, Center Guide And Bolt
Courtesy of AMERICAN HONDA MOTOR CO., INC.

21. Steering Column
    1. Disconnect the connectors (A) from the ignition switch (B).

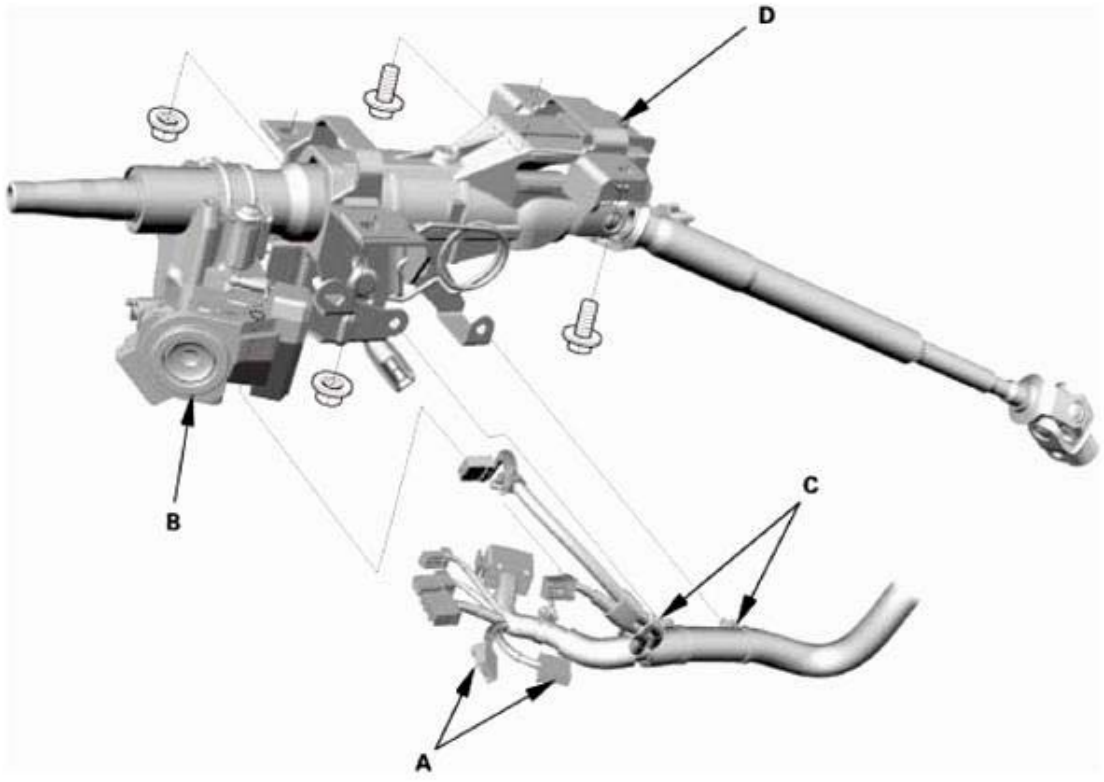

GETtheMANUALS.org

Fig. 167: Identifying Steering Column, Ignition Switch, Connector And Harness Clips
Courtesy of AMERICAN HONDA MOTOR CO., INC.

2. Detach the wire harness clips (C) from the steering column.
3. Remove the steering column (D).

NOTE: **Do not release the lock lever until the steering column is installed. If the lock lever is released before installation, adjust the steering column after installation.**

22. Center Maintenance Cover
    1. Remove the maintenance cover (A).

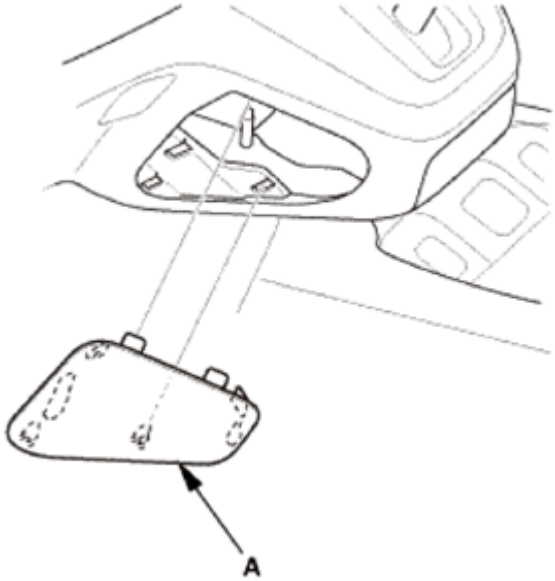

Fig. 168: Identifying Center Maintenance Cover
Courtesy of AMERICAN HONDA MOTOR CO., INC.

23. Shift Lever Panel (AT)
    1. Carefully pry out the shift lever panel (A) with the appropriate trim tool to detach the clips (B, C) and the hooks (D), then remove the shift lever panel.

GETtheMANUALS.org

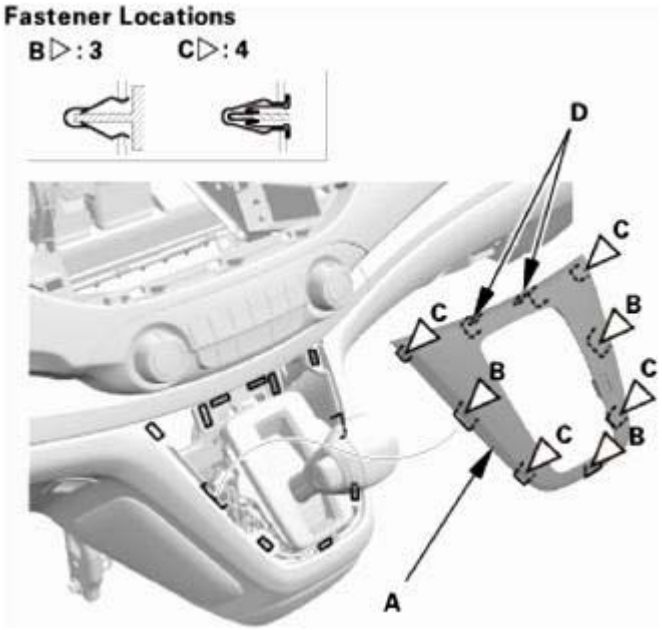

Fig. 169: Identifying Shift Lever Panel, Hooks And Clips
Courtesy of AMERICAN HONDA MOTOR CO., INC.

24. Shift Cable - Disconnection Lever Side
    1. Shift the shift lever to R.
    2. Insert a 6.0 mm (0.236 in) pin (A) into the positioning holes (B).

    NOTE: Use only a 6.0 mm (0.236 in) pin with no burrs.

    3. Remove the nut (C) securing the shift cable end (D).

GETtheMANUALS.org

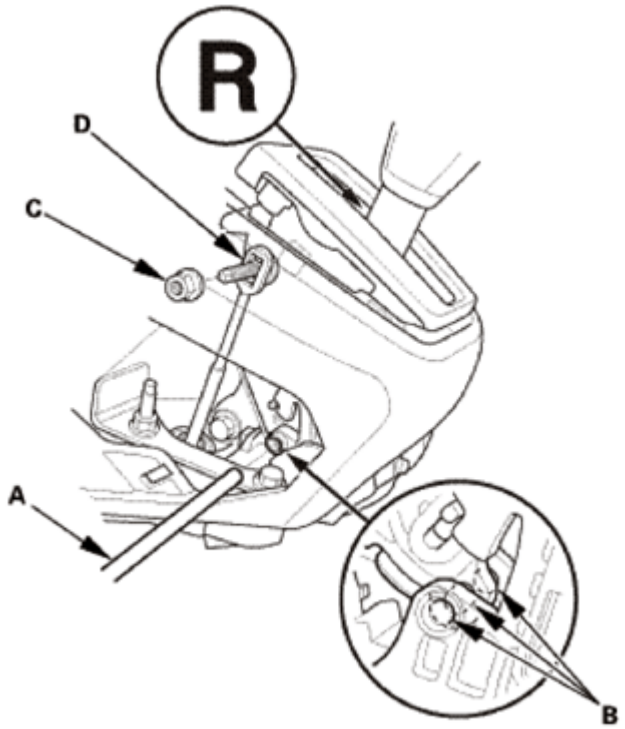

Fig. 170: Shifting Shift Lever At R Position
Courtesy of AMERICAN HONDA MOTOR CO., INC.

4. Unlock the retainer lock (A).

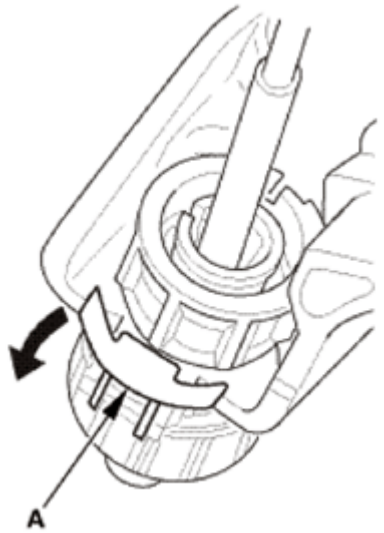

Fig. 171: Unlocking Retainer Lock
Courtesy of AMERICAN HONDA MOTOR CO., INC.

5. Rotate the socket holder retainer (A) counterclockwise (B) until it stops, and push the retainer lock (C) into the socket holder retainer to lock the retainer.

GETtheMANUALS.org

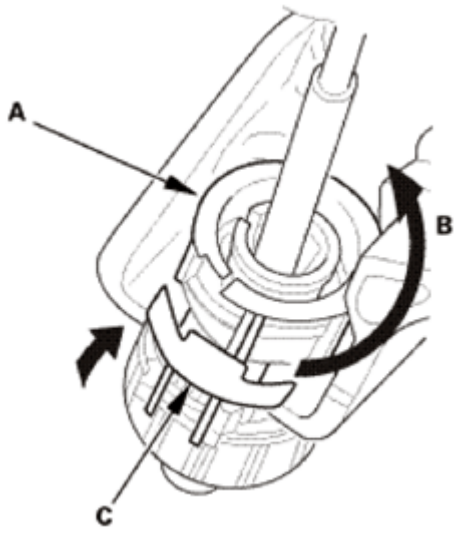

Fig. 172: Locking Retainer Lock
Courtesy of AMERICAN HONDA MOTOR CO., INC.

6. Slide the socket holder (A) away from the bracket as shown to remove the shift cable (B) from the shift cable bracket (C).

NOTE: Do not remove the shift cable by pulling the shift cable guide (D).

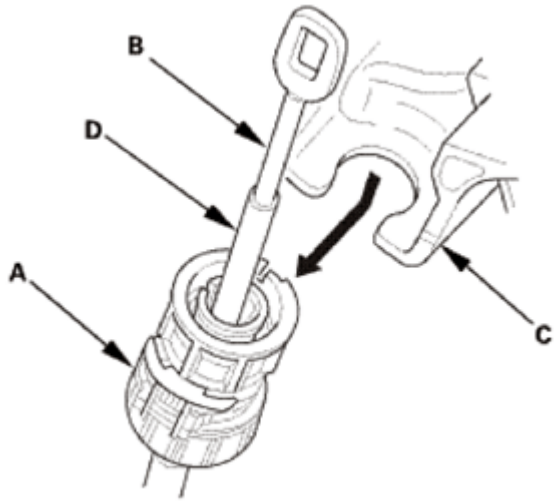

Fig. 173: Removing Shift Cable From Shift Cable Bracket
Courtesy of AMERICAN HONDA MOTOR CO., INC.

25. Dashboard/Steering Hanger Beam
    1. At the A-pillar, disconnect the connector(s) (A).

Driver's side

GETtheMANUALS.org

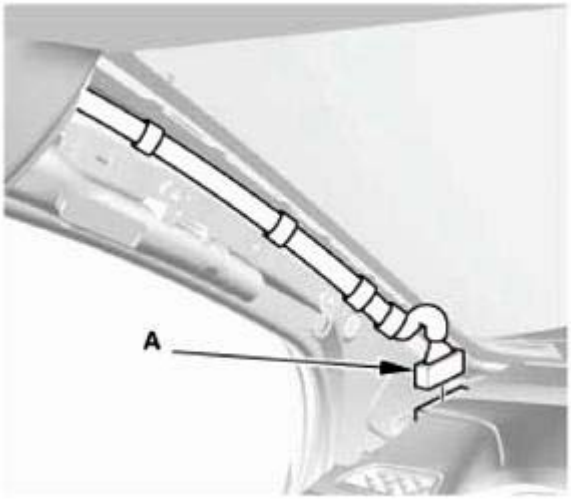

Fig. 174: Identifying Dashboard/Steering Hanger Beam Connector At A-Pillar (Driver Side)
Courtesy of AMERICAN HONDA MOTOR CO., INC.

Passenger's side

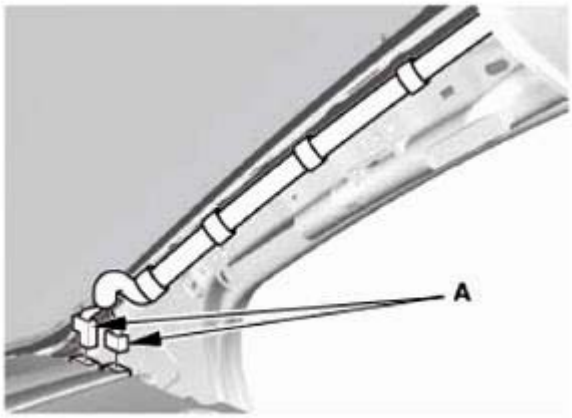

Fig. 175: Identifying Dashboard/Steering Hanger Beam Connector At A-Pillar (Passenger Side)
Courtesy of AMERICAN HONDA MOTOR CO., INC.

2. From under the dash, disconnect the connectors (A).

GETtheMANUALS.org

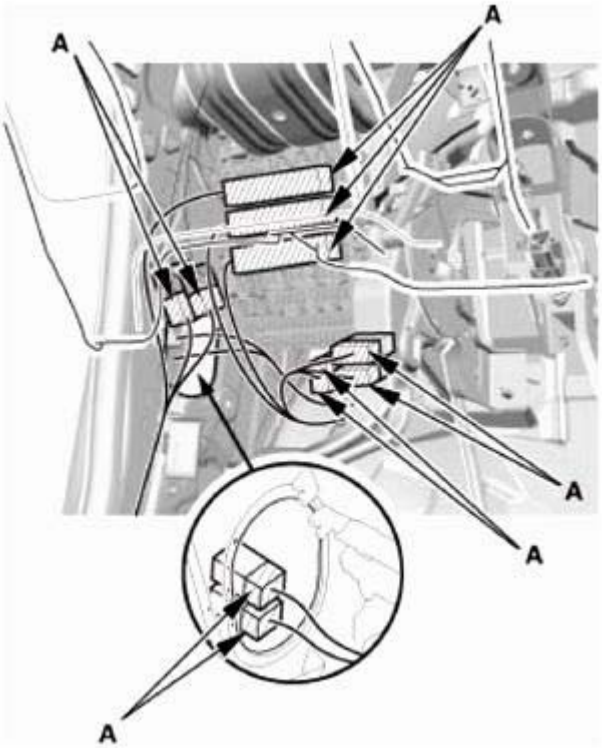

Fig. 176: Identifying Dashboard/Steering Hanger Beam Connector (Under Dash)
Courtesy of AMERICAN HONDA MOTOR CO., INC.

3. From under the dash, remove the nut (A) and the bolt (B).

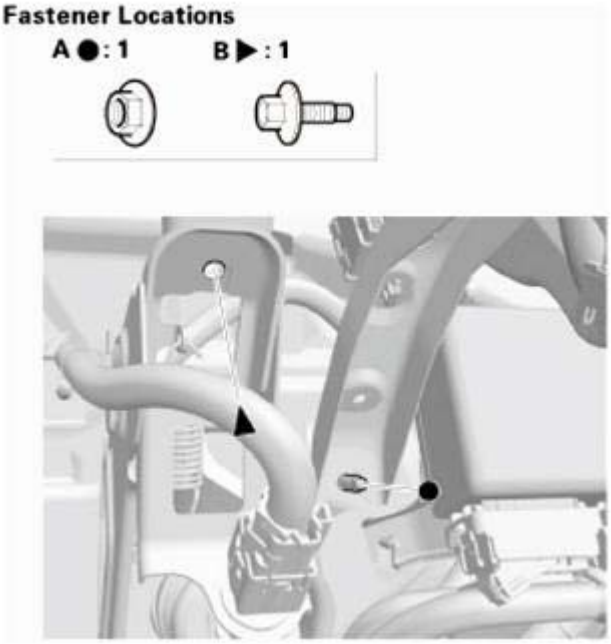

Fig. 177: Identifying Dashboard/Steering Hanger Beam Connector Nut And Clip (Under Dash)

GETtheMANUALS.org

Courtesy of AMERICAN HONDA MOTOR CO., INC.

4. With climate control: Disconnect the aspirator hose (A).
5. Disconnect the connector (B).

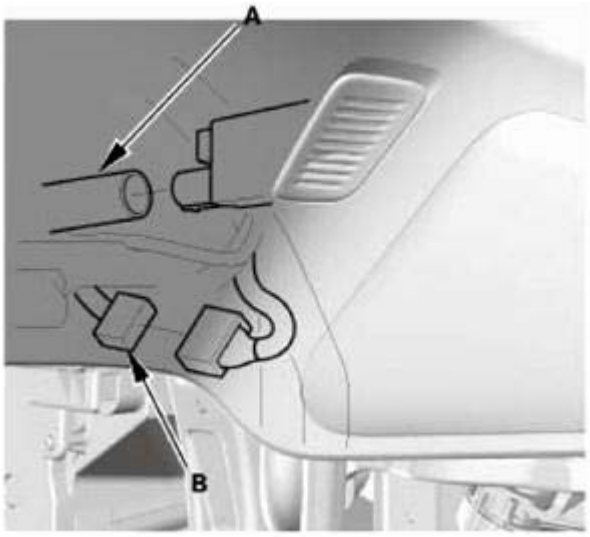

Fig. 178: Identifying Aspirator Hose And Connector (With Climate Control)
Courtesy of AMERICAN HONDA MOTOR CO., INC.

6. From under the dash, disconnect the connectors (A).
7. Remove the bolts (B, C), and remove the ground bolt (D) with a TORX T30 bit.

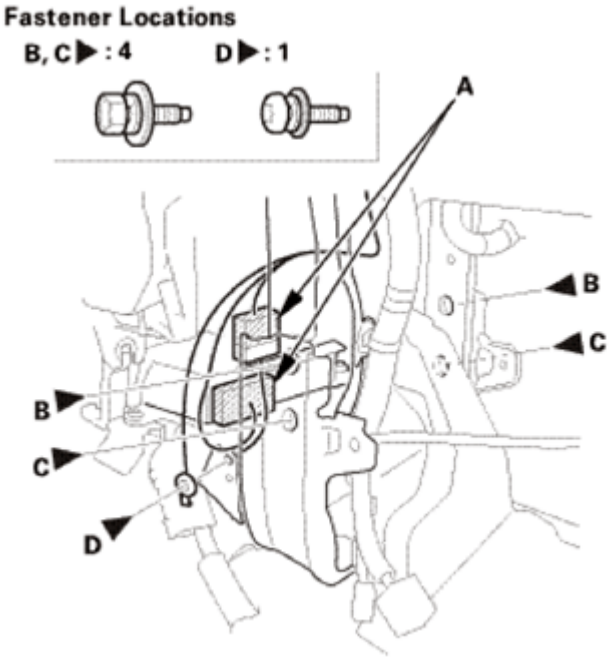

Fig. 179: Identifying Connector And Mounting Bolts

GETtheMANUALS.org

Courtesy of AMERICAN HONDA MOTOR CO., INC.

8. From under the dash, disconnect the connectors (A), and detach the harness clips (B).

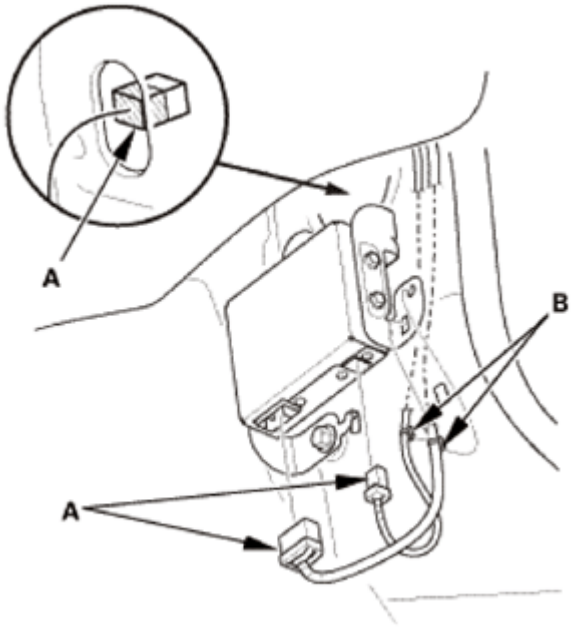

Fig. 180: Identifying Connector And Harness Clips
Courtesy of AMERICAN HONDA MOTOR CO., INC.

9. Loosen the special bolts (A) until they disengage from the threads on the hanger beam side bracket (B), and engage the inside threads of the collar bolts (C). The thread lock on the special bolts makes the special bolts and the collar bolts turn together.
10. Continue loosening the special bolts to turn the collar bolts into the fixed space adjusters (D) until the collar bolts engage the stops (E). This creates a gap (F) between the collar bolts and the body.
11. Loosen the special bolts to disengage them from the collar bolts, then remove them.

GETtheMANUALS.org

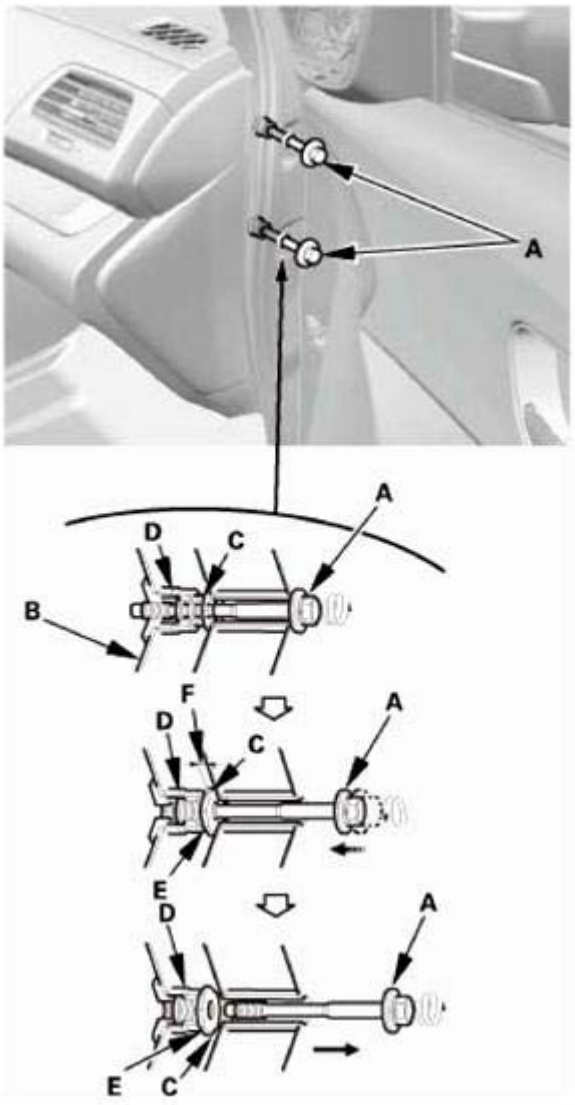

Fig. 181: Removing Collar Bolts
Courtesy of AMERICAN HONDA MOTOR CO., INC.

12. Check that the collar bolts (A) are seated in the fixed space adjusters (B).

NOTE: **If either collar bolt was not seated, replace the special bolts.**

GETtheMANUALS.org

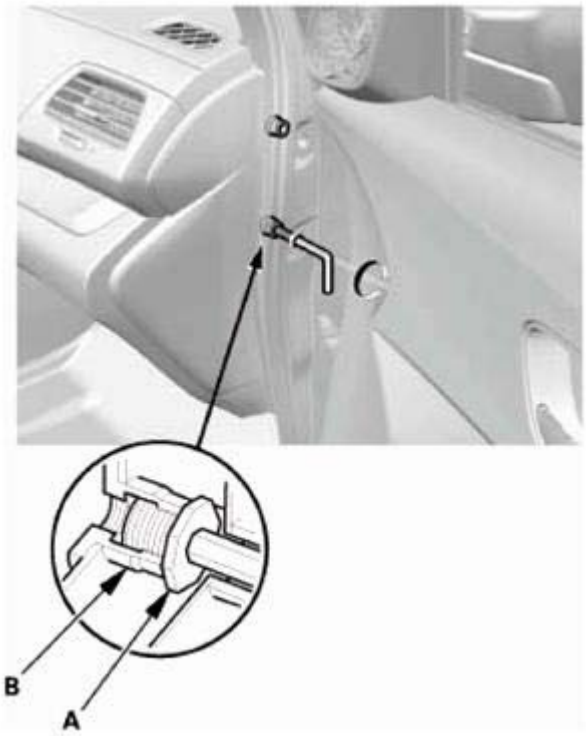

Fig. 182: Identifying Fixed Space Adjusters And Collar Bolts
Courtesy of AMERICAN HONDA MOTOR CO., INC.

13. Remove the bolts (A, B).

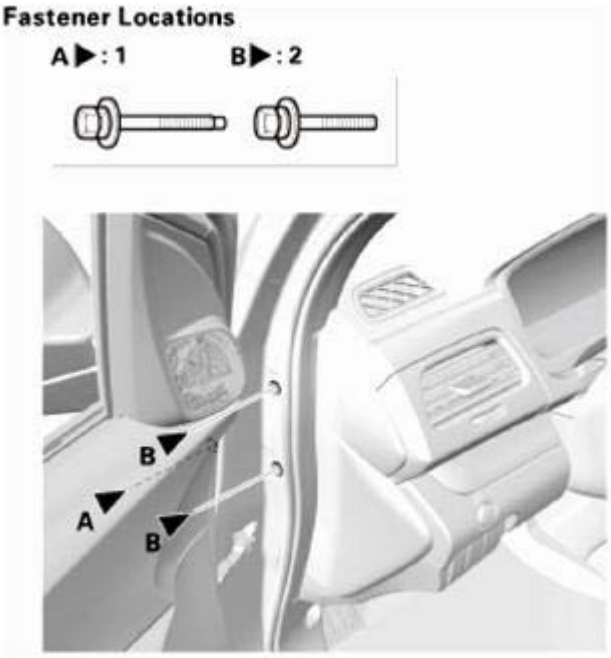

Fig. 183: Identifying Dashboard/Steering Hanger Beam Bolts
Courtesy of AMERICAN HONDA MOTOR CO., INC.

GETtheMANUALS.org

14. Remove the dashboard/steering hanger beam (A).

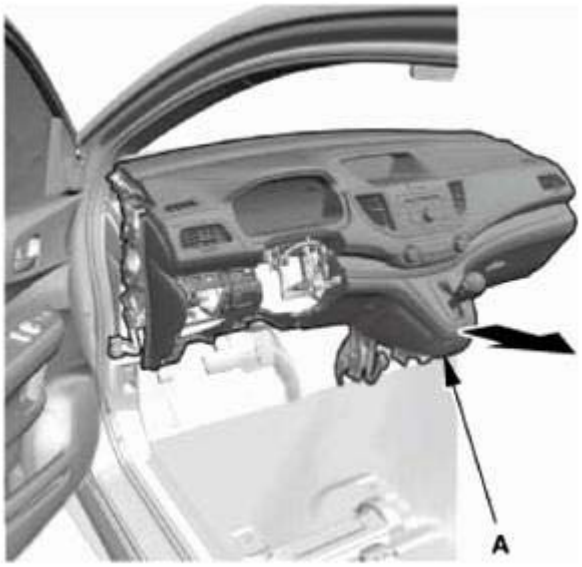

Fig. 184: Removing Dashboard/Steering Hanger Beam
Courtesy of AMERICAN HONDA MOTOR CO., INC.

15. If necessary, detach the hooks (A), then remove the dashboard upper side cover (B).

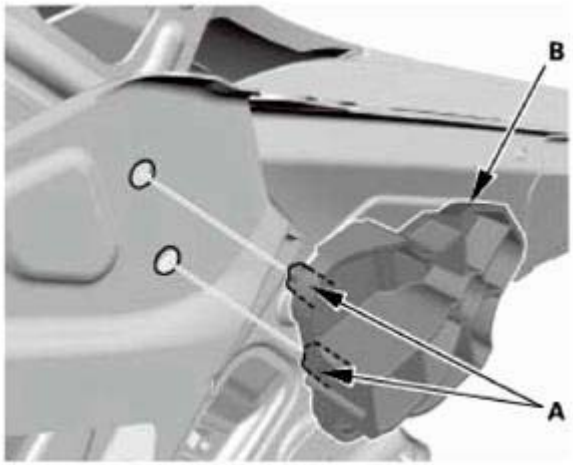

Fig. 185: Identifying Dashboard Upper Side Cover And Hooks
Courtesy of AMERICAN HONDA MOTOR CO., INC.

26. Upper Dashboard Support Gusset
    1. If necessary, remove the upper dashboard support gusset (A).

GETtheMANUALS.org

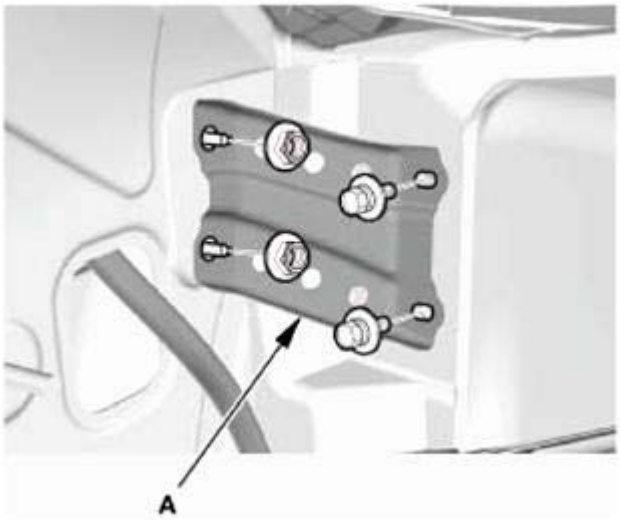

Fig. 186: Identifying Upper Dashboard Support Gusset
Courtesy of AMERICAN HONDA MOTOR CO., INC.

INSTALLATION

SRS components are located in this area. Review the **SRS COMPONENT LOCATIONS** and the **PRECAUTIONS AND PROCEDURES** before doing repairs or service.

1. Upper Dashboard Support Gusset
    1. Install the upper dashboard support gusset (A).

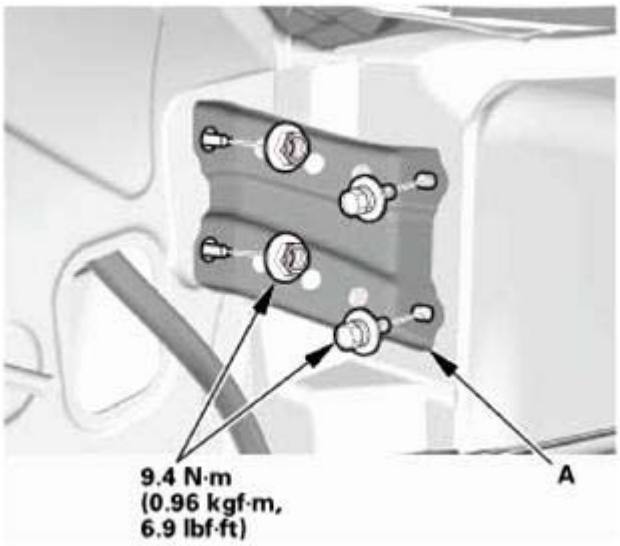

Fig. 187: Identifying Upper Dashboard Support Gusset With Torque Specifications
Courtesy of AMERICAN HONDA MOTOR CO., INC.

2. Dashboard/Steering Hanger Beam

GETtheMANUALS.org

NOTE:

- **Make sure the collar bolts (A) turn easily by hand in the fixed space adjusters (B). Tighten the collar bolts by hand until they engage the fixed space adjusters before reinstalling the dashboard.**
- **Before reinstalling the dashboard, screw the special bolts (C) into the collar bolts, and check that they turn together. If they do not turn together, replace the special bolts.**
- **After setting the dashboard/steering hanger beam in the body, install all of the mounting bolts but do not tighten them. First tighten the driver's side bracket bolts to the specified torque. Next, tighten the special bolts to turn the collar bolts. As you tighten the bolts, the collar bolts screw out of the fixed space adjuster until they contact the body. Continue tightening the special bolts to the specified torque.**

Special bolt tightening on passenger's side

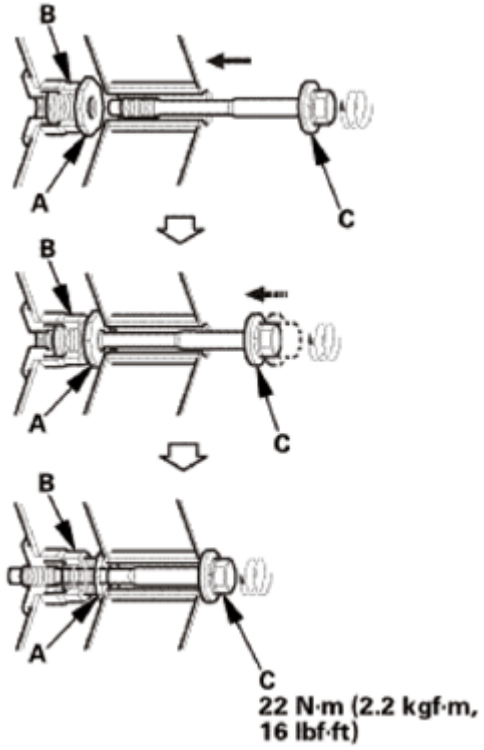

Fig. 188: Installing Collar Bolts
Courtesy of AMERICAN HONDA MOTOR CO., INC.

1. Install the dashboard upper side cover (A). Make sure the hooks (B) snap into place securely.

GETtheMANUALS.org

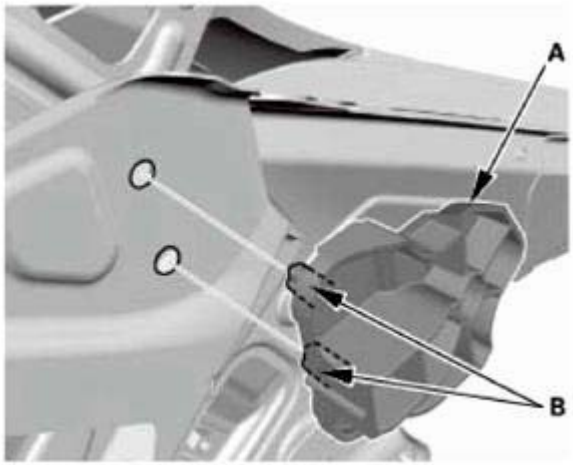

Fig. 189: Identifying Upper Dashboard Upper Side Cover And Hooks
Courtesy of AMERICAN HONDA MOTOR CO., INC.

2. Install the dashboard/steering hanger beam (A).

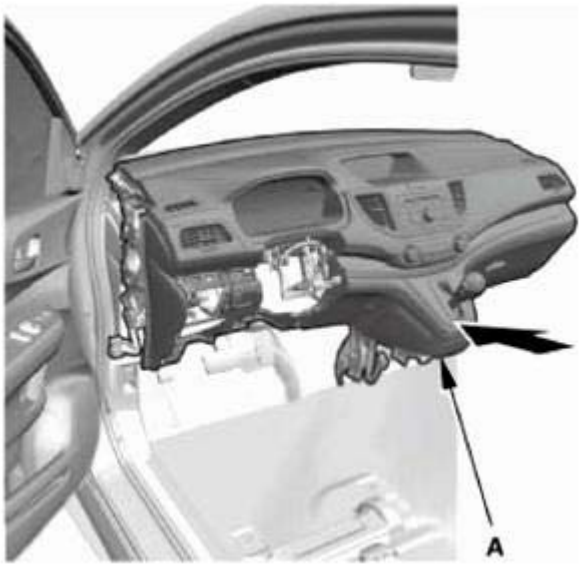

Fig. 190: Installing Dashboard/Steering Hanger Beam
Courtesy of AMERICAN HONDA MOTOR CO., INC.

3. Install the bolts (A, B).

GETtheMANUALS.org

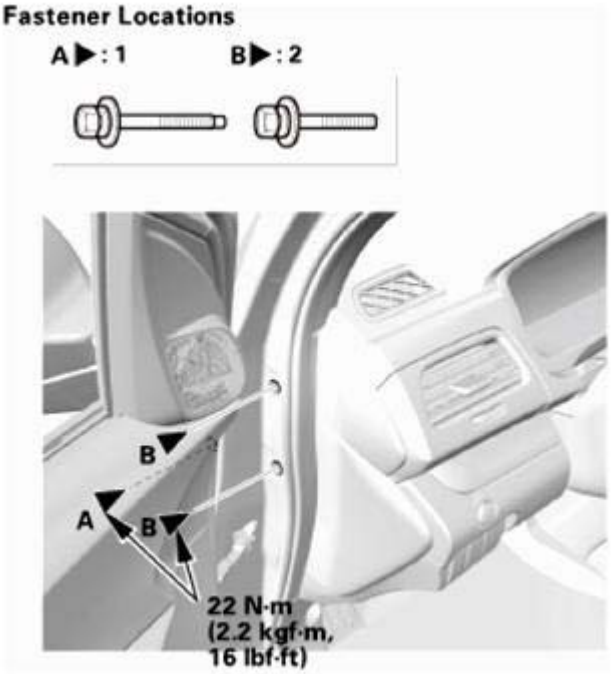

Fig. 191: Identifying Dashboard/Steering Hanger Beam Mounting Bolts With Torque Specifications
Courtesy of AMERICAN HONDA MOTOR CO., INC.

4. Install the special bolts (A).

GETtheMANUALS.org

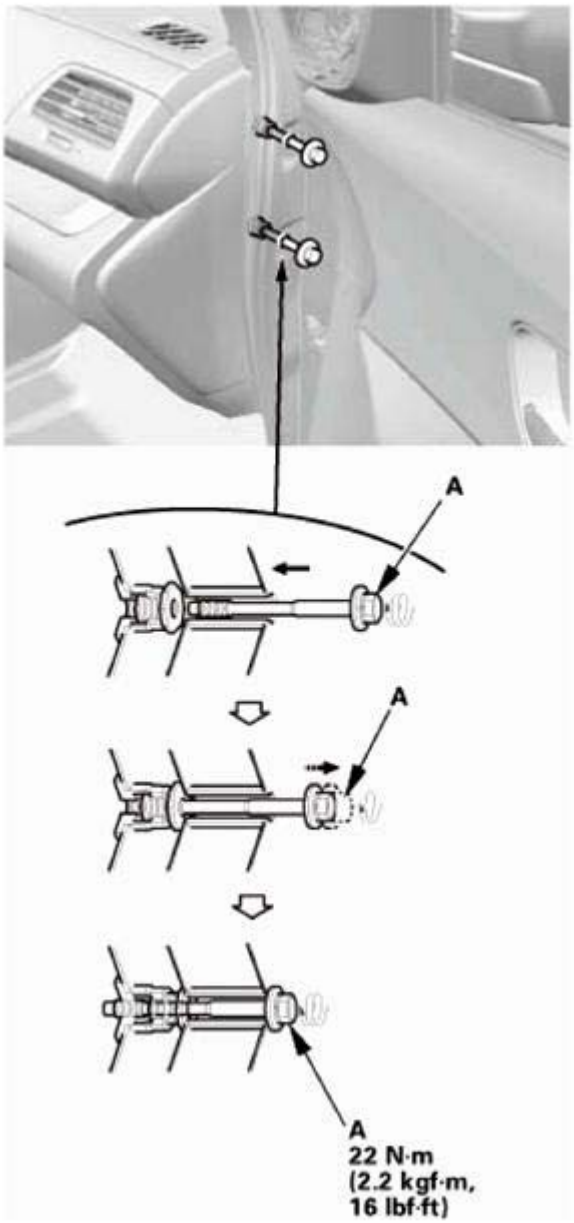

Fig. 192: Identifying Dashboard/Steering Hanger Beam Special Mounting Bolts With Torque Specifications
Courtesy of AMERICAN HONDA MOTOR CO., INC.

5. From under the dash, connect the connectors (A).
6. Install the bolts (B, C), and install the ground bolt (D) with a TORX T30 bit.

NOTE: **Apply medium strength liquid thread lock to the mounting bolts (C) before installation.**

GETtheMANUALS.org

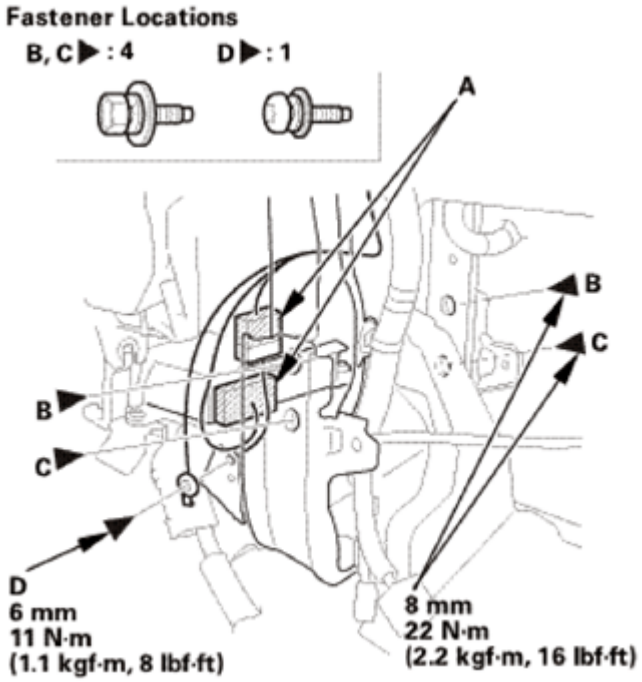

Fig. 193: Identifying Dashboard/Steering Hanger Beam Connector, Bolt And Ground Bolt With Torque Specifications
Courtesy of AMERICAN HONDA MOTOR CO., INC.

7. From under the dash, connect the connectors (A), and install the harness clips (B).

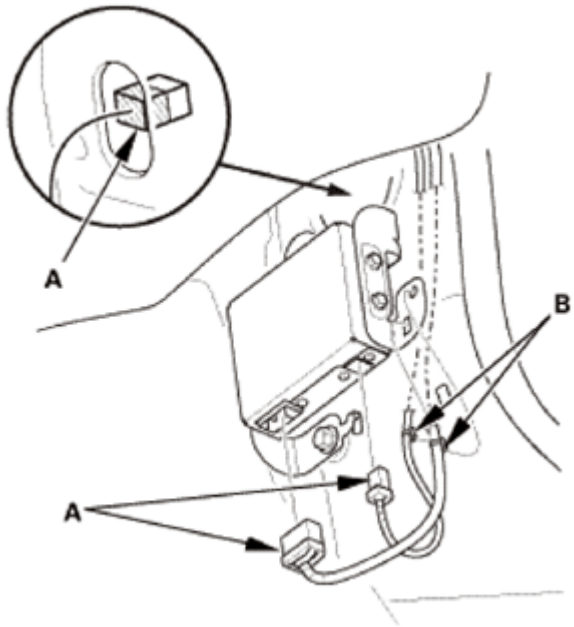

Fig. 194: Identifying Dashboard/Steering Hanger Beam Connector And Harness Clips With Torque Specifications
Courtesy of AMERICAN HONDA MOTOR CO., INC.

GETtheMANUALS.org

8. With climate control: Connect the aspirator hose (A).
9. Connect the connector (B).

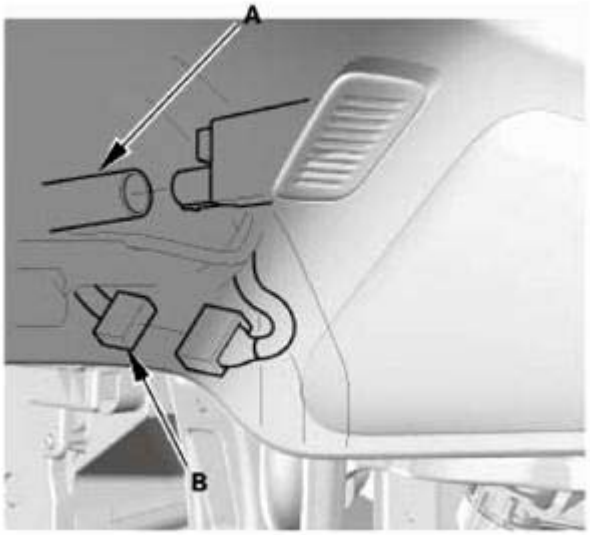

Fig. 195: Identifying Aspirator Hose And Connector (With Climate Control)
Courtesy of AMERICAN HONDA MOTOR CO., INC.

10. From under the dash, install the nut (A) and the bolt (B).

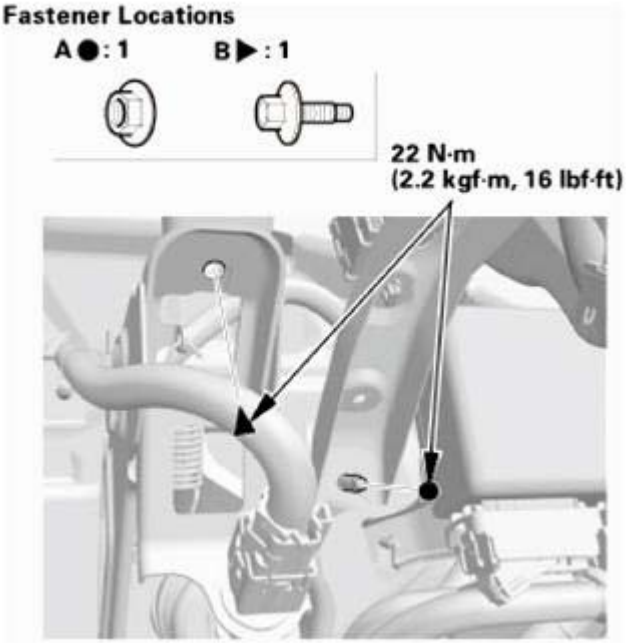

Fig. 196: Identifying Dashboard/Steering Hanger Beam Nut And Bolt With Torque Specifications
Courtesy of AMERICAN HONDA MOTOR CO., INC.

GETtheMANUALS.org

11. From under the dash, connect the connectors (A).

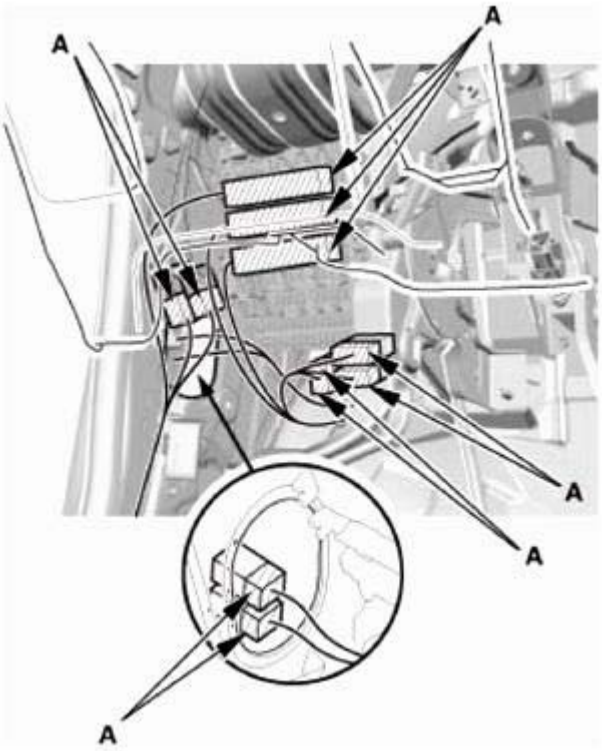

Fig. 197: Identifying Dashboard/Steering Hanger Beam Connectors
Courtesy of AMERICAN HONDA MOTOR CO., INC.

12. At the A-pillar, connect the connector(s) (A).

Driver's side

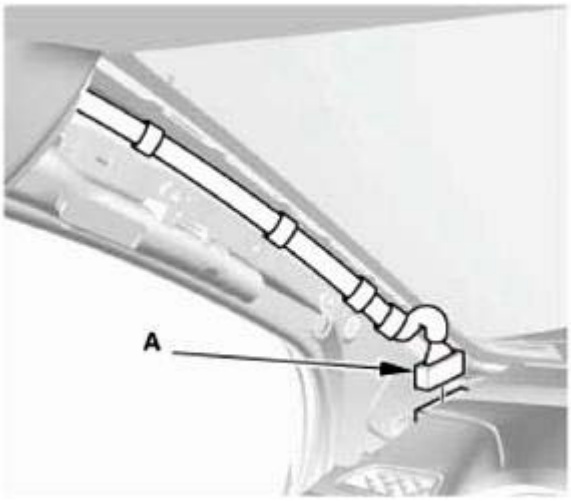

Fig. 198: Identifying A-Pillar Connector (Driver Side)

GETtheMANUALS.org

Courtesy of AMERICAN HONDA MOTOR CO., INC.

Passenger's side

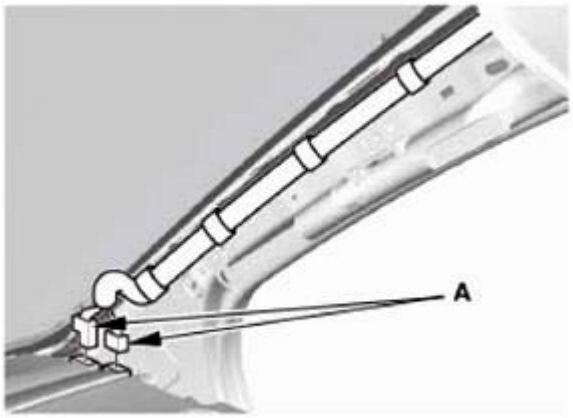

Fig. 199: Identifying A-Pillar Connector (Passenger Side)
Courtesy of AMERICAN HONDA MOTOR CO., INC.

3. Steering Column
    1. Install the steering column (A).

NOTE: **Do not release the lock lever until the steering column is installed. If the lock lever is released before installation, adjust the steering column after installation.**

GETtheMANUALS.org

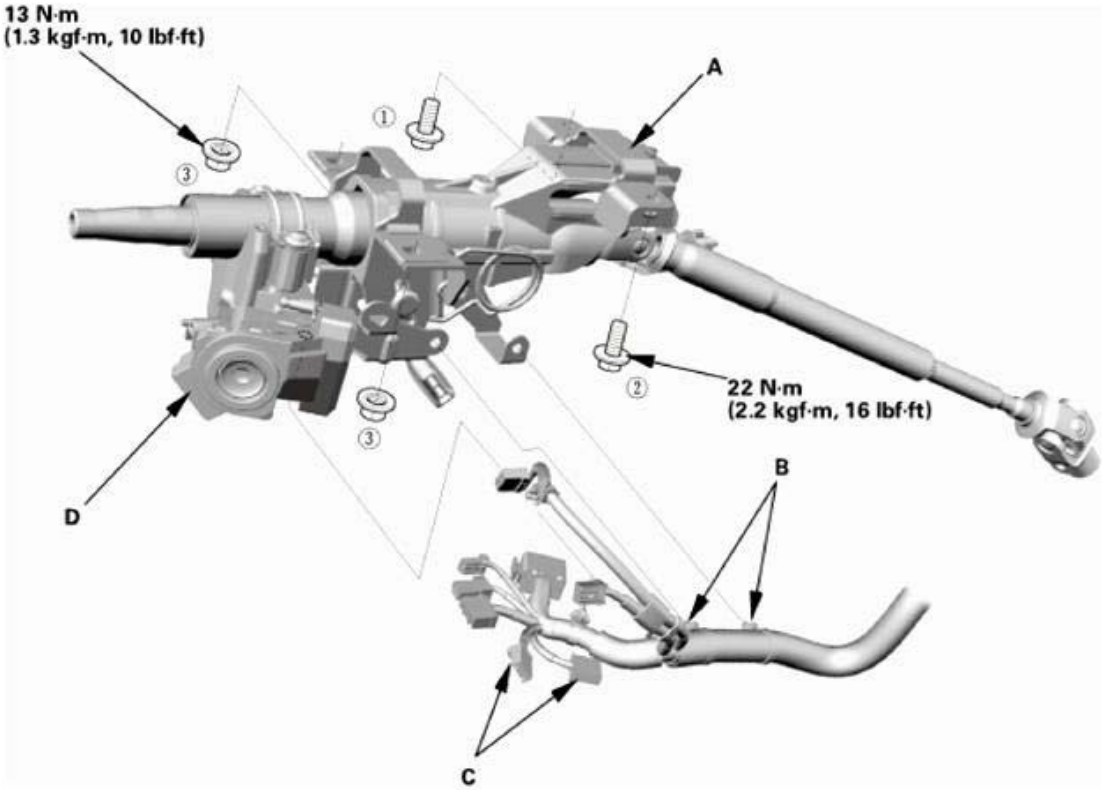

Fig. 200: Identifying Steering Column And Related Components With Torque Specifications
Courtesy of AMERICAN HONDA MOTOR CO., INC.

2. Loosely tighten the attaching nuts and bolts.
3. Tighten the attaching nuts and bolts to the specified torque in the sequence shown.
4. Install the wire harness clips (B) to the steering column.
5. Connect the connectors (C) to the ignition switch (D).

4. Steering Column Lower Slide Shaft - Release
    1. Cut the wire (A).

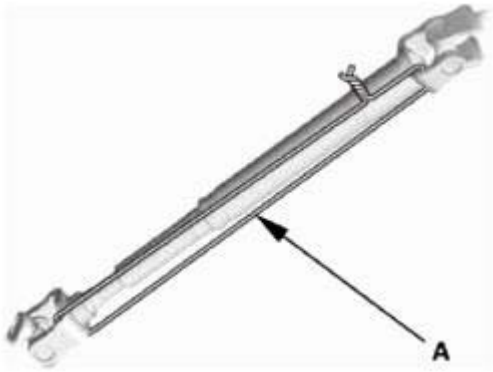

Fig. 201: Identifying Steering Column Lower Slide Shaft Wire
Courtesy of AMERICAN HONDA MOTOR CO., INC.

GETtheMANUALS.org

5. Steering Joint - Reconnection
    1. Place the rack in the straight ahead driving position.
    2. Slip the lower end of the steering joint (A) onto the pinion shaft (B).

NOTE:

- **Pinion shaft with center guide: Install the steering joint by aligning the center guide (C).**
- **Pinion shaft without center guide: Position the steering column by aligning the gap (D) within the angle.**

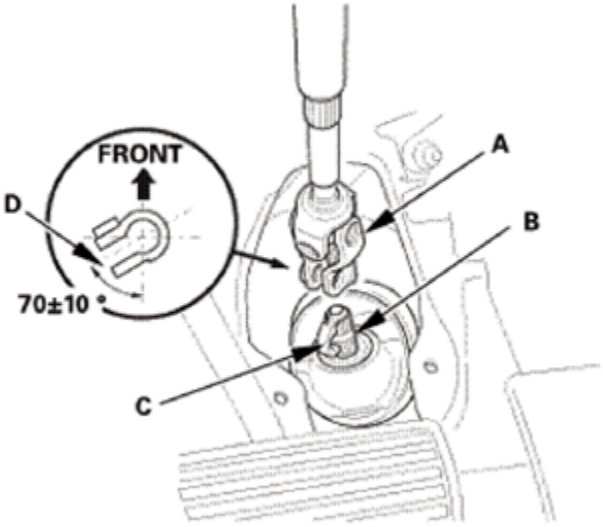

Fig. 202: Identifying Lower End Of Steering Joint, Pinion Shaft, Center Guide And Gap
Courtesy of AMERICAN HONDA MOTOR CO., INC.

    3. Align the bolt hole (A) on the steering joint with the groove (B) around the pinion shaft.
    4. Loosely install the steering joint bolt (C).
    5. Be sure that the joint bolt is securely in the groove in the pinion shaft.
    6. Pull on the steering joint to make sure that the steering joint is fully seated.
    7. Tighten the steering joint bolt to the specified torque.

GETtheMANUALS.org

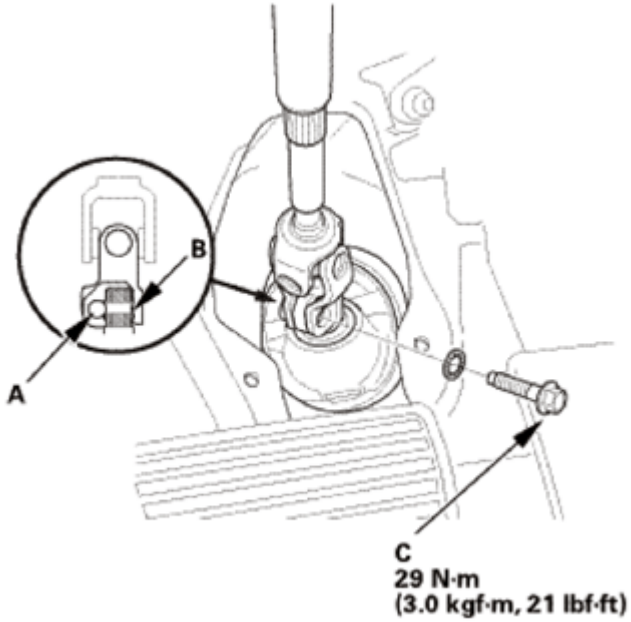

Fig. 203: Identifying Steering Joint Bolt, Hole And Groove With Torque Specifications
Courtesy of AMERICAN HONDA MOTOR CO., INC.

6. Steering Joint Cover
    1. Install the steering joint cover (A).

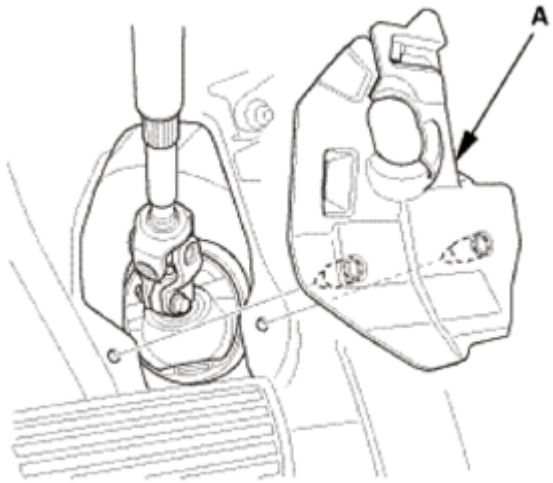

Fig. 204: Identifying Steering Joint Cover
Courtesy of AMERICAN HONDA MOTOR CO., INC.

7. Combination Switch Body Assembly
    1. Install the combination switch body assembly (A).
    2. Tighten three screws (B) in the sequence shown.

GETtheMANUALS.org

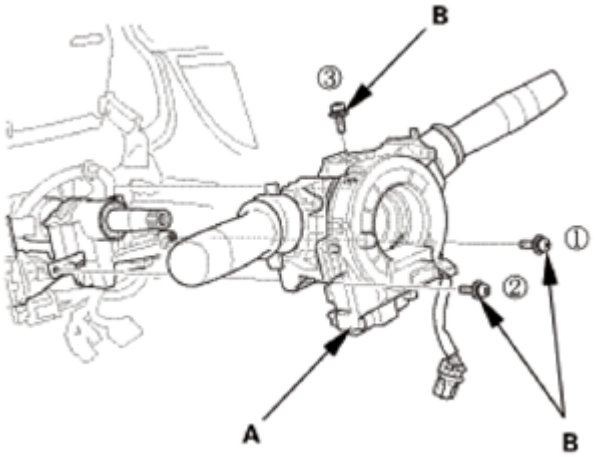

Fig. 205: Identifying Combination Switch Body Assembly And Screws
Courtesy of AMERICAN HONDA MOTOR CO., INC.

3. Connect the connectors (A).

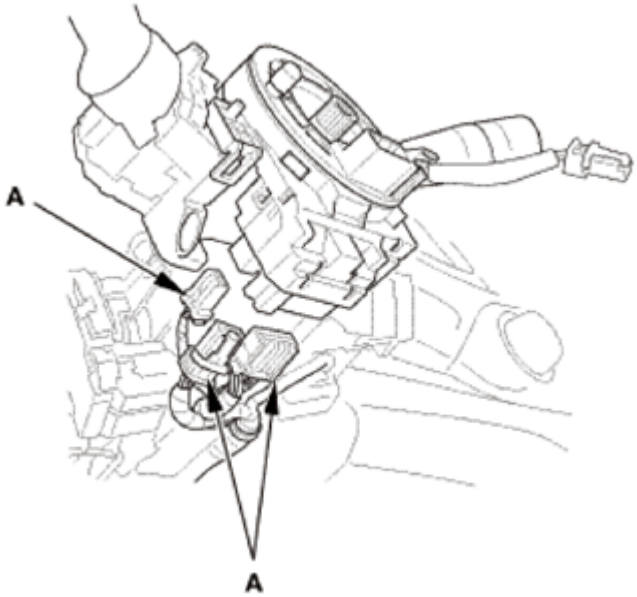

Fig. 206: Identifying Combination Switch Connectors
Courtesy of AMERICAN HONDA MOTOR CO., INC.

4. Connect the connectors (A).
5. Install the clip (B).

GETtheMANUALS.org

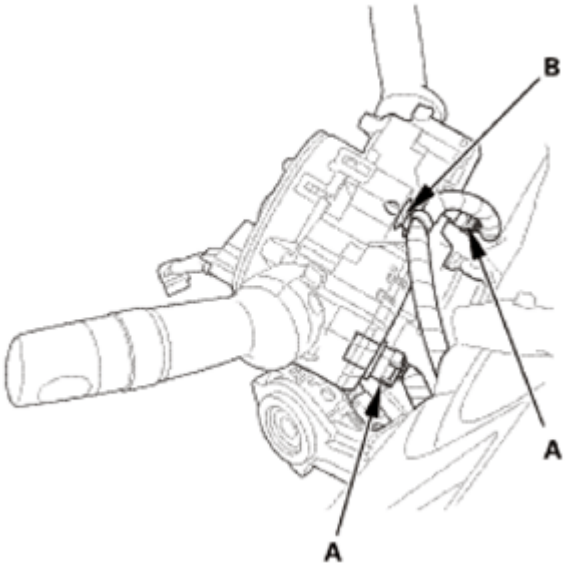

Fig. 207: Identifying Combination Switch Connectors And Clips
Courtesy of AMERICAN HONDA MOTOR CO., INC.

8. Lower Column Cover
    1. Push in on the lower column cover just above ignition switch opening (A) to engage the column cover with the locking tab (B).

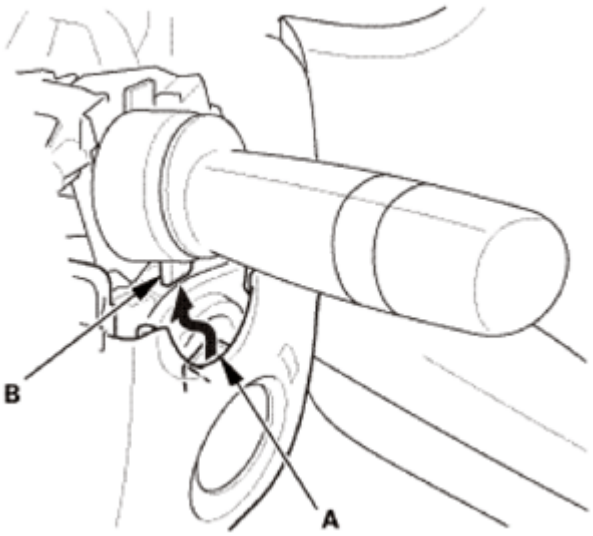

Fig. 208: Engaging Column Cover With Lock Tab
Courtesy of AMERICAN HONDA MOTOR CO., INC.

    2. Install the lower column cover (A), then install the screw (B).

GETtheMANUALS.org

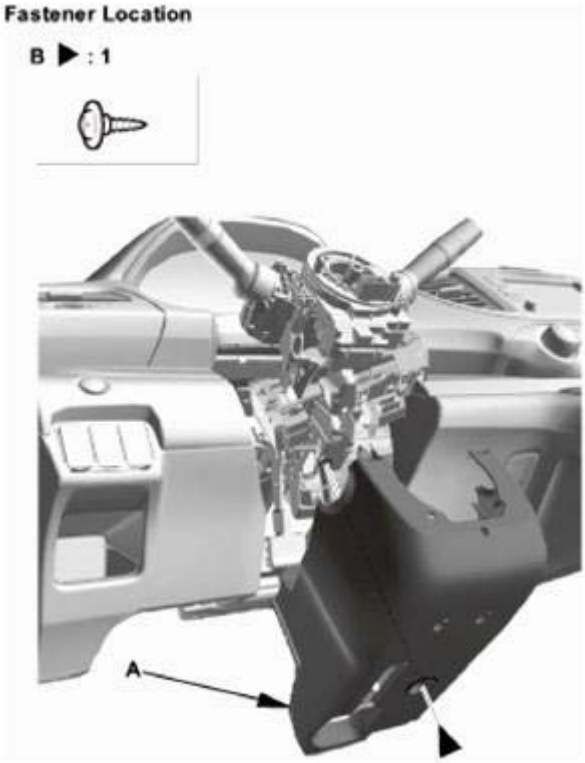

Fig. 209: Identifying Lower Column Cover And Screws
Courtesy of AMERICAN HONDA MOTOR CO., INC.

3. Install the screws (A) securing the lower column cover (B) from the front side.

GETtheMANUALS.org

Fig. 210: Identifying Lower Column Cover And Screws (Front Side)
Courtesy of AMERICAN HONDA MOTOR CO., INC.

9. Upper Column Cover
    1. Install the upper column cover (A).

Fig. 211: Identifying Upper Column Cover
Courtesy of AMERICAN HONDA MOTOR CO., INC.

    2. Install the dashboard meter visor blind cover (A). Make sure the clips (B) and the hook (C) snap into place securely.

GETtheMANUALS.org

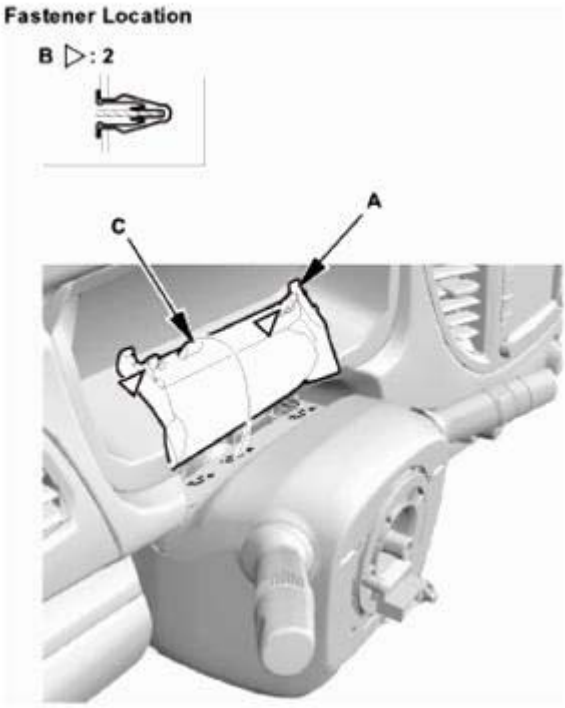

Fig. 212: Identifying Dashboard Meter Visor Blind Cover, Clips And Hook
Courtesy of AMERICAN HONDA MOTOR CO., INC.

10. Steering Wheel Assembly
    1. Make sure the front wheels are pointing straight ahead.
    2. Center the cable reel (A). Do this by first rotating the cable reel clockwise until it stops.
    3. Rotate the cable reel counterclockwise about three full turns. The arrow mark (B) on the cable reel label should point straight up.

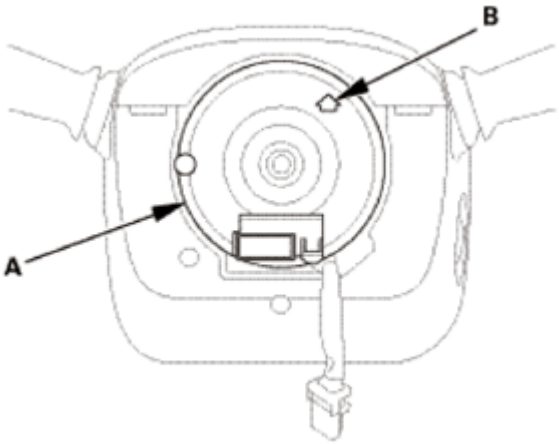

Fig. 213: Identifying Cable Reel And Label Mark
Courtesy of AMERICAN HONDA MOTOR CO., INC.

    4. Position the steering wheel hub (A) so that it engages the pin (B) of the cable reel.

GETtheMANUALS.org

5. Install the steering wheel (C) on to the steering column shaft.

NOTE: **Do not tap on the steering wheel or the steering column shaft when installing the steering wheel.**

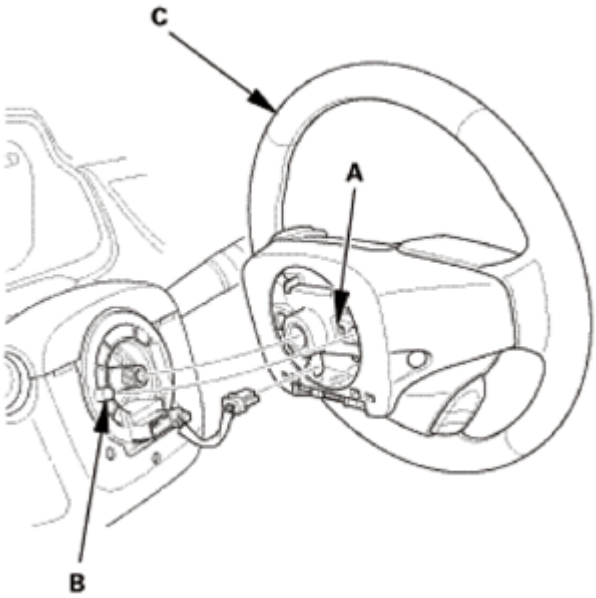

Fig. 214: Identifying Steering Wheel, Hub And Pin
Courtesy of AMERICAN HONDA MOTOR CO., INC.

6. Install the steering wheel bolt (A), and tighten it to the specified torque.
7. Connect the connector (B).
8. Make sure the wire harness is routed and fastened properly.

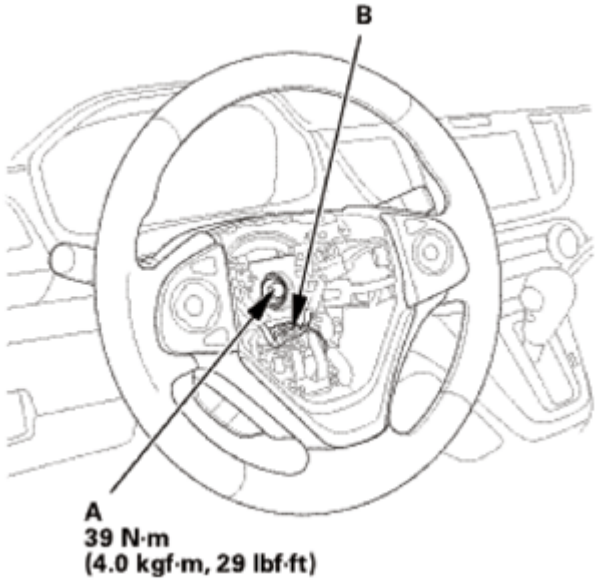

GETtheMANUALS.org

Fig. 215: Identifying Steering Wheel Connector And Bolt With Torque Specifications
Courtesy of AMERICAN HONDA MOTOR CO., INC.

11. Driver's Airbag

NOTE: **If you are replacing a deployed driver's airbag, inspect the cable reel for heat damage. If there is any damage, replace the cable reel.**

1. Place the driver's airbag (A) in the steering wheel.
2. Tighten the new TORX bolts using a TORX T30 bit.

NOTE: **Make sure the clearance (B) between the steering wheel and the horn pad is the specified value.**

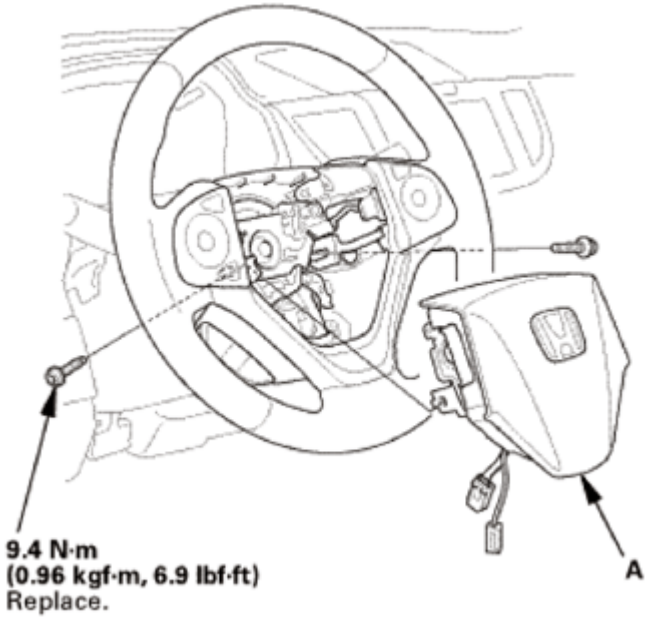

Fig. 216: Identifying Steering Wheel Driver Airbag With Torque Specifications
Courtesy of AMERICAN HONDA MOTOR CO., INC.

GETtheMANUALS.org

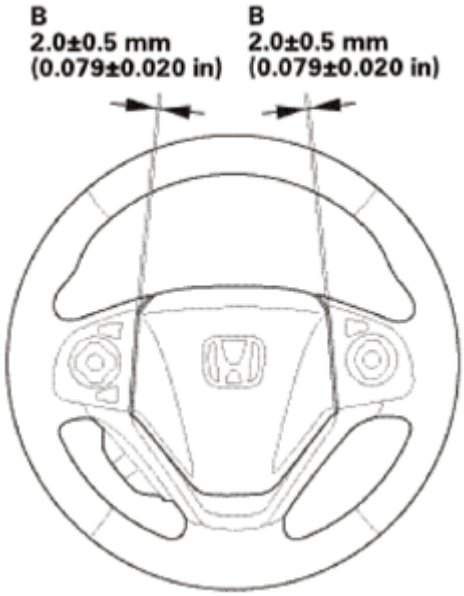

Fig. 217: Identifying Clearance Between Steering Wheel And Horn Pad
Courtesy of AMERICAN HONDA MOTOR CO., INC.

3. Connect the driver's airbag inflator connector (A) on the cable reel harness.
4. Connect the horn switch connector (B).

NOTE: **After reconnecting the negative cable to the battery, make sure the horn works properly.**

5. Install the access panel (C).

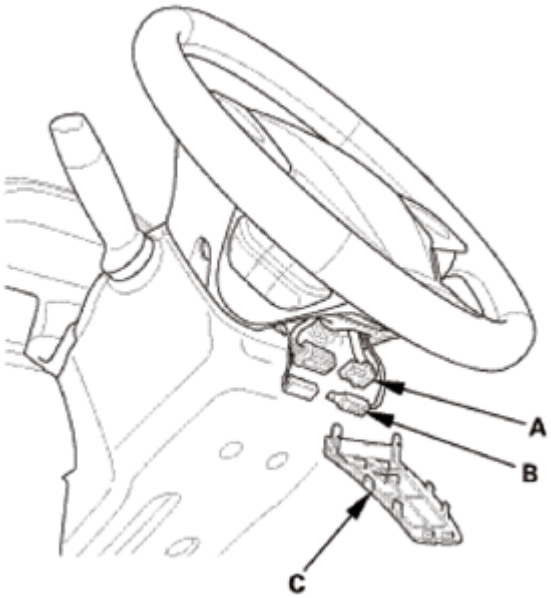

Fig. 218: Identifying Driver Airbag Inflator, Horn Switch Connector And Access Panel

GETtheMANUALS.org

Courtesy of AMERICAN HONDA MOTOR CO., INC.

12. Glove Box - Move
    1. Install the glove box (A). Make sure the glove box stops (B) snap into place securely.
    2. Install the glove box damper hook (C).

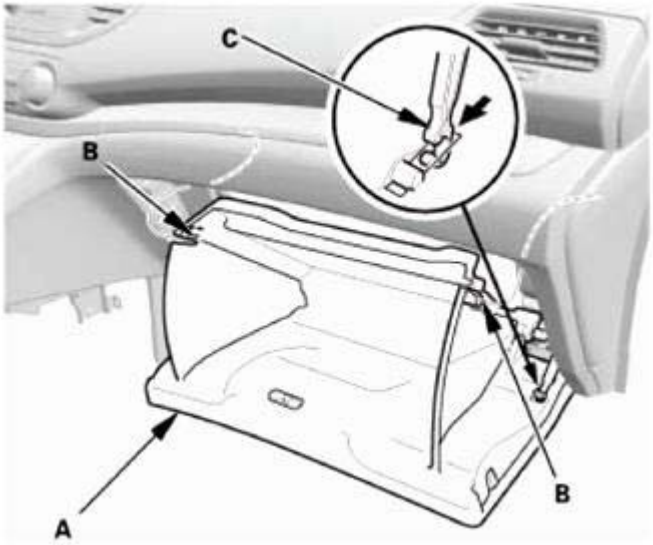

Fig. 219: Installing Glove Box
Courtesy of AMERICAN HONDA MOTOR CO., INC.

13. Kick Panel - Both Sides
    1. Install the driver's side kick panel (A) and the passenger's side kick panel (B). Make sure the clips (C) snap into place securely.
    2. Install the front door opening seal (D).

Driver's side

GETtheMANUALS.org

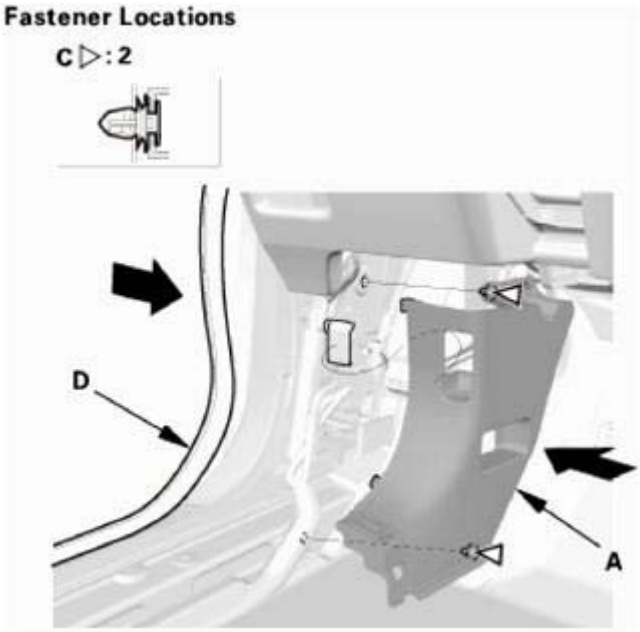

Fig. 220: Installing Front Door Opening Seal (Driver Side)
Courtesy of AMERICAN HONDA MOTOR CO., INC.

Passenger's side

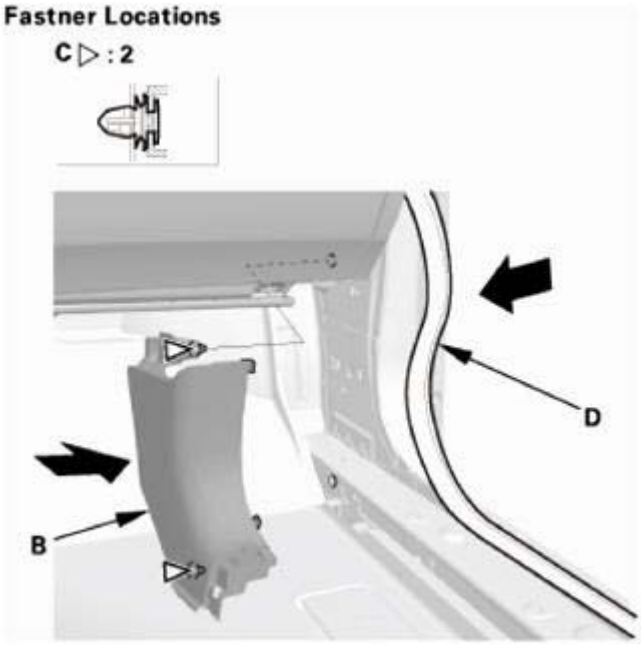

Fig. 221: Installing Front Door Opening Seal (Passenger Side)
Courtesy of AMERICAN HONDA MOTOR CO., INC.

14. Driver's Dashboard Lower Cover
    1. Connect the connector (A), then install the driver's dashboard lower cover (B). Make sure the clips

GETtheMANUALS.org

(C) snap into place securely.

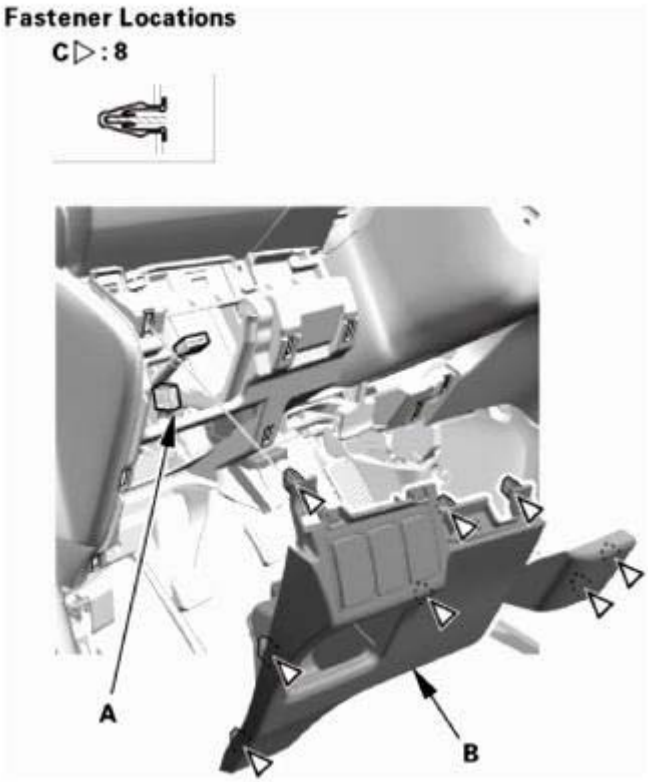

Fig. 222: Identifying Driver Dashboard Lower Cover And Connector
Courtesy of AMERICAN HONDA MOTOR CO., INC.

15. Driver's Dashboard Panel Assembly
    1. Connect the connector (A), then install the driver's dashboard panel assembly (B). Make sure the clips (C) snap into place securely.

GETtheMANUALS.org

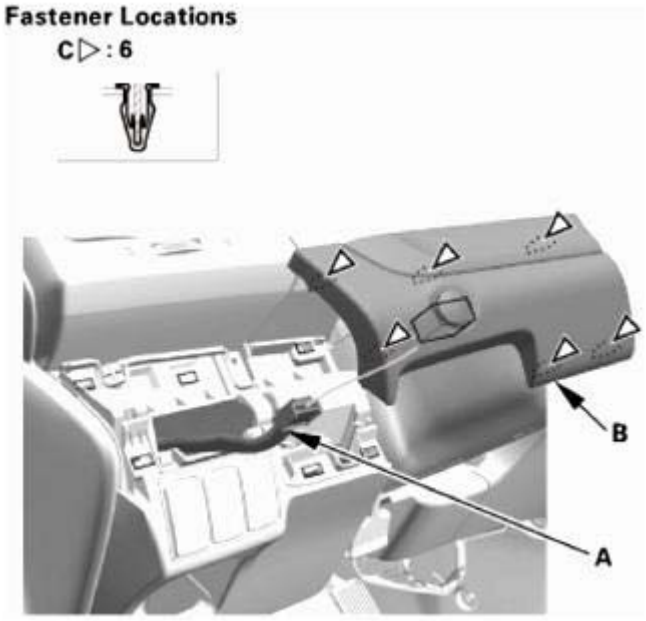

Fig. 223: Identifying Driver Dashboard Panel Assembly, Connector And Clips
Courtesy of AMERICAN HONDA MOTOR CO., INC.

16. Passenger's Dashboard Undercover
    1. Install the passenger's dashboard undercover (A). Make sure the clips (B) snap into place securely, and the pins (C) into the holder (D) securely.

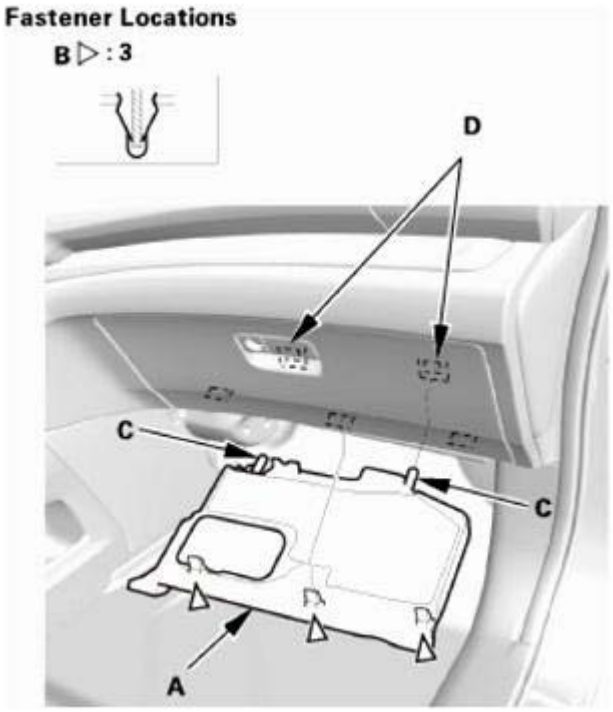

Fig. 224: Identifying Passenger Dashboard Undercover, Clips, Holder And Pins

GETtheMANUALS.org

Courtesy of AMERICAN HONDA MOTOR CO., INC.

17. Driver's Dashboard Undercover
    1. Install the driver's dashboard undercover (A). Make sure the clip (B) snap into place securely, and the pin (C) into the holder (D) securely.
    2. Turn the lock knob (E) 90 °.

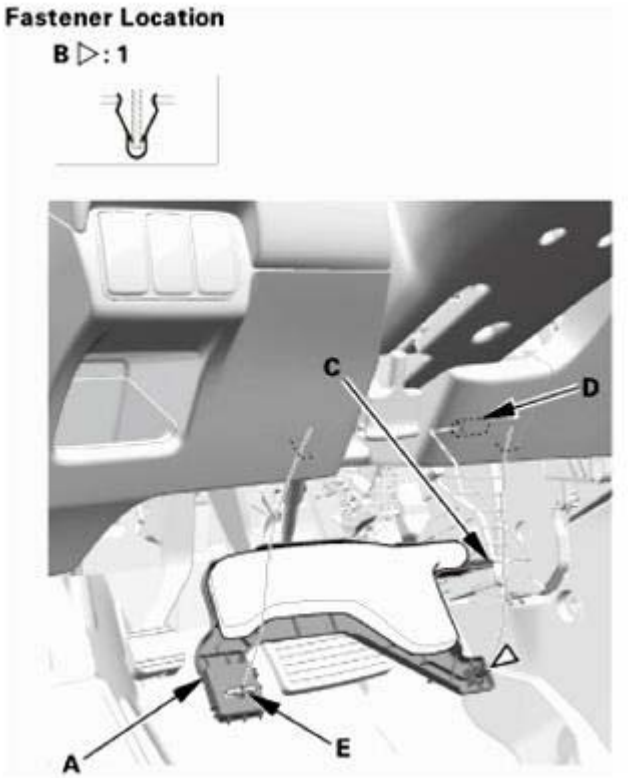

Fig. 225: Identifying Driver Dashboard Undercover, Clips, Holder And Pins
Courtesy of AMERICAN HONDA MOTOR CO., INC.

18. A-Pillar Trim - Check
    1. If the side curtain airbag has deployed, replace the A-pillar trim (A), along with the other parts listed for side curtain airbag deployment.
    2. If the side curtain airbag has not deployed, check the A-pillar trim and note the following items:
        - To prevent the side curtain airbags from deploying improperly and possibly causing injury, inspect the A-pillar trim and replace it with a new one if it has any of the following damage:
            - Any cracks, deformations, or stress-whitened areas in the A-pillar trim
            - Any cracks or stress-whitening in the clip seating surfaces (B)
        - After checking and adjusting the overlap between the headliner and the A-pillar trim, replace the upper clip (C) with a new one.
        - If the clips (D) are damaged or stress-whitened, replace them with new ones.

GETtheMANUALS.org

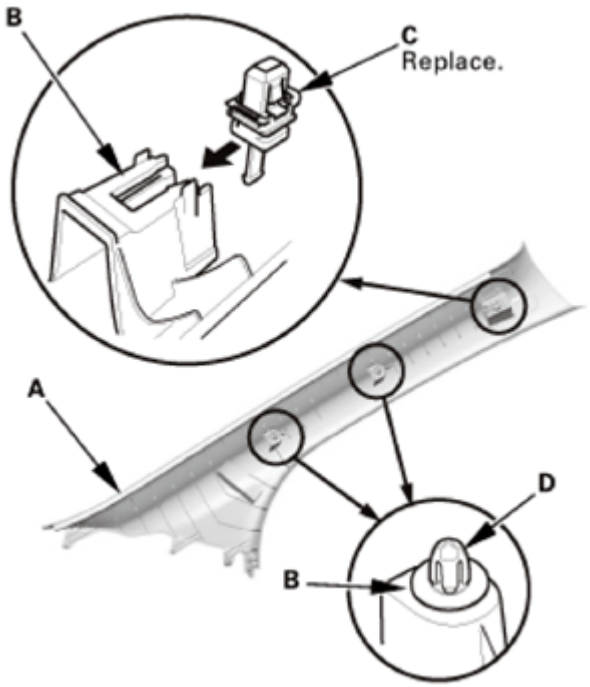

Fig. 226: Removing Headliner And A-Pillar Trim Upper Clip
Courtesy of AMERICAN HONDA MOTOR CO., INC.

19. Headliner/Pillar Trim Overlap - Check

Checking and Adjusting the Headliner/Pillar Trim Overlap

To prevent the side curtain airbag from deploying and damaging the pillar trim (A-pillar trim, B-pillar trim, quarter pillar trim), the overlap between the headliner and pillar trim must be 8.0+0/-2.0 mm (0.31+0/-0.08 in). To check the overlap, do this:

1. Install the headliner (A) and the pillar trim (B).

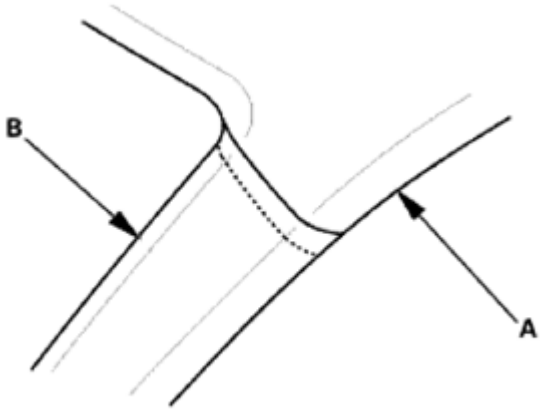

This illustration shows the A-pillar.

GETtheMANUALS.org

Fig. 227: Identifying Headliner And Pillar Trim
Courtesy of AMERICAN HONDA MOTOR CO., INC.

This illustration shows the A-pillar .

2. Apply masking tape (A) to the headliner (B) to mark the upper edge of the pillar trim (C).

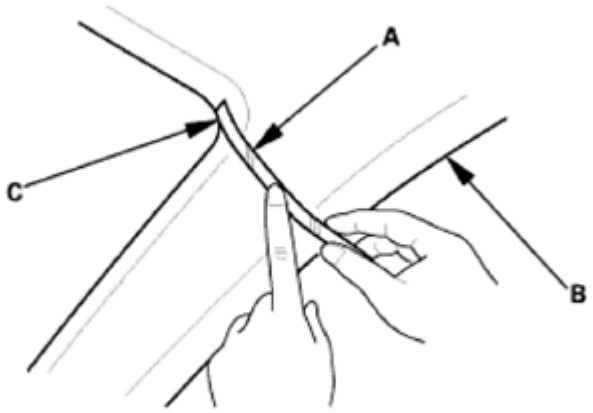

This illustration shows the A-pillar.

Fig. 228: Applying Masking Tape To Headliner
Courtesy of AMERICAN HONDA MOTOR CO., INC.

This illustration shows the A-pillar .

3. Remove the pillar trim, and measure the headliner overlap.
   - If the overlap is 8.0+0/-2.0 mm (0.31+0/-0.08 in), remove the tape, and install the pillar trim.
   - If the overlap is more than 8.0 mm (0.31 in), go to step 4.

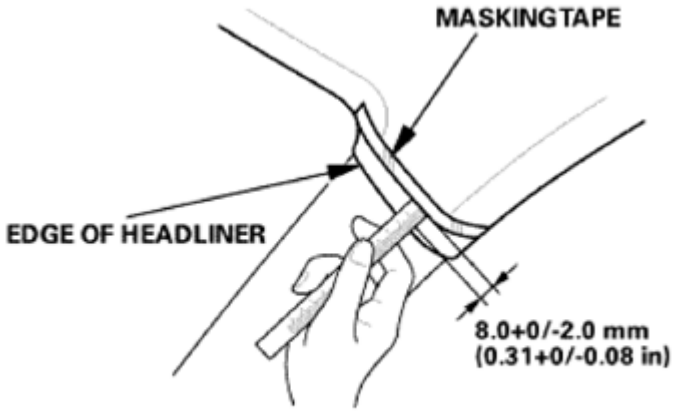

This illustration shows the A-pillar.

Fig. 229: Measuring Headliner Overlap
Courtesy of AMERICAN HONDA MOTOR CO., INC.

GETtheMANUALS.org

This illustration shows the A-pillar .

4. Carefully trim the headliner with a utility knife, reducing the overlap to 8.0+0/-2.0 mm (0.31+0/-0.08 in).
5. Remove the tape, and install the pillar trim.

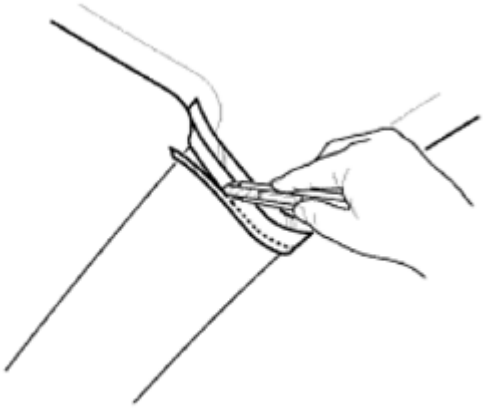

This illustration shows the A-pillar.

Fig. 230: Timing Headliner Using Utility Knife
Courtesy of AMERICAN HONDA MOTOR CO., INC.

This illustration shows the A-pillar .

20. A-Pillar Trim - Both Sides

NOTE: Repeat this procedure on the opposite side.

1. Carefully install a new upper clip (A) to the A-pillar trim (B).

GETtheMANUALS.org

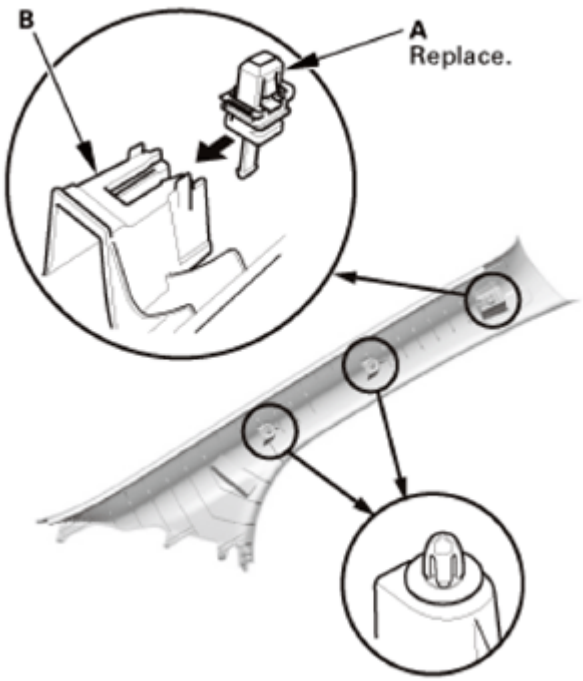

Fig. 231: Installing Upper Clip To A-Pillar Trim
Courtesy of AMERICAN HONDA MOTOR CO., INC.

2. Insert the bottom portion of the A-pillar trim (A) into the dashboard (B). Place the trim over the A-pillar (C), and fit its upper clip (D) and the other clips (E) into the holes (F) in the A-pillar, then lightly push the trim into place.

NOTE:

- **Make sure the side curtain airbag is not tucked under the clips or the trim ribs.**
- **Do not push too hard on the A-pillar trim. If you push too hard, the clip will be damaged, and it will not hold the trim properly.**
- **Gently tug on the A-pillar trim to verify that all clips are securely fastened.**

GETtheMANUALS.org

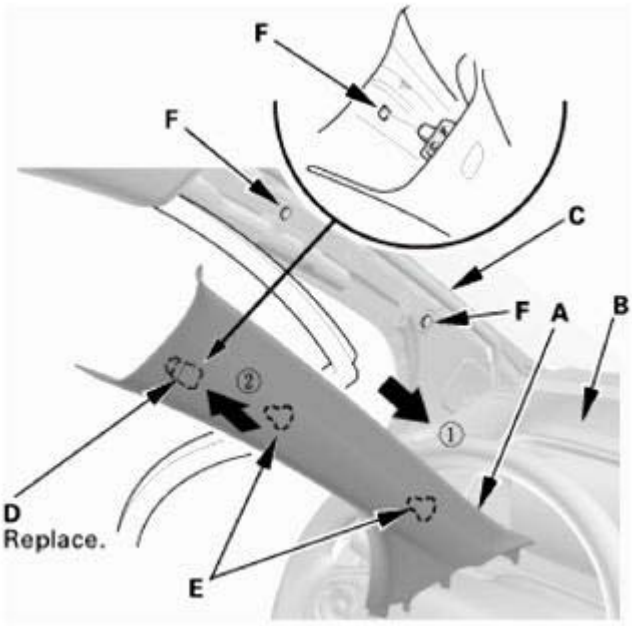

Fig. 232: Inserting Bottom Portion Of A-Pillar Trim Into Dashboard
Courtesy of AMERICAN HONDA MOTOR CO., INC.

21. Front Door Opening Seal As Needed - Both Sides

NOTE: Repeat this procedure on the opposite side.

1. Install the front door opening seal (A). Make sure the seal is installed securely into the hooks (B).

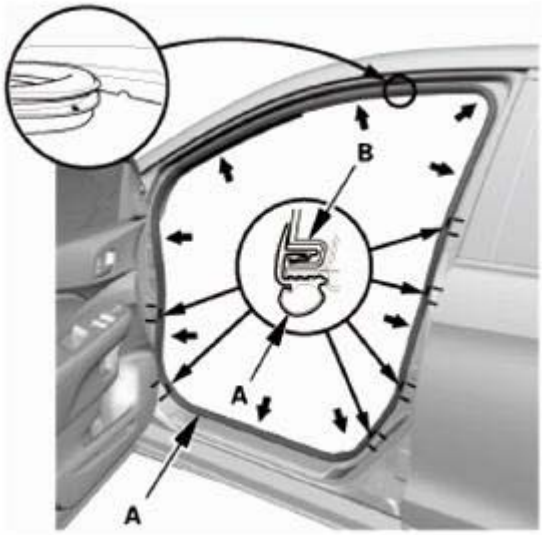

Fig. 233: Installing Front Door Opening Seal
Courtesy of AMERICAN HONDA MOTOR CO., INC.

22. Battery Terminal (SRS) - Reconnection

GETtheMANUALS.org

NOTE: If the battery performance is abnormal, test the battery.

1. Clean the battery terminals.
2. Connect the positive cable (A) to the battery.

NOTE: Always connect the positive side first.

3. Connect the negative cable (B) to the battery.
4. Apply multipurpose grease to the terminals to prevent corrosion.

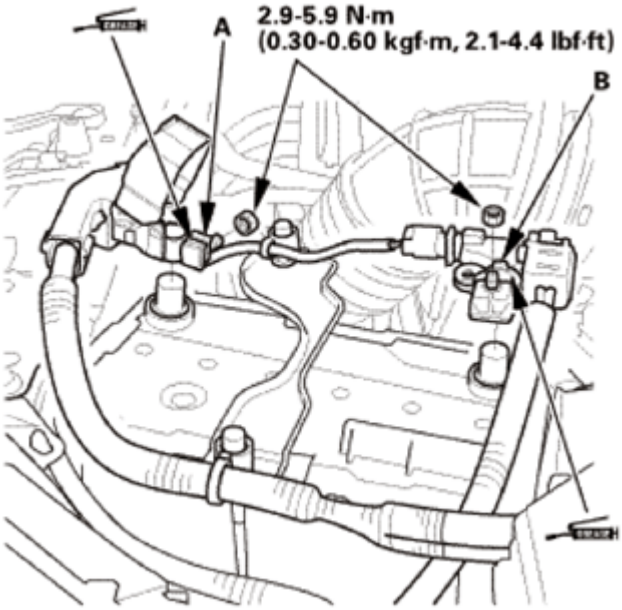

Fig. 234: Identifying Battery Terminal (SRS) Positive And Negative Cable With Torque Specifications
Courtesy of AMERICAN HONDA MOTOR CO., INC.

23. Shift Cable - Adjustment
    1. Push the shift cable (A) until it stops, then release it. Pull the shift cable back one step so that the shift position is in R.

NOTE: Do not hold the shift cable guide (B) to adjust the shift cable.

GETtheMANUALS.org

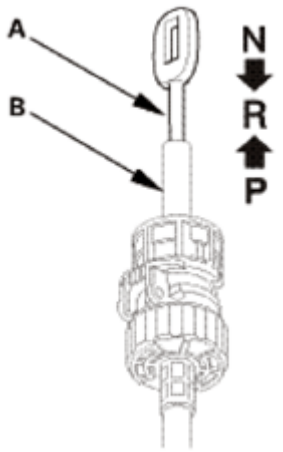

Fig. 235: Locating Shift Cable Position
Courtesy of AMERICAN HONDA MOTOR CO., INC.

2. Turn the ignition switch to ON (II).
3. Check that the R position indicator comes on.
4. Turn the ignition switch to LOCK (0).

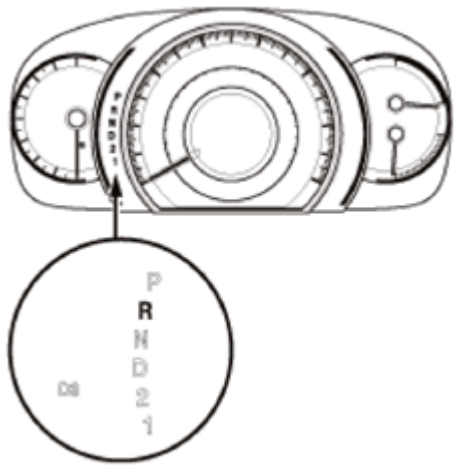

Fig. 236: Identifying R Position Indicator
Courtesy of AMERICAN HONDA MOTOR CO., INC.

5. Unlock the retainer lock (A).

GETtheMANUALS.org

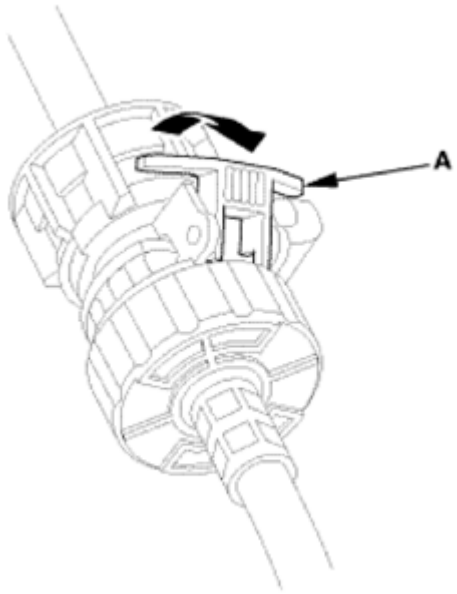

Fig. 237: Unlocking Retainer Lock
Courtesy of AMERICAN HONDA MOTOR CO., INC.

6. Rotate the socket holder retainer (A) in arrow direction (B) until it stops to create clearance (C) between the socket holder (D) and holder retainer, and push the retainer lock (E) into the socket holder retainer to lock the retainer.

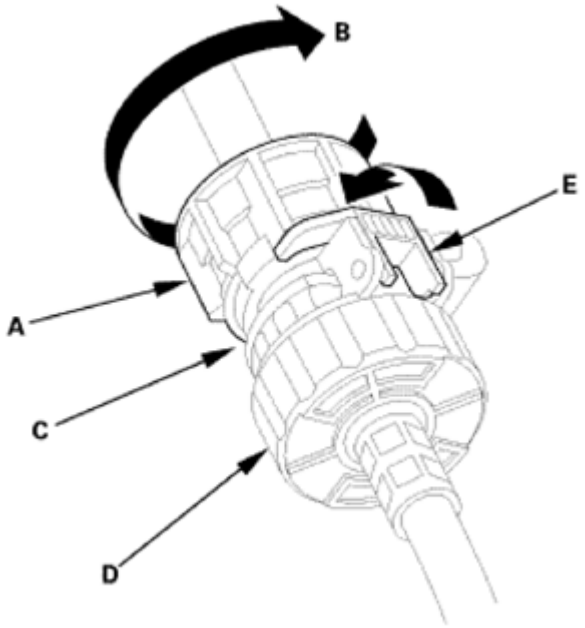

Fig. 238: Locking Retainer
Courtesy of AMERICAN HONDA MOTOR CO., INC.

7. Align the shift cable slot (A) between the socket holder (B) and the socket holder retainer (C) with the opening (D) in the shift cable bracket (E), then slide the holder into the bracket while installing

GETtheMANUALS.org

the shift cable end (F) over the mounting stud (G) by aligning its square hole (H) with the square fitting (I) at the bottom of the stud.

NOTE:

- **Do not install the shift cable by holding the shift cable guide (J).**
- **When the socket holder is installed in the shift cable bracket, the retainer lock is unhinged and releases the holder retainer lock, then the holder retainer returns under spring force to secure the shift cable.**

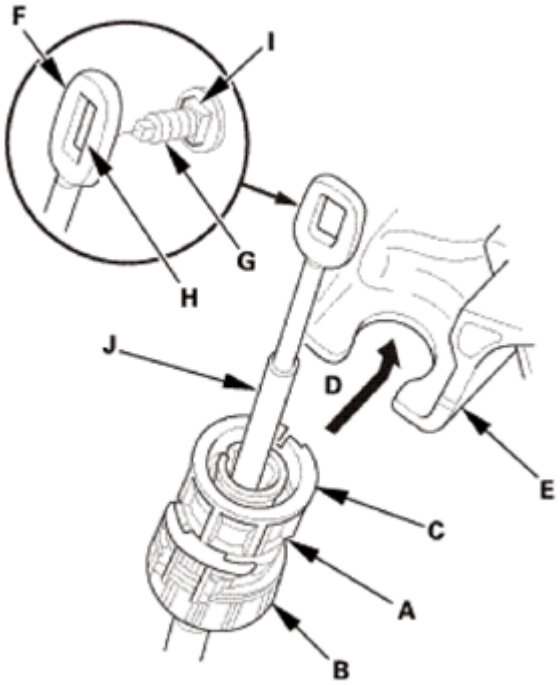

Fig. 239: Installing Socket Holder Into Shift Cable Bracket
Courtesy of AMERICAN HONDA MOTOR CO., INC.

8. Push the retainer lock (A) fully to lock the socket holder retainer (B), and make sure that the retainer lock fits into the hinged-joint (C). If the retainer lock does not fit with the edge of the hinged-joint, rotate the holder retainer counterclockwise while pushing the retainer lock until it locks.

GETtheMANUALS.org

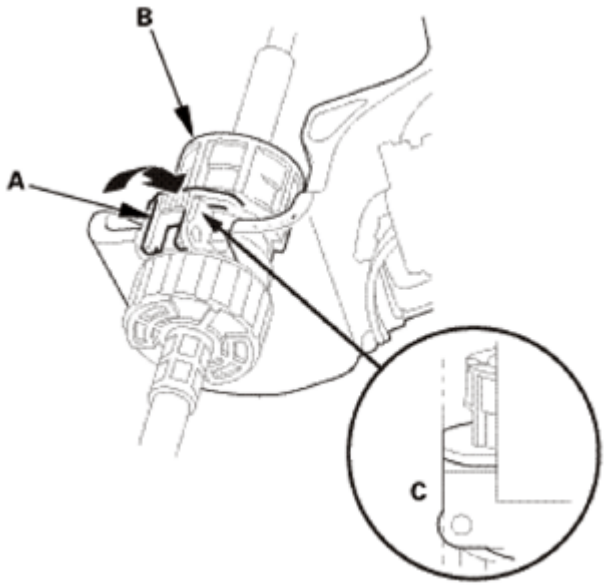

Fig. 240: Locking Socket Holder Retainer
Courtesy of AMERICAN HONDA MOTOR CO., INC.

9. Make sure that the shift cable end (A) is properly installed on the mounting stud (B).
    - If the shift cable end is out of position with the mounting stud, remove the shift cable from the shift cable bracket, then reinstall the cable end over the mounting stud before reinstalling the shift cable to the shift cable bracket. Do not install the shift cable end on the mounting stud with the shift cable install on the shift cable bracket.
    - If the shift cable end does not ride at the bottom of the mounting stud, rotate the stud to align the square fitting with the hole.

GETtheMANUALS.org

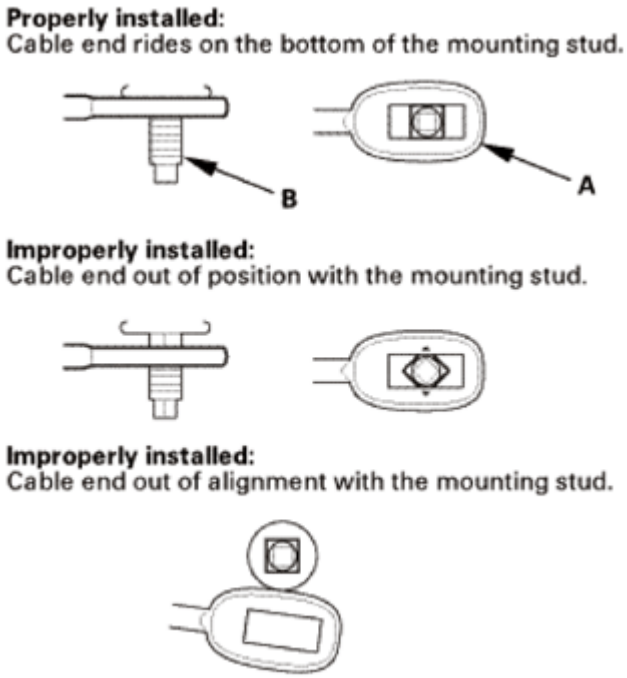

Fig. 241: Identifying Shift Cable End Into Mounting Stud Installation Position (Proper/Improper)
Courtesy of AMERICAN HONDA MOTOR CO., INC.

10. Install the shift cable end nut (A).
11. Remove the 6.0 mm (0.236 in) pin (B) that was installed to hold the shift lever.
12. Turn the ignition switch to ON (II).
13. Move the shift lever to each position, and check that the A/T gear position indicator follows the transmission range switch.
14. Shift the shift lever to P.
15. Check that the shift lock works properly.
16. Push the shift lock release, and check that the shift lever releases. Also check that the shift lever locks when it is shifted back to P.

GETtheMANUALS.org

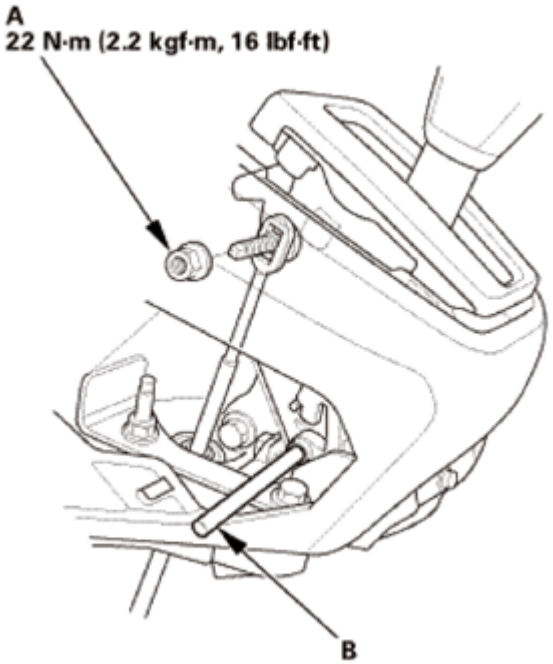

Fig. 242: Identifying Shift Cable End Nut And Pin With Torque Specification
Courtesy of AMERICAN HONDA MOTOR CO., INC.

24. Shift Lever Panel (AT)
    1. Install the shift lever panel (A). Make sure the clips (B, C) and the hooks (D) snap into place securely.

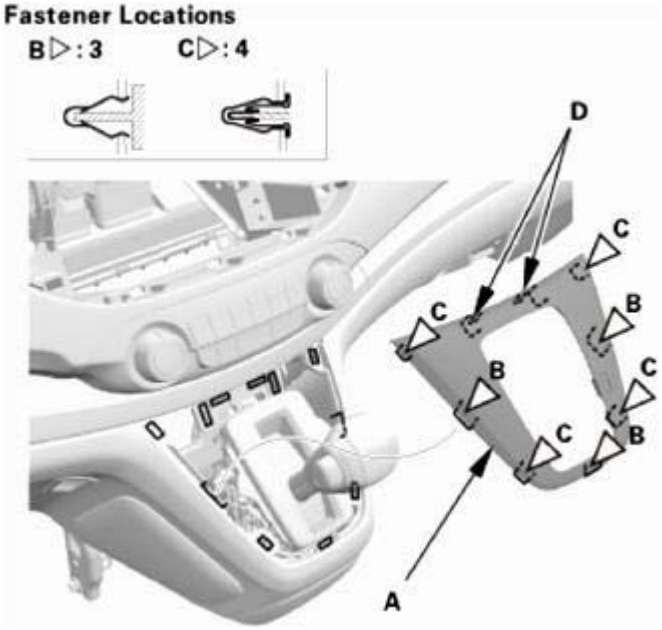

Fig. 243: Identifying Shift Lever Panel, Clips And Hooks
Courtesy of AMERICAN HONDA MOTOR CO., INC.

GETtheMANUALS.org

25. Center Maintenance Cover
    1. Install the maintenance cover (A).

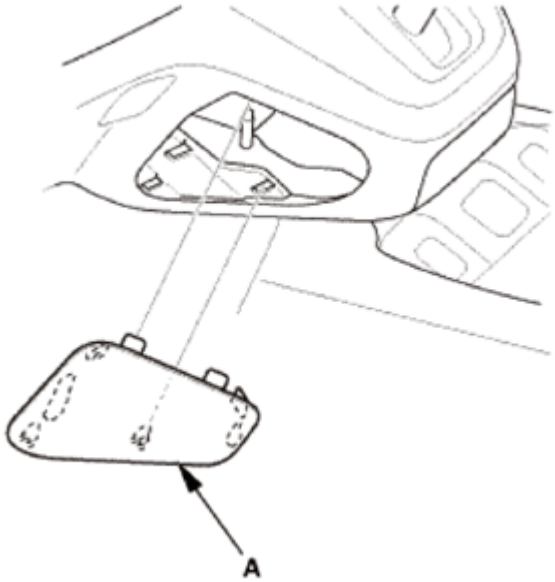

Fig. 244: Identifying Maintenance Cover
Courtesy of AMERICAN HONDA MOTOR CO., INC.

26. Center Console
    1. Install the center console (A).

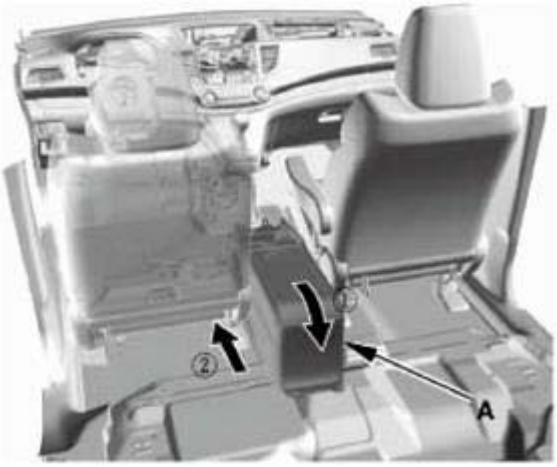

Fig. 245: Installing Center Console
Courtesy of AMERICAN HONDA MOTOR CO., INC.

    2. Connect the connectors (A), and install the clips (B).

GETtheMANUALS.org

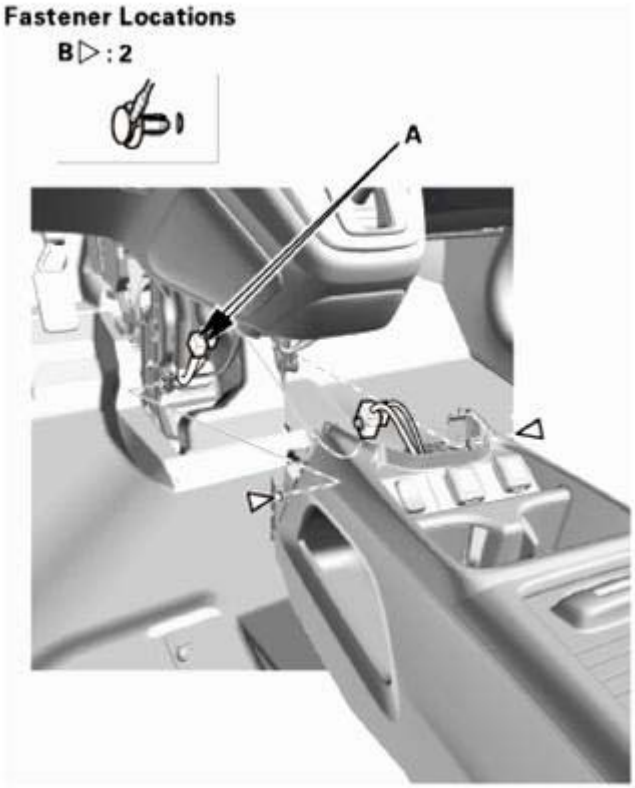

Fig. 246: Identifying Center Console Connector And Clips
Courtesy of AMERICAN HONDA MOTOR CO., INC.

3. Install the bolts (A), then install the console box mat (B).

GETtheMANUALS.org

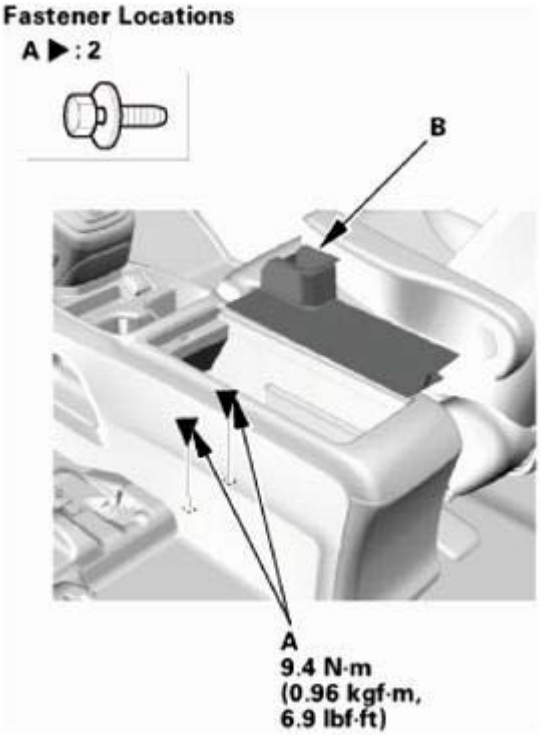

Fig. 247: Identifying Console Box Mat And Bolts With Torque Specifications
Courtesy of AMERICAN HONDA MOTOR CO., INC.

4. Install the bolts (A).

Fig. 248: Identifying Center Console Mounting Bolts With Torque Specifications
Courtesy of AMERICAN HONDA MOTOR CO., INC.

GETtheMANUALS.org

5. Install the bolt (A), then install the center lower cover (B). Make sure the clips (C) snap into place securely.

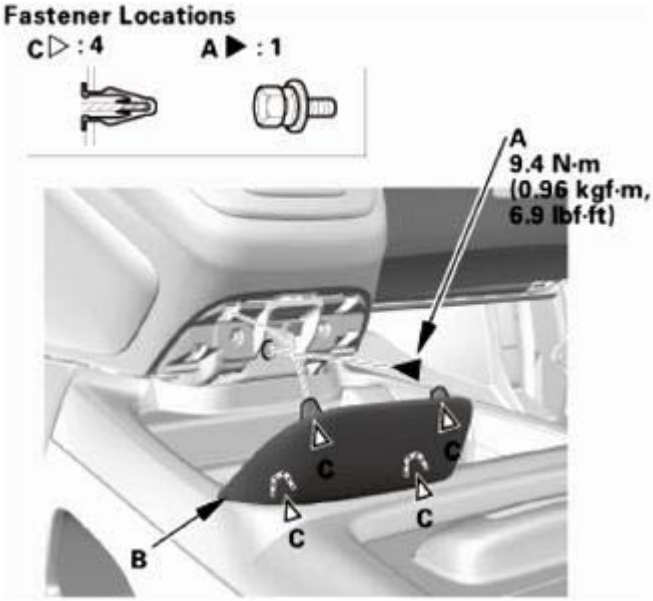

Fig. 249: Identifying Center Lower Cover, Clips And Bolts With Torque Specifications
Courtesy of AMERICAN HONDA MOTOR CO., INC.

27. Center Console Rear Trim
    1. Install the center console rear trim (A). Make sure the clips (B) and the hooks (C) snap into place securely.

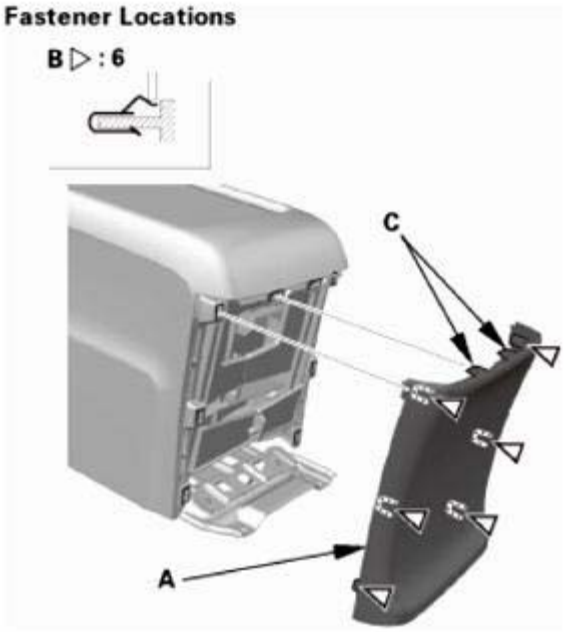

Fig. 250: Identifying Center Console Rear Trim, Clips And Hooks

GETtheMANUALS.org

Courtesy of AMERICAN HONDA MOTOR CO., INC.

28. Front Console Cover - Both Sides
    1. Install the front console covers (A). Make sure the clips (B, C) snap into place securely.

Left side

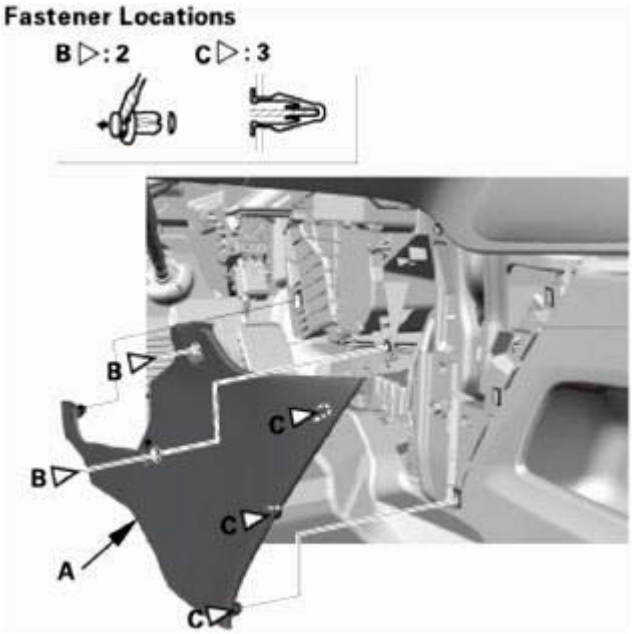

Fig. 251: Identifying Front Console Cover And Clips (Left Side)
Courtesy of AMERICAN HONDA MOTOR CO., INC.

Right side

GETtheMANUALS.org

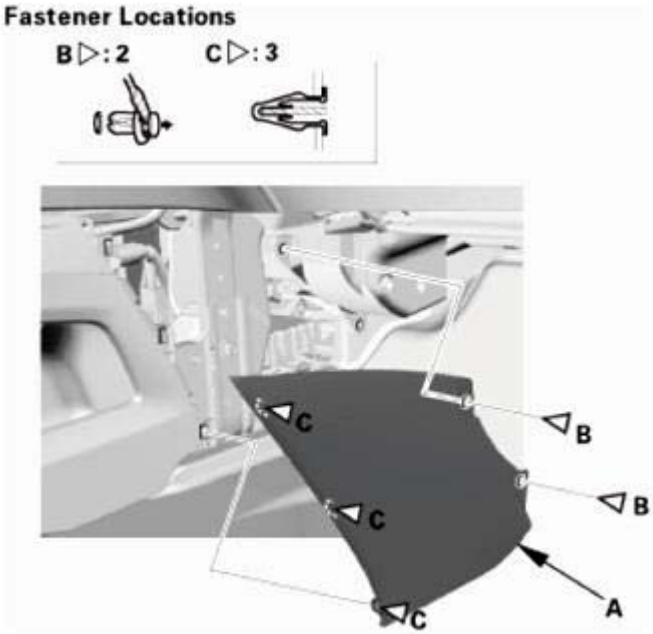

Fig. 252: Identifying Front Console Cover And Clips (Right Side)
Courtesy of AMERICAN HONDA MOTOR CO., INC.

29. Steering After Install - Check
    1. After installation, check these items:
        - Start the engine, allow it to idle, and turn the steering wheel from lock to lock several times.
        - Check that the EPS indicator does not come on.
        - Check the steering wheel spoke angle. If steering spoke angles to the right and left are not equal (steering wheel and rack are not centered), correct the engagement of the joint/pinion shaft splines.
30. HDS DLC - Connection
    1. Connect the HDS to the data link connector (DLC) (A) located under the driver's side of the dashboard.
    2. Turn the ignition switch to ON (II).
    3. Make sure the HDS communicates with the vehicle. If it does not communicate, go to the DLC circuit troubleshooting.

GETtheMANUALS.org

Fig. 253: Identifying Data Link Connector
Courtesy of AMERICAN HONDA MOTOR CO., INC.

31. DTC - Clear
    1. Clear the DTC(s) by following the screen prompts on the HDS.
    2. Turn the ignition switch to LOCK (0), then wait for 10 seconds.
32. Confirm Proper SRS Operation
    1. Turn the ignition switch to ON (II), and check that the SRS indicator comes on for about 6 seconds and then goes off.
33. VSA Sensor Neutral Position - Memorization
    1. Park the vehicle on a flat and level surface, with the steering wheel in the straight ahead position.
    2. Select VSA ADJUSTMENT, then select ALL SENSORS with the HDS, and follow the screen prompts.

NOTE: See the HDS Help menu for specific instructions.

34. Steering Angle Sensor Neutral Position - Clear
    1. Select EPS ADJUSTMENT, then select EPS STEERING ANGLE SENSOR VALUE CLEAR and follow the screen prompts on the HDS.

NOTE: See the HDS Help menu for specific instructions.

DRIVER'S DASHBOARD LOWER COVER REMOVAL AND INSTALLATION

REMOVAL

1. Driver's Dashboard Undercover
    1. Turn the lock knob (A) 90 °, then gently pull down the front edge of the driver's dashboard undercover (B) to detach the clip (C).

GETtheMANUALS.org

2. Pull away the undercover to release the pin (D) from the holder (E), then remove the driver's dashboard undercover.

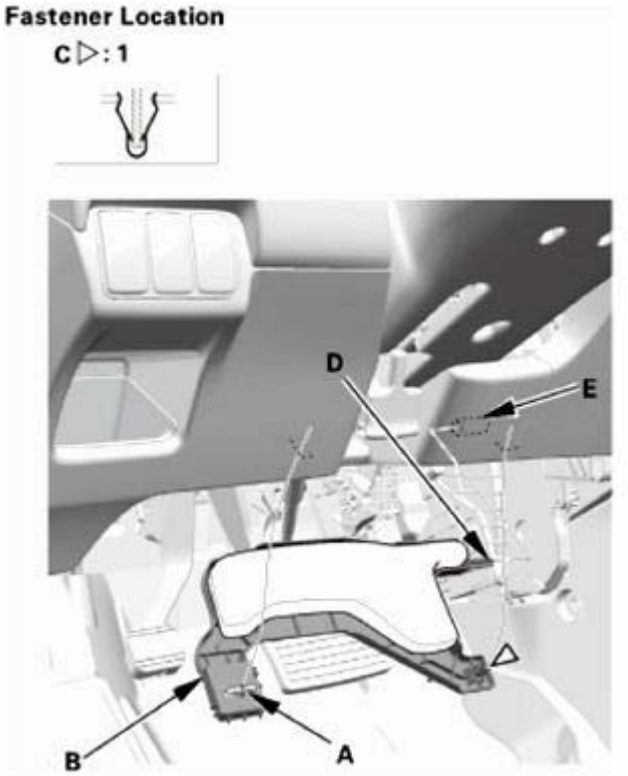

Fig. 254: Identifying Driver Dashboard Undercover, Lock Knob, Clip, Pin And Holder
Courtesy of AMERICAN HONDA MOTOR CO., INC.

2. Driver's Dashboard Panel Assembly
    1. Carefully pry out the driver's dashboard panel assembly (A) with the appropriate trim tool to detach the clips (B).
    2. Disconnect the connector (C), then remove the driver's dashboard panel assembly.

GETtheMANUALS.org

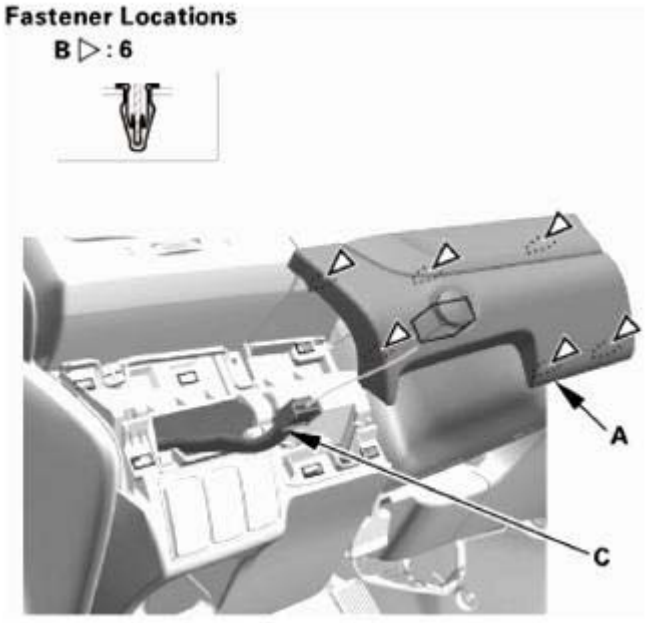

Fig. 255: Identifying Driver Dashboard Panel Assembly, Connector And Clips
Courtesy of AMERICAN HONDA MOTOR CO., INC.

3. Driver's Dashboard Lower Cover
    1. Carefully pry out the driver's dashboard lower cover (A) with the appropriate trim tool to detach the clips (B).
    2. Disconnect the connector (C), then remove the driver's dashboard lower cover.

GETtheMANUALS.org

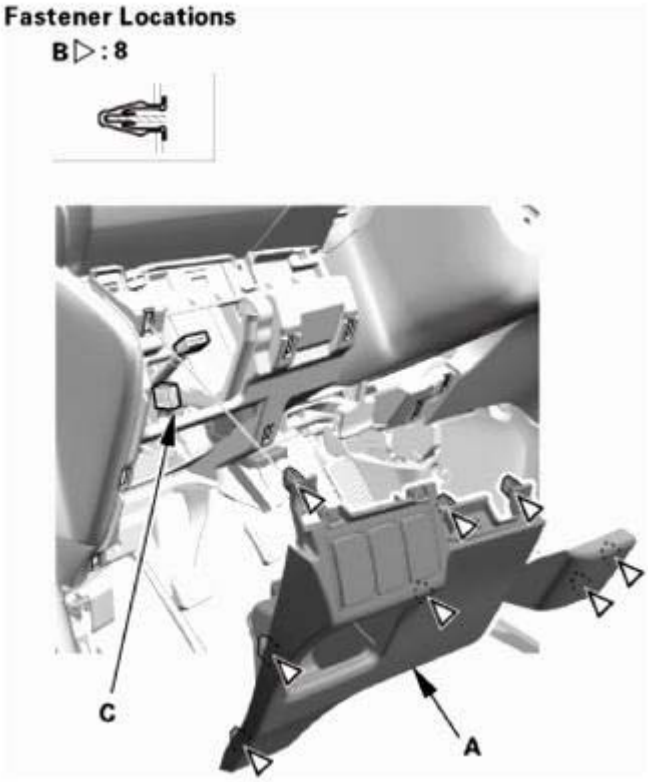

Fig. 256: Identifying Driver Dashboard Lower Cover, Connector And Clips
Courtesy of AMERICAN HONDA MOTOR CO., INC.

INSTALLATION

1. Driver's Dashboard Lower Cover
    1. Connect the connector (A), then install the driver's dashboard lower cover (B). Make sure the clips (C) snap into place securely.

GETtheMANUALS.org

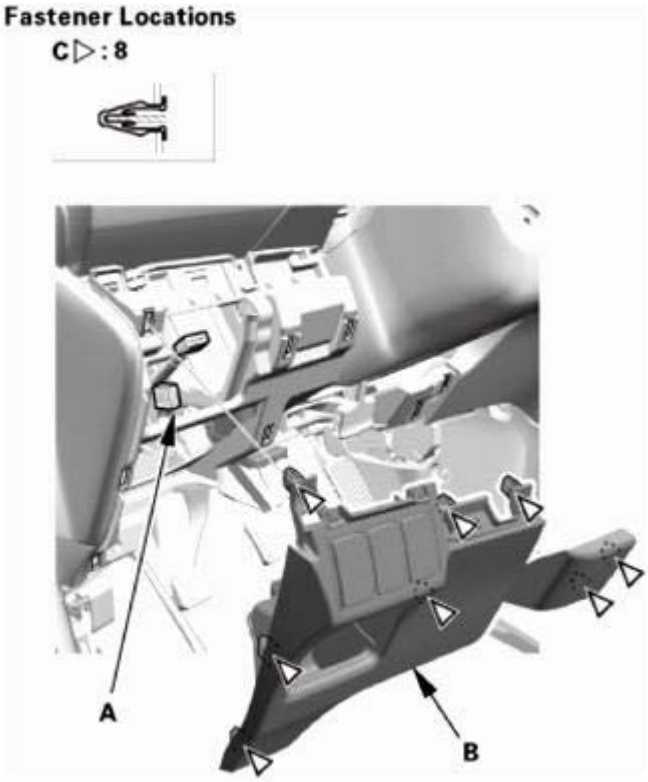

Fig. 257: Identifying Driver Dashboard Lower Cover, Connector And Clips
Courtesy of AMERICAN HONDA MOTOR CO., INC.

2. Driver's Dashboard Panel Assembly
    1. Connect the connector (A), then install the driver's dashboard panel assembly (B). Make sure the clips (C) snap into place securely.

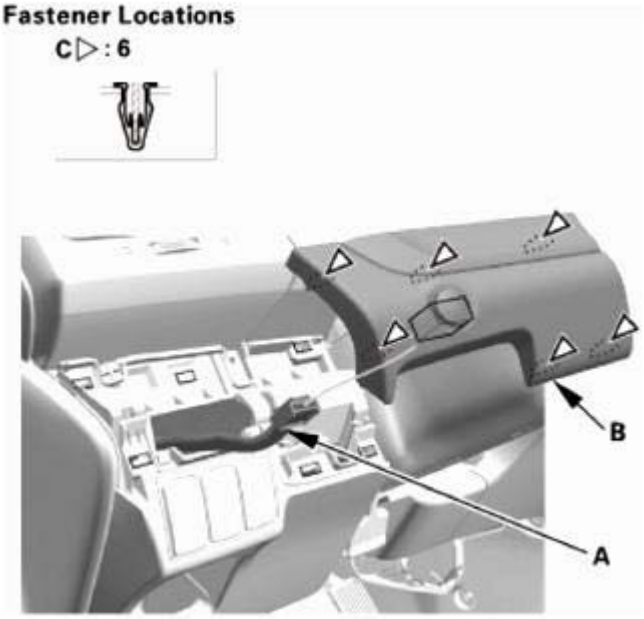

GETtheMANUALS.org

Fig. 258: Identifying Driver Dashboard Panel Assembly, Connector And Clips
Courtesy of AMERICAN HONDA MOTOR CO., INC.

3. Driver's Dashboard Undercover
    1. Install the driver's dashboard undercover (A). Make sure the clip (B) snap into place securely, and the pin (C) into the holder (D) securely.
    2. Turn the lock knob (E) 90 °.

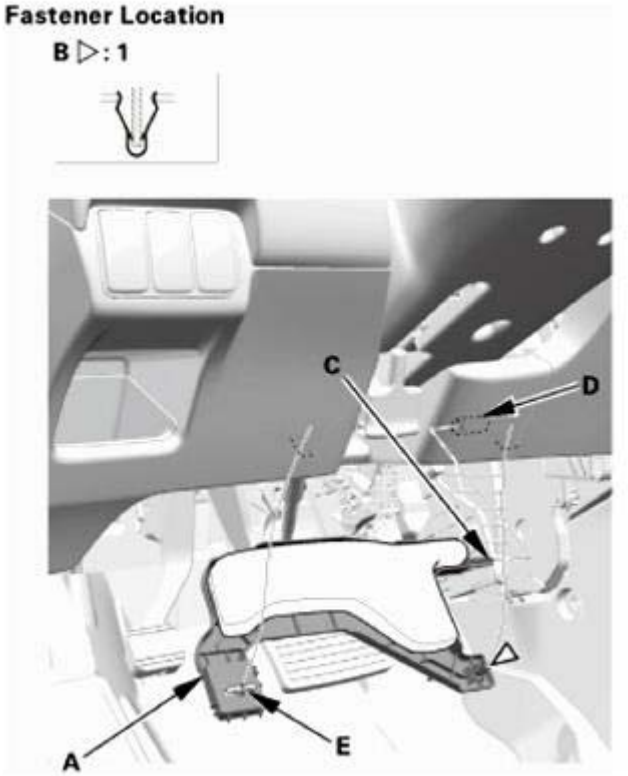

Fig. 259: Identifying Driver Dashboard Undercover, Lock Knob, Pin, Clips And Holder
Courtesy of AMERICAN HONDA MOTOR CO., INC.

DRIVER'S DASHBOARD UNDERCOVER REMOVAL AND INSTALLATION

REMOVAL

1. Driver's Dashboard Undercover
    1. Turn the lock knob (A) 90 °, then gently pull down the front edge of the driver's dashboard undercover (B) to detach the clip (C).
    2. Pull away the undercover to release the pin (D) from the holder (E), then remove the driver's dashboard undercover.

GETtheMANUALS.org

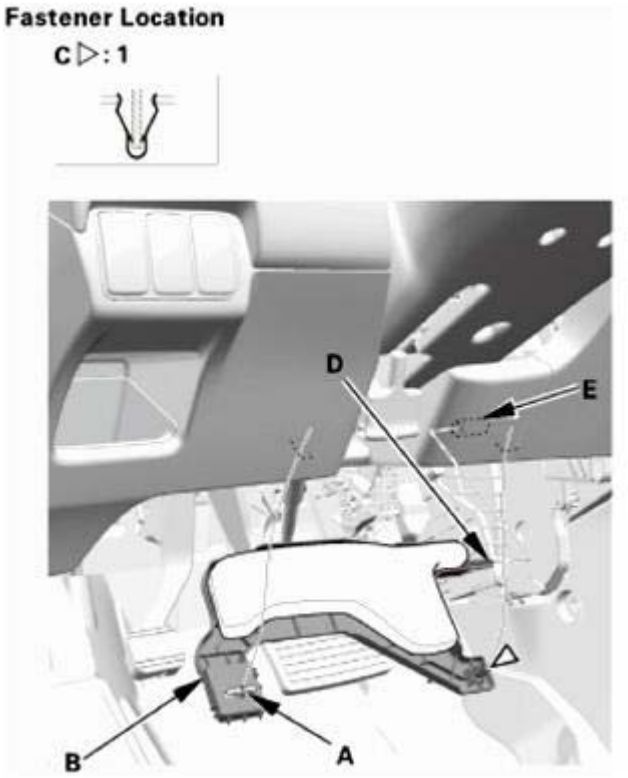

Fig. 260: Identifying Driver Dashboard Undercover, Lock Knob, Pin, Clips And Holder
Courtesy of AMERICAN HONDA MOTOR CO., INC.

INSTALLATION

1. Driver's Dashboard Undercover
    1. Install the driver's dashboard undercover (A). Make sure the clip (B) snap into place securely, and the pin (C) into the holder (D) securely.
    2. Turn the lock knob (E) 90 °.

GETtheMANUALS.org

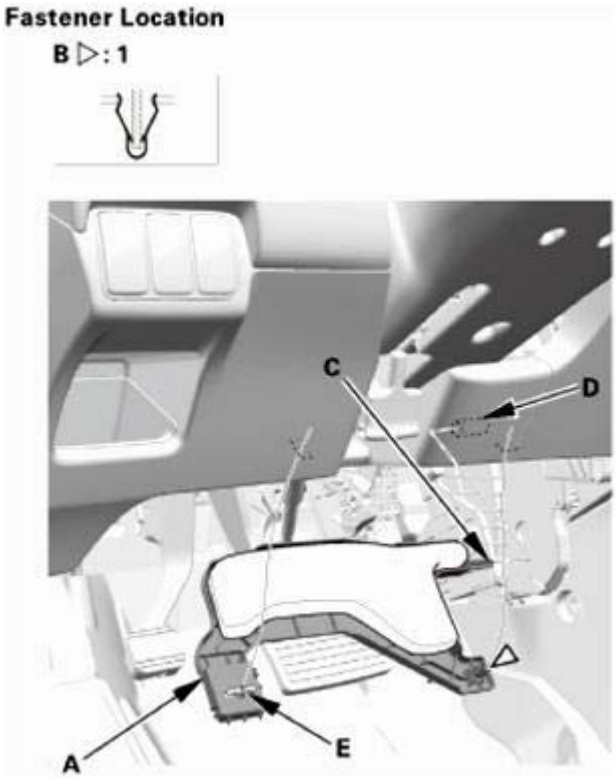

Fig. 261: Identifying Driver Dashboard Undercover, Lock Knob, Pin, Clips And Holder
Courtesy of AMERICAN HONDA MOTOR CO., INC.

ECON SWITCH REMOVAL, INSTALLATION, AND TEST

REMOVAL

1. Driver's Dashboard Panel Assembly
    1. Carefully pry out the driver's dashboard panel assembly (A) with the appropriate trim tool to detach the clips (B).
    2. Disconnect the connector (C), then remove the driver's dashboard panel assembly.

GETtheMANUALS.org

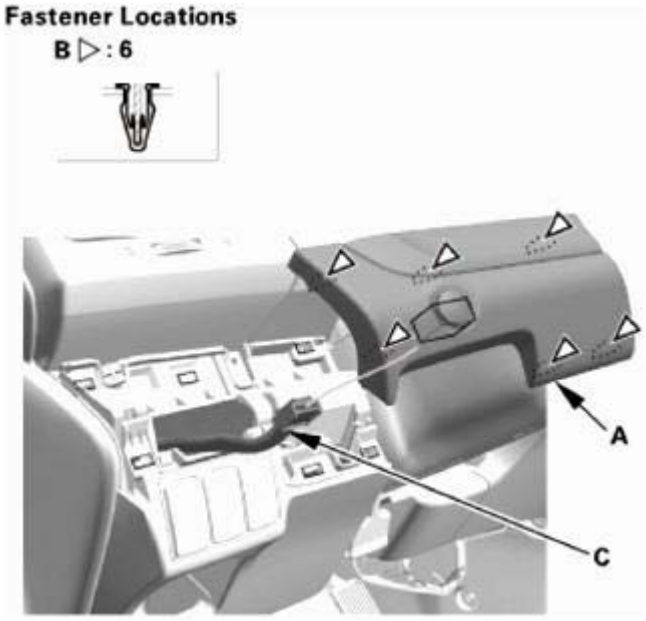

Fig. 262: Identifying Driver Dashboard Panel Assembly, Connector And Clips
Courtesy of AMERICAN HONDA MOTOR CO., INC.

2. ECON Switch
    1. Remove the ECON switch (A).

Fig. 263: Identifying ECON Switch
Courtesy of AMERICAN HONDA MOTOR CO., INC.

3. ECON Switch Bulb
    1. Remove the rear cover (A).
    2. Remove the front cover (B).

GETtheMANUALS.org

3. Remove the ECON switch bulb (C).

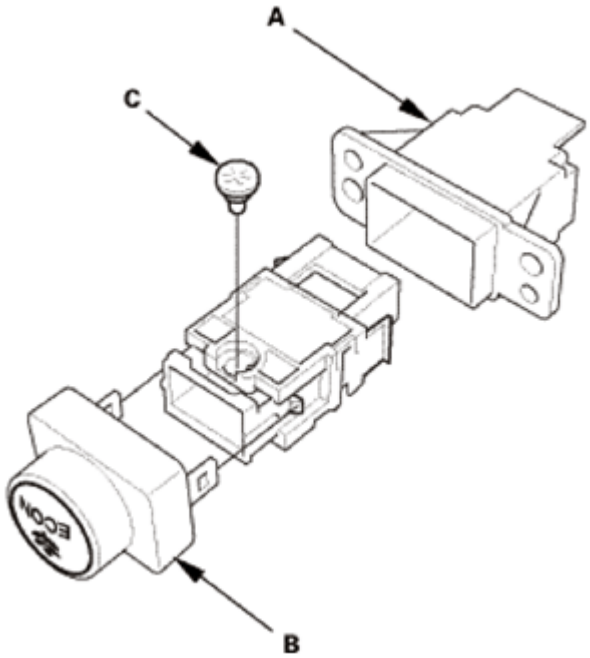

Fig. 264: Identifying ECON Switch Bulb, Front And Rear Cover
Courtesy of AMERICAN HONDA MOTOR CO., INC.

TEST

1. ECON Switch - Test

NOTE: When doing the ECON switch test, install the bulb correctly.

1. Check for continuity between the terminals in each switch position according to the table.
2. If the continuity is not as specified, replace the ECON switch (A).

GETtheMANUALS.org

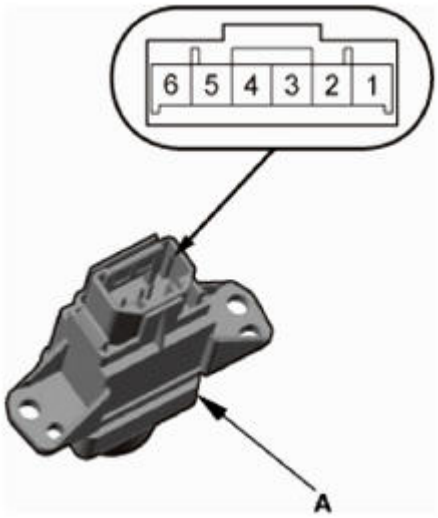

Fig. 265: Identifying ECON Switch Connector Terminals
Courtesy of AMERICAN HONDA MOTOR CO., INC.

Terminal / Position	1		2	4	5
OFF	○	—(B)—	○		
ON				○	—○

Fig. 266: ECON Switch Continuity Reference Chart
Courtesy of AMERICAN HONDA MOTOR CO., INC.

INSTALLATION

1. ECON Switch Bulb
    1. Install the ECON switch bulb (A).
    2. Install the front cover (B).
    3. Install the rear cover (C).

GETtheMANUALS.org

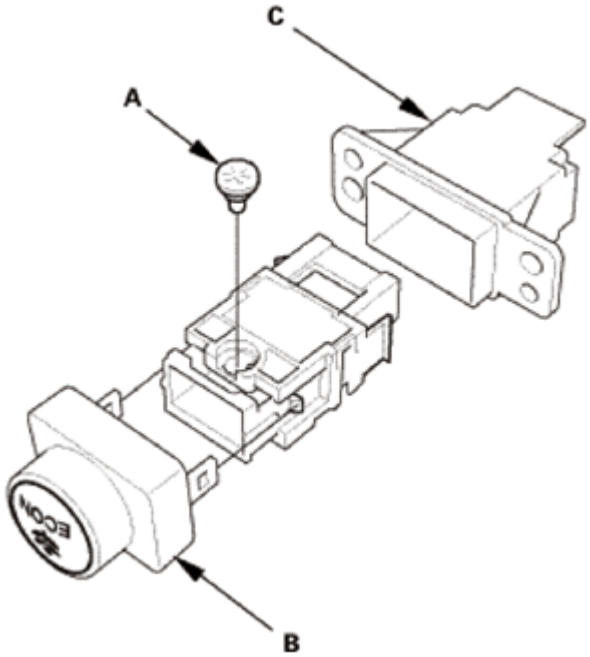

Fig. 267: Identifying ECON Switch Bulb, Rear And Front Cover
Courtesy of AMERICAN HONDA MOTOR CO., INC.

2. ECON Switch
    1. Install the ECON switch (A).

Fig. 268: Identifying ECON Switch
Courtesy of AMERICAN HONDA MOTOR CO., INC.

3. Driver's Dashboard Panel Assembly
    1. Connect the connector (A), then install the driver's dashboard panel assembly (B). Make sure the

GETtheMANUALS.org

clips (C) snap into place securely.

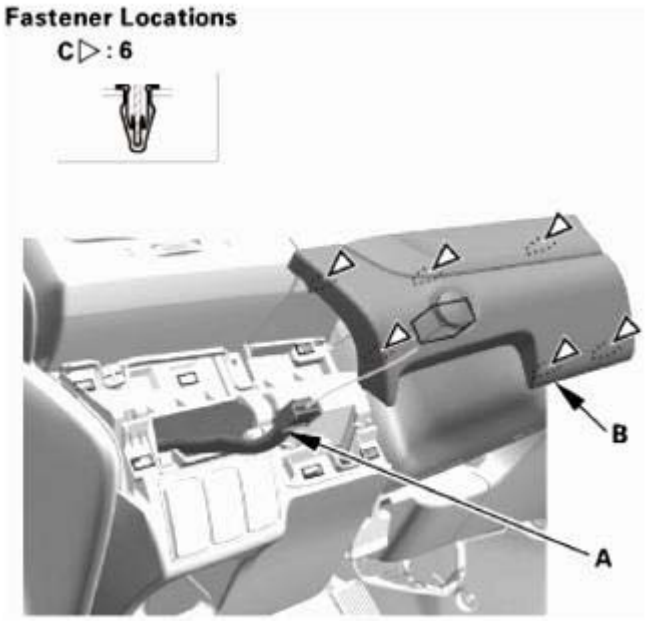

Fig. 269: Identifying Driver Dashboard Panel Assembly, Connector And Clips
Courtesy of AMERICAN HONDA MOTOR CO., INC.

FRONT CONSOLE COVER REMOVAL AND INSTALLATION

REMOVAL

1. Front Console Cover
    1. Remove the clips (A), and detach the clips (B), then remove the front console cover (C).

    Left side

GETtheMANUALS.org

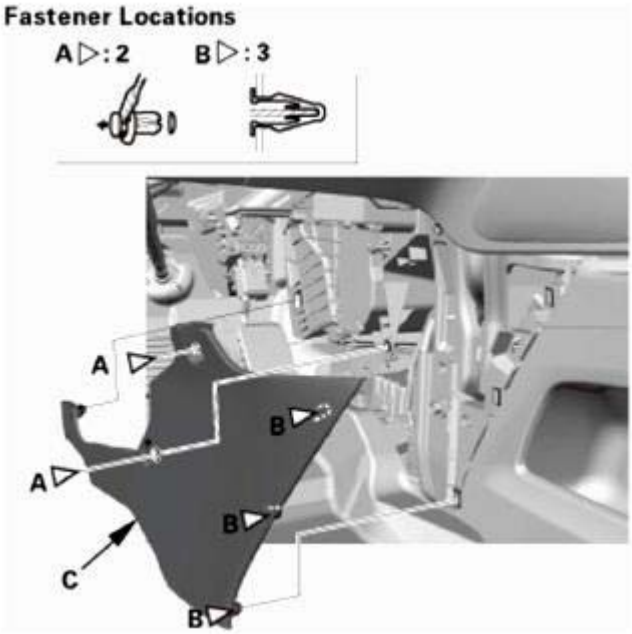

Fig. 270: Identifying Front Console Cover And Clips (Left Side)
Courtesy of AMERICAN HONDA MOTOR CO., INC.

Right side

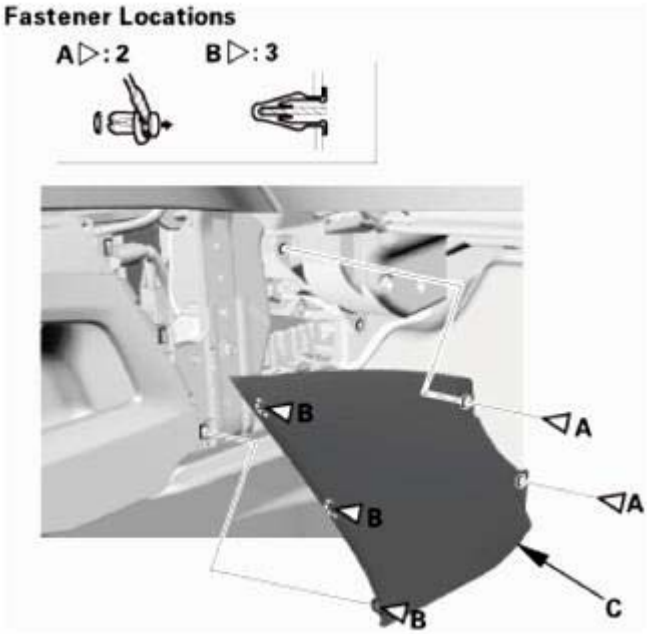

Fig. 271: Identifying Front Console Cover And Clips (Right Side)
Courtesy of AMERICAN HONDA MOTOR CO., INC.

INSTALLATION

GETtheMANUALS.org

1. Front Console Cover
    1. Install the front console cover (A). Make sure the clips (B, C) snap into place securely.

Left side

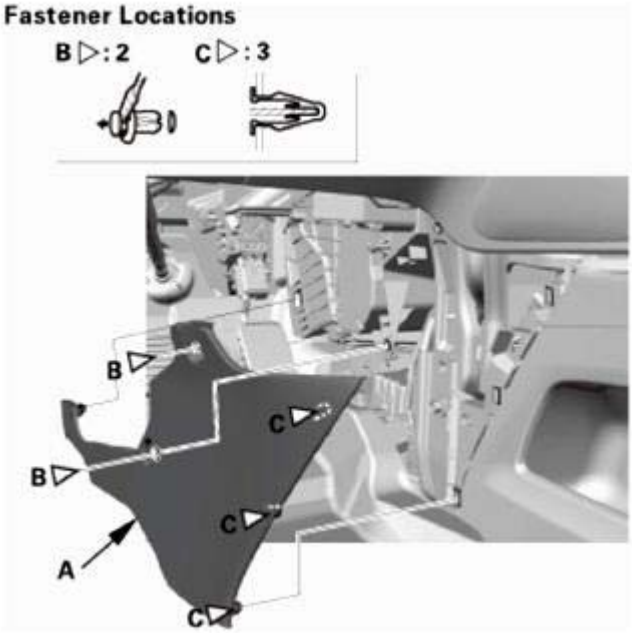

Fig. 272: Identifying Front Console Cover And Clips (Left Side)
Courtesy of AMERICAN HONDA MOTOR CO., INC.

Right side

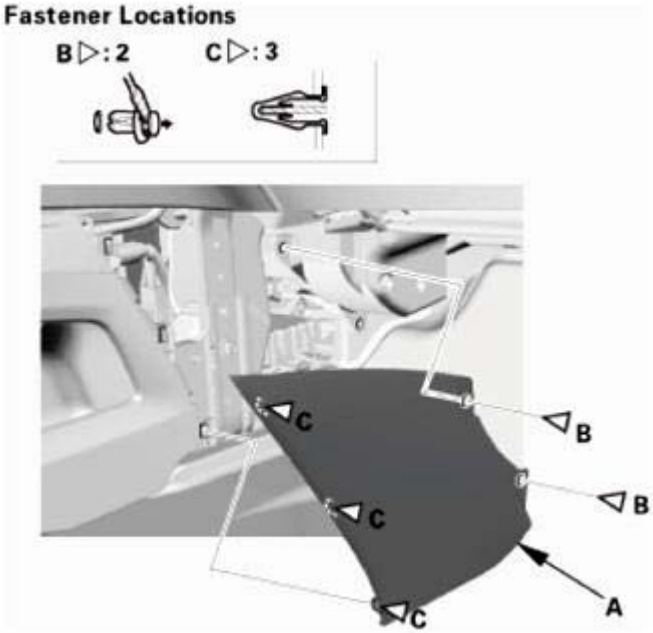

GETtheMANUALS.org

Fig. 273: Identifying Front Console Cover And Clips (Right Side)
Courtesy of AMERICAN HONDA MOTOR CO., INC.

GLOVE BOX REMOVAL AND INSTALLATION

REMOVAL

1. Glove Box
    1. Remove the bolts (A).

Fig. 274: Identifying Glove Box Mounting Bolts
Courtesy of AMERICAN HONDA MOTOR CO., INC.

2. Release both glove box stops (A) by pushing them in, then let the glove box (B) hang down.

GETtheMANUALS.org

Fig. 275: Releasing Glove Box Stops
Courtesy of AMERICAN HONDA MOTOR CO., INC.

3. Detach the glove box damper hook (A), then remove the glove box (B).

Fig. 276: Removing Glove Box
Courtesy of AMERICAN HONDA MOTOR CO., INC.

2. Glove Box Lock Cylinder
    1. Remove the glove box lock cylinder trim (A).

GETtheMANUALS.org

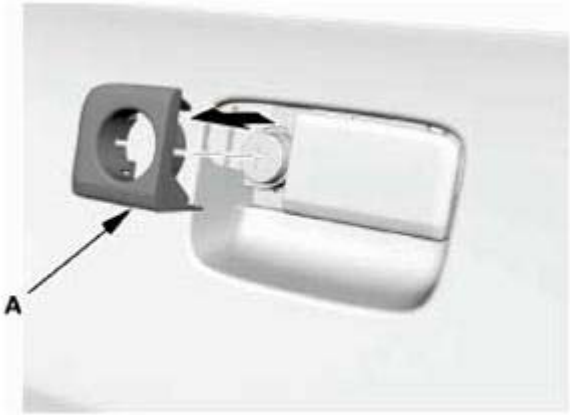

Fig. 277: Removing Glove Box Lock Cylinder Trim
Courtesy of AMERICAN HONDA MOTOR CO., INC.

2. Remove the retainer (A).

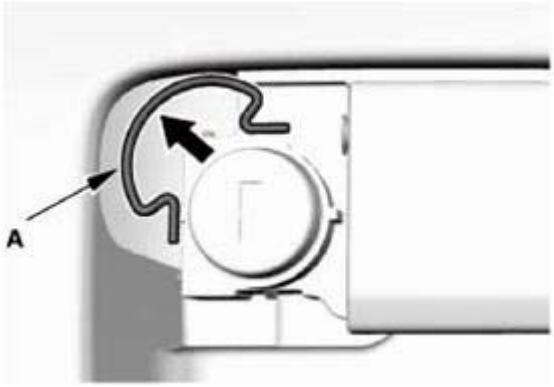

Fig. 278: Removing Glove Box Lock Cylinder Retainer
Courtesy of AMERICAN HONDA MOTOR CO., INC.

3. Remove the glove box lock cylinder (A).

Fig. 279: Removing Glove Box Lock Cylinder

GETtheMANUALS.org

Courtesy of AMERICAN HONDA MOTOR CO., INC.

3. Glove Box Damper
    1. Detach the hooks (A), then pull out the glove box damper (B).

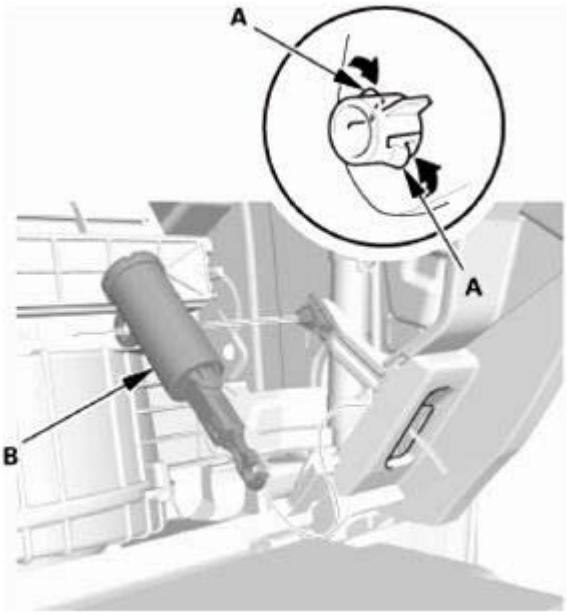

Fig. 280: Pulling Glove Box Damper
Courtesy of AMERICAN HONDA MOTOR CO., INC.

4. Glove Box Striker

    Remove the screws (A), then remove the glove box striker (B).

GETtheMANUALS.org

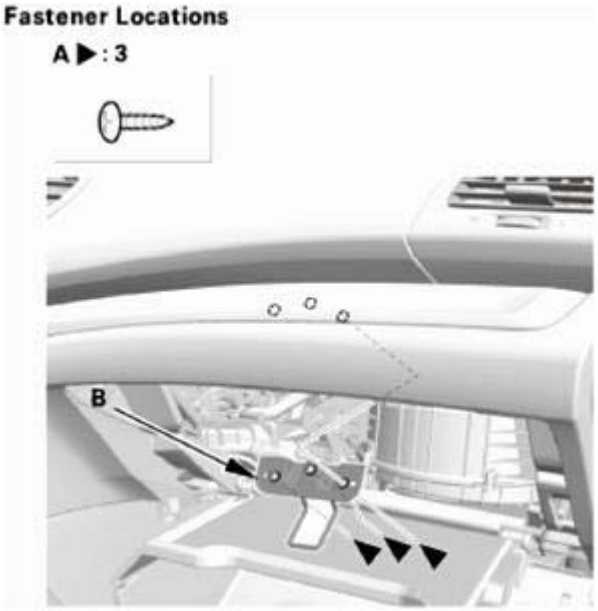

Fig. 281: Identifying Glove Box Striker And Screws
Courtesy of AMERICAN HONDA MOTOR CO., INC.

INSTALLATION

1. Glove Box Striker
    1. Install the glove box striker (A), then install the screws (B).

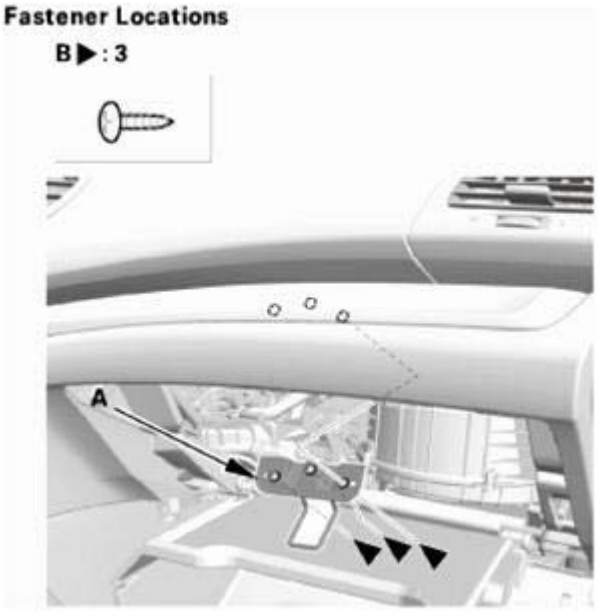

Fig. 282: Identifying Glove Box Striker And Screws
Courtesy of AMERICAN HONDA MOTOR CO., INC.

GETtheMANUALS.org

2. Glove Box Damper
    1. Install the glove box damper (A). Make sure the hooks (B) snap into place securely.

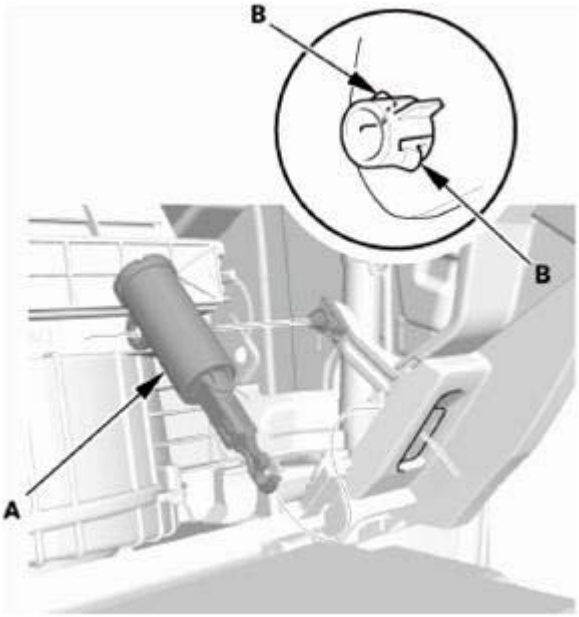

Fig. 283: Identifying Glove Box Damper And Hooks
Courtesy of AMERICAN HONDA MOTOR CO., INC.

3. Glove Box Lock Cylinder
    1. Install the retainer (A) in its slot.

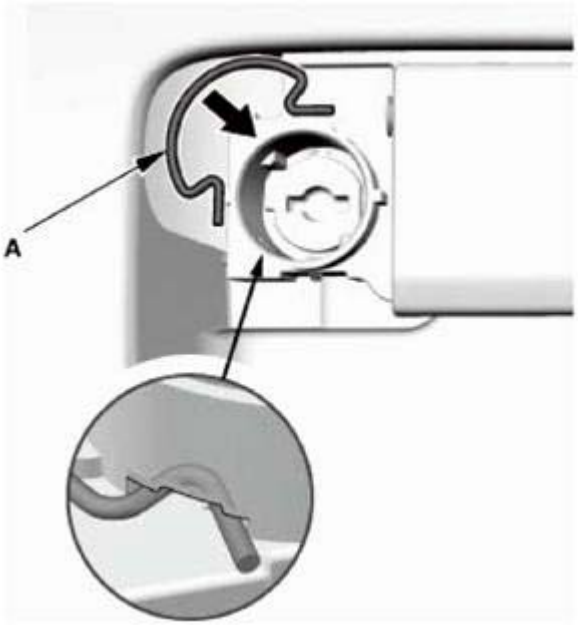

Fig. 284: Installing Retainer In Slot

GETtheMANUALS.org

Courtesy of AMERICAN HONDA MOTOR CO., INC.

2. Install the glove box lock cylinder (A). Push the lock cylinder into place securely until the retainer snaps into place.

Fig. 285: Installing Glove Box Lock Cylinder
Courtesy of AMERICAN HONDA MOTOR CO., INC.

Install the glove box lock cylinder trim (A).

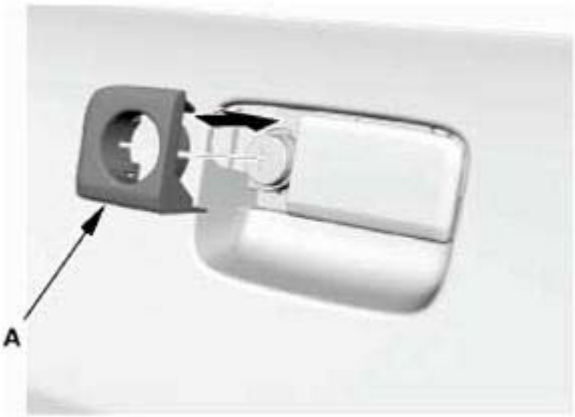

Fig. 286: Installing Glove Box Lock Cylinder Trim
Courtesy of AMERICAN HONDA MOTOR CO., INC.

4. Glove Box
    1. Install the glove box (A), then install the glove box damper hook (B).

GETtheMANUALS.org

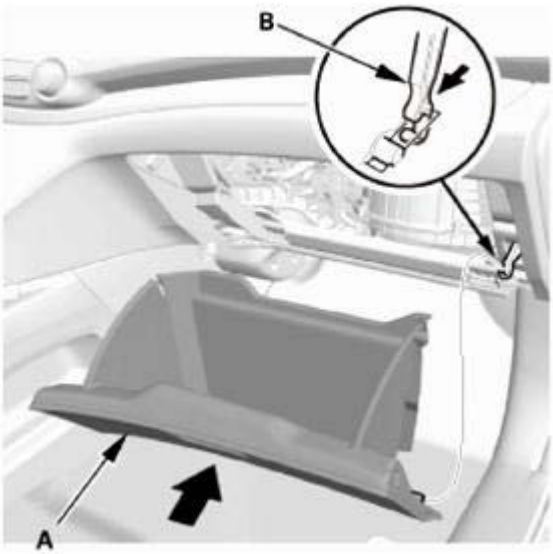

Fig. 287: Installing Glove Box
Courtesy of AMERICAN HONDA MOTOR CO., INC.

2. Install the bolts (A).

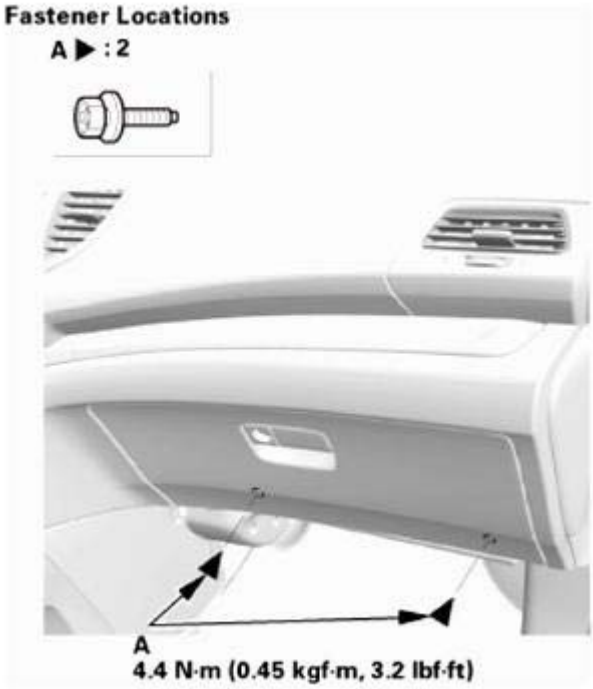

Fig. 288: Identifying Glove Box Mounting Bolts With Torque Specifications
Courtesy of AMERICAN HONDA MOTOR CO., INC.

GETtheMANUALS.org

DOOR LOCK SWITCH TEST

REMOVAL

1. Front Door Power Window Switch Panel
    1. Carefully pry out on the notch (A) in the power window switch panel (B) with the appropriate trim tool to detach the clips (C) and the hooks (D). Disconnect the connectors (E), then remove the power window switch panel.

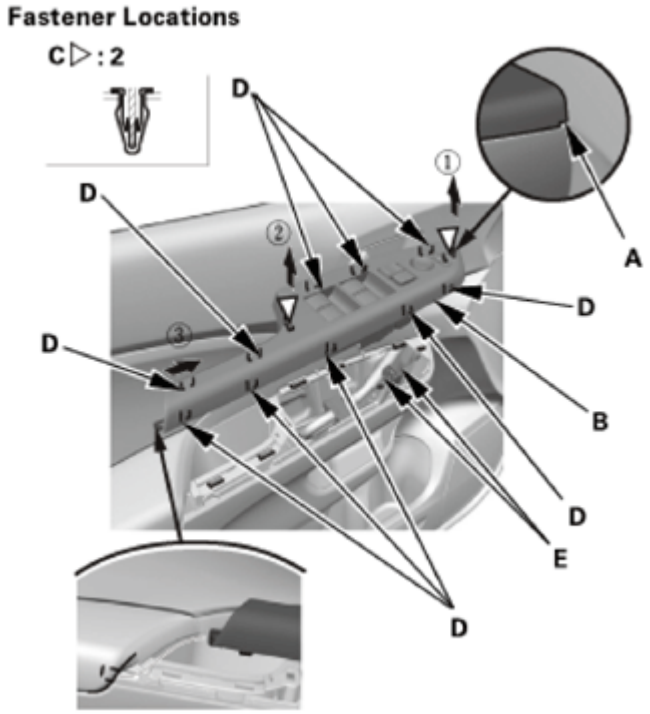

Fig. 1: Identifying Power Window Switch Panel, Connector, Hooks, Notch And Clips
Courtesy of AMERICAN HONDA MOTOR CO., INC.

2. Front Door Power Window Switch Panel - Passenger's Side
    1. Carefully pry out on the notch (A) in the power window switch panel (B) with the appropriate trim tool to detach the clips (C) and the hooks (D). Disconnect the connector (E), then remove the power window switch panel.

GETtheMANUALS.org

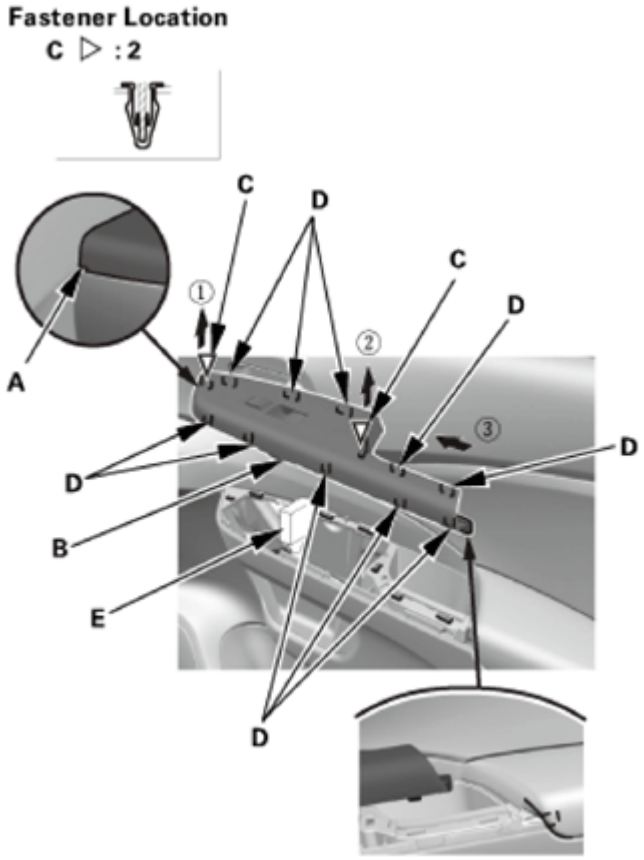

Fig. 2: Identifying Power Window Switch Panel, Connector, Hooks, Notch And Clips (Passenger's Side)
Courtesy of AMERICAN HONDA MOTOR CO., INC.

TEST

1. Driver's Door Lock Switch - Test
    1. Check for continuity between the terminals in each switch position according to table.
    2. If the continuity is not as specified, the driver's door lock switch is faulty; replace the power window master switch (A).

GETtheMANUALS.org

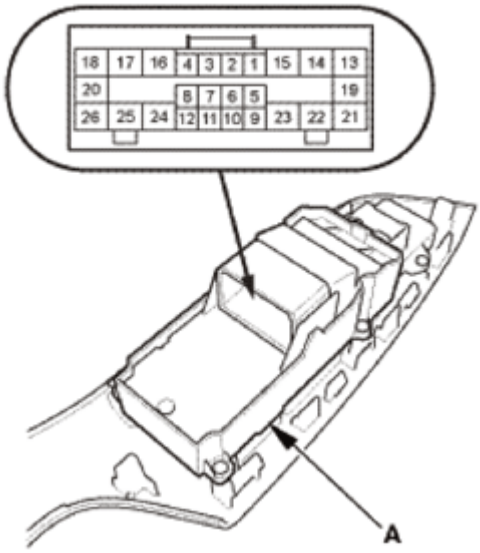

Fig. 3: Identifying Driver's Power Window Master Switch And Connector Terminals
Courtesy of AMERICAN HONDA MOTOR CO., INC.

Terminal / Position	2	3	13
LOCK	○		○
NEUTRAL			
UNLOCK		○	○

Fig. 4: Power Window Master Switch Continuity Reference Chart
Courtesy of AMERICAN HONDA MOTOR CO., INC.

2. Front Passenger's Door Lock Switch - Test
    1. Check for continuity between the terminals in each switch according to table.
    2. If the continuity is not as specified, the passenger's door lock switch is faulty; replace the front passenger's power window switch (A).

GETtheMANUALS.org

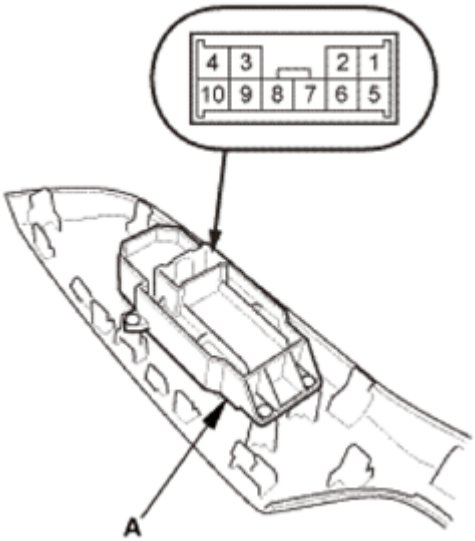

Fig. 5: Identifying Passenger's Power Window Master Switch And Connector Terminals
Courtesy of AMERICAN HONDA MOTOR CO., INC.

Terminal / Position	2	3	4
LOCK	○	○	
NEUTRAL			
UNLOCK	○		○

Fig. 6: Power Window Master Switch Continuity Reference Chart
Courtesy of AMERICAN HONDA MOTOR CO., INC.

INSTALLATION

1. Front Door Power Window Switch Panel - Passenger's Side
    1. Connect the connector (A), then install the power window switch panel (B). Make sure the clips (C) and the hooks (D) snap into place securely.

GETtheMANUALS.org

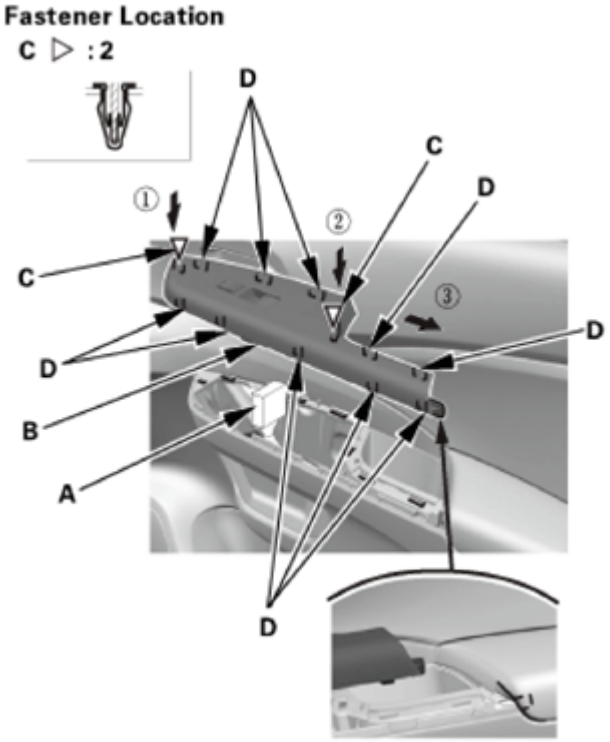

Fig. 7: Installing Power Window Switch Panel
Courtesy of AMERICAN HONDA MOTOR CO., INC.

2. Front Door Power Window Switch Panel
    1. Connect the connectors (A), then install the power window switch panel (B). Make sure the clips (C) and the hooks (D) snap into place securely.

GETtheMANUALS.org

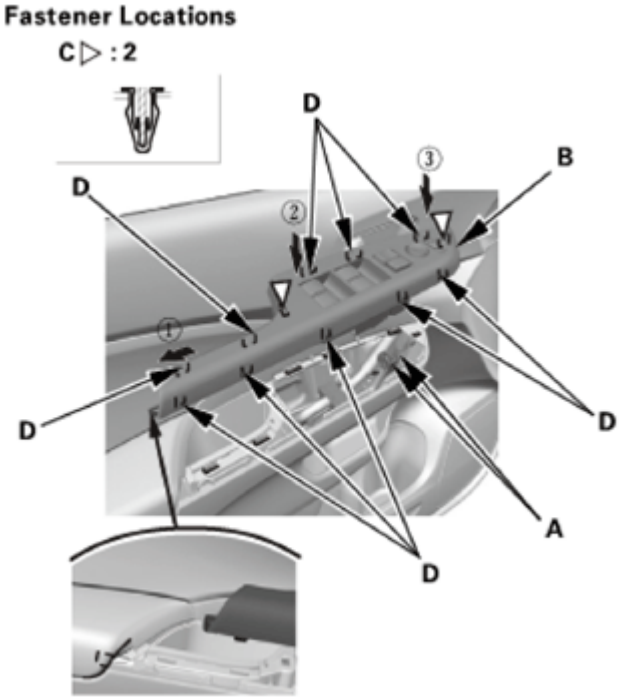

Fig. 8: Identifying Power Window Switch Panel, Connector, Hooks And Clips
Courtesy of AMERICAN HONDA MOTOR CO., INC.

DOOR POSITION ADJUSTMENT

REMOVAL

1. Vehicle Lift
    1. Raise the vehicle on a lift, and make sure it is securely supported.
2. Front Wheel
    1. Remove the front wheel.

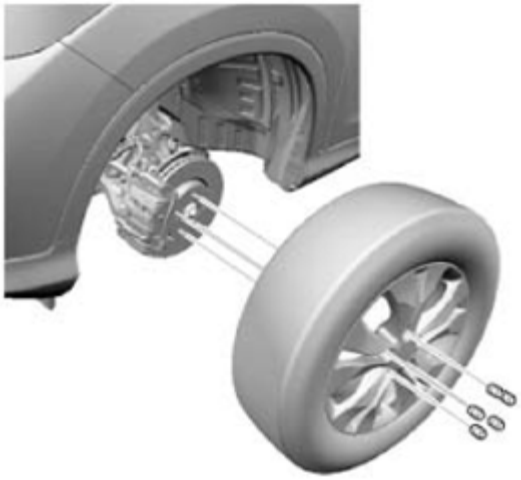

GETtheMANUALS.org

Fig. 9: Identifying Front Wheel Mounting Bolts
Courtesy of AMERICAN HONDA MOTOR CO., INC.

3. Front Splash Guard
    1. For some models: Remove the screws (A), then remove the front splash guard (B).

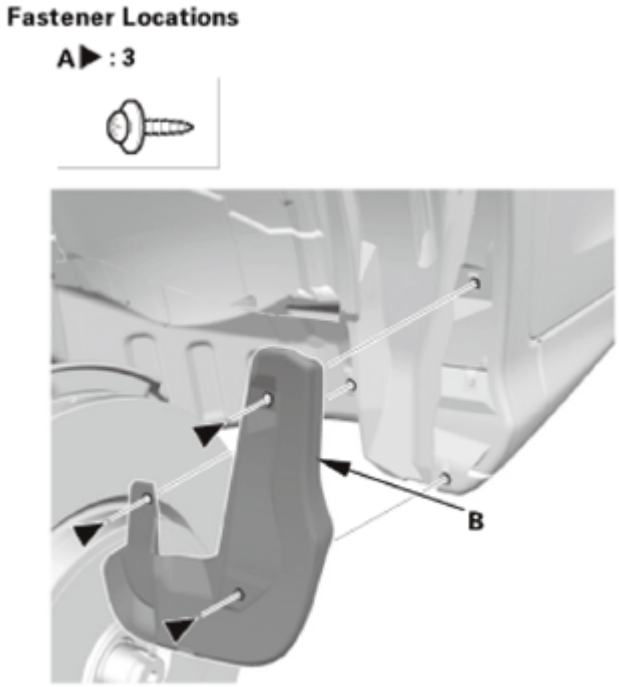

Fig. 10: Identifying Front Splash Guard And Mounting Screws
Courtesy of AMERICAN HONDA MOTOR CO., INC.

4. Front Inner Fender As Needed
    1. Front door: Remove the bolt (A), the screws (B), and the clips (C, D, and E) securing the front inner fender (F), then detach the front inner fender as needed.

GETtheMANUALS.org

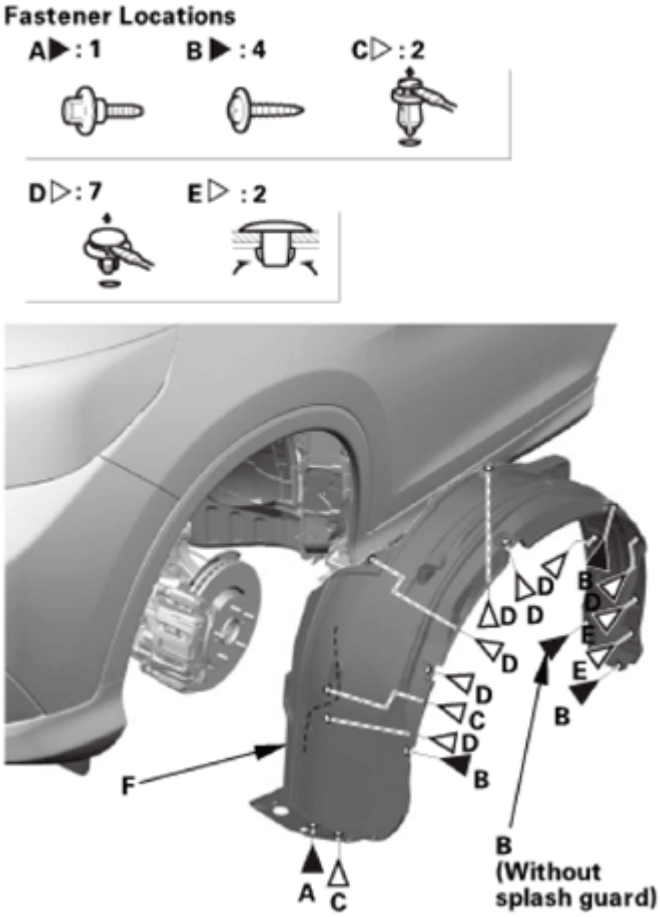

<u>Fig. 11: Identifying Front Inner Fender, Bolt, Screws And Clips</u>
Courtesy of AMERICAN HONDA MOTOR CO., INC.

5. Front Fender Fairing (When Front Door Position Adjustment)
    1. From the wheel arch, detach the clips (A).

GETtheMANUALS.org

Fig. 12: Identifying Wheel Arch Clips
Courtesy of AMERICAN HONDA MOTOR CO., INC.

2. Release the hooks (A) securing the front fender fairing (B).

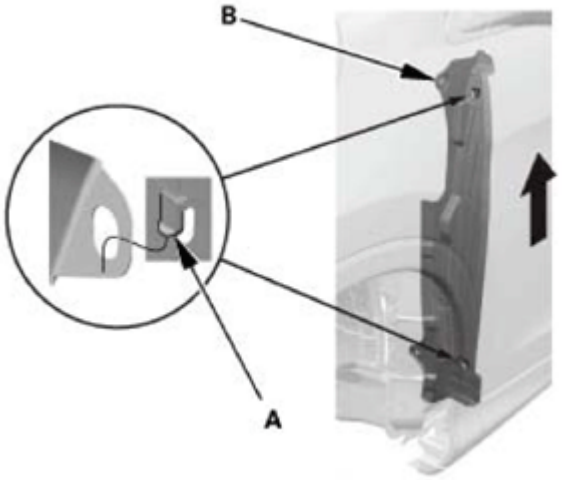

Fig. 13: Removing Front Fender Fairing Hooks
Courtesy of AMERICAN HONDA MOTOR CO., INC.

3. Remove the front fender fairing (A).
4. Install the front wheel.
5. Lower the vehicle on the lift.

GETtheMANUALS.org

Fig. 14: Removing Front Fender Fairing
Courtesy of AMERICAN HONDA MOTOR CO., INC.

ADJUSTMENT

1. Door Position - Adjustment

Front

NOTE: **Check for a flush fit with the body, then check for equal gaps between the front and the rear doors, and between doors and the body. Check that the door and body edges are parallel.**

1. Place the vehicle on a firm, level surface when adjusting the doors.
2. Adjust at the hinges:
   - Have an assistant help you when adjusting the door.
   - Loosen the hinge mounting bolts (A) slightly, and move the door backward or forward, up or down as necessary to equalize the gaps.
3. If necessary, replace the door mounting bolts with the adjusting bolts made specifically for door adjustment, then adjust at the door: Loosen the door mounting bolts (B) slightly, and move the door up or down as necessary to equalize the gaps, and move it in or out until it's flush with the body.

NOTE: **Refer to the Parts Catalog if you need to use an adjusting bolt.**

GETtheMANUALS.org

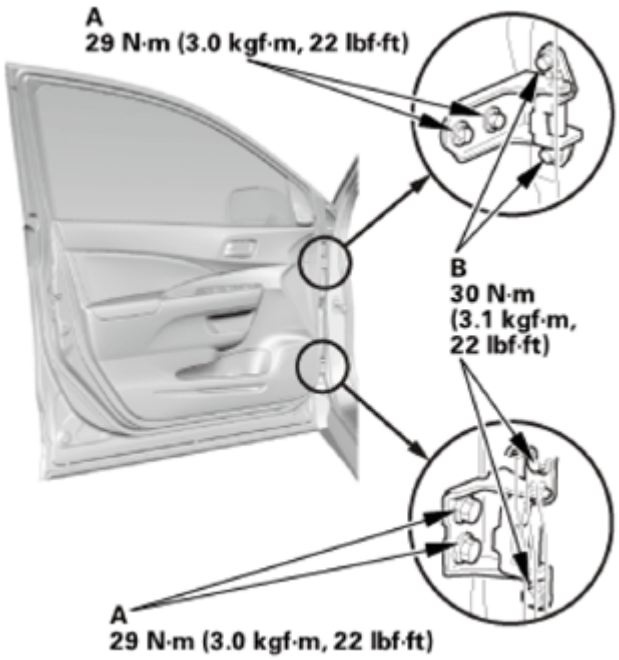

Fig. 15: Identifying Front Door And Hinge Mounting Bolts With Torque Specifications
Courtesy of AMERICAN HONDA MOTOR CO., INC.

Rear

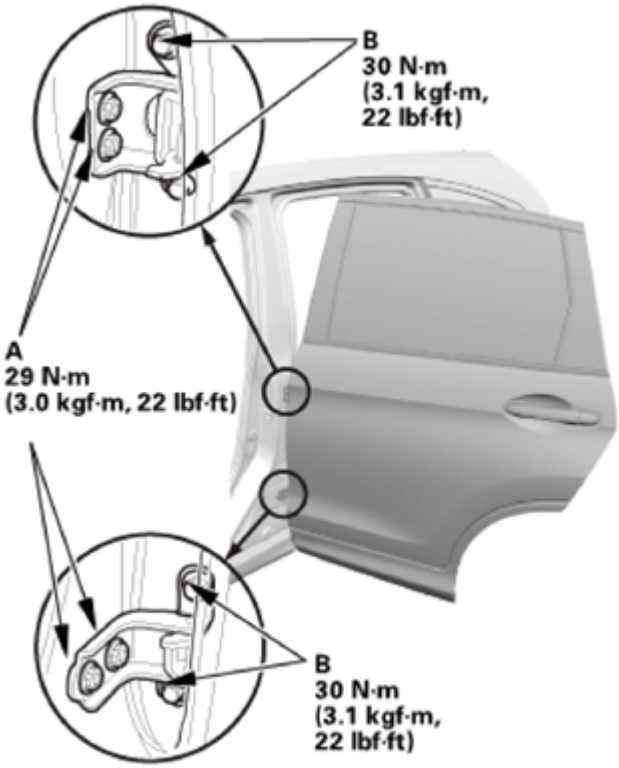

Fig. 16: Identifying Rear Door And Hinge Mounting Bolts With Torque Specifications

GETtheMANUALS.org

Courtesy of AMERICAN HONDA MOTOR CO., INC.

4. Check that the door and body edges are parallel. If necessary, adjust the door cushions (A) to make the rear of the doors flush with the body.
5. Apply touch-up paint to the hinge mounting bolts, and around the hinges.

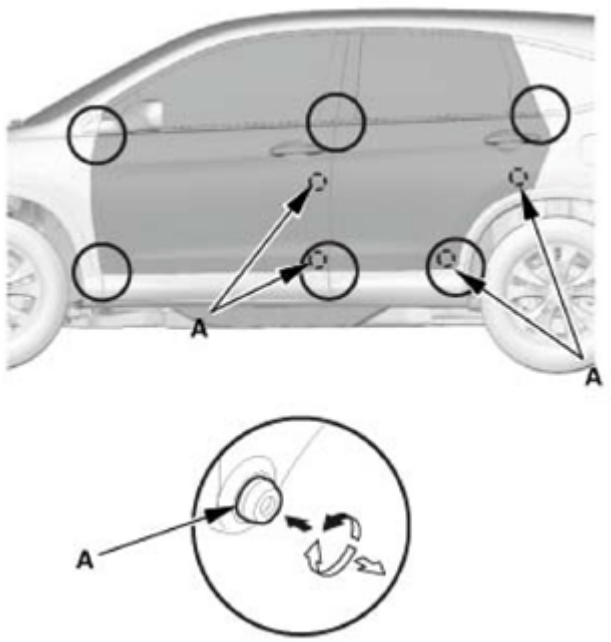

Fig. 17: Adjusting Door Cushions
Courtesy of AMERICAN HONDA MOTOR CO., INC.

INSTALLATION

1. Front Fender Fairing (When Front Door Position Adjustment)
    1. Raise the vehicle on a lift, and make sure it is securely supported.
    2. Remove the front wheel.
    3. Place the front fender fairing (A) as shown.

GETtheMANUALS.org

Fig. 18: Installing Front Fender Fairing
Courtesy of AMERICAN HONDA MOTOR CO., INC.

4. Install the hooks (A) of the front fender fairing (B) to the body holes as shown.

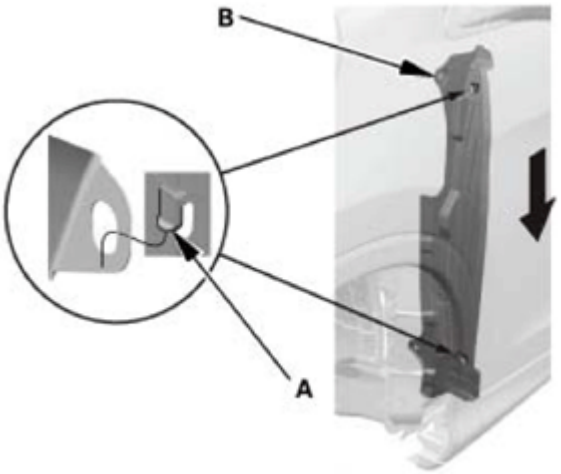

Fig. 19: Identifying Front Fender Fairing Hooks
Courtesy of AMERICAN HONDA MOTOR CO., INC.

5. From the wheel arch, install the clips (A).

GETtheMANUALS.org

Fig. 20: Identifying Wheel Arch Clips
Courtesy of AMERICAN HONDA MOTOR CO., INC.

2. Front Inner Fender As Needed
    1. Front door: Install the front inner fender (A), then install the bolt (B), the screws (C), and the clips (D, E, and F). Make sure the clips snap into place securely.

GETtheMANUALS.org

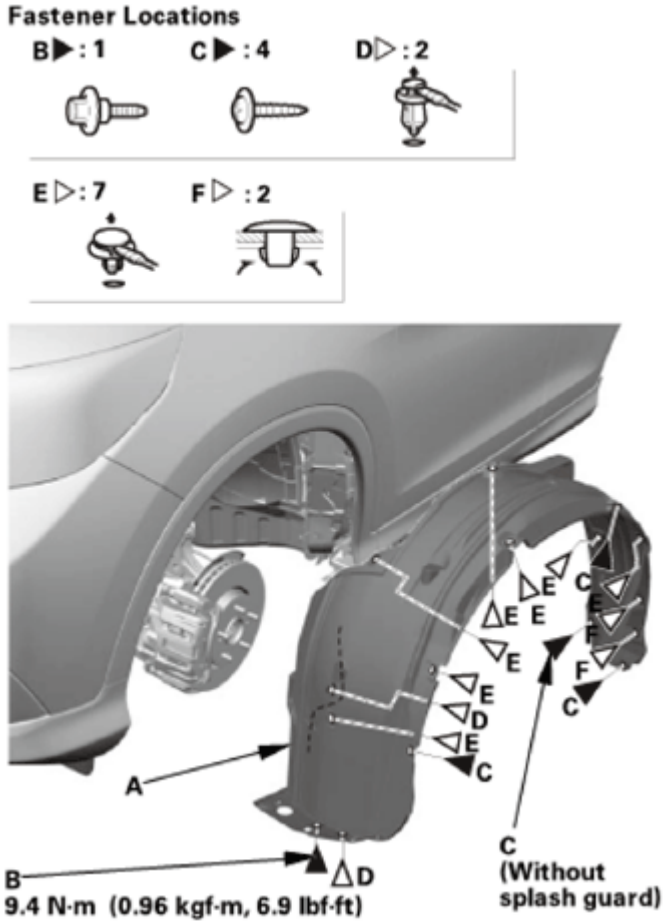

Fig. 21: Identifying Front Inner Fender, Bolt, Screws And Clips With Torque Specification
Courtesy of AMERICAN HONDA MOTOR CO., INC.

3. Front Splash Guard
    1. For some models: Install the front splash guard (A), then install the screws (B).

GETtheMANUALS.org

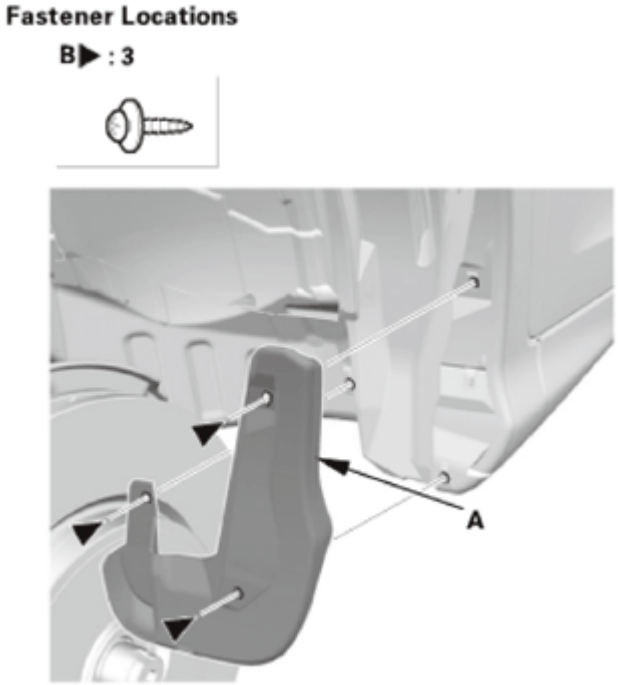

Fig. 22: Identifying Front Splash Guard And Screws
Courtesy of AMERICAN HONDA MOTOR CO., INC.

4. Front Wheel
    1. Install the front wheel.

NOTE: **Before installing the wheel, clean the mating surfaces between the brake disc and the inside of the wheel.**

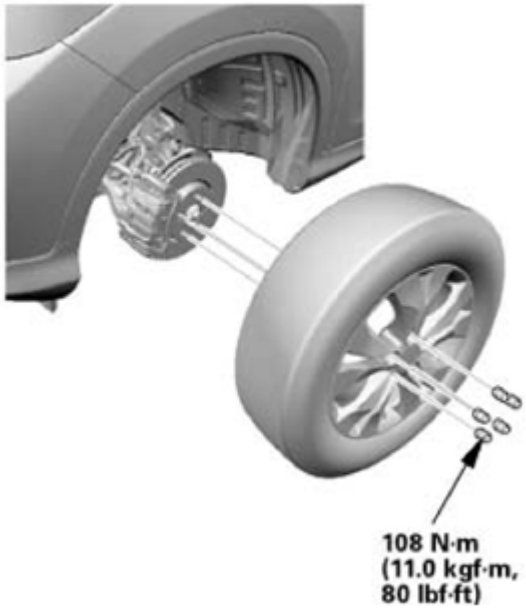

GETtheMANUALS.org

Fig. 23: Identifying Front Wheel Mounting Bolts With Torque Specifications
Courtesy of AMERICAN HONDA MOTOR CO., INC.

DOOR STRIKER ADJUSTMENT

ADJUSTMENT

1. Door Striker - Adjustment

   Make sure the door latches securely without slamming it. If necessary, adjust the striker (A): The striker screws are fixed, but the striker can be adjusted slightly up or down, and in or out.

   1. Loosen the screws (B).
   2. Wrap the striker with a shop towel, then adjust the striker by tapping it with a plastic hammer. Do not tap the striker too hard.
   3. Lightly tighten the screws.
   4. Hold the outer handle out, and push the door against the body to be sure the striker allows a flush fit. If the door latches properly, tighten the screws to the specified torque, and recheck.

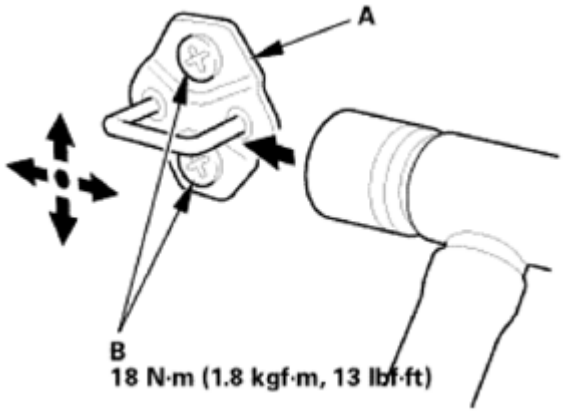

Fig. 24: Adjusting Door Striker With Torque Specification
Courtesy of AMERICAN HONDA MOTOR CO., INC.

FRONT DOOR COMPONENT LOCATION INDEX

GETtheMANUALS.org

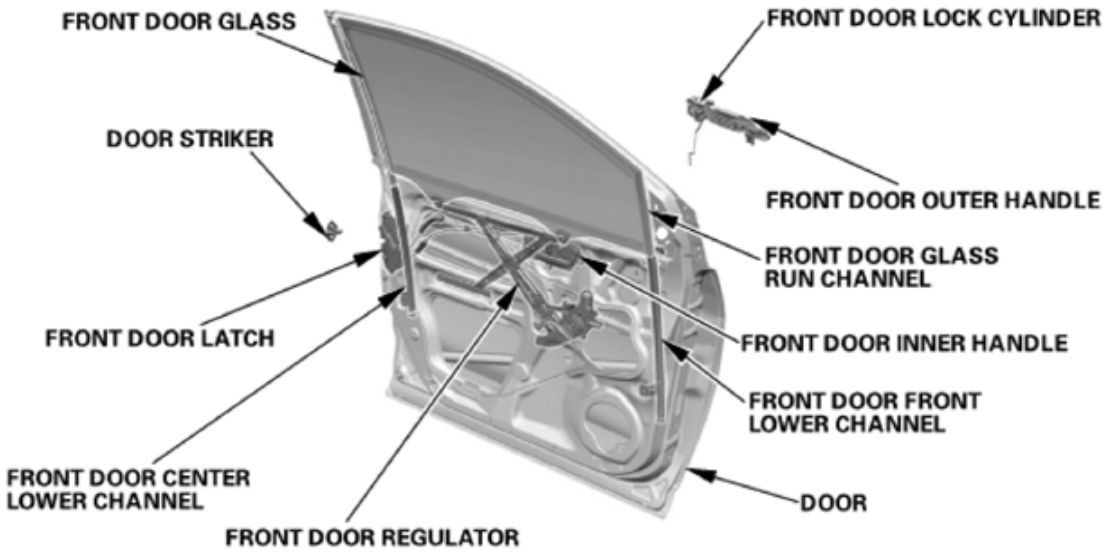

Fig. 25: Front Door Outer Components Location
Courtesy of AMERICAN HONDA MOTOR CO., INC.

DOOR	**POSITION ADJUSTMENT**
DOOR STRIKER	**ADJUSTMENT**
FRONT DOOR LATCH	**REMOVAL AND INSTALLATION**
FRONT DOOR OUTER HANDLE	**REMOVAL AND INSTALLATION**
FRONT DOOR GLASS	**Front Door Glass Removal and Installation** **Front Door Glass Adjustment**
FRONT DOOR REGULATOR	**Front Door Regulator Removal and Installation**
FRONT DOOR CENTER LOWER CHANNEL	**Front Door Glass Removal and Installation**
FRONT DOOR FRONT LOWER CHANNEL	**Front Door Glass Removal and Installation**
FRONT DOOR GLASS RUN CHANNEL	**Front Door Glass Removal and Installation**
FRONT DOOR INNER HANDLE	**REMOVAL AND INSTALLATION**
FRONT DOOR LOCK CYLINDER	**REMOVAL AND INSTALLATION**

GETtheMANUALS.org

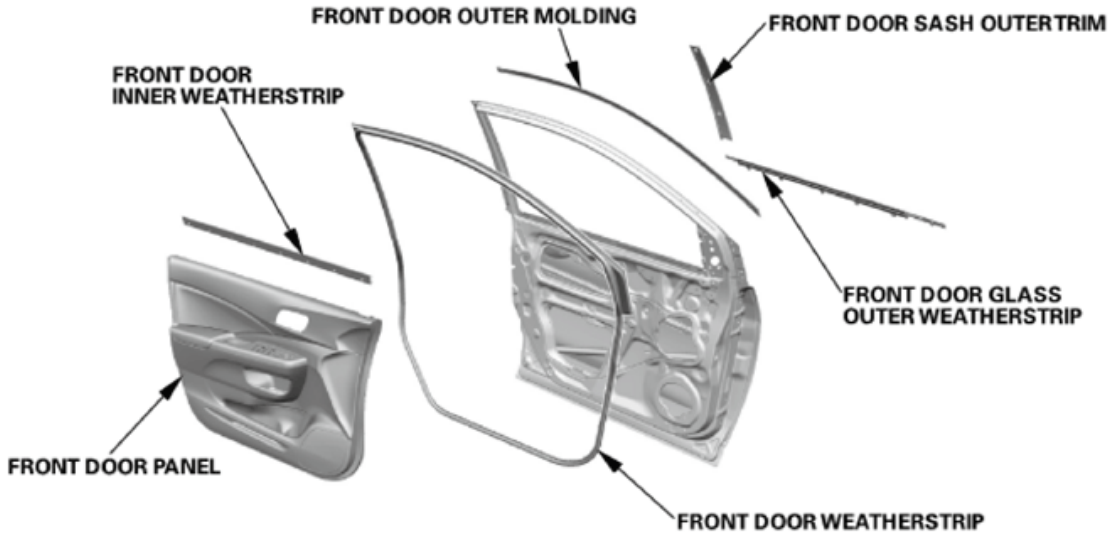

Fig. 26: Front Door Inner Components Location
Courtesy of AMERICAN HONDA MOTOR CO., INC.

FRONT DOOR OUTER MOLDING	**REPLACEMENT**
FRONT DOOR PANEL	**REMOVAL AND INSTALLATION**
FRONT DOOR WEATHERSTRIP	**REMOVAL AND INSTALLATION**
FRONT DOOR GLASS OUTER WEATHERSTRIP	**REMOVAL AND INSTALLATION**
FRONT DOOR INNER WEATHERSTRIP	**REMOVAL AND INSTALLATION**
FRONT DOOR SASH OUTER TRIM	**REMOVAL AND INSTALLATION**

FRONT DOOR GLASS OUTER WEATHERSTRIP REMOVAL AND INSTALLATION

REMOVAL

1. Door Mirror Cover
    1. Carefully pry out the door mirror cover (A) with the appropriate trim tool to detach the clips (B), then remove the door mirror cover.
    2. With tweeter: Disconnect the connector (C).

GETtheMANUALS.org

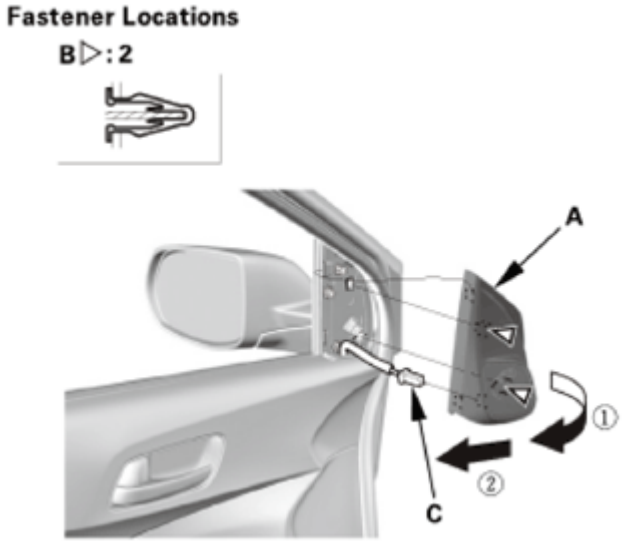

Fig. 27: Removing Door Mirror Cover
Courtesy of AMERICAN HONDA MOTOR CO., INC.

2. Front Door Power Window Switch Panel
    1. Carefully pry out on the notch (A) in the power window switch panel (B) with the appropriate trim tool to detach the clips (C) and the hooks (D). Disconnect the connectors (E), then remove the power window switch panel.

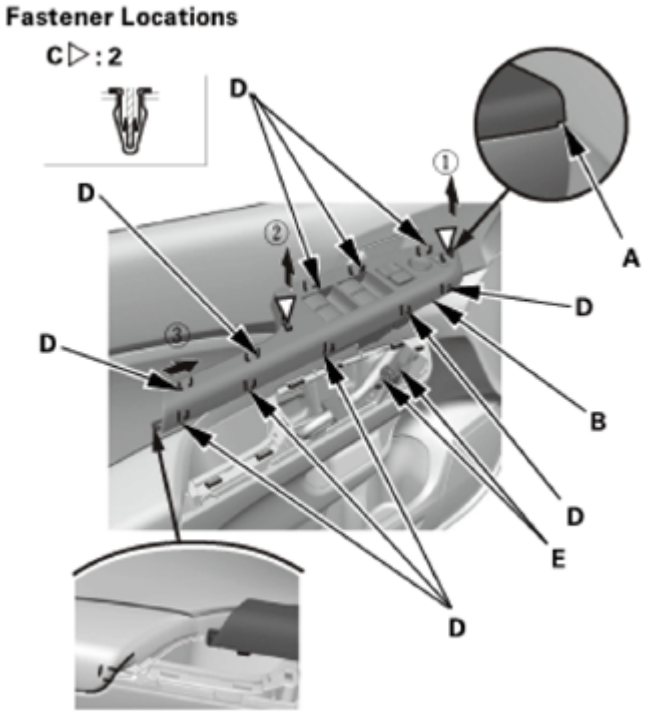

Fig. 28: Identifying Power Window Switch Panel, Connectors, Notch, Hooks And Clips
Courtesy of AMERICAN HONDA MOTOR CO., INC.

GETtheMANUALS.org

3. Front Door Panel
    1. Carefully pry out on the upper hook (A) in the inner handle cap (B) with the appropriate trim tool, then pull back the inner handle cap to remove it.

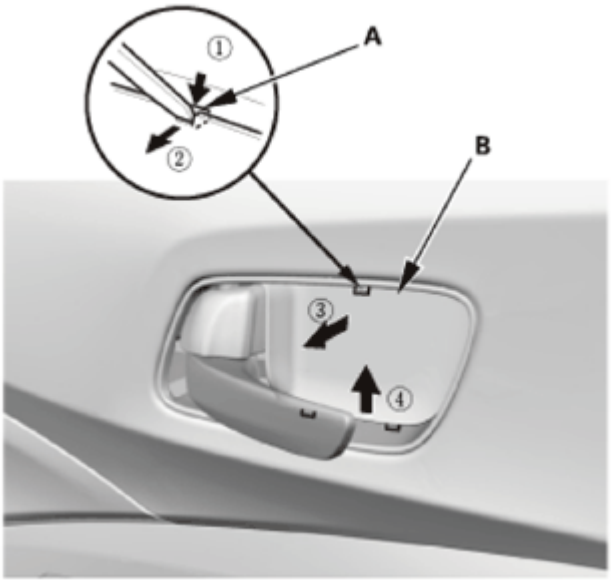

Fig. 29: Removing Inner Handle Cap Upper Hook Using Tool
Courtesy of AMERICAN HONDA MOTOR CO., INC.

    2. Remove the screws (A) securing the inner handle (B).

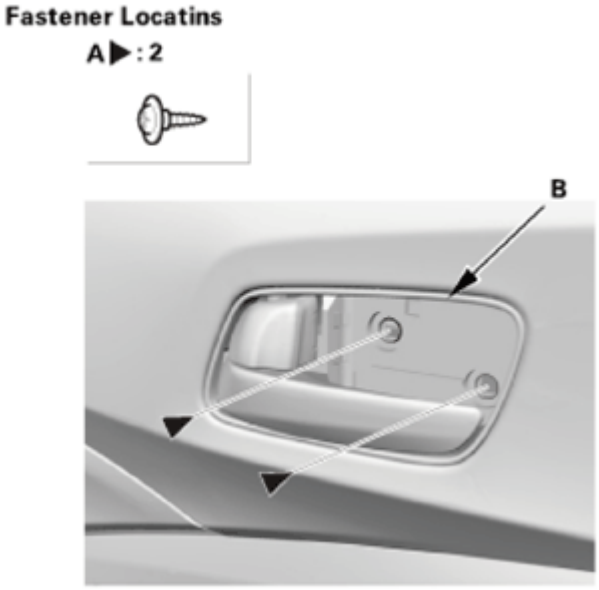

Fig. 30: Identifying Inner Handle And Screws
Courtesy of AMERICAN HONDA MOTOR CO., INC.

GETtheMANUALS.org

3. Remove the pull pocket mat (A), then remove the screw (B).

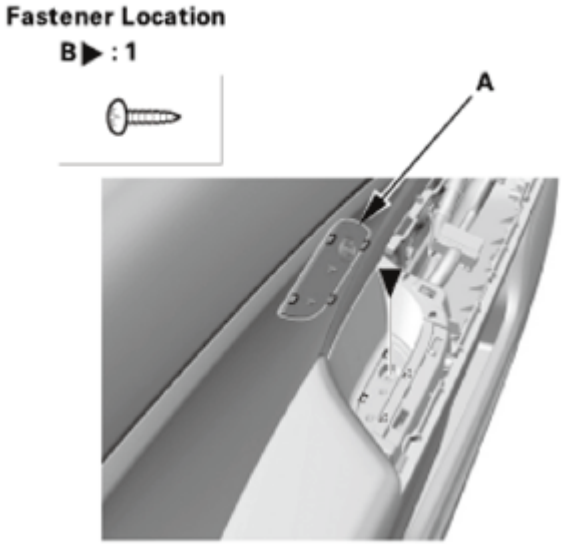

Fig. 31: Identifying Pocket Mat And Screw
Courtesy of AMERICAN HONDA MOTOR CO., INC.

4. Starting at the bottom edge of the door panel (A), detach the clips (B) with a commercially available trim pad remover.
5. Starting at the rear, pull the door panel upward.
6. Remove the inner handle (C) from the door panel, then remove the door panel.

GETtheMANUALS.org

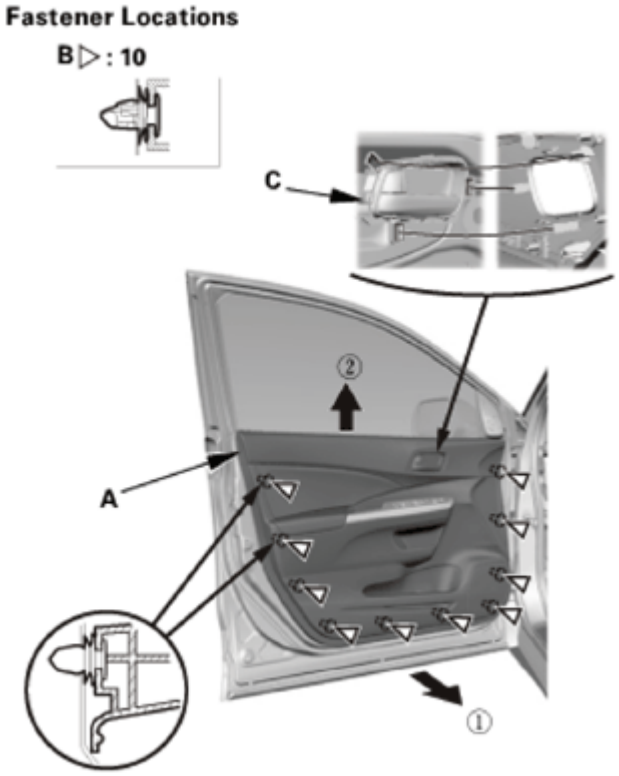

Fig. 32: Removing Door Panel
Courtesy of AMERICAN HONDA MOTOR CO., INC.

4. Door Mirror
    1. Disconnect the connector.
    2. Detach the harness clip (A).
    3. While holding the power mirror (B), remove the nuts (C) securing the mirror.

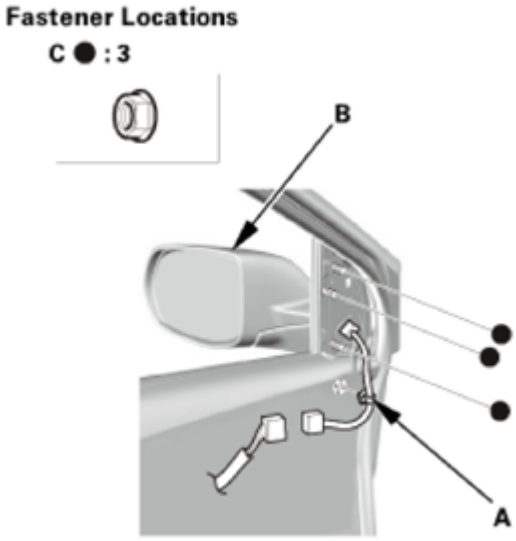

GETtheMANUALS.org

Fig. 33: Identifying Power Mirror, Harness Clip And Nuts
Courtesy of AMERICAN HONDA MOTOR CO., INC.

4. Remove the power mirror (A) and carefully pull out the harness (B).

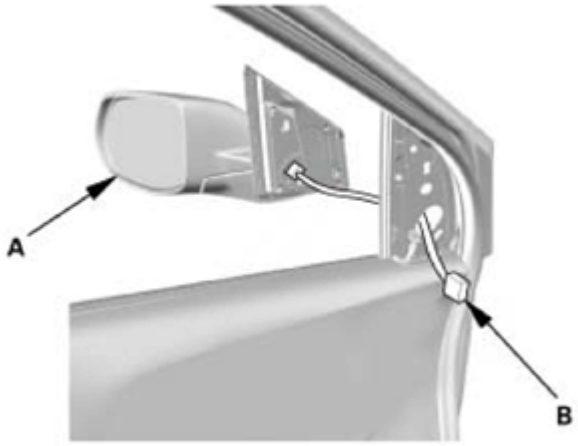

Fig. 34: Identifying Power Mirror And Harness
Courtesy of AMERICAN HONDA MOTOR CO., INC.

5. Front Door Plastic Cover As Needed
    1. Disconnect the connector (A), then detach the harness clips (B).
    2. Remove the screws (C), then remove the pull pocket bracket (D).
    3. Remove the plug caps (E), then carefully detach the plastic cover (F) as needed.

NOTE: **If the plastic cover is damaged or torn, replace it.**

GETtheMANUALS.org

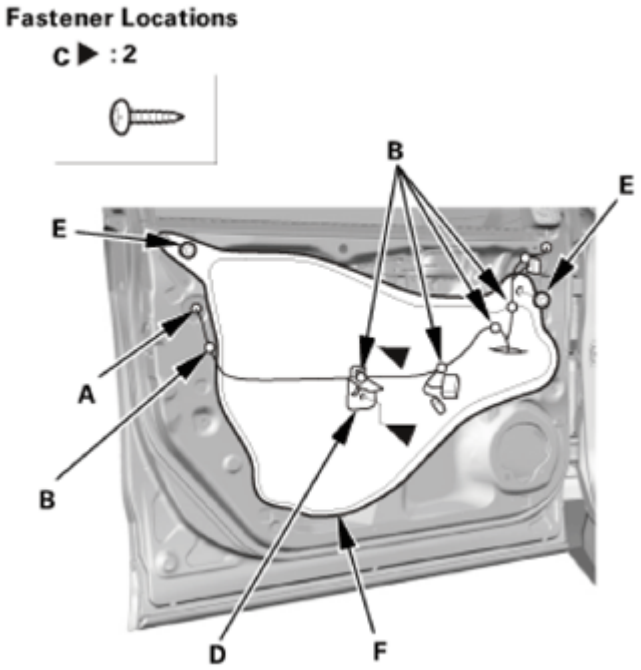

Fig. 35: Identifying Pocket Bracket, Connector, Plastic Cover, Plug Caps And Screws
Courtesy of AMERICAN HONDA MOTOR CO., INC.

6. Front Door Glass Outer Weatherstrip
    1. Remove the screw (A) securing the front door glass outer weatherstrip.
    2. Slide the front door glass outer weatherstrip clips (B) forward to release it from the door.

GETtheMANUALS.org

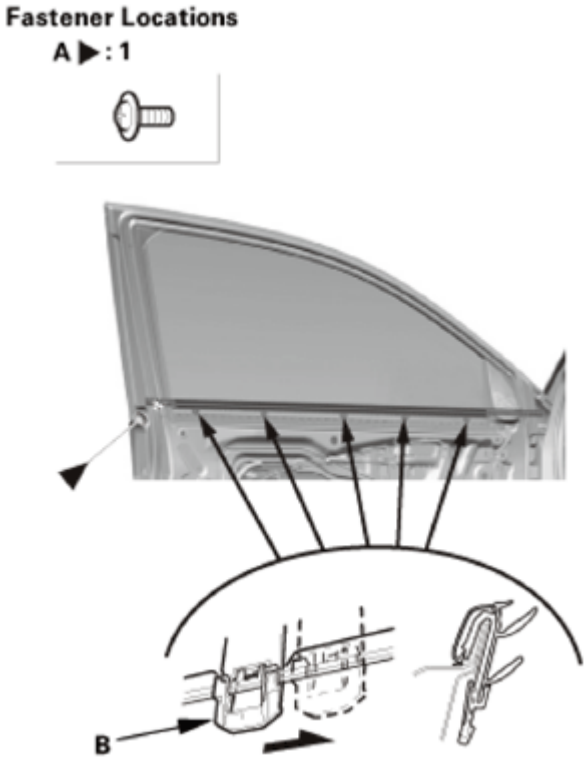

Fig. 36: Sliding Front Door Glass Outer Weatherstrip Clips
Courtesy of AMERICAN HONDA MOTOR CO., INC.

3. Remove the front door glass outer weatherstrip (A).

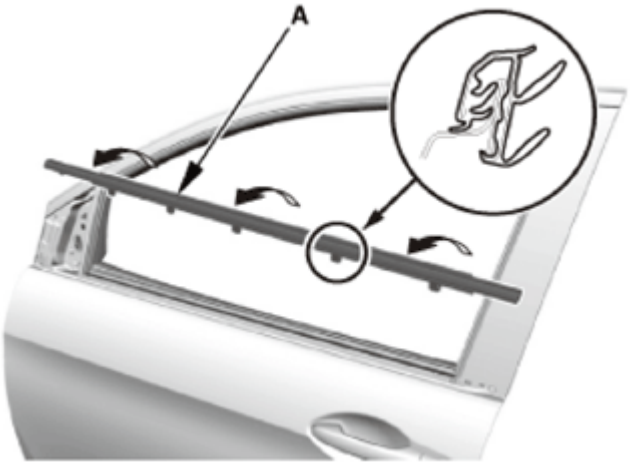

Fig. 37: Removing Front Door Glass Outer Weatherstrip
Courtesy of AMERICAN HONDA MOTOR CO., INC.

INSTALLATION

1. Front Door Glass Outer Weatherstrip

GETtheMANUALS.org

1. Install the front door glass outer weatherstrip (A).

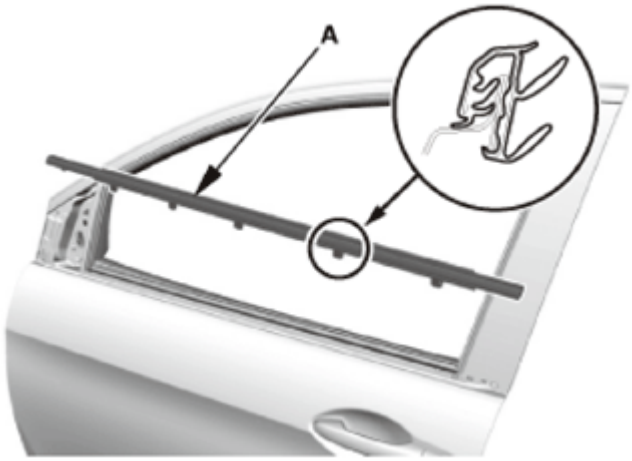

Fig. 38: Identifying Front Door Glass Outer Weatherstrip
Courtesy of AMERICAN HONDA MOTOR CO., INC.

2. Slide the front door glass outer weatherstrip clips (A) securely onto the flanges, then install the screw (B).

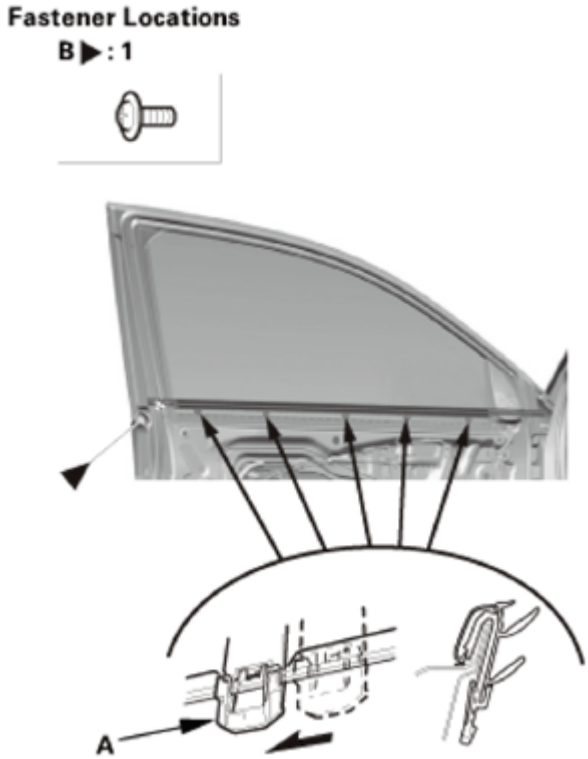

Fig. 39: Sliding Front Door Glass Outer Weatherstrip Clips Onto Flanges
Courtesy of AMERICAN HONDA MOTOR CO., INC.

GETtheMANUALS.org

2. Front Door Plastic Cover As Needed
    1. Install the plastic cover (A), then install the plug caps (B).
    2. Install the pull pocket bracket (C), then install the screws (D).
    3. Connect the connector (E), then install the harness clips (F).

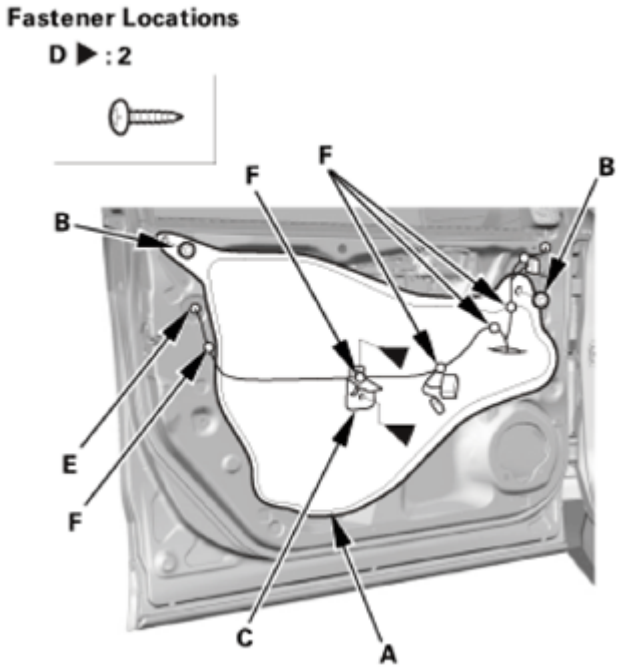

Fig. 40: Identifying Front Door Plastic Cover, Pocket Bracket And Fasteners With Torque Specification
Courtesy of AMERICAN HONDA MOTOR CO., INC.

3. Door Mirror
    1. Insert the harness (A) into the hole in the door, then install the power mirror (B).

Fig. 41: Identifying Power Mirror And Harness

GETtheMANUALS.org

Courtesy of AMERICAN HONDA MOTOR CO., INC.

2. Install the nuts (A).
3. Attach the harness clip (B).
4. Connect the connector.

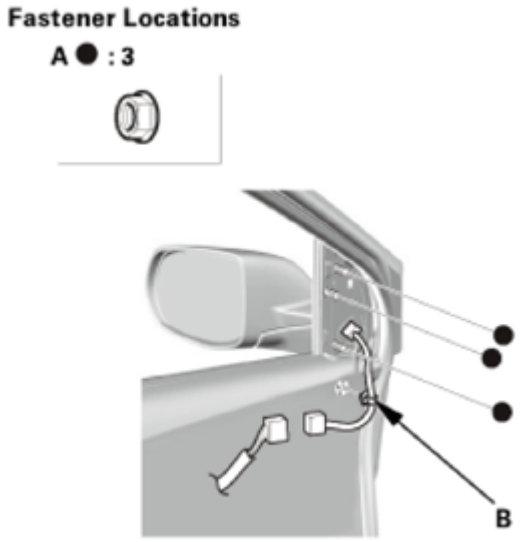

Fig. 42: Identifying Connector, Harness Clip And Nuts
Courtesy of AMERICAN HONDA MOTOR CO., INC.

4. Front Door Panel
    1. Install the inner handle (A) in the door panel (B).
    2. Install the door panel. Make sure the clips (C) snap into place securely.

GETtheMANUALS.org

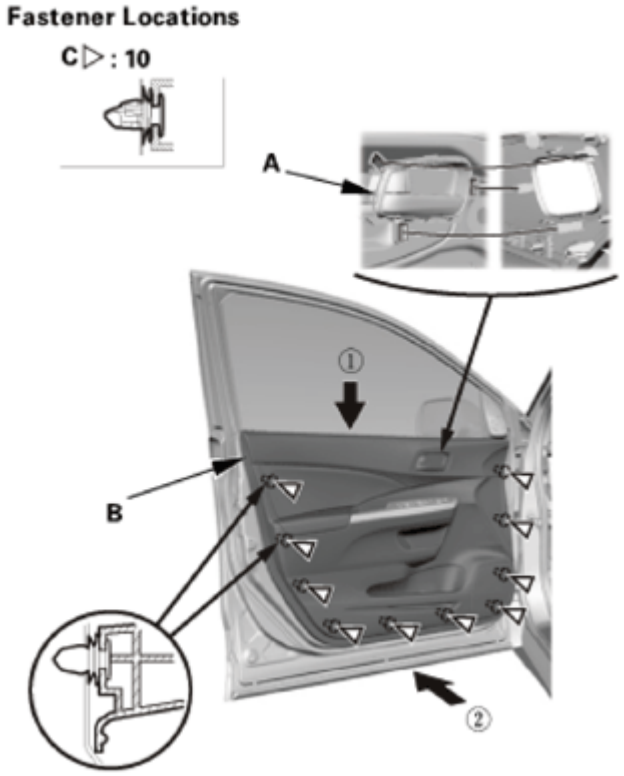

Fig. 43: Installing Inner Handle In Door Panel
Courtesy of AMERICAN HONDA MOTOR CO., INC.

3. Install the screw (A), then install the pull pocket mat (B).

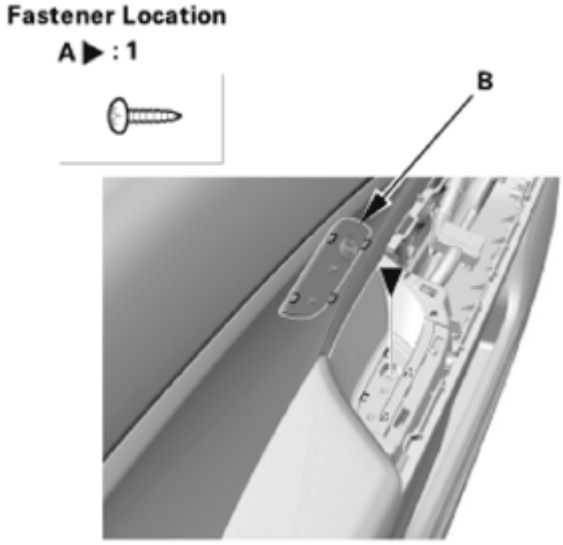

Fig. 44: Identifying Pocket Mat And Screw
Courtesy of AMERICAN HONDA MOTOR CO., INC.

4. Install the screws (A) securing the inner handle (B).

GETtheMANUALS.org

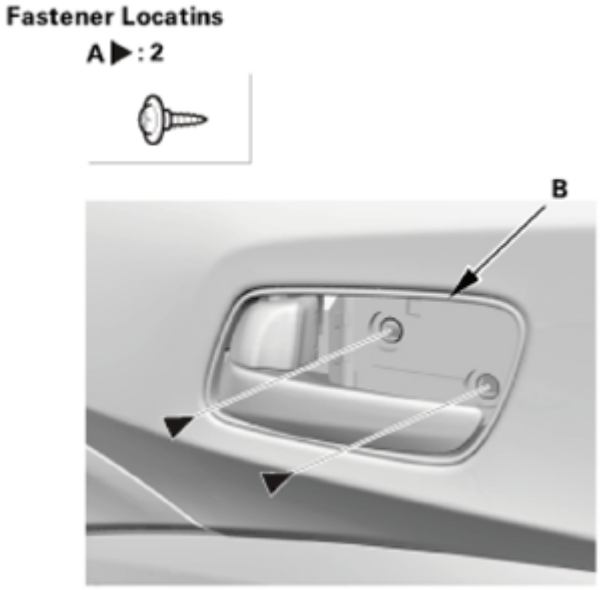

Fig. 45: Identifying Inner Handle And Screw
Courtesy of AMERICAN HONDA MOTOR CO., INC.

5. Install the inner handle cap (A). Make sure the upper hook (B) and the lower hooks (C) snap into place securely.

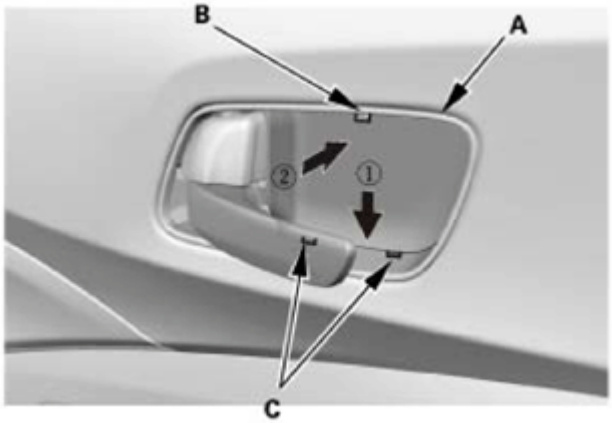

Fig. 46: Installing Inner Handle Cap And Hooks
Courtesy of AMERICAN HONDA MOTOR CO., INC.

5. Front Door Power Window Switch Panel
    1. Connect the connectors (A), then install the power window switch panel (B). Make sure the clips (C) and the hooks (D) snap into place securely.

GETtheMANUALS.org

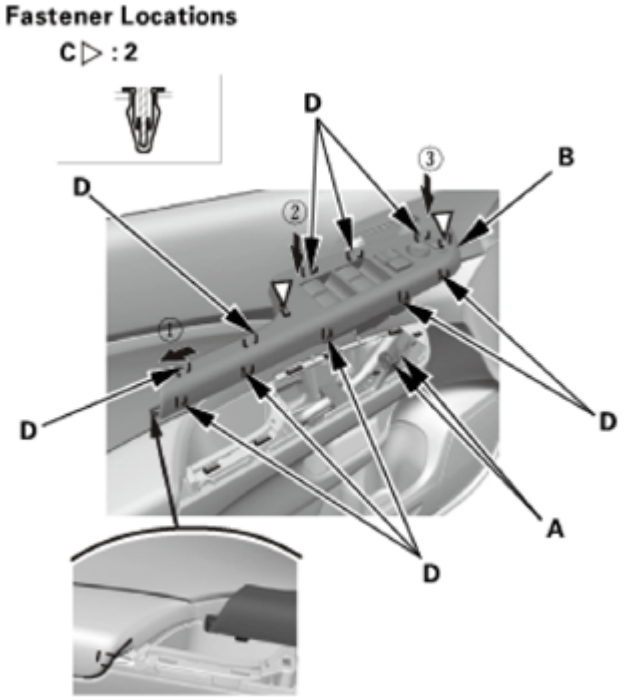

Fig. 47: Installing Front Door Power Window Switch Panel
Courtesy of AMERICAN HONDA MOTOR CO., INC.

6. Door Mirror Cover
    1. With tweeter: Connect the connector (A).
    2. Install the door mirror cover (B). Make sure the clips (C) snap into place securely.

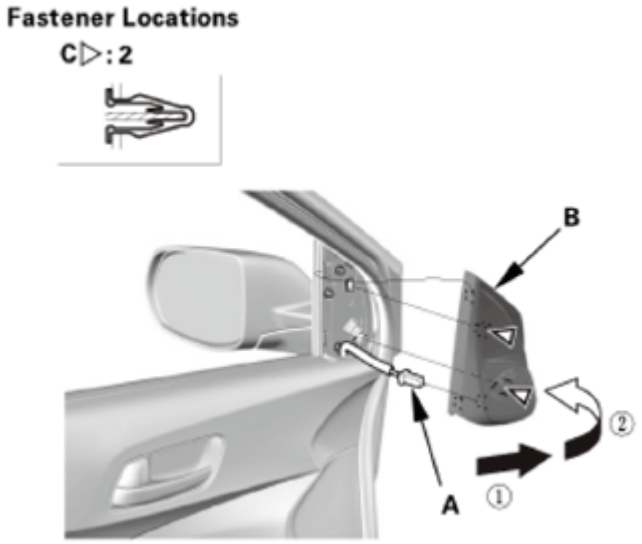

Fig. 48: Installing Door Mirror Cover
Courtesy of AMERICAN HONDA MOTOR CO., INC.

GETtheMANUALS.org

FRONT DOOR LATCH REMOVAL AND INSTALLATION

REMOVAL

1. Door Mirror Cover
    1. Carefully pry out the door mirror cover (A) with the appropriate trim tool to detach the clips (B), then remove the door mirror cover.
    2. With tweeter: Disconnect the connector (C).

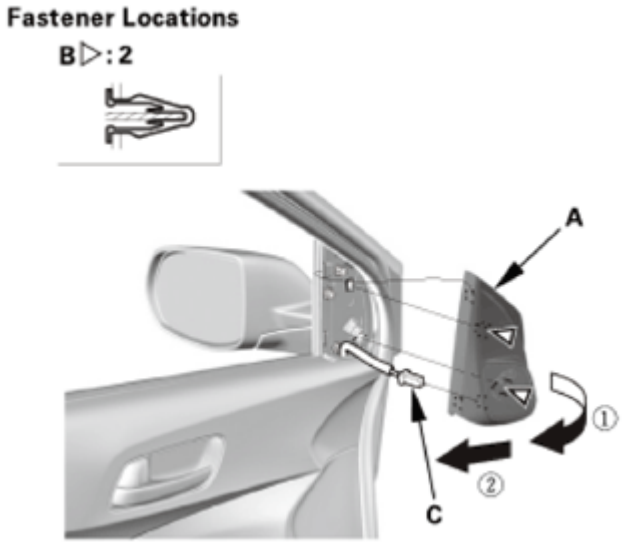

Fig. 49: Removing Door Mirror Cover
Courtesy of AMERICAN HONDA MOTOR CO., INC.

2. Front Door Power Window Switch Panel
    1. Carefully pry out on the notch (A) in the power window switch panel (B) with the appropriate trim tool to detach the clips (C) and the hooks (D). Disconnect the connectors (E), then remove the power window switch panel.

GETtheMANUALS.org

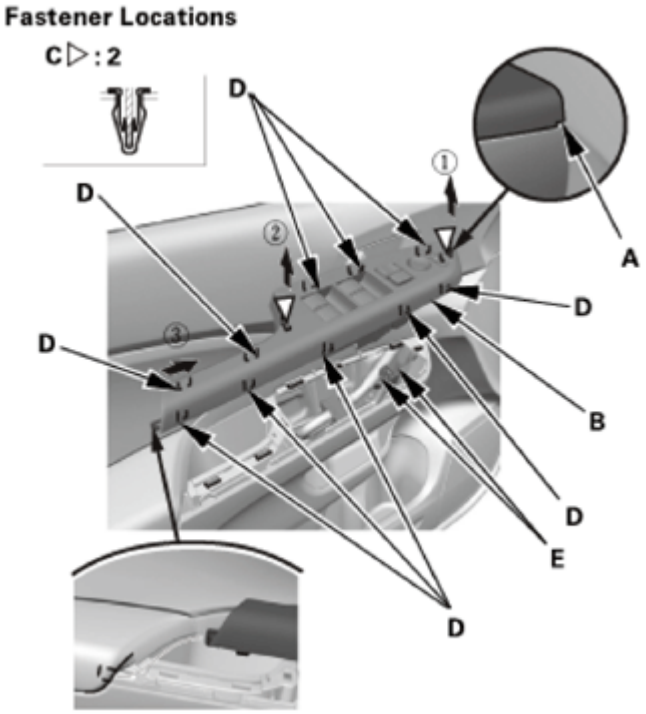

Fig. 50: Removing Front Door Power Window Switch Panel
Courtesy of AMERICAN HONDA MOTOR CO., INC.

3. Front Door Panel
    1. Carefully pry out on the upper hook (A) in the inner handle cap (B) with the appropriate trim tool, then pull back the inner handle cap to remove it.

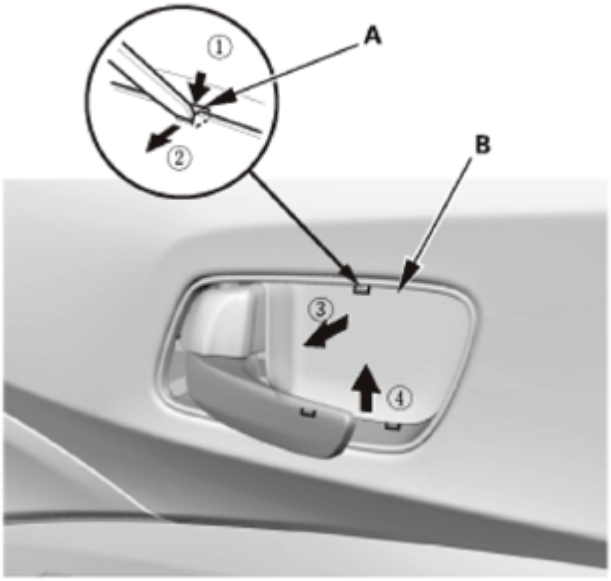

Fig. 51: Removing Inner Handle Cap Upper Hook Using Tool
Courtesy of AMERICAN HONDA MOTOR CO., INC.

GETtheMANUALS.org

2. Remove the screws (A) securing the inner handle (B).

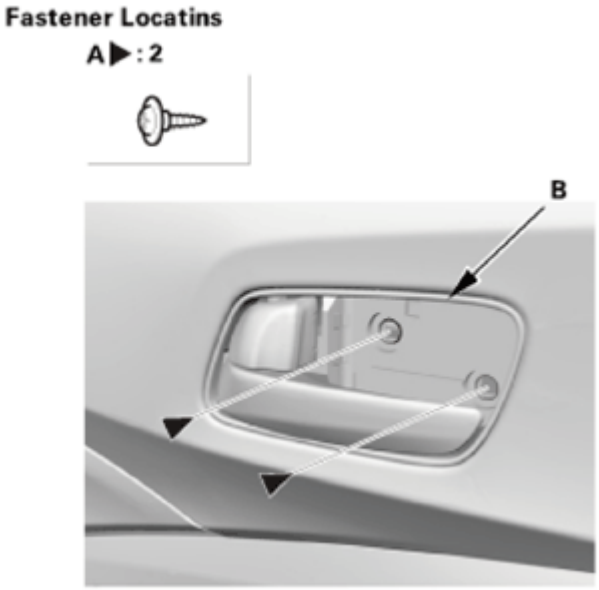

Fig. 52: Identifying Inner Handle And Screws
Courtesy of AMERICAN HONDA MOTOR CO., INC.

3. Remove the pull pocket mat (A), then remove the screw (B).

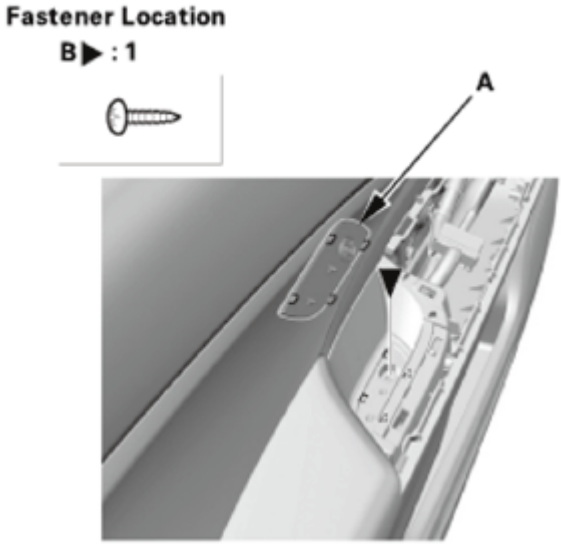

Fig. 53: Identifying Pocket Mat And Screw
Courtesy of AMERICAN HONDA MOTOR CO., INC.

4. Starting at the bottom edge of the door panel (A), detach the clips (B) with a commercially available trim pad remover.
5. Starting at the rear, pull the door panel upward.

GETtheMANUALS.org

6. Remove the inner handle (C) from the door panel, then remove the door panel.

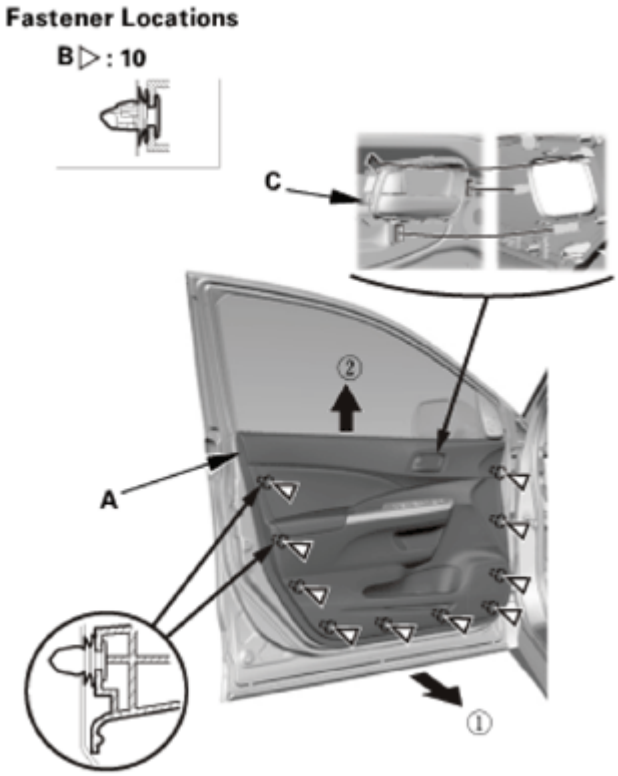

Fig. 54: Removing Door Panel
Courtesy of AMERICAN HONDA MOTOR CO., INC.

4. Front Door Plastic Cover As Needed
    1. Disconnect the connector (A), then detach the harness clips (B).
    2. Remove the screws (C), then remove the pull pocket bracket (D).
    3. Remove the plug caps (E), then carefully detach the plastic cover (F) as needed.

NOTE: **If the plastic cover is damaged or torn, replace it.**

GETtheMANUALS.org

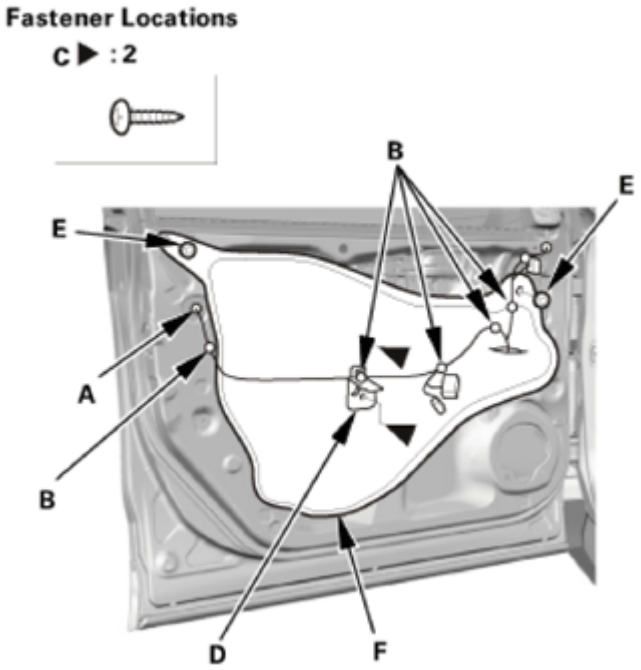

Fig. 55: Identifying Front Door Plastic Cover, Pocket Bracket And Fasteners
Courtesy of AMERICAN HONDA MOTOR CO., INC.

5. Front Door Center Lower Channel
    1. Remove the bolt (A), then remove the center lower channel (B).

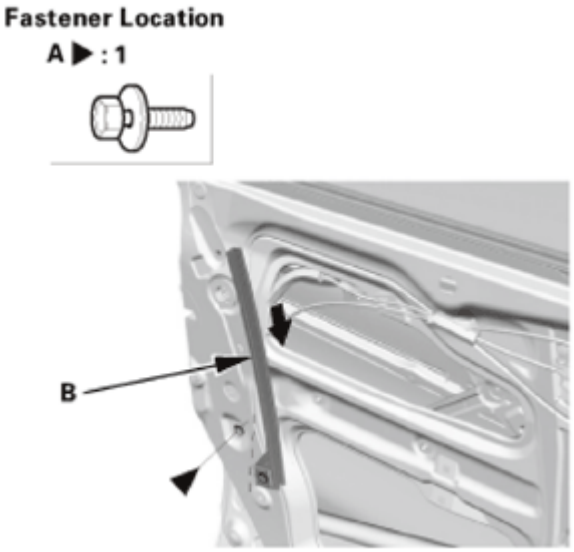

Fig. 56: Removing Front Door Center Lower Channel
Courtesy of AMERICAN HONDA MOTOR CO., INC.

6. Front Door Latch
    1. Detach the cables (A) from the cable clip (B), then remove the screws (C).

GETtheMANUALS.org

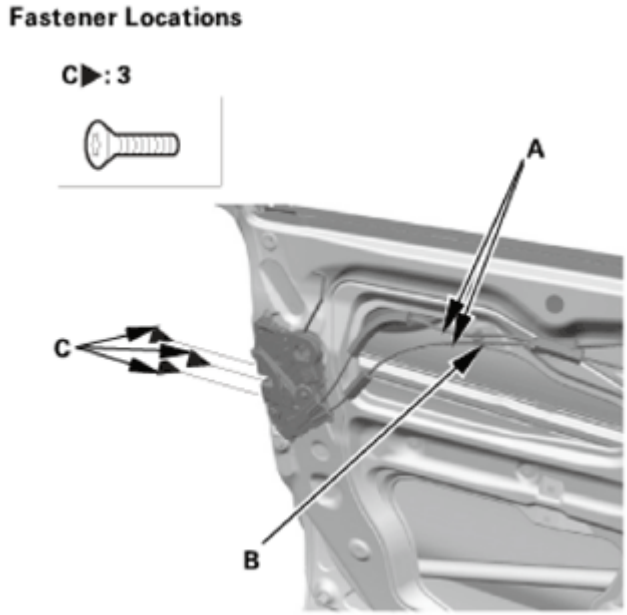

Fig. 57: Identifying Front Door Latch, Cable And Fasteners
Courtesy of AMERICAN HONDA MOTOR CO., INC.

2. Slide the latch (A) down to disconnect the outer handle rod (B) as shown, then remove the latch.

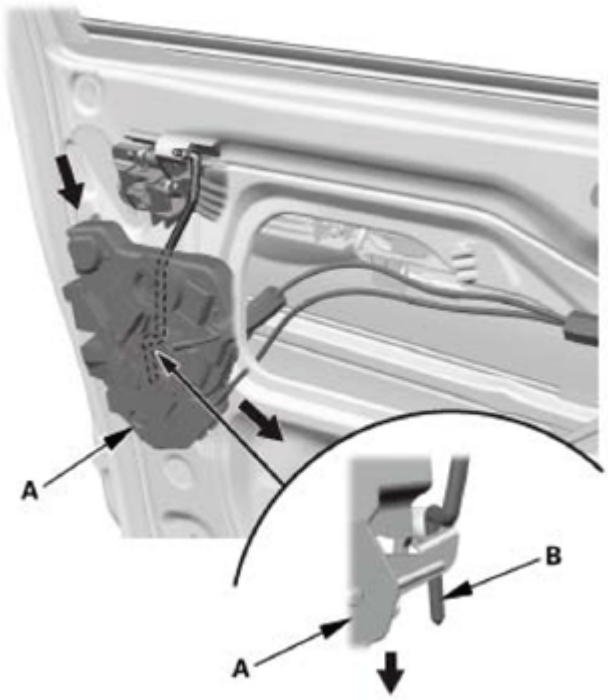

Fig. 58: Disconnecting Outer Handle Rod
Courtesy of AMERICAN HONDA MOTOR CO., INC.

3. Open the latch protector (A).

GETtheMANUALS.org

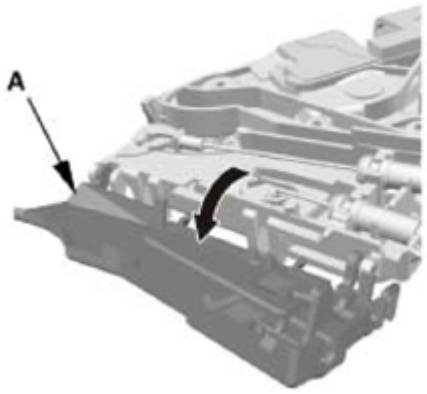

Fig. 59: Opening Latch Protector
Courtesy of AMERICAN HONDA MOTOR CO., INC.

4. Disconnect the latch cable (A) and the inner handle cable (B).

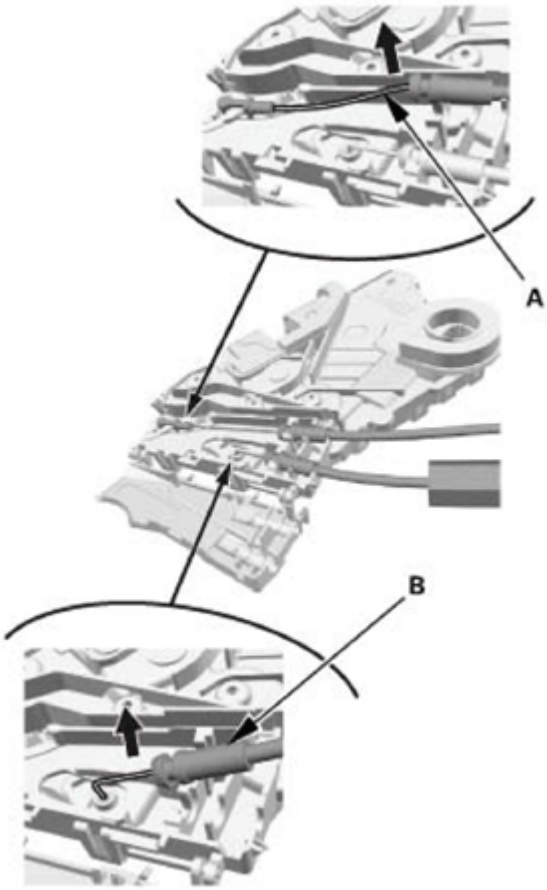

Fig. 60: Disconnecting Latch Cable And Inner Handle Cable
Courtesy of AMERICAN HONDA MOTOR CO., INC.

INSTALLATION

GETtheMANUALS.org

1. Front Door Latch
    1. Connect the latch cable (A) and the inner handle cable (B).

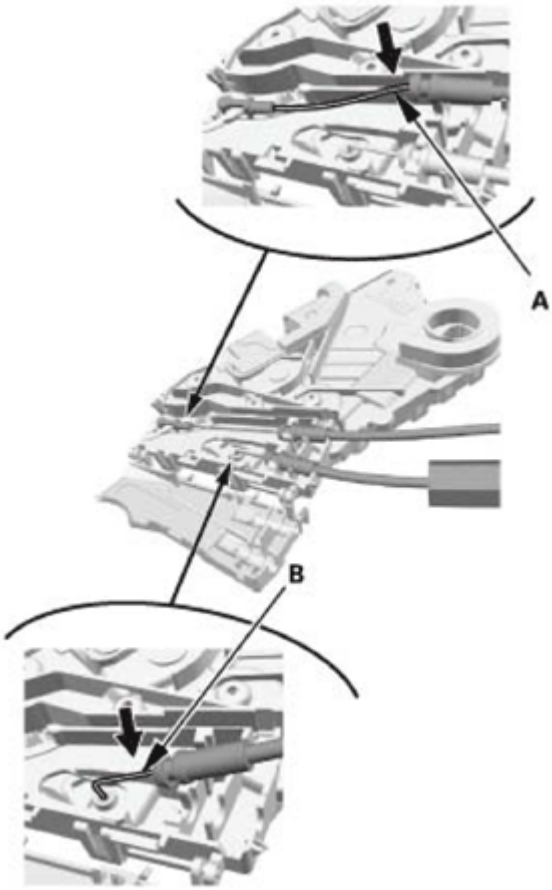

Fig. 61: Connecting Latch Cable And Inner Handle Cable
Courtesy of AMERICAN HONDA MOTOR CO., INC.

2. Close the latch protector (A).

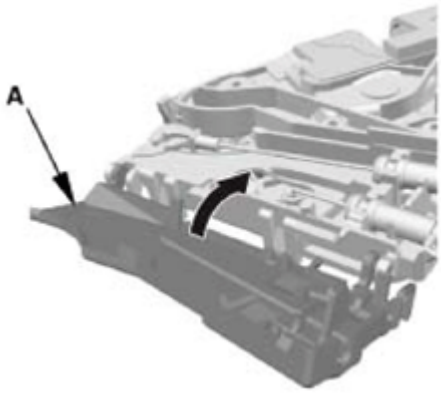

Fig. 62: Closing Latch Protector

GETtheMANUALS.org

Courtesy of AMERICAN HONDA MOTOR CO., INC.

3. Slide the latch (A) up to connect the outer handle rod (B) as shown.

NOTE: Outer handle rod into the latch securely.

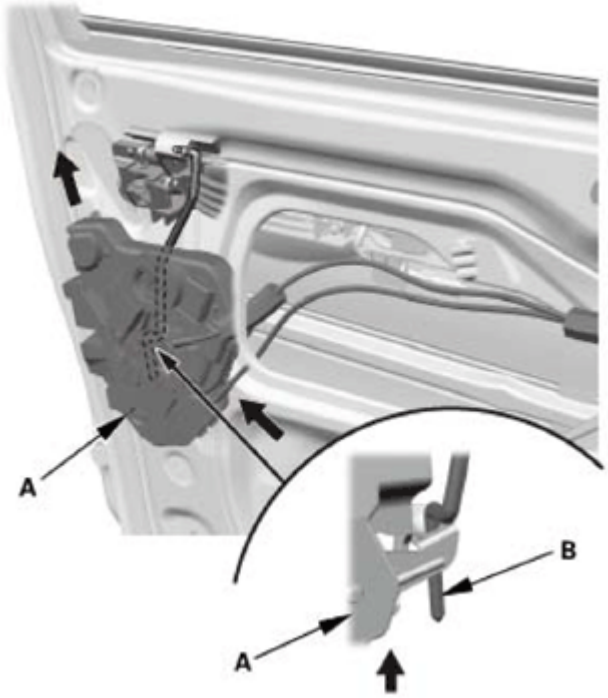

Fig. 63: Connecting Outer Handle Rod
Courtesy of AMERICAN HONDA MOTOR CO., INC.

4. Install the latch (A), then install the screws (B).
5. Install the cables (C) to the cable clip (D).

GETtheMANUALS.org

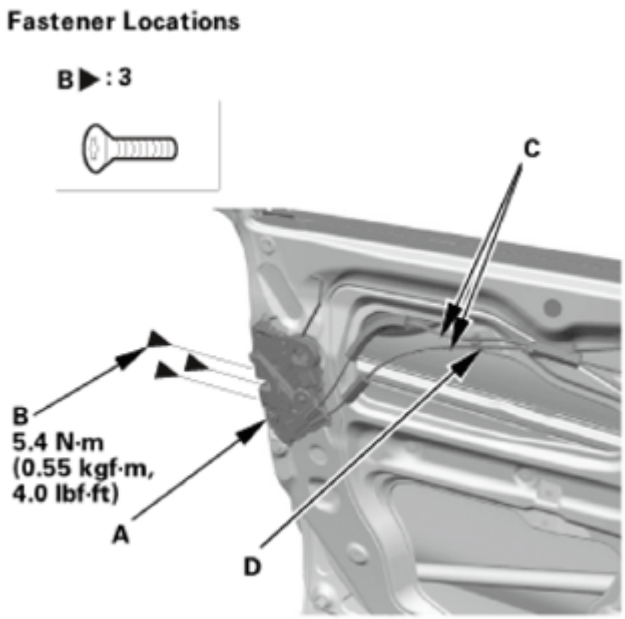

Fig. 64: Identifying Front Door Latch, Cable And Fasteners With Torque Specification
Courtesy of AMERICAN HONDA MOTOR CO., INC.

2. Front Door Center Lower Channel
    1. Install the center lower channel (A), then install the bolt (B).

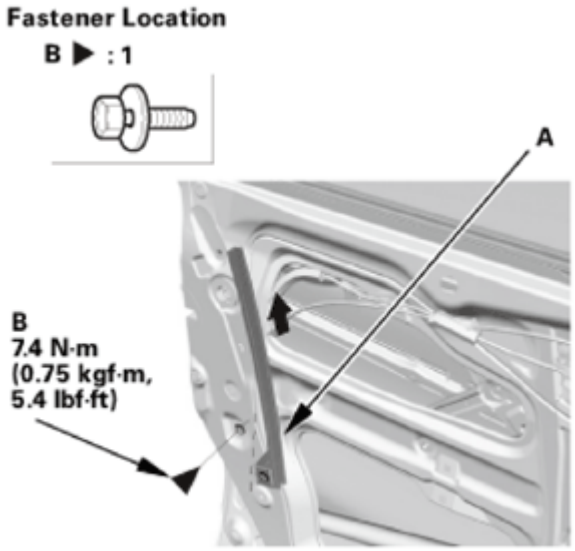

Fig. 65: Installing Front Door Center Lower Channel And Fastener With Torque Specification
Courtesy of AMERICAN HONDA MOTOR CO., INC.

3. Front Door Plastic Cover As Needed
    1. Install the plastic cover (A), then install the plug caps (B).

GETtheMANUALS.org

2. Install the pull pocket bracket (C), then install the screws (D).
3. Connect the connector (E), then install the harness clips (F).

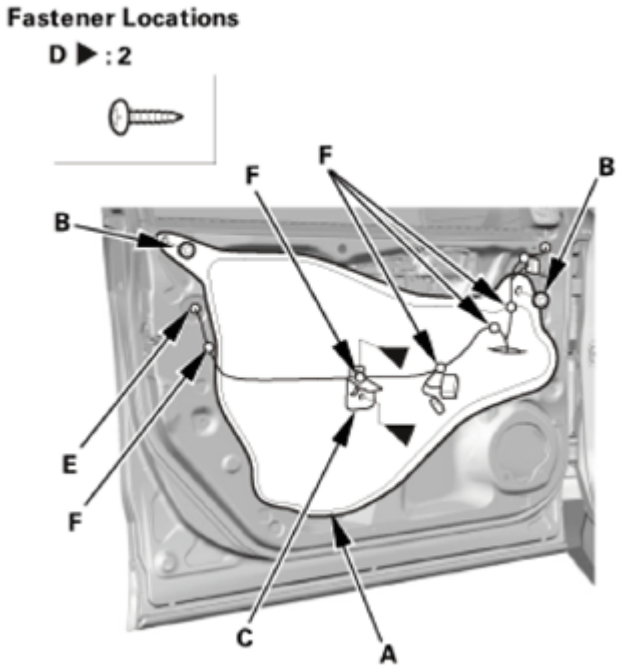

Fig. 66: Identifying Front Door Plastic Cover, Pocket Bracket And Fasteners With Torque Specification
Courtesy of AMERICAN HONDA MOTOR CO., INC.

4. Front Door Panel
    1. Install the inner handle (A) in the door panel (B).
    2. Install the door panel. Make sure the clips (C) snap into place securely.

GETtheMANUALS.org

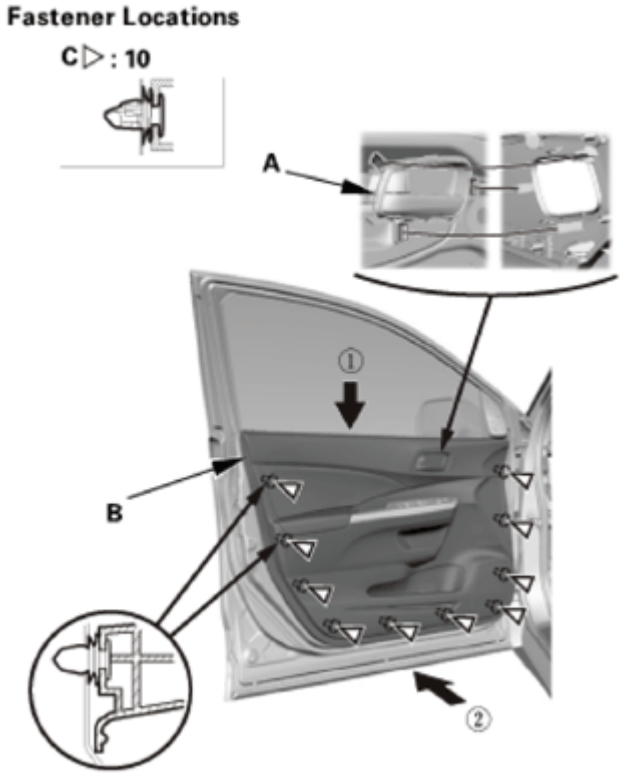

Fig. 67: Installing Front Door Panel
Courtesy of AMERICAN HONDA MOTOR CO., INC.

3. Install the screw (A), then install the pull pocket mat (B).

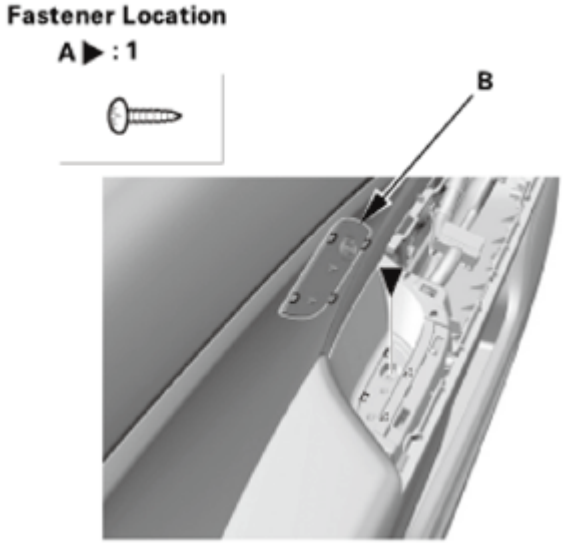

Fig. 68: Identifying Pocket Mat And Screw
Courtesy of AMERICAN HONDA MOTOR CO., INC.

4. Install the screws (A) securing the inner handle (B).

GETtheMANUALS.org

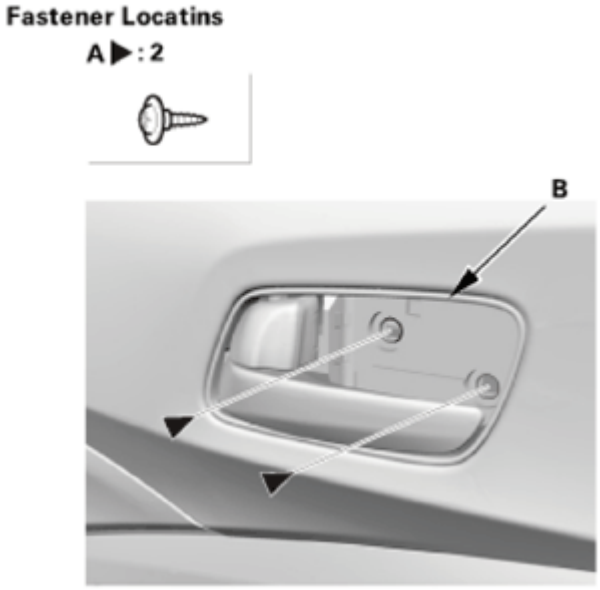

Fig. 69: Identifying Inner Handle And Screw
Courtesy of AMERICAN HONDA MOTOR CO., INC.

5. Install the inner handle cap (A). Make sure the upper hook (B) and the lower hooks (C) snap into place securely.

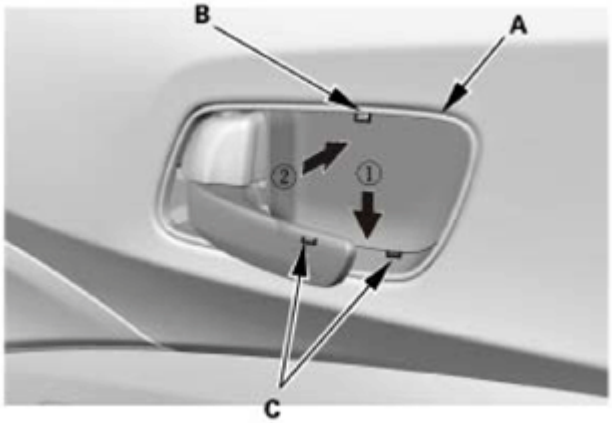

Fig. 70: Installing Inner Handle Cap And Screws
Courtesy of AMERICAN HONDA MOTOR CO., INC.

5. Front Door Power Window Switch Panel
    1. Connect the connectors (A), then install the power window switch panel (B). Make sure the clips (C) and the hooks (D) snap into place securely.

GETtheMANUALS.org

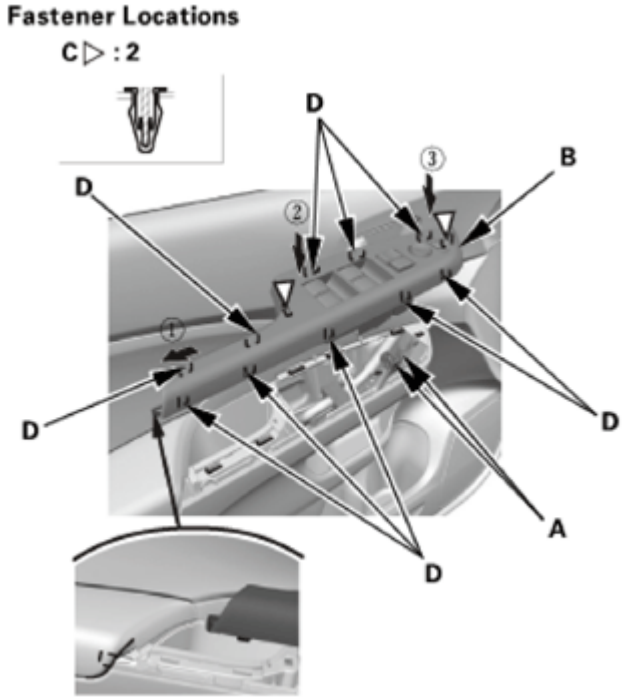

Fig. 71: Identifying Front Door Power Window Switch Panel And Fasteners
Courtesy of AMERICAN HONDA MOTOR CO., INC.

6. Door Mirror Cover
    1. With tweeter: Connect the connector (A).
    2. Install the door mirror cover (B). Make sure the clips (C) snap into place securely.

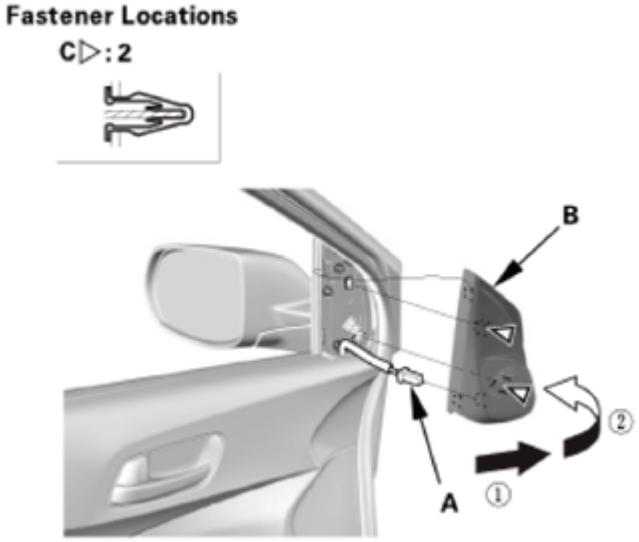

Fig. 72: Installing Door Mirror Cover
Courtesy of AMERICAN HONDA MOTOR CO., INC.

GETtheMANUALS.org

FRONT DOOR LOWER TRIM REMOVAL AND INSTALLATION

REMOVAL

1. Front Door Lower Trim
    1. Remove the cap (A), then remove the screw (B).

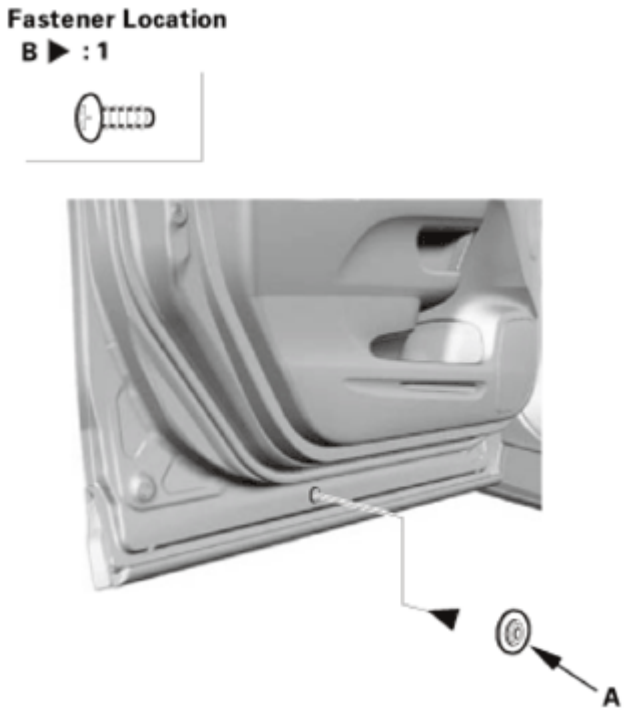

Fig. 73: Identifying Front Door Lower Trim Cap And Screw
Courtesy of AMERICAN HONDA MOTOR CO., INC.

2. Spray soapy water solution onto the double-sided adhesive tape (A), then carefully cut the adhesive tape along the rear edge of the door lower trim (B) with a utility knife while separating the trim from the door (C) with a trim tool.

NOTE: Apply protective tape (D) around the cutting area as shown.

GETtheMANUALS.org

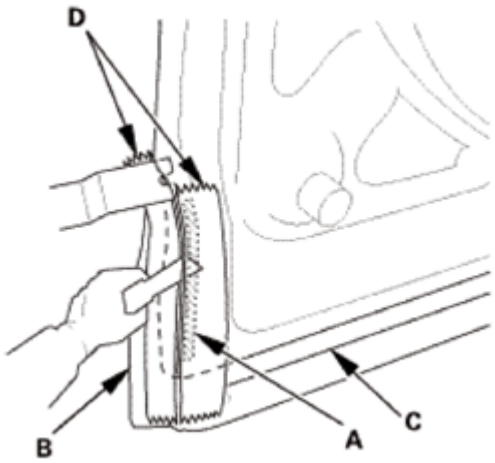

Fig. 74: Cutting Adhesive Tape From Door Lower Trim Rear Edge Using Knife
Courtesy of AMERICAN HONDA MOTOR CO., INC.

3. Spray soapy water solution onto the double-sided adhesive tape (A), then carefully cut the adhesive tape along the upper edge of the door lower trim (B) with a utility knife while separating the trim from the door (C) with a trim tool.

NOTE: Apply protective tape (D) around the cutting area as shown.

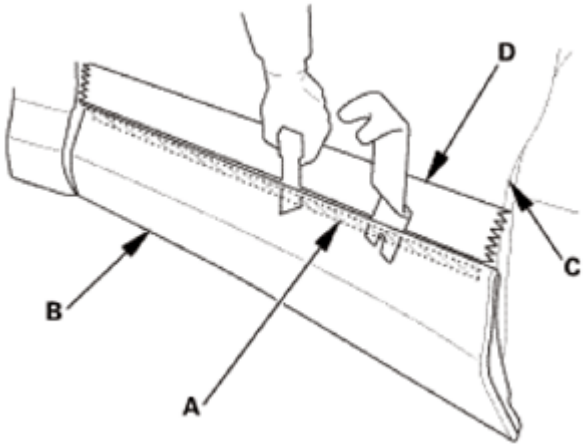

Fig. 75: Cutting Adhesive Tape From Door Lower Trim Rear Edge Using Knife
Courtesy of AMERICAN HONDA MOTOR CO., INC.

4. Slide the door lower trim (A) rearward and remove it. The clips (B, C) will stay in the door.
5. Remove the clips by turning them 45°.
6. Install the clips on the door lower trim.
7. Rub off the remaining double-sided adhesive tape from the door lower trim and the door, then clean the trim and door surface with a sponge dampened with isopropyl alcohol. After cleaning, keep oil, grease, and water from getting on the clean surface.

GETtheMANUALS.org

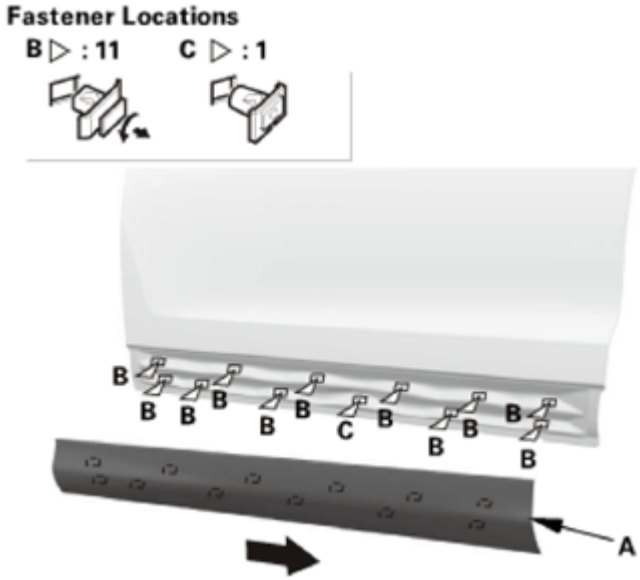

Fig. 76: Sliding Door Lower Trim
Courtesy of AMERICAN HONDA MOTOR CO., INC.

INSTALLATION

1. Front Door Lower Trim
    1. If you are reusing the original door lower trim (A), apply PP primer to the areas where new double-sided adhesive tapes (B, C, and D) will be applied, then attach the new double-sided adhesive tapes to the trim as shown.

       Adhesive tape (B): Thickness 1.2 mm (0.047 in)

       Width 8 mm (0.31 in)

       Length 68 mm (2.68 in)

       Adhesive tape (C): Thickness 1.5 mm (0.059 in)

       Width 6 mm (0.24 in)

       Length 1000 mm (39.37 in)

       Adhesive tape (D): Thickness 1.2 mm (0.047 in)

       Width 8 mm (0.31 in)

       Length 50 mm (1.97 in)

GETtheMANUALS.org

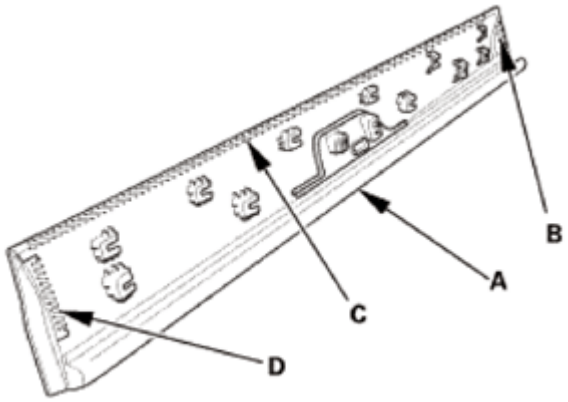

Fig. 77: Identifying Adhesive Tap Applying Area On Front Door Lower Trim
Courtesy of AMERICAN HONDA MOTOR CO., INC.

2. Fold the edge of each adhesive backing from the double-sided adhesive tape.
3. Install the screw (A) securing the clip (B) to the door lower trim (C). Hold up the trim, and first set the clip B into the hole in the door (D). Fit the clips (E) into the hole in the door, then push on the trim until the clips snap into place.
4. Carefully pull away the adhesive backing, and push on the double-sided adhesive tape areas to make the adhesives stick securely.
5. Install the cap.

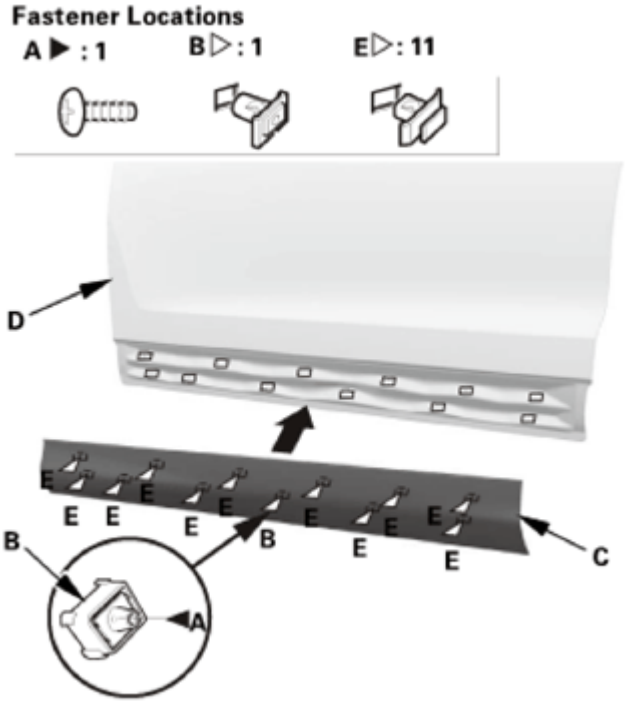

Fig. 78: Installing Door Lower Trim
Courtesy of AMERICAN HONDA MOTOR CO., INC.

GETtheMANUALS.org

FRONT DOOR OUTER HANDLE REMOVAL AND INSTALLATION

REMOVAL

1. Door Mirror Cover
    1. Carefully pry out the door mirror cover (A) with the appropriate trim tool to detach the clips (B), then remove the door mirror cover.
    2. With tweeter: Disconnect the connector (C).

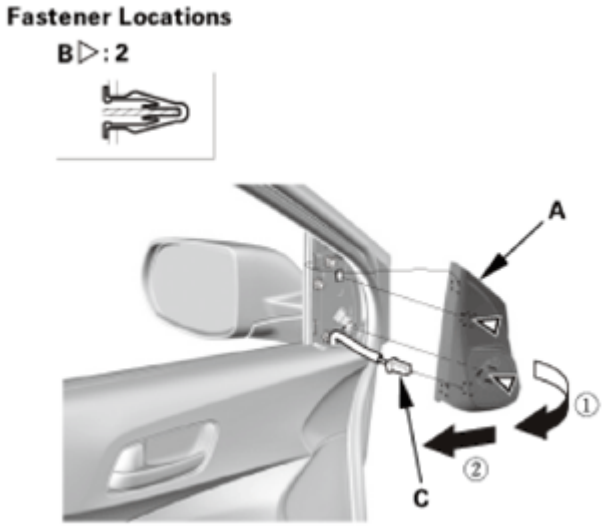

Fig. 79: Removing Door Mirror Cover
Courtesy of AMERICAN HONDA MOTOR CO., INC.

2. Front Door Power Window Switch Panel
    1. Carefully pry out on the notch (A) in the power window switch panel (B) with the appropriate trim tool to detach the clips (C) and the hooks (D). Disconnect the connectors (E), then remove the power window switch panel.

GETtheMANUALS.org

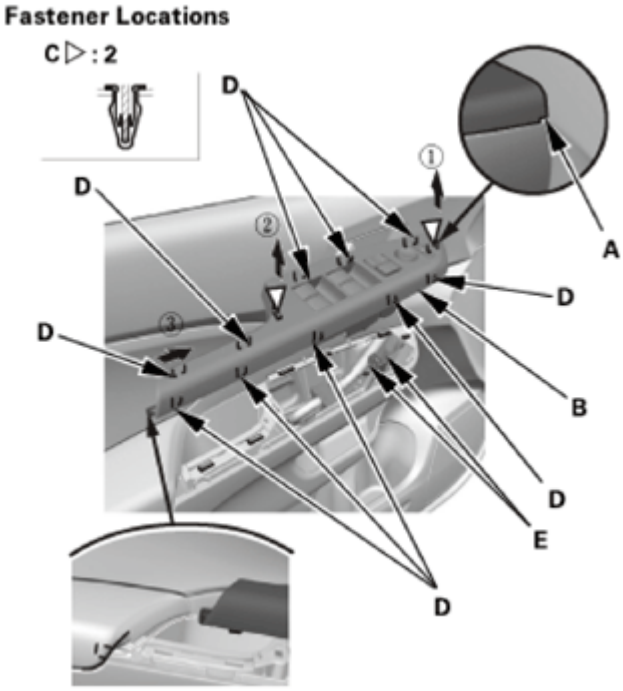

Fig. 80: Removing Front Door Power Window Switch Panel
Courtesy of AMERICAN HONDA MOTOR CO., INC.

3. Front Door Panel
    1. Carefully pry out on the upper hook (A) in the inner handle cap (B) with the appropriate trim tool, then pull back the inner handle cap to remove it.

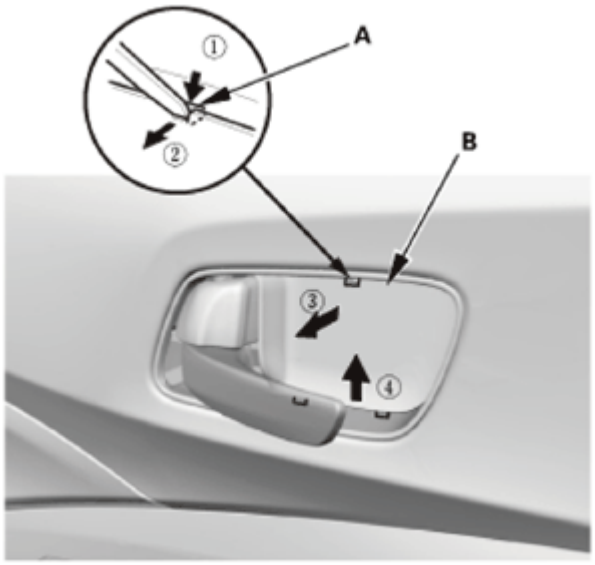

Fig. 81: Removing Inner Handle Cap Upper Hook Using Tool
Courtesy of AMERICAN HONDA MOTOR CO., INC.

GETtheMANUALS.org

2. Remove the screws (A) securing the inner handle (B).

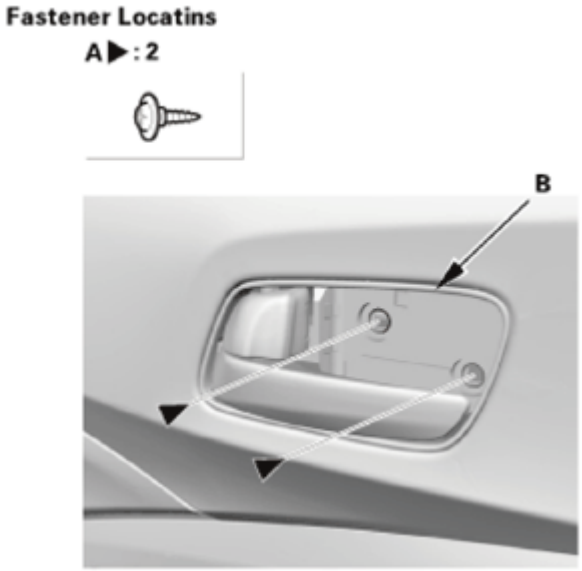

Fig. 82: Identifying Inner Handle And Screws
Courtesy of AMERICAN HONDA MOTOR CO., INC.

3. Remove the pull pocket mat (A), then remove the screw (B).

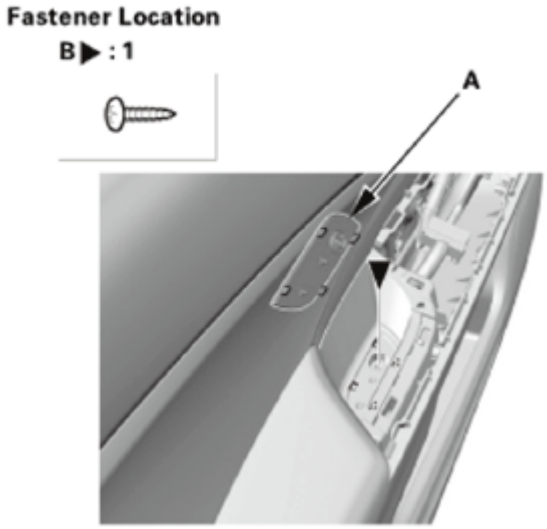

Fig. 83: Identifying Pocket Mat And Screw
Courtesy of AMERICAN HONDA MOTOR CO., INC.

4. Starting at the bottom edge of the door panel (A), detach the clips (B) with a commercially available trim pad remover.
5. Starting at the rear, pull the door panel upward.
6. Remove the inner handle (C) from the door panel, then remove the door panel.

GETtheMANUALS.org

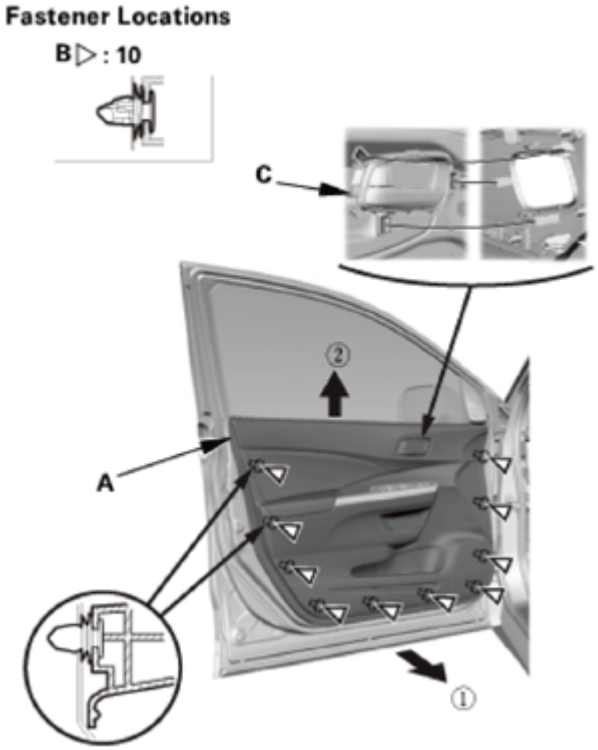

Fig. 84: Removing Door Panel
Courtesy of AMERICAN HONDA MOTOR CO., INC.

4. Front Door Plastic Cover As Needed
    1. Disconnect the connector (A), then detach the harness clips (B).
    2. Remove the screws (C), then remove the pull pocket bracket (D).
    3. Remove the plug caps (E), then carefully detach the plastic cover (F) as needed.

NOTE: **If the plastic cover is damaged or torn, replace it.**

GETtheMANUALS.org

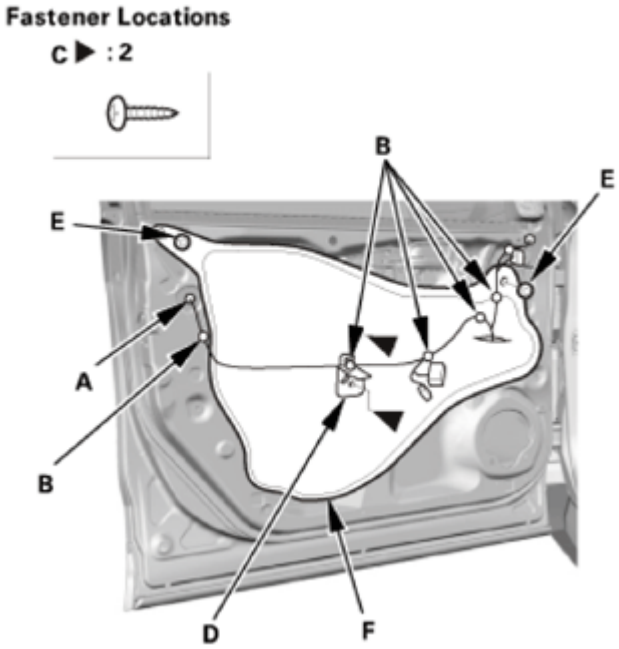

Fig. 85: Identifying Front Door Plastic Cover, Pocket Bracket And Fasteners
Courtesy of AMERICAN HONDA MOTOR CO., INC.

5. Door Lock Cylinder
    1. Remove the plug cap (A), then remove the bolt (B).

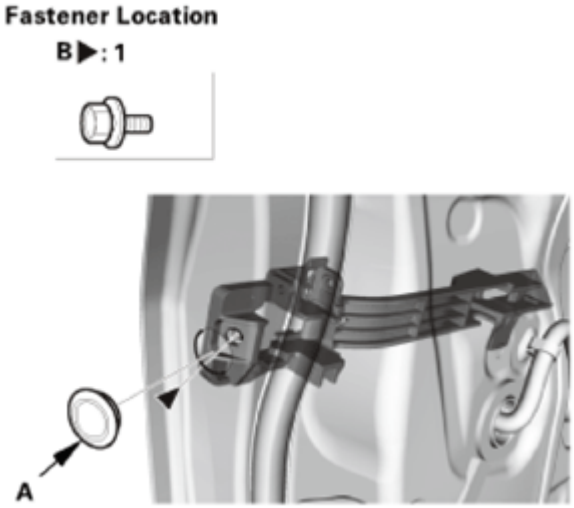

Fig. 86: Identifying Plug Cap And Bolt
Courtesy of AMERICAN HONDA MOTOR CO., INC.

    2. Remove the door lock cylinder (A).

GETtheMANUALS.org

Fig. 87: Identifying Door Lock Cylinder
Courtesy of AMERICAN HONDA MOTOR CO., INC.

6. Front Door Outer Handle
    1. Release the rod fastener (A).

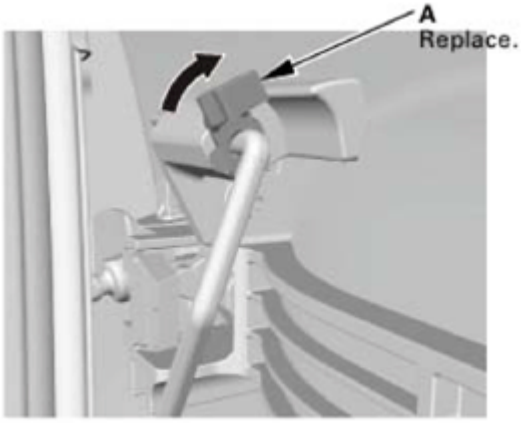

Fig. 88: Turning Rod Fastener
Courtesy of AMERICAN HONDA MOTOR CO., INC.

    2. Disconnect the outer handle rod (A).

GETtheMANUALS.org

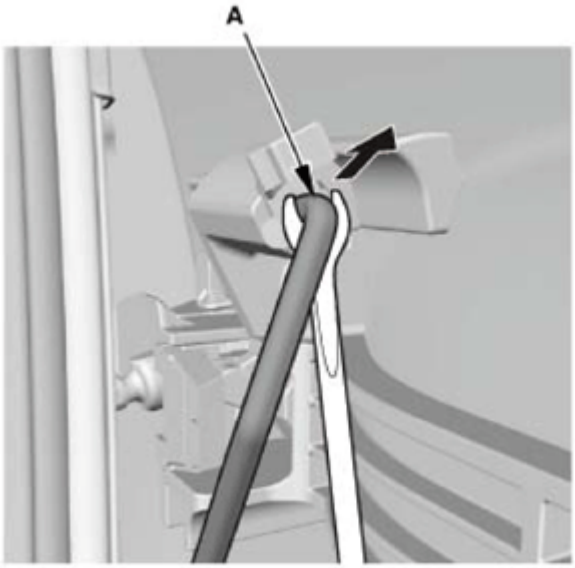

Fig. 89: Disconnecting Outer Handle Rod
Courtesy of AMERICAN HONDA MOTOR CO., INC.

3. Remove the nut (A) securing the outer handle base (B).

Fig. 90: Identifying Outer Handle Base And Nut
Courtesy of AMERICAN HONDA MOTOR CO., INC.

4. Remove the outer handle (A).

GETtheMANUALS.org

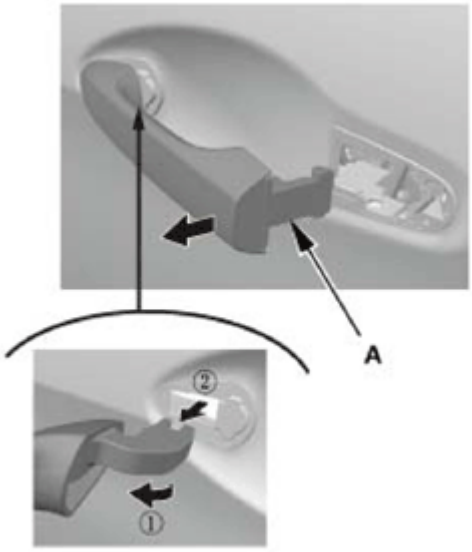

Fig. 91: Removing Outer Handle
Courtesy of AMERICAN HONDA MOTOR CO., INC.

5. Remove the outer handle seals (A).

Fig. 92: Identifying Outer Handle Seals
Courtesy of AMERICAN HONDA MOTOR CO., INC.

6. Remove the outer handle base (A).

GETtheMANUALS.org

Fig. 93: Identifying Outer Handle Base
Courtesy of AMERICAN HONDA MOTOR CO., INC.

7. Remove the rod fastener (A).

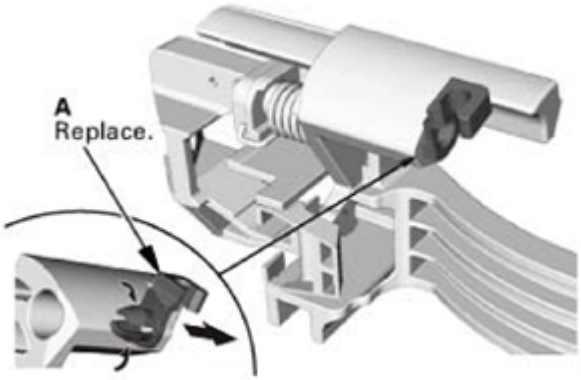

Fig. 94: Identifying Rod Fastener
Courtesy of AMERICAN HONDA MOTOR CO., INC.

INSTALLATION

1. Front Door Outer Handle
    1. Install a new rod fastener (A).

GETtheMANUALS.org

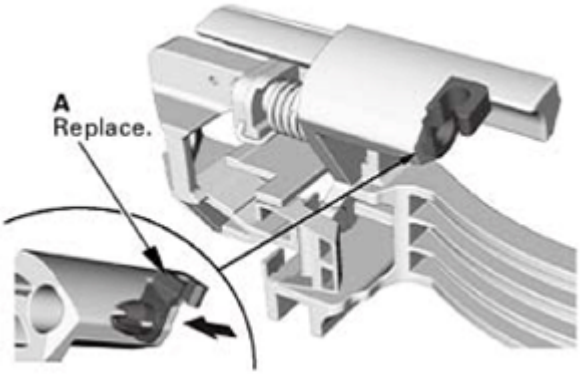

Fig. 95: Installing Rod Fastener
Courtesy of AMERICAN HONDA MOTOR CO., INC.

2. Install the outer handle base (A).

Fig. 96: Identifying Outer Handle Base
Courtesy of AMERICAN HONDA MOTOR CO., INC.

3. Install the outer handle seals (A).

GETtheMANUALS.org

Fig. 97: Identifying Outer Handle Seals
Courtesy of AMERICAN HONDA MOTOR CO., INC.

4. Install the outer handle (A).

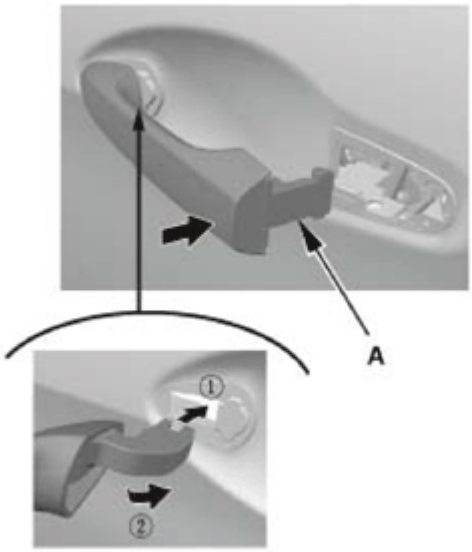

Fig. 98: Installing Outer Handle
Courtesy of AMERICAN HONDA MOTOR CO., INC.

5. Install the nut (A) securing the outer handle base (B).

Fig. 99: Identifying Outer Handle Base And Mounting Nut With Torque Specification
Courtesy of AMERICAN HONDA MOTOR CO., INC.

6. Connect the outer handle rod (A), then fasten the rod fastener (B) to the outer handle rod.

GETtheMANUALS.org

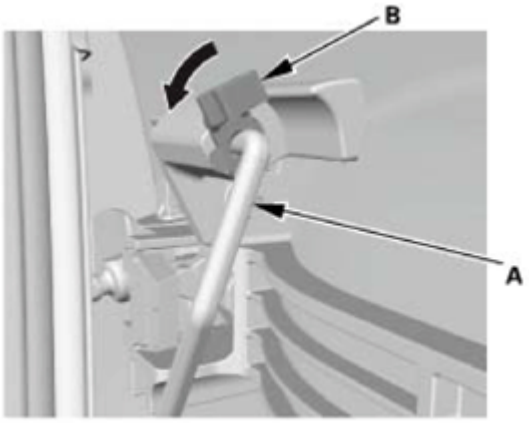

Fig. 100: Fastening Rod Fastener To Outer Handle Rod
Courtesy of AMERICAN HONDA MOTOR CO., INC.

2. Door Lock Cylinder
    1. Install the door lock cylinder (A).

Fig. 101: Identifying Door Lock Cylinder
Courtesy of AMERICAN HONDA MOTOR CO., INC.

    2. Install the bolt (A), then install the plug cap (B).

GETtheMANUALS.org

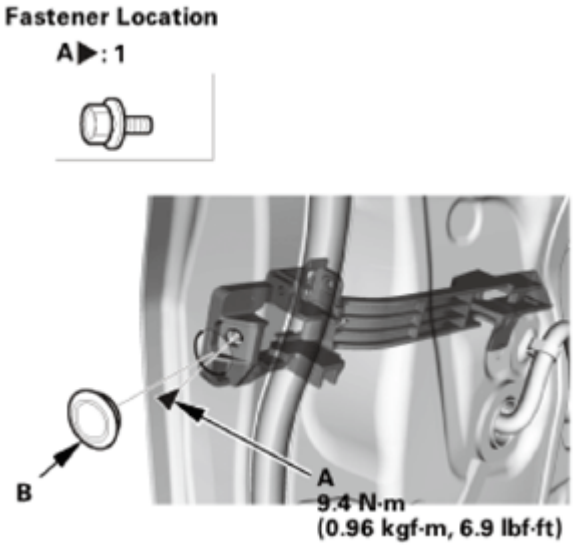

Fig. 102: Identifying Plug Cap And Bolt With Torque Specification
Courtesy of AMERICAN HONDA MOTOR CO., INC.

3. Front Door Plastic Cover As Needed
    1. Install the plastic cover (A), then install the plug caps (B).
    2. Install the pull pocket bracket (C), then install the screws (D).
    3. Connect the connector (E), then install the harness clips (F).

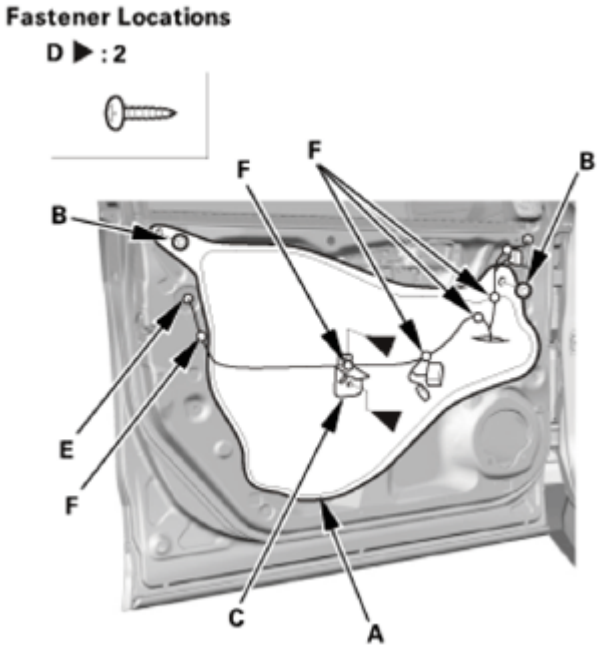

Fig. 103: Identifying Front Door Plastic Cover, Pocket Bracket And Fasteners With Torque Specification
Courtesy of AMERICAN HONDA MOTOR CO., INC.

GETtheMANUALS.org

4. Front Door Panel
    1. Install the inner handle (A) in the door panel (B).
    2. Install the door panel. Make sure the clips (C) snap into place securely.

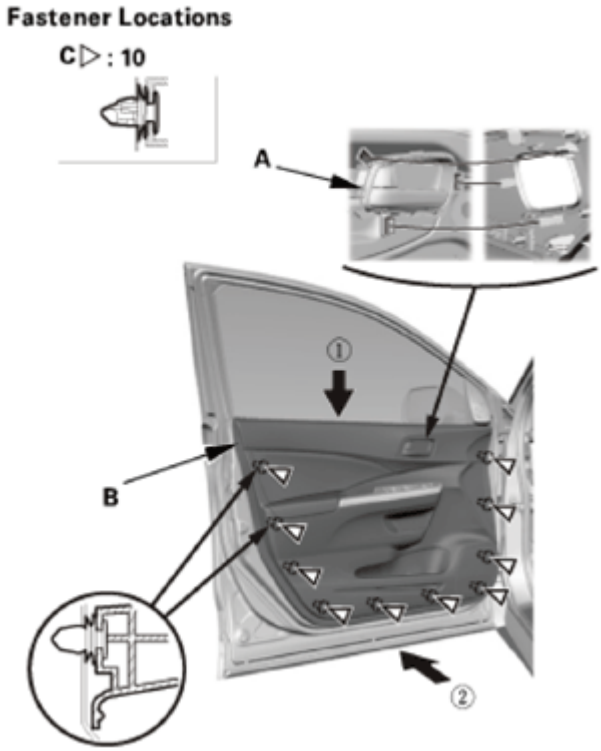

Fig. 104: Installing Front Door Panel
Courtesy of AMERICAN HONDA MOTOR CO., INC.

3. Install the screw (A), then install the pull pocket mat (B).

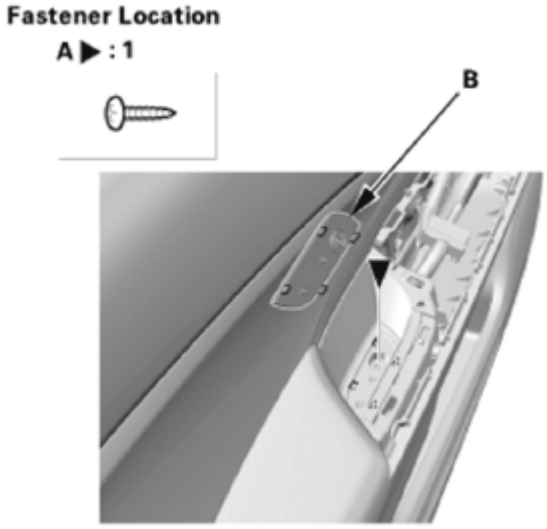

GETtheMANUALS.org

Fig. 105: Identifying Pocket Mat And Screw
Courtesy of AMERICAN HONDA MOTOR CO., INC.

4. Install the screws (A) securing the inner handle (B).

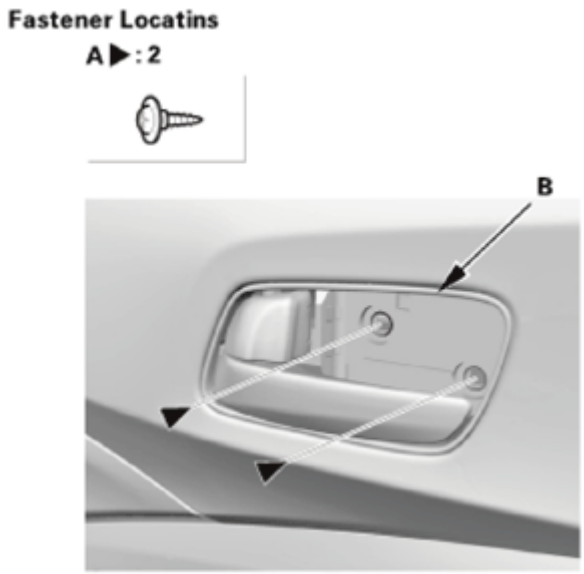

Fig. 106: Identifying Inner Handle And Screw
Courtesy of AMERICAN HONDA MOTOR CO., INC.

5. Install the inner handle cap (A). Make sure the upper hook (B) and the lower hooks (C) snap into place securely.

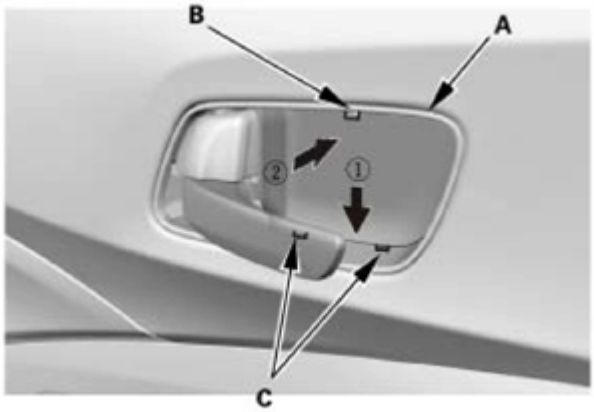

Fig. 107: Installing Inner Handle Cap And Screws
Courtesy of AMERICAN HONDA MOTOR CO., INC.

5. Front Door Power Window Switch Panel
    1. Connect the connectors (A), then install the power window switch panel (B). Make sure the clips (C) and the hooks (D) snap into place securely.

GETtheMANUALS.org

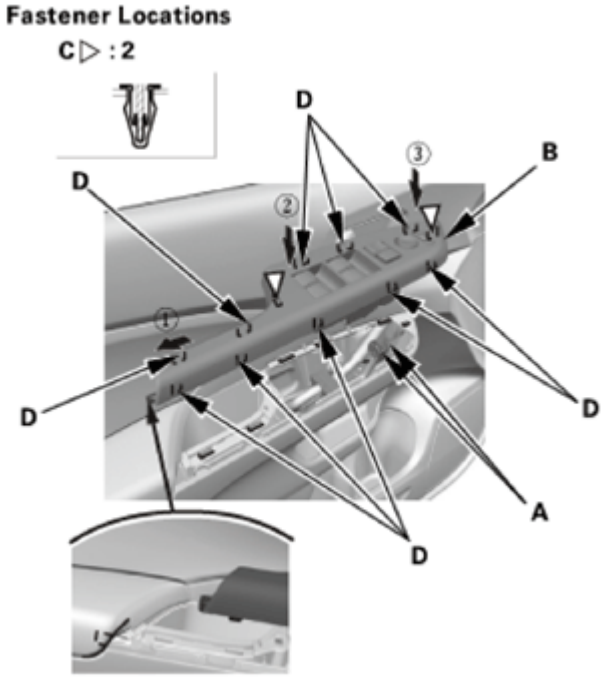

Fig. 108: Identifying Front Door Power Window Switch Panel And Fasteners
Courtesy of AMERICAN HONDA MOTOR CO., INC.

6. Door Mirror Cover
    1. With tweeter: Connect the connector (A).
    2. Install the door mirror cover (B). Make sure the clips (C) snap into place securely.

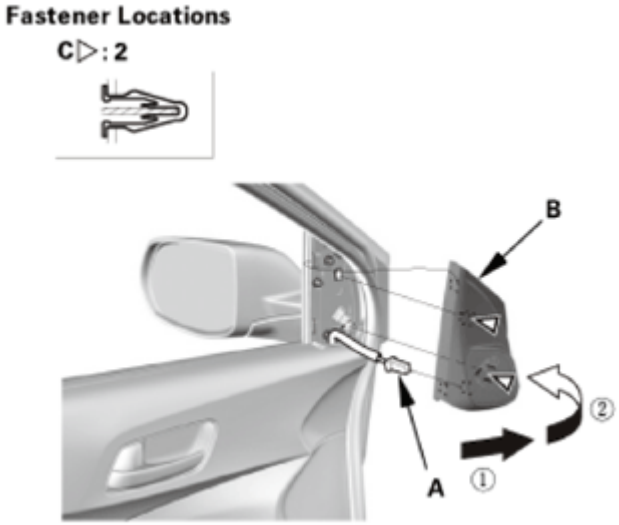

Fig. 109: Installing Door Mirror Cover
Courtesy of AMERICAN HONDA MOTOR CO., INC.

FRONT DOOR OUTER MOLDING REPLACEMENT

GETtheMANUALS.org

REMOVAL

1. Door Mirror Cover
    1. Carefully pry out the door mirror cover (A) with the appropriate trim tool to detach the clips (B), then remove the door mirror cover.
    2. With tweeter: Disconnect the connector (C).

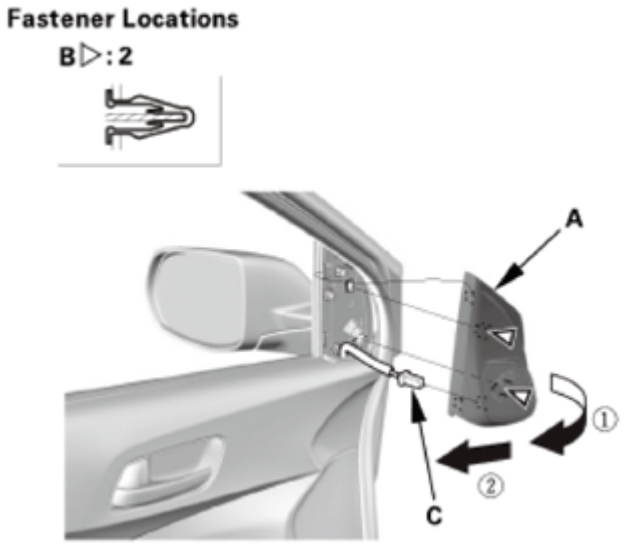

Fig. 110: Removing Door Mirror Cover
Courtesy of AMERICAN HONDA MOTOR CO., INC.

2. Front Door Power Window Switch Panel
    1. Carefully pry out on the notch (A) in the power window switch panel (B) with the appropriate trim tool to detach the clips (C) and the hooks (D). Disconnect the connectors (E), then remove the power window switch panel.

GETtheMANUALS.org

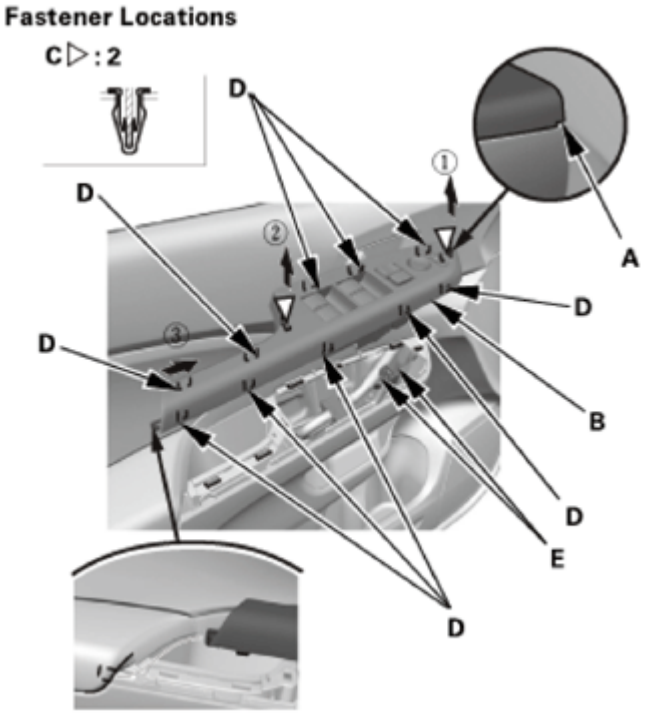

Fig. 111: Removing Front Door Power Window Switch Panel
Courtesy of AMERICAN HONDA MOTOR CO., INC.

3. Front Door Panel
    1. Carefully pry out on the upper hook (A) in the inner handle cap (B) with the appropriate trim tool, then pull back the inner handle cap to remove it.

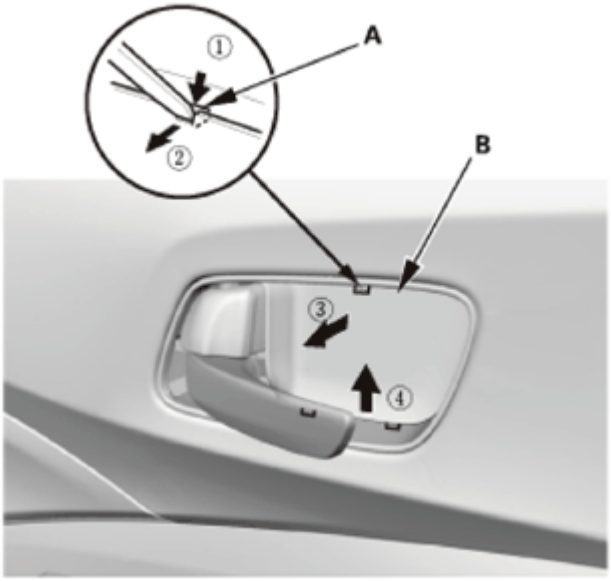

Fig. 112: Removing Inner Handle Cap Upper Hook Using Tool
Courtesy of AMERICAN HONDA MOTOR CO., INC.

GETtheMANUALS.org

2. Remove the screws (A) securing the inner handle (B).

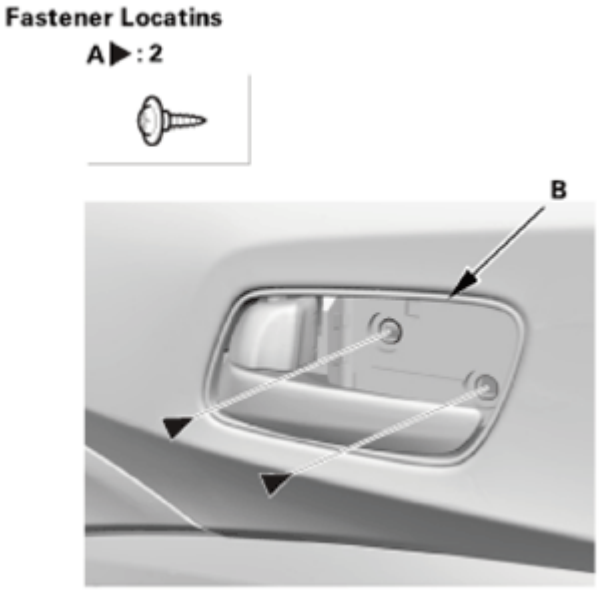

Fig. 113: Identifying Inner Handle And Screws
Courtesy of AMERICAN HONDA MOTOR CO., INC.

3. Remove the pull pocket mat (A), then remove the screw (B).

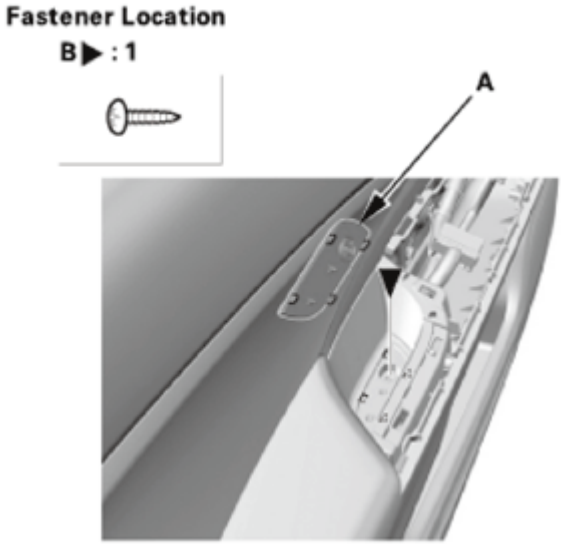

Fig. 114: Identifying Pocket Mat And Screw
Courtesy of AMERICAN HONDA MOTOR CO., INC.

4. Starting at the bottom edge of the door panel (A), detach the clips (B) with a commercially available trim pad remover.
5. Starting at the rear, pull the door panel upward.

GETtheMANUALS.org

6. Remove the inner handle (C) from the door panel, then remove the door panel.

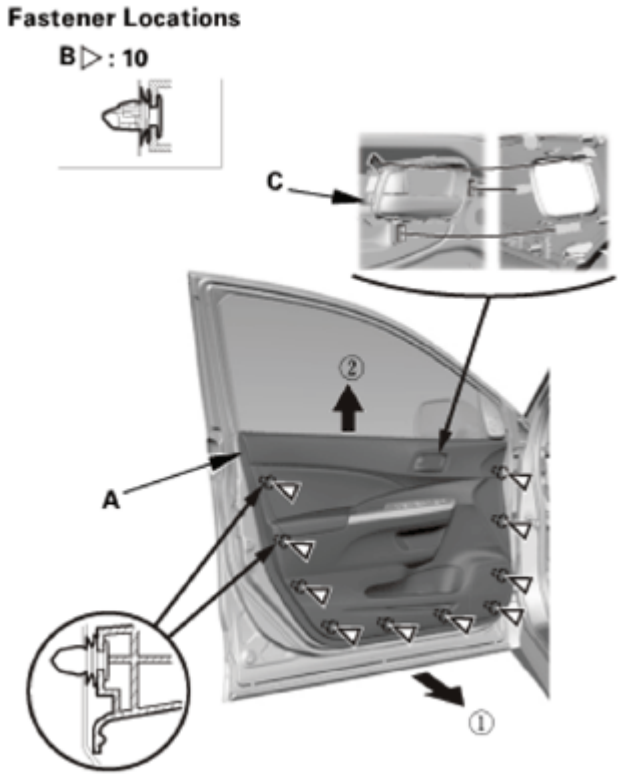

Fig. 115: Removing Door Panel
Courtesy of AMERICAN HONDA MOTOR CO., INC.

4. Door Mirror
    1. Disconnect the connector.
    2. Detach the harness clip (A).
    3. While holding the power mirror (B), remove the nuts (C) securing the mirror.

GETtheMANUALS.org

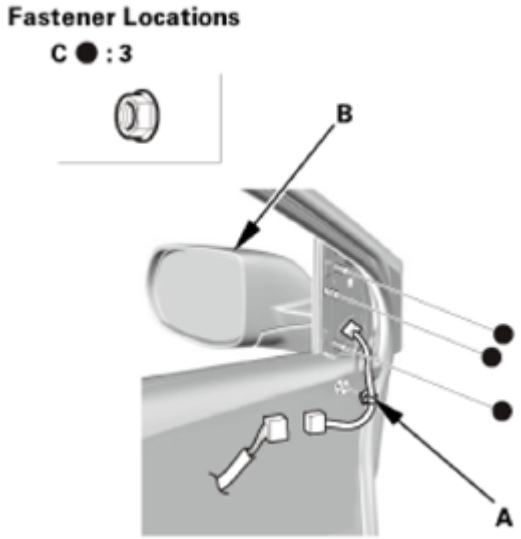

Fig. 116: Identifying Power Mirror, Harness Clip And Nuts
Courtesy of AMERICAN HONDA MOTOR CO., INC.

4. Remove the power mirror (A) and carefully pull out the harness (B).

Fig. 117: Identifying Power Mirror And Harness
Courtesy of AMERICAN HONDA MOTOR CO., INC.

5. Front Door Outer Molding
    1. Detach the clips (A), then pull out the upper edge of the front door outer molding (B) from the edge of the sash. If necessary, cut the double-sided adhesive tape (C) with a utility knife.

GETtheMANUALS.org

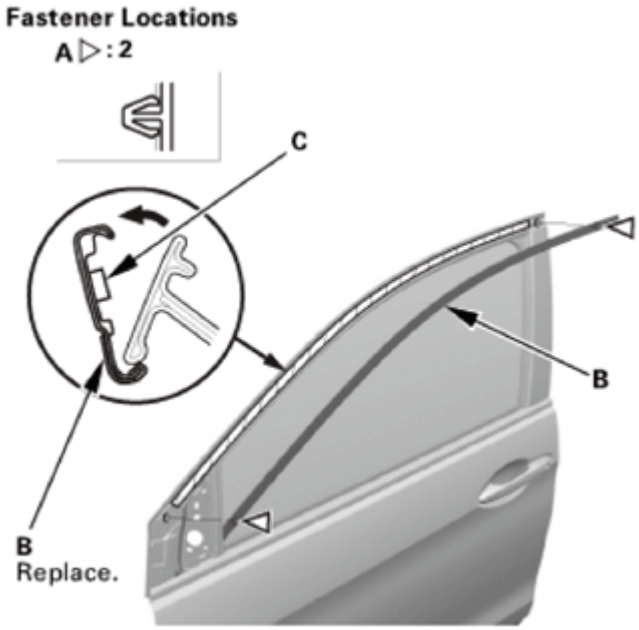

Fig. 118: Removing Front Door Outer Molding Upper Edge
Courtesy of AMERICAN HONDA MOTOR CO., INC.

INSTALLATION

1. Front Door Outer Molding
    1. Scrape off the remaining double-sided adhesive tape from the sash, then clean the surface with a sponge dampened in isopropyl alcohol. After cleaning, keep oil, grease, and water from getting on the surface.
    2. Install a new front door outer molding (A). Make sure the clips (B) snap into place securely.

GETtheMANUALS.org

Fig. 119: Installing Front Door Outer Molding
Courtesy of AMERICAN HONDA MOTOR CO., INC.

2. Door Mirror
    1. Insert the harness (A) into the hole in the door, then install the power mirror (B).

Fig. 120: Identifying Power Mirror And Harness
Courtesy of AMERICAN HONDA MOTOR CO., INC.

    2. Install the nuts (A).
    3. Attach the harness clip (B).
    4. Connect the connector.

GETtheMANUALS.org

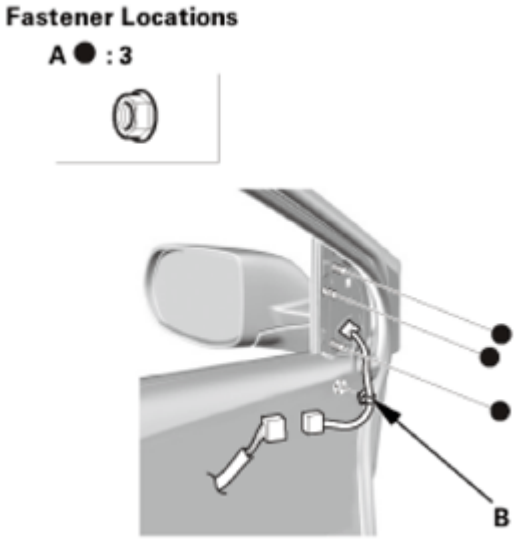

Fig. 121: Identifying Connector, Harness Clip And Nuts
Courtesy of AMERICAN HONDA MOTOR CO., INC.

3. Front Door Panel
    1. Install the inner handle (A) in the door panel (B).
    2. Install the door panel. Make sure the clips (C) snap into place securely.

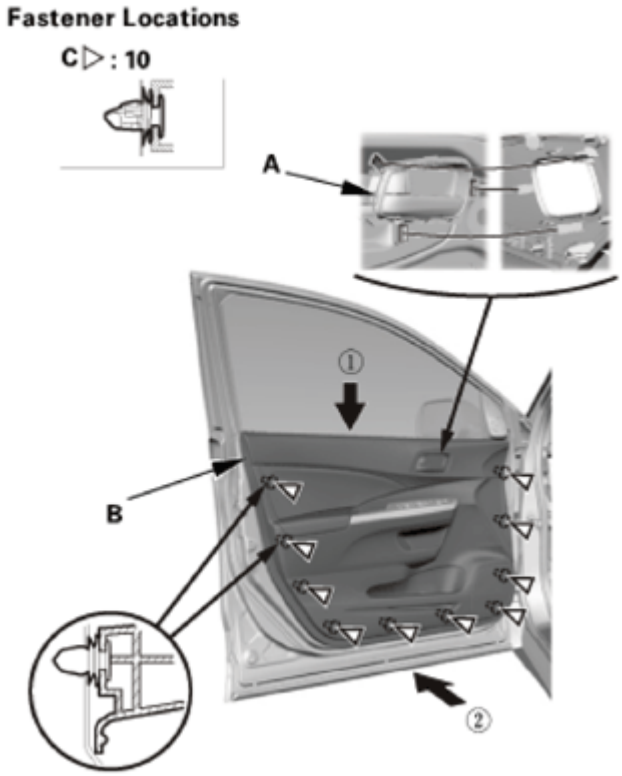

Fig. 122: Installing Front Door Panel

GETtheMANUALS.org

Courtesy of AMERICAN HONDA MOTOR CO., INC.

3. Install the screw (A), then install the pull pocket mat (B).

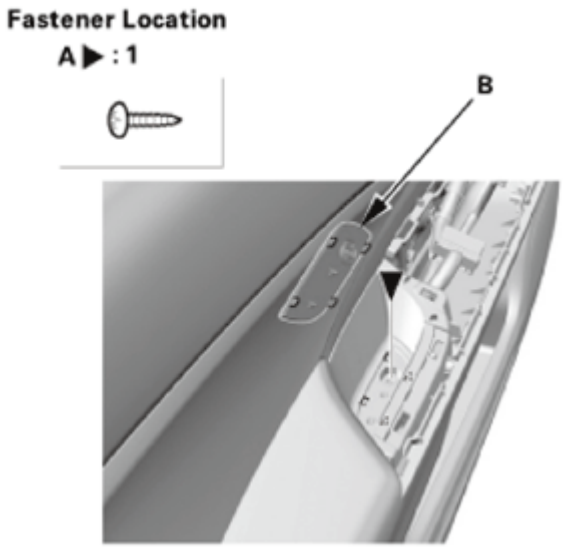

Fig. 123: Identifying Pocket Mat And Screw
Courtesy of AMERICAN HONDA MOTOR CO., INC.

4. Install the screws (A) securing the inner handle (B).

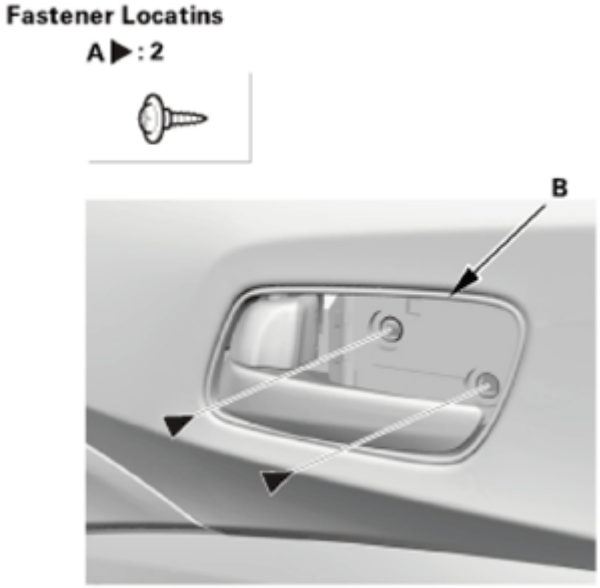

Fig. 124: Identifying Inner Handle And Screw
Courtesy of AMERICAN HONDA MOTOR CO., INC.

5. Install the inner handle cap (A). Make sure the upper hook (B) and the lower hooks (C) snap into place securely.

GETtheMANUALS.org

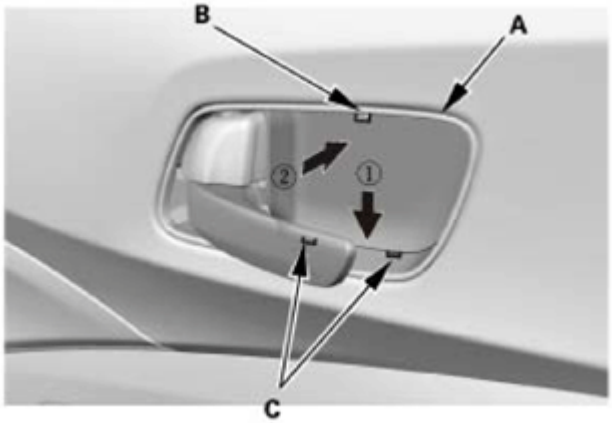

Fig. 125: Installing Inner Handle Cap And Screws
Courtesy of AMERICAN HONDA MOTOR CO., INC.

4. Front Door Power Window Switch Panel
    1. Connect the connectors (A), then install the power window switch panel (B). Make sure the clips (C) and the hooks (D) snap into place securely.

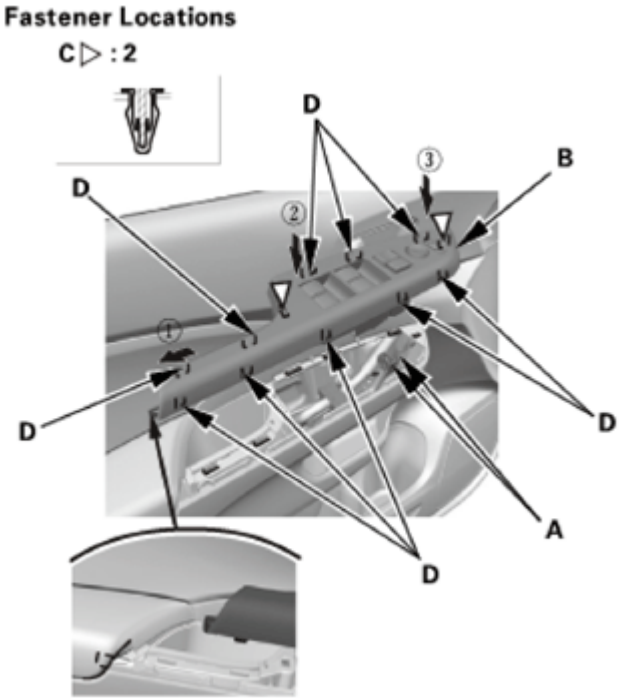

Fig. 126: Identifying Front Door Power Window Switch Panel And Fasteners
Courtesy of AMERICAN HONDA MOTOR CO., INC.

5. Door Mirror Cover
    1. With tweeter: Connect the connector (A).
    2. Install the door mirror cover (B). Make sure the clips (C) snap into place securely.

GETtheMANUALS.org

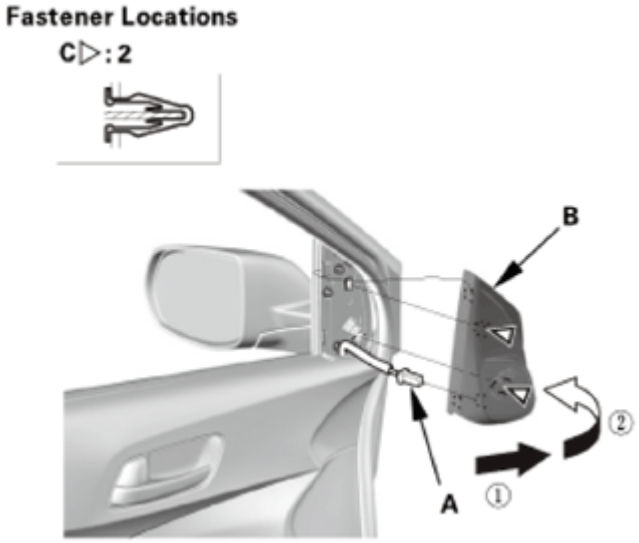

Fig. 127: Installing Door Mirror Cover
Courtesy of AMERICAN HONDA MOTOR CO., INC.

FRONT DOOR PANEL REMOVAL AND INSTALLATION

REMOVAL

1. Door Mirror Cover
    1. Carefully pry out the door mirror cover (A) with the appropriate trim tool to detach the clips (B), then remove the door mirror cover.
    2. With tweeter: Disconnect the connector (C).

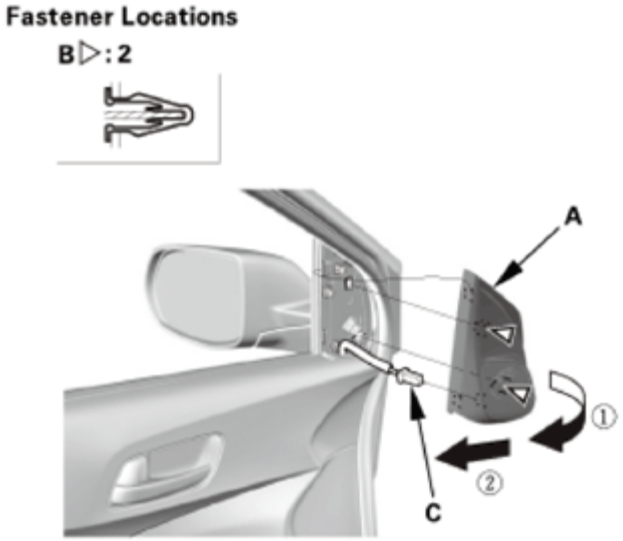

Fig. 128: Removing Door Mirror Cover
Courtesy of AMERICAN HONDA MOTOR CO., INC.

GETtheMANUALS.org

2. Front Door Power Window Switch Panel
    1. Carefully pry out on the notch (A) in the power window switch panel (B) with the appropriate trim tool to detach the clips (C) and the hooks (D). Disconnect the connectors (E), then remove the power window switch panel.

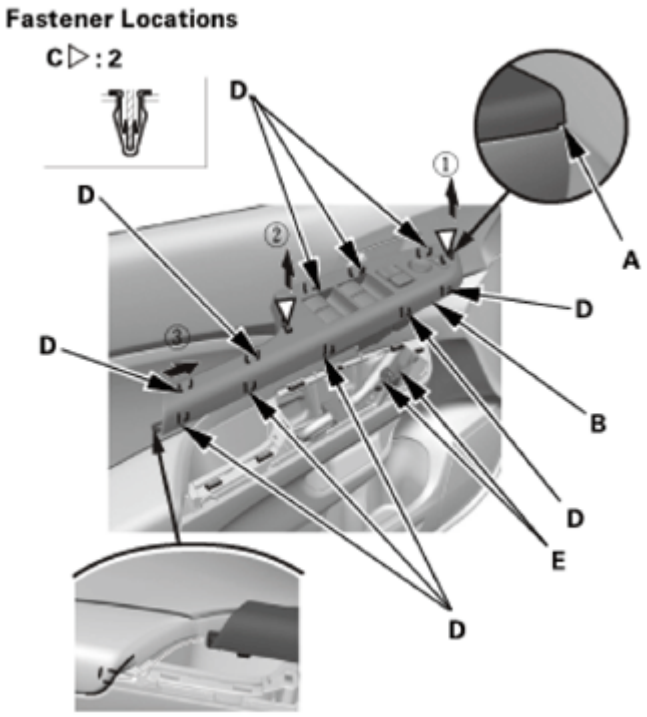

Fig. 129: Removing Front Door Power Window Switch Panel
Courtesy of AMERICAN HONDA MOTOR CO., INC.

3. Front Door Panel
    1. Carefully pry out on the upper hook (A) in the inner handle cap (B) with the appropriate trim tool, then pull back the inner handle cap to remove it.

GETtheMANUALS.org

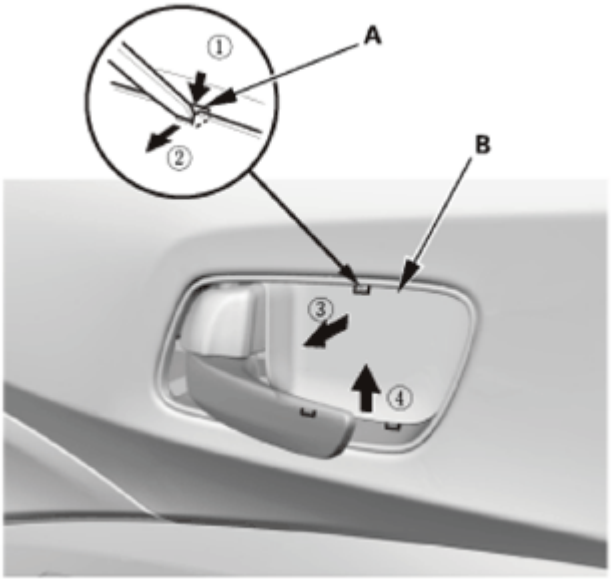

Fig. 130: Removing Inner Handle Cap Upper Hook Using Tool
Courtesy of AMERICAN HONDA MOTOR CO., INC.

2. Remove the screws (A) securing the inner handle (B).

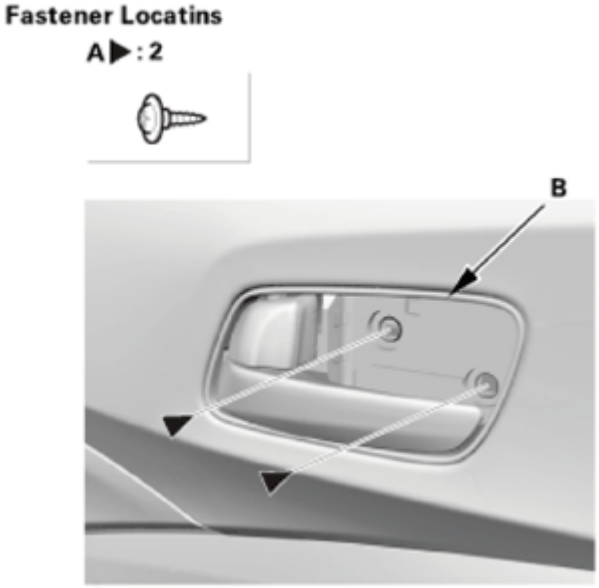

Fig. 131: Identifying Inner Handle And Screws
Courtesy of AMERICAN HONDA MOTOR CO., INC.

3. Remove the pull pocket mat (A), then remove the screw (B).

GETtheMANUALS.org

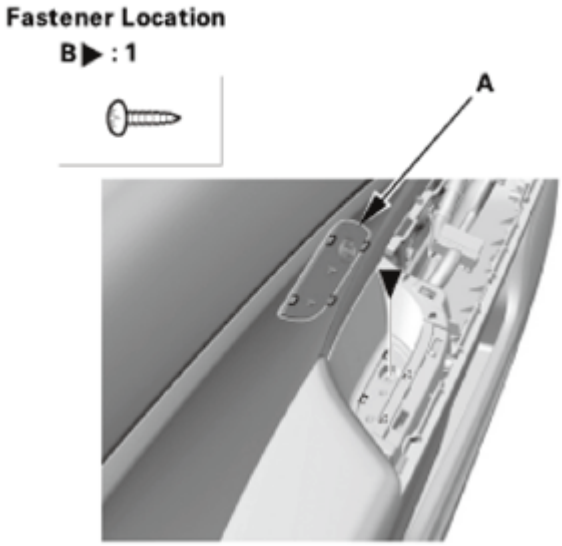

Fig. 132: Identifying Pocket Mat And Screw
Courtesy of AMERICAN HONDA MOTOR CO., INC.

4. Starting at the bottom edge of the door panel (A), detach the clips (B) with a commercially available trim pad remover.
5. Starting at the rear, pull the door panel upward.
6. Remove the inner handle (C) from the door panel, then remove the door panel.

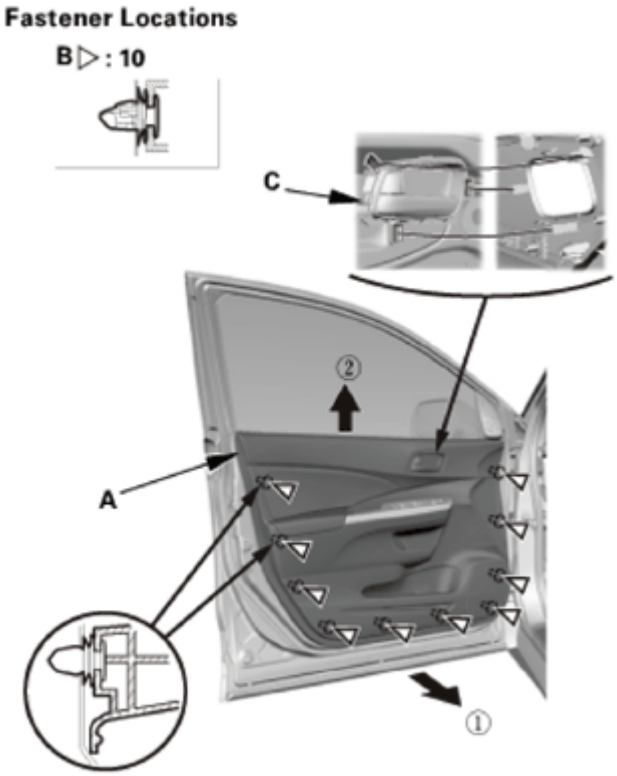

GETtheMANUALS.org

Fig. 133: Removing Door Panel
Courtesy of AMERICAN HONDA MOTOR CO., INC.

4. Front Door Inner Weatherstrip
    1. If necessary, remove the front door inner weatherstrip (A).

Fig. 134: Identifying Front Door Inner Weatherstrip
Courtesy of AMERICAN HONDA MOTOR CO., INC.

5. Front Door Inner Handle
    1. Detach the cable fasteners (A), then disconnect the latch cable (B) and the inner handle cable (C).

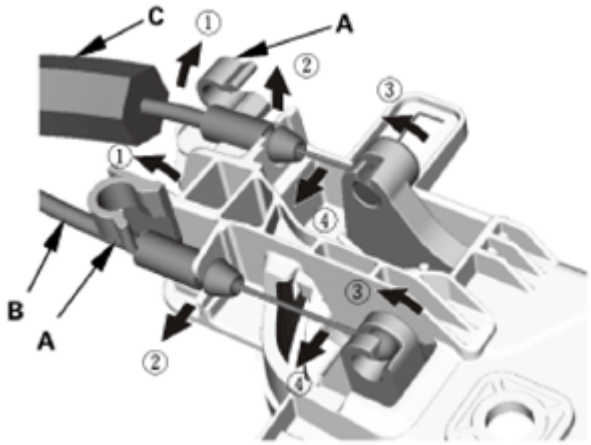

Fig. 135: Disconnecting Latch Cable And Inner Handle Cable
Courtesy of AMERICAN HONDA MOTOR CO., INC.

INSTALLATION

1. Front Door Inner Handle
    1. Connect the latch cable (A) and the inner handle cable (B), then fasten the cable fasteners (C).

GETtheMANUALS.org

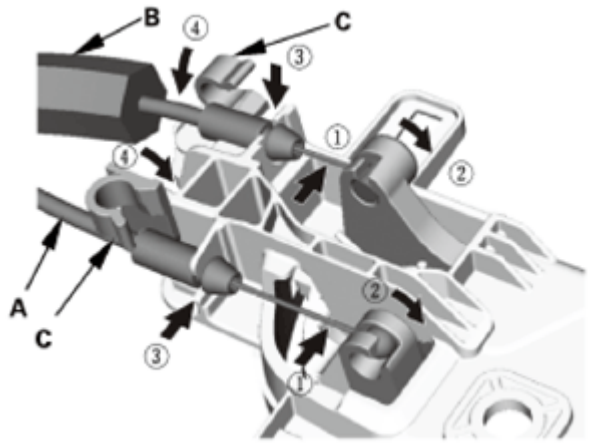

Fig. 136: Connecting Latch Cable And Inner Handle Cable
Courtesy of AMERICAN HONDA MOTOR CO., INC.

2. Front Door Inner Weatherstrip
    1. Install the front door inner weatherstrip (A).

Fig. 137: Identifying Front Door Inner Weatherstrip
Courtesy of AMERICAN HONDA MOTOR CO., INC.

3. Front Door Panel
    1. Install the inner handle (A) in the door panel (B).
    2. Install the door panel. Make sure the clips (C) snap into place securely.

GETtheMANUALS.org

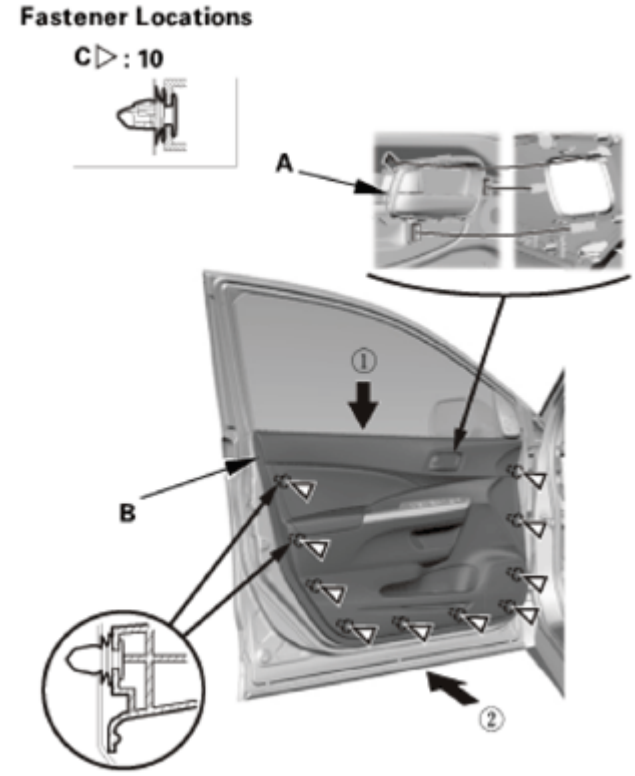

Fig. 138: Installing Front Door Panel
Courtesy of AMERICAN HONDA MOTOR CO., INC.

3. Install the screw (A), then install the pull pocket mat (B).

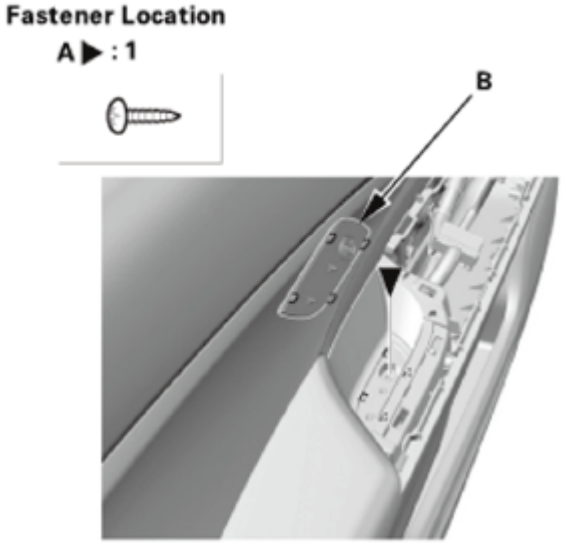

Fig. 139: Identifying Pocket Mat And Screw
Courtesy of AMERICAN HONDA MOTOR CO., INC.

4. Install the screws (A) securing the inner handle (B).

GETtheMANUALS.org

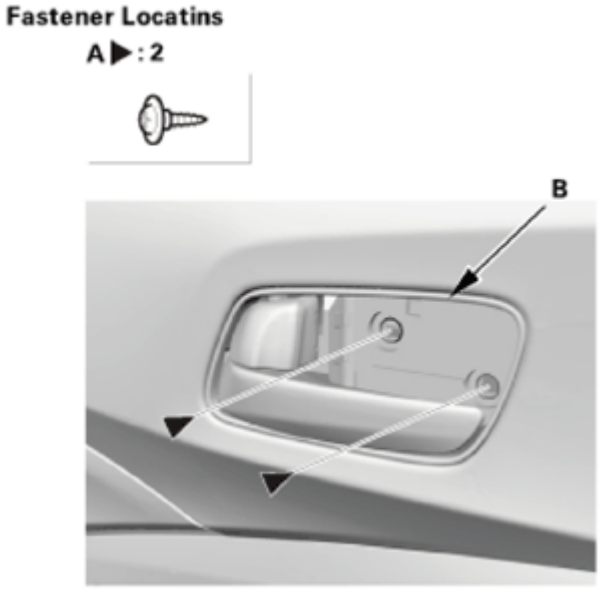

Fig. 140: Identifying Inner Handle And Screw
Courtesy of AMERICAN HONDA MOTOR CO., INC.

5. Install the inner handle cap (A). Make sure the upper hook (B) and the lower hooks (C) snap into place securely.

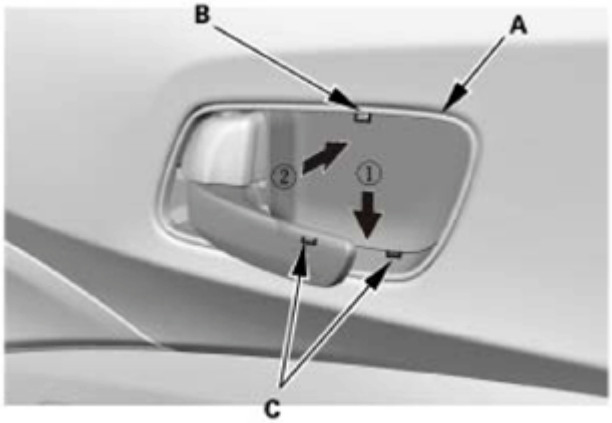

Fig. 141: Installing Inner Handle Cap And Screws
Courtesy of AMERICAN HONDA MOTOR CO., INC.

4. Front Door Power Window Switch Panel
    1. Connect the connectors (A), then install the power window switch panel (B). Make sure the clips (C) and the hooks (D) snap into place securely.

GETtheMANUALS.org

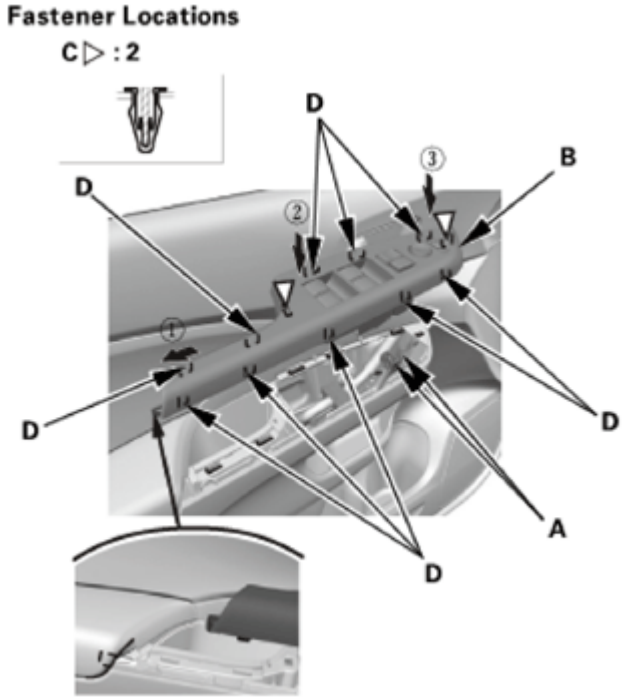

Fig. 142: Identifying Front Door Power Window Switch Panel And Fasteners
Courtesy of AMERICAN HONDA MOTOR CO., INC.

5. Door Mirror Cover
    1. With tweeter: Connect the connector (A).
    2. Install the door mirror cover (B). Make sure the clips (C) snap into place securely.

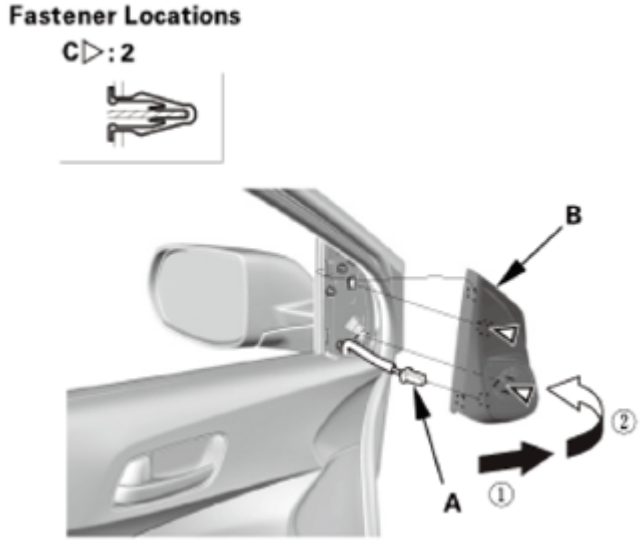

Fig. 143: Installing Door Mirror Cover
Courtesy of AMERICAN HONDA MOTOR CO., INC.

GETtheMANUALS.org

FRONT DOOR REGULATOR REMOVAL AND INSTALLATION

REMOVAL

1. Door Mirror Cover
    1. Carefully pry out the door mirror cover (A) with the appropriate trim tool to detach the clips (B), then remove the door mirror cover.
    2. With tweeter: Disconnect the connector (C).

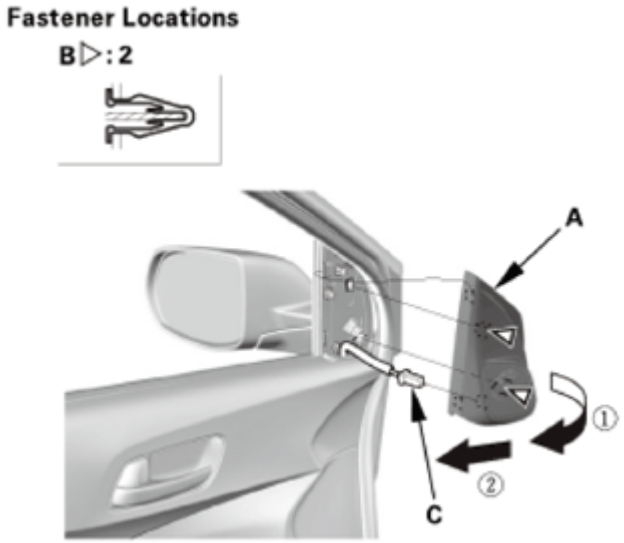

Fig. 144: Removing Door Mirror Cover
Courtesy of AMERICAN HONDA MOTOR CO., INC.

2. Front Door Power Window Switch Panel
    1. Carefully pry out on the notch (A) in the power window switch panel (B) with the appropriate trim tool to detach the clips (C) and the hooks (D). Disconnect the connectors (E), then remove the power window switch panel.

GETtheMANUALS.org

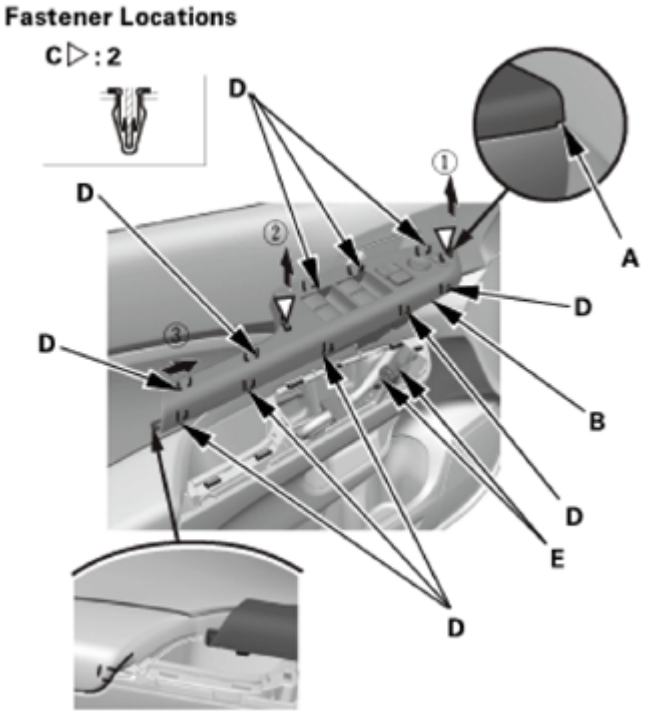

Fig. 145: Removing Front Door Power Window Switch Panel
Courtesy of AMERICAN HONDA MOTOR CO., INC.

3. Front Door Panel
    1. Carefully pry out on the upper hook (A) in the inner handle cap (B) with the appropriate trim tool, then pull back the inner handle cap to remove it.

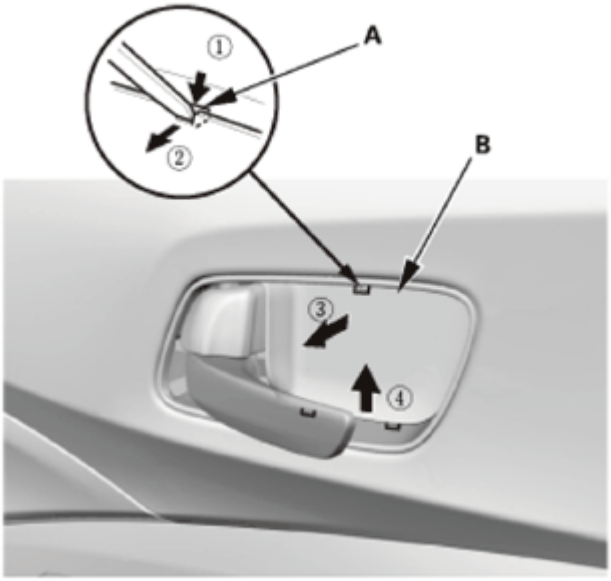

Fig. 146: Removing Inner Handle Cap Upper Hook Using Tool
Courtesy of AMERICAN HONDA MOTOR CO., INC.

GETtheMANUALS.org

2. Remove the screws (A) securing the inner handle (B).

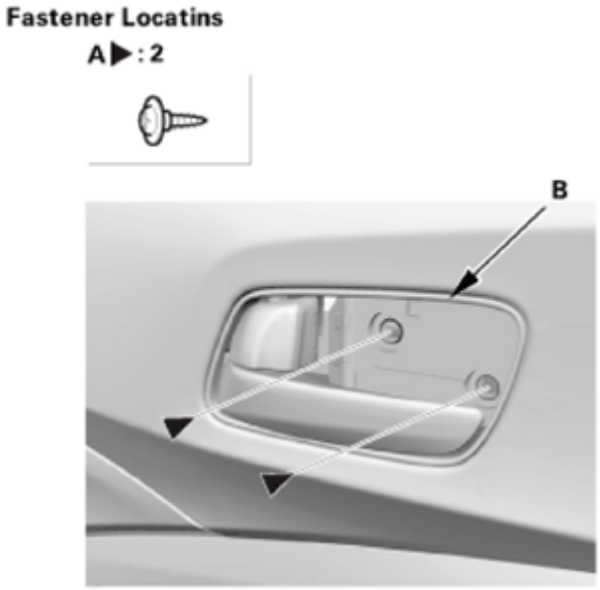

Fig. 147: Identifying Inner Handle And Screws
Courtesy of AMERICAN HONDA MOTOR CO., INC.

3. Remove the pull pocket mat (A), then remove the screw (B).

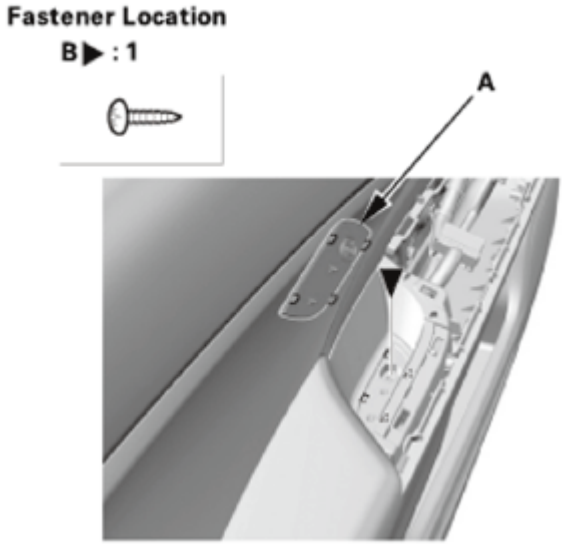

Fig. 148: Identifying Pocket Mat And Screw
Courtesy of AMERICAN HONDA MOTOR CO., INC.

4. Starting at the bottom edge of the door panel (A), detach the clips (B) with a commercially available trim pad remover.
5. Starting at the rear, pull the door panel upward.

GETtheMANUALS.org

6. Remove the inner handle (C) from the door panel, then remove the door panel.

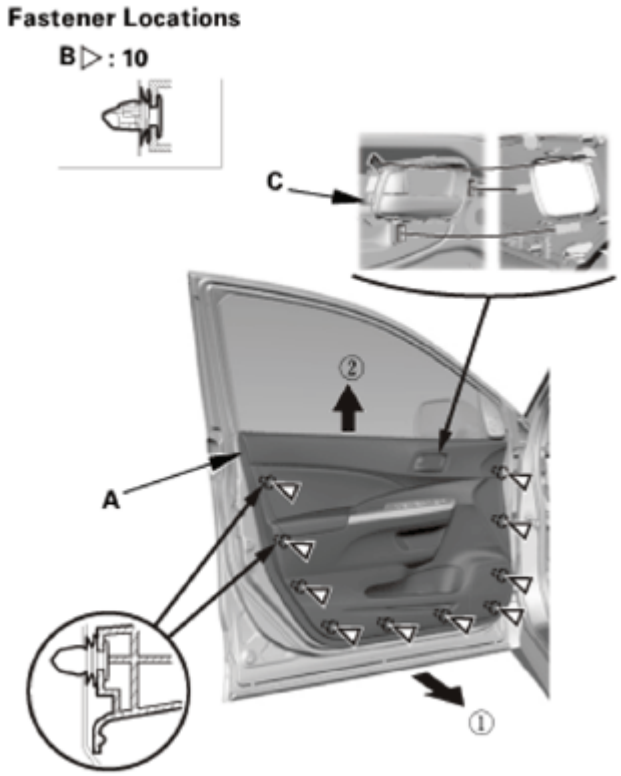

Fig. 149: Removing Door Panel
Courtesy of AMERICAN HONDA MOTOR CO., INC.

4. Front Door Plastic Cover
    1. Disconnect the connector (A), then detach the harness clips (B).
    2. Remove the screws (C), then remove the pull pocket bracket (D).
    3. Remove the plug caps (E), then carefully remove the plastic cover (F).

NOTE: If the plastic cover is damaged or torn, replace it with a new one.

GETtheMANUALS.org

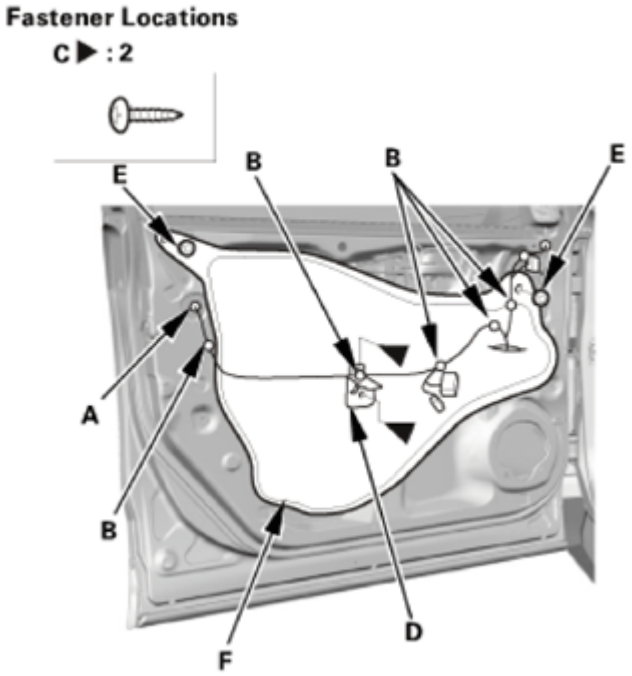

Fig. 150: Identifying Front Door Plastic Cover, Pocket Bracket And Fasteners With Torque Specification
Courtesy of AMERICAN HONDA MOTOR CO., INC.

5. Front Door Glass Support
    1. Carefully lower the glass (A) until you can see the glass mounting bolts (B), then remove them.

GETtheMANUALS.org

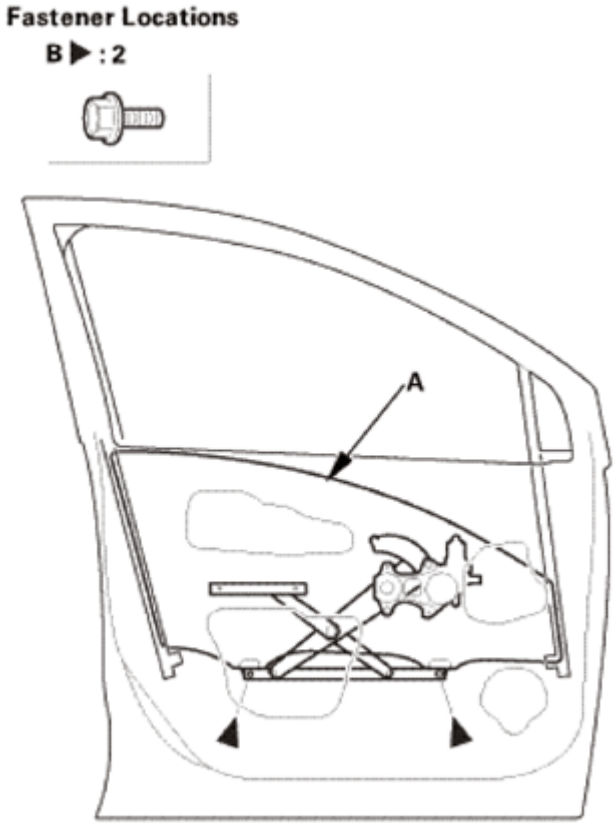

Fig. 151: Identifying Front Door Glass And Mounting Bolts
Courtesy of AMERICAN HONDA MOTOR CO., INC.

2. Raise the glass (A), then secure the glass with tape (B). Take care not to drop the glass inside the door.

GETtheMANUALS.org

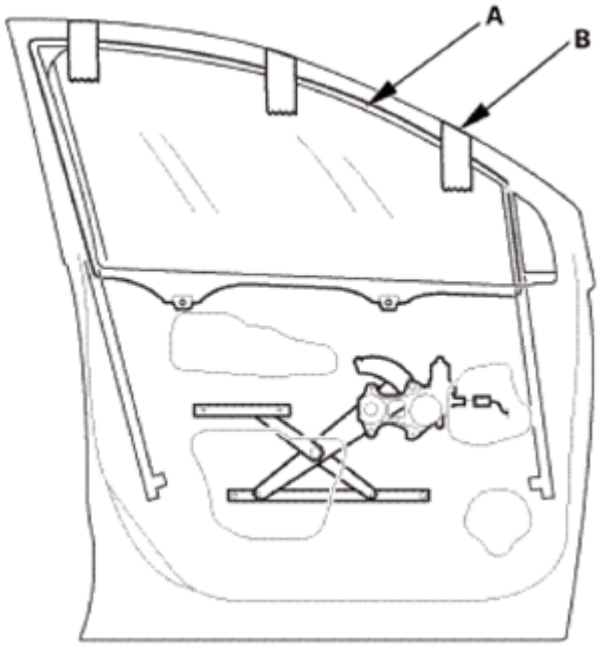

Fig. 152: Securing Glass Using Tape
Courtesy of AMERICAN HONDA MOTOR CO., INC.

6. Front Door Regulator
    1. Disconnect the connector (A) from the regulator (B).
    2. Remove the nuts (C).
    3. Remove the bolts (D), and loosen the bolts (E), then remove the regulator through the hole in the door.

GETtheMANUALS.org

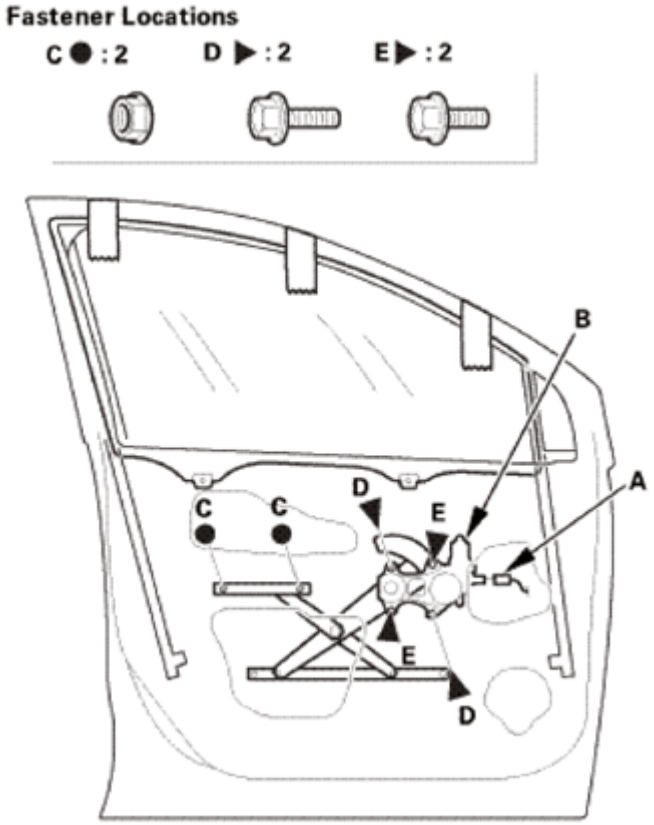

Fig. 153: Identifying Front Door Regulator, Connector And Fasteners
Courtesy of AMERICAN HONDA MOTOR CO., INC.

INSTALLATION

1. Front Door Regulator
    1. Apply multipurpose grease to the sliding surfaces of the regulator (A) where as shown.

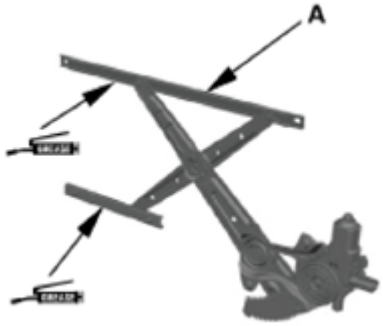

Fig. 154: Identifying Multipurpose Grease Applying Area On Regulator Sliding Surface
Courtesy of AMERICAN HONDA MOTOR CO., INC.

    2. Install the regulator (A) through the hole in the door, then install the nuts (B) and the bolts (C, D).
    3. Connect the connector (E) to the regulator.

GETtheMANUALS.org

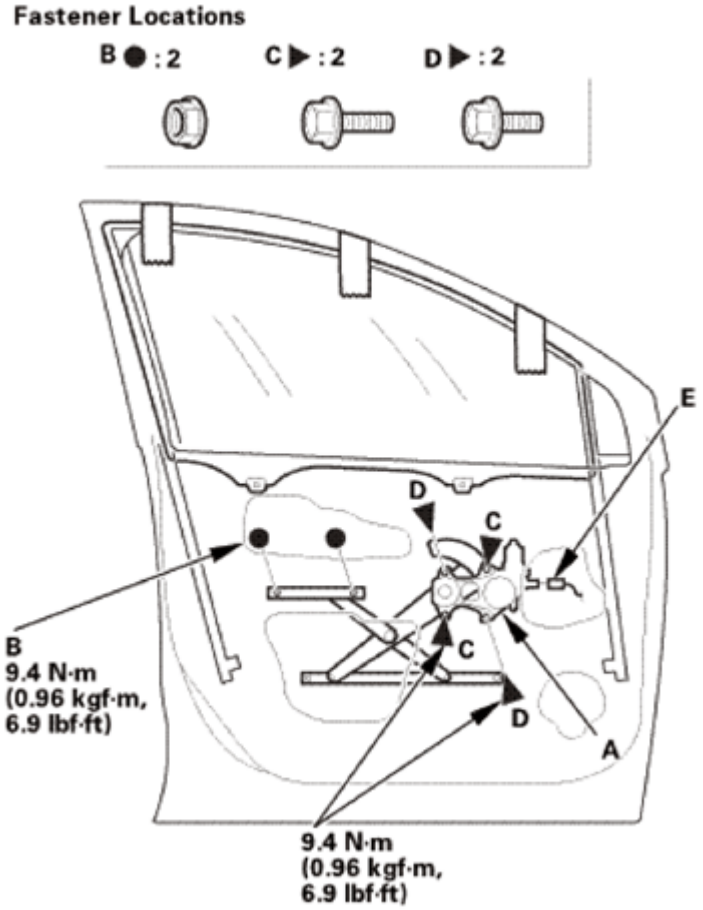

Fig. 155: Identifying Regulator, Connector And Fasteners With Torque Specification
Courtesy of AMERICAN HONDA MOTOR CO., INC.

2. Front Door Glass Support
    1. While holding the glass (A), remove the tape (B), then carefully lower the glass. Take care not to drop the glass inside the door.

GETtheMANUALS.org

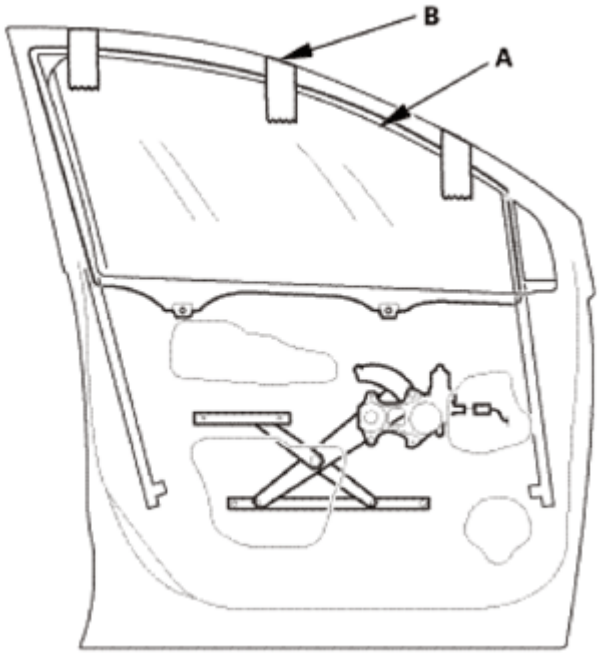

Fig. 156: Holding Glass Using Tape
Courtesy of AMERICAN HONDA MOTOR CO., INC.

2. Install the glass mounting bolts (A).

GETtheMANUALS.org

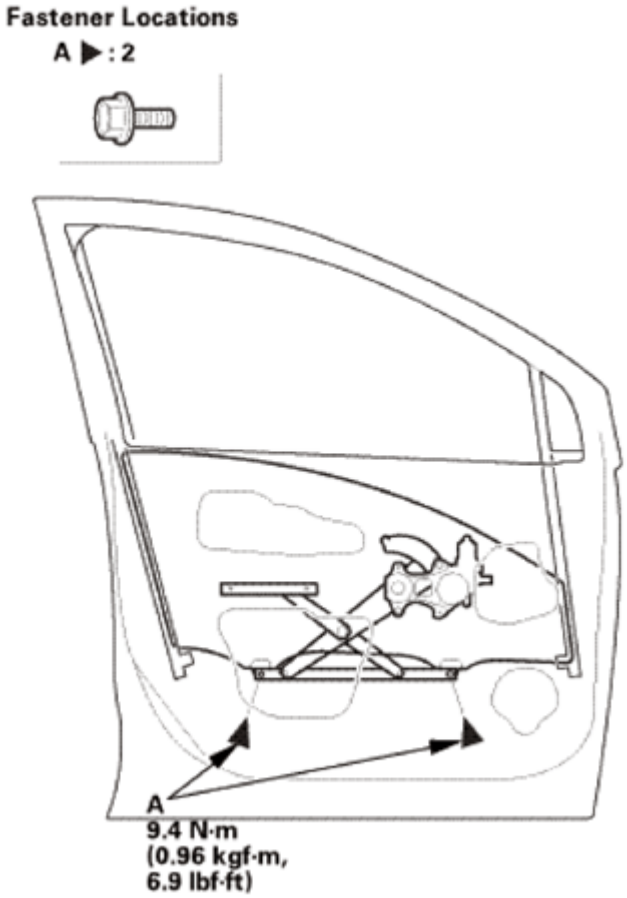

Fig. 157: Identifying Glass Mounting Bolts With Torque Specification
Courtesy of AMERICAN HONDA MOTOR CO., INC.

3. Front Door Glass - Adjustment

NOTE:

- **Check the weatherstrip and the glass run channel for damage or deterioration, and replace them if necessary.**
- **Wipe the run channel clean with a shop towel.**

1. Place the vehicle on a firm, level surface.
2. Carefully move the glass (A) until you can see the glass mounting bolts (B), then loosen them.
3. Push the glass against the center lower channel (C), then tighten the glass mounting bolts.
4. Make sure that the glass moves smoothly.

GETtheMANUALS.org

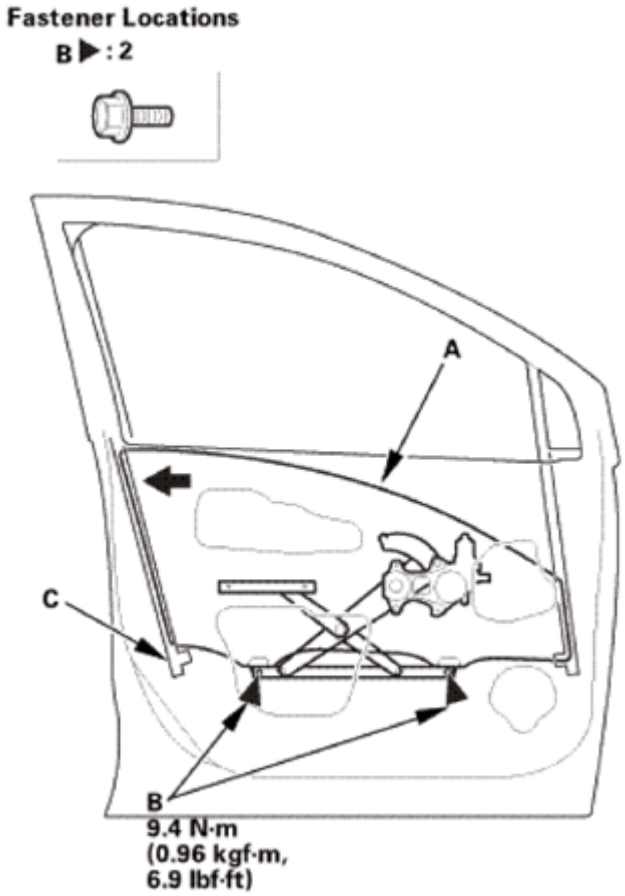

Fig. 158: Pushing Glass Against Center Lower Channel
Courtesy of AMERICAN HONDA MOTOR CO., INC.

5. Raise the glass fully, and check for gaps. Also make sure that the glass (A) contacts the glass run channel (B) evenly.

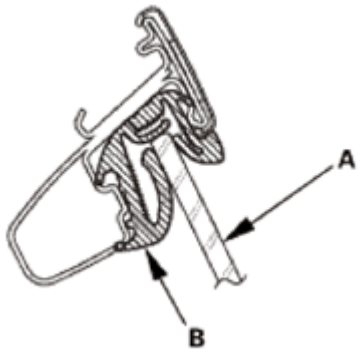

Fig. 159: Identifying Glass And Glass Run Channel
Courtesy of AMERICAN HONDA MOTOR CO., INC.

4. Front Door Plastic Cover
    1. Install the plastic cover (A), then install the plug caps (B).

GETtheMANUALS.org

2. Install the pull pocket bracket (C), then install the screws (D).
3. Connect the connector (E), then install the harness clips (F).

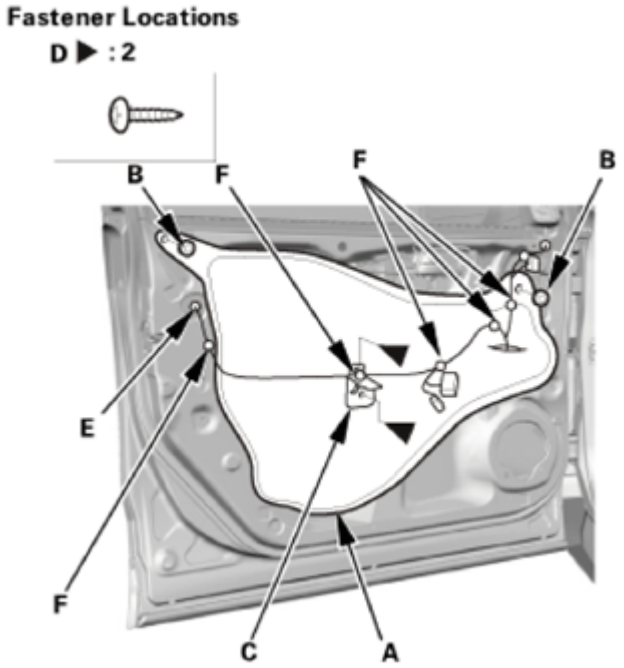

Fig. 160: Identifying Front Door Plastic Cover, Pocket Bracket And Fasteners With Torque Specification
Courtesy of AMERICAN HONDA MOTOR CO., INC.

5. Front Door Panel
    1. Install the inner handle (A) in the door panel (B).
    2. Install the door panel. Make sure the clips (C) snap into place securely.

GETtheMANUALS.org

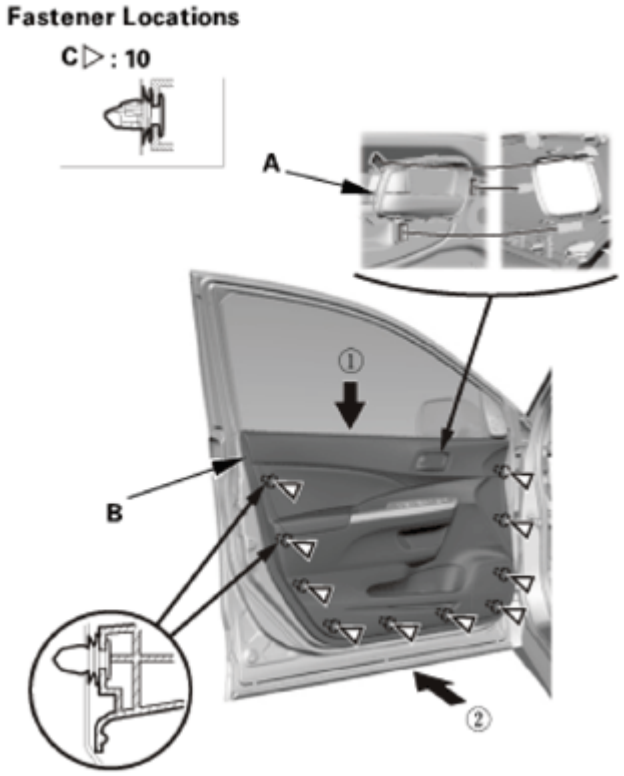

Fig. 161: Installing Rear Door Panel
Courtesy of AMERICAN HONDA MOTOR CO., INC.

3. Install the screw (A), then install the pull pocket mat (B).

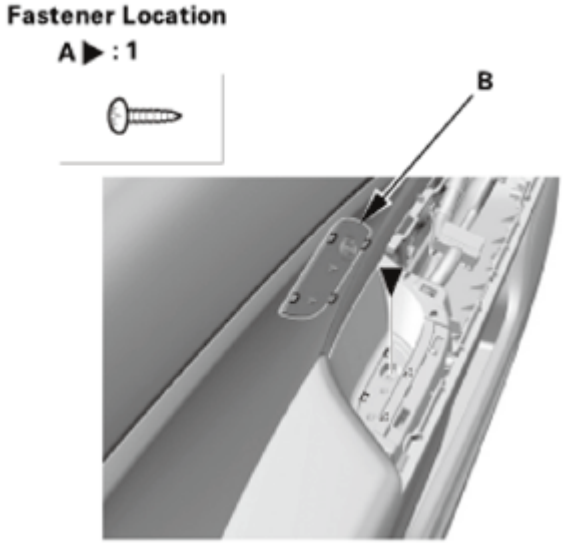

Fig. 162: Identifying Pocket Mat And Screw
Courtesy of AMERICAN HONDA MOTOR CO., INC.

4. Install the screws (A) securing the inner handle (B).

GETtheMANUALS.org

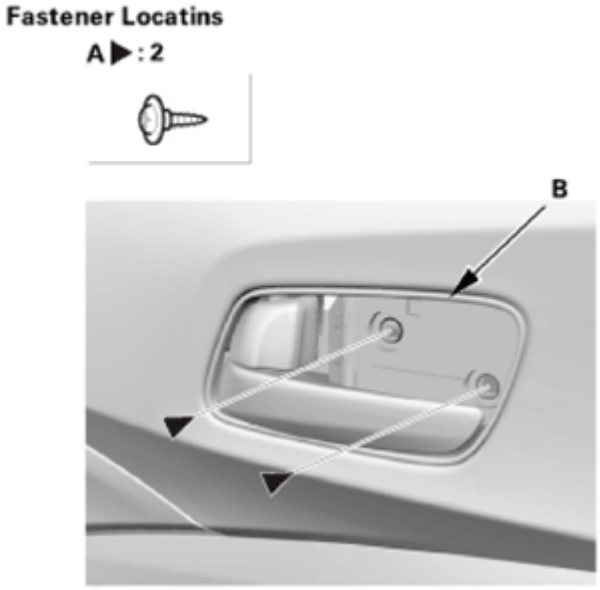

Fig. 163: Identifying Inner Handle And Screw
Courtesy of AMERICAN HONDA MOTOR CO., INC.

5. Install the inner handle cap (A). Make sure the upper hook (B) and the lower hooks (C) snap into place securely.

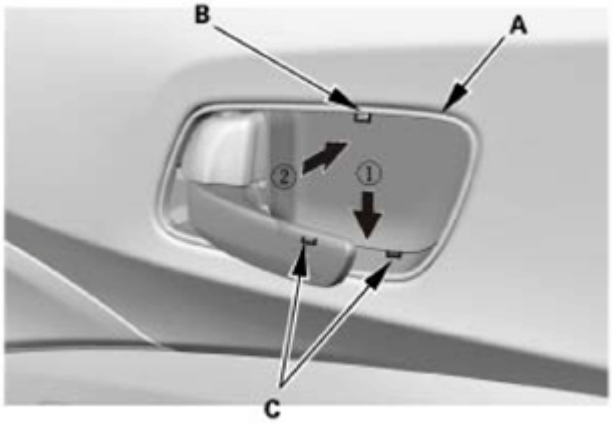

Fig. 164: Installing Inner Handle Cap And Screws
Courtesy of AMERICAN HONDA MOTOR CO., INC.

6. Front Door Power Window Switch Panel
    1. Connect the connectors (A), then install the power window switch panel (B). Make sure the clips (C) and the hooks (D) snap into place securely.

GETtheMANUALS.org

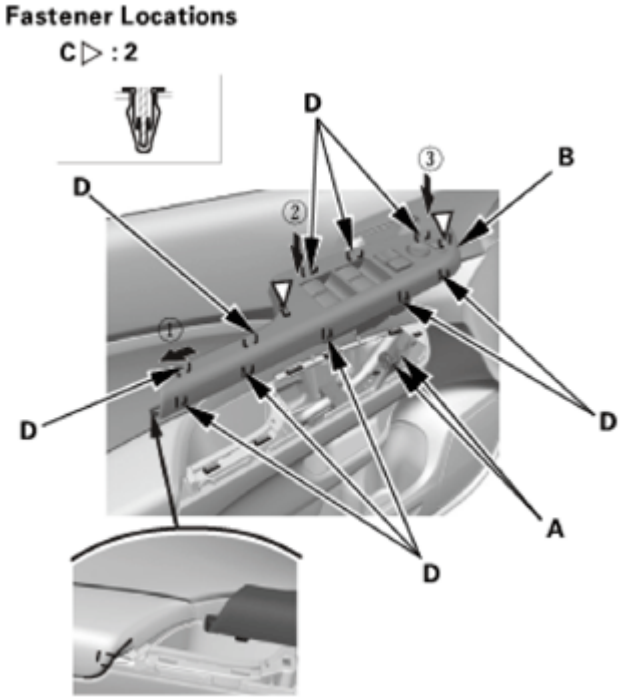

Fig. 165: Identifying Front Door Power Window Switch Panel And Fasteners
Courtesy of AMERICAN HONDA MOTOR CO., INC.

7. Door Mirror Cover
    1. With tweeter: Connect the connector (A).
    2. Install the door mirror cover (B). Make sure the clips (C) snap into place securely.

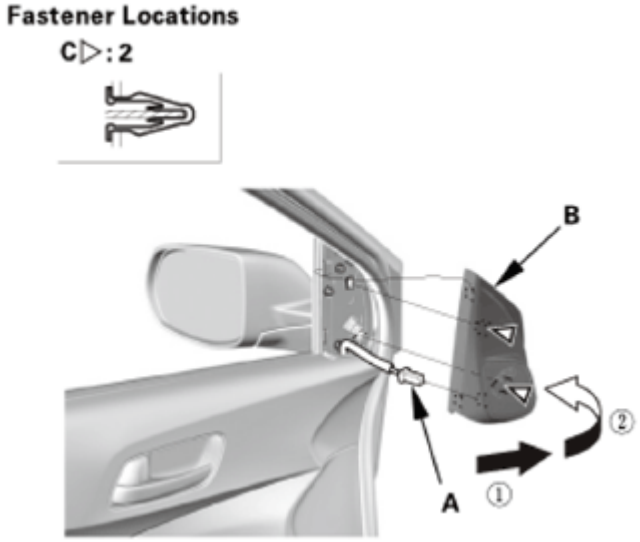

Fig. 166: Installing Door Mirror Cover
Courtesy of AMERICAN HONDA MOTOR CO., INC.

8. Power Window Control Unit - Reset

GETtheMANUALS.org

1. **DO THE POWER WINDOW CONTROL UNIT RESETTING PROCEDURE** .

FRONT DOOR SASH OUTER TRIM REMOVAL AND INSTALLATION

REMOVAL

1. Front Door Sash Outer Trim
    1. Detach the clip with a clip remover, then pull back the front door weatherstrip (A) as needed, and remove the screw (B) securing the front door sash outer trim (C).
    2. Pull down the upper portion of the front door sash outer trim to detach it from the front door outer molding (D).
    3. Pull up the front door sash outer trim to release the hooks (E) from the door, and release the trim from between the door glass outer weatherstrip (F) and the door.

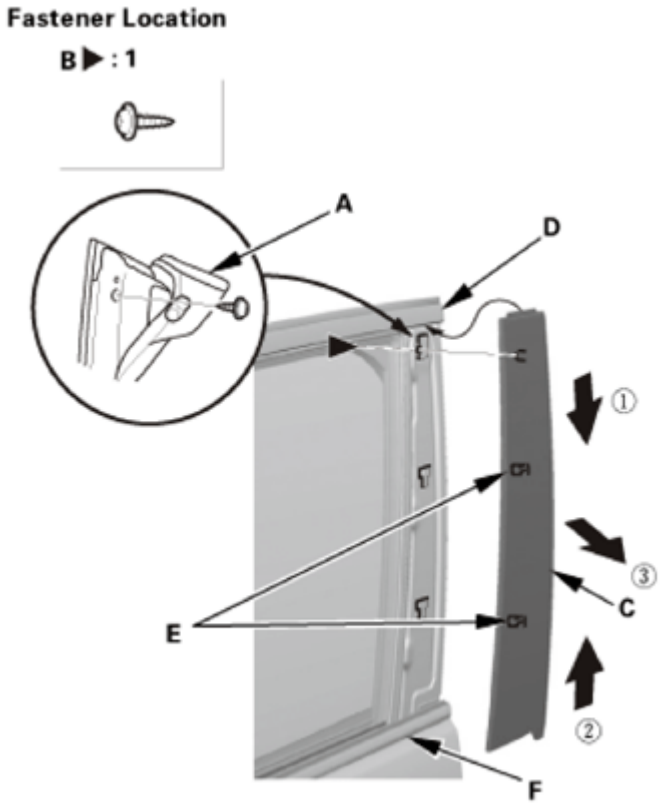

Fig. 167: Removing Front Door Sash Outer Trim
Courtesy of AMERICAN HONDA MOTOR CO., INC.

INSTALLATION

1. Front Door Sash Outer Trim
    1. Set the hooks (A) into the hole in the door, then slide the front door sash outer trim (B) down.
    2. Insert the upper portion of the front door sash outer trim to the front door outer molding (C).

GETtheMANUALS.org

3. Install the screw (D) securing the front door sash outer trim, then install the front door weatherstrip (E).

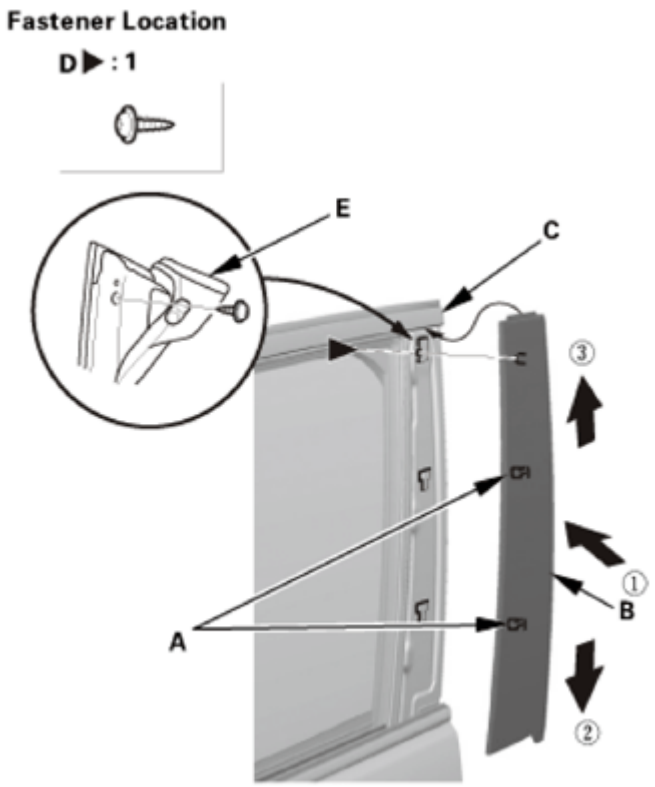

Fig. 168: Installing Front Door Sash Outer Trim
Courtesy of AMERICAN HONDA MOTOR CO., INC.

FRONT DOOR WEATHERSTRIP REMOVAL AND INSTALLATION

REMOVAL

1. Front Door Weatherstrip
    1. Remove the door checker mounting bolt (A) at the A-pillar.
    2. Detach the clips (B, C, and D), and release the door weatherstrip (E) from the holder (F) of the door sash, then remove the door weatherstrip.

GETtheMANUALS.org

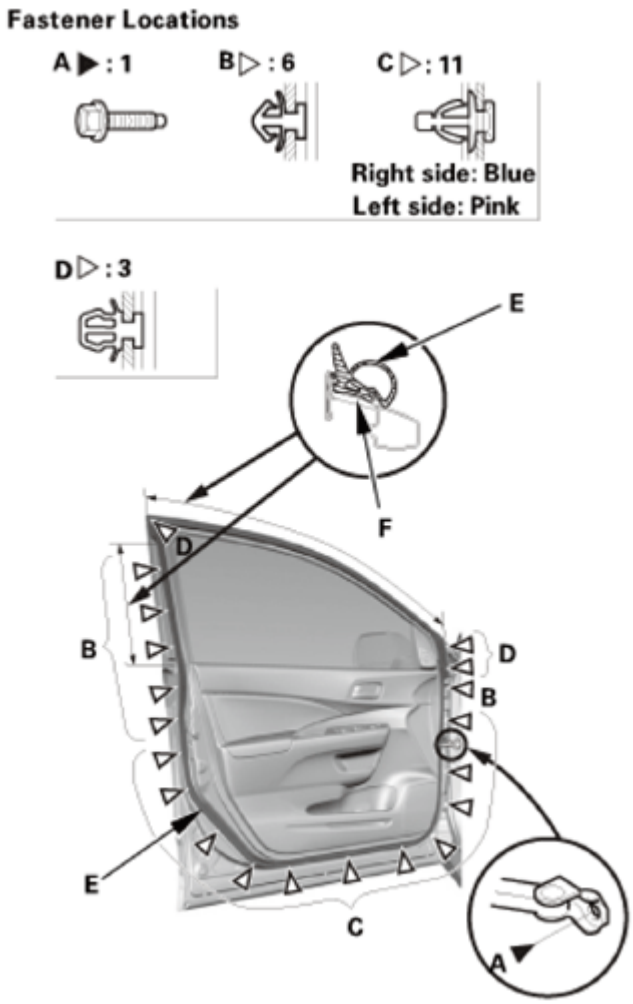

Fig. 169: Identifying Door Weatherstrip, Holder And Fasteners
Courtesy of AMERICAN HONDA MOTOR CO., INC.

INSTALLATION

1. Front Door Weatherstrip

NOTE: Apply medium strength liquid thread lock to the door checker mounting bolt (A) before installation.

1. Install the front door weatherstrip (B). Make sure the clips (C, D, and E) snap into place securely.
2. Install the door checker mounting bolt.

NOTE: Make sure the door weatherstrip is installed in the holder (F) securely.

GETtheMANUALS.org

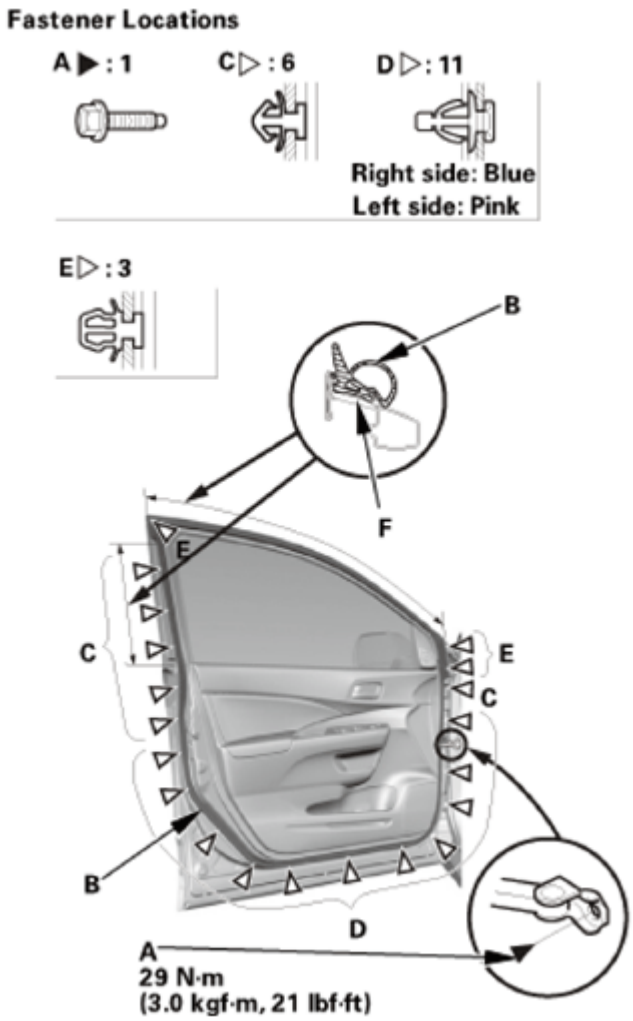

Fig. 170: Identifying Front Door Weatherstrip, Holder And Fasteners With Torque Specifications
Courtesy of AMERICAN HONDA MOTOR CO., INC.

2. Water Leak Test

Check for water leaks. Run water over the roof and on the sealing area as shown, and note these items:

- Use a 12 mm (0.47 in) diameter hose (A).
- Adjust the rate of water flow as shown.
- Do not use a nozzle.
- Hold the hose about 300 mm (11.81 in) away from the door.

GETtheMANUALS.org

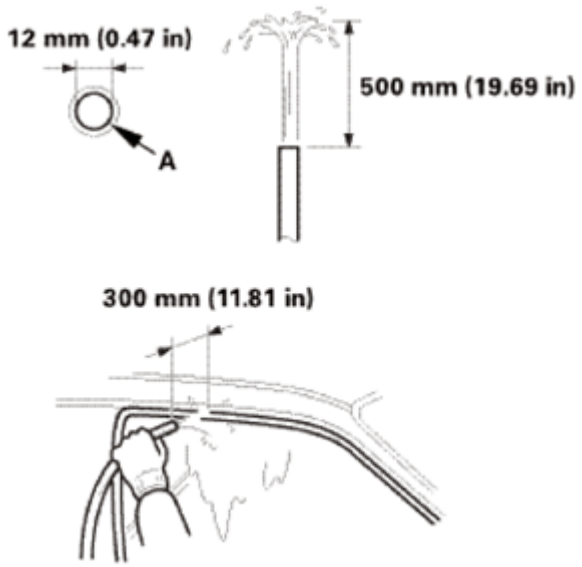

Fig. 171: Checking Water Leaks
Courtesy of AMERICAN HONDA MOTOR CO., INC.

REAR DOOR COMPONENT LOCATION INDEX

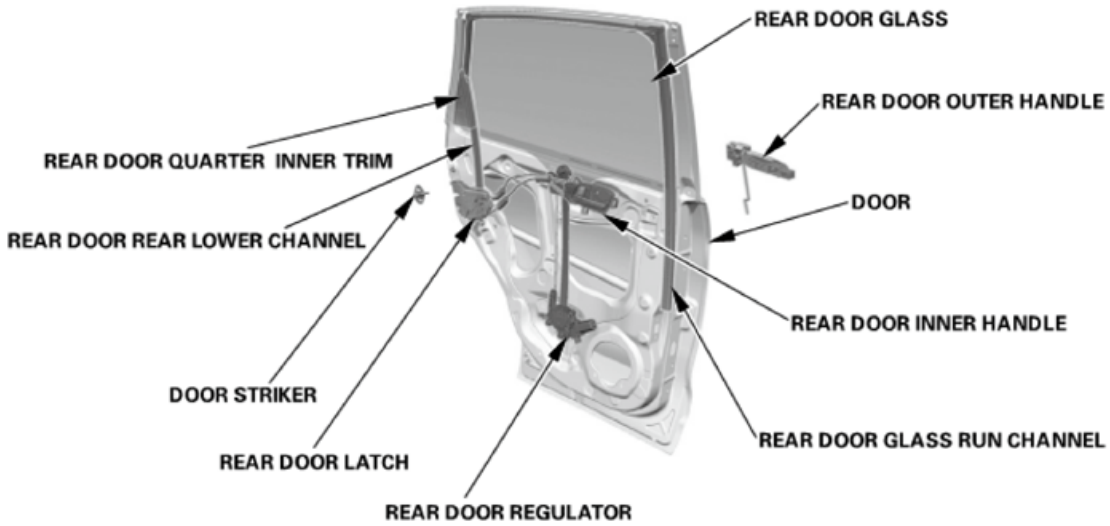

Fig. 172: Rear Door Components Location
Courtesy of AMERICAN HONDA MOTOR CO., INC.

DOOR	**POSITION ADJUSTMENT**
DOOR STRIKER	**ADJUSTMENT**
REAR DOOR LATCH	**REMOVAL AND INSTALLATION**
REAR DOOR OUTER HANDLE	**REMOVAL AND INSTALLATION**
REAR DOOR GLASS	**Rear Door Glass Removal and Installation**
	Rear Door Glass Adjustment

GETtheMANUALS.org

REAR DOOR REGULATOR	**Rear Door Regulator Removal and Installation**
REAR DOOR REAR LOWER CHANNEL	**Rear Door Glass Removal and Installation**
REAR DOOR GLASS RUN CHANNEL	**Rear Door Glass Removal and Installation**
REAR DOOR INNER HANDLE	**REMOVAL AND INSTALLATION**

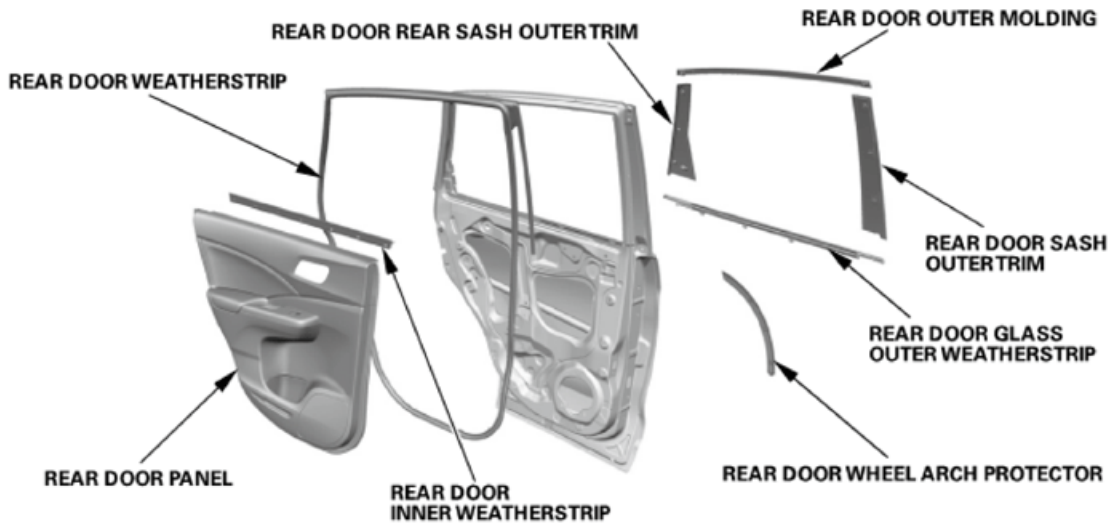

Fig. 173: Rear Door Components Location
Courtesy of AMERICAN HONDA MOTOR CO., INC.

REAR DOOR OUTER MOLDING	**REPLACEMENT**
REAR DOOR PANEL	**REMOVAL AND INSTALLATION**
REAR DOOR WEATHERSTRIP	**REMOVAL AND INSTALLATION**
REAR DOOR GLASS OUTER WEATHERSTRIP	**REMOVAL AND INSTALLATION**
REAR DOOR INNER WEATHERSTRIP	**REMOVAL AND INSTALLATION**
REAR DOOR REAR SASH OUTER TRIM	**REMOVAL AND INSTALLATION**
REAR DOOR SASH OUTER TRIM	**REMOVAL AND INSTALLATION**
REAR DOOR WHEEL ARCH PROTECTOR	**REMOVAL AND INSTALLATION**

REAR DOOR GLASS OUTER WEATHERSTRIP REMOVAL AND INSTALLATION

REMOVAL

1. Rear Door Power Window Switch Panel
    1. Carefully pry out on the notch (A) in the power window switch panel (B) with the appropriate trim tool to detach the clips (C) and the hooks (D). Disconnect the connector (E), then remove the power window switch panel.

GETtheMANUALS.org

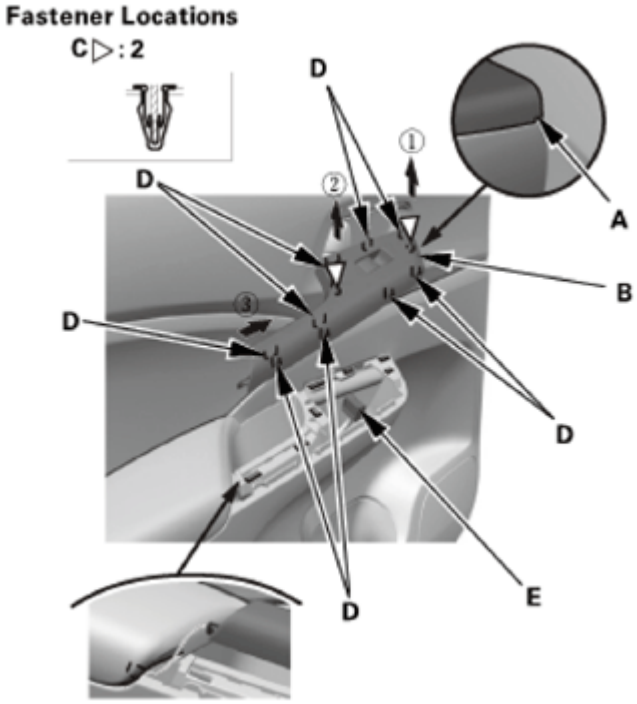

Fig. 174: Removing Rear Door Power Window Switch Panel
Courtesy of AMERICAN HONDA MOTOR CO., INC.

2. Rear Door Panel
    1. Detach the clip (A) and the hooks (B), then remove the rear door quarter inner trim (C).

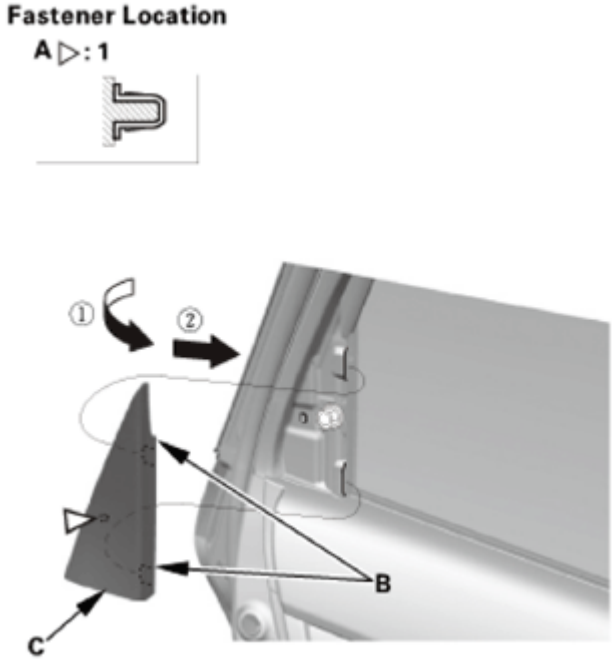

Fig. 175: Removing Rear Door Quarter Inner Trim

GETtheMANUALS.org

Courtesy of AMERICAN HONDA MOTOR CO., INC.

2. Carefully pry out on the upper hook (A) in the inner handle cap (B) with the appropriate trim tool, then pull back the inner handle cap to remove it.

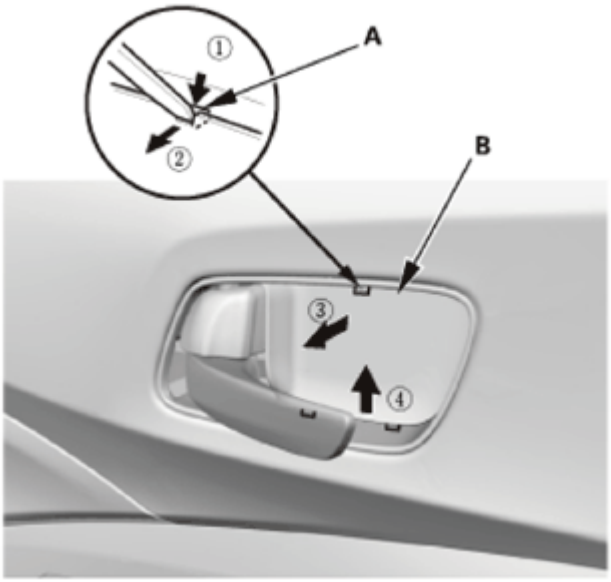

Fig. 176: Removing Inner Handle Cap Upper Hook Using Tool
Courtesy of AMERICAN HONDA MOTOR CO., INC.

3. Remove the screws (A) securing the inner handle (B).

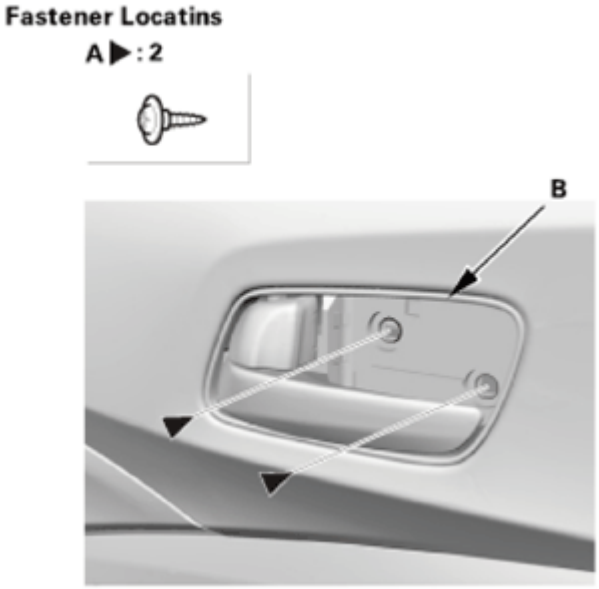

Fig. 177: Identifying Inner Handle And Screws
Courtesy of AMERICAN HONDA MOTOR CO., INC.

GETtheMANUALS.org

4. Remove the pull pocket mat (A), then remove the screw (B).

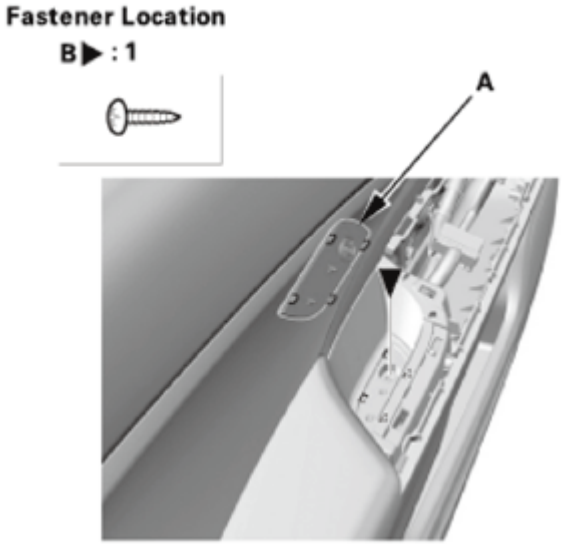

Fig. 178: Identifying Pocket Mat And Screw
Courtesy of AMERICAN HONDA MOTOR CO., INC.

5. Starting at the bottom edge of the door panel (A), detach the clips (B) with a commercially available trim pad remover.
6. Starting at the rear, pull the door panel up.
7. Remove the inner handle (C) from the door panel, then remove the door panel.

GETtheMANUALS.org

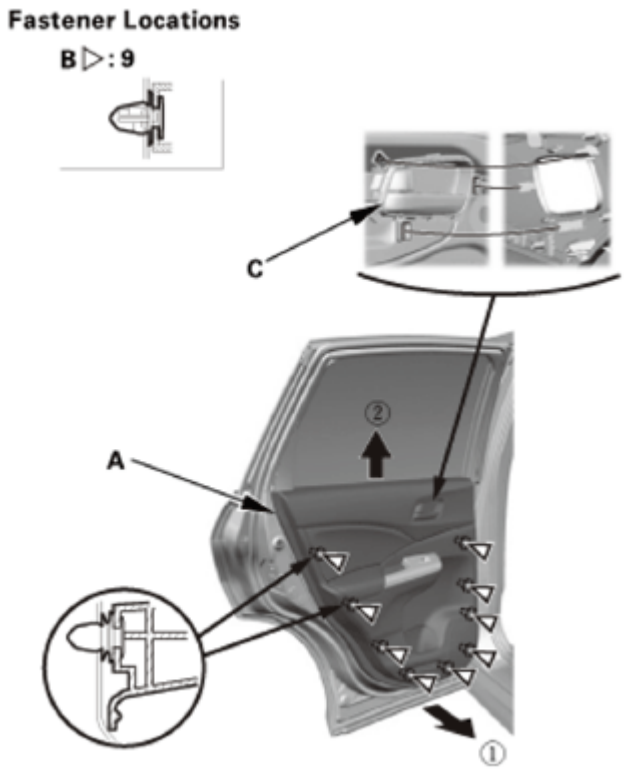

Fig. 179: Removing Door Panel
Courtesy of AMERICAN HONDA MOTOR CO., INC.

3. Rear Door Plastic Cover As Needed
    1. Disconnect the connector (A), then detach the harness clips (B).
    2. Remove the screws (C), then remove the door pull pocket bracket (D).
    3. Remove the plug caps (E), then carefully detach the plastic cover (F) as needed.

NOTE: If the plastic cover is damaged or torn, replace it.

GETtheMANUALS.org

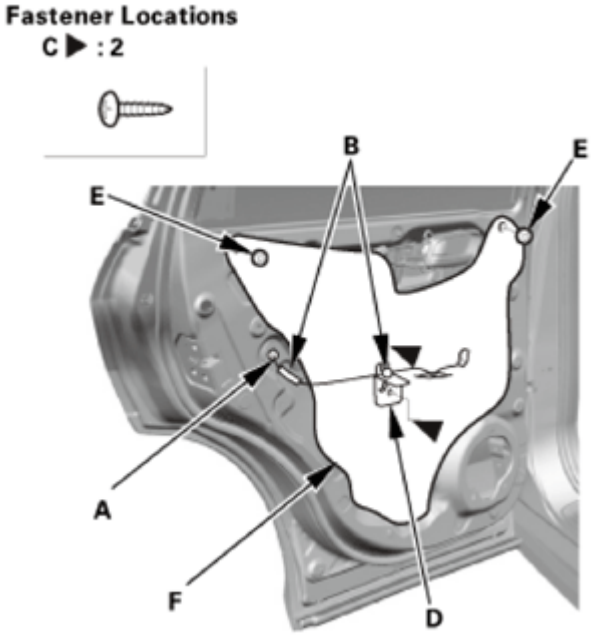

Fig. 180: Identifying Rear Door Plastic Cover, Pocket Bracket And Fasteners
Courtesy of AMERICAN HONDA MOTOR CO., INC.

4. Rear Door Glass Outer Weatherstrip
    1. Remove the screw (A) securing the rear door glass outer weatherstrip.
    2. Slide the rear door glass outer weatherstrip clips (B) forward to release it from the door.

GETtheMANUALS.org

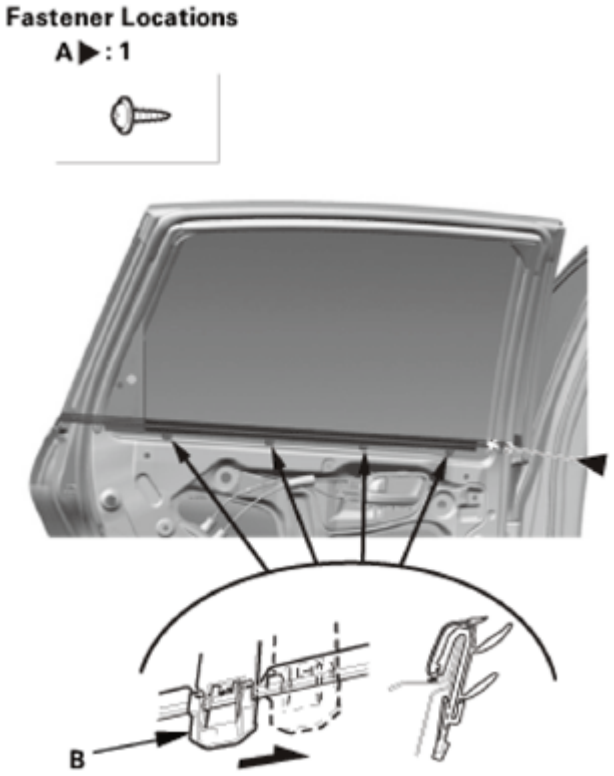

Fig. 181: Sliding Rear Door Glass Outer Weatherstrip Clips
Courtesy of AMERICAN HONDA MOTOR CO., INC.

3. Remove the rear door glass outer weatherstrip (A).

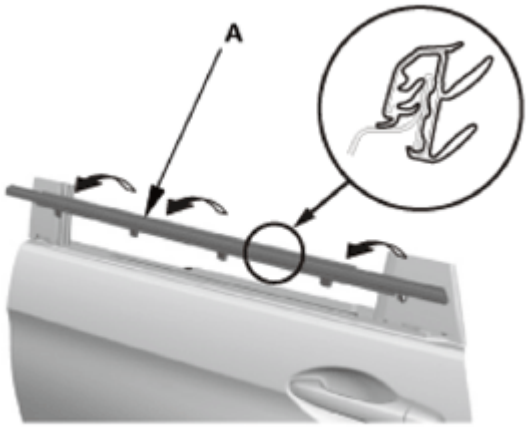

Fig. 182: Removing Rear Door Glass Outer Weatherstrip
Courtesy of AMERICAN HONDA MOTOR CO., INC.

INSTALLATION

1. Rear Door Glass Outer Weatherstrip

GETtheMANUALS.org

1. Install the rear door glass outer weatherstrip (A).

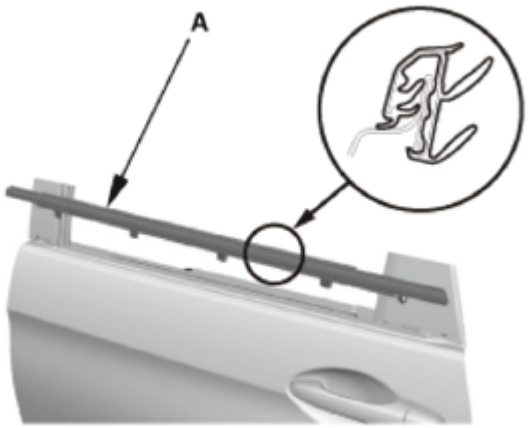

Fig. 183: Installing Rear Door Glass Outer Weatherstrip
Courtesy of AMERICAN HONDA MOTOR CO., INC.

2. Slide the rear door glass outer weatherstrip clips (A) securely onto the flanges, then install the screw (B).

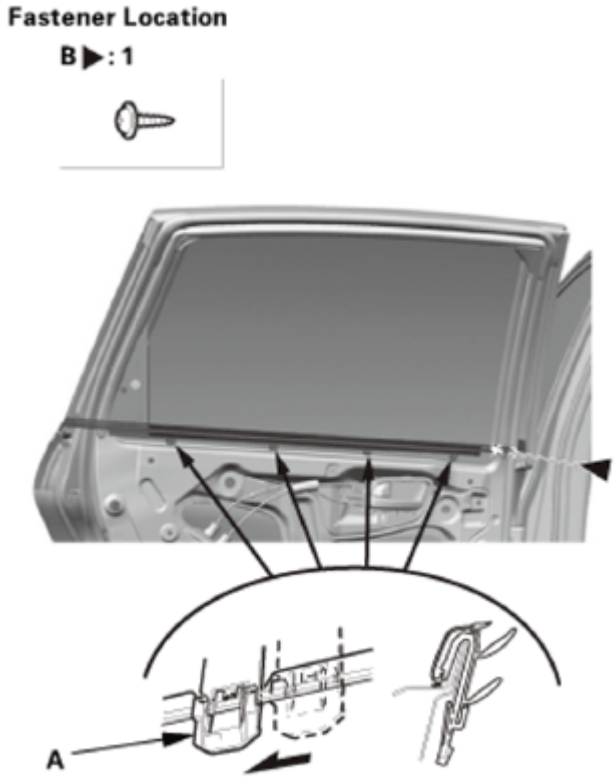

Fig. 184: Sliding Rear Door Glass Outer Weatherstrip Clips Onto Flanges
Courtesy of AMERICAN HONDA MOTOR CO., INC.

GETtheMANUALS.org

2. Rear Door Plastic Cover As Needed
    1. Install the plastic cover (A), then install the plug caps (B).
    2. Install the pull pocket bracket (C), then install the screws (D).
    3. Connect the connector (E), then install the harness clips (F).

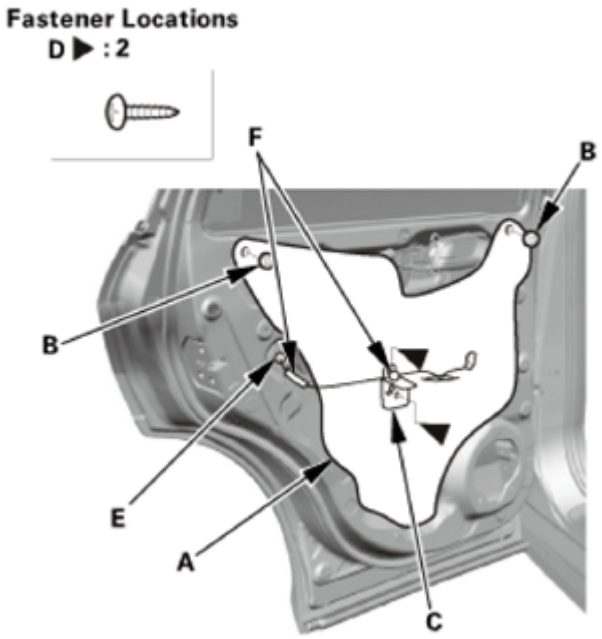

Fig. 185: Identifying Rear Door Plastic Cover, Pocket Bracket And Fasteners With Torque Specification
Courtesy of AMERICAN HONDA MOTOR CO., INC.

3. Rear Door Panel
    1. Install the inner handle (A) in the door panel (B).
    2. Install the door panel. Make sure the clips (C) snap into place securely.

GETtheMANUALS.org

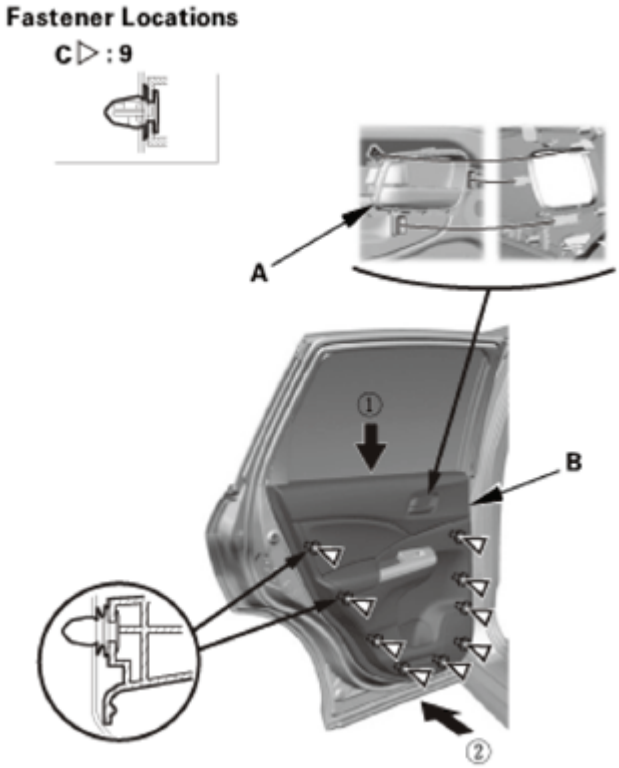

Fig. 186: Installing Rear Door Panel
Courtesy of AMERICAN HONDA MOTOR CO., INC.

3. Install the screw (A), then install the pull pocket mat (B).

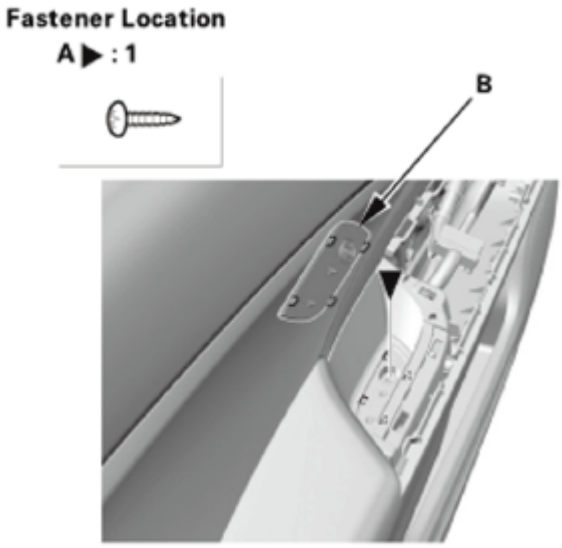

Fig. 187: Identifying Pocket Mat And Screw
Courtesy of AMERICAN HONDA MOTOR CO., INC.

4. Install the screws (A) securing the inner handle (B).

GETtheMANUALS.org

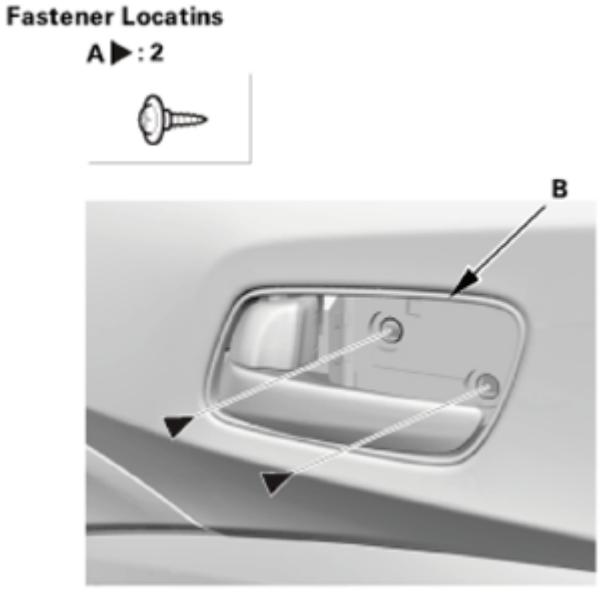

Fig. 188: Identifying Inner Handle And Screw
Courtesy of AMERICAN HONDA MOTOR CO., INC.

5. Install the inner handle cap (A). Make sure the upper hook (B) and the lower hooks (C) snap into place securely.

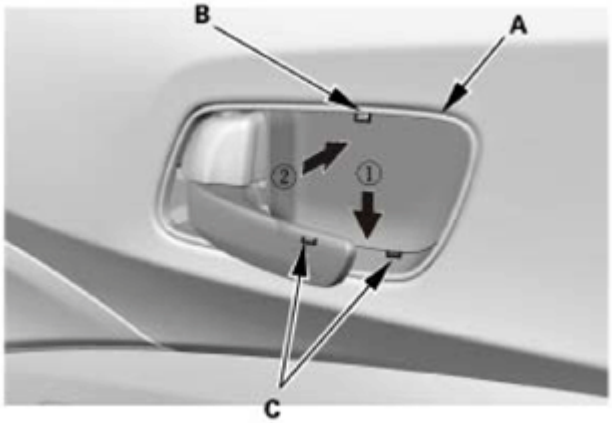

Fig. 189: Installing Inner Handle Cap And Screws
Courtesy of AMERICAN HONDA MOTOR CO., INC.

6. Install the rear door quarter inner trim (A). Make sure the clip (B) and the hooks (C) snap into place securely.

GETtheMANUALS.org

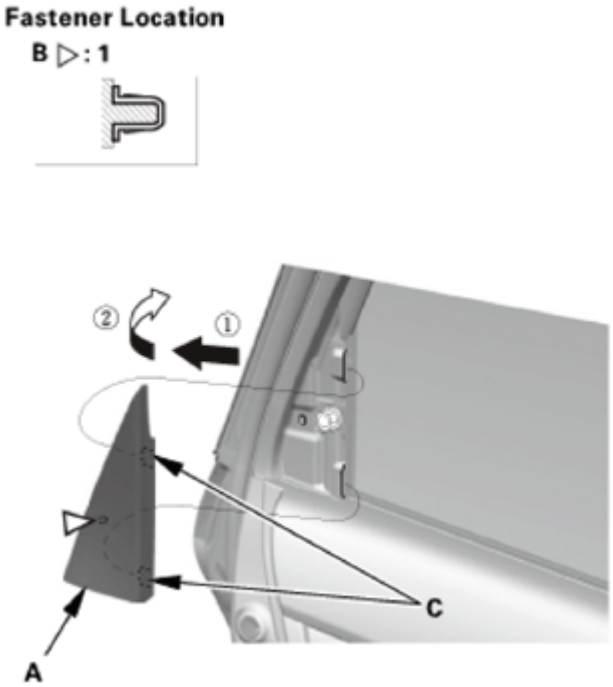

Fig. 190: Installing Rear Door Quarter Inner Trim
Courtesy of AMERICAN HONDA MOTOR CO., INC.

4. Rear Door Power Window Switch Panel
    1. Connect the connector (A), then install the power window switch panel (B). Make sure the clips (C) and the hooks (D) snap into place securely.

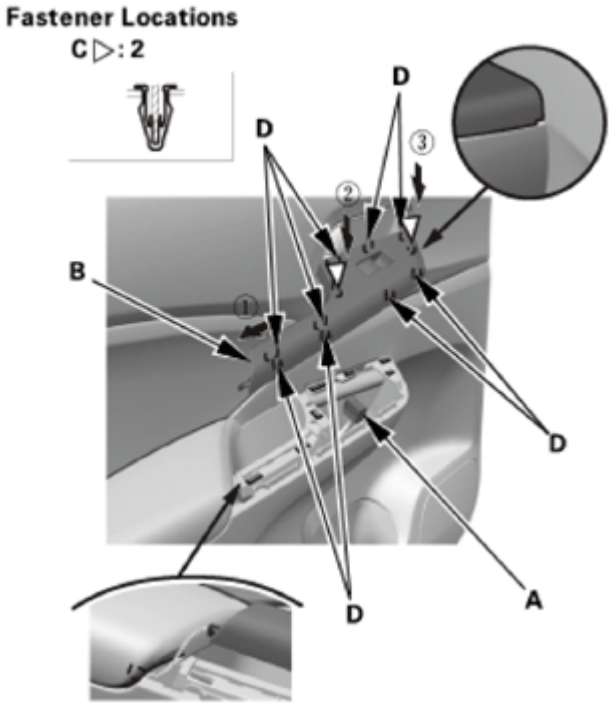

GETtheMANUALS.org

Fig. 191: Installing Power Window Switch Panel
Courtesy of AMERICAN HONDA MOTOR CO., INC.

REAR DOOR LATCH REMOVAL AND INSTALLATION

REMOVAL

1. Rear Door Power Window Switch Panel
    1. Carefully pry out on the notch (A) in the power window switch panel (B) with the appropriate trim tool to detach the clips (C) and the hooks (D). Disconnect the connector (E), then remove the power window switch panel.

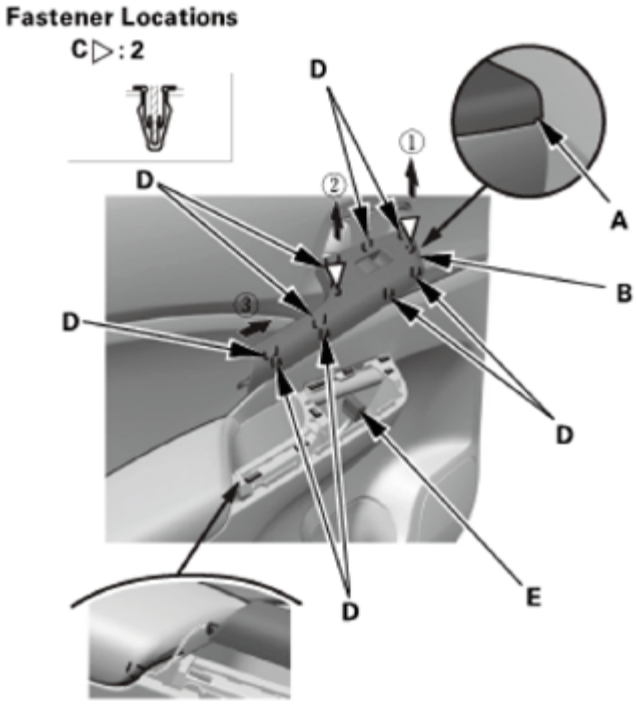

Fig. 192: Removing Rear Door Power Window Switch Panel
Courtesy of AMERICAN HONDA MOTOR CO., INC.

2. Rear Door Panel
    1. Detach the clip (A) and the hooks (B), then remove the rear door quarter inner trim (C).

GETtheMANUALS.org

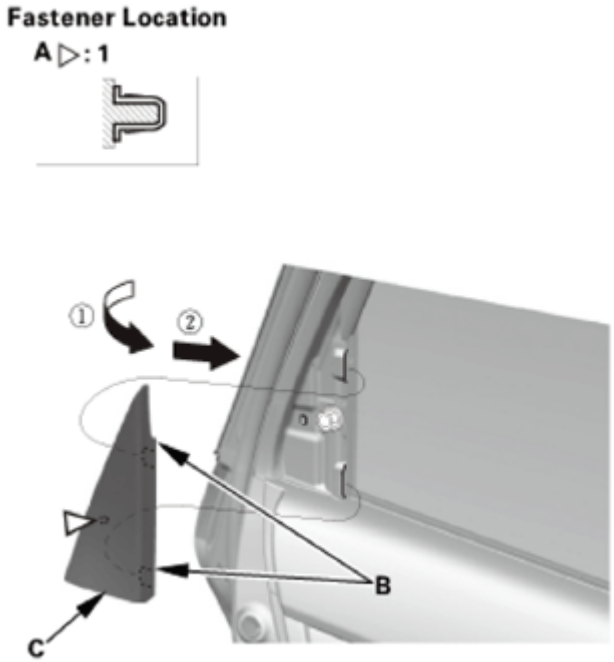

Fig. 193: Removing Rear Door Quarter Inner Trim
Courtesy of AMERICAN HONDA MOTOR CO., INC.

2. Carefully pry out on the upper hook (A) in the inner handle cap (B) with the appropriate trim tool, then pull back the inner handle cap to remove it.

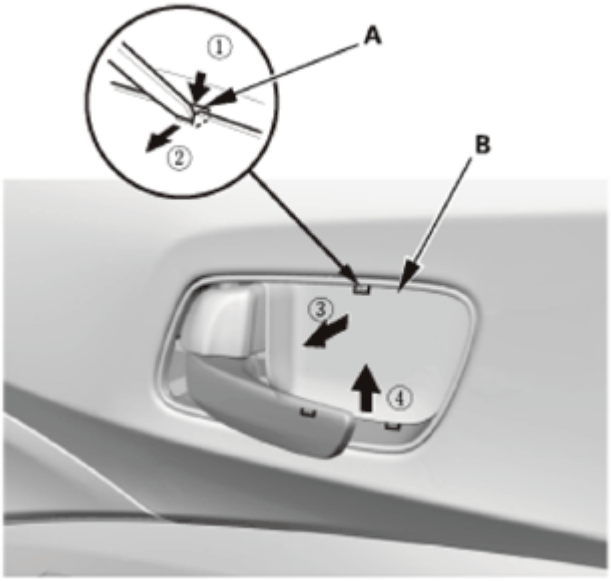

Fig. 194: Removing Inner Handle Cap Upper Hook Using Tool
Courtesy of AMERICAN HONDA MOTOR CO., INC.

3. Remove the screws (A) securing the inner handle (B).

GETtheMANUALS.org

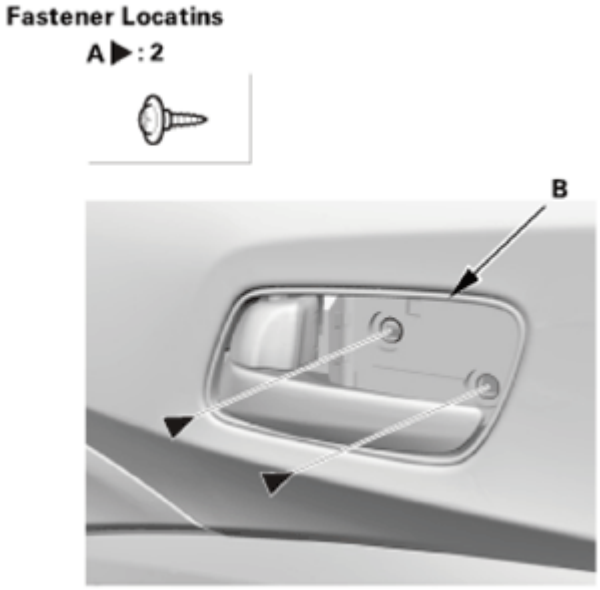

Fig. 195: Identifying Inner Handle And Screws
Courtesy of AMERICAN HONDA MOTOR CO., INC.

4. Remove the pull pocket mat (A), then remove the screw (B).

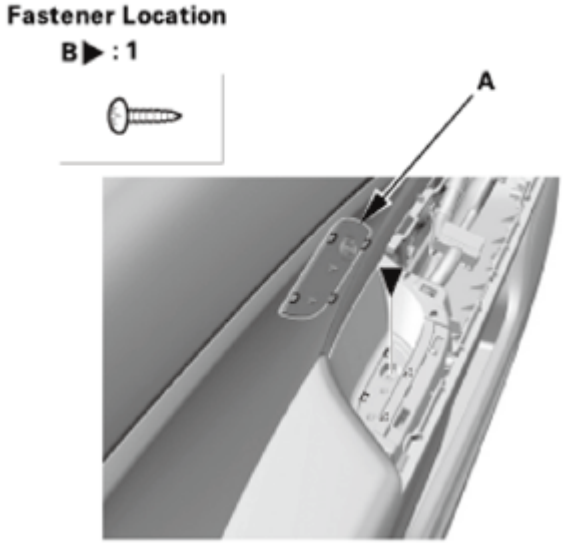

Fig. 196: Identifying Pocket Mat And Screw
Courtesy of AMERICAN HONDA MOTOR CO., INC.

5. Starting at the bottom edge of the door panel (A), detach the clips (B) with a commercially available trim pad remover.
6. Starting at the rear, pull the door panel up.
7. Remove the inner handle (C) from the door panel, then remove the door panel.

GETtheMANUALS.org

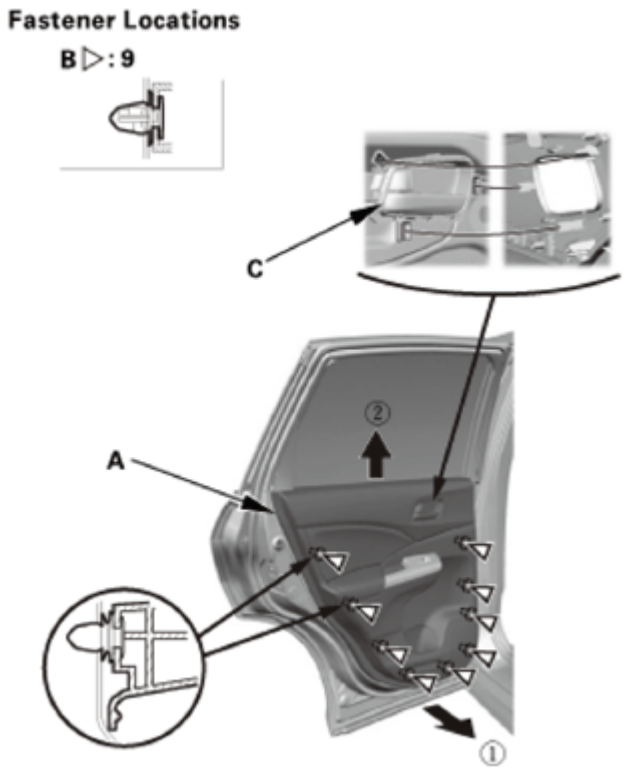

Fig. 197: Removing Door Panel
Courtesy of AMERICAN HONDA MOTOR CO., INC.

3. Rear Door Plastic Cover As Needed
    1. Disconnect the connector (A), then detach the harness clips (B).
    2. Remove the screws (C), then remove the door pull pocket bracket (D).
    3. Remove the plug caps (E), then carefully detach the plastic cover (F) as needed.

NOTE: If the plastic cover is damaged or torn, replace it.

GETtheMANUALS.org

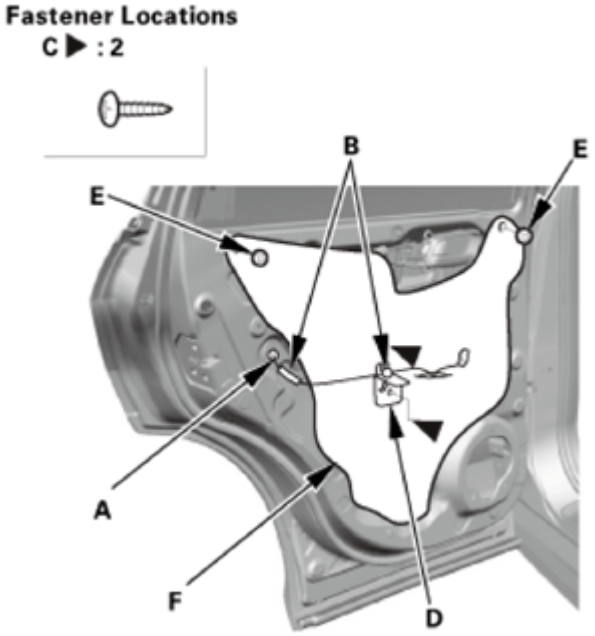

Fig. 198: Identifying Rear Door Plastic Cover, Pocket Bracket And Fasteners
Courtesy of AMERICAN HONDA MOTOR CO., INC.

4. Rear Door Glass
    1. Carefully move the glass (A) until you can see the glass mounting bolts (B), then remove them. Carefully lower the glass into the door. Take care not to drop the glass inside the door.

GETtheMANUALS.org

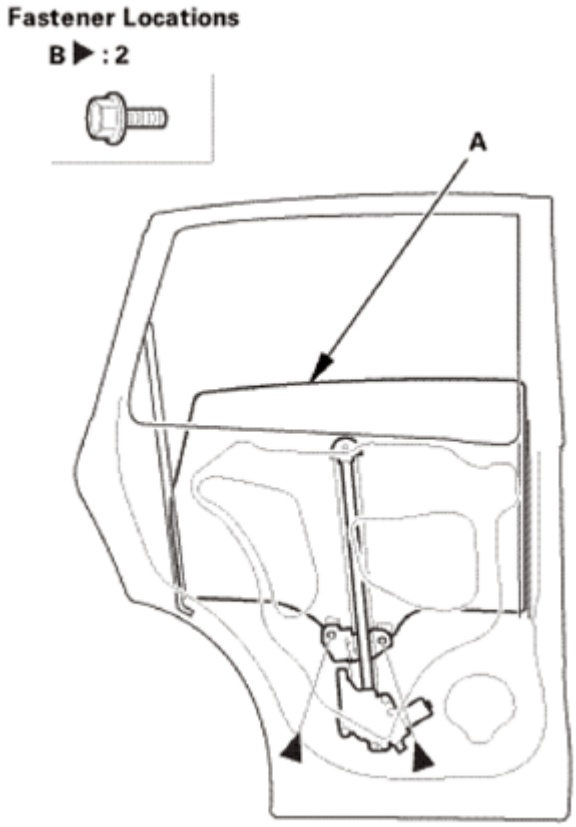

Fig. 199: Identifying Rear Door Glass And Mounting Bolts
Courtesy of AMERICAN HONDA MOTOR CO., INC.

2. Remove the nut (A) and the bolt (B) securing the rear door rear lower channel.
3. Carefully pull out the glass (C) through the window slot. Take care not to drop the glass inside the door.

GETtheMANUALS.org

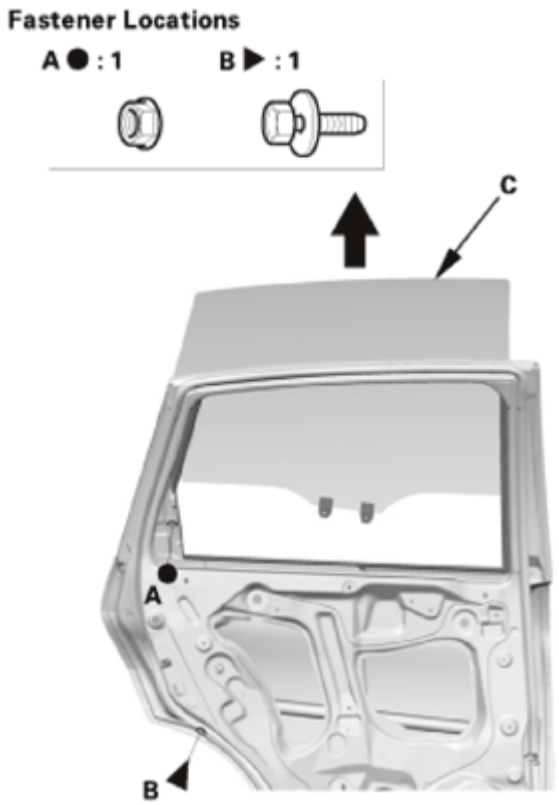

Fig. 200: Removing Rear Door Glass
Courtesy of AMERICAN HONDA MOTOR CO., INC.

5. Rear Door Rear Lower Channel
    1. Remove the rear door rear lower channel (A).

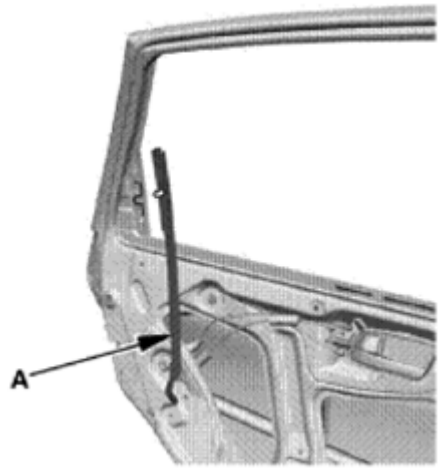

Fig. 201: Removing Rear Door Rear Lower Channel
Courtesy of AMERICAN HONDA MOTOR CO., INC.

6. Rear Door Latch

GETtheMANUALS.org

1. Remove the child lock trim (A), and detach the cable clip (B), then remove the screws (C).

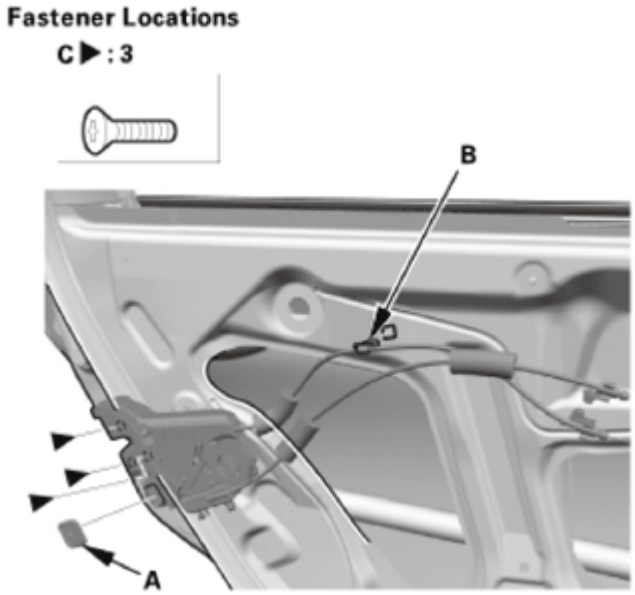

Fig. 202: Identifying Child Lock Trim And Fasteners
Courtesy of AMERICAN HONDA MOTOR CO., INC.

2. Slide the latch (A) down to disconnect the outer handle rod (B) as shown, then remove the latch.

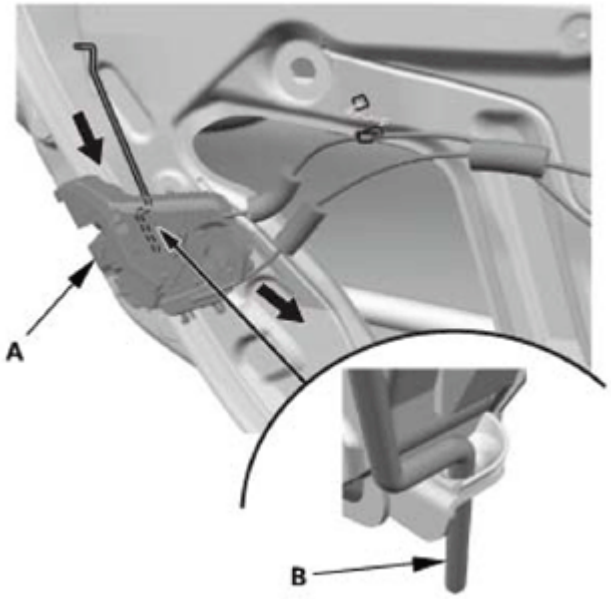

Fig. 203: Disconnecting Outer Handle Rod
Courtesy of AMERICAN HONDA MOTOR CO., INC.

3. Open the latch protectors (A).

GETtheMANUALS.org

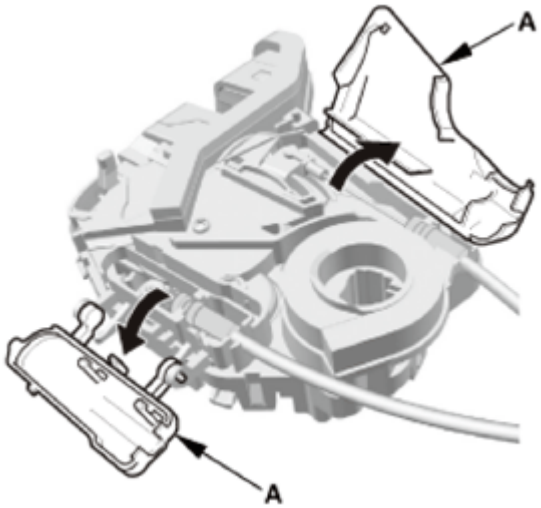

Fig. 204: Opening Latch Protectors
Courtesy of AMERICAN HONDA MOTOR CO., INC.

4. Disconnect the inner handle cable (A) and the latch cable (B).

GETtheMANUALS.org

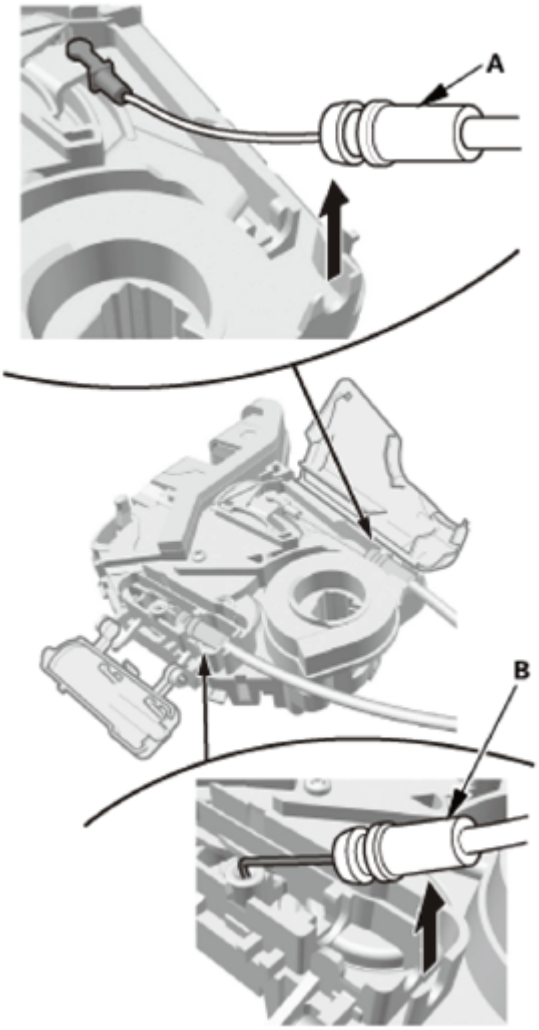

Fig. 205: Disconnecting Inner Handle Cable And Latch Cable
Courtesy of AMERICAN HONDA MOTOR CO., INC.

INSTALLATION

1. Rear Door Latch
    1. Connect the inner handle cable (A) and the latch cable (B).

GETtheMANUALS.org

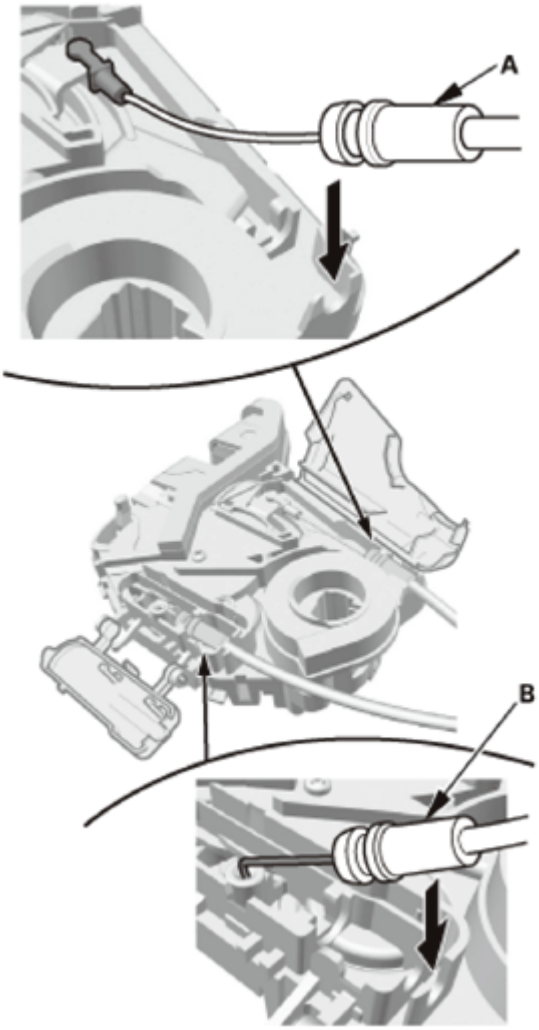

Fig. 206: Connecting Inner Handle Cable And Latch Cable
Courtesy of AMERICAN HONDA MOTOR CO., INC.

2. Close the latch protectors (A).

GETtheMANUALS.org

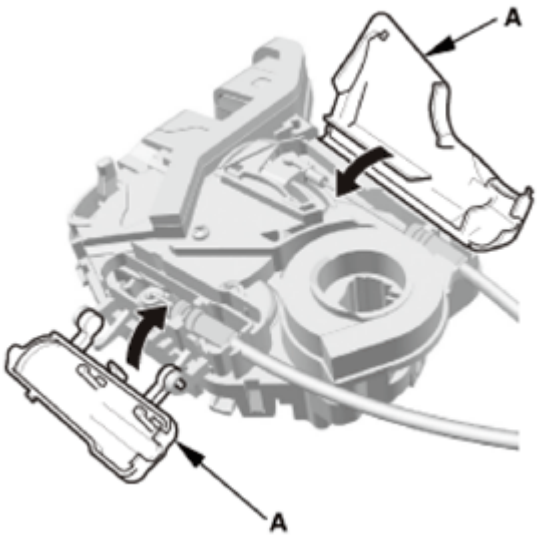

Fig. 207: Closing Latch Protectors
Courtesy of AMERICAN HONDA MOTOR CO., INC.

3. Slide the latch (A) up to connect the outer handle rod (B) as shown.

NOTE: Make sure the outer handle rod goes into the latch securely.

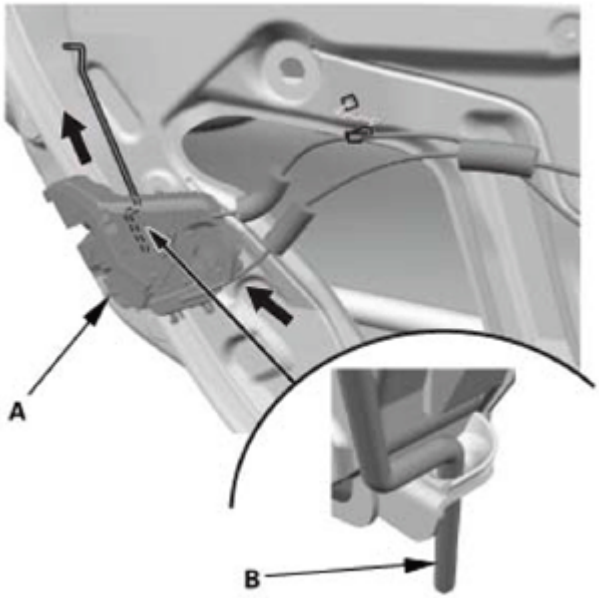

Fig. 208: Connecting Outer Handle Rod
Courtesy of AMERICAN HONDA MOTOR CO., INC.

4. Install the screws (A).
5. Install the cable clip (B) and the child lock trim (C).

GETtheMANUALS.org

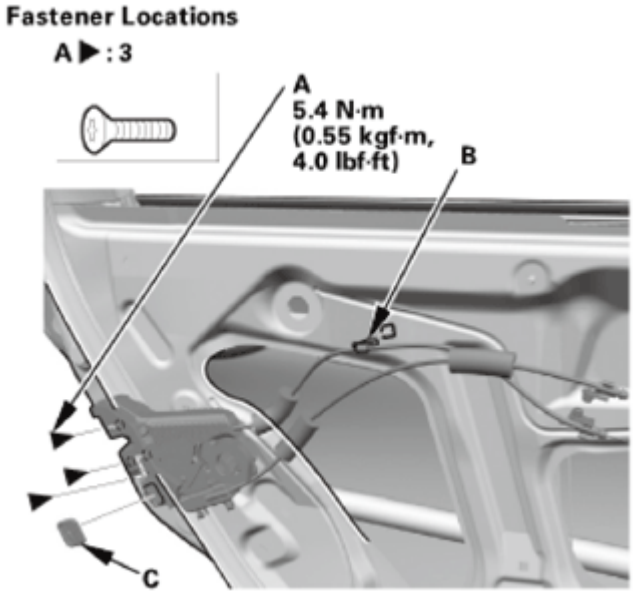

Fig. 209: Identifying Cable Clip, Child Lock Trim And Screws With Torque Specification
Courtesy of AMERICAN HONDA MOTOR CO., INC.

2. Rear Door Rear Lower Channel
    1. Install the rear door rear lower channel (A).

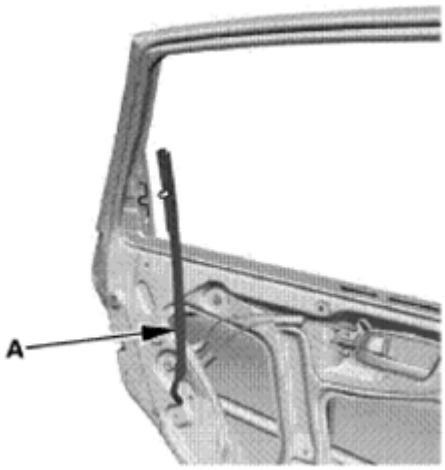

Fig. 210: Installing Rear Door Rear Lower Channel
Courtesy of AMERICAN HONDA MOTOR CO., INC.

3. Rear Door Glass
    1. Install the glass (A) through the window slot.
    2. Install the nut (B) and the bolt (C) securing the rear door rear lower channel.

GETtheMANUALS.org

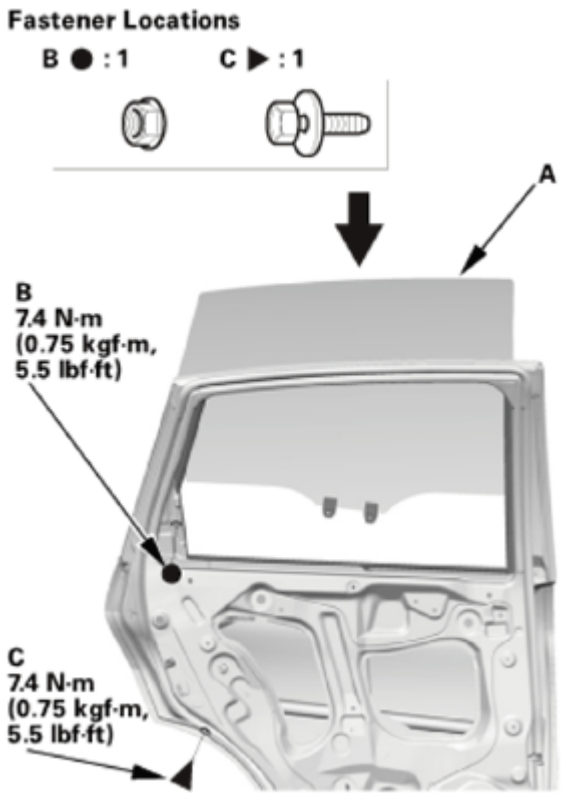

Fig. 211: Securing Rear Door Rear Lower Channel Using Nut And Bolts With Torque Specifications
Courtesy of AMERICAN HONDA MOTOR CO., INC.

3. Install the glass mounting bolts (A) securing the rear door glass (B).

GETtheMANUALS.org

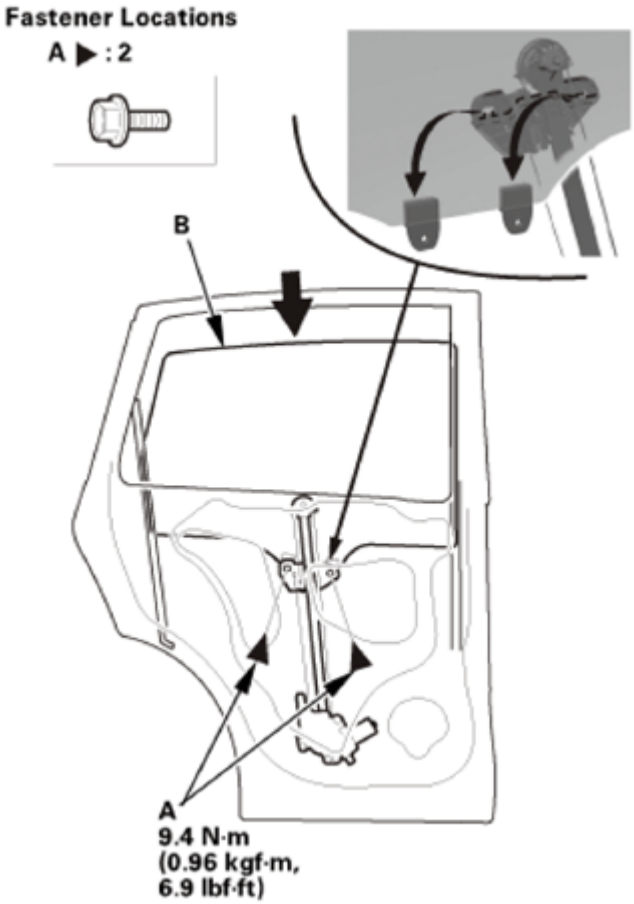

Fig. 212: Identifying Rear Door Glass And Mounting Bolt With Torque Specification
Courtesy of AMERICAN HONDA MOTOR CO., INC.

4. Rear Door Glass - Adjustment

NOTE:

- **Check the weatherstrip and the glass run channel for damage or deterioration, and replace them if necessary.**
- **Wipe the run channel clean with a shop towel.**

1. Place the vehicle on a firm, level surface.
2. Carefully move the glass (A) until you can see the glass mounting bolts (B), then loosen them.
3. Push the glass against the front side channel, then tighten the glass mounting bolts.
4. Make sure that the glass moves smoothly.

GETtheMANUALS.org

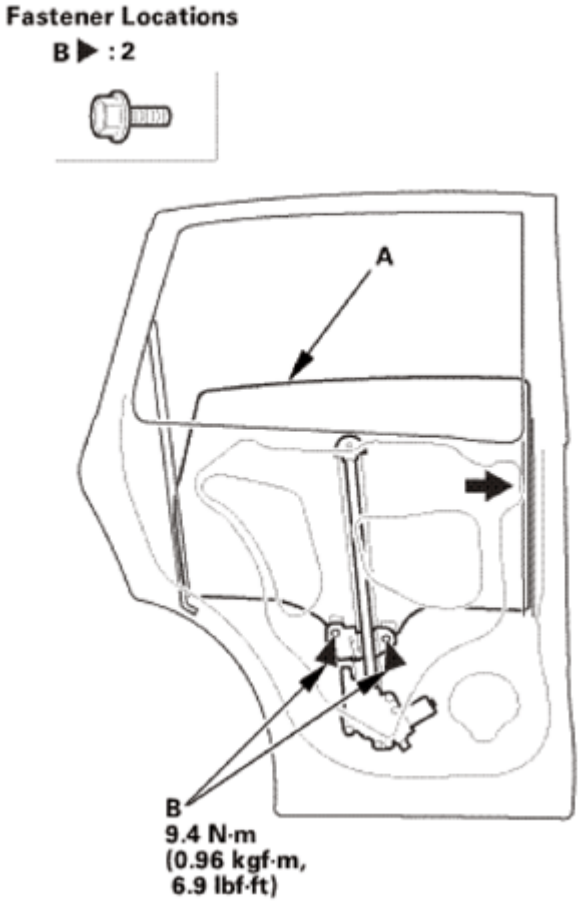

Fig. 213: Pushing Glass Against Center Lower Channel
Courtesy of AMERICAN HONDA MOTOR CO., INC.

5. Raise the glass fully, and check for gaps. Also make sure that the glass (A) contacts the glass run channel (B) evenly.

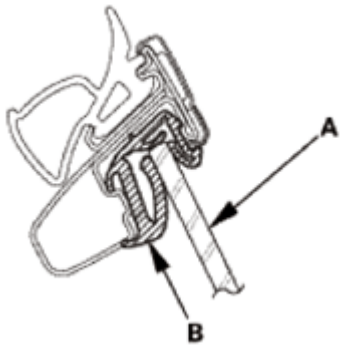

Fig. 214: Identifying Glass And Glass Run Channel
Courtesy of AMERICAN HONDA MOTOR CO., INC.

5. Rear Door Plastic Cover As Needed
    1. Install the plastic cover (A), then install the plug caps (B).

GETtheMANUALS.org

2. Install the pull pocket bracket (C), then install the screws (D).
3. Connect the connector (E), then install the harness clips (F).

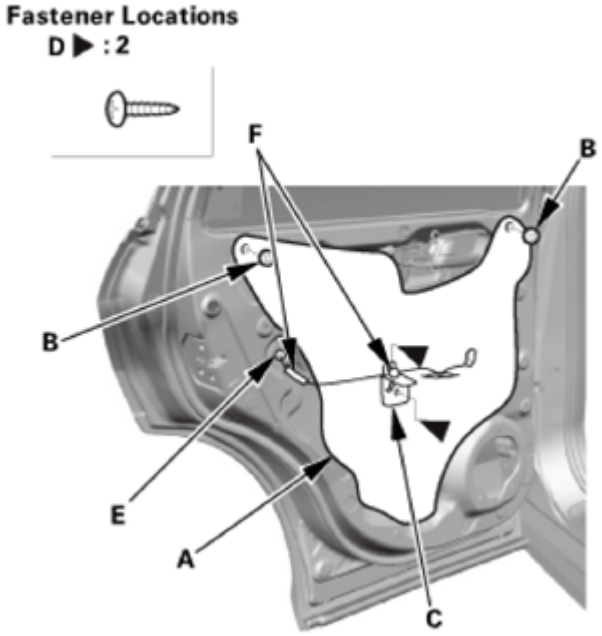

Fig. 215: Identifying Rear Door Plastic Cover, Pocket Bracket And Fasteners With Torque Specification
Courtesy of AMERICAN HONDA MOTOR CO., INC.

6. Rear Door Panel
    1. Install the inner handle (A) in the door panel (B).
    2. Install the door panel. Make sure the clips (C) snap into place securely.

GETtheMANUALS.org

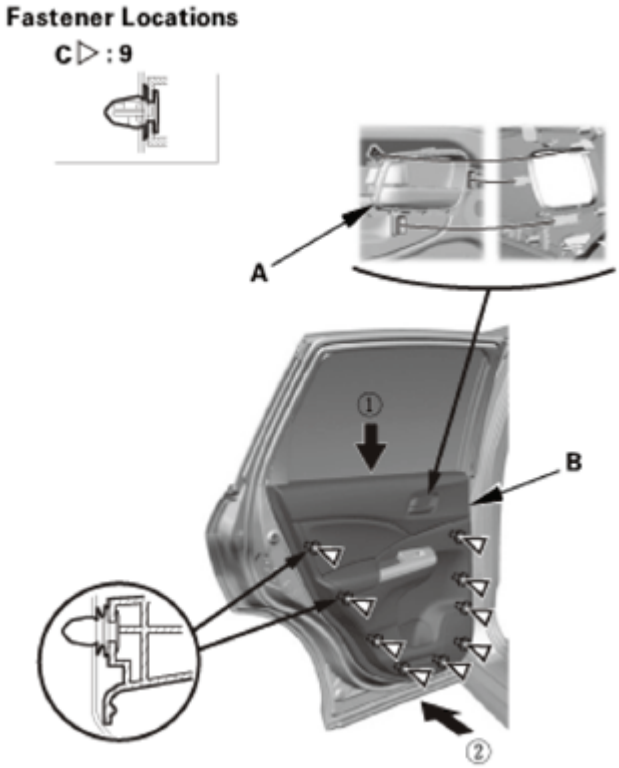

Fig. 216: Installing Rear Door Panel
Courtesy of AMERICAN HONDA MOTOR CO., INC.

3. Install the screw (A), then install the pull pocket mat (B).

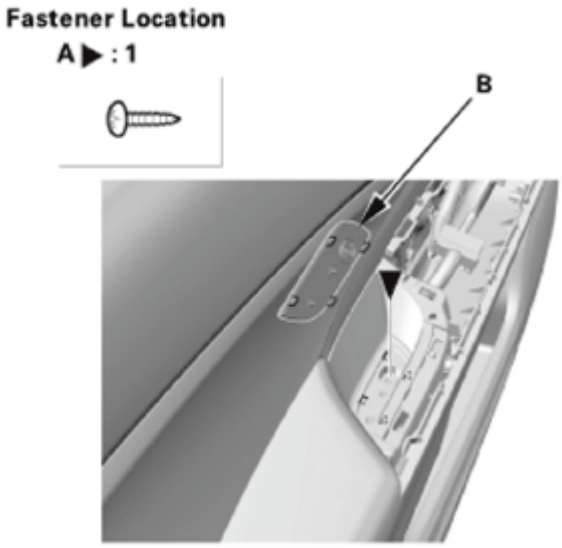

Fig. 217: Identifying Pocket Mat And Screw
Courtesy of AMERICAN HONDA MOTOR CO., INC.

4. Install the screws (A) securing the inner handle (B).

GETtheMANUALS.org

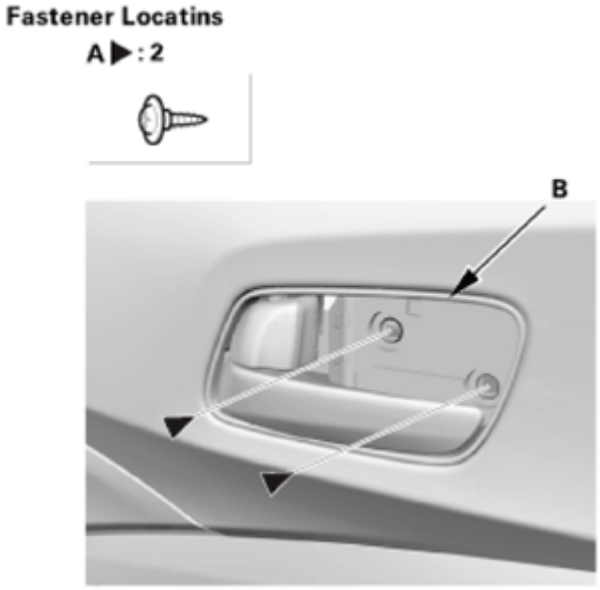

Fig. 218: Identifying Inner Handle And Screw
Courtesy of AMERICAN HONDA MOTOR CO., INC.

5. Install the inner handle cap (A). Make sure the upper hook (B) and the lower hooks (C) snap into place securely.

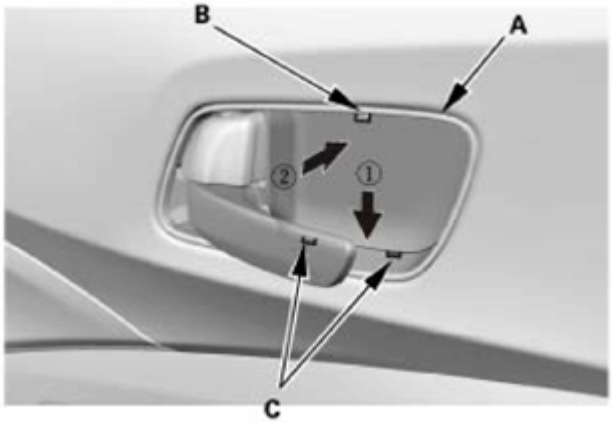

Fig. 219: Installing Inner Handle Cap And Screws
Courtesy of AMERICAN HONDA MOTOR CO., INC.

6. Install the rear door quarter inner trim (A). Make sure the clip (B) and the hooks (C) snap into place securely.

GETtheMANUALS.org

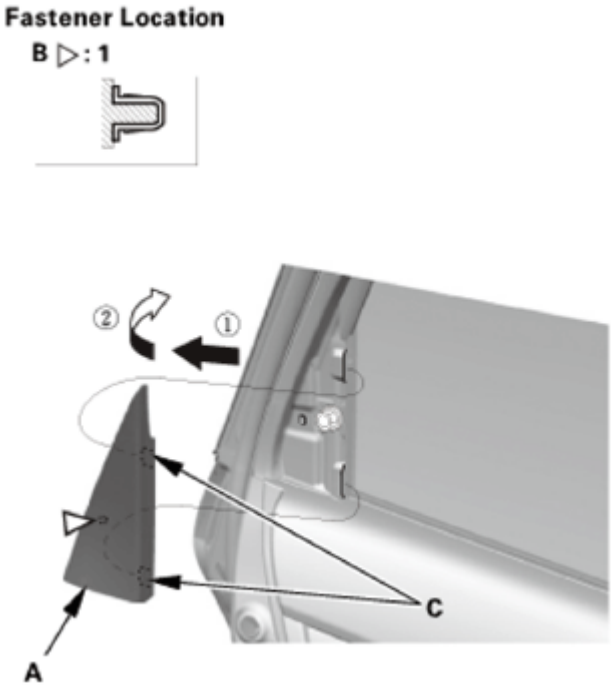

Fig. 220: Installing Rear Door Quarter Inner Trim
Courtesy of AMERICAN HONDA MOTOR CO., INC.

7. Rear Door Power Window Switch Panel
    1. Connect the connector (A), then install the power window switch panel (B). Make sure the clips (C) and the hooks (D) snap into place securely.

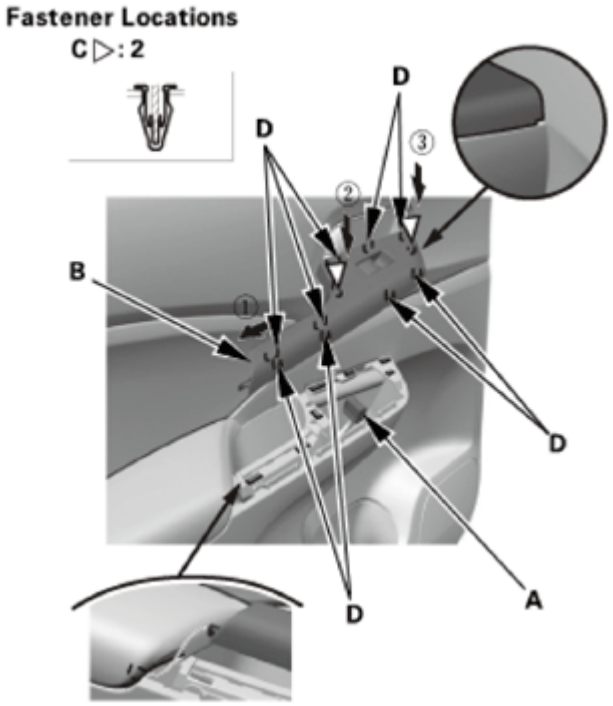

GETtheMANUALS.org

Fig. 221: Installing Power Window Switch Panel
Courtesy of AMERICAN HONDA MOTOR CO., INC.

REAR DOOR LOWER TRIM REMOVAL AND INSTALLATION

REMOVAL

1. Rear Door Lower Trim
    1. Remove the cap (A), then remove the screw (B).

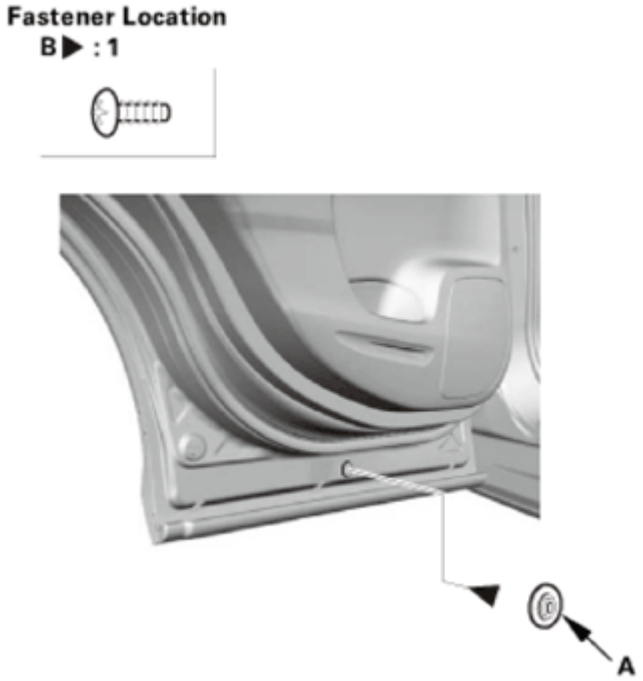

Fig. 222: Identifying Front Door Lower Trim Cap And Screw
Courtesy of AMERICAN HONDA MOTOR CO., INC.

2. Spray soapy water solution onto the double-sided adhesive tape (A), then carefully cut the adhesive tape along the rear edge of the door lower trim (B) with a utility knife while separating the trim from the door (C) with a trim tool.

NOTE: Apply protective tape (D) around the cutting area as shown.

GETtheMANUALS.org

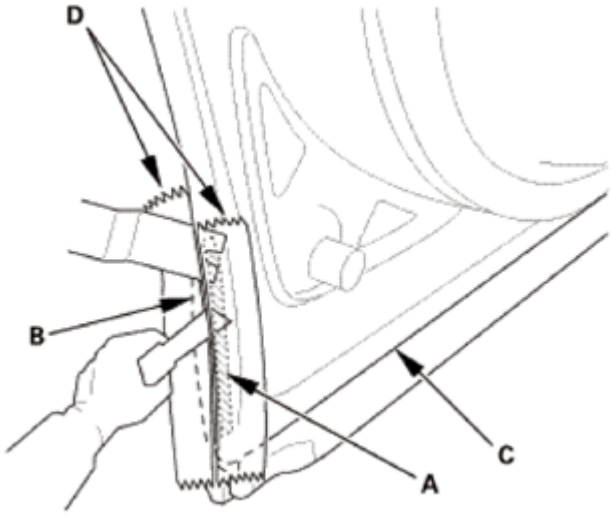

Fig. 223: Cutting Adhesive Tape From Door Lower Trim Rear Edge Using Knife
Courtesy of AMERICAN HONDA MOTOR CO., INC.

3. Spray soapy water solution onto the double-sided adhesive tape (A), then carefully cut the adhesive tape along the upper edge of the door lower trim (B) with a utility knife while separating the trim from the door (C) with a trim tool.

NOTE: Apply protective tape (D) around the cutting area as shown.

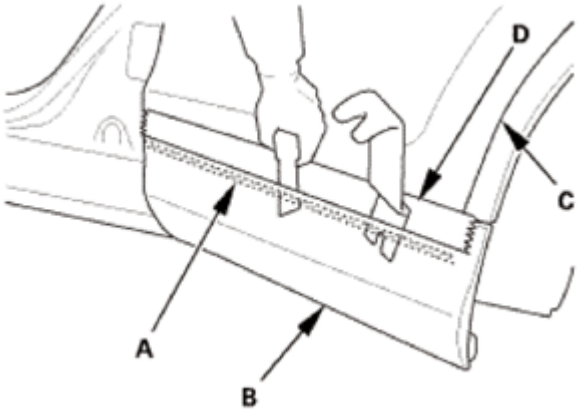

Fig. 224: Cutting Adhesive Tape From Door Lower Trim Rear Edge Using Knife
Courtesy of AMERICAN HONDA MOTOR CO., INC.

4. Slide the door lower trim (A) forward and remove it. The clips (B, C) will stay in the door.
5. Remove the clips by turning them 45°.
6. Install the clips on the door lower trim.
7. Rub off the remaining double-sided adhesive tape from the door lower trim and the door, then clean the trim and door surface with a sponge dampened with isopropyl alcohol. After cleaning, keep oil, grease, and water from getting on the clean surface.

GETtheMANUALS.org

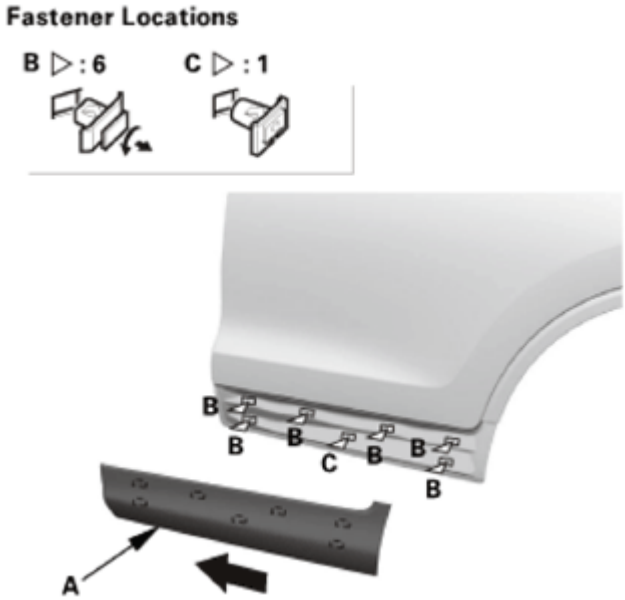

Fig. 225: Sliding Door Lower Trim
Courtesy of AMERICAN HONDA MOTOR CO., INC.

INSTALLATION

1. Rear Door Lower Trim
    1. If you are reusing the original door lower trim (A), apply PP primer to the areas where new double-sided adhesive tapes (B, C, and D) will be applied, then attach the new double-sided adhesive tapes to the trim as shown.

       Adhesive tape (B): Thickness 1.2 mm (0.047 in)

       Width 8 mm (0.31 in)

       Length 68 mm (2.68 in)

       Adhesive tape (C): Thickness 1.5 mm (0.059 in)

       Width 6 mm (0.24 in)

       Length 555 mm (21.85 in)

       Adhesive tape (D): Thickness 1.6 mm (0.063 in)

       Width 10 mm (0.39 in)

       Length 114 mm (4.49 in)

GETtheMANUALS.org

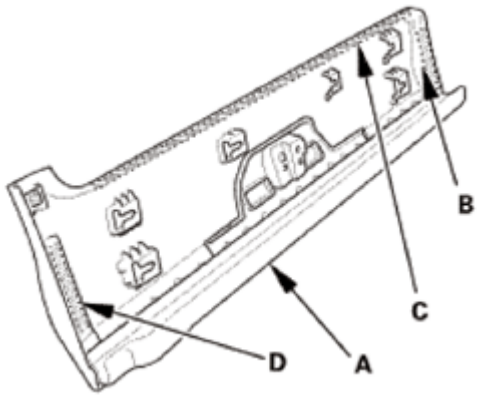

Fig. 226: Identifying Adhesive Tap Applying Area On Rear Door Lower Trim
Courtesy of AMERICAN HONDA MOTOR CO., INC.

2. Fold the edge of each adhesive backing from the double-sided adhesive tape.
3. Install the screw (A) securing the clip (B) to the door lower trim (C). Hold up the trim, and first set the clip B into the hole in the door (D). Fit the clips (E) into the hole in the door, then push on the trim until the clips snap into place.
4. Carefully pull away the adhesive backing, and push on the double sided-adhesive tape areas to make the adhesives stick securely.
5. Install the cap.

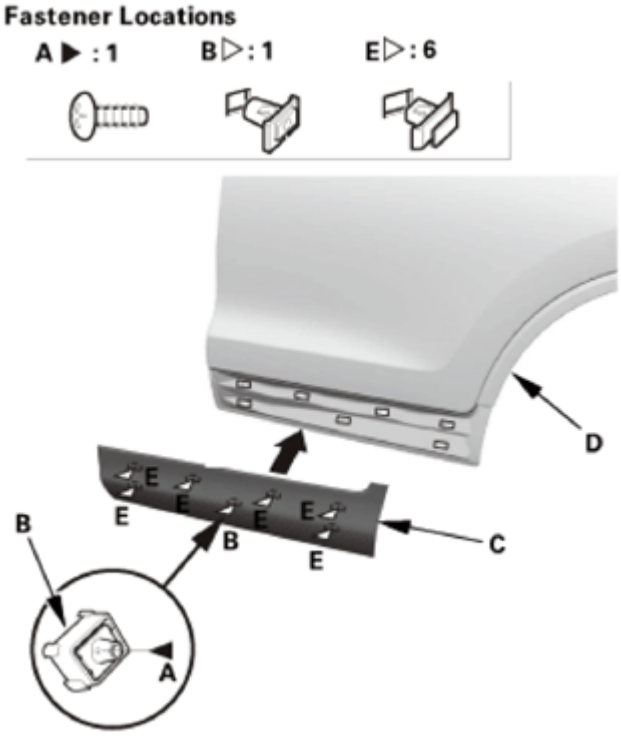

Fig. 227: Installing Door Lower Trim
Courtesy of AMERICAN HONDA MOTOR CO., INC.

GETtheMANUALS.org

REAR DOOR OUTER HANDLE REMOVAL AND INSTALLATION

REMOVAL

1. Rear Door Power Window Switch Panel
    1. Carefully pry out on the notch (A) in the power window switch panel (B) with the appropriate trim tool to detach the clips (C) and the hooks (D). Disconnect the connector (E), then remove the power window switch panel.

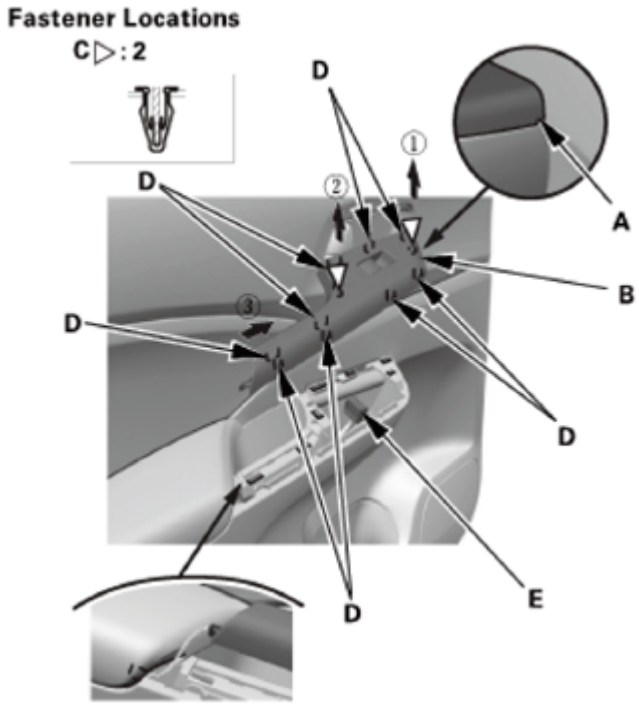

Fig. 228: Removing Rear Door Power Window Switch Panel
Courtesy of AMERICAN HONDA MOTOR CO., INC.

2. Rear Door Panel
    1. Detach the clip (A) and the hooks (B), then remove the rear door quarter inner trim (C).

GETtheMANUALS.org

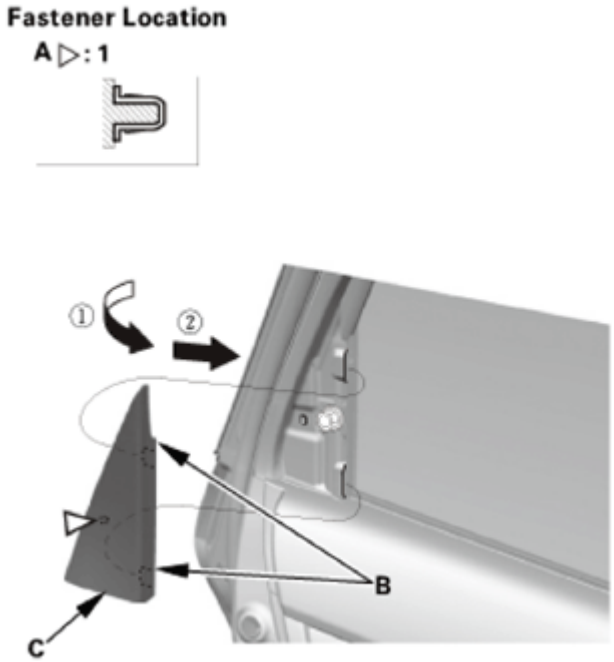

Fig. 229: Removing Rear Door Quarter Inner Trim
Courtesy of AMERICAN HONDA MOTOR CO., INC.

2. Carefully pry out on the upper hook (A) in the inner handle cap (B) with the appropriate trim tool, then pull back the inner handle cap to remove it.

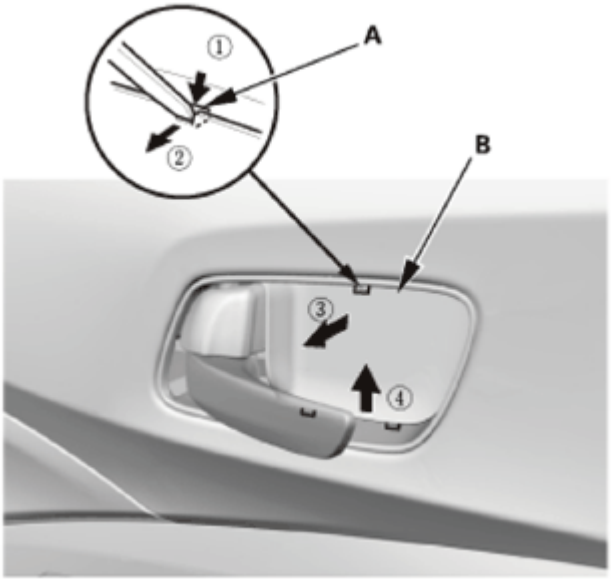

Fig. 230: Removing Inner Handle Cap Upper Hook Using Tool
Courtesy of AMERICAN HONDA MOTOR CO., INC.

3. Remove the screws (A) securing the inner handle (B).

GETtheMANUALS.org

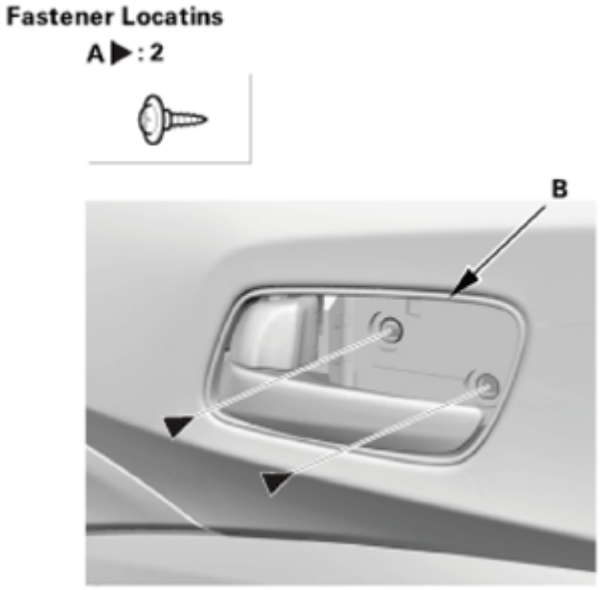

Fig. 231: Identifying Inner Handle And Screws
Courtesy of AMERICAN HONDA MOTOR CO., INC.

4. Remove the pull pocket mat (A), then remove the screw (B).

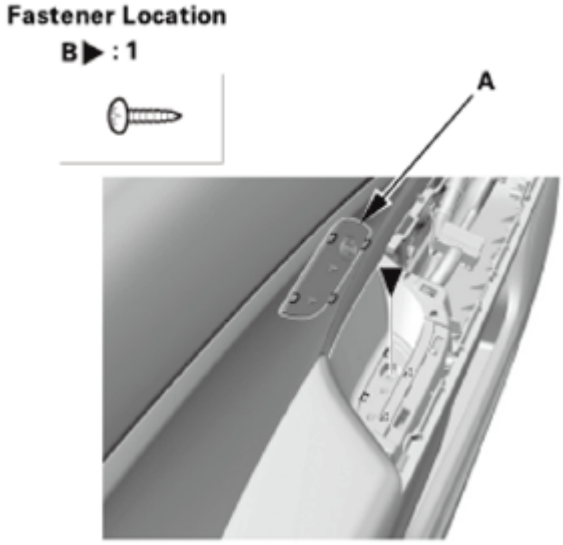

Fig. 232: Identifying Pocket Mat And Screw
Courtesy of AMERICAN HONDA MOTOR CO., INC.

5. Starting at the bottom edge of the door panel (A), detach the clips (B) with a commercially available trim pad remover.
6. Starting at the rear, pull the door panel up.
7. Remove the inner handle (C) from the door panel, then remove the door panel.

GETtheMANUALS.org

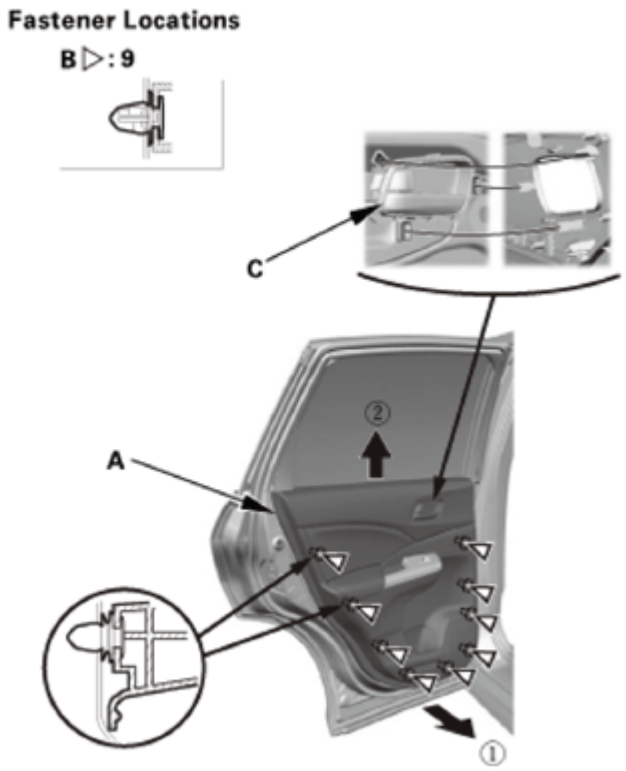

Fig. 233: Removing Door Panel
Courtesy of AMERICAN HONDA MOTOR CO., INC.

3. Rear Door Plastic Cover As Needed
    1. Disconnect the connector (A), then detach the harness clips (B).
    2. Remove the screws (C), then remove the door pull pocket bracket (D).
    3. Remove the plug caps (E), then carefully detach the plastic cover (F) as needed.

NOTE: If the plastic cover is damaged or torn, replace it.

GETtheMANUALS.org

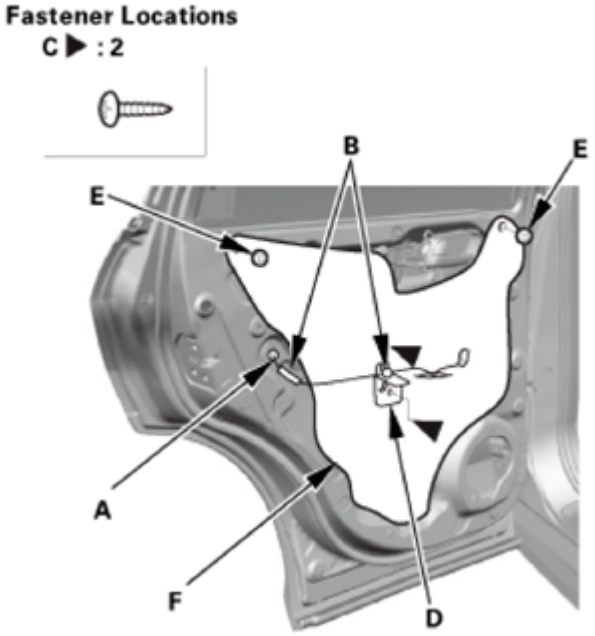

Fig. 234: Identifying Rear Door Plastic Cover, Pocket Bracket And Fasteners
Courtesy of AMERICAN HONDA MOTOR CO., INC.

4. Rear Door Outer Handle
    1. Remove the seal (A), then remove the bolt (B).
    2. Remove the outer handle cover (C).

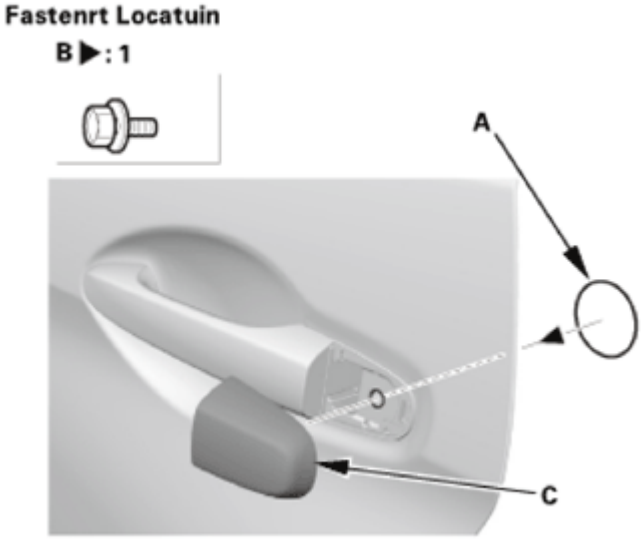

Fig. 235: Identifying Outer Handle Cover, Seal And Bolt
Courtesy of AMERICAN HONDA MOTOR CO., INC.

3. Remove the nut (A) securing the outer handle base (B).

GETtheMANUALS.org

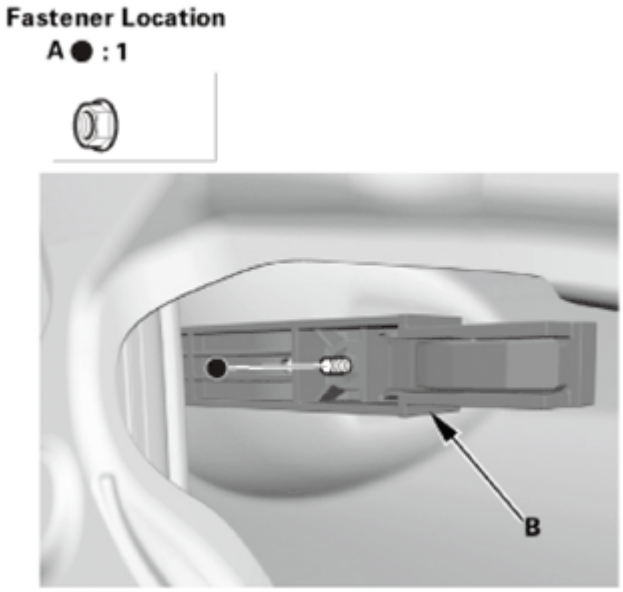

Fig. 236: Identifying Outer Handle Base And Nut
Courtesy of AMERICAN HONDA MOTOR CO., INC.

4. Remove the outer handle (A).

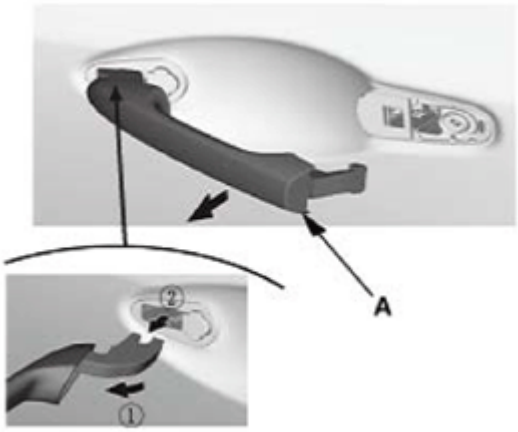

Fig. 237: Removing Outer Handle
Courtesy of AMERICAN HONDA MOTOR CO., INC.

5. Remove the outer handle seals (A).

GETtheMANUALS.org

Fig. 238: Identifying Outer Handle Seals
Courtesy of AMERICAN HONDA MOTOR CO., INC.

6. Remove the outer handle base (A).

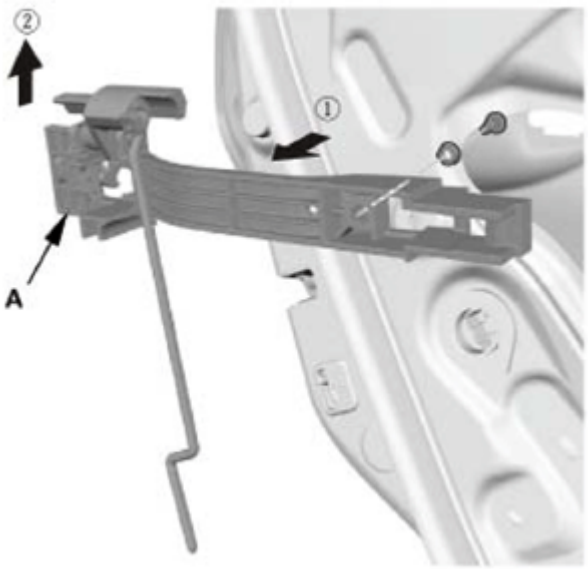

Fig. 239: Removing Outer Handle Base
Courtesy of AMERICAN HONDA MOTOR CO., INC.

7. If necessary, release the rod fastener (A), then remove the outer handle rod (B).

GETtheMANUALS.org

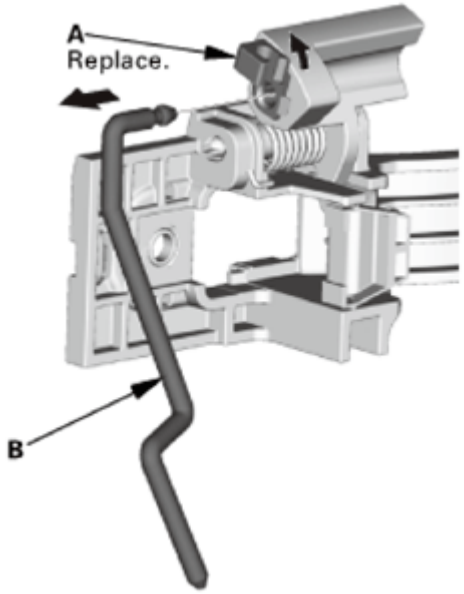

Fig. 240: Identifying Outer Handle Base And Mounting Bolt
Courtesy of AMERICAN HONDA MOTOR CO., INC.

8. Remove the rod fastener (A).

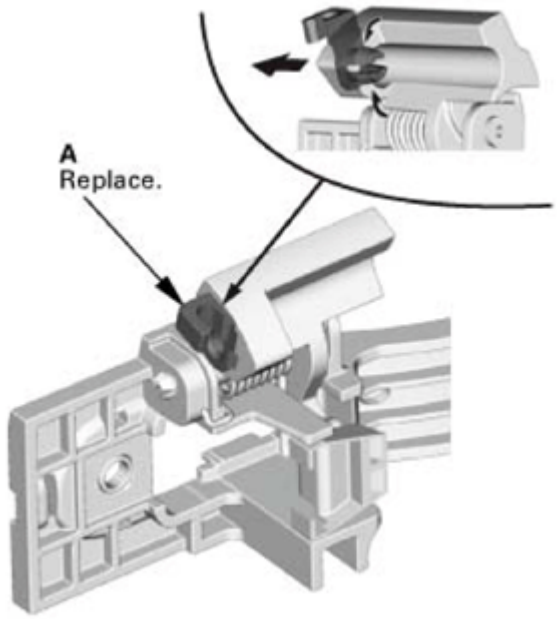

Fig. 241: Removing Rod Fastener
Courtesy of AMERICAN HONDA MOTOR CO., INC.

INSTALLATION

1. Rear Door Outer Handle

GETtheMANUALS.org

1. Install a new rod fastener (A).

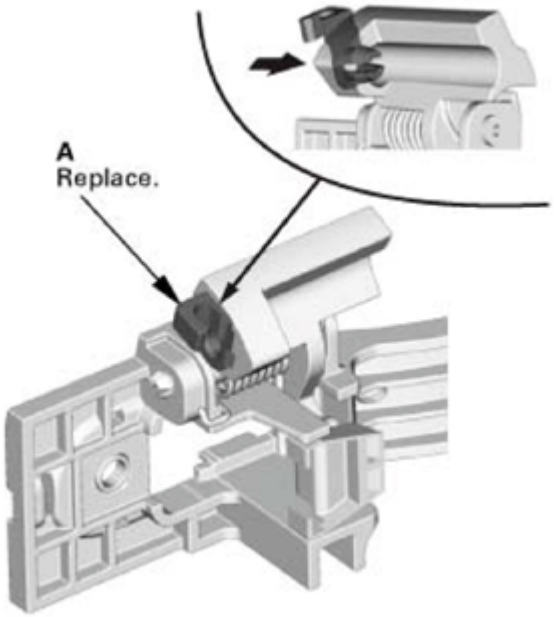

Fig. 242: Installing Rod Fastener
Courtesy of AMERICAN HONDA MOTOR CO., INC.

2. Install the outer handle rod (A), then fasten the rod fastener (B) to the outer handle rod.

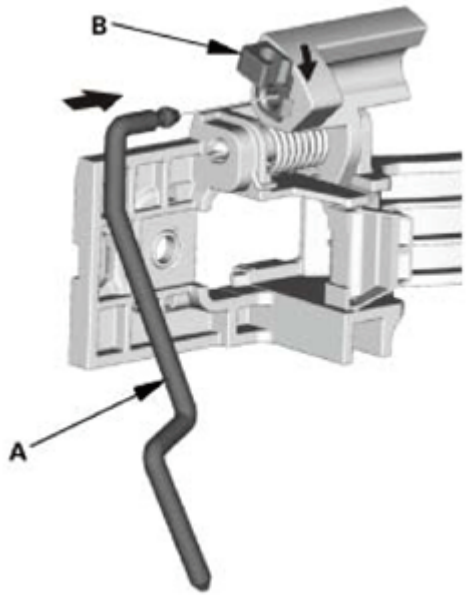

Fig. 243: Installing Outer Handle Rod
Courtesy of AMERICAN HONDA MOTOR CO., INC.

3. Install the outer handle base (A).

GETtheMANUALS.org

NOTE: **Make sure the outer handle rod (B) goes into the latch (C) securely.**

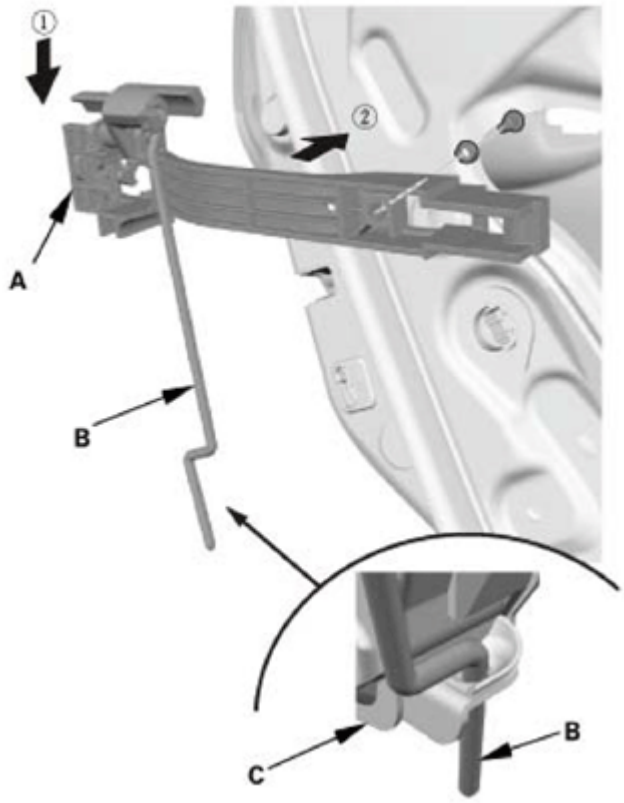

Fig. 244: Installing Outer Handle Base
Courtesy of AMERICAN HONDA MOTOR CO., INC.

4. Install the outer handle seals (A).

Fig. 245: Identifying Outer Handle Seals
Courtesy of AMERICAN HONDA MOTOR CO., INC.

5. Install the outer handle (A).

GETtheMANUALS.org

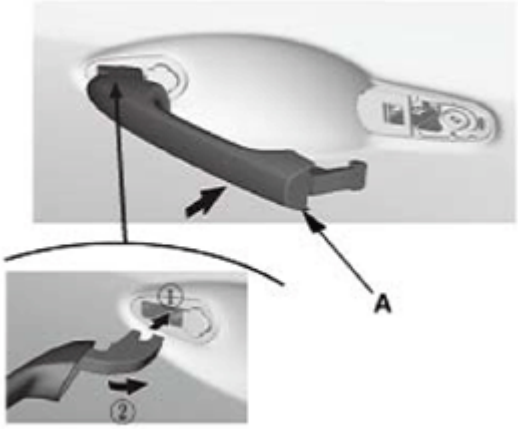

Fig. 246: Installing Outer Handle
Courtesy of AMERICAN HONDA MOTOR CO., INC.

6. Install the nut (A) securing the outer handle base (B).

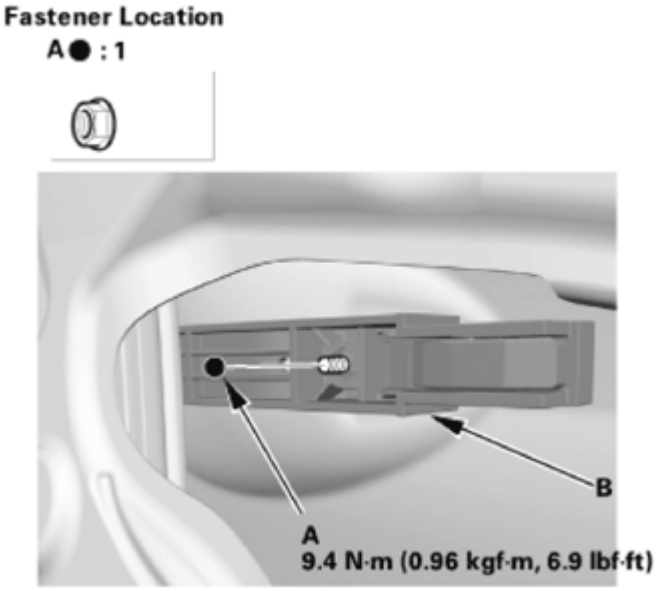

Fig. 247: Identifying Outer Handle Base And Mounting Nut With Torque Specification
Courtesy of AMERICAN HONDA MOTOR CO., INC.

7. Install the outer handle cover (A).
8. Install the bolt (B), then install a new seal (C).

GETtheMANUALS.org

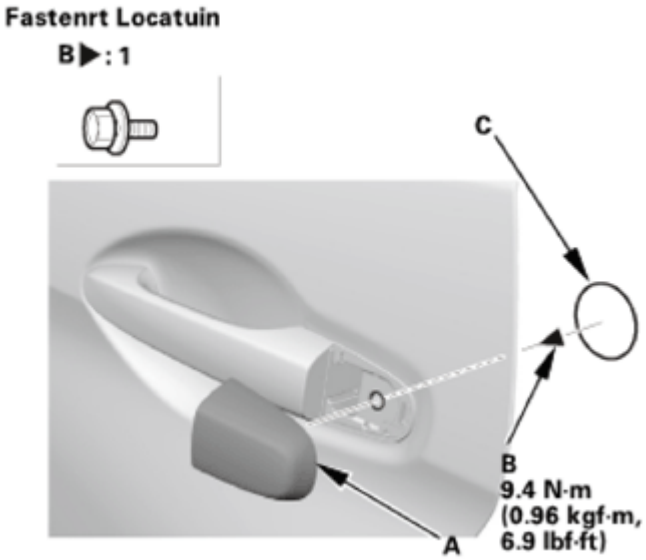

Fig. 248: Identifying Outer Handle Cover, Seal And Bolt With Torque Specification
Courtesy of AMERICAN HONDA MOTOR CO., INC.

2. Rear Door Plastic Cover As Needed
    1. Install the plastic cover (A), then install the plug caps (B).
    2. Install the pull pocket bracket (C), then install the screws (D).
    3. Connect the connector (E), then install the harness clips (F).

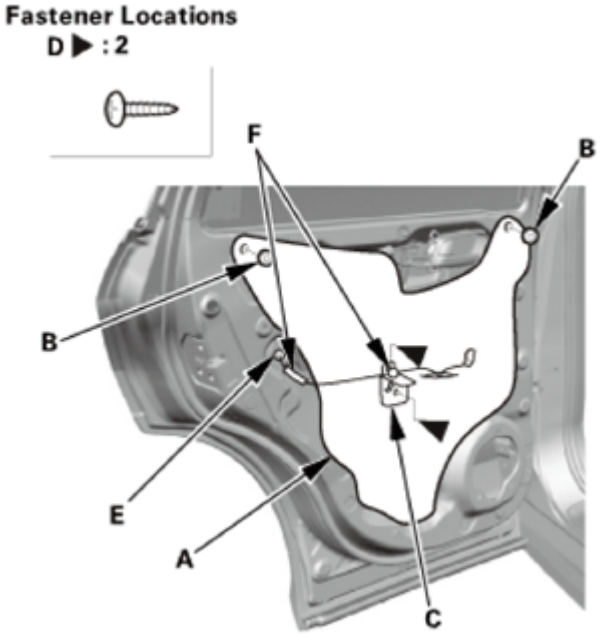

Fig. 249: Identifying Rear Door Plastic Cover, Pocket Bracket And Fasteners With Torque Specification
Courtesy of AMERICAN HONDA MOTOR CO., INC.

GETtheMANUALS.org

3. Rear Door Panel
    1. Install the inner handle (A) in the door panel (B).
    2. Install the door panel. Make sure the clips (C) snap into place securely.

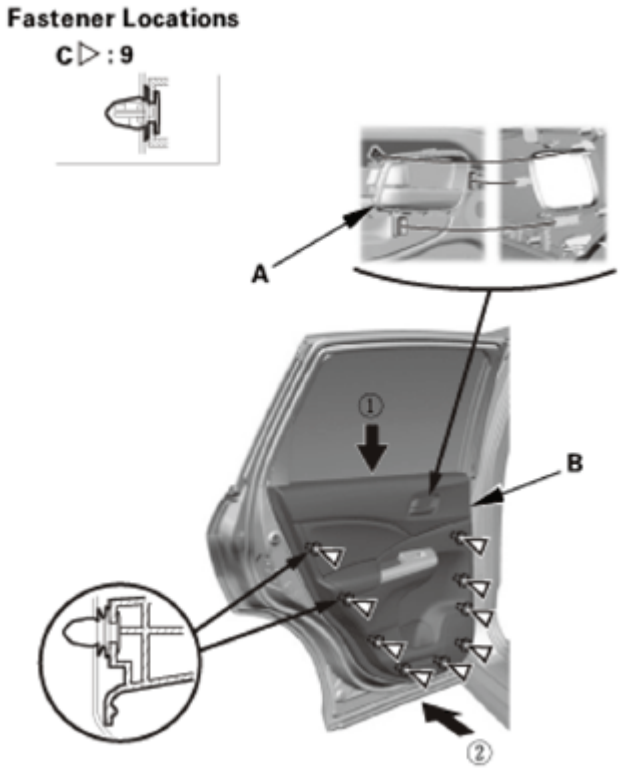

Fig. 250: Installing Rear Door Panel
Courtesy of AMERICAN HONDA MOTOR CO., INC.

3. Install the screw (A), then install the pull pocket mat (B).

GETtheMANUALS.org

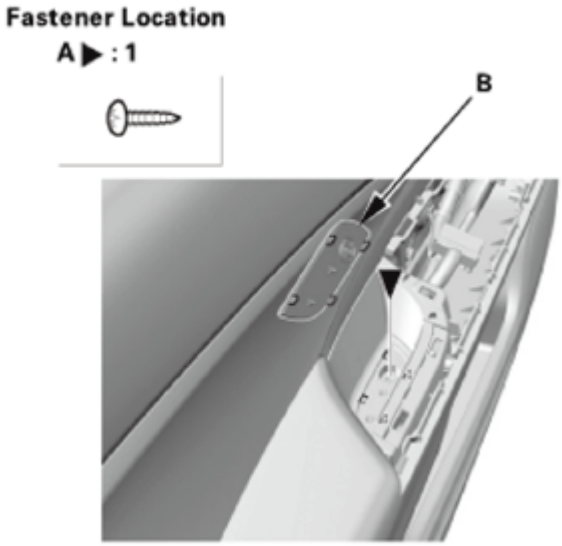

Fig. 251: Identifying Pocket Mat And Screw
Courtesy of AMERICAN HONDA MOTOR CO., INC.

4. Install the screws (A) securing the inner handle (B).

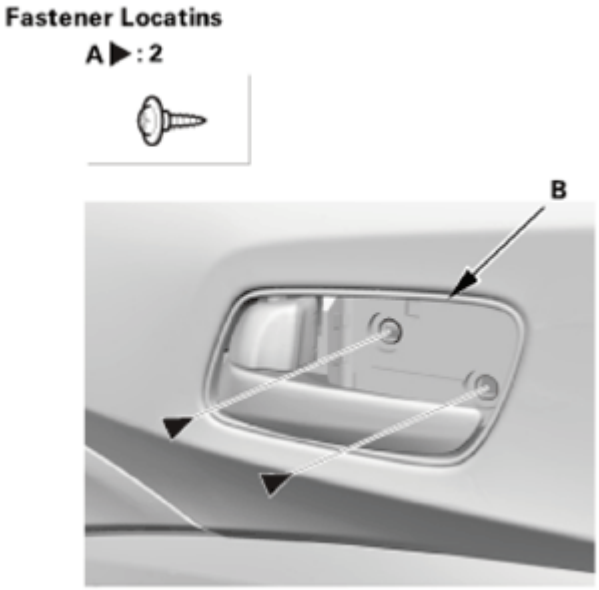

Fig. 252: Identifying Inner Handle And Screw
Courtesy of AMERICAN HONDA MOTOR CO., INC.

5. Install the inner handle cap (A). Make sure the upper hook (B) and the lower hooks (C) snap into place securely.

GETtheMANUALS.org

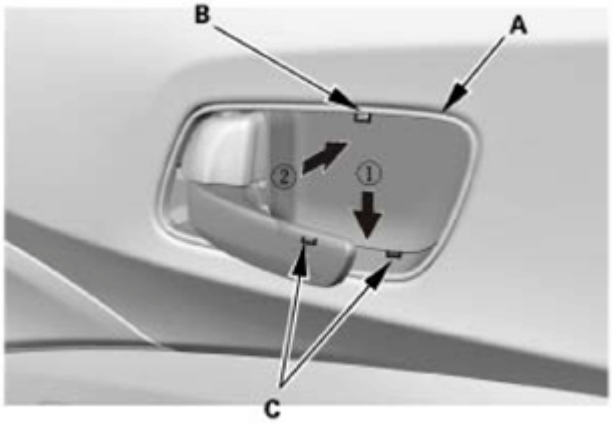

Fig. 253: Installing Inner Handle Cap And Screws
Courtesy of AMERICAN HONDA MOTOR CO., INC.

6. Install the rear door quarter inner trim (A). Make sure the clip (B) and the hooks (C) snap into place securely.

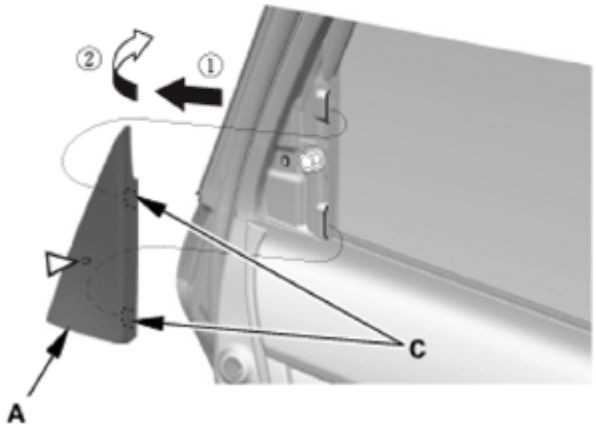

Fig. 254: Installing Rear Door Quarter Inner Trim
Courtesy of AMERICAN HONDA MOTOR CO., INC.

4. Rear Door Power Window Switch Panel
    1. Connect the connector (A), then install the power window switch panel (B). Make sure the clips (C) and the hooks (D) snap into place securely.

GETtheMANUALS.org

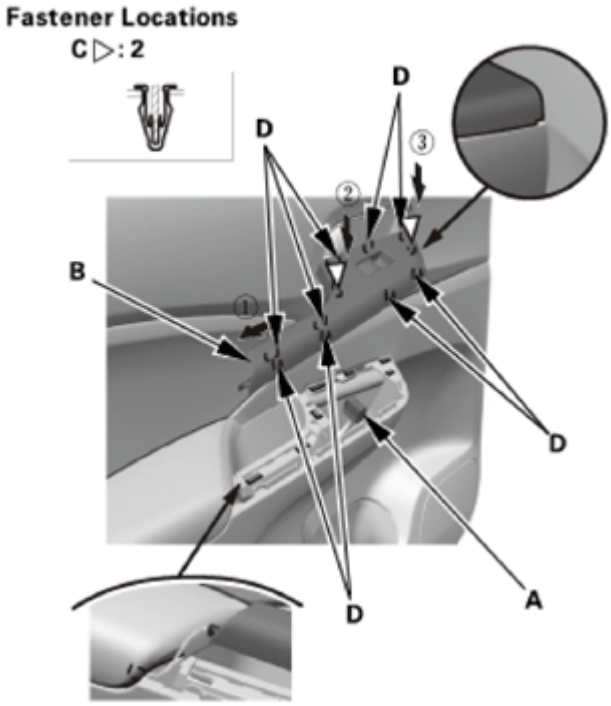

Fig. 255: Installing Power Window Switch Panel
Courtesy of AMERICAN HONDA MOTOR CO., INC.

REAR DOOR OUTER MOLDING REPLACEMENT

REMOVAL

1. Rear Door Outer Molding
    1. Detach the clips (A), then pull out the upper edge of the rear door outer molding (B) from the edge of the sash. If necessary, cut the double-sided adhesive tape (C) with a utility knife.

GETtheMANUALS.org

Fig. 256: Removing Rear Door Outer Molding Upper Edge
Courtesy of AMERICAN HONDA MOTOR CO., INC.

INSTALLATION

1. Rear Door Outer Molding
    1. Scrape off the remaining double-sided adhesive tape from the sash, then clean the surface with a sponge dampened in isopropyl alcohol. After cleaning, keep oil, grease, and water from getting on the surface.
    2. Install a new rear door outer molding (A). Make sure the clips (B) snap into place securely.

GETtheMANUALS.org

Fig. 257: Installing Rear Door Outer Molding
Courtesy of AMERICAN HONDA MOTOR CO., INC.

REAR DOOR PANEL REMOVAL AND INSTALLATION

REMOVAL

1. Rear Door Power Window Switch Panel
    1. Carefully pry out on the notch (A) in the power window switch panel (B) with the appropriate trim tool to detach the clips (C) and the hooks (D). Disconnect the connector (E), then remove the power window switch panel.

GETtheMANUALS.org

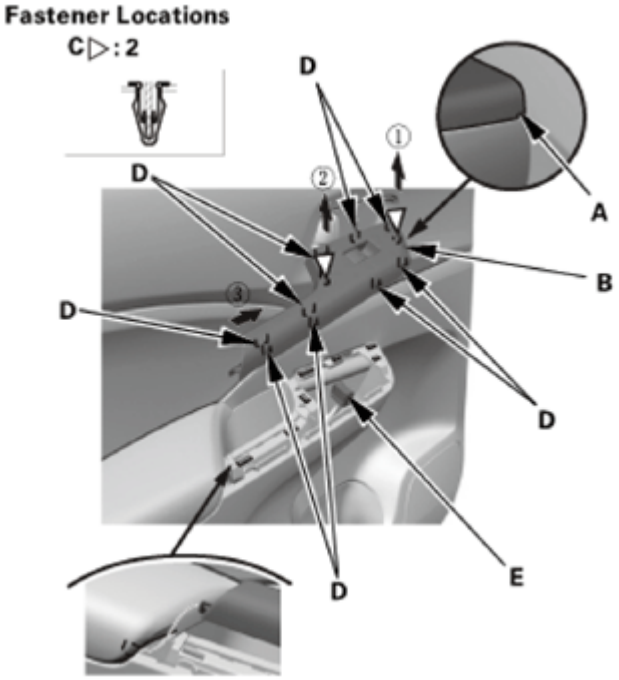

Fig. 258: Removing Rear Door Power Window Switch Panel
Courtesy of AMERICAN HONDA MOTOR CO., INC.

2. Rear Door Panel
    1. Detach the clip (A) and the hooks (B), then remove the rear door quarter inner trim (C).

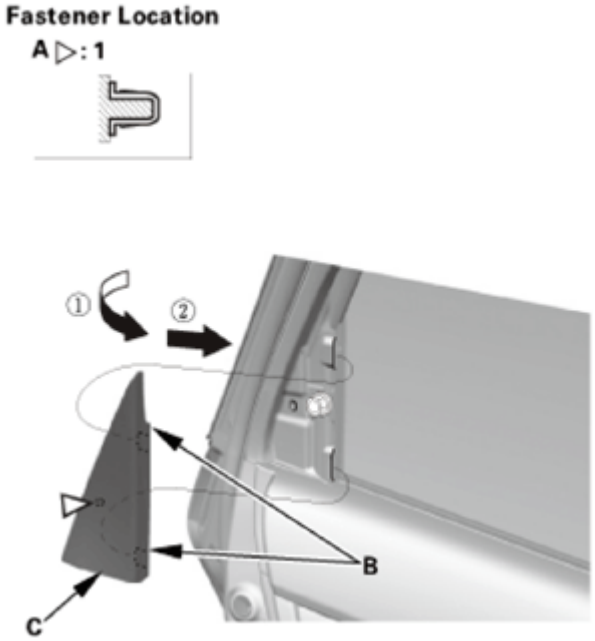

Fig. 259: Removing Rear Door Quarter Inner Trim
Courtesy of AMERICAN HONDA MOTOR CO., INC.

GETtheMANUALS.org

2. Carefully pry out on the upper hook (A) in the inner handle cap (B) with the appropriate trim tool, then pull back the inner handle cap to remove it.

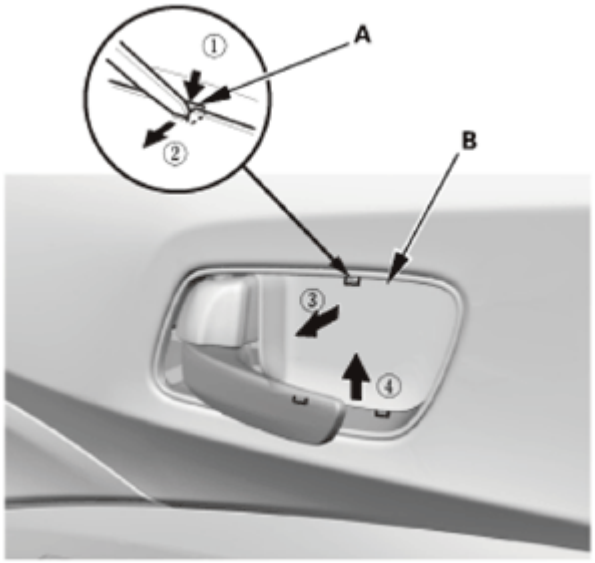

Fig. 260: Removing Inner Handle Cap Upper Hook Using Tool
Courtesy of AMERICAN HONDA MOTOR CO., INC.

3. Remove the screws (A) securing the inner handle (B).

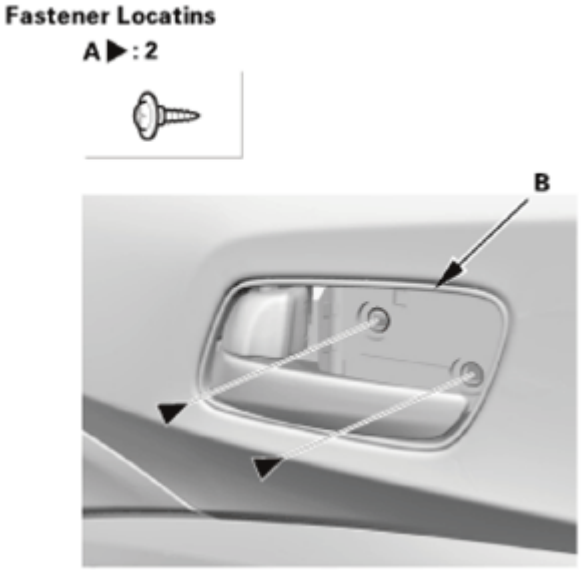

Fig. 261: Identifying Inner Handle And Screws
Courtesy of AMERICAN HONDA MOTOR CO., INC.

4. Remove the pull pocket mat (A), then remove the screw (B).

GETtheMANUALS.org

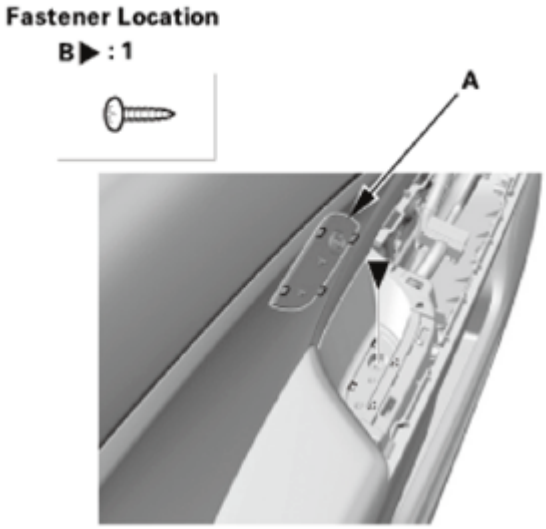

Fig. 262: Identifying Pocket Mat And Screw
Courtesy of AMERICAN HONDA MOTOR CO., INC.

5. Starting at the bottom edge of the door panel (A), detach the clips (B) with a commercially available trim pad remover.
6. Starting at the rear, pull the door panel up.
7. Remove the inner handle (C) from the door panel, then remove the door panel.

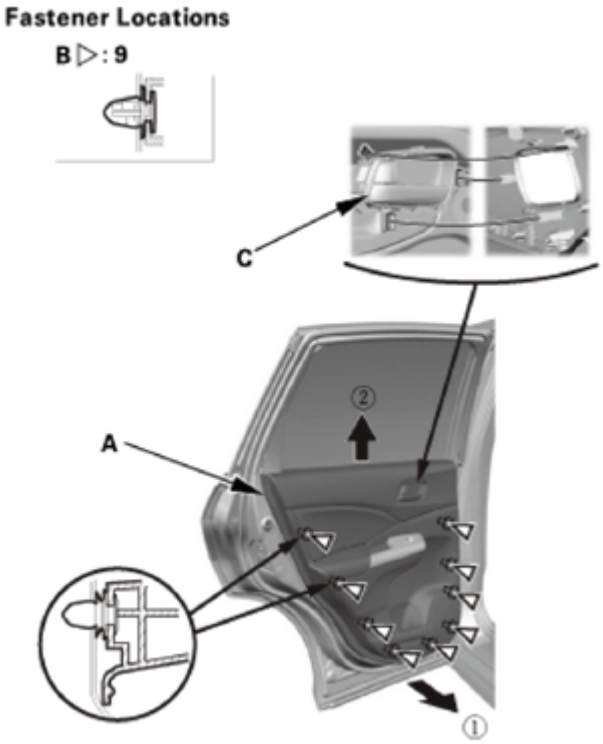

Fig. 263: Removing Door Panel
Courtesy of AMERICAN HONDA MOTOR CO., INC.

GETtheMANUALS.org

3. Rear Door Inner Weatherstrip
    1. If necessary, remove the rear door inner weatherstrip (A).

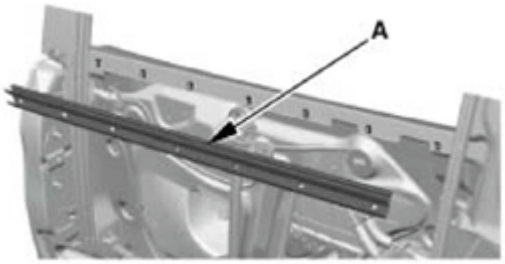

Fig. 264: Identifying Rear Door Inner Weatherstrip
Courtesy of AMERICAN HONDA MOTOR CO., INC.

4. Rear Door Inner Handle
    1. Detach the cable fasteners (A), then disconnect the latch cable (B) and the inner handle cable (C).

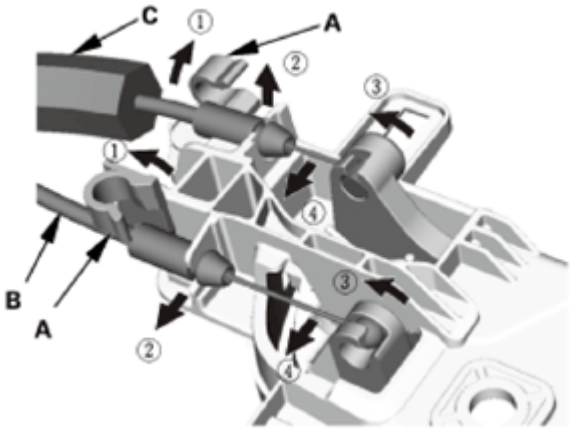

Fig. 265: Disconnecting Latch Cable And Inner Handle Cable
Courtesy of AMERICAN HONDA MOTOR CO., INC.

INSTALLATION

1. Rear Door Inner Handle
    1. Connect the latch cable (A) and the inner handle cable (B), then fasten the cable fasteners (C).

GETtheMANUALS.org

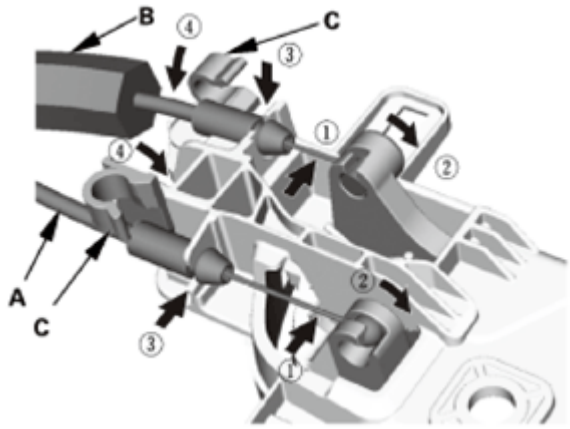

Fig. 266: Connecting Latch Cable And Inner Handle Cable
Courtesy of AMERICAN HONDA MOTOR CO., INC.

2. Rear Door Inner Weatherstrip
    1. Install the rear door inner weatherstrip (A).

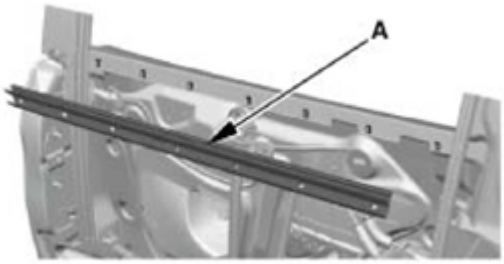

Fig. 267: Identifying Rear Door Inner Weatherstrip
Courtesy of AMERICAN HONDA MOTOR CO., INC.

3. Rear Door Panel
    1. Install the inner handle (A) in the door panel (B).
    2. Install the door panel. Make sure the clips (C) snap into place securely.

GETtheMANUALS.org

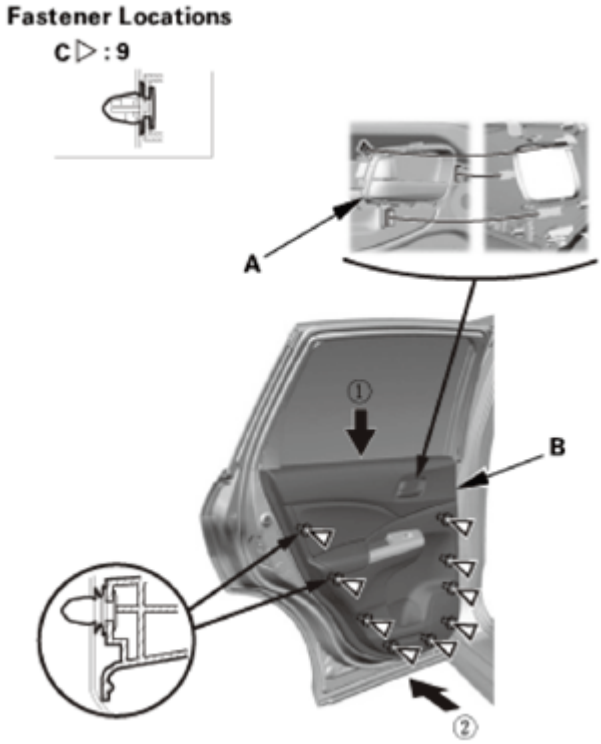

Fig. 268: Installing Rear Door Panel
Courtesy of AMERICAN HONDA MOTOR CO., INC.

3. Install the screw (A), then install the pull pocket mat (B).

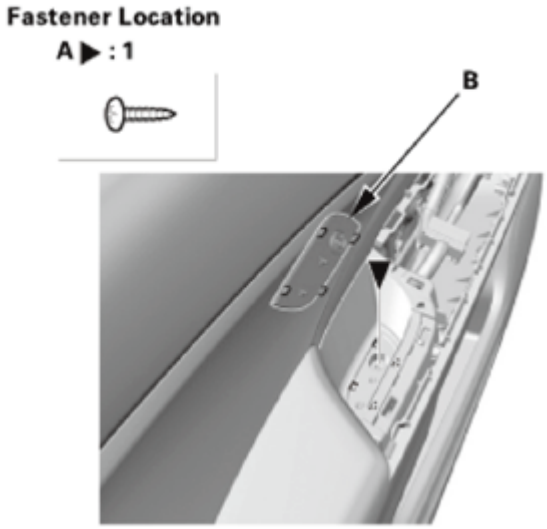

Fig. 269: Identifying Pocket Mat And Screw
Courtesy of AMERICAN HONDA MOTOR CO., INC.

4. Install the screws (A) securing the inner handle (B).

GETtheMANUALS.org

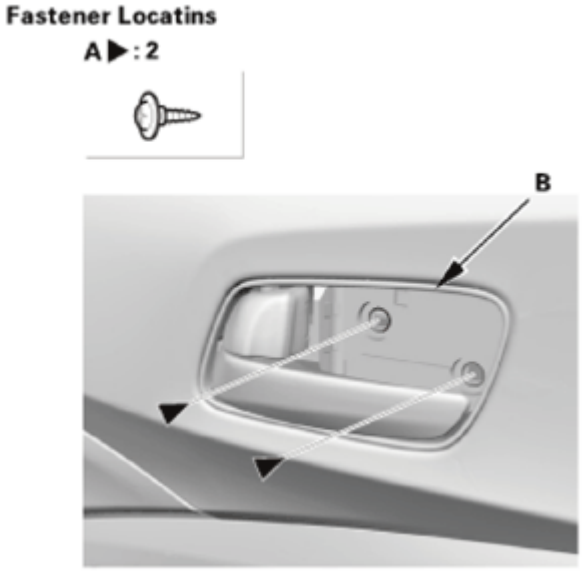

Fig. 270: Identifying Inner Handle And Screw
Courtesy of AMERICAN HONDA MOTOR CO., INC.

5. Install the inner handle cap (A). Make sure the upper hook (B) and the lower hooks (C) snap into place securely.

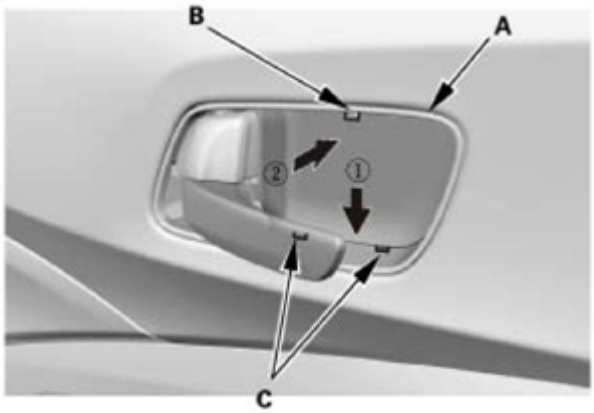

Fig. 271: Installing Inner Handle Cap And Screws
Courtesy of AMERICAN HONDA MOTOR CO., INC.

6. Install the rear door quarter inner trim (A). Make sure the clip (B) and the hooks (C) snap into place securely.

GETtheMANUALS.org

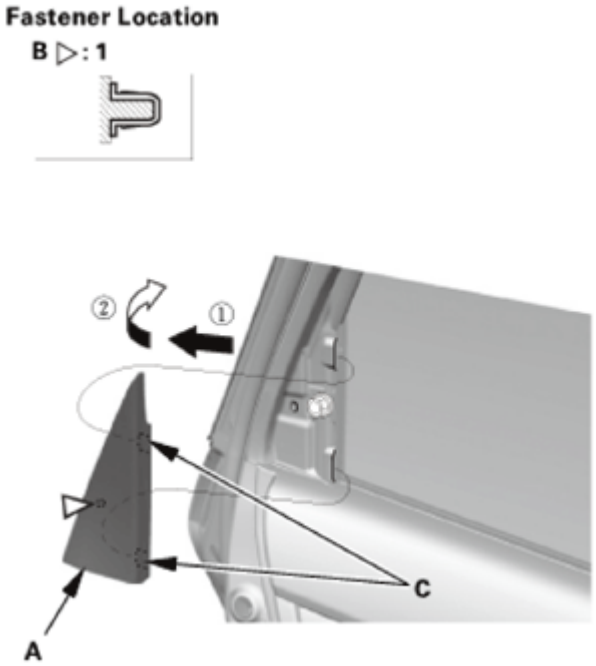

Fig. 272: Installing Rear Door Quarter Inner Trim
Courtesy of AMERICAN HONDA MOTOR CO., INC.

4. Rear Door Power Window Switch Panel
    1. Connect the connector (A), then install the power window switch panel (B). Make sure the clips (C) and the hooks (D) snap into place securely.

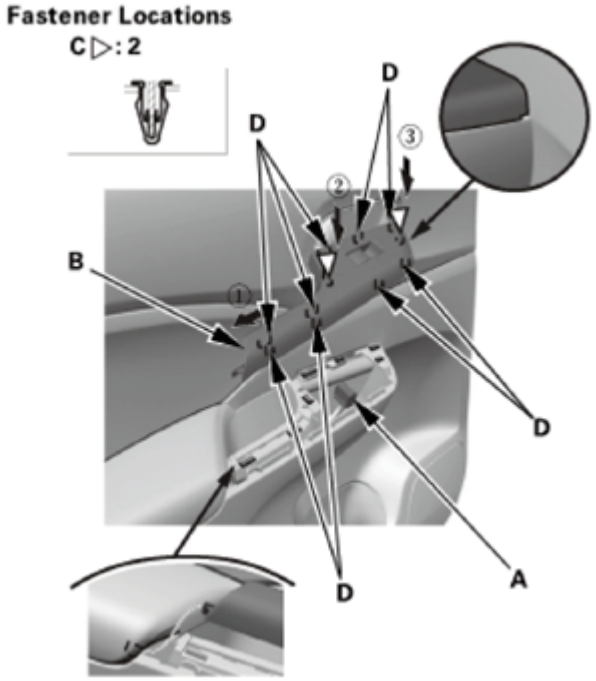

Fig. 273: Installing Power Window Switch Panel

GETtheMANUALS.org

Courtesy of AMERICAN HONDA MOTOR CO., INC.

REAR DOOR REAR SASH OUTER TRIM REMOVAL AND INSTALLATION

REMOVAL

1. Rear Door Rear Sash Outer Trim
    1. Detach the clip with a clip remover, then pull back the rear door weatherstrip (A) as needed, and remove the screw (B) securing the rear door rear sash outer trim (C).
    2. Pull down the upper portion of the rear door rear sash outer trim to detach it from the rear door outer molding (D).
    3. Pull up the rear door rear sash outer trim to release the hooks (E) from the door, and release the trim from between the door glass outer weatherstrip (F) and the door.

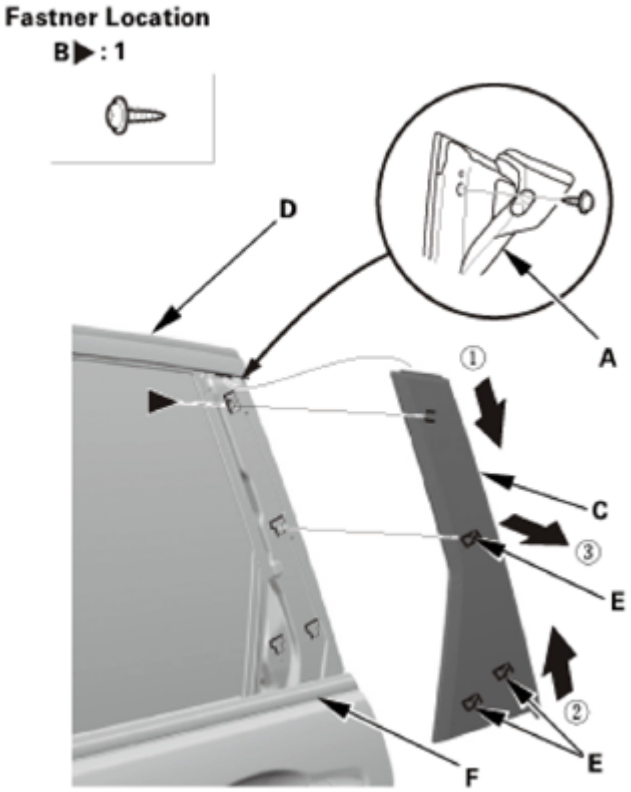

Fig. 274: Pulling Up Rear Door Rear Sash Outer Trim From Door
Courtesy of AMERICAN HONDA MOTOR CO., INC.

INSTALLATION

1. Rear Door Rear Sash Outer Trim
    1. Set the hooks (A) into the hole in the door, then slide the rear door rear sash outer trim (B) down.
    2. Insert the upper portion of the rear door rear sash outer trim to the rear door outer molding (C).
    3. Install the screw (D) securing the rear door rear sash outer trim, then install the rear door

GETtheMANUALS.org

weatherstrip (E).

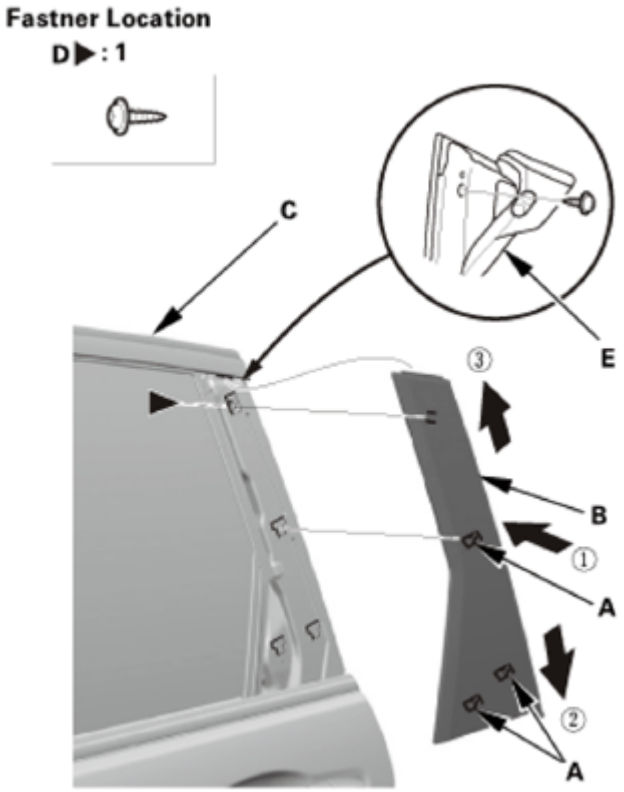

Fig. 275: Inserting Rear Door Rear Sash Outer Trim Upper Portion
Courtesy of AMERICAN HONDA MOTOR CO., INC.

REAR DOOR REGULATOR REMOVAL AND INSTALLATION

REMOVAL

1. Rear Door Power Window Switch Panel
    1. Carefully pry out on the notch (A) in the power window switch panel (B) with the appropriate trim tool to detach the clips (C) and the hooks (D). Disconnect the connector (E), then remove the power window switch panel.

GETtheMANUALS.org

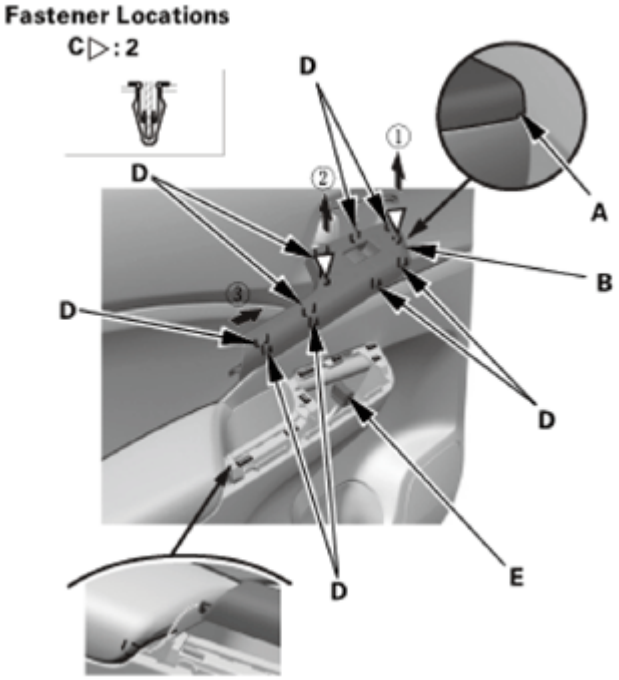

Fig. 276: Removing Rear Door Power Window Switch Panel
Courtesy of AMERICAN HONDA MOTOR CO., INC.

2. Rear Door Panel
    1. Detach the clip (A) and the hooks (B), then remove the rear door quarter inner trim (C).

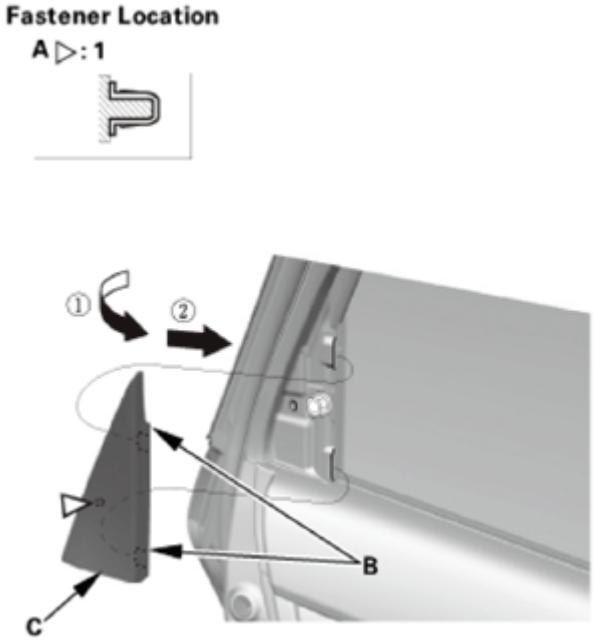

Fig. 277: Removing Rear Door Quarter Inner Trim
Courtesy of AMERICAN HONDA MOTOR CO., INC.

GETtheMANUALS.org

2. Carefully pry out on the upper hook (A) in the inner handle cap (B) with the appropriate trim tool, then pull back the inner handle cap to remove it.

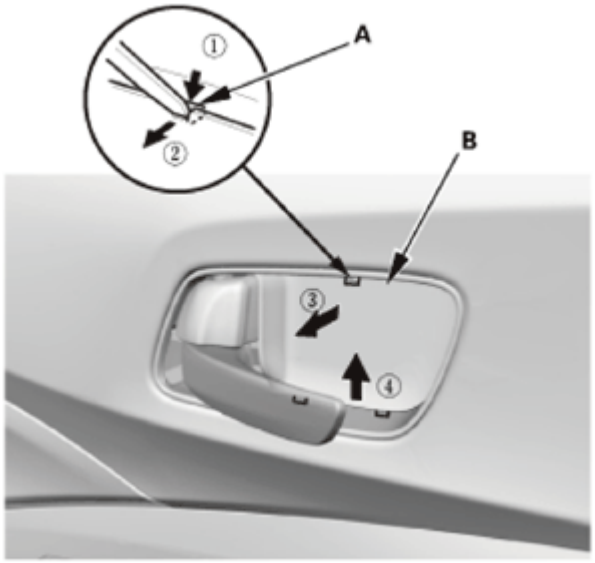

Fig. 278: Removing Inner Handle Cap Upper Hook Using Tool
Courtesy of AMERICAN HONDA MOTOR CO., INC.

3. Remove the screws (A) securing the inner handle (B).

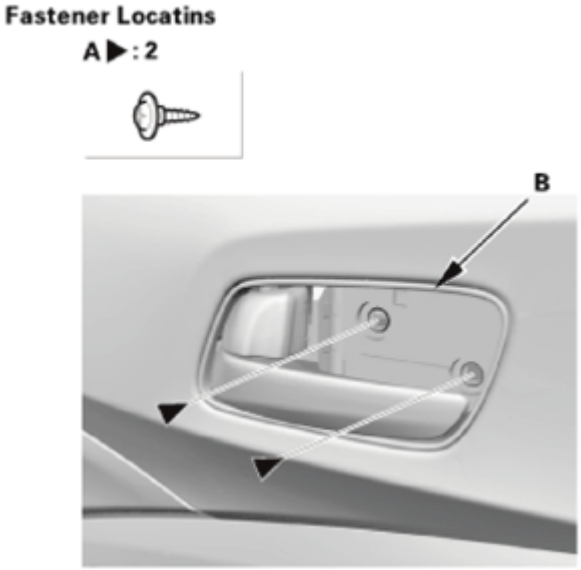

Fig. 279: Identifying Inner Handle And Screws
Courtesy of AMERICAN HONDA MOTOR CO., INC.

4. Remove the pull pocket mat (A), then remove the screw (B).

GETtheMANUALS.org

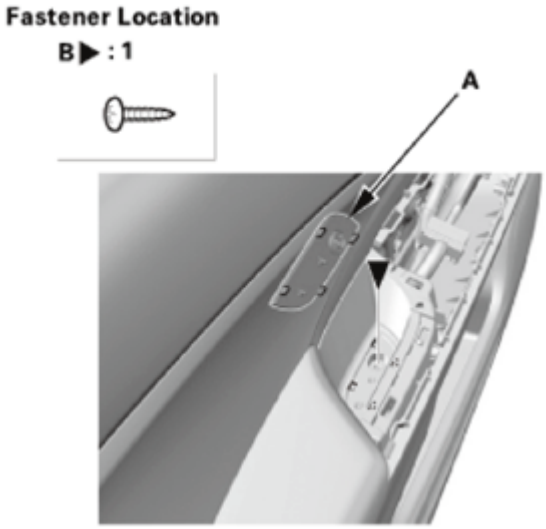

Fig. 280: Identifying Pocket Mat And Screw
Courtesy of AMERICAN HONDA MOTOR CO., INC.

5. Starting at the bottom edge of the door panel (A), detach the clips (B) with a commercially available trim pad remover.
6. Starting at the rear, pull the door panel up.
7. Remove the inner handle (C) from the door panel, then remove the door panel.

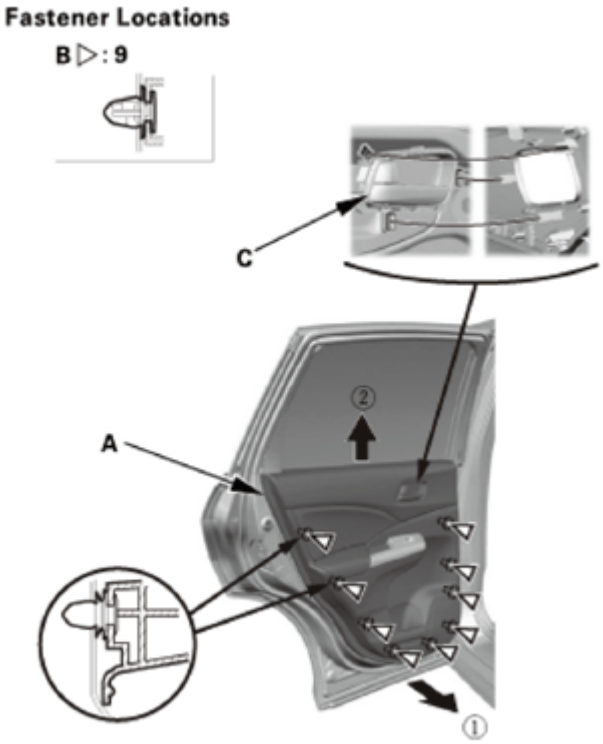

Fig. 281: Removing Door Panel
Courtesy of AMERICAN HONDA MOTOR CO., INC.

GETtheMANUALS.org

3. Rear Door Plastic Cover
    1. Disconnect the connector (A), then remove the harness clips (B).
    2. Remove the screws (C), then remove the door pull pocket bracket (D).
    3. Remove the plug caps (E), then carefully remove the plastic cover (F).

NOTE: If the plastic cover is damaged or torn, replace it.

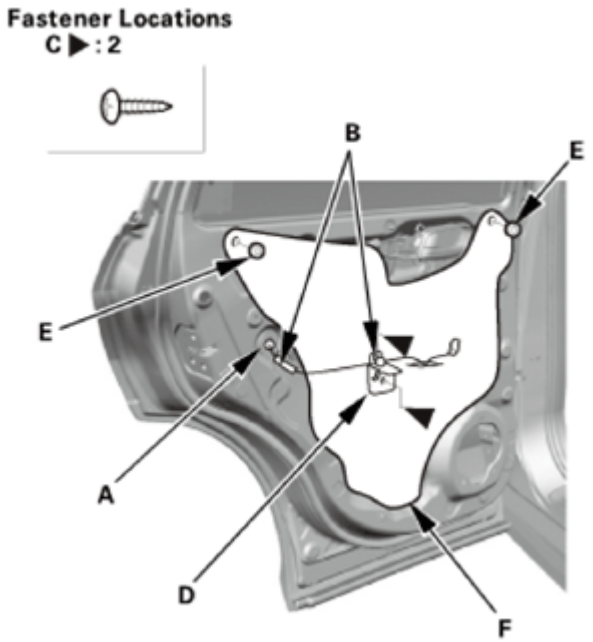

Fig. 282: Identifying Rear Door Plastic Cover, Pocket Bracket And Fasteners With Torque Specification
Courtesy of AMERICAN HONDA MOTOR CO., INC.

4. Rear Door Glass Support
    1. Carefully move the glass (A) until you can see the glass mounting bolts (B), then remove them.

GETtheMANUALS.org

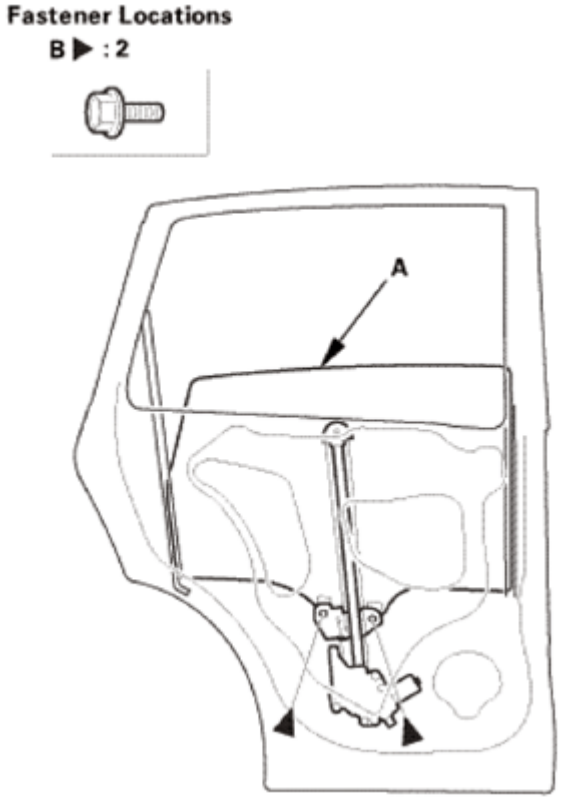

Fig. 283: Identifying Rear Door Glass And Mounting Bolts
Courtesy of AMERICAN HONDA MOTOR CO., INC.

2. Raise the glass (A), and secure the glass with tape (B). Take care not to drop the glass inside the door.

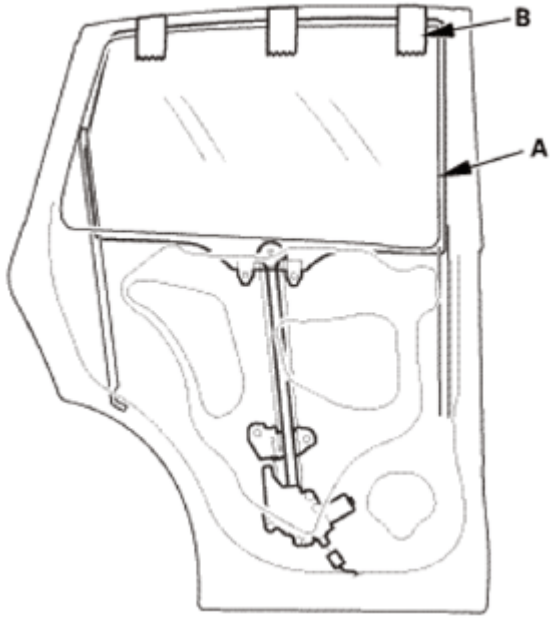

GETtheMANUALS.org

Fig. 284: Securing Glass Using Tape
Courtesy of AMERICAN HONDA MOTOR CO., INC.

5. Rear Door Regulator
    1. Disconnect the connector (A) from the regulator (B).
    2. Remove the nut (C) and the bolts (D), then remove the regulator through the hole in the door.

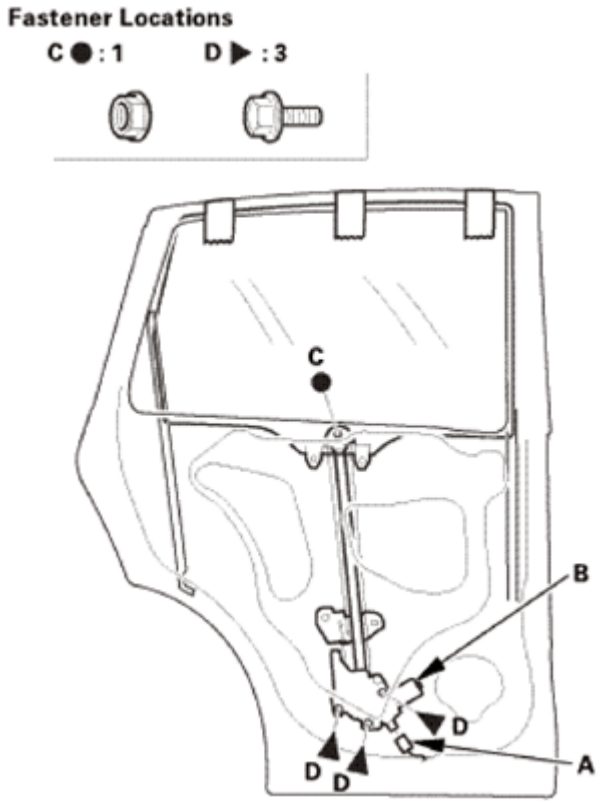

Fig. 285: Identifying Rear Door Regulator, Connector And Fasteners
Courtesy of AMERICAN HONDA MOTOR CO., INC.

INSTALLATION

1. Rear Door Regulator
    1. Apply multipurpose grease to all the sliding surfaces of the regulator (A) where as shown.

GETtheMANUALS.org

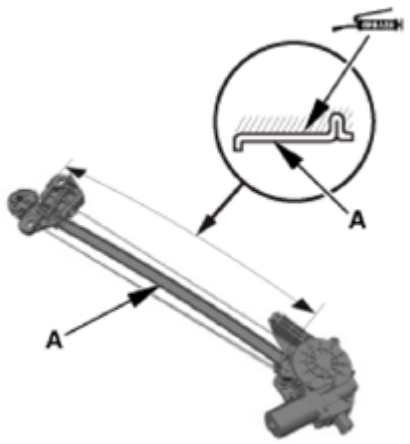

Fig. 286: Identifying Multipurpose Grease Applying Areas On Regulator Sliding Surfaces
Courtesy of AMERICAN HONDA MOTOR CO., INC.

2. Install the regulator (A) through the hole in the door, then install the nut (B) and the bolts (C).
3. Connect the connector (D) to the regulator.

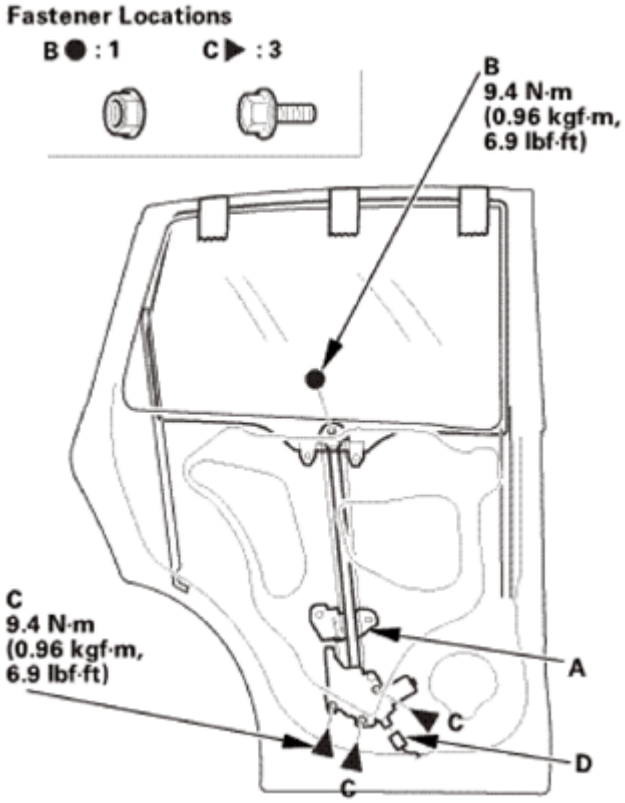

Fig. 287: Identifying Regulator, Connector And Fasteners With Torque Specifications
Courtesy of AMERICAN HONDA MOTOR CO., INC.

2. Rear Door Glass Support

GETtheMANUALS.org

1. While holding the glass (A), remove the tape (B), then carefully lower the glass. Take care not to drop the glass inside the door.

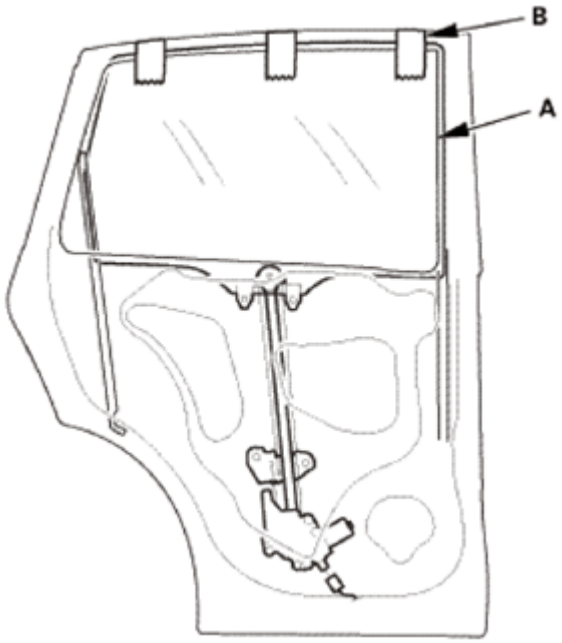

Fig. 288: Holding Glass Using Tape
Courtesy of AMERICAN HONDA MOTOR CO., INC.

2. Install the glass mounting bolts (A).

GETtheMANUALS.org

Fig. 289: Identifying Glass Mounting Bolts With Torque Specification
Courtesy of AMERICAN HONDA MOTOR CO., INC.

3. Rear Door Glass - Adjustment

NOTE:

- **Check the weatherstrip and the glass run channel for damage or deterioration, and replace them if necessary.**
- **Wipe the run channel clean with a shop towel.**

1. Place the vehicle on a firm, level surface.
2. Carefully move the glass (A) until you can see the glass mounting bolts (B), then loosen them.
3. Push the glass against the front side channel, then tighten the glass mounting bolts.
4. Make sure that the glass moves smoothly.

GETtheMANUALS.org

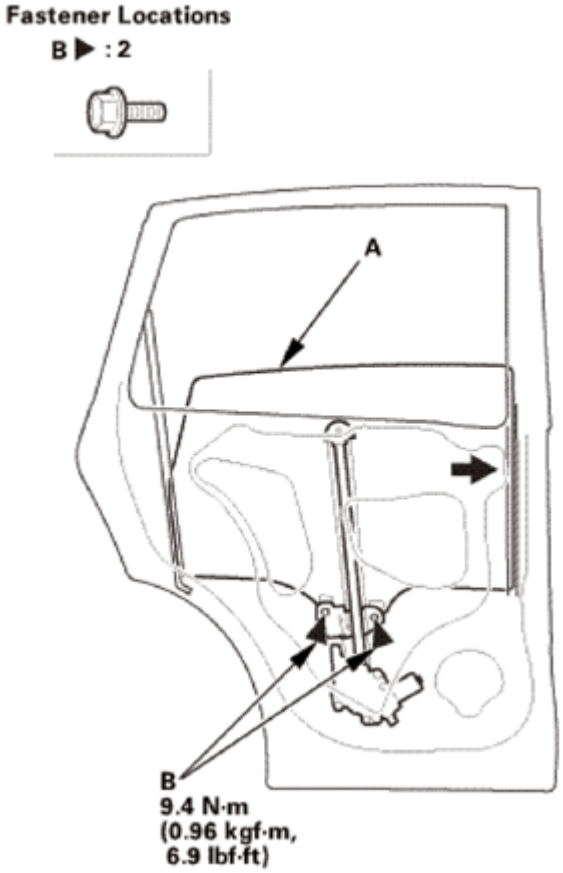

Fig. 290: Pushing Glass Against Center Lower Channel
Courtesy of AMERICAN HONDA MOTOR CO., INC.

5. Raise the glass fully, and check for gaps. Also make sure that the glass (A) contacts the glass run channel (B) evenly.

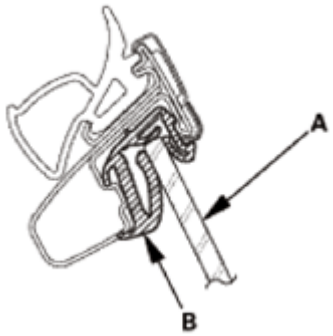

Fig. 291: Identifying Glass And Glass Run Channel
Courtesy of AMERICAN HONDA MOTOR CO., INC.

4. Rear Door Plastic Cover
    1. Install the plastic cover (A), then install the plug caps (B).

GETtheMANUALS.org

2. Install the pull pocket bracket (C), then install the screws (D).
3. Connect the connector (E), then install the harness clips (F).

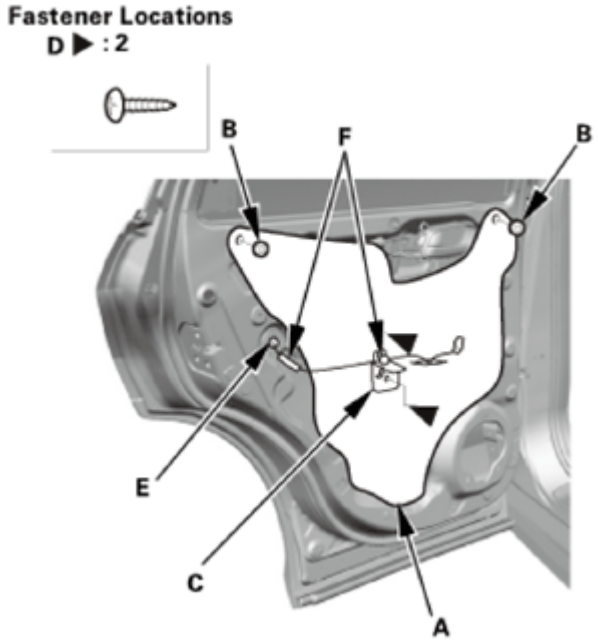

Fig. 292: Identifying Rear Door Plastic Cover, Pocket Bracket And Fasteners With Torque Specification
Courtesy of AMERICAN HONDA MOTOR CO., INC.

5. Rear Door Panel
    1. Install the inner handle (A) in the door panel (B).
    2. Install the door panel. Make sure the clips (C) snap into place securely.

GETtheMANUALS.org

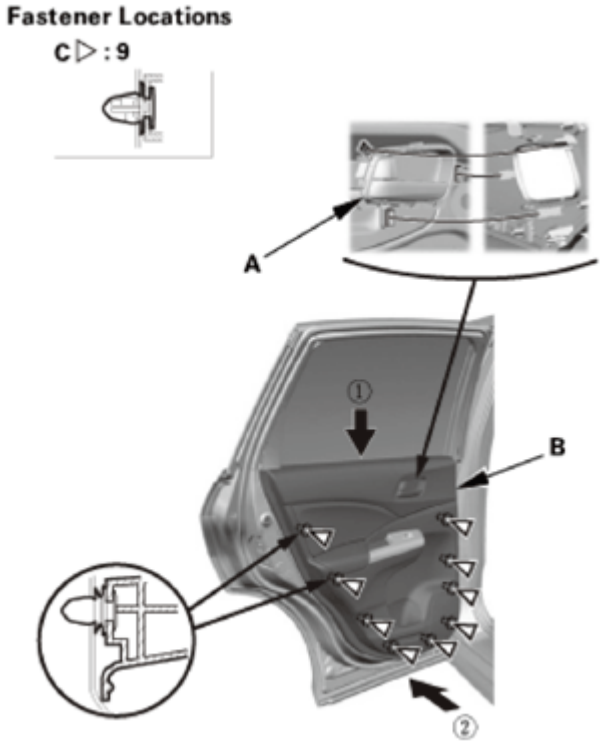

Fig. 293: Installing Rear Door Panel
Courtesy of AMERICAN HONDA MOTOR CO., INC.

3. Install the screw (A), then install the pull pocket mat (B).

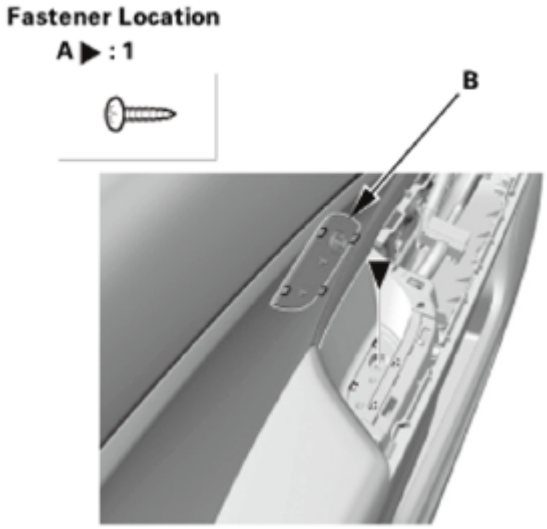

Fig. 294: Identifying Pocket Mat And Screw
Courtesy of AMERICAN HONDA MOTOR CO., INC.

4. Install the screws (A) securing the inner handle (B).

GETtheMANUALS.org

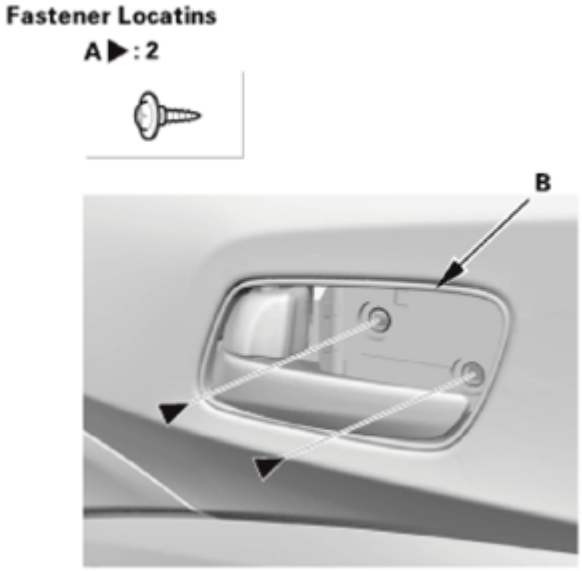

Fig. 295: Identifying Inner Handle And Screw
Courtesy of AMERICAN HONDA MOTOR CO., INC.

5. Install the inner handle cap (A). Make sure the upper hook (B) and the lower hooks (C) snap into place securely.

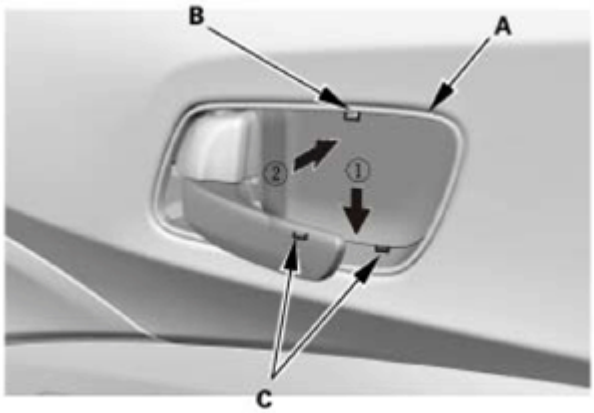

Fig. 296: Installing Inner Handle Cap And Screws
Courtesy of AMERICAN HONDA MOTOR CO., INC.

6. Install the rear door quarter inner trim (A). Make sure the clip (B) and the hooks (C) snap into place securely.

GETtheMANUALS.org

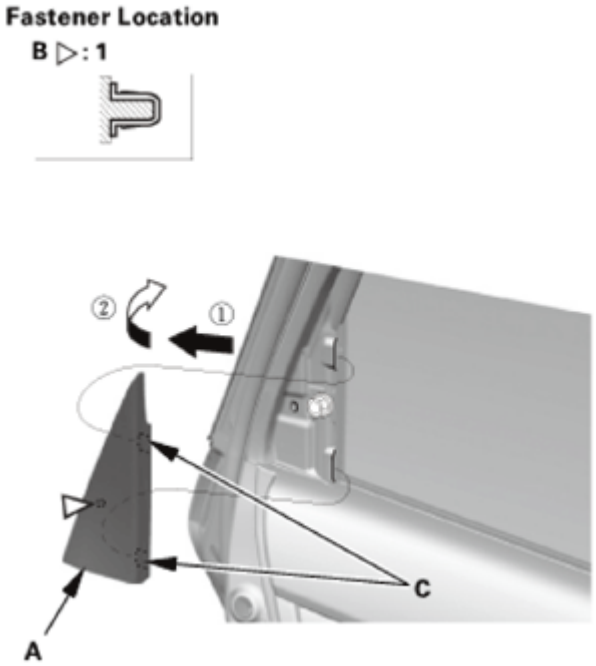

Fig. 297: Installing Rear Door Quarter Inner Trim
Courtesy of AMERICAN HONDA MOTOR CO., INC.

6. Rear Door Power Window Switch Panel
    1. Connect the connector (A), then install the power window switch panel (B). Make sure the clips (C) and the hooks (D) snap into place securely.

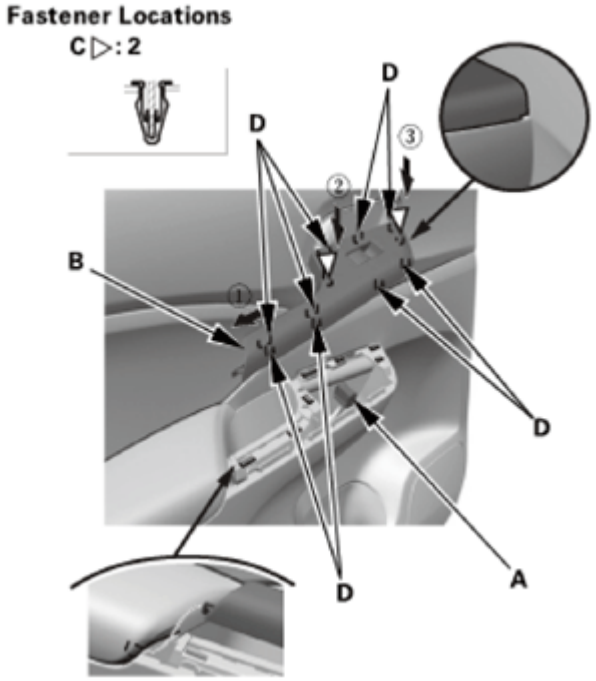

Fig. 298: Installing Power Window Switch Panel

GETtheMANUALS.org

Courtesy of AMERICAN HONDA MOTOR CO., INC.

REAR DOOR SASH OUTER TRIM REMOVAL AND INSTALLATION

REMOVAL

1. Rear Door Sash Outer Trim
    1. Detach the clip with a clip remover, then pull back the rear door weatherstrip (A) as needed, and remove the screw (B) securing the rear door sash outer trim (C).
    2. Pull down the upper portion of the rear door sash outer trim to detach it from the rear door outer molding (D).
    3. Pull up the rear door sash outer trim to release the hooks (E) from the door, and release the trim from between the door glass outer weatherstrip (F) and the door.

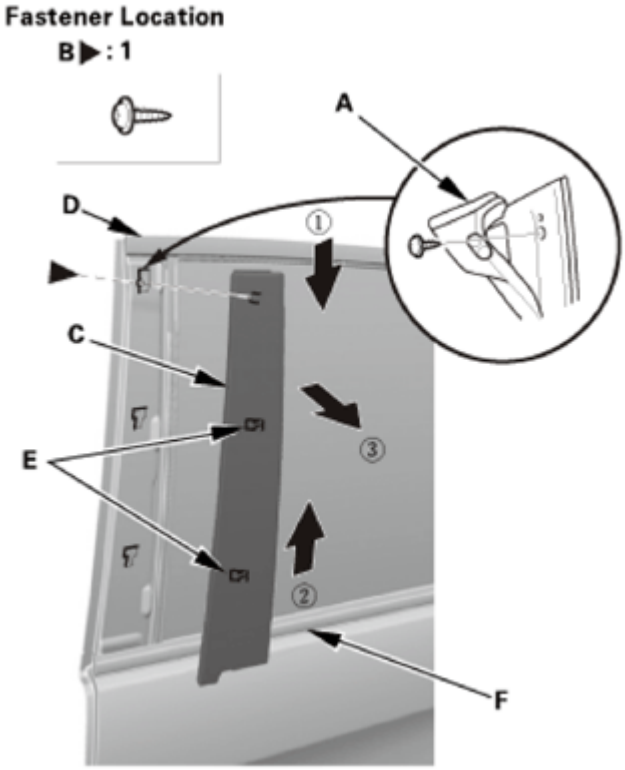

Fig. 299: Pulling Down Rear Door Sash Outer Trim Upper Portion
Courtesy of AMERICAN HONDA MOTOR CO., INC.

INSTALLATION

1. Rear Door Sash Outer Trim
    1. Set the hooks (A) into the hole in the door, then slide the rear door sash outer trim (B) down.
    2. Insert the upper portion of the rear door sash outer trim to the rear door outer molding (C).
    3. Install the screw (D) securing the rear door sash outer trim, then install the rear door weatherstrip

GETtheMANUALS.org

(E).

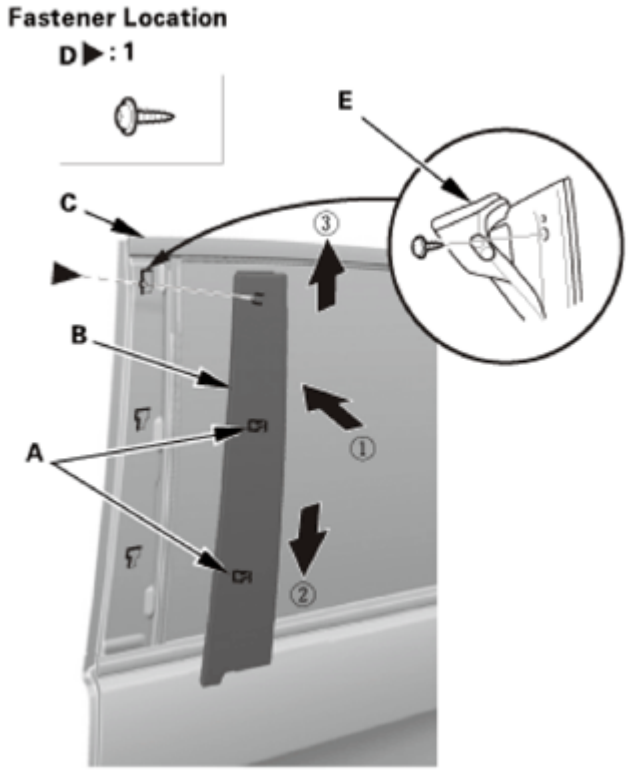

Fig. 300: Inserting Rear Door Sash Outer Trim Upper Portion
Courtesy of AMERICAN HONDA MOTOR CO., INC.

REAR DOOR WEATHERSTRIP REMOVAL AND INSTALLATION

REMOVAL

1. Rear Door Weatherstrip
    1. Remove the door checker mounting bolt (A) at the B-pillar.
    2. Detach the clips (B, C, and D), and release the rear door weatherstrip (E) from the holder (F) of the door sash, then remove the rear door weatherstrip.

GETtheMANUALS.org

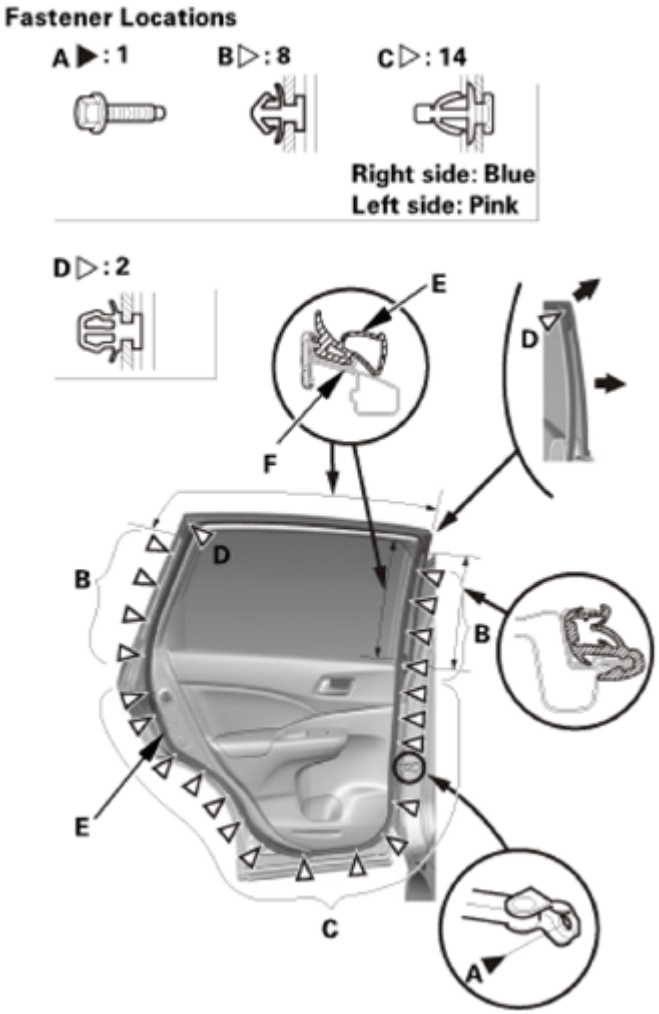

Fig. 301: Disconnecting Rear Door Weatherstrip Fasteners
Courtesy of AMERICAN HONDA MOTOR CO., INC.

INSTALLATION

1. Rear Door Weatherstrip

NOTE: Apply medium strength liquid thread lock to the door checker mounting bolt (A) before installation.

1. Install the rear door weatherstrip (B). Make sure the clips (C, D, and E) snap into place securely.
2. Install the door checker mounting bolt.

NOTE: Make sure the door weatherstrip is installed in the holder (F) securely.

GETtheMANUALS.org

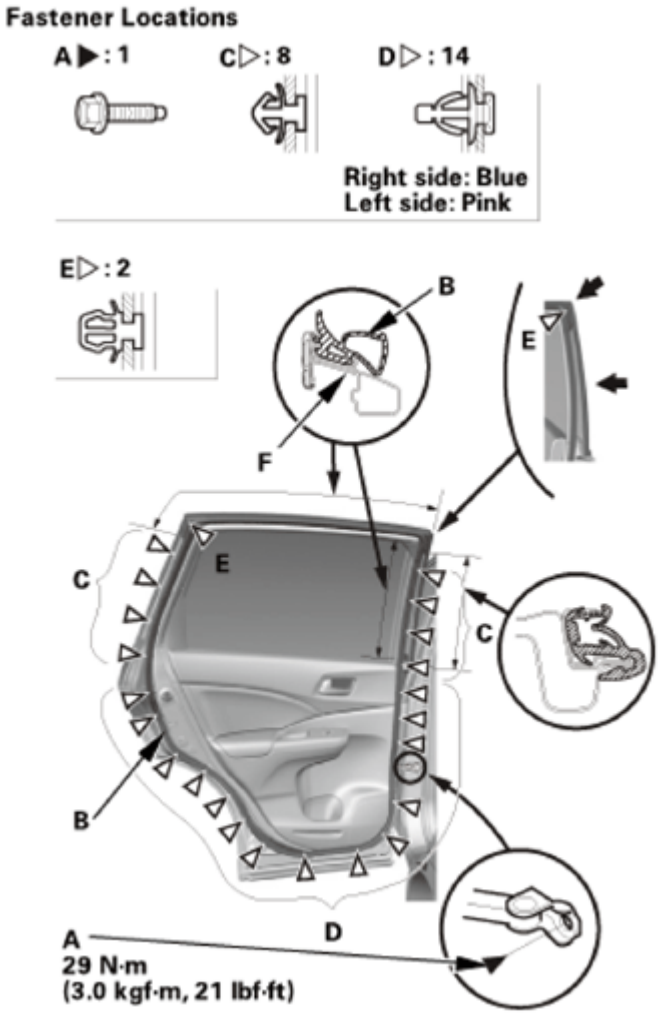

Fig. 302: Connecting Rear Door Weatherstrip Fastener With Torque Specification
Courtesy of AMERICAN HONDA MOTOR CO., INC.

2. Water Leak Test

Check for water leaks. Run water over the roof and on the sealing area as shown, and note these items:

- Use a 12 mm (0.47 in) diameter hose (A).
- Adjust the rate of water flow as shown.
- Do not use a nozzle.
- Hold the hose about 300 mm (11.81 in) away from the door.

GETtheMANUALS.org

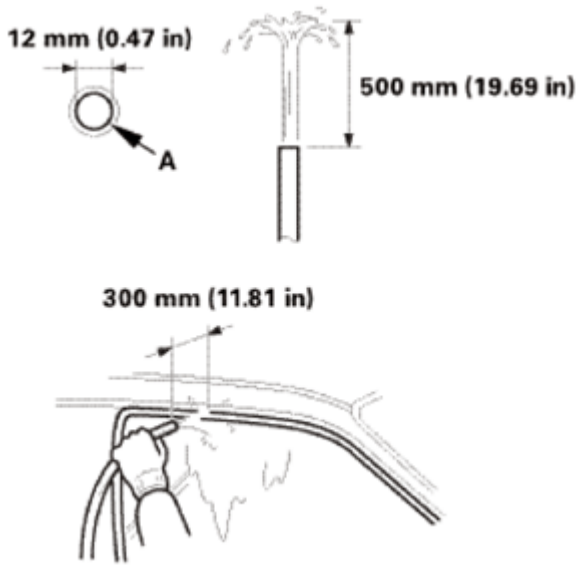

Fig. 303: Checking Water Leaks
Courtesy of AMERICAN HONDA MOTOR CO., INC.

REAR DOOR WHEEL ARCH PROTECTOR REMOVAL AND INSTALLATION

REMOVAL

1. Rear Door Wheel Arch Protector
    1. Remove the clip (A), then carefully pry out the clip portions of the rear door wheel arch protector (B) with the appropriate trim tool to detach the clips (C), then remove the rear door wheel arch protector.

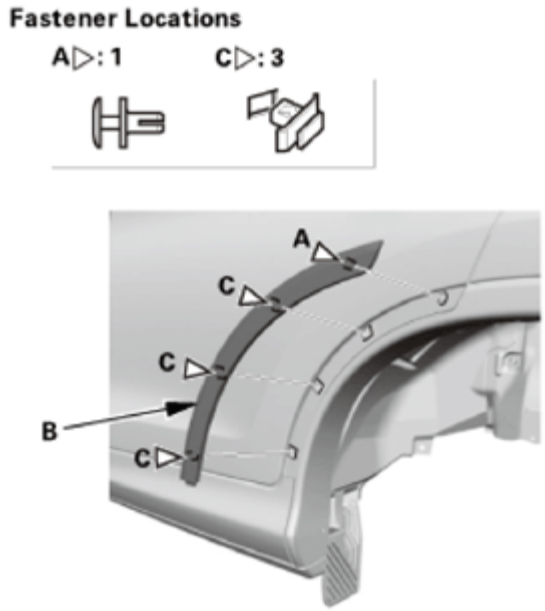

GETtheMANUALS.org

Fig. 304: Identifying Rear Door Wheel Arch Protector And Fasteners
Courtesy of AMERICAN HONDA MOTOR CO., INC.

INSTALLATION

1. Rear Door Wheel Arch Protector
    1. If you are reusing the original rear door wheel arch protector (A), apply PP primer to the areas where new double-sided adhesive tapes (B, C, and D) will be applied, then attach the new double-sided adhesive tapes to the trim as shown.

       Adhesive tape (B): Thickness 1.2 mm (0.047 in)

       Width 6 mm (0.24 in)

       Length 48 mm (1.89 in)

       Adhesive tape (C): Thickness 1.0 mm (0.039 in)

       Width 6 mm (0.24 in)

       Length 18 mm (0.71 in)

       Adhesive tape (D): Thickness 1.2 mm (0.047 in)

       Width 6 mm (0.24 in)

       Length 18 mm (0.71 in)

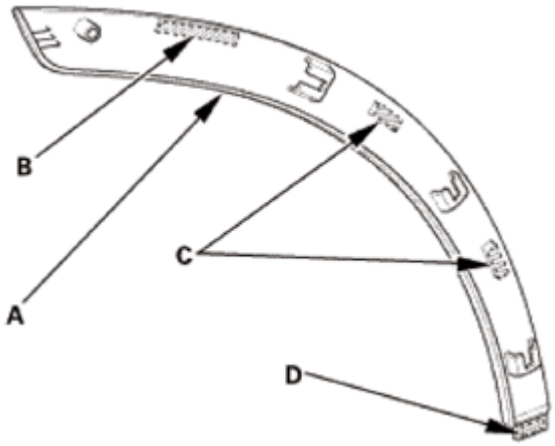

Fig. 305: Identifying Adhesive Tape Applying Area On Rear Door Wheel Arch Protector
Courtesy of AMERICAN HONDA MOTOR CO., INC.

    2. Fold the edge of each adhesive backing from the double-sided adhesive tape.
    3. Install the rear door wheel arch protector (A), then install the clip (B). Make sure the clips (C) snap

GETtheMANUALS.org

into place securely.

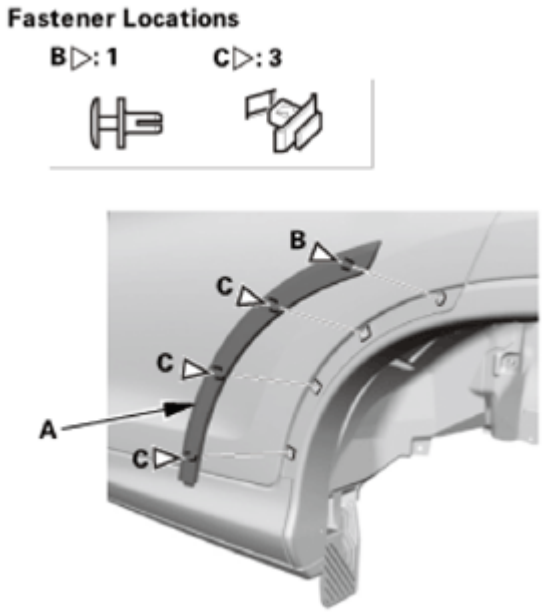

Fig. 306: Identifying Rear Door Wheel Arch Protector And Fasteners
Courtesy of AMERICAN HONDA MOTOR CO., INC.

GETtheMANUALS.org

DRIVE BELT AUTO-TENSIONER INSPECTION

SPECIAL TOOL DESCRIPTION

Image	Description/Tool Number
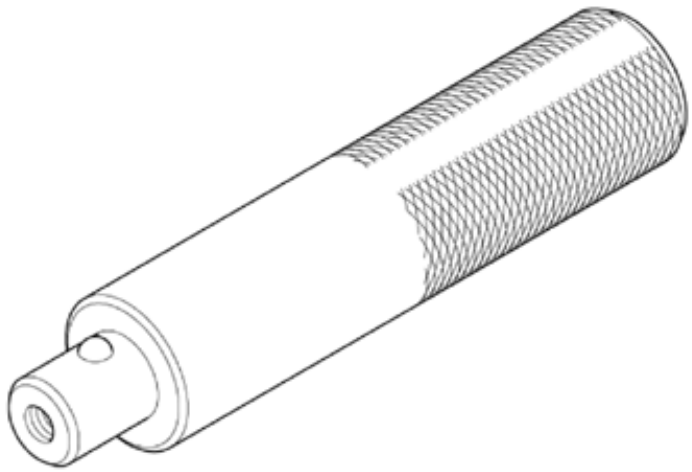	Belt Tension Release Tool Snap-on YA9317, commercially available

*Available through the Honda Tool and Equipment Program 888-424-6857

INSPECTION

1. Drive Belt Auto-Tensioner - Position Check
    1. Turn the ignition switch to ON (II), and make sure to turn the A/C switch OFF, then turn the ignition switch to LOCK (0).
    2. Check the position of the auto-tensioner indicator pointer (A).
    3. Start the engine, then check the position again with the engine idling. If the position of the indicator moves or fluctuates a lot, replace the auto-tensioner.
    4. Check for abnormal noise from the tensioner pulley. If you hear abnormal noise, replace the auto-tensioner.

GETtheMANUALS.org

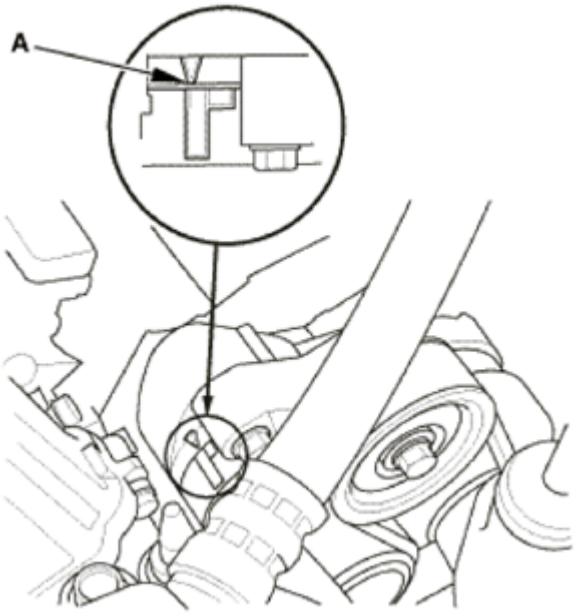

Fig. 1: Identifying Auto-Tensioner Indicator Pointer
Courtesy of AMERICAN HONDA MOTOR CO., INC.

REMOVAL

1. Drive Belt
    1. Move the auto-tensioner (A) using the belt tension release tool in the direction of the arrow to relieve tension from the drive belt, then remove the drive belt.

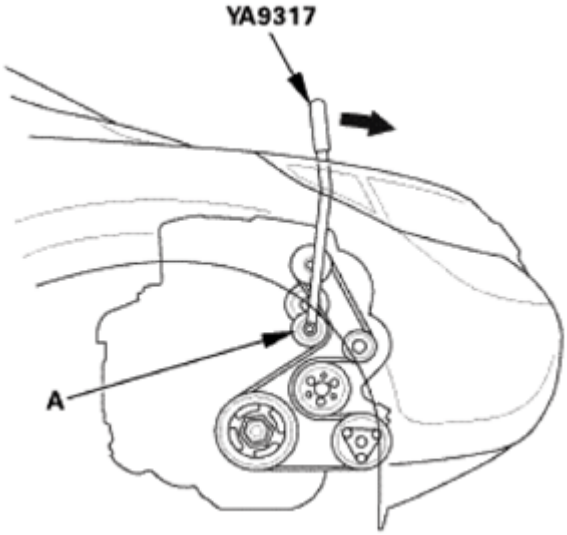

Fig. 2: Moving Auto-Tensioner Using Belt Tension Release Tool
Courtesy of AMERICAN HONDA MOTOR CO., INC.

INSPECTION

GETtheMANUALS.org

1. Drive Belt Auto-Tensioner - Inspection, Without Drive Belt
    1. Move the auto-tensioner within its limit using the belt tension release tool in the direction of the arrow. Check that the auto-tensioner moves smoothly and without any abnormal noise. If the tensioner does not move smoothly, or if you hear abnormal noise, replace the auto-tensioner.

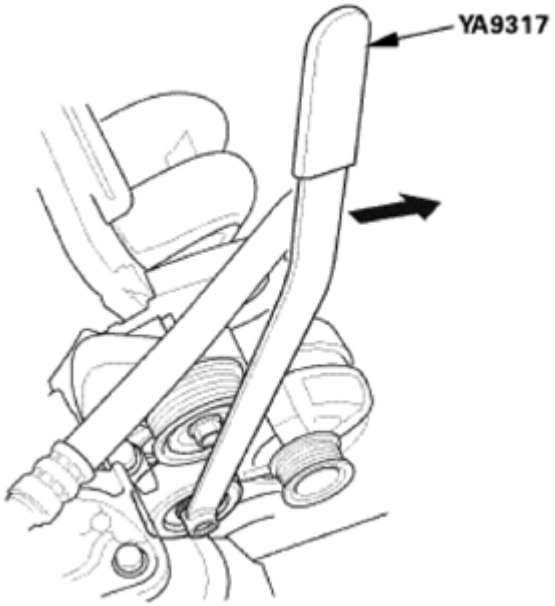

Fig. 3: Moving Auto-Tensioner Using Belt Tension Release Tool
Courtesy of AMERICAN HONDA MOTOR CO., INC.

REMOVAL

1. Idler Pulley Base Assembly
    1. Remove the idler pulley base.

GETtheMANUALS.org

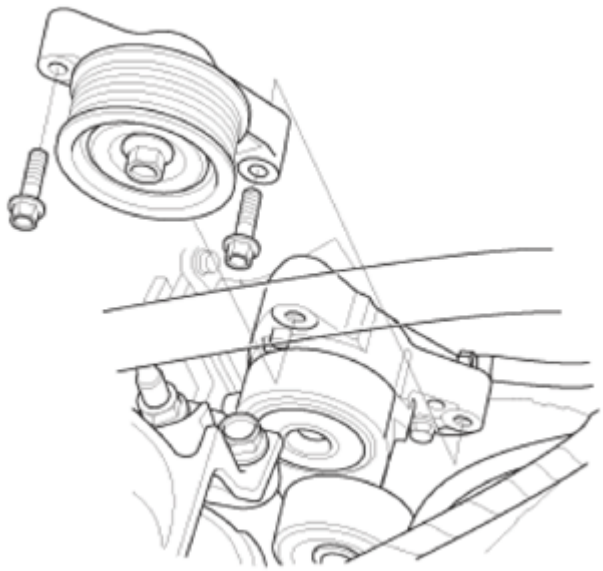

Fig. 4: Identifying Idler Pulley Base Assembly
Courtesy of AMERICAN HONDA MOTOR CO., INC.

2. Auto-Tensioner Assembly
    1. Remove the auto-tensioner.

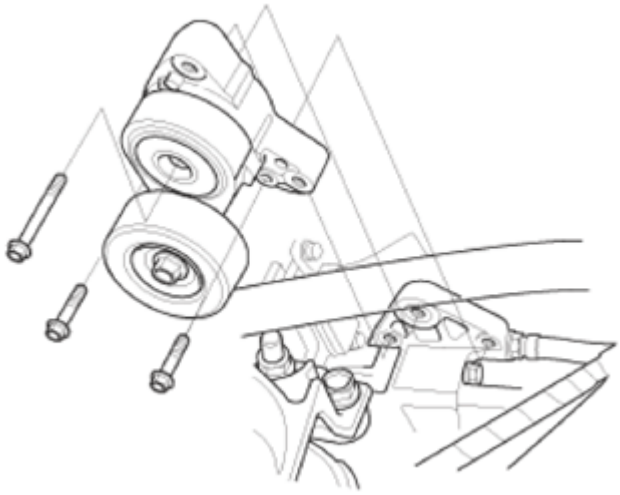

Fig. 5: Identifying Auto-Tensioner
Courtesy of AMERICAN HONDA MOTOR CO., INC.

INSPECTION

1. Drive Belt Auto-Tensioner - Inspection
    1. Clamp the auto-tensioner (A) by using two 8mm bolts (B) and a vise (C) as shown. Do not clamp the auto-tensioner itself.

GETtheMANUALS.org

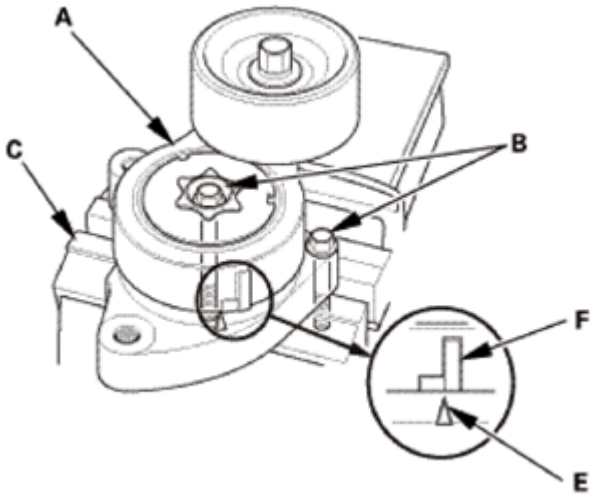

Fig. 6: Identifying Auto-Tensioner And Bolts
Courtesy of AMERICAN HONDA MOTOR CO., INC.

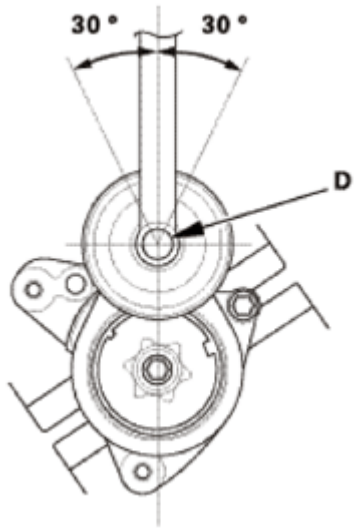

Fig. 7: Identifying Alignment Of Torque Wrench On Pulley Bolt
Courtesy of AMERICAN HONDA MOTOR CO., INC.

2. Attach the torque wrench (D) on the pulley bolt, and align it as shown.
3. Align the auto-tensioner indicator's pointer (E) on the auto-tensioner base with Max. belt position mark (F) on the auto-tensioner arm by using the torque wrench, and measure the torque. If the torque value is out of specification, replace the auto-tensioner.

NOTE: **If the auto-tensioner indicator's pointer exceeds the Max. belt position mark, recheck the torque.**

Auto-tensioner Spring Torque:

GETtheMANUALS.org

32.5-39.7 N.m (3.31-4.05 kgf.m, 24.0-29.3 lbf.ft)

INSTALLATION

1. Auto-Tensioner Assembly
    1. Install the auto-tensioner.

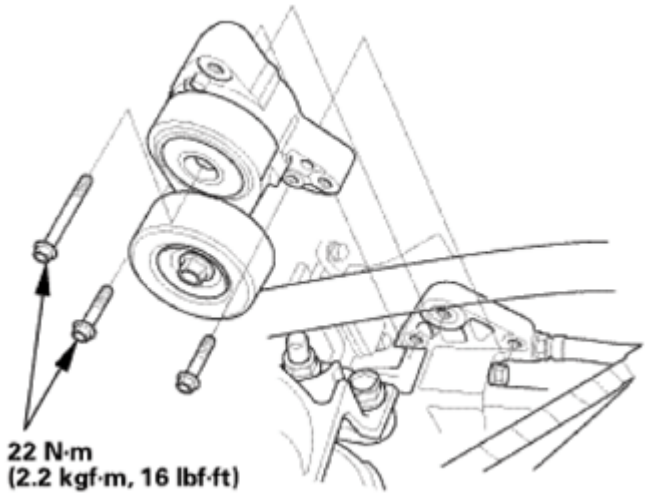

Fig. 8: Identifying Auto-Tensioner And Bolts With Torque Specifications
Courtesy of AMERICAN HONDA MOTOR CO., INC.

2. Idler Pulley Base Assembly
    1. Install the idler pulley base.

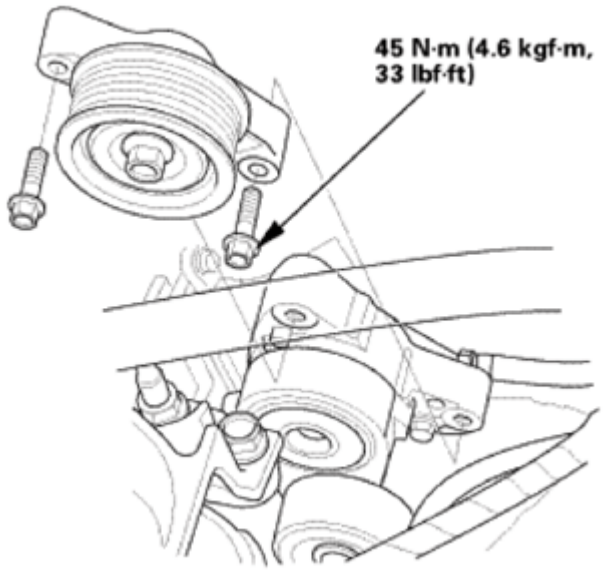

Fig. 9: Identifying Idler Pulley Base And Bolt With Torque Specifications
Courtesy of AMERICAN HONDA MOTOR CO., INC.

GETtheMANUALS.org

3. Drive Belt
    1. Install the drive belt.

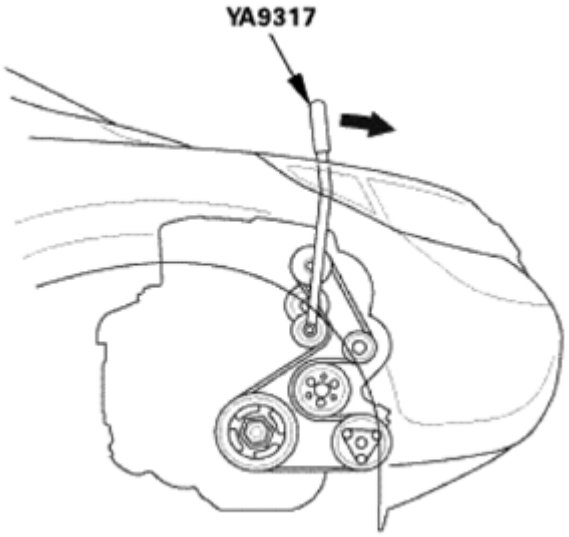

Fig. 10: Installing Drive Belt W/ Drive Belt Routing
Courtesy of AMERICAN HONDA MOTOR CO., INC.

DRIVE BELT AUTO-TENSIONER PULLEY REMOVAL AND INSTALLATION

SPECIAL TOOL DESCRIPTION

Image	Description/Tool Number
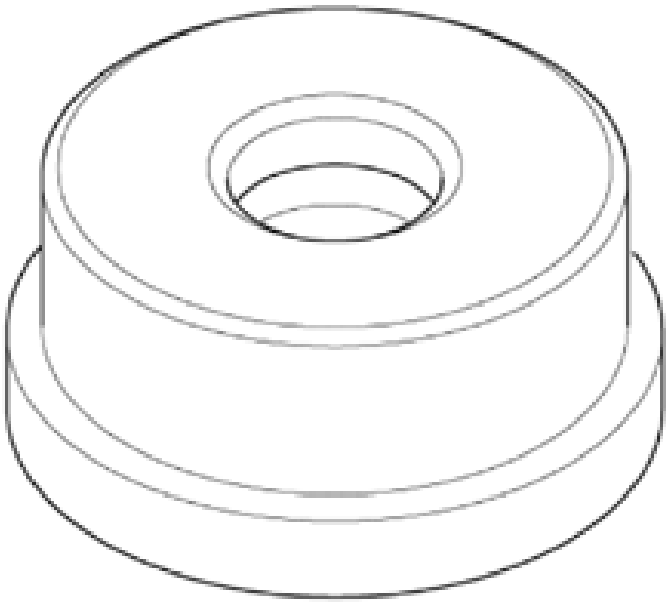	Belt Tension Release Tool Snap-on YA9317, commercially available

*Available through the Honda Tool and Equipment Program 888-424-6857

GETtheMANUALS.org

REMOVAL

1. Drive Belt
    1. Move the auto-tensioner (A) using the belt tension release tool in the direction of the arrow to relieve tension from the drive belt, then remove the drive belt.

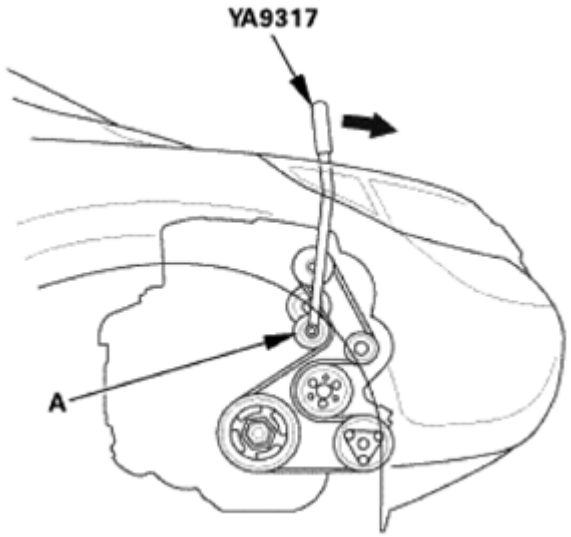

Fig. 11: Moving Auto-Tensioner Using Belt Tension Release Tool
Courtesy of AMERICAN HONDA MOTOR CO., INC.

2. Drive Belt Auto-Tensioner Pulley
    1. Remove the drive belt auto-tensioner pulley.

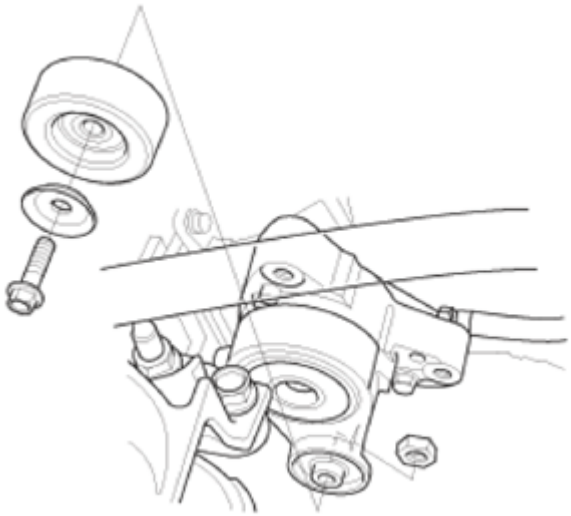

Fig. 12: Identifying Drive Belt Auto-Tensioner Pulley
Courtesy of AMERICAN HONDA MOTOR CO., INC.

INSTALLATION

GETtheMANUALS.org

1. Drive Belt Auto-Tensioner Pulley
    1. Install the drive belt auto-tensioner pulley.

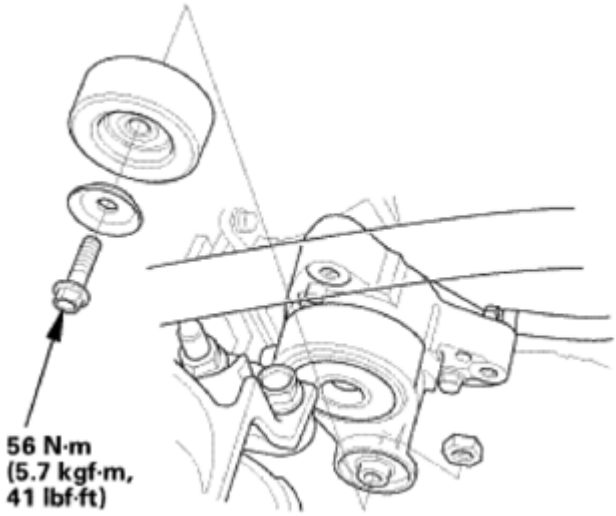

Fig. 13: Identifying Belt Auto-Tensioner Pulley And Bolt With Torque Specifications
Courtesy of AMERICAN HONDA MOTOR CO., INC.

2. Drive Belt
    1. Install the drive belt.

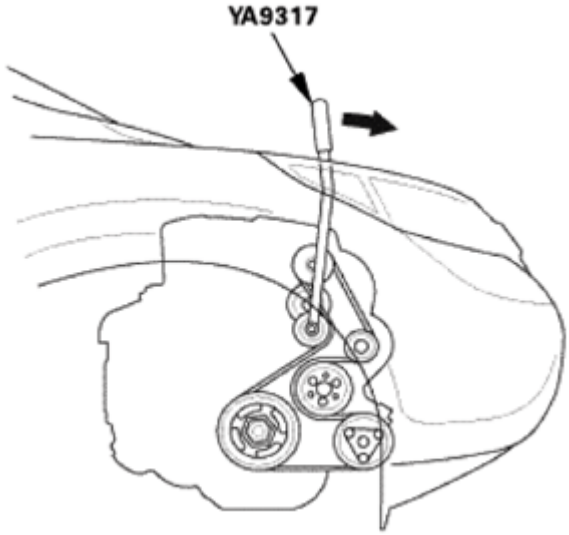

Fig. 14: Installing Drive Belt W/ Drive Belt Routing
Courtesy of AMERICAN HONDA MOTOR CO., INC.

DRIVE BELT AUTO-TENSIONER REMOVAL AND INSTALLATION

SPECIAL TOOL DESCRIPTION

GETtheMANUALS.org

Image	Description/Tool Number
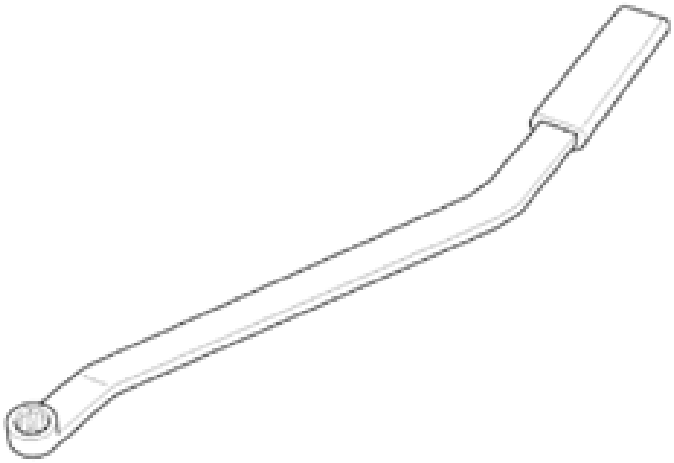	Belt Tension Release Tool Snap-on YA9317, commercially available

*Available through the Honda Tool and Equipment Program 888-424-6857

REMOVAL

1. Drive Belt
    1. Move the auto-tensioner (A) using the belt tension release tool in the direction of the arrow to relieve tension from the drive belt, then remove the drive belt.

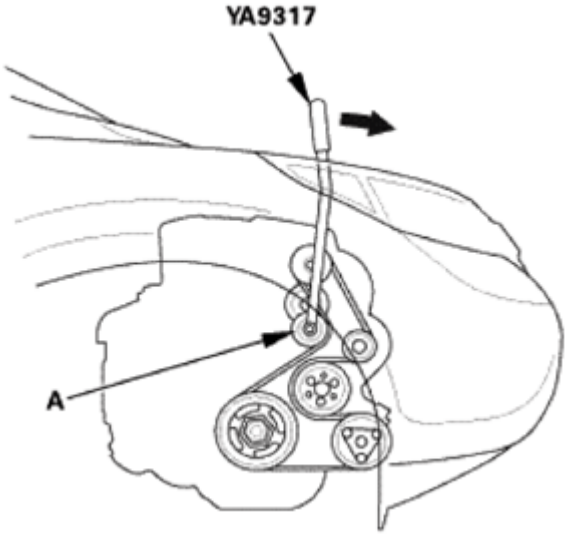

Fig. 15: Moving Auto-Tensioner Using Belt Tension Release Tool
Courtesy of AMERICAN HONDA MOTOR CO., INC.

2. Idler Pulley Base Assembly
    1. Remove the idler pulley base.

GETtheMANUALS.org

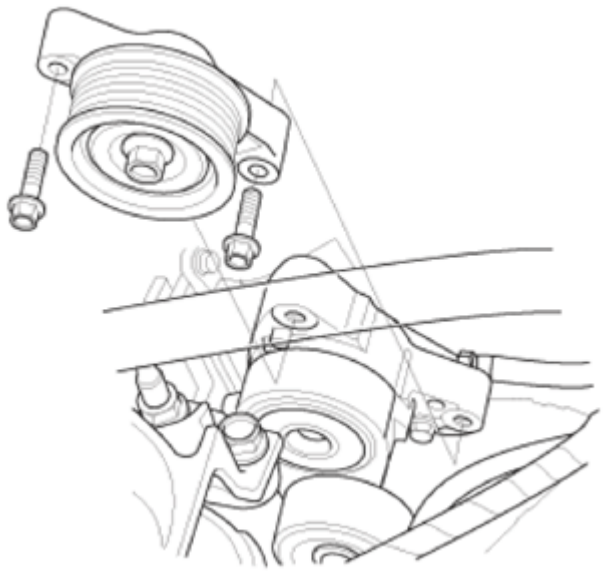

Fig. 16: Identifying Idler Pulley Base
Courtesy of AMERICAN HONDA MOTOR CO., INC.

3. Auto-Tensioner Assembly
    1. Remove the auto-tensioner.

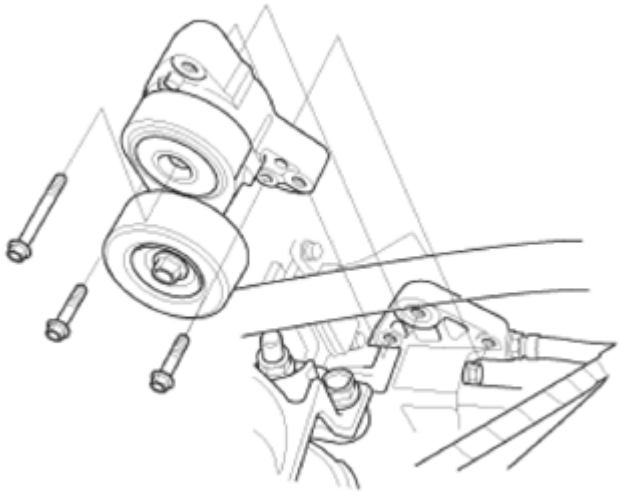

Fig. 17: Identifying Auto-Tensioner
Courtesy of AMERICAN HONDA MOTOR CO., INC.

INSTALLATION

1. Auto-Tensioner Assembly
    1. Install the auto-tensioner.

GETtheMANUALS.org

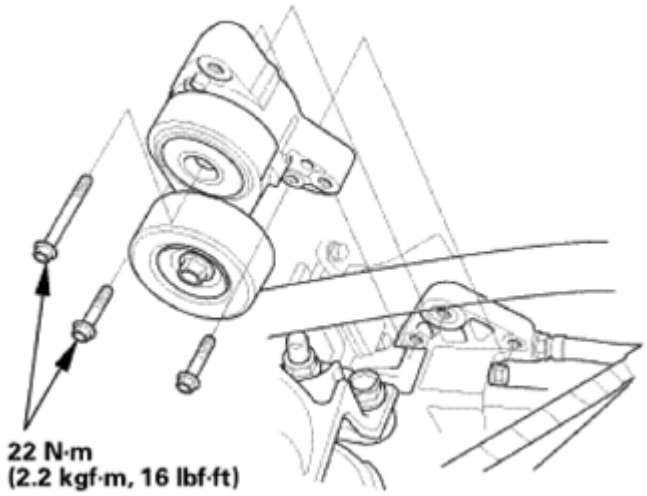

Fig. 18: Identifying Auto-Tensioner And Bolt With Torque Specifications
Courtesy of AMERICAN HONDA MOTOR CO., INC.

2. Idler Pulley Base Assembly
    1. Install the idler pulley base.

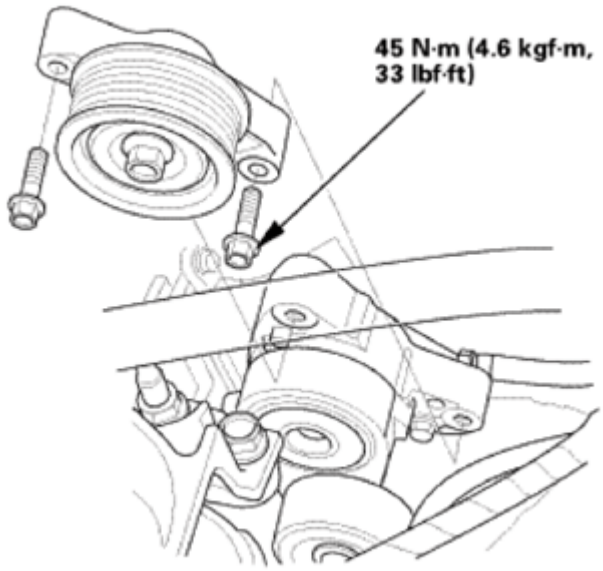

Fig. 19: Identifying Idler Pulley Base And Bolt With Torque Specifications
Courtesy of AMERICAN HONDA MOTOR CO., INC.

3. Drive Belt
    1. Install the drive belt.

GETtheMANUALS.org

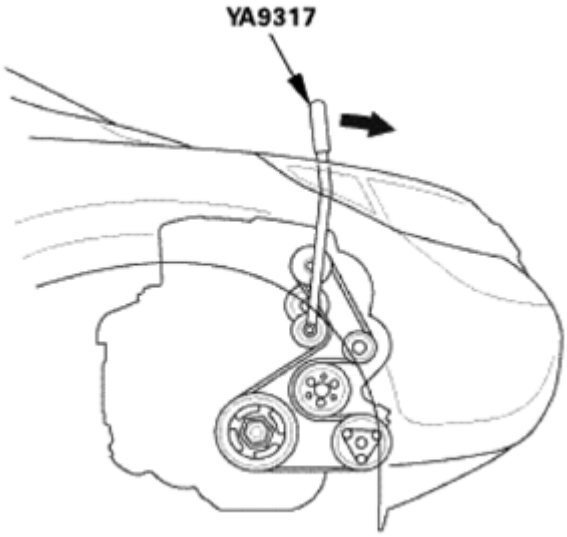

Fig. 20: Installing Drive Belt W/ Drive Belt Routing
Courtesy of AMERICAN HONDA MOTOR CO., INC.

DRIVE BELT IDLER PULLEY BASE REMOVAL AND INSTALLATION

SPECIAL TOOL DESCRIPTION

Image	Description/Tool Number
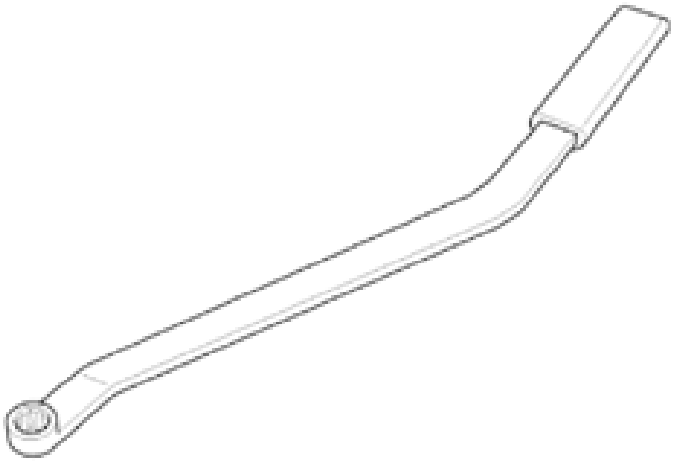	Belt Tension Release Tool Snap-on YA9317, commercially available

*Available through the Honda Tool and Equipment Program 888-424-6857

REMOVAL

1. Drive Belt
    1. Move the auto-tensioner (A) using the belt tension release tool in the direction of the arrow to relieve tension from the drive belt, then remove the drive belt.

GETtheMANUALS.org

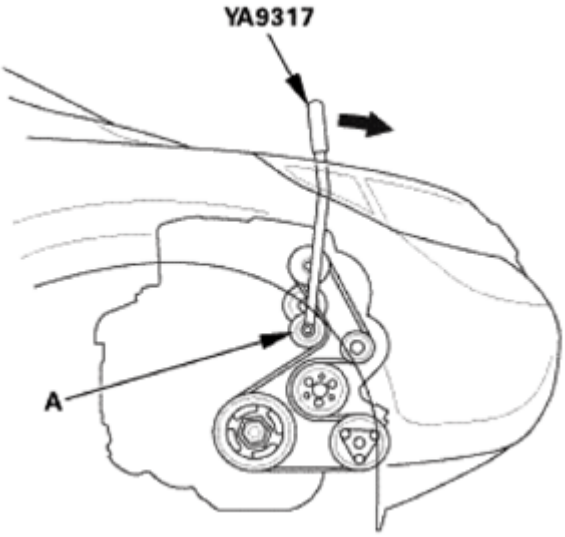

Fig. 21: Moving Auto-Tensioner Using Belt Tension Release Tool
Courtesy of AMERICAN HONDA MOTOR CO., INC.

2. Idler Pulley Base Assembly
    1. Remove the idler pulley base.

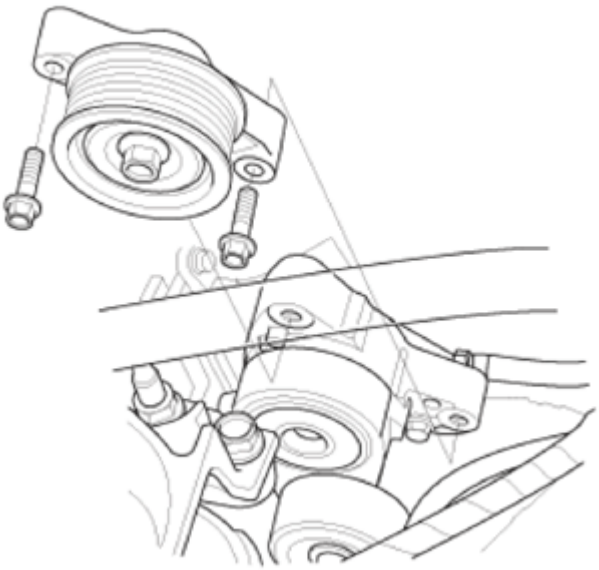

Fig. 22: Identifying Idler Pulley Base
Courtesy of AMERICAN HONDA MOTOR CO., INC.

INSTALLATION

1. Idler Pulley Base Assembly
    1. Install the idler pulley base.

GETtheMANUALS.org

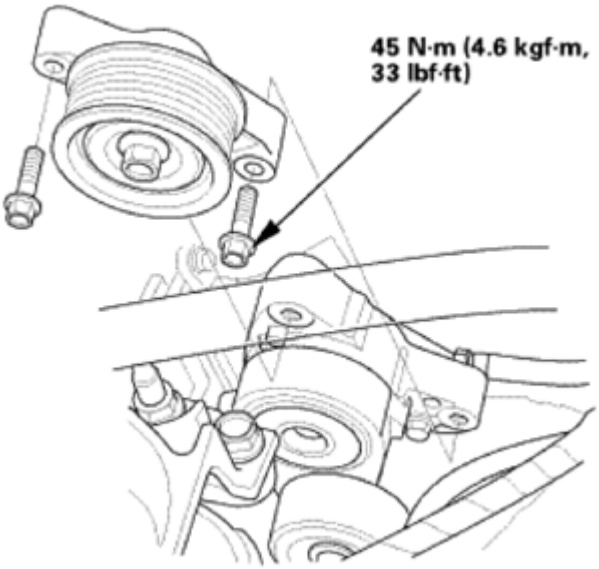

Fig. 23: Identifying Idler Pulley Base And Bolt With Torque Specifications
Courtesy of AMERICAN HONDA MOTOR CO., INC.

2. Drive Belt
    1. Install the drive belt.

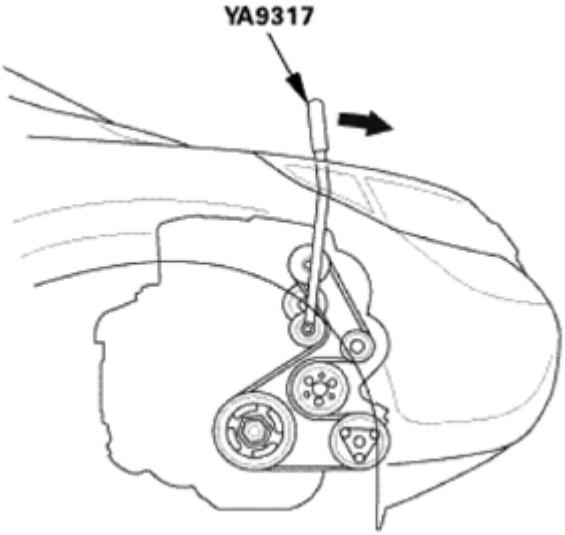

Fig. 24: Installing Drive Belt W/ Drive Belt Routing
Courtesy of AMERICAN HONDA MOTOR CO., INC.

DRIVE BELT IDLER PULLEY REMOVAL AND INSTALLATION

SPECIAL TOOL DESCRIPTION

Image	Description/Tool Number

GETtheMANUALS.org

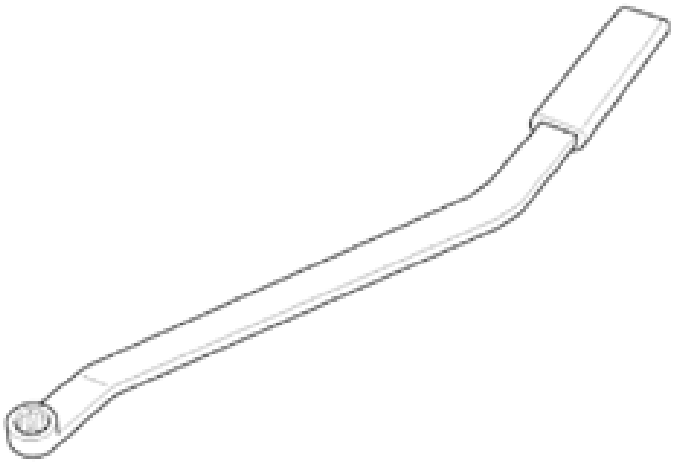	Belt Tension Release Tool Snap-on YA9317*, commercially available

*Available through the Honda Tool and Equipment Program 888-424-6857

REMOVAL

1. Drive Belt
    1. Move the auto-tensioner (A) using the belt tension release tool in the direction of the arrow to relieve tension from the drive belt, then remove the drive belt.

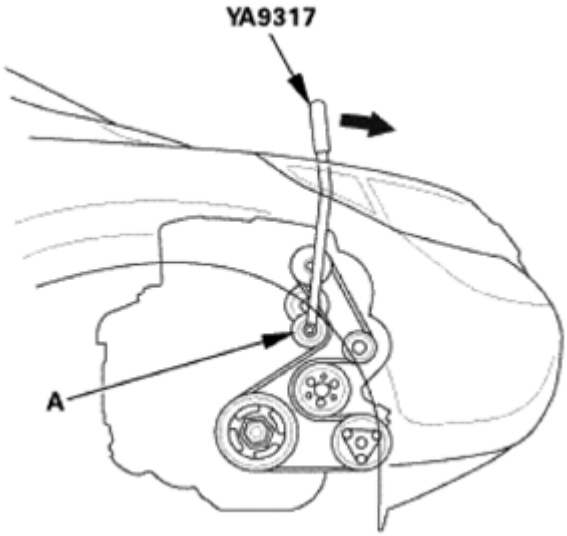

Fig. 25: Moving Auto-Tensioner Using Belt Tension Release Tool
Courtesy of AMERICAN HONDA MOTOR CO., INC.

2. Idler Pulley
    1. Remove the idler pulley.

GETtheMANUALS.org

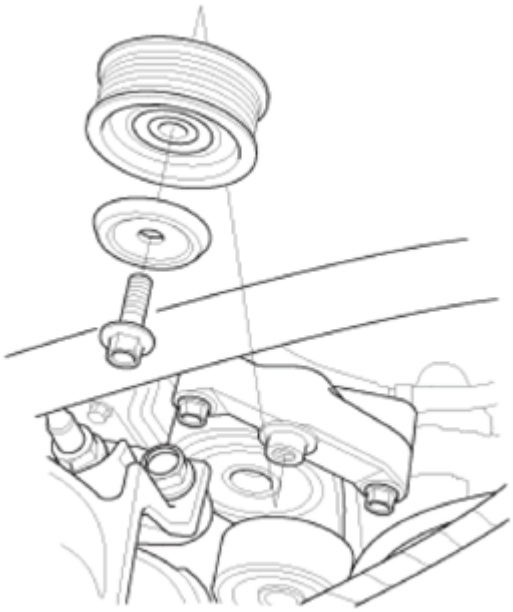

Fig. 26: Identifying Idler Pulley
Courtesy of AMERICAN HONDA MOTOR CO., INC.

INSTALLATION

1. Idler Pulley
    1. Install the idler pulley.

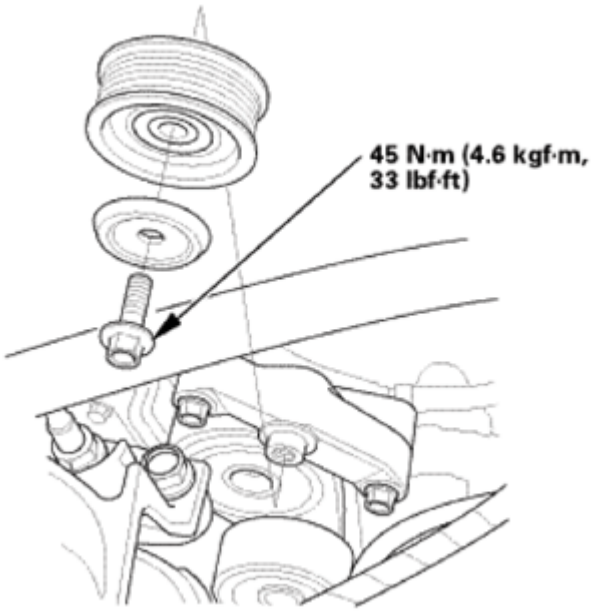

Fig. 27: Identifying Idler Pulley And Bolt With Torque Specifications
Courtesy of AMERICAN HONDA MOTOR CO., INC.

GETtheMANUALS.org

2. Drive Belt
    1. Install the drive belt.

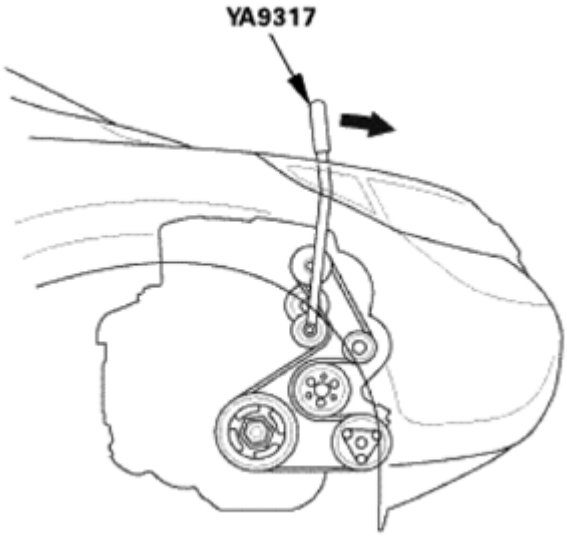

Fig. 28: Installing Drive Belt W/ Drive Belt Routing
Courtesy of AMERICAN HONDA MOTOR CO., INC.

DRIVE BELT INSPECTION

INSPECTION

1. Drive Belt - Inspection
    1. Inspect the belt for cracks or damage. If the belt is cracked or damaged, replace it.
    2. Check the position of the auto-tensioner indicator's pointer (A) is within the standard range (B) as shown. If it is out of the standard range, replace the drive belt.

GETtheMANUALS.org

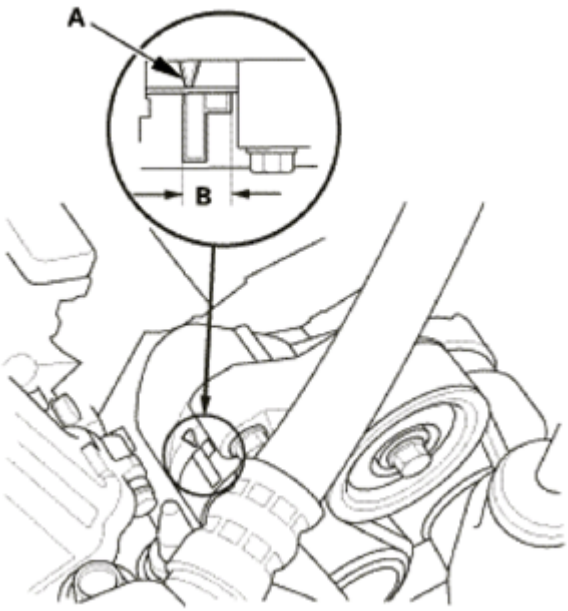

Fig. 29: Identifying Position Of Auto-Tensioner Indicator's Pointer
Courtesy of AMERICAN HONDA MOTOR CO., INC.

DRIVE BELT REMOVAL AND INSTALLATION

SPECIAL TOOL DESCRIPTION

Image	Description/Tool Number
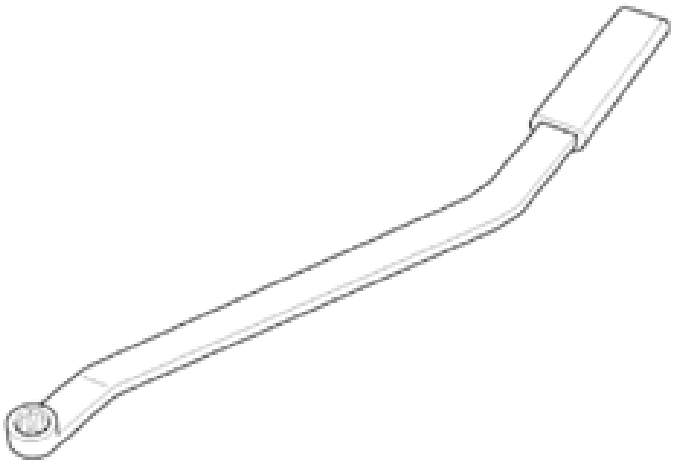	Belt Tension Release Tool Snap-on YA9317*, commercially available

*Available through the Honda Tool and Equipment Program 888-424-6857

REMOVAL

1. Drive Belt
    1. Move the auto-tensioner (A) using the belt tension release tool in the direction of the arrow to

GETtheMANUALS.org

relieve tension from the drive belt, then remove the drive belt.

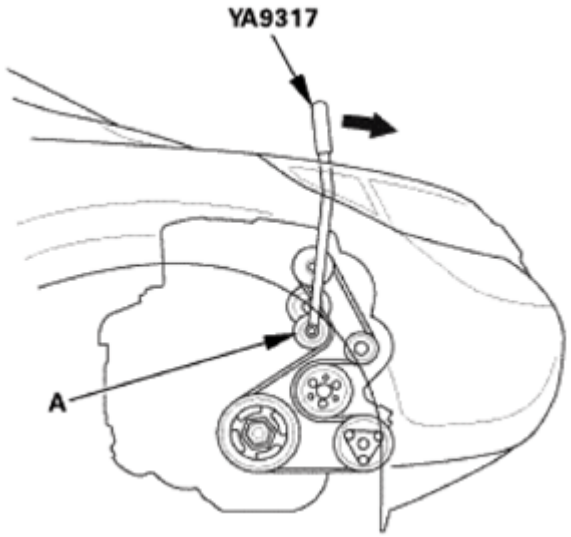

Fig. 30: Moving Auto-Tensioner Using Belt Tension Release Tool
Courtesy of AMERICAN HONDA MOTOR CO., INC.

INSTALLATION

1. Drive Belt
    1. Install the drive belt.

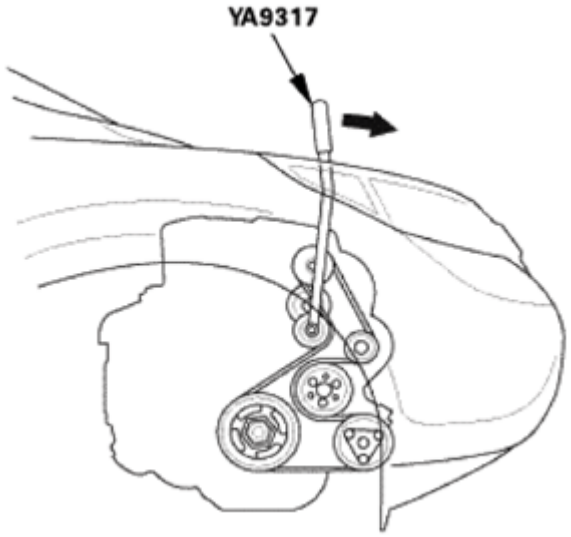

Fig. 31: Installing Drive Belt W/ Drive Belt Routing
Courtesy of AMERICAN HONDA MOTOR CO., INC.

GETtheMANUALS.org

DRIVELINE/AXLE COMPONENT LOCATION INDEX

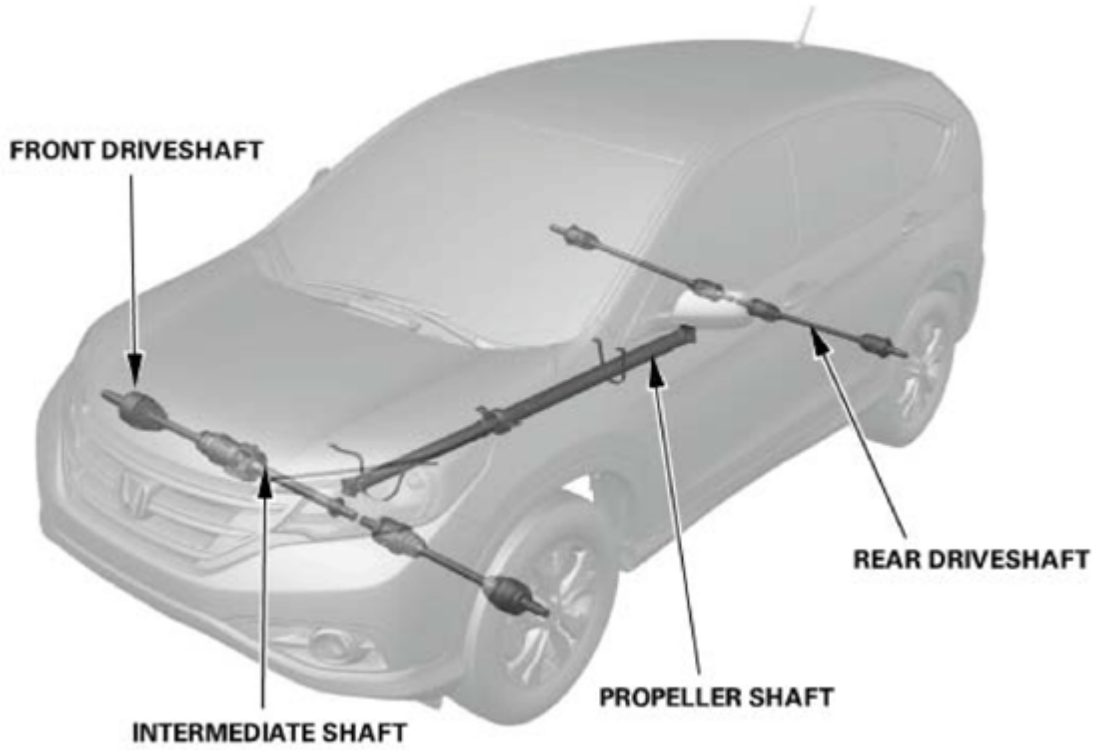

Fig. 1: Identifying Driveline/Axle Component Location
Courtesy of AMERICAN HONDA MOTOR CO., INC.

FRONT DRIVESHAFT	**INSPECTION**
	Removal and Installation See **FRONT DRIVESHAFT DISASSEMBLY AND REASSEMBLY** or **FRONT DRIVESHAFT REMOVAL AND INSTALLATION**
	Disassembly and Reassembly See **FRONT DRIVESHAFT DISASSEMBLY AND REASSEMBLY** or **FRONT DRIVESHAFT REMOVAL AND INSTALLATION**
	Inboard Boot Replacement See **FRONT DRIVESHAFT INBOARD BOOT REPLACEMENT** or **FRONT DRIVESHAFT OUTBOARD BOOT REPLACEMENT**
	Outboard Boot Replacement See **FRONT DRIVESHAFT INBOARD BOOT**

GETtheMANUALS.org

	REPLACEMENT or **FRONT DRIVESHAFT OUTBOARD BOOT REPLACEMENT**
INTERMEDIATE SHAFT	**Removal and Installation** See **INTERMEDIATE SHAFT DISASSEMBLY AND REASSEMBLY** or **INTERMEDIATE SHAFT REMOVAL AND INSTALLATION**
	Disassembly and Reassembly See **INTERMEDIATE SHAFT DISASSEMBLY AND REASSEMBLY** or **INTERMEDIATE SHAFT REMOVAL AND INSTALLATION**
REAR DRIVESHAFT	**INSPECTION**
	Disassembly and Reassembly - KA, KC and KX models except Japan built models See **Rear Driveshaft Disassembly and Reassembly**
	Removal and Installation - KA, KC and KX models except Japan built models See **Rear Driveshaft Removal and Installation**
	Inboard Boot Replacement - KA, KC and KX models except Japan built models See **Rear Driveshaft Inboard Boot Replacement**
	Outboard Boot Replacement -KX models except Japan built models See **Rear Driveshaft Outboard Boot Replacement**
INBOARD/OUTBOARD BOOT REPLACEMENT - KA MODELS JAPAN BUILT MODELS	
PROPELLER SHAFT	**INSPECTION**
	REMOVAL AND INSTALLATION

DRIVESHAFT INSPECTION

INSPECTION

1. Driveshaft Inspection
    1. Check the driveshaft (A) for cracks and damage. If any damage is found, replace the driveshaft.
    2. Check the inboard joint (B) and the outboard joint (C) for cracks and damage. If any damage is found, replace the inboard joint or the outboard joint as an assembly.
    3. Hold the inboard joint and turn the front wheel by hand, then make sure the joint is not excessively loose. If necessary, replace the inboard joint or the outboard joint as an assembly.

GETtheMANUALS.org

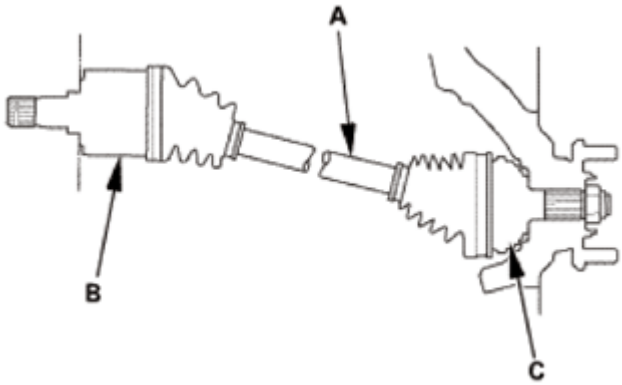

Fig. 2: Identifying Driveshaft, Inboard Joint And Outboard Joints
Courtesy of AMERICAN HONDA MOTOR CO., INC.

2. Driveshaft Boot Inspection
    1. Check the inboard boot (A) and the outboard boot (B) on the driveshaft (C) for cracks, damage, leaking grease, and loose boot bands (D). If any damage is found, replace the boot and the boot bands.

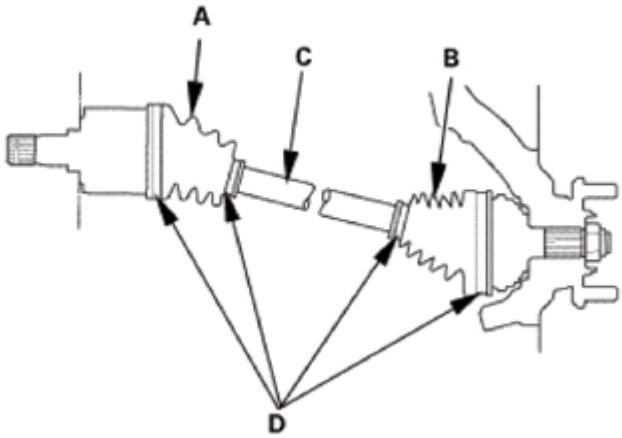

Fig. 3: Identifying Inboard And Outboard Boots On Driveshaft
Courtesy of AMERICAN HONDA MOTOR CO., INC.

FRONT DRIVESHAFT DISASSEMBLY AND REASSEMBLY

VIEW

1. Front Driveshaft Exploded View

    Exploded View

GETtheMANUALS.org

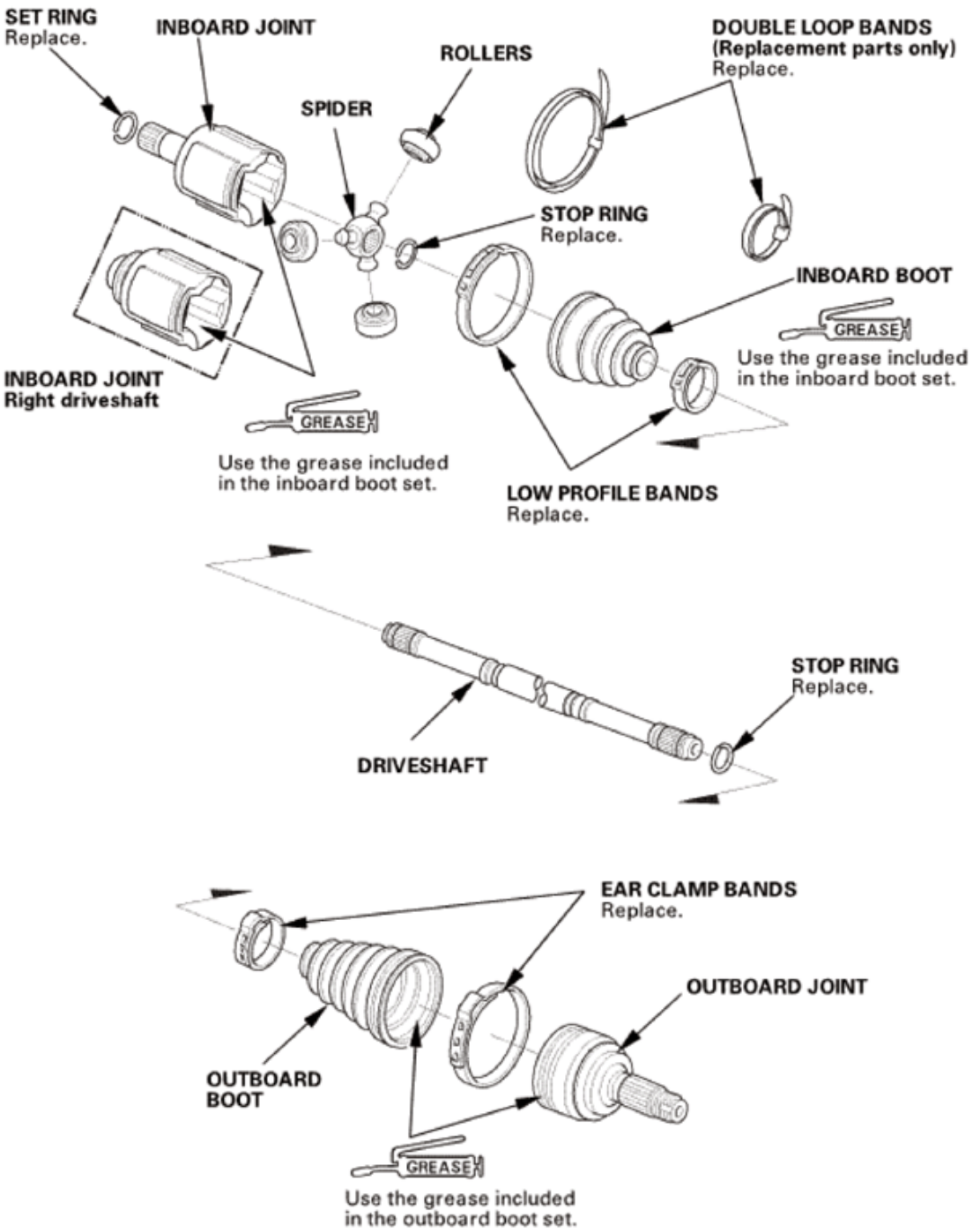

Fig. 4: Exploded View Of Front Driveshaft
Courtesy of AMERICAN HONDA MOTOR CO., INC.

FRONT DRIVESHAFT INBOARD BOOT REPLACEMENT

SPECIAL TOOLS DESCRIPTION

Image	Description/Tool Number

GETtheMANUALS.org

	Boot Band Pliers, commercially available
	Boot Band Tool KD-3191 or equivalent, commercially available
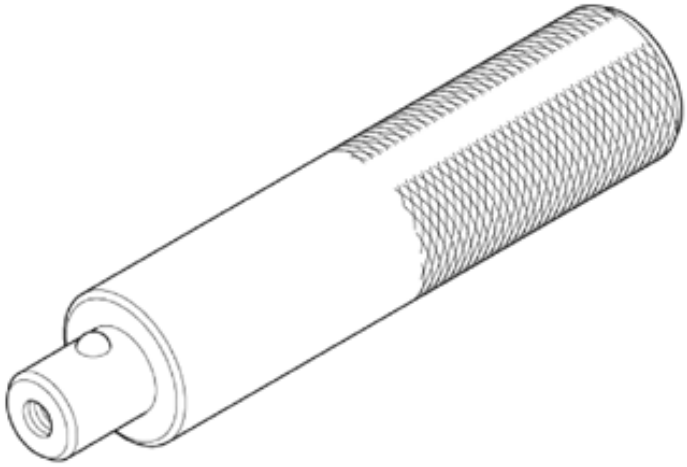	Driver Handle, 15 x 135L 07749-0010000

GETtheMANUALS.org

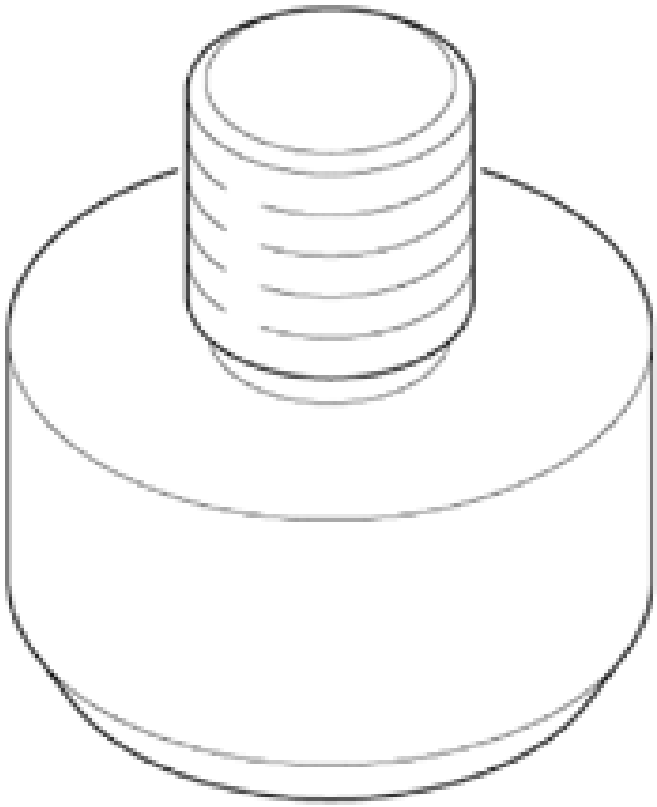	Pilot, 22 mm 07746-0041000
	Oil Seal Driver, 41.8 mm 07947-6890100

GETtheMANUALS.org

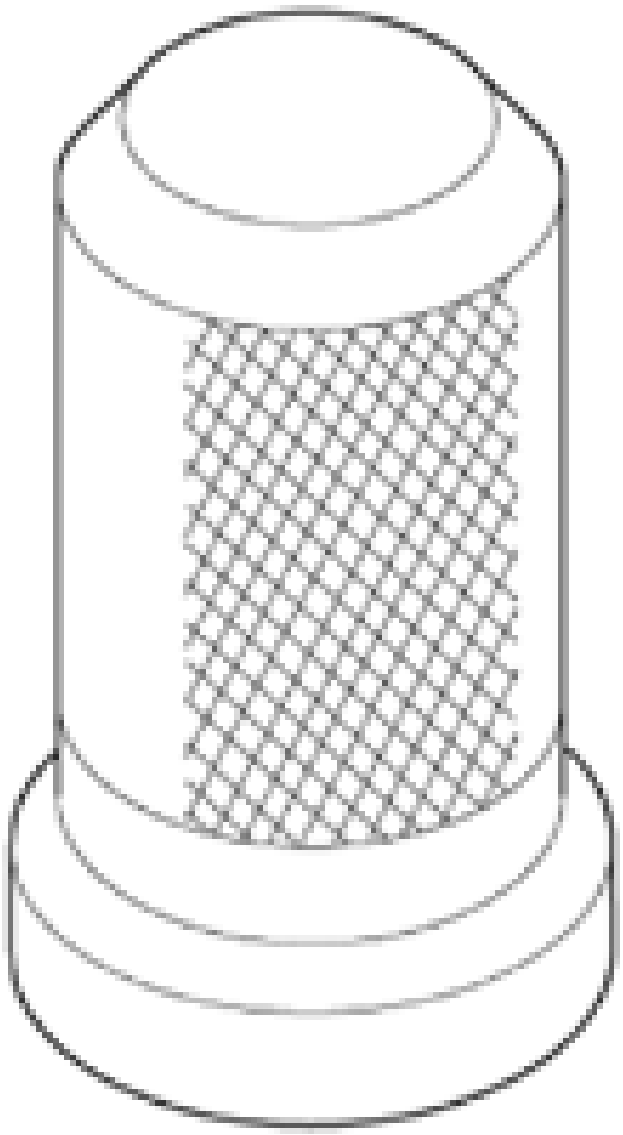

REMOVAL

1. Vehicle Lift
    1. Raise the vehicle on a lift, and make sure it is securely supported.
2. Front Wheel
    1. Remove the front wheel.

GETtheMANUALS.org

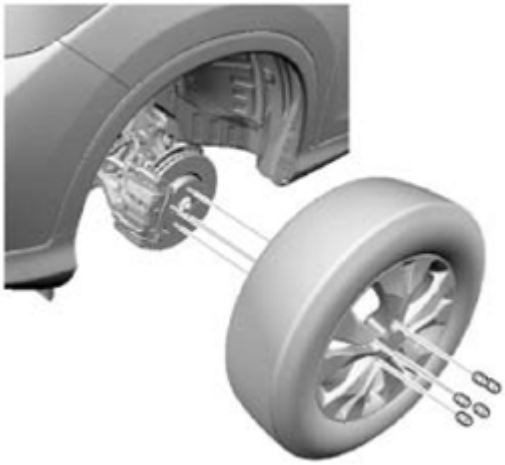

Fig. 5: Identifying Front Wheel
Courtesy of AMERICAN HONDA MOTOR CO., INC.

3. Front Driveshaft Spindle Nut
    1. Pry up the stake (A) on the spindle nut (B).
    2. Remove the spindle nut.

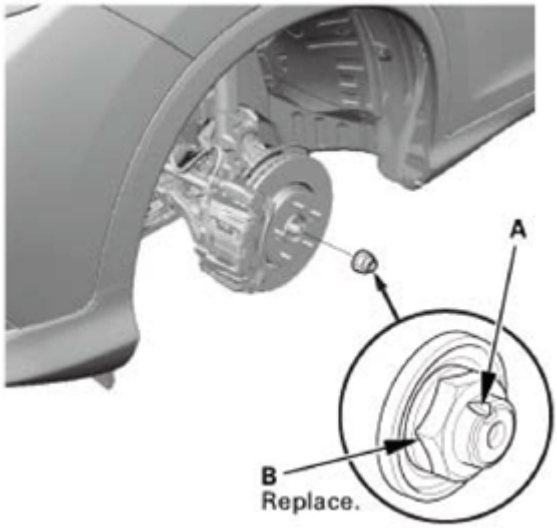

Fig. 6: Identifying Spindle Nut
Courtesy of AMERICAN HONDA MOTOR CO., INC.

4. Front Splash Shield
    1. Remove the bolts (A), then remove the clips (B) that secure the front inner fender and the front splash shield (C) to the body.
    2. From under the front bumper (D), remove the clips (E).
    3. From under the body, remove the clips (F), then pull out the front splash shield.

GETtheMANUALS.org

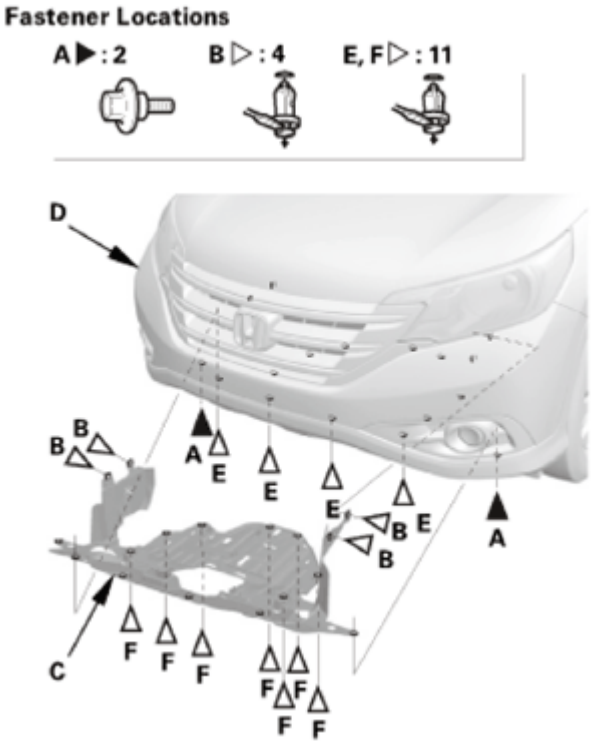

Fig. 7: Identifying Front Bumper, Clips And Bolts
Courtesy of AMERICAN HONDA MOTOR CO., INC.

5. ATF - Replacement
    1. Remove the drain plug (A), and drain the ATF.
    2. Reinstall the drain plug using a new sealing washer (B).

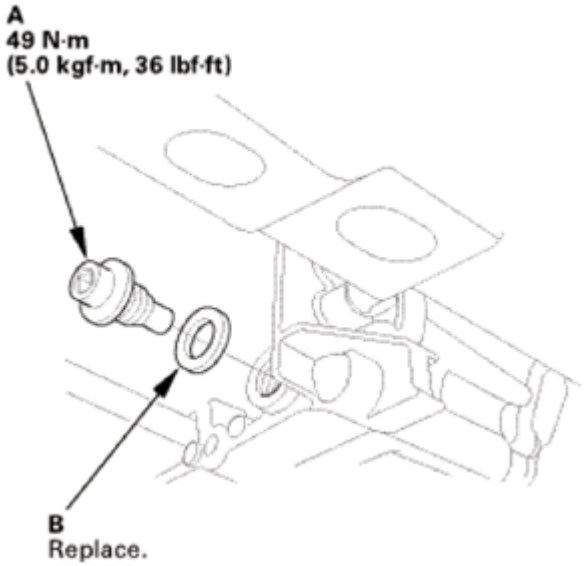

Fig. 8: Identifying Drain Plug And Sealing Washer
Courtesy of AMERICAN HONDA MOTOR CO., INC.

GETtheMANUALS.org

6. Lower Ball Joint Lower Arm Side - Disconnection
    1. Remove the flange bolt (A).
    2. Remove the flange nuts (B).
    3. Disconnect the lower arm (C) from the front lower ball joint (D).

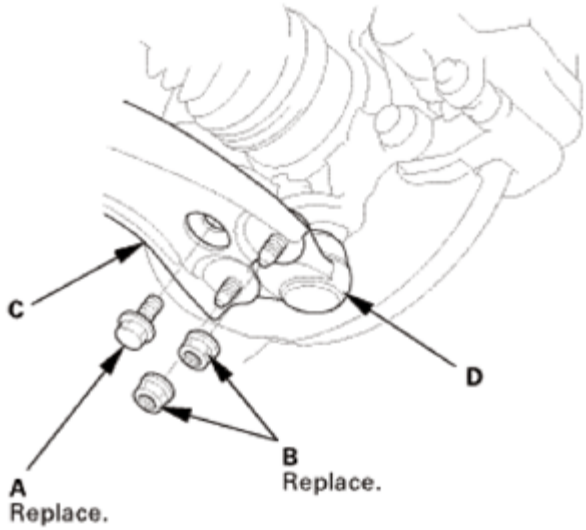

Fig. 9: Identifying Flange Bolt, Nuts And Lower Arm
Courtesy of AMERICAN HONDA MOTOR CO., INC.

7. Front Driveshaft - Disconnection Outboard Side
    1. Separate the outboard joint from the front hub using a soft face hammer.

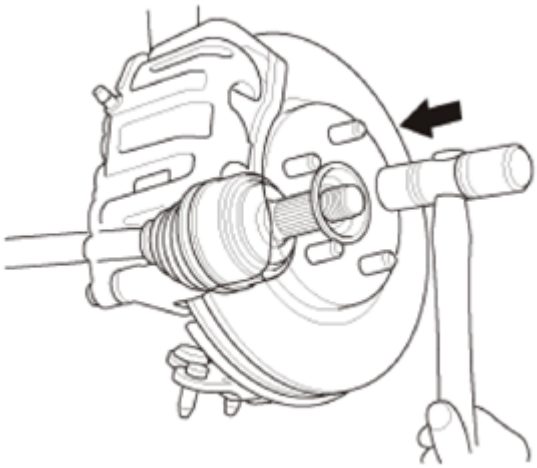

Fig. 10: Separating Outboard Joint From Front Hub Using Soft Face Hammer
Courtesy of AMERICAN HONDA MOTOR CO., INC.

    2. Pull the knuckle outward, and separate the outboard joint from the front hub.

GETtheMANUALS.org

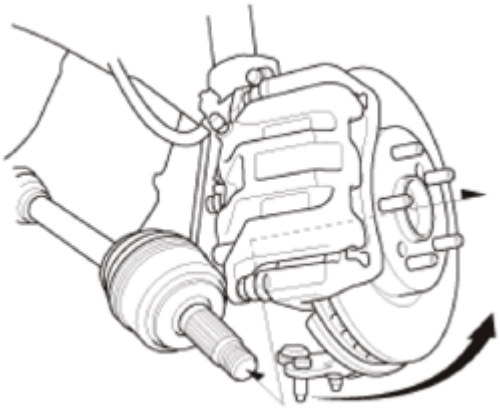

Fig. 11: Pulling Knuckle Outward
Courtesy of AMERICAN HONDA MOTOR CO., INC.

8. Front Driveshaft - Disconnection Inboard Side
    1. Pry the inboard joint (A) from the differential using a pry bar.

NOTE:

- **Do not pull on the driveshaft, or the inboard joint may come apart. Pull the inboard joint straight out to avoid damaging the oil seal.**
- **Be careful not to damage the oil seal or the end of the inboard joint using the pry bar.**

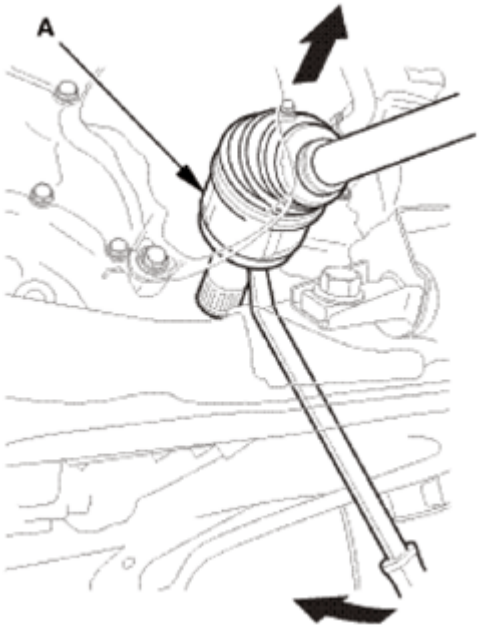

Fig. 12: Prying Inboard Joint From Differential Using Pry Bar
Courtesy of AMERICAN HONDA MOTOR CO., INC.

GETtheMANUALS.org

2. Remove the set ring (A).

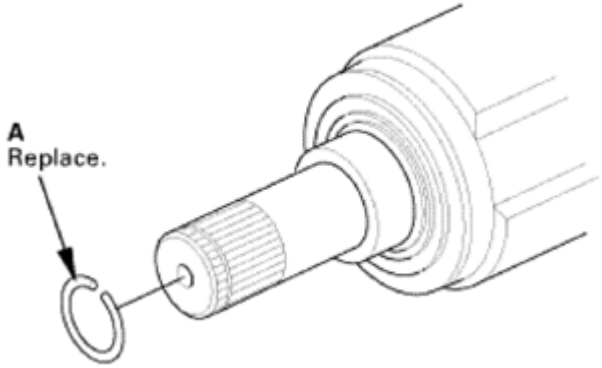

Fig. 13: Identifying Set Ring
Courtesy of AMERICAN HONDA MOTOR CO., INC.

9. Right Front Driveshaft Inboard Side - Disconnection
   1. Drive the inboard joint (A) off of the intermediate shaft using a drift punch and a hammer.

NOTE: Do not pull on the driveshaft or the inboard joint may come apart.

Fig. 14: Driving Inboard Joint Off Of Intermediate Shaft Using Drift Punch And Hammer
Courtesy of AMERICAN HONDA MOTOR CO., INC.

   2. Remove the set ring (A).

GETtheMANUALS.org

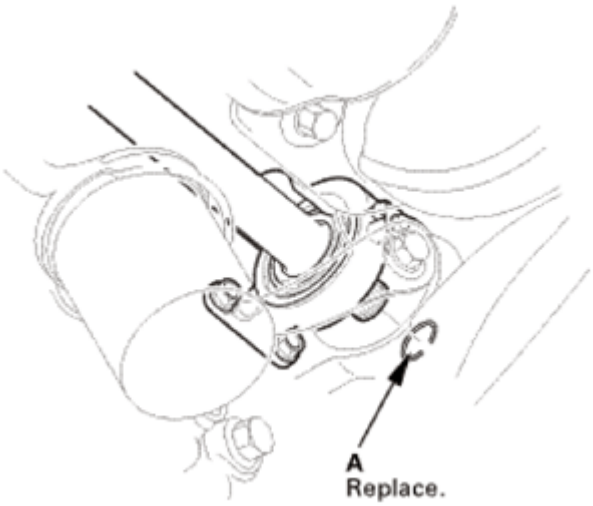

Fig. 15: Identifying Set Ring
Courtesy of AMERICAN HONDA MOTOR CO., INC.

10. Front Inboard Joint

Welded type

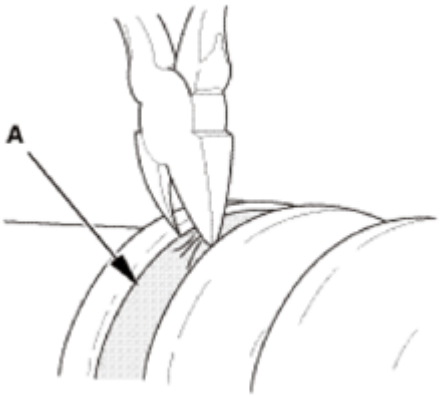

Fig. 16: Removing Boot Bands (Welded Type)
Courtesy of AMERICAN HONDA MOTOR CO., INC.

1. Remove the boot bands.

NOTE: **Be careful not to damage the boot.**

- **If the boot band is a welded type (A), cut the boot band.**
- **If the boot band is a double loop type (B), lift up the band end (C), and push it into the clip (D).**
- **If the boot band is a low profile type (E), pinch the boot band using commercially available boot band pliers (F).**

GETtheMANUALS.org

Double loop type

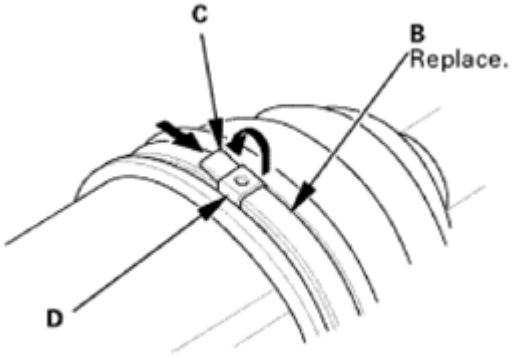

Fig. 17: Removing Boot Bands (Double Loop Type)
Courtesy of AMERICAN HONDA MOTOR CO., INC.

Low profile type

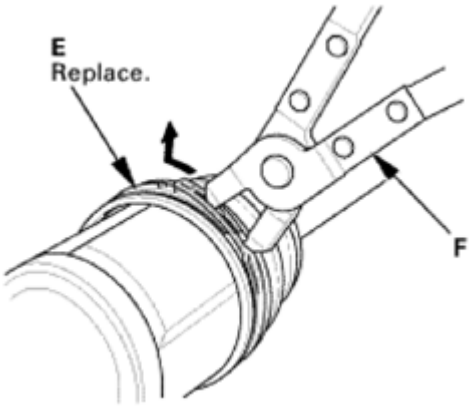

Fig. 18: Removing Boot Bands (Low Profile Type)
Courtesy of AMERICAN HONDA MOTOR CO., INC.

2. Make marks (A) on each roller (B) and the inboard joint (C) to identify the locations of the rollers to the grooves in the inboard joint.

   NOTE: Do not engrave or scribe any marks on the rolling surfaces.

3. Remove the inboard joint on a clean shop towel (D).

   NOTE: Be careful not to drop the rollers when separating them from the inboard joint.

GETtheMANUALS.org

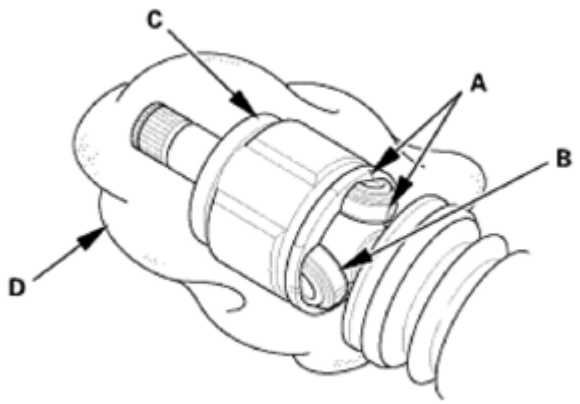

Fig. 19: Identifying Marks On Roller And Inboard Joint
Courtesy of AMERICAN HONDA MOTOR CO., INC.

4. Make marks (A) on the spider (B) that match the marks on the rollers.

NOTE: Do not engrave or scribe any marks on the rolling surfaces.

5. Remove the rollers.
6. Make marks (C) on the spider and the driveshaft (D) to identify the position of the spider on the shaft.

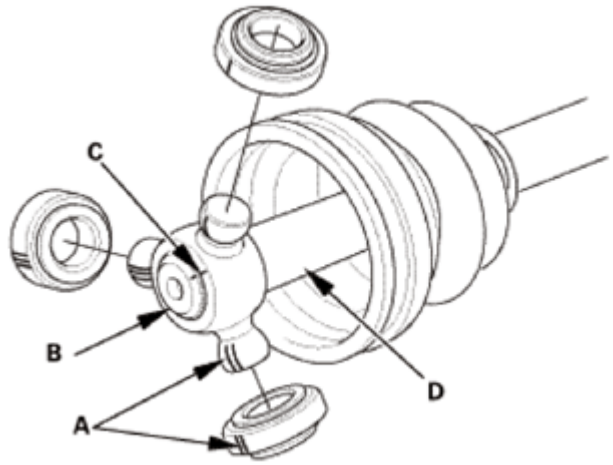

Fig. 20: Identifying Marks On Spider And Driveshaft
Courtesy of AMERICAN HONDA MOTOR CO., INC.

7. Make a mark (A) on the driveshaft (B) at the same level as the spider end.

GETtheMANUALS.org

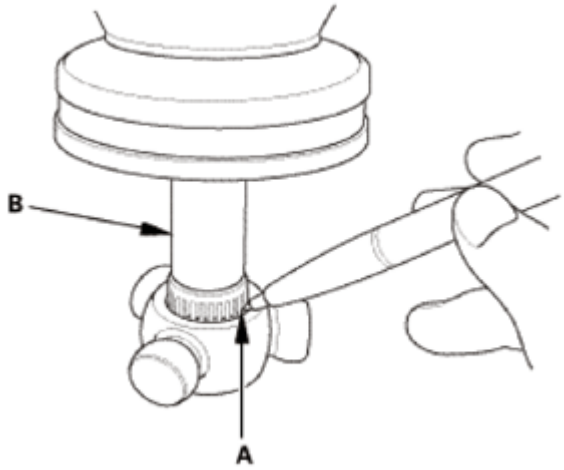

Fig. 21: Making Marks On Spider And Driveshaft
Courtesy of AMERICAN HONDA MOTOR CO., INC.

8. Support the spider (A) on a bench vise (B).
9. Remove the driveshaft (C) from the spider using the 22 mm pilot (D) and the 15 x 135L driver handle (E).

NOTE: Do not directly hit the driveshaft with the hammer.

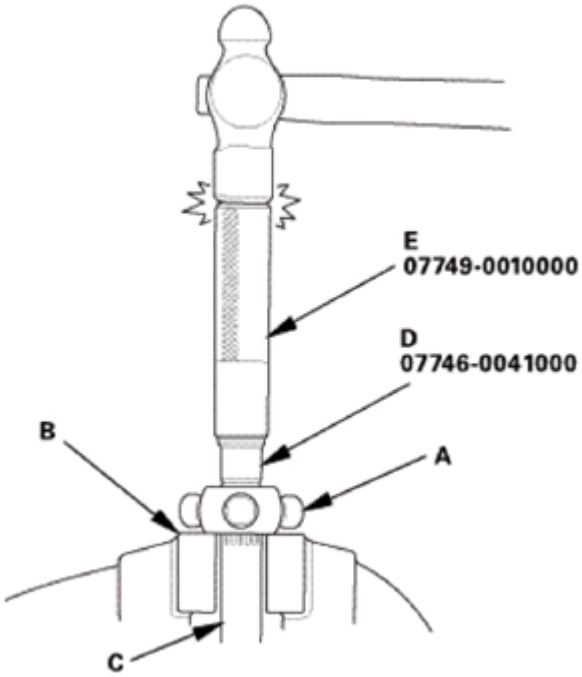

Fig. 22: Removing Driveshaft
Courtesy of AMERICAN HONDA MOTOR CO., INC.

10. Remove the stop ring (A).

GETtheMANUALS.org

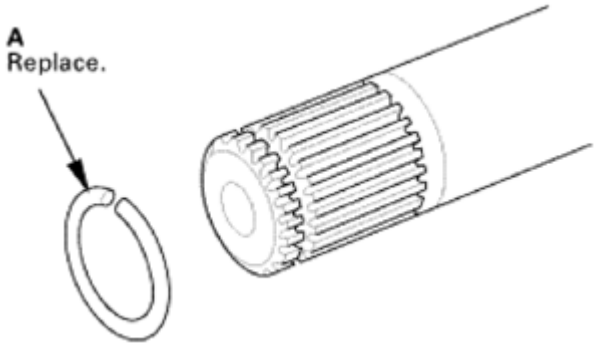

Fig. 23: Identifying Stop Ring
Courtesy of AMERICAN HONDA MOTOR CO., INC.

11. Front Inboard Boot
    1. Wrap the splines on the driveshaft with vinyl tape (A) to prevent damaging the inboard boot.
    2. Remove the inboard boot.

NOTE: Be careful not to damage the boot.

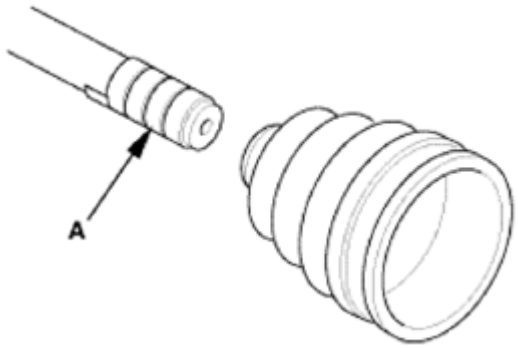

Fig. 24: Identifying Vinyl Tape On Driveshaft
Courtesy of AMERICAN HONDA MOTOR CO., INC.

INSTALLATION

1. Front Inboard Boot
    1. Install the inboard boot.

NOTE: Be careful not to damage the inboard boot.

    2. Remove the vinyl tape (A).

GETtheMANUALS.org

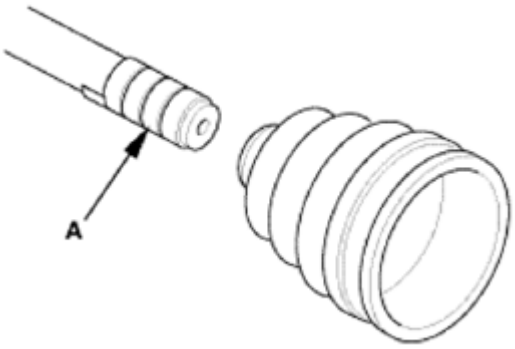

Fig. 25: Identifying Vinyl Tape On Inboard Boot
Courtesy of AMERICAN HONDA MOTOR CO., INC.

2. Front Inboard Joint
    1. Install the stop ring (A).

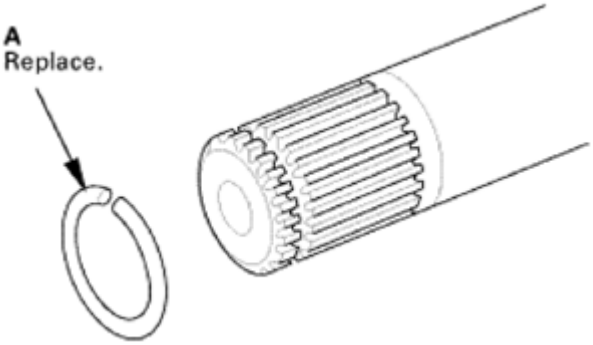

Fig. 26: Identifying Stop Ring
Courtesy of AMERICAN HONDA MOTOR CO., INC.

    2. Insert the driveshaft (A) into the spider (B) until the stop ring (C) is close to the spider.

NOTE: **Install the spider onto the driveshaft by aligning the marks you made on the spider and the end of the driveshaft.**

GETtheMANUALS.org

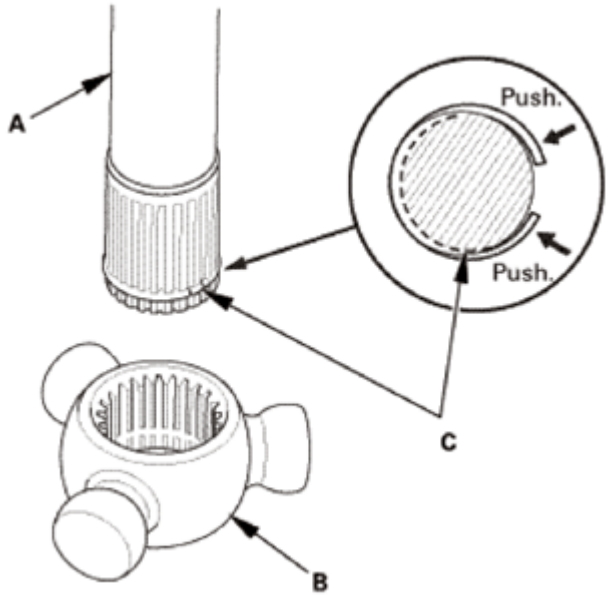

Fig. 27: Identifying Driveshaft, Spider And Stop Ring
Courtesy of AMERICAN HONDA MOTOR CO., INC.

3. Pick up the driveshaft and the spider, and tap or hit the assembly onto a hard surface from a height of about 10 cm (3.9 in).

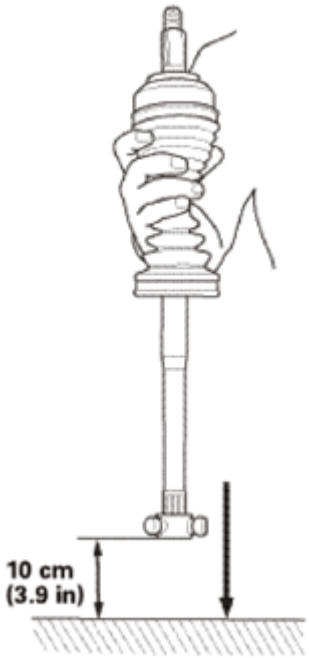

Fig. 28: Picking Up Driveshaft And Spider
Courtesy of AMERICAN HONDA MOTOR CO., INC.

4. Securely clamp the driveshaft (A) in the bench vise with wood blocks (B).

GETtheMANUALS.org

5. Drive on the spider (C) using the 41.8 mm oil seal driver (D).

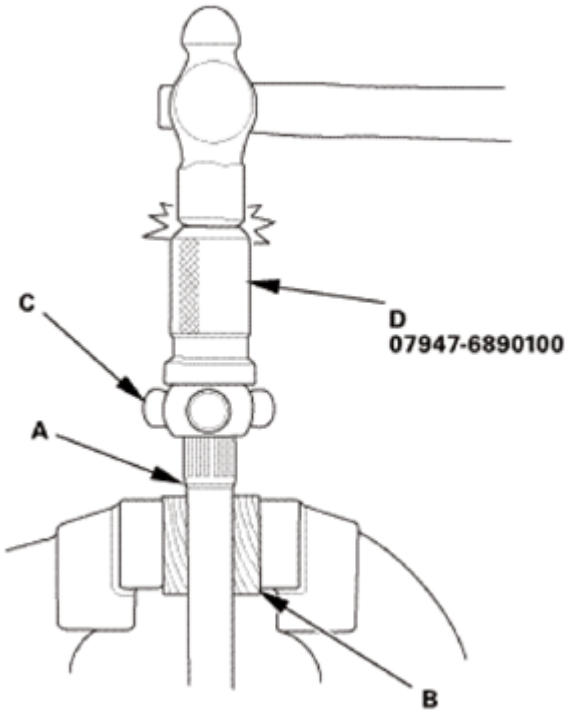

Fig. 29: Installing Spider Using Oil Seal Driver
Courtesy of AMERICAN HONDA MOTOR CO., INC.

6. Check the alignment of the paint mark (A) you made with the spider end.

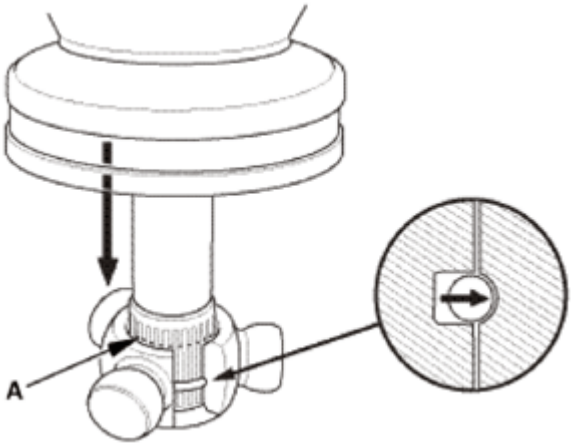

Fig. 30: Identifying Paint Mark
Courtesy of AMERICAN HONDA MOTOR CO., INC.

NOTE: **To avoid driveshaft and vehicle damage, the shaft must be all the way into the spider to ensure the stop ring is properly seated.**

GETtheMANUALS.org

7. Fit the rollers (A) onto the spider (B) as shown, and note these items:
    - Reinstall the rollers in their original positions on the spider by aligning the marks (C) you made.
    - Hold the driveshaft pointed up to prevent the rollers from falling off.

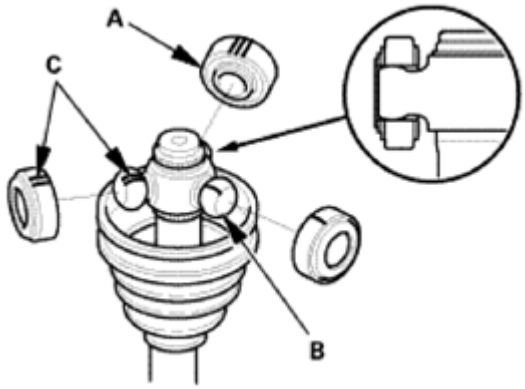

Fig. 31: Fitting Rollers Onto Spider
Courtesy of AMERICAN HONDA MOTOR CO., INC.

8. Pack the inboard joint with the joint grease included in the new inboard boot set.

    Grease quantity

    Inboard joint:

    100-110 g (3.5-3.9 oz)

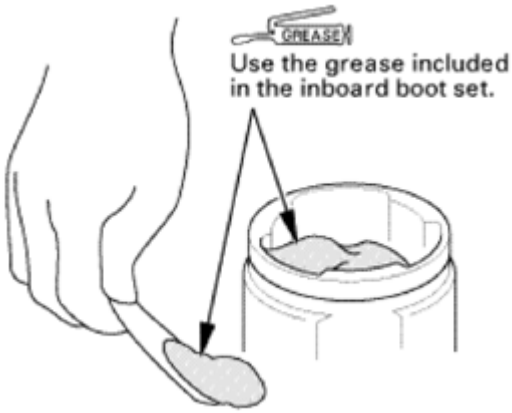

Fig. 32: Packing Inboard Joint With Joint Grease
Courtesy of AMERICAN HONDA MOTOR CO., INC.

9. Fit the inboard joint onto the driveshaft, and note these items:
    - Reinstall the inboard joint onto the driveshaft by aligning the marks (A) you made on the inboard joint and the rollers.

GETtheMANUALS.org

- Hold the driveshaft so the inboard joint is pointing up to prevent it from falling off.

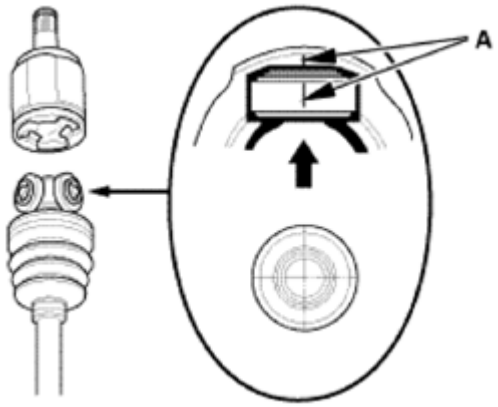

Fig. 33: Fitting Inboard Joint Onto Driveshaft
Courtesy of AMERICAN HONDA MOTOR CO., INC.

10. Fit the boot ends (A) onto the driveshaft (B) and the inboard joint (C).

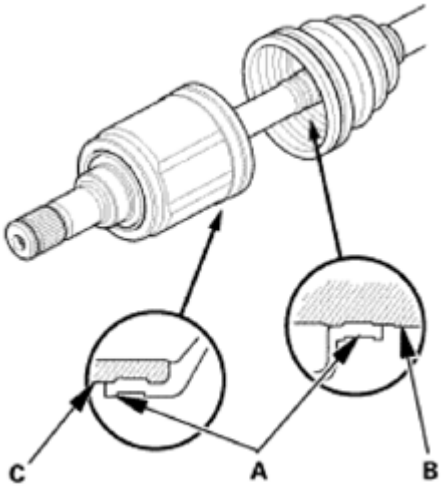

Fig. 34: Identifying Boot Ends Onto Driveshaft And Inboard Joint
Courtesy of AMERICAN HONDA MOTOR CO., INC.

11. Adjust the length (A) of the driveshaft in the figure as shown, then adjust the boots to halfway between full compression and full extension.
12. Bleed excess air from the boots by inserting a flat-tipped screwdriver between the boot and the joint.
13. Install new boot bands.

GETtheMANUALS.org

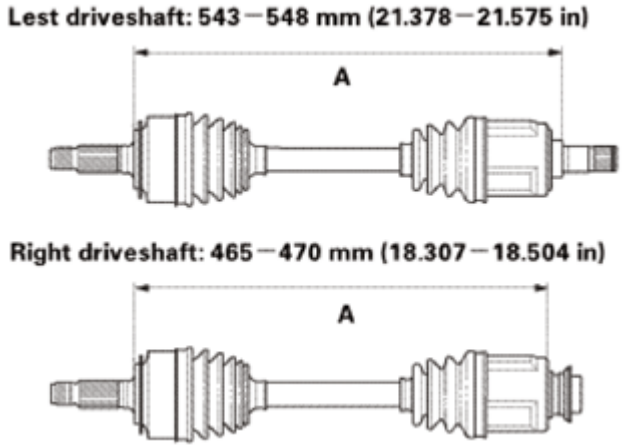

Fig. 35: Identifying Length Of Driveshaft
Courtesy of AMERICAN HONDA MOTOR CO., INC.

- For the double loop type, go to step 14.
- For the low profile type, go to step 25.

Double loop type

14. Install a new double loop band (A) onto the boot (B).

NOTE: **Pass the end of the double loop band through the clip (C) twice in the direction of the forward rotation of the driveshaft.**

15. Pull up the slack in the band by hand.

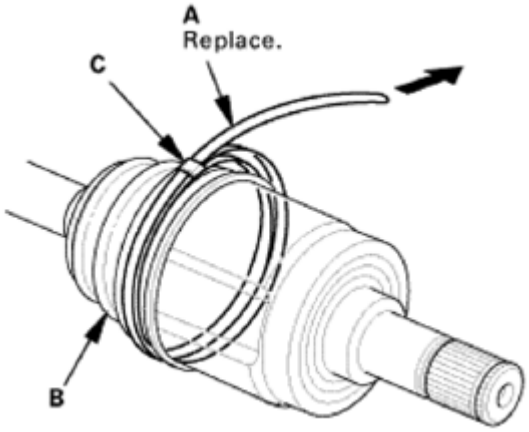

Fig. 36: Installing Double Loop Band Onto Boot
Courtesy of AMERICAN HONDA MOTOR CO., INC.

16. Mark a line (A) on the band 10-14 mm (0.39-0.55 in) from the clip (B).

GETtheMANUALS.org

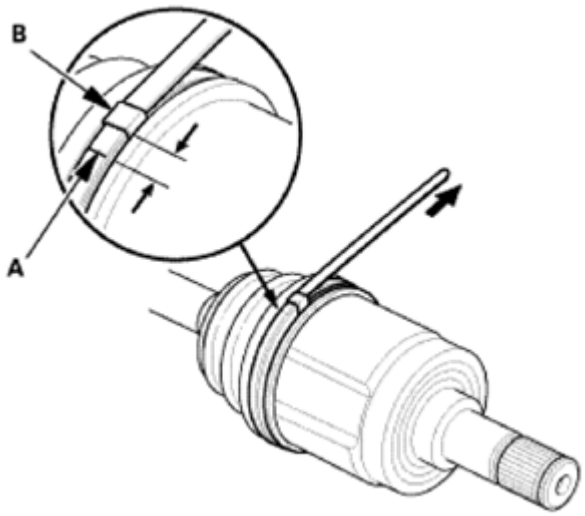

Fig. 37: Marking Line On Band 10-14 mm (0.39-0.55 In) From Clip
Courtesy of AMERICAN HONDA MOTOR CO., INC.

17. Thread the free end of the band through the nose section of the commercially available boot band tool (KD-3191 or equivalent) (A).
18. Into the slot on the winding mandrel (B).
19. Using a wrench on the winding mandrel of the boot band tool, tighten the band until the marked line (C) on the band meets the edge of the clip.

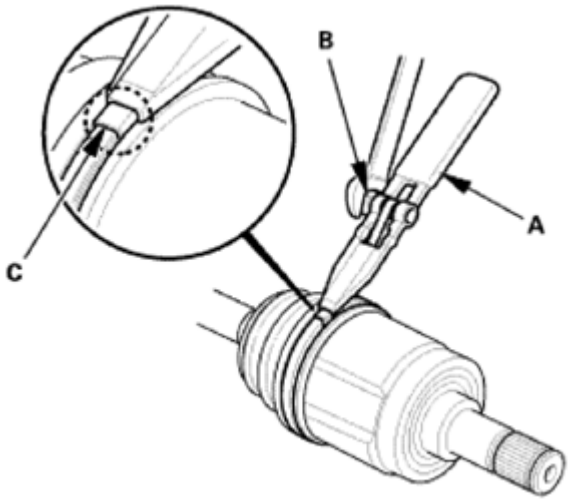

Fig. 38: Threading Free End Of Band
Courtesy of AMERICAN HONDA MOTOR CO., INC.

20. Lift up the boot band tool to bend the free end of the band 90 degrees to the clip.
21. Center-punch the clip.
22. Fold over the remaining tail onto the clip.

GETtheMANUALS.org

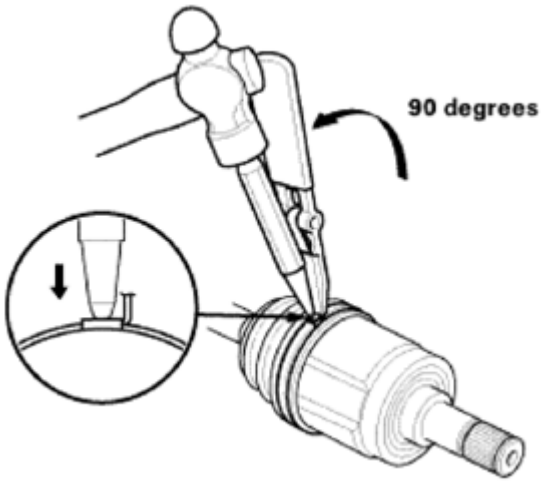

Fig. 39: Lifting Up Boot Band Tool
Courtesy of AMERICAN HONDA MOTOR CO., INC.

23. Unwind the boot band tool, and cut off the excess free end of the band to leave a 5-10 mm (0.20-0.39 in) tail protruding from the clip.

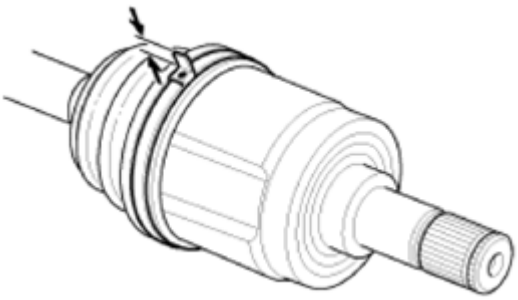

Fig. 40: Cutting Excess Free End Of Band
Courtesy of AMERICAN HONDA MOTOR CO., INC.

24. Bend the band end (A) by tapping it down using a hammer.

NOTE:

- **Make sure the band and the clip do not interfere with anything on the vehicle, and the band does not move.**
- **Clean any grease remaining on the surrounding surfaces.**

GETtheMANUALS.org

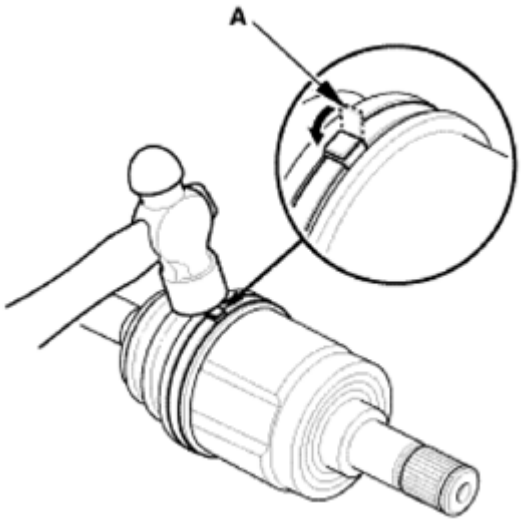

Fig. 41: Bending Band End
Courtesy of AMERICAN HONDA MOTOR CO., INC.

Low profile type

25. Install a new low profile band (A) onto the boot (B).
26. Hook the tab (C) of the band.

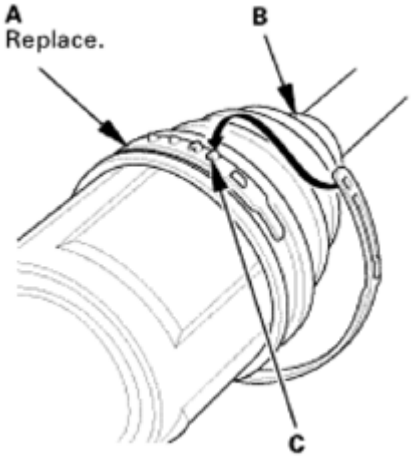

Fig. 42: Installing Low Profile Band Onto Boot
Courtesy of AMERICAN HONDA MOTOR CO., INC.

27. Check the hook portion of the band using commercially available boot band pliers (A).
28. Hook the tabs (B) of the band.

GETtheMANUALS.org

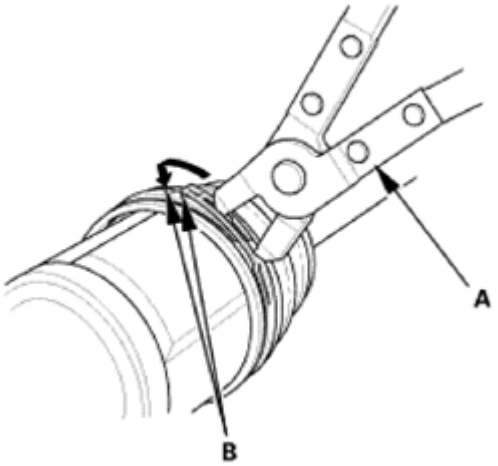

Fig. 43: Hooking Tabs Of Band
Courtesy of AMERICAN HONDA MOTOR CO., INC.

3. Right Front Driveshaft Inboard Side - Reconnection
    1. Install a new set ring (A).

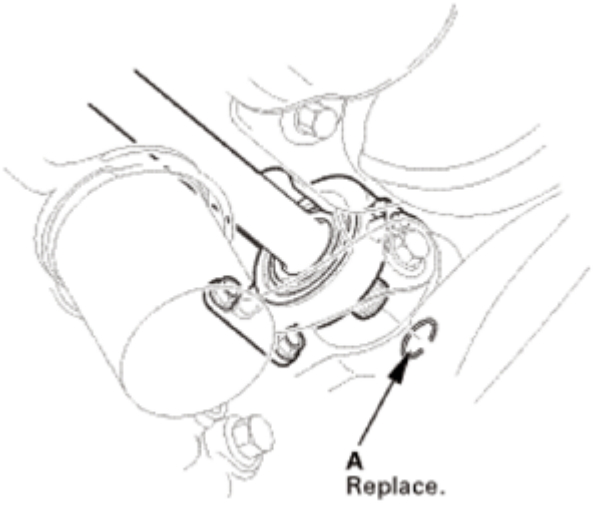

Fig. 44: Identifying Set Ring
Courtesy of AMERICAN HONDA MOTOR CO., INC.

    2. Apply 0.5-1.0 g (0.018-0.035 oz) of super high temp area grease (P/N 08798-9002) to the whole splined surface (A) of the right driveshaft.
    3. After applying grease, remove the grease from the splined grooves at intervals of 2-3 splines and from the set ring groove (B) so that air can bleed from the intermediate shaft during reassembly.

GETtheMANUALS.org

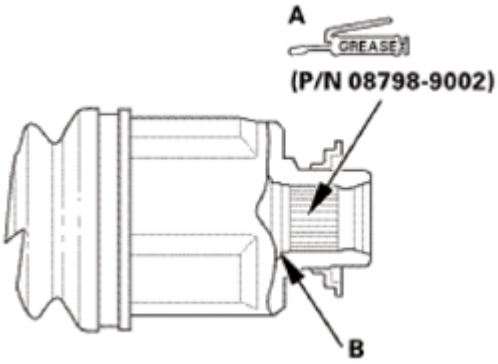

Fig. 45: Applying Super High Temp Area Grease To Whole Splined Surface Of Right Driveshaft
Courtesy of AMERICAN HONDA MOTOR CO., INC.

4. Insert the inboard end (A) of the driveshaft onto the intermediate shaft (B) until the set ring (C) locks in the groove (D).

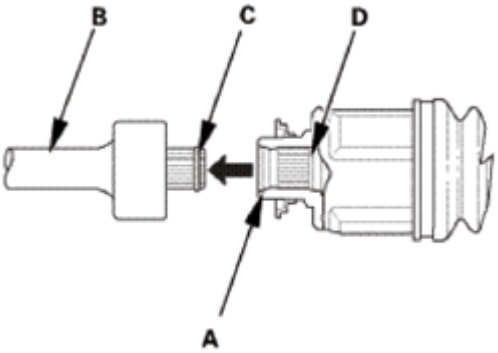

Fig. 46: Inserting Inboard End Of Driveshaft Onto Intermediate Shaft
Courtesy of AMERICAN HONDA MOTOR CO., INC.

4. Driveshaft Front Left - Reconnection, Inboard Side
    1. Install a new set ring (A).

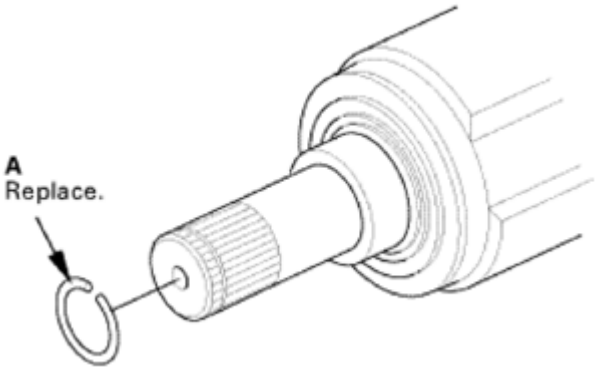

Fig. 47: Identifying Set Ring

GETtheMANUALS.org

Courtesy of AMERICAN HONDA MOTOR CO., INC.

2. Clean the areas where the driveshaft contacts the differential thoroughly with solvent.

NOTE: Do not wash the rubber parts with solvent.

3. Dry the areas where the driveshaft contacts the differential thoroughly with compressed air.
4. Insert the inboard end (A) of the driveshaft into the differential (B) until the set ring (C) locks in the groove (D).

NOTE: Insert the driveshaft horizontally to prevent damaging the oil seal.

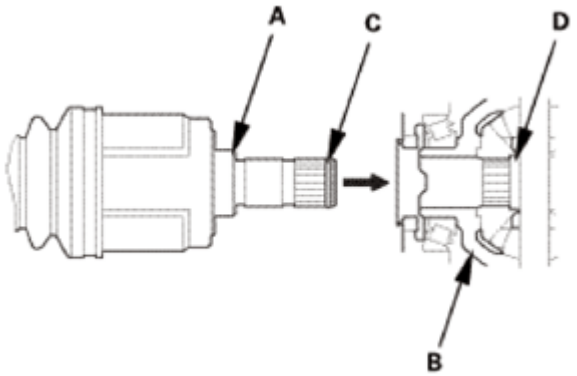

Fig. 48: Inserting Inboard End Of Driveshaft Into Differential
Courtesy of AMERICAN HONDA MOTOR CO., INC.

5. Driveshaft Front Left - Reconnection, Outboard Side
   1. Apply about 5 g (0.18 oz) of holy 60 paste (P/N 08734-0001) to the contact area (A) of the outboard joint and the front wheel bearing.

NOTE: The paste helps to prevent noise and vibration.

GETtheMANUALS.org

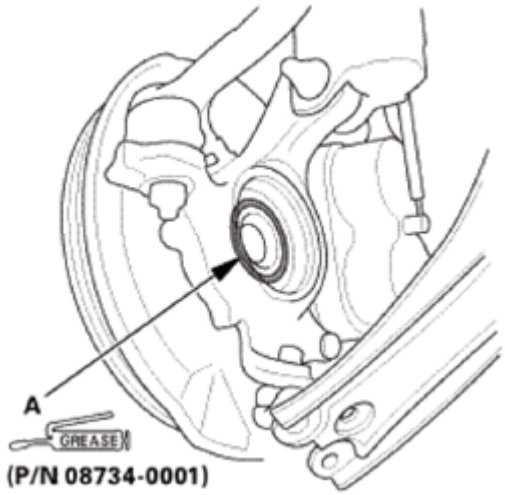

Fig. 49: Applying About 5 G (0.18 Oz) Of Holy 60 Paste (P/N 08734-0001) To Contact Area Of Outboard Joint And Front Wheel Bearing
Courtesy of AMERICAN HONDA MOTOR CO., INC.

2. Install the outboard joint (A) into the front hub (B) on the knuckle.

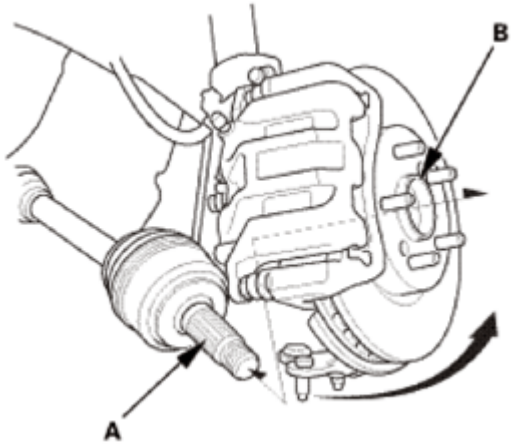

Fig. 50: Installing Outboard Joint Into Front Hub On Knuckle
Courtesy of AMERICAN HONDA MOTOR CO., INC.

6. Front Lower Ball Joint Lower Arm Side - Reconnection
    1. Connect the front lower ball joint (A) to the lower arm.
    2. Install the new flange nuts and the new flange bolt in the sequence shown.

GETtheMANUALS.org

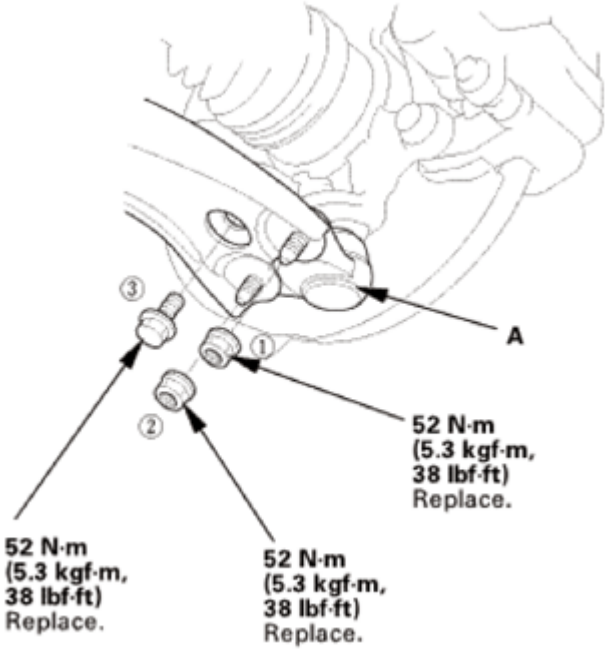

Fig. 51: Identifying Front Lower Ball Joint And Flange Bolts With Torque Specifications
Courtesy of AMERICAN HONDA MOTOR CO., INC.

7. Driveshaft Spindle Nut, Front Left
    1. Apply a small amount of engine oil to the seating surface of a new spindle nut (A).
    2. Install the spindle nut.
    3. Use a drift to stake the spindle nut shoulder (B) against the driveshaft.

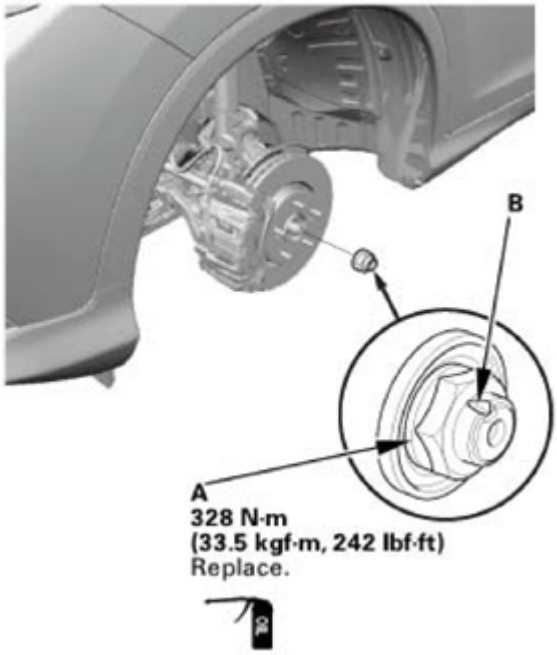

GETtheMANUALS.org

Fig. 52: Identifying Spindle Nut And Nut Shoulder
Courtesy of AMERICAN HONDA MOTOR CO., INC.

8. Front Wheel
    1. Install the front wheel.

NOTE: **Before installing the wheel, clean the mating surfaces between the brake disc and the inside of the wheel.**

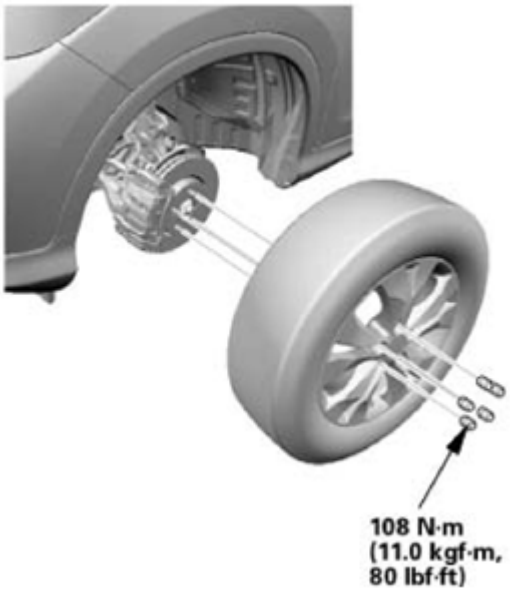

Fig. 53: Identifying Front Wheel Bolts With Torque Specifications
Courtesy of AMERICAN HONDA MOTOR CO., INC.

9. Driveshaft After Install Check
    1. Turn the wheel by hand, and make sure there is no interference between the driveshaft and surrounding parts.
10. ATF - Replacement
    1. Remove the ATF dipstick (yellow loop) (A), and wipe it with a clean cloth.

GETtheMANUALS.org

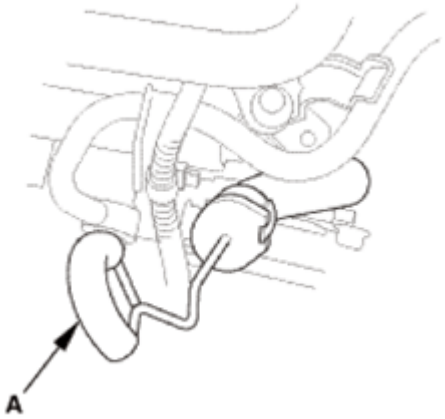

Fig. 54: Identifying ATF Dipstick (Yellow Loop)
Courtesy of AMERICAN HONDA MOTOR CO., INC.

2. Refill the transmission with the recommended fluid into the dipstick guide tube opening (A) to bring the fluid level between the upper mark and the lower mark of the dipstick. Always use ATF DW-1 (genuine Honda automatic transmission fluid). Using a non-Honda ATF can affect shift quality.

   Automatic Transmission Fluid Capacity

   2WD:

   2.2 L (2.3 US qt) at change

   5.85 L (6.18 US qt) at overhaul

   AWD/4WD:

   2.6 L (2.7 US qt) at change

   6.4 L (6.8 US qt) at overhaul

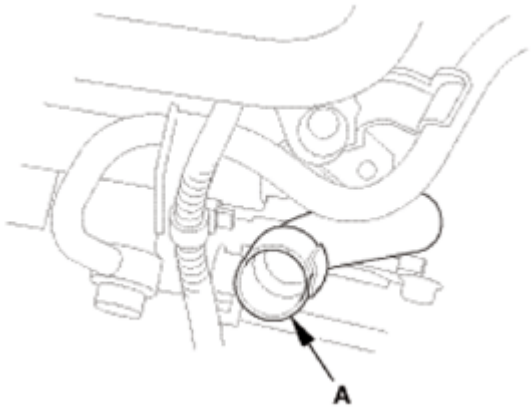

GETtheMANUALS.org

Fig. 55: Identifying Dipstick Guide Tube Opening
Courtesy of AMERICAN HONDA MOTOR CO., INC.

3. Insert the dipstick (A) into the guide tube aligning the notch (B) with the guide tab (C).

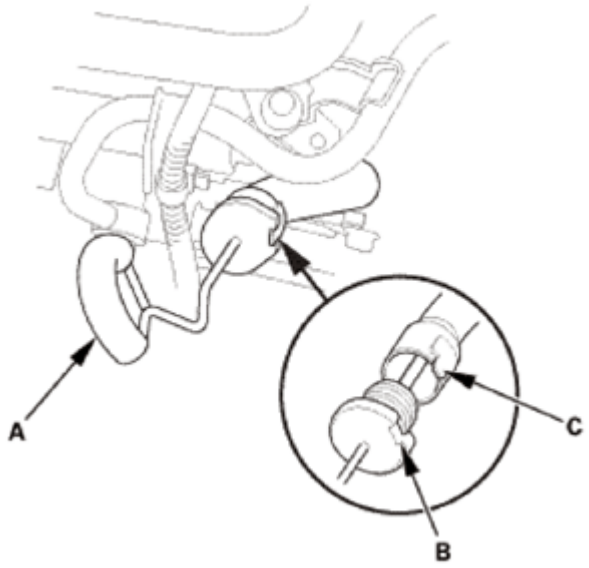

Fig. 56: Identifying Dipstick
Courtesy of AMERICAN HONDA MOTOR CO., INC.

4. Remove the dipstick.
5. Make sure the fluid level is between the upper mark (A) and the lower mark (B) on the dipstick.
6. Insert the dipstick into the guide tube aligning the notch with the guide tab.

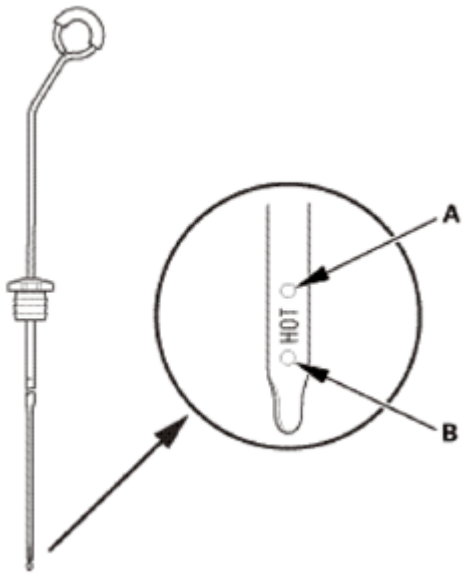

Fig. 57: Identifying Marking On Dipstick

GETtheMANUALS.org

Courtesy of AMERICAN HONDA MOTOR CO., INC.

11. Front Splash Shield
    1. Install the front splash shield (A), then install the bolts (B) and the clips (C, D). Make sure the clips snap into place securely.

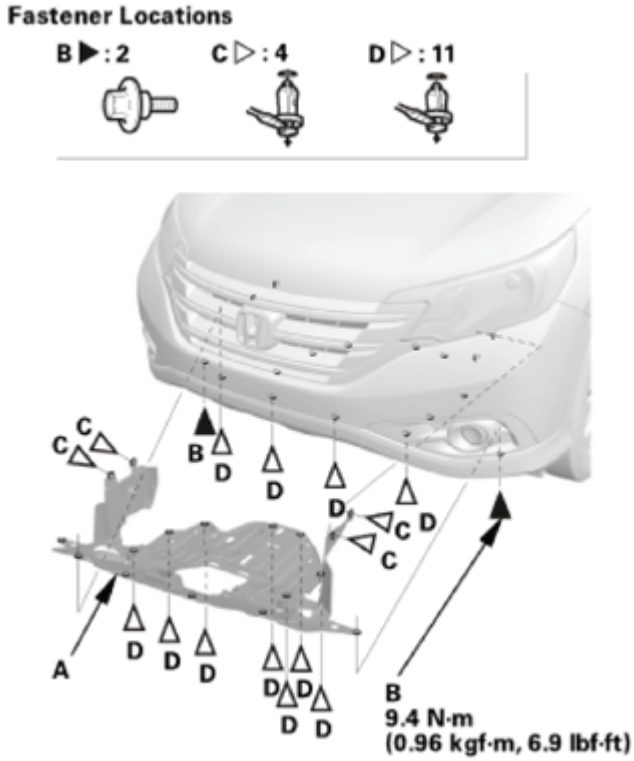

Fig. 58: Identifying Front Splash Shield, Clips And Bolts With Torque Specifications
Courtesy of AMERICAN HONDA MOTOR CO., INC.

12. Pre-Alignment Checks

    For proper inspection and adjustment of the wheel alignment, do these checks:

    1. Release the parking brake to avoid an incorrect measurement.
    2. Make sure the suspension is not modified.
    3. Make sure the fuel tank is full, and that the spare tire, the jack, and the tools are in place on the vehicle.
    4. Check the tire size and tire pressure according to tire information.
    5. Set the steering column to the middle tilt position and telescopic position.
13. Caster - Inspection

    Use commercially available computerized four wheel alignment equipment to measure wheel alignment (caster, camber, toe, and turning angle). Follow the equipment manufacturer's instructions.

GETtheMANUALS.org

1. Check the caster angle.

   Caster angle:

   2WD:

   With 16 inch wheel: 2 ° 44 '±30 '

   Without 16 inch wheel: 2 ° 50 '±30 '

   AWD/4WD:

   With 16 inch wheel: 2 ° 38 '±30 '

   Without 16 inch wheel: 2 ° 44 '±30 '

   - If the measurement is within specifications, measure the front camber angle.
   - If the measurement is not within specifications, check for bent or damaged suspension components.

14. Camber - Inspection

    Use commercially available computerized four wheel alignment equipment to measure wheel alignment (caster, camber, toe, and turning angle). Follow the equipment manufacturer's instructions.

    1. Check the camber angle.

       Camber angle:

       2WD:

       Front:

       With 16 inch wheel: -0 ° 01 '±1 ° 00 '

       Without 16 inch wheel: -0 ° 10 '±1 ° 00 '

       (Maximum difference between the front right and left side: 1 °00 ')

       Rear:

       With 16 inch wheel: -1 ° 06 '±45 '

       Without 16 inch wheel: -1 ° 12 '±45 '

       (Maximum difference between the front right and left side: 0 °45 ')

GETtheMANUALS.org

AWD/4WD:

Front:

With 16 inch wheel: -0 ° 08 '±1 ° 00 '

Without 16 inch wheel: 0 ° 00 '±1 ° 00 '

(Maximum difference between the front right and left side: 1 °00 ')

Rear:

With 16 inch wheel: -0 ° 50 '±45 '

Without 16 inch wheel: -1 ° 00 '±45 '

(Maximum difference between the front right and left side: 0 °45 ')

- If the measurement is within specification, measure the toe-in.
- If the measurement for the front camber is not within the specification, go to front camber adjustment.
- If the measurement for the rear camber is not within the specification, check for bent or damaged suspension components.

15. Front Toe - Inspection

Use commercially available computerized four wheel alignment equipment to measure wheel alignment (caster, camber, toe, and turning angle). Follow the equipment manufacturer's instructions.

1. Set the steering column to the middle tilt position and telescopic positions.
2. Center the steering wheel spokes, and install a steering wheel holder tool.
3. Check the toe with the wheels pointed straight ahead.

   Front toe-in: 0±2 mm (0±0.08 in)

   - If adjustment is required, go to the front toe adjustment.
   - If no adjustment is required, remove the alignment equipment.

16. Turning Angle - Inspection

Use commercially available computerized four wheel alignment equipment to measure wheel alignment (caster, camber, toe, and turning angle). Follow the equipment manufacturer's instructions.

1. Turn the wheel right and left while applying the brake, and measure the turning angle of both wheels.

   Turning angle:

GETtheMANUALS.org

2WD:

Inward:

With 16 inch wheel: 36 ° 29 '±2 °

Without 16 inch wheel: 36 ° 13 '±2 °

Outward (reference):

With 16 inch wheel: 31 ° 13 '

Without 16 inch wheel: 31 ° 02 '

AWD/4WD:

Inward:

With 16 inch wheel: 36 ° 48 '±2 °

Without 16 inch wheel: 36 ° 30 '±2 °

Outward (reference):

With 16 inch wheel: 31 ° 18 '

Without 16 inch wheel: 31 ° 12 '

2. If the measurement is not within the specifications, even up both sides of the tie-rod threaded section length while adjusting the front toe.

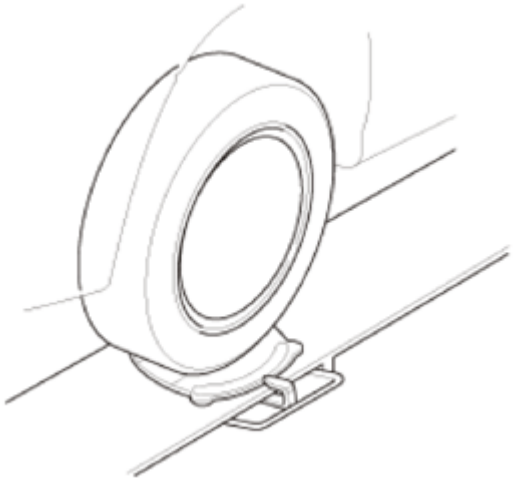

Fig. 59: Measuring Wheel Alignment
Courtesy of AMERICAN HONDA MOTOR CO., INC.

GETtheMANUALS.org

3. If it is correct, but the turning angle is not within the specifications, check for bent or damaged suspension components.

17. Warm Up The Engine
    1. Start the engine. Hold the engine speed at 3, 00 rpm without load in P or N until the radiator fan comes on.
    2. Park the vehicle on level ground.
    3. Turn the ignition switch to LOCK (0).
18. ATF Level Check

NOTE:

- **Keep all foreign particles out of the transmission.**
- **Check the fluid level within 60-90 seconds after turning the engine off.**
- **Higher fluid level may be indicated if the radiator fan comes on twice or more.**

1. Remove the ATF dipstick (yellow loop) (A), and wipe it with a clean cloth.
2. Insert the dipstick into the guide tube aligning the notch (B) with the guide tab (C).

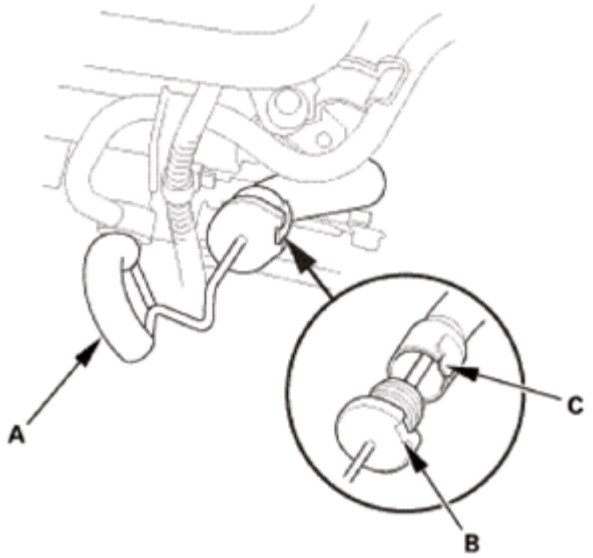

Fig. 60: Identifying ATF Dipstick And Alignment Of Notch With Guide Tab
Courtesy of AMERICAN HONDA MOTOR CO., INC.

3. Remove the dipstick, and check the ATF level. It should be between the upper mark (A) and the lower mark (B).
4. If the ATF level is below the lower mark, check for fluid leaks at the transmission, the hoses, and the line joints. If a problem is found, fix it before filling the transmission with ATF.

NOTE: **If the vehicle is driven when the ATF level is below the lower mark,**

GETtheMANUALS.org

one or more of these symptoms may occur:

- **Transmission damage.**
- **Vehicle does not move in any gear.**
- **Vehicle accelerates poorly, and engine revs up abnormally high when starting off in forward and reverse positions.**
- **Engine vibrates at idle.**

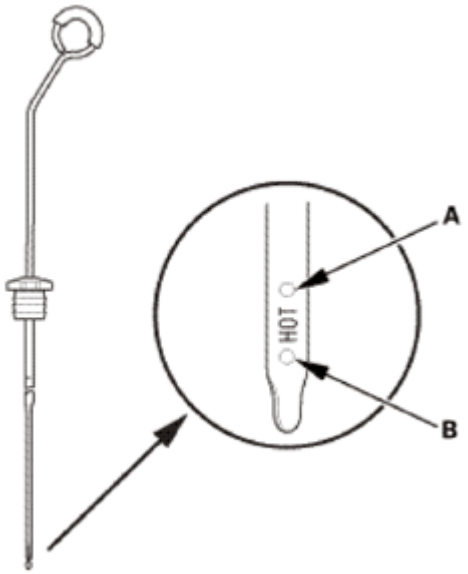

Fig. 61: Identifying Marking On Dipstick
Courtesy of AMERICAN HONDA MOTOR CO., INC.

5. If the ATF level is above the upper mark, drain the ATF to proper level.

NOTE: **If the vehicle is driven when the ATF level is above the upper mark, the vehicle may creep forward while in N, or have shifting problems.**

6. If necessary, fill the transmission with ATF through the dipstick guide tube opening (A) to bring the fluid level between the upper mark and the lower mark of the dipstick. Do not fill the fluid above the upper mark. Always use ATF DW-1 (genuine Honda automatic transmission fluid). Using a non-Honda ATF can affect shift quality.
7. Insert the dipstick into the guide tube aligning the notch with the guide tab.

GETtheMANUALS.org

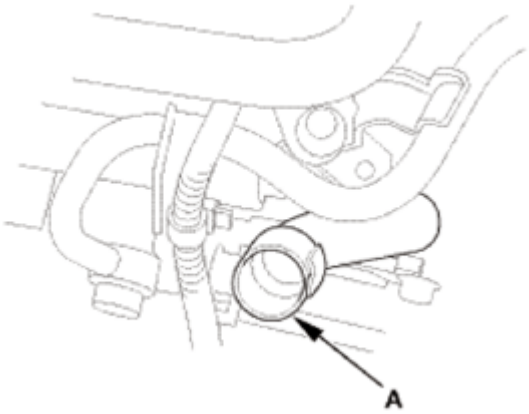

Fig. 62: Identifying Dipstick Guide Tube Opening
Courtesy of AMERICAN HONDA MOTOR CO., INC.

19. Test Drive
    1. Test-drive the vehicle.
20. HDS DLC - Connection
    1. Connect the HDS to the data link connector (DLC) (A) located under the driver's side of the dashboard.
    2. Turn the ignition switch to ON (II).
    3. Make sure the HDS communicates with the vehicle. If it does not communicate, go to the DLC circuit troubleshooting.

Fig. 63: Identifying Data Link Connector (DLC)
Courtesy of AMERICAN HONDA MOTOR CO., INC.

21. VSA Sensor Neutral Position - Memorization
    1. Park the vehicle on a flat and level surface, with the steering wheel in the straight ahead position.
    2. Select VSA ADJUSTMENT, then select ALL SENSORS with the HDS, and follow the screen

GETtheMANUALS.org

prompts.

NOTE: See the HDS Help menu for specific instructions.

22. Steering Angle Sensor Neutral Position - Clear
    1. Select EPS ADJUSTMENT, then select EPS STEERING ANGLE SENSOR VALUE CLEAR and follow the screen prompts on the HDS.

NOTE: See the HDS Help menu for specific instructions.

23. Maintenance Minder Reset
    1. **RESET THE MAINTENANCE MINDER** .

FRONT DRIVESHAFT OUTBOARD BOOT REPLACEMENT

SPECIAL TOOLS DESCRIPTION

Image	Description/Tool Number
	Threaded Adapter, 26 x 1.5 mm 07XAC-001030A

GETtheMANUALS.org

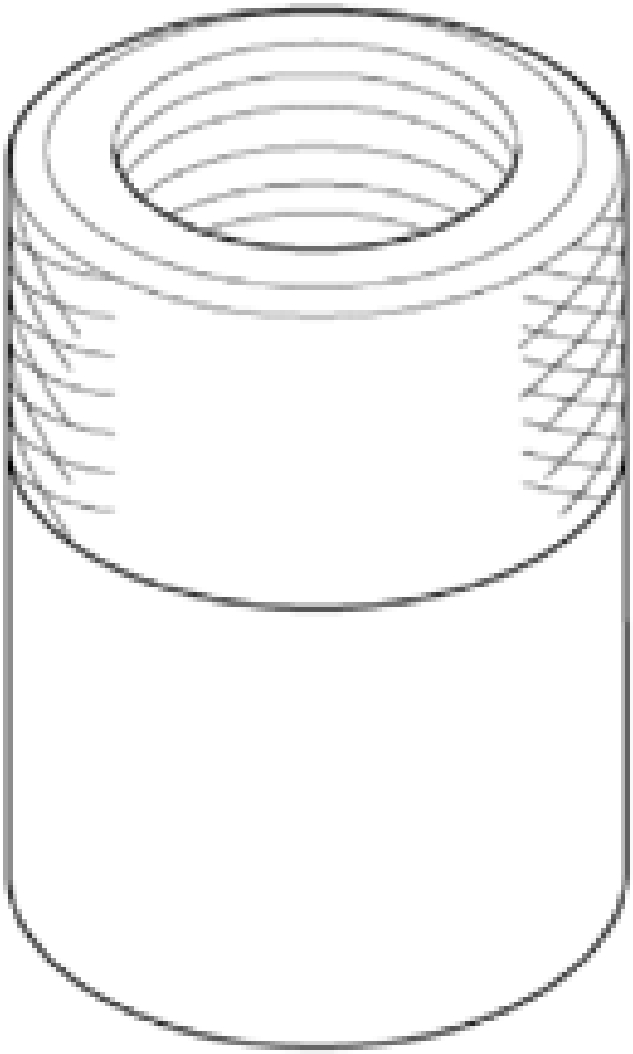	
	Boot Band Clamp Tool Kent-Moore J-35910 or equivalent, commercially available

GETtheMANUALS.org

	Slide Hammer 5/8"-18 UNF, commercially available

REMOVAL

1. Vehicle Lift
    1. Raise the vehicle on a lift, and make sure it is securely supported.
2. Front Wheel
    1. Remove the front wheel.

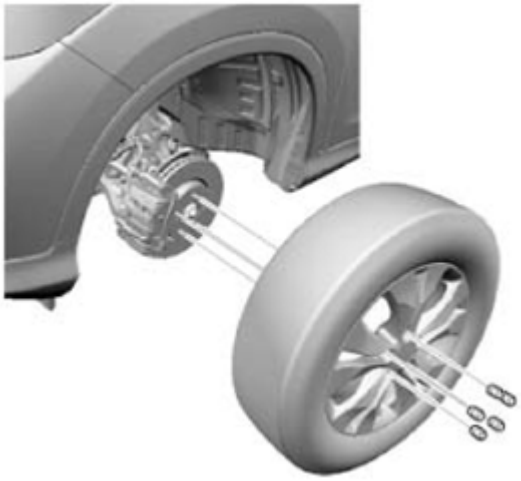

Fig. 64: Identifying Front Wheel
Courtesy of AMERICAN HONDA MOTOR CO., INC.

3. Front Driveshaft Spindle Nut
    1. Pry up the stake (A) on the spindle nut (B).
    2. Remove the spindle nut.

GETtheMANUALS.org

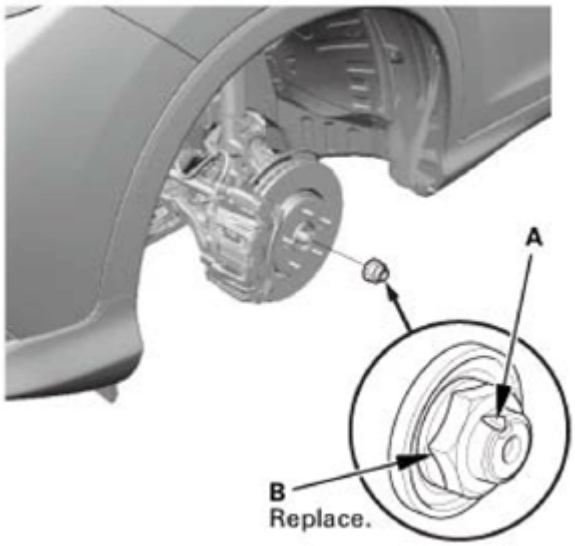

Fig. 65: Identifying Stake On Spindle Nut
Courtesy of AMERICAN HONDA MOTOR CO., INC.

4. Front Splash Shield
    1. Remove the bolts (A), then remove the clips (B) that secure the front inner fender and the front splash shield (C) to the body.
    2. From under the front bumper (D), remove the clips (E).
    3. From under the body, remove the clips (F), then pull out the front splash shield.

GETtheMANUALS.org

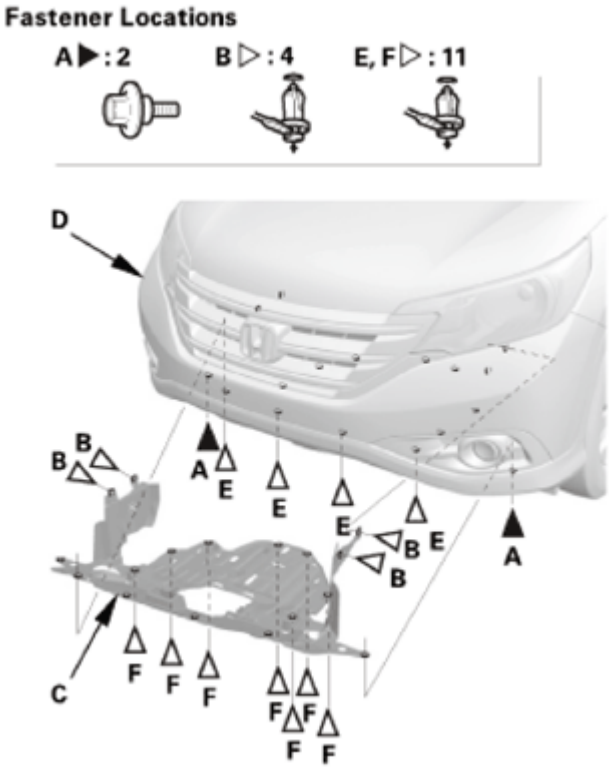

Fig. 66: Identifying Front Bumper, Clips And Bolts
Courtesy of AMERICAN HONDA MOTOR CO., INC.

5. ATF - Replacement
    1. Remove the drain plug (A), and drain the ATF.
    2. Reinstall the drain plug using a new sealing washer (B).

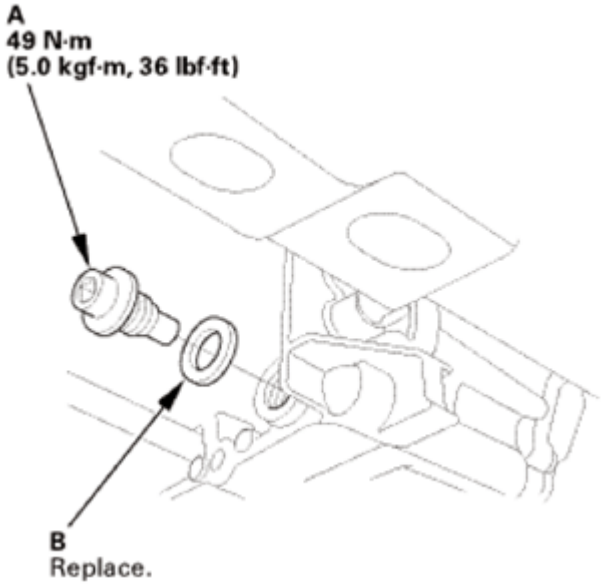

GETtheMANUALS.org

Fig. 67: Identifying Drain Plug And Washer
Courtesy of AMERICAN HONDA MOTOR CO., INC.

6. Lower Ball Joint Lower Arm Side - Disconnection
    1. Remove the flange bolt (A).
    2. Remove the flange nuts (B).
    3. Disconnect the lower arm (C) from the front lower ball joint (D).

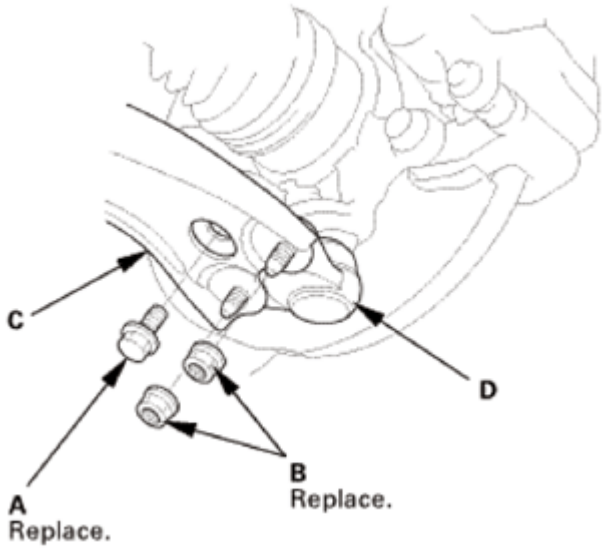

Fig. 68: Identifying Front Lower Ball Joint, Lower Arm, Flange Bolt And Nut
Courtesy of AMERICAN HONDA MOTOR CO., INC.

7. Front Driveshaft - Disconnection Outboard Side
    1. Separate the outboard joint from the front hub using a soft face hammer.

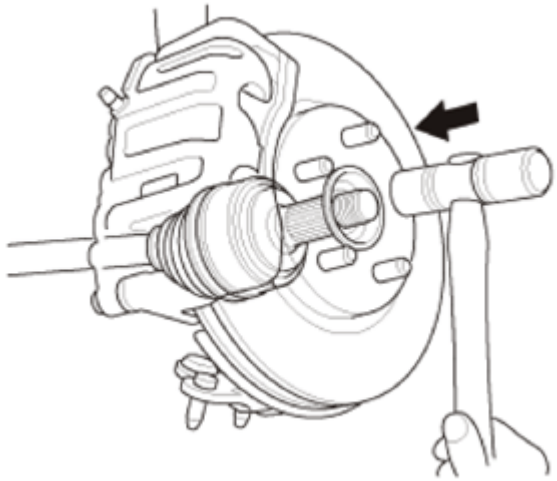

Fig. 69: Separating Outboard Joint From Front Hub Using Soft Face Hammer
Courtesy of AMERICAN HONDA MOTOR CO., INC.

GETtheMANUALS.org

2. Pull the knuckle outward, and separate the outboard joint from the front hub.

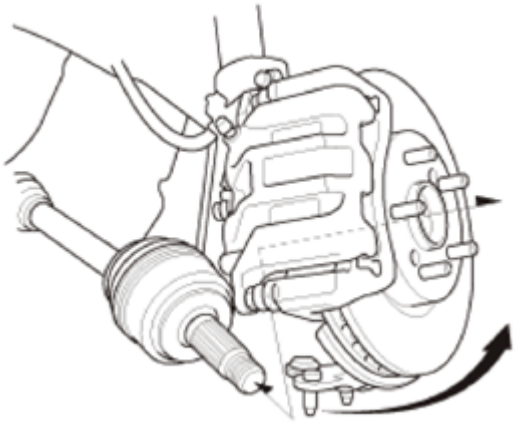

Fig. 70: Pulling Knuckle Outward
Courtesy of AMERICAN HONDA MOTOR CO., INC.

8. Front Driveshaft - Disconnection Inboard Side
    1. Pry the inboard joint (A) from the differential using a pry bar.

NOTE:

- **Do not pull on the driveshaft, or the inboard joint may come apart. Pull the inboard joint straight out to avoid damaging the oil seal.**
- **Be careful not to damage the oil seal or the end of the inboard joint using the pry bar.**

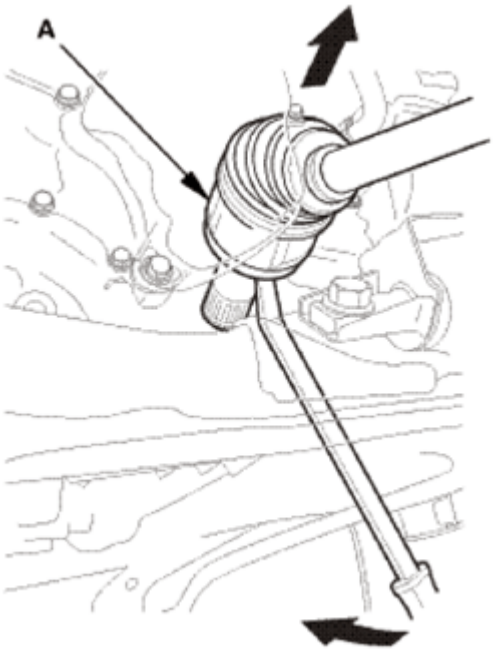

GETtheMANUALS.org

Fig. 71: Prying Inboard Joint From Differential Using Pry Bar
Courtesy of AMERICAN HONDA MOTOR CO., INC.

2. Remove the set ring (A).

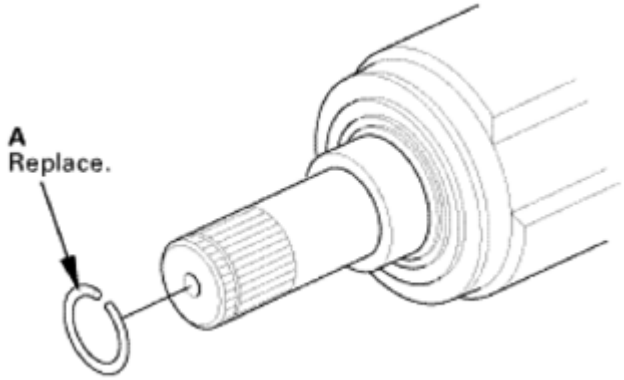

Fig. 72: Identifying Set Ring
Courtesy of AMERICAN HONDA MOTOR CO., INC.

9. Right Front Driveshaft Inboard Side - Disconnection
   1. Drive the inboard joint (A) off of the intermediate shaft using a drift punch and a hammer.

NOTE: Do not pull on the driveshaft or the inboard joint may come apart.

Fig. 73: Driving Inboard Joint Off Of Intermediate Shaft Using Drift Punch And Hammer
Courtesy of AMERICAN HONDA MOTOR CO., INC.

2. Remove the set ring (A).

GETtheMANUALS.org

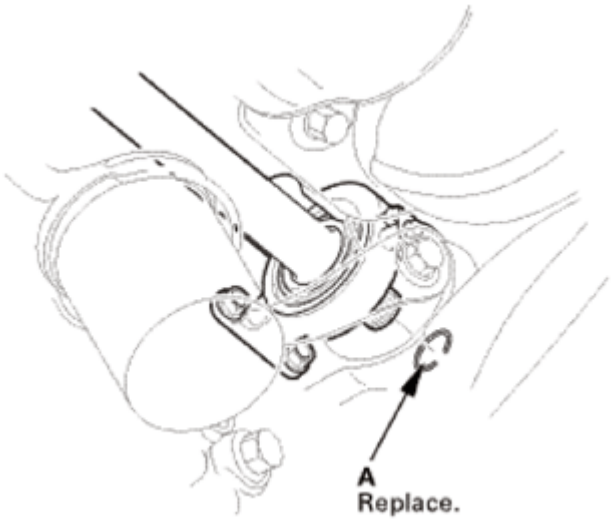

Fig. 74: Identifying Set Ring
Courtesy of AMERICAN HONDA MOTOR CO., INC.

10. Front Outboard Joint
    1. Lift up the three tabs (A) using a flat-tipped screwdriver.

       NOTE: Be careful not to damage the boot.

    2. Release the ear clamp bands (B).

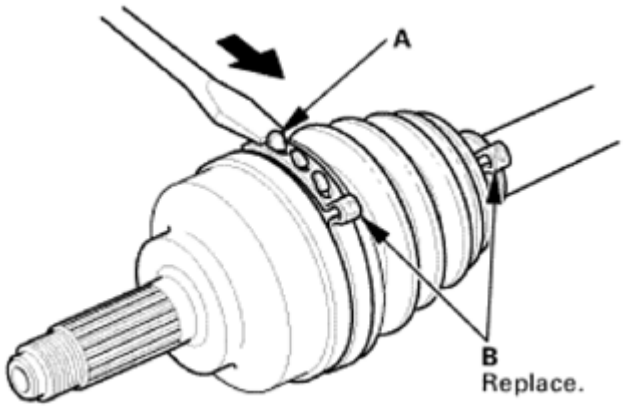

Fig. 75: Lifting Up Three Tabs Using A Flat-Tipped Screwdriver
Courtesy of AMERICAN HONDA MOTOR CO., INC.

    3. Slide the outboard boot (A) partially toward the inboard joint side.

       NOTE: Be careful not to damage the boot.

GETtheMANUALS.org

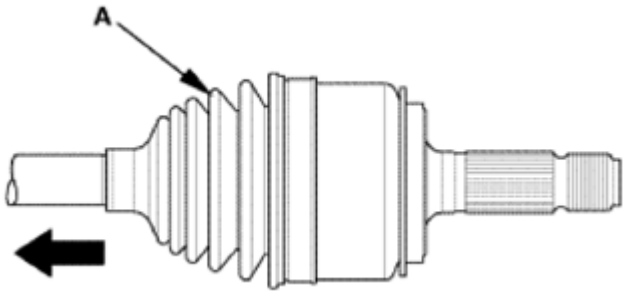

Fig. 76: Sliding Outboard Boot Partially Toward Inboard Joint Side
Courtesy of AMERICAN HONDA MOTOR CO., INC.

4. Wipe off the grease to expose the driveshaft and the outboard joint inner race.
5. Make a mark (A) on the driveshaft (B) at the same level as the outboard joint end (C).

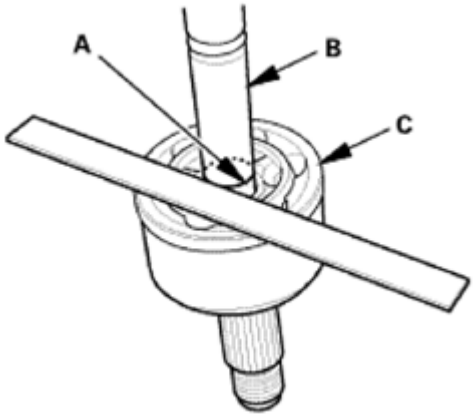

Fig. 77: Identifying Mark On Driveshaft
Courtesy of AMERICAN HONDA MOTOR CO., INC.

6. Securely clamp the driveshaft in a bench vise with a shop towel wrapped around the driveshaft.
7. Remove the outboard joint (A) using the threaded adapter (B) and a commercially available 5/8"-18 UNF slide hammer (C).
8. Remove the driveshaft from the bench vise.

GETtheMANUALS.org

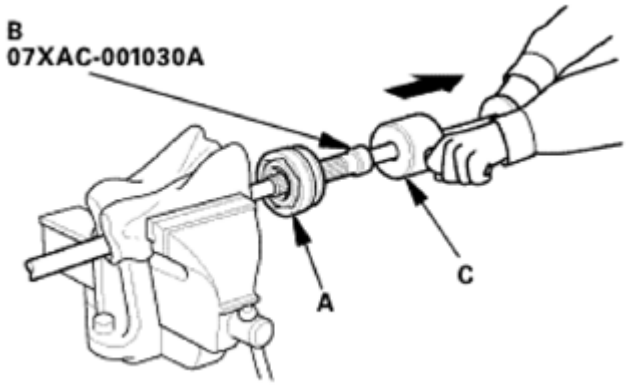

Fig. 78: Removing Outboard Joint Using Threaded Adapter
Courtesy of AMERICAN HONDA MOTOR CO., INC.

9. Remove the stop ring (A).

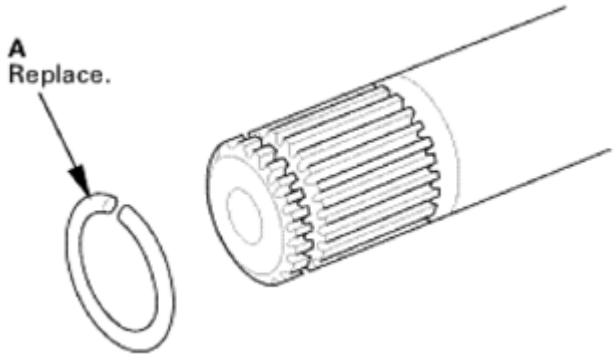

Fig. 79: Identifying Stop Ring
Courtesy of AMERICAN HONDA MOTOR CO., INC.

11. Front Outboard Boot, Left
    1. Wrap the splines on the driveshaft with vinyl tape (A) to prevent damaging the outboard boot.
    2. Remove the outboard boot.

NOTE: **Be careful not to damage the boot.**

GETtheMANUALS.org

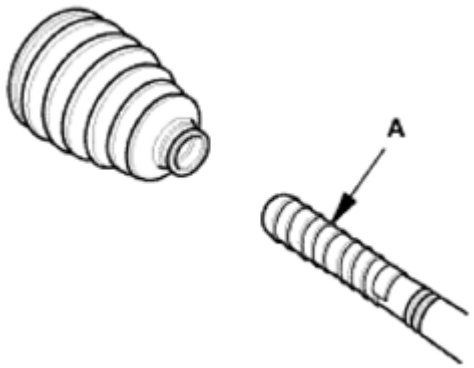

Fig. 80: Identifying Tape On Driveshaft Splines
Courtesy of AMERICAN HONDA MOTOR CO., INC.

INSTALLATION

1. Front Outboard Boot, Left
    1. Install new ear clamp bands (A) and the outboard boot onto the driveshaft.

        NOTE: Be careful not to damage the boot.

    2. Remove the vinyl tape.

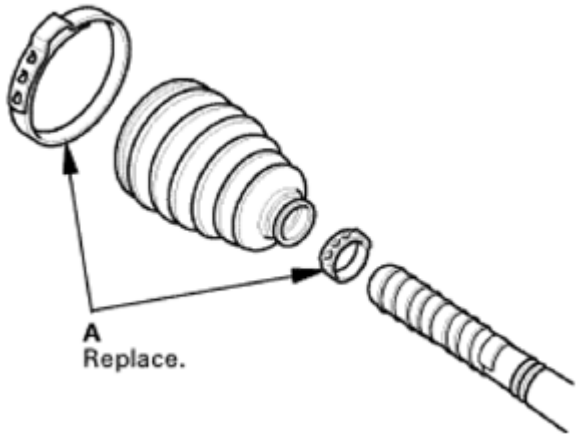

Fig. 81: Identifying Ear Clamp Bands
Courtesy of AMERICAN HONDA MOTOR CO., INC.

2. Front Outboard Joint, Left
    1. Make sure to check the size of a new stop ring.

        NOTE: To avoid driveshaft and vehicle damage, make sure you install a new stop ring.

STOP RING SPECIFICATIONS

GETtheMANUALS.org

Model	Overall diameter (A)	Wire diameter (B)
12 model	26.0 mm (1.024 in)	2.0 mm (0.079 in)
Except 12 models	26.45 mm (1.0413 in)	2.0 mm (0.079 in)

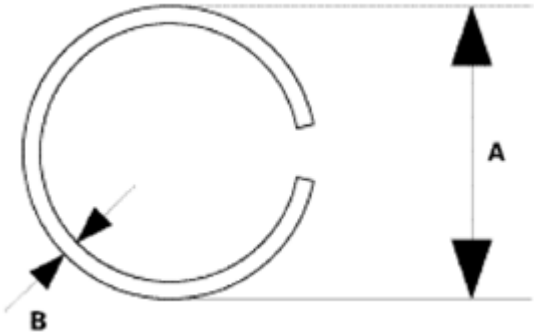

Fig. 82: Identifying Stop Ring Specifications
Courtesy of AMERICAN HONDA MOTOR CO., INC.

2. Install the stop ring (A).

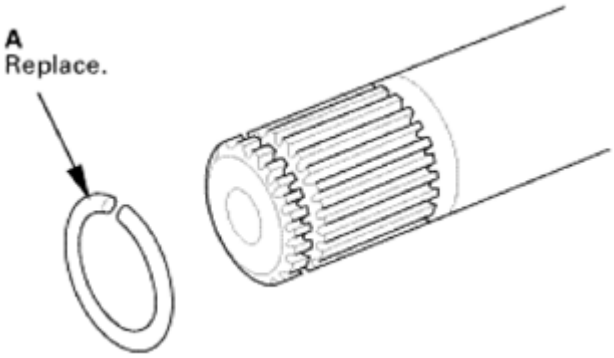

Fig. 83: Identifying Stop Ring
Courtesy of AMERICAN HONDA MOTOR CO., INC.

3. Pack about 35 g (1.23 oz) of grease included in the new outboard boot set into the driveshaft hole in the outboard joint.

NOTE: **If you are installing a new outboard joint, the grease is already installed.**

GETtheMANUALS.org

Fig. 84: Packing Grease Included In Outboard Boot Set Into Driveshaft Hole
Courtesy of AMERICAN HONDA MOTOR CO., INC.

4. Insert the driveshaft (A) into the outboard joint (B) until the stop ring (C) is close to the joint.

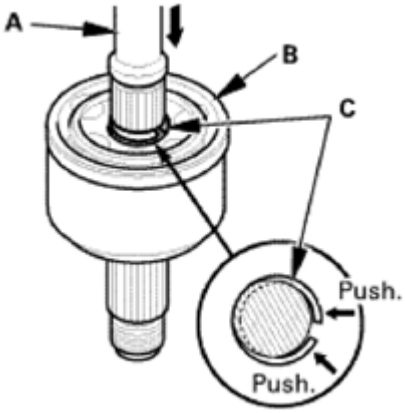

Fig. 85: Inserting Driveshaft Into Outboard Joint
Courtesy of AMERICAN HONDA MOTOR CO., INC.

5. To completely seat the outboard joint, pick up the driveshaft and the joint, and tap or hit the assembly onto a hard surface from a height of about 10 cm (3.9 in).

NOTE: **Do not use a hammer, as excessive force may damage the driveshaft. Be careful not to damage the threaded section (A) of the outboard joint.**

GETtheMANUALS.org

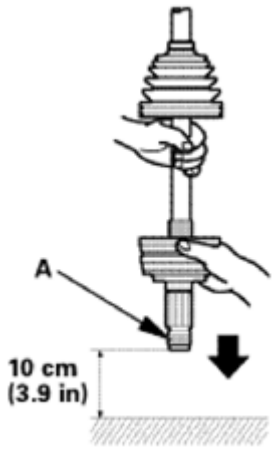

Fig. 86: Seating Outboard Joint
Courtesy of AMERICAN HONDA MOTOR CO., INC.

6. Check the alignment of the paint mark (A) you made with the outboard joint end (B).

NOTE: **To avoid driveshaft and vehicle damage, the shaft must be all the way into the outboard joint to ensure the stop ring is properly seated.**

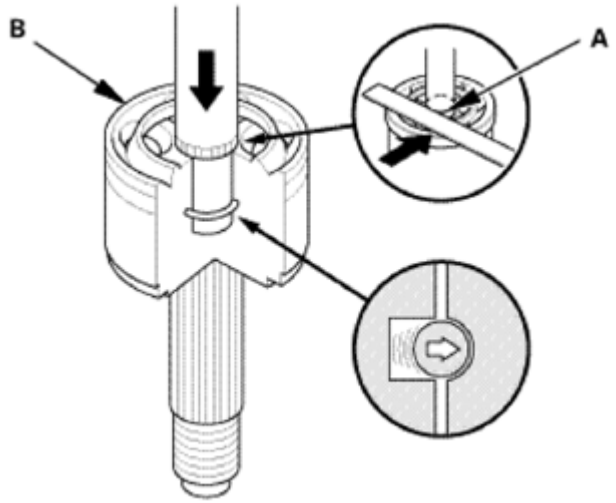

Fig. 87: Checking Alignment Of Paint Mark
Courtesy of AMERICAN HONDA MOTOR CO., INC.

7. Pack the outboard joint (A) with the remaining joint grease included in the outboard boot set.

Total grease quantity

Outboard joint:

115-125 g (4.1-4.4 oz)

GETtheMANUALS.org

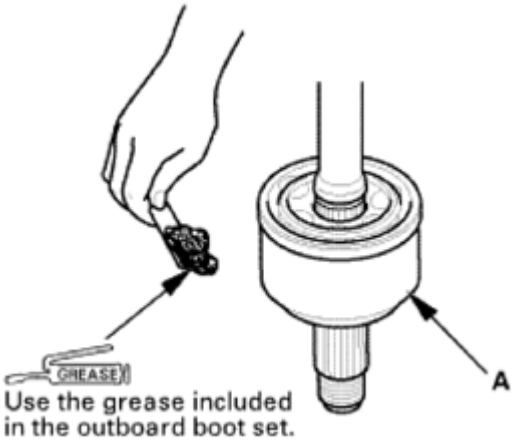

Fig. 88: Packing Outboard Joint With Joint Grease
Courtesy of AMERICAN HONDA MOTOR CO., INC.

8. Fit the boot ends (A) onto the driveshaft (B) and the outboard joint (C).
9. Bleed any excess air from the boot by inserting a flat-tipped screwdriver between the boot and the joint.

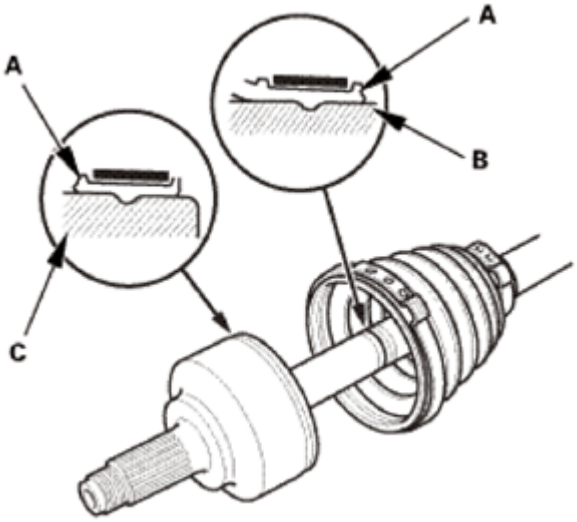

Fig. 89: Identifying Boot Ends On Driveshaft And Outboard Joint
Courtesy of AMERICAN HONDA MOTOR CO., INC.

10. Inspect the length (A) of the driveshaft in the figure as shown, then adjust the boots to halfway between full compression and full extension.

GETtheMANUALS.org

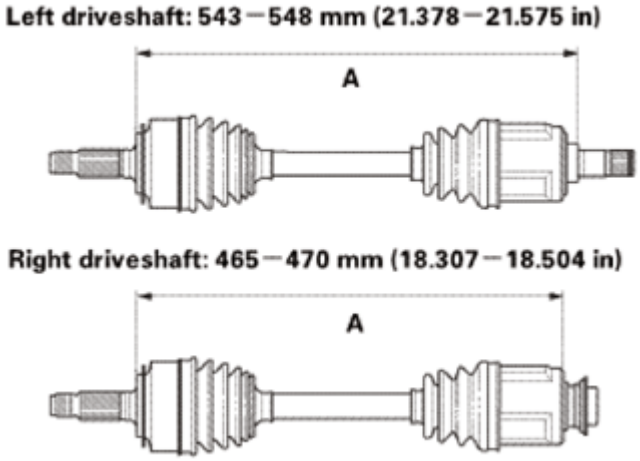

Fig. 90: Identifying Length Of Driveshaft
Courtesy of AMERICAN HONDA MOTOR CO., INC.

11. Close the ear portion (A) of the band using a commercially available boot band clamp tool (Kent-Moore J-35910 or equivalent) (B).

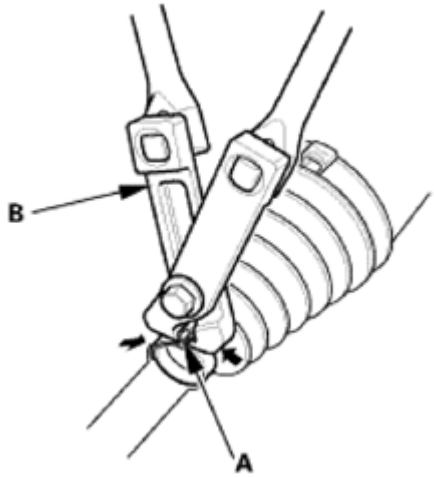

Fig. 91: Closing Ear Portion Of Band Using Commercially Available Boot Band Clamp Tool
Courtesy of AMERICAN HONDA MOTOR CO., INC.

12. Check the clearance between the closed ear portion of the band. If the clearance is not within the standard, close the ear portion of the band tighter.

GETtheMANUALS.org

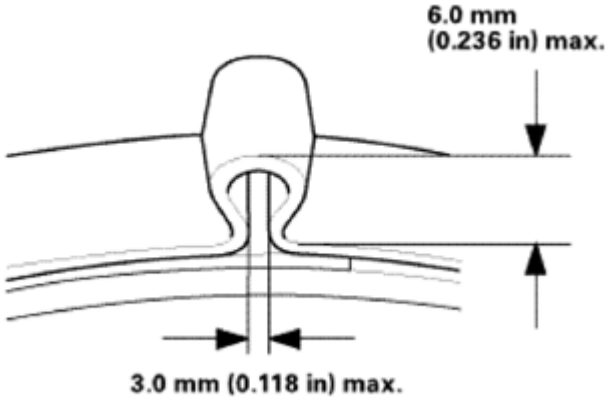

Fig. 92: Identifying Clearance Between Closed Ear Portion Of Band
Courtesy of AMERICAN HONDA MOTOR CO., INC.

3. Right Front Driveshaft Inboard Side - Reconnection
    1. Install a new set ring (A).

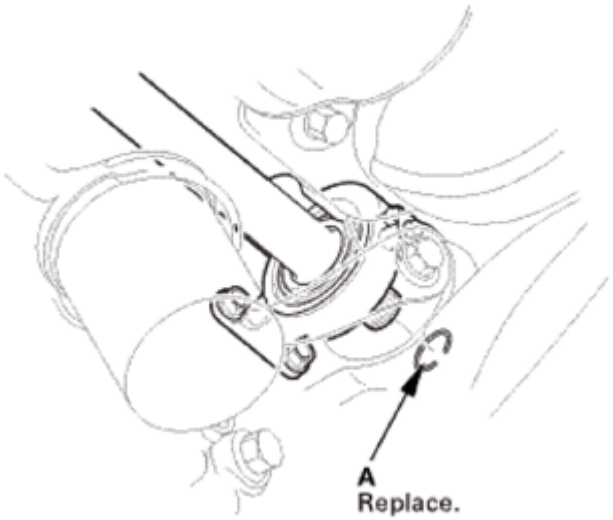

Fig. 93: Identifying Set Ring
Courtesy of AMERICAN HONDA MOTOR CO., INC.

    2. Apply 0.5-1.0 g (0.018-0.035 oz) of super high temp area grease (P/N 08798-9002) to the whole splined surface (A) of the right driveshaft.
    3. After applying grease, remove the grease from the splined grooves at intervals of 2-3 splines and from the set ring groove (B) so that air can bleed from the intermediate shaft during reassembly.

GETtheMANUALS.org

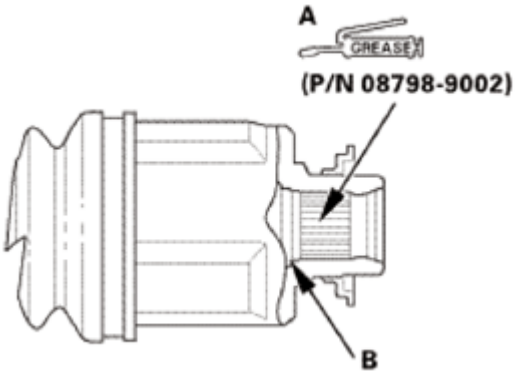

Fig. 94: Applying Super High Temp Area Grease To Whole Splined Surface Of Right Driveshaft
Courtesy of AMERICAN HONDA MOTOR CO., INC.

4. Insert the inboard end (A) of the driveshaft onto the intermediate shaft (B) until the set ring (C) locks in the groove (D).

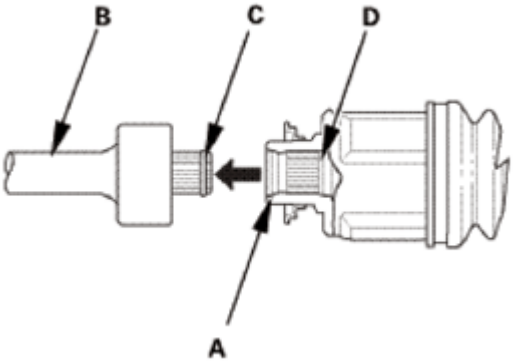

Fig. 95: Inserting Inboard End Of Driveshaft Onto Intermediate Shaft
Courtesy of AMERICAN HONDA MOTOR CO., INC.

4. Driveshaft Front Left - Reconnection, Inboard Side
    1. Install a new set ring (A).

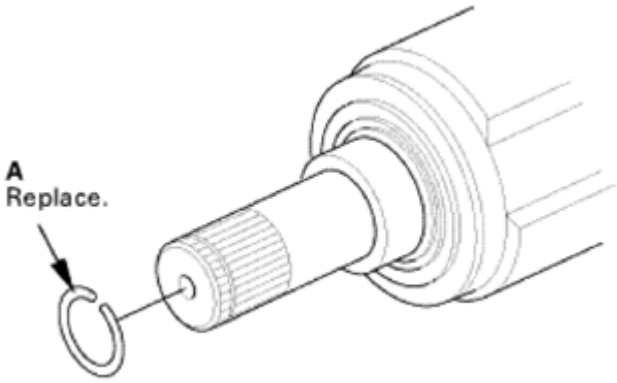

GETtheMANUALS.org

Fig. 96: Identifying Set Ring
Courtesy of AMERICAN HONDA MOTOR CO., INC.

2. Clean the areas where the driveshaft contacts the differential thoroughly with solvent.

NOTE: Do not wash the rubber parts with solvent.

3. Dry the areas where the driveshaft contacts the differential thoroughly with compressed air.
4. Insert the inboard end (A) of the driveshaft into the differential (B) until the set ring (C) locks in the groove (D).

NOTE: Insert the driveshaft horizontally to prevent damaging the oil seal.

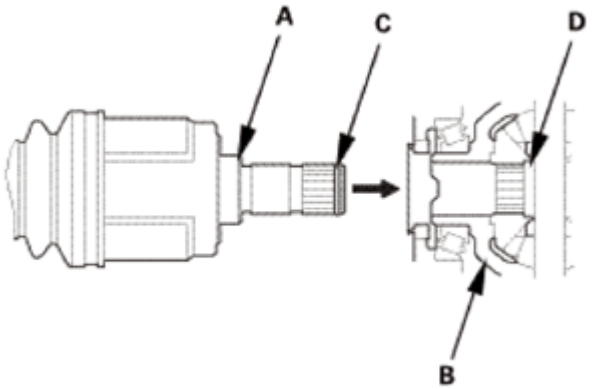

Fig. 97: Inserting Inboard End Of Driveshaft Into Differential
Courtesy of AMERICAN HONDA MOTOR CO., INC.

5. Driveshaft Front Left - Reconnection, Outboard Side
   1. Apply about 5 g (0.18 oz) of holy 60 paste (P/N 08734-0001) to the contact area (A) of the outboard joint and the front wheel bearing.

NOTE: The paste helps to prevent noise and vibration.

GETtheMANUALS.org

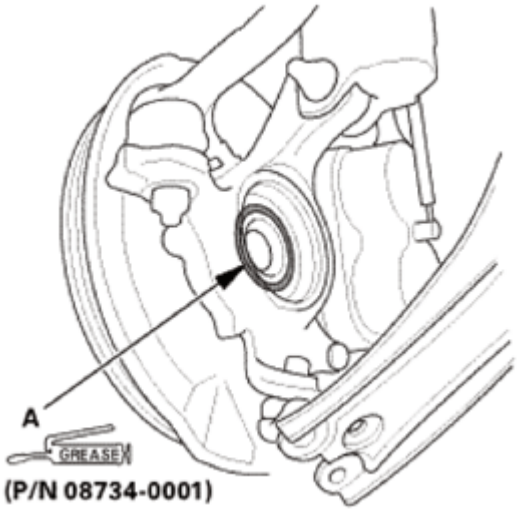

Fig. 98: Applying About 5 G (0.18 Oz) Of Holy 60 Paste To Contact Area Of Outboard Joint And Front Wheel Bearing
Courtesy of AMERICAN HONDA MOTOR CO., INC.

2. Install the outboard joint (A) into the front hub (B) on the knuckle.

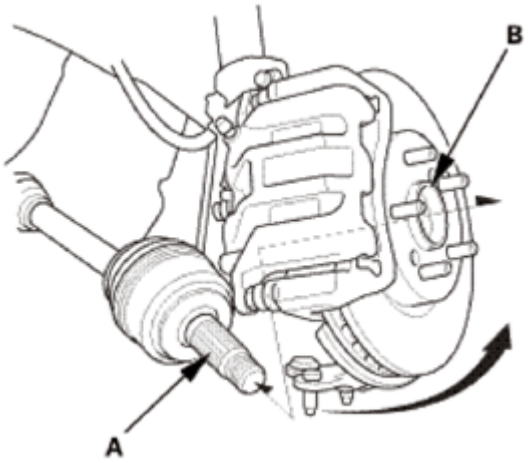

Fig. 99: Installing Outboard Joint Into Front Hub
Courtesy of AMERICAN HONDA MOTOR CO., INC.

6. Front Lower Ball Joint Lower Arm Side - Reconnection
    1. Connect the front lower ball joint (A) to the lower arm.
    2. Install the new flange nuts and the new flange bolt in the sequence shown.

GETtheMANUALS.org

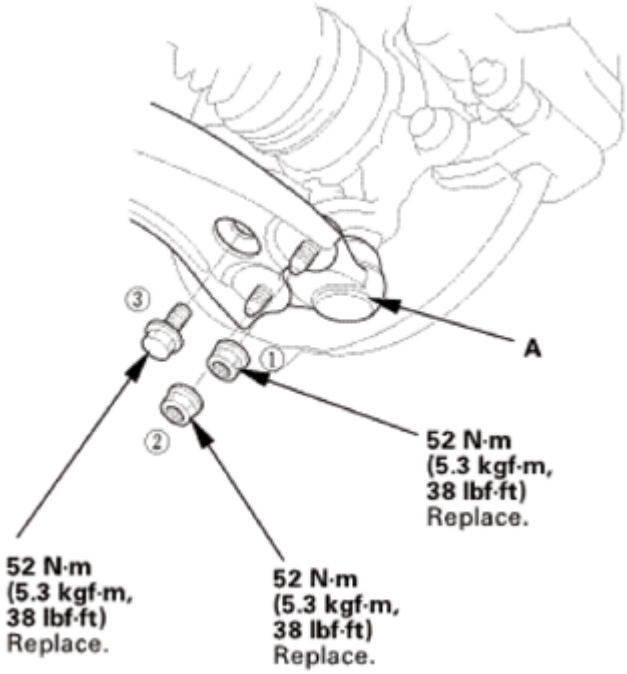

Fig. 100: Identifying Front Lower Ball Joint, Nut And Bolts With Torque Specifications
Courtesy of AMERICAN HONDA MOTOR CO., INC.

7. Driveshaft Spindle Nut, Front Left
    1. Apply a small amount of engine oil to the seating surface of a new spindle nut (A).
    2. Install the spindle nut.
    3. Use a drift to stake the spindle nut shoulder (B) against the driveshaft.

GETtheMANUALS.org

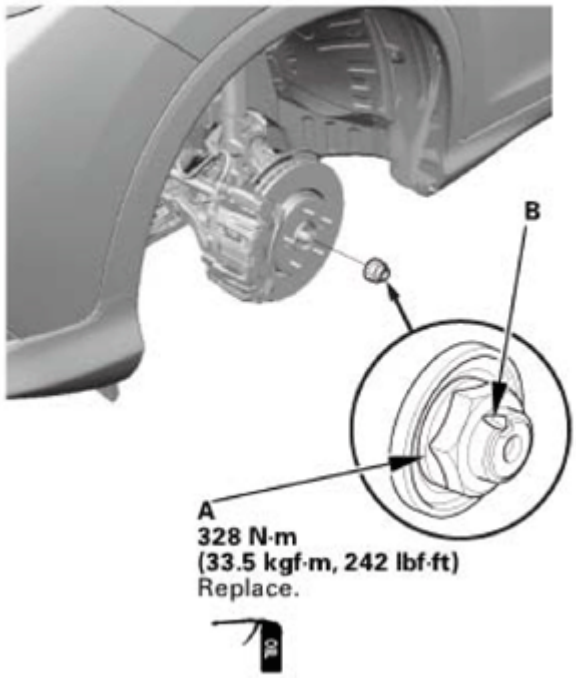

Fig. 101: Identifying Spindle Nut And Nut Shoulder
Courtesy of AMERICAN HONDA MOTOR CO., INC.

8. Front Wheel
    1. Install the front wheel.

NOTE: **Before installing the wheel, clean the mating surfaces between the brake disc and the inside of the wheel.**

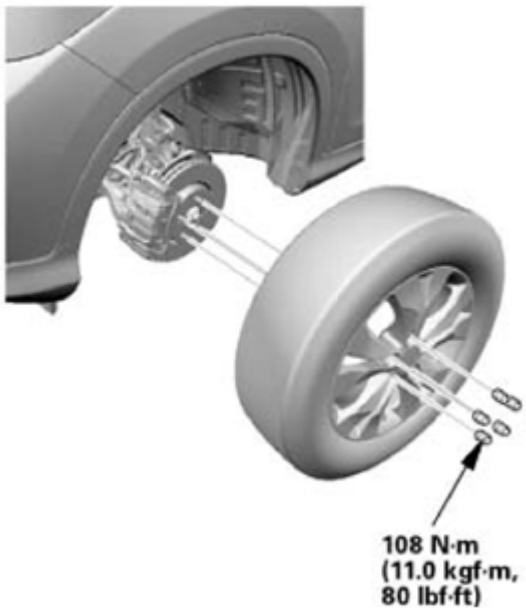

GETtheMANUALS.org

Fig. 102: Identifying Front Wheel And Bolts With Torque Specifications
Courtesy of AMERICAN HONDA MOTOR CO., INC.

9. Driveshaft After Install Check
    1. Turn the wheel by hand, and make sure there is no interference between the driveshaft and surrounding parts.
10. ATF - Replacement
    1. Remove the ATF dipstick (yellow loop) (A), and wipe it with a clean cloth.

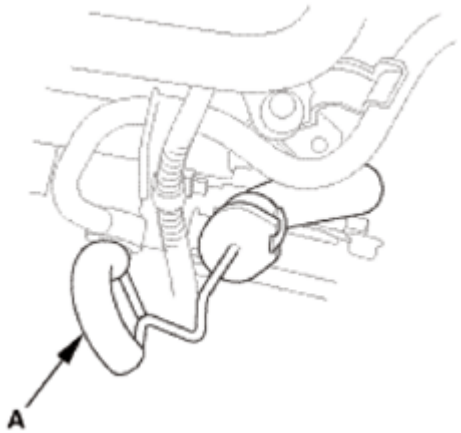

Fig. 103: Identifying ATF Dipstick
Courtesy of AMERICAN HONDA MOTOR CO., INC.

2. Refill the transmission with the recommended fluid into the dipstick guide tube opening (A) to bring the fluid level between the upper mark and the lower mark of the dipstick. Always use ATF DW-1 (genuine Honda automatic transmission fluid). Using a non-Honda ATF can affect shift quality.

Automatic Transmission Fluid Capacity

2WD:

2.2 L (2.3 US qt) at change

5.85 L (6.18 US qt) at overhaul

AWD/4WD:

2.6 L (2.7 US qt) at change

6.4 L (6.8 US qt) at overhaul

GETtheMANUALS.org

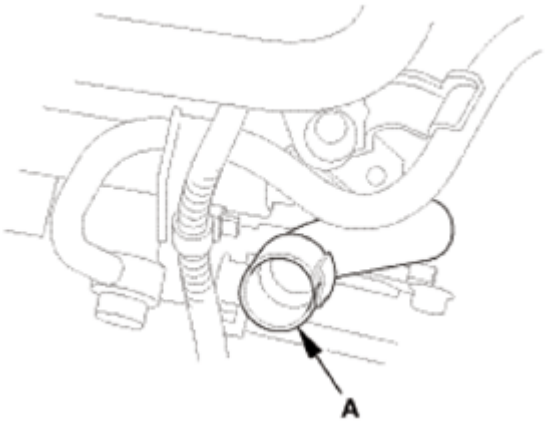

Fig. 104: Identifying Dipstick Guide Tube Opening
Courtesy of AMERICAN HONDA MOTOR CO., INC.

3. Insert the dipstick (A) into the guide tube aligning the notch (B) with the guide tab (C).

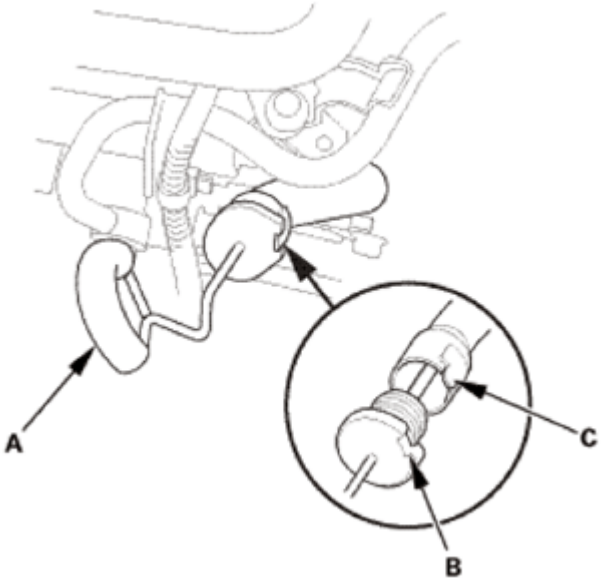

Fig. 105: Identifying Dipstick And Alignment Of Notch With Guide Tab
Courtesy of AMERICAN HONDA MOTOR CO., INC.

4. Remove the dipstick.
5. Make sure the fluid level is between the upper mark (A) and the lower mark (B) on the dipstick.
6. Insert the dipstick into the guide tube aligning the notch with the guide tab.

GETtheMANUALS.org

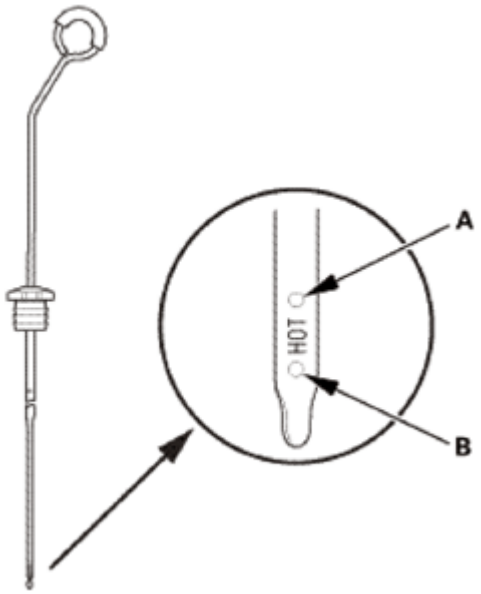

Fig. 106: Identifying Marking On Dipstick
Courtesy of AMERICAN HONDA MOTOR CO., INC.

11. Front Splash Shield
    1. Install the front splash shield (A), then install the bolts (B) and the clips (C, D). Make sure the clips snap into place securely.

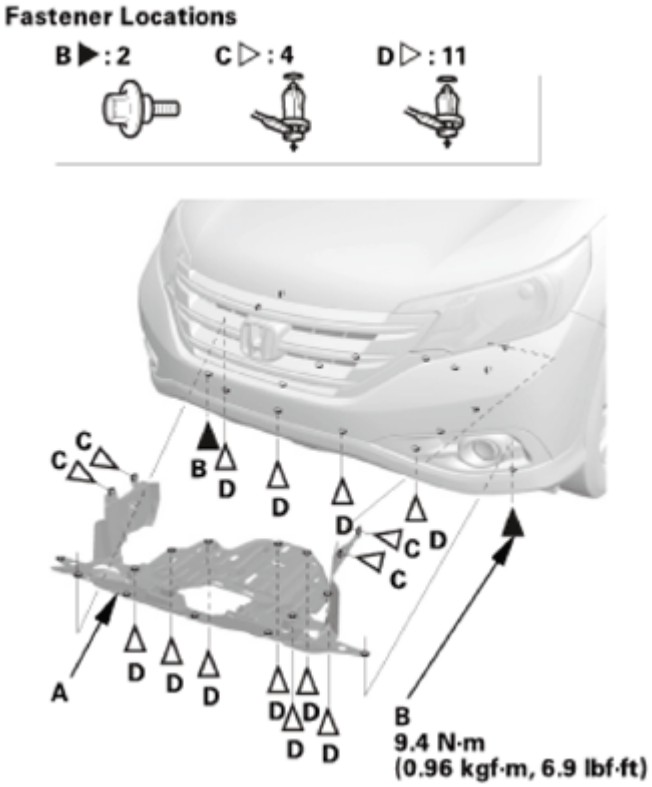

GETtheMANUALS.org

Fig. 107: Identifying Front Splash Shield, Bolts And Chips
Courtesy of AMERICAN HONDA MOTOR CO., INC.

12. Pre-Alignment Checks

    For proper inspection and adjustment of the wheel alignment, do these checks:

    1. Release the parking brake to avoid an incorrect measurement.
    2. Make sure the suspension is not modified.
    3. Make sure the fuel tank is full, and that the spare tire, the jack, and the tools are in place on the vehicle.
    4. Check the tire size and tire pressure according to tire information.
    5. Set the steering column to the middle tilt position and telescopic position.
13. Caster - Inspection

    Use commercially available computerized four wheel alignment equipment to measure wheel alignment (caster, camber, toe, and turning angle). Follow the equipment manufacturer's instructions.

    1. Check the caster angle.

       Caster angle:

       2WD:

       With 16 inch wheel: 2 ° 44 '±30 '

       Without 16 inch wheel: 2 ° 50 '±30 '

       AWD/4WD:

       With 16 inch wheel: 2 ° 38 '±30 '

       Without 16 inch wheel: 2 ° 44 '±30 '

       - If the measurement is within specifications, measure the front camber angle.
       - If the measurement is not within specifications, check for bent or damaged suspension components.
14. Camber - Inspection

    Use commercially available computerized four wheel alignment equipment to measure wheel alignment (caster, camber, toe, and turning angle). Follow the equipment manufacturer's instructions.

    1. Check the camber angle.

       Camber angle:

GETtheMANUALS.org

2WD:

Front:

With 16 inch wheel: -0 ° 01 '±1 ° 00 '

Without 16 inch wheel: -0 ° 10 '±1 ° 00 '

(Maximum difference between the front right and left side: 1 °00 ')

Rear:

With 16 inch wheel: -1 ° 06 '±45 '

Without 16 inch wheel: -1 ° 12 '±45 '

(Maximum difference between the front right and left side: 0 °45 ')

AWD/4WD:

Front:

With 16 inch wheel: -0 ° 08 '±1 ° 00 '

Without 16 inch wheel: 0 ° 00 '±1 ° 00 '

(Maximum difference between the front right and left side: 1 °00 ')

Rear:

With 16 inch wheel: -0 ° 50 '±45 '

Without 16 inch wheel: -1 ° 00 '±45 '

(Maximum difference between the front right and left side: 0 °45 ')

- If the measurement is within specification, measure the toe-in.
- If the measurement for the front camber is not within the specification, go to front camber adjustment.
- If the measurement for the rear camber is not within the specification, check for bent or damaged suspension components.

15. Front Toe - Inspection

Use commercially available computerized four wheel alignment equipment to measure wheel alignment (caster, camber, toe, and turning angle). Follow the equipment manufacturer's instructions.

GETtheMANUALS.org

1. Set the steering column to the middle tilt position and telescopic positions.
2. Center the steering wheel spokes, and install a steering wheel holder tool.
3. Check the toe with the wheels pointed straight ahead.

   Front toe-in: 0±2 mm (0±0.08 in)

   - If adjustment is required, go to the front toe adjustment.
   - If no adjustment is required, remove the alignment equipment.

16. Turning Angle - Inspection

Use commercially available computerized four wheel alignment equipment to measure wheel alignment (caster, camber, toe, and turning angle). Follow the equipment manufacturer's instructions.

1. Turn the wheel right and left while applying the brake, and measure the turning angle of both wheels.

   Turning angle:

   2WD:

   Inward:

   With 16 inch wheel: 36 ° 29 '±2 °

   Without 16 inch wheel: 36 ° 13 '±2 °

   Outward (reference):

   With 16 inch wheel: 31 ° 13 '

   Without 16 inch wheel: 31 ° 02 '

   AWD/4WD:

   Inward:

   With 16 inch wheel: 36 ° 48 '±2 °

   Without 16 inch wheel: 36 ° 30 '±2 °

   Outward (reference):

   With 16 inch wheel: 31 ° 18 '

   Without 16 inch wheel: 31 ° 12 '

GETtheMANUALS.org

2. If the measurement is not within the specifications, even up both sides of the tie-rod threaded section length while adjusting the front toe.
3. If it is correct, but the turning angle is not within the specifications, check for bent or damaged suspension components.

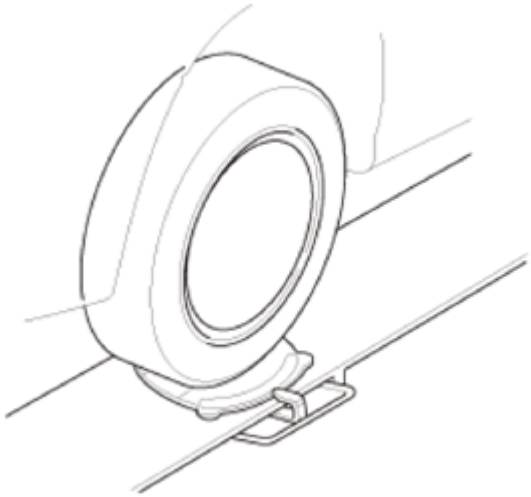

Fig. 108: Measuring Wheel Alignment
Courtesy of AMERICAN HONDA MOTOR CO., INC.

17. Warm Up The Engine
    1. Start the engine. Hold the engine speed at 3, 00 rpm without load in P or N until the radiator fan comes on.
    2. Park the vehicle on level ground.
    3. Turn the ignition switch to LOCK (0).
18. ATF Level Check

NOTE:

- **Keep all foreign particles out of the transmission.**
- **Check the fluid level within 60-90 seconds after turning the engine off.**
- **Higher fluid level may be indicated if the radiator fan comes on twice or more.**

1. Remove the ATF dipstick (yellow loop) (A), and wipe it with a clean cloth.
2. Insert the dipstick into the guide tube aligning the notch (B) with the guide tab (C).

GETtheMANUALS.org

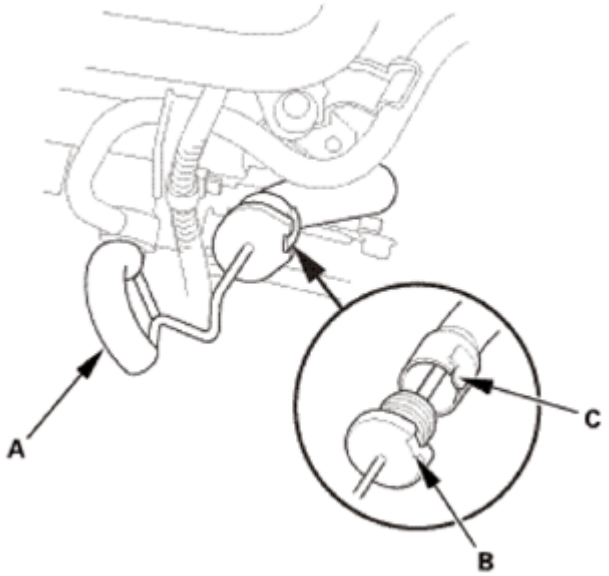

Fig. 109: Identifying ATF Dipstick
Courtesy of AMERICAN HONDA MOTOR CO., INC.

3. Remove the dipstick, and check the ATF level. It should be between the upper mark (A) and the lower mark (B).
4. If the ATF level is below the lower mark, check for fluid leaks at the transmission, the hoses, and the line joints. If a problem is found, fix it before filling the transmission with ATF.

NOTE: **If the vehicle is driven when the ATF level is below the lower mark, one or more of these symptoms may occur:**

- **Transmission damage.**
- **Vehicle does not move in any gear.**
- **Vehicle accelerates poorly, and engine revs up abnormally high when starting off in forward and reverse positions.**
- **Engine vibrates at idle.**

5. If the ATF level is above the upper mark, drain the ATF to proper level.

NOTE: **If the vehicle is driven when the ATF level is above the upper mark, the vehicle may creep forward while in N, or have shifting problems.**

GETtheMANUALS.org

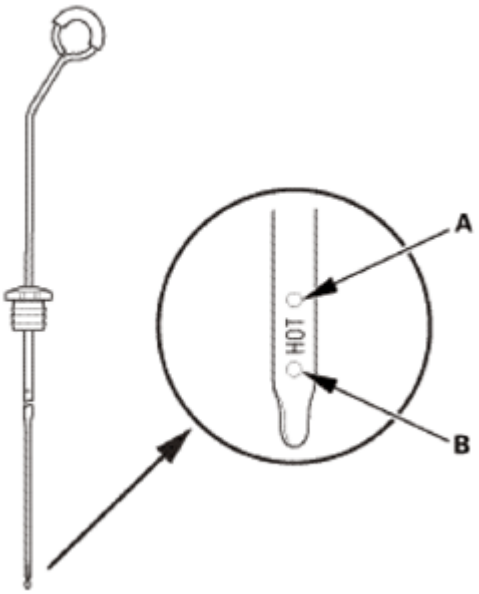

Fig. 110: Identifying Marking On Dipstick
Courtesy of AMERICAN HONDA MOTOR CO., INC.

6. If necessary, fill the transmission with ATF through the dipstick guide tube opening (A) to bring the fluid level between the upper mark and the lower mark of the dipstick. Do not fill the fluid above the upper mark. Always use ATF DW-1 (genuine Honda automatic transmission fluid). Using a non-Honda ATF can affect shift quality.
7. Insert the dipstick into the guide tube aligning the notch with the guide tab.

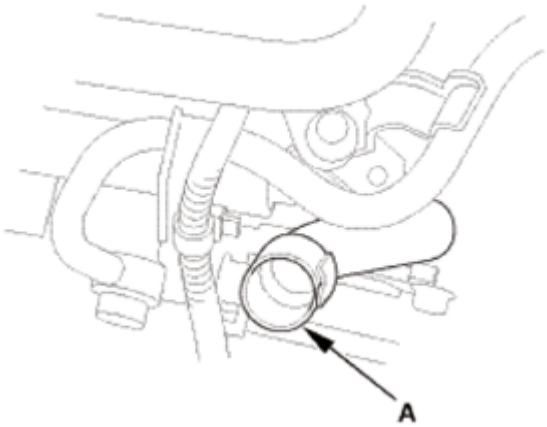

Fig. 111: Identifying Dipstick Guide Tube Opening
Courtesy of AMERICAN HONDA MOTOR CO., INC.

19. Test Drive
    1. Test-drive the vehicle.
20. HDS DLC - Connection
    1. Connect the HDS to the data link connector (DLC) (A) located under the driver's side of the

GETtheMANUALS.org

dashboard.

2. Turn the ignition switch to ON (II).
3. Make sure the HDS communicates with the vehicle. If it does not communicate, go to the DLC circuit troubleshooting.

Fig. 112: Identifying Data Link Connector (DLC)
Courtesy of AMERICAN HONDA MOTOR CO., INC.

21. VSA Sensor Neutral Position - Memorization
    1. Park the vehicle on a flat and level surface, with the steering wheel in the straight ahead position.
    2. Select VSA ADJUSTMENT, then select ALL SENSORS with the HDS, and follow the screen prompts.

    NOTE: See the HDS Help menu for specific instructions.

22. Steering Angle Sensor Neutral Position - Clear
    1. Select EPS ADJUSTMENT, then select EPS STEERING ANGLE SENSOR VALUE CLEAR and follow the screen prompts on the HDS.

    NOTE: See the HDS Help menu for specific instructions.

23. Maintenance Minder Reset
    1. **RESET THE MAINTENANCE MINDER** .

FRONT DRIVESHAFT REMOVAL AND INSTALLATION

REMOVAL

1. Vehicle Lift

GETtheMANUALS.org

1. Raise the vehicle on a lift, and make sure it is securely supported.

2. Front Wheel
    1. Remove the front wheel.

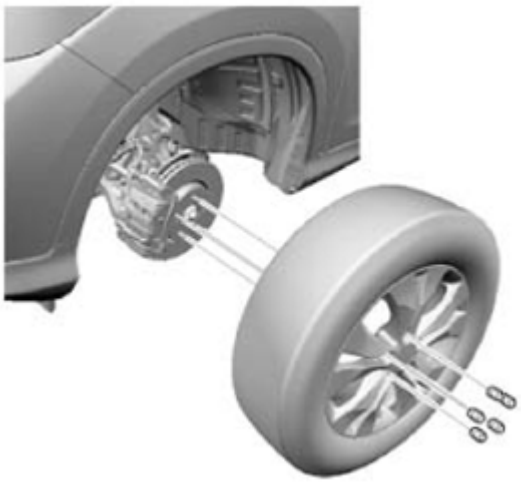

Fig. 113: Identifying Front Wheel
Courtesy of AMERICAN HONDA MOTOR CO., INC.

3. Front Driveshaft Spindle Nut
    1. Pry up the stake (A) on the spindle nut (B).
    2. Remove the spindle nut.

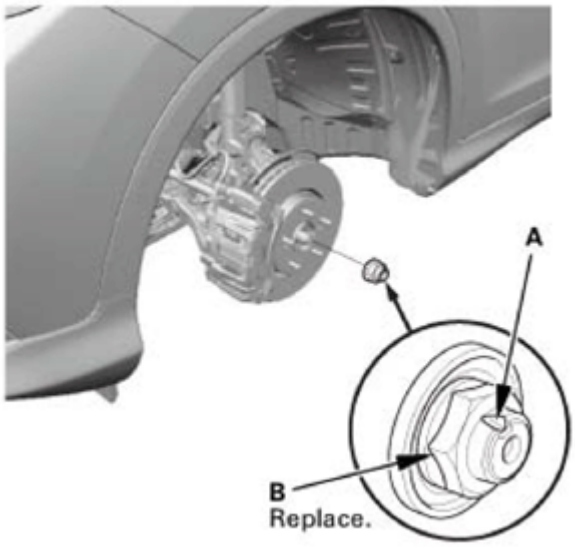

Fig. 114: Identifying Stake On Spindle Nut
Courtesy of AMERICAN HONDA MOTOR CO., INC.

4. Front Splash Shield

GETtheMANUALS.org

1. Remove the bolts (A), then remove the clips (B) that secure the front inner fender and the front splash shield (C) to the body.
2. From under the front bumper (D), remove the clips (E).
3. From under the body, remove the clips (F), then pull out the front splash shield.

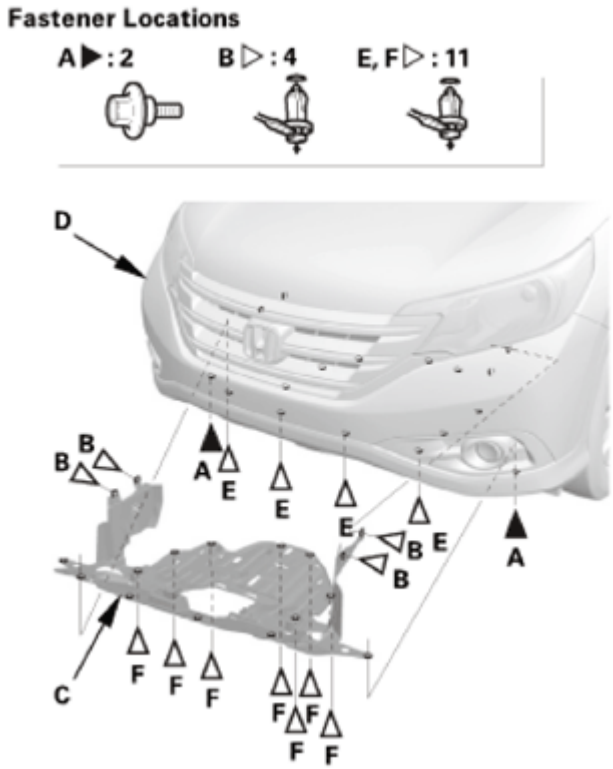

Fig. 115: Identifying Front Bumper, Bolts And Clips
Courtesy of AMERICAN HONDA MOTOR CO., INC.

5. ATF - Replacement
    1. Remove the drain plug (A), and drain the ATF.
    2. Reinstall the drain plug using a new sealing washer (B).

GETtheMANUALS.org

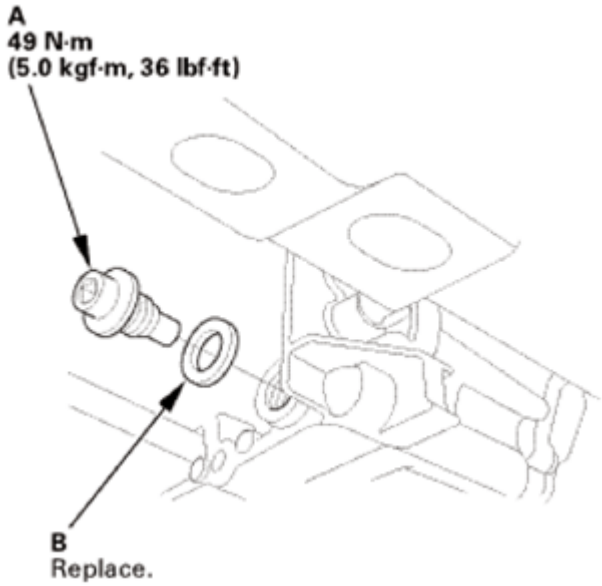

Fig. 116: Identifying Drain Plug And Washer
Courtesy of AMERICAN HONDA MOTOR CO., INC.

6. Lower Ball Joint Lower Arm Side - Disconnection
    1. Remove the flange bolt (A).
    2. Remove the flange nuts (B).
    3. Disconnect the lower arm (C) from the front lower ball joint (D).

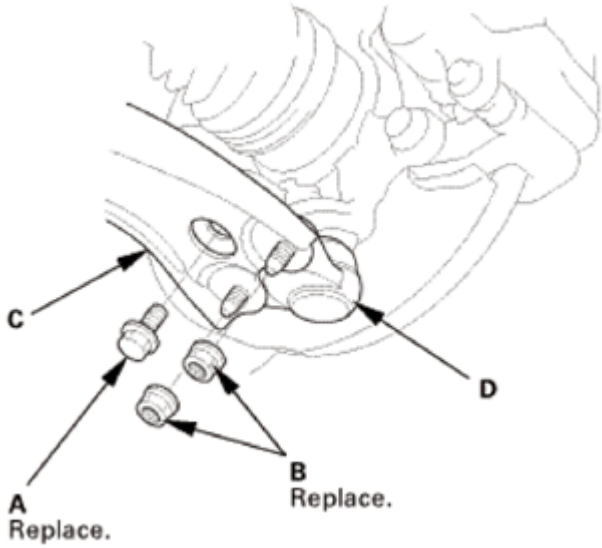

Fig. 117: Identifying Front Lower Ball Joint, Lower Arm, Flange Bolts And Nuts
Courtesy of AMERICAN HONDA MOTOR CO., INC.

7. Front Driveshaft - Disconnection Outboard Side
    1. Separate the outboard joint from the front hub using a soft face hammer.

GETtheMANUALS.org

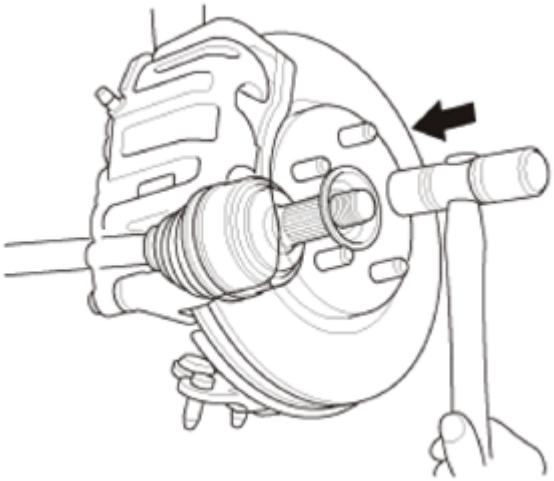

Fig. 118: Separating Outboard Joint From Front Hub Using Soft Face Hammer
Courtesy of AMERICAN HONDA MOTOR CO., INC.

2. Pull the knuckle outward, and separate the outboard joint from the front hub.

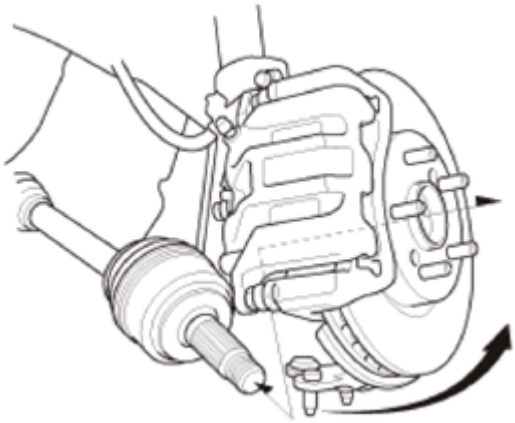

Fig. 119: Pulling Knuckle Outward
Courtesy of AMERICAN HONDA MOTOR CO., INC.

8. Front Driveshaft - Disconnection Inboard Side
   1. Pry the inboard joint (A) from the differential using a pry bar.

NOTE:

- **Do not pull on the driveshaft, or the inboard joint may come apart. Pull the inboard joint straight out to avoid damaging the oil seal.**
- **Be careful not to damage the oil seal or the end of the inboard joint using the pry bar.**

GETtheMANUALS.org

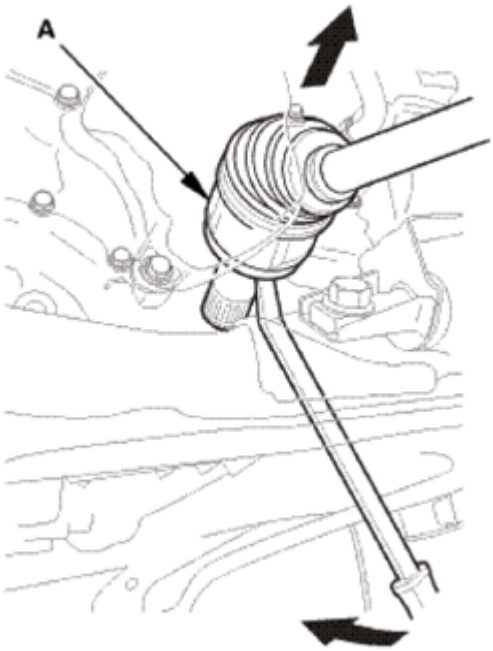

Fig. 120: Prying Inboard Joint From Differential Using A Pry Bar
Courtesy of AMERICAN HONDA MOTOR CO., INC.

2. Remove the set ring (A).

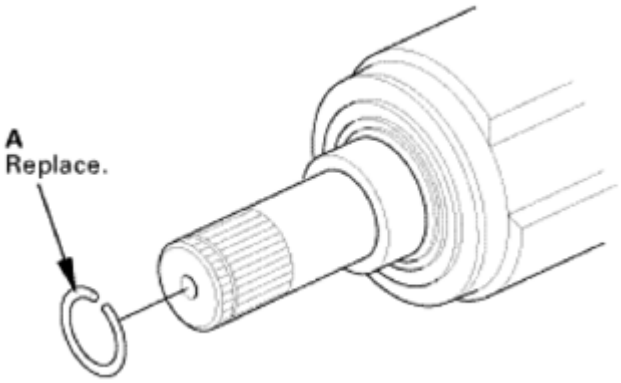

Fig. 121: Identifying Set Ring
Courtesy of AMERICAN HONDA MOTOR CO., INC.

9. Right Front Driveshaft Inboard Side - Disconnection
    1. Drive the inboard joint (A) off of the intermediate shaft using a drift punch and a hammer.

NOTE: **Do not pull on the driveshaft or the inboard joint may come apart.**

GETtheMANUALS.org

Fig. 122: Driving Inboard Joint Off Of Intermediate Shaft Using Drift Punch And Hammer
Courtesy of AMERICAN HONDA MOTOR CO., INC.

2. Remove the set ring (A).

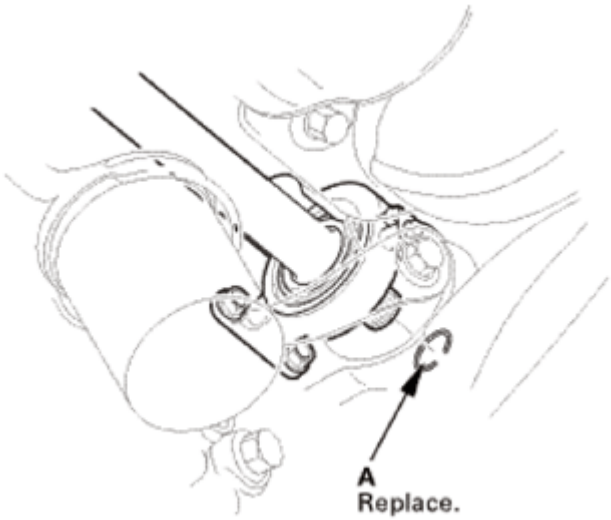

Fig. 123: Identifying Set Ring
Courtesy of AMERICAN HONDA MOTOR CO., INC.

INSTALLATION

1. Right Front Driveshaft Inboard Side - Reconnection
    1. Install a new set ring (A).

GETtheMANUALS.org

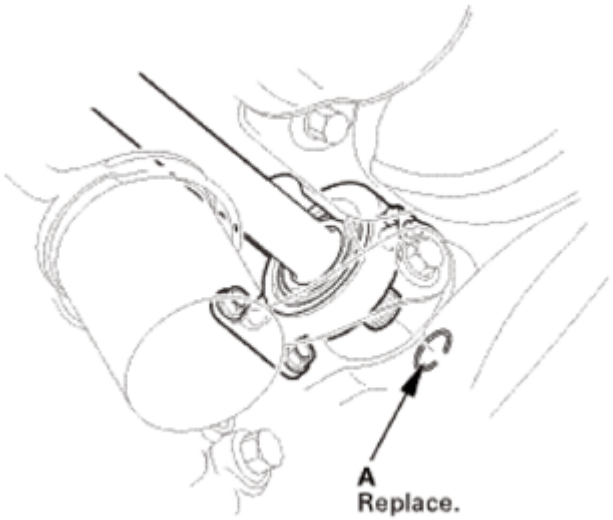

Fig. 124: Identifying Set Ring
Courtesy of AMERICAN HONDA MOTOR CO., INC.

2. Apply 0.5-1.0 g (0.018-0.035 oz) of super high temp area grease (P/N 08798-9002) to the whole splined surface (A) of the right driveshaft.
3. After applying grease, remove the grease from the splined grooves at intervals of 2-3 splines and from the set ring groove (B) so that air can bleed from the intermediate shaft during reassembly.

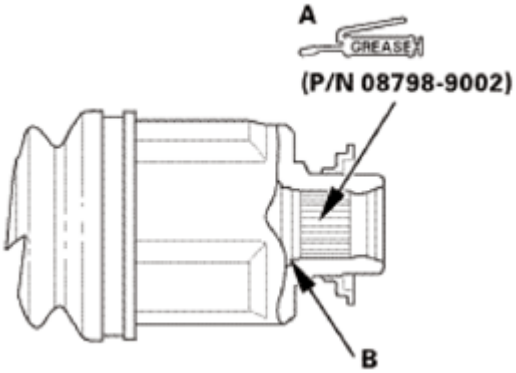

Fig. 125: Applying Super High Temp Area Grease To Whole Splined Surface Of Right Driveshaft
Courtesy of AMERICAN HONDA MOTOR CO., INC.

4. Insert the inboard end (A) of the driveshaft onto the intermediate shaft (B) until the set ring (C) locks in the groove (D).

GETtheMANUALS.org

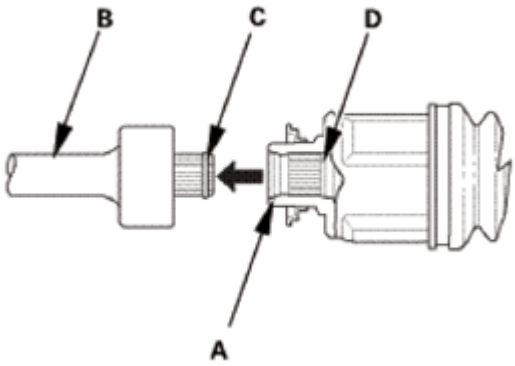

Fig. 126: Inserting Inboard End Of Driveshaft Onto Intermediate Shaft
Courtesy of AMERICAN HONDA MOTOR CO., INC.

2. Driveshaft Front Left - Reconnection, Inboard Side
    1. Install a new set ring (A).

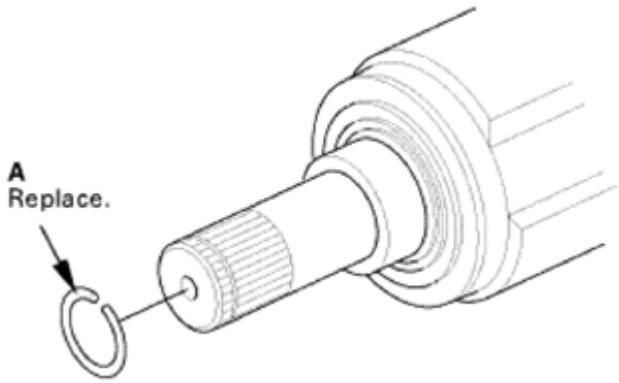

Fig. 127: Identifying Set Ring
Courtesy of AMERICAN HONDA MOTOR CO., INC.

2. Clean the areas where the driveshaft contacts the differential thoroughly with solvent.

NOTE: Do not wash the rubber parts with solvent.

3. Dry the areas where the driveshaft contacts the differential thoroughly with compressed air.
4. Insert the inboard end (A) of the driveshaft into the differential (B) until the set ring (C) locks in the groove (D).

NOTE: Insert the driveshaft horizontally to prevent damaging the oil seal.

GETtheMANUALS.org

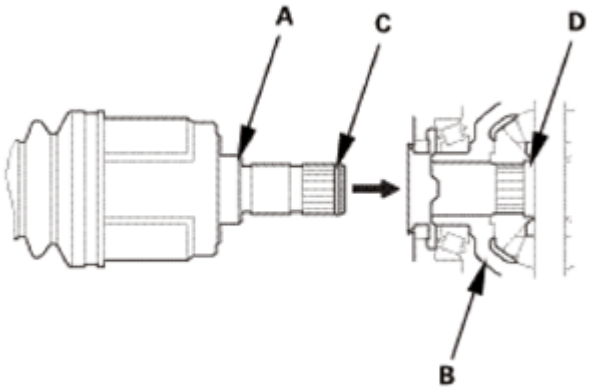

Fig. 128: Inserting Inboard End Of Driveshaft Into Differential
Courtesy of AMERICAN HONDA MOTOR CO., INC.

3. Driveshaft Front Left - Reconnection, Outboard Side
    1. Apply about 5 g (0.18 oz) of holy 60 paste (P/N 08734-0001) to the contact area (A) of the outboard joint and the front wheel bearing.

    NOTE: The paste helps to prevent noise and vibration.

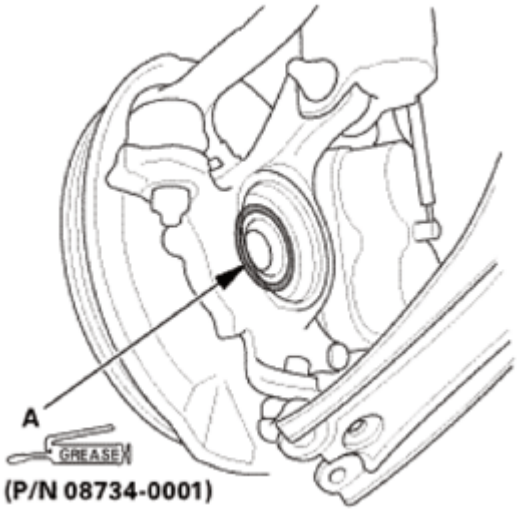

Fig. 129: Applying About 5 G (0.18 Oz) Of Holy 60 Paste To Contact Area Of Outboard Joint And Front Wheel Bearing
Courtesy of AMERICAN HONDA MOTOR CO., INC.

    2. Install the outboard joint (A) into the front hub (B) on the knuckle.

GETtheMANUALS.org

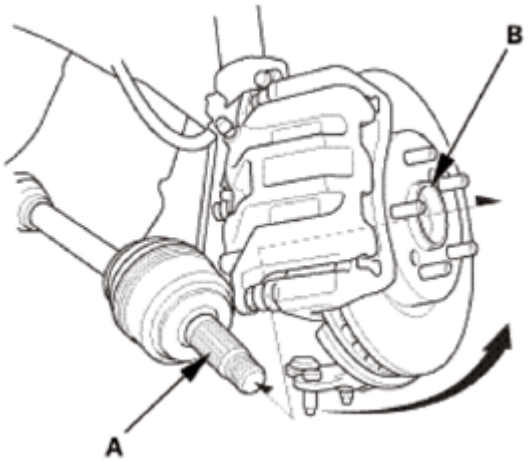

Fig. 130: Installing Outboard Joint Into Front Hub On Knuckle
Courtesy of AMERICAN HONDA MOTOR CO., INC.

4. Front Lower Ball Joint Lower Arm Side - Reconnection
    1. Connect the front lower ball joint (A) to the lower arm.
    2. Install the new flange nuts and the new flange bolt in the sequence shown.

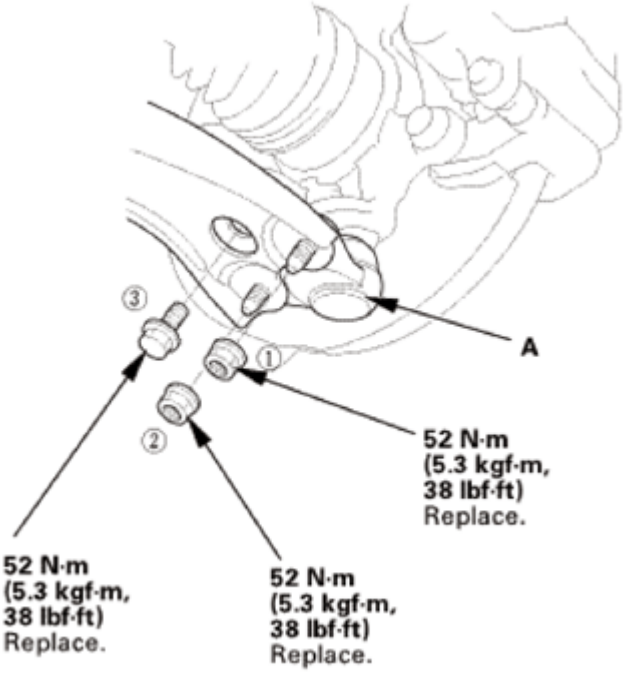

Fig. 131: Identifying Front Lower Ball Joint And Bolts With Torque Specifications
Courtesy of AMERICAN HONDA MOTOR CO., INC.

5. Driveshaft Spindle Nut, Front Left
    1. Apply a small amount of engine oil to the seating surface of a new spindle nut (A).
    2. Install the spindle nut.

GETtheMANUALS.org

3. Use a drift to stake the spindle nut shoulder (B) against the driveshaft.

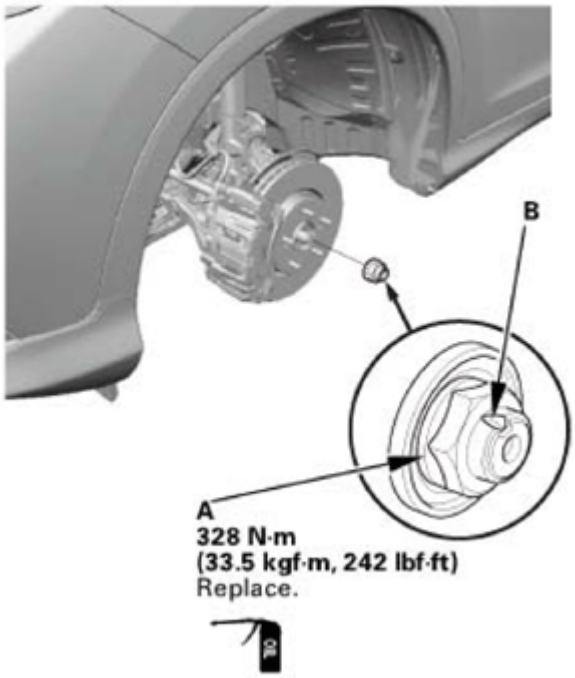

Fig. 132: Identifying Spindle Nut With Torque Specifications
Courtesy of AMERICAN HONDA MOTOR CO., INC.

6. Front Wheel
   1. Install the front wheel.

NOTE: **Before installing the wheel, clean the mating surfaces between the brake disc and the inside of the wheel.**

GETtheMANUALS.org

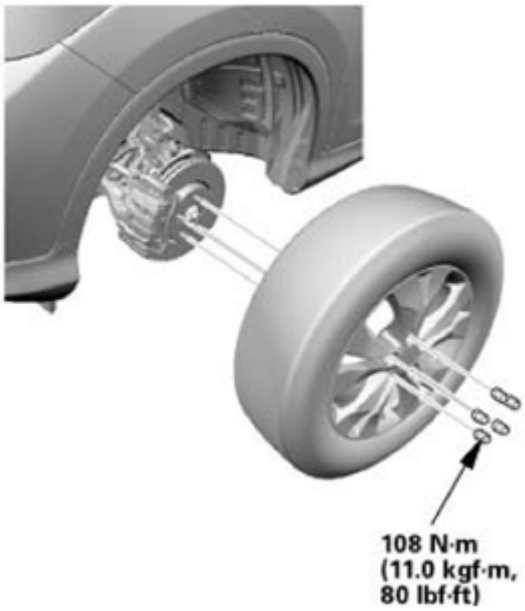

Fig. 133: Identifying Front Wheel Bolts With Torque Specifications
Courtesy of AMERICAN HONDA MOTOR CO., INC.

7. Driveshaft After Install Check
    1. Turn the wheel by hand, and make sure there is no interference between the driveshaft and surrounding parts.
8. ATF - Replacement
    1. Remove the ATF dipstick (yellow loop) (A), and wipe it with a clean cloth.

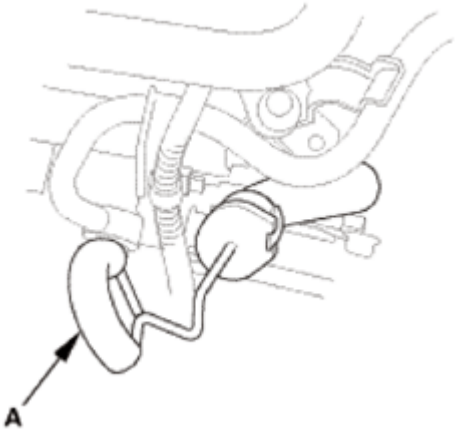

Fig. 134: Identifying ATF Dipstick
Courtesy of AMERICAN HONDA MOTOR CO., INC.

    2. Refill the transmission with the recommended fluid into the dipstick guide tube opening (A) to bring the fluid level between the upper mark and the lower mark of the dipstick. Always use ATF DW-1 (genuine Honda automatic transmission fluid). Using a non-Honda ATF can affect shift quality.

GETtheMANUALS.org

Automatic Transmission Fluid Capacity

2WD:

2.2 L (2.3 US qt) at change

5.85 L (6.18 US qt) at overhaul

AWD/4WD:

2.6 L (2.7 US qt) at change

6.4 L (6.8 US qt) at overhaul

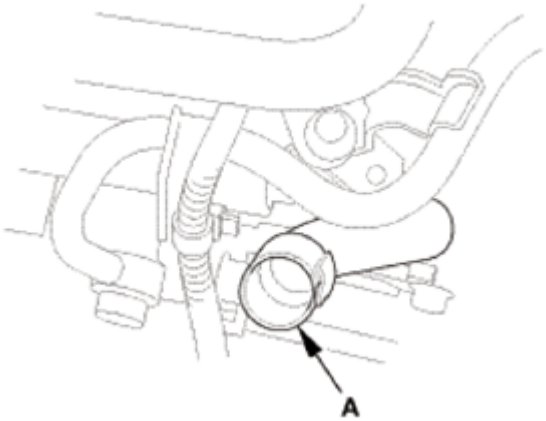

Fig. 135: Identifying Dipstick Guide Tube Opening
Courtesy of AMERICAN HONDA MOTOR CO., INC.

3. Insert the dipstick (A) into the guide tube aligning the notch (B) with the guide tab (C).

GETtheMANUALS.org

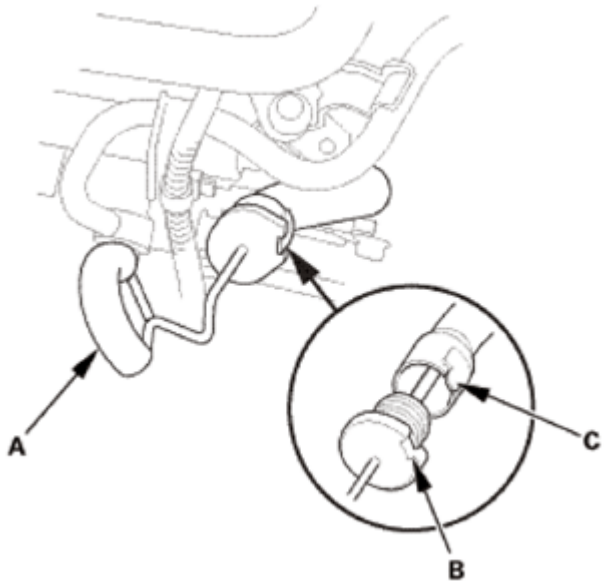

Fig. 136: Identifying Dipstick And Alignment Of Notch With Guide Tab
Courtesy of AMERICAN HONDA MOTOR CO., INC.

4. Remove the dipstick.
5. Make sure the fluid level is between the upper mark (A) and the lower mark (B) on the dipstick.
6. Insert the dipstick into the guide tube aligning the notch with the guide tab.

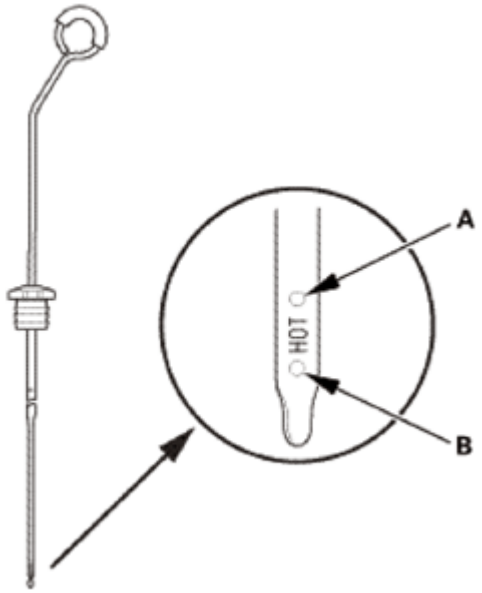

Fig. 137: Identifying Marking On Dipstick
Courtesy of AMERICAN HONDA MOTOR CO., INC.

9. Front Splash Shield
    1. Install the front splash shield (A), then install the bolts (B) and the clips (C, D). Make sure the clips

GETtheMANUALS.org

snap into place securely.

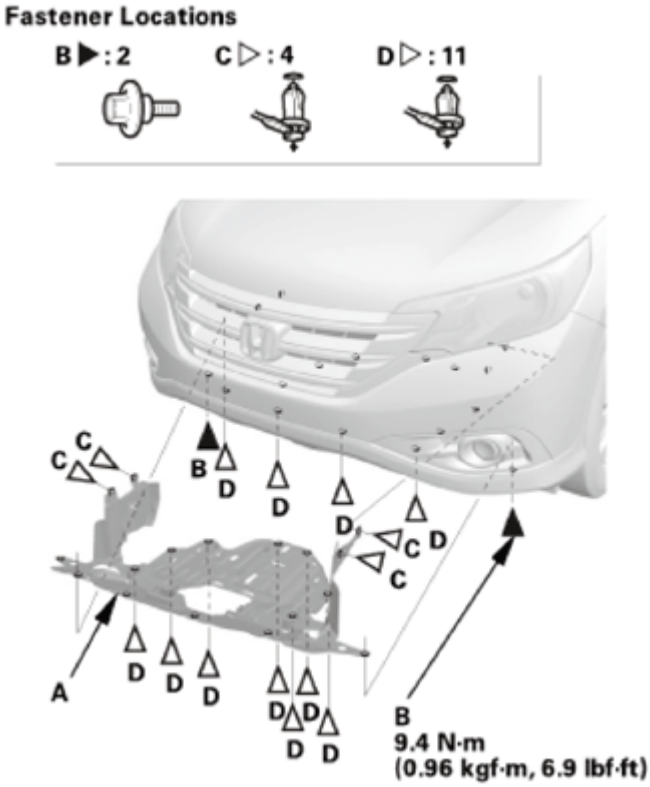

Fig. 138: Identifying Front Splash Shield, Bolts And Clips
Courtesy of AMERICAN HONDA MOTOR CO., INC.

10. Pre-Alignment Checks

    For proper inspection and adjustment of the wheel alignment, do these checks:

    1. Release the parking brake to avoid an incorrect measurement.
    2. Make sure the suspension is not modified.
    3. Make sure the fuel tank is full, and that the spare tire, the jack, and the tools are in place on the vehicle.
    4. Check the tire size and tire pressure according to tire information.
    5. Set the steering column to the middle tilt position and telescopic position.

11. Caster - Inspection

    Use commercially available computerized four wheel alignment equipment to measure wheel alignment (caster, camber, toe, and turning angle). Follow the equipment manufacturer's instructions.

    1. Check the caster angle.

       Caster angle:

GETtheMANUALS.org

2WD:

With 16 inch wheel: 2 ° 44 '±30 '

Without 16 inch wheel: 2 ° 50 '±30 '

AWD/4WD:

With 16 inch wheel: 2 ° 38 '±30 '

Without 16 inch wheel: 2 ° 44 '±30 '

- If the measurement is within specifications, measure the front camber angle.
- If the measurement is not within specifications, check for bent or damaged suspension components.

12. Camber - Inspection

Use commercially available computerized four wheel alignment equipment to measure wheel alignment (caster, camber, toe, and turning angle). Follow the equipment manufacturer's instructions.

1. Check the camber angle.

Camber angle:

2WD:

Front:

With 16 inch wheel: -0 ° 01 '±1 ° 00 '

Without 16 inch wheel: -0 ° 10 '±1 ° 00 '

(Maximum difference between the front right and left side: 1 °00 ')

Rear:

With 16 inch wheel: -1 ° 06 '±45 '

Without 16 inch wheel: -1 ° 12 '±45 '

(Maximum difference between the front right and left side: 0 °45 ')

AWD/4WD:

Front:

With 16 inch wheel: -0 ° 08 '±1 ° 00 '

GETtheMANUALS.org

Without 16 inch wheel: 0 ° 00 '±1 ° 00 '

(Maximum difference between the front right and left side: 1 °00 ')

Rear:

With 16 inch wheel: -0 ° 50 '±45 '

Without 16 inch wheel: -1 ° 00 '±45 '

(Maximum difference between the front right and left side: 0 °45 ')

- If the measurement is within specification, measure the toe-in.
- If the measurement for the front camber is not within the specification, go to front camber adjustment.
- If the measurement for the rear camber is not within the specification, check for bent or damaged suspension components.

13. Front Toe - Inspection

Use commercially available computerized four wheel alignment equipment to measure wheel alignment (caster, camber, toe, and turning angle). Follow the equipment manufacturer's instructions.

1. Set the steering column to the middle tilt position and telescopic positions.
2. Center the steering wheel spokes, and install a steering wheel holder tool.
3. Check the toe with the wheels pointed straight ahead.

Front toe-in: 0±2 mm (0±0.08 in)

- If adjustment is required, go to the front toe adjustment.
- If no adjustment is required, remove the alignment equipment.

14. Turning Angle - Inspection

Use commercially available computerized four wheel alignment equipment to measure wheel alignment (caster, camber, toe, and turning angle). Follow the equipment manufacturer's instructions.

1. Turn the wheel right and left while applying the brake, and measure the turning angle of both wheels.

Turning angle:

2WD:

Inward:

With 16 inch wheel: 36 ° 29 '±2 °

GETtheMANUALS.org

Without 16 inch wheel: 36 ° 13 '±2 °

Outward (reference):

With 16 inch wheel: 31 ° 13 '

Without 16 inch wheel: 31 ° 02 '

AWD/4WD:

Inward:

With 16 inch wheel: 36 ° 48 '±2 °

Without 16 inch wheel: 36 ° 30 '±2 °

Outward (reference):

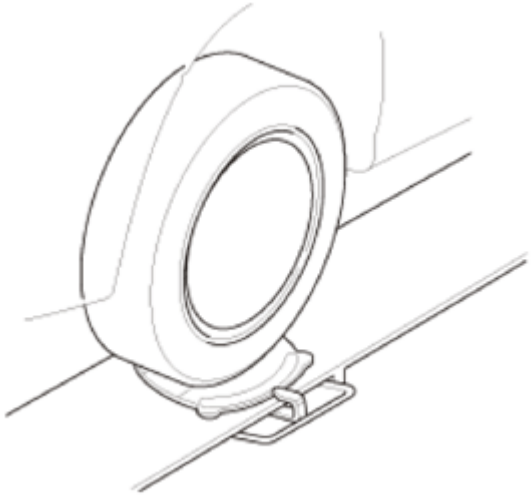

Fig. 139: Measuring Wheel Alignment
Courtesy of AMERICAN HONDA MOTOR CO., INC.

With 16 inch wheel: 31 ° 18 '

Without 16 inch wheel: 31 ° 12 '

2. If the measurement is not within the specifications, even up both sides of the tie-rod threaded section length while adjusting the front toe.
3. If it is correct, but the turning angle is not within the specifications, check for bent or damaged suspension components.

15. Warm Up The Engine
    1. Start the engine. Hold the engine speed at 3, 00 rpm without load in P or N until the radiator fan comes on.

GETtheMANUALS.org

2. Park the vehicle on level ground.
3. Turn the ignition switch to LOCK (0).

16. ATF Level Check

NOTE:

- **Keep all foreign particles out of the transmission.**
- **Check the fluid level within 60-90 seconds after turning the engine off.**
- **Higher fluid level may be indicated if the radiator fan comes on twice or more.**

1. Remove the ATF dipstick (yellow loop) (A), and wipe it with a clean cloth.
2. Insert the dipstick into the guide tube aligning the notch (B) with the guide tab (C).

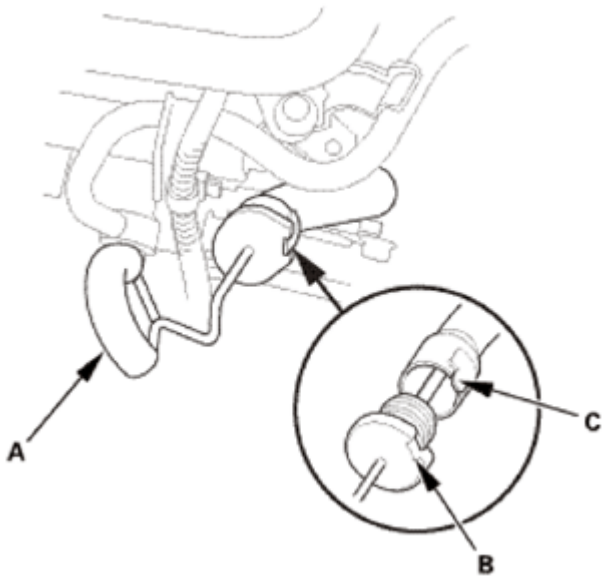

Fig. 140: Identifying ATF Dipstick And Alignment Of Notch With Guide Tab
Courtesy of AMERICAN HONDA MOTOR CO., INC.

3. Remove the dipstick, and check the ATF level. It should be between the upper mark (A) and the lower mark (B).
4. If the ATF level is below the lower mark, check for fluid leaks at the transmission, the hoses, and the line joints. If a problem is found, fix it before filling the transmission with ATF.

NOTE: **If the vehicle is driven when the ATF level is below the lower mark, one or more of these symptoms may occur:**

- **Transmission damage.**
- **Vehicle does not move in any gear.**
- **Vehicle accelerates poorly, and engine revs up abnormally high**

GETtheMANUALS.org

when starting off in forward and reverse positions.

- **Engine vibrates at idle.**

5. If the ATF level is above the upper mark, drain the ATF to proper level.

NOTE: **If the vehicle is driven when the ATF level is above the upper mark, the vehicle may creep forward while in N, or have shifting problems.**

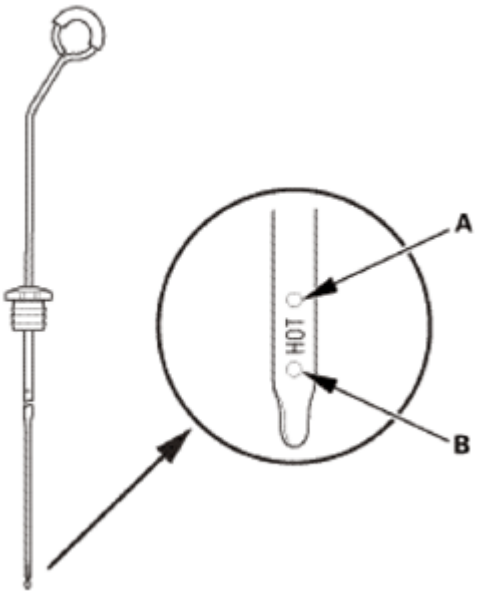

Fig. 141: Identifying ATF Level
Courtesy of AMERICAN HONDA MOTOR CO., INC.

6. If necessary, fill the transmission with ATF through the dipstick guide tube opening (A) to bring the fluid level between the upper mark and the lower mark of the dipstick. Do not fill the fluid above the upper mark. Always use ATF DW-1 (genuine Honda automatic transmission fluid). Using a non-Honda ATF can affect shift quality.
7. Insert the dipstick into the guide tube aligning the notch with the guide tab.

GETtheMANUALS.org

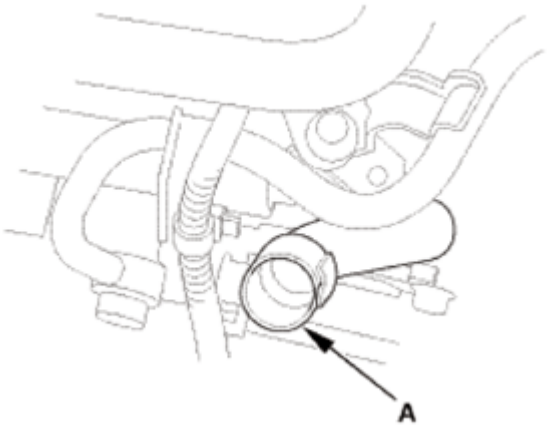

Fig. 142: Identifying Dipstick Guide Tube Opening
Courtesy of AMERICAN HONDA MOTOR CO., INC.

17. Test Drive
    1. Test-drive the vehicle.
18. HDS DLC - Connection
    1. Connect the HDS to the data link connector (DLC) (A) located under the driver's side of the dashboard.
    2. Turn the ignition switch to ON (II).
    3. Make sure the HDS communicates with the vehicle. If it does not communicate, go to the DLC circuit troubleshooting.

Fig. 143: Identifying Data Link Connector (DLC)
Courtesy of AMERICAN HONDA MOTOR CO., INC.

19. VSA Sensor Neutral Position - Memorization
    1. Park the vehicle on a flat and level surface, with the steering wheel in the straight ahead position.

GETtheMANUALS.org

2. Select VSA ADJUSTMENT, then select ALL SENSORS with the HDS, and follow the screen prompts.

NOTE: See the HDS Help menu for specific instructions.

20. Steering Angle Sensor Neutral Position - Clear
    1. Select EPS ADJUSTMENT, then select EPS STEERING ANGLE SENSOR VALUE CLEAR and follow the screen prompts on the HDS.

NOTE: See the HDS Help menu for specific instructions.

21. Maintenance Minder Reset
    1. **RESET THE MAINTENANCE MINDER**

PROPELLER SHAFT INSPECTION

INSPECTION

1. Vehicle Lift
    1. Raise the vehicle on a lift, and make sure it is securely supported.
2. Universal Joint And Boot - Inspection
    1. Move the shift lever to N.
    2. Check the center support bearing (A) for excessive play or noise.
        - If the center support has excessive play or noise, replace the propeller shaft assembly.
    3. Check the rubber portion (B) of the center support bearing for damage and deterioration.
        - If the rubber portion is damaged or deteriorated, replace the propeller shaft assembly.
    4. Check the universal joints for excessive play or noise.
        - If the universal joints have excessive play or noise, replace the propeller shaft assembly.

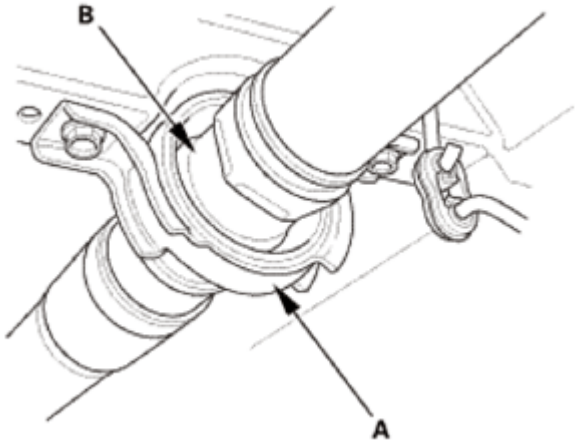

Fig. 144: Identifying Center Support Bearing And Rubber Portion

GETtheMANUALS.org

Courtesy of AMERICAN HONDA MOTOR CO., INC.

3. Propeller Shaft Runout - Inspection
    1. Install a dial indicator with its needle on the center of the No. 1 propeller shaft or the No. 2 propeller shaft.
    2. Turn the other propeller shaft slowly and check the runout. Repeat this procedure for the other propeller shaft.
    3. If the runout on either propeller shaft exceeds the service limit, replace the propeller shaft assembly.

No. 1 Propeller Shaft Runout
Service Limit: 1.5 mm (0.059 in)

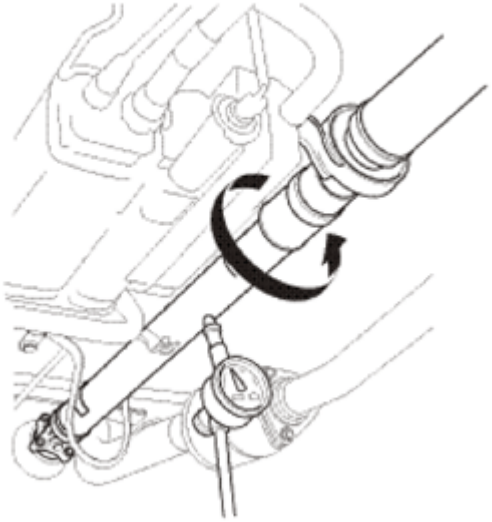

Fig. 145: Checking No. 1 Propeller Shaft Runout
Courtesy of AMERICAN HONDA MOTOR CO., INC.

GETtheMANUALS.org

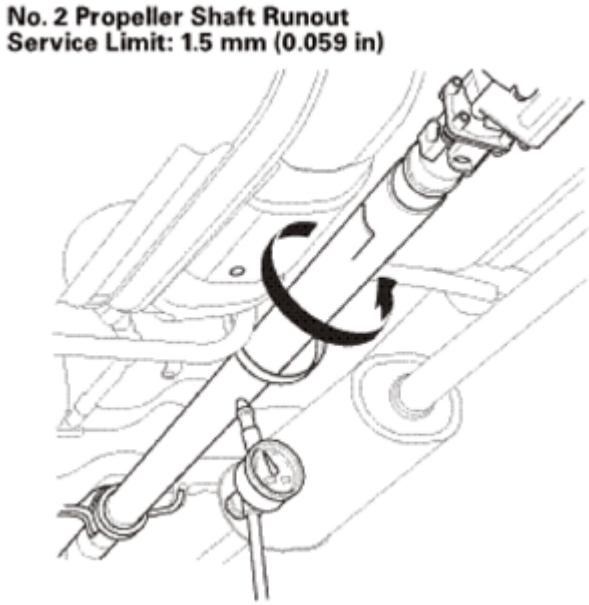

Fig. 146: Checking No. 2 Propeller Shaft Runout
Courtesy of AMERICAN HONDA MOTOR CO., INC.

PROPELLER SHAFT REMOVAL AND INSTALLATION

REMOVAL

1. Vehicle Lift
    1. Raise the vehicle on a lift, and make sure it is securely supported.
2. Front Floor Undercover
    1. Remove the bolts (A) and the clips (B, C) securing the front floor undercover (D), then remove the front floor undercover.

GETtheMANUALS.org

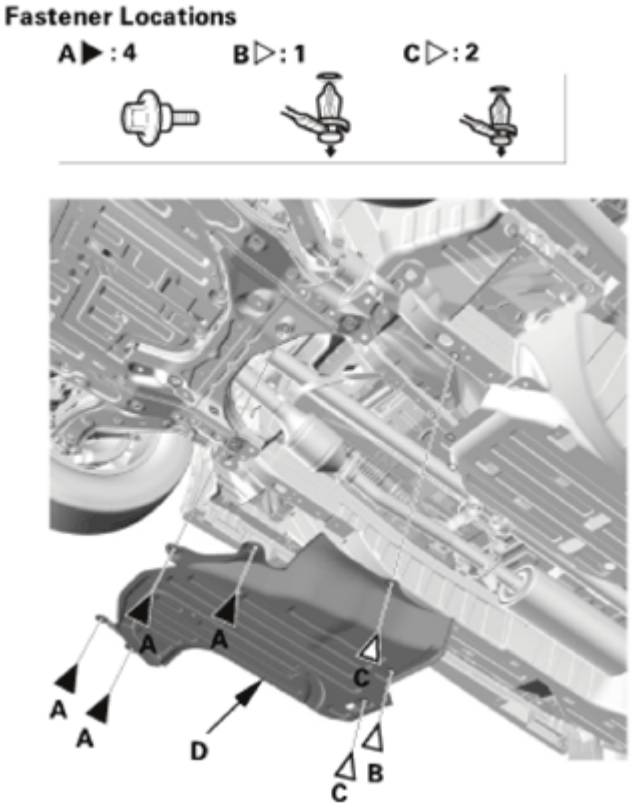

Fig. 147: Identifying Front Floor Undercover, Bolts And Clips
Courtesy of AMERICAN HONDA MOTOR CO., INC.

3. Left Middle Floor Undercover
    1. Remove the bolts (A) and clips (B, C), then remove the left middle floor undercover (D).

GETtheMANUALS.org

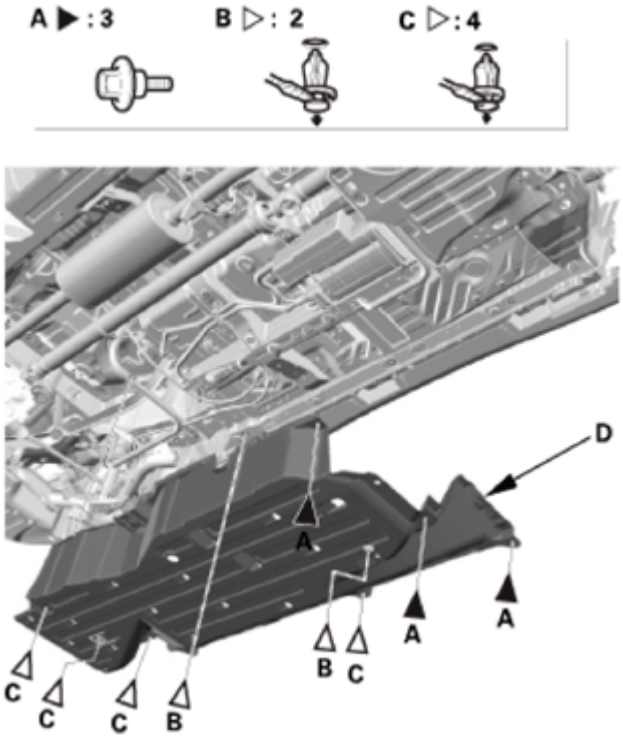

Fig. 148: Identifying Left Middle Floor Undercover, Bolts And Clips
Courtesy of AMERICAN HONDA MOTOR CO., INC.

4. Propeller Shaft Protector No.
    1. Remove the No. 1 propeller shaft protector (A).

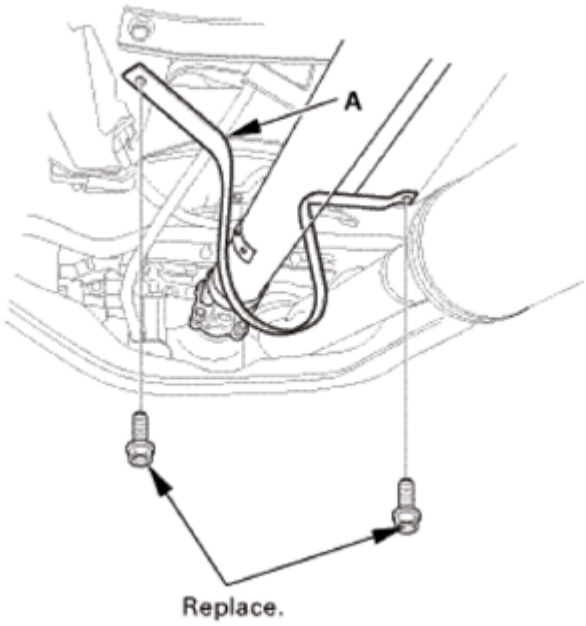

Fig. 149: Identifying No. 1 Propeller Shaft Protector

GETtheMANUALS.org

Courtesy of AMERICAN HONDA MOTOR CO., INC.

5. Propeller Shaft Protector No.
    1. Remove the No. 2 propeller shaft protector (A).

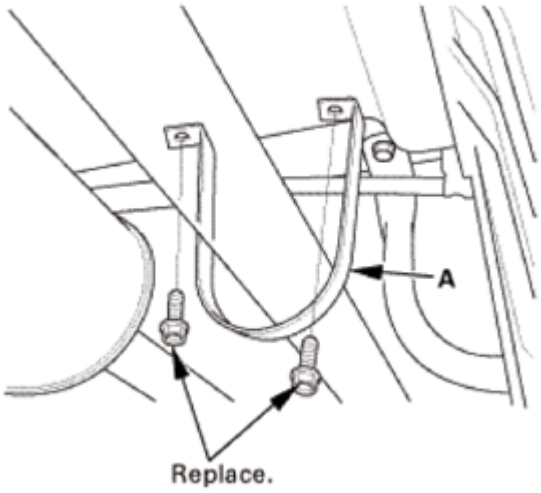

Fig. 150: Identifying No. 2 Propeller Shaft Protector
Courtesy of AMERICAN HONDA MOTOR CO., INC.

6. Propeller Shaft Transmission Side - Disconnection
    1. Make reference mark (A) across the No. 1 propeller shaft (B) and the transfer companion flange (C).
    2. Remove the No. 1 propeller shaft flange bolts (D).

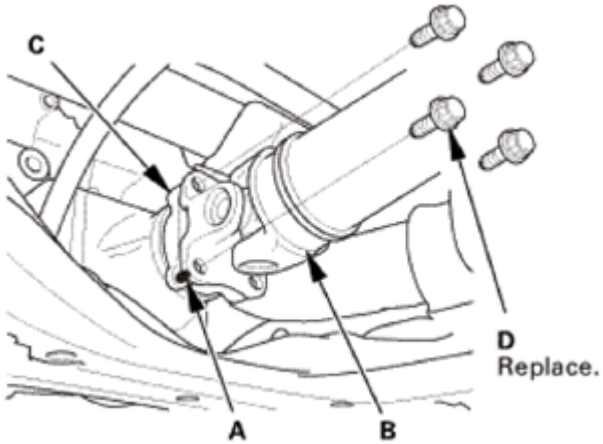

Fig. 151: Identifying Mark On No. 1 Propeller Shaft, Transfer Companion Flange And Flange Bolts
Courtesy of AMERICAN HONDA MOTOR CO., INC.

7. Propeller Shaft Differential Side - Disconnection

GETtheMANUALS.org

1. Make reference mark (A) across the No. 2 propeller shaft (B) and the rear differential companion flange (C).
2. Remove the No. 2 propeller shaft flange bolts (D).

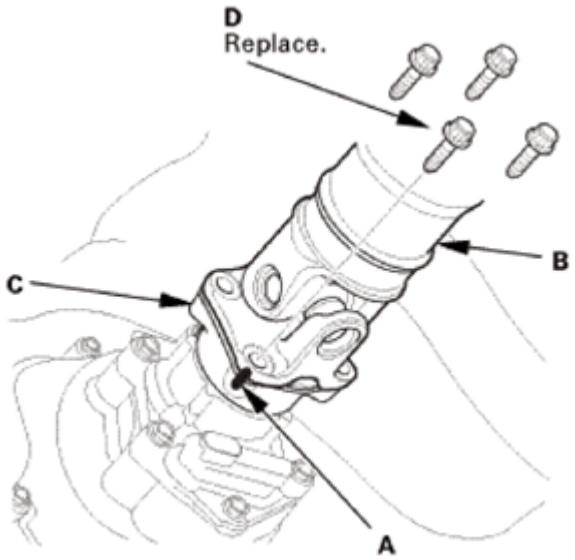

Fig. 152: Identifying Marks On No. 2 Propeller Shaft And Bolts
Courtesy of AMERICAN HONDA MOTOR CO., INC.

8. Propeller Shaft Assembly
    1. Remove the center support bearing mounting bolts (A), then remove the propeller shaft assembly (B).

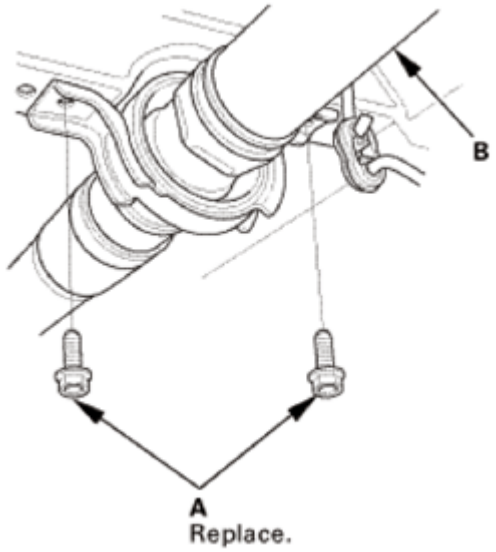

Fig. 153: Identifying Center Support Bearing Mounting Bolts And Propeller Shaft Assembly
Courtesy of AMERICAN HONDA MOTOR CO., INC.

GETtheMANUALS.org

INSTALLATION

1. Propeller Shaft Assembly
    1. Install the propeller shaft assembly (A), then Install new center support bearing mounting bolts (B).

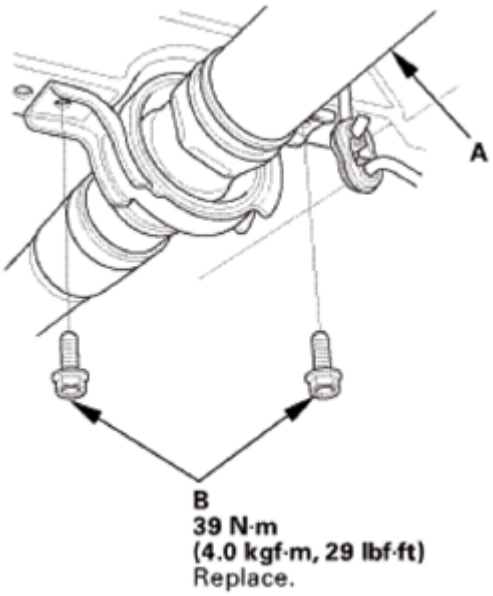

Fig. 154: Identifying Propeller Shaft Assembly And Center Support Bearing Mounting Bolts With Torque Specifications
Courtesy of AMERICAN HONDA MOTOR CO., INC.

2. Propeller Shaft Differential Side - Reconnection
    1. Set the No. 2 propeller shaft (A) to the rear differential companion flange (B) by aligning the reference mark (C) you made during the removal procedure.
    2. Install new No. 2 propeller shaft flange bolts (D) to the specified torque.

GETtheMANUALS.org

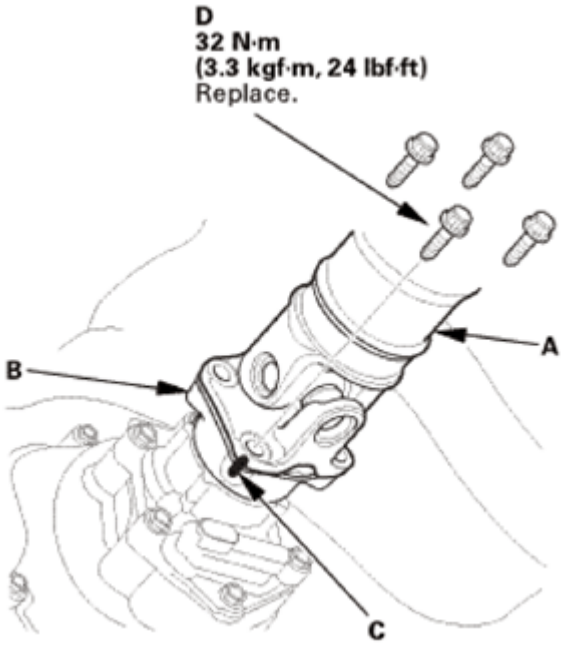

Fig. 155: Identifying No. 2 Propeller Shaft, Companion Flange And Bolts
Courtesy of AMERICAN HONDA MOTOR CO., INC.

3. Propeller Shaft Transmission Side - Reconnection
    1. Set the No. 1 propeller shaft (A) to the transfer companion flange (B) by aligning the reference mark (C) you made during the removal procedure. Then install new No. 1 propeller shaft flange bolts (D) to the specified torque.

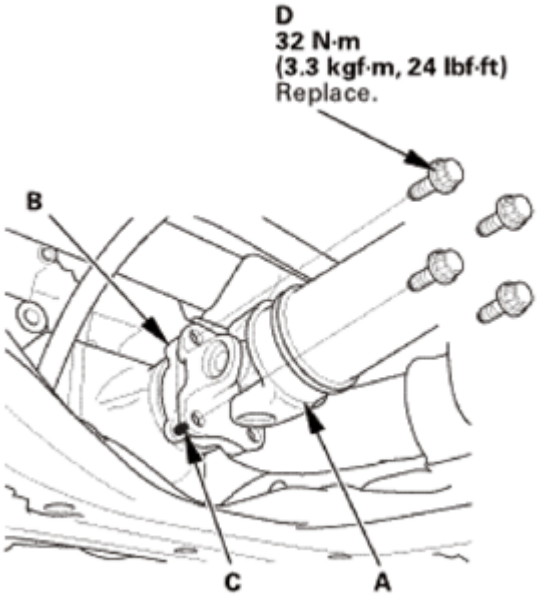

Fig. 156: Identifying No. 1 Propeller Shaft, Transfer Companion Flange And Bolts With Torque Specifications
Courtesy of AMERICAN HONDA MOTOR CO., INC.

GETtheMANUALS.org

4. Propeller Shaft Protector No.
    1. Install the No. 2 propeller shaft protector (A).

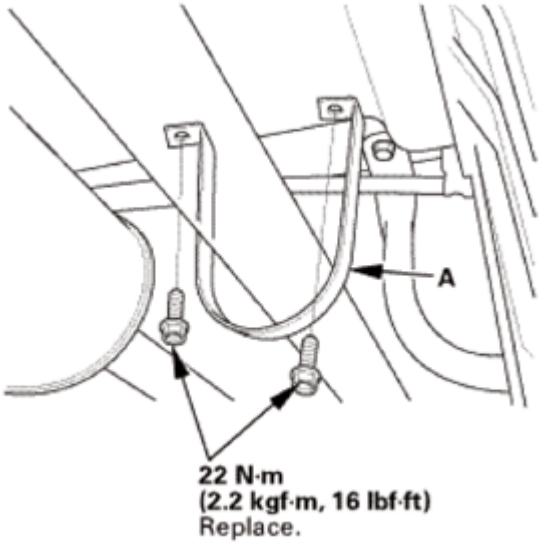

Fig. 157: Identifying No. 2 Propeller Shaft Protector
Courtesy of AMERICAN HONDA MOTOR CO., INC.

5. Propeller Shaft Protector No.
    1. Install the No. 1 propeller shaft protector (A).

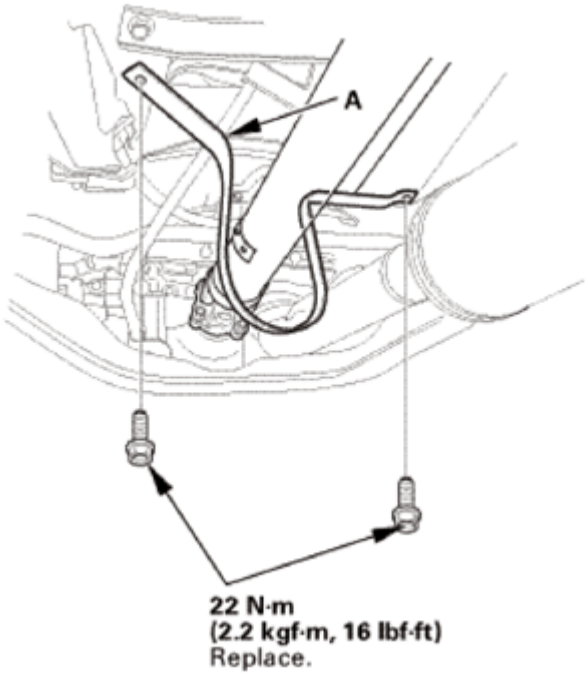

Fig. 158: Identifying No. 1 Propeller Shaft Protector
Courtesy of AMERICAN HONDA MOTOR CO., INC.

GETtheMANUALS.org

6. Left Middle Floor Undercover
    1. Install the left middle floor undercover (A), then install the bolts (B) and the clips (C, D). Make sure the clips snap into place securely.

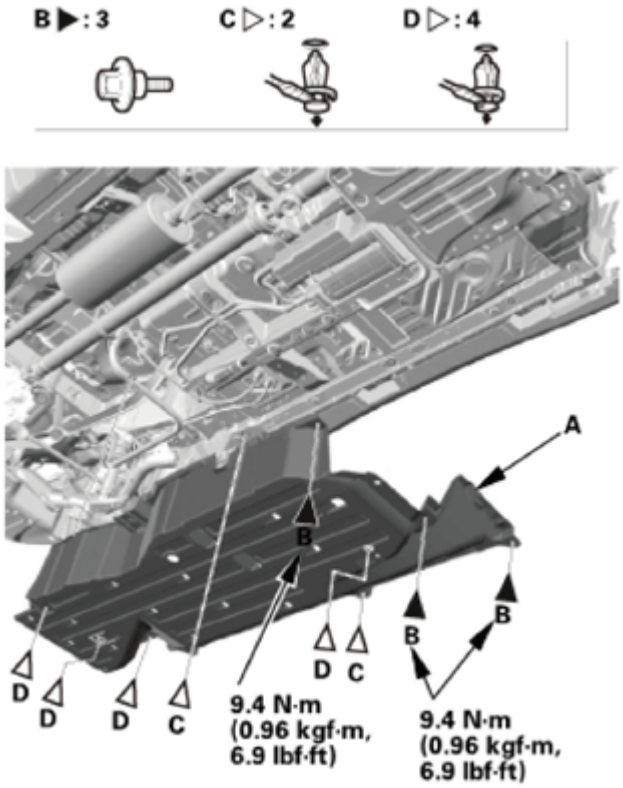

Fig. 159: Identifying Left Middle Floor Undercover, Bolts And Clips
Courtesy of AMERICAN HONDA MOTOR CO., INC.

7. Front Floor Undercover
    1. Install the front floor undercover (A), then install the bolts (B) and the clips (C, D). Make sure the clips snap into place securely.

GETtheMANUALS.org

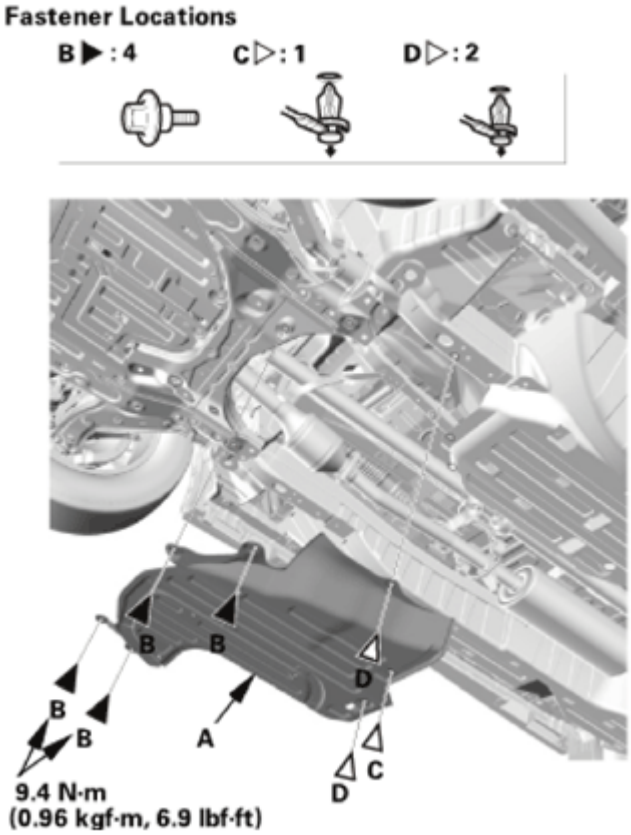

Fig. 160: Identifying Front Floor Undercover, Bolts And Clips
Courtesy of AMERICAN HONDA MOTOR CO., INC.

8. Propeller Shaft After Install - Check
    1. If you installed a new propeller shaft, test-drive the vehicle at 55 mph (88 km/h), and check for noise or vibration.
    2. If there is a noise or vibration, rotate the propeller shaft 180 degrees from its current alignment with the rear differential companion flange, then recheck.

REAR DRIVESHAFT DISASSEMBLY AND REASSEMBLY

EXPLODED VIEW

1. Rear Driveshaft Exploded View

    Exploded View

    Japan - built models

GETtheMANUALS.org

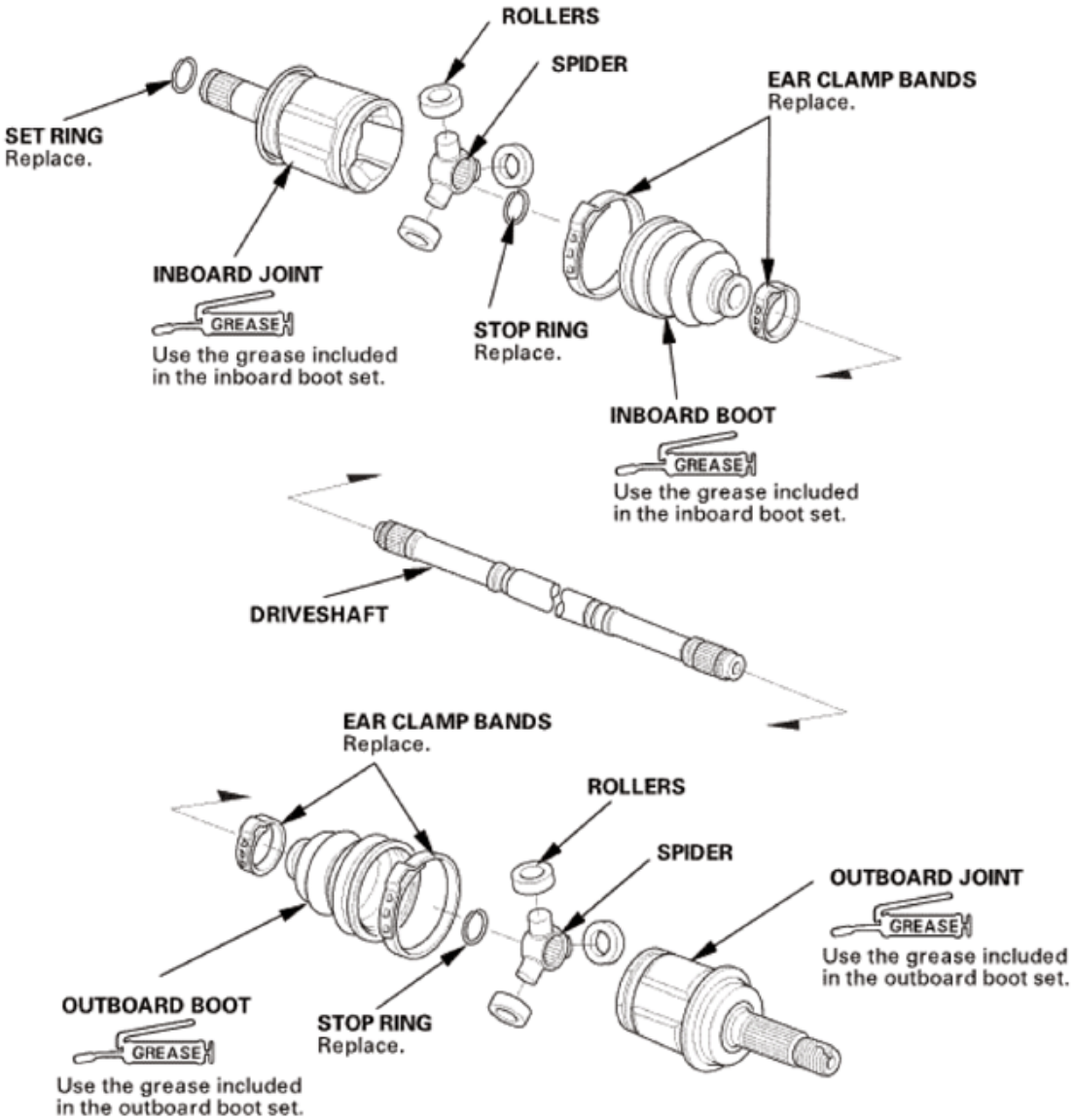

Fig. 161: Exploded View Of Rear Driveshaft (Japan)
Courtesy of AMERICAN HONDA MOTOR CO., INC.

Except japan - built models

GETtheMANUALS.org

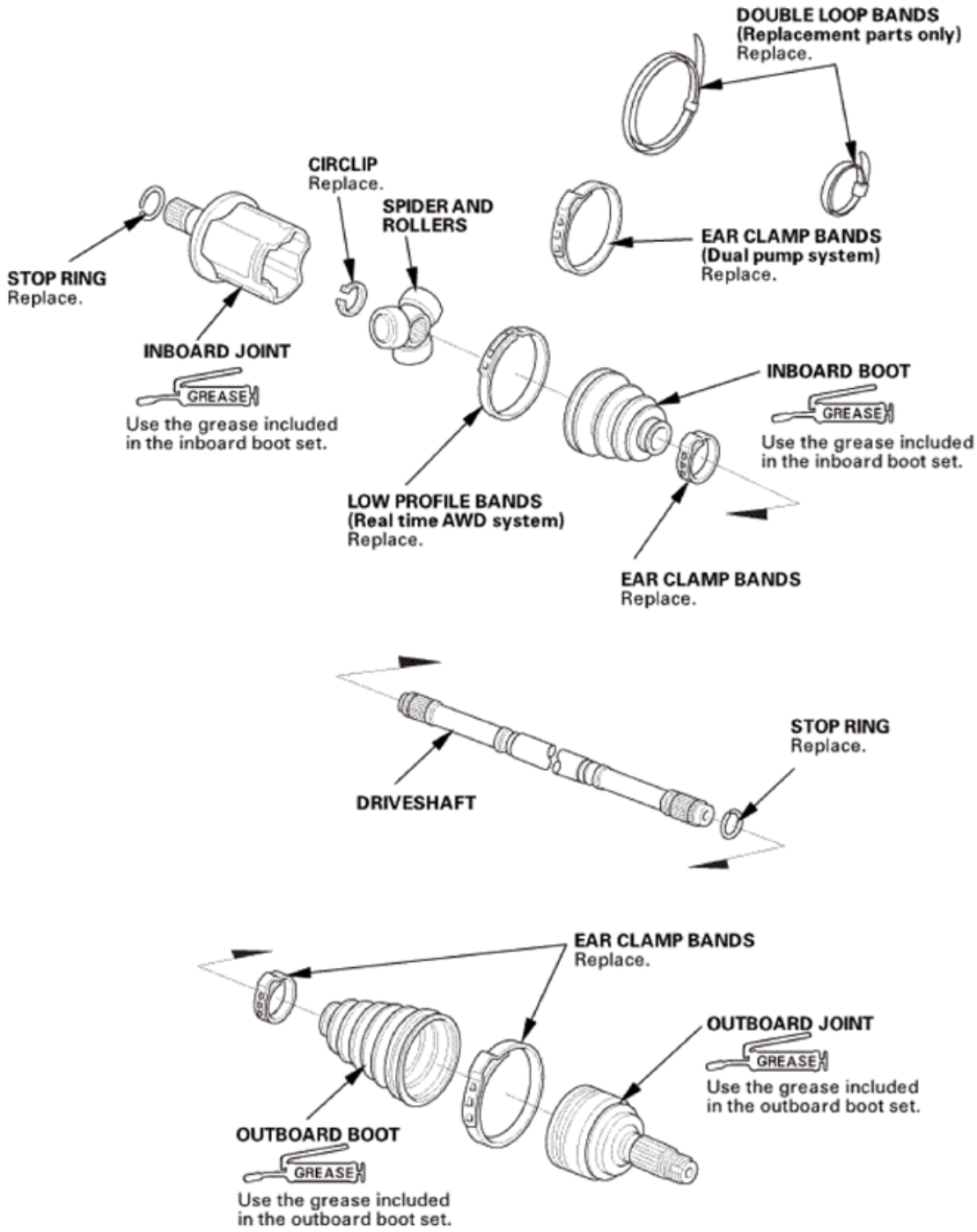

Fig. 162: Exploded View Of Rear Driveshaft (Except Japan)
Courtesy of AMERICAN HONDA MOTOR CO., INC.

REAR DRIVESHAFT INBOARD BOOT REPLACEMENT

SPECIAL TOOLS DESCRIPTION

Image	Description/Tool Number

GETtheMANUALS.org

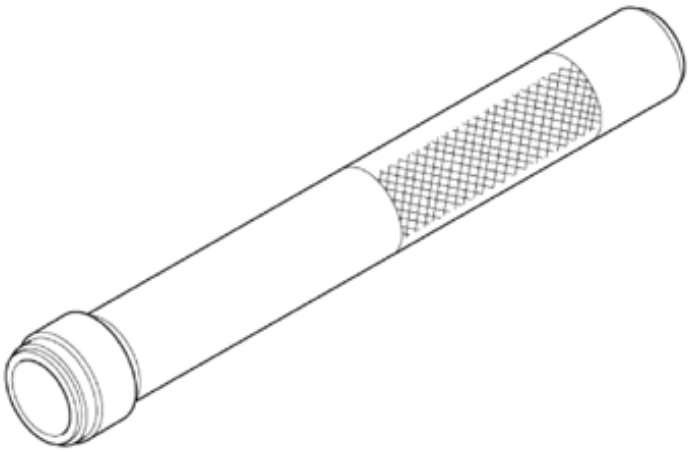	Driver, 30 mm I.D. 07946-MB00000
	Boot Band Pliers, commercially available
	Boot Band Tool KD-3191 or equivalent, commercially available

GETtheMANUALS.org

	Boot Band Clamp Tool Kent-Moore J-35910 or equivalent, commercially available

REMOVAL

1. Vehicle Lift
    1. Raise the vehicle on a lift, and make sure it is securely supported.
2. Rear Wheel
    1. Remove the rear wheel.

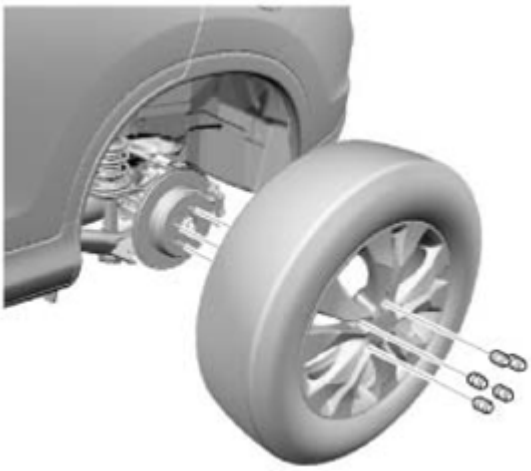

Fig. 163: Identifying Rear Wheel
Courtesy of AMERICAN HONDA MOTOR CO., INC.

GETtheMANUALS.org

3. Left Rear Driveshaft Spindle Nut
    1. Pry up the stake (A) on the spindle nut (B), then remove the nut.

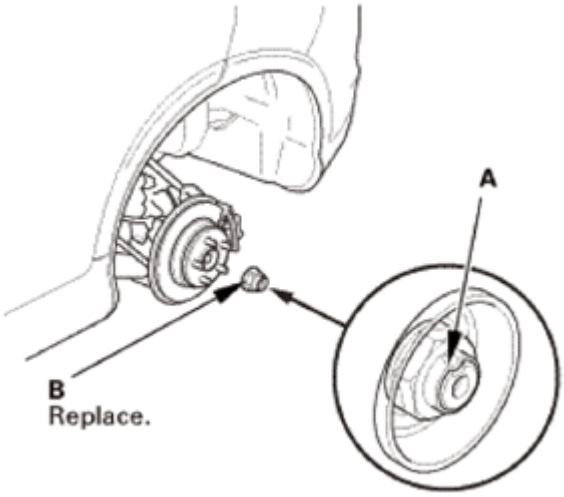

Fig. 164: Identifying Spindle Nut
Courtesy of AMERICAN HONDA MOTOR CO., INC.

4. Rear Differential Fluid - Replacement (Real Time AWD System)
    1. Remove the oil filler plug (A) and the sealing washer (B).

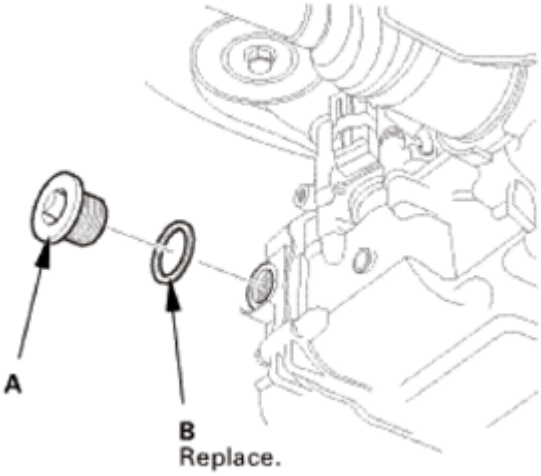

Fig. 165: Identifying Oil Filler Plug And Sealing Washer
Courtesy of AMERICAN HONDA MOTOR CO., INC.

    2. Remove the drain plug (A) and the sealing washer (B), then drain the rear differential fluid.

GETtheMANUALS.org

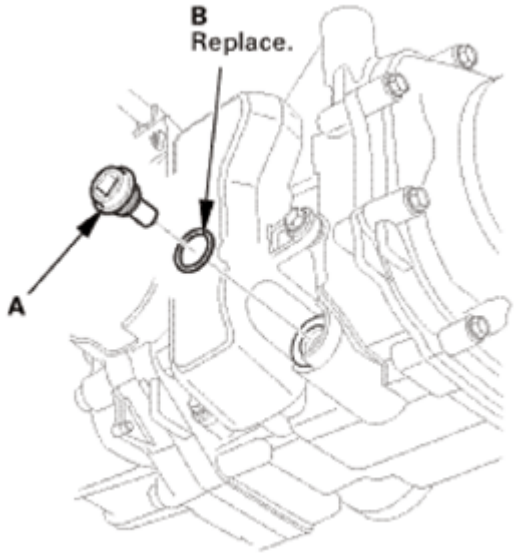

Fig. 166: Identifying Drain Plug And Sealing Washer
Courtesy of AMERICAN HONDA MOTOR CO., INC.

5. Propeller Shaft Rear Differential Side - Disconnection (With Nylon Strap)
    1. Make a reference mark (A) across the No. 2 propeller shaft (B) and the rear differential companion flange (C).
    2. Remove the No. 2 propeller shaft flange bolts (D).
    3. Separate the No. 2 propeller shaft from the rear differential.

NOTE: Suspend the propeller shaft with an appropriate size nylon strap.

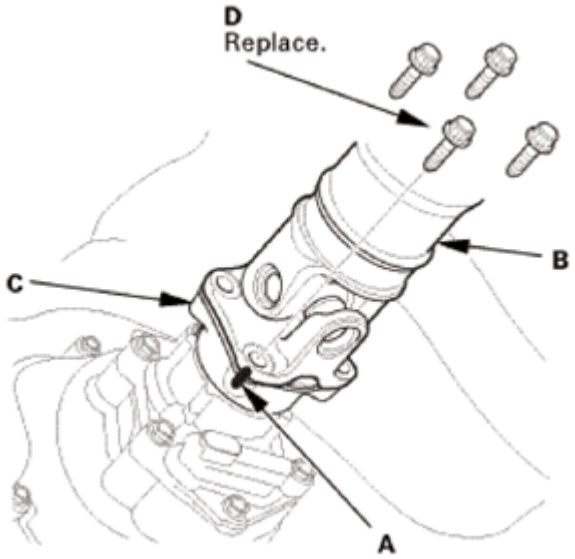

Fig. 167: Identifying No. 2 Propeller Shaft, Flange Bolts And Rear Differential Companion Flange

GETtheMANUALS.org

Courtesy of AMERICAN HONDA MOTOR CO., INC.

6. Rear Differential Connector
    1. Remove the connector cover (A).
    2. Disconnect the connectors (B).

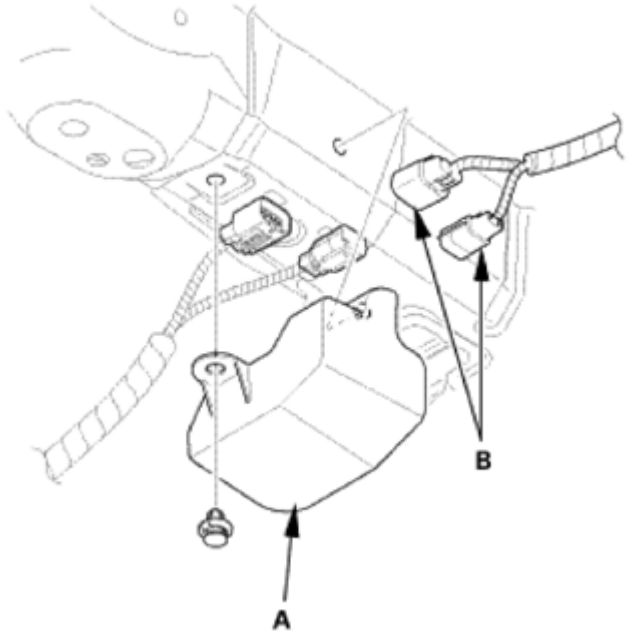

Fig. 168: Identifying Connectors And Cover
Courtesy of AMERICAN HONDA MOTOR CO., INC.

3. Release the harness clips (A).

GETtheMANUALS.org

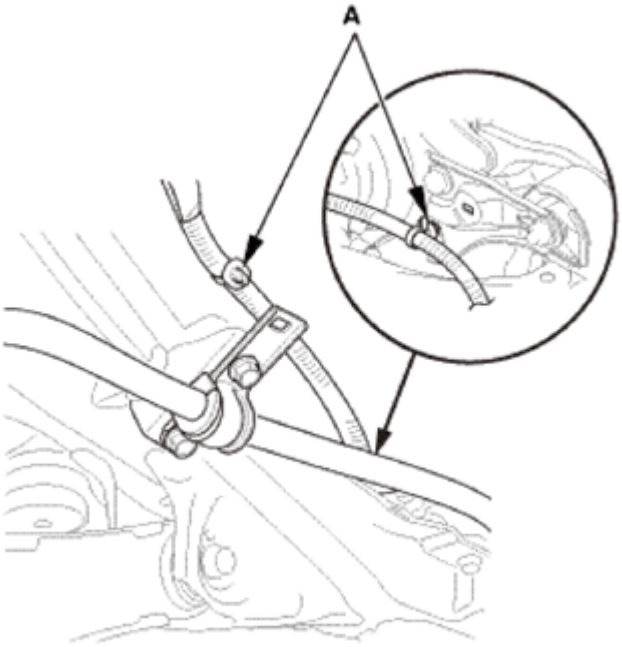

Fig. 169: Identifying Harness Clips
Courtesy of AMERICAN HONDA MOTOR CO., INC.

7. Rear Differential Breather Hoses
    1. Disconnect the breather hoses (A) from the breather pipes (B) and clamps (C).

Differential upper side

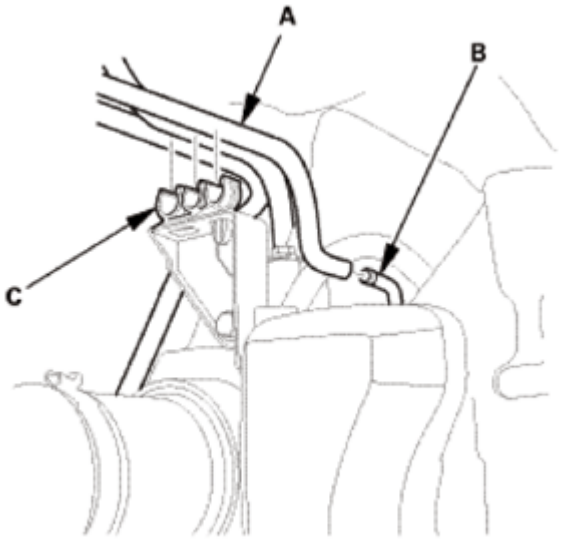

Fig. 170: Identifying Breather Hoses, Breather Pipes And Clamps (Differential Upper Side)
Courtesy of AMERICAN HONDA MOTOR CO., INC.

Pump motor side

GETtheMANUALS.org

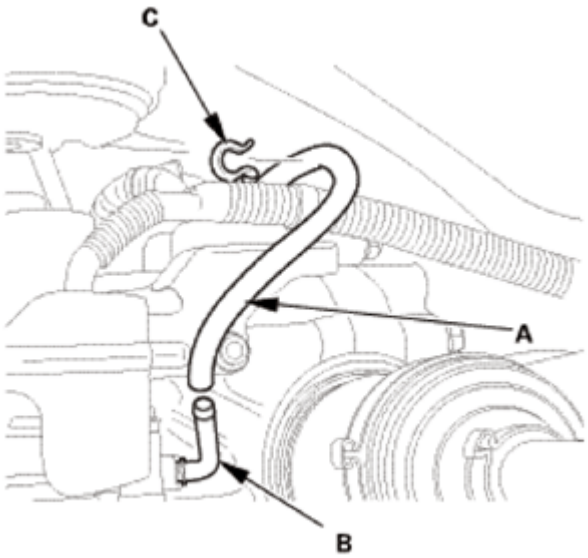

Fig. 171: Identifying Breather Hoses, Breather Pipes And Clamps (Pump Motor Side)
Courtesy of AMERICAN HONDA MOTOR CO., INC.

2. Disconnect the breather hose (A) from the clamp (B).

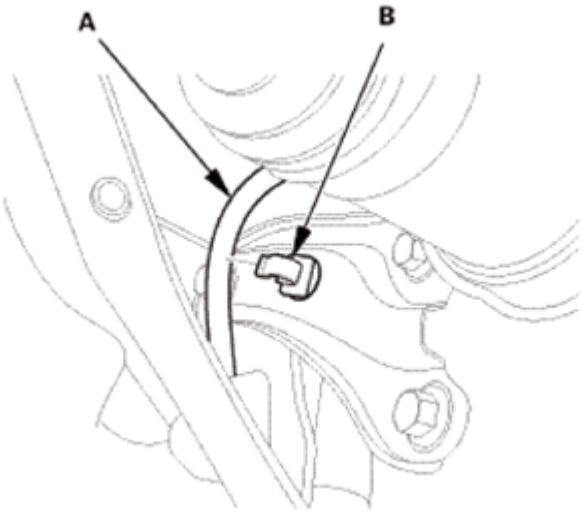

Fig. 172: Identifying Breather Hose And Clamp
Courtesy of AMERICAN HONDA MOTOR CO., INC.

8. Rear Differential Jack Support
    1. Place a transmission jack under the rear differential assembly.
9. Rear Differential Mount Bracket
    1. Remove the left and right rear differential mount brackets B.

GETtheMANUALS.org

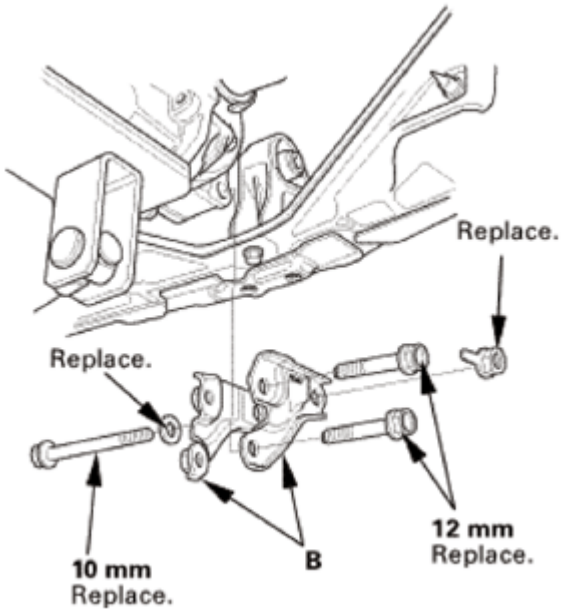

Fig. 173: Identifying Left And Right Rear Differential Mount Brackets B
Courtesy of AMERICAN HONDA MOTOR CO., INC.

2. Remove the mounting bolts (A) and the plates (B).

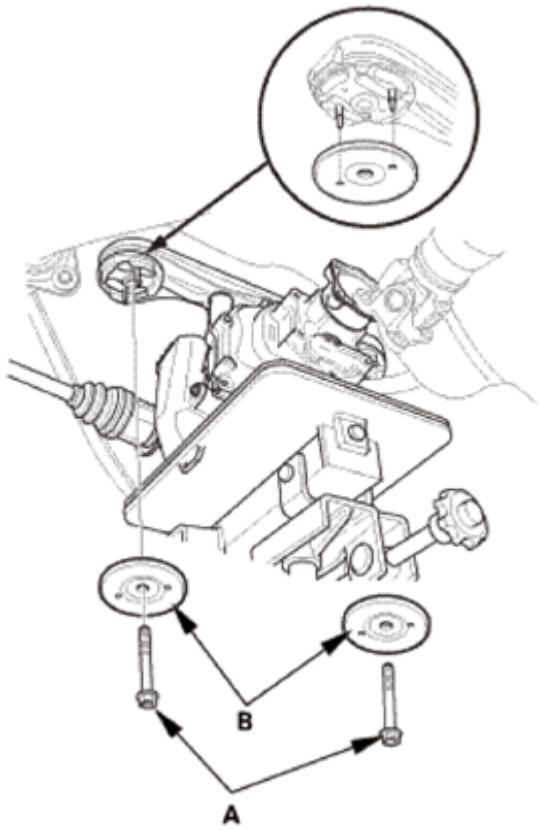

GETtheMANUALS.org

Fig. 174: Identifying Mounting Bolts And Plates
Courtesy of AMERICAN HONDA MOTOR CO., INC.

10. Rear Driveshaft Inboard Side Both - Disconnection
    1. Lower the rear differential assembly (A) while pulling both rear driveshaft inboard joints (B) out of the rear differential assembly.

NOTE:

- **Be careful not to damage the driveshaft ring (C) when prying out the driveshaft inboard joints.**
- **Be careful not to damage the oil seals (D).**

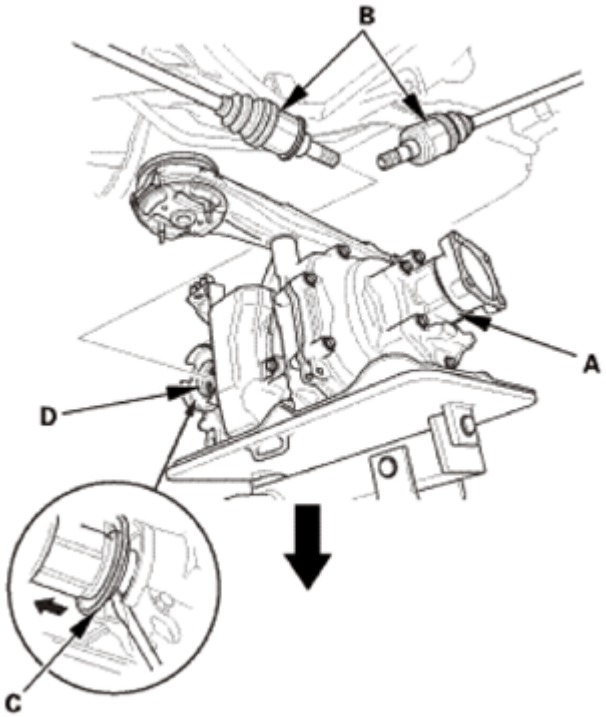

Fig. 175: Lowering Rear Differential Assembly
Courtesy of AMERICAN HONDA MOTOR CO., INC.

    2. Remove the set ring (A) from inboard joint.

GETtheMANUALS.org

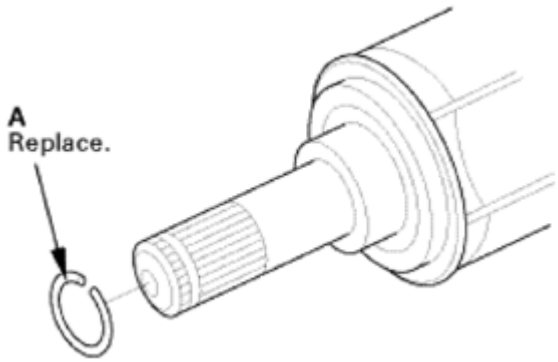

Fig. 176: Identifying Set Ring
Courtesy of AMERICAN HONDA MOTOR CO., INC.

11. Rear Driveshaft Outboard Side - Disconnection
    1. Separate the outboard joint from the rear hub using a soft face hammer.

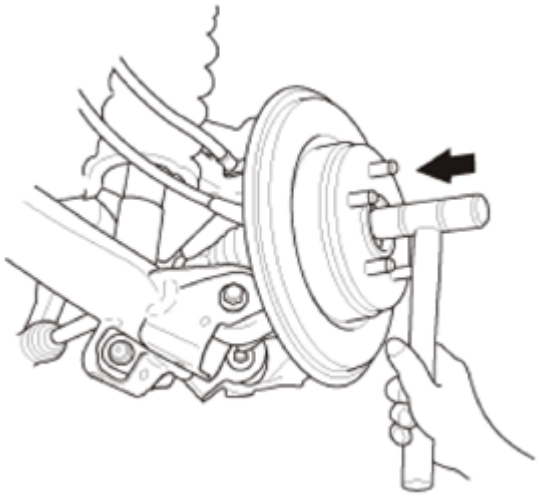

Fig. 177: Separating Outboard Joint From Rear Hub Using Soft Face Hammer
Courtesy of AMERICAN HONDA MOTOR CO., INC.

    2. Remove the rear driveshaft (A).

NOTE:

- **Be careful not to damage the wheel speed sensor (B).**
- **Pull on the outboard joint. Do not pull on the driveshaft because the joint may come apart.**

GETtheMANUALS.org

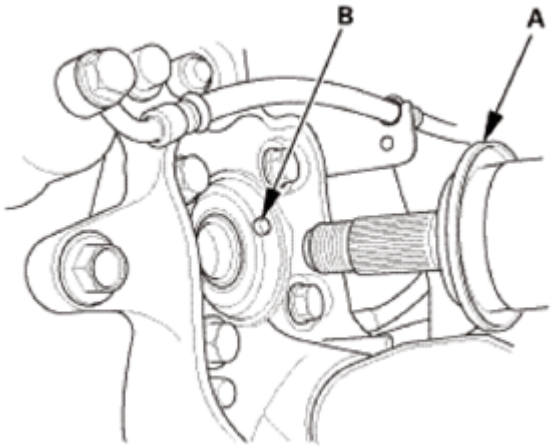

Fig. 178: Identifying Rear Driveshaft
Courtesy of AMERICAN HONDA MOTOR CO., INC.

12. Rear Inboard Joint (Except japan - built models)

Double loop type

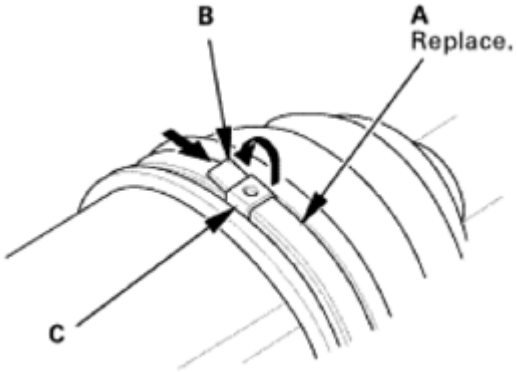

Fig. 179: Removing Boot Bands (Double Loop Type)
Courtesy of AMERICAN HONDA MOTOR CO., INC.

Low profile type

GETtheMANUALS.org

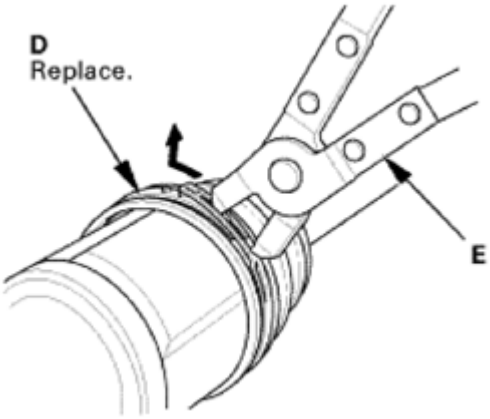

Fig. 180: Removing Boot Bands (Low Profile Type)
Courtesy of AMERICAN HONDA MOTOR CO., INC.

Ear clamp type

1. Remove the boot bands.

NOTE: **Be careful not to damage the boot.**

- **If the boot band is a double loop type (A), lift up the band end (B), and push it into the clip (C).**
- **If the boot band is a low profile type (D), pinch the boot band using commercially available boot band pliers (E).**
- **If the boot band is an ear clamp type (F), lift up the three tabs (G) using a flat-tipped screwdriver.**

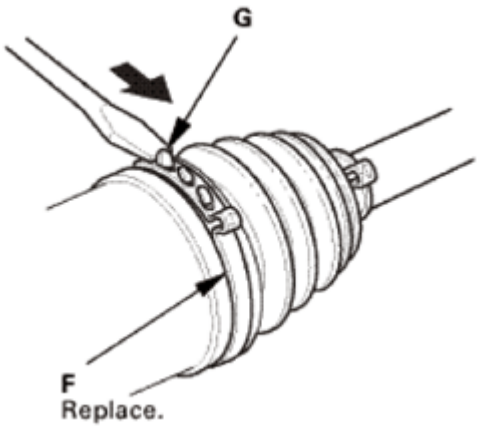

Fig. 181: Removing Boot Bands (Ear Clamp Type)
Courtesy of AMERICAN HONDA MOTOR CO., INC.

2. Make marks (A) on each roller (B) and the inboard joint (C) to identify the locations of the rollers to the grooves in the inboard joint.

GETtheMANUALS.org

NOTE: Do not engrave or scribe any marks on the rolling surfaces.

3. Remove the inboard joint on a clean shop towel (D).

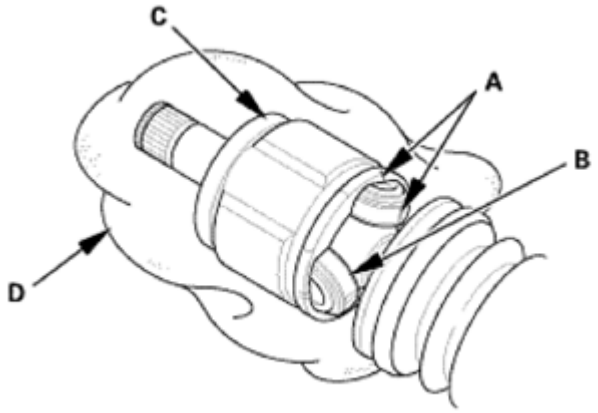

Fig. 182: Identifying Marks On Roller And Inboard Joint
Courtesy of AMERICAN HONDA MOTOR CO., INC.

4. Remove the circlip (A).
5. Make marks (B) on the spider (C) and the driveshaft (D) to identify the position of the spider on the shaft.
6. Remove the spider and the rollers using a commercially available bearing remover (E).

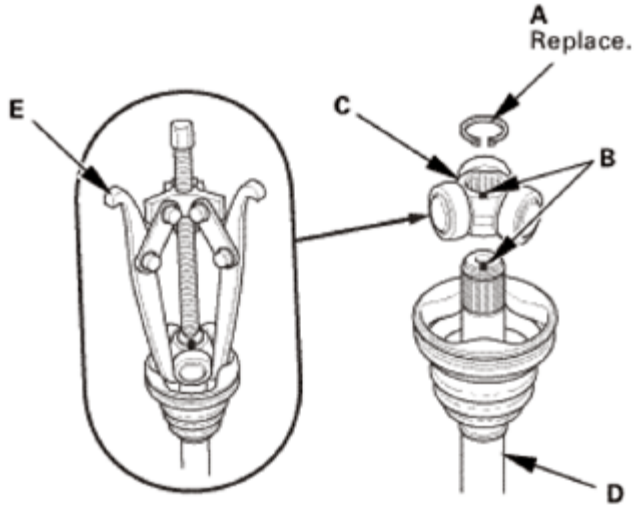

Fig. 183: Removing Spider And Rollers Using Commercially Available Bearing Remover
Courtesy of AMERICAN HONDA MOTOR CO., INC.

13. Rear Inboard Boot
    1. Wrap the splines on the driveshaft with vinyl tape (A) to prevent damaging the inboard boot.
    2. Remove the inboard boot.

GETtheMANUALS.org

NOTE: **Be careful not to damage the boot.**

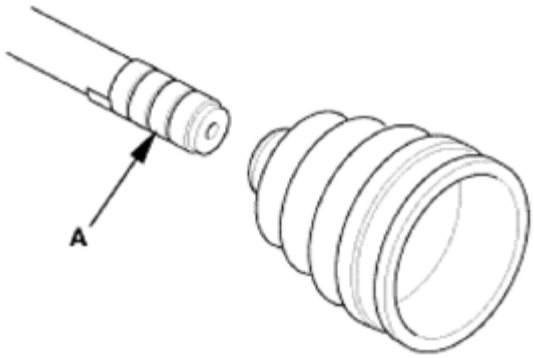

Fig. 184: Identifying Vinyl Tape On Driveshaft
Courtesy of AMERICAN HONDA MOTOR CO., INC.

INSTALLATION

1. Rear Inboard Boot
    1. Install new ear clamp bands (A) and the outboard boot onto the driveshaft.

    NOTE: **Be careful not to damage the boot.**

    2. Remove the vinyl tape.

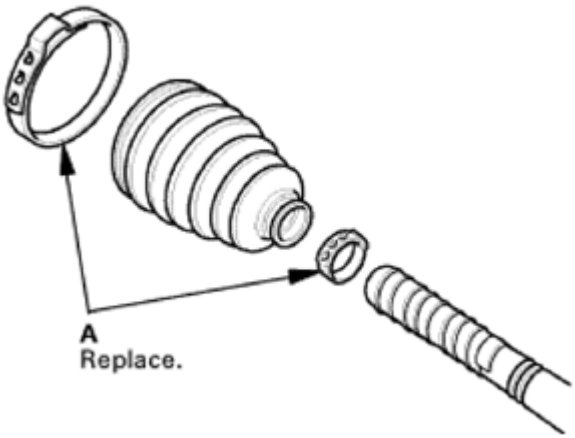

Fig. 185: Identifying Ear Clamp Bands
Courtesy of AMERICAN HONDA MOTOR CO., INC.

2. Rear Inboard Joint (Except japan - built models)
    1. Install the spider and rollers (A) onto the driveshaft by aligning the marks (B) you made, install it using the 30 mm driver (C).
    2. Install a new circlip (D) into the driveshaft groove. Always rotate the circlip in its groove to make sure it is fully seated.

GETtheMANUALS.org

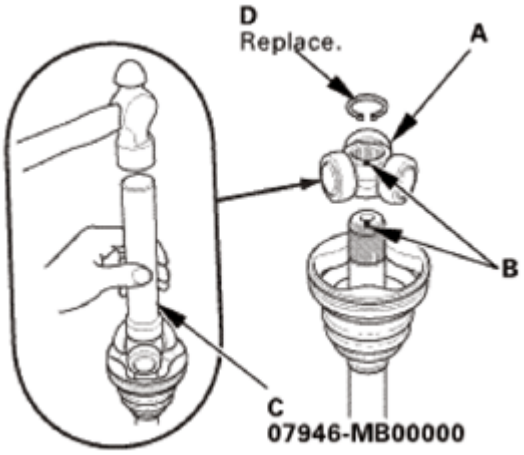

Fig. 186: Installing Circlip
Courtesy of AMERICAN HONDA MOTOR CO., INC.

3. Pack the inboard joint with the joint grease included in the new inboard boot set.

   Grease quantity

   Inboard joint:

   100-116 g (3.5-4.1 oz)

Fig. 187: Packing Inboard Joint With Joint Grease
Courtesy of AMERICAN HONDA MOTOR CO., INC.

4. Fit the inboard joint onto the driveshaft, and note these items:
   - Reinstall the inboard joint onto the driveshaft by aligning the marks (A) you made on the inboard joint and the rollers.
   - Hold the driveshaft so the inboard joint is pointing up to prevent it from falling off.

GETtheMANUALS.org

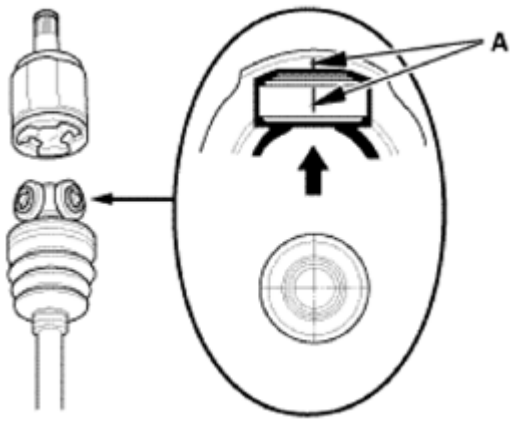

Fig. 188: Fitting Inboard Joint Onto Driveshaft
Courtesy of AMERICAN HONDA MOTOR CO., INC.

5. Fit the boot ends (A) onto the driveshaft (B) and the inboard joint (C).

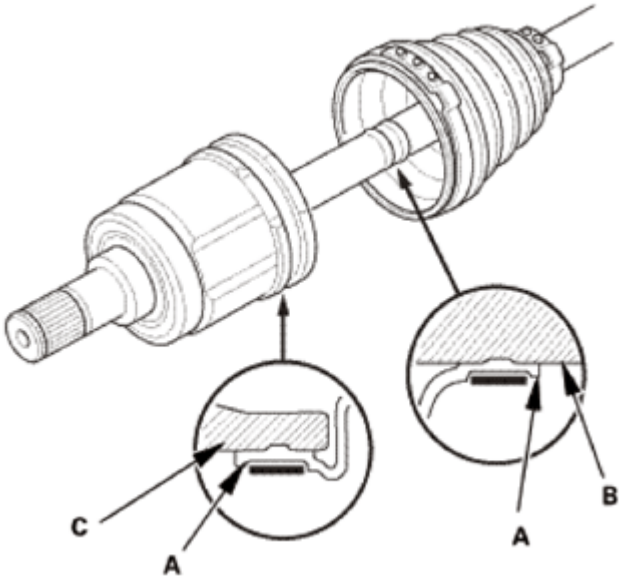

Fig. 189: Fitting Boot Ends Onto Driveshaft And Inboard Joint
Courtesy of AMERICAN HONDA MOTOR CO., INC.

6. Adjust the length (A) of the driveshaft in the figure as shown, then adjust the boots to halfway between full compression and full extension.

Driveshaft	Specified length (A)
Left	658.6-663.6 mm (25.929-26.126 in)
Right	702.6-707.6 mm (27.661-27.858 in)

7. Bleed excess air from the boots by inserting a flat-tipped screwdriver between the boot and the joint.

GETtheMANUALS.org

8. Install new boot bands.
    - For the double loop type, go to step 9.
    - For the low profile type, go to step 20.
    - For the ear clamp type, go to step 24.

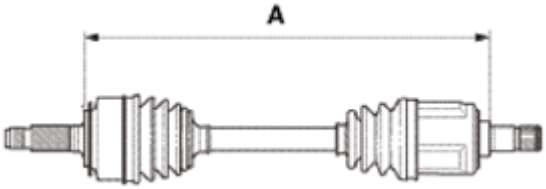

Fig. 190: Identifying Length Of Driveshaft
Courtesy of AMERICAN HONDA MOTOR CO., INC.

Double loop type

9. Install a new double loop band (A) onto the boot (B).

NOTE: **Pass the end of the double loop band through the clip (C) twice in the direction of the forward rotation of the driveshaft.**

10. Pull up the slack in the band by hand.

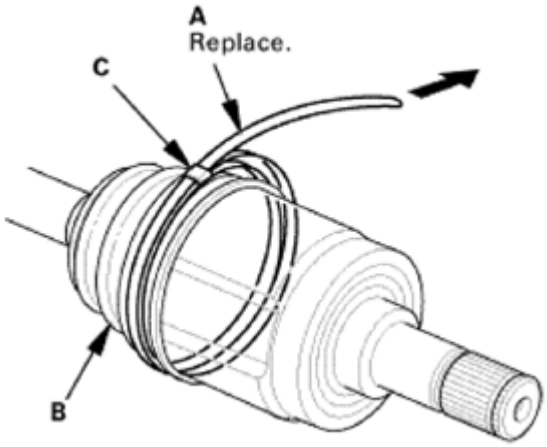

Fig. 191: Installing Double Loop Band Onto Boot
Courtesy of AMERICAN HONDA MOTOR CO., INC.

11. Mark a line (A) on the band 10-14 mm (0.39-0.55 in) from the clip (B).

GETtheMANUALS.org

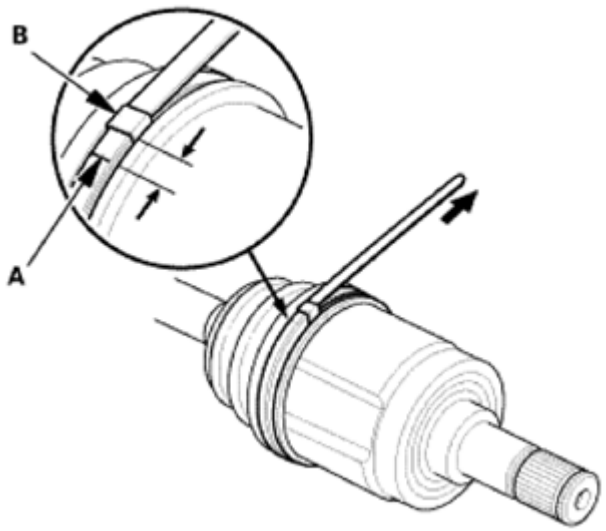

Fig. 192: Identifying Line On Band
Courtesy of AMERICAN HONDA MOTOR CO., INC.

12. Thread the free end of the band through the nose section of the commercially available boot band tool (KD-3191 or equivalent) (A).
13. Into the slot on the winding mandrel (B).
14. Using a wrench on the winding mandrel of the boot band tool, tighten the band until the marked line (C) on the band meets the edge of the clip.

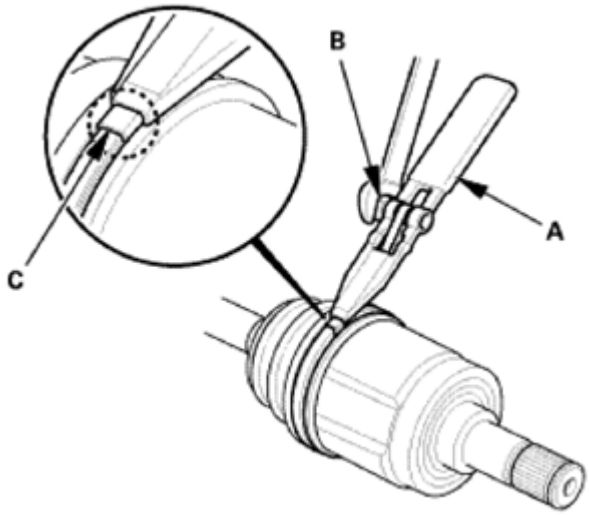

Fig. 193: Threading Free End Of Band
Courtesy of AMERICAN HONDA MOTOR CO., INC.

15. Lift up the boot band tool to bend the free end of the band 90 degrees to the clip.
16. Center-punch the clip.
17. Fold over the remaining tail onto the clip.

GETtheMANUALS.org

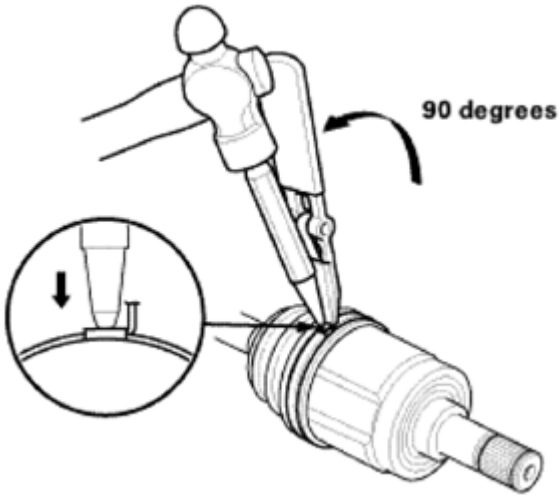

Fig. 194: Bending Free End Of Band
Courtesy of AMERICAN HONDA MOTOR CO., INC.

18. Unwind the boot band tool, and cut off the excess free end of the band to leave a 5-10 mm (0.20-0.39 in) tail protruding from the clip.

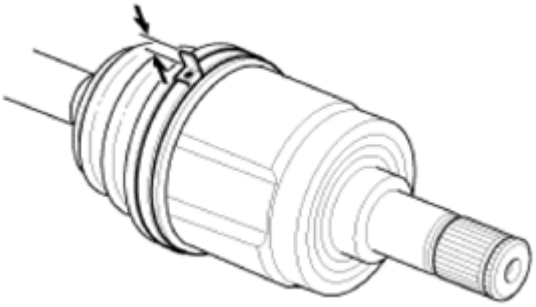

Fig. 195: Identifying Free End Of Band
Courtesy of AMERICAN HONDA MOTOR CO., INC.

19. Bend the band end (A) by tapping it down using a hammer.

NOTE:

- **Make sure the band and the clip do not interfere with anything on the vehicle, and the band does not move.**
- **Clean any grease remaining on the surrounding surfaces.**

GETtheMANUALS.org

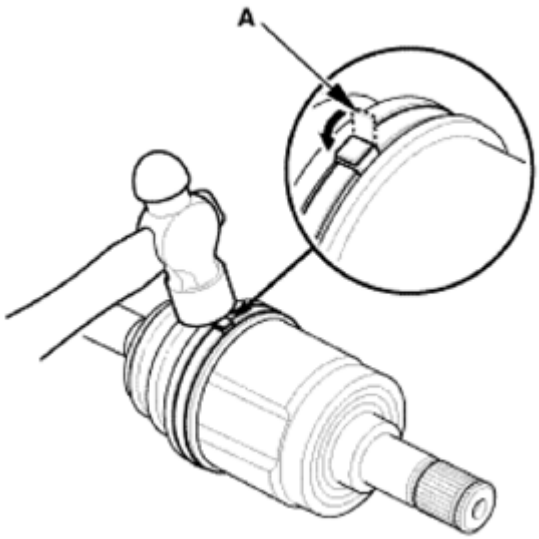

Fig. 196: Bending Band End
Courtesy of AMERICAN HONDA MOTOR CO., INC.

Low profile type

20. Install a new low profile band (A) onto the boot (B).
21. Hook the tab (C) of the band.

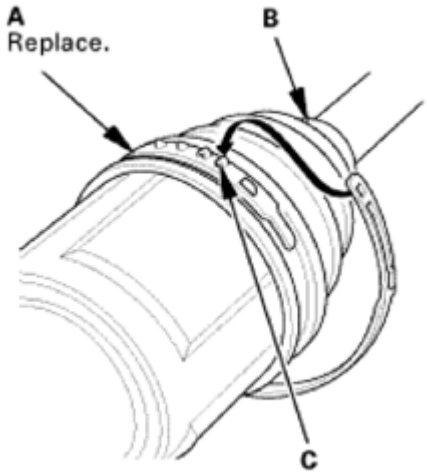

Fig. 197: Installing Low Profile Band Onto Boot
Courtesy of AMERICAN HONDA MOTOR CO., INC.

22. Check the hook portion of the band using commercially available boot band pliers (A).
23. Hook the tabs (B) of the band.

GETtheMANUALS.org

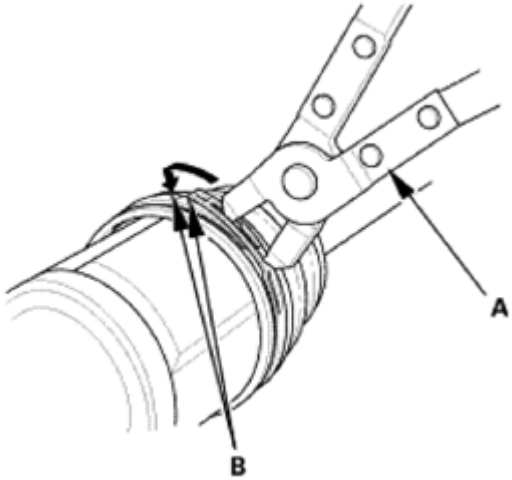

Fig. 198: Checking Hook Portion Of Band Using Commercially Available Boot Band Pliers
Courtesy of AMERICAN HONDA MOTOR CO., INC.

Ear clamp type

24. Close the ear portion (A) of the band using a commercially available boot band clamp tool (Kent-Moore J-35910 or equivalent) (B).

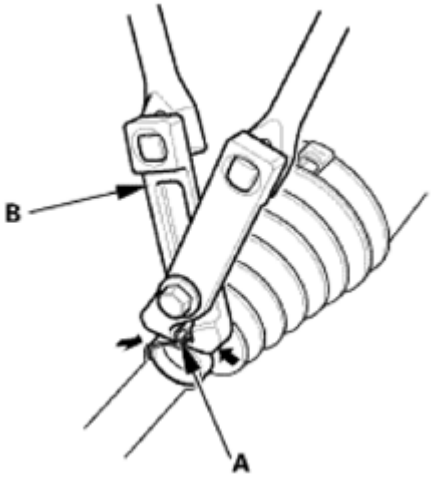

Fig. 199: Closing Ear Portion Of Band
Courtesy of AMERICAN HONDA MOTOR CO., INC.

25. Check the clearance between the closed ear portion of the band. If the clearance is not within the standard, close the ear portion of the band tighter.

GETtheMANUALS.org

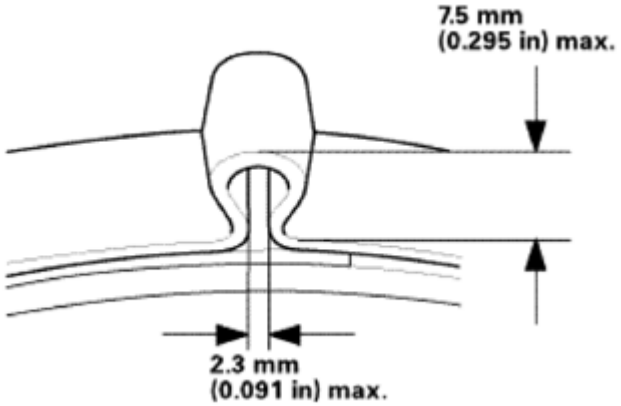

Fig. 200: Identifying Clearance Between Closed Ear Portion Of Band
Courtesy of AMERICAN HONDA MOTOR CO., INC.

3. Rear Driveshaft Outboard Side - Reconnection
    1. Install the outboard joint (A) into the rear hub (B).

NOTE: Be careful not to damage the wheel speed sensor (C).

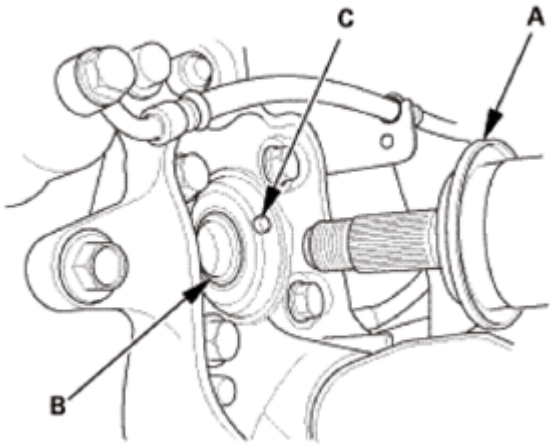

Fig. 201: Installing Outboard Joint Into Rear Hub
Courtesy of AMERICAN HONDA MOTOR CO., INC.

4. Rear Driveshaft Inboard Side Both - Reconnection
    1. Install new set ring (A) into the groove (B) of the rear driveshaft inboard joint on both side.

GETtheMANUALS.org

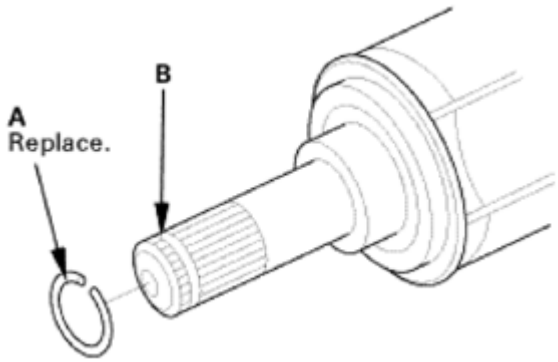

Fig. 202: Identifying Set Ring And Groove Of Rear Driveshaft Inboard Joint
Courtesy of AMERICAN HONDA MOTOR CO., INC.

2. Lift the rear differential assembly (A) up into position.
3. Insert the inboard end (B) of the rear driveshaft (C) into the differential (D) until the set ring (E) locks in the groove (F).

NOTE: **Insert the driveshaft horizontally to prevent damaging the oil seals (G).**

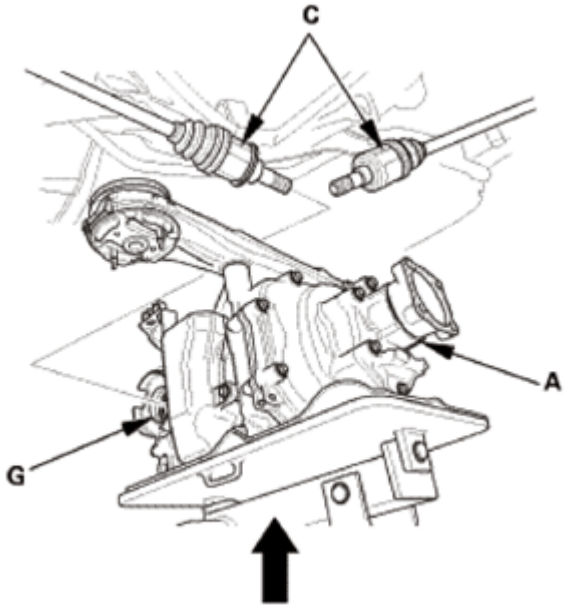

Fig. 203: Lifting Rear Differential Assembly
Courtesy of AMERICAN HONDA MOTOR CO., INC.

GETtheMANUALS.org

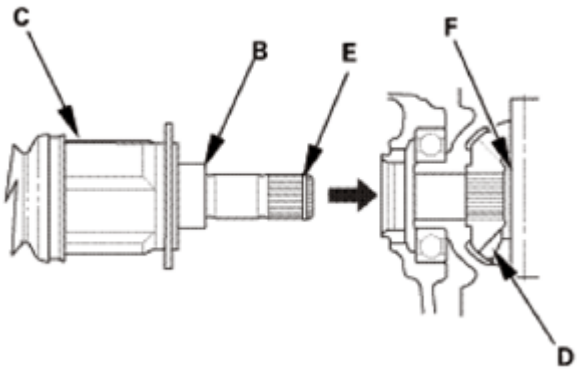

Fig. 204: Inserting Inboard End Of Rear Driveshaft Into Differential
Courtesy of AMERICAN HONDA MOTOR CO., INC.

5. Rear Differential Mount Bracket
    1. Align the tabs (A) of the rubber mount (B) with the holes (C) of the plates (D).
    2. Install the rear differential mounting bolts (E).

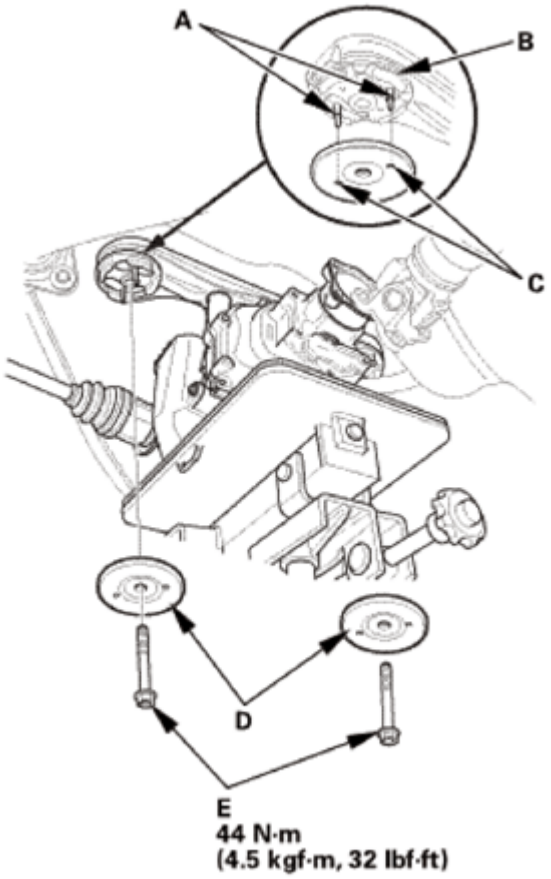

Fig. 205: Identifying Tabs Of Rubber Mount, Plates And Rear Differential Mounting Bolts
Courtesy of AMERICAN HONDA MOTOR CO., INC.

GETtheMANUALS.org

3. Install the left and right rear differential mount brackets B.
4. Tighten new differential mount brackets B mounting bolts (A) to the specified torque.
5. Loosely install new differential mount brackets B mounting bolt (C).

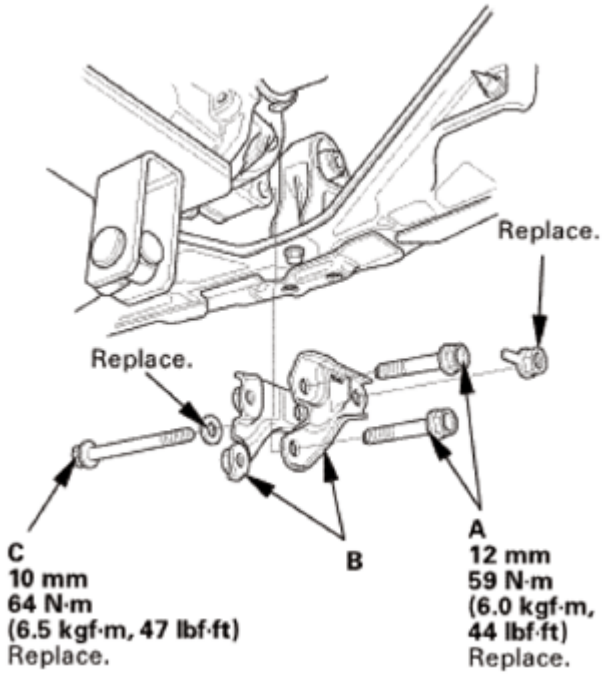

Fig. 206: Identifying Differential Mount Brackets B Mounting Bolts With Torque Specifications
Courtesy of AMERICAN HONDA MOTOR CO., INC.

6. Rear Differential Mount Bolt - Tighten
    1. Lower the transmission jack.
    2. Tighten differential mount brackets B mounting bolt to the specified torque.
7. Rear Differential Breather Hoses

Differential upper side

GETtheMANUALS.org

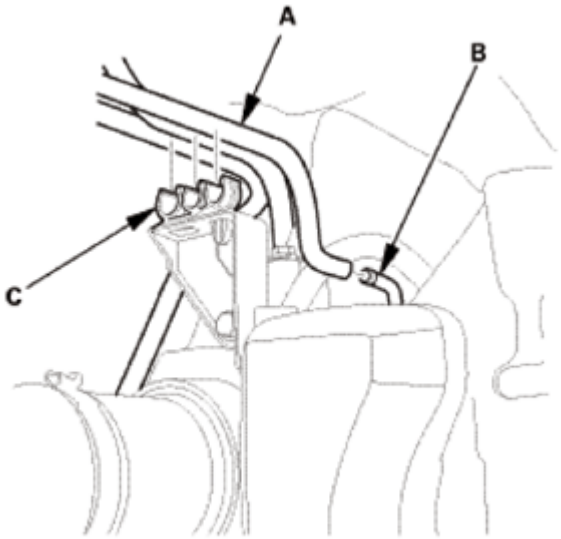

Fig. 207: Identifying Breather Hoses, Breather Pipe And Clamps (Differential Upper Side)
Courtesy of AMERICAN HONDA MOTOR CO., INC.

Pump motor side

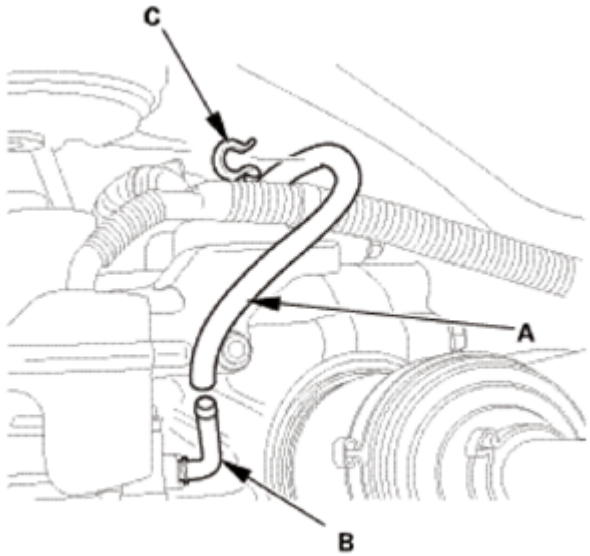

Fig. 208: Identifying Breather Hoses, Breather Pipe And Clamps (Pump Motor Side)
Courtesy of AMERICAN HONDA MOTOR CO., INC.

1. Connect the breather hoses (A) to the breather pipes (B) and clamps (C).
2. Connect the breather hose (A) to the clamp (B).

GETtheMANUALS.org

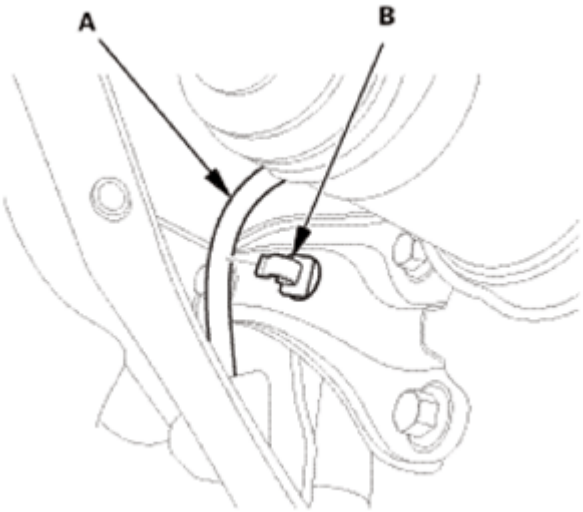

Fig. 209: Identifying Breather Hose And Clamp
Courtesy of AMERICAN HONDA MOTOR CO., INC.

8. Rear Differential Connector
    1. Install the harness clips (A).

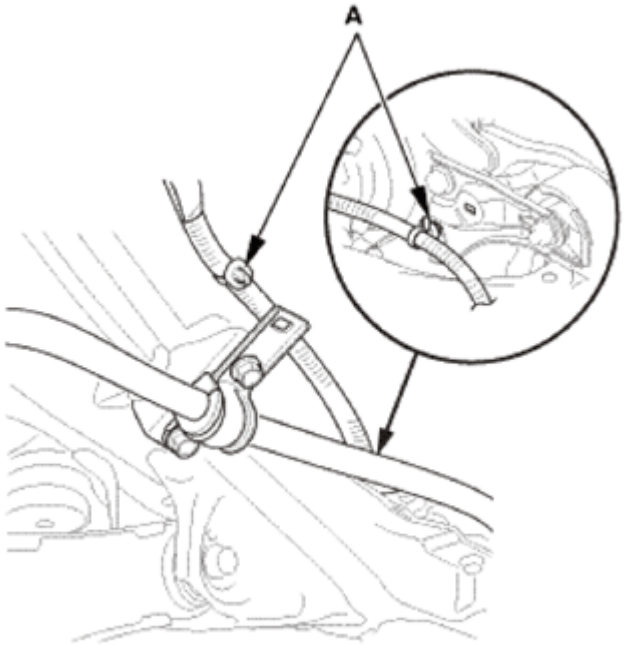

Fig. 210: Identifying Harness Clips
Courtesy of AMERICAN HONDA MOTOR CO., INC.

    2. Connect the connectors (A).
    3. Install the connector cover (B).

GETtheMANUALS.org

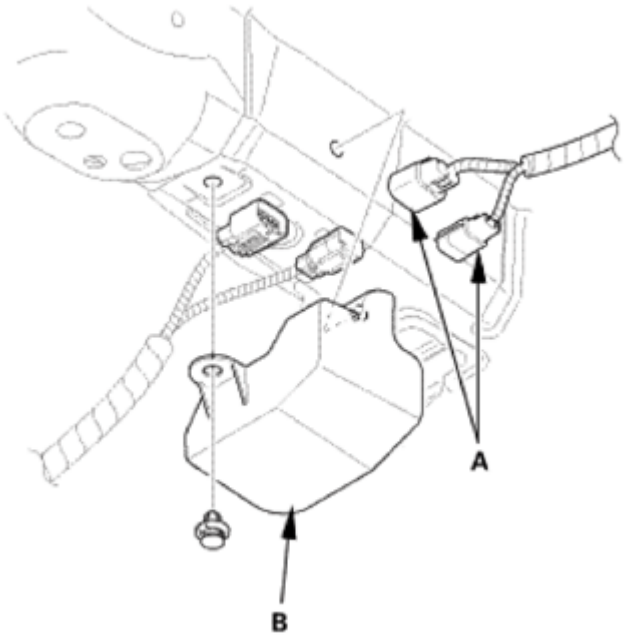

Fig. 211: Identifying Connectors And Cover
Courtesy of AMERICAN HONDA MOTOR CO., INC.

9. Propeller Shaft Rear Differential Side - Disconnection (With Nylon Strap)
    1. Attach the No. 2 propeller shaft (A) to the rear differential companion flange (B) by aligning the reference mark (C) you made during the removal procedure.
    2. Install new flange bolts (D) to the specified torque.

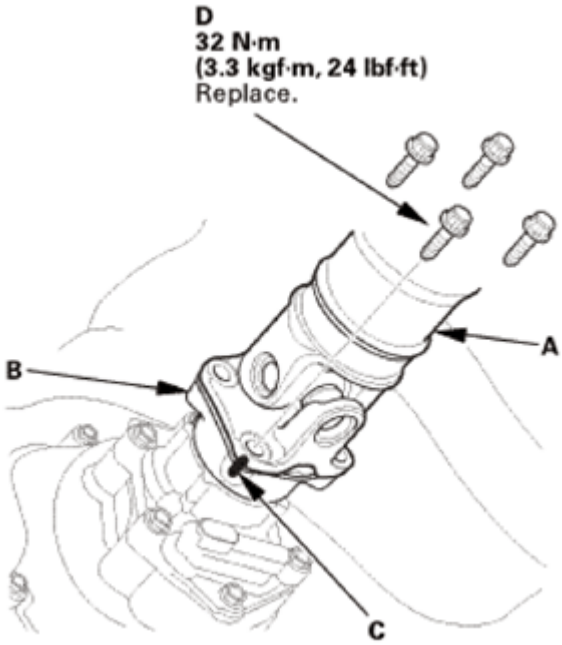

Fig. 212: Identifying No. 2 Propeller Shaft, Rear Differential Companion Flange And Flange

GETtheMANUALS.org

Bolts
Courtesy of AMERICAN HONDA MOTOR CO., INC.

10. Left Rear Driveshaft Spindle Nut
    1. Apply a small amount of engine oil to the seating surface of a new spindle nut (A).
    2. Install the spindle nut, then tighten it. After tightening, use a drift to stake the spindle nut shoulder (B) against the driveshaft.

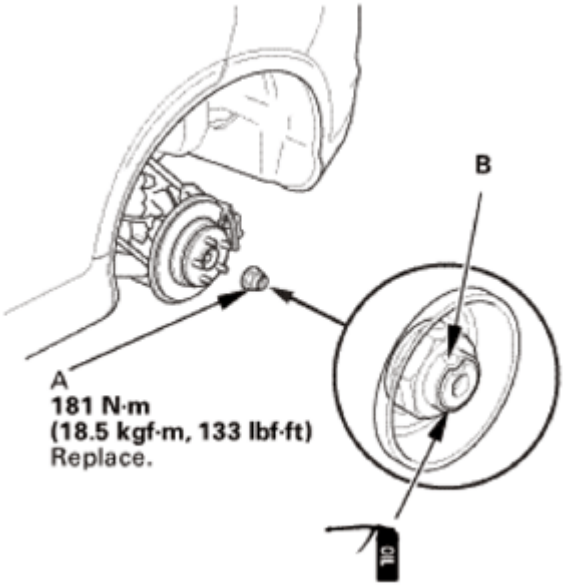

Fig. 213: Identifying Spindle Nut And Shoulder With Torque Specifications
Courtesy of AMERICAN HONDA MOTOR CO., INC.

11. Rear Wheel
    1. Install the rear wheel.

NOTE: **Before installing the wheel, clean the mating surfaces between the brake disc/drum and the inside of the wheel.**

GETtheMANUALS.org

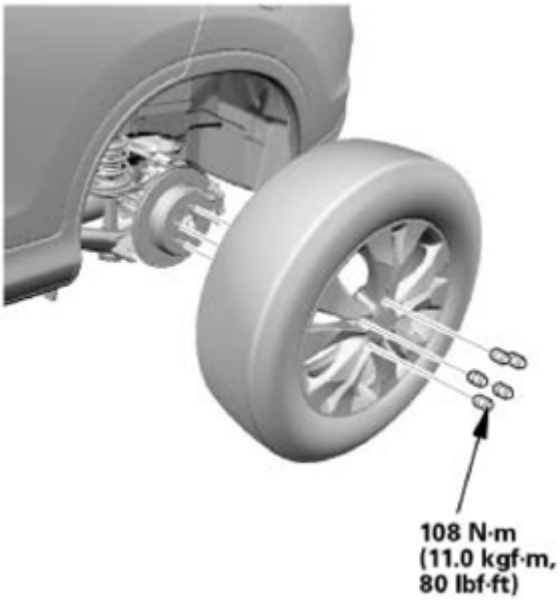

Fig. 214: Identifying Rear Wheel Bolts With Torque Specifications
Courtesy of AMERICAN HONDA MOTOR CO., INC.

12. Driveshaft After Install Check
    1. Turn the wheel by hand, and make sure there is no interference between the driveshaft and surrounding parts.
13. Rear Differential Fluid - Replacement (Real Time AWD System)
    1. Clean the drain plug (A), then install it with a new sealing washer (B).
    2. Refill the differential with rear differential fluid to the proper level.

NOTE: **If you disassemble the differential, check the rear differential fluid level again after the 4WD system check is finished. Add fluid if necessary.**

Fluid Capacity:

1.2 L (1.3 US qt) at fluid change

1.5 L (1.6 US qt) at overhaul

Recommended fluid: Honda Dual Pump Fluid II

GETtheMANUALS.org

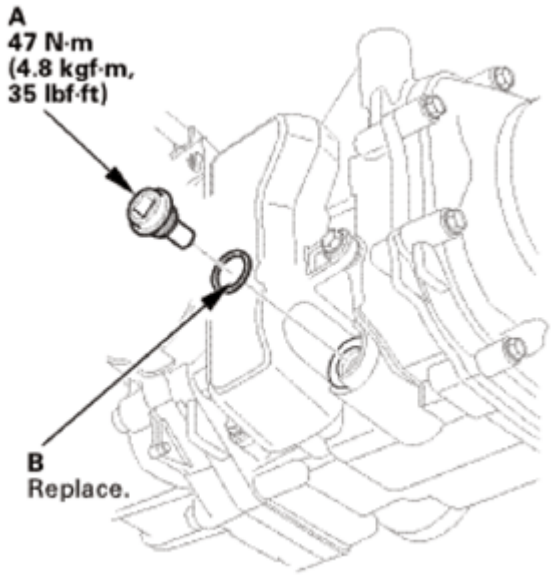

Fig. 215: Identifying Drain Plug, Washer And Bolts With Torque Specifications
Courtesy of AMERICAN HONDA MOTOR CO., INC.

3. Install the oil filler plug (A) with a new sealing washer (B).

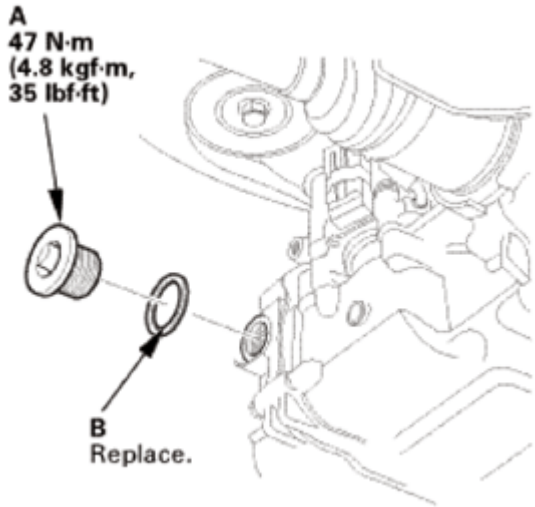

Fig. 216: Identifying Oil Filler Plug And Sealing Washer
Courtesy of AMERICAN HONDA MOTOR CO., INC.

14. Rear Differential Fluid After Replacement - Check (Real Time AWD System)
    1. Apply the parking brake, and block all four wheels.
    2. Start the engine, and let it idle more than 6 seconds, then turn the engine off. Repeat this step three more times.
    3. Shift to D while pressing the brake pedal firmly. Press the accelerator pedal for 2 seconds, then let it idle. Repeat this three more times.

GETtheMANUALS.org

    4. Check that the real time AWD indicator does not come on. If it does, check for real time AWD system DTC's.
15. Test Drive
    1. Test-drive the vehicle.
16. HDS DLC - Connection
    1. Connect the HDS to the data link connector (DLC) (A) located under the driver's side of the dashboard.
    2. Turn the ignition switch to ON (II).
    3. Make sure the HDS communicates with the vehicle. If it does not communicate, go to the DLC circuit troubleshooting.

Fig. 217: Identifying Data Link Connector (DLC)
Courtesy of AMERICAN HONDA MOTOR CO., INC.

17. Maintenance Minder Reset
    1. **RESET THE MAINTENANCE MINDER**

REAR DRIVESHAFT INBOARD/OUTBOARD BOOT REPLACEMENT

SPECIAL TOOLS DESCRIPTION

Image	Description/Tool Number
	Driver Handle, 15 x 135L 07749-0010000

GETtheMANUALS.org

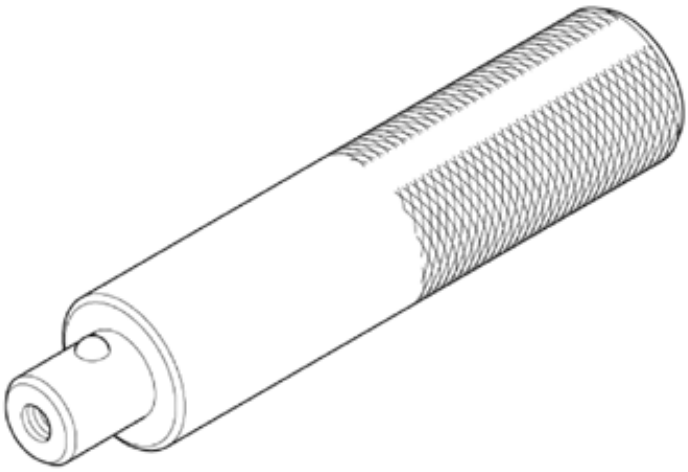	
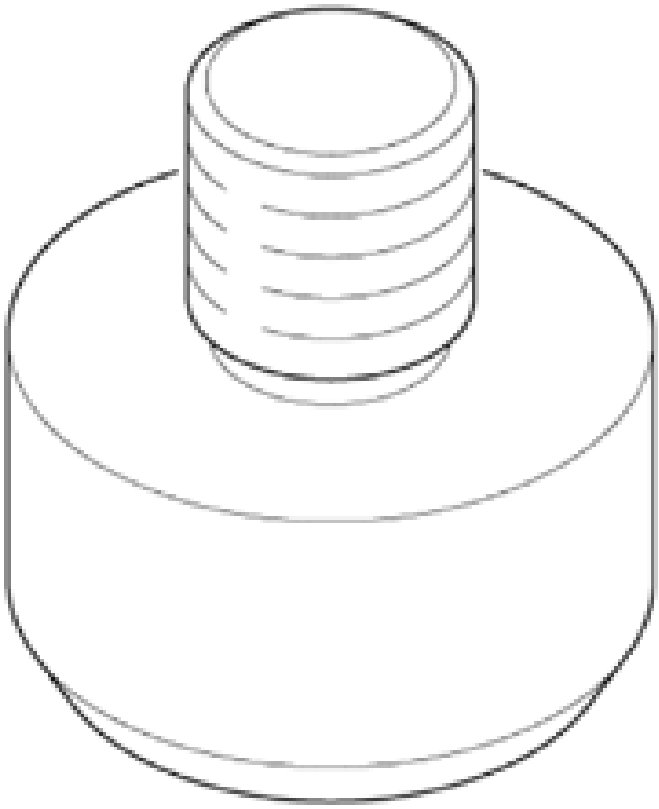	Pilot, 22 mm 07746-0041000

GETtheMANUALS.org

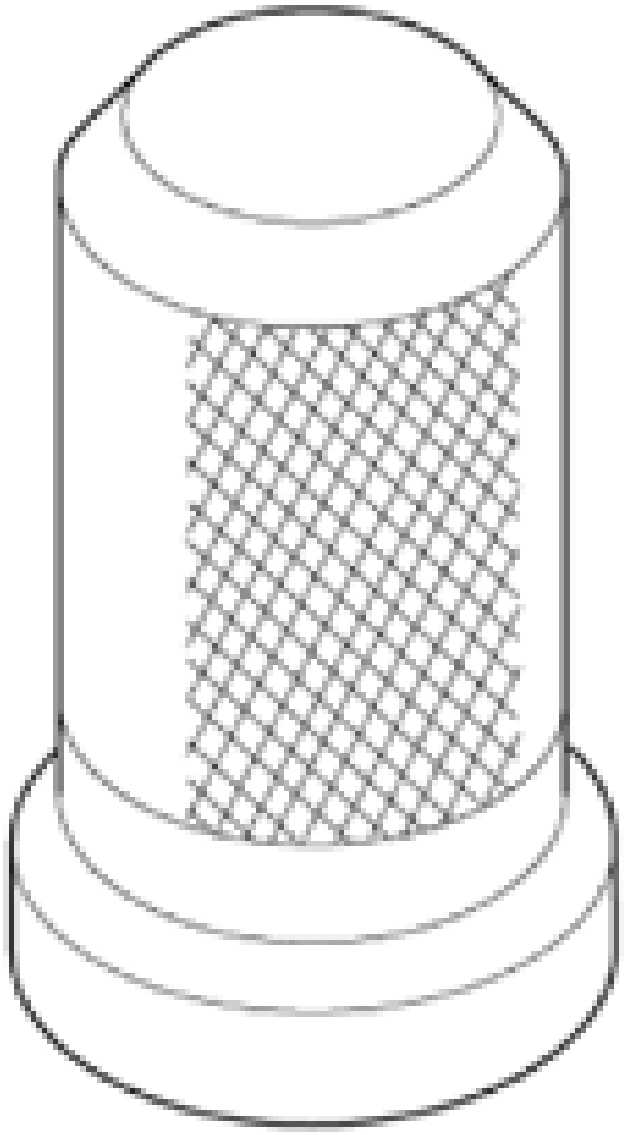	Oil Seal Driver, 41.8 mm 07947-6890100
	Boot Band Clamp Tool Kent-Moore J-35910 or equivalent, commercially available

GETtheMANUALS.org

REMOVAL

NOTE:

- **Due to the amount of work required to replace one damaged boot, it is best to replace both boots at the same time.**
- **These instructions are for the inboard joint. The same procedure applies to the outboard joint.**

1. Vehicle Lift
    1. Raise the vehicle on a lift, and make sure it is securely supported.
2. Rear Wheel
    1. Remove the rear wheel.

GETtheMANUALS.org

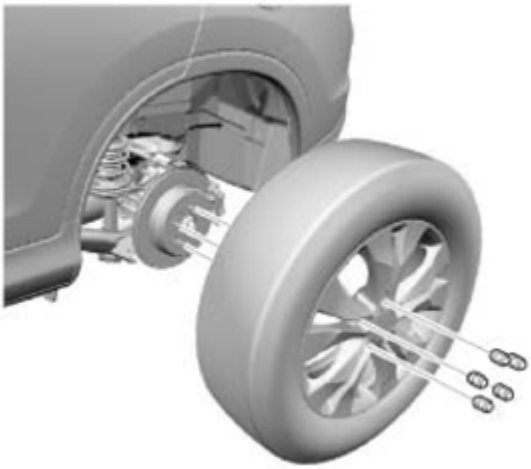

Fig. 218: Identifying Rear Wheel Bolts
Courtesy of AMERICAN HONDA MOTOR CO., INC.

3. Left Rear Driveshaft Spindle Nut
    1. Pry up the stake (A) on the spindle nut (B), then remove the nut.

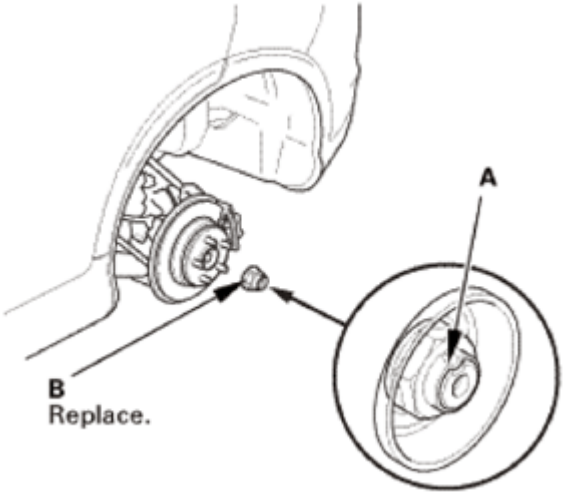

Fig. 219: Identifying Stake On Spindle Nut
Courtesy of AMERICAN HONDA MOTOR CO., INC.

4. Rear Differential Fluid - Replacement (Real Time AWD System)
    1. Remove the oil filler plug (A) and the sealing washer (B).

GETtheMANUALS.org

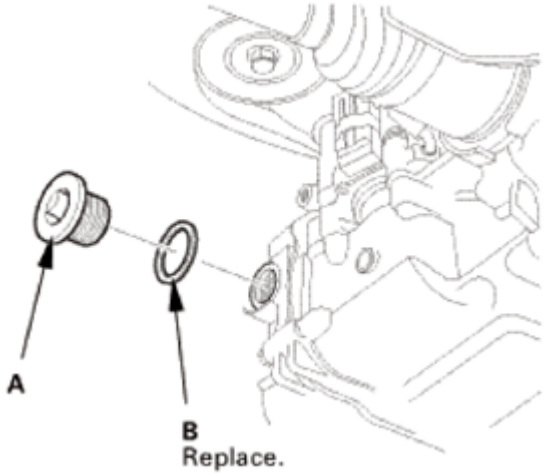

Fig. 220: Identifying Oil Filler Plug And Sealing Washer
Courtesy of AMERICAN HONDA MOTOR CO., INC.

2. Remove the drain plug (A) and the sealing washer (B), then drain the rear differential fluid.

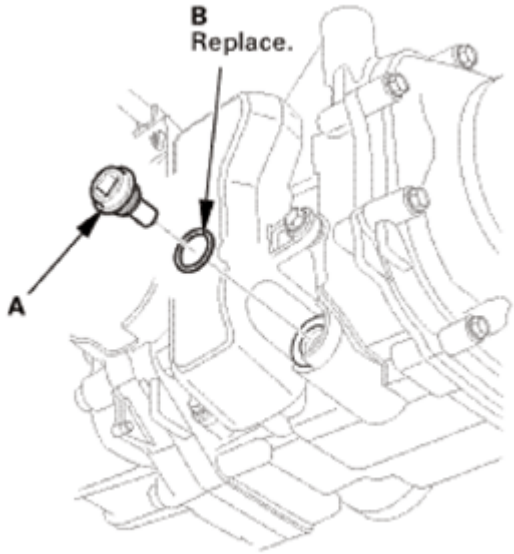

Fig. 221: Identifying Drain Plug And Sealing Washer
Courtesy of AMERICAN HONDA MOTOR CO., INC.

5. Propeller Shaft Rear Differential Side - Disconnection (With Nylon Strap)
    1. Make a reference mark (A) across the No. 2 propeller shaft (B) and the rear differential companion flange (C).
    2. Remove the No. 2 propeller shaft flange bolts (D).
    3. Separate the No. 2 propeller shaft from the rear differential.

NOTE: Suspend the propeller shaft with an appropriate size nylon strap.

GETtheMANUALS.org

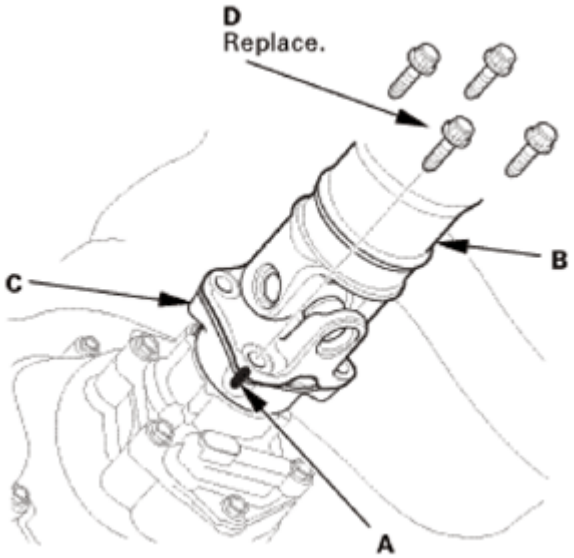

Fig. 222: Identifying Reference Mark Across No. 2 Propeller Shaft And Rear Differential Companion Flange
Courtesy of AMERICAN HONDA MOTOR CO., INC.

6. Rear Differential Connector
    1. Remove the connector cover (A).
    2. Disconnect the connectors (B).

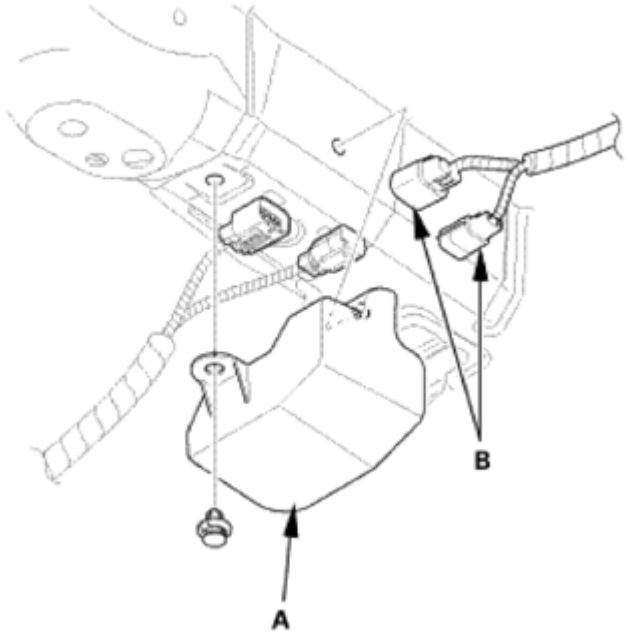

Fig. 223: Identifying Connectors And Connector Cover
Courtesy of AMERICAN HONDA MOTOR CO., INC.

3. Release the harness clips (A).

GETtheMANUALS.org

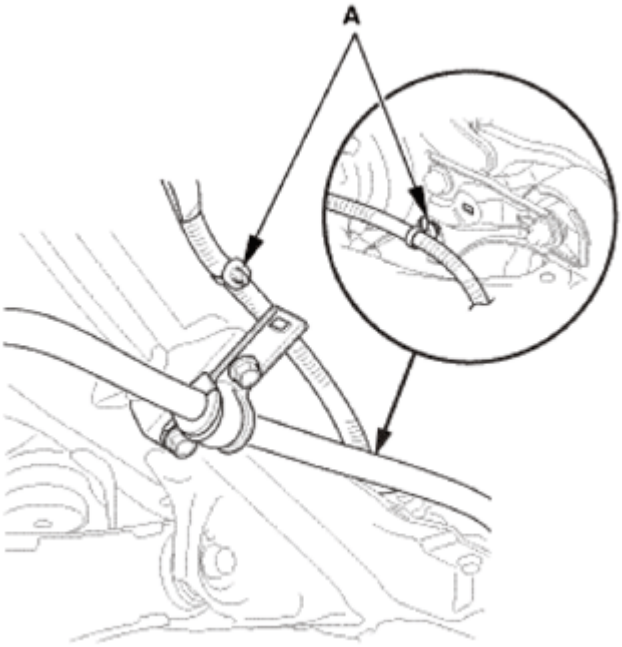

Fig. 224: Identifying Harness Clips
Courtesy of AMERICAN HONDA MOTOR CO., INC.

7. Rear Differential Breather Hoses
    1. Disconnect the breather hoses (A) from the breather pipes (B) and clamps (C).

Differential upper side

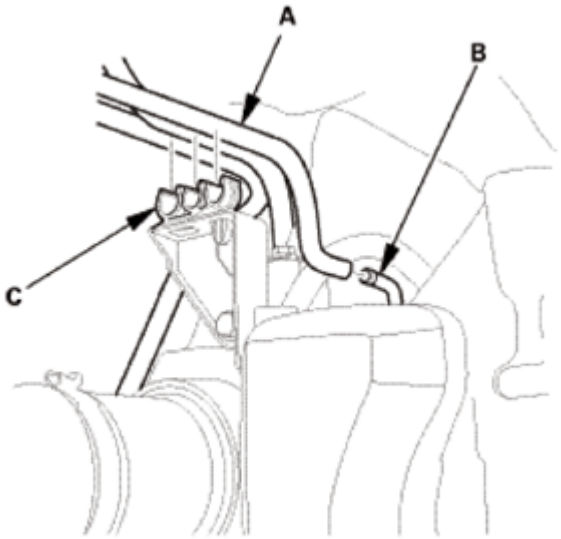

Fig. 225: Identifying Breather Hoses, Pipes And Clamps (Differential Upper Side)
Courtesy of AMERICAN HONDA MOTOR CO., INC.

Pump motor side

GETtheMANUALS.org

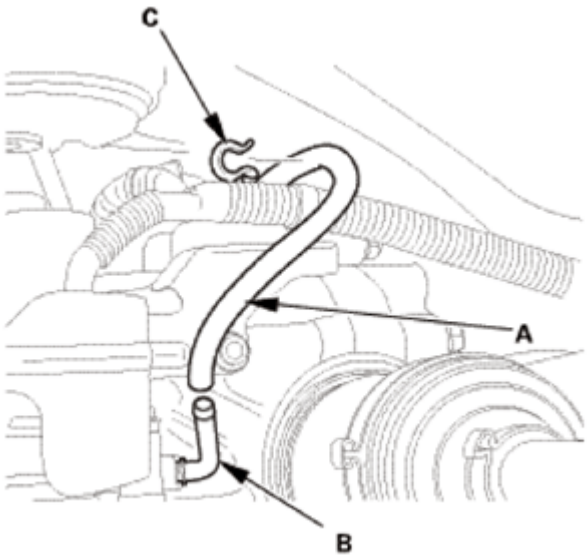

Fig. 226: Identifying Breather Hoses, Pipes And Clamps (Pump Motor Side)
Courtesy of AMERICAN HONDA MOTOR CO., INC.

2. Disconnect the breather hose (A) from the clamp (B).

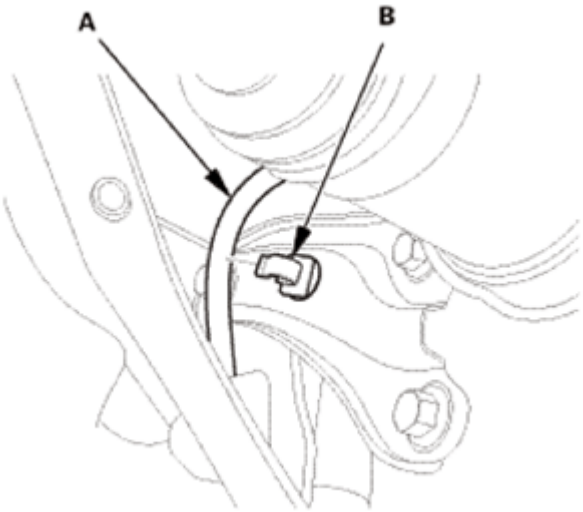

Fig. 227: Identifying Breather Hose And Clamp
Courtesy of AMERICAN HONDA MOTOR CO., INC.

8. Rear Differential Jack Support
    1. Place a transmission jack under the rear differential assembly.
9. Rear Differential Mount Bracket
    1. Remove the left and right rear differential mount brackets B.

GETtheMANUALS.org

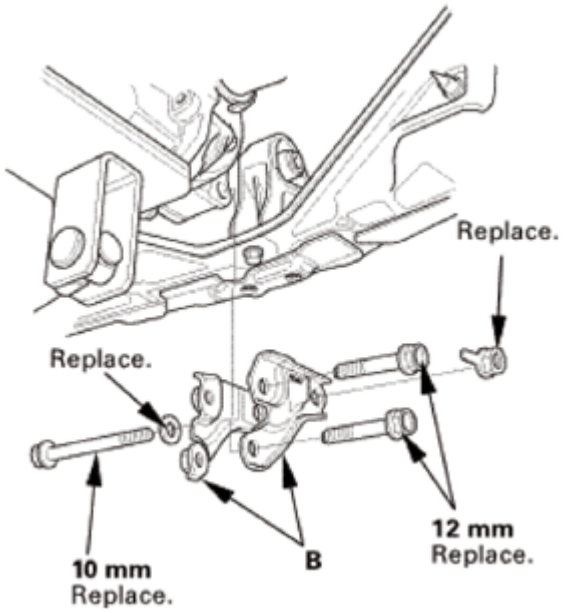

Fig. 228: Identifying Left And Right Rear Differential Mount Brackets B And Bolts
Courtesy of AMERICAN HONDA MOTOR CO., INC.

2. Remove the mounting bolts (A) and the plates (B).

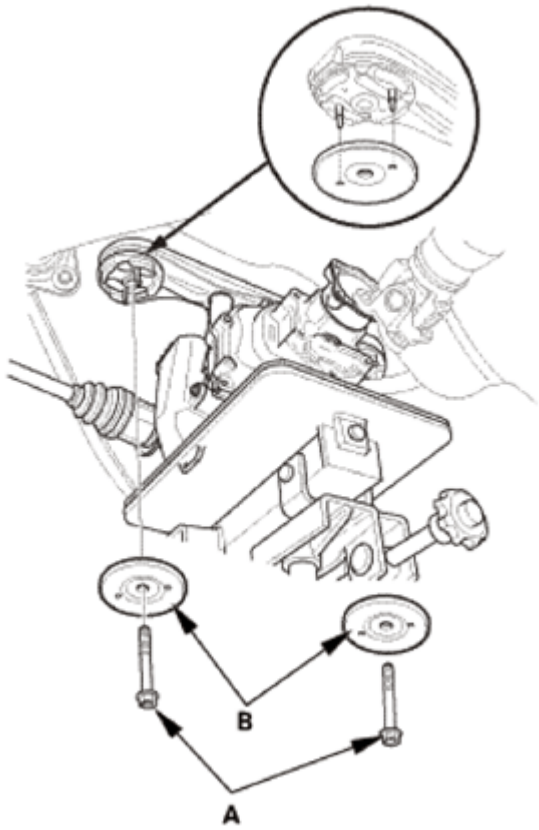

GETtheMANUALS.org

Fig. 229: Identifying Mounting Bolts And Plates
Courtesy of AMERICAN HONDA MOTOR CO., INC.

10. Rear Driveshaft Inboard Side Both - Disconnection
    1. Lower the rear differential assembly (A) while pulling both rear driveshaft inboard joints (B) out of the rear differential assembly.

NOTE:

- **Be careful not to damage the driveshaft ring (C) when prying out the driveshaft inboard joints.**
- **Be careful not to damage the oil seals (D).**

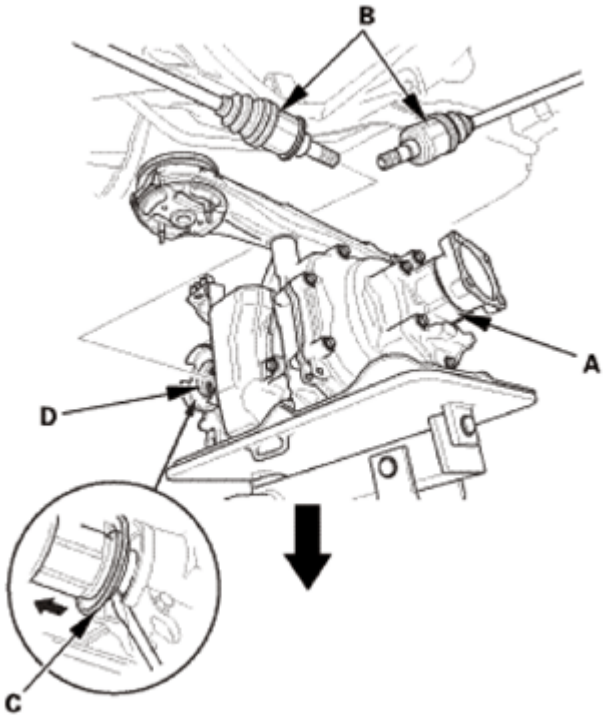

Fig. 230: Lowering Rear Differential Assembly
Courtesy of AMERICAN HONDA MOTOR CO., INC.

    2. Remove the set ring (A) from inboard joint.

GETtheMANUALS.org

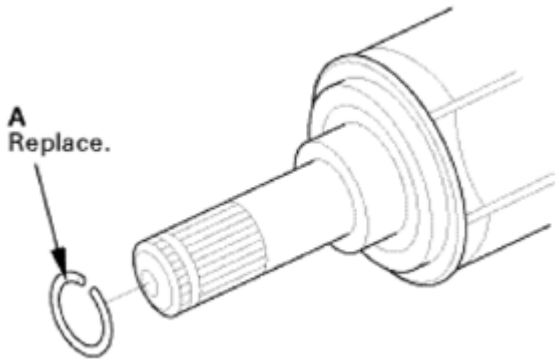

Fig. 231: Identifying Set Ring
Courtesy of AMERICAN HONDA MOTOR CO., INC.

11. Rear Driveshaft Outboard Side - Disconnection
    1. Separate the outboard joint from the rear hub using a soft face hammer.

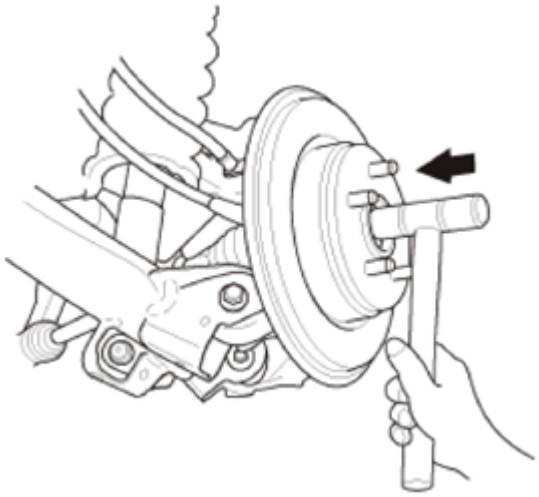

Fig. 232: Separating Outboard Joint From Rear Hub Using Soft Face Hammer
Courtesy of AMERICAN HONDA MOTOR CO., INC.

    2. Remove the rear driveshaft (A).

NOTE:

- **Be careful not to damage the wheel speed sensor (B).**
- **Pull on the outboard joint. Do not pull on the driveshaft because the joint may come apart.**

GETtheMANUALS.org

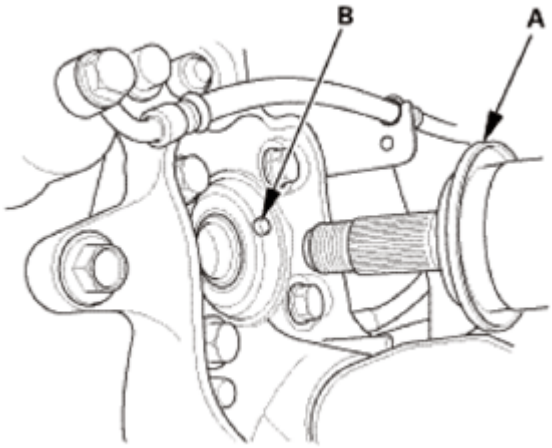

Fig. 233: Removing Rear Driveshaft
Courtesy of AMERICAN HONDA MOTOR CO., INC.

12. Rear Inboard Joint (Japan - Built models)
    1. Lift up the three tabs (A) using a flat-tipped screwdriver.

       NOTE: Be careful not to damage the boot.

    2. Release the ear clamp bands (B).

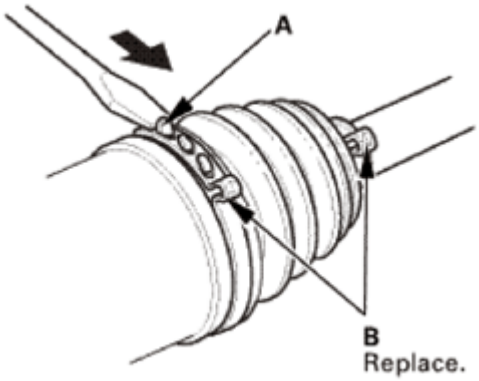

Fig. 234: Lifting Up Three Tabs Using Flat-Tipped Screwdriver
Courtesy of AMERICAN HONDA MOTOR CO., INC.

    3. Make marks (A) on each roller (B) and the inboard joint (C) to identify the locations of the rollers to the grooves in the inboard joint.

       NOTE: Do not engrave or scribe any marks on the rolling surfaces.

    4. Remove the inboard joint on a clean shop towel (D).

       NOTE: Be careful not to drop the rollers when separating them from the

GETtheMANUALS.org

inboard joint.

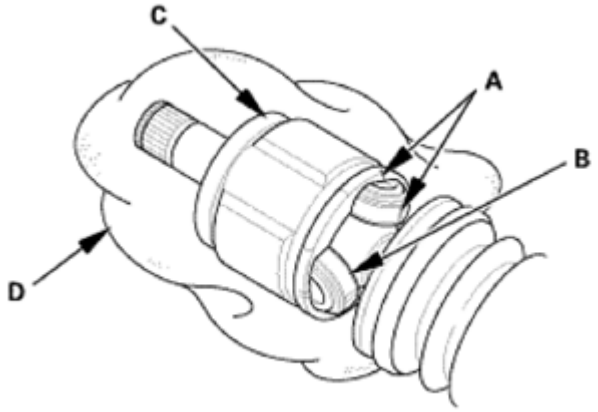

Fig. 235: Identifying Marks On Roller And Inboard Joint
Courtesy of AMERICAN HONDA MOTOR CO., INC.

5. Make marks (A) on the spider (B) that match the marks on the rollers.

NOTE: Do not engrave or scribe any marks on the rolling surfaces.

6. Remove the rollers.
7. Make marks (C) on the spider and the driveshaft (D) to identify the position of the spider on the shaft.

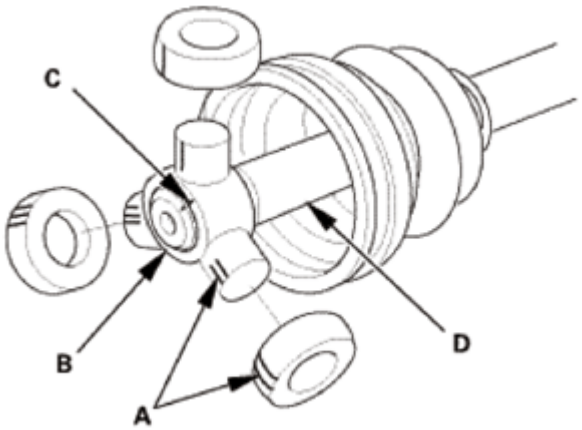

Fig. 236: Identifying Markings On Spider And Roller
Courtesy of AMERICAN HONDA MOTOR CO., INC.

8. Make a mark (A) on the driveshaft (B) at the same level as the spider end.

GETtheMANUALS.org

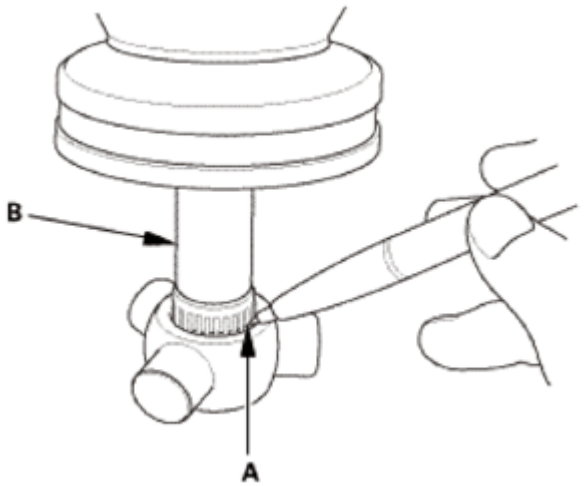

Fig. 237: Identifying Marking On Driveshaft
Courtesy of AMERICAN HONDA MOTOR CO., INC.

9. Support the spider (A) on a bench vise (B).
10. Remove the driveshaft (C) from the spider using the 22 mm pilot and the 15 x 135L driver handle.

NOTE: Do not directly hit the driveshaft with the hammer.

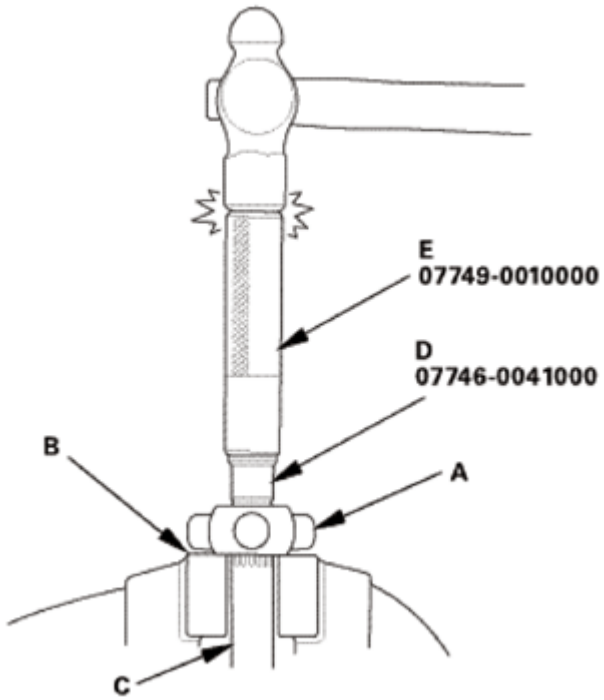

Fig. 238: Removing Driveshaft From Spider
Courtesy of AMERICAN HONDA MOTOR CO., INC.

11. Remove the stop ring (A).

GETtheMANUALS.org

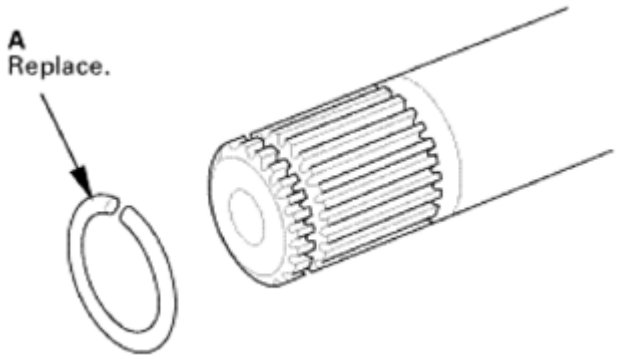

Fig. 239: Identifying Stop Ring
Courtesy of AMERICAN HONDA MOTOR CO., INC.

13. Rear Inboard Boot
    1. Wrap the splines on the driveshaft with vinyl tape (A) to prevent damaging the inboard boot.
    2. Remove the inboard boot.

NOTE: **Be careful not to damage the boot.**

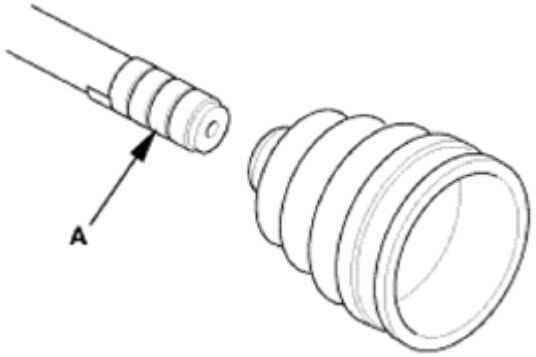

Fig. 240: Identifying Vinyl Tape On Driveshaft Splines
Courtesy of AMERICAN HONDA MOTOR CO., INC.

INSTALLATION

NOTE: **Refer to the EXPLODED VIEW in the Rear Driveshaft Disassembly and Reassembly as needed during this procedure.**

1. Rear Inboard Boot
    1. Install new ear clamp bands (A) and the outboard boot onto the driveshaft.

NOTE: **Be careful not to damage the boot.**

    2. Remove the vinyl tape.

GETtheMANUALS.org

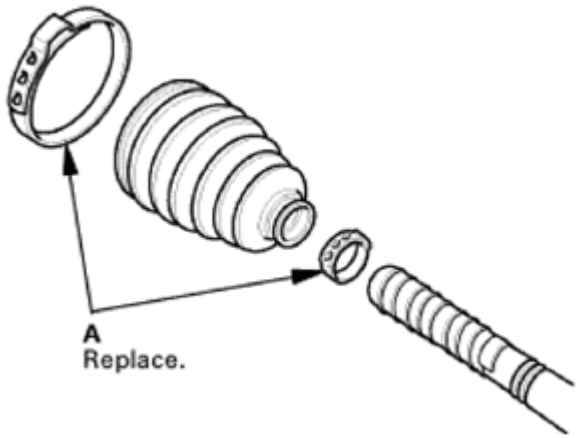

Fig. 241: Identifying Clamp Bands
Courtesy of AMERICAN HONDA MOTOR CO., INC.

2. Rear Inboard Joint (Japan - Built models)
    1. Install the stop ring (A).

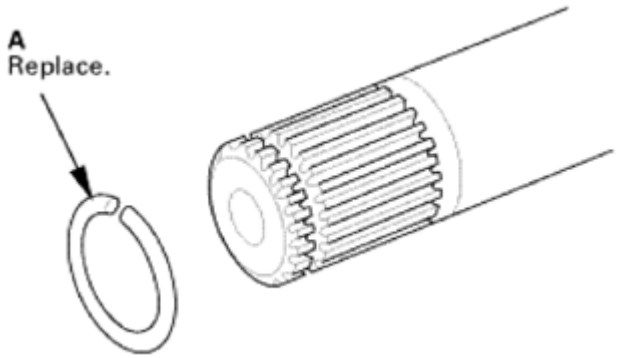

Fig. 242: Identifying Stop Ring
Courtesy of AMERICAN HONDA MOTOR CO., INC.

    2. Insert the driveshaft (A) into the spider (B) until the stop ring (C) is close to the spider.

NOTE: **Install the spider onto the driveshaft by aligning the marks (D) you made on the spider and the end of the driveshaft.**

GETtheMANUALS.org

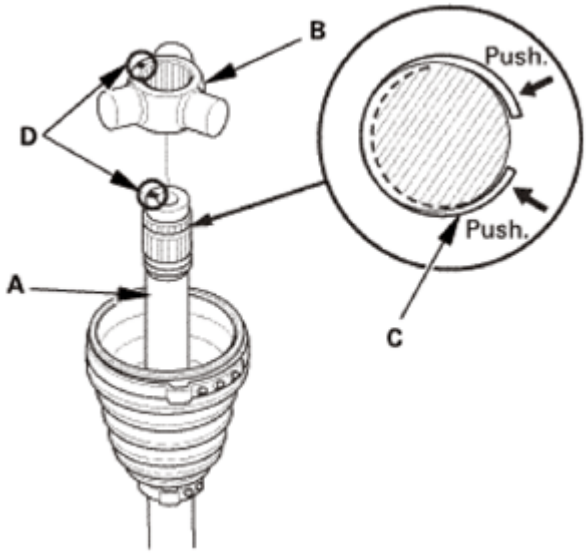

Fig. 243: Identifying Marks On Driveshaft And Spider
Courtesy of AMERICAN HONDA MOTOR CO., INC.

3. Pick up the driveshaft and the spider, and tap or hit the assembly onto a hard surface from a height of about 10 cm (3.9 in).

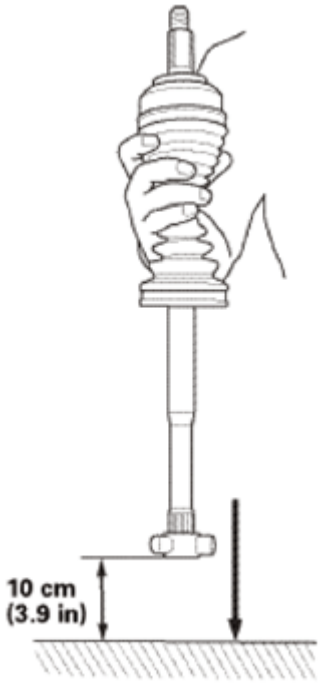

Fig. 244: Tapping Assembly
Courtesy of AMERICAN HONDA MOTOR CO., INC.

4. Securely clamp the driveshaft (A) in the bench vise with wood blocks (B).
5. Drive on the spider (C) using the 41.8 mm oil seal driver.

GETtheMANUALS.org

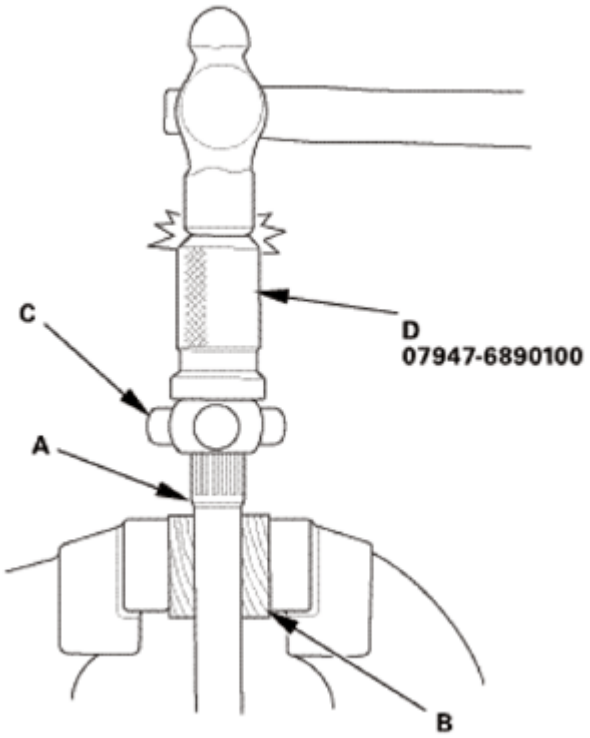

Fig. 245: Installing Spider
Courtesy of AMERICAN HONDA MOTOR CO., INC.

6. Check the alignment of the paint mark (A) you made with the spider end.

NOTE: **To avoid driveshaft and vehicle damage, the shaft must be all the way into the spider to ensure the stop ring is properly seated.**

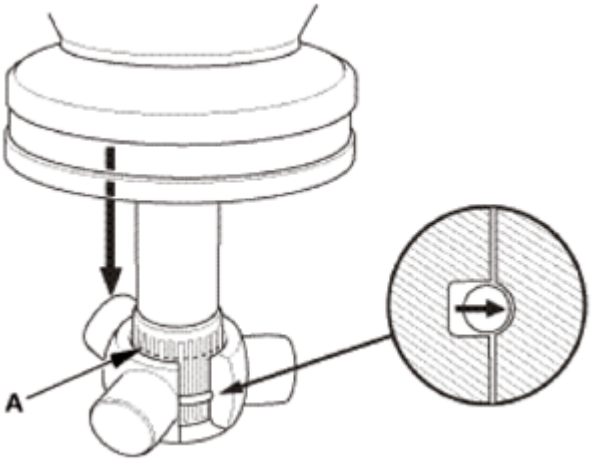

Fig. 246: Checking Alignment Of Paint Mark
Courtesy of AMERICAN HONDA MOTOR CO., INC.

7. Fit the rollers (A) onto the spider (B) as shown, and note these items:

GETtheMANUALS.org

- Reinstall the rollers in their original positions on the spider by aligning the marks (C) you made.
- Hold the driveshaft pointed up to prevent the rollers from falling off.

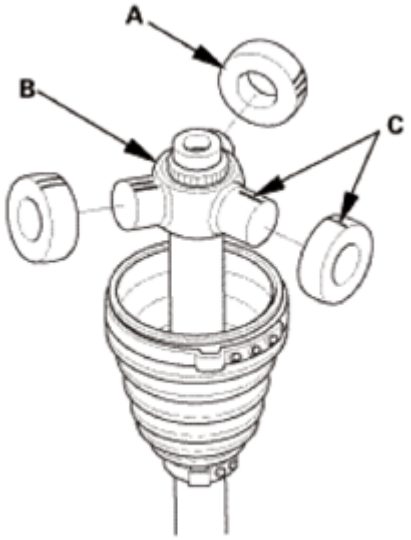

Fig. 247: Fitting Rollers Onto Spider
Courtesy of AMERICAN HONDA MOTOR CO., INC.

8. Pack the inboard joint with the joint grease included in the new inboard boot set.

Grease quantity

Inboard joint/Outboard

joint:

60-70 g (2.1-2.5 oz)

Fig. 248: Packing Inboard Joint With Joint Grease

GETtheMANUALS.org

Courtesy of AMERICAN HONDA MOTOR CO., INC.

9. Fit the inboard joint onto the driveshaft, and note these items:
   - Reinstall the inboard joint onto the driveshaft by aligning the marks (A) you made on the inboard joint and the rollers.
   - Hold the driveshaft so the inboard joint is pointing up to prevent it from falling off.

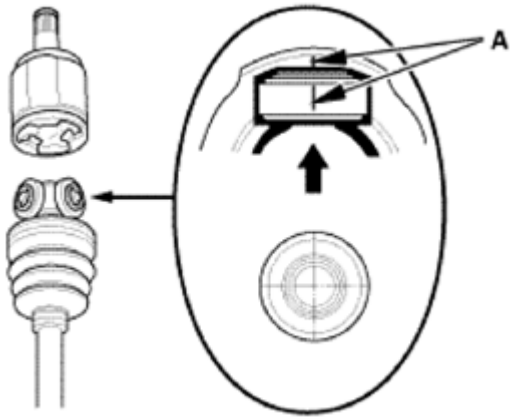

Fig. 249: Fitting Inboard Joint Onto Driveshaft
Courtesy of AMERICAN HONDA MOTOR CO., INC.

10. Fit the boot ends (A) onto the driveshaft (B) and the inboard joint (C).

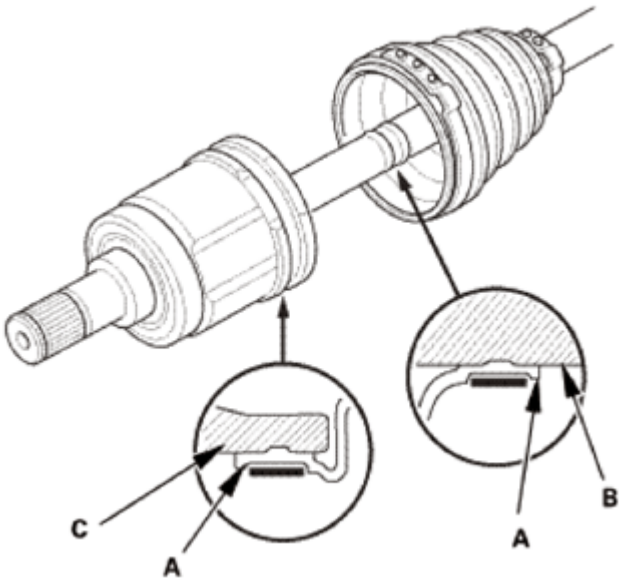

Fig. 250: Identifying Boot Ends Onto Driveshaft And Inboard Joint
Courtesy of AMERICAN HONDA MOTOR CO., INC.

11. Adjust the length (A) of the driveshaft in the figure as shown, then adjust the boots to halfway between full compression and full extension.

GETtheMANUALS.org

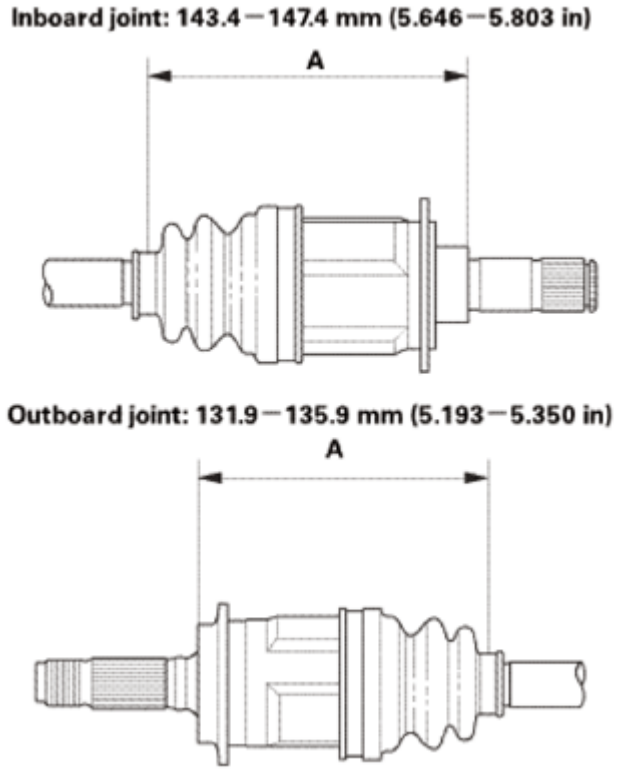

Fig. 251: Identifying Length Of Driveshaft
Courtesy of AMERICAN HONDA MOTOR CO., INC.

12. Bleed excess air from the boots by inserting a flat-tipped screwdriver between the boot and the joint.
13. Close the ear portion (A) of the band using a commercially available boot band clamp tool (Kent-Moore J-35910 or equivalent) (B).

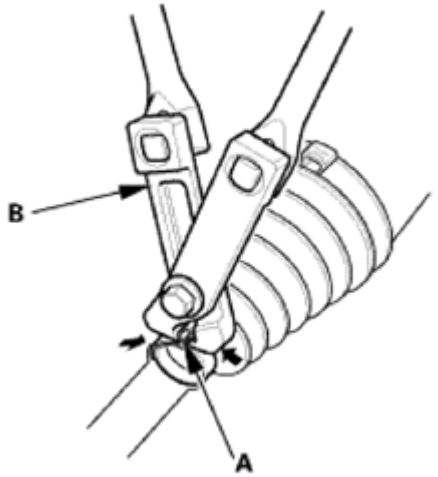

Fig. 252: Closing Ear Portion Of Band
Courtesy of AMERICAN HONDA MOTOR CO., INC.

GETtheMANUALS.org

14. Check the clearance between the closed ear portion of the band. If the clearance is not within the standard, close the ear portion of the band tighter.

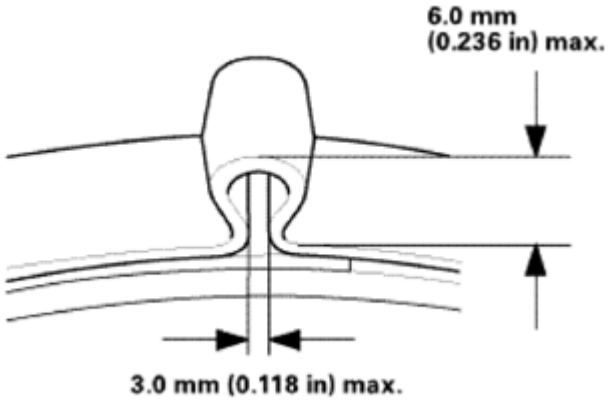

Fig. 253: Identifying Clearance Between Closed Ear Portion Of Band
Courtesy of AMERICAN HONDA MOTOR CO., INC.

3. Rear Driveshaft Outboard Side - Reconnection
   1. Install the outboard joint (A) into the rear hub (B).

NOTE: Be careful not to damage the wheel speed sensor (C).

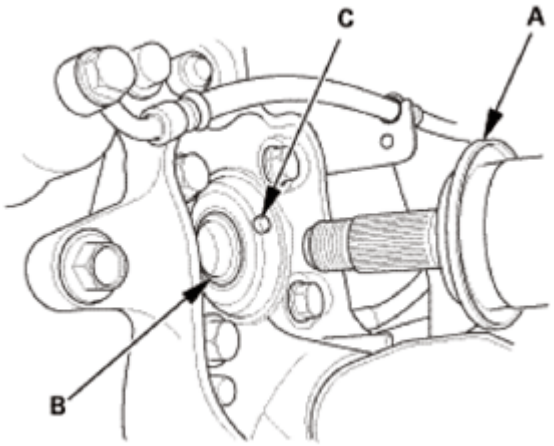

Fig. 254: Identifying Outboard Joint Into Rear Hub
Courtesy of AMERICAN HONDA MOTOR CO., INC.

4. Rear Driveshaft Inboard Side Both - Reconnection
   1. Install new set ring (A) into the groove (B) of the rear driveshaft inboard joint on both side.

GETtheMANUALS.org

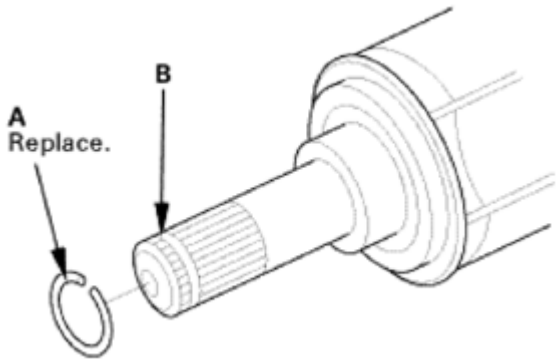

Fig. 255: Identifying Set Ring And Joint Groove
Courtesy of AMERICAN HONDA MOTOR CO., INC.

2. Lift the rear differential assembly (A) up into position.
3. Insert the inboard end (B) of the rear driveshaft (C) into the differential (D) until the set ring (E) locks in the groove (F).

NOTE: Insert the driveshaft horizontally to prevent damaging the oil seals (G).

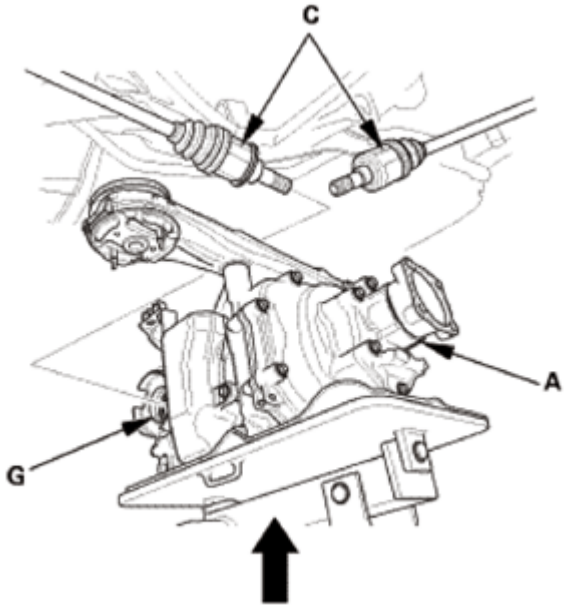

Fig. 256: Lifting Rear Differential Assembly
Courtesy of AMERICAN HONDA MOTOR CO., INC.

GETtheMANUALS.org

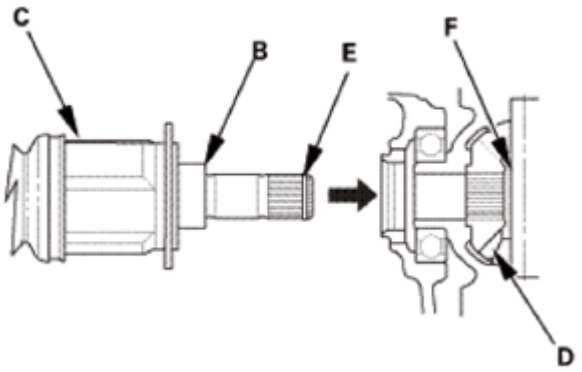

Fig. 257: Inserting Inboard End Of Rear Driveshaft
Courtesy of AMERICAN HONDA MOTOR CO., INC.

5. Rear Differential Mount Bracket
    1. Align the tabs (A) of the rubber mount (B) with the holes (C) of the plates (D).
    2. Install the rear differential mounting bolts (E).

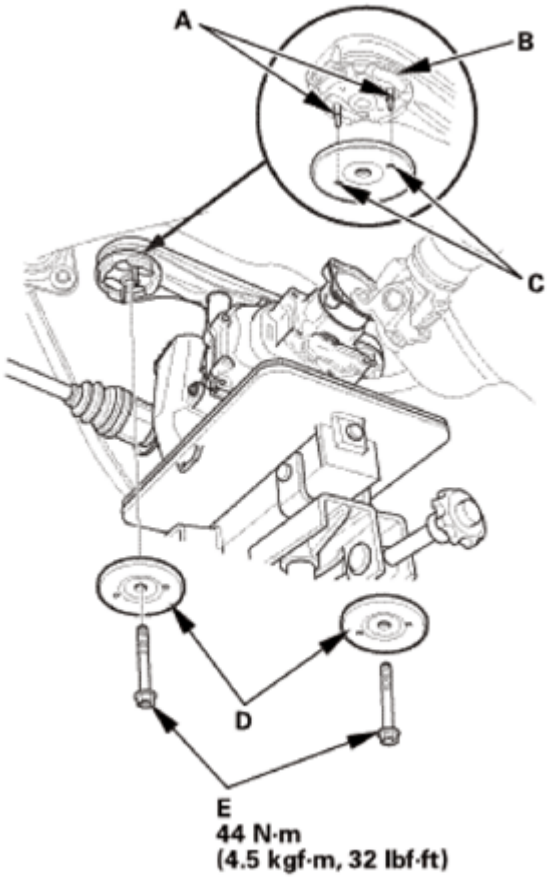

Fig. 258: Identifying Tabs Of Rubber Mount And Holes Of Plates
Courtesy of AMERICAN HONDA MOTOR CO., INC.

GETtheMANUALS.org

3. Install the left and right rear differential mount brackets B.
4. Tighten new differential mount brackets B mounting bolts (A) to the specified torque.
5. Loosely install new differential mount brackets B mounting bolt (C).

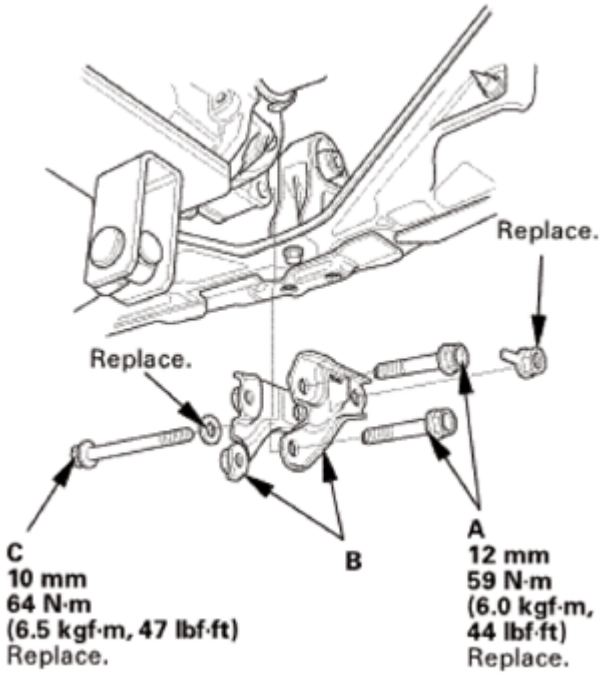

Fig. 259: Identifying Left And Right Rear Differential Mount Brackets B, And Bolts With Torque Specifications
Courtesy of AMERICAN HONDA MOTOR CO., INC.

6. Rear Differential Mount Bolt - Tighten
    1. Lower the transmission jack.
    2. Tighten differential mount brackets B mounting bolt to the specified torque.
7. Rear Differential Breather Hoses

Differential upper side

GETtheMANUALS.org

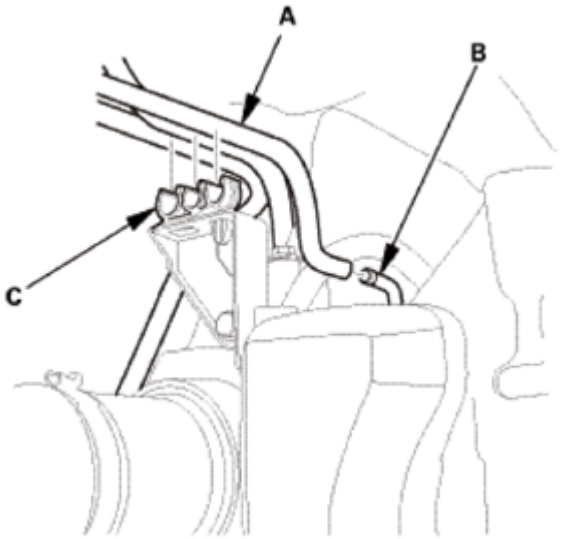

Fig. 260: Identifying Breather Hoses, Pipes And Clamps (Differential Upper Side)
Courtesy of AMERICAN HONDA MOTOR CO., INC.

Pump motor side

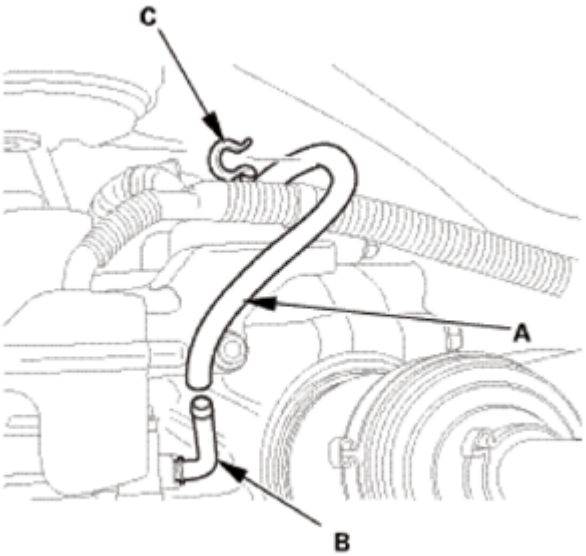

Fig. 261: Identifying Breather Hoses, Pipes And Clamps (Pump Motor Side)
Courtesy of AMERICAN HONDA MOTOR CO., INC.

1. Connect the breather hoses (A) to the breather pipes (B) and clamps (C).
2. Connect the breather hose (A) to the clamp (B).

GETtheMANUALS.org

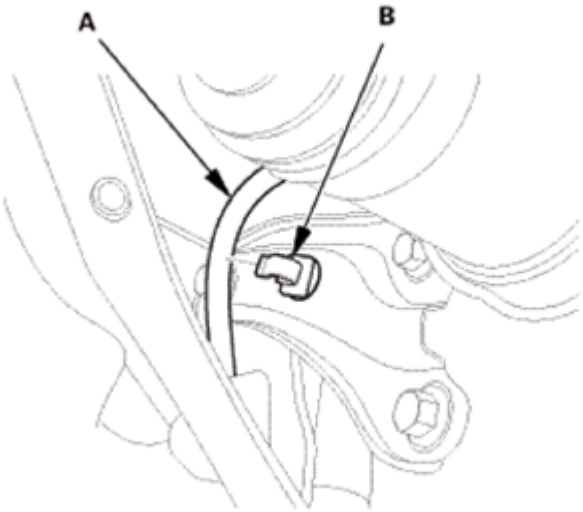

Fig. 262: Identifying Breather Hose And Clamp
Courtesy of AMERICAN HONDA MOTOR CO., INC.

8. Rear Differential Connector
    1. Install the harness clips (A).

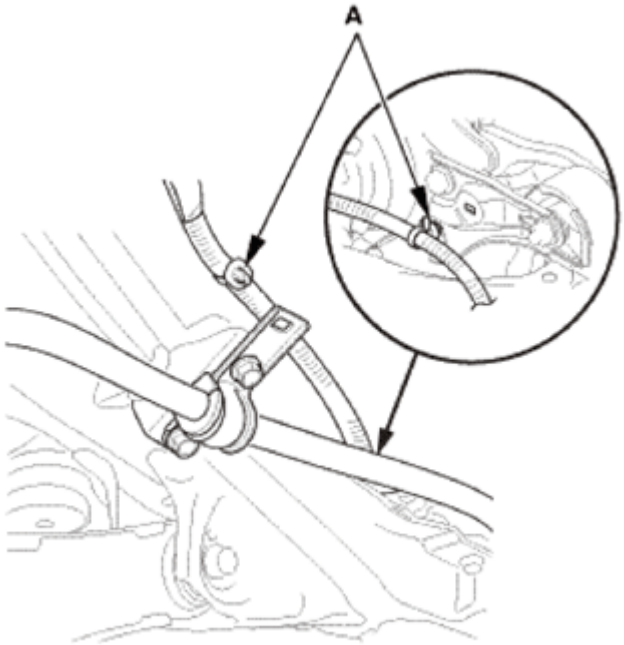

Fig. 263: Identifying Harness Clips
Courtesy of AMERICAN HONDA MOTOR CO., INC.

    2. Connect the connectors (A).
    3. Install the connector cover (B).

GETtheMANUALS.org

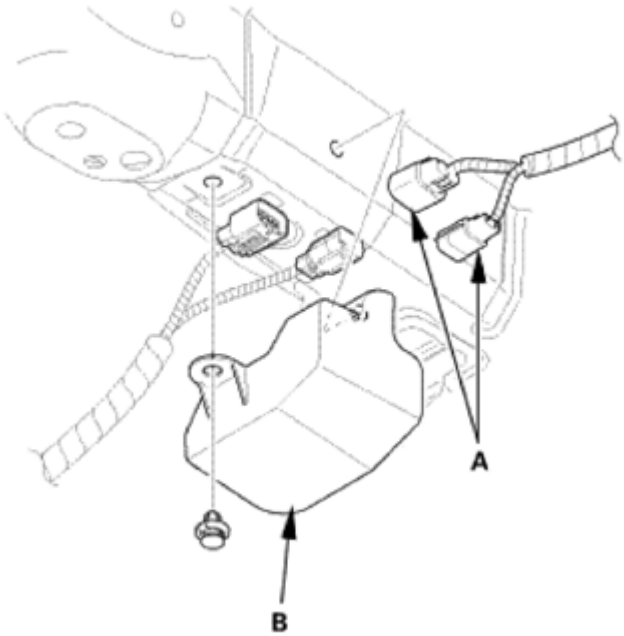

Fig. 264: Identifying Connector And Connector Cover
Courtesy of AMERICAN HONDA MOTOR CO., INC.

9. Propeller Shaft Rear Differential Side - Disconnection (With Nylon Strap)
    1. Attach the No. 2 propeller shaft (A) to the rear differential companion flange (B) by aligning the reference mark (C) you made during the removal procedure.
    2. Install new flange bolts (D) to the specified torque.

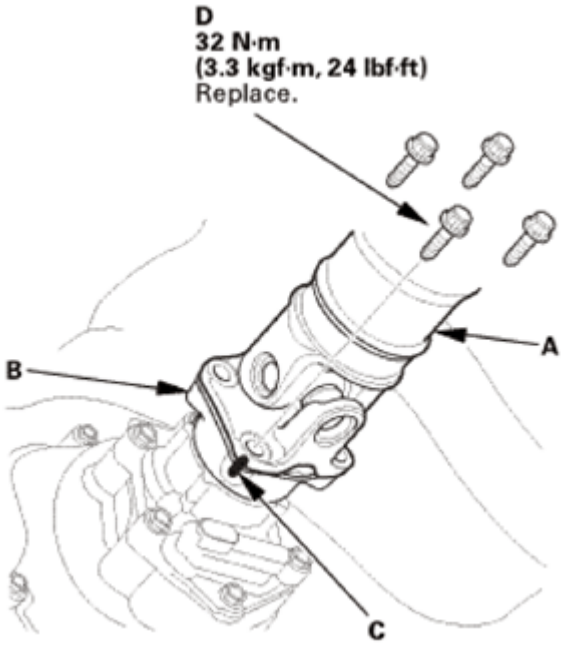

Fig. 265: Identifying Reference Mark On No. 2 Propeller Shaft And Rear Differential

GETtheMANUALS.org

Companion Flange
Courtesy of AMERICAN HONDA MOTOR CO., INC.

10. Left Rear Driveshaft Spindle Nut
    1. Apply a small amount of engine oil to the seating surface of a new spindle nut (A).
    2. Install the spindle nut, then tighten it. After tightening, use a drift to stake the spindle nut shoulder (B) against the driveshaft.

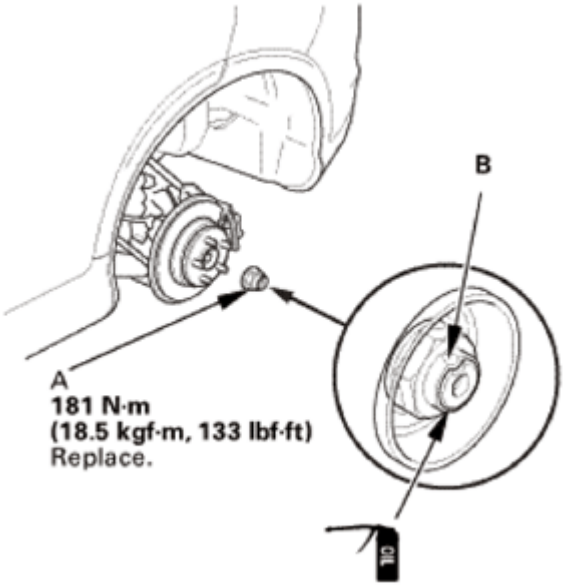

Fig. 266: Identifying Spindle Nut With Torque Specifications
Courtesy of AMERICAN HONDA MOTOR CO., INC.

11. Rear Wheel
    1. Install the rear wheel.

NOTE: **Before installing the wheel, clean the mating surfaces between the brake disc/drum and the inside of the wheel.**

GETtheMANUALS.org

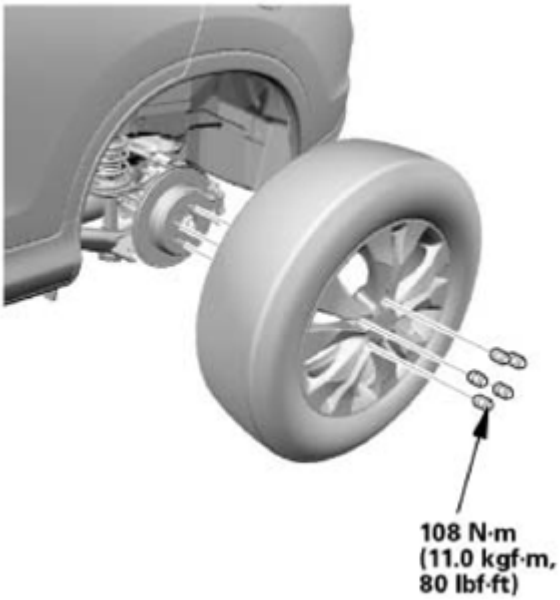

Fig. 267: Identifying Rear Wheel Bolts With Torque Specifications
Courtesy of AMERICAN HONDA MOTOR CO., INC.

12. Driveshaft After Install Check
    1. Turn the wheel by hand, and make sure there is no interference between the driveshaft and surrounding parts.
13. Rear Differential Fluid - Replacement (Real Time AWD System)
    1. Clean the drain plug (A), then install it with a new sealing washer (B).
    2. Refill the differential with rear differential fluid to the proper level.

NOTE: **If you disassemble the differential, check the rear differential fluid level again after the 4WD system check is finished. Add fluid if necessary.**

Fluid Capacity:

1.2 L (1.3 US qt) at fluid change

1.5 L (1.6 US qt) at overhaul

Recommended fluid: Honda Dual Pump Fluid II

GETtheMANUALS.org

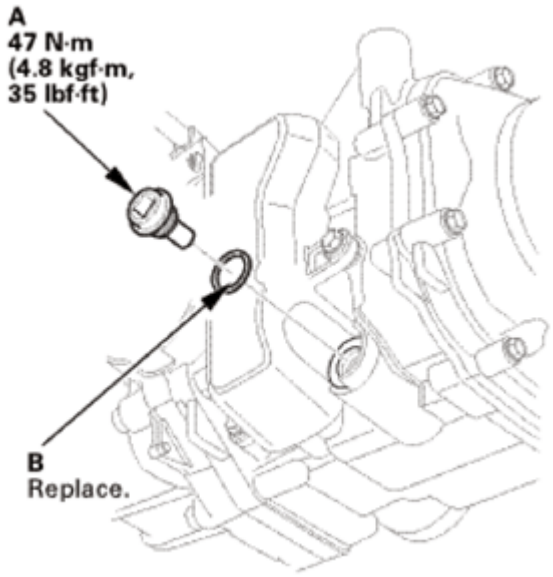

Fig. 268: Identifying Drain Plug And Washer With Torque Specifications
Courtesy of AMERICAN HONDA MOTOR CO., INC.

3. Install the oil filler plug (A) with a new sealing washer (B).

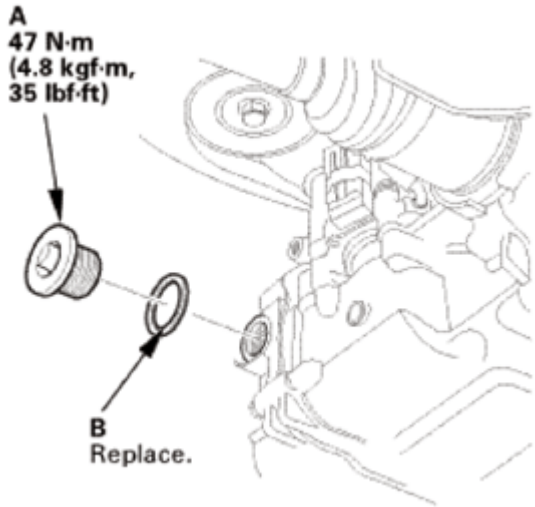

Fig. 269: Identifying Oil Filler Plug And Sealing Washer
Courtesy of AMERICAN HONDA MOTOR CO., INC.

14. Rear Differential Fluid After Replacement - Check (Real Time AWD System)
    1. Apply the parking brake, and block all four wheels.
    2. Start the engine, and let it idle more than 6 seconds, then turn the engine off. Repeat this step three more times.
    3. Shift to D while pressing the brake pedal firmly. Press the accelerator pedal for 2 seconds, then let it idle. Repeat this three more times.

GETtheMANUALS.org

4. Check that the real time AWD indicator does not come on. If it does, check for real time AWD system DTC's.

15. Test Drive
    1. Test-drive the vehicle.
16. HDS DLC - Connection
    1. Connect the HDS to the data link connector (DLC) (A) located under the driver's side of the dashboard.
    2. Turn the ignition switch to ON (II).
    3. Make sure the HDS communicates with the vehicle. If it does not communicate, go to the DLC circuit troubleshooting.

Fig. 270: Identifying Data Link Connector (DLC)
Courtesy of AMERICAN HONDA MOTOR CO., INC.

17. Maintenance Minder Reset
    1. **RESET THE MAINTENANCE MINDER** .

REAR DRIVESHAFT OUTBOARD BOOT REPLACEMENT

SPECIAL TOOLS DESCRIPTION

Image	Description/Tool Number

GETtheMANUALS.org

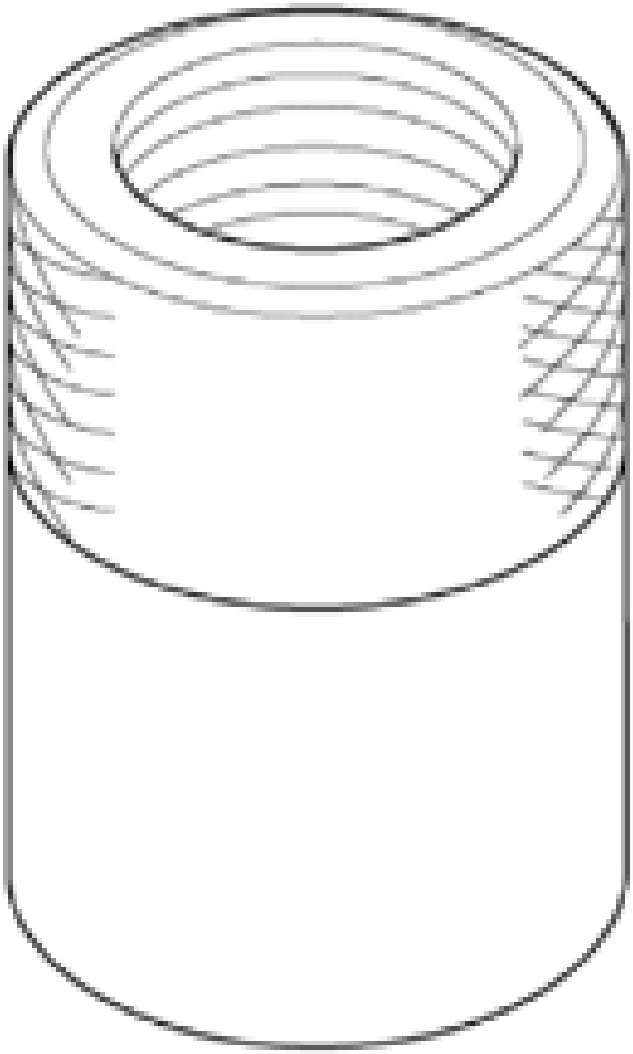	Threaded Adapter, 22 x 1.5 mm 07XAC-001010A
	Boot Band Clamp Tool Kent-Moore J-35910 or equivalent, commercially available

GETtheMANUALS.org

	Slide Hammer 5/8"-18 UNF, commercially available

REMOVAL

1. Vehicle Lift
    1. Raise the vehicle on a lift, and make sure it is securely supported.
2. Rear Wheel
    1. Remove the rear wheel.

GETtheMANUALS.org

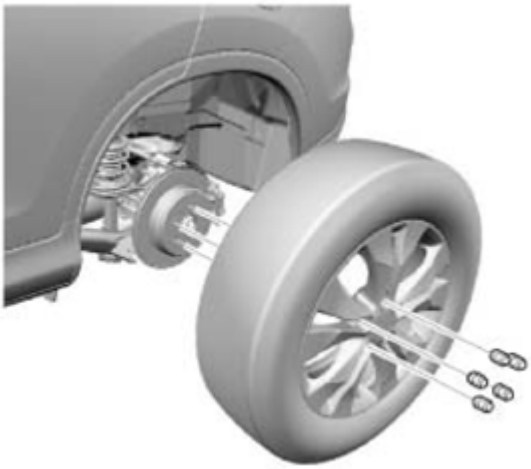

Fig. 271: Identifying Rear Wheel
Courtesy of AMERICAN HONDA MOTOR CO., INC.

3. Left Rear Driveshaft Spindle Nut
    1. Pry up the stake (A) on the spindle nut (B), then remove the nut.

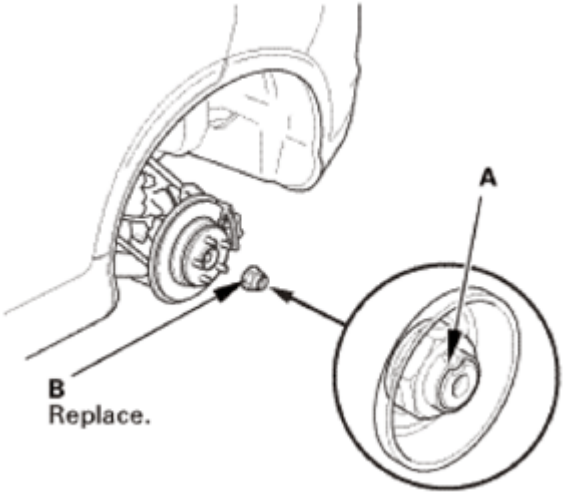

Fig. 272: Identifying Stake On Spindle Nut
Courtesy of AMERICAN HONDA MOTOR CO., INC.

4. Rear Differential Fluid - Replacement (Real Time AWD System)
    1. Remove the oil filler plug (A) and the sealing washer (B).

GETtheMANUALS.org

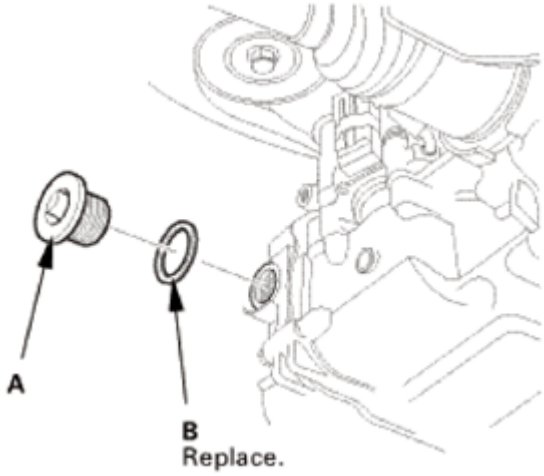

Fig. 273: Identifying Oil Filler Plug And Sealing Washer
Courtesy of AMERICAN HONDA MOTOR CO., INC.

2. Remove the drain plug (A) and the sealing washer (B), then drain the rear differential fluid.

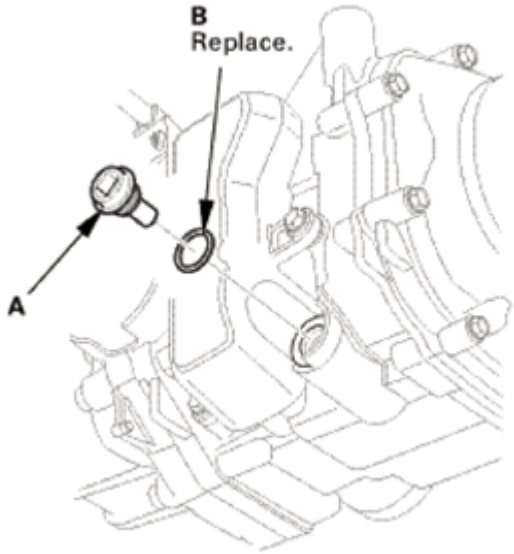

Fig. 274: Identifying Drain Plug And Sealing Washer
Courtesy of AMERICAN HONDA MOTOR CO., INC.

5. Propeller Shaft Rear Differential Side - Disconnection (With Nylon Strap)
    1. Make a reference mark (A) across the No. 2 propeller shaft (B) and the rear differential companion flange (C).
    2. Remove the No. 2 propeller shaft flange bolts (D).
    3. Separate the No. 2 propeller shaft from the rear differential.

NOTE: Suspend the propeller shaft with an appropriate size nylon strap.

GETtheMANUALS.org

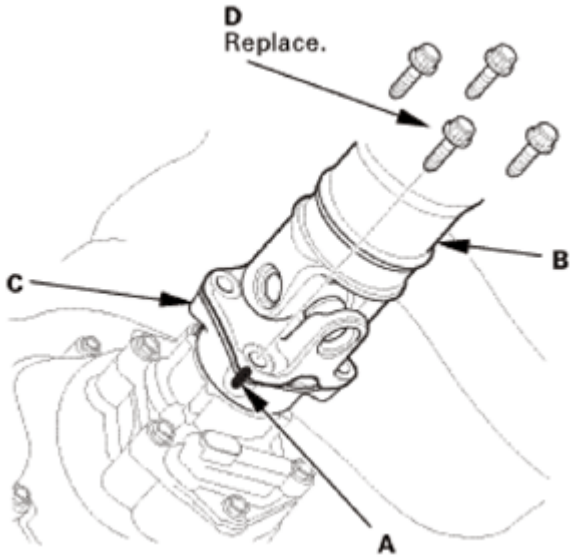

Fig. 275: Identifying Reference Mark On No. 2 Propeller Shaft And Rear Differential Companion Flange
Courtesy of AMERICAN HONDA MOTOR CO., INC.

6. Rear Differential Connector
    1. Remove the connector cover (A).
    2. Disconnect the connectors (B).

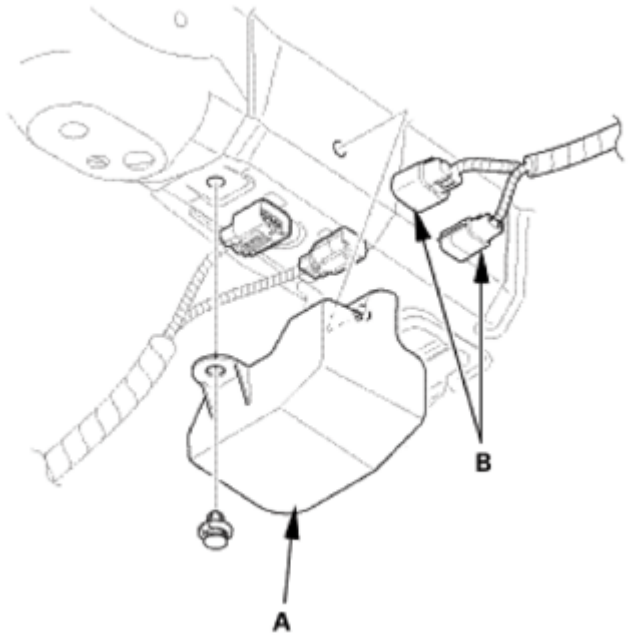

Fig. 276: Identifying Connectors And Cover
Courtesy of AMERICAN HONDA MOTOR CO., INC.

3. Release the harness clips (A).

GETtheMANUALS.org

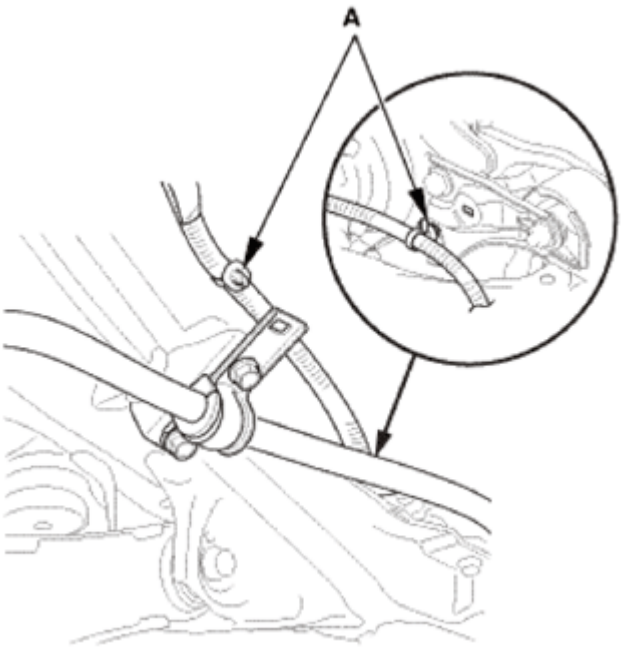

Fig. 277: Identifying Harness Clips
Courtesy of AMERICAN HONDA MOTOR CO., INC.

7. Rear Differential Breather Hoses
    1. Disconnect the breather hoses (A) from the breather pipes (B) and clamps (C).

Differential upper side

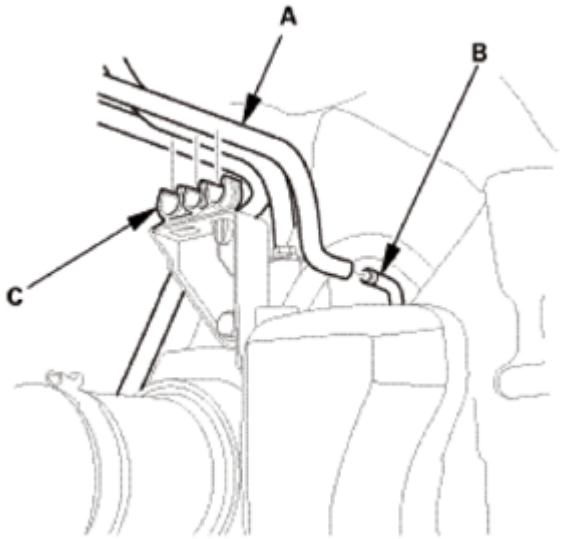

Fig. 278: Identifying Breather Hoses, Breather Pipes And Clamps (Differential Upper Side)
Courtesy of AMERICAN HONDA MOTOR CO., INC.

Pump motor side

GETtheMANUALS.org

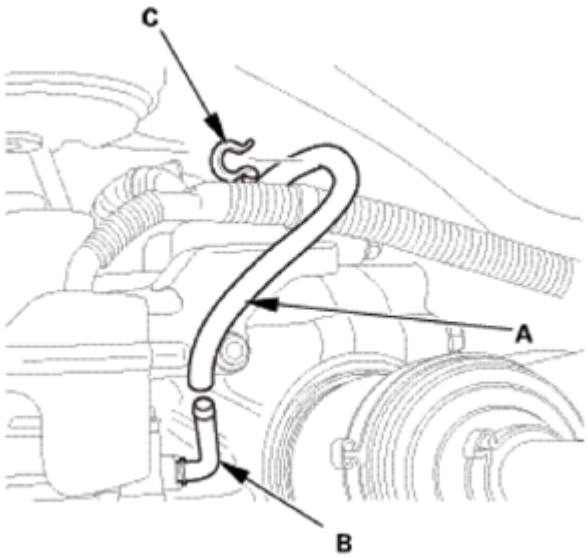

Fig. 279: Identifying Breather Hoses, Breather Pipes And Clamps (Pump Motor Side)
Courtesy of AMERICAN HONDA MOTOR CO., INC.

2. Disconnect the breather hose (A) from the clamp (B).

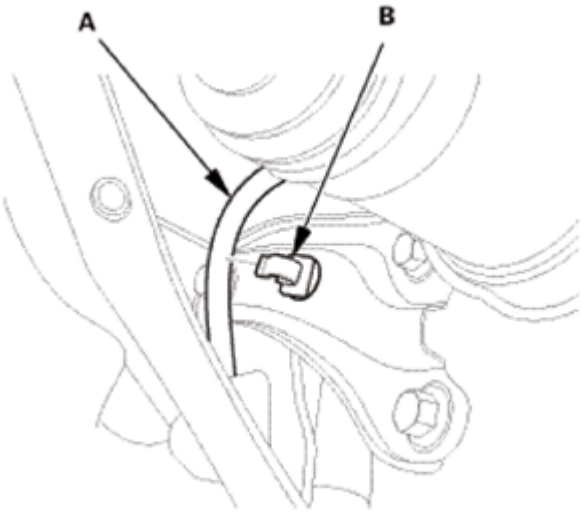

Fig. 280: Identifying Breather Hose And Clamp
Courtesy of AMERICAN HONDA MOTOR CO., INC.

8. Rear Differential Jack Support
    1. Place a transmission jack under the rear differential assembly.
9. Rear Differential Mount Bracket
    1. Remove the left and right rear differential mount brackets B.

GETtheMANUALS.org

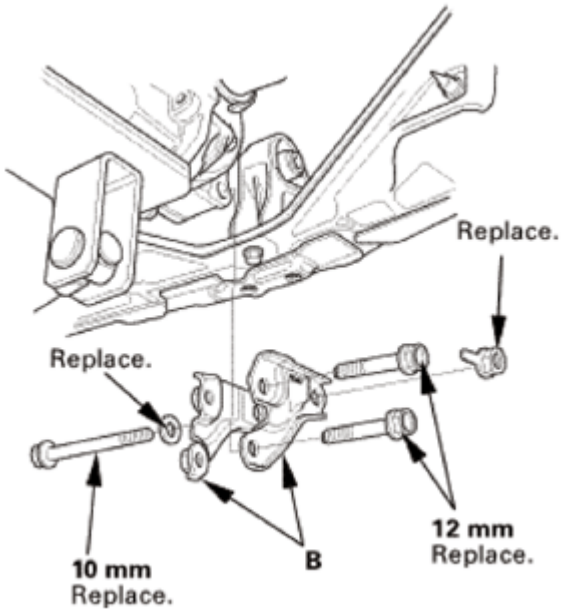

Fig. 281: Identifying Left And Right Rear Differential Mount Brackets B
Courtesy of AMERICAN HONDA MOTOR CO., INC.

2. Remove the mounting bolts (A) and the plates (B).

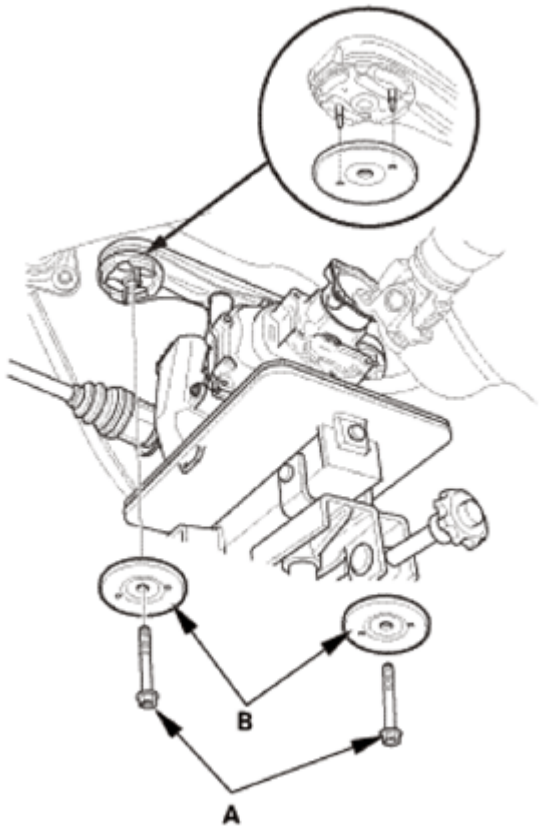

GETtheMANUALS.org

Fig. 282: Identifying Mounting Bolts And Plates
Courtesy of AMERICAN HONDA MOTOR CO., INC.

10. Rear Driveshaft Inboard Side Both - Disconnection
    1. Lower the rear differential assembly (A) while pulling both rear driveshaft inboard joints (B) out of the rear differential assembly.

NOTE:

- **Be careful not to damage the driveshaft ring (C) when prying out the driveshaft inboard joints.**
- **Be careful not to damage the oil seals (D).**

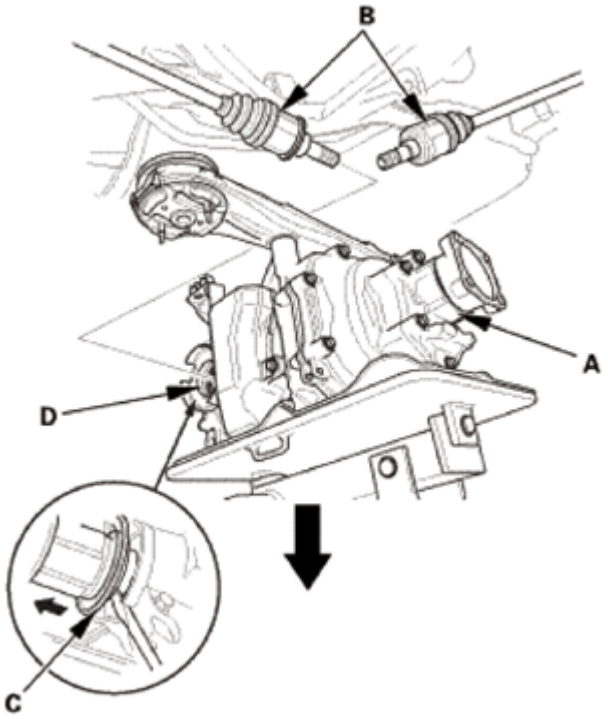

Fig. 283: Lowering Rear Differential Assembly
Courtesy of AMERICAN HONDA MOTOR CO., INC.

    2. Remove the set ring (A) from inboard joint.

GETtheMANUALS.org

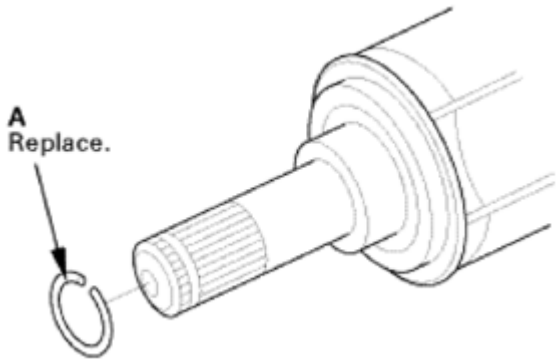

Fig. 284: Identifying Set Ring
Courtesy of AMERICAN HONDA MOTOR CO., INC.

11. Rear Driveshaft Outboard Side - Disconnection
    1. Separate the outboard joint from the rear hub using a soft face hammer.

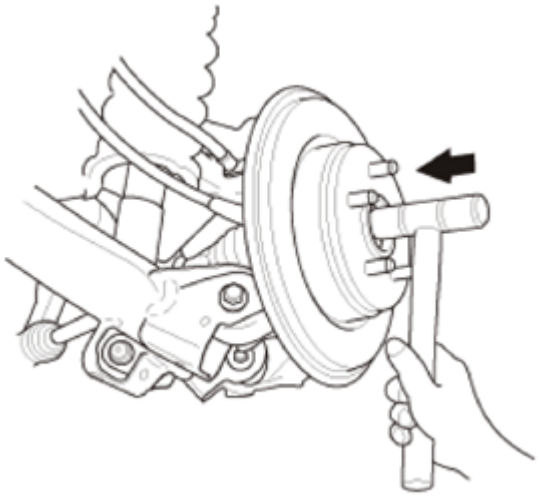

Fig. 285: Separating Outboard Joint From Rear Hub Using Soft Face Hammer
Courtesy of AMERICAN HONDA MOTOR CO., INC.

    2. Remove the rear driveshaft (A).

NOTE:

- **Be careful not to damage the wheel speed sensor (B).**
- **Pull on the outboard joint. Do not pull on the driveshaft because the joint may come apart.**

GETtheMANUALS.org

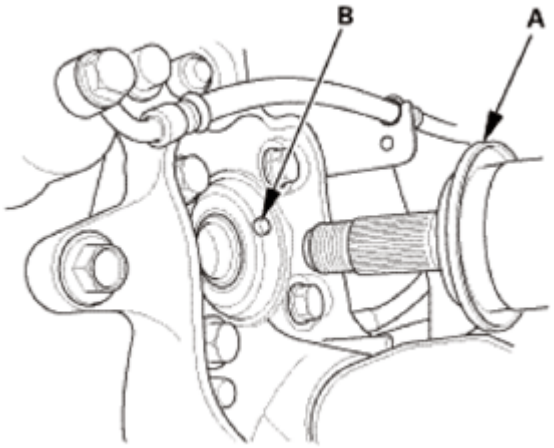

Fig. 286: Identifying Rear Driveshaft
Courtesy of AMERICAN HONDA MOTOR CO., INC.

12. Rear Outboard Joint (Except japan - built models)
    1. Lift up the three tabs (A) using a flat-tipped screwdriver.

       NOTE: Be careful not to damage the boot.

    2. Release the ear clamp bands (B).

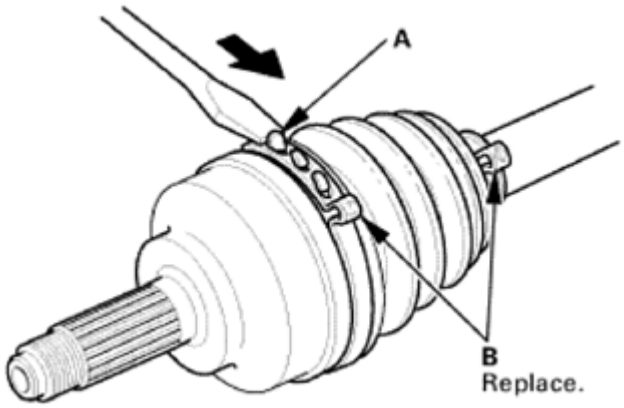

Fig. 287: Lifting Up Three Tabs Using A Flat-Tipped Screwdriver
Courtesy of AMERICAN HONDA MOTOR CO., INC.

    3. Slide the outboard boot (A) partially toward the inboard joint side.

       NOTE: Be careful not to damage the boot.

GETtheMANUALS.org

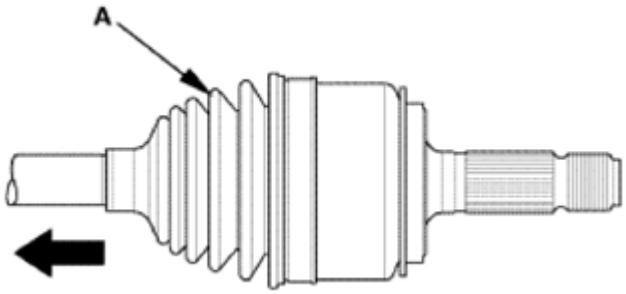

Fig. 288: Sliding Outboard Boot Partially Toward Inboard Joint Side
Courtesy of AMERICAN HONDA MOTOR CO., INC.

4. Wipe off the grease to expose the driveshaft and the outboard joint inner race.
5. Make a mark (A) on the driveshaft (B) at the same level as the outboard joint end (C).

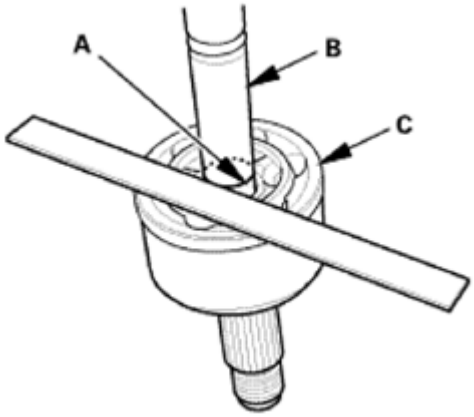

Fig. 289: Making Mark On Driveshaft
Courtesy of AMERICAN HONDA MOTOR CO., INC.

6. Securely clamp the driveshaft in a bench vise with a shop towel wrapped around the driveshaft.
7. Remove the outboard joint (A) using the threaded adapter (B) and a commercially available 5/8"-18 UNF slide hammer (C).
8. Remove the driveshaft from the bench vise.

GETtheMANUALS.org

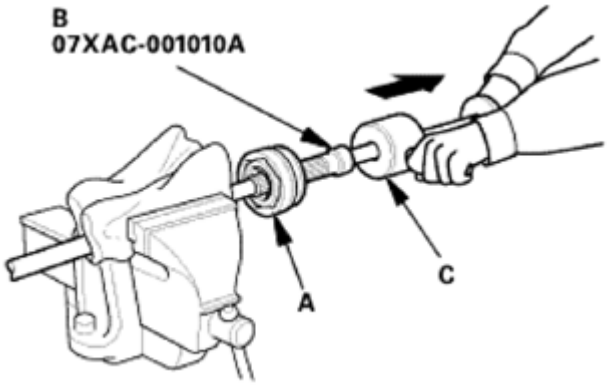

Fig. 290: Removing Outboard Joint Using Threaded Adapter
Courtesy of AMERICAN HONDA MOTOR CO., INC.

9. Remove the stop ring (A).

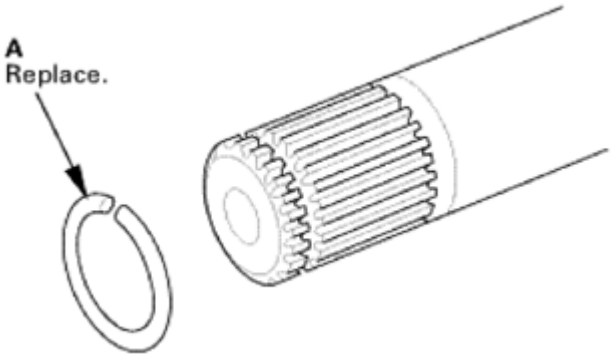

Fig. 291: Identifying Stop Ring
Courtesy of AMERICAN HONDA MOTOR CO., INC.

13. Rear Outboard boot (Except japan - built models)
    1. Wrap the splines on the driveshaft with vinyl tape (A) to prevent damaging the outboard boot.
    2. Remove the outboard boot.

NOTE: **Be careful not to damage the boot.**

GETtheMANUALS.org

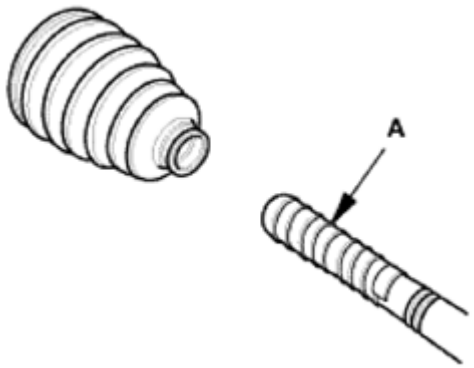

Fig. 292: Identifying Tape On Driveshaft Splines
Courtesy of AMERICAN HONDA MOTOR CO., INC.

INSTALLATION

NOTE: Refer to the EXPLODED VIEW in the Rear Driveshaft Disassembly and Reassembly, as needed, during this procedure.

1. Rear Outboard boot (Except japan - built models)
    1. Install new ear clamp bands (A) and the outboard boot onto the driveshaft.

        NOTE: Be careful not to damage the boot.

    2. Remove the vinyl tape.

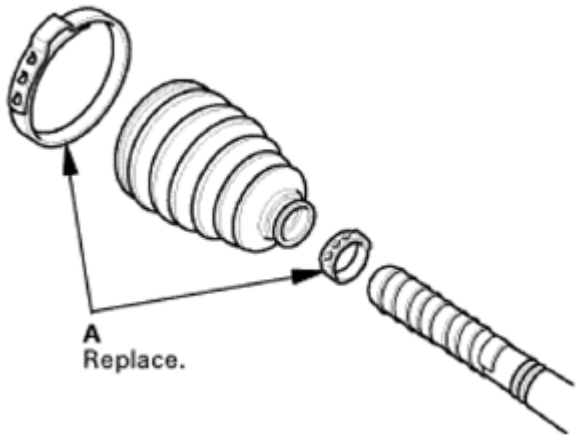

Fig. 293: Identifying Ear Clamp Bands
Courtesy of AMERICAN HONDA MOTOR CO., INC.

2. Rear Outboard Joint (Except japan - built models)
    1. Make sure to check the size of a new stop ring.

        NOTE: To avoid driveshaft and vehicle damage, make sure you install a new

GETtheMANUALS.org

stop ring.

Stop ring specifications

Overall diameter (A): 20.9 mm (0.823 in)

Wire diameter (B): 1.4 mm (0.055 in)

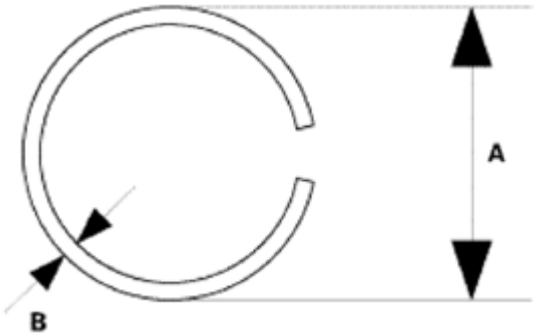

Fig. 294: Identifying Stop Ring Specifications
Courtesy of AMERICAN HONDA MOTOR CO., INC.

2. Install the stop ring (A).

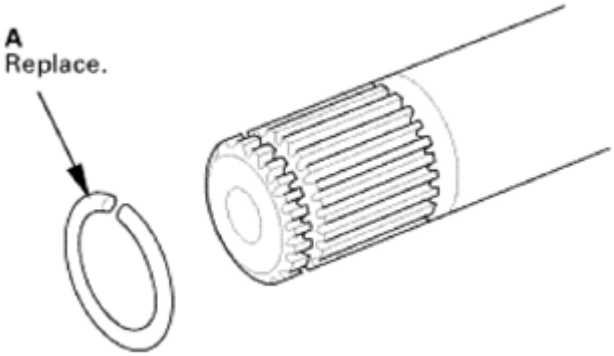

Fig. 295: Identifying Stop Ring
Courtesy of AMERICAN HONDA MOTOR CO., INC.

3. Pack about 35 g (1.23 oz) of grease included in the new outboard boot set into the driveshaft hole in the outboard joint.

NOTE: **If you are installing a new outboard joint, the grease is already installed.**

GETtheMANUALS.org

Fig. 296: Packing Grease Included In Outboard Boot Set Into Driveshaft Hole
Courtesy of AMERICAN HONDA MOTOR CO., INC.

4. Insert the driveshaft (A) into the outboard joint (B) until the stop ring (C) is close to the joint.

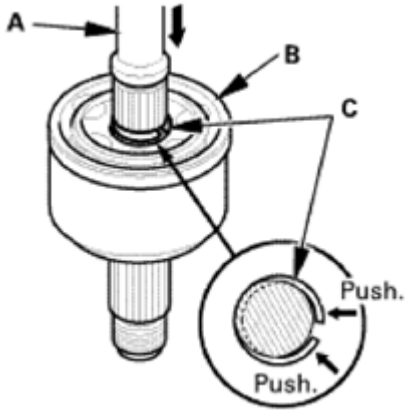

Fig. 297: Inserting Driveshaft Into Outboard Joint
Courtesy of AMERICAN HONDA MOTOR CO., INC.

5. To completely seat the outboard joint, pick up the driveshaft and the joint, and tap or hit the assembly onto a hard surface from a height of about 10 cm (3.9 in).

NOTE: **Do not use a hammer, as excessive force may damage the driveshaft. Be careful not to damage the threaded section (A) of the outboard joint.**

GETtheMANUALS.org

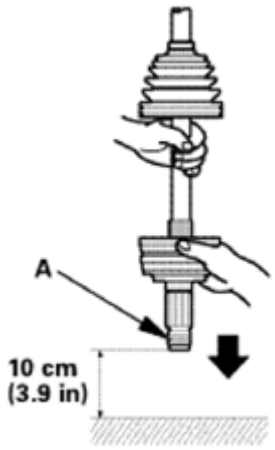

Fig. 298: Hitting Assembly Onto Hard Surface
Courtesy of AMERICAN HONDA MOTOR CO., INC.

6. Check the alignment of the paint mark (A) you made with the outboard joint end (B).

NOTE: **To avoid driveshaft and vehicle damage, the shaft must be all the way into the outboard joint to ensure the stop ring is properly seated.**

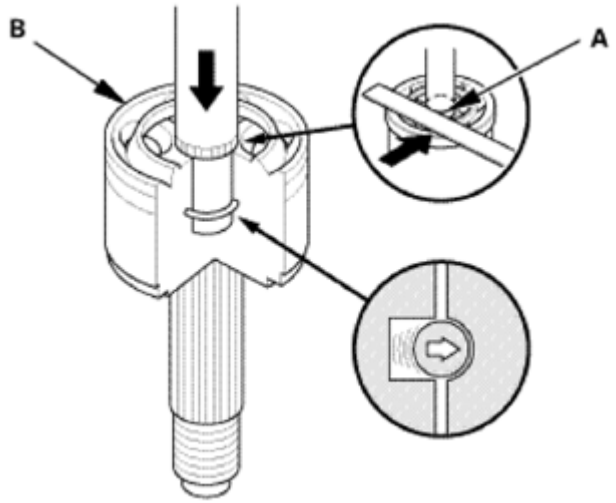

Fig. 299: Checking Alignment Of Paint Mark
Courtesy of AMERICAN HONDA MOTOR CO., INC.

7. Pack the outboard joint (A) with the remaining joint grease included in the outboard boot set.

Total grease quantity

Outboard joint:

67-77 g (2.4-2.7 oz)

GETtheMANUALS.org

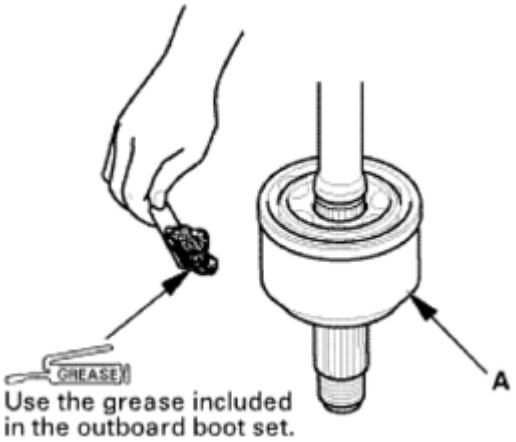

Fig. 300: Packing Outboard Joint With Joint Grease
Courtesy of AMERICAN HONDA MOTOR CO., INC.

8. Fit the boot ends (A) onto the driveshaft (B) and the outboard joint (C).
9. Bleed any excess air from the boot by inserting a flat-tipped screwdriver between the boot and the joint.

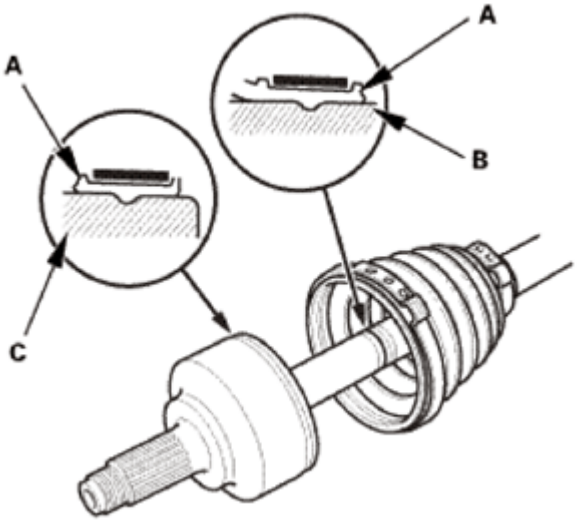

Fig. 301: Identifying Boot Ends On Driveshaft And Outboard Joint
Courtesy of AMERICAN HONDA MOTOR CO., INC.

10. Inspect the length (A) of the driveshaft in the figure as shown, then adjust the boots to halfway between full compression and full extension.

Driveshaft	Specified length (A)
Left	658.6-663.6 mm (25.929-26.126 in)
Right	702.6-707.6 mm (27.661-27.858 in)

GETtheMANUALS.org

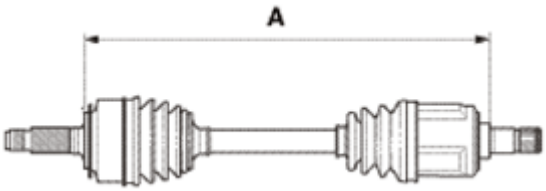

Fig. 302: Identifying Length Of Driveshaft
Courtesy of AMERICAN HONDA MOTOR CO., INC.

11. Close the ear portion (A) of the band using a commercially available boot band clamp tool (Kent-Moore J-35910 or equivalent) (B).

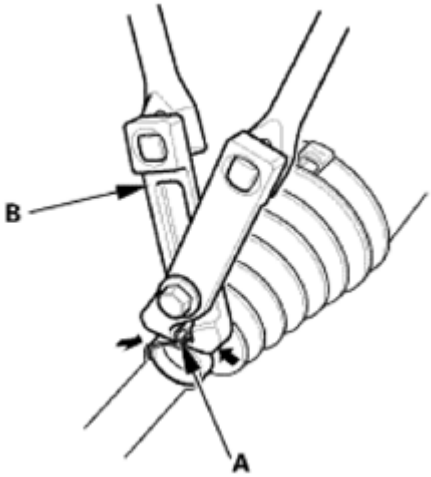

Fig. 303: Closing Ear Portion Of Band Using Commercially Available Boot Band Clamp Tool
Courtesy of AMERICAN HONDA MOTOR CO., INC.

12. Check the clearance between the closed ear portion of the band. If the clearance is not within the standard, close the ear portion of the band tighter.

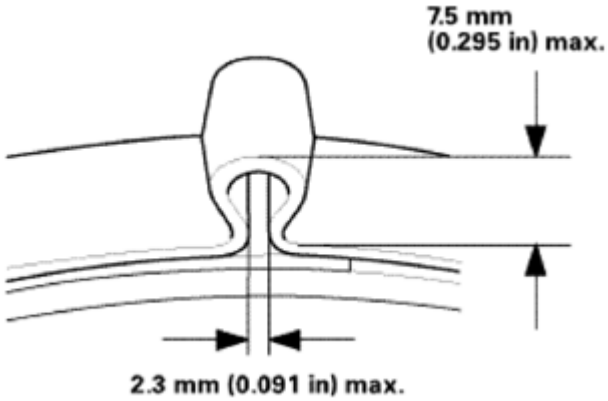

Fig. 304: Identifying Clearance Between Closed Ear Portion Of Band
Courtesy of AMERICAN HONDA MOTOR CO., INC.

GETtheMANUALS.org

3. Rear Driveshaft Outboard Side - Reconnection
    1. Install the outboard joint (A) into the rear hub (B).

NOTE: **Be careful not to damage the wheel speed sensor (C).**

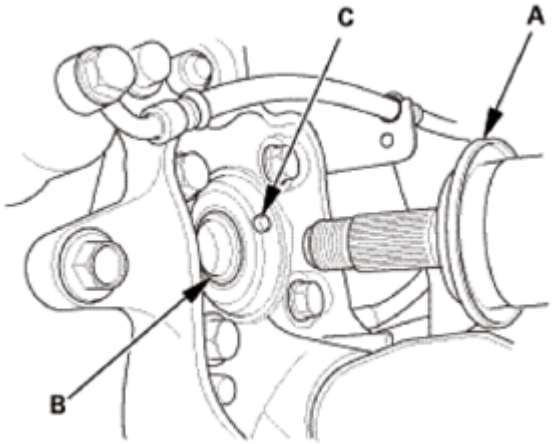

Fig. 305: Identifying Outboard Joint, Rear Hub And Wheel Speed Sensor
Courtesy of AMERICAN HONDA MOTOR CO., INC.

4. Rear Driveshaft Inboard Side Both - Reconnection
    1. Install new set ring (A) into the groove (B) of the rear driveshaft inboard joint on both side.

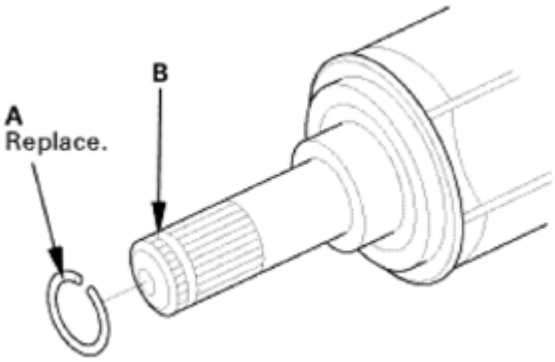

Fig. 306: Identifying Set Ring And Groove Of Rear Driveshaft Inboard Joint
Courtesy of AMERICAN HONDA MOTOR CO., INC.

    2. Lift the rear differential assembly (A) up into position.
    3. Insert the inboard end (B) of the rear driveshaft (C) into the differential (D) until the set ring (E) locks in the groove (F).

NOTE: **Insert the driveshaft horizontally to prevent damaging the oil seals (G).**

GETtheMANUALS.org

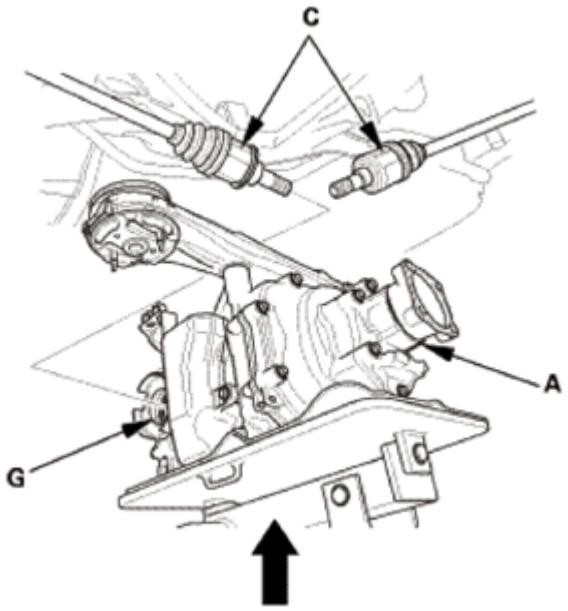

Fig. 307: Lifting Rear Differential Assembly
Courtesy of AMERICAN HONDA MOTOR CO., INC.

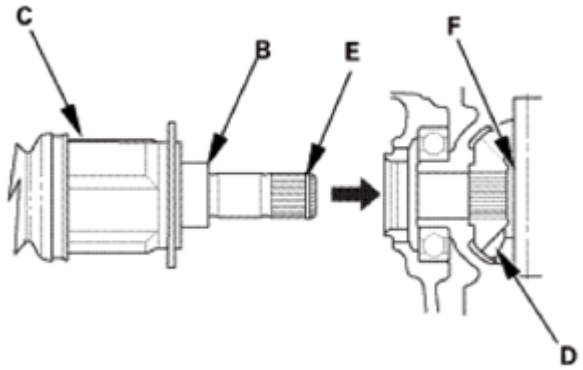

Fig. 308: Inserting Inboard End Of Rear Driveshaft Into Differential
Courtesy of AMERICAN HONDA MOTOR CO., INC.

5. Rear Differential Mount Bracket
    1. Align the tabs (A) of the rubber mount (B) with the holes (C) of the plates (D).
    2. Install the rear differential mounting bolts (E).

GETtheMANUALS.org

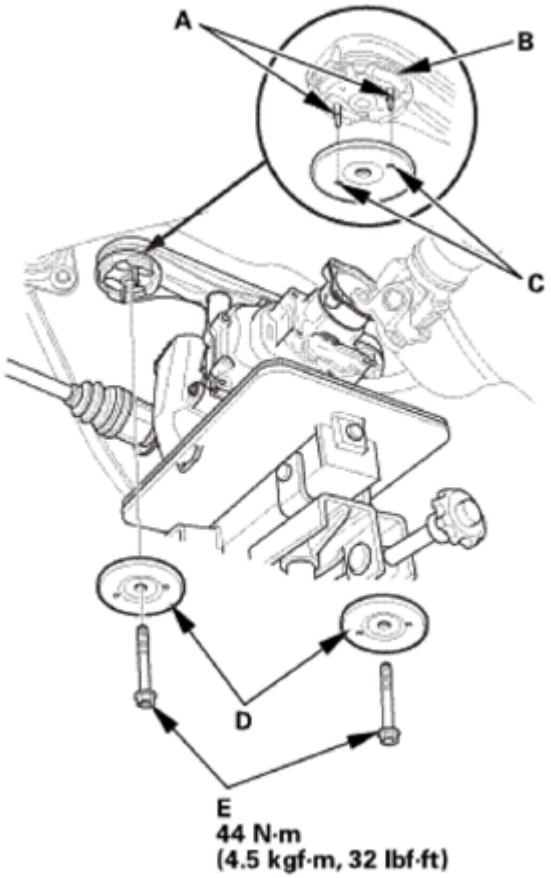

Fig. 309: Identifying Tabs Of Rubber Mount, Plates And Rear Differential Mounting Bolts
Courtesy of AMERICAN HONDA MOTOR CO., INC.

3. Install the left and right rear differential mount brackets B.
4. Tighten new differential mount brackets B mounting bolts (A) to the specified torque.
5. Loosely install new differential mount brackets B mounting bolt (C).

GETtheMANUALS.org

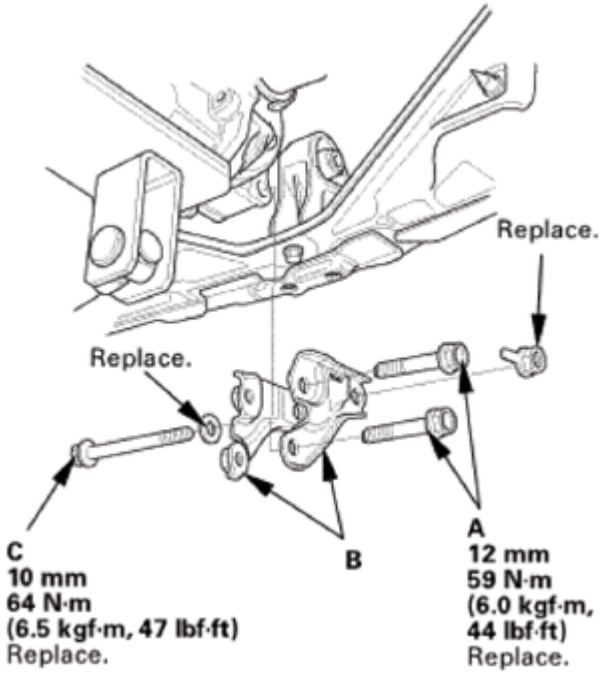

Fig. 310: Identifying Differential Mount Brackets B Mounting Bolts With Torque Specifications
Courtesy of AMERICAN HONDA MOTOR CO., INC.

6. Rear Differential Mount Bolt - Tighten
    1. Lower the transmission jack.
    2. Tighten differential mount brackets B mounting bolt to the specified torque.
7. Rear Differential Breather Hoses

Differential upper side

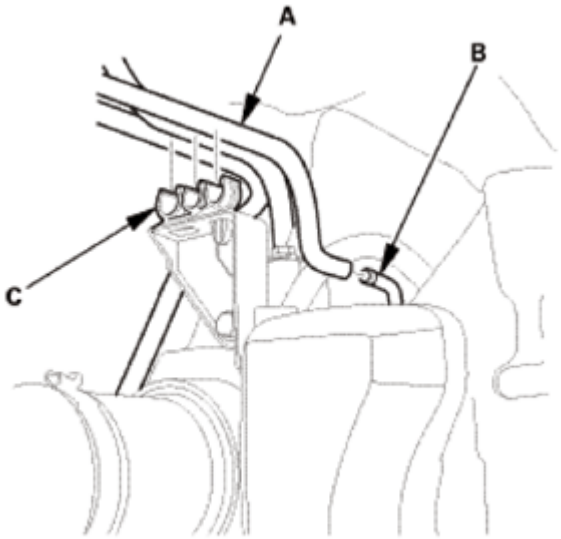

GETtheMANUALS.org

Fig. 311: Identifying Breather Hoses, Breather Pipe And Clamps (Differential Upper Side)
Courtesy of AMERICAN HONDA MOTOR CO., INC.

Pump motor side

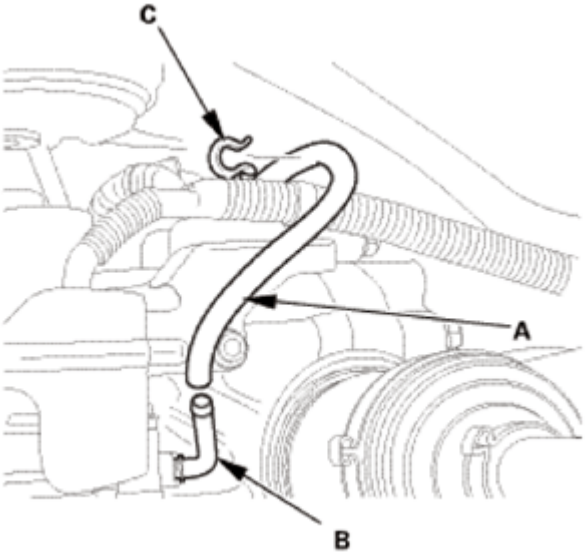

Fig. 312: Identifying Breather Hoses, Breather Pipe And Clamps (Pump Motor Side)
Courtesy of AMERICAN HONDA MOTOR CO., INC.

1. Connect the breather hoses (A) to the breather pipes (B) and clamps (C).
2. Connect the breather hose (A) to the clamp (B).

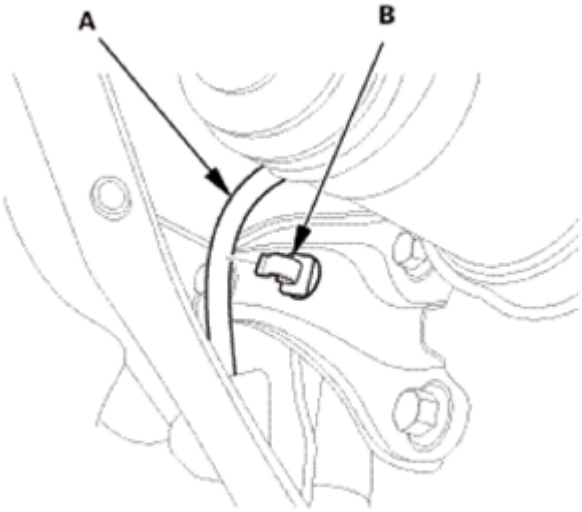

Fig. 313: Identifying Breather Hose And Clamp
Courtesy of AMERICAN HONDA MOTOR CO., INC.

8. Rear Differential Connector

GETtheMANUALS.org

1. Install the harness clips (A).

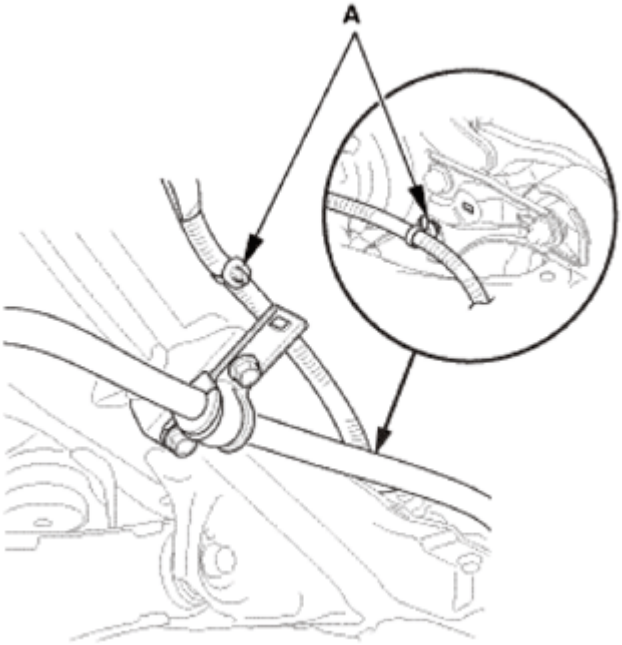

Fig. 314: Identifying Harness Clips
Courtesy of AMERICAN HONDA MOTOR CO., INC.

2. Connect the connectors (A).
3. Install the connector cover (B).

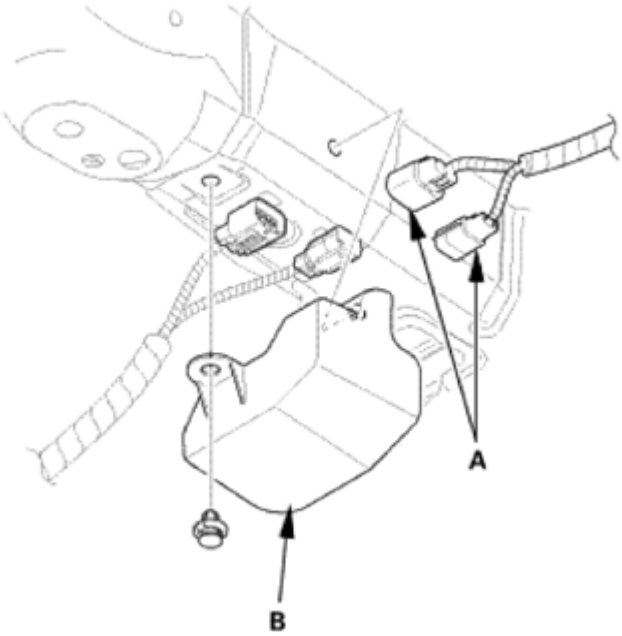

Fig. 315: Identifying Connectors And Cover

GETtheMANUALS.org

Courtesy of AMERICAN HONDA MOTOR CO., INC.

9. Propeller Shaft Rear Differential Side - Disconnection (With Nylon Strap)
    1. Attach the No. 2 propeller shaft (A) to the rear differential companion flange (B) by aligning the reference mark (C) you made during the removal procedure.
    2. Install new flange bolts (D) to the specified torque.

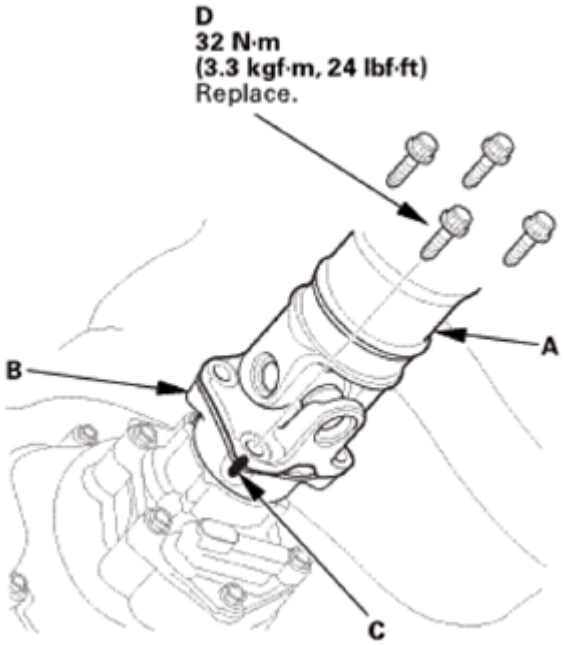

Fig. 316: Identifying No. 2 Propeller Shaft, Rear Differential Companion Flange And Flange Bolts
Courtesy of AMERICAN HONDA MOTOR CO., INC.

10. Left Rear Driveshaft Spindle Nut
    1. Apply a small amount of engine oil to the seating surface of a new spindle nut (A).
    2. Install the spindle nut, then tighten it. After tightening, use a drift to stake the spindle nut shoulder (B) against the driveshaft.

GETtheMANUALS.org

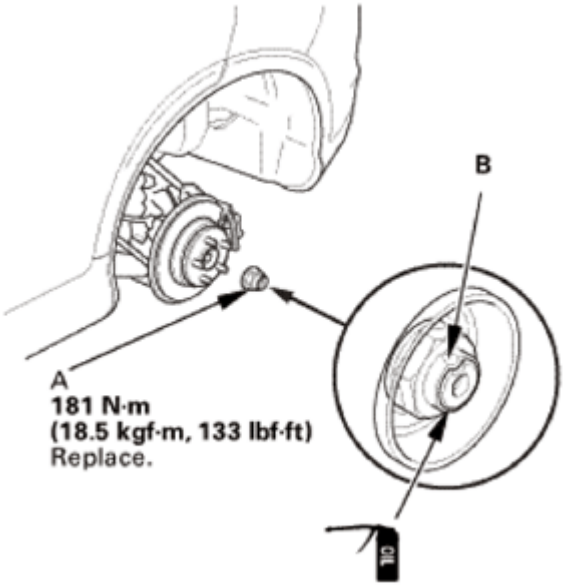

Fig. 317: Identifying Spindle Nut And Shoulder With Torque Specifications
Courtesy of AMERICAN HONDA MOTOR CO., INC.

11. Rear Wheel
    1. Install the rear wheel.

NOTE: **Before installing the wheel, clean the mating surfaces between the brake disc/drum and the inside of the wheel.**

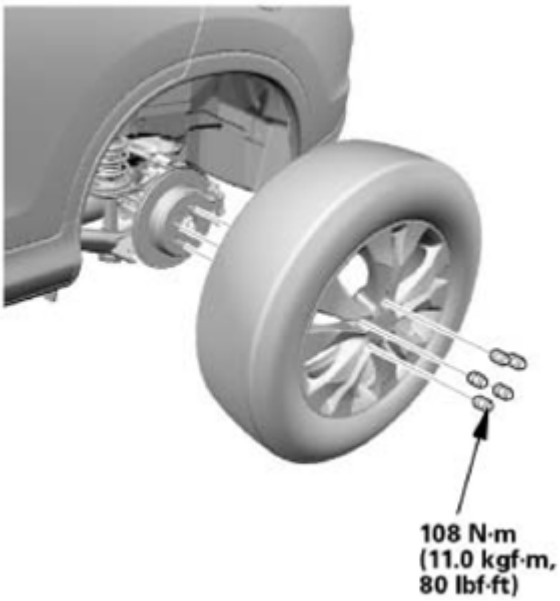

Fig. 318: Identifying Rear Wheel Bolts With Torque Specifications
Courtesy of AMERICAN HONDA MOTOR CO., INC.

GETtheMANUALS.org

12. Driveshaft After Install Check
    1. Turn the wheel by hand, and make sure there is no interference between the driveshaft and surrounding parts.
13. Rear Differential Fluid - Replacement (Real Time AWD System)
    1. Clean the drain plug (A), then install it with a new sealing washer (B).
    2. Refill the differential with rear differential fluid to the proper level.

NOTE: **If you disassemble the differential, check the rear differential fluid level again after the 4WD system check is finished. Add fluid if necessary.**

Fluid Capacity:

1.2 L (1.3 US qt) at fluid change

1.5 L (1.6 US qt) at overhaul

Recommended fluid: Honda Dual Pump Fluid II

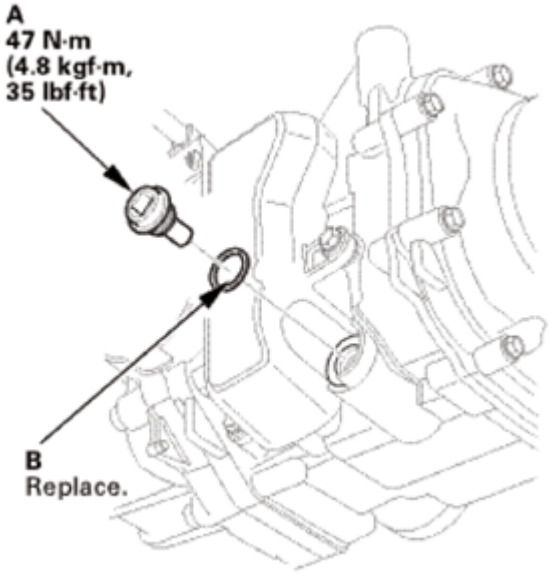

Fig. 319: Identifying Drain Plug, Washer And Bolts With Torque Specifications
Courtesy of AMERICAN HONDA MOTOR CO., INC.

3. Install the oil filler plug (A) with a new sealing washer (B).

GETtheMANUALS.org

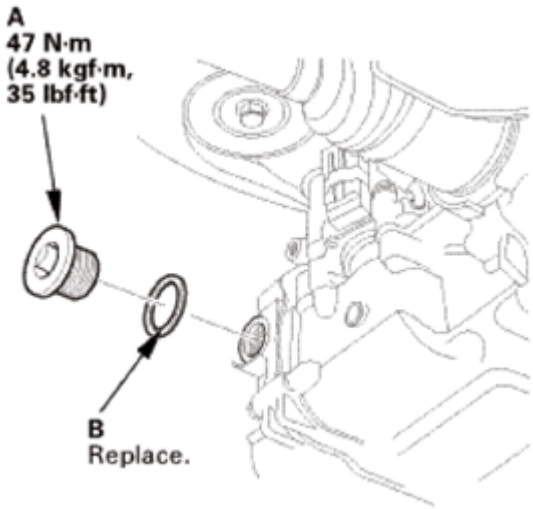

Fig. 320: Identifying Oil Filler Plug And Sealing Washer
Courtesy of AMERICAN HONDA MOTOR CO., INC.

14. Rear Differential Fluid After Replacement - Check (Real Time AWD System)
    1. Apply the parking brake, and block all four wheels.
    2. Start the engine, and let it idle more than 6 seconds, then turn the engine off. Repeat this step three more times.
    3. Shift to D while pressing the brake pedal firmly. Press the accelerator pedal for 2 seconds, then let it idle. Repeat this three more times.
    4. Check that the real time AWD indicator does not come on. If it does, check for real time AWD system DTC's.
15. Test Drive
    1. Test-drive the vehicle.
16. HDS DLC - Connection
    1. Connect the HDS to the data link connector (DLC) (A) located under the driver's side of the dashboard.
    2. Turn the ignition switch to ON (II).
    3. Make sure the HDS communicates with the vehicle. If it does not communicate, go to the DLC circuit troubleshooting.

GETtheMANUALS.org

Fig. 321: Identifying Data Link Connector (DLC)
Courtesy of AMERICAN HONDA MOTOR CO., INC.

17. Maintenance Minder Reset
    1. **RESET THE MAINTENANCE MINDER** .

REAR DRIVESHAFT REMOVAL AND INSTALLATION

REMOVAL

1. Vehicle Lift
    1. Raise the vehicle on a lift, and make sure it is securely supported.
2. Rear Wheel
    1. Remove the rear wheel.

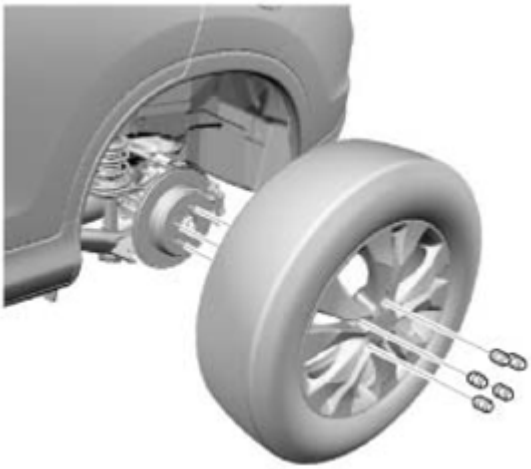

Fig. 322: Identifying Rear Wheel Bolts

GETtheMANUALS.org

Courtesy of AMERICAN HONDA MOTOR CO., INC.

3. Left Rear Driveshaft Spindle Nut
    1. Pry up the stake (A) on the spindle nut (B), then remove the nut.

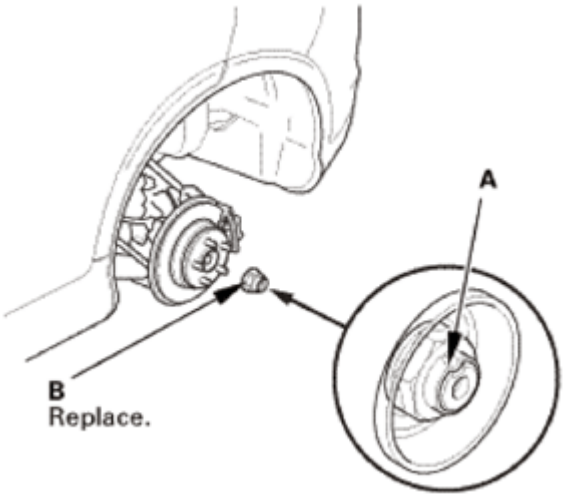

Fig. 323: Identifying Stake On Spindle Nut
Courtesy of AMERICAN HONDA MOTOR CO., INC.

4. Rear Differential Fluid - Replacement (Real Time AWD System)
    1. Remove the oil filler plug (A) and the sealing washer (B).

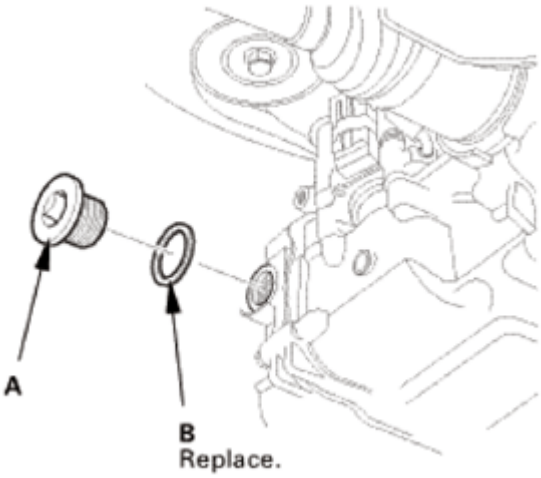

Fig. 324: Identifying Oil Filler Plug And Sealing Washer
Courtesy of AMERICAN HONDA MOTOR CO., INC.

    2. Remove the drain plug (A) and the sealing washer (B), then drain the rear differential fluid.

GETtheMANUALS.org

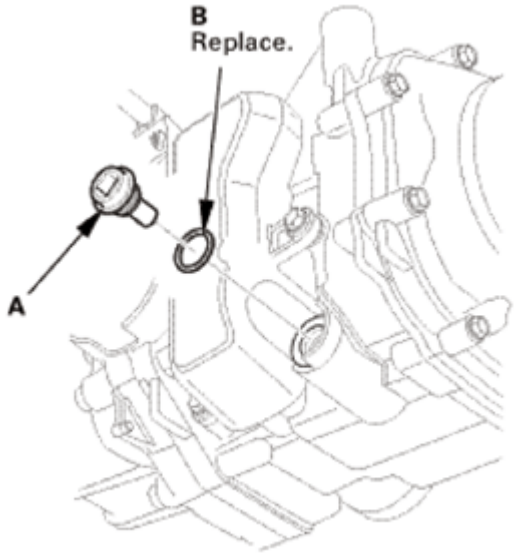

Fig. 325: Identifying Drain Plug And Sealing Washer
Courtesy of AMERICAN HONDA MOTOR CO., INC.

5. Propeller Shaft Rear Differential Side - Disconnection (With Nylon Strap)
    1. Make a reference mark (A) across the No. 2 propeller shaft (B) and the rear differential companion flange (C).
    2. Remove the No. 2 propeller shaft flange bolts (D).
    3. Separate the No. 2 propeller shaft from the rear differential.

NOTE: Suspend the propeller shaft with an appropriate size nylon strap.

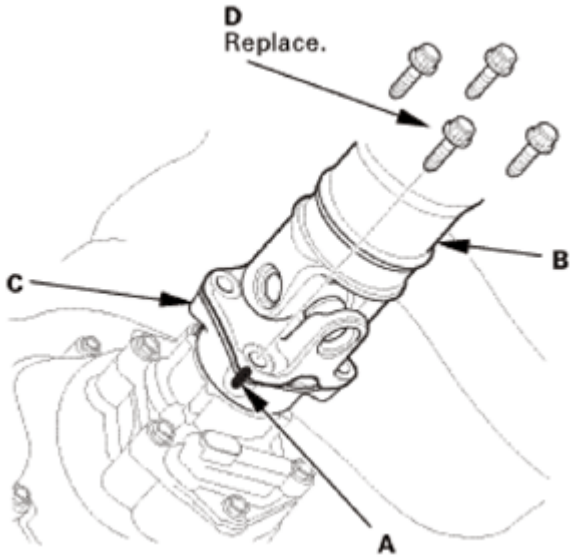

Fig. 326: Identifying Reference Mark Across No. 2 Propeller Shaft And Rear Differential Companion Flange

GETtheMANUALS.org

Courtesy of AMERICAN HONDA MOTOR CO., INC.

6. Rear Differential Connector
    1. Remove the connector cover (A).
    2. Disconnect the connectors (B).

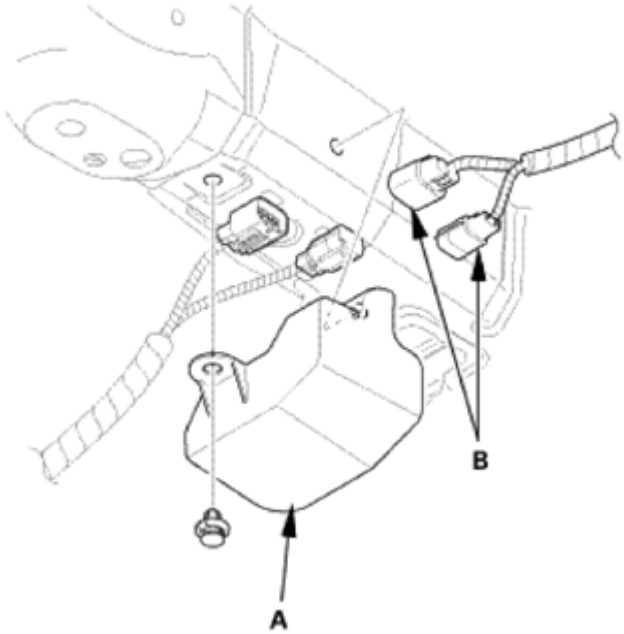

Fig. 327: Identifying Connectors And Connector Cover
Courtesy of AMERICAN HONDA MOTOR CO., INC.

3. Release the harness clips (A).

GETtheMANUALS.org

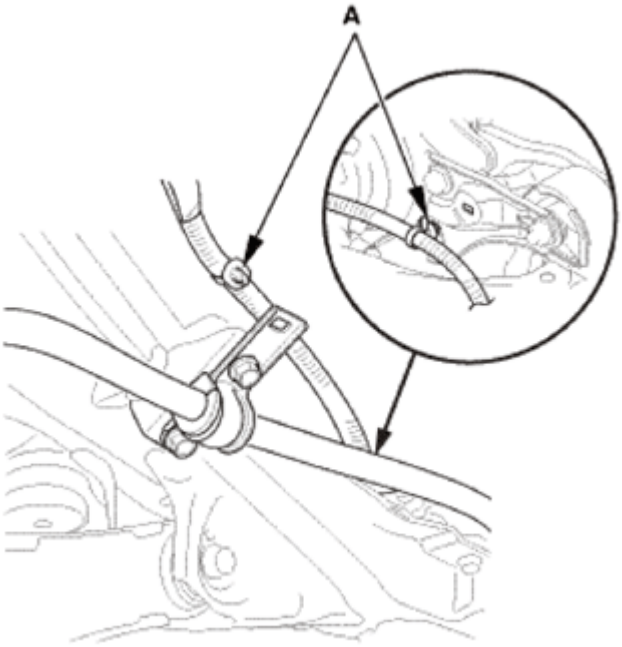

Fig. 328: Identifying Harness Clips
Courtesy of AMERICAN HONDA MOTOR CO., INC.

7. Rear Differential Breather Hoses
    1. Disconnect the breather hoses (A) from the breather pipes (B) and clamps (C).

Differential upper side

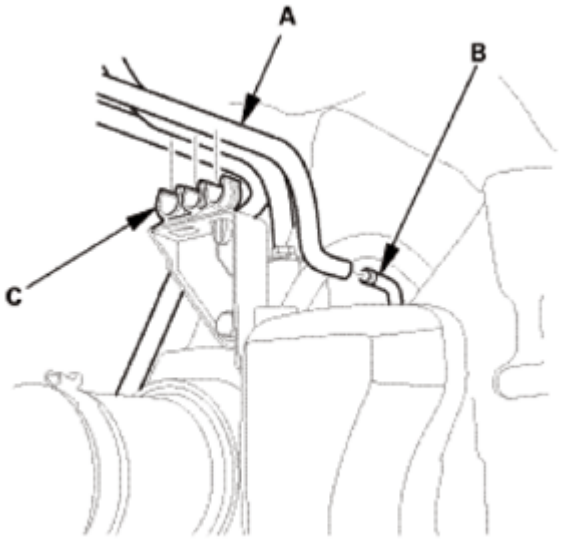

Fig. 329: Identifying Breather Hoses, Pipes And Clamps (Differential Upper Side)
Courtesy of AMERICAN HONDA MOTOR CO., INC.

Pump motor side

GETtheMANUALS.org

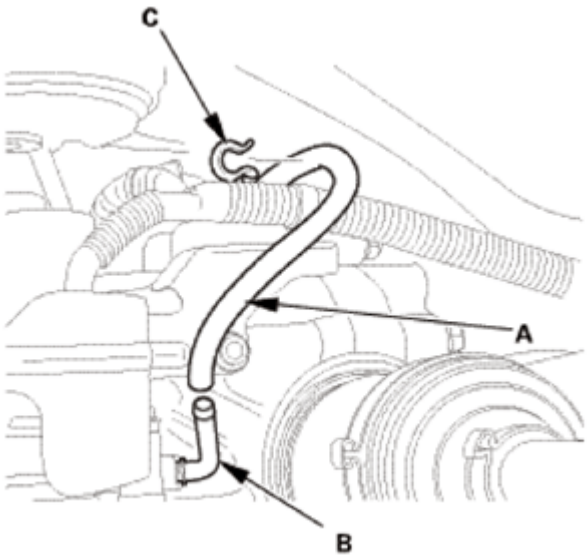

Fig. 330: Identifying Breather Hoses, Pipes And Clamps (Pump Motor Side)
Courtesy of AMERICAN HONDA MOTOR CO., INC.

2. Disconnect the breather hose (A) from the clamp (B).

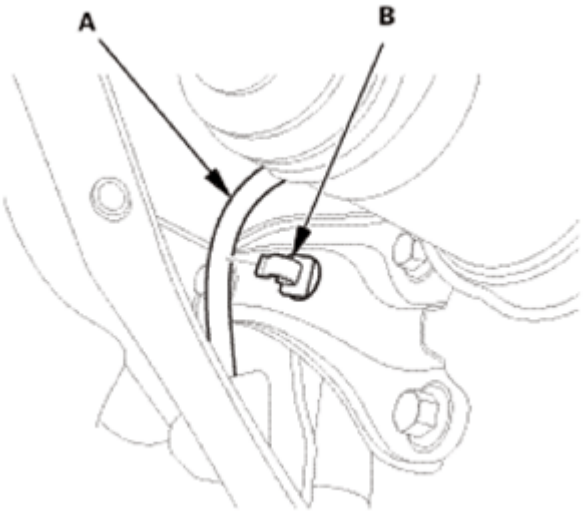

Fig. 331: Identifying Breather Hose And Clamp
Courtesy of AMERICAN HONDA MOTOR CO., INC.

8. Rear Differential Jack Support
    1. Place a transmission jack under the rear differential assembly.
9. Rear Differential Mount Bracket
    1. Remove the left and right rear differential mount brackets B.

GETtheMANUALS.org

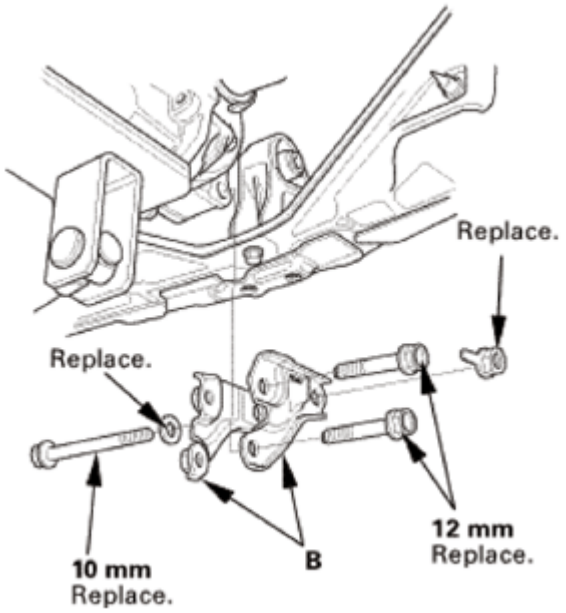

Fig. 332: Identifying Left And Right Rear Differential Mount Brackets B And Bolts
Courtesy of AMERICAN HONDA MOTOR CO., INC.

2. Remove the mounting bolts (A) and the plates (B).

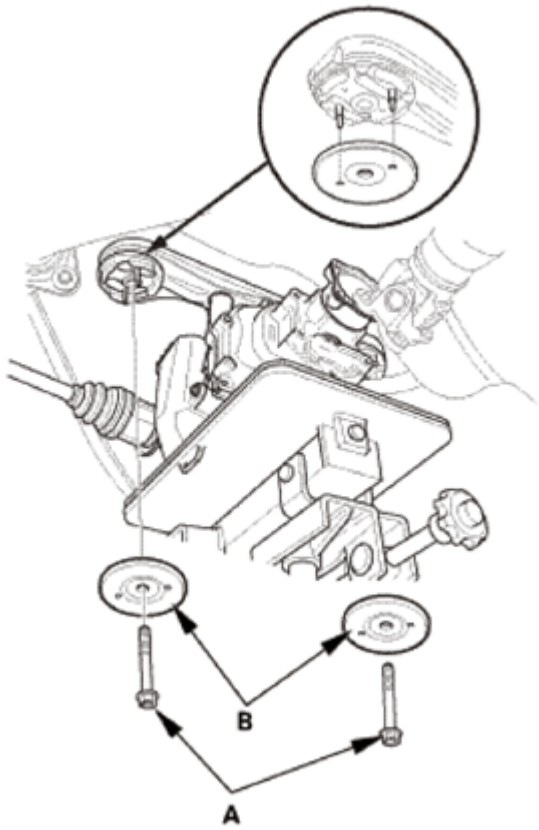

GETtheMANUALS.org

Fig. 333: Identifying Mounting Bolts And Plates
Courtesy of AMERICAN HONDA MOTOR CO., INC.

10. Rear Driveshaft Inboard Side Both - Disconnection
    1. Lower the rear differential assembly (A) while pulling both rear driveshaft inboard joints (B) out of the rear differential assembly.

NOTE:

- **Be careful not to damage the driveshaft ring (C) when prying out the driveshaft inboard joints.**
- **Be careful not to damage the oil seals (D).**

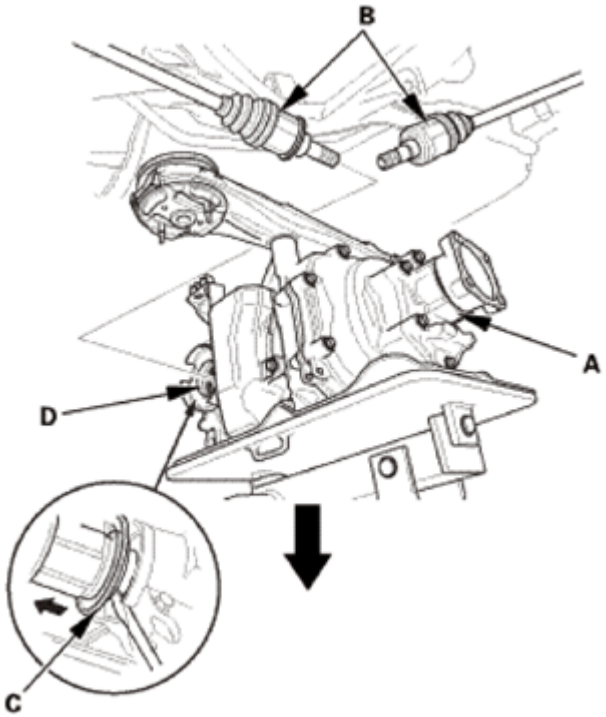

Fig. 334: Lowering Rear Differential Assembly
Courtesy of AMERICAN HONDA MOTOR CO., INC.

    2. Remove the set ring (A) from inboard joint.

GETtheMANUALS.org

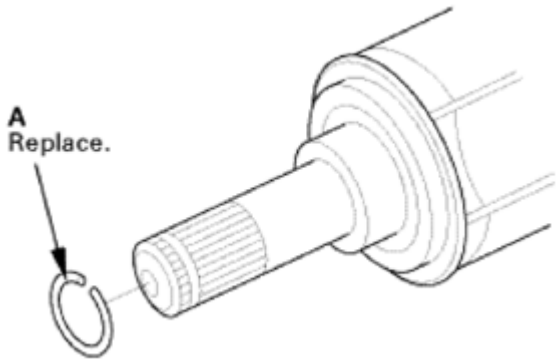

Fig. 335: Identifying Set Ring
Courtesy of AMERICAN HONDA MOTOR CO., INC.

11. Rear Driveshaft Outboard Side - Disconnection
    1. Separate the outboard joint from the rear hub using a soft face hammer.

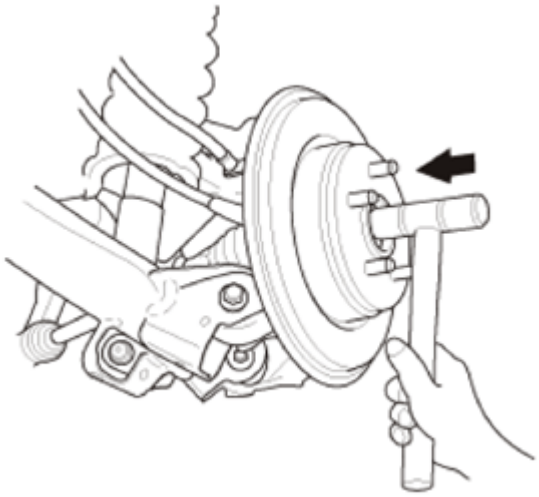

Fig. 336: Separating Outboard Joint From Rear Hub Using Soft Face Hammer
Courtesy of AMERICAN HONDA MOTOR CO., INC.

    2. Remove the rear driveshaft (A).

NOTE:

- **Be careful not to damage the wheel speed sensor (B).**
- **Pull on the outboard joint. Do not pull on the driveshaft because the joint may come apart.**

GETtheMANUALS.org

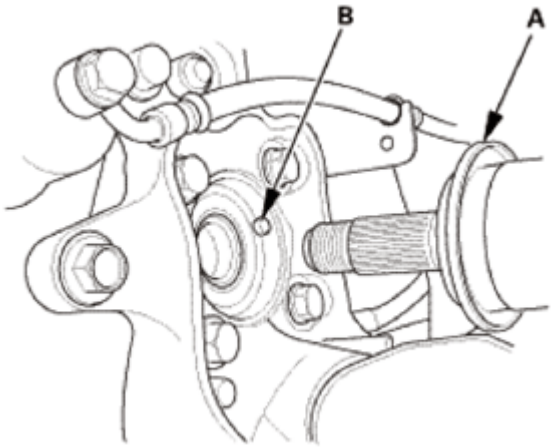

Fig. 337: Removing Rear Driveshaft
Courtesy of AMERICAN HONDA MOTOR CO., INC.

INSTALLATION

1. Rear Driveshaft Outboard Side - Reconnection
    1. Install the outboard joint (A) into the rear hub (B).

NOTE: Be careful not to damage the wheel speed sensor (C).

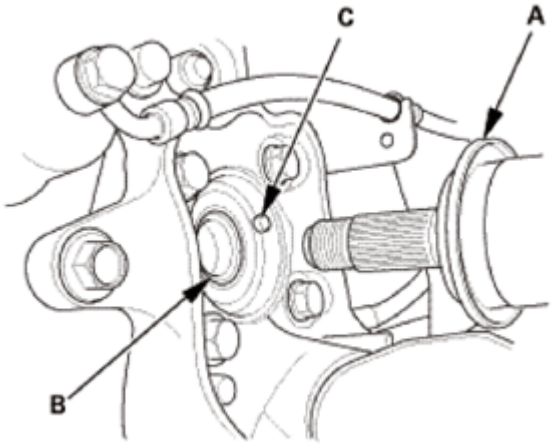

Fig. 338: Installing Outboard Joint Into Rear Hub
Courtesy of AMERICAN HONDA MOTOR CO., INC.

2. Rear Driveshaft Inboard Side Both - Reconnection
    1. Install new set ring (A) into the groove (B) of the rear driveshaft inboard joint on both side.

GETtheMANUALS.org

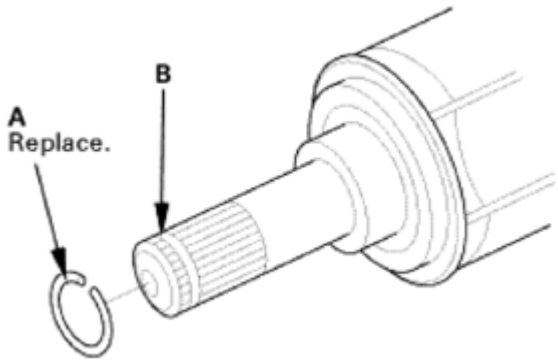

Fig. 339: Identifying Set Ring And Groove Of Rear Driveshaft Inboard Joint
Courtesy of AMERICAN HONDA MOTOR CO., INC.

2. Lift the rear differential assembly (A) up into position.
3. Insert the inboard end (B) of the rear driveshaft (C) into the differential (D) until the set ring (E) locks in the groove (F).

NOTE: Insert the driveshaft horizontally to prevent damaging the oil seals (G).

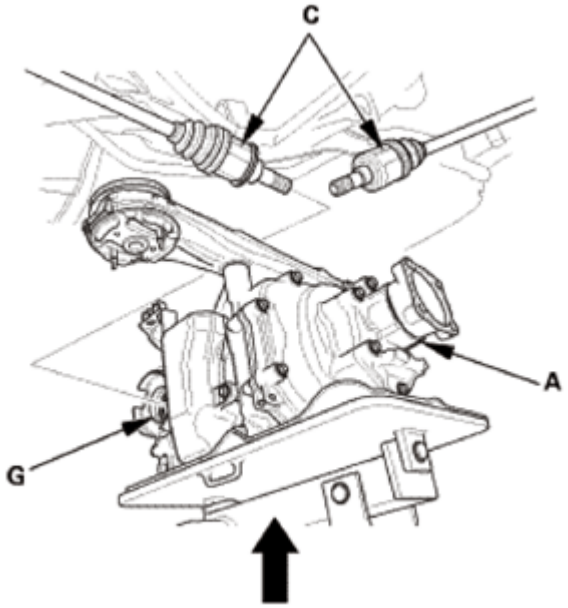

Fig. 340: Lifting Rear Differential Assembly
Courtesy of AMERICAN HONDA MOTOR CO., INC.

GETtheMANUALS.org

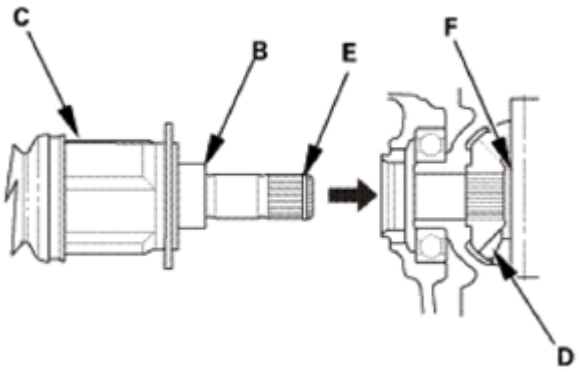

Fig. 341: Inserting Inboard End Of Rear Driveshaft Into Differential
Courtesy of AMERICAN HONDA MOTOR CO., INC.

3. Rear Differential Mount Bracket
    1. Align the tabs (A) of the rubber mount (B) with the holes (C) of the plates (D).
    2. Install the rear differential mounting bolts (E).

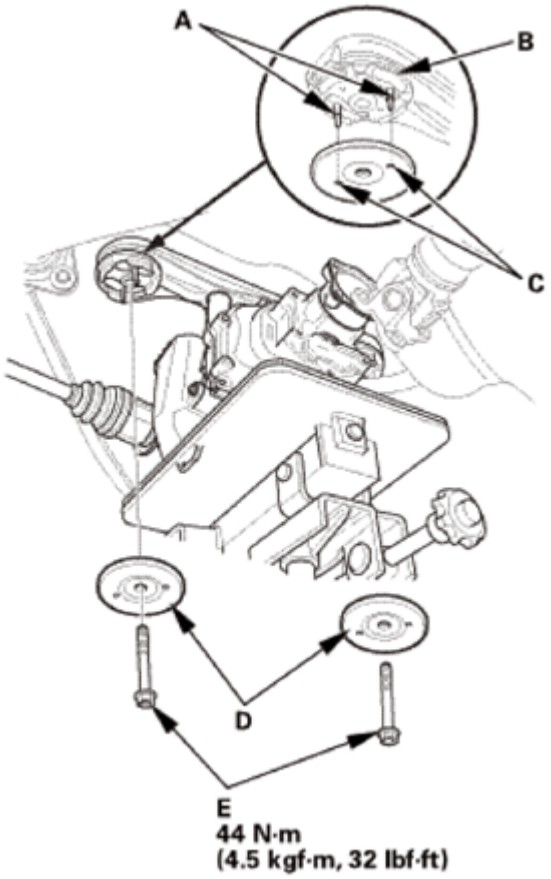

Fig. 342: Identifying Tabs Of Rubber Mount, Plates And Rear Differential Mounting Bolts
Courtesy of AMERICAN HONDA MOTOR CO., INC.

GETtheMANUALS.org

3. Install the left and right rear differential mount brackets B.
4. Tighten new differential mount brackets B mounting bolts (A) to the specified torque.
5. Loosely install new differential mount brackets B mounting bolt (C).

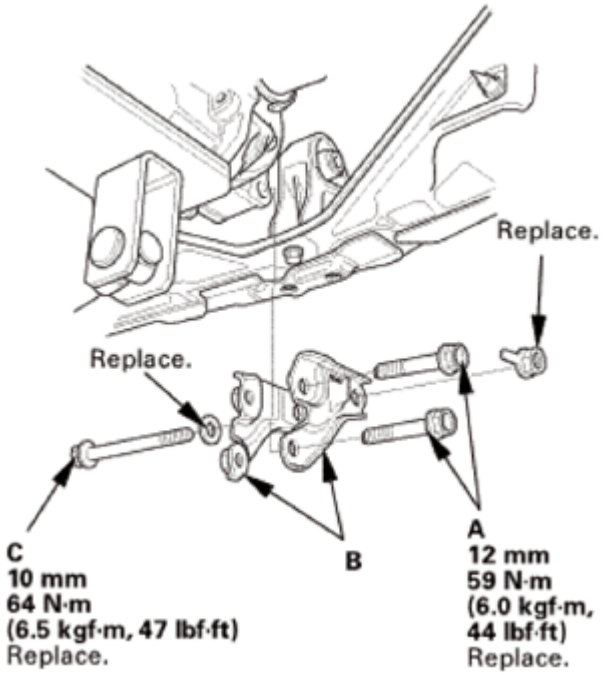

Fig. 343: Identifying Differential Mount Brackets B Mounting Bolts With Torque Specifications
Courtesy of AMERICAN HONDA MOTOR CO., INC.

4. Rear Differential Mount Bolt - Tighten
    1. Lower the transmission jack.
    2. Tighten differential mount brackets B mounting bolt to the specified torque.
5. Rear Differential Breather Hoses

Differential upper side

GETtheMANUALS.org

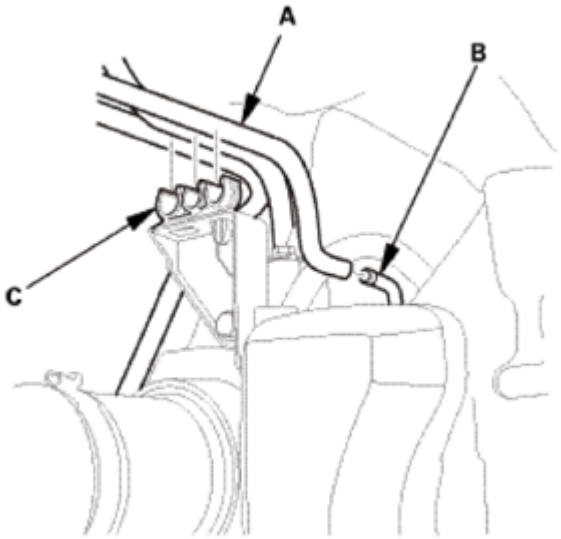

Fig. 344: Identifying Breather Hoses, Breather Pipe And Clamps (Differential Upper Side)
Courtesy of AMERICAN HONDA MOTOR CO., INC.

Pump motor side

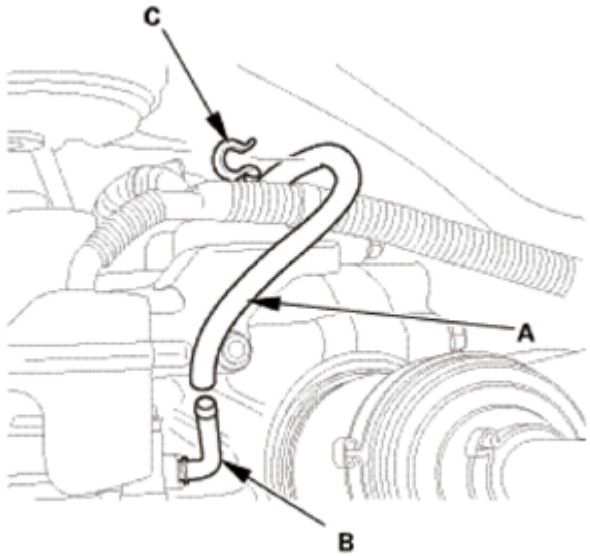

Fig. 345: Identifying Breather Hoses, Breather Pipe And Clamps (Pump Motor Side)
Courtesy of AMERICAN HONDA MOTOR CO., INC.

1. Connect the breather hoses (A) to the breather pipes (B) and clamps (C).
2. Connect the breather hose (A) to the clamp (B).

GETtheMANUALS.org

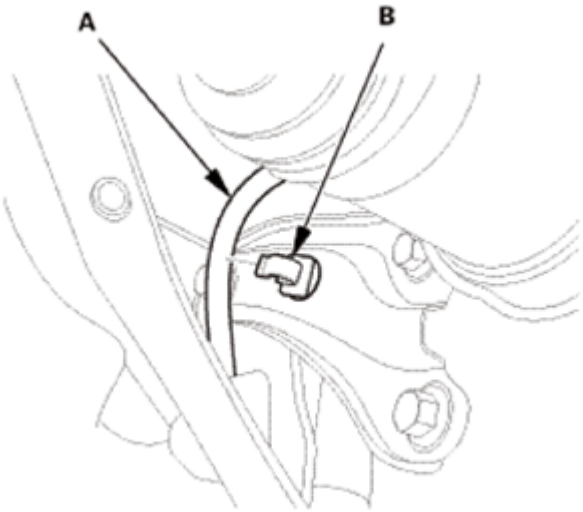

Fig. 346: Identifying Breather Hose And Clamp
Courtesy of AMERICAN HONDA MOTOR CO., INC.

6. Rear Differential Connector
    1. Install the harness clips (A).

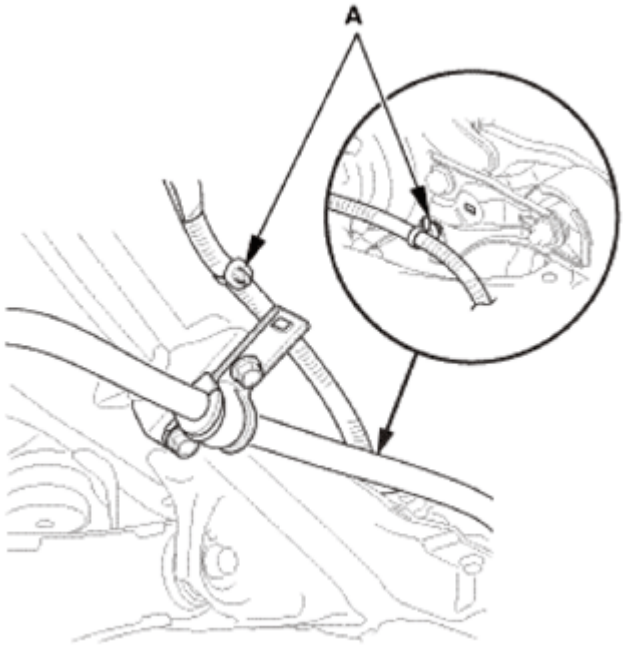

Fig. 347: Identifying Harness Clips
Courtesy of AMERICAN HONDA MOTOR CO., INC.

    2. Connect the connectors (A).
    3. Install the connector cover (B).

GETtheMANUALS.org

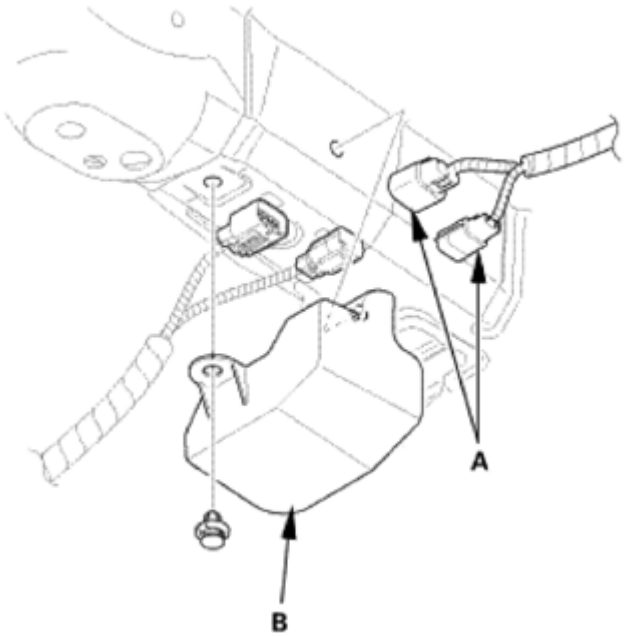

Fig. 348: Identifying Connectors And Cover
Courtesy of AMERICAN HONDA MOTOR CO., INC.

7. Propeller Shaft Rear Differential Side - Disconnection (With Nylon Strap)
    1. Attach the No. 2 propeller shaft (A) to the rear differential companion flange (B) by aligning the reference mark (C) you made during the removal procedure.
    2. Install new flange bolts (D) to the specified torque.

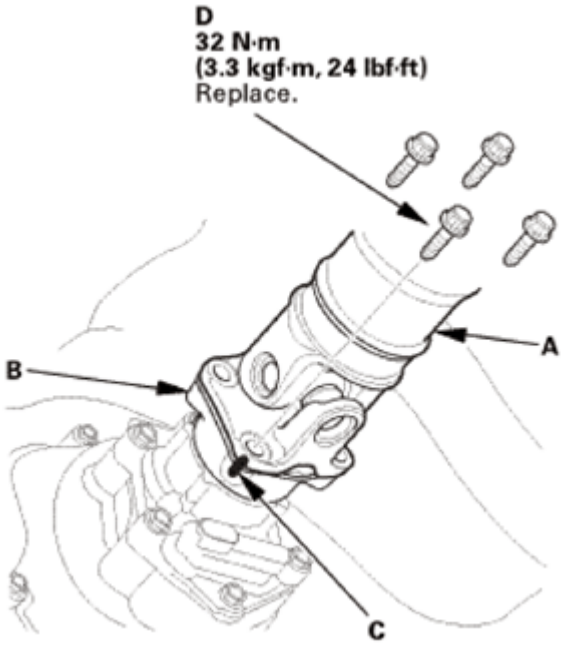

Fig. 349: Identifying No. 2 Propeller Shaft, Rear Differential Companion Flange And Flange

GETtheMANUALS.org

Bolts
Courtesy of AMERICAN HONDA MOTOR CO., INC.

8. Left Rear Driveshaft Spindle Nut
    1. Apply a small amount of engine oil to the seating surface of a new spindle nut (A).
    2. Install the spindle nut, then tighten it. After tightening, use a drift to stake the spindle nut shoulder (B) against the driveshaft.

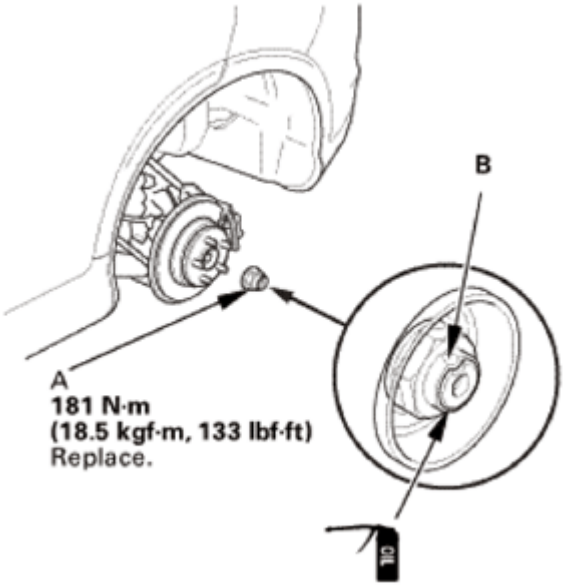

Fig. 350: Identifying Spindle Nut And Shoulder With Torque Specifications
Courtesy of AMERICAN HONDA MOTOR CO., INC.

9. Rear Wheel
    1. Install the rear wheel.

NOTE: **Before installing the wheel, clean the mating surfaces between the brake disc/drum and the inside of the wheel.**

GETtheMANUALS.org

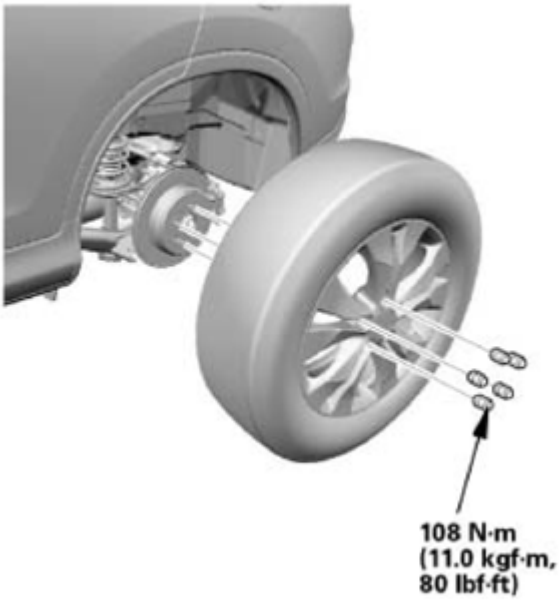

Fig. 351: Identifying Rear Wheel Bolts With Torque Specifications
Courtesy of AMERICAN HONDA MOTOR CO., INC.

10. Driveshaft After Install Check
    1. Turn the wheel by hand, and make sure there is no interference between the driveshaft and surrounding parts.
11. Rear Differential Fluid - Replacement (Real Time AWD System)
    1. Clean the drain plug (A), then install it with a new sealing washer (B).
    2. Refill the differential with rear differential fluid to the proper level.

NOTE: **If you disassemble the differential, check the rear differential fluid level again after the 4WD system check is finished. Add fluid if necessary.**

Fluid Capacity:

1.2 L (1.3 US qt) at fluid change

1.5 L (1.6 US qt) at overhaul

Recommended fluid: Honda Dual Pump Fluid II

GETtheMANUALS.org

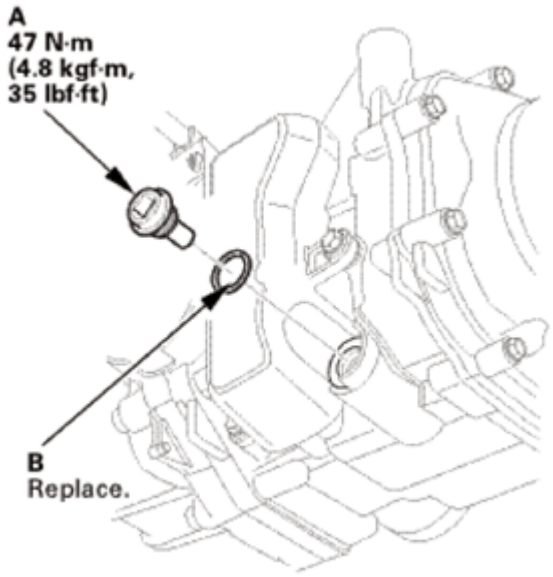

Fig. 352: Identifying Drain Plug And Sealing Washer With Torque Specifications
Courtesy of AMERICAN HONDA MOTOR CO., INC.

3. Install the oil filler plug (A) with a new sealing washer (B).

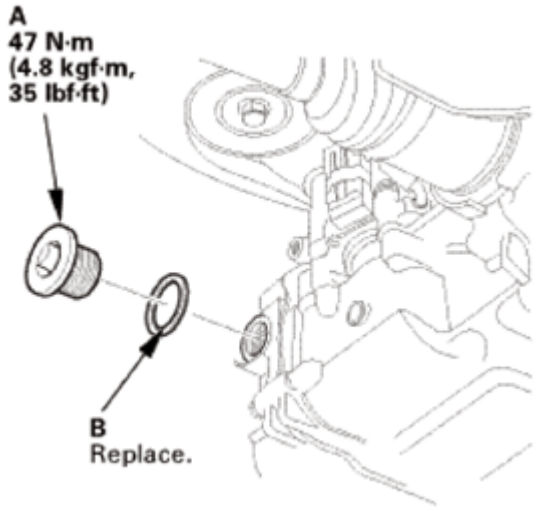

Fig. 353: Identifying Oil Filler Plug And Sealing Washer
Courtesy of AMERICAN HONDA MOTOR CO., INC.

12. Rear Differential Fluid After Replacement - Check (Real Time AWD System)
    1. Apply the parking brake, and block all four wheels.
    2. Start the engine, and let it idle more than 6 seconds, then turn the engine off. Repeat this step three more times.
    3. Shift to D while pressing the brake pedal firmly. Press the accelerator pedal for 2 seconds, then let it idle. Repeat this three more times.

GETtheMANUALS.org

    4. Check that the real time AWD indicator does not come on. If it does, check for real time AWD system DTC's.

13. Test Drive
    1. Test-drive the vehicle.
14. HDS DLC - Connection
    1. Connect the HDS to the data link connector (DLC) (A) located under the driver's side of the dashboard.
    2. Turn the ignition switch to ON (II).
    3. Make sure the HDS communicates with the vehicle. If it does not communicate, go to the DLC circuit troubleshooting.

Fig. 354: Identifying Data Link Connector (DLC)
Courtesy of AMERICAN HONDA MOTOR CO., INC.

15. Maintenance Minder Reset
    1. **RESET THE MAINTENANCE MINDER** .

GETtheMANUALS.org

HOW TO TROUBLESHOOT THE EPS

EPS INDICATOR

Under normal conditions, the EPS indicator (A) comes on when the ignition switch is turned to ON (II), then goes off after the engine is started. This indicates that the LED and its circuit are operating correctly.

If there is a failure in the system after the engine is started, the EPS indicator will stay on, and the power assist is turned off or restricted.

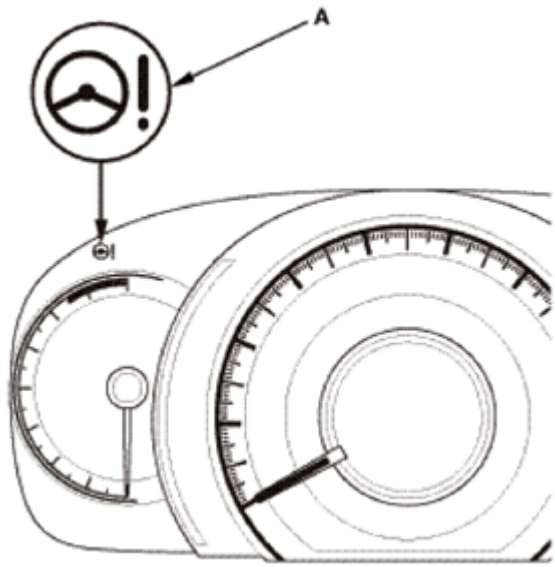

Fig. 1: Identifying EPS Indicator
Courtesy of AMERICAN HONDA MOTOR CO., INC.

When the EPS indicator comes on, the control unit stores the DTC. In this case, the control unit will not activate the EPS system after the engine starts again, but it keeps the EPS indicator on.

The EPS indicator will stay on until the DTC is erased. When a problem is detected and the EPS indicator comes on, there are cases when the indicator stays on until the ignition switch is turned to LOCK (0), and cases when the indicator goes off automatically when the system returns to normal. Even though the system is operating normally, the EPS indicator will come on under some conditions with the vehicle stopped and the engine at high speed with constant input from the steering wheel.

To determine the actual cause of the problem, question the customer about the conditions during which the problem occurred, taking the above conditions into consideration.

DIAGNOSTIC TROUBLE CODE (DTC)

GETtheMANUALS.org

- If the CPU cannot be activated, or it fails, the EPS indicator comes on, but no EPS DTC is stored.
- The memory can hold any number of DTCs. However, when the same DTC is detected more than once, the most recent DTC is written over the prior DTC, therefore only one occurrence is stored.
- The lowest DTC is indicated first. The DTCs are indicated in ascending order, not in the order that they occurred.
- The DTCs are stored in the EEPROM (non-volatile memory) therefore the stored DTCs cannot be erased by disconnecting the battery. Do the specified procedures to clear the DTCs.

SELF-DIAGNOSIS

Self-diagnosis can be classified into three categories:

- Initial diagnosis: Done right after the engine starts and until the EPS indicator goes off.
- Regular diagnosis: Done right after the initial diagnosis until the ignition switch is turned to LOCK (0).

RESTRICTION ON POWER ASSIST OPERATION

Repeated extreme steering force, such as turning the steering wheel continuously back-and-forth with the vehicle stopped, causes an increase in electrical current draw by the EPS motor. The increase of electric current causes the EPS motor and EPS control unit to heat up. Because this heat adversely affects the system, the control unit monitors the electric current draw of the EPS motor.

When the control unit detects heat build-up in the EPS motor, it reduces the electric current to the EPS motor gradually to protect the system, and it restricts the power assist operation. The EPS indicator does not come on during this function.

When steering torque is not applied to the steering wheel, or when the ignition is turned to LOCK (0) and the EPS motor cools, the control unit will restore the power assist gradually until it's fully restored (after about 8 minutes).

TORQUE SENSOR NEUTRAL POSITION

The EPS control unit stores the torque sensor neutral position in the EEPROM. The torque sensor neutral position must be memorized whenever the steering gearbox or the EPS control unit is replaced.

NOTE: The torque sensor neutral position is not affected when erasing the DTCs.

STEERING ANGLE SENSOR NEUTRAL POSITION

The EPS control unit stores the steering angle sensor neutral position in the EEPROM. Do the steering angle sensor neutral position clear whenever you do any of these actions:

- Disconnect the steering joint.
- Remove the steering wheel.
- Remove the steering angle sensor.

GETtheMANUALS.org

- Adjust the front toe.
- VSA sensor neutral position memorization procedure.

HOW TO TROUBLESHOOT DTCS

The troubleshooting procedures assume that the cause of the problem is still present and the EPS indicator is still on. Following the procedure when the EPS indicator does not come on can result in incorrect diagnosis.

1. Question the customer about the conditions when the problem occurred, and try to reproduce the same conditions for troubleshooting. Find out when the EPS indicator came on, such as while turning, after turning, when the vehicle was at a certain speed, etc.
2. When the EPS indicator does not come on during the test-drive, but troubleshooting is done based on the DTC, check for loose connectors, poor terminal contact, etc., in the affected circuit before you start troubleshooting.
3. After troubleshooting, clear the DTC and test-drive the vehicle. Be sure the EPS indicator does not come on.

HOW TO USE THE HDS (HONDA DIAGNOSTIC SYSTEM)

NOTE: Make sure the battery is in good condition and fully charged.

1. If the system indicators stay on, connect the HDS to the data link connector (DLC) (A) located under the driver's side of the dashboard.

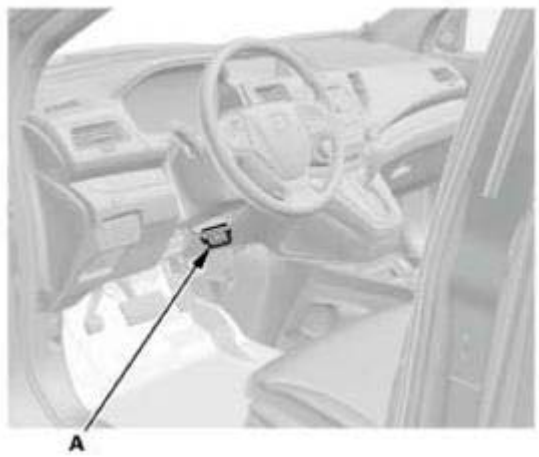

Fig. 2: Identifying Data Link Connector (DLC)
Courtesy of AMERICAN HONDA MOTOR CO., INC.

2. Turn the ignition switch to ON (II).
3. Make sure the HDS communicates with the vehicle and the EPS control unit. If it does not, **GO TO THE DLC CIRCUIT TROUBLESHOOTING** .
4. Check the diagnostic trouble code (DTC) and the freeze data, for all systems, troubleshoot the powertrain

GETtheMANUALS.org

DTCs first. Then refer to the indicated DTC's troubleshooting, and do the appropriate troubleshooting procedure.

NOTE:

- **Freeze data indicates the EPS conditions when the first system malfunction that activated the indicator was detected.**
- **The HDS can read the DTC, the freeze data, the current data, and other system data.**
- **For specific operations, refer to the Help menu that came with the HDS.**

HOW TO RETRIEVE DTCS

1. With the ignition switch in LOCK (0), connect the HDS to the data link connector (DLC) located under the driver's side of the dashboard.
2. Turn the ignition switch to ON (II).
3. Make sure the HDS communicates with the vehicle and the EPS control unit. If it does not, **GO TO THE DLC CIRCUIT TROUBLESHOOTING** .
4. Follow the prompts on the HDS to display the DTC(s) on the screen. After determining the DTC, refer to the DTC troubleshooting. Do the all systems DTC check, and troubleshoot any powertrain DTCs first.
5. Turn the ignition switch to LOCK (0).

HOW TO CLEAR DTCS

1. With the ignition switch in LOCK (0), connect the HDS to the data link connector (DLC) located under the driver's side of the dashboard.
2. Turn the ignition switch to ON (II).
3. Make sure the HDS communicates with the vehicle and the EPS control unit. If it does not, **GO TO THE DLC CIRCUIT TROUBLESHOOTING** .
4. Clear the DTC(s) by following the screen prompts on the HDS.
5. Turn the ignition switch to LOCK (0).

EPS COMPONENT LOCATION INDEX

GETtheMANUALS.org

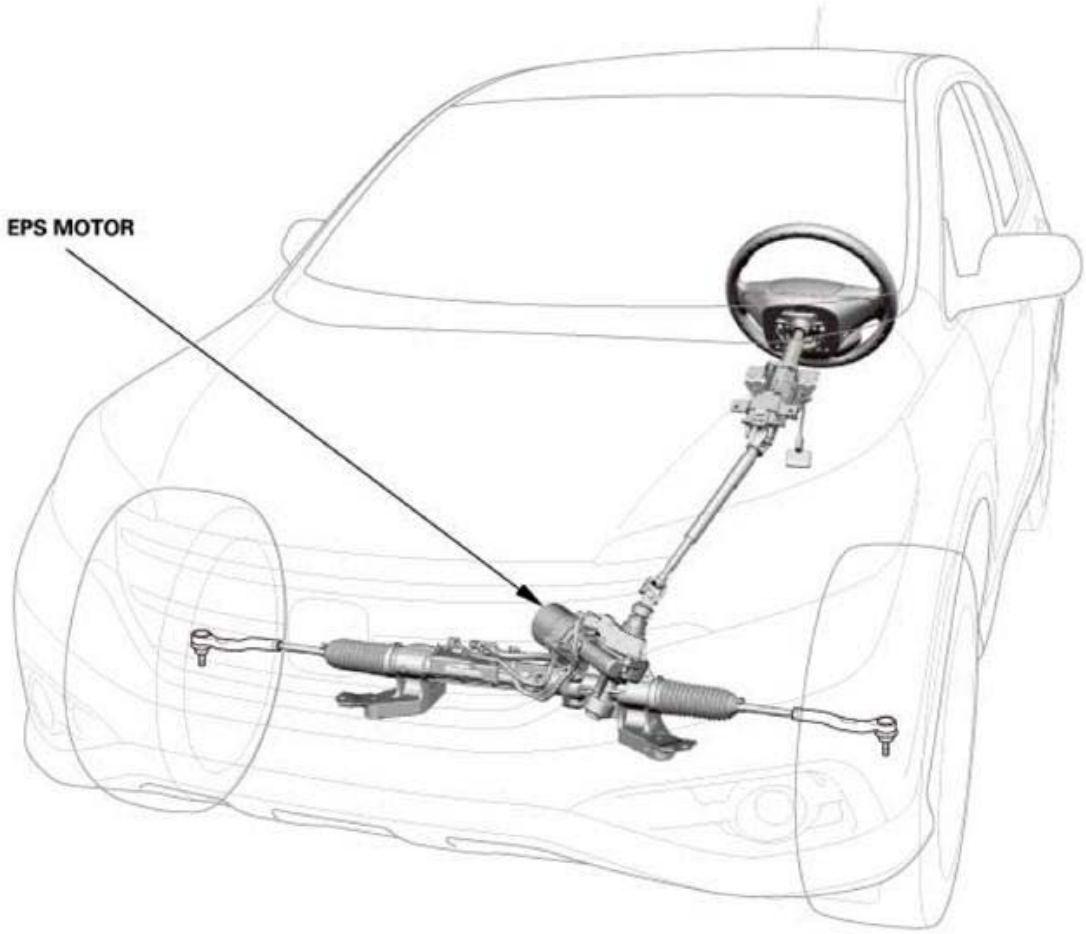

Fig. 3: Identifying EPS Motor
Courtesy of AMERICAN HONDA MOTOR CO., INC.

GETtheMANUALS.org

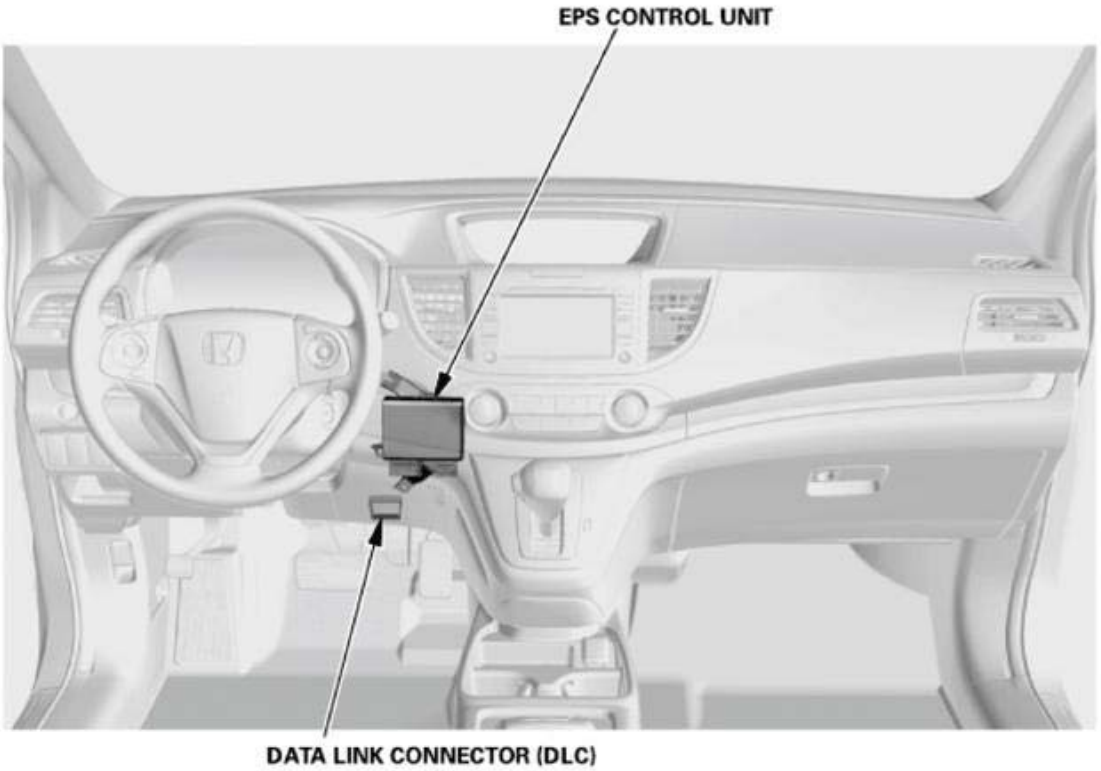

Fig. 4: Identifying EPS Control Unit And DLC
Courtesy of AMERICAN HONDA MOTOR CO., INC.

DATA LINK CONNECTOR (DLC)	-
EPS CONTROL UNIT	**STEERING ANGLE SENSOR NEUTRAL POSITION CLEAR**
	Removal and Installation See **EPS CONTROL UNIT REMOVAL AND INSTALLATION** or **EPS CONTROL UNIT UPDATE**
	Update See **EPS CONTROL UNIT REMOVAL AND INSTALLATION** or **EPS CONTROL UNIT UPDATE**
EPS MOTOR	**REMOVAL AND INSTALLATION**

EPS CONTROL UNIT CONNECTOR FOR INPUTS AND OUTPUTS

EPS CONTROL UNIT INPUTS AND OUTPUTS FOR CONNECTOR A (11P)

GETtheMANUALS.org

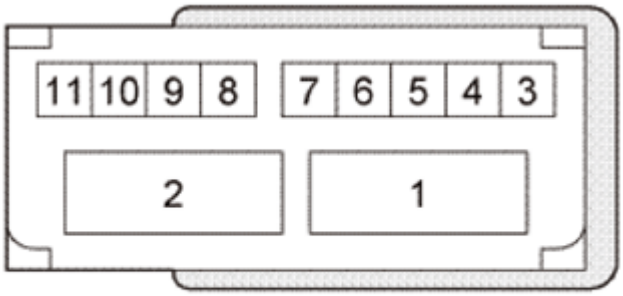

Wire side of female terminals

Fig. 5: EPS Control Unit Connector A (11P) Terminals Layout
Courtesy of AMERICAN HONDA MOTOR CO., INC.

Terminal Number	Wire color	Terminal sign (Terminal name)	Description	Signal
1	BLK	GND (Power ground)	Ground for the EPS control unit	Continuity to ground
2	WHT	+B_EPS (Plus battery)	Power source for the actuator EPS motor	Battery voltage (about 12V) at all times
3	YEL	NEP (Engine speed pulse)	Detects engine speed signal	With engine running: pulses
4	Not used	Not used	---------	---------
5	LT BLU	K-LINE (Data link connector)	Communicates with HDS	Pulse voltage (digital signal)
6	Not used	Not used	---------	---------
7	WHT	F_CAN-H	F-CAN communication circuit	With ignition switch ON (II): pulses (2.5-3.5 V)
8	Not used	Not used	---------	---------
9	RED	F_CAN-L	F-CAN communication circuit	With ignition switch ON (II): pulses (1.5-2.5 V)
10	Not used	Not used	---------	---------
11	PUR	IG1_VSA/ABS	Power source for activating the system	With ignition switch ON (II): battery voltage (about 12V)

EPS CONTROL UNIT INPUTS AND OUTPUTS FOR CONNECTOR B (16P)

GETtheMANUALS.org

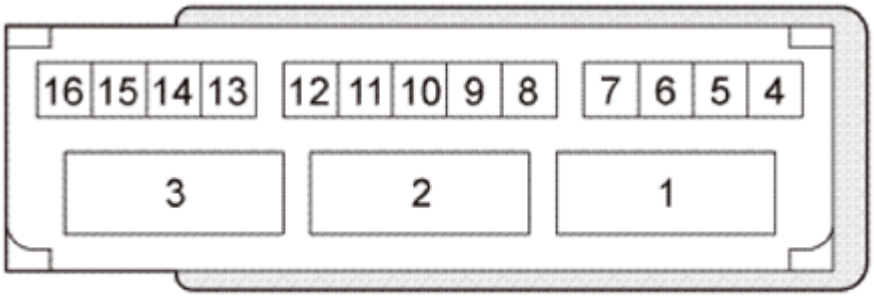

Wire side of female terminals

Fig. 6: EPS Control Unit Connector B (16P) Terminals Layout
Courtesy of AMERICAN HONDA MOTOR CO., INC.

Terminal Number	Wire color	Terminal sign (Terminal name)	Description	Signal
1	GRN	MTR_V	Drive the EPS motor	With engine running: three-phase alternating current (0-12V)
2	RED	MTR_U	Drive the EPS motor	With engine running: three-phase alternating current (0-12V)
3	WHT	MTR_W	Drive the EPS motor	With engine running: three-phase alternating current (0-12V)
4	LT GRN	RESOLVER_S3	Detects EPS motor angle sensor signal	With engine running: pulses (0-5V)
5	GRN	RESOLVER_S1	Detects EPS motor angle sensor signal	With engine running: pulses (0-5V)
6	PNK	RESOLVER_S4	Detects EPS motor angle sensor signal	With engine running: pulses (0-5V)
7	PUR	RESOLVER_S2	Detects EPS motor angle sensor signal	With engine running: pulses (0-5V)
8	LT BLU	RESOLVER_R2	Detects EPS motor angle sensor signal	With engine running: pulses (0-5V)
9	BLK	SH GND (Sealed ground)	Ground for the sealed line	Continuity to ground
10	ORN	RESOLVER_R1	Detects EPS motor angle sensor signal	With engine running: pulses (0-5V)
11	Not used	Not used	---------	---------
12	RED	VS1	Reference voltage for torque sensor	With engine running: about 3.3 V
13	YEL	TRQ_SUB	Detects torque sensor signal	Turn to the right: about 2.5 -1.7 V (decrease) Turn to the left: about 2.5-3.3 V (increase)
14	BRN	TRQ_SE	Ground for the	Continuity to ground

GETtheMANUALS.org

			torque sensor	
15	BLU	VS2	Detects torque sensor signal	Turn to the right: about 2.5 -3.3 V (increase) Turn to the left: about 2.5-1.7 V (decrease)
16	WHT	PVF	Power source for torque sensor	With engine running: about 10 V

EPS CONTROL UNIT REMOVAL AND INSTALLATION

REMOVAL

1. Battery Terminal (SRS) - Disconnection
    1. Make sure the ignition switch is in LOCK (0).
    2. Disconnect and isolate the negative cable (A) from the battery.

    NOTE: Always disconnect the negative side first.

    3. Disconnect the positive cable (B) from the battery.
    4. Wait at least 3 minutes before starting work.

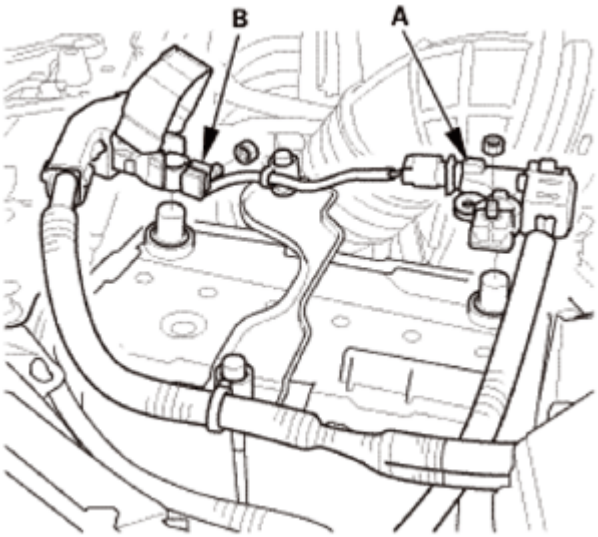

Fig. 7: Identifying Negative And Positive Cables Of Battery
Courtesy of AMERICAN HONDA MOTOR CO., INC.

2. Driver's Dashboard Panel Assembly
    1. Carefully pry out the driver's dashboard panel assembly (A) with the appropriate trim tool to detach the clips (B).
    2. Disconnect the connector (C), then remove the driver's dashboard panel assembly.

GETtheMANUALS.org

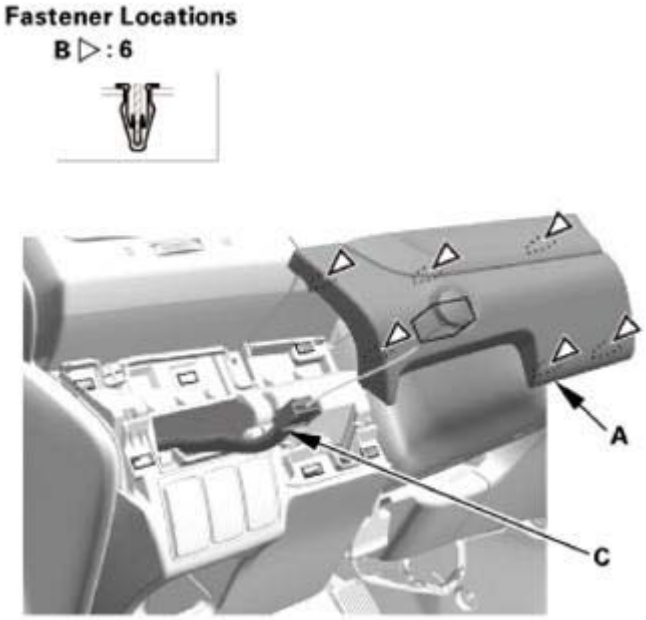

Fig. 8: Identifying Driver's Dashboard Panel Assembly, Clips And Connector
Courtesy of AMERICAN HONDA MOTOR CO., INC.

3. Driver's Dashboard Undercover
    1. Turn the lock knob (A) 90 °, then gently pull down the front edge of the driver's dashboard undercover (B) to detach the clip (C).
    2. Pull away the undercover to release the pin (D) from the holder (E), then remove the driver's dashboard undercover.

GETtheMANUALS.org

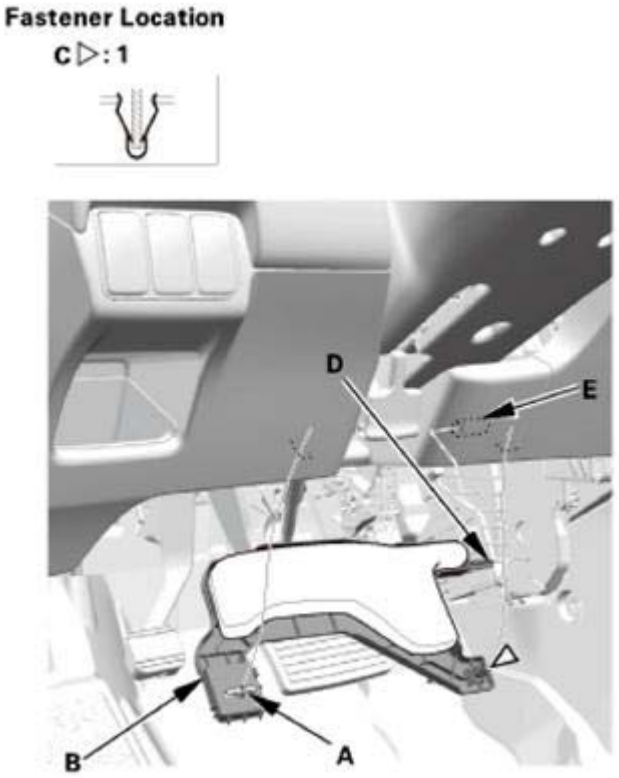

Fig. 9: Identifying Lock Knob, Driver's Dashboard Undercover, Clip, Pin And Holder
Courtesy of AMERICAN HONDA MOTOR CO., INC.

4. Driver's Dashboard Lower Cover
    1. Carefully pry out the driver's dashboard lower cover (A) with the appropriate trim tool to detach the clips (B).
    2. Disconnect the connector (C), then remove the driver's dashboard lower cover.

GETtheMANUALS.org

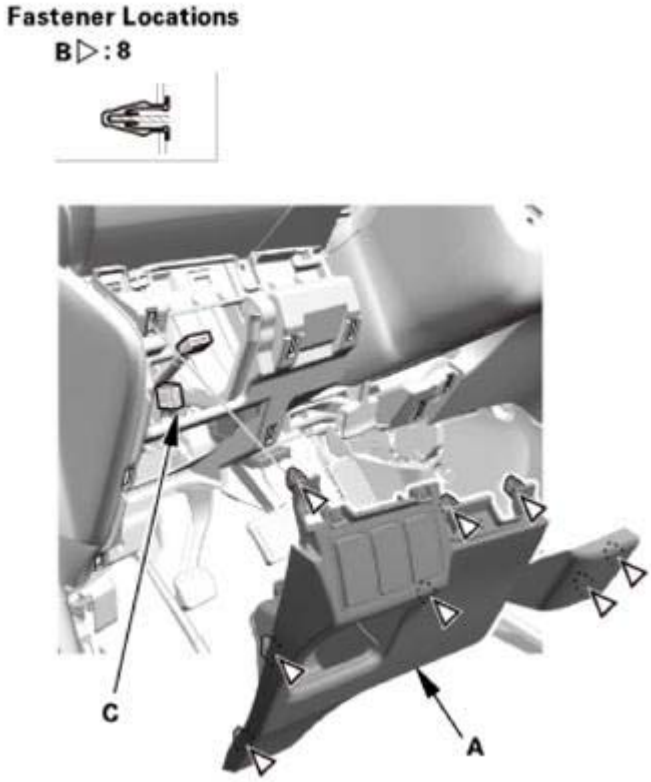

Fig. 10: Identifying Driver's Dashboard Lower Cover, Clips And Connector
Courtesy of AMERICAN HONDA MOTOR CO., INC.

5. EPS Control Unit
    1. Disconnect the accelerator pedal position (APP) sensor connector (A).
    2. Disconnect the EPS control unit connectors (B) by pushing the lock (C) and pulling down the lever (D).
    3. Remove the EPS control unit (E).

GETtheMANUALS.org

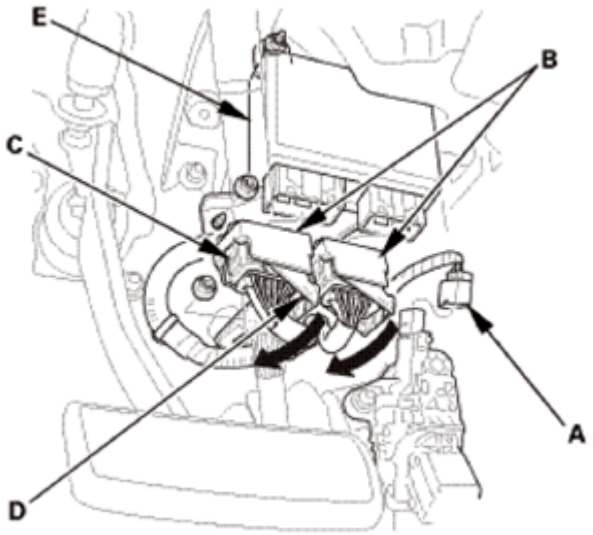

Fig. 11: Disconnecting EPS Control Unit Connectors
Courtesy of AMERICAN HONDA MOTOR CO., INC.

INSTALLATION

1. EPS Control Unit
    1. Install the EPS control unit (A).
    2. Pull up the lever (B) of the EPS control unit connectors (C), then confirm the connector is fully seated.
    3. Connect the accelerator pedal position (APP) sensor connector (D).

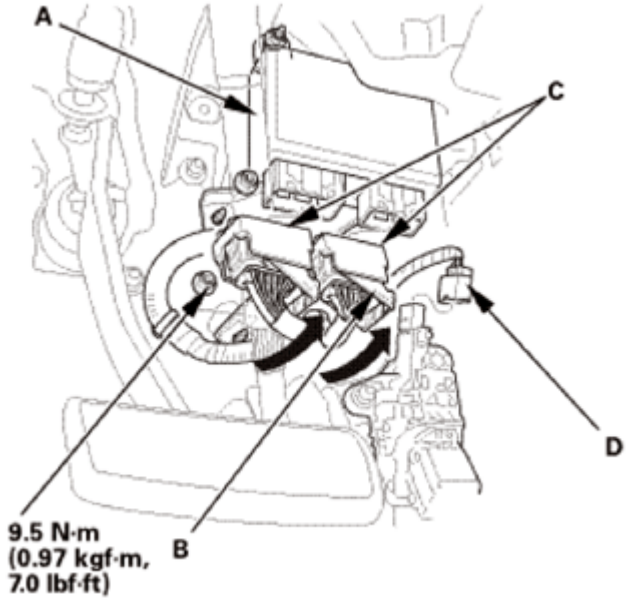

Fig. 12: Pulling Up Lever Of EPS Control Unit Connectors
Courtesy of AMERICAN HONDA MOTOR CO., INC.

GETtheMANUALS.org

2. Driver's Dashboard Lower Cover
    1. Connect the connector (A), then install the driver's dashboard lower cover (B). Make sure the clips (C) snap into place securely.

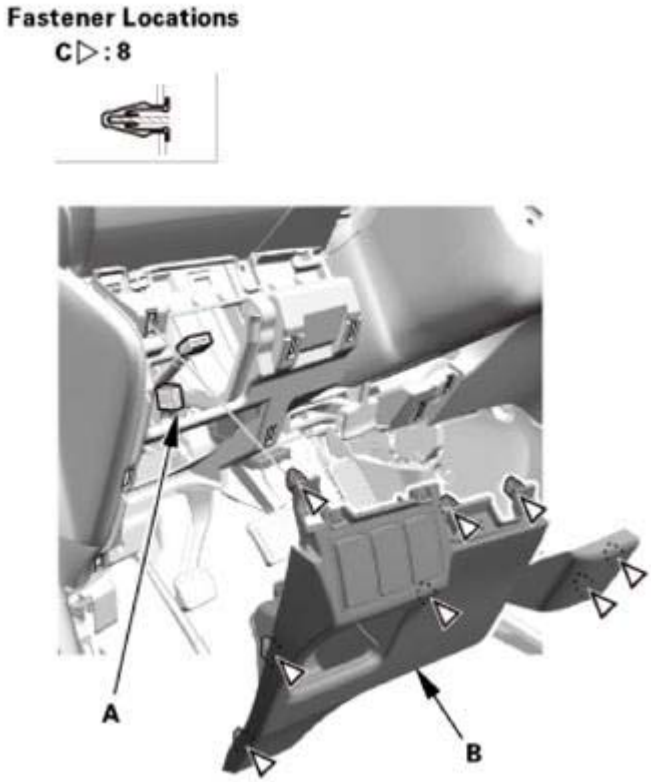

Fig. 13: Identifying Driver's Dashboard Lower Cover And Connectors
Courtesy of AMERICAN HONDA MOTOR CO., INC.

3. Driver's Dashboard Undercover
    1. Install the driver's dashboard undercover (A). Make sure the clip (B) snap into place securely, and the pin (C) into the holder (D) securely.
    2. Turn the lock knob (E) 90 °.

GETtheMANUALS.org

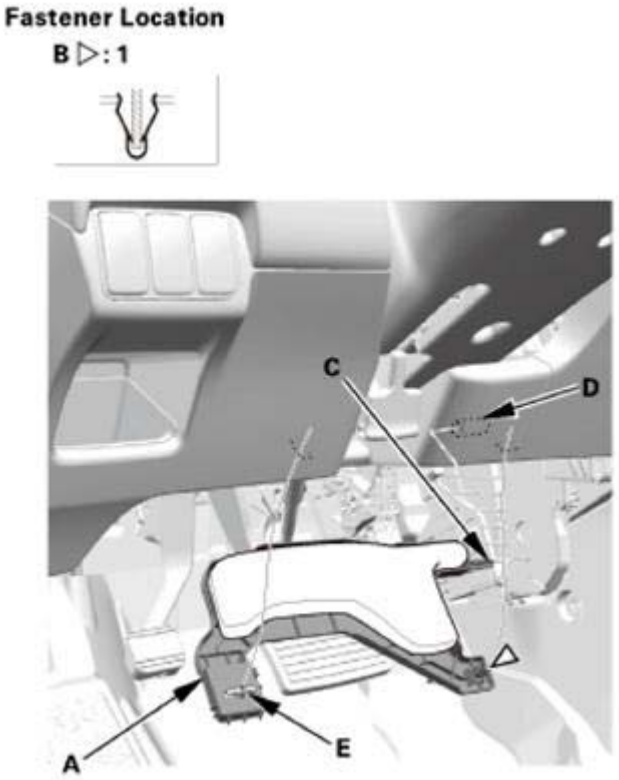

Fig. 14: Identifying Driver's Dashboard Undercover, Clip, Pin And Holder
Courtesy of AMERICAN HONDA MOTOR CO., INC.

4. Driver's Dashboard Panel Assembly
    1. Connect the connector (A), then install the driver's dashboard panel assembly (B). Make sure the clips (C) snap into place securely.

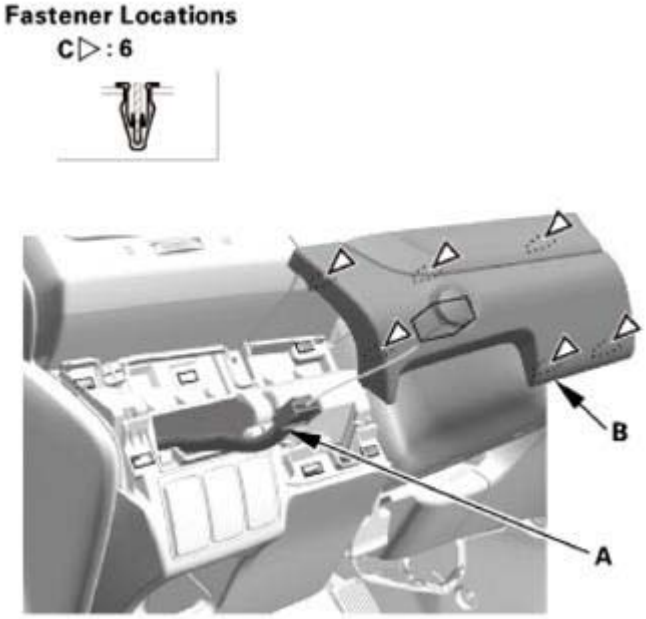

GETtheMANUALS.org

Fig. 15: Identifying Driver's Dashboard Panel Assembly, Connector And Clips
Courtesy of AMERICAN HONDA MOTOR CO., INC.

5. Battery Terminal (SRS) - Reconnection

NOTE: If the battery performance is abnormal, test the battery.

1. Clean the battery terminals.
2. Connect the positive cable (A) to the battery.

NOTE: Always connect the positive side first.

3. Connect the negative cable (B) to the battery.
4. Apply multipurpose grease to the terminals to prevent corrosion.

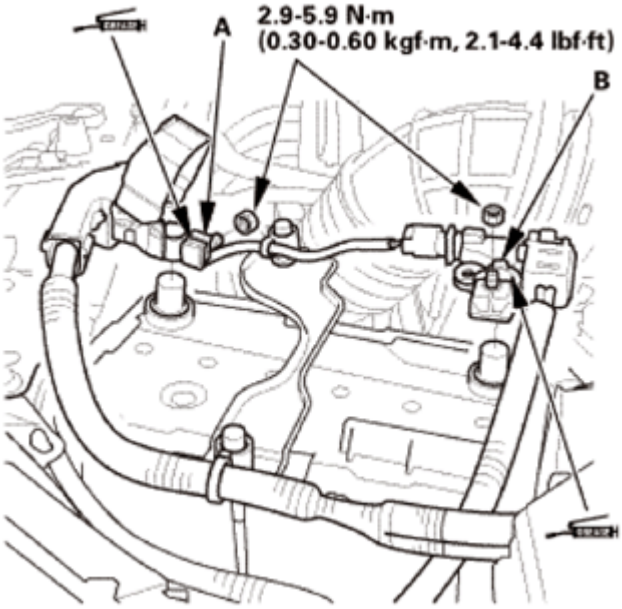

Fig. 16: Identifying Positive And Negative Battery Cables
Courtesy of AMERICAN HONDA MOTOR CO., INC.

6. EPS Control Unit After Install - Check
   1. After installation, check these items:
      - Start the engine, allow it to idle, and turn the steering wheel from lock to lock several times.
      - Check that the EPS indicator does not come on.

EPS CONTROL UNIT UPDATE

SPECIAL TOOLS DESCRIPTION

Image	Description/Tool Number

GETtheMANUALS.org

	MVCI unit with the latest control module (CM) update software installed

Any one of the above updating tools can be used.

PROCEDURE

1. EPS Control Unit - Update

NOTE: **Check any official Honda service website for more service information about updating the MVCI and control units.**

EPS DTC TROUBLESHOOTING INDEX

DTC	Detection Item
11-02	Control Unit Power Supply Voltage
12-01	Motor Power Supply Voltage
21-03	CAN Vehicle Speed Stuck ON
22-01	Engine Speed Signal
23-01	CAN Data Stuck ON
23-02	CAN Vehicle Speed Data
23-03	CAN Engine Speed Data

GETtheMANUALS.org

23-04	CAN Bus-Off Malfunction
32-09	Motor Current Correlation
32-0B	Over Current
32-0C	Battery Current Detect Circuit
32-0E	Over Current Continuation
32-0F	Battery Current/Motor Current Correlation
34-01	Power Relay
34-02	Fail-Safe Relay
35-02	EPS Control Unit Internal Circuit (EEPROM1)
35-04	EPS Control Unit Internal Circuit (CPU Communication)
35-05	EPS Control Unit Internal Circuit (A/D Conversion)
35-08	EPS Control Unit Internal Circuit (EEPROM2)
35-0A	EPS Control Unit Internal Circuit (CPU Operation)
36-02	EPS Control Unit Internal Circuit (INH Output Circuit)
37-01	EPS Control Unit Internal Circuit (Step-Up Circuit)
38-01	EPS Control Unit Internal Circuit (Temperature Sensor)
39-01	EPS Control Unit Internal Circuit (Precharge Circuit)
39-03	EPS Control Unit Internal Circuit (Power Self-Holding Circuit)
52-01	Torque Sensor Allowable Tolerance (Initial Diagnosis)
52-02	Torque Sensor Power Supply (Initial Diagnosis)
52-03	Main Torque Sensor
52-04	Sub Torque Sensor
52-05	Torque Sensor Allowable Tolerance
52-06	Torque Sensor Offset Out of Range
52-08	Torque Sensor Power Supply
61-04	Motor Harness Malfunction
61-05	Motor Harness Short
61-06	Motor Harness Open
71-01	Motor Angle Sensor (SIN/COS Signals)
71-02	Motor Angle Sensor (Neutral Position Learning of SIN/COS)
81-03	Yaw Rate Sensor Malfunction
83-01	CAN Communication Failure
83-02	CAN Communication Timeout Error
84-01	Steering Angle Sensor Malfunction
85-01	Problem in VSA System

DTC 11-02: CONTROL UNIT POWER SUPPLY VOLTAGE; DTC 12-01: MOTOR POWER SUPPLY VOLTAGE

GETtheMANUALS.org

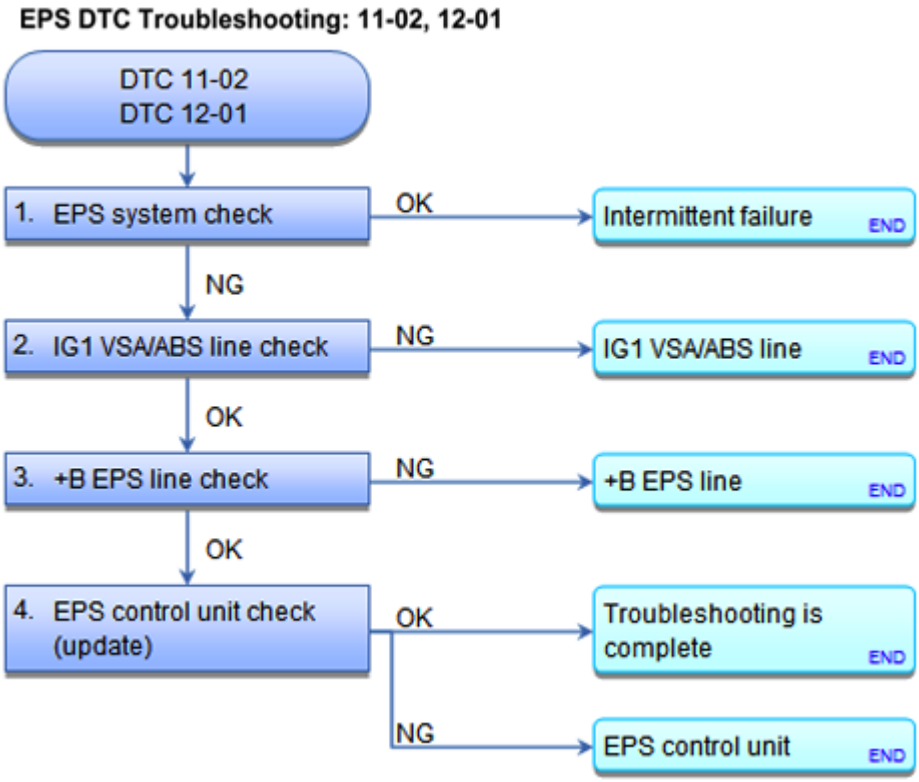

Fig. 17: EPS DTC Troubleshooting Flow Chart
Courtesy of AMERICAN HONDA MOTOR CO., INC.

NOTE:

- **BEFORE YOU TROUBLESHOOT, RECORD ALL FREEZE DATA AND ANY ON-BOARD SNAPSHOT, AND REVIEW THE HOW TO TROUBLESHOOT THE EPS.**
- **If the ignition switch is turned to ON (II) and the engine is started, this DTC can be stored when any of these occur:**
  - **Quick-charging the battery.**
  - **High voltage battery (24 V) is connected to the vehicle.**
  - **Dead battery is connected to the vehicle.**

DTC Description	DTC	Freeze Frame
11-02 Control Unit Power Supply Voltage		
12-01 Motor Power Supply Voltage		

1. EPS system check:
   - 1. Start the engine.
   - 2. Check the parameter(s) below with the HDS.

Signal	Current conditions	
	Values	Unit

GETtheMANUALS.org

BATTERY VOLTAGE		
IG1 VOLTAGE		

Is there battery voltage?

YES : Intermittent failure, the system is OK at this time.

NO : **CHECK THE BATTERY** and **the PGM-FI DTCs** See **HOW TO TROUBLESHOOT THE A/T SYSTEM** or **HOW TO TROUBLESHOOT THE FUEL AND EMISSIONS SYSTEMS** . If they are OK, go to step 2.

2. IG1 VSA/ABS line check:
   - 1. Check for a poor connection at all IG1 VSA/ABS line connections between the EPS control unit connector A (11P) terminal No. 11 and the under dash fuse/relay box No. B24 (7.5 A) fuse.

Are the connections OK?

YES : Go to step 3.

NO : Repair the IG1 VSA/ABS line.

3. +B EPS line check:
   - 1. Check for a poor connection at all +B EPS line connections between the EPS control unit connector A (11P) terminal No. 2 and the under-hood fuse/relay box No. A1-1 (70 A) fuse.

Are the connections OK?

YES : Go to step 4.

NO : Repair the +B EPS line.

4. EPS control unit check (update):
   - 1. **Update the EPS control unit** See **EPS CONTROL UNIT REMOVAL AND INSTALLATION** or **EPS CONTROL UNIT UPDATE** if it does not have the latest software.
   - 2. Turn the ignition switch to LOCK (0), then start the engine.
   - 3. Check the parameter(s) below with the HDS.

Signal	**Current conditions**	
	Values	**Unit**
BATTERY VOLTAGE		
IG1 VOLTAGE		

Is there battery voltage?

YES : Troubleshooting is complete.

GETtheMANUALS.org

NO : **Replace the EPS control unit** See **EPS CONTROL UNIT REMOVAL AND INSTALLATION** or **EPS CONTROL UNIT UPDATE**.

DTC 21-03: CAN VEHICLE SPEED STUCK ON

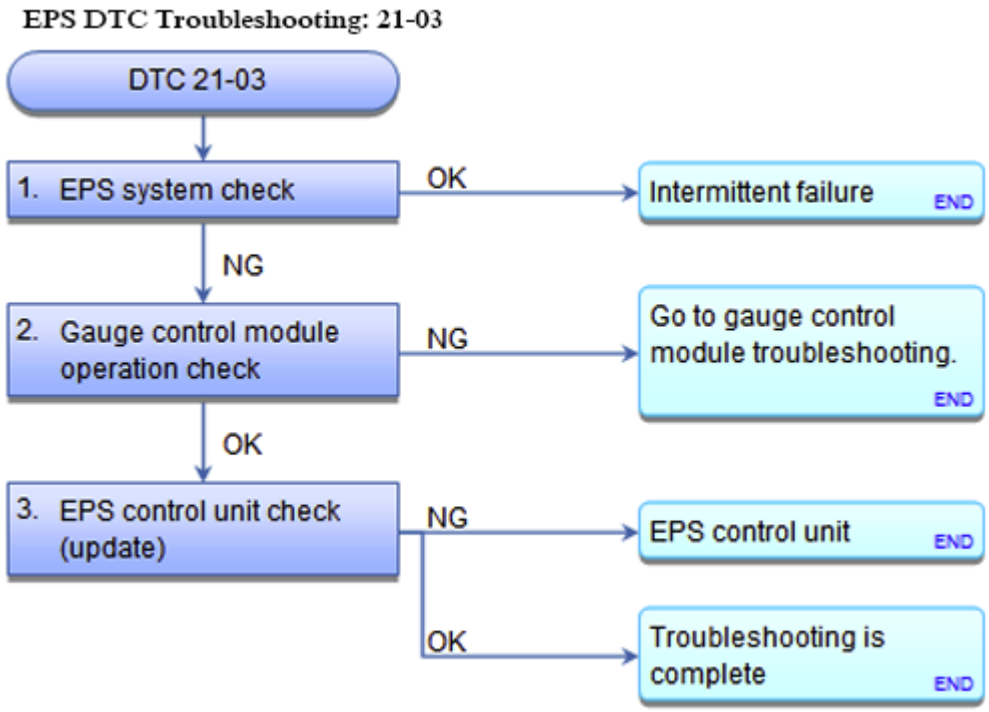

Fig. 18: EPS DTC Troubleshooting Flow Chart (CAN Vehicle Speed Stuck ON)
Courtesy of AMERICAN HONDA MOTOR CO., INC.

NOTE:

- **BEFORE YOU TROUBLESHOOT, RECORD ALL FREEZE DATA AND ANY ON-BOARD SNAPSHOT, AND REVIEW THE HOW TO TROUBLESHOOT THE EPS.**
- **Troubleshoot any fuel and emissions systems DTCs first.**
- **Even though the system is operating normally, the EPS indicator may come on and set DTC 21-03 when you raise the engine speed repeatedly with the vehicle stopped. REVIEW THE HOW TO TROUBLESHOOT THE EPS.**
- **VSA DTCs may set during this troubleshooting. If so, clear them.**

DTC Description	DTC	Freeze Frame
21-03 CAN Vehicle Speed Stuck ON		

1. EPS system check:
   - 1. **RAISE AND SUPPORT THE VEHICLE** , and allow all wheels to rotate freely.
   - 2. Start the engine.

GETtheMANUALS.org

- 3. Turn off the VSA function by using the VSA OFF switch.
- 4. Run the vehicle while in D position.
- 5. Check the parameter(s) below with the HDS.

Signal	Current condition	
	Values	Unit
VEHICLE SPEED		

Is the vehicle speed indicated?

YES : Intermittent failure, the system is OK at this time.

NO : Go to step 2.

2. Gauge control module operation check:
   - 1. Check the tachometer and the speedometer.

Is the tachometer and the speedometer working correctly?

YES : Go to step 3.

NO : Go to gauge control module troubleshooting.

3. EPS control unit check (update):
   - 1. **Update the EPS control unit** See **EPS CONTROL UNIT REMOVAL AND INSTALLATION** or **EPS CONTROL UNIT UPDATE** if it does not have the latest software.
   - 2. **RAISE AND SUPPORT THE VEHICLE** , and allow all wheels to rotate freely.
   - 3. Turn the ignition switch to LOCK (0), then start the engine.
   - 4. Turn off the VSA function by using the VSA OFF switch.
   - 5. Run the vehicle while in D position.
   - 6. Check for DTCs with the HDS.

DTC Description	DTC	Freeze Frame
21-03 CAN Vehicle Speed Stuck ON		

Is DTC 21-03 indicated?

YES : **Replace the EPS control unit** See **EPS CONTROL UNIT REMOVAL AND INSTALLATION** or **EPS CONTROL UNIT UPDATE**.

NO : Troubleshooting is complete.

DTC 22-01: ENGINE SPEED SIGNAL

GETtheMANUALS.org

EPS DTC Troubleshooting: 22-01

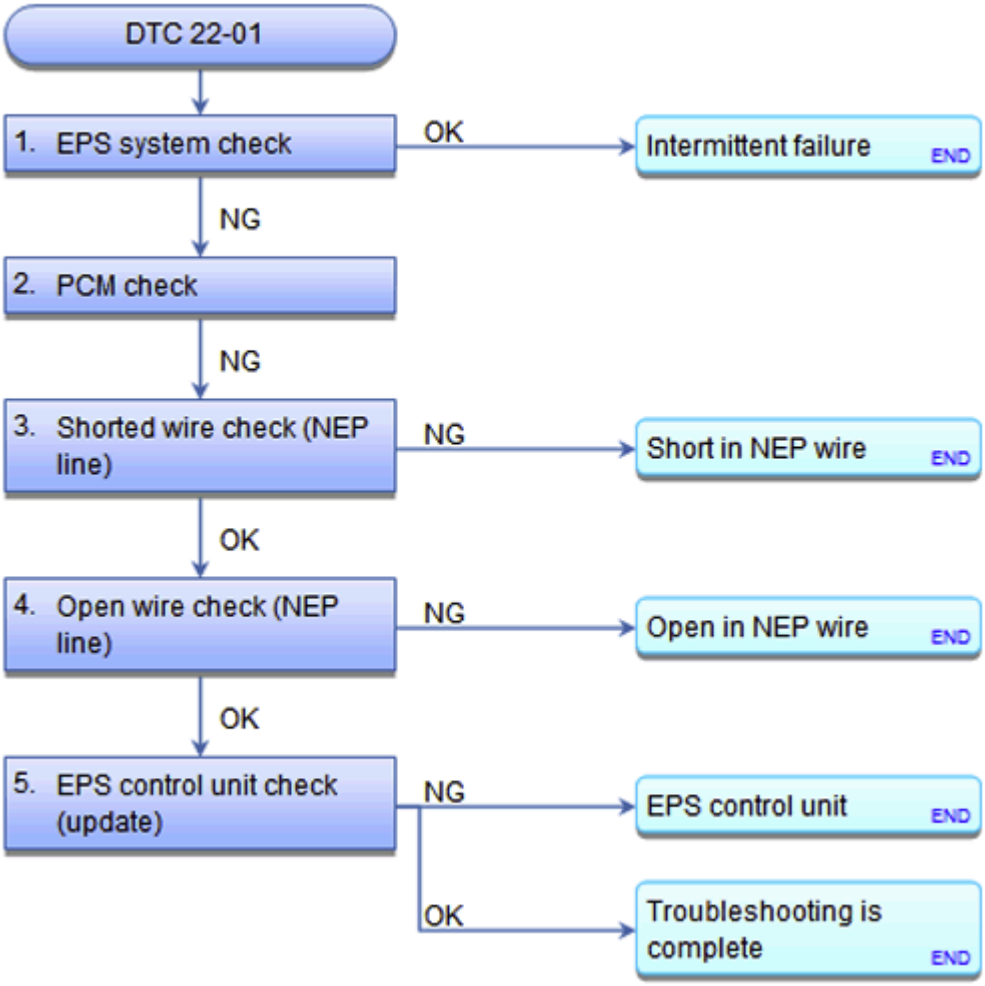

Fig. 19: EPS DTC Troubleshooting Flow Chart (Engine Speed Signal)
Courtesy of AMERICAN HONDA MOTOR CO., INC.

NOTE:

- **BEFORE YOU TROUBLESHOOT, RECORD ALL FREEZE DATA AND ANY ON-BOARD SNAPSHOT, AND REVIEW THE HOW TO TROUBLESHOOT THE EPS.**
- **If the MIL indicator is on, troubleshoot the fuel and emissions systems first.**

DTC Description	DTC	Freeze Frame
22-01 Engine Speed Signal		

1. EPS system check:
    - 1. Start the engine.
    - 2. Check the parameter(s) below with the HDS.

GETtheMANUALS.org

Signal	Current condition	
	Values	Unit
ENGINE SPEED		

Is the engine speed 0-400 rpm?

YES : Go to step 2.

NO : Intermittent failure, the system is OK at this time.

2. PCM check:
   - 1. Disconnect the following connector.

     EPS control unit connector A (11P)

   - 2. Turn the ignition switch to ON (II).
   - 3. Measure the voltage between test points 1 and 2.

     Test condition IG ON (II)

     EPS control unit connector A (11P): disconnected

     Test circuit NEP

     Test point 1 EPS control unit connector A (11P) No. 3 (YEL)

     Test point 2 Body ground

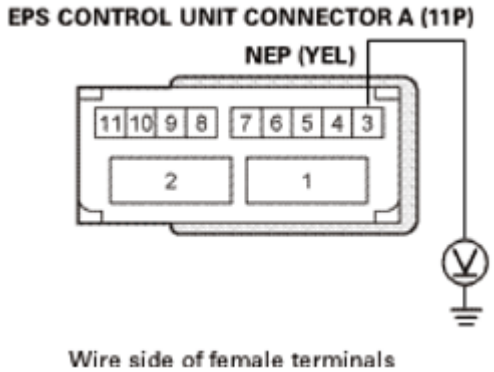

Fig. 20: Measuring Voltage Between Test Points 1 And 2
Courtesy of AMERICAN HONDA MOTOR CO., INC.

Is there battery voltage?

YES : The NEP wire is OK. Go to step 3.

GETtheMANUALS.org

NO : Go to step 3.

3. Shorted wire check (NEP line):
    - 1. Turn the ignition switch to LOCK (0).
    - 2. Short the SCS line with the HDS.
    - 3. Disconnect the following connector.

      PCM connector A (49P)

    - 4. Check for continuity between test points 1 and 2.

      Test condition IG LOCK (0)

      EPS control unit connector A (11P): disconnected

      PCM connector A (49P): disconnected

      Test circuit NEP

      Test point 1 EPS control unit connector A (11P) No. 3 (YEL)

      Test point 2 Body ground

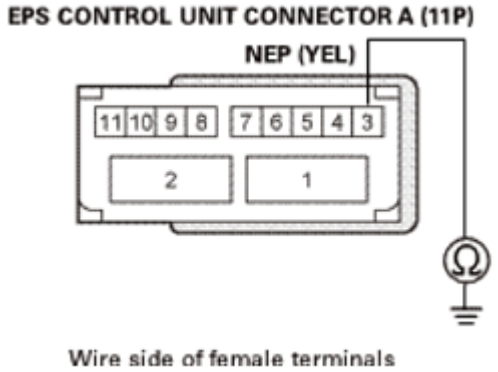

Fig. 21: Checking For Continuity Between Test Points 1 And 2
Courtesy of AMERICAN HONDA MOTOR CO., INC.

Is there continuity?

YES : Repair a short to body ground in the wire between the EPS control unit and the PCM.

NO : The NEP wire is not shorted. Go to step 4.

4. Open wire check (NEP line):
    - 1. Check for continuity between test points 1 and 2.

GETtheMANUALS.org

Test condition IG LOCK (0)

EPS control unit connector A (11P): disconnected

PCM connector A (49P): disconnected

Test circuit NEP

Test point 1 EPS control unit connector A (11P) No. 3 (YEL)

Test point 2 PCM connector A (49P) No. 22 (YEL)

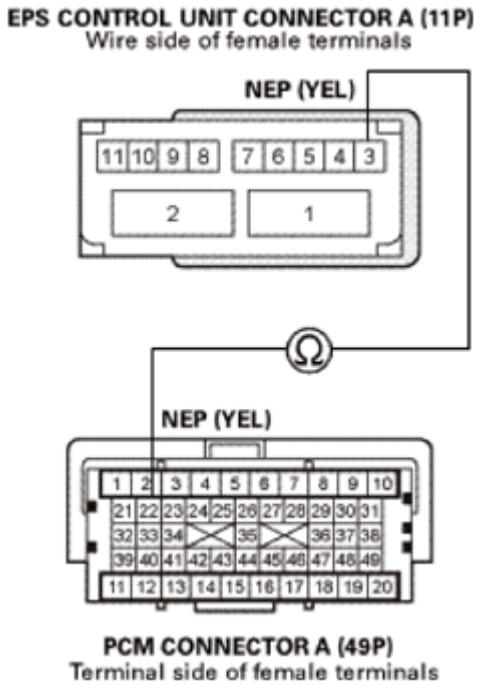

Fig. 22: Checking For Continuity Between Test Points 1 And 2
Courtesy of AMERICAN HONDA MOTOR CO., INC.

Is there continuity?

YES : The NEP wire is not open. Go to step 5.

NO : Repair an open in the wire between the EPS control unit and the PCM.

5. EPS control unit check (update):
   - 1. Reconnect the following connector.

     EPS control unit connector A (11P)

   - 2. **Update the EPS control unit** See **EPS CONTROL UNIT REMOVAL AND**

GETtheMANUALS.org

INSTALLATION or **EPS CONTROL UNIT UPDATE** if it does not have the latest software.

- 3. Turn the ignition switch to LOCK (0), then start the engine.
- 4. Check for DTCs with the HDS.

DTC Description	DTC	Freeze Frame
22-01 Engine Speed Signal		

Is DTC 22-01 indicated?

YES : **Replace the EPS control unit** See **EPS CONTROL UNIT REMOVAL AND INSTALLATION** or **EPS CONTROL UNIT UPDATE**.

NO : Troubleshooting is complete.

DTC 23-01: CAN DATA STUCK ON; DTC 32-0C: BATTERY CURRENT DETECT CIRCUIT; DTC 34-01: POWER RELAY; DTC 35-02: EPS CONTROL UNIT INTERNAL CIRCUIT (EEPROM1); DTC 35-04: EPS CONTROL UNIT INTERNAL CIRCUIT (CPU COMMUNICATION); DTC 35-05: EPS CONTROL UNIT INTERNAL CIRCUIT (A/D CONVERSION); DTC 35-08: EPS CONTROL UNIT INTERNAL CIRCUIT (EEPROM2); DTC 35-0A: EPS CONTROL UNIT INTERNAL CIRCUIT (CPU OPERATION); DTC 36-02: EPS CONTROL UNIT INTERNAL CIRCUIT (INH OUTPUT CIRCUIT); DTC 37-01: EPS CONTROL UNIT INTERNAL CIRCUIT (STEP-UP CIRCUIT); DTC 38-01: EPS CONTROL UNIT INTERNAL CIRCUIT (TEMPERATURE SENSOR)

GETtheMANUALS.org

EPS DTC Troubleshooting: 23-01, 32-0C, 34-01, 35-02, 35-04, 35-05, 35-08, 35-0A, 36-02, 37-01, 38-01

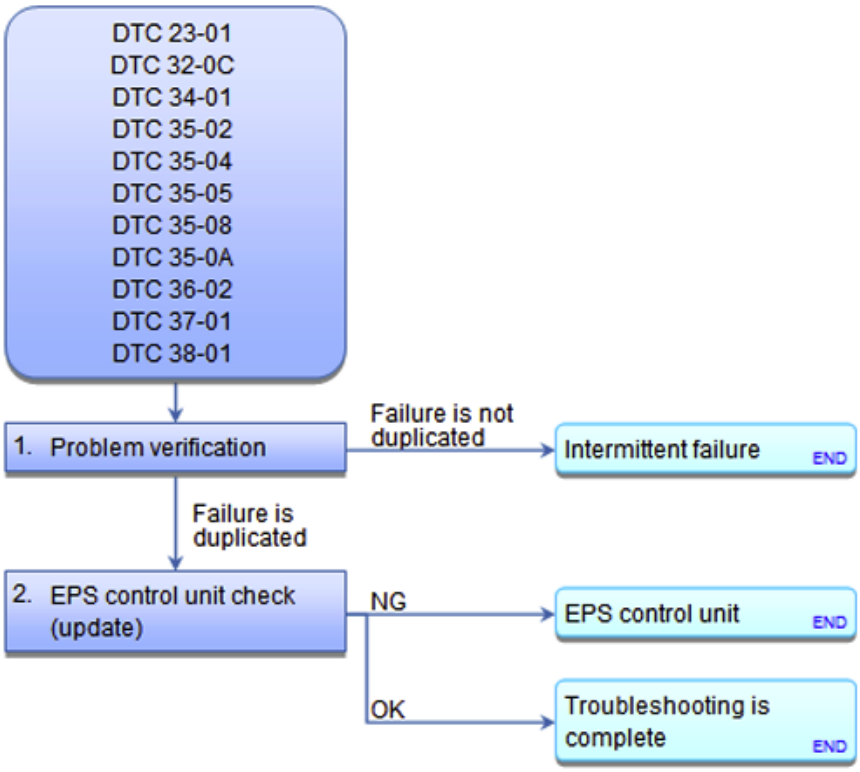

Fig. 23: EPS DTC Troubleshooting Flow Chart
Courtesy of AMERICAN HONDA MOTOR CO., INC.

NOTE: **BEFORE YOU TROUBLESHOOT, RECORD ALL FREEZE DATA AND ANY ON-BOARD SNAPSHOT, AND REVIEW THE HOW TO TROUBLESHOOT THE EPS.**

DTC Description	DTC	Freeze Frame
23-01 CAN Data Stuck ON		
32-0C Battery Current Detect Circuit		
34-01 Power Relay		
35-02 EPS Control Unit Internal Circuit (EEPROM1)		
35-04 EPS Control Unit Internal Circuit (CPU Communication)		
35-05 EPS Control Unit Internal Circuit (A/D Conversion)		
35-08 EPS Control Unit Internal Circuit (EEPROM2)		
35-0A EPS Control Unit Internal Circuit (CPU Operation)		
36-02 EPS Control Unit Internal Circuit (INH Output Circuit)		
37-01 EPS Control Unit Internal Circuit (Step-Up Circuit)		
38-01 EPS Control Unit Internal Circuit (Temperature Sensor)		

1. Problem verification:
    - 1. Turn the ignition switch to ON (II).
    - 2. Clear the DTC with the HDS.

GETtheMANUALS.org

- 3. Turn the ignition switch to LOCK (0), then start the engine.
- 4. Check for DTCs with the HDS.

DTC Description	DTC	Freeze Frame
23-01 CAN Data Stuck ON		
32-0C Battery Current Detect Circuit 34-01 Power Relay		
35-02 EPS Control Unit Internal Circuit (EEPROM1)		
35-04 EPS Control Unit Internal Circuit (CPU Communication)		
35-05 EPS Control Unit Internal Circuit (A/D Conversion)		
35-08 EPS Control Unit Internal Circuit (EEPROM2)		
35-0A EPS Control Unit Internal Circuit (CPU Operation)		
36-02 EPS Control Unit Internal Circuit (INH Output Circuit)		
37-01 EPS Control Unit Internal Circuit (Step-Up Circuit)		
38-01 EPS Control Unit Internal Circuit (Temperature Sensor)		

Is DTC 23-01, 32-0C, 34-01, 35-02, 35-04, 35-05, 35-08, 35-0A, 36-02, 37-01, or 38-01 indicated?

YES : The failure is duplicated. Go to step 2.

NO : Intermittent failure, the system is OK at this time.

2. EPS control unit check (update):
   - 1. **Update the EPS control unit** See **EPS CONTROL UNIT REMOVAL AND INSTALLATION** or **EPS CONTROL UNIT UPDATE** if it does not have the latest software.
   - 2. Turn the ignition switch to LOCK (0), then start the engine.
   - 3. Check for DTCs with the HDS.

DTC Description	DTC	Freeze Frame
23-01 CAN Data Stuck ON		
32-0C Battery Current Detect Circuit		
34-01 Power Relay		
35-02 EPS Control Unit Internal Circuit (EEPROM1)		
35-04 EPS Control Unit Internal Circuit (CPU Communication)		
35-05 EPS Control Unit Internal Circuit (A/D Conversion)		
35-08 EPS Control Unit Internal Circuit (EEPROM2)		
35-0A EPS Control Unit Internal Circuit (CPU Operation)		
36-02 EPS Control Unit Internal Circuit (INH Output Circuit)		
37-01 EPS Control Unit Internal Circuit (Step-Up Circuit)		
38-01 EPS Control Unit Internal Circuit (Temperature Sensor)		

Is DTC 23-01, 32-0C, 34-01, 35-02, 35-04, 35-05, 35-08, 35-0A, 36-02, 37-01, or 38-01 indicated?

GETtheMANUALS.org

YES : **Replace the EPS control unit** See **EPS CONTROL UNIT REMOVAL AND INSTALLATION** or **EPS CONTROL UNIT UPDATE**.

NO : Troubleshooting is complete.

DTC 23-02: CAN VEHICLE SPEED DATA

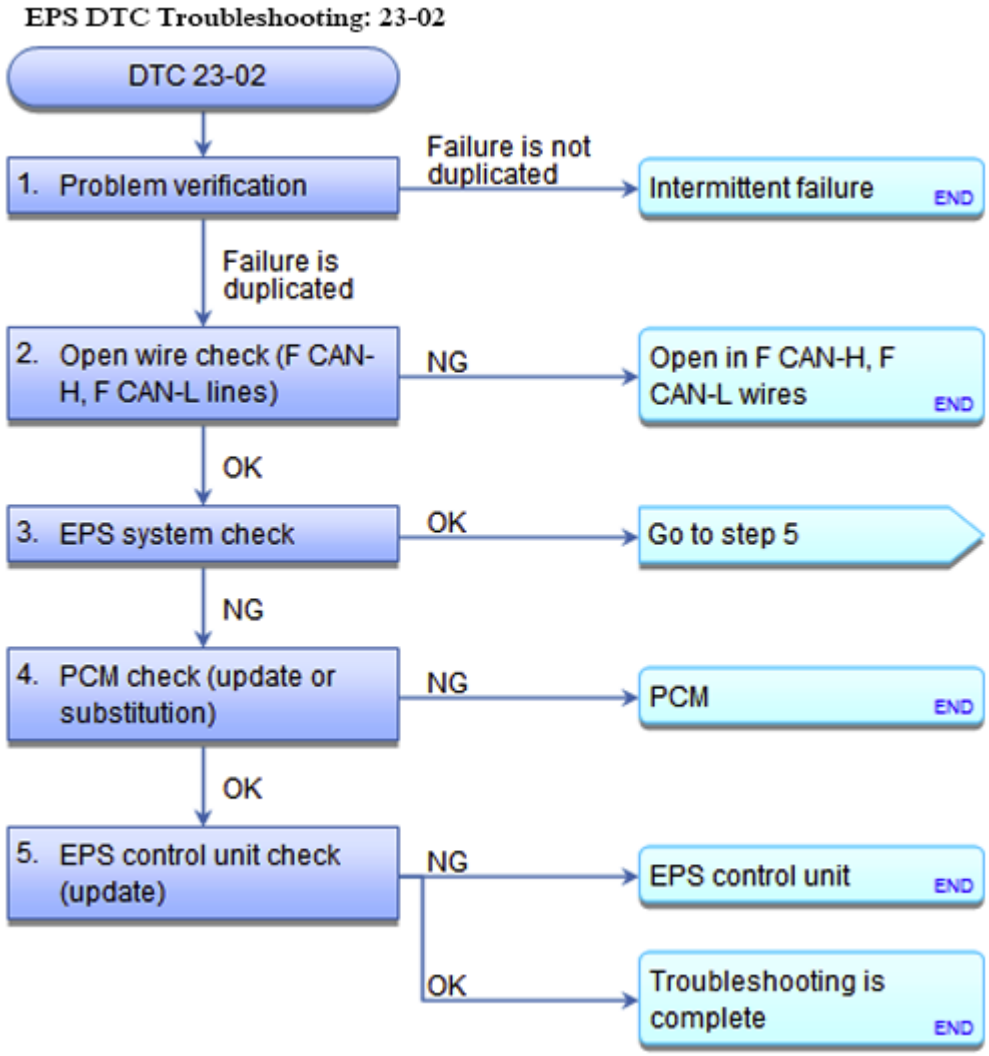

Fig. 24: EPS DTC Troubleshooting Flow Chart (Vehicle Speed Data)
Courtesy of AMERICAN HONDA MOTOR CO., INC.

NOTE:

- **BEFORE YOU TROUBLESHOOT, RECORD ALL FREEZE DATA AND ANY ON-BOARD SNAPSHOT, AND REVIEW THE HOW TO TROUBLESHOOT THE EPS.**
- **VSA DTCs may set during this troubleshooting. If so, clear them.**

DTC Description	DTC	Freeze Frame

GETtheMANUALS.org

23-02 CAN Vehicle Speed Data		

1. Problem verification:
   - 1. Turn the ignition switch to ON (II).
   - 2. Clear the DTC with the HDS.
   - 3. Turn the ignition switch to LOCK (0), then start the engine, and let it run for at least 60 seconds.
   - 4. Check for DTCs with the HDS.

DTC Description	DTC	Freeze Frame
23-02 CAN Vehicle Speed Data		

Is DTC 23-02 indicated?

YES : The failure is duplicated. Go to step 2.

NO : Intermittent failure, the system is OK at this time.

2. Open wire check (F CAN-H, F CAN-L lines):
   - 1. Turn the ignition switch to LOCK (0).
   - 2. Short the SCS line with the HDS.
   - 3. Disconnect the following connectors.

     EPS control unit connector A (11P)

     PCM connector A (49P)

   - 4. Check for continuity between test points 1 and 2.

     Test condition IG LOCK (0)

     EPS control unit connector A (11P): disconnected

     PCM connector A (49P): disconnected

     Test circuit F CAN-H

     Test point 1 EPS control unit connector A (11P) No. 7 (WHT)

     Test point 2 PCM connector A (49P) No. 3 (WHT)

     Test circuit F CAN-L

     Test point 1 EPS control unit connector A (11P) No. 9 (RED)

GETtheMANUALS.org

Test point 2 PCM connector A (49P) No. 4 (RED)

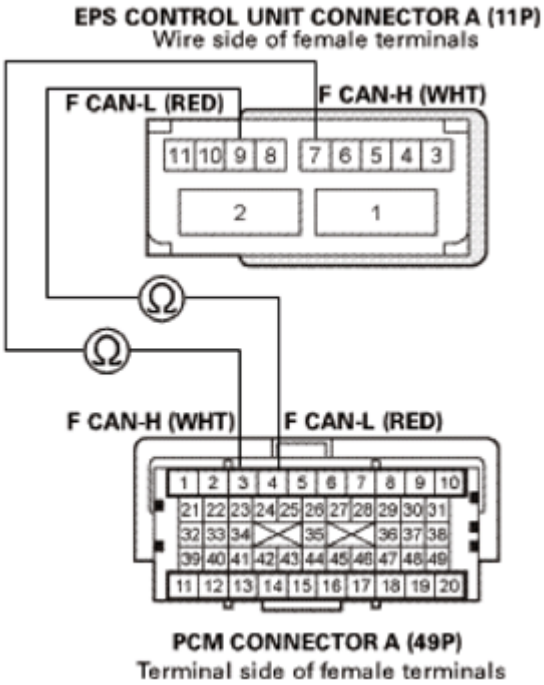

Fig. 25: Checking For Continuity Between Test Points 1 And 2
Courtesy of AMERICAN HONDA MOTOR CO., INC.

Is there continuity?

YES : The F AN-H, F CAN-L wires are OK. Go to step 3.

NO : Repair an open in the wire between the EPS control unit and the PCM.

3. EPS system check:
   - 1. Reconnect the following connectors.

     EPS control unit connector A (11P)

     PCM connector A (49P)

   - 2. **RAISE AND SUPPORT THE VEHICLE** , and allow all wheels to rotate freely.
   - 3. Start the engine.
   - 4. Turn off the VSA function by using the VSA OFF switch.
   - 5. Run the vehicle while in the D position for at least 60 seconds.
   - 6. Check the parameter(s) below with the HDS.

Signal	Current condition	
	Values	Unit

GETtheMANUALS.org

VEHICLE SPEED		

Is the vehicle speed indicated?

YES : Go to step 5.

NO : Go to step 4.

4. PCM check (update or substitution):
   - 1. Update the PCM if it does not have the latest software, or substitute a known-good PCM.
   - 2. Clear the DTC with the HDS.
   - 3. Turn the ignition switch to LOCK (0), then start the engine.
   - 4. Check for DTCs with the HDS.

DTC Description	DTC	Freeze Frame
23-02 CAN Vehicle Speed Data		

Is DTC 23-02 indicated?

YES : Go to step 5.

NO : If the PCM was updated, troubleshooting is complete. If the PCM was substituted, replace the original PCM.

5. EPS control unit check (update):
   - 1. **Update the EPS control unit** See **EPS CONTROL UNIT REMOVAL AND INSTALLATION** or **EPS CONTROL UNIT UPDATE** if it does not have the latest software.
   - 2. **RAISE AND SUPPORT THE VEHICLE** , and allow all wheels to rotate freely.
   - 3. Turn the ignition switch to LOCK (0), then start the engine.
   - 4. Turn off the VSA function by using the VSA OFF switch.
   - 5. Run the vehicle while in the D position for at least 60 seconds.
   - 6. Check for DTCs with the HDS.

DTC Description	DTC	Freeze Frame
23-02 CAN Vehicle Speed Data		

Is DTC 23-02 indicated?

YES : **Replace the EPS control unit** See **EPS CONTROL UNIT REMOVAL AND INSTALLATION** or **EPS CONTROL UNIT UPDATE**.

NO : Troubleshooting is complete.

GETtheMANUALS.org

DTC 23-03: CAN ENGINE SPEED DATA

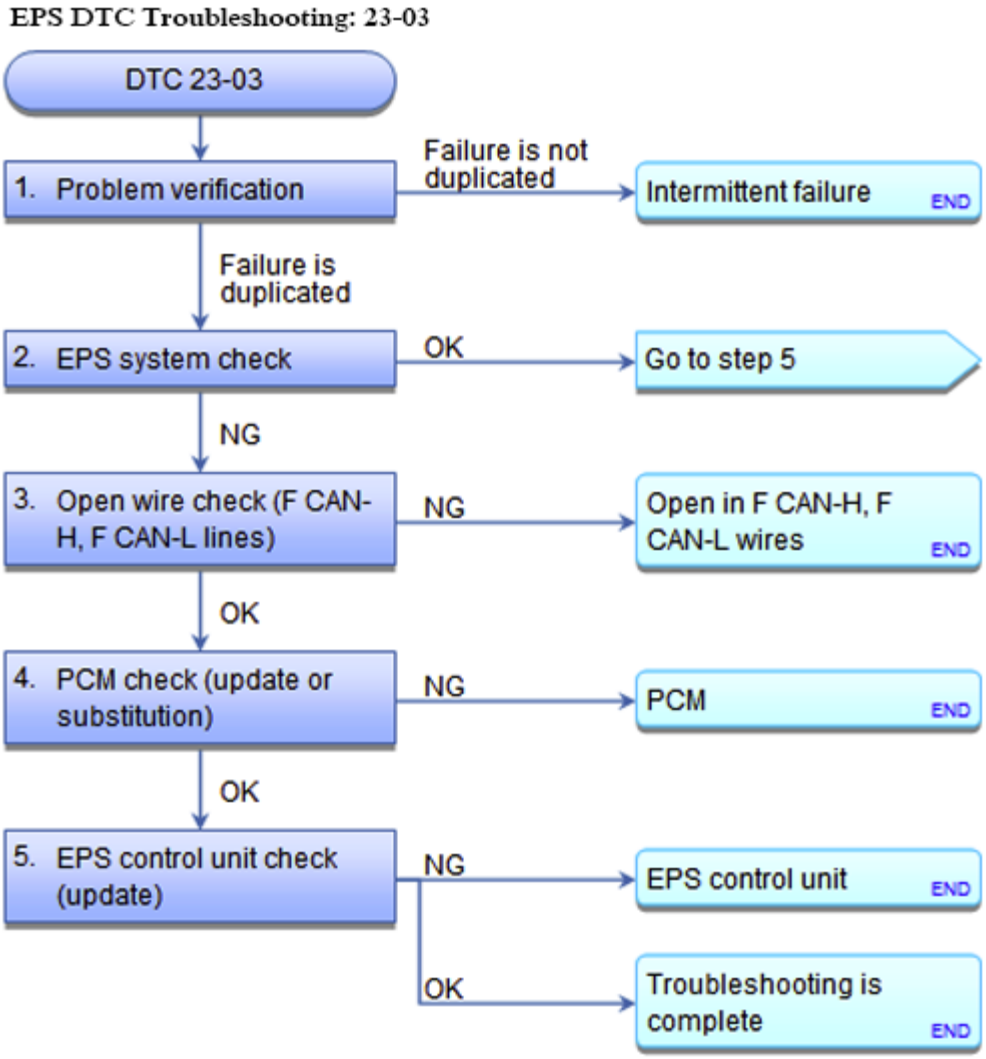

Fig. 26: EPS DTC Troubleshooting Flow Chart (CAN Engine Speed Data)
Courtesy of AMERICAN HONDA MOTOR CO., INC.

NOTE: **BEFORE YOU TROUBLESHOOT, RECORD ALL FREEZE DATA AND ANY ON-BOARD SNAPSHOT, AND REVIEW THE HOW TO TROUBLESHOOT THE EPS.**

DTC Description	DTC	Freeze Frame
23-03 CAN Engine Speed Data		

1. Problem verification:
   - 1. Turn the ignition switch to ON (II).
   - 2. Clear the DTC with the HDS.
   - 3. Turn the ignition switch to LOCK (0), then start the engine, and let it run for at least 60 seconds.

GETtheMANUALS.org

- 4. Check for DTCs with the HDS.

DTC Description	DTC	Freeze Frame
23-03 CAN Engine Speed Data		

Is DTC 23-03 indicated?

YES : The failure is duplicated. Go to step 2.

NO : Intermittent failure, the system is OK at this time.

2. EPS system check:
   - 1. Start the engine, and let it run for at least 60 seconds.
   - 2. Check the parameter(s) below with the HDS.

Signal	Current condition	
	Values	Unit
ENGINE SPEED		

Is the engine speed indicated?

YES : Go to step 5.

NO : Go to step 3.

3. Open wire check (F CAN-H, F CAN-L lines):
   - 1. Turn the ignition switch to LOCK (0).
   - 2. Short the SCS line with the HDS.
   - 3. Disconnect the following connectors.

     EPS control unit connector A (11P)

     PCM connector A (49P)

   - 4. Check for continuity between test points 1 and 2.

     Test condition IG LOCK (0)

     EPS control unit connector A (11P): disconnected

     PCM connector A (49P): disconnected

     Test circuit F CAN-H

GETtheMANUALS.org

Test point 1 EPS control unit connector A (11P) No. 7 (WHT)

Test point 2 PCM connector A (49P) No. 3 (WHT)

Test circuit F CAN-L

Test point 1 EPS control unit connector A (11P) No. 9 (RED)

Test point 2 PCM connector A (49P) No. 4 (RED)

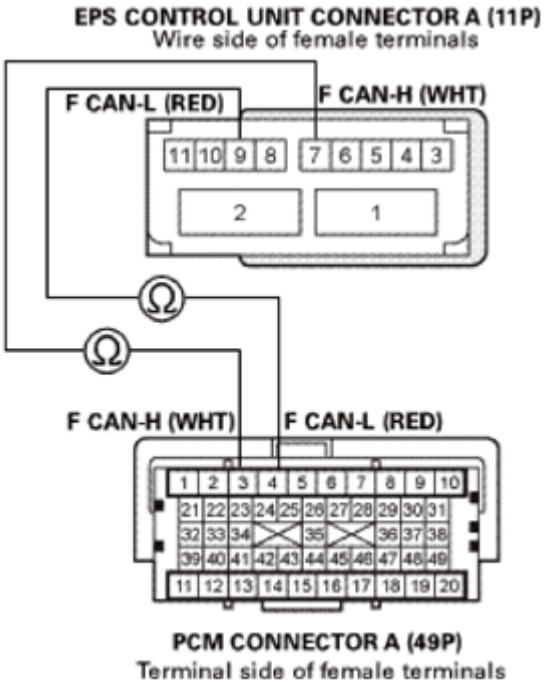

Fig. 27: Checking For Continuity Between Test Points 1 And 2
Courtesy of AMERICAN HONDA MOTOR CO., INC.

Is there continuity?

YES : The F CAN-H, F CAN-L wires are OK. Go to step 4.

NO : Repair an open in the wire between the EPS control unit and the PCM.

4. PCM check (update or substitution):
   - 1. **Update the PCM** See **PCM REMOVAL AND INSTALLATION** or **PCM UPDATE** if it does not have the latest software, or substitute a known-good PCM.
   - 2. Clear the DTC with the HDS.
   - 3. Turn the ignition switch to LOCK (0), then start the engine, and let it run for at least 60 seconds.
   - 4. Check for DTCs with the HDS.

GETtheMANUALS.org

DTC Description	DTC	Freeze Frame
23-03 CAN Engine Speed Data		

Is DTC 23-03 indicated?

YES : Go to step 5.

NO : If the PCM was updated, troubleshooting is complete. If the PCM was substituted, replace the original PCM.

5. EPS control unit check (update):
   - 1. **Update the EPS control unit** See **EPS CONTROL UNIT REMOVAL AND INSTALLATION** or **EPS CONTROL UNIT UPDATE** if it does not have the latest software.
   - 2. Turn the ignition switch to LOCK (0), then start the engine, and let it run for at least 60 seconds.
   - 3. Check for DTCs with the HDS.

DTC Description	DTC	Freeze Frame
23-03 CAN Engine Speed Data		

Is DTC 23-03 indicated?

YES : **Replace the EPS control unit** See **EPS CONTROL UNIT REMOVAL AND INSTALLATION** or **EPS CONTROL UNIT UPDATE**.

NO : Troubleshooting is complete.

DTC 23-04: CAN BUS-OFF MALFUNCTION

GETtheMANUALS.org

EPS DTC Troubleshooting: 23-04

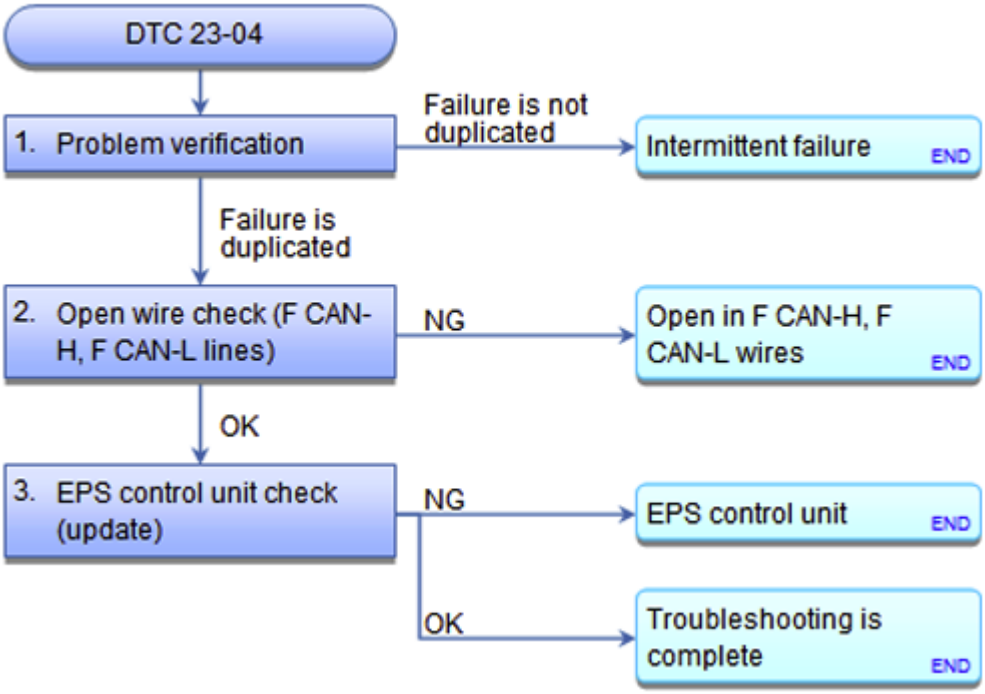

Fig. 28: EPS DTC Troubleshooting Flow Chart (CAN Bus-Off Malfunction)
Courtesy of AMERICAN HONDA MOTOR CO., INC.

NOTE:

- **BEFORE YOU TROUBLESHOOT, RECORD ALL FREEZE DATA AND ANY ON-BOARD SNAPSHOT, AND REVIEW THE HOW TO TROUBLESHOOT THE EPS.**
- **If the MIL indicator is on, troubleshoot the fuel and emissions systems first.**

DTC Description	DTC	Freeze Frame
23-04 CAN Bus-Off Malfunction		

1. Problem verification:
   - 1. Turn the ignition switch to ON (II).
   - 2. Clear the DTC with the HDS.
   - 3. Turn the ignition switch to LOCK (0), then start the engine.
   - 4. Check for DTCs with the HDS.

DTC Description	DTC	Freeze Frame
23-04 CAN Bus-Off Malfunction		

Is DTC 23-04 indicated?

GETtheMANUALS.org

YES : The failure is duplicated. Go to step 2.

NO : Intermittent failure, the system is OK at this time.

2. Open wire check (F CAN-H, F CAN-L lines):
    - 1. Turn the ignition switch to LOCK (0).
    - 2. Short the SCS line with the HDS.
    - 3. Disconnect the following connectors.

      EPS control unit connector A (11P)

      PCM connector A (49P)

    - 4. Check for continuity between test points 1 and 2.

      Test condition IG LOCK (0)

      EPS control unit connector A (11P): disconnected

      PCM connector A (49P): disconnected

      Test circuit F CAN-H

      Test point 1 EPS control unit connector A (11P) No. 7 (WHT)

      Test point 2 PCM connector A (49P) No. 3 (WHT)

      Test circuit F CAN-L

      Test point 1 EPS control unit connector A (11P) No. 9 (RED)

      Test point 2 PCM connector A (49P) No. 4 (RED)

GETtheMANUALS.org

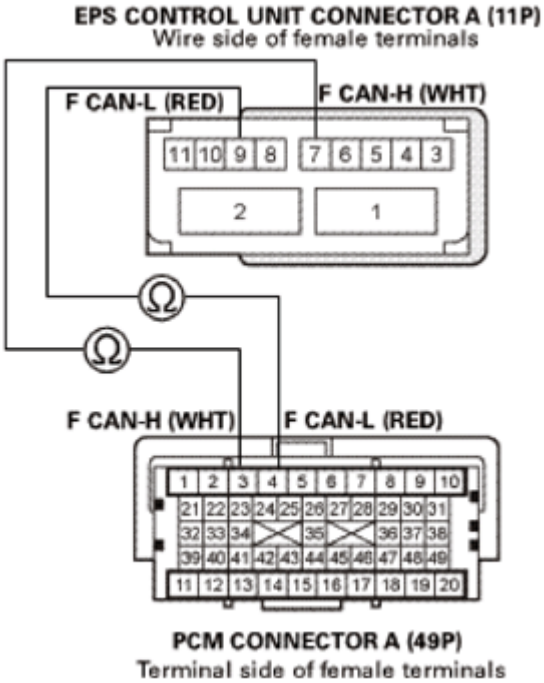

Fig. 29: Checking For Continuity Between Test Points 1 And 2
Courtesy of AMERICAN HONDA MOTOR CO., INC.

Is there continuity?

YES : The F CAN-H, F CAN-L wires are OK. Go to step 3.

NO : Repair an open in the wire between the EPS control unit and the PCM.

3. EPS control unit check (update):
   - 1. Reconnect the following connectors.

     EPS control unit connector A (11P)

     PCM connector A (49P)

   - 2. **Update the EPS control unit** See **EPS CONTROL UNIT REMOVAL AND INSTALLATION** or **EPS CONTROL UNIT UPDATE** if it does not have the latest software.
   - 3. Turn the ignition switch to LOCK (0), then start the engine.
   - 4. Check for DTCs with the HDS.

DTC Description	DTC	Freeze Frame
23-04 CAN Bus-Off Malfunction		

Is DTC 23-04 indicated?

GETtheMANUALS.org

YES : **Replace the EPS control unit** See **EPS CONTROL UNIT REMOVAL AND INSTALLATION** or **EPS CONTROL UNIT UPDATE**.

NO : Troubleshooting is complete.

DTC 32-09: MOTOR CURRENT CORRELATION

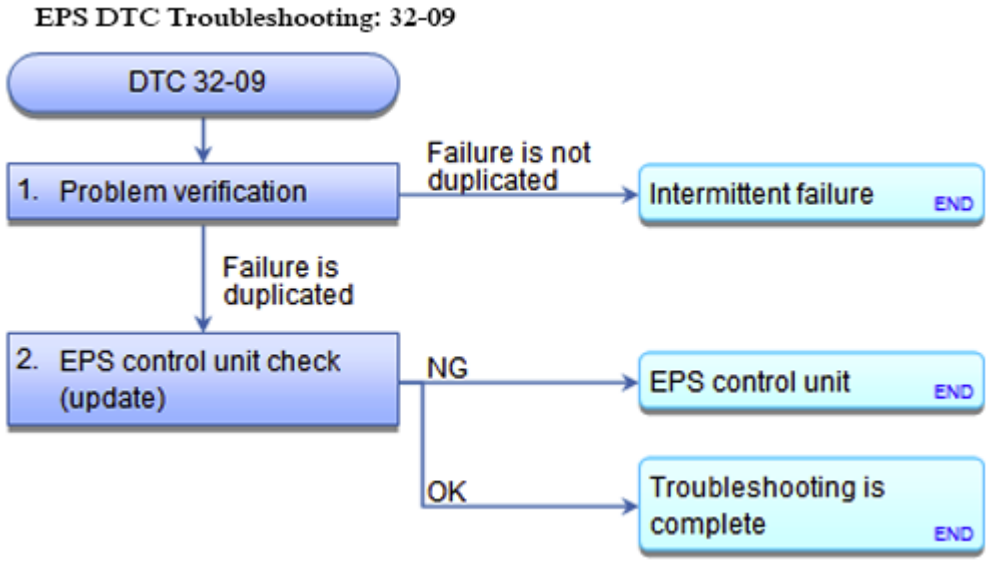

Fig. 30: EPS DTC Troubleshooting Flow Chart (Motor Current Correlation)
Courtesy of AMERICAN HONDA MOTOR CO., INC.

NOTE: **BEFORE YOU TROUBLESHOOT, RECORD ALL FREEZE DATA AND ANY ON-BOARD SNAPSHOT, AND REVIEW THE HOW TO TROUBLESHOOT THE EPS.**

DTC Description	DTC	Freeze Frame
32-09 Motor Current Correlation		

1. Problem verification:
   - 1. Turn the ignition switch to ON (II).
   - 2. Clear the DTC with the HDS.
   - 3. Turn the ignition switch to LOCK (0), then start the engine. Turn the steering wheel lock to lock at least 5 times.
   - 4. Check for DTCs with the HDS.

DTC Description	DTC	Freeze Frame
32-09 Motor Current Correlation		

Is DTC 32-09 indicated?

GETtheMANUALS.org

YES : The failure is duplicated. Go to step 2.

NO : Intermittent failure, the system is OK at this time.

2. EPS control unit check (update):
   - 1. **Update the EPS control unit** See **EPS CONTROL UNIT REMOVAL AND INSTALLATION** or **EPS CONTROL UNIT UPDATE** if it does not have the latest software.
   - 2. Turn the ignition switch to LOCK (0), then start the engine. Turn the steering wheel lock to lock at least 5 times.
   - 3. Check for DTCs with the HDS.

DTC Description	DTC	Freeze Frame
32-09 Motor Current Correlation		

Is DTC 32-09 indicated?

YES : **Replace the EPS control unit** See **EPS CONTROL UNIT REMOVAL AND INSTALLATION** or **EPS CONTROL UNIT UPDATE**.

NO : Troubleshooting is complete.

DTC 32-0B: OVER CURRENT; DTC 32-0E: OVER CURRENT CONTINUATION; DTC 34-02: FAIL-SAFE RELAY

GETtheMANUALS.org

EPS DTC Troubleshooting: 32-0B, 32-0E, 34-02

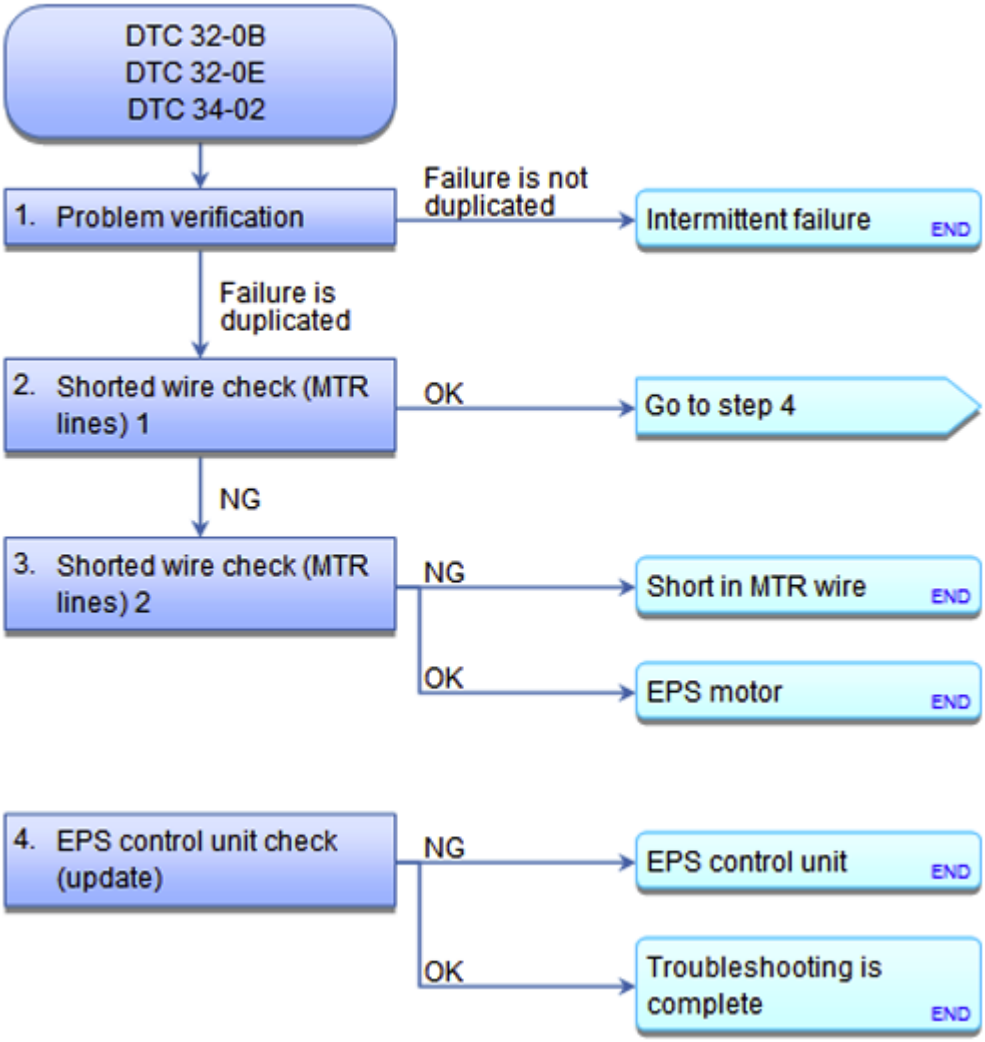

Fig. 31: EPS DTC Troubleshooting Flow Chart (Over Current, Over Current Continuation And Fail-Safe Relay)
Courtesy of AMERICAN HONDA MOTOR CO., INC.

NOTE: **BEFORE YOU TROUBLESHOOT, RECORD ALL FREEZE DATA AND ANY ON-BOARD SNAPSHOT, AND REVIEW THE HOW TO TROUBLESHOOT THE EPS.**

DTC Description	DTC	Freeze Frame
32-0B Over Current		
32-0E Over Current Continuation		
34-02 Fail-Safe Relay		

1. Problem verification:
    - 1. Turn the ignition switch to ON (II).
    - 2. Clear the DTC with the HDS.

GETtheMANUALS.org

- 3. Turn the ignition switch to LOCK (0), then start the engine. Turn the steering wheel lock to lock at least 5 times.
- 4. Check for DTCs with the HDS.

DTC Description	DTC	Freeze Frame
32-0B Over Current		
32-0E Over Current Continuation		
34-02 Fail-Safe Relay		

Is DTC 32-0B, 32-0E, or 34-02 indicated?

YES : The failure is duplicated. Go to step 2.

NO : Intermittent failure, the system is OK at this time.

2. Shorted wire check (MTR lines) 1:
   - 1. Turn the ignition switch to LOCK (0).
   - 2. Disconnect the following connector.

     EPS control unit connector B (16P)

   - 3. Check for continuity between these test points and body ground individually.

     Test condition IG LOCK (0)

     EPS control unit connector B (16P): disconnected

Connector	Test circuit	Terminal
EPS control unit connector B (16P)	MTR V	No. 1 (GRN)
	MTR U	No. 2 (RED)
	MTR W	No. 3 (WHT)

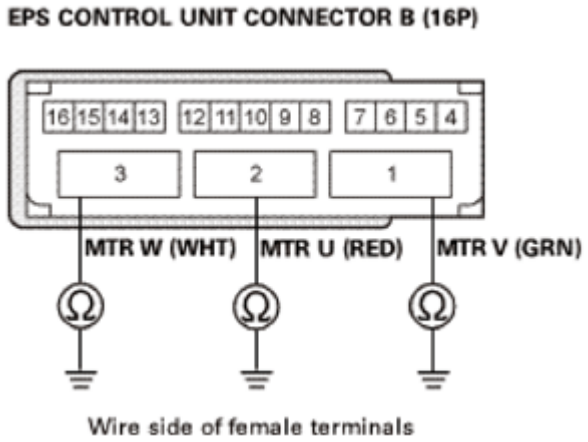

GETtheMANUALS.org

Fig. 32: Checking For Continuity Between Test Points And Body Ground
Courtesy of AMERICAN HONDA MOTOR CO., INC.

Is there continuity?

YES : Go to step 3.

NO : The MTR wires are OK. Go to step 4.

3. Shorted wire check (MTR lines) 2:
   - 1.

     Disconnect the following connector.

     EPS motor 3P connector

   - 2. Check for continuity between these test points and body ground individually.

     Test condition IG LOCK (0)

     EPS control unit connector B (16P): disconnected

     EPS motor 3P connector: disconnected

Connector	Test circuit	Terminal
EPS control unit connector B (16P)	MTR V	No. 1 (GRN)
	MTR U	No. 2 (RED)
	MTR W	No. 3 (WHT)

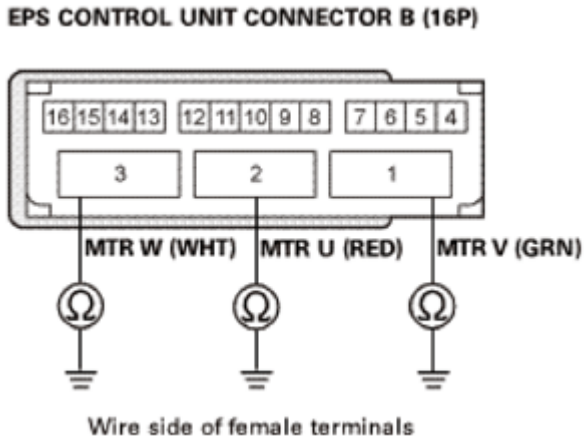

Fig. 33: Checking For Continuity Between Test Points And Body Ground
Courtesy of AMERICAN HONDA MOTOR CO., INC.

Is there continuity?

GETtheMANUALS.org

YES : Repair a short to body ground in the wire between the EPS control unit and the EPS motor.

NO : The MTR wires are OK. **REPLACE THE EPS MOTOR**.

4. EPS control unit check (update):
   - 1. Reconnect the following connector.

     EPS control unit connector B (16P)

   - 2. **Update the EPS control unit** See **EPS CONTROL UNIT REMOVAL AND INSTALLATION** or **EPS CONTROL UNIT UPDATE** if it does not have the latest software.
   - 3. Turn the ignition switch to LOCK (0), then start the engine. Turn the steering wheel lock to lock at least 5 times.
   - 4. Check for DTCs with the HDS.

DTC Description	DTC	Freeze Frame
32-0B Over Current		
32-0E Over Current Continuation		
34-02 Fail-Safe Relay		

Is DTC 32-0B, 32-0E, or 34-02 indicated?

YES : **Replace the EPS control unit** See **EPS CONTROL UNIT REMOVAL AND INSTALLATION** or **EPS CONTROL UNIT UPDATE**.

NO : Troubleshooting is complete.

DTC 32-0F: BATTERY CURRENT/MOTOR CURRENT CORRELATION

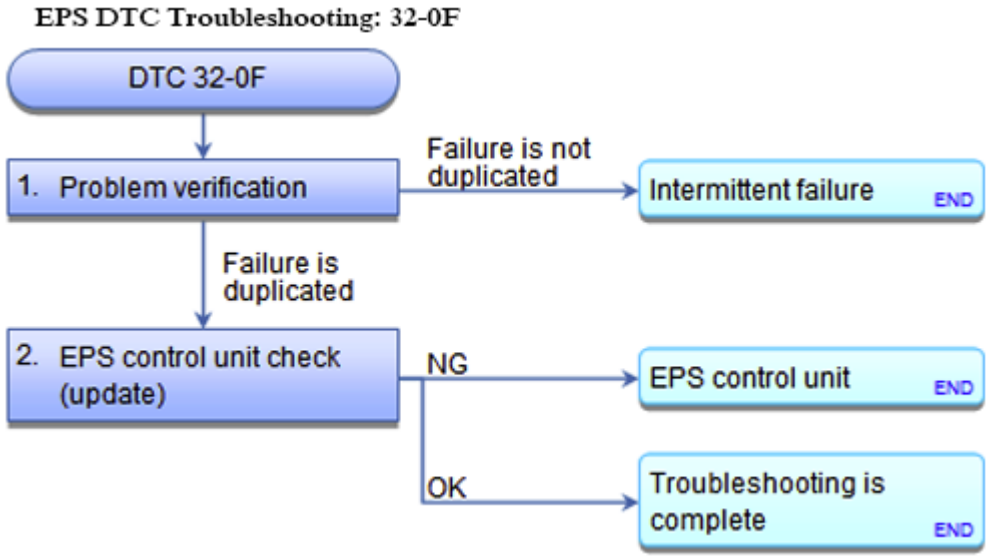

GETtheMANUALS.org

Fig. 34: EPS DTC Troubleshooting Flow Chart (Battery Current/Motor Current Correlation)
Courtesy of AMERICAN HONDA MOTOR CO., INC.

NOTE: **BEFORE YOU TROUBLESHOOT, RECORD ALL FREEZE DATA AND ANY ON-BOARD SNAPSHOT, AND REVIEW THE HOW TO TROUBLESHOOT THE EPS.**

DTC Description	DTC	Freeze Frame
32-0F Battery Current/Motor Current Correlation		

1. Problem verification:
   - 1. Turn the ignition switch to ON (II).
   - 2. Clear the DTC with the HDS.
   - 3. Turn the ignition switch to LOCK (0), then start the engine.
   - 4. Turn the steering wheel from lock to lock several times.
   - 5. Check for DTCs with the HDS.

DTC Description	DTC	Freeze Frame
32-0F Battery Current/Motor Current Correlation		

Is DTC 32-0F indicated?

YES : The failure is duplicated. Go to step 2.

NO : Intermittent failure, the system is OK at this time.

2. EPS control unit check (update):
   - 1. **Update the EPS control unit** See **EPS CONTROL UNIT REMOVAL AND INSTALLATION** or **EPS CONTROL UNIT UPDATE** if it does not have the latest software.
   - 2. Turn the ignition switch to LOCK (0), then start the engine.
   - 3. Turn the steering wheel from lock to lock several times.
   - 4. Check for DTCs with the HDS.

DTC Description	DTC	Freeze Frame
32-0F Battery Current/Motor Current Correlation		

Is DTC 32-0F indicated?

YES : **Replace the EPS control unit** See **EPS CONTROL UNIT REMOVAL AND INSTALLATION** or **EPS CONTROL UNIT UPDATE**.

NO : Troubleshooting is complete.

DTC 39-01: EPS CONTROL UNIT INTERNAL CIRCUIT (PRECHARGE

GETtheMANUALS.org

CIRCUIT)

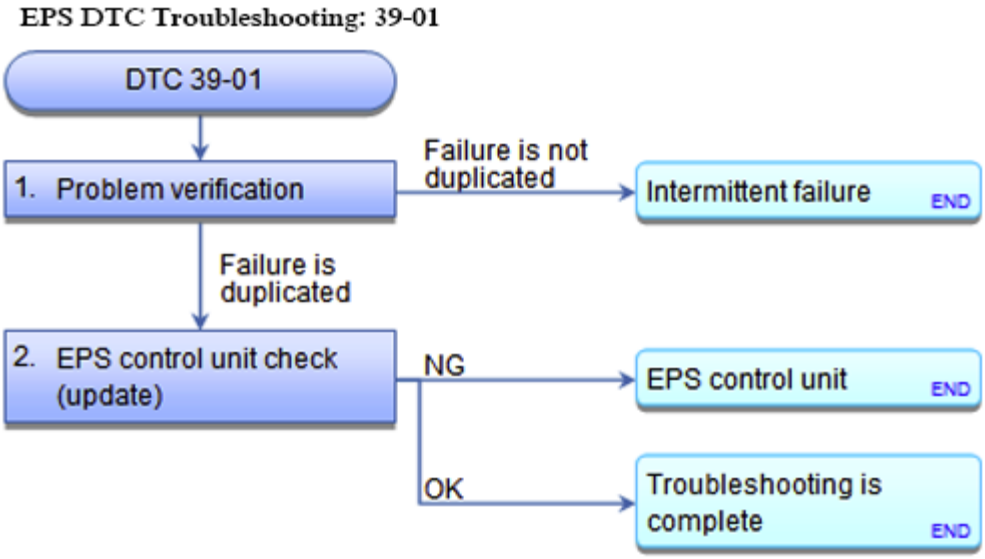

Fig. 35: EPS DTC Troubleshooting Flow Chart (EPS Control Unit Internal Circuit (Precharge Circuit))
Courtesy of AMERICAN HONDA MOTOR CO., INC.

NOTE: **BEFORE YOU TROUBLESHOOT, RECORD ALL FREEZE DATA AND ANY ON-BOARD SNAPSHOT, AND REVIEW THE HOW TO TROUBLESHOOT THE EPS.**

DTC Description	DTC	Freeze Frame
39-01 EPS Control Unit Internal Circuit (Precharge Circuit)		

1. Problem verification:
   - 1. Turn the ignition switch to ON (II).
   - 2. Clear the DTC with the HDS.
   - 3. Turn the ignition switch to LOCK (0), then turn it to ON (II) again, and wait for at least 10 seconds.
   - 4. Check for DTCs with the HDS.

DTC Description	DTC	Freeze Frame
39-01 EPS Control Unit Internal Circuit (Precharge Circuit)		

Is DTC 39-01 indicated?

YES : The failure is duplicated. Go to step 2.

NO : Intermittent failure, the system is OK at this time.

2. EPS control unit check (update):

GETtheMANUALS.org

- 1. **Update the EPS control unit** See **EPS CONTROL UNIT REMOVAL AND INSTALLATION** or **EPS CONTROL UNIT UPDATE** if it does not have the latest software.
- 2. Turn the ignition switch to LOCK (0), then turn it to ON (II) again, and wait for at least 10 seconds.
- 3. Check for DTCs with the HDS.

DTC Description	DTC	Freeze Frame
39-01 EPS Control Unit Internal Circuit (Precharge Circuit)		

Is DTC 39-01 indicated?

YES : **Replace the EPS control unit** See **EPS CONTROL UNIT REMOVAL AND INSTALLATION** or **EPS CONTROL UNIT UPDATE**.

NO : Troubleshooting is complete.

DTC 39-03: EPS CONTROL UNIT INTERNAL CIRCUIT (POWER SELF-HOLDING CIRCUIT)

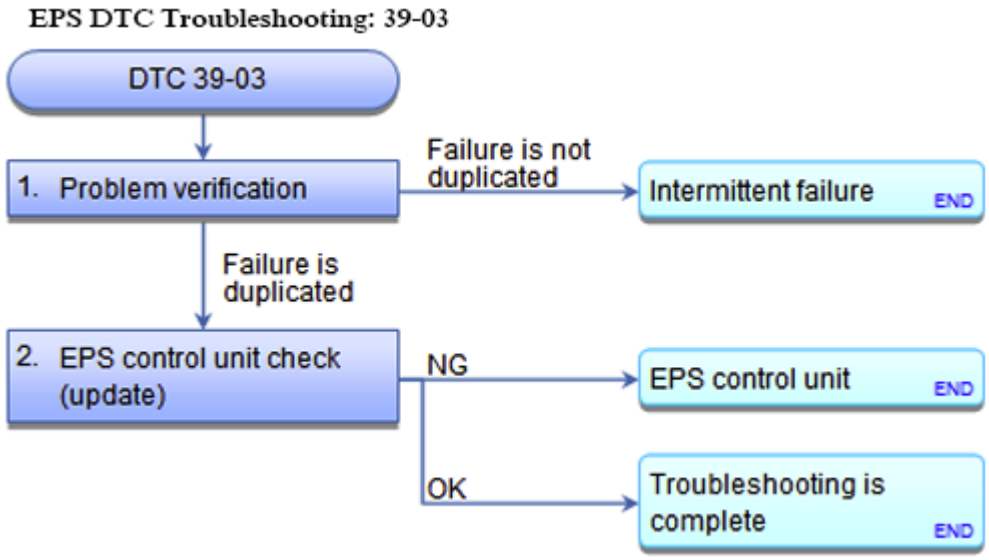

Fig. 36: EPS DTC Troubleshooting Flow Chart (EPS Control Unit Internal Circuit (Power Self-Holding Circuit))
Courtesy of AMERICAN HONDA MOTOR CO., INC.

NOTE: **BEFORE YOU TROUBLESHOOT, RECORD ALL FREEZE DATA AND ANY ON-BOARD SNAPSHOT, AND REVIEW THE HOW TO TROUBLESHOOT THE EPS.**

DTC Description	DTC	Freeze Frame
39-03 EPS Control Unit Internal Circuit (Power Self-Holding Circuit)		

GETtheMANUALS.org

1. Problem verification:
   - 1. Turn the ignition switch to ON (II).
   - 2. Clear the DTC with the HDS.
   - 3. Turn the ignition switch to LOCK (0).
   - 4. Wait 30 seconds or more.
   - 5. Turn the ignition switch to ON (II).
   - 6. Check for DTCs with the HDS.

DTC Description	DTC	Freeze Frame
39-03 EPS Control Unit Internal Circuit (Power Self-Holding Circuit)		

Is DTC 39-03 indicated?

YES : The failure is duplicated. Go to step 2.

NO : Intermittent failure, the system is OK at this time.

2. EPS control unit check (update):
   - 1. **Update the EPS control unit** See **EPS CONTROL UNIT REMOVAL AND INSTALLATION** or **EPS CONTROL UNIT UPDATE** if it does not have the latest software.
   - 2. Turn the ignition switch to LOCK (0).
   - 3. Wait 30 seconds or more.
   - 4. Turn the ignition switch to ON (II).
   - 5. Check for DTCs with the HDS.

DTC Description	DTC	Freeze Frame
39-03 EPS Control Unit Internal Circuit (Power Self-Holding Circuit)		

Is DTC 39-03 indicated?

YES : **Replace the EPS control unit** See **EPS CONTROL UNIT REMOVAL AND INSTALLATION** or **EPS CONTROL UNIT UPDATE**.

NO : Troubleshooting is complete.

DTC 52-01: TORQUE SENSOR ALLOWABLE TOLERANCE (INITIAL DIAGNOSIS); DTC 52-03: MAIN TORQUE SENSOR; DTC 52-04: SUB TORQUE SENSOR; DTC 52-05: TORQUE SENSOR ALLOWABLE TOLERANCE

GETtheMANUALS.org

EPS DTC Troubleshooting: 52-01, 52-03, 52-04, 52-05

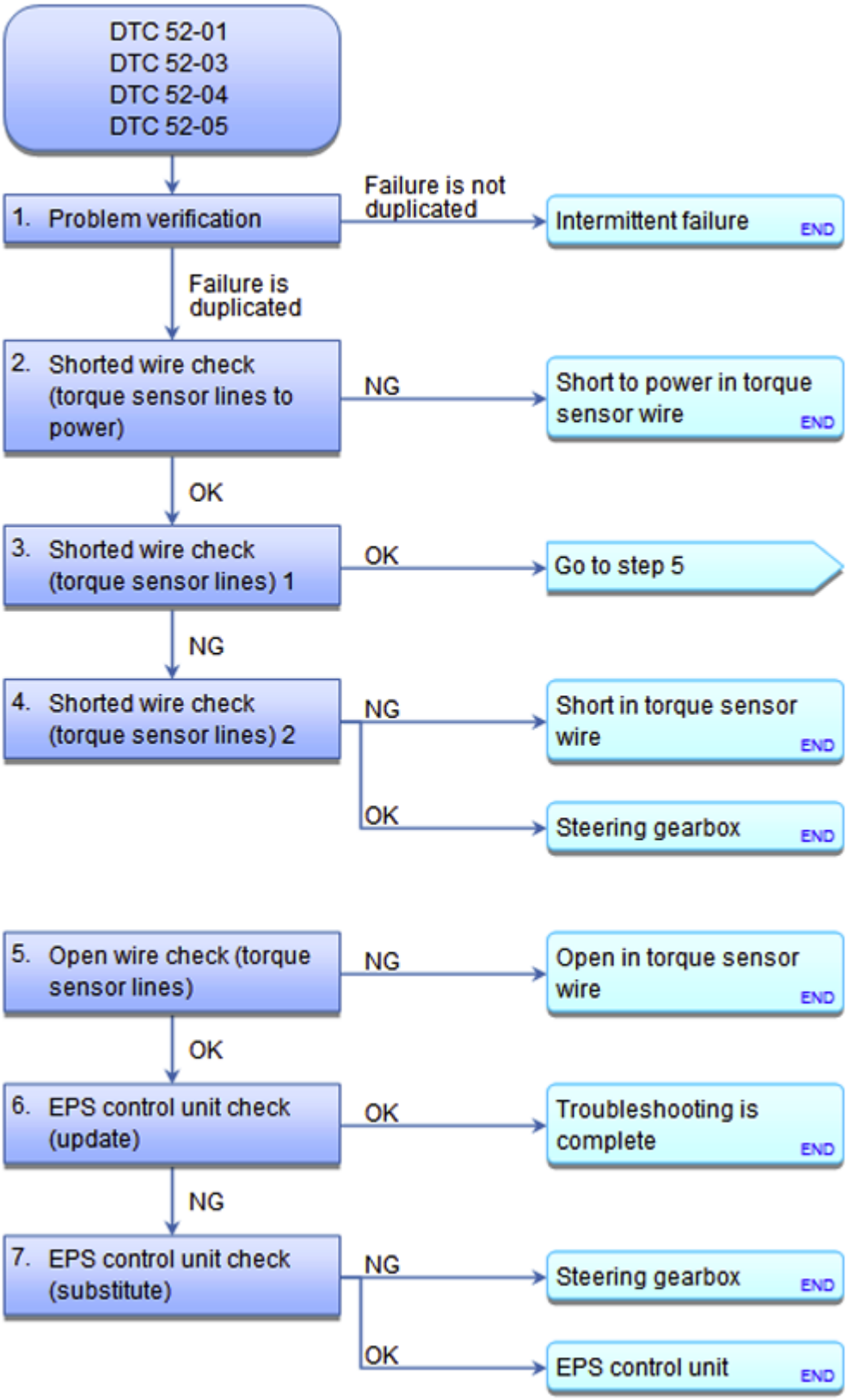

GETtheMANUALS.org

Fig. 37: EPS DTC Troubleshooting Flow Chart (Torque Sensor Allowable Tolerance)
Courtesy of AMERICAN HONDA MOTOR CO., INC.

NOTE: **BEFORE YOU TROUBLESHOOT, RECORD ALL FREEZE DATA AND ANY ON-BOARD SNAPSHOT, AND REVIEW THE HOW TO TROUBLESHOOT THE EPS.**

DTC Description	DTC	Freeze Frame
52-01 Torque Sensor Allowable Tolerance (Initial Diagnosis)		
52-03 Main Torque Sensor		
52-04 Sub Torque Sensor		
52-05 Torque Sensor Allowable Tolerance		

1. Problem verification:
   - 1. Turn the ignition switch to ON (II).
   - 2. Clear the DTC with the HDS.
   - 3. Turn the ignition switch to LOCK (0), then start the engine.
   - 4. Check for DTCs with the HDS.

DTC Description	DTC	Freeze Frame
52-01 Torque Sensor Allowable Tolerance (Initial Diagnosis)		
52-03 Main Torque Sensor		
52-04 Sub Torque Sensor		
52-05 Torque Sensor Allowable Tolerance		

Is DTC 52-01, 52-03, 52-04 or 52-05 indicated?

YES : The failure is duplicated. Go to step 2.

NO : Intermittent failure, the system is OK at this time.

2. Shorted wire check (torque sensor lines to power):
   - 1. Turn the ignition switch to LOCK (0).
   - 2. Disconnect the following connector.

     EPS control unit connector B (16P)

   - 3. Turn the ignition switch to ON (II).
   - 4. Measure the voltage between these test points and body ground individually.

     Test condition IG ON (II)

     EPS control unit connector B (16P): disconnected

GETtheMANUALS.org

Connector	Test circuit	Terminal
EPS control unit connector B (16P)	VS1	No. 12 (RED)
	TRQ SUB	No. 13 (YEL)
	TRQ SE	No. 14 (BRN)
	VS2	No. 15 (BLU)
	PVF	No. 16 (WHT)

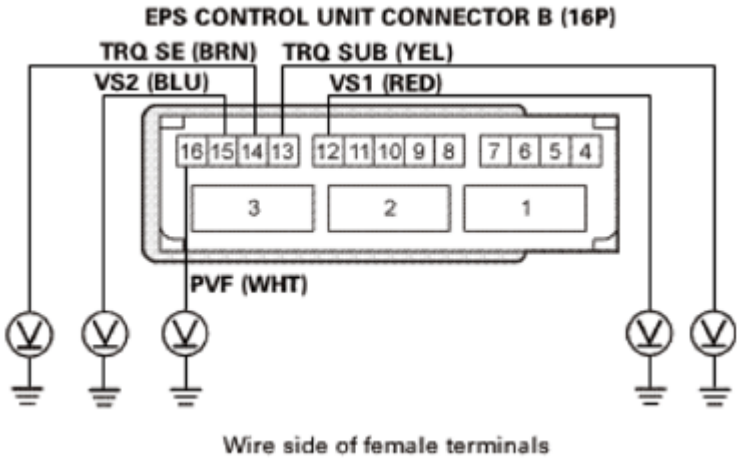

Fig. 38: Measuring Voltage Between Test Points And Body Ground
Courtesy of AMERICAN HONDA MOTOR CO., INC.

Is there battery voltage?

YES : Repair a short to power in the wire between the EPS control unit and the torque sensor.

NO : The torque sensor wires are not shorted to power. Go to step 3.

3. Shorted wire check (torque sensor lines) 1:
   - 1. Turn the ignition switch to LOCK (0).
   - 2. Check for continuity between these test points and body ground individually.

   Test condition IG LOCK (0)

   EPS control unit connector B (16P): disconnected

Connector	Test circuit	Terminal
EPS control unit connector B (16P)	VS1	No. 12 (RED)
	TRQ SUB	No. 13 (YEL)
	TRQ SE	No. 14 (BRN)
	VS2	No. 15 (BLU)
	PVF	No. 16 (WHT)

GETtheMANUALS.org

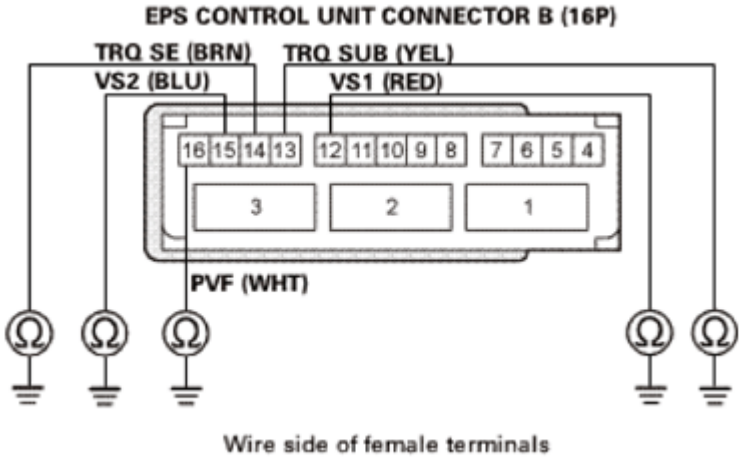

Fig. 39: Checking For Continuity Between Test Points And Body Ground
Courtesy of AMERICAN HONDA MOTOR CO., INC.

Is there continuity?

YES : Go to step 4.

NO : The torque sensor wires are not shorted. Go to step 5.

4. Shorted wire check (torque sensor lines) 2:
   - 1. Disconnect the following connector.

     Torque sensor 6P connector

   - 2. Check for continuity between these test points and body ground individually.

     Test condition IG LOCK (0)

     EPS control unit connector B (16P): disconnected

     Torque sensor 6P connector: disconnected

Connector	Test circuit	Terminal
EPS control unit connector B (16P)	VS1	No. 12 (RED)
	TRQ SUB	No. 13 (YEL)
	TRQ SE	No. 14 (BRN)
	VS2	No. 15 (BLU)
	PVF	No. 16 (WHT)

GETtheMANUALS.org

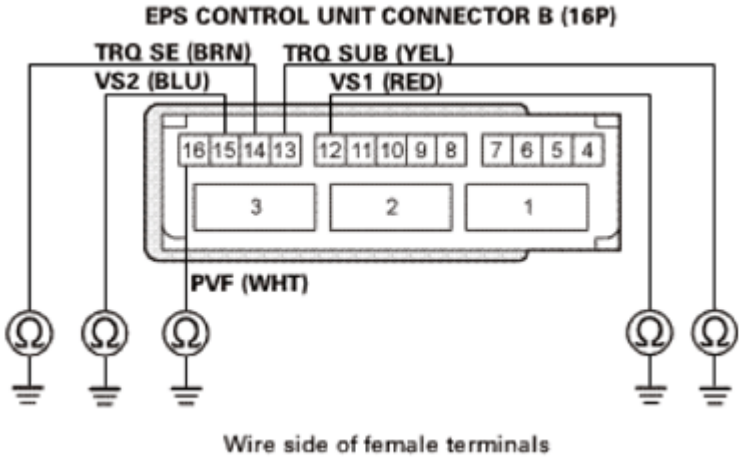

Fig. 40: Checking Continuity Between Test Points And Body Ground
Courtesy of AMERICAN HONDA MOTOR CO., INC.

Is there continuity?

YES : Repair a short to body ground in the wire between the EPS control unit and the torque sensor.

NO : **Replace the steering gearbox** See **STEERING GEARBOX DISASSEMBLY AND REASSEMBLY** or **STEERING GEARBOX REMOVAL AND INSTALLATION** .

5. Open wire check (torque sensor lines):
   - 1. Disconnect the following connector.

     Torque sensor 6P connector

   - 2. Check for continuity between these test points and body ground individually.

     Test condition IG LOCK (0)

     EPS control unit connector B (16P): disconnected

     Torque sensor 6P connector: disconnected

Test circuit	EPS control unit connector B (16P) Terminal	Torque sensor 6P connector Terminal
VS1	No. 12 (RED)	No. 5 (WHT)
TRQ SUB	No. 13 (YEL)	No. 3 (YEL)
TRQ SE	No. 14 (BRN)	No. 1 (BLK)
VS2	No. 15 (BLU)	No. 6 (GRN)
PVF	No. 16 (WHT)	No. 4 (RED)

GETtheMANUALS.org

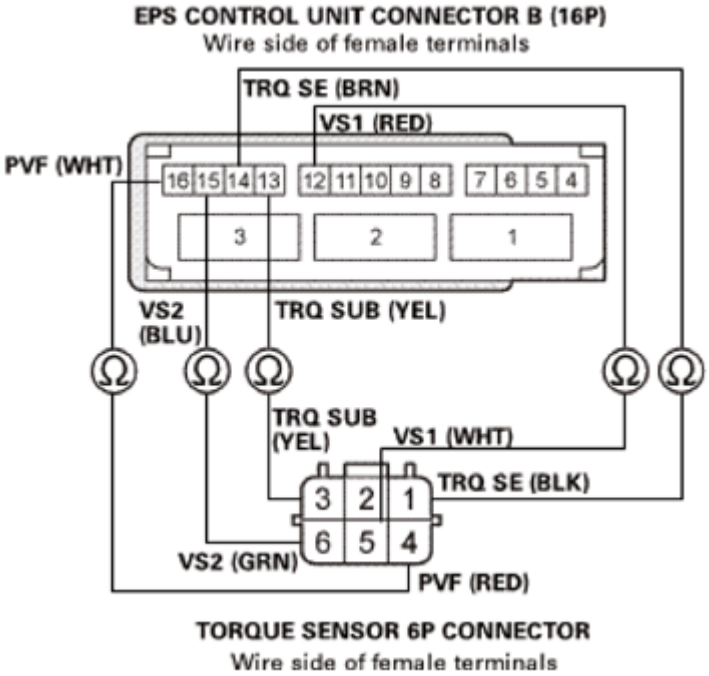

Fig. 41: Checking For Continuity Between Test Points And Body Ground
Courtesy of AMERICAN HONDA MOTOR CO., INC.

Is there continuity?

YES : The torque sensor wires are OK. Go to step 6.

NO : Repair an open in the wire between the EPS control unit and the torque sensor.

6. EPS control unit check (update):
   - 1. Reconnect the following connectors.

     EPS control unit connector B (16P)

     Torque sensor 6P connector

   - 2. **Update the EPS control unit** See **EPS CONTROL UNIT REMOVAL AND INSTALLATION** or **EPS CONTROL UNIT UPDATE** if it does not have the latest software.
   - 3. Turn the ignition switch to LOCK (0), then start the engine.
   - 4. Check for DTCs with the HDS.

DTC Description	DTC	Freeze Frame
52-01 Torque Sensor Allowable Tolerance (Initial Diagnosis)		
52-03 Main Torque Sensor		
52-04 Sub Torque Sensor		
52-05 Torque Sensor Allowable Tolerance		

GETtheMANUALS.org

Is DTC 52-01, 52-03, 52-04 or 52-05 indicated?

YES : Go to step 7.

NO : Troubleshooting is complete.

7. EPS control unit check (substitute):
   - 1. **Substitute a known good EPS control unit** See **EPS CONTROL UNIT REMOVAL AND INSTALLATION** or **EPS CONTROL UNIT UPDATE**.
   - 2. Turn the ignition switch to LOCK (0), then start the engine.
   - 3. Check for DTCs with the HDS.

DTC Description	DTC	Freeze Frame
52-01 Torque Sensor Allowable Tolerance (Initial Diagnosis)		
52-03 Main Torque Sensor		
52-04 Sub Torque Sensor		
52-05 Torque Sensor Allowable Tolerance		

Is DTC 52-01, 52-03, 52-04 or 52-05 indicated?

YES : **Replace the steering gearbox** See **STEERING GEARBOX DISASSEMBLY AND REASSEMBLY** or **STEERING GEARBOX REMOVAL AND INSTALLATION** .

NO : **Replace the original EPS control unit** See **EPS CONTROL UNIT REMOVAL AND INSTALLATION** or **EPS CONTROL UNIT UPDATE**.

DTC 52-02: TORQUE SENSOR POWER SUPPLY (INITIAL DIAGNOSIS)

GETtheMANUALS.org

EPS DTC Troubleshooting: 52-02

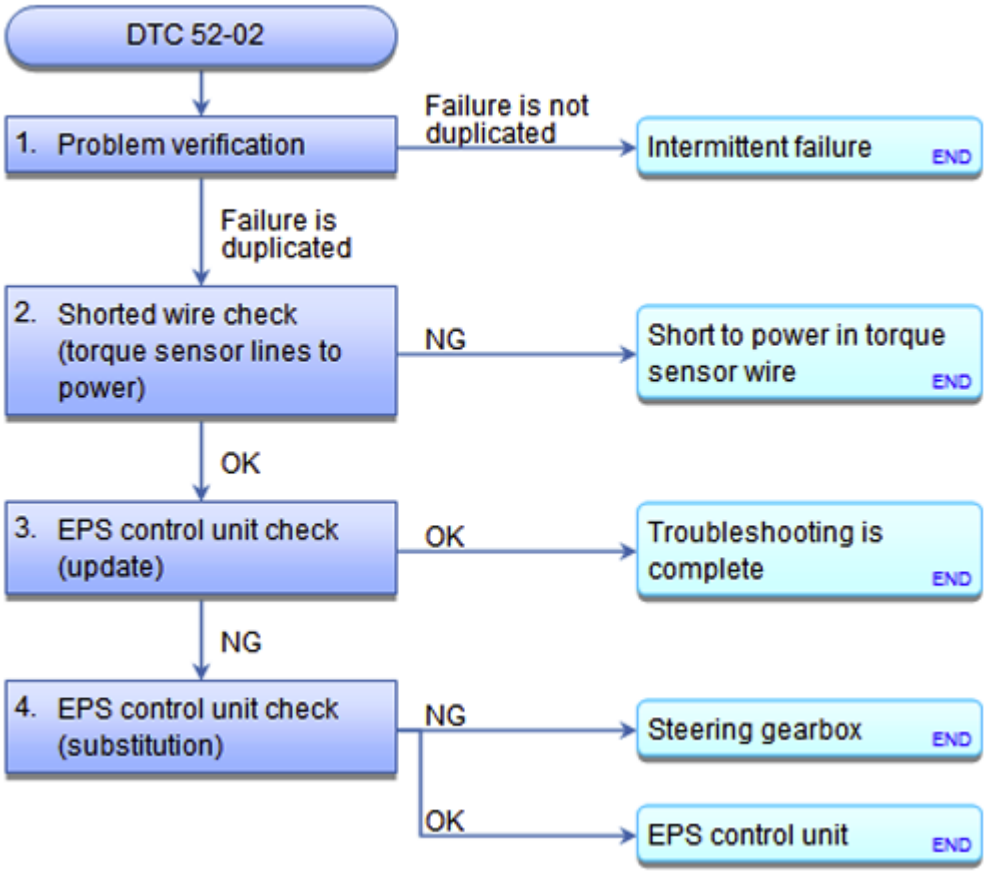

Fig. 42: EPS DTC Troubleshooting Flow Chart (Torque Sensor Power Supply (Initial Diagnosis))
Courtesy of AMERICAN HONDA MOTOR CO., INC.

NOTE: **BEFORE YOU TROUBLESHOOT, RECORD ALL FREEZE DATA AND ANY ON-BOARD SNAPSHOT, AND REVIEW THE HOW TO TROUBLESHOOT THE EPS.**

DTC Description	DTC	Freeze Frame
52-02 Torque Sensor Power Supply (Initial Diagnosis)		

1. Problem verification:
   - 1. Turn the ignition switch to ON (II).
   - 2. Clear the DTC with the HDS.
   - 3. Turn the ignition switch to LOCK (0), then start the engine.
   - 4. Check for DTCs with the HDS.

DTC Description	DTC	Freeze Frame
52-02 Torque Sensor Power Supply (Initial diagnosis)		

Is DTC 52-02 indicated?

GETtheMANUALS.org

YES : The failure is duplicated. Go to step 2.

NO : Intermittent failure, the system is OK at this time.

2. Shorted wire check (torque sensor lines to power):
   - 1. Turn the ignition switch to LOCK (0).
   - 2. Disconnect the following connector.

     EPS control unit connector B (16P)

   - 3. Turn the ignition switch to ON (II).
   - 4. Measure the voltage between these test points and body ground individually.

     Test condition IG ON (II)

     EPS control unit connector B (16P): disconnected

Connector	Test circuit	Terminal
EPS control unit connector B (16P)	VS1	No. 12 (RED)
	PVF	No. 16 (WHT)

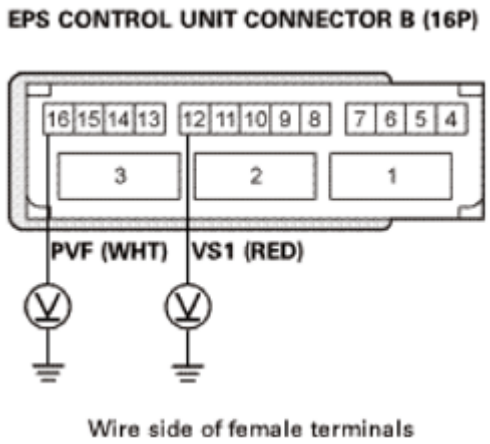

Fig. 43: Measuring Voltage Between Test Points And Body Ground
Courtesy of AMERICAN HONDA MOTOR CO., INC.

Is there battery voltage?

YES : Repair a short to power in the wire between the EPS control unit and the torque sensor.

NO : The torque sensor wires are OK. Go to step 3.

3. EPS control unit check (update):
   - 1. Turn the ignition switch to LOCK (0).

GETtheMANUALS.org

- 2. Reconnect the following connector.

  EPS control unit connector B (16P)

- 3. **Update the EPS control unit** See **EPS CONTROL UNIT REMOVAL AND INSTALLATION** or **EPS CONTROL UNIT UPDATE** if it does not have the latest software.
- 4. Turn the ignition switch to LOCK (0), then start the engine.
- 5. Check for DTCs with the HDS.

DTC Description	DTC	Freeze Frame
52-02 Torque Sensor Power Supply (Initial Diagnosis)		

Is DTC 52-02 indicated?

YES : Go to step 4.

NO : Troubleshooting is complete.

4. EPS control unit check (substitution):
   - 1. **Substitute a known good EPS control unit** See **EPS CONTROL UNIT REMOVAL AND INSTALLATION** or **EPS CONTROL UNIT UPDATE**.
   - 2. Turn the ignition switch to LOCK (0), then start the engine.
   - 3. Check for DTCs with the HDS.

DTC Description	DTC	Freeze Frame
52-02 Torque Sensor Power Supply (Initial Diagnosis)		

Is DTC 52-02 indicated?

YES : **Replace the steering gearbox** See **STEERING GEARBOX DISASSEMBLY AND REASSEMBLY** or **STEERING GEARBOX REMOVAL AND INSTALLATION** .

NO : **Replace the original EPS control unit** See **EPS CONTROL UNIT REMOVAL AND INSTALLATION** or **EPS CONTROL UNIT UPDATE**.

DTC 52-06: TORQUE SENSOR OFFSET OUT OF RANGE

GETtheMANUALS.org

EPS DTC Troubleshooting: 52-06

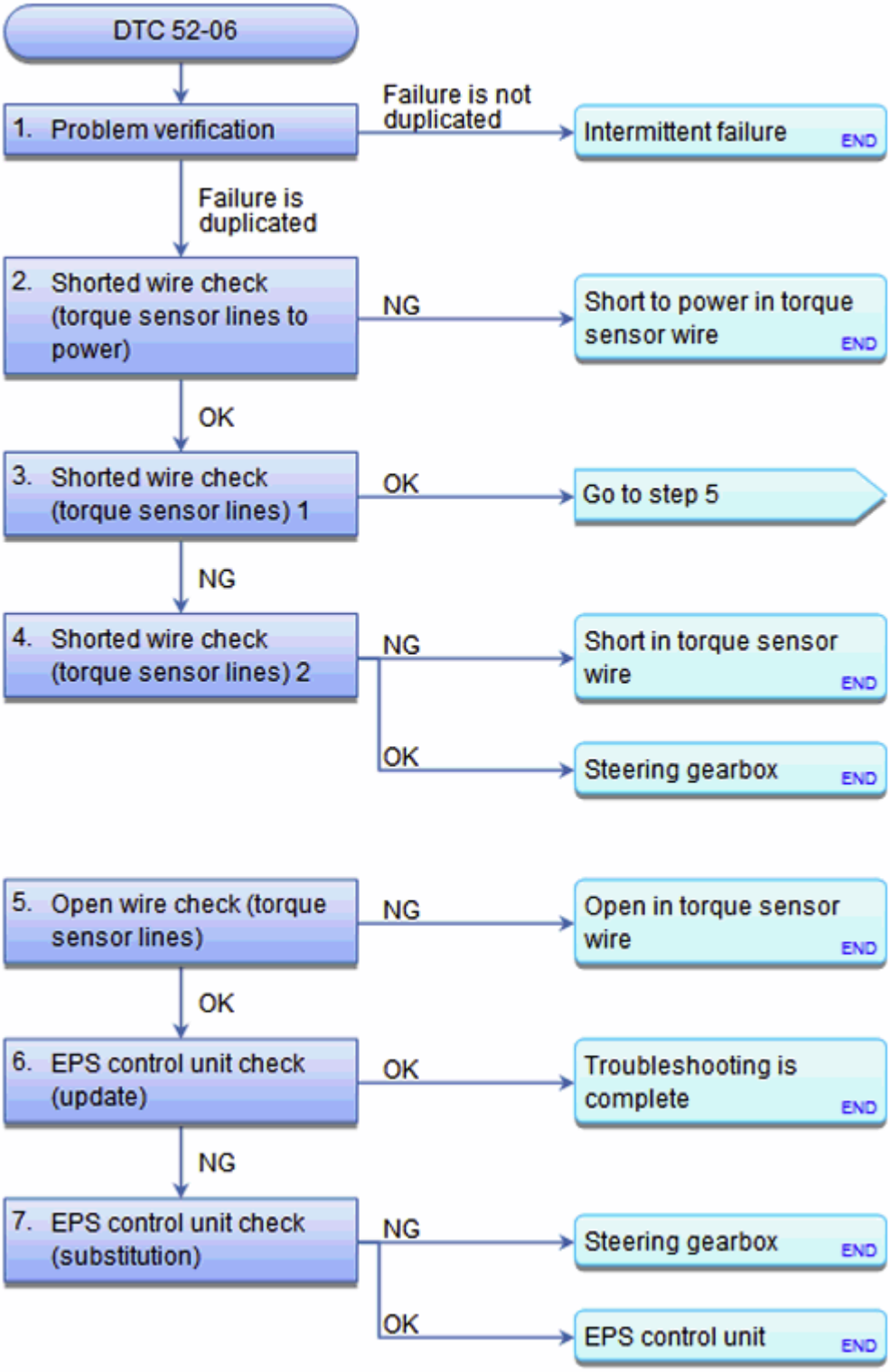

Fig. 44: EPS DTC Troubleshooting Flow Chart (Torque Sensor Offset Out Of Range)
Courtesy of AMERICAN HONDA MOTOR CO., INC.

GETtheMANUALS.org

NOTE: **BEFORE YOU TROUBLESHOOT, RECORD ALL FREEZE DATA AND ANY ON-BOARD SNAPSHOT, AND REVIEW THE HOW TO TROUBLESHOOT THE EPS.**

DTC Description	DTC	Freeze Frame
52-06 Torque Sensor Offset Out of Range		

1. Problem verification:
   - 1. Turn the ignition switch to ON (II).
   - 2. Clear the DTC with the HDS.
   - 3. Turn the ignition switch to LOCK (0), then start the engine.
   - 4. Turn the steering wheel from lock to lock several times.
   - 5. Check for DTCs with the HDS.

DTC Description	DTC	Freeze Frame
52-06 Torque Sensor Offset Out of Range		

Is DTC 52-06 indicated?

YES : The failure is duplicated. Go to step 2.

NO : Intermittent failure, the system is OK at this time.

2. Shorted wire check (torque sensor lines to power):
   - 1. Turn the ignition switch to LOCK (0).
   - 2. Disconnect the following connector.

     EPS control unit connector B (16P)

   - 3. Turn the ignition switch to ON (II).
   - 4. Measure the voltage between these test points and body ground individually.

     Test condition IG ON (II)

     EPS control unit connector B (16P): disconnected

Connector	Test circuit	Terminal
EPS control unit connector B (16P)	TRQ SUB	No. 13 (YEL)
	VS2	No. 15 (BLU)

GETtheMANUALS.org

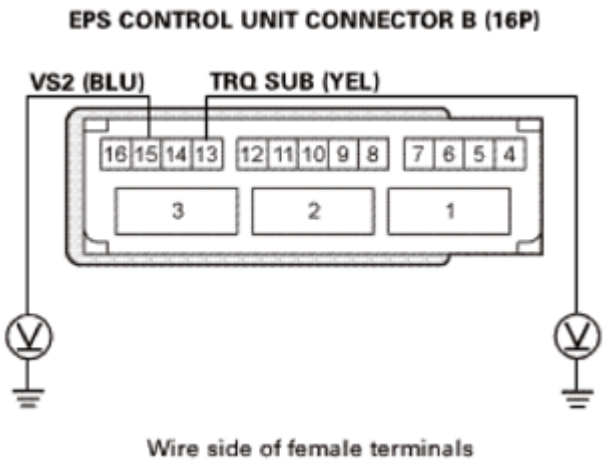

Fig. 45: Measuring Voltage Between Test Points And Body Ground
Courtesy of AMERICAN HONDA MOTOR CO., INC.

Is there battery voltage?

YES : Repair a short to power in the wire between the EPS control unit and the torque sensor.

NO : The torque sensor wires are not shorted to power. Go to step 3.

3. Shorted wire check (torque sensor lines) 1:
   - 1. Turn the ignition switch to LOCK (0).
   - 2. Check for continuity between these test points and body ground individually.

   Test condition IG LOCK (0)

   EPS control unit connector B (16P): disconnected

Connector	Test circuit	Terminal
EPS control unit connector B (16P)	TRQ SUB	No. 13 (YEL)
	VS2	No. 15 (BLU)

GETtheMANUALS.org

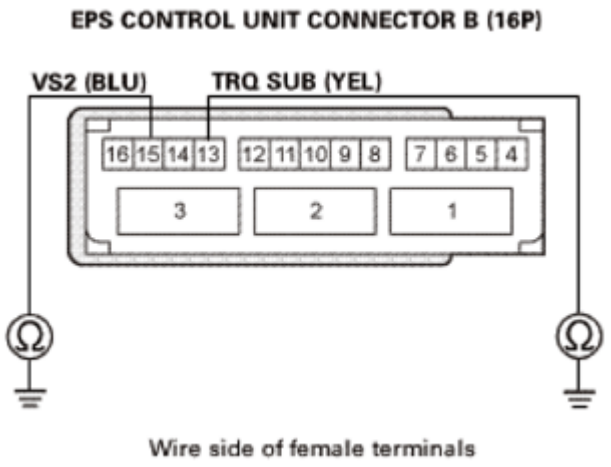

Fig. 46: Checking For Continuity Between Test Points And Body Ground
Courtesy of AMERICAN HONDA MOTOR CO., INC.

Is there continuity?

YES : Go to step 4.

NO : The torque sensor wires are not shorted. Go to step 5.

4. Shorted wire check (torque sensor lines) 2:
   - 1. Disconnect the following connector.

     Torque sensor 6P connector

   - 2. Check for continuity between these test points and body ground individually.

     Test condition IG LOCK (0)

     EPS control unit connector B (16P): disconnected

     Torque sensor 6P connector: disconnected

Connector	Test circuit	Terminal
EPS control unit connector B (16P)	TRQ SUB	No. 13 (YEL)
	VS2	No. 15 (BLU)

GETtheMANUALS.org

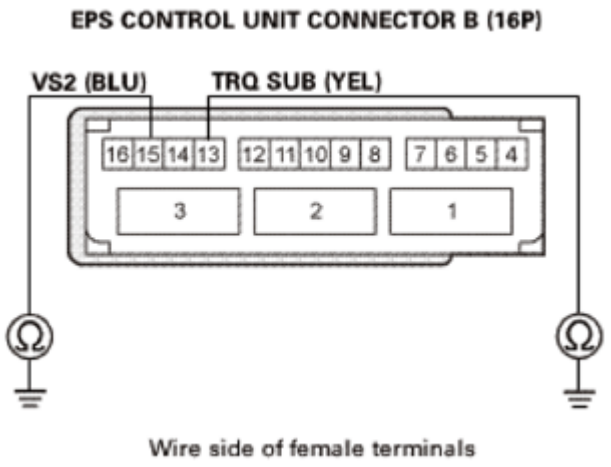

Fig. 47: Checking For Continuity Between Test Points And Body Ground
Courtesy of AMERICAN HONDA MOTOR CO., INC.

Is there continuity?

YES : Repair a short to body ground in the wire between the EPS control unit and the torque sensor.

NO : **Replace the steering gearbox** See **STEERING GEARBOX DISASSEMBLY AND REASSEMBLY** or **STEERING GEARBOX REMOVAL AND INSTALLATION** .

5. Open wire check (torque sensor lines):
   - 1. Disconnect the following connector.

     Torque sensor 6P connector

   - 2. Check for continuity between these test points and body ground individually.

     Test condition IG LOCK (0)

     EPS control unit connector B (16P): disconnected

     Torque sensor 6P connector: disconnected

Test circuit	EPS control unit connector B (16P) Terminal	Torque sensor 6P connector Terminal
TRQ SUB	No. 13 (YEL)	No. 3 (YEL)
VS2	No. 15 (BLU)	No. 6 (GRN)

GETtheMANUALS.org

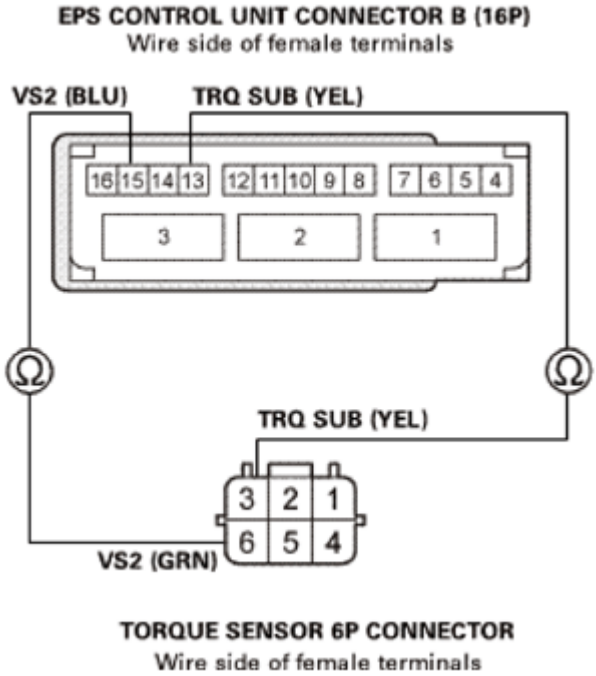

Fig. 48: Checking For Continuity Between Test Points And Body Ground
Courtesy of AMERICAN HONDA MOTOR CO., INC.

Is there continuity?

YES : The torque sensor wires are OK. Go to step 6.

NO : Repair an open in the wire between the EPS control unit and the torque sensor.

6. EPS control unit check (update):
   - 1. Reconnect the following connectors.

     EPS control unit connector B (16P)

     Torque sensor 6P connector

   - 2. **Update the EPS control unit** See **EPS CONTROL UNIT REMOVAL AND INSTALLATION** or **EPS CONTROL UNIT UPDATE** if it does not have the latest software.
   - 3. Turn the ignition switch to LOCK (0), then start the engine.
   - 4. Turn the steering wheel from lock to lock several times.
   - 5. Check for DTCs with the HDS.

DTC Description	DTC	Freeze Frame
52-06 Torque Sensor Offset Out of Range		

Is DTC 52-06 indicated?

GETtheMANUALS.org

YES : Go to step 7.

NO : Troubleshooting is complete.

7. EPS control unit check (substitution):
   - 1. **Substitute a known good EPS control unit** See **EPS CONTROL UNIT REMOVAL AND INSTALLATION** or **EPS CONTROL UNIT UPDATE**.
   - 2. Turn the ignition switch to LOCK (0), then start the engine.
   - 3. Turn the steering wheel from lock to lock several times.
   - 4. Check for DTCs with the HDS.

DTC Description	DTC	Freeze Frame
52-06 Torque Sensor Offset Out of Range		

Is DTC 52-06 indicated?

YES : **Replace the steering gearbox** See **STEERING GEARBOX DISASSEMBLY AND REASSEMBLY** or **STEERING GEARBOX REMOVAL AND INSTALLATION** .

NO : **Replace the original EPS control unit** See **EPS CONTROL UNIT REMOVAL AND INSTALLATION** or **EPS CONTROL UNIT UPDATE**.

DTC 52-08: TORQUE SENSOR POWER SUPPLY

GETtheMANUALS.org

EPS DTC Troubleshooting: 52-08

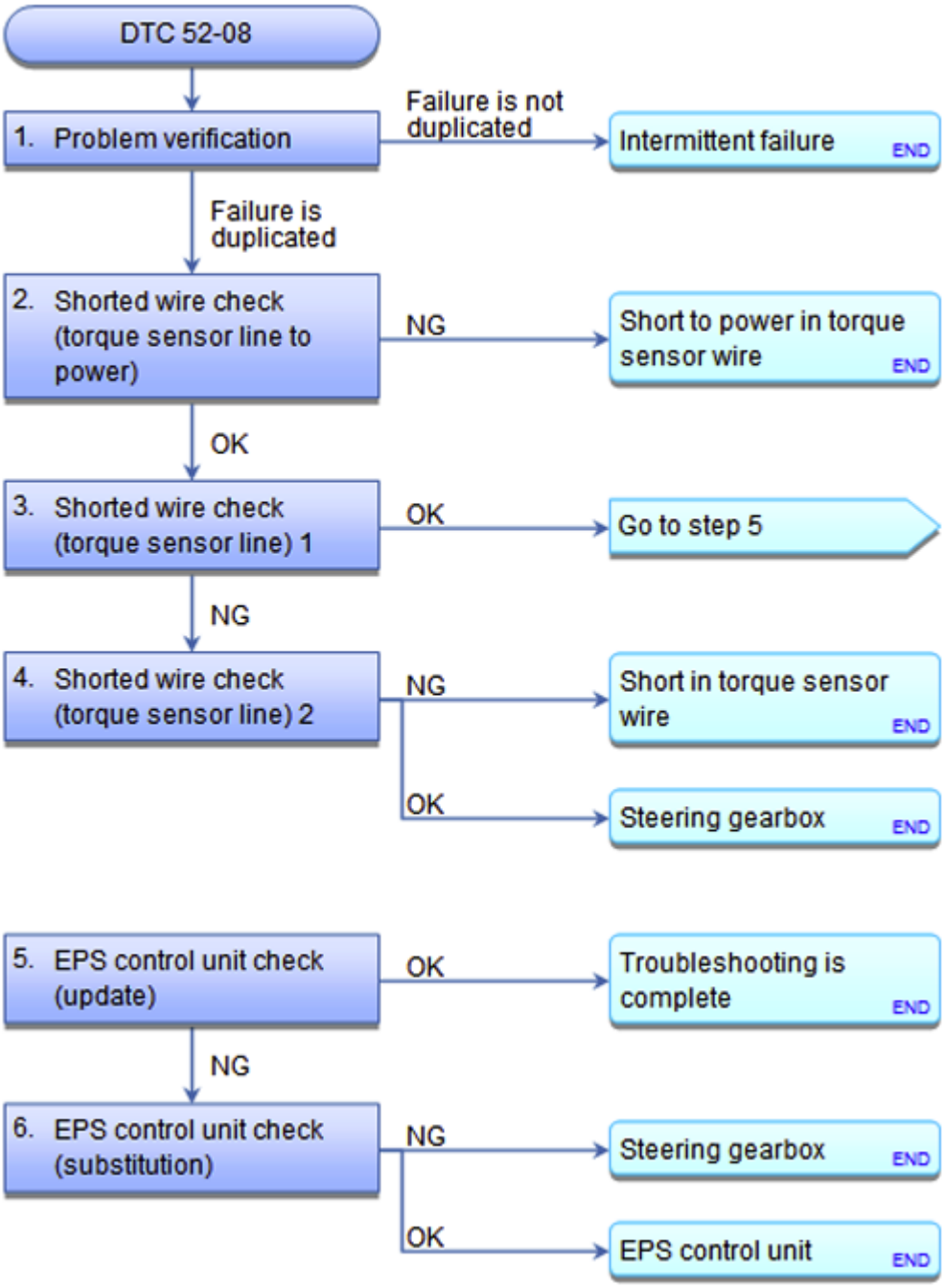

Fig. 49: EPS DTC Troubleshooting Flow Chart (Torque Sensor Power Supply)
Courtesy of AMERICAN HONDA MOTOR CO., INC.

NOTE: **BEFORE YOU TROUBLESHOOT, RECORD ALL FREEZE DATA AND ANY ON-BOARD SNAPSHOT, AND REVIEW THE HOW TO TROUBLESHOOT THE EPS.**

DTC Description	DTC	Freeze Frame

GETtheMANUALS.org

52-08 Torque Sensor Power Supply		

1. Problem verification:
   - 1. Turn the ignition switch to ON (II).
   - 2. Clear the DTC with the HDS.
   - 3. Turn the ignition switch to LOCK (0), then start the engine.
   - 4. Check for DTCs with the HDS.

DTC Description	DTC	Freeze Frame
52-08 Torque Sensor Power Supply		

Is DTC 52-08 indicated?

YES : The failure is duplicated. Go to step 2.

NO : Intermittent failure, the system is OK at this time.

2. Shorted wire check (torque sensor line to power):
   - 1. Turn the ignition switch to LOCK (0).
   - 2. Disconnect the following connector.

     EPS control unit connector B (16P)

   - 3. Turn the ignition switch to ON (II).
   - 4. Measure the voltage between test points 1 and 2.

     Test condition IG ON (II)

     EPS control unit connector B (16P): disconnected

     Test circuit PVF

     Test point 1 EPS control unit connector B (16P) No. 16 (WHT)

     Test point 2 Body ground

GETtheMANUALS.org

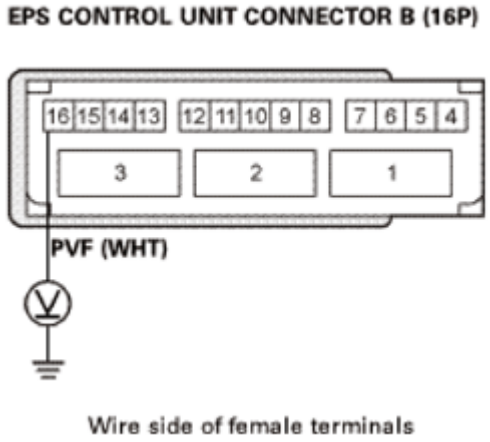

Fig. 50: Measuring Voltage Between Test Points 1 And 2
Courtesy of AMERICAN HONDA MOTOR CO., INC.

Is there battery voltage?

YES : Repair a short to power in the wire between the EPS control unit and the torque sensor.

NO : The torque sensor wire is not shorted to power. Go to step 3.

3. Shorted wire check (torque sensor line) 1:
   - 1. Turn the ignition switch to LOCK (0).
   - 2. Check for continuity between these test point and body ground.

     Test condition LOCK (0)

     EPS control unit connector B (16P): disconnected

     Test circuit PVF

     Test point 1 EPS control unit connector B (16P) No. 16 (WHT)

     Test point 2 Body ground

GETtheMANUALS.org

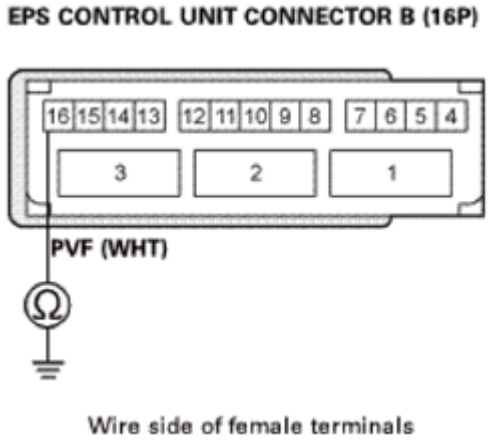

Fig. 51: Checking For Continuity Between Test Point And Body Ground
Courtesy of AMERICAN HONDA MOTOR CO., INC.

Is there continuity?

YES : Go to step 4.

NO : The torque sensor wire is OK. Go to step 5.

4. Shorted wire check (torque sensor line) 2:
   - 1. Disconnect the following connector.

     Torque sensor 6P connector

   - 2. Check for continuity between these test point and body ground.

     Test condition LOCK (0)

     EPS control unit connector B (16P): disconnected

     Torque sensor 6P connector: disconnected

     Test circuit PVF

     Test point 1 EPS control unit connector B (16P) No. 16 (WHT)

     Test point 2 Body ground

GETtheMANUALS.org

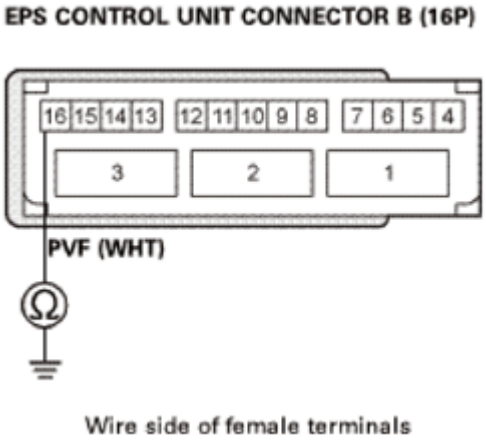

Fig. 52: Checking For Continuity Between Test Point And Body Ground
Courtesy of AMERICAN HONDA MOTOR CO., INC.

Is there continuity?

YES : Repair a short to body ground in the wire between the EPS control unit and the torque sensor.

NO : **Replace the steering gearbox** See **STEERING GEARBOX DISASSEMBLY AND REASSEMBLY** or **STEERING GEARBOX REMOVAL AND INSTALLATION** .

5. EPS control unit check (update):
   - 1. Reconnect the following connector.

     EPS control unit connector B (16P)

   - 2. **Update the EPS control unit** See **EPS CONTROL UNIT REMOVAL AND INSTALLATION** or **EPS CONTROL UNIT UPDATE** if it does not have the latest software.
   - 3. Turn the ignition switch to LOCK (0), then start the engine.
   - 4. Check for DTCs with the HDS.

DTC Description	DTC	Freeze Frame
52-08 Torque Sensor Power Supply		

Is DTC 52-08 indicated?

YES : Go to step 6.

NO : Troubleshooting is complete.

6. EPS control unit check (substitution):
   - 1. **Substitute a known good EPS control unit** See **EPS CONTROL UNIT REMOVAL AND INSTALLATION** or **EPS CONTROL UNIT UPDATE**.

GETtheMANUALS.org

- 2. Turn the ignition switch to LOCK (0), then start the engine.
- 3. Check for DTCs with the HDS.

DTC Description	DTC	Freeze Frame
52-08 Torque Sensor Power Supply		

Is DTC 52-08 indicated?

YES : **Replace the steering gearbox** See **STEERING GEARBOX DISASSEMBLY AND REASSEMBLY** or **STEERING GEARBOX REMOVAL AND INSTALLATION** .

NO : **Replace the original EPS control unit** See **EPS CONTROL UNIT REMOVAL AND INSTALLATION** or **EPS CONTROL UNIT UPDATE**.

DTC 61-04: MOTOR HARNESS MALFUNCTION

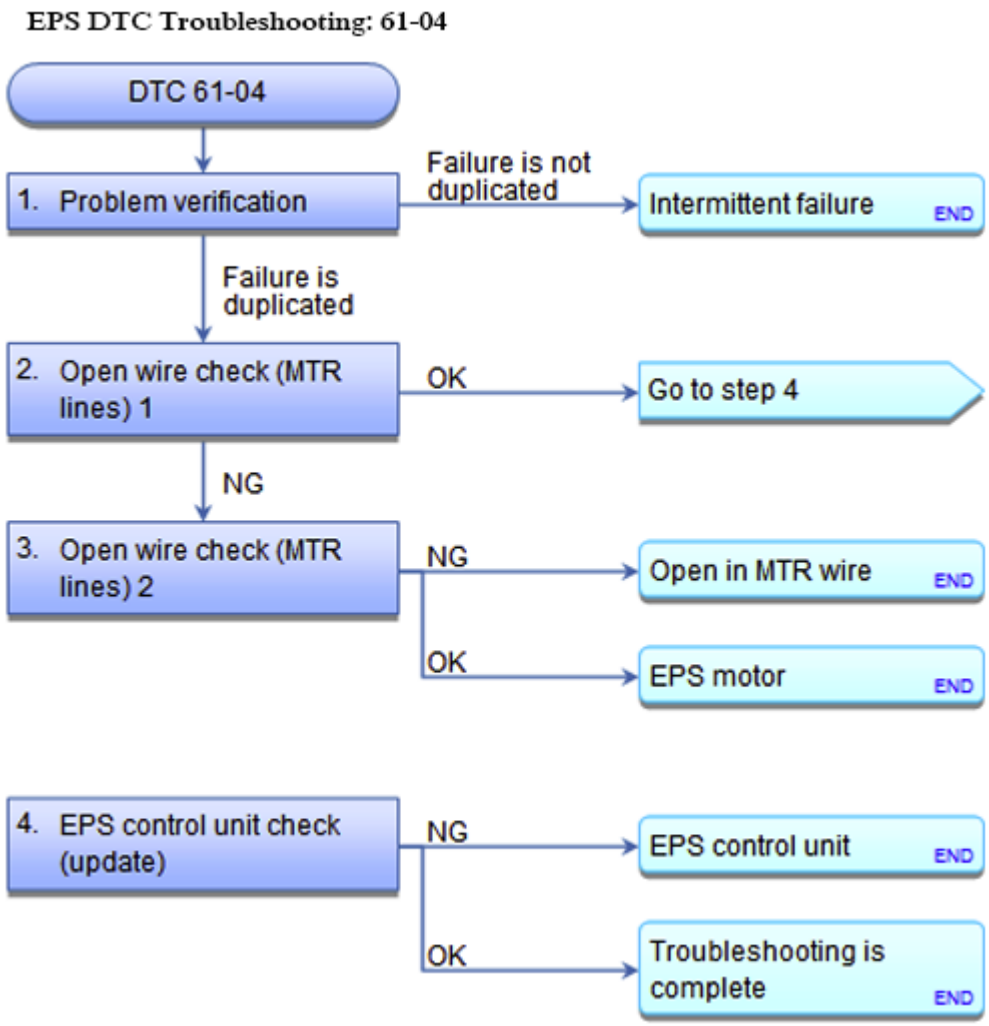

Fig. 53: EPS DTC Troubleshooting Flow Chart (Motor Harness Malfunction)

GETtheMANUALS.org

Courtesy of AMERICAN HONDA MOTOR CO., INC.

NOTE: **BEFORE YOU TROUBLESHOOT, RECORD ALL FREEZE DATA AND ANY ON-BOARD SNAPSHOT, AND REVIEW THE HOW TO TROUBLESHOOT THE EPS.**

DTC Description	DTC	Freeze Frame
61-04 Motor Harness Malfunction		

1. Problem verification:
   - 1. Turn the ignition switch to ON (II).
   - 2. Clear the DTC with the HDS.
   - 3. Turn the ignition switch to LOCK (0), then start the engine.
   - 4. Check for DTCs with the HDS.

DTC Description	DTC	Freeze Frame
61-04 Motor Harness Malfunction		

Is DTC 61-04 indicated?

YES : The failure is duplicated. Go to step 2.

NO : Intermittent failure, the system is OK at this time.

2. Open wire check (MTR lines) 1:
   - 1. Turn the ignition switch to LOCK (0).
   - 2. Disconnect the following connector.

     EPS control unit connector B (16P)

   - 3. Check for continuity between test points 1 and 2.

     Test condition IG LOCK (0)

     EPS control unit connector B (16P): disconnected

     Test circuit MTR V, MTR U

     Test point 1 EPS control unit connector B (16P) No. 1 (GRN)

     Test point 2 EPS control unit connector B (16P) No. 2 (RED)

     Test circuit MTR V, MTR W

     Test point 1 EPS control unit connector B (16P) No. 1 (GRN)

GETtheMANUALS.org

Test point 2 EPS control unit connector B (16P) No. 3 (WHT)

Test circuit MTR U, MTR W

Test point 1 EPS control unit connector B (16P) No. 2 (RED)

Test point 2 EPS control unit connector B (16P) No. 3 (WHT)

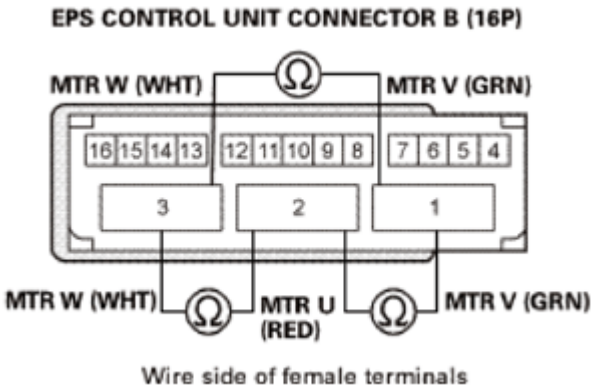

Fig. 54: Checking For Continuity Between Test Points 1 And 2
Courtesy of AMERICAN HONDA MOTOR CO., INC.

Is there continuity?

YES : The MTR wires are OK. Go to step 4.

NO : Go to step 3.

3. Open wire check (MTR lines) 2:
   - 1. Disconnect the following connector.

     EPS motor 3P connector

   - 2. On the EPS motor side, check for continuity between test points 1 and 2.

     Test condition IG LOCK (0)

     EPS control unit connector B (16P): disconnected

     EPS motor 3P connector: disconnected

     Test circuit MTR W, MTR V

     Test point 1 EPS motor 3P connector No. 1 (WHT)

     Test point 2 EPS motor 3P connector No. 2 (RED)

GETtheMANUALS.org

Test circuit MTR W, MTR U

Test point 1 EPS motor 3P connector No. 1 (WHT)

Test point 2 EPS motor 3P connector No. 3 (BLK)

Test circuit MTR U, MTR V

Test point 1 EPS motor 3P connector No. 2 (RED)

Test point 2 EPS motor 3P connector No. 3 (BLK)

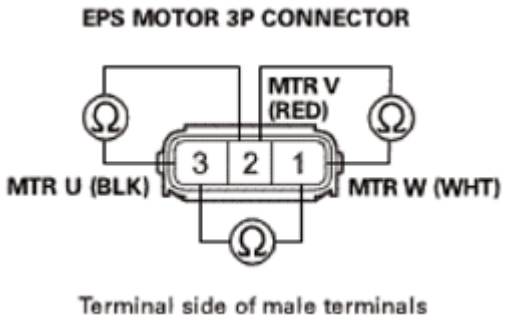

Fig. 55: Checking For Continuity Between Test Points 1 And 2
Courtesy of AMERICAN HONDA MOTOR CO., INC.

Is there continuity?

YES : Repair an open in the wire between the EPS control unit and the EPS motor.

NO : The MTR wires are OK. **REPLACE THE EPS MOTOR**.

4. EPS control unit check (update):
   - 1. Reconnect the following connector.

     EPS control unit connector B (16P)

   - 2. **Update the EPS control unit** See **EPS CONTROL UNIT REMOVAL AND INSTALLATION** or **EPS CONTROL UNIT UPDATE** if it does not have the latest software.
   - 3. Turn the ignition switch to LOCK (0), then start the engine.
   - 4. Check for DTCs with the HDS.

DTC Description	DTC	Freeze Frame
61-04 Motor Harness Malfunction		

Is DTC 61-04 indicated?

GETtheMANUALS.org

YES : **Replace the EPS control unit** See **EPS CONTROL UNIT REMOVAL AND INSTALLATION** or **EPS CONTROL UNIT UPDATE**.

NO : Troubleshooting is complete.

DTC 61-05: MOTOR HARNESS SHORT

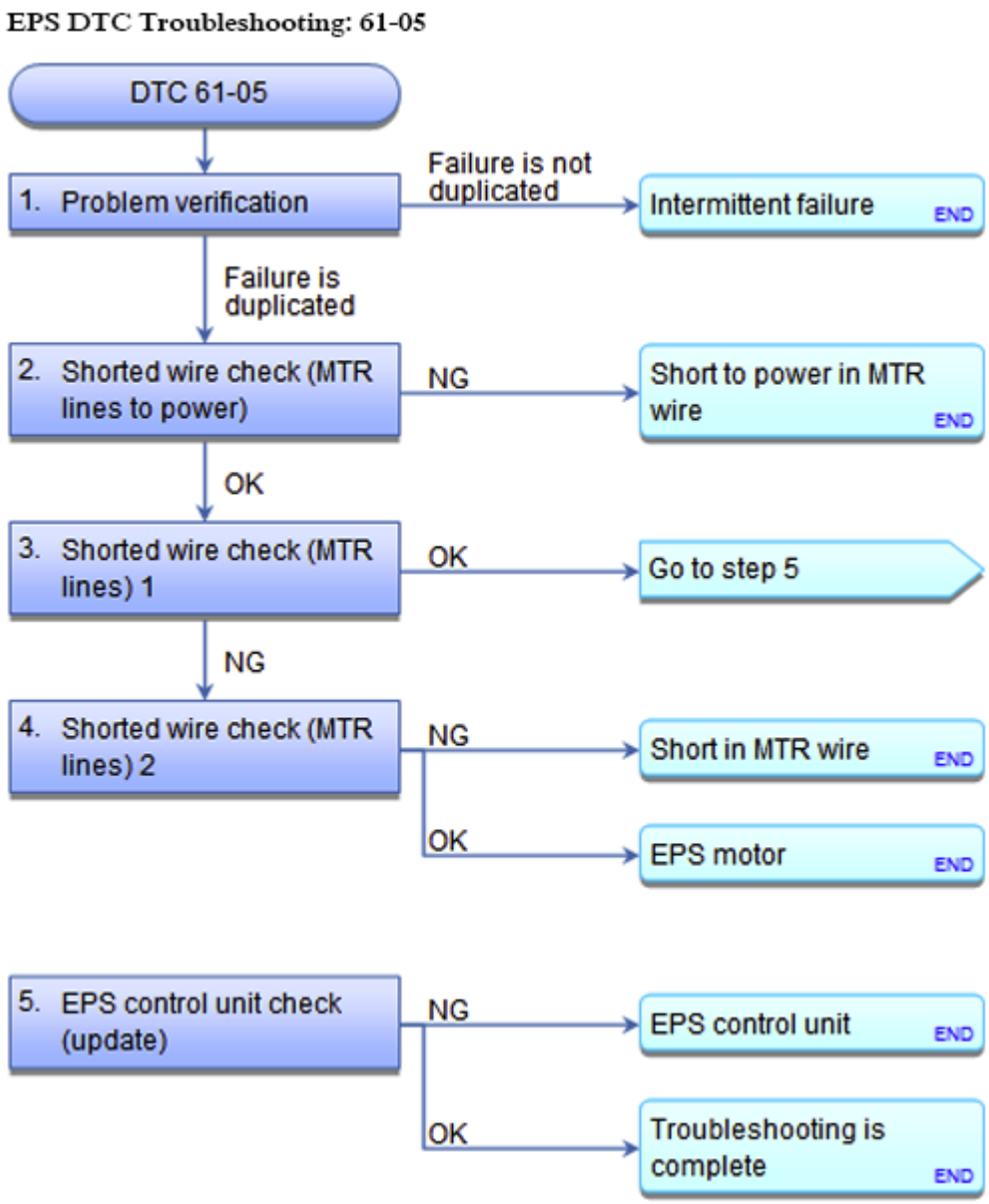

Fig. 56: EPS DTC Troubleshooting Flow Chart (Motor Harness Short)
Courtesy of AMERICAN HONDA MOTOR CO., INC.

NOTE: **BEFORE YOU TROUBLESHOOT, RECORD ALL FREEZE DATA AND ANY ON-BOARD SNAPSHOT, AND REVIEW THE HOW TO TROUBLESHOOT THE EPS.**

GETtheMANUALS.org

DTC Description	DTC	Freeze Frame
61-05 Motor Harness Short		

1. Problem verification:
   - 1. Turn the ignition switch to ON (II).
   - 2. Clear the DTC with the HDS.
   - 3. Turn the ignition switch to LOCK (0), then start the engine.
   - 4. Check for DTCs with the HDS.

DTC Description	DTC	Freeze Frame
61-05 Motor Harness Short		

Is DTC 61-05 indicated?

YES : The failure is duplicated. Go to step 2.

NO : Intermittent failure, the system is OK at this time.

2. Shorted wire check (MTR lines to power):
   - 1. Turn the ignition switch to LOCK (0).
   - 2. Disconnect the following connector.

     EPS control unit connector B (16P)

   - 3. Turn the ignition switch to ON (II).
   - 4. Measure the voltage between these test points and body ground individually.

     Test condition IG ON (II)

     EPS control unit connector B (16P): disconnected

Connector	Test circuit	Terminal
EPS control unit connector B (16P)	MTR V	No. 1 (GRN)
	MTR U	No. 2 (RED)
	MTR W	No. 3 (WHT)

GETtheMANUALS.org

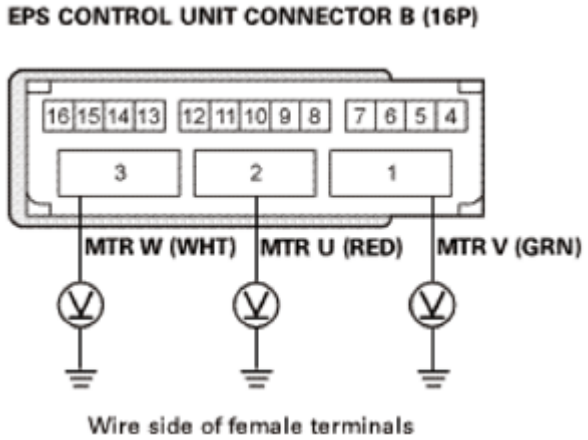

Fig. 57: Measuring Voltage Between These Test Points And Body Ground
Courtesy of AMERICAN HONDA MOTOR CO., INC.

Is there battery voltage?

YES : Repair a short to power in the wire between the EPS control unit and the EPS motor.

NO : The MTR wires are not shorted to power. Go to step 3.

3. Shorted wire check (MTR lines) 1:
   - 1. Turn the ignition switch to LOCK (0).
   - 2. Check for continuity between these test points and body ground individually.

   Test condition IG LOCK (0)

   EPS control unit connector B (16P): disconnected

Connector	Test circuit	Terminal
EPS control unit connector B (16P)	MTR V	No. 1 (GRN)
	MTR U	No. 2 (RED)
	MTR W	No. 3 (WHT)

GETtheMANUALS.org

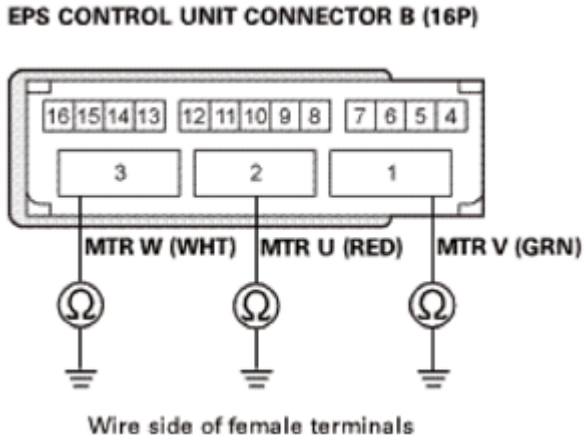

Fig. 58: Checking For Continuity Between Test Points And Body Ground
Courtesy of AMERICAN HONDA MOTOR CO., INC.

Is there continuity?

YES : Go to step 4.

NO : The MTR wires are OK. Go to step 5.

4. Shorted wire check (MTR lines) 2:
   - 1. Disconnect the following connector.

     EPS motor 3P connector

   - 2. Check for continuity between these test points and body ground individually.

     Test condition IG LOCK (0)

     EPS control unit connector B (16P): disconnected

     EPS motor 3P connector: disconnected

Connector	Test circuit	Terminal
EPS control unit connector B (16P)	MTR V	No. 1 (GRN)
	MTR U	No. 2 (RED)
	MTR W	No. 3 (WHT)

GETtheMANUALS.org

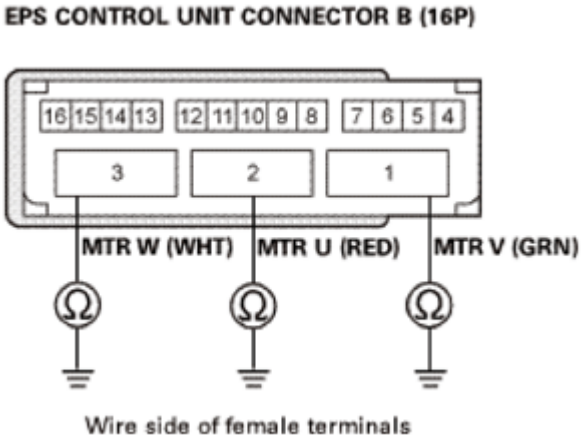

Fig. 59: Checking For Continuity Between Test Points And Body Ground
Courtesy of AMERICAN HONDA MOTOR CO., INC.

Is there continuity?

YES : Repair a short to body ground in the wire between the EPS control unit and the EPS motor.

NO : The MTR wires are OK. **REPLACE THE EPS MOTOR**.

5. EPS control unit check (update):
   - 1. Reconnect the following connector.

     EPS control unit connector B (16P)

   - 2. **Update the EPS control unit** See **EPS CONTROL UNIT REMOVAL AND INSTALLATION** or **EPS CONTROL UNIT UPDATE** if it does not have the latest software.
   - 3. Turn the ignition switch to LOCK (0), then start the engine.
   - 4. Check for DTCs with the HDS.

DTC Description	DTC	Freeze Frame
61-05 Motor Harness Short		

Is DTC 61-05 indicated?

YES : **Replace the EPS control unit** See **EPS CONTROL UNIT REMOVAL AND INSTALLATION** or **EPS CONTROL UNIT UPDATE**.

NO : Troubleshooting is complete.

DTC 61-06: MOTOR HARNESS OPEN

GETtheMANUALS.org

EPS DTC Troubleshooting: 61-06

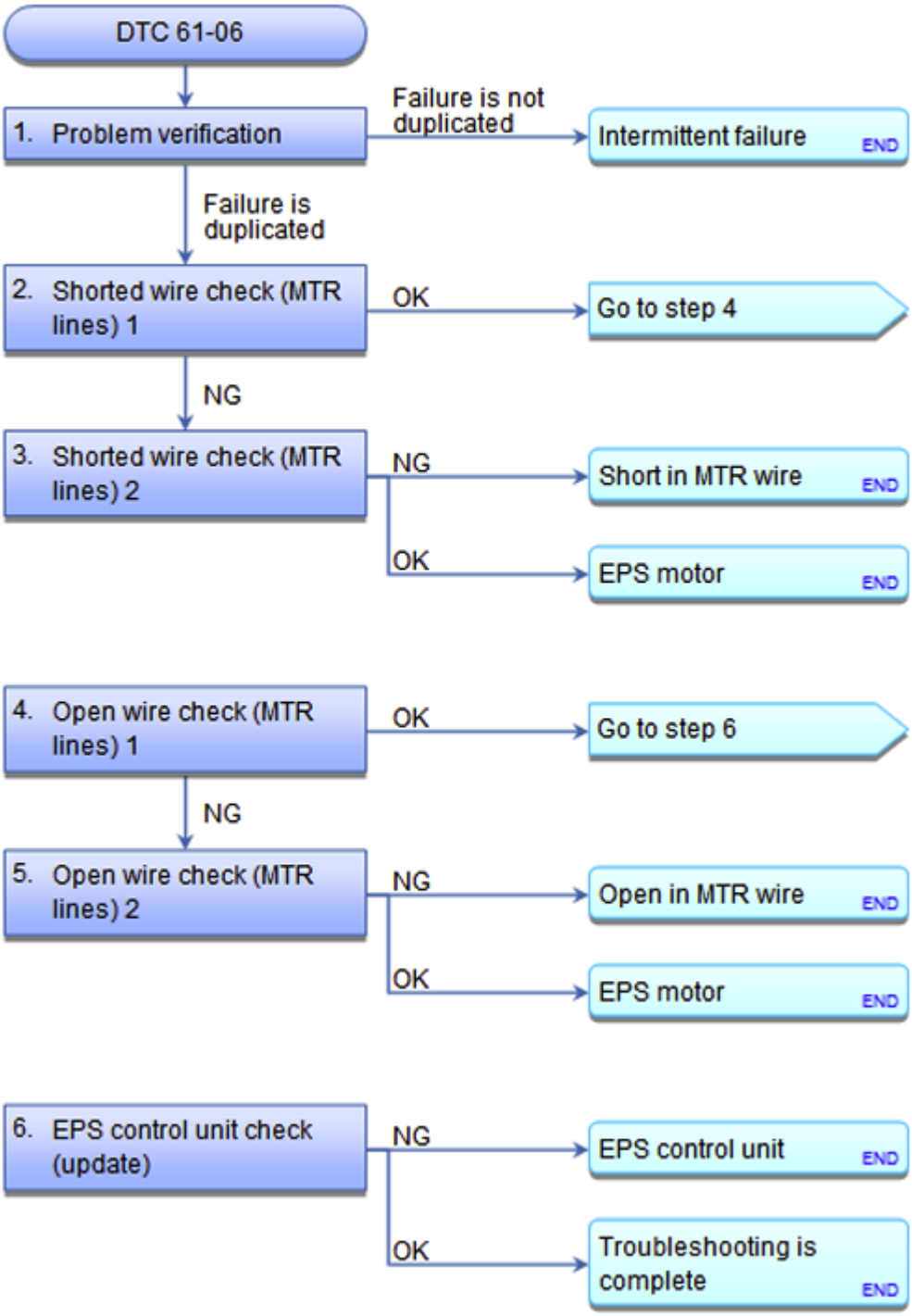

Fig. 60: EPS DTC Troubleshooting Flow Chart (Motor Harness Open)
Courtesy of AMERICAN HONDA MOTOR CO., INC.

NOTE: **BEFORE YOU TROUBLESHOOT, RECORD ALL FREEZE DATA AND ANY ON-BOARD SNAPSHOT, AND REVIEW THE HOW TO TROUBLESHOOT THE EPS.**

GETtheMANUALS.org

DTC Description	DTC	Freeze Frame
61-06 Motor Harness Open		

1. Problem verification:
   - 1. Turn the ignition switch to ON (II).
   - 2. Clear the DTC with the HDS.
   - 3. Turn the ignition switch to LOCK (0), then start the engine.
   - 4. Turn the steering wheel from lock to lock several times.
   - 5. Check for DTCs with the HDS.

DTC Description	DTC	Freeze Frame
61-06 Motor Harness Open		

Is DTC 61-06 indicated?

YES : The failure is duplicated. Go to step 2.

NO : Intermittent failure, the system is OK at this time.

2. Shorted wire check (MTR lines) 1:
   - 1. Turn the ignition switch to LOCK (0).
   - 2. Disconnect the following connector.

     EPS control unit connector B (16P)

   - 3. Check for continuity between these test points and body ground individually.

     Test condition IG LOCK (0)

     EPS control unit connector B (16P): disconnected

Connector	Test circuit	Terminal
EPS control unit connector B (16P)	MTR V	No. 1 (GRN)
	MTR U	No. 2 (RED)
	MTR W	No. 3 (WHT)

GETtheMANUALS.org

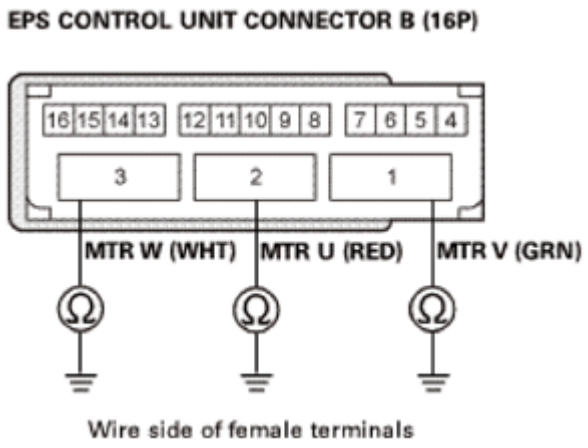

Fig. 61: Motor Harness Open
Courtesy of AMERICAN HONDA MOTOR CO., INC.

Is there continuity?

YES : Go to step 3.

NO : The MTR wires are not shorted. Go to step 4.

3. Shorted wire check (MTR lines) 2:
   - 1. Disconnect the following connector.

     EPS motor 3P connector

   - 2. Check for continuity between these test points and body ground individually.

     Test condition IG LOCK (0)

     EPS control unit connector B (16P): disconnected

     EPS motor 3P connector: disconnected

Connector	Test circuit	Terminal
EPS control unit connector B (16P)	MTR V	No. 1 (GRN)
	MTR U	No. 2 (RED)
	MTR W	No. 3 (WHT)

GETtheMANUALS.org

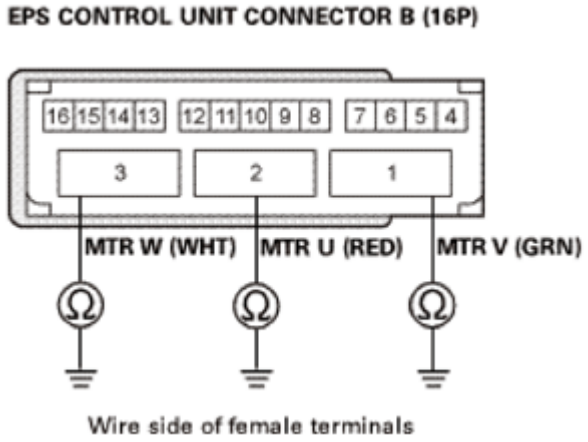

<u>Fig. 62: Checking For Continuity Between Test Points And Body Ground</u>
Courtesy of AMERICAN HONDA MOTOR CO., INC.

Is there continuity?

YES : Repair a short to body ground in the wire between the EPS control unit and the EPS motor.

NO : The MTR wires are OK. **<u>REPLACE THE EPS MOTOR</u>**.

4. Open wire check (MTR lines) 1:
   - 1. Check for continuity between test points 1 and 2.

     Test condition IG LOCK (0)

     EPS control unit connector B (16P): disconnected

     Test circuit MTR V, MTR U

     Test point 1 EPS control unit connector B (16P) No. 1 (GRN)

     Test point 2 EPS control unit connector B (16P) No. 2 (RED)

     Test circuit MTR V, MTR W

     Test point 1 EPS control unit connector B (16P) No. 1 (GRN)

     Test point 2 EPS control unit connector B (16P) No. 3 (WHT)

     Test circuit MTR U, MTR W

     Test point 1 EPS control unit connector B (16P) No. 2 (RED)

     Test point 2 EPS control unit connector B (16P) No. 3 (WHT)

GETtheMANUALS.org

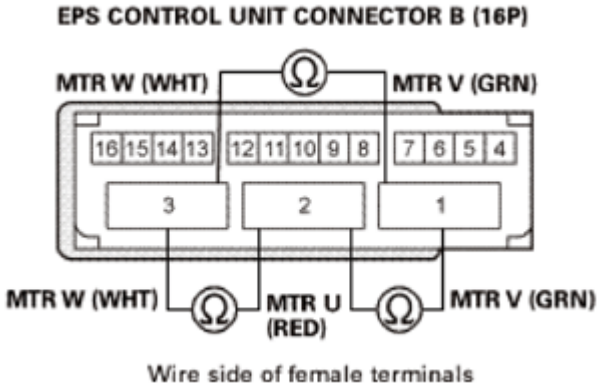

Fig. 63: Checking For Continuity Between Test Points 1 And 2
Courtesy of AMERICAN HONDA MOTOR CO., INC.

Is there continuity?

YES : The MTR wires are OK. Go to step 6.

NO : Go to step 5.

5. Open wire check (MTR lines) 2:
   - 1. Disconnect the following connector.

     EPS motor 3P connector

   - 2. On the EPS motor side, check for continuity between test points 1 and 2.

     Test condition IG LOCK (0)

     EPS control unit connector B (16P): disconnected

     EPS motor 3P connector: disconnected

     Test circuit MTR W, MTR V

     Test point 1 EPS motor 3P connector No. 1 (WHT)

     Test point 2 EPS motor 3P connector No. 2 (RED)

     Test circuit MTR W, MTR U

     Test point 1 EPS motor 3P connector No. 1 (WHT)

     Test point 2 EPS motor 3P connector No. 3 (BLK)

     Test circuit MTR U, MTR V

GETtheMANUALS.org

Test point 1 EPS motor 3P connector No. 2 (RED)

Test point 2 EPS motor 3P connector No. 3 (BLK)

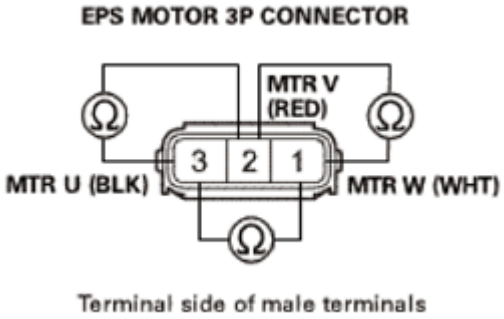

Fig. 64: Checking For Continuity Between Test Points 1 And 2
Courtesy of AMERICAN HONDA MOTOR CO., INC.

Is there continuity?

YES : Repair an open in the wire between the EPS control unit and the EPS motor.

NO : The MTR wires are OK. **REPLACE THE EPS MOTOR**.

6. EPS control unit check (update):
   - 1. Reconnect the following connector.

     EPS control unit connector B (16P)

   - 2. **Update the EPS control unit** See **EPS CONTROL UNIT REMOVAL AND INSTALLATION** or **EPS CONTROL UNIT UPDATE** if it does not have the latest software.
   - 3. Turn the ignition switch to LOCK (0), then start the engine.
   - 4. Turn the steering wheel from lock to lock several times.
   - 5. Check for DTCs with the HDS.

DTC Description	DTC	Freeze Frame
61-06 Motor Harness Open		

Is DTC 61-06 indicated?

YES : **Replace the EPS control unit** See **EPS CONTROL UNIT REMOVAL AND INSTALLATION** or **EPS CONTROL UNIT UPDATE**.

NO : Troubleshooting is complete.

DTC 71-01: MOTOR ANGLE SENSOR (SIN/COS SIGNALS); DTC 71-02: MOTOR ANGLE SENSOR (NEUTRAL POSITION LEARNING OF SIN/COS)

GETtheMANUALS.org

EPS DTC Troubleshooting: 71-01, 71-02

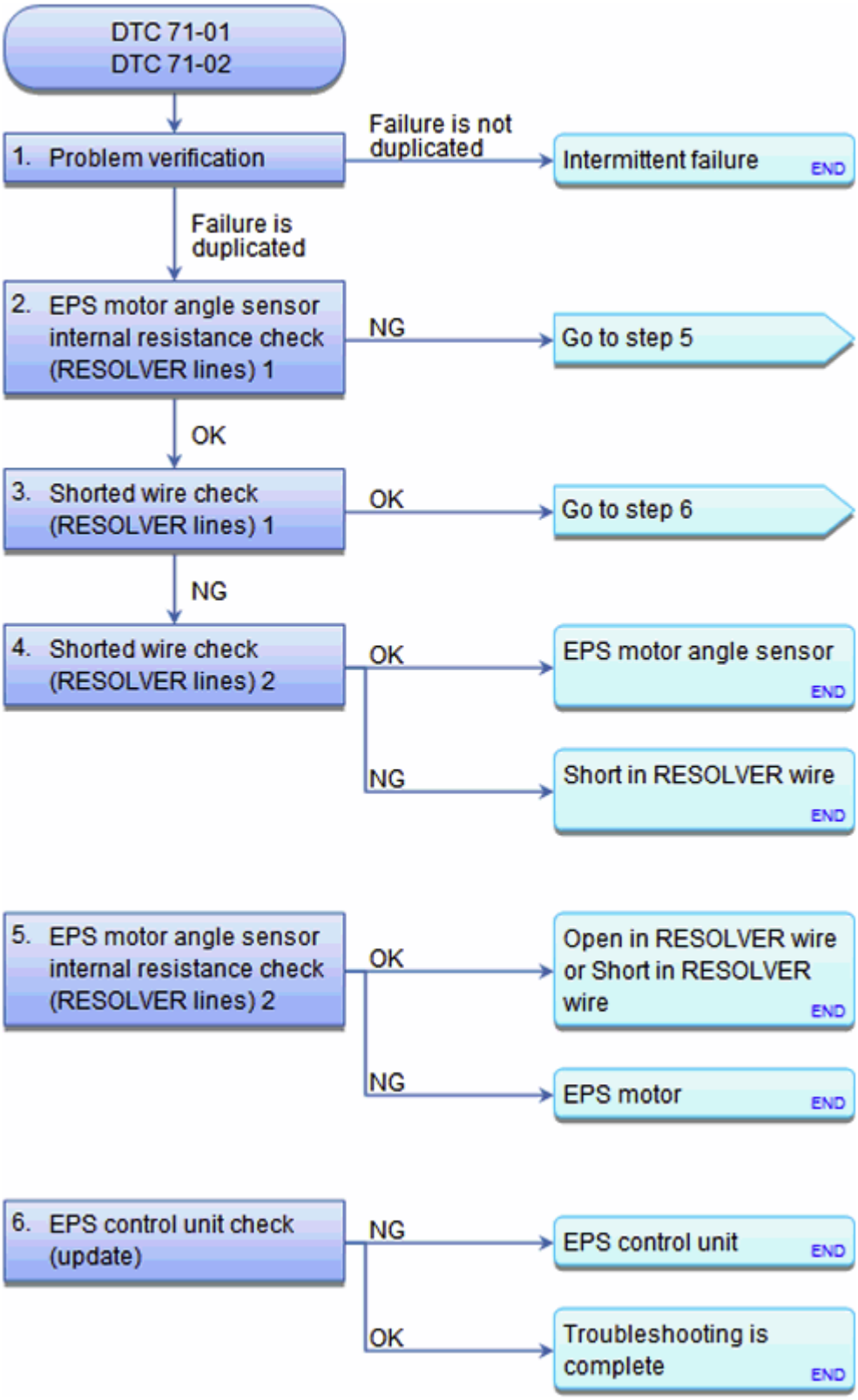

Fig. 65: EPS DTC Troubleshooting Flow Chart (Motor Angle Sensor)

GETtheMANUALS.org

Courtesy of AMERICAN HONDA MOTOR CO., INC.

NOTE: **BEFORE YOU TROUBLESHOOT, RECORD ALL FREEZE DATA AND ANY ON-BOARD SNAPSHOT, AND REVIEW THE HOW TO TROUBLESHOOT THE EPS.**

DTC Description	DTC	Freeze Frame
71-01 Motor Angle Sensor (SIN/COS Signals)		
71-02 Motor Angle Sensor (Neutral Position Learning of SIN/COS)		

1. Problem verification:
   - 1. Turn the ignition switch to ON (II).
   - 2. Clear the DTC with the HDS.
   - 3. Turn the ignition switch to LOCK (0), then start the engine.
   - 4. Turn the steering wheel to the right or left, and wait for at least 10 seconds.
   - 5. Check for DTCs with the HDS.

DTC Description	DTC	Freeze Frame
71-01 Motor Angle Sensor (SIN/COS Signals)		
71-02 Motor Angle Sensor (Neutral Position Learning of SIN/COS)		

Is DTC 71-01 or 71-02 indicated?

YES : The failure is duplicated. Go to step 2.

NO : Intermittent failure, the system is OK at this time.

2. EPS motor angle sensor internal resistance check (RESOLVER lines) 1:
   - 1. Turn the ignition switch to LOCK (0).
   - 2. Disconnect the following connector.

     EPS control unit connector B (16P)

   - 3. Measure the resistance between test points 1 and 2.

     Test condition IG LOCK (0)

     EPS control unit connector B (16P): disconnected

     Test circuit RESOLVER R1, RESOLVER R2

     Test point 1 EPS control unit connector B (16P) No. 10 (ORN)

     Test point 2 EPS control unit connector B (16P) No. 8 (LT BLU)

GETtheMANUALS.org

Test circuit RESOLVER S1, RESOLVER S3

Test point 1 EPS control unit connector B (16P) No. 5 (GRN)

Test point 2 EPS control unit connector B (16P) No. 4 (LT GRN)

Test circuit RESOLVER S2, RESOLVER S4

Test point 1 EPS control unit connector B (16P) No. 7 (PUR)

Test point 2 EPS control unit connector B (16P) No. 6 (PNK)

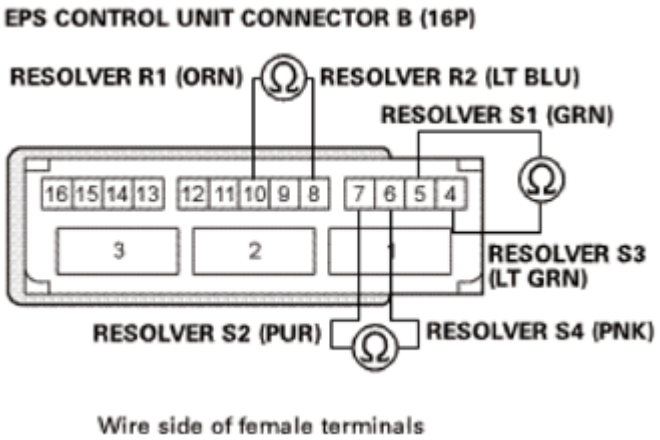

Fig. 66: Measuring Resistance Between Test Points 1 And 2
Courtesy of AMERICAN HONDA MOTOR CO., INC.

Is the resistance between RESOLVER R1-RESOLVER R2 10-22 ohms, RESOLVER S1-RESOLVER S3 20-47 ohms, and RESOLVER S2-RESOLVER S4 20-47 ohms?

YES : Go to step 3.

NO : Go to step 5.

3. Shorted wire check (RESOLVER lines) 1:
   - 1. Check for continuity between these test points and body ground individually.

     Test condition IG LOCK (0)

     EPS control unit connector B (16P): disconnected

Connector	Test circuit	Terminal
EPS control unit connector B (16P)	RESOLVER R1	No. 10 (ORN)
	RESOLVER R2	No. 8 (LT BUL)
	RESOLVER S1	No. 5 (GRN)

GETtheMANUALS.org

	RESOLVER S2	No. 7 (PUR)
	RESOLVER S3	No. 4 (LT GRN)
	RESOLVER S4	No. 6 (PNK)

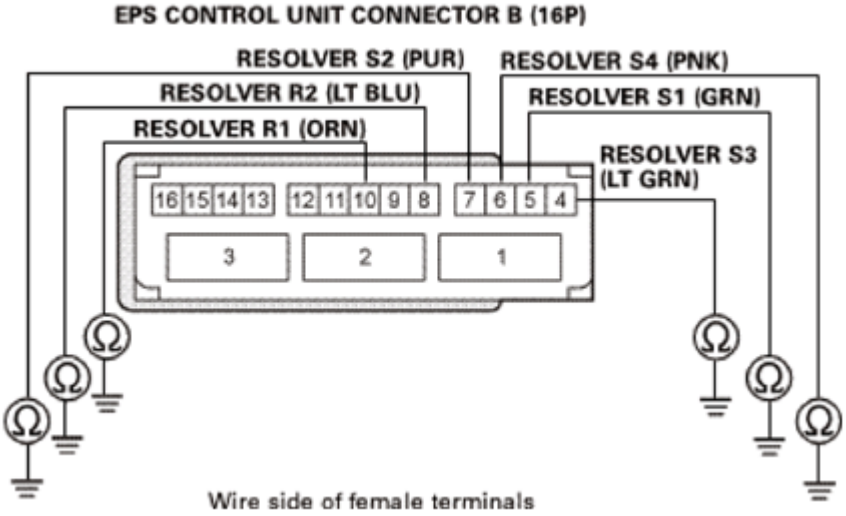

Fig. 67: Checking For Continuity Between Test Points And Body Ground
Courtesy of AMERICAN HONDA MOTOR CO., INC.

Is there continuity?

YES : Go to step 4.

NO : The RESOLVER wires are OK. Go to step 6.

4. Shorted wire check (RESOLVER lines) 2:
   - 1. Disconnect the following connector.

     EPS motor angle sensor 8P connector

   - 2. On the sensor side, check for continuity between these test points and body ground individually.

     Test condition IG LOCK (0)

     EPS control unit connector B (16P): disconnected

     EPS motor angle sensor 8P connector: disconnected

Connector	Test circuit	Terminal
EPS motor angle sensor 8P connector	RESOLVER R1	No. 4 (BRN)
	RESOLVER R2	No. 8 (BRN)
	RESOLVER S1	No. 7 (YEL)

GETtheMANUALS.org

	RESOLVER S2	No. 2 (BLK)
	RESOLVER S3	No. 6 (BLU)
	RESOLVER S4	No. 3 (RED)

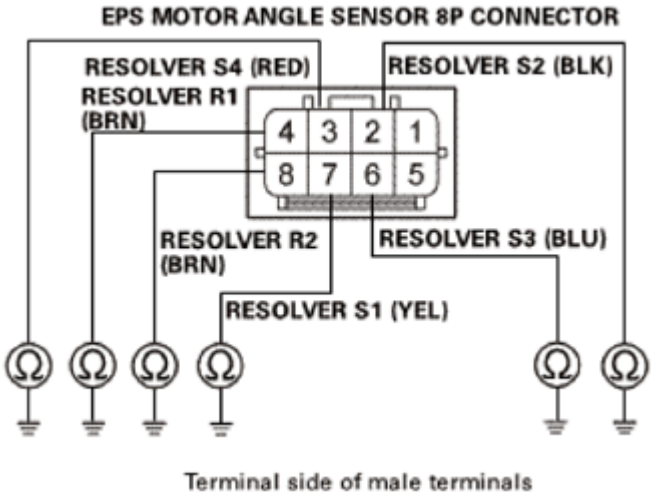

Fig. 68: Checking For Continuity Between Test Points And Body Ground
Courtesy of AMERICAN HONDA MOTOR CO., INC.

Is there continuity?

YES : The RESOLVER wires are OK. **REPLACE THE EPS MOTOR**.

NO : Repair a short to body ground in the wire between the EPS motor angle sensor and the EPS control unit.

5. EPS motor angle sensor internal resistance check (RESOLVER lines) 2:
   - 1. Disconnect the following connector.

     EPS motor angle sensor 8P connector

   - 2. On the sensor side, measure the resistance between test points 1 and 2.

     Test condition IG LOCK (0)

     EPS control unit connector B (16P): disconnected

     EPS motor angle sensor 8P connector: disconnected

     Test circuit RESOLVER S2, RESOLVER S4

     Test point 1 EPS motor angle sensor 8P connector No. 2 (BLK)

     Test point 2 EPS motor angle sensor 8P connector No. 3 (RED)

GETtheMANUALS.org

Test circuit RESOLVER S3, RESOLVER S1

Test point 1 EPS motor angle sensor 8P connector No. 6 (BLU)

Test point 2 EPS motor angle sensor 8P connector No. 7 (YEL)

Test circuit RESOLVER R1, RESOLVER R2

Test point 1 EPS motor angle sensor 8P connector No. 8 (BRN)

Test point 2 EPS motor angle sensor 8P connector No. 4 (BRN)

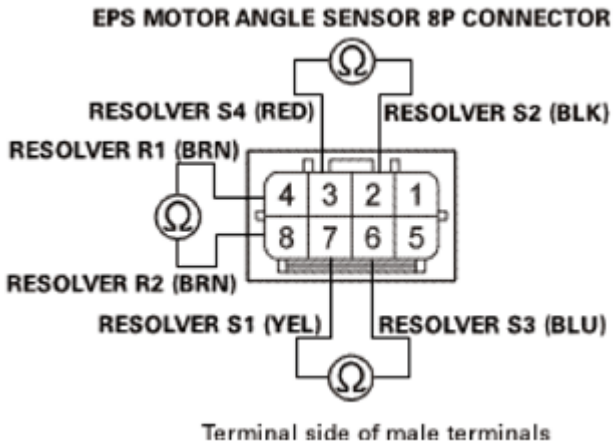

Fig. 69: Measuring Resistance Between Test Points 1 And 2
Courtesy of AMERICAN HONDA MOTOR CO., INC.

Is the resistance between RESOLVER R1-RESOLVER R2 10-22 ohms, RESOLVER S1-RESOLVER S3 20-47 ohms, and RESOLVER S2-RESOLVER S4 20-47 ohms?

YES : Repair an open or a short to body ground in the wire between the EPS motor angle sensor and the EPS control unit.

NO : **REPLACE THE EPS MOTOR**.

6. EPS control unit check (update):
   - 1. Reconnect the following connector.

     EPS control unit connector B (16P)

   - 2. **Update the EPS control unit** See **EPS CONTROL UNIT REMOVAL AND INSTALLATION** or **EPS CONTROL UNIT UPDATE** if it does not have the latest software.
   - 3. Turn the ignition switch to LOCK (0), then start the engine.
   - 4. Turn the steering wheel to the right or left, and wait for at least 10 seconds.
   - 5. Check for DTCs with the HDS.

GETtheMANUALS.org

DTC Description	DTC	Freeze Frame
71-01 Motor Angle Sensor (SIN/COS Signals)		
71-02 Motor Angle Sensor (Neutral Position Learning of SIN/COS)		

Is DTC 71-01 or 71-02 indicated?

YES : **Replace the EPS control unit** See **EPS CONTROL UNIT REMOVAL AND INSTALLATION** or **EPS CONTROL UNIT UPDATE**.

NO : Troubleshooting is complete.

DTC 81-03: YAW RATE SENSOR MALFUNCTION; DTC 85-01: PROBLEM IN VSA SYSTEM

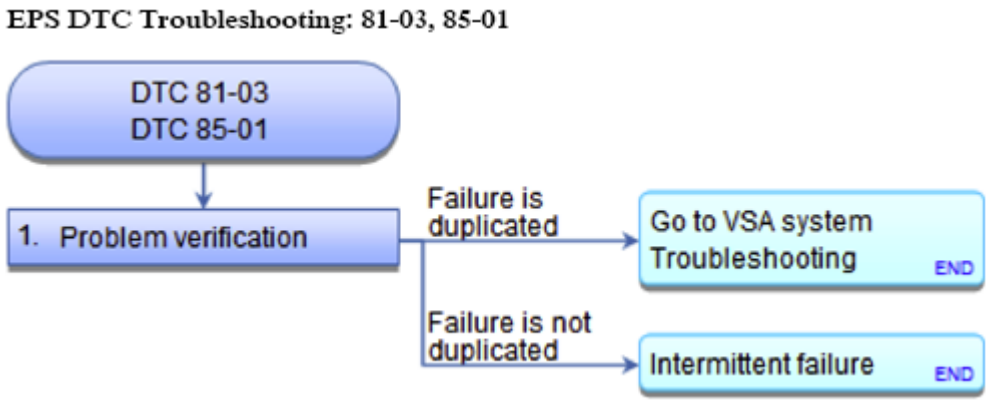

Fig. 70: EPS DTC Troubleshooting Flow Chart (Yaw Rate Sensor Malfunction And Problem In VSA System)
Courtesy of AMERICAN HONDA MOTOR CO., INC.

NOTE: **BEFORE YOU TROUBLESHOOT, RECORD ALL FREEZE DATA AND ANY ON-BOARD SNAPSHOT, AND REVIEW THE HOW TO TROUBLESHOOT THE EPS.**

DTC Description	DTC	Freeze Frame
81-03 Yaw Rate Sensor Malfunction		
85-01 Problem in VSA System		

1. Problem verification:
   - 1. Turn the ignition switch to ON (II).
   - 2. Clear the DTC with the HDS.
   - 3. Turn the ignition switch to LOCK (0), then start the engine.
   - 4. Wait 30 seconds or more.
   - 5. Check for DTCs with the HDS.

GETtheMANUALS.org

DTC Description	DTC	Freeze Frame
81-03 Yaw Rate Sensor Malfunction		
85-01 Problem in VSA System		

Is DTC 81-03 or 85-01 indicated?

YES : The failure is duplicated. **GO TO VSA SYSTEM TROUBLESHOOTING** .

NO : Intermittent failure, the system is OK at this time.

DTC 83-01: CAN COMMUNICATION FAILURE; DTC 83-02: CAN COMMUNICATION TIMEOUT ERROR

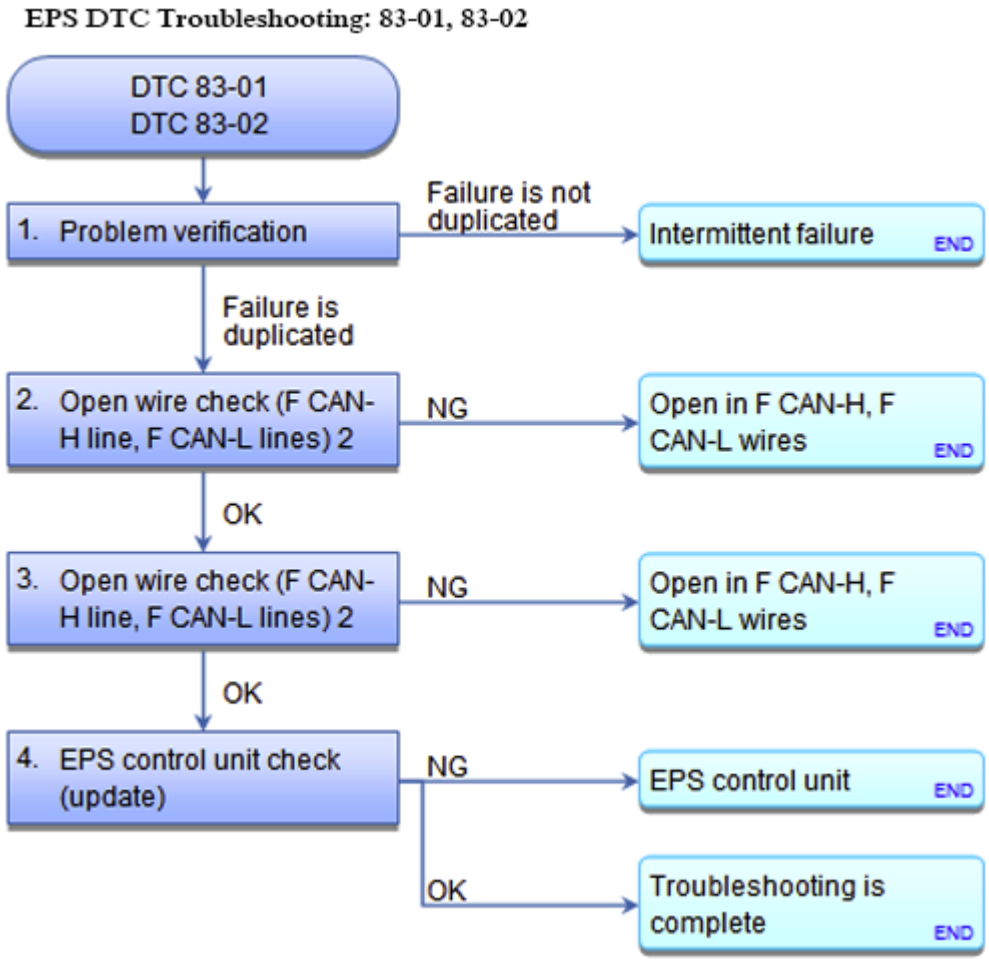

Fig. 71: EPS DTC Troubleshooting Flow Chart (CAN Communication Failure And Timeout Error)
Courtesy of AMERICAN HONDA MOTOR CO., INC.

NOTE:

- **BEFORE YOU TROUBLESHOOT, RECORD ALL FREEZE DATA AND ANY ON-BOARD SNAPSHOT, AND REVIEW THE HOW TO TROUBLESHOOT**

GETtheMANUALS.org

THE EPS.

- **Diagnose and repair any Powertrain DTCs first.**

DTC Description	DTC	Freeze Frame
83-01 CAN Communication Failure		
83-02 CAN Communication Timeout Error		

1. Problem verification:
   - 1. Turn the ignition switch to ON (II).
   - 2. Clear the DTC with the HDS.
   - 3. Turn the ignition switch to LOCK (0), then turn it to ON (II) again.
   - 4. Wait 60 seconds or more.
   - 5. Check for DTCs with the HDS.

DTC Description	DTC	Freeze Frame
83-01 CAN Communication Failure		
83-02 CAN Communication Timeout Error		

Is DTC 83-01 or 83-02 indicated?

YES : The failure is duplicated. Go to step 2.

NO : Intermittent failure, the system is OK at this time.

2. Open wire check (F CAN-H line, F CAN-L lines) 1:
   - 1. Turn the ignition switch to LOCK (0).
   - 2. Disconnect the following connectors.

     EPS control unit connector A (11P)

     VSA modulator-control unit 38P connector

   - 3. Check for continuity between test points 1 and 2.

     Test condition IG LOCK (0)

     EPS control unit connector A (11P): disconnected

     VSA modulator-control unit 38P connector: disconnected

     Test circuit F CAN-H

     Test point 1 EPS control unit connector A (11P) No. 7 (WHT)

GETtheMANUALS.org

Test point 2 VSA modulator-control unit 38P connector No. 38 (WHT)

Test circuit F CAN-L

Test point 1 EPS control unit connector A (11P) No. 9 (RED)

Test point 2 VSA modulator-control unit 38P connector No. 26 (RED)

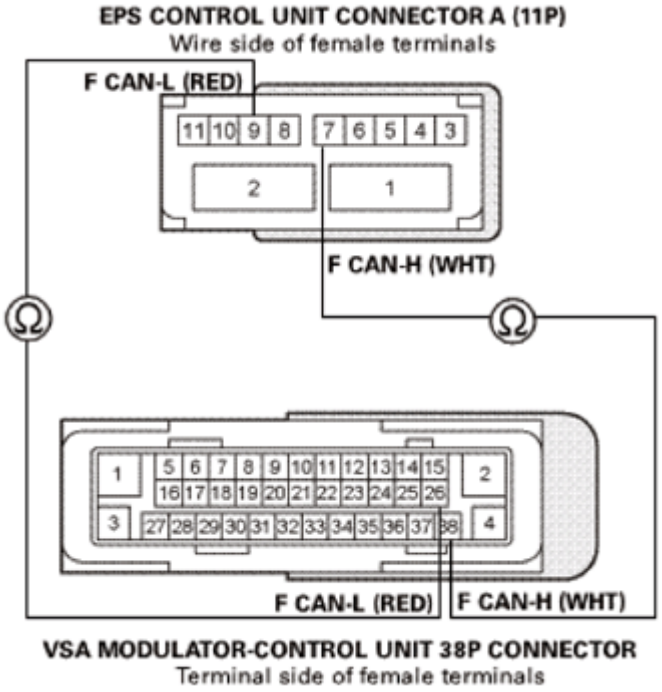

Fig. 72: Checking For Continuity Between Test Points 1 And 2
Courtesy of AMERICAN HONDA MOTOR CO., INC.

Is there continuity?

YES : The F CAN-H, F CAN-L wires are OK. Go to step 3.

NO : Repair open in the wire between the EPS control unit and the VSA modulator-control unit.

3. Open wire check (F CAN-H line, F CAN-L lines) 2:
   - 1. Reconnect the following connector.

     VSA modulator-control unit 38P connector

   - 2. Disconnect the following connectors.

     Steering angle sensor 4P connector

   - 3. Check for continuity between test points 1 and 2.

GETtheMANUALS.org

Test condition IG LOCK (0)

EPS control unit connector A (11P): disconnected

Steering angle sensor 4P connector: disconnected

Test circuit F CAN-H

Test point 1 EPS control unit connector A (11P) No. 7 (WHT)

Test point 2 Steering angle sensor 4P connector No. 2 (WHT)

Test circuit F CAN-L

Test point 1 EPS control unit connector A (11P) No. 9 (RED)

Test point 2 Steering angle sensor 4P connector No. 3 (RED)

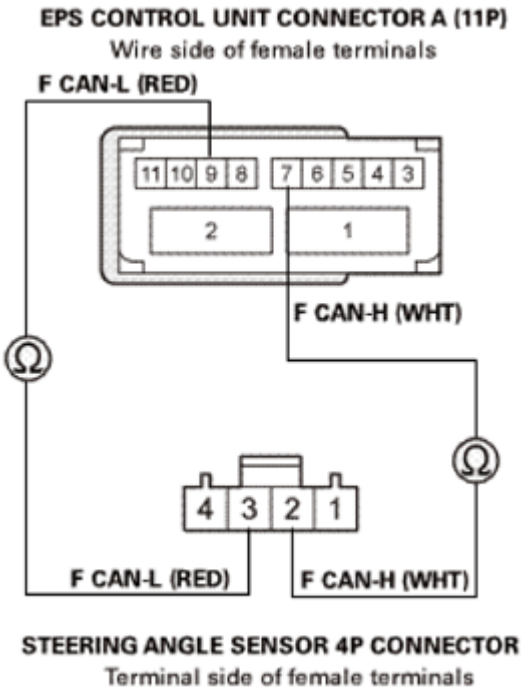

Fig. 73: Checking For Continuity Between Test Points 1 And 2
Courtesy of AMERICAN HONDA MOTOR CO., INC.

Is there continuity?

YES : The F CAN-H, F CAN-L wires are OK. Go to step 4.

NO : Repair open in the wire between the EPS control unit and the steering angle sensor.

GETtheMANUALS.org

4. EPS control unit check (update):
   - 1. Reconnect the following connectors.

     EPS control unit connector A (11P)

     VSA modulator-control unit 38P connector

   - 2. **Update the EPS control unit** See **EPS CONTROL UNIT REMOVAL AND INSTALLATION** or **EPS CONTROL UNIT UPDATE** if it does not have the latest software.
   - 3. Turn the ignition switch to LOCK (0), then turn it to ON (II) again.
   - 4. Wait 60 seconds or more.
   - 5. Check for DTCs with the HDS.

DTC Description	DTC	Freeze Frame
83-01 CAN Communication Failure		
83-02 CAN Communication Timeout Error		

Is DTC 83-01 or 83-02 indicated?

YES : **Replace the EPS control unit** See **EPS CONTROL UNIT REMOVAL AND INSTALLATION** or **EPS CONTROL UNIT UPDATE**.

NO : Troubleshooting is complete.

DTC 84-01: STEERING ANGLE SENSOR MALFUNCTION

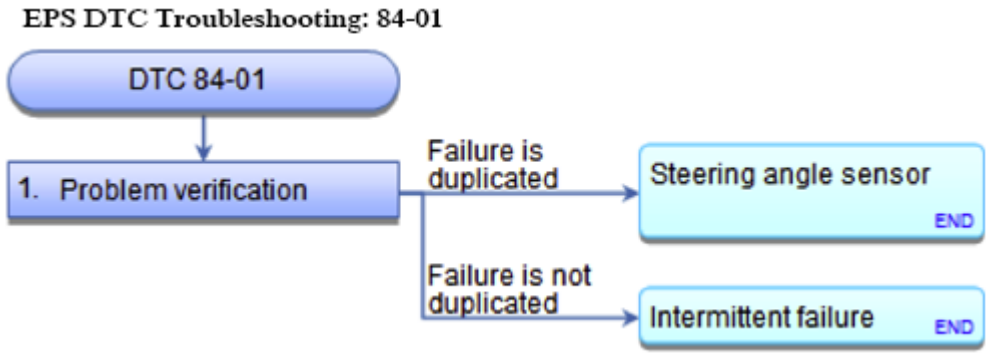

Fig. 74: EPS DTC Troubleshooting Flow Chart (Steering Angle Sensor Malfunction)
Courtesy of AMERICAN HONDA MOTOR CO., INC.

NOTE: **BEFORE YOU TROUBLESHOOT, RECORD ALL FREEZE DATA AND ANY ON-BOARD SNAPSHOT, AND REVIEW THE HOW TO TROUBLESHOOT THE EPS.**

DTC Description	DTC	Freeze Frame
84-01 Steering Angle Sensor Malfunction		

GETtheMANUALS.org

1. Problem verification:
    - 1. Turn the ignition switch to ON (II).
    - 2. Clear the DTC with the HDS.
    - 3. Turn the ignition switch to LOCK (0), then start the engine.
    - 4. Check for DTCs with the HDS.

DTC Description	DTC	Freeze Frame
84-01 Steering Angle Sensor Malfunction		

Is DTC 84-01 indicated?

YES : The failure is duplicated. **REPLACE THE STEERING ANGLE SENSOR** .

NO : Intermittent failure, the system is OK at this time.

EPS MOTOR REMOVAL AND INSTALLATION

REMOVAL

NOTE: Do not allow dust, dirt, or other foreign materials to enter the steering gearbox.

1. Vehicle Lift
    1. Raise the vehicle on a lift, and make sure it is securely supported.
2. Front Splash Shield
    1. Remove the bolts (A), then remove the clips (B) that secure the front inner fender and the front splash shield (C) to the body.
    2. From under the front bumper (D), remove the clips (E).
    3. From under the body, remove the clips (F), then pull out the front splash shield.

GETtheMANUALS.org

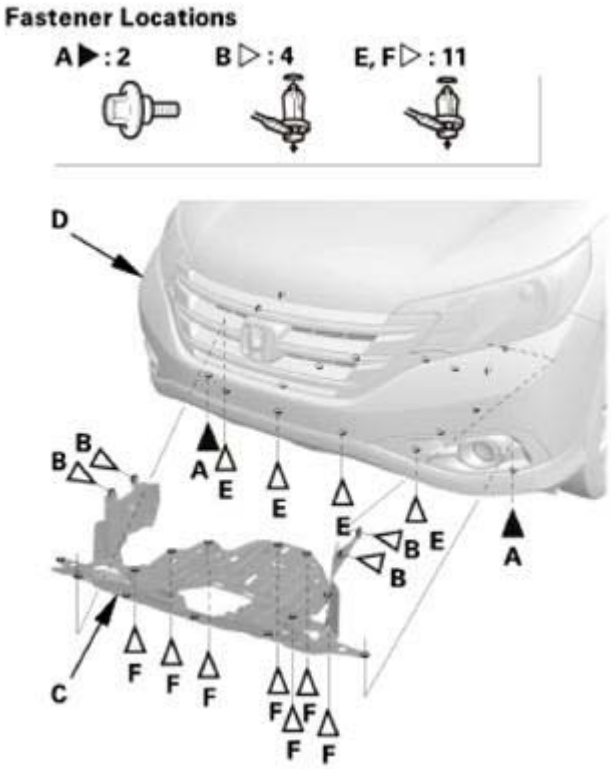

Fig. 75: Identifying Front Bumper, Splash Shield, Clips And Bolts
Courtesy of AMERICAN HONDA MOTOR CO., INC.

3. Front Floor Undercover
    1. Remove the bolts (A) and the clips (B, C) securing the front floor undercover (D), then remove the front floor undercover.

GETtheMANUALS.org

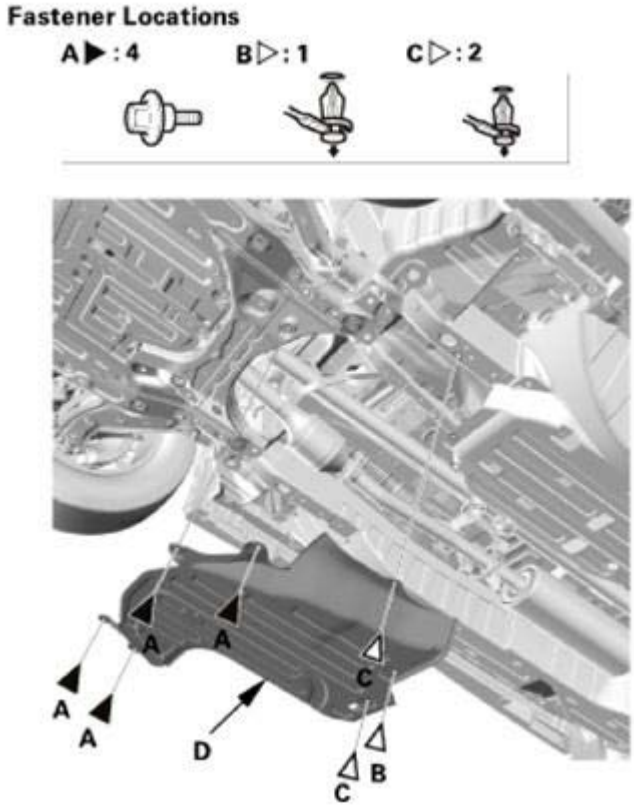

Fig. 76: Identifying Front Floor Undercover, Bolts And Clips
Courtesy of AMERICAN HONDA MOTOR CO., INC.

4. EPS Motor
    1. Disconnect the EPS motor connector (A) by pushing the lock (B) and pulling up the lever (C).
    2. Disconnect the EPS motor angle sensor connector (D).
    3. Remove the harness clips (E).

GETtheMANUALS.org

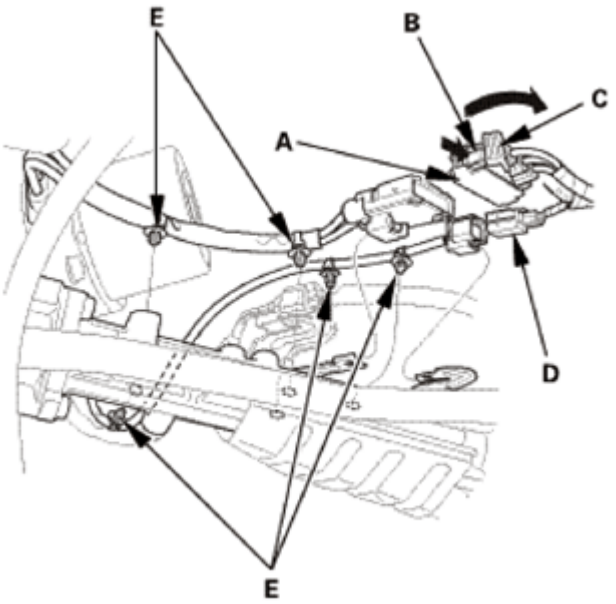

Fig. 77: Pushing Lock
Courtesy of AMERICAN HONDA MOTOR CO., INC.

4. Remove the EPS motor (A) and O-ring (B).

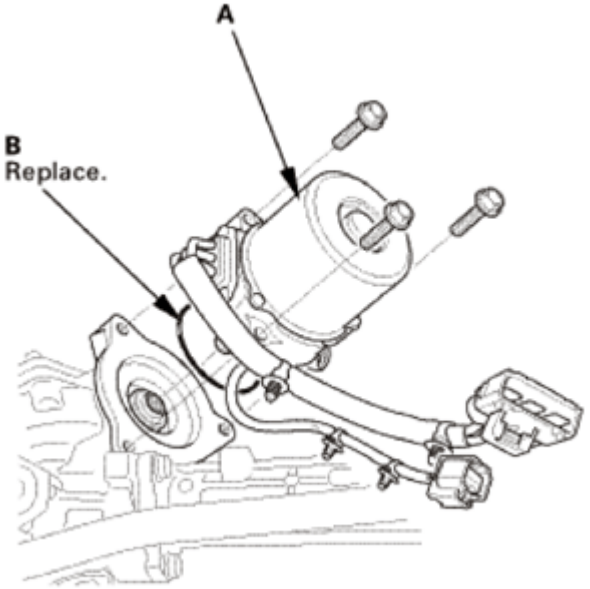

Fig. 78: Identifying EPS Motor And O-Ring
Courtesy of AMERICAN HONDA MOTOR CO., INC.

INSTALLATION

NOTE: **Do not allow dust, dirt, or other foreign materials to enter the steering gearbox.**

GETtheMANUALS.org

1. EPS Motor
    1. Apply steering grease to the new O-ring (A).
    2. Apply steering grease into the EPS motor shaft (B).
    3. Install the O-ring to the EPS motor (C).
    4. Install the EPS motor.

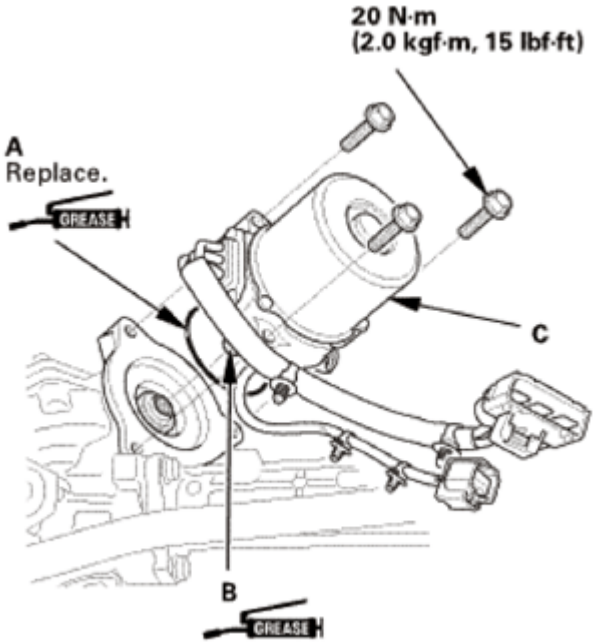

Fig. 79: Identifying Grease Applying Areas Of EPS Motor Shaft And O-Ring
Courtesy of AMERICAN HONDA MOTOR CO., INC.

5. Pull down the lever (A) of the EPS motor connector (B), then confirm the connector is fully seated.
6. Connect the EPS motor angle sensor connector (C)
7. Install the harness clips (D).

GETtheMANUALS.org

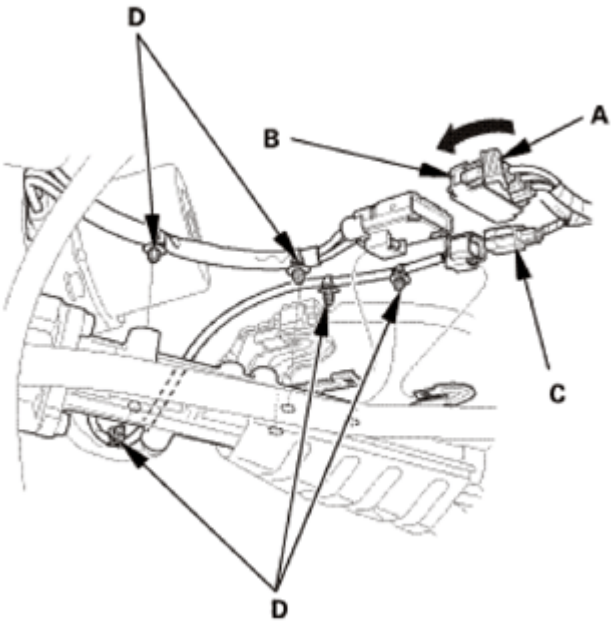

Fig. 80: Pulling Down EPS Motor Connector Lever
Courtesy of AMERICAN HONDA MOTOR CO., INC.

2. Front Floor Undercover
    1. Install the front floor undercover (A), then install the bolts (B) and the clips (C, D). Make sure the clips snap into place securely.

GETtheMANUALS.org

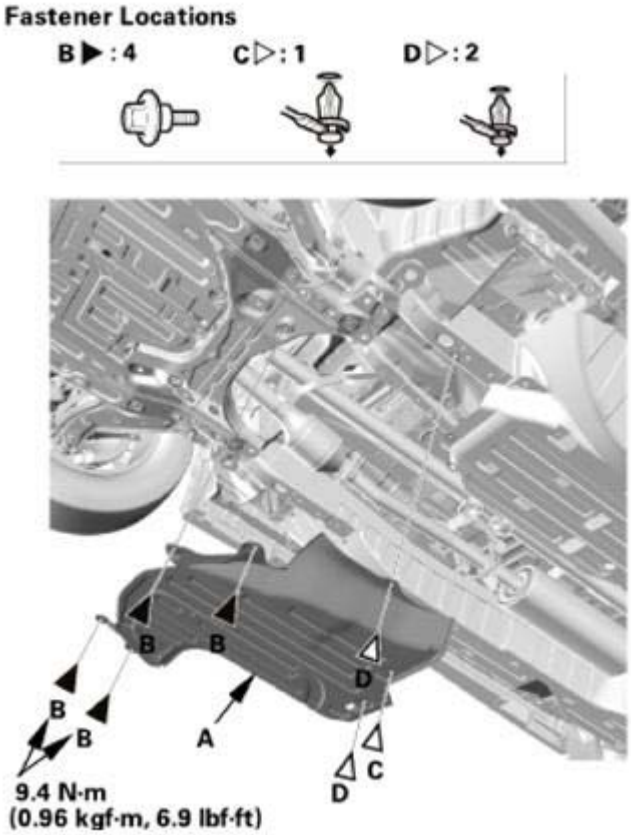

Fig. 81: Identifying Front Floor Undercover, Clips And Bolts With Torque Specifications
Courtesy of AMERICAN HONDA MOTOR CO., INC.

3. Front Splash Shield
    1. Install the front splash shield (A), then install the bolts (B) and the clips (C, D). Make sure the clips snap into place securely.

GETtheMANUALS.org

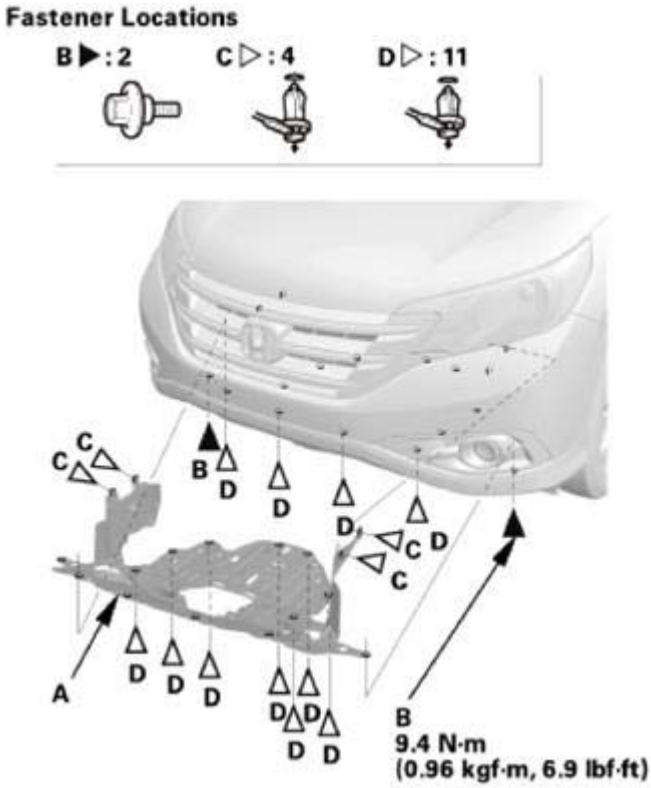

Fig. 82: Identifying Front Splash Shield, Clips And Bolts With Torque Specifications
Courtesy of AMERICAN HONDA MOTOR CO., INC.

EPS INDICATOR DOES NOT COME ON

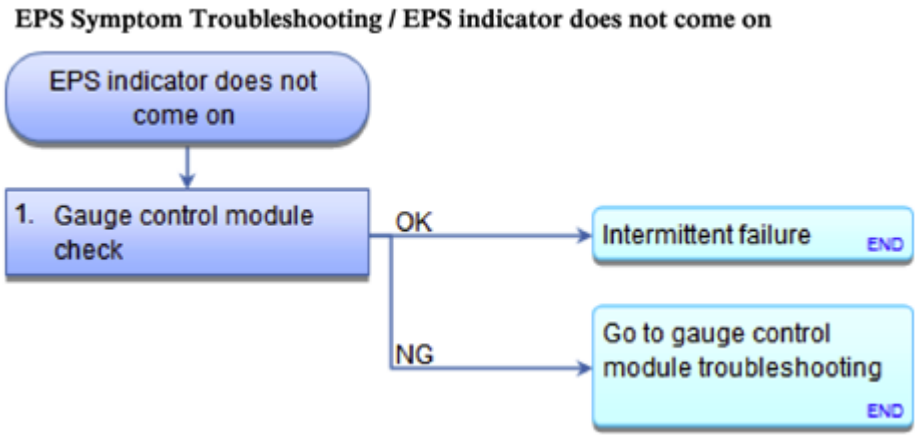

Fig. 83: EPS Symptom Troubleshooting Flow Chart
Courtesy of AMERICAN HONDA MOTOR CO., INC.

1. Gauge control module check:
    - 1. Turn the ignition switch to ON (II).
    - 2. Check the EPS indicator.

GETtheMANUALS.org

Does the EPS indicator come on?

YES : Intermittent failure, the system is OK at this time.

NO : **GO TO GAUGE CONTROL MODULE TROUBLESHOOTING** .

EPS INDICATOR DOES NOT GO OFF, AND NO DTCS ARE STORED

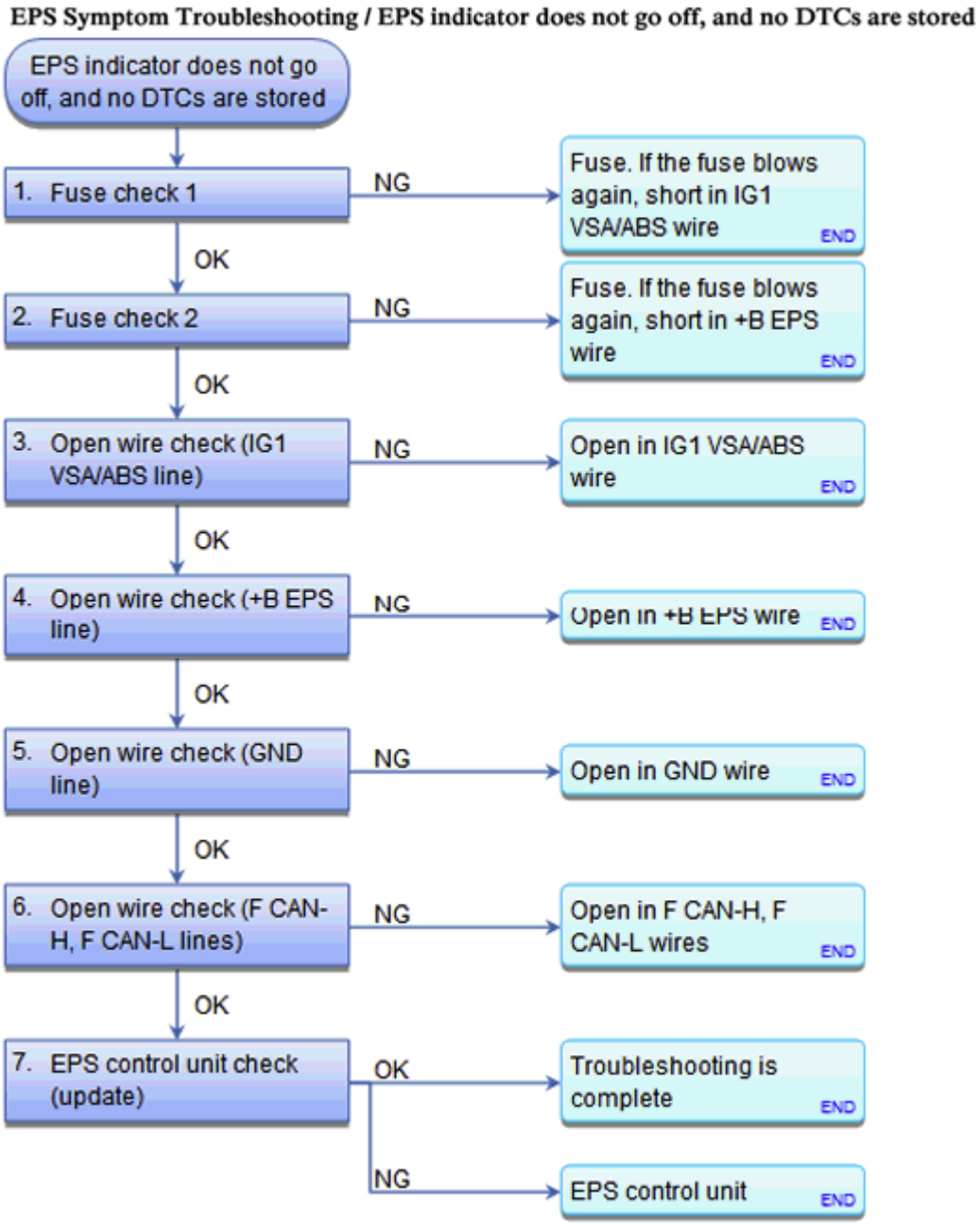

Fig. 84: EPS Symptom Troubleshooting Flow Chart (EPS Indicator Does Not Go Off, And No DTCs Are Stored)

GETtheMANUALS.org

Courtesy of AMERICAN HONDA MOTOR CO., INC.

1. Fuse check 1:
   - 1. Turn the ignition switch to LOCK (0).
   - 2. Check the following fuse.

     Fuse No. B24 (7.5 A)

     Location Under-dash fuse/relay box

   Is the fuse OK?

   YES : The fuse is OK. Reinstall the fuse, then go to step 2.

   NO : Replace the fuse. Turn the ignition switch to ON (II), then turn it to LOCK (0) again.

   If the fuse blows again, repair the short to ground on the No. B24 (7.5 A) fuse circuit.

2. Fuse check 2:
   - 1. Check the following fuse.

     Fuse No. A1-1 (70 A)

     Location Under-hood fuse/relay box

   Is the fuse OK?

   YES : The fuse is OK. Reinstall the fuse, then go to step 3.

   NO : Replace the fuse. If the fuse blows again, repair the short to ground on the No. A1-1 (70 A) fuse circuit.

3. Open wire check (IG1 VSA/ABS line):
   - 1. Disconnect the following connector.

     EPS control unit connector A (11P)

   - 2. Turn the ignition switch to ON (II).
   - 3. Measure the voltage between test points 1 and 2.

     Test condition IG ON (II)

     EPS control unit connector A (11P): disconnected

     Test circuit IG1 VSA/ABS

GETtheMANUALS.org

Test point 1 EPS control unit connector A (11P) No. 11 (PUR)

Test point 2 Body ground

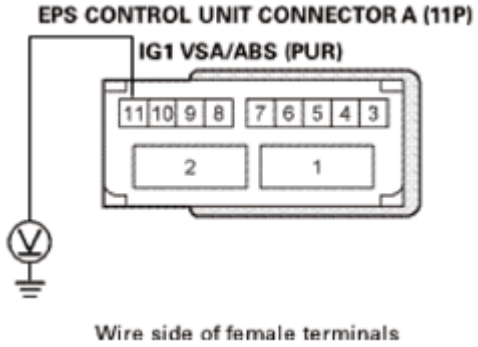

Fig. 85: Measuring Voltage Between Test Points 1 And 2
Courtesy of AMERICAN HONDA MOTOR CO., INC.

Is there battery voltage?

YES : The IG1 VSA/ABS wire is OK. Go to step 4.

NO : Repair an open in the wire between the EPS control unit and the No. B24 (7.5 A) fuse in the under-dash fuse/relay box.

4. Open wire check (+B EPS line):
   - 1. Turn the ignition switch to LOCK (0).
   - 2. Measure the voltage between test points 1 and 2.

     Test condition IG LOCK (0)

     EPS control unit connector A (11P): disconnected

     Test circuit +B EPS

     Test point 1 EPS control unit connector A (11P) No. 2 (WHT)

     Test point 2 Body ground

GETtheMANUALS.org

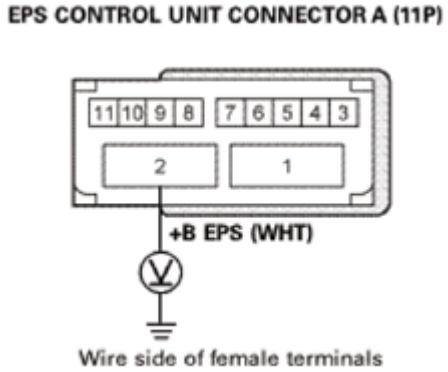

Fig. 86: Measuring Voltage Between Test Points 1 And 2
Courtesy of AMERICAN HONDA MOTOR CO., INC.

Is there battery voltage?

YES : The +B EPS wire is OK. Go to step 5.

NO : Repair an open in the wire between the EPS control unit and the No. A1-1 (70 A) fuse in the under-hood fuse/relay box.

5. Open wire check (GND line):
   - 1. Check for continuity between test points 1 and 2.

     Test condition IG LOCK (0)

     EPS control unit connector A (11P): disconnected

     Test circuit GND

     Test point 1 EPS control unit connector A (11P) No. 1 (BLK)

     Test point 2 Body ground

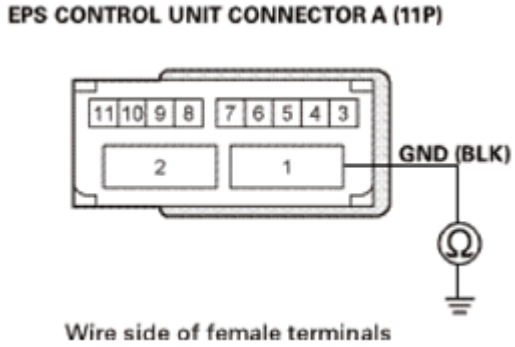

Fig. 87: Checking For Continuity Between Test Points 1 And 2
Courtesy of AMERICAN HONDA MOTOR CO., INC.

GETtheMANUALS.org

Is there continuity?

YES : The GND wire is OK. Go to step 6.

NO : Repair an open in the wire between the EPS control unit and body ground (G403).

6. Open wire check (F CAN-H, F CAN-L lines):
   - 1. Disconnect the following connector.

     Gauge control module 32P connector

   - 2. Check for continuity between test points 1 and 2.

     Test condition IG LOCK (0)

     EPS control unit connector A (11P): disconnected

     Gauge control module 32P connector: disconnected

     Test circuit F CAN-H

     Test point 1 EPS control unit connector A (11P) No. 7 (WHT)

     Test point 2 Gauge control module 32P connector No. 19 (WHT)

     Test circuit F CAN-L

     Test point 1 EPS control unit connector A (11P) No. 9 (RED)

     Test point 2 Gauge control module 32P connector No. 20 (RED)

GETtheMANUALS.org

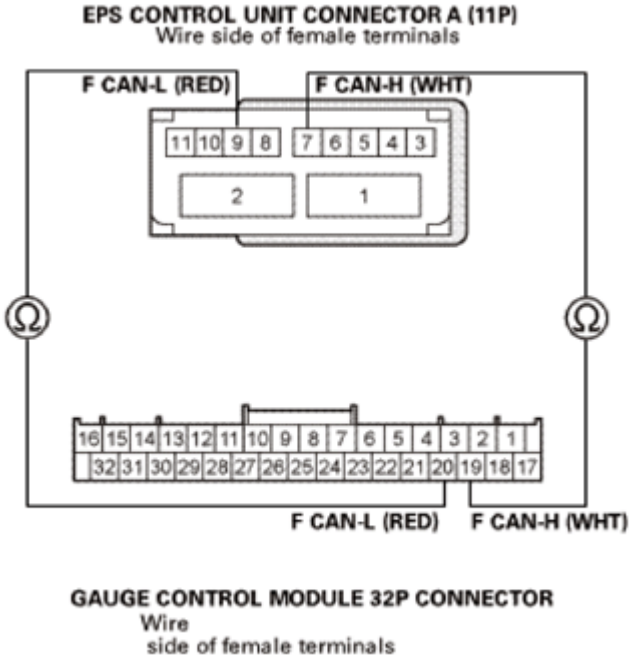

Fig. 88: Checking For Continuity Between Test Points 1 And 2
Courtesy of AMERICAN HONDA MOTOR CO., INC.

Is there continuity?

YES : The F CAN-H, F CAN-L wires are OK. Go to step 7.

NO : Repair an open in the wire between the EPS control unit and the gauge control module.

7. EPS control unit check (update):
   - 1. Reconnect the following connectors.

     EPS control unit connector A (11P)

     Gauge control module 32P connector

   - 2. **Update the EPS control unit** See **EPS CONTROL UNIT REMOVAL AND INSTALLATION** or **EPS CONTROL UNIT UPDATE** if it does not have the latest software.
   - 3. Turn the ignition switch to LOCK (0), then turn it to ON (II) again.
   - 4. Check the EPS indicator.

Does the EPS indicator come on, then go off?

YES : Troubleshooting is complete.

NO : **Replace the EPS control unit** See **EPS CONTROL UNIT REMOVAL AND INSTALLATION** or **EPS CONTROL UNIT UPDATE**.

GETtheMANUALS.org

EPS SYMPTOM TROUBLESHOOTING INDEX

When the vehicle has one of these symptoms, check for a diagnostic trouble code (DTC) with the HDS. If there is no DTC, do the diagnostic procedure for the symptom, in the sequence listed, until you find the cause.

Symptom	Diagnostic Procedure
HDS does not communicate with the EPS control unit or the vehicle	**TROUBLESHOOT THE DLC CIRCUIT** .
Steering pull	**SYMPTOM TROUBLESHOOTING** .
EPS indicator does not come on	**SYMPTOM TROUBLESHOOTING** .
EPS indicator does not go off, and no DTCs are stored	**SYMPTOM TROUBLESHOOTING** .
EPS indicator is not on, no DTCs are stored, but there is no power assist or power assist is reduced	○ 1. Check the EPS motor power wires between the EPS control unit and the EPS motor for a short to body ground. Repair as needed. ○ 2. If the EPS motor power wires are OK, replace the EPS motor (short in the EPS motor). ○ 3. Check the power and body ground connections at the EPS control unit.

STEERING PULL

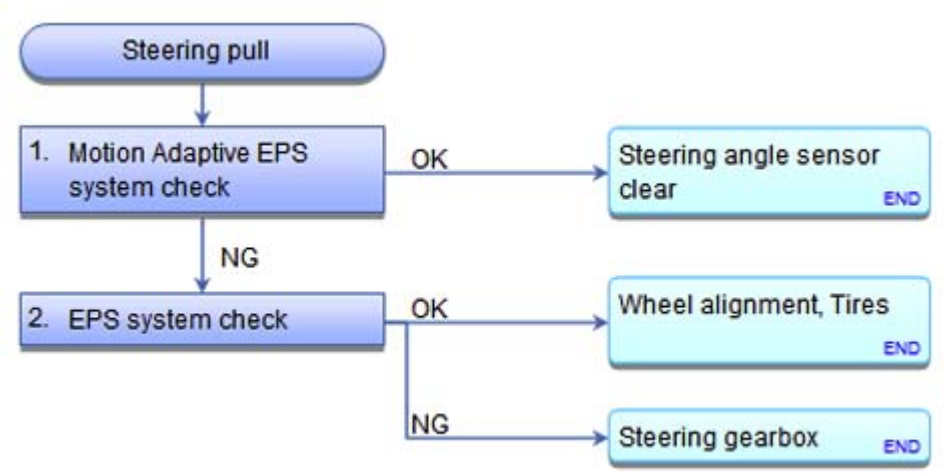

Fig. 89: EPS Symptom Troubleshooting Flow Chart (Steering Pull)
Courtesy of AMERICAN HONDA MOTOR CO., INC.

1. Motion Adaptive EPS system check:
   - 1. Turn off the Motion Adaptive EPS System operation with HDS.
   - 2. Test-drive the vehicle.

   Is there steering pull?

GETtheMANUALS.org

YES : Go to step 2.

NO : **DO THE STEERING ANGLE SENSOR NEUTRAL POSITION CLEAR** .

2. EPS system check:
   - 1. Turn the ignition switch to LOCK (0).
   - 2. Disconnect the following connector.

     EPS control unit connector A (11P)

   - Test-drive the vehicle.

Is there steering pull?

YES : Make sure the suspension is not modified, and **ADJUST THE WHEEL ALIGNMENT** . Also check the tire pressure, tire size, and for abnormal tread wear.

NO : Do the torque sensor neutral position memorization, then retest. If it is NG, **replace the steering gearbox** See **STEERING GEARBOX DISASSEMBLY AND REASSEMBLY** or **STEERING GEARBOX REMOVAL AND INSTALLATION** .

GETtheMANUALS.org

EMISSION APPLICATIONS

2013 CR-V

Engine & Fuel System	(1) Emission Control Systems & Devices	EGR Test No.
2.4L (144") 4-Cyl. SFI	**PCV, (2) EVAP, WU-TWC, TWC, FR, (2) SPK, AFS, HO2S, CEC, (2) MIL** EVAP-CPCSV, EVAP-CVSV, EVAP-EV, EVAP-TWV, EVAP-VC, EVAP-VCF, ORVR-FTVCV, ORVR-FTVRV, FTPS	...

(1) Major emission control systems and devices are listed in bold type. Components and other related devices are listed in light type.

(2) PCM-controlled.

GETtheMANUALS.org

THROTTLE BODY CLEANING

REMOVAL

CAUTION: Do not insert your fingers into the installed throttle body when you turn the ignition switch to ON (II) or while the ignition switch is in ON (II). If you do, you will seriously injure your fingers if the throttle valve is activated.

1. Air Cleaner Element - Inspection
    1. Check for damage to the air cleaner element. If the air cleaner element is damaged, replace it.

NOTE: Do not use compressed air to clean the air cleaner element.

2. Intake Air Duct
    1. Remove the intake air duct.

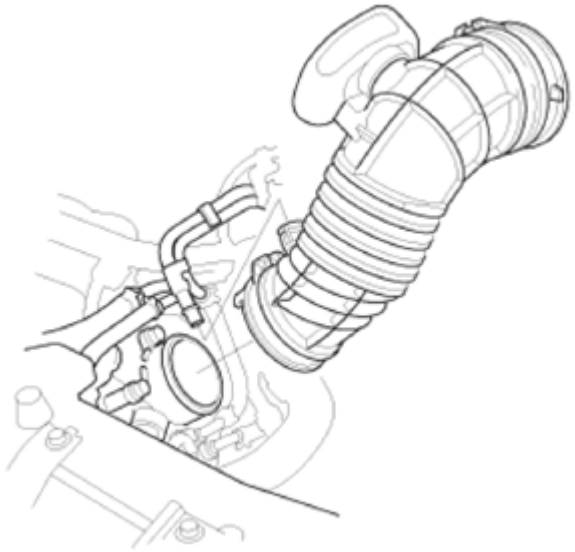

Fig. 1: Identifying Intake Air Duct
Courtesy of AMERICAN HONDA MOTOR CO., INC.

3. Throttle Body Assembly
    1. Disconnect the connector (A), then remove the clamps (B).

GETtheMANUALS.org

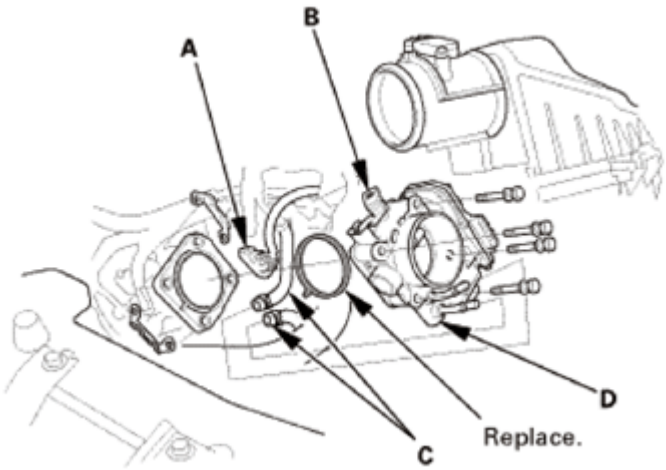

Fig. 2: Identifying Throttle Body, Water Bypass Hoses, Connector And Clamps
Courtesy of AMERICAN HONDA MOTOR CO., INC.

2. Disconnect the water bypass hoses (C), and plug them.
3. Remove the throttle body (D).

CLEANING

1. Throttle Body - Cleaning
    1. Clean off the carbon from the throttle valve and inside the throttle body with a paper towel soaked carburetor cleaner.

NOTE:

- **Remove the throttle body to clean it.**
- **Be careful not to pinch your fingers.**
- **To avoid removing the molybdenum coating, do not clean the bearing area of the throttle shaft (A).**
- **Do not spray carburetor cleaner directly on the throttle body.**
- **Use genuine Honda carburetor cleaner.**

GETtheMANUALS.org

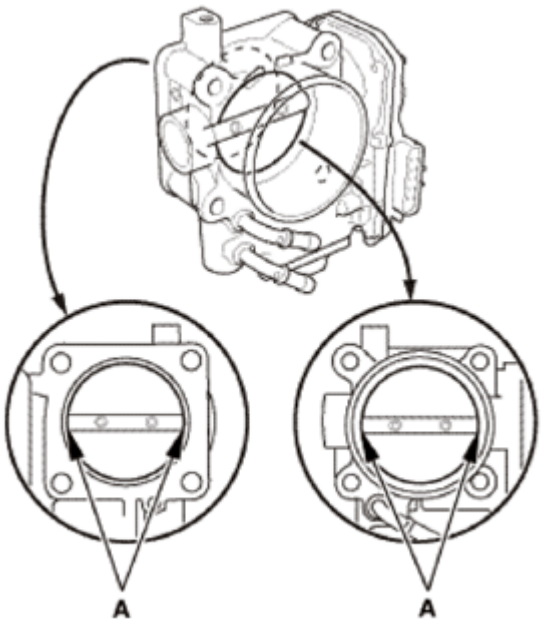

Fig. 3: Identifying Throttle Body
Courtesy of AMERICAN HONDA MOTOR CO., INC.

INSTALLATION

CAUTION: Do not insert your fingers into the installed throttle body when you turn the ignition switch to ON (II) or while the ignition switch is in ON (II). If you do, you will seriously injure your fingers if the throttle valve is activated.

1. Throttle Body Assembly
    1. Install the throttle body (A) with a new gasket (B).

NOTE: If the throttle body is dirty, clean it before installation.

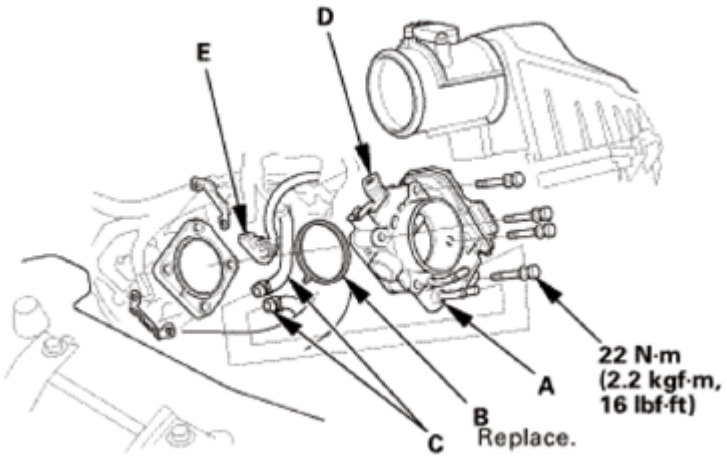

Fig. 4: Identifying Throttle Body, Water Bypass Hoses, Connector, Gasket And Clamp

GETtheMANUALS.org

Courtesy of AMERICAN HONDA MOTOR CO., INC.

2. Remove the plug then connect the water bypass hoses (C)
3. Install the clamp (D) and connect the connector (E).

2. Intake Air Duct
   1. Install the intake air duct.

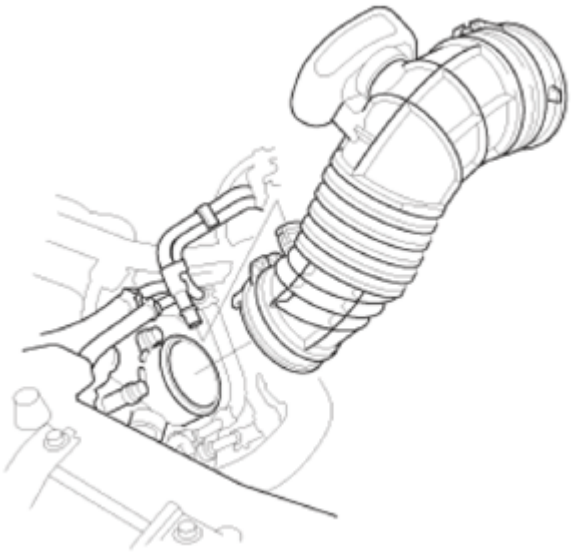

Fig. 5: Identifying Intake Air Duct
Courtesy of AMERICAN HONDA MOTOR CO., INC.

3. Coolant - Check
   1. Check at the coolant level in the coolant reservoir. Make sure it is between the MAX mark (A) and MIN mark (B).
   2. If the coolant level in the coolant reservoir is at or below the MIN mark, add coolant to bring it between the MIN and MAX marks, then inspect the cooling system for leaks.
   3. Check the coolant level in the radiator, and add Honda Long Life Antifreeze/Coolant Type 2 into the radiator up to the base of the filler neck, if needed.

NOTE:

- **Always use Honda Long Life Antifreeze/Coolant Type 2. Using a non-Honda coolant can result in corrosion, causing the cooling system to malfunction or fail.**
- **Honda Long Life Antifreeze/Coolant Type 2 is a mixture of 50 % antifreeze and 50 % water. Do not add water.**

GETtheMANUALS.org

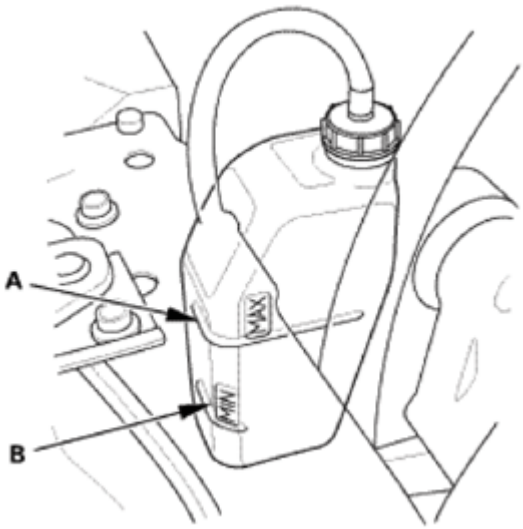

Fig. 6: Identifying MIN And MAX Marks On Coolant Reservoir
Courtesy of AMERICAN HONDA MOTOR CO., INC.

4. HDS DLC - Connection
    1. Connect the HDS to the data link connector (DLC) (A) located under the driver's side of the dashboard.
    2. Turn the ignition switch to ON (II).
    3. Make sure the HDS communicates with the vehicle. If it does not communicate, go to the DLC circuit troubleshooting.

Fig. 7: Identifying Data Link Connector
Courtesy of AMERICAN HONDA MOTOR CO., INC.

5. PCM - Reset
    1. Reset the PCM with the HDS while the engine is stopped.
    2. Turn the ignition switch to LOCK (0).

GETtheMANUALS.org

   3. Turn the ignition switch to ON (II), and wait 30 seconds.
6. TP Position - Check
   1. Select the INSPECTION MENU on the HDS.
   2. Do the TP POSITION CHECK in the ETCS TEST.
   3. Turn the ignition switch to LOCK (0).
7. Warm Up The Engine

   Start the engine. Hold the engine speed at 3, 000 rpm without load in P or N until the radiator fan comes on, then let it idle.

8. PCM - Idle Learn
   1. Let the engine idle for about 5 minutes with the throttle fully closed.

      NOTE: If the radiator fan comes on, do not include its running time in the 5 minutes.

   2. After learning, turn the ignition switch to LOCK (0).

THROTTLE BODY DISASSEMBLY AND REASSEMBLY

EXPLODED VIEW

1. Throttle Body - Disassembly/Reassembly

GETtheMANUALS.org

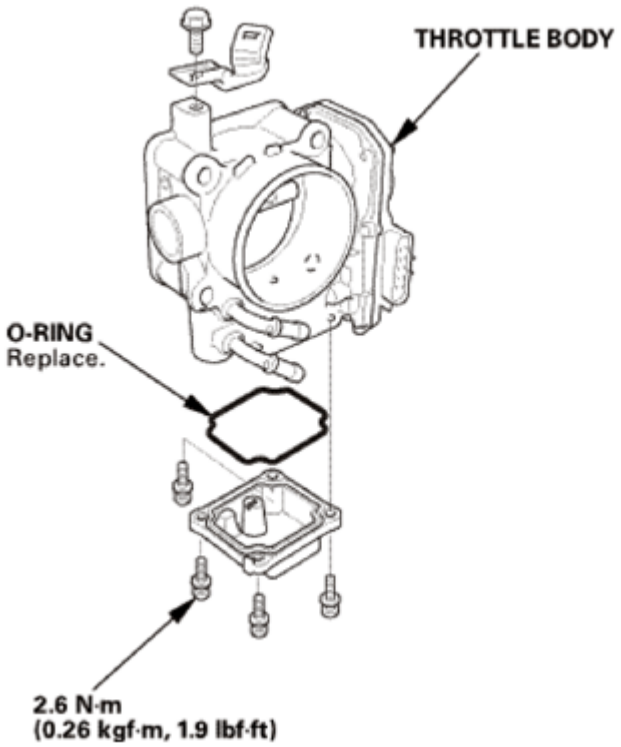

Fig. 8: Identifying Throttle Body, O-Ring And Mounting Bolt With Torque Specifications
Courtesy of AMERICAN HONDA MOTOR CO., INC.

THROTTLE BODY REMOVAL AND INSTALLATION

REMOVAL

CAUTION: Do not insert your fingers into the installed throttle body when you turn the ignition switch to ON (II) or while the ignition switch is in ON (II). If you do, you will seriously injure your fingers if the throttle valve is activated.

1. Intake Air Duct
    1. Remove the intake air duct.

GETtheMANUALS.org

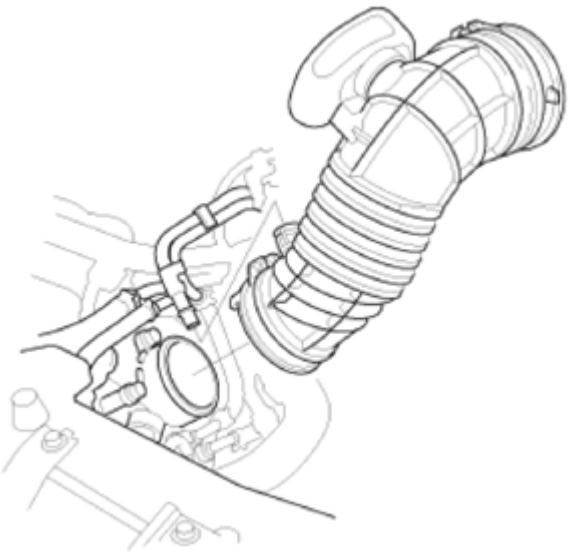

Fig. 9: Identifying Intake Air Duct
Courtesy of AMERICAN HONDA MOTOR CO., INC.

2. Throttle Body Assembly
    1. Disconnect the connector (A), then remove the clamps (B).

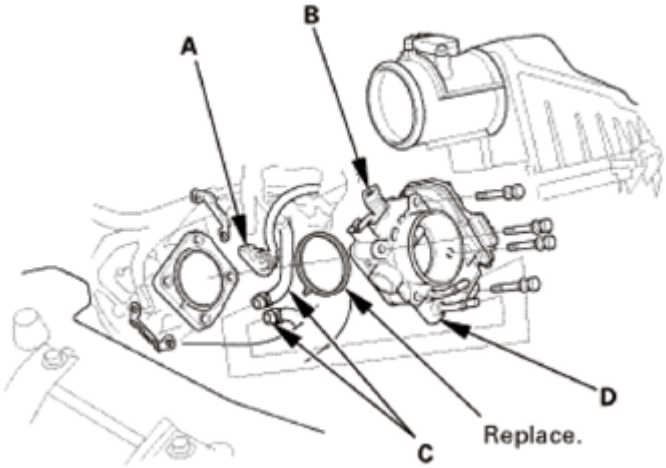

Fig. 10: Identifying Throttle Body, Water Bypass Hoses, Connector And Clamps
Courtesy of AMERICAN HONDA MOTOR CO., INC.

    2. Disconnect the water bypass hoses (C), and plug them.
    3. Remove the throttle body (D).

INSTALLATION

CAUTION: Do not insert your fingers into the installed throttle body when you turn the ignition switch to ON (II) or while the ignition switch is in ON (II). If you

GETtheMANUALS.org

do, you will seriously injure your fingers if the throttle valve is activated.

1. Throttle Body Assembly
    1. Install the throttle body (A) with a new gasket (B).

NOTE: If the throttle body is dirty, clean it before installation.

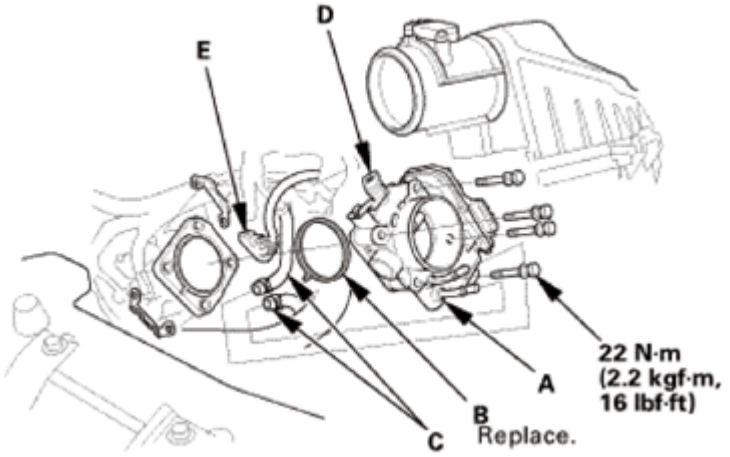

Fig. 11: Identifying Throttle Body, Water Bypass Hoses, Connector, Gasket And Clamp With Torque Specification
Courtesy of AMERICAN HONDA MOTOR CO., INC.

    2. Remove the plug then connect the water bypass hoses (C)
    3. Install the clamp (D) and connect the connector (E).
2. Intake Air Duct
    1. Install the intake air duct.

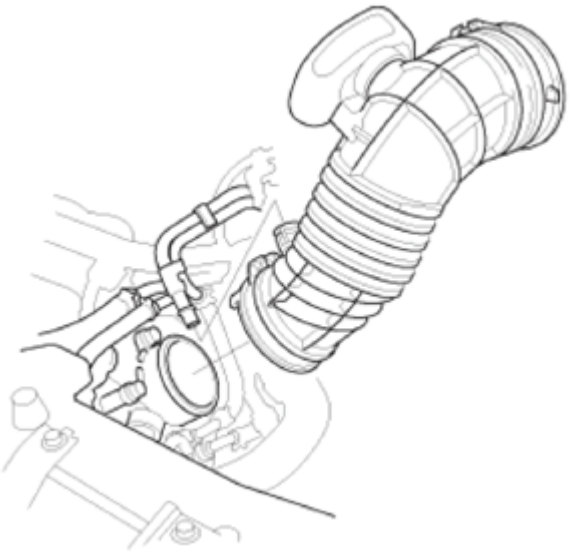

GETtheMANUALS.org

Fig. 12: Identifying Intake Air Duct
Courtesy of AMERICAN HONDA MOTOR CO., INC.

3. Coolant - Check
    1. Check at the coolant level in the coolant reservoir. Make sure it is between the MAX mark (A) and MIN mark (B).
    2. If the coolant level in the coolant reservoir is at or below the MIN mark, add coolant to bring it between the MIN and MAX marks, then inspect the cooling system for leaks.
    3. Check the coolant level in the radiator, and add Honda Long Life Antifreeze/Coolant Type 2 into the radiator up to the base of the filler neck, if needed.

NOTE:

- **Always use Honda Long Life Antifreeze/Coolant Type 2. Using a non-Honda coolant can result in corrosion, causing the cooling system to malfunction or fail.**
- **Honda Long Life Antifreeze/Coolant Type 2 is a mixture of 50 % antifreeze and 50 % water. Do not add water.**

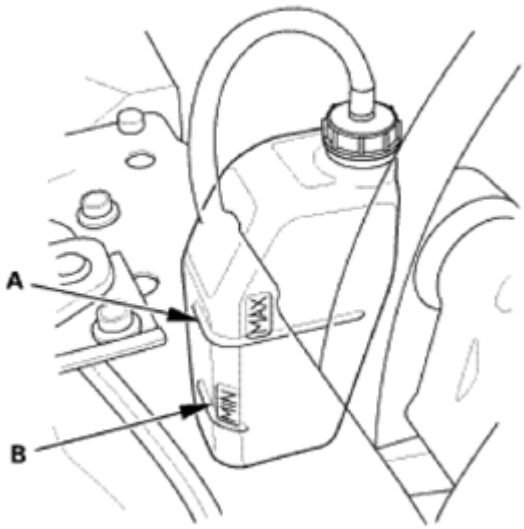

Fig. 13: Identifying MAX And MIN Marks On Coolant Reservoir
Courtesy of AMERICAN HONDA MOTOR CO., INC.

4. HDS DLC - Connection
    1. Connect the HDS to the data link connector (DLC) (A) located under the driver's side of the dashboard.
    2. Turn the ignition switch to ON (II).
    3. Make sure the HDS communicates with the vehicle. If it does not communicate, go to the DLC circuit troubleshooting.

GETtheMANUALS.org

Fig. 14: Identifying Data Link Connector
Courtesy of AMERICAN HONDA MOTOR CO., INC.

5. PCM - Reset
    1. Reset the PCM with the HDS while the engine is stopped.
    2. Turn the ignition switch to LOCK (0).
    3. Turn the ignition switch to ON (II), and wait 30 seconds.
6. TP Position - Check
    1. Select the INSPECTION MENU on the HDS.
    2. Do the TP POSITION CHECK in the ETCS TEST.
    3. Turn the ignition switch to LOCK (0).
7. Warm Up The Engine

    Start the engine. Hold the engine speed at 3, 000 rpm without load in P or N until the radiator fan comes on, then let it idle.

8. PCM - Idle Learn
    1. Let the engine idle for about 5 minutes with the throttle fully closed.

        NOTE: If the radiator fan comes on, do not include its running time in the 5 minutes.

    2. After learning, turn the ignition switch to LOCK (0).

THROTTLE BODY TEST

TEST

1. HDS DLC - Connection

GETtheMANUALS.org

1. Connect the HDS to the data link connector (DLC) (A) located under the driver's side of the dashboard.
2. Turn the ignition switch to ON (II).
3. Make sure the HDS communicates with the vehicle. If it does not communicate, go to the DLC circuit troubleshooting.

Fig. 15: Identifying Data Link Connector
Courtesy of AMERICAN HONDA MOTOR CO., INC.

2. Warm Up The Engine

   Start the engine. Hold the engine speed at 3, 000 rpm without load in P or N until the radiator fan comes on, then let it idle.

3. Throttle Body - Test
   1. Check the REL TP SENSOR in the DATA LIST with the HDS. The reading should be below 2.46 percent. If it is not, clean the throttle body.

UNDER-FLOOR TWC REMOVAL AND INSTALLATION

SPECIAL TOOL DESCRIPTION

Image	Description/Tool Number
	O2 Sensor Socket Wrench Snap-on SWR2 or O2 Sensor Wrench Snap-on YA8875, commercially available

GETtheMANUALS.org

REMOVAL

1. Vehicle Lift
    1. Raise the vehicle on a lift, and make sure it is securely supported.
2. Front Floor Undercover
    1. Remove the bolts (A) and the clips (B, C) securing the front floor undercover (D), then remove the front floor undercover.

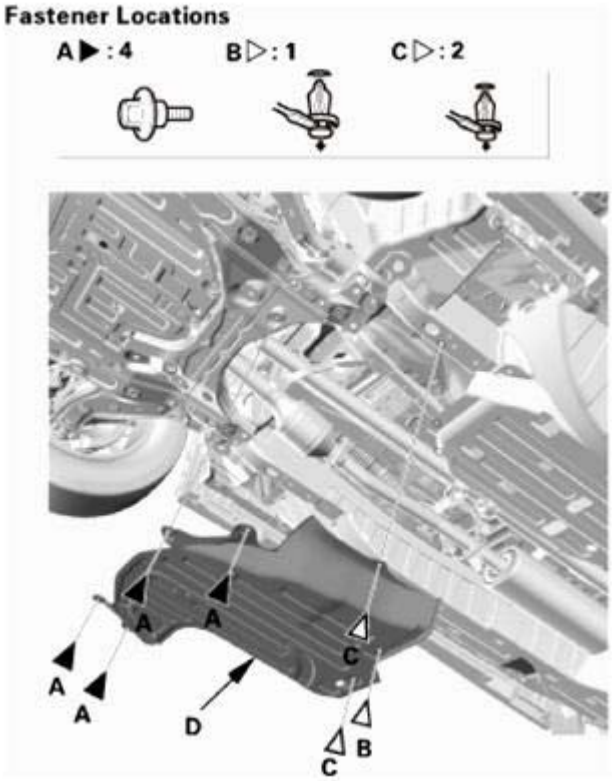

GETtheMANUALS.org

Fig. 16: Identifying Front Floor Undercover Fasteners
Courtesy of AMERICAN HONDA MOTOR CO., INC.

3. Secondary HO2S
    1. Remove the secondary HO2S (A).

Fig. 17: Identifying Secondary HO2S
Courtesy of AMERICAN HONDA MOTOR CO., INC.

4. Under-Floor TWC
    1. Remove the under-floor TWC (A).

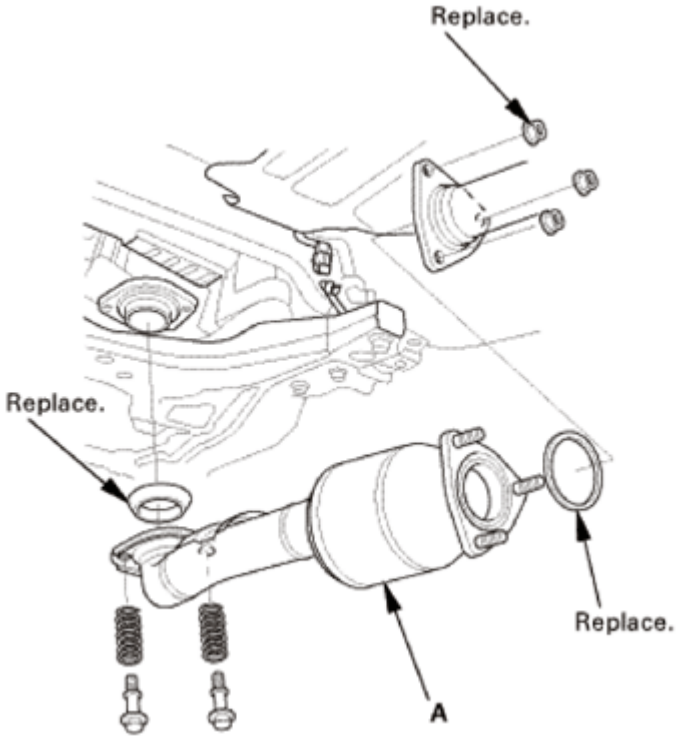

GETtheMANUALS.org

Fig. 18: Identifying Under-Floor TWC And Related Components
Courtesy of AMERICAN HONDA MOTOR CO., INC.

INSTALLATION

1. Under-Floor TWC
    1. Install the under-floor TWC (A) with new gaskets (B).

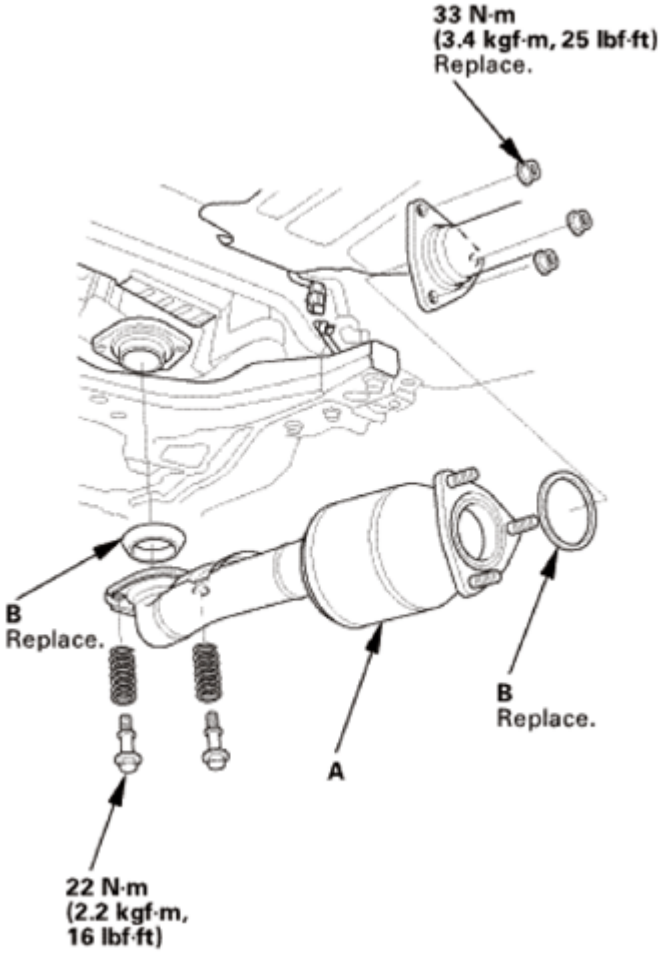

Fig. 19: Identifying Under-Floor TWC And Bolt With Torque Specifications
Courtesy of AMERICAN HONDA MOTOR CO., INC.

2. Secondary HO2S
    1. Install the secondary HO2S (A).

GETtheMANUALS.org

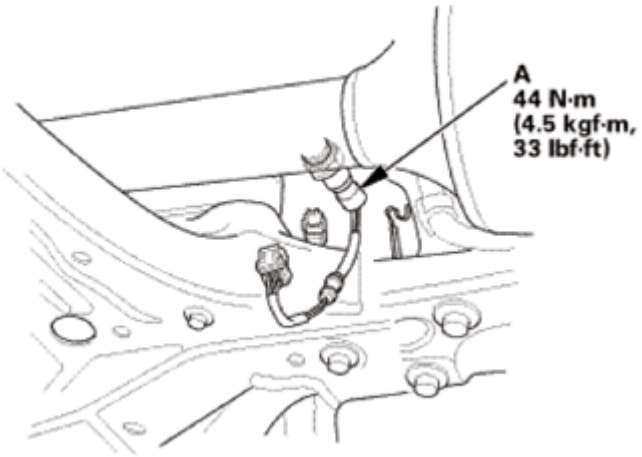

Fig. 20: Identifying Secondary HO2S And Bolt With Torque Specifications
Courtesy of AMERICAN HONDA MOTOR CO., INC.

3. Front Floor Undercover
    1. Install the front floor undercover (A), then install the bolts (B) and the clips (C, D). Make sure the clips snap into place securely.

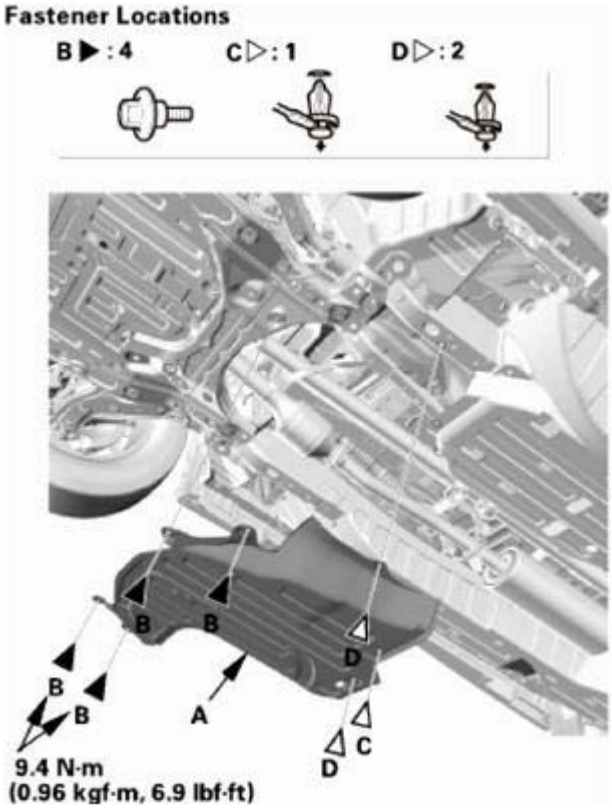

Fig. 21: Identifying Front Floor Undercover Fasteners
Courtesy of AMERICAN HONDA MOTOR CO., INC.

GETtheMANUALS.org

WARM UP TWC REMOVAL AND INSTALLATION

SPECIAL TOOL DESCRIPTION

Image	Description/Tool Number
	O2 Sensor Socket Wrench Snap-on SWR2 or O2 Sensor Wrench Snap-on YA8875, commercially available

REMOVAL

1. Vehicle Lift
    1. Raise the vehicle on a lift, and make sure it is securely supported.
2. Front Splash Shield
    1. Remove the bolts (A), then remove the clips (B) that secure the front inner fender and the front splash shield (C) to the body.
    2. From under the front bumper (D), remove the clips (E).
    3. From under the body, remove the clips (F), then pull out the front splash shield.

GETtheMANUALS.org

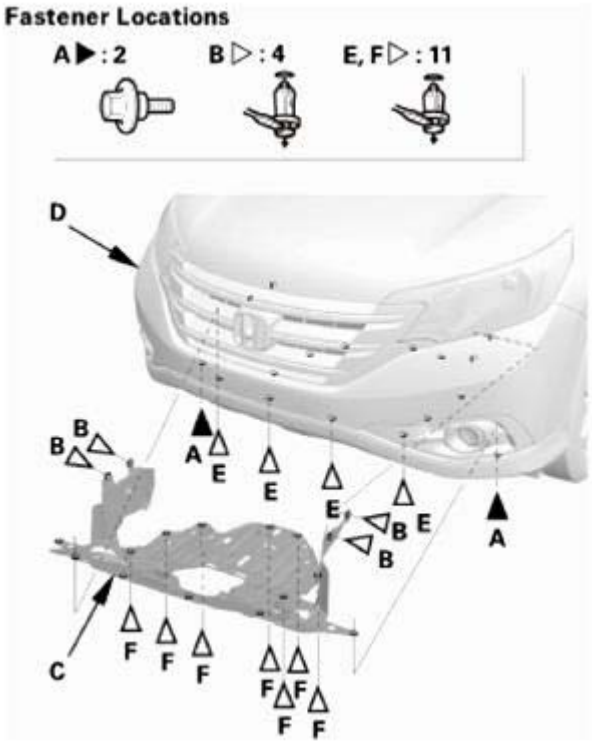

Fig. 22: Identifying Front Splash Shield Fasteners
Courtesy of AMERICAN HONDA MOTOR CO., INC.

3. Both Windshield Wiper Arm Assemblies

NOTE: Set the wiper arms to the auto-stop position before removal.

1. Remove the caps (A) and nuts (B).
2. Remove the wiper arms (C).

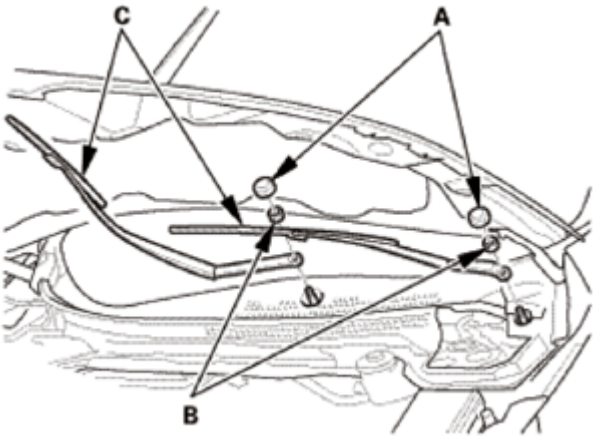

Fig. 23: Identifying Wiper Arm, Caps And Nuts
Courtesy of AMERICAN HONDA MOTOR CO., INC.

GETtheMANUALS.org

4. Front Fender Trim - Both Sides

NOTE: Repeat on the opposite side.

1. Remove the clips (A, B).
2. Pull up the front fender trim (C) by hand to detach the clips (D), then remove the trim.

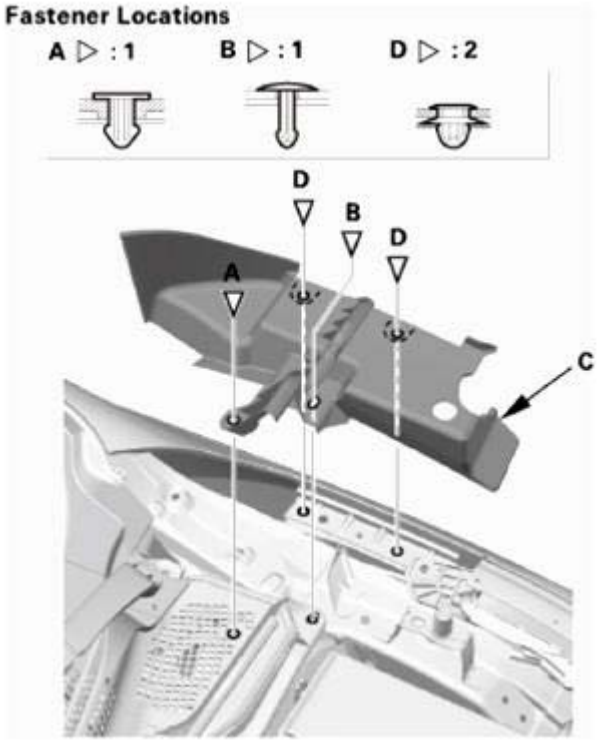

Fig. 24: Identifying Front Fender Trim Fasteners
Courtesy of AMERICAN HONDA MOTOR CO., INC.

5. Cowl Top Cover - Both Sides

NOTE: Repeat this procedure on the opposite side.

1. Remove the clip (A).
2. Pull out the hood rear seal (B).
3. Detach the hooks, and remove the cowl top cover (C).

GETtheMANUALS.org

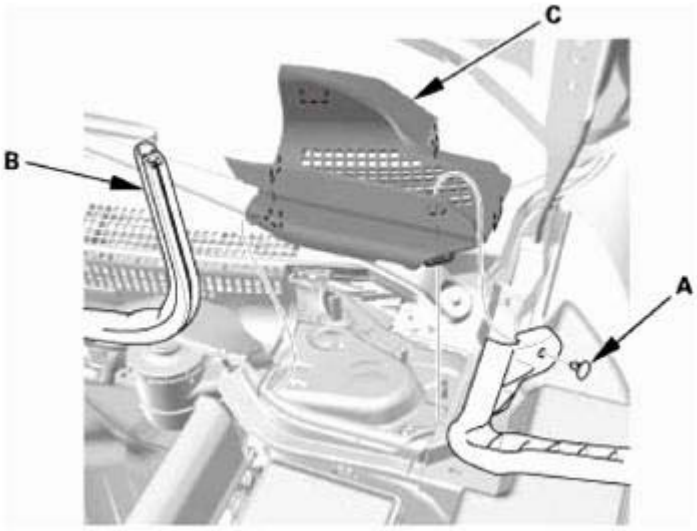

Fig. 25: Identifying Cowl Top Cover, Hood Rear Seal And Clip
Courtesy of AMERICAN HONDA MOTOR CO., INC.

6. Side Cowl Cover - Both Sides

NOTE: Repeat on the opposite side.

1. Detach the hook (A) at the inside of the cowl cover (B).
2. Release the hooks (C) from the cowl cover and the front fender (D), then remove the side cowl cover (E).
3. Right side; Detach the windshield washer tube.

GETtheMANUALS.org

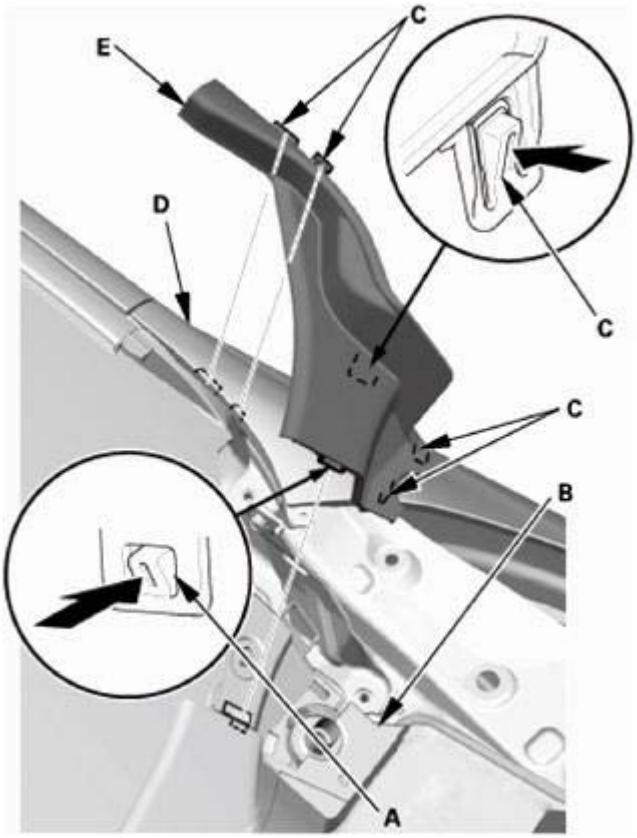

Fig. 26: Removing Side Cowl Cover
Courtesy of AMERICAN HONDA MOTOR CO., INC.

7. Center Cowl Cover
    1. Remove the clips (A).
    2. Carefully pull the center cowl cover (B) forward to release the hooks (C) from the windshield and the body.

GETtheMANUALS.org

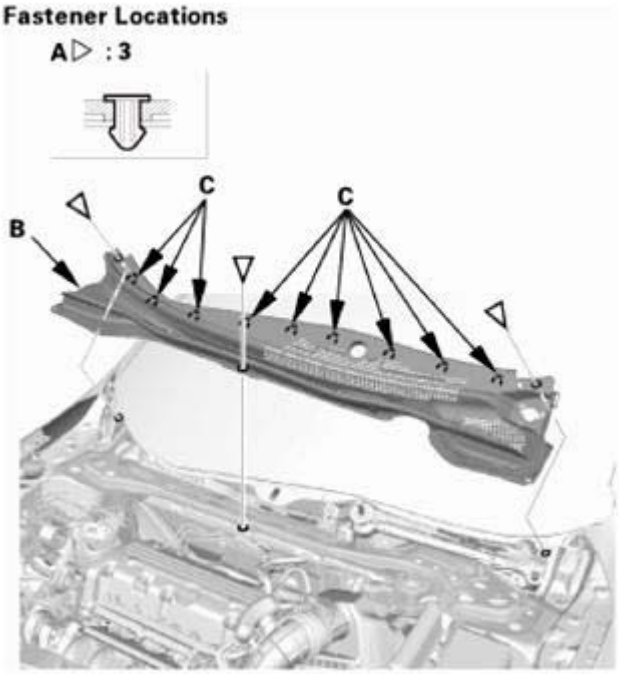

Fig. 27: Identifying Center Cowl Cover And Fasteners
Courtesy of AMERICAN HONDA MOTOR CO., INC.

8. Under-Cowl Panel
    1. Disconnect the connector (A).
    2. Remove the bolts and the nuts, then remove the under-cowl panel (B).
    3. Remove the wire harness (C) from the under-cowl panel.

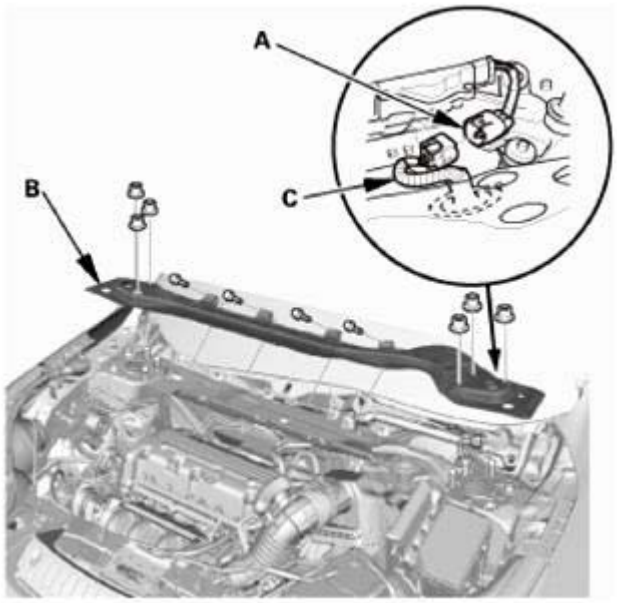

Fig. 28: Identifying Under-Cowl Panel, Connecter And Wire Harness

GETtheMANUALS.org

Courtesy of AMERICAN HONDA MOTOR CO., INC.

9. A/F Sensor
    1. Remove the A/F sensor (A).

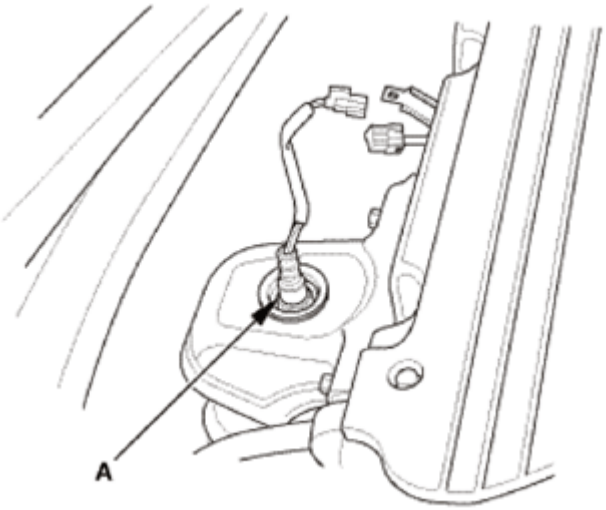

Fig. 29: Identifying A/F Sensor
Courtesy of AMERICAN HONDA MOTOR CO., INC.

10. Exhaust Chamber Cover
    1. Remove the exhaust chamber cover (A).

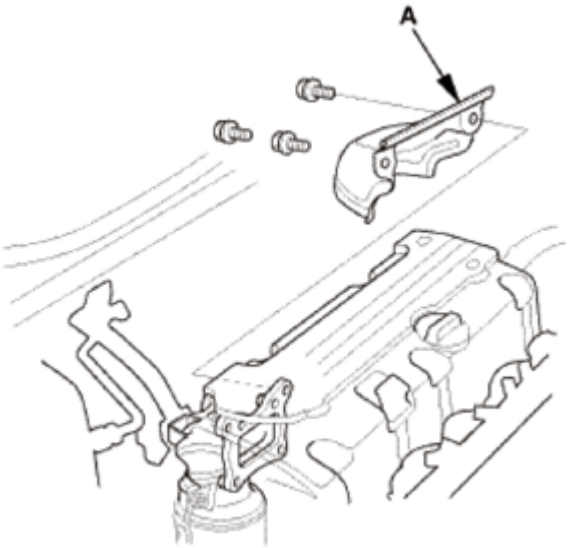

Fig. 30: Identifying Exhaust Chamber Cover
Courtesy of AMERICAN HONDA MOTOR CO., INC.

11. WU-TWC

GETtheMANUALS.org

1. Separate the lower side of the WU-TWC (A) from the under-floor TWC (B).

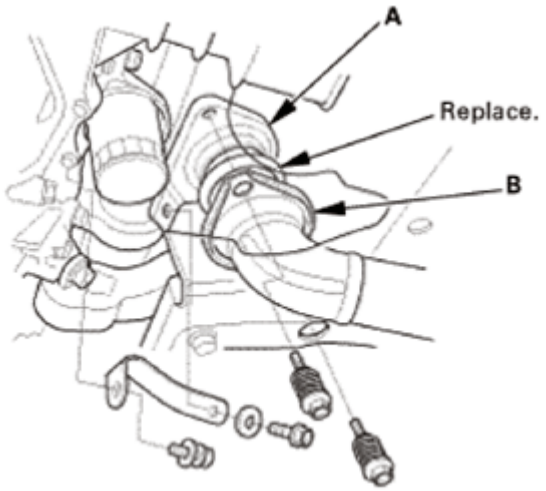

Fig. 31: Identifying WU-TWC Lower Side And Under-Floor TWC
Courtesy of AMERICAN HONDA MOTOR CO., INC.

2. Remove the WU-TWC (C).
3. Remove the WU-TWC cover (D).

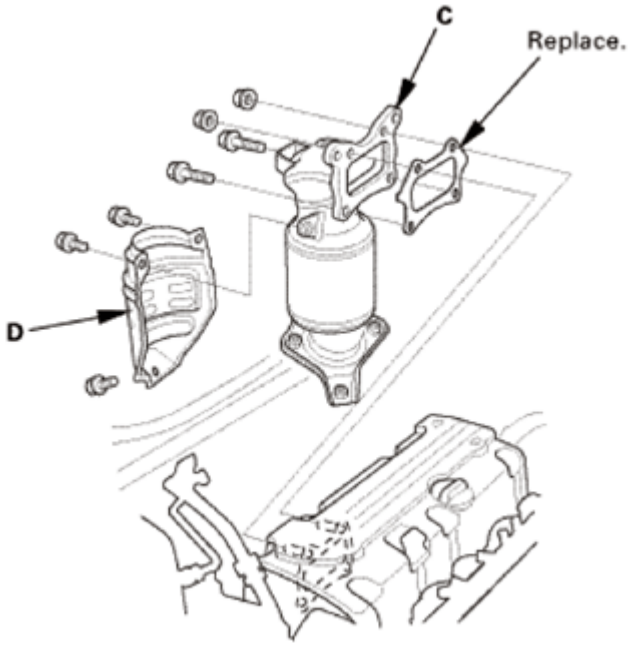

Fig. 32: Identifying WU-TWC And Cover
Courtesy of AMERICAN HONDA MOTOR CO., INC.

INSTALLATION

GETtheMANUALS.org

1. WU-TWC
    1. Install the upper side of the WU-TWC (A) with a new gasket (B).
    2. Install the WU-TWC cover (C).

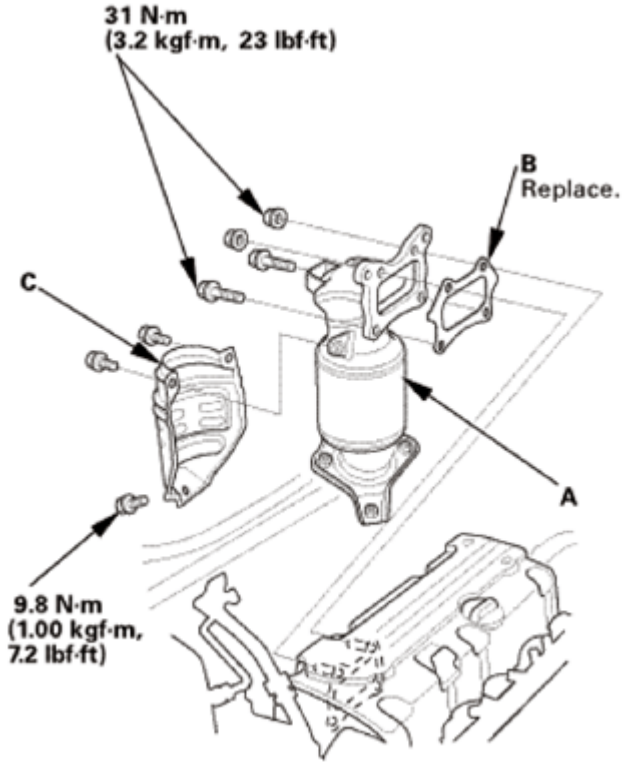

Fig. 33: Identifying WU-TWC, Cover, Gasket And Mounting Bolt With Torque Specifications
Courtesy of AMERICAN HONDA MOTOR CO., INC.

3. Install the lower side of the WU-TWC with a new gasket (A).

GETtheMANUALS.org

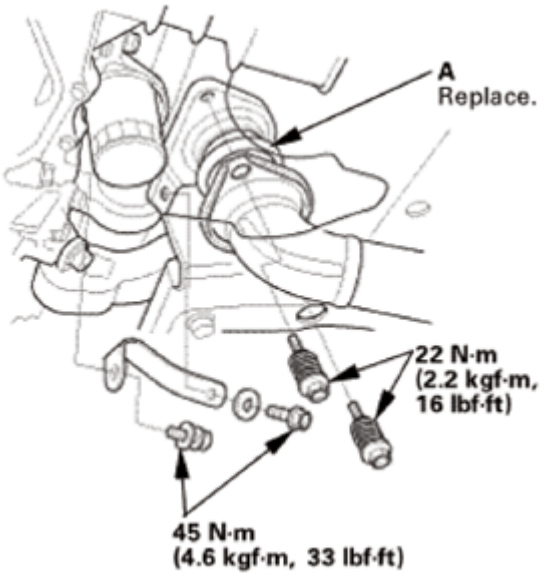

Fig. 34: Identifying WU-TWC Lower Side, Gasket And Bolt With Torque Specifications
Courtesy of AMERICAN HONDA MOTOR CO., INC.

2. Exhaust Chamber Cover
    1. Install the exhaust chamber cover (A).

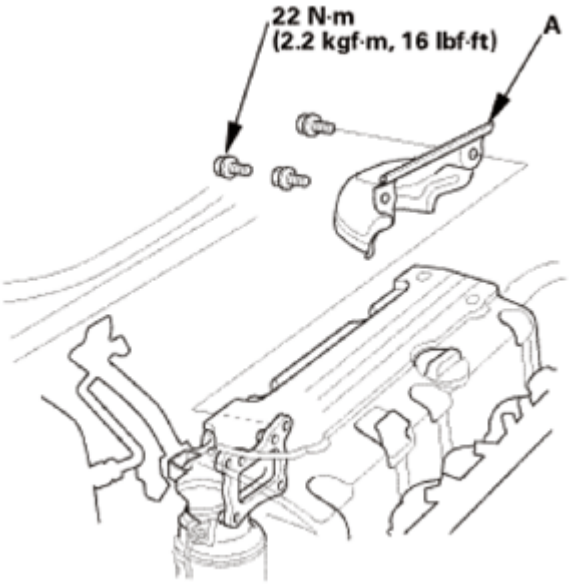

Fig. 35: Identifying Exhaust Chamber Cover, Bolt With Torque Specification
Courtesy of AMERICAN HONDA MOTOR CO., INC.

3. A/F Sensor
    1. Install the A/F sensor (A).

GETtheMANUALS.org

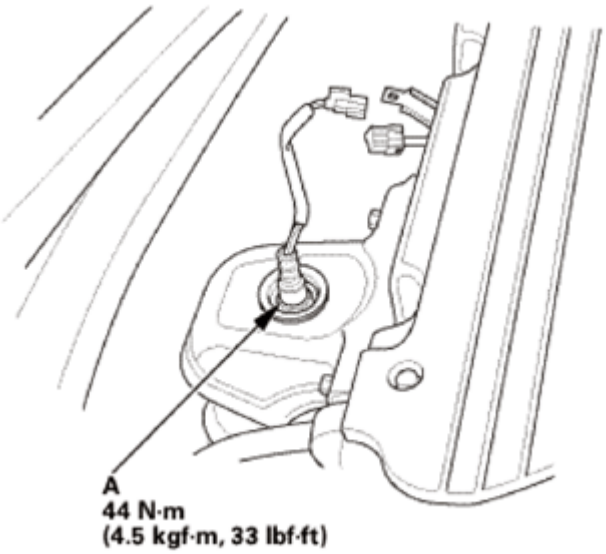

Fig. 36: Identifying A/F Sensor With Torque Specifications
Courtesy of AMERICAN HONDA MOTOR CO., INC.

4. Under-Cowl Panel
    1. Install the under-cowl panel (A), then install the bolts and the nuts.
    2. Install the wire harness (B) to the under-cowl panel.
    3. Connect the connector (C).

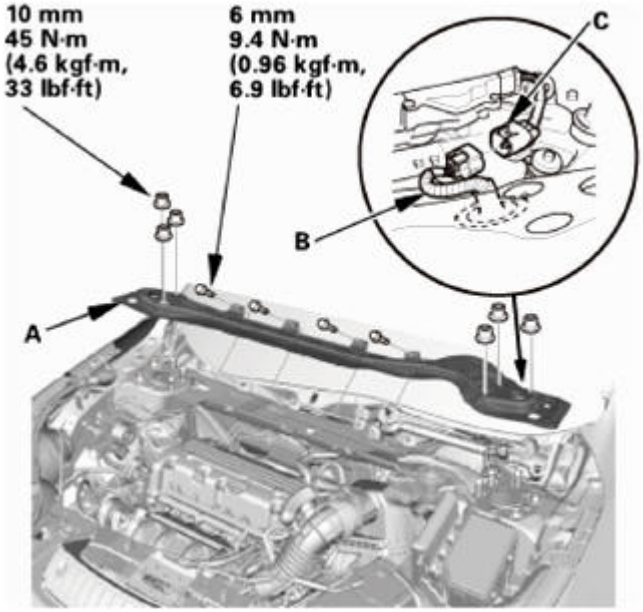

Fig. 37: Identifying Under-Cowl Panel, Wire Harness, Connecter And Bolts With Torque Specifications
Courtesy of AMERICAN HONDA MOTOR CO., INC.

GETtheMANUALS.org

5. Center Cowl Cover
    1. Install the center cowl cover (A). Make sure the clips (B) and the hooks (C) snap into place securely.

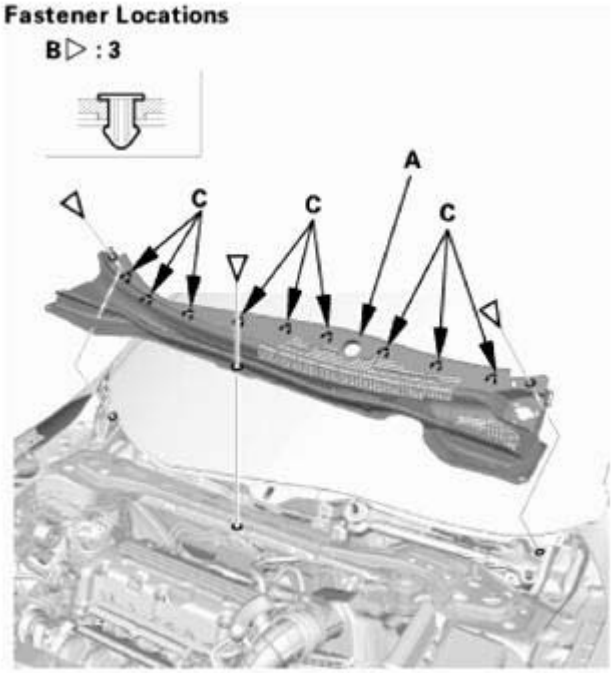

Fig. 38: Identifying Center Cowl Cover And Fasteners
Courtesy of AMERICAN HONDA MOTOR CO., INC.

6. Side Cowl Cover - Both Sides

NOTE: Repeat on the opposite side.

1. Install the side cowl cover (A). Make sure the hooks (B) snap into place securely.
2. Right side; Install the windshield washer tube.

GETtheMANUALS.org

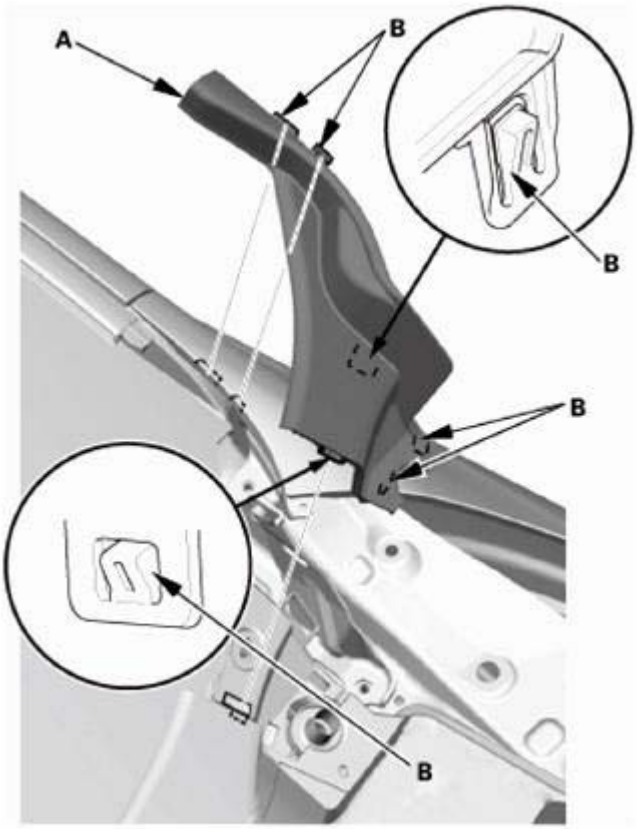

Fig. 39: Identifying Side Cowl Cover And Hooks
Courtesy of AMERICAN HONDA MOTOR CO., INC.

7. Cowl Top Cover - Both Sides

NOTE: Repeat this procedure on the opposite side.

1. Install the cowl top cover (A).
2. Install the hood rear seal (B).
3. Install the clip (C).

GETtheMANUALS.org

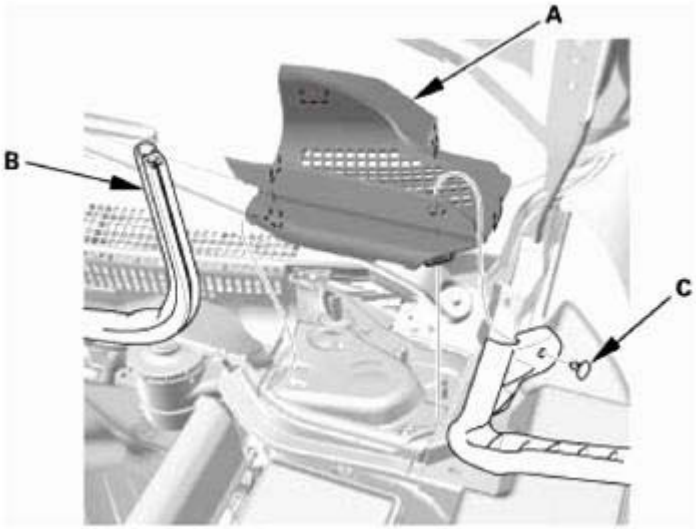

Fig. 40: Identifying Cowl Top Cover, Hood Rear Seal And Clip
Courtesy of AMERICAN HONDA MOTOR CO., INC.

8. Front Fender Trim - Both Sides

NOTE: Repeat on the opposite side.

1. Install the front fender trim (A), then install the clips (B, C). Make sure the clips (D) snap into place securely.

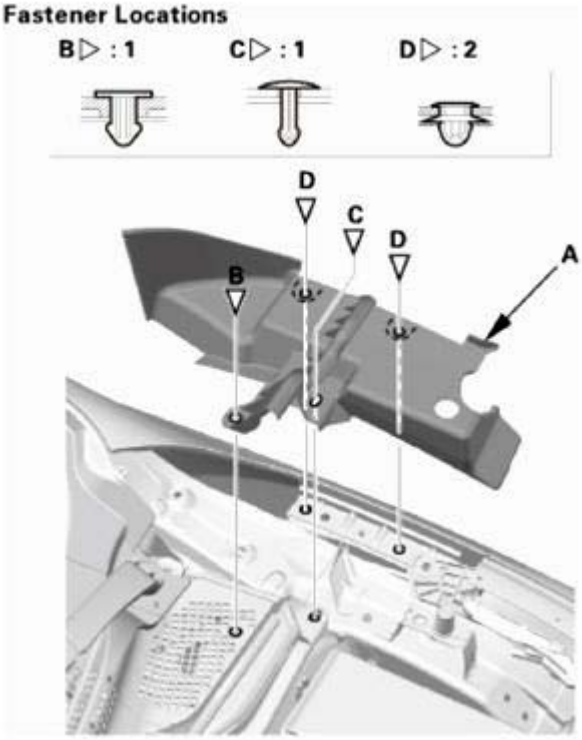

GETtheMANUALS.org

Fig. 41: Identifying Front Fender Trim Fasteners
Courtesy of AMERICAN HONDA MOTOR CO., INC.

9. Both Windshield Wiper Arm Assemblies

NOTE: Set the wiper arms to the auto-stop position before installation.

1. Install the wiper arms (A), the nut (B), and the caps (C).

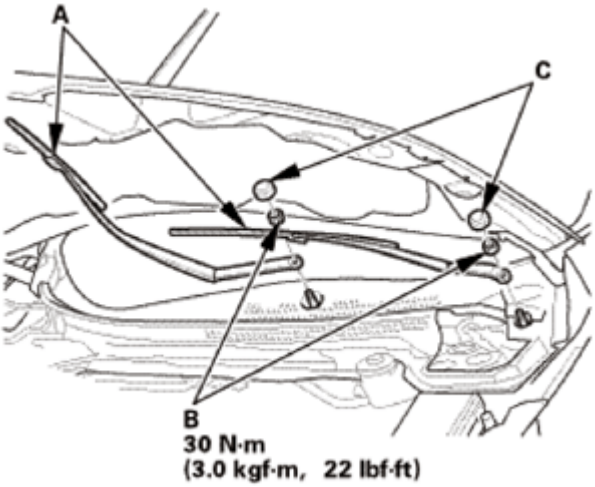

Fig. 42: Identifying Wiper Arms, Caps And Nut With Torque Specification
Courtesy of AMERICAN HONDA MOTOR CO., INC.

10. Front Splash Shield
    1. Install the front splash shield (A), then install the bolts (B) and the clips (C, D). Make sure the clips snap into place securely.

GETtheMANUALS.org

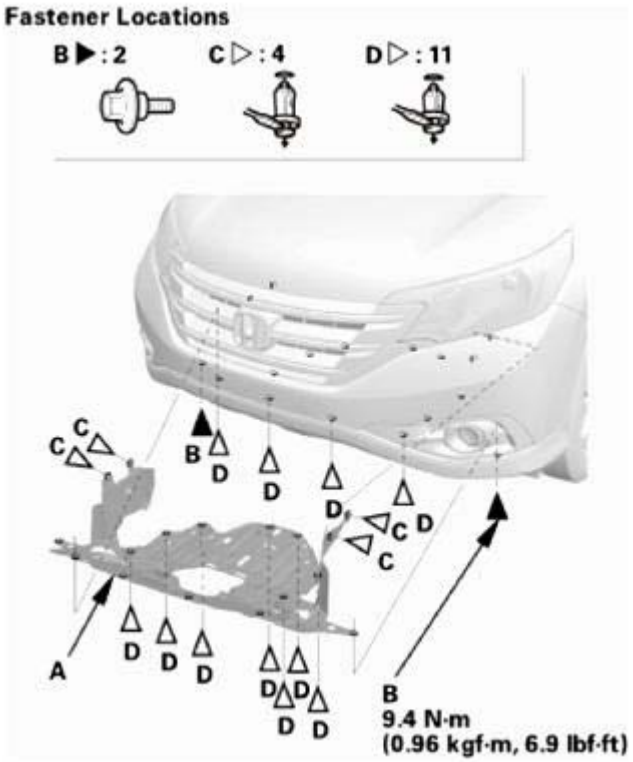

Fig. 43: Identifying Front Splash Shield Fasteners
Courtesy of AMERICAN HONDA MOTOR CO., INC.

GETtheMANUALS.org

GENERAL INFORMATION

Engine Overhaul Procedures

* PLEASE READ THIS FIRST *

NOTE: **Examples used in this article are general in nature and do not necessarily relate to a specific engine or system. Illustrations and procedures have been chosen to guide mechanic through engine overhaul process. Descriptions of processes of cleaning, inspection, assembly and machine shop practice are included.**

Always refer to appropriate engine overhaul article, if available, in the ENGINES section for complete overhaul procedures and specifications for the vehicle being repaired.

DESCRIPTION

Examples used in this article are general in nature and do not necessarily relate to a specific engine or system. Illustrations and procedures have been chosen to guide mechanic through engine overhaul process. Descriptions of cleaning, inspection, and assembly processes are included.

ENGINE IDENTIFICATION

Engine may be identified from Vehicle Identification Number (VIN) stamped on a metal tab. Metal tab may be located in different locations depending on manufacturer. Engine identification number or serial number is located on cylinder block. Location varies with each manufacturer.

INSPECTION PROCEDURES

*** PLEASE READ THIS FIRST ***

NOTE: **Examples used in this article are general in nature and do not necessarily relate to a specific engine or system. Illustrations and procedures have been chosen to guide mechanic through engine overhaul process. Descriptions of processes of cleaning, inspection, assembly and machine shop practice are included.**

Always refer to appropriate engine overhaul article, if available, in the ENGINES section for complete overhaul procedures and specifications for the vehicle being repaired.

GENERAL

NOTE: **Examples used in this article are general in nature and do not necessarily relate to a specific engine or system. Illustrations and procedures have been chosen to guide mechanic through engine overhaul process. Descriptions of processes**

GETtheMANUALS.org

of cleaning, inspection, assembly and machine shop practice are included.

Always refer to appropriate engine overhaul article, if available, in the ENGINES section for complete overhaul procedures and specifications for the vehicle being repaired.

Engine components must be inspected to meet manufacturer's specifications and tolerances during overhaul. Proper dimensions and tolerances must be met to obtain proper performance and maximum engine life.

Micrometers, depth gauges and dial indicator are used for checking tolerances during engine overhaul. Magnaflux, Magnaglo, dye-check, ultrasonic and x-ray inspection procedures are used for parts inspection.

MAGNETIC PARTICLE INSPECTION

NOTE: **Examples used in this article are general in nature and do not necessarily relate to a specific engine or system. Illustrations and procedures have been chosen to guide mechanic through engine overhaul process. Descriptions of processes of cleaning, inspection, assembly and machine shop practice are included.**

Always refer to appropriate engine overhaul article, if available, in the ENGINES section for complete overhaul procedures and specifications for the vehicle being repaired.

Magnaflux & Magnaglo

Magnaflux is an inspection technique used to locate material flaws and stress cracks. Component is subjected to a strong magnetic field. Entire component or a localized area can be magnetized. Component is coated with either a wet or dry material that contains fine magnetic particles.

Cracks which are outlined by the particles cause an interruption of magnetic field. Dry powder method of Magnaflux can be used in normal lighting and crack appears as a bright line.

Fluorescent liquid is used along with a Black light in the Magnaglo Magnaflux system. Darkened room is required for this procedure. The crack will appear as a glowing line. Complete demagnetizing of component upon completion is required on both procedures. Magnetic particle inspection applies to ferrous materials only.

PENETRANT INSPECTION

NOTE: **Examples used in this article are general in nature and do not necessarily relate to a specific engine or system. Illustrations and procedures have been chosen to guide mechanic through engine overhaul process. Descriptions of processes of cleaning, inspection, assembly and machine shop practice are included.**

Always refer to appropriate engine overhaul article, if available, in the ENGINES section for complete overhaul procedures and specifications for the vehicle being repaired.

GETtheMANUALS.org

Zyglo

The Zyglo process coats material with a fluorescent dye penetrant. Component is often warmed to expand cracks that will be penetrated by the dye. Using darkened room and Black light, component is inspected for cracks. Crack will glow brightly.

Developing solution is often used to enhance results. Parts made of any material, such as aluminum cylinder heads or plastics, may be tested using this process.

Dye Check

Penetrating dye is sprayed on the previously cleaned component. Dye is left on component for 5-45 minutes, depending upon material density. Component is then wiped clean and sprayed with a developing solution. Surface cracks will show up as a bright line.

ULTRASONIC INSPECTION

NOTE: **Examples used in this article are general in nature and do not necessarily relate to a specific engine or system. Illustrations and procedures have been chosen to guide mechanic through engine overhaul process. Descriptions of processes of cleaning, inspection, assembly and machine shop practice are included.**

Always refer to appropriate engine overhaul article, if available, in the ENGINES section for complete overhaul procedures and specifications for the vehicle being repaired.

If an expensive part is suspected of internal cracking, ultrasonic testing is used. Sound waves are used for component inspection.

X-RAY INSPECTION

NOTE: **Examples used in this article are general in nature and do not necessarily relate to a specific engine or system. Illustrations and procedures have been chosen to guide mechanic through engine overhaul process. Descriptions of processes of cleaning, inspection, assembly and machine shop practice are included.**

Always refer to appropriate engine overhaul article, if available, in the ENGINES section for complete overhaul procedures and specifications for the vehicle being repaired.

This form of inspection is used on highly stressed components. X-ray inspection may be used to detect internal and external flaws in any material.

PRESSURE TESTING

NOTE: **Examples used in this article are general in nature and do not necessarily relate to a specific engine or system. Illustrations and procedures have been chosen**

GETtheMANUALS.org

to guide mechanic through engine overhaul process. Descriptions of processes of cleaning, inspection, assembly and machine shop practice are included.

Always refer to appropriate engine overhaul article, if available, in the ENGINES section for complete overhaul procedures and specifications for the vehicle being repaired.

Cylinder heads can be tested for cracks using a pressure tester. Pressure testing is performed by plugging all but one of the holes of cylinder head and injecting air or water into the open passage.

Leaks are indicated by the appearance of wet or damp areas when using water. When air is used, it is necessary to spray the head surface with a soap solution. Bubbles will indicate a leak. Cylinder head may also be submerged in water heated to specified temperature to check for cracks created during heat expansion.

CLEANING PROCEDURES

*** PLEASE READ THIS FIRST ***

NOTE: **Examples used in this article are general in nature and do not necessarily relate to a specific engine or system. Illustrations and procedures have been chosen to guide mechanic through engine overhaul process. Descriptions of processes of cleaning, inspection, assembly and machine shop practice are included.**

Always refer to appropriate engine overhaul article, if available, in the ENGINES section for complete overhaul procedures and specifications for the vehicle being repaired.

GENERAL

NOTE: **Examples used in this article are general in nature and do not necessarily relate to a specific engine or system. Illustrations and procedures have been chosen to guide mechanic through engine overhaul process. Descriptions of processes of cleaning, inspection, assembly and machine shop practice are included.**

Always refer to appropriate engine overhaul article, if available, in the ENGINES section for complete overhaul procedures and specifications for the vehicle being repaired.

All components of an engine do not have the same cleaning requirements. Physical methods include bead blasting and manual removal. Chemical methods include solvent blast, solvent tank, hot tank, cold tank and steam cleaning of components.

BEAD BLASTING

NOTE: **Examples used in this article are general in nature and do not necessarily relate to a specific engine or system. Illustrations and procedures have been chosen**

GETtheMANUALS.org

to guide mechanic through engine overhaul process. Descriptions of processes of cleaning, inspection, assembly and machine shop practice are included.

Always refer to appropriate engine overhaul article, if available, in the ENGINES section for complete overhaul procedures and specifications for the vehicle being repaired.

Manual removal of deposits may be required prior to bead blasting, followed by some other cleaning method. Carbon, paint and rust may be removed using bead blasting method. Components must be free of oil and grease prior to bead blasting. Beads will stick to grease or oil soaked areas causing area not to be cleaned.

Use air pressure to remove all trapped residual beads from component after cleaning. After cleaning internal engine parts made of aluminum, wash thoroughly with hot soapy water. Component must be thoroughly cleaned as glass beads will enter engine oil resulting in bearing damage.

CHEMICAL CLEANING

NOTE: **Examples used in this article are general in nature and do not necessarily relate to a specific engine or system. Illustrations and procedures have been chosen to guide mechanic through engine overhaul process. Descriptions of processes of cleaning, inspection, assembly and machine shop practice are included.**

Always refer to appropriate engine overhaul article, if available, in the ENGINES section for complete overhaul procedures and specifications for the vehicle being repaired.

Solvent tank is used for cleaning oily residue from components. Solvent blasting sprays solvent through a siphon gun using compressed air.

The hot tank, using heated caustic solvents, is used for cleaning ferrous materials only. DO NOT clean aluminum parts such as cylinder heads, bearings or other soft metals using the hot tank. After cleaning, flush parts with hot water.

A non-ferrous part will be ruined and caustic solution will be diluted if placed in the hot tank. Always use eye protection and gloves when using the hot tank.

Use of a cold tank is for cleaning aluminum cylinder heads, carburetors and other soft metals. A less caustic and unheated solution is used. Parts may be left in the tank for several hours without damage. After cleaning, flush parts with hot water.

Steam cleaning, with boiling hot water sprayed at high pressure, is recommended as the final cleaning process when using either hot or cold tank cleaning.

COMPONENT CLEANING

*** PLEASE READ THIS FIRST ***

GETtheMANUALS.org

NOTE: **Examples used in this article are general in nature and do not necessarily relate to a specific engine or system. Illustrations and procedures have been chosen to guide mechanic through engine overhaul process. Descriptions of processes of cleaning, inspection, assembly and machine shop practice are included.**

Always refer to appropriate engine overhaul article, if available, in the ENGINES section for complete overhaul procedures and specifications for the vehicle being repaired.

SHEET METAL PARTS

NOTE: **Examples used in this article are general in nature and do not necessarily relate to a specific engine or system. Illustrations and procedures have been chosen to guide mechanic through engine overhaul process. Descriptions of processes of cleaning, inspection, assembly and machine shop practice are included.**

Always refer to appropriate engine overhaul article, if available, in the ENGINES section for complete overhaul procedures and specifications for the vehicle being repaired.

Examples of sheet metal parts are rocker covers, front and side covers, oil pan and bellhousing dust cover. Glass bead blasting or hot tank may be used for cleaning.

Ensure all mating surfaces are flat. Deformed surfaces should be straightened. Check all sheet metal parts for cracks and dents.

INTAKE & EXHAUST MANIFOLDS

NOTE: **Examples used in this article are general in nature and do not necessarily relate to a specific engine or system. Illustrations and procedures have been chosen to guide mechanic through engine overhaul process. Descriptions of processes of cleaning, inspection, assembly and machine shop practice are included.**

Always refer to appropriate engine overhaul article, if available, in the ENGINES section for complete overhaul procedures and specifications for the vehicle being repaired.

Using solvent cleaning or bead blasting, clean manifolds for inspection. If intake manifold has an exhaust crossover, all carbon deposits must be removed. Inspect manifolds for cracks, burned or eroded areas, corrosion and damage to fasteners.

Exhaust heat and products of combustion cause threads of fasteners to corrode. Replace studs and bolts as necessary. On "V" type intake manifolds, sheet metal oil shield must be removed for proper cleaning and inspection. Ensure all manifold parting surfaces are flat and free of burrs.

CYLINDER HEAD REPLACEMENT

GETtheMANUALS.org

*** PLEASE READ THIS FIRST ***

NOTE: **Examples used in this article are general in nature and do not necessarily relate to a specific engine or system. Illustrations and procedures have been chosen to guide mechanic through engine overhaul process. Descriptions of processes of cleaning, inspection, assembly and machine shop practice are included.**

Always refer to appropriate engine overhaul article, if available, in the ENGINES section for complete overhaul procedures and specifications for the vehicle being repaired.

REMOVAL

NOTE: **Examples used in this article are general in nature and do not necessarily relate to a specific engine or system. Illustrations and procedures have been chosen to guide mechanic through engine overhaul process. Descriptions of processes of cleaning, inspection, assembly and machine shop practice are included.**

Always refer to appropriate engine overhaul article, if available, in the ENGINES section for complete overhaul procedures and specifications for the vehicle being repaired.

Remove intake and exhaust manifolds and valve cover. Cylinder head and camshaft carrier bolts (if equipped) should be removed only when engine is cold. On many aluminum cylinder heads, removal while hot will cause cylinder head warpage. Mark rocker arm or overhead cam components for location.

Remove rocker arm components or overhead cam components. Components must be installed in original location. Individual design rocker arms may utilize shafts, ball-type pedestal mounts or no rocker arms. For all design types, wire components together and identify according to corresponding valve. Remove cylinder head bolts. Note length and location. Some applications require cylinder head bolts be removed in proper sequence to prevent cylinder head damage. See **Fig. 1**. Remove cylinder head.

INSTALLATION

NOTE: **Examples used in this article are general in nature and do not necessarily relate to a specific engine or system. Illustrations and procedures have been chosen to guide mechanic through engine overhaul process. Descriptions of processes of cleaning, inspection, assembly and machine shop practice are included.**

Always refer to appropriate engine overhaul article, if available, in the ENGINES section for complete overhaul procedures and specifications for the vehicle being repaired.

Ensure all surfaces and head bolts are clean. Check that head bolt holes of cylinder block are clean and dry to prevent block damage when bolts are tightened. Clean threads with tap to ensure accurate bolt torque.

GETtheMANUALS.org

Install head gasket on cylinder block. Some manufacturers may recommend sealant be applied to head gasket prior to installation. Note that all holes are aligned. Some gasket applications may be marked so that certain area faces upward. Install cylinder head using care not to damage head gasket. Ensure cylinder head is fully seated on cylinder block.

Some applications require head bolts be coated with sealant prior to installation. This is done if head bolts are exposed to coolant passages. Some applications require head bolts be coated with light coat of engine oil.

Install head bolts. Head bolts should be tightened in proper steps and sequence to specification. See **Fig. 1**. Install remaining components. Tighten all bolts to specification. Adjust valves if required. See VALVE ADJUSTMENT.

NOTE: **Some manufacturers require that head bolts be retightened after specified amount of operation. This must be done to prevent head gasket failure.**

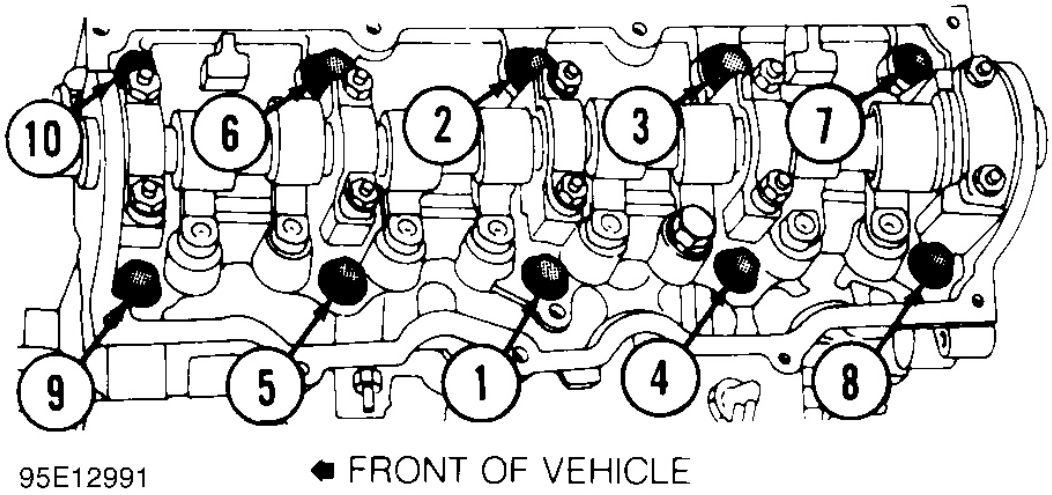

Fig. 1: Typical Cylinder Head Tightening or Loosening Sequence

VALVE ADJUSTMENT

NOTE: **Examples used in this article are general in nature and do not necessarily relate to a specific engine or system. Illustrations and procedures have been chosen to guide mechanic through engine overhaul process. Descriptions of processes of cleaning, inspection, assembly and machine shop practice are included.**

Always refer to appropriate engine overhaul article, if available, in the ENGINES section for complete overhaul procedures and specifications for the vehicle being repaired.

GETtheMANUALS.org

Engine specifications will indicate valve train clearance and temperature at which adjustment is to be made on most models. In most cases, adjustment will be made with a cold engine. In some cases, both a cold and a hot clearance will be given for maintenance convenience.

On some models, adjustment is not required. Rocker arms are tightened to specification and valve lash is automatically set. On some models with push rod actuated valve train, adjustment is made at push rod end of rocker arm while other models do not require adjustment.

Clearance will be checked between tip of rocker arm and tip of valve stem in proper sequence using a feeler gauge. Adjustment is made by rotating adjusting screw until proper clearance is obtained. Lock nut is then tightened. Engine will be rotated to obtain all valve adjustments to manufacturer's specifications.

Some models require hydraulic lifter to be bled down and clearance measured. Push rods of different length can be used to obtain proper clearance. Clearance will be checked between tip of rocker arm and tip of valve stem in proper sequence using a feeler gauge.

Overhead cam engines designed without rocker arms actuate valves directly on a cam follower. A hardened, removable disc is installed between the cam lobe and lifter. Clearance will be checked between cam heel and adjusting disc in proper sequence using a feeler gauge. Engine will be rotated to obtain all valve adjustments.

On overhead cam engines designed with rocker arms, adjustment is made at valve end of rocker arm. Ensure valve to be adjusted is riding on heel of cam on all engines. Clearance will be checked between tip of rocker arm and tip of valve stem in proper sequence using a feeler gauge. Adjustment is made by rotating adjusting screw until proper clearance is obtained. Lock nut is then tightened. Engine will be rotated to obtain all valve adjustments to manufacturer's specifications.

CYLINDER HEAD OVERHAUL

*** PLEASE READ THIS FIRST ***

NOTE: **Examples used in this article are general in nature and do not necessarily relate to a specific engine or system. Illustrations and procedures have been chosen to guide mechanic through engine overhaul process. Descriptions of processes of cleaning, inspection, assembly and machine shop practice are included.**

Always refer to appropriate engine overhaul article, if available, in the ENGINES section for complete overhaul procedures and specifications for the vehicle being repaired.

CYLINDER HEAD DISASSEMBLY

NOTE: **Examples used in this article are general in nature and do not necessarily relate to a specific engine or system. Illustrations and procedures have been chosen to guide mechanic through engine overhaul process. Descriptions of processes of cleaning, inspection, assembly and machine shop practice are included.**

Always refer to appropriate engine overhaul article, if available, in the ENGINES

GETtheMANUALS.org

section for complete overhaul procedures and specifications for the vehicle being repaired.

Mark valves for location. Using valve spring compressor, compress valve springs. Remove valve locks. Carefully release spring compressor. Remove retainer or rotator, valve spring, spring seat and valve. See **Fig. 2**.

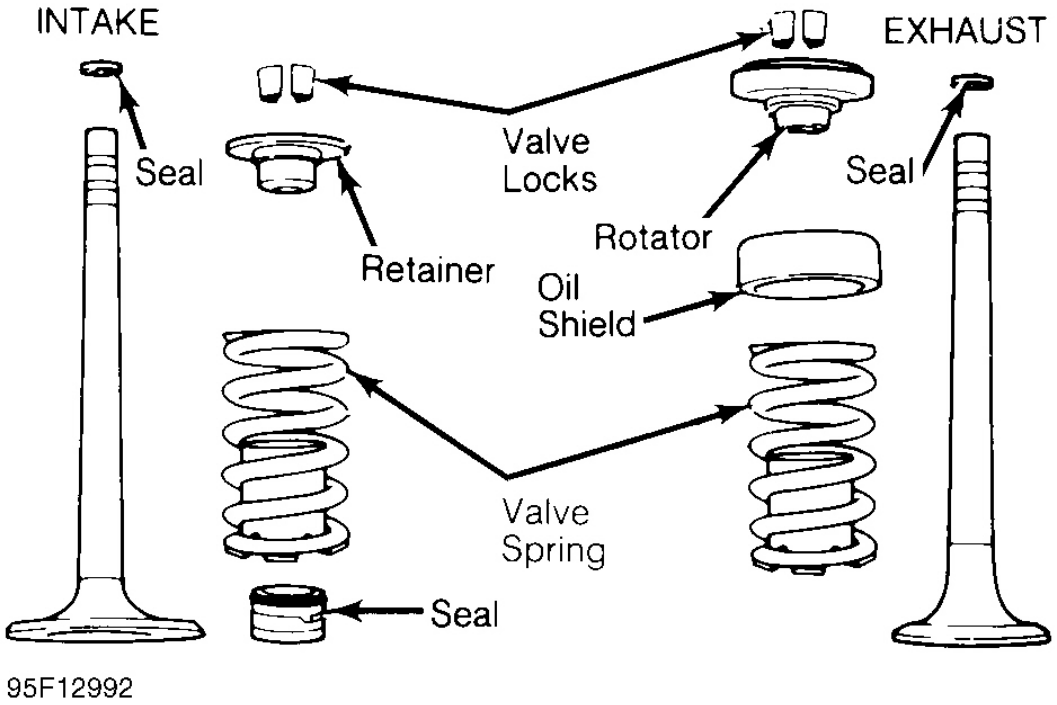

Fig. 2: Exploded View of Valve Assemblies

CYLINDER HEAD CLEANING & INSPECTION

NOTE: **Examples used in this article are general in nature and do not necessarily relate to a specific engine or system. Illustrations and procedures have been chosen to guide mechanic through engine overhaul process. Descriptions of processes of cleaning, inspection, assembly and machine shop practice are included.**

Always refer to appropriate engine overhaul article, if available, in the ENGINES section for complete overhaul procedures and specifications for the vehicle being repaired.

Clean cylinder head and valve components using approved cleaning methods. Inspect cylinder head for cracks, damage or warped gasket surface. Place straightedge across gasket surface. Determine clearance at center of straightedge. Measure across both diagonals, longitudinal center line and across cylinder head at several points. See **Fig. 3**.

GETtheMANUALS.org

On cast iron cylinder heads, if warpage exceeds .003" (.08 mm) in a 6" span, or .006" (.15 mm) over total length, cylinder head must be resurfaced. On most aluminum cylinder heads, if warpage exceeds .002" (.05 mm) in any area, cylinder head must be resurfaced. Warpage specification may vary by manufacturer. If warpage exceeds specification on some cylinder heads, cylinder head must be replaced.

Cylinder head thickness should be measured to determine amount of material which can be removed before replacement is required. Cylinder head thickness must not be less than the manufacturer's specification.

If cylinder head required resurfacing, it may not align properly with intake manifold. On "V" type engines, misalignment is corrected by machining intake manifold surface that contacts cylinder head. Cylinder head may be machined on surface that contacts intake manifold. Using oil stone, remove burrs or scratches from all sealing surfaces.

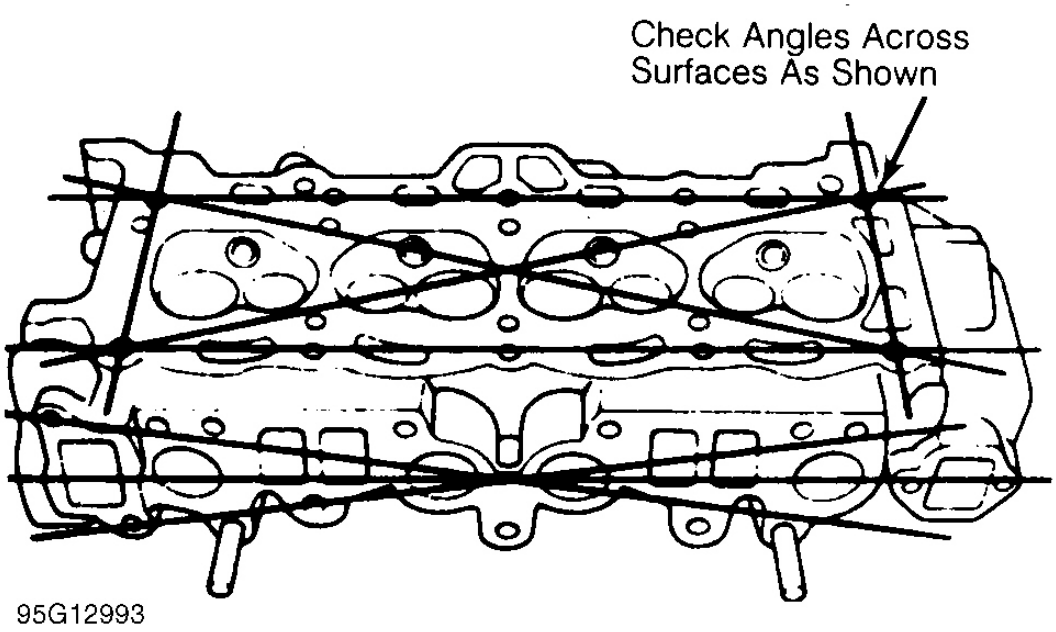

Fig. 3: Checking Cylinder Head for Warpage

VALVE SPRINGS

NOTE: **Examples used in this article are general in nature and do not necessarily relate to a specific engine or system. Illustrations and procedures have been chosen to guide mechanic through engine overhaul process. Descriptions of processes of cleaning, inspection, assembly and machine shop practice are included.**

Always refer to appropriate engine overhaul article, if available, in the ENGINES section for complete overhaul procedures and specifications for the vehicle being repaired.

GETtheMANUALS.org

Inspect valve springs for corroded or pitted valve spring surfaces which may lead to breakage. Polished spring ends caused by a rotating spring indicate that spring surge has occurred. Replace springs showing evidence of these conditions.

Inspect valve springs for squareness using a 90-degree straightedge. See **Fig. 4**. Replace valve spring if out-of-square exceeds manufacturer's specification.

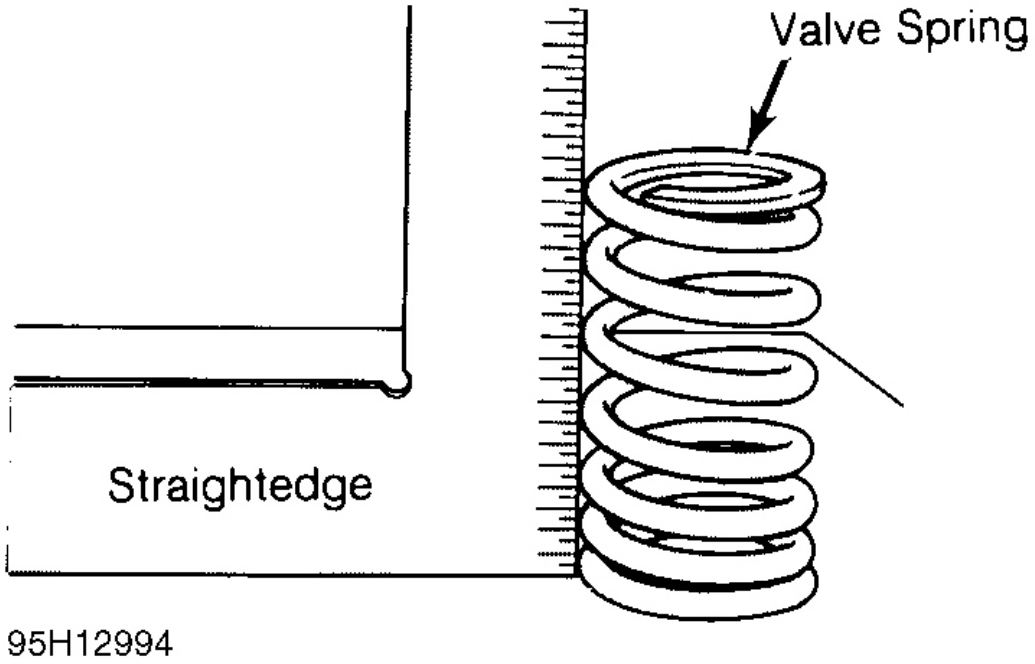

Fig. 4: Checking Valve Spring Squareness

Using vernier caliper, measure free length of all valve springs. Replace springs if not within specification. Using valve spring tester, test valve spring pressure at installed and compressed heights. See **Fig. 5**.

Usually compressed height is installed height minus valve lift. Replace valve spring if not within specification. It is recommended to replace all valve springs when overhauling cylinder head. Valve springs may need to be installed with color coded end or small coils at specified area according to manufacturer.

GETtheMANUALS.org

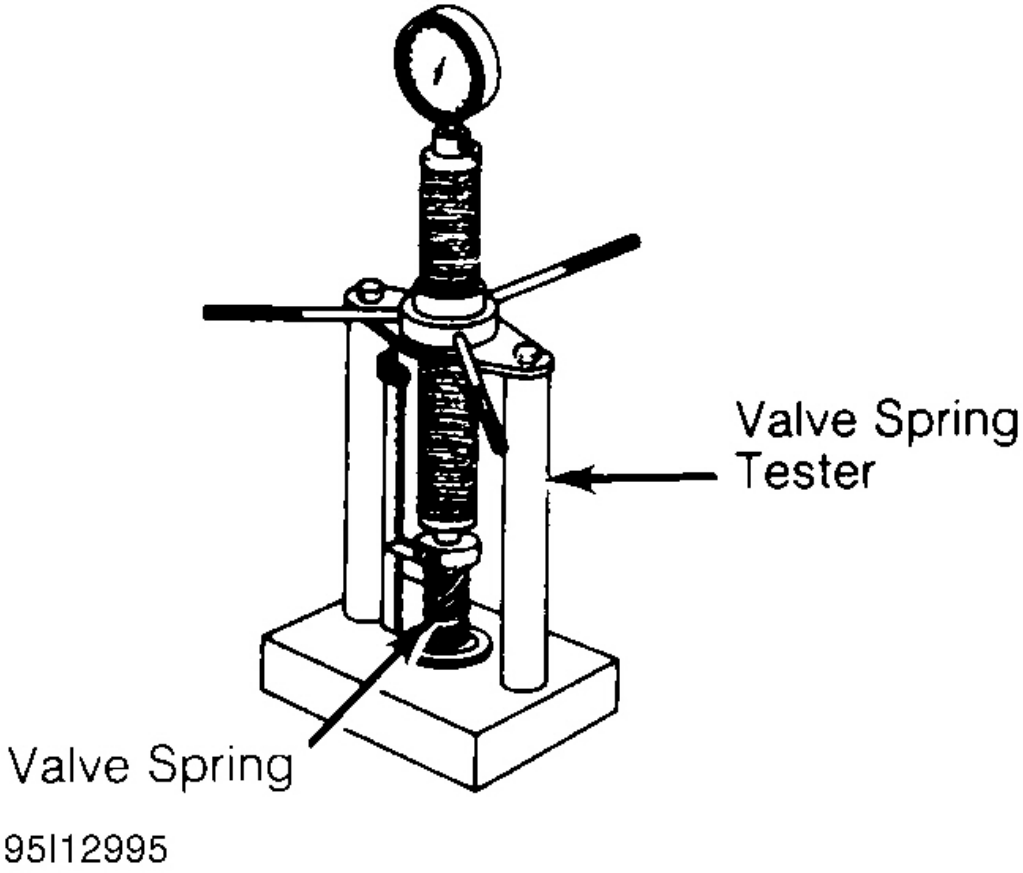

Fig. 5: Checking Valve Spring Pressure

VALVE GUIDE

NOTE: **Examples used in this article are general in nature and do not necessarily relate to a specific engine or system. Illustrations and procedures have been chosen to guide mechanic through engine overhaul process. Descriptions of processes of cleaning, inspection, assembly and machine shop practice are included.**

Always refer to appropriate engine overhaul article, if available, in the ENGINES section for complete overhaul procedures and specifications for the vehicle being repaired.

Measuring Valve Guide Clearance

Check valve stem-to-guide clearance. Ensure valve stem diameter is within specification. Install valve in valve guide. Install dial indicator assembly on cylinder head with tip resting against valve stem just above valve

GETtheMANUALS.org

guide. See **Fig. 6**.

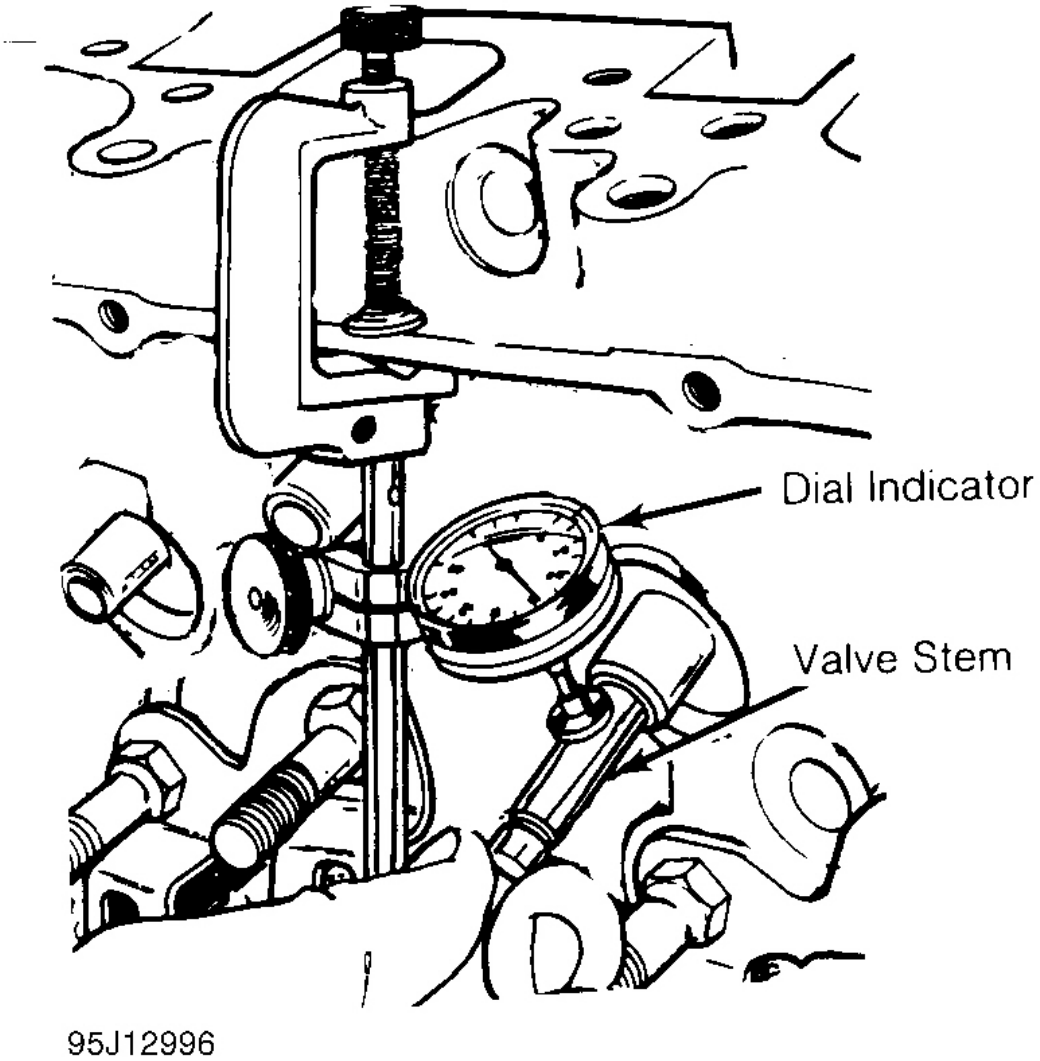

Fig. 6: Measuring Valve Stem-to-Guide Clearance

Lower valve approximately 1/16" below valve seat. Push valve stem against valve guide as far as possible. Adjust dial indicator to zero. Push valve stem in opposite direction and note reading. Clearance must be within specification.

If valve guide clearance exceeds specification, valves with oversize stems may be used and valve guides are reamed to larger size or valve guide must be replaced. On some applications, a false guide is installed, then reamed to proper specification. Valve guide reamer set is used to ream valve guide to obtain proper clearance for new valve.

GETtheMANUALS.org

Reaming Valve Guide

Select proper reamer for size of valve stem. Reamer must be of proper length to provide clean cut through entire length of valve guide. Install reamer in valve guide and rotate to cut valve guide. See **Fig. 7**.

GETtheMANUALS.org

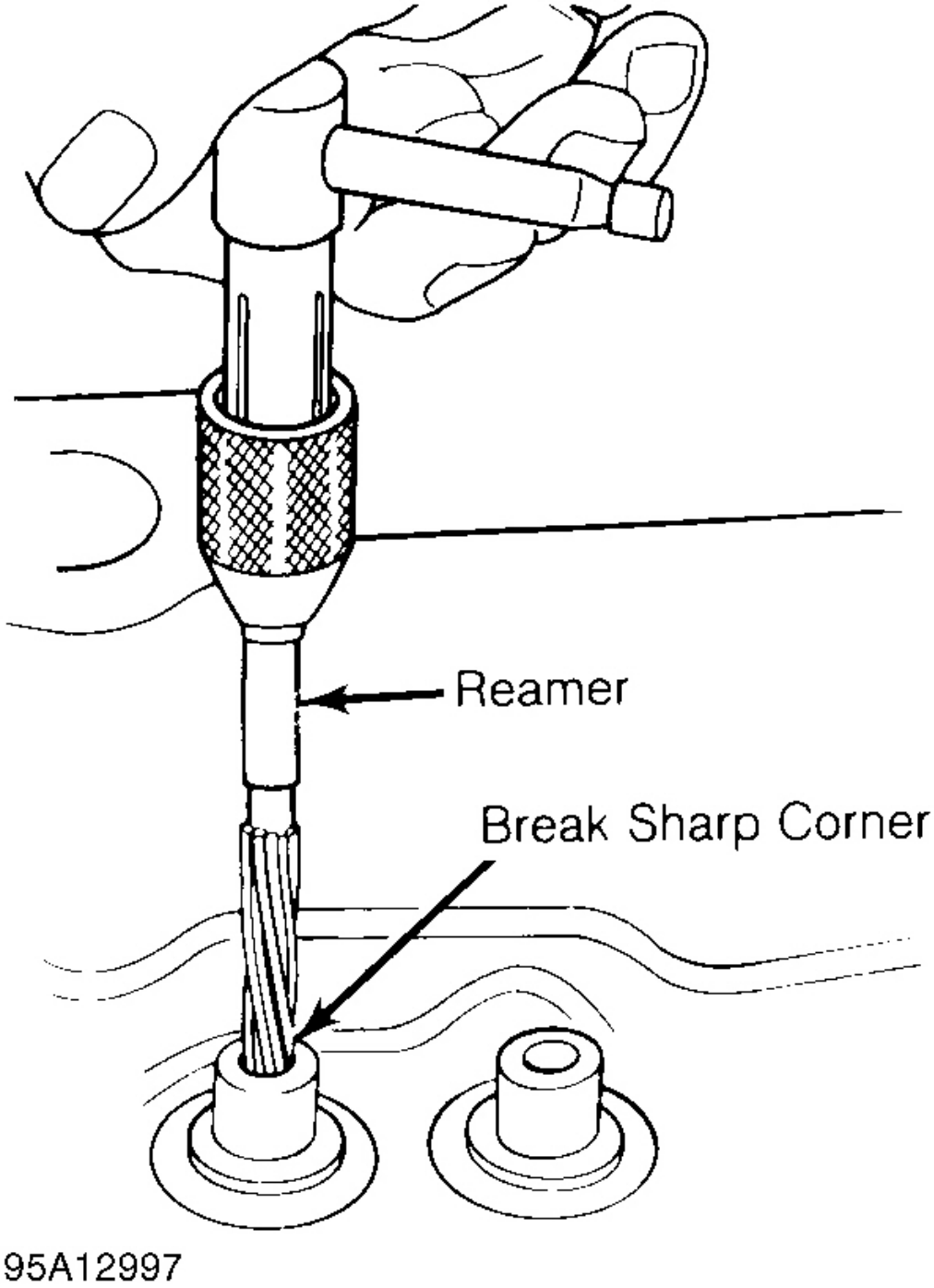

Fig. 7: Reaming Valve Guides

GETtheMANUALS.org

Replacing Valve Guide

Replace valve guide if clearance exceeds specification. Valve guides are either pressed, hammered or shrunk in place, depending upon cylinder head design and type of metal used.

Remove valve guide from cylinder head by pressing or tapping on a stepped drift. See **Fig. 8**. Once valve guide is installed, distance from cylinder head to top of valve guide must be checked. This distance must be within specification.

Aluminum heads are often heated before installing valve guide. Valve guide is sometimes cooled in dry ice prior to installation. Combination of a heated cylinder head and cooled valve guide ensures a tight guide fit upon assembly. The new guide must be reamed to specification.

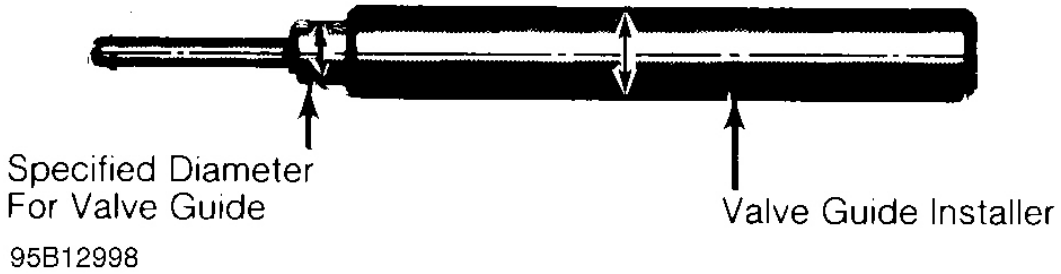

Fig. 8: Typical Valve Guide Remover & Installer

VALVES & VALVE SEATS

NOTE: **Examples used in this article are general in nature and do not necessarily relate to a specific engine or system. Illustrations and procedures have been chosen to guide mechanic through engine overhaul process. Descriptions of processes of cleaning, inspection, assembly and machine shop practice are included.**

Always refer to appropriate engine overhaul article, if available, in the ENGINES section for complete overhaul procedures and specifications for the vehicle being repaired.

Valve Grinding

Valve stem O.D. should be measured in several areas to indicate amount of wear. Replace valve if not within specification. Valve margin area should be measured to ensure that valve can be ground. See **Fig. 9**.

If valve margin is less than specification, the valves will be burned. Valve must be replaced. Due to minimum margin dimensions during manufacture, some new type valves cannot be reground. Some manufacturers use stellite coated valves that must NOT be machined. Valves can only be lapped into valve seat.

GETtheMANUALS.org

CAUTION: Some valves are sodium filled. Extreme care must be used when disposing of damaged or worn sodium-filled valves.

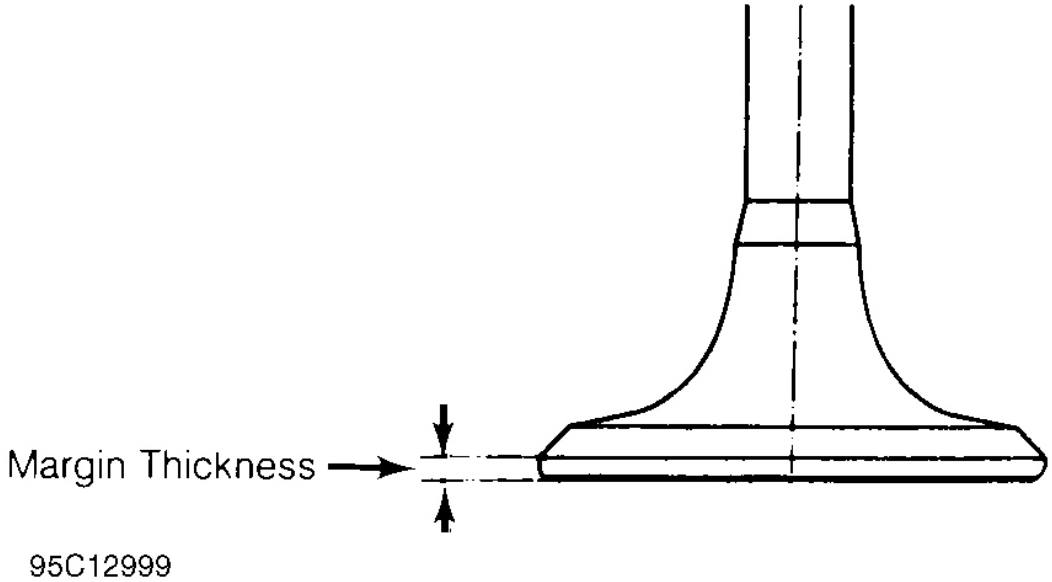

Fig. 9: Measuring Valve Head Margin

Resurface valve to proper angle specification using valve grinding machine. Follow manufacturer's instructions for valve grinding machine. Specifications may indicate a different valve face angle than seat angle. Measure valve margin after grinding. Replace valve if not within specification. Valve stem tip can be refinished using valve grinding machine.

Valve Lapping

During valve lapping of recently designed valves, be sure to follow manufacturer's recommendations. Surface hardening and materials used with some valves do not permit lapping. Lapping process will remove excessive amounts of the hardened surface.

Valve lapping is done to ensure adequate sealing between valve face and seat. Use either a hand drill or lapping stick with suction cup attached.

Moisten and attach suction cup to valve. Lubricate valve stem and guide. Apply a thin coat of fine valve grinding compound between valve and seat. Rotate lapping tool between the palms or with hand drill.

Lift valve upward off the seat and change position often. This is done to prevent grooving of valve seat. Lap valve until a smooth polished seat is obtained. Thoroughly clean grinding compound from components. Valve-to-valve seat concentricity should be checked. See **VALVE SEAT CONCENTRICITY**.

GETtheMANUALS.org

CAUTION: Valve guides must be in good condition and free of carbon deposits prior to valve seat grinding. Some engines contain an induction hardened valve seat. Excessive material removal will damage valve seats.

Valve Seat Grinding

Select coarse stone of correct size and angle for seat to be ground. Ensure stone is true and has a smooth surface. Select correct size pilot for valve guide dimension. Install pilot in valve guide. Lightly lubricate pilot shaft. Install stone on pilot. Move stone off and on the seat approximately 2 times per second during grinding operation.

Select a fine stone to finish grinding operation. Various angle grinding stones are used to center and narrow the valve seat as required. See **Fig. 10**.

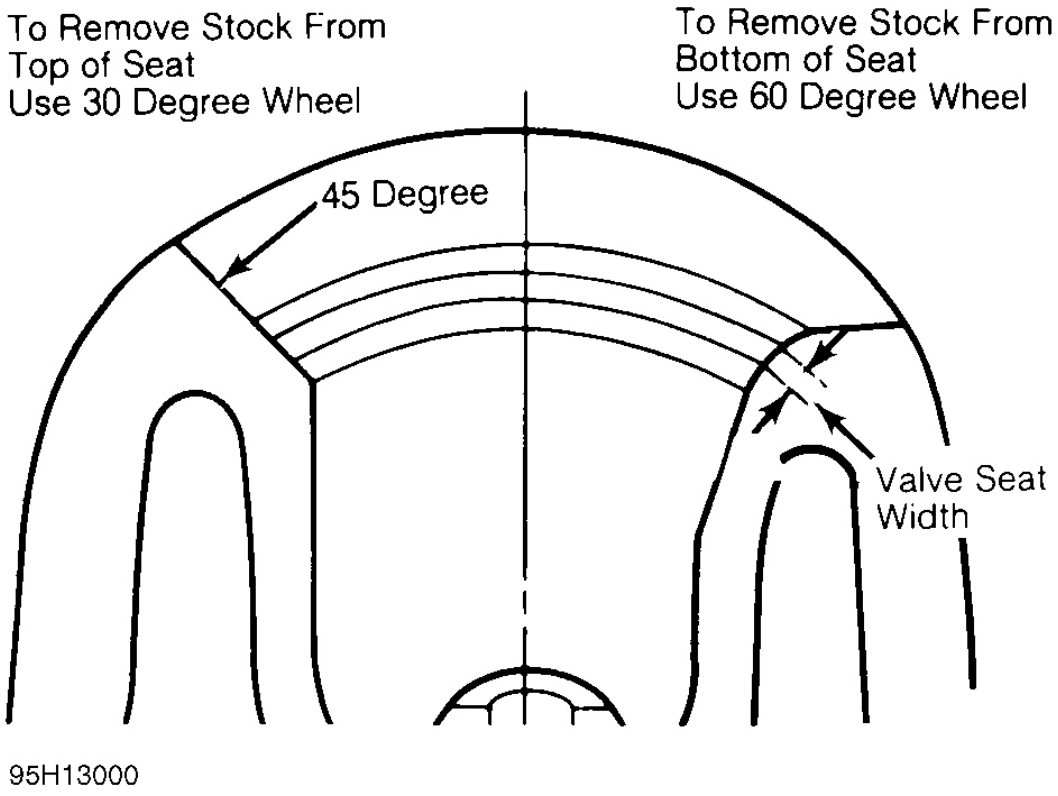

Fig. 10: Adjusting Valve Seat Width

Valve Seat Replacement

Replacement of valve seat inserts is done by cutting out the old insert and machining an oversize insert bore. Replacement oversize insert is usually cooled and the cylinder head is sometimes warmed. Valve seat is pressed into the head. This operation requires specialized machine shop equipment.

GETtheMANUALS.org

Valve Seat Concentricity

Using dial gauge, install gauge pilot in valve guide. Position gauge arm on the valve seat. Adjust dial indicator to zero. Rotate arm 360 degrees and note reading. Runout should not exceed specification.

To check valve-to-valve seat concentricity, coat valve face lightly with Prussian Blue dye. Install valve and rotate it on valve seat. If pattern is even and entire seat is coated at valve contact point, valve is concentric with the valve seat.

CYLINDER HEAD REASSEMBLY

NOTE: **Examples used in this article are general in nature and do not necessarily relate to a specific engine or system. Illustrations and procedures have been chosen to guide mechanic through engine overhaul process. Descriptions of processes of cleaning, inspection, assembly and machine shop practice are included.**

Always refer to appropriate engine overhaul article, if available, in the ENGINES section for complete overhaul procedures and specifications for the vehicle being repaired.

Valve Stem Installed Height

Valve stem installed height must be checked when new valves are installed or when valves or valve seats have been ground. Install valve in valve guide. Measure distance from tip of valve stem to spring seat. See **Fig. 11**. Distance must be within specification to allow sufficient clearance for valve operation.

Remove valve and grind valve stem tip if height exceeds specification. Valve tips are surface hardened. DO NOT remove more than .010" (.25 mm) from tip. Chamfer sharp edge of reground valve tip. Recheck valve stem installed height.

GETtheMANUALS.org

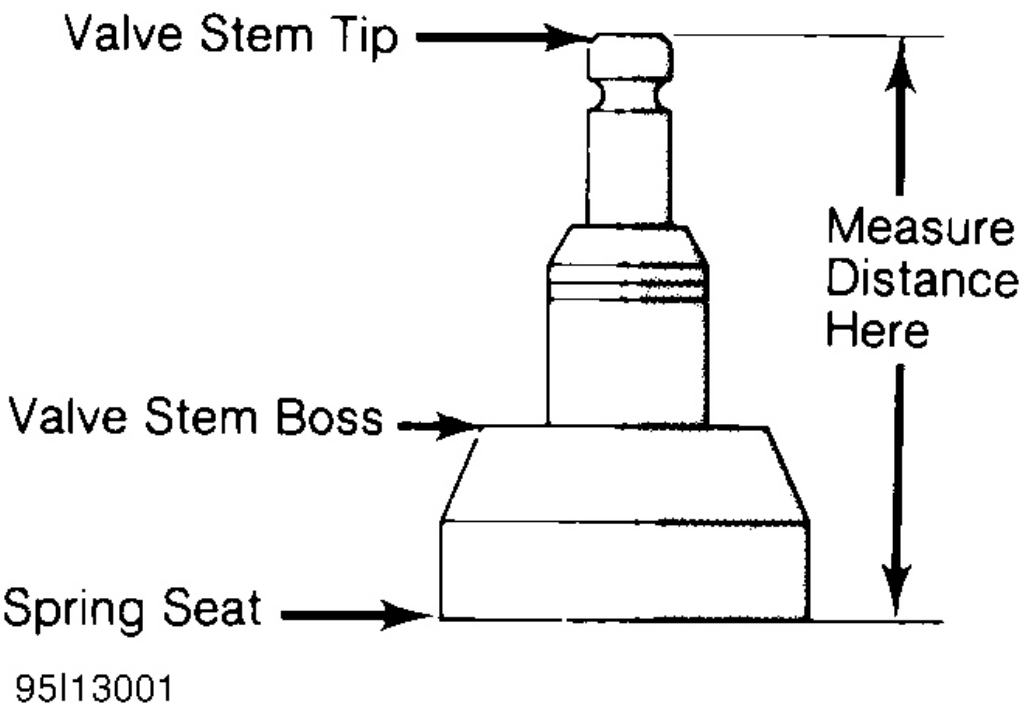

Fig. 11: Measuring Valve Stem Installed Height

VALVE STEM OIL SEALS

NOTE: **Examples used in this article are general in nature and do not necessarily relate to a specific engine or system. Illustrations and procedures have been chosen to guide mechanic through engine overhaul process. Descriptions of processes of cleaning, inspection, assembly and machine shop practice are included.**

Always refer to appropriate engine overhaul article, if available, in the ENGINES section for complete overhaul procedures and specifications for the vehicle being repaired.

Valve stem oil seals must be installed on valve stem. See **Fig. 2**. Seals are needed due to pressure differential at the ends of valve guides. Atmospheric pressure above intake guide, combined with manifold vacuum below guide, causes oil to be drawn into the cylinder.

Exhaust guides also have pressure differential created by exhaust gas flowing past the guide, creating a low pressure area. This low pressure area draws oil into the exhaust system.

Some manufacturers require that special color code or specified height valve stem oil seal be installed in

GETtheMANUALS.org

designated area.

Replacement (On-Vehicle)

Mark rocker arm or overhead cam components for location. Remove rocker arm components or overhead cam components. Components must be installed in original location. Remove spark plugs. Valve stem oil seals may be replaced by holding valves against seats using air pressure.

Air pressure must be installed in cylinder using an adapter for spark plug hole. An adapter can be constructed by welding air hose connection to spark plug body with porcelain removed.

Rotate engine until piston is at top of stroke. Install adapter in spark plug hole. Apply a minimum of 140 psi (9.8 kg/cm^2) line pressure to adapter. Air pressure should hold valve closed. If air pressure does not hold valve closed, check for damaged or bent valve. Cylinder head must be removed for service.

Using valve spring compressor, compress valve springs. Remove valve locks. Carefully release spring compressor. Remove retainer or rotator and valve spring. Remove valve stem oil seal.

If oversize valves have been installed, oversize oil seals must be used. Coat valve stem with engine oil. Install protective sleeve over end of valve stem. Install new oil seal over valve stem and seat on valve guide. Remove protective sleeve. Install spring seat, valve spring and retainer or rotator. Compress spring and install valve locks. Remove spring compressor. Ensure valve locks are fully seated.

Install rocker arms or overhead cam components. Tighten all bolts to specification. Adjust valves if required. Remove adapter. Install spark plugs, valve cover and gasket.

VALVE SPRING INSTALLED HEIGHT

NOTE: **Examples used in this article are general in nature and do not necessarily relate to a specific engine or system. Illustrations and procedures have been chosen to guide mechanic through engine overhaul process. Descriptions of processes of cleaning, inspection, assembly and machine shop practice are included.**

Always refer to appropriate engine overhaul article, if available, in the ENGINES section for complete overhaul procedures and specifications for the vehicle being repaired.

Valve spring installed height should be checked during reassembly. Measure height from lower edge of valve spring to the upper edge. DO NOT include valve spring seat or retainer. Distance must be within specification. If valves and/or seats have been ground, a valve spring shim may be required to correct spring height. See **Fig. 12**.

GETtheMANUALS.org

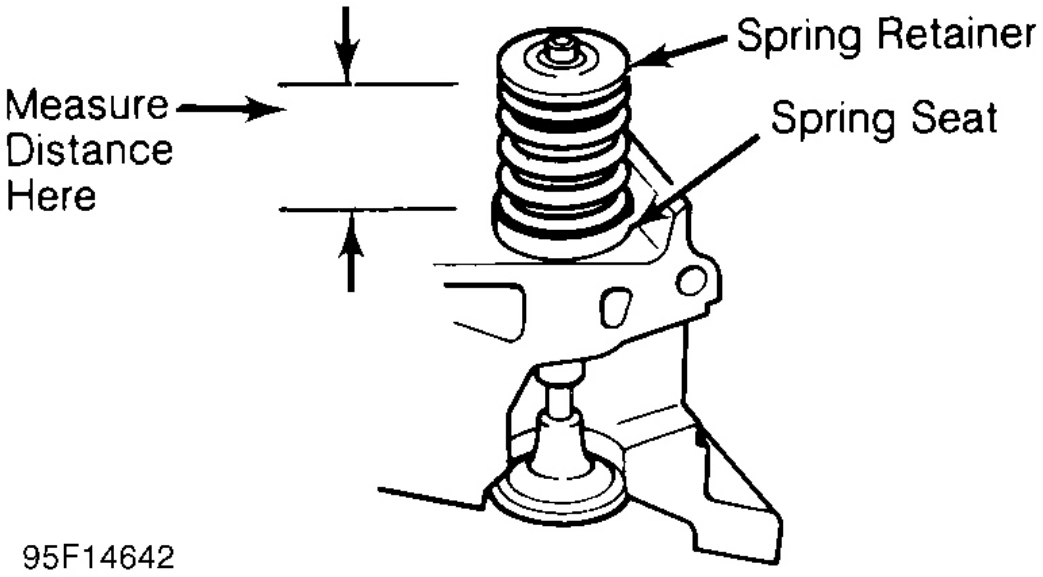

Fig. 12: Measuring Valve Spring Installed Height

ROCKER ARMS & ASSEMBLIES

NOTE: **Examples used in this article are general in nature and do not necessarily relate to a specific engine or system. Illustrations and procedures have been chosen to guide mechanic through engine overhaul process. Descriptions of processes of cleaning, inspection, assembly and machine shop practice are included.**

Always refer to appropriate engine overhaul article, if available, in the ENGINES section for complete overhaul procedures and specifications for the vehicle being repaired.

Rocker Studs

Rocker studs are either threaded or pressed in place. Threaded studs are removed by locking 2 nuts on the stud. Unscrew the stud by turning the jam nut. Coat new stud threads with Loctite and install. Tighten to specification.

Pressed-in stud can be removed using a stud puller. Ream stud bore to proper specification and press in a new oversize stud. Pressed-in studs are often replaced by cutting threads in the stud bore to accept a threaded stud.

Rocker Arms & Shafts

Mark rocker arms for location. Remove rocker arm retaining bolts. Remove rocker arms. Inspect rocker arms, shafts, bushings and pivot balls (if equipped) for excessive wear. Inspect rocker arms for wear in valve stem

GETtheMANUALS.org

contact area. Measure rocker arm bushing I.D. Replace bushings if excessively worn.

The rocker arm valve stem contact point may be reground, using special fixture for valve grinding machine. Remove minimum amount of material as possible. Ensure all oil passages are clear. Install rocker arm components in original location. Ensure rocker arm is properly seated in push rod. Tighten bolts to specification. Adjust valves if required. See **VALVE ADJUSTMENT**.

PUSH RODS

NOTE: **Examples used in this article are general in nature and do not necessarily relate to a specific engine or system. Illustrations and procedures have been chosen to guide mechanic through engine overhaul process. Descriptions of processes of cleaning, inspection, assembly and machine shop practice are included.**

Always refer to appropriate engine overhaul article, if available, in the ENGINES section for complete overhaul procedures and specifications for the vehicle being repaired.

Remove rocker arms. Mark push rods for location. Remove push rods. Push rods can be steel or aluminum, solid or hollow. Hollow push rods must be internally cleaned to ensure oil passage to rocker arms is cleaned. Check push rods for damage, such as loose ends on steel tipped aluminum types.

Check push rod for straightness. Roll push rod on a flat surface. Using feeler gauge, check clearance at center. Replace push rod if bent. The push rod can also be supported at each end and rotated. A dial indicator is used to detect a bent area in the push rod.

Lubricate ends of push rod and install push rod in original location. Ensure push rod is properly seated in lifter. Install rocker arm. Tighten bolts to specification. Adjust valves if required. See **VALVE ADJUSTMENT**.

LIFTERS

NOTE: **Examples used in this article are general in nature and do not necessarily relate to a specific engine or system. Illustrations and procedures have been chosen to guide mechanic through engine overhaul process. Descriptions of processes of cleaning, inspection, assembly and machine shop practice are included.**

Always refer to appropriate engine overhaul article, if available, in the ENGINES section for complete overhaul procedures and specifications for the vehicle being repaired.

Hydraulic Lifters

Before replacing a hydraulic lifter for noisy operation, ensure noise is not caused by worn rocker arms or valve tips. Also ensure sufficient oil pressure exists. Hydraulic lifters must be installed in original location. Remove rocker arm assembly and push rod. Mark components for location. Some applications require intake manifold, cylinder head or lifter cover removal. Remove lifter retainer plate (if used). To remove lifters, use a hydraulic lifter remover or magnet. Different type lifters are used. See **Fig. 13**.

GETtheMANUALS.org

On sticking lifters, disassemble and clean lifter. DO NOT mix lifter components or positions. Parts are select-fitted and are not interchangeable. Inspect all components for wear. Note amount of wear in lifter body-to-camshaft contact area. Surface must have smooth and convex contact face. If wear is apparent, carefully inspect cam lobe.

Inspect push rod contact area and lifter body for scoring or signs of wear. If body is scored, inspect lifter bore for damage and lack of lubrication. On roller type lifters, inspect roller for flaking, pitting, loss of needle bearings and roughness during rotation.

Measure lifter body O.D. in several areas. Measure lifter bore I.D. Ensure components or oil clearance is within specification. Some models offer oversize lifters. Replace lifter if damaged.

If lifter check valve is not operating, obstructions may be preventing it from closing or valve spring may be broken. Clean or replace components as necessary.

Check plunger operation. Plunger should drop to bottom of the body by its own weight when assembled dry. If plunger is not free, soak lifter in solvent to dissolve deposits.

Lifter leak-down test can be performed on lifter. Lifter must be filled with special test oil. New lifters contain special test oil. Using lifter leak-down tester, perform leak-down test following manufacturer's instructions. If leak-down time is not within specifications, replace lifter assembly.

Lifters should be soaked in clean engine oil several hours prior to installation. Coat lifter base, roller (if equipped) and lifter body with ample amount of Molykote or camshaft lubricant. See **Fig. 13**. Install lifter in original location. Install remaining components. Valve lash adjustment is not required on most hydraulic lifters. Preload of hydraulic lifter is automatic. Some models may require adjustment.

NOTE: **Some manufacturers require that a crankcase conditioner be added to engine oil and engine operated for specified amount of time to aid in lifter break-in procedure if new lifters or camshaft are installed.**

GETtheMANUALS.org

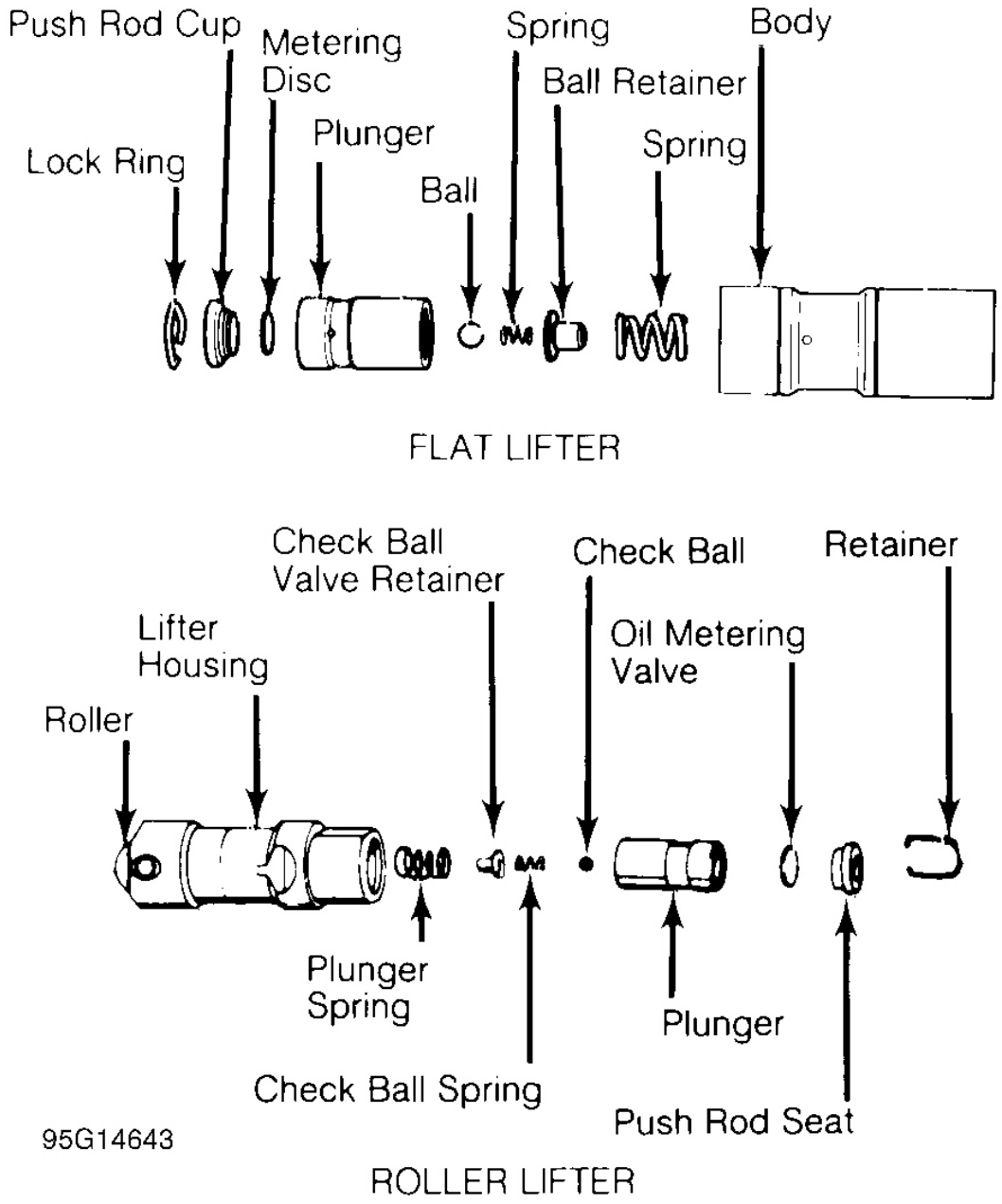

Fig. 13: Typical Hydraulic Valve Lifter Assemblies

Mechanical Lifters

Lifter assemblies must be installed in original locations. Remove rocker arm assembly and push rod. Mark components for location. Some applications require intake manifold or lifter cover removal. Remove lifter retainer plate (if used). To remove lifters, use lifter remover or magnet.

GETtheMANUALS.org

Inspect push rod contact area and lifter body for scoring or signs of wear. If body is scored, inspect lifter bore for damage and lack of lubrication. Note amount of wear in lifter body-to-camshaft contact area. Surface must have smooth and convex contact face. If wear is apparent, carefully inspect cam lobe.

Coat lifter base, roller (if equipped) and lifter body with ample amount of Molykote or camshaft lubricant. Install lifter in original location. Install remaining components. Tighten bolts to specification. Adjust valves. See **VALVE ADJUSTMENT**.

PISTONS, CONNECTING RODS & BEARINGS

*** PLEASE READ THIS FIRST ***

NOTE: **Examples used in this article are general in nature and do not necessarily relate to a specific engine or system. Illustrations and procedures have been chosen to guide mechanic through engine overhaul process. Descriptions of processes of cleaning, inspection, assembly and machine shop practice are included.**

Always refer to appropriate engine overhaul article, if available, in the ENGINES section for complete overhaul procedures and specifications for the vehicle being repaired.

RIDGE REMOVAL

NOTE: **Examples used in this article are general in nature and do not necessarily relate to a specific engine or system. Illustrations and procedures have been chosen to guide mechanic through engine overhaul process. Descriptions of processes of cleaning, inspection, assembly and machine shop practice are included.**

Always refer to appropriate engine overhaul article, if available, in the ENGINES section for complete overhaul procedures and specifications for the vehicle being repaired.

Ridge in cylinder wall must be removed prior to piston removal. Failure to remove ridge prior to removing pistons will cause piston damage in piston ring lands or grooves.

With piston at bottom dead center, place rag in bore to trap metal chips. Install ridge reamer in cylinder bore. Adjust ridge reamer using manufacturer's instructions. Remove ridge using ridge reamer. DO NOT remove an excessive amount of material. Ensure ridge is completely removed.

PISTON & CONNECTING ROD REMOVAL

NOTE: **Examples used in this article are general in nature and do not necessarily relate to a specific engine or system. Illustrations and procedures have been chosen to guide mechanic through engine overhaul process. Descriptions of processes of cleaning, inspection, assembly and machine shop practice are included.**

GETtheMANUALS.org

Always refer to appropriate engine overhaul article, if available, in the ENGINES section for complete overhaul procedures and specifications for the vehicle being repaired.

Note top of piston. Some pistons may contain a notch, arrow or be marked FRONT. Piston must be installed in proper direction to prevent damage with valve operation.

Check that connecting rod and cap are numbered for cylinder location and which side of cylinder block the number faces. Proper cap and connecting rod must be installed together. Connecting rod cap must be installed on connecting rod in proper direction to ensure bearing lock procedure. Mark connecting rod and cap if necessary. Pistons must be installed in original location.

Remove cap retaining nuts or bolts. Remove bearing cap. Install tubing protectors on connecting rod bolts. This protects cylinder walls from scoring during removal. Ensure proper removal of ridge. Push piston and connecting rod from cylinder. Connecting rod boss can be tapped with a wooden dowel or hammer handle to aid in removal.

PISTON & CONNECTING ROD

NOTE: **Examples used in this article are general in nature and do not necessarily relate to a specific engine or system. Illustrations and procedures have been chosen to guide mechanic through engine overhaul process. Descriptions of processes of cleaning, inspection, assembly and machine shop practice are included.**

Always refer to appropriate engine overhaul article, if available, in the ENGINES section for complete overhaul procedures and specifications for the vehicle being repaired.

Disassembly

Using ring expander, remove piston rings. Remove piston pin retaining rings (if equipped). Note direction of piston installation on connecting rod. On pressed type piston pins, special fixtures and procedures according to manufacturer must be used to remove piston pins. Follow manufacturer's recommendations to avoid piston distortion or breakage.

Cleaning

Remove all carbon and varnish from piston. Pistons and connecting rods may be cleaned in cold type chemical tank. Using ring groove cleaner, clean all deposits from ring grooves. Ensure all deposits are cleaned from ring grooves to prevent ring breakage or sticking. DO NOT attempt to clean pistons with wire brush.

Inspection

Inspect pistons for nicks, scoring, cracks or damage in ring areas. Connecting rod should be checked for cracks using Magnaflux procedure. Piston diameter must be measured in manufacturer's specified area.

Using telescopic gauge and micrometer, measure piston pin bore of piston in 2 areas, 90 degrees apart. This is

GETtheMANUALS.org

done to check diameter and out-of-round.

Install proper bearing cap on connecting rod. Ensure bearing cap is installed in proper location. Tighten bolts or nuts to specification. Using inside micrometer, measure inside diameter in 2 areas, 90 degrees apart.

Connecting rod I.D. and out-of-round must be within specification. Measure piston pin bore I.D. and piston pin O.D. All components must be within specification. Subtract piston pin diameter from piston pin bore in piston and connecting rod to determine proper fit.

Connecting rod length must be measured from center of crankshaft journal inside diameter to center of piston pin bushing using proper caliper. Connecting rods must be the same length. Connecting rods should be checked on an alignment fixture for bent or twisted condition. Replace all components which are damaged or not within specification.

PISTON & CYLINDER BORE FIT

NOTE: **Examples used in this article are general in nature and do not necessarily relate to a specific engine or system. Illustrations and procedures have been chosen to guide mechanic through engine overhaul process. Descriptions of processes of cleaning, inspection, assembly and machine shop practice are included.**

Always refer to appropriate engine overhaul article, if available, in the ENGINES section for complete overhaul procedures and specifications for the vehicle being repaired.

Ensure cylinder is checked for taper, out-of-round and properly honed prior to checking piston and cylinder bore fit. See **CYLINDER BLOCK**. Using dial bore gauge, measure cylinder bore.

Measure piston skirt diameter at 90 degree angle to piston pin at specified area by manufacturer. Subtract piston diameter from cylinder bore diameter to determine piston-to-cylinder clearance. Clearance must be within specification. Mark piston for proper cylinder location.

ASSEMBLING PISTON & CONNECTING ROD

NOTE: **Examples used in this article are general in nature and do not necessarily relate to a specific engine or system. Illustrations and procedures have been chosen to guide mechanic through engine overhaul process. Descriptions of processes of cleaning, inspection, assembly and machine shop practice are included.**

Always refer to appropriate engine overhaul article, if available, in the ENGINES section for complete overhaul procedures and specifications for the vehicle being repaired.

Install piston on connecting rod for corresponding cylinder. Ensure reference marking on top of piston corresponds with connecting rod and cap number. See **Fig. 14**.

Lubricate piston pin and install in connecting rod. Ensure piston pin retainers are fully seated (if equipped). On

GETtheMANUALS.org

pressed type piston pins, follow manufacturer's recommended procedure to avoid distortion or breakage.

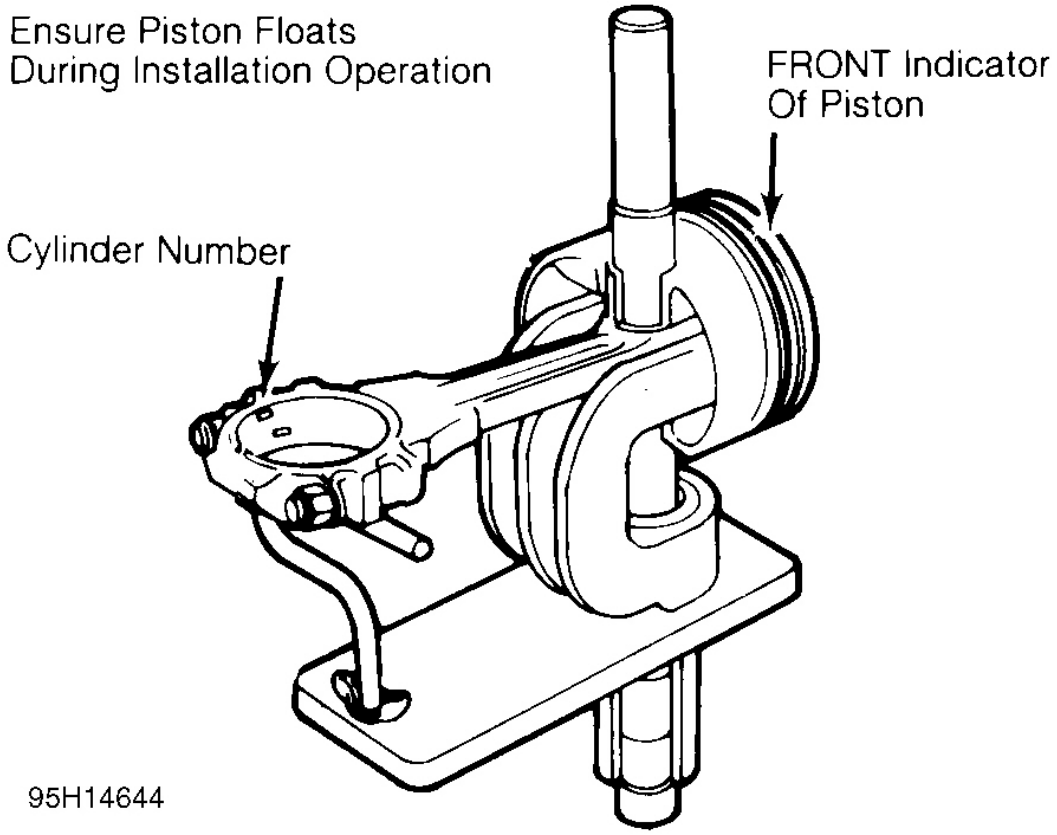

Fig. 14: Installing Typical Piston Pin

CHECKING PISTON RING CLEARANCES

NOTE: **Examples used in this article are general in nature and do not necessarily relate to a specific engine or system. Illustrations and procedures have been chosen to guide mechanic through engine overhaul process. Descriptions of processes of cleaning, inspection, assembly and machine shop practice are included.**

Always refer to appropriate engine overhaul article, if available, in the ENGINES section for complete overhaul procedures and specifications for the vehicle being repaired.

Piston rings must be checked for side clearance and end gap. To check end gap, install piston ring in cylinder in which it is to be installed. Using an inverted piston, push ring to bottom of cylinder in smallest cylinder diameter.

GETtheMANUALS.org

Using feeler gauge, check ring end gap. See **Fig. 15**. Piston ring end gap must be within specification. Ring breakage will occur if insufficient ring end gap exists.

Some manufacturers permit correcting insufficient ring end gap by using a fine file while other manufacturers recommend using another ring set. Mark rings for proper cylinder installation after checking end gap.

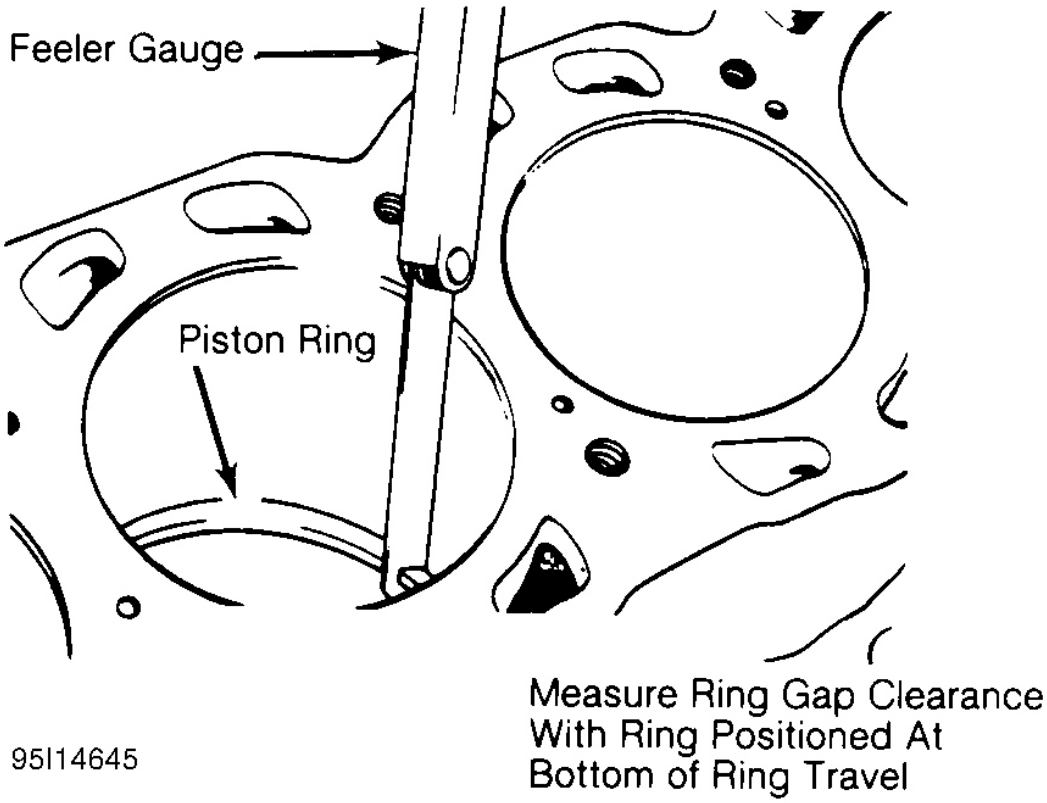

Fig. 15: Checking Piston Ring End Gap

For checking side clearance, install rings on piston. Using feeler gauge, measure clearance between piston ring and piston ring land. Check side clearance in several areas around piston. Side clearance must be within specification.

If side clearance is excessive, piston ring grooves can be machined to accept oversize piston rings (if available). Normal practice is to replace piston.

PISTON & CONNECTING ROD INSTALLATION

NOTE: **Examples used in this article are general in nature and do not necessarily relate to a specific engine or system. Illustrations and procedures have been chosen to guide mechanic through engine overhaul process. Descriptions of processes**

GETtheMANUALS.org

of cleaning, inspection, assembly and machine shop practice are included.

Always refer to appropriate engine overhaul article, if available, in the ENGINES section for complete overhaul procedures and specifications for the vehicle being repaired.

Cylinders must be honed prior to piston installation. See **CYLINDER HONING** under CYLINDER BLOCK.

Install upper connecting rod bearings. Lubricate upper bearings with engine oil. Install lower bearings in rod caps. Ensure bearing tabs are properly seated. Position piston ring gaps according to manufacturer's recommendations. See **Fig. 16**. Lubricate pistons, rings and cylinder walls.

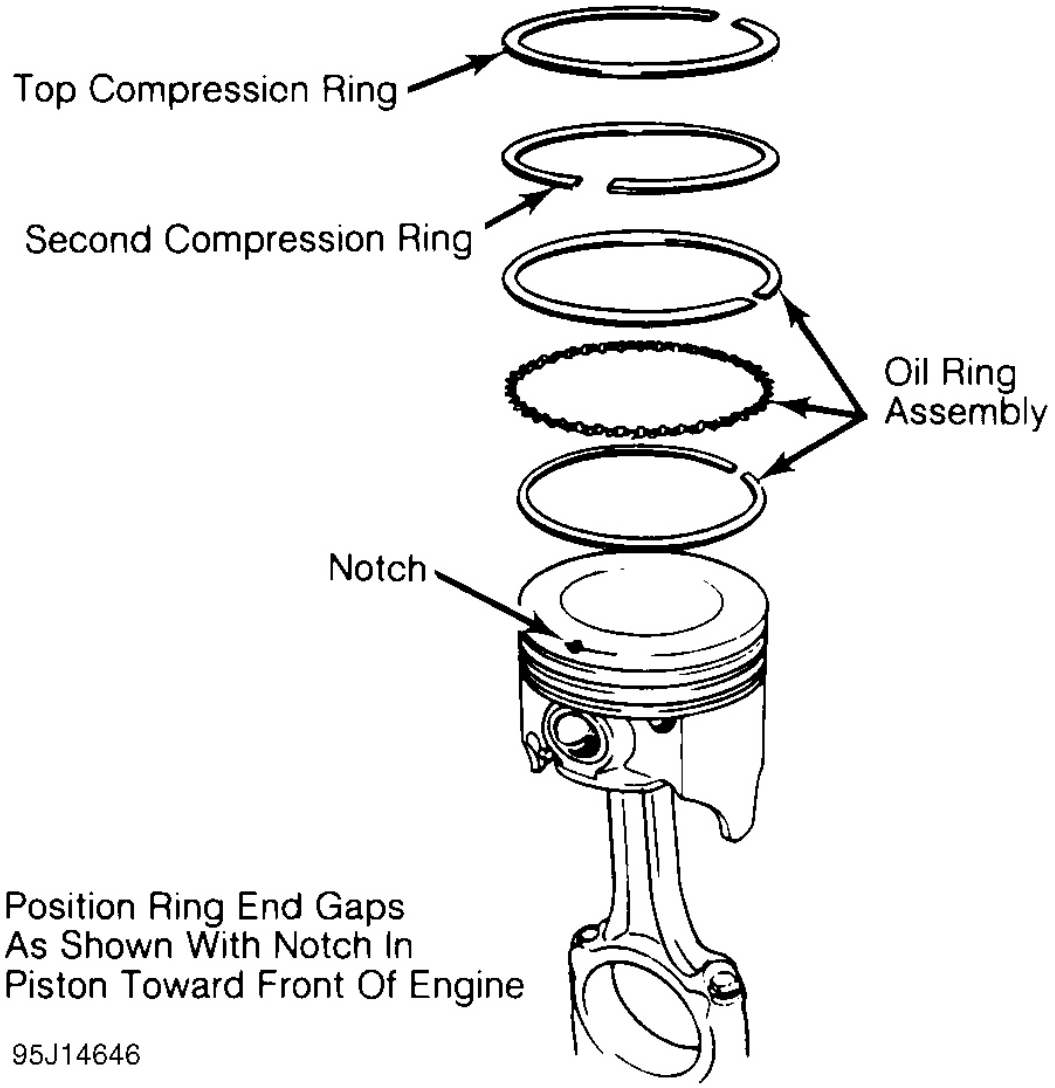

GETtheMANUALS.org

Fig. 16: Positioning Typical Piston Ring End Gap

Install ring compressor. Use care not to rotate piston rings. Compress rings with ring compressor. Install plastic tubing protectors over connecting rod bolts. Install piston and connecting rod assembly. Ensure piston notch, arrow or FRONT mark is toward front of engine. See **Fig. 17**.

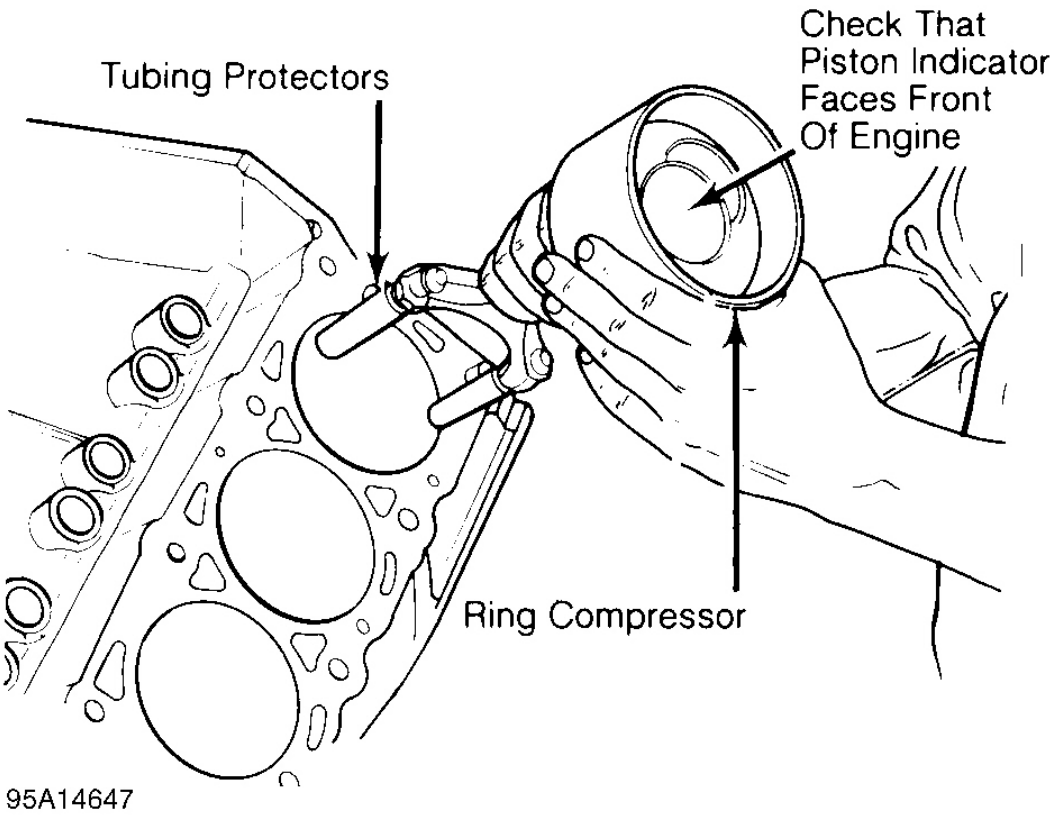

Fig. 17: Installing Piston & Connecting Rod Assembly

Carefully tap piston into cylinder until rod bearing is seated on crankshaft journal. Remove protectors. Install rod cap and bearing. Lightly tighten connecting rod bolts. Repeat procedure for remaining cylinders. Check bearing clearance. See **MAIN & CONNECTING ROD BEARING CLEARANCE**.

Once clearance is checked, lubricate journals and bearings. Install bearing caps. Ensure marks are aligned on connecting rod and cap. Tighten rod nuts or bolts to specification. Ensure rod moves freely on crankshaft. Check connecting rod side clearance. See **CONNECTING ROD SIDE CLEARANCE**.

CONNECTING ROD SIDE CLEARANCE

NOTE: **Examples used in this article are general in nature and do not necessarily relate to a specific engine or system. Illustrations and procedures have been chosen**

GETtheMANUALS.org

to guide mechanic through engine overhaul process. Descriptions of processes of cleaning, inspection, assembly and machine shop practice are included.

Always refer to appropriate engine overhaul article, if available, in the ENGINES section for complete overhaul procedures and specifications for the vehicle being repaired.

Position connecting rod toward one side of crankshaft as far as possible. Using feeler gauge, measure clearance between side of connecting rod and crankshaft. See **Fig. 18**. Clearance must be within specification.

Check for improper bearing installation, wrong bearing cap or insufficient bearing clearance if side clearance is insufficient. Connecting rod may require machining to obtain proper clearance. Excessive clearance usually indicates excessive wear at crankshaft. Crankshaft must be repaired or replaced.

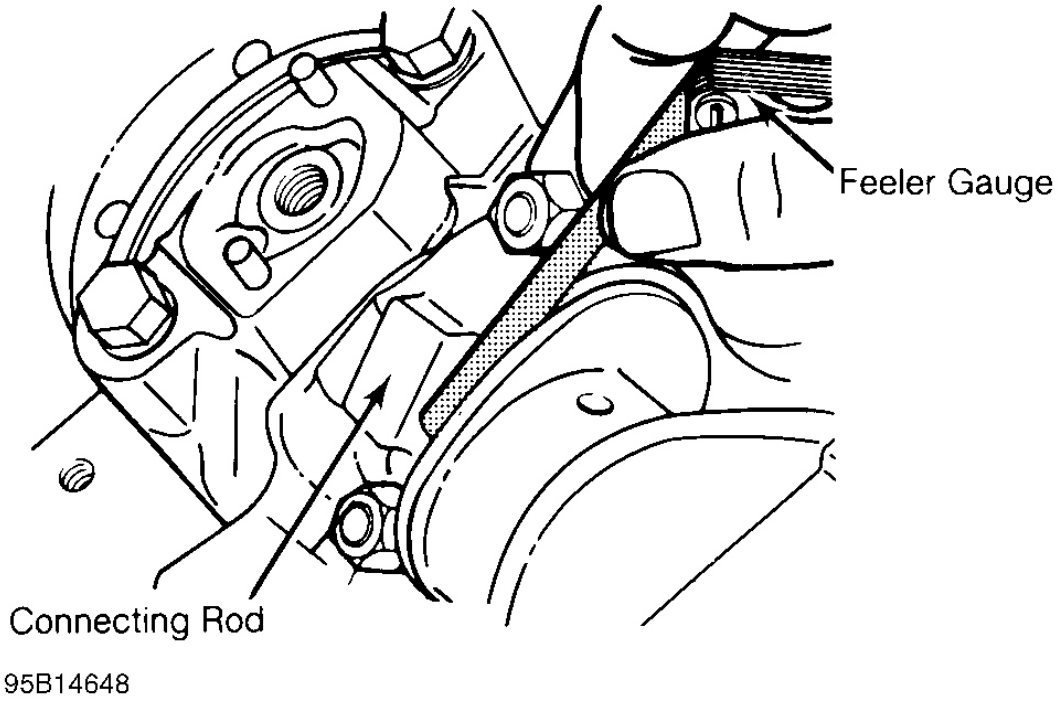

Fig. 18: Measuring Connecting Rod Side Clearance

MAIN & CONNECTING ROD BEARING CLEARANCE

NOTE: **Examples used in this article are general in nature and do not necessarily relate to a specific engine or system. Illustrations and procedures have been chosen to guide mechanic through engine overhaul process. Descriptions of processes of cleaning, inspection, assembly and machine shop practice are included.**

GETtheMANUALS.org

Always refer to appropriate engine overhaul article, if available, in the ENGINES section for complete overhaul procedures and specifications for the vehicle being repaired.

Plastigage Method

Plastigage method may be used to determine bearing clearance. Plastigage can be used with an engine in service or during reassembly. Plastigage material is oil soluble.

Ensure journals and bearings are free of oil or solvent. Oil or solvent will dissolve material and false reading will be obtained. Install small piece of Plastigage along full length of bearing journal. Install bearing cap in original location. Tighten bolts to specification.

CAUTION: DO NOT rotate crankshaft while Plastigage is installed. Bearing clearance will not be obtained if crankshaft is rotated.

Remove bearing cap. Compare Plastigage width with scale on Plastigage container to determine bearing clearance. See **Fig. 19**. Rotate crankshaft 90 degrees. Repeat procedure. This is done to check journal eccentricity. This procedure can be used to check oil clearance on both connecting rod and main bearings.

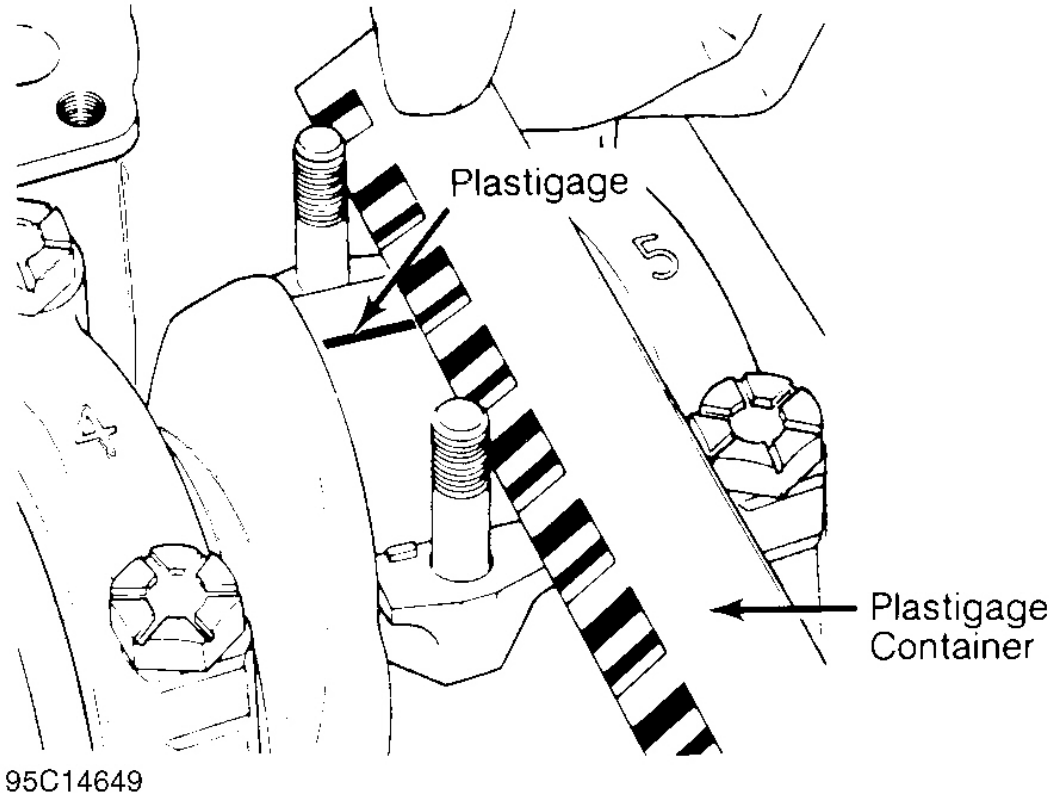

GETtheMANUALS.org

Fig. 19: Measuring Bearing Clearance

Micrometer & Telescopic Gauge Method

A micrometer is used to determine journal diameter, taper and out-of-round dimensions of the crankshaft. See **CLEANING & INSPECTION** under CRANKSHAFT & MAIN BEARINGS in this article.

With crankshaft removed, install bearings and caps in original location on cylinder block. Tighten bolts to specification. On connecting rods, install bearings and caps on connecting rods. Install proper connecting rod cap on corresponding rod. Ensure bearing cap is installed in original location. Tighten bolts to specification.

Using a telescopic gauge and micrometer or inside micrometer, measure inside diameter of connecting rod and main bearings bores. Subtract each crankshaft journal diameter from the corresponding inside bearing bore diameter. This is the bearing clearance.

CRANKSHAFT & MAIN BEARINGS

*** PLEASE READ THIS FIRST ***

NOTE: **Examples used in this article are general in nature and do not necessarily relate to a specific engine or system. Illustrations and procedures have been chosen to guide mechanic through engine overhaul process. Descriptions of processes of cleaning, inspection, assembly and machine shop practice are included.**

Always refer to appropriate engine overhaul article, if available, in the ENGINES section for complete overhaul procedures and specifications for the vehicle being repaired.

REMOVAL

NOTE: **Examples used in this article are general in nature and do not necessarily relate to a specific engine or system. Illustrations and procedures have been chosen to guide mechanic through engine overhaul process. Descriptions of processes of cleaning, inspection, assembly and machine shop practice are included.**

Always refer to appropriate engine overhaul article, if available, in the ENGINES section for complete overhaul procedures and specifications for the vehicle being repaired.

Ensure all main bearing caps are marked for location on cylinder block. Some main bearing caps have an arrow stamped on them. The arrow must face timing belt or timing chain end of engine. Remove main bearing cap bolts. Remove main bearing caps. Carefully remove crankshaft. Use care not to bind crankshaft in cylinder block during removal.

CLEANING & INSPECTION

GETtheMANUALS.org

NOTE: **Examples used in this article are general in nature and do not necessarily relate to a specific engine or system. Illustrations and procedures have been chosen to guide mechanic through engine overhaul process. Descriptions of processes of cleaning, inspection, assembly and machine shop practice are included.**

Always refer to appropriate engine overhaul article, if available, in the ENGINES section for complete overhaul procedures and specifications for the vehicle being repaired.

Thoroughly clean crankshaft using solvent. Dry with compressed air. Ensure all oil passages are clear and free of sludge, rust, dirt and metal chips.

Inspect crankshaft for scoring and nicks. Inspect crankshaft for cracks using Magnaflux procedure. Inspect rear seal area for grooving or damage. Inspect bolt hole threads for damage. If pilot bearing or bushing is used, check pilot bearing or bushing fit in crankshaft. Inspect crankshaft gear for damaged or cracked teeth. Replace gear if damaged. Ensure oil passage plugs are tight (if equipped).

Using micrometer, measure all journals in 4 areas to determine journal taper, out-of-round and undersize. See **Fig. 20**. Some crankshafts can be reground to the next largest undersize, depending on the amount of wear or damage. Crankshafts with rolled fillet cannot be reground and must be replaced.

GETtheMANUALS.org

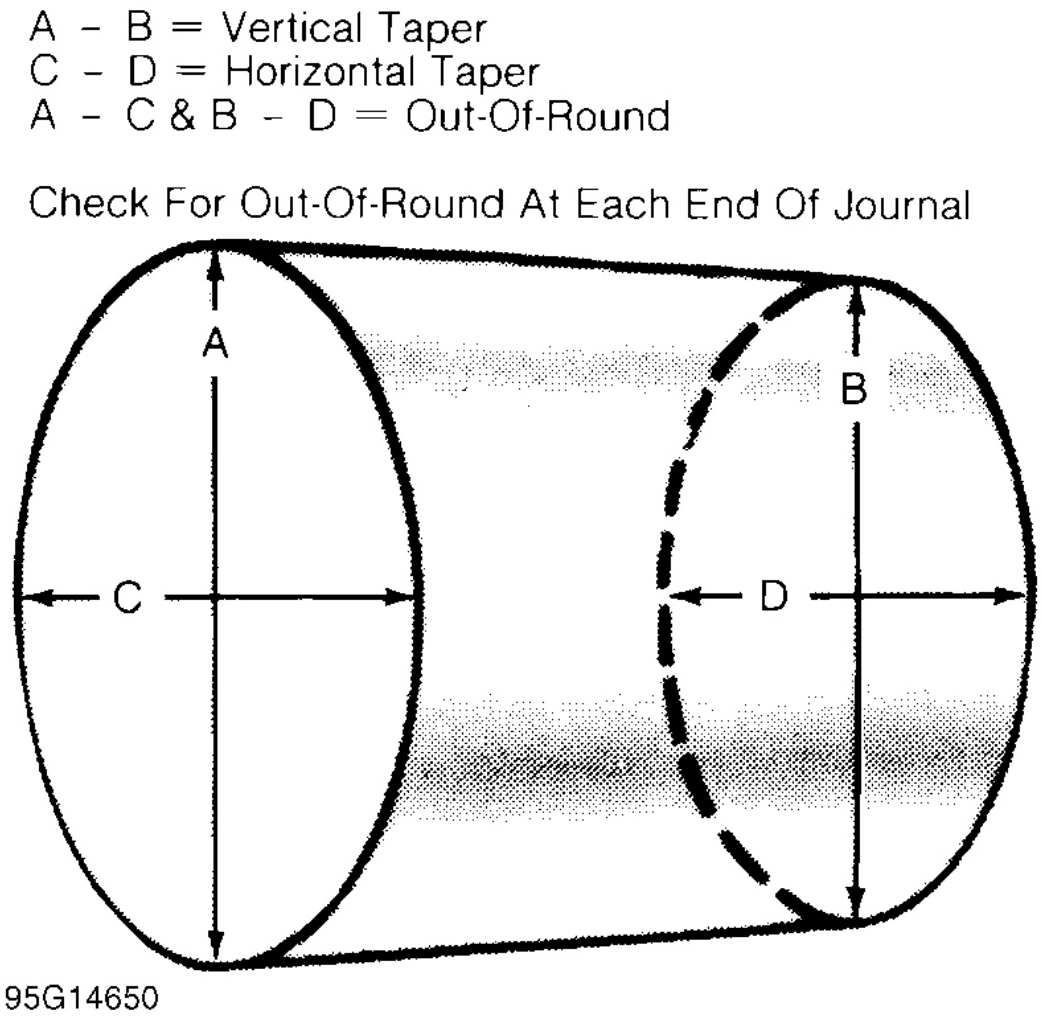

Fig. 20: Measuring Crankshaft Journals

Crankshaft journal runout should be checked. Install crankshaft in "V" blocks or bench center. Position dial indicator with tip resting on the main bearing journal area. See **Fig. 21**. Rotate crankshaft and note reading. Journal runout must not exceed specification. Repeat procedure on all main bearing journals. Crankshaft must be replaced if runout exceeds specification.

GETtheMANUALS.org

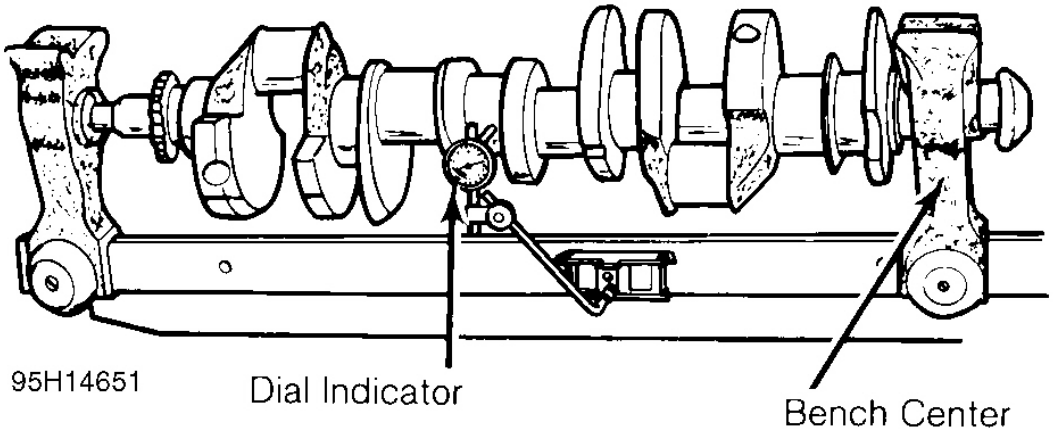

Fig. 21: Measuring Crankshaft Main Bearing Journal Runout

INSTALLATION

NOTE: **Examples used in this article are general in nature and do not necessarily relate to a specific engine or system. Illustrations and procedures have been chosen to guide mechanic through engine overhaul process. Descriptions of processes of cleaning, inspection, assembly and machine shop practice are included.**

Always refer to appropriate engine overhaul article, if available, in the ENGINES section for complete overhaul procedures and specifications for the vehicle being repaired.

Install upper main bearing in cylinder block. Ensure lock tab is properly located in cylinder block. Install bearings in main bearing caps. Ensure all oil passages are aligned. Install rear seal (if removed).

Ensure crankshaft journals are clean. Lubricate upper main bearings with clean engine oil. Carefully install crankshaft. Check each main bearing clearance using Plastigage method. See **MAIN & CONNECTING ROD BEARING CLEARANCE**.

Once clearance is checked, lubricate lower main bearing and journals. Install main bearing caps in original location. Install rear seal in rear main bearing cap (if removed). Some rear main bearing caps require sealant to be applied in corners to prevent oil leakage.

Install and tighten all bolts except thrust bearing cap to specification. Tighten thrust bearing cap bolts finger tight only. Some models require that thrust bearing be aligned. On most applications, crankshaft must be moved rearward then forward. Procedure may vary with manufacturer. Thrust bearing cap is then tightened to specification. Ensure crankshaft rotates freely. Crankshaft end play should be checked. See **CRANKSHAFT END PLAY**.

GETtheMANUALS.org

CRANKSHAFT END PLAY

NOTE: **Examples used in this article are general in nature and do not necessarily relate to a specific engine or system. Illustrations and procedures have been chosen to guide mechanic through engine overhaul process. Descriptions of processes of cleaning, inspection, assembly and machine shop practice are included.**

Always refer to appropriate engine overhaul article, if available, in the ENGINES section for complete overhaul procedures and specifications for the vehicle being repaired.

Dial Indicator Method

Crankshaft end play can be checked using dial indicator. Mount dial indicator on rear of cylinder block. Position dial indicator tip against rear of crankshaft. Ensure tip is resting against flat surface.

Pry crankshaft rearward. Adjust dial indicator to zero. Pry crankshaft forward and note reading. Crankshaft end play must be within specification. If end play is not within specification, check for faulty thrust bearing installation or worn crankshaft. Some applications offer oversize thrust bearings.

Feeler Gauge Method

Crankshaft end play can be checked using feeler gauge. Pry crankshaft rearward. Pry crankshaft forward. Using feeler gauge, measure clearance between crankshaft and thrust bearing surface. See **Fig. 22**.

GETtheMANUALS.org

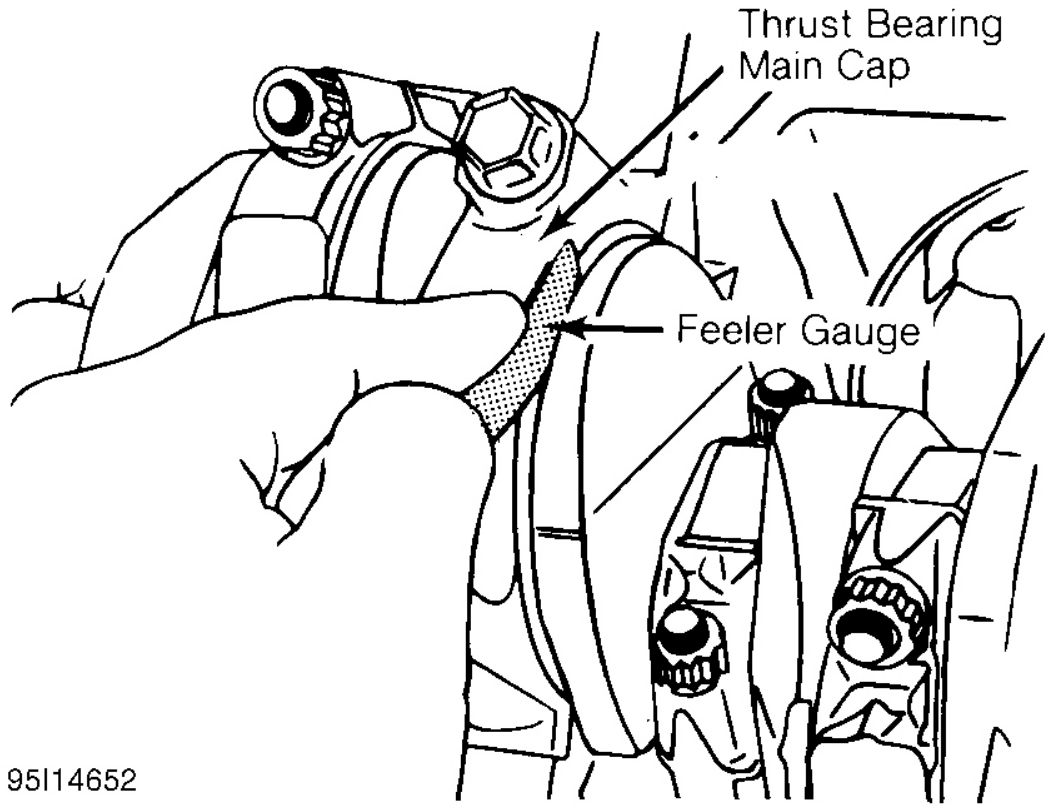

Fig. 22: Checking Crankshaft End Play

Crankshaft end play must be within specification. If end play is not within specification, check for faulty thrust bearing installation or worn crankshaft. Some applications offer oversize thrust bearings.

CYLINDER BLOCK

NOTE: **Examples used in this article are general in nature and do not necessarily relate to a specific engine or system. Illustrations and procedures have been chosen to guide mechanic through engine overhaul process. Descriptions of processes of cleaning, inspection, assembly and machine shop practice are included.**

Always refer to appropriate engine overhaul article, if available, in the ENGINES section for complete overhaul procedures and specifications for the vehicle being repaired.

Block Cleaning

Only cast cylinder blocks should be hot tank cleaned. Aluminum cylinder blocks should be cleaned using cold tank method. Cylinder block is cleaned in order to remove carbon deposits, gasket residue and water jacket

GETtheMANUALS.org

scale. Remove oil gallery plugs, freeze plugs and cam bearings before cleaning block.

Block Inspection

Visually inspect the block. Check suspected areas for cracks using the Dye Penetrant inspection method. Block may be checked for cracks using the Magnaflux method.

Cracks are most commonly found at the bottom of cylinders, main bearing saddles, near expansion plugs and between cylinders and water jackets. Inspect lifter bores for damage. Inspect all head bolt holes for damaged threads. Threads should be cleaned using tap to ensure proper head bolt torque. Consult machine shop concerning possible welding and machining (if required).

Cylinder Bore Inspection

Inspect bore for scoring or roughness. Cylinder bore is dimensionally checked for out-of-round and taper using dial bore gauge. For determining out-of-round, measure cylinder parallel and perpendicular to the block center line. Difference in the 2 readings is the bore out-of-round. Cylinder bore must be checked at top, middle and bottom of piston travel area.

Bore taper is obtained by measuring bore at the top and bottom. If wear has exceeded allowable limits, block must be honed or bored to next available oversize piston dimension.

Cylinder Honing

Cylinder must be properly honed to allow new piston rings to properly seat. Cross-hatching at correct angle and depth is critical to lubrication of cylinder walls and pistons.

A flexible drive hone and power drill are commonly used. Drive hone must be lubricated during operation. Mix equal parts of kerosene and SAE 20W engine oil for lubrication.

Apply lubrication to cylinder wall. Operate cylinder hone from top to bottom of cylinder using even strokes to produce 45 degree cross-hatch pattern on the cylinder wall. DO NOT allow cylinder hone to extend below cylinder during operation.

Recheck bore dimension after final honing. Wash cylinder wall with hot soapy water to remove abrasive particles. Blow dry with compressed air. Coat cleaned cylinder walls with lubricating oil.

Deck Warpage

Check deck for damage or warped gasket surface. Place a straightedge across gasket surface of the deck. Using feeler gauge, measure clearance at center of straightedge. Measure across width and length of cylinder block at several points.

If warpage exceeds specifications, deck must be resurfaced. If warpage exceeds manufacturer's maximum tolerance for material removal, replace block.

NOTE: **Some manufacturers recommend that a total amount of material (cylinder head and cylinder block) can only be removed before components must be replaced.**

GETtheMANUALS.org

Deck Height

Distance from crankshaft center line to block deck is called the deck height. Measure and record front and rear main journals of crankshaft. To compute this distance, install crankshaft and retain with center main bearing and cap only. Measure distance from crankshaft journal to block deck, parallel to cylinder center line.

Add one half of main bearing journal diameter to distance from crankshaft journal to block deck. This dimension should be checked at front and rear of cylinder block. Both readings should be the same.

If difference exceeds specification, cylinder block must be repaired or replaced. Deck height and warpage should be corrected at the same time.

Main Bearing Bore & Alignment

For checking main bearing bore, remove all bearings from cylinder block and main bearing caps. Install main bearing caps in original location. Tighten bolts to specification. Using inside micrometer, measure main bearing bore in 2 areas 90 degrees apart. Determine bore size and out-of-round. If diameter is not within specification, block must be align-bored.

For checking alignment, place a straightedge along center line of main bearing saddles. Check for clearance between straightedge and main bearing saddles. Block must be align-bored if clearance exists.

Expansion Plug Removal

Drill hole in center of expansion plug. Remove with screwdriver or punch. Use care not to damage sealing surface.

Expansion Plug Installation

Ensure sealing surface is free of burrs. Coat expansion plug with sealer. Using wooden dowel or pipe of slightly smaller diameter, install expansion plug. Ensure expansion plug is evenly located.

Oil Gallery Plug Removal

Remove threaded oil gallery plugs using appropriate wrench. Soft press-in plugs are removed by drilling into plug and installing a sheet metal screw. Remove plug with slide hammer or pliers.

Oil Gallery Plug Installation

Ensure threads or sealing surface is clean. Coat threaded oil gallery plugs with sealer and install. Replacement soft press-in plugs are installed with a hammer and drift.

CAMSHAFT

*** PLEASE READ THIS FIRST ***

NOTE: Examples used in this article are general in nature and do not necessarily relate

GETtheMANUALS.org

to a specific engine or system. Illustrations and procedures have been chosen to guide mechanic through engine overhaul process. Descriptions of processes of cleaning, inspection, assembly and machine shop practice are included.

Always refer to appropriate engine overhaul article, if available, in the ENGINES section for complete overhaul procedures and specifications for the vehicle being repaired.

CLEANING & INSPECTION

NOTE: **Examples used in this article are general in nature and do not necessarily relate to a specific engine or system. Illustrations and procedures have been chosen to guide mechanic through engine overhaul process. Descriptions of processes of cleaning, inspection, assembly and machine shop practice are included.**

Always refer to appropriate engine overhaul article, if available, in the ENGINES section for complete overhaul procedures and specifications for the vehicle being repaired.

Clean camshaft with solvent. Ensure all oil passages are clear. Inspect cam lobes and bearing journals for pitting, flaking or scoring. Using micrometer, measure bearing journal O.D.

Support camshaft at each end with "V" blocks. Position dial indicator with tip resting on center bearing journal. Rotate camshaft and note camshaft runout reading. If reading exceeds specification, replace camshaft.

Check cam lobe lift by measuring base circle of camshaft using micrometer. Measure again at 90-degree angle to tip of cam lobe. Cam lift can be determined by subtracting base circle diameter from tip of cam lobe measurement.

Different lift dimensions are given for intake and exhaust cam lobes. Reading must be within specification. Replace camshaft if cam lobes or bearing journals are not within specification.

Inspect camshaft gear for chipped, eroded or damaged teeth. Replace gear if damaged. On camshafts using thrust plate, measure distance between thrust plate and camshaft shoulder. Replace thrust plate if not within specification.

CAMSHAFT BEARINGS

NOTE: **Examples used in this article are general in nature and do not necessarily relate to a specific engine or system. Illustrations and procedures have been chosen to guide mechanic through engine overhaul process. Descriptions of processes of cleaning, inspection, assembly and machine shop practice are included.**

Always refer to appropriate engine overhaul article, if available, in the ENGINES section for complete overhaul procedures and specifications for the vehicle being repaired.

GETtheMANUALS.org

Removal & Installation

Remove camshaft rear plug. Camshaft bearing remover is assembled with shoulder resting against bearing to be removed according to manufacturer's instructions. Tighten puller nut until bearing is removed. Remove remaining bearings, leaving front and rear bearings until last. These bearings act as a guide for camshaft bearing remover.

To install new bearings, puller is rearranged to pull bearings toward the center of block. Ensure all lubrication passages of bearing are aligned with cylinder block. Coat new camshaft rear plug with sealant. Install camshaft rear plug. Ensure plug is even in cylinder block.

CAMSHAFT INSTALLATION

NOTE: **Examples used in this article are general in nature and do not necessarily relate to a specific engine or system. Illustrations and procedures have been chosen to guide mechanic through engine overhaul process. Descriptions of processes of cleaning, inspection, assembly and machine shop practice are included.**

Always refer to appropriate engine overhaul article, if available, in the ENGINES section for complete overhaul procedures and specifications for the vehicle being repaired.

Lubricate bearing surfaces and cam lobes with ample amount of Molykote or camshaft lubricant. Carefully install camshaft. Use care not to damage bearing journals during installation. Install thrust plate retaining bolts (if equipped). Tighten bolts to specification. On overhead camshafts, install bearing caps in original location. Tighten bolts to specification. On all applications, check camshaft end play.

CAMSHAFT END PLAY

NOTE: **Examples used in this article are general in nature and do not necessarily relate to a specific engine or system. Illustrations and procedures have been chosen to guide mechanic through engine overhaul process. Descriptions of processes of cleaning, inspection, assembly and machine shop practice are included.**

Always refer to appropriate engine overhaul article, if available, in the ENGINES section for complete overhaul procedures and specifications for the vehicle being repaired.

Using dial indicator, check camshaft end play. Position dial indicator on front of engine block or cylinder head. Position indicator tip against camshaft. Push camshaft toward rear of cylinder head or engine and adjust indicator to zero.

Move camshaft forward and note reading. Camshaft end play must be within specification. End play may be adjusted by relocating gear, shimming thrust plate or replacing thrust plate depending on each manufacturer.

TIMING CHAINS & BELTS

GETtheMANUALS.org

*** PLEASE READ THIS FIRST ***

NOTE: **Examples used in this article are general in nature and do not necessarily relate to a specific engine or system. Illustrations and procedures have been chosen to guide mechanic through engine overhaul process. Descriptions of processes of cleaning, inspection, assembly and machine shop practice are included.**

Always refer to appropriate engine overhaul article, if available, in the ENGINES section for complete overhaul procedures and specifications for the vehicle being repaired.

TIMING CHAINS

NOTE: **Examples used in this article are general in nature and do not necessarily relate to a specific engine or system. Illustrations and procedures have been chosen to guide mechanic through engine overhaul process. Descriptions of processes of cleaning, inspection, assembly and machine shop practice are included.**

Always refer to appropriate engine overhaul article, if available, in the ENGINES section for complete overhaul procedures and specifications for the vehicle being repaired.

Timing chains will stretch during operation. Limits are placed upon amount of stretch before replacement is required. Timing chain stretch will alter ignition timing and valve timing.

To check timing chain stretch, rotate crankshaft to eliminate slack from one side of timing chain. Mark reference point on cylinder block. Rotate crankshaft in opposite direction to eliminate slack from remaining side of timing chain. Force other side of chain outward and measure distance between reference point and timing chain. See **Fig. 23**. Replace timing chain and gears if not within specification.

GETtheMANUALS.org

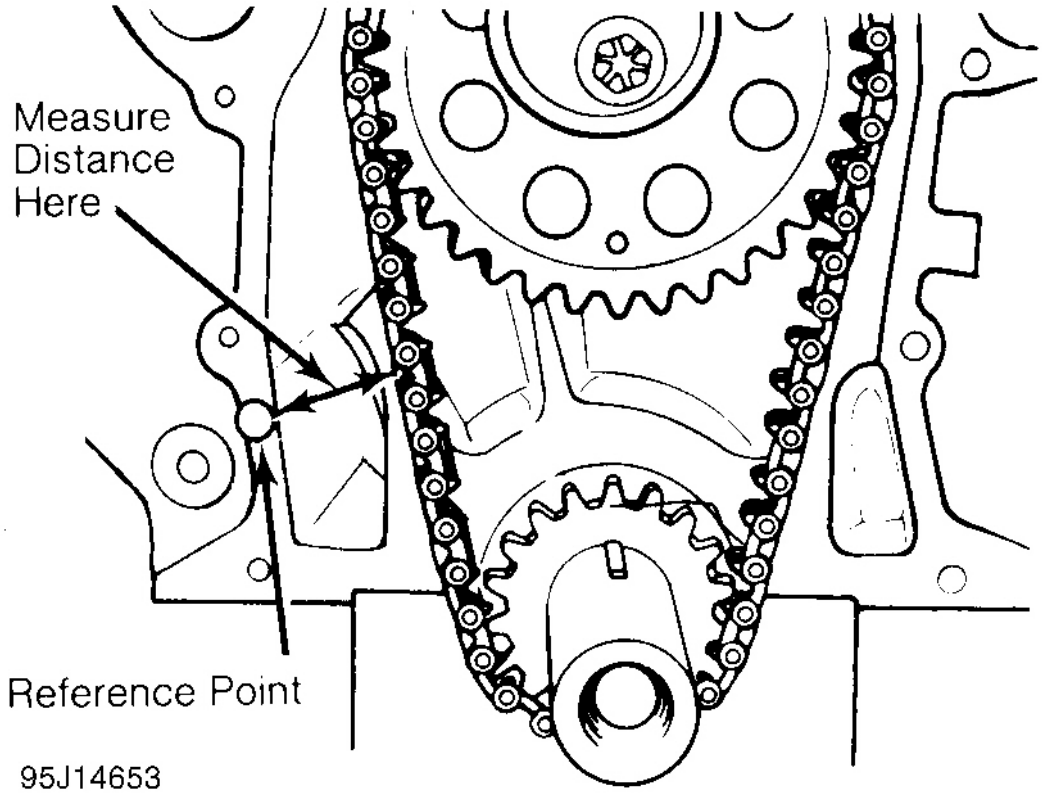

Fig. 23: Measuring Timing Chain Stretch

Timing chains must be installed so timing marks on camshaft gear and crankshaft gear are aligned according to manufacturer. See **Fig. 24**.

GETtheMANUALS.org

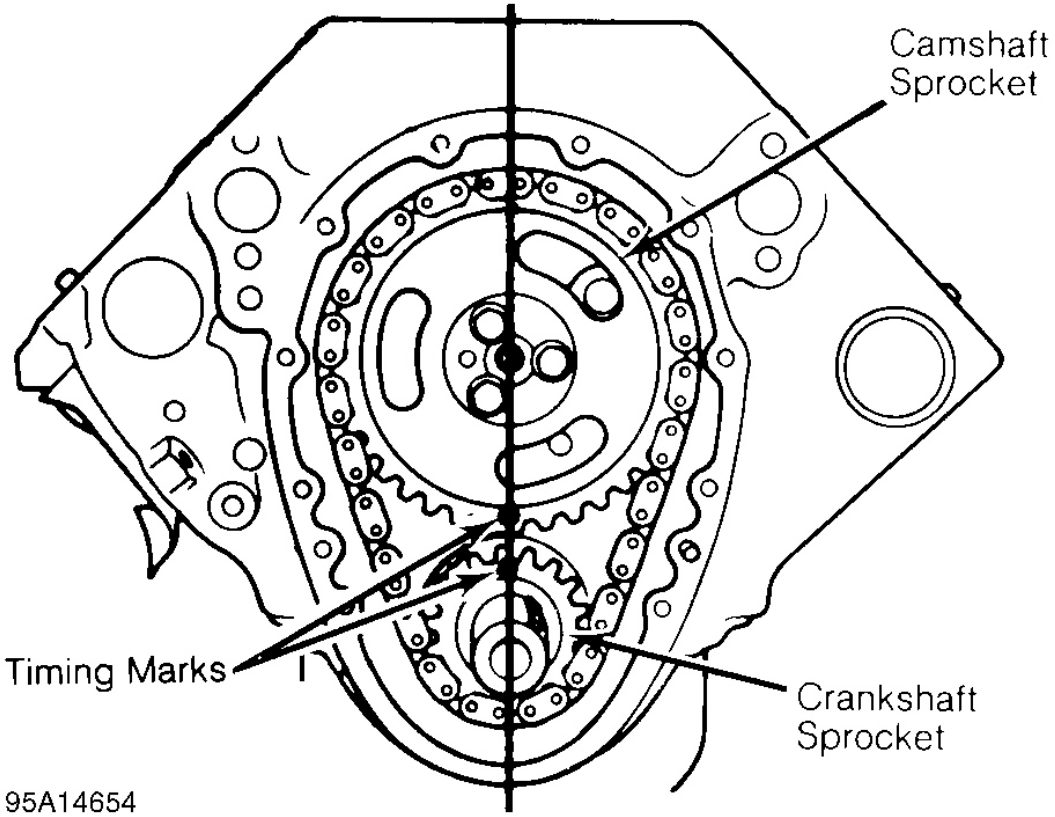

Fig. 24: Typical Gear Timing Mark Alignment

TIMING BELTS

NOTE: **Examples used in this article are general in nature and do not necessarily relate to a specific engine or system. Illustrations and procedures have been chosen to guide mechanic through engine overhaul process. Descriptions of processes of cleaning, inspection, assembly and machine shop practice are included.**

Always refer to appropriate engine overhaul article, if available, in the ENGINES section for complete overhaul procedures and specifications for the vehicle being repaired.

Cogged tooth belts are commonly used on overhead cam engines. Inspect belt teeth for rounded corners or cracking. Replace belt if it is cracked, damaged, missing teeth or oil soaked.

Used timing belt must be installed in original direction of rotation. Inspect all sprocket teeth for wear. Replace all worn sprockets. Sprockets are marked for timing purposes. Engine is positioned so that crankshaft sprocket mark will be upward. Camshaft sprocket is aligned with reference mark on cylinder head or timing belt cover and then timing belt can be installed. See **Fig. 25**.

GETtheMANUALS.org

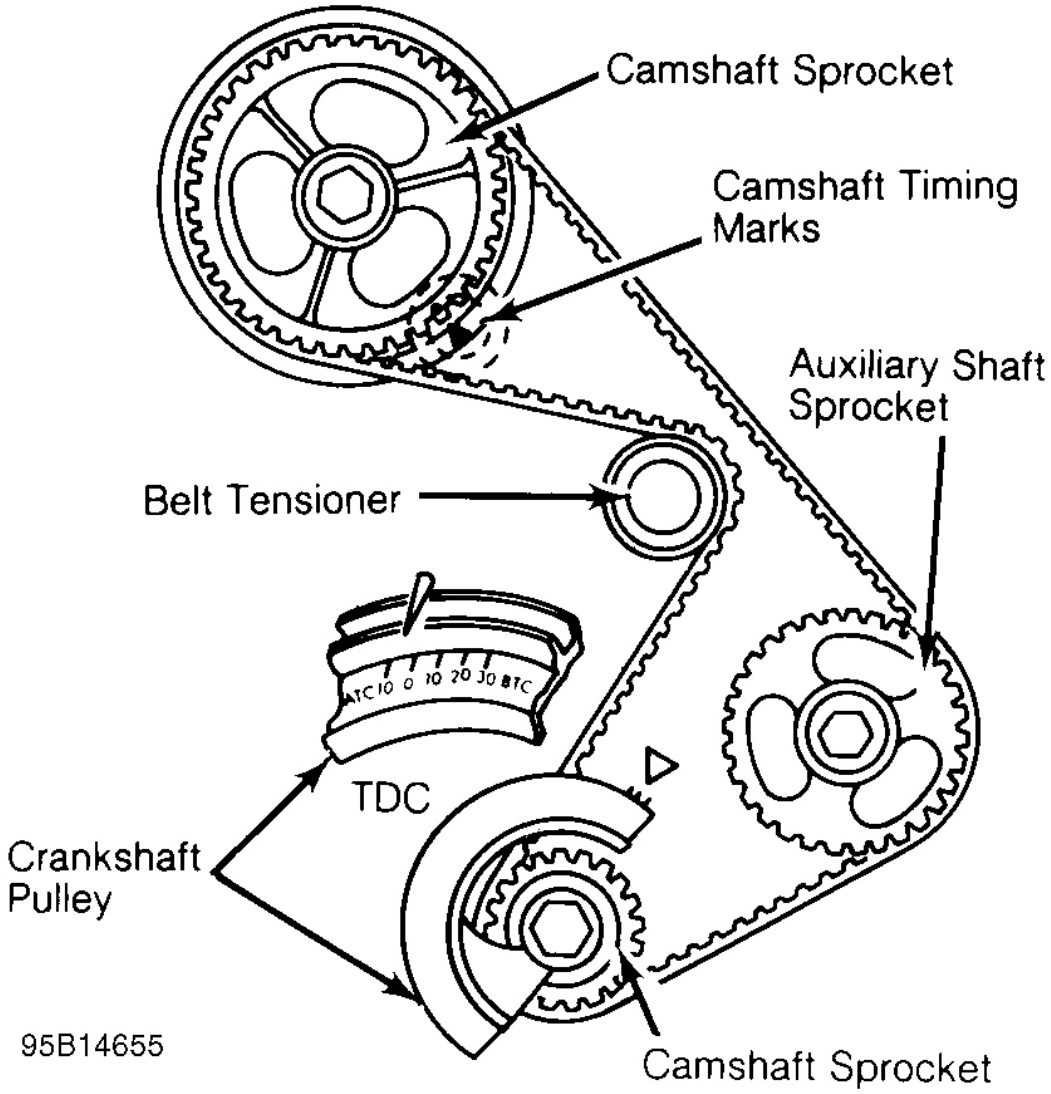

Fig. 25: Typical Camshaft Belt Sprocket Alignment

TENSION ADJUSTMENT

NOTE: **Examples used in this article are general in nature and do not necessarily relate to a specific engine or system. Illustrations and procedures have been chosen to guide mechanic through engine overhaul process. Descriptions of processes of cleaning, inspection, assembly and machine shop practice are included.**

Always refer to appropriate engine overhaul article, if available, in the ENGINES section for complete overhaul procedures and specifications for the vehicle being repaired.

GETtheMANUALS.org

If guide rails are used with spring loaded tensioners, ensure at least half of original rail thickness remains. Spring loaded tensioner should be inspected for damage.

Ensure all timing marks are aligned. Adjust belt tension using manufacturer's recommendations. Belt tension may require checking using tension gauge. See **Fig. 26**.

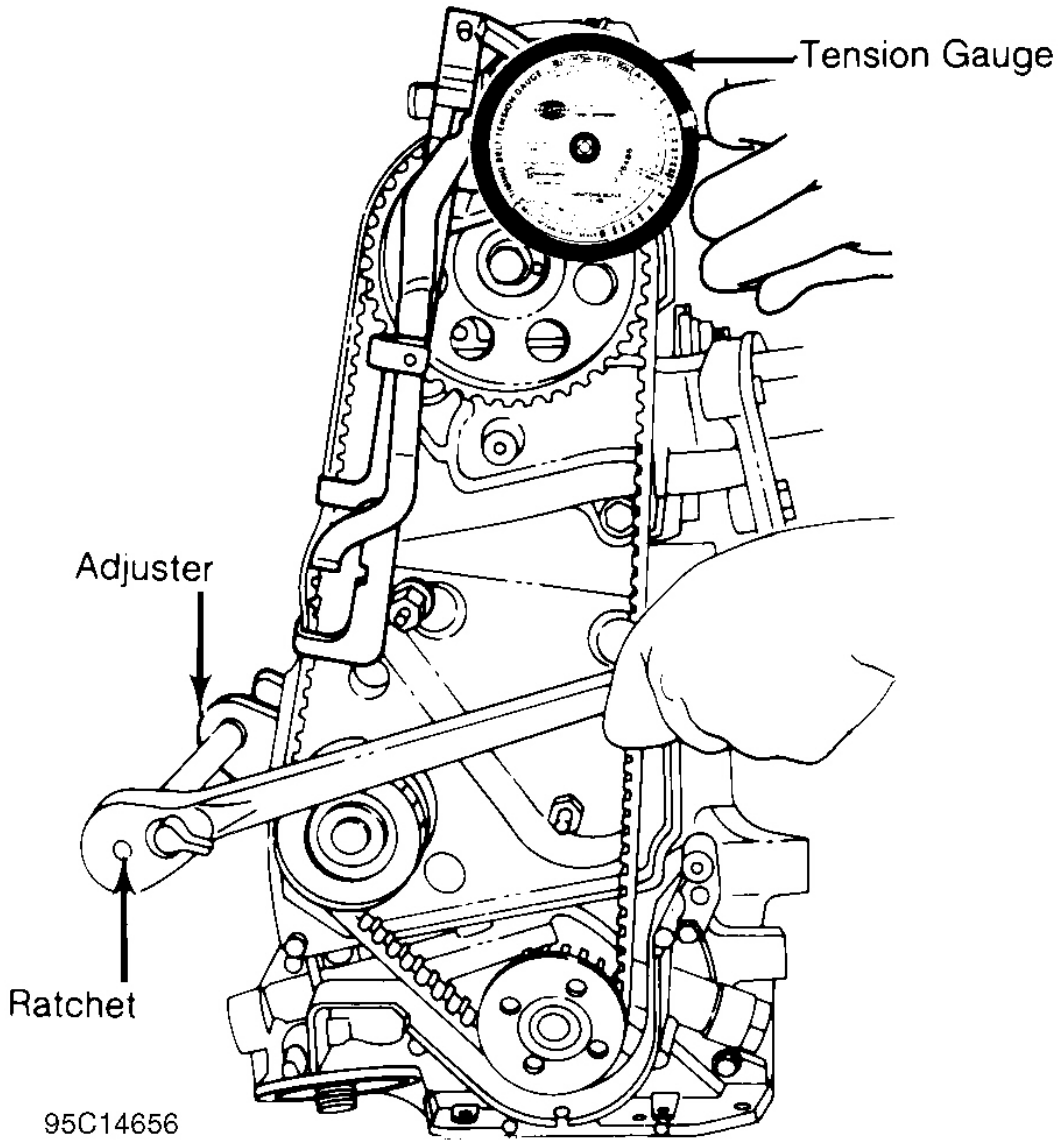

Fig. 26: Adjusting Typical Timing Belt Tension

TIMING GEARS

*** PLEASE READ THIS FIRST ***

GETtheMANUALS.org

NOTE: **Examples used in this article are general in nature and do not necessarily relate to a specific engine or system. Illustrations and procedures have been chosen to guide mechanic through engine overhaul process. Descriptions of processes of cleaning, inspection, assembly and machine shop practice are included.**

Always refer to appropriate engine overhaul article, if available, in the ENGINES section for complete overhaul procedures and specifications for the vehicle being repaired.

TIMING GEAR BACKLASH & RUNOUT

NOTE: **Examples used in this article are general in nature and do not necessarily relate to a specific engine or system. Illustrations and procedures have been chosen to guide mechanic through engine overhaul process. Descriptions of processes of cleaning, inspection, assembly and machine shop practice are included.**

Always refer to appropriate engine overhaul article, if available, in the ENGINES section for complete overhaul procedures and specifications for the vehicle being repaired.

On engines where camshaft gear operates directly on crankshaft gear, gear backlash and runout must be checked. To check backlash, install dial indicator with tip resting on tooth of camshaft gear. Rotate camshaft gear as far as possible. Adjust indicator to zero. Rotate camshaft gear in opposite direction as far as possible and note reading.

To determine timing gear runout, mount dial indicator with tip resting on face edge of camshaft gear. Adjust indicator to zero. Rotate camshaft gear 360 degrees and note reading. If backlash or runout exceeds specification, replace camshaft and/or crankshaft gear.

REAR MAIN OIL SEAL INSTALLATION

NOTE: **Examples used in this article are general in nature and do not necessarily relate to a specific engine or system. Illustrations and procedures have been chosen to guide mechanic through engine overhaul process. Descriptions of processes of cleaning, inspection, assembly and machine shop practice are included.**

Always refer to appropriate engine overhaul article, if available, in the ENGINES section for complete overhaul procedures and specifications for the vehicle being repaired.

One-Piece Type Seal

For one-piece type oil seal installation, coat block contact surface of seal with sealer if seal is not factory coated. Ensure seal surface is free of burrs. Lubricate seal lip with engine oil and press seal into place using proper oil seal installer. See **Fig. 27**.

GETtheMANUALS.org

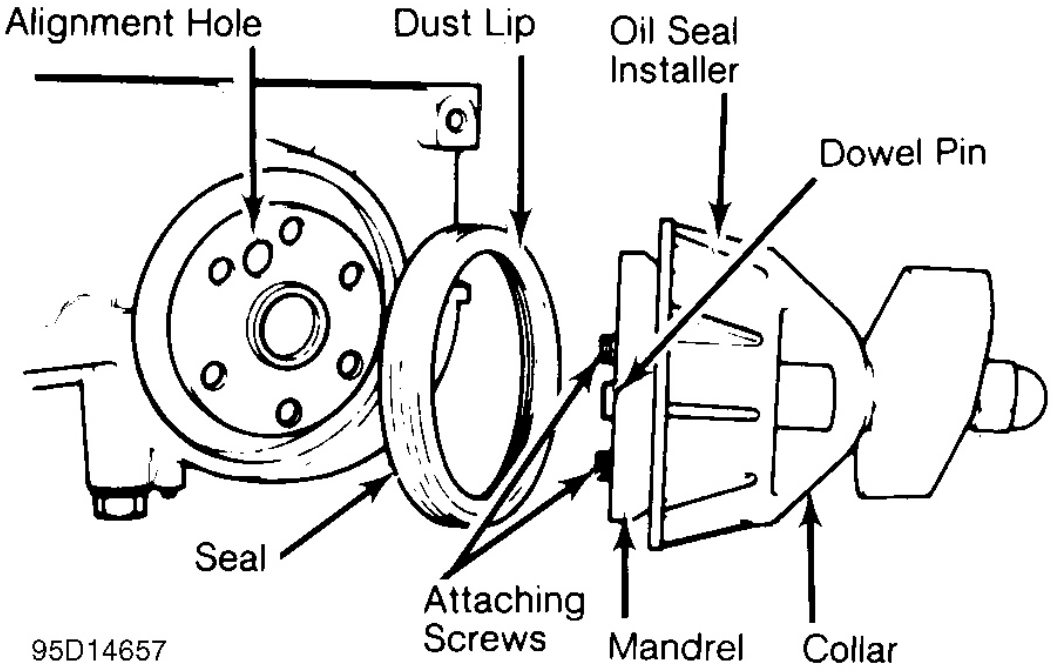

Fig. 27: Installing Typical One-Piece Oil Seal

Rope Type Seal

For rope type rear main oil seal installation, press seal lightly into seat area. Using seal installer, fully seat seal in bearing cap or cylinder block.

Trim seal ends even with cylinder block parting surface. Some applications require sealer to be applied on main bearing cap before installing. See **Fig. 28**.

GETtheMANUALS.org

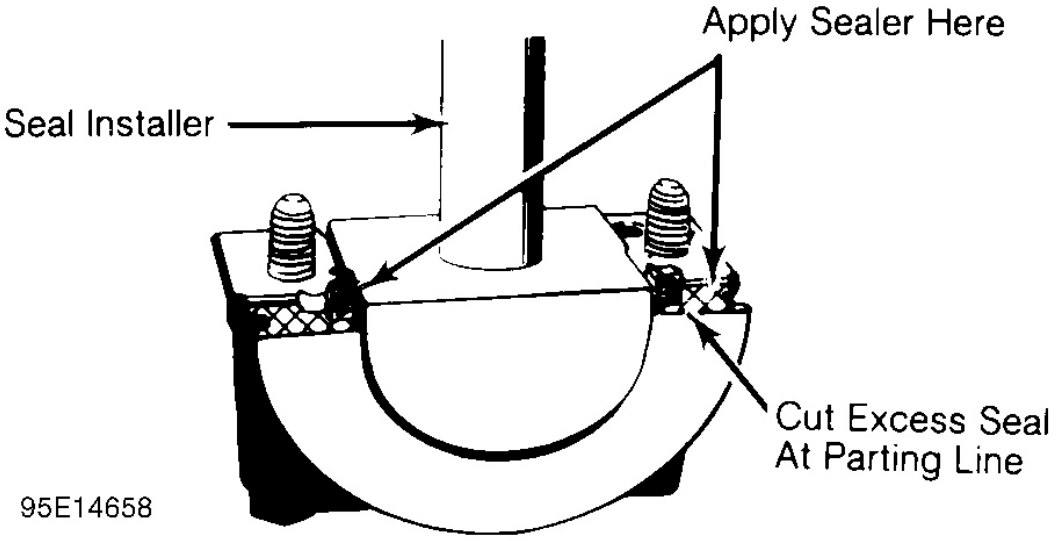

Fig. 28: Installing Typical Rope Seal

Split-Rubber Type Seal

Follow manufacturer's procedures when installing split-rubber type rear main oil seals. Installation procedures vary with manufacturer and engine type. See **Fig. 29**.

GETtheMANUALS.org

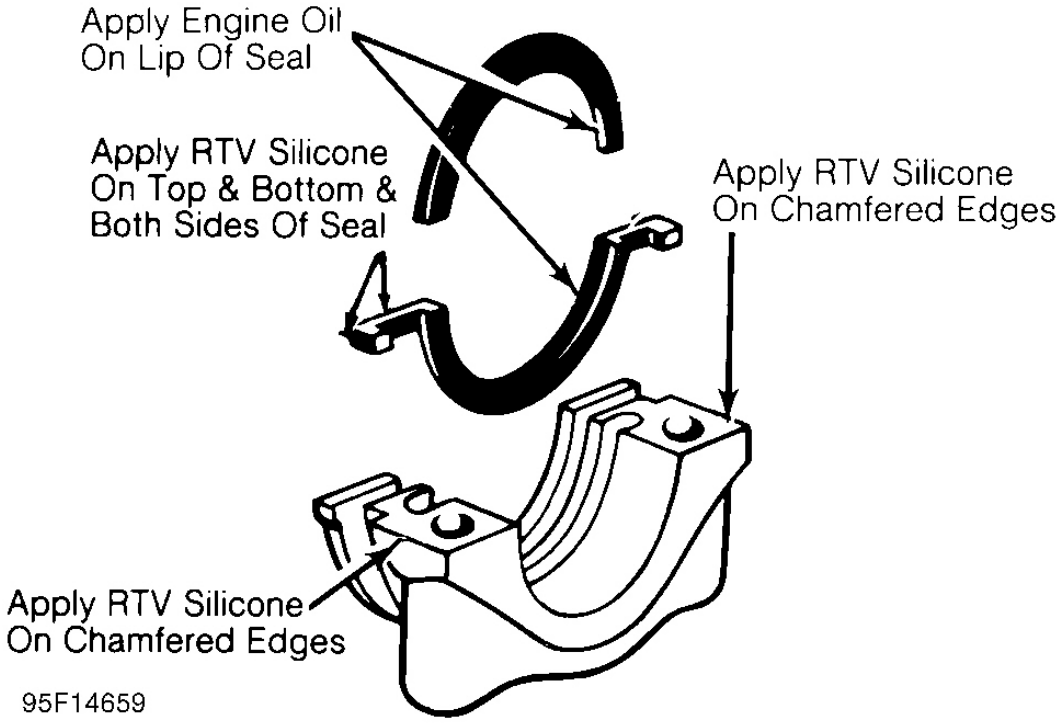

Fig. 29: Installing Typical Split-Rubber Seal

OIL PUMP

*** PLEASE READ THIS FIRST ***

NOTE: **Examples used in this article are general in nature and do not necessarily relate to a specific engine or system. Illustrations and procedures have been chosen to guide mechanic through engine overhaul process. Descriptions of processes of cleaning, inspection, assembly and machine shop practice are included.**

Always refer to appropriate engine overhaul article, if available, in the ENGINES section for complete overhaul procedures and specifications for the vehicle being repaired.

ROTOR TYPE

NOTE: **Examples used in this article are general in nature and do not necessarily relate to a specific engine or system. Illustrations and procedures have been chosen to guide mechanic through engine overhaul process. Descriptions of processes of cleaning, inspection, assembly and machine shop practice are included.**

GETtheMANUALS.org

Always refer to appropriate engine overhaul article, if available, in the ENGINES section for complete overhaul procedures and specifications for the vehicle being repaired.

Mark oil pump rotor locations before removing. See **Fig. 30**. Remove outer rotor and measure thickness and diameter. Measure inner rotor thickness. Inspect shaft for scoring or wear. Inspect rotors for pitting or damage. Inspect cover for grooving or wear. Replace worn or damaged components.

Measure outer rotor-to-body clearance. Replace pump assembly if clearance exceeds specification. Measure clearance between rotors. See **Fig. 31**. Replace shaft and both rotors if clearance exceeds specification.

Install rotors in pump body. Position straightedge across pump body. Using feeler gauge, measure clearance between rotors and straightedge. Pump cover wear is measured using a straightedge and feeler gauge. Replace pump if clearance exceeds specification.

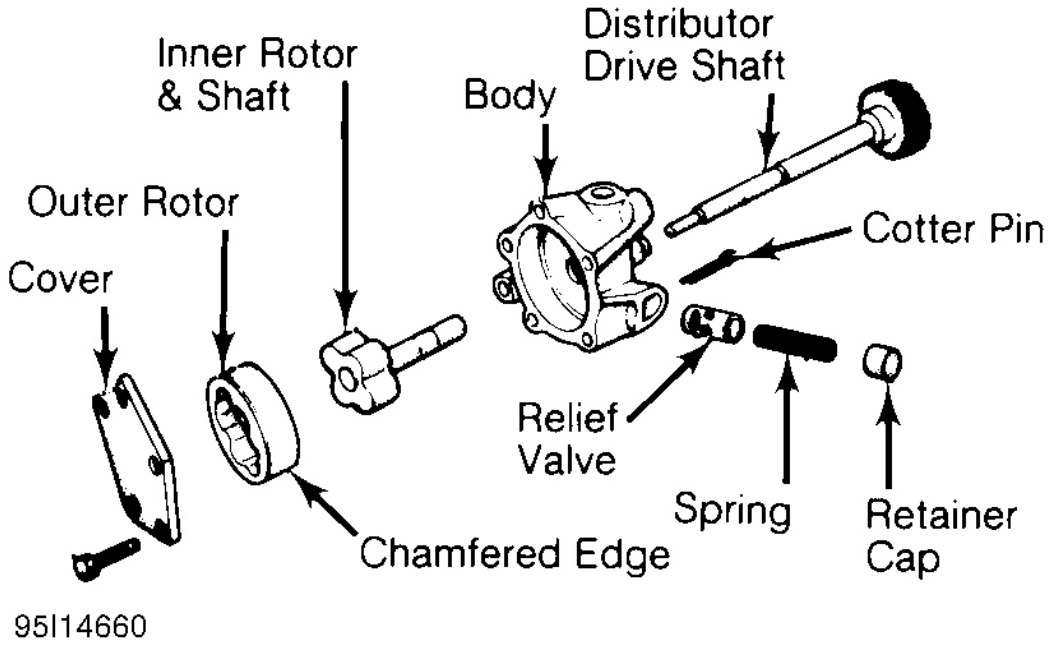

Fig. 30: Typical Rotor Type Oil Pump

GETtheMANUALS.org

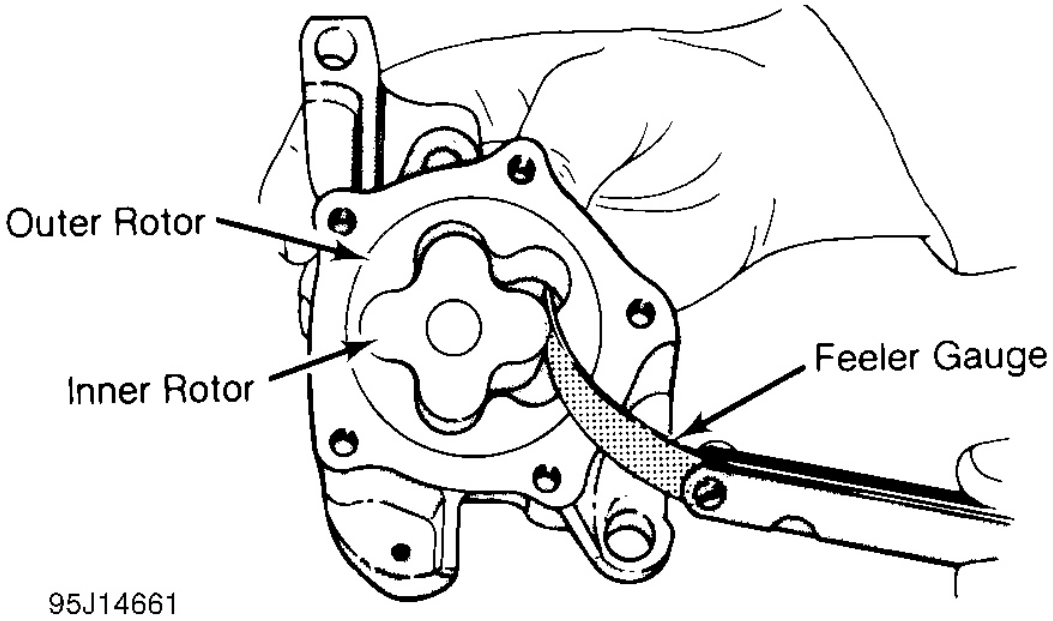

Fig. 31: Measuring Rotor Clearance

GEAR TYPE

NOTE: **Examples used in this article are general in nature and do not necessarily relate to a specific engine or system. Illustrations and procedures have been chosen to guide mechanic through engine overhaul process. Descriptions of processes of cleaning, inspection, assembly and machine shop practice are included.**

Always refer to appropriate engine overhaul article, if available, in the ENGINES section for complete overhaul procedures and specifications for the vehicle being repaired.

Mark oil pump gear location before removing. See **Fig. 32**. Remove gears from pump body. Inspect gears for pitting or damage. Inspect cover for grooving or wear. Measure gear diameter and length. Measure gear housing cavity depth and diameter. See **Fig. 33**. Replace worn or damaged components.

Pump cover wear is measured using a straightedge and feeler gauge. Replace pump or components if warpage or wear exceeds specification, or mating surface of pump cover is scratched or grooved.

GETtheMANUALS.org

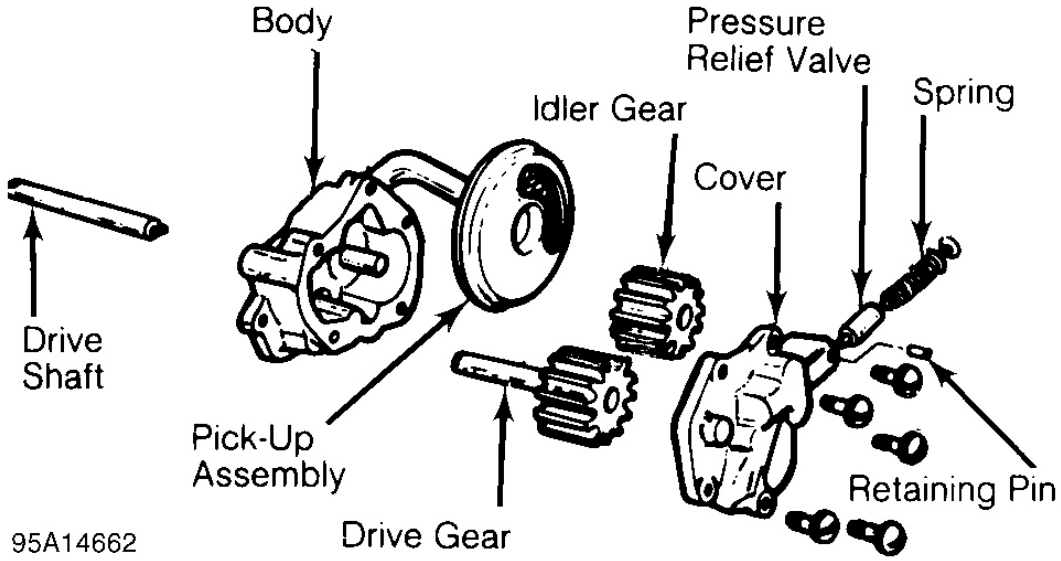

Fig. 32: Typical Gear Type Oil Pump

GETtheMANUALS.org

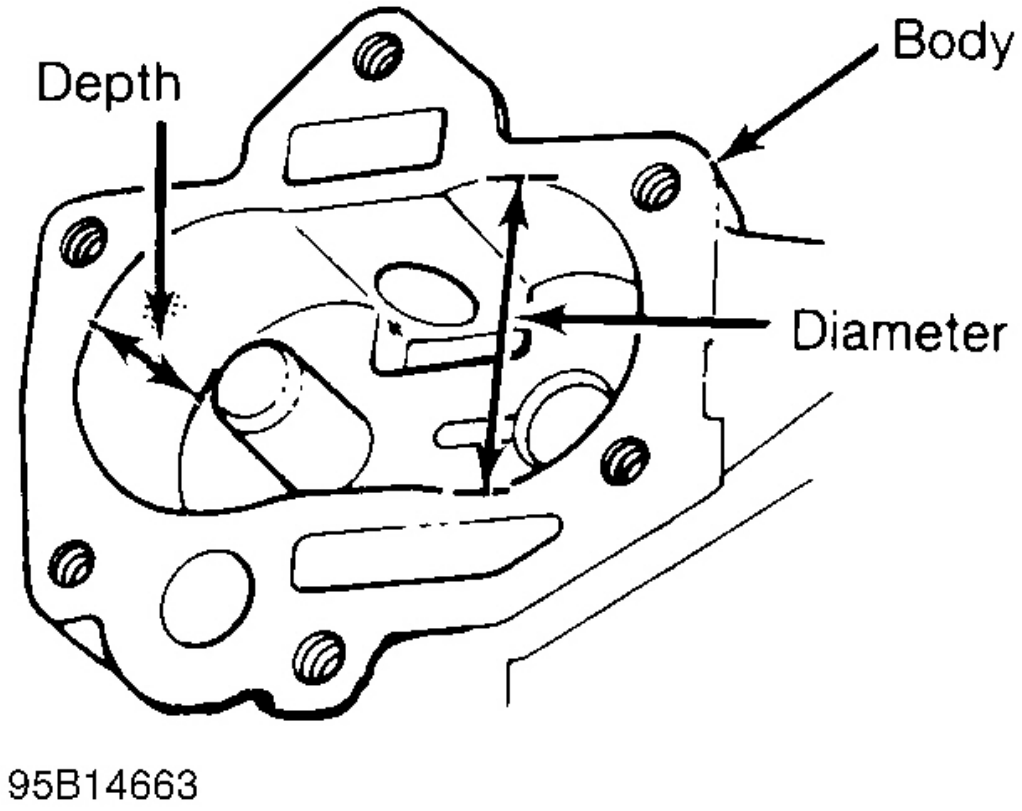

Fig. 33: Measuring Oil Pump Gear Cavity

BREAK-IN PROCEDURE

*** PLEASE READ THIS FIRST ***

NOTE: **Examples used in this article are general in nature and do not necessarily relate to a specific engine or system. Illustrations and procedures have been chosen to guide mechanic through engine overhaul process. Descriptions of processes of cleaning, inspection, assembly and machine shop practice are included.**

Always refer to appropriate engine overhaul article, if available, in the ENGINES section for complete overhaul procedures and specifications for the vehicle being repaired.

ENGINE PRE-OILING

GETtheMANUALS.org

NOTE: **Examples used in this article are general in nature and do not necessarily relate to a specific engine or system. Illustrations and procedures have been chosen to guide mechanic through engine overhaul process. Descriptions of processes of cleaning, inspection, assembly and machine shop practice are included.**

Always refer to appropriate engine overhaul article, if available, in the ENGINES section for complete overhaul procedures and specifications for the vehicle being repaired.

Pre-oil engine prior to operation to prevent engine damage. Lightly oiled oil pump will cavitate unless oil pump cavities are filled with engine oil or petroleum jelly.

Engine pre-oiling can be done using pressure oiler (if available). Connect pressure oiler to cylinder block oil passage such as oil pressure sending unit. Operate pressure oiler long enough to ensure correct amount of oil has filled crankcase. Check oil level while pre-oiling.

If pressure oiler is not available, disconnect ignition system. Remove oil pressure sending unit and replace with oil pressure test gauge. Using starter motor, rotate engine starter until gauge shows normal oil pressure for several seconds. DO NOT crank engine for more than 30 seconds to avoid starter motor damage. Ensure oil pressure has reached the most distant point from the oil pump.

NOTE: **If new lifters or camshaft are installed, some manufacturers require that a crankcase conditioner be added to engine oil. The engine should be operated for specified amount of time to aid in lifter break-in procedure.**

INITIAL START-UP

NOTE: **Examples used in this article are general in nature and do not necessarily relate to a specific engine or system. Illustrations and procedures have been chosen to guide mechanic through engine overhaul process. Descriptions of processes of cleaning, inspection, assembly and machine shop practice are included.**

Always refer to appropriate engine overhaul article, if available, in the ENGINES section for complete overhaul procedures and specifications for the vehicle being repaired.

Start engine and operate engine at low speed while checking for coolant, fuel and oil leaks. Stop engine. Recheck coolant and oil level. Adjust if necessary.

CAMSHAFT

NOTE: **Examples used in this article are general in nature and do not necessarily relate to a specific engine or system. Illustrations and procedures have been chosen to guide mechanic through engine overhaul process. Descriptions of processes of cleaning, inspection, assembly and machine shop practice are included.**

GETtheMANUALS.org

Always refer to appropriate engine overhaul article, if available, in the ENGINES section for complete overhaul procedures and specifications for the vehicle being repaired.

Break-in procedure is required when new or reground camshaft has been installed. Operate and maintain engine speed between 1500-2500 RPM for approximately 30 minutes. Procedure may vary due to manufacturer's recommendations.

PISTON RINGS

NOTE: **Examples used in this article are general in nature and do not necessarily relate to a specific engine or system. Illustrations and procedures have been chosen to guide mechanic through engine overhaul process. Descriptions of processes of cleaning, inspection, assembly and machine shop practice are included.**

Always refer to appropriate engine overhaul article, if available, in the ENGINES section for complete overhaul procedures and specifications for the vehicle being repaired.

Piston rings require a break-in procedure to ensure seating of rings to cylinder walls. Serious damage may occur to rings if correct procedures are not followed.

Extremely high piston ring temperatures are obtained during break-in process. If rings are exposed to excessively high RPM or high cylinder pressures, ring damage can occur. Follow piston ring manufacturer's recommended break-in procedure.

FINAL ADJUSTMENTS

NOTE: **Examples used in this article are general in nature and do not necessarily relate to a specific engine or system. Illustrations and procedures have been chosen to guide mechanic through engine overhaul process. Descriptions of processes of cleaning, inspection, assembly and machine shop practice are included.**

Always refer to appropriate engine overhaul article, if available, in the ENGINES section for complete overhaul procedures and specifications for the vehicle being repaired.

Check or adjust ignition timing and dwell (if applicable). Adjust valves (if necessary). Adjust idle speed and mixture. Retighten cylinder heads (if required). If cylinder head or block is aluminum, retighten bolts when engine is cold. Follow the engine manufacturer's recommended break-in procedure and maintenance schedule for new engines.

NOTE: **Some manufacturers require that head bolts be retightened after specified amount of operation. This must be done to prevent head gasket failure.**

GETtheMANUALS.org

AUTOMATIC LIGHTING SENSOR REMOVAL AND INSTALLATION

REMOVAL

1. Automatic Lighting Sensor
    1. Using a flat-tip screwdriver wrapped with protective tape, carefully pry up the automatic lighting sensor (A).
    2. Disconnect the connector.

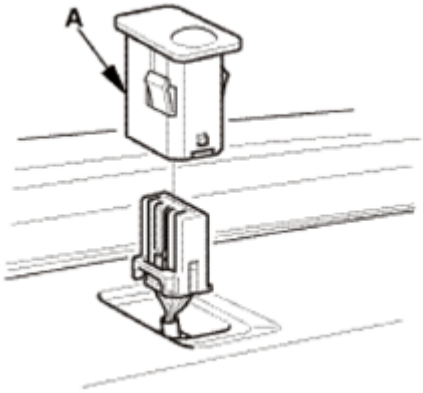

Fig. 1: Identifying Automatic Lighting Sensor
Courtesy of AMERICAN HONDA MOTOR CO., INC.

INSTALLATION

1. Automatic Lighting Sensor
    1. Connect the connector.
    2. Install the automatic lighting sensor (A).

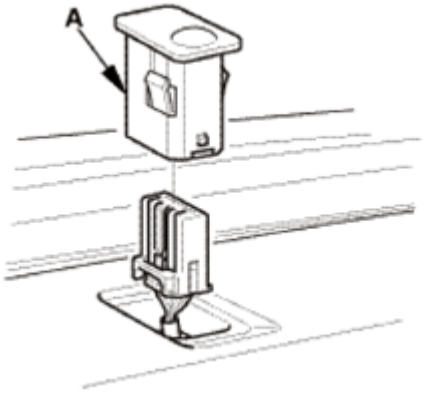

GETtheMANUALS.org

Fig. 2: Identifying Automatic Lighting Sensor
Courtesy of AMERICAN HONDA MOTOR CO., INC.

EXTERIOR LIGHTS BULB REMOVAL AND INSTALLATION - FOG LIGHT

REMOVAL

1. Vehicle Lift
    1. Raise the vehicle on a lift, and make sure it is securely supported.
2. Front Splash Shield As Needed
    1. Remove the bolts (A), then remove the clips (B) that secure the front inner fender and the front splash shield (C) to the body.
    2. From under the front bumper (D), remove the clips (E).
    3. From under the body, remove the clips (F), then pull out the front splash shield.

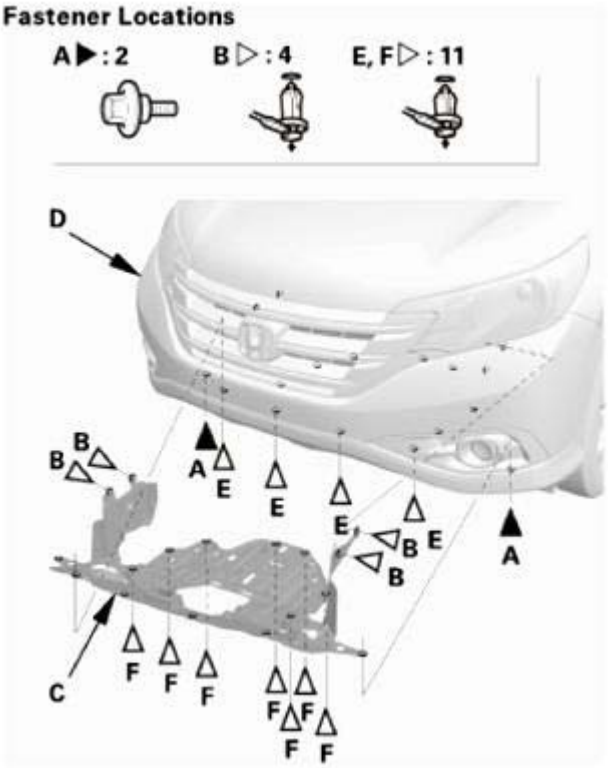

Fig. 3: Identifying Front Splash Shield, Front Bumper, Bolts And Clips
Courtesy of AMERICAN HONDA MOTOR CO., INC.

3. Fog Light Bulb
    1. Disconnect the connector.
    2. Turn the bulb (A) 45 ° counterclockwise to remove it from the housing.

GETtheMANUALS.org

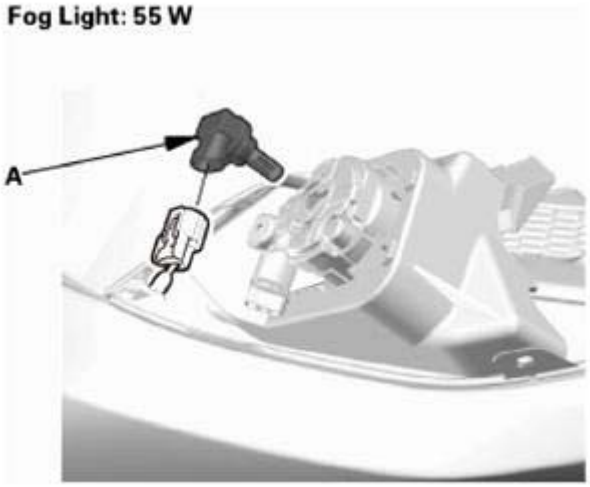

Fig. 4: Identifying Fog Light Bulb
Courtesy of AMERICAN HONDA MOTOR CO., INC.

INSTALLATION

1. Fog Light Bulb
    1. Turn the bulb (A) 45 ° clockwise to install it to the housing.
    2. Connect the connectors.

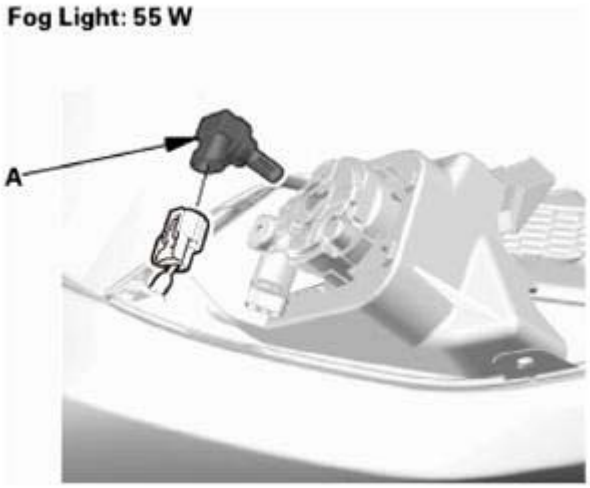

Fig. 5: Identifying Fog Light Bulb
Courtesy of AMERICAN HONDA MOTOR CO., INC.

2. Front Splash Shield (2.4L) As Needed
    1. Install the front splash shield (A), then install the bolts (B) and the clips (C, D). Make sure the clips snap into place securely. Exterior Lights Bulb Removal and Installation - Headlight Housing

GETtheMANUALS.org

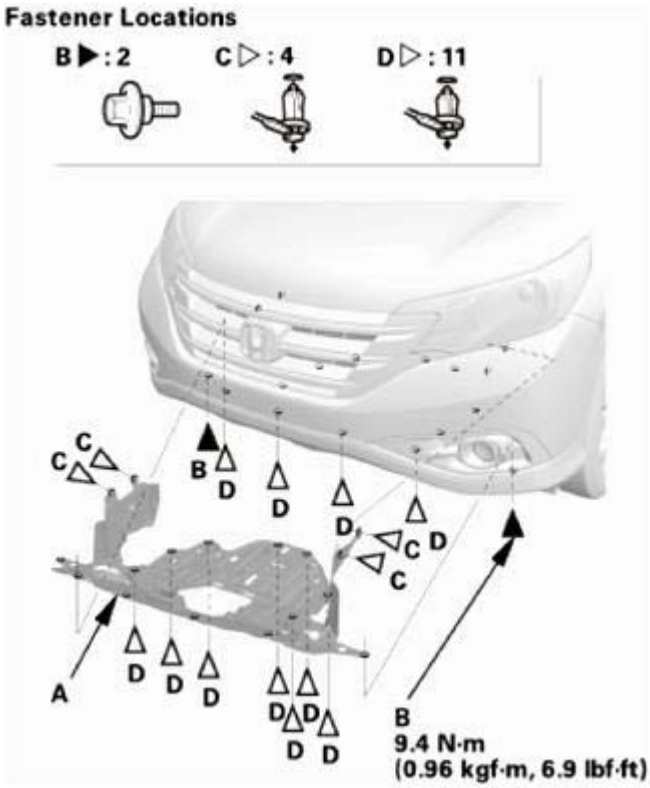

Fig. 6: Identifying Front Splash Shield, Bolts And Clips
Courtesy of AMERICAN HONDA MOTOR CO., INC.

EXTERIOR LIGHTS BULB REMOVAL AND INSTALLATION - HEADLIGHT HOUSING

REMOVAL

NOTE:

- **For the headlight bulb, go to step 1.**
- **For the front turn signal light/front parking light bulb, go to step 2.**
- **For the front side marker light bulb, go to step 3.**

1. Headlight Bulb
    1. Disconnect the connector.
    2. Remove the rubber cap (A).
    3. Pull the retaining spring (B) away, then remove the bulb.

GETtheMANUALS.org

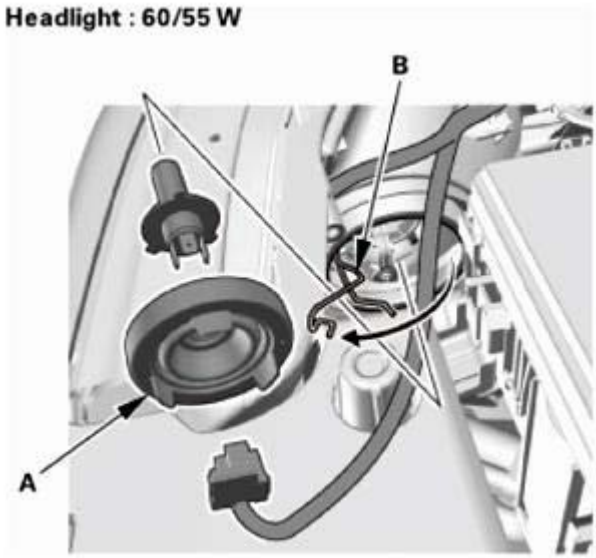

Fig. 7: Identifying Retaining Spring And Rubber Cap
Courtesy of AMERICAN HONDA MOTOR CO., INC.

2. Front Turn Signal Light/Front Parking Light Bulb
    1. Disconnect the connector.
    2. Turn the bulb socket (A) 45 ° counterclockwise to remove the bulb socket.

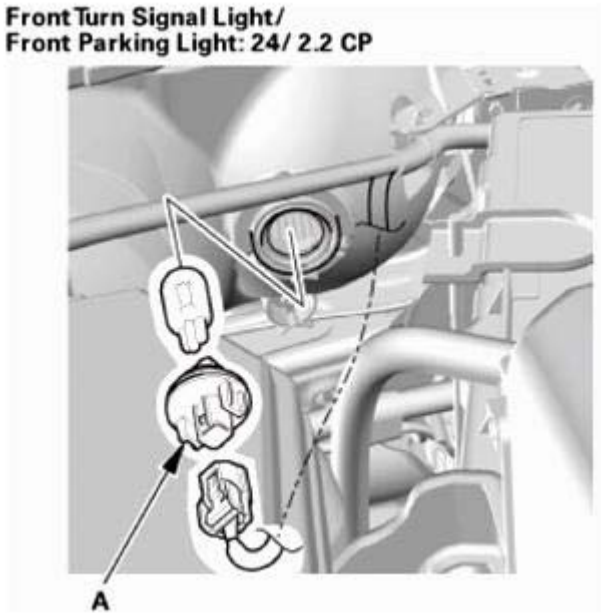

Fig. 8: Identifying Front Turn Signal Light/Front Parking Light Bulb
Courtesy of AMERICAN HONDA MOTOR CO., INC.

3. Front Side Marker Light Bulb
    1. Disconnect the connector.

GETtheMANUALS.org

2. Turn the bulb socket (A) 45 ° counterclockwise to remove the bulb socket.

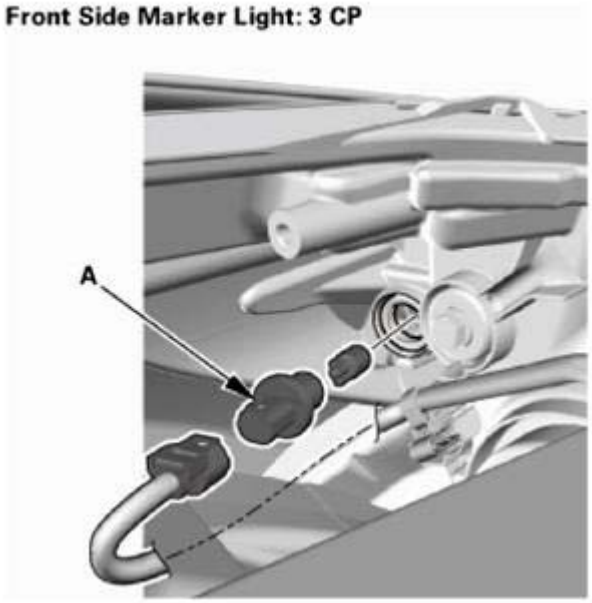

Fig. 9: Identifying Front Side Marker Light Bulb
Courtesy of AMERICAN HONDA MOTOR CO., INC.

INSTALLATION

NOTE:

- **For the front side marker light bulb, go to step 1.**
- **For the front turn signal light/front parking light bulb, go to step 2.**
- **For the headlight bulb, go to step 3.**

1. Front Side Marker Light Bulb
    1. Turn the bulb socket (A) 45 ° clockwise to install the bulb socket.
    2. Connect the connector.

GETtheMANUALS.org

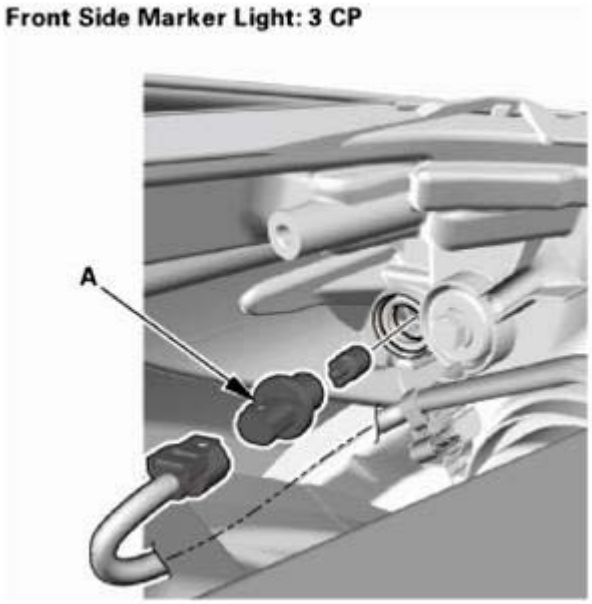

Fig. 10: Identifying Front Side Marker Light Bulb
Courtesy of AMERICAN HONDA MOTOR CO., INC.

2. Front Turn Signal Light/Front Parking Light Bulb
    1. Turn the bulb socket (A) 45 ° clockwise to install the bulb socket.
    2. Connect the connector.

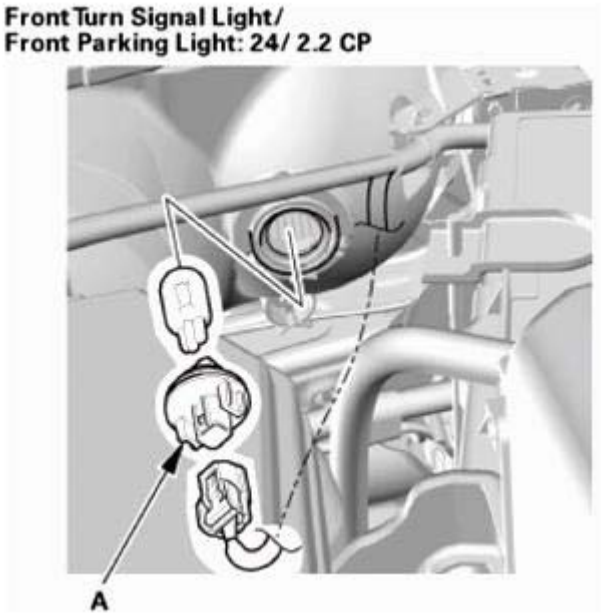

Fig. 11: Identifying Front Turn Signal Light/Front Parking Light Bulb
Courtesy of AMERICAN HONDA MOTOR CO., INC.

3. Headlight Bulb

GETtheMANUALS.org

1. Install the bulb, then set the retaining spring (A).
2. Install the rubber cap (B).
3. Connect the connector.

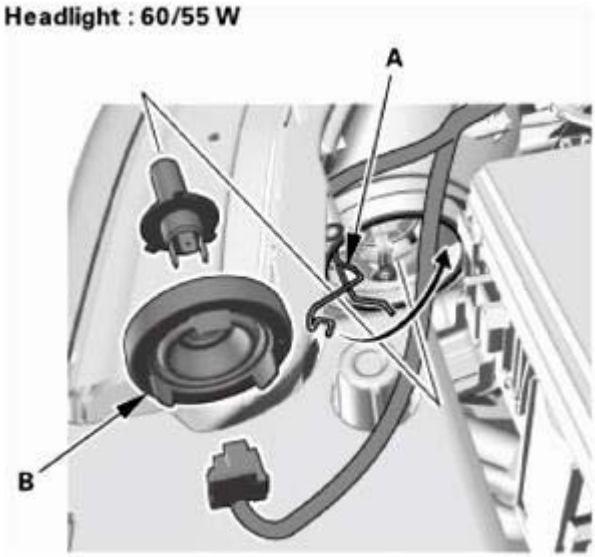

Fig. 12: Identifying Retaining Spring And Rubber Cap
Courtesy of AMERICAN HONDA MOTOR CO., INC.

EXTERIOR LIGHTS BULB REMOVAL AND INSTALLATION - TAILLIGHT HOUSING

REMOVAL

NOTE:

- **For the lower taillight, go to step 1.**
- **For the upper taillight, go to step 2.**

1. Taillight Bulbs - Lower Taillight
    1. Remove the lower taillight (A).
    2. Disconnect the connectors.
    3. Turn the bulb socket (B) 45 ° counterclockwise to remove the bulb sockets.

GETtheMANUALS.org

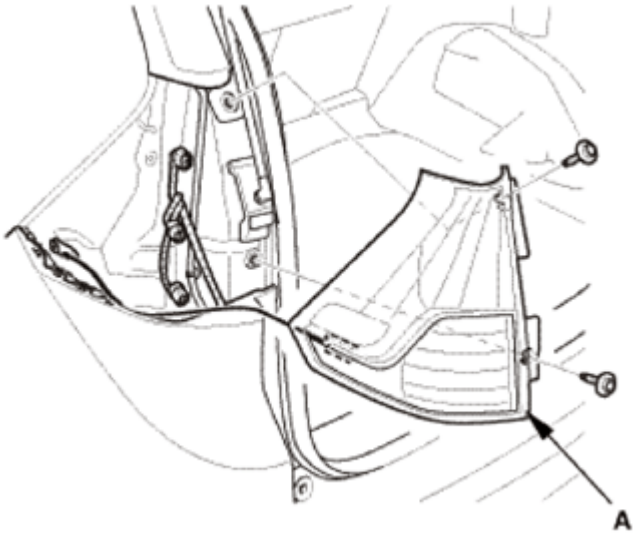

Fig. 13: Identifying Lower Taillight With Mounting Bolts
Courtesy of AMERICAN HONDA MOTOR CO., INC.

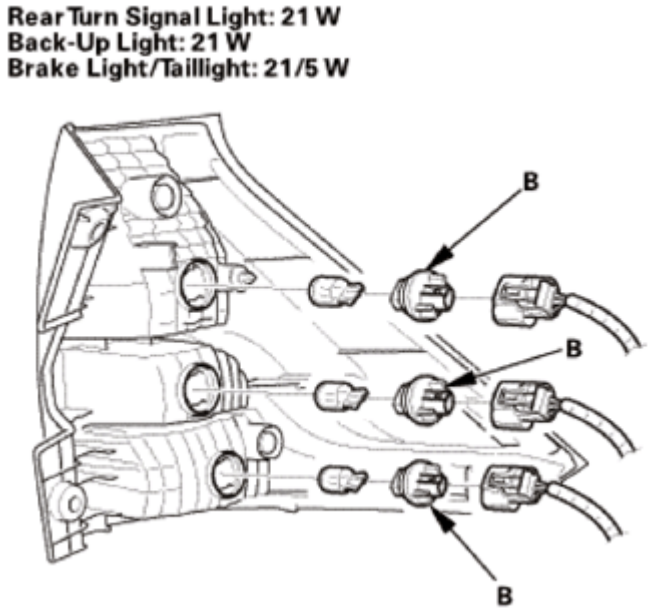

Fig. 14: Identifying Bulb Socket
Courtesy of AMERICAN HONDA MOTOR CO., INC.

2. Taillight Bulbs - Upper Taillight
    1. Remove the lower taillight (A).

GETtheMANUALS.org

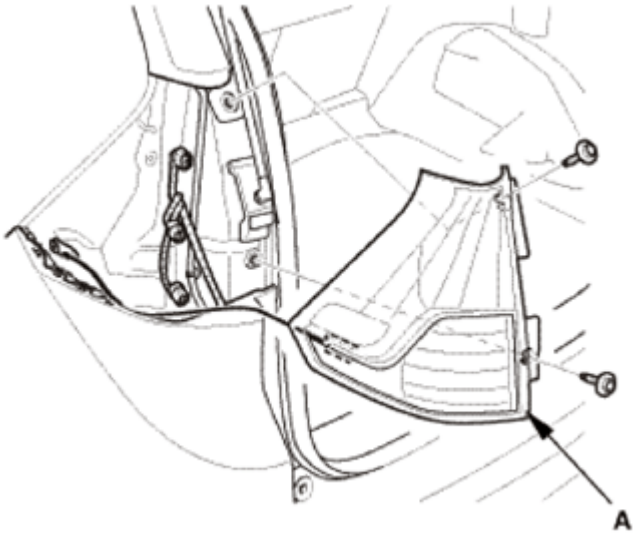

Fig. 15: Identifying Lower Taillight With Mounting Bolts
Courtesy of AMERICAN HONDA MOTOR CO., INC.

2. Remove the upper taillight (A).
3. Disconnect the connectors.
4. Turn the bulb socket (B) 45 ° counterclockwise to remove the bulb sockets.

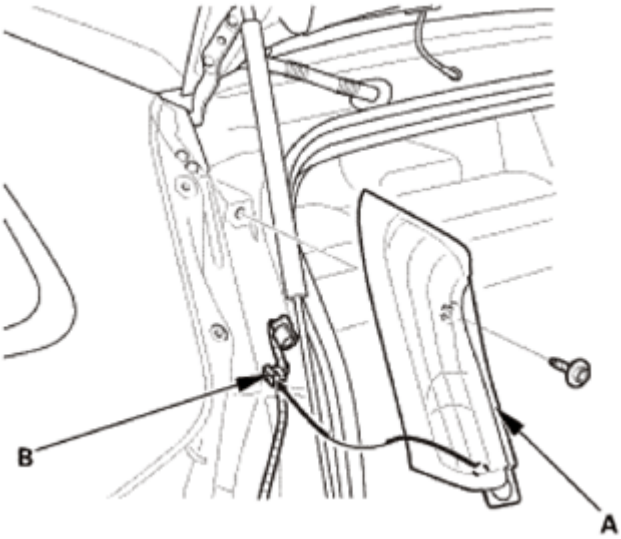

Fig. 16: Identifying Upper Taillight And Bulb Socket With Mounting Bolt
Courtesy of AMERICAN HONDA MOTOR CO., INC.

GETtheMANUALS.org

Fig. 17: Identifying Bulb Socket - Rear Side Marker Light (3 CP)
Courtesy of AMERICAN HONDA MOTOR CO., INC.

INSTALLATION

NOTE:

- **For the upper taillight, go to step 1.**
- **For the lower taillight, go to step 2.**

1. Taillight Bulbs - Upper Taillight
    1. Turn the bulb socket (A) 45 ° clockwise to install the bulb sockets.
    2. Connect the connectors.
    3. Install the upper taillight (B).

GETtheMANUALS.org

Fig. 18: Identifying Bulb Socket - Rear Side Marker Light (3 CP)
Courtesy of AMERICAN HONDA MOTOR CO., INC.

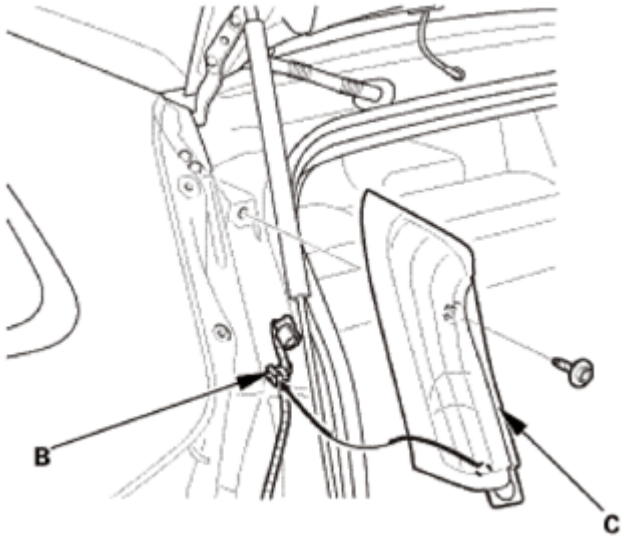

Fig. 19: Identifying Upper Taillight With Mounting Bolt
Courtesy of AMERICAN HONDA MOTOR CO., INC.

4. Install the lower taillight (A).

GETtheMANUALS.org

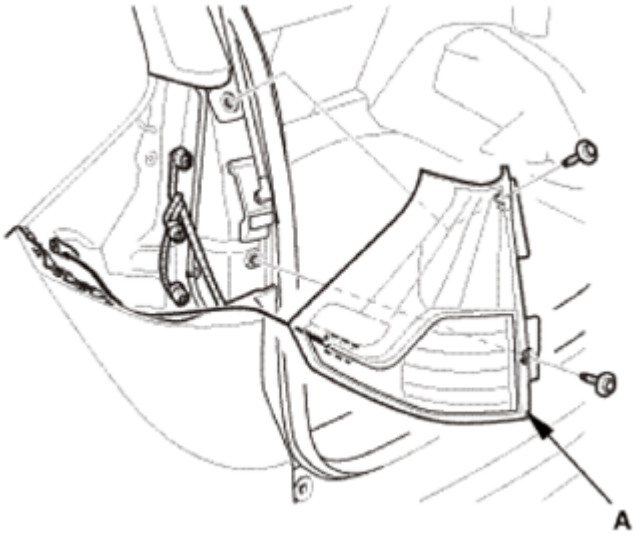

Fig. 20: Identifying Lower Taillight With Mounting Bolts
Courtesy of AMERICAN HONDA MOTOR CO., INC.

2. Taillight Bulbs - Lower Taillight
    1. Turn the bulb socket (A) 45 ° clockwise to install the bulb sockets.
    2. Connect the connectors.
    3. Install the lower taillight (B).

Rear Turn Signal Light: 21 W
Back-Up Light: 21 W
Brake Light/Taillight: 21/5 W

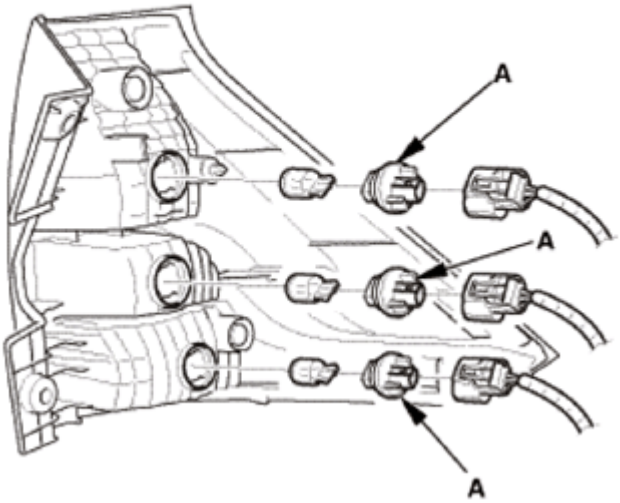

Fig. 21: Identifying Bulb Socket
Courtesy of AMERICAN HONDA MOTOR CO., INC.

GETtheMANUALS.org

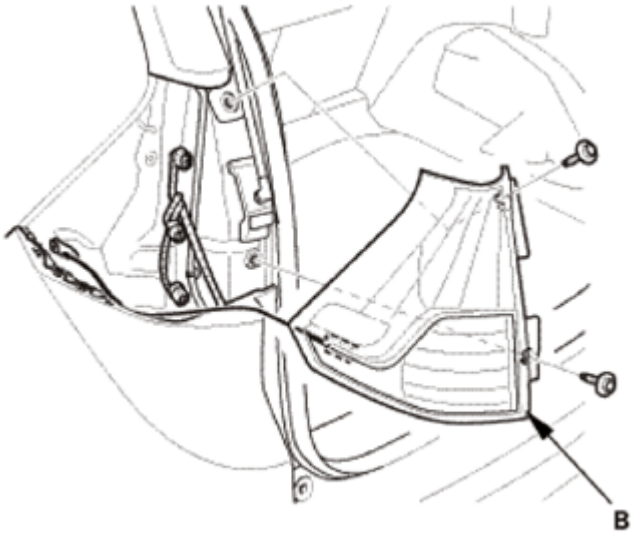

Fig. 22: Identifying Lower Taillight With Mounting Bolts
Courtesy of AMERICAN HONDA MOTOR CO., INC.

EXTERIOR LIGHTS COMPONENT LOCATION INDEX

GETtheMANUALS.org

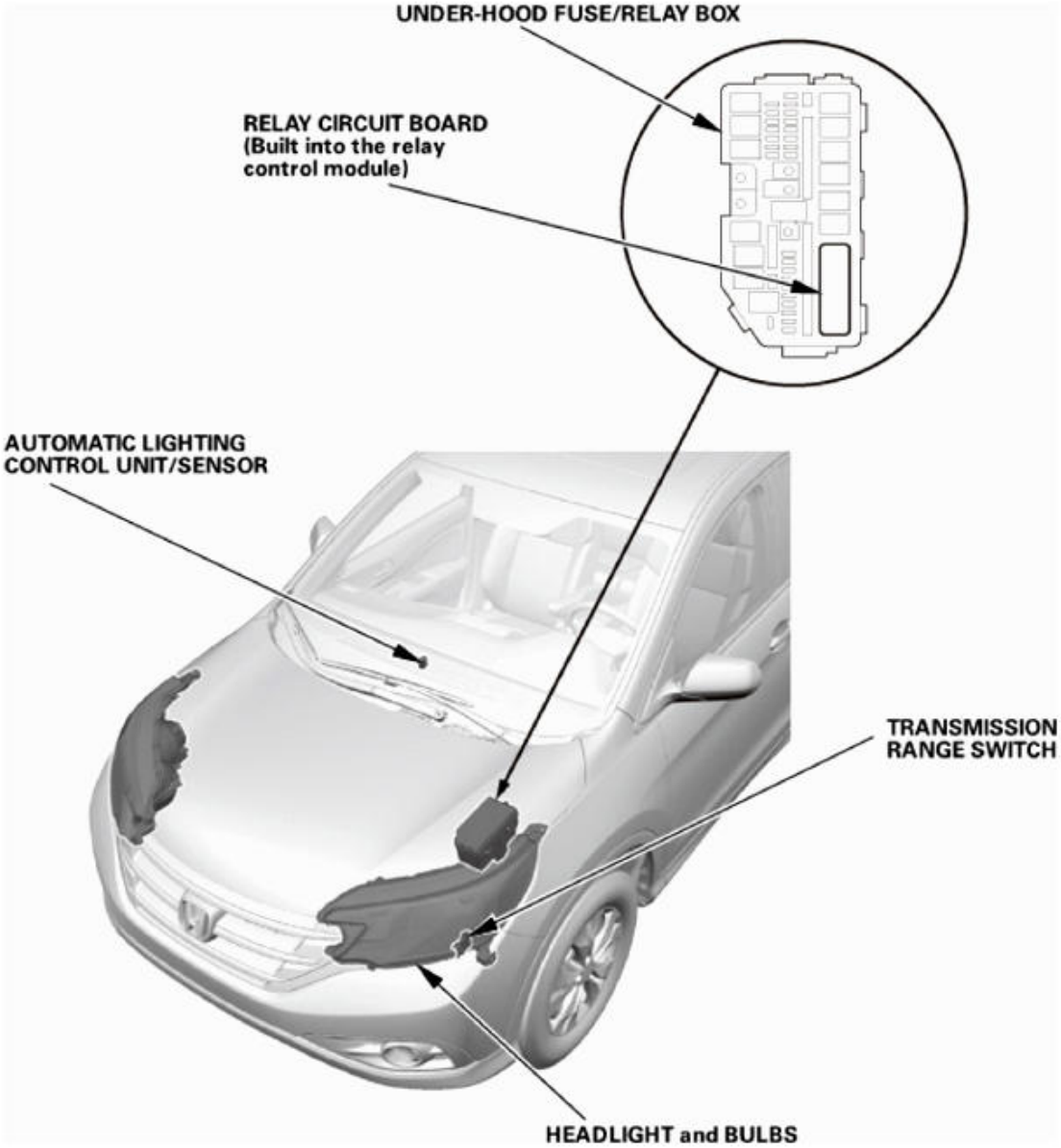

Fig. 23: Identifying Exterior Lights Component Location (1 Of 3)
Courtesy of AMERICAN HONDA MOTOR CO., INC.

GETtheMANUALS.org

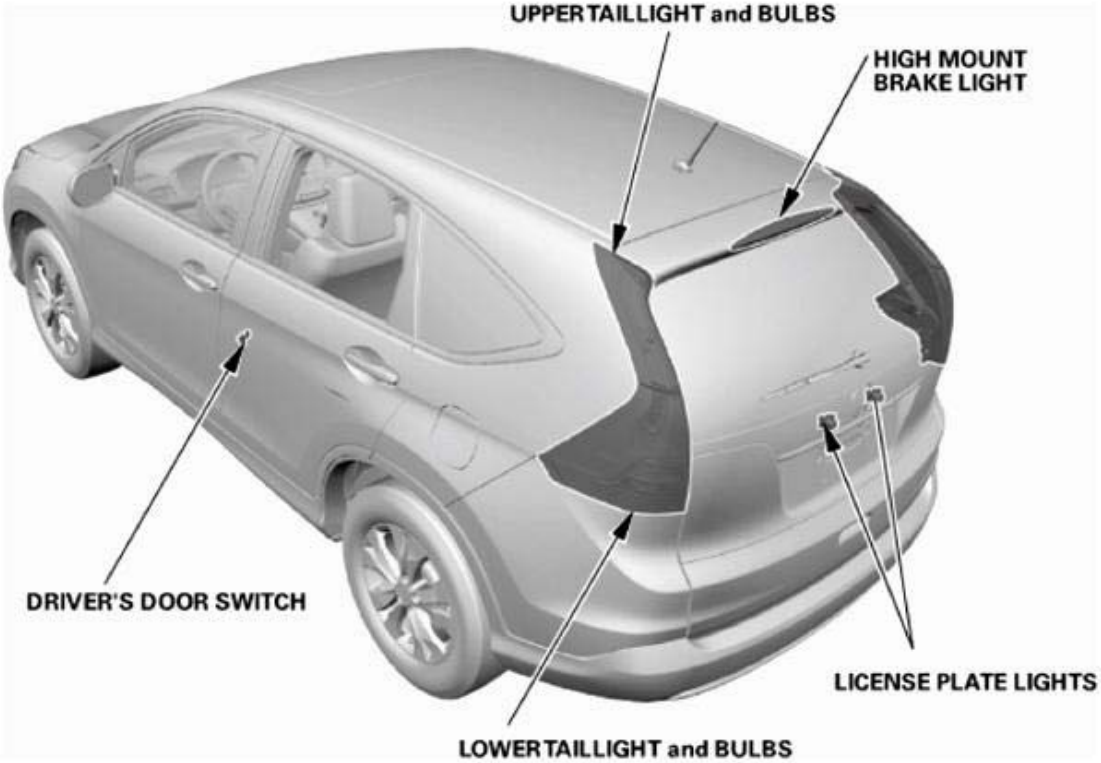

Fig. 24: Identifying Exterior Lights Component Location (2 Of 3)
Courtesy of AMERICAN HONDA MOTOR CO., INC.

GETtheMANUALS.org

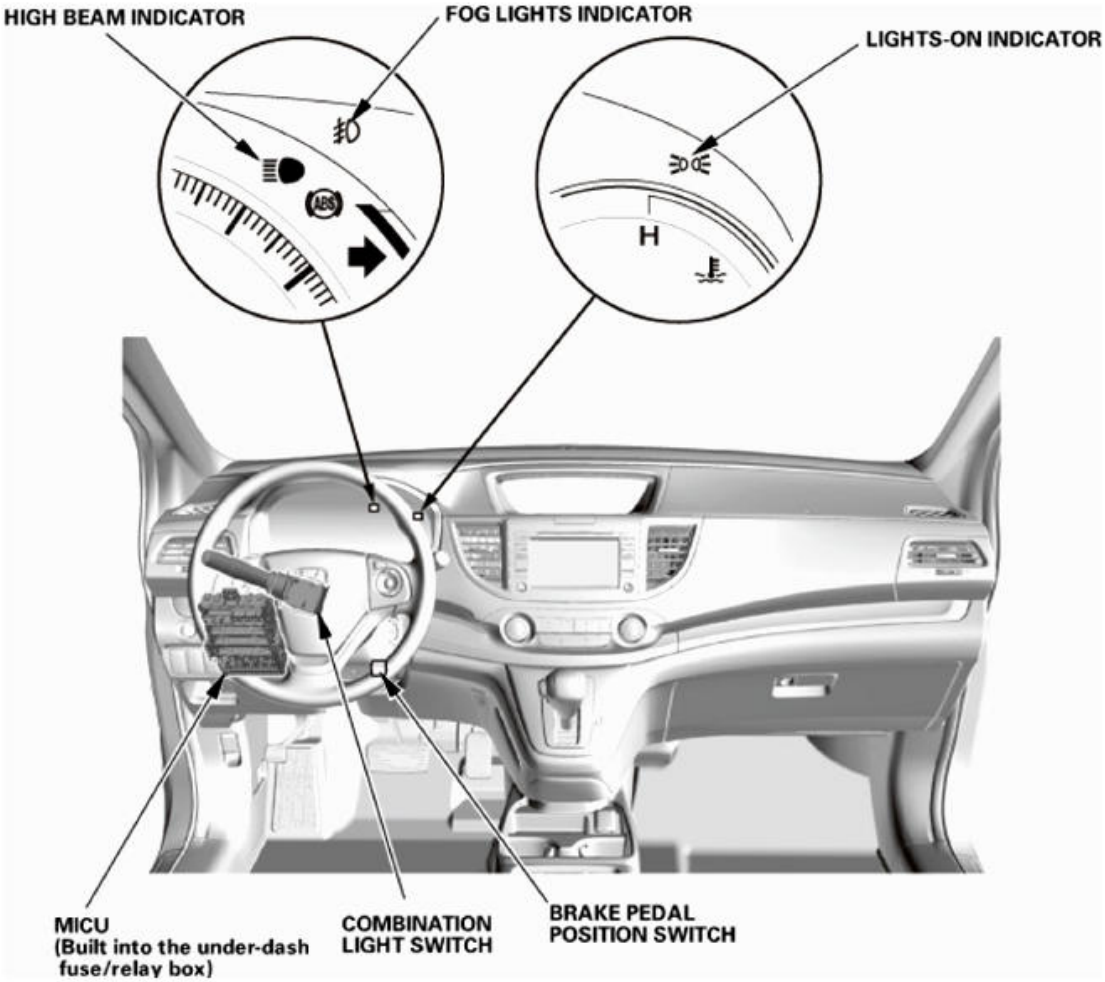

Fig. 25: Identifying Exterior Lights Component Location (3 Of 3)
Courtesy of AMERICAN HONDA MOTOR CO., INC.

AUTOMATIC LIGHTING CONTROL UNIT/SENSOR	**INPUT TEST**
	REMOVAL AND INSTALLATION
BACK-UP LIGHT BULB	**Removal and Installation** See **EXTERIOR LIGHTS BULB REMOVAL AND INSTALLATION - FOG LIGHT**, **EXTERIOR LIGHTS BULB REMOVAL AND INSTALLATION - HEADLIGHT HOUSING** or **EXTERIOR LIGHTS BULB REMOVAL AND INSTALLATION - TAILLIGHT HOUSING**
BRAKE PEDAL POSITION SWITCH	**TEST**
	Removal and Installation See **BRAKE PEDAL AND BRAKE PEDAL POSITION SWITCH ADJUSTMENT** or **BRAKE PEDAL POSITION SWITCH REMOVAL AND INSTALLATION**
COMBINATION LIGHT SWITCH	**REMOVAL, INSTALLATION, AND TEST**
	Removal and Installation See **EXTERIOR LIGHTS BULB REMOVAL AND INSTALLATION - FOG LIGHT**, **EXTERIOR LIGHTS BULB**

GETtheMANUALS.org

FRONT SIDE MARKER LIGHT BULB	**REMOVAL AND INSTALLATION - HEADLIGHT HOUSING** or **EXTERIOR LIGHTS BULB REMOVAL AND INSTALLATION - TAILLIGHT HOUSING**
FRONT TURN SIGNAL and PARKING LIGHT BULB	**Removal and Installation** See **EXTERIOR LIGHTS BULB REMOVAL AND INSTALLATION - FOG LIGHT**, **EXTERIOR LIGHTS BULB REMOVAL AND INSTALLATION - HEADLIGHT HOUSING** or **EXTERIOR LIGHTS BULB REMOVAL AND INSTALLATION - TAILLIGHT HOUSING**
HEADLIGHT	**Adjustment** See **HEADLIGHT ADJUSTMENT** or **HEADLIGHT REMOVAL AND INSTALLATION**
	Removal and Installation See **HEADLIGHT ADJUSTMENT** or **HEADLIGHT REMOVAL AND INSTALLATION**
HEADLIGHT BULB (High beam)	**Removal and Installation** See **EXTERIOR LIGHTS BULB REMOVAL AND INSTALLATION - FOG LIGHT**, **EXTERIOR LIGHTS BULB REMOVAL AND INSTALLATION - HEADLIGHT HOUSING** or **EXTERIOR LIGHTS BULB REMOVAL AND INSTALLATION - TAILLIGHT HOUSING**
HEADLIGHT BULB (Low beam)	**Removal and Installation** See **EXTERIOR LIGHTS BULB REMOVAL AND INSTALLATION - FOG LIGHT**, **EXTERIOR LIGHTS BULB REMOVAL AND INSTALLATION - HEADLIGHT HOUSING** or **EXTERIOR LIGHTS BULB REMOVAL AND INSTALLATION - TAILLIGHT HOUSING**
HIGH MOUNT BRAKE LIGHT	**REMOVAL AND INSTALLATION**
LICENSE PLATE LIGHTS	**REMOVAL AND INSTALLATION**
LIGHTING CONTROL CIRCUIT (Built into the relay control module)	**REMOVAL, INSTALLATION, AND TEST**
MICU (Built into the under-dash fuse/relay box)	**REMOVAL AND INSTALLATION**
	INPUT TEST
REAR SIDE MARKER LIGHT BULB	**Removal and Installation** See **EXTERIOR LIGHTS BULB REMOVAL AND INSTALLATION - FOG LIGHT**, **EXTERIOR LIGHTS BULB REMOVAL AND INSTALLATION - HEADLIGHT HOUSING** or **EXTERIOR LIGHTS BULB REMOVAL AND INSTALLATION - TAILLIGHT HOUSING**
REAR TURN SIGNAL LIGHT BULB	**Removal and Installation** See **EXTERIOR LIGHTS BULB REMOVAL AND INSTALLATION - FOG LIGHT**, **EXTERIOR LIGHTS BULB REMOVAL AND INSTALLATION - HEADLIGHT HOUSING** or **EXTERIOR LIGHTS BULB REMOVAL AND INSTALLATION - TAILLIGHT HOUSING**
TAILLIGHT	**REMOVAL AND INSTALLATION**
TAILLIGHT and BRAKE LIGHT BULB	**Removal and Installation** See **EXTERIOR LIGHTS BULB REMOVAL AND INSTALLATION - FOG LIGHT**, **EXTERIOR LIGHTS BULB REMOVAL AND INSTALLATION - HEADLIGHT HOUSING** or **EXTERIOR LIGHTS BULB REMOVAL AND INSTALLATION - TAILLIGHT HOUSING**

GETtheMANUALS.org

TRANSMISSION RANGE SWTCH	**TEST**

EXTERIOR TRIM COMPONENT LOCATION INDEX

Front

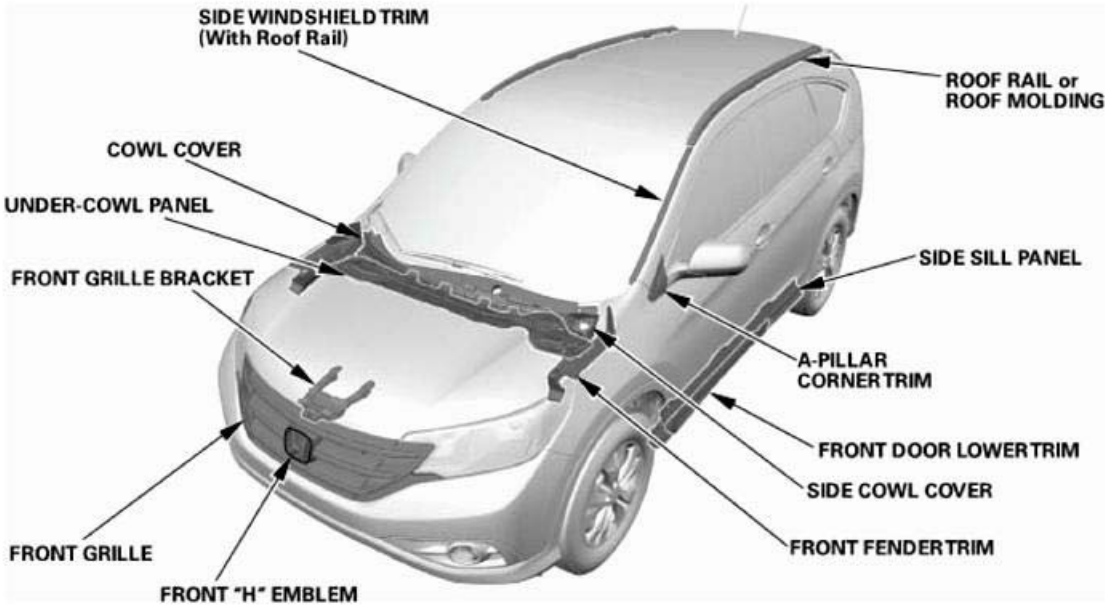

Fig. 26: Identifying Front Exterior Trim Component Location
Courtesy of AMERICAN HONDA MOTOR CO., INC.

COWL COVER	**REMOVAL AND INSTALLATION**
SIDE COWL COVER	**REMOVAL AND INSTALLATION**
FRONT FENDER TRIM	**REMOVAL AND INSTALLATION**
UNDER-COWL PANEL	**REMOVAL AND INSTALLATION**
FRONT "H" EMBLEM	**REMOVAL AND INSTALLATION**
FRONT GRILLE	**REMOVAL AND INSTALLATION**
A-PILLAR CORNER TRIM	**REMOVAL AND INSTALLATION**
ROOF RAIL	**REMOVAL AND INSTALLATION**
SIDE WINDSHIELD TRIM	**REMOVAL AND INSTALLATION**
SIDE SILL PANEL	**REMOVAL AND INSTALLATION**
FRONT DOOR	**Removal and Installation** See **FRONT DOOR LOWER TRIM REMOVAL AND INSTALLATION** or **REAR DOOR LOWER TRIM REMOVAL AND**

GETtheMANUALS.org

LOWER TRIM	**INSTALLATION**
ROOF MOLDING	**REMOVAL AND INSTALLATION**

Rear

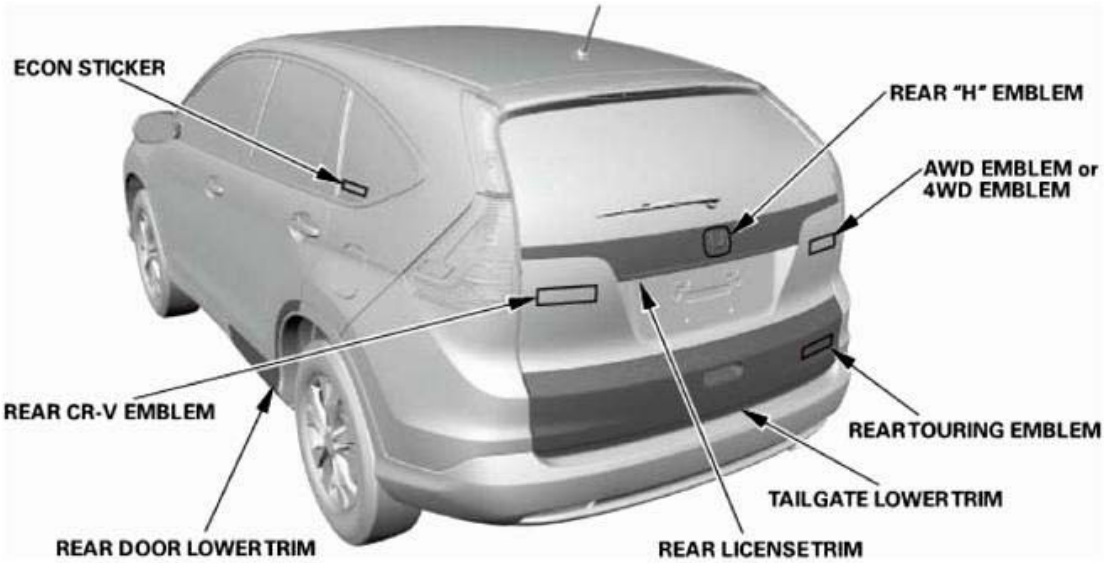

Fig. 27: Identifying Rear Exterior Trim Component Location
Courtesy of AMERICAN HONDA MOTOR CO., INC.

REAR CR-V EMBLEM	**REMOVAL AND INSTALLATION**
REAR AWD EMBLEM	**REMOVAL AND INSTALLATION**
ECON STICKER	**REMOVAL AND INSTALLATION**
REAR "H" EMBLEM	**REMOVAL AND INSTALLATION**
REAR TOURING EMBLEM	**REMOVAL AND INSTALLATION**
REAR DOOR LOWER TRIM	**Removal and Installation** See **FRONT DOOR LOWER TRIM REMOVAL AND INSTALLATION** or **REAR DOOR LOWER TRIM REMOVAL AND INSTALLATION**
TAILGATE LOWER TRIM	**REMOVAL AND INSTALLATION**
REAR LICENSE TRIM	**REMOVAL AND INSTALLATION**

FENDERWELL COMPONENT LOCATION INDEX

Front

GETtheMANUALS.org

Fig. 28: Identifying Front Fenderwell Component Location
Courtesy of AMERICAN HONDA MOTOR CO., INC.

FRONT FLOOR UNDERCOVER	**Removal and Installation** See **FRONT FLOOR UNDERCOVER REMOVAL AND INSTALLATION** , **MIDDLE FLOOR UNDERCOVER REMOVAL AND INSTALLATION** or **REAR FLOOR UNDERCOVER REMOVAL AND INSTALLATION**
FRONT FENDER FAIRING	**REMOVAL AND INSTALLATION**
FRONT INNER FENDER	**Removal and Installation** See **FRONT INNER FENDER REMOVAL AND INSTALLATION** or **REAR INNER FENDER REMOVAL AND INSTALLATION**
FRONT SPLASH GUARD	**Removal and Installation** See **FRONT SPLASH GUARD REMOVAL AND INSTALLATION** or **REAR SPLASH GUARD REMOVAL AND INSTALLATION**
LEFT MIDDLE FLOOR UNDERCOVER	**Removal and Installation** See **FRONT FLOOR UNDERCOVER REMOVAL AND INSTALLATION** , **MIDDLE FLOOR UNDERCOVER REMOVAL AND INSTALLATION** or **REAR FLOOR UNDERCOVER REMOVAL AND INSTALLATION**
RIGHT MIDDLE FLOOR UNDERCOVER	**Removal and Installation** See **FRONT FLOOR UNDERCOVER REMOVAL AND INSTALLATION** , **MIDDLE FLOOR UNDERCOVER REMOVAL AND INSTALLATION** or **REAR FLOOR UNDERCOVER REMOVAL AND INSTALLATION**
FRONT WHEEL ARCH PROTECTOR	**Removal and Installation** See **FRONT WHEEL ARCH PROTECTOR REMOVAL AND INSTALLATION** or **REAR WHEEL ARCH PROTECTOR REMOVAL AND INSTALLATION**
FRONT SPLASH SHIELD	**REMOVAL AND INSTALLATION**

GETtheMANUALS.org

Rear

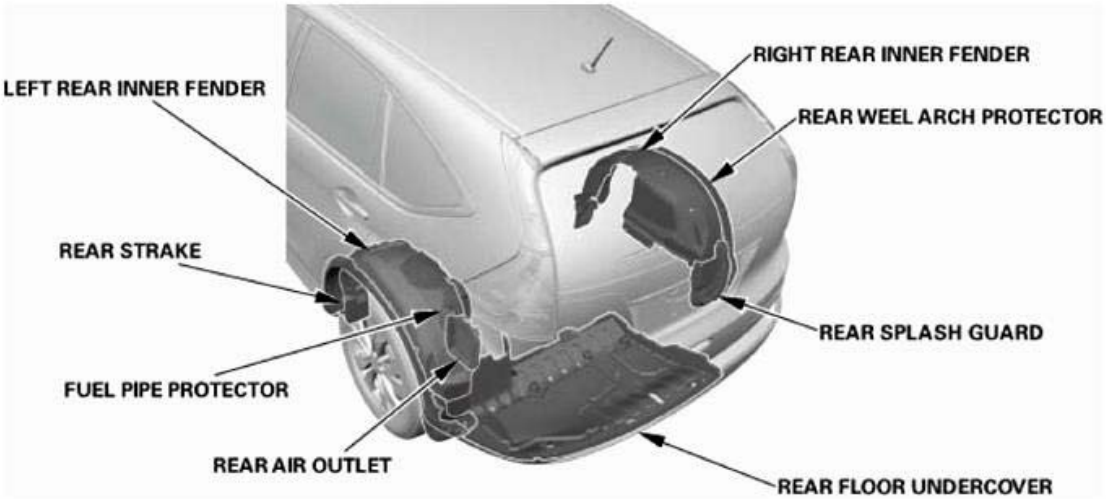

Fig. 29: Identifying Rear Fenderwell Component Location
Courtesy of AMERICAN HONDA MOTOR CO., INC.

LEFT REAR INNER FENDER	**Removal and Installation** See **FRONT INNER FENDER REMOVAL AND INSTALLATION** or **REAR INNER FENDER REMOVAL AND INSTALLATION**
REAR AIR OUTLET	**REMOVAL AND INSTALLATION**
REAR FLOOR UNDERCOVER	**Removal and Installation** See **FRONT FLOOR UNDERCOVER REMOVAL AND INSTALLATION** , **MIDDLE FLOOR UNDERCOVER REMOVAL AND INSTALLATION** or **REAR FLOOR UNDERCOVER REMOVAL AND INSTALLATION**
REAR SPLASH GUARD	**Removal and Installation** See **FRONT SPLASH GUARD REMOVAL AND INSTALLATION** or **REAR SPLASH GUARD REMOVAL AND INSTALLATION**
REAR STRAKE	**REMOVAL AND INSTALLATION**
REAR WHEEL ARCH PRORECTOR	**Removal and Installation** See **FRONT WHEEL ARCH PROTECTOR REMOVAL AND INSTALLATION** or **REAR WHEEL ARCH PROTECTOR REMOVAL AND INSTALLATION**
FUEL PIPE PROTECTOR	REMOVAL AND INSTALLATION
RIGHT REAR INNER FENDER	**Removal and Installation** See **FRONT INNER FENDER REMOVAL AND INSTALLATION** or **REAR INNER FENDER REMOVAL AND INSTALLATION**

FOG LIGHT ADJUSTMENT

REMOVAL

1. Vehicle Lift

GETtheMANUALS.org

1. Raise the vehicle on a lift, and make sure it is securely supported.

2. Front Splash Shield As Needed (Except Canada models)
    1. Remove the bolts (A), then remove the clips (B) that secure the front inner fender and the front splash shield (C) to the body.
    2. From under the front bumper (D), remove the clips (E).
    3. From under the body, remove the clips (F), then pull out the front splash shield.

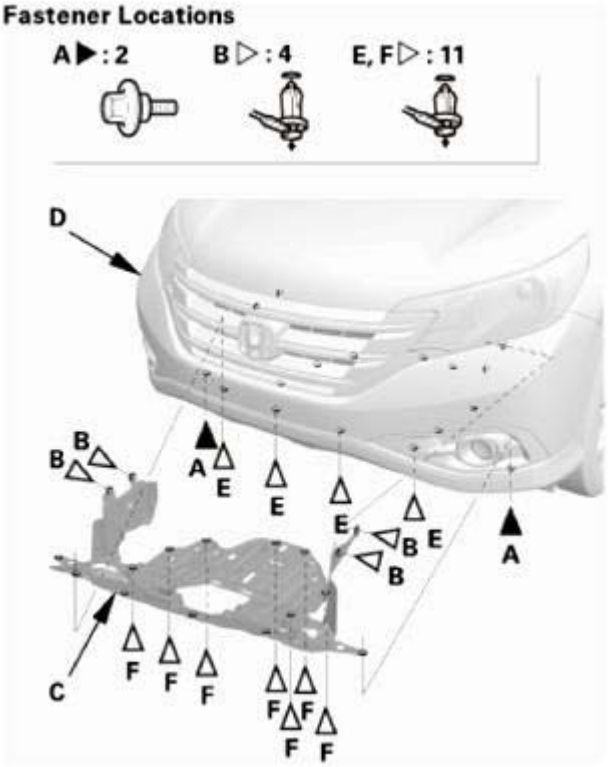

Fig. 30: Identifying Front Splash Shield, Front Bumper, Bolts And Clips
Courtesy of AMERICAN HONDA MOTOR CO., INC.

ADJUSTMENT

1. Fog Light - Adjustment

    Before adjusting the fog light:

    - Park the vehicle on a level surface.
    - Make sure the tire pressures are correct.
    - The driver or someone who weighs the same should sit in the driver's seat.
    - Unload the vehicle.

NOTE: **The fog lights should aim down slightly. To check for proper adjustment.**

GETtheMANUALS.org

1. Park the vehicle in front of a wall or a screen (A).
2. Turn the fog lights on.

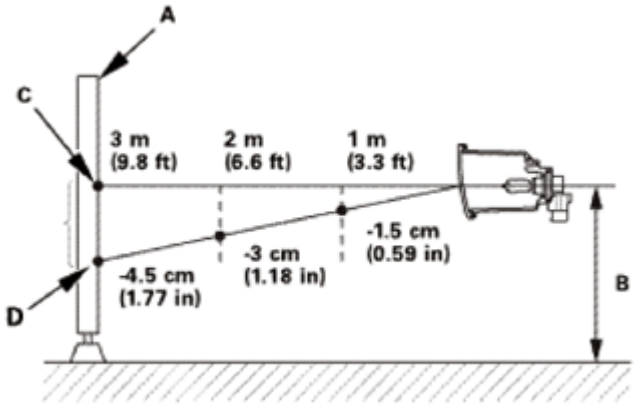

Fig. 31: Identifying Fog Light Adjusting Dimension
Courtesy of AMERICAN HONDA MOTOR CO., INC.

3. Determine if the fog lights are aimed properly:
   - Measure the height of the fog lights (B).
   - On the screen or wall, mark the height of the fog lights with a line of tape (C).
   - Measure the distance between the tape mark and the top of the fog light beam (D).
   - If needed, adjust the fog lights to the specified height.

   For example, if the vehicle is parked 3 m (9.8 ft) from the screen, the top of the fog light beam should be 4.5 cm (1.77 in) below the tape mark.

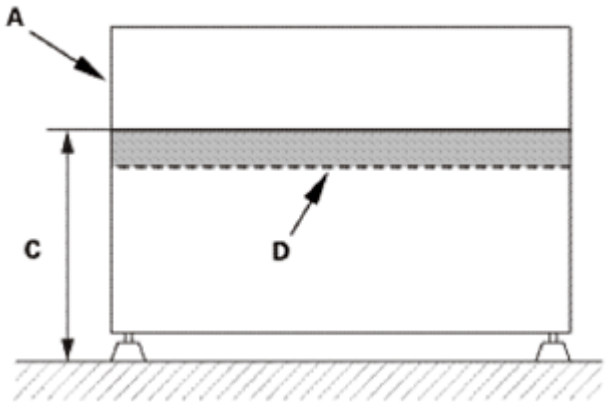

Fig. 32: Identifying Between Tape Mark And Top Of Fog Light Beam
Courtesy of AMERICAN HONDA MOTOR CO., INC.

4. Adjust the fog lights by turning the adjuster (A).

NOTE: Canada models: Access to the fog light adjuster from the vent of the

GETtheMANUALS.org

front bumper.

Except Canada models

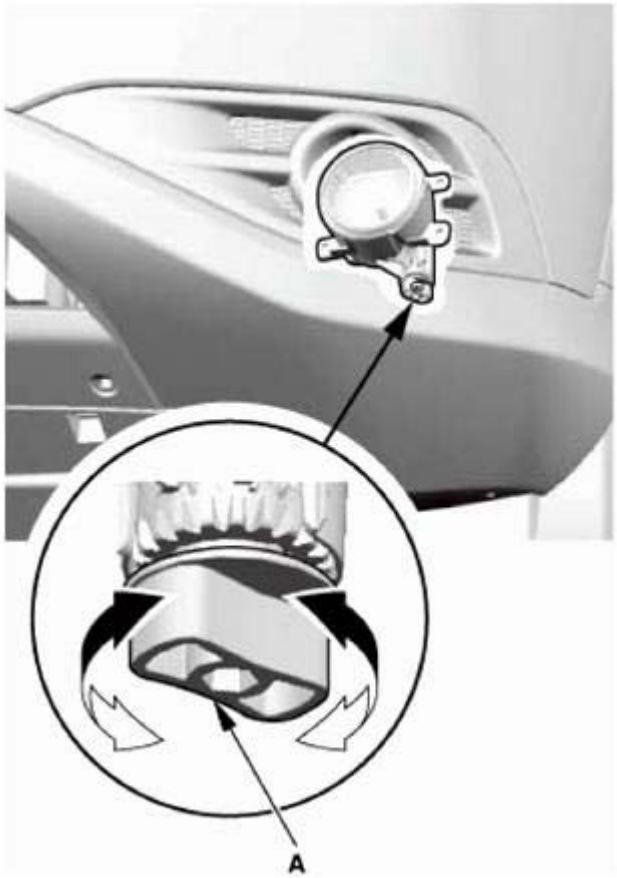

Fig. 33: Adjusting Fog Lights By Turning Adjuster (Except Canada Models)
Courtesy of AMERICAN HONDA MOTOR CO., INC.

Canada models

GETtheMANUALS.org

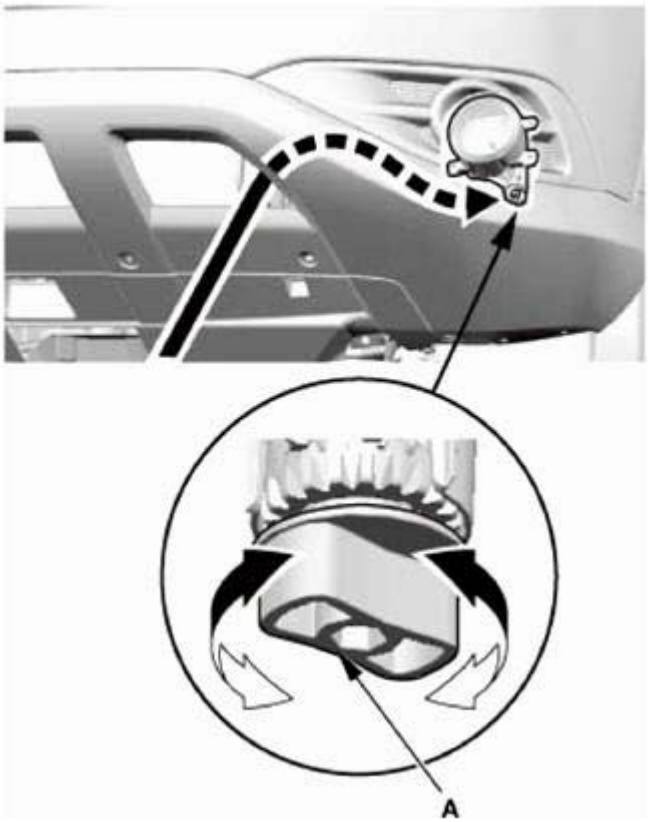

Fig. 34: Adjusting Fog Lights By Turning Adjuster (Canada Models)
Courtesy of AMERICAN HONDA MOTOR CO., INC.

INSTALLATION

1. Front Splash Shield As Needed (Except Canada models)
    1. Install the front splash shield (A), then install the bolts (B) and the clips (C, D). Make sure the clips snap into place securely.

GETtheMANUALS.org

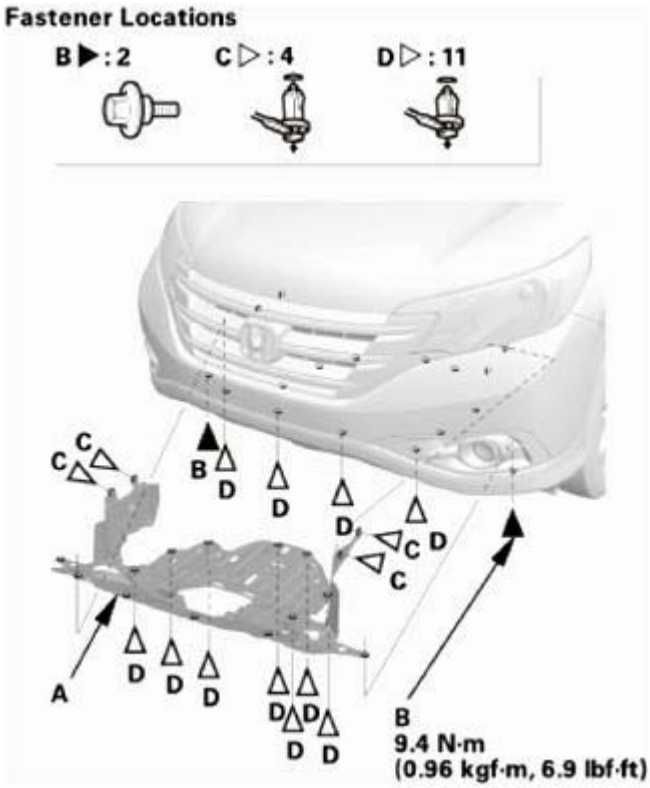

Fig. 35: Identifying Front Splash Shield, Bolts And Clips
Courtesy of AMERICAN HONDA MOTOR CO., INC.

FOG LIGHT REMOVAL AND INSTALLATION

REMOVAL

1. Front Grille
    1. Apply protective tape (A) to the front grille lower trim (B).

GETtheMANUALS.org

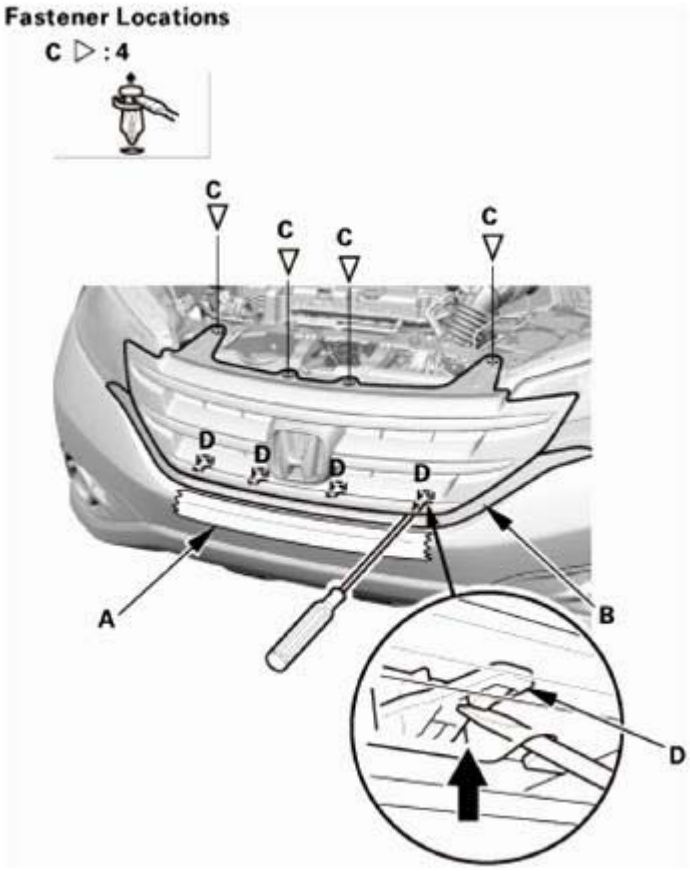

Fig. 36: Removing Fog Light Clips And Hooks
Courtesy of AMERICAN HONDA MOTOR CO., INC.

2. Remove the clips (C) and detach the hooks (D).
3. Insert a shop towel (A) between the front grille (B) and the front grille lower trim (C).

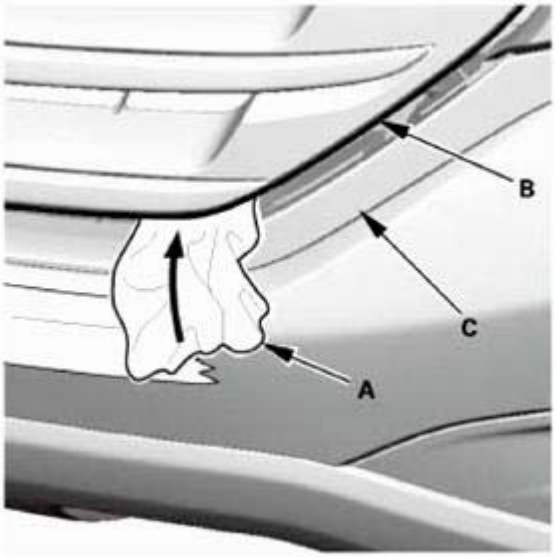

GETtheMANUALS.org

Fig. 37: Inserting Shop Towel Between Front Grille And Front Grille Lower Trim
Courtesy of AMERICAN HONDA MOTOR CO., INC.

4. Insert a flat-tip screwdriver (A) into the opening at the front grille (B), then turn the screwdriver to detach the clip (C).

NOTE: Repeat this procedure on the opposite side.

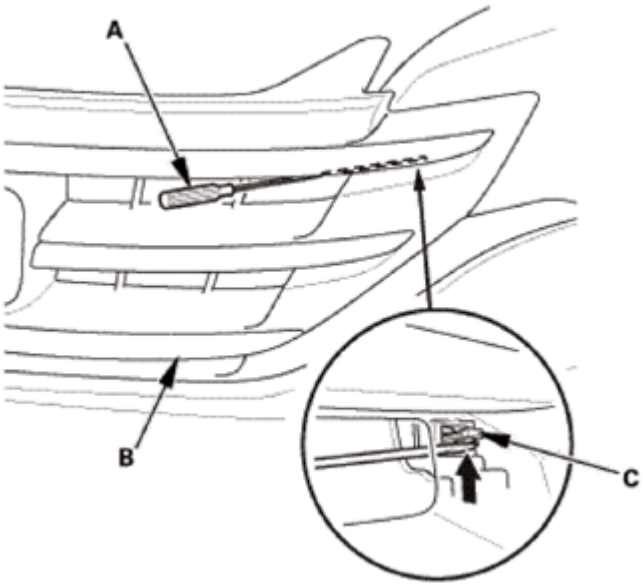

Fig. 38: Inserting Flat-Tip Screwdriver Into Opening At Front Grille
Courtesy of AMERICAN HONDA MOTOR CO., INC.

5. Remove the front grille (A).

GETtheMANUALS.org

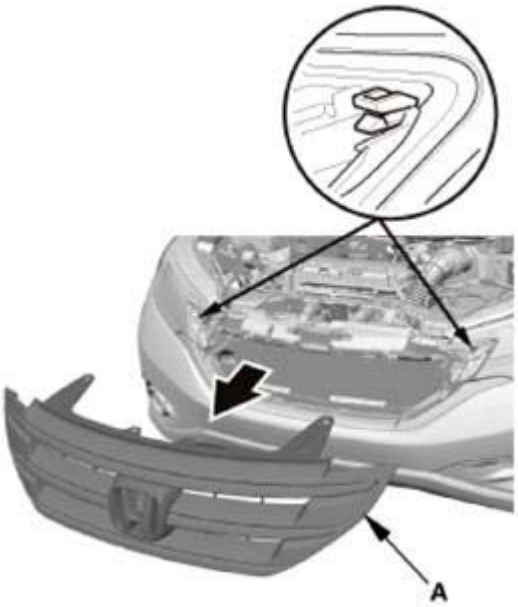

Fig. 39: Removing Front Grille
Courtesy of AMERICAN HONDA MOTOR CO., INC.

2. Front Wheel Arch Protector Front Side As Needed - Both Sides

NOTE: Repeat on the opposite side.

1. Remove the screws (A) and the clips (B) securing the front wheel arch protector (C).
2. Carefully pry out the clip portions of the wheel arch protector with the appropriate trim tool to detach the clips (D, E), then detach the wheel arch protector front side as needed.
3. Put a shop towel (F) in the opening between the front wheel arch protector and the front fender.

GETtheMANUALS.org

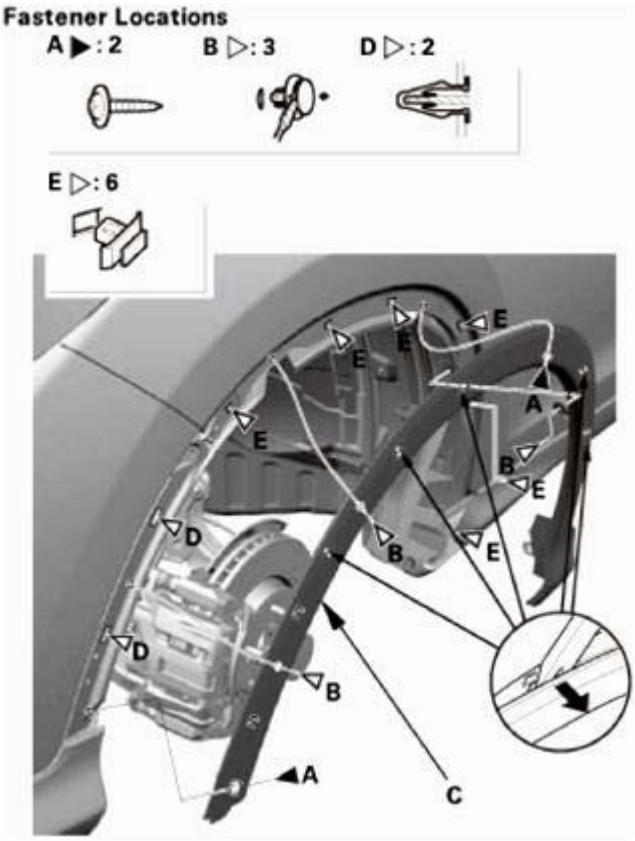

Fig. 40: Identifying Front Wheel Arch Protector, Screws And Clips
Courtesy of AMERICAN HONDA MOTOR CO., INC.

Fig. 41: Putting Shop Towel In Opening Between Front Wheel Arch Protector And Front
Courtesy of AMERICAN HONDA MOTOR CO., INC.

3. Front Bumper
    1. Remove the screws (A), the bolts (B), and the clips (C) securing the front bumper (D).

GETtheMANUALS.org

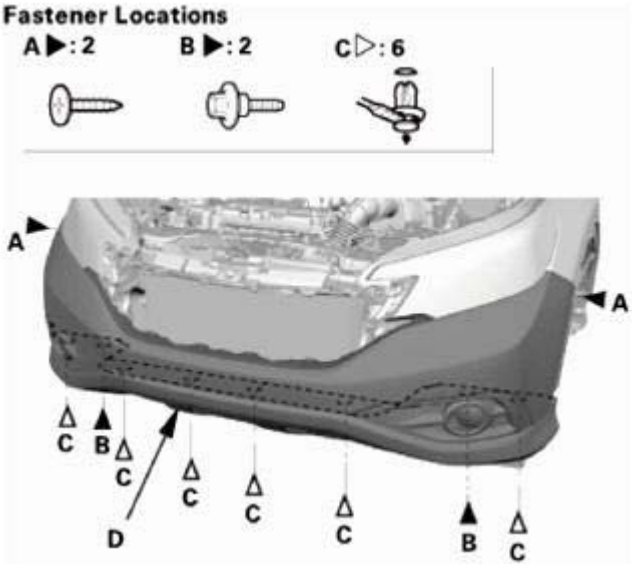

Fig. 42: Identifying Front Bumper, Screws, And Clips
Courtesy of AMERICAN HONDA MOTOR CO., INC.

2. Pull out the front bumper (A) from the side spacer (B). Repeat this step on the opposite side.

Fig. 43: Pulling Out Front Bumper From Side Spacer
Courtesy of AMERICAN HONDA MOTOR CO., INC.

3. Detach the clip (A). Repeat this step on the opposite side.

GETtheMANUALS.org

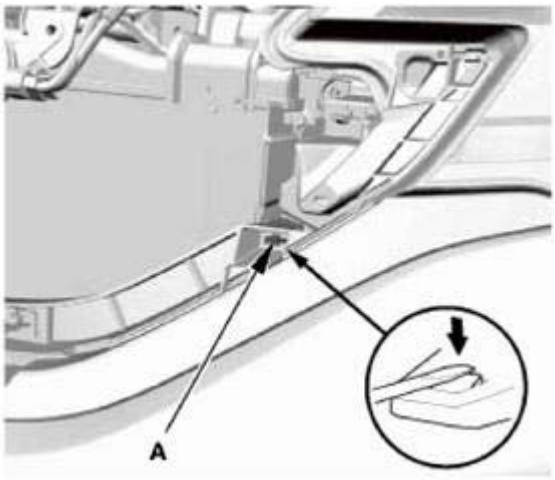

Fig. 44: Detaching Clip From Front Bumper
Courtesy of AMERICAN HONDA MOTOR CO., INC.

4. With the help of an assistant, pull out both sides of the front bumper (A) from the upper beam (B).

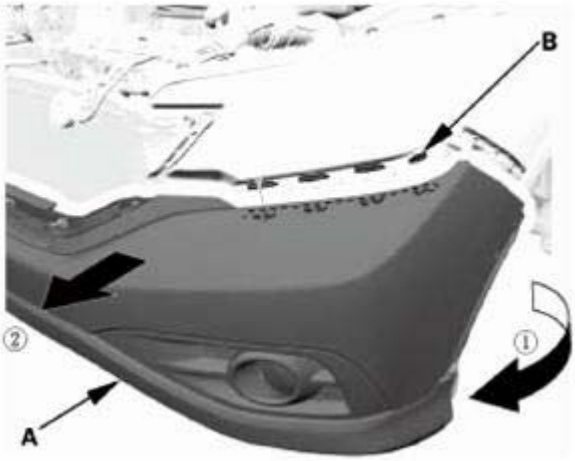

Fig. 45: Pulling Out Front Bumper From Upper Beam
Courtesy of AMERICAN HONDA MOTOR CO., INC.

5. With the help of an assistant, disconnect the connectors (A), then remove the front bumper (B).

GETtheMANUALS.org

Fig. 46: Identifying Front Bumper And Connectors
Courtesy of AMERICAN HONDA MOTOR CO., INC.

4. Fog Light Assembly
    1. Remove the fog light assembly (A) from the front bumper.

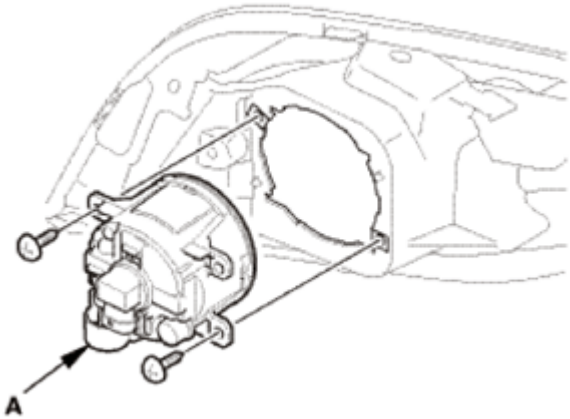

Fig. 47: Identifying Fog Light Assembly
Courtesy of AMERICAN HONDA MOTOR CO., INC.

INSTALLATION

1. Fog Light Assembly
    1. Install the fog light assembly (A) to the front bumper.

GETtheMANUALS.org

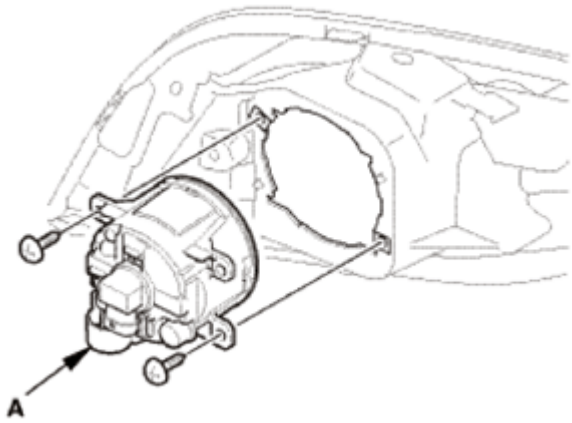

Fig. 48: Identifying Fog Light Assembly
Courtesy of AMERICAN HONDA MOTOR CO., INC.

2. Front Bumper
    1. With the help of an assistant, connect the connectors (A), then install the front bumper (B).

Fig. 49: Identifying Front Bumper And Connectors
Courtesy of AMERICAN HONDA MOTOR CO., INC.

    2. With the help of an assistant, install both sides of the front bumper (A) to the upper beam (B).

GETtheMANUALS.org

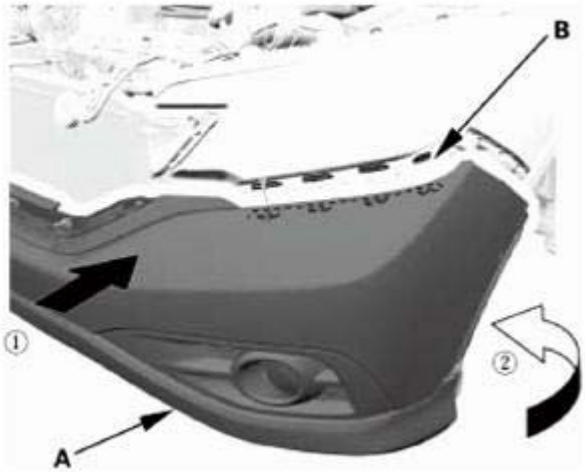

Fig. 50: Installing Front Bumper To Upper Beam
Courtesy of AMERICAN HONDA MOTOR CO., INC.

3. Push the front bumper (A) until the clip (B) snaps into place. Repeat this step on the opposite side.

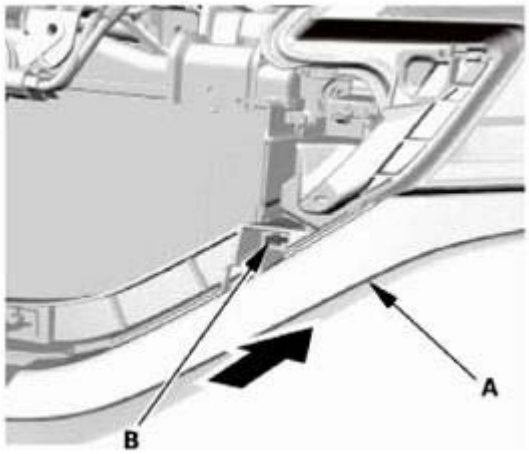

Fig. 51: Pushing Front Bumper With Clip
Courtesy of AMERICAN HONDA MOTOR CO., INC.

4. Install the front bumper (A) to the side spacer (B). Repeat this step on the opposite side.

GETtheMANUALS.org

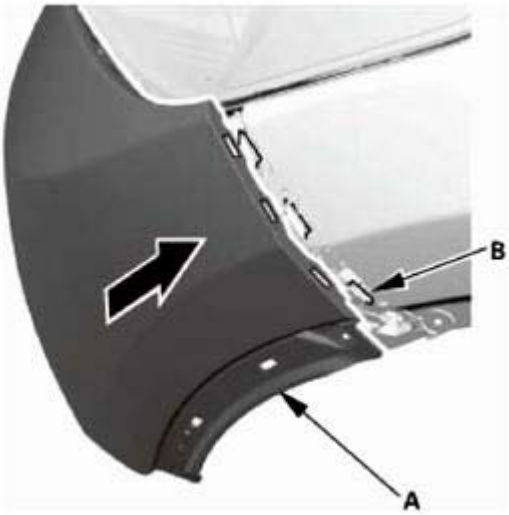

Fig. 52: Installing Front Bumper To Side Spacer
Courtesy of AMERICAN HONDA MOTOR CO., INC.

5. Install the screws (A), the bolts (B), and the clips (C) securing the front bumper (D).

Fig. 53: Identifying Front Bumper, Screws, Bolts And Clips With Torque Specification
Courtesy of AMERICAN HONDA MOTOR CO., INC.

3. Front Wheel Arch Protector Front Side As Needed - Both Sides
    1. Install the front wheel arch protector (A), then install the screws (B) and the clips (C). Make sure the clips (D, E) snap into place securely. Repeat this step on the opposite side.

GETtheMANUALS.org

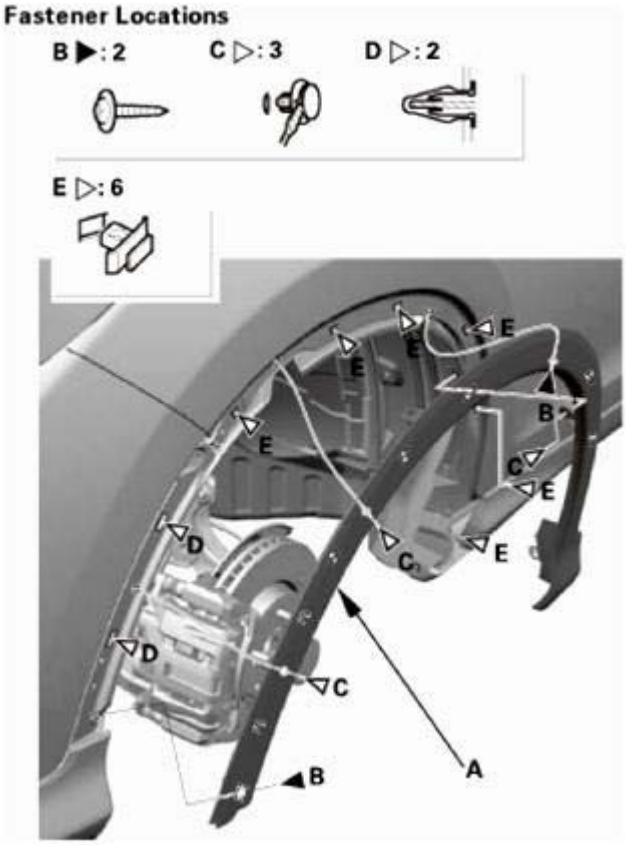

Fig. 54: Identifying Front Wheel Arch Protector, Screws And Clips
Courtesy of AMERICAN HONDA MOTOR CO., INC.

4. Front Grille
    1. Install the front grille (A) by pushing on the clip areas until the clips snap into place.
    2. Install the clips (B).

GETtheMANUALS.org

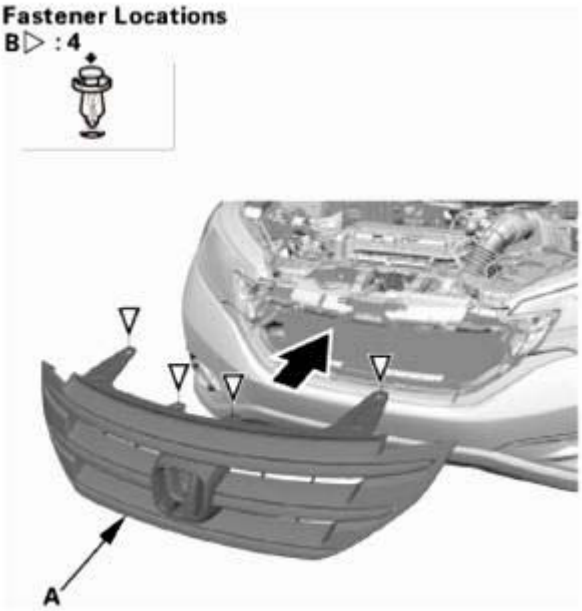

Fig. 55: Installing Front Grille With Clips
Courtesy of AMERICAN HONDA MOTOR CO., INC.

5. Fog Light - Adjustment
    1. **Adjust the fog lights** See **FOG LIGHT ADJUSTMENT** or **FOG LIGHT REMOVAL AND INSTALLATION**.

FOG LIGHTS COMPONENT LOCATION INDEX

GETtheMANUALS.org

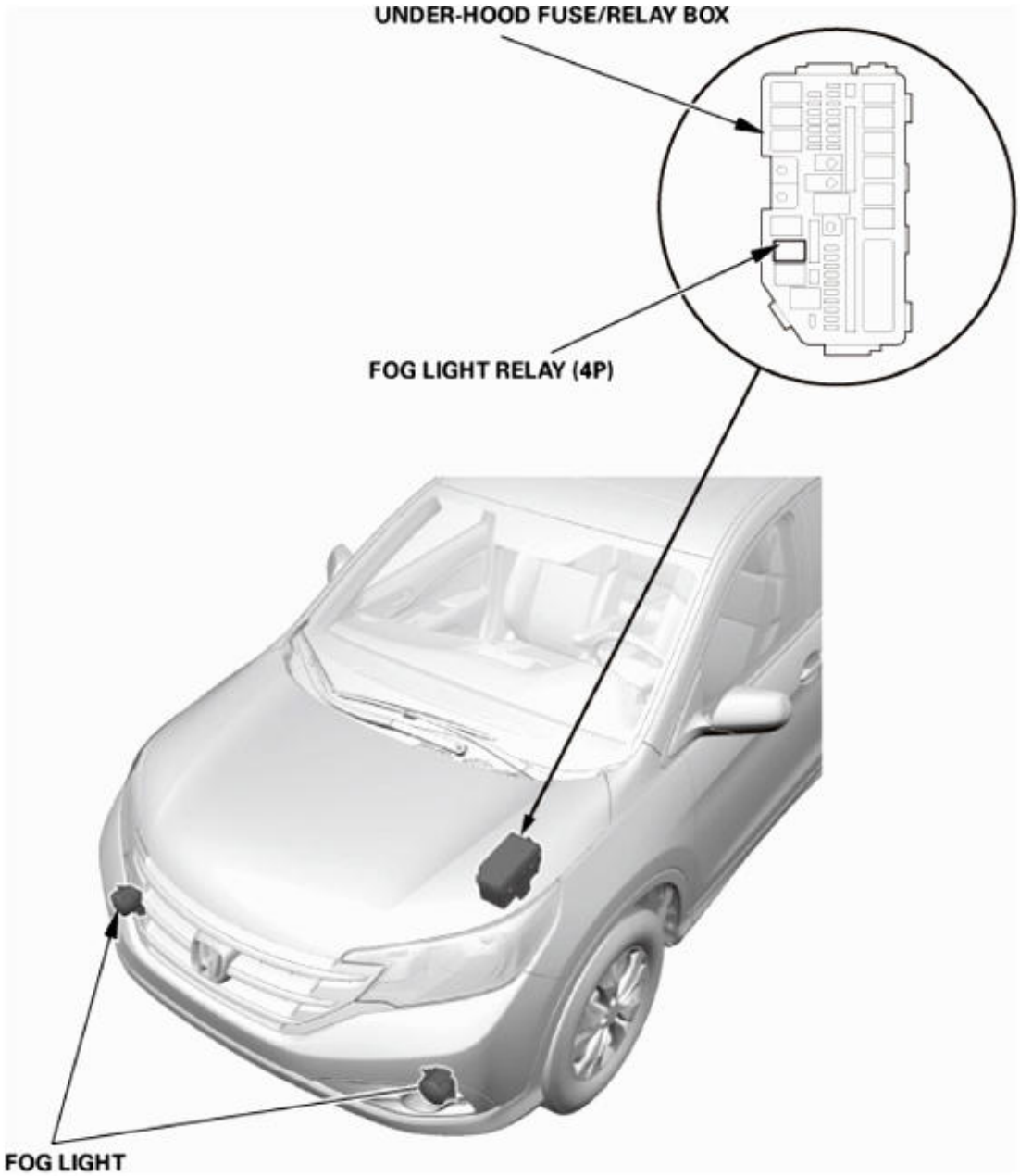

Fig. 56: Identifying Fog Lights Component Location (1 Of 2)
Courtesy of AMERICAN HONDA MOTOR CO., INC.

GETtheMANUALS.org

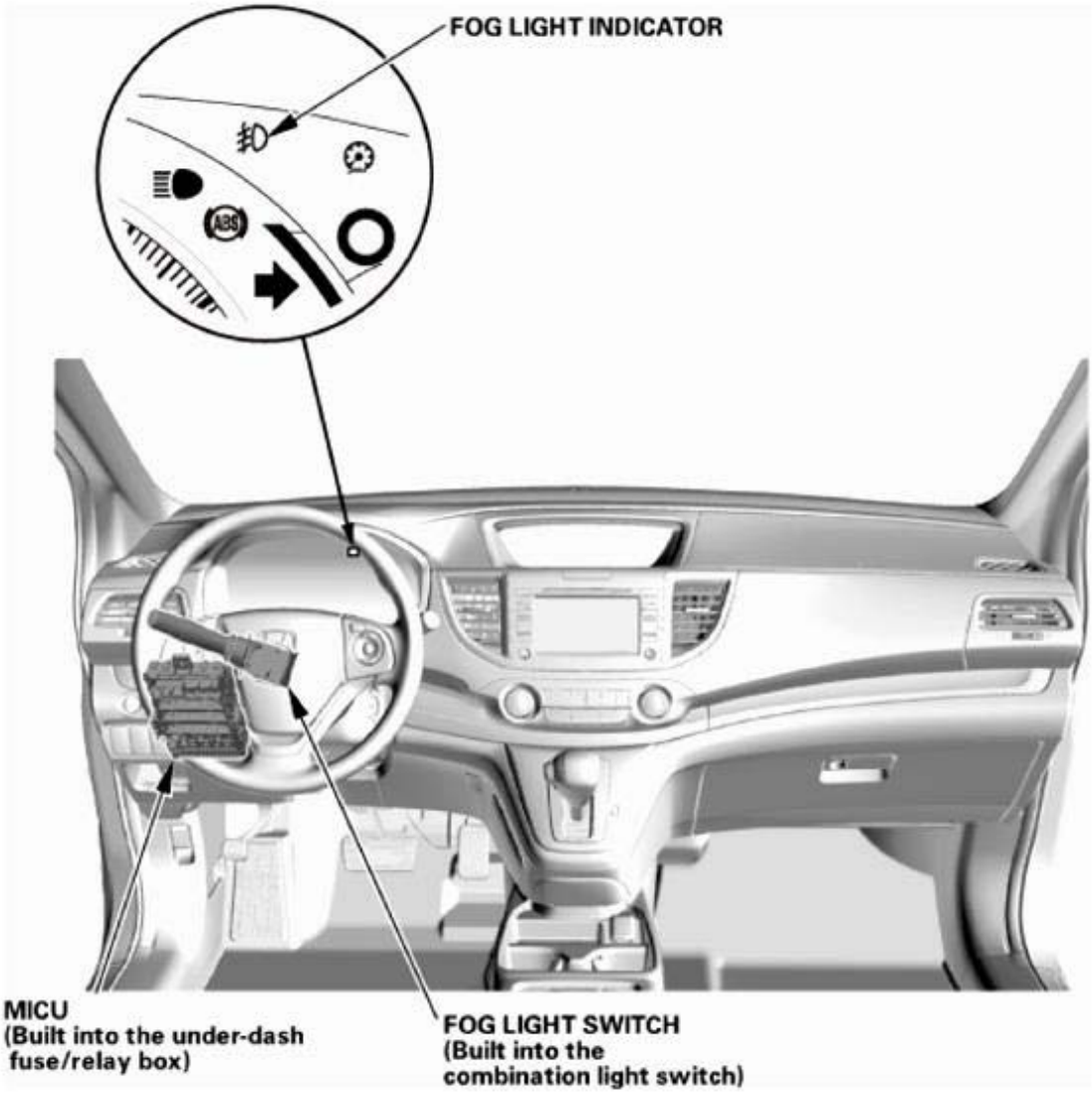

Fig. 57: Identifying Fog Lights Component Location (2 Of 2)
Courtesy of AMERICAN HONDA MOTOR CO., INC.

FOG LIGHT	**Adjustment** See **FOG LIGHT ADJUSTMENT** or **FOG LIGHT REMOVAL AND INSTALLATION**
	Removal and Installation See **FOG LIGHT ADJUSTMENT** or **FOG LIGHT REMOVAL AND INSTALLATION**
FOG LIGHT BULB	**Removal and Installation** See **EXTERIOR LIGHTS BULB REMOVAL AND INSTALLATION - FOG LIGHT**, **EXTERIOR LIGHTS BULB REMOVAL AND INSTALLATION - HEADLIGHT HOUSING** or **EXTERIOR LIGHTS BULB REMOVAL AND INSTALLATION - TAILLIGHT HOUSING**
FOG LIGHT RELAY (4P)	**TEST**
FOG LIGHT	

GETtheMANUALS.org

SWITCH (Built into the combination light switch)	**REMOVAL, INSTALLATION, AND TEST**
MICU (Built into the under-dash fuse/relay box)	**INPUT TEST**
	REMOVAL AND INSTALLATION

HEADLIGHT ADJUSTMENT

ADJUSTMENT

1. Headlight - Adjustment

CAUTION: Headlights become very hot during use; do not touch them or any attaching hardware immediately after they have been turned off.

Before adjusting the headlights:

- Park the vehicle on a level surface.
- Make sure the tire pressures are correct.
- The driver or someone who weighs the same should sit in the driver's seat.
- Unload the vehicle.

1. Clean the outer lens so that you can see the center (A) of the headlights.

GETtheMANUALS.org

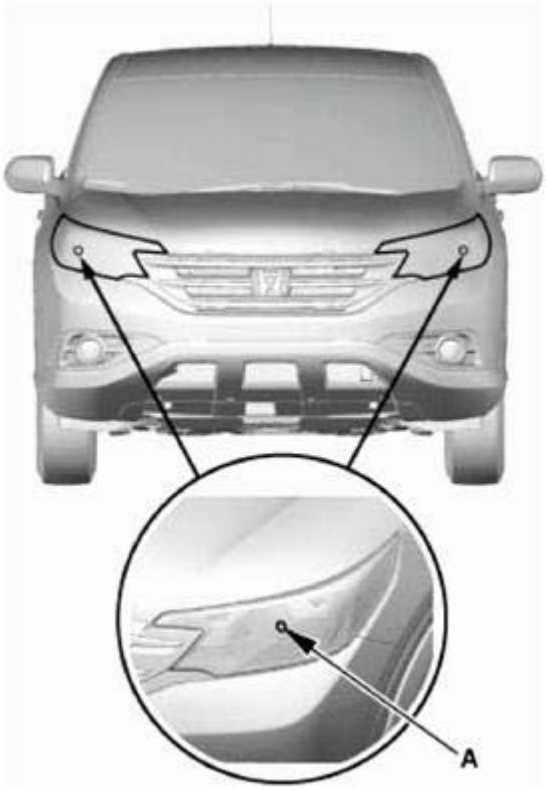

Fig. 58: Identifying Headlights Center Outer Lens
Courtesy of AMERICAN HONDA MOTOR CO., INC.

2. Park the vehicle so that the center mark of the headlight (A) is 7.5 m (24.6 ft) away from a wall or a screen (B).

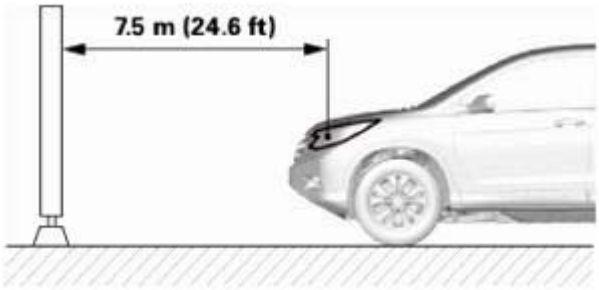

Fig. 59: Identifying Vehicle Parking Distance Dimension
Courtesy of AMERICAN HONDA MOTOR CO., INC.

3. Measure the height of the headlight's center mark (A), then, on the wall or screen (B), mark the same height of the headlights with masking tape in a straight horizontal line (C).

GETtheMANUALS.org

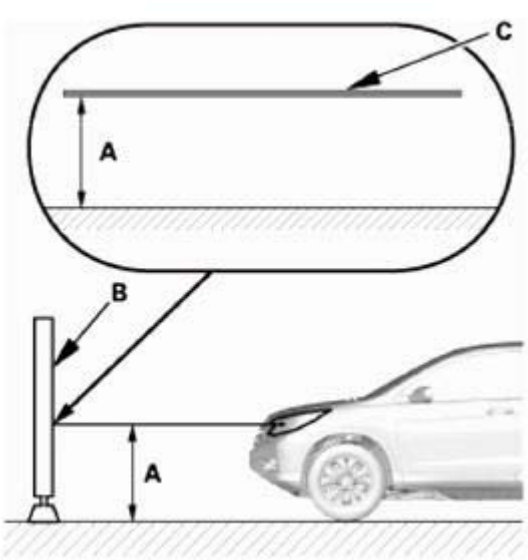

Fig. 60: Measuring Height Of Headlight's Center Mark On Wall Or Screen
Courtesy of AMERICAN HONDA MOTOR CO., INC.

4. Turn on the low beam headlights.
5. To see if the headlights are adjusted properly, observe the beams of light projected on the wall or screen. The highest edge or "cut line" (A) of the headlights should be equal with the masking tape (B).

NOTE: **To help determine which headlight is out of adjustment, block one of the beams with a piece of cardboard or equivalent, and observe the other beam on the wall or screen. Repeat this for the other headlight.**

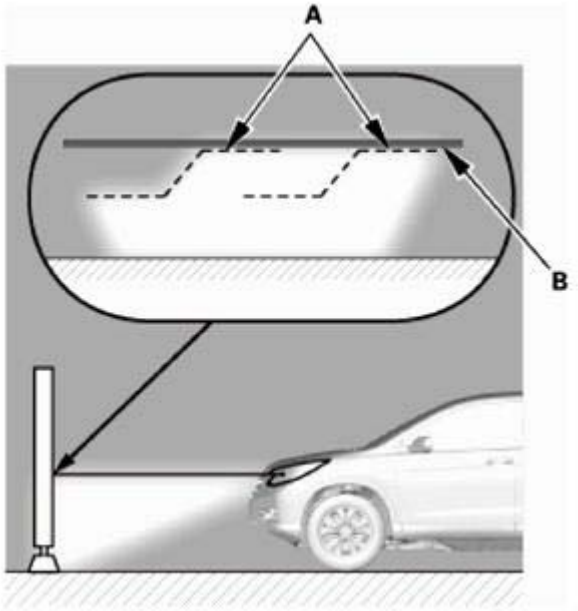

Fig. 61: Identifying Cut Line And Masking Tape

GETtheMANUALS.org

Courtesy of AMERICAN HONDA MOTOR CO., INC.

6. If necessary, open the hood and adjust the headlights by turning the adjuster.

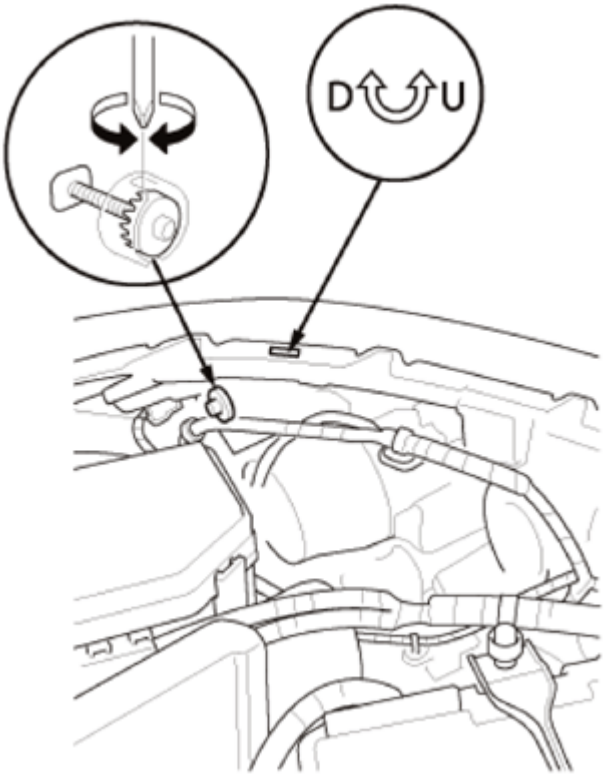

Fig. 62: Adjusting Headlights By Turning Vertical Adjuster
Courtesy of AMERICAN HONDA MOTOR CO., INC.

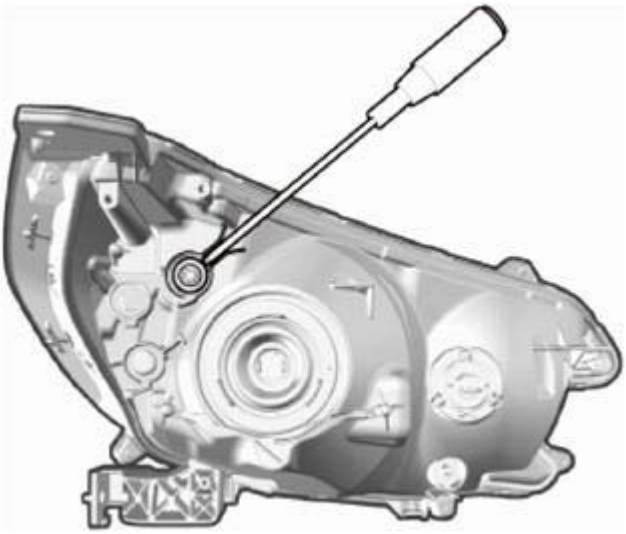

Fig. 63: Opening Hood
Courtesy of AMERICAN HONDA MOTOR CO., INC.

GETtheMANUALS.org

HEADLIGHT REMOVAL AND INSTALLATION

REMOVAL

1. Front Grille
    1. Apply protective tape (A) to the front grille lower trim (B).

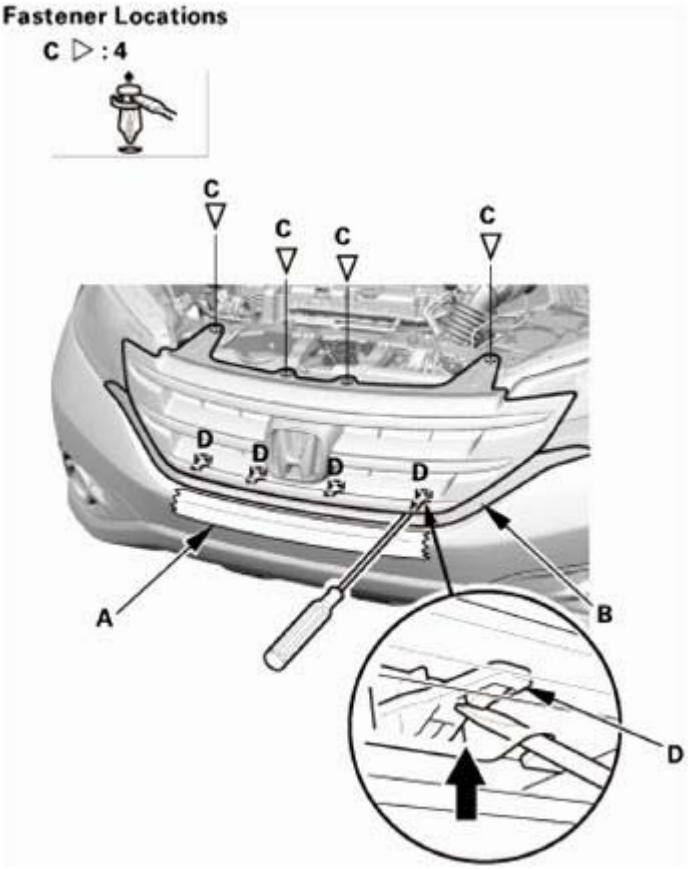

Fig. 64: Removing Fog Light Clips And Hooks
Courtesy of AMERICAN HONDA MOTOR CO., INC.

2. Remove the clips (C) and detach the hooks (D).
3. Insert a shop towel (A) between the front grille (B) and the front grille lower trim (C).

GETtheMANUALS.org

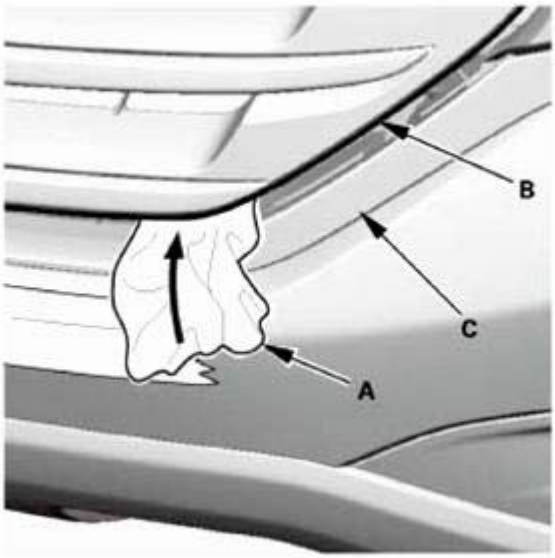

Fig. 65: Inserting Shop Towel Between Front Grille And Front Grille Lower Trim
Courtesy of AMERICAN HONDA MOTOR CO., INC.

4. Insert a flat-tip screwdriver (A) into the opening at the front grille (B), then turn the screwdriver to detach the clip (C).

NOTE: Repeat this procedure on the opposite side.

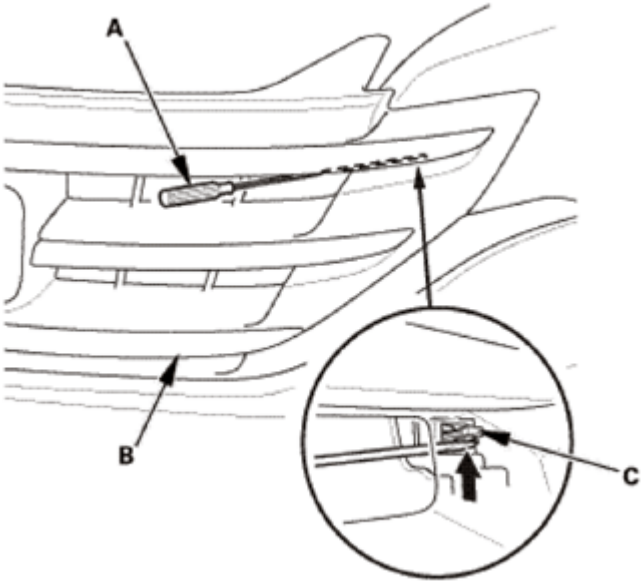

Fig. 66: Inserting Flat-Tip Screwdriver Into Opening At Front Grille
Courtesy of AMERICAN HONDA MOTOR CO., INC.

5. Remove the front grille (A).

GETtheMANUALS.org

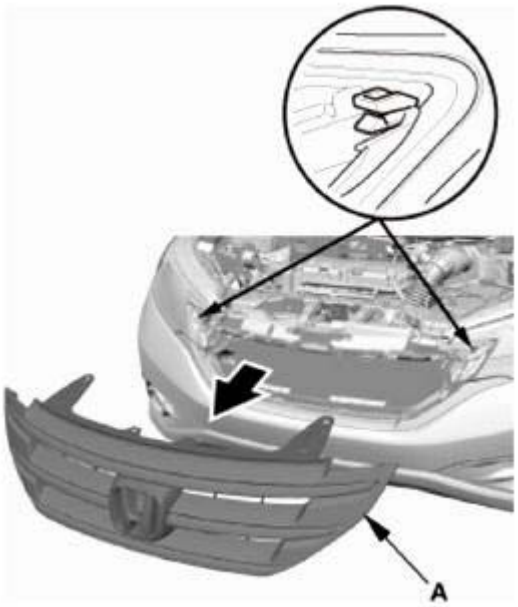

Fig. 67: Removing Front Grille
Courtesy of AMERICAN HONDA MOTOR CO., INC.

2. Front Wheel Arch Protector Front Side As Needed - Both Sides

NOTE: Repeat on the opposite side.

1. Remove the screws (A) and the clips (B) securing the front wheel arch protector (C).
2. Carefully pry out the clip portions of the wheel arch protector with the appropriate trim tool to detach the clips (D, E), then detach the wheel arch protector front side as needed.
3. Put a shop towel (F) in the opening between the front wheel arch protector and the front fender.

GETtheMANUALS.org

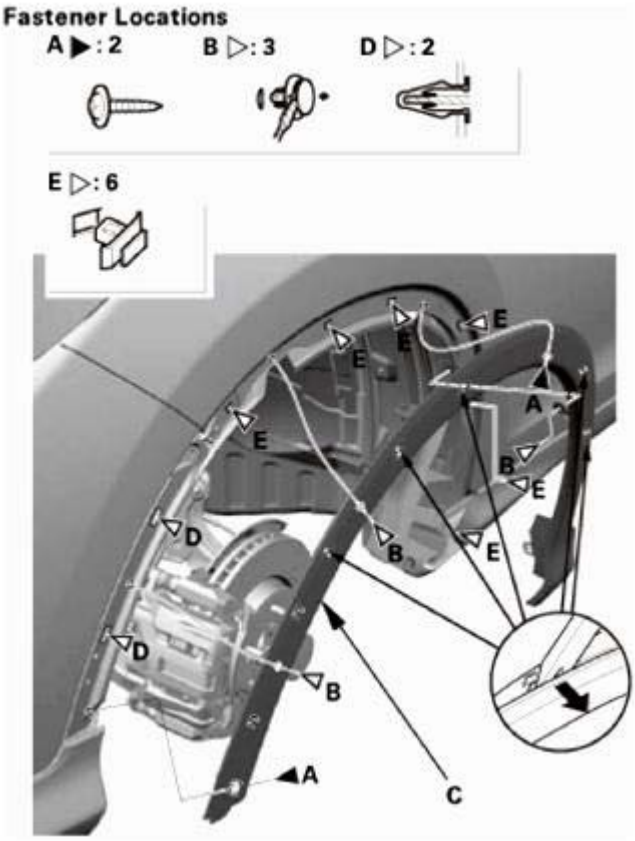

Fig. 68: Identifying Front Wheel Arch Protector, Screws And Clips
Courtesy of AMERICAN HONDA MOTOR CO., INC.

Fig. 69: Putting Shop Towel In Opening Between Front Wheel Arch Protector And Front Fender
Courtesy of AMERICAN HONDA MOTOR CO., INC.

3. Front Bumper
    1. Remove the screws (A), the bolts (B), and the clips (C) securing the front bumper (D).

GETtheMANUALS.org

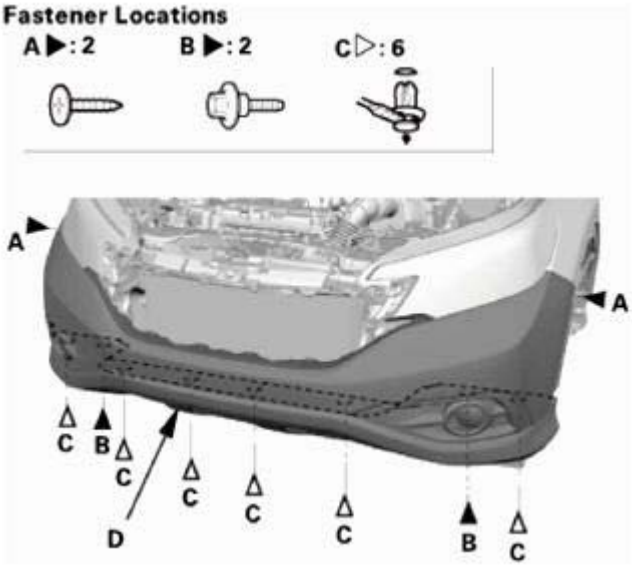

Fig. 70: Identifying Front Bumper, Screws, And Clips
Courtesy of AMERICAN HONDA MOTOR CO., INC.

2. Pull out the front bumper (A) from the side spacer (B). Repeat this step on the opposite side.

Fig. 71: Pulling Out Front Bumper From Side Spacer
Courtesy of AMERICAN HONDA MOTOR CO., INC.

3. Detach the clip (A). Repeat this step on the opposite side.

GETtheMANUALS.org

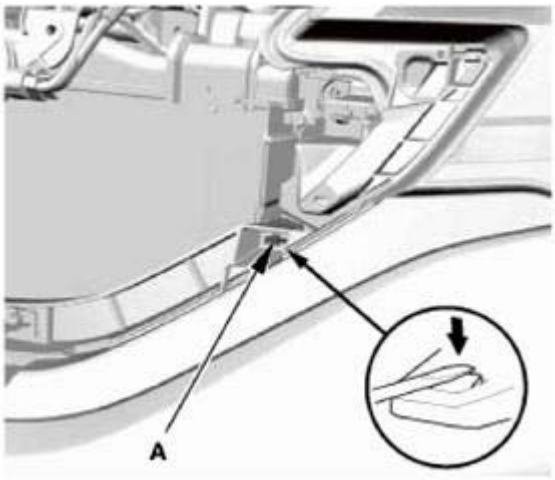

Fig. 72: Detaching Clip From Front Bumper
Courtesy of AMERICAN HONDA MOTOR CO., INC.

4. With the help of an assistant, pull out both sides of the front bumper (A) from the upper beam (B).

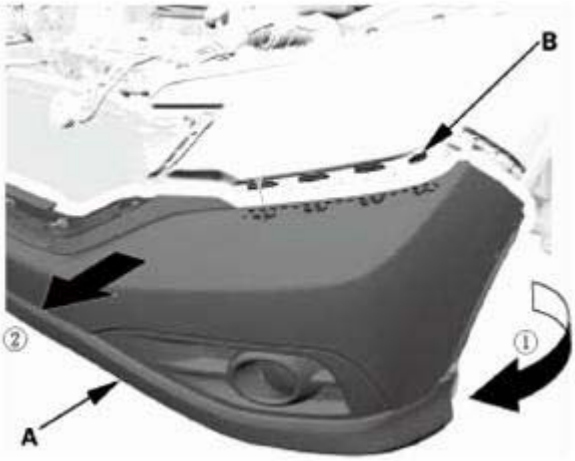

Fig. 73: Pulling Out Front Bumper From Upper Beam
Courtesy of AMERICAN HONDA MOTOR CO., INC.

5. With the help of an assistant, disconnect the connectors (A), then remove the front bumper (B).

GETtheMANUALS.org

Fig. 74: Identifying Front Bumper And Connectors
Courtesy of AMERICAN HONDA MOTOR CO., INC.

4. Headlight Assembly
    1. Remove the headlight (A) with the corner upper beam (B) as an assembly.
    2. Remove the harness clips (C) from the headlight housing.
    3. Disconnect the connectors.

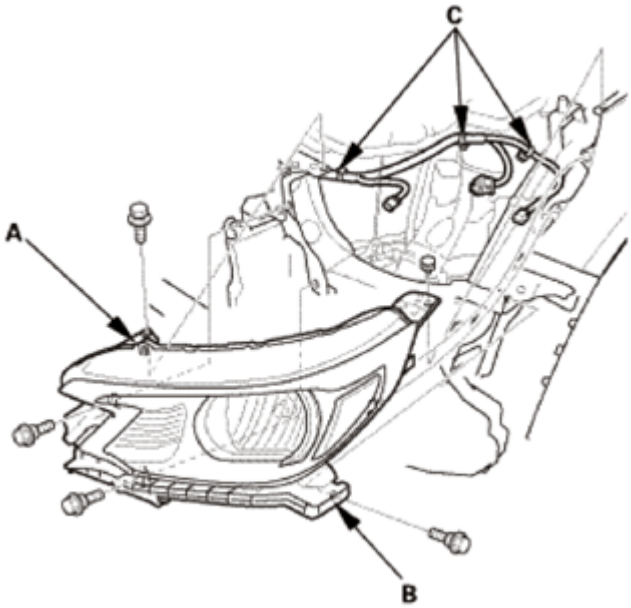

Fig. 75: Identifying Headlight, Corner Upper Beam And Harness Clips With Mounting Bolts
Courtesy of AMERICAN HONDA MOTOR CO., INC.

5. Headlight
    1. Remove the bolt and release the pin (A) from the corner upper beam (B).

GETtheMANUALS.org

2. Release the pins (C) from the corner upper beam, then remove the corner upper beam from the headlight (D).

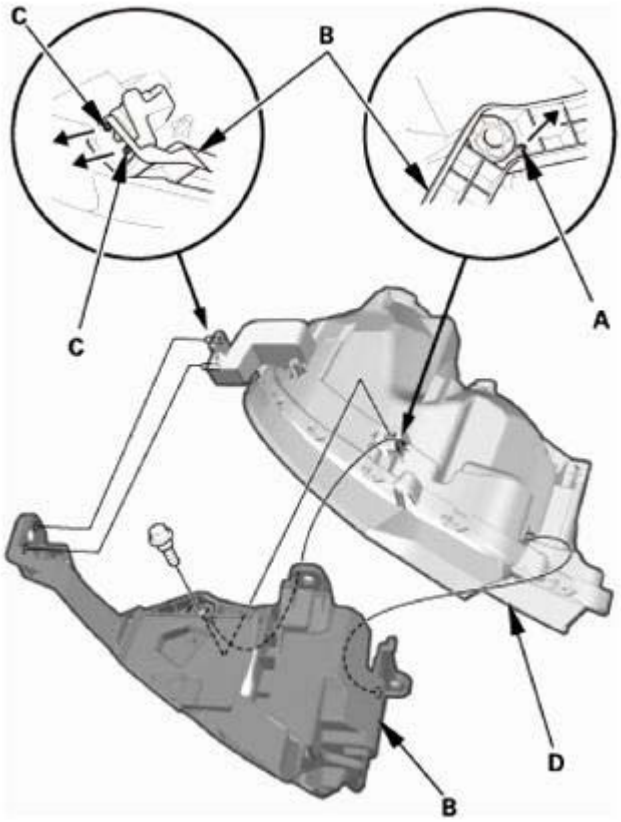

Fig. 76: Releasing Pin From Corner Upper Beam
Courtesy of AMERICAN HONDA MOTOR CO., INC.

INSTALLATION

1. Headlight
    1. Install the corner upper beam (A) to the pin (B) of the headlight (C).
    2. Install the corner upper beam to the pin (D).
    3. Install the corner upper beam to the pin (E), then install the bolt.

GETtheMANUALS.org

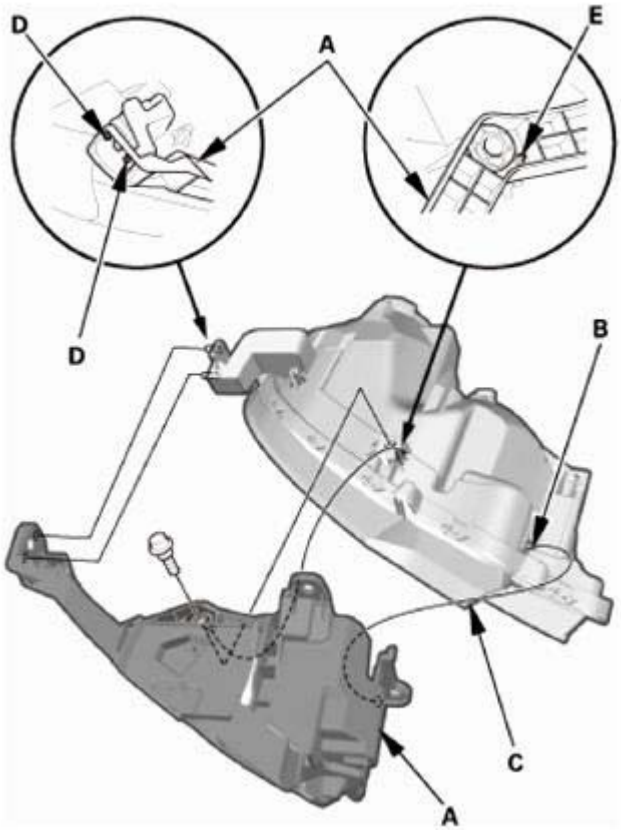

Fig. 77: Identifying Corner Upper Beam, Headlight And Pins With Mounting Bolts
Courtesy of AMERICAN HONDA MOTOR CO., INC.

2. Headlight Assembly
    1. Connect the connectors.
    2. Install the harness clips (A) to the headlight housing.
    3. Install the headlight (B) with the corner upper beam (C) as an assembly.

GETtheMANUALS.org

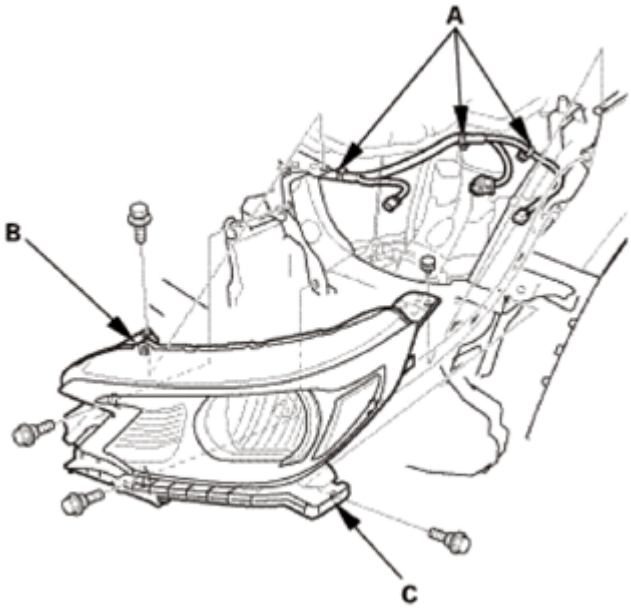

Fig. 78: Identifying Corner Upper Beam, Headlight And Harness Clips With Mounting Bolts
Courtesy of AMERICAN HONDA MOTOR CO., INC.

3. Front Bumper
    1. With the help of an assistant, connect the connectors (A), then install the front bumper (B).

Fig. 79: Identifying Front Bumper And Connectors
Courtesy of AMERICAN HONDA MOTOR CO., INC.

    2. With the help of an assistant, install both sides of the front bumper (A) to the upper beam (B).

GETtheMANUALS.org

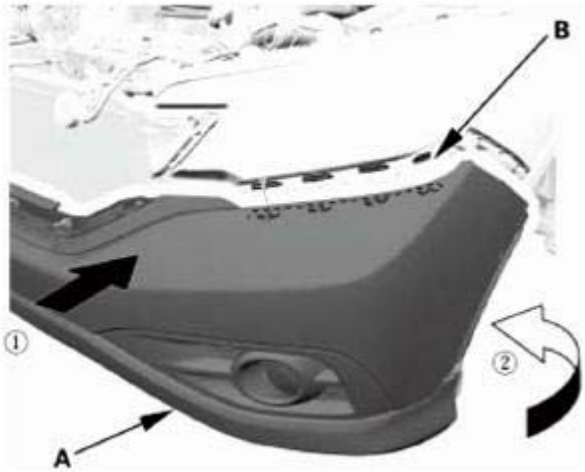

Fig. 80: Installing Front Bumper To Upper Beam
Courtesy of AMERICAN HONDA MOTOR CO., INC.

3. Push the front bumper (A) until the clip (B) snaps into place. Repeat this step on the opposite side.

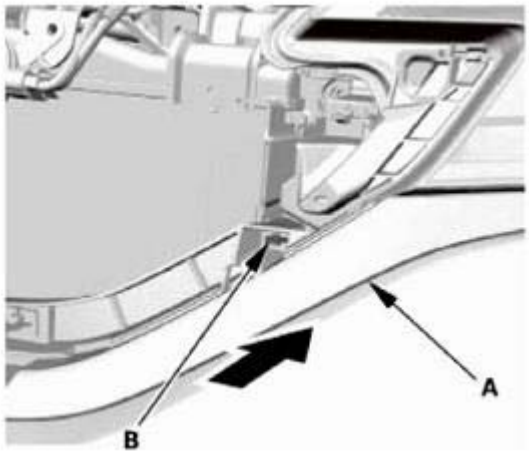

Fig. 81: Pushing Front Bumper With Clip
Courtesy of AMERICAN HONDA MOTOR CO., INC.

4. Install the front bumper (A) to the side spacer (B). Repeat this step on the opposite side.

GETtheMANUALS.org

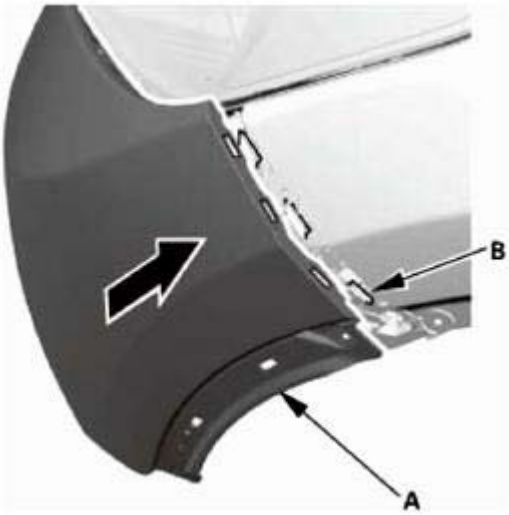

Fig. 82: Installing Front Bumper To Side Spacer
Courtesy of AMERICAN HONDA MOTOR CO., INC.

5. Install the screws (A), the bolts (B), and the clips (C) securing the front bumper (D).

Fig. 83: Identifying Front Bumper, Screws, Bolts And Clips With Torque Specification
Courtesy of AMERICAN HONDA MOTOR CO., INC.

4. Front Wheel Arch Protector Front Side As Needed - Both Sides
    1. Install the front wheel arch protector (A), then install the screws (B) and the clips (C). Make sure the clips (D, E) snap into place securely. Repeat this step on the opposite side.

GETtheMANUALS.org

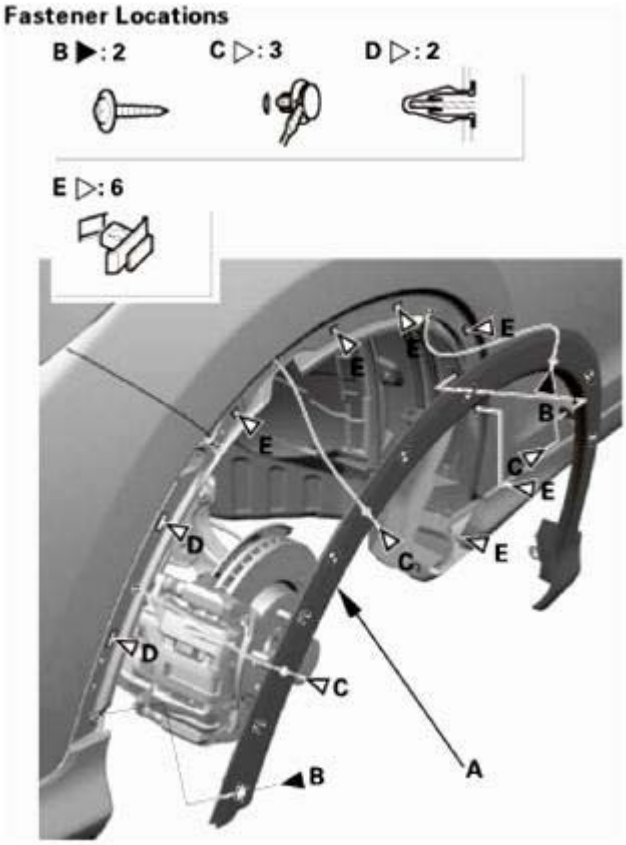

Fig. 84: Identifying Front Wheel Arch Protector, Screws And Clips
Courtesy of AMERICAN HONDA MOTOR CO., INC.

5. Front Grille
    1. Install the front grille (A) by pushing on the clip areas until the clips snap into place.
    2. Install the clips (B).

GETtheMANUALS.org

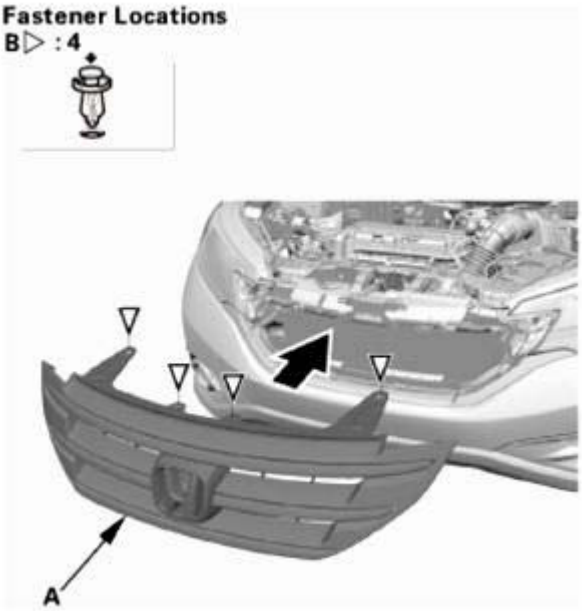

Fig. 85: Installing Front Grille With Clips
Courtesy of AMERICAN HONDA MOTOR CO., INC.

6. Headlight - Adjustment
    1. **Adjust the headlights** See **HEADLIGHT ADJUSTMENT** or **HEADLIGHT REMOVAL AND INSTALLATION**.

HIGH MOUNT BRAKE LIGHT REMOVAL AND INSTALLATION

REMOVAL

1. Tailgate Upper Trim Panel
    1. Carefully pry out the notch (A) in the tailgate upper trim (B) with the appropriate trim tool to detach the hooks (C) and the tabs (D) from the tailgate side trims (E), and pull back the tailgate upper trim panel by hand to detach the clips (F), then remove the tailgate upper trim panel.

GETtheMANUALS.org

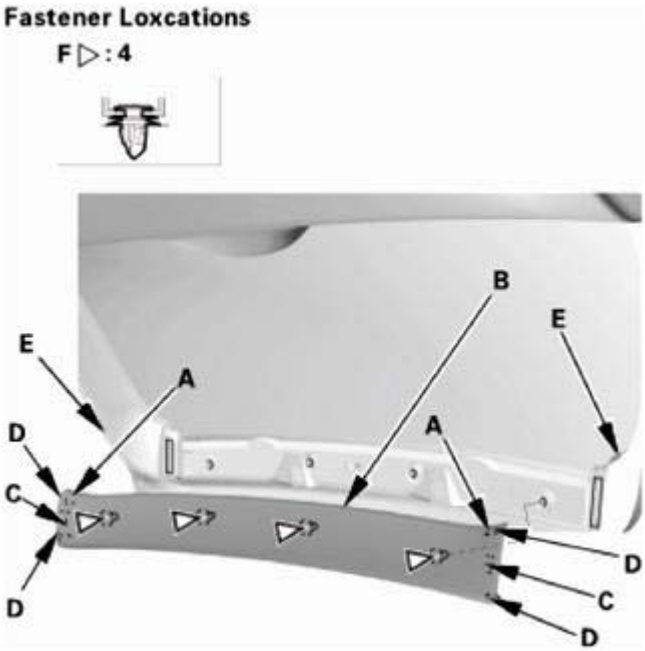

Fig. 86: Identifying Tailgate Upper Trim, Notch, Hooks, Tabs, Tailgate Side Trims And Clips
Courtesy of AMERICAN HONDA MOTOR CO., INC.

2. High Mount Brake Light
    1. Remove the high mount brake light (A).
    2. Disconnect the connector.

Fig. 87: Identifying High Mount Brake Light With Nuts
Courtesy of AMERICAN HONDA MOTOR CO., INC.

INSTALLATION

1. High Mount Brake Light
    1. Connect the connector.
    2. Install the high mount brake light (A).

GETtheMANUALS.org

Fig. 88: Identifying High Mount Brake Light With Nuts
Courtesy of AMERICAN HONDA MOTOR CO., INC.

2. Tailgate Upper Trim Panel
    1. Install the tailgate upper trim panel (A). Make sure the hooks (B), the tabs (C), and the clips (D) snap into place securely.

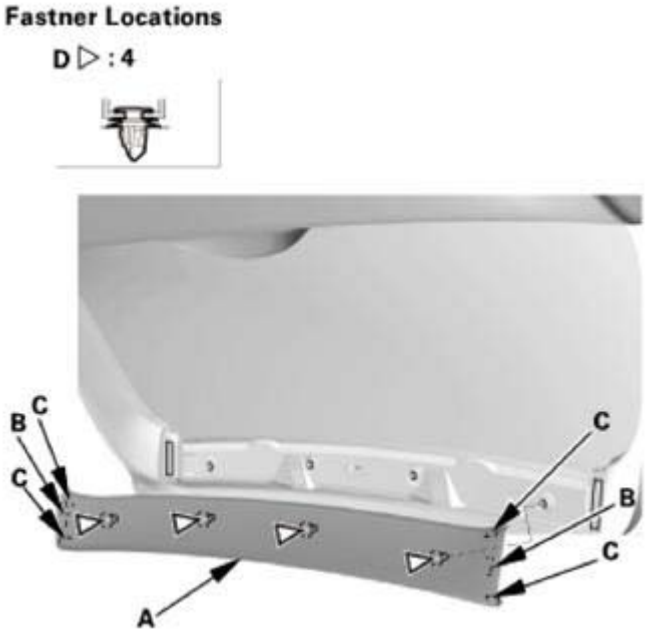

Fig. 89: Identifying Tailgate Upper Trim Panel, Hooks, Tabs And Clips
Courtesy of AMERICAN HONDA MOTOR CO., INC.

TAILLIGHT REMOVAL AND INSTALLATION

REMOVAL

1. Taillight Assembly

    Lower Taillight

GETtheMANUALS.org

1. Remove the lower taillight (A).
2. Disconnect the connectors.
3. Turn the bulb socket (B) 45 counterclockwise to remove the bulb sockets.

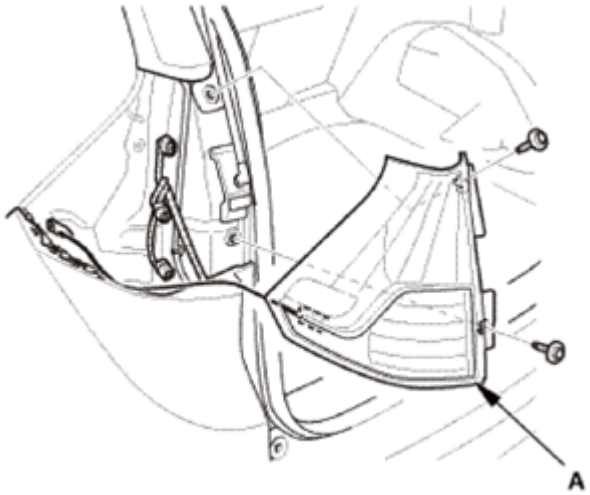

Fig. 90: Identifying Lower Taillight With Screws (Lower Taillight)
Courtesy of AMERICAN HONDA MOTOR CO., INC.

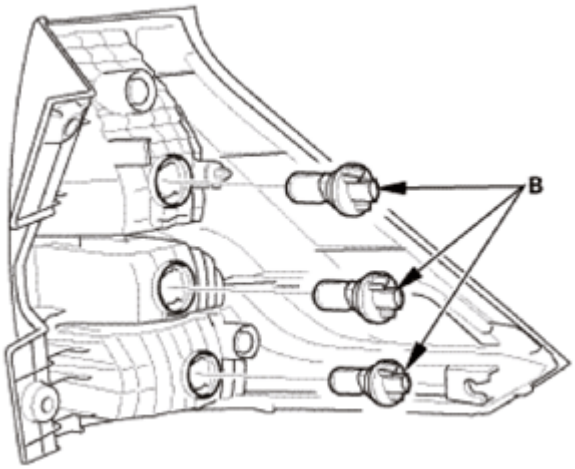

Fig. 91: Identifying Bulb Socket (Lower Taillight)
Courtesy of AMERICAN HONDA MOTOR CO., INC.

Upper Taillight

1. Remove the lower taillight (A).
2. Disconnect the connectors.
3. Turn the bulb socket (B) 45 counterclockwise to remove the bulb sockets.

GETtheMANUALS.org

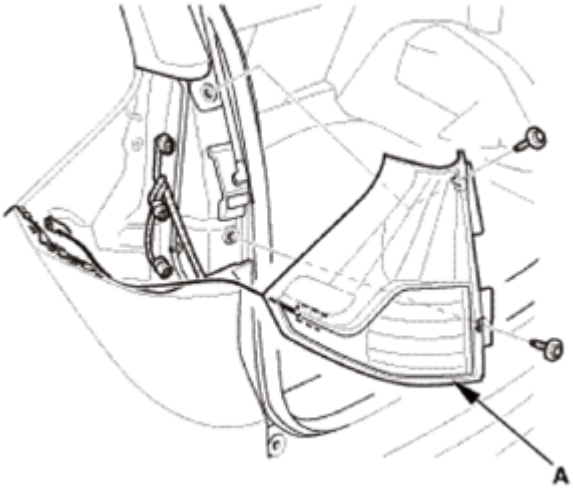

Fig. 92: Identifying Lower Taillight With Screws (Upper Taillight)
Courtesy of AMERICAN HONDA MOTOR CO., INC.

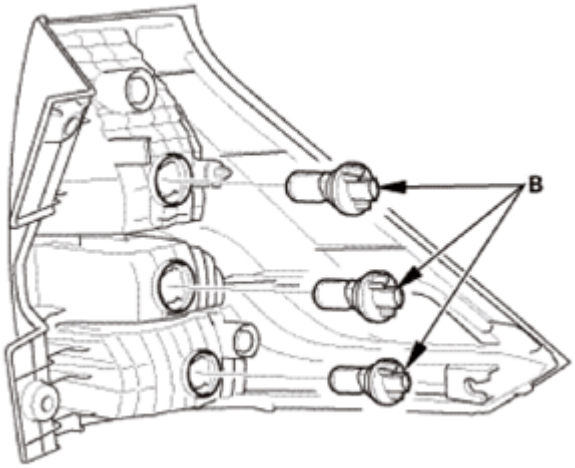

Fig. 93: Identifying Bulb Socket (Upper Taillight)
Courtesy of AMERICAN HONDA MOTOR CO., INC.

4. Remove the upper taillight (A).
5. Disconnect the connector.
6. Turn the bulb socket (B) 45 counterclockwise to remove the bulb sockets.

GETtheMANUALS.org

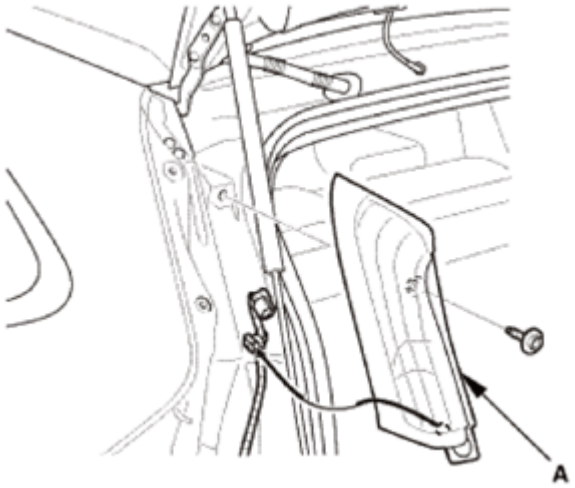

Fig. 94: Identifying Upper Taillight With Screws
Courtesy of AMERICAN HONDA MOTOR CO., INC.

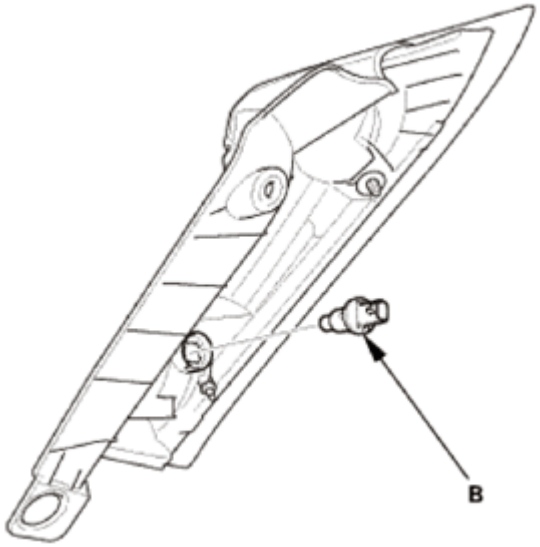

Fig. 95: Identifying Bulb Socket
Courtesy of AMERICAN HONDA MOTOR CO., INC.

INSTALLATION

1. Taillight Assembly

Upper Taillight

1. Turn the bulb socket (A) 45 clockwise to install the bulb sockets.
2. Connect the connector.
3. Install the upper taillight (B).

GETtheMANUALS.org

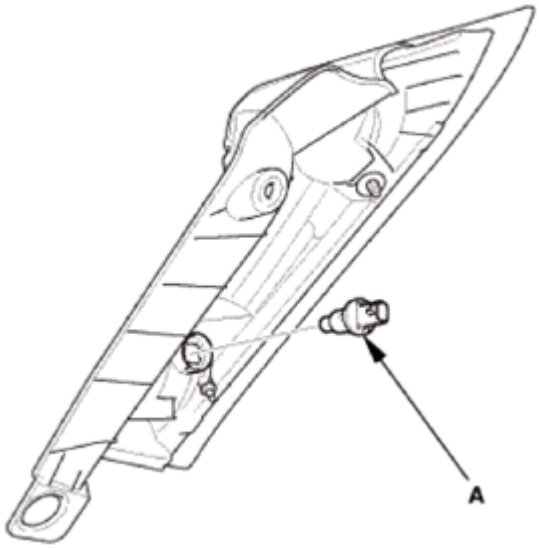

Fig. 96: Identifying Bulb Socket (Upper Taillight)
Courtesy of AMERICAN HONDA MOTOR CO., INC.

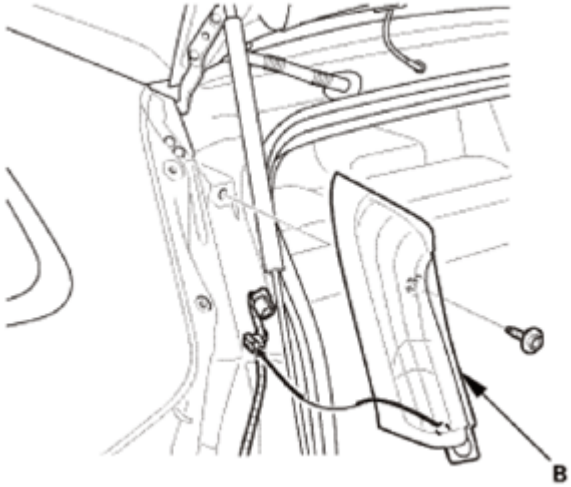

Fig. 97: Identifying Upper Taillight With Screws
Courtesy of AMERICAN HONDA MOTOR CO., INC.

4. Turn the bulb socket (A) 45 clockwise to install the bulb sockets.
5. Connect the connectors.
6. Install the lower taillight (B).

GETtheMANUALS.org

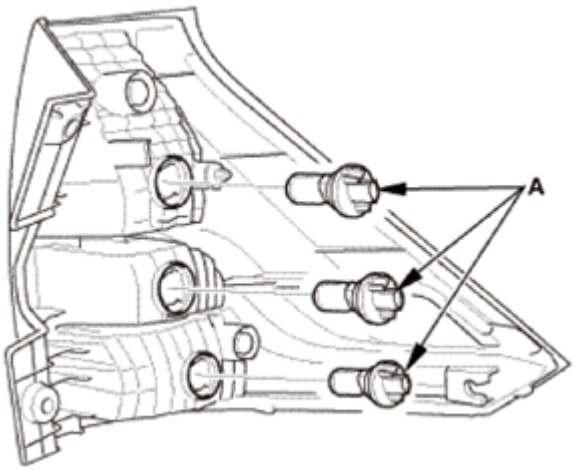

Fig. 98: Identifying Bulb Socket
Courtesy of AMERICAN HONDA MOTOR CO., INC.

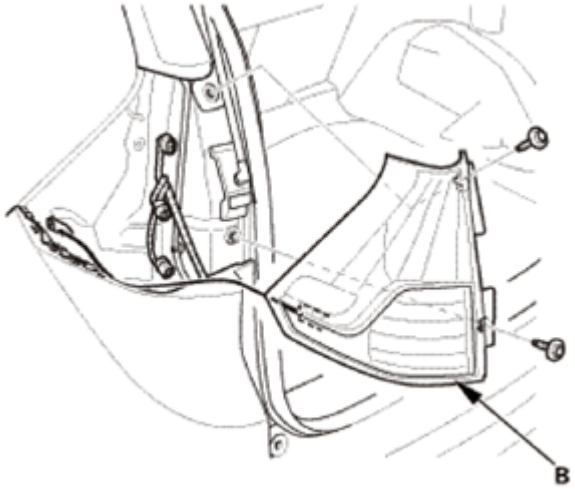

Fig. 99: Identifying Lower Taillight
Courtesy of AMERICAN HONDA MOTOR CO., INC.

Lower Taillight

1. Turn the bulb socket (A) 45 clockwise to install the bulb sockets.
2. Connect the connectors.
3. Install the lower taillight (B).

GETtheMANUALS.org

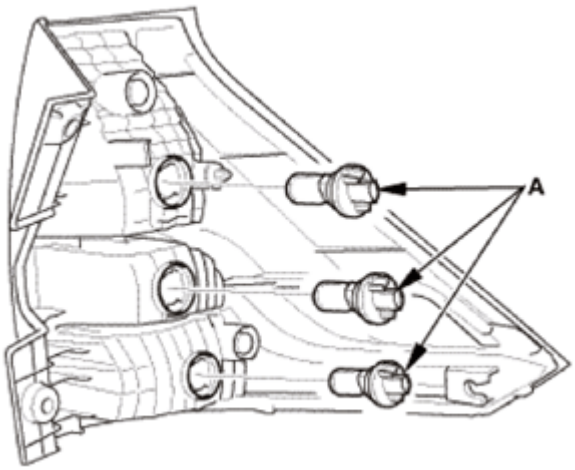

Fig. 100: Identifying Bulb Socket (Lower Taillight)
Courtesy of AMERICAN HONDA MOTOR CO., INC.

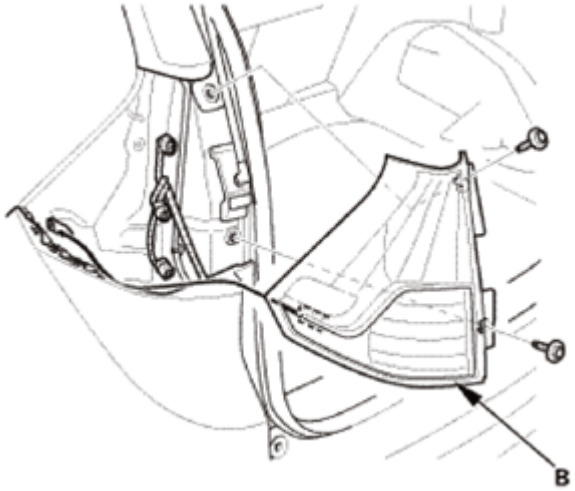

Fig. 101: Identifying Lower Taillight With Screws
Courtesy of AMERICAN HONDA MOTOR CO., INC.

TURN SIGNAL/HAZARD WARNING LIGHTS COMPONENT LOCATION INDEX

GETtheMANUALS.org

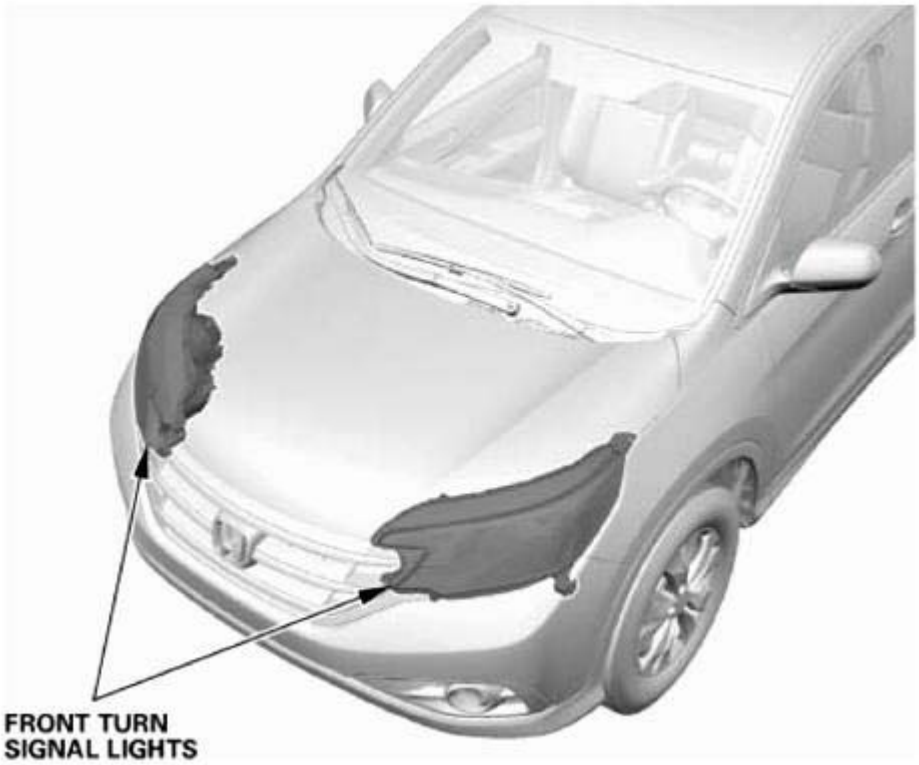

Fig. 102: Identifying Turn Signal/Hazard Warning Lights Component Location (1 Of 3)
Courtesy of AMERICAN HONDA MOTOR CO., INC.

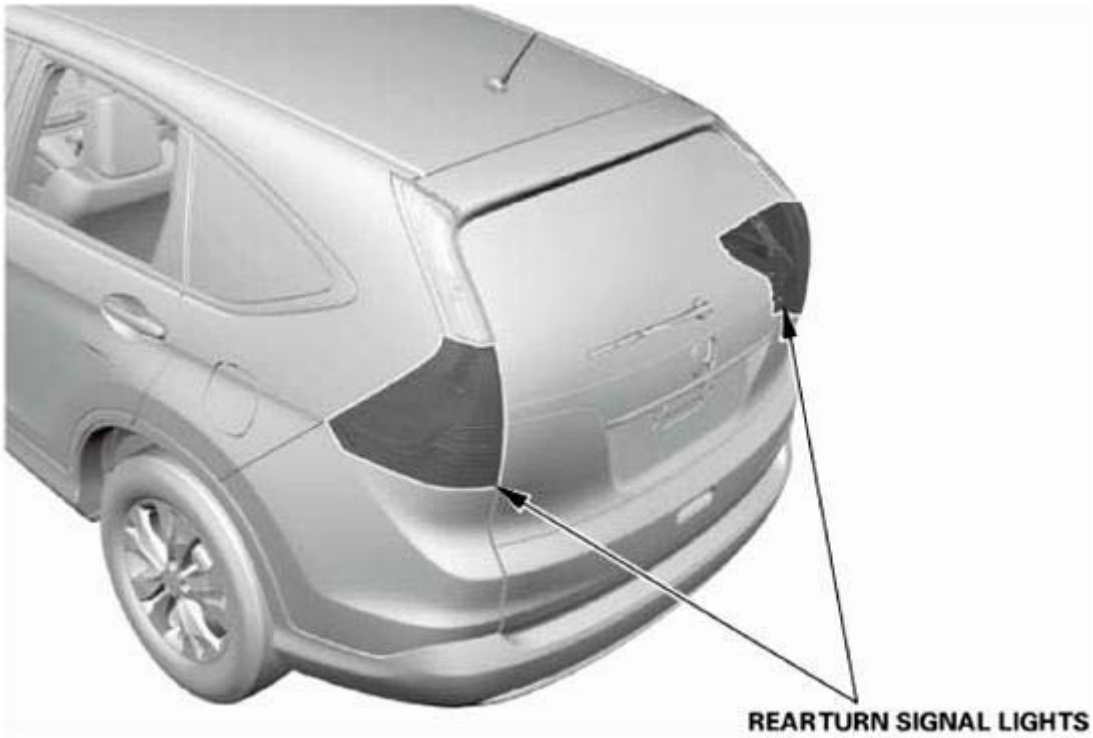

Fig. 103: Identifying Turn Signal/Hazard Warning Lights Component Location (2 Of 3)

GETtheMANUALS.org

Courtesy of AMERICAN HONDA MOTOR CO., INC.

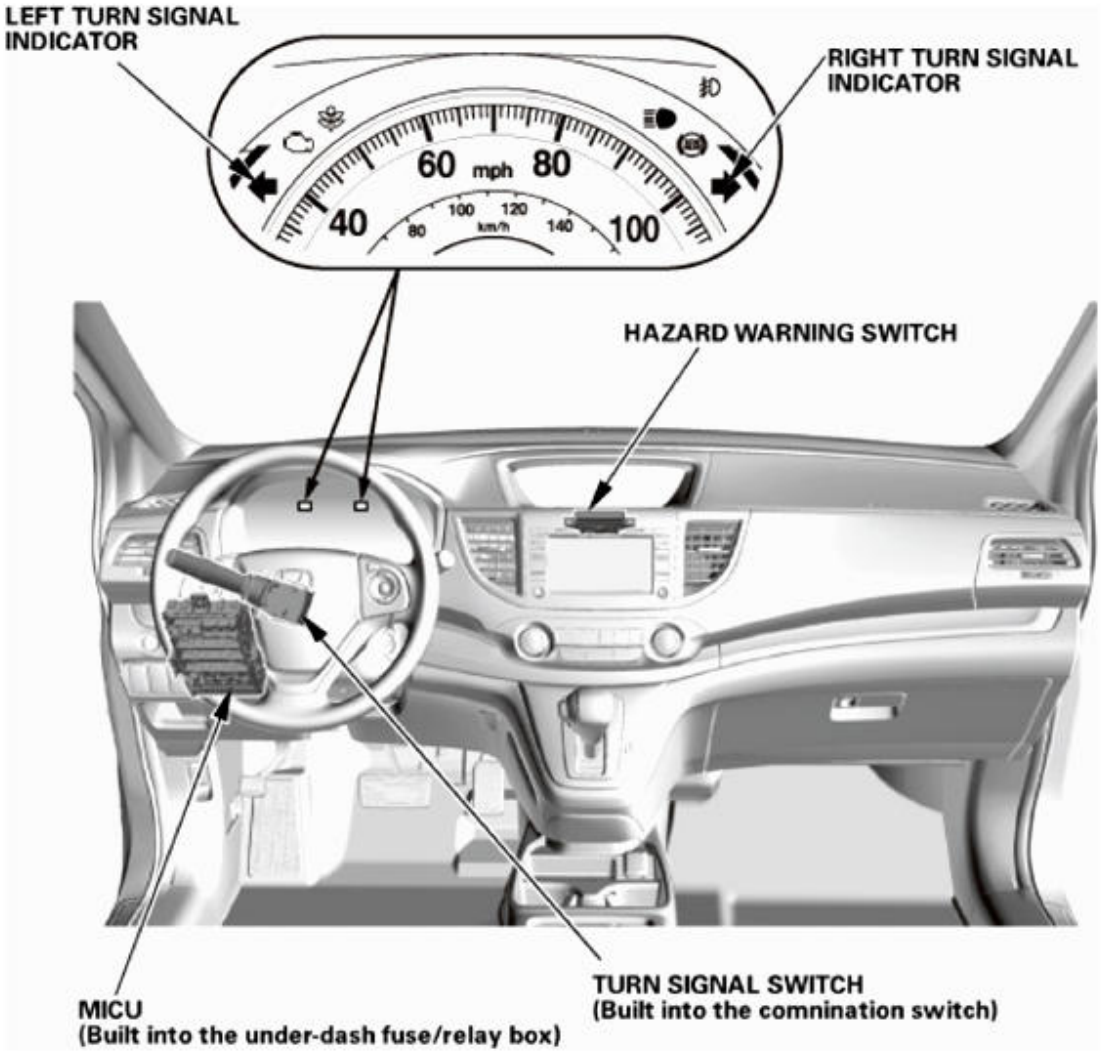

Fig. 104: Identifying Turn Signal/Hazard Warning Lights Component Location (3 Of 3)
Courtesy of AMERICAN HONDA MOTOR CO., INC.

FRONT TURN SIGNAL LIGHT BULB	**Removal and Installation** See **EXTERIOR LIGHTS BULB REMOVAL AND INSTALLATION - FOG LIGHT**, **EXTERIOR LIGHTS BULB REMOVAL AND INSTALLATION - HEADLIGHT HOUSING** or **EXTERIOR LIGHTS BULB REMOVAL AND INSTALLATION - TAILLIGHT HOUSING**
HAZARD WARNING SWITCH	**REMOVAL, INSTALLATION, AND TEST**
MICU (Built into the under-dash fuse/relay box)	**INPUT TEST**
	REMOVAL AND INSTALLATION
REAR TURN SIGNAL LIGHT	**Removal and Installation** See **EXTERIOR LIGHTS BULB REMOVAL AND INSTALLATION - FOG LIGHT**, **EXTERIOR LIGHTS BULB REMOVAL AND INSTALLATION - HEADLIGHT HOUSING** or **EXTERIOR LIGHTS**

GETtheMANUALS.org

BULB	**BULB REMOVAL AND INSTALLATION - TAILLIGHT HOUSING**
TURN SIGNAL SWITCH (Built into the combination switch)	**REMOVAL, INSTALLATION, AND TEST**

AUTOMATIC LIGHTING/SUNLIGHT SENSOR INPUT TEST

NOTE:

- **Before testing, check for DTCs. If any DTCs are indicated, troubleshoot those DTCs first.**
- **Before testing, make sure the No. A29 (10 A) fuse in the under-hood fuse/relay box is OK.**

1. Turn the ignition switch to LOCK (0).
2. **DISCONNECT THE AUTOMATIC LIGHTING/SUNLIGHT SENSOR 7P CONNECTOR**.

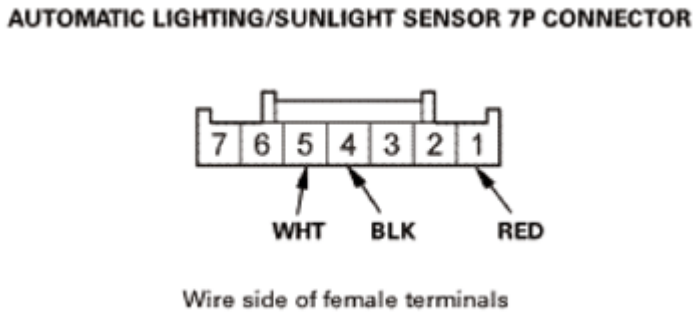

Fig. 105: Identifying Automatic Lighting/Sunlight Sensor 7P Connector Terminals
Courtesy of AMERICAN HONDA MOTOR CO., INC.

3. Inspect the connector and socket terminals to be sure they are all making good contact:
   - If the terminals are bent, loose, or corroded, repair them as necessary, and recheck the system.
   - If the terminals are OK, go to step **4** .
4. With the connector still disconnected, do the following input tests:
   - If any test indicates a problem, find and correct the cause, then recheck the system.
   - If all the input tests prove OK, go to step **5** .

Cavity	Wire	Test condition	Test: Desired result	Possible cause if desired result is not obtained
5	WHT	Disconnect under-dash fuse/relay box connector T (20P)	Check for continuity between terminal No. 5 and under-dash fuse/relay box connector T (20P) terminal No. 2: There should be continuity.	An open or high resistance in the wire

GETtheMANUALS.org

5. Reconnect the connector to the automatic lighting/sunlight sensor, do the following input tests:
   - If any test indicates a problem, find and correct the cause, then recheck the system.
   - If all the input tests prove OK, **REPLACE THE AUTOMATIC LIGHTING/SUNLIGHT SENSOR**.

Cavity	Wire	Test condition	Test: Desired result	Possible cause if desired result is not obtained
1	RED	Under all conditions	Measure the voltage to ground: There should be battery voltage.	• Blown No. A29 (10 A) fuse in the under-hood fuse/relay box • Faulty under-dash fuse/relay box • An open or high resistance in the wire
4	BLK	In all ignition switch positions	Measure the voltage to ground: There should be less than 0.2 V.	• Poor ground (G502) • An open or high resistance in the ground wire

GETtheMANUALS.org

BUMPERS COMPONENT LOCATION INDEX

FRONT

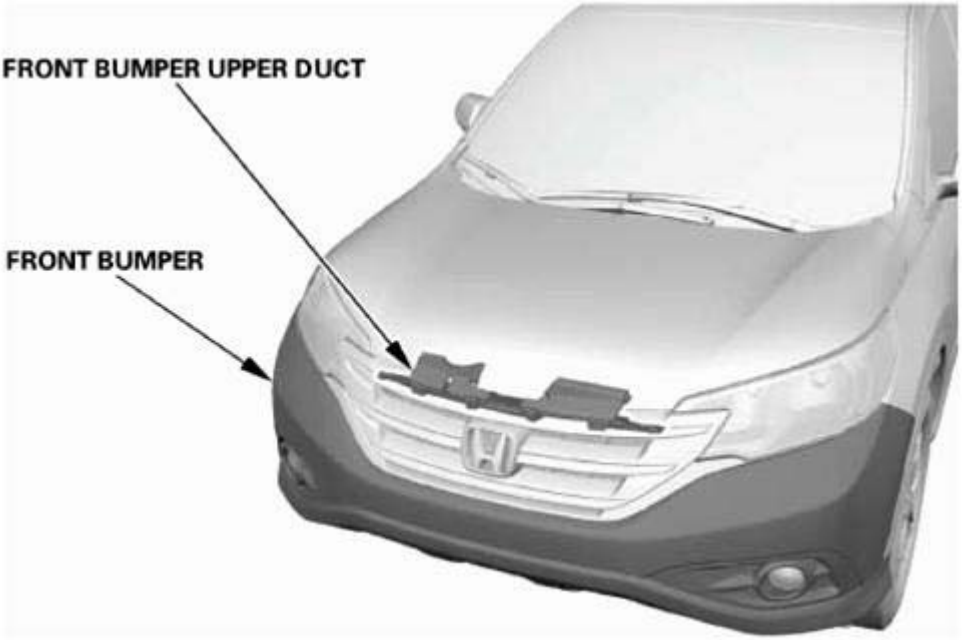

Fig. 1: Identifying Front Bumper And Front Bumper Upper Duct
Courtesy of AMERICAN HONDA MOTOR CO., INC.

FRONT BUMPER	**Removal and Installation** See **FRONT BUMPER DISASSEMBLY AND REASSEMBLY** or **FRONT BUMPER REMOVAL AND INSTALLATION**
FRONT BUMPER	**Disassembly and Reassembly** See **FRONT BUMPER DISASSEMBLY AND REASSEMBLY** or **FRONT BUMPER REMOVAL AND INSTALLATION**
FRONT BUMPER UPPER DUCT	**REMOVAL AND INSTALLATION**

REAR

GETtheMANUALS.org

Fig. 2: Identifying Rear Bumper And Rear Bumper Refractor
Courtesy of AMERICAN HONDA MOTOR CO., INC.

REAR BUMPER	**Removal and Installation** See **REAR BUMPER DISASSEMBLY AND REASSEMBLY** or **REAR BUMPER REMOVAL AND INSTALLATION**
REAR BUMPER	**Disassembly and Reassembly** See **REAR BUMPER DISASSEMBLY AND REASSEMBLY** or **REAR BUMPER REMOVAL AND INSTALLATION**
REAR BUMPER REFRACTOR	**Removal and Installation** See **REAR BUMPER DISASSEMBLY AND REASSEMBLY** or **REAR BUMPER REMOVAL AND INSTALLATION**

COWL COVER REMOVAL AND INSTALLATION

REMOVAL

1. Both Windshield Wiper Arm Assemblies

NOTE: **Set the wiper arms to the auto-stop position before removal.**

1. Remove the caps (A) and nuts (B).
2. Remove the wiper arms (C).

GETtheMANUALS.org

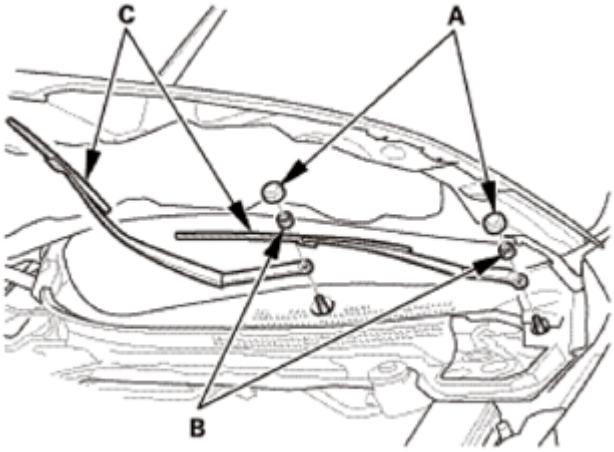

Fig. 3: Identifying Wiper Arms With Caps And Nuts
Courtesy of AMERICAN HONDA MOTOR CO., INC.

2. Front Fender Trim - Both Sides

NOTE: Repeat on the opposite side.

1. Remove the clips (A, B).
2. Pull up the front fender trim (C) by hand to detach the clips (D), then remove the trim.

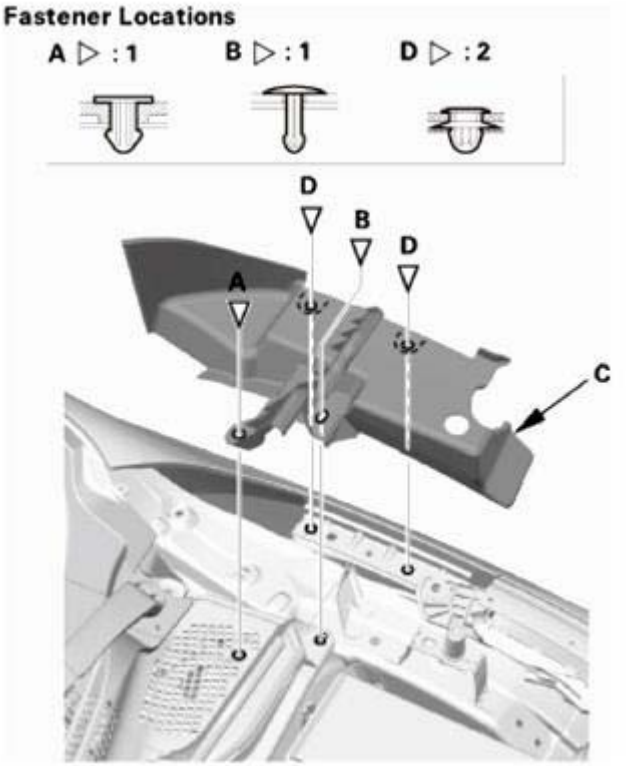

Fig. 4: Identifying Front Fender Trim And Clips

GETtheMANUALS.org

Courtesy of AMERICAN HONDA MOTOR CO., INC.

3. Cowl Top Cover - Both Sides

NOTE: Repeat this procedure on the opposite side.

1. Remove the clip (A).
2. Pull out the hood rear seal (B).
3. Detach the hooks, and remove the cowl top cover (C).

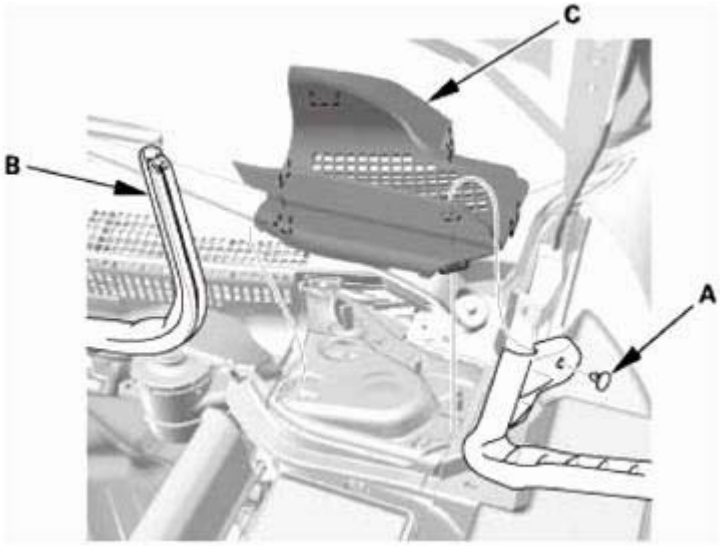

Fig. 5: Identifying Hood Rear Seal, Cowl Top Cover And Clip
Courtesy of AMERICAN HONDA MOTOR CO., INC.

4. Side Cowl Cover - Both Sides

NOTE: Repeat on the opposite side.

1. Detach the hook (A) at the inside of the cowl cover (B).
2. Release the hooks (C) from the cowl cover and the front fender (D), then remove the side cowl cover (E).
3. Right side; Detach the windshield washer tube.

GETtheMANUALS.org

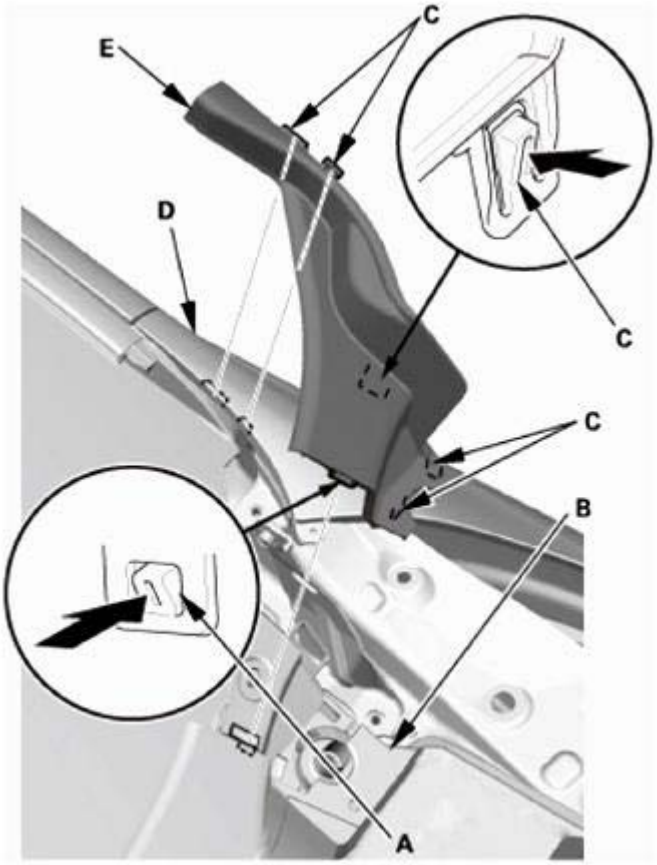

Fig. 6: Releasing Hooks From Cowl Cover And Front Fender
Courtesy of AMERICAN HONDA MOTOR CO., INC.

5. Center Cowl Cover
    1. Remove the clips (A).
    2. Carefully pull the center cowl cover (B) forward to release the hooks (C) from the windshield and the body.

GETtheMANUALS.org

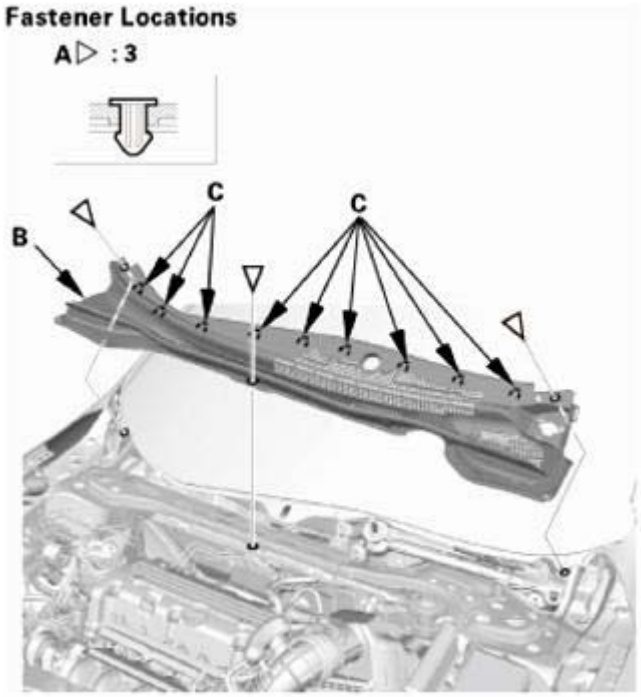

Fig. 7: Identifying Center Cowl Cover, Hooks And Clips
Courtesy of AMERICAN HONDA MOTOR CO., INC.

6. Under-Cowl Panel
    1. Disconnect the connector (A).
    2. Remove the bolts and the nuts, then remove the under-cowl panel (B).
    3. Remove the wire harness (C) from the under-cowl panel.

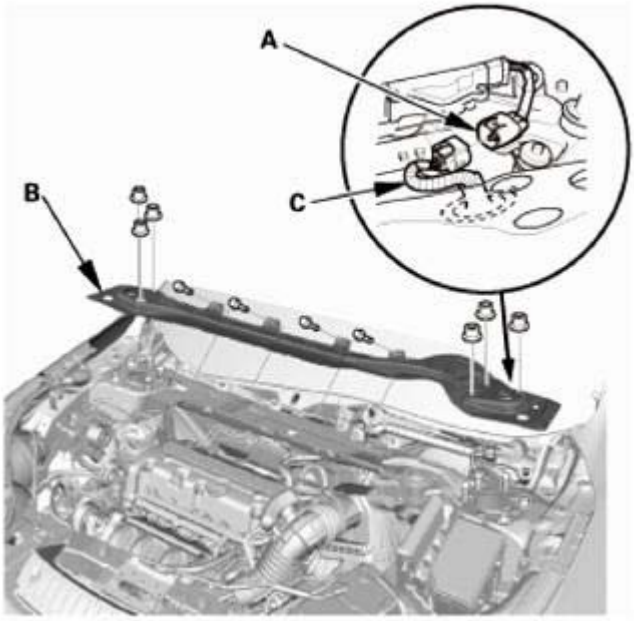

GETtheMANUALS.org

Fig. 8: Identifying Wire Harness, Under-Cowl Panel And Connector
Courtesy of AMERICAN HONDA MOTOR CO., INC.

INSTALLATION

1. Under-Cowl Panel
    1. Install the under-cowl panel (A), then install the bolts and the nuts.
    2. Install the wire harness (B) to the under-cowl panel.
    3. Connect the connector (C).

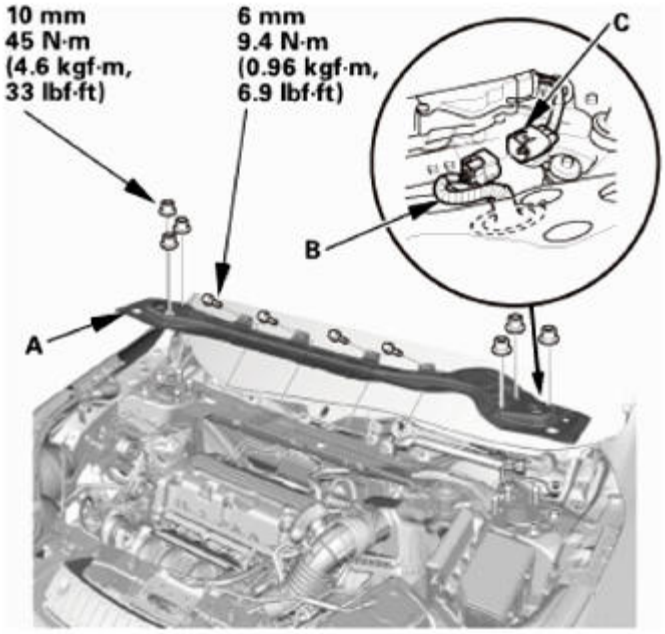

Fig. 9: Identifying Wire Harness, Under-Cowl Panel And Connector
Courtesy of AMERICAN HONDA MOTOR CO., INC.

2. Center Cowl Cover
    1. Install the center cowl cover (A). Make sure the clips (B) and the hooks (C) snap into place securely.

GETtheMANUALS.org

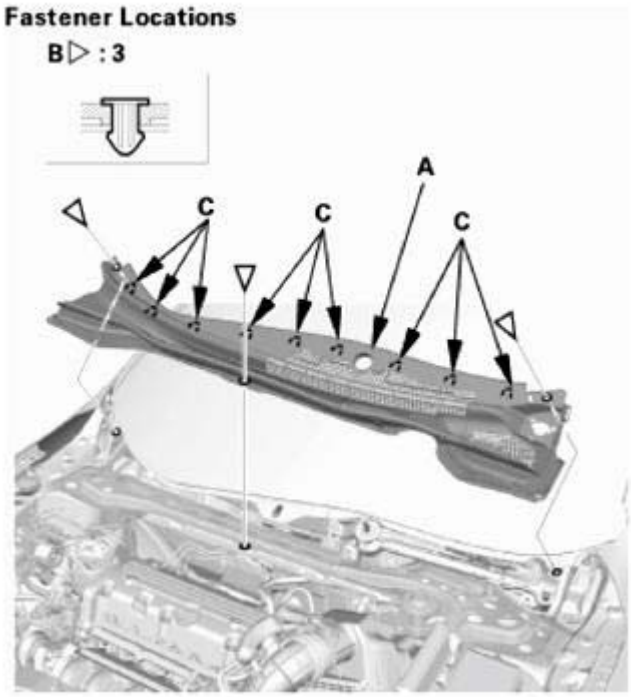

Fig. 10: Identifying Center Cowl Cover, Hooks And Clips
Courtesy of AMERICAN HONDA MOTOR CO., INC.

3. Side Cowl Cover - Both Sides

NOTE: Repeat on the opposite side.

1. Install the side cowl cover (A). Make sure the hooks (B) snap into place securely.
2. Right side; Install the windshield washer tube.

GETtheMANUALS.org

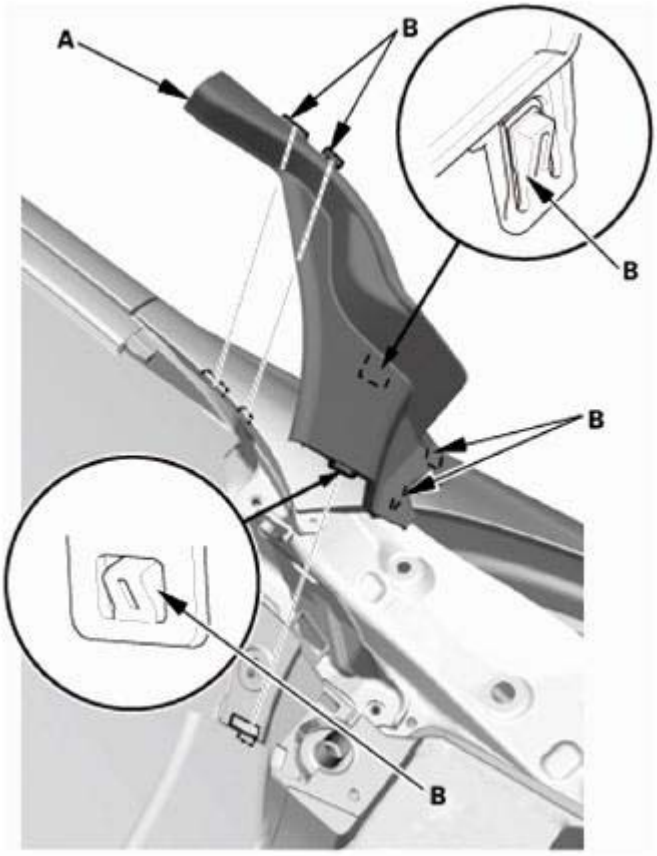

Fig. 11: Identifying Side Cowl Cover And Hooks
Courtesy of AMERICAN HONDA MOTOR CO., INC.

4. Cowl Top Cover - Both Sides

NOTE: Repeat this procedure on the opposite side.

1. Install the cowl top cover (A).
2. Install the hood rear seal (B).
3. Install the clip (C).

GETtheMANUALS.org

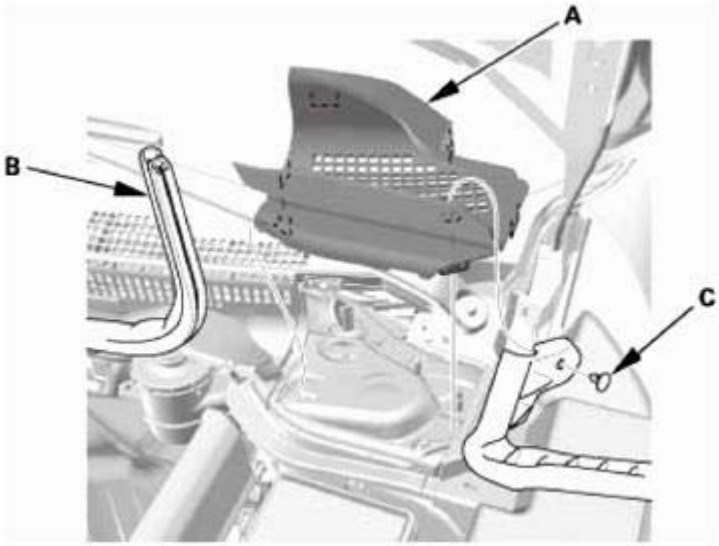

Fig. 12: Identifying Hood Rear Seal, Cowl Top Cover And Clip
Courtesy of AMERICAN HONDA MOTOR CO., INC.

5. Front Fender Trim - Both Sides

NOTE: Repeat on the opposite side.

1. Install the front fender trim (A), then install the clips (B, C). Make sure the clips (D) snap into place securely.

GETtheMANUALS.org

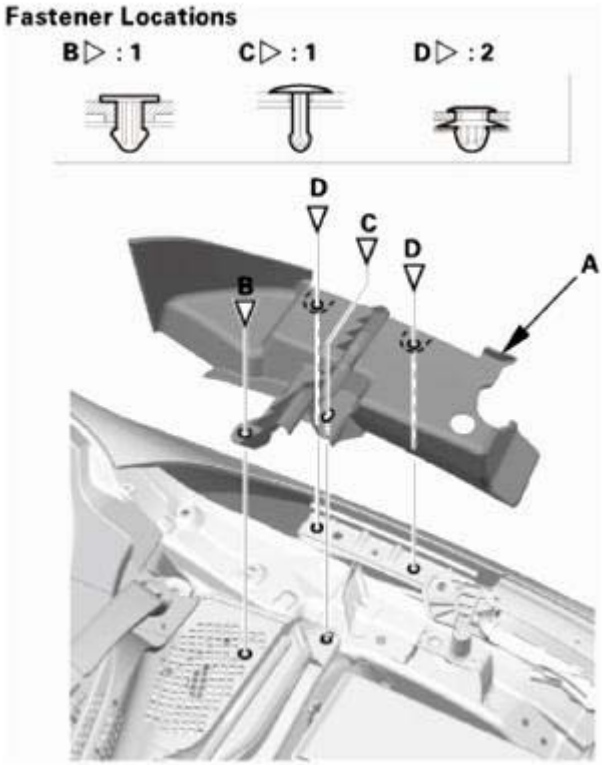

Fig. 13: Identifying Front Fender Trim And Clips
Courtesy of AMERICAN HONDA MOTOR CO., INC.

6. Both Windshield Wiper Arm Assemblies

NOTE: Set the wiper arms to the auto-stop position before installation.

1. Install the wiper arms (A), the nut (B), and the caps (C).

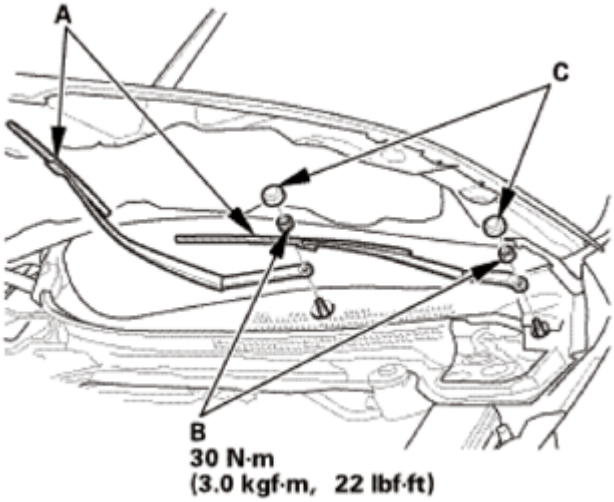

Fig. 14: Identifying Wiper Arms, Nut And Caps With Torque Specification

GETtheMANUALS.org

Courtesy of AMERICAN HONDA MOTOR CO., INC.

7. Windshield Wiper Arm - Adjustment
    1. **Adjust the windshield wiper arms** See **WIPER ARM REMOVAL AND INSTALLATION** or **WIPER ARM/NOZZLE ADJUSTMENT** .

EMBLEM/STICKER REMOVAL AND INSTALLATION

REMOVAL

1. Front Emblem
    1. To remove the front "H" emblem, remove the front grille.

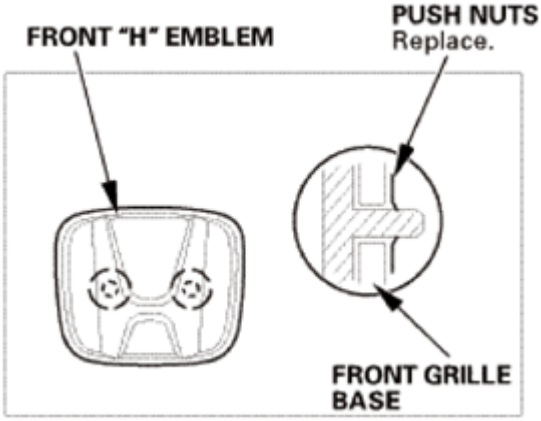

Fig. 15: Identifying Front "H" Emblem, Front Grille And Front Grill Base
Courtesy of AMERICAN HONDA MOTOR CO., INC.

    2. Remove the front emblems.
2. Rear Emblem/Sticker
    1. To remove the rear "H" emblem, remove the rear license trim.

GETtheMANUALS.org

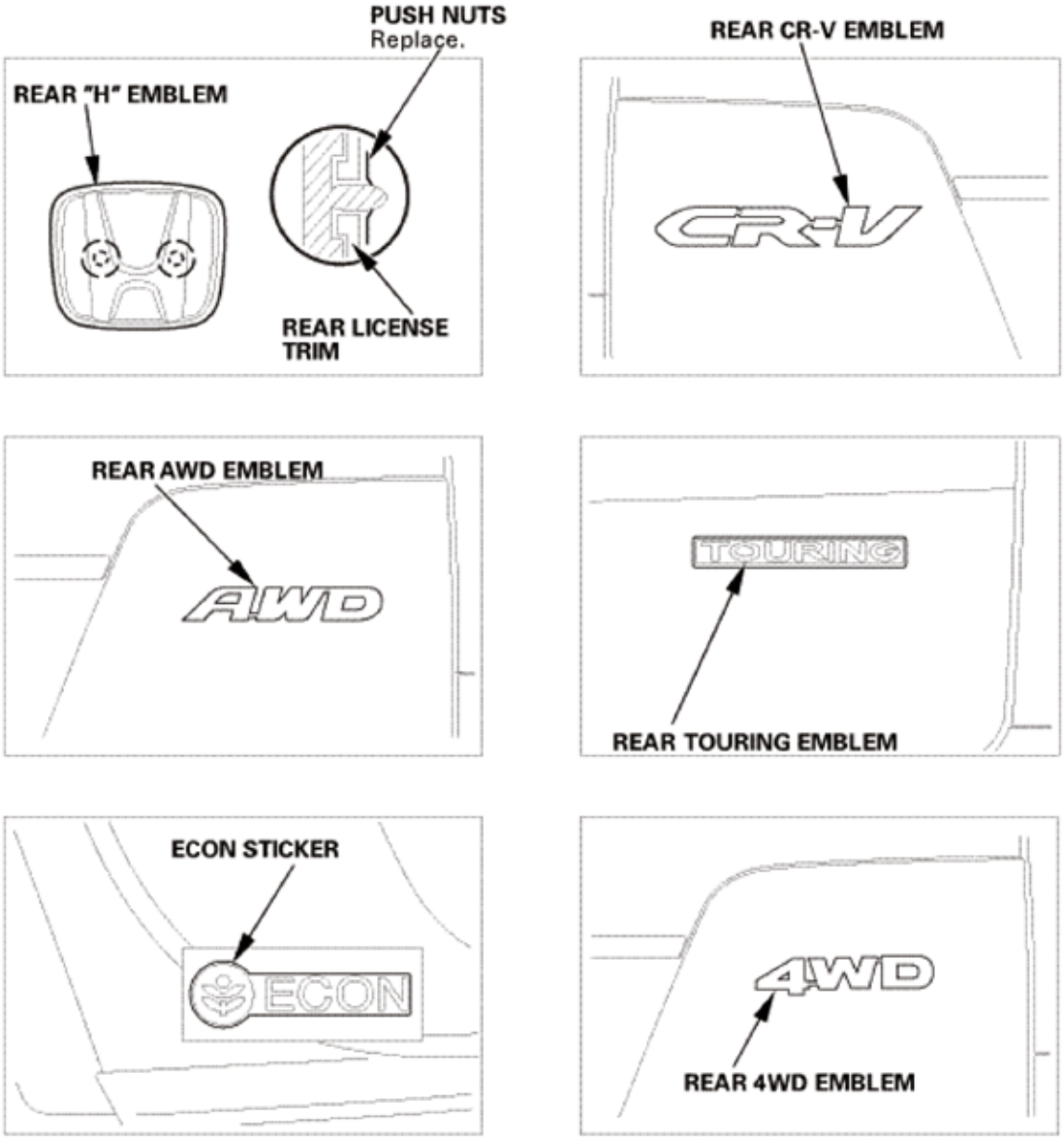

Fig. 16: Identifying Rear Emblem And Sticker
Courtesy of AMERICAN HONDA MOTOR CO., INC.

2. Remove the rear emblem/sticker.

INSTALLATION

1. Rear Emblem/Sticker
    1. Clean the body surface with a shop towel dampened with isopropyl alcohol. After cleaning, keep oil, grease, and water from getting on the surface.

GETtheMANUALS.org

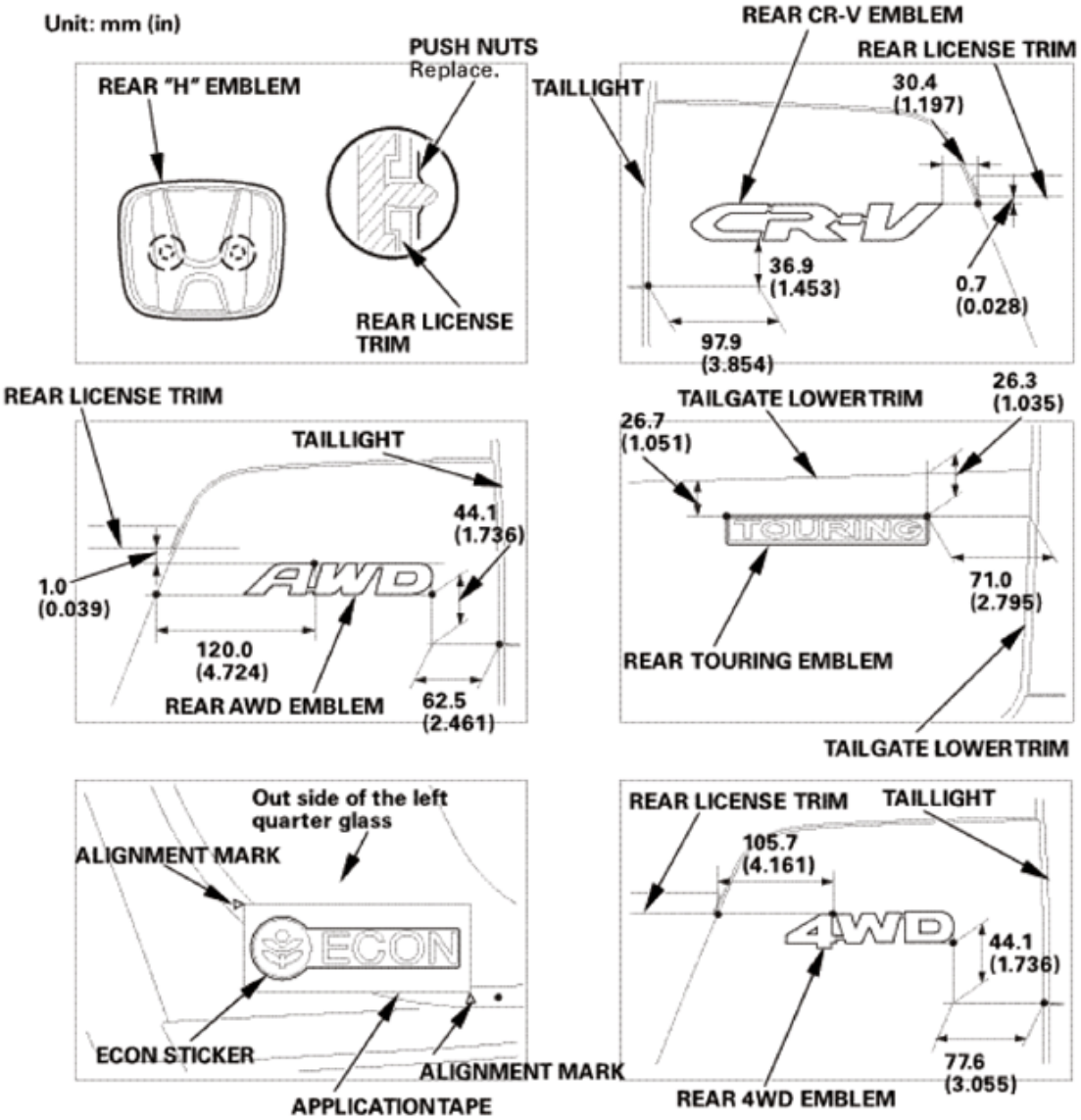

Fig. 17: Identifying Rear Emblem And Sticker Installation Dimension
Courtesy of AMERICAN HONDA MOTOR CO., INC.

2. Install the rear emblem/sticker.
3. After installing the rear "H" emblem, install the rear license trim.

2. Front Emblem
   1. Clean the body surface with a shop towel dampened with isopropyl alcohol. After cleaning, keep oil, grease, and water from getting on the surface.

GETtheMANUALS.org

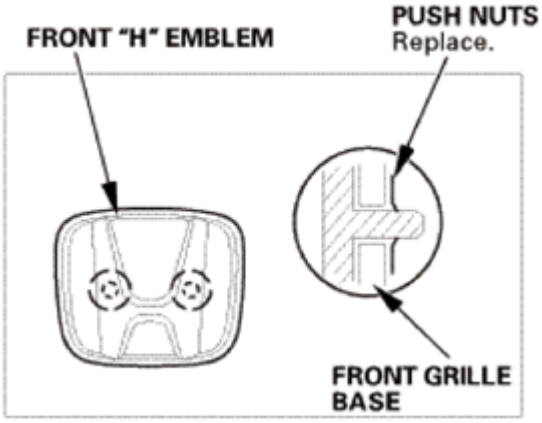

Fig. 18: Identifying Front "H" Emblem, Front Grille And Front Grill Base
Courtesy of AMERICAN HONDA MOTOR CO., INC.

2. Install the front emblems.
3. After installing the front "H" emblem, install the front grille.

FRONT BUMPER DISASSEMBLY AND REASSEMBLY

DISASSEMBLY

1. Front Grille Lower Trim
    1. Remove the clips (A) and the screws (B) securing the front grille lower trim (C).
    2. Detach the hooks (D), then remove the front grille lower trim.

GETtheMANUALS.org

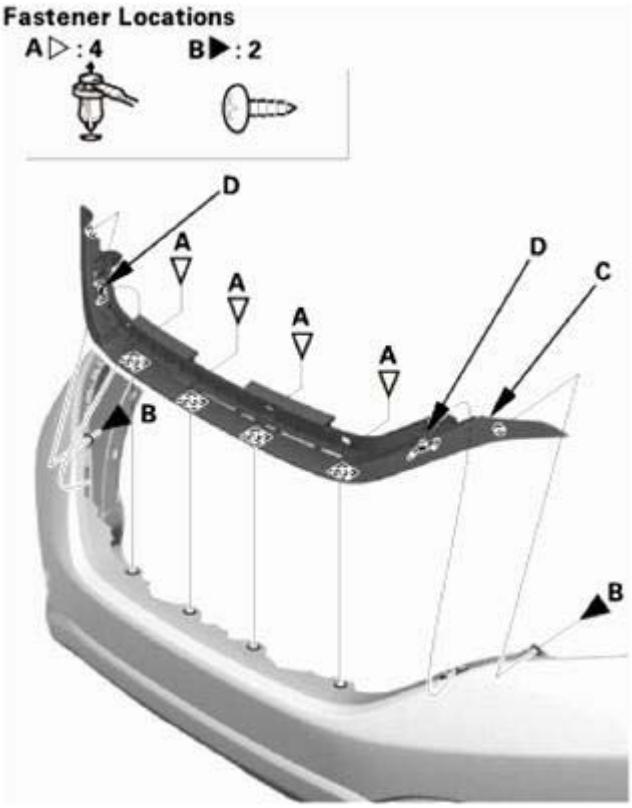

Fig. 19: Identifying Front Grille Lower Trim, Hooks, Clips And Screws
Courtesy of AMERICAN HONDA MOTOR CO., INC.

2. Fog Light Bracket (With Fog Light) - Both Sides
    1. Remove the screws (A) and the clip (B), then remove the fog light bracket (C). Repeat this step on the opposite side.

GETtheMANUALS.org

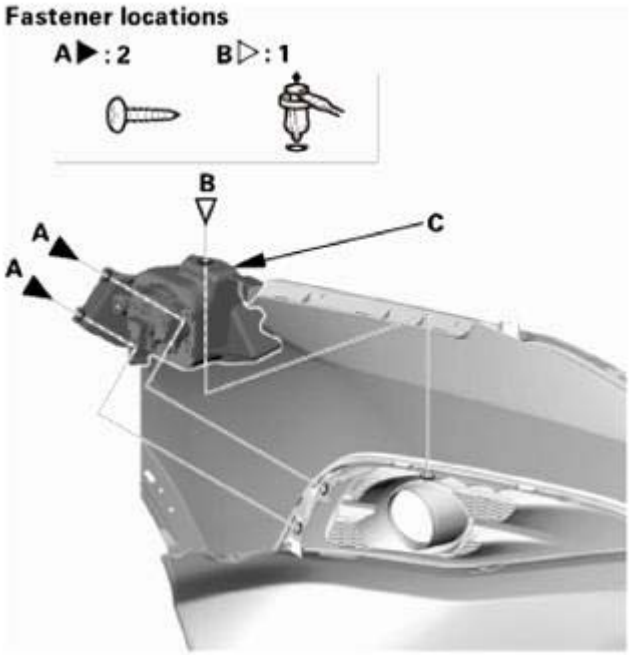

Fig. 20: Identifying Fog Light Bracket, Screws And Clip
Courtesy of AMERICAN HONDA MOTOR CO., INC.

3. Front Bumper Face
    1. Remove the clips (A) and detach the hooks (B), then separate the front bumper upper face (C) and the front bumper lower face (D).

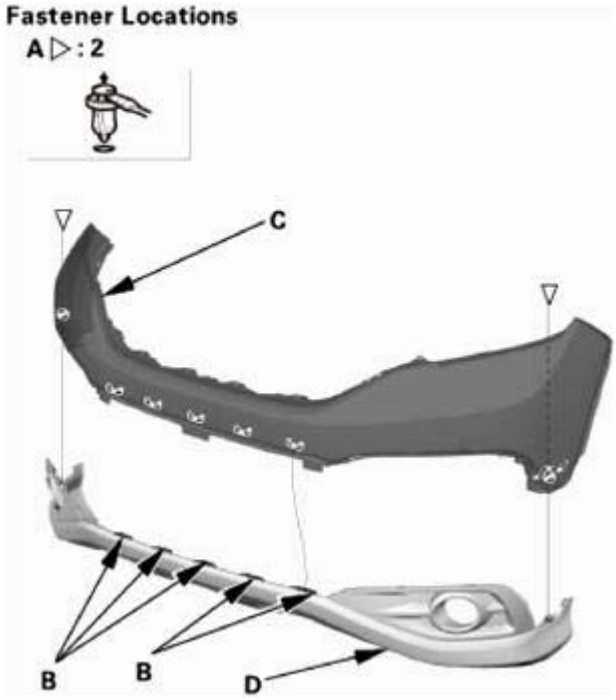

Fig. 21: Identifying Clips, Hooks, Front Bumper Upper Face And Lower Face

GETtheMANUALS.org

Courtesy of AMERICAN HONDA MOTOR CO., INC.

REASSEMBLY

1. Front Bumper Face
    1. Reassemble the front bumper upper face (A) and the front bumper lower face (B), then install the clips (C). Make sure the clips and the hooks (D) snap into place securely.

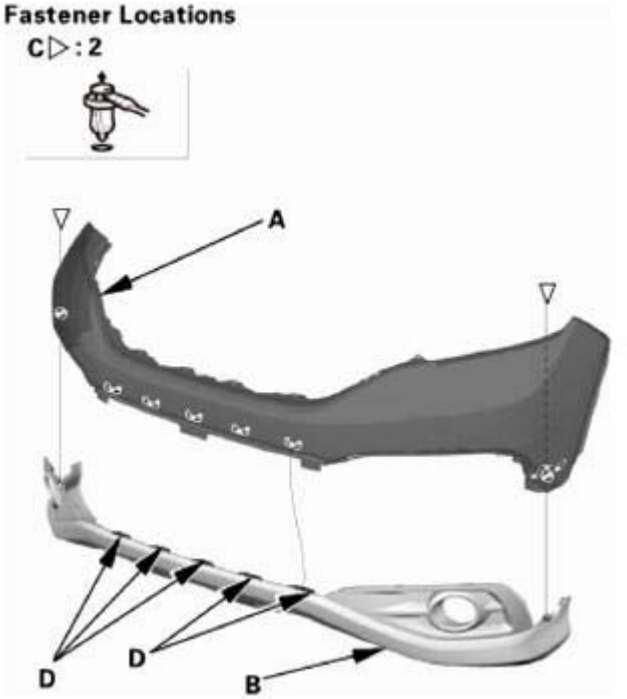

Fig. 22: Identifying Clips, Hooks, Front Bumper Upper Face And Lower Face
Courtesy of AMERICAN HONDA MOTOR CO., INC.

2. Fog Light Bracket (With Fog Light) - Both Sides

NOTE: Repeat on the opposite side.

1. Install the fog light bracket (A).
2. Install the screws (B) and the clip (C).

GETtheMANUALS.org

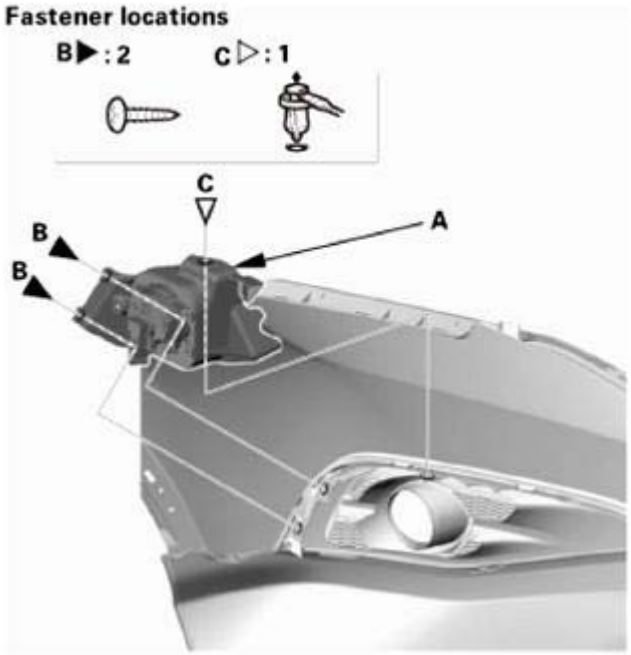

Fig. 23: Identifying Fog Light Bracket, Screws And Clip
Courtesy of AMERICAN HONDA MOTOR CO., INC.

3. Front Grille Lower Trim
    1. Install the front grille lower trim (A), then install the clips (B) and the screws (C). Make sure the clips and the hooks (D) snap into place securely.

GETtheMANUALS.org

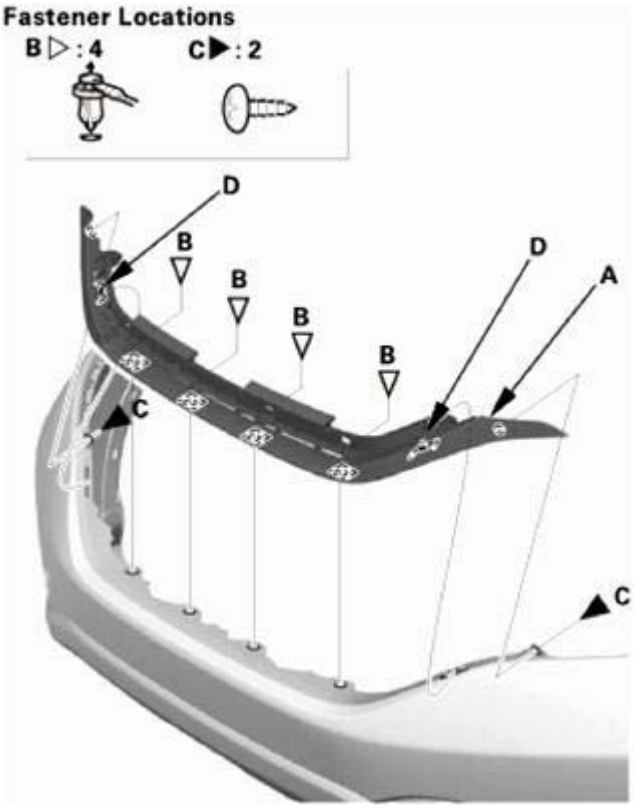

Fig. 24: Identifying Front Grille Lower Trim, Hooks, Clips And Screws
Courtesy of AMERICAN HONDA MOTOR CO., INC.

FRONT BUMPER REMOVAL AND INSTALLATION

REMOVAL

1. Front Grille
    1. Apply protective tape (A) to the front grille lower trim (B).

GETtheMANUALS.org

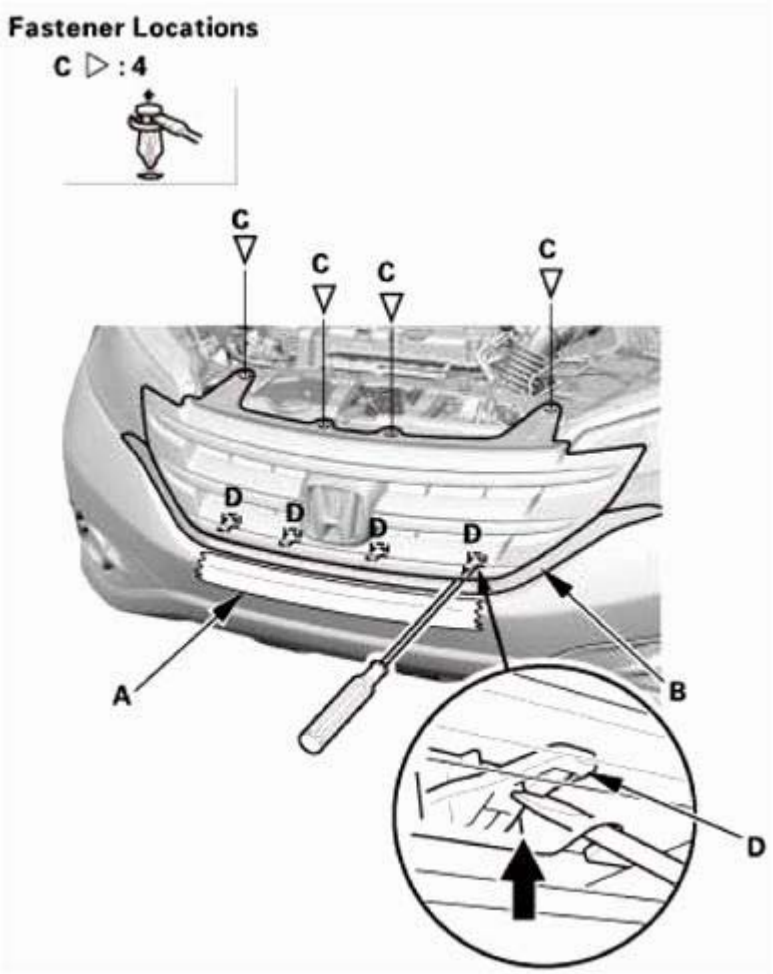

Fig. 25: Applying Protective Tape To Front Grille Lower Trim
Courtesy of AMERICAN HONDA MOTOR CO., INC.

2. Remove the clips (C) and detach the hooks (D).
3. Insert a shop towel (A) between the front grille (B) and the front grille lower trim (C).

GETtheMANUALS.org

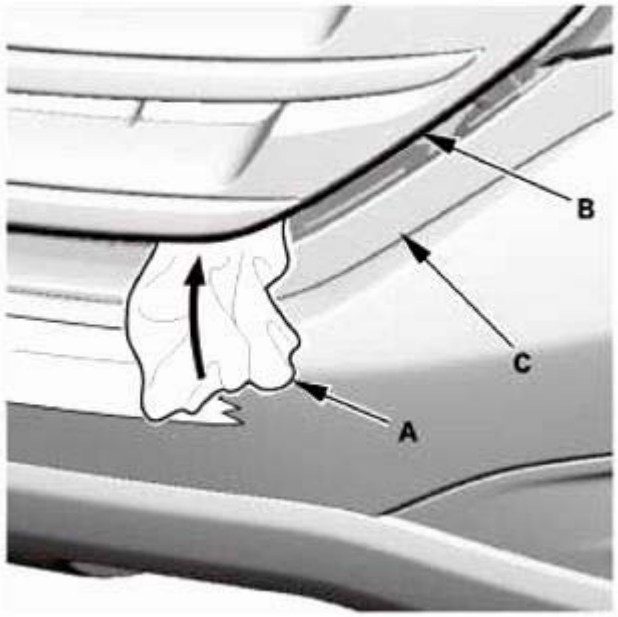

Fig. 26: Inserting Shop Towel Between Front Grille And Front Grille Lower Trim
Courtesy of AMERICAN HONDA MOTOR CO., INC.

4. Insert a flat-tip screwdriver (A) into the opening at the front grille (B), then turn the screwdriver to detach the clip (C).

NOTE: Repeat this procedure on the opposite side.

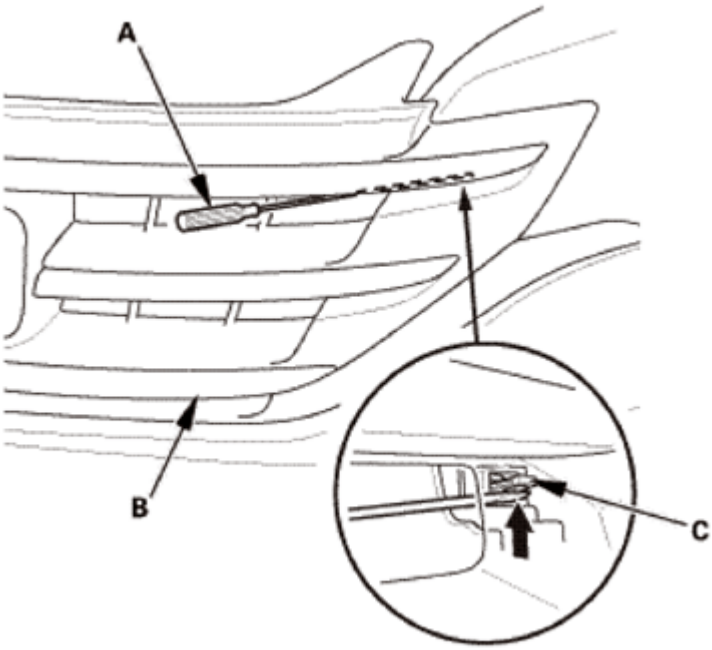

Fig. 27: Inserting Flat-Tip Screwdriver Into Opening At Front Grille
Courtesy of AMERICAN HONDA MOTOR CO., INC.

GETtheMANUALS.org

5. Remove the front grille (A).

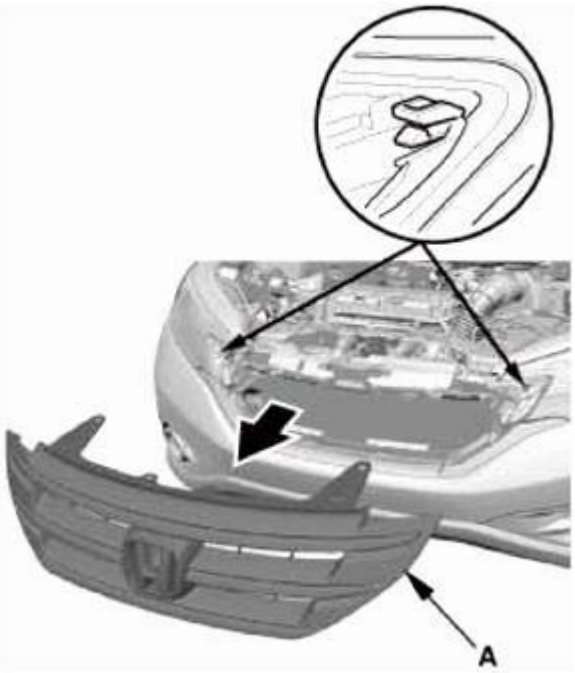

Fig. 28: Removing Front Grille
Courtesy of AMERICAN HONDA MOTOR CO., INC.

2. Front Wheel Arch Protector Front Side As Needed - Both Sides

NOTE: Repeat on the opposite side.

1. Remove the screws (A) and the clips (B) securing the front wheel arch protector (C).
2. Carefully pry out the clip portions of the wheel arch protector with the appropriate trim tool to detach the clips (D, E), then detach the wheel arch protector front side as needed.
3. Put a shop towel (F) in the opening between the front wheel arch protector and the front fender.

GETtheMANUALS.org

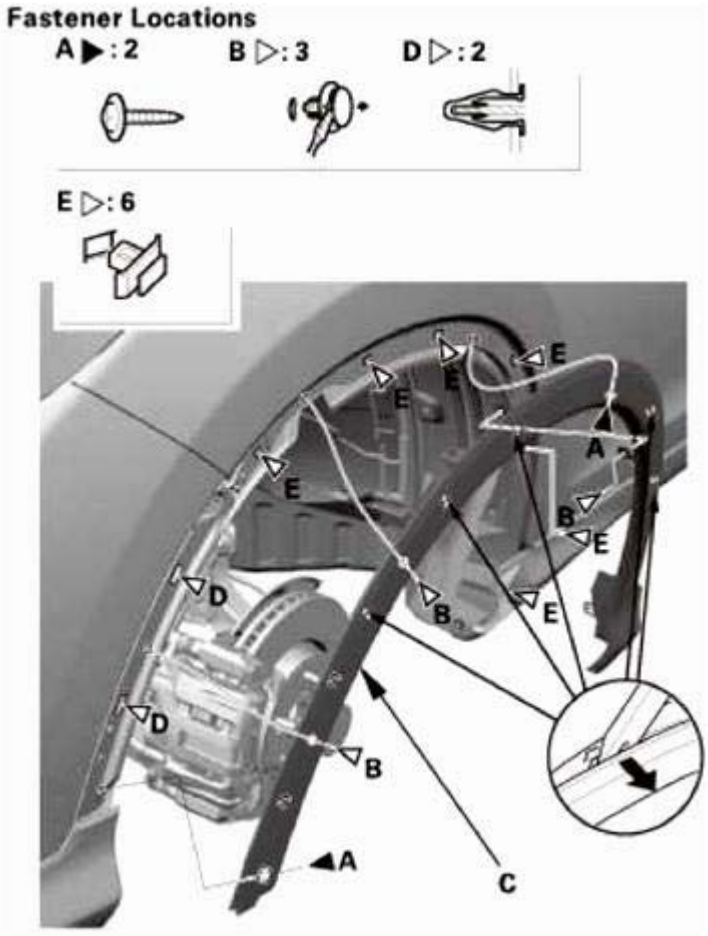

Fig. 29: Prying Out Clip Portions Of Wheel Arch Protector With Appropriate Trim Tool
Courtesy of AMERICAN HONDA MOTOR CO., INC.

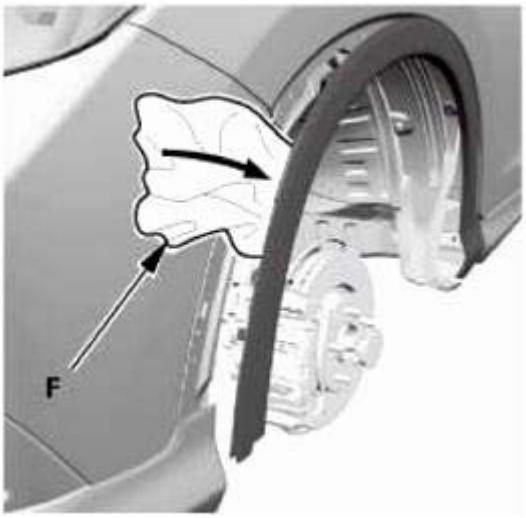

Fig. 30: Putting Shop Towel In Opening Between Front Wheel Arch Protector And Front Fender

GETtheMANUALS.org

Courtesy of AMERICAN HONDA MOTOR CO., INC.

3. Front Bumper
    1. Remove the screws (A), the bolts (B), and the clips (C) securing the front bumper (D).

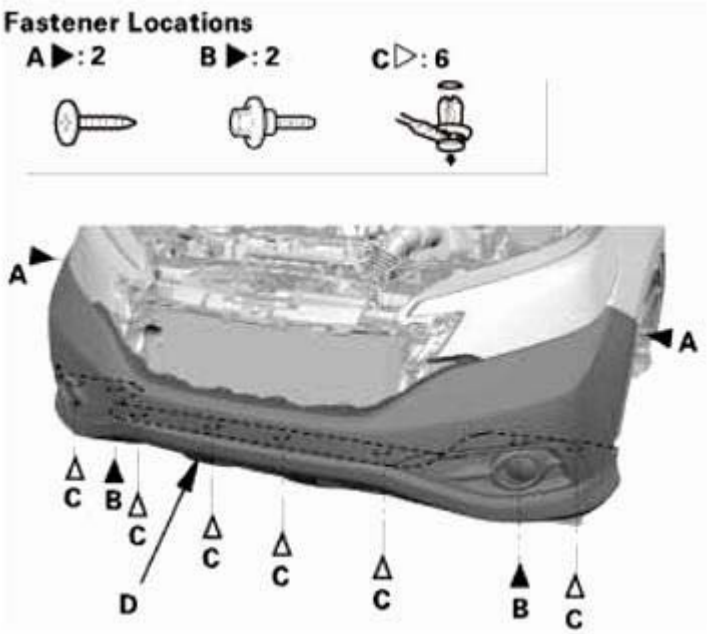

Fig. 31: Identifying Front Bumper, Screws, Bolts And Clips
Courtesy of AMERICAN HONDA MOTOR CO., INC.

    2. Pull out the front bumper (A) from the side spacer (B). Repeat this step on the opposite side.

Fig. 32: Pulling Out Front Bumper From Side Spacer

GETtheMANUALS.org

Courtesy of AMERICAN HONDA MOTOR CO., INC.

3. Detach the clip (A). Repeat this 3 on the opposite side.

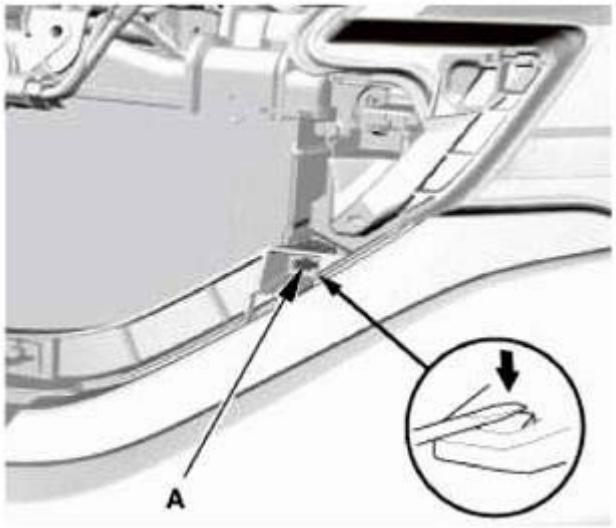

Fig. 33: Detaching Clip
Courtesy of AMERICAN HONDA MOTOR CO., INC.

4. With the help of an assistant, pull out both sides of the front bumper (A) from the upper beam (B).

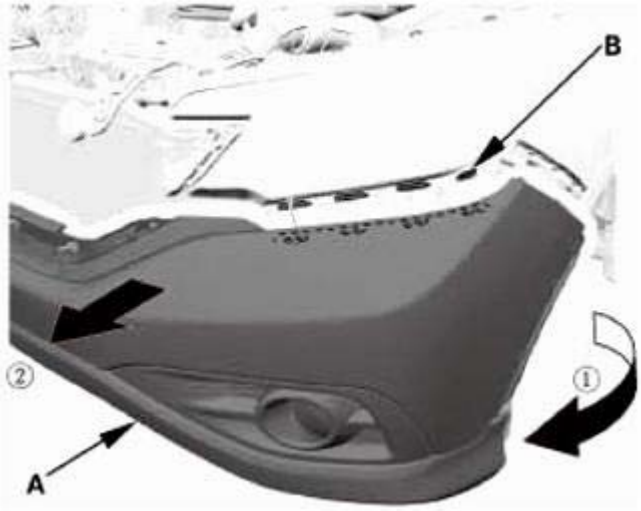

Fig. 34: Pulling Out Front Bumper From Upper Beam
Courtesy of AMERICAN HONDA MOTOR CO., INC.

5. With the help of an assistant, disconnect the connectors (A), then remove the front bumper (B).

GETtheMANUALS.org

Fig. 35: Identifying Front Bumper And Connectors
Courtesy of AMERICAN HONDA MOTOR CO., INC.

INSTALLATION

1. Front Bumper
    1. With the help of an assistant, connect the connectors (A), then install the front bumper (B).

Fig. 36: Identifying Front Bumper And Connectors
Courtesy of AMERICAN HONDA MOTOR CO., INC.

2. With the help of an assistant, install both sides of the front bumper (A) to the upper beam (B).

GETtheMANUALS.org

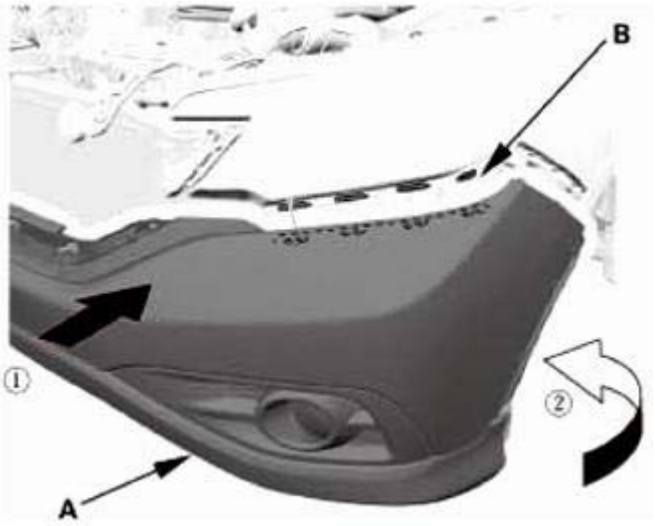

Fig. 37: Installing Front Bumper To Upper Beam
Courtesy of AMERICAN HONDA MOTOR CO., INC.

3. Push the front bumper (A) until the clip (B) snaps into place. Repeat this step on the opposite side.

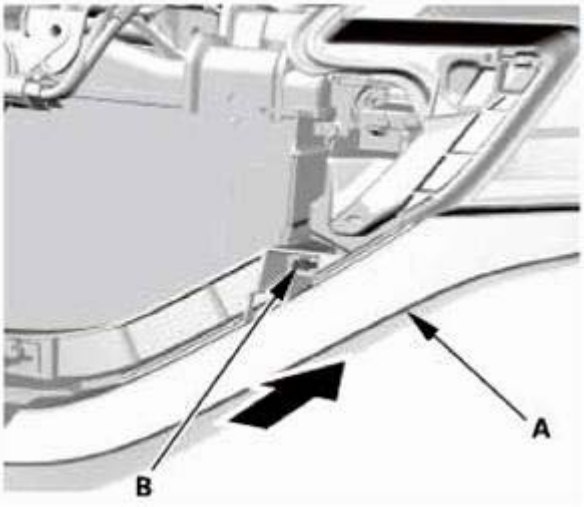

Fig. 38: Pushing Front Bumper With Clip
Courtesy of AMERICAN HONDA MOTOR CO., INC.

4. Install the front bumper (A) to the side spacer (B). Repeat this step on the opposite side.

GETtheMANUALS.org

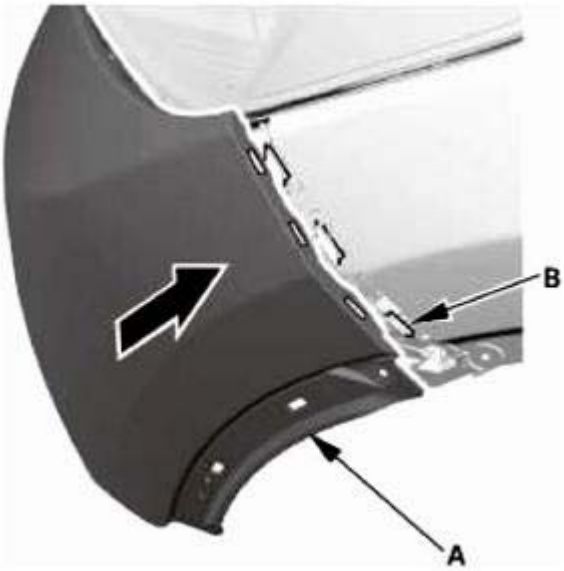

Fig. 39: Installing Front Bumper To Side Spacer
Courtesy of AMERICAN HONDA MOTOR CO., INC.

5. Install the screws (A), the bolts (B), and the clips (C) securing the front bumper (D).

Fig. 40: Identifying Front Bumper, Screws, Bolts And Clips With Torque Specification
Courtesy of AMERICAN HONDA MOTOR CO., INC.

2. Front Wheel Arch Protector Front Side As Needed - Both Sides
    1. Install the front wheel arch protector (A), then install the screws (B) and the clips (C). Make sure

GETtheMANUALS.org

the clips (D, E) snap into place securely. Repeat this step on the opposite side.

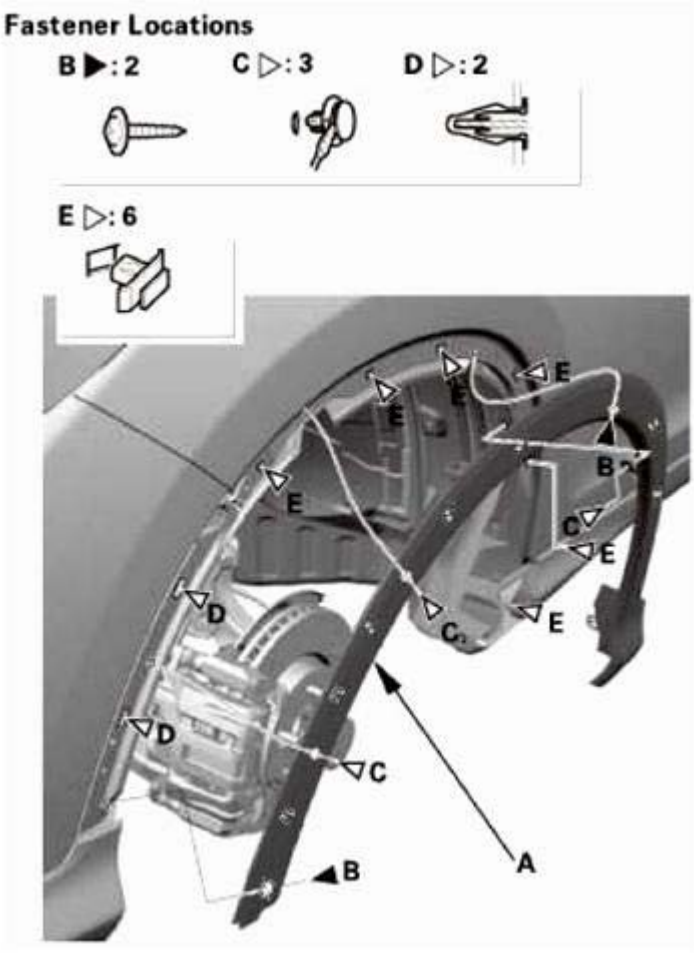

Fig. 41: Identifying Front Wheel Arch Protector, Screws And Clips
Courtesy of AMERICAN HONDA MOTOR CO., INC.

3. Front Grille
    1. Install the front grille (A) by pushing on the clip areas clips snap into place.
    2. Install the clips (B).

GETtheMANUALS.org

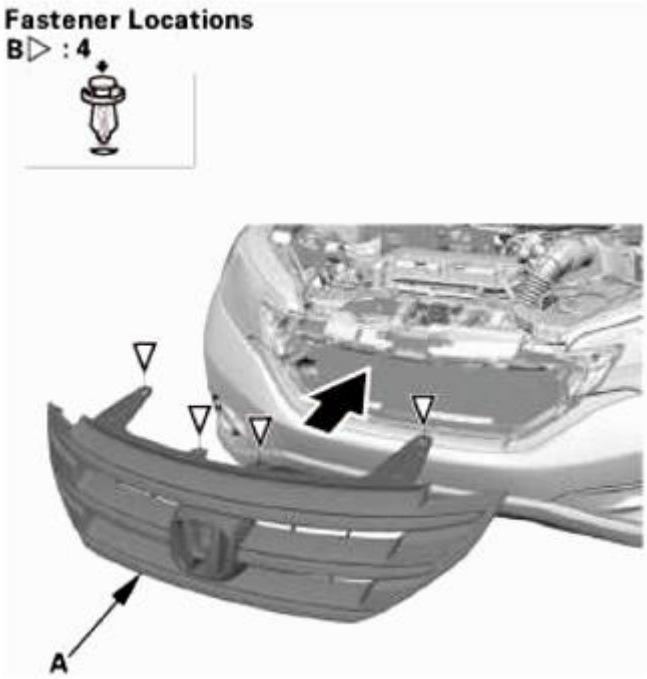

Fig. 42: Installing Front Grille
Courtesy of AMERICAN HONDA MOTOR CO., INC.

FRONT FENDER FAIRING REMOVAL AND INSTALLATION

REMOVAL

1. Vehicle Lift
    1. Raise the vehicle on a lift, and make sure it is securely supported.
2. Front Wheel
    1. Remove the front wheel.

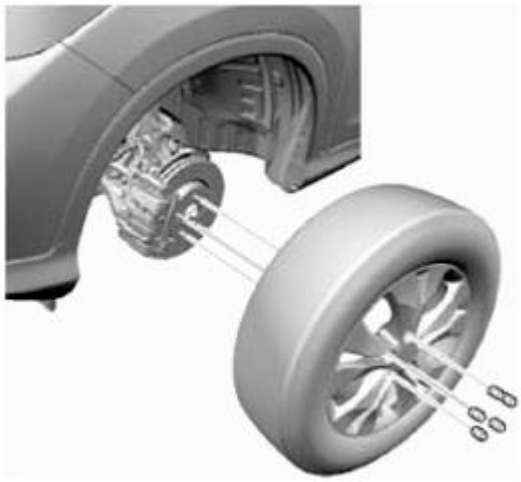

GETtheMANUALS.org

Fig. 43: Identifying Front Wheel With Studs
Courtesy of AMERICAN HONDA MOTOR CO., INC.

3. Front Splash Guard
    1. For some models: Remove the screws (A), then remove the front splash guard (B).

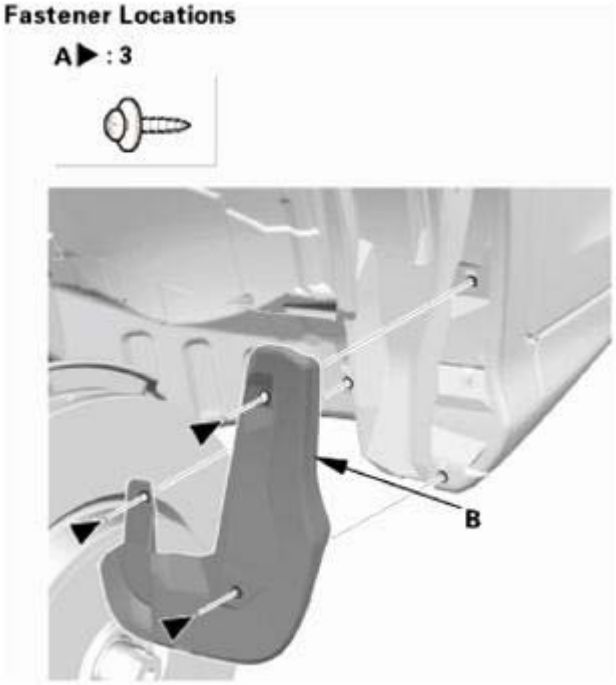

Fig. 44: Identifying Front Splash Guard And Screws
Courtesy of AMERICAN HONDA MOTOR CO., INC.

4. Front Inner Fender As Needed
    1. Remove the bolt (A), the screws (B), and the clips (C, D, and E) securing the front inner fender (F), then detach the front inner fender as needed.

GETtheMANUALS.org

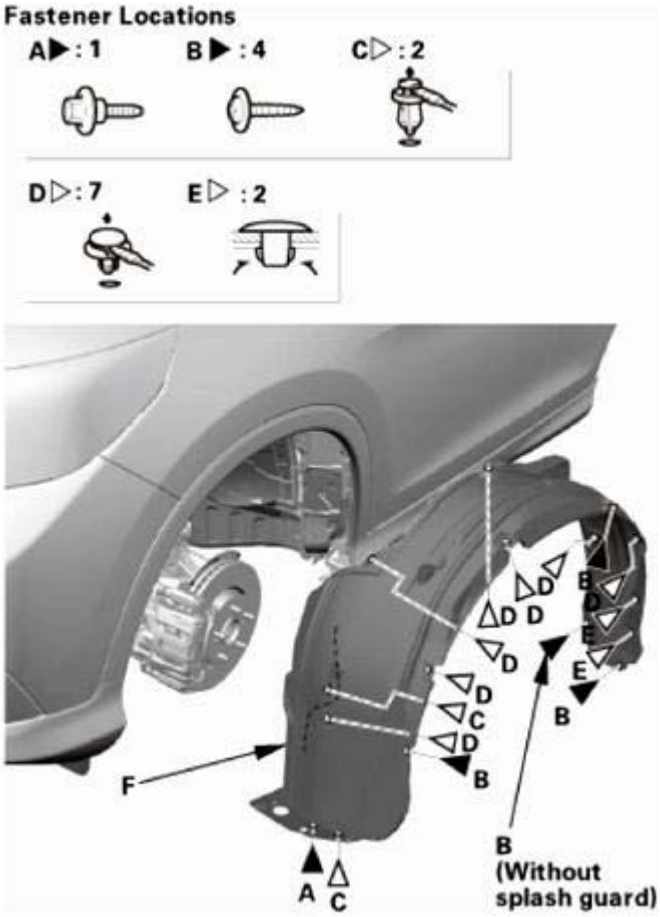

Fig. 45: Identifying Front Inner Fender, Bolt, Screws And Clips
Courtesy of AMERICAN HONDA MOTOR CO., INC.

5. Front Fender Fairing
    1. From the wheel arch, detach the clips (A).

GETtheMANUALS.org

Fig. 46: Identifying Front Fender Fairing Clips
Courtesy of AMERICAN HONDA MOTOR CO., INC.

2. Release the hooks (A) securing the front fender fairing (B).

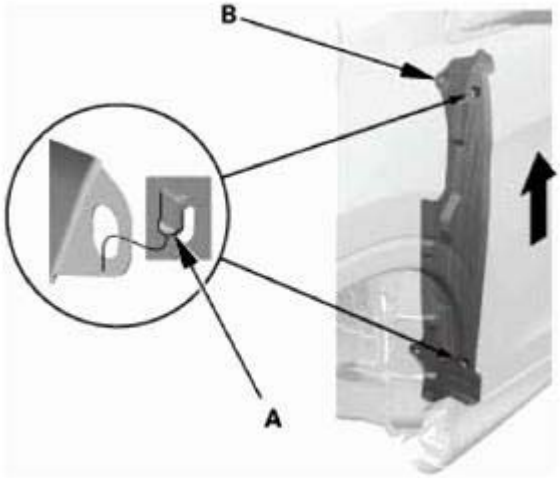

Fig. 47: Releasing Hooks And Securing Front Fender Fairing
Courtesy of AMERICAN HONDA MOTOR CO., INC.

3. Remove the front fender fairing (A).

GETtheMANUALS.org

Fig. 48: Removing Front Fender Fairing
Courtesy of AMERICAN HONDA MOTOR CO., INC.

INSTALLATION

1. Front Fender Fairing
    1. Place the front fender fairing (A) as shown.

Fig. 49: Placing Front Fender Fairing
Courtesy of AMERICAN HONDA MOTOR CO., INC.

    2. Install the hooks (A) of the front fender fairing (B) to the body holes as shown.

GETtheMANUALS.org

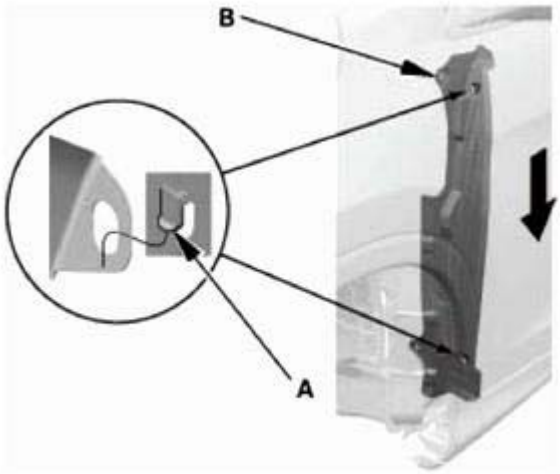

Fig. 50: Installing Hooks Of Front Fender Fairing
Courtesy of AMERICAN HONDA MOTOR CO., INC.

3. From the wheel arch, install the clips (A).

Fig. 51: Identifying Front Fender Fairing Clips
Courtesy of AMERICAN HONDA MOTOR CO., INC.

2. Front Inner Fender As Needed
    1. Install the front inner fender (A), then install the bolt (B), the screws (C), and the clips (D, E, and F). Make sure the clips snap into place securely.

GETtheMANUALS.org

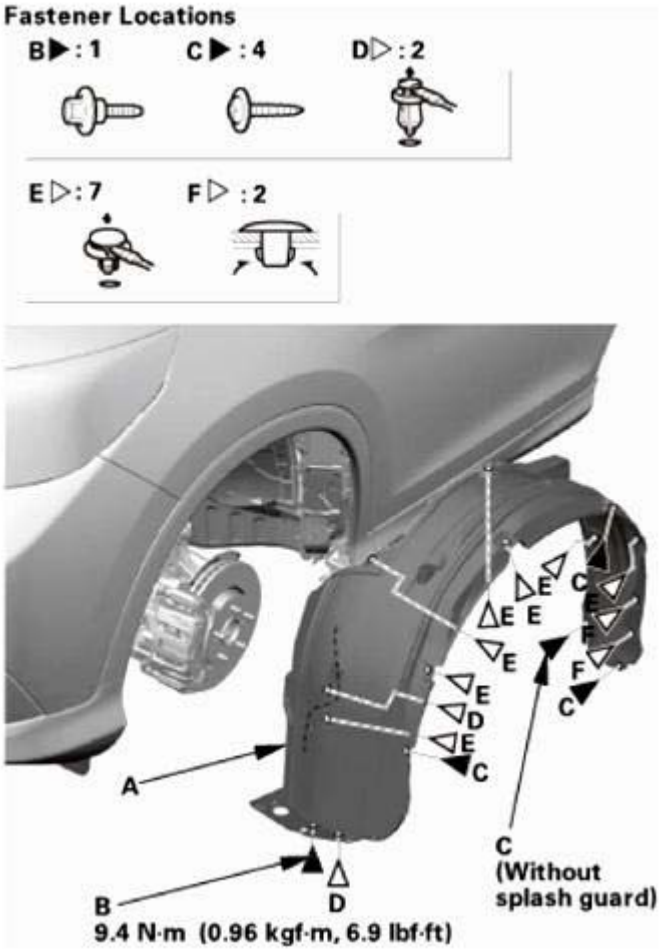

Fig. 52: Identifying Front Inner Fender, Bolt, Screws And Clips With Torque Specification
Courtesy of AMERICAN HONDA MOTOR CO., INC.

3. Front Splash Guard
    1. For some models: Install the front splash guard (A), then install the screws (B).

GETtheMANUALS.org

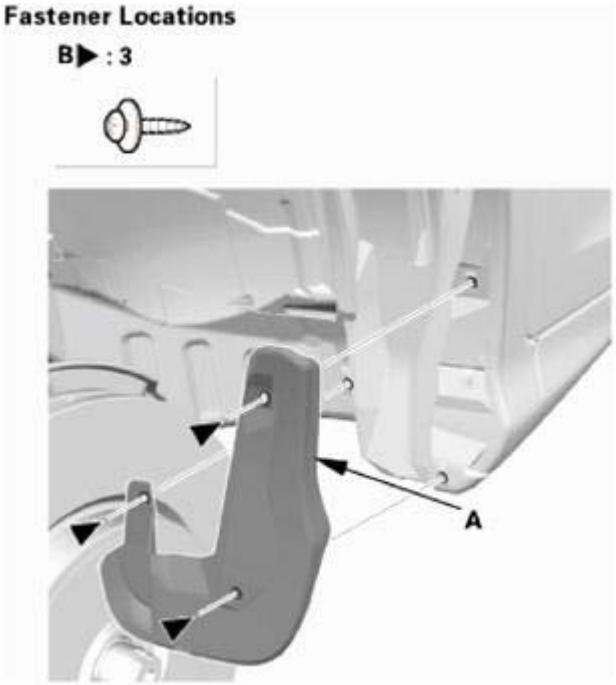

Fig. 53: Identifying Front Splash Guard And Screws
Courtesy of AMERICAN HONDA MOTOR CO., INC.

4. Front Wheel
    1. Install the front wheel.

NOTE: **Before installing the wheel, clean the mating surfaces between the brake disc and the inside of the wheel.**

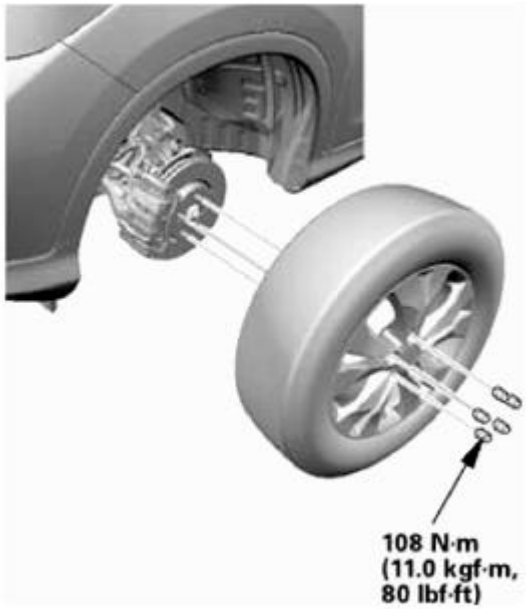

GETtheMANUALS.org

Fig. 54: Identifying Front Wheel Studs With Torque Specification
Courtesy of AMERICAN HONDA MOTOR CO., INC.

FRONT FLOOR UNDERCOVER REMOVAL AND INSTALLATION

REMOVAL

1. Vehicle Lift
    1. Raise the vehicle on a lift, and make sure it is securely supported.
2. Front Floor Undercover
    1. Remove the bolts (A) and the clips (B, C) securing the front floor undercover (D), then remove the front floor undercover.

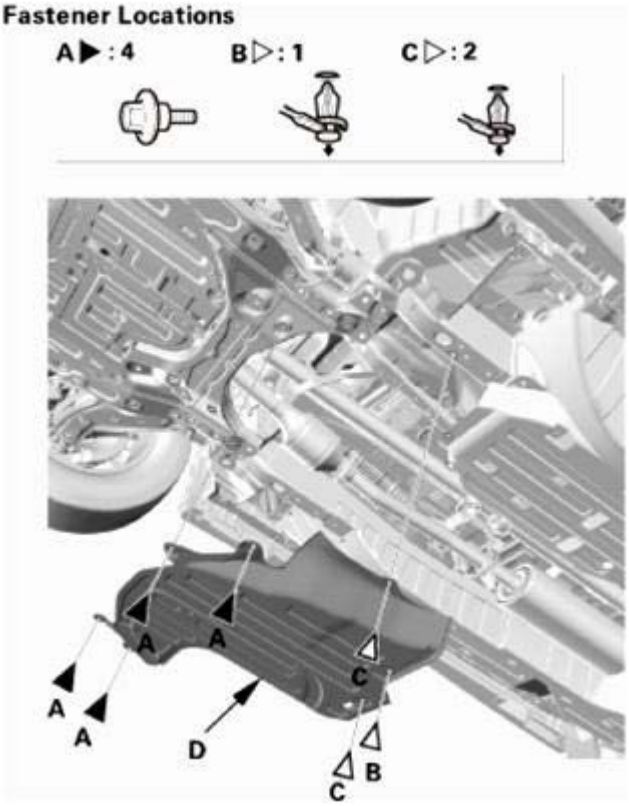

Fig. 55: Identifying Front Floor Undercover, Bolts And Clips
Courtesy of AMERICAN HONDA MOTOR CO., INC.

INSTALLATION

1. Front Floor Undercover
    1. Install the front floor undercover (A), then install the bolts (B) and the clips (C, D). Make sure the clips snap into place securely.

GETtheMANUALS.org

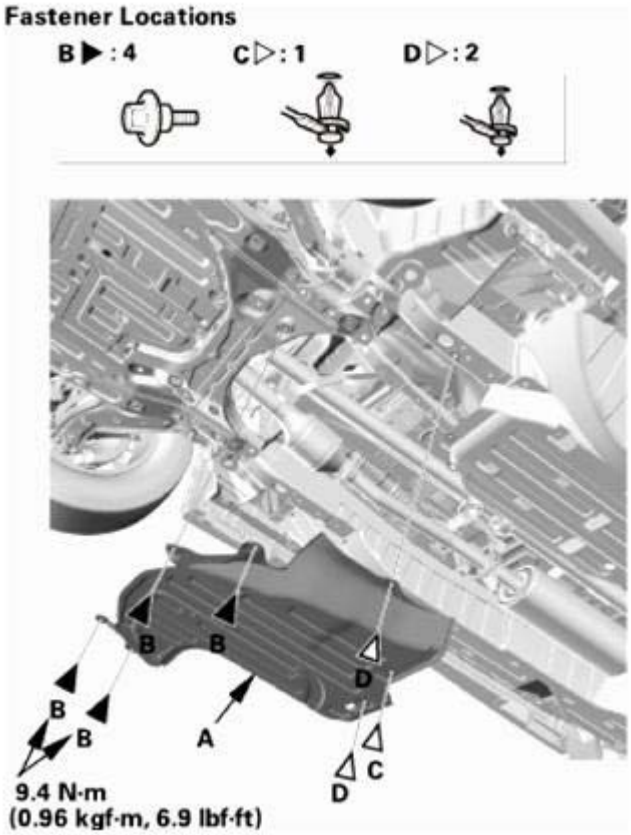

Fig. 56: Identifying Front Floor Undercover, Bolts And Clips With Torque Specification
Courtesy of AMERICAN HONDA MOTOR CO., INC.

FRONT GRILLE REMOVAL AND INSTALLATION

REMOVAL

1. Front Grille
    1. Apply protective tape (A) to the front grille lower trim (B).

GETtheMANUALS.org

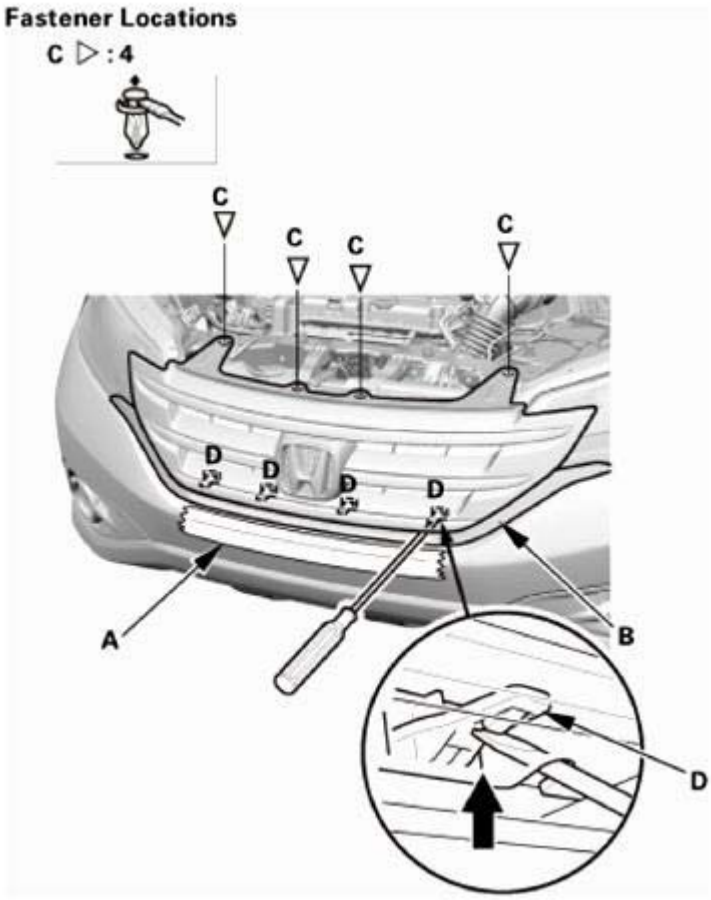

Fig. 57: Applying Protective Tape To Front Grille Lower Trim
Courtesy of AMERICAN HONDA MOTOR CO., INC.

2. Remove the clips (C) and detach the hooks (D).
3. Insert a shop towel (A) between the front grille (B) and the front grille lower trim (C).

GETtheMANUALS.org

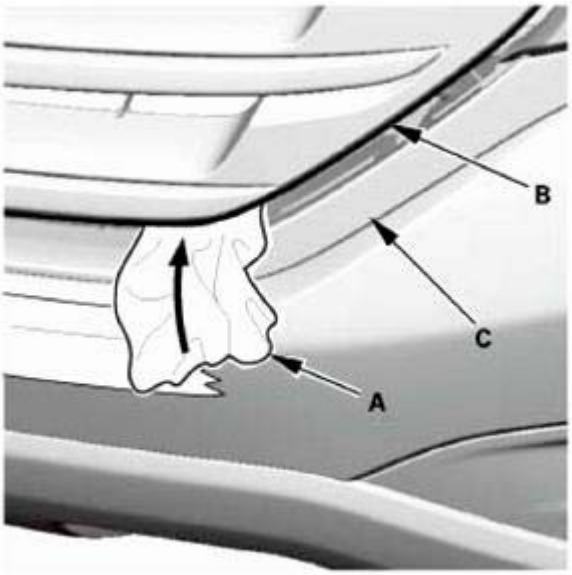

Fig. 58: Inserting Shop Towel Between Front Grille And Front Grille Lower Trim
Courtesy of AMERICAN HONDA MOTOR CO., INC.

4. Insert a flat-tip screwdriver (A) into the opening at the front grille (B), then turn the screwdriver to detach the clip (C).

NOTE: Repeat this procedure on the opposite side.

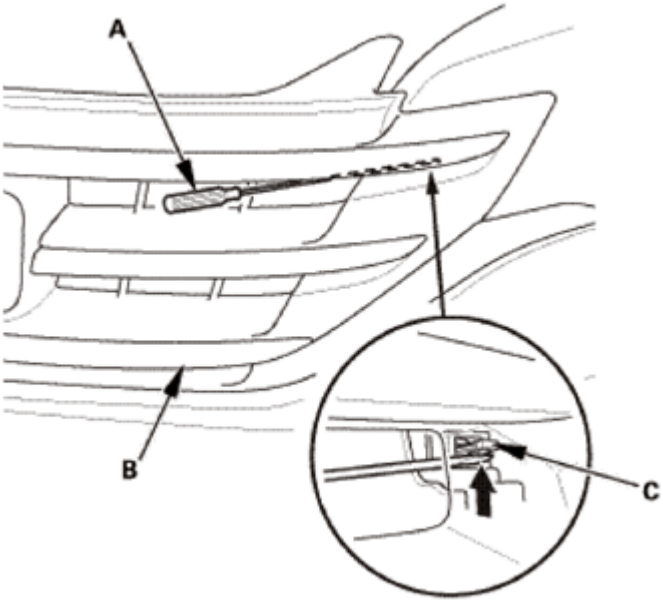

Fig. 59: Inserting Flat-Tip Screwdriver Into Opening At Front Grille
Courtesy of AMERICAN HONDA MOTOR CO., INC.

5. Remove the front grille (A).

GETtheMANUALS.org

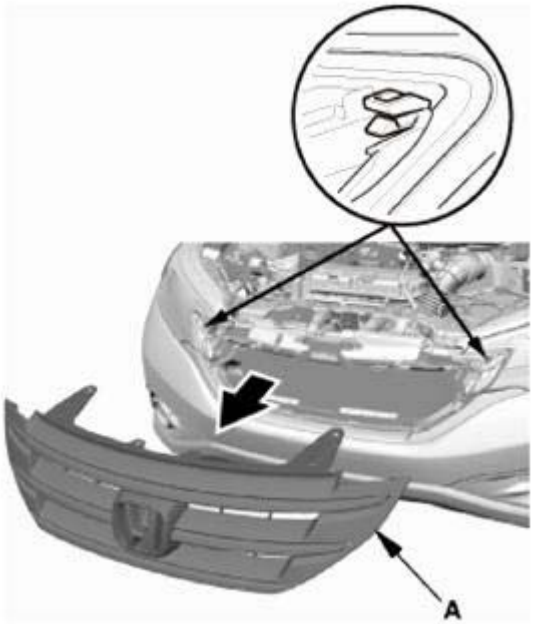

Fig. 60: Removing Front Grille
Courtesy of AMERICAN HONDA MOTOR CO., INC.

2. Front Bumper Upper Duct
    1. Remove the clips (A), then remove the front bumper upper duct (B).

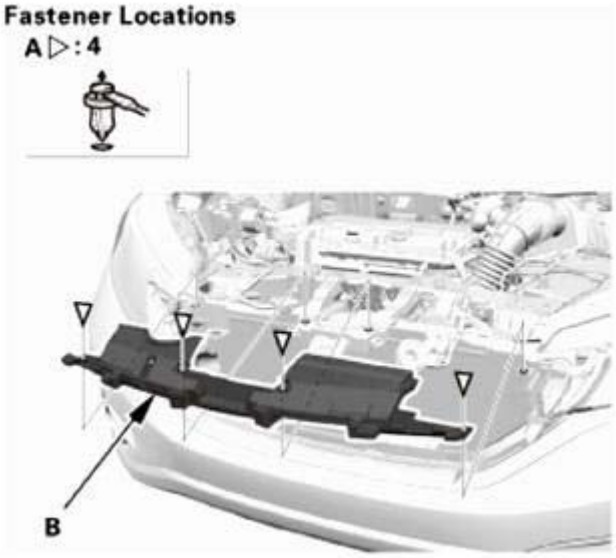

Fig. 61: Identifying Front Bumper Upper Duct And Clips
Courtesy of AMERICAN HONDA MOTOR CO., INC.

3. Front Grille Bracket
    1. Remove the clips (A), then remove the front grille bracket (B).

GETtheMANUALS.org

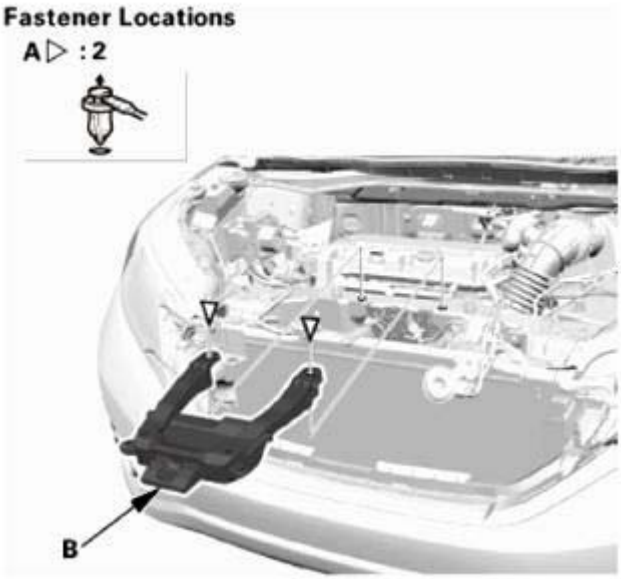

Fig. 62: Identifying Front Grille Bracket And Clips
Courtesy of AMERICAN HONDA MOTOR CO., INC.

4. Front Grille Molding
    1. Remove the screws (A), then remove the front grille upper molding (B), the front grille middle moldings (C), the front grille lower molding (D), and the front emblem base (E) from the front grille base (F).

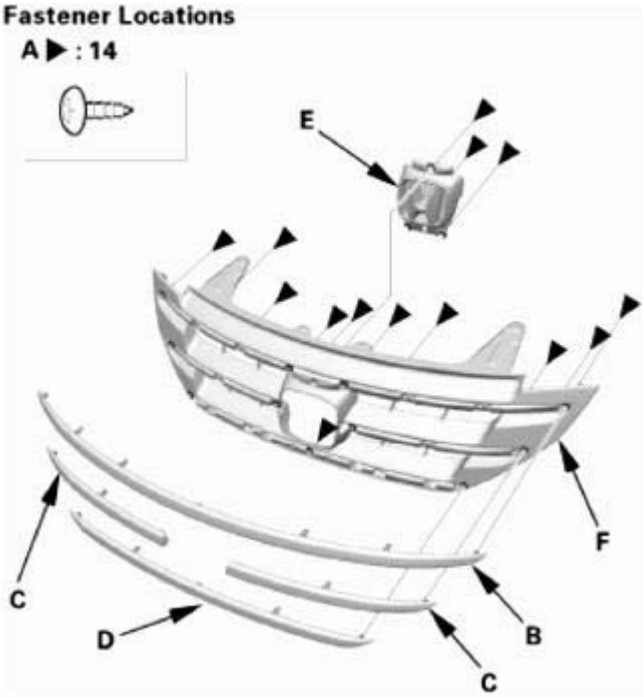

Fig. 63: Identifying Front Grille Upper Molding, Middle Moldings, Lower Molding, Front Emblem Base, Front Grille Base And Screws

GETtheMANUALS.org

Courtesy of AMERICAN HONDA MOTOR CO., INC.

INSTALLATION

1. Front Grille Molding
    1. Install the front grille upper molding (A), the front grille middle moldings (B), the front grille lower molding (C), and the front emblem base (D) to the front grille base (E), then install the screws (F).

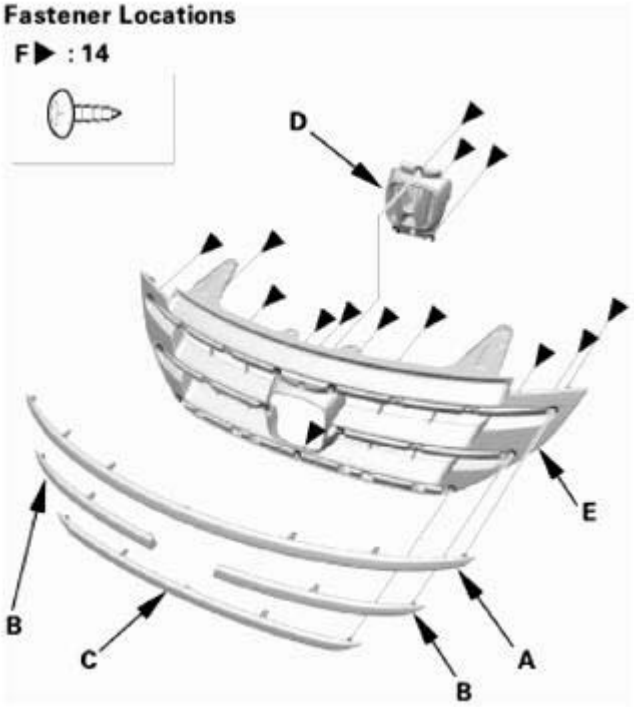

Fig. 64: Identifying Front Grille Upper Molding, Middle Moldings, Lower Molding, Front Emblem Base, Front Grille Base And Screws
Courtesy of AMERICAN HONDA MOTOR CO., INC.

2. Front Grille Bracket
    1. Install the front grille bracket (A). Make sure the clips (B) snap into place securely.

GETtheMANUALS.org

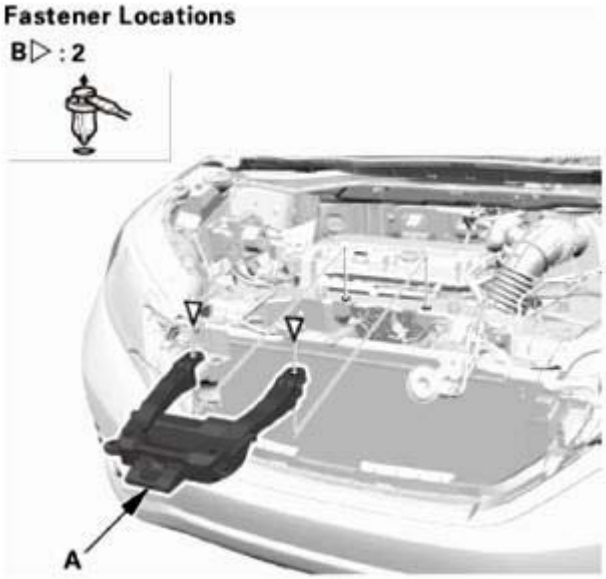

Fig. 65: Identifying Front Grille Bracket And Clips
Courtesy of AMERICAN HONDA MOTOR CO., INC.

3. Front Bumper Upper Duct
    1. Install the front bumper upper duct (A). Make sure the clips (B) snap into place securely.

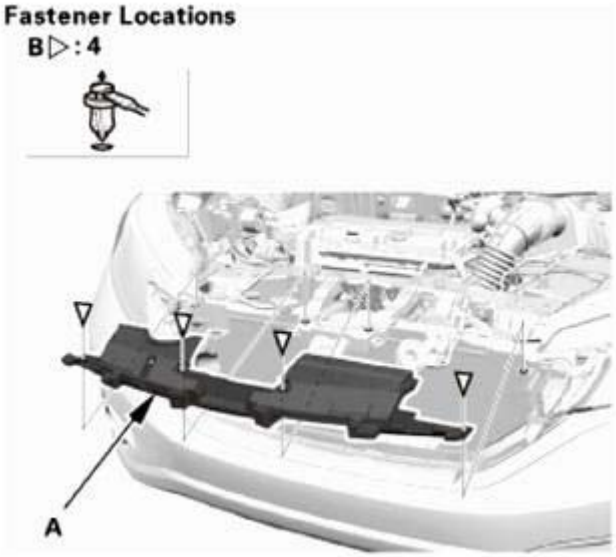

Fig. 66: Identifying Front Bumper Upper Duct And Clips
Courtesy of AMERICAN HONDA MOTOR CO., INC.

4. Front Grille
    1. Install the front grille (A) by pushing on the clip areas until the clips snap into place.
    2. Install the clips (B).

GETtheMANUALS.org

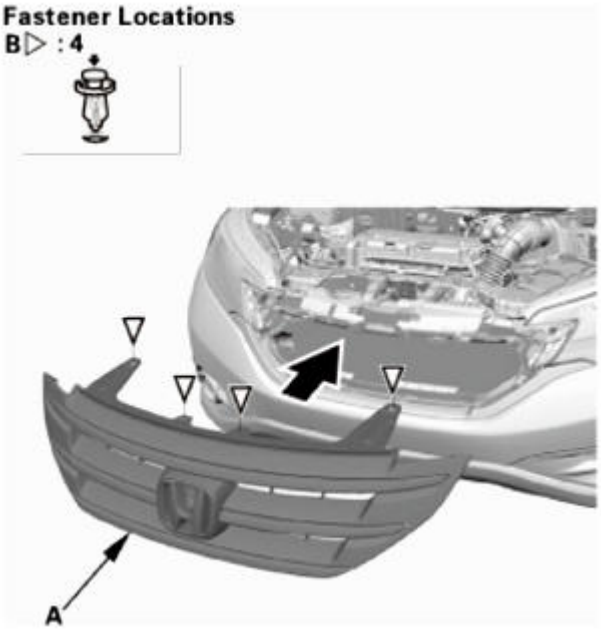

Fig. 67: Installing Front Grille
Courtesy of AMERICAN HONDA MOTOR CO., INC.

FRONT INNER FENDER REMOVAL AND INSTALLATION

REMOVAL

1. Vehicle Lift
    1. Raise the vehicle on a lift, and make sure it is securely supported.
2. Front Wheel
    1. Remove the front wheel.

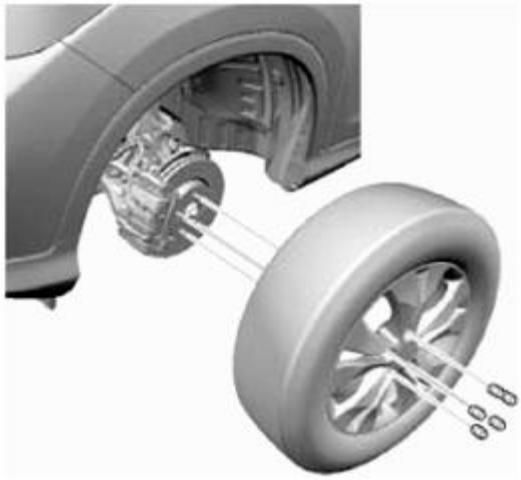

Fig. 68: Identifying Front Wheel With Studs
Courtesy of AMERICAN HONDA MOTOR CO., INC.

GETtheMANUALS.org

3. Front Splash Guard
    1. For some models: Remove the screws (A), then remove the front splash guard (B).

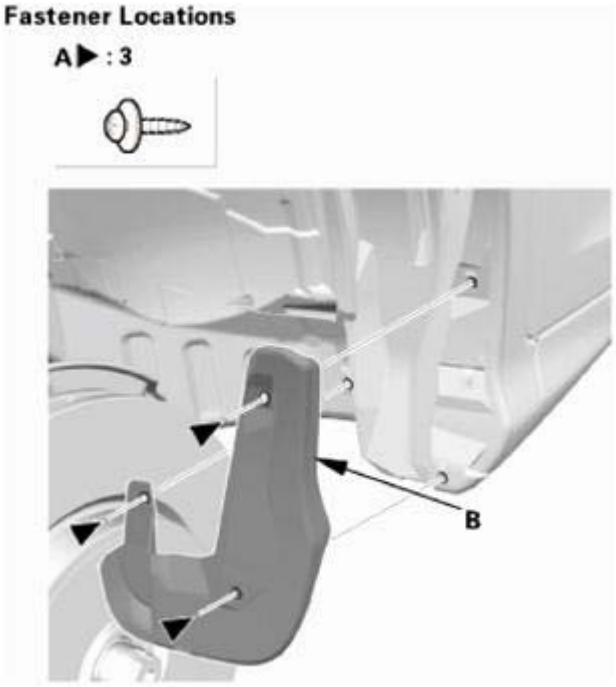

Fig. 69: Identifying Front Splash Guard And Screws
Courtesy of AMERICAN HONDA MOTOR CO., INC.

4. Front Inner Fender
    1. Remove the bolt (A), the screws (B), and the clips (C, D, and E) securing the front inner fender (F), then remove the front inner fender.

GETtheMANUALS.org

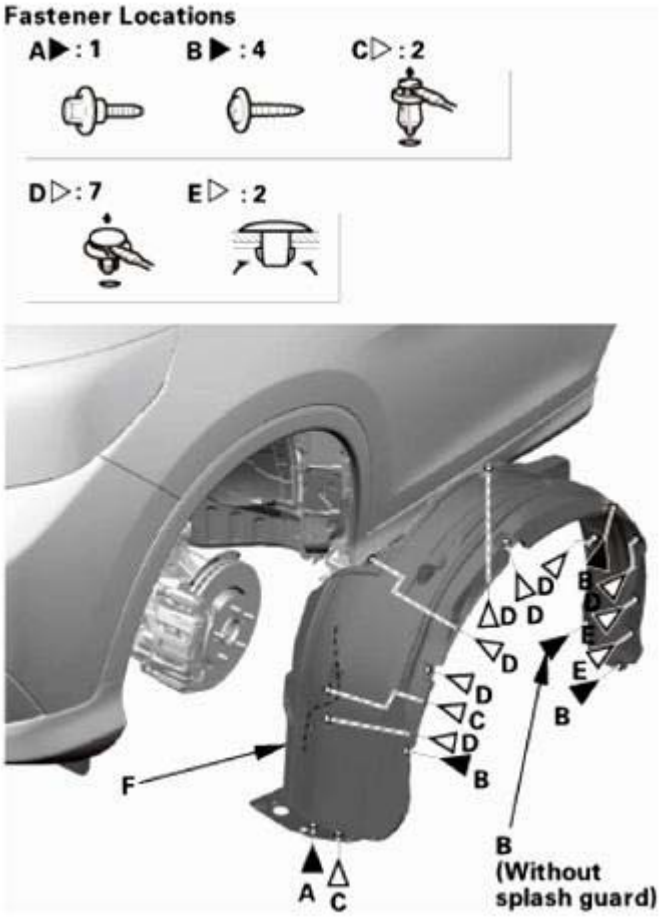

Fig. 70: Identifying Front Inner Fender, Bolt, Screws And Clips
Courtesy of AMERICAN HONDA MOTOR CO., INC.

INSTALLATION

1. Front Inner Fender
    1. Install the front inner fender (A), then install the bolt (B), the screws (C), and the clips (D, E, and F). Make sure the clips snap into place securely.

GETtheMANUALS.org

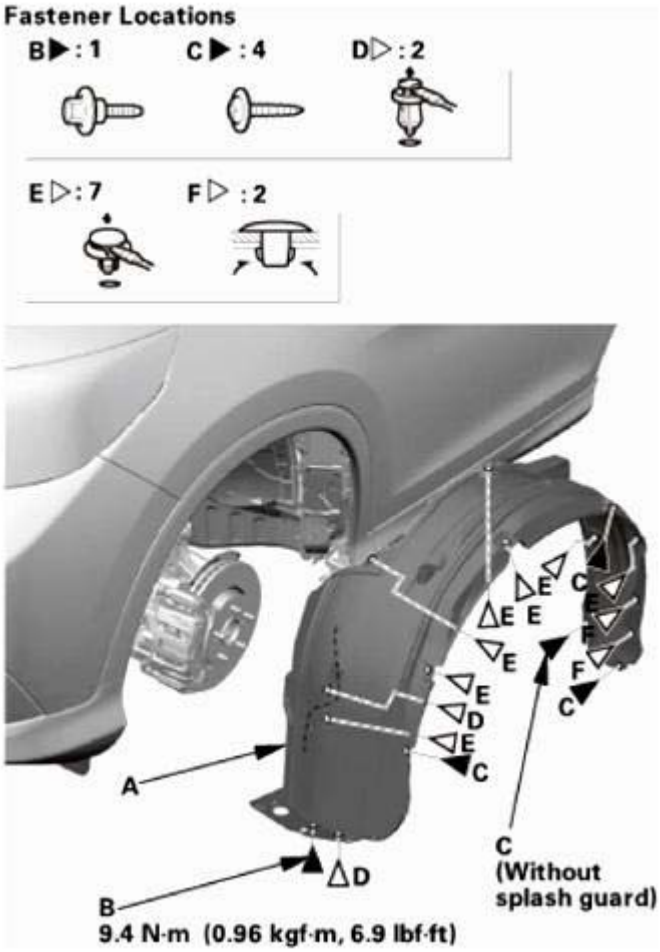

Fig. 71: Identifying Front Inner Fender, Bolt, Screws And Clips With Torque Specification
Courtesy of AMERICAN HONDA MOTOR CO., INC.

2. Front Splash Guard
    1. For some models: Install the front splash guard (A), then install the screws (B).

GETtheMANUALS.org

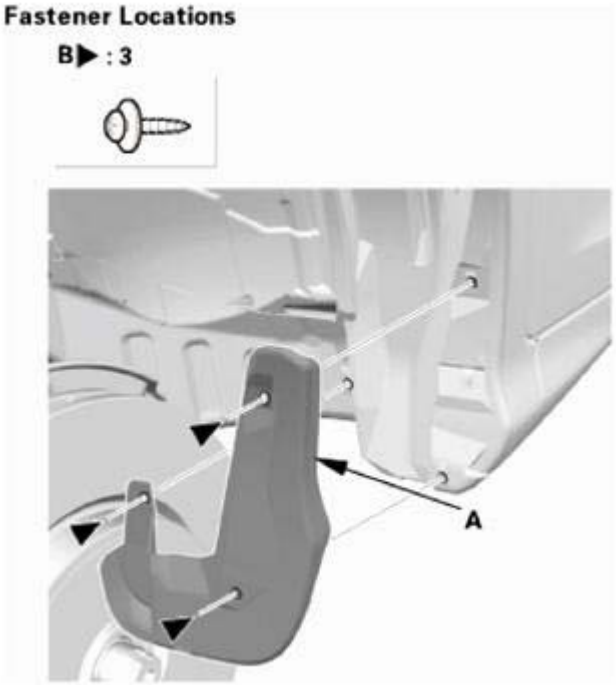

Fig. 72: Identifying Front Splash Guard And Screws
Courtesy of AMERICAN HONDA MOTOR CO., INC.

3. Front Wheel
    1. Install the front wheel.

NOTE: **Before installing the wheel, clean the mating surfaces between the brake disc and the inside of the wheel.**

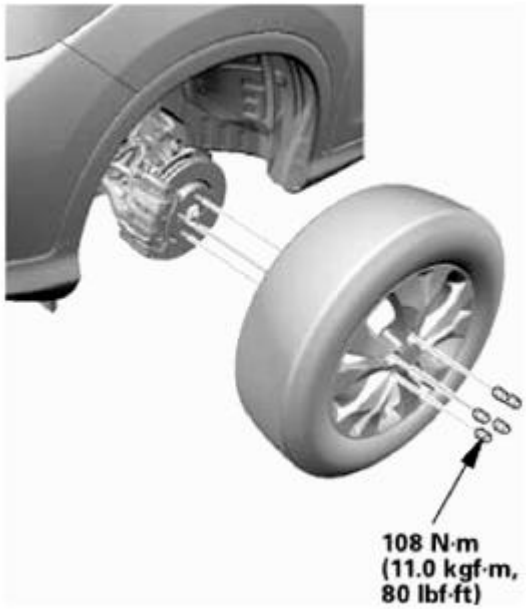

GETtheMANUALS.org

Fig. 73: Identifying Front Wheel Studs With Torque Specification
Courtesy of AMERICAN HONDA MOTOR CO., INC.

FRONT SPLASH GUARD REMOVAL AND INSTALLATION

REMOVAL

1. Front Splash Guard
    1. Remove the screws (A), then remove the front splash guard (B).

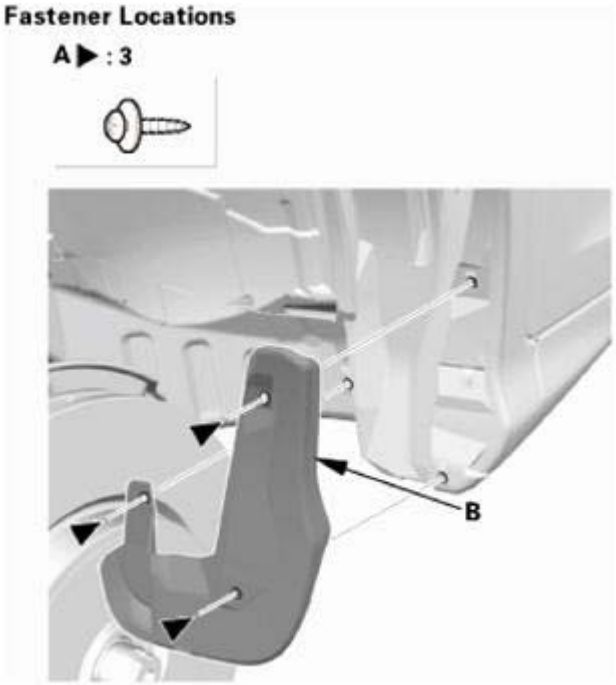

Fig. 74: Identifying Front Splash Guard And Screws
Courtesy of AMERICAN HONDA MOTOR CO., INC.

INSTALLATION

1. Front Splash Guard
    1. Install the front splash guard (A), then install the screws (B).

GETtheMANUALS.org

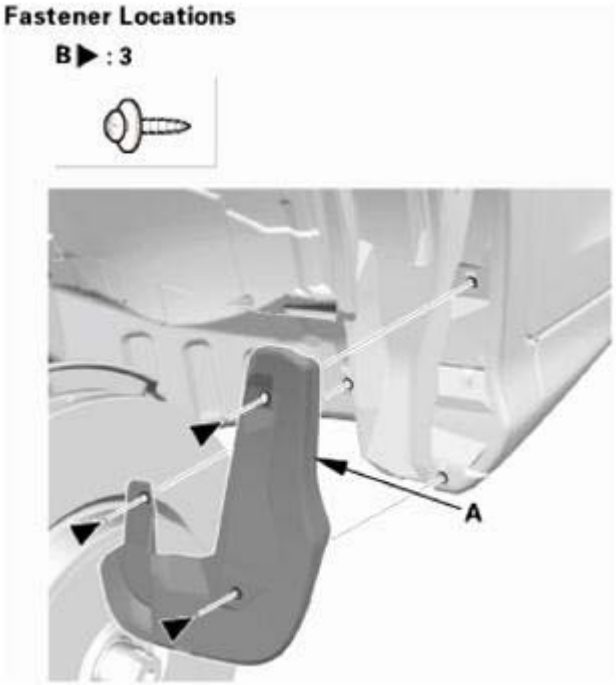

Fig. 75: Identifying Front Splash Guard And Screws
Courtesy of AMERICAN HONDA MOTOR CO., INC.

FRONT SPLASH SHIELD REMOVAL AND INSTALLATION

REMOVAL

1. Vehicle Lift
    1. Raise the vehicle on a lift, and make sure it is securely supported.
2. Front Splash Shield
    1. Remove the bolts (A), then remove the clips (B) that secure the front inner fender and the front splash shield (C) to the body.
    2. From under the front bumper (D), remove the clips (E).
    3. From under the body, remove the clips (F), then pull out the front splash shield.

GETtheMANUALS.org

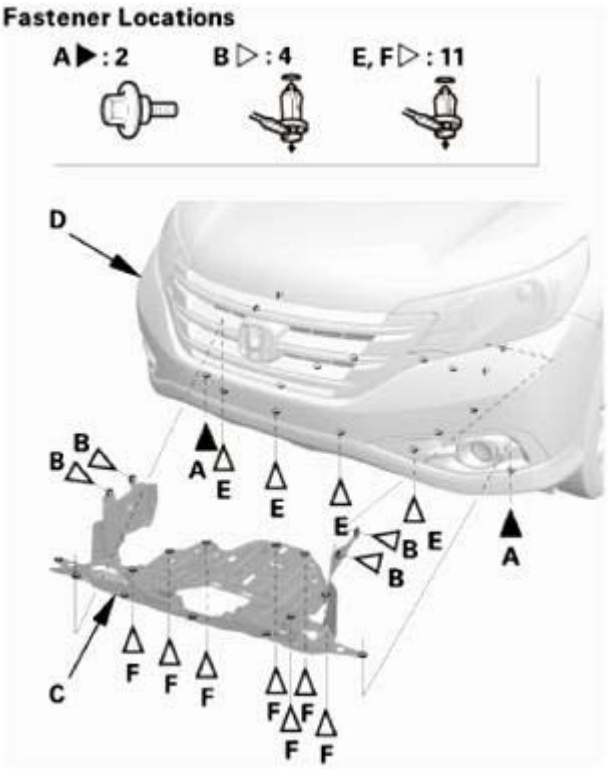

Fig. 76: Identifying Front Bumper, Bolts, Clips, Front Inner Fender And Front Splash Shield
Courtesy of AMERICAN HONDA MOTOR CO., INC.

INSTALLATION

1. Front Splash Shield
    1. Install the front splash shield (A), then install the bolts (B) and the clips (C, D). Make sure the clips snap into place securely.

GETtheMANUALS.org

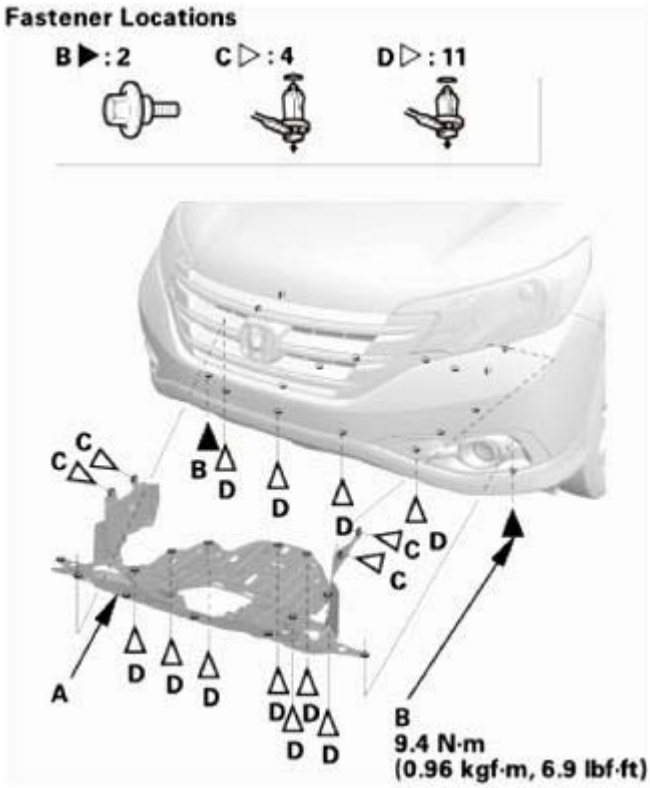

Fig. 77: Identifying Front Splash Shield, Bolts And Clips With Torque Specification
Courtesy of AMERICAN HONDA MOTOR CO., INC.

FRONT WHEEL ARCH PROTECTOR REMOVAL AND INSTALLATION

REMOVAL

1. Front Splash Guard
    1. For some models: Remove the screws (A), then remove the front splash guard (B).

GETtheMANUALS.org

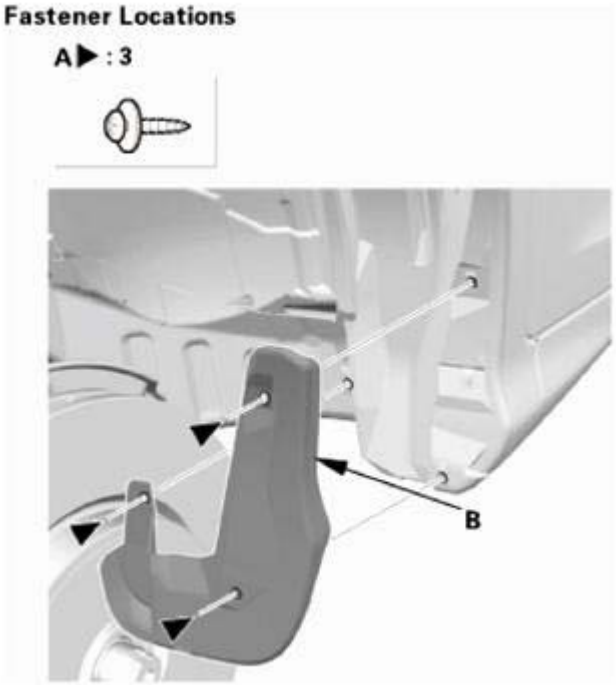

Fig. 78: Identifying Front Splash Guard And Screws
Courtesy of AMERICAN HONDA MOTOR CO., INC.

2. Front Wheel Arch Protector
    1. Remove the screws (A) and the clips (B) securing the front wheel arch protector (C).
    2. Carefully pry out the clip portions of the wheel arch protector with the appropriate trim tool to detach the clips (D, E), then remove the wheel arch protector.

GETtheMANUALS.org

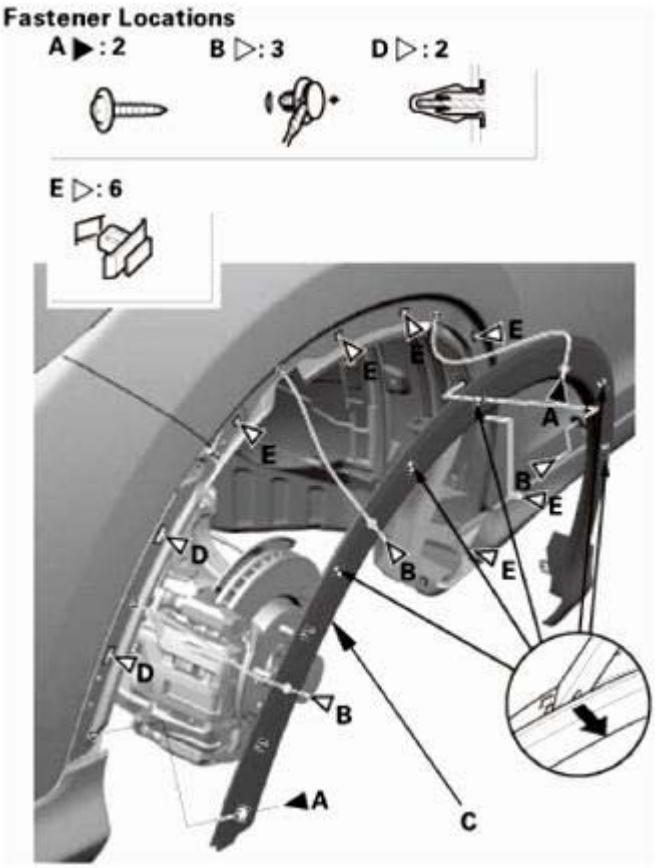

Fig. 79: Prying Out Clip Portions Of Wheel Arch Protector With Appropriate Trim Tool
Courtesy of AMERICAN HONDA MOTOR CO., INC.

INSTALLATION

1. Front Wheel Arch Protector
    1. Install the front wheel arch protector (A), then install the screws (B) and the clips (C). Make sure the clips (D, E) snap into place securely.

GETtheMANUALS.org

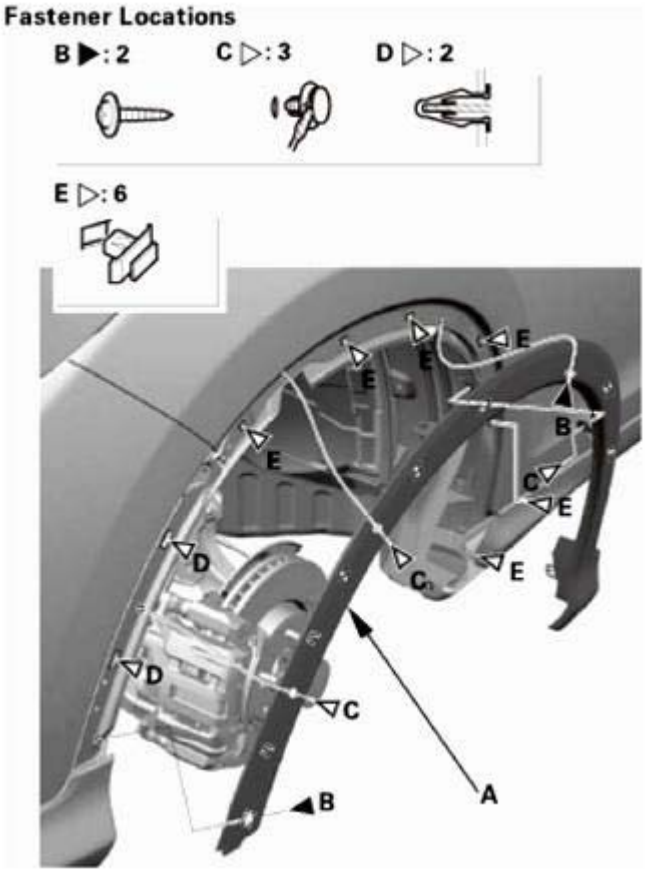

Fig. 80: Identifying Front Wheel Arch Protector, Screws And Clips
Courtesy of AMERICAN HONDA MOTOR CO., INC.

2. Front Splash Guard
    1. For some models: Install the front splash guard (A), then install the screws (B).

GETtheMANUALS.org

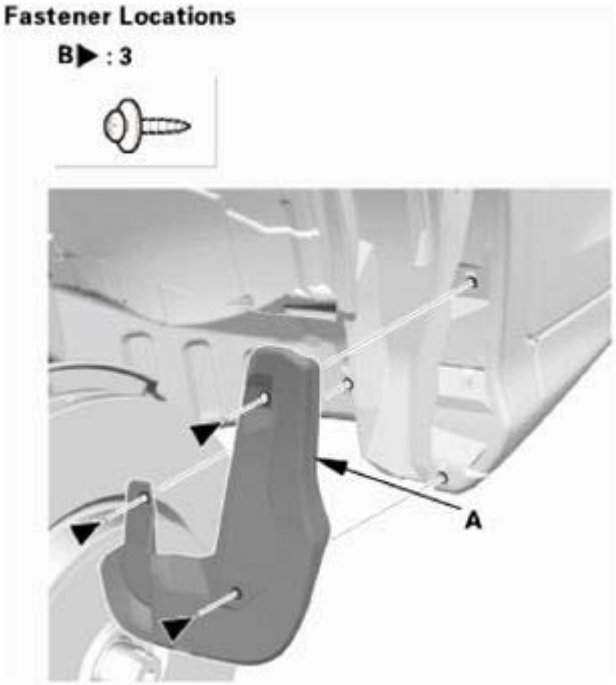

Fig. 81: Identifying Front Splash Guard And Screws
Courtesy of AMERICAN HONDA MOTOR CO., INC.

LICENSE PLATE LIGHT REMOVAL AND INSTALLATION

REMOVAL

1. License Plate Light Assembly
    1. Push the license plate light assembly (A) to the side to release the retaining spring, and pull out the license plate light assembly.

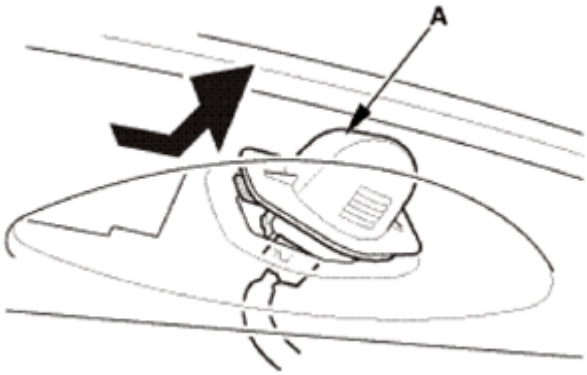

Fig. 82: Pushing License Plate Light Assembly
Courtesy of AMERICAN HONDA MOTOR CO., INC.

    2. Disconnect the connector and remove the license plate light assembly.

GETtheMANUALS.org

3. Separate the lens (A) from the housing (B), then remove the bulb.

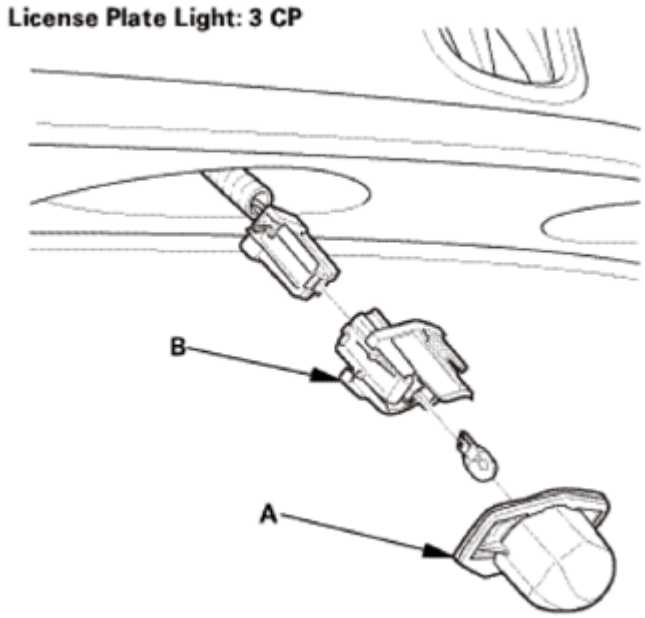

Fig. 83: Identifying Lens And Housing (License Plate Light - 3CP)
Courtesy of AMERICAN HONDA MOTOR CO., INC.

INSTALLATION

1. License Plate Light Assembly
    1. Set the lens (A) into the housing (B).
    2. Connect the connector.

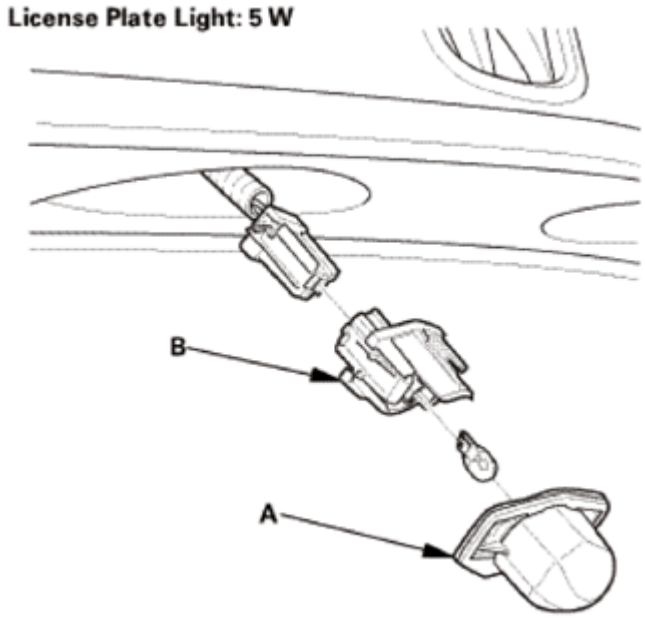

GETtheMANUALS.org

Fig. 84: Identifying Lens And Housing (License Plate Light - 5 W)
Courtesy of AMERICAN HONDA MOTOR CO., INC.

3. Insert the hook (A), then lightly push the license plate light assembly (B) and install it.

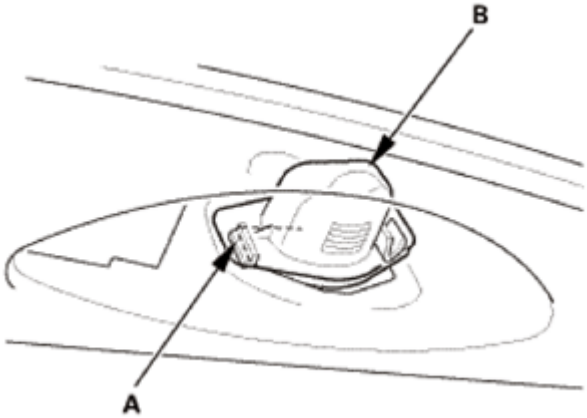

Fig. 85: Identifying License Plate Light Assembly And Hook
Courtesy of AMERICAN HONDA MOTOR CO., INC.

MIDDLE FLOOR UNDERCOVER REMOVAL AND INSTALLATION

REMOVAL

1. Vehicle Lift
    1. Raise the vehicle on a lift, and make sure it is securely supported.
2. Middle Floor Undercover
    1. Remove the bolts (A) and the clips (B, C), then remove the left middle floor undercover (D) or the right middle floor undercover (E).

    Left side

GETtheMANUALS.org

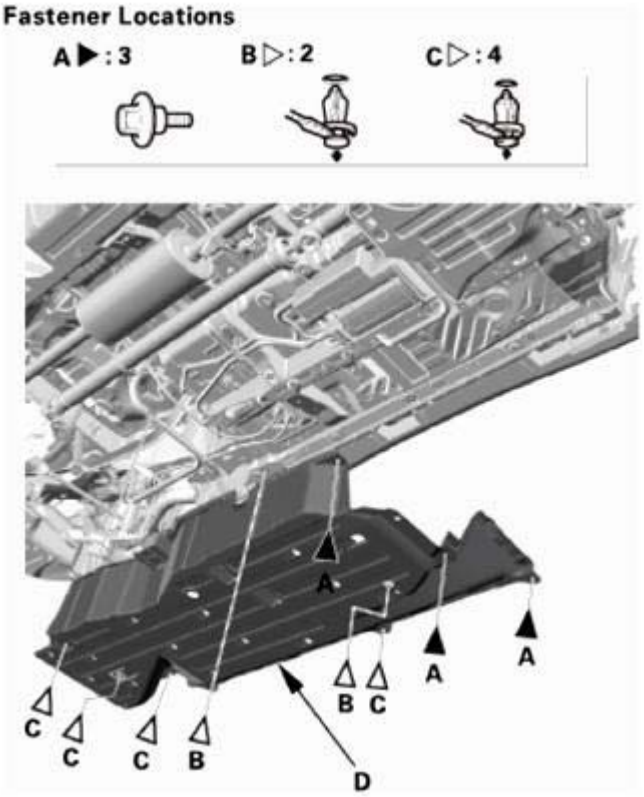

Fig. 86: Identifying Left Middle Floor Undercover, Bolts And Clips (Left Side)
Courtesy of AMERICAN HONDA MOTOR CO., INC.

Right side

GETtheMANUALS.org

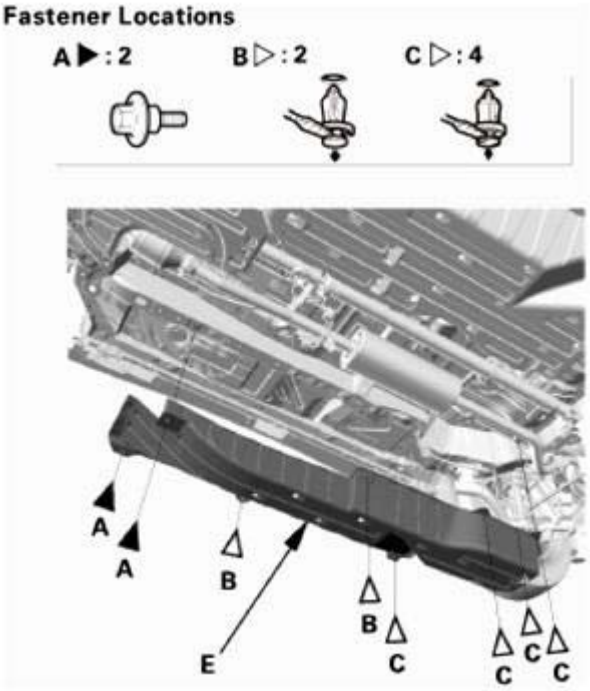

Fig. 87: Identifying Left Middle Floor Undercover, Bolts And Clips (Right Side)
Courtesy of AMERICAN HONDA MOTOR CO., INC.

INSTALLATION

1. Middle Floor Undercover
    1. Install the left middle floor undercover (A) or the right middle floor undercover (B), then install the bolts (C) and the clips (D, E). Make sure the clips snap into place securely.

    Left side

GETtheMANUALS.org

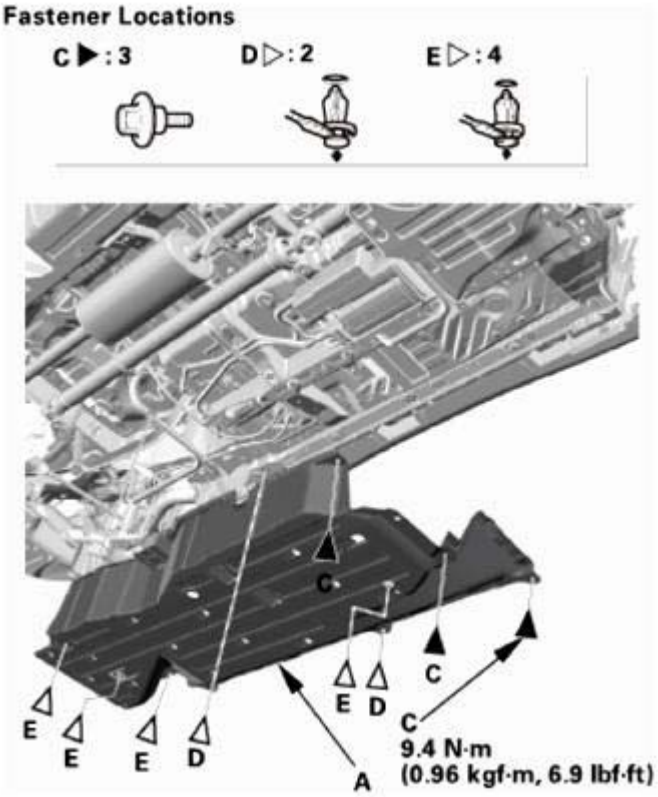

Fig. 88: Identifying Left Middle Floor Undercover, Bolts And Clips With Torque Specification (Left Side)
Courtesy of AMERICAN HONDA MOTOR CO., INC.

Right side

GETtheMANUALS.org

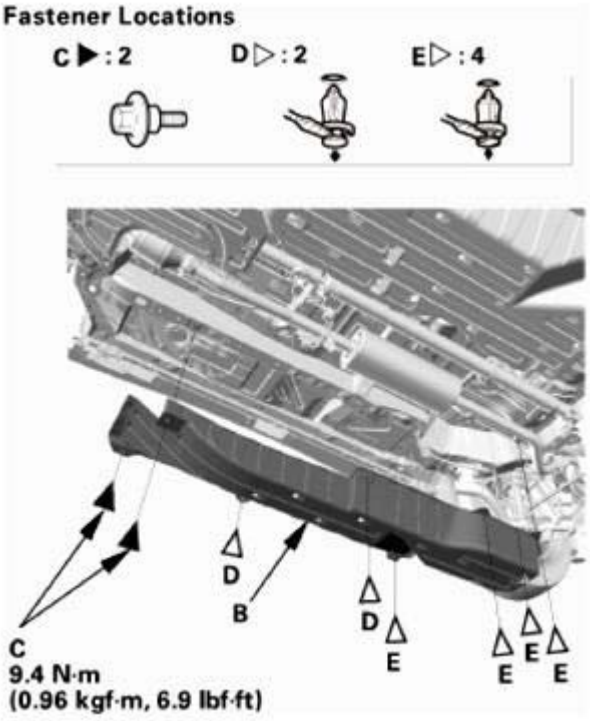

Fig. 89: Identifying Left Middle Floor Undercover, Bolts And Clips With Torque Specification (Right Side)
Courtesy of AMERICAN HONDA MOTOR CO., INC.

REAR BUMPER DISASSEMBLY AND REASSEMBLY

DISASSEMBLY

1. Rear Bumper Face
    1. Remove the clips (A) and detach the hooks (B), then separate the left rear bumper upper face (C), the right rear bumper upper face (D), and the rear bumper lower face (E).

GETtheMANUALS.org

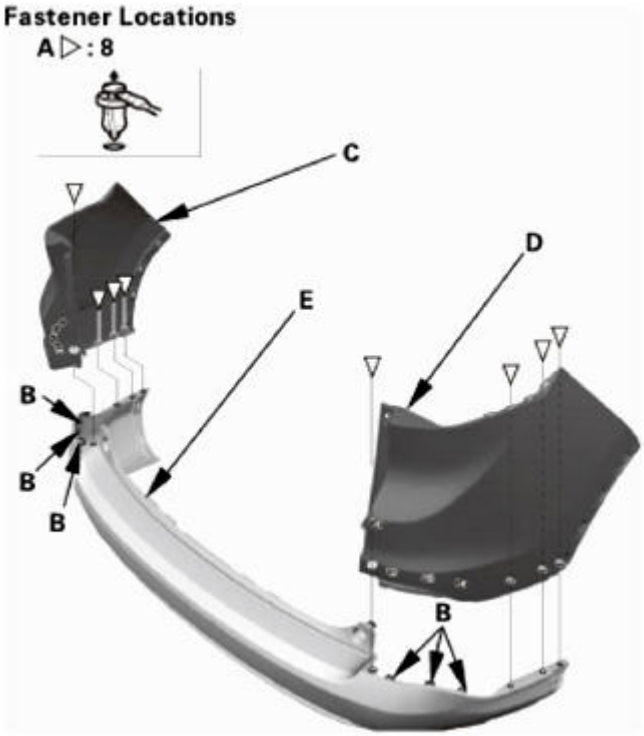

Fig. 90: Identifying Left Rear Bumper Upper Right Rear Bumper Upper, Rear Bumper Lower Face, Hooks And Clips
Courtesy of AMERICAN HONDA MOTOR CO., INC.

2. Rear Bumper Reflector
    1. If necessary, detach the hook (A), then remove the rear bumper reflector (B).

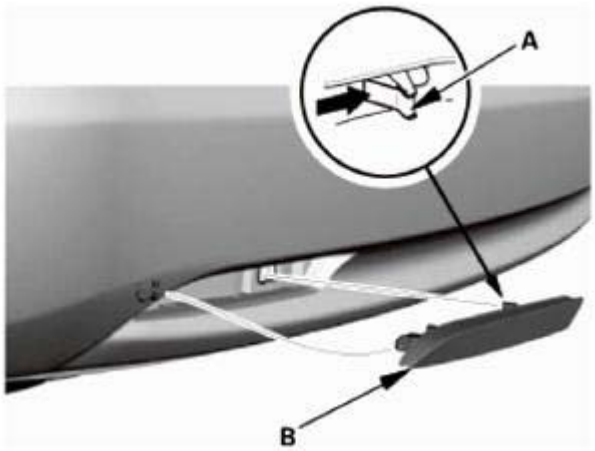

Fig. 91: Removing Rear Bumper Reflector With Hook
Courtesy of AMERICAN HONDA MOTOR CO., INC.

REASSEMBLY

GETtheMANUALS.org

1. Rear Bumper Reflector
    1. Install the rear bumper reflector (A). Make sure the hook (B) snaps into place securely.

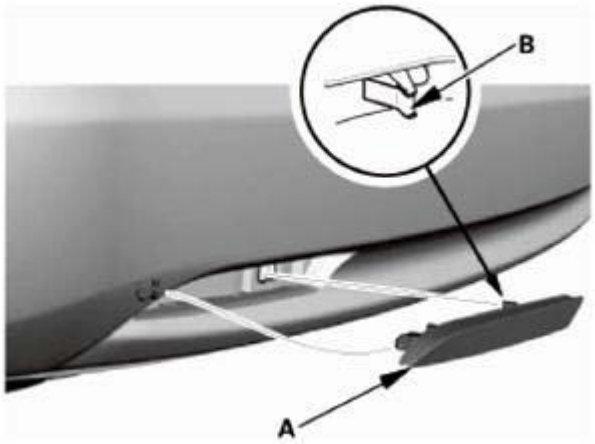

Fig. 92: Installing Rear Bumper Reflector With Hook
Courtesy of AMERICAN HONDA MOTOR CO., INC.

2. Rear Bumper Face
    1. Reassemble the left rear bumper upper face (A), the right rear bumper upper face (B), and the rear bumper lower face (C), then install the clips (D). Make sure the clips and the hooks (E) snap into place securely.

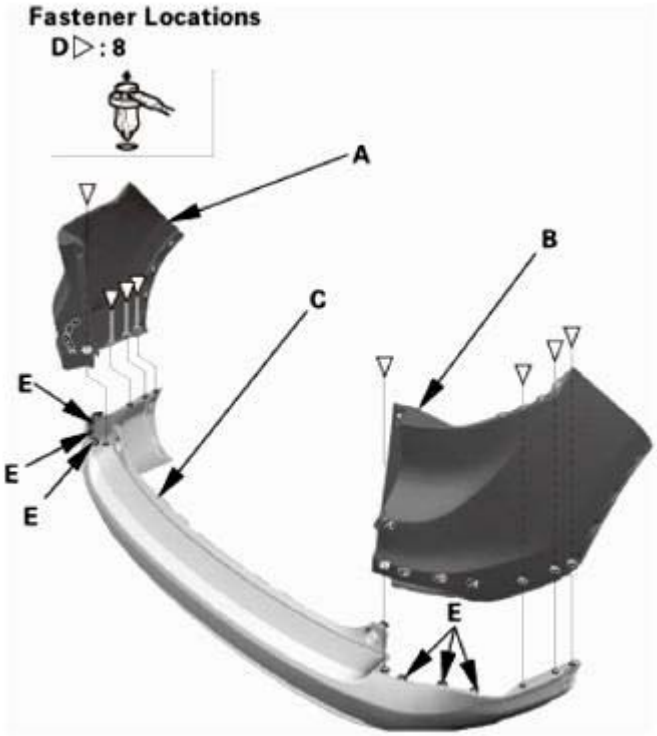

Fig. 93: Identifying Left Rear Bumper Upper Right Rear Bumper Upper, Rear Bumper

GETtheMANUALS.org

Lower Face, Hooks And Clips
Courtesy of AMERICAN HONDA MOTOR CO., INC.

REAR BUMPER REMOVAL AND INSTALLATION

REMOVAL

1. Tailgate Weatherstrip As Needed
    1. Detach the tailgate weatherstrip (A) as needed.

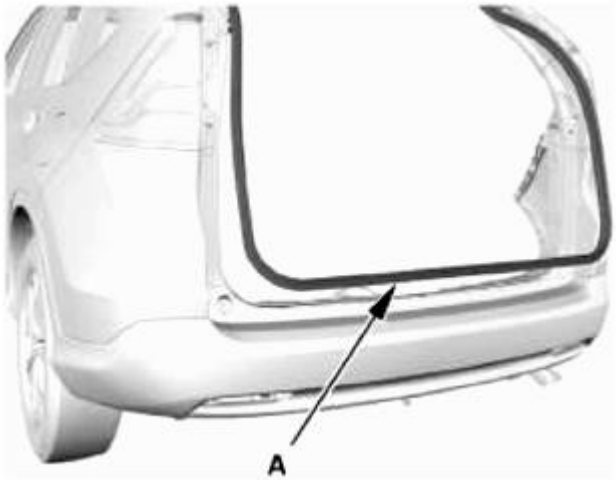

Fig. 94: Identifying Tailgate Weatherstrip
Courtesy of AMERICAN HONDA MOTOR CO., INC.

2. Rear Splash Guard (For Some Models) - Both Sides
    1. Remove the screws (A) and the clip (B), then remove the rear splash guards (C).

Left side

GETtheMANUALS.org

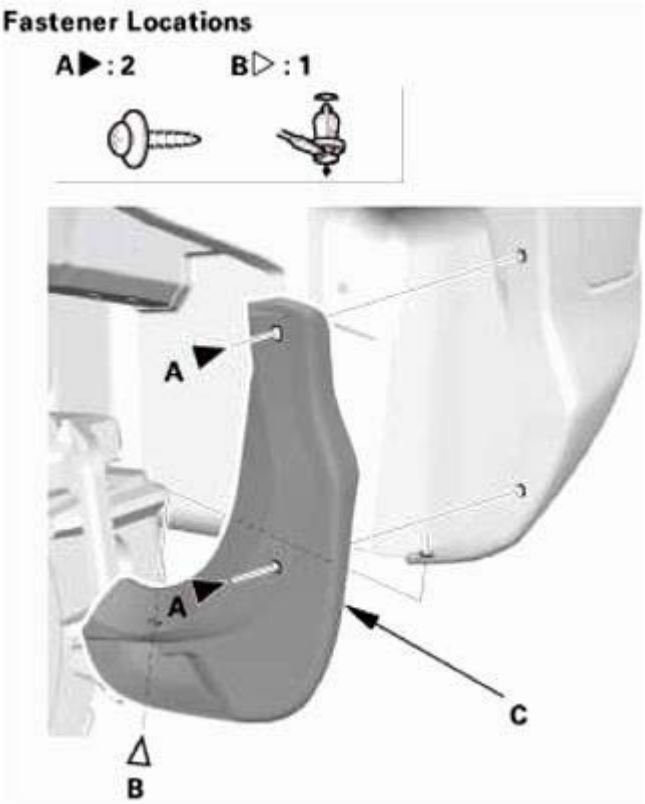

Fig. 95: Identifying Rear Splash Guards, Screws And Clip (Left Side)
Courtesy of AMERICAN HONDA MOTOR CO., INC.

Right side

GETtheMANUALS.org

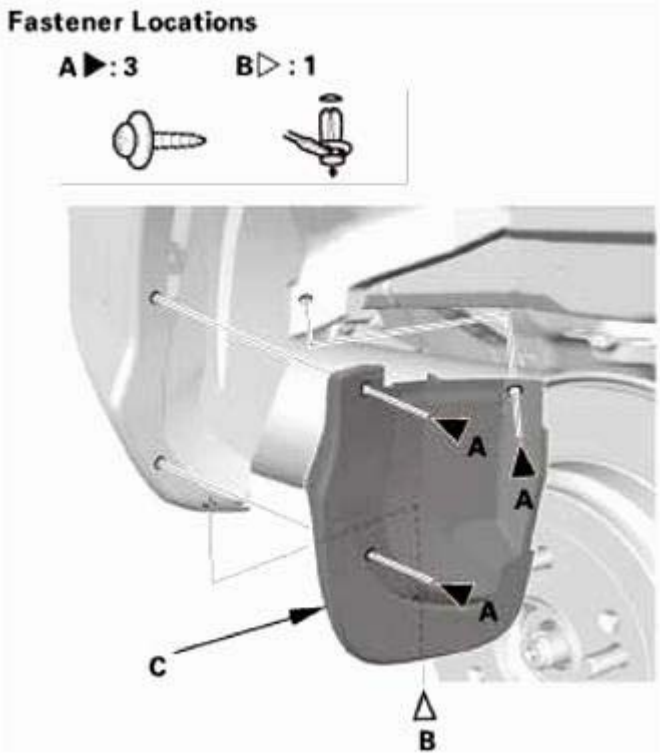

Fig. 96: Identifying Rear Splash Guards, Screws And Clip (Right Side)
Courtesy of AMERICAN HONDA MOTOR CO., INC.

3. Rear Wheel Arch Protector Rear Side As Needed - Both Sides

NOTE: Repeat this procedure on the opposite side.

1. Remove the screws (A) and the clip (B) securing the rear wheel arch protector (C).
2. Carefully pry out the clip portions of the wheel arch protector with the appropriate trim tool to detach the clips (D, E), then detach the wheel arch protector rear side as needed.
3. Put a shop towel (F) in the opening between the rear wheel arch protector and the rear fender.

GETtheMANUALS.org

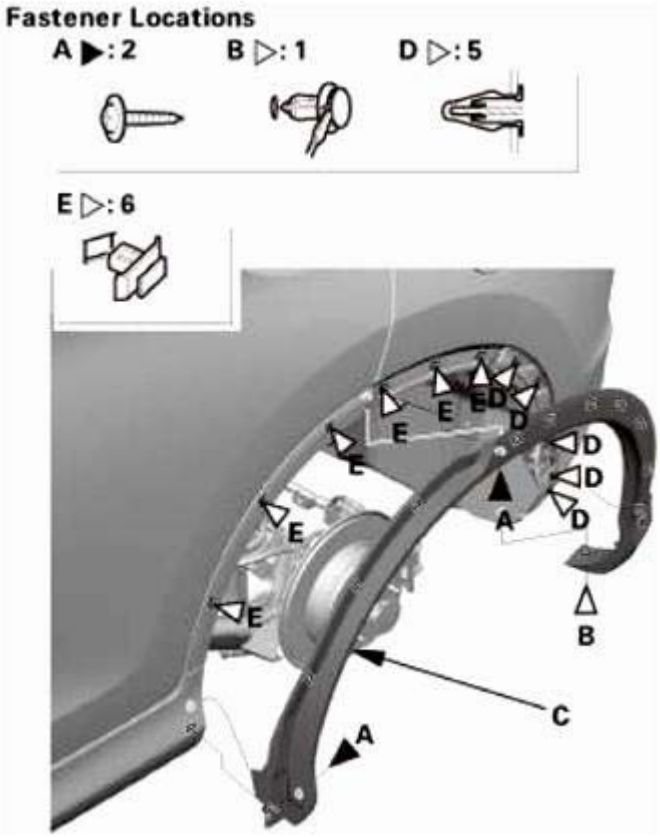

Fig. 97: Identifying Rear Wheel Arch Protector, Screws And Clips
Courtesy of AMERICAN HONDA MOTOR CO., INC.

Fig. 98: Putting Shop Towel In Opening Between Front Wheel Arch Protector And Front Fender
Courtesy of AMERICAN HONDA MOTOR CO., INC.

4. Rear Bumper

GETtheMANUALS.org

1. Remove the caps (A), then remove the bolts (B).
2. Remove the bolts (C), the screws (D), and the clips (E, F) securing the rear bumper (G).

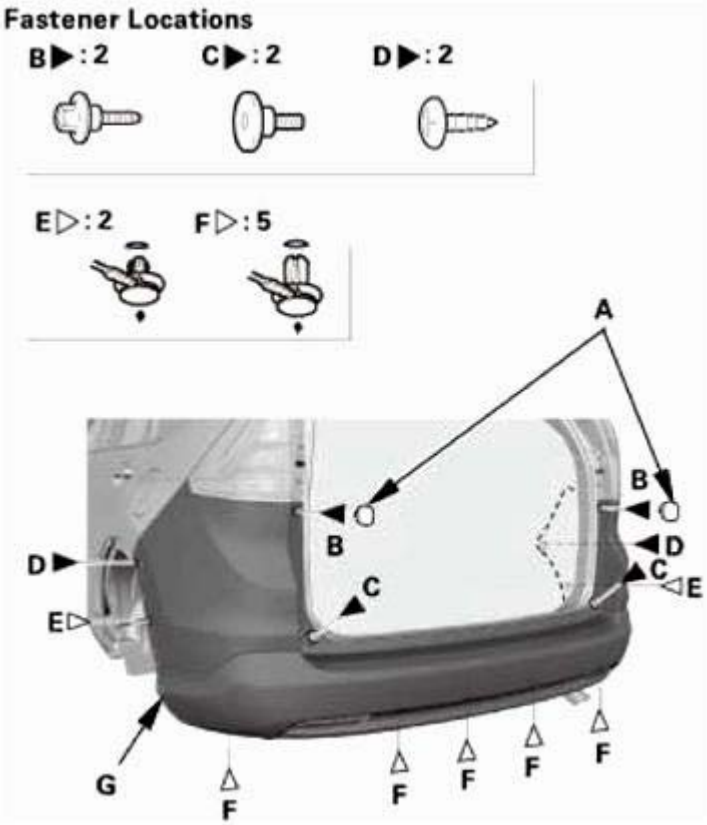

Fig. 99: Identifying Rear Bumper, Clips, Caps And Bolts
Courtesy of AMERICAN HONDA MOTOR CO., INC.

3. Pull out the rear bumper (A) from the side spacer (B).

NOTE: Repeat this procedure on the opposite side.

GETtheMANUALS.org

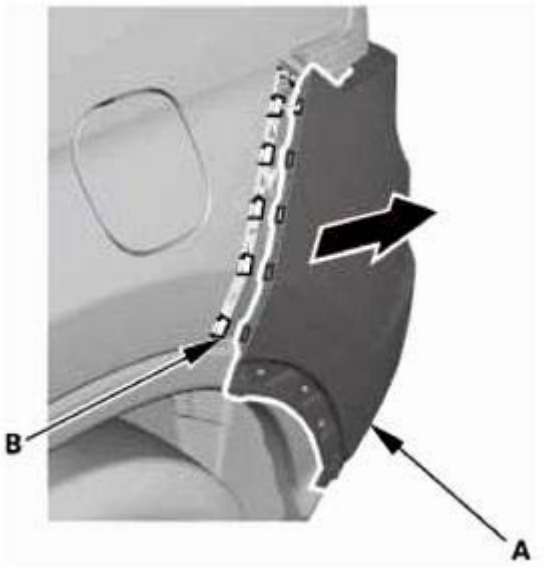

Fig. 100: Pulling Out Rear Bumper From Side Spacer
Courtesy of AMERICAN HONDA MOTOR CO., INC.

4. With the help of an assistant, pull out the rear bumper (A) from the side bracket (B).

NOTE: Repeat this procedure on the opposite side.

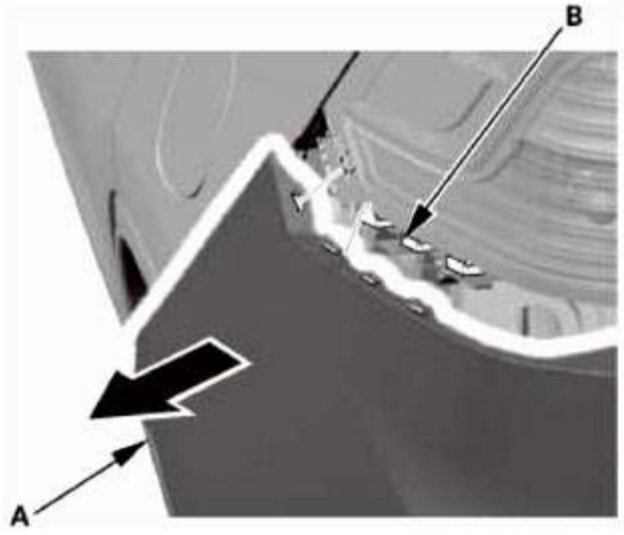

Fig. 101: Pulling Out Rear Bumper From Side Bracket
Courtesy of AMERICAN HONDA MOTOR CO., INC.

5. With the help of an assistant, remove the rear bumper

GETtheMANUALS.org

Fig. 102: Identifying Rear Bumper
Courtesy of AMERICAN HONDA MOTOR CO., INC.

5. Rear Bumper Absorber
    1. For some models: Remove the rear bumper absorber (

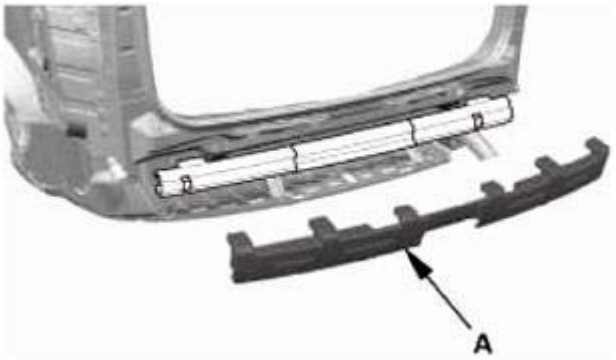

Fig. 103: Identifying Rear Bumper Absorber
Courtesy of AMERICAN HONDA MOTOR CO., INC.

INSTALLATION

1. Rear Bumper Absorber
    1. For some models: Install the rear bumper absorber (A

GETtheMANUALS.org

Fig. 104: Identifying Rear Bumper Absorber
Courtesy of AMERICAN HONDA MOTOR CO., INC.

2. Rear Bumper
    1. With the help of an assistant, install the rear bumper (

Fig. 105: Identifying Rear Bumper
Courtesy of AMERICAN HONDA MOTOR CO., INC.

    2. With the help of an assistant, install the rear bumper (A) side bracket (B).

NOTE: **Repeat this procedure on the opposite side.**

GETtheMANUALS.org

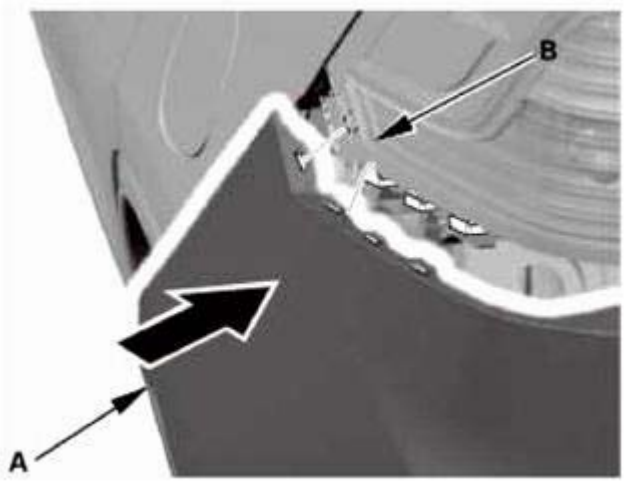

Fig. 106: Installing Rear Bumper Side Bracket
Courtesy of AMERICAN HONDA MOTOR CO., INC.

3. Install the rear bumper (A) to the side spacer (B).

NOTE: Repeat this procedure on the opposite side.

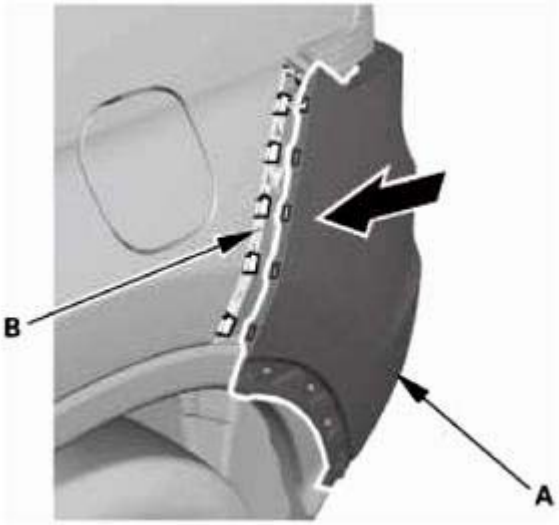

Fig. 107: Installing Rear Bumper To Side Spacer
Courtesy of AMERICAN HONDA MOTOR CO., INC.

4. Install the bolts (A, B), the screws (C), and the clips (D, E securing the rear bumper (F), then install the caps (G).

GETtheMANUALS.org

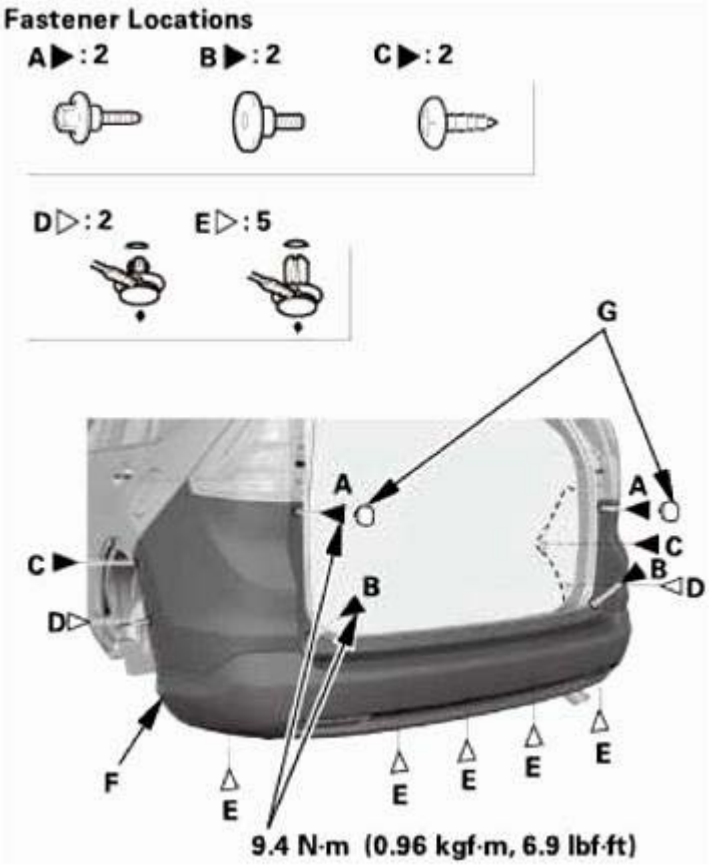

Fig. 108: Identifying Rear Bumper, Caps, Bolts, Screws And Clips With Torque Specification
Courtesy of AMERICAN HONDA MOTOR CO., INC.

3. Rear Wheel Arch Protector Rear Side As Needed - Both Sides

NOTE: Repeat this procedure on the opposite side.

1. Install the rear wheel arch protector (A), then install the screws (B) and the clip (C). Make sure the clips (D, E) snap into securely.

GETtheMANUALS.org

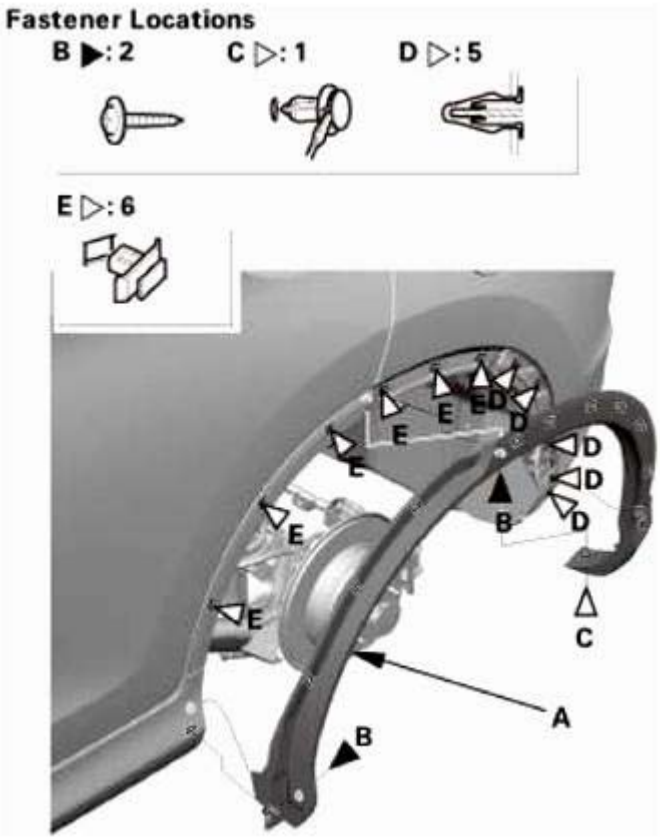

Fig. 109: Identifying Rear Wheel Arch Protector, Screws And Clips
Courtesy of AMERICAN HONDA MOTOR CO., INC.

4. Rear Splash Guard (For Some Models) - Both Sides
    1. Install the rear splash guards (A), then install the screw the clip (C). Make sure the clips snap into place securely.

    Left side

GETtheMANUALS.org

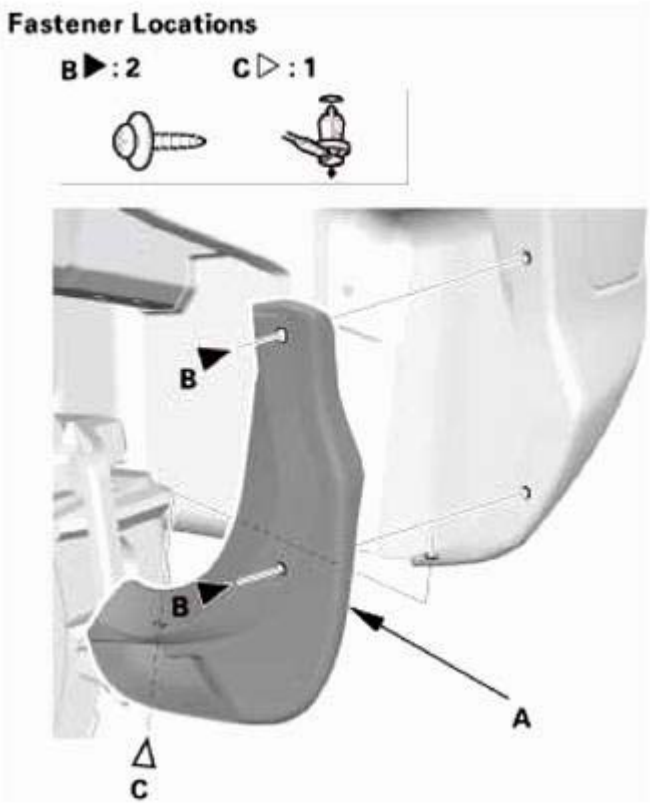

Fig. 110: Identifying Rear Splash Guards, Screw And Clip (Left Side)
Courtesy of AMERICAN HONDA MOTOR CO., INC.

Right side

GETtheMANUALS.org

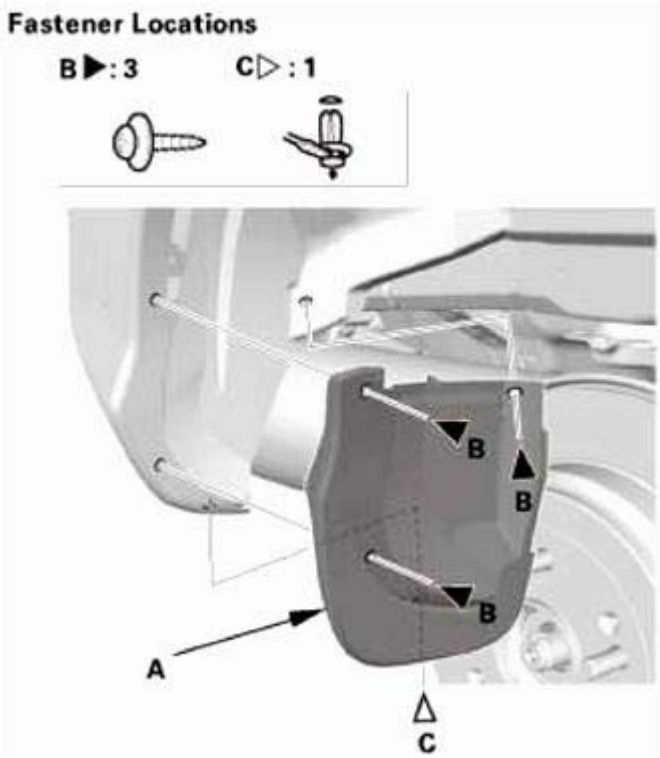

Fig. 111: Identifying Rear Splash Guards, Screw And Clip (Right Side)
Courtesy of AMERICAN HONDA MOTOR CO., INC.

5. Tailgate Weatherstrip As Needed
    1. Locate the alignment mark (A) of the tailgate weather Align the alignment mark (C) with the center of the lower area of the tailgate opening, then install the tailgate weatherstrip way around.

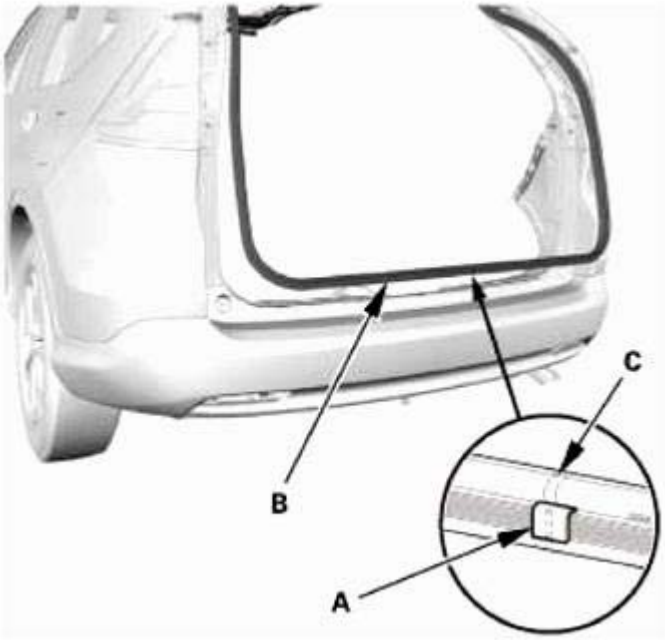

GETtheMANUALS.org

Fig. 112: Identifying Alignment Mark On Tailgate Weather
Courtesy of AMERICAN HONDA MOTOR CO., INC.

REAR FLOOR UNDER BAR REMOVAL AND INSTALLATION

REMOVAL

1. Vehicle Lift
    1. Raise the vehicle on a lift, and make sure it is securely supported.
2. Rear Floor Under Bar
    1. Remove the bolts (A, B) securing the rear floor under bar (C).

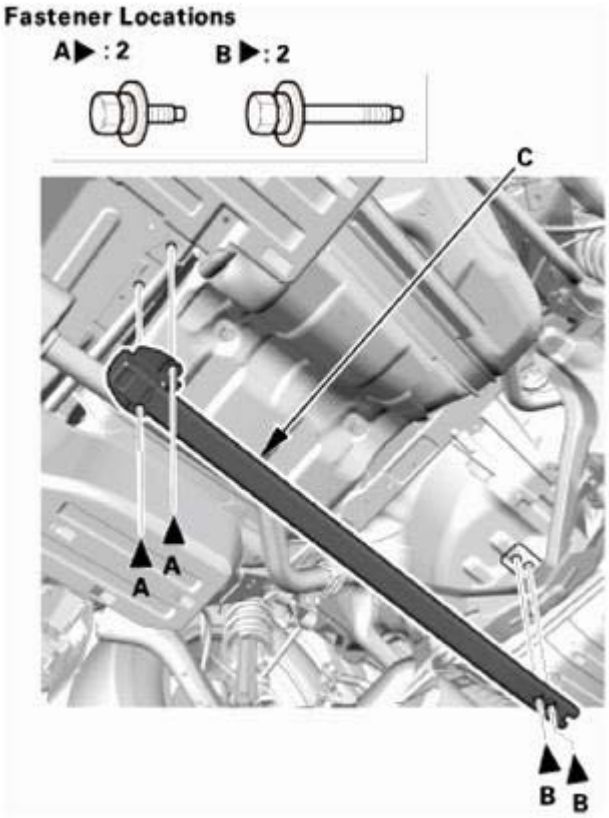

Fig. 113: Identifying Rear Floor Under Bar And Bolts
Courtesy of AMERICAN HONDA MOTOR CO., INC.

2. Remove the bolts (A, B) securing the rear floor under bar bracket (C).

GETtheMANUALS.org

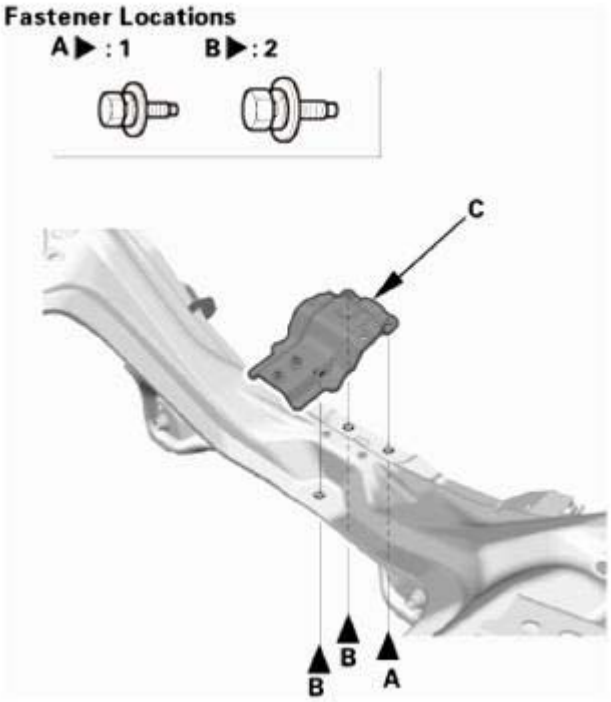

Fig. 114: Identifying Rear Floor Under Bar Bracket And Bolts
Courtesy of AMERICAN HONDA MOTOR CO., INC.

INSTALLATION

1. Rear Floor Under Bar
    1. Install the rear floor under bar bracket (A), then install the bolts (B, C).

GETtheMANUALS.org

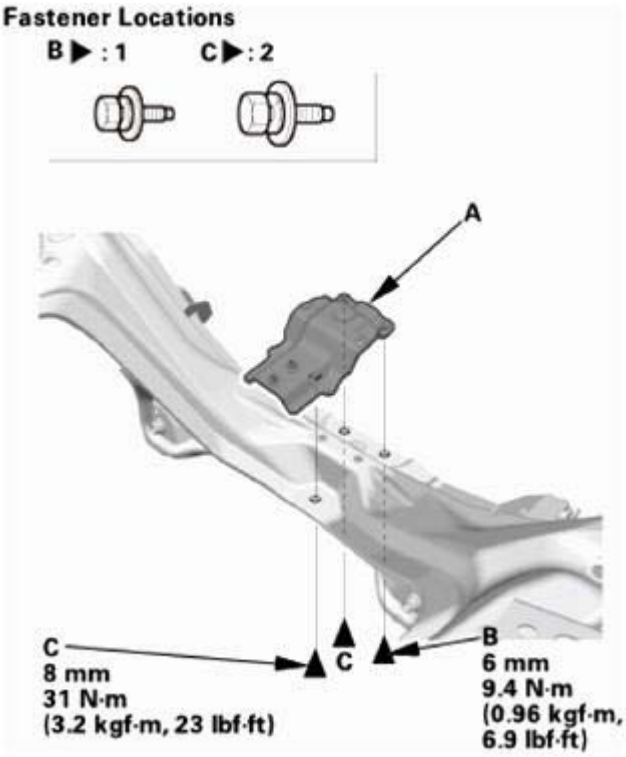

Fig. 115: Identifying Rear Floor Under Bar Bracket And Bolts With Torque Specification
Courtesy of AMERICAN HONDA MOTOR CO., INC.

2. Install the rear floor under bar (A), then install the bolts (B, C).

GETtheMANUALS.org

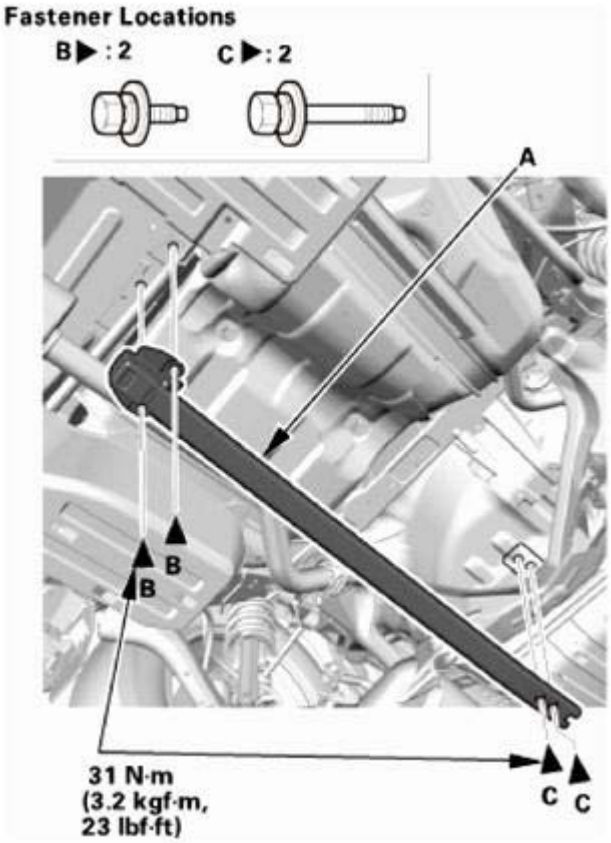

Fig. 116: Identifying Rear Floor Under Bar And Bolts With Torque Specification
Courtesy of AMERICAN HONDA MOTOR CO., INC.

REAR FLOOR UNDERCOVER REMOVAL AND INSTALLATION

REMOVAL

1. Vehicle Lift
    1. Raise the vehicle on a lift, and make sure it is securely supported.
2. Rear Floor Undercover
    1. Remove the screws (A), the bolts (B), and the clips (C, D) securing the rear floor undercover (E), then remove the rear floor undercover.

GETtheMANUALS.org

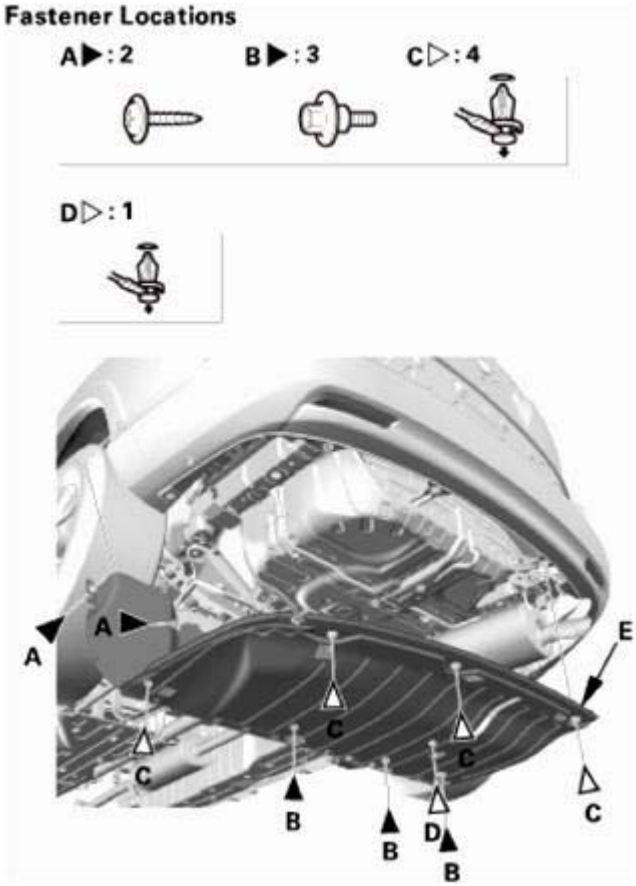

Fig. 117: Identifying Rear Floor Undercover, Screws, Bolts And Clips
Courtesy of AMERICAN HONDA MOTOR CO., INC.

INSTALLATION

1. Rear Floor Undercover
    1. Install the rear floor undercover (A), then install the screws (B), the bolts (C), and the clips (D, E). Make sure the clips snap into place securely.

GETtheMANUALS.org

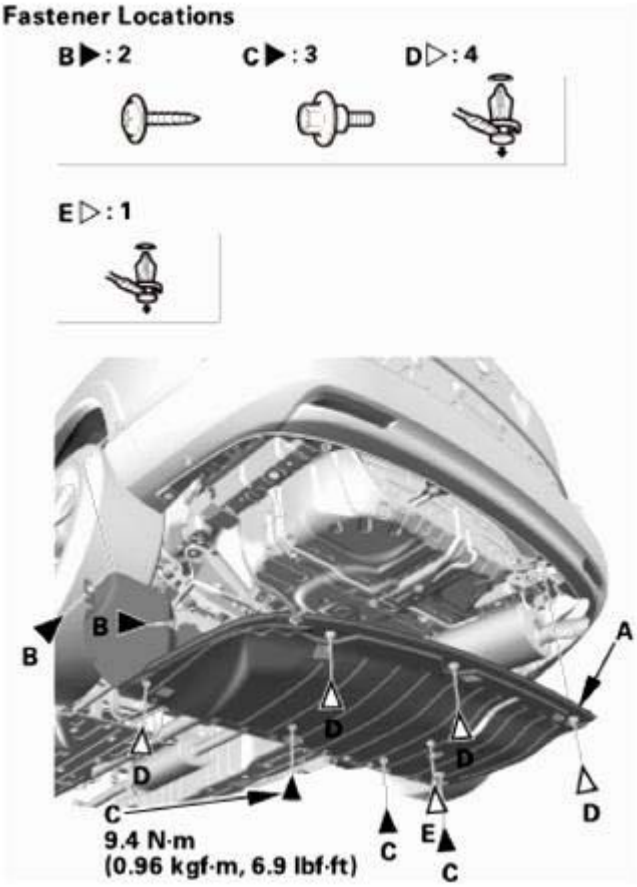

Fig. 118: Identifying Rear Floor Undercover, Screws, Bolts And Clips With Torque Specification
Courtesy of AMERICAN HONDA MOTOR CO., INC.

REAR INNER FENDER REMOVAL AND INSTALLATION

REMOVAL

1. Vehicle Lift
    1. Raise the vehicle on a lift, and make sure it is securely supported.
2. Rear Wheel
    1. Remove the rear wheel.

GETtheMANUALS.org

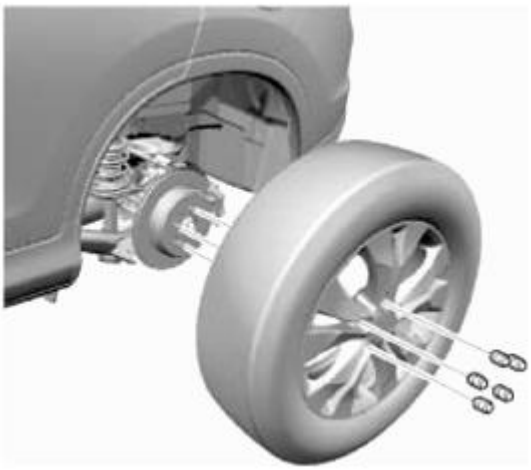

Fig. 119: Identifying Rear Wheel And Studs
Courtesy of AMERICAN HONDA MOTOR CO., INC.

3. Rear Splash Guard (For Some Models)
    1. Remove the screws (A) and the clip (B), then remove the rear splash guard (C).

Left side

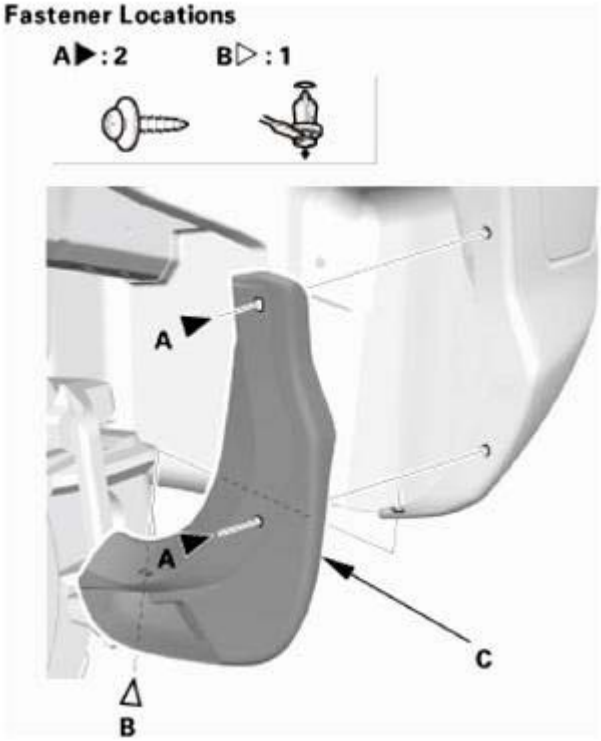

Fig. 120: Identifying Rear Splash Guards, Screws And Clip (Left Side)
Courtesy of AMERICAN HONDA MOTOR CO., INC.

Right side

GETtheMANUALS.org

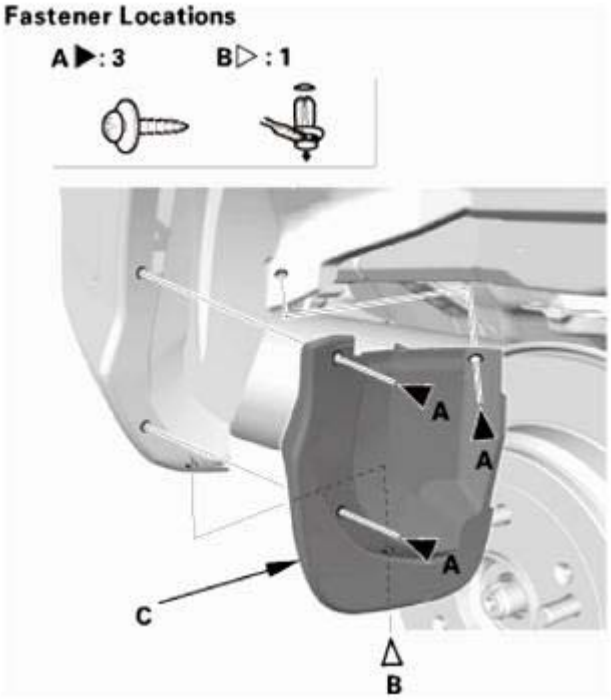

Fig. 121: Identifying Rear Splash Guards, Screws And Clip (Right Side)
Courtesy of AMERICAN HONDA MOTOR CO., INC.

4. Rear Inner Fender (For Right and Left Guide)
    1. Remove the screws (A, C), the bolt (B), and the clips (D, E, and F) securing the rear inner fender, then remove the left rear inner fender (G) or the right rear inner fender (H).

    Left side

GETtheMANUALS.org

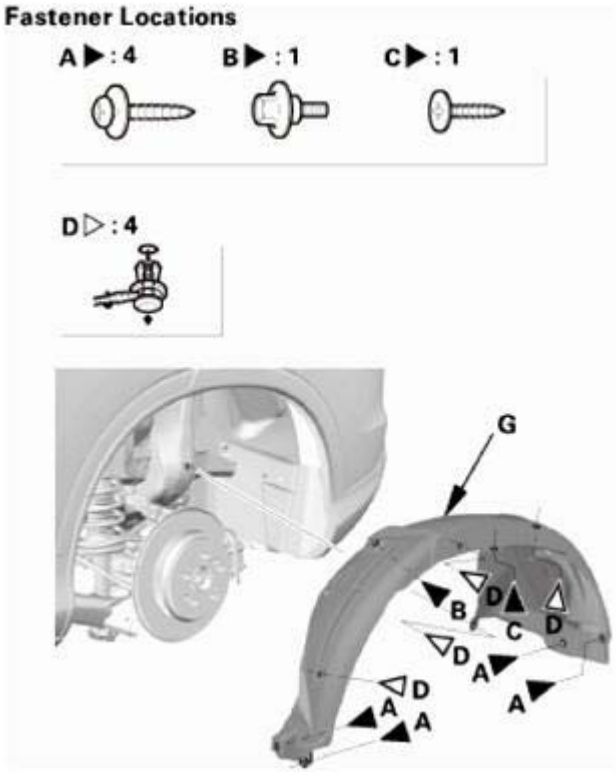

Fig. 122: Identifying Left Rear Inner Fender, Right Rear Inner Fender, Screws, Bolt And Clips (Left Side)
Courtesy of AMERICAN HONDA MOTOR CO., INC.

Right side

GETtheMANUALS.org

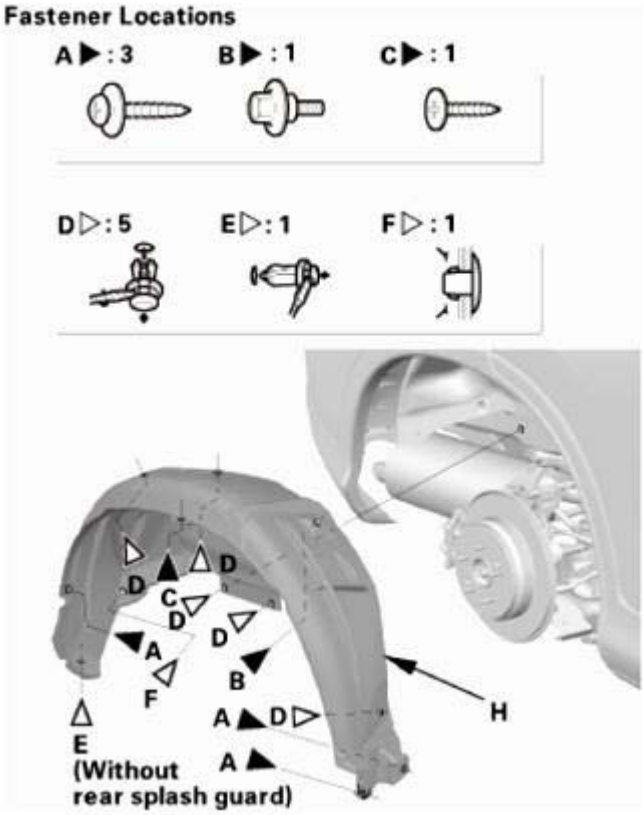

Fig. 123: Identifying Left Rear Inner Fender, Right Rear Inner Fender, Screws, Bolt And Clips (Right Side)
Courtesy of AMERICAN HONDA MOTOR CO., INC.

INSTALLATION

1. Rear Inner Fender (For Right and Left Guide)
    1. Install the left rear inner fender (A) or the right rear inner fender (B), then install the screws (C, E), the bolt (D), and the clips (F, G, and H). Make sure the clips snap into place securely.

    Left side

GETtheMANUALS.org

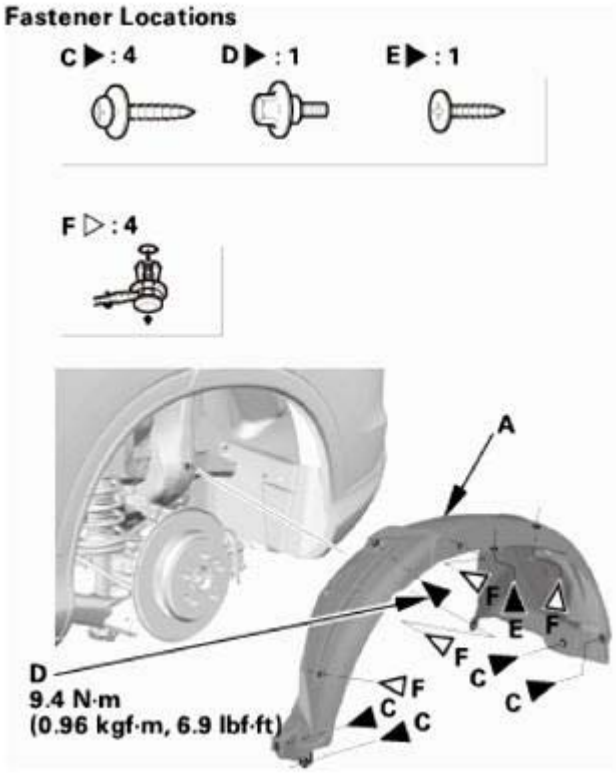

Fig. 124: Identifying Left Rear Inner Fender, Right Rear Inner Fender, Screws, Bolt And Clips With Torque Specification (Left Side)
Courtesy of AMERICAN HONDA MOTOR CO., INC.

Right side

GETtheMANUALS.org

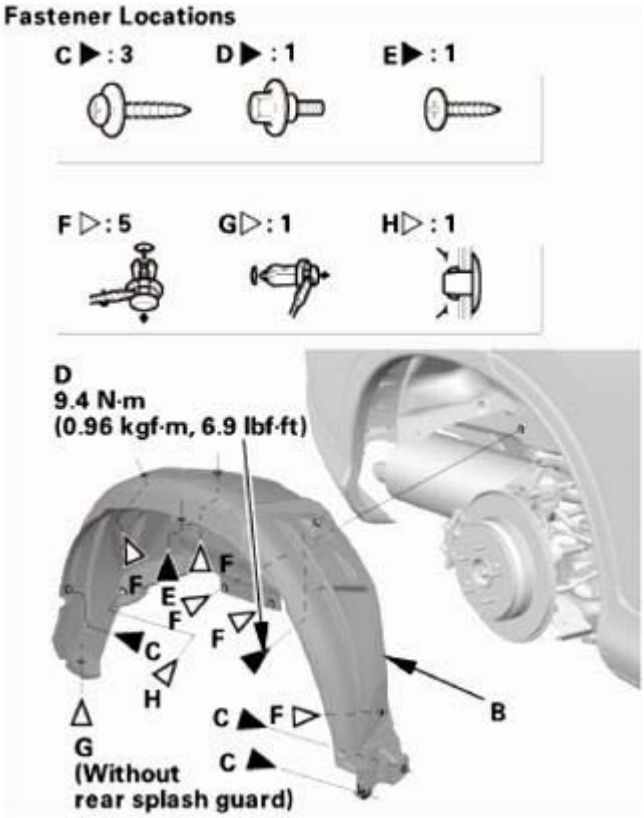

Fig. 125: Identifying Left Rear Inner Fender, Right Rear Inner Fender, Screws, Bolt And Clips With Torque Specification (Right Side)
Courtesy of AMERICAN HONDA MOTOR CO., INC.

2. Rear Splash Guard (For Some Models)
    1. Install the rear splash guard (A), then install the screws (B) and the clip (C). Make sure the clip snaps into place securely.

    Left side

GETtheMANUALS.org

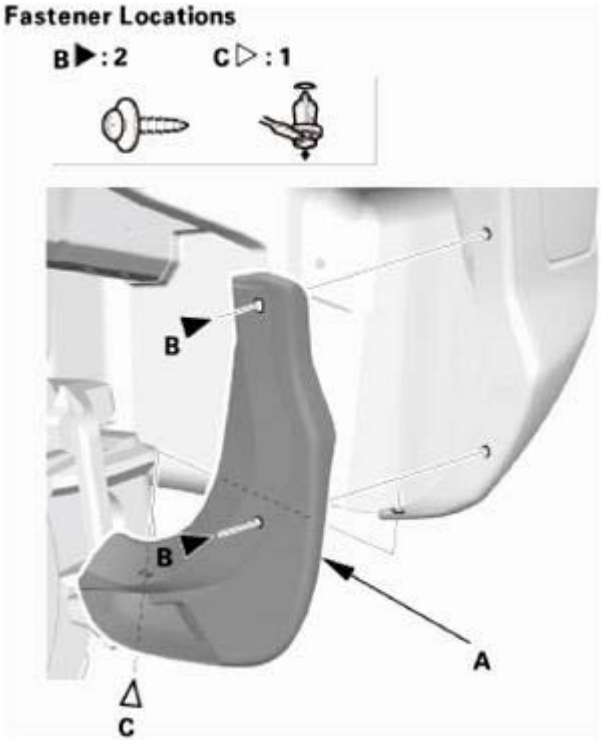

Fig. 126: Identifying Rear Splash Guard, Screws And Clip (Left Side)
Courtesy of AMERICAN HONDA MOTOR CO., INC.

Right side

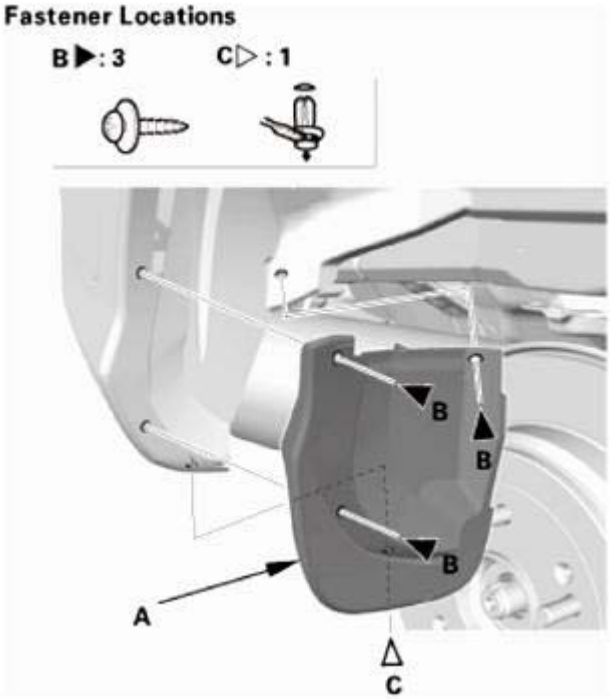

Fig. 127: Identifying Rear Splash Guard, Screws And Clip (Right Side)

GETtheMANUALS.org

Courtesy of AMERICAN HONDA MOTOR CO., INC.

3. Rear Wheel
    1. Install the rear wheel.

NOTE: **Before installing the wheel, clean the mating surfaces between the brake disc/drum and the inside of the wheel.**

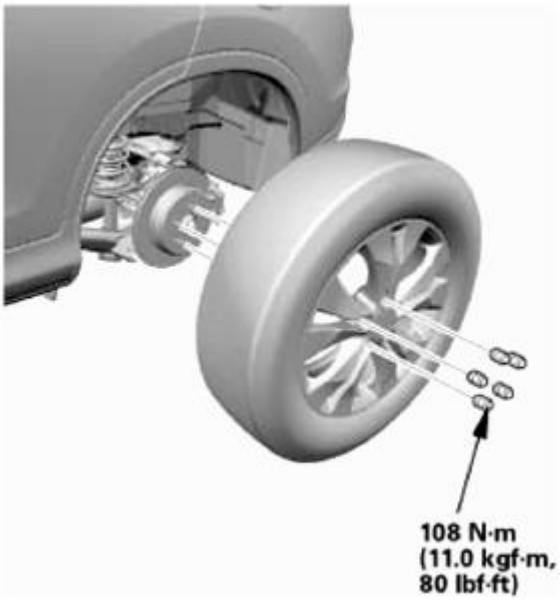

Fig. 128: Identifying Rear Wheel And Studs With Torque Specification
Courtesy of AMERICAN HONDA MOTOR CO., INC.

REAR LICENSE TRIM REMOVAL AND INSTALLATION

REMOVAL

1. Rear License Trim
    1. Remove the bolts (A).

GETtheMANUALS.org

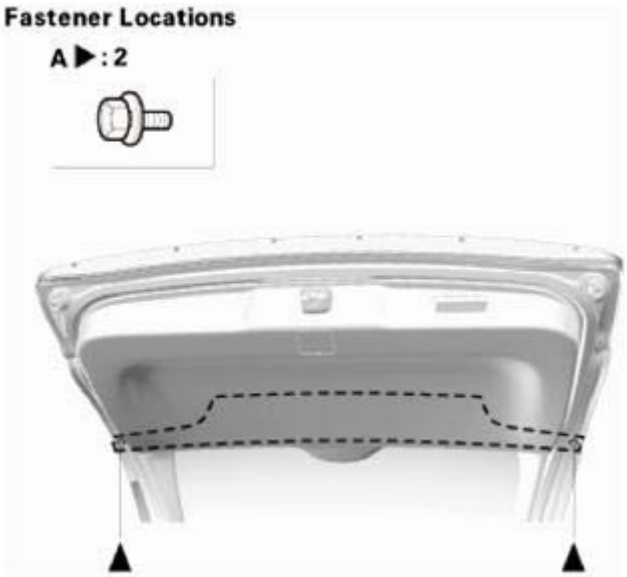

Fig. 129: Identifying Rear License Trim Bolts
Courtesy of AMERICAN HONDA MOTOR CO., INC.

2. Spray soapy water solution onto the double-sided adhesive tape (A), then carefully cut the adhesive tape along the lower edge of the rear license trim (B) with a utility knife while separating the trim from the tailgate (C) with a trim tool.

NOTE: Apply protective tape (D) around the cutting area as shown.

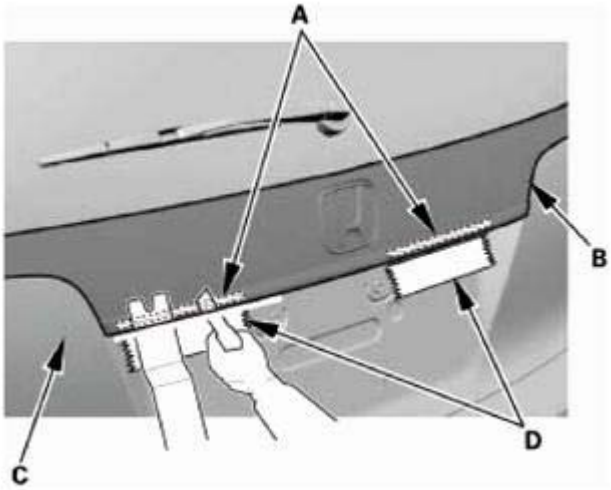

Fig. 130: Applying Protective Tape Around Cutting Area
Courtesy of AMERICAN HONDA MOTOR CO., INC.

3. Pull out the rear license trim (A) with the appropriate trim tool to release the clip pins (B) of the clips (C) from the clip grommets (D) on the tailgate, and detach the clips (E), then remove the rear license trim from the tailgate.

GETtheMANUALS.org

NOTE: **The clip grommets will stay on the tailgate.**

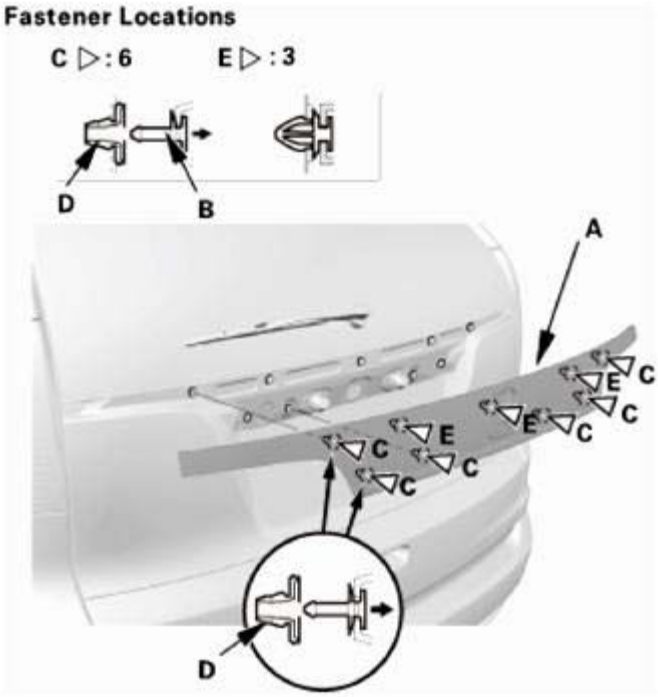

Fig. 131: Identifying Rear License Trim, Clip Pins, Clip Grommets And Clips
Courtesy of AMERICAN HONDA MOTOR CO., INC.

4. Remove the clip grommets (A) from the tailgate.
5. Install the clip grommets into the clip pins on the rear license trim.

NOTE: **If the clip pins and the clip grommets are damaged or stress-whitened, replace them as an assembly with new ones.**

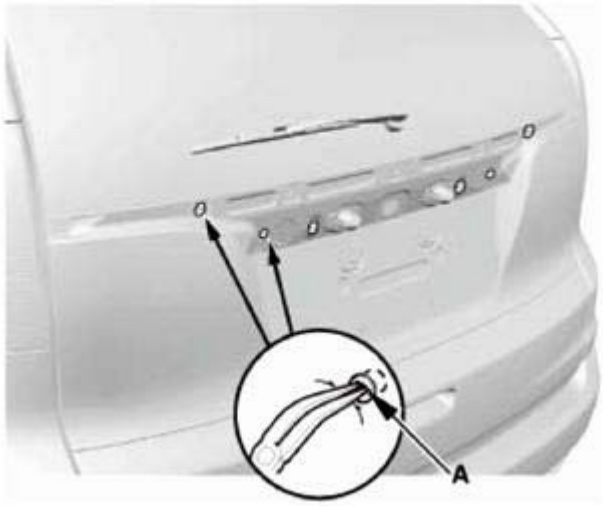

GETtheMANUALS.org

Fig. 132: Identifying Clip Grommets
Courtesy of AMERICAN HONDA MOTOR CO., INC.

INSTALLATION

1. Rear License Trim
    1. If you are reusing the original rear license trim (A), apply PP primer to the areas where new double-sided adhesive tapes (B, C) will be applied, then attach the new double-sided adhesive tapes to the trim as shown.

       Adhesive tape (B): Thickness 3 mm (0.12 in)

       Width 4 mm (0.16 in)

       Length 255 mm (10.04 in)

       Adhesive tape (C): Thickness 2 mm (0.08 in)

       Width 5 mm (0.20 in)

       Length 177 mm (6.97 in)

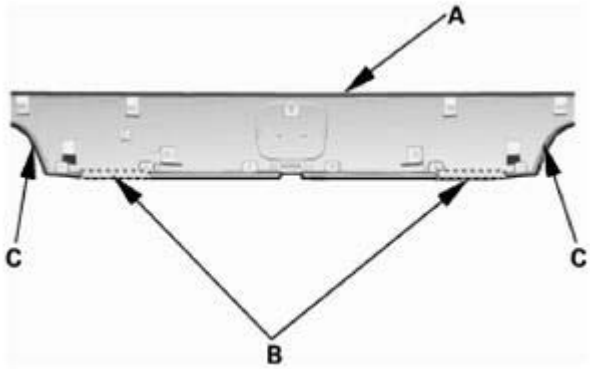

Fig. 133: Identifying Adhesive Tape Applying Area On Rear License Trim
Courtesy of AMERICAN HONDA MOTOR CO., INC.

    2. Fold the edge of each adhesive backing from the double-sided adhesive tape.
    3. Hold up the rear license trim (A), and fit the clips (B, C) into the holes in the tailgate. Push on the trim until the clips snap into place securely.

GETtheMANUALS.org

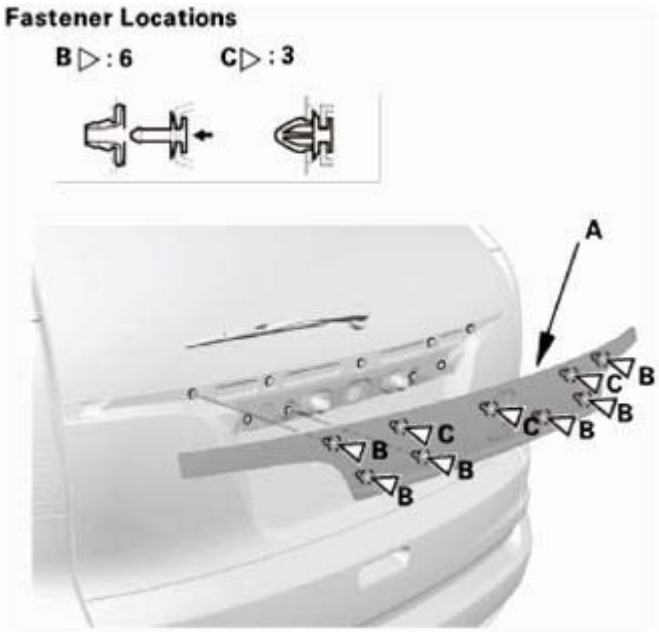

Fig. 134: Identifying Rear License Trim And Clips
Courtesy of AMERICAN HONDA MOTOR CO., INC.

4. Install the bolts (A).

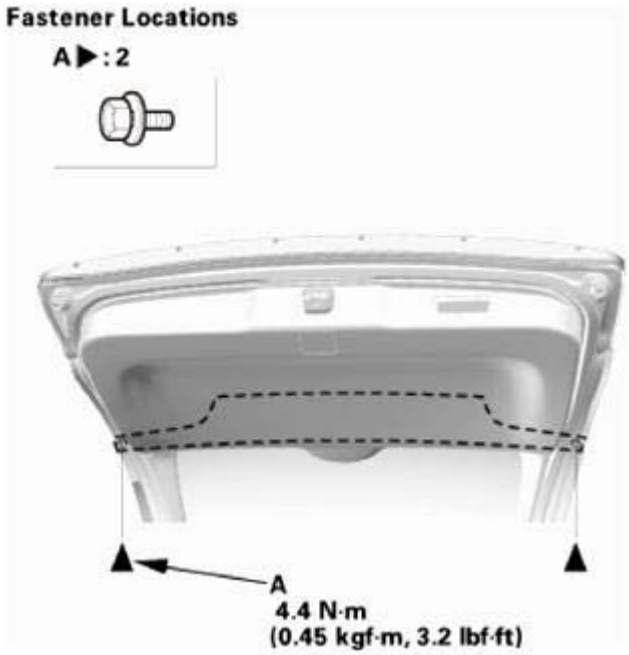

Fig. 135: Identifying Rear License Trim Bolts With Torque Specification
Courtesy of AMERICAN HONDA MOTOR CO., INC.

REAR SPLASH GUARD REMOVAL AND INSTALLATION

GETtheMANUALS.org

REMOVAL

1. Rear Splash Guard
    1. Remove the screws (A) and the clip (B), then remove the rear splash guard (C).

Left side

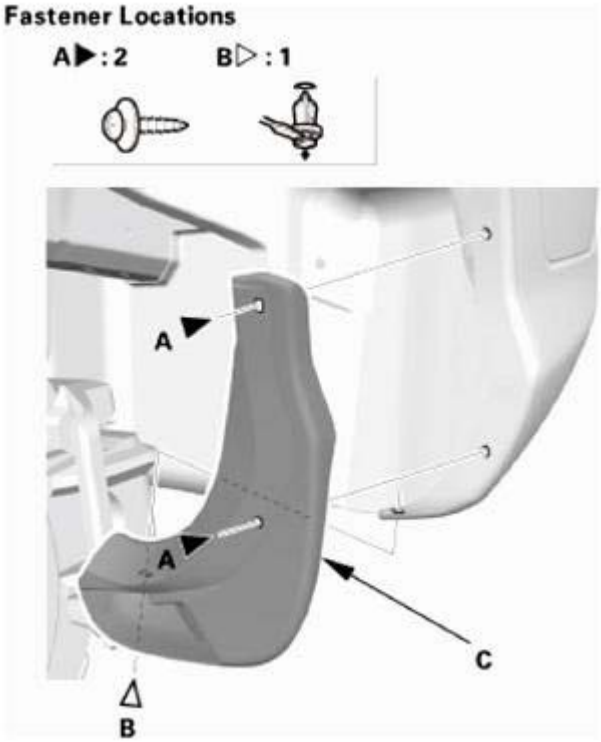

Fig. 136: Identifying Rear Splash Guards, Screws And Clip (Left Side)
Courtesy of AMERICAN HONDA MOTOR CO., INC.

Right side

GETtheMANUALS.org

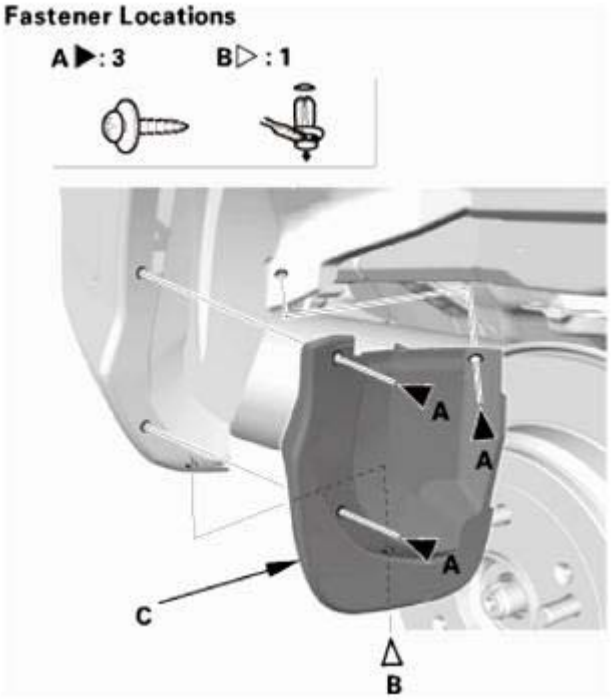

Fig. 137: Identifying Rear Splash Guards, Screws And Clip (Right Side)
Courtesy of AMERICAN HONDA MOTOR CO., INC.

INSTALLATION

1. Rear Splash Guard
    1. Install the rear splash guard (A), then install the screws (B) and the clip (C). Make sure the clips snap into place securely.

    Left side

GETtheMANUALS.org

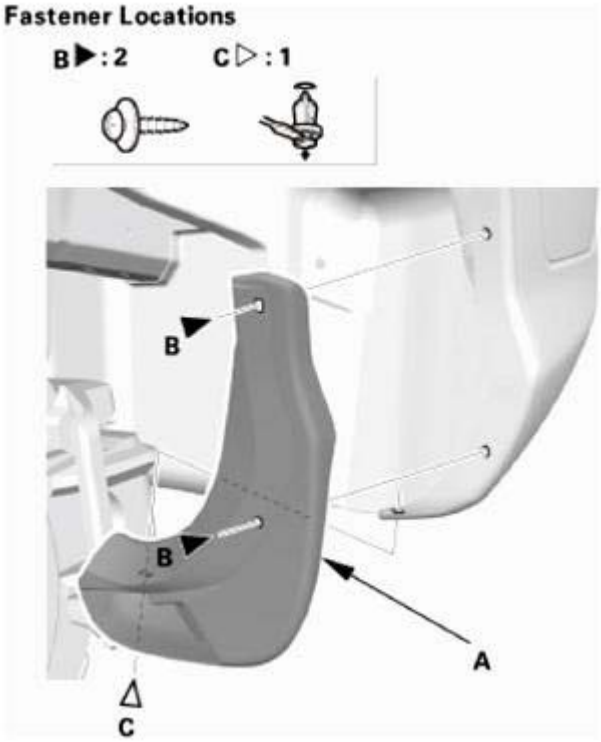

Fig. 138: Identifying Rear Splash Guard, Screws And Clip (Left Side)
Courtesy of AMERICAN HONDA MOTOR CO., INC.

Right side

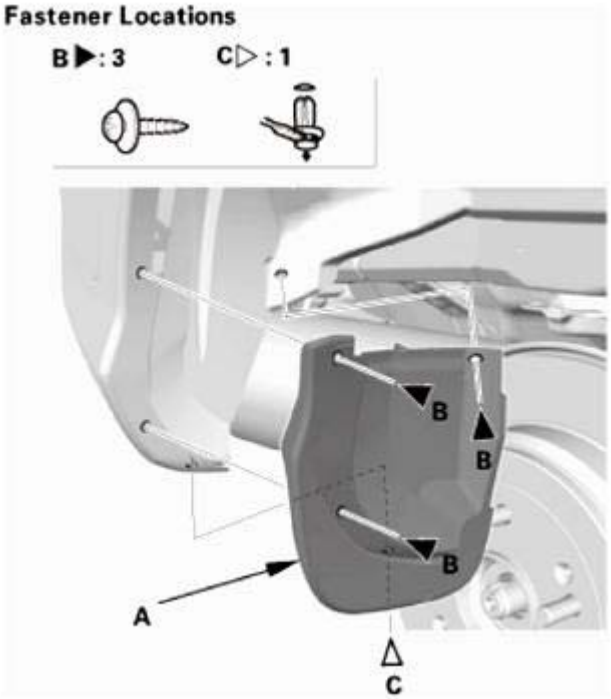

Fig. 139: Identifying Rear Splash Guard, Screws And Clip (Right Side)

GETtheMANUALS.org

Courtesy of AMERICAN HONDA MOTOR CO., INC.

REAR WHEEL ARCH PROTECTOR REMOVAL AND INSTALLATION

REMOVAL

1. Rear Splash Guard (For Some Models)
    1. Remove the screws (A) and the clip (B), then remove the rear splash guard (C).

Left side

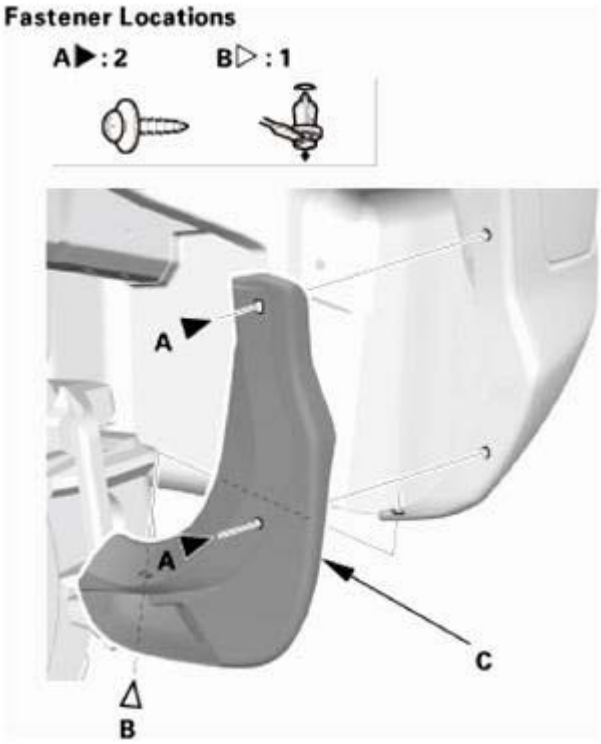

Fig. 140: Identifying Rear Splash Guards, Screws And Clip (Left Side)
Courtesy of AMERICAN HONDA MOTOR CO., INC.

Right side

GETtheMANUALS.org

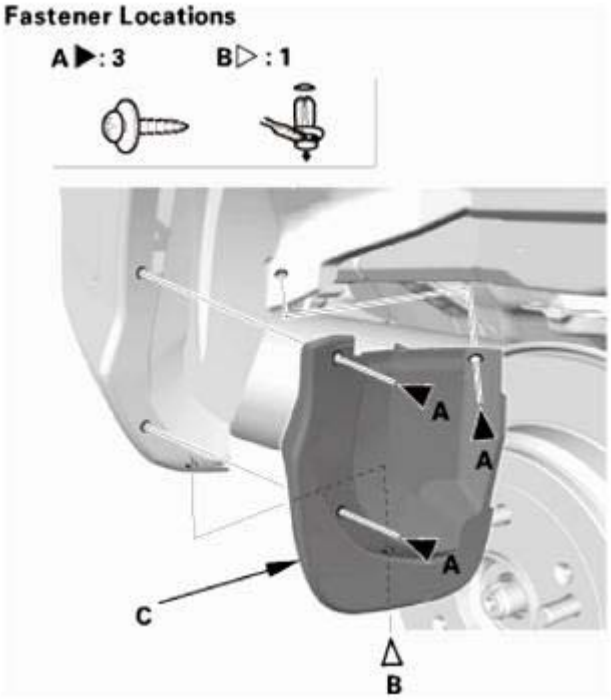

Fig. 141: Identifying Rear Splash Guards, Screws And Clip (Right Side)
Courtesy of AMERICAN HONDA MOTOR CO., INC.

2. Rear Wheel Arch Protector
    1. Remove the screws (A) and the clip (B) securing the rear wheel arch protector (C).
    2. Carefully pry out the clip portions of the wheel arch protector with the appropriate trim tool to detach the clips (D, E), then remove the wheel arch protector.

GETtheMANUALS.org

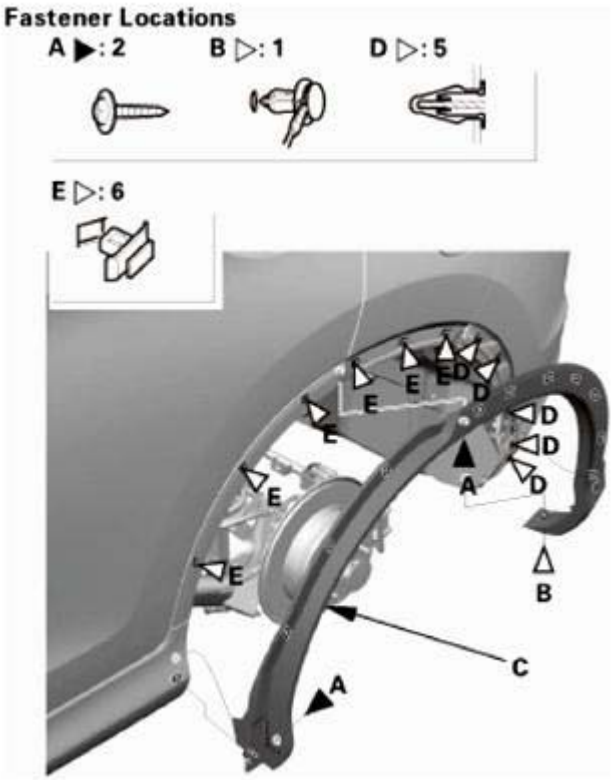

Fig. 142: Identifying Rear Wheel Arch Protector, Screws And Clips
Courtesy of AMERICAN HONDA MOTOR CO., INC.

INSTALLATION

1. Rear Wheel Arch Protector
    1. Install the rear wheel arch protector (A), then install the screws (B) and the clip (C). Make sure the clips (D, E) snap into place securely.

GETtheMANUALS.org

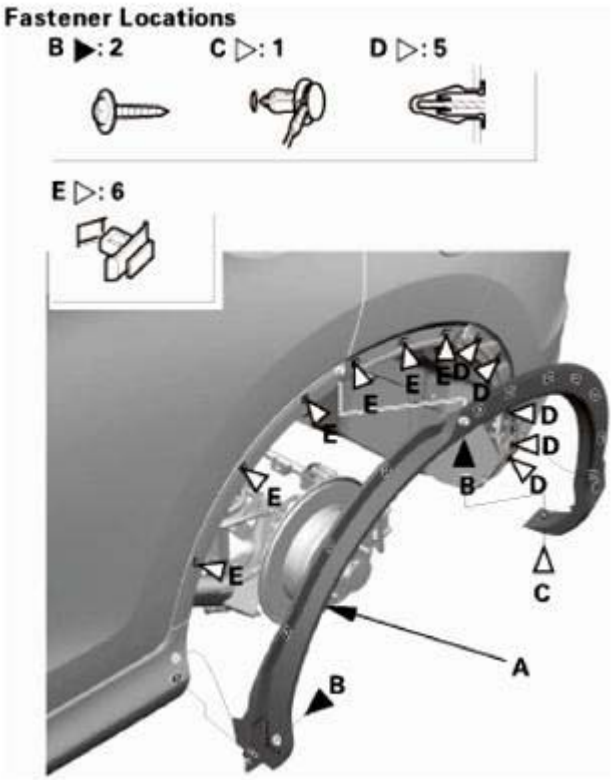

Fig. 143: Identifying Rear Wheel Arch Protector, Screws And Clips
Courtesy of AMERICAN HONDA MOTOR CO., INC.

2. Rear Splash Guard (For Some Models)
    1. Install the rear splash guard (A), then install the screws (B) and the clip (C). Make sure the clip snaps into place securely.

    Left side

GETtheMANUALS.org

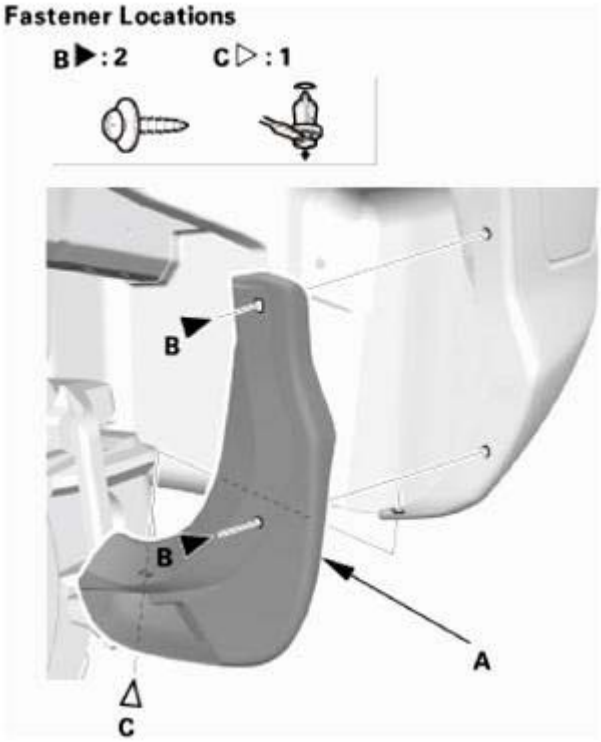

Fig. 144: Identifying Rear Splash Guard, Screws And Clip (Left Side)
Courtesy of AMERICAN HONDA MOTOR CO., INC.

Right side

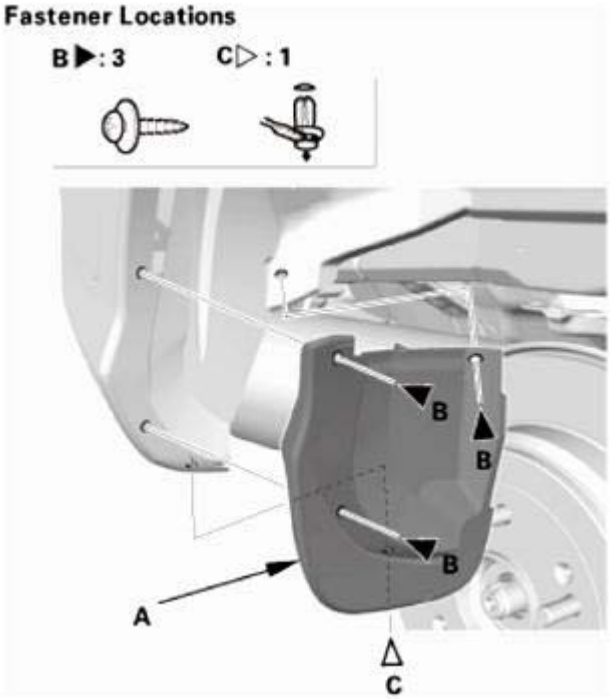

Fig. 145: Identifying Rear Splash Guard, Screws And Clip (Right Side)

GETtheMANUALS.org

Courtesy of AMERICAN HONDA MOTOR CO., INC.

ROOF MOLDING REMOVAL AND INSTALLATION

REMOVAL

1. Left Windshield Wiper Arm Assembly

NOTE: Set the windshield wiper arms to the auto-stop position before removal.

   1. Remove the wiper arm cap (A).
   2. Remove the nut (B), then remove the left wiper arm (C).

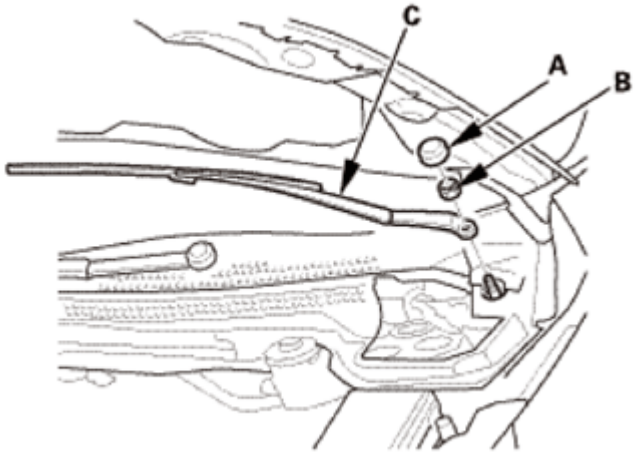

Fig. 146: Identifying Wiper Arms With Cap And Nut
Courtesy of AMERICAN HONDA MOTOR CO., INC.

2. Front Fender Trim
   1. Remove the clips (A, B).
   2. Pull up the front fender trim (C) by hand to detach the clips (D), then remove the trim.

GETtheMANUALS.org

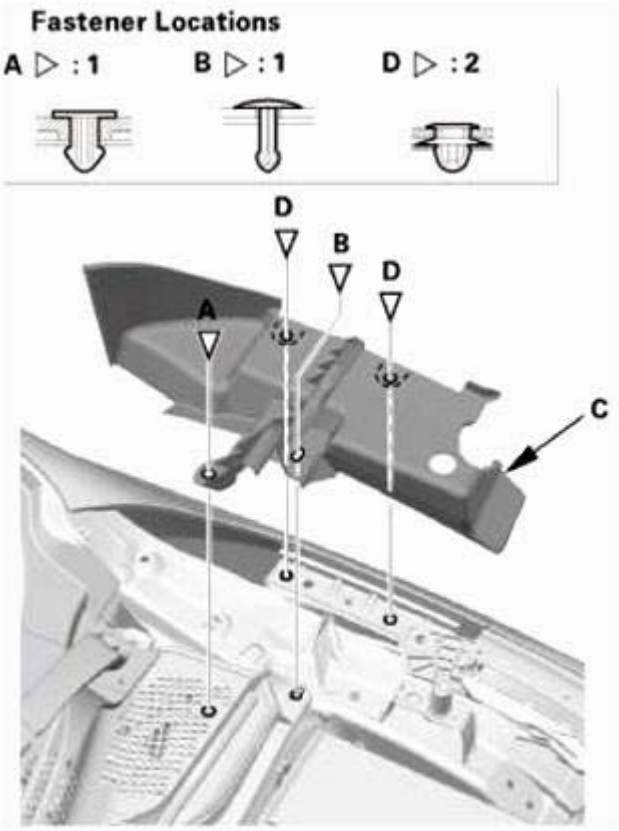

Fig. 147: Identifying Front Fender Trim And Clips
Courtesy of AMERICAN HONDA MOTOR CO., INC.

3. Left Cowl Top Cover
    1. Remove the clip (A).
    2. Pull out the hood rear seal (B).
    3. Detach the hooks, and remove the cowl top cover (C).

GETtheMANUALS.org

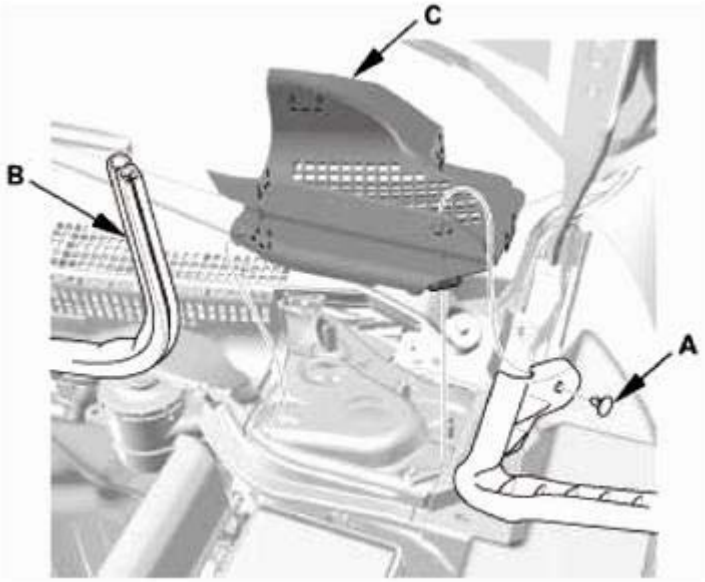

Fig. 148: Identifying Hood Rear Seal, Cowl Top Cover And Clip
Courtesy of AMERICAN HONDA MOTOR CO., INC.

4. Side Cowl Cover
    1. Detach the hook (A) at the inside of the cowl cover (B).
    2. Release the hooks (C) from the cowl cover and the front fender (D), then remove the side cowl cover (E).
    3. Right side: Detach the windshield washer tube.

GETtheMANUALS.org

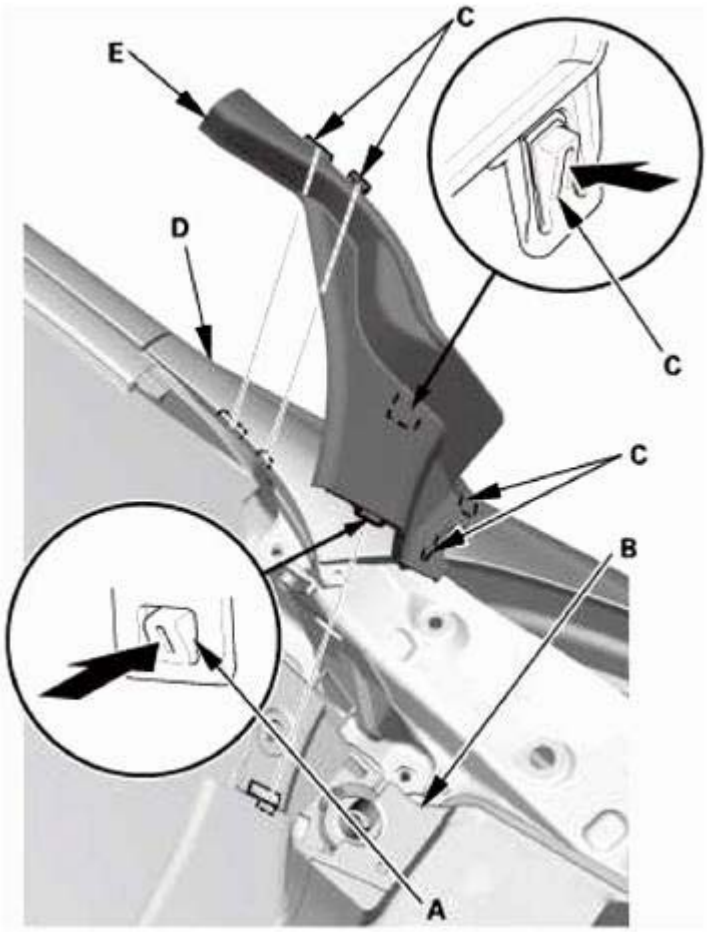

Fig. 149: Releasing Hooks From Cowl Cover And Front Fender
Courtesy of AMERICAN HONDA MOTOR CO., INC.

5. Roof Molding
    1. Carefully insert the trim tool (A) under the molding next to lower clip (B).
    2. While pulling up the clip area of the molding by hand of the six small hooks (C) to release the clip from the on the A-pillar. Do not pry up the clip if it is hard to release it from the clip on the A-pillar.
    3. Gradually work your way up to release each of the upper F, G).

GETtheMANUALS.org

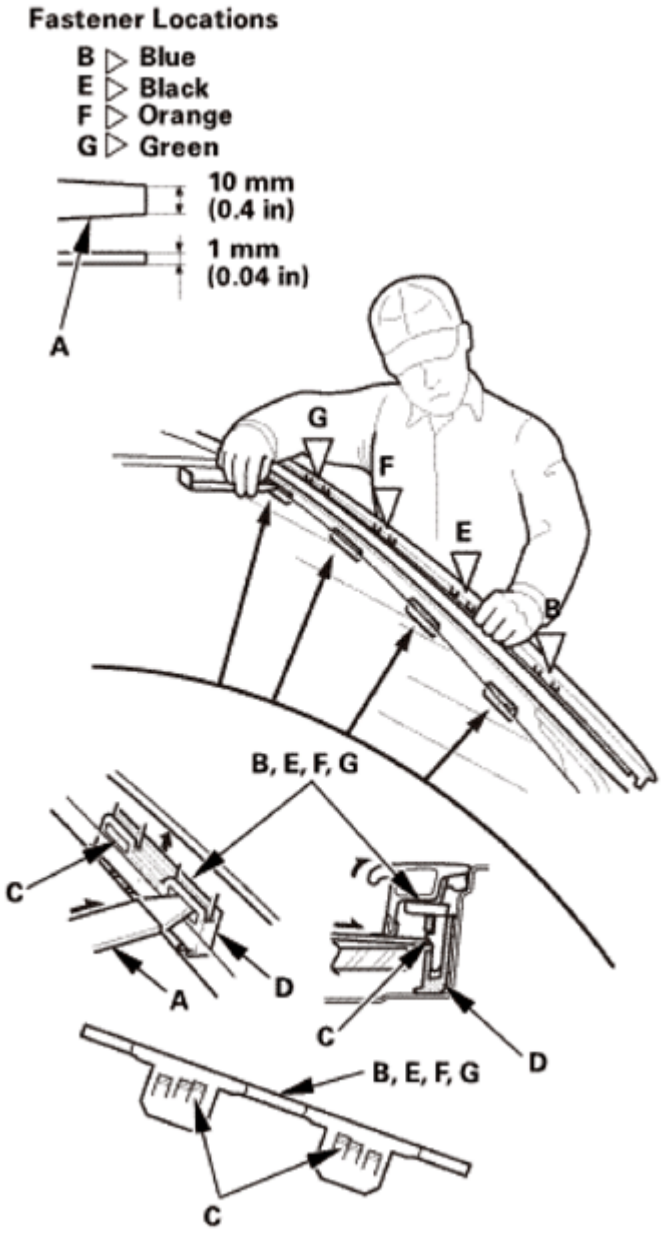

Fig. 150: Inserting Trim Tool Under Molding To Lower Clip
Courtesy of AMERICAN HONDA MOTOR CO., INC.

4. Start from the front to the rear; carefully insert a trim under the roof molding (A) next to each of the retainers (B, C). Slide and pry up the retainers to release it with the clips from the stud bolts (D) and the pins (E) on the body.

GETtheMANUALS.org

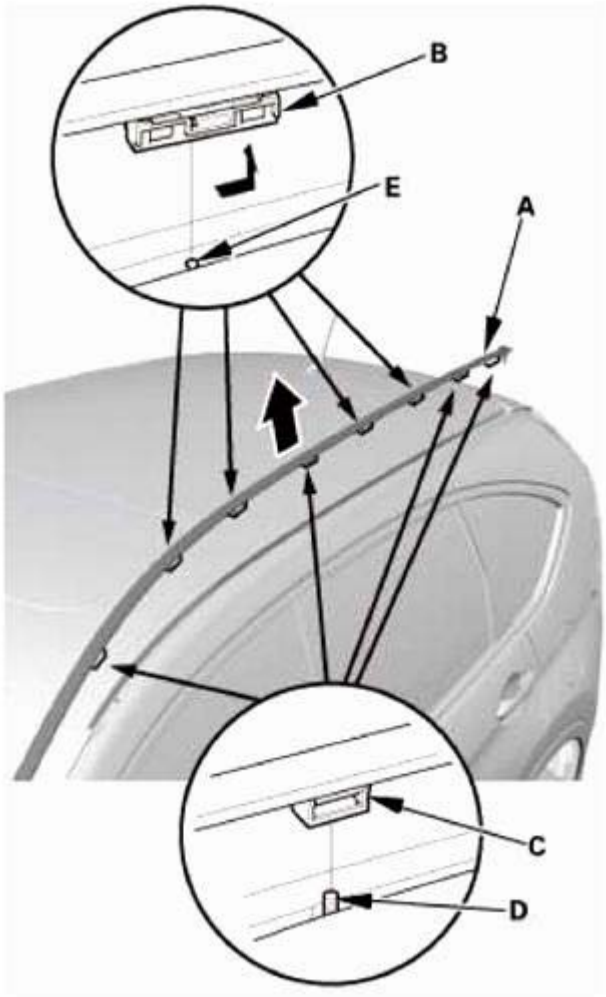

Fig. 151: Inserting Trim Under Roof Molding To Retainers
Courtesy of AMERICAN HONDA MOTOR CO., INC.

5. Slide the rear end of the roof molding (A) forward to release it from the body, then remove the roof molding from the body

GETtheMANUALS.org

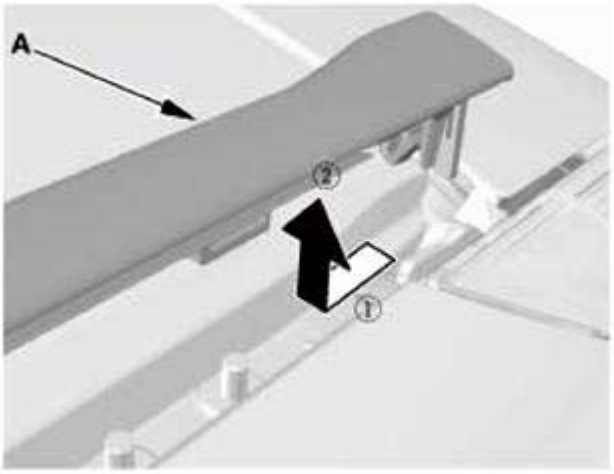

Fig. 152: Sliding Rear End Of Roof Molding
Courtesy of AMERICAN HONDA MOTOR CO., INC.

6. Pry up the middle hooks (A) with a flat-tip screw driver to release the retainer (B) from the roof molding (C).

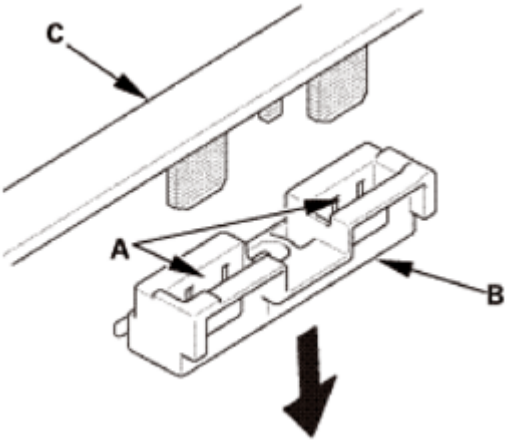

Fig. 153: Prying Up Middle Hooks With Flat-Tip Screw Driver
Courtesy of AMERICAN HONDA MOTOR CO., INC.

7. If necessary, remove the retainers (A, B) from the A-pillar
8. Carefully rub off the adhesive tape (C) under the retainers heating it with a heat gun.
9. Clean the body bonding surface with a shop towel dampened isopropyl alcohol. After cleaning, keep oil, grease, and water from getting on the clean surface.

GETtheMANUALS.org

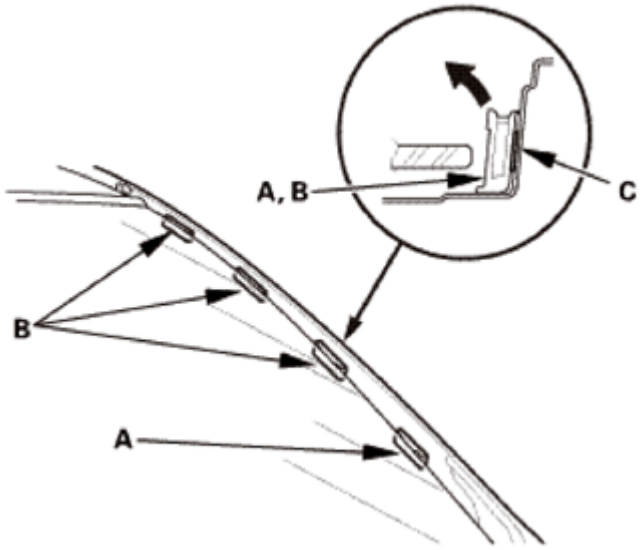

Fig. 154: Removing Adhesive Tape Under Retainers
Courtesy of AMERICAN HONDA MOTOR CO., INC.

INSTALLATION

1. Roof Molding
    1. Install the retainers (A, B) on the A-pillar.
    2. Peel the adhesive backing away from the upper retainers and the lower retainer.
    3. Line up the retainers with the alignment marks (C) on and attach the retainers with adhesive tape (D).
    4. Apply epoxy two-part adhesive (E) around the edge of the retainers as shown.

GETtheMANUALS.org

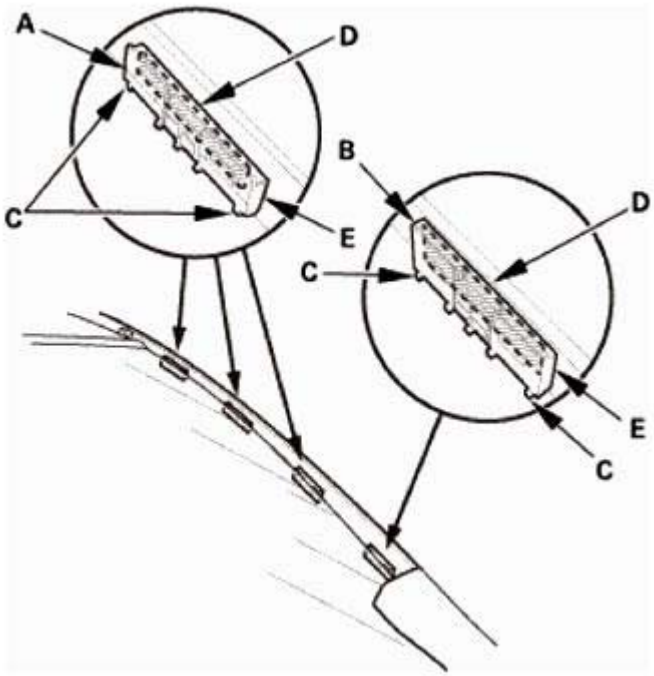

Fig. 155: Identifying Epoxy Two-Part Adhesive Applying Area Around Edge Of Retainers
Courtesy of AMERICAN HONDA MOTOR CO., INC.

5. Install the retainers (A) to the pins (B) on the body. (4 places)

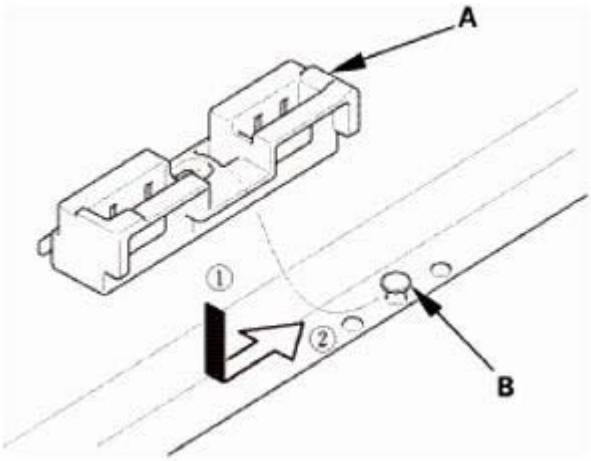

Fig. 156: Installing Retainers To Pins
Courtesy of AMERICAN HONDA MOTOR CO., INC.

6. Slide the rear end of the roof molding (A) rearward to the body.

GETtheMANUALS.org

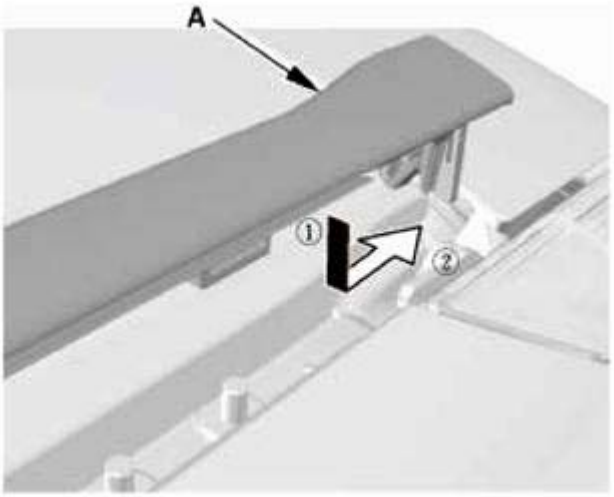

Fig. 157: Sliding Rear End Of Roof Molding
Courtesy of AMERICAN HONDA MOTOR CO., INC.

7. Push on the clip areas (A) of the roof molding (B) until the lock into the retainers (C) securely, and the retainers (D lock onto the stud bolts (E).
8. Make sure the roof molding is installed securely.

GETtheMANUALS.org

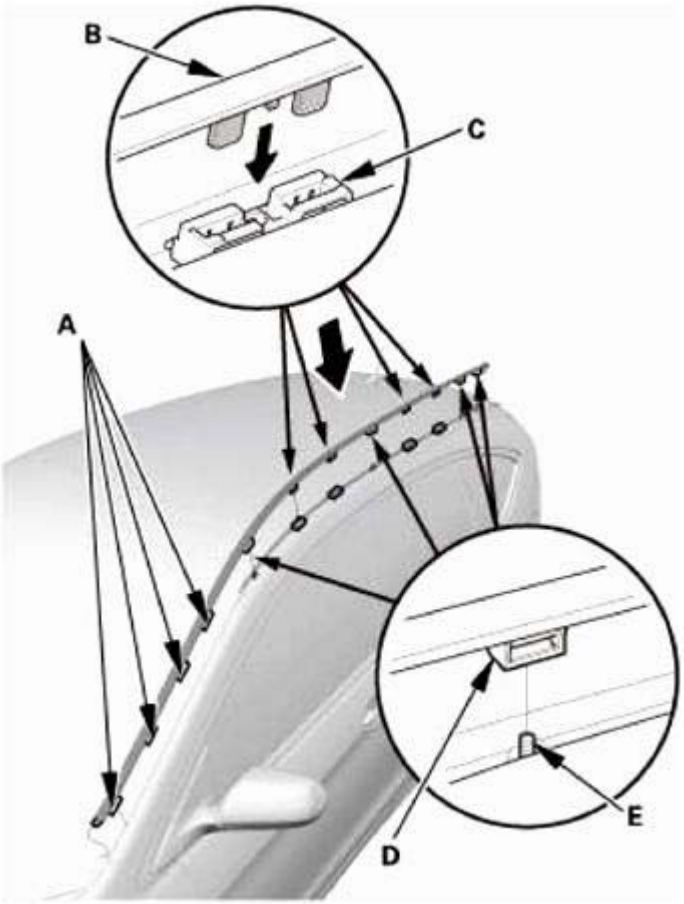

Fig. 158: Pushing Clip Areas Of Roof Molding Until Lock Into Retainers
Courtesy of AMERICAN HONDA MOTOR CO., INC.

2. Side Cowl Cover
    1. Install the side cowl cover (A). Make sure the hooks (B) snap into place securely.
    2. Right side: Install the windshield washer tube.

GETtheMANUALS.org

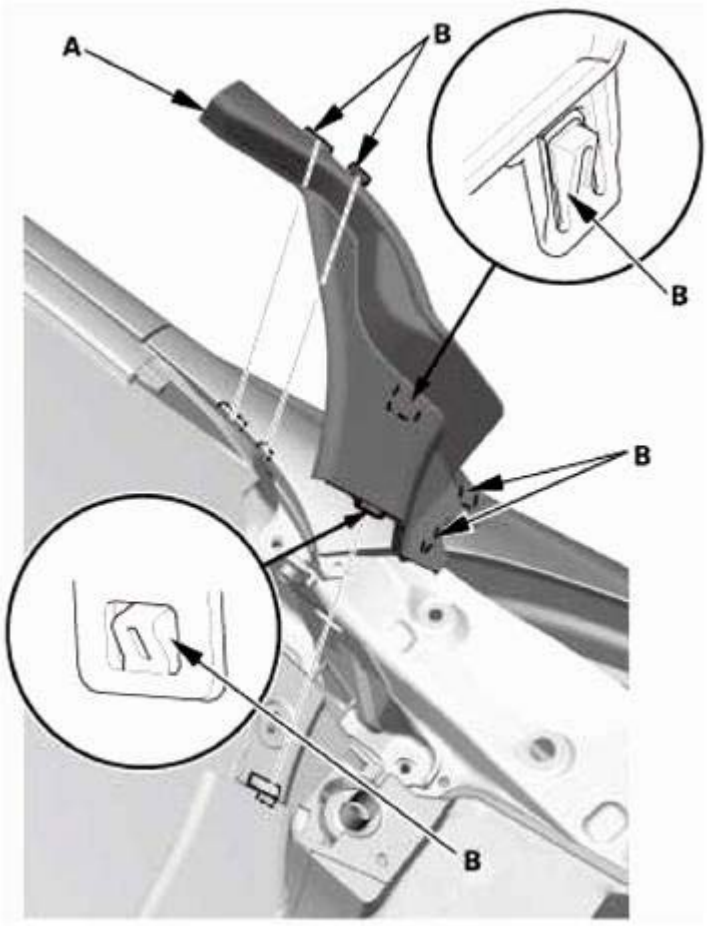

Fig. 159: Identifying Side Cowl Cover And Hooks
Courtesy of AMERICAN HONDA MOTOR CO., INC.

3. Left Cowl Top Cover
    1. Install the cowl top cover (A).
    2. Install the hood rear seal (B).
    3. Install the clip (C).

GETtheMANUALS.org

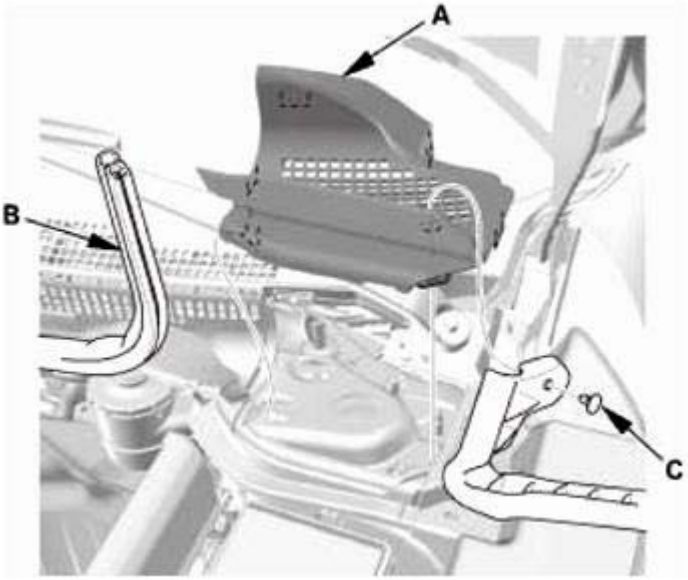

Fig. 160: Identifying Cowl Top Cover, Hood Rear Seal And Clip
Courtesy of AMERICAN HONDA MOTOR CO., INC.

4. Front Fender Trim
    1. Install the front fender trim (A), then install the clips (Make sure the clips (D) snap into place securely.

GETtheMANUALS.org

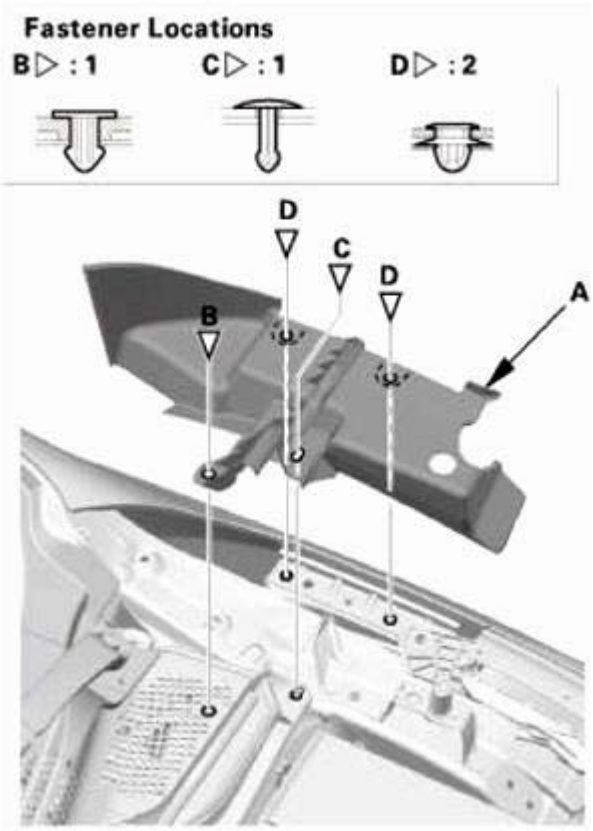

Fig. 161: Identifying Front Fender Trim And Clips
Courtesy of AMERICAN HONDA MOTOR CO., INC.

5. Left Windshield Wiper Arm Assembly

NOTE: Set the wiper arms to the auto-stop position before installation.

1. Install the wiper arm (A), the nut (B), and the cap (C).

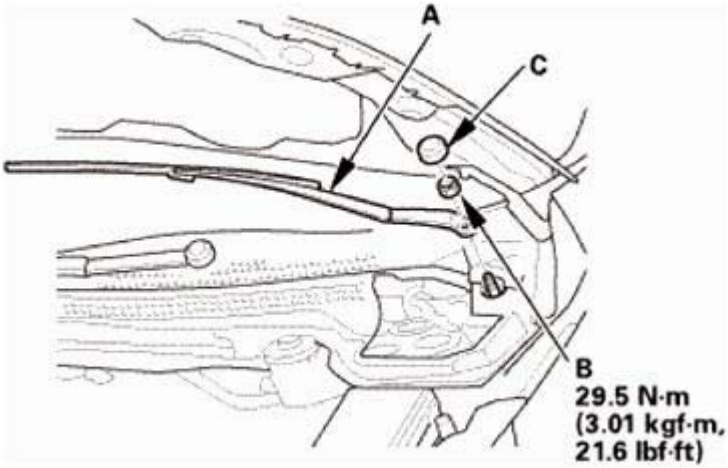

GETtheMANUALS.org

Fig. 162: Identifying Wiper Arm, Nut And Cap With Torque Specification
Courtesy of AMERICAN HONDA MOTOR CO., INC.

6. Windshield Wiper Arm - Adjustment
    1. **Adjust the windshield wiper arms** See **WIPER ARM REMOVAL AND INSTALLATION** or **WIPER ARM/NOZZLE ADJUSTMENT** .

ROOF RAIL REMOVAL AND INSTALLATION

REMOVAL

1. Roof Rail
    1. Remove the caps (A). (4 Places)

Fig. 163: Identifying Roof Rail Caps
Courtesy of AMERICAN HONDA MOTOR CO., INC.

    2. Remove the roof rail (A).

GETtheMANUALS.org

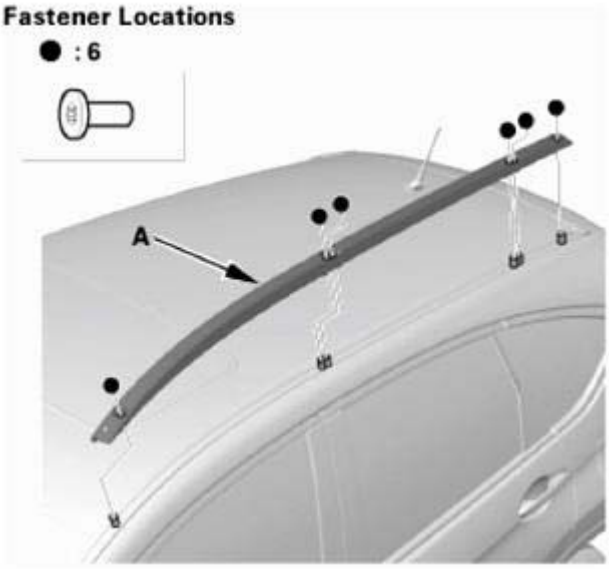

Fig. 164: Identifying Roof Rail With Fasteners
Courtesy of AMERICAN HONDA MOTOR CO., INC.

3. If necessary, slide the rear roof side trim (A) forward to release it from the body.

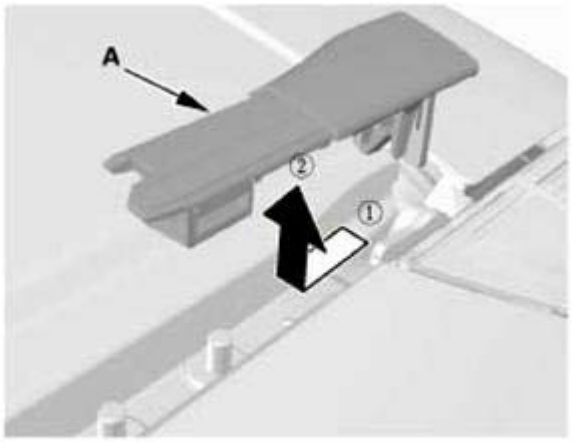

Fig. 165: Sliding Rear Roof Side Trim
Courtesy of AMERICAN HONDA MOTOR CO., INC.

INSTALLATION

1. Roof Rail
    1. Slide the rear roof side trim (A) rearward to install it to the body.

GETtheMANUALS.org

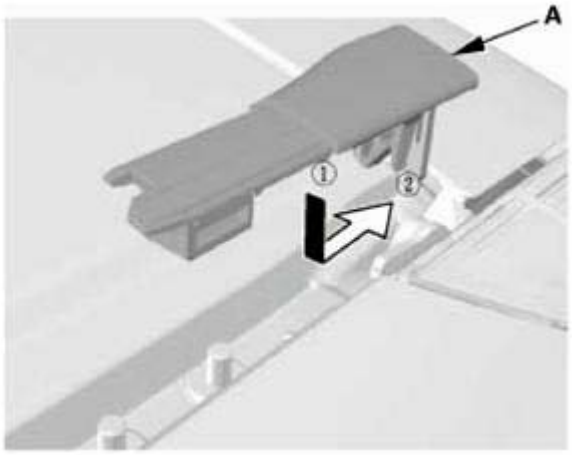

Fig. 166: Sliding Rear Roof Side Trim
Courtesy of AMERICAN HONDA MOTOR CO., INC.

2. Install the roof rail (A), then install the nuts (B).

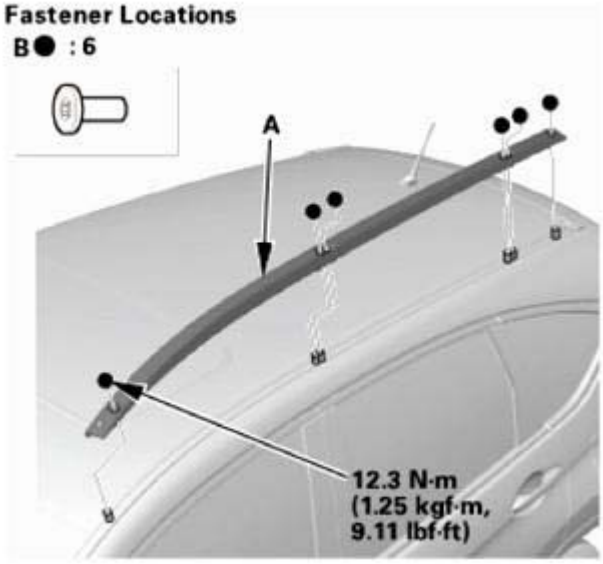

Fig. 167: Identifying Roof Rail, Nuts And Fasteners With Torque Specification
Courtesy of AMERICAN HONDA MOTOR CO., INC.

3. Install the caps (A). (4 Places)

GETtheMANUALS.org

Fig. 168: Identifying Roof Rail Caps
Courtesy of AMERICAN HONDA MOTOR CO., INC.

GETtheMANUALS.org

FRAME

Frame - CR-V

FRAME COMPONENT LOCATION INDEX

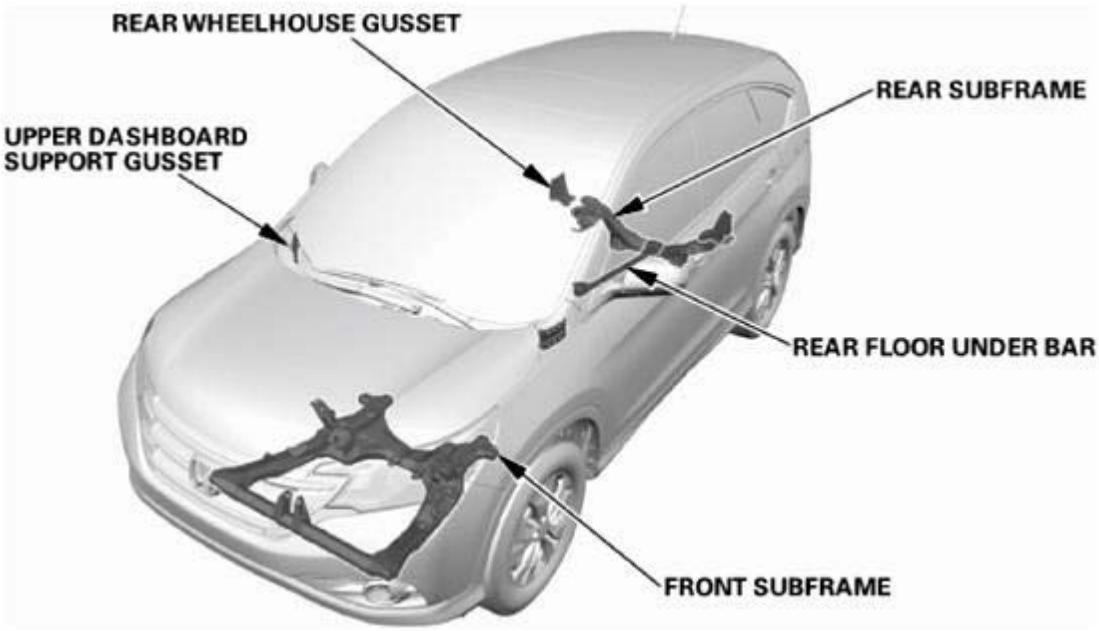

Fig. 1: Frame Components Location
Courtesy of AMERICAN HONDA MOTOR CO., INC.

REAR FLOOR UNDER BAR	**REMOVAL AND INSTALLATION**
UPPER DASHBOARD SUPPORT GUSSET	**Removal and Installation** See **DASHBOARD/STEERING HANGER BEAM DISASSEMBLY AND REASSEMBLY** or **DASHBOARD/STEERING HANGER BEAM REMOVAL AND INSTALLATION**
REAR WHEELHOUSE GUSSET	**REMOVAL AND INSTALLATION**
SUBFRAME	**REMOVAL AND INSTALLATION**

SUBFRAME REMOVAL AND INSTALLATION

SPECIAL TOOL DESCRIPTION

Image	Description/Tool Number

GETtheMANUALS.org

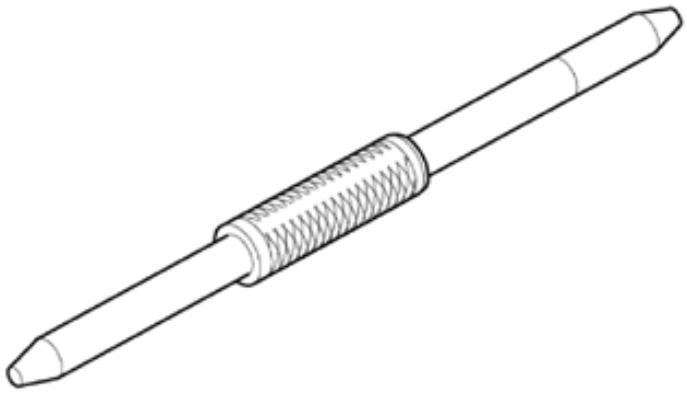	Subframe Alignment Pin 070AG-SJAA10S

REPLACEMENT

1. Front Subframe - Torque

NOTE: **After removing the subframe mounting bolts, be sure to replace them with new ones.**

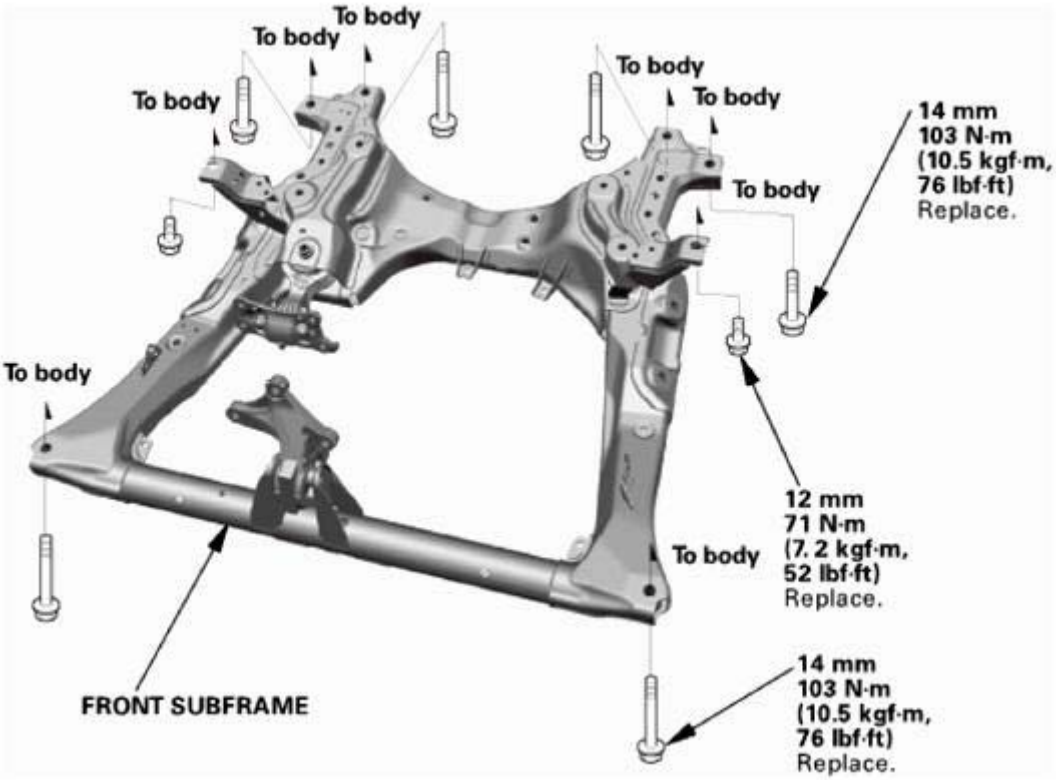

Fig. 2: Identifying Front Subframe Mounting Bolts With Torque Specifications
Courtesy of AMERICAN HONDA MOTOR CO., INC.

2. Rear Subframe - Toque

GETtheMANUALS.org

NOTE: **After removing the subframe mounting bolts, be sure to replace them with new ones.**

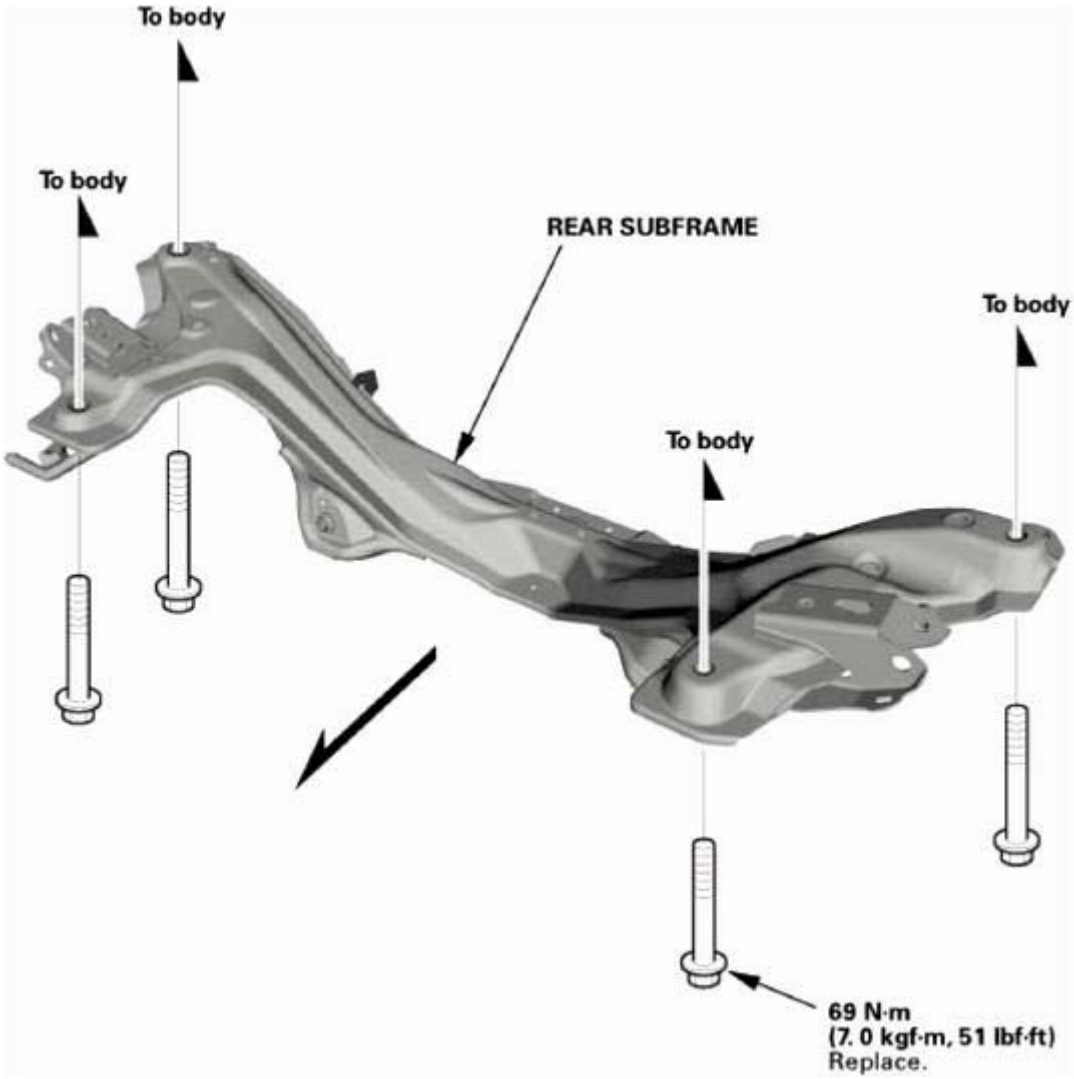

Fig. 3: Identifying Rear Subframe Mounting Bolts With Torque Specifications
Courtesy of AMERICAN HONDA MOTOR CO., INC.

3. Front Subframe - Alignment

NOTE:

- **Align the front subframe in the following sequence.**
- **When Installing, align both installation reference holes in the subframe with both reference holes in the body using the subframe alignment pin as a guide.**

1. Lift the front subframe (A) up to the body, and loosely install new subframe mounting bolts (B, C).

GETtheMANUALS.org

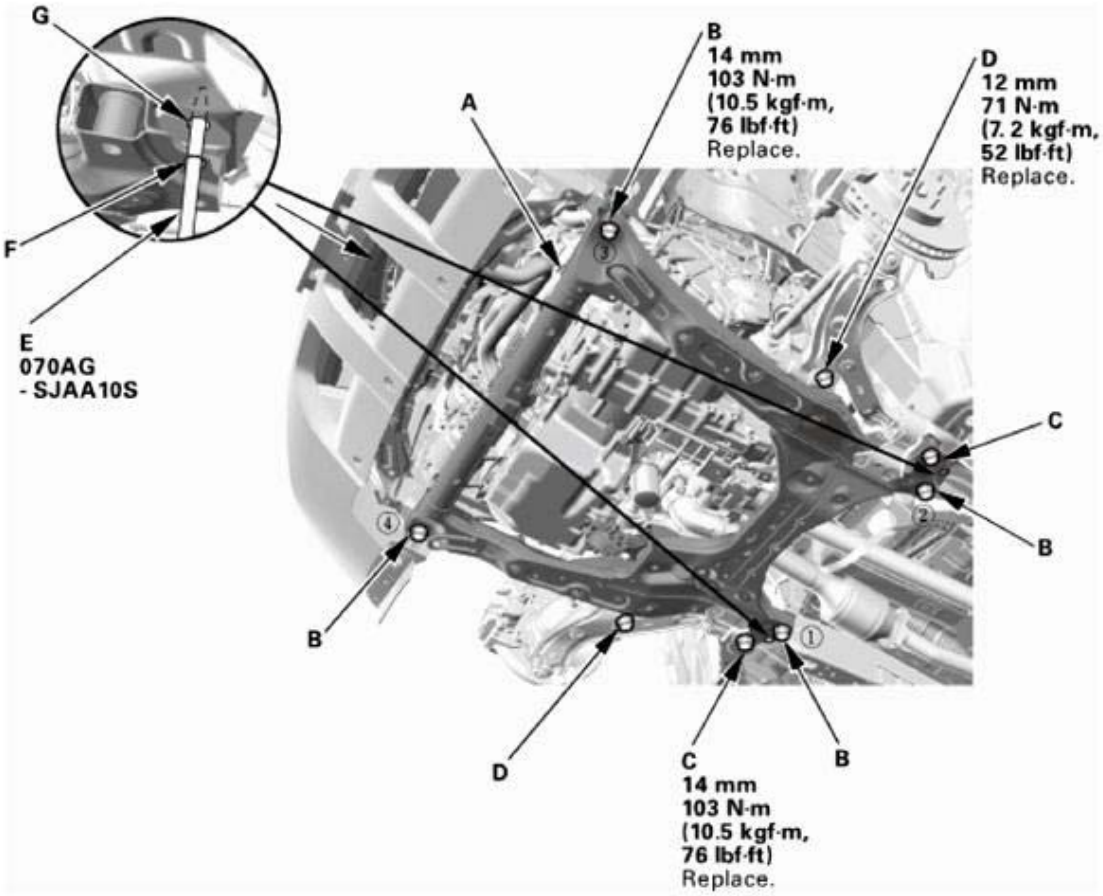

Fig. 4: Identifying Front Subframe And Mounting Bolts With Torque Specifications
Courtesy of AMERICAN HONDA MOTOR CO., INC.

2. Loosely install new mid mounting bolts (D).
3. Insert the subframe alignment pin (E) through the positioning hole (F) on the right rear subframe, and into the positioning hole (G) on the body, then loosely tighten the subframe right rear mounting bolt.
4. Insert the subframe alignment pin through the positioning hole on the left rear subframe, and into the positioning hole on the body, then loosely tighten the subframe left rear mounting bolt.
5. Tighten the subframe mounting bolts to the specified torque values starting with the right rear subframe mounting bolt. Use the subframe alignment pin when tightening the rear side subframe mounting bolts.
6. Check all of the subframe mounting bolts, and retighten if necessary.

NOTE: Tighten the bolts in the sequence shown.

7. Tighten the mid mounting bolts to the specified torque.
8. After reinstalling all remaining parts, check and adjust the front wheel alignment.

GETtheMANUALS.org

BALL JOINT BOOT INSPECTION

REMOVAL

1. Vehicle Lift
    1. Raise the vehicle on a lift, and make sure it is securely supported.
2. Front Wheel
    1. Remove the front wheel.

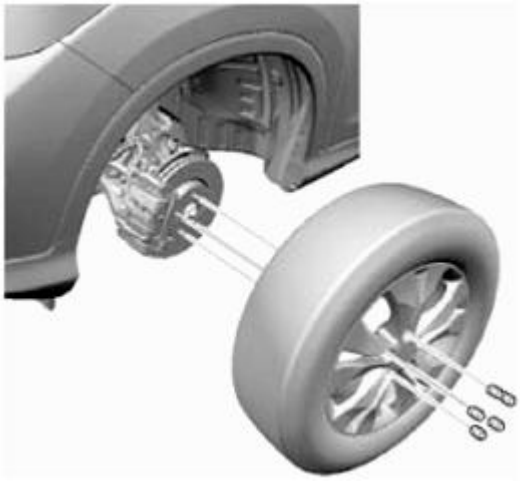

Fig. 1: Identifying Front Wheel And Studs

INSPECTION

1. Ball Joint Boot - Inspection
    1. Check the ball joint boot (A) for weakness, damage, cracks, and grease leaks.

NOTE:

- **If the ball joint boot is damaged with grease leaks, replace the appropriate part as an assembly.**
- **If the ball joint boot is soft and cracked without grease leaks, replace the appropriate ball joint boot.**

GETtheMANUALS.org

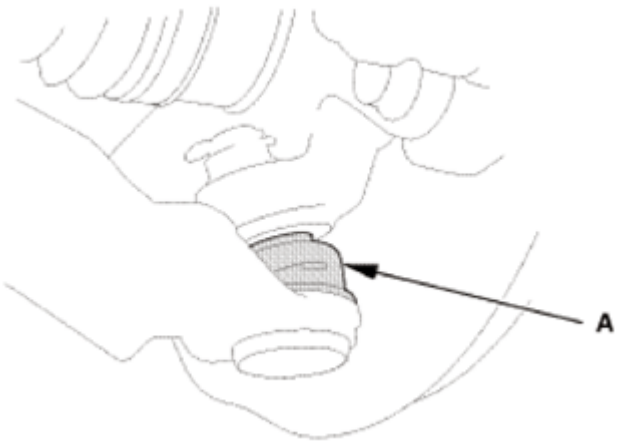

Fig. 2: Identifying Ball Joint Boot

INSTALLATION

1. Front Wheel
    1. Install the front wheel.

NOTE: **Before installing the wheel, clean the mating surfaces between the brake disc and the inside of the wheel.**

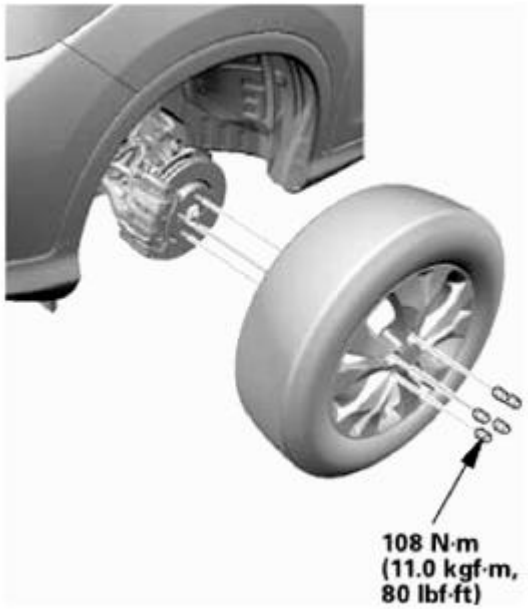

Fig. 3: Identifying Front Wheel And Studs With Torque Specification

BALL JOINT BOOT REPLACEMENT

SPECIAL TOOL REQUIRED

GETtheMANUALS.org

Image	Description/Tool Number
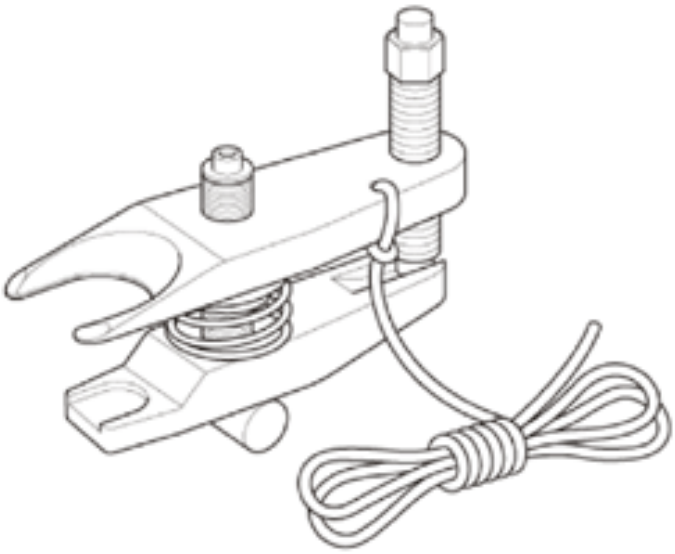	Ball Joint Remover, 32 mm 07MAC-SL00102
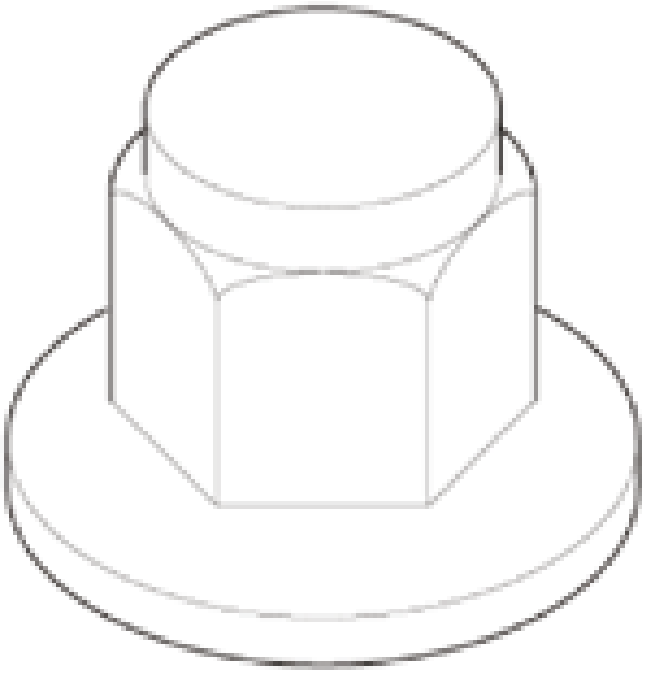	Ball Joint Thread Protector, 14 mm 071AF-SZNA100

GETtheMANUALS.org

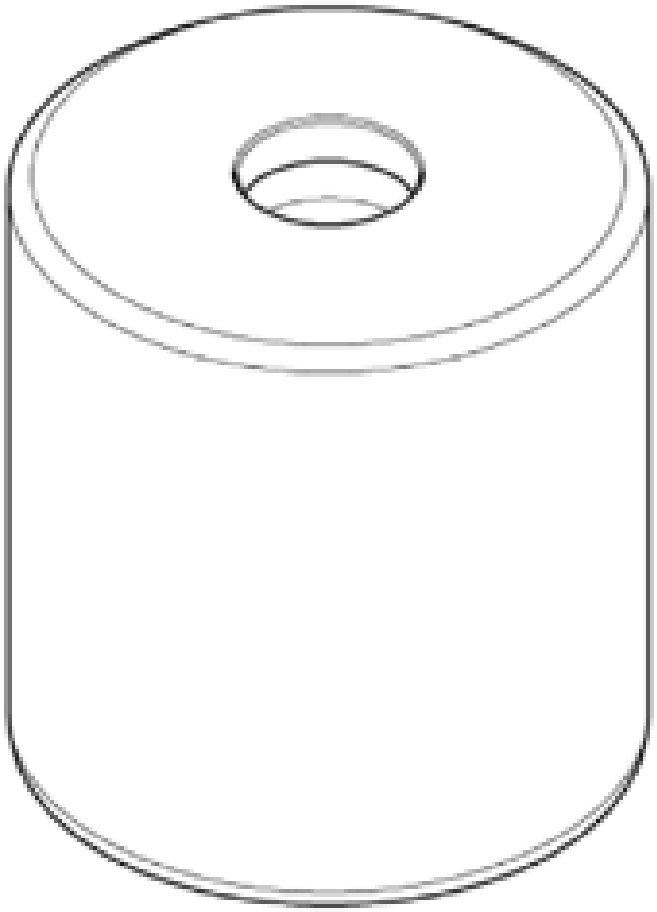	Bearing Driver Attachment, 40 mm 07GAF-SE00200

REMOVAL

1. Vehicle Lift
    1. Raise the vehicle on a lift, and make sure it is securely supported.
2. Front Wheel
    1. Remove the front wheel.

GETtheMANUALS.org

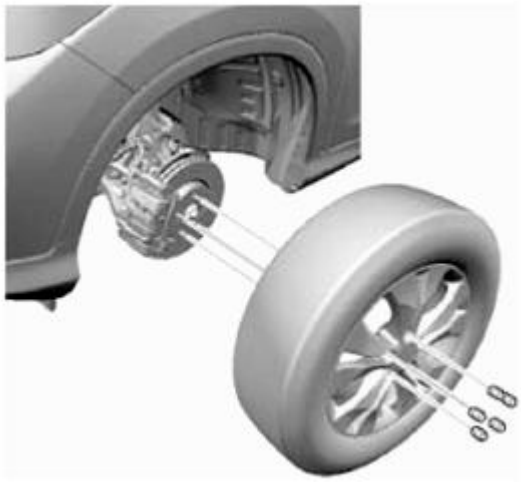

Fig. 4: Identifying Front Wheel And Studs

3. Ball Joint - Removal

NOTE: **Always use a ball joint remover to disconnect a ball joint. Do not strike the housing or any other part of the ball joint connection to disconnect it.**

1. Install a hex nut (A) or the ball joint thread protector.

NOTE: **When using a hex nut, make sure the nut is flush with the ball joint pin end to prevent damage to the threaded end of the ball joint pin.**

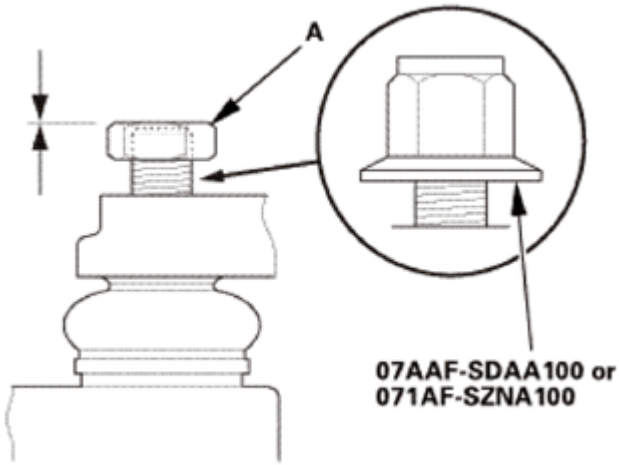

Fig. 5: Identifying Hex Nut And Ball Joint Thread Protector

2. Apply grease to the ball joint remover on the areas shown (A).

GETtheMANUALS.org

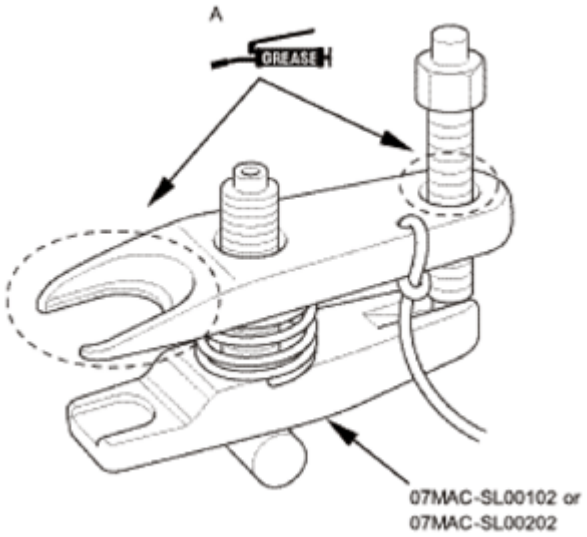

Fig. 6: Identifying Grease Applying Area On Ball Joint Remover

3. Install the ball joint remover as shown.

NOTE:

- **Fasten the safety tie (A) securely to a suspension arm or the subframe (B).**
- **Making sure not to damage the ball joint boot.**

4. Tighten the pressure bolt until the ball joint pin pops loose from the ball joint connecting hole.

NOTE: **Do not use pneumatic or electric tools on the pressure bolt.**

5. Remove the ball joint remover.
6. Remove the hex nut or the ball joint thread protector.
7. Pull the ball joint out of the ball joint connecting hole.

GETtheMANUALS.org

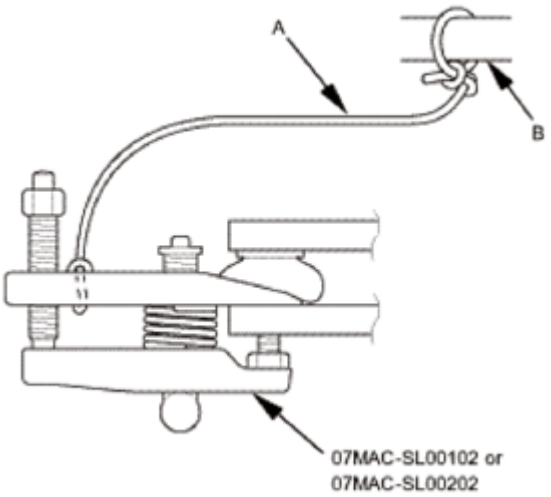

Fig. 7: Fastening Safety Tie Securely To Suspension Arm Or Subframe

4. Front Lower Ball Joint knuckle side - Disconnection
    1. Remove the lock pin (A).
    2. Remove the castle nut (B).
    3. Disconnect the lower ball joint (C) from the knuckle.

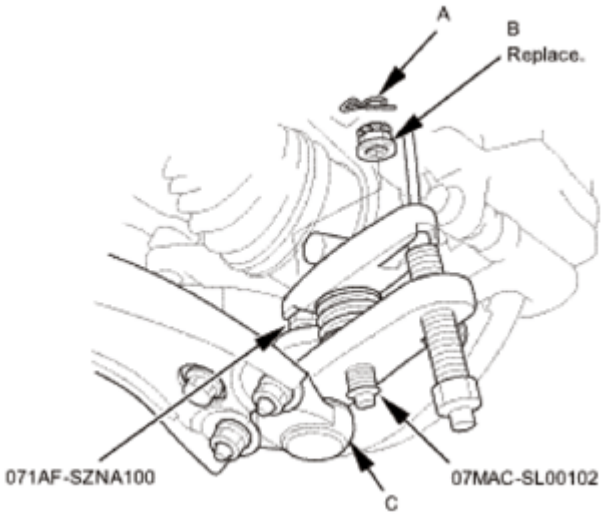

Fig. 8: Disconnecting Lower Ball Joint From Knuckle

5. Front Lower Ball Joint
    1. Remove the flange bolt (A).
    2. Remove the flange nuts (B).
    3. Remove the front lower ball joint (C).

GETtheMANUALS.org

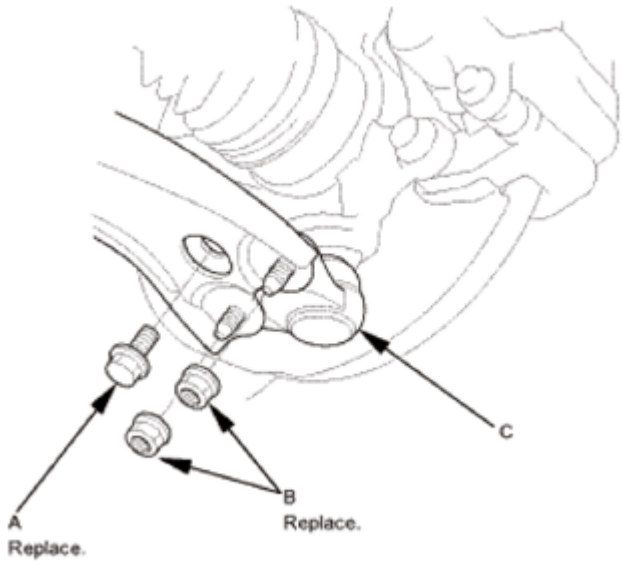

Fig. 9: Identifying Front Lower Ball Joint, Flange Nuts And Flange Bolt

6. Ball Joint Boot
    1. Remove the boot (A).

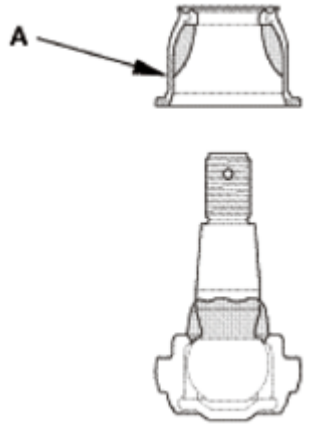

Fig. 10: Identifying Ball Joint Boot

INSTALLATION

1. Ball Joint Boot
    1. Pack the interior and lip (A) of a new boot with grease.

NOTE:

- **Keep the grease off of the boot-to-lower ball joint housing mating surfaces (B).**
- **Use the grease that comes with the ball joint kit, or multipurpose grease.**

GETtheMANUALS.org

- **Do not let dirt or other foreign materials get into the boot.**

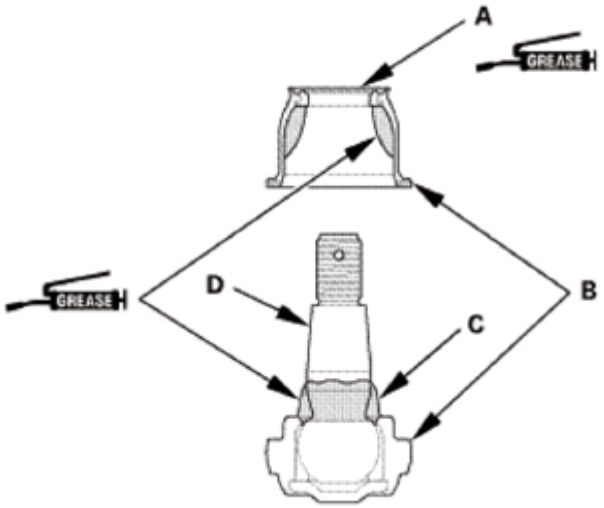

Fig. 11: Identifying Grease Applying Area On Boot-To-Lower Ball Joint Housing Mating Surfaces

2. Pack fresh grease into the base (C).
3. Install the boot.
4. Squeeze it gently to force out any air.
5. Wipe the grease off the tapered portion of the ball joint pin (D).
6. Press the boot.
7. Wipe any grease off the exposed portion of the ball joint pin.

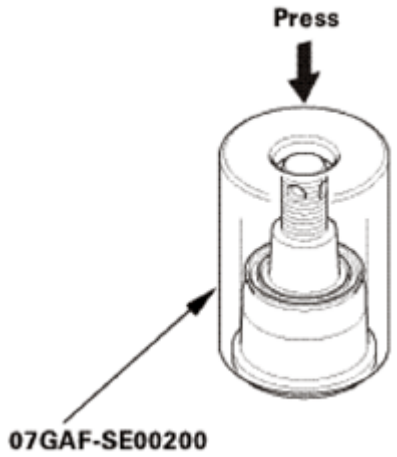

Fig. 12: Pressing Boot

2. Front Lower Ball Joint
    1. Install the lower ball joint (A) to the lower arm.

GETtheMANUALS.org

2. Install the new flange nuts and the new flange bolt in the sequence shown.

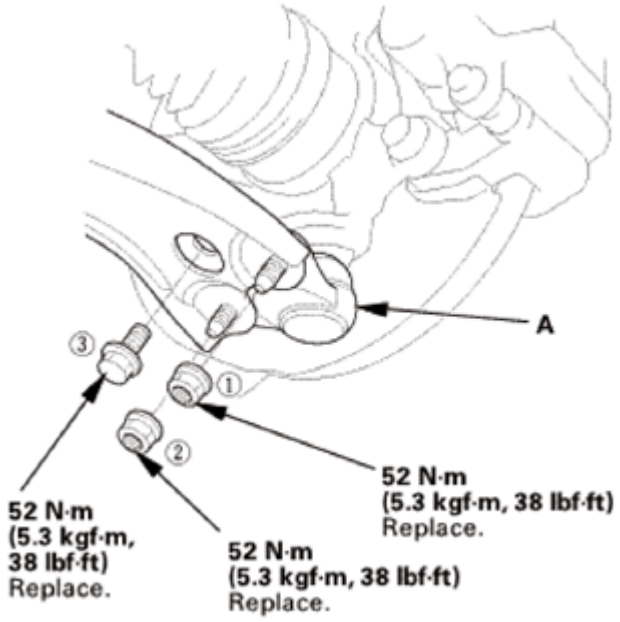

Fig. 13: Identifying Lower Ball Joint, Flange Nuts And Bolt Tightening Sequence With Torque Specification

3. Front Lower Ball Joint knuckle side - Reconnection
    1. Connect the lower ball joint (A) to the knuckle.
    2. Install the new castle nut (B).

NOTE: **Torque the castle nut to the lower torque specification, then tighten it only far enough to align the slot with the ball joint pin hole. Do not align the castle nut by loosening it.**

    3. Install the lock pin (C) as shown.

GETtheMANUALS.org

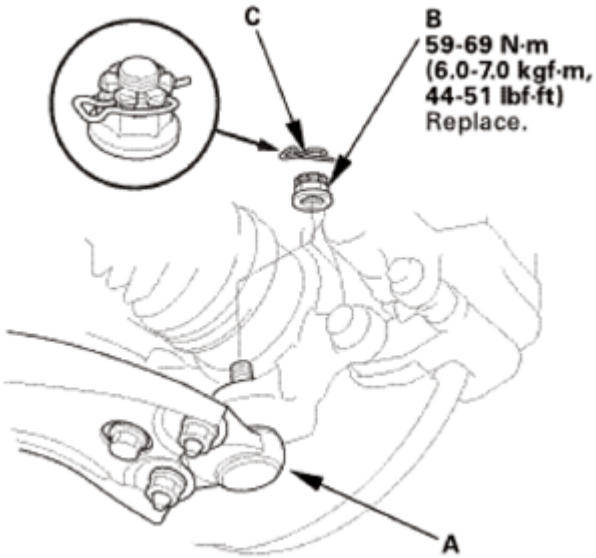

Fig. 14: Identifying Lock Pin, Lower Ball Joint And Castle Nut With Torque Specification

4. Front Wheel
    1. Install the front wheel.

NOTE: **Before installing the wheel, clean the mating surfaces between the brake disc and the inside of the wheel.**

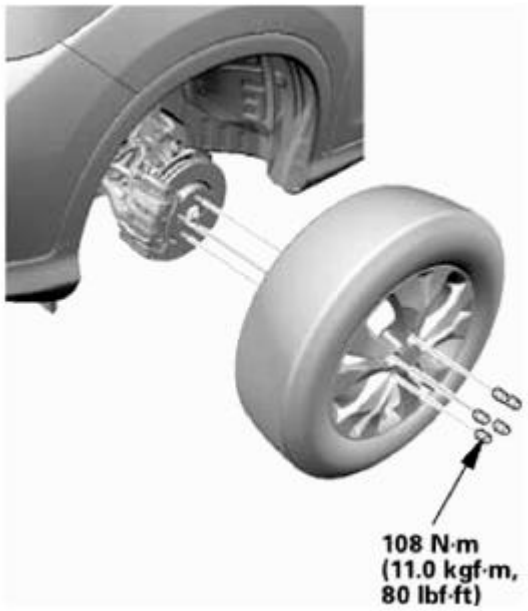

Fig. 15: Identifying Front Wheel And Studs With Torque Specification

COMPLIANCE BUSHING REPLACEMENT

GETtheMANUALS.org

REMOVAL

1. Vehicle Lift
    1. Raise the vehicle on a lift, and make sure it is securely supported.
2. Front Wheel
    1. Remove the front wheel.

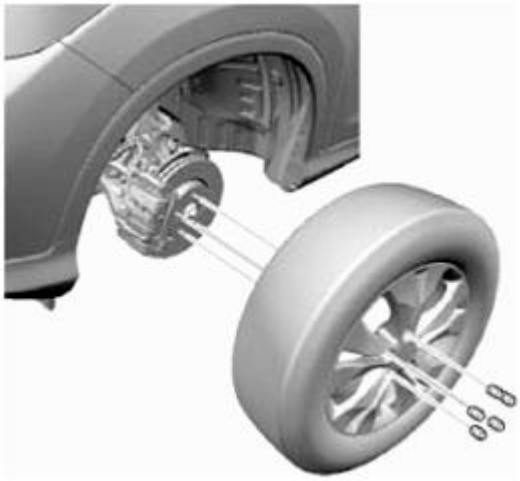

Fig. 16: Identifying Front Wheel And Studs

3. Front Stabilizer Bar Bushing Holder
    1. Remove the front stabilizer bar bushing holder (A).

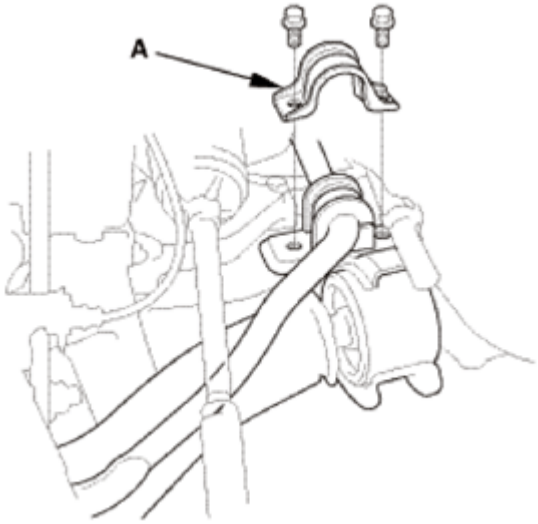

Fig. 17: Identifying Front Stabilizer Bar Bushing Holder

4. Lower Ball Joint Lower Arm Side - Disconnection
    1. Remove the flange bolt (A).

GETtheMANUALS.org

2. Remove the flange nuts (B).
3. Disconnect the lower arm (C) from the front lower ball joint (D).

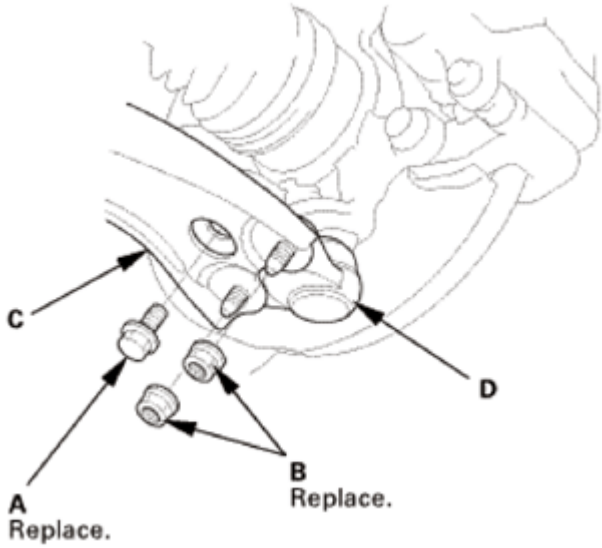

Fig. 18: Identifying Lower Arm, Front Lower Ball Joint, Flange Nuts And Flange Bolt

5. Front Lower Arm
    1. Remove the lower arm (A).
    2. Remove the bushing stopper bracket (B) from the lower arm.

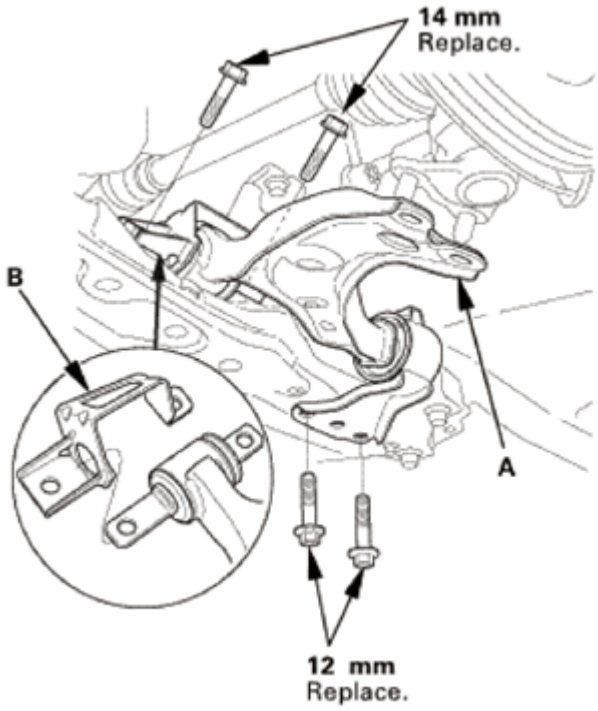

GETtheMANUALS.org

Fig. 19: Identifying Bushing Stopper Bracket, Lower Arm And Mounting Bolts With Torque Specification

6. Front Lower Arm Bushing
    1. Support the lower arm (A) on suitable bar (B) as shown.
    2. Press out the lower arm with a suitable socket and a hydraulic press, and remove the lower arm from the bushing (C).

NOTE: **Be careful not to damage the inside of the bushing hole when pressing on the bushing.**

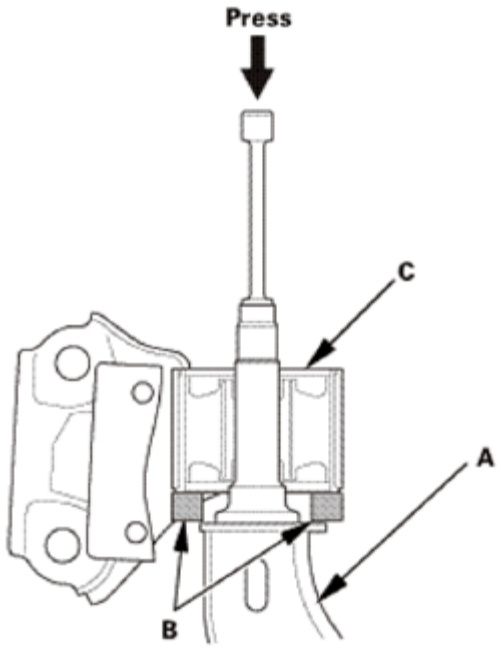

Fig. 20: Pressing Out Lower Arm With Suitable Socket And Hydraulic Press

INSTALLATION

1. Front Lower Arm Bushing
    1. Clean the mating surfaces of the new bushing and the lower arm.
    2. Apply a mild soap and water to the bushing surface.
    3. Align the angle of the lower arm (A) and the tab portion (B) of the bushing (C). Press in the bushing by hand first.

NOTE:

- **The installed bushing's tab portion points upward and downward to the installed lower arm.**
- **Make sure the up/down direction of the bushing.**

GETtheMANUALS.org

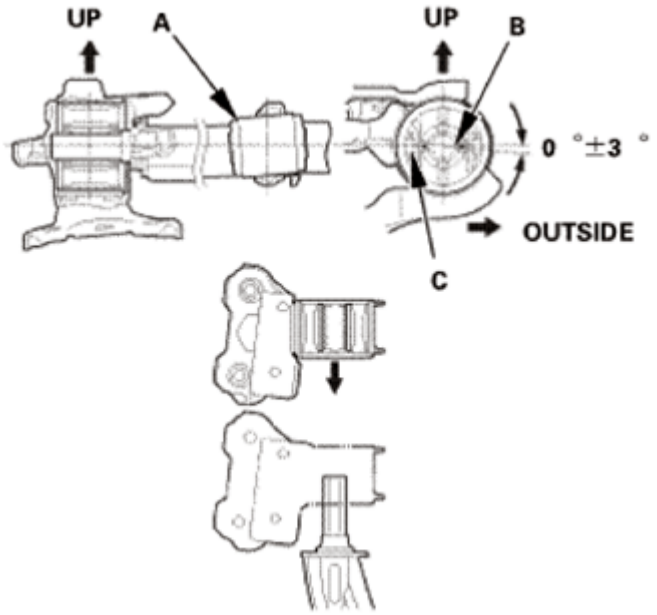

Fig. 21: Aligning Angle Of Lower Arm And Tab Portion Of Bushing

4. Support the lower arm (A) on suitable square lumber (B) as shown.
5. Press in the bushing (C) with a suitable socket (D) and a hydraulic press.
6. Adjust the distance between the top of the lower arm (E), and the bushing surface to the dimension shown.

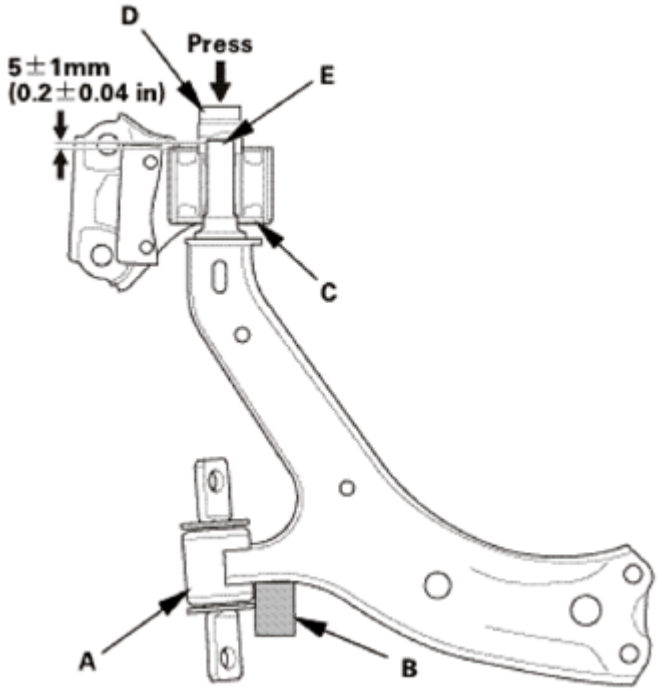

Fig. 22: Adjusting Distance Between Top Of Lower Arm And Bushing Surface

GETtheMANUALS.org

2. Front Lower Arm
    1. Install the bushing stopper bracket (A) on the lower arm (B).
    2. Install the lower arm.
    3. Loosely install the new flange bolts (C).

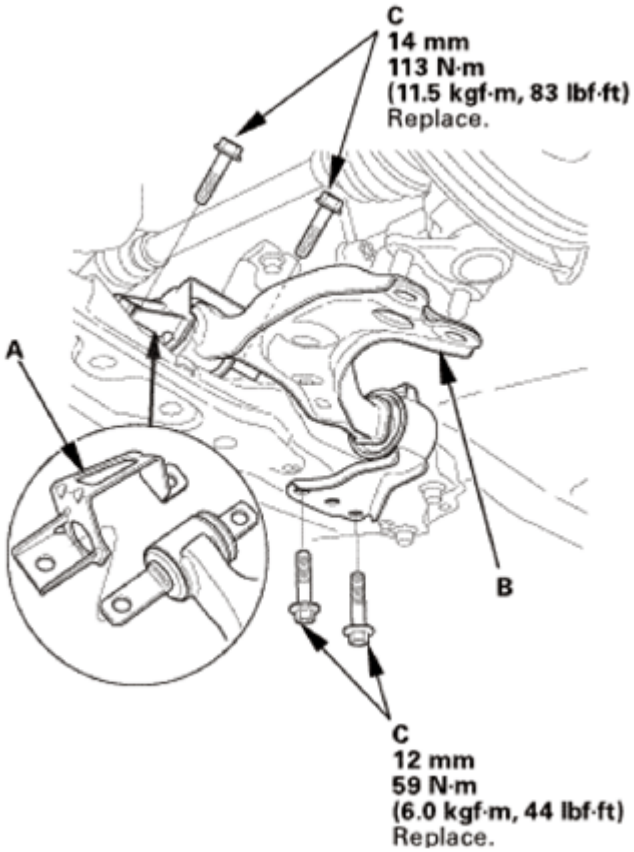

Fig. 23: Identifying Bushing Stopper Bracket, Lower Arm And Flange Bolts With Torque Specification

3. Front Lower Ball Joint Lower Arm Side - Reconnection
    1. Connect the front lower ball joint (A) to the lower arm.
    2. Install the new flange nuts and the new flange bolt in the sequence shown.

GETtheMANUALS.org

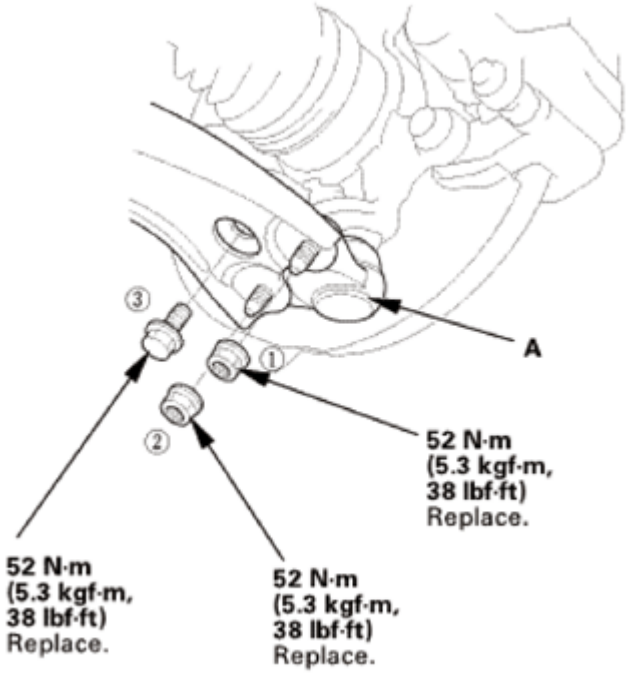

Fig. 24: Identifying Lower Ball Joint, Flange Nuts And Bolt Tightening Sequence With Torque Specification

4. Front Lower Arm - Tighten Vehicle's Weight
    1. Raise the front suspension with a floor jack to load the suspension with the vehicle's weight.
    2. Tighten the flange bolts to the specified torque.
5. Front Stabilizer Bar Bushing Holder
    1. Install the front stabilizer bar bushing holder (A).

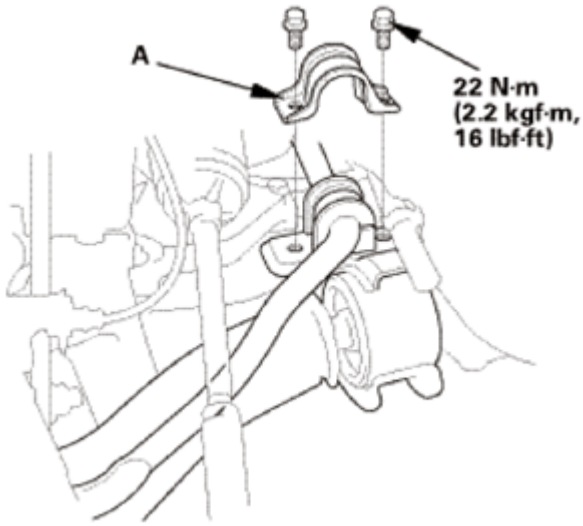

Fig. 25: Identifying Front Stabilizer Bar Bushing Holder And Mounting Bolts With Torque Specification

GETtheMANUALS.org

6. Front Wheel
    1. Install the front wheel.

NOTE: **Before installing the wheel, clean the mating surfaces between the brake disc and the inside of the wheel.**

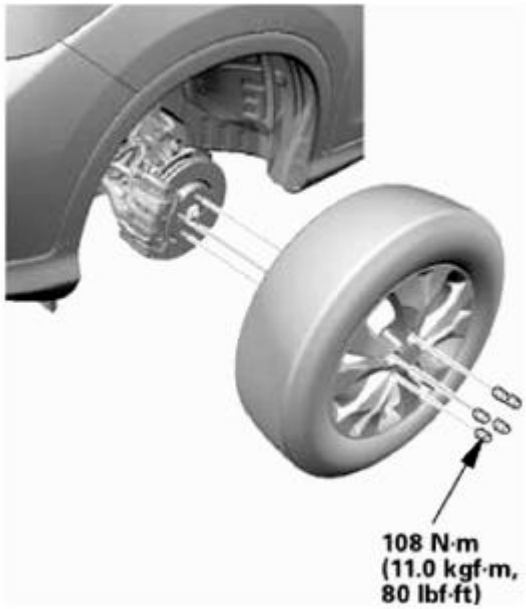

Fig. 26: Identifying Front Wheel And Studs With Torque Specification

7. Pre-Alignment Checks

    For proper inspection and adjustment of the wheel alignment, do these checks:

    1. Release the parking brake to avoid an incorrect measurement.
    2. Make sure the suspension is not modified.
    3. Make sure the fuel tank is full, and that the spare tire, the jack, and the tools are in place on the vehicle.
    4. Check the tire size and tire pressure according to tire information.
    5. Set the steering column to the middle tilt position and telescopic position.
8. Caster - Inspection

    Use commercially available computerized four wheel alignment equipment to measure wheel alignment (caster, camber, toe, and turning angle). Follow the equipment manufacturer's instructions.

    1. Check the caster angle.

        Caster angle:

GETtheMANUALS.org

2WD:

With 16 inch wheel: 2 ° 44 '±30 '

Without 16 inch wheel: 2 ° 50 '±30 '

AWD/4WD:

With 16 inch wheel: 2 ° 38 '±30 '

Without 16 inch wheel: 2 ° 44 '±30 '

- If the measurement is within specifications, measure the front camber angle.
- If the measurement is not within specifications, check for bent or damaged suspension components.

9. Camber - Inspection

Use commercially available computerized four wheel alignment equipment to measure wheel alignment (caster, camber, toe, and turning angle). Follow the equipment manufacturer's instructions.

1. Check the camber angle.

Camber angle:

2WD:

Front:

With 16 inch wheel: -0 ° 01 '±1 ° 00 '

Without 16 inch wheel: -0 ° 10 '±1 ° 00 '

(Maximum difference between the front right and left side: 1 °00 ')

Rear:

With 16 inch wheel: -1 ° 06 '±45 '

Without 16 inch wheel: -1 ° 12 '±45 '

(Maximum difference between the front right and left side: 0 °45 ')

AWD/4WD:

Front:

With 16 inch wheel: -0 ° 08 '±1 ° 00 '

GETtheMANUALS.org

Without 16 inch wheel: 0 ° 00 '±1 ° 00 '

(Maximum difference between the front right and left side: 1 °00 ')

Rear:

With 16 inch wheel: -0 ° 50 '±45 '

Without 16 inch wheel: -1 ° 00 '±45 '

(Maximum difference between the front right and left side: 0 °45 ')

- If the measurement is within specification, measure the toe-in.
- If the measurement for the front camber is not within the specification, go to front camber adjustment.
- If the measurement for the rear camber is not within the specification, check for bent or damaged suspension components.

10. Front Toe - Inspection

Use commercially available computerized four wheel alignment equipment to measure wheel alignment (caster, camber, toe, and turning angle). Follow the equipment manufacturer's instructions.

1. Set the steering column to the middle tilt position and telescopic positions.
2. Center the steering wheel spokes, and install a steering wheel holder tool.
3. Check the toe with the wheels pointed straight ahead.

Front toe-in: 0±2 mm (0±0.08 in)

- If adjustment is required, go to the front toe adjustment.
- If no adjustment is required, remove the alignment equipment.

11. Turning Angle - Inspection

Use commercially available computerized four wheel alignment equipment to measure wheel alignment (caster, camber, toe, and turning angle). Follow the equipment manufacturer's instructions.

1. Turn the wheel right and left while applying the brake, and measure the turning angle of both wheels.

Turning angle:

2WD:

Inward:

With 16 inch wheel: 36 ° 29 '±2 °

GETtheMANUALS.org

Without 16 inch wheel: 36 ° 13 '±2 °

Outward (reference):

With 16 inch wheel: 31 ° 13 '

Without 16 inch wheel: 31 ° 02 '

AWD/4WD:

Inward:

With 16 inch wheel: 36 ° 48 '±2 °

Without 16 inch wheel: 36 ° 30 '±2 °

Outward (reference):

With 16 inch wheel: 31 ° 18 '

Without 16 inch wheel: 31 ° 12 '

2. If the measurement is not within the specifications, even up both sides of the tie-rod threaded section length while adjusting the front toe.
3. If it is correct, but the turning angle is not within the specifications, check for bent or damaged suspension components.

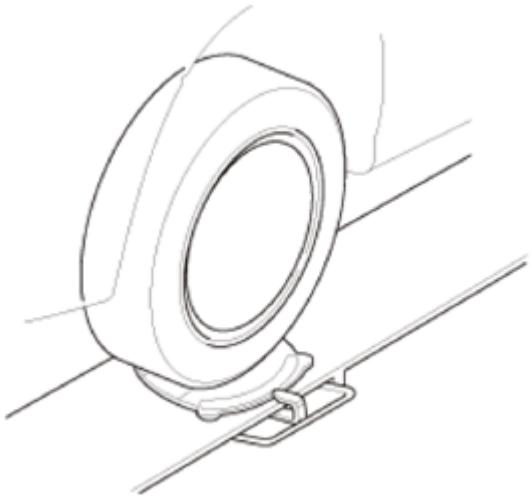

Fig. 27: Measuring Wheel Alignment (Caster, Camber, Toe And Turning Angle)

12. HDS DLC - Connection
    1. Connect the HDS to the data link connector (DLC) (A) located under the driver's side of the dashboard.

GETtheMANUALS.org

2. Turn the ignition switch to ON (II).
3. Make sure the HDS communicates with the vehicle. If it does not communicate, go to the DLC circuit troubleshooting.

Fig. 28: Identifying Data Link Connector (DLC) Located Under Driver's Side Of Dashboard

13. VSA Sensor Neutral Position - Memorization
    1. Park the vehicle on a flat and level surface, with the steering wheel in the straight ahead position.
    2. Select VSA ADJUSTMENT, then select ALL SENSORS with the HDS, and follow the screen prompts.

    NOTE: See the HDS Help menu for specific instructions.

14. Steering Angle Sensor Neutral Position - Clear
    1. Select EPS ADJUSTMENT, then select EPS STEERING ANGLE SENSOR VALUE CLEAR and follow the screen prompts on the HDS.

    NOTE: See the HDS Help menu for specific instructions.

FRONT AND REAR SUSPENSION COMPONENT LOCATION INDEX

FRONT SUSPENSION

GETtheMANUALS.org

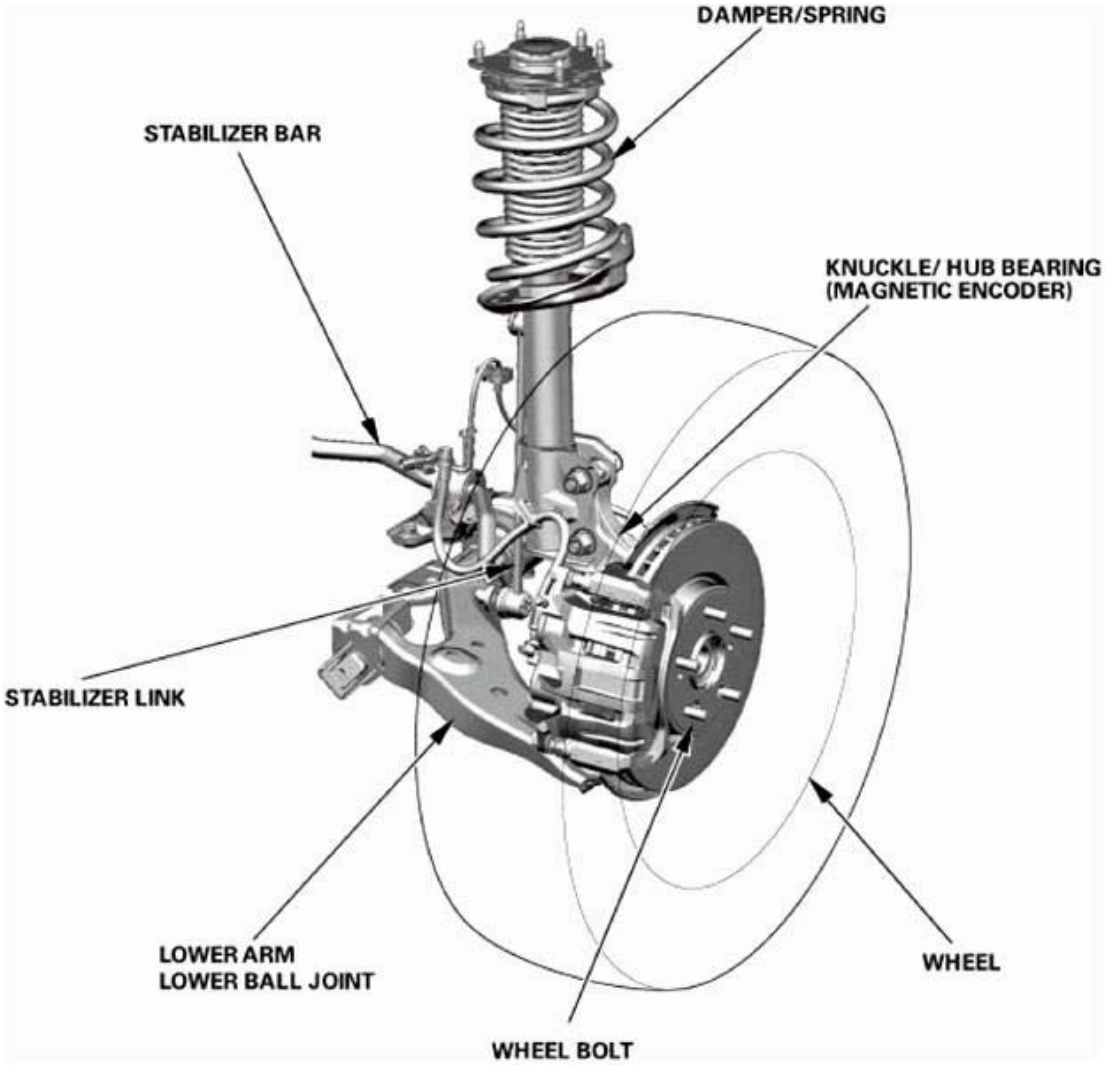

Fig. 29: Identifying Front Suspension Component Location

WHEEL ALIGNMENT	**INSPECTION AND ADJUSTMENT**
DAMPER/SPRING	**Disassembly, Reassembly, and Inspection** See **FRONT DAMPER/SPRING DISASSEMBLY, REASSEMBLY, AND INSPECTION** or **FRONT DAMPER/SPRING REMOVAL AND INSTALLATION**
	Removal and Installation See **FRONT DAMPER/SPRING DISASSEMBLY, REASSEMBLY, AND INSPECTION** or **FRONT DAMPER/SPRING REMOVAL AND INSTALLATION**
KNUCKLE/HUB BEARING (MAGNETIC ENCODER)	**KNUCKLE/HUB REMOVAL AND INSTALLATION**
	WHEEL BEARING END PLAY INSPECTION
	WHEEL BEARING REPLACEMENT
	Compliance Bushing Replacement See **COMPLIANCE BUSHING REPLACEMENT** or **FRONT LOWER ARM REMOVAL AND INSTALLATION**

GETtheMANUALS.org

LOWER ARM	**Removal and Installation** See **COMPLIANCE BUSHING REPLACEMENT** or **FRONT LOWER ARM REMOVAL AND INSTALLATION**
LOWER BALL JOINT	**BOOT INSPECTION**
	BOOT REPLACEMENT
	REMOVAL AND INSTALLATION
STABILIZER BAR	**REMOVAL AND INSTALLATION**
STABILIZER LINK	**REMOVAL AND INSTALLATION**
WHEEL	**RUNOUT INSPECTION**
WHEEL BOLT	**Removal and Installation** See **FRONT WHEEL BOLT REMOVAL AND INSTALLATION** or **REAR WHEEL BOLT REMOVAL AND INSTALLATION**

REAR SUSPENSION

GETtheMANUALS.org

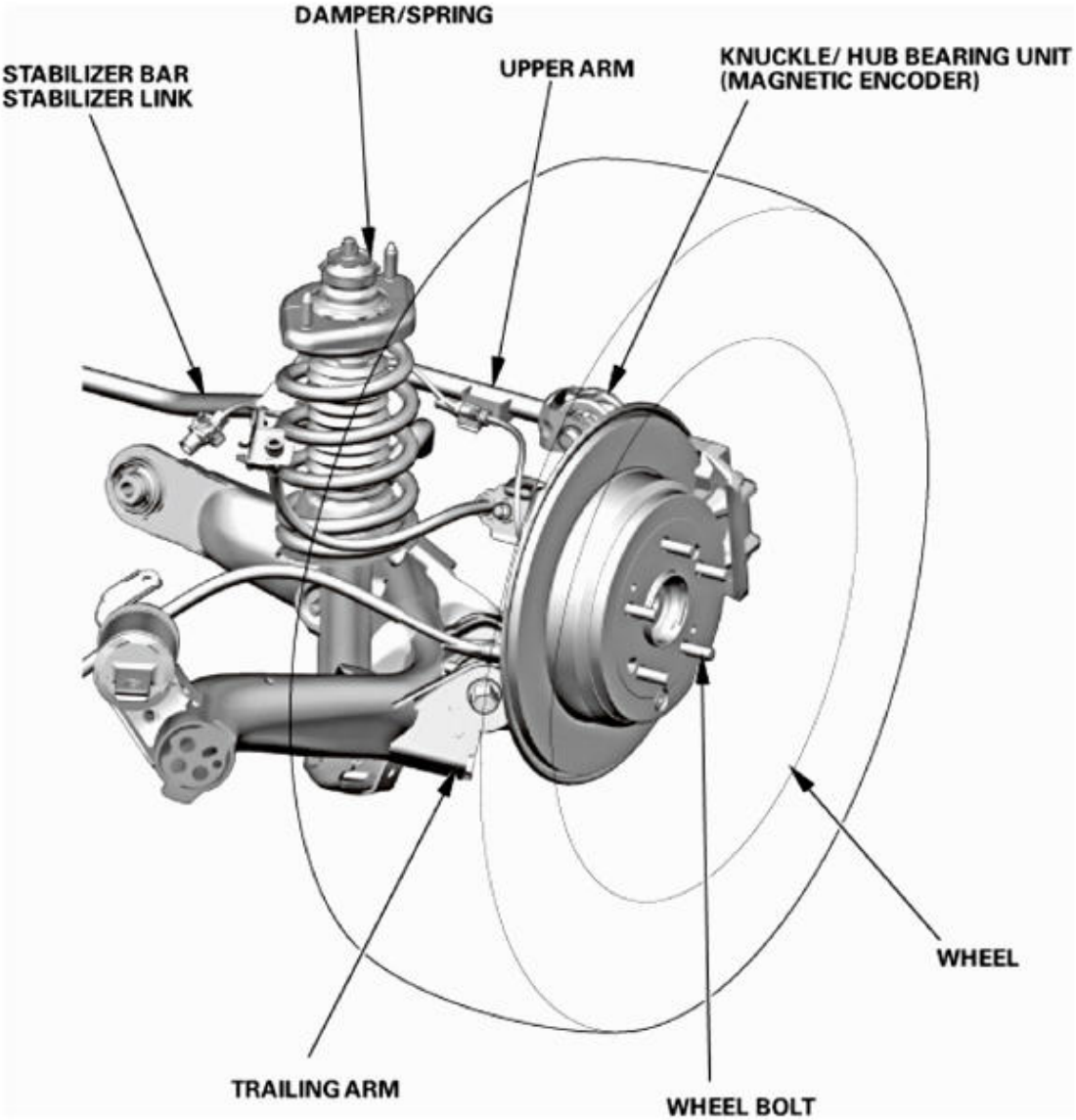

Fig. 30: Identifying Rear Suspension Component Location

WHEEL ALIGNMENT	**INSPECTION AND ADJUSTMENT**
DAMPER/SPRING	**Disassembly, Reassembly, and Inspection** See **REAR DAMPER/SPRING DISASSEMBLY, REASSEMBLY, AND INSPECTION** or **REAR DAMPER/SPRING REMOVAL AND INSTALLATION**
	Removal and Installation See **REAR DAMPER/SPRING DISASSEMBLY, REASSEMBLY, AND INSPECTION** or **REAR DAMPER/SPRING REMOVAL AND INSTALLATION**
KNUCKLE/HUB BEARING UNIT (MAGNETIC ENCODER)	**HUB BEARING UNIT REPLACEMENT**
	KNUCKLE REMOVAL AND INSTALLATION
	WHEEL BEARING END PLAY INSPECTION
STABILIZER BAR	**REMOVAL AND INSTALLATION**

GETtheMANUALS.org

STABILIZER LINK	**REMOVAL AND INSTALLATION**
TRAILING ARM	**REMOVAL AND INSTALLATION**
UPPER ARM	**REMOVAL AND INSTALLATION**
WHEEL	**RUNOUT INSPECTION**
WHEEL BOLT	**Removal and Installation** See **FRONT WHEEL BOLT REMOVAL AND INSTALLATION** or **REAR WHEEL BOLT REMOVAL AND INSTALLATION**

FRONT DAMPER/SPRING DISASSEMBLY, REASSEMBLY, AND INSPECTION

SPECIAL TOOL REQUIRED

Image	Description/Tool Number
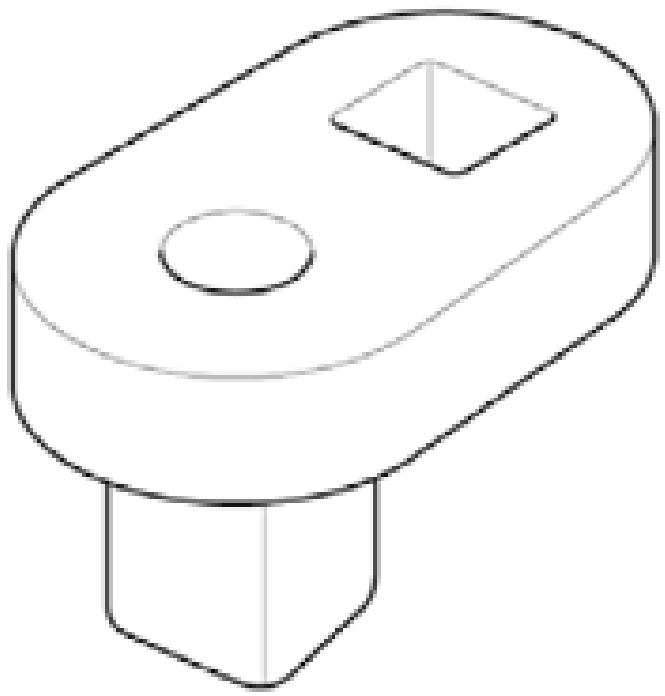	Strut Nut Adapter 07AAA-SVAA100

EXPLODED VIEW

1. Front Damper/Spring Exploded View

   Exploded View

GETtheMANUALS.org

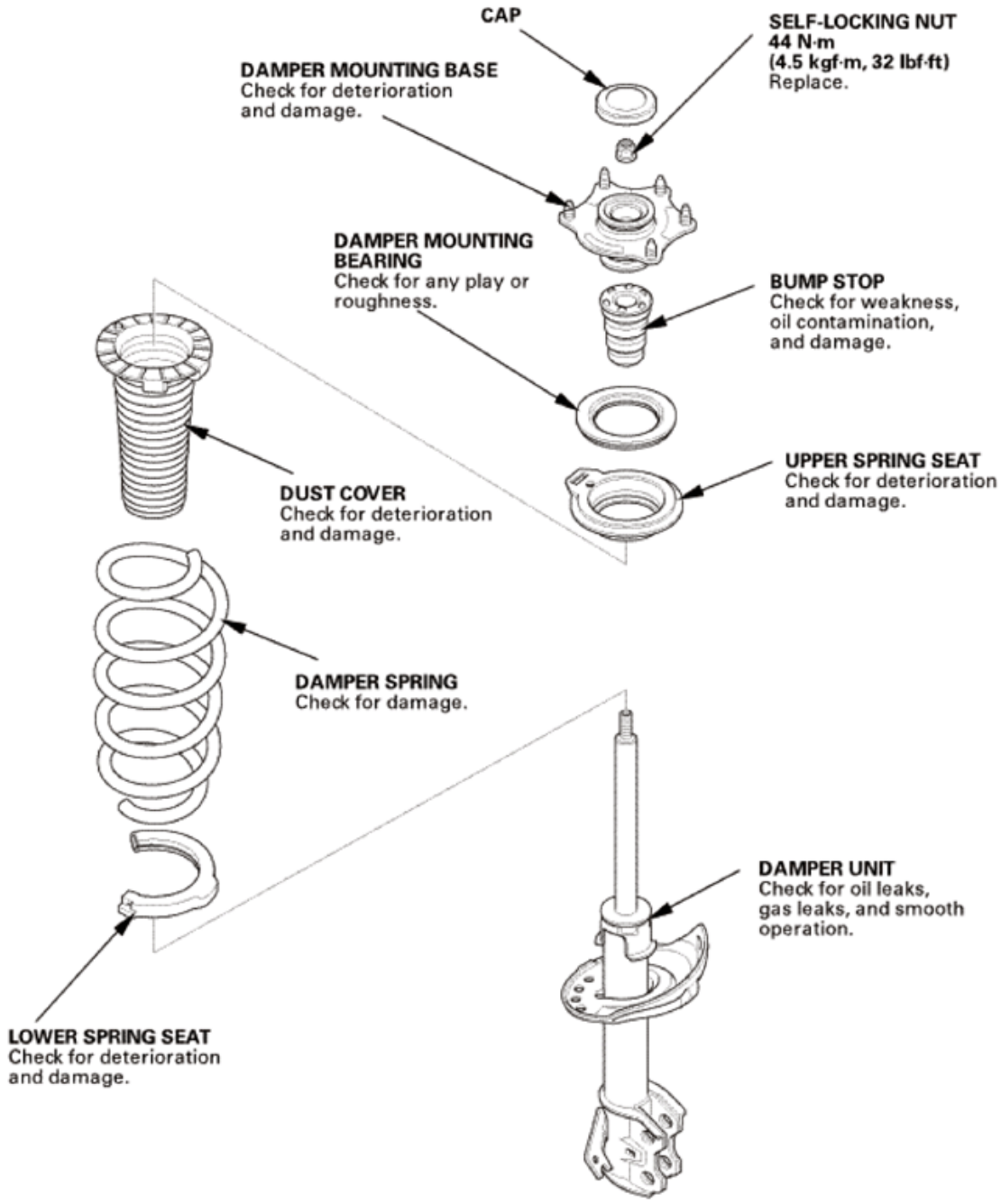

Fig. 31: Exploded View Of Front Damper/Spring

DISASSEMBLY

NOTE:

- **When compressing the damper spring, use a commercially available strut spring compressor (Branick MST-580A or Model 7200, or equivalent) according to the manufacturer's instructions.**
- **Refer to the EXPLODED VIEW as needed during the following procedure.**

GETtheMANUALS.org

1. Front Damper/Spring - Disassembly
    1. Remove the cap (A).

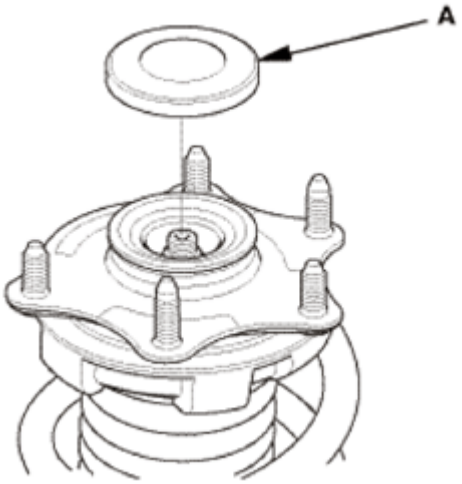

Fig. 32: Identifying Front Damper/Spring Cap

2. Compress the damper spring.

NOTE: Do not compress the spring more than necessary to remove the nut.

3. Remove the self-locking nut (A) while holding the damper shaft with a hex wrench (B).
4. Release the pressure from the strut spring compressor.
5. Disassemble the damper as shown in the Exploded View.

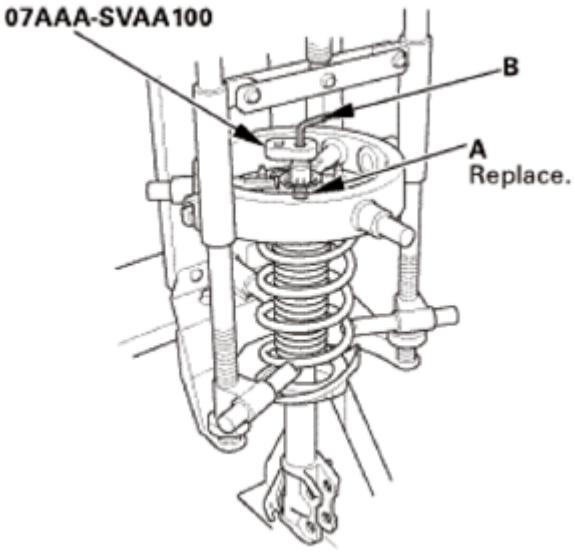

Fig. 33: Compressing Damper Spring

GETtheMANUALS.org

INSPECTION

1. Front Damper/Spring - Inspection
    1. Reassemble the damper mounting base and the self-locking nut.
    2. Compress the damper assembly by hand, and check for smooth operation through a full stroke, both compression and extension. The damper should extend smoothly and constantly when compression is released. If it does not, the gas is leaking and the damper should be replaced.
    3. Check for oil leaks, abnormal noises, or binding during these tests.

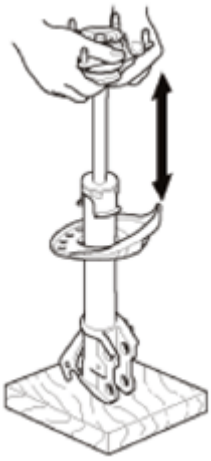

Fig. 34: Compressing Damper Assembly

REASSEMBLY

NOTE:

- **When compressing the damper spring, use a commercially available strut spring compressor (Branick MST-580A or Model 7200, or equivalent) according to the manufacturer's instructions.**
- **Refer to the EXPLODED VIEW as needed during the following procedure.**

1. Front Damper/Spring - Reassembly
    1. Install the dust cover (A) on the upper spring seat (B) by aligning the ledge portion (C).

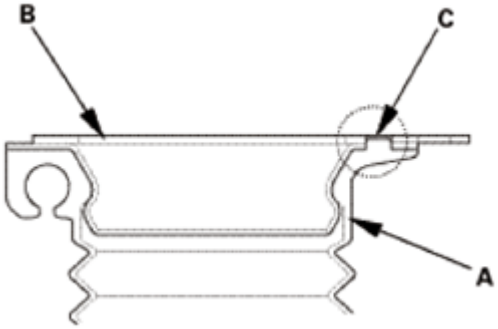

GETtheMANUALS.org

Fig. 35: Identifying Dust Cover And Upper Spring Seat

2. Install the damper spring (A) on the upper spring mounting cushion (B), then align the upper end (C) of the damper spring with the cushion stop (D).

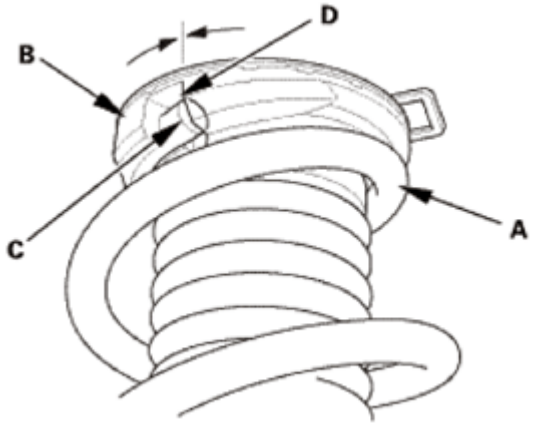

Fig. 36: Aligning Upper End Of Damper Spring With Cushion Stop

3. Install all the parts except the self-locking nut and the cap onto the damper unit (A) by referring to the **EXPLODED VIEW**.
4. Compress the damper spring.

NOTE: Do not compress the spring excessively.

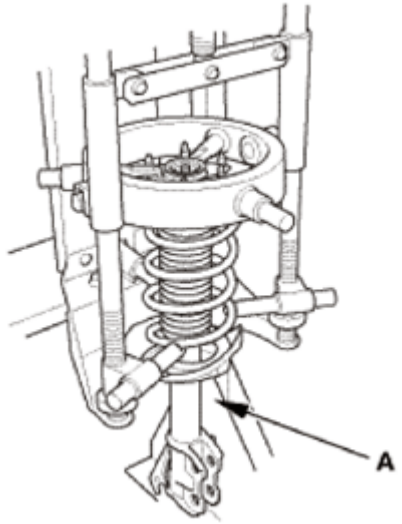

Fig. 37: Compressing Damper Spring

5. Align the bottom of the damper spring (A) with the stepped part (B) of the lower spring seat.

GETtheMANUALS.org

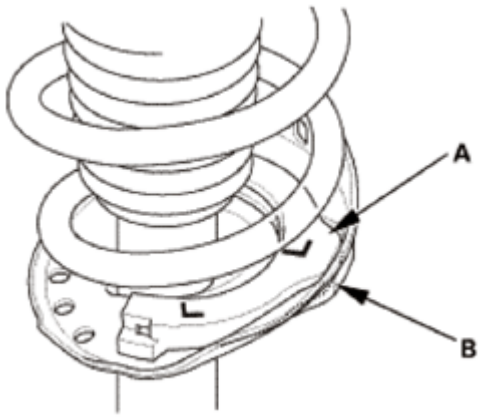

Fig. 38: Identifying Damper Spring And Stepped Part Of Lower Spring Seat

6. Align the center of raised portion (A) on the upper spring seat and the damper unit.
7. Align the damper bracket (B) and the damper mounting base (C) so that "delta" stamp (D) on it is toward the outside of the vehicle.

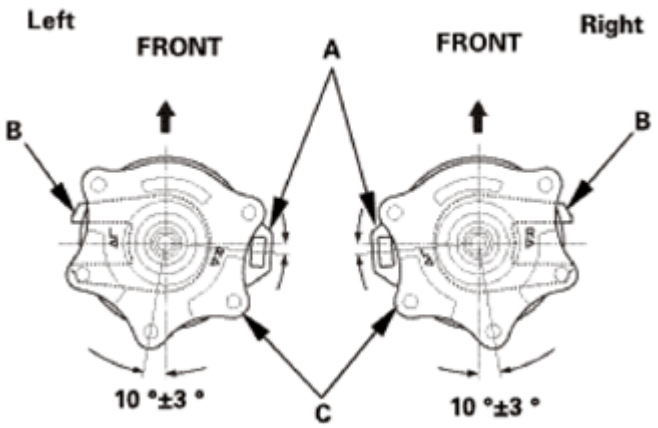

Fig. 39: Aligning Center Of Raised Portion On Upper Spring Seat And Damper Unit

8. Install the new self-locking nut (A).
9. Hold the damper shaft using a hex wrench (B), and tighten the self-locking nut.
10. Remove the damper/spring from the strut spring compressor.

GETtheMANUALS.org

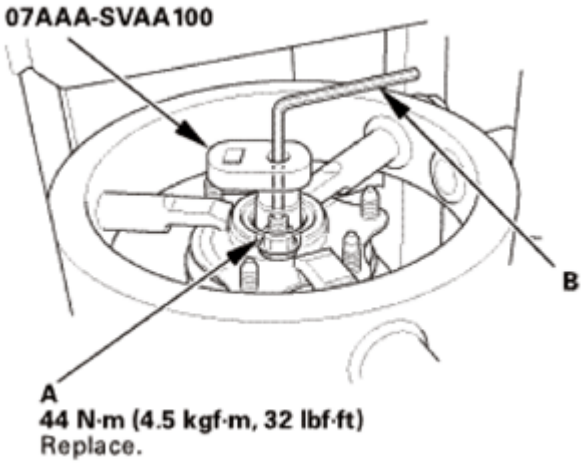

Fig. 40: Holding Damper Shaft Using Hex Wrench

11. Install the cap (A).

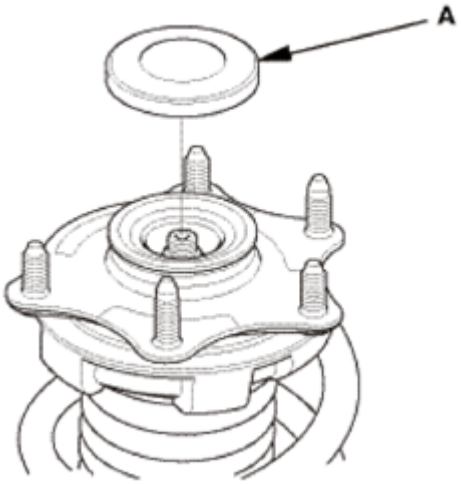

Fig. 41: Identifying Front Damper/Spring Cap

FRONT DAMPER/SPRING REMOVAL AND INSTALLATION

REMOVAL

1. Vehicle Lift
    1. Raise the vehicle on a lift, and make sure it is securely supported.
2. Front Wheel
    1. Remove the front wheel.

GETtheMANUALS.org

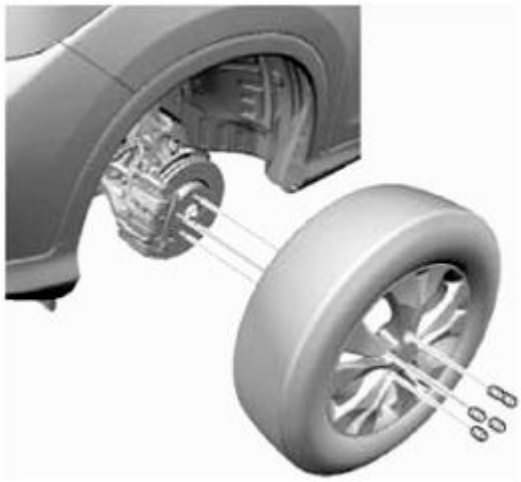

Fig. 42: Identifying Front Wheel And Studs

3. Front Damper/Spring Items
    1. Remove the wheel speed sensor harness clips (A).
    2. Remove the brake hose bracket (B).

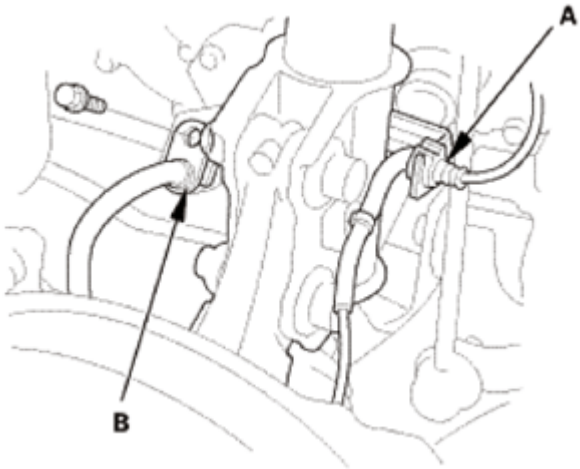

Fig. 43: Identifying Wheel Speed Sensor Harness Clips And Brake Hose Bracket

4. Front Stabilizer Ball Joint Damper Side - Disconnection
    1. Remove the flange nut (A) while holding the joint pin (B) with a hex wrench (C).
    2. Disconnect the stabilizer link (D) from the damper.

GETtheMANUALS.org

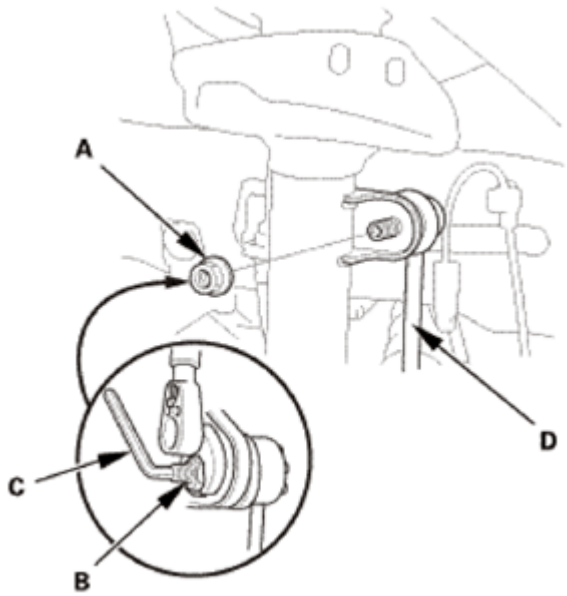

Fig. 44: Removing Flange Nut While Holding Joint Pin With Hex Wrench

5. Front Damper/Spring Lower Side - Disconnection
    1. Remove the damper pinch bolts (A) and flange nuts (B).

NOTE: **Do not allow the knuckle to rotate too far outward. This may allow the driveshaft inboard joint to come apart.**

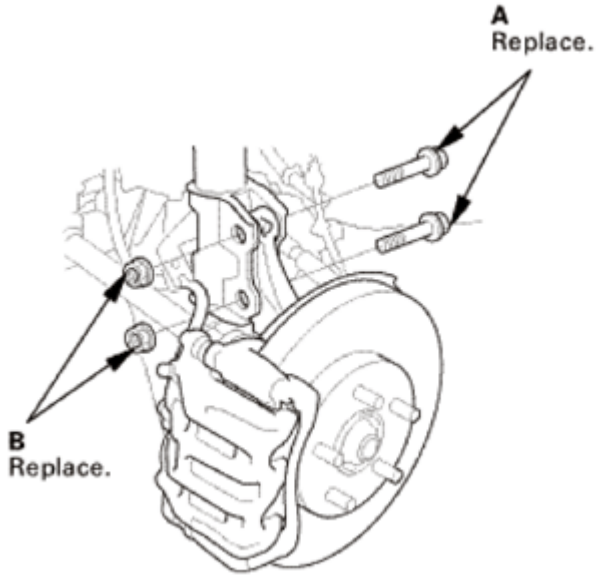

Fig. 45: Identifying Damper Pinch Bolts And Flange Nuts

6. Front Damper/Spring
    1. Remove the clip (A).

GETtheMANUALS.org

2. Pull out the hood rear seal (B).
3. Detach the hooks, and remove the cowl top lid (C).
4. Remove the flange nuts (D).

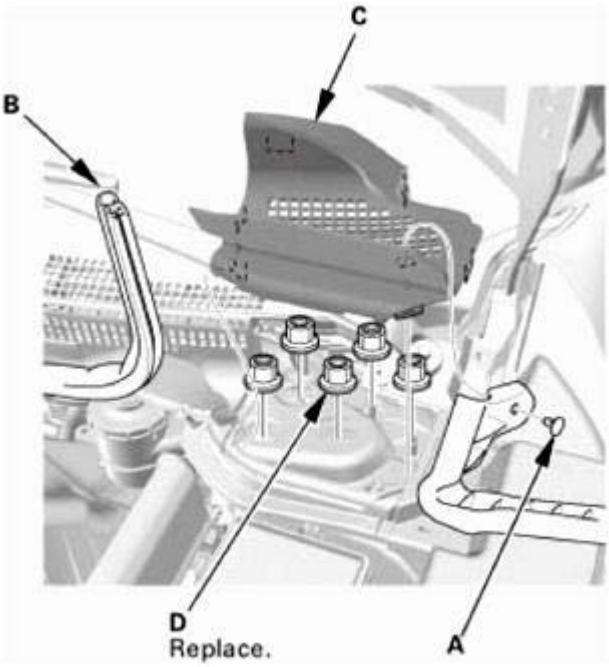

Fig. 46: Identifying Hood Rear Seal, Cowl Top Lid, Clip And Flange Nuts

5. Remove the damper/spring (A).

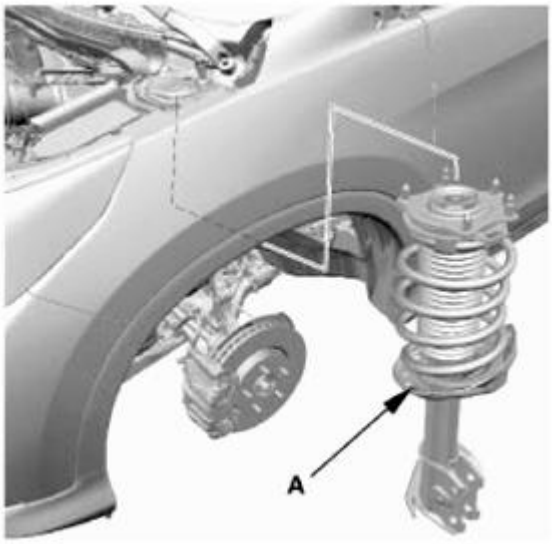

Fig. 47: Identifying Damper/Spring

INSTALLATION

GETtheMANUALS.org

1. Front Damper/Spring
    1. Install the damper/spring (A). Note the direction of the damper mounting base as shown.

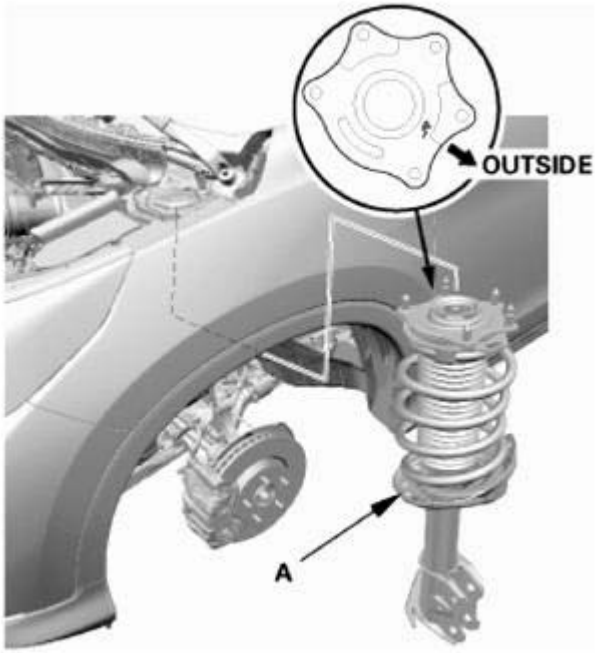

Fig. 48: Identifying Damper/Spring

    2. Loosely install the new flange nuts (A).

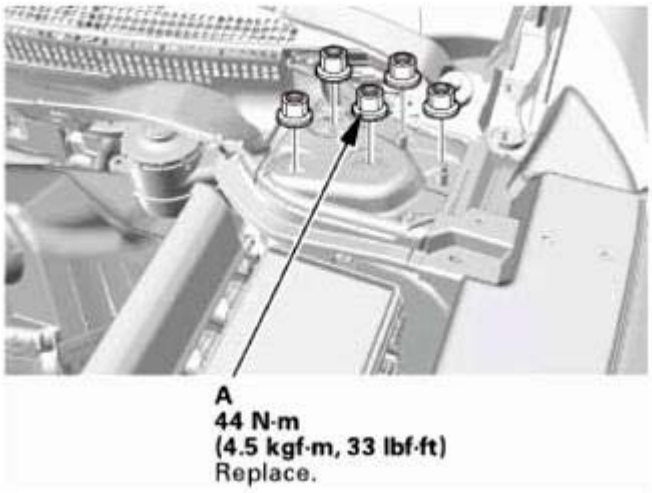

Fig. 49: Identifying Flange Nuts With Torque Specification

2. Front Damper/Spring Lower Side - Reconnection
    1. Loosely install the new damper pinch bolts (A) and the new flange nuts (B).

GETtheMANUALS.org

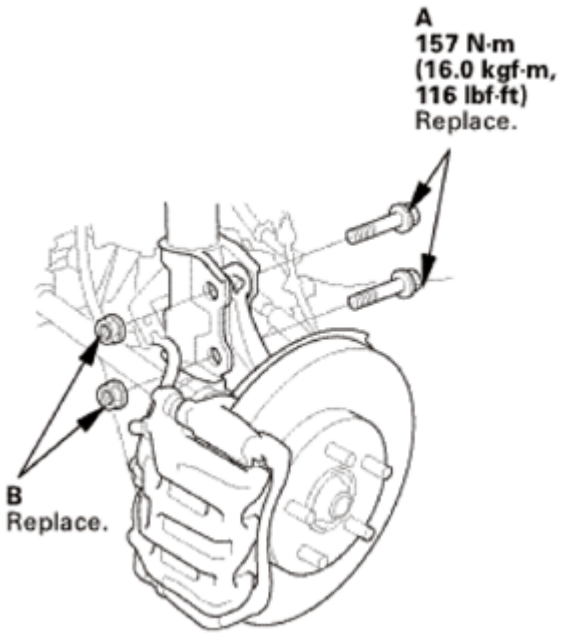

Fig. 50: Identifying Damper Pinch Bolts And Flange Nuts With Torque Specification

3. Front Damper/Spring - Tighten Under Vehicle's Weight
    1. Raise the front suspension with a floor jack to load the suspension with the vehicle's weight.
    2. Tighten the flange nuts on the upper side of the damper.
    3. Tighten the flange nuts on the lower side of the damper.
4. Front Stabilizer Ball Joint Damper Side - Reconnection
    1. Connect the stabilizer link (A) to the damper.
    2. Tighten the flange nut (B) while holding the joint pin (C) with a hex wrench (D).

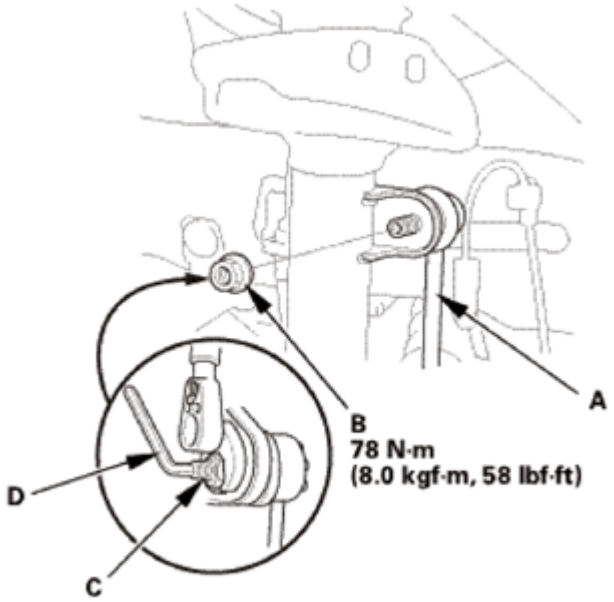

GETtheMANUALS.org

Fig. 51: Tightening Flange Nut While Holding Joint Pin With Hex Wrench

5. Front Damper/Spring Items
    1. Install the wheel speed sensor harness clips (A).
    2. Install the brake hose bracket (B).

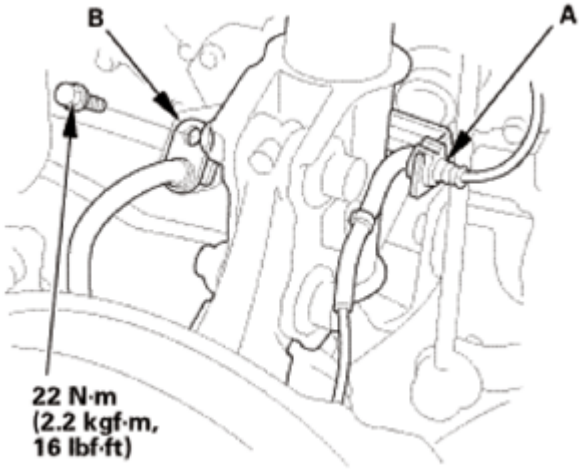

Fig. 52: Identifying Wheel Speed Sensor Harness Clips And Brake Hose Bracket And Mounting Bolt With Torque Specification

3. Install the cowl top lid (A).
4. Install the hood rear seal (B).
5. Install the clip (C).

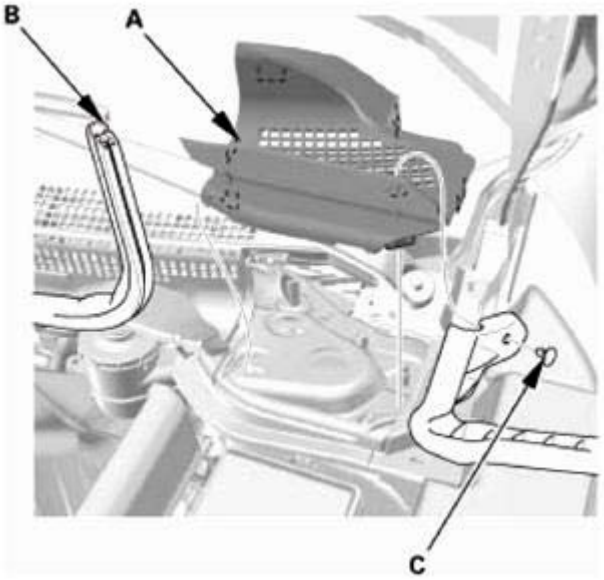

Fig. 53: Identifying Cowl Top Lid, Hood Rear Seal And Clip

GETtheMANUALS.org

6. Front Wheel
    1. Install the front wheel.

NOTE: **Before installing the wheel, clean the mating surfaces between the brake disc and the inside of the wheel.**

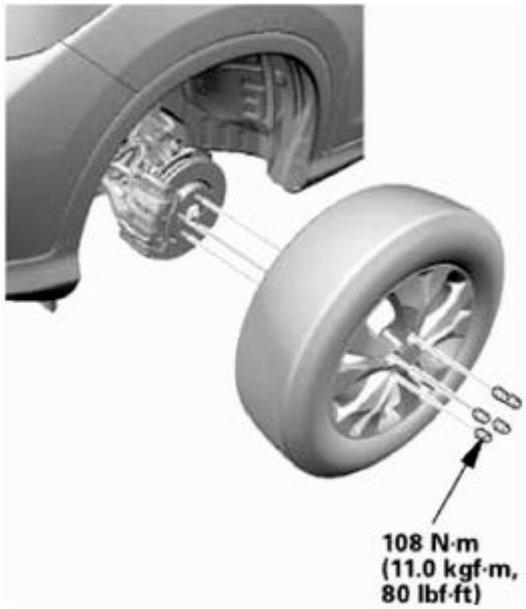

Fig. 54: Identifying Front Wheel And Studs With Torque Specification

7. Pre-Alignment Checks

    For proper inspection and adjustment of the wheel alignment, do these checks:

    1. Release the parking brake to avoid an incorrect measurement.
    2. Make sure the suspension is not modified.
    3. Make sure the fuel tank is full, and that the spare tire, the jack, and the tools are in place on the vehicle.
    4. Check the tire size and tire pressure according to tire information.
    5. Set the steering column to the middle tilt position and telescopic position.
8. Caster - Inspection

    Use commercially available computerized four wheel alignment equipment to measure wheel alignment (caster, camber, toe, and turning angle). Follow the equipment manufacturer's instructions.

    1. Check the caster angle.

        Caster angle:

GETtheMANUALS.org

2WD:

With 16 inch wheel: 2 ° 44 '±30 '

Without 16 inch wheel: 2 ° 50 '±30 '

AWD/4WD:

With 16 inch wheel: 2 ° 38 '±30 '

Without 16 inch wheel: 2 ° 44 '±30 '

- If the measurement is within specifications, measure the front camber angle.
- If the measurement is not within specifications, check for bent or damaged suspension components.

9. Camber - Inspection

Use commercially available computerized four wheel alignment equipment to measure wheel alignment (caster, camber, toe, and turning angle). Follow the equipment manufacturer's instructions.

1. Check the camber angle.

Camber angle:

2WD:

Front:

With 16 inch wheel: -0 ° 01 '±1 ° 00 '

Without 16 inch wheel: -0 ° 10 '±1 ° 00 '

(Maximum difference between the front right and left side: 1 °00 ')

Rear:

With 16 inch wheel: -1 ° 06 '±45 '

Without 16 inch wheel: -1 ° 12 '±45 '

(Maximum difference between the front right and left side: 0 °45 ')

AWD/4WD:

Front:

With 16 inch wheel: -0 ° 08 '±1 ° 00 '

GETtheMANUALS.org

Without 16 inch wheel: 0 ° 00 '±1 ° 00 '

(Maximum difference between the front right and left side: 1 °00 ')

Rear:

With 16 inch wheel: -0 ° 50 '±45 '

Without 16 inch wheel: -1 ° 00 '±45 '

(Maximum difference between the front right and left side: 0 °45 ')

- If the measurement is within specification, measure the toe-in.
- If the measurement for the front camber is not within the specification, go to front camber adjustment.
- If the measurement for the rear camber is not within the specification, check for bent or damaged suspension components.

10. Front Toe - Inspection

Use commercially available computerized four wheel alignment equipment to measure wheel alignment (caster, camber, toe, and turning angle). Follow the equipment manufacturer's instructions.

1. Set the steering column to the middle tilt position and telescopic positions.
2. Center the steering wheel spokes, and install a steering wheel holder tool.
3. Check the toe with the wheels pointed straight ahead.

Front toe-in: 0±2 mm (0±0.08 in)

- If adjustment is required, go to the front toe adjustment.
- If no adjustment is required, remove the alignment equipment.

11. Turning Angle - Inspection

Use commercially available computerized four wheel alignment equipment to measure wheel alignment (caster, camber, toe, and turning angle). Follow the equipment manufacturer's instructions.

1. Turn the wheel right and left while applying the brake, and measure the turning angle of both wheels.

Turning angle:

2WD:

Inward:

With 16 inch wheel: 36 ° 29 '±2 °

GETtheMANUALS.org

Without 16 inch wheel: 36 ° 13 '±2 °

Outward (reference):

With 16 inch wheel: 31 ° 13 '

Without 16 inch wheel: 31 ° 02 '

AWD/4WD:

Inward:

With 16 inch wheel: 36 ° 48 '±2 °

Without 16 inch wheel: 36 ° 30 '±2 °

Outward (reference):

With 16 inch wheel: 31 ° 18 '

Without 16 inch wheel: 31 ° 12 '

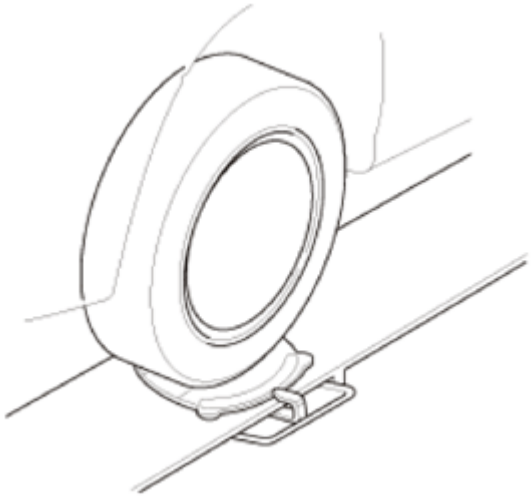

Fig. 55: Measuring Wheel Alignment (Caster, Camber, Toe And Turning Angle)

2. If the measurement is not within the specifications, even up both sides of the tie-rod threaded section length while adjusting the front toe.
3. If it is correct, but the turning angle is not within the specifications, check for bent or damaged suspension components.

12. HDS DLC - Connection
    1. Connect the HDS to the data link connector (DLC) (A) located under the driver's side of the dashboard.

GETtheMANUALS.org

2. Turn the ignition switch to ON (II).
3. Make sure the HDS communicates with the vehicle. If it does not communicate, go to the DLC circuit troubleshooting.

Fig. 56: Identifying Data Link Connector (DLC) Located Under Driver's Side Of Dashboard

13. VSA Sensor Neutral Position - Memorization
    1. Park the vehicle on a flat and level surface, with the steering wheel in the straight ahead position.
    2. Select VSA ADJUSTMENT, then select ALL SENSORS with the HDS, and follow the screen prompts.

    NOTE: See the HDS Help menu for specific instructions.

14. Steering Angle Sensor Neutral Position - Clear
    1. Select EPS ADJUSTMENT, then select EPS STEERING ANGLE SENSOR VALUE CLEAR and follow the screen prompts on the HDS.

    NOTE: See the HDS Help menu for specific instructions.

FRONT KNUCKLE/HUB REMOVAL AND INSTALLATION

SPECIAL TOOL REQUIRED

Image	Description/Tool Number

GETtheMANUALS.org

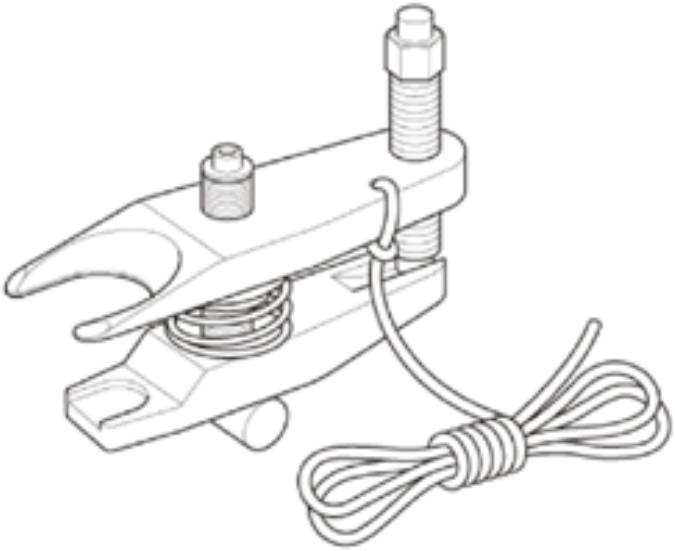	Ball Joint Remover, 32 mm 07MAC-SL00102
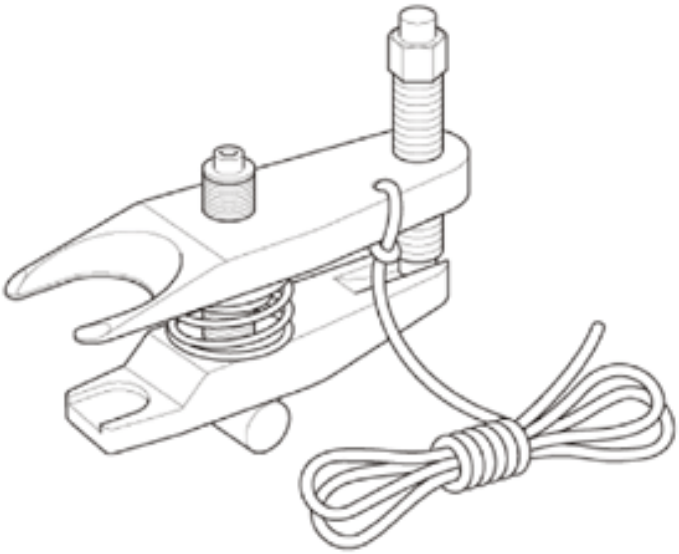	Ball Joint Remover, 28 mm 07MAC-SL00202
	Ball Joint Thread Protector, 12 mm 07AAF-SDAA100

GETtheMANUALS.org

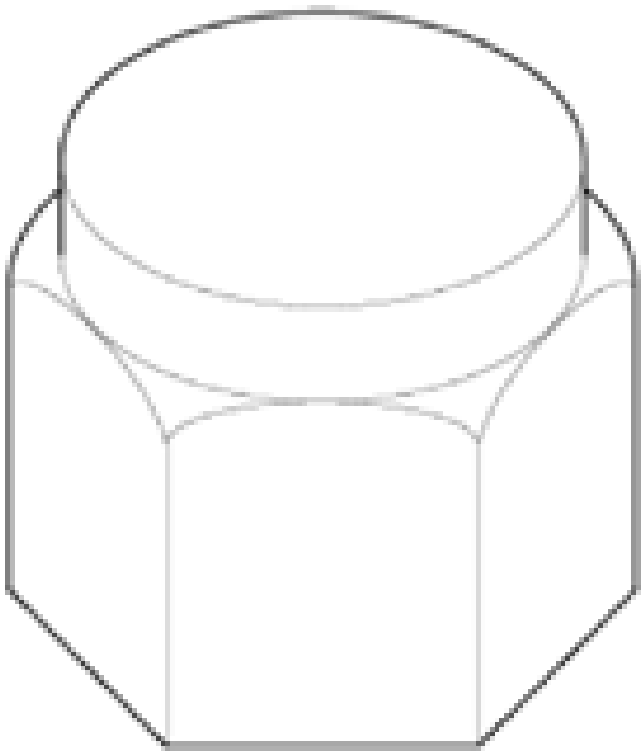	
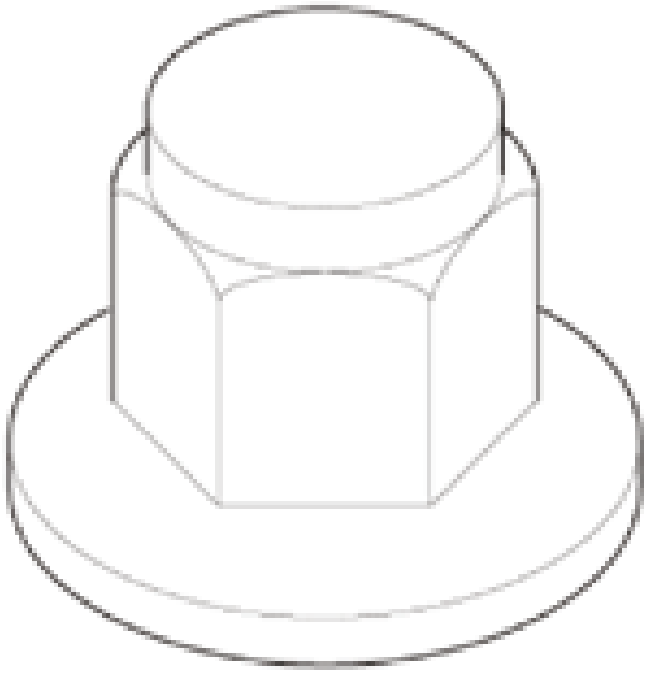	Ball Joint Thread Protector, 14 mm 071AF-SZNA100

REMOVAL

GETtheMANUALS.org

1. Vehicle Lift
    1. Raise the vehicle on a lift, and make sure it is securely supported.
2. Front Wheel
    1. Remove the front wheel.

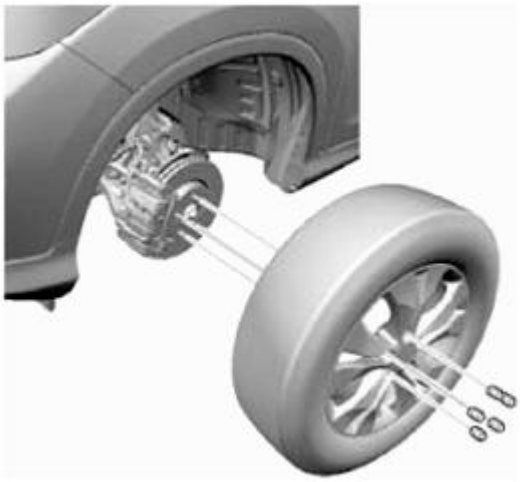

Fig. 57: Identifying Front Wheel And Studs

3. Front Brake Caliper - Detach
    1. Remove the brake hose mounting bolt (A).
    2. Remove the caliper assembly (B).

NOTE:

- **To prevent damage to the caliper assembly or brake hose, use a short piece of wire to hang the caliper assembly from the undercarriage.**
- **Do not twist the brake hose excessively.**

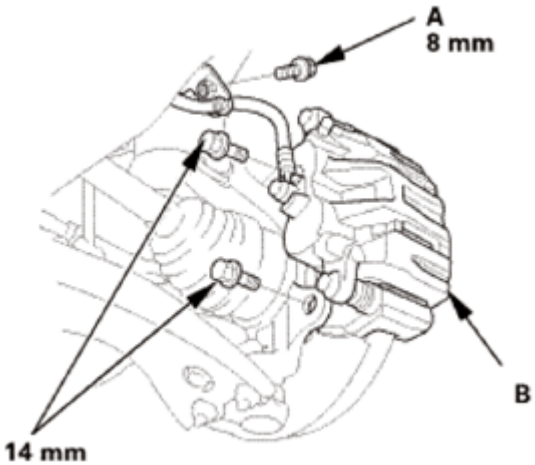

Fig. 58: Identifying Caliper Assembly And Brake Hose Mounting Bolt

GETtheMANUALS.org

4. Front Wheel Speed Sensor - Move
    1. Remove the wheel speed sensor (A).

NOTE: Do not disconnect the wheel speed sensor connector.

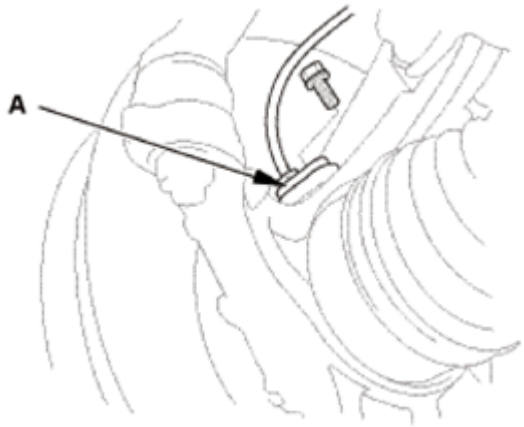

Fig. 59: Identifying Wheel Speed Sensor

5. Front Driveshaft Spindle Nut
    1. Pry up the stake (A) on the spindle nut (B).
    2. Remove the spindle nut.

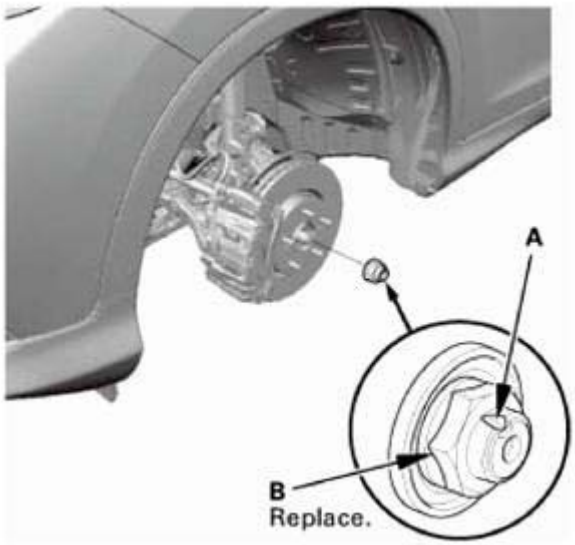

Fig. 60: Identifying Stake And Spindle Nut

6. Front Brake Disc
    1. Remove the brake disc (A).

GETtheMANUALS.org

NOTE: **If the brake disc is stuck to the front hub, thread two 8 x 1.25 mm bolts (B) into the brake disc to push it away from the front hub. Turn each bolt 90 degrees at a time to prevent the brake disc from binding.**

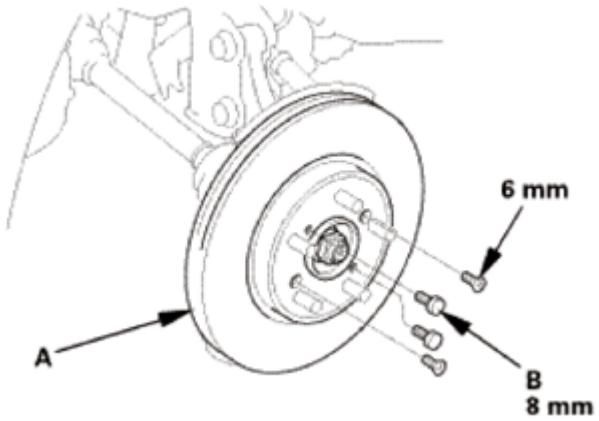

Fig. 61: Identifying Brake Disc And Bolts With Torque Specification

7. Ball Joint - Removal

NOTE: **Always use a ball joint remover to disconnect a ball joint. Do not strike the housing or any other part of the ball joint connection to disconnect it.**

1. Install a hex nut (A) or the ball joint thread protector.

NOTE: **When using a hex nut, make sure the nut is flush with the ball joint pin end to prevent damage to the threaded end of the ball joint pin.**

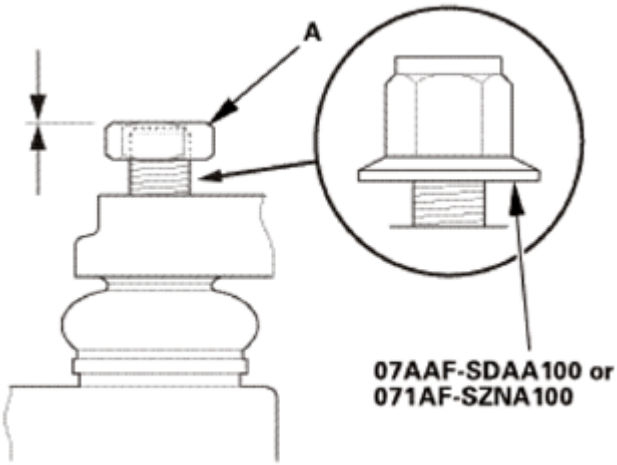

Fig. 62: Identifying Hex Nut And Ball Joint Thread Protector

2. Apply grease to the ball joint remover on the areas shown (A).

GETtheMANUALS.org

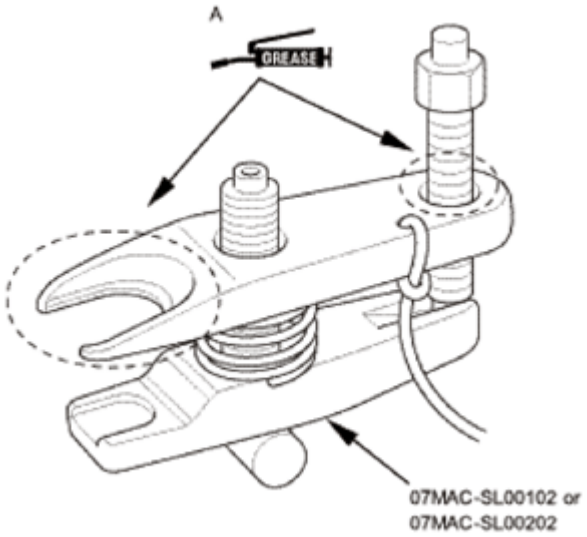

Fig. 63: Identifying Grease Applying Area On Ball Joint Remover

3. Install the ball joint remover as shown.

NOTE:

- **Fasten the safety tie (A) securely to a suspension arm or the subframe (B).**
- **Making sure not to damage the ball joint boot.**

4. Tighten the pressure bolt until the ball joint pin pops loose from the ball joint connecting hole.

NOTE: **Do not use pneumatic or electric tools on the pressure bolt.**

5. Remove the ball joint remover.
6. Remove the hex nut or the ball joint thread protector.
7. Pull the ball joint out of the ball joint connecting hole.

GETtheMANUALS.org

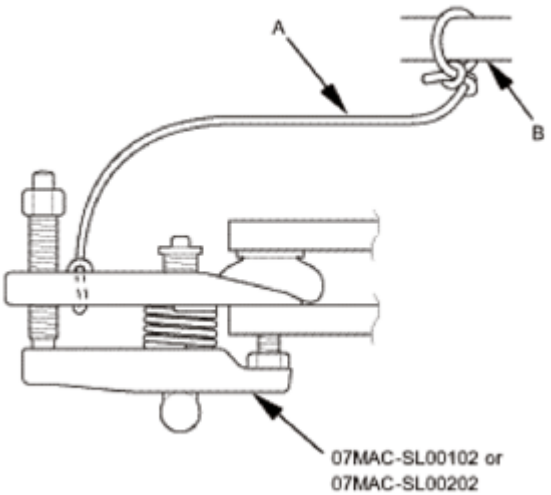

Fig. 64: Fastening Safety Tie Securely To Suspension Arm Or Subframe

8. Tie-Rod End Ball Joint - Disconnection
    1. Remove the cotter pin (A).
    2. Remove the nut (B).
    3. Disconnect the tie-rod end ball joint.

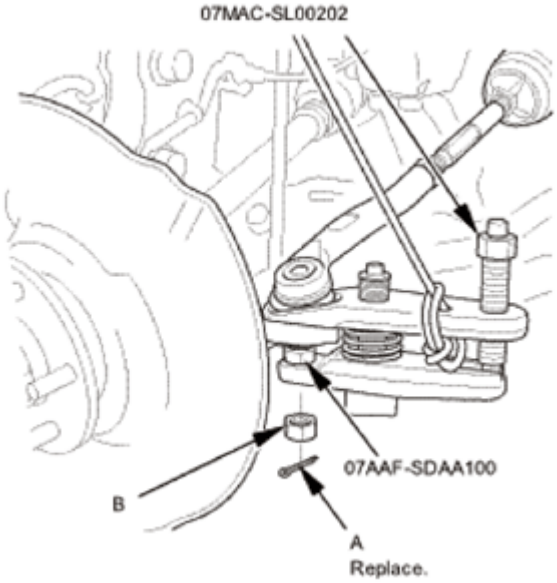

Fig. 65: Disconnecting Tie-Rod End Ball Joint

9. Front Lower Ball Joint knuckle side - Disconnection
    1. Remove the lock pin (A).
    2. Remove the castle nut (B).
    3. Disconnect the lower ball joint (C) from the knuckle.

GETtheMANUALS.org

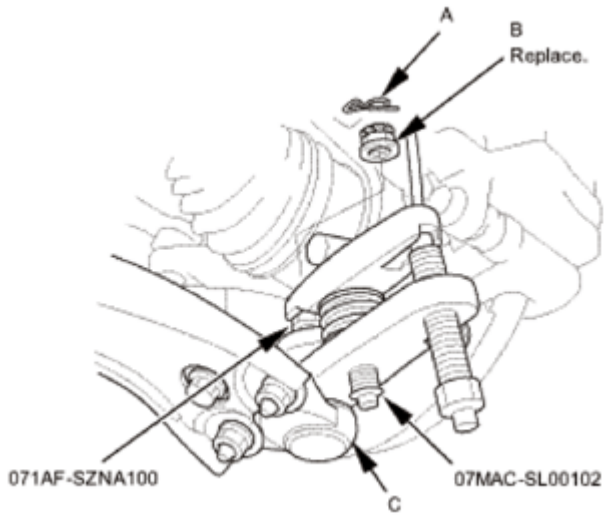

Fig. 66: Disconnecting Lower Ball Joint From Knuckle

10. Front Knuckle/Hub Assembly
    1. Remove the damper pinch bolts (A) and the self-locking nuts (B).
    2. Pull the knuckle (C) outward, and separate the outboard joint (D) from the front hub, then remove the knuckle/hub.

NOTE: **Do not pull the driveshaft end outward. The inner driveshaft inboard joint may come apart.**

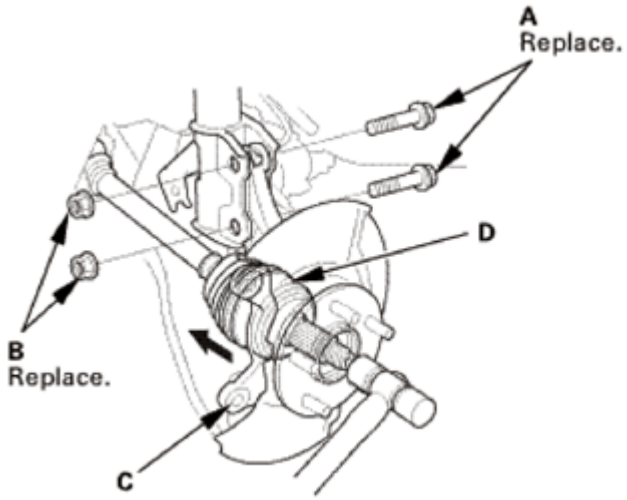

Fig. 67: Pulling Knuckle Outward

INSTALLATION

1. Front Knuckle/Hub Assembly
    1. Install the knuckle/hub (A).

GETtheMANUALS.org

NOTE: **Apply grease to the mating surfaces of the wheel bearing and the driveshaft outboard joint.**

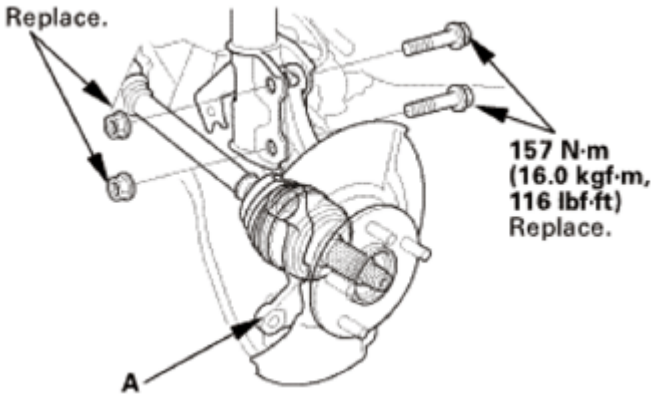

Fig. 68: Identifying Knuckle/Hub And Mounting Bolts And Nuts With Torque Specification

2. Front Lower Ball Joint knuckle side - Reconnection
    1. Connect the lower ball joint (A) to the knuckle.
    2. Install the new castle nut (B).

    NOTE: **Torque the castle nut to the lower torque specification, then tighten it only far enough to align the slot with the ball joint pin hole. Do not align the castle nut by loosening it.**

    3. Install the lock pin (C) as shown.

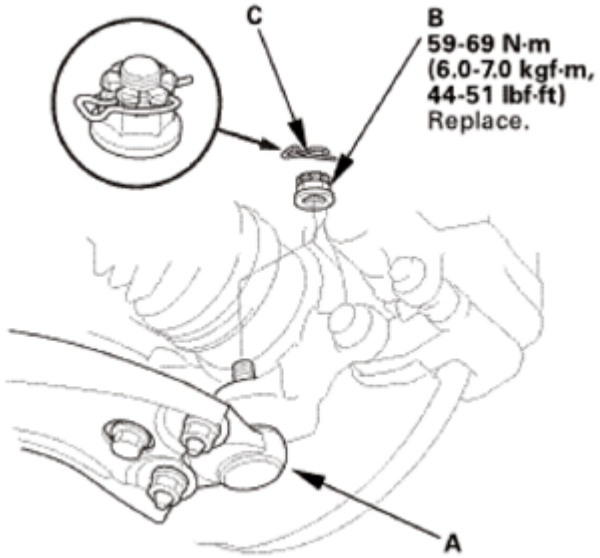

Fig. 69: Identifying Lock Pin, Lower Ball Joint And Castle Nut With Torque Specification

3. Tie-Rod End Ball Joint - Reconnection

GETtheMANUALS.org

1. Connect the tie-rod end ball joint.
2. Install the nut (A).
3. Install the cotter pin (B) as shown.

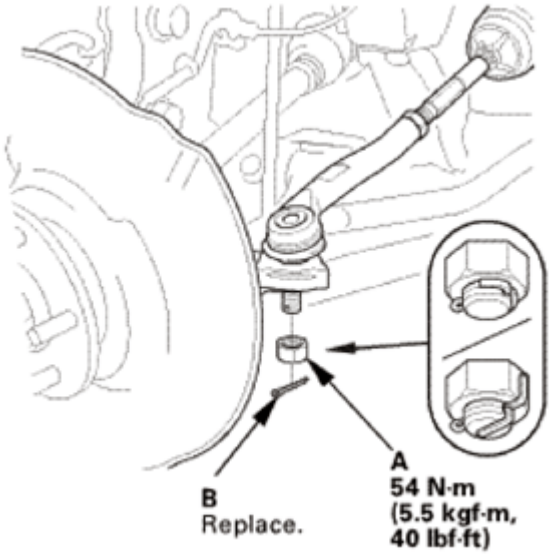

Fig. 70: Identifying Tie-Rod End Ball Joint, Cotter Pin And Nut With Torque Specification

4. Front Brake Disc
   1. Install the brake disc (A).

NOTE: **Before installing the brake disc, clean the mating surfaces between the front hub and the inside of the brake disc.**

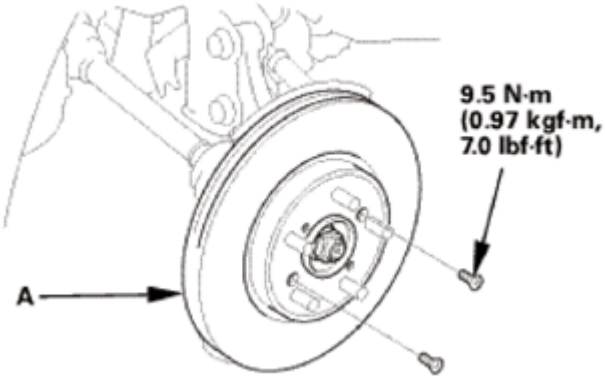

Fig. 71: Identifying Brake Disc And Bolts With Torque Specification

5. Driveshaft Spindle Nut, Front Left
   1. Apply a small amount of engine oil to the seating surface of a new spindle nut (A).
   2. Install the spindle nut.

GETtheMANUALS.org

3. Use a drift to stake the spindle nut shoulder (B) against the driveshaft.

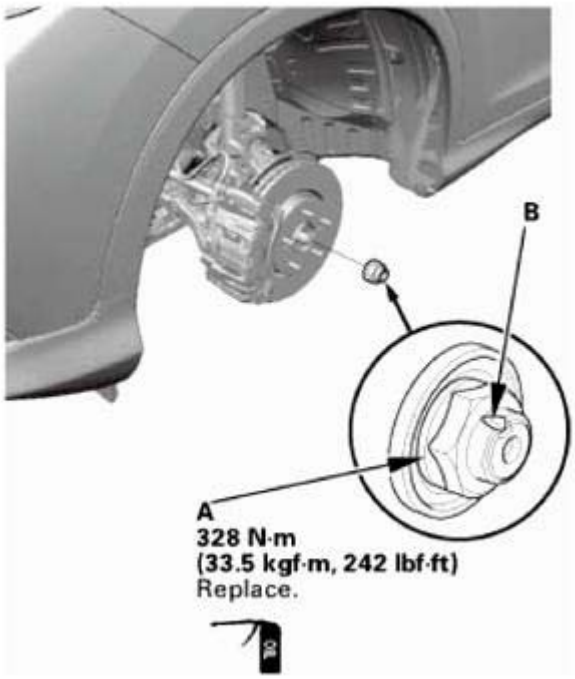

Fig. 72: Identifying Spindle Nut Shoulder And Spindle Nut With Torque Specification

6. Front Wheel Speed Sensor - Move
    1. Install the wheel speed sensor (A).

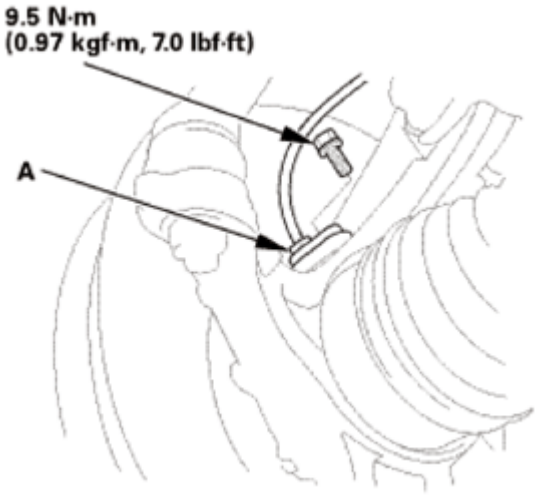

Fig. 73: Identifying Wheel Speed Sensor And Mounting Bolt With Torque Specification

7. Front Brake Caliper - Reattach
    1. Install the caliper assembly (A).
    2. Install the brake hose mounting bolt (B).

GETtheMANUALS.org

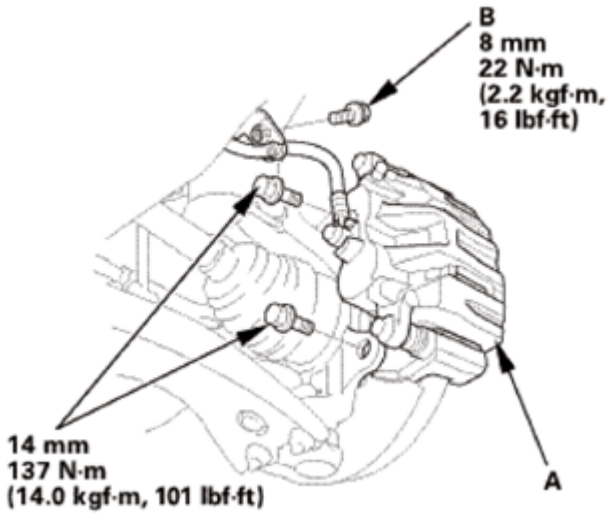

Fig. 74: Identifying Caliper Assembly And Brake Hose Mounting Bolt With Torque Specification

8. Front Wheel
    1. Install the front wheel.

NOTE: **Before installing the wheel, clean the mating surfaces between the brake disc and the inside of the wheel.**

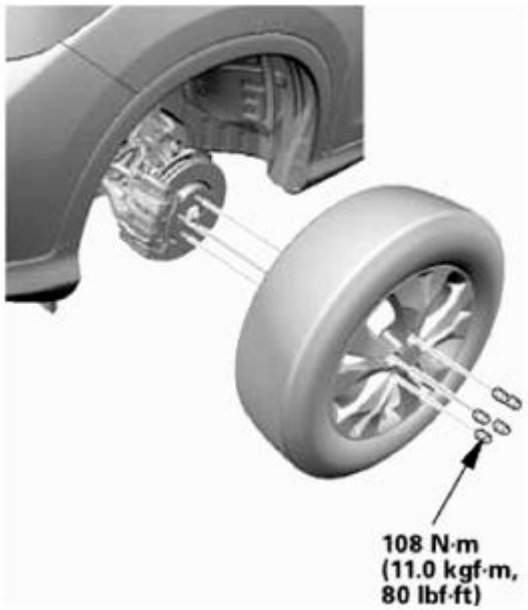

Fig. 75: Identifying Front Wheel And Studs With Torque Specification

9. Pre-Alignment Checks

For proper inspection and adjustment of the wheel alignment, do these checks:

GETtheMANUALS.org

1. Release the parking brake to avoid an incorrect measurement.
2. Make sure the suspension is not modified.
3. Make sure the fuel tank is full, and that the spare tire, the jack, and the tools are in place on the vehicle.
4. Check the tire size and tire pressure according to tire information.
5. Set the steering column to the middle tilt position and telescopic position.

10. Caster - Inspection

Use commercially available computerized four wheel alignment equipment to measure wheel alignment (caster, camber, toe, and turning angle). Follow the equipment manufacturer's instructions.

1. Check the caster angle.

Caster angle:

2WD:

With 16 inch wheel: 2 ° 44 '±30 '

Without 16 inch wheel: 2 ° 50 '±30 '

AWD/4WD:

With 16 inch wheel: 2 ° 38 '±30 '

Without 16 inch wheel: 2 ° 44 '±30 '

- If the measurement is within specifications, measure the front camber angle.
- If the measurement is not within specifications, check for bent or damaged suspension components.

11. Camber - Inspection

Use commercially available computerized four wheel alignment equipment to measure wheel alignment (caster, camber, toe, and turning angle). Follow the equipment manufacturer's instructions.

1. Check the camber angle.

Camber angle:

2WD:

Front:

With 16 inch wheel: -0 ° 01 '±1 ° 00 '

GETtheMANUALS.org

Without 16 inch wheel: -0 ° 10 '±1 ° 00 '

(Maximum difference between the front right and left side: 1 °00 ')

Rear:

With 16 inch wheel: -1 ° 06 '±45 '

Without 16 inch wheel: -1 ° 12 '±45 '

(Maximum difference between the front right and left side: 0 °45 ')

AWD/4WD:

Front:

With 16 inch wheel: -0 ° 08 '±1 ° 00 '

Without 16 inch wheel: 0 ° 00 '±1 ° 00 '

(Maximum difference between the front right and left side: 1 °00 ')

Rear:

With 16 inch wheel: -0 ° 50 '±45 '

Without 16 inch wheel: -1 ° 00 '±45 '

(Maximum difference between the front right and left side: 0 °45 ')

- If the measurement is within specification, measure the toe-in.
- If the measurement for the front camber is not within the specification, go to front camber adjustment.
- If the measurement for the rear camber is not within the specification, check for bent or damaged suspension components.

12. Front Toe - Inspection

Use commercially available computerized four wheel alignment equipment to measure wheel alignment (caster, camber, toe, and turning angle). Follow the equipment manufacturer's instructions.

1. Set the steering column to the middle tilt position and telescopic positions.
2. Center the steering wheel spokes, and install a steering wheel holder tool.
3. Check the toe with the wheels pointed straight ahead.

Front toe-in: 0±2 mm (0±0.08 in)

GETtheMANUALS.org

- If adjustment is required, go to the front toe adjustment.
- If no adjustment is required, remove the alignment equipment.

13. Turning Angle - Inspection

Use commercially available computerized four wheel alignment equipment to measure wheel alignment (caster, camber, toe, and turning angle). Follow the equipment manufacturer's instructions.

1. Turn the wheel right and left while applying the brake, and measure the turning angle of both wheels.

Turning angle:

2WD:

Inward:

With 16 inch wheel: 36 ° 29 '±2 °

Without 16 inch wheel: 36 ° 13 '±2 °

Outward (reference):

With 16 inch wheel: 31 ° 13 '

Without 16 inch wheel: 31 ° 02 '

AWD/4WD:

Inward:

With 16 inch wheel: 36 ° 48 '±2 °

Without 16 inch wheel: 36 ° 30 '±2 °

Outward (reference):

With 16 inch wheel: 31 ° 18 '

Without 16 inch wheel: 31 ° 12 '

GETtheMANUALS.org

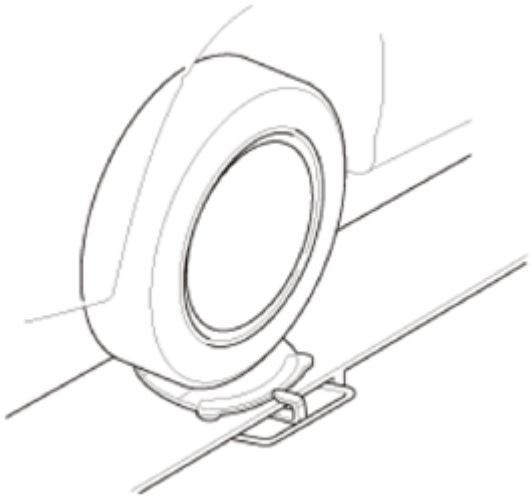

Fig. 76: Measuring Wheel Alignment (Caster, Camber, Toe And Turning Angle)

2. If the measurement is not within the specifications, even up both sides of the tie-rod threaded section length while adjusting the front toe.
3. If it is correct, but the turning angle is not within the specifications, check for bent or damaged suspension components.

14. HDS DLC - Connection
    1. Connect the HDS to the data link connector (DLC) (A) located under the driver's side of the dashboard.
    2. Turn the ignition switch to ON (II).
    3. Make sure the HDS communicates with the vehicle. If it does not communicate, go to the DLC circuit troubleshooting.

Fig. 77: Identifying Data Link Connector (DLC) Located Under Driver's Side Of Dashboard

15. VSA Sensor Neutral Position - Memorization

GETtheMANUALS.org

1. Park the vehicle on a flat and level surface, with the steering wheel in the straight ahead position.
2. Select VSA ADJUSTMENT, then select ALL SENSORS with the HDS, and follow the screen prompts.

NOTE: See the HDS Help menu for specific instructions.

16. Steering Angle Sensor Neutral Position - Clear
    1. Select EPS ADJUSTMENT, then select EPS STEERING ANGLE SENSOR VALUE CLEAR and follow the screen prompts on the HDS.

NOTE: See the HDS Help menu for specific instructions.

FRONT LOWER ARM REMOVAL AND INSTALLATION

REMOVAL

1. Vehicle Lift
    1. Raise the vehicle on a lift, and make sure it is securely supported.
2. Front Wheel
    1. Remove the front wheel.

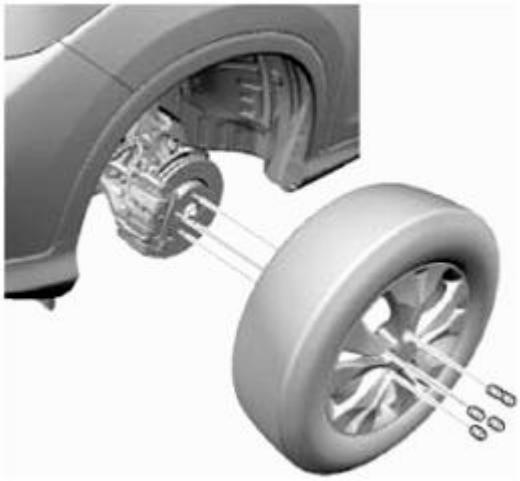

Fig. 78: Identifying Front Wheel And Studs

3. Front Stabilizer Bar Bushing Holder
    1. Remove the front stabilizer bar bushing holder (A).

GETtheMANUALS.org

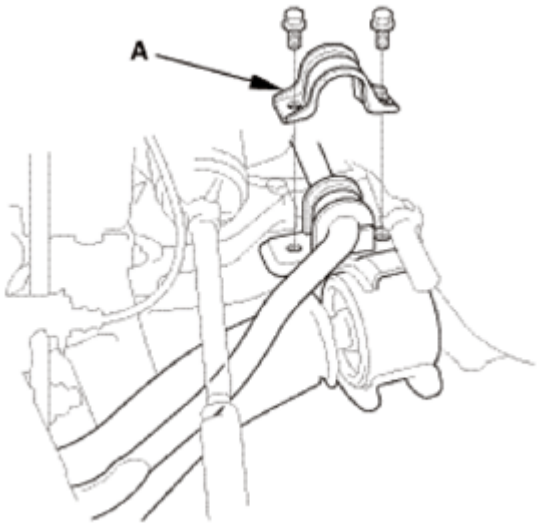

Fig. 79: Identifying Front Stabilizer Bar Bushing Holder

4. Lower Ball Joint Lower Arm Side - Disconnection
    1. Remove the flange bolt (A).
    2. Remove the flange nuts (B).
    3. Disconnect the lower arm (C) from the front lower ball joint (D).

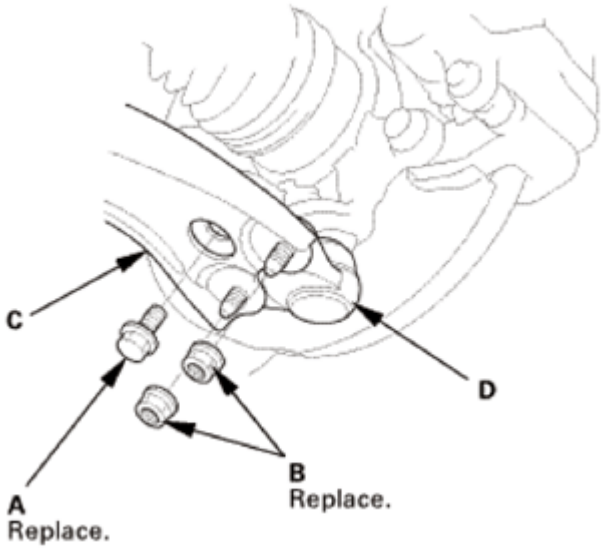

Fig. 80: Identifying Lower Arm, Front Lower Ball Joint, Flange Nuts And Flange Bolt

5. Front Lower Arm
    1. Remove the lower arm (A).
    2. Remove the bushing stopper bracket (B) from the lower arm.

GETtheMANUALS.org

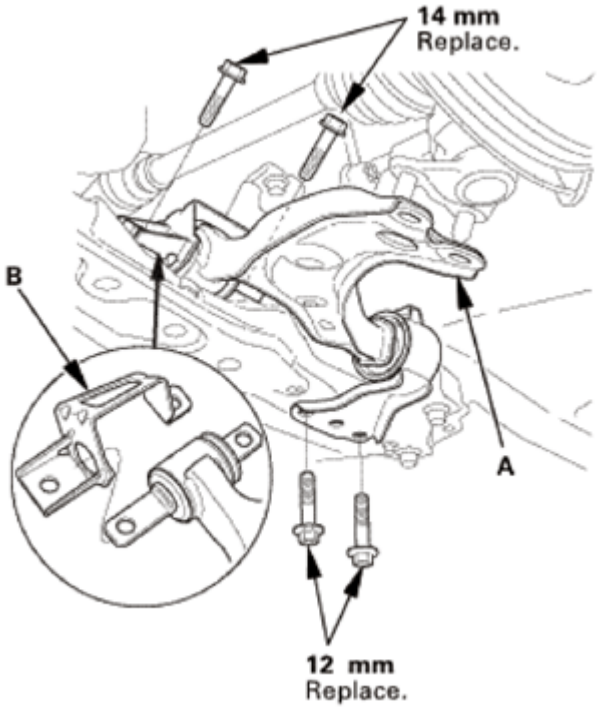

Fig. 81: Identifying Bushing Stopper Bracket, Lower Arm And Mounting Bolts With Torque Specification

INSTALLATION

1. Front Lower Arm
    1. Install the bushing stopper bracket (A) on the lower arm (B).
    2. Install the lower arm.
    3. Loosely install the new flange bolts (C).

GETtheMANUALS.org

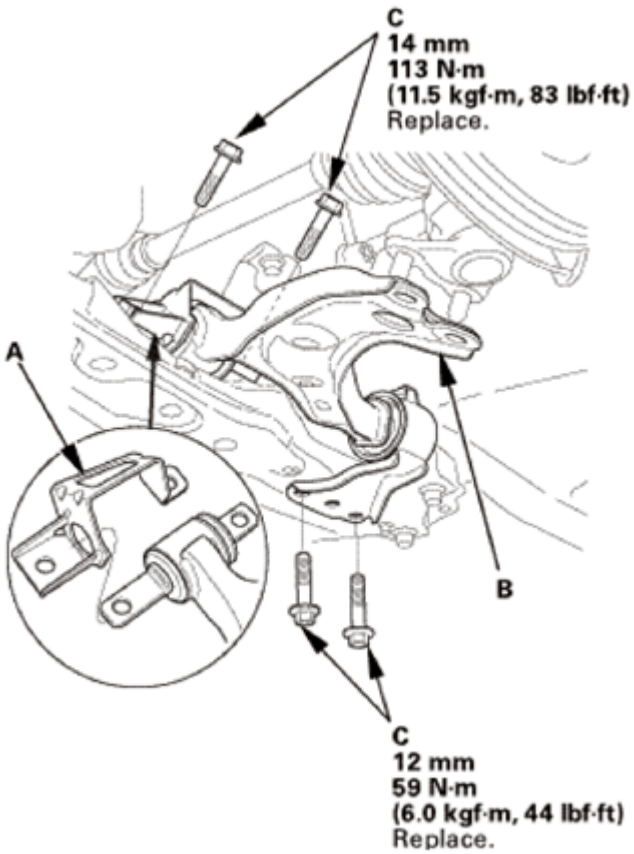

Fig. 82: Identifying Bushing Stopper Bracket, Lower Arm And Flange Bolts With Torque Specification

2. Front Lower Ball Joint Lower Arm Side - Reconnection
    1. Connect the front lower ball joint (A) to the lower arm.
    2. Install the new flange nuts and the new flange bolt in the sequence shown.

GETtheMANUALS.org

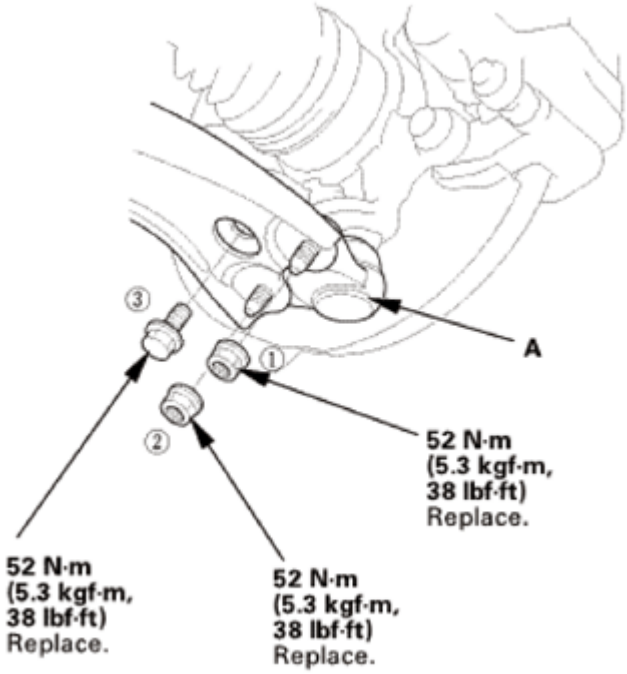

Fig. 83: Identifying Lower Ball Joint, Flange Nuts And Bolt Tightening Sequence With Torque Specification

3. Front Lower Arm - Tighten Vehicle's Weight
    1. Raise the front suspension with a floor jack to load the suspension with the vehicle's weight.
    2. Tighten the flange bolts to the specified torque.
4. Front Stabilizer Bar Bushing Holder
    1. Install the front stabilizer bar bushing holder (A).

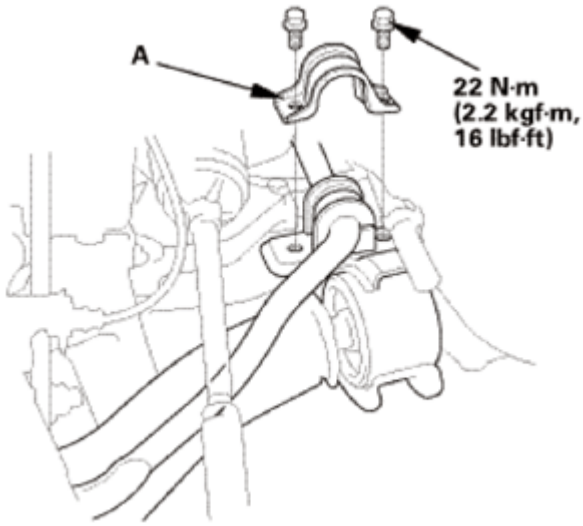

Fig. 84: Identifying Front Stabilizer Bar Bushing Holder And Mounting Bolts With Torque Specification

GETtheMANUALS.org

5. Front Wheel
    1. Install the front wheel.

NOTE: **Before installing the wheel, clean the mating surfaces between the brake disc and the inside of the wheel.**

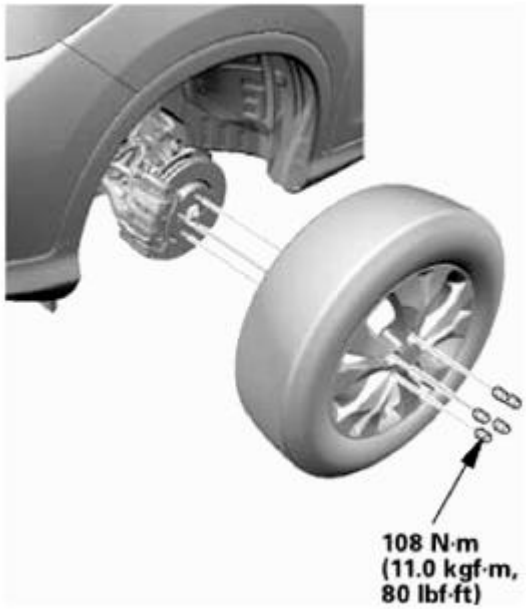

Fig. 85: Identifying Front Wheel And Studs With Torque Specification

6. Pre-Alignment Checks

    For proper inspection and adjustment of the wheel alignment, do these checks:

    1. Release the parking brake to avoid an incorrect measurement.
    2. Make sure the suspension is not modified.
    3. Make sure the fuel tank is full, and that the spare tire, the jack, and the tools are in place on the vehicle.
    4. Check the tire size and tire pressure according to tire information.
    5. Set the steering column to the middle tilt position and telescopic position.
7. Caster - Inspection

    Use commercially available computerized four wheel alignment equipment to measure wheel alignment (caster, camber, toe, and turning angle). Follow the equipment manufacturer's instructions.

    1. Check the caster angle.

        Caster angle:

GETtheMANUALS.org

2WD:

With 16 inch wheel: 2 ° 44 '±30 '

Without 16 inch wheel: 2 ° 50 '±30 '

AWD/4WD:

With 16 inch wheel: 2 ° 38 '±30 '

Without 16 inch wheel: 2 ° 44 '±30 '

- If the measurement is within specifications, measure the front camber angle.
- If the measurement is not within specifications, check for bent or damaged suspension components.

8. Camber - Inspection

Use commercially available computerized four wheel alignment equipment to measure wheel alignment (caster, camber, toe, and turning angle). Follow the equipment manufacturer's instructions.

1. Check the camber angle.

Camber angle:

2WD:

Front:

With 16 inch wheel: -0 ° 01 '±1 ° 00 '

Without 16 inch wheel: -0 ° 10 '±1 ° 00 '

(Maximum difference between the front right and left side: 1 °00 ')

Rear:

With 16 inch wheel: -1 ° 06 '±45 '

Without 16 inch wheel: -1 ° 12 '±45 '

(Maximum difference between the front right and left side: 0 °45 ')

AWD/4WD:

Front:

With 16 inch wheel: -0 ° 08 '±1 ° 00 '

GETtheMANUALS.org

Without 16 inch wheel: 0 ° 00 '±1 ° 00 '

(Maximum difference between the front right and left side: 1 °00 ')

Rear:

With 16 inch wheel: -0 ° 50 '±45 '

Without 16 inch wheel: -1 ° 00 '±45 '

(Maximum difference between the front right and left side: 0 °45 ')

- If the measurement is within specification, measure the toe-in.
- If the measurement for the front camber is not within the specification, go to front camber adjustment.
- If the measurement for the rear camber is not within the specification, check for bent or damaged suspension components.

9. Front Toe - Inspection

Use commercially available computerized four wheel alignment equipment to measure wheel alignment (caster, camber, toe, and turning angle). Follow the equipment manufacturer's instructions.

1. Set the steering column to the middle tilt position and telescopic positions.
2. Center the steering wheel spokes, and install a steering wheel holder tool.
3. Check the toe with the wheels pointed straight ahead.

Front toe-in: 0±2 mm (0±0.08 in)

- If adjustment is required, go to the front toe adjustment.
- If no adjustment is required, remove the alignment equipment.

10. Turning Angle - Inspection

Use commercially available computerized four wheel alignment equipment to measure wheel alignment (caster, camber, toe, and turning angle). Follow the equipment manufacturer's instructions.

1. Turn the wheel right and left while applying the brake, and measure the turning angle of both wheels.

Turning angle:

2WD:

Inward:

With 16 inch wheel: 36 ° 29 '±2 °

GETtheMANUALS.org

Without 16 inch wheel: 36 ° 13 '±2 °

Outward (reference):

With 16 inch wheel: 31 ° 13 '

Without 16 inch wheel: 31 ° 02 '

AWD/4WD:

Inward:

With 16 inch wheel: 36 ° 48 '±2 °

Without 16 inch wheel: 36 ° 30 '±2 °

Outward (reference):

With 16 inch wheel: 31 ° 18 '

Without 16 inch wheel: 31 ° 12 '

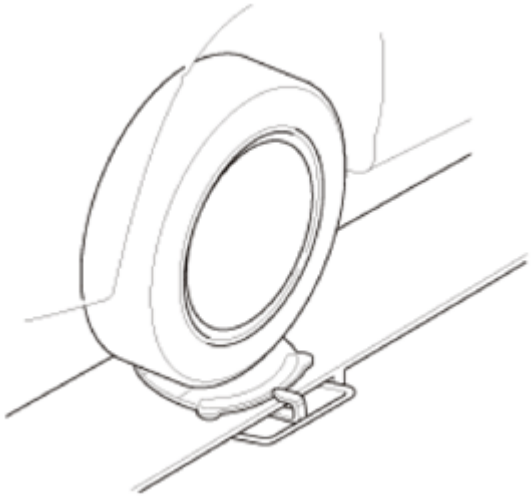

Fig. 86: Measuring Wheel Alignment (Caster, Camber, Toe And Turning Angle)

2. If the measurement is not within the specifications, even up both sides of the tie-rod threaded section length while adjusting the front toe.
3. If it is correct, but the turning angle is not within the specifications, check for bent or damaged suspension components.

11. HDS DLC - Connection
    1. Connect the HDS to the data link connector (DLC) (A) located under the driver's side of the dashboard.

GETtheMANUALS.org

2. Turn the ignition switch to ON (II).
3. Make sure the HDS communicates with the vehicle. If it does not communicate, go to the DLC circuit troubleshooting.

Fig. 87: Identifying Data Link Connector (DLC) Located Under Driver's Side Of Dashboard

12. VSA Sensor Neutral Position - Memorization
    1. Park the vehicle on a flat and level surface, with the steering wheel in the straight ahead position.
    2. Select VSA ADJUSTMENT, then select ALL SENSORS with the HDS, and follow the screen prompts.

    NOTE: See the HDS Help menu for specific instructions.

13. Steering Angle Sensor Neutral Position - Clear
    1. Select EPS ADJUSTMENT, then select EPS STEERING ANGLE SENSOR VALUE CLEAR and follow the screen prompts on the HDS.

    NOTE: See the HDS Help menu for specific instructions.

FRONT LOWER BALL JOINT REMOVAL AND INSTALLATION

SPECIAL TOOL REQUIRED

Image	Description/Tool Number

GETtheMANUALS.org

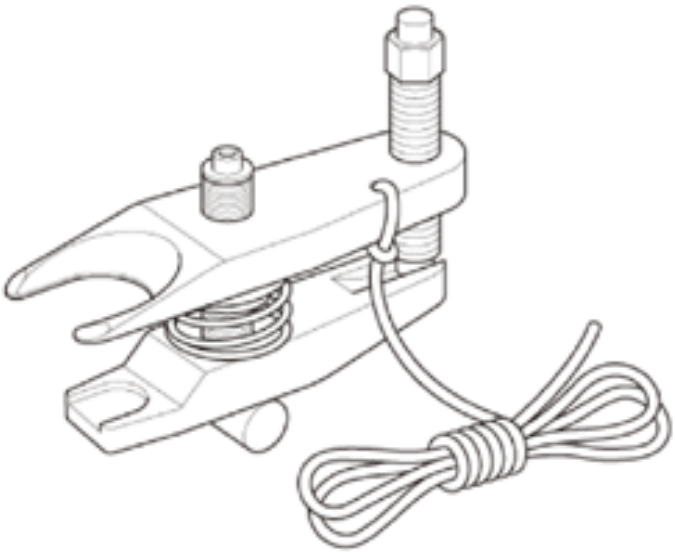	Ball Joint Remover, 32 mm 07MAC-SL00102
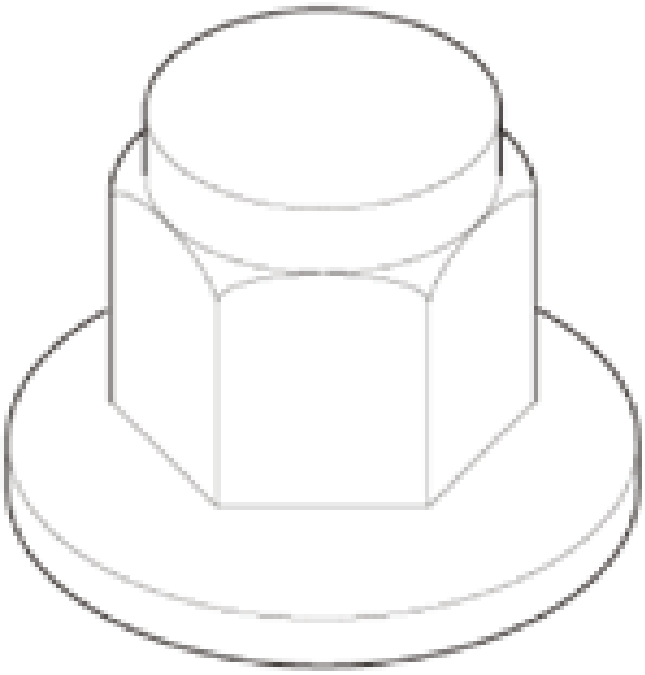	Ball Joint Thread Protector, 14 mm 071AF-SZNA100

REMOVAL

1. Vehicle Lift
    1. Raise the vehicle on a lift, and make sure it is securely supported.
2. Front Wheel
    1. Remove the front wheel.

GETtheMANUALS.org

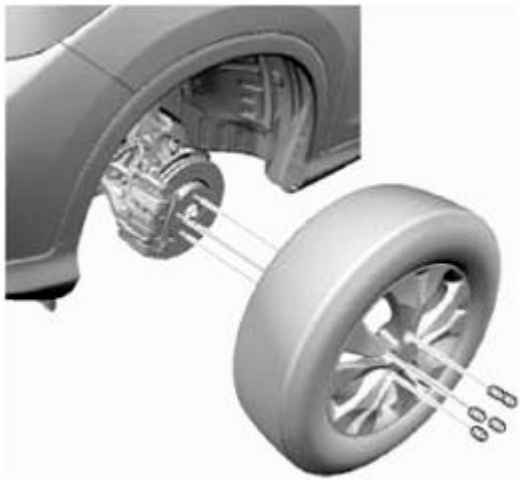

Fig. 88: Identifying Front Wheel And Studs

3. Ball Joint - Removal

NOTE: **Always use a ball joint remover to disconnect a ball joint. Do not strike the housing or any other part of the ball joint connection to disconnect it.**

1. Install a hex nut (A) or the ball joint thread protector.

NOTE: **When using a hex nut, make sure the nut is flush with the ball joint pin end to prevent damage to the threaded end of the ball joint pin.**

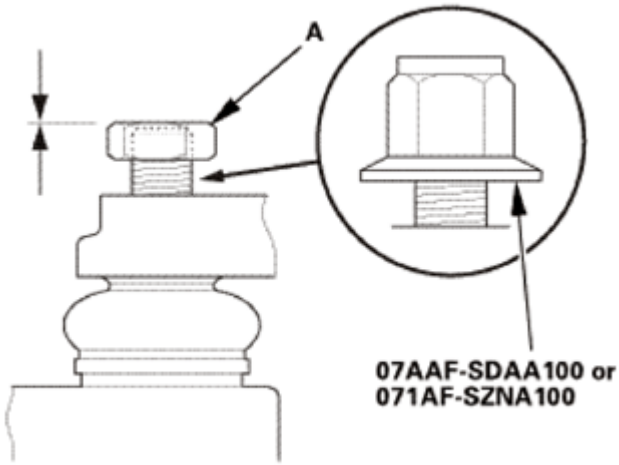

Fig. 89: Identifying Hex Nut And Ball Joint Thread Protector

2. Apply grease to the ball joint remover on the areas shown (A).

GETtheMANUALS.org

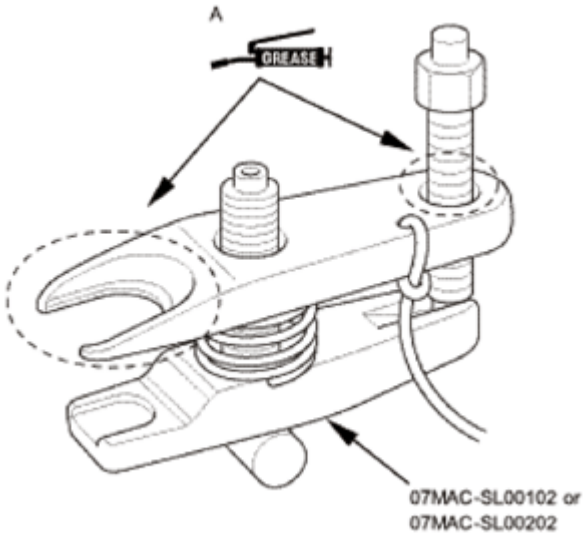

Fig. 90: Identifying Grease Applying Area On Ball Joint Remover

3. Install the ball joint remover as shown.

NOTE:

- **Fasten the safety tie (A) securely to a suspension arm or the subframe (B).**
- **Making sure not to damage the ball joint boot.**

4. Tighten the pressure bolt until the ball joint pin pops loose from the ball joint connecting hole.

NOTE: **Do not use pneumatic or electric tools on the pressure bolt.**

5. Remove the ball joint remover.
6. Remove the hex nut or the ball joint thread protector.
7. Pull the ball joint out of the ball joint connecting hole.

GETtheMANUALS.org

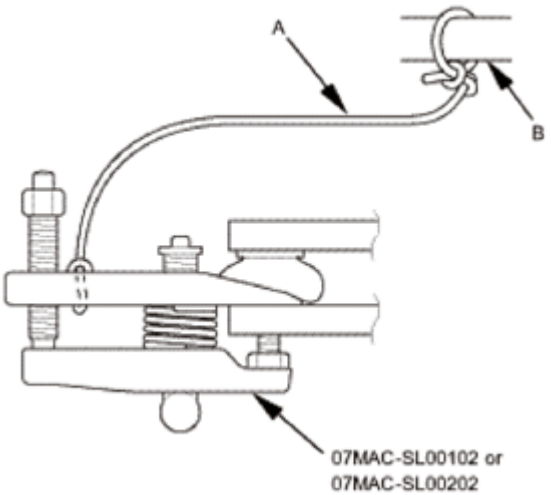

Fig. 91: Fastening Safety Tie Securely To Suspension Arm Or Subframe

4. Front Lower Ball Joint knuckle side - Disconnection
    1. Remove the lock pin (A).
    2. Remove the castle nut (B).
    3. Disconnect the lower ball joint (C) from the knuckle.

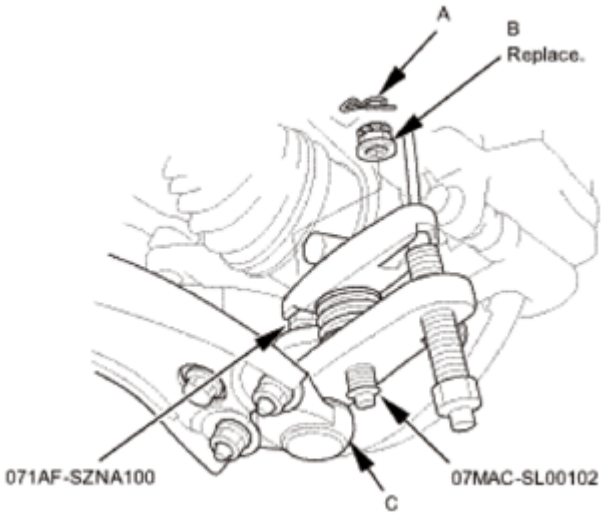

Fig. 92: Disconnecting Lower Ball Joint From Knuckle

5. Front Lower Ball Joint
    1. Remove the flange bolt (A).
    2. Remove the flange nuts (B).
    3. Remove the front lower ball joint (C).

GETtheMANUALS.org

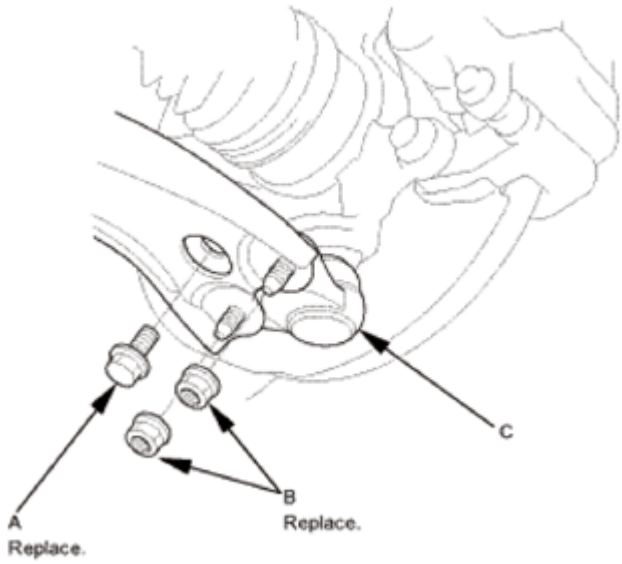

Fig. 93: Identifying Front Lower Ball Joint, Flange Nuts And Flange Bolt

INSTALLATION

1. Front Lower Ball Joint
    1. Install the lower ball joint (A) to the lower arm.
    2. Install the new flange nuts and the new flange bolt in the sequence shown.

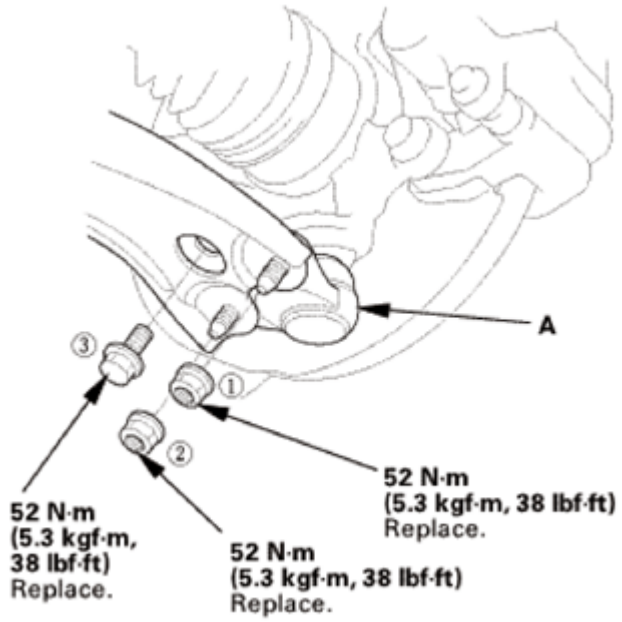

Fig. 94: Identifying Lower Ball Joint, Flange Nuts And Bolt Tightening Sequence With Torque Specification

2. Front Lower Ball Joint knuckle side - Reconnection

GETtheMANUALS.org

1. Connect the lower ball joint (A) to the knuckle.
2. Install the new castle nut (B).

NOTE: **Torque the castle nut to the lower torque specification, then tighten it only far enough to align the slot with the ball joint pin hole. Do not align the castle nut by loosening it.**

3. Install the lock pin (C) as shown.

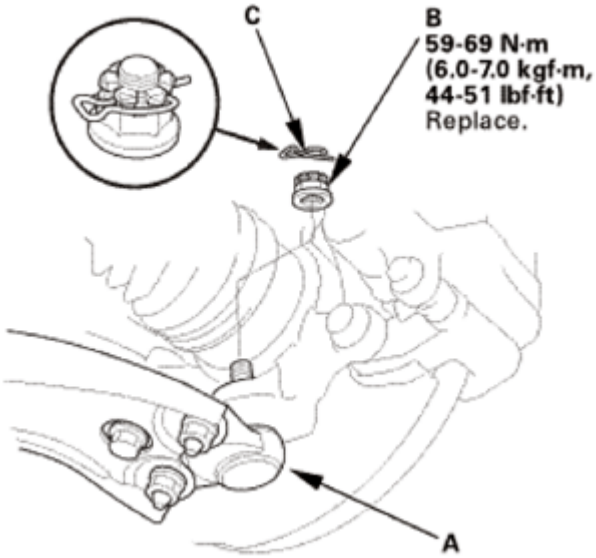

Fig. 95: Identifying Lock Pin, Lower Ball Joint And Castle Nut With Torque Specification

3. Front Wheel
   1. Install the front wheel.

NOTE: **Before installing the wheel, clean the mating surfaces between the brake disc and the inside of the wheel.**

GETtheMANUALS.org

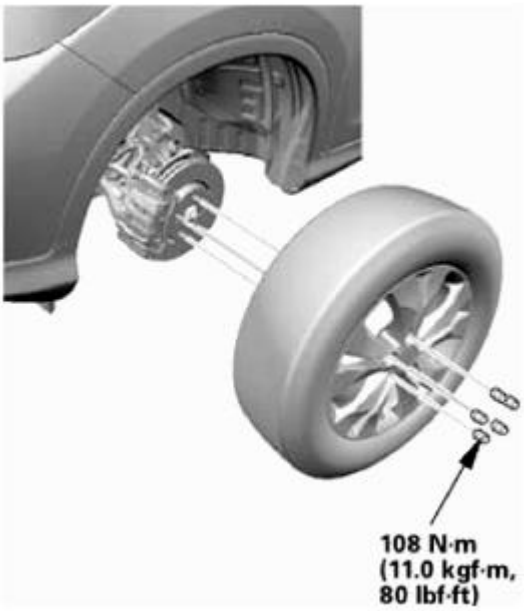

Fig. 96: Identifying Front Wheel And Studs With Torque Specification

FRONT STABILIZER BAR REMOVAL AND INSTALLATION

SPECIAL TOOL REQUIRED

Image	Description/Tool Number
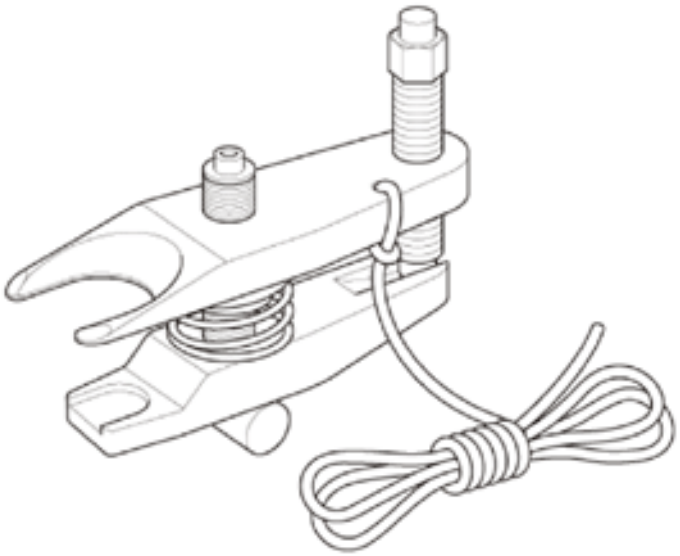	Ball Joint Remover, 28 mm 07MAC-SL00202

GETtheMANUALS.org

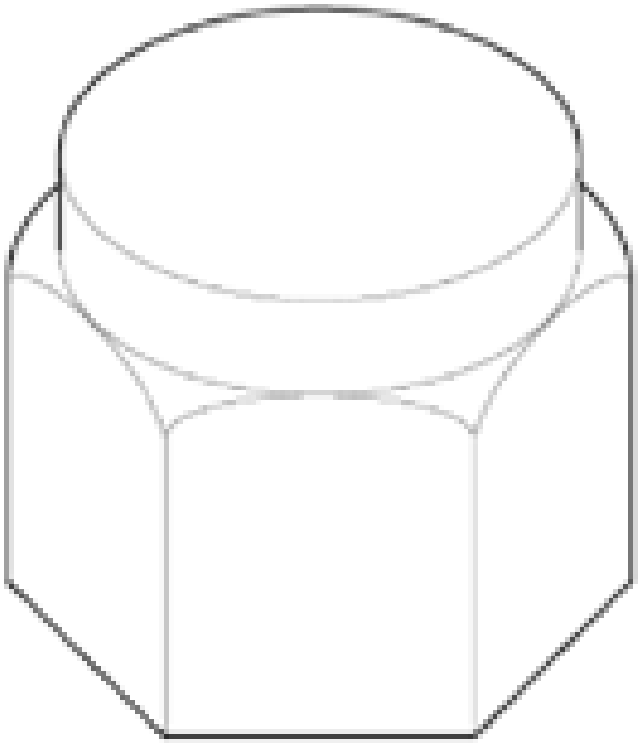	Ball Joint Thread Protector, 12 mm 07AAF-SDAA100
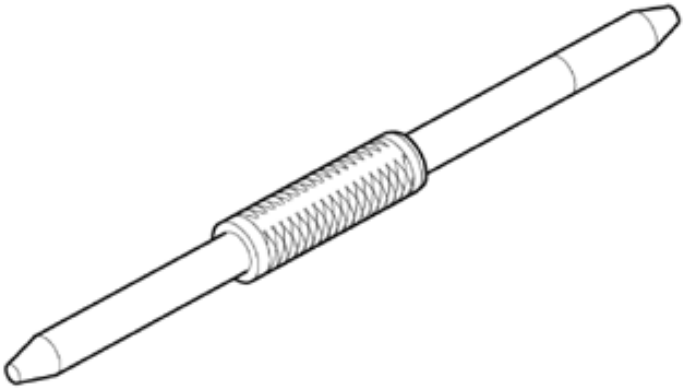	Subframe Alignment Pin 070AG-SJAA10S

REMOVAL

1. Vehicle Lift
    1. Raise the vehicle on a lift, and make sure it is securely supported.
2. Front Wheel - Both Side
    1. Remove both front wheels.

GETtheMANUALS.org

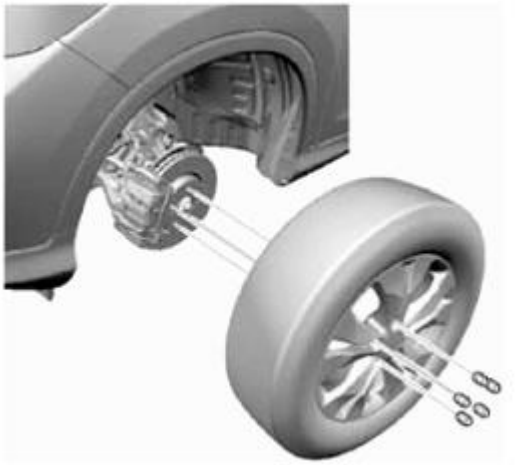

Fig. 97: Identifying Front Wheel And Studs

3. Steering Joint Cover
    1. Remove the steering joint cover (A).

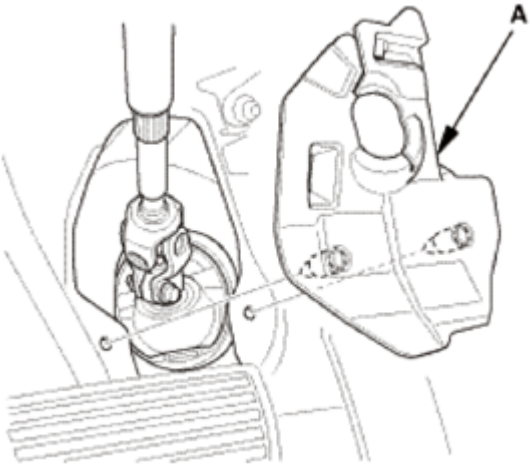

Fig. 98: Identifying Steering Joint Cover

4. Steering Column Lower Slide Shaft - Hold
    1. Set the steering column to the center tilt position, and to the center telescopic position.
    2. Hold the lower slide shaft (A) on the column with a piece of wire (B) between the joint yoke (C) of the lower slide shaft and the joint yoke (D) of the upper shaft to prevent the lower slider shaft from pulling out.

GETtheMANUALS.org

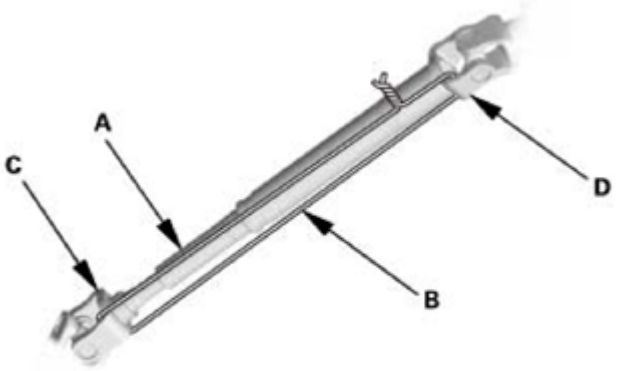

Fig. 99: Holding Lower Slide Shaft On Column With Piece Of Wire

5. Steering Wheel Hold
    1. Center the steering wheel spoke angle.
    2. Install a commercially available steering wheel holder tool (A).

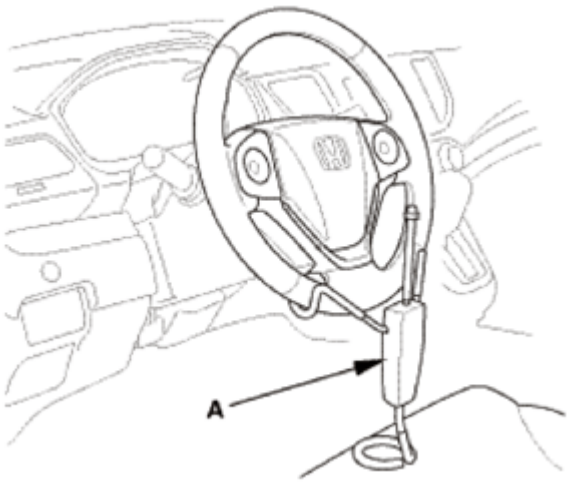

Fig. 100: Installing Commercially Available Steering Wheel Holder Tool

6. Steering Joint - Disconnection
    1. Remove the steering joint bolt (A).
    2. Disconnect the steering joint (B) from the pinion shaft.
    3. Remove the center guide (C) (if equipped), and discard it.

GETtheMANUALS.org

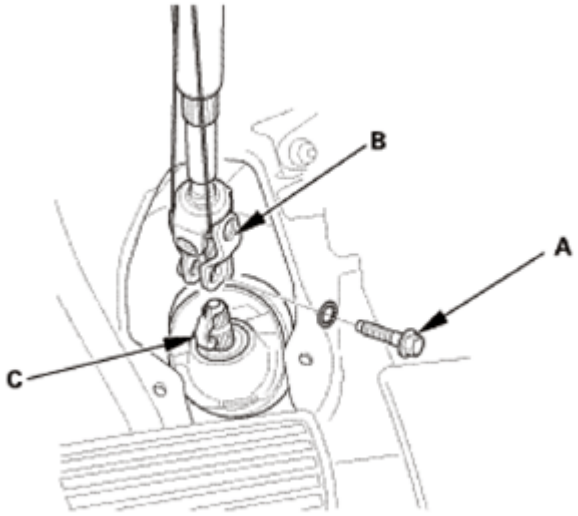

Fig. 101: Identifying Steering Joint, Center Guide And Steering Joint Bolt

7. Ball Joint - Removal

NOTE: **Always use a ball joint remover to disconnect a ball joint. Do not strike the housing or any other part of the ball joint connection to disconnect it.**

1. Install a hex nut (A) or the ball joint thread protector.

NOTE: **When using a hex nut, make sure the nut is flush with the ball joint pin end to prevent damage to the threaded end of the ball joint pin.**

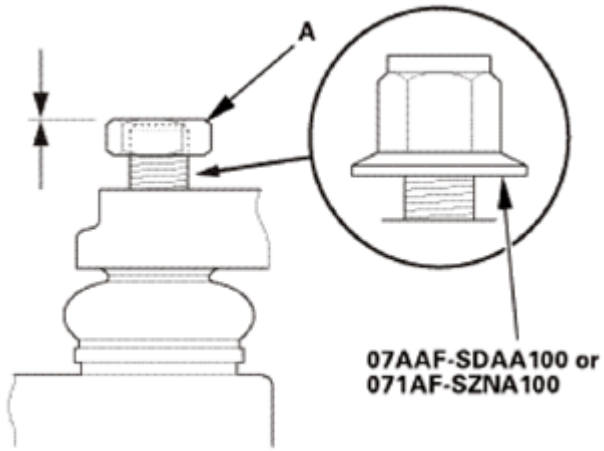

Fig. 102: Identifying Hex Nut And Ball Joint Thread Protector

2. Apply grease to the ball joint remover on the areas shown (A).

GETtheMANUALS.org

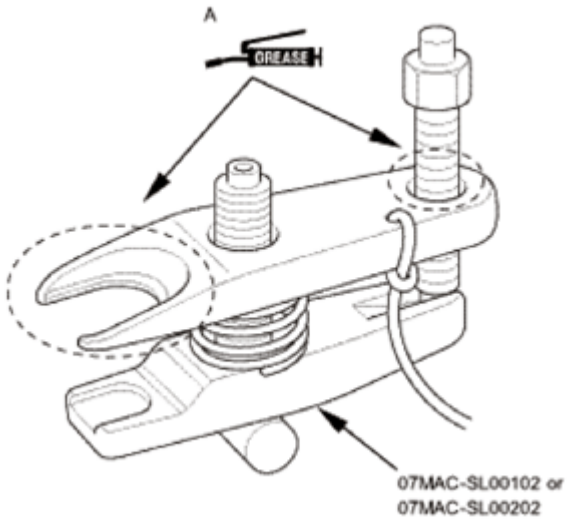

Fig. 103: Identifying Grease Applying Area On Ball Joint Remover

3. Install the ball joint remover as shown.

NOTE:

- **Fasten the safety tie (A) securely to a suspension arm or the subframe (B).**
- **Making sure not to damage the ball joint boot.**

4. Tighten the pressure bolt until the ball joint pin pops loose from the ball joint connecting hole.

NOTE: **Do not use pneumatic or electric tools on the pressure bolt.**

5. Remove the ball joint remover.
6. Remove the hex nut or the ball joint thread protector.
7. Pull the ball joint out of the ball joint connecting hole.

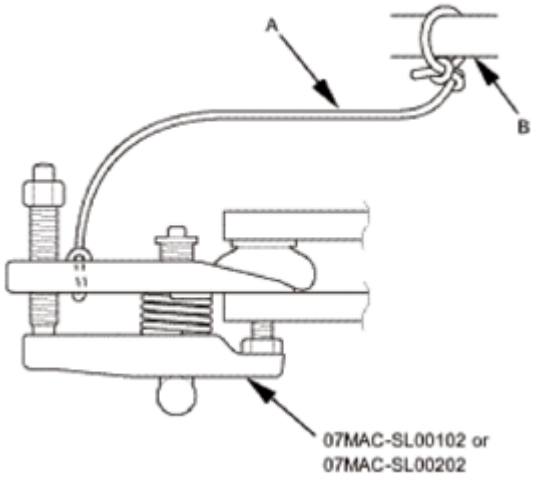

GETtheMANUALS.org

Fig. 104: Fastening Safety Tie Securely To Suspension Arm Or Subframe

8. Tie-Rod End Ball Joint - Disconnection, Both Side
    1. Remove the cotter pin (A) from the tie-rod end ball joint.
    2. Remove the nut (B).
    3. Disconnect the tie-rod end ball joint.

NOTE: **Be careful not to damage the ball joint boot when installing the remover.**

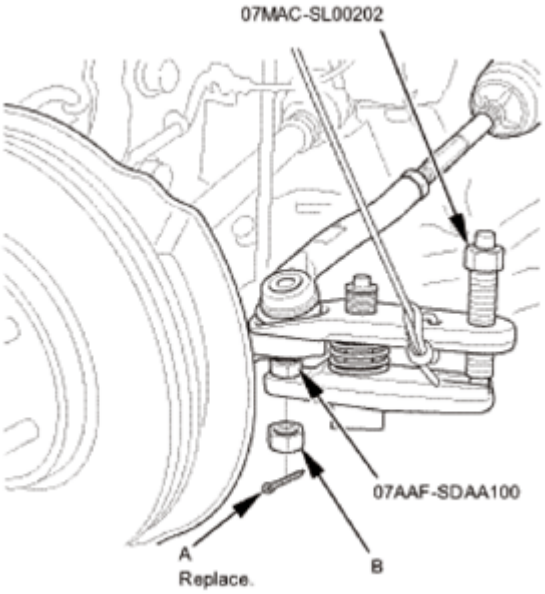

Fig. 105: Disconnecting Tie-Rod End Ball Joint

9. Front Stabilizer Link Stabilizer Bar Side - Disconnection, Both Side
    1. Remove the flange nuts (A) while holding the respective joint pin (B) with a hex wrench (C).
    2. Disconnect both sides of the stabilizer link (D) from the front stabilizer bar (E).

GETtheMANUALS.org

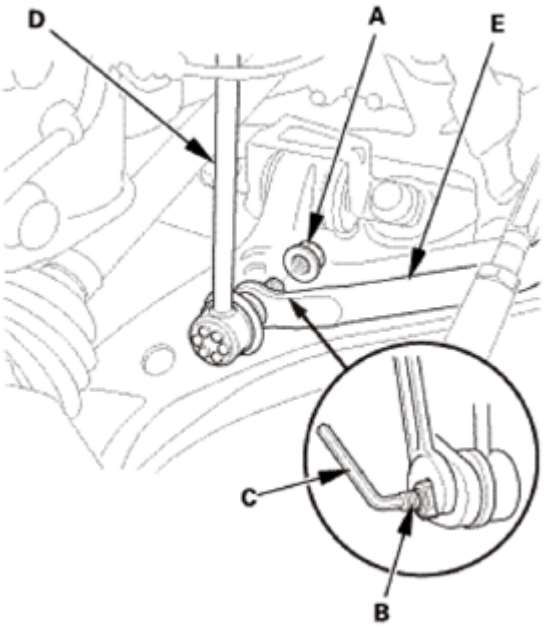

Fig. 106: Removing Flange Nuts While Holding Respective Joint Pin With Hex Wrench

10. Front Splash Shield
    1. Remove the bolts (A), then remove the clips (B) that secure the front inner fender and the front splash shield (C) to the body.
    2. From under the front bumper (D), remove the clips (E).
    3. From under the body, remove the clips (F), then pull out the front splash shield.

GETtheMANUALS.org

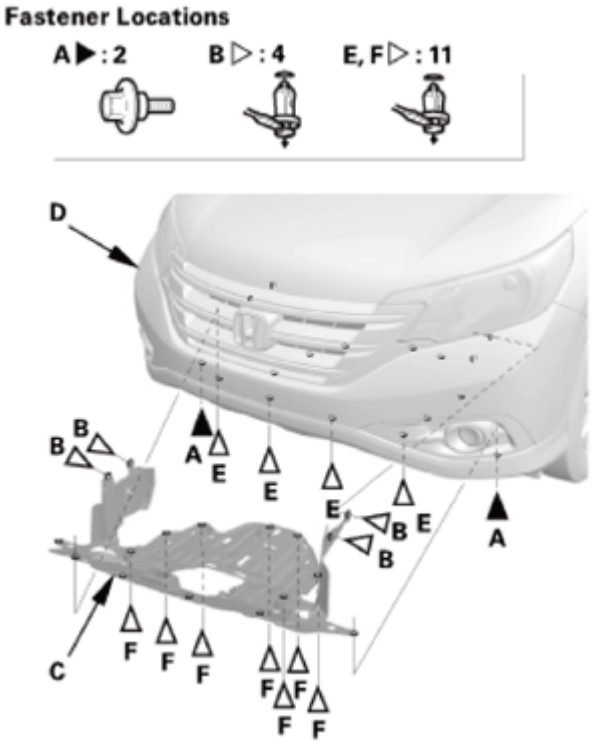

Fig. 107: Identifying Front Bumper, Clips, Bolts, Front Inner Fender And Front Splash Shield With Torque Specification

11. Front Floor Undercover
    1. Remove the bolts (A) and the clips (B, C) securing the front floor undercover (D), then remove the front floor undercover.

GETtheMANUALS.org

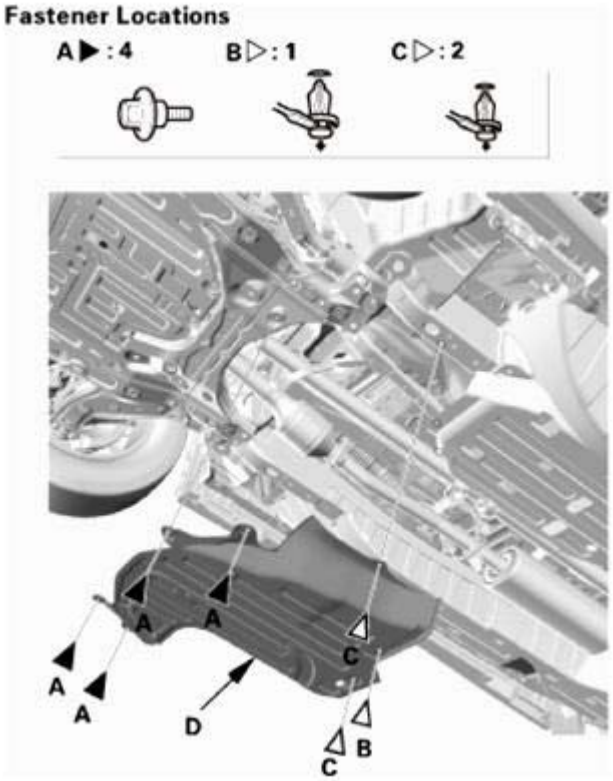

Fig. 108: Identifying Front Floor Undercover, Bolts And Clips

12. Under-Floor TWC Assembly
    1. Remove the under-floor TWC.

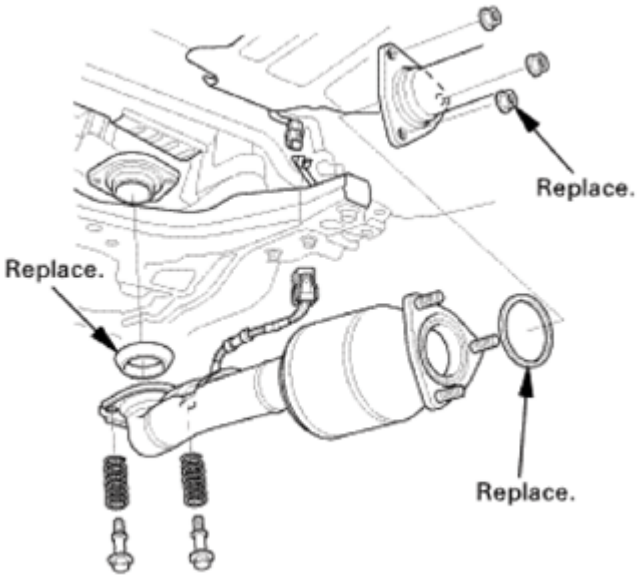

Fig. 109: Identifying Under-Floor TWC Assembly Related Components

13. Left Middle Floor Undercover (AWD/4WD)

GETtheMANUALS.org

1. Remove the bolts (A) and clips (B, C), then remove the left middle floor undercover (D).

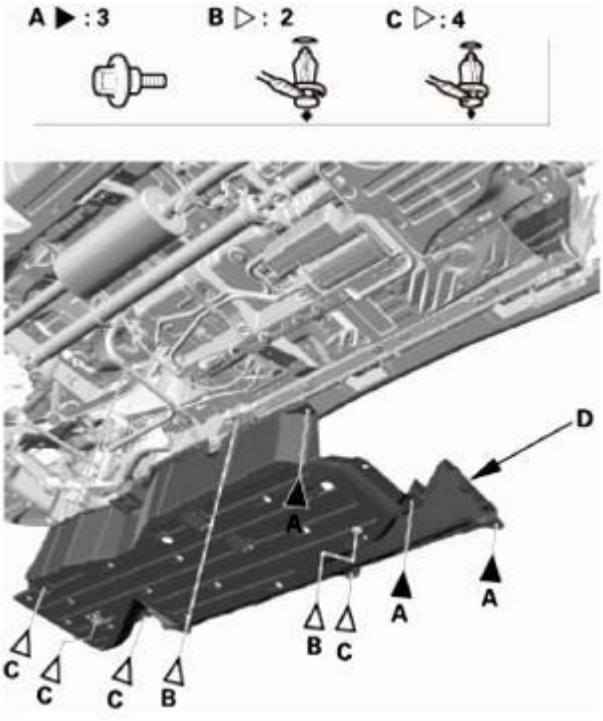

Fig. 110: Identifying Left Middle Floor Undercover, Bolts And Clips

14. Propeller Shaft Protector No. 1 (AWD/4WD)
    1. Remove the No. 1 propeller shaft protector (A).

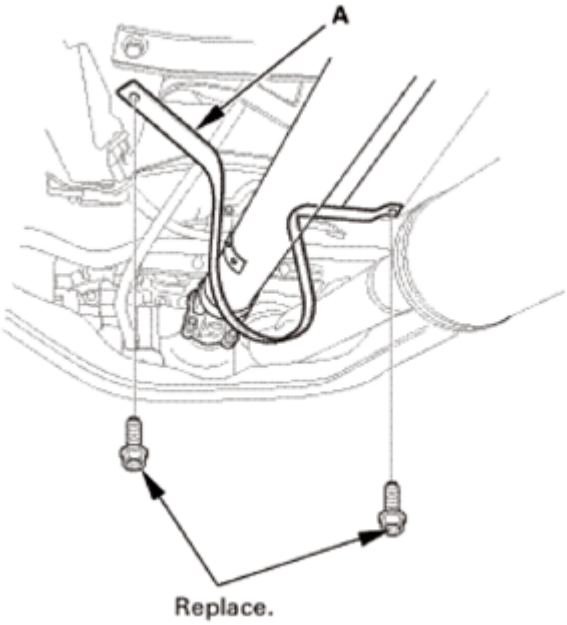

Fig. 111: Identifying No. 1 Propeller Shaft Protector And Mounting Bolts

GETtheMANUALS.org

15. Propeller Shaft Protector No. 2 (AWD/4WD)
    1. Remove the No. 2 propeller shaft protector (A).

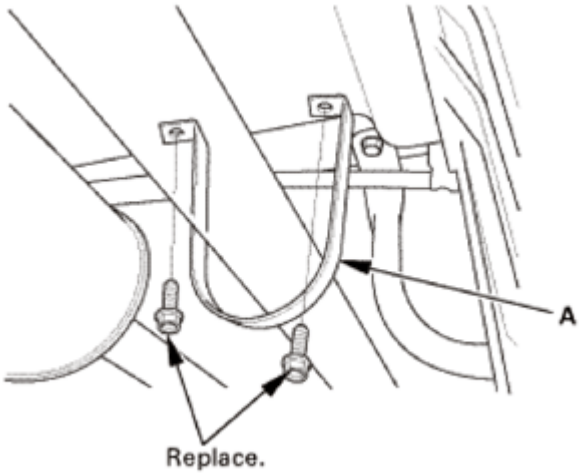

Fig. 112: Identifying No. 2 Propeller Shaft Protector And Mounting Bolts

16. Propeller Shaft Transmission Side - Disconnection (AWD/4WD)
    1. Make reference mark (A) across the No. 1 propeller shaft (B) and the transfer companion flange (C).
    2. Remove the No. 1 propeller shaft flange bolts (D).

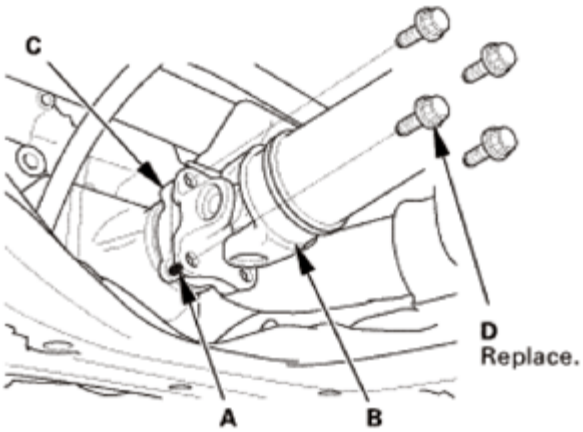

Fig. 113: Identifying Reference Mark, No. 1 Propeller Shaft, Transfer Companion Flange And Flange Bolts With Torque Specification

17. Propeller Shaft Differential Side - Disconnection (AWD/4WD)
    1. Make reference mark (A) across the No. 2 propeller shaft (B) and the rear differential companion flange (C).
    2. Remove the No. 2 propeller shaft flange bolts (D).

GETtheMANUALS.org

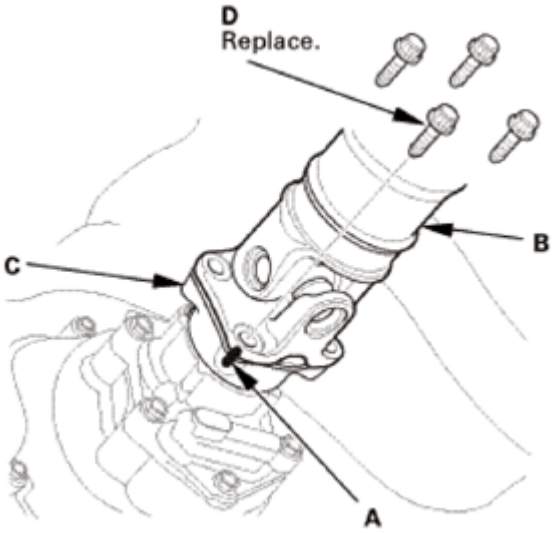

Fig. 114: Identifying Reference Mark, No. 2 Propeller Shaft, Rear Differential Companion Flange And Flange Bolts With Torque Specification

18. Propeller Shaft Assembly (AWD/4WD)
    1. Remove the center support bearing mounting bolts (A), then remove the propeller shaft assembly (B).

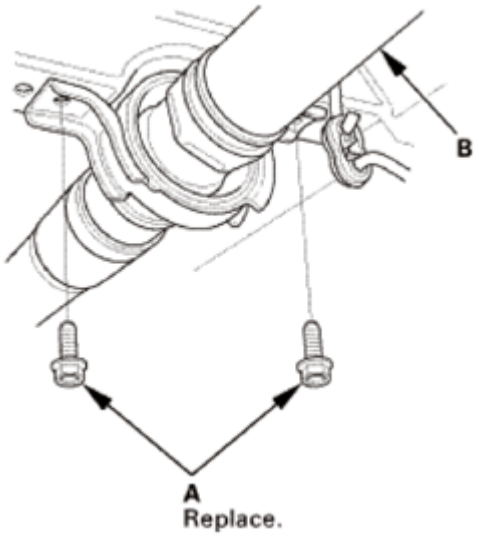

Fig. 115: Identifying Propeller Shaft Assembly And Center Support Bearing Mounting Bolts

19. Subframe Support
    1. Attach the subframe adapter (A) to the front subframe by looping the belt (B) over the front of the front subframe (C), then secure the belt with its stop (D).
    2. Raise the jack and line up the slots in the subframe adapter arms with the bolt holes on the jack base, then securely attach them with four bolts.

GETtheMANUALS.org

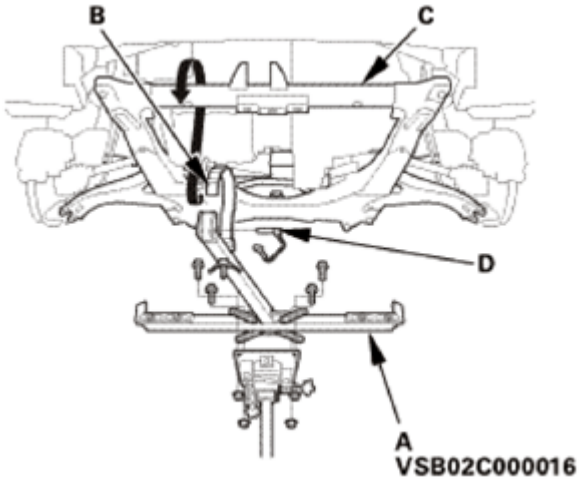

Fig. 116: Attaching Subframe Adapter To Front Subframe By Looping Belt Over Front Of Front Subframe

20. Lower Torque Rod - Disconnection
    1. Remove the lower torque rod mount mounting bolts (A).

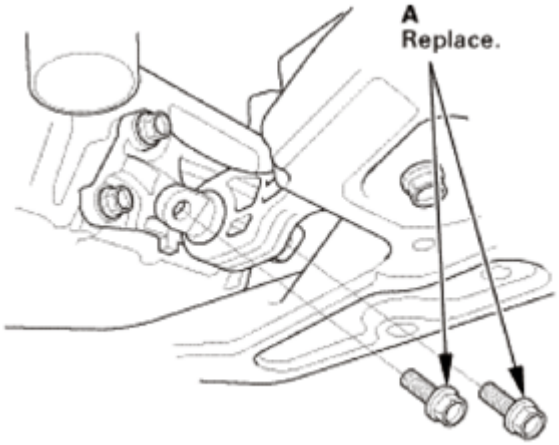

Fig. 117: Identifying Lower Torque Rod Mount Mounting Bolts

21. Front Subframe - Move
    1. Remove the mid mounting bolts (A) on both sides.

GETtheMANUALS.org

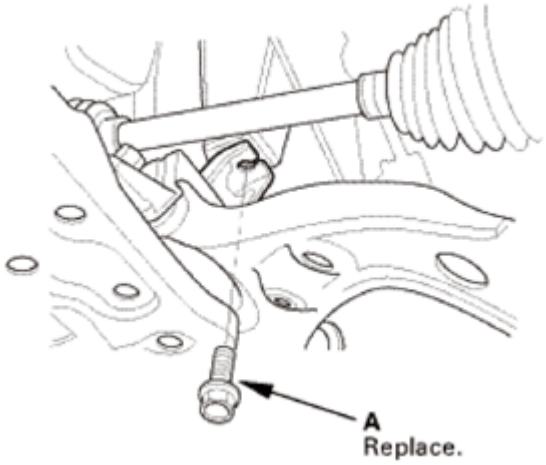

Fig. 118: Identifying Mid Mounting Bolts

2. Loosen the front subframe mounting bolts (A) so they are about 30 mm (1.18 in) from the mounting surface on both sides.

NOTE: Do not loosen the front subframe mounting bolts more than necessary.

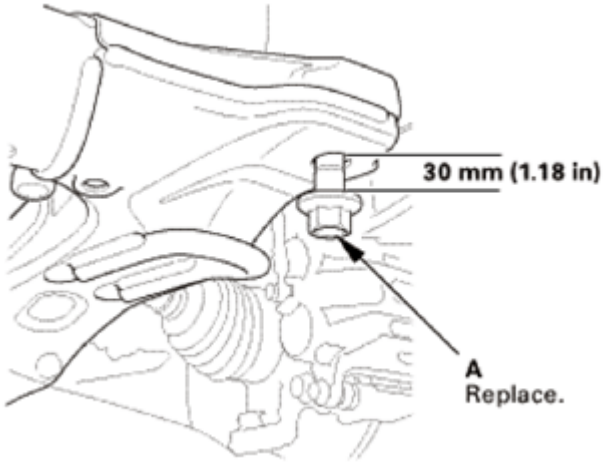

Fig. 119: Identifying Front Subframe Mounting Bolts Loosening Dimension

3. Remove the front subframe mounting bolts (A) on both side.
4. Lower the jack slowly until the front subframe has dropped about 130 mm (5.12 in).

GETtheMANUALS.org

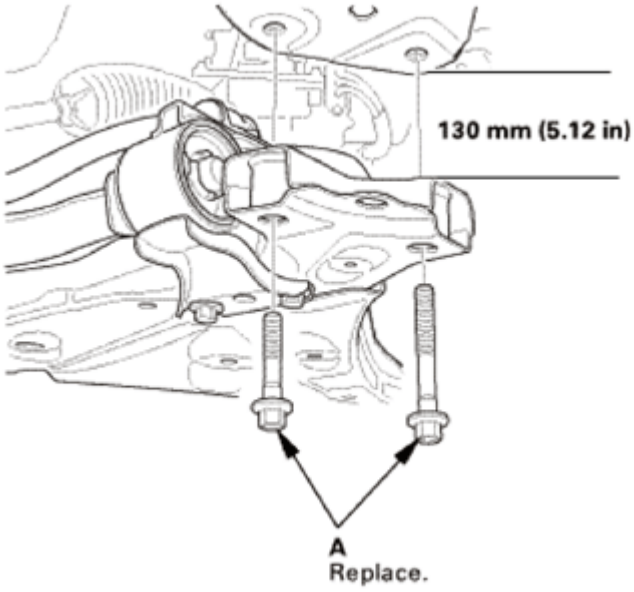

Fig. 120: Identifying Front Subframe Mounting Bolts

22. Front Stabilizer Bar

NOTE: Be careful not to damage the steering gearbox.

1. Remove the front stabilizer bar bushing holders (A).
2. Remove the bushings (B).
3. Remove the front stabilizer bar (C).

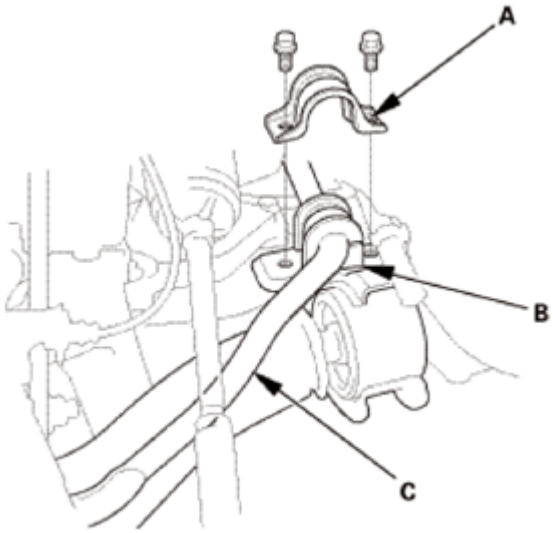

Fig. 121: Identifying Front Stabilizer Bar, Front Stabilizer Bar Bushing Holders And Bushings With Mounting Bolts

GETtheMANUALS.org

INSTALLATION

1. Front Stabilizer Bar

NOTE: **Be careful not to damage the steering gearbox.**

1. Install the front stabilizer bar (A).
2. Install the bushings (B).

NOTE:

- **Note the direction of installation for the bushing.**
- **Align the paint mark (C) on the stabilizer bar with the side of the bushing.**

3. Install the front stabilizer bar bushing holders (D).

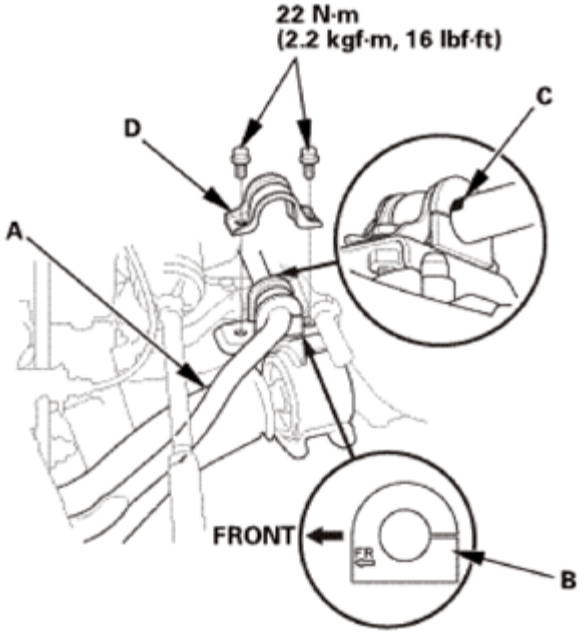

Fig. 122: Identifying Front Stabilizer Bar Bushing Holders, Paint Mark, Bushings, Front Stabilizer Bar And Mounting Bolts With Torque Specification

2. Front Subframe - Move
   1. Turn the lip (A) of the pinion shaft grommet.
   2. Lift the front subframe (B) up to the body, then restore the pinion shaft grommet back to proper position.

NOTE: **Be sure that the pinion shaft grommet is securely in place. Make sure the lip of the pinion shaft grommet is not turned up. Incorrect installation can cause leakage of water and mud, or noise.**

GETtheMANUALS.org

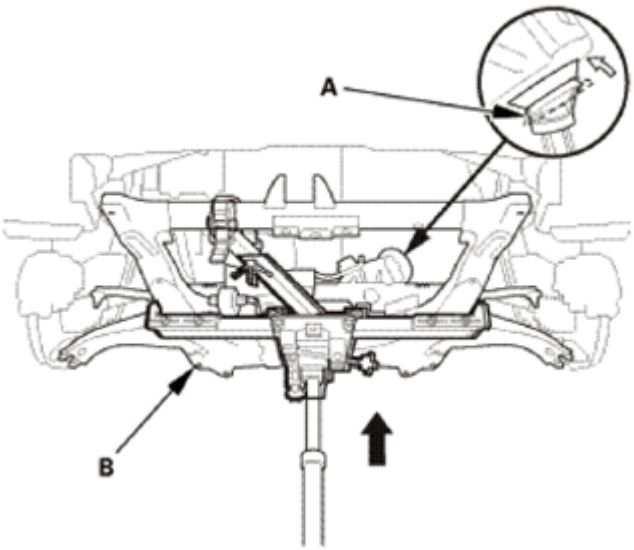

Fig. 123: Lifting Front Subframe Up To Body

3. Loosely install the new front subframe mounting bolts (A).

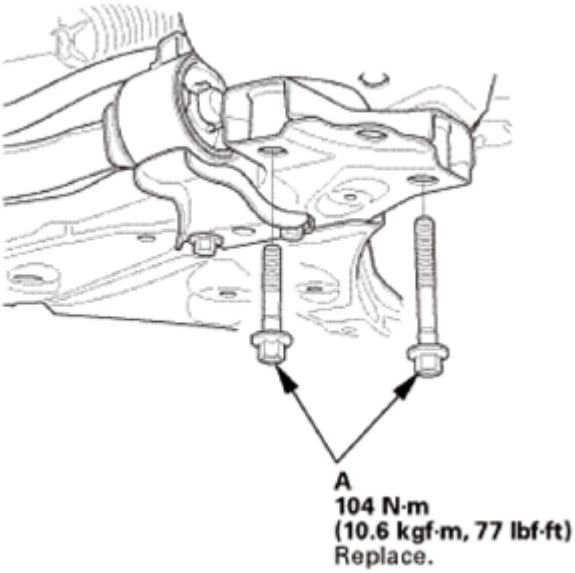

Fig. 124: Identifying Front Subframe Mounting Bolts With Torque Specification

GETtheMANUALS.org

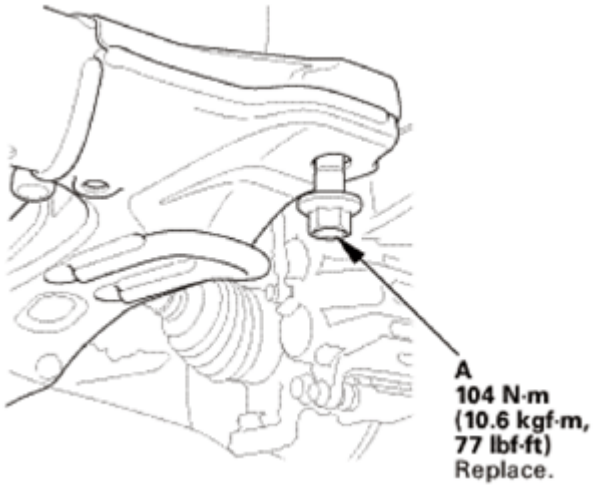

Fig. 125: Identifying Front Subframe Mounting Bolt With Torque Specification

4. Loosely install the mid mounting bolts (A).

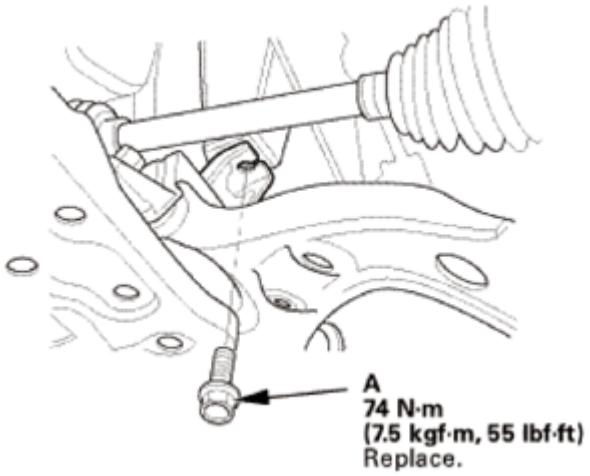

Fig. 126: Identifying Mid Mounting Bolt With Torque Specification

3. Front Subframe - Alignment

NOTE:

- **Align the front subframe in the following sequence.**
- **When Installing, align both installation reference holes in the subframe with both reference holes in the body using the subframe alignment pin.**

1. Insert the subframe alignment pin (A) through the positioning hole (B) on the right rear subframe, and into the positioning hole (C) on the body, then loosely tighten the subframe right rear mounting bolts.

GETtheMANUALS.org

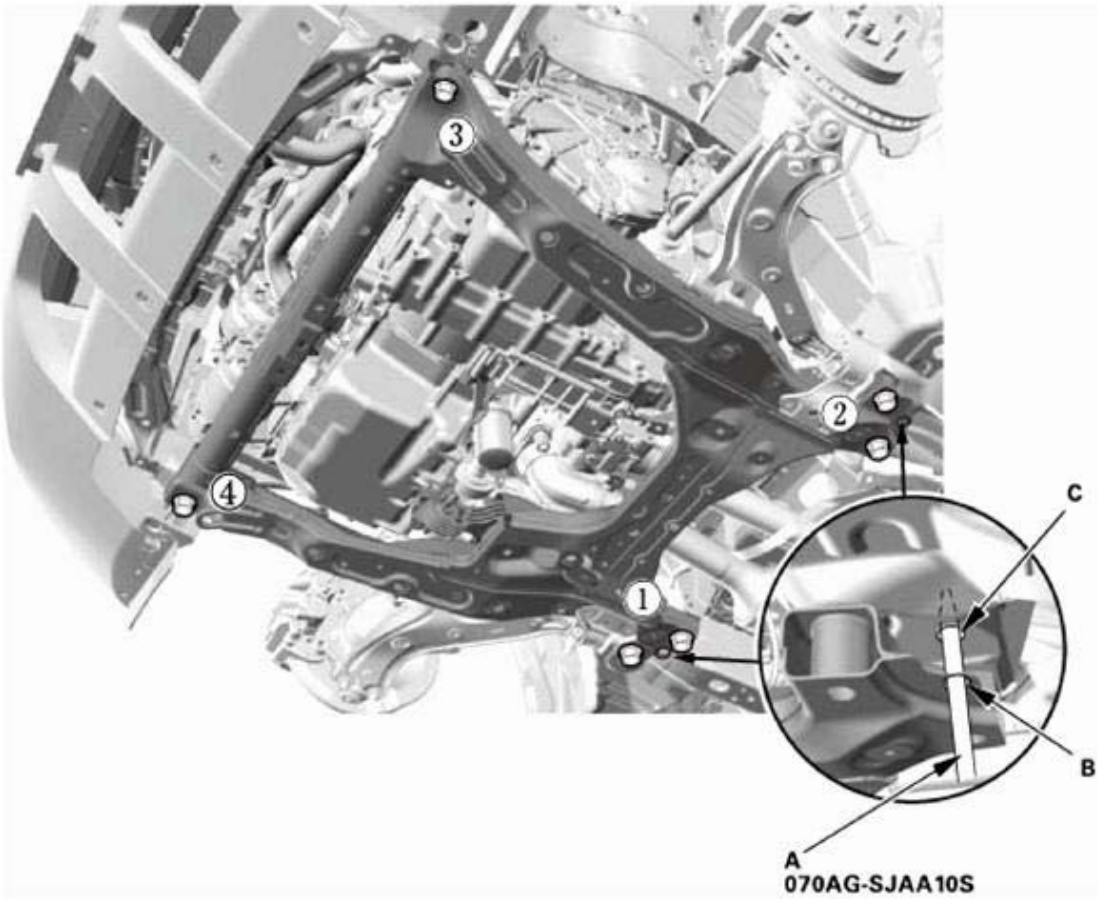

Fig. 127: Inserting Subframe Alignment Pin Through Positioning Hole On Right Rear Subframe And Body

2. Insert the subframe alignment pin through the positioning hole on the left rear subframe, and into the positioning hole on the body, then loosely tighten the subframe left rear mounting bolts.
3. Tighten the subframe mounting bolts to the specified torque values starting with the right rear subframe mounting bolt. Use the subframe alignment pin when tightening the rear side subframe mounting bolts.
4. Check all of the subframe mounting bolts, and retighten if necessary.

NOTE: Tighten the bolts in the sequence shown.

5. Tighten the mid mounting bolts to the specified torque.
6. Lower the transmission jack supporting the subframe.

4. Lower Torque Rod - Reconnection
   1. Loosely install the new lower torque rod mounting bolts (A).

GETtheMANUALS.org

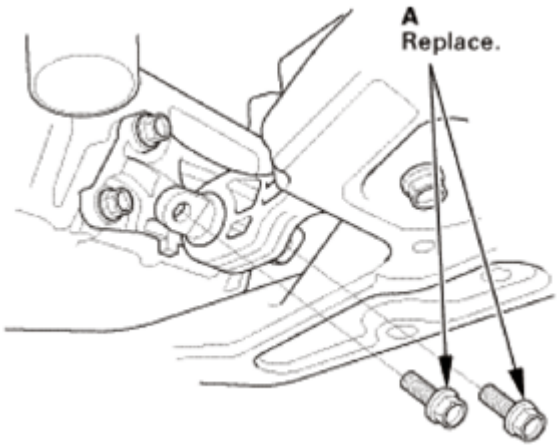

Fig. 128: Identifying Lower Torque Rod Mounting Bolts

5. Lower Torque Rod Mounting Bolt - Tighten
    1. Loosen the lower torque mount mounting bolt.
    2. Tighten the lower torque rod mount mounting bolts in the numbered sequence shown.

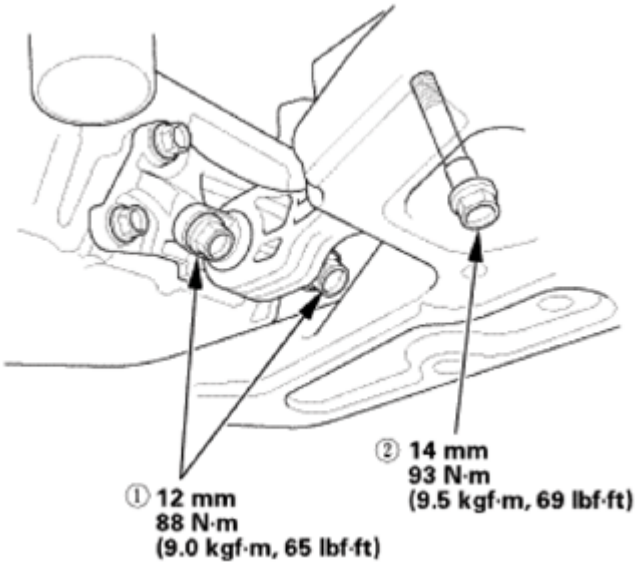

Fig. 129: Identifying Lower Torque Rod Mount Mounting Bolts Tightening Sequence With Torque Specification

6. Propeller Shaft Assembly (AWD/4WD)
    1. Install the propeller shaft assembly (A), then Install new center support bearing mounting bolts (B).

GETtheMANUALS.org

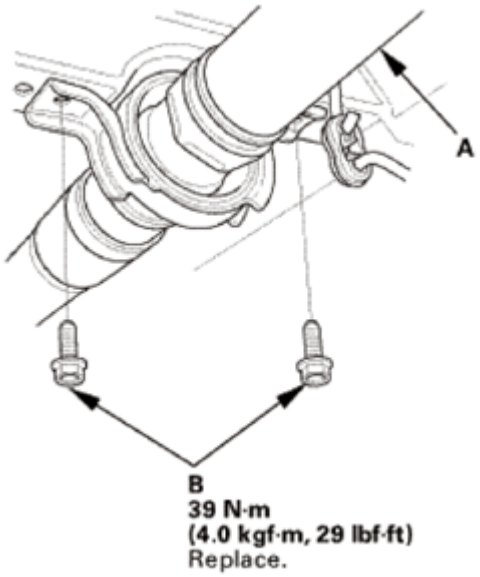

Fig. 130: Identifying Propeller Shaft Assembly And Center Support Bearing Mounting Bolts With Torque Specification

7. Propeller Shaft Differential Side - Reconnection (AWD/4WD)
    1. Set the No. 2 propeller shaft (A) to the rear differential companion flange (B) by aligning the reference mark (C) you made during the removal procedure.
    2. Install new No. 2 propeller shaft flange bolts (D) to the specified torque.

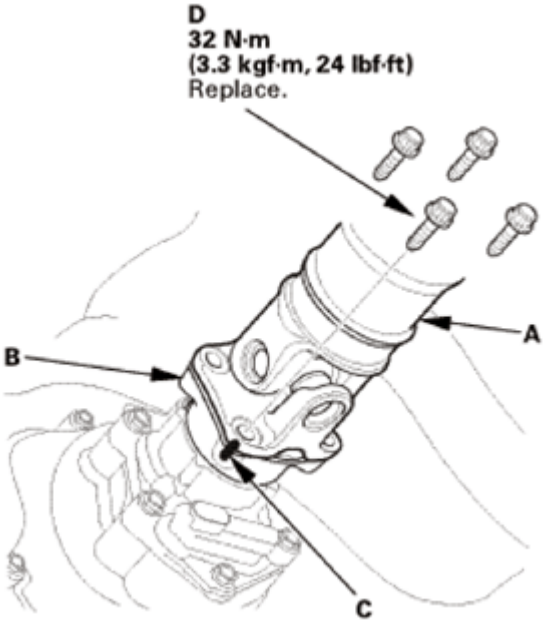

Fig. 131: Identifying Reference Mark, No. 2 Propeller Shaft, Rear Differential Companion Flange And Flange Bolts With Torque Specification

8. Propeller Shaft Transmission Side - Reconnection (AWD/4WD)

GETtheMANUALS.org

1. Set the No. 1 propeller shaft (A) to the transfer companion flange (B) by aligning the reference mark (C) you made during the removal procedure.
2. Install new No. 1 propeller shaft flange bolts (D) to the specified torque.

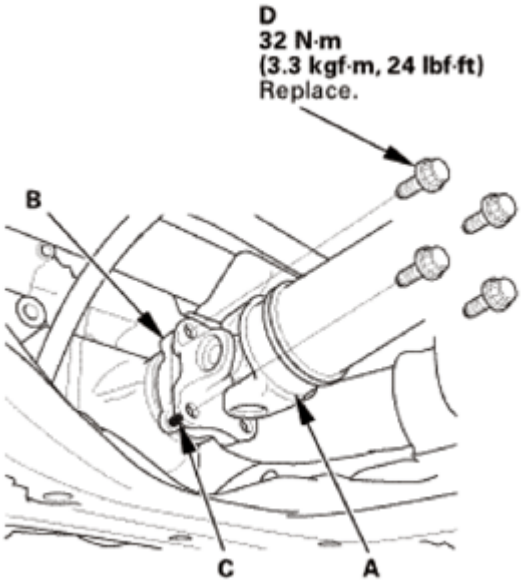

Fig. 132: Identifying Reference Mark, No. 1 Propeller Shaft, Transfer Companion Flange And Flange Bolts With Torque Specification

9. Propeller Shaft Protector No. 2 (AWD/4WD)
    1. Install the No. 2 propeller shaft protector (A).

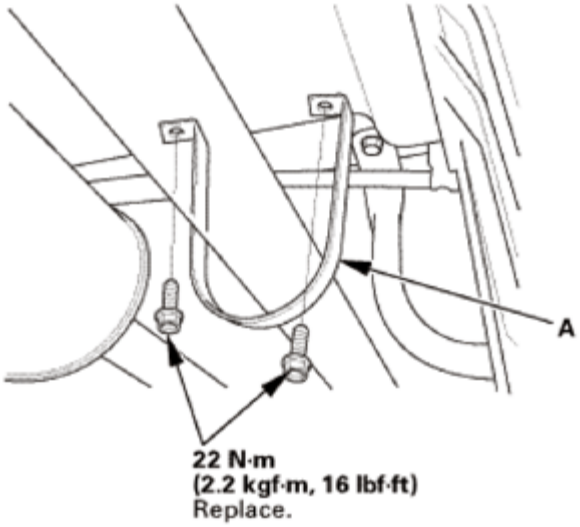

Fig. 133: Identifying No. 2 Propeller Shaft Protector And Mounting Bolts With Torque Specification

10. Propeller Shaft Protector No. 1 (AWD/4WD)

GETtheMANUALS.org

1. Install the No. 1 propeller shaft protector (A).

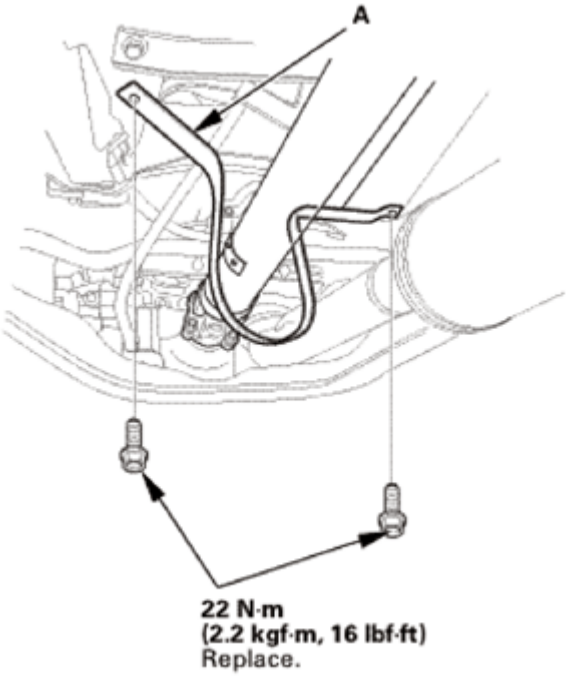

Fig. 134: Identifying No. 1 Propeller Shaft Protector And Mounting Bolts With Torque Specification

11. Left Middle Floor Undercover (AWD/4WD)
    1. Install the left middle floor undercover (A), then install the bolts (B) and the clips (C, D). The clips snap into place securely.

GETtheMANUALS.org

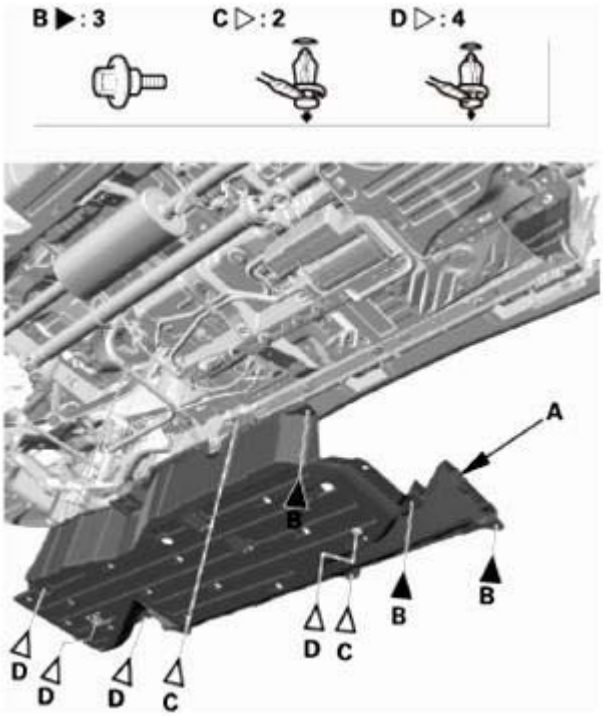

Fig. 135: Identifying Left Middle Floor Undercover, Bolts And Clips

12. Under Floor TWC Assembly
    1. Install the under-floor TWC.

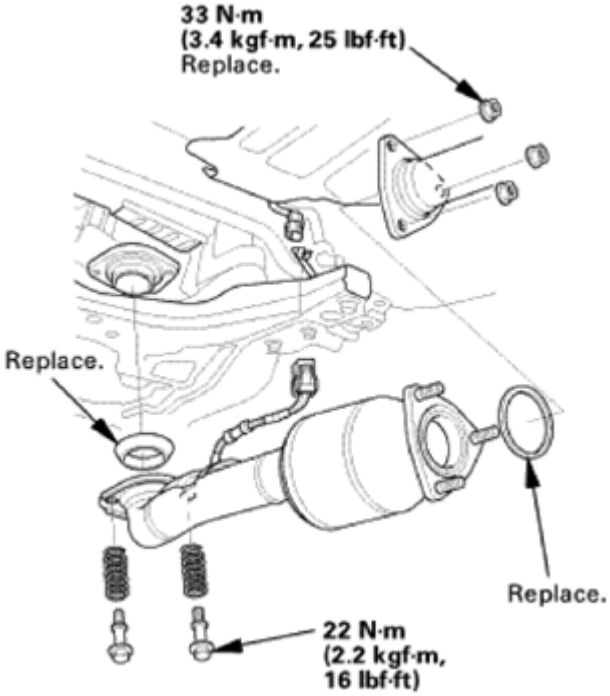

Fig. 136: Identifying Under-Floor TWC Assembly Related Components With Torque

GETtheMANUALS.org

Specification

13. Front Floor Undercover
    1. Install the front floor undercover (A), then install the bolts (B) and the clips (C, D). Make sure the clips snap into place securely.

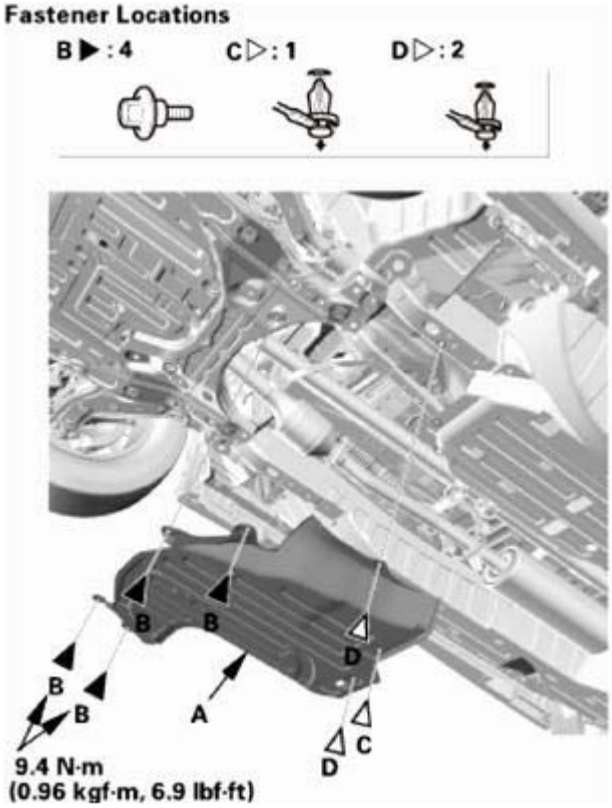

Fig. 137: Identifying Front Floor Undercover, Bolts And With Torque Specification

14. Front Splash Shield
    1. Install the front splash shield (A), then install the bolts (B) and the clips (C, D). Make sure the clips snap into place securely.

GETtheMANUALS.org

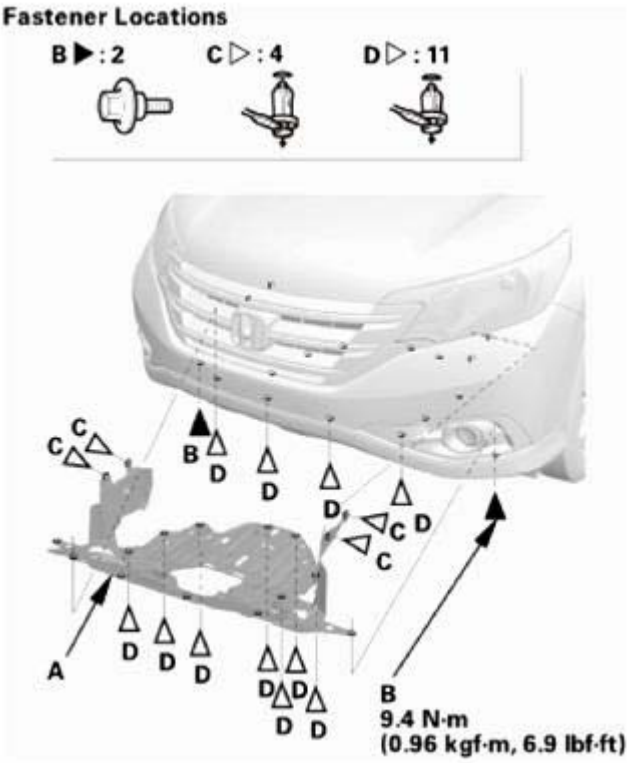

Fig. 138: Identifying Front Splash Shield, Bolts And Clips With Torque Specification

15. Front Stabilizer Link Stabilizer Bar Side - Reconnection, Both Side
    1. Connect both sides of the stabilizer link (A) to the front stabilizer bar (B).
    2. Install the flange nuts (C), and tighten them to the specified torque while holding the respective joint pin (D) with a hex wrench (E).

GETtheMANUALS.org

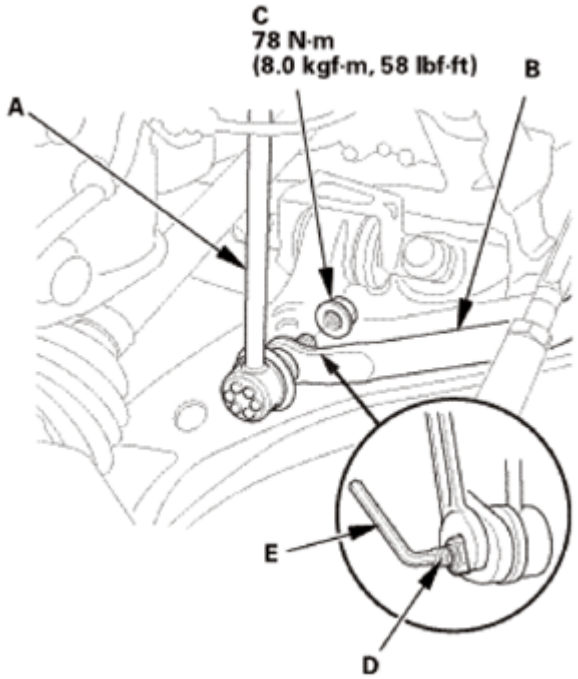

Fig. 139: Connecting Both Sides Of Stabilizer Link To Front Stabilizer Bar

16. Tie-Rod End Ball Joint - Connection, Both Side
    1. Wipe off any grease contamination from the ball joint tapered section and threads.
    2. Connect the tie-rod ball joint (A) to the knuckle.
    3. Install the nut (B) and tighten to the specified torque.
    4. Install a new cotter pin (C).

NOTE: Bend the cotter pin as shown.

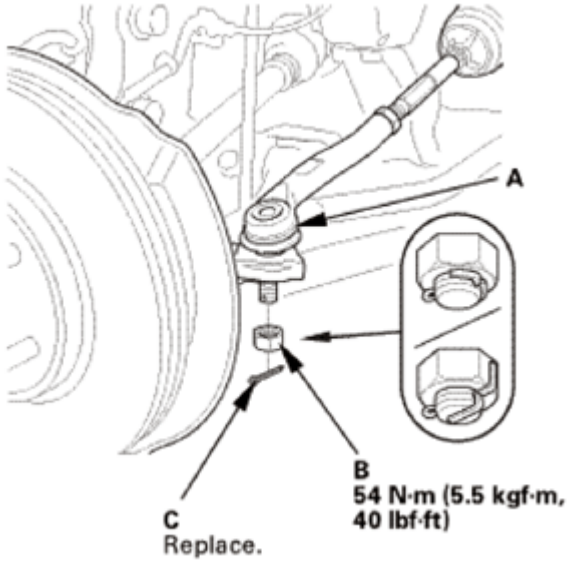

GETtheMANUALS.org

Fig. 140: Connecting Tie-Rod Ball Joint To Knuckle

17. Steering Column Lower Slide Shaft - Release
    1. Cut the wire (A).

Fig. 141: Identifying Steering Column Lower Slide Shaft Wire

18. Steering Wheel Release
    1. Remove the steering wheel holder tool (A).

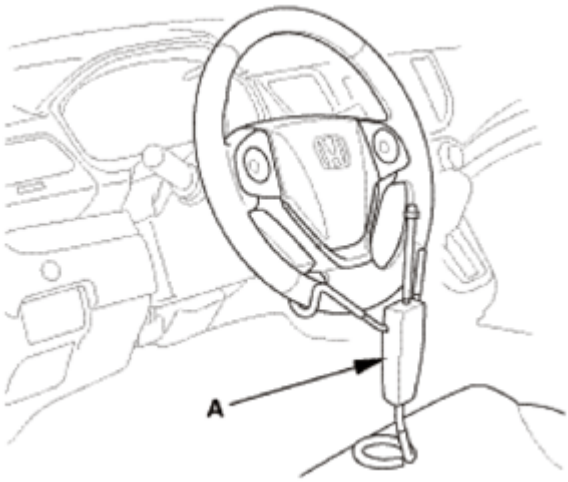

Fig. 142: Identifying Steering Wheel Holder Tool

19. Steering Joint - Reconnection
    1. Place the rack in the straight ahead driving position.
    2. Slip the lower end of the steering joint (A) onto the pinion shaft (B).

NOTE: Position the steering column by aligning the gap (C) within the angle.

GETtheMANUALS.org

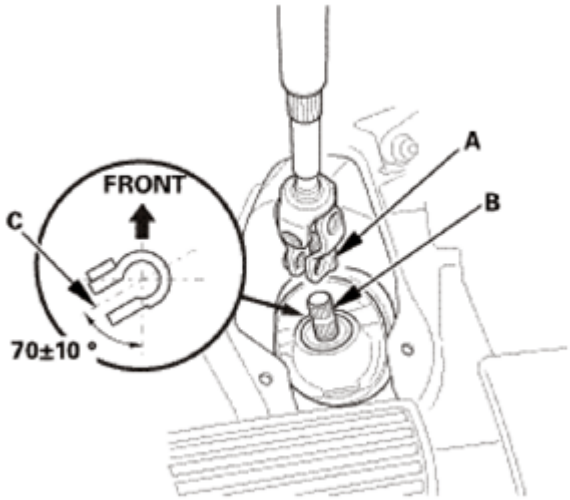

Fig. 143: Identifying Steering Joint And Pinion Shaft

3. Align the bolt hole (A) on the steering joint with the groove (B) around the pinion shaft.
4. Loosely install the steering joint bolt (C).
5. Be sure that the joint bolt is securely in the groove in the pinion shaft.
6. Pull on the steering joint to make sure that the steering joint is fully seated.
7. Tighten the steering joint bolt to the specified torque.

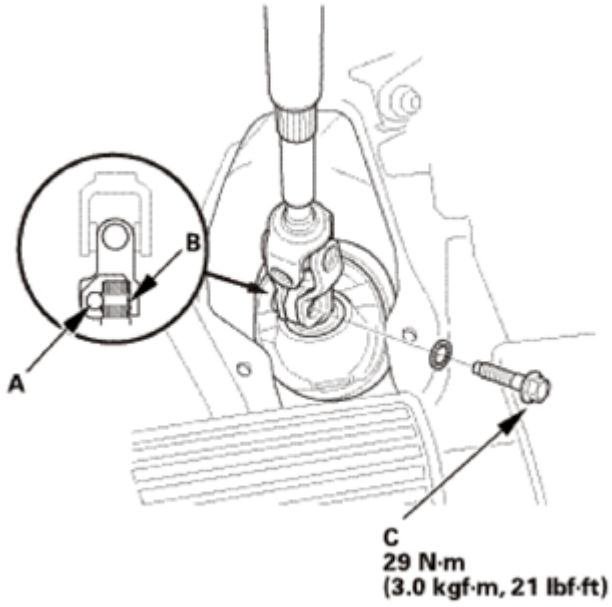

Fig. 144: Identifying Bolt Hole, Groove And Steering Joint Bolt With Torque Specification

20. Steering Joint Cover
    1. Install the steering joint cover (A).

GETtheMANUALS.org

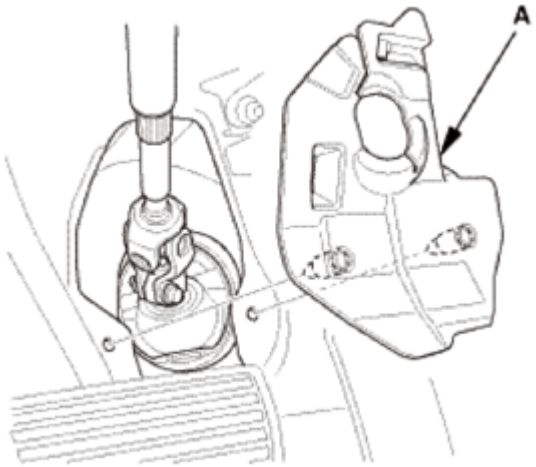

Fig. 145: Identifying Steering Joint Cover

21. Front Wheel - Both Side
    1. Install both front wheels.

NOTE: **Before installing the wheel, clean the mating surfaces between the brake disc and the inside of the wheel.**

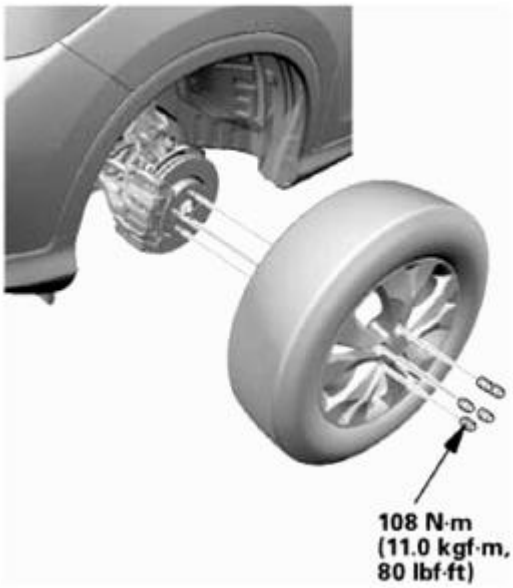

Fig. 146: Identifying Front Wheels And Studs With Torque Specification

22. Steering After Install - Check
    1. After installation, check these items:
        - Start the engine, allow it to idle, and turn the steering wheel from lock to lock several times.
        - Check that the EPS indicator does not come on.
        - Check the steering wheel spoke angle. If steering spoke angles to the right and left are not

GETtheMANUALS.org

equal (steering wheel and rack are not centered), correct the engagement of the joint/pinion shaft splines.

23. Pre-Alignment Checks

For proper inspection and adjustment of the wheel alignment, do these checks:

1. Release the parking brake to avoid an incorrect measurement.
2. Make sure the suspension is not modified.
3. Make sure the fuel tank is full, and that the spare tire, the jack, and the tools are in place on the vehicle.
4. Check the tire size and tire pressure according to tire information.
5. Set the steering column to the middle tilt position and telescopic position.

24. Caster - Inspection

Use commercially available computerized four wheel alignment equipment to measure wheel alignment (caster, camber, toe, and turning angle). Follow the equipment manufacturer's instructions.

1. Check the caster angle.

   Caster angle:

   2WD:

   With 16 inch wheel: 2 ° 44 '±30 '

   Without 16 inch wheel: 2 ° 50 '±30 '

   AWD/4WD:

   With 16 inch wheel: 2 ° 38 '±30 '

   Without 16 inch wheel: 2 ° 44 '±30 '

   - If the measurement is within specifications, measure the front camber angle.
   - If the measurement is not within specifications, check for bent or damaged suspension components.

25. Camber - Inspection

Use commercially available computerized four wheel alignment equipment to measure wheel alignment (caster, camber, toe, and turning angle). Follow the equipment manufacturer's instructions.

1. Check the camber angle.

   Camber angle:

GETtheMANUALS.org

2WD:

Front:

With 16 inch wheel: -0 ° 01 '±1 ° 00 '

Without 16 inch wheel: -0 ° 10 '±1 ° 00 '

(Maximum difference between the front right and left side: 1 °00 ')

Rear:

With 16 inch wheel: -1 ° 06 '±45 '

Without 16 inch wheel: -1 ° 12 '±45 '

(Maximum difference between the front right and left side: 0 °45 ')

AWD/4WD:

Front:

With 16 inch wheel: -0 ° 08 '±1 ° 00 '

Without 16 inch wheel: 0 ° 00 '±1 ° 00 '

(Maximum difference between the front right and left side: 1 °00 ')

Rear:

With 16 inch wheel: -0 ° 50 '±45 '

Without 16 inch wheel: -1 ° 00 '±45 '

(Maximum difference between the front right and left side: 0 °45 ')

- If the measurement is within specification, measure the toe-in.
- If the measurement for the front camber is not within the specification, go to front camber adjustment.
- If the measurement for the rear camber is not within the specification, check for bent or damaged suspension components.

26. Front Toe - Inspection

Use commercially available computerized four wheel alignment equipment to measure wheel alignment (caster, camber, toe, and turning angle). Follow the equipment manufacturer's instructions.

GETtheMANUALS.org

1. Set the steering column to the middle tilt position and telescopic positions.
2. Center the steering wheel spokes, and install a steering wheel holder tool.
3. Check the toe with the wheels pointed straight ahead.

   Front toe-in: 0±2 mm (0±0.08 in)

   - If adjustment is required, go to the front toe adjustment.
   - If no adjustment is required, remove the alignment equipment.

27. Turning Angle - Inspection

Use commercially available computerized four wheel alignment equipment to measure wheel alignment (caster, camber, toe, and turning angle). Follow the equipment manufacturer's instructions.

1. Turn the wheel right and left while applying the brake, and measure the turning angle of both wheels.

   Turning angle:

   2WD:

   Inward:

   With 16 inch wheel: 36 ° 29 '±2 °

   Without 16 inch wheel: 36 ° 13 '±2 °

   Outward (reference):

   With 16 inch wheel: 31 ° 13 '

   Without 16 inch wheel: 31 ° 02 '

   AWD/4WD:

   Inward:

   With 16 inch wheel: 36 ° 48 '±2 °

   Without 16 inch wheel: 36 ° 30 '±2 °

   Outward (reference):

   With 16 inch wheel: 31 ° 18 '

   Without 16 inch wheel: 31 ° 12 '

GETtheMANUALS.org

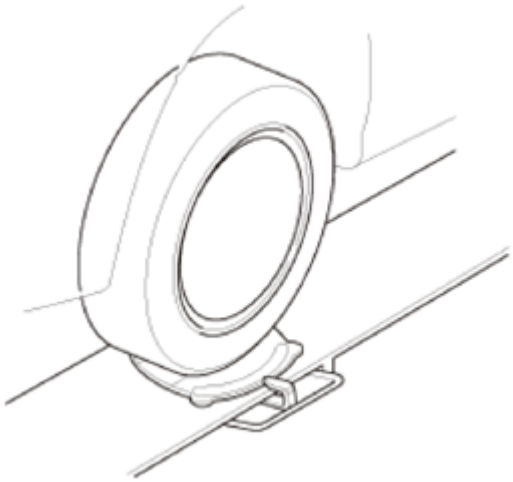

Fig. 147: Measuring Wheel Alignment (Caster, Camber, Toe And Turning Angle)

2. If the measurement is not within the specifications, even up both sides of the tie-rod threaded section length while adjusting the front toe.
3. If it is correct, but the turning angle is not within the specifications, check for bent or damaged suspension components.

28. Test Drive
    1. Test-drive the vehicle.
29. Front Stabilizer Link - Tighten
    1. After 5 minutes of driving, tighten the self-locking nut again to the specified torque value.
30. HDS DLC - Connection
    1. Connect the HDS to the data link connector (DLC) (A) located under the driver's side of the dashboard.
    2. Turn the ignition switch to ON (II).
    3. Make sure the HDS communicates with the vehicle. If it does not communicate, go to the DLC circuit troubleshooting.

GETtheMANUALS.org

Fig. 148: Identifying Data Link Connector (DLC) Located Under Driver's Side Of Dashboard

31. VSA Sensor Neutral Position - Memorization
    1. Park the vehicle on a flat and level surface, with the steering wheel in the straight ahead position.
    2. Select VSA ADJUSTMENT, then select ALL SENSORS with the HDS, and follow the screen prompts.

    NOTE: See the HDS Help menu for specific instructions.

32. Steering Angle Sensor Neutral Position - Clear
    1. Select EPS ADJUSTMENT, then select EPS STEERING ANGLE SENSOR VALUE CLEAR and follow the screen prompts on the HDS.

    NOTE: See the HDS Help menu for specific instructions.

FRONT STABILIZER LINK REMOVAL AND INSTALLATION

REMOVAL

1. Vehicle Lift
    1. Raise the vehicle on a lift, and make sure it is securely supported.
2. Front Wheel
    1. Remove the front wheel.

GETtheMANUALS.org

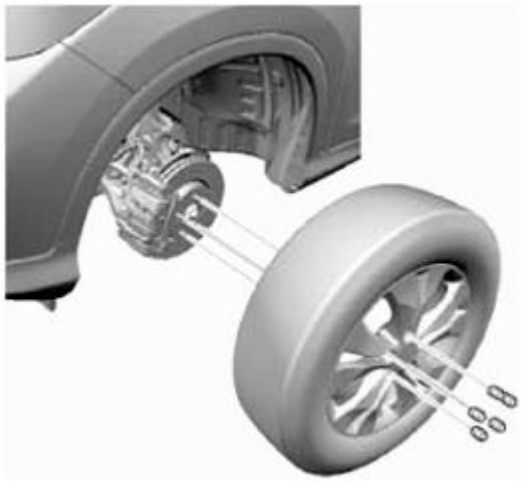

Fig. 149: Identifying Front Wheel And Studs

3. Front Stabilizer Link
    1. Remove the flange nuts (A) while holding the respective joint pin (B) with a hex wrench (C).
    2. Remove the stabilizer link (D).

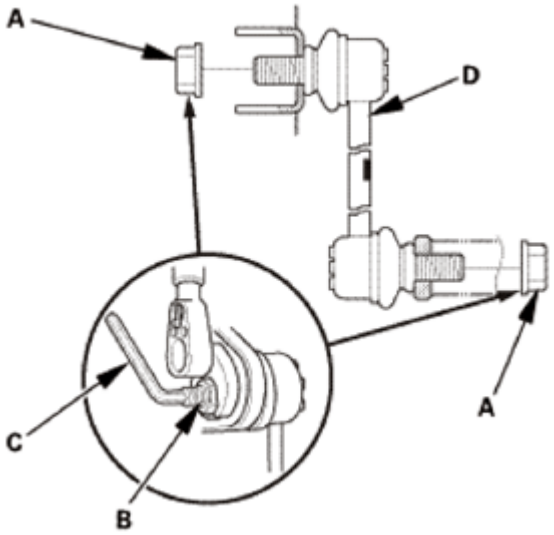

Fig. 150: Removing Flange Nuts While Holding Respective Joint Pin With Hex Wrench

INSTALLATION

1. Front Stabilizer Link
    1. Install the stabilizer link (A).

    NOTE: The stabilizer link has a paint mark (B).

    2. Install the flange nuts (C), and tighten them to the specified torque while holding the respective

GETtheMANUALS.org

joint pin (D) with a hex wrench (E).

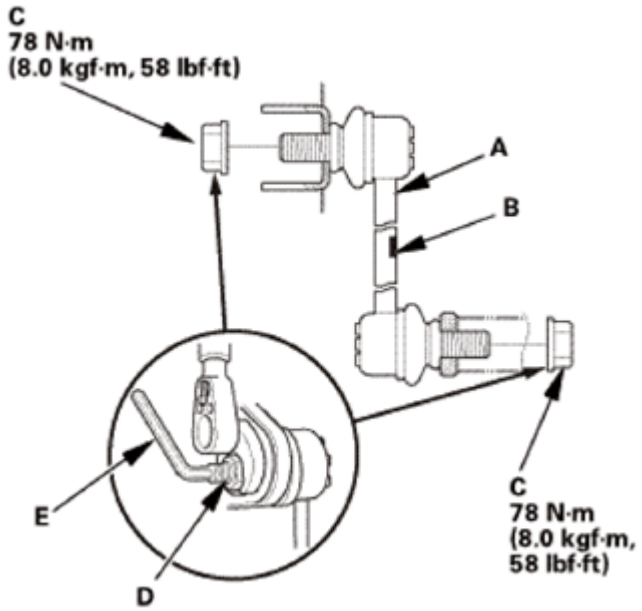

Fig. 151: Installing Flange Nuts

2. Front Wheel
    1. Install the front wheel.

NOTE: **Before installing the wheel, clean the mating surfaces between the brake disc and the inside of the wheel.**

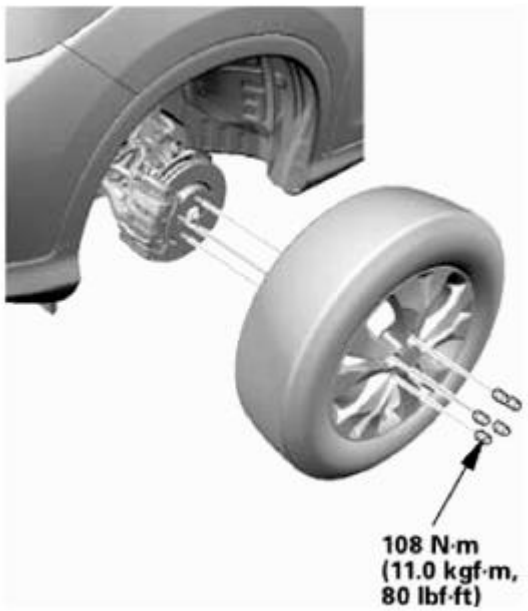

Fig. 152: Identifying Front Wheel And Studs With Torque Specification

GETtheMANUALS.org

3. Test Drive
    1. Test-drive the vehicle.
4. Front Stabilizer Link - Tighten
    1. After 5 minutes of driving, tighten the self-locking nut again to the specified torque value.

FRONT WHEEL BEARING REPLACEMENT

SPECIAL TOOL REQUIRED

Image	Description/Tool Number
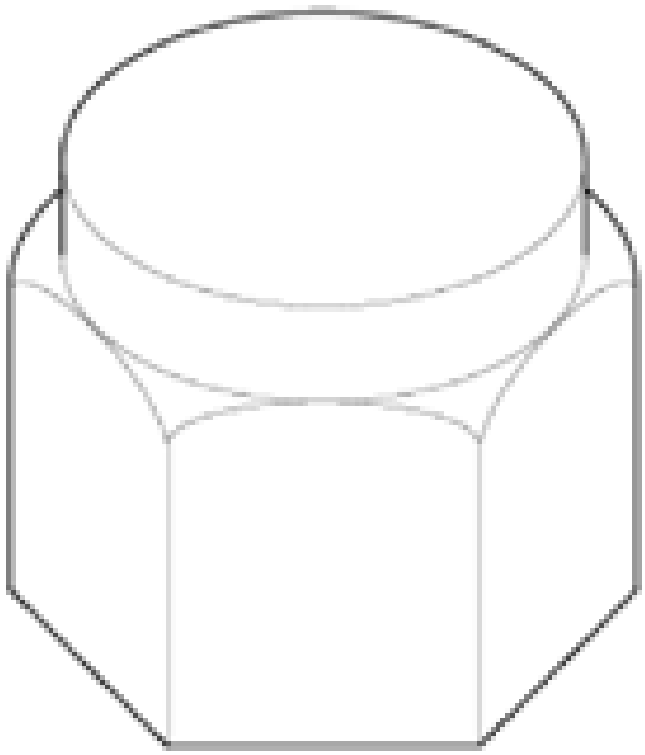	Ball Joint Thread Protector, 12 mm 07AAF-SDAA100
	Ball Joint Thread Protector, 14 mm 071AF-SZNA100

GETtheMANUALS.org

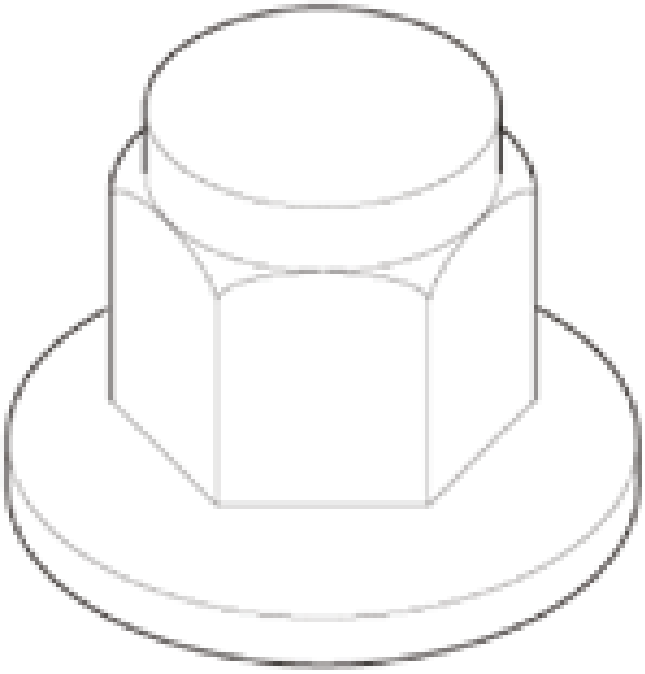	
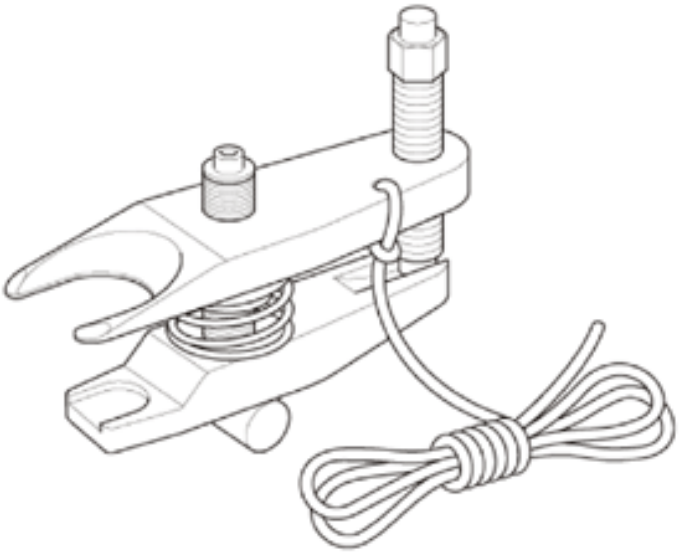	Ball Joint Remover, 28 mm 07MAC-SL00202
	Ball Joint Remover, 32 mm 07MAC-SL00102

GETtheMANUALS.org

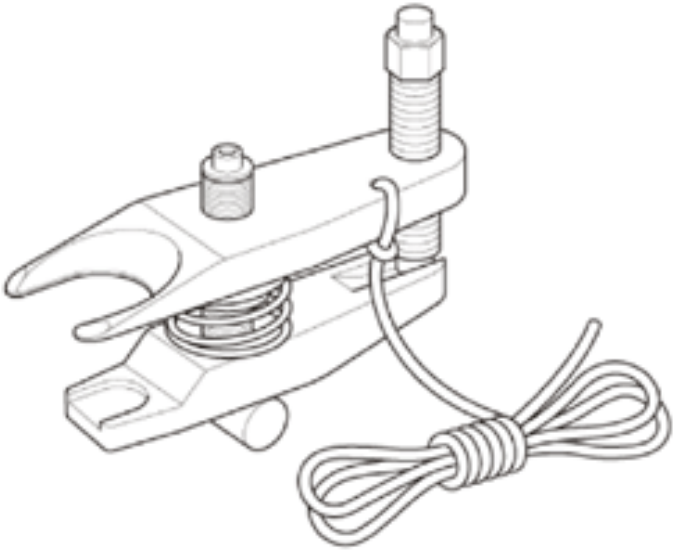	
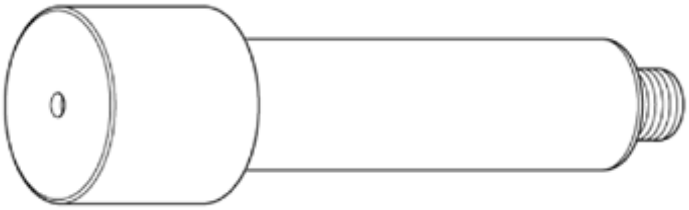	Hub Dis/Assembly Pin, 42 mm 07GAF-SD4A100
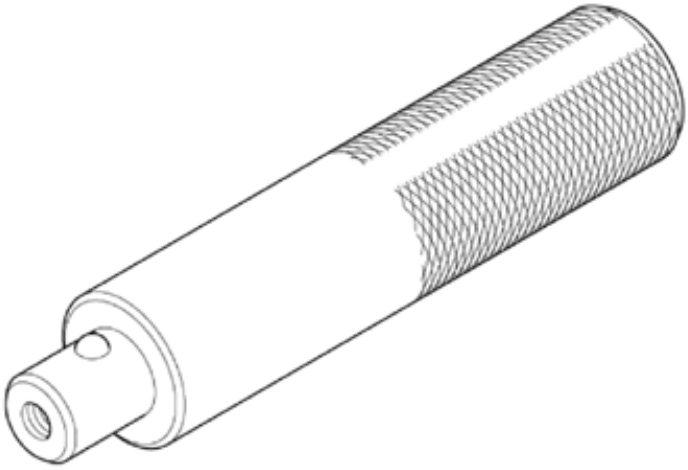	Driver Handle, 15 x 135L 07749-0010000
	Bearing Driver Attachment, 62 x 68 mm 07746-0010500

GETtheMANUALS.org

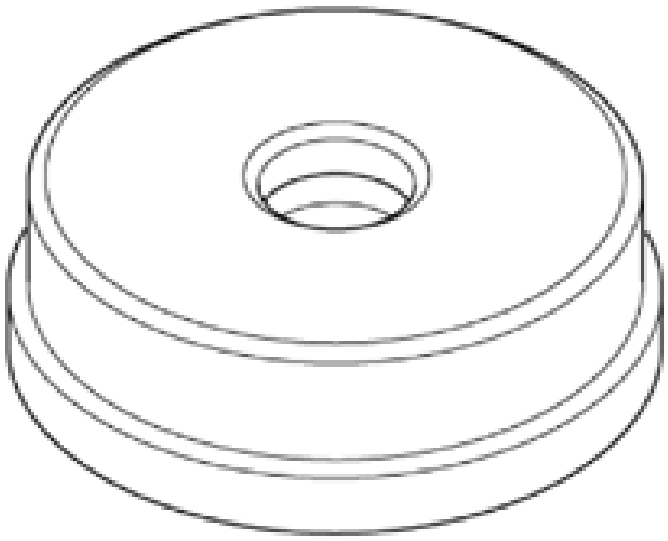	
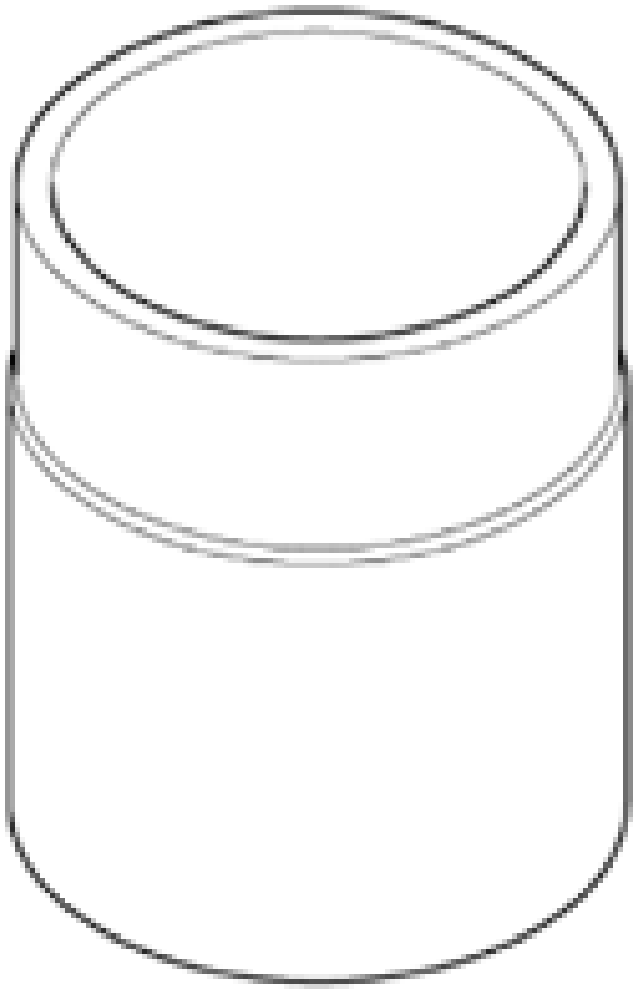	Support Base 07965-SD90100

GETtheMANUALS.org

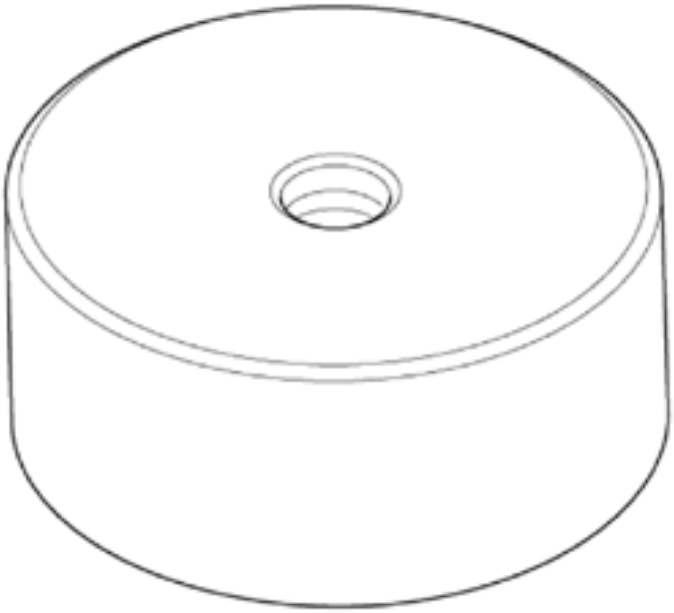	Oil Seal Driver Attachment, 96 mm 07ZAD-PNAA100

EXPLODED VIEW

1. Front Knuckle/Hub/Wheel Bearing Exploded View

   Exploded View

GETtheMANUALS.org

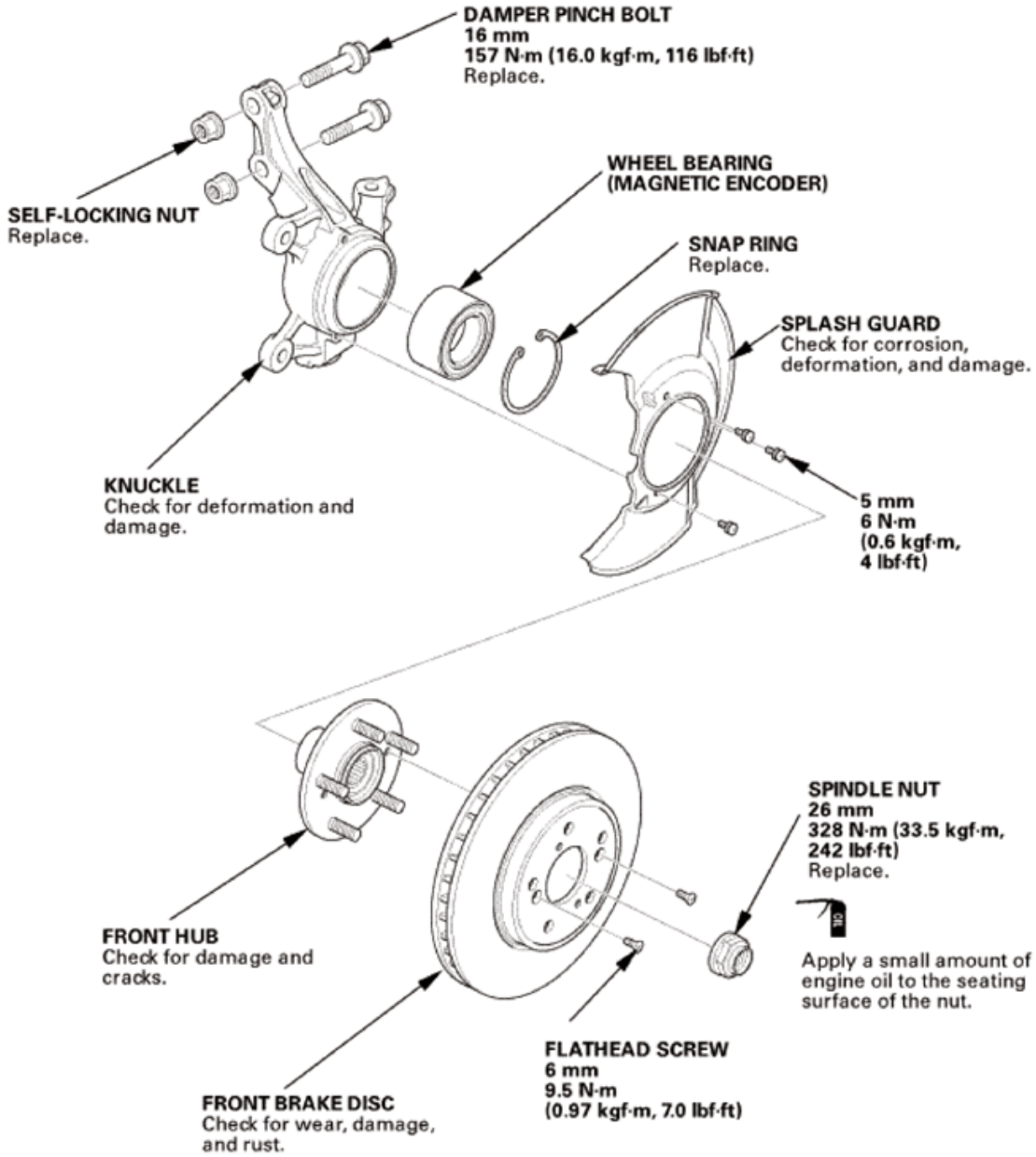

Fig. 153: Exploded View Of Front Knuckle/Hub/Wheel Bearing

REMOVAL

NOTE: Refer to the EXPLODED VIEW as needed during the following procedures.

1. Vehicle Lift
    1. Raise the vehicle on a lift, and make sure it is securely supported.
2. Front Wheel
    1. Remove the front wheel.

GETtheMANUALS.org

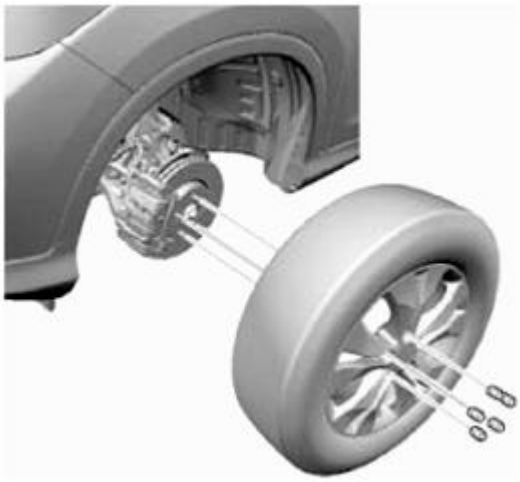

Fig. 154: Identifying Front Wheel And Studs

3. Front Brake Caliper - Detach
    1. Remove the brake hose mounting bolt (A).
    2. Remove the caliper assembly (B).

NOTE:

- **To prevent damage to the caliper assembly or brake hose, use a short piece of wire to hang the caliper assembly from the undercarriage.**
- **Do not twist the brake hose excessively.**

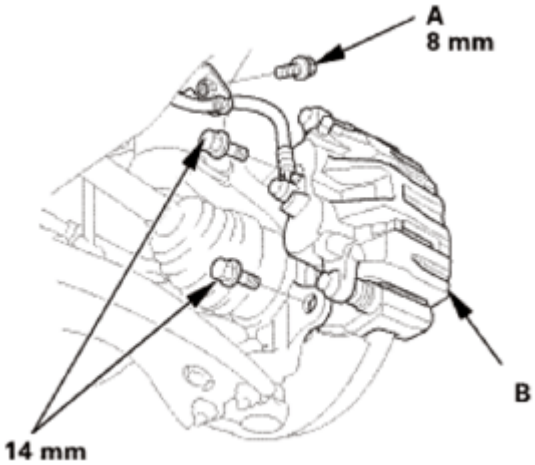

Fig. 155: Identifying Caliper Assembly And Brake Hose Mounting Bolt

4. Front Wheel Speed Sensor - Move
    1. Remove the wheel speed sensor (A).

NOTE: **Do not disconnect the wheel speed sensor connector.**

GETtheMANUALS.org

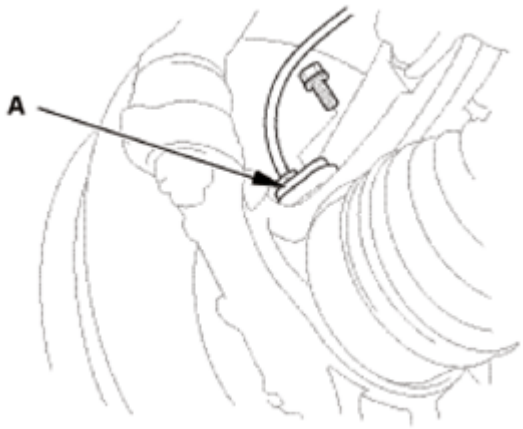

Fig. 156: Identifying Wheel Speed Sensor

5. Front Driveshaft Spindle Nut
    1. Pry up the stake (A) on the spindle nut (B).
    2. Remove the spindle nut.

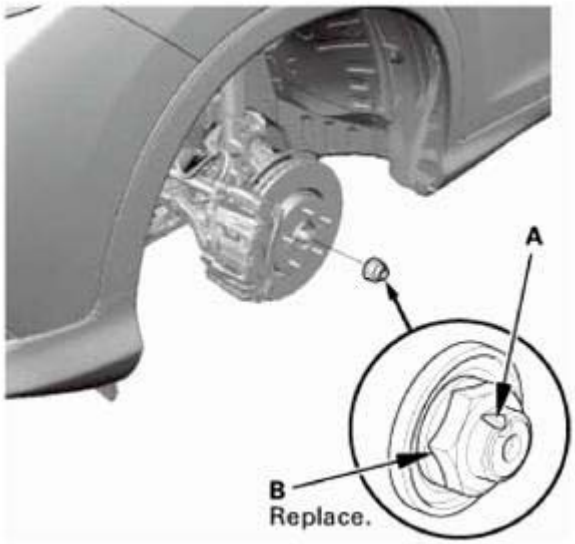

Fig. 157: Identifying Stake And Spindle Nut

6. Front Brake Disc
    1. Remove the brake disc (A).

NOTE: **If the brake disc is stuck to the front hub, thread two 8 x 1.25 mm bolts (B) into the brake disc to push it away from the front hub. Turn each bolt 90 degrees at a time to prevent the brake disc from binding.**

GETtheMANUALS.org

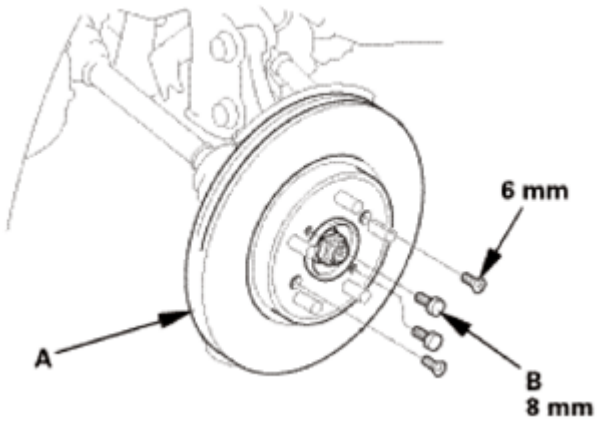

Fig. 158: Identifying Brake Disc And Bolts With Torque Specification

7. Ball Joint - Removal

NOTE: **Always use a ball joint remover to disconnect a ball joint. Do not strike the housing or any other part of the ball joint connection to disconnect it.**

1. Install a hex nut (A) or the ball joint thread protector.

NOTE: **When using a hex nut, make sure the nut is flush with the ball joint pin end to prevent damage to the threaded end of the ball joint pin.**

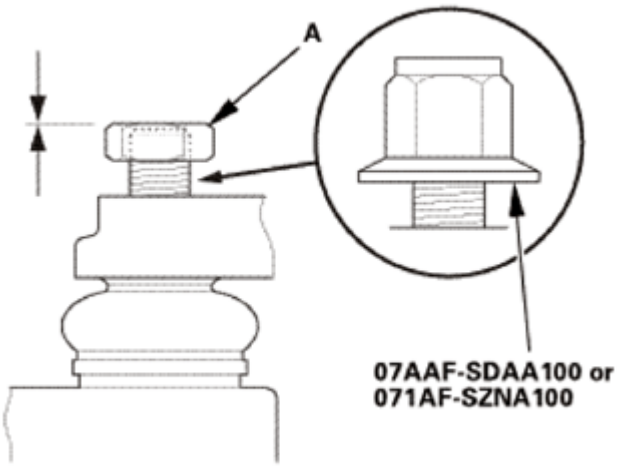

Fig. 159: Identifying Hex Nut And Ball Joint Thread Protector

2. Apply grease to the ball joint remover on the areas shown (A).

GETtheMANUALS.org

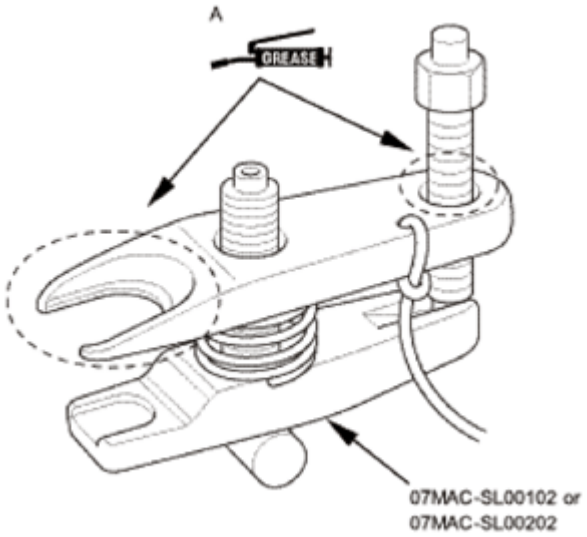

Fig. 160: Identifying Grease Applying Area On Ball Joint Remover

3. Install the ball joint remover as shown.

NOTE:

- **Fasten the safety tie (A) securely to a suspension arm or the subframe (B).**
- **Making sure not to damage the ball joint boot.**

4. Tighten the pressure bolt until the ball joint pin pops loose from the ball joint connecting hole.

NOTE: **Do not use pneumatic or electric tools on the pressure bolt.**

5. Remove the ball joint remover.

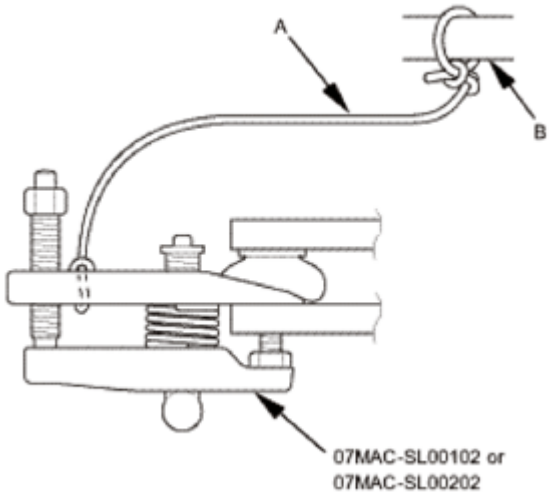

Fig. 161: Fastening Safety Tie Securely To Suspension Arm Or Subframe

GETtheMANUALS.org

6. Remove the hex nut or the ball joint thread protector.
7. Pull the ball joint out of the ball joint connecting hole.

8. Tie-Rod End Ball Joint - Disconnection
    1. Remove the cotter pin (A).
    2. Remove the nut (B).
    3. Disconnect the tie-rod end ball joint.

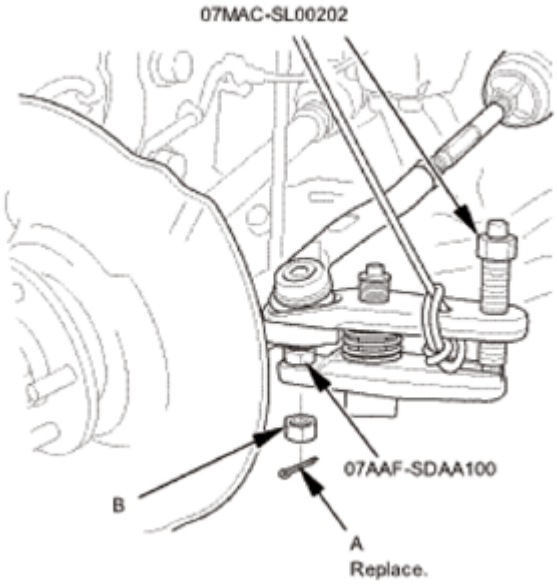

Fig. 162: Disconnecting Tie-Rod End Ball Joint

9. Front Lower Ball Joint knuckle side - Disconnection
    1. Remove the lock pin (A).
    2. Remove the castle nut (B).
    3. Disconnect the lower ball joint (C) from the knuckle.

GETtheMANUALS.org

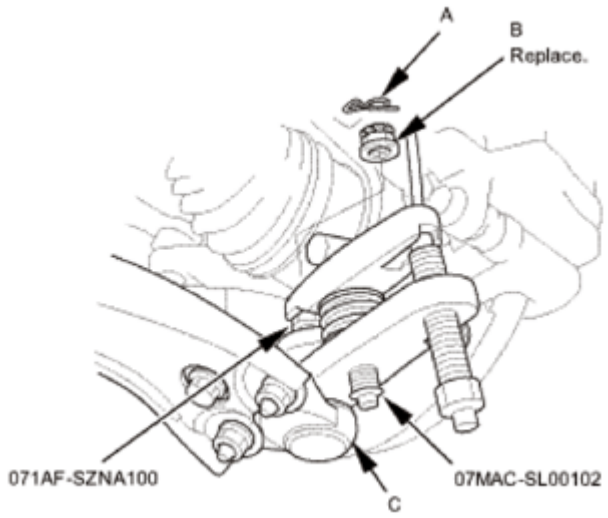

Fig. 163: Disconnecting Lower Ball Joint From Knuckle

10. Front Knuckle/Hub Assembly
    1. Remove the damper pinch bolts (A) and the self-locking nuts (B).
    2. Pull the knuckle (C) outward, and separate the outboard joint (D) from the front hub, then remove the knuckle/hub.

NOTE: **Do not pull the driveshaft end outward. The inner driveshaft inboard joint may come apart.**

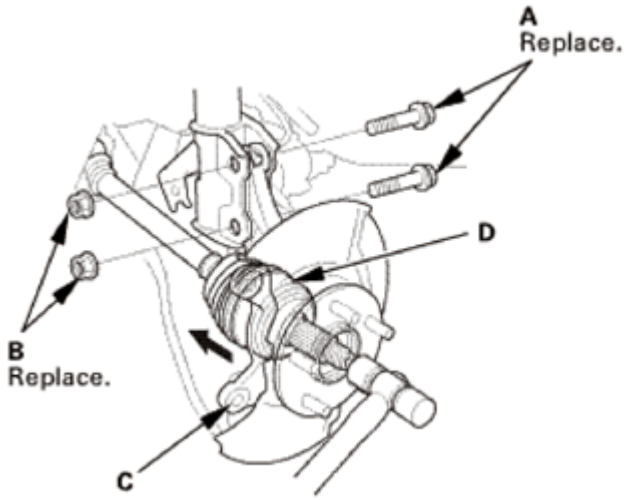

Fig. 164: Pulling Knuckle Outward

11. Front Wheel Hub
    1. Separate the hub (A) from the knuckle (B).

NOTE: **Be careful not to damage or deform the splash guard (C).**

GETtheMANUALS.org

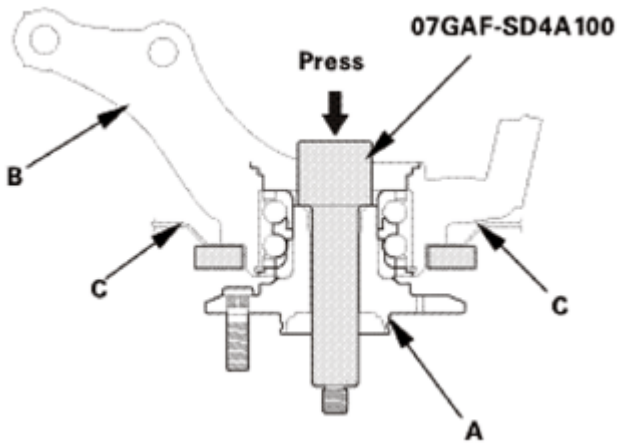

Fig. 165: Separating Hub From Knuckle

2. Press out the wheel bearing inner race (A) of the hub (B).

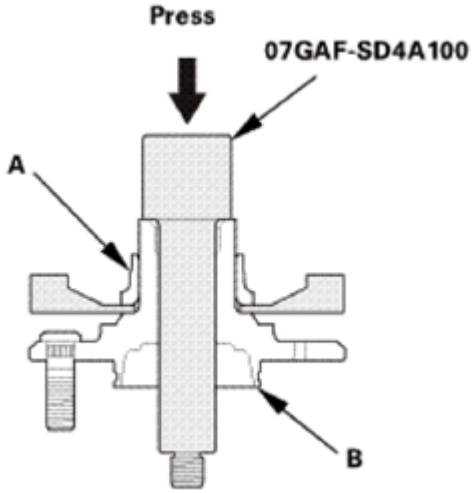

Fig. 166: Pressing Out Wheel Bearing Inner Race Of Hub

12. Front Splash Guard and Snap Ring
    1. Remove the splash guard (A).
    2. Remove the snap ring (B).

GETtheMANUALS.org

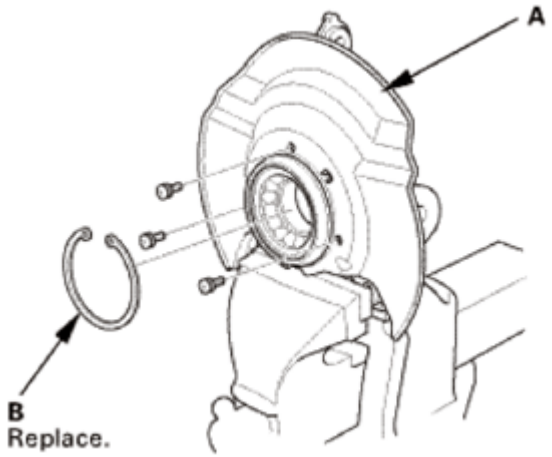

Fig. 167: Identifying Splash Guard And Snap Ring

13. Front Wheel Bearing
    1. Press the wheel bearing (A) out of the knuckle (B).

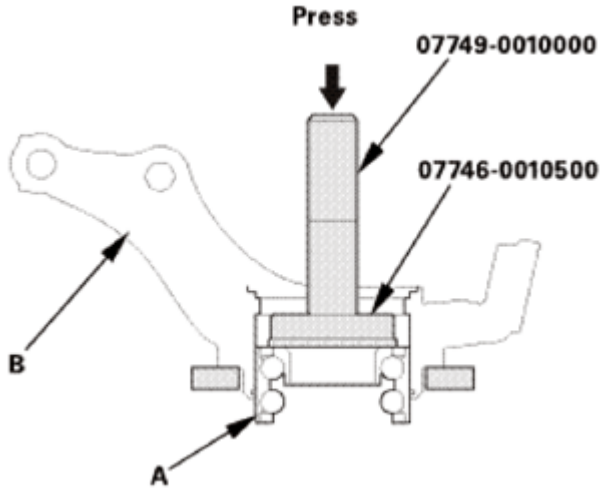

Fig. 168: Pressing Wheel Bearing Out Of Knuckle

INSTALLATION

NOTE: Refer to the EXPLODED VIEW as needed during the following procedures.

1. Front Wheel Bearing
    1. Wash the knuckle and the hub thoroughly in high flash point solvent before reassembly.
    2. Press a new wheel bearing (A) into the knuckle (B).

NOTE:

- **Install the wheel bearing with the wheel speed sensor magnetic encoder (C) (brown color), toward the inside of the knuckle.**

GETtheMANUALS.org

- **Keep the wheel bearing and magnetic encoder away from any magnetic field. The encoder can be damaged or erased.**

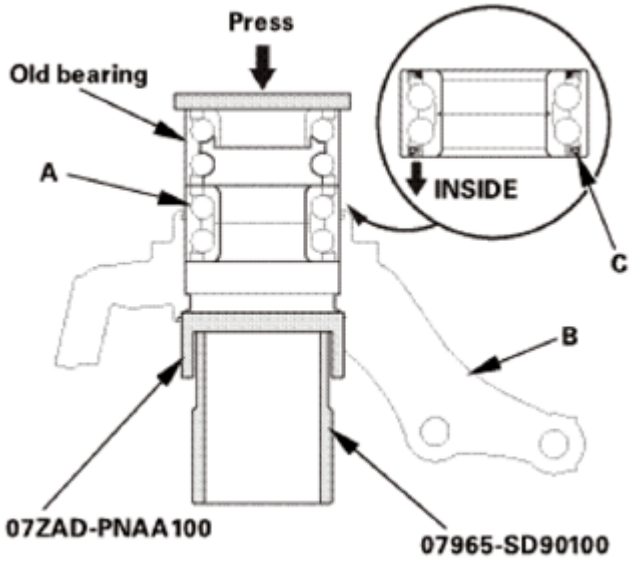

Fig. 169: Pressing Wheel Bearing Into Knuckle

2. Front Splash Guard and Snap Ring
    1. Install the new snap ring (A).
    2. Install the splash guard (B).

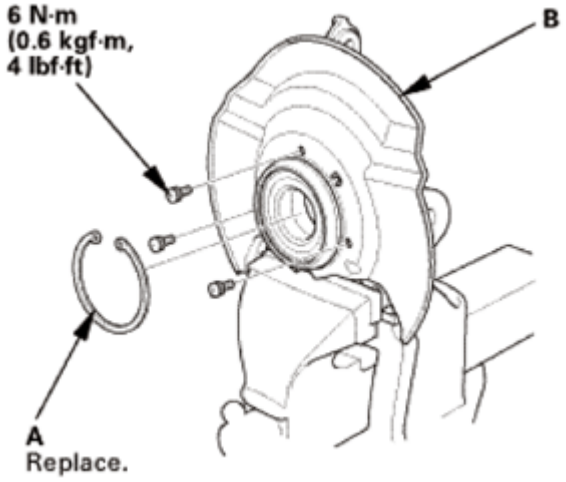

Fig. 170: Identifying Splash Guard, Snap Ring And Mounting Bolts With Torque Specification

3. Front Wheel Hub
    1. Install the hub (A) onto the knuckle (B).

GETtheMANUALS.org

NOTE: **Be careful not to damage the splash guard (C).**

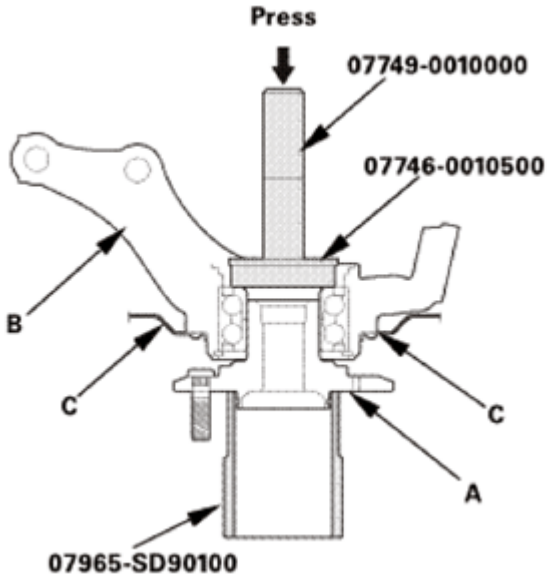

Fig. 171: Installing Hub Onto Knuckle

4. Front Knuckle/Hub Assembly
    1. Install the knuckle/hub (A).

NOTE: **Apply grease to the mating surfaces of the wheel bearing and the driveshaft outboard joint.**

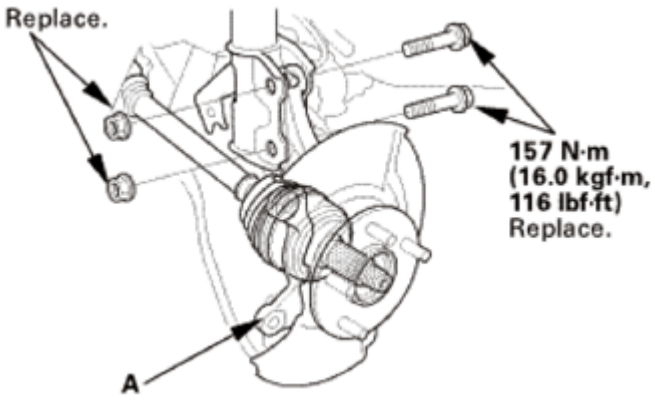

Fig. 172: Identifying Knuckle/Hub And Mounting Bolts And Nuts With Torque Specification

5. Front Lower Ball Joint knuckle side - Reconnection
    1. Connect the lower ball joint (A) to the knuckle.
    2. Install the new castle nut (B).

NOTE: **Torque the castle nut to the lower torque specification, then tighten it**

GETtheMANUALS.org

only far enough to align the slot with the ball joint pin hole. Do not align the castle nut by loosening it.

3. Install the lock pin (C) as shown.

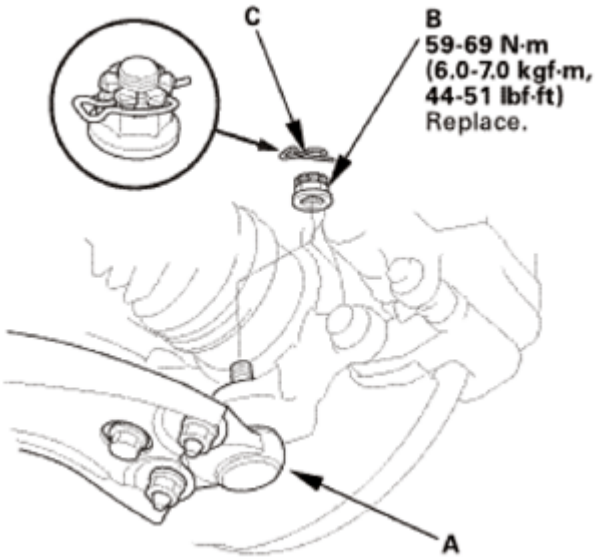

Fig. 173: Identifying Lock Pin, Lower Ball Joint And Castle Nut With Torque Specification

6. Tie-Rod End Ball Joint - Reconnection
   1. Connect the tie-rod end ball joint.
   2. Install the nut (A).
   3. Install the cotter pin (B) as shown.

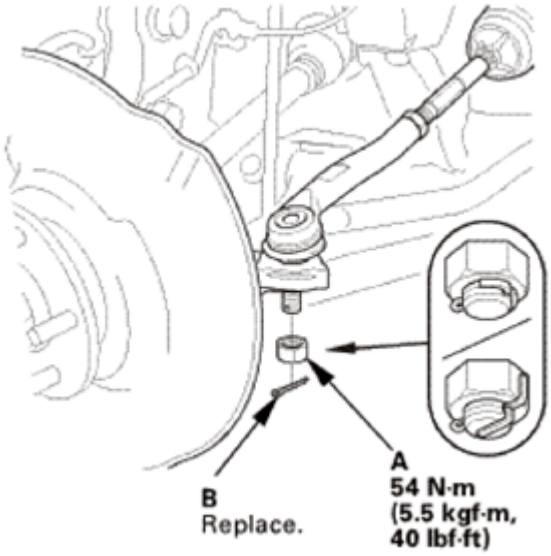

Fig. 174: Identifying Tie-Rod End Ball Joint, Cotter Pin And Nut With Torque Specification

GETtheMANUALS.org

7. Front Brake Disc
    1. Install the brake disc (A).

NOTE: **Before installing the brake disc, clean the mating surfaces between the front hub and the inside of the brake disc.**

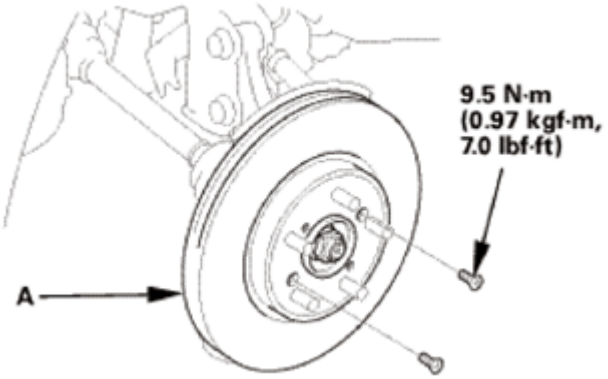

Fig. 175: Identifying Brake Disc And Bolts With Torque Specification

8. Driveshaft Spindle Nut, Front Left
    1. Apply a small amount of engine oil to the seating surface of a new spindle nut (A).
    2. Install the spindle nut.
    3. Use a drift to stake the spindle nut shoulder (B) against the driveshaft.

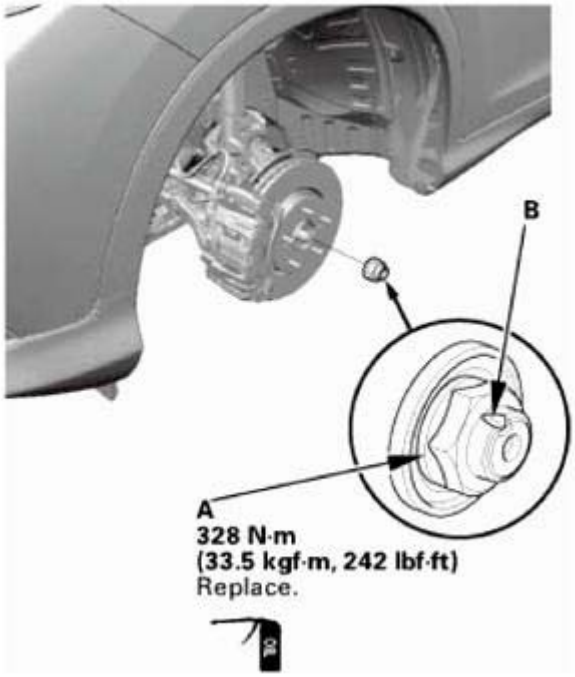

Fig. 176: Identifying Spindle Nut Shoulder And Spindle Nut With Torque Specification

GETtheMANUALS.org

9. Front Wheel Speed Sensor - Move
    1. Install the wheel speed sensor (A).

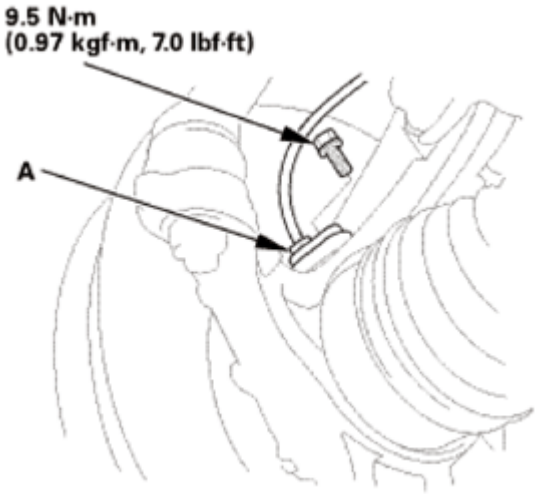

Fig. 177: Identifying Wheel Speed Sensor And Mounting Bolt With Torque Specification

10. Front Brake Caliper - Reattach
    1. Install the caliper assembly (A).
    2. Install the brake hose mounting bolt (B).

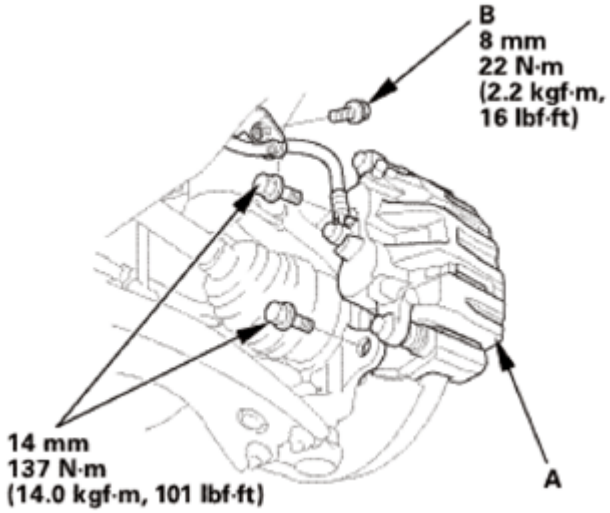

Fig. 178: Identifying Caliper Assembly And Brake Hose Mounting Bolt With Torque Specification

11. Front Wheel
    1. Install the front wheel.

NOTE: Before installing the wheel, clean the mating surfaces between the

GETtheMANUALS.org

brake disc and the inside of the wheel.

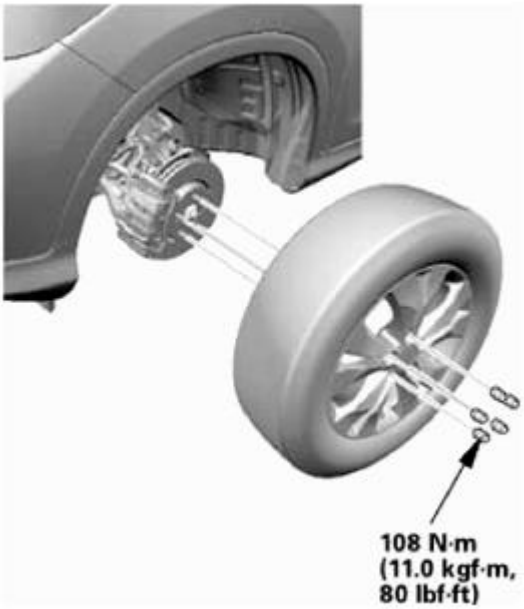

Fig. 179: Identifying Front Wheel And Studs With Torque Specification

12. Pre-Alignment Checks

    For proper inspection and adjustment of the wheel alignment, do these checks:

    1. Release the parking brake to avoid an incorrect measurement.
    2. Make sure the suspension is not modified.
    3. Make sure the fuel tank is full, and that the spare tire, the jack, and the tools are in place on the vehicle.
    4. Check the tire size and tire pressure according to tire information.
    5. Set the steering column to the middle tilt position and telescopic position.
13. Caster - Inspection

    Use commercially available computerized four wheel alignment equipment to measure wheel alignment (caster, camber, toe, and turning angle). Follow the equipment manufacturer's instructions.

    1. Check the caster angle.

       Caster angle:

       2WD:

       With 16 inch wheel: 2 ° 44 '±30 '

       Without 16 inch wheel: 2 ° 50 '±30 '

GETtheMANUALS.org

AWD/4WD:

With 16 inch wheel: 2 ° 38 '±30 '

Without 16 inch wheel: 2 ° 44 '±30 '

- If the measurement is within specifications, measure the front camber angle.
- If the measurement is not within specifications, check for bent or damaged suspension components.

14. Camber - Inspection

Use commercially available computerized four wheel alignment equipment to measure wheel alignment (caster, camber, toe, and turning angle). Follow the equipment manufacturer's instructions.

1. Check the camber angle.

Camber angle:

2WD:

Front:

With 16 inch wheel: -0 ° 01 '±1 ° 00 '

Without 16 inch wheel: -0 ° 10 '±1 ° 00 '

(Maximum difference between the front right and left side: 1 °00 ')

Rear:

With 16 inch wheel: -1 ° 06 '±45 '

Without 16 inch wheel: -1 ° 12 '±45 '

(Maximum difference between the front right and left side: 0 °45 ')

AWD/4WD:

Front:

With 16 inch wheel: -0 ° 08 '±1 ° 00 '

Without 16 inch wheel: 0 ° 00 '±1 ° 00 '

(Maximum difference between the front right and left side: 1 °00 ')

Rear:

GETtheMANUALS.org

With 16 inch wheel: -0 ° 50 '±45 '

Without 16 inch wheel: -1 ° 00 '±45 '

(Maximum difference between the front right and left side: 0 °45 ')

- If the measurement is within specification, measure the toe-in.
- If the measurement for the front camber is not within the specification, go to front camber adjustment.
- If the measurement for the rear camber is not within the specification, check for bent or damaged suspension components.

15. Front Toe - Inspection

Use commercially available computerized four wheel alignment equipment to measure wheel alignment (caster, camber, toe, and turning angle). Follow the equipment manufacturer's instructions.

1. Set the steering column to the middle tilt position and telescopic positions.
2. Center the steering wheel spokes, and install a steering wheel holder tool.
3. Check the toe with the wheels pointed straight ahead.

Front toe-in: 0±2 mm (0±0.08 in)

- If adjustment is required, go to the front toe adjustment.
- If no adjustment is required, remove the alignment equipment.

16. Turning Angle - Inspection

Use commercially available computerized four wheel alignment equipment to measure wheel alignment (caster, camber, toe, and turning angle). Follow the equipment manufacturer's instructions.

1. Turn the wheel right and left while applying the brake, and measure the turning angle of both wheels.

Turning angle:

2WD:

Inward:

With 16 inch wheel: 36 ° 29 '±2 °

Without 16 inch wheel: 36 ° 13 '±2 °

Outward (reference):

With 16 inch wheel: 31 ° 13 '

GETtheMANUALS.org

Without 16 inch wheel: 31 ° 02 '

AWD/4WD:

Inward:

With 16 inch wheel: 36 ° 48 '±2 °

Without 16 inch wheel: 36 ° 30 '±2 °

Outward (reference):

With 16 inch wheel: 31 ° 18 '

Without 16 inch wheel: 31 ° 12 '

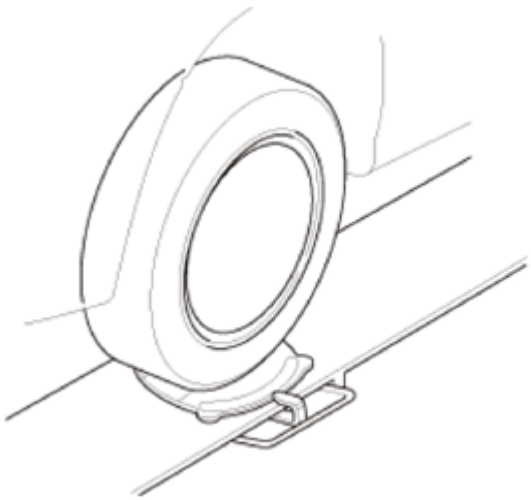

Fig. 180: Measuring Wheel Alignment (Caster, Camber, Toe And Turning Angle)

2. If the measurement is not within the specifications, even up both sides of the tie-rod threaded section length while adjusting the front toe.
3. If it is correct, but the turning angle is not within the specifications, check for bent or damaged suspension components.

17. HDS DLC - Connection
    1. Connect the HDS to the data link connector (DLC) (A) located under the driver's side of the dashboard.
    2. Turn the ignition switch to ON (II).
    3. Make sure the HDS communicates with the vehicle. If it does not communicate, go to the DLC circuit troubleshooting.

GETtheMANUALS.org

Fig. 181: Identifying Data Link Connector (DLC) Located Under Driver's Side Of Dashboard

18. VSA Sensor Neutral Position - Memorization
    1. Park the vehicle on a flat and level surface, with the steering wheel in the straight ahead position.
    2. Select VSA ADJUSTMENT, then select ALL SENSORS with the HDS, and follow the screen prompts.

    NOTE: See the HDS Help menu for specific instructions.

19. Steering Angle Sensor Neutral Position - Clear
    1. Select EPS ADJUSTMENT, then select EPS STEERING ANGLE SENSOR VALUE CLEAR and follow the screen prompts on the HDS.

    NOTE: See the HDS Help menu for specific instructions.

FRONT WHEEL BOLT REMOVAL AND INSTALLATION

SPECIAL TOOL REQUIRED

Image	Description/Tool Number
	Ball Joint Thread Protector, 12 mm 07AAF-

GETtheMANUALS.org

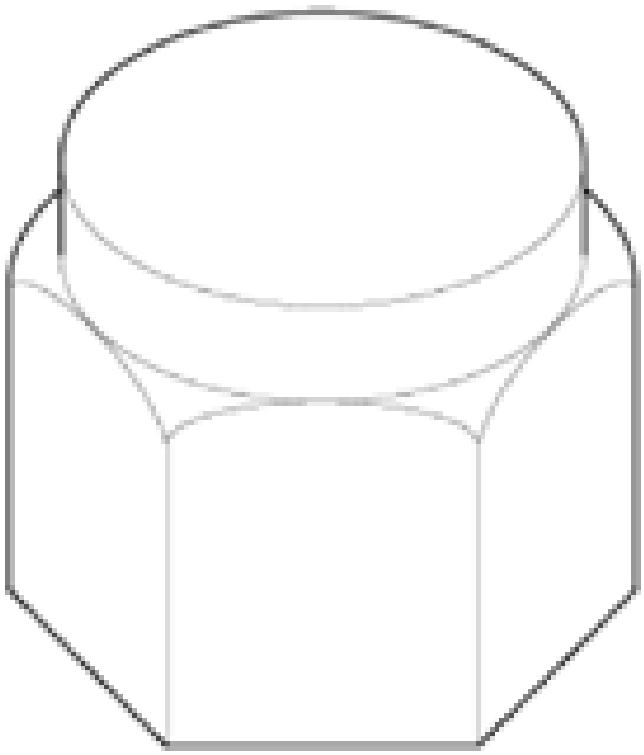	SDAA100
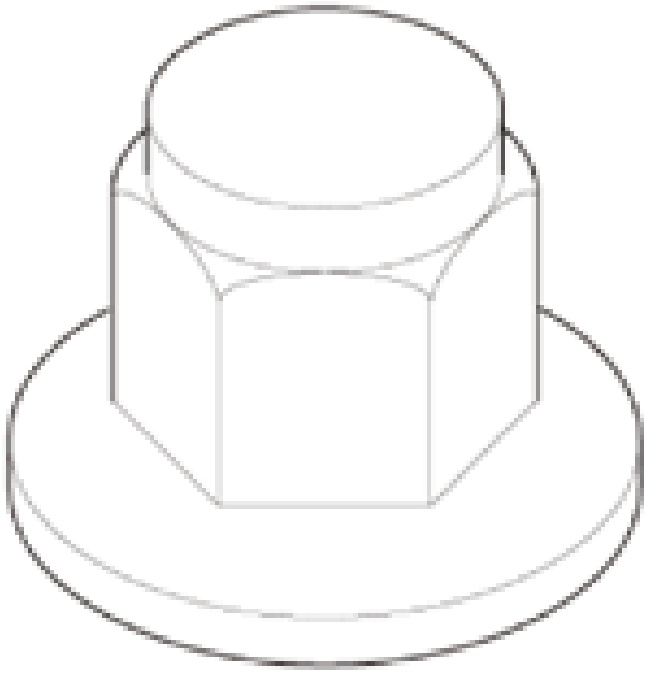	Ball Joint Thread Protector, 14 mm 071AF-SZNA100

GETtheMANUALS.org

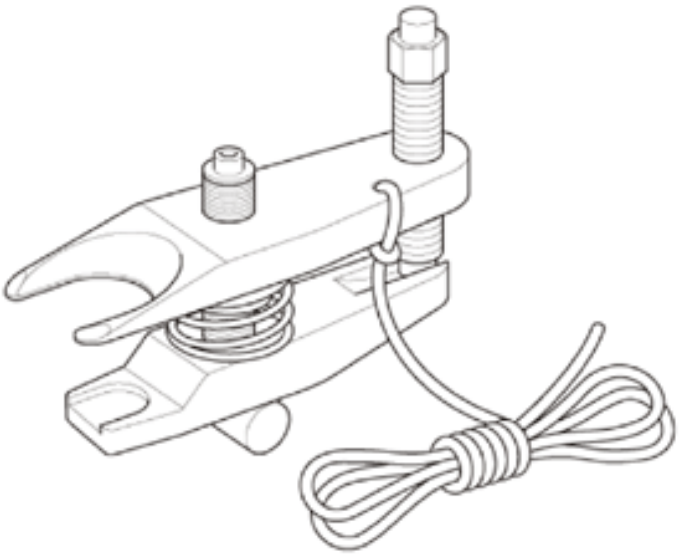	Ball Joint Remover, 28 mm 07MAC-SL00202
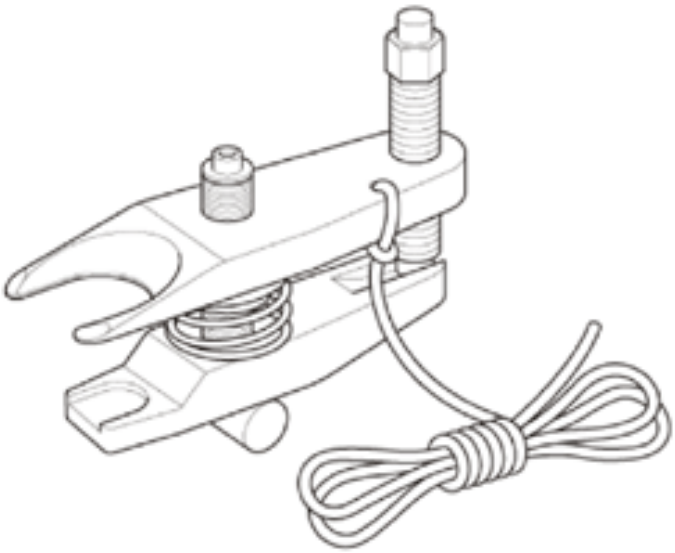	Ball Joint Remover, 32 mm 07MAC-SL00102
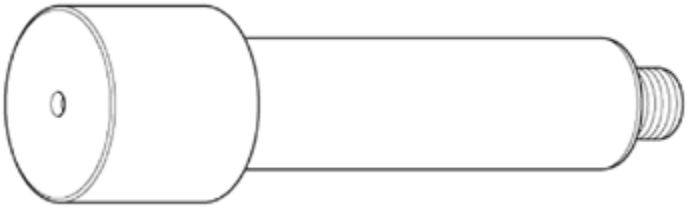	Hub Dis/Assembly Pin, 40 mm 07GAF-SE00100
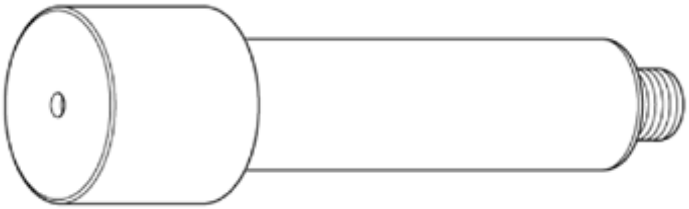	Hub Dis/Assembly Pin, 42 mm 07GAF-SD4A100

GETtheMANUALS.org

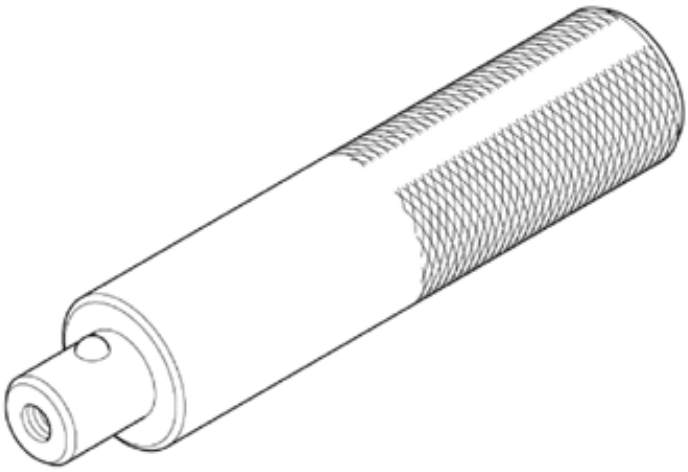	Driver Handle, 15 x 135L 07749-0010000
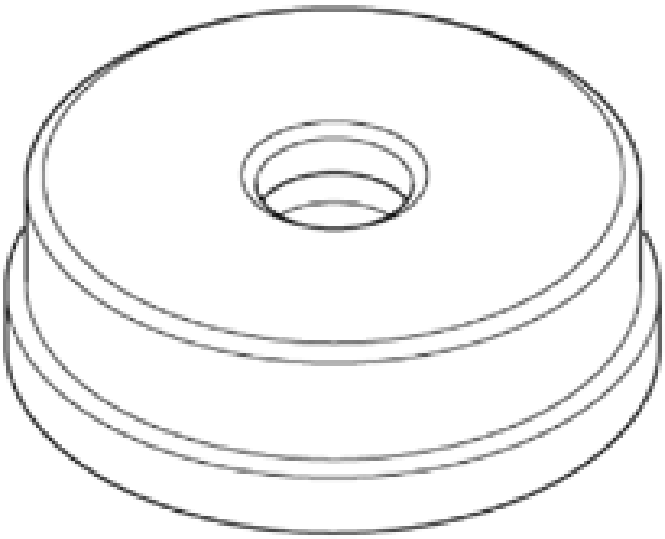	Bearing Driver Attachment, 62 x 68 mm 07746-0010500
	Support Base 07965-SD90100

GETtheMANUALS.org

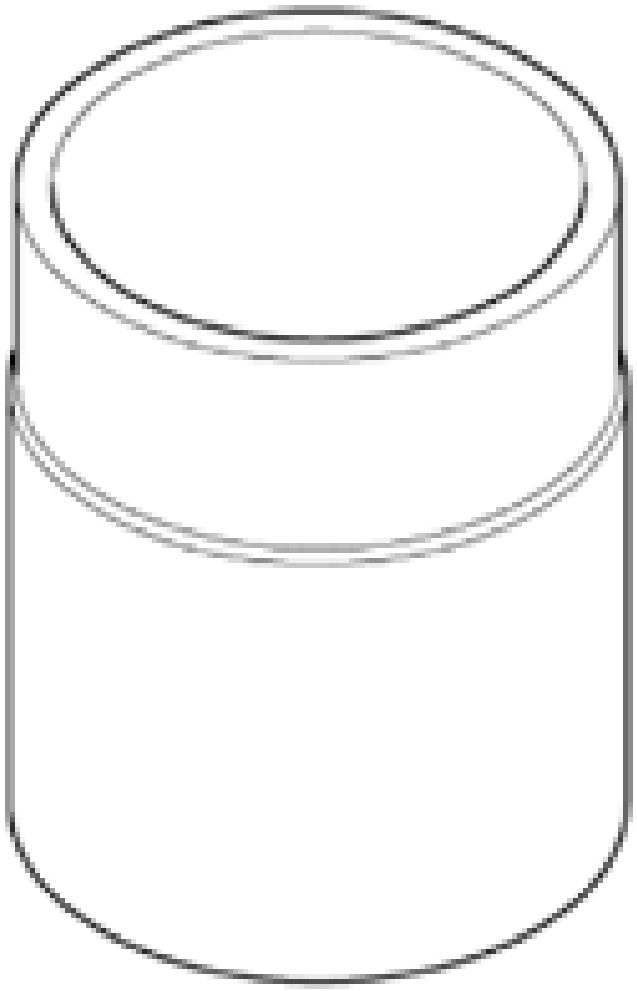	
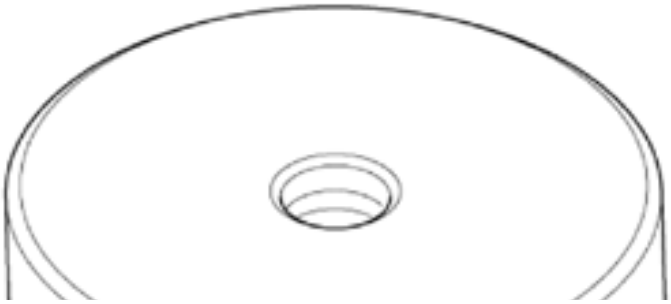	Oil Seal Driver Attachment, 96 mm 07ZAD-PNAA100

GETtheMANUALS.org

REMOVAL

1. Vehicle Lift
    1. Raise the vehicle on a lift, and make sure it is securely supported.
2. Front Wheel
    1. Remove the front wheel.

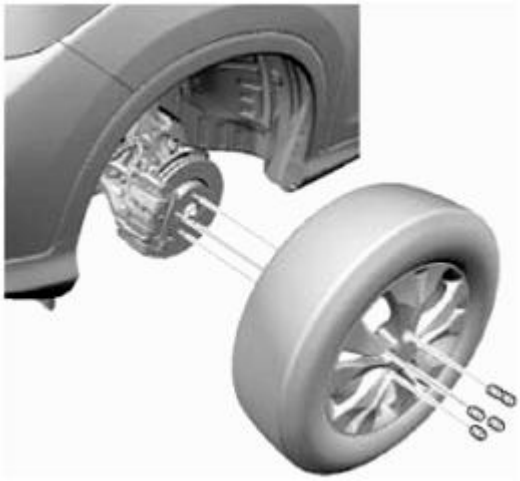

Fig. 182: Identifying Front Wheel And Studs

3. Front Brake Caliper - Detach
    1. Remove the brake hose mounting bolt (A).
    2. Remove the caliper assembly (B).

NOTE:

- **To prevent damage to the caliper assembly or brake hose, use a short piece of wire to hang the caliper assembly from the undercarriage.**
- **Do not twist the brake hose excessively.**

GETtheMANUALS.org

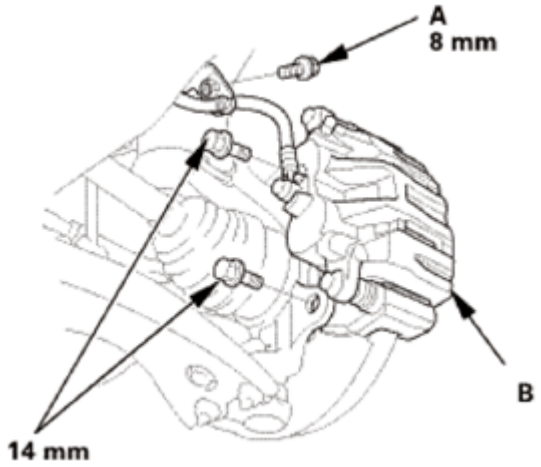

Fig. 183: Identifying Caliper Assembly And Brake Hose Mounting Bolt

4. Front Wheel Speed Sensor - Move
    1. Remove the wheel speed sensor (A).

NOTE: Do not disconnect the wheel speed sensor connector.

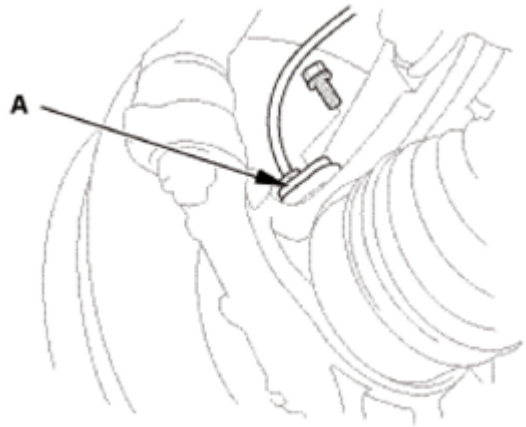

Fig. 184: Identifying Wheel Speed Sensor

5. Front Driveshaft Spindle Nut
    1. Pry up the stake (A) on the spindle nut (B).
    2. Remove the spindle nut.

GETtheMANUALS.org

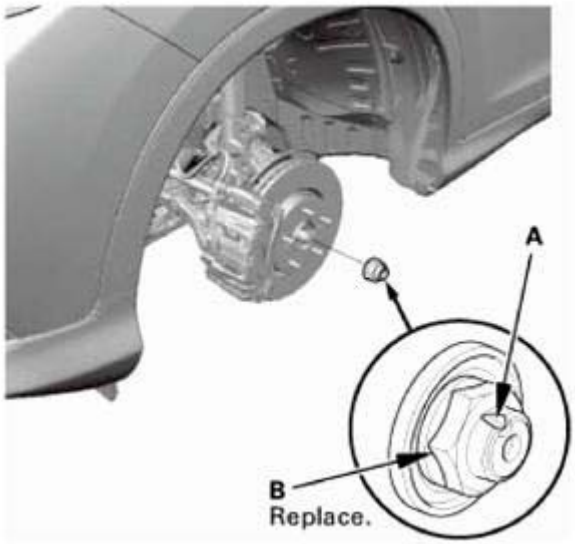

Fig. 185: Identifying Stake And Spindle Nut

6. Front Brake Disc
    1. Remove the brake disc (A).

NOTE: **If the brake disc is stuck to the front hub, thread two 8 x 1.25 mm bolts (B) into the brake disc to push it away from the front hub. Turn each bolt 90 degrees at a time to prevent the brake disc from binding.**

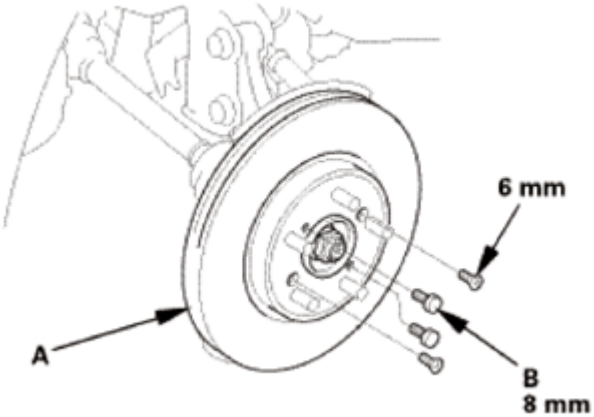

Fig. 186: Identifying Brake Disc And Bolts With Torque Specification

7. Ball Joint - Removal

NOTE: **Always use a ball joint remover to disconnect a ball joint. Do not strike the housing or any other part of the ball joint connection to disconnect it.**

    1. Install a hex nut (A) or the ball joint thread protector.

GETtheMANUALS.org

NOTE: **When using a hex nut, make sure the nut is flush with the ball joint pin end to prevent damage to the threaded end of the ball joint pin.**

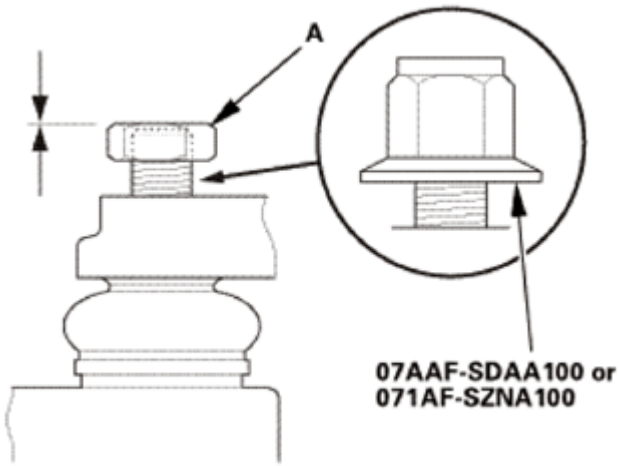

Fig. 187: Identifying Hex Nut And Ball Joint Thread Protector

2. Apply grease to the ball joint remover on the areas shown (A).

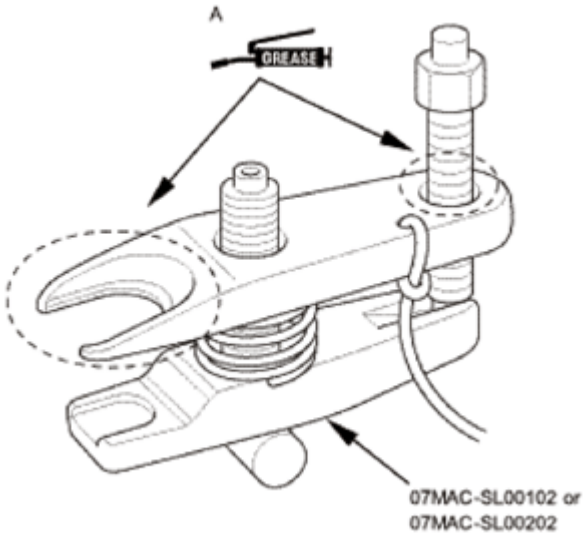

Fig. 188: Identifying Grease Applying Area On Ball Joint Remover

3. Install the ball joint remover as shown.

NOTE:

- **Fasten the safety tie (A) securely to a suspension arm or the subframe (B).**
- **Making sure not to damage the ball joint boot.**

4. Tighten the pressure bolt until the ball joint pin pops loose from the ball joint connecting hole.

GETtheMANUALS.org

NOTE: **Do not use pneumatic or electric tools on the pressure bolt.**

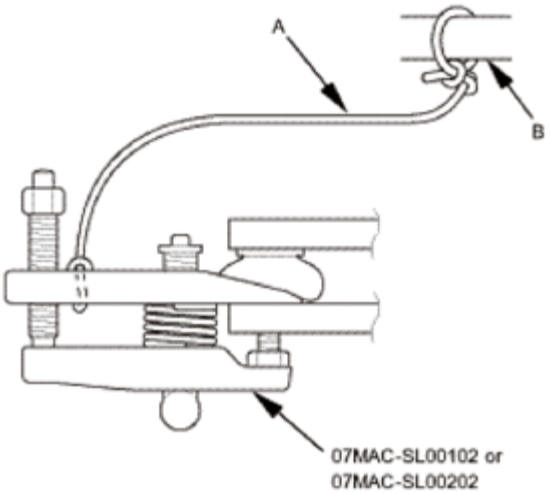

Fig. 189: Fastening Safety Tie Securely To Suspension Arm Or Subframe

5. Remove the ball joint remover.
6. Remove the hex nut or the ball joint thread protector.
7. Pull the ball joint out of the ball joint connecting hole.

8. Tie-Rod End Ball Joint - Disconnection
    1. Remove the cotter pin (A).
    2. Remove the nut (B).
    3. Disconnect the tie-rod end ball joint.

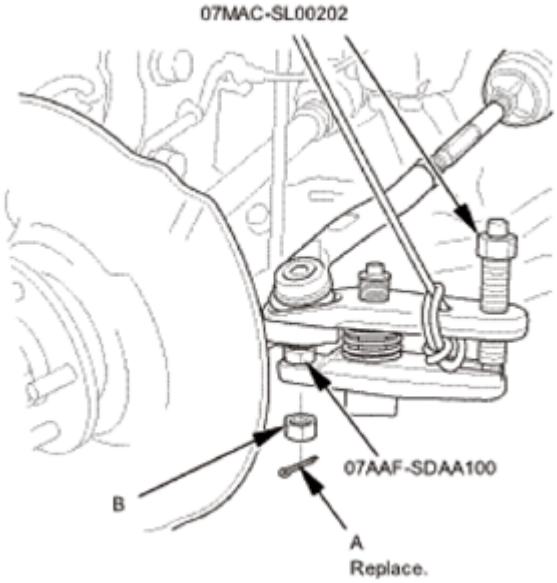

Fig. 190: Disconnecting Tie-Rod End Ball Joint

GETtheMANUALS.org

9. Front Lower Ball Joint knuckle side - Disconnection
    1. Remove the lock pin (A).
    2. Remove the castle nut (B).
    3. Disconnect the lower ball joint (C) from the knuckle.

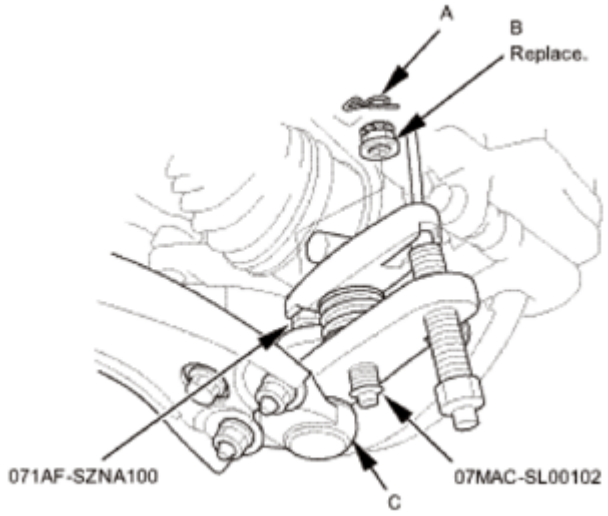

Fig. 191: Disconnecting Lower Ball Joint From Knuckle

10. Front Knuckle/Hub Assembly
    1. Remove the damper pinch bolts (A) and the self-locking nuts (B).
    2. Pull the knuckle (C) outward, and separate the outboard joint (D) from the front hub, then remove the knuckle/hub.

NOTE: **Do not pull the driveshaft end outward. The inner driveshaft inboard joint may come apart.**

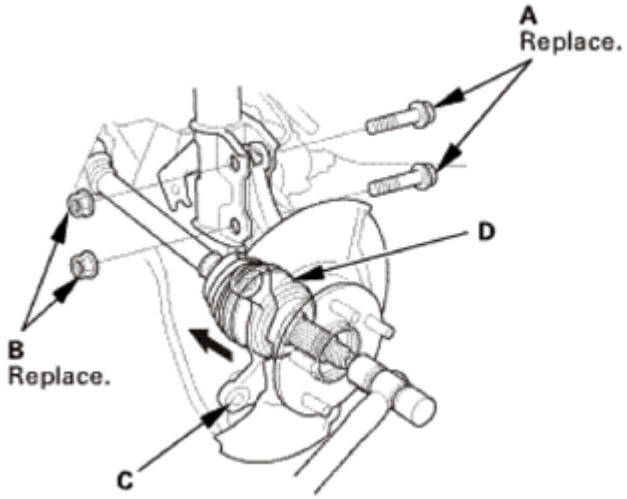

GETtheMANUALS.org

Fig. 192: Pulling Knuckle Outward

11. Front Wheel Hub
    1. Separate the hub (A) from the knuckle (B).

NOTE: Be careful not to damage or deform the splash guard (C).

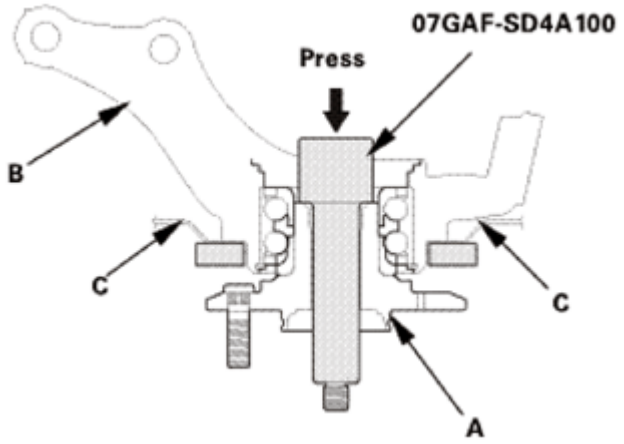

Fig. 193: Separating Hub From Knuckle

    2. Press out the wheel bearing inner race (A) of the hub (B).

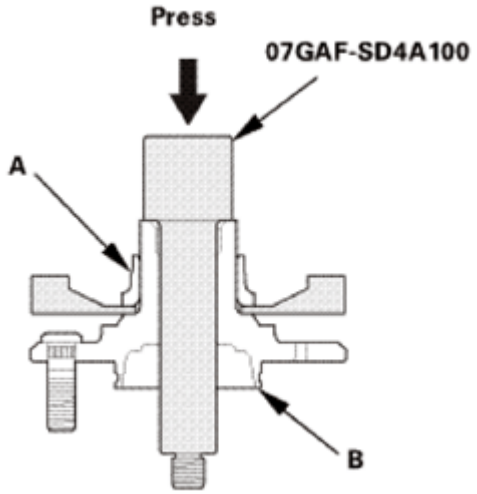

Fig. 194: Pressing Out Wheel Bearing Inner Race Of Hub

12. Front Splash Guard and Snap Ring
    1. Remove the splash guard (A).
    2. Remove the snap ring (B).

GETtheMANUALS.org

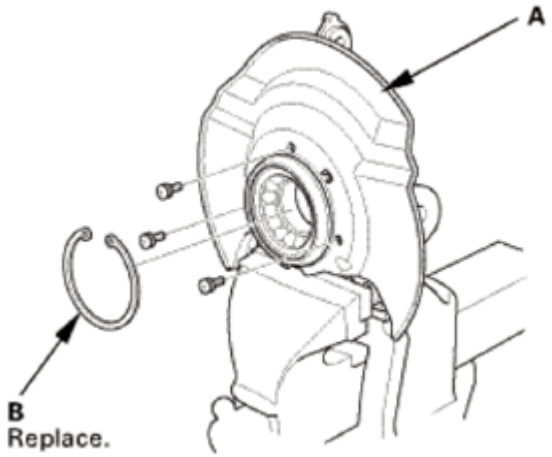

Fig. 195: Identifying Splash Guard And Snap Ring

13. Front Wheel Bearing
    1. Press the wheel bearing (A) out of the knuckle (B).

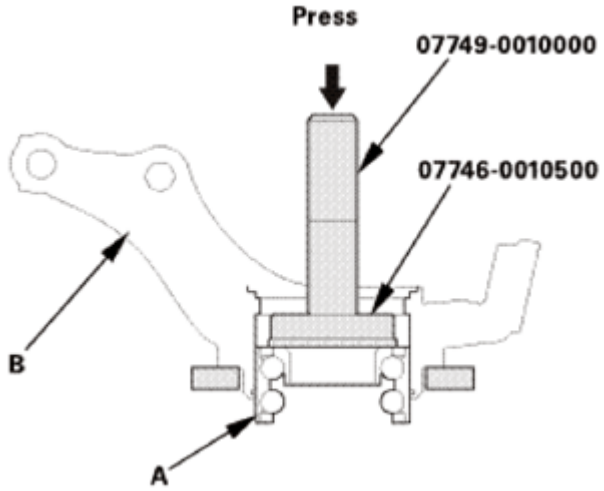

Fig. 196: Pressing Wheel Bearing Out Of Knuckle

14. LEFT FRONT WHEEL BOLT
    1. Separate the wheel bolt (A) from the hub (B) using a hydraulic press. Support the hub with hydraulic press attachments (C) or equivalent tools.

GETtheMANUALS.org

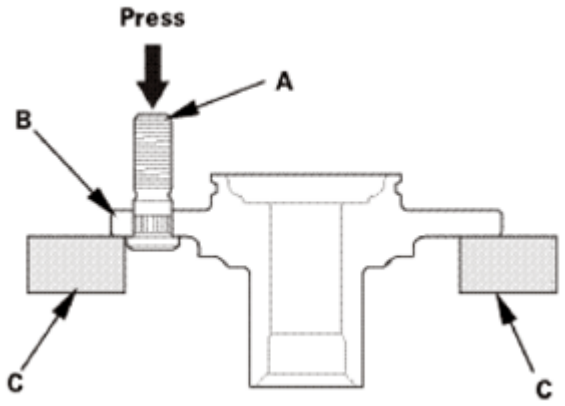

Fig. 197: Separating Wheel Bolt From Hub Using Hydraulic Press

INSTALLATION

NOTE: **If you cannot tighten the wheel nut to the specified torque when installing the wheel, replace the front hub bearing unit as an assembly.**

1. LEFT FRONT WHEEL BOLT
    1. Insert the new wheel bolt (A) into the hub (B).

    NOTE:
    - **Before installing the new wheel bolt, clean the mating surfaces on the bolt and the hub.**
    - **Degrease the area around the wheel bolt and the threaded section of the nut.**

    2. Adjust the measurement (C) with the washers (P/N 94101-12800 or equivalent) (D).

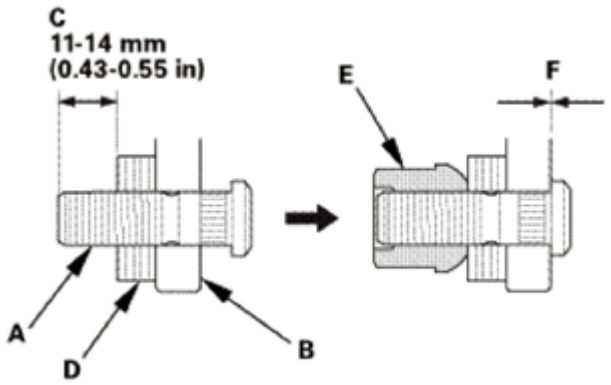

Fig. 198: Identifying Gap Between Bolt And Hub

    3. Install a nut (P/N 90304-SC2-000 or equivalent) (E) hand-tight.

    NOTE:

GETtheMANUALS.org

- **Make sure the wheel bolt is installed vertically to the hub disc surface.**
- **Do not install the nut and the washers that have been used as tools on a vehicle.**

4. Tighten the nut.

NOTE:

- **Do not exceed the maximum torque limit.**
- **Make sure there is no gap (F) between the bolt and the hub.**

Limited torque: 108 N.m (11.0 kgf.m, 80 lbf.ft) max .

NOTE: **If you cannot tighten the wheel nut to the specified torque when installing the wheel, replace the rear hub bearing unit as an assembly.**

2. Front Wheel Bearing
   1. Wash the knuckle and the hub thoroughly in high flash point solvent before reassembly.
   2. Press a new wheel bearing (A) into the knuckle (B).

NOTE:

- **Install the wheel bearing with the wheel speed sensor magnetic encoder (C) (brown color), toward the inside of the knuckle.**
- **Keep the wheel bearing and magnetic encoder away from any magnetic field. The encoder can be damaged or erased.**

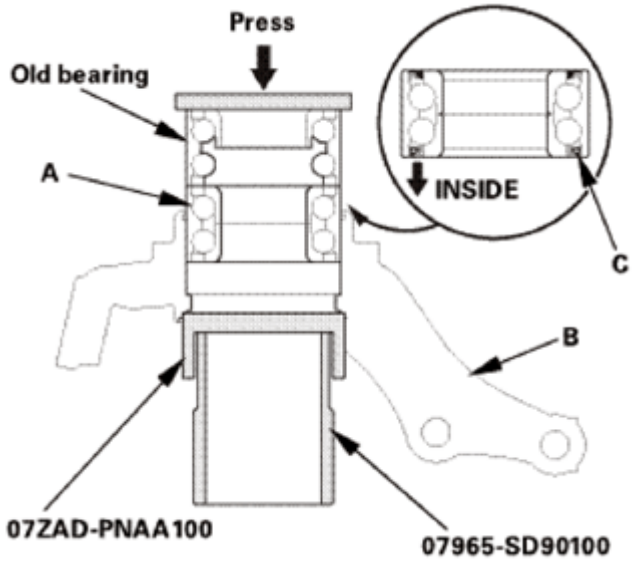

Fig. 199: Pressing Wheel Bearing Into Knuckle

GETtheMANUALS.org

3. Front Splash Guard and Snap Ring
    1. Install the new snap ring (A).
    2. Install the splash guard (B).

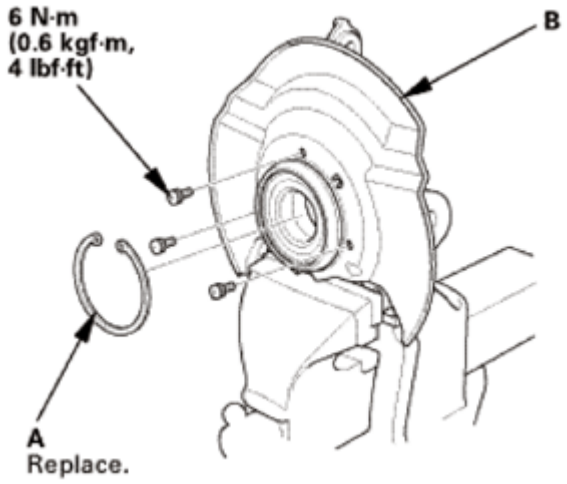

Fig. 200: Identifying Splash Guard, Snap Ring And Mounting Bolts With Torque Specification

4. Front Wheel Hub
    1. Install the hub (A) onto the knuckle (B).

NOTE: Be careful not to damage the splash guard (C).

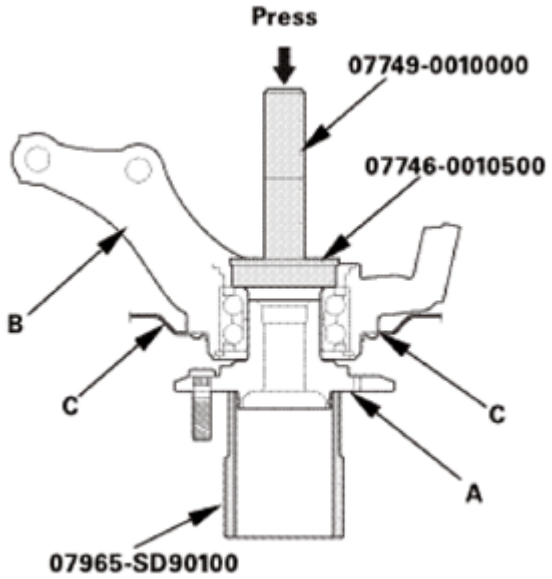

Fig. 201: Installing Hub Onto Knuckle

5. Front Knuckle/Hub Assembly

GETtheMANUALS.org

1. Install the knuckle/hub (A).

NOTE: **Apply grease to the mating surfaces of the wheel bearing and the driveshaft outboard joint.**

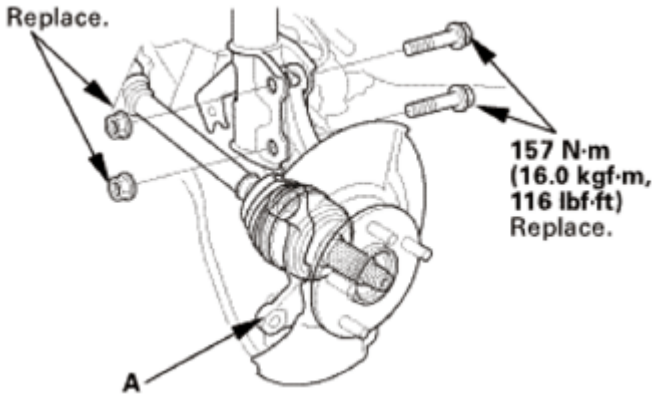

Fig. 202: Identifying Knuckle/Hub And Mounting Bolts And Nuts With Torque Specification

6. Front Lower Ball Joint knuckle side - Reconnection
   1. Connect the lower ball joint (A) to the knuckle.
   2. Install the new castle nut (B).

NOTE: **Torque the castle nut to the lower torque specification, then tighten it only far enough to align the slot with the ball joint pin hole. Do not align the castle nut by loosening it.**

   3. Install the lock pin (C) as shown.

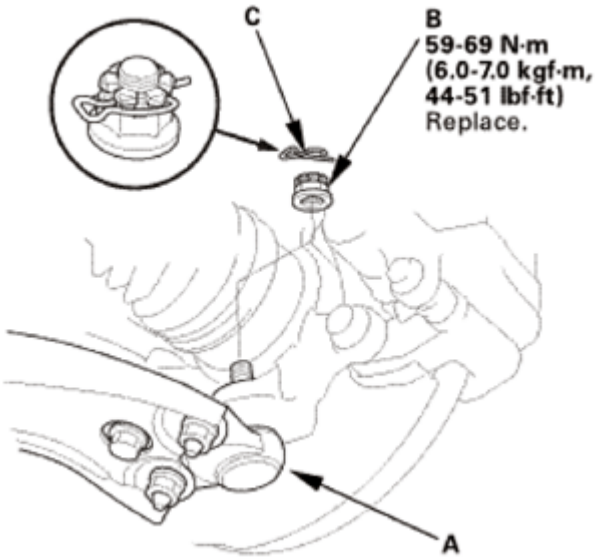

GETtheMANUALS.org

Fig. 203: Identifying Lock Pin, Lower Ball Joint And Castle Nut With Torque Specification

7. Tie-Rod End Ball Joint - Reconnection
    1. Connect the tie-rod end ball joint.
    2. Install the nut (A).
    3. Install the cotter pin (B) as shown.

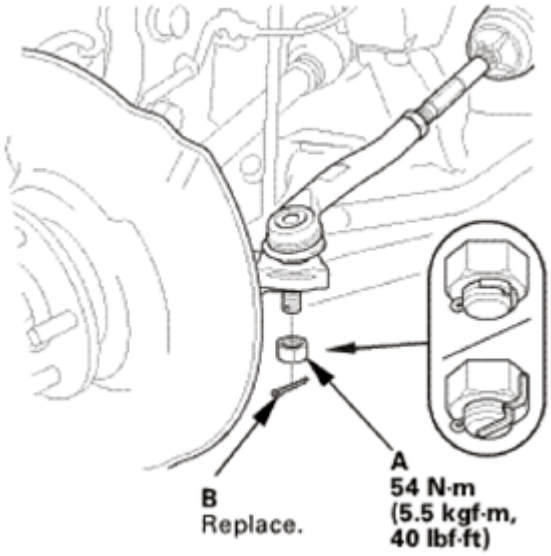

Fig. 204: Identifying Tie-Rod End Ball Joint, Cotter Pin And Nut With Torque Specification

8. Front Brake Disc
    1. Install the brake disc (A).

NOTE: **Before installing the brake disc, clean the mating surfaces between the front hub and the inside of the brake disc.**

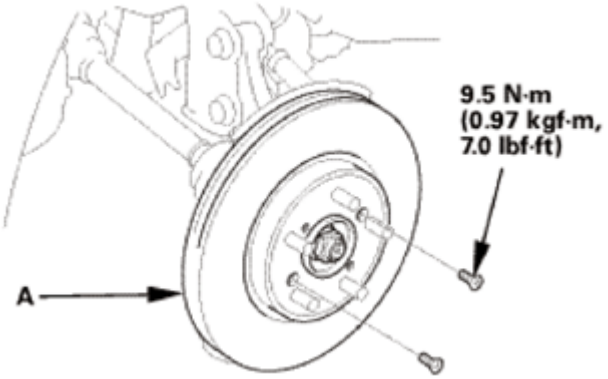

Fig. 205: Identifying Brake Disc And Bolts With Torque Specification

9. Driveshaft Spindle Nut, Front Left

GETtheMANUALS.org

1. Apply a small amount of engine oil to the seating surface of a new spindle nut (A).
2. Install the spindle nut.
3. Use a drift to stake the spindle nut shoulder (B) against the driveshaft.

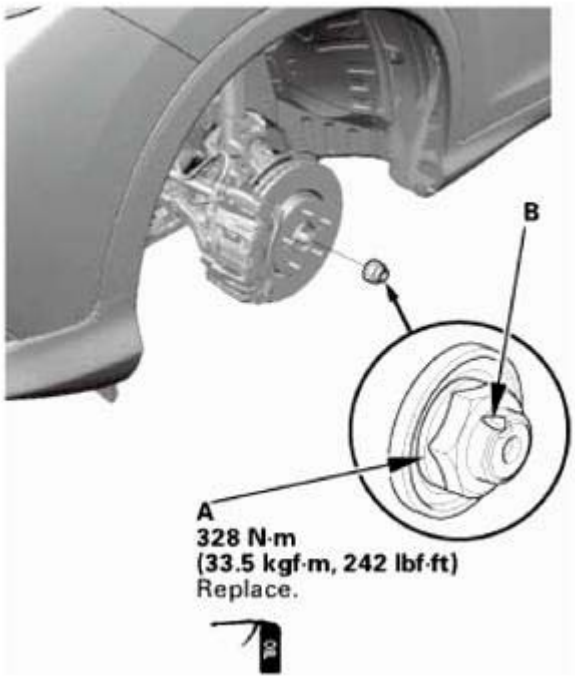

Fig. 206: Identifying Spindle Nut Shoulder And Spindle Nut With Torque Specification

10. Front Wheel Speed Sensor - Move
    1. Install the wheel speed sensor (A).

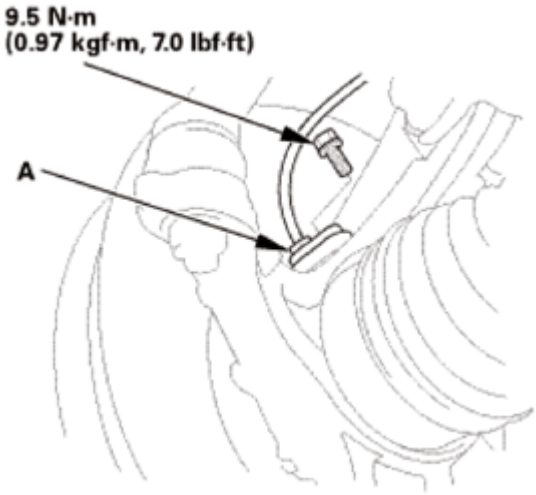

Fig. 207: Identifying Wheel Speed Sensor And Mounting Bolt With Torque Specification

11. Front Brake Caliper - Reattach

GETtheMANUALS.org

1. Install the caliper assembly (A).
2. Install the brake hose mounting bolt (B).

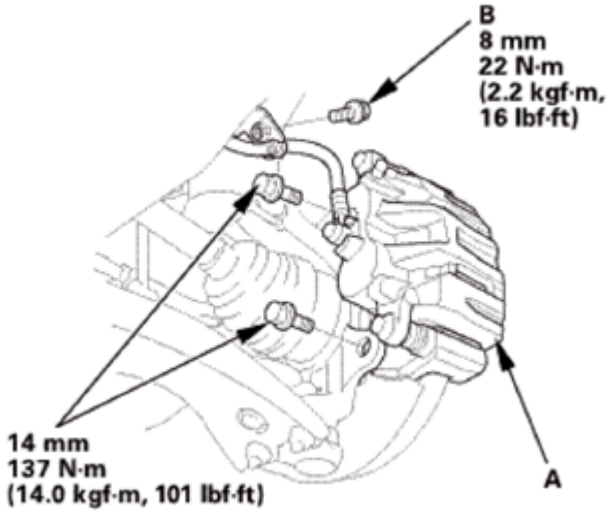

Fig. 208: Identifying Caliper Assembly And Brake Hose Mounting Bolt With Torque Specification

12. Front Wheel
    1. Install the front wheel.

NOTE: **Before installing the wheel, clean the mating surfaces between the brake disc and the inside of the wheel.**

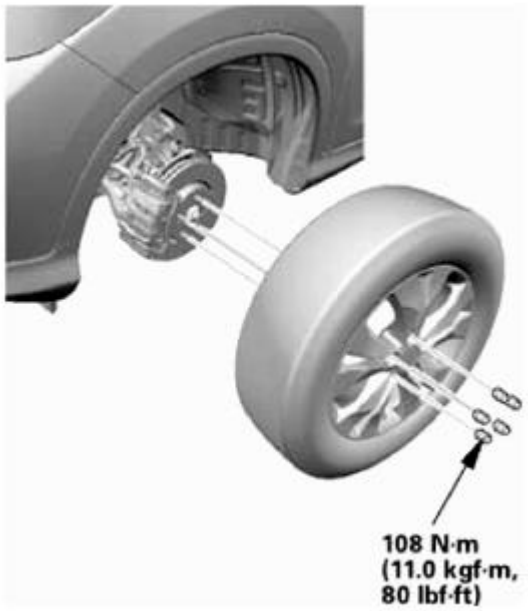

Fig. 209: Identifying Front Wheel And Studs With Torque Specification

GETtheMANUALS.org

13. Pre-Alignment Checks

    For proper inspection and adjustment of the wheel alignment, do these checks:

    1. Release the parking brake to avoid an incorrect measurement.
    2. Make sure the suspension is not modified.
    3. Make sure the fuel tank is full, and that the spare tire, the jack, and the tools are in place on the vehicle.
    4. Check the tire size and tire pressure according to tire information.
    5. Set the steering column to the middle tilt position and telescopic position.
14. Caster - Inspection

    Use commercially available computerized four wheel alignment equipment to measure wheel alignment (caster, camber, toe, and turning angle). Follow the equipment manufacturer's instructions.

    1. Check the caster angle.

       Caster angle:

       2WD:

       With 16 inch wheel: 2 ° 44 '±30 '

       Without 16 inch wheel: 2 ° 50 '±30 '

       AWD/4WD:

       With 16 inch wheel: 2 ° 38 '±30 '

       Without 16 inch wheel: 2 ° 44 '±30 '

       - If the measurement is within specifications, measure the front camber angle.
       - If the measurement is not within specifications, check for bent or damaged suspension components.
15. Camber - Inspection

    Use commercially available computerized four wheel alignment equipment to measure wheel alignment (caster, camber, toe, and turning angle). Follow the equipment manufacturer's instructions.

    1. Check the camber angle.

       Camber angle:

       2WD:

GETtheMANUALS.org

Front:

With 16 inch wheel: -0 ° 01 '±1 ° 00 '

Without 16 inch wheel: -0 ° 10 '±1 ° 00 '

(Maximum difference between the front right and left side: 1 °00 ')

Rear:

With 16 inch wheel: -1 ° 06 '±45 '

Without 16 inch wheel: -1 ° 12 '±45 '

(Maximum difference between the front right and left side: 0 °45 ')

AWD/4WD:

Front:

With 16 inch wheel: -0 ° 08 '±1 ° 00 '

Without 16 inch wheel: 0 ° 00 '±1 ° 00 '

(Maximum difference between the front right and left side: 1 °00 ')

Rear:

With 16 inch wheel: -0 ° 50 '±45 '

Without 16 inch wheel: -1 ° 00 '±45 '

(Maximum difference between the front right and left side: 0 °45 ')

- If the measurement is within specification, measure the toe-in.
- If the measurement for the front camber is not within the specification, go to front camber adjustment.
- If the measurement for the rear camber is not within the specification, check for bent or damaged suspension components.

16. Front Toe - Inspection

Use commercially available computerized four wheel alignment equipment to measure wheel alignment (caster, camber, toe, and turning angle). Follow the equipment manufacturer's instructions.

1. Set the steering column to the middle tilt position and telescopic positions.
2. Center the steering wheel spokes, and install a steering wheel holder tool.

GETtheMANUALS.org

3. Check the toe with the wheels pointed straight ahead.

   Front toe-in: 0±2 mm (0±0.08 in)

   - If adjustment is required, go to the front toe adjustment.
   - If no adjustment is required, remove the alignment equipment.

17. Turning Angle - Inspection

Use commercially available computerized four wheel alignment equipment to measure wheel alignment (caster, camber, toe, and turning angle). Follow the equipment manufacturer's instructions.

1. Turn the wheel right and left while applying the brake, and measure the turning angle of both wheels.

   Turning angle:

   2WD:

   Inward:

   With 16 inch wheel: 36 ° 29 '±2 °

   Without 16 inch wheel: 36 ° 13 '±2 °

   Outward (reference):

   With 16 inch wheel: 31 ° 13 '

   Without 16 inch wheel: 31 ° 02 '

   AWD/4WD:

   Inward:

   With 16 inch wheel: 36 ° 48 '±2 °

   Without 16 inch wheel: 36 ° 30 '±2 °

   Outward (reference):

   With 16 inch wheel: 31 ° 18 '

   Without 16 inch wheel: 31 ° 12 '

GETtheMANUALS.org

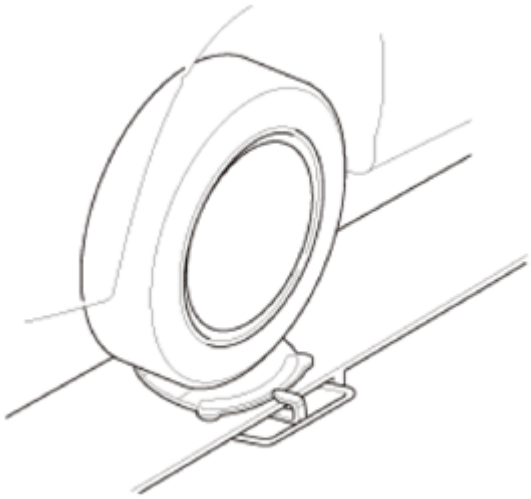

Fig. 210: Measuring Wheel Alignment (Caster, Camber, Toe And Turning Angle)

2. If the measurement is not within the specifications, even up both sides of the tie-rod threaded section length while adjusting the front toe.
3. If it is correct, but the turning angle is not within the specifications, check for bent or damaged suspension components.

18. HDS DLC - Connection
    1. Connect the HDS to the data link connector (DLC) (A) located under the driver's side of the dashboard.
    2. Turn the ignition switch to ON (II).
    3. Make sure the HDS communicates with the vehicle. If it does not communicate, go to the DLC circuit troubleshooting.

Fig. 211: Identifying Data Link Connector (DLC) Located Under Driver's Side Of Dashboard

19. VSA Sensor Neutral Position - Memorization

GETtheMANUALS.org

1. Park the vehicle on a flat and level surface, with the steering wheel in the straight ahead position.
2. Select VSA ADJUSTMENT, then select ALL SENSORS with the HDS, and follow the screen prompts.

NOTE: See the HDS Help menu for specific instructions.

20. Steering Angle Sensor Neutral Position - Clear
    1. Select EPS ADJUSTMENT, then select EPS STEERING ANGLE SENSOR VALUE CLEAR and follow the screen prompts on the HDS.

NOTE: See the HDS Help menu for specific instructions.

WHEEL BEARING END PLAY INSPECTION

REMOVAL

1. Vehicle Lift
    1. Raise the vehicle on a lift, and make sure it is securely supported.
2. Front Wheel - Both Side
    1. Remove both front wheels.

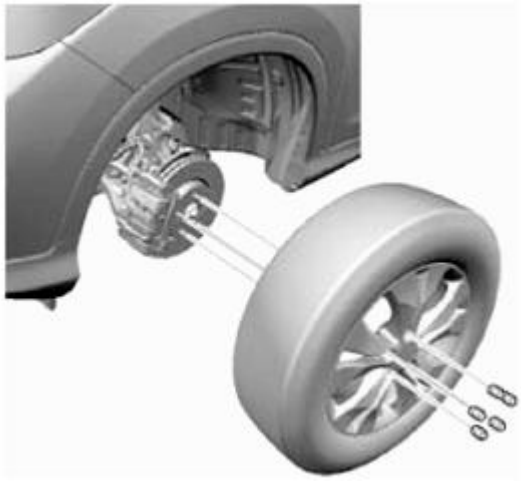

Fig. 212: Identifying Front Wheel And Studs

3. Rear Wheel - Both Side
    1. Remove both rear wheels.

GETtheMANUALS.org

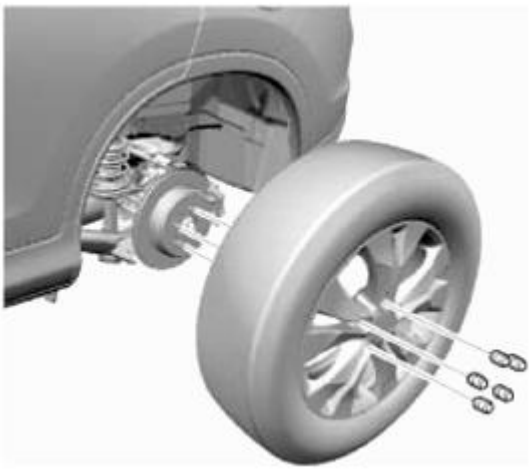

Fig. 213: Identifying Rear Wheel And Studs

INSPECTION

1. Wheel Bearing End Play - Inspection
    1. Install suitable flat washers (A).

Front

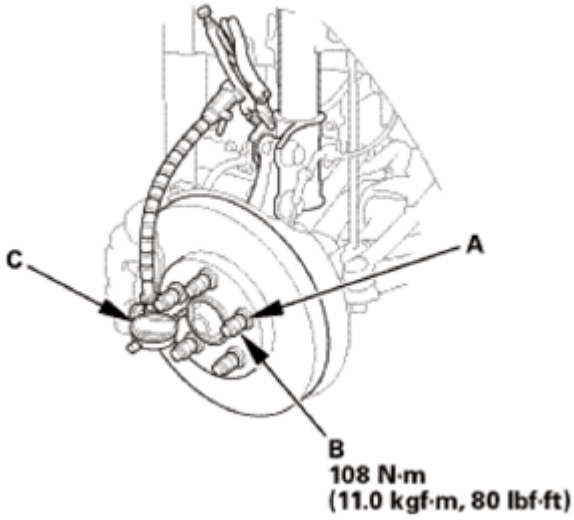

Fig. 214: Measuring Bearing End Play While Moving Brake Disc Inward And Outward (Front)

Rear

GETtheMANUALS.org

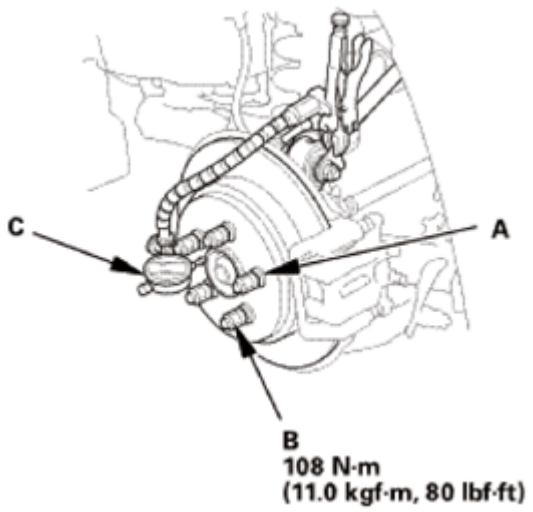

Fig. 215: Measuring Bearing End Play While Moving Brake Disc Inward And Outward (Rear)

2. Install the wheel nuts (B).
3. Attach the dial gauge (C).
4. Place the dial gauge against the hub flange.
5. Measure the bearing end play while moving the brake disc inward and outward.

   Wheel bearing end play:

   Front/Rear: 0-0.05 mm (0-0.0020 in)

6. If the bearing end play measurement is more than the standard, replace the wheel bearing or the hub bearing unit.

INSTALLATION

1. Rear Wheel - Both Side
   1. Install both rear wheels.

      NOTE: Before installing the wheel, clean the mating surfaces between the brake disc/drum and the inside of the wheel.

GETtheMANUALS.org

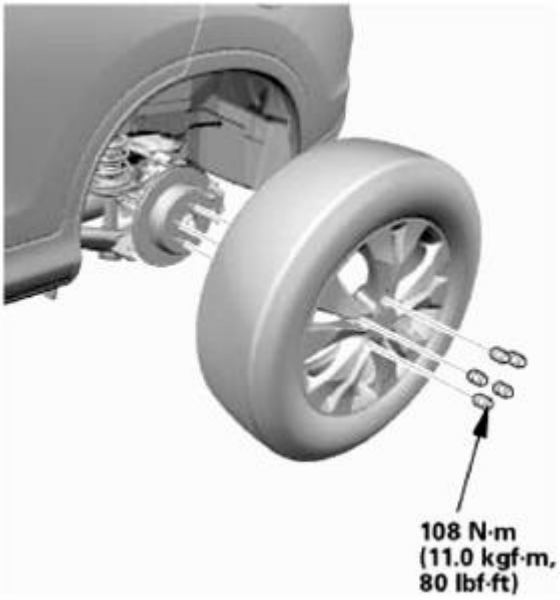

Fig. 216: Identifying Rear Wheels And Studs With Torque Specification

2. Front Wheel - Both Side
    1. Install both front wheels.

NOTE: **Before installing the wheel, clean the mating surfaces between the brake disc and the inside of the wheel.**

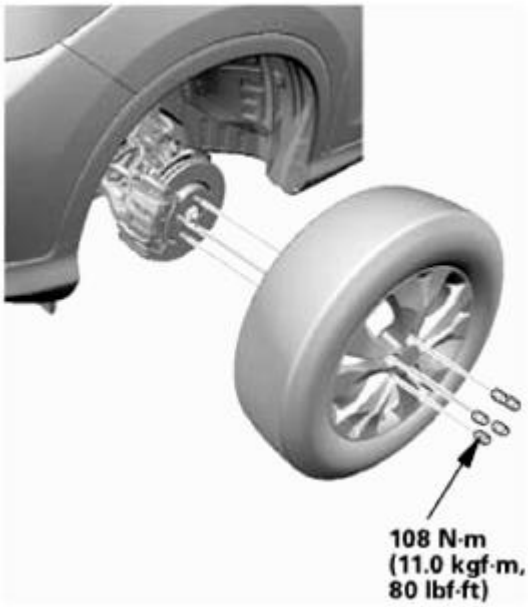

Fig. 217: Identifying Front Wheels And Studs With Torque Specification

GETtheMANUALS.org

A/F SENSOR REMOVAL AND INSTALLATION

SPECIAL TOOLS DESCRIPTION

Image	Description/Tool Number
	O2 Sensor Socket Wrench Snap-on SWR2 or O2 Sensor Wrench Snap-on YA8875, commercially available

REMOVAL

1. A/F Sensor
    1. Remove the A/F sensor (A).

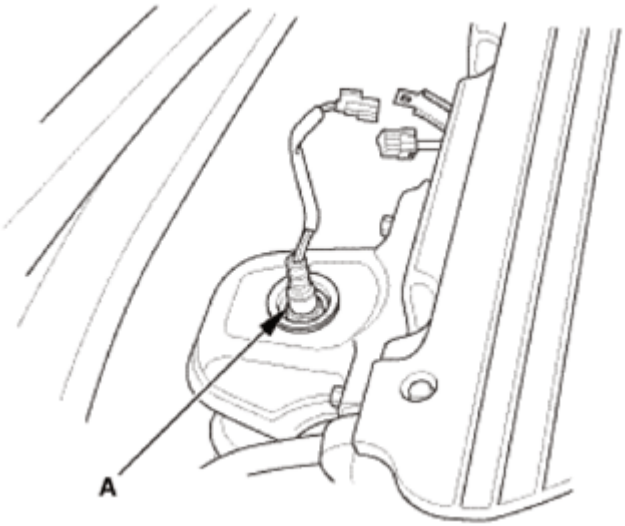

Fig. 1: Identifying A/F Sensor

GETtheMANUALS.org

Courtesy of AMERICAN HONDA MOTOR CO., INC.

INSTALLATION

1. A/F Sensor
    1. Install the A/F sensor (A).

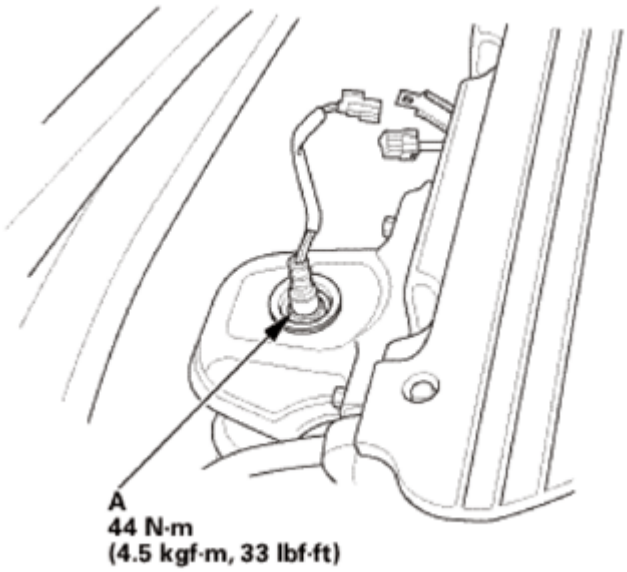

Fig. 2: Identifying A/F Sensor With Torque Specifications
Courtesy of AMERICAN HONDA MOTOR CO., INC.

ACCELERATOR PEDAL MODULE REMOVAL AND INSTALLATION

REMOVAL

1. Accelerator Pedal Module
    1. Disconnect the APP sensor connector.
    2. Remove the accelerator pedal module (A).

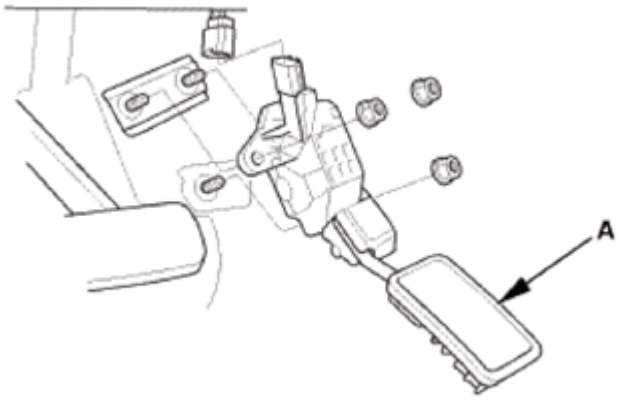

GETtheMANUALS.org

Fig. 3: Identifying Accelerator Pedal Module
Courtesy of AMERICAN HONDA MOTOR CO., INC.

INSTALLATION

1. Accelerator Pedal Module
    1. Install the accelerator pedal module (A).
    2. Connect the APP sensor connector.

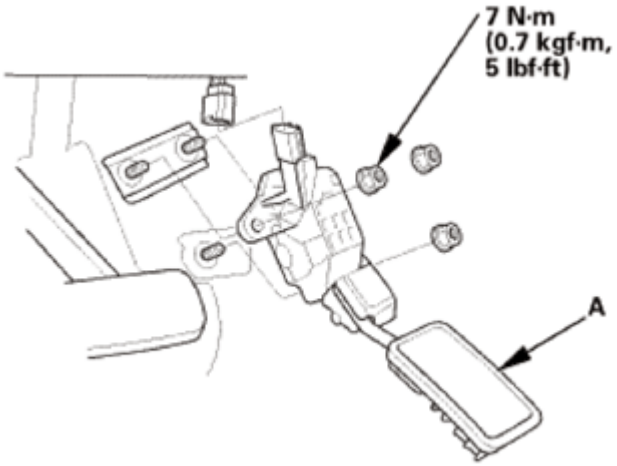

Fig. 4: Identifying Accelerator Pedal Module And Bolts With Torque Specifications
Courtesy of AMERICAN HONDA MOTOR CO., INC.

AIR CLEANER ELEMENT REMOVAL, INSTALLATION, AND INSPECTION

REMOVAL

1. Air Cleaner Element
    1. Open the air cleaner cover (A).
    2. Remove the air cleaner element (B).

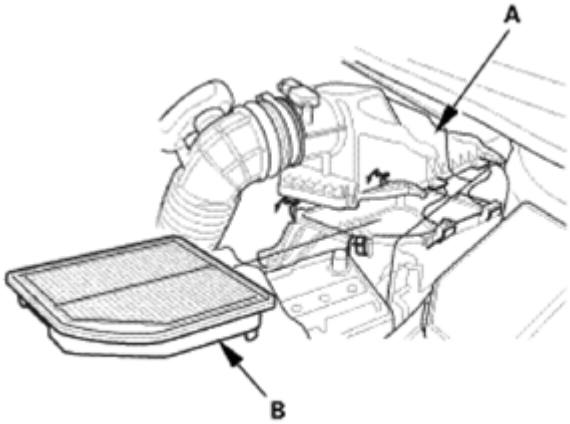

GETtheMANUALS.org

Fig. 5: Identifying Air Cleaner Cover And Element
Courtesy of AMERICAN HONDA MOTOR CO., INC.

INSPECTION

1. Air Cleaner Element - Inspection
    1. Check the air cleaner element for damage or clogging. If it is damaged or clogged, replace it.

    NOTE: Do not use compressed air to clean the air cleaner element.

    2. Clean and remove any debris from inside the air cleaner.

INSTALLATION

1. Air Cleaner Element
    1. Install the air cleaner element (A).
    2. Close the air cleaner cover (B).

    IF THE IDLE SPEED FLUCTUATES, DO THE IDLE SPEED INSPECTION .

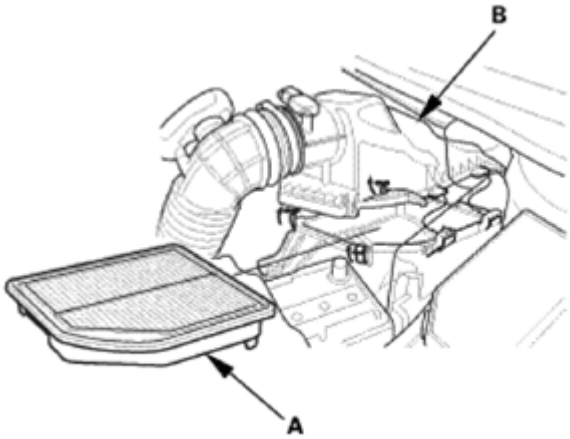

Fig. 6: Identifying Air Cleaner Element And Cleaner Cover
Courtesy of AMERICAN HONDA MOTOR CO., INC.

AIR CLEANER REMOVAL AND INSTALLATION

REMOVAL

1. Air Cleaner Assembly
    1. Disconnect the MAF sensor/IAT sensor connector (A).
    2. Remove the harness clamp (B).
    3. Disconnect the intake air duct (C) and the intake air pipe (D).
    4. Remove the air cleaner (E).

GETtheMANUALS.org

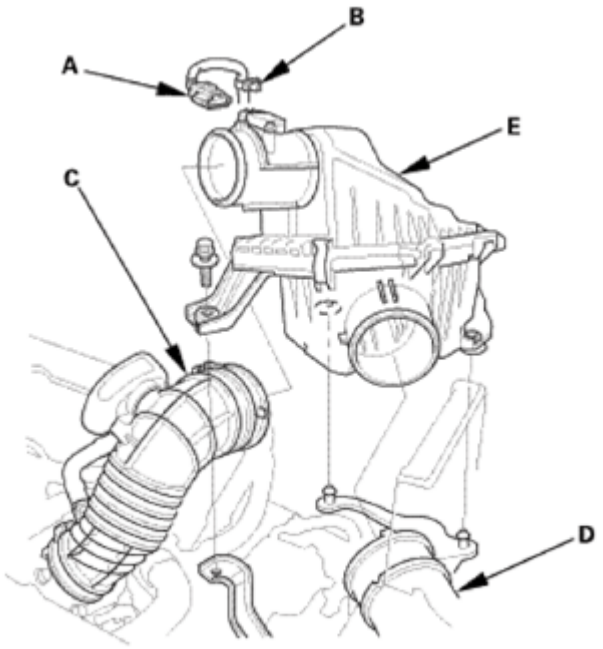

Fig. 7: Identifying MAF Sensor/IAT Sensor Connector, Harness Clamp, Intake Air Duct, Intake Air Pipe And Cleaner
Courtesy of AMERICAN HONDA MOTOR CO., INC.

INSTALLATION

1. Air Cleaner Assembly
    1. Install the air cleaner (A).
    2. Connect the intake air pipe (B) and the intake air duct (C).
    3. Install the harness clamp (D).
    4. Connect the MAF sensor/IAT sensor connector (E).

GETtheMANUALS.org

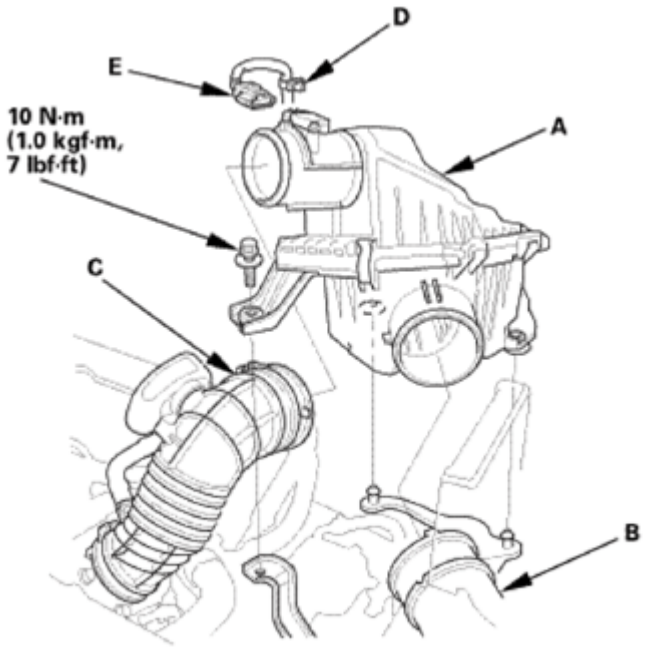

Fig. 8: Identifying MAF Sensor/IAT Sensor Connector, Harness Clamp, Intake Air Duct, Intake Air Pipe And Cleaner
Courtesy of AMERICAN HONDA MOTOR CO., INC.

APP SENSOR SIGNAL INSPECTION

INSPECTION

1. HDS DLC - Connection
    1. Connect the HDS to the data link connector (DLC) (A) located under the driver's side of the dashboard.
    2. Turn the ignition switch to ON (II).
    3. Make sure the HDS communicates with the vehicle. If it does not communicate, go to the DLC circuit troubleshooting.

GETtheMANUALS.org

Fig. 9: Identifying Data Link Connector (DLC)
Courtesy of AMERICAN HONDA MOTOR CO., INC.

2. APP Sensor Signal - Inspection

NOTE:

- **This procedure checks the APP sensor in its fully closed position. If it is in any other position, the APP sensor stores DTCs which are covered in other troubleshooting procedures.**
- **Check for Pending or Confirmed DTCs with the HDS before doing this procedure. If any DTCs are indicated, troubleshoot them first, then do this procedure.**
- **Press the accelerator pedal several times to check its operation. If it does not operate smoothly, check the pedal. If you find a problem, replace the accelerator pedal module.**

1. Make sure the accelerator pedal is not pressed, then check the APP SENSOR in the DATA LIST with the HDS.
   - If it is 0 %, the APP sensor is OK.
   - If it is not 0 %, update the PCM if it does not have the latest software, or substitute a known-good PCM, then go to next step.
2. With the accelerator pedal not pressed, check the APP SENSOR in the DATA LIST with the HDS.
   - If it is 0 %, the APP sensor is OK.
   - If it is not 0%, replace the accelerator pedal module, then recheck.

CATALYTIC CONVERTER INSPECTION

SPECIAL TOOLS DESCRIPTION

Image	Description/Tool Number

GETtheMANUALS.org

	O2 Sensor Socket Wrench Snap-on SWR2 or O2 Sensor Wrench Snap-on YA8875, commercially available

REMOVAL

1. Vehicle Lift
    1. Raise the vehicle on a lift, and make sure it is securely supported.
2. Front Splash Shield
    1. Remove the bolts (A), then remove the clips (B) that secure the front inner fender and the front splash shield (C) to the body.
    2. From under the front bumper (D), remove the clips (E).
    3. From under the body, remove the clips (F), then pull out the front splash shield.

GETtheMANUALS.org

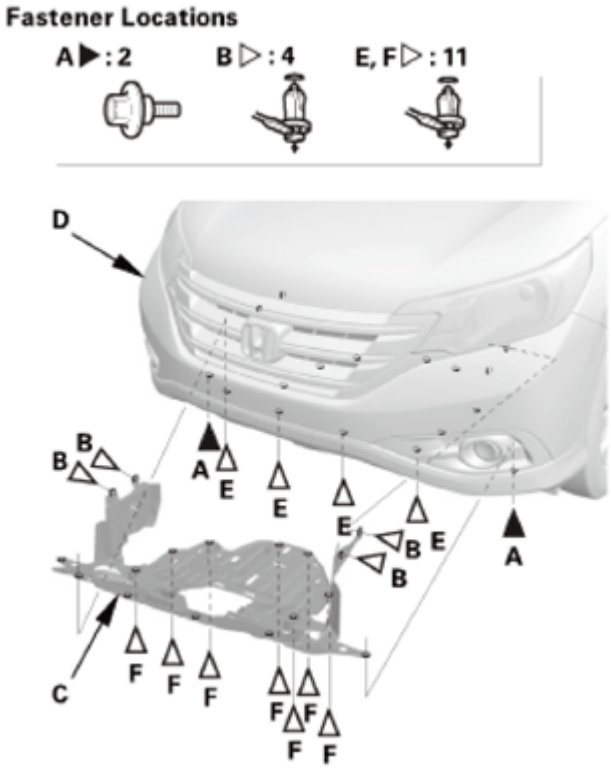

Fig. 10: Identifying Front Bumper, Clips And Front Splash Shield
Courtesy of AMERICAN HONDA MOTOR CO., INC.

3. Front Floor Undercover
    1. Remove the bolts (A) and the clips (B, C) securing the front floor undercover (D), then remove the front floor undercover.

GETtheMANUALS.org

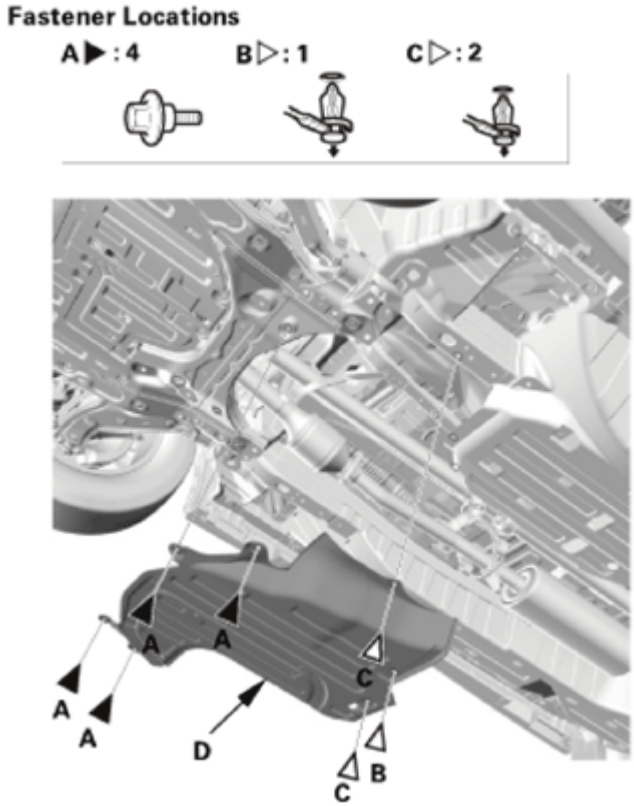

Fig. 11: Identifying Front Floor Undercover, Clips And Bolts
Courtesy of AMERICAN HONDA MOTOR CO., INC.

4. Both Windshield Wiper Arm Assemblies

NOTE: Set the wiper arms to the auto-stop position before removal.

1. Remove the caps (A) and nuts (B).
2. Remove the wiper arms (C).

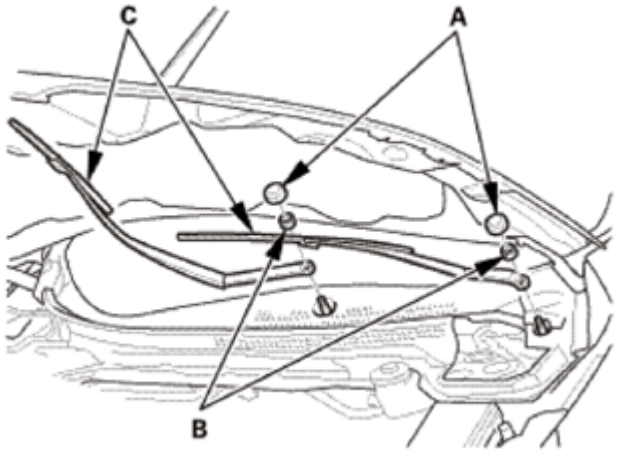

GETtheMANUALS.org

Fig. 12: Identifying Wiper Arms, Caps And Nuts
Courtesy of AMERICAN HONDA MOTOR CO., INC.

5. Front Fender Trim - Both Sides

NOTE: Repeat on the opposite side.

1. Remove the clips (A, B).
2. Pull up the front fender trim (C) by hand to detach the clips (D), then remove the trim.

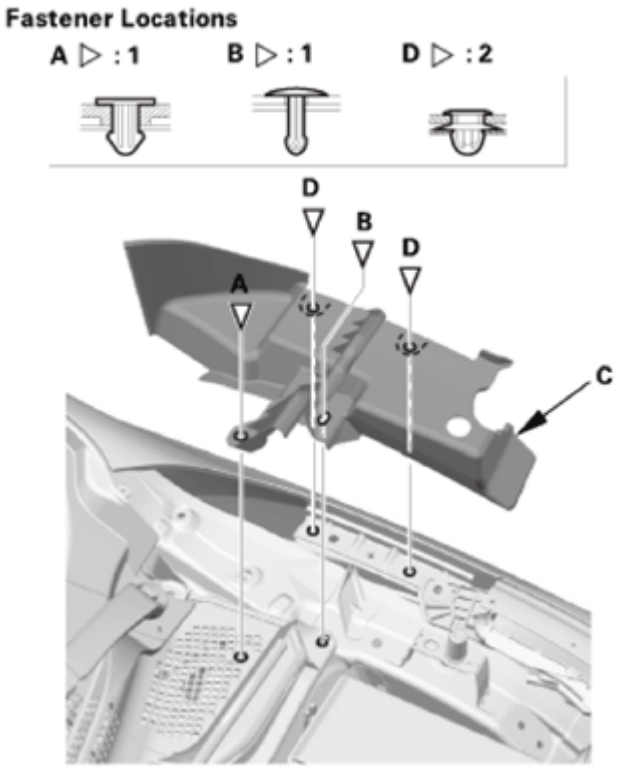

Fig. 13: Identifying Front Fender Trim And Clips
Courtesy of AMERICAN HONDA MOTOR CO., INC.

6. Cowl Top Cover - Both Sides

NOTE: Repeat this procedure on the opposite side.

1. Remove the clip (A).
2. Pull out the hood rear seal (B).
3. Detach the hooks, and remove the cowl top cover (C).

GETtheMANUALS.org

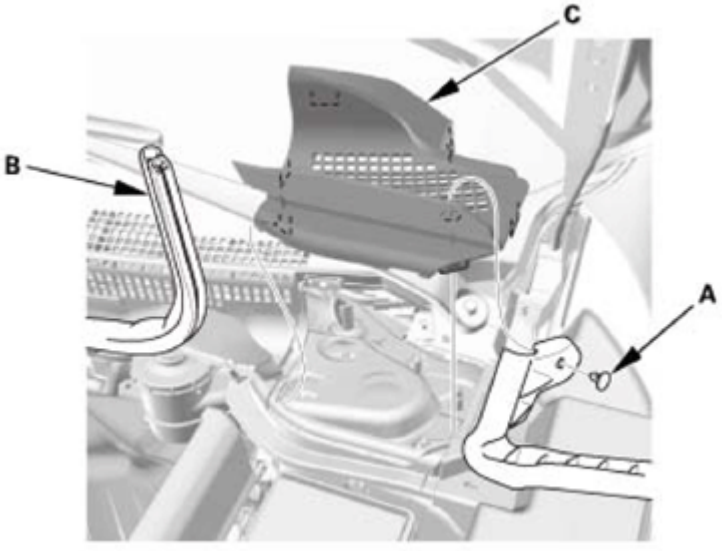

Fig. 14: Identifying Cowl Top Cover, Hood Rear Seal And Clip
Courtesy of AMERICAN HONDA MOTOR CO., INC.

7. Side Cowl Cover - Both Sides

NOTE: Repeat on the opposite side.

1. Detach the hook (A) at the inside of the cowl cover (B).
2. Release the hooks (C) from the cowl cover and the front fender (D), then remove the side cowl cover (E).
3. Right side; Detach the windshield washer tube.

GETtheMANUALS.org

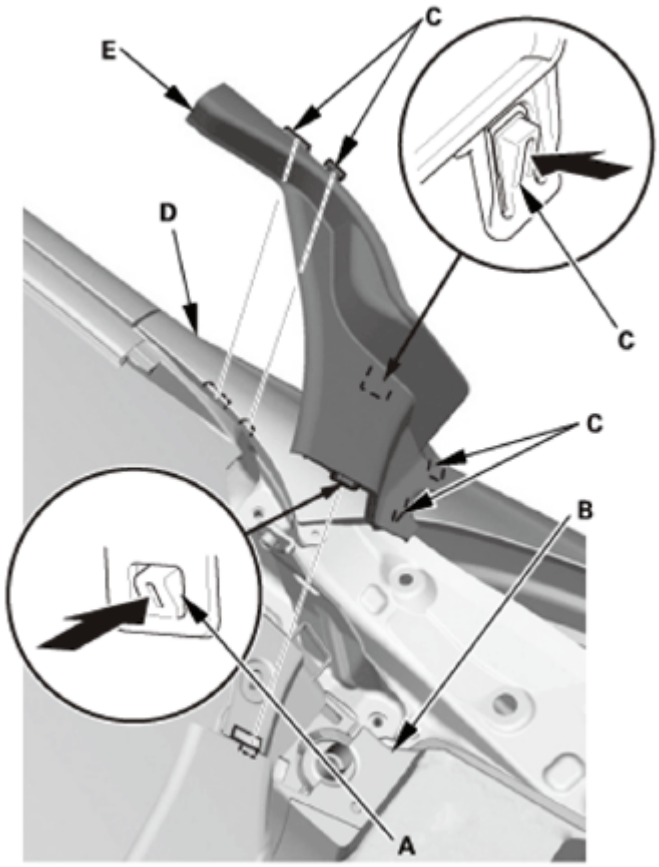

Fig. 15: Releasing Hooks
Courtesy of AMERICAN HONDA MOTOR CO., INC.

8. Center Cowl Cover
    1. Remove the clips (A).
    2. Carefully pull the center cowl cover (B) forward to release the hooks (C) from the windshield and the body.

GETtheMANUALS.org

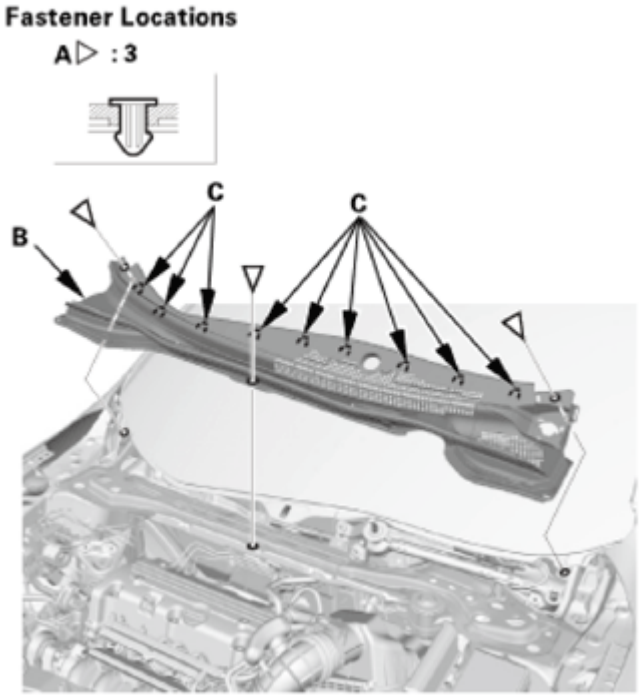

Fig. 16: Identifying Center Cowl Cover, Hooks And Clips
Courtesy of AMERICAN HONDA MOTOR CO., INC.

9. Under-Cowl Panel
    1. Disconnect the connector (A).
    2. Remove the bolts and the nuts, then remove the under-cowl panel (B).
    3. Remove the wire harness (C) from the under-cowl panel.

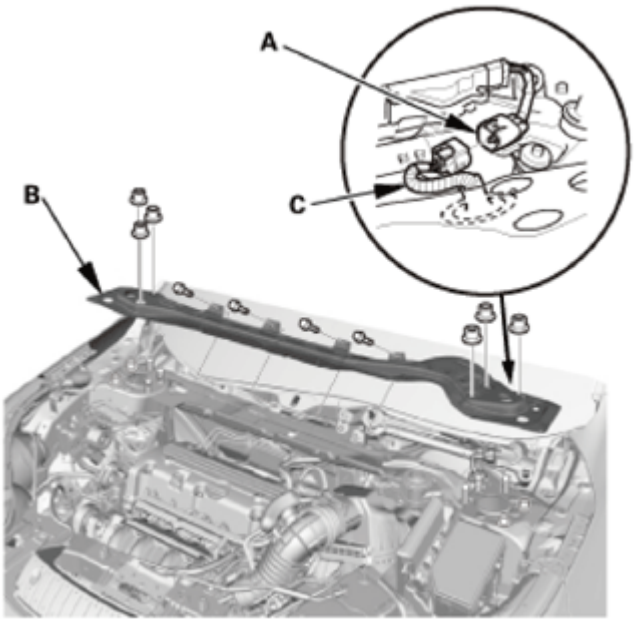

GETtheMANUALS.org

Fig. 17: Identifying Connector, Under-Cowl Panel And Wire Harness
Courtesy of AMERICAN HONDA MOTOR CO., INC.

10. A/F Sensor
    1. Remove the A/F sensor (A).

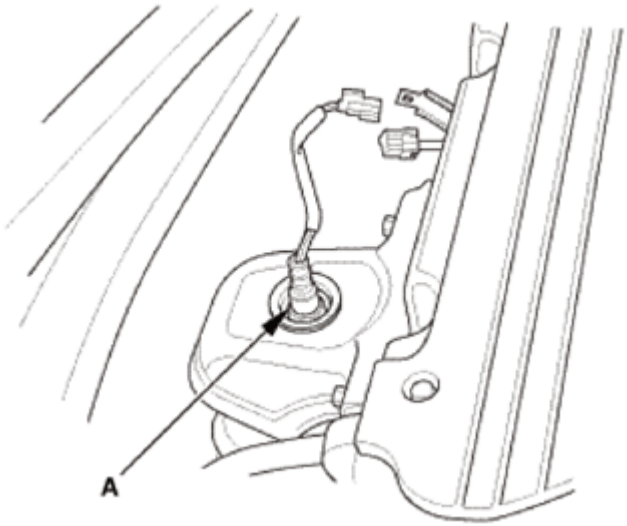

Fig. 18: Identifying A/F Sensor
Courtesy of AMERICAN HONDA MOTOR CO., INC.

11. Exhaust Chamber Cover
    1. Remove the exhaust chamber cover (A).

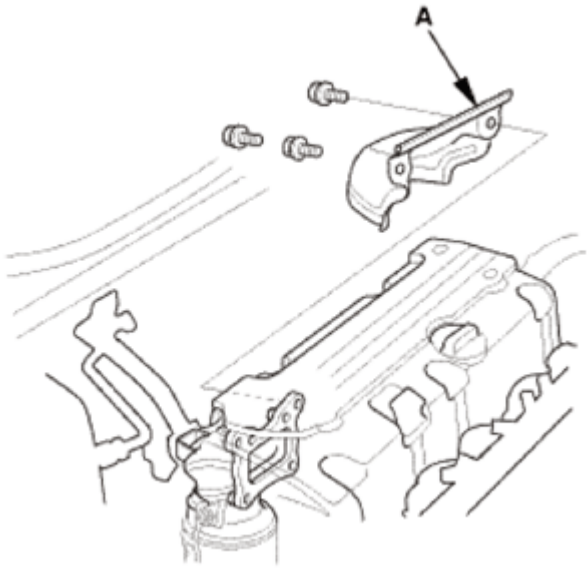

Fig. 19: Identifying Exhaust Chamber Cover
Courtesy of AMERICAN HONDA MOTOR CO., INC.

GETtheMANUALS.org

12. WU-TWC
    1. Separate the lower side of the WU-TWC (A) from the under-floor TWC (B).

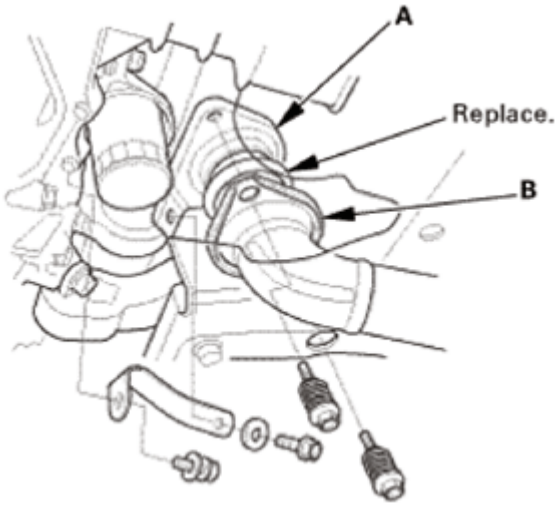

Fig. 20: Identifying WU-TWC And Under-Floor WU-TWC
Courtesy of AMERICAN HONDA MOTOR CO., INC.

    2. Remove the WU-TWC (C).
    3. Remove the WU-TWC cover (D).

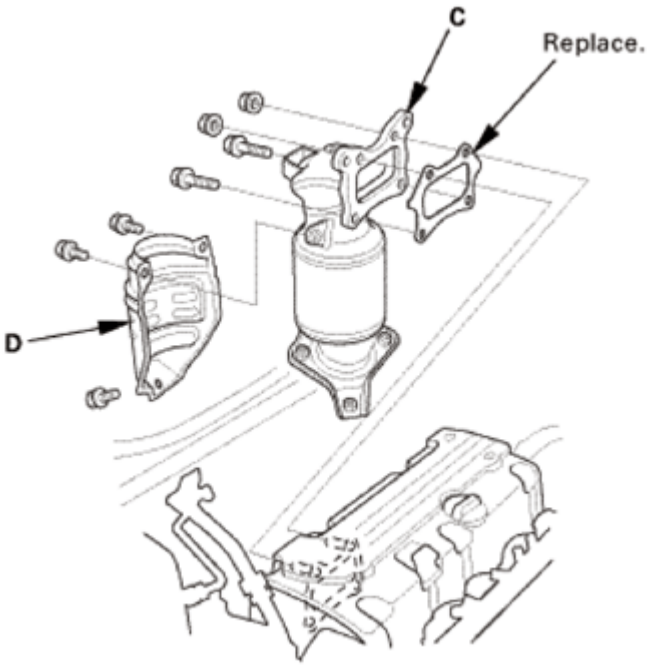

Fig. 21: Identifying WU-TWC Cover
Courtesy of AMERICAN HONDA MOTOR CO., INC.

GETtheMANUALS.org

13. Secondary HO2S
    1. Remove the secondary HO2S (A).

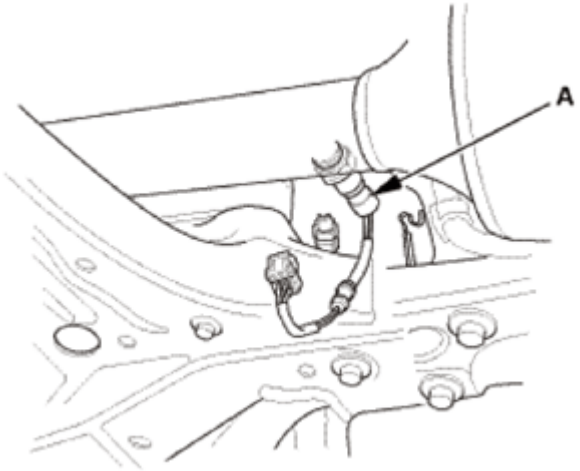

Fig. 22: Identifying Secondary HO2S
Courtesy of AMERICAN HONDA MOTOR CO., INC.

14. Under-Floor TWC
    1. Remove the under-floor TWC (A).

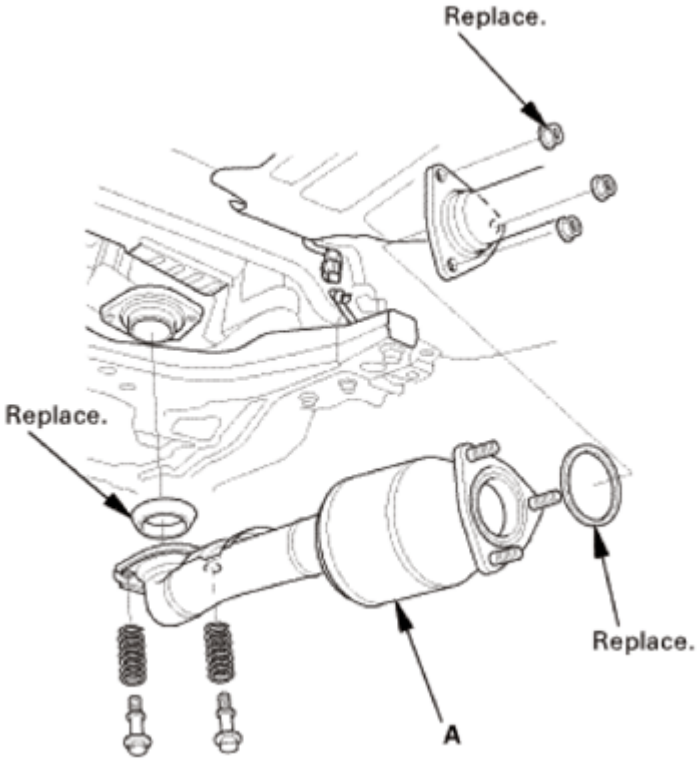

Fig. 23: Identifying Under-Floor TWC

GETtheMANUALS.org

Courtesy of AMERICAN HONDA MOTOR CO., INC.

INSPECTION

1. Catalytic Converter - Inspection
    1. If excessive exhaust system back-pressure is suspected, remove the WU-TWC and TWC from the vehicle. Using a flashlight (A), make a visual check for plugging, melting or cracking of the catalyst. Replace the TWC if any of the visible area is damaged or plugged.

WU-TWC

Fig. 24: Checking For Plugging, Melting Or Cracking Of Catalyst (WU-TWC)
Courtesy of AMERICAN HONDA MOTOR CO., INC.

TWC

GETtheMANUALS.org

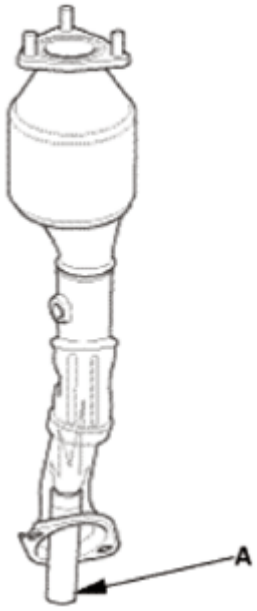

Fig. 25: Checking For Plugging, Melting Or Cracking Of Catalyst (TWC)
Courtesy of AMERICAN HONDA MOTOR CO., INC.

INSTALLATION

1. Under-Floor TWC
    1. Install the under-floor TWC (A) with new gaskets (B).

GETtheMANUALS.org

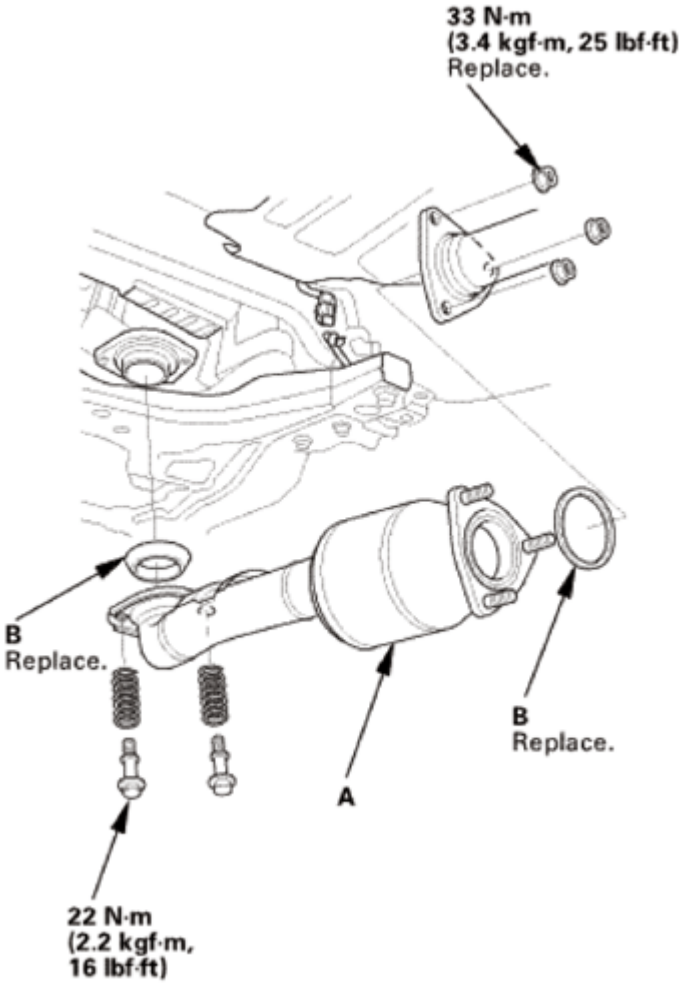

Fig. 26: Identifying Under-Floor TWC And Gaskets
Courtesy of AMERICAN HONDA MOTOR CO., INC.

2. Secondary HO2S
    1. Install the secondary HO2S (A).

GETtheMANUALS.org

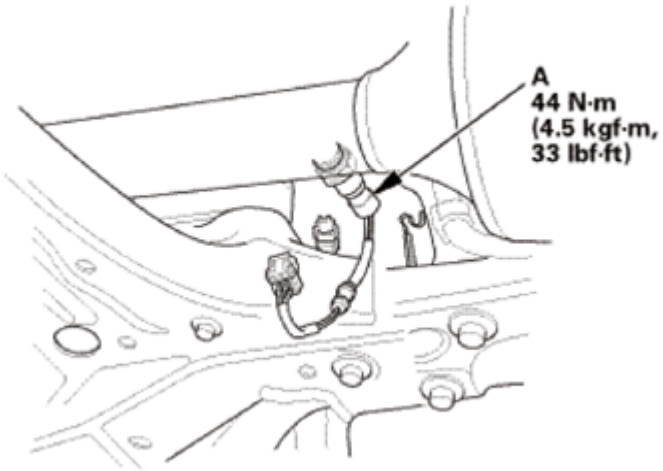

Fig. 27: Identifying Secondary HO2S With Torque Specifications
Courtesy of AMERICAN HONDA MOTOR CO., INC.

3. WU-TWC
    1. Install the upper side of the WU-TWC (A) with a new gasket (B).
    2. Install the WU-TWC cover (C).

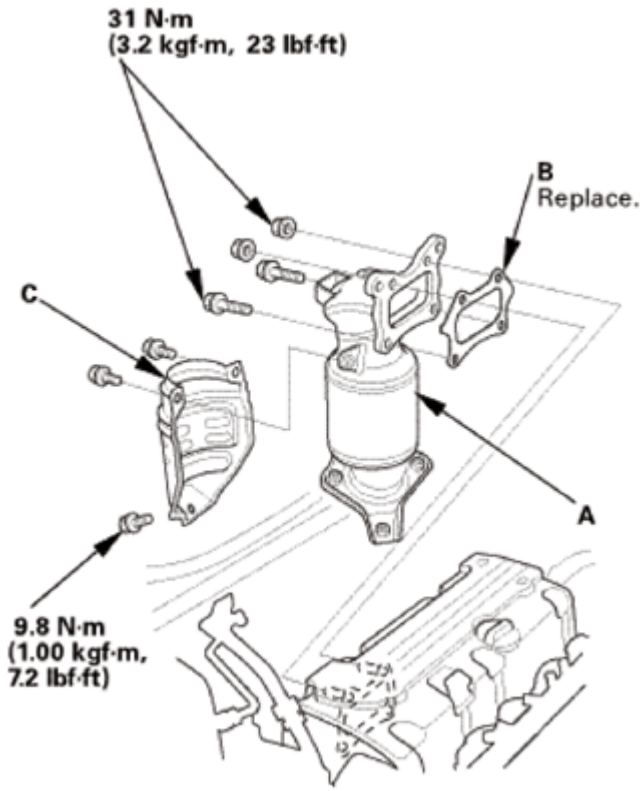

Fig. 28: Identifying WU-TWC Cover
Courtesy of AMERICAN HONDA MOTOR CO., INC.

GETtheMANUALS.org

3. Install the lower side of the WU-TWC with a new gasket (A).

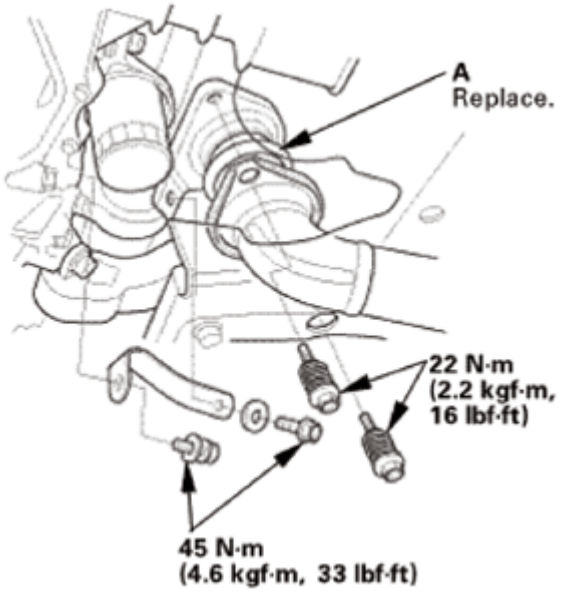

Fig. 29: Identifying WU-TWC And Gasket
Courtesy of AMERICAN HONDA MOTOR CO., INC.

4. Exhaust Chamber Cover
    1. Install the exhaust chamber cover (A).

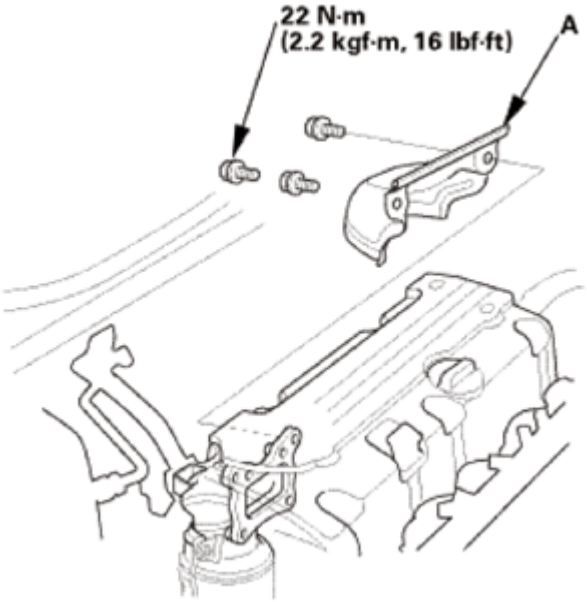

Fig. 30: Identifying Exhaust Chamber Cover
Courtesy of AMERICAN HONDA MOTOR CO., INC.

5. A/F Sensor

GETtheMANUALS.org

1. Install the A/F sensor (A).

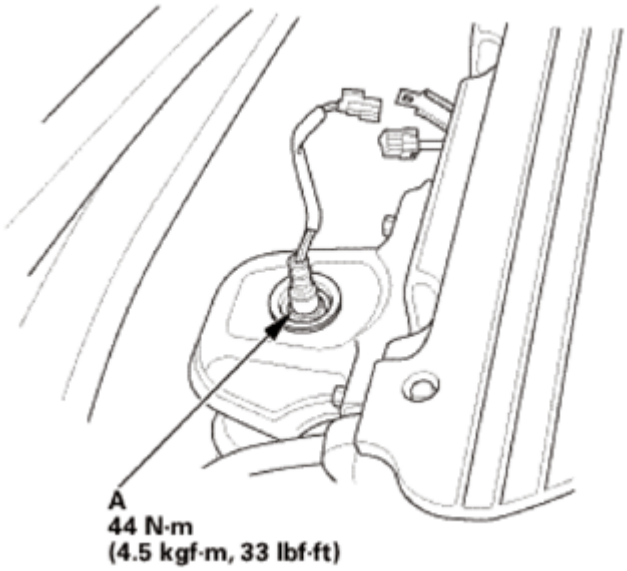

Fig. 31: Identifying A/F Sensor
Courtesy of AMERICAN HONDA MOTOR CO., INC.

6. Under-Cowl Panel
    1. Install the under-cowl panel (A), then install the bolts and the nuts.
    2. Install the wire harness (B) to the under-cowl panel.
    3. Connect the connector (C).

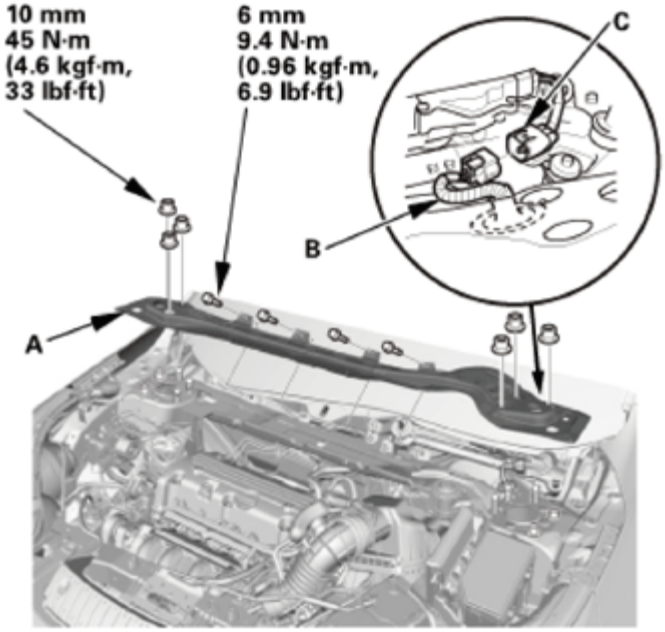

Fig. 32: Identifying Under-Cowl Panel, Wire Harness And Connector

GETtheMANUALS.org

Courtesy of AMERICAN HONDA MOTOR CO., INC.

7. Center Cowl Cover
    1. Install the center cowl cover (A). Make sure the clips (B) and the hooks (C) snap into place securely.

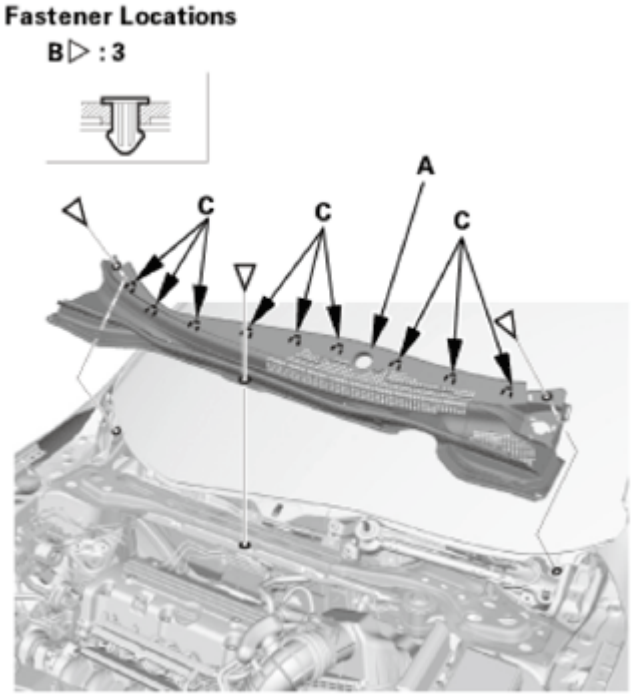

Fig. 33: Identifying Center Cowl Cover, Clips And Hooks
Courtesy of AMERICAN HONDA MOTOR CO., INC.

8. Side Cowl Cover - Both Sides

NOTE: Repeat on the opposite side.

1. Install the side cowl cover (A). Make sure the hooks (B) snap into place securely.
2. Right side; Install the windshield washer tube.

GETtheMANUALS.org

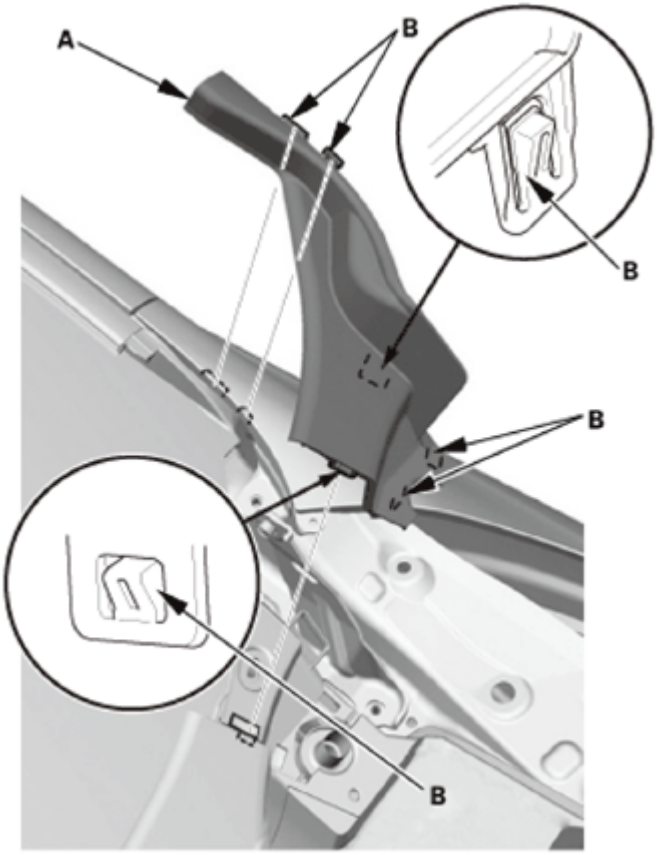

Fig. 34: Identifying Side Cowl Cover And Hooks
Courtesy of AMERICAN HONDA MOTOR CO., INC.

9. Cowl Top Cover - Both Sides

NOTE: Repeat this procedure on the opposite side.

1. Install the cowl top cover (A).
2. Install the hood rear seal (B).
3. Install the clip (C).

GETtheMANUALS.org

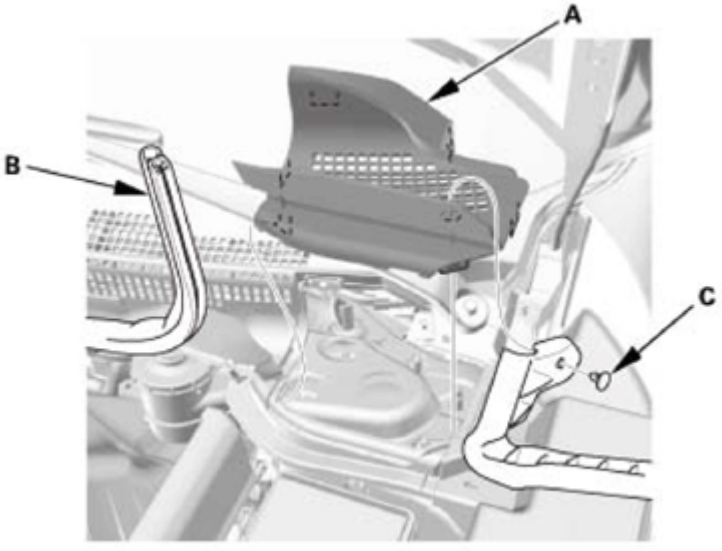

Fig. 35: Identifying Cowl Top Cover, Hood Rear Seal And Clip
Courtesy of AMERICAN HONDA MOTOR CO., INC.

10. Front Fender Trim - Both Sides

NOTE: Repeat on the opposite side.

1. Install the front fender trim (A), then install the clips (B, C). Make sure the clips (D) snap into place securely.

GETtheMANUALS.org

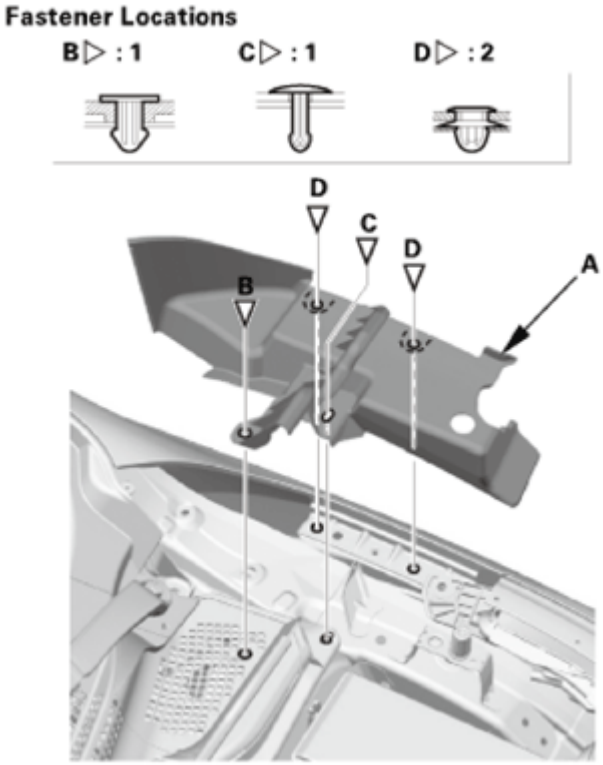

Fig. 36: Identifying Front Fender Trim And Clips
Courtesy of AMERICAN HONDA MOTOR CO., INC.

11. Both Windshield Wiper Arm Assemblies

NOTE: Set the wiper arms to the auto-stop position before installation.

1. Install the wiper arms (A), the nut (B), and the caps (C).

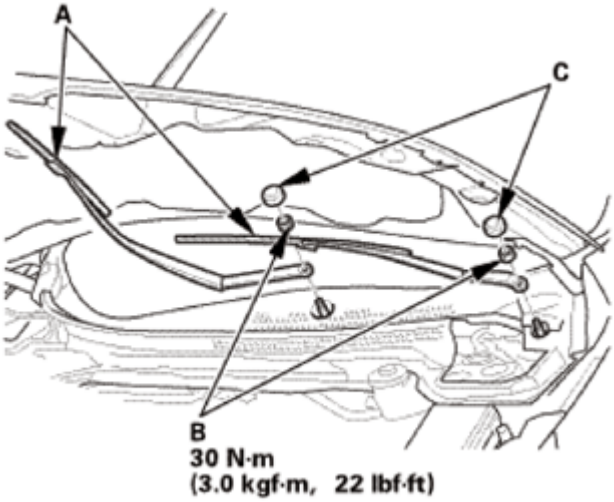

Fig. 37: Identifying Wiper Arms, Nuts And Caps

GETtheMANUALS.org

Courtesy of AMERICAN HONDA MOTOR CO., INC.

12. Front Floor Undercover
    1. Install the front floor undercover (A), then install the bolts (B) and the clips (C, D). Make sure the clips snap into place securely.

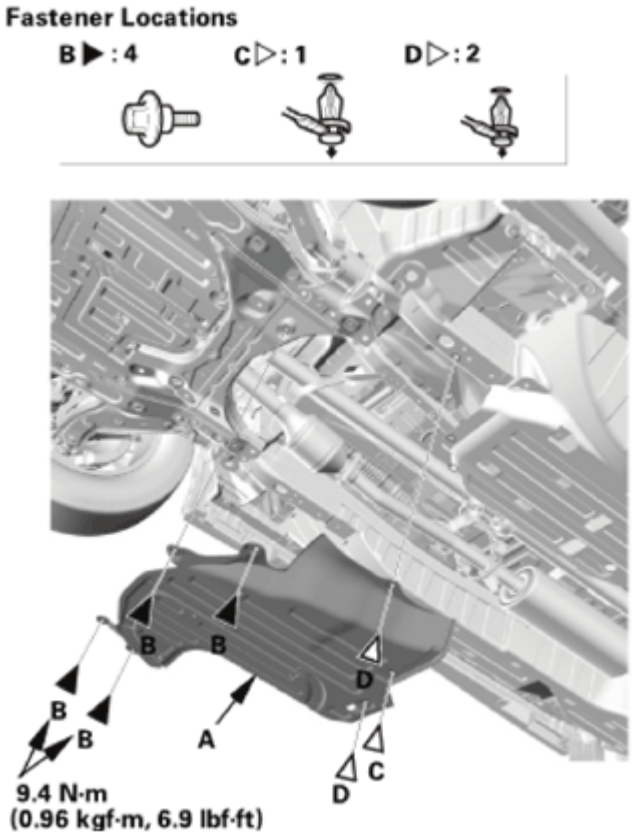

Fig. 38: Identifying Front Floor Undercover, Bolts And Clips
Courtesy of AMERICAN HONDA MOTOR CO., INC.

13. Front Splash Shield
    1. Install the front splash shield (A), then install the bolts (B) and the clips (C, D). Make sure the clips snap into place securely.

GETtheMANUALS.org

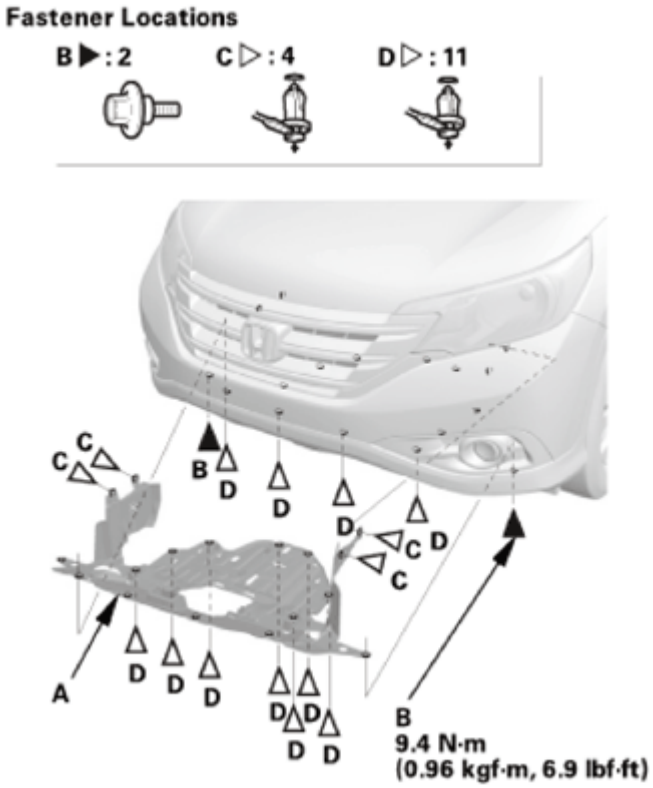

Fig. 39: Identifying Front Splash Shield, Bolts And Clips
Courtesy of AMERICAN HONDA MOTOR CO., INC.

CATALYTIC CONVERTER SYSTEM COMPONENT LOCATION INDEX

GETtheMANUALS.org

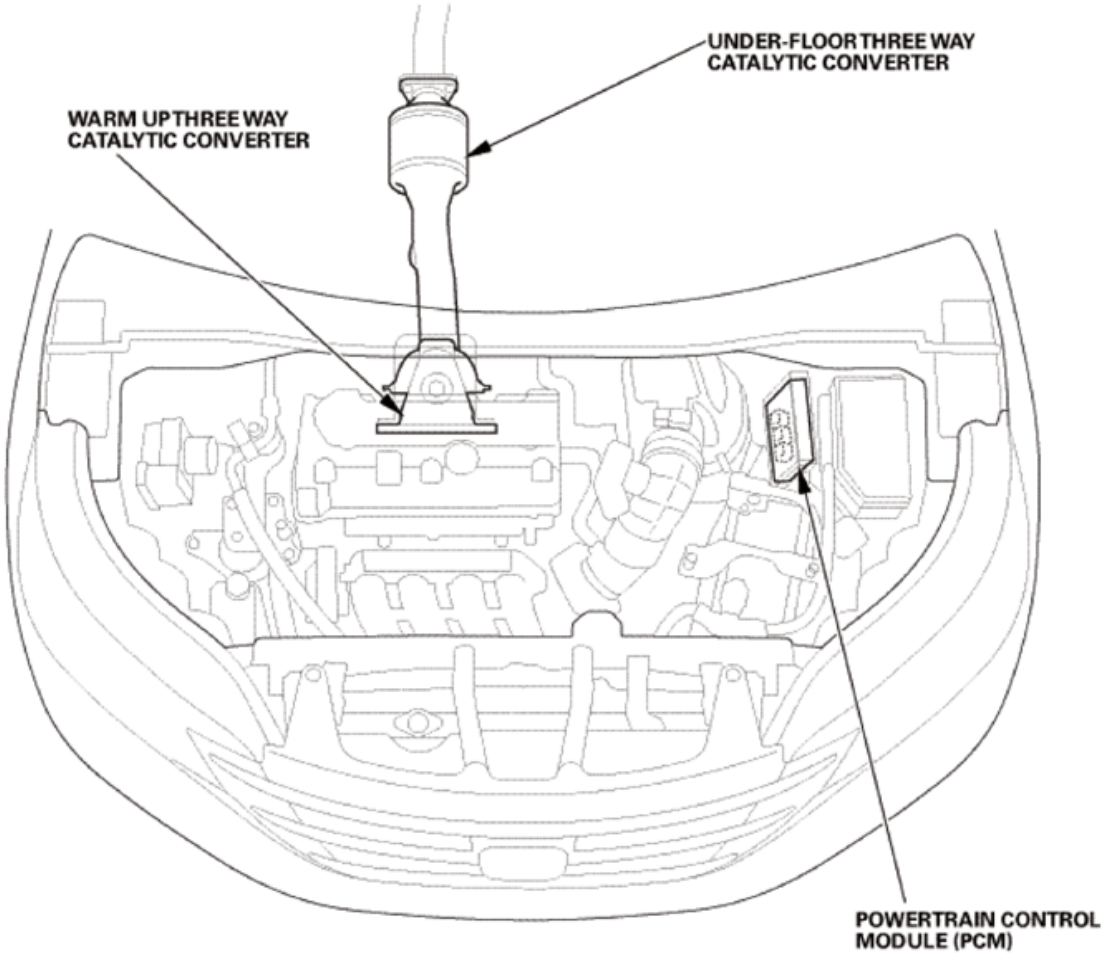

Fig. 40: Catalytic Converter System Components Locations
Courtesy of AMERICAN HONDA MOTOR CO., INC.

POWERTRAIN CONTROL MODULE (PCM)	**Update** See **PCM REMOVAL AND INSTALLATION** or **PCM UPDATE**
	Removal and Installation See **PCM REMOVAL AND INSTALLATION** or **PCM UPDATE**
UNDER-FLOOR THREE WAY CATALYTIC CONVERTER (TWC)	**Removal and Installation** See **UNDER-FLOOR TWC REMOVAL AND INSTALLATION** or **WARM UP TWC REMOVAL AND INSTALLATION**
WARM UP THREE WAY CATALYTIC CONVERTER (WU-TWC)	**Removal and Installation** See **UNDER-FLOOR TWC REMOVAL AND INSTALLATION** or **WARM UP TWC REMOVAL AND INSTALLATION**

CKP SENSOR REMOVAL AND INSTALLATION

REMOVAL

1. Vehicle Lift

GETtheMANUALS.org

1. Raise the vehicle on a lift, and make sure it is securely supported.

2. Front Splash Shield
    1. Remove the bolts (A), then remove the clips (B) that secure the front inner fender and the front splash shield (C) to the body.
    2. From under the front bumper (D), remove the clips (E).
    3. From under the body, remove the clips (F), then pull out the front splash shield.

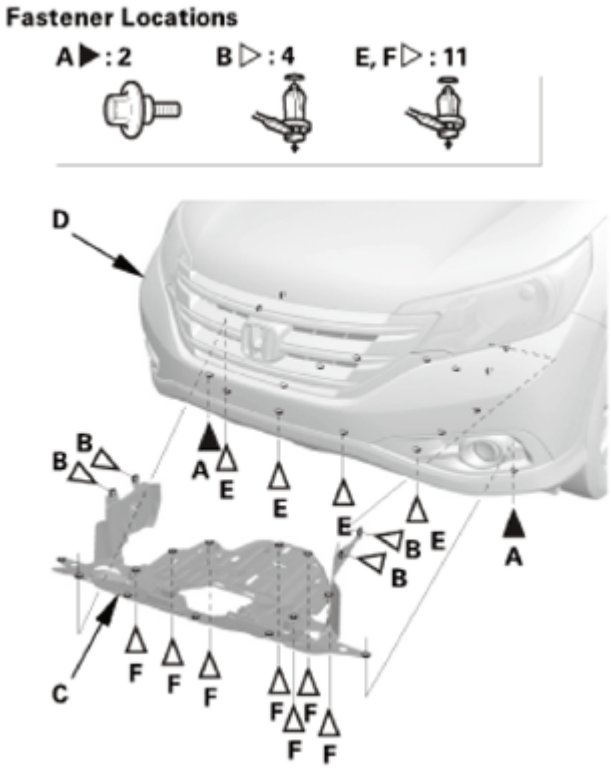

Fig. 41: Identifying Front Bumper, Clips And Bolts
Courtesy of AMERICAN HONDA MOTOR CO., INC.

3. CKP Sensor
    1. Remove the CKP sensor cover (A).
    2. Remove the CKP sensor (B).

GETtheMANUALS.org

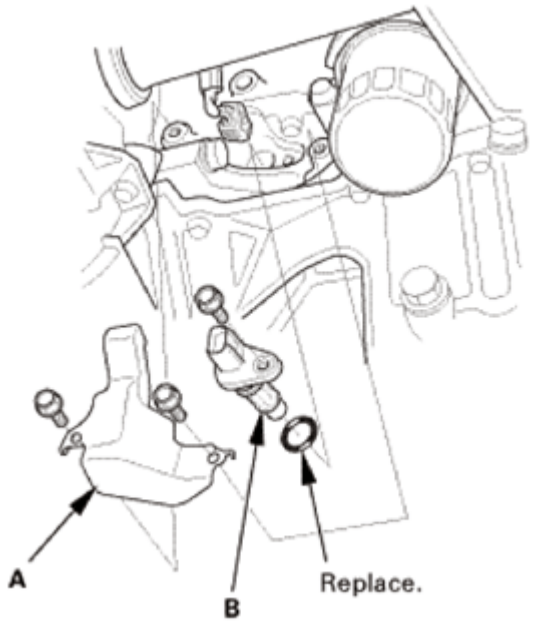

Fig. 42: Identifying CKP Sensor And Cover
Courtesy of AMERICAN HONDA MOTOR CO., INC.

INSTALLATION

1. CKP Sensor
    1. Install the CKP sensor (A) with a new O-ring (B).
    2. Install the CKP sensor cover (C).

GETtheMANUALS.org

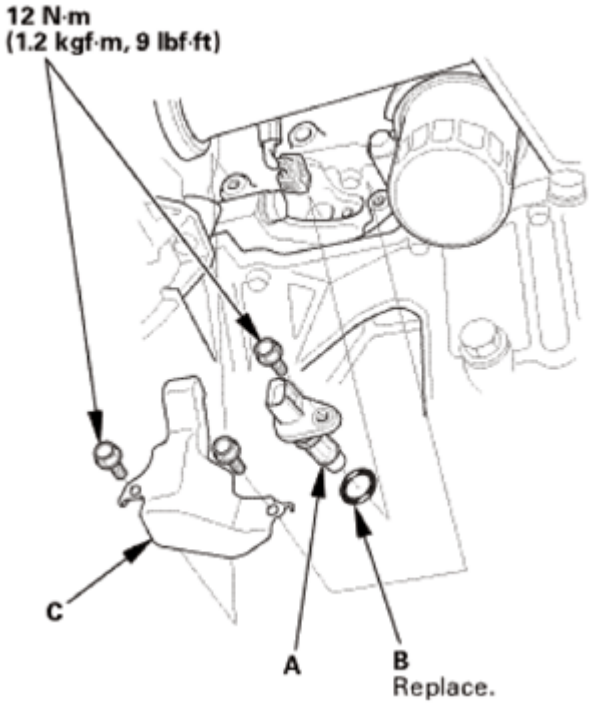

Fig. 43: Identifying CKP Sensor, Cover And O-Ring
Courtesy of AMERICAN HONDA MOTOR CO., INC.

2. Front Splash Shield
    1. Install the front splash shield (A), then install the bolts (B) and the clips (C, D). Make sure the clips snap into place securely.

GETtheMANUALS.org

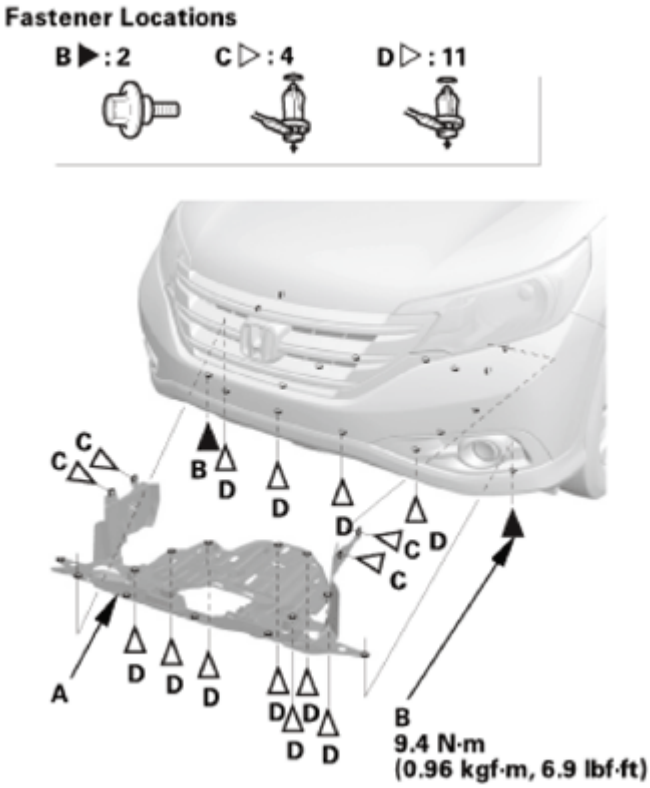

Fig. 44: Identifying Front Splash Shield, Bolts And Clips
Courtesy of AMERICAN HONDA MOTOR CO., INC.

3. HDS DLC - Connection
    1. Connect the HDS to the data link connector (DLC) (A) located under the driver's side of the dashboard.
    2. Turn the ignition switch to ON (II).
    3. Make sure the HDS communicates with the vehicle. If it does not communicate, go to the DLC circuit troubleshooting.

GETtheMANUALS.org

Fig. 45: Identifying Data Link Connector (DLC)
Courtesy of AMERICAN HONDA MOTOR CO., INC.

4. CKP Pattern - Clear/Learn
    1. Connect the HDS to the data link connector (DLC) (A) located under the driver's side of the dashboard.
    2. Turn the ignition switch to ON (II).
    3. Make sure the HDS communicates with the vehicle. If it does not communicate, go to the DLC circuit troubleshooting.
    4. Select CRANK PATTERN in the ADJUSTMENT MENU with the HDS.
    5. Select CRANK PATTERN CLEAR, and clear the CKP pattern.
    6. Select CRANK PATTERN LEARNING with the HDS, and follow the screen prompts.
    7. After learning, turn the ignition switch to LOCK (0).
    8. Disconnect the HDS from the DLC.

GETtheMANUALS.org

Fig. 46: Identifying Data Link Connector (DLC)
Courtesy of AMERICAN HONDA MOTOR CO., INC.

CMP PULSE PLATE A REMOVAL AND INSTALLATION

REMOVAL

1. Ignition Coil Cover
    1. Remove the ignition coil cover.

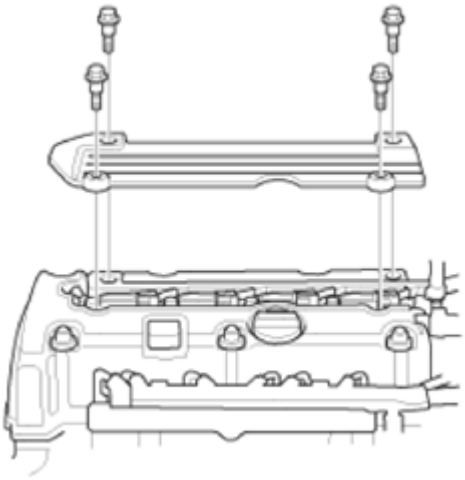

Fig. 47: Identifying Ignition Coil Cover
Courtesy of AMERICAN HONDA MOTOR CO., INC.

2. Ignition Coil
    1. Remove the ignition coils.

GETtheMANUALS.org

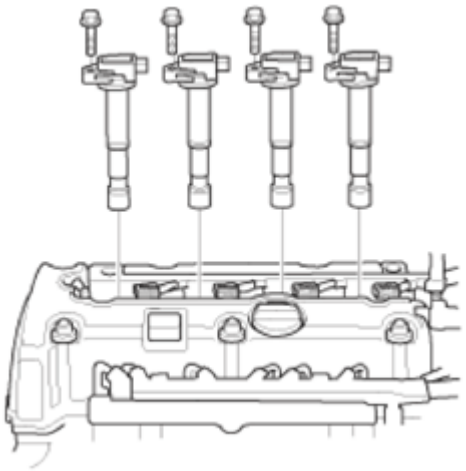

Fig. 48: Identifying Ignition Coils
Courtesy of AMERICAN HONDA MOTOR CO., INC.

3. Cylinder Head Cover
    1. Remove the dipstick (A).
    2. Disconnect the breather hose (B).
    3. Remove the two bolts (C).

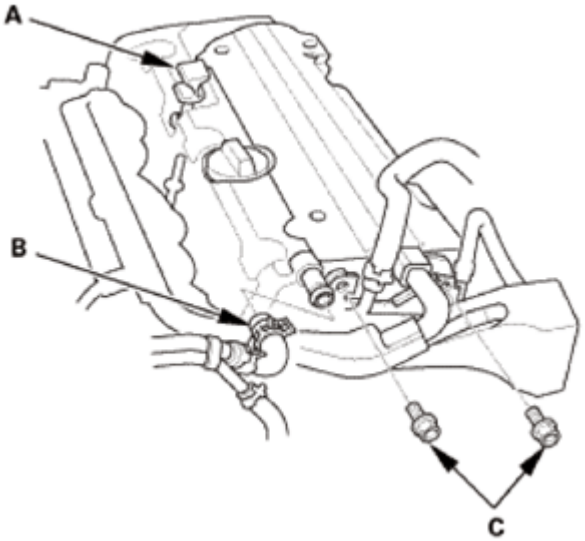

Fig. 49: Identifying Dipstick, Breather Hose And Bolts
Courtesy of AMERICAN HONDA MOTOR CO., INC.

4. Remove the cylinder head cover.

GETtheMANUALS.org

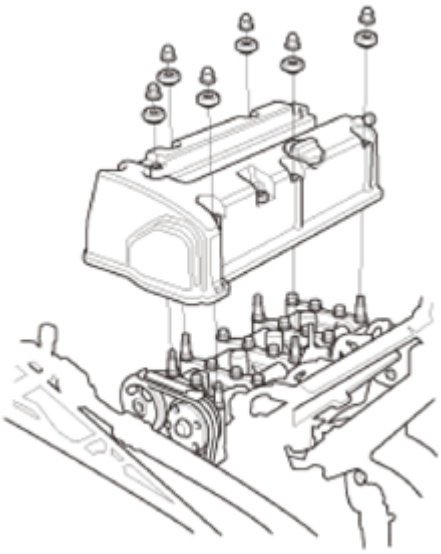

Fig. 50: Identifying Cylinder Head Cover
Courtesy of AMERICAN HONDA MOTOR CO., INC.

4. CMP Pulse Plate A
    1. Hold the camshaft with an open-end wrench, then loosen the bolt.

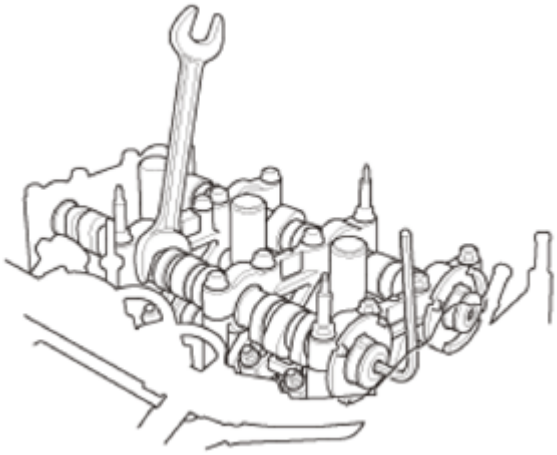

Fig. 51: Holding Camshaft Using Open-End Wrench
Courtesy of AMERICAN HONDA MOTOR CO., INC.

    2. Remove CMP pulse plate A.

GETtheMANUALS.org

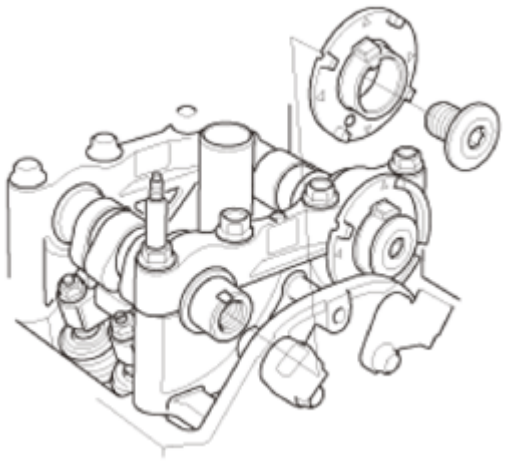

Fig. 52: Identifying CMP Pulse Plate A
Courtesy of AMERICAN HONDA MOTOR CO., INC.

INSTALLATION

1. CMP Pulse Plate A
    1. Apply new engine oil to the bolt threads.
    2. Install CMP pulse plate A.

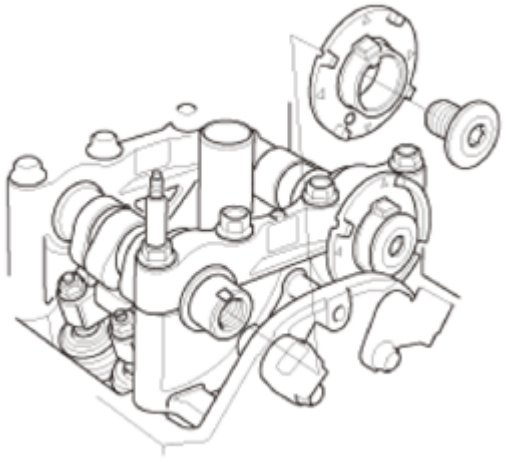

Fig. 53: Identifying CMP Pulse Plate A
Courtesy of AMERICAN HONDA MOTOR CO., INC.

    3. Hold the camshaft with an open-end wrench, then tighten the bolt.

GETtheMANUALS.org

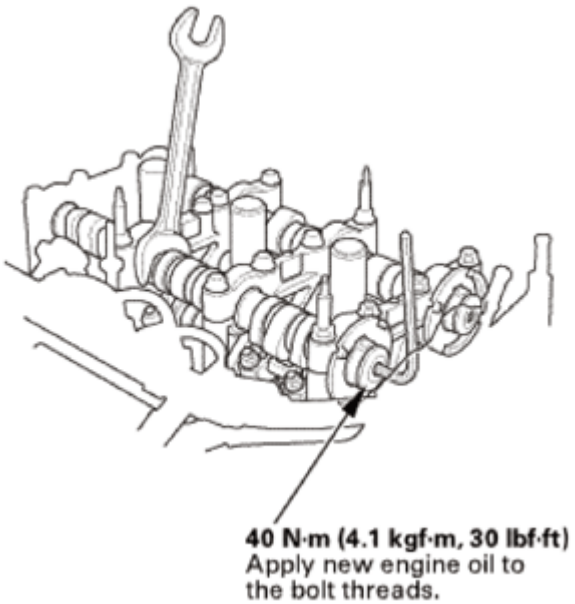

Fig. 54: Holding Camshaft Using Open-End Wrench
Courtesy of AMERICAN HONDA MOTOR CO., INC.

2. Cylinder Head Cover
    1. Check the spark plug seals for damage. If any seals are damaged, replace it.
    2. Thoroughly clean the head cover gasket and the groove.

    NOTE: Check and, if necessary, replace the head cover gasket.

    3. Install the head cover gasket (A) in the groove of the cylinder head cover (B). Make sure the head cover gasket is seated securely.

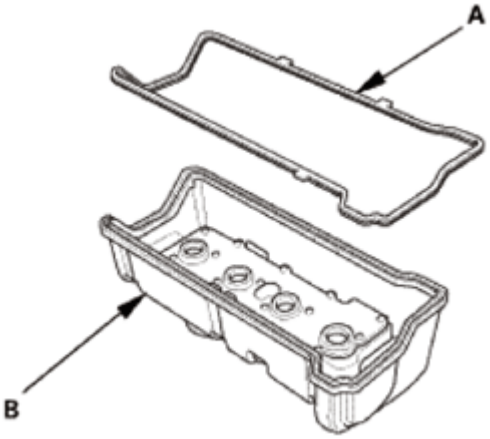

Fig. 55: Identifying Cylinder Head Cover And Gasket
Courtesy of AMERICAN HONDA MOTOR CO., INC.

    4. Remove all of the old liquid gasket from the chain case and the No. 5 rocker shaft holder.

GETtheMANUALS.org

5. Clean the head cover contacting surfaces with a shop towel.
6. Apply liquid gasket, (P/N 08718-0004 or 08718-0009) on the chain case and the No. 5 rocker shaft holder mating areas (A). Install the component within 5 minutes of applying the liquid gasket.

NOTE: **If too much time has passed after applying the liquid gasket, remove the old liquid gasket and residue, then reapply new liquid gasket.**

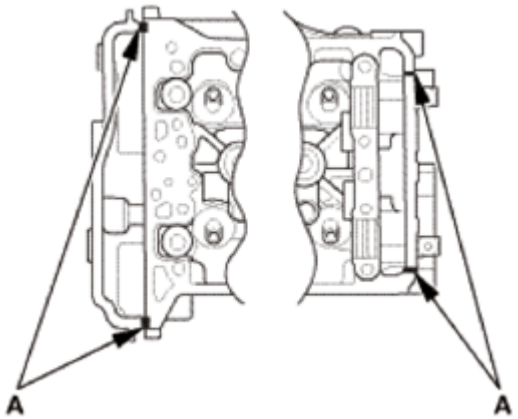

Fig. 56: Identifying No. 5 Rocker Shaft Holder Mating Areas
Courtesy of AMERICAN HONDA MOTOR CO., INC.

7. Set the spark plug seals (A) on the spark plug tubes. Place the cylinder head cover (B) on the cylinder head, then slide the cover slightly back and forth to seat the head cover gasket.
8. Inspect the spark plug seals for damage.
9. Inspect the cover washers (C). Replace any washer that is damaged or deteriorated.

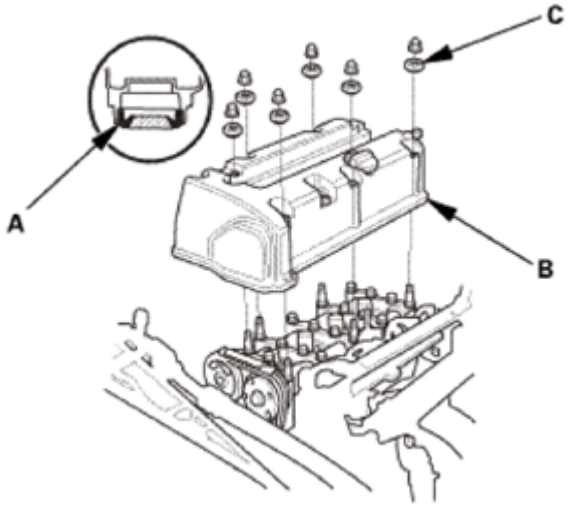

Fig. 57: Identifying Spark Plug Seals, Cylinder Head Cover And Washers
Courtesy of AMERICAN HONDA MOTOR CO., INC.

GETtheMANUALS.org

10. Tighten the bolts in two steps. In the final step torque bolts, in sequence, to 12 N.m (1.2 kgf.m, 9 lbf.ft).

NOTE:

- **Wait at least 30 minutes before filling the engine with oil.**
- **Do not run the engine for at least 3 hours after installing the head cover.**

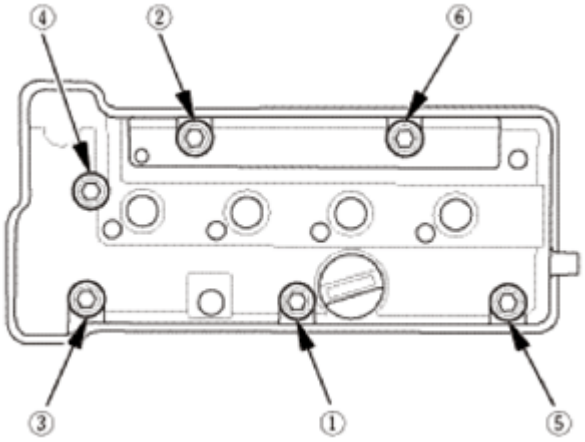

Fig. 58: Cylinder Head Cover Bolts Tightening Sequence
Courtesy of AMERICAN HONDA MOTOR CO., INC.

11. Install the two bolts (A).
12. Connect the breather hose (B).
13. Install the dipstick (C).

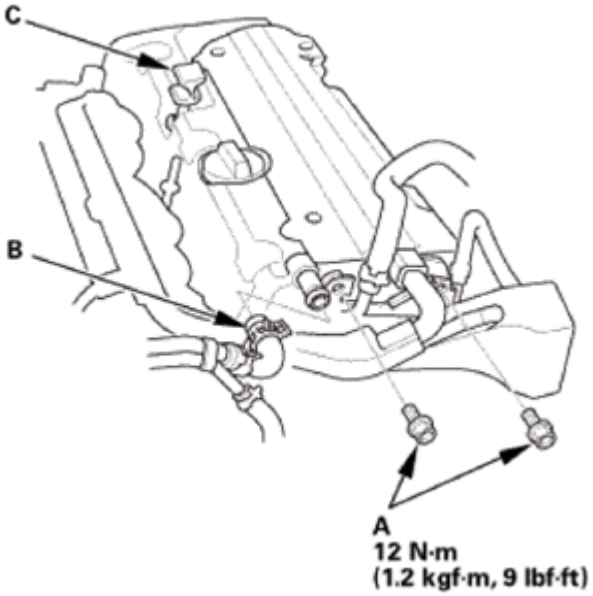

Fig. 59: Identifying Breather Hose, Bolts And Dipstick

GETtheMANUALS.org

Courtesy of AMERICAN HONDA MOTOR CO., INC.

3. Ignition Coil
    1. Install the ignition coils.

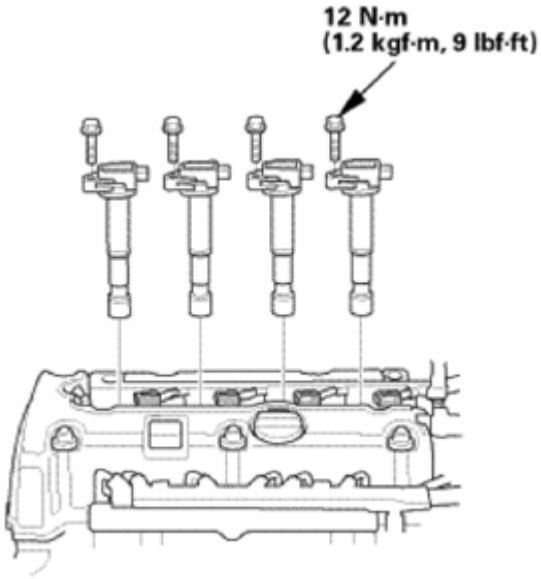

Fig. 60: Identifying Ignition Coil
Courtesy of AMERICAN HONDA MOTOR CO., INC.

4. Ignition Coil Cover
    1. Install the ignition coil cover.

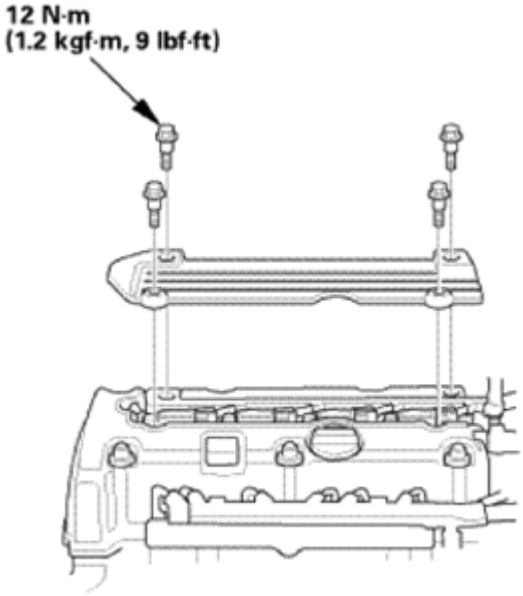

Fig. 61: Identifying Ignition Coil Cover

GETtheMANUALS.org

Courtesy of AMERICAN HONDA MOTOR CO., INC.

CMP PULSE PLATE B REMOVAL AND INSTALLATION

REMOVAL

1. Ignition Coil Cover
    1. Remove the ignition coil cover.

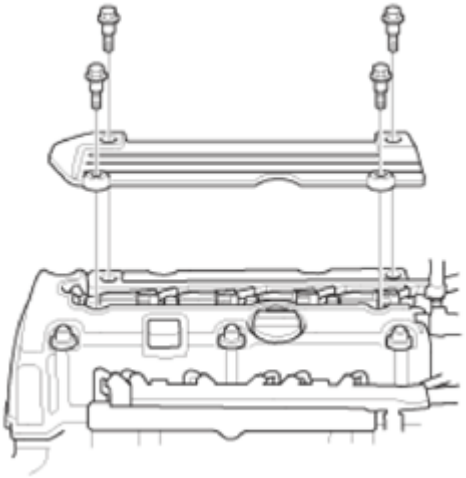

Fig. 62: Identifying Ignition Coil Cover
Courtesy of AMERICAN HONDA MOTOR CO., INC.

2. Ignition Coil
    1. Remove the ignition coils.

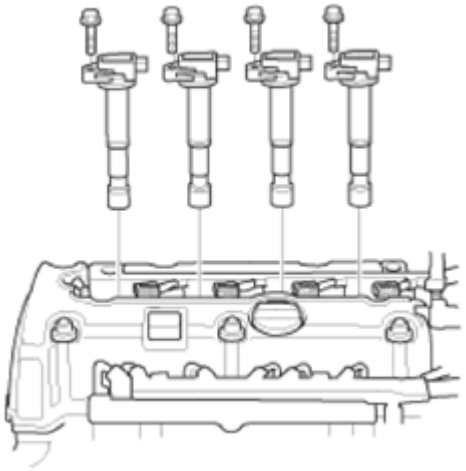

Fig. 63: Identifying Ignition Coils
Courtesy of AMERICAN HONDA MOTOR CO., INC.

GETtheMANUALS.org

3. Cylinder Head Cover
    1. Remove the dipstick (A).
    2. Disconnect the breather hose (B).
    3. Remove the two bolts (C).

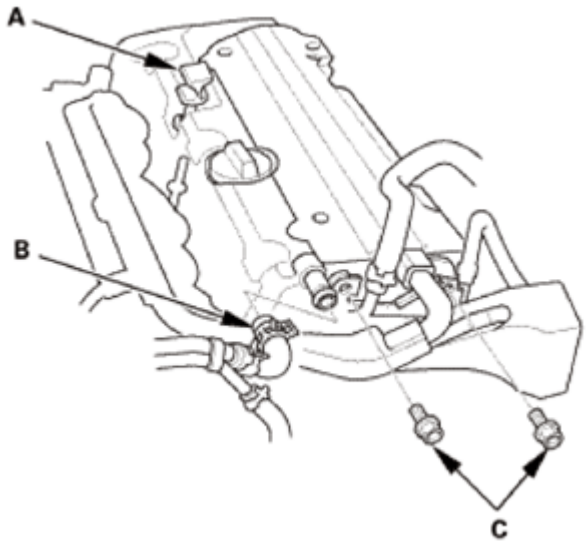

Fig. 64: Identifying Breather Hose, Dipsctick And Bolts
Courtesy of AMERICAN HONDA MOTOR CO., INC.

4. Remove the cylinder head cover.

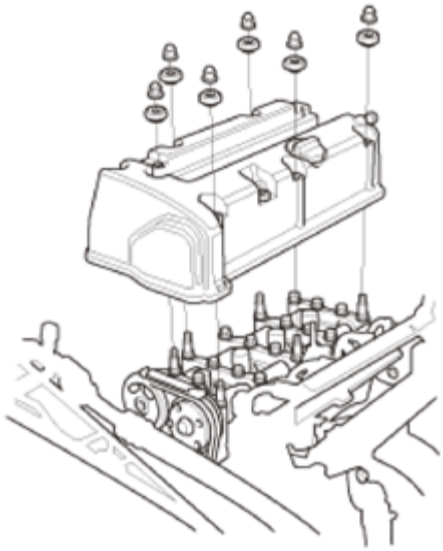

Fig. 65: Identifying Cylinder Head Cover
Courtesy of AMERICAN HONDA MOTOR CO., INC.

4. CMP Pulse Plate B

GETtheMANUALS.org

1. Hold the camshaft with an open-end wrench, then loosen the bolt.

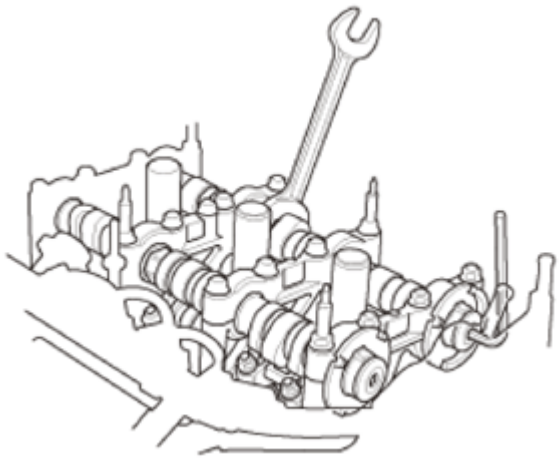

Fig. 66: Holding Camshaft Using Open-End Wrench
Courtesy of AMERICAN HONDA MOTOR CO., INC.

2. Remove CMP pulse plate B.

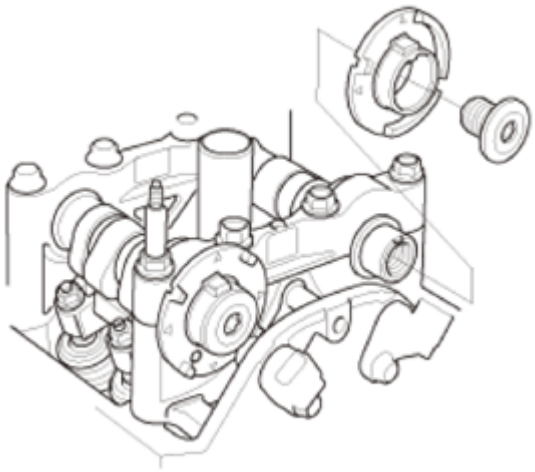

Fig. 67: Identifying CMP Pulse Plate B
Courtesy of AMERICAN HONDA MOTOR CO., INC.

INSTALLATION

1. CMP Pulse Plate B
    1. Apply new engine oil to the bolt threads.
    2. Install CMP pulse plate B.

GETtheMANUALS.org

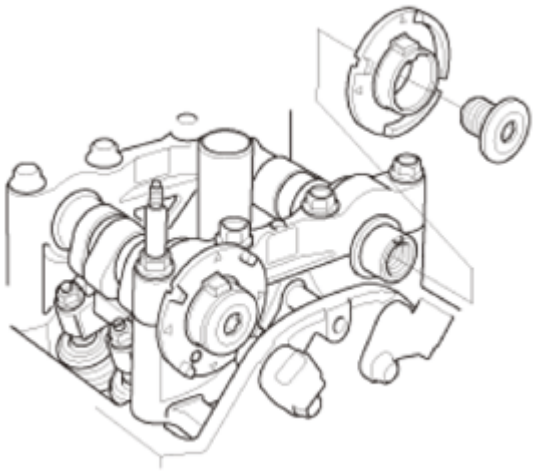

Fig. 68: Identifying CMP Pulse Plate B
Courtesy of AMERICAN HONDA MOTOR CO., INC.

3. Hold the camshaft with an open-end wrench, then tighten the bolt.

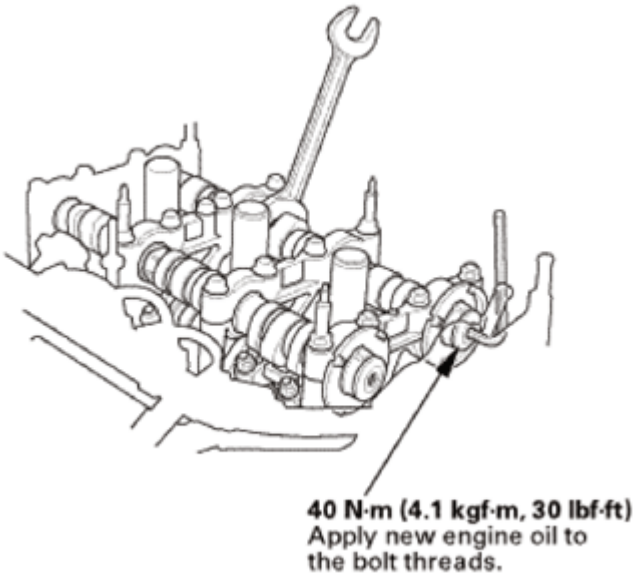

Fig. 69: Holding Camshaft Using Open-End Wrench
Courtesy of AMERICAN HONDA MOTOR CO., INC.

2. Cylinder Head Cover
    1. Check the spark plug seals for damage. If any seals are damaged, replace it.
    2. Thoroughly clean the head cover gasket and the groove.

    NOTE: Check and, if necessary, replace the head cover gasket.

    3. Install the head cover gasket (A) in the groove of the cylinder head cover (B). Make sure the head

GETtheMANUALS.org

cover gasket is seated securely.

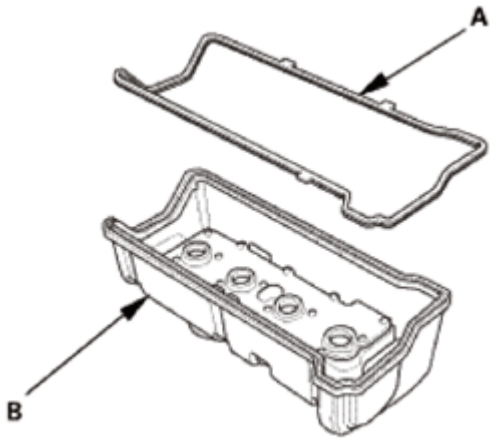

Fig. 70: Identifying Head Cover Gasket And Cover
Courtesy of AMERICAN HONDA MOTOR CO., INC.

4. Remove all of the old liquid gasket from the chain case and the No. 5 rocker shaft holder.
5. Clean the head cover contacting surfaces with a shop towel.
6. Apply liquid gasket, (P/N 08718-0004 or 08718-0009) on the chain case and the No. 5 rocker shaft holder mating areas (A). Install the component within 5 minutes of applying the liquid gasket.

NOTE: **If too much time has passed after applying the liquid gasket, remove the old liquid gasket and residue, then reapply new liquid gasket.**

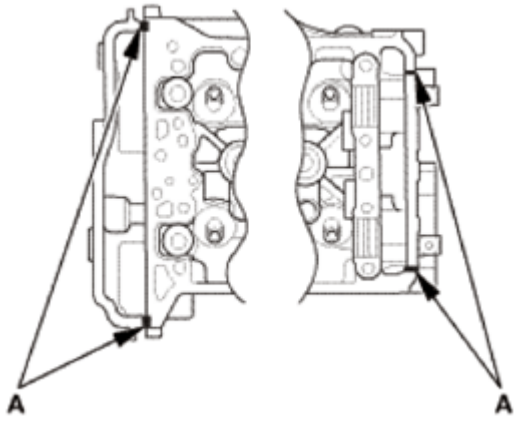

Fig. 71: Identifying No. 5 Rocker Shaft Holder Mating Areas
Courtesy of AMERICAN HONDA MOTOR CO., INC.

7. Set the spark plug seals (A) on the spark plug tubes. Place the cylinder head cover (B) on the cylinder head, then slide the cover slightly back and forth to seat the head cover gasket.
8. Inspect the spark plug seals for damage.
9. Inspect the cover washers (C). Replace any washer that is damaged or deteriorated.

GETtheMANUALS.org

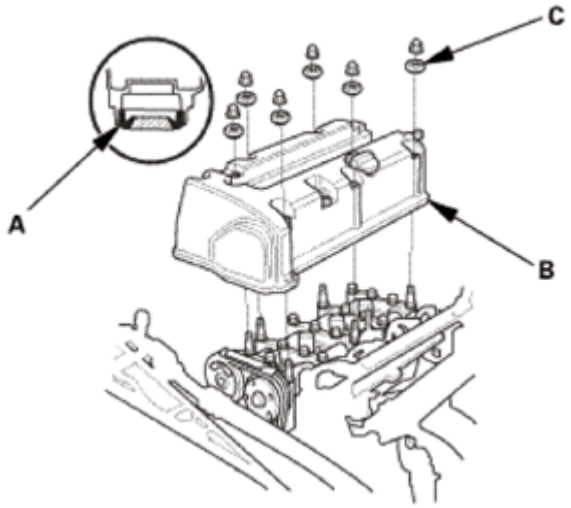

Fig. 72: Identifying Spark Plug Seals, Cylinder Head Cover And Washers
Courtesy of AMERICAN HONDA MOTOR CO., INC.

10. Tighten the bolts in two steps. In the final step torque bolts, in sequence, to 12 N.m (1.2 kgf.m, 9 lbf.ft).

NOTE:

- **Wait at least 30 minutes before filling the engine with oil.**
- **Do not run the engine for at least 3 hours after installing the head cover.**

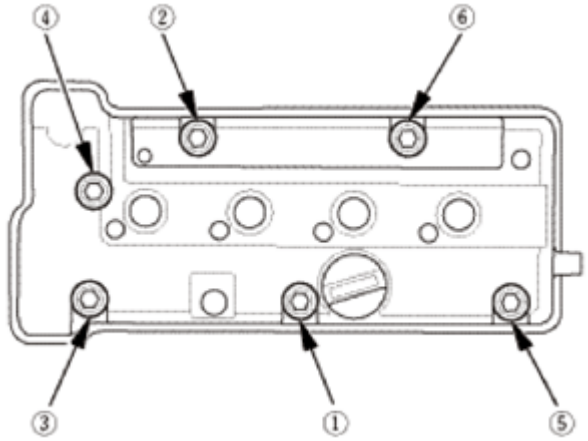

Fig. 73: Cylinder Head Cover Bolts Tightening Sequence
Courtesy of AMERICAN HONDA MOTOR CO., INC.

11. Install the two bolts (A).
12. Connect the breather hose (B).
13. Install the dipstick (C).

GETtheMANUALS.org

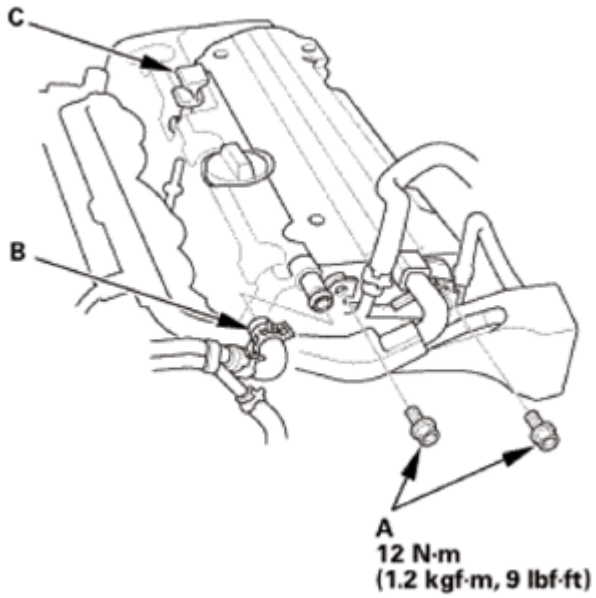

Fig. 74: Identifying Breather Hose, Bolts And Dipstick
Courtesy of AMERICAN HONDA MOTOR CO., INC.

3. Ignition Coil
    1. Install the ignition coils.

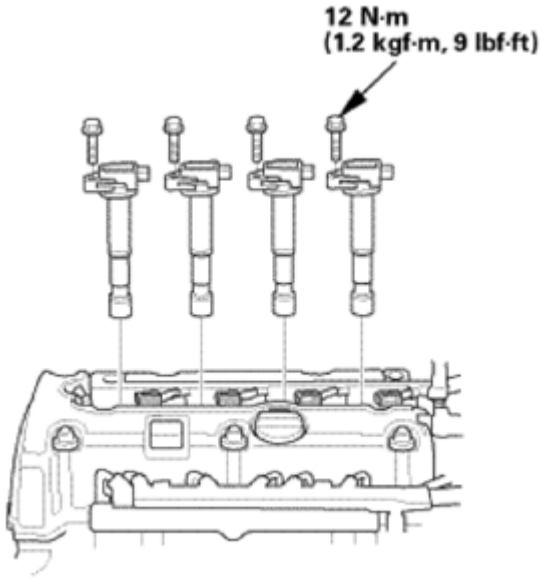

Fig. 75: Identifying Ignition Coil
Courtesy of AMERICAN HONDA MOTOR CO., INC.

4. Ignition Coil Cover
    1. Install the ignition coil cover.

GETtheMANUALS.org

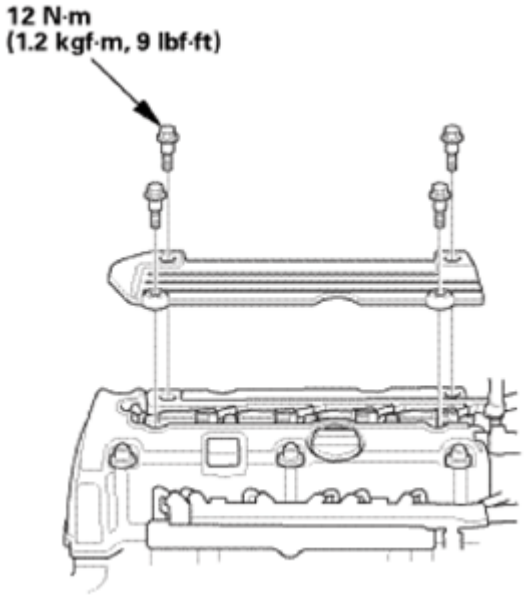

Fig. 76: Identifying Ignition Coil Cover
Courtesy of AMERICAN HONDA MOTOR CO., INC.

CMP SENSOR A REMOVAL AND INSTALLATION

REMOVAL

1. CMP Sensor A
    1. Remove CMP sensor A.

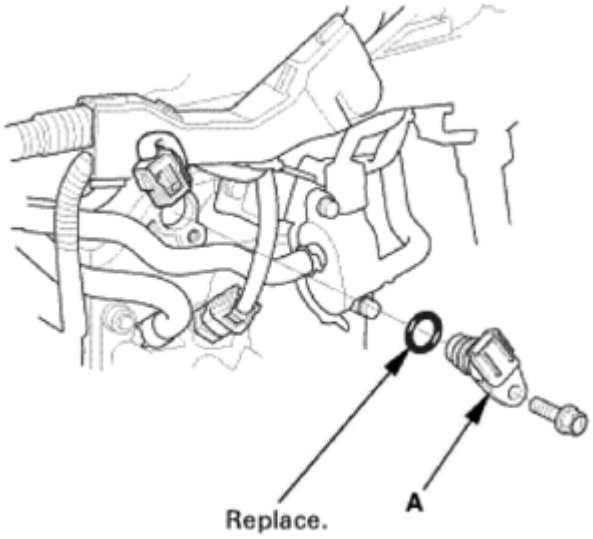

Fig. 77: Identifying CMP Sensor A
Courtesy of AMERICAN HONDA MOTOR CO., INC.

GETtheMANUALS.org

INSTALLATION

1. CMP Sensor A
    1. Install CMP sensor A with a new O-ring (B).

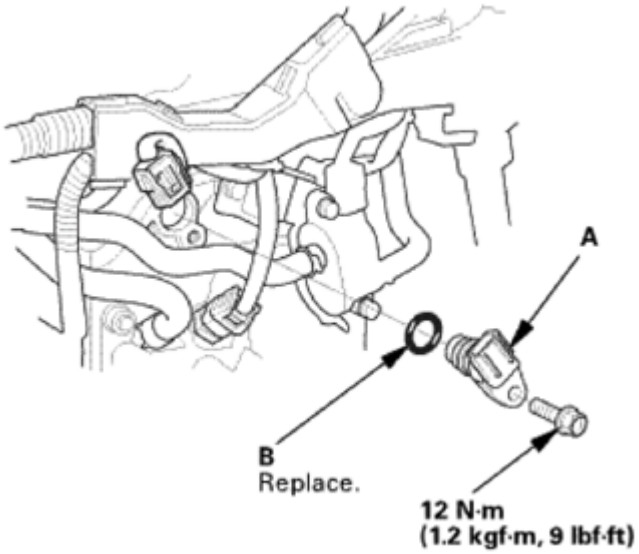

Fig. 78: Identifying CMP Sensor A And O-Ring
Courtesy of AMERICAN HONDA MOTOR CO., INC.

CMP SENSOR B REMOVAL AND INSTALLATION

REMOVAL

1. Air Cleaner Cover
    1. Remove the air cleaner cover (A).

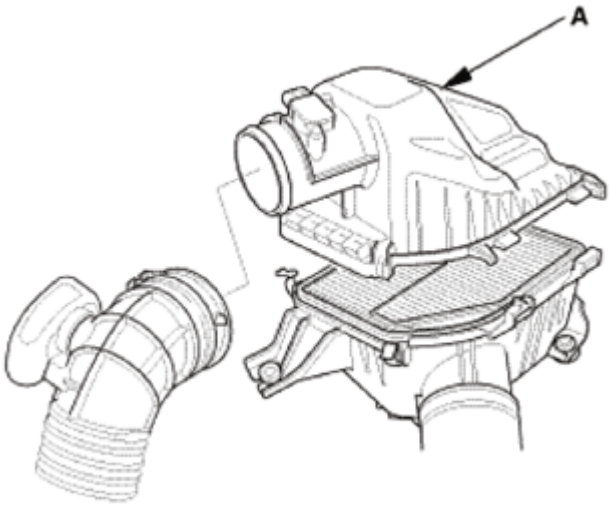

GETtheMANUALS.org

Fig. 79: Identifying Air Cleaner Cover
Courtesy of AMERICAN HONDA MOTOR CO., INC.

2. EVAP Canister Purge Valve and Bracket
    1. Remove the bolt (A) and loosen the bolt (B), then move the EVAP canister purge valve (C) with its bracket.

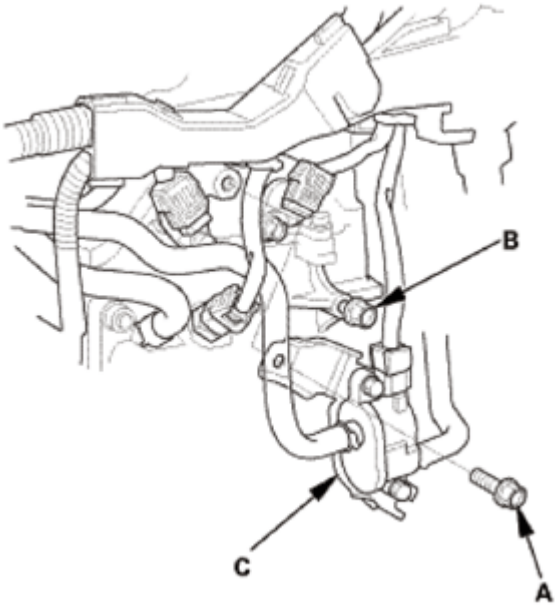

Fig. 80: Identifying EVAP Canister Purge Valve And Bolts
Courtesy of AMERICAN HONDA MOTOR CO., INC.

3. CMP Sensor B
    1. Remove CMP sensor B.

GETtheMANUALS.org

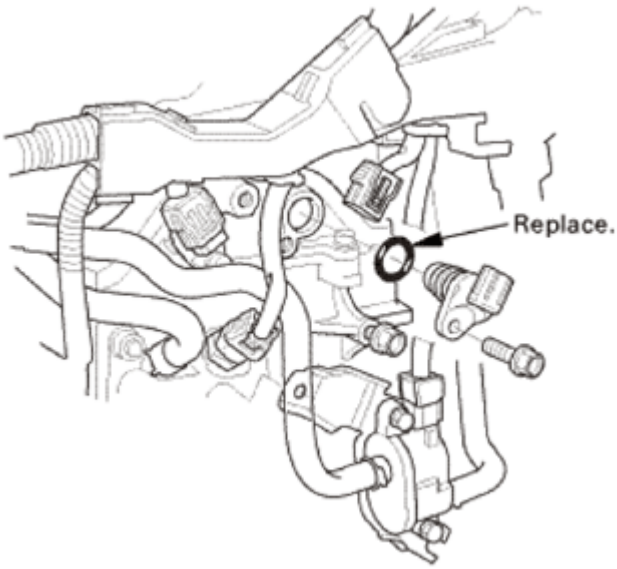

Fig. 81: Identifying CMP Sensor B
Courtesy of AMERICAN HONDA MOTOR CO., INC.

INSTALLATION

1. CMP Sensor B
    1. Install CMP sensor B with a new O-ring (A).

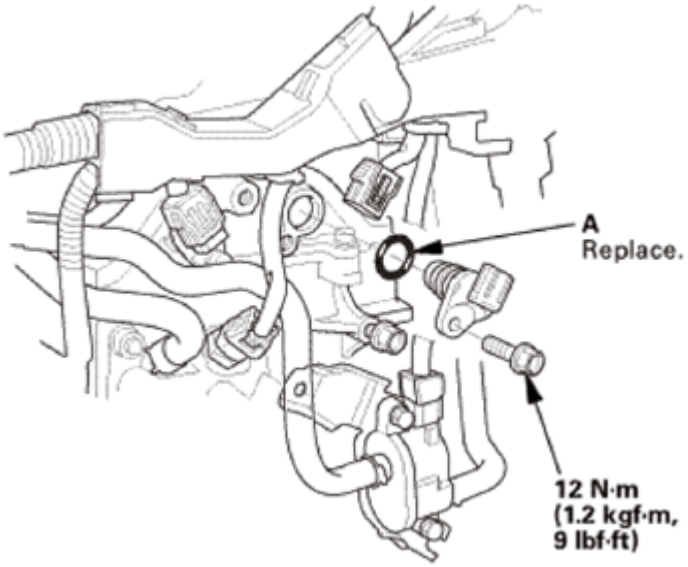

Fig. 82: Identifying CMP Sensor B And O-Ring
Courtesy of AMERICAN HONDA MOTOR CO., INC.

2. EVAP Canister Purge Valve and Bracket
    1. Install the EVAP canister purge valve and bracket (A).

GETtheMANUALS.org

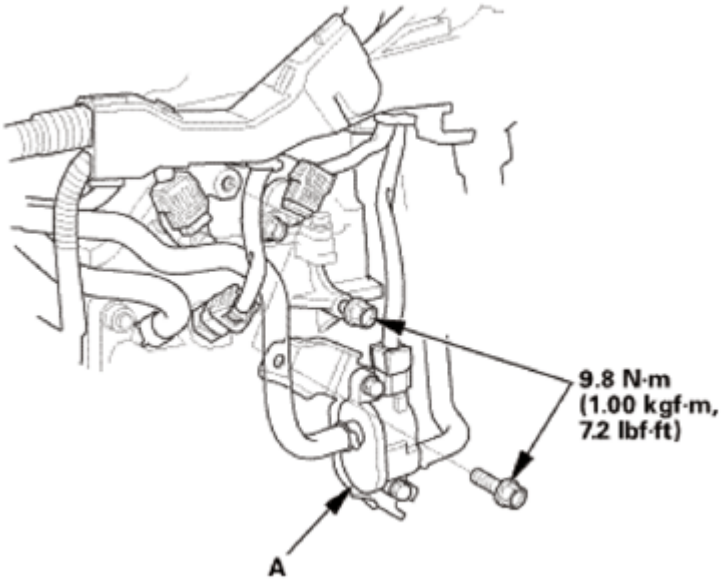

Fig. 83: Identifying EVAP Canister Purge Valve And Bracket
Courtesy of AMERICAN HONDA MOTOR CO., INC.

3. Air Cleaner Cover
    1. Install the air cleaner cover (A).

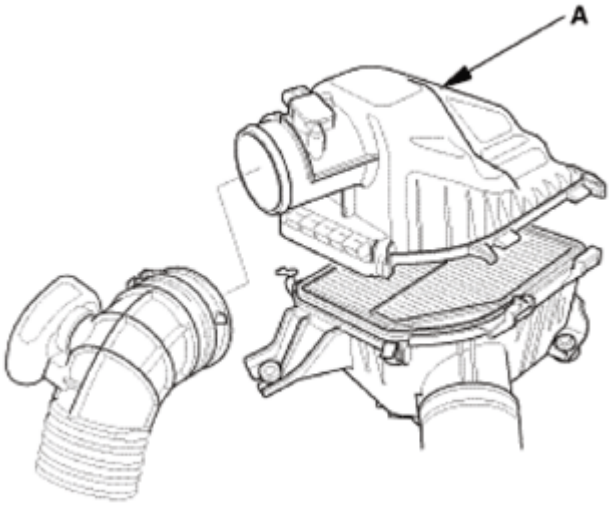

Fig. 84: Identifying Air Cleaner Cover
Courtesy of AMERICAN HONDA MOTOR CO., INC.

CRANKSHAFT AND CKP PULSE PLATE REMOVAL, INSTALLATION, AND INSPECTION

SPECIAL TOOLS DESCRIPTION

Image	Description/Tool Number

GETtheMANUALS.org

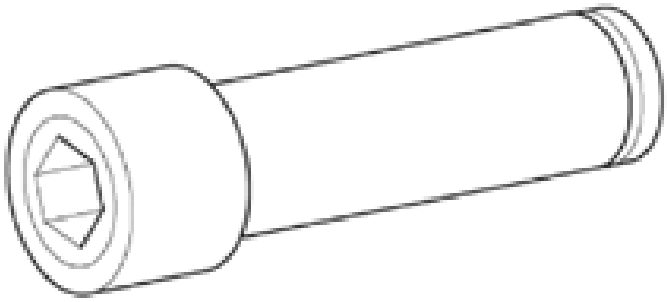	Socket, 19 mm 07JAA-001020A
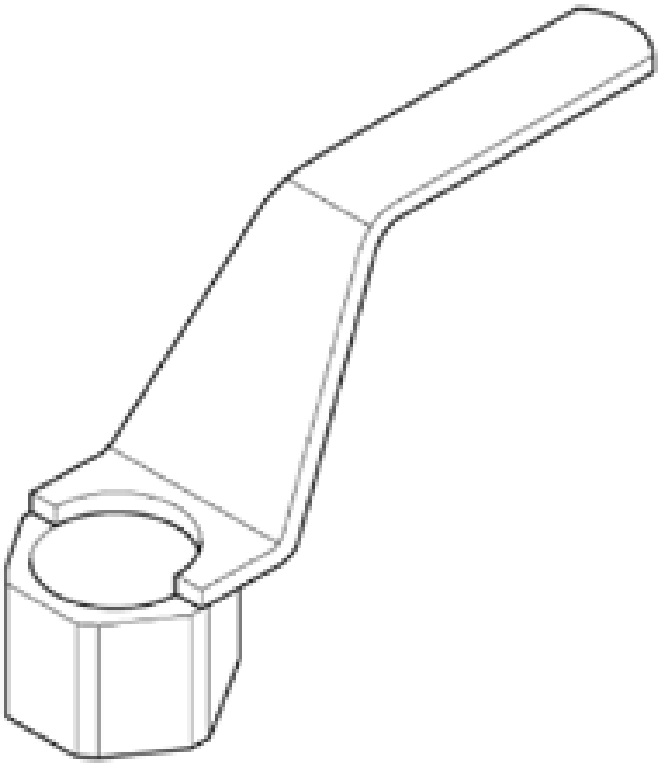	Crankshaft Pulley Holder 07AAB-RJAA100
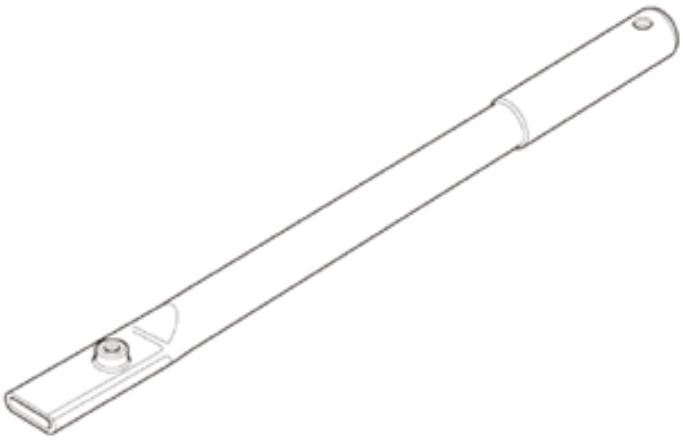	Holder Handle 07JAB-001020B

GETtheMANUALS.org

	O2 Sensor Socket Wrench Snap-on SWR2 or O2 Sensor Wrench Snap-on YA8875, commercially available
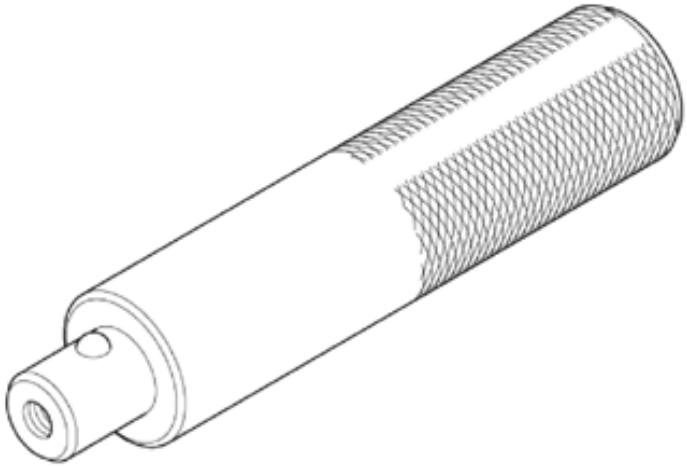	Driver Handle, 15 x 135L 07749-0010000
	Oil Seal Driver Attachment, 96 mm 07ZAD-PNAA100

GETtheMANUALS.org

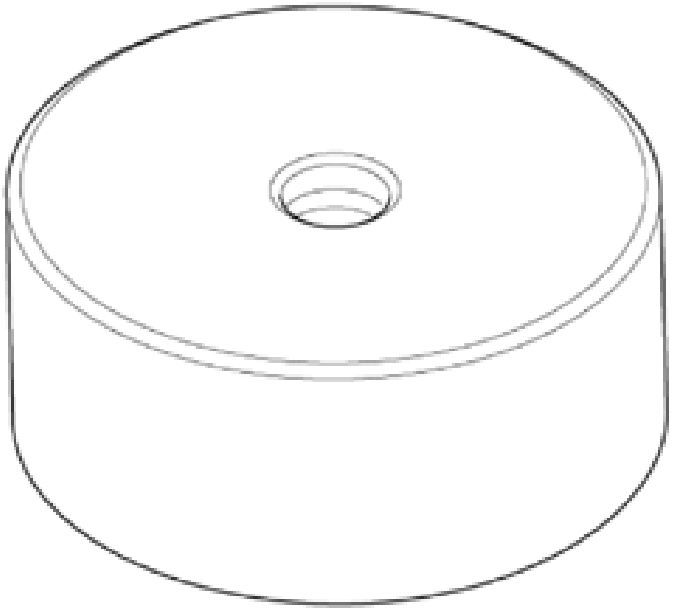	
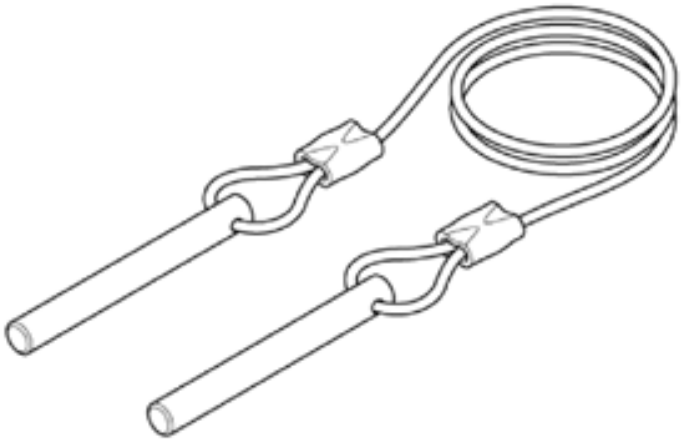	Camshaft Lock Pin Set 07AAB-RWCA120

GETtheMANUALS.org

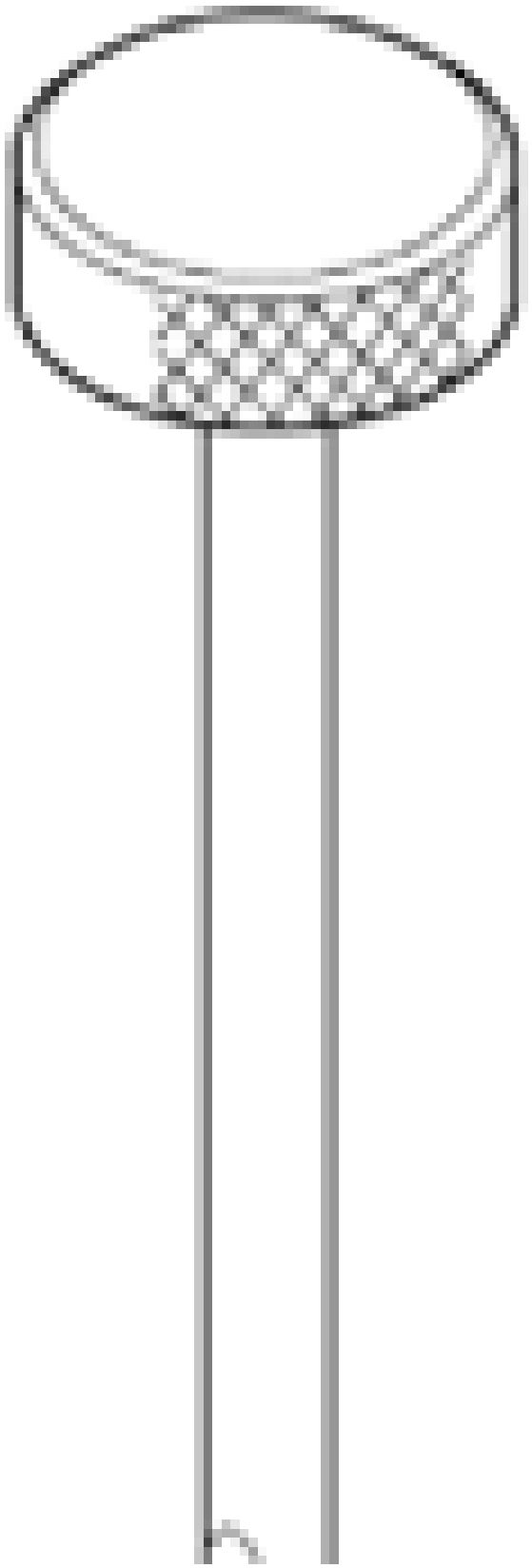

Adjuster 07MAA-PR70110

GETtheMANUALS.org

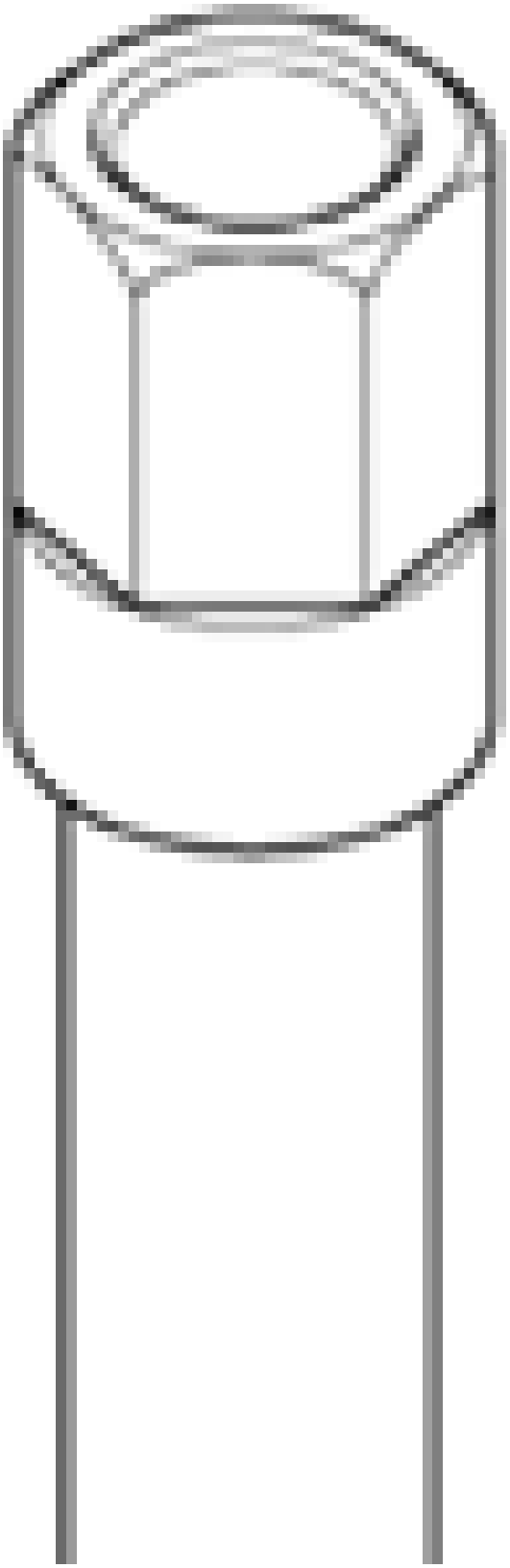

Locknut Wrench 07MAA-PR70120

GETtheMANUALS.org

REMOVAL

1. Starter
    1. Remove the starter bolts.

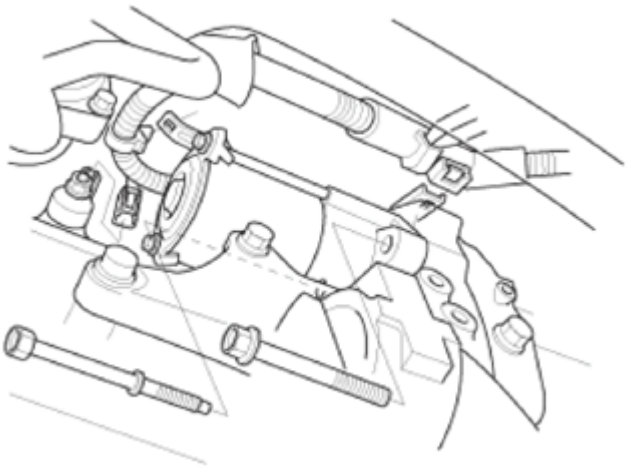

Fig. 85: Identifying Starter Bolts
Courtesy of AMERICAN HONDA MOTOR CO., INC.

    2. Disconnect the cable and the connector.
    3. Remove the starter.

Fig. 86: Identifying Starter
Courtesy of AMERICAN HONDA MOTOR CO., INC.

2. Alternator
    1. Remove the three bolts securing the alternator.

GETtheMANUALS.org

Fig. 87: Identifying Alternator Securing Bolts
Courtesy of AMERICAN HONDA MOTOR CO., INC.

2. Disconnect the connector and the cable.
3. Remove the alternator.

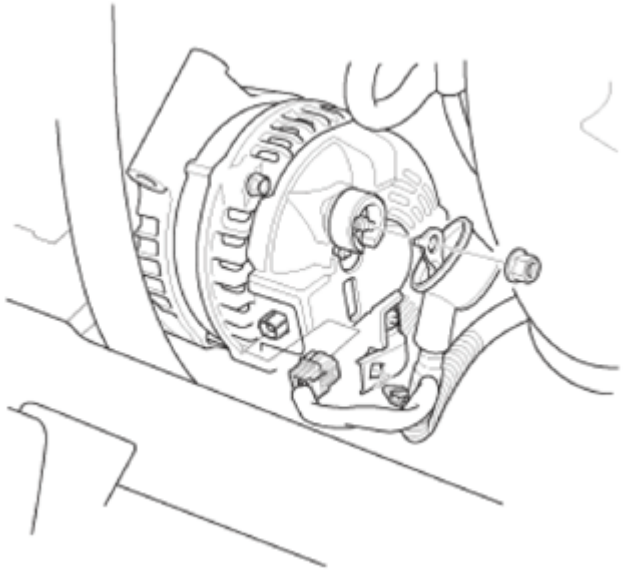

Fig. 88: Identifying Alternator Connector And Cable
Courtesy of AMERICAN HONDA MOTOR CO., INC.

3. Ignition Coil Cover
    1. Remove the ignition coil cover.

GETtheMANUALS.org

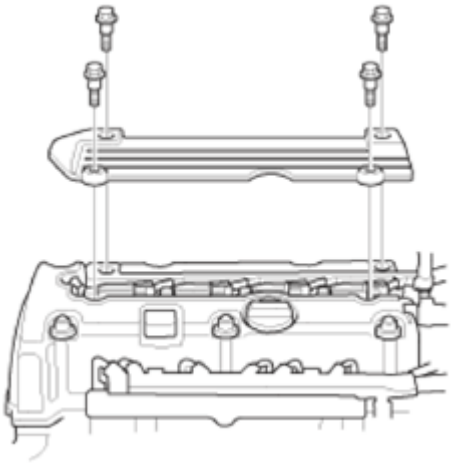

Fig. 89: Identifying Ignition Coil Cover
Courtesy of AMERICAN HONDA MOTOR CO., INC.

4. Engine Wire Harness
    1. Remove the engine wire harness.

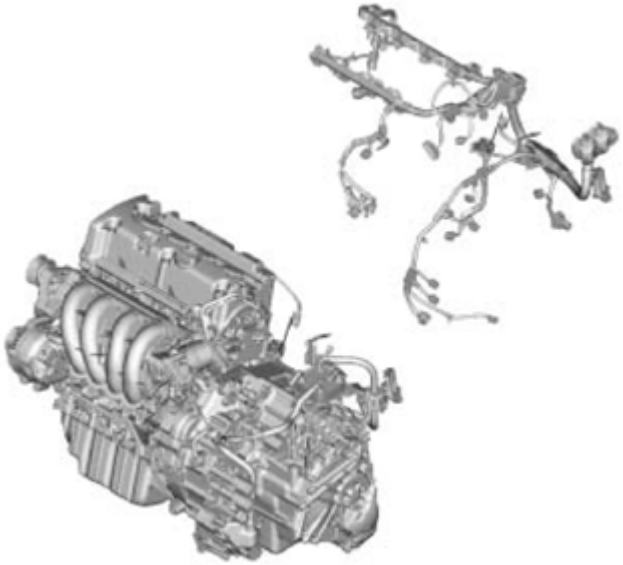

Fig. 90: Identifying Engine Wire Harness
Courtesy of AMERICAN HONDA MOTOR CO., INC.

5. A/T Intermediate Shaft Assembly
    1. Remove the flange bolt (A) and the two dowel bolts (B).

GETtheMANUALS.org

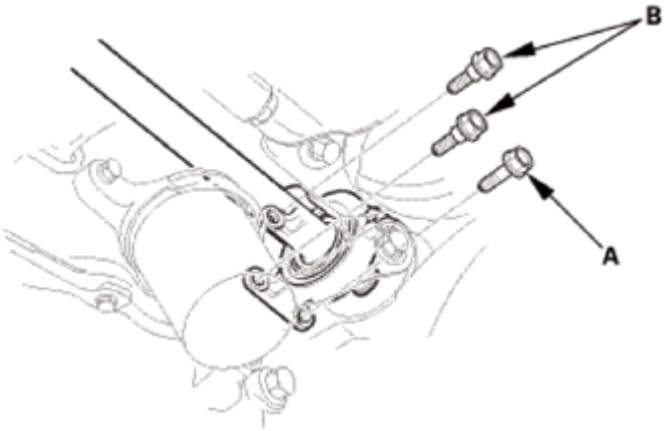

Fig. 91: Identifying Flange Bolt And Dowel Bolts
Courtesy of AMERICAN HONDA MOTOR CO., INC.

2. Remove the intermediate shaft (A) from the differential. Hold the intermediate shaft horizontal until it is clear of the differential to prevent damaging the oil seal (B).

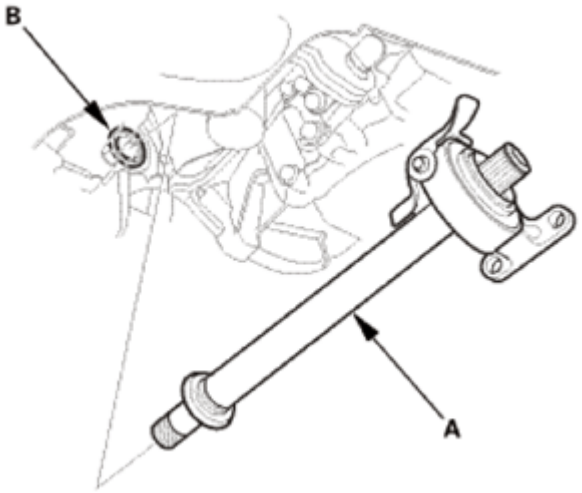

Fig. 92: Identifying Intermediate Shaft And Oil Seal
Courtesy of AMERICAN HONDA MOTOR CO., INC.

6. Automatic Transmission Assembly (After Removal Engine)
    1. Remove the torque converter cover (A).
    2. Remove the torque converter bolts (B) (8 bolts) while rotating the crankshaft pulley.

GETtheMANUALS.org

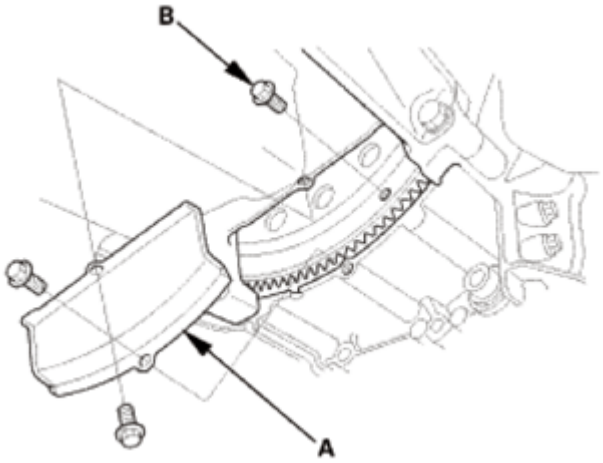

Fig. 93: Identifying Torque Converter Cover And Bolts
Courtesy of AMERICAN HONDA MOTOR CO., INC.

3. Remove the automatic transmission.

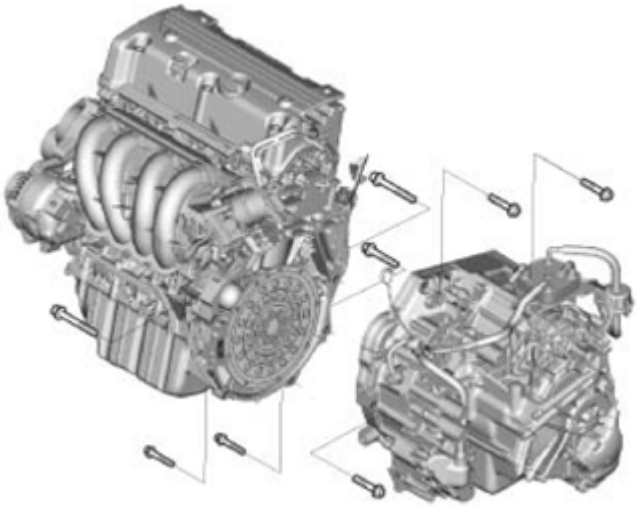

Fig. 94: Identifying Automatic Transmission
Courtesy of AMERICAN HONDA MOTOR CO., INC.

7. Drive Plate Assembly
    1. Remove the drive plate (A) and the washer (B).

GETtheMANUALS.org

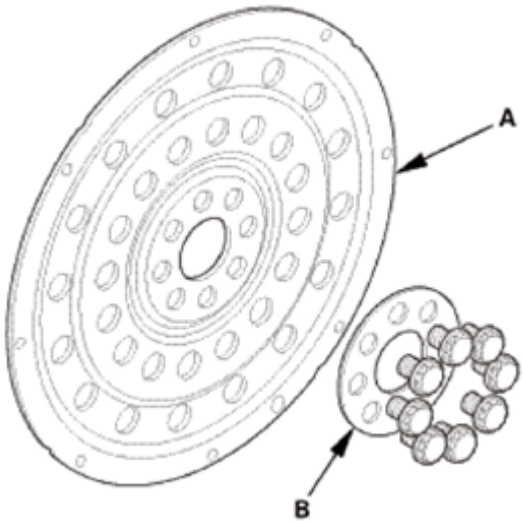

Fig. 95: Identifying Drive Plate And Washer
Courtesy of AMERICAN HONDA MOTOR CO., INC.

8. Intake Manifold and Throttle Body Assembly
    1. Remove the intake manifold lower bracket.

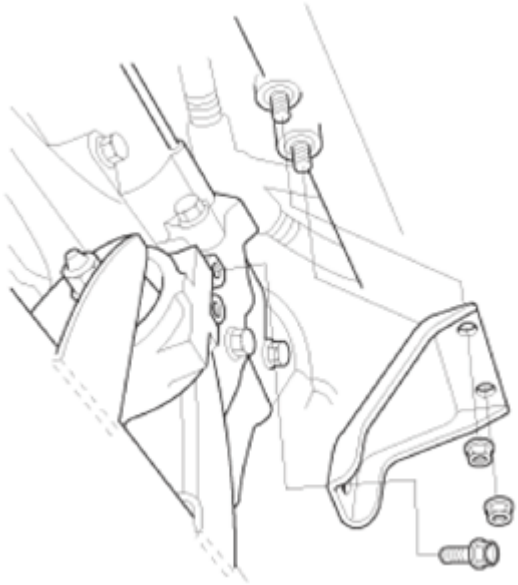

Fig. 96: Identifying Intake Manifold Lower Bracket
Courtesy of AMERICAN HONDA MOTOR CO., INC.

    2. Remove the intake manifold with the throttle body.

GETtheMANUALS.org

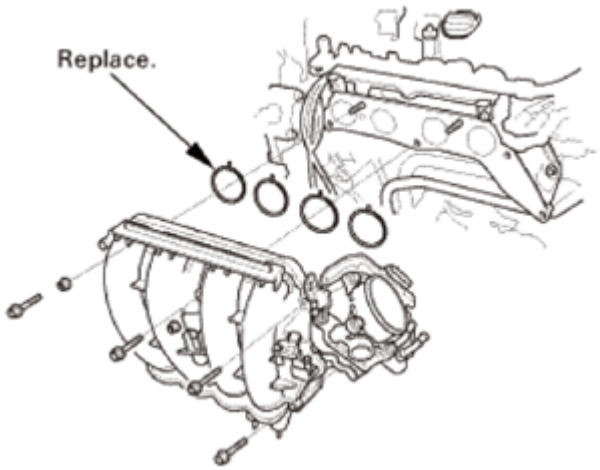

Fig. 97: Identifying Intake Manifold With Throttle Body
Courtesy of AMERICAN HONDA MOTOR CO., INC.

9. Fuel Injector and Rail Assembly
    1. Remove the rail with the fuel injector.

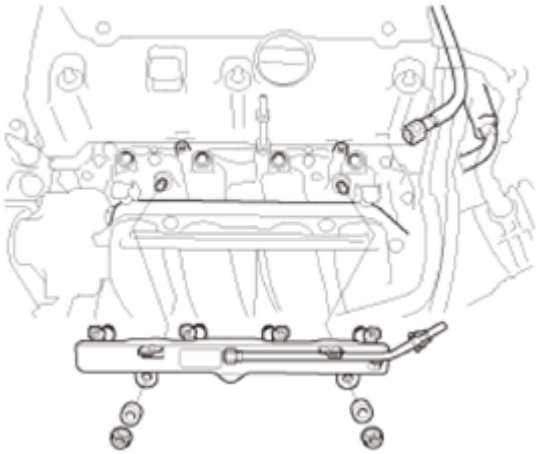

Fig. 98: Identifying Rail With Fuel Injector
Courtesy of AMERICAN HONDA MOTOR CO., INC.

10. Injector Base Assembly
    1. Remove the injector base (A).

GETtheMANUALS.org

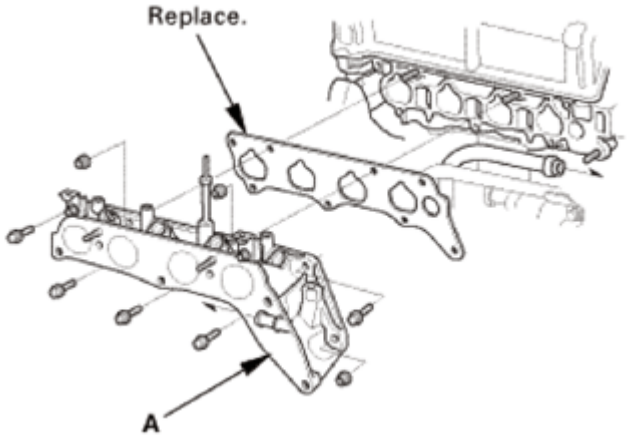

Fig. 99: Identifying Injector Base
Courtesy of AMERICAN HONDA MOTOR CO., INC.

11. Water Passage Assembly
    1. Remove the water passage.

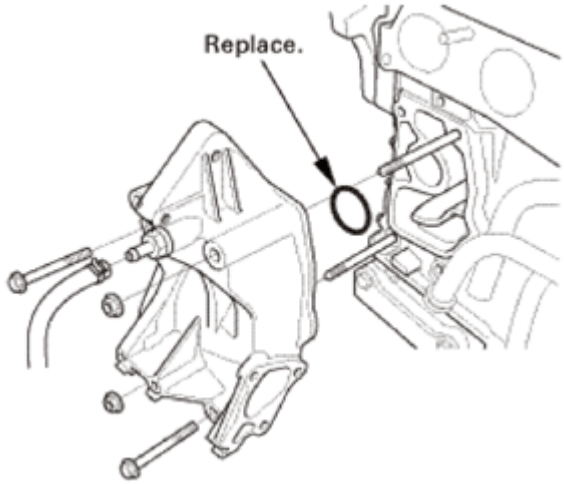

Fig. 100: Identifying Water Passage
Courtesy of AMERICAN HONDA MOTOR CO., INC.

12. A/F Sensor
    1. Remove the A/F sensor.

GETtheMANUALS.org

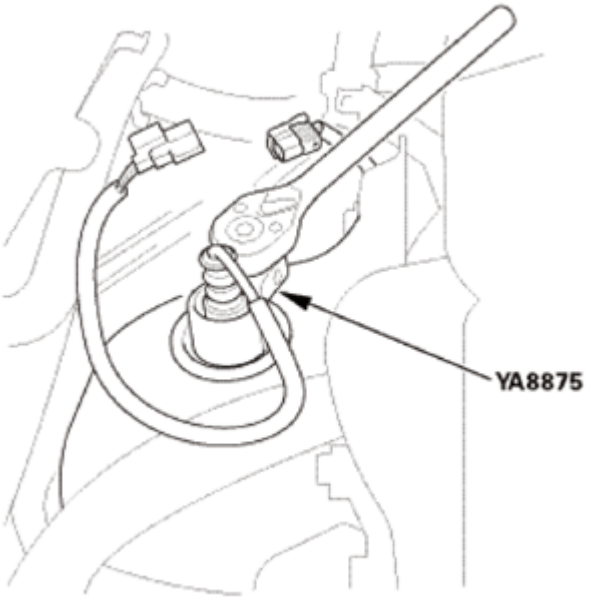

Fig. 101: Identifying A/F Sensor
Courtesy of AMERICAN HONDA MOTOR CO., INC.

13. Warm Up TWC
    1. Remove the exhaust chamber cover (A).
    2. Remove the warm up TWC (B).

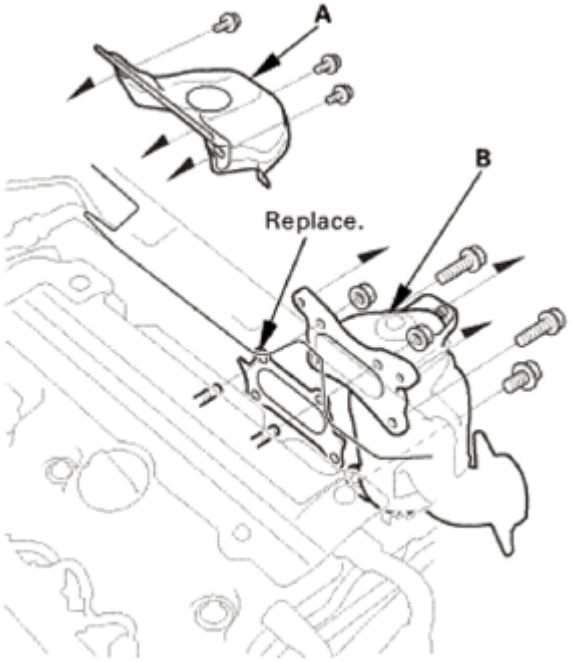

Fig. 102: Identifying Exhaust Chamber Cover And TWC
Courtesy of AMERICAN HONDA MOTOR CO., INC.

GETtheMANUALS.org

14. Ignition Coil
    1. Remove the ignition coils.

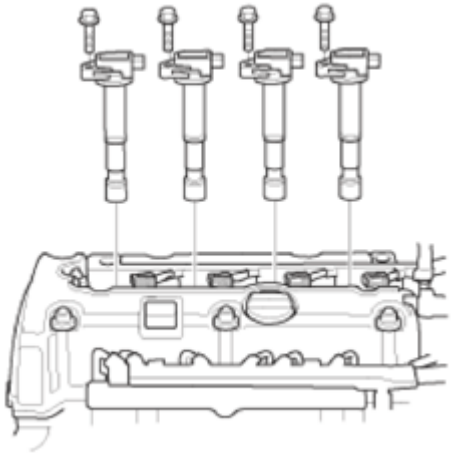

Fig. 103: Identifying Ignition Coils
Courtesy of AMERICAN HONDA MOTOR CO., INC.

15. Cylinder Head Cover
    1. Remove the dipstick (A).
    2. Disconnect the breather hose (B).
    3. Remove the two bolts (C).

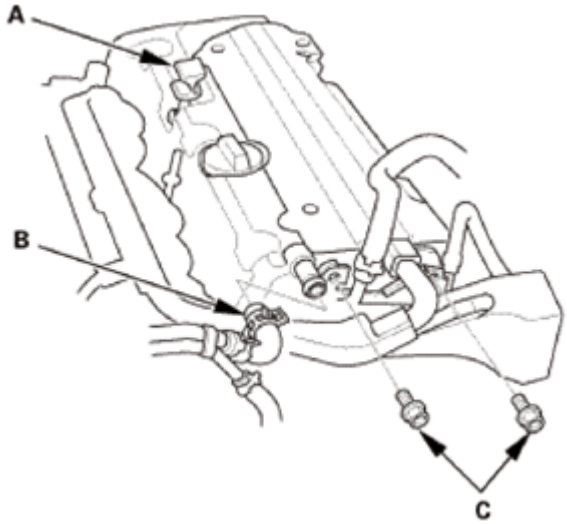

Fig. 104: Identifying Dipstick, Breather Hose And Bolts
Courtesy of AMERICAN HONDA MOTOR CO., INC.

    4. Remove the cylinder head cover.

GETtheMANUALS.org

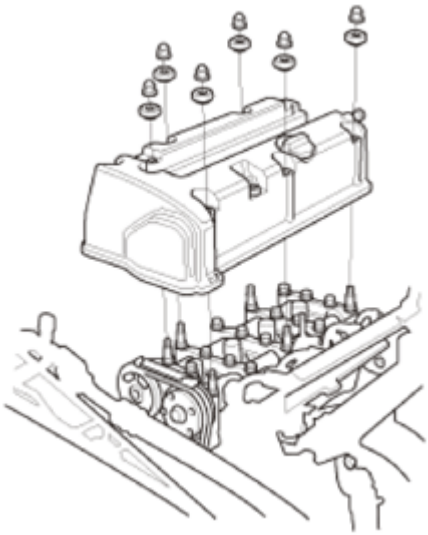

Fig. 105: Identifying Cylinder Head Cover
Courtesy of AMERICAN HONDA MOTOR CO., INC.

16. Set The Crankshaft To Top Dead Center
    1. Turn the crankshaft so its white mark (A) lines up with the pointer (B).

NOTE: The other pointer (C) is not used.

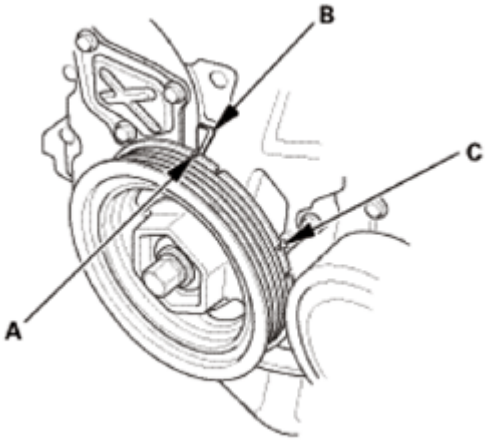

Fig. 106: Identifying White Mark And Pointer On Crankshaft
Courtesy of AMERICAN HONDA MOTOR CO., INC.

17. Set The No. 1 Piston at Top Dead Center (With Cam Chain Case/Oil Pump)
    1. Set the No. 1 piston at top dead center (TDC). The punch mark (A) on the VTC actuator and the punch mark (B) on the exhaust camshaft sprocket should be at the top. Align the TDC marks (C) on the VTC actuator and the exhaust camshaft sprocket.

GETtheMANUALS.org

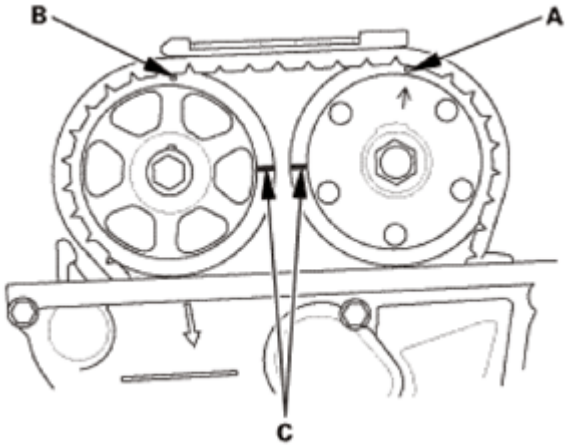

Fig. 107: Identifying Punch Marks On VTC Actuator And Exhaust Camshaft Sprocket
Courtesy of AMERICAN HONDA MOTOR CO., INC.

18. VTC Oil Control Solenoid Valve
    1. Remove the VTC oil control solenoid valve.

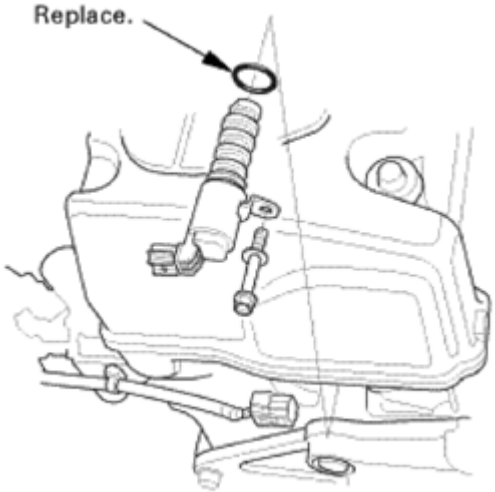

Fig. 108: Identifying VTC Oil Control Solenoid Valve O-Ring
Courtesy of AMERICAN HONDA MOTOR CO., INC.

19. Crankshaft Pulley
    1. Hold the pulley with the holder handle (A) and the crankshaft pulley holder (B).
    2. Remove the bolt with a socket, 19 mm (C) and a breaker bar, then remove the crankshaft pulley.

GETtheMANUALS.org

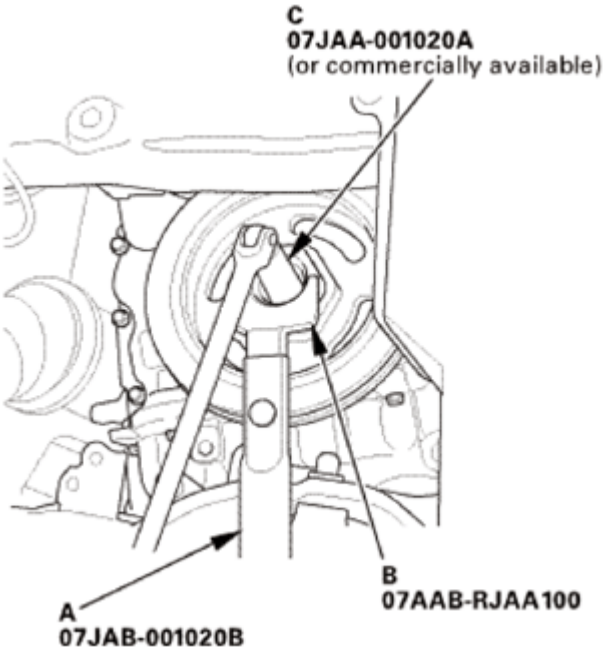

Fig. 109: Removing Bolt
Courtesy of AMERICAN HONDA MOTOR CO., INC.

20. Oil Pan Assembly (Without Transmission)
    1. Remove the bolts securing the oil pan.
    2. Using a flat blade screwdriver, separate the oil pan from the engine block in the places shown.

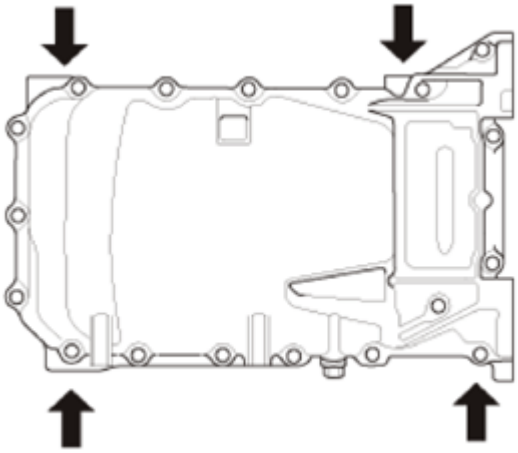

Fig. 110: Locating Areas For Separating Oil Pan
Courtesy of AMERICAN HONDA MOTOR CO., INC.

    3. Remove the oil pan.

GETtheMANUALS.org

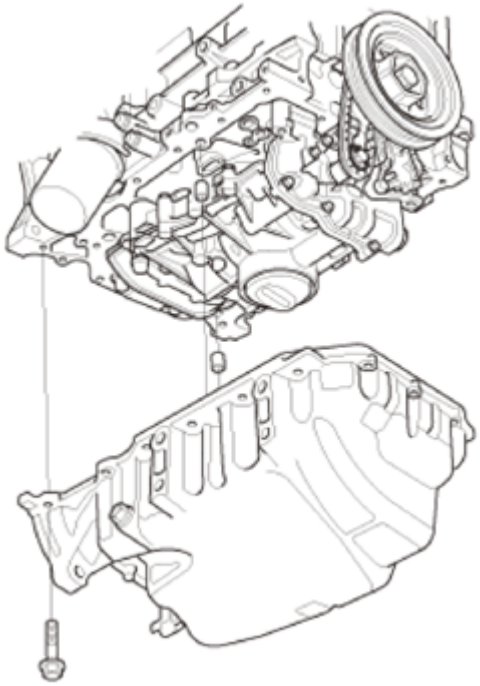

Fig. 111: Identifying Oil Pan
Courtesy of AMERICAN HONDA MOTOR CO., INC.

21. Side Engine Mount Bracket, Engine Side
    1. Remove the side engine mount bracket.

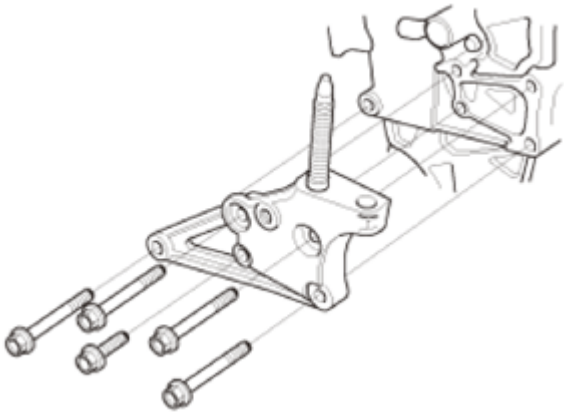

Fig. 112: Identifying Side Engine Mount Bracket
Courtesy of AMERICAN HONDA MOTOR CO., INC.

22. Cam Chain Case
    1. Remove the cam chain case (A) and the spacer (B).

GETtheMANUALS.org

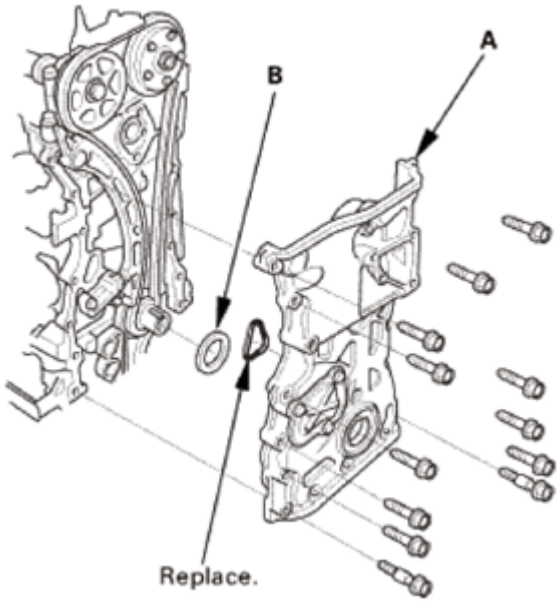

Fig. 113: Identifying Cam Chain Case And Spacer
Courtesy of AMERICAN HONDA MOTOR CO., INC.

23. Cam Chain Auto-Tensioner
    1. Loosely install the crankshaft pulley.
    2. Turn the crankshaft counterclockwise to compress the auto-tensioner.

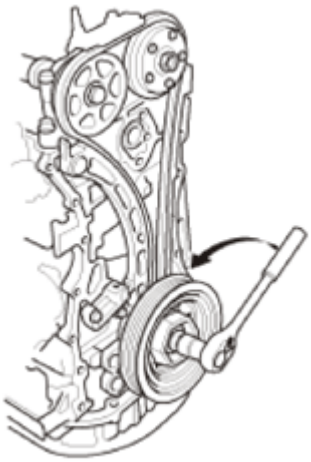

Fig. 114: Turning Crankshaft
Courtesy of AMERICAN HONDA MOTOR CO., INC.

    3. Rotate the crankshaft counterclockwise to align the holes on the lock (A) and the auto-tensioner (B), then insert a 1.2 mm (3/64 in) diameter pin (C) into the holes. Turn the crankshaft clockwise to secure the pin.

NOTE: **If the holes in the lock and the auto-tensioner do not align, continue**

GETtheMANUALS.org

to rotating the crankshaft counterclockwise until the holes align, then install the pin.

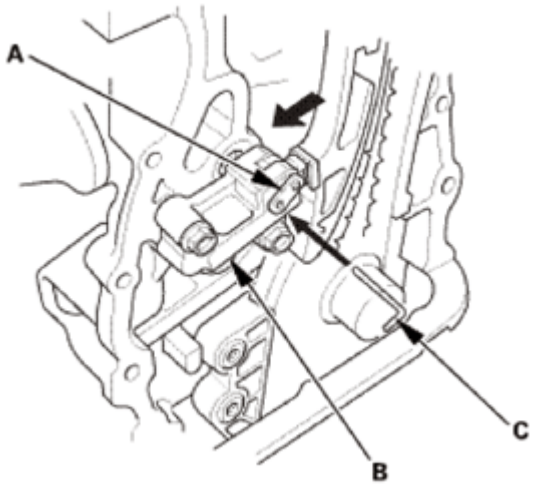

Fig. 115: Inserting Pin Of 1.2 mm Diameter
Courtesy of AMERICAN HONDA MOTOR CO., INC.

4. Remove the auto-tensioner.

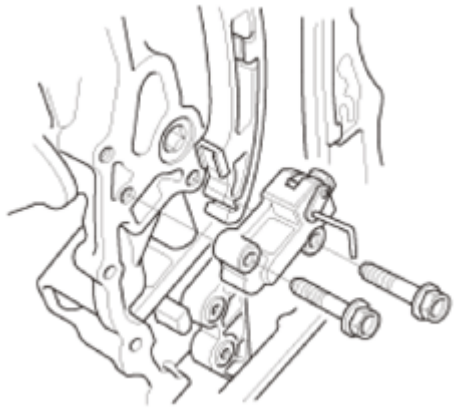

Fig. 116: Identifying Auto-Tensioner
Courtesy of AMERICAN HONDA MOTOR CO., INC.

24. Cam Chain Tensioner Arm and Cam Chain Guide
    1. Remove cam chain guide B.

GETtheMANUALS.org

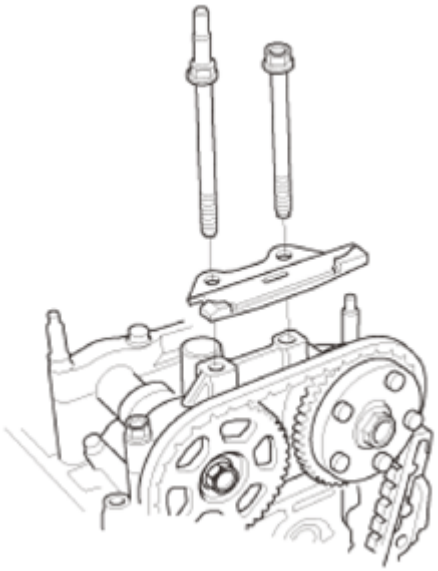

Fig. 117: Identifying Cam Chain Guide
Courtesy of AMERICAN HONDA MOTOR CO., INC.

2. Remove cam chain guide A and the tensioner arm (B).

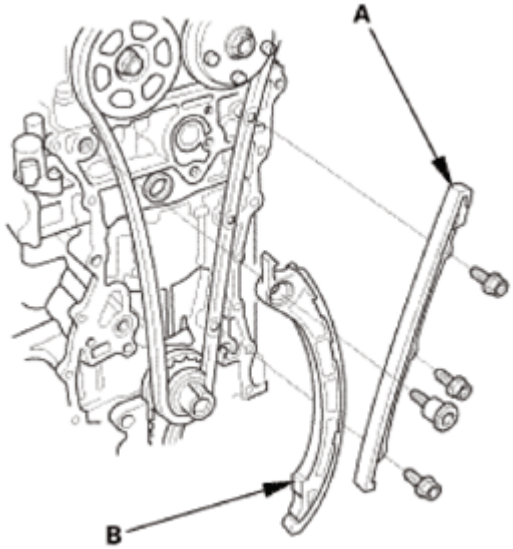

Fig. 118: Identifying Cam Chain Guide And Tensioner Arm
Courtesy of AMERICAN HONDA MOTOR CO., INC.

25. Cam Chain
    1. Remove the cam chain.
26. Camshaft Holder
    1. Loosen the rocker arm and the adjusting screws (A).

GETtheMANUALS.org

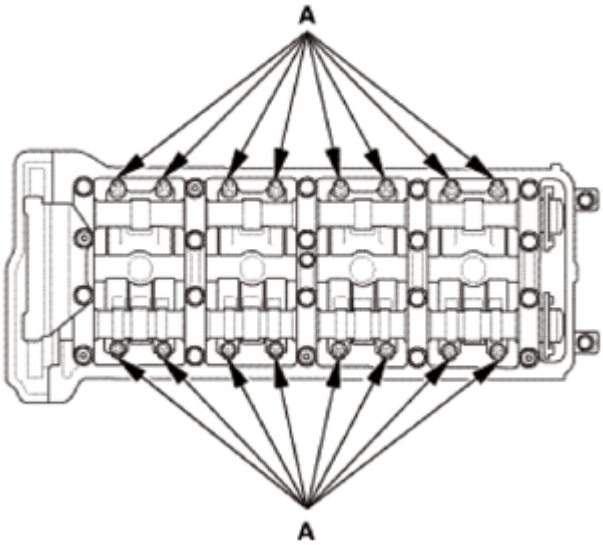

Fig. 119: Identifying Adjusting Screws
Courtesy of AMERICAN HONDA MOTOR CO., INC.

2. Remove the camshaft holder bolts. To prevent damaging the camshafts, loosen the bolts, in sequence, two turns at a time.

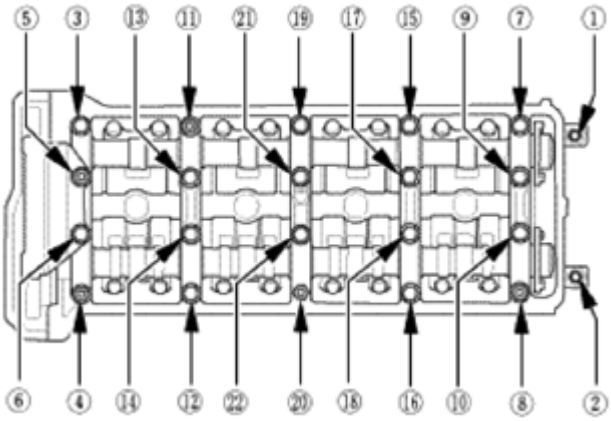

Fig. 120: Camshaft Holder Bolts Removing Order
Courtesy of AMERICAN HONDA MOTOR CO., INC.

3. Remove cam chain guide B, the camshaft holders (A).

GETtheMANUALS.org

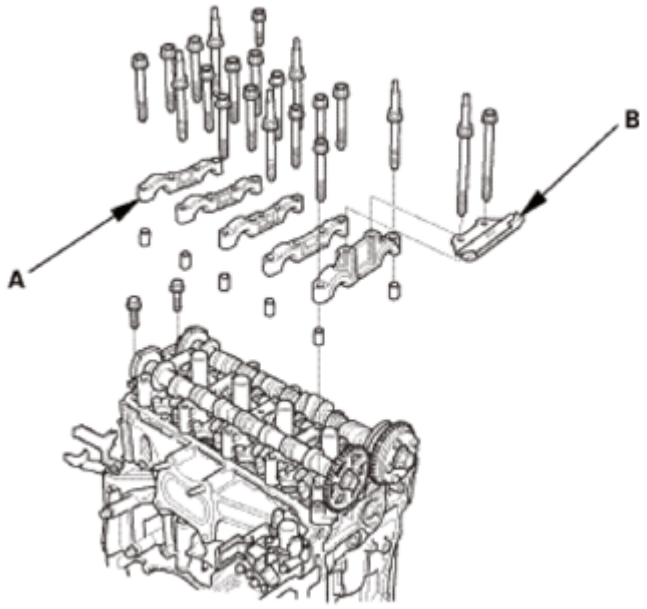

Fig. 121: Identifying Camshaft Holders And Cam Chain Guide
Courtesy of AMERICAN HONDA MOTOR CO., INC.

27. Camshaft
    1. Carefully tip up the intake camshaft on the transmission side of the engine until there is enough slack in the chain to lift the chain off of the VTC actuator's teeth.
    2. Remove the intake camshaft and the exhaust camshaft while keeping some tension on the cam chain.
    3. Secure the cam chain to the A/C compressor suction hose with a wire tie to prevent the chain from falling down into the chain case.

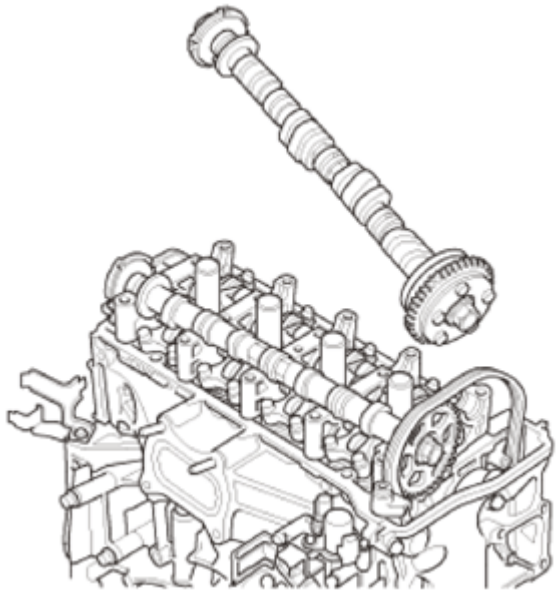

GETtheMANUALS.org

Fig. 122: Identifying Intake Camshaft
Courtesy of AMERICAN HONDA MOTOR CO., INC.

28. Rocker Arm Assembly
    1. Insert the bolts (A) into the rocker shaft holder, then remove the rocker arm assembly (B).

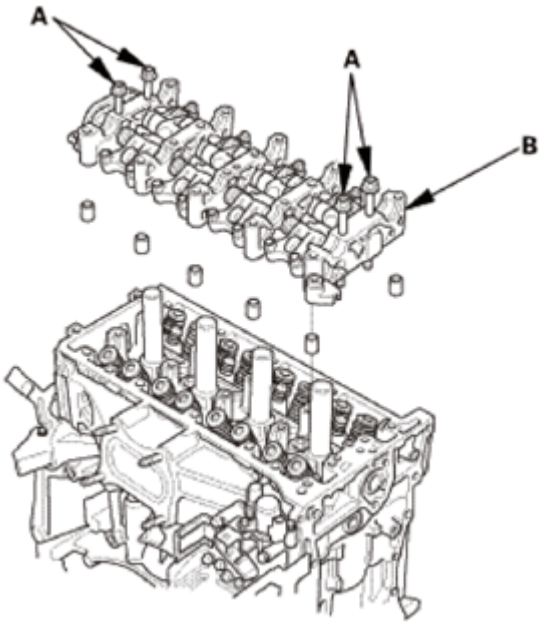

Fig. 123: Identifying Rocker Arm Assembly And Bolts
Courtesy of AMERICAN HONDA MOTOR CO., INC.

29. Cylinder Head Assembly
    1. Remove the cylinder head bolts. To prevent warpage, loosen the bolts in sequence 1/3 turn at a time; repeat the sequence until all bolts are loosened.
    2. Remove the cylinder head.

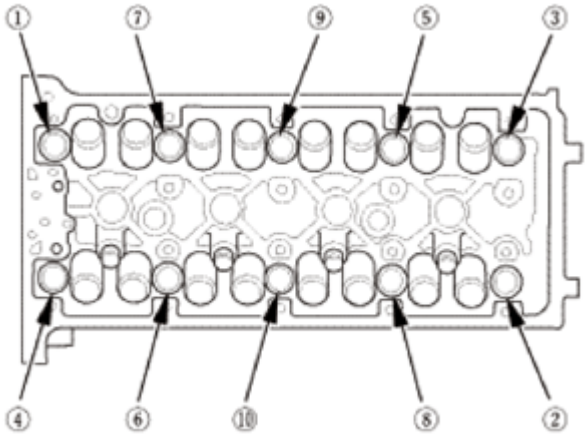

Fig. 124: Cylinder Head Bolts Removing Order

GETtheMANUALS.org

Courtesy of AMERICAN HONDA MOTOR CO., INC.

30. Oil Pump Chain Tensioner
    1. Loosely install the crankshaft pulley.
    2. To hold the rear balancer shaft, insert a 6 mm long pin punch (A) into the maintenance hole in the balancer shaft holder and through the rear balancer shaft.
    3. Turn the crankshaft counterclockwise to compress the oil pump chain auto-tensioner.
    4. Remove the crankshaft pulley.

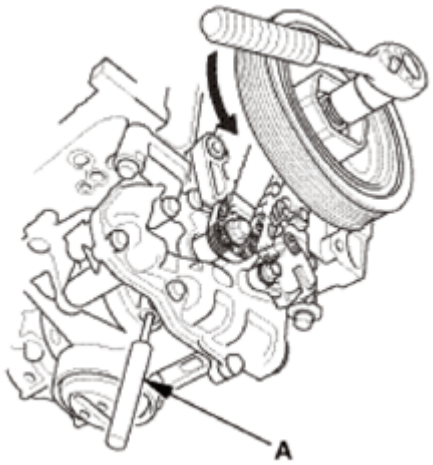

Fig. 125: Turning Crankshaft
Courtesy of AMERICAN HONDA MOTOR CO., INC.

5. Align the holes on the lock (A) and the oil pump chain auto-tensioner (B), then insert a 3.0 mm (7/64 in) diameter pin (C) into the holes. Turn the crankshaft clockwise to secure the pin.

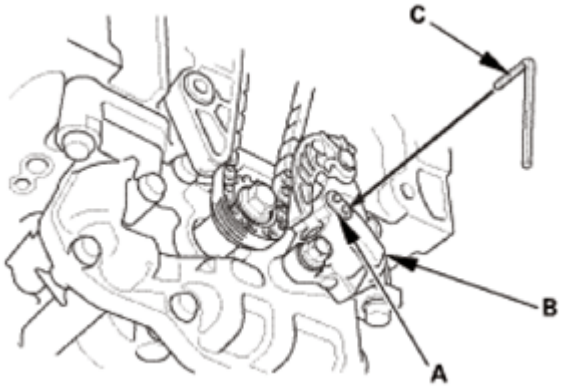

Fig. 126: Inserting Pin Into Holes
Courtesy of AMERICAN HONDA MOTOR CO., INC.

6. Use a transmission jack to lift the transmission 30-40 mm (1.18 -1.57 in), then remove the oil pump chain auto-tensioner.

GETtheMANUALS.org

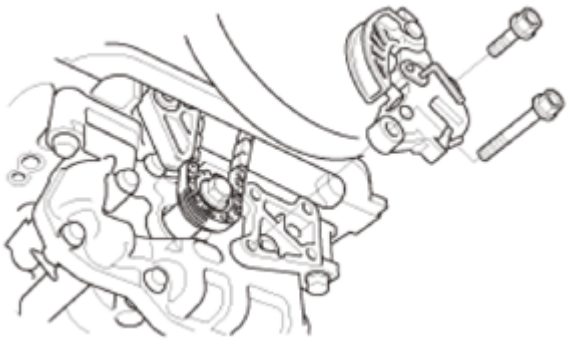

Fig. 127: Identifying Oil Pump Chain Auto-Tensioner
Courtesy of AMERICAN HONDA MOTOR CO., INC.

31. Engine Oil Pump Assembly
    1. Loosen the oil pump sprocket mounting bolt.

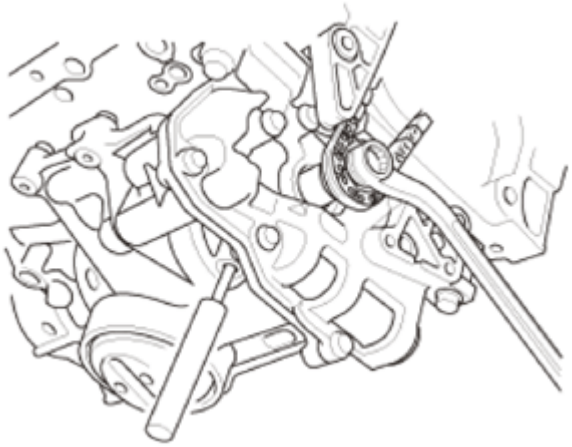

Fig. 128: Loosening Oil Pump Sprocket Mounting Bolt
Courtesy of AMERICAN HONDA MOTOR CO., INC.

    2. Remove the oil pump sprocket (A) and the oil pump chain guide (B).
    3. Remove the oil pump chain (C).

GETtheMANUALS.org

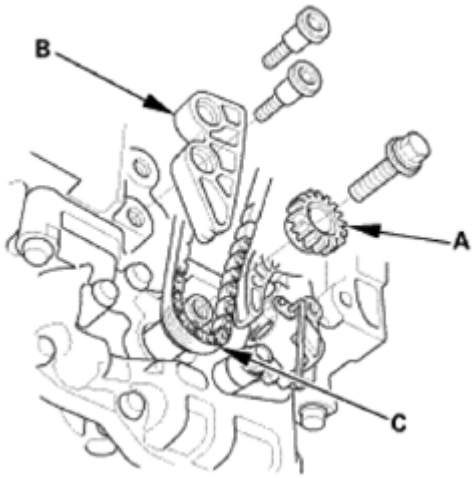

Fig. 129: Identifying Oil Pump Sprocket, Chain Guide And Pump Chain
Courtesy of AMERICAN HONDA MOTOR CO., INC.

4. Remove the oil pump.

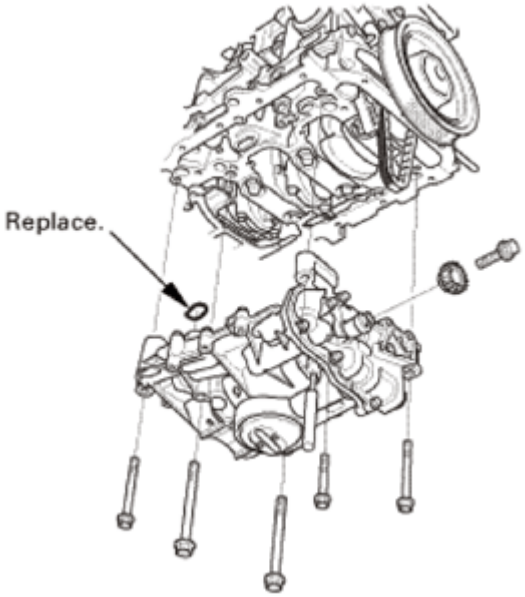

Fig. 130: Identifying Oil Pump
Courtesy of AMERICAN HONDA MOTOR CO., INC.

32. Engine Baffle Plate
    1. Remove the baffle plate.

GETtheMANUALS.org

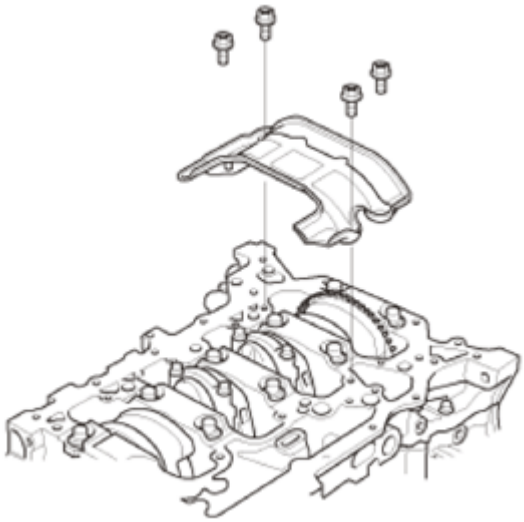

Fig. 131: Identifying Baffle Plate
Courtesy of AMERICAN HONDA MOTOR CO., INC.

33. Connecting Rod Caps/Bearing Halves
    1. Remove the connecting rod caps/bearing. Keep all connecting rod caps/bearing halves in order.

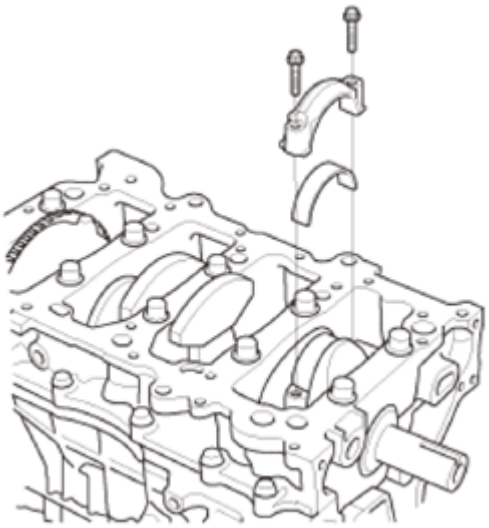

Fig. 132: Identifying Connecting Rod Caps/Bearing
Courtesy of AMERICAN HONDA MOTOR CO., INC.

34. Cylinder Lower Block Assembly
    1. Remove the 8 mm bolts.

GETtheMANUALS.org

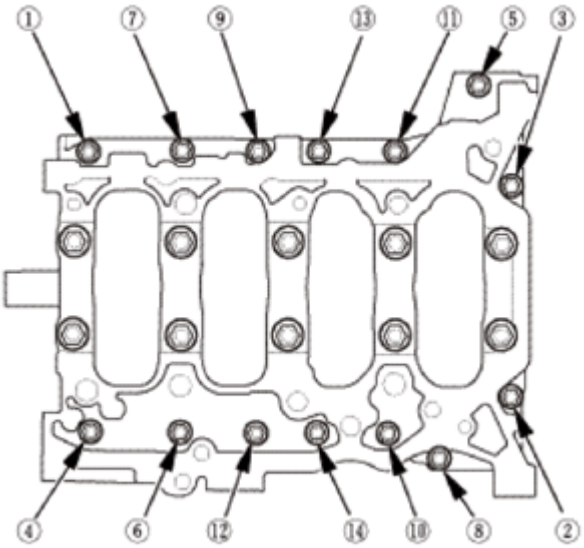

Fig. 133: Cylinder Lower Block Assembly Bolts Removing Order
Courtesy of AMERICAN HONDA MOTOR CO., INC.

2. Remove the bearing cap bolts. To prevent warpage, loosen the bolts in sequence 1/3 turn at a time; repeat the sequence until all bolts are loosened.

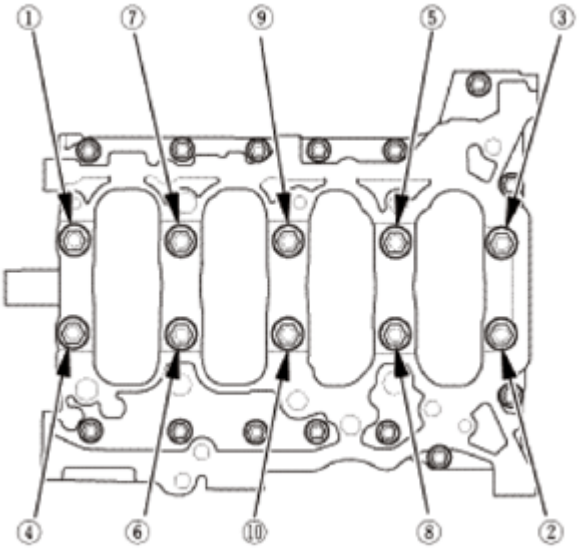

Fig. 134: Bearing Cap Bolts Removing Order
Courtesy of AMERICAN HONDA MOTOR CO., INC.

3. Remove the lower block and the bearings. Keep all the bearings in order.

GETtheMANUALS.org

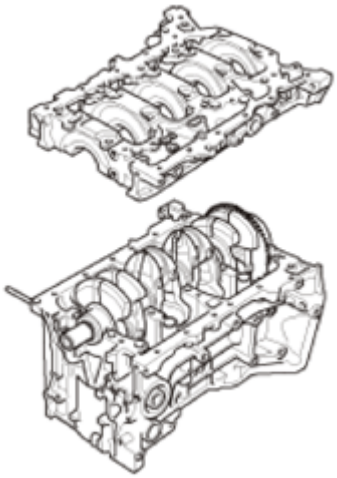

Fig. 135: Identifying Lower Block And Bearings
Courtesy of AMERICAN HONDA MOTOR CO., INC.

35. Crankshaft
    1. Remove the crankshaft.

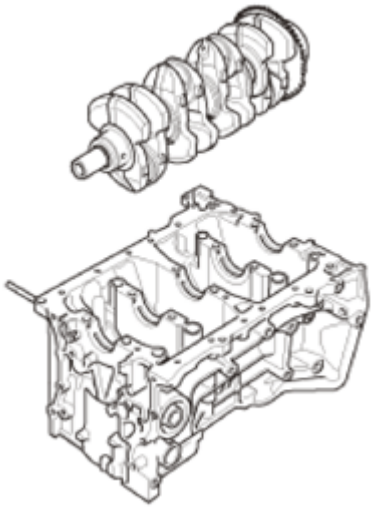

Fig. 136: Identifying Crankshaft
Courtesy of AMERICAN HONDA MOTOR CO., INC.

36. Crankshaft Oil Seal Transmission Side
    1. Remove the crankshaft oil seal.

GETtheMANUALS.org

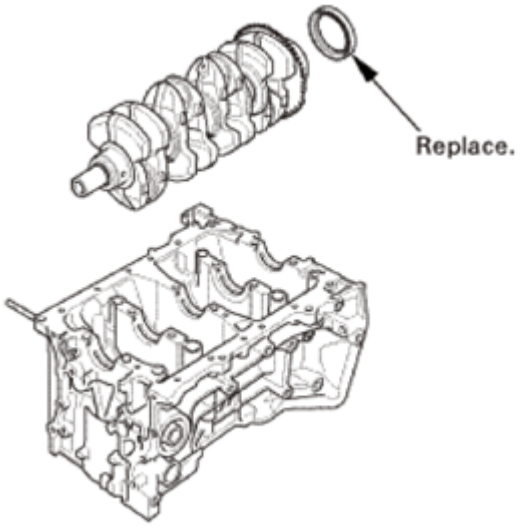

Fig. 137: Identifying Crankshaft Oil Seal
Courtesy of AMERICAN HONDA MOTOR CO., INC.

37. CKP Pulse Plate
    1. Remove the CKP pulse plate.

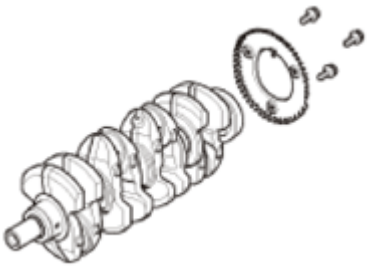

Fig. 138: Identifying CKP Pulse Plate
Courtesy of AMERICAN HONDA MOTOR CO., INC.

INSPECTION

1. Crankshaft - Inspection
    1. Clean the crankshaft oil passages with pipe cleaners or a suitable brush.

GETtheMANUALS.org

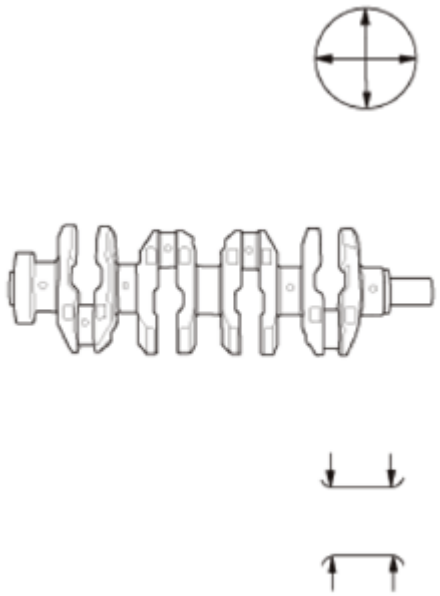

Fig. 139: Identifying Crankshaft Oil Passages
Courtesy of AMERICAN HONDA MOTOR CO., INC.

2. Check the keyway slot and the threaded holes for damage.
3. Measure the out-of-round at the middle of each rod and the main journal in two places. The difference between measurements on each journal must not be more than the service limit.

   Journal Out-of-Round

   Standard (New): 0.004 mm (0.00016 in) max .

   Service Limit: 0.010 mm (0.00039 in)

4. Measure the taper at the edges of each rod and the main journal. The difference between measurements on each journal must not be more than the service limit.

   Journal Taper

   Standard (New): 0.005 mm (0.00020 in) max .

   Service Limit: 0.010 mm (0.00039 in)

5. Place the V-blocks on a flat surface.

GETtheMANUALS.org

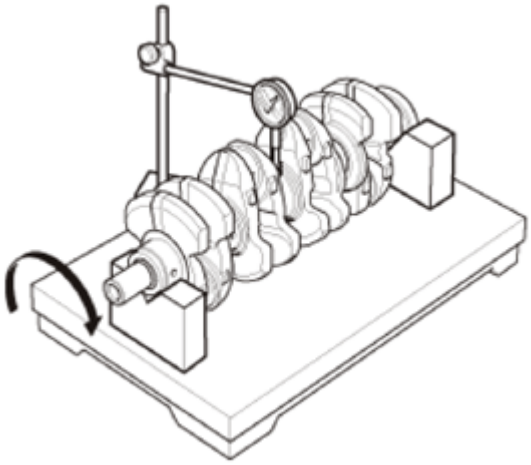

Fig. 140: Checking Crankshaft Runout
Courtesy of AMERICAN HONDA MOTOR CO., INC.

6. Check the total runout with the crankshaft supported on V-blocks.
7. Measure the runout on all of the main journals. Rotate the crankshaft two complete revolutions. The difference between measurements on each journal must not be more than the service limit.

Crankshaft Total Runout

Standard (New): 0.03 mm (0.0012 in) max .

INSTALLATION

1. CKP Pulse Plate
    1. Install the CKP pulse plate.

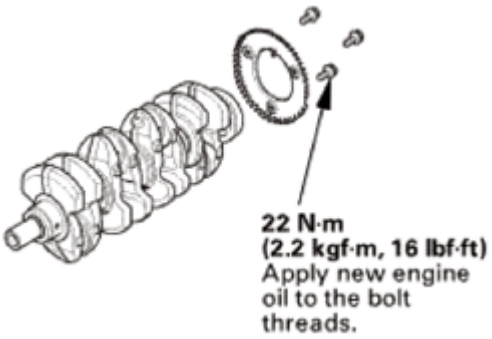

Fig. 141: Identifying CKP Pulse Plate And Bolts With Torque Specifications
Courtesy of AMERICAN HONDA MOTOR CO., INC.

2. Crankshaft
    1. Hold the crankshaft so rod journal No. 2 and rod journal No. 3 are straight up, and lower the crankshaft into the engine block. Be careful not to damage the journals and the CKP pulse plate.

GETtheMANUALS.org

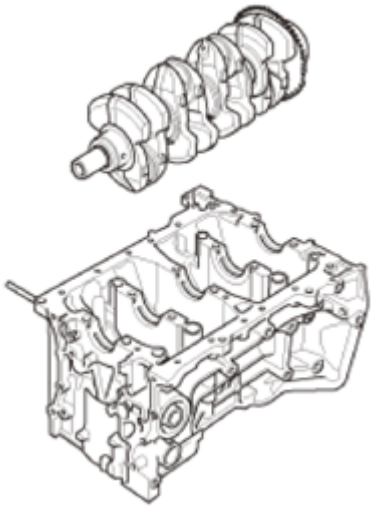

Fig. 142: Identifying Crankshaft
Courtesy of AMERICAN HONDA MOTOR CO., INC.

3. Crankshaft Main Bearing Clearance - Inspection
    1. Clean each main journal and the bearing half with a clean shop towel.
    2. Place one strip of plastigage across each main journal.
    3. Reinstall the main bearings and the lower block, then torque the bolts to 30 N.m (3.1 kgf.m, 22 lbf.ft).

NOTE:

- **Apply new engine oil to the bolt threads and flanges.**
- **Do not rotate the crankshaft during inspection.**

    4. Tighten the bearing cap bolts an additional 48 °.

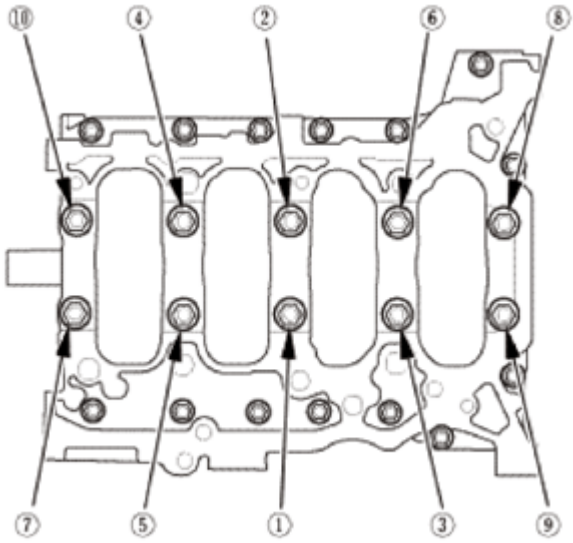

Fig. 143: Bearing Cap Bolts Tightening Sequence

GETtheMANUALS.org

Courtesy of AMERICAN HONDA MOTOR CO., INC.

5. Remove the lower block and the main bearings again, and measure the widest part of the plastigage.

   Main Bearing-to-Journal Oil Clearance No. 1, 2, 4, 5 Journals:

   Standard (New): 0.017-0.041 mm (0.00067-0.00161 in)

   Service Limit: 0.050 mm (0.00197 in)

   No. 3 Journal:

   Standard (New): 0.025-0.049 mm (0.00098-0.00193 in)

   Service Limit: 0.055 mm (0.00217 in)

Fig. 144: Measuring Widest Part Of Plastigage
Courtesy of AMERICAN HONDA MOTOR CO., INC.

4. Crankshaft Main Bearing - Selection
   1. Numbers, letters, or bars have been stamped on the end of the lower block as a code for the size of each of the five main journal bores. Write down the block bore codes. If you cannot read the codes because of accumulated dirt and dust, do not scrub them with a wire brush or scraper. Clean them only with solvent or detergent.

GETtheMANUALS.org

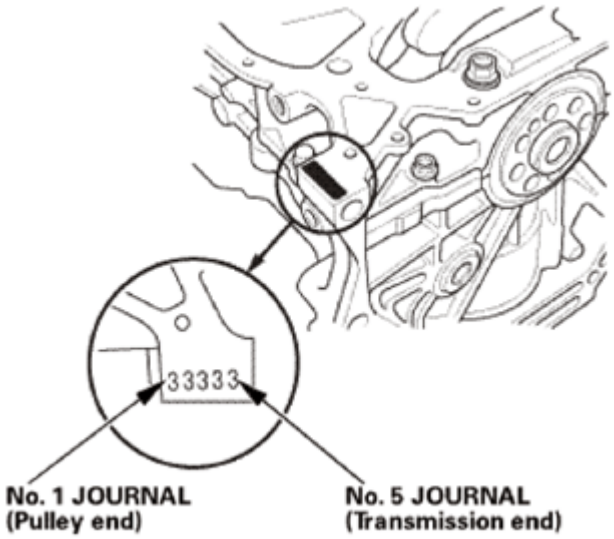

Fig. 145: Identifying Number Stamped On End Of Lower Block
Courtesy of AMERICAN HONDA MOTOR CO., INC.

2. The main journal codes are stamped on the crankshaft.

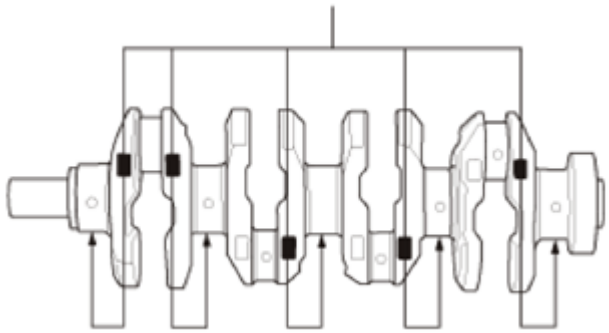

Fig. 146: Identifying Main Journal Codes (Stamped On Crankshaft)
Courtesy of AMERICAN HONDA MOTOR CO., INC.

GETtheMANUALS.org

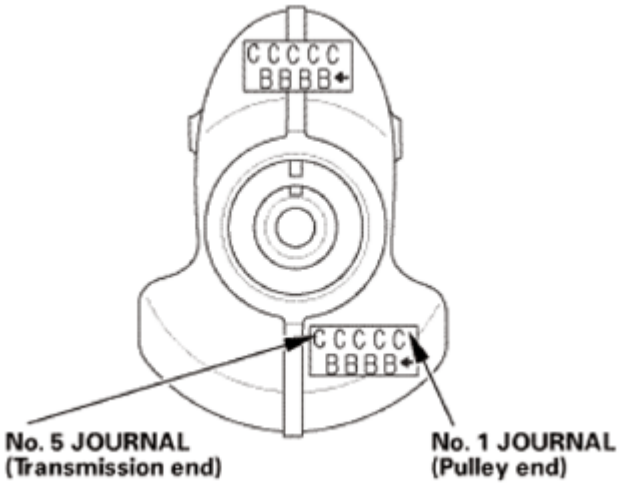

Fig. 147: Identifying Main Journal Codes (Stamped On Crankshaft)
Courtesy of AMERICAN HONDA MOTOR CO., INC.

3. Use the block bore codes and the main journal codes to select the appropriate replacement bearings from the following table.

NOTE:

- **Color code is on the edge of the bearing.**
- **When using bearing halves of different colors, it does not matter which color is used in the top or bottom.**

Crank bore code → Larger block bore

Main journal code	1 or A or I	2 or B or II	3 or C or III	4 or D or IIII
1	Red	Red/ Pink	Pink	Yellow
2	Red/ Pink	Pink	Yellow	Yellow/ Green
3	Pink	Yellow	Yellow/ Green	Green
4	Yellow	Yellow/ Green	Green	Brown
5	Yellow/ Green	Green	Brown	Brown/ Black
6	Green	Brown	Brown/ Black	Black

Smaller bearing (Thicker)

Smaller main journal ↓ Smaller bearing (Thicker) ↓

Fig. 148: Block Bore Codes And Main Journal Codes Chart
Courtesy of AMERICAN HONDA MOTOR CO., INC.

5. Cylinder Lower Block Assembly

GETtheMANUALS.org

1. Remove all of the old liquid gasket from the lower block mating surfaces, the bolts, and the bolt holes.
2. Clean and dry the lower block mating surfaces.
3. Apply liquid gasket (P/N 08718-0004 or 08718-0009) to the engine block mating surface of the lower block and to the inside edge of the threaded bolt holes. Install the component within 5 minutes of applying the liquid gasket.

NOTE:

- **Apply a 2.5 mm (0.098 in) diameter bead of liquid gasket along the broken line (A).**
- **If too much time has passed after applying the liquid gasket, remove the old liquid gasket and residue, then reapply new liquid gasket.**

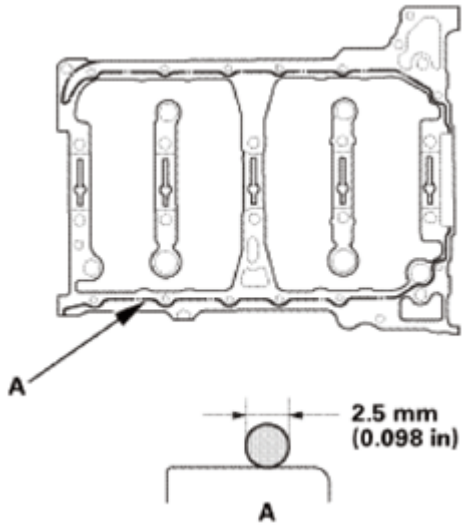

Fig. 149: Identifying Broken Line
Courtesy of AMERICAN HONDA MOTOR CO., INC.

4. Put the lower block on the engine block.
5. Apply new engine oil to the threads of the bearing cap bolts. Torque the bearing cap bolts in sequence, to 30 N.m (3.1 kgf.m, 22 lbf.ft).

GETtheMANUALS.org

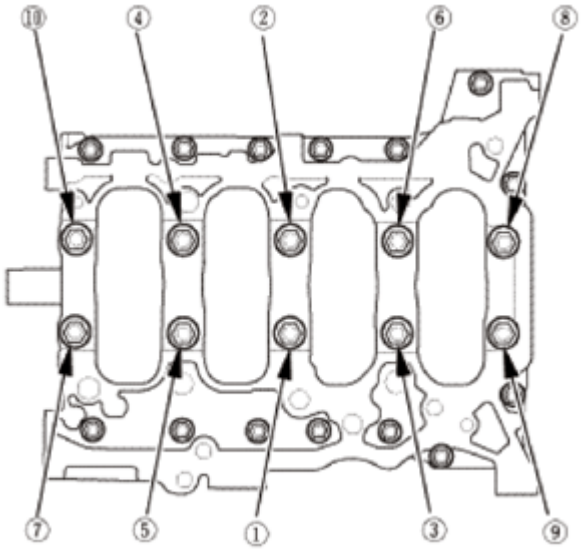

Fig. 150: Bearing Cap Bolts Tightening Sequence
Courtesy of AMERICAN HONDA MOTOR CO., INC.

6. Tighten the bearing cap bolts an additional 48 °.

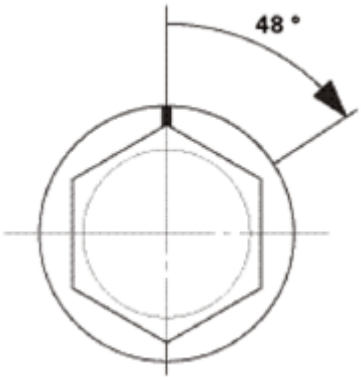

Fig. 151: Identifying Bearing Cap Bolts Tightening Angle
Courtesy of AMERICAN HONDA MOTOR CO., INC.

7. Torque the 8 mm bolts in sequence to 22 N.m (2.2 kgf.m, 16 lbf.ft).

NOTE:

- **Wait at least 30 minutes before filling the engine with oil.**
- **Do not run the engine for at least 3 hours after installing the lower block.**

GETtheMANUALS.org

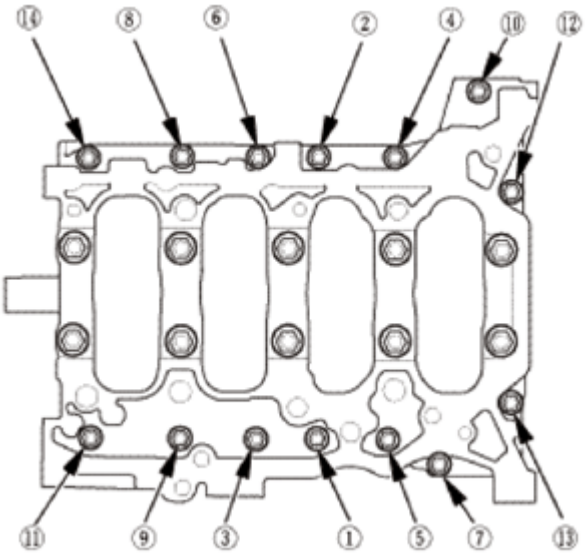

Fig. 152: Bearing Cap Bolts Tightening Sequence
Courtesy of AMERICAN HONDA MOTOR CO., INC.

6. Connecting Rod Bearing Clearance - Inspection
    1. Clean the connecting rod journal and the bearing half with a clean shop towel.
    2. Place plastigage across the connecting rod journal.
    3. Reinstall the bearing half and the connecting rod cap, then torque the bolts to 41 N.m (4.2 kgf.m, 30 lbf.ft) + 120 °.

    NOTE:
    - **Apply new engine oil to the bolt threads and flanges.**
    - **Do not rotate the crankshaft during inspection.**

    4. Remove the connecting rod cap and the bearing half, and measure the widest part of the plastigage.

    Connecting Rod Bearing-to-Journal Oil Clearance

    Standard (New): 0.032-0.066 mm (0.00126-0.00260 in)

    Service Limit: 0.077 mm (0.00303 in)

GETtheMANUALS.org

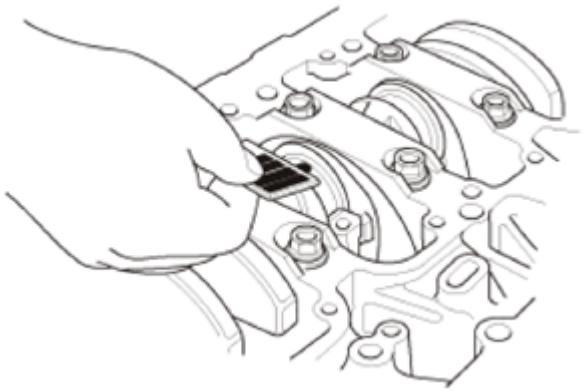

Fig. 153: Measuring Widest Part Of Plastigage
Courtesy of AMERICAN HONDA MOTOR CO., INC.

5. If the plastigage measures too wide or too narrow, remove the cap, and the upper half of the bearing. Install a new, complete bearing with the appropriate color code(s), and recheck the clearance. Do not file, shim, or scrape the bearings or the caps to adjust clearance.
6. If the plastigage shows the clearance is still incorrect, try the next larger or smaller bearing (the color listed above or below the current one), and check the clearance again. If the proper clearance cannot be obtained by using the appropriate larger or smaller bearings, replace the crankshaft and start over.

7. Connecting Rod Bearing - Selection
   1. Each connecting rod has a tolerance range from 0 to 0.024 mm (0.00094 in), in 0.006 mm (0.00024 in) increments, depending on the size of its big end bore. It's then stamped with a number or bar (1, 2, 3, or 4/l, ll, lll, or llll) indicating the range. You may find any combination of numbers and bars in any engine. (Half the number or bar is stamped on the rod cap, the other half is on the connecting rod.) If you cannot read the code because of an accumulation of oil and varnish, do not scrub it with a wire brush or scraper. Clean it only with solvent or detergent.

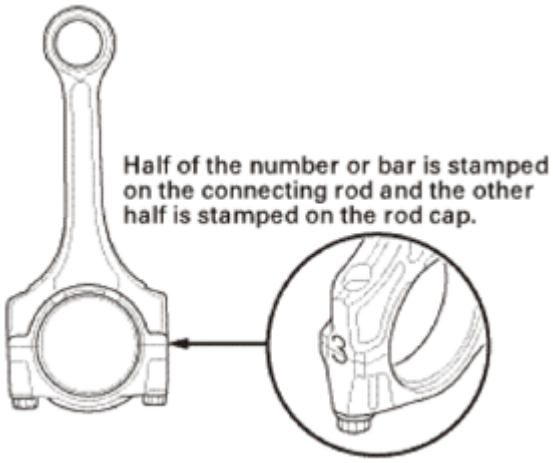

Fig. 154: Identifying Number Stamped On Connecting Rod
Courtesy of AMERICAN HONDA MOTOR CO., INC.

GETtheMANUALS.org

2. The connecting rod journal codes are stamped on the crankshaft in either location.

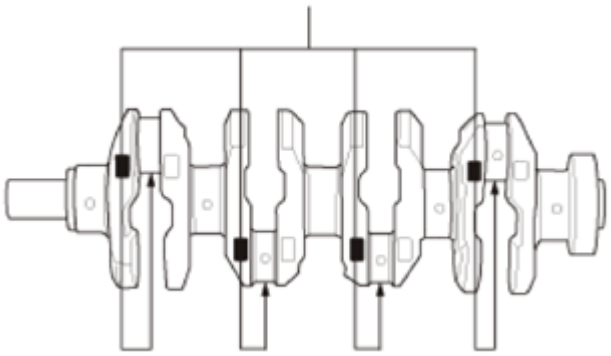

Fig. 155: Identifying Connecting Rod Journal Codes (Stamped On Crankshaft)
Courtesy of AMERICAN HONDA MOTOR CO., INC.

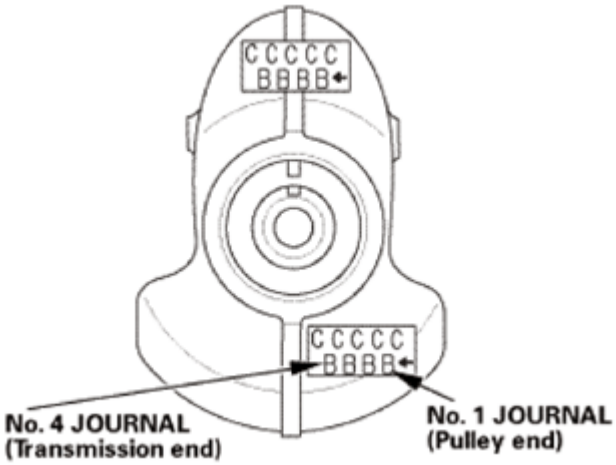

Fig. 156: Identifying Connecting Rod Journal Codes (Stamped On Crankshaft)
Courtesy of AMERICAN HONDA MOTOR CO., INC.

3. Use the big end bore codes and the rod journal codes to select appropriate replacement bearings from the following table.

NOTE:

- **Color code is on the edge of the bearing.**
- **When using bearing halves of different colors, it does not matter which color is used in the top or bottom.**

GETtheMANUALS.org

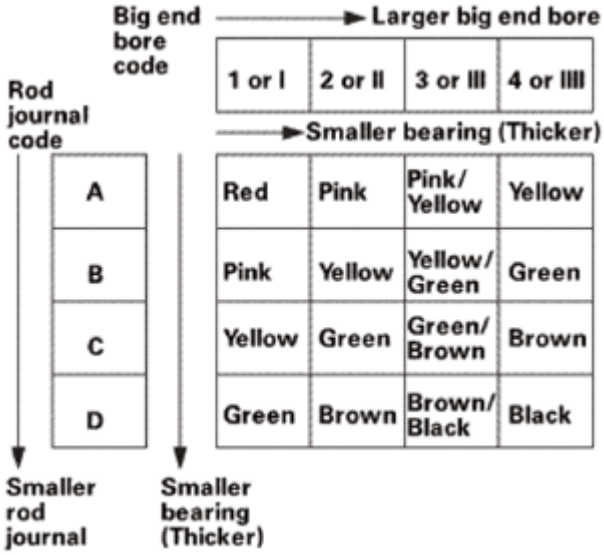

Fig. 157: Big End Bore Codes And Rod Journal Codes Chart
Courtesy of AMERICAN HONDA MOTOR CO., INC.

8. Connecting Rod Bolt - Inspection
    1. Measure the diameter of each connecting rod bolt at point A and point B.

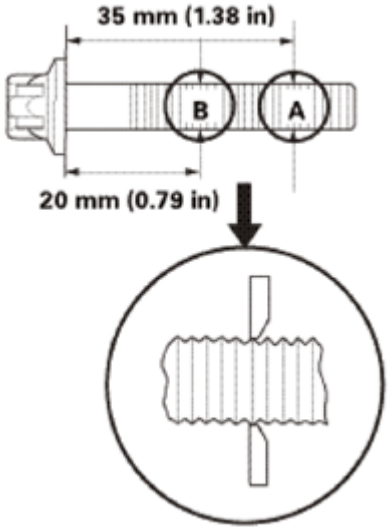

Fig. 158: Identifying Diameter Of Connecting Rod Bolts
Courtesy of AMERICAN HONDA MOTOR CO., INC.

    2. Calculate the difference in diameter between point A and point B.

Point A-Point B = Difference in Diameter

Difference in Diameter

GETtheMANUALS.org

Specification: 0-0.1 mm (0-0.004 in)

3. If the difference in diameter is out of specification, replace the connecting rod bolt.

9. Connecting Rod Caps/Bearing Halves
   1. Apply new engine oil to the threads of the connecting rod bolts.
   2. Seat the rod journals into connecting rod No. 1 and connecting rod No. 4. Line up the mark (A) on the connecting rod and the bearing cap.
   3. Install the bearing caps and the bolts finger-tight.
   4. Rotate the crankshaft clockwise, and seat the journals into connecting rod No. 2 and connecting rod No. 3. Line up the mark on the connecting rod and the bearing cap.
   5. Install the bearing caps and the bolts finger-tight.

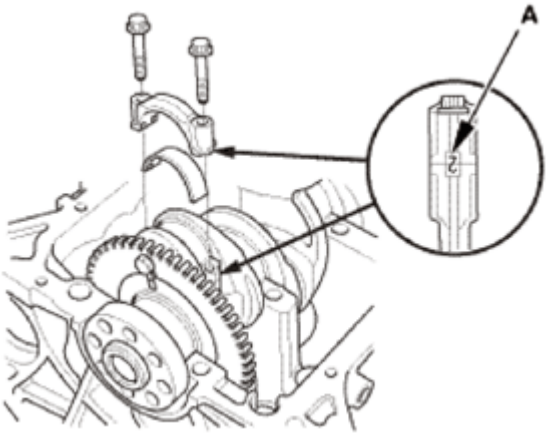

Fig. 159: Identifying Mark On Connecting Rod And Bearing Cap
Courtesy of AMERICAN HONDA MOTOR CO., INC.

6. Torque the bolts to 41 N.m (4.2 kgf.m, 30 lbf.ft).
7. Tighten the connecting rod bolts an additional 120 °.

NOTE: **Remove the connecting rod bolt if you tightened it beyond the specified angle, inspect the connecting rod bolts. Do not loosen it back to the specified angle.**

GETtheMANUALS.org

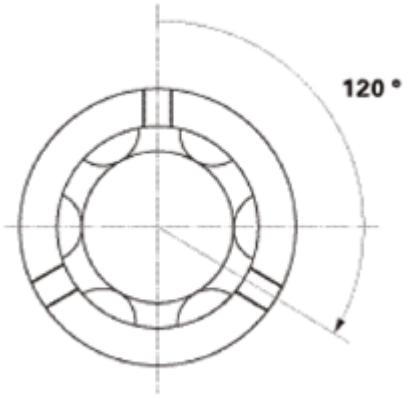

Fig. 160: Identifying Tightening Angle Of Connecting Rod Bolt
Courtesy of AMERICAN HONDA MOTOR CO., INC.

10. Crankshaft Oil Seal Transmission Side
    1. Clean and dry the crankshaft oil seal housing.
    2. Apply a light coat of new engine oil to the lip of the crankshaft oil seal.
    3. Use the driver handle, 15 x 135L and the oil seal driver attachment, 96 mm to drive a new crankshaft oil seal (A) squarely into the engine block to the specified installed height.
    4. Clean the excess oil off the crankshaft, and check that the oil seal lip is not distorted.

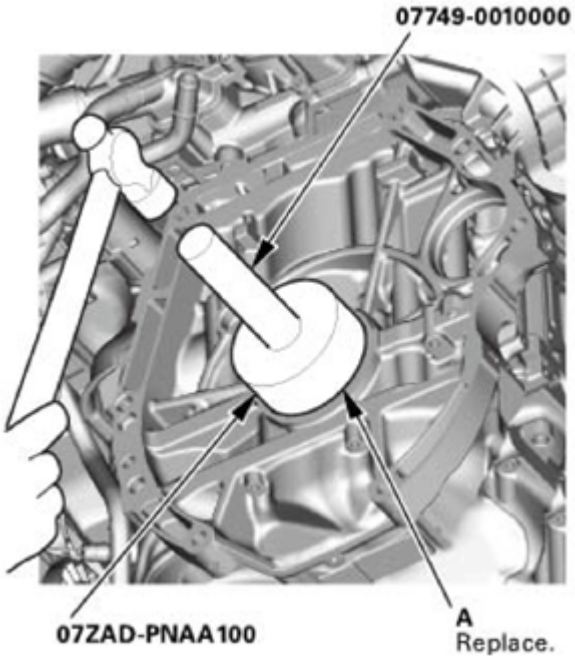

Fig. 161: Installing Crankshaft Oil Seal
Courtesy of AMERICAN HONDA MOTOR CO., INC.

    5. Measure the distance between the engine block (A) and the crankshaft oil seal (B).

GETtheMANUALS.org

Oil Seal Installed Height: 0.2-1.2 mm (0.008-0.047 in)

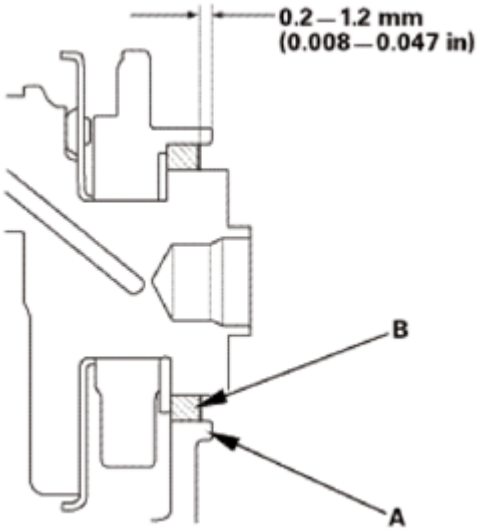

Fig. 162: Identifying Distance Between Engine Block And Crankshaft Oil Seal
Courtesy of AMERICAN HONDA MOTOR CO., INC.

11. Engine Baffle Plate
    1. Install the baffle plate.

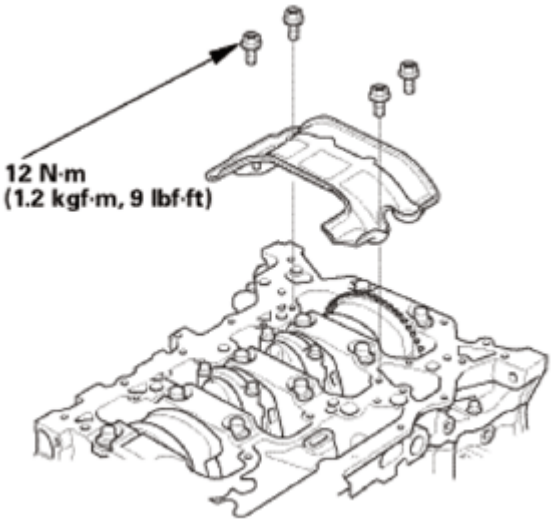

Fig. 163: Identifying Baffle Plate
Courtesy of AMERICAN HONDA MOTOR CO., INC.

12. Set The Crankshaft To Top Dead Center
    1. Set the crankshaft to top dead center (TDC). Align the TDC mark (A) on the crankshaft sprocket with the pointer (B) on the engine block.

GETtheMANUALS.org

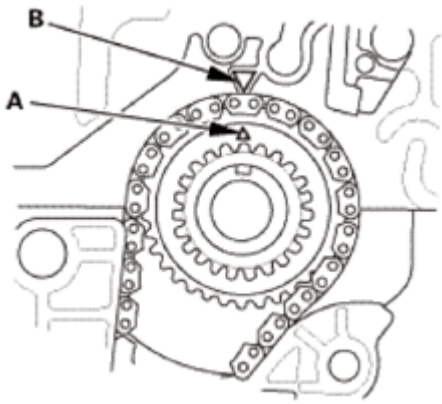

Fig. 164: Identifying TDC Mark On Crankshaft Sprocket
Courtesy of AMERICAN HONDA MOTOR CO., INC.

13. Engine Oil Pump Assembly
    1. Align the dowel pin (A) on the rear balancer shaft with the mark (B) on the oil pump.

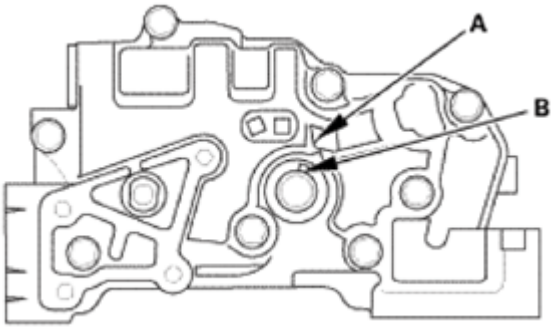

Fig. 165: Identifying Dowel Pin And Mark On Rear Balancer
Courtesy of AMERICAN HONDA MOTOR CO., INC.

    2. To hold the rear balancer shaft, insert a 6 mm long pin punch (Snap-on PPC108LA or equivalent) (A) into the maintenance hole in the balancer shaft holder and through the rear balancer shaft.

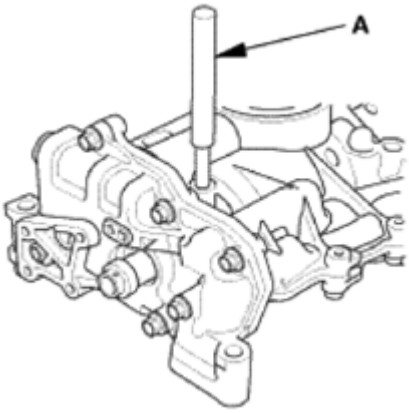

GETtheMANUALS.org

Fig. 166: Holding Rear Balancer Shaft
Courtesy of AMERICAN HONDA MOTOR CO., INC.

6. Set the oil pump chain on the oil pump chain sprocket (A) with the punch mark (B) aligned with the center of the two colored link plates (C), then install the oil pump chain sprocket to the oil pump.

7. Apply new engine oil to the threads of the oil pump sprocket mounting bolt (D), then install the oil pump sprocket mounting bolt.

8. Install the oil pump chain guide (E).

9. Remove the 6 mm long pin punch (F).

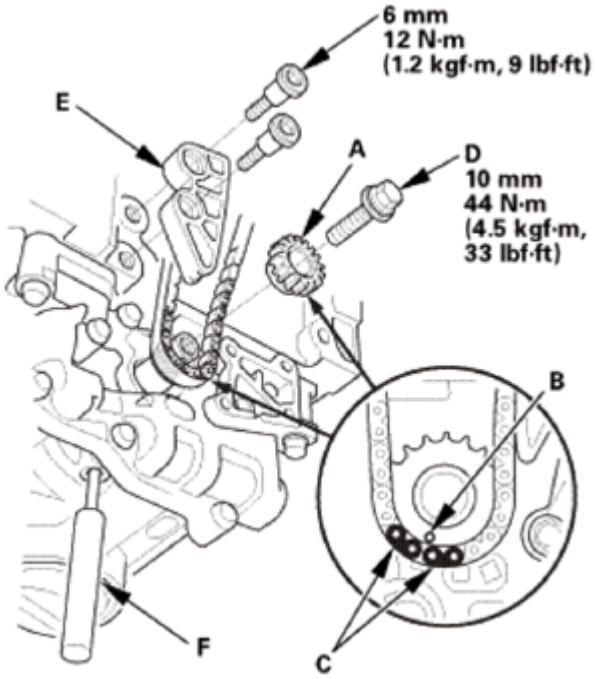

Fig. 167: Identifying Oil Pump Chain Sprocket And Mounting Bolts With Torque Specifications
Courtesy of AMERICAN HONDA MOTOR CO., INC.

14. Oil Pump Chain Tensioner

2. Install the oil pump chain tensioner, then remove the 3.0 mm (7/64 in) diameter pin.

GETtheMANUALS.org

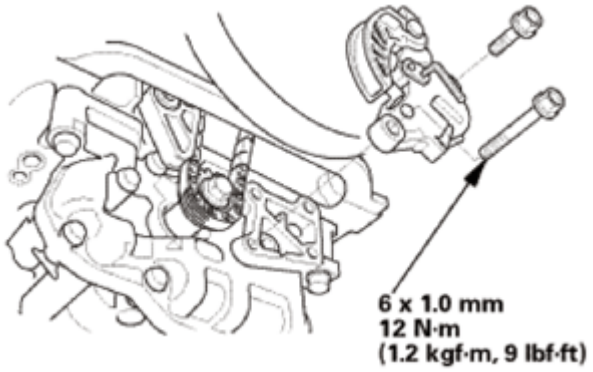

Fig. 168: Identifying Oil Pump Chain Tensioner Bolt With Torque Specifications
Courtesy of AMERICAN HONDA MOTOR CO., INC.

15. Coolant Separator
    1. Install a new coolant separator (A) in the engine block whenever the engine block is replaced.

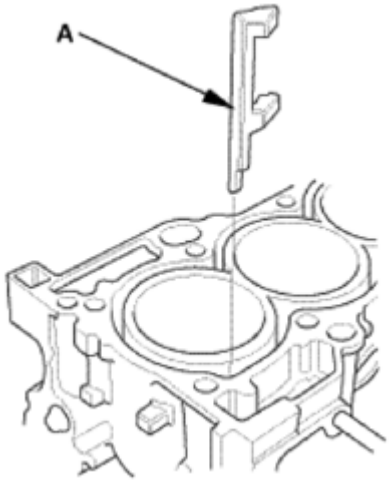

Fig. 169: Identifying Coolant Separator
Courtesy of AMERICAN HONDA MOTOR CO., INC.

16. Cylinder Head Assembly
    1. Clean the cylinder head and the engine block surface.
    2. Install the new cylinder head gasket (A) and the dowel pins (B) on the engine block. Always use a new cylinder head gasket.
    3. Install the cylinder head on the engine block.

GETtheMANUALS.org

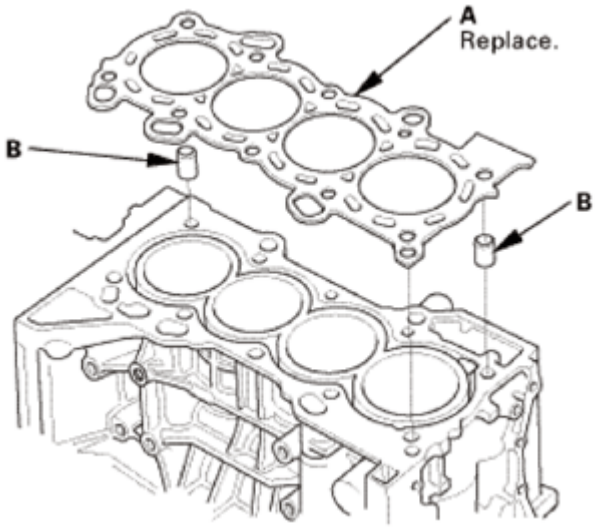

Fig. 170: Identifying Cylinder Head Gasket And Dowel Pins
Courtesy of AMERICAN HONDA MOTOR CO., INC.

4. Measure the diameter of each cylinder head bolt at point A and point B.
5. If either diameter is less than 10.6 mm (0.417 in), replace the cylinder head bolt.
6. Apply new engine oil to the threads and under the bolt heads of all cylinder head bolts.

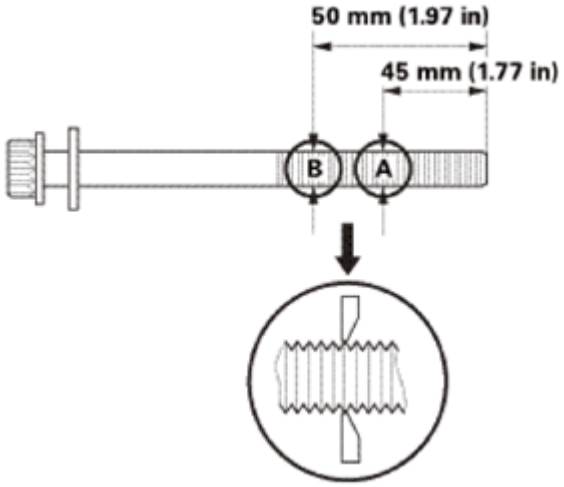

Fig. 171: Identifying Cylinder Head Bolt Diameter
Courtesy of AMERICAN HONDA MOTOR CO., INC.

7. Torque the cylinder head bolts in sequence to 39 N.m (4.0 kgf.m, 29 lbf.ft). Use a beam-type torque wrench. When using a preset click-type torque wrench, be sure to tighten slowly and do not overtighten. If a bolt makes any noise while you are torquing it, loosen the bolt and retighten it from the first step.

GETtheMANUALS.org

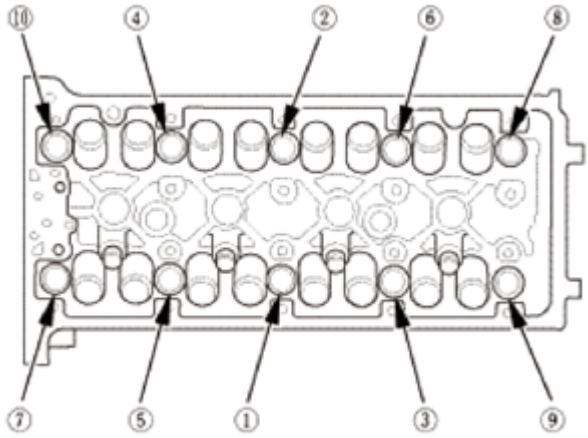

Fig. 172: Cylinder Head Bolts Tightening Sequence
Courtesy of AMERICAN HONDA MOTOR CO., INC.

8. After torquing, tighten all cylinder head bolts in two steps (90 ° per step) using the sequence shown in step 9. If you are using a new cylinder head bolt, tighten the bolt an extra 90 °.

NOTE: **Remove the cylinder head bolt if you tightened it beyond the specified angle, and go back to step 6 of the procedure. Do not loosen it back to the specified angle.**

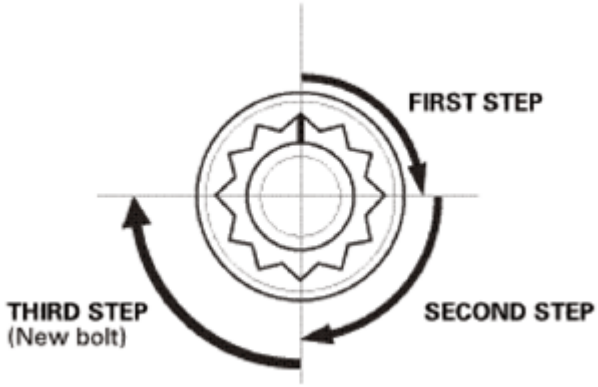

Fig. 173: Tightening Of Cylinder Head Bolt
Courtesy of AMERICAN HONDA MOTOR CO., INC.

17. Rocker Arm Assembly
    1. Clean and dry the No. 5 rocker shaft holder mating surface.
    2. Apply liquid gasket (P/N 08718-0004 or 08718-0009) to the cylinder head mating surface of the No. 5 rocker shaft holder and to the inside edge of the threaded bolt holes. Install the component within 5 minutes of applying the liquid gasket.

NOTE:

- **Apply a 2.5 mm (0.098 in) diameter bead of liquid gasket along the broken line (A).**

GETtheMANUALS.org

- **If too much time has passed after applying the liquid gasket, remove the old liquid gasket and residue, then reapply new liquid gasket.**

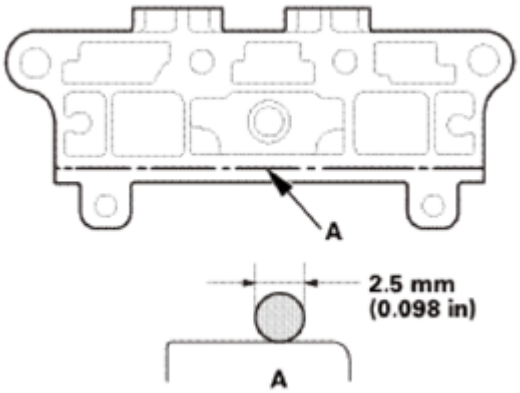

Fig. 174: Identifying Broken Line Of Gasket
Courtesy of AMERICAN HONDA MOTOR CO., INC.

3. Install the lost motion assembly in the cylinder head.

NOTE: Apply new engine oil to the lost motion assembly.

4. Insert the bolts (A) into the rocker shaft holder, then install the rocker arm assembly (B) on the cylinder head.
5. Remove the bolts from the rocker shaft holder.

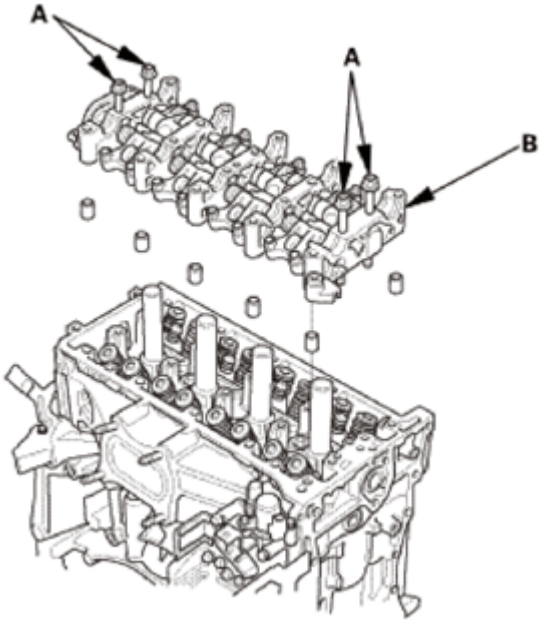

Fig. 175: Identifying Rocker Arm Assembly And Bolts

GETtheMANUALS.org

Courtesy of AMERICAN HONDA MOTOR CO., INC.

18. Camshaft
    1. Remove the wire tie while keeping light tension on the cam chain.
    2. Install the exhaust camshaft.
    3. Slide the exhaust camshaft in at an angle to allow the cam chain to slip over the VTC actuator's teeth.

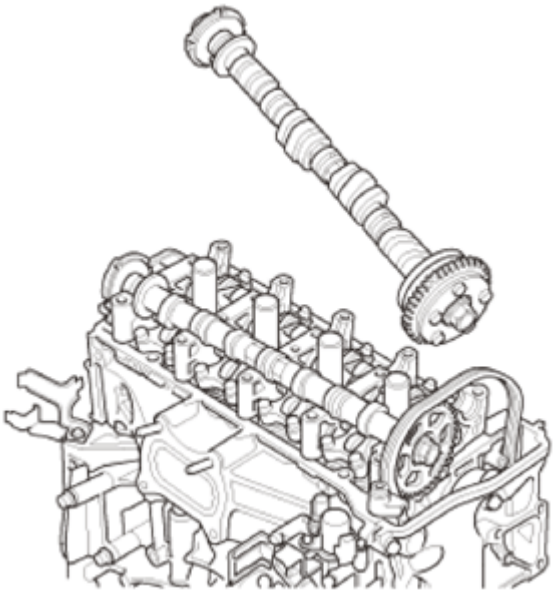

Fig. 176: Identifying Exhaust Camshaft
Courtesy of AMERICAN HONDA MOTOR CO., INC.

    4. Set the No. 1 piston at top dead center (TDC). The punch mark (A) on the VTC actuator and the punch mark (B) on the exhaust camshaft sprocket should be at the top. Align the TDC marks (C) on the VTC actuator and the exhaust camshaft sprocket.
    5. Apply new engine oil to the camshaft journals and lobes on both cams.

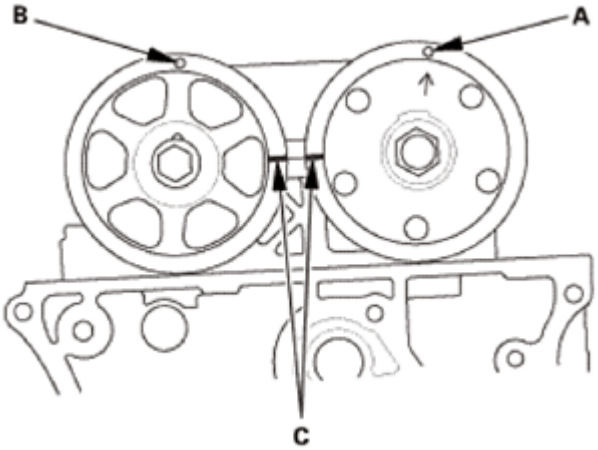

GETtheMANUALS.org

Fig. 177: Identifying Punch Marks On VTC Actuator And Exhaust Camshaft Sprocket
Courtesy of AMERICAN HONDA MOTOR CO., INC.

19. Camshaft Holder
    1. Set the camshaft holders (A) and cam chain guide B in place.

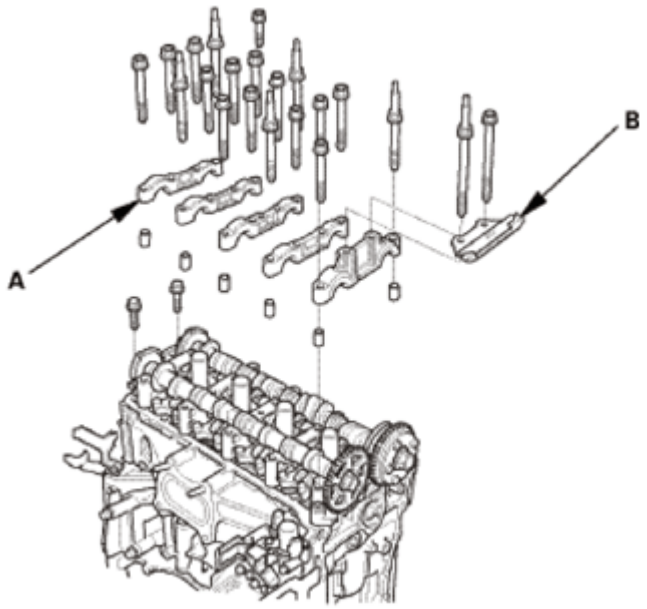

Fig. 178: Identifying Camshaft Holders And Cam Chain Guide
Courtesy of AMERICAN HONDA MOTOR CO., INC.

    2. Tighten the bolts to the specified torque.

Specified Torque

8 x 1.25 mm 22 N.m (2.2 kgf.m, 16 lbf.ft)

6 x 1.0 mm 12 N.m (1.2 kgf.m, 9 lbf.ft)

6 x 1.0 mm Bolts: (21), (22)

GETtheMANUALS.org

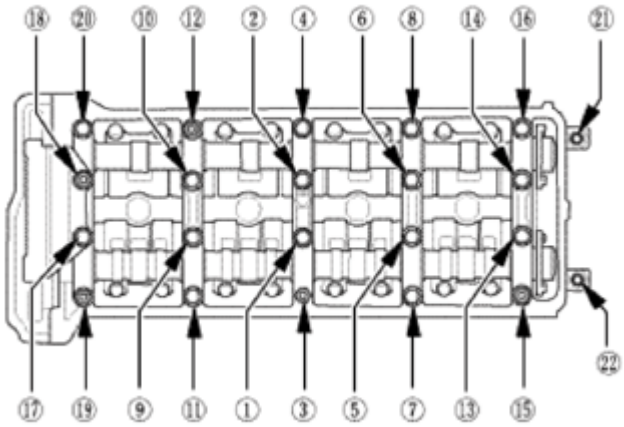

Fig. 179: Camshaft Holder Bolts Tightening Sequence
Courtesy of AMERICAN HONDA MOTOR CO., INC.

20. Cam Chain
    1. To hold the intake camshaft, insert one of the camshaft lock pins (C) into the maintenance hole in CMP pulse plate A and through the No. 5 rocker shaft holder (D).
    2. To hold the exhaust camshaft, insert the other camshaft lock pin (C) into the maintenance hole in CMP pulse plate B and through the No. 5 rocker shaft holder (D).

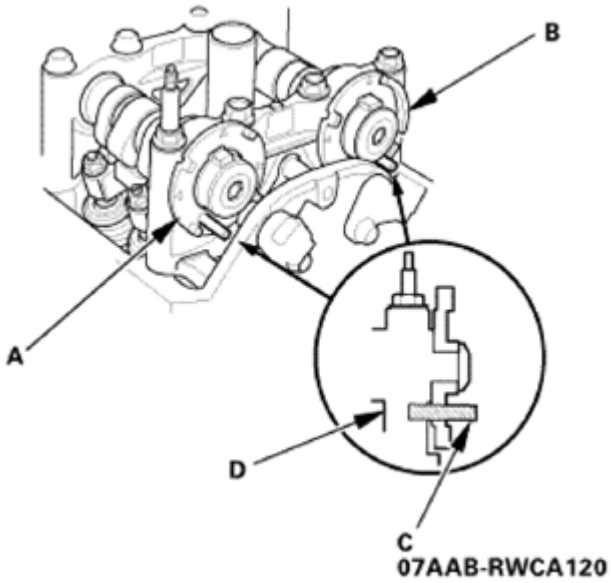

Fig. 180: Installing Intake Camshaft
Courtesy of AMERICAN HONDA MOTOR CO., INC.

    3. Install the cam chain on the crankshaft sprocket with the colored link plate (A) aligned with the mark (B) on the crankshaft sprocket.

GETtheMANUALS.org

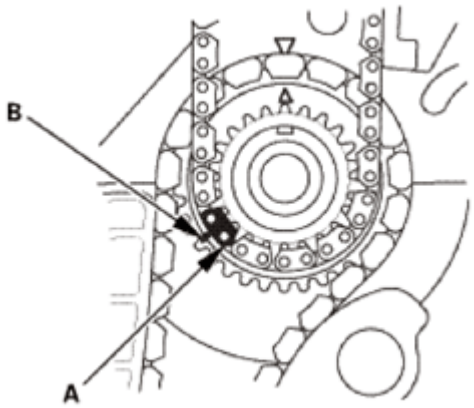

Fig. 181: Identifying Link Plate And Mark On Crankshaft Sprocket
Courtesy of AMERICAN HONDA MOTOR CO., INC.

4. Install the cam chain on the VTC actuator and the exhaust camshaft sprocket with the punch marks (A) aligned with the center of the two colored link plates (B).

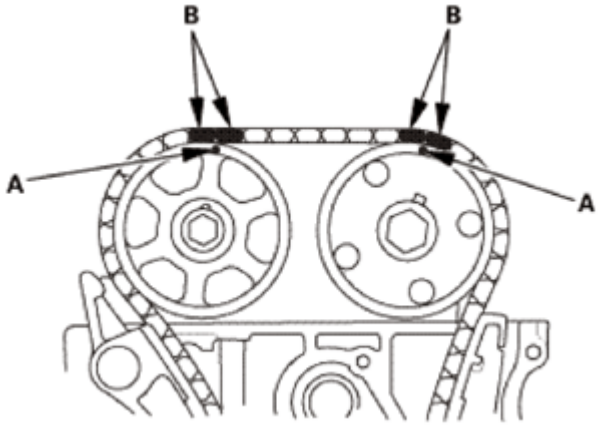

Fig. 182: Identifying Punch Marks On Link Plates
Courtesy of AMERICAN HONDA MOTOR CO., INC.

21. Cam Chain Tensioner Arm and Cam Chain Guide
    1. Install cam chain guide A and the tensioner arm (B).

GETtheMANUALS.org

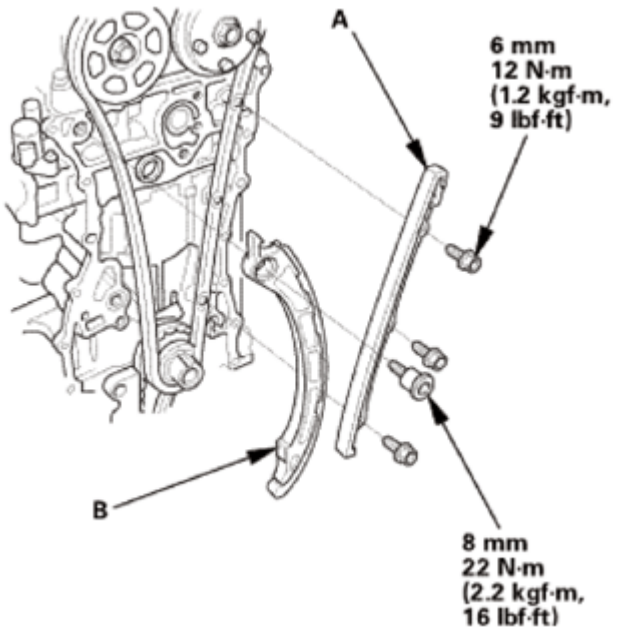

Fig. 183: Identifying Cam Chain Guide And Tensioner Arm
Courtesy of AMERICAN HONDA MOTOR CO., INC.

2. Install cam chain guide B.

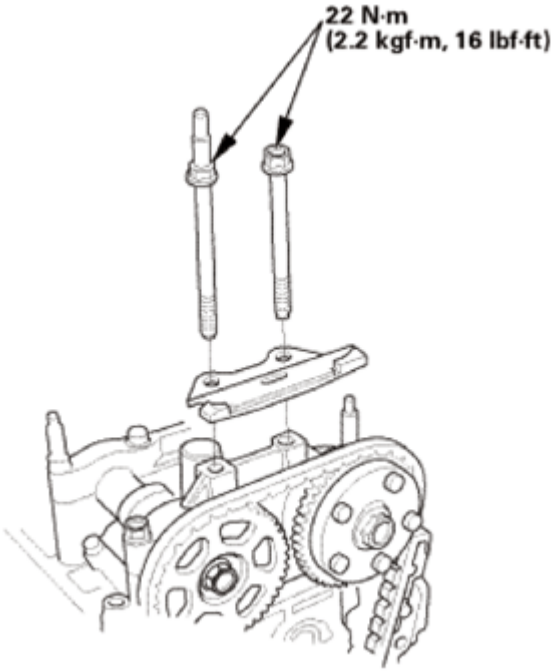

Fig. 184: Identifying Cam Chain Guide With Torque Specifications
Courtesy of AMERICAN HONDA MOTOR CO., INC.

22. Cam Chain Auto-Tensioner

GETtheMANUALS.org

1. Compress the auto-tensioner when replacing the cam chain. Remove the pin (A) from the auto-tensioner that was installed during removal. Turn the plate (B) counterclockwise, to release the lock, then press the rod (C), and set the first cam (D) to the first edge of the rack (E). Insert the 1.2 mm (3/64 in) diameter pin back into the holes (F).

NOTE: **If the chain tensioner is not set up as described, the tensioner will be damaged.**

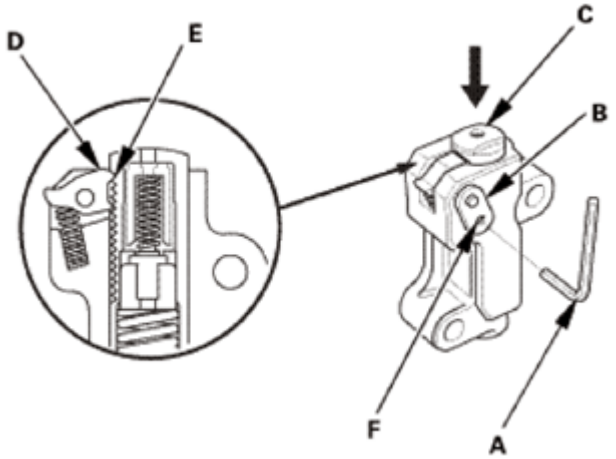

Fig. 185: Pressing Rod
Courtesy of AMERICAN HONDA MOTOR CO., INC.

2. Install the auto-tensioner.

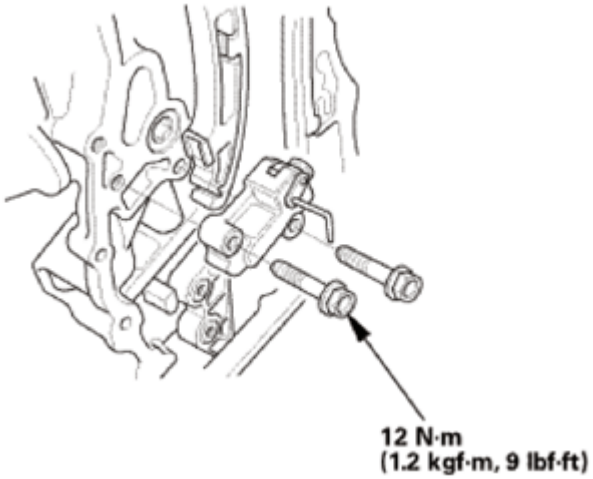

Fig. 186: Identifying Auto-Tensioner Bolts With Torque Specifications
Courtesy of AMERICAN HONDA MOTOR CO., INC.

3. Remove the pin from the auto-tensioner.

GETtheMANUALS.org

Fig. 187: Identifying Pin Of Auto-Tensioner
Courtesy of AMERICAN HONDA MOTOR CO., INC.

4. Remove the camshaft lock pin set.

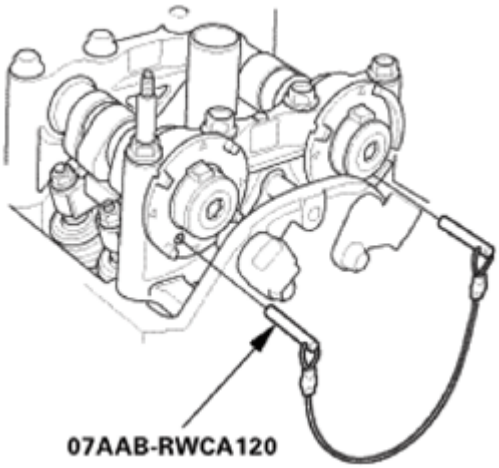

Fig. 188: Removing Camshaft Lock Pin Set
Courtesy of AMERICAN HONDA MOTOR CO., INC.

23. Cam Chain Case
    1. Check the chain case oil seal for damage. If the oil seal is damaged, replace the chain case oil seal.
    2. Remove the old liquid gasket from the chain case mating surfaces, the bolts, and the bolt holes.
    3. Clean and dry the chain case mating surfaces.
    4. Apply liquid gasket (P/N 08718-0004 or 08718-0009) to the engine block mating surface of the chain case and to the inside edge of the threaded bolt holes. Install the component within 5 minutes of applying the liquid gasket.
        - Apply a 2.5 mm (0.098 in) diameter bead of liquid gasket along the broken line (A) and (B).
        - Apply a 3.0 mm (0.118 in) diameter bead of liquid gasket along the broken line (C).
        - If too much time has passed after applying the liquid gasket, remove the old liquid gasket and residue, then reapply new liquid gasket.

GETtheMANUALS.org

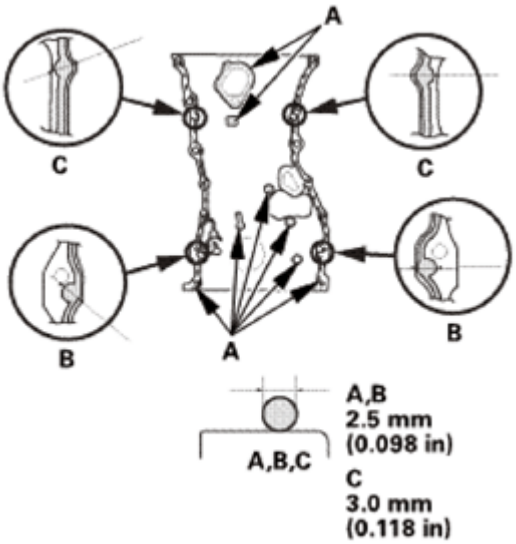

Fig. 189: Identifying Liquid Gasket Applying Areas Of Chain
Courtesy of AMERICAN HONDA MOTOR CO., INC.

5. Install the spacer (A), then install a new O-ring (B) on the chain case.

NOTE:

- **When installing the chain case, do not slide the bottom surface onto the oil pan mounting surface.**
- **Wait at least 30 minutes before filling the engine with oil.**
- **Do not run the engine for at least 3 hours after installing the chain case.**

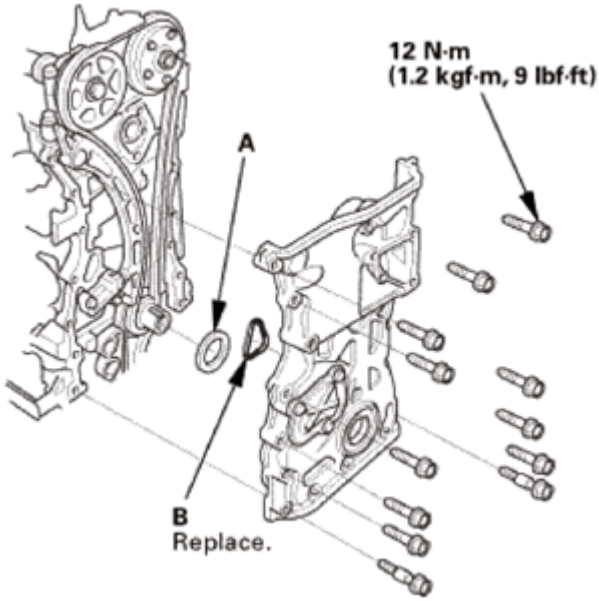

Fig. 190: Identifying Spacer, O-Ring And Bolts With Torque Specifications
Courtesy of AMERICAN HONDA MOTOR CO., INC.

GETtheMANUALS.org

24. Oil Pan Assembly (Without Transmission)
    1. Remove all of the old liquid gasket from the oil pan mating surfaces, the bolts, and the bolt holes.
    2. Clean and dry the oil pan mating surfaces.
    3. Apply liquid gasket (P/N 08718-0004 or 08718-0009) to the engine block mating surface of the oil pan and to the inner threads of the bolt holes. Install the component within 5 minutes of applying the liquid gasket.

NOTE:

- **Apply liquid gasket about 2.5 mm (0.098 in) diameter bead along the broken line (A).**
- **If too much time has passed after applying the liquid gasket, remove the old liquid gasket and residue, then reapply new liquid gasket.**

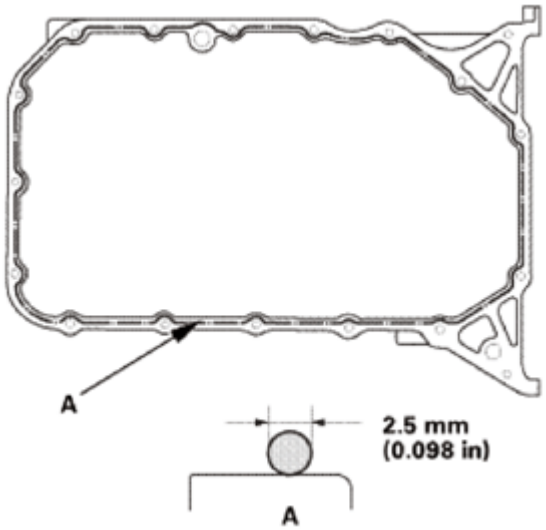

Fig. 191: Identifying Gasket Broken Line
Courtesy of AMERICAN HONDA MOTOR CO., INC.

    4. Install the oil pan on the engine block.
    5. Tighten the bolts in three steps. In the final step, torque all bolts, in sequence, to 12 N.m (1.2 kgf.m, 9 lbf.ft). Wipe off the excess liquid gasket on the each side of crankshaft pulley and the flywheel/drive plate.

NOTE:

- **Wait at least 30 minutes before filling the engine with oil.**
- **Do not run the engine for at least 3 hours after installing the oil pan.**

GETtheMANUALS.org

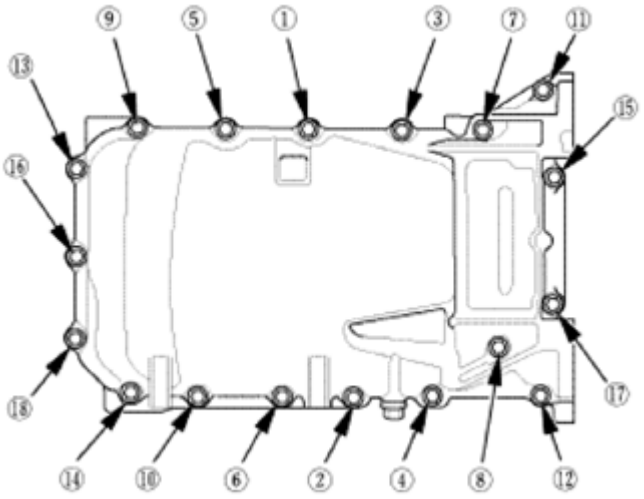

Fig. 192: Oil Pan Bolts Tightening Sequence
Courtesy of AMERICAN HONDA MOTOR CO., INC.

25. Side Engine Mount Bracket, Engine Side
    1. Install the side engine mount bracket (A), then tighten the side engine mount bracket mounting bolts.

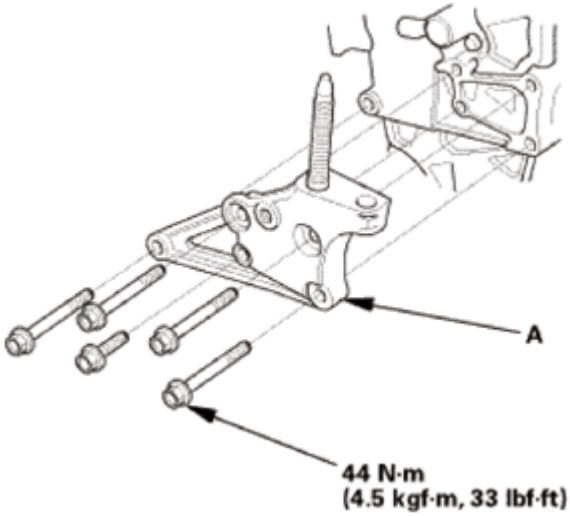

Fig. 193: Identifying Side Engine Mount Bracket
Courtesy of AMERICAN HONDA MOTOR CO., INC.

26. Crankshaft Pulley
    1. Clean the crankshaft pulley (A), the crankshaft (B), the bolt (C), and the washer (D). Lubricate with new engine oil as shown.

GETtheMANUALS.org

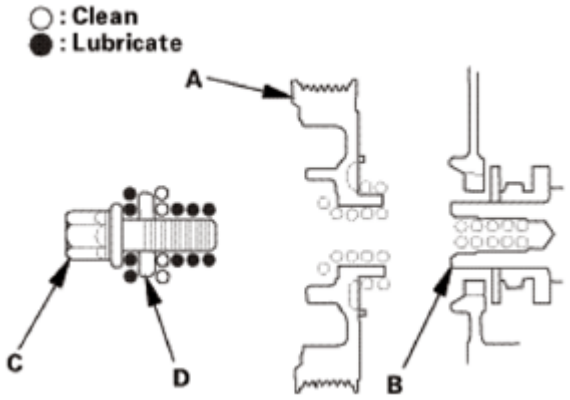

Fig. 194: Identifying Crankshaft Pulley, Crankshaft, Bolt And Washer
Courtesy of AMERICAN HONDA MOTOR CO., INC.

2. Install the crankshaft pulley, and hold the pulley with the holder handle (A) and the crankshaft pulley holder (B).
3. Torque the bolt to 50 N.m (5.1 kgf.m, 37 lbf.ft) with a torque wrench and a socket, 19mm(C). Do not use an impact wrench. If the pulley bolt or crankshaft are new, torque the bolt to 177 N.m (18.0 kgf.m, 131 lbf.ft), then remove the bolt and torque it to 50 N.m (5.1 kgf.m, 37 lbf.ft).
4. Tighten the pulley bolt an additional 90 °.

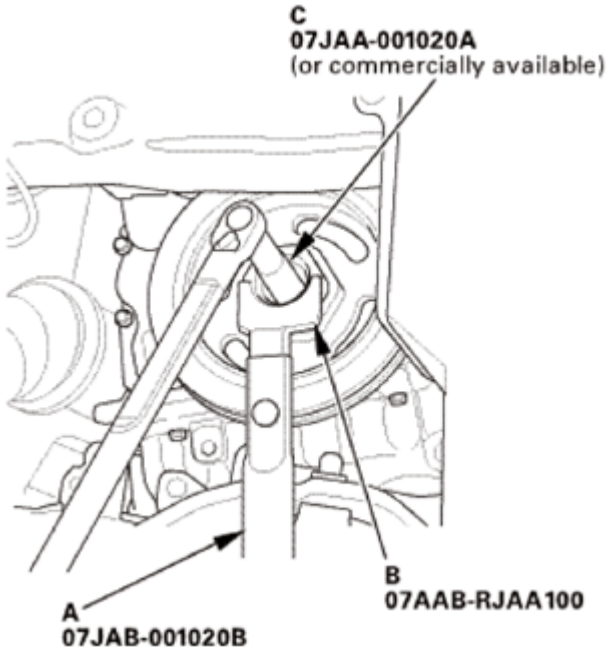

Fig. 195: Holding Pulley
Courtesy of AMERICAN HONDA MOTOR CO., INC.

27. VTC Oil Control Solenoid Valve
    1. Install the VTC oil control solenoid valve.

GETtheMANUALS.org

NOTE:

- **Coat a new O-ring with engine oil.**
- **Clean and dry the mating surface of the valve.**

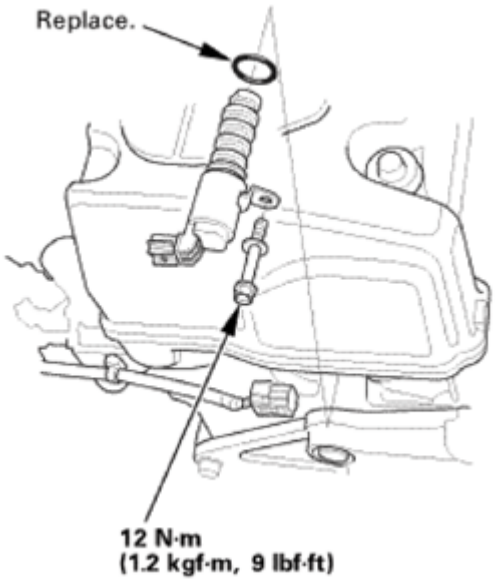

Fig. 196: Identifying VTC Oil Control Solenoid Valve O-Ring And Bolts With Torque Specifications
Courtesy of AMERICAN HONDA MOTOR CO., INC.

28. Valve Clearance - Adjustment
    1. Set the No. 1 piston at top dead center (TDC). The punch mark (A) on the VTC actuator and the punch mark (B) on the exhaust camshaft sprocket should be at the top. Align the TDC marks (C) on the VTC actuator and the exhaust camshaft sprocket.

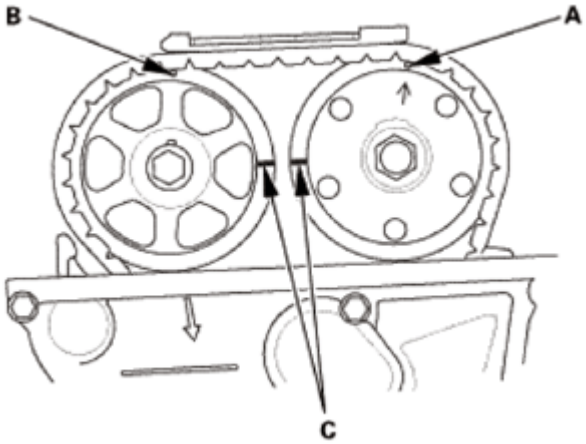

Fig. 197: Identifying Punch Marks On VTC Actuator And Exhaust Camshaft Sprocket
Courtesy of AMERICAN HONDA MOTOR CO., INC.

    2. Select the correct feeler gauge for the valve clearance you are going to check.

GETtheMANUALS.org

Valve Clearance

Intake: 0.21-0.25 mm (0.009-0.009 in)

Exhaust: 0.25-0.29 mm (0.010-0.011 in)

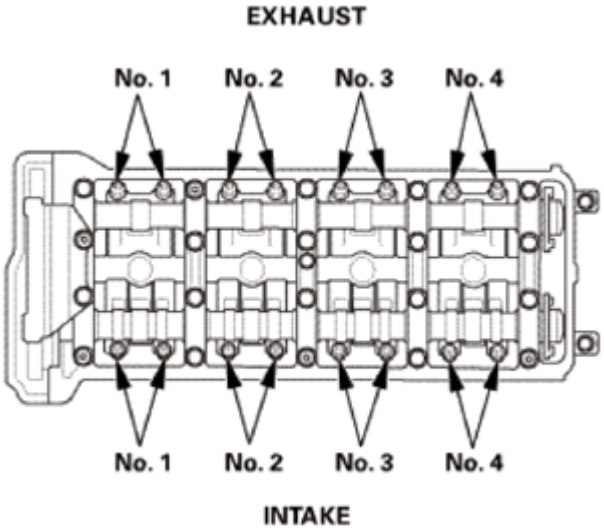

Fig. 198: Identifying Valve Clearance
Courtesy of AMERICAN HONDA MOTOR CO., INC.

3. Insert the feeler gauge (A) between the adjusting screw (B) and the end of the valve stem on the No. 1 cylinder, and slide it back and forth; you should feel a slight amount of drag.

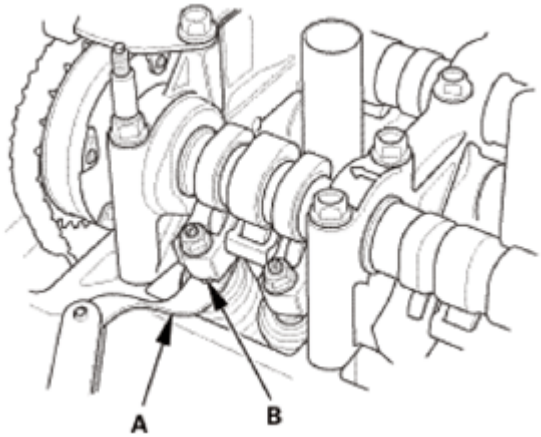

Fig. 199: Identifying Feeler Gauge Between Adjusting Screw
Courtesy of AMERICAN HONDA MOTOR CO., INC.

4. If you feel too much or too little drag, loosen the locknut with the locknut wrench and the adjuster, and turn the adjusting screw until the drag on the feeler gauge is correct.
5. Tighten the locknut to the specified torque, and recheck the clearance. Repeat the adjustment if

GETtheMANUALS.org

necessary.

Specified Torque

7 x 0.75 mm

14 N.m (1.4 kgf.m, 10 lbf.ft)

Apply new engine oil to the nut threads .

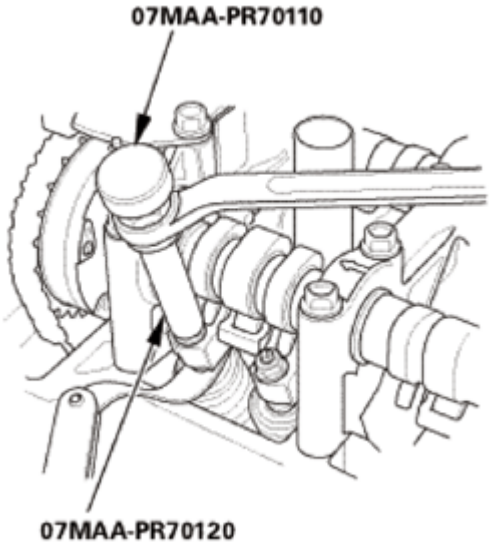

Fig. 200: Tightening Locknut
Courtesy of AMERICAN HONDA MOTOR CO., INC.

6. Rotate the crankshaft 180 ° clockwise (camshaft pulley turns 90 °).
7. Check and, if necessary, adjust the valve clearance on the No. 3 cylinder.

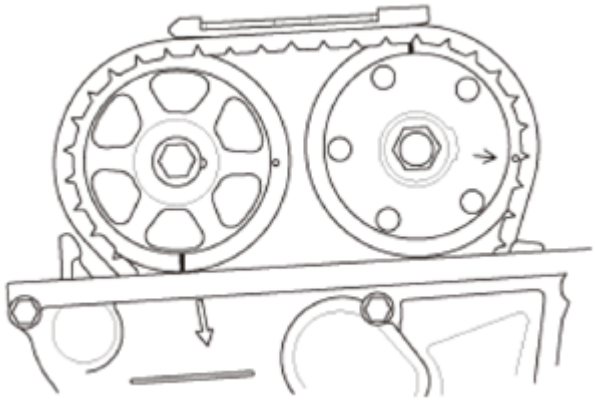

Fig. 201: Identifying Crankshaft Rotation
Courtesy of AMERICAN HONDA MOTOR CO., INC.

GETtheMANUALS.org

8. Rotate the crankshaft 180 ° clockwise (camshaft pulley turns 90 °).
9. Check and, if necessary, adjust the valve clearance on the No. 4 cylinder.

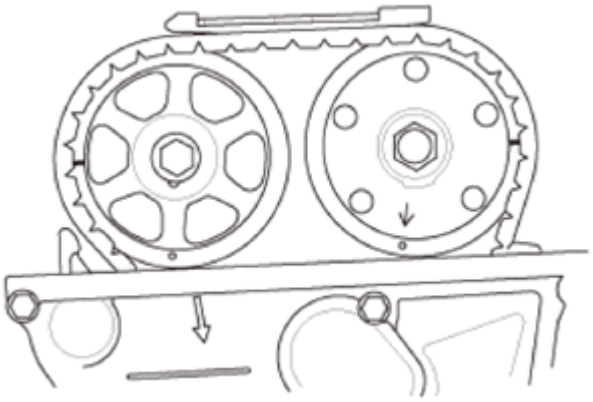

Fig. 202: Identifying Crankshaft Rotation
Courtesy of AMERICAN HONDA MOTOR CO., INC.

10. Rotate the crankshaft 180 ° clockwise (camshaft pulley turns 90 °).
11. Check and, if necessary, adjust the valve clearance on the No. 2 cylinder.

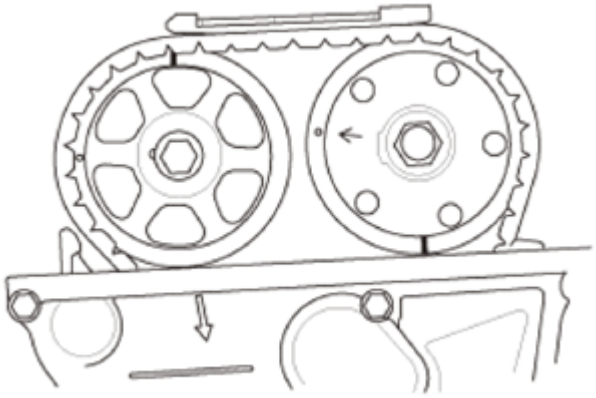

Fig. 203: Identifying Crankshaft Rotation
Courtesy of AMERICAN HONDA MOTOR CO., INC.

29. Cylinder Head Cover
    1. Check the spark plug seals for damage. If any seals are damaged, replace it.
    2. Thoroughly clean the head cover gasket and the groove.

    NOTE: Check and, if necessary, replace the head cover gasket.

    3. Install the head cover gasket (A) in the groove of the cylinder head cover (B). Make sure the head cover gasket is seated securely.

GETtheMANUALS.org

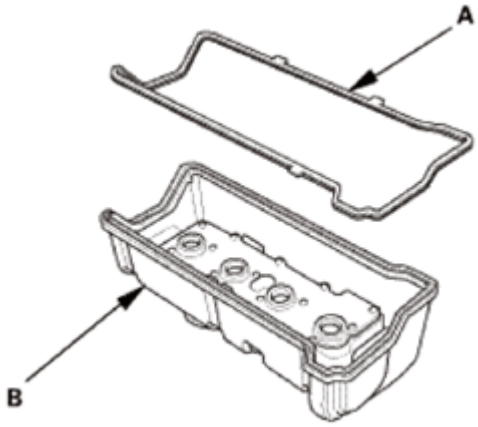

Fig. 204: Identifying Cylinder Head Cover And Gasket
Courtesy of AMERICAN HONDA MOTOR CO., INC.

4. Remove all of the old liquid gasket from the chain case and the No. 5 rocker shaft holder.
5. Clean the head cover contacting surfaces with a shop towel.
6. Apply liquid gasket, (P/N 08718-0004 or 08718-0009) on the chain case and the No. 5 rocker shaft holder mating areas (A). Install the component within 5 minutes of applying the liquid gasket.

NOTE: **If too much time has passed after applying the liquid gasket, remove the old liquid gasket and residue, then reapply new liquid gasket.**

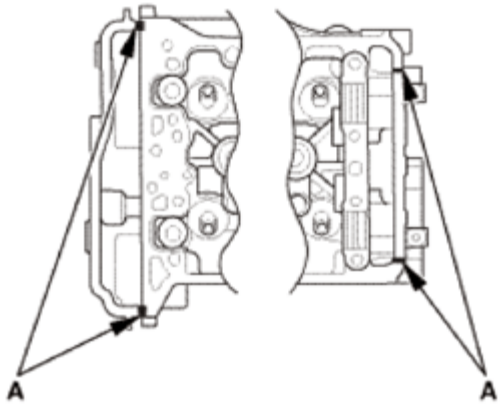

Fig. 205: Identifying No. 5 Rocker Shaft Holder Mating Areas
Courtesy of AMERICAN HONDA MOTOR CO., INC.

7. Set the spark plug seals (A) on the spark plug tubes. Place the cylinder head cover (B) on the cylinder head, then slide the cover slightly back and forth to seat the head cover gasket.
8. Inspect the spark plug seals for damage.
9. Inspect the cover washers (C). Replace any washer that is damaged or deteriorated.

GETtheMANUALS.org

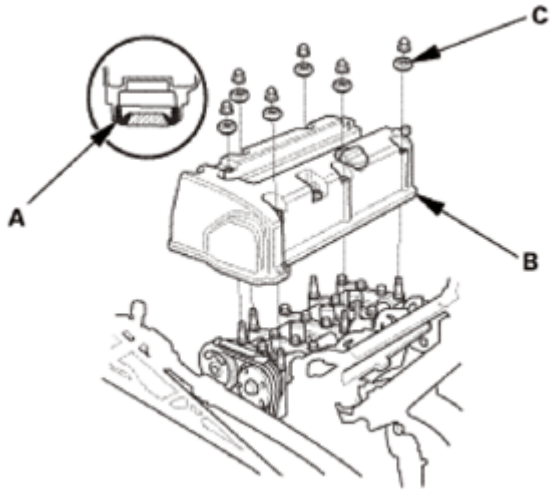

Fig. 206: Identifying Spark Plug Seals, Cylinder Head Cover And Washers
Courtesy of AMERICAN HONDA MOTOR CO., INC.

10. Tighten the bolts in two steps. In the final step torque bolts, in sequence, to 12 N.m (1.2 kgf.m, 9 lbf.ft).

NOTE:

- **Wait at least 30 minutes before filling the engine with oil.**
- **Do not run the engine for at least 3 hours after installing the head cover.**

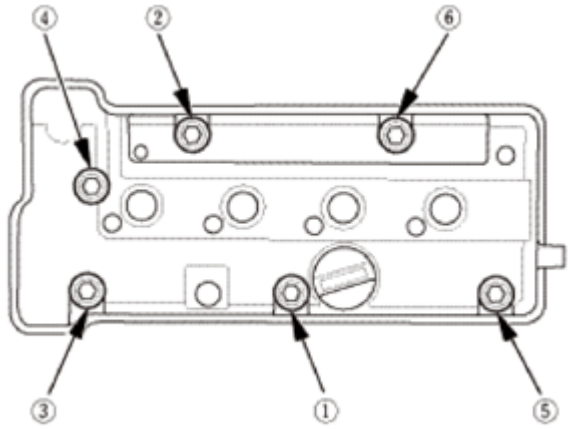

Fig. 207: Cylinder Head Cover Bolts Tightening Sequence
Courtesy of AMERICAN HONDA MOTOR CO., INC.

11. Install the two bolts (A).
12. Connect the breather hose (B).
13. Install the dipstick (C).

GETtheMANUALS.org

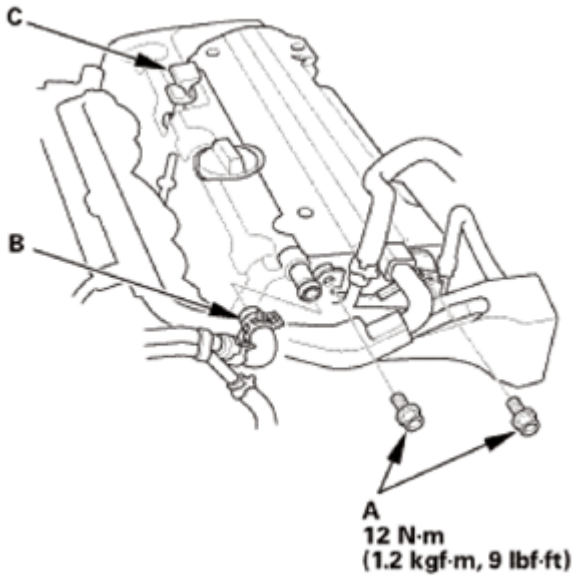

Fig. 208: Identifying Breather Hose, Bolts And Dipstick
Courtesy of AMERICAN HONDA MOTOR CO., INC.

30. Ignition Coil
    1. Install the ignition coils.

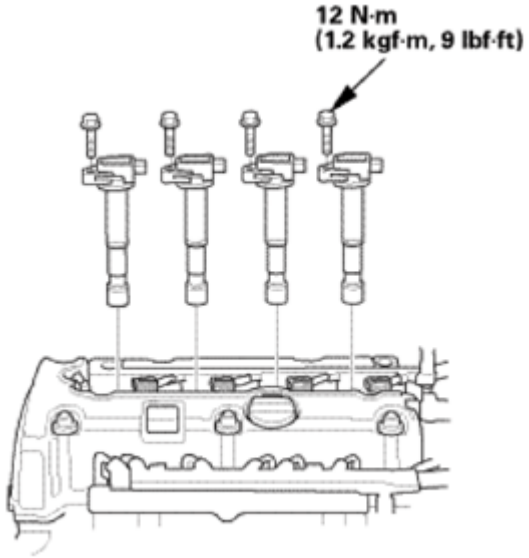

Fig. 209: Identifying Ignition Coil
Courtesy of AMERICAN HONDA MOTOR CO., INC.

31. Warm Up TWC
    1. Install the Warm Up TWC with new gasket.
    2. Install the exhaust chamber cover.

GETtheMANUALS.org

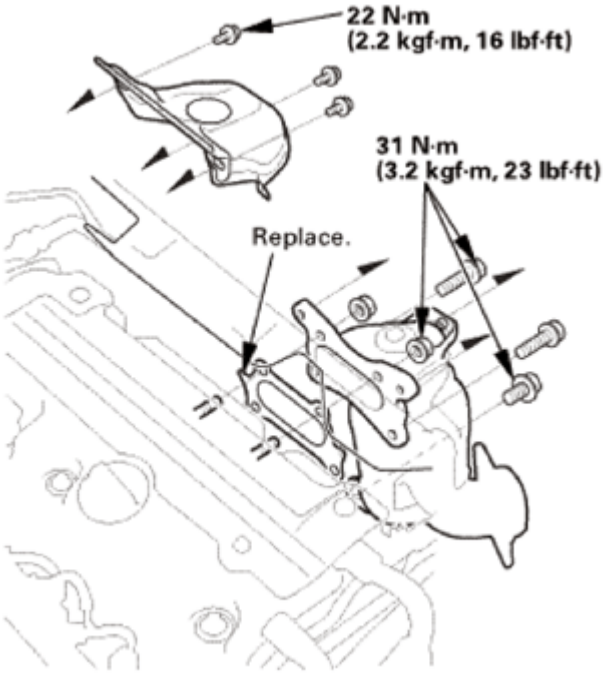

Fig. 210: Identifying Exhaust Chamber Cover And Warm Up TWC With Gasket
Courtesy of AMERICAN HONDA MOTOR CO., INC.

32. A/F Sensor
    1. Install the A/F sensor.

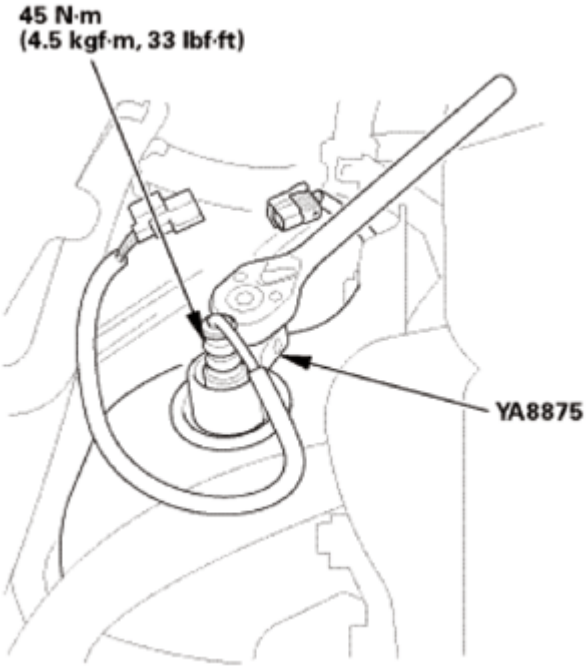

Fig. 211: Installing A/F Sensor
Courtesy of AMERICAN HONDA MOTOR CO., INC.

GETtheMANUALS.org

33. Water Passage Assembly
    1. Clean and dry the water passage mating surfaces.
    2. Apply liquid gasket (P/N 08718-0004 or 08718-0009) to the engine block mating surface of the water passage, and to the inside edge of the threaded bolt holes. Install the component within 5 minutes of applying the liquid gasket.

NOTE:

- **Apply a 2.5 mm (0.098 in) diameter bead of liquid gasket along the broken line (A).**
- **If too much time has passed after applying the liquid gasket, remove the old liquid gasket and residue, then reapply new liquid gasket.**

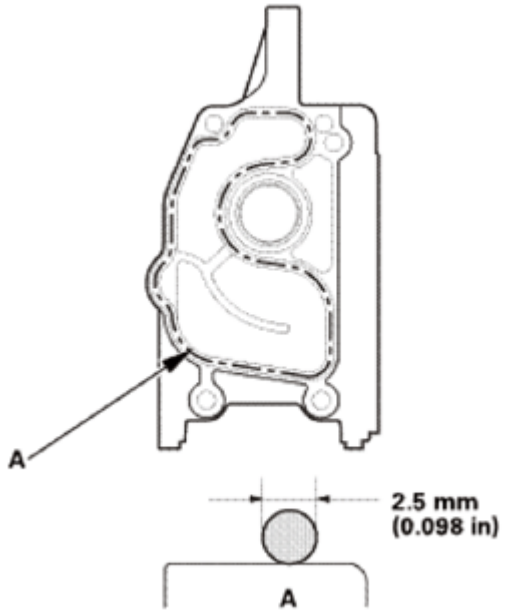

Fig. 212: Identifying Gasket Broken Line
Courtesy of AMERICAN HONDA MOTOR CO., INC.

    3. Install the water passage with new O-ring.

GETtheMANUALS.org

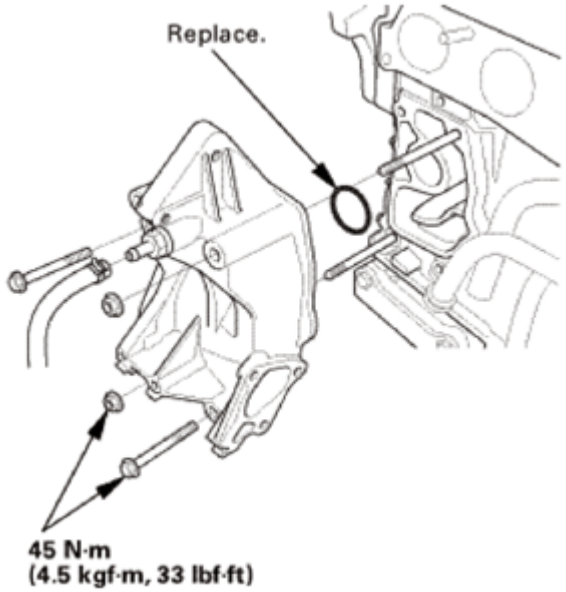

Fig. 213: Identifying Water Passage With O-Ring And Bolts With Torque Specifications
Courtesy of AMERICAN HONDA MOTOR CO., INC.

34. Injector Base Assembly
    1. Install the injector base (A) with a new gasket (B).

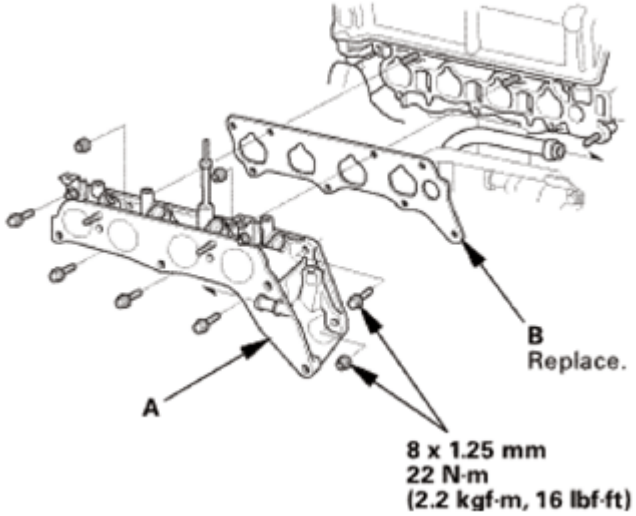

Fig. 214: Identifying Injector Base And Gasket
Courtesy of AMERICAN HONDA MOTOR CO., INC.

35. Intake Manifold and Throttle Body Assembly
    1. Install the intake manifold (A) with new gaskets (B), and tighten the bolts and nuts in a crisscross pattern in three steps, beginning with the inner bolt.

GETtheMANUALS.org

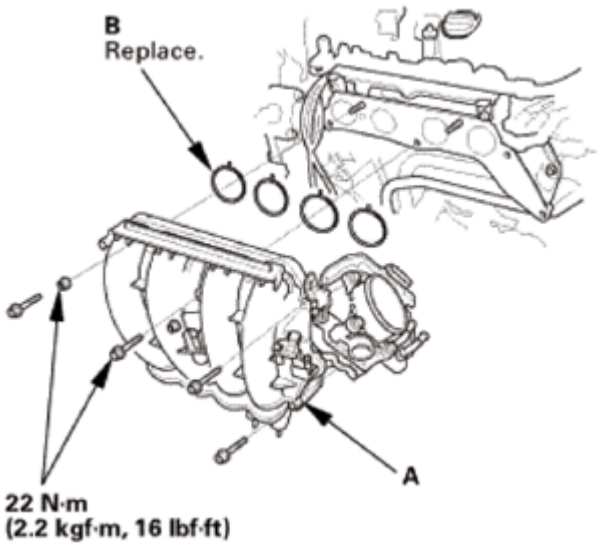

Fig. 215: Identifying Intake Manifold, Gasket And Bolts With Torque Specifications
Courtesy of AMERICAN HONDA MOTOR CO., INC.

2. Install the intake manifold lower bracket.

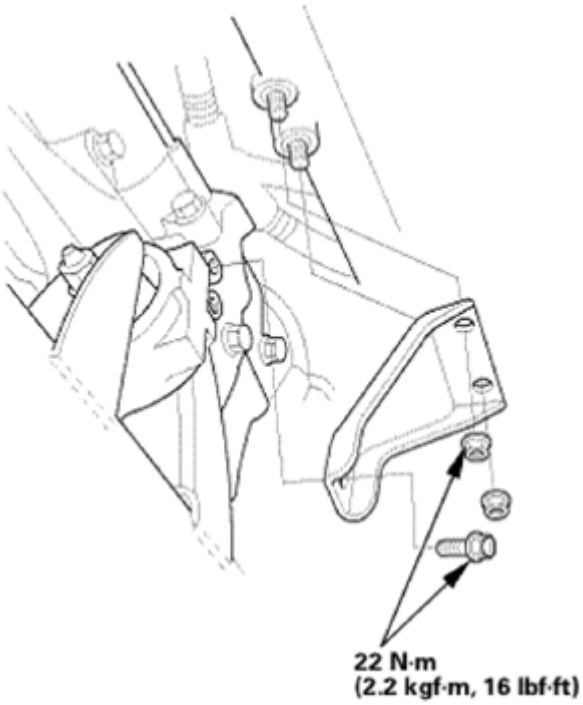

Fig. 216: Identifying Intake Manifold Lower Bracket Bolts With Torque Specifications
Courtesy of AMERICAN HONDA MOTOR CO., INC.

36. Fuel Injector and Rail Assembly
    1. Install the rail with the fuel injector.

GETtheMANUALS.org

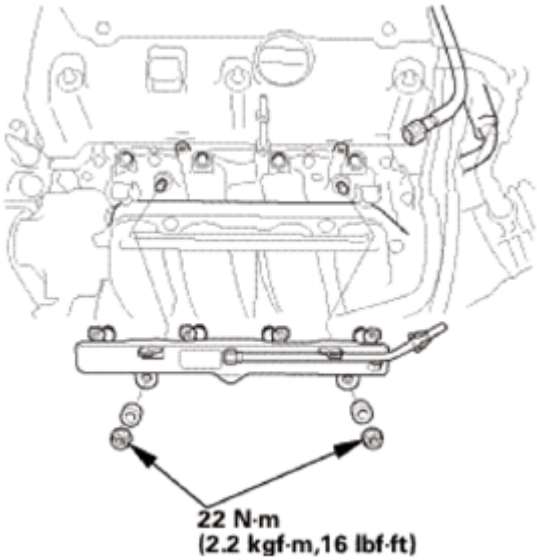

Fig. 217: Identifying Fuel Injector And Rail Assembly Bolts With Torque Specifications
Courtesy of AMERICAN HONDA MOTOR CO., INC.

37. Drive Plate Assembly
    1. Install the drive plate (A) and the washer (B), and tighten the eight bolts in a crisscross pattern in at least two steps.

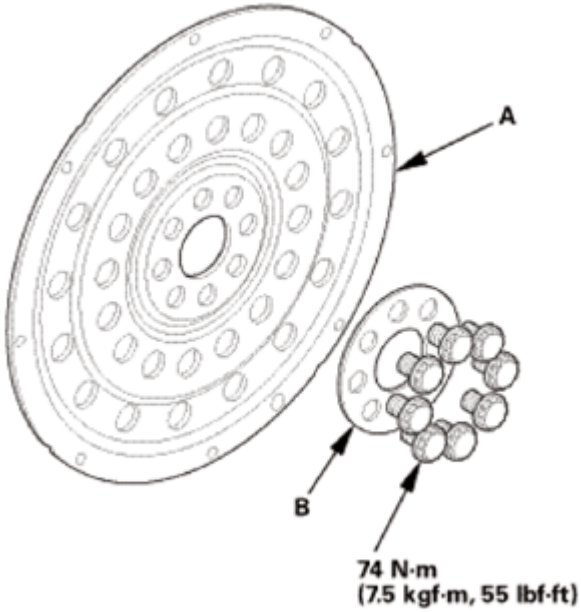

Fig. 218: Identifying Drive Plate, Washer And Bolt
Courtesy of AMERICAN HONDA MOTOR CO., INC.

38. Automatic Transmission Assembly (After Removal Engine)
    1. Install the automatic transmission.

GETtheMANUALS.org

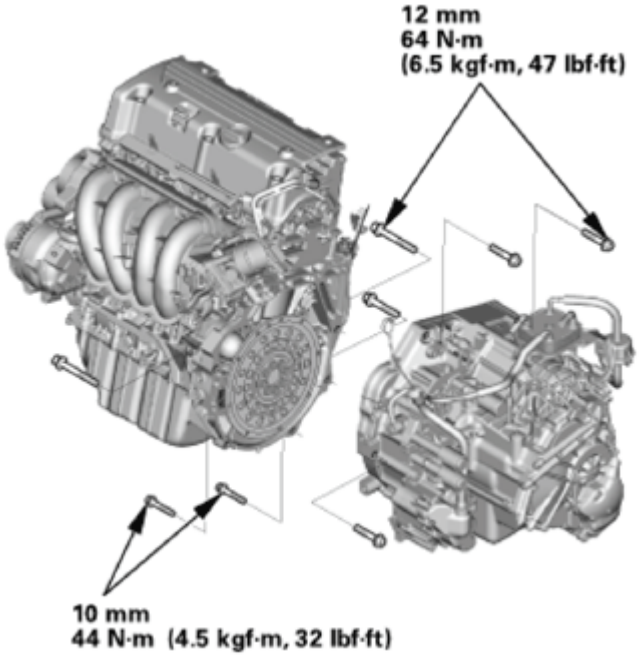

Fig. 219: Identifying Automatic Transmission Bolts With Torque Specifications
Courtesy of AMERICAN HONDA MOTOR CO., INC.

2. Install the torque converter bolts (8 bolts) while rotating the crankshaft pulley.
3. Install the torque converter cover.

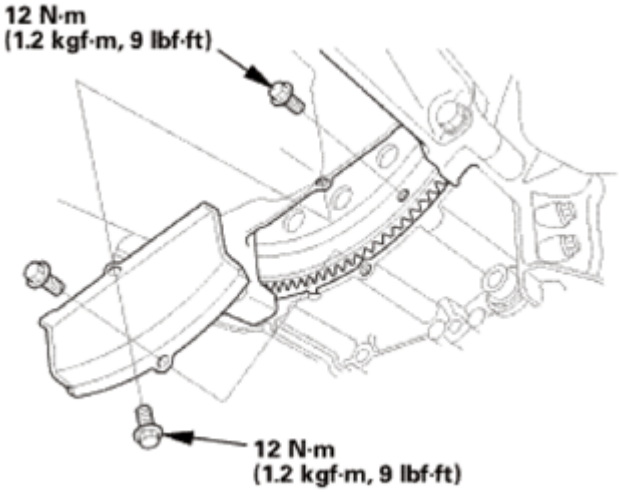

Fig. 220: Identifying Torque Converter Cover And Bolts With Torque Specifications
Courtesy of AMERICAN HONDA MOTOR CO., INC.

39. A/T Intermediate Shaft Assembly
    1. Clean the areas where the intermediate shaft contacts the differential thoroughly with solvent, and dry them with compressed air.

GETtheMANUALS.org

NOTE: **Do not wash the rubber parts with solvent.**

2. Insert the intermediate shaft (A) into the differential correctly.

NOTE: **Insert the intermediate shaft carefully to prevent damaging the oil seal (B).**

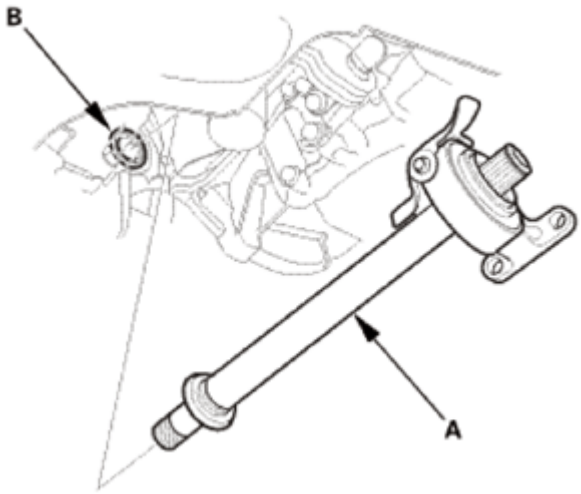

Fig. 221: Identifying Intermediate Shaft And Oil Seal
Courtesy of AMERICAN HONDA MOTOR CO., INC.

3. Install the two dowel bolts (A) and the flange bolt (B).

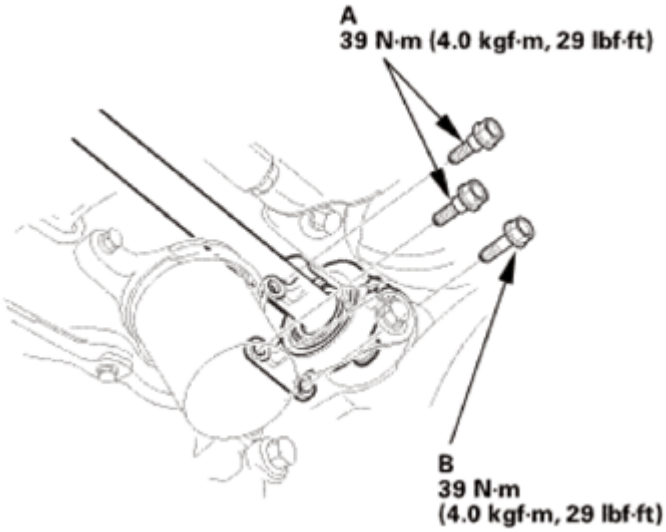

Fig. 222: Identifying Dowel Bolts And Flange Bolts
Courtesy of AMERICAN HONDA MOTOR CO., INC.

40. Engine Wire Harness

GETtheMANUALS.org

1. Install the engine wire harness.

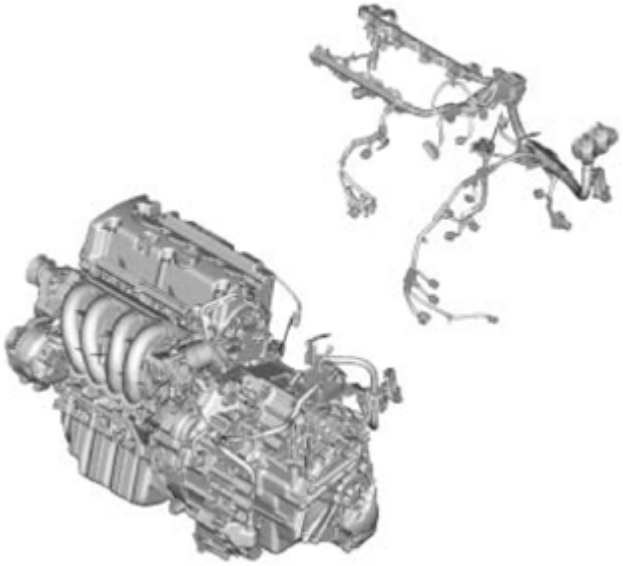

Fig. 223: Identifying Engine Wire Harness
Courtesy of AMERICAN HONDA MOTOR CO., INC.

41. Alternator
    1. Connect the connector and the cable.
    2. Install the alternator.

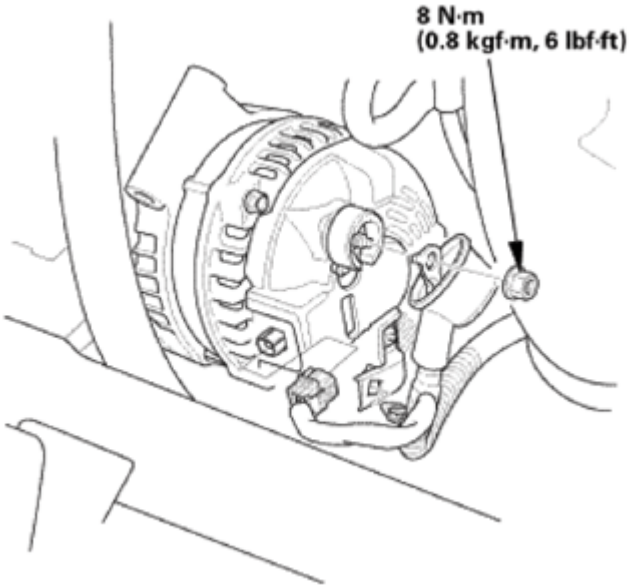

Fig. 224: Identifying Alternator Nut With Torque Specifications
Courtesy of AMERICAN HONDA MOTOR CO., INC.

GETtheMANUALS.org

3. Install the three bolts securing the alternator.

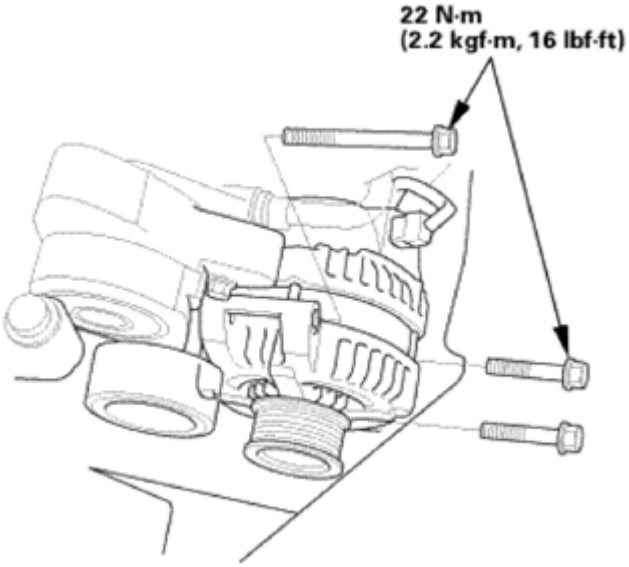

Fig. 225: Identifying Alternator Securing Bolts
Courtesy of AMERICAN HONDA MOTOR CO., INC.

42. Starter
    1. Install the starter.
    2. Connect the cable, and the connector. Make sure the crimped side of the ring terminal faces away from the starter when you connect it.

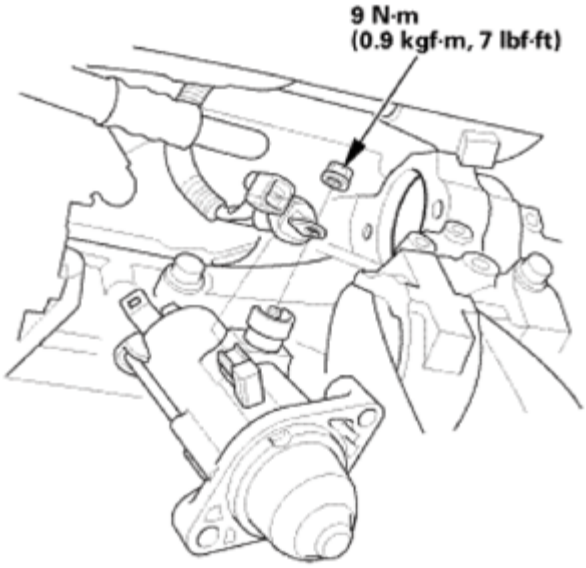

Fig. 226: Identifying Starter Nut With Torque Specifications
Courtesy of AMERICAN HONDA MOTOR CO., INC.

GETtheMANUALS.org

3. Install the starter.

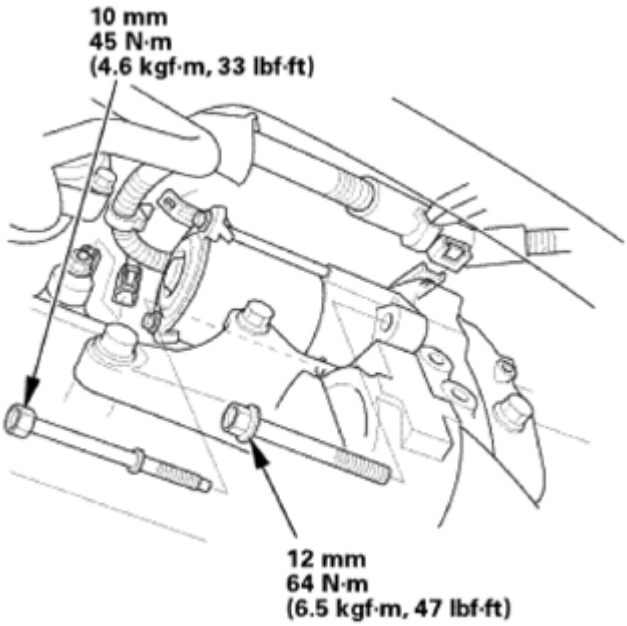

Fig. 227: Identifying Starter Bolts With Torque Specifications
Courtesy of AMERICAN HONDA MOTOR CO., INC.

43. Ignition Coil Cover
    1. Install the ignition coil cover.

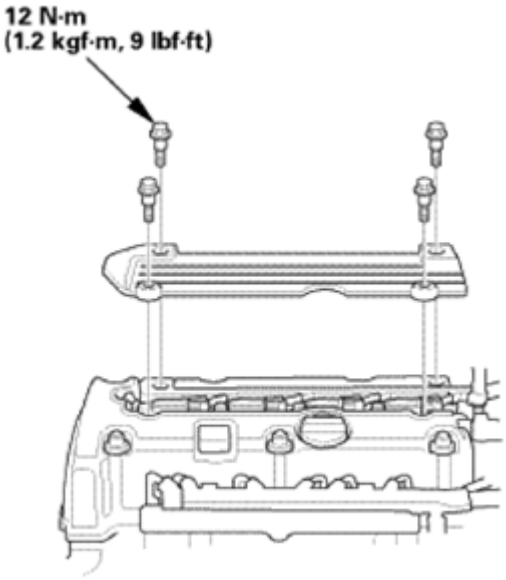

Fig. 228: Identifying Ignition Coil Cover
Courtesy of AMERICAN HONDA MOTOR CO., INC.

GETtheMANUALS.org

ECM/PCM CONNECTOR FOR INPUTS AND OUTPUTS

PCM INPUTS AND OUTPUTS AT PCM CONNECTOR A ([]) (49P)

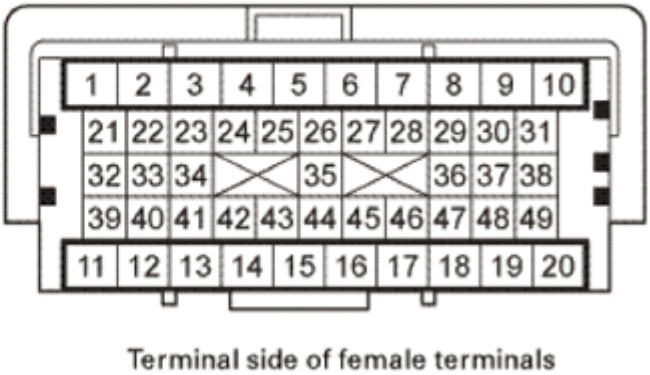

Fig. 229: PCM Connector A (49P) Terminals Layout
Courtesy of AMERICAN HONDA MOTOR CO., INC.

Terminal number	Wire color	Terminal name	Description	Signal
1	BLU	IG1_FI-ECU (POWER SOURCE FOR SOLENOID VALVES)	Power source for solenoid valves	With ignition switch ON (II): battery voltage
2	Not used	Not used		
3	WHT	F_CAN-H (CAN COMMUNICATION SIGNAL HIGH)	Sends and receives communication signal	With ignition switch ON (II): pulses
4	RED	F_CAN-L (CAN COMMUNICATION SIGNAL LOW)	Sends and receives communication signal	With ignition switch ON (II): pulses
5	Not used	Not used		
6	Not used	Not used		
7	GRY	FI_MAIN_RLY_CL- (PGM-FI MAIN RELAY 1)	Drives PGM-FI main relay 1	With ignition switch ON (II): about 0 V With ignition switch in LOCK (0): battery voltage
8	Not used	Not used		
9	BRN	FI_MAIN_RLY_OUT (POWER SOURCE)	Power source for PCM	With ignition switch ON (II): battery voltage

GETtheMANUALS.org

10	GRY	SG6 (SENSOR GROUND)	Sensor ground	Less than 0.2 V at all times
11	Not used	Not used		
12	GRN	A/C_MG_CLUTCH_RLY_CL - (A/C COMPRESSOR CLUTCH RELAY)	Drives A/C compressor clutch relay	With compressor ON: about 0 V With compressor OFF: battery voltage
13	BLU	STOP_SW (BRAKE PEDAL POSITION SWITCH)	Detects brake pedal position switch signal	With brake pedal released: about 0 V With brake pedal pressed: battery voltage
14	RED	OD_SW (D3 SWITCH)	Detects D3 switch signal	With ignition switch ON (II): • D3 switch ON (pressed): about 0 V • D3 switch OFF (released): battery voltage
15	PUR	FAN_LO_SIGNAL (RADIATOR FAN CONTROL)	Drives radiator fan relay	With radiator fan running: about 0 V With radiator fan stopped: battery voltage
16	GRY	FAN_HI_SIGNAL (RADIATOR FAN CONTROL)	Drives A/C condenser fan relay	With A/C condenser fan running at high speed: about 0 V With A/C condenser fan running at low speed or stopped: battery voltage
17	YEL	S-NET (SERIAL COMMUNICATION FOR IMMOBILIZER)	Sends serial communication signal	With ignition switch ON (II): pulses With key removed from ignition switch: 0 - 5.0 V
18	Not used	Not used		
19	Not used	Not used		
20	WHT	FI_SUB_RLY_CL- (PGM-FI SUBRELAY)	Drives PGM-FI subrelay	With ignition switch ON (II): about 0 V
21	WHT	SHIFT_LOCK_SOL (SHIFT LOCK SOLENOID)	Drives shift lock solenoid	With ignition switch ON (II), in P, brake pedal pressed, and accelerator pedal released: about 0 V
			Outputs engine	With engine running:

GETtheMANUALS.org

22	YEL	NEP (ENGINE SPEED PULSE)	speed pulse	pulses
23	Not used	Not used		
24	Not used	Not used		
25	BRN	BKSWNC (BRAKE PEDAL POSITION SWITCH)	Detects brake pedal position switch signal	With ignition switch ON (II) and brake pedal released: battery voltage With ignition switch ON (II) and brake pedal pressed: about 0 V
26	GRN	VSP (VEHICLE SPEED SIGNAL OUTPUT)	Sends vehicle speed signal	Depending on vehicle speed: pulses
27	BLU	PD_SENSOR (A/C PRESSURE SENSOR)	Detects A/C pressure sensor signal	With A/C switch ON: about 1.4 - 4.8 V (depending on A/C pressure)
28	ORN	APS1 (ACCELERATOR PEDAL POSITION (APP) SENSOR A)	Detects APP sensor A signal	With ignition switch ON (II) and accelerator pedal pressed: about 4.7 V With ignition switch ON (II) and accelerator pedal released: about 1.0 V
29	PUR	APS2 (ACCELERATOR PEDAL POSITION (APP) SENSOR B)	Detects APP sensor B signal	With ignition switch ON (II) and accelerator pedal pressed: about 2.4 V With ignition switch ON (II) and accelerator pedal released: about 0.5 V
30	RED	VCC6 (SENSOR VOLTAGE)	Provides sensor reference voltage	With ignition switch ON (II): about 5.0 V
31	Not used	Not used		
32	GRY	VSV (EVAPORATIVE EMISSION (EVAP) CANISTER VENT SHUT VALVE)	Drives EVAP canister vent shut valve	With ignition switch ON (II): battery voltage
33	Not used	Not used		
34	WHT	ELD (ELECTRICAL LOAD DETECTOR (ELD))	Detects ELD signal	With ignition switch ON (II): about 0.1 - 4.8 V (depending on electrical load)
35	LT GRN	VCC5 (SENSOR VOLTAGE)	Provides sensor reference voltage	With ignition switch ON (II): about 5.0 V
36	BRN	VCC4 (SENSOR VOLTAGE)	Provides sensor reference voltage	With ignition switch ON (II): about 5.0 V

GETtheMANUALS.org

37	WHT	PTANK (FUEL TANK PRESSURE (FTP) SENSOR)	Detects FTP sensor signal	With ignition switch ON (II) and fuel fill cap removed: about 2.5 V
38	Not used	Not used		
39	Not used	Not used		
40	RED	FUEL_PUMP_RLY_CL- (IMMOBILIZER FUEL PUMP RELAY)	Drives PGM-FI main relay 2	About 0 V for 2 seconds after turning ignition switch ON (II), then battery voltage With engine running: about 0 V
41	Not used	Not used		
42	ORN	SCS (SERVICE CHECK SIGNAL)	Detects service check signal	With service check signal shorted using the HDS: about 0 V With service check signal opened: about 5.0 V
43	Not used	Not used		
44	PNK	TW2_SENSOR (ENGINE COOLANT TEMPERATURE (ECT) SENSOR 2)	Detects ECT sensor 2 signal	With ignition switch ON (II): about 0.1 - 4.8 V (depending on engine coolant temperature)
45	YEL	SG5 (SENSOR GROUND)	Sensor ground	Less than 0.2 V at all times
46	LT BLU	SG4 (SENSOR GROUND)	Sensor ground	Less than 0.2 V at all times
47	Not used	Not used		
48	PUR	ETCS_RLY_CL- (ELECTRONIC THROTTLE CONTROL SYSTEM (ETCS) CONTROL RELAY)	Drives electronic throttle control system (ETCS) control relay	With ignition switch ON (II): about 0 V
49	Not used	Not used		

PCM INPUTS AND OUTPUTS AT PCM CONNECTOR B (DELTA) (49P)

GETtheMANUALS.org

PCM Inputs and Outputs at PCM Connector B (△) (49P)

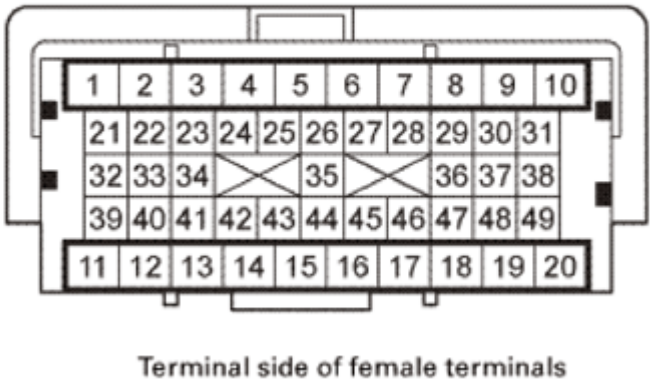

Fig. 230: PCM Connector B (49P) Terminals Layout
Courtesy of AMERICAN HONDA MOTOR CO., INC.

Terminal number	Wire color	Terminal name	Description	Signal
1	BLK	PG2 (POWER GROUND)	Ground circuit for PCM	Less than 0.2 V at all times
2	Not used	Not used		
3	YEL	PC_SOL (EVAPORATIVE EMISSION (EVAP) CANISTER PURGE VALVE)	Drives EVAP canister purge valve	With engine running, engine coolant below 131 °F (55 ° C): battery voltage With engine running, engine coolant above 131 °F (55 ° C): duty controlled
4	LT GRN	SO2HT (SECONDARY HEATED OXYGEN SENSOR (SECONDARY HO2S) (SENSOR 2) HEATER)	Drives secondary HO2S (sensor 2) heater	With ignition switch ON (II): battery voltage With warmed up engine running: duty controlled
5	Not used	Not used		
6	Not used	Not used		
7	PNK	OPSW (OIL PRESSURE SWITCH)	Detects engine oil pressure signal	With engine running: battery voltage
8	LT BLU	LINEAR_A+ (A/T CLUTCH PRESSURE CONTROL SOLENOID VALVE A)	Drives A/T clutch pressure control solenoid valve A	With ignition switch ON (II): current controlled
9	BLU	OP_3_SW (TRANSMISSION FLUID PRESSURE SWITCH B (3RD CLUTCH))	Detects transmission fluid pressure switch B (3rd clutch) signal	With engine running: • Without 3rd clutch pressure: about 5.0 V

GETtheMANUALS.org

				• With 3rd clutch pressure: about 0 V
10	BLK	PG1 (POWER GROUND)	Ground circuit for PCM	Less than 0.2 V at all times
11	PUR	LINEAR_B+ (A/T CLUTCH PRESSURE CONTROL SOLENOID VALVE B)	Drives A/T clutch pressure control solenoid valve B	With ignition switch ON (II): current controlled
12	Not used	Not used		
13	Not used	Not used		
14	Not used	Not used		
15	Not used	Not used		
16	TAN	LIN	Sends and receives communication signal	With ignition switch ON (II): pulses
17	Not used	Not used		
18	Not used	Not used		
19	RED	OP_2_SW (TRANSMISSION FLUID PRESSURE SWITCH A (2ND CLUTCH))	Detects transmission fluid pressure switch A (2nd clutch) signal	With engine running: • Without 2nd clutch pressure: about 5.0 V • With 2nd clutch pressure: about 0 V
20	Not used	Not used		
21	PUR	SHA (SHIFT SOLENOID VALVE A)	Drives shift solenoid valve A	With engine running in R, D (in 1st, 4th, and 5th gears), D3 (in 1st gear), and 1: battery voltage With engine running in P, N, D (in 2nd and 3rd gears) and D3 (in 2nd and 3rd gears), and 2: about 0 V
22	LT BLU	VGP (MASS AIR FLOW (MAF) SENSOR +SIDE)	Detects MAF sensor signal	At idle with warmed up engine and no electrical load: about 1.1 - 1.6 V (between VG+ terminal and VG- terminal)
23	WHT	ATP-N (TRANSMISSION RANGE SWITCH N	Detects transmission range switch N	With ignition switch ON (II) in N: about 0 V With ignition switch ON (II)

GETtheMANUALS.org

		POSITION)	position signal	in any position other than N: about 5.0 V
24	PUR	ATP-P (TRANSMISSION RANGE SWITCH P POSITION)	Detects transmission range switch P position signal	With ignition switch ON (II) in P: about 0 V With ignition switch ON (II) in any position other than P: more than 5.0 V
25	TAN	ATP-R (TRANSMISSION RANGE SWITCH R POSITION)	Detects transmission range switch R position signal	With ignition switch ON (II) in R: about 0 V With ignition switch ON (II) in any position other than R: battery voltage
26	PUR	ATP-1 (TRANSMISSION RANGE SWITCH 1 POSITION)	Detects transmission range switch 1 position signal	With ignition switch ON (II) in 1: about 0 V With ignition switch ON (II) in any position other than 1: battery voltage.
27	RED	ATP-D3 (TRANSMISSION RANGE SWITCH D3 POSITION)	Detects transmission range switch 2 position signal	With ignition switch ON (II) in 2: about 0 V With ignition switch ON (II) in any position other than 2: battery voltage
28	WHT	NM (INPUT SHAFT (MAINSHAFT) SPEED SENSOR)	Detects input shaft (mainshaft) speed sensor signals	With ignition switch ON (II): about 0 V or about 5.0 V With engine running in N: about 2.5 V (pulses)
29	PNK	VCC2 (SENSOR VOLTAGE)	Provides sensor reference voltage	With ignition switch ON (II): about 5.0 V
30	Not used	Not used		
31	GRN	MAP (PB) (MANIFOLD ABSOLUTE PRESSURE (MAP) SENSOR)	Detects MAP sensor signal	With ignition switch ON (II): about 3.0 V At idle: about 1.0 V (depending on engine speed)
32	WHT	SHB (SHIFT SOLENOID VALVE B)	Drives shift solenoid valve B	With engine running in P, R, N, D (in 1st and 2nd gears), D3 (in 1st and 2nd gears), 2, and 1: battery voltage With engine running in D (in 3rd, 4th, and 5th gears), and D3 (in 3rd gear): about 0 V
33	GRN	VT_SOL (ROCKER ARM OIL CONTROL SOLENOID A)	Drives rocker arm oil control solenoid A	At idle: about 0 V
34	PNK	TW (ENGINE COOLANT TEMPERATURE (ECT)	Detects ECT sensor 1	With ignition switch ON (II): about 0.1 - 4.8 V

GETtheMANUALS.org

		SENSOR 1)	signal	(depending on engine coolant temperature)
35	YEL	ATP-D (TRANSMISSION RANGE SWITCH D POSITION)	Detects transmission range switch D position signal	With ignition switch ON (II) in D: about 0 V With ignition switch ON (II) in any position other than D: battery voltage
36	BLU	LINEAR_C+ (A/T CLUTCH PRESSURE CONTROL SOLENOID VALVE C)	Drives A/T clutch pressure control solenoid valve C	With ignition switch ON (II): current controlled
37	Not used	Not used		
38	RED	TATF (ATF TEMPERATURE SENSOR)	Detects ATF temperature signal	With ignition switch ON (II): about 0.2 - 4.8 V (depending on ATF temperature)
39	LT GRN	ATP-FWD (TRANSMISSION RANGE SWITCH FWD POSITION)	Detects transmission range switch FWD position signal	With ignition switch ON (II) in D, 2, and 1: about 0 V With ignition switch ON (II) in any position other than D, 2, and 1: battery voltage
40	YEL	SHE (SHIFT SOLENOID VALVE E)	Drives shift solenoid valve E	With engine running in P and R, and lock-up condition (in D): battery voltage With engine running in N, and no lock-up condition (in D, D3, 2, and 1): about 0 V
41	Not used	Not used		
42	RED	TA (INTAKE AIR TEMPERATURE (IAT) SENSOR)	Detects IAT sensor signal	With ignition switch ON (II): about 0.1 - 4.0 V (about 2.6 V at normal operating temperature)
43	LT GRN	VGM (MASS AIR FLOW (MAF) SENSOR -SIDE)	Ground for MAF sensor signal	
44	GRY	SG2 (SENSOR GROUND)	Sensor ground	Less than 0.2 V at all times
45	PNK	ATP-RVS (TRANSMISSION RANGE SWITCH RVS POSITION)	Detects transmission range switch RVS position signal	With ignition switch ON (II) in R: about 0 V With ignition switch ON (II) in any position other than R: battery voltage
46	WHT	SO2 (SECONDARY HEATED OXYGEN SENSOR (SECONDARY HO2S)	Detects secondary HO2S (sensor 2) signal	With throttle fully opened from idle and warmed up engine: about 0.8 V With throttle quickly closed: below 0.4 V (() between SO2

GETtheMANUALS.org

		(SENSOR 2))		terminal and SO2SG terminal)
47	Not used	Not used		
48	LT GRN	NC (OUTPUT SHAFT (COUNTERSHAFT) SPEED SENSOR)	Detects output shaft (countershaft) speed sensor signal	With ignition switch ON (II): about 0 V or about 5.0 V With driving: about 2.5 V (pulses)
49	Not used	Not used		

PCM INPUTS AND OUTPUTS AT PCM CONNECTOR C (O) (49P)

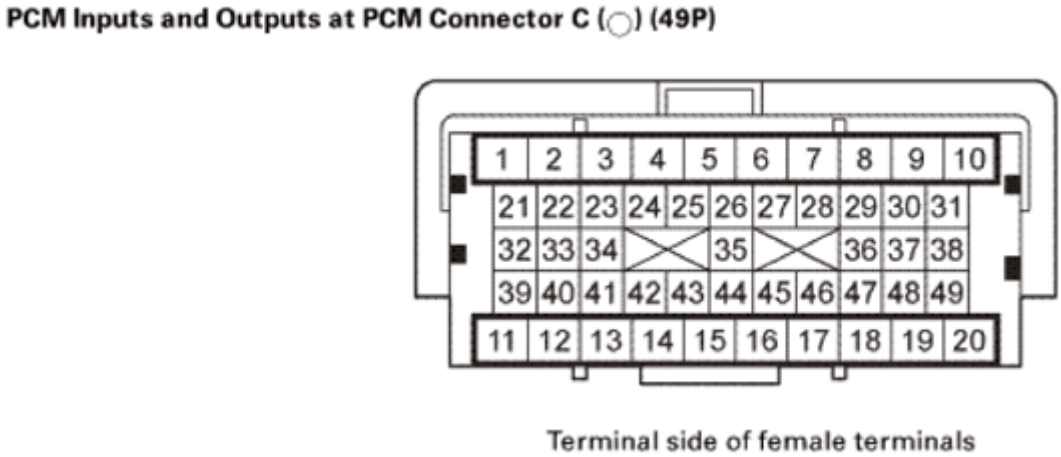

Fig. 231: PCM Connector C (49P) Terminals Layout
Courtesy of AMERICAN HONDA MOTOR CO., INC.

Terminal number	Wire color	Terminal name	Description	Signal
1	YEL	VB ETCS (IGNITION SIGNAL ETCS)	Detects ignition signal	With ignition switch ON (II): battery voltage
2	BLK	PG1 (POWER GROUND ETCS)	Ground circuit for PCM	Less than 0.2 V at all times
3	GRN	MTR1 (THROTTLE ACTUATOR -SIDE)	Ground for throttle actuator	With ignition switch ON (II) and accelerator pedal released: about 0 V
4	PNK	MTR2 (THROTTLE ACTUATOR +SIDE)	Drives throttle actuator	About 1.5 V immediately after turning ignition switch ON (II), then about 0 V
5	PUR	INJ_1 (No. 1 INJECTOR)	Drives No. 1 injector	
6	RED	INJ_2 (No. 2 INJECTOR)	Drives No. 2	

GETtheMANUALS.org

			injector	
7	BLU	INJ_3 (No. 3 INJECTOR)	Drives No. 3 injector	At idle: duty controlled With ignition switch ON (II): battery voltage
8	TAN	INJ_4 (No. 4 INJECTOR)	Drives No. 4 injector	
9	GRN	AFHT (AIR FUEL RATIO (A/F) SENSOR (SENSOR 1) HEATER CONTROL)	Drives A/F sensor (sensor 1) heater	With ignition switch ON (II): battery voltage With warmed up engine running: duty controlled
10	WHT	IG1 (F/P) (IGNITION SIGNAL)	Detects ignition signal	With ignition switch ON (II): battery voltage
11	Not used	Not used		
12	Not used	Not used		
13	LT BLU	VT_SW (ROCKER ARM OIL PRESSURE SWITCH)	Detects rocker arm oil pressure switch signal	At idle: about 0 V
14	GRY	SG3 (ETCS) (SENSOR GROUND)	Sensor ground	Less than 0.2 V at all times
15	BRN	PG1 (POWER GROUND)	Ground circuit for PCM	Less than 0.2 V at all times
16	BLU	CAM (CAMSHAFT POSITION (CMP) SENSOR A)	Detects CMP sensor A signal	With engine running: pulses
17	RED	KS (KNOCK SENSOR)	Detects knock sensor signal	With engine knocking: pulses Without engine knocking: 0 V
18	Not used	Not used		
19	Not used	Not used		
20	BRN	LG2 (LOGIC GROUND)	Ground circuit for PCM	Less than 0.2 V at all times
21	GRN	SHC (SHIFT SOLENOID VALVE C)	Drives shift solenoid valve C	With engine running in N, D (in 1st, 3rd, and 5th gears), D3 (in 1st and 3rd gears), and 1: battery voltage With engine running in P, R, D (in 2nd and 4th gears), D3 (in 2nd gear), and 2: about 0 V
22	TAN	VCC3 (ETCS) (SENSOR VOLTAGE)	Provides sensor reference voltage	With ignition switch ON (II): about 5.0 V
23	PNK	VCC1 (SENSOR VOLTAGE)	Provides sensor reference voltage	With ignition switch ON (II): about 5.0 V
24	GRY	SG1 (SENSOR GROUND)	Sensor ground	Less than 0.2 V at all times

GETtheMANUALS.org

25	YEL	IGN_PULSE1 (No. 1 IGNITION COIL PULSE)	Drives No. 1 ignition coil	With ignition switch ON (II): about 0 V With engine running: pulses
26	BLU	IGN_PULSE2 (No. 2 IGNITION COIL PULSE)	Drives No. 2 ignition coil	
27	WHT	IGN_PULSE3 (No. 3 IGNITION COIL PULSE)	Drives No. 3 ignition coil	
28	PUR	IGN_PULSE4 (No. 4 IGNITION COIL PULSE)	Drives No. 4 ignition coil	
29	Not used	Not used		
30	LT GRN	TH_1 (THROTTLE POSITION (TP) SENSOR A)	Detects TP sensor A signal	With ignition switch ON (II) and accelerator pedal pressed: about 3.9 V With ignition switch ON (II) and accelerator pedal released: about 0.8 V
31	RED	TH_2 (THROTTLE POSITION (TP) SENSOR B)	Detects TP sensor B signal	With ignition switch ON (II) and accelerator pedal pressed: about 4.2 V With ignition switch ON (II) and accelerator pedal released: about 1.7 V
32	PNK	SHD (SHIFT SOLENOID VALVE D)	Drives shift solenoid valve D	With engine running in D (in 2nd and 5th gears), D3 (in 2nd gear), and 2: battery voltage With engine running in P, R, N, D (in 1st, 3rd, and 4th gears), D3 (in 1st and 3rd gears), and 1: about 0 V
33	BLU	VTC_P (VTC OIL CONTROL SOLENOID VALVE)	Drives VTC oil control solenoid valve	With ignition switch ON (II): about 0 V
34	Not used	Not used		
35	Not used	Not used		
36	Not used	Not used		
37	Not used	Not used		
38	Not used	Not used		
39	RED	AFS+ (AIR FUEL RATIO (A/F) SENSOR (SENSOR 1) +SIDE)	Detects A/F sensor (sensor 1) signal	At idle: about 2.2 V

GETtheMANUALS.org

40	YEL	AFS- (AIR FUEL RATIO (A/F) SENSOR (SENSOR 1) -SIDE)	Detects A/F sensor (sensor 1) signal	At idle: about 1.8 V
41	GRN	TDC (CAMSHAFT POSITION (CMP) SENSOR B)	Detects CMP sensor B signal	With engine running: pulses
42	BLU	CRANK_P (CRANKSHAFT POSITION (CKP) SENSOR)	Detects CKP sensor signal	With engine running: pulses
43	Not used	Not used		
44	Not used	Not used		
45	Not used	Not used		
46	Not used	Not used		
47	GRY	SO2SG (SECONDARY HEATED OXYGEN SENSOR (SECONDARY HO2S (SENSOR 2)) SENSOR GROUND)	Sensor ground for secondary HO2S (sensor 2)	With ignition switch ON (II): about 1.5 V
48	GRN	KSGND (KNOCK SENSOR GROUND)	Sensor ground for knock sensor	Less than 0.2 V at all times.
49	Not used	Not used		

ECT SENSOR 1 REMOVAL AND INSTALLATION

REMOVAL

1. Vehicle Lift
    1. Raise the vehicle on a lift, and make sure it is securely supported.
2. Front Splash Shield
    1. Remove the bolts (A), then remove the clips (B) that secure the front inner fender and the front splash shield (C) to the body.
    2. From under the front bumper (D), remove the clips (E).
    3. From under the body, remove the clips (F), then pull out the front splash shield.

GETtheMANUALS.org

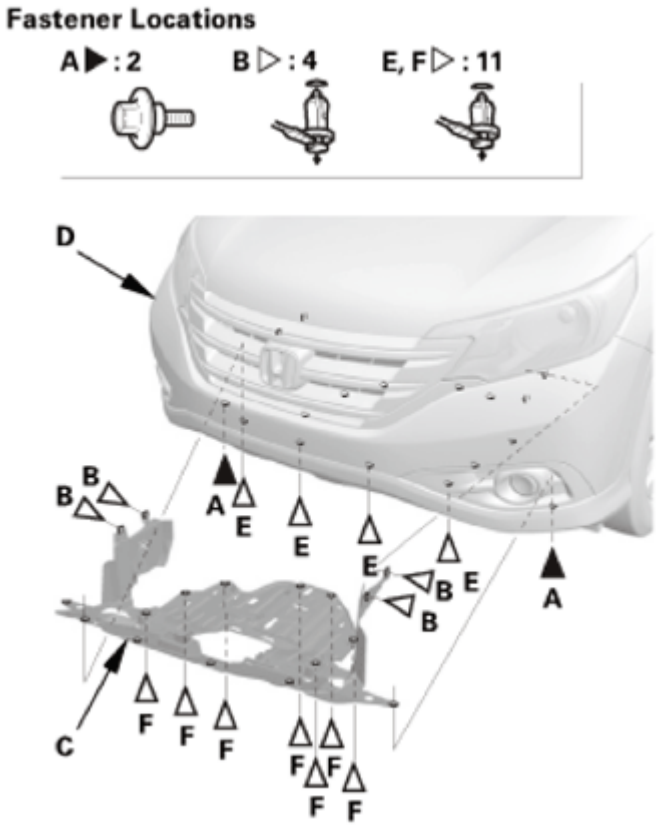

Fig. 232: Identifying Front Bumper, Clips And Front Splash Shield
Courtesy of AMERICAN HONDA MOTOR CO., INC.

3. Radiator Cap
    1. Wait until the engine is cool, then carefully remove the radiator cap.
4. Radiator Coolant - Replacement
    1. Loosen the drain plug (A), and drain the coolant.
    2. After the coolant has drained, tighten the drain plug securely.

GETtheMANUALS.org

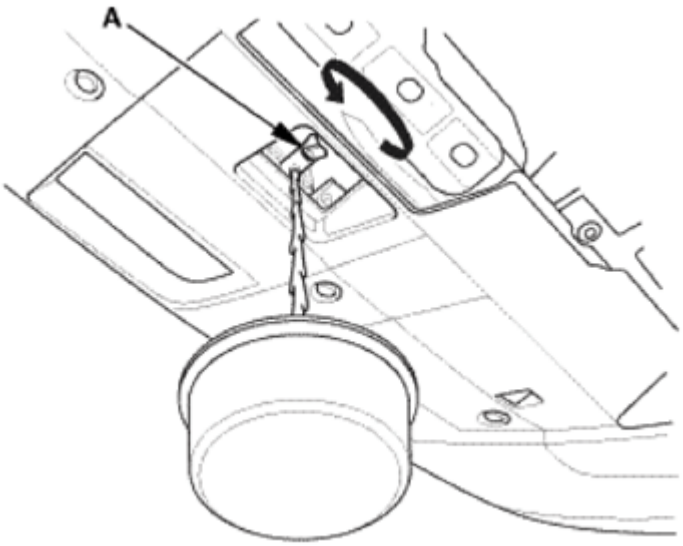

Fig. 233: Loosening Drain Plug
Courtesy of AMERICAN HONDA MOTOR CO., INC.

5. ECT Sensor 1
    1. Remove ECT sensor 1.

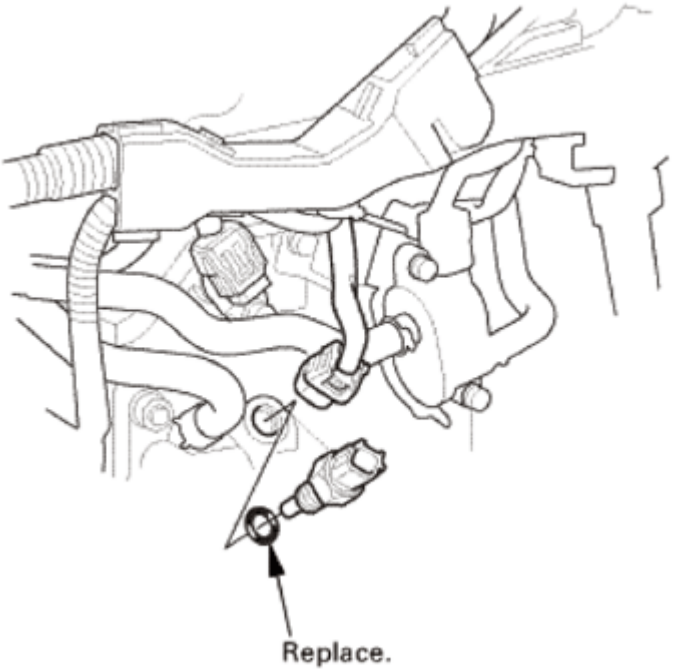

Fig. 234: Identifying Ect Sensor 1 O-Ring
Courtesy of AMERICAN HONDA MOTOR CO., INC.

INSTALLATION

GETtheMANUALS.org

1. ECT Sensor 1
    1. Install ECT sensor 1 (A) with a new O-ring (B).

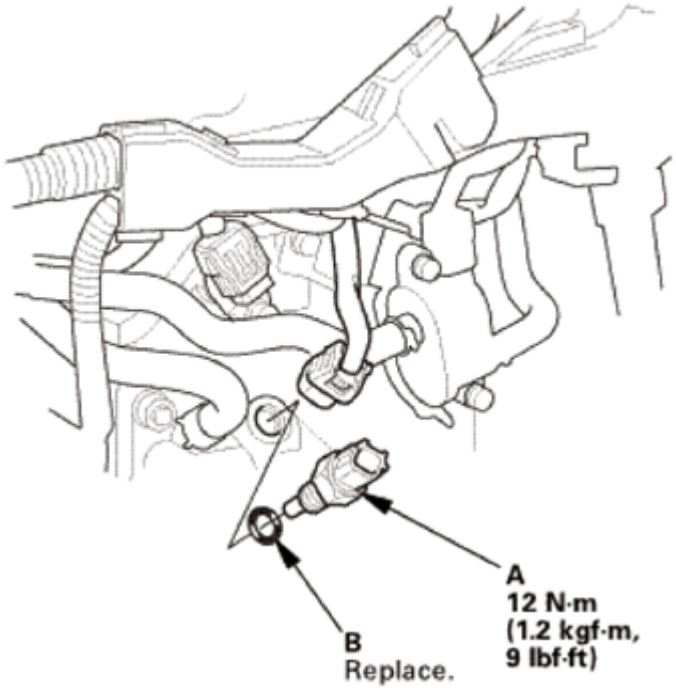

Fig. 235: Identifying ECT Sensor 1 And O-Ring
Courtesy of AMERICAN HONDA MOTOR CO., INC.

2. Front Splash Shield
    1. Install the front splash shield (A), then install the bolts (B) and the clips (C, D). Make sure the clips snap into place securely.

GETtheMANUALS.org

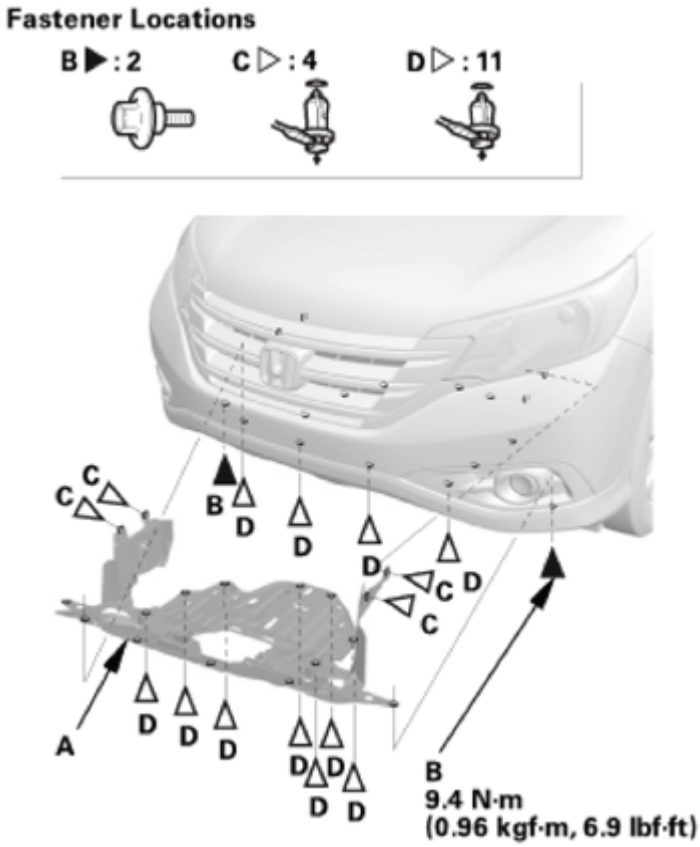

Fig. 236: Identifying Front Splash Shield, Clips And Bolts
Courtesy of AMERICAN HONDA MOTOR CO., INC.

3. Radiator Coolant - Replacement
    1. Follow the chart and pour coolant into the radiator up to the base of the filler neck.

NOTE:

- **Always use Honda Long Life Antifreeze/Coolant Type 2 or Honda Extreme Cold Weather Antifreeze/Coolant Type 2. Using a non-Honda coolant can result in corrosion, causing the cooling system to malfunction or fail.**
- **Honda Long Life Antifreeze/Coolant Type 2 is a mixture of 50 % antifreeze and 50 % water. Honda Extreme Cold Weather Antifreeze/Coolant Type 2 is a 100% concentration coolant. Do not add water to either coolant.**
- **If the vehicle is regularly used in very low temperatures (under -22 °F (-30 °C)) a 60% concentration of coolant should be used.**

Operation	Vehicle Usage (Desired Mixture)	Current Mixture	Coolant Drain	Add Amount of Honda Extreme Cold Weather Antifreeze/Coolant Type 2 (100% concentrate)	Then add Honda Long Life Antifreeze/Coolant Type 2 (50/50)

GETtheMANUALS.org

Coolant Change	Normal Area (50/50)	50/50 60/40 unknown	Drain radiator and reservoir	None	Top off the cooling system
	Very Cold Area (60/40)	50/50 unknown		About 1.5 L (51 fl oz)	
		60/40		About 1.3L (44 fl oz)	
Engine Overhaul	Normal Area (50/50)	-	-	None	
	Very Cold Area (60/40)	-	-	About 1.5 L (51 fl oz)	
Coolant Winterizing	Very Cold Area (60/40)	50/50	Drain about 2.0 L (68 fl oz) from radiator	About 1.5 L (51 fl oz)	
		unknown (1)	Drain radiator and reservoir		
(1) When you want to winterize the coolant with the minimum amount of coolant change but the current coolant concentration in the vehicle is unknown, you must drain all coolant from the cooling system.					

Engine Coolant Capacities (Including the coolant reservoir capacity of 0.62 L (0.164 US gal))	
At Coolant Change:	6.23 L (1.646 US gal)
After Engine Overhaul:	7.44 L (1.966 US gal)

Fig. 237: Pouring Coolant Into Radiator
Courtesy of AMERICAN HONDA MOTOR CO., INC.

2. Loosely install the radiator cap.

GETtheMANUALS.org

3. Start the engine and let it run until the radiator fan comes on at least twice. Do not operate the air conditioning system.
4. Turn off the engine. Check the level in the radiator and add Honda Long Life Antifreeze/Coolant Type 2 if needed.
5. Put the radiator cap securely, then start the engine again, and check for leaks.
6. Clean up any spilled engine coolant.
7. Fill the coolant reservoir to the MAX mark (A) with Honda Long Life Antifreeze/Coolant Type 2.

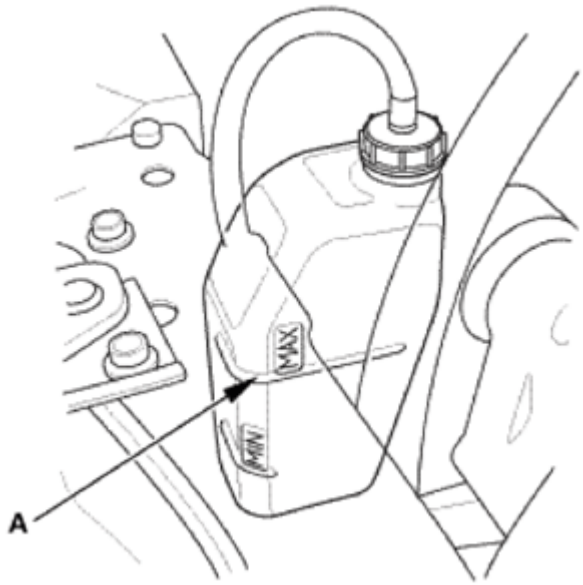

Fig. 238: Identifying Marking On Coolant Reservoir
Courtesy of AMERICAN HONDA MOTOR CO., INC.

4. HDS DLC - Connection
    1. Connect the HDS to the data link connector (DLC) (A) located under the driver's side of the dashboard.
    2. Turn the ignition switch to ON (II).
    3. Make sure the HDS communicates with the vehicle. If it does not communicate, go to the DLC circuit troubleshooting.

GETtheMANUALS.org

Fig. 239: Identifying Data Link Connector (DLC)
Courtesy of AMERICAN HONDA MOTOR CO., INC.

5. Maintenance Minder Reset
    1. **RESET THE MAINTENANCE MINDER** .

ECT SENSOR 2 REMOVAL AND INSTALLATION

REMOVAL

1. Vehicle Lift
    1. Raise the vehicle on a lift, and make sure it is securely supported.
2. Front Splash Shield
    1. Remove the bolts (A), then remove the clips (B) that secure the front inner fender and the front splash shield (C) to the body.
    2. From under the front bumper (D), remove the clips (E).
    3. From under the body, remove the clips (F), then pull out the front splash shield.

GETtheMANUALS.org

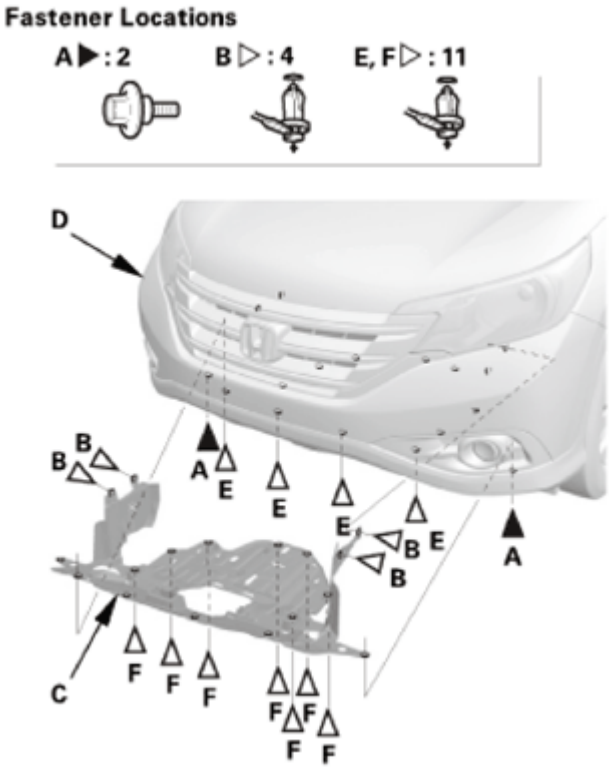

Fig. 240: Identifying Front Floor Undercover, Clips And Bolts
Courtesy of AMERICAN HONDA MOTOR CO., INC.

3. Radiator Cap
    1. Wait until the engine is cool, then carefully remove the radiator cap.
4. Radiator Coolant - Replacement
    1. Loosen the drain plug (A), and drain the coolant.
    2. After the coolant has drained, tighten the drain plug securely.

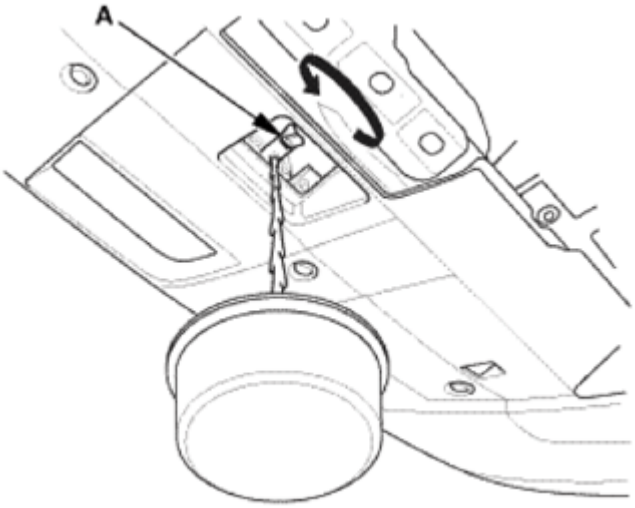

GETtheMANUALS.org

Fig. 241: Loosening Drain Plug
Courtesy of AMERICAN HONDA MOTOR CO., INC.

5. ECT Sensor 2
    1. Remove ECT sensor 2.

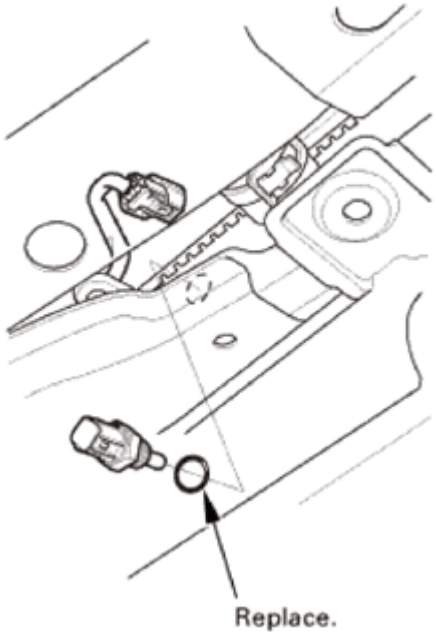

Fig. 242: Identifying Ect Sensor 2 O-Ring
Courtesy of AMERICAN HONDA MOTOR CO., INC.

INSTALLATION

1. ECT Sensor 2
    1. Install ECT sensor 2 (A) with a new O-ring (B).

GETtheMANUALS.org

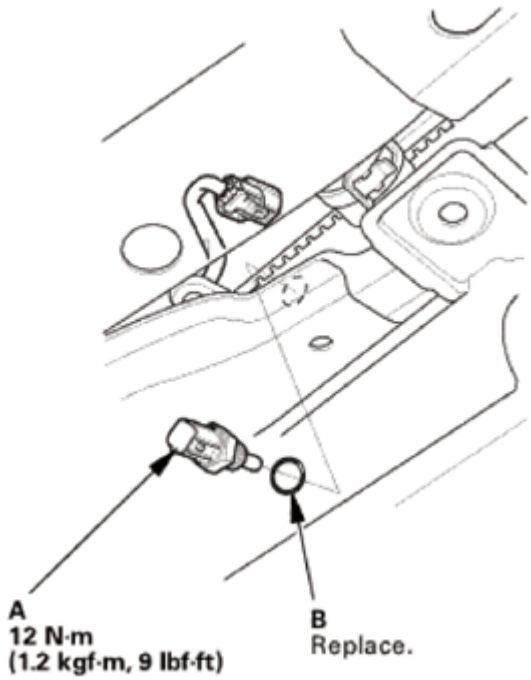

Fig. 243: Identifying ECT Sensor And O-ring
Courtesy of AMERICAN HONDA MOTOR CO., INC.

2. Front Splash Shield
    1. Install the front splash shield (A), then install the bolts (B) and the clips (C, D). Make sure the clips snap into place securely.

GETtheMANUALS.org

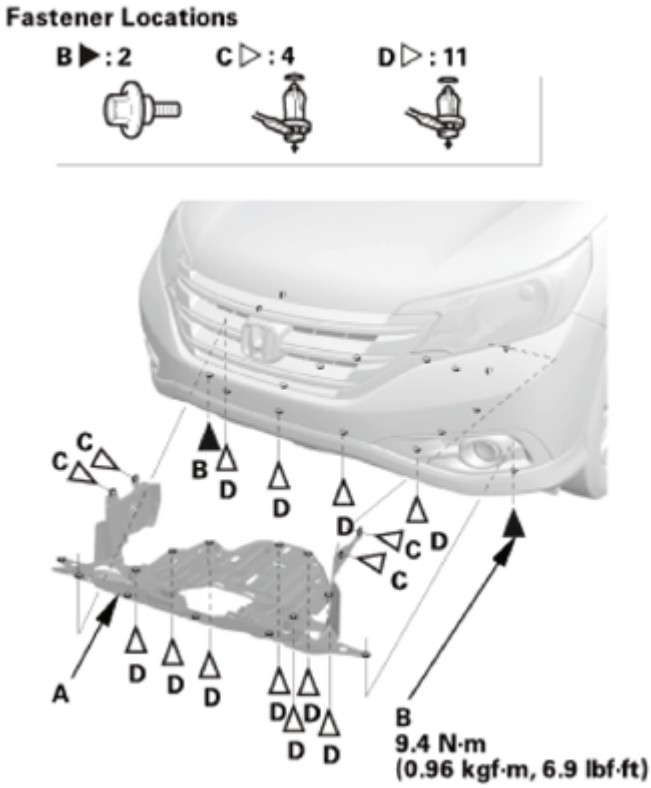

Fig. 244: Identifying Front Splash Shield, Clips And Bolts
Courtesy of AMERICAN HONDA MOTOR CO., INC.

3. Radiator Coolant - Replacement
    1. Follow the chart and pour coolant into the radiator up to the base of the filler neck.

NOTE:

- **Always use Honda Long Life Antifreeze/Coolant Type 2 or Honda Extreme Cold Weather Antifreeze/Coolant Type 2. Using a non-Honda coolant can result in corrosion, causing the cooling system to malfunction or fail.**
- **Honda Long Life Antifreeze/Coolant Type 2 is a mixture of 50 % antifreeze and 50 % water. Honda Extreme Cold Weather Antifreeze/Coolant Type 2 is a 100% concentration coolant. Do not add water to either coolant.**
- **If the vehicle is regularly used in very low temperatures (under -22 °F (-30 °C)) a 60% concentration of coolant should be used.**

Operation	Vehicle Usage (Desired Mixture)	Current Mixture	Coolant Drain	Add Amount of Honda Extreme Cold Weather Antifreeze/Coolant Type 2 (100% concentrate)	Then add Honda Long Life Antifreeze/Coolant Type 2 (50/50)
	Normal Area	50/50 60/40	Drain	None	

GETtheMANUALS.org

Coolant Change	(50/50)	unknown	radiator and reservoir		Top off the cooling system
	Very Cold Area (60/40)	50/50 unknown		About 1.5 L (51 fl oz)	
		60/40		About 1.3L (44 fl oz)	
Engine Overhaul	Normal Area (50/50)	-	-	None	
	Very Cold Area (60/40)	-	-	About 1.5 L (51 fl oz)	
Coolant Winterizing	Very Cold Area (60/40)	50/50	Drain about 2.0 L (68 fl oz) from radiator	About 1.5 L (51 fl oz)	
		unknown (1)	Drain radiator and reservoir		
(1) When you want to winterize the coolant with the minimum amount of coolant change but the current coolant concentration in the vehicle is unknown, you must drain all coolant from the cooling system.					

Engine Coolant Capacities (Including the coolant reservoir capacity of 0.62 L (0.164 US gal))	
At Coolant Change:	6.23 L (1.646 US gal)
After Engine Overhaul:	7.44 L (1.966 US gal)

Fig. 245: Pouring Coolant Into Radiator
Courtesy of AMERICAN HONDA MOTOR CO., INC.

2. Loosely install the radiator cap.
3. Start the engine and let it run until the radiator fan comes on at least twice. Do not operate the air conditioning system.

GETtheMANUALS.org

4. Turn off the engine. Check the level in the radiator and add Honda Long Life Antifreeze/Coolant Type 2 if needed.
5. Put the radiator cap securely, then start the engine again, and check for leaks.
6. Clean up any spilled engine coolant.
7. Fill the coolant reservoir to the MAX mark (A) with Honda Long Life Antifreeze/Coolant Type 2.

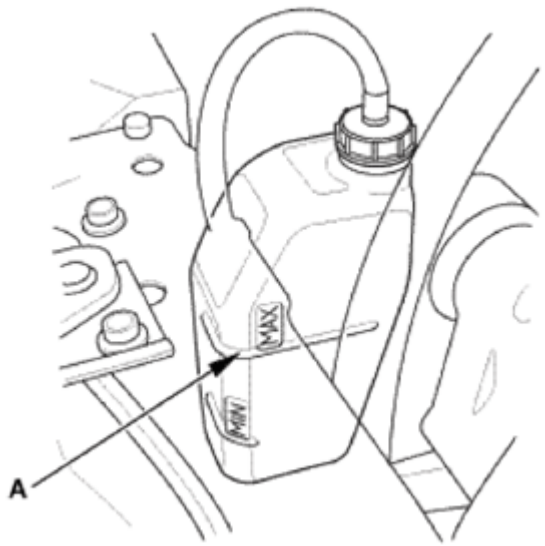

Fig. 246: Identifying Marking On Coolant Reservoir
Courtesy of AMERICAN HONDA MOTOR CO., INC.

4. HDS DLC - Connection
    1. Connect the HDS to the data link connector (DLC) (A) located under the driver's side of the dashboard.
    2. Turn the ignition switch to ON (II).
    3. Make sure the HDS communicates with the vehicle. If it does not communicate, go to the DLC circuit troubleshooting.

GETtheMANUALS.org

Fig. 247: Identifying Data Link Connector (DLC)
Courtesy of AMERICAN HONDA MOTOR CO., INC.

5. Maintenance Minder Reset
    1. **RESET THE MAINTENANCE MINDER** .

ELECTRONIC THROTTLE CONTROL SYSTEM COMPONENT LOCATION INDEX

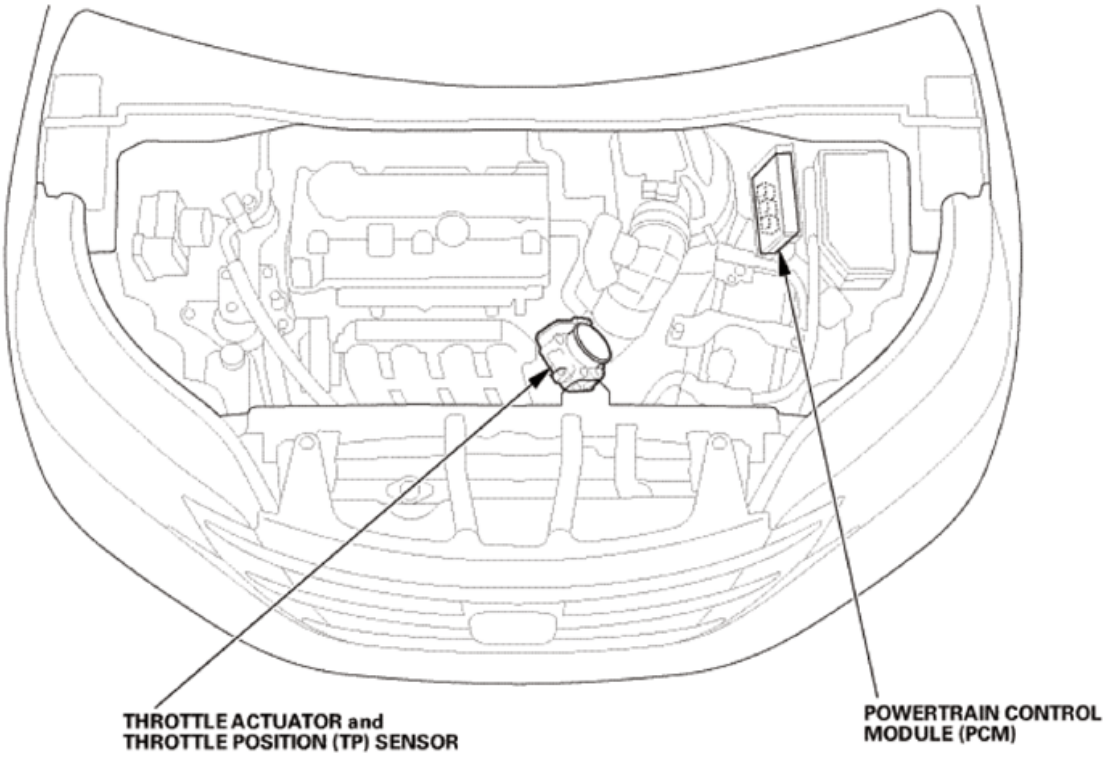

GETtheMANUALS.org

Fig. 248: Electronic Throttle Control System Components Location (1 Of 2)
Courtesy of AMERICAN HONDA MOTOR CO., INC.

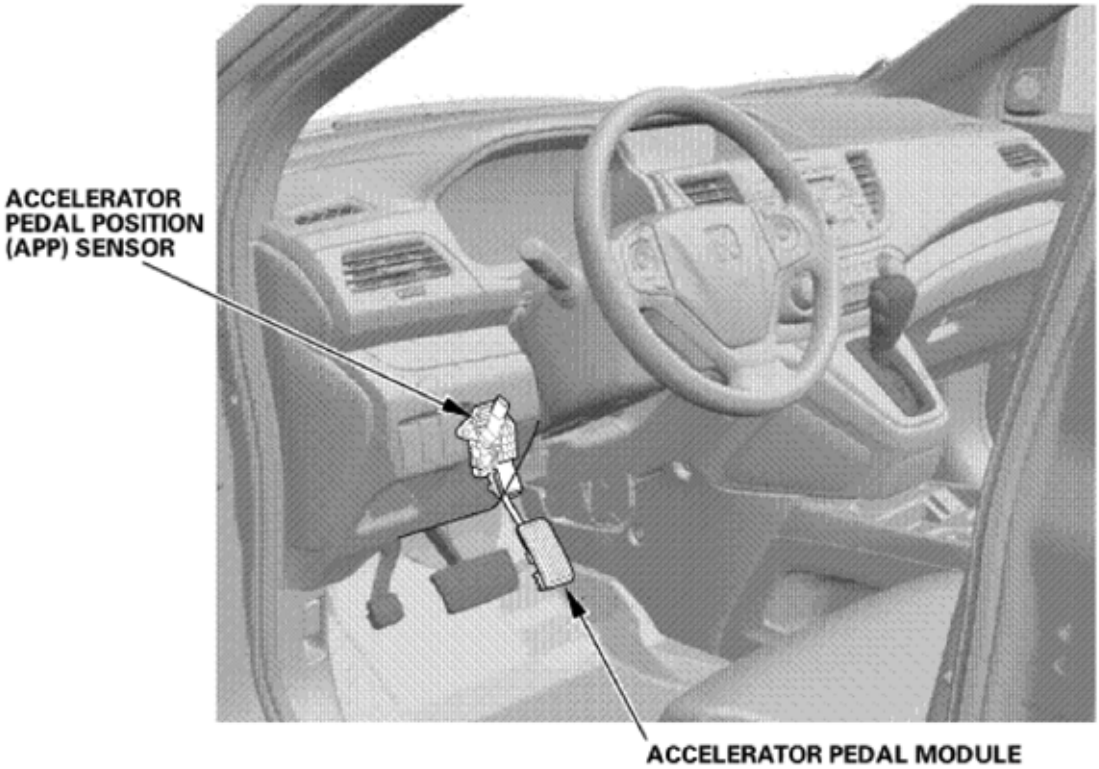

Fig. 249: Electronic Throttle Control System Components Location (2 Of 2)
Courtesy of AMERICAN HONDA MOTOR CO., INC.

POWERTRAIN CONTROL MODULE (PCM)	**Update** See **PCM REMOVAL AND INSTALLATION** or **PCM UPDATE**
	Removal and Installation See **PCM REMOVAL AND INSTALLATION** or **PCM UPDATE**
THROTTLE ACTUATOR and THROTTLE POSITION (TP) SENSOR	**TEST**
	Cleaning See **THROTTLE BODY CLEANING** , **THROTTLE BODY DISASSEMBLY AND REASSEMBLY** or **THROTTLE BODY REMOVAL AND INSTALLATION**
	Removal and Installation See **THROTTLE BODY CLEANING** , **THROTTLE BODY DISASSEMBLY AND REASSEMBLY** or **THROTTLE BODY REMOVAL AND INSTALLATION**
	Disassembly and Reassenbly See **THROTTLE BODY CLEANING** , **THROTTLE BODY DISASSEMBLY AND REASSEMBLY** or **THROTTLE BODY REMOVAL AND INSTALLATION**
ACCELERATOR PEDAL MODULE	**REMOVAL AND INSTALLATION**
ACCELERATOR PEDAL	

GETtheMANUALS.org

EVAP CANISTER PURGE VALVE REMOVAL AND INSTALLATION

REMOVAL

1. Air Cleaner Cover
    1. Remove the air cleaner cover (A).

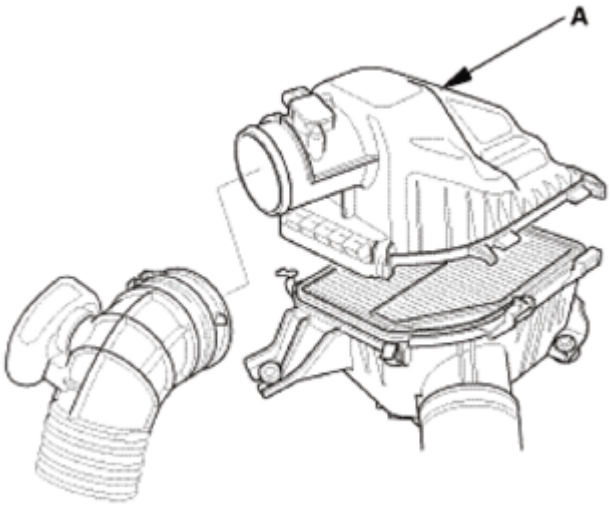

Fig. 250: Identifying Air Cleaner Cover
Courtesy of AMERICAN HONDA MOTOR CO., INC.

2. EVAP Canister Purge Valve
    1. Disconnect the hoses and the connector.
    2. Remove the EVAP canister purge valve (A).

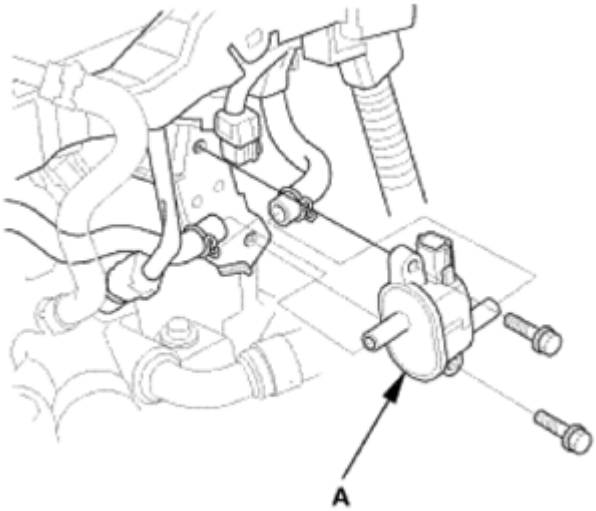

GETtheMANUALS.org

Fig. 251: Identifying EVAP Canister Purge Valve
Courtesy of AMERICAN HONDA MOTOR CO., INC.

INSTALLATION

1. EVAP Canister Purge Valve
    1. Install the EVAP canister purge valve (A).
    2. Connect the hoses and the connector.

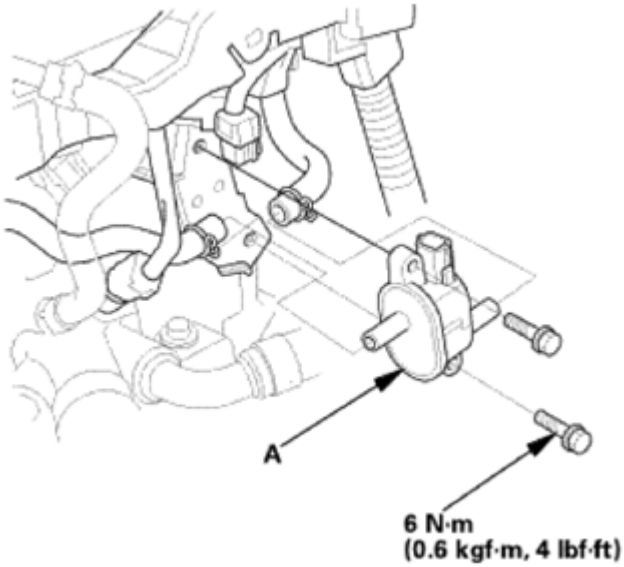

Fig. 252: Identifying EVAP Canister Purge Valve
Courtesy of AMERICAN HONDA MOTOR CO., INC.

2. Air Cleaner Cover
    1. Install the air cleaner cover (A).

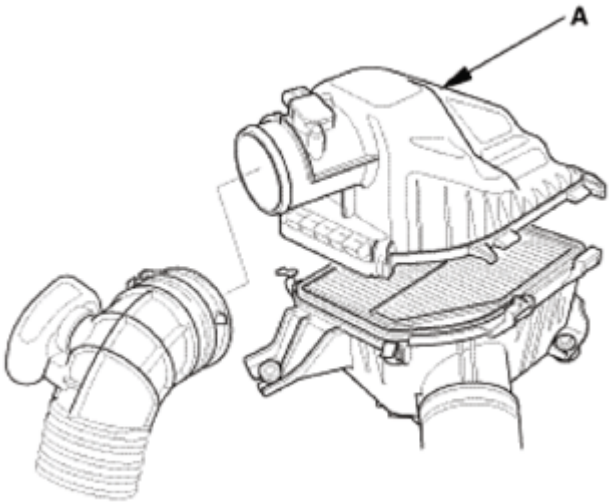

GETtheMANUALS.org

Fig. 253: Identifying Air Cleaner Cover
Courtesy of AMERICAN HONDA MOTOR CO., INC.

EVAP CANISTER REMOVAL AND INSTALLATION

REMOVAL

1. Vehicle Lift
    1. Raise the vehicle on a lift, and make sure it is securely supported.
2. Left Middle Floor Undercover
    1. Remove the bolts (A) and clips (B, C), then remove the left middle floor undercover (D).

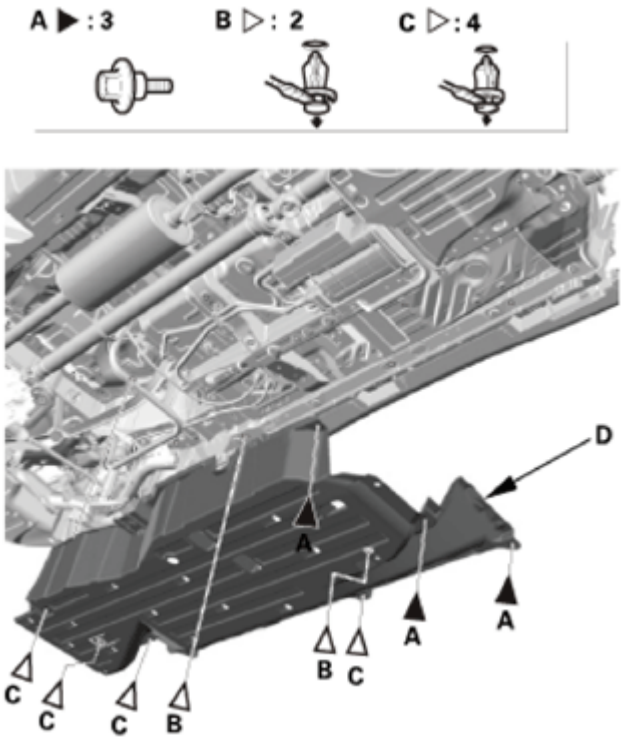

Fig. 254: Identifying Left Middle Floor Undercover, Clips And Bolts
Courtesy of AMERICAN HONDA MOTOR CO., INC.

3. EVAP Canister-USA and Canada models
    1. Disconnect the quick-connect fitting (A), the hoses (B), and the connectors (C).

GETtheMANUALS.org

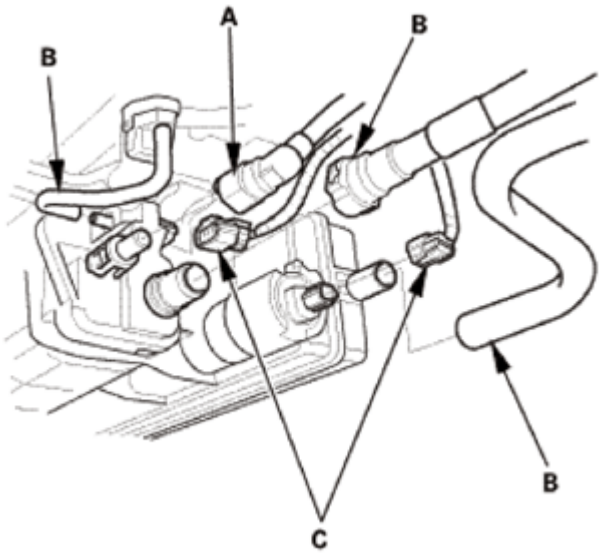

Fig. 255: Identifying Quick-Connect Fitting, Hoses And Connectors
Courtesy of AMERICAN HONDA MOTOR CO., INC.

2. Remove the EVAP canister (D).

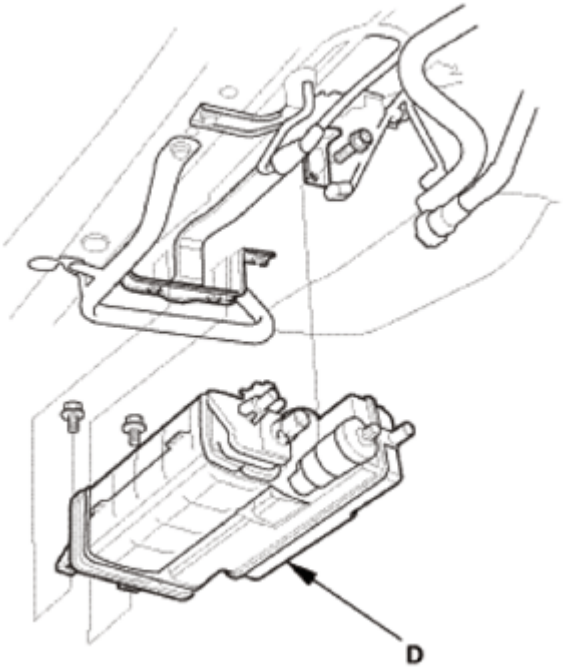

Fig. 256: Identifying EVAP Canister
Courtesy of AMERICAN HONDA MOTOR CO., INC.

4. EVAP Canister-Mexico model
    1. Disconnect the hoses (A), then remove the EVAP canister (B).

GETtheMANUALS.org

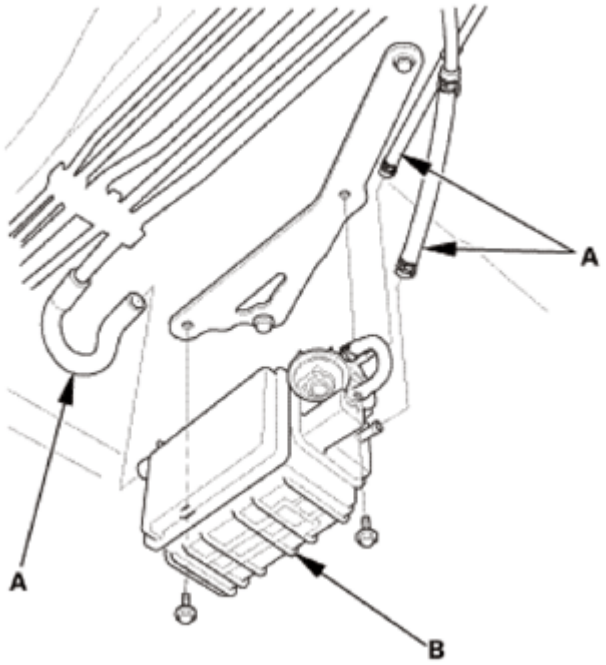

Fig. 257: Identifying EVAP Canister And Hoses
Courtesy of AMERICAN HONDA MOTOR CO., INC.

INSTALLATION

1. EVAP Canister-USA and Canada models
    1. Install the EVAP canister (A).

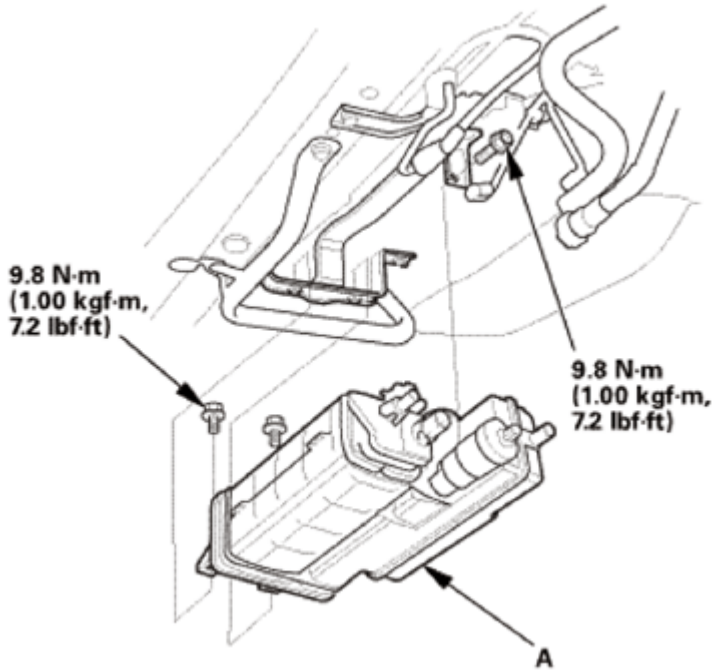

GETtheMANUALS.org

Fig. 258: Identifying EVAP Canister
Courtesy of AMERICAN HONDA MOTOR CO., INC.

2. Connect the quick-connect fitting (A), the hoses (B), and the connectors (C) securely.

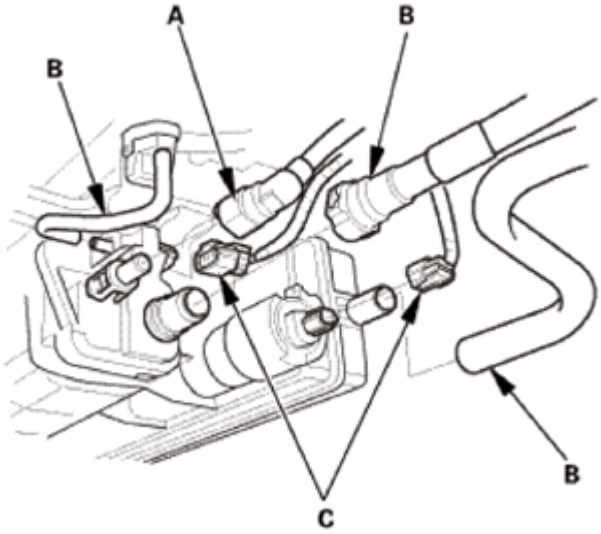

Fig. 259: Identifying Quick-Connect Fitting, Hoses And Connectors
Courtesy of AMERICAN HONDA MOTOR CO., INC.

2. EVAP Canister-Mexico model
    1. Install the EVAP canister (A).

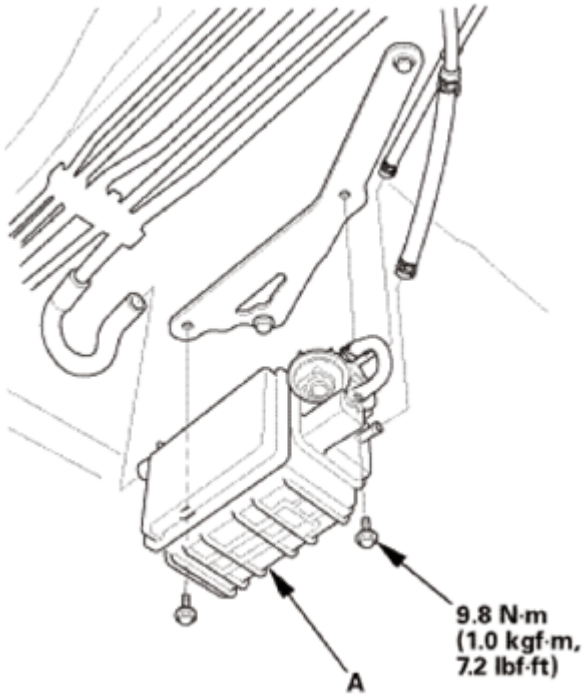

GETtheMANUALS.org

Fig. 260: Identifying EVAP Canister
Courtesy of AMERICAN HONDA MOTOR CO., INC.

3. Left Middle Floor Undercover
    1. Install the left middle floor undercover (A), then install the bolts (B) and the clips (C, D). Make sure the clips snap into place securely.

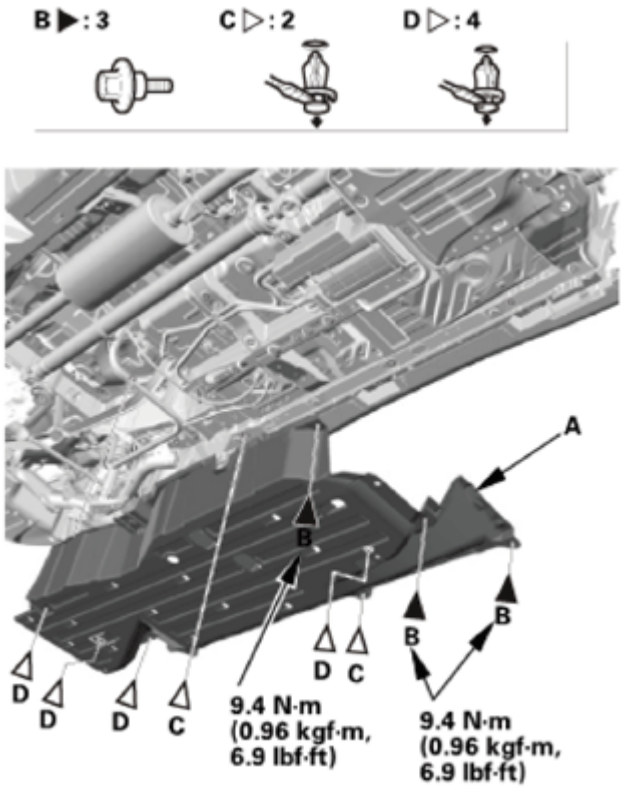

Fig. 261: Identifying Middle Floor Undercover, Bolts And Clips
Courtesy of AMERICAN HONDA MOTOR CO., INC.

EVAP CANISTER VENT SHUT VALVE REMOVAL AND INSTALLATION

REMOVAL

1. Vehicle Lift
    1. Raise the vehicle on a lift, and make sure it is securely supported.
2. Left Middle Floor Undercover
    1. Remove the bolts (A) and clips (B, C), then remove the left middle floor undercover (D).

GETtheMANUALS.org

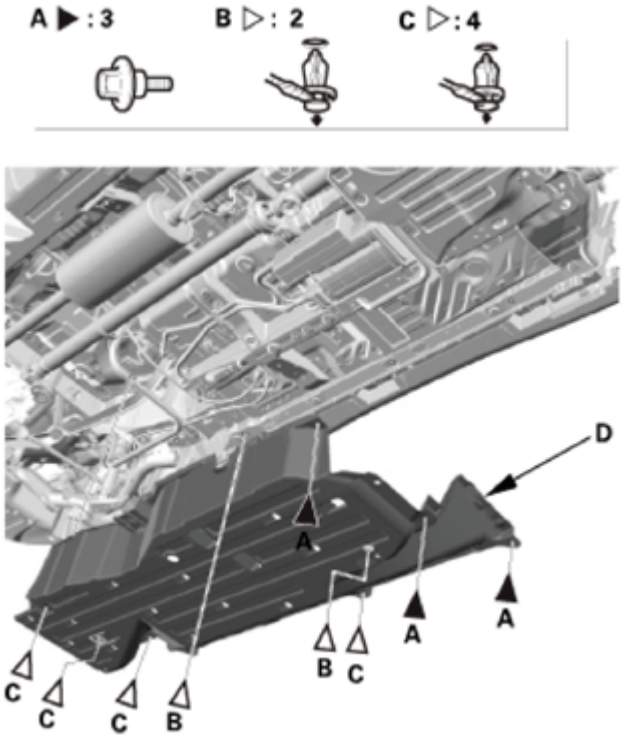

Fig. 262: Identifying Left Middle Floor Undercover, Bolts And Clips
Courtesy of AMERICAN HONDA MOTOR CO., INC.

3. EVAP Canister Vent Shut Valve
    1. Turn the EVAP canister vent shut valve (A) 45° counterclockwise, and pull it out.

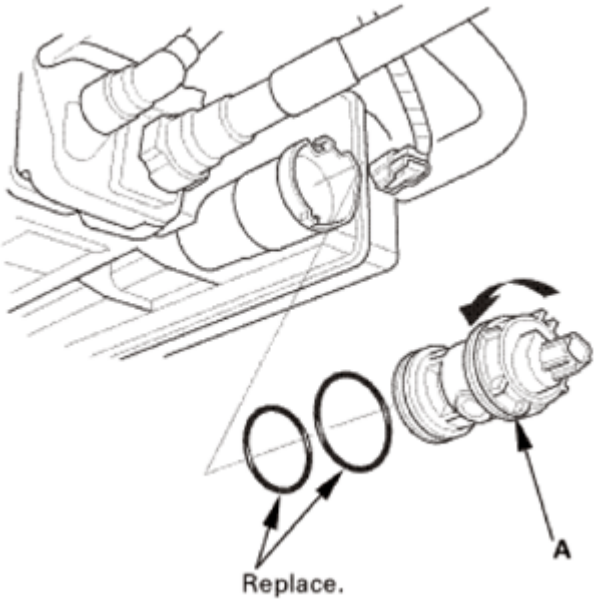

Fig. 263: Turning EVAP Canister Vent Shut Valve
Courtesy of AMERICAN HONDA MOTOR CO., INC.

GETtheMANUALS.org

INSTALLATION

1. EVAP Canister Vent Shut Valve
    1. Align the positions (A), then install the EVAP canister vent shut valve (B) with new O-rings (C).

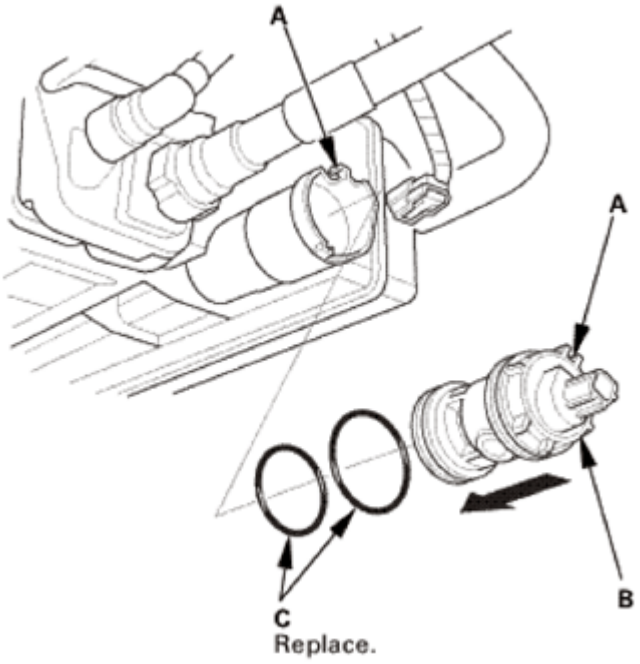

Fig. 264: Installing EVAP Canister Vent Shut Valve
Courtesy of AMERICAN HONDA MOTOR CO., INC.

2. Left Middle Floor Undercover
    1. Install the left middle floor undercover (A), then install the bolts (B) and the clips (C, D). Make sure the clips snap into place securely.

GETtheMANUALS.org

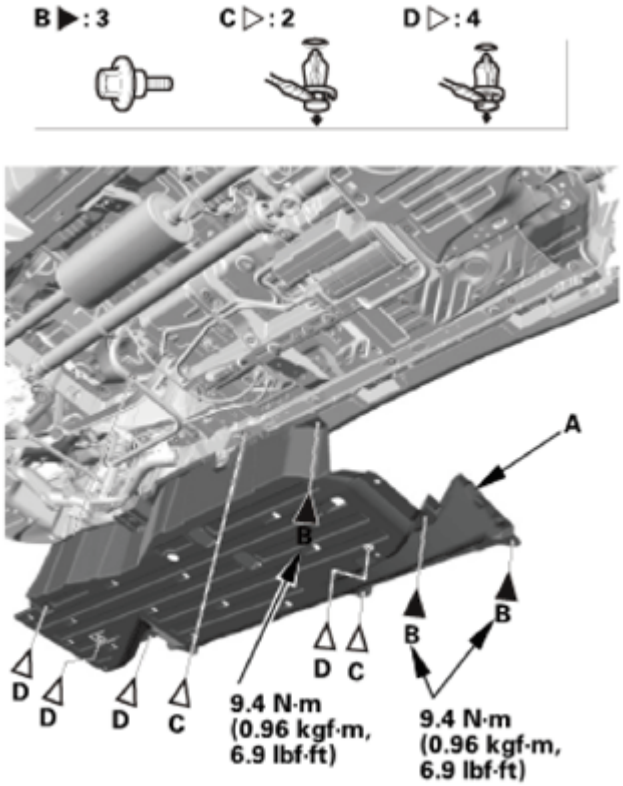

Fig. 265: Identifying Left Middle Floor Undercover, Bolts And Clips
Courtesy of AMERICAN HONDA MOTOR CO., INC.

EVAP CONTROL SYSTEM COMPONENT LOCATION INDEX

GETtheMANUALS.org

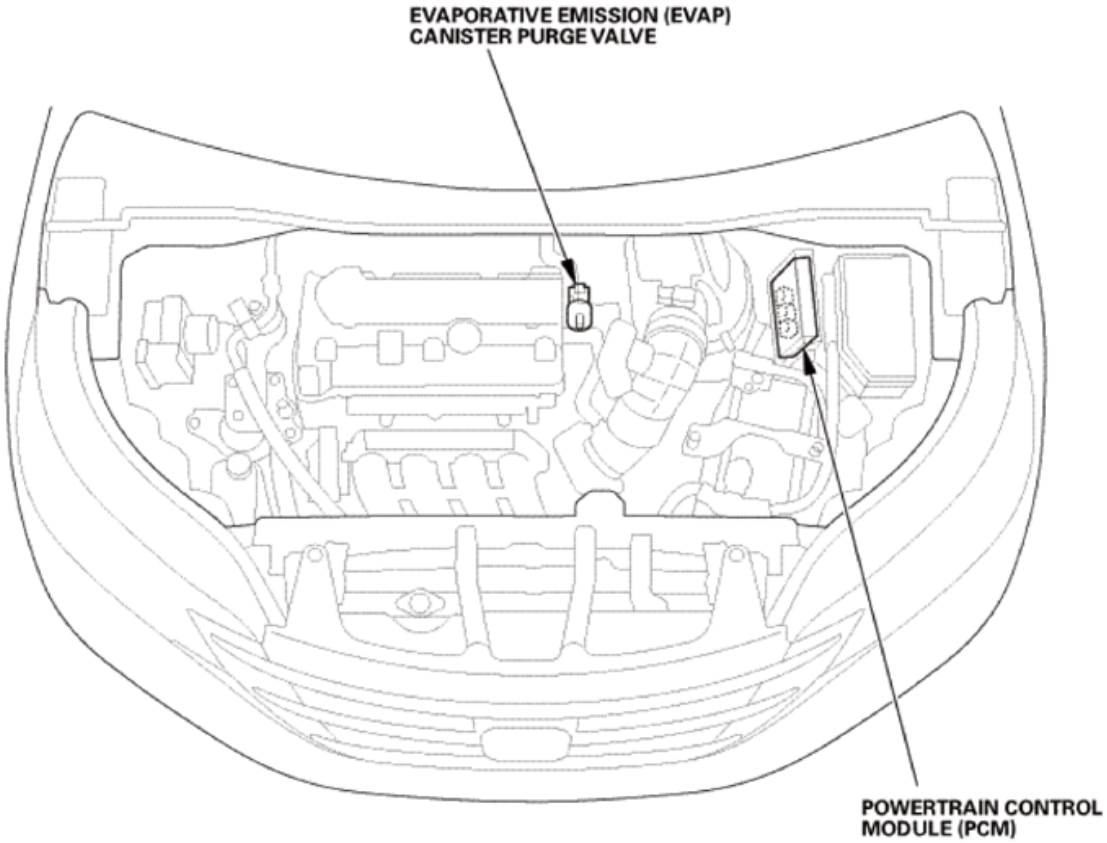

Fig. 266: EVAP Control System Component - USA And Canada Models
Courtesy of AMERICAN HONDA MOTOR CO., INC.

USA AND CANADA MODELS

GETtheMANUALS.org

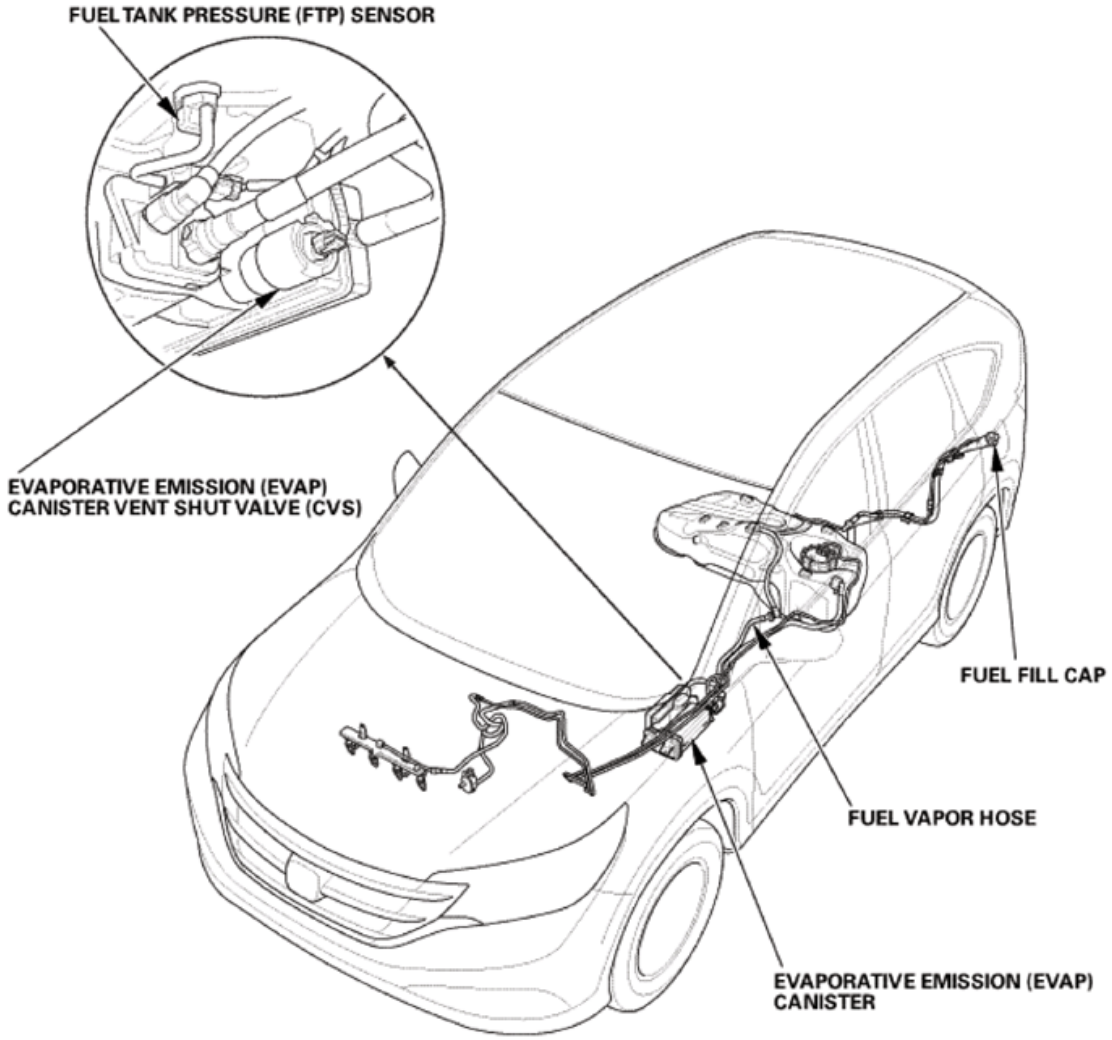

Fig. 267: EVAP Control System Component - Mexico Model (1 Of 2)
Courtesy of AMERICAN HONDA MOTOR CO., INC.

MEXICO MODEL

GETtheMANUALS.org

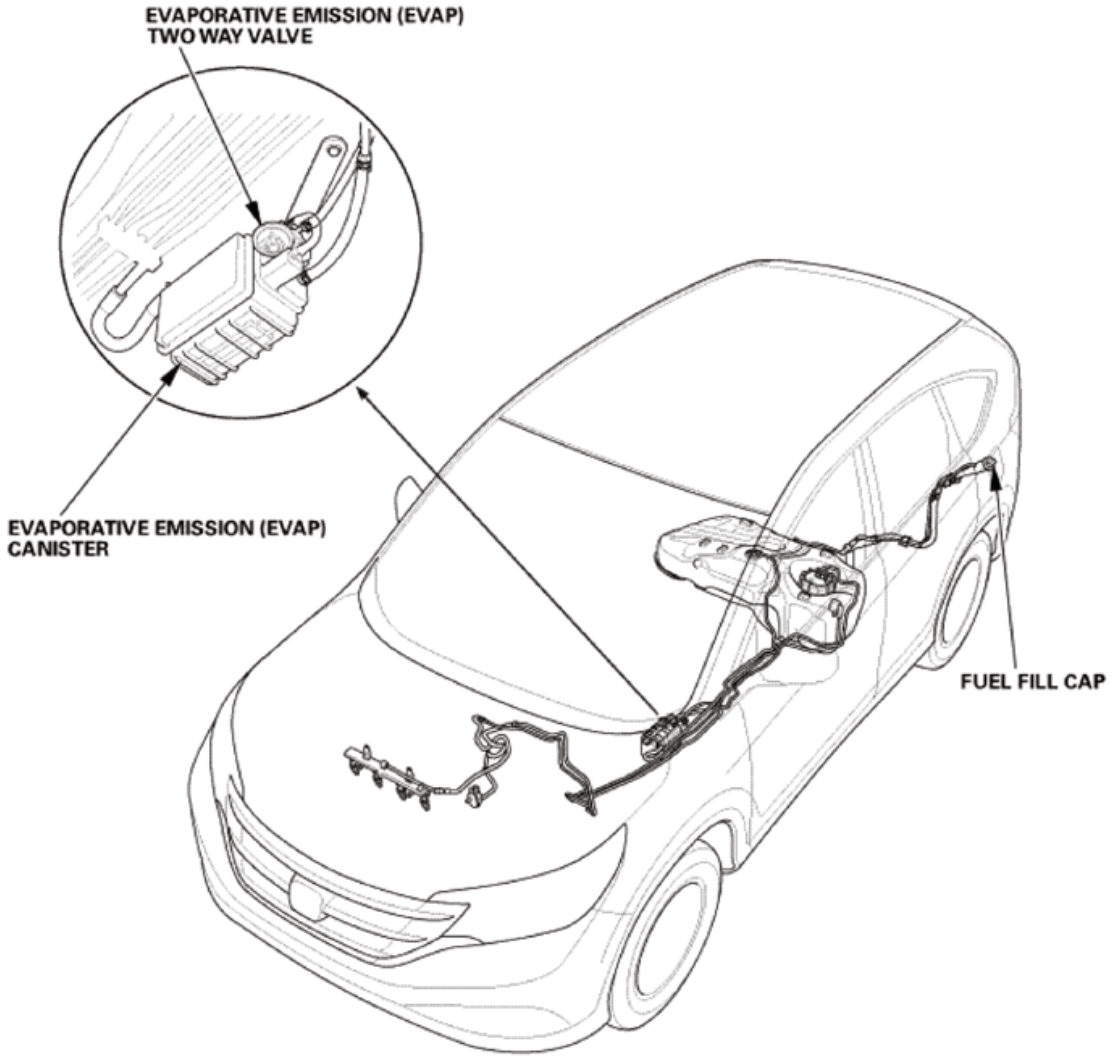

Fig. 268: EVAP Control System Component - Mexico Model (2 Of 2)
Courtesy of AMERICAN HONDA MOTOR CO., INC.

EVAPORATIVE EMISSION (EVAP) CANISTER	**REMOVAL AND INSTALLATION**
EVAPORATIVE EMISSION (EVAP) CANISTER PURGE VALVE	**REMOVAL AND INSTALLATION**
EVAPORATIVE EMISSION (EVAP) TWO WAY VALVE	Test
	Removal and Installation
EVAP CANISTER VENT SHUT VALVE	**REMOVAL AND INSTALLATION**
FUEL TANK PRESSURE (FTP) SENSOR	REMOVAL AND INSTALLATION
FUEL VAPOR HOSE	REMOVAL AND INSTALLATION
POWERTRAIN CONTROL MODULE (PCM)	**Update** See **PCM REMOVAL AND INSTALLATION** or **PCM UPDATE**
	Removal and Installation See **PCM REMOVAL AND INSTALLATION** or **PCM UPDATE**

GETtheMANUALS.org

IDLE CONTROL SYSTEM COMPONENT LOCATION INDEX

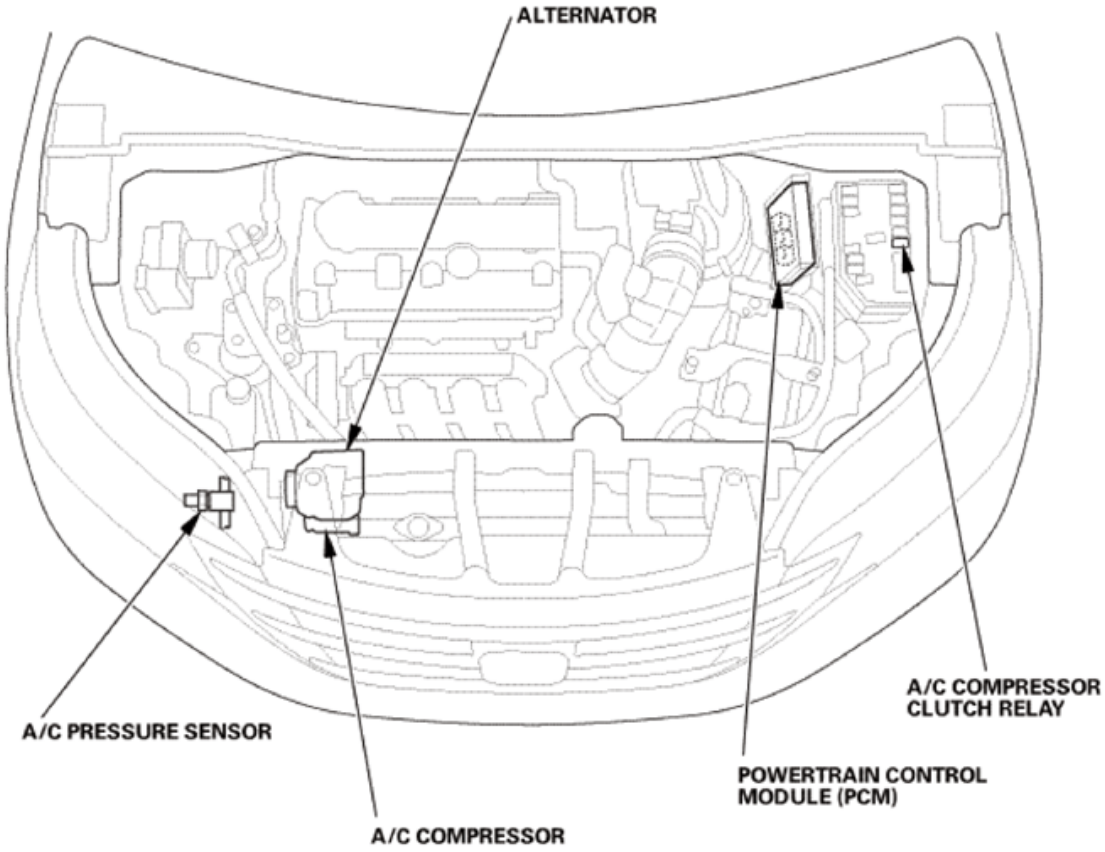

Fig. 269: Idle Control System Component Location (1 Of 2)
Courtesy of AMERICAN HONDA MOTOR CO., INC.

GETtheMANUALS.org

Fig. 270: Idle Control System Component Location (2 Of 2)
Courtesy of AMERICAN HONDA MOTOR CO., INC.

A/C COMPRESSOR CLUTCH RELAY	**SIGNAL CIRCUIT TROUBLESHOOTING**
BRAKE PEDAL POSITION SWITCH	**SIGNAL CIRCUIT TROUBLESHOOTING**
POWERTRAIN CONTROL MODULE (PCM)	**Update** See **PCM REMOVAL AND INSTALLATION** or **PCM UPDATE**
	Removal and Installation See **PCM REMOVAL AND INSTALLATION** or **PCM UPDATE**

KNOCK SENSOR REMOVAL AND INSTALLATION

REMOVAL

1. Vehicle Lift
    1. Raise the vehicle on a lift, and make sure it is securely supported.
2. Front Splash Shield
    1. Remove the bolts (A), then remove the clips (B) that secure the front inner fender and the front splash shield (C) to the body.
    2. From under the front bumper (D), remove the clips (E).

GETtheMANUALS.org

3. From under the body, remove the clips (F), then pull out the front splash shield.

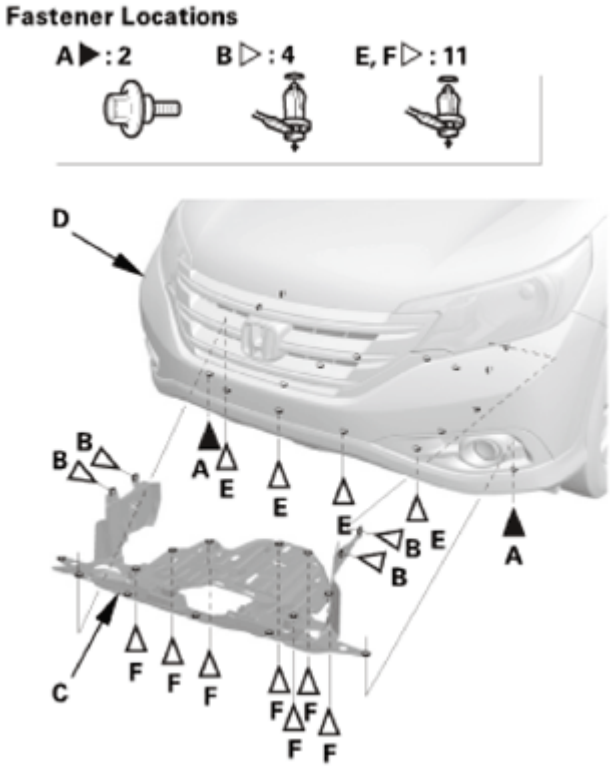

Fig. 271: Identifying Front Bumper, Clips And Bolts
Courtesy of AMERICAN HONDA MOTOR CO., INC.

3. Knock Sensor
   1. Remove the knock sensor (A).

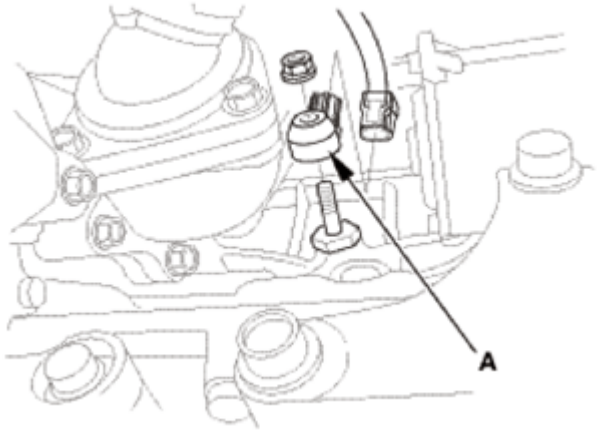

Fig. 272: Identifying Knock Sensor
Courtesy of AMERICAN HONDA MOTOR CO., INC.

INSTALLATION

GETtheMANUALS.org

1. Knock Sensor
    1. Install the knock sensor (A) so that the connector position is top.

NOTE: Do not use impact tools, hand tools only on installation.

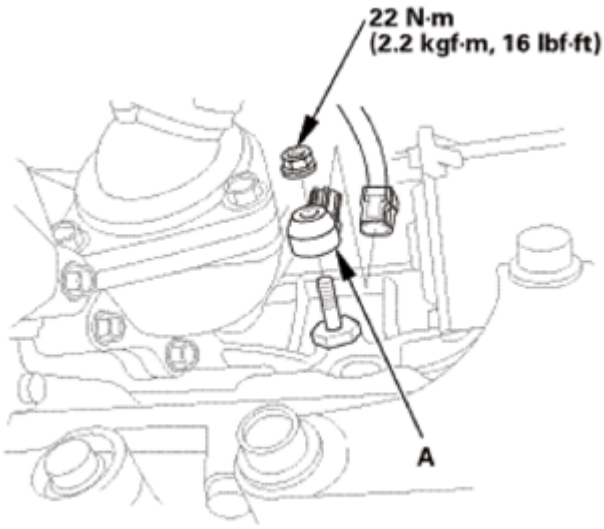

Fig. 273: Identifying Knock Sensor
Courtesy of AMERICAN HONDA MOTOR CO., INC.

2. Front Splash Shield
    1. Install the front splash shield (A), then install the bolts (B) and the clips (C, D). Make sure the clips snap into place securely.

GETtheMANUALS.org

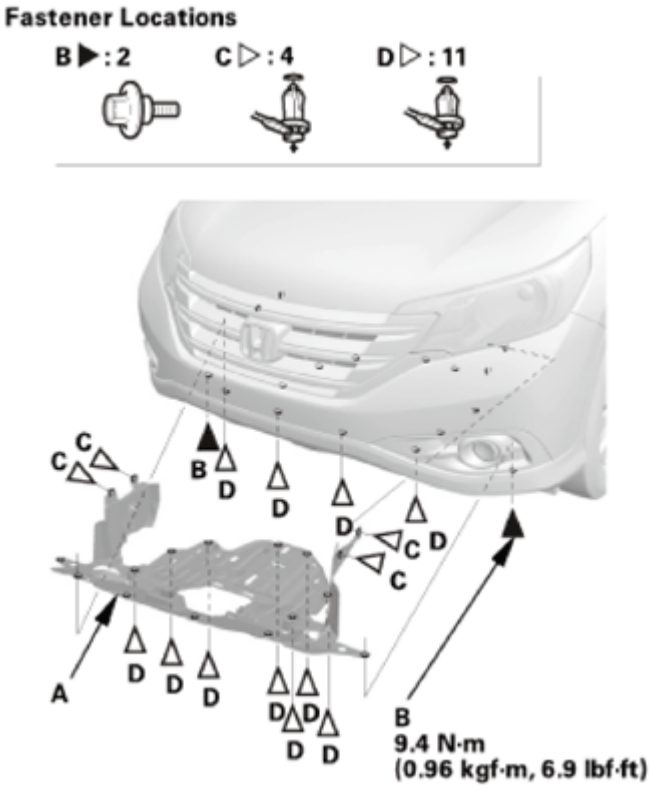

Fig. 274: Identifying Front Splash Shield, Bolts And Clips
Courtesy of AMERICAN HONDA MOTOR CO., INC.

MAF SENSOR/IAT SENSOR REMOVAL AND INSTALLATION

REMOVAL

1. MAF Sensor/IAT Sensor
    1. Remove the MAF sensor/IAT sensor.

GETtheMANUALS.org

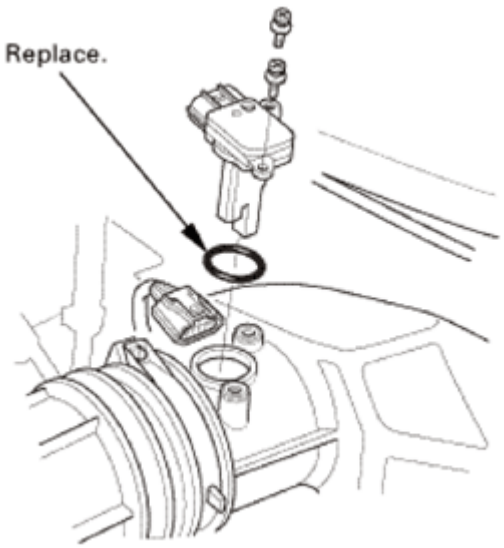

Fig. 275: Identifying MAF Sensor/IAT Sensor
Courtesy of AMERICAN HONDA MOTOR CO., INC.

INSTALLATION

1. MAF Sensor/IAT Sensor
    1. Install the MAF sensor/IAT sensor (A) with a new O-ring (B).

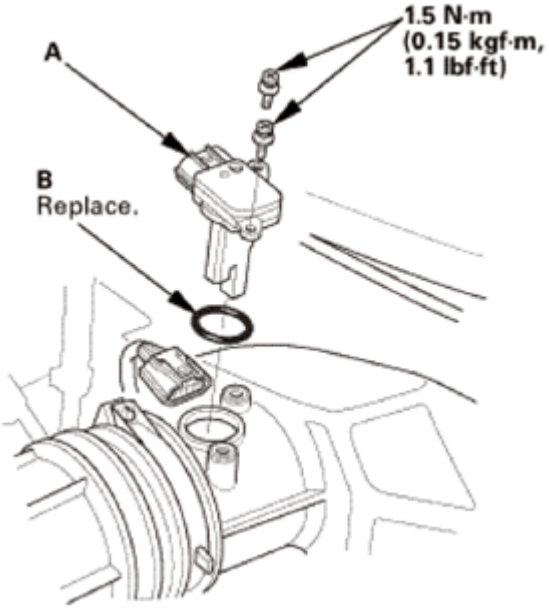

Fig. 276: Identifying MAF Sensor/IAT Sensor And O-Ring
Courtesy of AMERICAN HONDA MOTOR CO., INC.

MAP SENSOR REMOVAL AND INSTALLATION

GETtheMANUALS.org

REMOVAL

1. MAP Sensor
    1. Remove the MAP sensor.

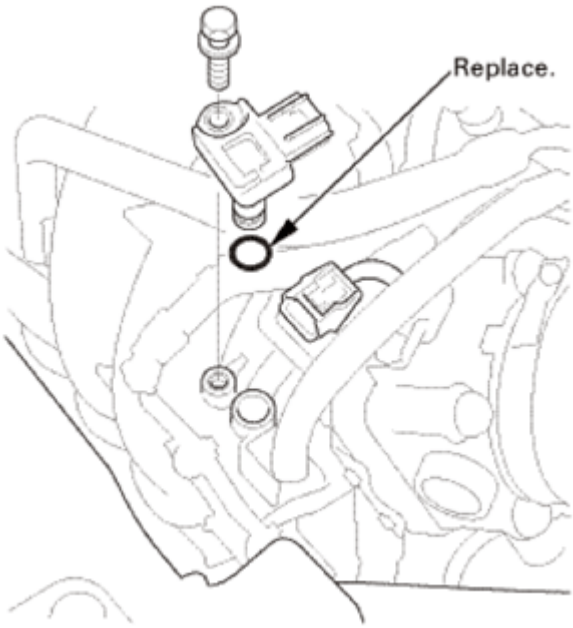

Fig. 277: Identifying MAP Sensor
Courtesy of AMERICAN HONDA MOTOR CO., INC.

INSTALLATION

1. MAP Sensor
    1. Install the MAP sensor (A) with a new O-ring (B).

GETtheMANUALS.org

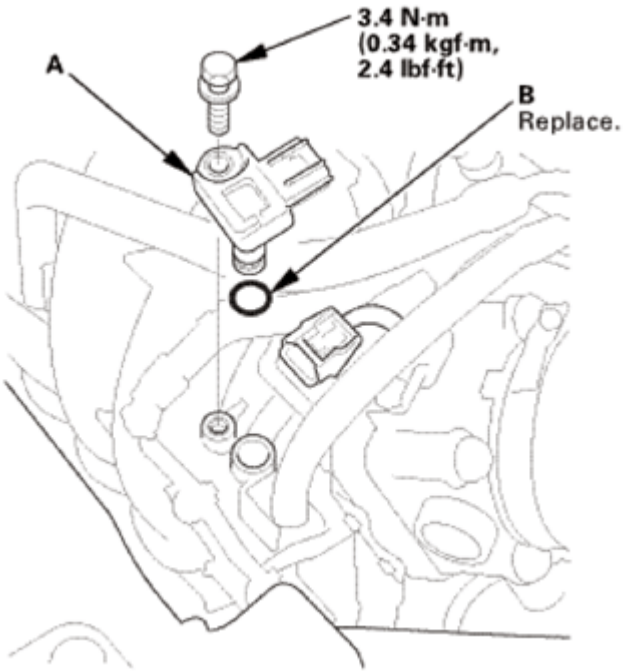

Fig. 278: Identifying MAP Sensor And O-Ring
Courtesy of AMERICAN HONDA MOTOR CO., INC.

PCM REMOVAL AND INSTALLATION

REMOVAL

1. HDS DLC - Connection
    1. Connect the HDS to the data link connector (DLC) (A) located under the driver's side of the dashboard.
    2. Turn the ignition switch to ON (II).
    3. Make sure the HDS communicates with the vehicle. If it does not communicate, go to the DLC circuit troubleshooting.

GETtheMANUALS.org

Fig. 279: Identifying Data Link Connector (DLC)
Courtesy of AMERICAN HONDA MOTOR CO., INC.

2. SCS Line Short
    1. Jump the SCS line with the HDS.
    2. Turn the ignition switch to LOCK (0).
3. PCM Assembly
    1. Remove the PCM cover (D).
    2. Disconnect PCM connectors A, B, and C.

    NOTE: PCM connectors A, B, and C have symbols (A=[], B=delta, C=o) embossed on them for identification.

    3. Remove the PCM (E).

GETtheMANUALS.org

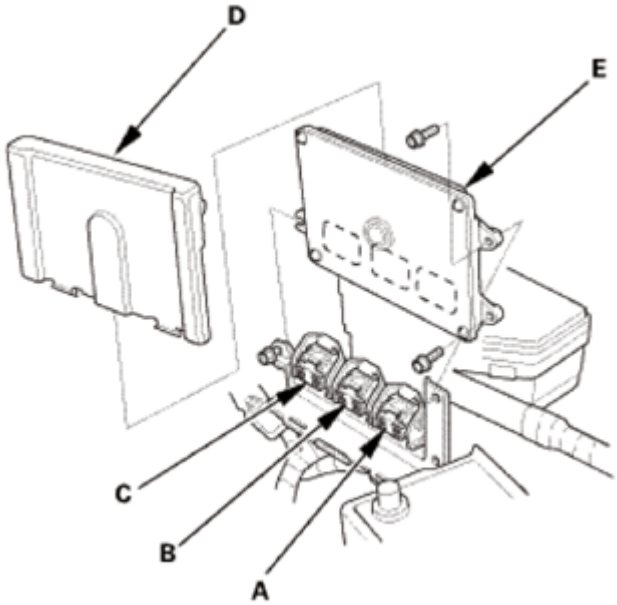

Fig. 280: Identifying PCM, Cover And Connectors
Courtesy of AMERICAN HONDA MOTOR CO., INC.

INSTALLATION

NOTE: If you are removing the PCM, skip the procedures of using the HDS.

1. PCM Assembly
    1. Install the PCM (D).
    2. Connect PCM connectors A, B, and C.

        NOTE: PCM connectors A, B, and C have symbols (A=[], B= delta, C=o) embossed on them for identification.

    3. Install the PCM cover (E).

GETtheMANUALS.org

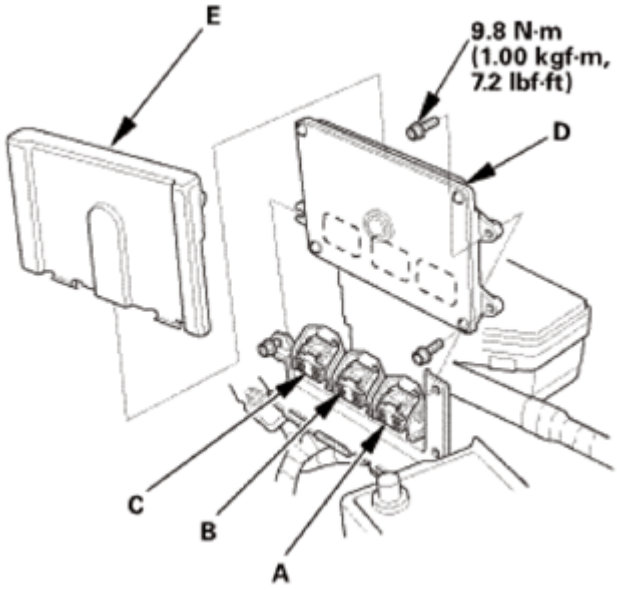

Fig. 281: Identifying PCM, Cover And Connectors
Courtesy of AMERICAN HONDA MOTOR CO., INC.

2. HDS DLC - Connection
    1. Connect the HDS to the data link connector (DLC) (A) located under the driver's side of the dashboard.
    2. Turn the ignition switch to ON (II).
    3. Make sure the HDS communicates with the vehicle. If it does not communicate, go to the DLC circuit troubleshooting.

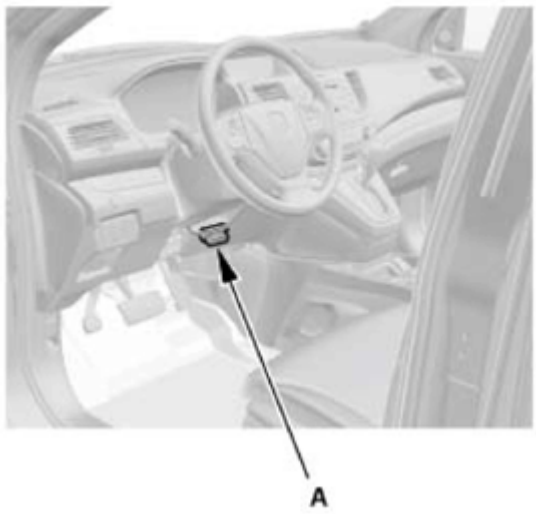

Fig. 282: Identifying Data Link Connector (DLC)
Courtesy of AMERICAN HONDA MOTOR CO., INC.

GETtheMANUALS.org

3. VIN Registration
    1. Manually input the VIN to the PCM with the HDS.

        NOTE: DTC P0630 VIN Not Programmed or Mismatch may be stored because the VIN has not been programmed into the PCM; ignore it, and continue this procedure.

4. Immobilizer System Registration - Programming Control Unit
    1. Select the IMMOBI SYSTEM with the HDS.
    2. Enter the immobilizer code using the PCM replacement procedure in the HDS; it allows you to start the engine.
5. PCM - Reset
    1. Reset the PCM with the HDS while the engine is stopped.
    2. Turn the ignition switch to LOCK (0).
    3. Turn the ignition switch to ON (II), and wait 30 seconds.
6. PCM - Update

    NOTE: Check any official Honda service website for more service information about updating the MVCI and control units.

7. Warm Up The Engine

    Start the engine. Hold the engine speed at 3, 000 rpm without load in P or N until the radiator fan comes on, then let it idle.

8. PCM - Idle Learn
    1. Let the engine idle for about 5 minutes with the throttle fully closed.

        NOTE: If the radiator fan comes on, do not include its running time in the 5 minutes.

    2. After learning, turn the ignition switch to LOCK (0).
9. CKP Pattern - Clear/Learn
    1. Connect the HDS to the data link connector (DLC) (A) located under the driver's side of the dashboard.
    2. Turn the ignition switch to ON (II).
    3. Make sure the HDS communicates with the vehicle. If it does not communicate, go to the DLC circuit troubleshooting.
    4. Select CRANK PATTERN in the ADJUSTMENT MENU with the HDS.
    5. Select CRANK PATTERN CLEAR, and clear the CKP pattern.
    6. Select CRANK PATTERN LEARNING with the HDS, and follow the screen prompts.
    7. After learning, turn the ignition switch to LOCK (0).

GETtheMANUALS.org

8. Disconnect the HDS from the DLC.

Fig. 283: Identifying Data Link Connector (DLC)
Courtesy of AMERICAN HONDA MOTOR CO., INC.

PCV VALVE REMOVAL AND INSTALLATION

REMOVAL

1. PCV Valve
    1. Disconnect the PCV hose (A).
    2. Remove the PCV valve (B).

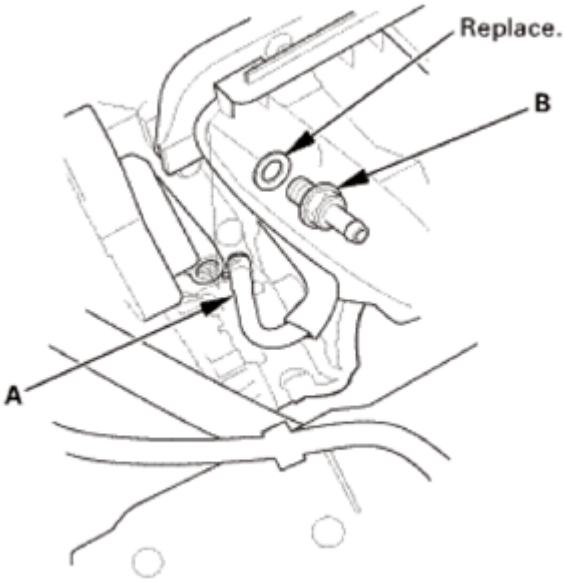

GETtheMANUALS.org

Fig. 284: Identifying PCV Hose And Valve
Courtesy of AMERICAN HONDA MOTOR CO., INC.

INSTALLATION

1. PCV Valve
    1. Install the PCV valve (A) with a new washer (B).
    2. Connect the PCV hose (C).

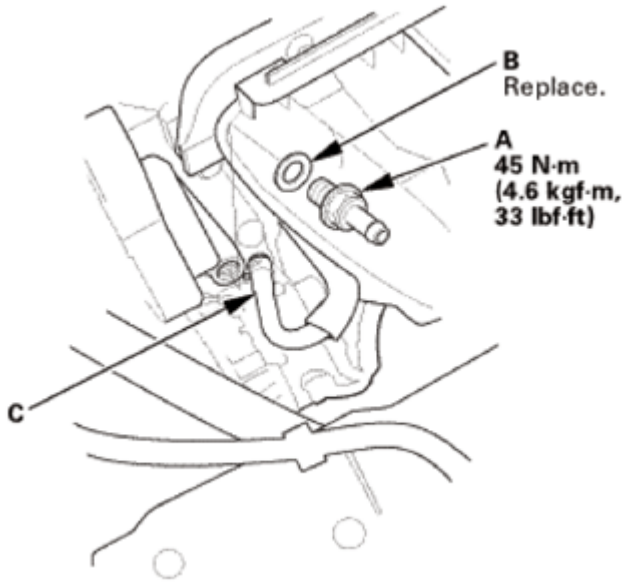

Fig. 285: Identifying PCV Valve, Hose And Washer
Courtesy of AMERICAN HONDA MOTOR CO., INC.

SECONDARY HO2S REMOVAL AND INSTALLATION

SPECIAL TOOLS DESCRIPTION

Image	Description/Tool Number
	O2 Sensor Socket Wrench Snap-on SWR2 or O2 Sensor Wrench Snap-on YA8875, commercially available

GETtheMANUALS.org

REMOVAL

1. Vehicle Lift
    1. Raise the vehicle on a lift, and make sure it is securely supported.
2. Front Floor Undercover
    1. Remove the bolts (A) and the clips (B, C) securing the front floor undercover (D), then remove the front floor undercover.

GETtheMANUALS.org

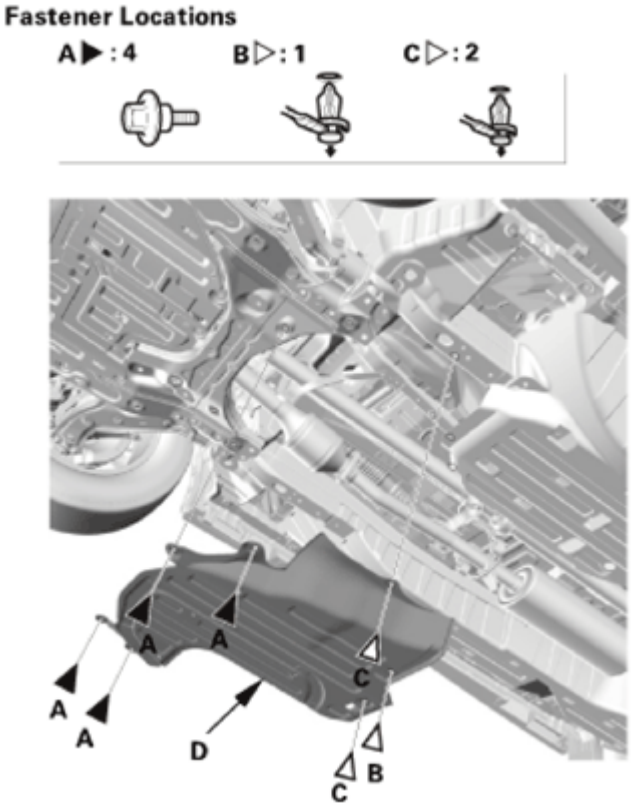

Fig. 286: Identifying Front Floor Undercover, Clips And Bolts
Courtesy of AMERICAN HONDA MOTOR CO., INC.

3. Secondary HO2S
    1. Remove the secondary HO2S (A).

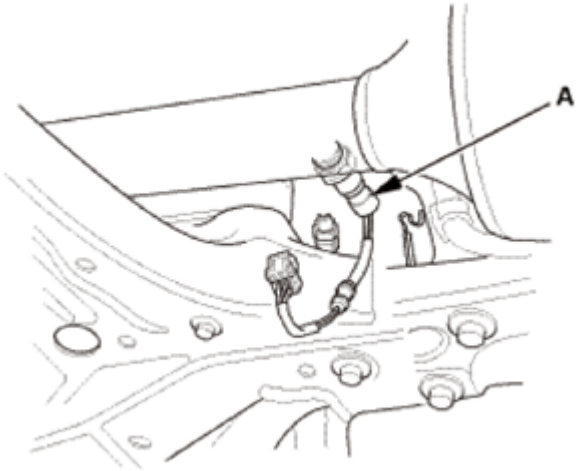

Fig. 287: Identifying Secondary HO2S
Courtesy of AMERICAN HONDA MOTOR CO., INC.

INSTALLATION

GETtheMANUALS.org

1. Secondary HO2S
    1. Install the secondary HO2S (A).

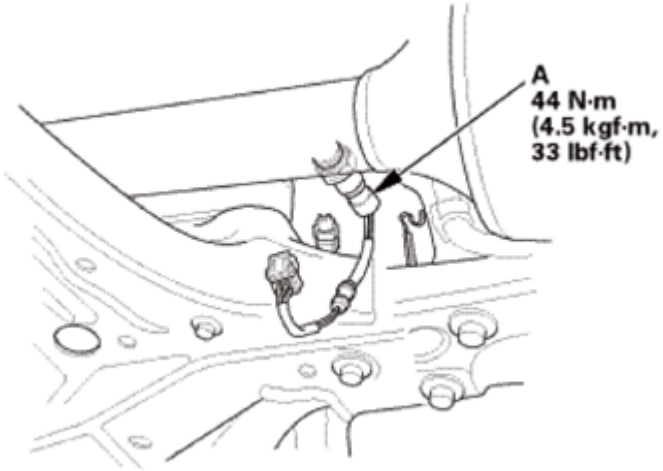

Fig. 288: Identifying Secondary HO2S
Courtesy of AMERICAN HONDA MOTOR CO., INC.

2. Front Floor Undercover
    1. Install the front floor undercover (A), then install the bolts (B) and the clips (C, D). Make sure the clips snap into place securely.

GETtheMANUALS.org

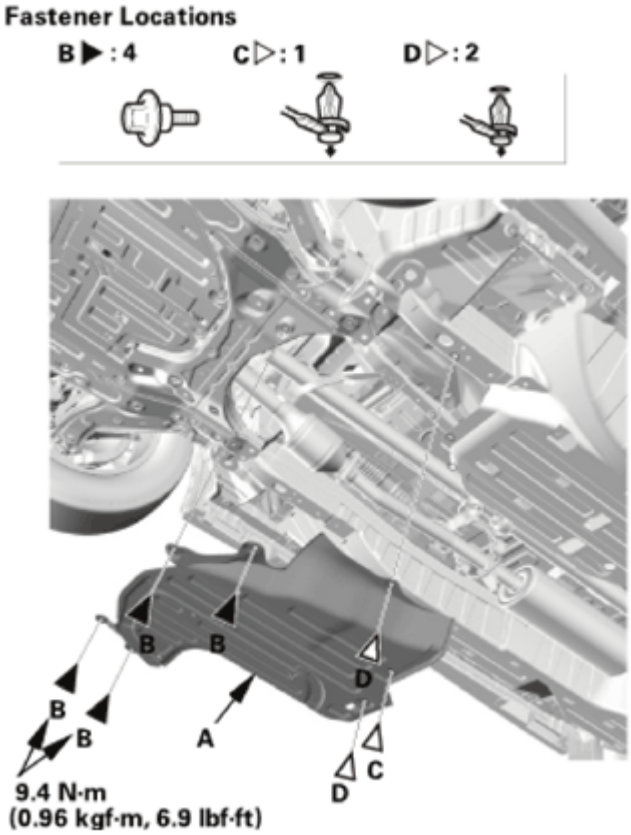

Fig. 289: Identifying Front Floor Undercover, Bolts And Clips
Courtesy of AMERICAN HONDA MOTOR CO., INC.

GETtheMANUALS.org

HOW TO SET READINESS CODES

MALFUNCTION INDICATOR LAMP (MIL) INDICATION (IN RELATION TO READINESS CODES)

The vehicle has certain readiness codes that are part of the on-board diagnostics for the emissions systems. If the vehicle's battery has been disconnected or gone dead, if DTCs have been cleared, or if the PCM has been reset, these readiness codes are reset to incomplete. In some states, part of the emissions testing is to make sure these codes are set to complete. If all of them are not set to complete, the vehicle may fail the emission test, or the test cannot be finished.

To check if the readiness codes are set to complete, turn the ignition switch to ON (II), but do not start the engine. The MIL comes on for 15-20 seconds. If it then goes off, the readiness codes are set to complete. If it flashes five times, one or more readiness codes are not set to complete. To set readiness codes from incomplete to complete, do the procedure for the appropriate code.

To check the status of a specific DTC system, check the OBD status in the DTC MENU with the HDS. This screen displays the DTC, the current data list of the enable criteria, and the status of the readiness testing.

CATALYTIC CONVERTER MONITOR AND READINESS CODE

NOTE:

- **During the procedure, do not turn the ignition switch to ACC (I) or LOCK (0).**
- **All readiness codes are cleared when the battery is disconnected, if DTCs have been cleared, or if the PCM is reset with the HDS.**
- **Low ambient temperatures or excessive stop-and-go traffic may increase the drive time needed to switch the readiness code from incomplete to complete.**
- **The readiness code will not switch to complete until all the enable criteria are met.**
- **If a fault in the secondary HO2S system caused the MIL to come on, the readiness code cannot be set to complete until you correct the fault.**

Enable Criteria

- ECT SENSOR 1 at 158 °F (70 °C) or more.
- IAT SENSOR at 20 °F (-7 °C) or more.
- Vehicle speed above 25 mph (40 km/h).

Procedure

GETtheMANUALS.org

1. Connect the HDS to the vehicle's data link connector (DLC), and bring up the READINESS CODEs screen for Catalyst in the DTCs MENU.
2. Start the engine.
3. Test-drive the vehicle under stop-and-go conditions with short periods of steady cruise. After about 5 miles (8 km), the readiness code should switch to complete.
4. If the readiness code is still not set to complete, check for a Pending DTC with the HDS. If there is no DTC, one or more of the enable criteria were probably not met; repeat the procedure.

EVAPORATIVE EMISSION (EVAP) CONTROL SYSTEM MONITOR AND READINESS CODE

NOTE: **All readiness codes are cleared when the battery is disconnected, if DTCs have been cleared, or if the PCM is reset with the HDS.**

Enable Criteria

- Battery voltage is more than 10.5 V.
- Engine at idle.
- ECT SENSOR 1 and 2 between 176 °F (80 °C) and 212 °F (100 °C).
- MAP SENSOR less than 46.6 kPa (14 inHg, 350 mmHg).
- Vehicle speed 0 mph (0 km/h).
- IAT SENSOR between 32 °F (0 °C) and 212 °F (100 °C).

Procedure

1. Connect the HDS to the DLC.
2. Start the engine.
3. Select EVAP TEST in the INSPECTION MENU with the HDS, then select the FUNCTION TEST in the EVAP TEST MENU.
   - If the result is normal, readiness is complete.
   - If the result is not normal, go to the next step.
4. Check for a Pending DTC. If there is no DTC, one or more of the enable criteria were probably not met; repeat the procedure.

AIR FUEL RATIO (A/F) SENSOR MONITOR AND READINESS CODE

NOTE:
- **During the procedure, do not turn the ignition switch to ACC (I) or LOCK (0).**
- **All readiness codes are cleared when the battery is disconnected, if DTCs have been cleared, or if the PCM is reset with the HDS.**

Enable Criteria

ECT SENSOR 1 at 140 °F (60 °C) or more.

GETtheMANUALS.org

Procedure

1. Start the engine.
2. Test-drive the vehicle under stop-and-go conditions with short periods of steady cruise. During the drive, decelerate (with the throttle fully closed) for 5 seconds. After about 3.5 miles (5.6 km), the readiness code should switch from incomplete to complete.
3. Check the readiness codes screen for the AIR FUEL RATIO (A/F) SENSOR in the DTCs MENU with the HDS.
   - If the screen shows complete, readiness is complete.
   - If the screen shows not complete, go to the next step.
4. Check for a Pending DTC. If there is no DTC, the enable criteria was probably not met. Select the DATA LIST MENU. Check ECT SENSOR 1 in the ALL DATA LIST with the HDS. If ECT SENSOR 1 is less than 140 °F (60 °C), run the engine until it is more than 140 °F (60 °C), then repeat the procedure.

AIR FUEL RATIO (A/F) SENSOR HEATER MONITOR READINESS CODE

NOTE: All readiness codes are cleared when the battery is disconnected, if DTCs have been cleared, or if the PCM is reset with the HDS.

Procedure

1. Start the engine, and let it idle for 1 minute. The readiness code should switch from incomplete to complete.
2. If the readiness code is still not set to complete, check for a Pending DTC. If there is no DTC, repeat the procedure.

MISFIRE MONITOR AND READINESS CODE

- This readiness code is always set to available because misfiring is continuously monitored.
- Monitoring pauses, and the misfire counter resets, if the vehicle is driven over a rough road.
- Monitoring also pauses, and the misfire counter holds at its current value, if the throttle position changes more than a predetermined value, or if driving conditions fall outside the range of any related enable criteria.

FUEL SYSTEM MONITOR AND READINESS CODE

- This readiness code is always set to available because the fuel system is continuously monitored during closed loop operation.
- Monitoring pauses when the catalytic converter, the EVAP control system, and the A/F sensor monitors are active.
- Monitoring also pauses when any related enable criteria are not being met. Monitoring resumes when the enable criteria is again being met.

COMPREHENSIVE COMPONENT MONITOR AND READINESS CODE

GETtheMANUALS.org

This readiness code is always set to available because the comprehensive component monitor is continuously running whenever the engine is cranking or running.

HOW TO TROUBLESHOOT THE FUEL AND EMISSIONS SYSTEMS

INTERMITTENT FAILURES

The term intermittent failure means a system may have had a failure, but it checks OK now. If the malfunction indicator lamp (MIL) on the dash does not come on, check for poor connections or loose terminals at all connectors related to the circuit that you are troubleshooting. If the MIL was on but then went off, the original problem may have been intermittent.

SERVICE INFORMATION

Periodically, new PCM software or new service procedures may become available. Always check online for the latest software or service information related to the DTCs or symptoms you are troubleshooting.

OPENS AND SHORTS

Open and short are common electrical terms. An open is a break in a wire or at a connection. A short is an accidental connection of a wire to ground or to another wire. In simple electronics, this usually means something won't work at all. With complex electronics (such as PCMs) this can sometimes mean something works, but not the way it's supposed to.

HOW TO USE THE HDS (HONDA DIAGNOSTIC SYSTEM)

1. Start the engine, and check the MIL (A).

NOTE: If the ignition switch is turned to ON (II), and the engine is not started, the MIL stays on for 15 -20 seconds.

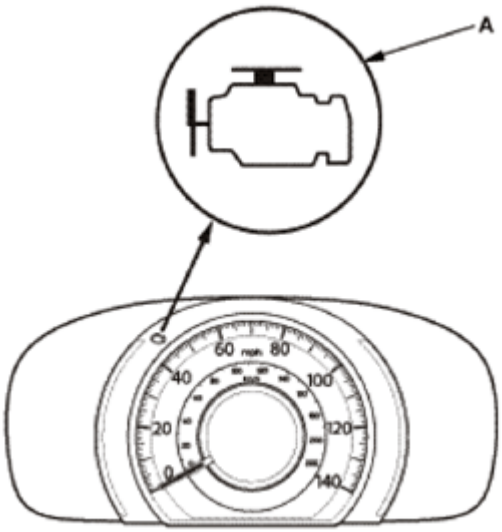

GETtheMANUALS.org

Fig. 1: Identifying MLL
Courtesy of AMERICAN HONDA MOTOR CO., INC.

2. If the MIL stays on, connect the HDS to the data link connector (DLC) (A) located under the driver's side of the dashboard.

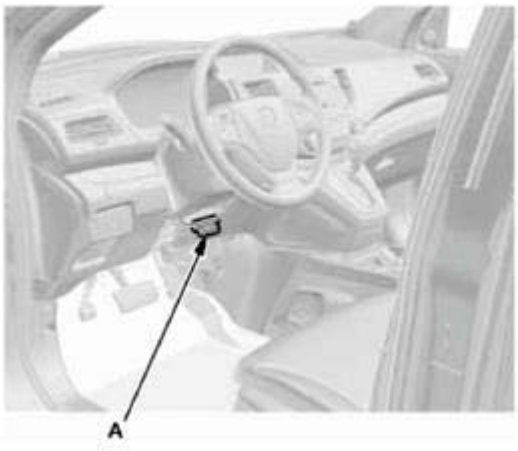

Fig. 2: Identifying Data Link Connector (DLC)
Courtesy of AMERICAN HONDA MOTOR CO., INC.

3. Turn the ignition switch to ON (II).
4. Make sure the HDS communicates with the PCM and other vehicle systems. If it does not, go to the **DLC CIRCUIT TROUBLESHOOTING**.
5. Check the diagnostic trouble code (DTC) and note it. Also check the freeze data and/or on-board snapshot data, and download any data found. Then refer to the indicated DTC's troubleshooting, and begin the appropriate troubleshooting procedure.

NOTE:

- **Freeze data indicates the engine conditions when the first malfunction, misfire, or fuel trim malfunction was detected.**
- **The HDS can read the DTC, the freeze data, the on-board snapshot, the current data, and other powertrain control module (PCM) data.**
- **For specific operations, refer to the user's manual that came with the HDS.**

6. If no DTCs are found, go to the MIL circuit troubleshooting.

IF THE MIL DID NOT STAY ON

If the MIL did not stay on but there is a driveability problem, do the symptom troubleshooting.

IF YOU CAN'T DUPLICATE THE DTC

Some of the troubleshooting requires you to reset the PCM and try to duplicate the DTC. If the problem is

GETtheMANUALS.org

intermittent and you can't duplicate the DTC, do not continue through the procedure. To do so will only result in confusion and possibly, a needlessly replaced PCM.

HDS CLEAR COMMAND

The PCM stores various specific data to correct the system even if there is no electrical power such as when the battery negative terminal or No. A23 (15 A) fuse is disconnected. Stored data based on failed parts should be cleared by using the CLEAR COMMAND of the HDS, if parts are replaced.

The HDS has three kinds of clear commands to meet this purpose. They are DTC clear, PCM reset, and CKP pattern clear. The DTC clear command erases all stored DTC codes, freeze data, on-board snapshot, and readiness codes. This must be done with the HDS after reproducing the DTC during troubleshooting. The PCM reset command erases all stored DTC codes, freeze data, on-board snapshot, readiness codes, and all specific data to correct the system except CKP pattern. If the CKP pattern data in the PCM was cleared, you must do the CKP pattern learn procedure. The CKP pattern clear command erases only CKP pattern data. This command is for repair of a misfire or the CKP sensor.

SCAN TOOL CLEAR COMMAND

If you are using a generic scan tool to clear commands, be aware that there is only one setting for clearing the PCM, and it clears all commands at the same time (CKP pattern learn, idle learn, readiness codes, freeze data, on-board snapshot, and DTCs). After you clear all commands, you then need to do these procedures, in this order: PCM idle learn procedure; CKP pattern learn procedure.

DTC CLEAR

1. Clear the DTC with the HDS while the engine is stopped.
2. Turn the ignition switch to LOCK (0).
3. Turn the ignition switch to ON (II), and wait 30 seconds.
4. Turn the ignition switch to LOCK (0), and disconnect the HDS from the DLC.

PCM RESET

1. Reset the PCM with the HDS while the engine is stopped.
2. Turn the ignition switch to LOCK (0).
3. Turn the ignition switch to ON (II), and wait 30 seconds.
4. Turn the ignition switch to LOCK (0), and disconnect the HDS from the DLC.
5. **DO THE PCM IDLE LEARN PROCEDURE**.

HOW TO END A TROUBLESHOOTING SESSION (REQUIRED AFTER ANY TROUBLESHOOTING)

1. Reset the PCM with the HDS.
2. **DO THE PCM IDLE LEARN PROCEDURE**.
3. Turn the ignition switch to LOCK (0).

GETtheMANUALS.org

4. Disconnect the HDS from the DLC.

NOTE: **The PCM is part of the immobilizer system. If you replace the PCM, you must use the HDS to instruct the new PCM and the immobilizer- keyless control unit to recognize each other's unique serial code.**

HOW TO TROUBLESHOOT CIRCUITS AT THE PCM CONNECTORS

NOTE: **The PCM stays on for about an hour after the ignition switch is turned to LOCK (0). Jumping the SCS line after turning the ignition switch to LOCK (0) cancels this function. Disconnecting the PCM during this function, without jumping the SCS line first, can damage the PCM.**

1. Jump the SCS line with the HDS.
2. Remove the cover (A).

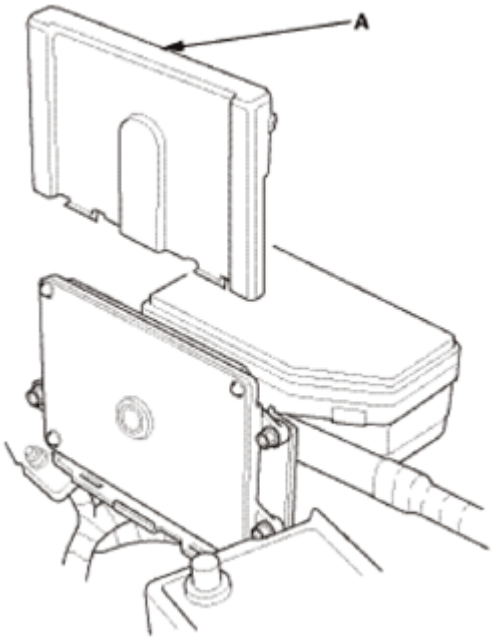

Fig. 3: Identifying Cover
Courtesy of AMERICAN HONDA MOTOR CO., INC.

3. Disconnect PCM connectors A, B, and C.

NOTE: **PCM connectors A, B, and C have symbols (A=•, B=delta, C=o) embossed on them for identification.**

GETtheMANUALS.org

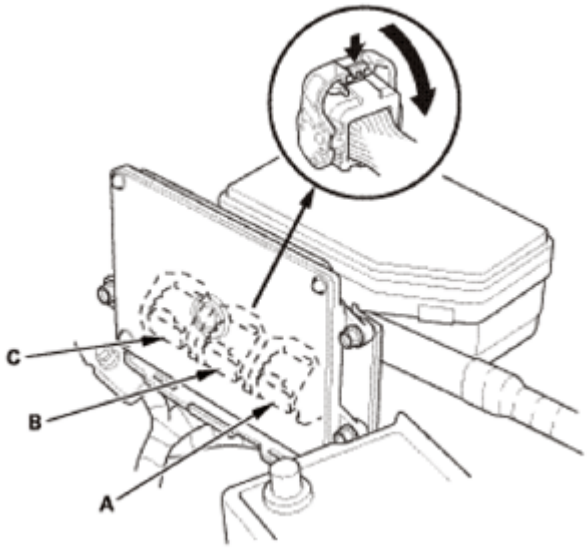

Fig. 4: Disconnecting PCM Connectors
Courtesy of AMERICAN HONDA MOTOR CO., INC.

4. When diagnosis/troubleshooting is done at the PCM connectors, use the terminal test port (A) above the terminal you need to check.

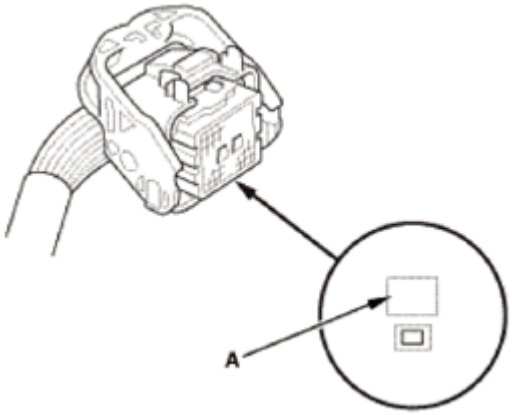

Fig. 5: Identifying Terminal Test Port
Courtesy of AMERICAN HONDA MOTOR CO., INC.

5. Connect one side of the patch cord terminals (A) to a commercially available digital multimeter (B), and connect the other side of the terminal (C) to a commercially available banana jack (Pomona Electronics Tool No. 3563 or equivalent) (D).

GETtheMANUALS.org

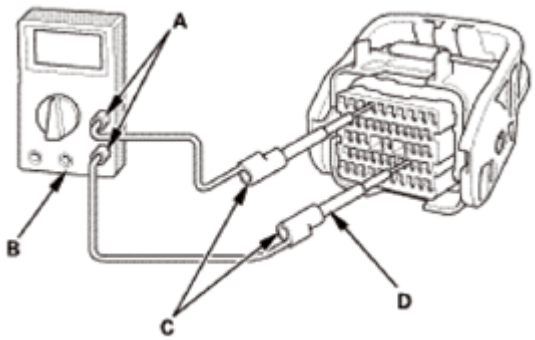

Fig. 6: Identifying Connections Of Patch Cord Terminals With Digital Multimeter And Banana Jack
Courtesy of AMERICAN HONDA MOTOR CO., INC.

6. Gently contact the pin probe (male) at the terminal test port from the terminal side. Do not force the tips into the terminals.

NOTE:

- **For accurate results, always use the pin probe (male).**
- **To prevent damage to the connector terminals, do not insert test equipment probes, paper clips, or other substitutes as they can damage the terminals. Damaged terminals cause a poor connection and an incorrect measurement.**
- **Do not puncture the insulation on a wire. Punctures can cause or eventually lead to poor or intermittent electrical connections.**

OBD STATUS

The OBD status shows the current system status of each DTC and all of the parameters. This function is used to see if the repair was successfully completed. The results of diagnostic tests for the DTC are displayed as:

- PASSED: The on board diagnosis is successfully finished.
- FAILED: The on board diagnosis has finished but failed.
- EXECUTING: The vehicle is in enable criteria conditions of the DTC, and the on board diagnosis is running.
- NOT COMPLETED: The on board diagnosis was running but is out of the enable conditions of the DTC.
- OUT OF CONDITION: The vehicle has stayed out of the enable conditions of the DTC.

FUEL AND EMISSIONS SYSTEMS SYMPTOM TROUBLESHOOTING INDEX

SYMPTOM TROUBLESHOOTING INDEX

When the vehicle has one of these symptoms, check for a diagnostic trouble code (DTC) with the HDS. If there is no DTC, do the diagnostic procedure for the symptom, in the sequence listed, until you find the cause.

GETtheMANUALS.org

Symptom	Diagnostic procedure	Also check for
Engine will not start (MIL works OK, no DTCs set)	**TROUBLESHOOT THE ENGINE WILL NOT START, ENGINE STARTS BUT STALLS IMMEDIATELY, OR ENGINE IS HARD TO START**.	
Engine will not start, and HDS does not communicate with the PCM (MIL comes on and stays on)	**PCM POWER AND GROUND CIRCUIT TROUBLESHOOTING**.	
MIL comes on and stays on, or never comes on at all, no DTCs set	**TROUBLESHOOT THE MIL CIRCUIT**.	
Engine will not start (MIL works OK, no DTCs set, immobilizer indicator stays on or flashes)	**CHECK THE IMMOBILIZER SYSTEM** .	
Engine starts but stalls immediately (MIL works OK, no DTCs set, immobilizer indicator stays on or flashes)	**CHECK THE IMMOBILIZER SYSTEM** .	
Engine is hard to start (MIL works OK, no DTCs set)	**TROUBLESHOOT THE ENGINE WILL NOT START, ENGINE STARTS BUT STALLS IMMEDIATELY, OR ENGINE IS HARD TO START**.	
Cold fast idle too low (MIL works OK, no DTCs set)	1. **DO THE PCM IDLE LEARN PROCEDURE**. 2. **CHECK THE IDLE SPEED**. 3. **Clean the throttle body** See **THROTTLE BODY CLEANING** , **THROTTLE BODY DISASSEMBLY AND REASSEMBLY** or **THROTTLE BODY REMOVAL AND INSTALLATION** .	
Cold fast idle too high (MIL works OK, no DTCs set)	1. **DO THE PCM IDLE LEARN PROCEDURE**. 2. **CHECK THE IDLE SPEED**.	Intake air leaks
Idle speed fluctuates (MIL works OK, no DTCs set)	1. **DO THE PCM IDLE LEARN PROCEDURE**. 2. **CHECK THE IDLE SPEED**. 3. **TEST THE THROTTLE BODY** . 4. **TROUBLESHOOT THE A/C SIGNAL CIRCUIT** .	• Incorrect valve adjustment • Intake air leak
After warming up, idle		

GETtheMANUALS.org

speed is below specifications without load (MIL works OK, no DTCs set)	**TEST THE THROTTLE BODY** .	Incorrect valve timing or clearance adjustment
After warming up, idle speed is above specifications without load (MIL works OK, no DTCs set)	**INSPECT THE APP SENSOR** .	Intake air leaks
Low power (MIL works OK, no DTCs set)	CHECK THE FUEL PRESSURE .	• Low compression • Incorrect camshaft timing • Incorrect engine oil level • Exhaust restriction • Fuel contamination
Engine stalls (MIL works OK, no DTCs set)	**TROUBLESHOOT THE ENGINE STALLS**.	
Difficult to refuel (MIL works OK, no DTCs set)	1. Check the fuel vent tube between the EVAP canister and the fuel tank. 2. Check the fuel tank vapor recirculation tube between the fuel pipe and the fuel tank. 3. REPLACE THE FUEL TANK .	Malfunctioning gas station filling nozzle
Fuel overflows during refueling (No DTCs set)	REPLACE THE FUEL TANK .	Malfunctioning gas station filling nozzle
Fuel cap warning message stays on (MIL works OK, no DTCs set)	TROUBLESHOOT THE FUEL CAP WARNING MESSAGE SYSTEM .	
HDS does not communicate with the PCM or the vehicle	**TROUBLESHOOT THE DLC CIRCUIT**.	

GETtheMANUALS.org

DLC Circuit Troubleshooting

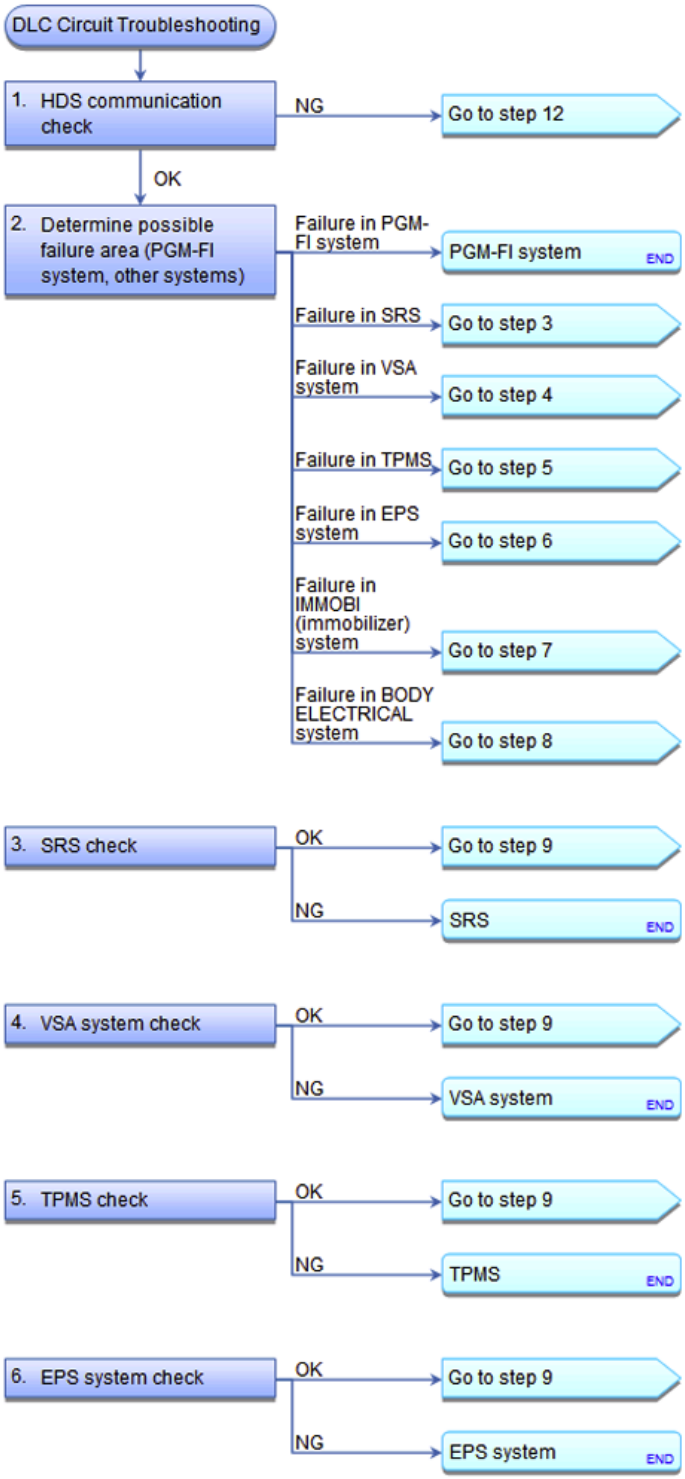

Fig. 7: DLC Circuit Troubleshooting Flow Chart (1 Of 2)
Courtesy of AMERICAN HONDA MOTOR CO., INC.

GETtheMANUALS.org

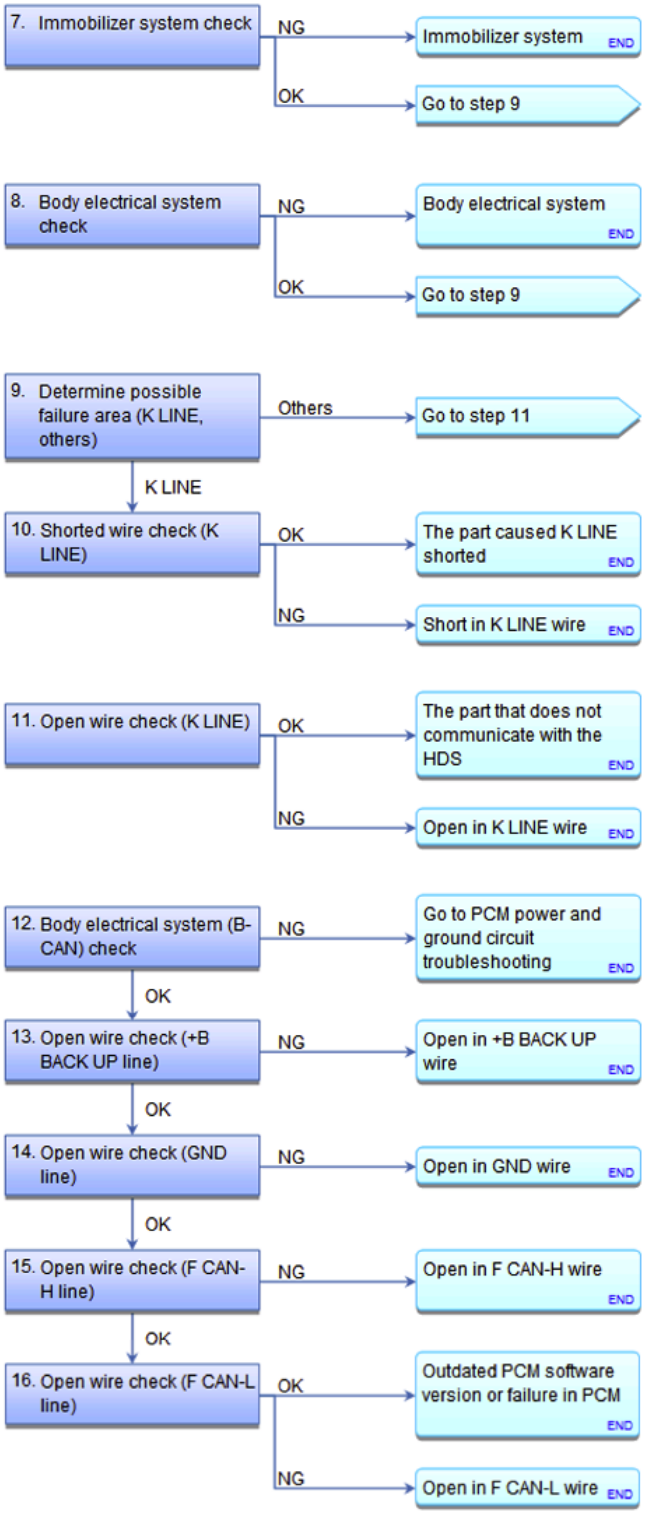

Fig. 8: DLC Circuit Troubleshooting Flow Chart (2 Of 2)
Courtesy of AMERICAN HONDA MOTOR CO., INC.

DLC CIRCUIT TROUBLESHOOTING

GETtheMANUALS.org

NOTE: **If you suspect the HDS or the HDS DLC cable may be the source of the communication problem, verify that they are working properly by connecting them to a known-good, like vehicle and system, and checking for communication problems.**

1. HDS communication check:
   - 1. Turn the ignition switch to LOCK (0).
   - 2. Connect the HDS to the DLC.

     NOTE: **Make sure the HDS is properly connected to the DLC.**

   - 3. Turn the ignition switch to ON (II), and turn on the HDS.

     Does the HDS identify the vehicle?

     YES : Go to step 2.

     NO : Go to step 12.

2. Determine possible failure area (PGM-FI system, other systems):
   - 1. Check for Pending or Confirmed DTCs in the PGM-FI system with the HDS.

DTC Description	Confirmed DTC	Pending DTC	Freeze Frame

     Are any Pending or Confirmed DTCs indicated?

     YES : Go to the indicated DTC's troubleshooting.

     NO : If the HDS does not communicate with the SRS, go to step 3.

     NO : If the HDS does not communicate with the VSA system, go to step 4.

     NO : If the HDS does not communicate with the TPMS, go to step 5.

     NO : If the HDS does not communicate with the EPS system, go to step 6.

     NO : If the HDS does not communicate with the IMMOBI (immobilizer) system, go to step 7.

     NO : If the HDS does not communicate with the BODY ELECTRICAL system, go to step 8.

3. SRS check:
   - 1. Turn the ignition switch to LOCK (0).
   - 2. Turn the ignition switch to ON (II), and watch the SRS indicator.

GETtheMANUALS.org

Does the SRS indicator come on and go off?

YES : The SRS is OK. Go to step 9.

NO : Go to the symptom troubleshooting for **SRS indicator stays on, but no DTCs are stored, or cannot be read**

4. VSA system check:
   - 1. Turn the ignition switch to LOCK (0).
   - 2. Turn the ignition switch to ON (II), and watch the VSA indicator.

   Does the VSA indicator come on and go off?

   YES : The VSA system is OK. Go to step 9.

   NO : Go to the **SYMPTOM TROUBLESHOOTING FOR ABS INDICATOR, BRAKE SYSTEM INDICATOR, AND VSA INDICATOR DO NOT GO OFF** .

5. TPMS check:
   - 1. Turn the ignition switch to LOCK (0).
   - 2. Turn the ignition switch to ON (II), and watch the TPMS indicator.

   Does the TPMS indicator come on and go off?

   YES : The TPMS is OK. Go to step 9.

   NO : Go to the symptom troubleshooting for **TPMS indicator does not go off, and no DTCs are stored**

6. EPS system check:
   - 1. Turn the ignition switch to LOCK (0).
   - 2. Start the engine, and watch the EPS indicator.

   Does the EPS indicator come on and go off?

   YES : The EPS system is OK. Go to step 9.

   NO : Go to the **EPS SYMPTOM TROUBLESHOOTING FOR EPS INDICATOR DOES NOT GO OFF, AND NO DTCS ARE STORED** .

7. Immobilizer system check:
   - 1. Turn the ignition switch to LOCK (0).
   - 2. Turn the ignition switch to ON (II), and watch the immobilizer indicator.

   Does the immobilizer indicator stay on or flash?

GETtheMANUALS.org

YES : **GO TO THE IMMOBILIZER SYSTEM TROUBLESHOOTING** .

NO : The immobilizer system is OK. Go to step 9.

8. Body electrical system check:
   - 1. **DO THE GAUGE SELF-DIAGNOSTIC FUNCTION** .
   - 2. Check the gauge display.

   Is Error 2 or Error 12 indicated?

   YES : **GO TO THE BODY ELECTRICAL SYSTEM DTC'S TROUBLESHOOTING** .

   NO : The body electrical system is OK. Go to step 9.

9. Determine possible failure area (K LINE, others):
   - 1. Turn the ignition switch to LOCK (0).
   - 2. Disconnect the HDS from the DLC.
   - 3. Check for continuity between test points 1 and 2.

   Test condition IG LOCK (0)

   Test circuit K LINE

   Test point 1 DLC (16P) No. 7 (LT BLU)

   Test point 2 Body ground

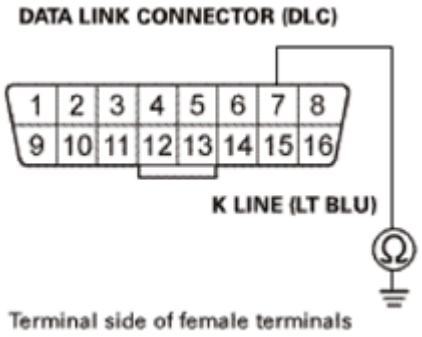

Fig. 9: Checking For Continuity Between Test Points 1 And 2
Courtesy of AMERICAN HONDA MOTOR CO., INC.

Is there continuity?

YES : Go to step 10.

NO : Go to step 11.

GETtheMANUALS.org

10. Shorted wire check (K LINE):
    - 1. Continue to check for continuity between DLC terminal No. 7 and body ground, while disconnecting these parts, one at a time:
        - SRS unit connector A (39P)
        - VSA modulator-control unit 38P connector
        - TPMS control unit 20P connector
        - EPS control unit connector A (11P)
        - Immobilizer-keyless control unit 7P connector
        - Audio unit (audio-navigation unit) connector A (24P)
        - Under-dash fuse/relay box connector Q (16P)

        Does continuity go away when one of the above components is disconnected?

        YES : Replace the part that caused an open when it was disconnected.

        NO : Repair a short in the K LINE wire between the DLC terminal No. 7 and the SRS unit, the VSA modulator-control unit, the TPMS control unit, the EPS control unit, the immobilizer-keyless control unit, the audio unit, the audio-navigation unit, or the driver's under-dash fuse/relay box.

11. Open wire check (K LINE):
    - 1. Connect terminals A and B with a jumper wire.

    Terminal A DLC (16P) No. (LT BLU)

    Terminal B Body ground

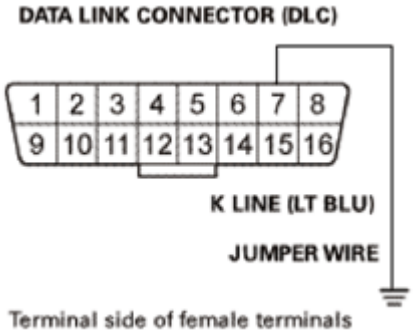

Fig. 10: Checking For Continuity Between Body Ground And Connector Terminals No. 7
Courtesy of AMERICAN HONDA MOTOR CO., INC.

    - 2. Check for continuity between body ground and these connector terminals:

Connector	Terminal
SRS unit connector A (39P)	No. 19 (LT BLU)

GETtheMANUALS.org

VSA modulator-control unit 38P connector	No. 11 (LT BLU)
TPMS control unit 20P connector	No. 4 (LT BLU)
EPS control unit connector A (11P)	No. 5 (LT BLU)
Immobilizer-keyless control unit 7P connector	No. 3 (LT BLU)
Audio unit (audio-navigation unit) connector A (24P)	No. 13 (LT BLU)
Under-dash fuse/relay box connector Q (16P)	No. 14 (LT BLU)

Is there continuity between the body ground and each of the terminals in the chart?

YES : The K LINE wire is OK. Replace the control unit that does not communicate with the HDS.

NO : Repair an open in the K LINE wire between the DLC and the appropriate control unit connector.

12. Body electrical system (B-CAN) check:
    - 1. **DO THE GAUGE SELF-DIAGNOSTIC FUNCTION** .
    - 2. Check for gauge control module DTCs without the HDS.

    Is DTC U0029 and/or U0100 indicated?

    YES : **DO THE PCM POWER AND GROUND CIRCUIT TROUBLESHOOTING**.

    NO : Go to step 13.

13. Open wire check (+B BACK UP line):
    - 1. Turn the ignition switch to LOCK (0).
    - 2. Disconnect the HDS from the DLC.
    - 3. Measure the voltage between test points 1 and 2.

    Test condition IG LOCK (0)

    Test circuit +B BACK UP

    Test point 1 DLC (16P) No. 16 (WHT)

    Terminal B Body ground

GETtheMANUALS.org

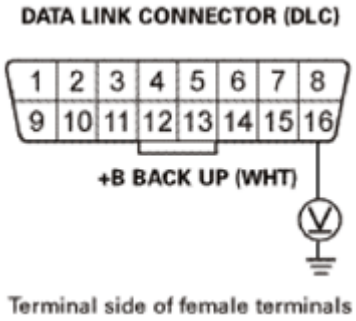

Fig. 11: Measuring Voltage Between Test Points 1 And 2
Courtesy of AMERICAN HONDA MOTOR CO., INC.

YES : The +B BACK UP wire is OK. Go to step 14.

NO : Repair an open in the +B BACK UP wire between DLC terminal No. 16 and the No. A29 (10 A) fuse in the under-hood fuse/relay box.

14. Open wire check (GND line):
    - 1. Measure the voltage between test points 1 and 2.

      Test condition IG LOCK (0)

      Test circuit GND, +B BACK UP

      Test point 1 DLC (16P) No. 4 (BLK)

      Terminal B DLC (16P) No. 16 (WHT)

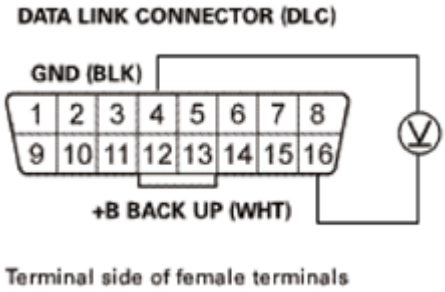

Fig. 12: Measuring Voltage Between Test Points 1 And 2
Courtesy of AMERICAN HONDA MOTOR CO., INC.

Is there battery voltage?

YES : The GND wire is OK. Go to step 15.

NO : Repair an open in the GND wire between DLC terminal No. 4 and G502.

GETtheMANUALS.org

15. Open wire check (F CAN-H line):
    - 1. Connect the HDS to the DLC.
    - 2. Jump the SCS line with the HDS.
    - 3. Disconnect the following connector. PCM connector A (49P)
    - 4. Disconnect the HDS from the DLC.
    - 5. Check for continuity between test points 1 and 2.

    Test condition IG LOCK (0)

    PCM connector A (49P): disconnected

    Test circuit F CAN-H

    Test point 1 PCM connector A (49P) No. 3 (WHT)

    Test point 2 DLC (16P) No. 6 (WHT)

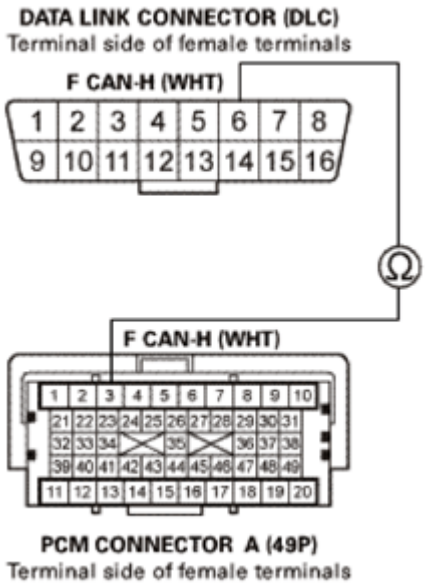

Fig. 13: Checking For Continuity Between Test Points 1 And 2
Courtesy of AMERICAN HONDA MOTOR CO., INC.

Is there continuity?

YES : The F CAN-H wire is OK. Go to step 16.

NO : Repair an open in the F CAN-H wire between the PCM (A3) and DLC terminal No. 6.

16. Open wire check (F CAN-L line):
    - 1. Check for continuity between test points 1 and 2.

GETtheMANUALS.org

Test condition IG LOCK (0)

PCM connector A (49P): disconnected

Test circuit F CAN-L

Test point 1 PCM connector A (49P) No. 4 (RED)

Test point 2 DLC (16P) No. 14 (RED)

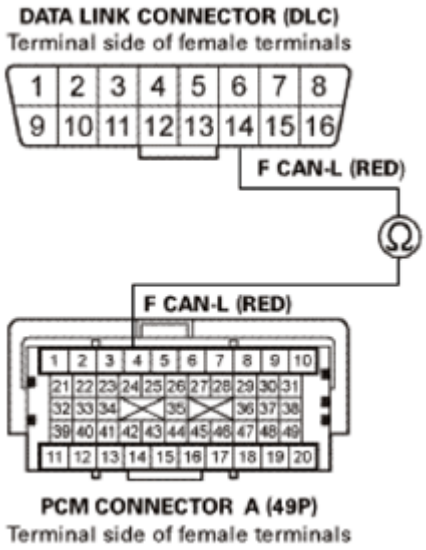

Fig. 14: Checking For Continuity Between Test Points 1 And 2
Courtesy of AMERICAN HONDA MOTOR CO., INC.

Is there continuity?

YES : The F CAN-L wire is OK. **Update the PCM** See **PCM REMOVAL AND INSTALLATION** or **PCM UPDATE** if it does not have the latest software, or **substitute a known-good PCM** See **PCM REMOVAL AND INSTALLATION** or **PCM UPDATE**, then recheck. If the symptom/indication goes away and the PCM was updated, troubleshooting is complete. If the symptom/indication goes away and the PCM was substituted, **replace the original PCM** See **PCM REMOVAL AND INSTALLATION** or **PCM UPDATE**.

NO : Repair an open in the F CAN-L wire between the PCM (A4) and the DLC terminal No. 14.

CKP PATTERN CLEAR/CKP PATTERN LEARN PROCEDURE

PROCEDURE

1. HDS DLC - Connection
    1. Connect the HDS to the data link connector (DLC) (A) located under the driver's side of the dashboard.

GETtheMANUALS.org

2. Turn the ignition switch to ON (II).
3. Make sure the HDS communicates with the vehicle. If it does not communicate, go to the DLC circuit troubleshooting.

Fig. 15: Identifying Data Link Connector (DLC)
Courtesy of AMERICAN HONDA MOTOR CO., INC.

2. CKP Pattern - Clear/Learn
    1. Connect the HDS to the data link connector (DLC) (A) located under the driver's side of the dashboard.
    2. Turn the ignition switch to ON (II).
    3. Make sure the HDS communicates with the vehicle. If it does not communicate, go to the DLC circuit troubleshooting.
    4. Select CRANK PATTERN in the ADJUSTMENT MENU with the HDS.
    5. Select CRANK PATTERN CLEAR, and clear the CKP pattern.
    6. Select CRANK PATTERN LEARNING with the HDS, and follow the screen prompts.
    7. After learning, turn the ignition switch to LOCK (0).
    8. Disconnect the HDS from the DLC.

GETtheMANUALS.org

Fig. 16: Identifying Data Link Connector (DLC)
Courtesy of AMERICAN HONDA MOTOR CO., INC.

FUEL AND EMISSIONS SYSTEMS DIAGNOSTIC INTERVIEW - ENGINE STALLS

ENGINE STALLS-DIAGNOSTIC INTERVIEW

1. Accessories/modifications	A: No modification	B: Modified
2. Situation when occurred	Booming noise, vibration occurs when deceleration, stopping, engine stalls	
3. Situation when occurred	Engine stalls without vibrations as if stopped by turning off the ignition switch	

ENGINE STALLS CONDITION-POSSIBLE CAUSE PATTERN CHART FROM DIAGNOSTIC INTERVIEW

	Conditions when the engine stalls	Possible causes
Pattern 1	Accessories/modifications	"Hard to start engine", "engine stall" sometimes occurs due to a fault in the ignition system, intake duct, intake manifold, exhaust system. (Intermittent failure may occur due to modification)
Pattern 2	Booming noise, vibration occurs when deceleration, stopping, engine stalls	The following intermittent failure may exist. • Intermittent failure of PGM-FI main relay 2 • Faulty fuel supply (parameter ST FUEL TRIM) • Delay of EGR function (parameter EGR) (only vehicles with EGR) • Delay of VTEC, VTC system function (parameter VTEC) (only vehicles with VTEC or VTC)

GETtheMANUALS.org

		• Delay of lock up operation (parameter SLIP RATIO OF TORQ OR START CLUTCH) (AT vehicle)
Pattern 3	Engine stalls without vibrations as if stopped by turning off the ignition switch	The following intermittent failure may exist. • Intermittent failure of ignition coil relay • Intermittent failure of PGM-FI main relay 1 • Intermittent failure of PGM-FI subrelay

FUEL AND EMISSIONS SYSTEMS DIAGNOSTIC INTERVIEW - ENGINE WILL NOT START, ENGINE STARTS BUT STALLS IMMEDIATELY, OR ENGINE IS HARD TO START

HARD TO START ENGINE-DIAGNOSTIC INTERVIEW

How often does it occur?	**(_____) times/day (_____) times/month**
1. Weather when occurred	A. Warm (temp:_____) B. Sunny C: Cloudy D: Rainy
2. Situation when occurred	A. After an overnight parking, (_____) nights B. Tends to occur about 3 hours after stopping engine C. Parking hours irrelevant
3. Weather when occurred	A. Cold (temp:_____)
• Fuel when occurred	: Filled (_____) months before occurrence
4. Use of specified fuel	A. Use specified fuel only B. Used ethanol-mixed fuel C. Gasoline additive
5. How the starter motor turned when the problem occurred	A. Starter motor turned weaker then usual B. Spinning of starter motor irrelevant
• Cranking operation	A. Keep cranking until the engine starts B. Stop cranking after several seconds: (_____) sec
• Cranking	A. Turn on starter motor immediately after turning the ignition switch to ON(II) B. Turn on starter motor several seconds after turning the ignition switch to ON (II) (after confirming that the check engine indicator goes off)
6. Ground where occurred	A. Level B. Downhill C. Uphill
	A. Full

GETtheMANUALS.org

Fuel level when occurred	B. Half full C. Only a little
7. Aftermarket accessory	A. Modified B. No modification

HARD-TO START CONDITION-POSSIBLE CAUSE PATTERN CHART FROM DIAGNOSTIC INTERVIEW

	Conditions when hard-to-start occurred	Possible causes
Pattern 1	• When in warm climate • Tends to occur approx 3 hours after stopping engine	Check for the EVAP canister purge valve
Pattern 2	Weather when occurred: Windy	When wind is blowing into the exhaust system, the exhaust gas can blow back into the combustion chamber and/or intake manifold, causing long crank times.
Pattern 3	• Weather when occurred: Cold • Fuel filled two months before occurrence	• If summer fuel is used during cold weather, long crank times may occur. • When using fuel that is more than a couple months old (stale fuel), the symptom may disappear with fresh fuel.
Pattern 4	• Use of non-specified fuel • Ethanol mixed, use of additive	• When ethanol fuel or fuel other than specified is mixed, engine stalling may occur. • Poor fuel quality may cause a hard-to-start condition.
Pattern 5	• Immediately crank after turning ignition switch to ON (II) • Starter motor spins weaker than usual	• When cranking, the battery turns starter motor, operates fuel pump to boost fuel pressure to the prescribed level, and gives power to the ignition system to start engine. • When the battery is weak, it takes a long time until the fuel pump boosts fuel pressure to the prescribed level, causing slow start in some cases.
Pattern 6	• Vehicle parked on an uphill or downhill slope • When fuel level is low	When the vehicle is parked on uphill or downhill slope, and the fuel level is low, the fuel pump cannot pickup and pressurize the fuel properly, causing the engine to start slowly.
Pattern 7	• Check for modification in ignition system, intake duct, intake manifold, exhaust system • Inspect amount of oil/fluid/gas (engine oil, ATF, A/C refrigerant)	Hard-to-start engine or engine stall may occur due to modified ignition system, intake duct, intake manifold, exhaust system, use of non-specified engine oil or ATF, or excessive amount of engine oil or ATF (temporary failure may occur due to modification)

FUEL AND EMISSIONS SYSTEMS DTC TROUBLESHOOTING INDEX

GETtheMANUALS.org

DTC TROUBLESHOOTING INDEX

DTC (MIL indication*)	Two Drive Cycle Detection	Detection Item	MIL
P0010 (56)	---	Variable Valve Timing Control (VTC) Oil Control Solenoid Valve Malfunction	ON
P0011 (56)	o	Variable Valve Timing Control (VTC) System Malfunction	ON
P0101 (50)	o	Mass Air Flow (MAF) Sensor Circuit Range/Performance Problem	ON
P0102 (50)	---	Mass Air Flow (MAF) Sensor Circuit Low Voltage	ON
P0103 (50)	---	Mass Air Flow (MAF) Sensor Circuit High Voltage	ON
P0107 (3)	---	Manifold Absolute Pressure (MAP) Sensor Circuit Low Voltage	ON
P0108 (3)	---	Manifold Absolute Pressure (MAP) Sensor Circuit High Voltage	ON
P0111 (10)	o	Intake Air Temperature (IAT) Sensor Circuit Range/Performance Problem	ON
P0112 (10)	o	Intake Air Temperature (IAT) Sensor Circuit Low Voltage	ON
P0113 (10)	o	Intake Air Temperature (IAT) Sensor Circuit High Voltage	ON
P0116 (86)	o	Engine Coolant Temperature (ECT) Sensor 1 Circuit Range/Performance Problem	ON
P0117 (6)	---	Engine Coolant Temperature (ECT) Sensor 1 Circuit Low Voltage	ON
P0118 (6)	---	Engine Coolant Temperature (ECT) Sensor 1 Circuit High Voltage	ON
P0122 (7)	---	Throttle Position (TP) Sensor A Circuit Low Voltage	ON
P0123 (7)	---	Throttle Position (TP) Sensor A Circuit High Voltage	ON
P0125 (86)	o	Engine Coolant Temperature (ECT) Sensor 1 Malfunction/Slow Response	ON
P0128 (87)	o	Cooling System Malfunction	ON
P0133 (61)	o	Air Fuel Ratio (A/F) Sensor (Sensor 1) Malfunction Slow/Response	ON
P0134 (41)	o	Air Fuel Ratio (A/F) Sensor (Sensor 1) Heater System Malfunction	ON
P0135 (41)	o	Air Fuel Ratio (A/F) Sensor (Sensor 1) Heater Circuit Malfunction	ON
P0137 (63)	o	Secondary Heated Oxygen Sensor (Secondary	ON

GETtheMANUALS.org

		HO2S (Sensor 2)) Circuit Low Voltage	
P0138 (63)	o	Secondary Heated Oxygen Sensor (Secondary HO2S (Sensor 2)) Circuit High Voltage	ON
P0139 (63)	o	Secondary Heated Oxygen Sensor (Secondary HO2S (Sensor 2)) Slow Response	ON
P0141 (65)	o	Secondary Heated Oxygen Sensor (Secondary HO2S (Sensor 2)) Heater Circuit Malfunction	ON
P0171 (45)	o	Fuel System Too Lean	ON
P0172 (45)	o	Fuel System Too Rich	ON
P0201 (71)	---	No. 1 Cylinder Injector Circuit Malfunction	ON
P0202 (72)	---	No. 2 Cylinder Injector Circuit Malfunction	ON
P0203 (73)	---	No. 3 Cylinder Injector Circuit Malfunction	ON
P0204 (74)	---	No. 4 Cylinder Injector Circuit Malfunction	ON
P0222 (7)	---	Throttle Position (TP) Sensor B Circuit Low Voltage	ON
P0223 (7)	---	Throttle Position (TP) Sensor B Circuit High Voltage	ON
P0300 (211) and any combination of the following: P0301 (71) P0302 (72) P0303 (73) P0304 (74)	o	Random Misfire Detected	ON
P0301 (71)	o	No. 1 Cylinder Misfire Detected	ON
P0302 (72)	o	No. 2 Cylinder Misfire Detected	ON
P0303 (73)	o	No. 3 Cylinder Misfire Detected	ON
P0304 (74)	o	No. 4 Cylinder Misfire Detected	ON
P0326 (23)	o	Knock Sensor Malfunction	ON
P0327 (23)	o	Knock Sensor Circuit Low Voltage	ON
P0328 (23)	o	Knock Sensor Circuit High Voltage	ON
P0335 (4)	---	Crankshaft Position (CKP) Sensor No Signal	ON
P0339 (4)	---	Crankshaft Position (CKP) Sensor Circuit Intermittent Interruption	ON
P0340 (57)	o	Camshaft Position (CMP) Sensor A No Signal	ON
P0341 (57)	o	Camshaft Position (CMP) Sensor A and Crankshaft Position (CKP) Sensor Incorrect Phase Detected	ON
P0344 (57)	o	Camshaft Position (CMP) Sensor A Circuit Intermittent Interruption	ON
P0351 (71)	---	No. 1 Cylinder Ignition Coil Circuit Malfunction	ON
P0352 (72)	---	No. 2 Cylinder Ignition Coil Circuit Malfunction	ON
P0353 (73)	---	No. 3 Cylinder Ignition Coil Circuit Malfunction	ON

GETtheMANUALS.org

P0354 (74)	---	No. 4 Cylinder Ignition Coil Circuit Malfunction	ON
P0365 (8)	---	Camshaft Position (CMP) Sensor B Circuit No Signal	ON
P0369 (8)	---	Camshaft Position (CMP) Sensor B Circuit Intermittent Interruption	ON
P0420 (67)	o	Catalyst System Efficiency Below Threshold	ON
P0443 (92)	o	Evaporative Emission (EVAP) Canister Purge Valve Circuit Malfunction	ON
P0451 (91)	o	Fuel Tank Pressure (FTP) Sensor Circuit Range/Performance Problem	ON
P0452 (91)	o	Fuel Tank Pressure (FTP) Sensor Circuit Low Voltage	ON
P0453 (91)	o	Fuel Tank Pressure (FTP) Sensor Circuit High Voltage	ON
P0455 (90)	o	Evaporative Emission (EVAP) System Large Leak Detected	ON
P0456 (90)	o	Evaporative Emission (EVAP) System Very Small Leak Detected	ON
P0457	---	Evaporative Emission (EVAP) System Leak Detected/Fuel Fill Cap Loose or Missing	OFF
P0461	---	Fuel Level Sensor (Fuel Gauge Sending Unit) Circuit Range/Performance Problem	OFF
P0462	o	Fuel Level Sensor (Fuel Gauge Sending Unit) Circuit Low Voltage	OFF
P0463	o	Fuel Level Sensor (Fuel Gauge Sending Unit) Circuit High Voltage	OFF
P0496 (92)	o	Evaporative Emission (EVAP) System High Purge Flow Detected	ON
P0497 (90)	o	Evaporative Emission (EVAP) System Low Purge Flow Detected	ON
P0498 (117)	o	Evaporative Emission (EVAP) Canister Vent Shut Valve Circuit Low Voltage	ON
P0499 (117)	o	Evaporative Emission (EVAP) Canister Vent Shut Valve Circuit High Voltage	ON
P0506 (14)	o	Idle Control System RPM Lower Than Expected	ON
P0507 (14)	o	Idle Control System RPM Higher Than Expected	ON
P050A (167)	o	Cold Start Idle Air Control System Performance Problem	ON
P050B (167)	o	Cold Start Ignition Timing Control System Performance Problem	ON
P0532	o	A/C Pressure Sensor Circuit Low Voltage	OFF

GETtheMANUALS.org

P0533	o	A/C Pressure Sensor Circuit High Voltage	OFF
P0562	---	Charging System Low Voltage	OFF
P0563	o	Powertrain Control Module (PCM) Power Source Circuit Unexpected Voltage	OFF
P0602 (196)	---	Powertrain Control Module (PCM) Programming Error	ON
P060A (131)	---	Powertrain Control Module (PCM) Internal Control Module Malfunction	ON
P062F (131)	---	Powertrain Control Module (PCM) Internal Control Module Keep Alive Memory (KAM) Error	ON
P0630 (139)	---	VIN Not Programmed or Mismatch	ON
P0641 (133)	---	Sensor Reference Voltage A Malfunction	ON
P0651 (134)	---	Sensor Reference Voltage B Malfunction	ON
P065A	---	ACG No Charging Malfunction	OFF
P0685 (135)	o	Powertrain Control Module (PCM) Power Control Circuit/Internal Circuit Malfunction	ON
P06A8 (131)	---	Internal VCC Power Malfunction	ON
P1009 (56)	---	Variable Valve Timing Control (VTC) Advance Malfunction	ON
P1109 (13)	o	Barometric Pressure (BARO) Sensor Circuit Out of Range High	ON
P1116 (86)	o	Engine Coolant Temperature (ECT) Sensor 1 Circuit Range/Performance Problem	ON
P1128 (5)	o	Manifold Absolute Pressure (MAP) Sensor Signal Lower Than Expected	ON
P1129 (5)	o	Manifold Absolute Pressure (MAP) Sensor Signal Higher Than Expected	ON
P1157 (48)	o	Air Fuel Ratio (A/F) Sensor (Sensor 1) AFS Circuit High Voltage	ON
P1172 (61)	o	Air Fuel Ratio (A/F) Sensor (Sensor 1) Circuit Out of Range High	ON
P1297	o	Electrical Load Detector (ELD) Circuit Low Voltage	OFF
P1298	o	Electrical Load Detector (ELD) Circuit High Voltage	OFF
P1454 (91)	o	Fuel Tank Pressure (FTP) Sensor Range/Performance Problem	ON
P1458 (91)	o	Fuel Tank Pressure (FTP) Sensor Circuit Range/Performance Problem	ON
P145C (90)	o	Evaporative Emission (EVAP) System Purge Flow Malfunction	ON
P1549	---	Charging System High Voltage	OFF

GETtheMANUALS.org

P154A	---	Battery Sensor Internal Failure	OFF
P1658 (40)	---	Electronic Throttle Control System (ETCS) Control Relay ON Malfunction	ON
P1659 (40)	---	Electronic Throttle Control System (ETCS) Control Relay OFF Malfunction	ON
P1683 (40)	---	Throttle Valve Default Position Spring Performance Problem	ON
P1684 (40)	---	Throttle Valve Return Spring Performance Problem	ON
P16BB	---	Alternator B Terminal Circuit Low Voltage	OFF
P16E2	---	PGM-FI-ACG LIN Communication Error	OFF
P16E3	---	PGM-FI-Battery Sensor LIN Communication Error	OFF
P16E4	---	ACG High-temperature	OFF
P2101 (40)	---	Electronic Throttle Control System (ETCS) Malfunction	ON
P2118 (40)	---	Throttle Actuator Current Range/Performance Problem	ON
P2122 (37)	---	Accelerator Pedal Position (APP) Sensor A (Throttle Position (TP) Sensor D) Circuit Low Voltage	ON
P2123 (37)	---	Accelerator Pedal Position (APP) Sensor A (Throttle Position (TP) Sensor D) Circuit High Voltage	ON
P2127 (37)	---	Accelerator Pedal Position (APP) Sensor B (Throttle Position (TP) Sensor E) Circuit Low Voltage	ON
P2128 (37)	---	Accelerator Pedal Position (APP) Sensor B (Throttle Position (TP) Sensor E) Circuit High Voltage	ON
P2135 (7)	---	Throttle Position (TP) Sensor A/B Incorrect Voltage Correlation	ON
P2138 (37)	---	Accelerator Pedal Position (APP) Sensor A/B (Throttle Position (TP) Sensor D/E) Incorrect Voltage Correlation	ON
P2176 (40)	---	Throttle Actuator Control System Idle Position Not Learned	ON
P2183 (192)	o	Engine Coolant Temperature (ECT) Sensor 2 Circuit Range/Performance Problem	ON
P2184 (192)	o	Engine Coolant Temperature (ECT) Sensor 2 Circuit Low Voltage	ON
P2185 (192)	o	Engine Coolant Temperature (ECT) Sensor 2 Circuit High Voltage	ON
P2195 (48)	o	Air Fuel Ratio (A/F) Sensor (Sensor 1) Signal	ON

GETtheMANUALS.org

		Stuck Lean	
P219A (45)	o	Air Fuel Ratio Variation of Cylinders	ON
P2227 (13)	o	Barometric Pressure (BARO) Sensor Circuit Range/Performance Problem	ON
P2228 (13)	o	Barometric Pressure (BARO) Sensor Circuit Low Voltage	ON
P2229 (13)	o	Barometric Pressure (BARO) Sensor Circuit High Voltage	ON
P2238 (48)	o	Air Fuel Ratio (A/F) Sensor (Sensor 1) AFS+ Circuit Low Voltage	ON
P2252 (48)	o	Air Fuel Ratio (A/F) Sensor (Sensor 1) AFS- Circuit Low Voltage	ON
P2270 (63)	o	Secondary Heated Oxygen Sensor (Secondary HO2S (Sensor 2)) Circuit Signal Stuck Lean	ON
P2279 (109)	o	Intake Air System Leak	ON
P2422 (117)	o	Evaporative Emission (EVAP) Canister Vent Shut Valve Stuck Closed Malfunction	ON
P2610 (132)	---	Powertrain Control Module (PCM) Ignition Off Internal Timer Malfunction	ON
P2646 (22)	o	Rocker Arm Oil Pressure Switch Circuit Low Voltage	ON
P2647 (22)	o	Rocker Arm Oil Pressure Switch Circuit High Voltage	ON
P2648 (21)	---	Rocker Arm Oil Control Solenoid Circuit Low Voltage	ON
P2649 (21)	---	Rocker Arm Oil Control Solenoid Circuit High Voltage	ON
P2A00 (61)	o	Air Fuel Ratio (A/F) Sensor (Sensor 1) Circuit Range/Performance Problem	ON
U0029 (126)	---	F-CAN Malfunction (BUS-OFF (Powertrain Control Module (PCM))	ON
U0114 *1	---	F-CAN Malfunction (Powertrain Control Module (PCM)-AWD Control Unit)	OFF
U0122	---	F-CAN Malfunction (Powertrain Control Module (PCM)-VSA Modulator Control Unit)	OFF
U0131	---	F-CAN Malfunction (Powertrain (PCM)-EPS Control Unit)	OFF
U0155 (126)	---	F-CAN Malfunction (Powertrain Control Module (PCM)-Gauge Control Module)	ON

NOTE: **The above DTCs are indicated when the PGM-FI system is selected with the HDS.**

GETtheMANUALS.org

*: These DTCs are indicated by a blinking MIL when the SCS line is jumped with the HDS. Some DTCs do not cause the MIL to blink when the SCS line is jumped; these DTCs are shown in the gauge display.

*1: With real time AWD

GETtheMANUALS.org

Fuel and Emissions Systems Symptom Troubleshooting - Engine stalls

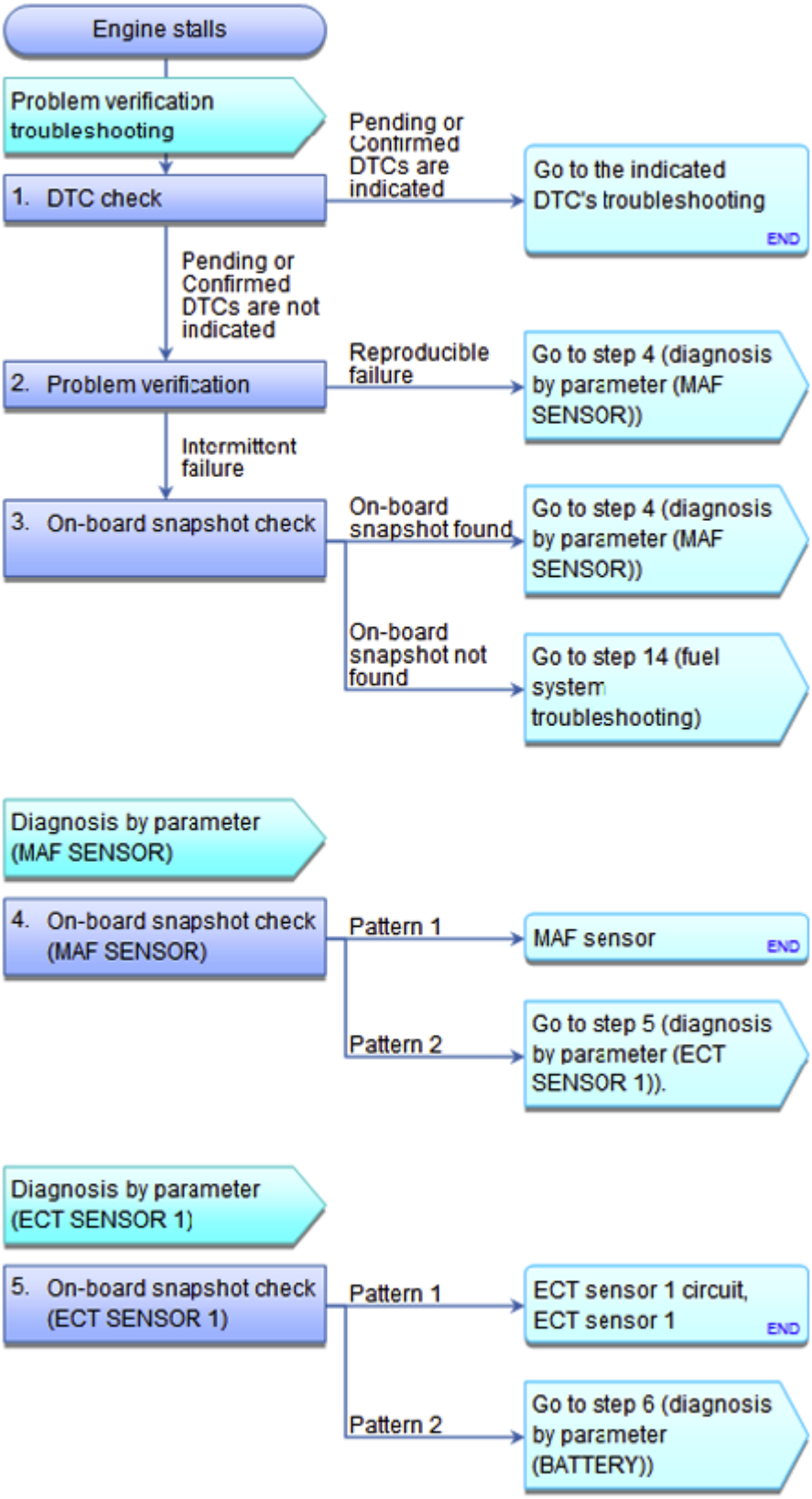

GETtheMANUALS.org

Fig. 17: Fuel And Emissions Systems Symptom Troubleshooting Flow Chart - Engine Stalls (1 Of 5)
Courtesy of AMERICAN HONDA MOTOR CO., INC.

GETtheMANUALS.org

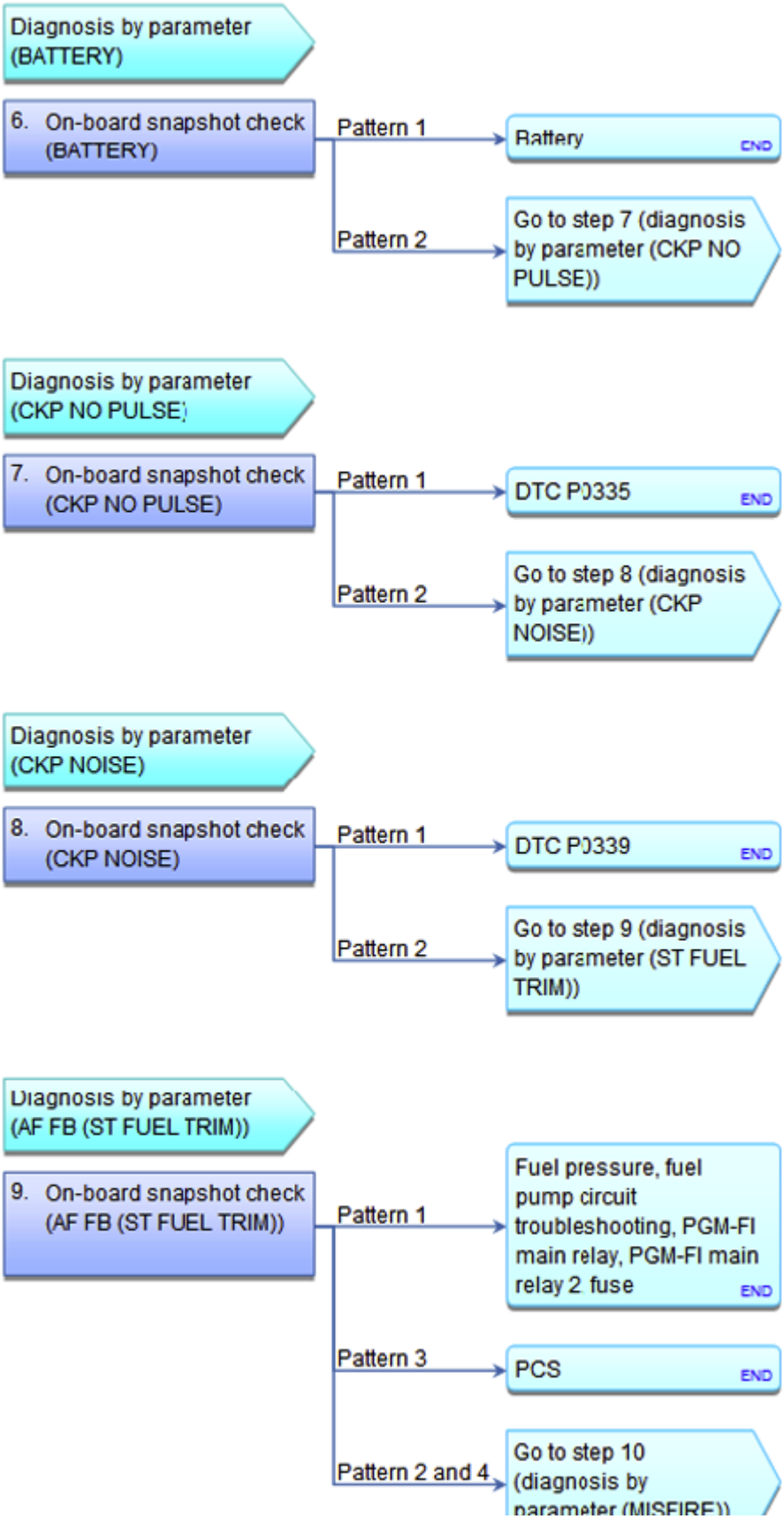

GETtheMANUALS.org

Fig. 18: Fuel And Emissions Systems Symptom Troubleshooting Flow Chart - Engine Stalls (2 Of 5)
Courtesy of AMERICAN HONDA MOTOR CO., INC.

GETtheMANUALS.org

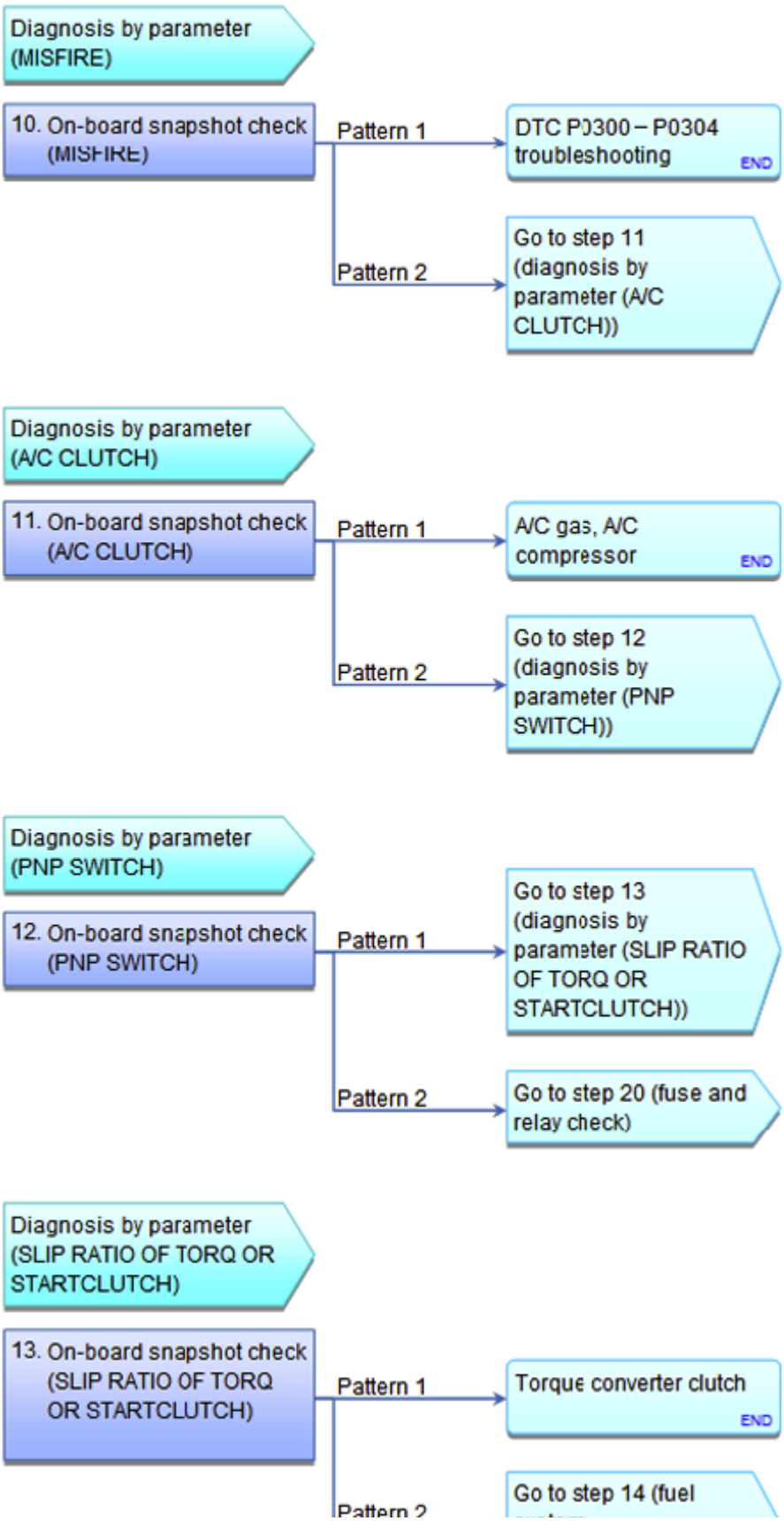

GETtheMANUALS.org

Fig. 19: Fuel And Emissions Systems Symptom Troubleshooting Flow Chart - Engine Stalls (3 Of 5)
Courtesy of AMERICAN HONDA MOTOR CO., INC.

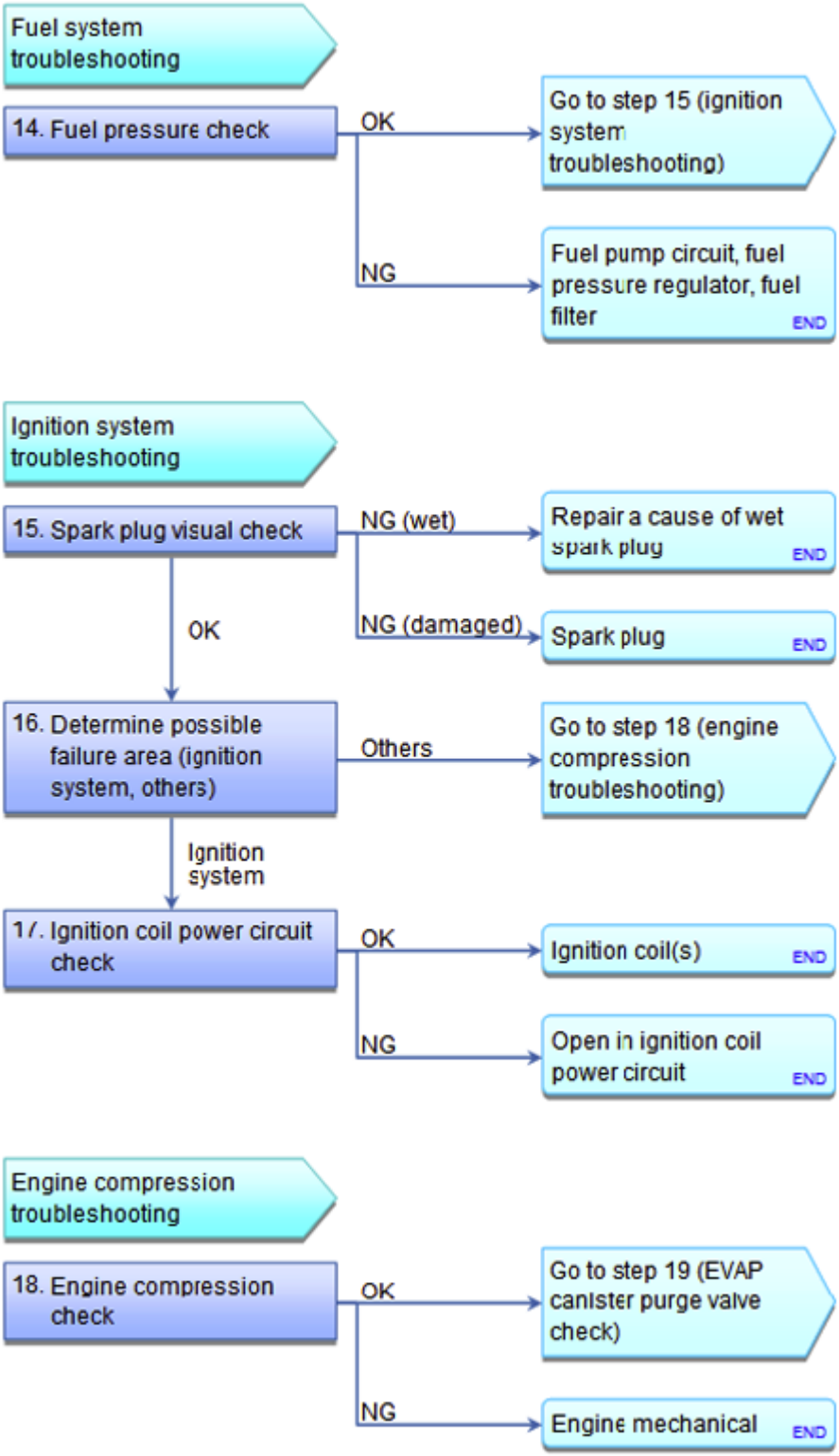

Fig. 20: Fuel And Emissions Systems Symptom Troubleshooting Flow Chart - Engine Stalls (4 Of 5)

GETtheMANUALS.org

Courtesy of AMERICAN HONDA MOTOR CO., INC.

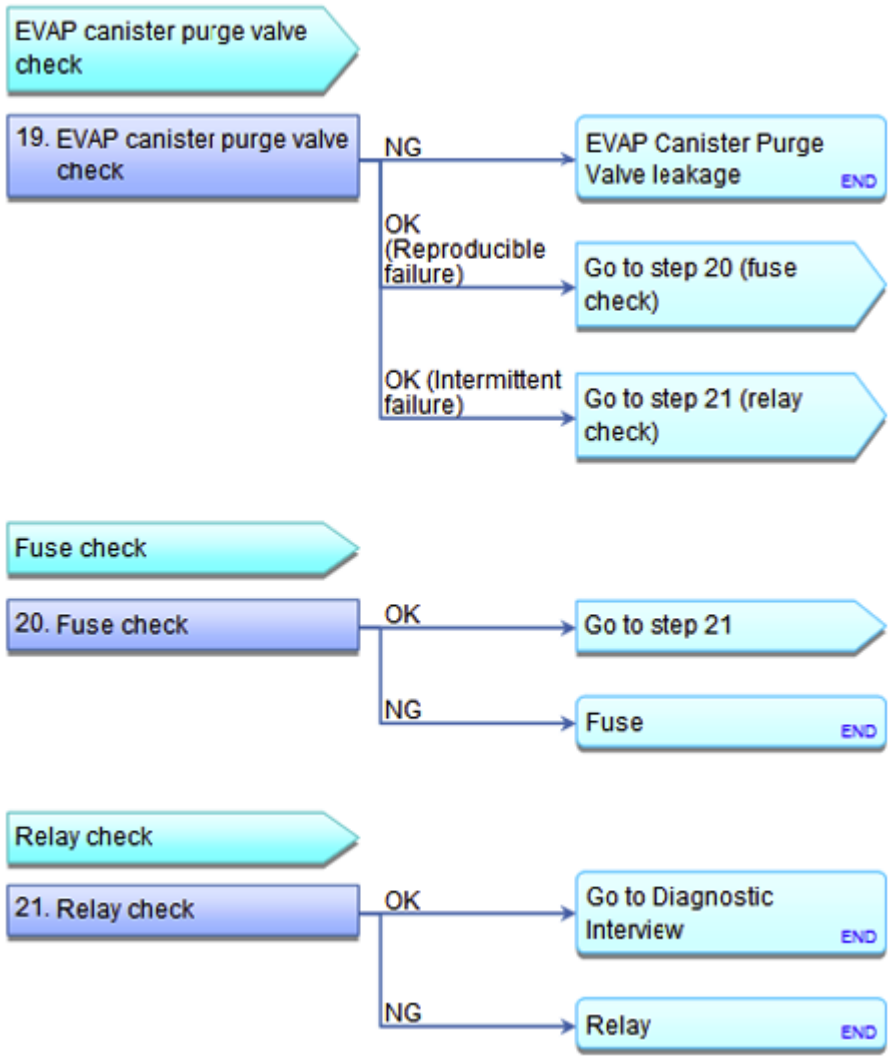

Fig. 21: Fuel And Emissions Systems Symptom Troubleshooting Flow Chart - Engine Stalls (5 Of 5)
Courtesy of AMERICAN HONDA MOTOR CO., INC.

ENGINE STALLS

Special Tools Required

Vacuum Pump/Gauge, 0-30 inHg Snap-on YA4000A or equivalent, commercially available

NOTE: Before beginning this troubleshooting:

- Make sure the battery is fully charged.
- Make sure the fuel tank is at least 1/4 full.
- Make sure the engine oil level is correct.

GETtheMANUALS.org

1. DTC check:
   - 1. Turn the ignition switch to ON (II).
   - 2. Check for Pending or Confirmed DTCs with the HDS.

DTC Description	Confirmed DTC	Pending DTC	Freeze Frame

Are any Pending or Confirmed DTCs indicated?

YES : Go to the indicated DTC's troubleshooting.

NO : Go to step 2.

NOTE: **If the HDS does not communicate with the vehicle, go to the PCM power and ground circuit troubleshooting.**

2. Problem verification:
   - 1. Set the HDS to record a HIGH-SPEED SNAPSHOT of following parameters for 30 seconds.
     - ENGINE SPEED
     - MAF SENSOR
     - ECT SENSOR 1
     - BATTERY
     - CKP NOISE
     - CKP NO PULSE
     - AF FB (ST FUEL TRIM)
     - EVAP PC DUTY
     - MISFIRE
     - A/C CLUTCH
     - PNP SWITCH
     - SLIP RATIO OF TORQ OR START CLUTCH
   - 2. Begin the snapshot, then start the engine and let it idle without load (in P or N).

     Did the engine stall?

     YES : Go to step 4 (diagnosis by parameter (MAF SENSOR)).

     NO : Go to step 3.

3. On-board snapshot check:
   - 1. Check for a record of Engine Stall 2 in the on-board snapshot with the HDS

     Is there a Engine Stall 2 record in the on-board snapshot?

GETtheMANUALS.org

YES : Go to step 4 (diagnosis by parameter (MAF SENSOR)).

NO : Go to step 14 (fuel system troubleshooting).

NOTE: **If an engine stall on-board 2 snapshot was not found, the snapshot may have been lost due to low battery voltage or because of battery disconnection or replacement.**

4. On-board snapshot check (MAF SENSOR):

NOTE: **Use the on-board snapshot in case of intermittent failure, or use the snapshot in case of reproducible failure.**

- 1. Check for a record of Engine Stall 2 in the on-board snapshot or the recorded snapshot with the HDS.
- 2. Select the MAF SENSOR and ENGINE SPEED in the configuration list.

Check the recorded snapshot parameters of the Engine Stall, then compare the MAF SENSOR pattern from the charts, and determine the problem.

Pattern	Symptom (Diagnosis by parameter)	Additional remarks
Pattern 1	Poor connection of MAF 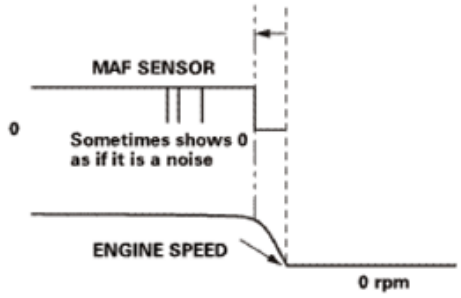 SENSOR	If the engine stalls 1-2 seconds after MAF SENSOR shows "0" g/s the engine stall may be caused by a faulty MAF sensor, poor connection, or electrical noise in the MAF sensor signal.
Pattern 2	MAF SENSOR: 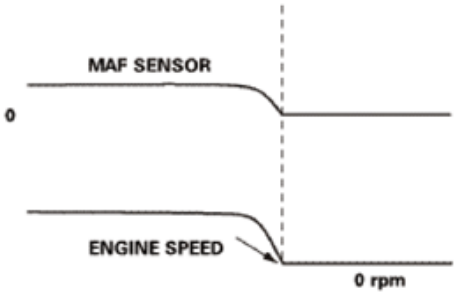 Normal	When the MAF SENSOR pattern matches ENGINE SPEED, the MAF sensor is normal.

Which pattern is indicated?

Pattern 1 Check the MAF sensor for loose terminals or poor connections. If the terminals and connections are OK, **SUBSTITUTE A KNOWN-GOOD MAF SENSOR**.

GETtheMANUALS.org

Pattern 2 The MAF sensor is OK. Go to step 5 (diagnosis by parameter (ECT SENSOR 1)).

5. On-board snapshot check (ECT SENSOR 1):

NOTE: **Use the on-board snapshot in case of intermittent failure, or use the snapshot in case of reproducible failure.**

- 1. Check for a record of Engine Stall 2 in the on-board snapshot or the recorded snapshot with the HDS.
- 2. Select ECT SENSOR 1 and ENGINE SPEED in the configuration list.

Check the recorded snapshot parameters of the Engine Stall, then compare ECT SENSOR 1 pattern from the charts, and determine the problem.

Pattern	Symptom (Diagnosis by parameter)	Additional remarks
Pattern 1	ECT SENSOR 1 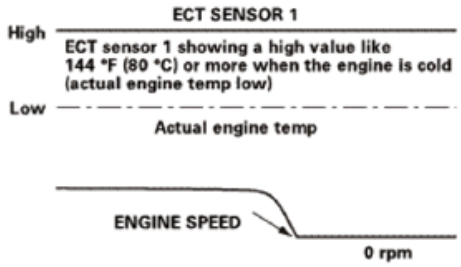 high	When ECT SENSOR 1 indicates about 176°F (80 °C) or more when the engine is actually cold, ECT sensor 1 signal may be stuck high. If this occurs, the PCM may not properly compensate for cold engine operation, causing the engine to stall.
Pattern 2	ECT SENSOR 1 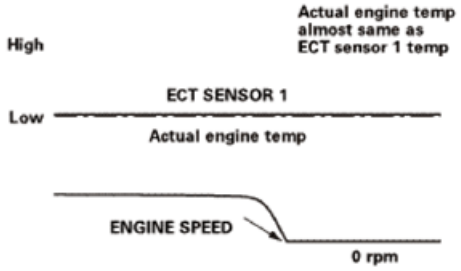 normal	If actual engine temp is similar to ECT SENSOR 1, ECT sensor 1 is normal.

Which pattern is indicated?

Pattern 1 Check for a short in ECT sensor 1 circuit and failure in ECT sensor 1.

Pattern 2 ECT sensor 1 is OK. Go to step 6 (diagnosis by parameter (BATTERY)).

6. On-board snapshot check (BATTERY):

NOTE: **Use the on-board snapshot in case of intermittent failure, or use the snapshot in case of reproducible failure.**

GETtheMANUALS.org

- 1. Check for a record of Engine Stall 2 in the on-board snapshot or the recorded snapshot with the HDS.
- 2. Select the BATTERY and ENGINE SPEED in the configuration list.

Check the recorded snapshot parameters of the Engine Stall, then compare the BATTERY pattern from the charts, and determine the problem.

Pattern	Symptom (Diagnosis by parameter)	Additional remarks
Pattern 1	BATTERY voltage 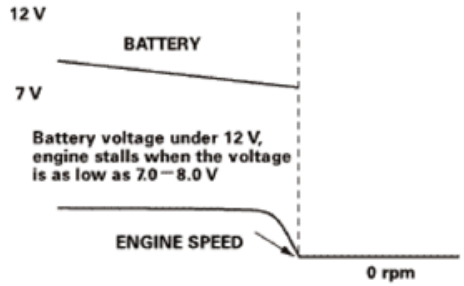 low	• When the BATTERY voltage is excessively low, the PCM or unit stops functioning, causing engine stall. • For PCM or each unit to start (functioning), more than 7.0 V is needed.
Pattern 2	BATTERY voltage 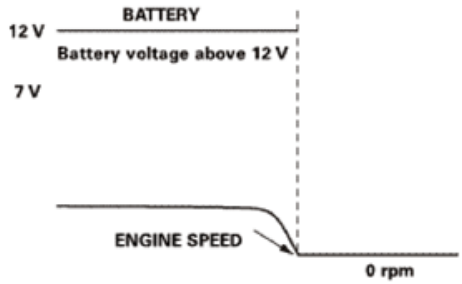 normal	If the BATTERY voltage is above 12 V when the engine stalls, the battery is normal.

Which pattern is indicated?

Pattern 1 **<u>TEST THE BATTERY</u>** , and check the battery cables and terminals.

Pattern 2 The battery is OK. Go to step 7 (diagnosis by parameter (CKP NO PULSE)).

7. On-board snapshot check (CKP NO PULSE):

NOTE: **Use the on-board snapshot in case of intermittent failure, or use the snapshot in case of reproducible failure.**

- 1. Check for a record of Engine Stall 2 in the on-board snapshot or the recorded snapshot with the HDS.
- 2. Select the CKP NO PULSE and ENGINE SPEED in the configuration list.

Check the recorded snapshot parameters of the Engine Stall, then compare the CKP NO PULSE pattern from the charts, and determine the problem.

GETtheMANUALS.org

Pattern	Symptom (Diagnosis by parameter)	Additional remarks
Pattern 1	CKP NO PULSE counts up when 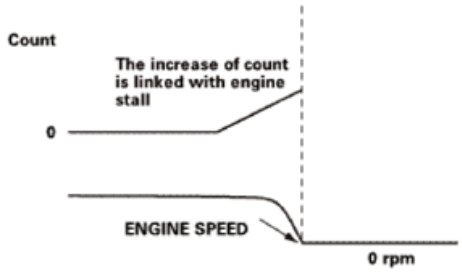 cranking	When CKP NO PULSE counts up, the PCM is not receiving the CKP sensor signal.
Pattern 2	The CKP NO PULSE indicates the pulse is 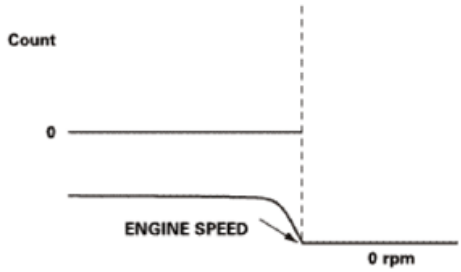 normal	The CKP sensor signal is OK when the CKP NO PULSE count does not increase.

Which pattern is indicated?

Pattern 1 **DO THE TROUBLESHOOTING PROCEDURE FOR DTC P0335** .

Pattern 2 Go to step 8 (diagnosis by parameter (CKP NOISE)).

8. On-board snapshot check (CKP NOISE):

NOTE: Use the on-board snapshot in case of intermittent failure, or use the snapshot in case of reproducible failure.

- 1. Check for a record of Engine Stall 2 in the on-board snapshot or the recorded snapshot with the HDS.
- 2. Select the CKP NOISE and ENGINE SPEED in the configuration list.

Check the recorded on-board snapshot parameters while the engine stall, then compare the CKP NOISE pattern from these charts, and determine the problem.

Pattern	Symptom (Diagnosis by parameter)	Additional remarks
Pattern 1	CKP NOISE counts up	When CKP NOISE counts up, the PCM is receiving electrical noise along with the CKP sensor signal.

GETtheMANUALS.org

	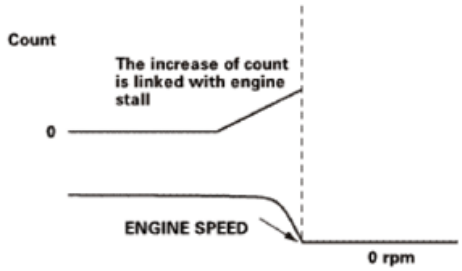 up	
Pattern 2	Normal when CKP NOISE does not count 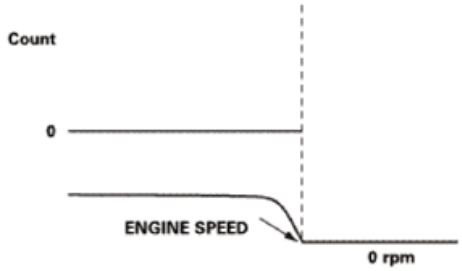 up	The CKP sensor signal is OK when the CKP NOISE count does not increase.

Which pattern is indicated?

Pattern 1 **GO TO THE TROUBLESHOOTING PROCEDURE FOR DTC P0339** . Check for after market accessories.

Pattern 2 The CKP sensor is OK. Go to step 9 (diagnosis by parameter (ST FUEL TRIM)).

9. On-board snapshot check (AF FB (ST FUEL TRIM)):

NOTE: Use the on-board snapshot in case of intermittent failure, or use the snapshot in case of reproducible failure.

- 1. Check for a record of Engine Stall 2 in the on-board snapshot or the recorded snapshot with the HDS.
- 2. Select the AF FB (ST FUEL TRIM) and ENGINE SPEED in the configuration list.

Check the recorded snapshot parameters of the Engine Stall, then compare the AF FB (ST FUEL TRIM) pattern from the charts, and determine the problem.

Pattern	Symptom (Diagnosis by parameter)	Additional remarks
Pattern 1	Engine stalls while AF FB (ST FUEL TRIM) value	If the AF FB (ST FUEL TRIM) value increases when the engine stalls, there may be a lean condition.

GETtheMANUALS.org

	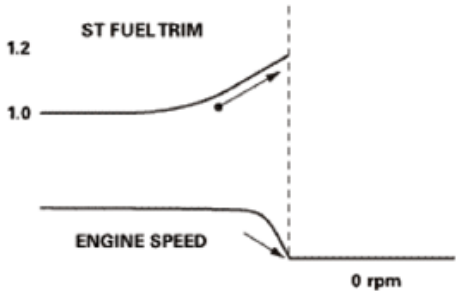 increases	
Pattern 2	Normal when the engine stalls when AF FB (ST FUEL TRIM) is around 1.0 (center 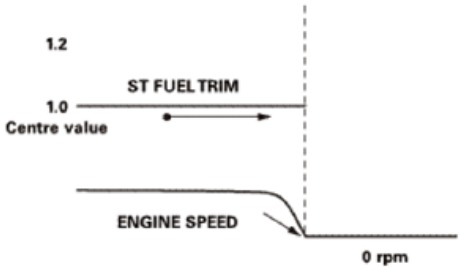 value)	The fuel trim is normal when the engine stalled with AF FB (ST FUEL TRIM) around 1.0 (center value).
Pattern 3	Engine stalls when AF FB (ST FUEL TRIM) is 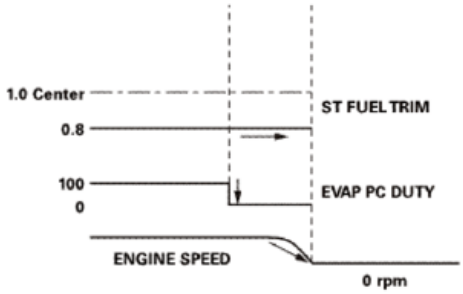 around 0.8	When the value of AF FB (ST FUEL TRIM) is around 0.8, the PCM commands the purge control solenoid (PCS) to close (closed when EVAP PC DUTY is 0 %). If the AF FB (ST FUEL TRIM) does not move toward 1.0, the PCS may be leaking.
Pattern 4	Normal when the engine stalls with AF FB (ST FUEL TRIM) is around 1.0 (center 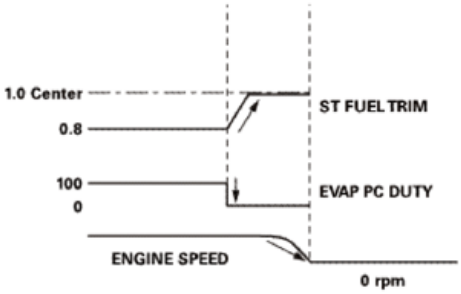 value)	When the value of AF FB (ST FUEL TRIM) is around 0.8, the PCM commands the purge control solenoid (PCS) to close (closed when EVAP PC DUTY is 0 %). If the AF FB moves toward 1.0, the PCS is no leaking.

Which pattern is indicated?

Pattern 1 Diagnostic procedure:

1. Check fuel pump operation sound.

GETtheMANUALS.org

2. **GO TO THE FUEL PRESSURE TEST** .
3. GO TO THE FUEL PUMP CIRCUIT TROUBLESHOOTING .
4. TEST THE PGM-FI MAIN RELAY .
5. **TEST PGM-FI MAIN RELAY 2** .
6. Check for the following fuses:
   - No. A23 (15 A) fuse (in the under-hood fuse/relay box)
   - No. B4 (15 A) fuse (in the under-dash fuse/relay box)

   Pattern 3 Check the PCS for leaks.

   Pattern 2 and 4 Go to step 10 (diagnosis by parameter (MISFIRE)).

10. On-board snapshot check (MISFIRE):

NOTE: **Use the on-board snapshot in case of intermittent failure, or use the snapshot in case of reproducible failure.**

- 1. Check for a record of Engine Stall 2 in the on-board snapshot or the recorded snapshot with the HDS.
- 2. Select the MISFIRE and ENGINE SPEED in the configuration list.

Check the recorded snapshot parameters of the Engine Stall, then compare the MISFIRE pattern from the charts, and determine the problem.

Pattern	Symptom (Diagnosis by parameter)	Additional remarks
Pattern 1	Engine stalls after MISFIRE counts 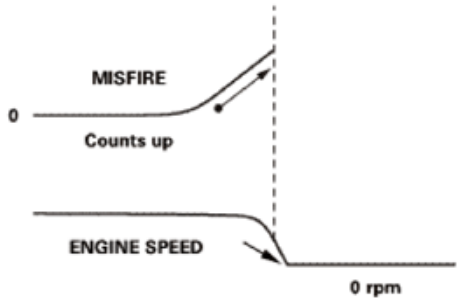 up	When engine stalls after MISFIRE count increases, the engine stall may be caused by misfire.
Pattern 2	Normal when engine stalls with MISFIRE count	If the MISFIRE count remains constant when the engine stalls, the stall was not caused by misfire.

GETtheMANUALS.org

	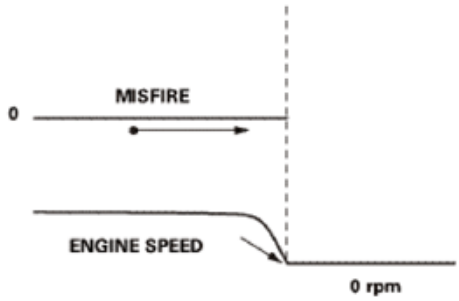 remaining constant	

Which pattern is indicated?

Pattern 1 Diagnostic procedure:

1. When misfire counts up without storing misfire DTC P0300-P0304, **GO TO THE DTC P0300-P0304 TROUBLESHOOTING** .
2. When the misfire count reaches prescribed value, DTC P0300-P0304 is stored. Go to the **DTC P0300: Random Misfire Detected; DTC P0301: No. 1 Cylinder Misfire Detected; DTC P0302: No. 2 Cylinder Misfire Detected; DTC P0303: No. 3 Cylinder Misfire Detected; DTC P0304: No. 4 Cylinder Misfire Detected** .

   Pattern 2 Go to step 11 (diagnosis by parameter (A/C CLUTCH)).

11. On-board snapshot check (A/C CLUTCH):

NOTE: **Use the on-board snapshot in case of intermittent failure, or use the snapshot in case of reproducible failure.**

- 1. Check for a record of Engine Stall 2 in the on-board snapshot or the recorded snapshot with the HDS.
- 2. Select the A/C CLUTCH and ENGINE SPEED in the configuration list.

Check the recorded snapshot parameters of the Engine Stall, then compare the A/C CLUTCH pattern from the charts, and determine the problem.

Pattern	Symptom (Diagnosis by parameter)	Additional remarks
Pattern 1	Engine stalls when A/C is CLUTCH 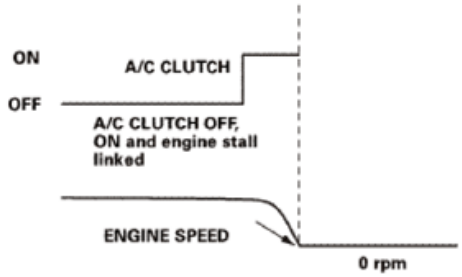 ON.	If the engine stall occurs just after the A/C compressor clutch turns on, the stall may be caused by excessive A/C compressor load.

GETtheMANUALS.org

Pattern 2	Engine stalls during A/C CLUTCH is 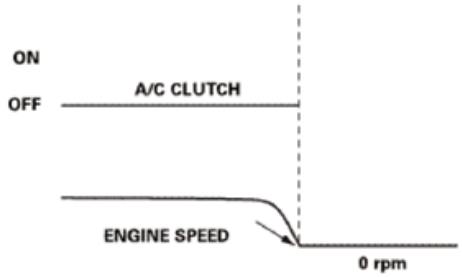 OFF.	If the engine stall occurs just when the A/C compressor clutch is off, the A/C system is not the cause of the engine stall.

Which pattern is indicated?

Pattern 1 Diagnostic procedure:

1. Check for excessive charging of A/C refrigerant.
2. Check for charging of other gas.
3. Check for drag of the A/C compressor.

Pattern 2 Go to step 12 (diagnosis by parameter (PNP SWITCH)).

12. On-board snapshot check (PNP SWITCH):

NOTE: Use the on-board snapshot in case of intermittent failure, or use the snapshot in case of reproducible failure.

- 1. Check for a record of Engine Stall 2 in the on-board snapshot or the recorded snapshot with the HDS.
- 2. Select the PNP SWITCH and the ENGINE SPEED in the configuration list.

Check the recorded snapshot parameters of the Engine Stall, then compare the PNP SWITCH pattern from the charts, and determine the problem.

Pattern	Symptom (Diagnosis by parameter)	Additional remarks
Pattern 1	A/T is in-gear 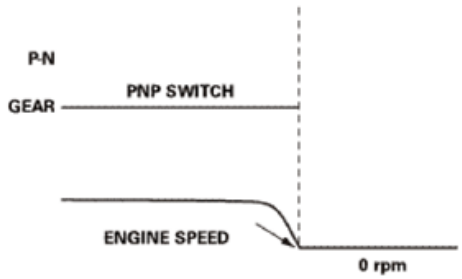 condition	In-gear condition when PNP SWITCH is "GEAR". Engine stall may be caused by A/T. (Engine also is a factor)
	A/T is N or P condition	

GETtheMANUALS.org

Pattern 2	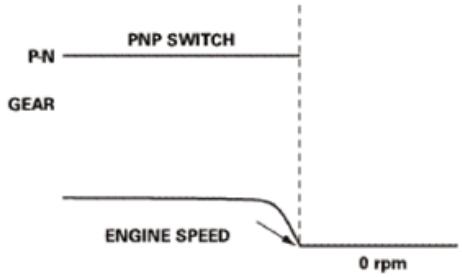 condition	N or P condition when PNP SWITCH is "P-N". The engine stall is not caused by A/T. A/T is not faulty.

Which pattern is indicated?

Pattern 1 Go to step 13 (diagnosis by parameter (SLIP RATIO OF TORQ OR START CLUTCH)).

Pattern 2 Go to step 20 (fuse and relay check).

13. On-board snapshot check (SLIP RATIO OF TORQ OR START CLUTCH):

NOTE: Use the on-board snapshot in case of intermittent failure, or use the snapshot in case of reproducible failure.

- 1. Check for a record of Engine Stall 2 in the on-board snapshot or the recorded snapshot with the HDS.
- 2. Select the SLIP RATIO OF TORQ OR START CLUTCH, ENGINE SPEED, VEHICLE SPEED in the configuration list.

Check the recorded on-board snapshot parameters while the engine stall, then chose the SLIP RATIO OF TORQ OR START CLUTCH pattern from these charts, and determine the problem.

Pattern	Symptom (diagnosis by parameter)	Additional remarks
Pattern 1	Engine stall caused by lock 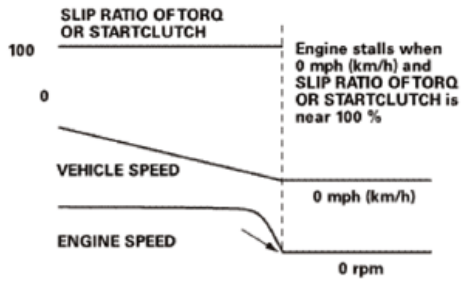 up	When engine stalls, SLIP RATIO OF TORQ OR START CLUTCH is near 100 % from deceleration to stopping, the engine stall is caused by lock up.
Pattern 2	Lock up normal	Lock up is normal when engine stalls with SLIP RATIO OF TORQ OR START CLUTCH near "0" in the middle of deceleration.

GETtheMANUALS.org

	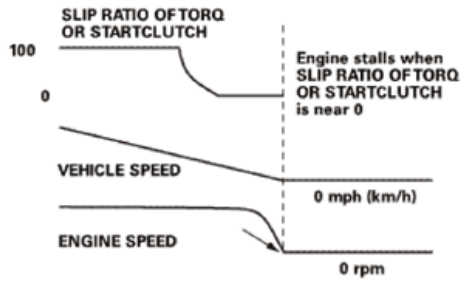 normal	

Which pattern is indicated?

Pattern 1 Go to the **Automatic Transmission Symptom Troubleshooting Index** for torque converter clutch does not disengage.

Pattern 2 Go to step 14 (fuel system troubleshooting).

14. Fuel pressure check:
    - 1. Do **THE FUEL PRESSURE TEST** .

    Is the fuel pressure OK?

    YES : Go to step 15 (ignition system troubleshooting).

    NO : Check for following pars:

    - FUEL PUMP CIRCUIT
    - FUEL PRESSURE REGULATOR
    - **Fuel filter** See FUEL TANK UNIT DISASSEMBLY AND REASSEMBLY or FUEL TANK UNIT REMOVAL AND INSTALLATION
15. Spark plug visual check:
    - 1. Turn the ignition switch to LOCK (0).
    - 2. **Remove the spark plugs** See FUEL TANK UNIT DISASSEMBLY AND REASSEMBLY or FUEL TANK UNIT REMOVAL AND INSTALLATION .
    - 3. Check conditions of spark plug electrode.

NOTE: **Make sure the spark plugs are the correct part number for the vehicle. If the plugs are aftermarket or they are not the correct part number, replace all of the plugs and retest.**

Is the electrode damage or wet?

YES (wet) : Check the following conditions. If they are OK, go to step 16.

- In very cold conditions, multiple very short trips can cause the spark plug to foul. If this is the case,

GETtheMANUALS.org

drive the vehicle a longer distance and recheck.

- Incorrect or poor quality fuel can cause a wet spark plug. Replace the fuel and recheck.

YES (damaged) : REPLACE THE DAMAGED SPARK PLUGS , determine the cause of the spark plug damage.

NO : Go to step 16.

16. Determine possible failure area (ignition system, others):
    - 1. Select the ALL INJECTORS in the INSPECTION MENU with the HDS, and disable all the injectors.
    - 2. Turn the ignition switch to LOCK (0).
    - 3. Fit spark plug to the ignition coil and ground it to the engine.
    - 4. Crank the engine and watch for spark at the spark plugs.

    Do the spark plugs spark?

    YES : The ignition system is OK. Select PCM reset in the PGM-FI INSPECTION MENU to cancel ALL INJECTORS with the HDS, then go to step 18 (engine compression troubleshooting).

    NO : Go to step 17.

17. Ignition coil power circuit check:
    - 1. Disconnect the following connector(s).

      Ignition coil(s) 3P connector from the problem cylinder

    - 2. Remove the ignition coil relay (A) from the under-hood fuse/relay box.

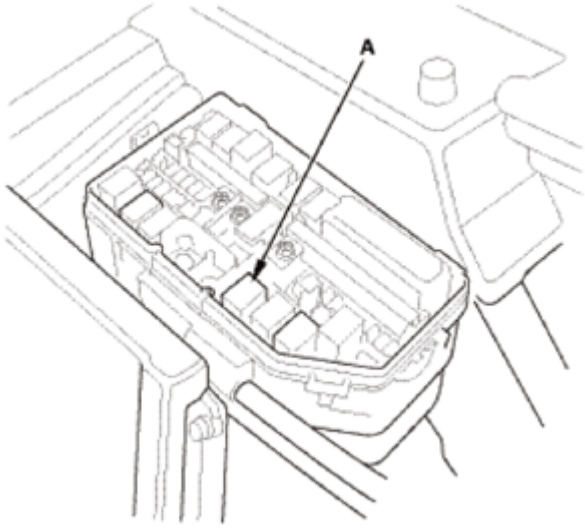

Fig. 22: Identifying Ignition Coil Relay

GETtheMANUALS.org

Courtesy of AMERICAN HONDA MOTOR CO., INC.

- 3. Check for continuity between test points 1 and 2.

  Test condition IG LOCK (0)

  Ignition coil 3P connector: disconnected

  Ignition coil relay: disconnected

  Test circuit IG1(COIL), IG COIL RLY OUT

  Test point 1 Ignition coil 3P connector No. 1 (RED)

  Test point 2 Ignition coil relay 4P socket No. 2 (Under-hood fuse/relay box)

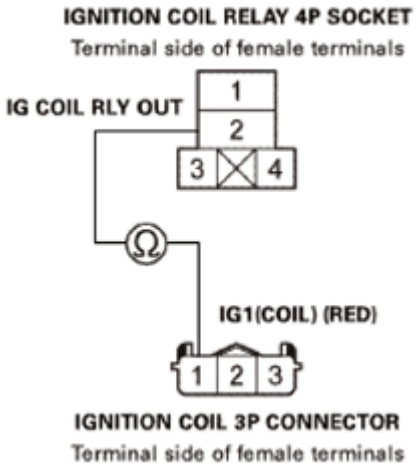

Fig. 23: Checking For Continuity Between Test Points 1 And 2
Courtesy of AMERICAN HONDA MOTOR CO., INC.

Is there continuity?

YES : The ignition coil power circuit is OK. REPLACE THE IGNITION COIL(S) .

NO : Repair an open in the IG1(COIL)/IG COIL RLY OUT wire between the ignition coil relay and the ignition coil.

18. Engine compression check:
    - 1. DO AN ENGINE COMPRESSION INSPECTION .

      Is the engine compression OK?

      YES : Go to step 19 (EVAP canister purge valve check).

GETtheMANUALS.org

NO : Check for wear or damage to these parts:

- Incorrect valve clearance
- Confirmation of cam timing
- Oil pressure relief valve
- Damage or worn cam lobes
- Damage or worn valve and seats
- Damage cylinder head gasket
- Damage or worn piston rings
- Damage or worn piston and cylinder bore

19. EVAP canister purge valve check:
    - 1. Turn the ignition switch to LOCK (0).
    - 2. Disconnect the following connector.

      EVAP canister purge valve 2P connector

    - 3. Disconnect the vacuum hose (A) from the EVAP canister purge valve (B) in the engine compartment, and connect a vacuum pump/gauge, 0-30 inHg, to the EVAP canister purge valve.

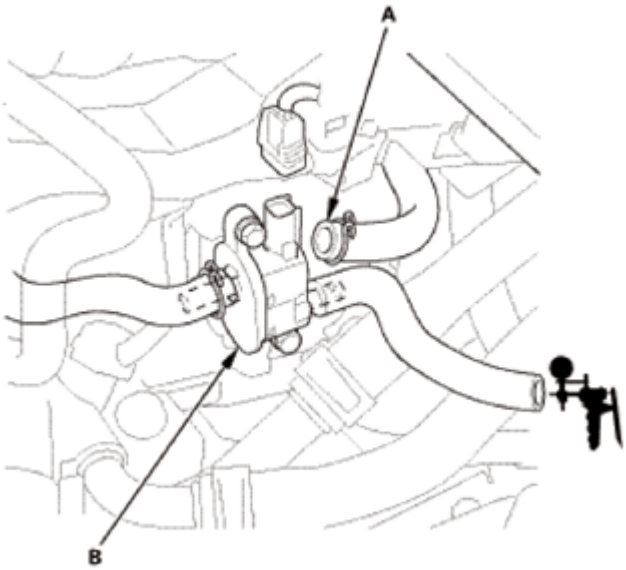

Fig. 24: Identifying Vacuum Hose And EVAP Canister Purge Valve
Courtesy of AMERICAN HONDA MOTOR CO., INC.

    - 4. Start the engine.

      Vacuum occurs in the vacuum pump?

      YES : When the climate is warm, fuel vapor from the tank enters the canister. If the purge control solenoid is leaking, this excessively rich mixture enters the intake manifold causing the engine to

GETtheMANUALS.org

stall. If needed, REPLACE THE EVAP CANISTER PURGE VALVE .

NO (Reproducible failure) : Go to step 20 (fuse check).

NO (Intermittent failure) : Go to step 21 (relay check).

20. Fuse check:
    - 1. Check the following fuses.

      Fuse No. A17 (15 A) to the ignition coil relay

      Fuse No. A18 (15 A) to the PGM-FI subrelay

      Fuse No. A23 (15 A) to PGM-FI main relay 1

      Location Under-hood fuse/relay box

      Fuse No. B4 (15 A) to FGM-FI main relay 2

      Location Under-dash fuse/relay box

      Are the fuses OK?

      YES : The fuses are OK. Go to step 21.

      NO : Replace the blown fuse(s).

21. Relay check:
    - 1. **TEST THE FOLLOWING RELAYS** :

      NOTE: In situations where the failure is difficult to reproduce, the following relays may have intermittent failure.

      - PGM-FI main relay 2
      - Ignition coil relay
      - PGM-FI main relay 1
      - PGM-FI subrelay

      Are the relays OK?

      YES : **GO TO THE DIAGNOSTIC INTERVIEW** .

      NO : Replace any damaged relays.

GETtheMANUALS.org

Fuel and Emissions Systems Symptom Troubleshooting - Engine will not start, engine starts but stalls immediately, or engine is hard to start

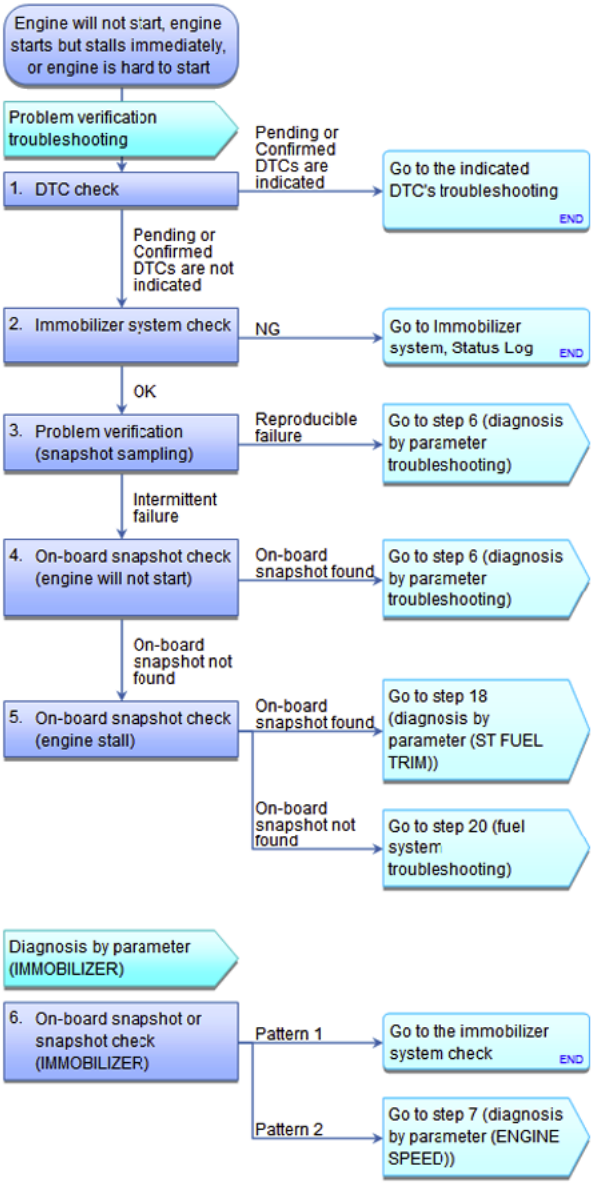

Fig. 25: Fuel And Emissions Systems Symptom Troubleshooting Flow Chart - Engine Related Problems (1 Of 6)
Courtesy of AMERICAN HONDA MOTOR CO., INC.

GETtheMANUALS.org

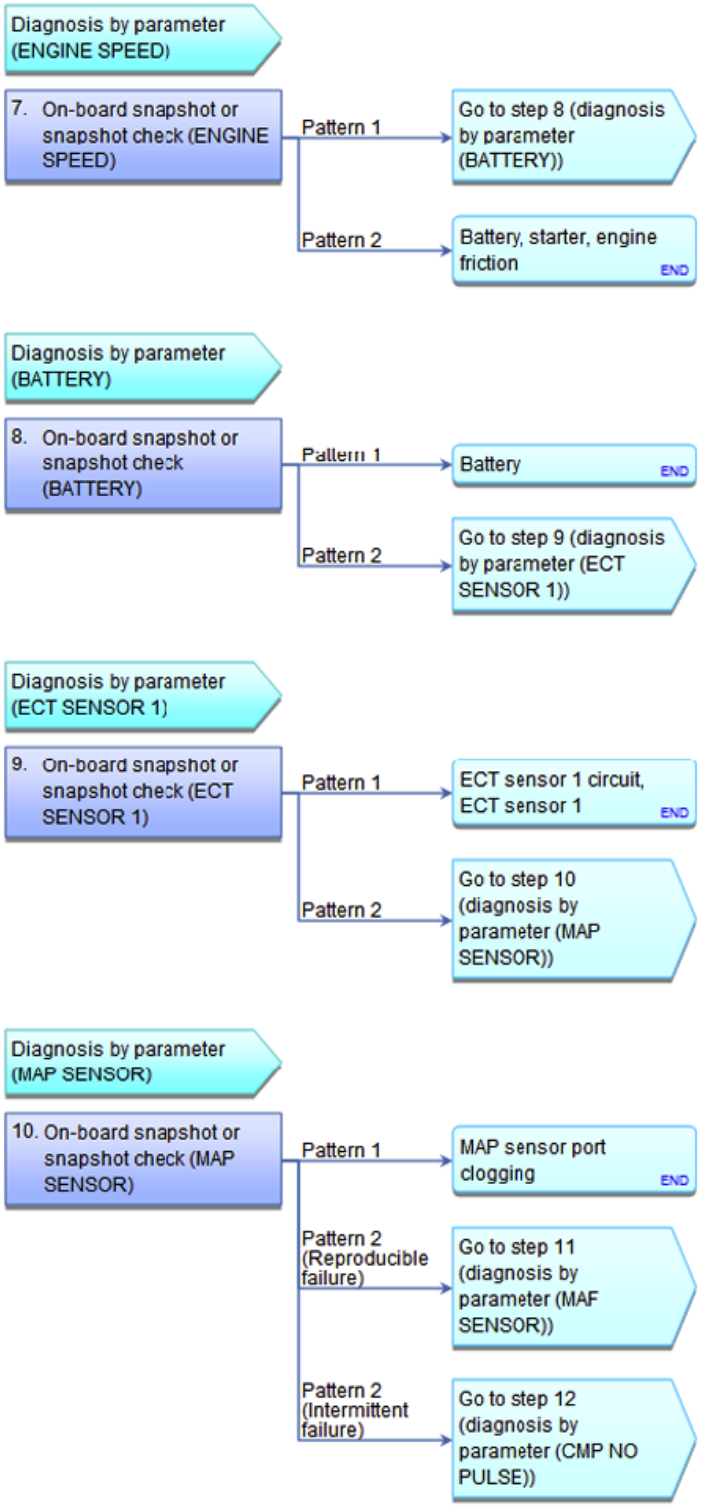

Fig. 26: Fuel And Emissions Systems Symptom Troubleshooting Flow Chart - Engine Related Problems (2 Of 6)
Courtesy of AMERICAN HONDA MOTOR CO., INC.

GETtheMANUALS.org

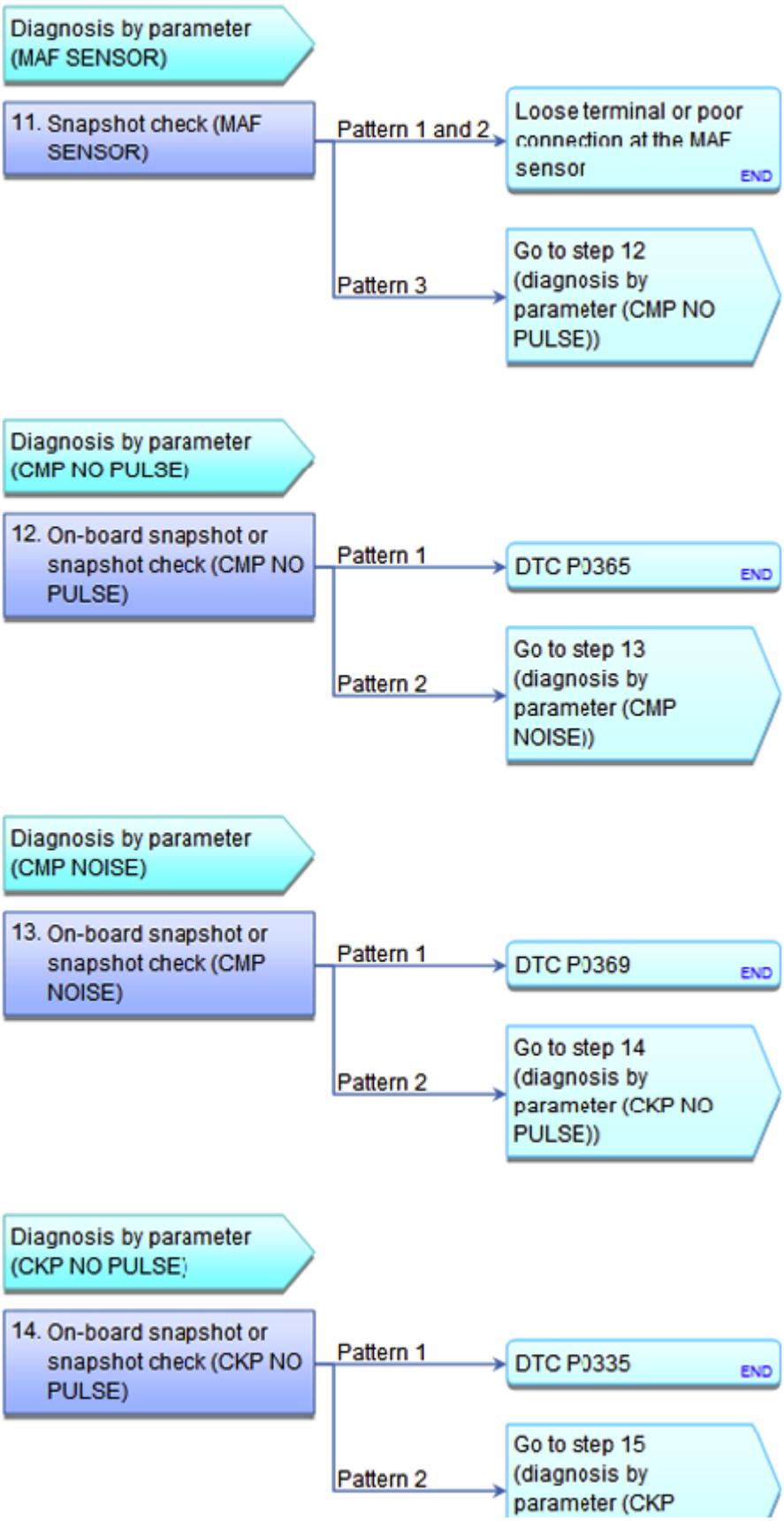

GETtheMANUALS.org

Fig. 27: Fuel And Emissions Systems Symptom Troubleshooting Flow Chart - Engine Related Problems (3 Of 6)
Courtesy of AMERICAN HONDA MOTOR CO., INC.

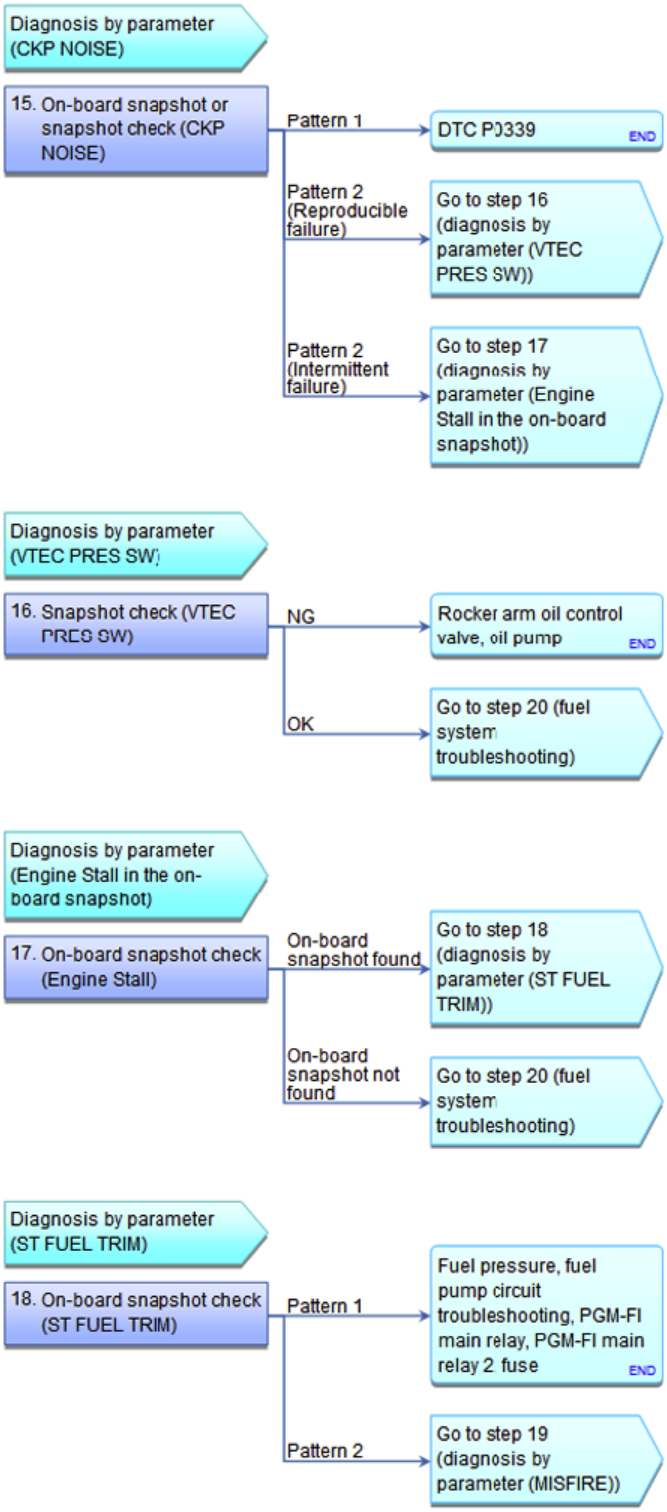

Fig. 28: Fuel And Emissions Systems Symptom Troubleshooting Flow Chart - Engine Related Problems

GETtheMANUALS.org

(4 Of 6)
Courtesy of AMERICAN HONDA MOTOR CO., INC.

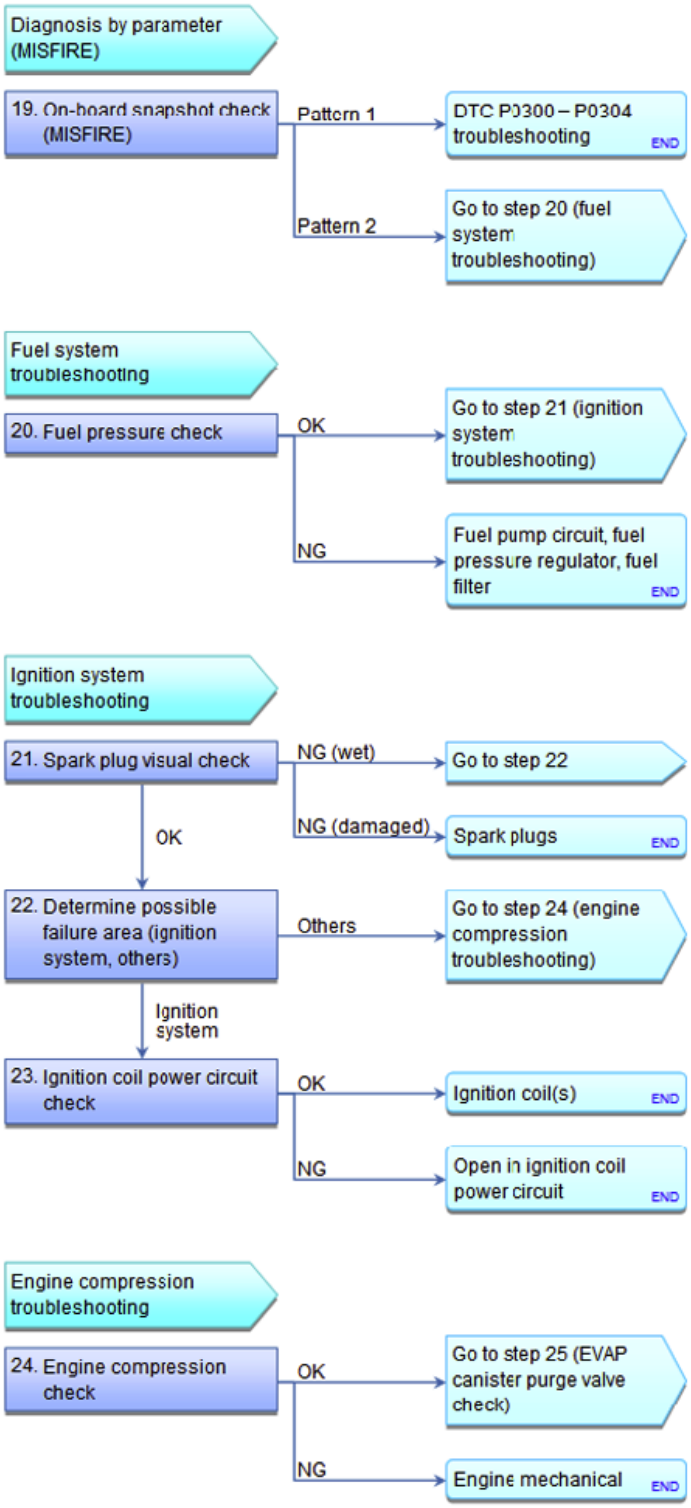

Fig. 29: Fuel And Emissions Systems Symptom Troubleshooting Flow Chart - Engine Related Problems (5 Of 6)

GETtheMANUALS.org

Courtesy of AMERICAN HONDA MOTOR CO., INC.

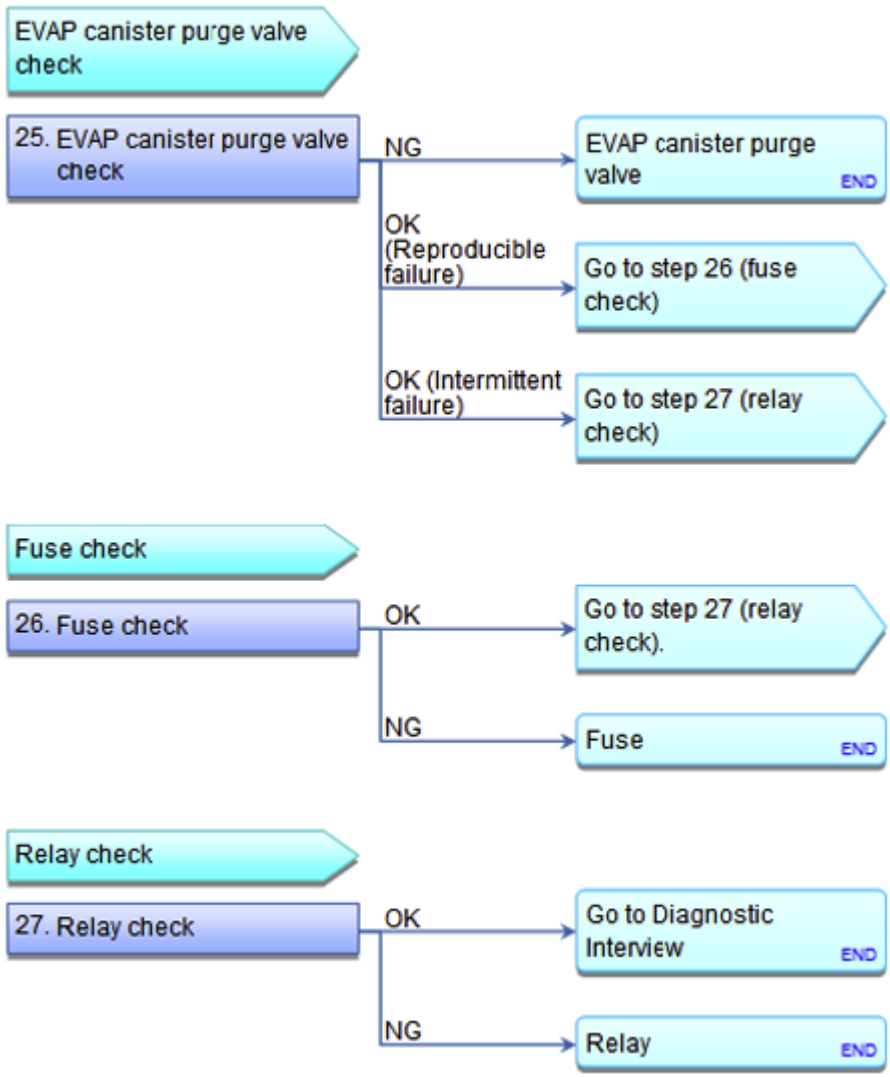

Fig. 30: Fuel And Emissions Systems Symptom Troubleshooting Flow Chart - Engine Related Problems (6 Of 6)
Courtesy of AMERICAN HONDA MOTOR CO., INC.

ENGINE WILL NOT START, ENGINE STARTS BUT STALLS IMMEDIATELY, OR ENGINE IS HARD TO START

Special Tools Required

Vacuum Pump/Gauge, 0-30 inHg Snap-on YA4000A or equivalent, commercially available

NOTE: Before beginning this troubleshooting:

- Make sure the battery is fully charged.

GETtheMANUALS.org

- Make sure the fuel tank is at least 1/4 full.
- Make sure the engine oil level is correct.

1. DTC check:
   - 1. Turn the ignition switch to ON (II).
   - 2. Check for Pending or Confirmed DTCs with the HDS.

DTC Description	Confirmed DTC	Pending DTC	Freeze Frame

Are any Pending or Confirmed DTCs indicated?

YES : Go to the indicated DTC's troubleshooting.

NO : Go to step 2.

NOTE: **If the HDS does not communicate with the vehicle, GO TO THE PCM POWER AND GROUND CIRCUIT TROUBLESHOOTING.**

2. Immobilizer system check:
   - 1. Select HDS immobilizer set-up, select immobilizer information, then select status log.

NOTE: **When the status log count is found, it means the immobilizer system has prohibited the engine from starting in the past.**

The number of status log count shows the frequency that the system has prohibited the engine from starting in the past.

If immobilizer system has not status log count, the system is normal.

Was the status log count found?

YES : **GO TO IMMOBILIZER SYSTEM, STATUS LOG** .

NO : Go to step 3.

3. Problem verification (snapshot sampling):
   - 1. Set the HDS to record a HIGH-SPEED SNAPSHOT of following parameters for 30 seconds.
     - ENGINE SPEED
     - MAP SENSOR
     - MAF SENSOR
     - ECT SENSOR 1
     - BATTERY

GETtheMANUALS.org

- CKP NOISE
- CKP NO PULSE
- CMP NOISE
- CMP NO PULSE
- IMMOBILIZER

  - 2. Begin the snapshot, then try to start the engine.

    Was the engine hard to start?

    YES : Go to step 6 (diagnosis by parameter troubleshooting).

    NO : Go to step 4.

4. On-board snapshot check (engine will not start):
   - 1. Check for a record of Hard to Start Engine in the on-board snapshot with the HDS.

   Hard to Start Engine in the on-board snapshot recorded?

   YES : Go to step 6 (diagnosis by parameter troubleshooting).

   NO : Go to step 5.

5. On-board snapshot check (engine stall):
   - 1. Check for a record of Engine Stall 2 in the on-board snapshot with the HDS.

   NOTE: When Hard to Start on-board snapshot data was not recorded, use the Engine Stall on-board snapshot data and check the cause of failure.

   Engine Stall as on-board snapshot recorded?

   YES : Go to step 18 (diagnosis by parameter (ST FUEL TRIM)).

   NO : Go to step 20 (fuel system troubleshooting).

   NOTE: In the following conditions, the on-board snapshot will not be recorded when the engine stalls.

   - Ignition switch turned to LOCK (0) shortly after starting the engine.
   - Vehicle is out of the Hard to start condition to record an on-board snapshot (see the gray zone of following graph).
   - Low or dead battery
   - Disconnecting the battery

GETtheMANUALS.org

ECT SENSOR 1 (°F (°C))	-40 (-40)	-22 (-30)	-13 (-25)	-4 (-20)	5 (-15)	14 (-10)	194 (90)
Start time (sec)	20	10	5	3.5	2.5	1.5	1.5

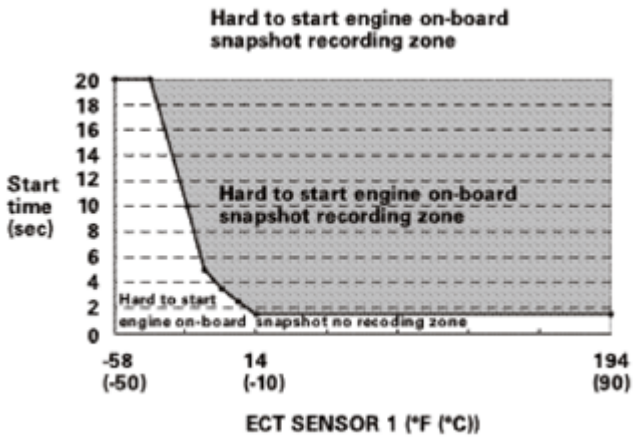

Fig. 31: Snapshot Of Hard To Start Engine On-Board
Courtesy of AMERICAN HONDA MOTOR CO., INC.

6. On-board snapshot or snapshot check (IMMOBILIZER):

NOTE: **Use the on-board snapshot in case of intermittent failure, or use the snapshot in case of reproducible failure.**

- 1. Select the Hard to Start Engine in the on-board snapshot or snapshot with the HDS.
- 2. Select the IMMOBILIZER and ENGINE SPEED in the configuration list.

Compare the snapshot parameters while the engine is cranking, from the chart, to determine the problem.

Pattern	Symptom (Diagnosis by parameter)	Additional remarks
Pattern 1	IMMOBILIZER 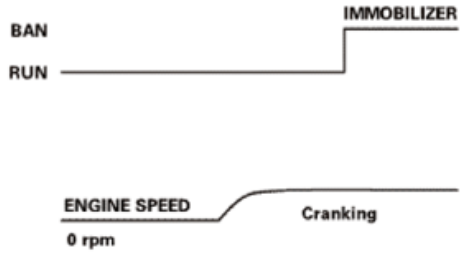 inhibit IMMOBILIZER inhibit	When IMMOBILIZER becomes "BAN" during cranking or after start, the fuel pump is stopped by IMMOBILIZER inhibit. • No failure in the engine

GETtheMANUALS.org

	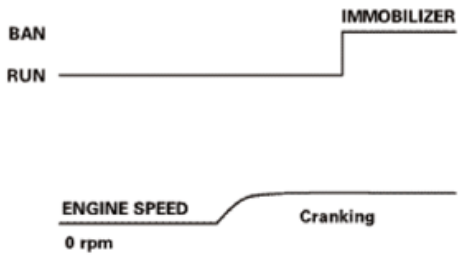 inhibit	
Pattern 2	IMMOBILIZER permit 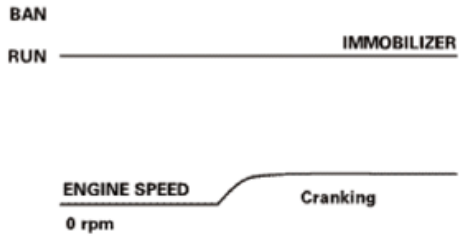 Normal IMMOBILIZER permit 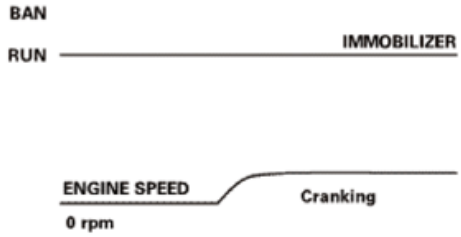 Normal	IMMOBILIZER is normal when IMMOBILIZER is "permit" when cranking or after start.

Which pattern is indicated?

Pattern 1 The immobilizer system has failure. **GO TO THE IMMOBILIZER SYSTEM CHECK** .

Pattern 2 The immobilizer system is OK. Go to step 7 (diagnosis by parameter (ENGINE SPEED)).

7. On-board snapshot or snapshot check (ENGINE SPEED):

NOTE: **Use the on-board snapshot in case of intermittent failure, or use the snapshot in case of reproducible failure.**

- 1. Select the Hard to Start Engine in the on-board snapshot or snapshot with the HDS.
- 2. Select the ENGINE SPEED pattern chart in the configuration list.

Check the recorded snapshot parameters while the engine is cranking, then compare the pattern from the chart, and determine the problem.

Pattern	Symptom (Diagnosis by parameter)	Additional remarks
	ENGINE SPEED when cranking is normal	

GETtheMANUALS.org

Pattern 1	normal 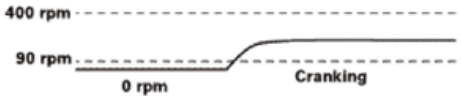	
Pattern 2	ENGINE SPEED when cranking is low 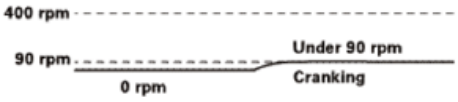	When ENGINE SPEED during cranking is low, weak battery or increased engine friction can be considered.

Which pattern is indicated?

Pattern 1 The engine cranking speed is OK. Go to step 8 (diagnosis by parameter (BATTERY)).

Pattern 2 Diagnostic procedure:

1. **TEST THE BATTERY** .
2. Check the battery cables and connections.
3. Check the starter; **KA KC models, KX model** See **STARTER OVERHAUL** or **STARTER OVERHAUL** or **STARTER REMOVAL, INSTALLATION, AND PERFORMANCE TEST** .
4. Check the engine friction.

8. On-board snapshot or snapshot check (BATTERY):

NOTE: Use the on-board snapshot in case of intermittent failure, or use the snapshot in case of reproducible failure.

- 1. Select the Hard to Start Engine in the on-board snapshot or snapshot with the HDS.
- 2. Select the BATTERY and ENGINE SPEED in the configuration list.

Check the recorded snapshot parameters while the engine is cranking, then compare the BATTERY pattern from the chart, and determine the problem.

Pattern	Symptom (Diagnosis by parameter)	Additional remarks
Pattern 1	BATTERY voltage low when cranking 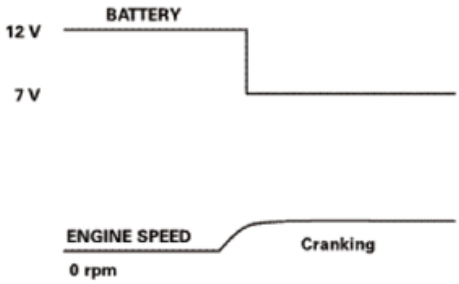	• When BATTERY voltage during cranking is too low, there is a possibility that PCM and/or engine is unable to start. • The PCM and other system units require 7.0 V or more to start.
	BATTERY voltage normal when cranking	

GETtheMANUALS.org

Pattern 2	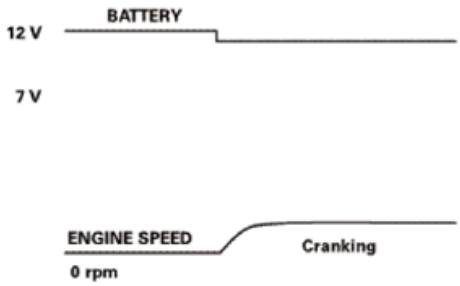 cranking	To start the engine, 7.0 V or more is needed.

Which pattern is indicated?

Pattern 1 Diagnostic procedure:

1. **<u>TEST THE BATTERY</u>** .
2. Check the battery cables and connections.

Pattern 2 The battery is OK. Go to step 9 (diagnosis by parameter (ECT SENSOR 1)).

9. On-board snapshot or snapshot check (ECT SENSOR 1):

NOTE: Use the on-board snapshot in case of intermittent failure, or use the snapshot in case of reproducible failure.

- 1. Select the Hard to Start Engine in the on-board snapshot or snapshot with the HDS.
- 2. Select ECT SENSOR 1 and ENGINE SPEED in the configuration list.

Check the recorded snapshot parameters while the engine is cranking, then compare the ECT SENSOR 1 pattern from the chart, and determine the problem.

Pattern	Symptom (Diagnosis by parameter)	Additional remarks
Pattern 1	ECT SENSOR 1 high when 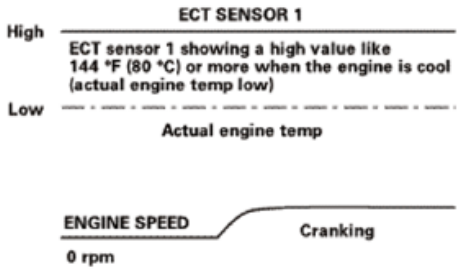 cranking	When ECT SENSOR 1 indicates about 144 °F (80 °C) or more when the engine is cold (engine temp low), ECT sensor 1 may be stuck high. ECT compensation is not applied after the engine is warmed up, it is not necessary to check the ECT sensor (not a faulty part)
Pattern 2	ECT SENSOR 1 normal when cranking	If actual engine temp is nearly same as the temp detected by ECT sensor 1

GETtheMANUALS.org

	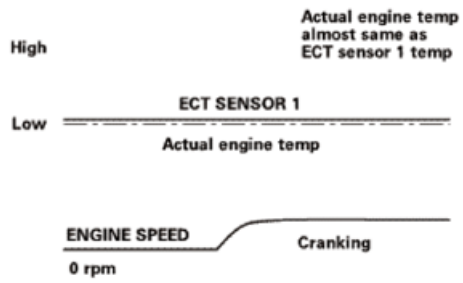 cranking	when cranking, ECT sensor 1 is normal.

Which pattern is indicated?

Pattern 1 Check for a short in ECT sensor 1 circuit and failure in ECT sensor 1.

Pattern 2 ECT sensor 1 is OK. Go to step 10 (diagnosis by parameter (MAP SENSOR)).

10. On-board snapshot or snapshot check (MAP SENSOR):

NOTE: Use the on-board snapshot in case of intermittent failure, or use the snapshot in case of reproducible failure.

- 1. Select the Hard to Start Engine in the on-board snapshot or snapshot with the HDS.
- 2. Select the MAP sensor and ENGINE SPEED in the configuration list.

Check the recorded snapshot parameters while the engine is cranking, then compare the MAP SENSOR pattern from the chart, and determine the problem.

Pattern	Symptom (Diagnosis by parameter)	Additional remarks
Pattern 1	MAP Sensor detects no change of pressure when 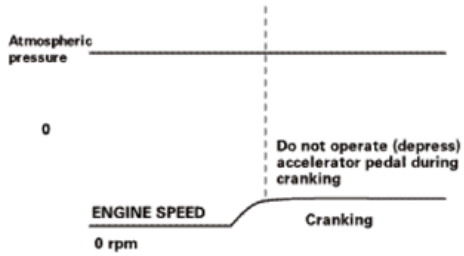 cranking	When MAP SENSOR detects no change of pressure when cranking, the pressure measurement port may be clogged. The PCM decides basic duration time of fuel injection from engine speed and MAP sensor signal when cranking.
Pattern 2	Normal when MAP sensor detects vacuum when 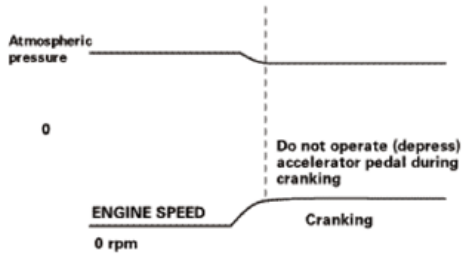 cranking	When MAP Sensor detects vacuum while cranking, the condition is normal, without any clogging.

GETtheMANUALS.org

Which pattern is indicated?

Pattern 1 Check the port of MAP sensor for clogging. If port is OK, **SUBSTITUTE A KNOWN-GOOD MAP SENSOR** . Also check for clogging in the exhaust system.

Pattern 2 (Reproducible failure) The MAP sensor is OK. Go to step 11 (diagnosis by parameter (MAF SENSOR)).

Pattern 2 (Intermittent failure) The MAP sensor is OK. Go to step 12 (diagnosis by parameter (CMP NO PULSE)).

11. Snapshot check (MAF SENSOR):
    - 1. Select the Hard to Start Engine in the snapshot with the HDS.
    - 2. Select the MAF sensor and ENGINE SPEED in the configuration list.

    Check the recorded snapshot parameters while the engine is cranking, then compare the MAF SENSOR pattern from the chart, and determine the problem.

Pattern	Symptom (Diagnosis by parameter)	Additional remarks
Pattern 1	Poor connection of MAF 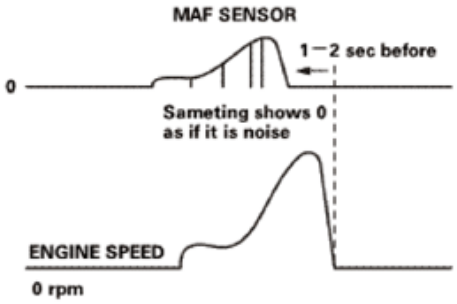 sensor	Complete combustion stall: When MAF SENSOR indicates "0" 1 -2 sec before ENGINE SPEED becomes 0 rpm, or when "0" is shown like noise, poor connection of MAF SENSOR connector may exist.
Pattern 2	MAF sensor output 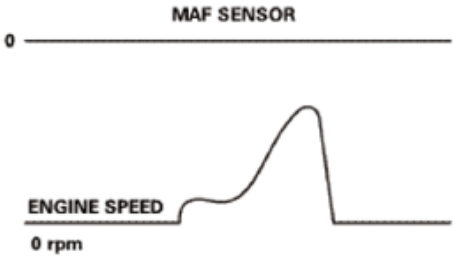 incorrect	When MAF SENSOR shows "0" when cranking or after start, the MAF sensor's measurement point or a poor connection may exist.
Pattern 3	MAF sensor: Normal	When MAF SENSOR output compares with ENGINE SPEED when cranking or after start, MAF SENSOR is normal.

GETtheMANUALS.org

	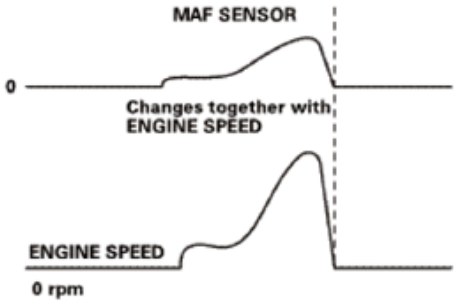 Normal	

Which pattern is indicated?

Pattern 1 and 2 Check for loose terminal or poor connection at the MAF sensor. If the terminals and connections are OK, **SUBSTITUTE A KNOWN-GOOD MAF SENSOR** .

Pattern 3 The MAF sensor is OK. Go to step 12 (diagnosis by parameter (CMP NO PULSE)).

12. On-board snapshot or snapshot check (CMP NO PULSE):

NOTE: Use the on-board snapshot in case of intermittent failure, or use the snapshot in case of reproducible failure.

- 1. Select the Hard to Start Engine in the on-board snapshot or snapshot with the HDS.
- 2. Select the CMP NO PULSE and ENGINE SPEED in the configuration list.

Check the recorded snapshot parameters while the engine is cranking, then compare the CMP NO PULSE pattern from the chart, and determine the problem.

Pattern	Symptom (Diagnosis by parameter)	Additional remarks
Pattern 1	CMP NO PULSE count increases when 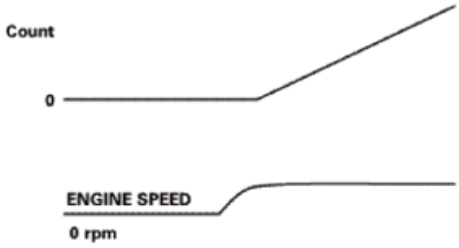 cranking	When CMP NO PULSE count increases when cranking, no CMP pulse is received. If the CMP pulse is not received, the PCM cannot detect the cylinder to be ignited and engine is unable to start.
Pattern 2	The CMP NO PULSE indicates the pulse is 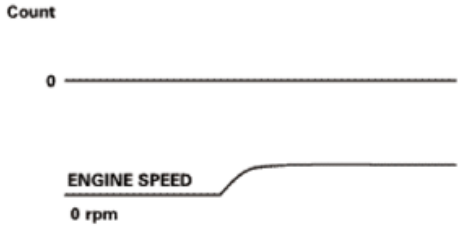 normal	It is normal, when CMP NO PULSE count does not increase and pulse is received when cranking.

GETtheMANUALS.org

Which pattern is indicated?

Pattern 1 **DO THE TROUBLESHOOTING PROCEDURE FOR DTC P0365** . If the CMP NO PULSE count reaches the threshold, DTC P0365 will set. Check for poor connections and loose terminals at the CMP sensor.

Pattern 2 Go to step 13 (diagnosis by parameter (CMP NOISE)).

13. On-board snapshot or snapshot check (CMP NOISE):

NOTE: Use the on-board snapshot in case of intermittent failure, or use the snapshot in case of reproducible failure.

- 1. Select the Hard to Start Engine in the on-board snapshot or snapshot with the HDS.
- 2. Select the CMP NOISE and ENGINE SPEED in the configuration list.

Check the recorded snapshot parameters while the engine is cranking, then compare the CMP NOISE pattern from the chart, and determine the problem.

Pattern	Symptom (Diagnosis by parameter)	Additional remarks
Pattern 1	CMP NOISE count increases when 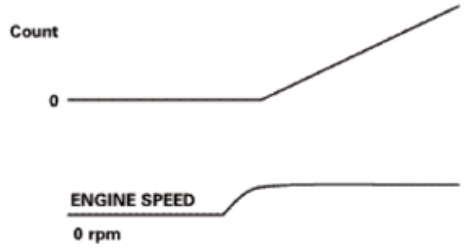 cranking	When CMP NOISE count increases when cranking, there is noise in the CMP signal. When CMP signal has noise, the PCM cannot detect the cylinder to be ignited and engine is unable to start.
Pattern 2	The CMP NOISE indicates the pulse is 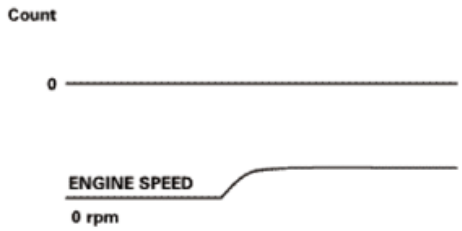 normal	It is normal, when CMP NOISE count does not increase when cranking.

Which pattern is indicated?

Pattern 1 **DO THE TROUBLESHOOTING PROCEDURE FOR DTC P0369** . If the CMP NOISE count reaches the threshold, DTC P0369 will set. Check for poor connections and loose terminals at the CMP sensor.

Pattern 2 The CMP sensor is OK. Go to step 14 (diagnosis by parameter (CKP NO PULSE)).

GETtheMANUALS.org

14. On-board snapshot or snapshot check (CKP NO PULSE):

NOTE: **Use the on-board snapshot in case of intermittent failure, or use the snapshot in case of reproducible failure.**

- 1. Select the Hard to Start Engine in the on-board snapshot or snapshot with the HDS.
- 2. Select the CKP NO PULSE and ENGINE SPEED in the configuration list.

Check the recorded snapshot parameters while the engine is cranking, then compare the CKP NO PULSE pattern from the chart, and determine the problem.

Pattern	Symptom (Diagnosis by parameter)	Additional remarks
Pattern 1	CKP NO PULSE counts up when 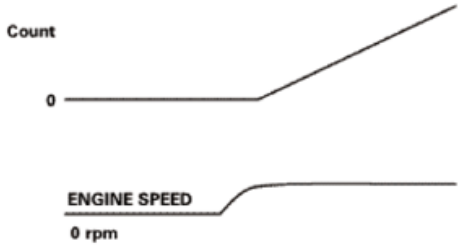 cranking	When the CKP NO PULSE count increases when cranking, the PCM cannot receive correct CKP pulse.
Pattern 2	The CKP NO PULSE indicates the pulse is 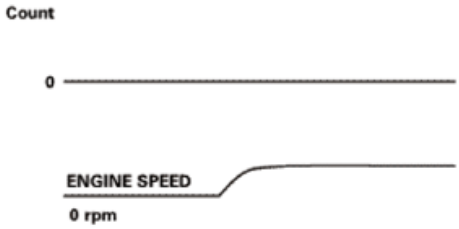 normal	It is normal, when the CKP NO PULSE count does not increase and pulse is received when cranking.

Which pattern is indicated?

Pattern 1 **DO THE TROUBLESHOOTING PROCEDURE FOR DTC P0335** . If the CKP NO PULSE count reaches the threshold, DTC P0335 will set. Check for poor connections and loose terminals at the CKP sensor.

Pattern 2 Go to step 15 (diagnosis by parameter (CKP NOISE)).

15. On-board snapshot or snapshot check (CKP NOISE):

NOTE: **Use the on-board snapshot in case of intermittent failure, or use the snapshot in case of reproducible failure.**

- 1. Select the Hard to Start Engine in the on-board snapshot or snapshot with the HDS.
- 2. Select the CKP NOISE and ENGINE SPEED in the configuration list.

GETtheMANUALS.org

Check the recorded snapshot parameters while the engine is cranking, then compare the CKP NOISE pattern from the chart, and determine the problem.

Pattern	Symptom (Diagnosis by parameter)	Additional remarks
Pattern 1	CKP NOISE counts up when 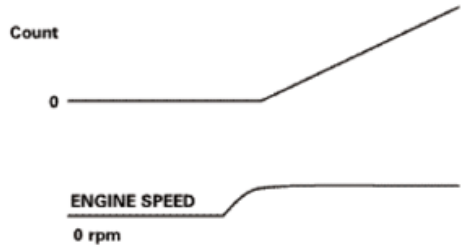 cranking	When the CKP NOISE count increases during cranking, there is noises in the CKP signal. When CKP signal has, noise, the PCM cannot detect the cylinder to be ignited and engine is unable to start.
Pattern 2	Normal when CKP NOISE does not count up when 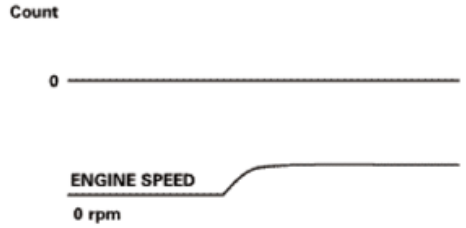 cranking	It is normal, when CKP NOISE count does not increase when cranking.

Which pattern is indicated?

Pattern 1 **DO THE TROUBLESHOOTING PROCEDURE FOR DTC P0339** . If the CKP NOISE count reaches the threshold, DTC P0339 will set. Check for poor connections and loose terminals at the CKP sensor, and also check for aftermarket accessories.

Pattern 2 (Reproducible failure) The CKP sensor is OK. Go to step 16 (diagnosis by parameter (VTEC PRES SW)).

Pattern 2 (Intermittent failure) The CKP sensor is OK. Go to step 17 (diagnosis by parameter (Engine Stall in the on-board snapshot)).

16. Snapshot check (VTEC PRES SW):
    - 1. Check the parameter(s) below with the HDS when the engine is cranking.

Signal	Threshold		Current conditions	
	Values	Unit	Values	Unit
VTEC PRES SW	OFF			

Do the current condition(s) match the threshold?

YES : SUBSTITUTE A KNOWN-GOOD ROCKER ARM OIL CONTROL VALVE . If the valve is OK, **replace the oil pump** See ENGINE OIL PUMP OVERHAUL or ENGINE OIL PUMP REMOVAL AND INSTALLATION .

GETtheMANUALS.org

NO : Go to step 20 (fuel system troubleshooting).

17. On-board snapshot check (Engine Stall):
    - 1. Check for a record of Engine Stall 2 in the on-board snapshot with the HDS.

Engine stall in the on-board snapshot recorded?

YES : Go to step 18 (diagnosis by parameter (ST FUEL TRIM)).

NO : Go to step 20 (fuel system troubleshooting).

18. On-board snapshot check (ST FUEL TRIM):
    - 1. Check for a record of Engine Stall 2 in the on-board snapshot with the HDS.
    - 2. Select the ST FUEL TRIM and ENGINE SPEED in the configuration list.

    Check the recorded snapshot parameters when the Engine Stalls, then compare the ST FUEL TRIM pattern from the chart, and determine the problem.

Pattern	Symptom (Diagnosis by parameter)	Additional remarks
Pattern 1	Engine stalls while ST FUEL TRIM value 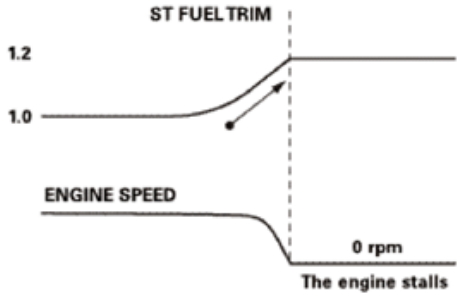 increasing	When the engine stalls while ST FUEL TRIM value increasing, a failure may exist in the fuel system.
Pattern 2	Normal when the engine stalls when ST FUEL TRIM is around 1.0 (center 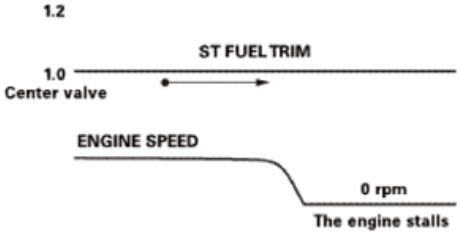 value)	The fuel is normal when the engine stalled with ST FUEL TRIM around 1.0 (center value) until the engine stall.

Which pattern is indicated?

Pattern 1 Diagnostic procedure:

1. Check fuel pump operation sound.
2. GO TO THE FUEL PRESSURE TEST .

GETtheMANUALS.org

3. GO TO THE FUEL PUMP CIRCUIT TROUBLESHOOTING .
4. **TEST THE PGM-FI MAIN RELAY** .
5. **TEST PGM-FI MAIN RELAY 2** .
6. Check for the following fuses:
- No. A21 (15 A) fuse (in the under-hood fuse/relay box)
- No. B4 (15 A) fuse (in the under-dash fuse/relay box)

Pattern 2 Go to step 19 (diagnosis by parameter (MISFIRE)).

19. On-board snapshot check (MISFIRE):
    - 1. Check for a record of Engine Stall 2 in the on-board snapshot with the HDS.
    - 2. Select the MISFIRE and ENGINE SPEED in the configuration list.

    Check the recorded snapshot parameters when the engine stalls, then compare the MISFIRE pattern from the chart, and determine the problem.

Pattern	Symptom (Diagnosis by parameter)	Additional remarks
Pattern 1	Engine stalls after MISFIRE counts 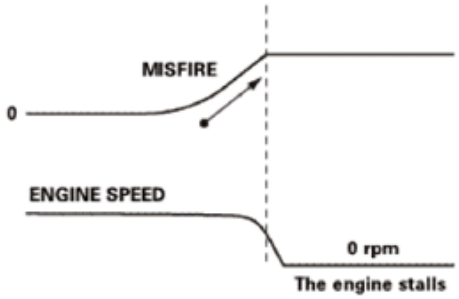 increase	When engine stalls after the MISFIRE count increases, the engine stall may be caused by misfire. Also the misfire may be caused by a loss of compression, faulty ignition system, faulty fuel system, etc.
Pattern 2	Normal when engine stalls with MISFIRE count remaining 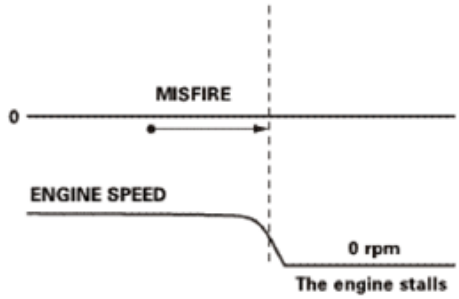 constant	If the MISFIRE count remains constant when the engine stalls, the stall was not caused by a misfire.

Which pattern is indicated?

Pattern 1 Do the troubleshooting procedure for **DTC P0300: Random Misfire Detected; DTC P0301: No. 1 Cylinder Misfire Detected; DTC P0302: No. 2 Cylinder Misfire Detected; DTC P0303: No. 3 Cylinder Misfire Detected; DTC P0304: No. 4 Cylinder Misfire Detected** .

GETtheMANUALS.org

Pattern 2 Go to step 20 (fuel system troubleshooting).

20. Fuel pressure check:
    - 1. DO THE FUEL PRESSURE TEST .

    Is the fuel pressure OK?

    YES : Go to step 21 (ignition system troubleshooting).

    NO : Check the following:

    - FUEL PUMP CIRCUIT
    - **Fuel pressure regulator** See FUEL TANK UNIT DISASSEMBLY AND REASSEMBLY or FUEL TANK UNIT REMOVAL AND INSTALLATION
    - **Fuel filter** See FUEL TANK UNIT DISASSEMBLY AND REASSEMBLY or FUEL TANK UNIT REMOVAL AND INSTALLATION
21. Spark plug visual check:
    - 1. Turn the ignition switch to LOCK (0).
    - 2. REMOVE THE SPARK PLUGS .
    - 3. Check the conditions of the spark plug electrode.

    NOTE: Make sure the plugs are genuine parts.

    Is the electrode damaged or wet?

    YES (wet) : Check the following conditions. If they are OK, go to step 22.

    - In very cold conditions, multiple very short trips can cause the spark plug to foul. If this is the case, drive the vehicle a longer distance and recheck.
    - Incorrect or poor quality fuel can cause a wet spark plug. Replace the fuel and recheck.

    YES (damaged) : REPLACE THE DAMAGED SPARK PLUGS , determine the cause of the spark plug damage.

    NO : Go to step 22.

22. Determine possible failure area (ignition system, others):
    - 1. Turn the ignition switch to LOCK (0).
    - 2. Select ALL INJECTORS in the INSPECTION MENU with the HDS, and stop fuel injection from injector.
    - 3. Fit spark plug to the ignition coil and ground it to the engine.
    - 4. Crank the engine and watch for spark at the spark plug.

    Is there spark?

GETtheMANUALS.org

YES : The ignition system is OK. Select PCM reset in the INSPECTION MENU to cancel ALL INJECTORS with the HDS, then go to step 24 (engine compression troubleshooting).

NO : Go to step 23.

23. Ignition coil power circuit check:
    - 1. Disconnect the following connector(s).

      Ignition coil(s) 3P connector from the problem cylinder

    - 2. Remove the ignition coil relay (A) from the under-hood fuse/relay box.

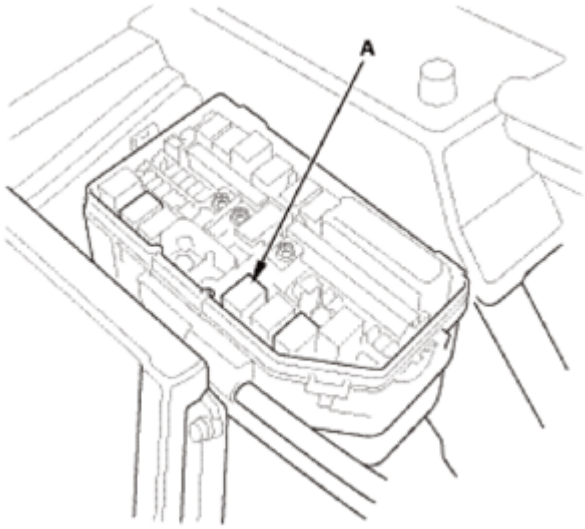

Fig. 32: Identifying Ignition Coil Relay
Courtesy of AMERICAN HONDA MOTOR CO., INC.

    - 3. Check for continuity between test points 1 and 2.

      Test condition IG LOCK (0)

      Ignition coil 3P connector: disconnected

      Ignition coil relay: disconnected

      Test circuit IG1(COIL), IG COIL RLY OUT

      Test point 1 Ignition coil 3P connector No. 1 (RED)

      Test point 2 Ignition coil relay 4P socket No. 2 (Under-hood fuse/relay box)

GETtheMANUALS.org

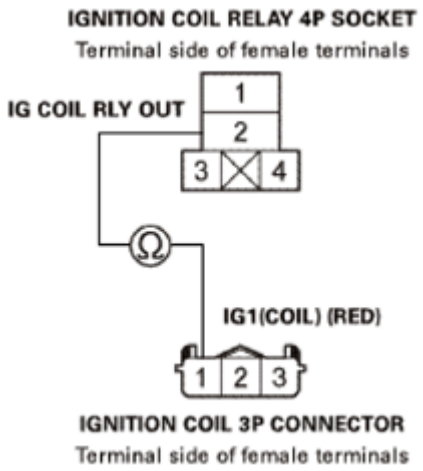

Fig. 33: Checking For Continuity Between Test Points 1 And 2
Courtesy of AMERICAN HONDA MOTOR CO., INC.

Is there continuity?

YES : The ignition coil power circuit is OK. REPLACE THE IGNITION COIL(S) .

NO : Repair an open in the IG1(COIL)/IG COIL RLY OUT wire between the ignition coil relay and the ignition coil.

24. Engine compression check:
    - 1. DO AN ENGINE COMPRESSION INSPECTION .

NOTE: When removing the spark plugs, make sure the plugs are genuine parts.

Is engine compression OK?

YES : Go to step 25 (EVAP canister purge valve check).

NO : Repair the cause of low compression.

25. EVAP canister purge valve check:
    - 1. Turn the ignition switch to LOCK (0).
    - 2. Disconnect the following connector.

      EVAP canister purge valve 2P connector

    - 3. Disconnect the vacuum hose (A) from the EVAP canister purge valve (B) in the engine compartment, and connect a vacuum pump/gauge, 0-30 inHg, to the purge valve.

GETtheMANUALS.org

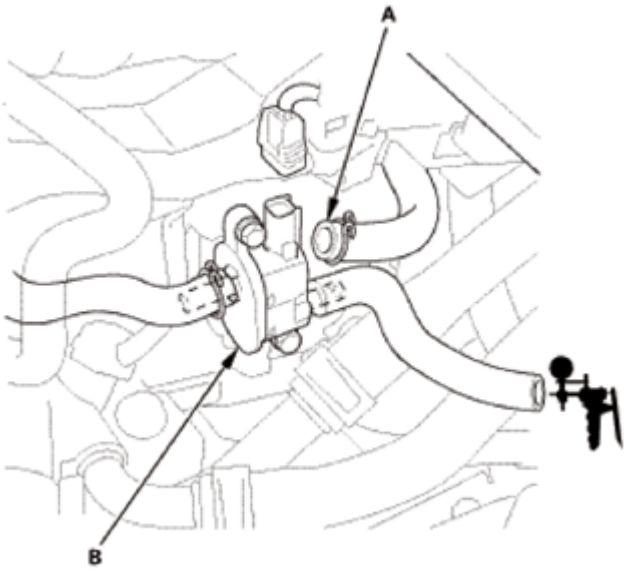

Fig. 34: Identifying Vacuum Hose And EVAP Canister Purge Valve
Courtesy of AMERICAN HONDA MOTOR CO., INC.

- 4. Start the engine.

  Is there vacuum?

  YES : **REPLACE THE EVAP CANISTER PURGE VALVE** .

  NO (Reproducible failure) : Go to step 26 (fuse check).

  NO (Intermittent failure) : Go to step 27 (relay check).

26. Fuse check:
    - 1. Check the following fuses.

      Fuse No. A17 (15 A) to the ignition coil relay

      Fuse No. A18 (15 A) to the PGM-FI subrelay

      Fuse No. A23 (15 A) to PGM-FI main relay 1

      Location Under-hood fuse/relay box

      Fuse No. B4 (15 A) to PGM-FI main relay 2

      Location Under-dash fuse/relay box

      Are the fuses OK?

GETtheMANUALS.org

YES : The fuses are OK. Go to step 27 (relay check).

NO : Replace the blown fuse(s).

27. Relay check:
    - 1. **TEST THE FOLLOWING RELAYS** :

NOTE: **In case the failure is not reproduced, the following relays may have intermittent failure.**

- PGM-FI main relay 2
- Ignition coil relay
- PGM-FI main relay 1
- PGM-FI subrelay

Are the relays OK?

YES : **Go to the Diagnostic Interview** See **FUEL AND EMISSIONS SYSTEMS DIAGNOSTIC INTERVIEW - ENGINE STALLS** or **FUEL AND EMISSIONS SYSTEMS DIAGNOSTIC INTERVIEW - ENGINE WILL NOT START, ENGINE STARTS BUT STALLS IMMEDIATELY, OR ENGINE IS HARD TO START**.

NO : Replace the damaged relays.

IDLE SPEED INSPECTION

INSPECTION

1. HDS DLC - Connection
    1. Connect the HDS to the data link connector (DLC) (A) located under the driver's side of the dashboard.
    2. Turn the ignition switch to ON (II).
    3. Make sure the HDS communicates with the vehicle. If it does not communicate, go to the DLC circuit troubleshooting.

GETtheMANUALS.org

Fig. 35: Identifying Data Link Connector (DLC)
Courtesy of AMERICAN HONDA MOTOR CO., INC.

2. Warm Up The Engine

   Start the engine. Hold the engine speed at 3, 00 rpm without load in P or N until the radiator fan comes on, then let it idle.

3. Idle Speed - Inspection
   1. Check the idle speed under no load conditions: headlights, blower fan, radiator fan, audio system, and air conditioner off.

      Idle speed should be:

      760±50 rpm (in P or N)

   2. 2. Let the engine idle for 1 minute with high electric load (A/C switch on, temperature set to max cool, blower fan on High, and headlights on high beam).

      Idle speed should be:

      760±50 rpm (in P or N)

      NOTE: **If the idle speed is not within specification, do the PCM idle learn procedure. If the idle speed is still not within specification, go to symptom troubleshooting.**

GETtheMANUALS.org

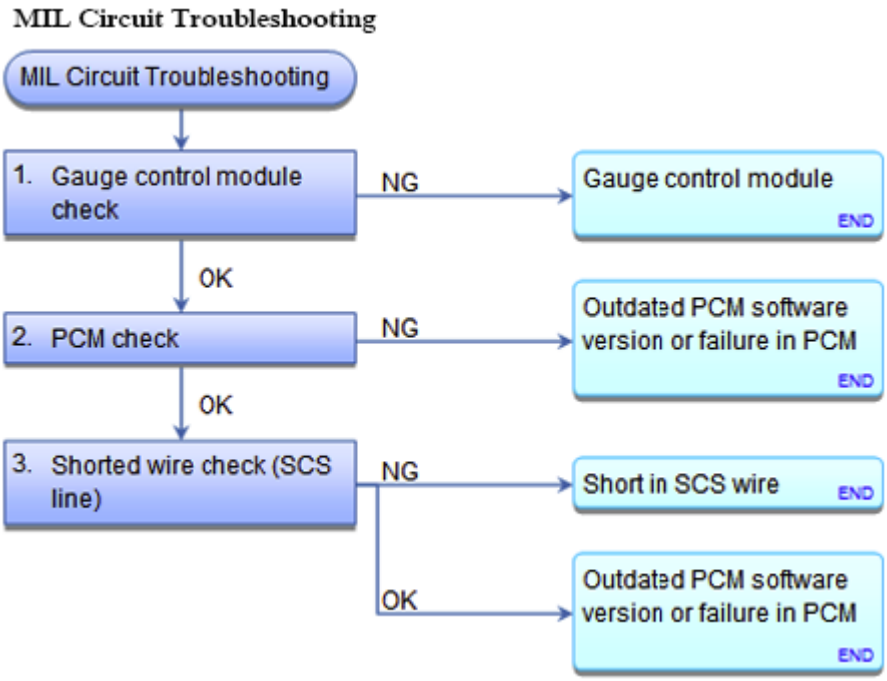

Fig. 36: MIL Circuit Troubleshooting Flow Chart
Courtesy of AMERICAN HONDA MOTOR CO., INC.

MIL CIRCUIT TROUBLESHOOTING

1. Gauge control module check:
   - 1. Turn the ignition switch to ON (II).
   - 2. **DO THE GAUGE SELF-DIAGNOSTIC FUNCTION** .

     Does the MIL flash?

     YES : Go to step 2.

     NO : **Substitute a known-good gauge control module** See **GAUGE CONTROL MODULE REMOVAL AND INSTALLATION** or **Rewriting the ODO Data and Transferring the Maintenance Minder™ Data to a New Gauge Control Module** , then recheck. If the symptom/indication goes away with a known-good gauge control module, **replace the original gauge control module** See **GAUGE CONTROL MODULE REMOVAL AND INSTALLATION** or **Rewriting the ODO Data and Transferring the Maintenance Minder™ Data to a New Gauge Control Module** .

2. PCM check:
   - 1. Connect the HDS to the DLC.
   - 2. Check the parameter(s) below with the HDS.

Signal	Threshold		Current conditions	

GETtheMANUALS.org

	Values	Unit	Values	Unit
SCS	Short			

Do the current condition(s) match the threshold?

YES : Go to step 3.

NO : **Update the PCM** See **PCM REMOVAL AND INSTALLATION** or **PCM UPDATE** if it does not have the latest software, or **substitute a known-good PCM** See **PCM REMOVAL AND INSTALLATION** or **PCM UPDATE**, then recheck. If the symptom/indication goes away and the PCM was updated, troubleshooting is complete. If the symptom/indication goes away and the PCM was substituted, **replace the original PCM** See **PCM REMOVAL AND INSTALLATION** or **PCM UPDATE**.

3. Shorted wire check (SCS line):
   - 1. Turn the ignition switch to LOCK (0).
   - 2. Disconnect the following connector.

     PCM connector A (49P)

   - 3. Disconnect the HDS.
   - 4. Check for continuity between test points 1 and 2.

     Test condition IG LOCK (0)

     PCM connector A (49P): disconnected

     Test circuit SCS

     Test point 1 PCM connector A (49P) No. 42 (ORN)

     Test point 2 Body ground

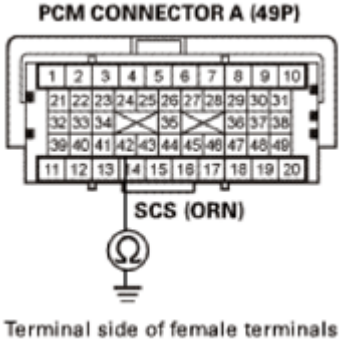

Fig. 37: Checking For Continuity Between Test Points 1 And 2
Courtesy of AMERICAN HONDA MOTOR CO., INC.

GETtheMANUALS.org

Is there continuity?

YES : Repair a short in the SCS wire between the PCM (A42) and the DLC.

NO : The SCS wire is OK. **Update the PCM** See **PCM REMOVAL AND INSTALLATION** or **PCM UPDATE** if it does not have the latest software, or **substitute a known-good PCM** See **PCM REMOVAL AND INSTALLATION** or **PCM UPDATE**, then recheck. If the symptom/indication goes away and the PCM was updated, troubleshooting is complete. If the symptom/indication goes away and the PCM was substituted, **replace the original PCM** See **PCM REMOVAL AND INSTALLATION** or **PCM UPDATE**.

PCM IDLE LEARN PROCEDURE

PROCEDURE

1. HDS DLC - Connection
    1. Connect the HDS to the data link connector (DLC) (A) located under the driver's side of the dashboard.
    2. Turn the ignition switch to ON (II).
    3. Make sure the HDS communicates with the vehicle. If it does not communicate, go to the DLC circuit troubleshooting.

Fig. 38: Identifying Data Link Connector (DLC)
Courtesy of AMERICAN HONDA MOTOR CO., INC.

2. PCM - Reset
    1. Reset the PCM with the HDS while the engine is stopped.
    2. Turn the ignition switch to LOCK (0).
    3. Turn the ignition switch to ON (II), and wait 30 seconds.
3. Warm Up The Engine

GETtheMANUALS.org

Start the engine. Hold the engine speed at 3, 00 rpm without load in P or N until the radiator fan comes on, then let it idle.

4. PCM - Idle Learn
    1. Let the engine idle for about 5 minutes with the throttle fully closed.

        NOTE: If the radiator fan comes on, do not include its running time in the 5 minutes.

    2. After learning, turn the ignition switch to LOCK (0).

GETtheMANUALS.org

PCM Power and Ground Circuit Troubleshooting

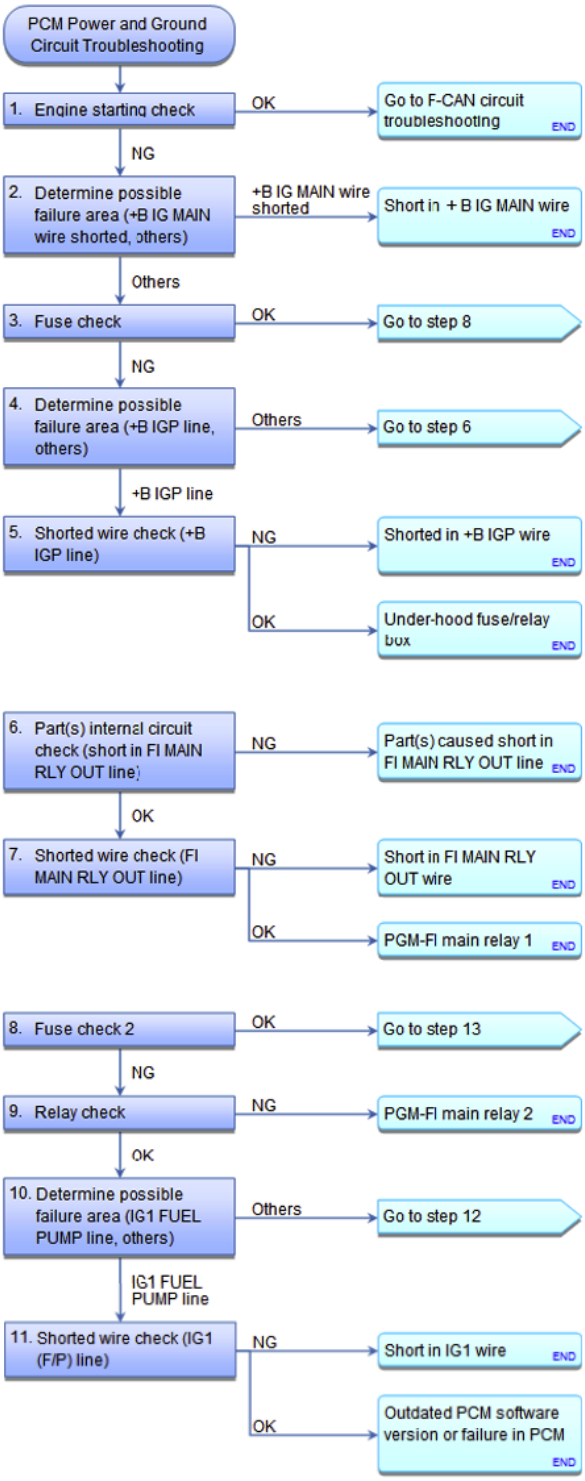

Fig. 39: PCM Power And Ground Circuit Troubleshooting Flow Chart (1 Of 3)
Courtesy of AMERICAN HONDA MOTOR CO., INC.

GETtheMANUALS.org

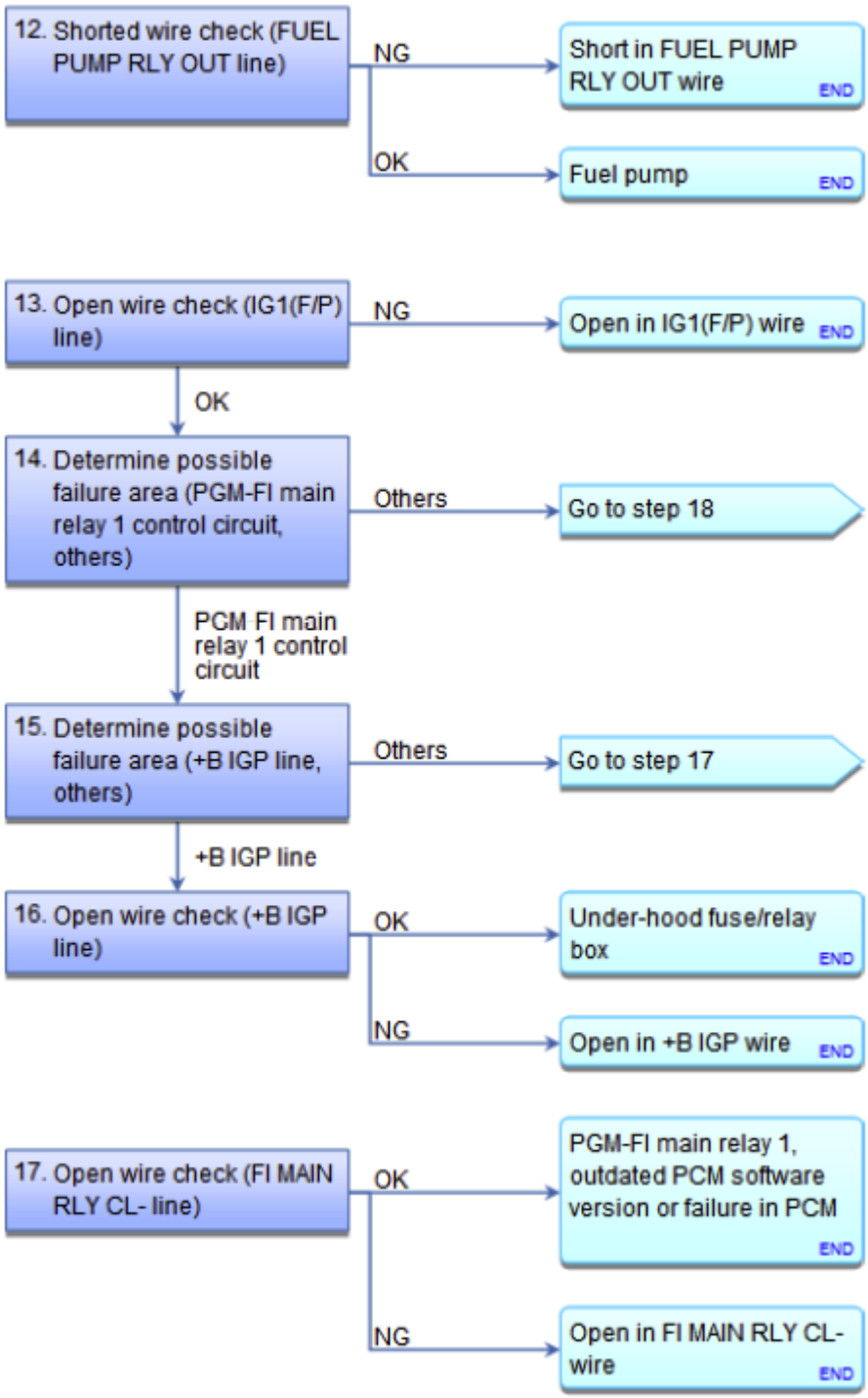

Fig. 40: PCM Power And Ground Circuit Troubleshooting Flow Chart (2 Of 3)
Courtesy of AMERICAN HONDA MOTOR CO., INC.

GETtheMANUALS.org

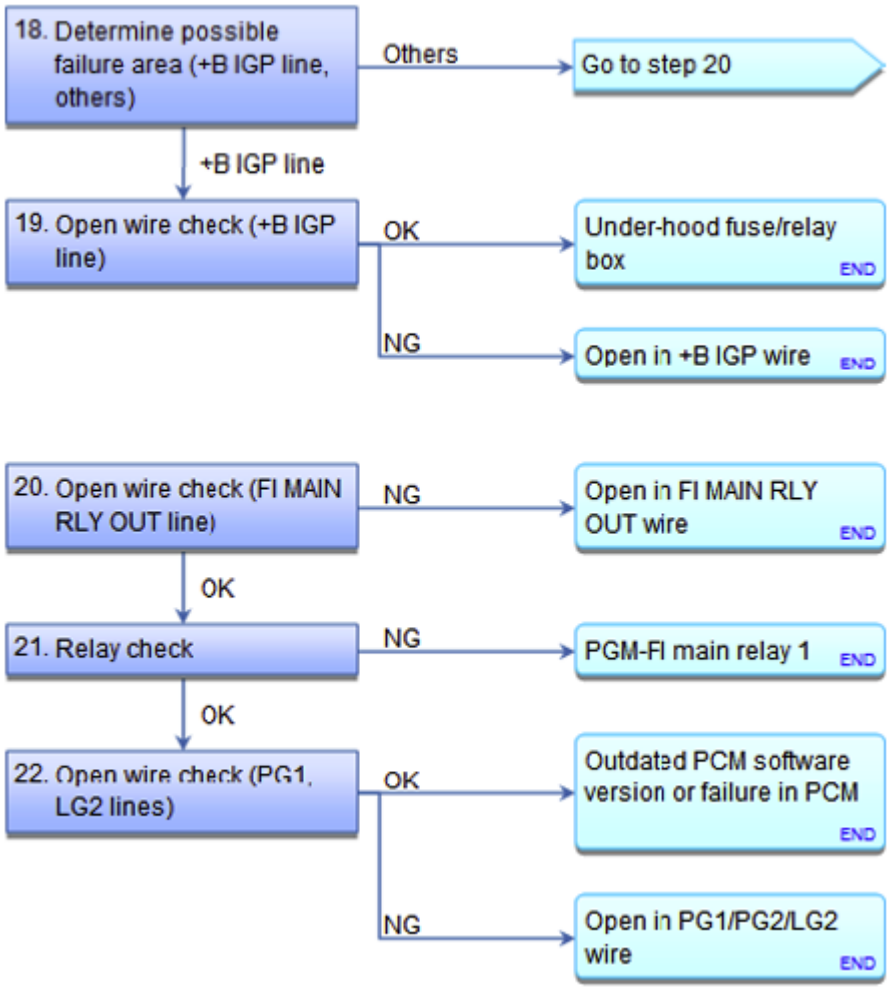

Fig. 41: PCM Power And Ground Circuit Troubleshooting Flow Chart (3 Of 3)
Courtesy of AMERICAN HONDA MOTOR CO., INC.

PCM POWER AND GROUND CIRCUIT TROUBLESHOOTING

1. Engine starting check:
   - 1. Try to start the engine.

     Does the engine start and idle smoothly?

     YES : **GO TO THE F-CAN CIRCUIT TROUBLESHOOTING** .

     NO : Go to step 2.

2. Determine possible failure area (+B IG MAIN wire shorted, others):
   - 1. Turn the ignition switch to LOCK (0).
   - 2. Check the following fuse.

GETtheMANUALS.org

Fuse No. A2-1 (50 A)

Location Under-hood fuse/relay box

Is the fuse OK?

YES : Repair an open in the +B IG MAIN wire between the No. A2-1 (50 A) fuse and the ignition switch. If the wire is OK, go to step 3.

NO : Repair a short in the +B IG MAIN wire between the No. A2-1 (50 A) fuse and the under-hood fuse/relay box. Also replace the No. A2-1 (50 A) fuse.

3. Fuse check:
   - 1. Check the following fuse.

     Fuse No. A23 (15 A)

     Location Under-hood fuse/relay box

     Is the fuse OK?

     YES : Go to step 8.

     NO : Go to step 4.

4. Determine possible failure area (+B IGP line, others):
   - 1. Remove the blown No. A23 (15 A) fuse from the under-hood fuse/relay box.
   - 2. Remove PGM-FI main relay 1 (A) from the under-dash fuse/relay box.

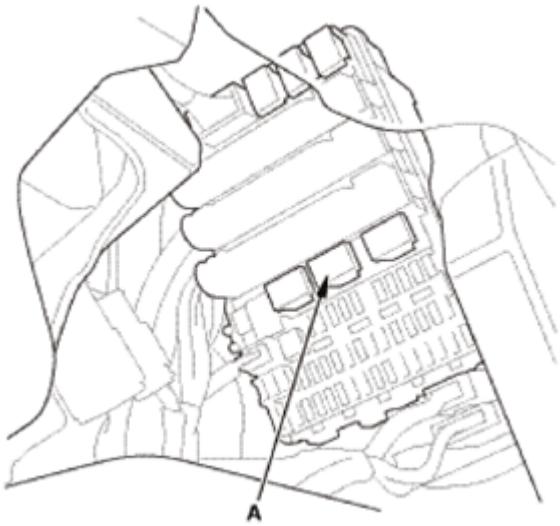

Fig. 42: Identifying PGM-FI Main Relay 1
Courtesy of AMERICAN HONDA MOTOR CO., INC.

GETtheMANUALS.org

- 3. Check for continuity between test points 1 and 2.

  Test condition IG LOCK (0)

  PGM-FI main relay 1: disconnected

  Test circuit +B IGP

  Test point 1 PGM-FI main relay 1 4P socket No. 1 (Under-dash fuse/relay box)

  Test point 2 Body ground

  Test circuit +B IGP

  Test point 1 PGM-FI main relay 1 4P socket No. 4 (Under-dash fuse/relay box)

  Test point 2 Body ground

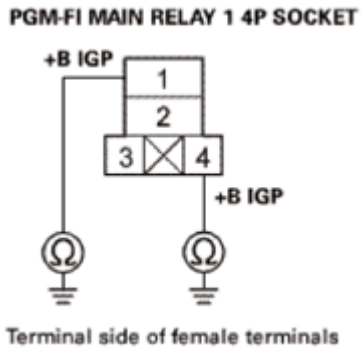

Fig. 43: Checking For Continuity Between Test Points 1 And 2
Courtesy of AMERICAN HONDA MOTOR CO., INC.

Is there continuity?

YES : Go to step 5.

NO : Go to step 6.

5. Shorted wire check (+B IGP line):
   - 1. Disconnect the following connector.

     Under-dash fuse/relay box connector D (32P)

   - 2. Check for continuity between test points 1 and 2.

     Test condition IG LOCK (0)

GETtheMANUALS.org

PGM-FI main relay 1: disconnected

Under-dash fuse/relay box connector D (32P): disconnected

Test circuit +B IGP

Test point 1 Under-dash fuse/relay box connector D (32P) No. 9 (BLU)

Test point 2 Body ground

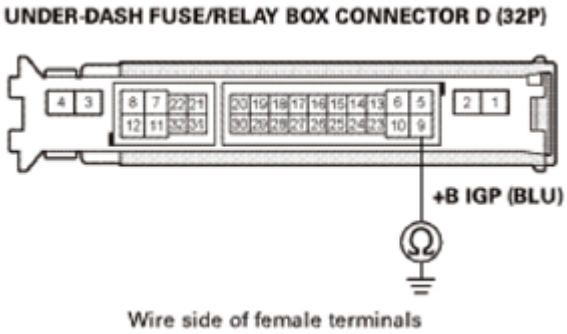

Fig. 44: Checking For Continuity Between Test Points 1 And 2
Courtesy of AMERICAN HONDA MOTOR CO., INC.

Is there continuity?

YES : Repair a short in the +B IGP wire between the No. A23 (15 A) fuse and the under-dash fuse/relay box. Also replace the No. A23 (15 A) fuse.

NO : The +B IGP wire is OK. Replace the under-hood fuse/relay box. Also replace the No. A23 (15 A) fuse.

6. Part(s) internal circuit check (short in FI MAIN RLY OUT line):
   - 1. Disconnect each of the parts or connectors below, one at a time, then check for continuity between test points 1 and 2.
   - PGM-FI main relay 2
   - PCM connector A (49P)
   - Each injector 2P connector
   - CMP sensor B 3P connector
   - CKP sensor 3P connector
   - Electronic throttle control system (ETCS) control relay

Test condition IG LOCK (0)

Test circuit FI MAIN RLY OUT

GETtheMANUALS.org

Test point 1 PGM-FI main relay 1 4P socket No. 2 (Under-hood fuse/relay box)

Test point 2 Body ground

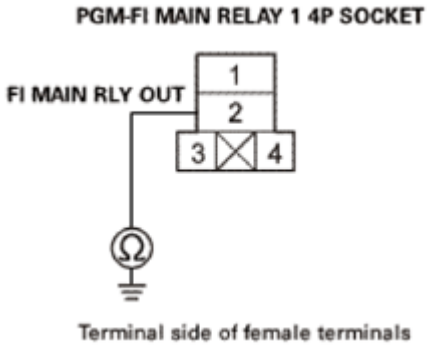

Fig. 45: Checking For Continuity Between Test Points 1 And 2
Courtesy of AMERICAN HONDA MOTOR CO., INC.

Does continuity go away when one of the above components is disconnected?

YES : Replace the part that made the short to body ground go away when it was disconnected. If the part is the PCM, replace it or **substitute a known-good PCM** See **PCM REMOVAL AND INSTALLATION** or **PCM UPDATE**, then recheck. If the symptom/indication goes away and the PCM was updated, troubleshooting is complete. If the symptom/indication goes away and the PCM was substituted, **replace the original PCM** See **PCM REMOVAL AND INSTALLATION** or **PCM UPDATE**. Also replace the No. A23 (15 A) fuse.

NO : Parts are OK. Go to step 7.

7. Shorted wire check (FI MAIN RLY OUT line):
   - 1. Jump the SCS line with the HDS.
   - 2. Disconnect the following parts:
     - PGM-FI main relay 2
     - PCM connector A (49P)
     - Injectors
     - CMP sensor B
     - CKP sensor
     - Electronic throttle control system (ETCS) control relay
   - 3. Check for continuity between test points 1 and 2.

     Test condition IG LOCK (0)

     PGM-FI main relay 1: disconnected

     PGM-FI main relay 2: disconnected

GETtheMANUALS.org

PCM connector A (49P): disconnected

Each injector 2P connector: disconnected

CMP sensor B 3P connector: disconnected

CKP sensor 3P connector: disconnected

Electronic throttle control system (ETCS) control relay: disconnected

Test circuit FI MAIN RLY OUT

Test point 1 PGM-FI main relay 1 4P socket No. 2 (Under-dash fuse/relay box)

Test point 2 Body ground

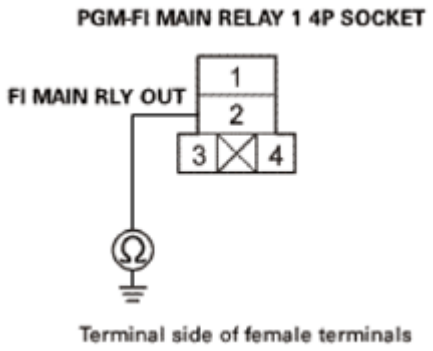

Fig. 46: Checking For Continuity Between Test Points 1 And 2
Courtesy of AMERICAN HONDA MOTOR CO., INC.

Does continuity go away when one of the above components is disconnected?

YES : Repair a short in the FI MAIN RLY OUT wire between PGM-FI main relay 1 and each part. Also replace the No. A23 (15 A) fuse.

NO : The FI MAIN RLY OUT wire is OK. Replace PGM-FI main relay 1. Also replace the No. A23 (15 A) fuse.

8. Fuse check 2:
   - 1. Check the following fuse.

     Fuse No. B4 (15 A)

     Location Under-dash fuse/relay box

     Is the fuse OK?

GETtheMANUALS.org

YES : Go to step 13.

NO : Go to step 9.

9. Relay check:
   - 1. Remove the blown No. B4 (15 A) fuse from the under-hood fuse/relay box.
   - 2. Remove PGM-FI main relay 2 (A) from the under-dash fuse/relay box.

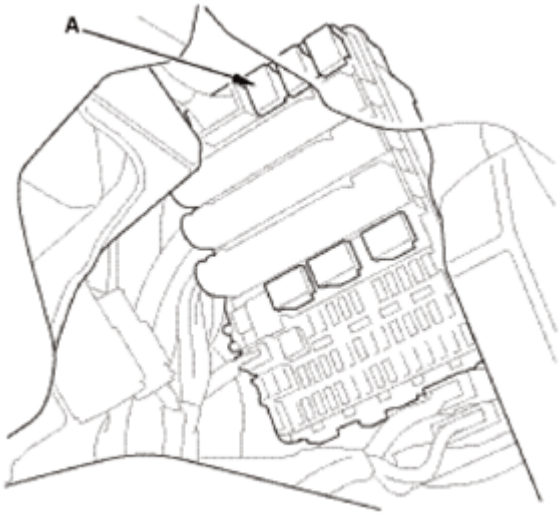

Fig. 47: Identifying PGM-FI Main Relay 2
Courtesy of AMERICAN HONDA MOTOR CO., INC.

   - 3. **TEST PGM-FI MAIN RELAY 2** .

Is the relay OK?

YES : PGM-FI main relay 2 is OK. Go to step 10.

NO : Replace PGM-FI main relay 2. Also replace the No. B4 (15 A) fuse.

10. Determine possible failure area (IG1 FUEL PUMP line, others):
   - 1. Check for continuity between test points 1 and 2.

Test condition IG LOCK (0)

PGM-FI main relay 2: disconnected

Test circuit IG1 FUEL PUMP

Test point 1 PGM-FI main relay 2 4P socket No. 2 (Under-dash fuse/relay box)

Test point 2 Body ground

GETtheMANUALS.org

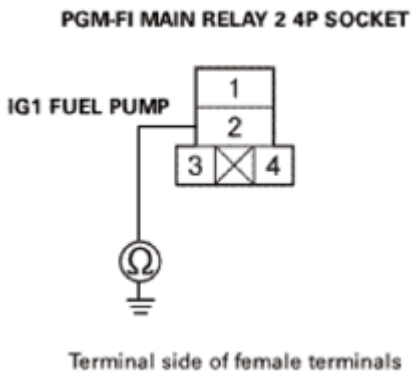

Fig. 48: Checking For Continuity Between Test Points 1 And 2
Courtesy of AMERICAN HONDA MOTOR CO., INC.

Is there continuity?

YES : Go to step 11.

NO : Go to step 12.

11. Shorted wire check (IG1(F/P) line):
    - 1. Jump the SCS line with the HDS.
    - 2. Disconnect the following connector.

      PCM connector C (49P)

    - 3. Check for continuity between test points 1 and 2.

      Test condition IG LOCK (0)

      PGM-FI main relay 2: disconnected

      PCM connector C (49P): disconnected

      Test circuit IG1(F/P)

      Test point 1 PCM connector C (49P) No. 10 (WHT)

      Test point 2 Body ground

GETtheMANUALS.org

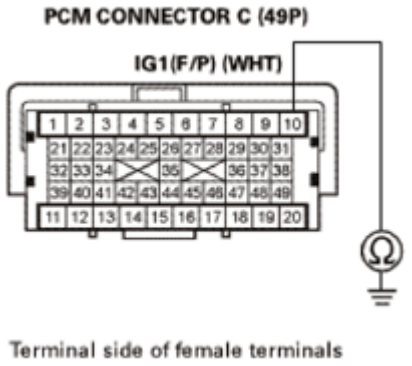

Fig. 49: Checking For Continuity Between Test Points 1 And 2
Courtesy of AMERICAN HONDA MOTOR CO., INC.

Is there continuity?

YES : Repair a short in the IG1(F/P) wire between the No. B4 (15 A) fuse and the PCM (C10), between the No. B4 (15 A) fuse and PGM-FI main relay 2, or between the No. B4 (15 A) fuse and the immobilizer control unit. Also replace the No. B4 (15 A) fuse.

NO : The IG1(F/P) wire is OK. Replace the No. B4 (15 A) fuse, and **update the PCM** See **PCM REMOVAL AND INSTALLATION** or **PCM UPDATE** if it does not have the latest software, or **substitute a known-good PCM** See **PCM REMOVAL AND INSTALLATION** or **PCM UPDATE**, then recheck. If the symptom/indication goes away and the PCM was updated, troubleshooting is complete. If the symptom/indication goes away and the PCM was substituted, **replace the original PCM** See **PCM REMOVAL AND INSTALLATION** or **PCM UPDATE**.

12. Shorted wire check (FUEL PUMP RLY OUT line):
    - 1. Remove the access panel from the floor.
    - 2. Disconnect the following connector.

      Fuel tank unit 4P connector

    - 3. Check for continuity between test points 1 and 2.

      Test condition IG LOCK (0)

      PGM-FI main relay 2: disconnected

      Fuel tank unit 4P connector: disconnected

      Test circuit FUEL PUMP RLY OUT

      Test point 1 Fuel tank unit 4P connector No. 1 (GRN)

      Test point 2 Body ground

GETtheMANUALS.org

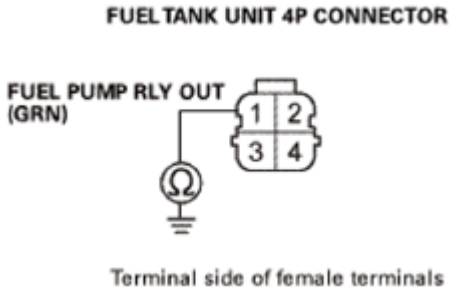

Fig. 50: Checking For Continuity Between Test Points 1 And 2
Courtesy of AMERICAN HONDA MOTOR CO., INC.

Is there continuity?

YES : Repair a short in the FUEL PUMP RLY OUT wire between the fuel tank unit 4P connector and PGM-FI main relay 2. Also replace the No. B4 (15 A) fuse.

NO : The FUEL PUMP RLY OUT wire is OK. Check the fuel pump, and replace it if needed. Also replace the No. B4 (15 A) fuse.

13. Open wire check (IG1(F/P) line):
    - 1. Jump the SCS line with the HDS.
    - 2. Disconnect the following connectors.

      PCM connector A (49P)

      PCM connector C (49P)

    - 3. Turn the ignition switch to ON (II).
    - 4. Measure the voltage between test points 1 and 2.

      Test condition IG ON (II)

      PCM connector A (49P): disconnected

      PCM connector C (49P): disconnected

      Test circuit IG1(F/P)

      Test point 1 PCM connector C (49P) No. 10 (WHT)

      Test point 2 Body ground

GETtheMANUALS.org

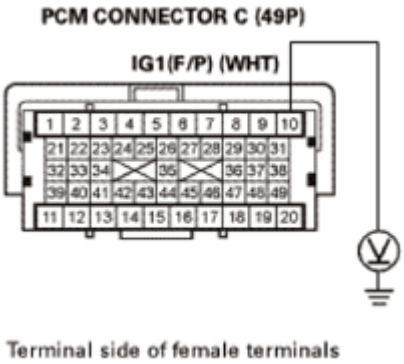

Fig. 51: Measuring Voltage Between Test Points 1 And 2
Courtesy of AMERICAN HONDA MOTOR CO., INC.

Is there battery voltage?

YES : The IG1(F/P) wire is OK. Go to step 14.

NO : Repair an open in the IG1(F/P) wire between the No. B4 (15 A) fuse and the PCM (C10).

14. Determine possible failure area (PGM-FI main relay 1 control circuit, others):
    - 1. Measure the voltage between test points 1 and 2.

Test condition IG ON (II)

PCM connector A (49P): disconnected

PCM connector C (49P): disconnected

Test circuit FI MAIN RLY CL-

Test point 1 PCM connectors A (49P) No. 7 (GRY)

Test point 2 Body ground

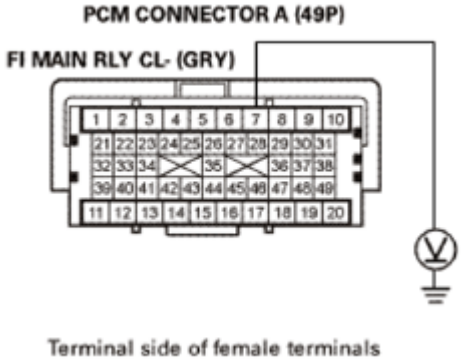

Fig. 52: Measuring Voltage Between Test Points 1 And 2

GETtheMANUALS.org

Courtesy of AMERICAN HONDA MOTOR CO., INC.

Is there battery voltage?

YES : Go to step 18.

NO : Go to step 15.

15. Determine possible failure area (+B IGP line, others):
    - 1. Turn the ignition switch to LOCK (0).
    - 2. Remove PGM-FI main relay 1 (A) from the under-dash fuse/relay box.

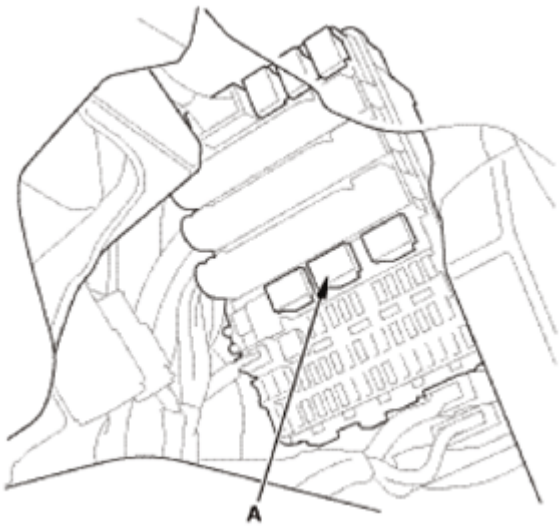

Fig. 53: Identifying PGM-FI Main Relay 1
Courtesy of AMERICAN HONDA MOTOR CO., INC.

- 3. Measure the voltage between test points 1 and 2.

  Test condition IG LOCK (0)

  PCM connector A (49P): disconnected

  PCM connector C (49P): disconnected

  PGM-FI main relay 1: disconnected

  Test circuit +B IGP

  Test point 1 PGM-FI main relay 1 4P socket No. 4 (Under-dash fuse/relay box)

  Test point 2 Body ground

GETtheMANUALS.org

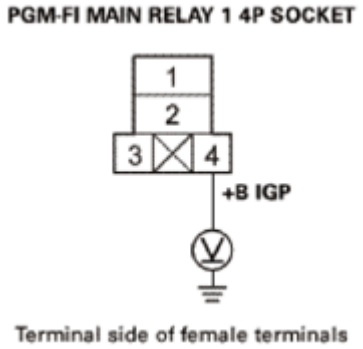

Fig. 54: Measuring Voltage Between Test Points 1 And 2
Courtesy of AMERICAN HONDA MOTOR CO., INC.

Is there battery voltage?

YES : Go to step 17.

NO : Go to step 16.

16. Open wire check (+B IGP line):
    - 1. Disconnect the following connector.

      Under-dash fuse/relay box connector D (32P)

    - 2. Measure the voltage between test points 1 and 2.

      Test condition IG LOCK (0)

      PCM connector A (49P): disconnected

      PCM connector C (49P): disconnected

      PGM-FI main relay 1: disconnected

      Under-dash fuse/relay box connector D (32P): disconnected

      Test circuit +B IGP

      Test point 1 Under-dash fuse/relay box connector D (32P) No. 9 (BLU)

      Test point 2 Body ground

GETtheMANUALS.org

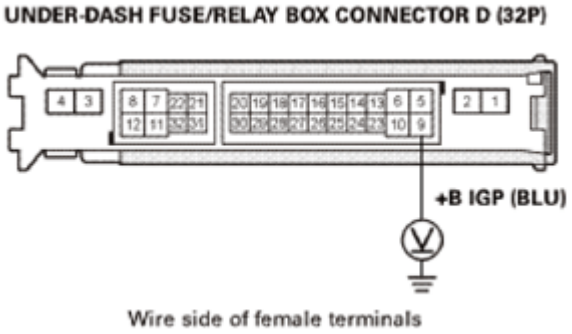

Fig. 55: Measuring Voltage Between Test Points 1 And 2
Courtesy of AMERICAN HONDA MOTOR CO., INC.

Is there battery voltage?

YES : The +B IGP wire is OK. Replace the under-hood fuse/relay box.

NO : Repair an open in the +B IGP wire between the No. A23 (15A) fuse and the under-dash fuse/relay box.

17. Open wire check (FI MAIN RLY CL- line):
    - 1. Check for continuity between test points 1 and 2.

      Test condition IG LOCK (0)

      PCM connector A (49P): disconnected

      PCM connector C (49P): disconnected

      PGM-FI main relay 1: disconnected

      Test circuit FI MAIN RLY CLT-

      Test point 1 PCM connector A (49P) No. 7 (GRY)

      Test point 2 PGM-FI main relay 1 4P socket No. 3 (Under-dash fuse/relay box)

GETtheMANUALS.org

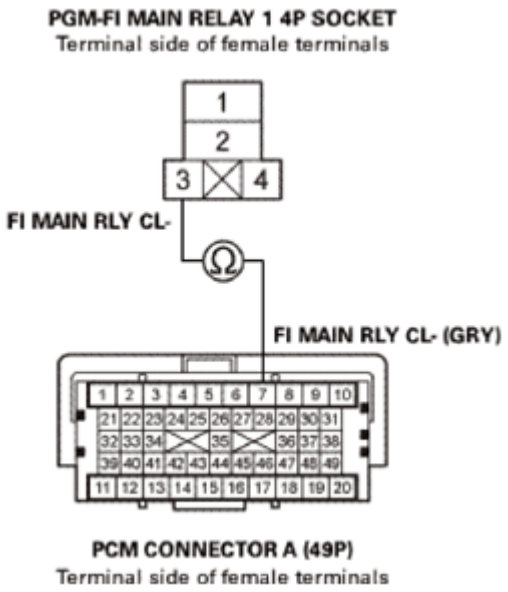

Fig. 56: Checking For Continuity Between Test Points 1 And 2
Courtesy of AMERICAN HONDA MOTOR CO., INC.

Is there continuity?

YES : The FI MAIN RLY CL- wire is OK. **TEST PGM-FI MAIN RELAY 1** . If the relay is OK, **update the PCM** See **PCM REMOVAL AND INSTALLATION** or **PCM UPDATE** if it does not have the latest software, or **substitute a known-good PCM** See **PCM REMOVAL AND INSTALLATION** or **PCM UPDATE**, then recheck. If the symptom/indication goes away and the PCM was updated, troubleshooting is complete. If the symptom/indication goes away and the PCM was substituted, **replace the original PCM** See **PCM REMOVAL AND INSTALLATION** or **PCM UPDATE**.

NO : Repair an open in the FI MAIN RLY CL- wire between the PCM (A7) and PGM-FI main relay 1.

18. Determine possible failure area (+B IGP line, others):
    - 1. Turn the ignition switch to LOCK (0).
    - 2. Remove PGM-FI main relay 1 (A) from the under-dash fuse/relay box.

GETtheMANUALS.org

Fig. 57: Identifying PGM-FI Main Relay 1
Courtesy of AMERICAN HONDA MOTOR CO., INC.

- 3. Measure the voltage between test points 1 and 2.

  Test condition IG LOCK (0)

  PCM connector A (49P): disconnected

  PCM connector C (49P): disconnected

  PGM-FI main relay 1: disconnected

  Test circuit +B IGP

  Test point 1 PGM-FI main relay 1 4P socket No. 1 (Under-dash fuse/relay box)

  Test point 2 Body ground

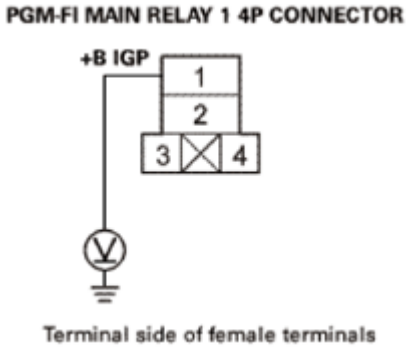

GETtheMANUALS.org

Fig. 58: Measuring Voltage Between Test Points 1 And 2
Courtesy of AMERICAN HONDA MOTOR CO., INC.

Is there battery voltage?

YES : Go to step 20.

NO : Go to step 19.

19. Open wire check (+B IGP line):
    - 1. Disconnect the following connector.

      Under-dash fuse/relay box connector D (32P)

    - 2. Measure the voltage between test points 1 and 2.

      Test condition IG LOCK (0)

      PCM connector A (49P): disconnected

      PCM connector C (49P): disconnected

      PGM-FI main relay 1: disconnected

      Under-dash fuse/relay box connector D: disconnected

      Test circuit +B IGP

      Test point 1 Under-dash fuse/relay box connector D (32P) No. 9 (BLU)

      Test point 2 Body ground

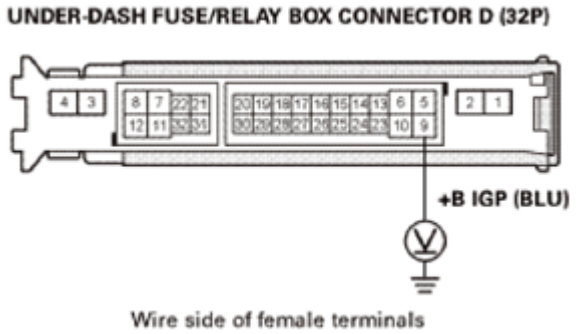

Fig. 59: Measuring Voltage Between Test Points 1 And 2
Courtesy of AMERICAN HONDA MOTOR CO., INC.

Is there battery voltage?

GETtheMANUALS.org

YES : The +B IGP wire is OK. Replace the under-hood fuse/relay box.

NO : Repair an open in the +B IGP wire between the No. A23 (15 A) fuse and the under-dash fuse/relay box.

20. Open wire check (FI MAIN RLY OUT line):
    - 1. Check for continuity between test points 1 and 2.

Test condition IG LOCK (0)

PCM connector A (49P): disconnected

PCM connector C (49P): disconnected

PGM-FI main relay 1: disconnected

Test circuit FI MAIN RLY OUT

Test point 1 PCM connector A (49P) No. 9 (BRN)

Test point 2 PGM-FI main relay 1 4P socket terminal No. 2 (Under-dash fuse/relay box)

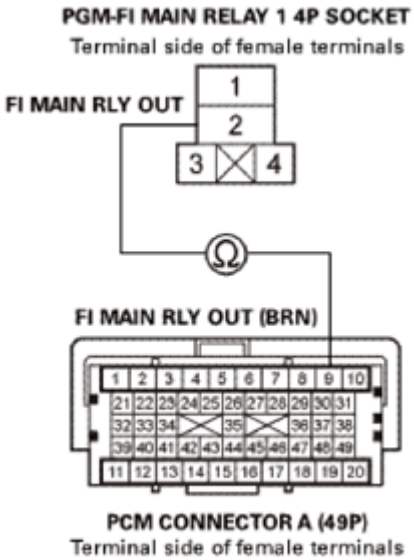

Fig. 60: Checking For Continuity Between Test Points 1 And 2
Courtesy of AMERICAN HONDA MOTOR CO., INC.

Is there continuity?

YES : The FI MAIN RLY OUT wire is OK. Go to step 21.

NO : Repair an open in the FI MAIN RLY OUT wire between the PCM (A9) and PGM-FI main relay 1.

GETtheMANUALS.org

21. Relay check:
    - 1. **TEST PGM-FI MAIN RELAY 1** .

      Is PGM-FI main relay 1 OK?

      YES : PGM-FI main relay 1 is OK. Go to step 22.

      NO : Replace PGM-FI main relay 1.

22. Open wire check (PG1, LG2 lines):
    - 1. Disconnect the following connector.

      PCM connectors B (49P)

    - 2. Check for continuity between these test points and body ground individually.

      Test condition IG LOCK (0)

      PCM connector A (49P): disconnected

      PCM connector B (49P): disconnected

      PCM connector C (49P): disconnected

      PGM-FI main relay 1: disconnected

Connector	Test circuit	Terminal
PCM connector B (49P)	PG2	No. 1 (BLK)
	PG1	No. 10 (BLK)
PCM connector C (49P)	PG1	No. 2 (BLK)
	PG1	No. 15 (BRN)
	LG2	No. 20 (BRN)

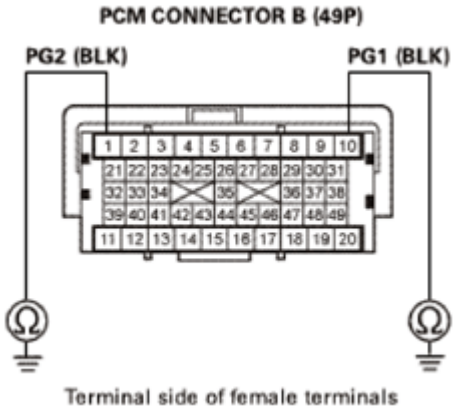

GETtheMANUALS.org

Fig. 61: Checking For Continuity Between PCM Connector B (49P) Terminals And Body Ground
Courtesy of AMERICAN HONDA MOTOR CO., INC.

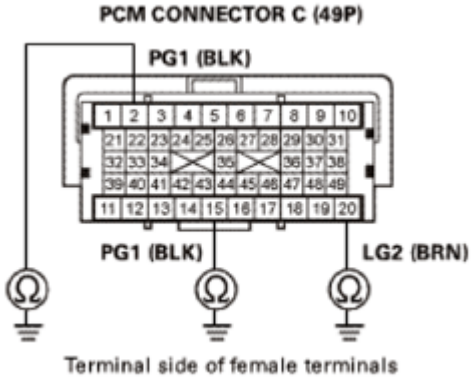

Fig. 62: Checking For Continuity Between PCM Connector C (49P) Terminals And Body Ground
Courtesy of AMERICAN HONDA MOTOR CO., INC.

Is there continuity?

YES : The PG1/PG2/LG2 wires are OK. **Update the PCM** See **PCM REMOVAL AND INSTALLATION** or **PCM UPDATE** if it does not have the latest software, or **substitute a known-good PCM** See **PCM REMOVAL AND INSTALLATION** or **PCM UPDATE**, then recheck. If the symptom/indication goes away and the PCM was updated, troubleshooting is complete. If the symptom/indication goes away and the PCM was substituted, **replace the original PCM** See **PCM REMOVAL AND INSTALLATION** or **PCM UPDATE**.

NO : Repair an open in the PG1, PG2, and/or LG2 wire between the PCM (B1, B10, C2, C15, C20) and G101.

PCM UPDATE

Special Tool Required

Image	Description/Tool Number

GETtheMANUALS.org

	MVCI unit with the latest control module (CM) update software installed*

PROCEDURE

1. PCM - Update

   NOTE: Check any official Honda service website for more service information about updating the MVCI and control units.

2. Warm Up The Engine

   Start the engine. Hold the engine speed at 3, 00 rpm without load in P or N until the radiator fan comes on, then let it idle.

3. PCM - Idle Learn
   1. Let the engine idle for about 5 minutes with the throttle fully closed.

      NOTE: If the radiator fan comes on, do not include its running time in the 5 minutes.

GETtheMANUALS.org

2. After learning, turn the ignition switch to LOCK (0).

4. CKP Pattern - Clear/Learn
   1. Connect the HDS to the data link connector (DLC) (A) located under the driver's side of the dashboard.
   2. Turn the ignition switch to ON (II).
   3. Make sure the HDS communicates with the vehicle. If it does not communicate, go to the DLC circuit troubleshooting.
   4. Select CRANK PATTERN in the ADJUSTMENT MENU with the HDS.

Fig. 63: Identifying Data Link Connector (DLC)
Courtesy of AMERICAN HONDA MOTOR CO., INC.

   5. Select CRANK PATTERN CLEAR, and clear the CKP pattern.
   6. Select CRANK PATTERN LEARNING with the HDS, and follow the screen prompts.
   7. After learning, turn the ignition switch to LOCK (0).
   8. Disconnect the HDS from the DLC.

PCV SYSTEM COMPONENT LOCATION INDEX

GETtheMANUALS.org

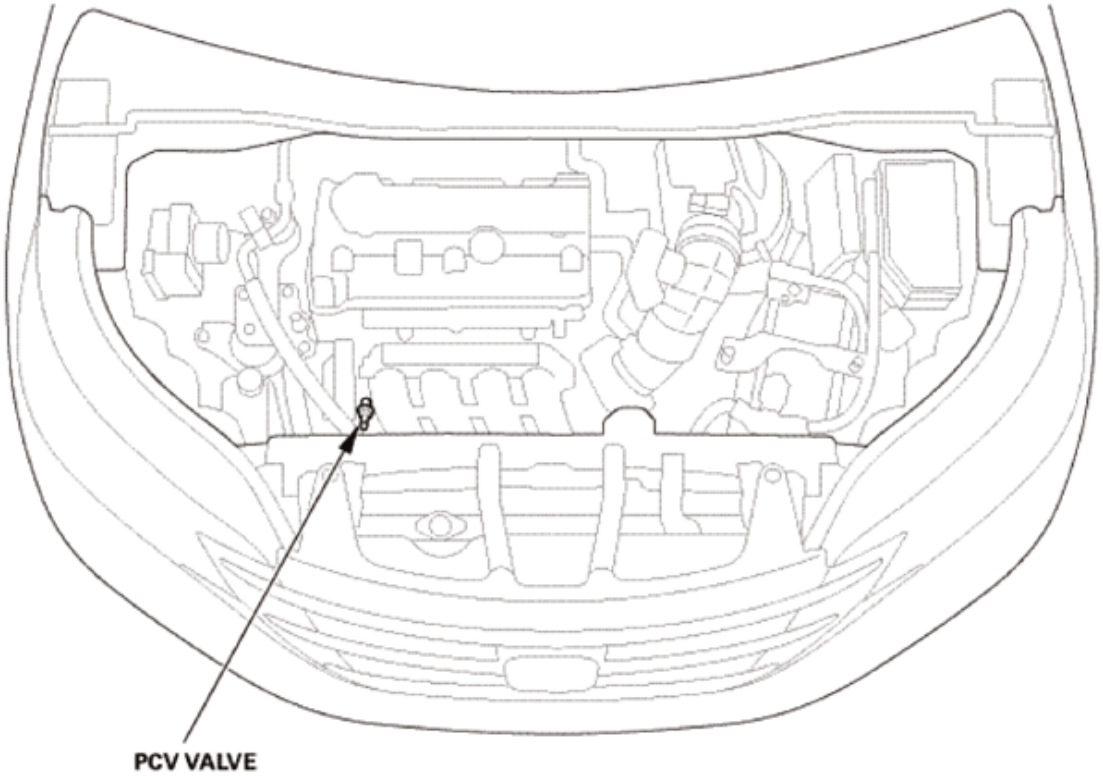

Fig. 64: Identifying PCV Valve
Courtesy of AMERICAN HONDA MOTOR CO., INC.

PCV VALVE	**INSPECTION**
	REMOVAL AND INSTALLATION

PCV VALVE INSPECTION

INSPECTION

1. PCV Valve - Inspection
    1. Check the PCV valve (A), hoses (B), and connections for leaks or restrictions.

GETtheMANUALS.org

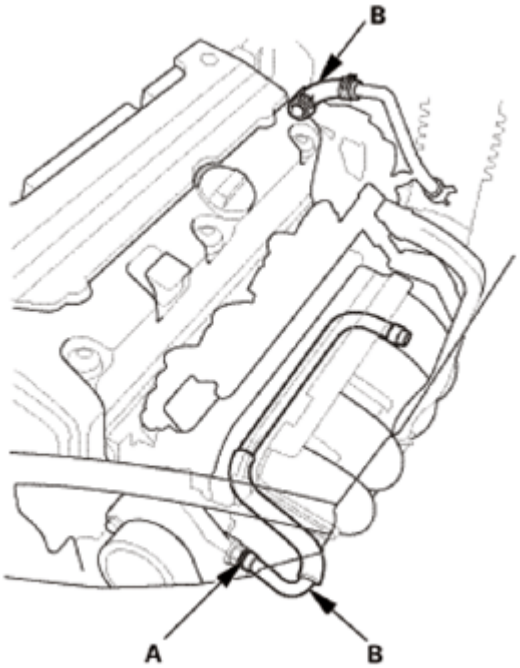

Fig. 65: Identifying PCV Valve And Hoses
Courtesy of AMERICAN HONDA MOTOR CO., INC.

2. Start the engine.
3. At idle, make sure there is a clicking sound from the PCV valve when the hose between the PCV valve and the intake manifold is lightly pinched (A) with your fingers or pliers. If there is no clicking sound, check the PCV valve washer for cracks or damage. If the washer is OK, replace the PCV valve, and recheck.

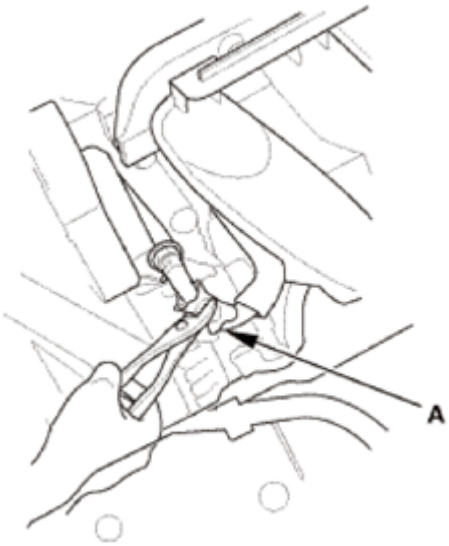

Fig. 66: pinching Hose
Courtesy of AMERICAN HONDA MOTOR CO., INC.

GETtheMANUALS.org

PGM-FI SYSTEM COMPONENT LOCATION INDEX

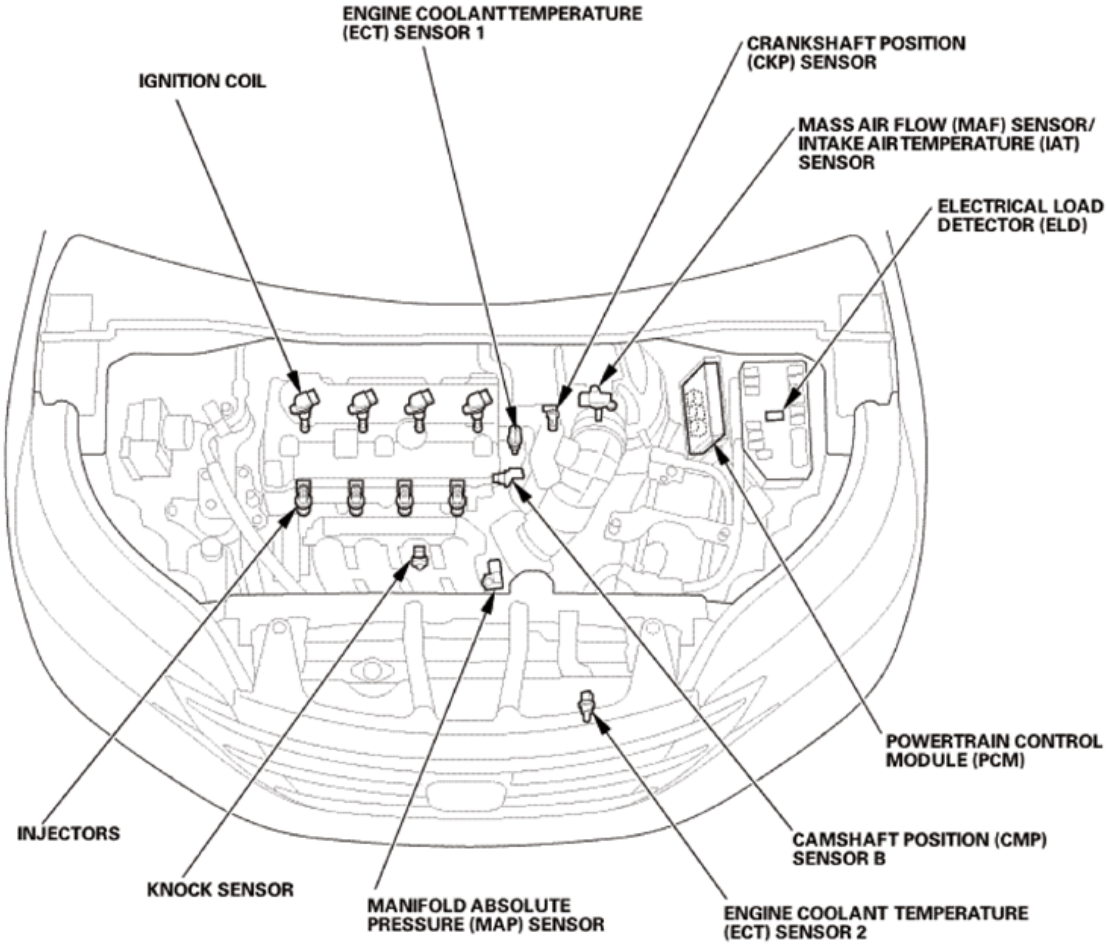

Fig. 67: PGM-FI System Components Location (1 Of 2)
Courtesy of AMERICAN HONDA MOTOR CO., INC.

GETtheMANUALS.org

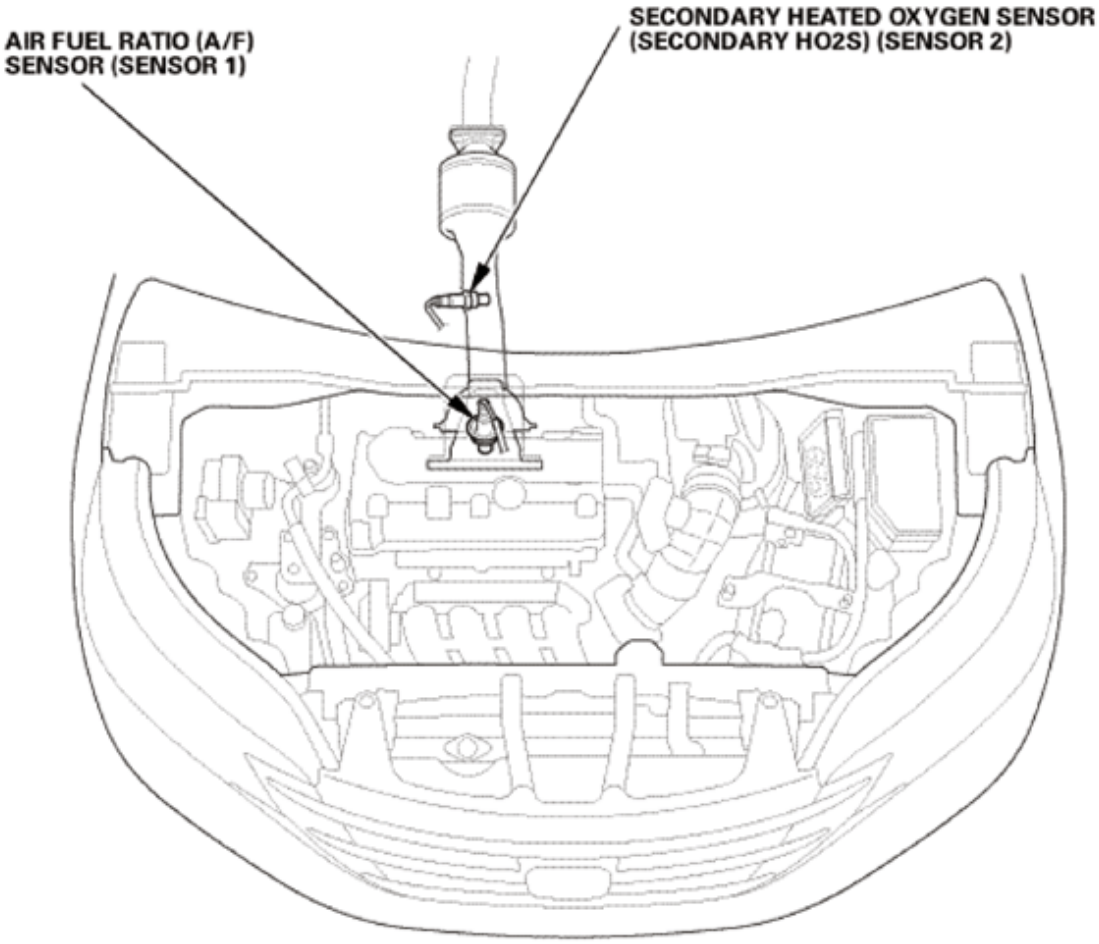

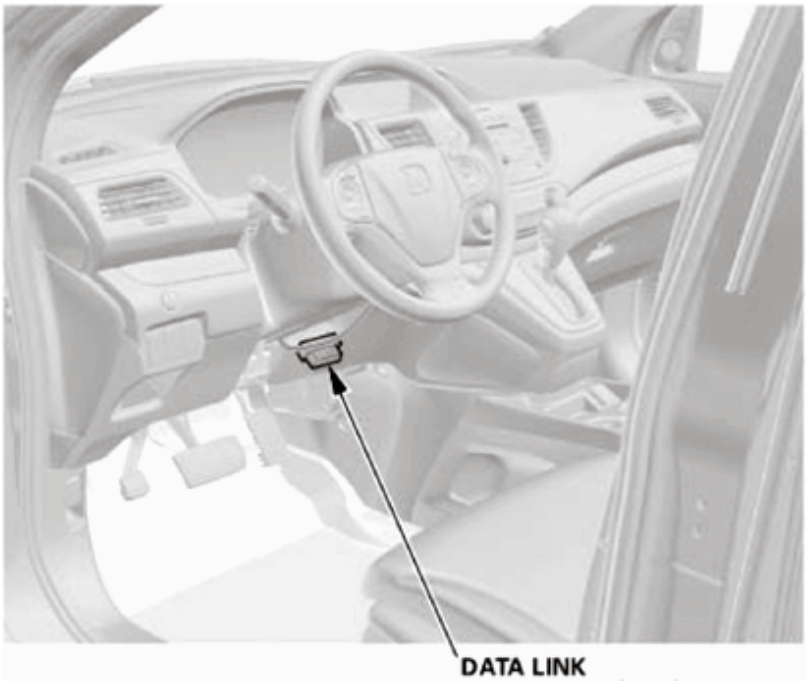

GETtheMANUALS.org

Fig. 68: PGM-FI System Components Location (2 Of 2)
Courtesy of AMERICAN HONDA MOTOR CO., INC.

AIR FUEL RATIO (A/F) SENSOR (SENSOR 1)	**REMOVAL AND INSTALLATION**
CAMSHAFT POSITION (CMP) SENSOR B	**REMOVAL AND INSTALLATION**
CRANKSHAFT POSITION (CKP) SENSOR	**REMOVAL AND INSTALLATION**
DATA LINK CONNECTOR (DLC)	**CIRCUIT TROUBLESHOOTING**
ELECTRICAL LOAD DETECTOR (ELD)	**REMOVAL AND INSTALLATION**
ENGINE COOLANT TEMPERATURE (ECT) SENSOR 1	**REMOVAL AND INSTALLATION**
ENGINE COOLANT TEMPERATURE (ECT) SENSOR 2	**REMOVAL AND INSTALLATION**
INJECTORS	REMOVAL AND INSTALLATION
KNOCK SENSOR	**REMOVAL AND INSTALLATION**
MANIFOLD ABSOLUTE PRESSURE (MAP) SENSOR	**REMOVAL AND INSTALLATION**
MASS AIR FLOW (MAF) SENSOR/INTAKE AIR TEMPERATURE (IAT) SENSOR	**REMOVAL AND INSTALLATION**
POWERTRAIN CONTROL MODULE (PCM)	**Update** See **PCM REMOVAL AND INSTALLATION** or **PCM UPDATE**
	Removal and Installation See **PCM REMOVAL AND INSTALLATION** or **PCM UPDATE**
SECONDARY HEATED OXYGEN SENSOR (SECONDARY HO2S) (SENSOR 2)	**REMOVAL AND INSTALLATION**

GETtheMANUALS.org

FUEL FILL DOOR

Fuel Fill Door - CR-V

FUEL FILL DOOR ADJUSTMENT

ADJUSTMENT

1. Fuel Fill Door - Adjustment
    1. Slightly loosen the hinge mounting bolts (A).
    2. Adjust the fuel fill door (B) in or out until it is flush with the body and up or down as necessary to equalize the gaps.
    3. Tighten the hinge mounting bolts.
    4. Make sure the fuel fill door opens properly and locks securely, and check that the rear of the door is flush with the body.

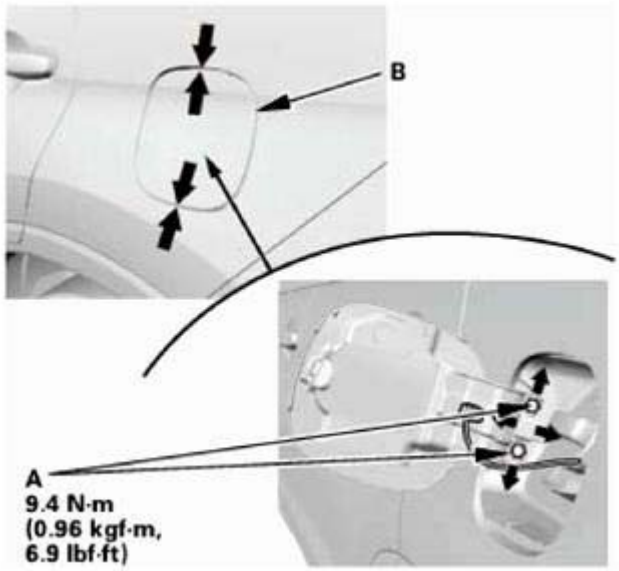

Fig. 1: Adjusting Fuel Fill Door
Courtesy of AMERICAN HONDA MOTOR CO., INC.

5. Apply multipurpose grease to each location indicated by the arrows.
6. Apply touch-up paint to the hinge mounting bolts and around the hinges.

GETtheMANUALS.org

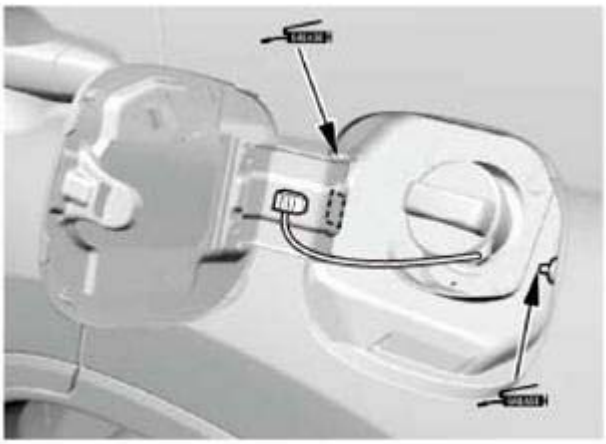

Fig. 2: Identifying Multipurpose Grease Applying Area On Hinge Mounting Bolt
Courtesy of AMERICAN HONDA MOTOR CO., INC.

FUEL FILL DOOR COMPONENT LOCATION INDEX

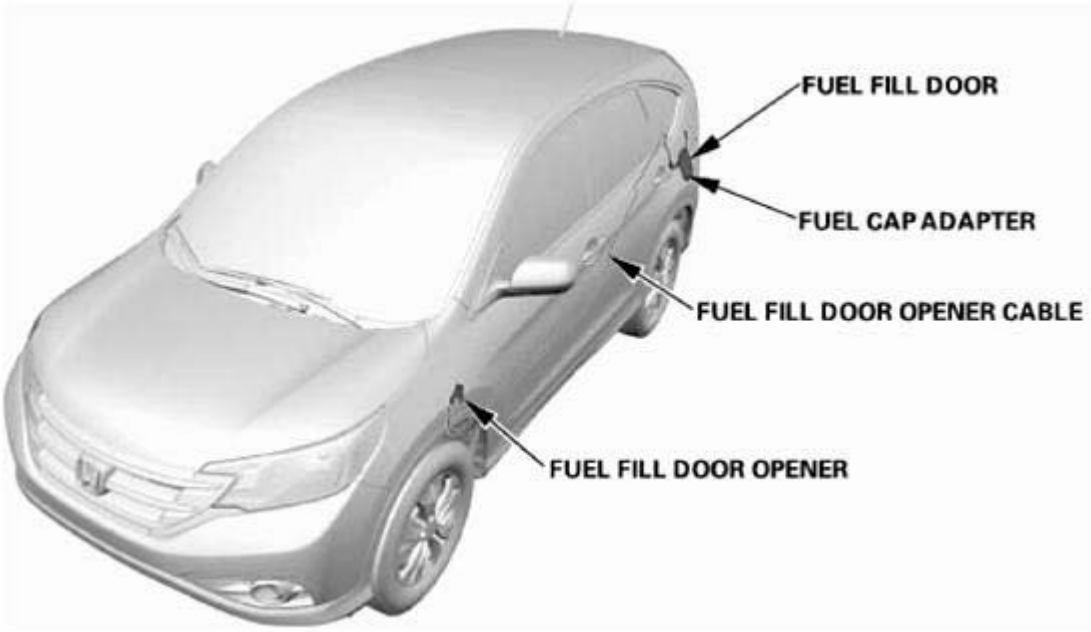

Fig. 3: Identifying Fuel Cap Adapter, Fuel Fill Door Adjustment, Fuel Fill Door Opener And Cable
Courtesy of AMERICAN HONDA MOTOR CO., INC.

FUEL CAP ADAPTER	REMOVAL AND INSTALLATION
FUEL FILL DOOR	**ADJUSTMENT**
FUEL FILL DOOR OPENER	**REMOVAL AND INSTALLATION**
FUEL FILL DOOR OPENER CABLE	**REMOVAL AND INSTALLATION**

FUEL FILL DOOR OPENER CABLE REMOVAL AND INSTALLATION

GETtheMANUALS.org

REMOVAL

1. Front Door Sill Trim
    1. Detach the hooks (A) and the tabs (B) from the kick panel (C) and the B-pillar lower trim (D), and pull up the front door inner sill trim (E) by hand to detach the clips (F), then remove the trim.

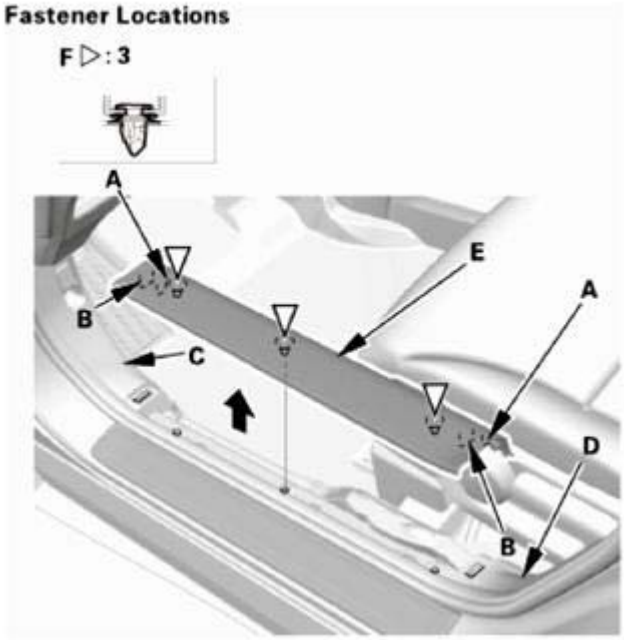

Fig. 4: Identifying Front Door Sill Trim Fasteners
Courtesy of AMERICAN HONDA MOTOR CO., INC.

2. Rear Door Sill Trim
    1. Pull the release strap to fold down the rear seat, then lift-up and latch the rear seat-back in the upright position.
    2. Detach the hooks (A) and the tab (B) from the B-pillar lower trim (C) and the rear side trim panel (D), and pull up the rear door inner sill trim (E) by hand to detach the clips (F, G), then remove the trim.

GETtheMANUALS.org

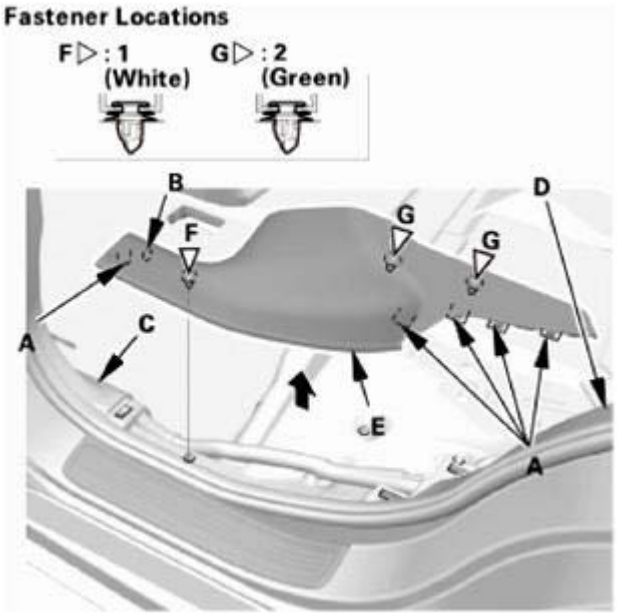

Fig. 5: Identifying Rear Door Sill Trim Fasteners
Courtesy of AMERICAN HONDA MOTOR CO., INC.

3. Front/Rear Door Opening Seals As Needed

Front

1. Pull out the door opening seals (A) from the trim hooks (B) around the door opening flange as needed.

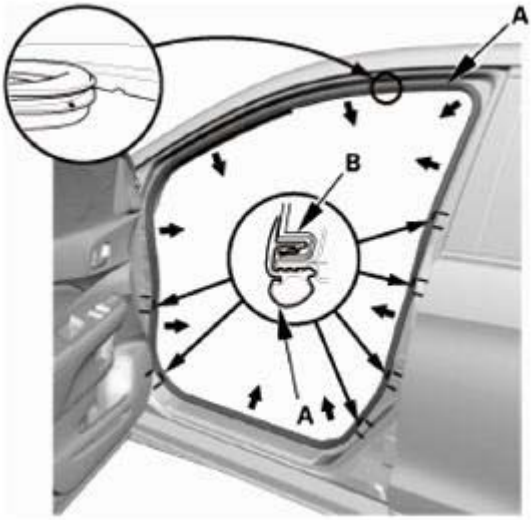

Fig. 6: Pulling Out Front Door Opening Seals From Trim Hooks
Courtesy of AMERICAN HONDA MOTOR CO., INC.

Rear

GETtheMANUALS.org

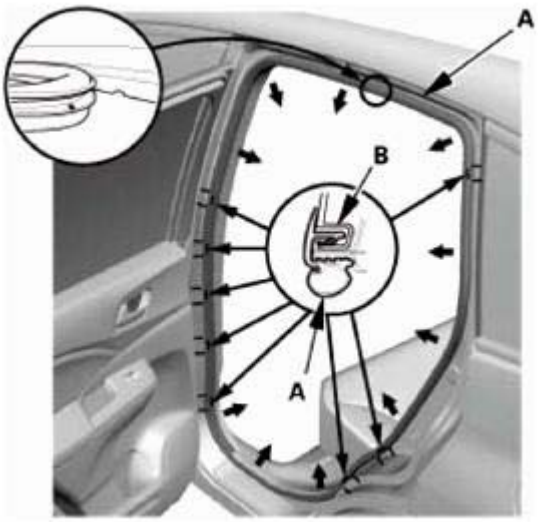

Fig. 7: Pulling Out Rear Door Opening Seals From Trim Hooks
Courtesy of AMERICAN HONDA MOTOR CO., INC.

4. Kick Panel
    1. Pull out the front door opening seal (A) as needed from the kick panel hooks and the door opening flange.
    2. Pull back the kick panel by hand to detach the clips (B), then remove the driver's side kick panel (C).

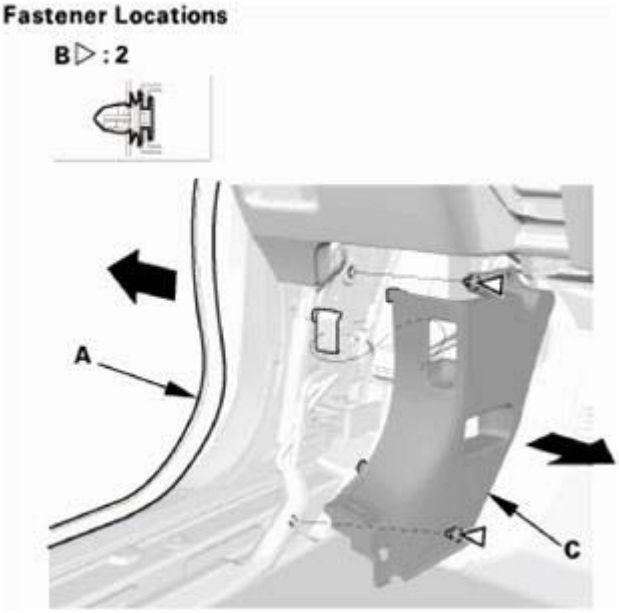

Fig. 8: Removing Driver's Side Kick Panel
Courtesy of AMERICAN HONDA MOTOR CO., INC.

5. Fuel Fill Door Opener

GETtheMANUALS.org

1. Remove the bolts (A), then remove the fuel fill door opener/cable (B).
2. Disconnect the fuel fill door opener cable (C) from the opener (D).

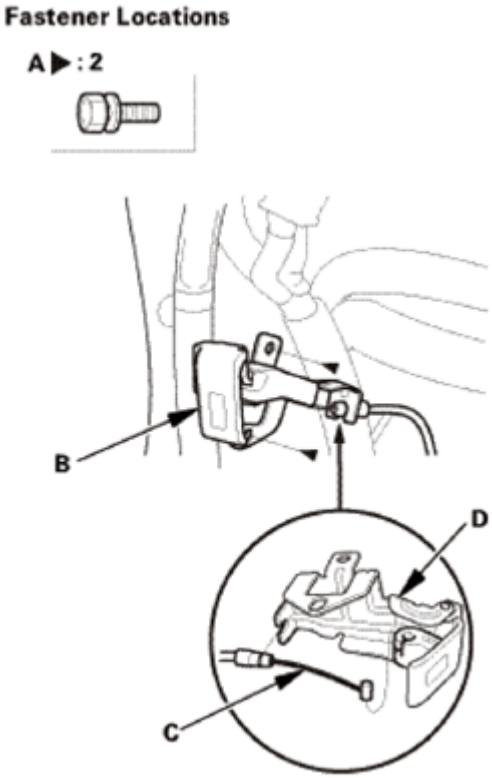

Fig. 9: Identifying Fuel Fill Door Opener, Cable And Bolts
Courtesy of AMERICAN HONDA MOTOR CO., INC.

6. B-Pillar Lower Trim
    1. Slide the front seat forward fully.
    2. Pull back the bottom portion of the B-pillar lower trim (A) by hand to detach the clips (B).
    3. Pull back the upper portion of the B-pillar lower trim to detach the upper hooks (C), then remove the B-pillar lower trim.

GETtheMANUALS.org

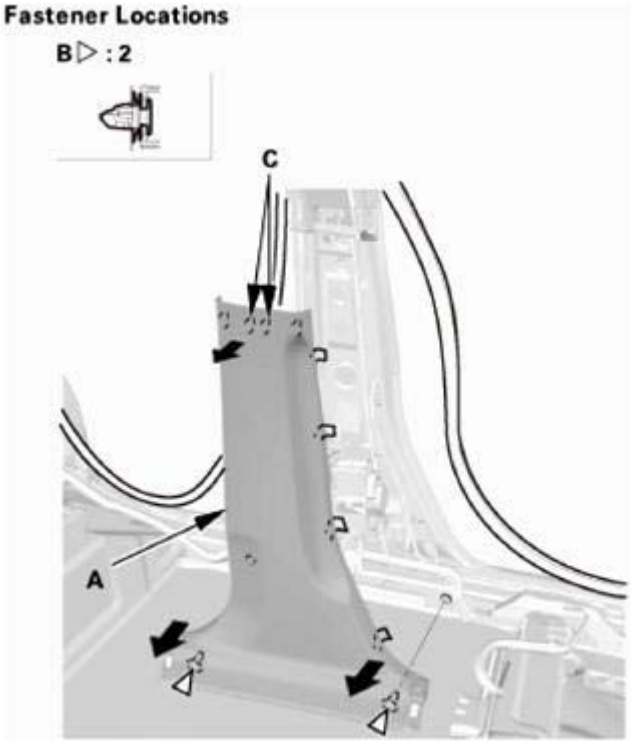

Fig. 10: Removing B-Pillar Lower Trim Upper Portion
Courtesy of AMERICAN HONDA MOTOR CO., INC.

7. Tonneau Cover (For Some Models)
    1. Remove the tonneau cover (A).

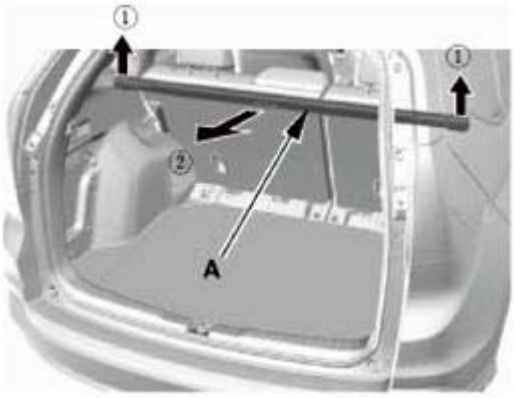

Fig. 11: Removing Tonneau Cover
Courtesy of AMERICAN HONDA MOTOR CO., INC.

8. Cargo Floor Cover
    1. Remove the cargo floor cover (A).

GETtheMANUALS.org

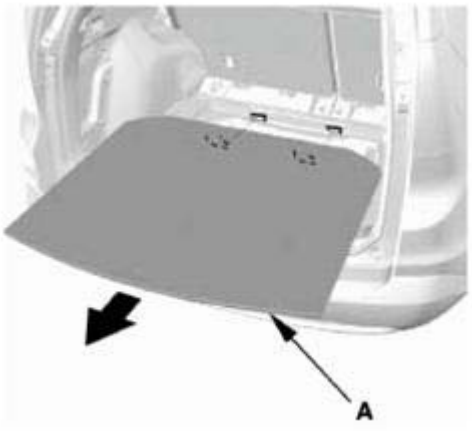

Fig. 12: Removing Cargo Floor Cover
Courtesy of AMERICAN HONDA MOTOR CO., INC.

9. Tailgate Weatherstrip As Needed
    1. Detach the tailgate weatherstrip (A) as needed.

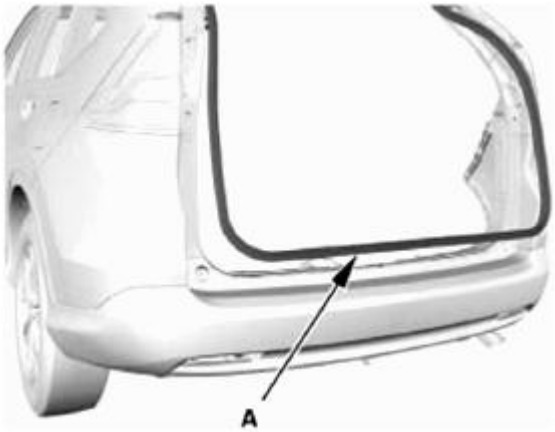

Fig. 13: Removing Tailgate Weatherstrip
Courtesy of AMERICAN HONDA MOTOR CO., INC.

10. Rear Trim Panel
    1. Remove the clips (A).
    2. Detach the hooks (B) and the tabs (C) from the rear side trim panels (D), and pull up the rear trim panel (E) by hand to detach the clips (F, G), then remove the rear trim panel.

GETtheMANUALS.org

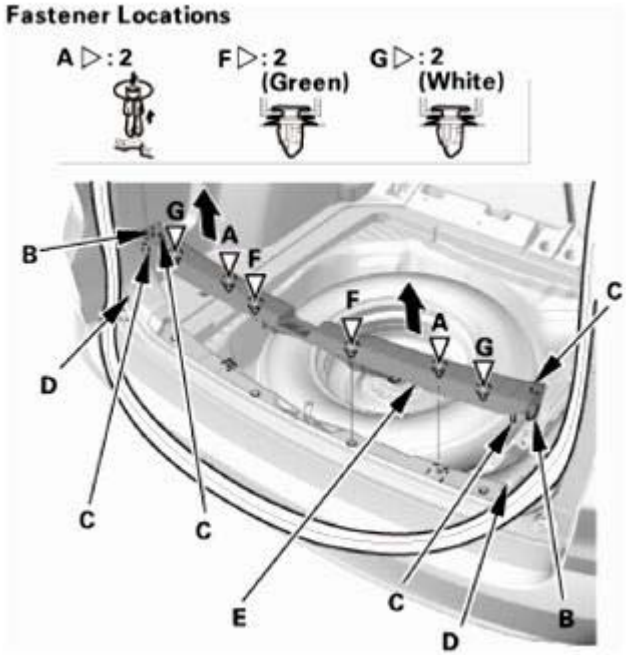

Fig. 14: Removing Rear Trim Panel
Courtesy of AMERICAN HONDA MOTOR CO., INC.

11. Rear Damper Maintenance Cover
    1. Fold down the rear seat-back.
    2. Pull up the rear damper maintenance cover (A) by hand to detach the hooks (B), then remove the rear damper maintenance cover.

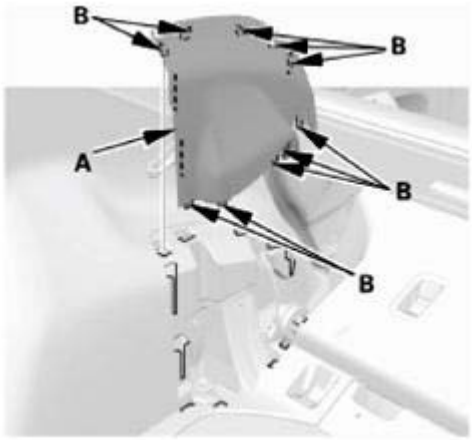

Fig. 15: Identifying Rear Damper Maintenance Cover And Hooks
Courtesy of AMERICAN HONDA MOTOR CO., INC.

12. Left Rear Carpet Trim
    1. Detach the clips (A), then tack up the rear seat-back cover (B).

GETtheMANUALS.org

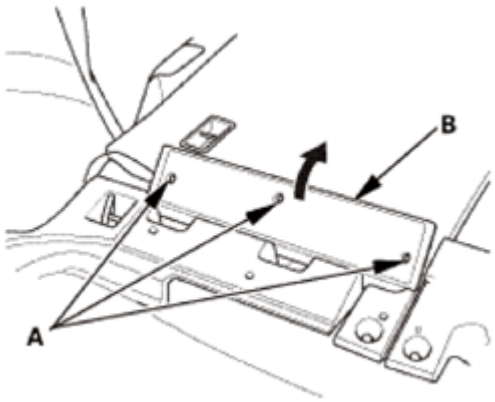

Fig. 16: Removing Rear Seat-Back Cover Clips
Courtesy of AMERICAN HONDA MOTOR CO., INC.

2. Detach the hooks (A) from the rear side trim panel (B), and pull up the rear carpet trim (C) by hand to detach the clips (D), then remove the rear carpet trim.

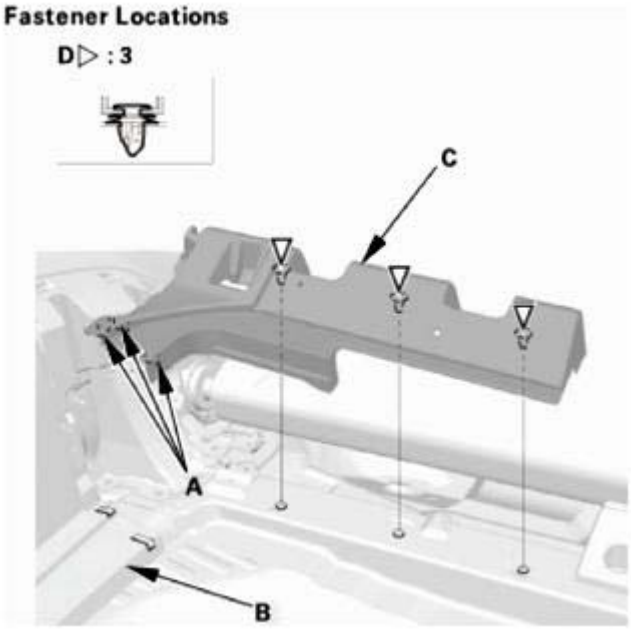

Fig. 17: Identifying Rear Side Trim Panel And Rear Carpet Trim Fasteners
Courtesy of AMERICAN HONDA MOTOR CO., INC.

13. Rear Side Trim Panel
    1. Carefully pry out on the upper hook (A) in the rear seat release lever cap (B) with the appropriate trim tool, then pull back the rear seat release lever cap to remove it.
    2. Remove the screws (C).

GETtheMANUALS.org

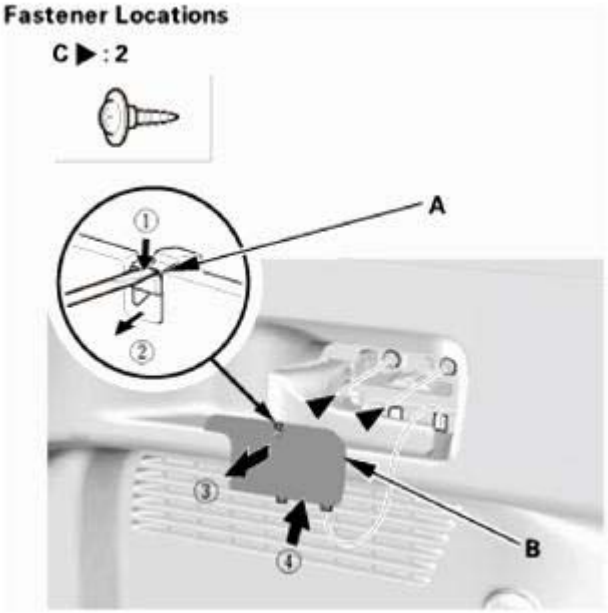

Fig. 18: Removing Rear Seat Release Lever Cap Upper Hook Using Trim Tool
Courtesy of AMERICAN HONDA MOTOR CO., INC.

3. Push in the center pin (A), then remove the trunk hook (B).

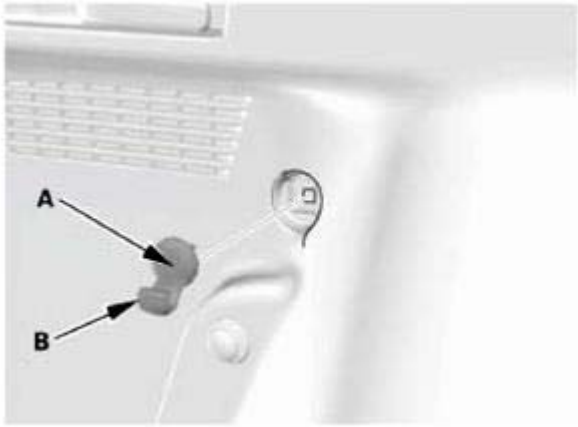

Fig. 19: Identifying Center Pin And Trunk Hook
Courtesy of AMERICAN HONDA MOTOR CO., INC.

4. Remove the bolt (A), then remove the tie-down hook (B).

GETtheMANUALS.org

Fig. 20: Identifying Tie-Down Hook And Fasteners
Courtesy of AMERICAN HONDA MOTOR CO., INC.

5. Remove the clips (A, B).
6. Detach the hooks (C) and the tabs (D) from the quarter pillar trim (E), and pull out the rear side trim panel (F) by hand to detach the clips (G, H).

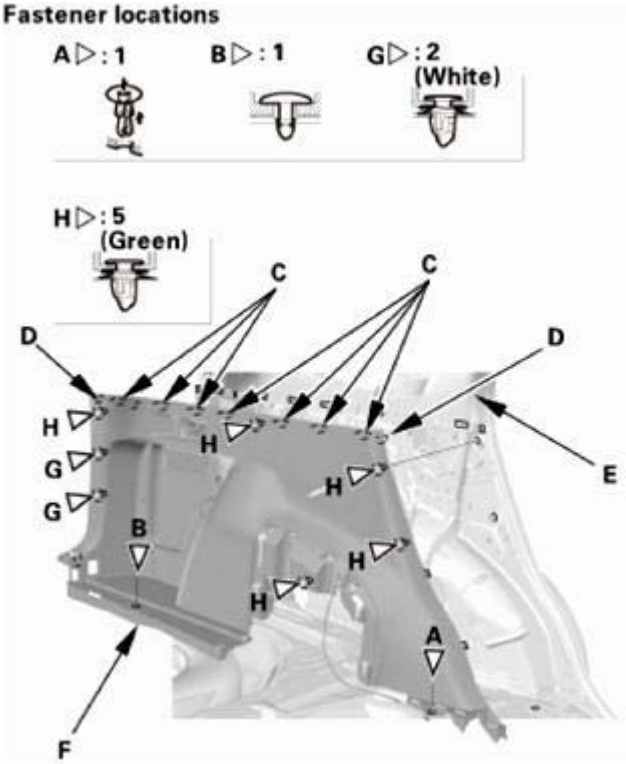

Fig. 21: Identifying Quarter Pillar Trim And Rear Side Trim Panel Fasteners

GETtheMANUALS.org

Courtesy of AMERICAN HONDA MOTOR CO., INC.

7. Remove the rear seat release lever (A) from the rear side trim panel (B).

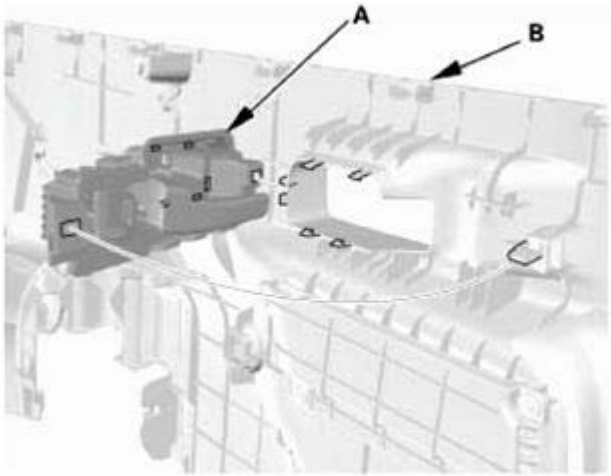

Fig. 22: Identifying Rear Seat Release Lever And Rear Side Trim Panel
Courtesy of AMERICAN HONDA MOTOR CO., INC.

8. Detach the rear seat release cable (A) from the clips of the rear side trim panel (B), then remove the rear side trim panel.

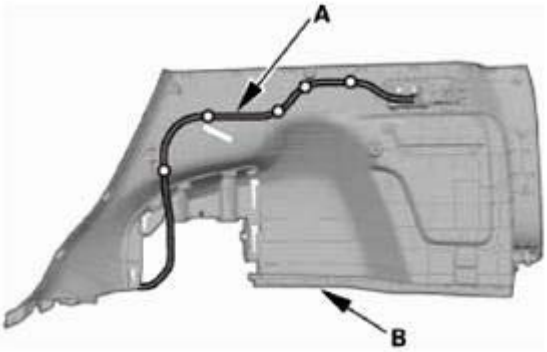

Fig. 23: Identifying Rear Seat Release Cable And Rear Side Trim Panel
Courtesy of AMERICAN HONDA MOTOR CO., INC.

14. Fuel Fill Door Opener Cable
    1. Remove the cushion tape (A) securing the fuel fill door opener cable (B), and then detach the fuel fill door opener cable from the clips (C, D).

GETtheMANUALS.org

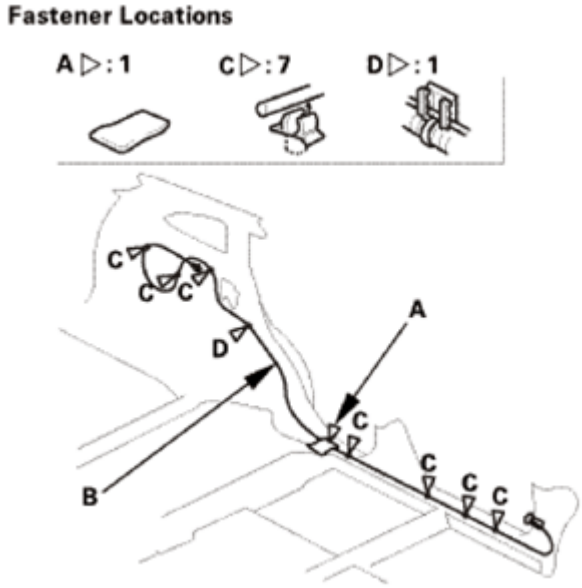

Fig. 24: Identifying Fuel Fill Door Opener Cable, Cushion Tape And Clips
Courtesy of AMERICAN HONDA MOTOR CO., INC.

2. Remove the fuel fill door latch (A) from the body by turning it 90°, then remove the opener cable (B) from the vehicle.

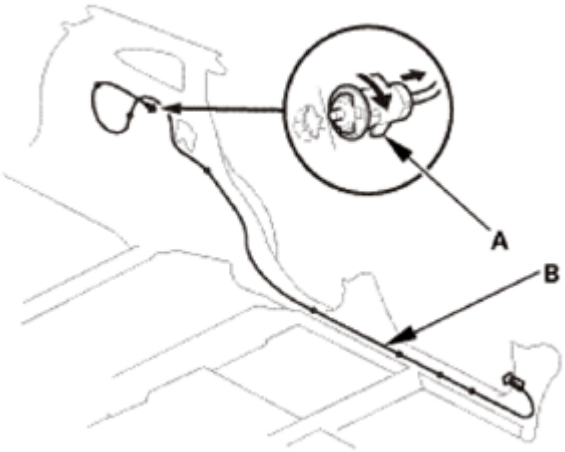

Fig. 25: Turning Fuel Fill Door Latch
Courtesy of AMERICAN HONDA MOTOR CO., INC.

INSTALLATION

1. Fuel Fill Door Opener Cable
    1. Install the fuel fill door latch (A) to the body by turning it 90°.

GETtheMANUALS.org

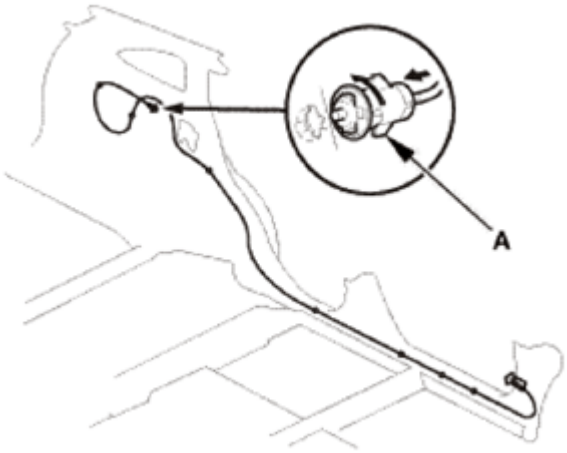

Fig. 26: Turning Fuel Fill Door Latch
Courtesy of AMERICAN HONDA MOTOR CO., INC.

2. Install the fuel fill door opener cable (A) to the clips (B), and install the cushion tape (C) securing the fuel fill door opener cable.

NOTE: Align the marks (D) with the clips as shown.

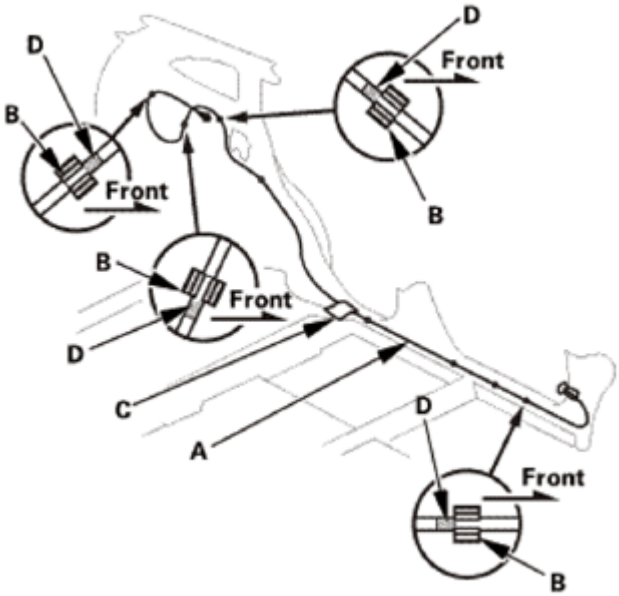

Fig. 27: Identifying Fuel Fill Door Opener Cable, Cushion Tape And Clips
Courtesy of AMERICAN HONDA MOTOR CO., INC.

2. Rear Side Trim Panel
    1. Install the rear seat release cable (A) to the clips (B) of the rear side trim panel (C).

NOTE: Align the marks (D) with the clips as shown.

GETtheMANUALS.org

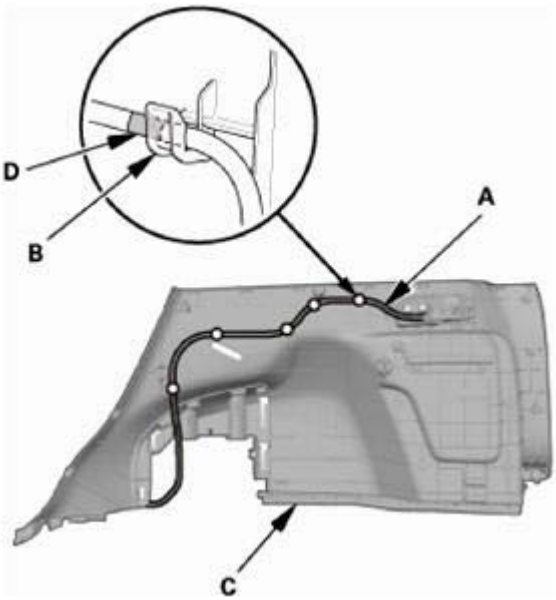

Fig. 28: Aligning Rear Seat Release Cable Marks And Clips
Courtesy of AMERICAN HONDA MOTOR CO., INC.

2. Install the rear seat release lever (A) to the rear side trim panel (B).

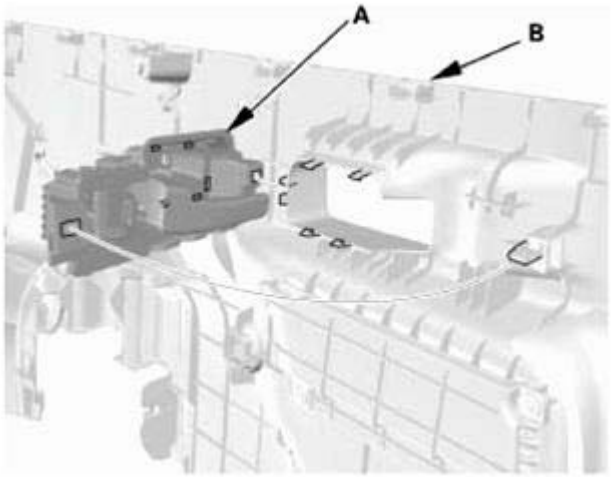

Fig. 29: Identifying Rear Seat Release Lever And Rear Side Trim Panel
Courtesy of AMERICAN HONDA MOTOR CO., INC.

3. Install the rear side trim panel (A). Make sure the hooks (B), the tabs (C), and the clips (D, E) snap into place securely.
4. Install the clips (F, G).

GETtheMANUALS.org

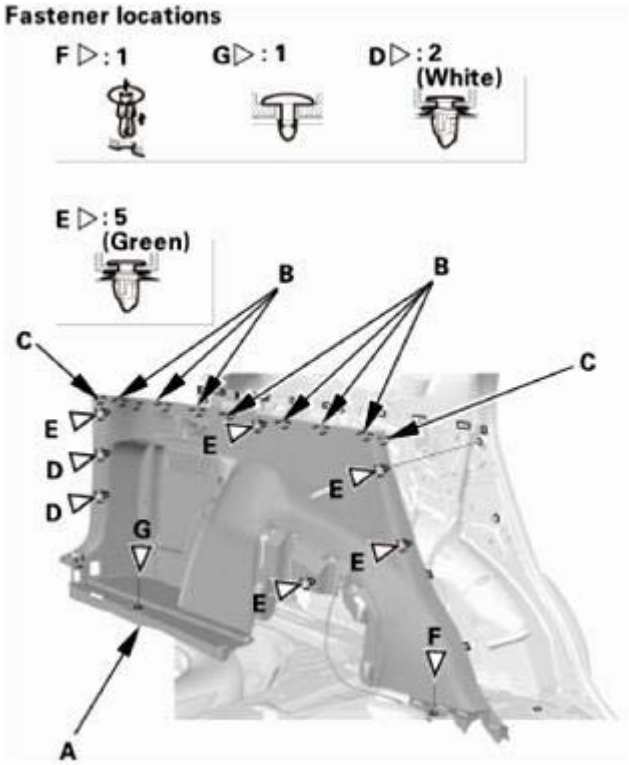

Fig. 30: Identifying Rear Side Trim Panel, Tab And Fasteners
Courtesy of AMERICAN HONDA MOTOR CO., INC.

5. Install the tie-down hook (A), then install the bolt (B).

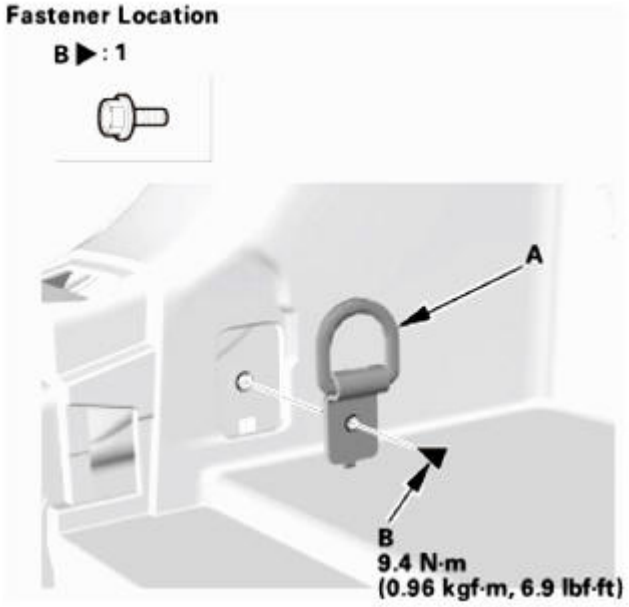

Fig. 31: Identifying Tie-Down Hook And Bolt With Torque Specification
Courtesy of AMERICAN HONDA MOTOR CO., INC.

GETtheMANUALS.org

6. Install the trunk hook (A).

Fig. 32: Identifying Trunk Hook
Courtesy of AMERICAN HONDA MOTOR CO., INC.

7. Install the screws (A), then install the rear seat release lever cap (B). Make sure the upper hook (C) and the lower hooks (D) snap into place securely.

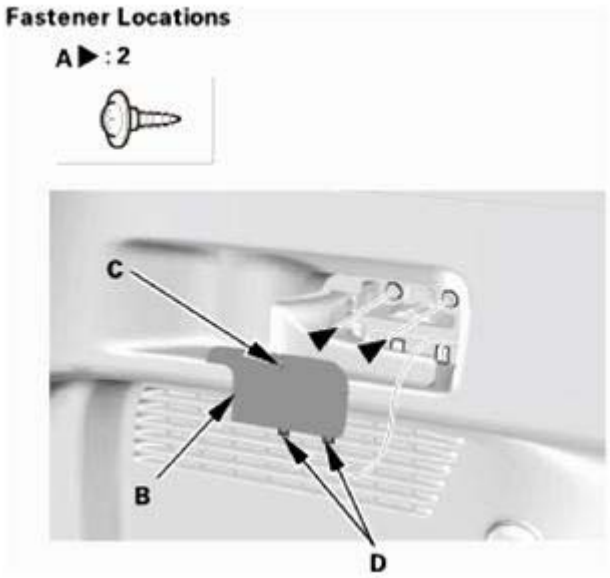

Fig. 33: Identifying Rear Seat Release Lever Cap, Upper, Lower Hooks And Screws
Courtesy of AMERICAN HONDA MOTOR CO., INC.

3. Left Rear Carpet Trim
    1. Install the rear carpet trim (A). Make sure the clips (B) and the hooks (C) snap into place securely.

GETtheMANUALS.org

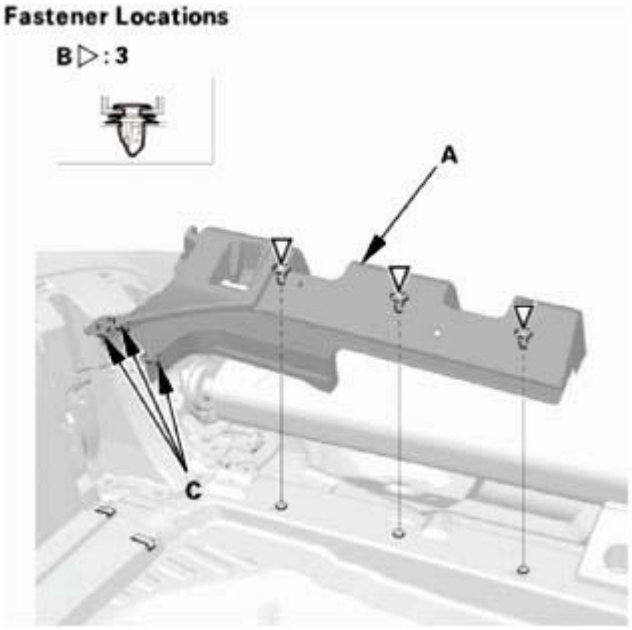

Fig. 34: Identifying Rear Carpet Trim Fasteners
Courtesy of AMERICAN HONDA MOTOR CO., INC.

2. Install the rear seat-back cover (A). Make sure the clips (B) snap into place securely.

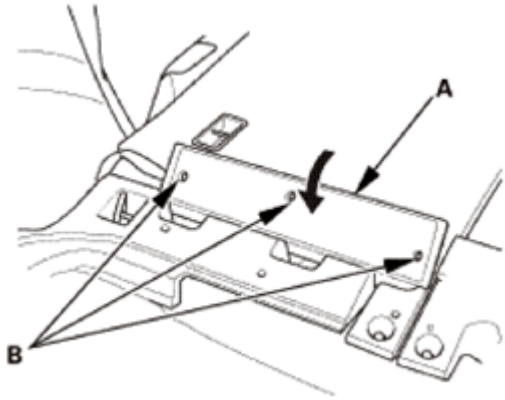

Fig. 35: Installing Rear Seat-Back Cover
Courtesy of AMERICAN HONDA MOTOR CO., INC.

4. Rear Damper Maintenance Cover
    1. Fold down the rear seat-back.
    2. Install the rear damper maintenance cover (A). Make sure the hooks (B) snap into place securely.

GETtheMANUALS.org

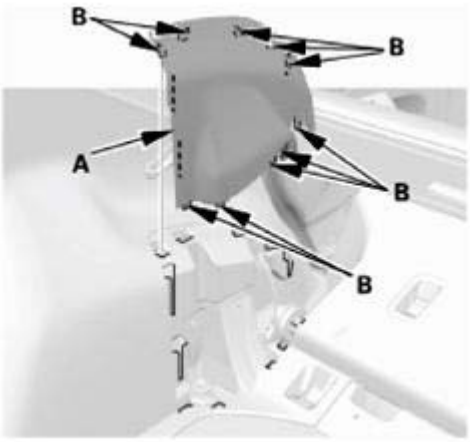

Fig. 36: Identifying Rear Damper Maintenance Cover And Hooks
Courtesy of AMERICAN HONDA MOTOR CO., INC.

5. Rear Trim Panel
    1. Install the rear trim panel (A). Make sure the clips (B, C), the hooks (D), and the tabs (E) snap into place securely.
    2. Install the clips (F).

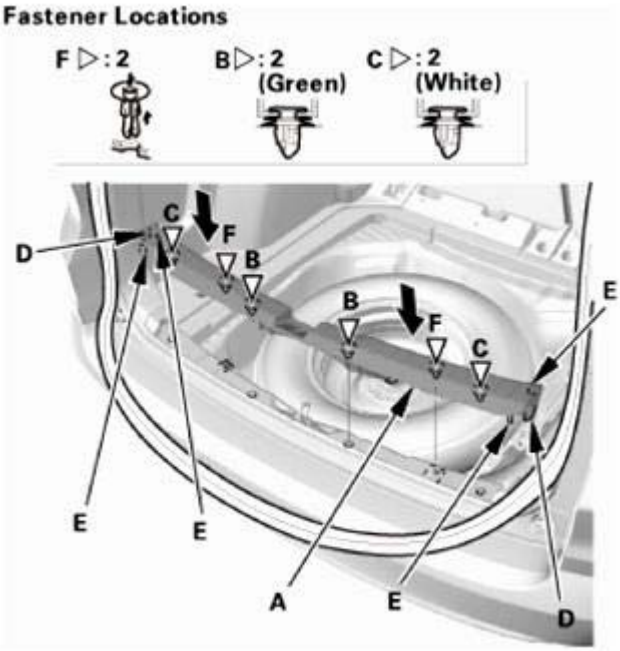

Fig. 37: Installing Rear Trim Panel
Courtesy of AMERICAN HONDA MOTOR CO., INC.

6. Tailgate Weatherstrip As Needed
    1. Locate the alignment mark (A) of the tailgate weatherstrip (B). Align the alignment mark (C) with the center of the lower area on the tailgate opening, then install the tailgate weatherstrip all the way

GETtheMANUALS.org

around.

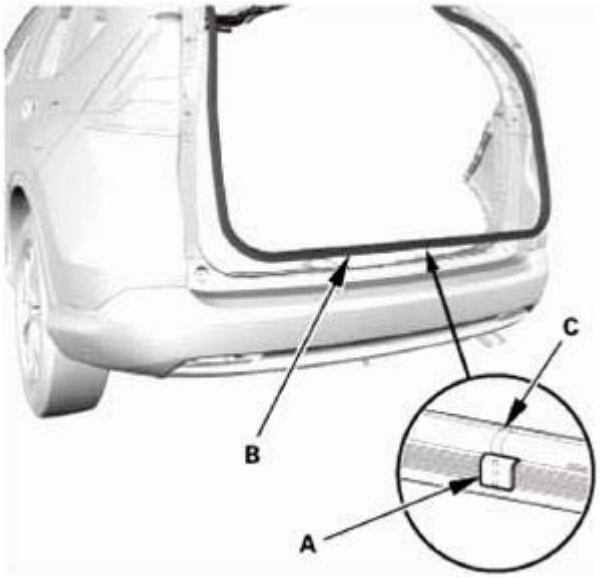

Fig. 38: Identifying Tailgate Weatherstrip And Alignment Mark
Courtesy of AMERICAN HONDA MOTOR CO., INC.

7. Cargo Floor Cover
    1. Install the cargo floor cover (A).

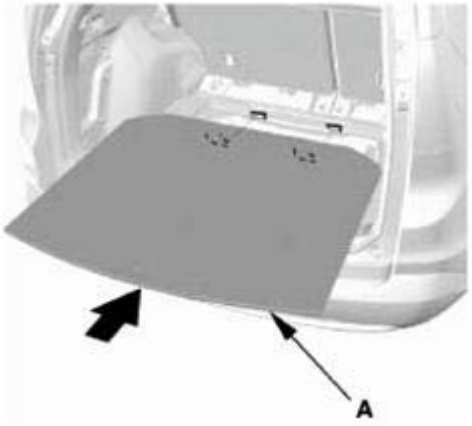

Fig. 39: Installing Cargo Floor Cover
Courtesy of AMERICAN HONDA MOTOR CO., INC.

8. Tonneau Cover (For Some Models)
    1. Install the tonneau cover (A).

GETtheMANUALS.org

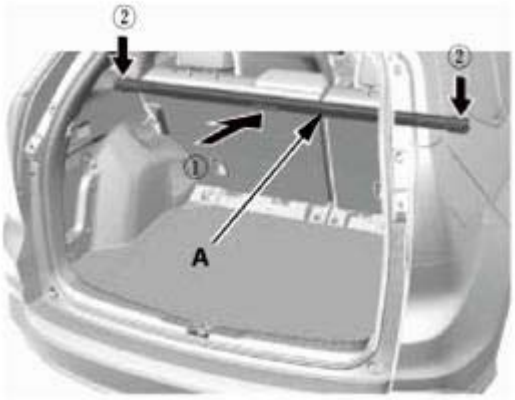

Fig. 40: Installing Tonneau Cover
Courtesy of AMERICAN HONDA MOTOR CO., INC.

9. B-Pillar Lower Trim
    1. Install the B-pillar lower trim (A). Make sure the clips (B) and the hooks (C) snap into place securely.

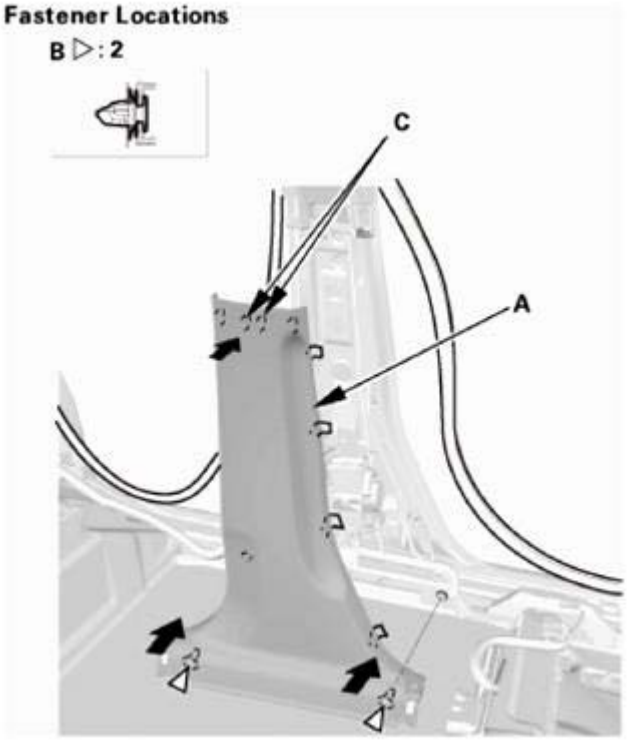

Fig. 41: Installing B-Pillar Lower Trim
Courtesy of AMERICAN HONDA MOTOR CO., INC.

10. Fuel Fill Door Opener
    1. Connect the fuel fill door opener cable (A) to the opener (B).
    2. Install the fuel fill door opener/cable (C), then install the bolts (D).

GETtheMANUALS.org

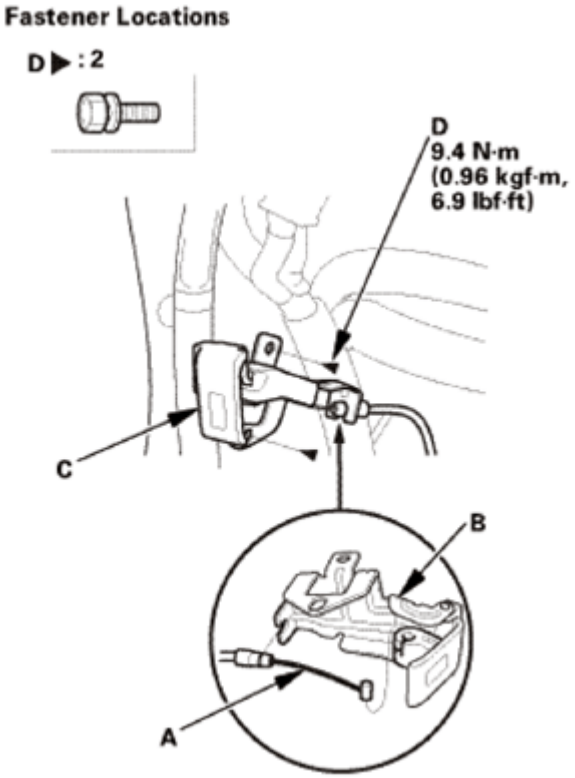

Fig. 42: Identifying Fuel Fill Door Opener/Cable And Bolt With Torque Specifications
Courtesy of AMERICAN HONDA MOTOR CO., INC.

11. Kick Panel
    1. Install the driver's side kick panel (A). Make sure the clips (B) snap into place securely.
    2. Install the front door opening seal (C).

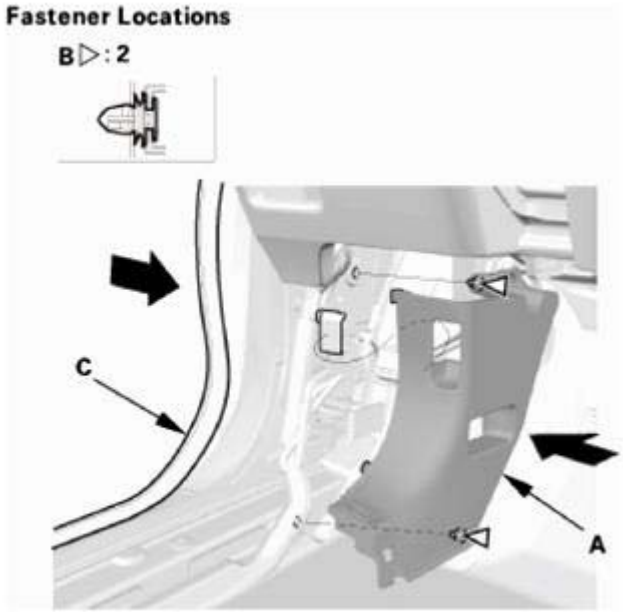

GETtheMANUALS.org

Fig. 43: Installing Front Door Opening Seal
Courtesy of AMERICAN HONDA MOTOR CO., INC.

12. Front/Rear Door Opening Seals As Needed

Front

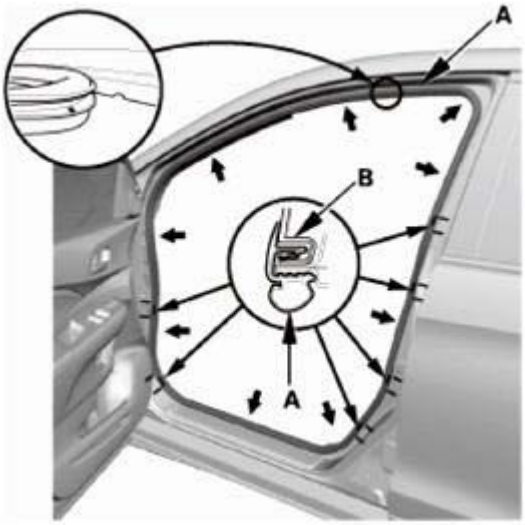

Fig. 44: Installing Front Door Opening Seals
Courtesy of AMERICAN HONDA MOTOR CO., INC.

Rear

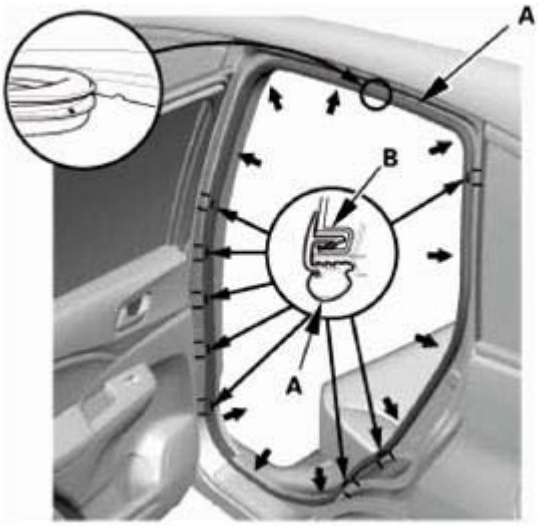

Fig. 45: Installing Rear Door Opening Seals
Courtesy of AMERICAN HONDA MOTOR CO., INC.

1. Install the door opening seals (A). Make sure the seal is installed securely into the hooks (B).

GETtheMANUALS.org

13. Rear Door Sill Trim
    1. Pull the release strap to fold down the rear seat, then lift-up and latch the rear seat-back in the upright position.
    2. Install the rear door inner sill trim (A). Make sure the clips (B, C), the hooks (D), and the tab (E) snap into place securely.

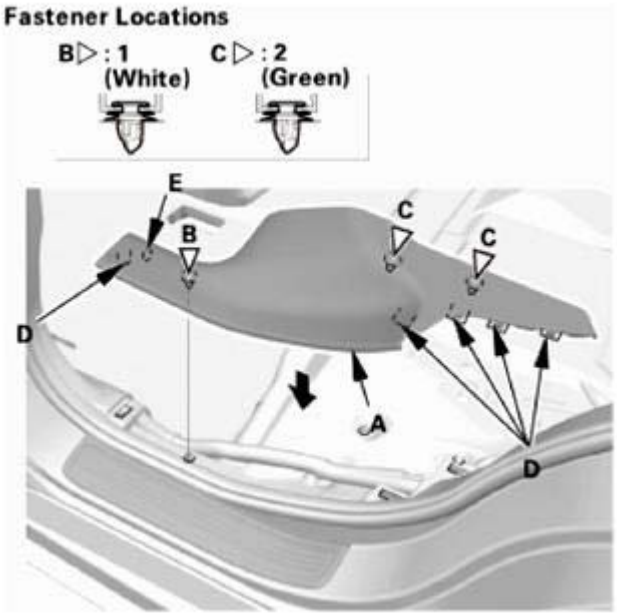

Fig. 46: Installing Rear Door Inner Sill Trim
Courtesy of AMERICAN HONDA MOTOR CO., INC.

14. Front Door Sill Trim
    1. Install the front door inner sill trim (A). Make sure the clips (B), the hooks (C), and the tabs (D) snap into place securely.

GETtheMANUALS.org

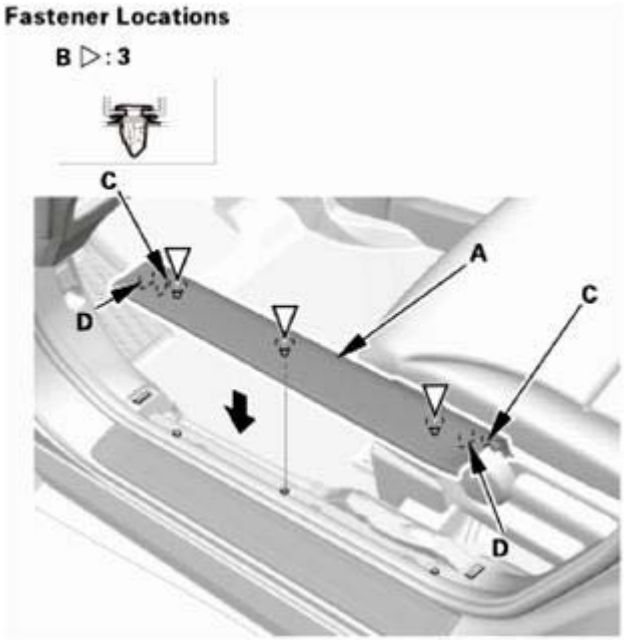

Fig. 47: Installing Front Door Inner Sill Trim
Courtesy of AMERICAN HONDA MOTOR CO., INC.

FUEL FILL DOOR OPENER REMOVAL AND INSTALLATION

REMOVAL

1. Front Door Sill Trim
    1. Detach the hooks (A) and the tabs (B) from the kick panel (C) and the B-pillar lower trim (D), and pull up the front door inner sill trim (E) by hand to detach the clips (F), then remove the trim.

GETtheMANUALS.org

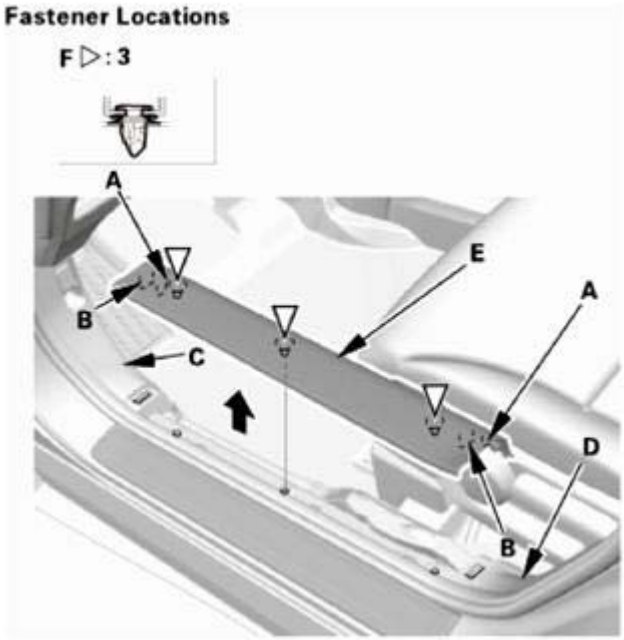

Fig. 48: Removing Front Door Sill Trim
Courtesy of AMERICAN HONDA MOTOR CO., INC.

2. Front Door Opening Seal As Needed
    1. Pull out the front door opening seal (A) from the trim hooks (B) around the front door opening flange as needed.

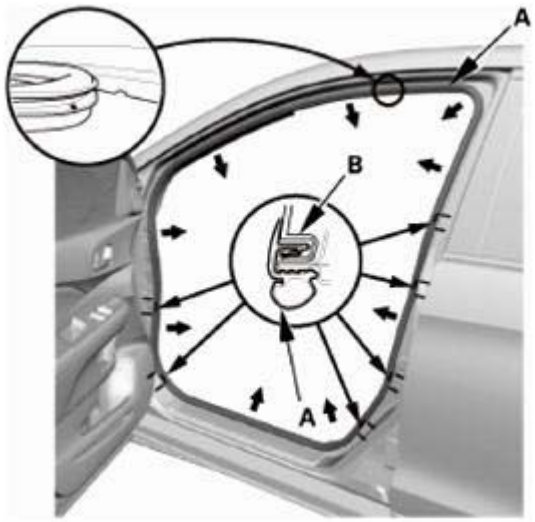

Fig. 49: Pulling Out Front Door Opening Seal From Trim Hooks
Courtesy of AMERICAN HONDA MOTOR CO., INC.

3. Kick Panel
    1. Pull out the front door opening seal (A) as needed from the kick panel hooks and the door opening flange.

GETtheMANUALS.org

2. Pull back the kick panel by hand to detach the clips (B), then remove the driver's side kick panel (C).

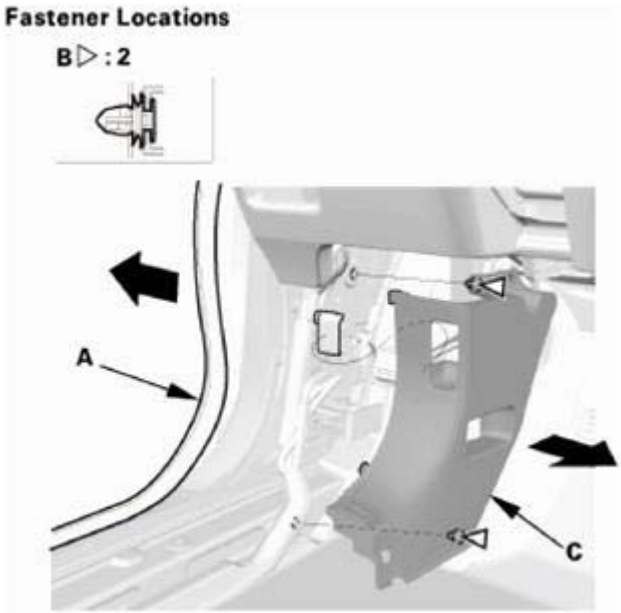

Fig. 50: Removing Driver's Side Kick Panel
Courtesy of AMERICAN HONDA MOTOR CO., INC.

4. Fuel Fill Door Opener
    1. Remove the bolts (A), then remove the fuel fill door opener/cable (B).
    2. Disconnect the fuel fill door opener cable (C) from the opener (D).

GETtheMANUALS.org

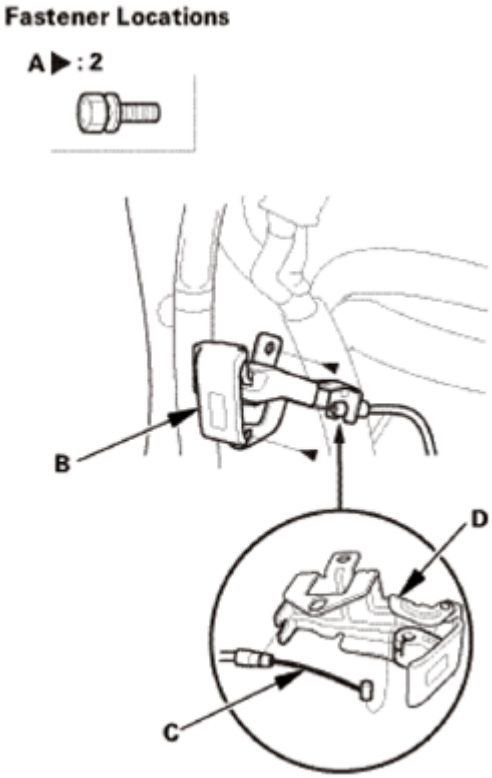

Fig. 51: Identifying Fuel Fill Door Opener, Cable And Bolts
Courtesy of AMERICAN HONDA MOTOR CO., INC.

INSTALLATION

1. Fuel Fill Door Opener
    1. Connect the fuel fill door opener cable (A) to the opener (B).
    2. Install the fuel fill door opener/cable (C), then install the bolts (D).

GETtheMANUALS.org

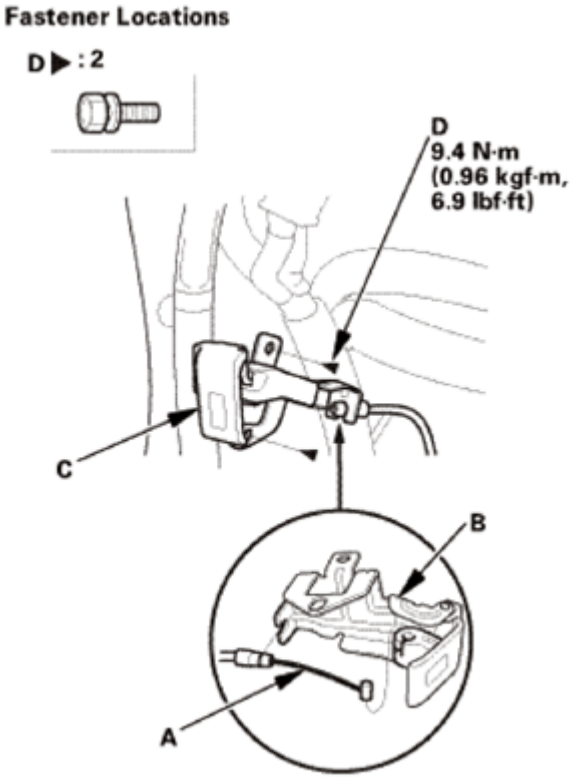

Fig. 52: Identifying Fuel Fill Door Opener, Cable And Bolt With Torque Specification
Courtesy of AMERICAN HONDA MOTOR CO., INC.

2. Kick Panel
    1. Install the driver's side kick panel (A). Make sure the clips (B) snap into place securely.
    2. Install the front door opening seal (C).

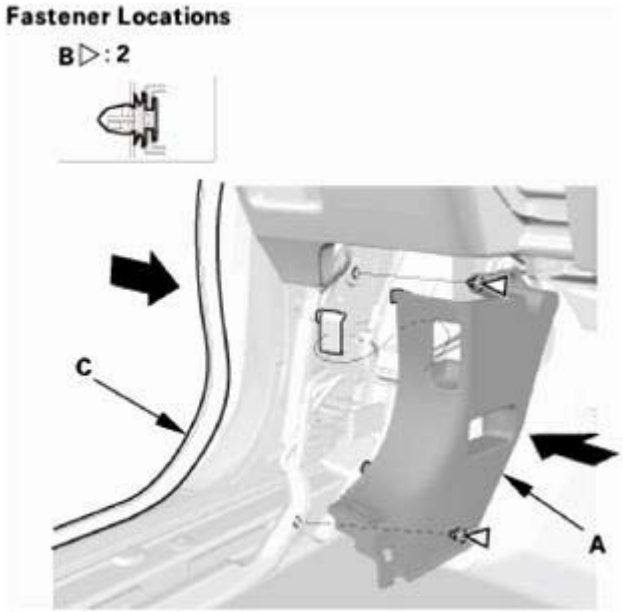

GETtheMANUALS.org

Fig. 53: Installing Driver's Side Kick Panel
Courtesy of AMERICAN HONDA MOTOR CO., INC.

3. Front Door Opening Seal As Needed
    1. Install the front door opening seal (A). Make sure the seal is installed securely into the hooks (B).

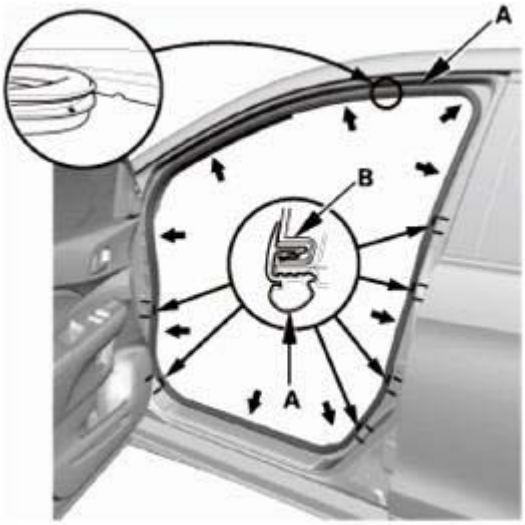

Fig. 54: Installing Front Door Opening Seal
Courtesy of AMERICAN HONDA MOTOR CO., INC.

4. Front Door Sill Trim
    1. Install the front door inner sill trim (A). Make sure the clips (B), the hooks (C), and the tabs (D) snap into place securely.

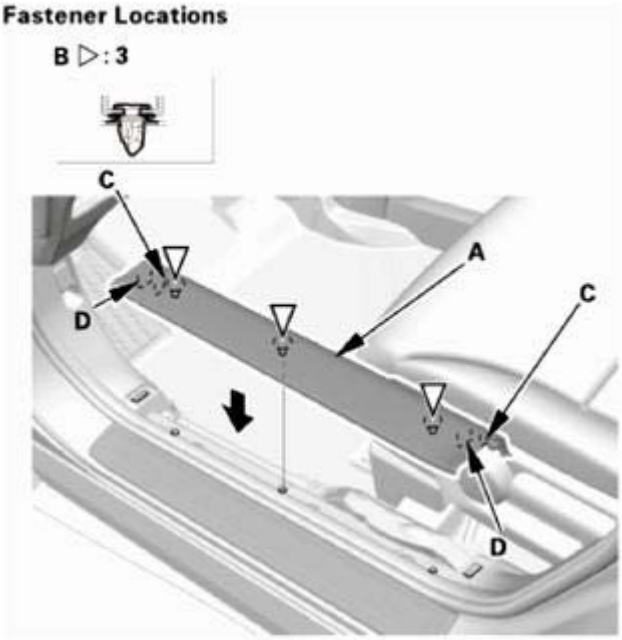

GETtheMANUALS.org

Fig. 55: Installing Front Door Inner Sill Trim
Courtesy of AMERICAN HONDA MOTOR CO., INC.

GETtheMANUALS.org

ELD REMOVAL AND INSTALLATION

REMOVAL

1. Battery Terminal - Disconnection
    1. Make sure the ignition switch is in LOCK (0).
    2. Disconnect and isolate the negative cable (A) from the battery.

    NOTE: Always disconnect the negative side first.

    3. Disconnect the positive cable (B) from the battery.

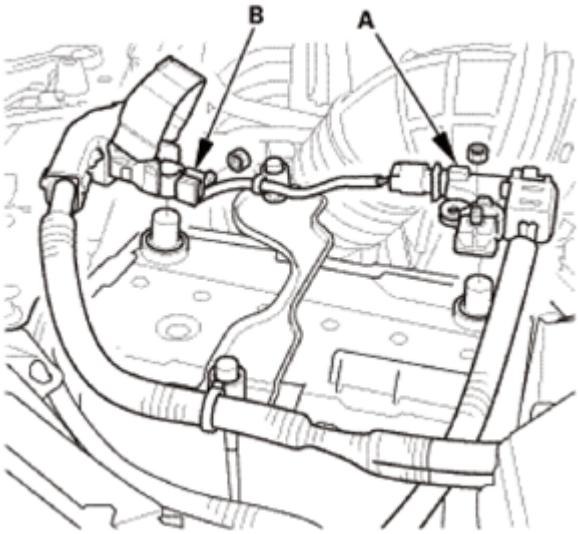

Fig. 1: Identifying Battery Positive And Negative Terminals
Courtesy of AMERICAN HONDA MOTOR CO., INC.

2. ELD
    1. Remove the ELD (A).

GETtheMANUALS.org

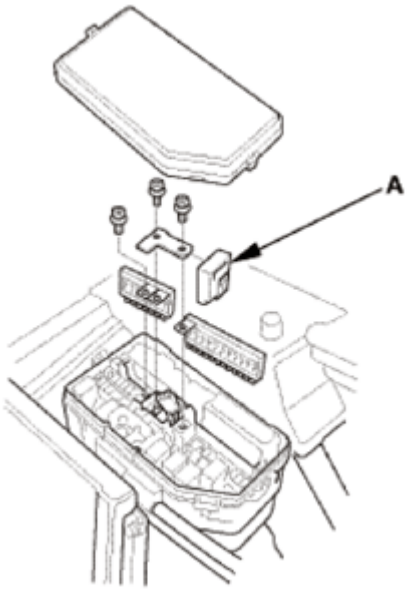

Fig. 2: Identifying ELD
Courtesy of AMERICAN HONDA MOTOR CO., INC.

INSTALLATION

1. ELD
    1. Install the ELD (A).

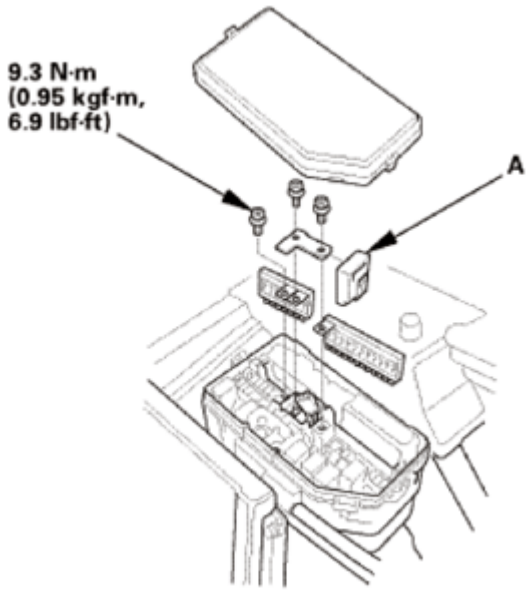

Fig. 3: Identifying ELD And Mounting Bolts With Torque Specifications
Courtesy of AMERICAN HONDA MOTOR CO., INC.

2. Battery Terminal - Reconnection

GETtheMANUALS.org

NOTE: If the battery performance is abnormal, test the battery.

1. Clean the battery terminals.
2. Connect the positive cable (A) to the battery.

NOTE: Always connect the positive side first.

3. Connect the negative cable (B) to the battery.
4. Apply multipurpose grease to the terminals to prevent corrosion.

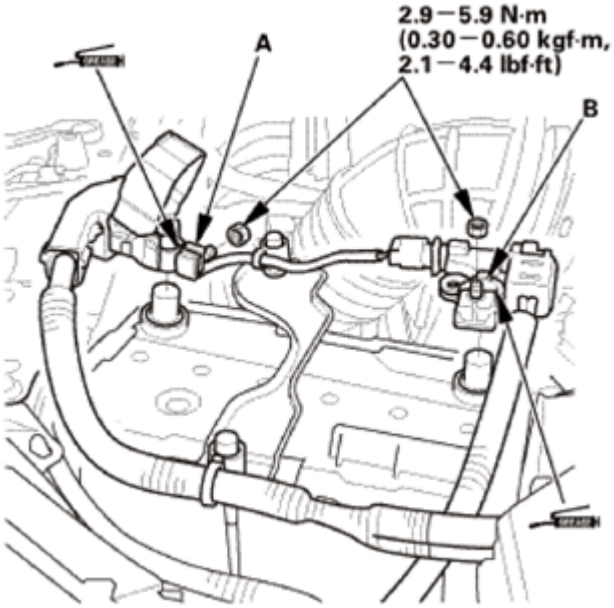

Fig. 4: Identifying Battery Positive, Negative Terminals, Mounting Bolts And Nuts With Torque Specifications
Courtesy of AMERICAN HONDA MOTOR CO., INC.

GETtheMANUALS.org

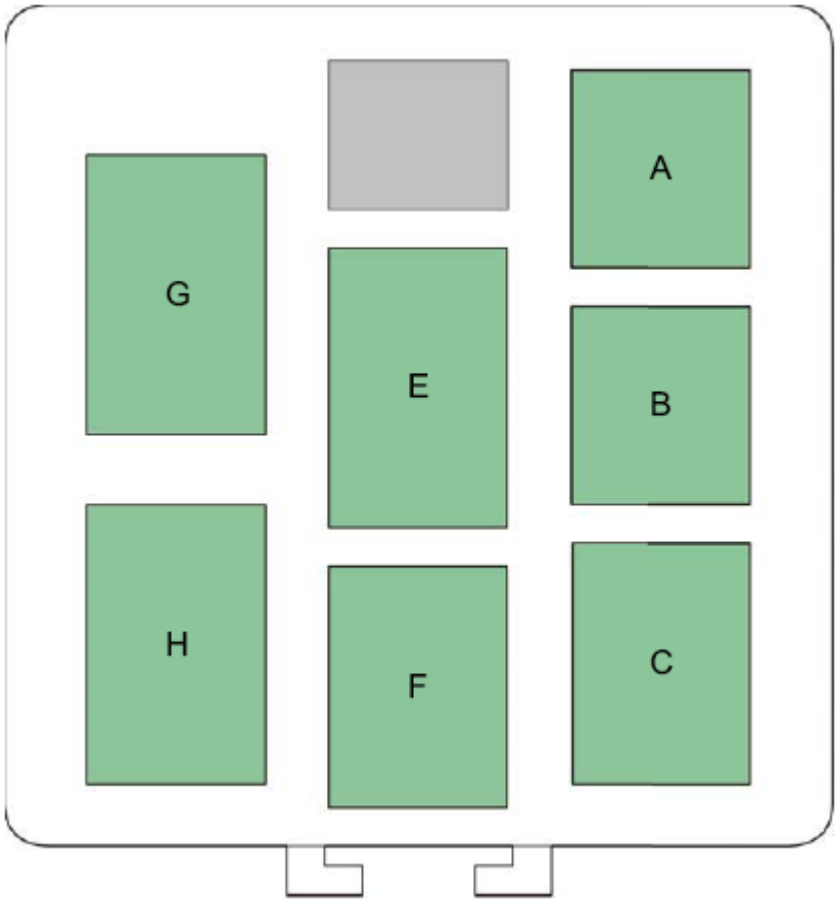

Fig. 5: Center Junction Box Relay Terminals
Courtesy of AMERICAN HONDA MOTOR CO., INC.

FUSE/RELAY BOXES > JUNCTION BOX > CENTER JUNCTION BOX

CONNECTOR DESCRIPTION

Ref. No.	Connector Name	Male/Female	Connector Type	Notes
A	Center Junction Box Connector A (6P)	Male	Component Connector	
B	Center Junction Box Connector B(6P)	Male	Component Connector	
C	Center Junction Box Connector C(8P)	Male	Component Connector	
E	Center Junction Box Connector E (1 OP)	Male	Component Connector	
F	Center Junction Box Connector F(8P)	Male	Component Connector	
G	Center Junction Box Connector G (1 OP)	Male	Component Connector	
H	Center Junction Box Connector H (1 OP)	Male	Component Connector	

GETtheMANUALS.org

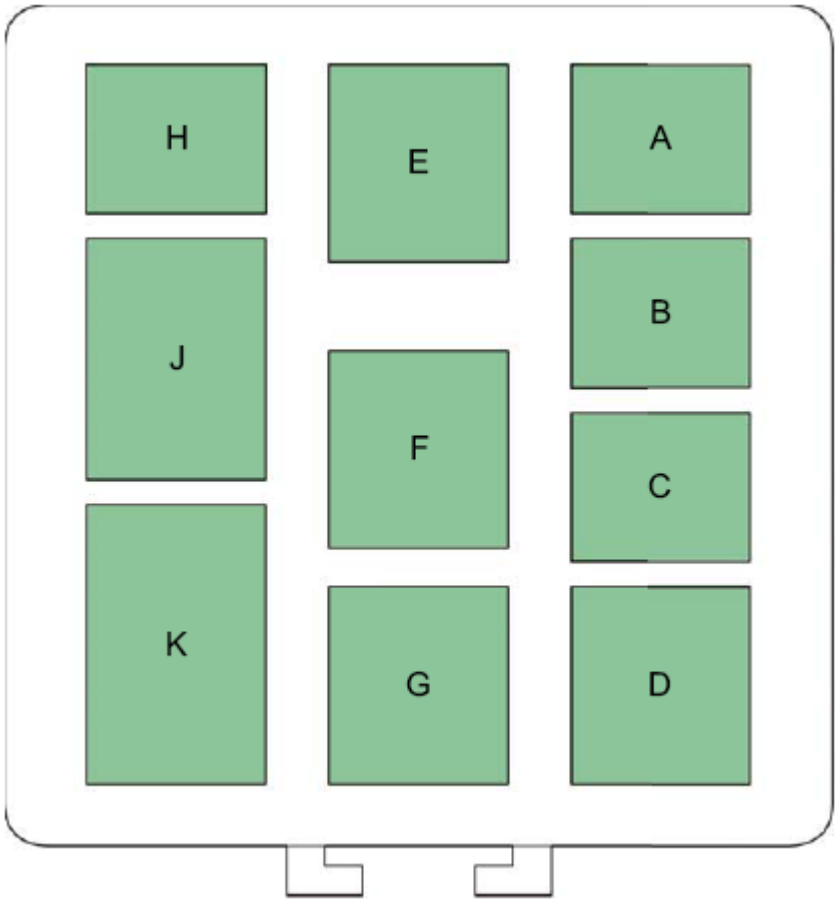

Fig. 6: Driver's Junction Box 1 Relay Terminals
Courtesy of AMERICAN HONDA MOTOR CO., INC.

FUSE/RELAY BOXES > JUNCTION BOX > DRIVER'S JUNCTION BOX 1

CONNECTOR DESCRIPTION

Ref. No.	Connector Name	Male/Female	Connector Type	Notes
A	Driver's Junction Box 1 Connector A (4P)	Male	Component Connector	
B	Driver's Junction Box 1 Connector B(4P)	Male	Component Connector	
C	Driver's Junction Box 1 Connector C (4P)	Male	Component Connector	
D	Driver's Junction Box 1 Connector D (6P)	Male	Component Connector	
E	Driver's Junction Box 1 Connector E (6P)	Male	Component Connector	
F	Driver's Junction Box 1 Connector F(6P)	Male	Component Connector	
G	Driver's Junction Box 1 Connector G (6P)	Male	Component Connector	
H	Driver's Junction Box 1 Connector H (4P)	Male	Component Connector	
J	Driver's Junction Box 1 Connector J (8P)	Male	Component Connector	
K	Driver's Junction Box 1 Connector K (10P)	Male	Component Connector	

GETtheMANUALS.org

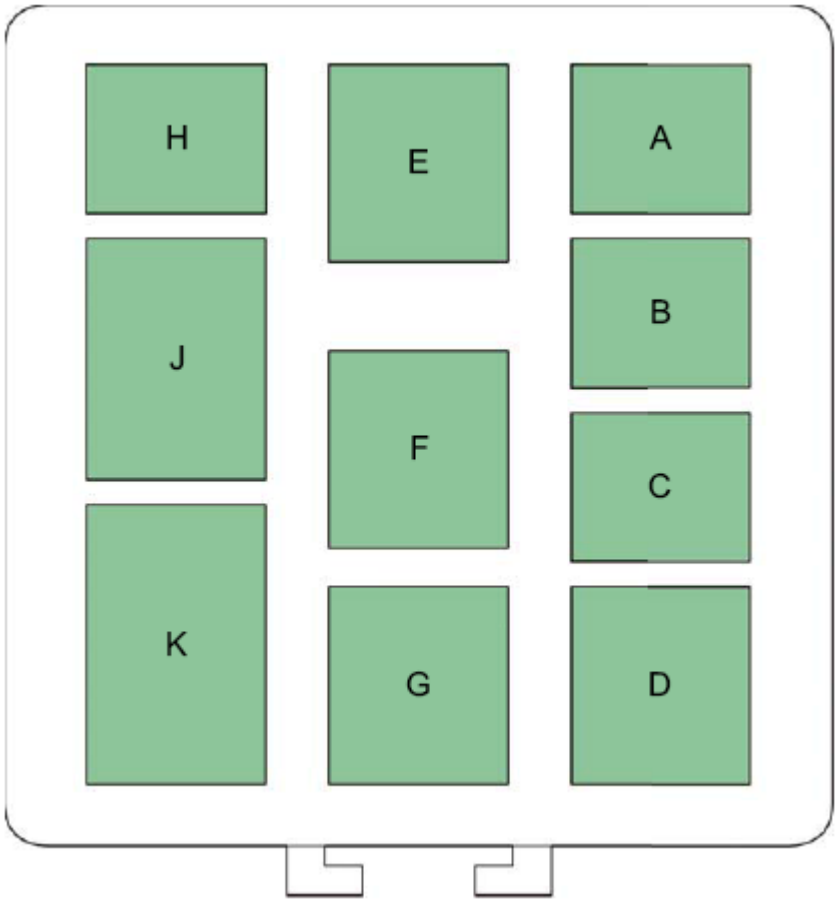

Fig. 7: Driver's Junction Box 2 Relay Terminals
Courtesy of AMERICAN HONDA MOTOR CO., INC.

FUSE/RELAY BOXES > JUNCTION BOX > DRIVER'S JUNCTION BOX 2

CONNECTOR DESCRIPTION

Ref. No.	Connector Name	Male/Female	Connector Type	Notes
A	Driver's Junction Box 2 Connector A (4P)	Male	Component Connector	
B	Driver's Junction Box 2 Connector B (4P)	Male	Component Connector	
C	Driver's Junction Box 2 Connector C (4P)	Male	Component Connector	
D	Driver's Junction Box 2 Connector D (6P)	Male	Component Connector	
E	Driver's Junction Box 2 Connector E (6P)	Male	Component Connector	
F	Driver's Junction Box 2 Connector F (6P)	Male	Component Connector	
G	Driver's Junction Box 2 Connector G (6P)	Male	Component Connector	
H	Driver's Junction Box 2 Connector H (4P)	Male	Component Connector	
J	Driver's Junction Box 2 Connector J (8P)	Male	Component Connector	
K	Driver's Junction Box 2 Connector K (10P)	Male	Component Connector	

GETtheMANUALS.org

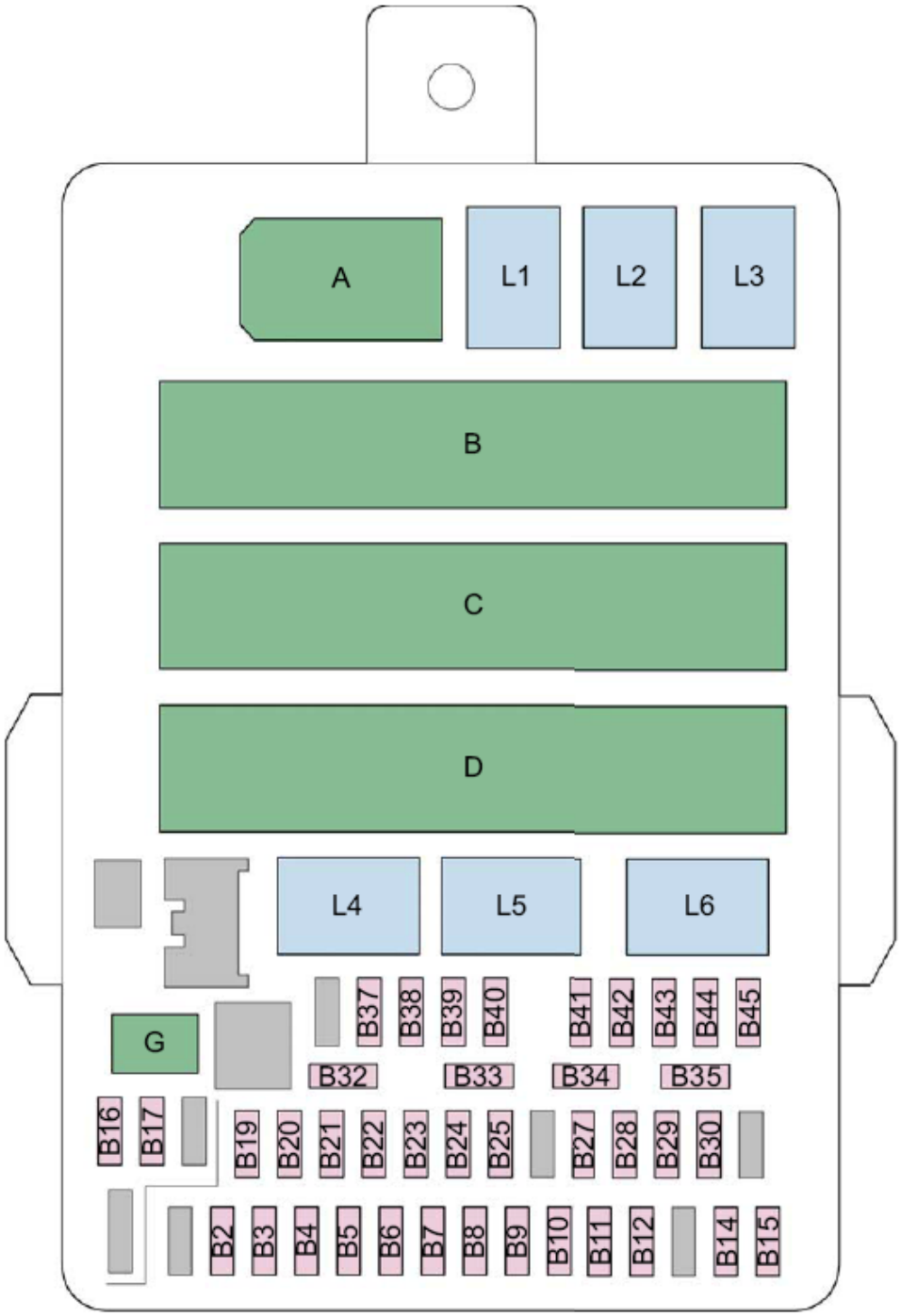

Fig. 8: Under-Dash Fuse/Relay Box Connector Terminals (Front Side)
Courtesy of AMERICAN HONDA MOTOR CO., INC.

FUSE/RELAY BOXES > UNDER-DASH FUSE/RELAY BOX > FRONT SIDE

FUSE DESCRIPTION

Ref. No.	Amps	Notes

GETtheMANUALS.org

B10	7.5A	
B11	20A	
B12	20A	
B14	20A	
B15	10A	
B16	20A	
B17	20A	
B19	7.5A	
B2	10A	
B20	7.5A	
B21	7.5A	
B22	7.5A	
B23	10A	
B24	7.5A	
B25	10A	
B27	20A	
B28	15A	
B29	7.5A	
B3	10A	
B30	10A	
B32	15A	
B33	15A	
B34	10A	
B35	7.5A	
B37	15A	
B38	10A	
B39	10A	
B4	15A	
B40	7.5A	
B41	20A	
B42	20A	
B43	20A	
B44	20A	
B45	20A	
B5	10A	
B6	7.5A	
B7	7.5A	
B8	15A	
B9	15A	

RELAY DESCRIPTION

GETtheMANUALS.org

Ref. No.	Relay Name	Notes
L1	PGM-FI Main Relay 2	
L2	Front Accessory Power Socket Relay	
L3	Starter Cut Relay	
L4	ETCS Control Relay	
L5	PGM-FI Main Relay 1	
L6	Power Window Relay	

CONNECTOR DESCRIPTION

Ref. No.	Connector Name	Male/Female	Connector Type	Notes
A	Under-Dash Fuse/Relay Box Connector A (5P)	Male	Component Connector	
B	Under-Dash Fuse/Relay Box Connector B (44P)	Male	Component Connector	
C	Under-Dash Fuse/Relay Box Connector C (38P)	Male	Component Connector	
D	Under-Dash Fuse/Relay Box Connector D (32P)	Male	Component Connector	
G	Under-Dash Fuse/Relay Box Connector G (3P)	Male	Component Connector	

GETtheMANUALS.org

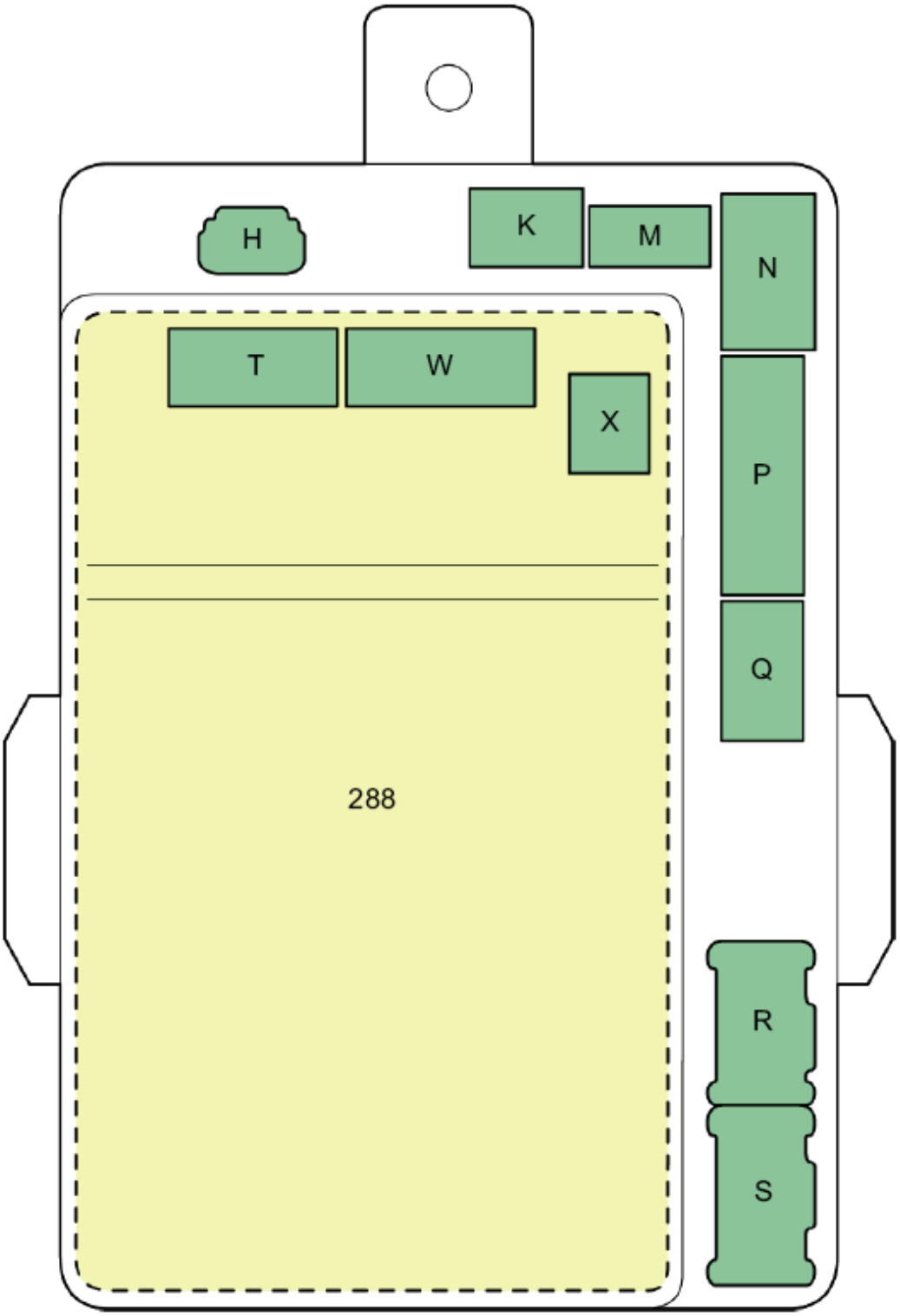

Fig. 9: Under-Dash Fuse/Relay Box Connector Terminals (Back Side)
Courtesy of AMERICAN HONDA MOTOR CO., INC.

GETtheMANUALS.org

FUSE/RELAY BOXES > UNDER-DASH FUSE/RELAY BOX > BACK SIDE

COMPONENT DESCRIPTION

Ref. No.	Component Name	Notes
288	Driver's MICU	

CONNECTOR DESCRIPTION

Ref. No.	Connector Name	Male/Female	Connector Type	Notes
H	Under-Dash Fuse/Relay Box Connector H (4P)	Male	Component Connector	
K	Under-Dash Fuse/Relay Box Connector K (12P)	Male	Component Connector	
M	Under-Dash Fuse/Relay Box Connector M (7P)	Male	Component Connector	
N	Under-Dash Fuse/Relay Box Connector N (13P)	Male	Component Connector	
P	Under-Dash Fuse/Relay Box Connector P (20P)	Male	Component Connector	
Q	Under-Dash Fuse/Relay Box Connector Q (16P)	Male	Component Connector	
R	Under-Dash Fuse/Relay Box Connector R (8P)	Male	Component Connector	
S	Under-Dash Fuse/Relay Box Connector S (10P)	Male	Component Connector	
T	Under-Dash Fuse/Relay Box Connector T (20P)	Male	Component Connector	
W	Under-Dash Fuse/Relay Box Connector W (24P)	Male	Component Connector	
X	Under-Dash Fuse/Relay Box Connector X (1 OP)	Male	Component Connector	

GETtheMANUALS.org

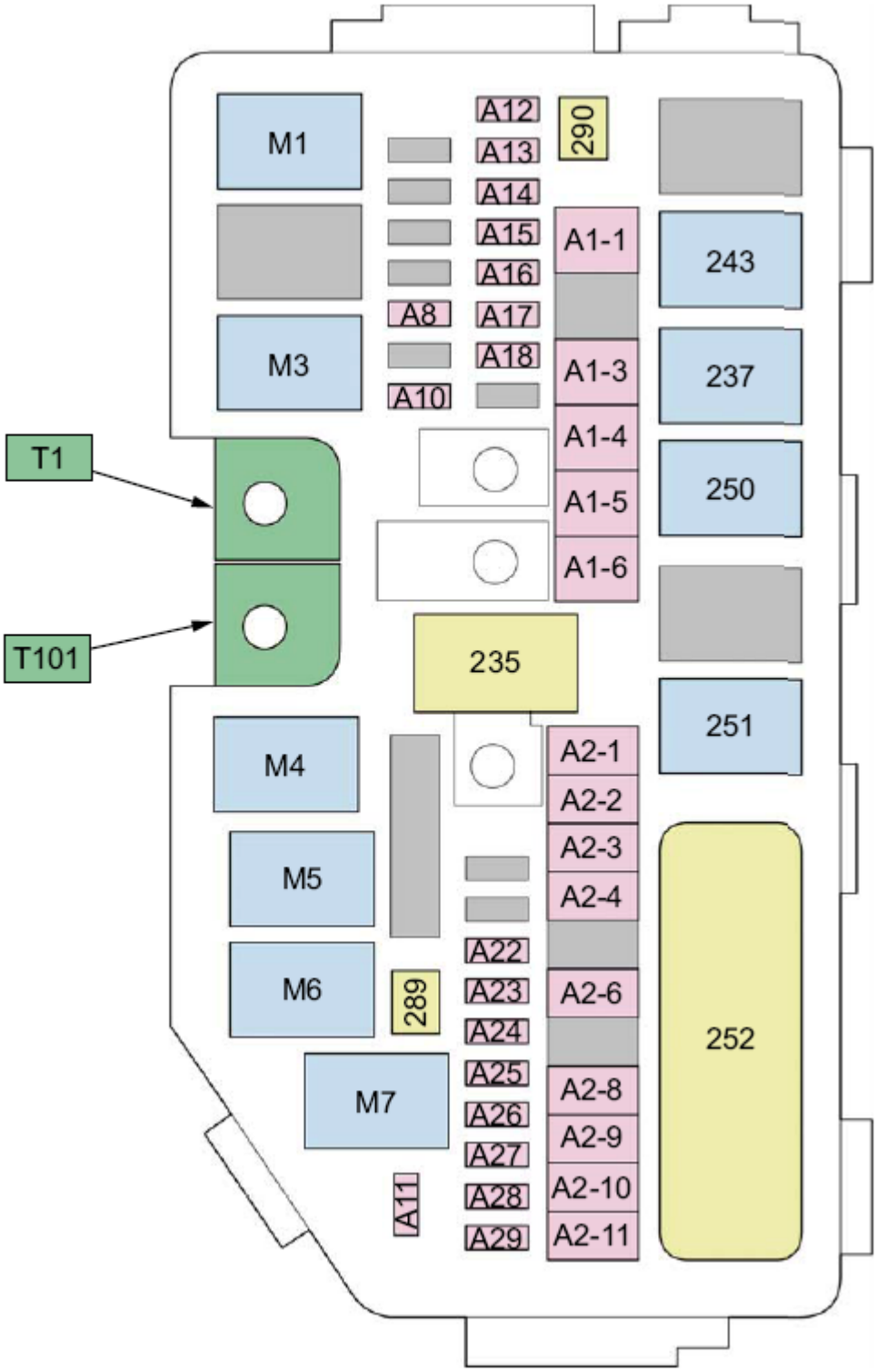

Fig. 10: Under-Hood Fuse/Relay Box Connector Terminals (Front Side)
Courtesy of AMERICAN HONDA MOTOR CO., INC.

FUSE/RELAY BOXES > UNDER-HOOD FUSE/RELAY BOX > FRONT SIDE

GETtheMANUALS.org

FUSE DESCRIPTION

Ref. No.	Amps	Notes
A1-1	70A	
A1-3	40A	
A1-4	20A	
A1-5	30A	
A1-6	100A	
A10	7.5A	
A11	7.5A	
A12	20A	
A13	20A	
A14	10A	
A15	10A	
A16	10A	
A17	15A	
A18	15A	
A2-1	50A	
A2-10	20A	
A2-11	20A	
A2-2	60A	
A2-3	60A	
A2-4	30A	
A2-6	30A	
A2-8	40A	
A2-9	30A	
A22	15A	
A23	15A	
A24	15A	
A25	15A	
A26	20A	
A27	7.5A	
A28	7.5A	
A29	10A	
A8	7.5A	

RELAY DESCRIPTION

Ref. No.	Relay Name	Notes
M1	Blower Motor Relay	
M3	A/C Condenser Fan Relay	
M4	Ignition Coil Relay	
M5	Front Fog Light Relay	

GETtheMANUALS.org

M6	PGM-FI Subrelay	
M7	Rear Window Defogger Relay	

COMPONENT DESCRIPTION

Ref. No.	Component Name	Notes
235	ELD	
237	Fan Control Relay	
243	Horn Relay	
250	Radiator Fan Relay	
251	A/C Compressor Clutch Relay	
252	Relay Circuit Board	
289	Diode B	
290	Diode A	

CONNECTOR DESCRIPTION

Ref. No.	Connector Name	Male/Female	Connector Type	Notes
T1	T1		Component Connector	
T101	T101		Component Connector	

GETtheMANUALS.org

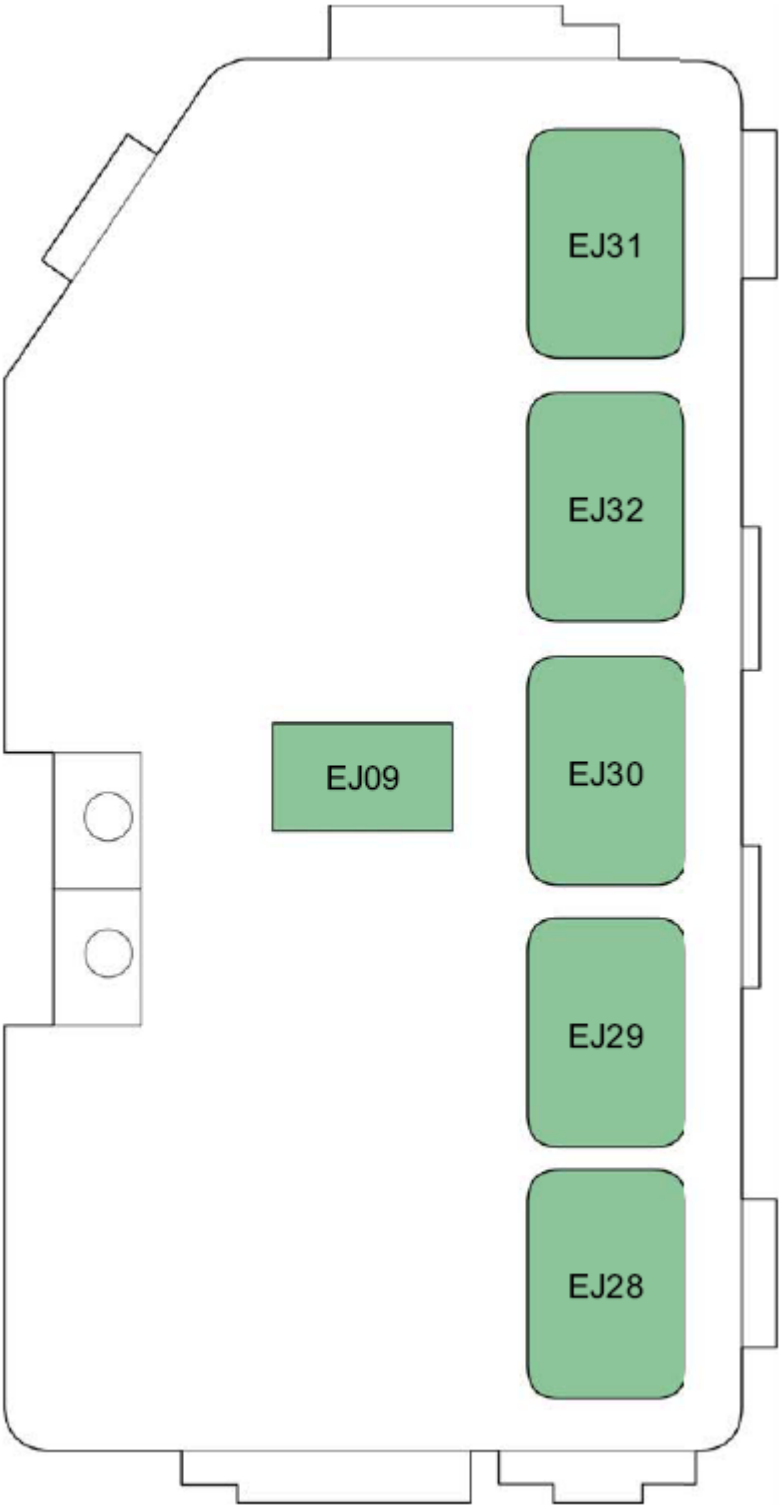

Fig. 11: Under-Hood Fuse/Relay Box Connector Terminals (Back Side)
Courtesy of AMERICAN HONDA MOTOR CO., INC.

FUSE/RELAY BOXES > UNDER-HOOD FUSE/RELAY BOX > BACK SIDE

GETtheMANUALS.org

CONNECTOR DESCRIPTION

Ref. No.	Connector Name	Male/Female	Connector Type	Notes
EJ09	ELD 3P Connector	Female	Component Connector	
EJ28	Relay Holder A		Component Connector	
EJ29	Relay Holder B		Component Connector	
EJ30	Relay Holder C		Component Connector	
EJ31	Relay Circuit Board Connector A (16P)	Female	Component Connector	
EJ32	Relay Circuit Board Connector B (1 OP)	Female	Component Connector	

POWER RELAY TEST

SPECIAL TOOL DESCRIPTION

Image	Description/Tool Number
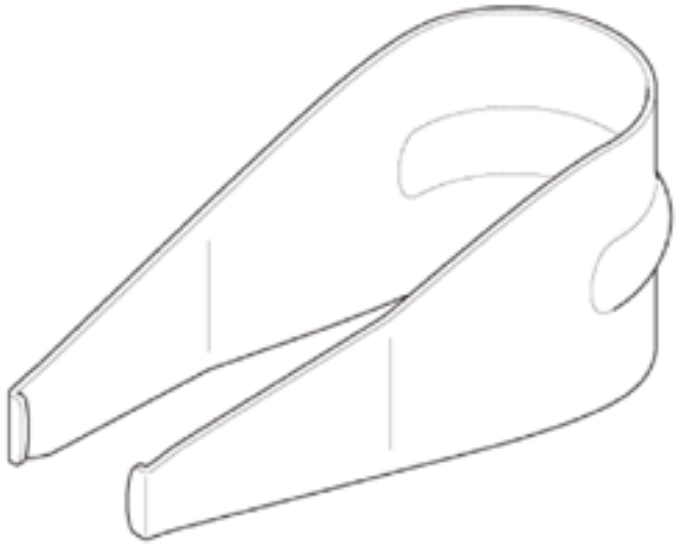	Relay Puller 07AAC-000A2A1 or 07AAC-000A1A0
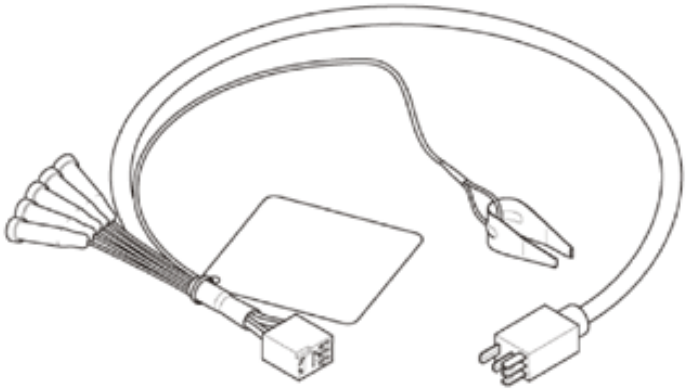	Relay Socket Extension (5 Pin) 07AGK-000A2A0

GETtheMANUALS.org

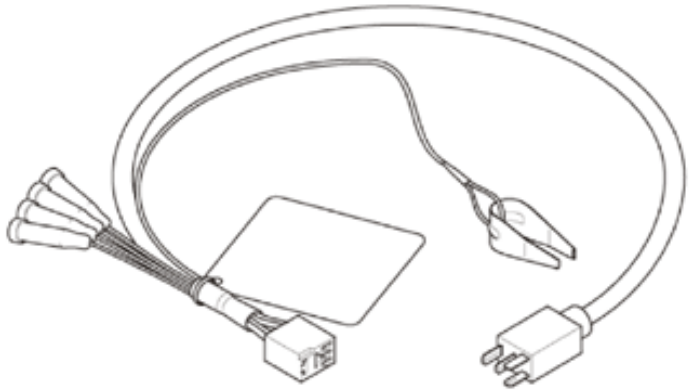	Relay Socket Extension (4 Pin) 07AGK-000A1A0

TEST

1. Power Relay - Test

   Use this chart to identify the types of the relay, then do the test listed for it.

   NOTE: Do not use pliers to remove a relay. Pliers will damage the relay.

Relay	Test
A/C compressor clutch relay A/C condenser fan relay Blower motor relay Console accessory power socket relay Driver's seat heater relay (high) (with seat heater) Electronic throttle control system (ETCS) control relay Front accessory power socket relay Fog light relay (with fog light) Front passenger's seat heater relay (high) (with seat heater) Horn relay Ignition coil relay Interior light cut relay PGM-FI main relay 1 PGM-FI main relay 2 PGM-FI subrelay Power window relay Radiator fan relay Real time AWD relay Rear window defogger relay Starter cut relay	Normally-open four-terminal type
Driver's seat heater relay (low) (with seat heater) Fan control relay Front passenger's seat heater relay (low) (with seat heater)	Five-terminal type

GETtheMANUALS.org

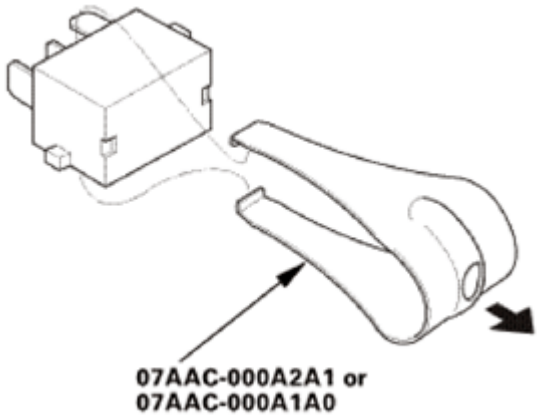

Fig. 12: Disconnecting Relay Puller (07AAC-000A2A1 Or 07AAC-000A1A0)
Courtesy of AMERICAN HONDA MOTOR CO., INC.

Normally-Open Four-Terminal Type

Check for continuity between the terminals:

- There should be continuity between terminals No. 1 and No. 2 when battery power is connected to terminal No. 3, and battery ground is connected to terminal No. 4.
- There should be no continuity between terminals No. 1 and No. 2 when battery power is disconnected.

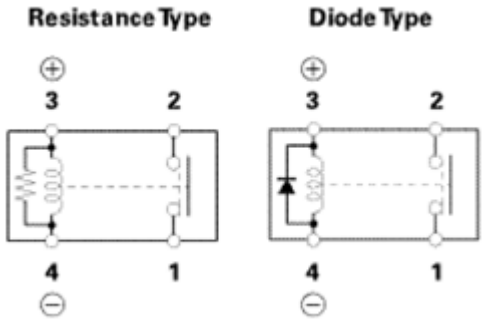

Fig. 13: Checking Continuity Between Four-Terminal Type Battery Terminals No. 1 And 2
Courtesy of AMERICAN HONDA MOTOR CO., INC.

GETtheMANUALS.org

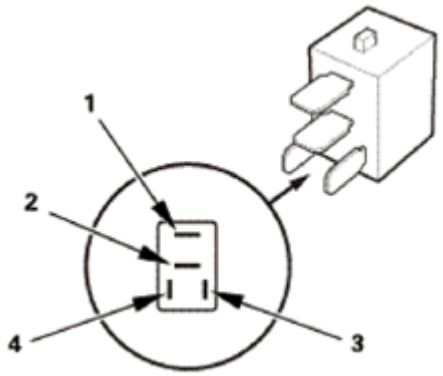

Fig. 14: Identifying Normally-Open Four-Terminal Type Battery Terminals
Courtesy of AMERICAN HONDA MOTOR CO., INC.

Five-Terminal Type

Check for continuity between the terminals:

- There should be continuity between terminals No. 1 and No. 2 when battery power is connected to terminal No. 3, and battery ground is connected to terminal No. 5.
- There should be continuity between terminals No. 1 and No. 4 when battery power is disconnected.

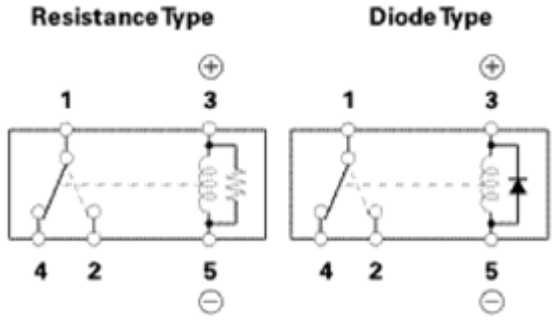

Fig. 15: Checking Continuity Between Five-Terminal Type Battery Terminals No. 1 And 2
Courtesy of AMERICAN HONDA MOTOR CO., INC.

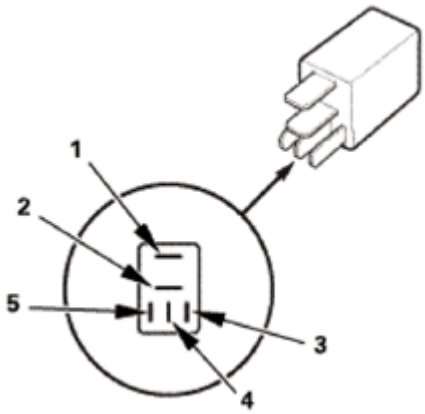

GETtheMANUALS.org

Fig. 16: Identifying Five-Terminal Type Battery Terminals
Courtesy of AMERICAN HONDA MOTOR CO., INC.

POWER RELAY TEST

SPECIAL TOOL DESCRIPTION

Image	Description/Tool Number
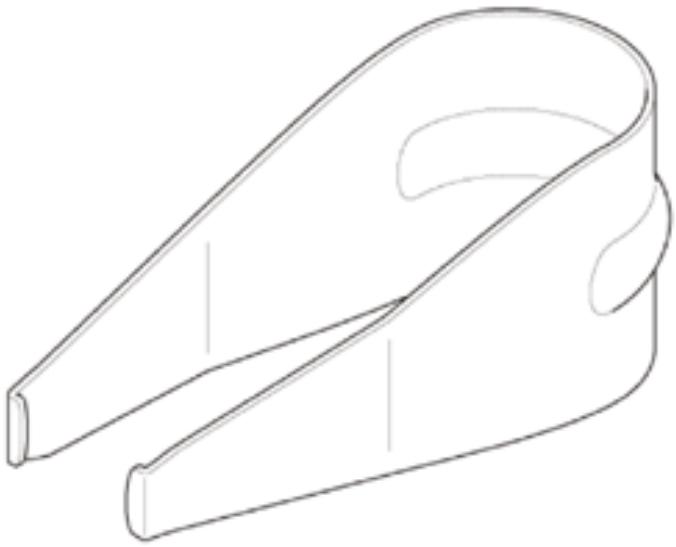	Relay Puller 07AAC-000A2A1 or 07AAC-000A1A0
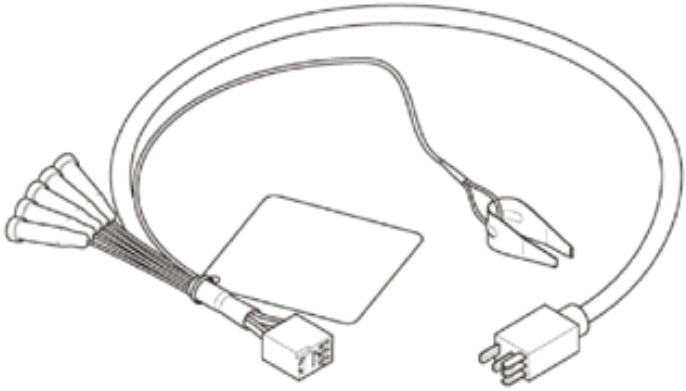	Relay Socket Extension (5 Pin) 07AGK-000A2A0
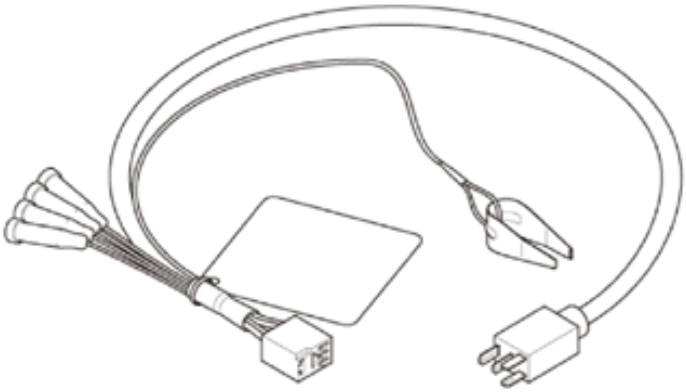	Relay Socket Extension (4 Pin) 07AGK-000A1A0

GETtheMANUALS.org

TEST

1. Power Relay - Test

   Use this chart to identify the types of the relay, then do the test listed for it.

   NOTE: Do not use pliers to remove a relay. Pliers will damage the relay.

Relay	Test
A/C compressor clutch relay A/C condenser fan relay Blower motor relay Console accessory power socket relay Driver's seat heater relay (high) (with seat heater) Electronic throttle control system (ETCS) control relay Front accessory power socket relay Fog light relay (with fog light) Front passenger's seat heater relay (high) (with seat heater) Horn relay Ignition coil relay Interior light cut relay PGM-FI main relay 1 PGM-FI main relay 2 PGM-FI subrelay Power window relay Radiator fan relay Real time AWD relay Rear window defogger relay Starter cut relay	Normally-open four-terminal type
Driver's seat heater relay (low) (with seat heater) Fan control relay Front passenger's seat heater relay (low) (with seat heater)	Five-terminal type

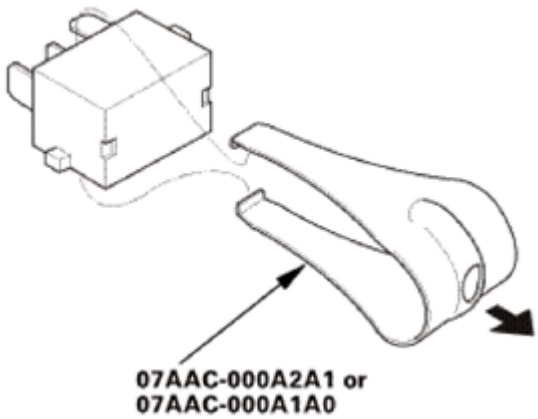

Fig. 17: Disconnecting Relay Puller (07AAC-000A2A1 Or 07AAC-000A1A0)

GETtheMANUALS.org

Courtesy of AMERICAN HONDA MOTOR CO., INC.

Normally-Open Four-Terminal Type

Check for continuity between the terminals:

- There should be continuity between terminals No. 1 and No. 2 when battery power is connected to terminal No. 3, and battery ground is connected to terminal No. 4.
- There should be no continuity between terminals No. 1 and No. 2 when battery power is disconnected.

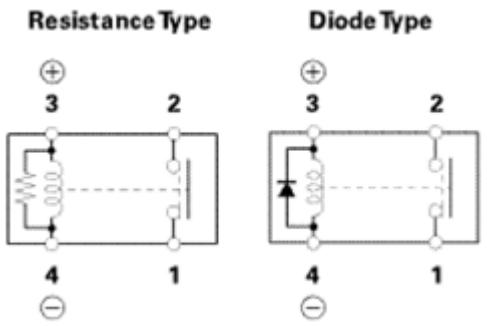

Fig. 18: Checking Continuity Between Four-Terminal Type Battery Terminals No. 1 And 2
Courtesy of AMERICAN HONDA MOTOR CO., INC.

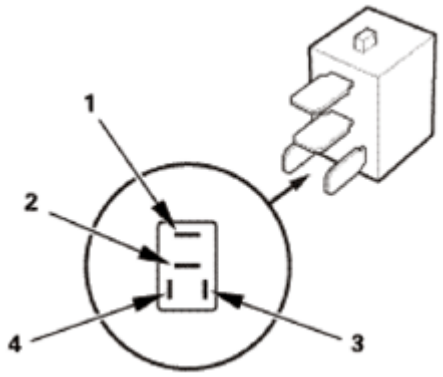

Fig. 19: Identifying Normally-Open Four-Terminal Type Battery Terminals
Courtesy of AMERICAN HONDA MOTOR CO., INC.

Five-Terminal Type

Check for continuity between the terminals:

- There should be continuity between terminals No. 1 and No. 2 when battery power is connected to terminal No. 3, and battery ground is connected to terminal No. 5.
- There should be continuity between terminals No. 1 and No. 4 when battery power is disconnected.

GETtheMANUALS.org

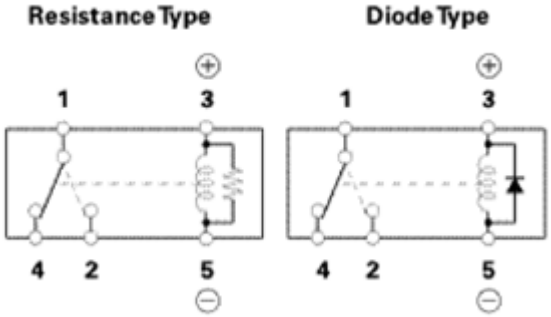

Fig. 20: Checking Continuity Between Five-Terminal Type Battery Terminals No. 1 And 2
Courtesy of AMERICAN HONDA MOTOR CO., INC.

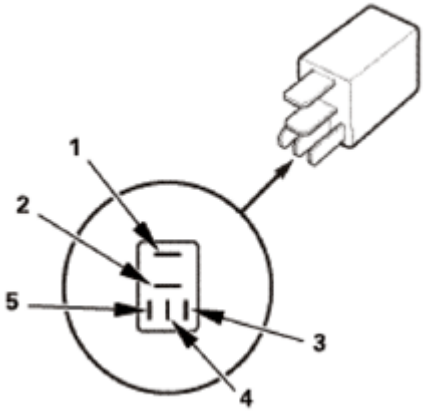

Fig. 21: Identifying Five-Terminal Type Battery Terminals
Courtesy of AMERICAN HONDA MOTOR CO., INC.

RELAY CONTROL MODULE REMOVAL, INSTALLATION, AND TEST

REMOVAL

1. Relay Control Module
    1. Remove the cover (A).
    2. Remove the relay control module (B) from the under-hood fuse/relay box.
    3. Disconnect the relay control module connectors.

GETtheMANUALS.org

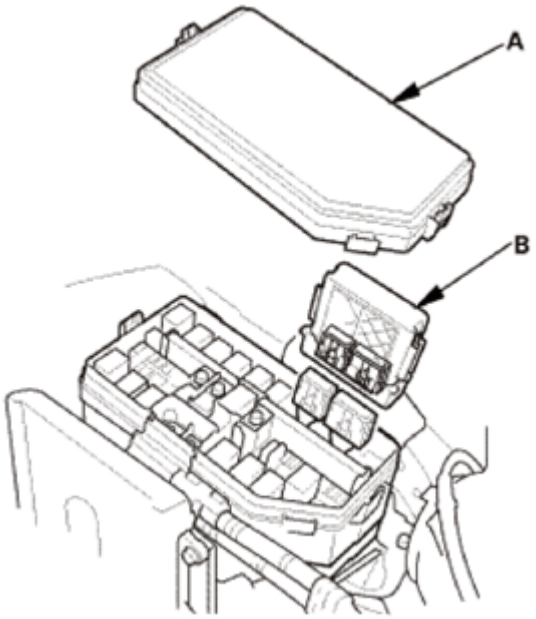

Fig. 22: Identifying Relay Control Module And Cover
Courtesy of AMERICAN HONDA MOTOR CO., INC.

TEST

1. Relay Control Module - Test

   The relay control module is part of the under-hood fuse/relay box, and contains these relays:

   - Left headlight low beam relay
   - Right headlight low beam relay
   - Taillight relay
   - Windshield wiper motor relay
   - Windshield wiper intermittent relay
   - Windshield wiper high/low relay

   1. Test each relay circuit as shown.
   2. If any of these relay circuit fails the test, replace the relay control module.

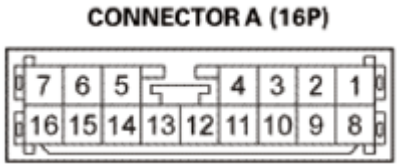

Fig. 23: Identifying Relay Control Module Connector A (16P)
Courtesy of AMERICAN HONDA MOTOR CO., INC.

GETtheMANUALS.org

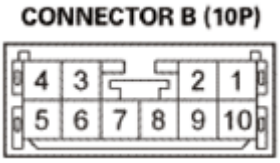

Fig. 24: Identifying Relay Control Module Connector B (10P)
Courtesy of AMERICAN HONDA MOTOR CO., INC.

Left Headlight Low Beam Relay

There should be battery voltage at terminal B9 when battery power is connected to terminals B8, and body ground is connected to terminal B6. There should be no voltage at terminal B9 when power is disconnected.

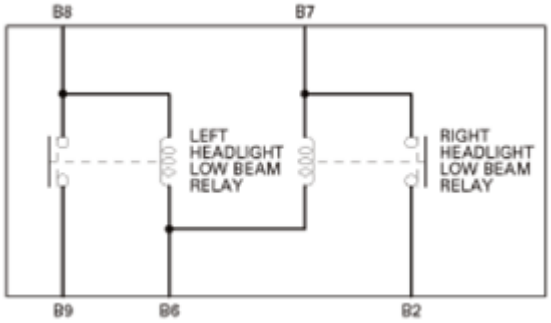

Fig. 25: Left Headlight Low Beam Relay - Circuit Diagram
Courtesy of AMERICAN HONDA MOTOR CO., INC.

Right Headlight Low Beam Relay

There should be battery voltage at terminal B2 when battery power is connected to terminals B7, and body ground is connected to terminal B6. There should be no voltage at terminal B2 when power is disconnected.

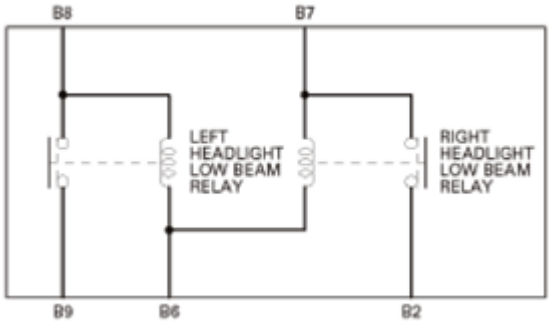

Fig. 26: Right Headlight Low Beam Relay - Circuit Diagram
Courtesy of AMERICAN HONDA MOTOR CO., INC.

Taillight Relay

GETtheMANUALS.org

There should be battery voltage at terminal A2 when battery power is connected to terminal A8, and body ground is connected to terminal A1. There should be no voltage at terminal A2 when terminal A1 is disconnected.

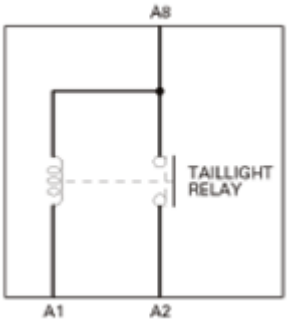

Fig. 27: Taillight Relay - Circuit Diagram
Courtesy of AMERICAN HONDA MOTOR CO., INC.

Windshield Wiper Motor Relay

There should be continuity between terminals A16 and A3, and terminals A16 and A6 when battery power is connected to terminal A9, and body ground is connected to terminal B1. There should be no continuity between terminals A16 and A3, and terminals A16 and A6 when power is disconnected.

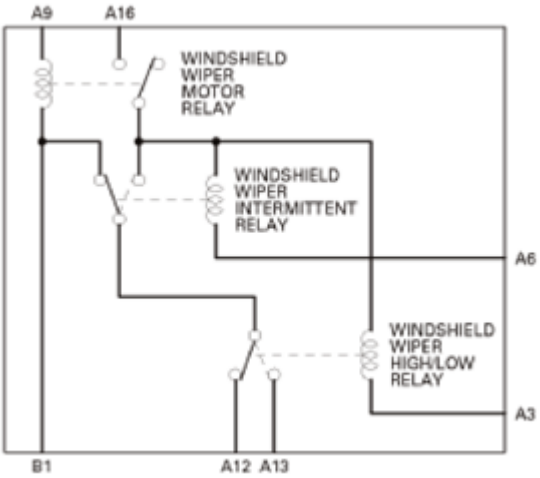

Fig. 28: Windshield Wiper Motor Relay - Circuit Diagram
Courtesy of AMERICAN HONDA MOTOR CO., INC.

Windshield Wiper Intermittent Relay

There should be battery voltage at terminal A12 when battery power is connected to terminals A16 and A9, and body ground is connected to terminals B1 and A6. There should be no voltage at terminal A12 when terminal A6 is disconnected.

GETtheMANUALS.org

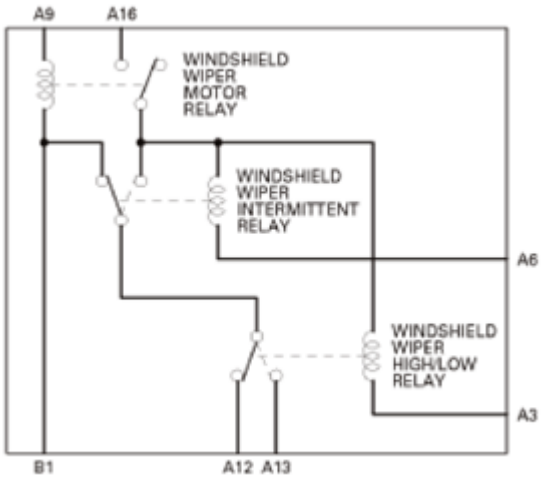

Fig. 29: Windshield Wiper Intermittent Relay - Circuit Diagram
Courtesy of AMERICAN HONDA MOTOR CO., INC.

Windshield Wiper High/Low Relay

There should be battery voltage at terminal A13 when battery power is connected to terminals A16 and A9, and body ground is connected to terminals B1, A3, and A6. There should be no voltage at terminal A13 when terminal A3 is disconnected.

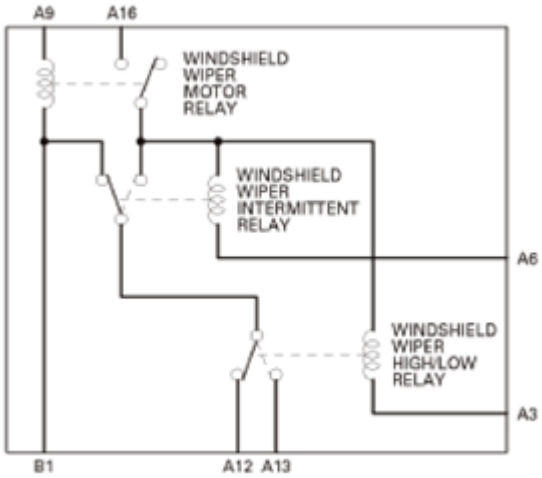

Fig. 30: Windshield Wiper High/Low Relay - Circuit Diagram
Courtesy of AMERICAN HONDA MOTOR CO., INC.

INSTALLATION

1. Relay Control Module
    1. Connect the relay control module connectors.
    2. Install the relay control module (A) to the under-hood fuse/relay box.
    3. Install the cover (B).

GETtheMANUALS.org

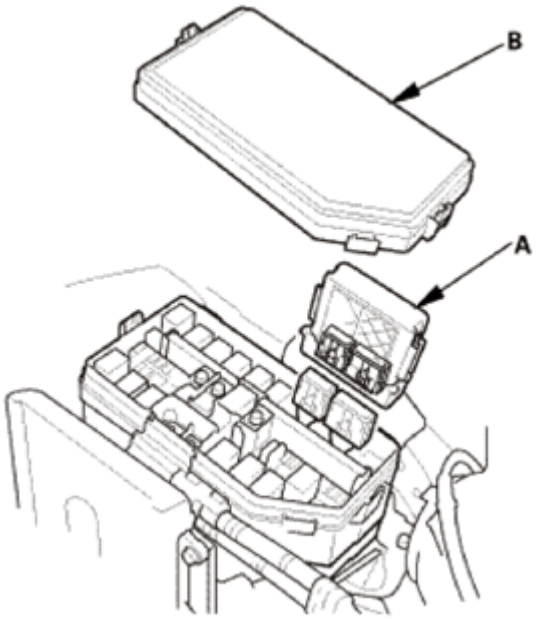

Fig. 31: Identifying Relay Control Module And Cover
Courtesy of AMERICAN HONDA MOTOR CO., INC.

UNDER-DASH FUSE/RELAY BOX REMOVAL AND INSTALLATION

REMOVAL

SRS components are located in this area. Review the **SRS COMPONENT LOCATIONS** and the **PRECAUTIONS AND PROCEDURES** before doing repairs or service.

1. Battery Terminal (SRS) - Disconnection
    1. Make sure the ignition switch is in LOCK (0).
    2. Disconnect and isolate the negative cable (A) from the battery.

    NOTE: Always disconnect the negative side first.

    3. Disconnect the positive cable (B) from the battery.
    4. Wait at least 3 minutes before starting work.

GETtheMANUALS.org

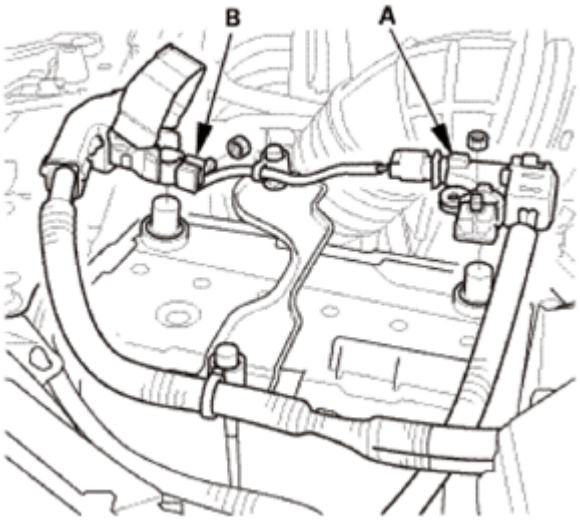

Fig. 32: Identifying Battery Positive And Negative Terminals
Courtesy of AMERICAN HONDA MOTOR CO., INC.

2. Driver's Dashboard Undercover
    1. Turn the lock knob (A) 90 °, then gently pull down the front edge of the driver's dashboard undercover (B) to detach the clip (C).
    2. Pull away the undercover to release the pin (D) from the holder (E), then remove the driver's dashboard undercover.

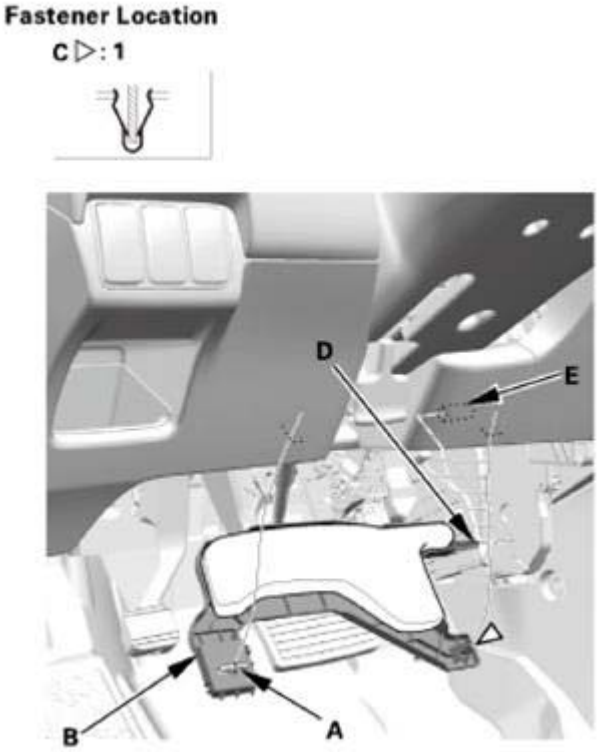

Fig. 33: Identifying Driver's Dashboard Undercover, Lock Knob, Holder, Pin And Clip

GETtheMANUALS.org

Courtesy of AMERICAN HONDA MOTOR CO., INC.

3. Driver's Dashboard Panel Assembly
    1. Carefully pry out the driver's dashboard panel assembly (A) with the appropriate trim tool to detach the clips (B).
    2. Disconnect the connector (C), then remove the driver's dashboard panel assembly.

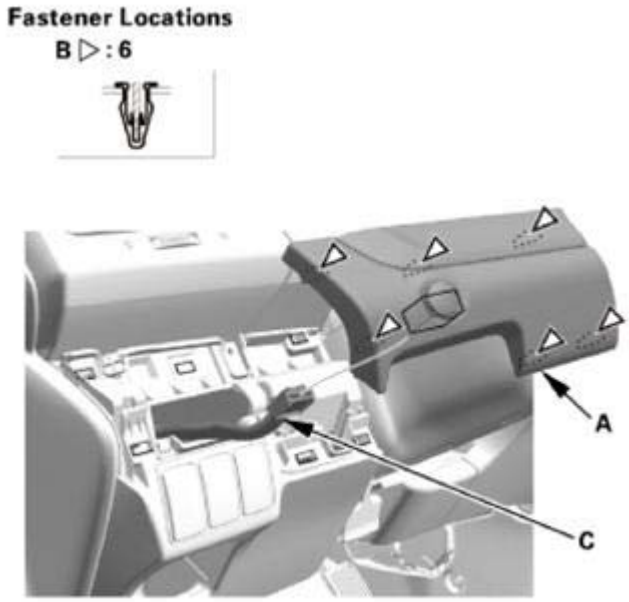

Fig. 34: Identifying Driver's Dashboard Panel Assembly, Connector And Clips
Courtesy of AMERICAN HONDA MOTOR CO., INC.

4. Driver's Dashboard Lower Cover
    1. Carefully pry out the driver's dashboard lower cover (A) with the appropriate trim tool to detach the clips (B).
    2. Disconnect the connector (C), then remove the driver's dashboard lower cover.

GETtheMANUALS.org

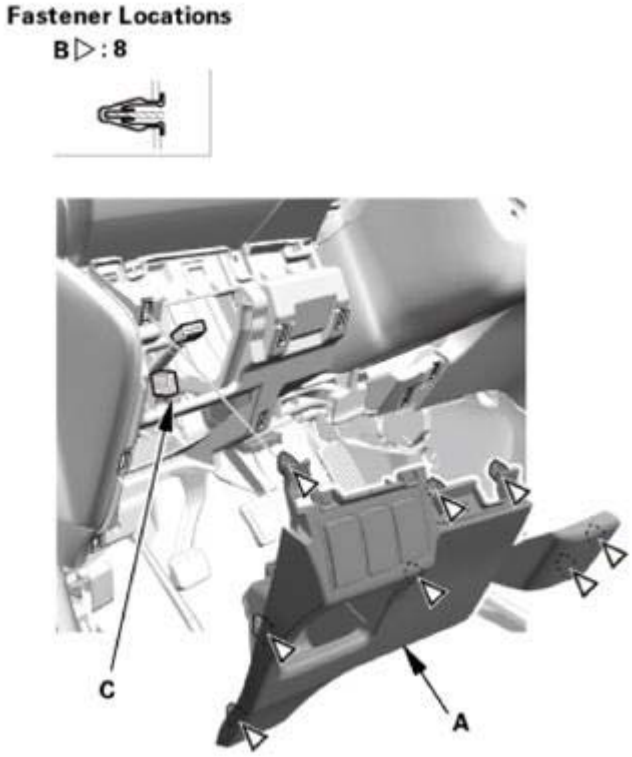

Fig. 35: Identifying Driver's Dashboard Lower Cover, Connector And Clips
Courtesy of AMERICAN HONDA MOTOR CO., INC.

5. Under-Dash Fuse/Relay Box
    1. Disconnect the connectors from the fuse side of the under-dash fuse/relay box (A).

GETtheMANUALS.org

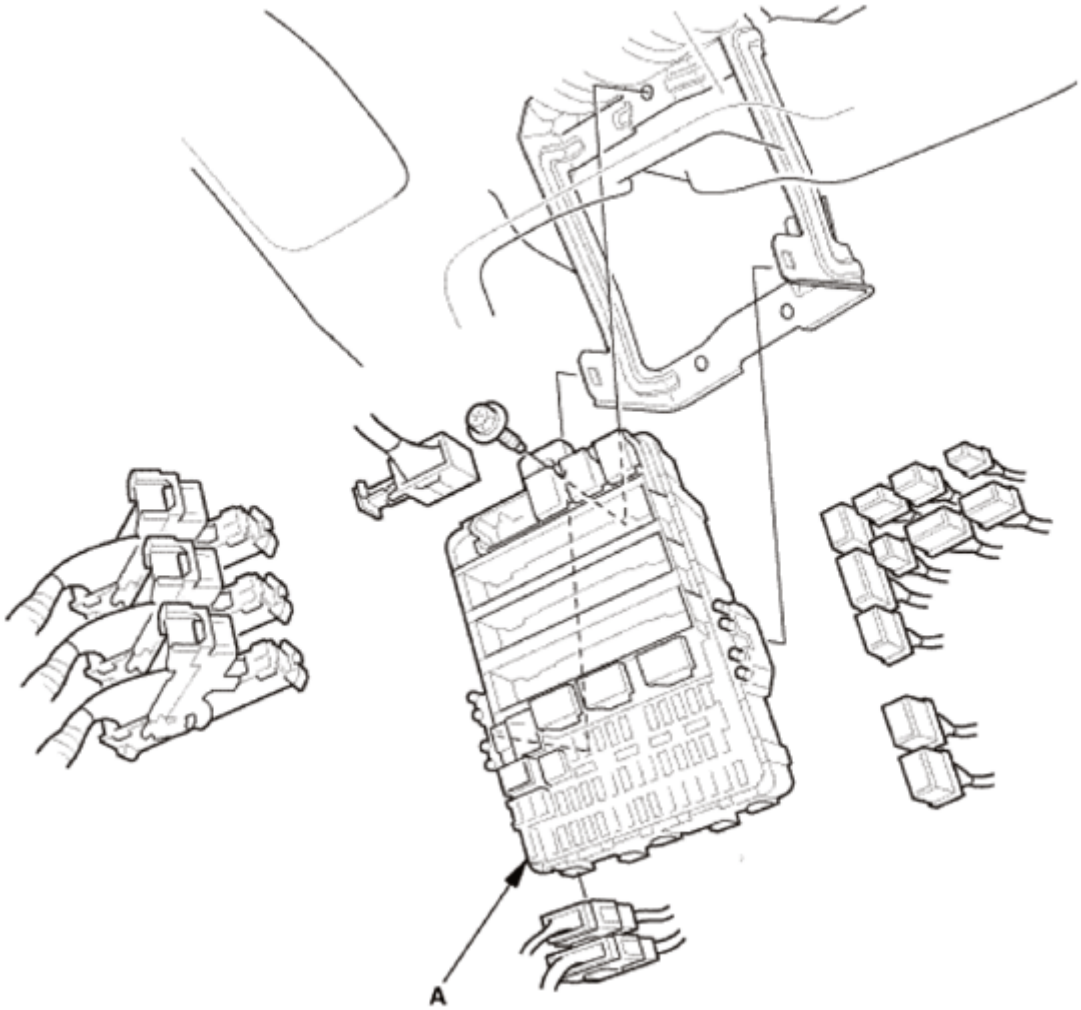

Fig. 36: Identifying Under-Dash Fuse/Relay Box
Courtesy of AMERICAN HONDA MOTOR CO., INC.

2. Detach the under-dash fuse/relay box.
3. Disconnect the connectors from the back side of the under-dash fuse/relay box, then remove the under-dash fuse/relay box.
4. Carefully remove the relays using a relay puller.

NOTE: **Do not use pliers. Pliers will damage the relays, which could cause the engine to stall or not start or cause other functions to fail.**

6. Under-Dash Fuse/Relay Box - Canada models
   1. Disconnect the connectors from the fuse side of the under-dash fuse/relay box (A).

GETtheMANUALS.org

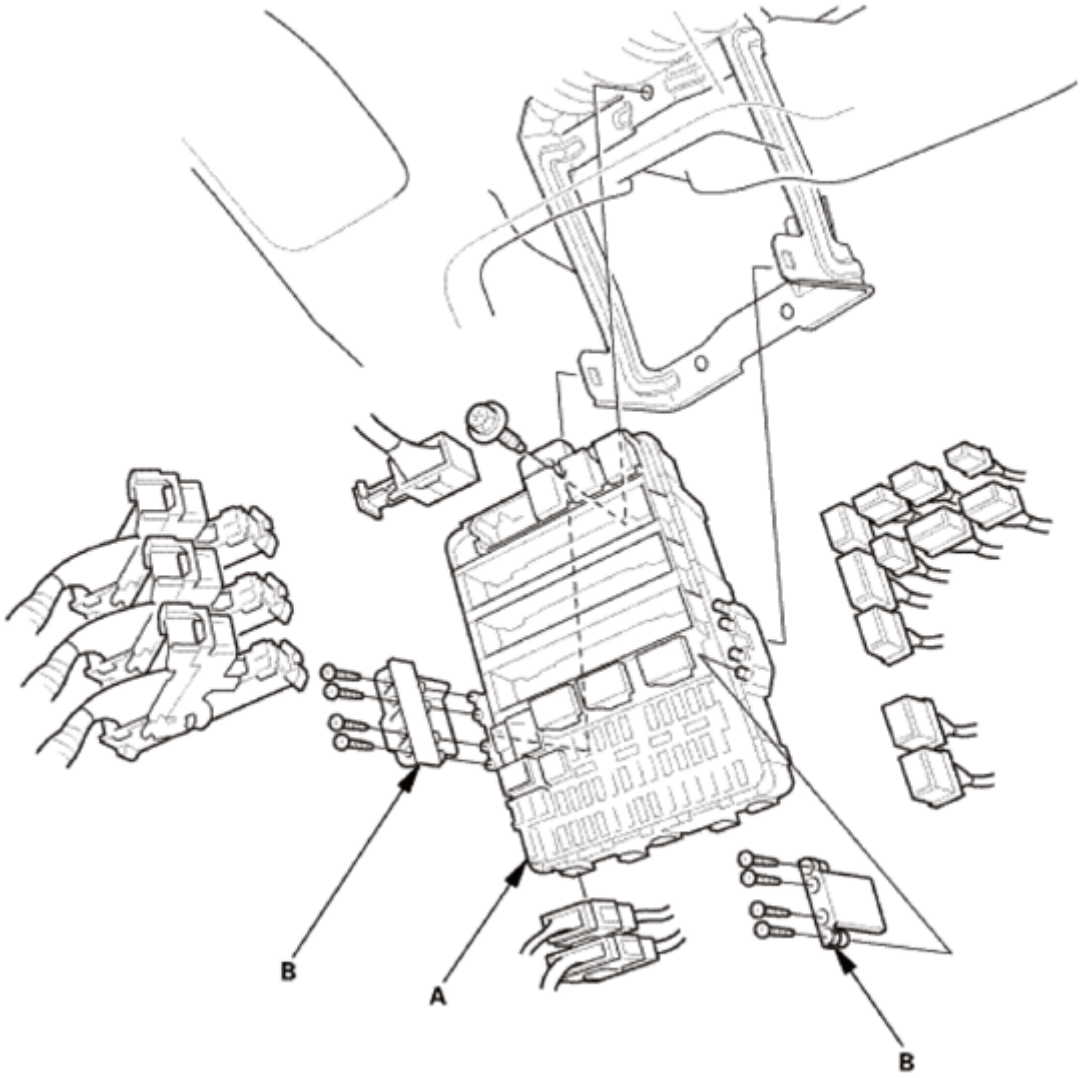

Fig. 37: Identifying Under-Dash Fuse/Relay Box And Covers
Courtesy of AMERICAN HONDA MOTOR CO., INC.

2. Remove the covers (B) from the under-dash fuse/relay box.
3. Detach the under-dash fuse/relay box.
4. Disconnect the connectors from the back side of the under-dash fuse/relay box, then remove the under-dash fuse/relay box.
5. Carefully remove the relays using a relay puller.

NOTE: **Do not use pliers. Pliers will damage the relays, which could cause the engine to stall or not start or cause other functions to fail.**

INSTALLATION

SRS components are located in this area. Review the **SRS COMPONENT LOCATIONS** and the **PRECAUTIONS AND PROCEDURES** before doing repairs or service.

GETtheMANUALS.org

1. Under-Dash Fuse/Relay Box - Canada models

NOTE: **The imoes unit is built into the MICU, which is part of the under-dash fuse/relay box. Because of this construction, the imoes must be registered, or the vehicle will not start.**

1. Install the relays in the under-dash fuse/relay box (A).

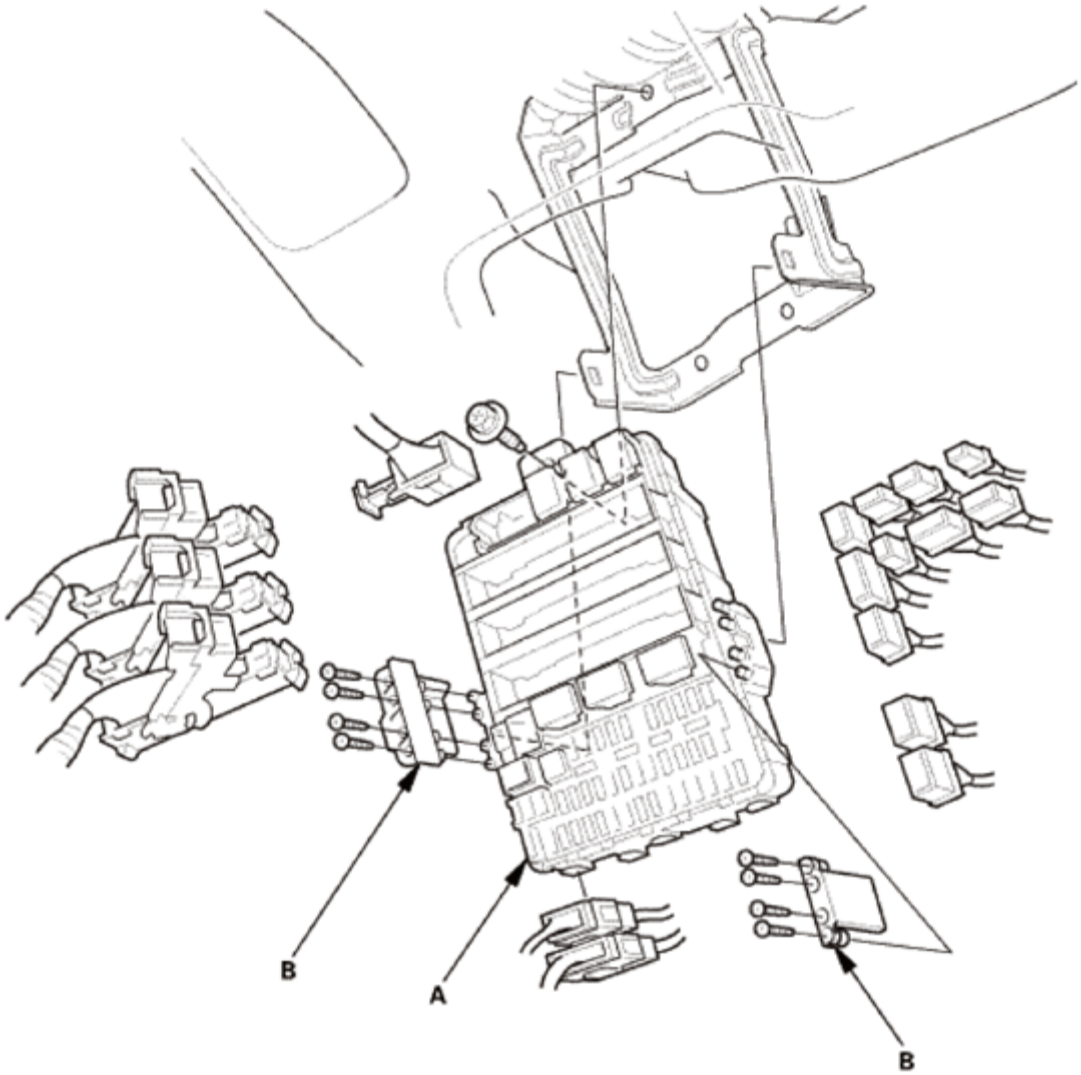

Fig. 38: Identifying Under-Dash Fuse/Relay Box Covers
Courtesy of AMERICAN HONDA MOTOR CO., INC.

2. Connect the connectors to the back side of the under-dash fuse/relay box.
3. Install the under-dash fuse/relay box.
4. Install the covers (B) to the under-dash fuse/relay box.
5. Connect the connectors to the fuse side of the under-dash fuse/relay box.

GETtheMANUALS.org

2. Under-Dash Fuse/Relay Box

NOTE: **The imoes unit is built into the MICU, which is part of the under-dash fuse/relay box. Because of this construction, the imoes must be registered, or the vehicle will not start.**

1. Install the relays in the under-dash fuse/relay box (A).

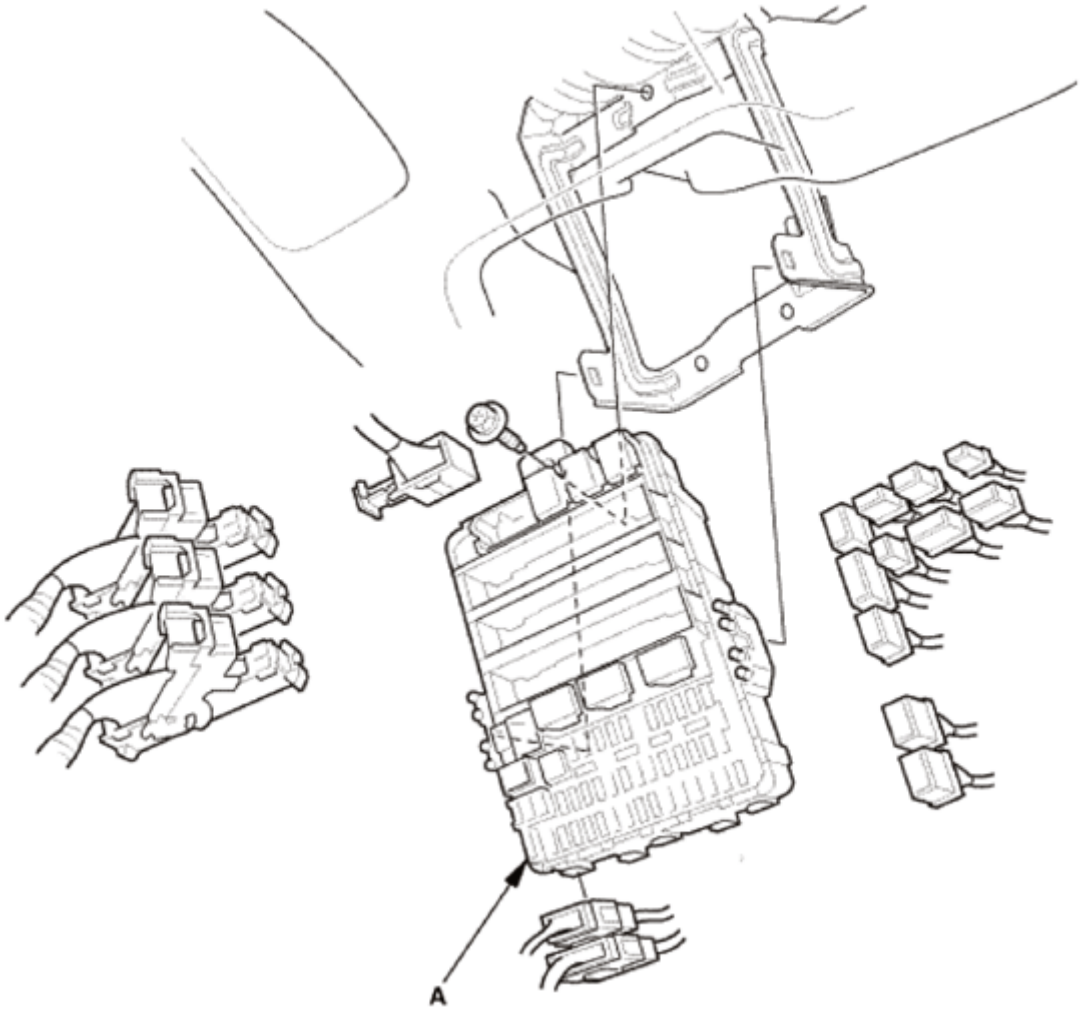

Fig. 39: Identifying Under-Dash Fuse/Relay Box
Courtesy of AMERICAN HONDA MOTOR CO., INC.

2. Connect the connectors to the back side of the under-dash fuse/relay box.
3. Install the under-dash fuse/relay box.
4. Connect the connectors to the fuse side of the under-dash fuse/relay box.

3. Driver's Dashboard Lower Cover
   1. Connect the connector (A), then install the driver's dashboard lower cover (B). Make sure the clips (C) snap into place securely.

GETtheMANUALS.org

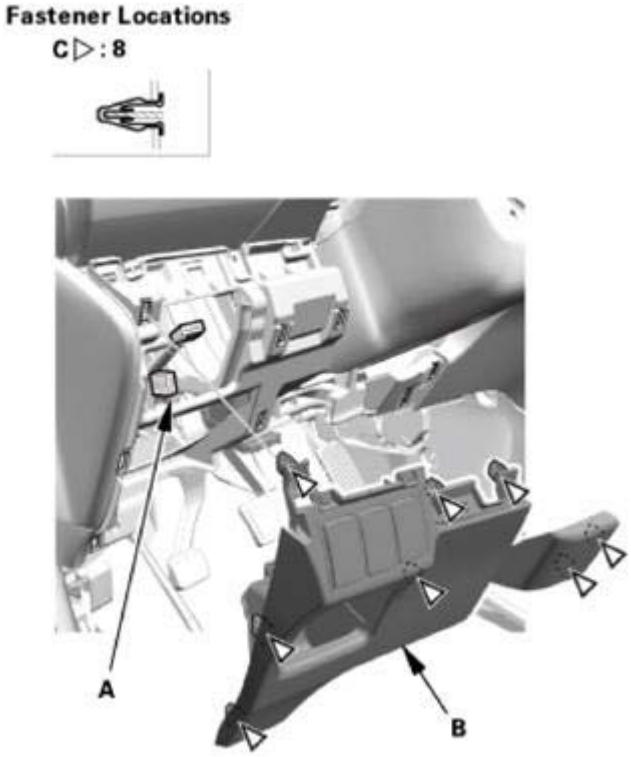

Fig. 40: Identifying Driver's Dashboard Lower Cover, Connector And Clips
Courtesy of AMERICAN HONDA MOTOR CO., INC.

4. Driver's Dashboard Panel Assembly
    1. Connect the connector (A), then install the driver's dashboard panel assembly (B). Make sure the clips (C) snap into place securely.

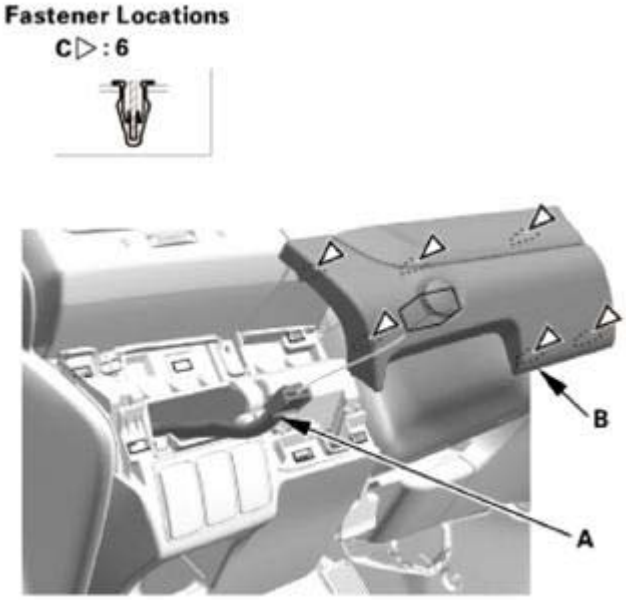

Fig. 41: Identifying Driver's Dashboard Panel Assembly, Connector And Clips

GETtheMANUALS.org

Courtesy of AMERICAN HONDA MOTOR CO., INC.

5. Driver's Dashboard Undercover
    1. Install the driver's dashboard undercover (A). Make sure the clip (B) snap into place securely, and the pin (C) into the holder (D) securely.
    2. Turn the lock knob (E) 90 °.

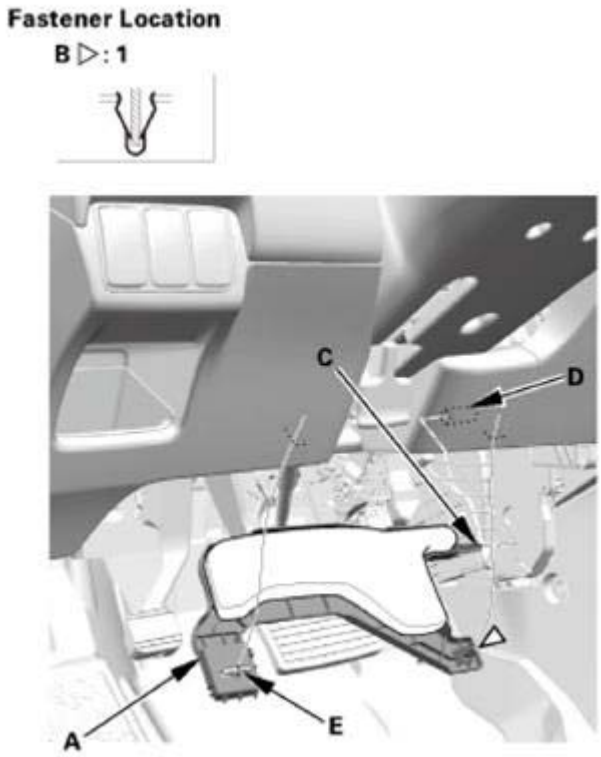

Fig. 42: Identifying Driver's Dashboard Undercover, Lock Knob, Holder, Pin And Clip
Courtesy of AMERICAN HONDA MOTOR CO., INC.

6. Battery Terminal (SRS) - Reconnection

NOTE: If the battery performance is abnormal, test the battery.

1. Clean the battery terminals.
2. Connect the positive cable (A) to the battery.

NOTE: Always connect the positive side first.

3. Connect the negative cable (B) to the battery.
4. Apply multipurpose grease to the terminals to prevent corrosion.

GETtheMANUALS.org

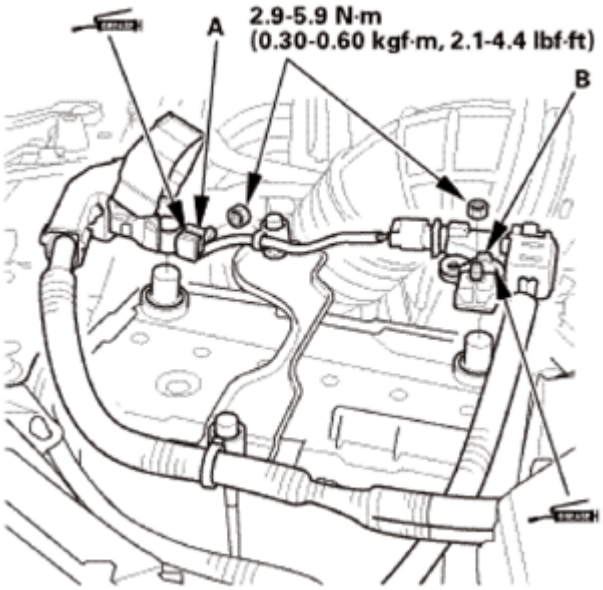

Fig. 43: Identifying Battery Positive, Negative Terminals, Mounting Bolts And Nuts With Torque Specifications
Courtesy of AMERICAN HONDA MOTOR CO., INC.

7. HDS DLC - Connection
    1. Connect the HDS to the data link connector (DLC) (A) located under the driver's side of the dashboard.
    2. Turn the ignition switch to ON (II).
    3. Make sure the HDS communicates with the vehicle. If it does not communicate, go to the DLC circuit troubleshooting.

Fig. 44: Identifying Data Link Connector
Courtesy of AMERICAN HONDA MOTOR CO., INC.

8. Under-Dash Fuse/Relay Box After Installation Check

GETtheMANUALS.org

1. Select IMMOBI from the SYSTEM SELECTION MENU, then select IMMOBILIZER SET UP.
2. Select REPLACE MPCS/MICU/IMOES, then select the suitable menu from the HDS indications.
3. After registration, confirm that the vehicle will start.
4. Confirm that all system work properly.

UNDER-HOOD FUSE/RELAY BOX REMOVAL AND INSTALLATION

REMOVAL

1. Battery Terminal (SRS) - Disconnection
    1. Make sure the ignition switch is in LOCK (0).
    2. Disconnect and isolate the negative cable (A) from the battery.

    NOTE: Always disconnect the negative side first.

    3. Disconnect the positive cable (B) from the battery.
    4. Wait at least 3 minutes before starting work.

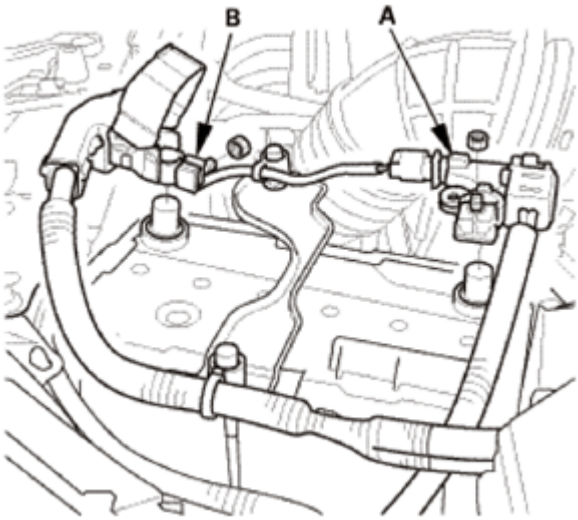

Fig. 45: Identifying Battery Positive And Negative Terminals
Courtesy of AMERICAN HONDA MOTOR CO., INC.

2. Relay Control Module
    1. Remove the cover (A).
    2. Remove the relay control module (B) from the under-hood fuse/relay box.
    3. Disconnect the relay control module connectors.

GETtheMANUALS.org

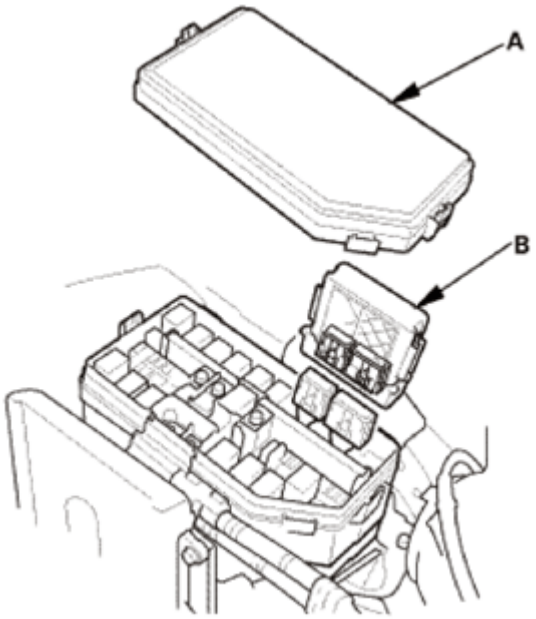

Fig. 46: Identifying Relay Control Module And Cover
Courtesy of AMERICAN HONDA MOTOR CO., INC.

3. Under-Hood Fuse/Relay Box Assembly

NOTE: The under-hood fuse/relay box is a part of the engine compartment wire harness, and it cannot be replaced by itself.

1. Remove the alternator and battery cable (A) from the under-hood fuse/relay box (B).
2. Release the tabs (C), then detach the under-hood fuse/relay box.
3. Remove the bottom cover (D) and connector from the under-hood fuse/relay box.
4. Carefully remove the relays using a relay puller.

NOTE: Do not use pliers. Pliers will damage the relays, which could cause the engine to stall or not start or cause other functions to fail.

GETtheMANUALS.org

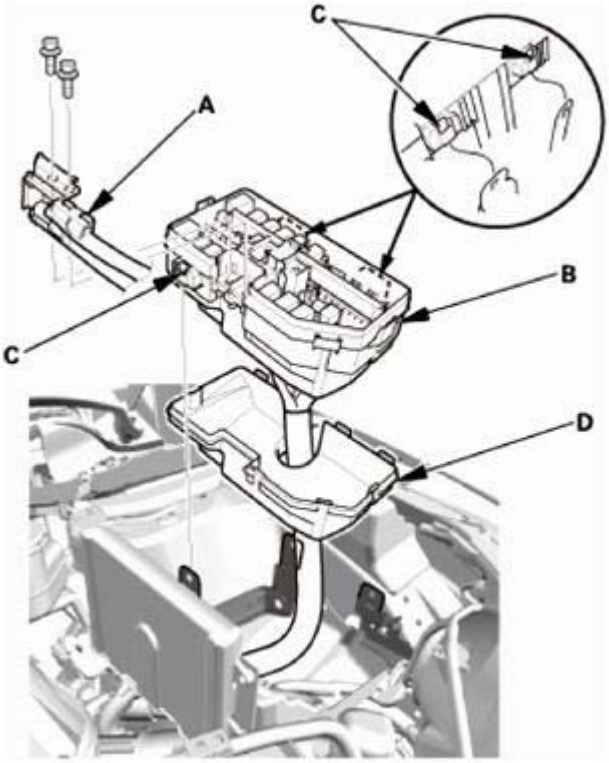

Fig. 47: Identifying Alternator And Battery Cable, Under-Hood Fuse/Relay Box, Bottom Cover And Tabs
Courtesy of AMERICAN HONDA MOTOR CO., INC.

INSTALLATION

1. Under-Hood Fuse/Relay Box Assembly

NOTE: **The under-hood fuse/relay box is a part of the engine compartment wire harness, and it cannot be replaced by itself.**

1. Install the relays, connector, and bottom cover (A) to the under-hood fuse/relay box (B).
2. Install the under-hood fuse/relay box.
3. Install the alternator and battery cable (C) to the under-hood fuse/relay box.

GETtheMANUALS.org

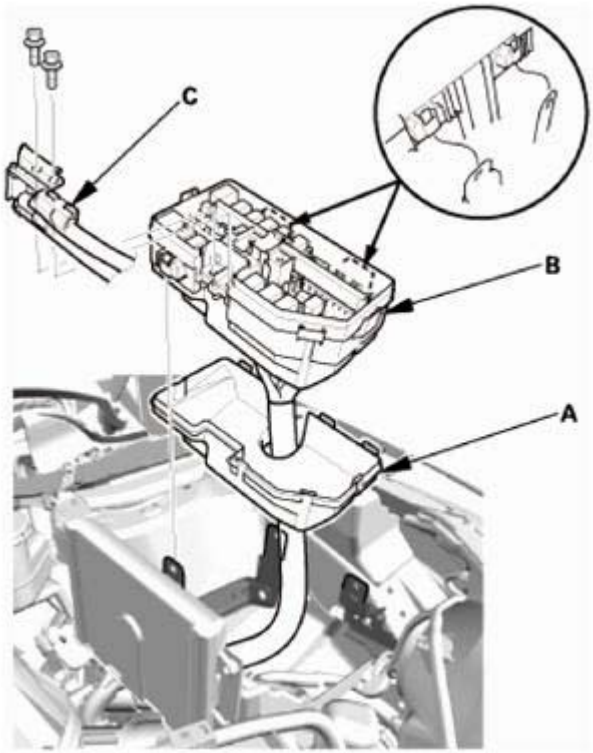

Fig. 48: Identifying Alternator And Battery Cable, Under-Hood Fuse/Relay Box, Bottom Cover And Tabs
Courtesy of AMERICAN HONDA MOTOR CO., INC.

2. Relay Control Module
    1. Connect the relay control module connectors.
    2. Install the relay control module (A) to the under-hood fuse/relay box.
    3. Install the cover (B).

GETtheMANUALS.org

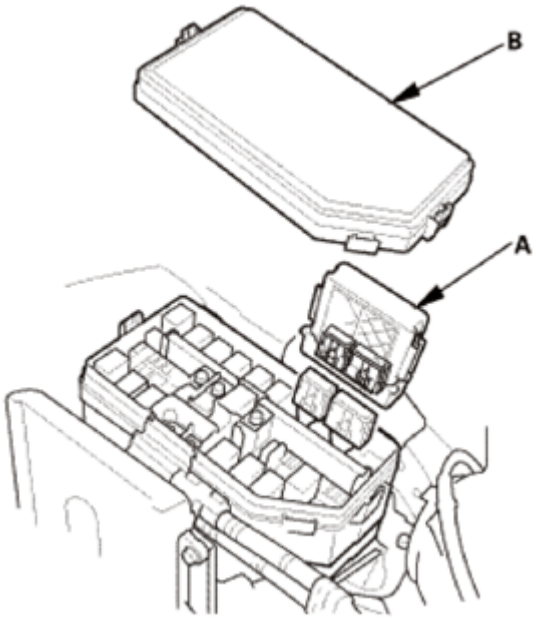

Fig. 49: Identifying Relay Control Module And Cover
Courtesy of AMERICAN HONDA MOTOR CO., INC.

3. Battery Terminal (SRS) - Reconnection

NOTE: If the battery performance is abnormal, test the battery.

1. Clean the battery terminals.
2. Connect the positive cable (A) to the battery.

NOTE: Always connect the positive side first.

3. Connect the negative cable (B) to the battery.
4. Apply multipurpose grease to the terminals to prevent corrosion.

GETtheMANUALS.org

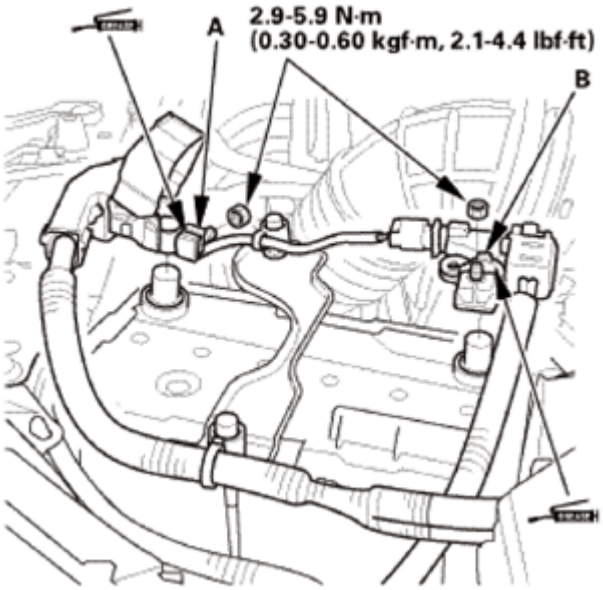

Fig. 50: Identifying Battery Positive, Negative Terminals, Mounting Bolts And Nuts With Torque Specifications
Courtesy of AMERICAN HONDA MOTOR CO., INC.

GETtheMANUALS.org

GAUGES SELF-DIAGNOSTIC FUNCTION

The gauge control module has a self-diagnostic function which consists of the following checks:

- The indicator drive circuit check.
- The ambient meter color variation check.
- The switch input check.
- The beeper drive circuit check.
- The LCD check.
- The gauge drive circuit check (engine coolant temperature gauge, fuel gauge, speedometer, and tachometer).
- The communication line check (of the body controller area network (B-CAN) communication line and the fast controller area network (F-CAN) communication line between the gauges).

NOTE: Indicators are also controlled via the communication lines.

ENTERING THE SELF-DIAGNOSTIC FUNCTION WITH THE HDS

Using the HDS, select BODY ELECTRICAL, GAUGES, then FUNCTION TESTS and do the self-diagnostic function.

ENTERING THE SELF-DIAGNOSTIC FUNCTION (MANUAL METHOD)

Before doing the self-diagnostic function, make sure the No. A29 (10 A) fuse in the under-hood fuse/relay box, and No. B5 (10 A) fuse in the under-dash fuse/relay box are OK.

1. Push and hold the SEL/RESET button.
2. Turn the combination light switch to the Parking position ( ).
3. Turn the ignition switch to ON (II).
4. Within 5 sec., turn the combination light switch OFF, then to the Parking position ( ) and OFF again.
5. Within 5 sec., release the SEL/RESET button, and then push and release the button three times repeatedly.

NOTE:

- **While in the self-diagnostic mode, the dashlights brightness controller operates normally.**
- **While in the self-diagnostic mode, the SEL/RESET switch is used to start the Beeper Drive Circuit Test and the Gauge Drive Circuit Check.**
- **If the vehicle speed exceeds 1.2 mph (2 km/h), or the ignition switch**

GETtheMANUALS.org

is turned to LOCK (0), the self-diagnostic mode ends.

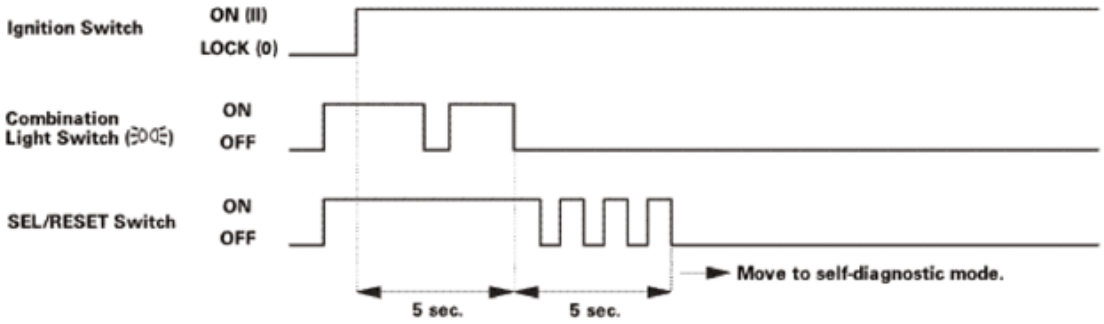

Fig. 1: Ignition Switch Blinking Pattern
Courtesy of AMERICAN HONDA MOTOR CO., INC.

THE INDICATOR DRIVE CIRCUIT CHECK

When entering the self-diagnostic mode, the following indicators (if equipped) blink:

A/T gear position indicator, ABS indicator, brake system indicator, charging system indicator, cruise control indicator, cruise main indicator, door indicator, ECO indicator, AWD system indicator, EPS indicator, fog light indicator, high beam indicator, immobilizer indicator, lights-on indicator, low fuel indicator, low oil pressure indicator, low tire pressure indicator, maintenance required indicator, malfunction indicator lamp (MIL), seat belt reminder indicator, security indicator, side airbag cutoff indicator, SRS indicator, tailgate indicator, TPMS indicator, VSA indicator, VSA OFF indicator, and washer fluid level indicator (Canada models).

THE AMBIENT METER COLOR VARIATION CHECK

When entering the self-diagnostic mode, the color of the ambient meter varies to white, white/green, and green in that order.

SWITCH INPUT CHECK

At the initial stage of the self-diagnostic function, the beeper sounds intermittently. The beeper sounds continuously when any of the following switch inputs are switched from OFF to ON: Cruise control main switch, ECON switch, parking brake switch, SEL/RESET switch, SET, RESUME, CANCEL switches, PREVIOUS switch, NEXT switch, and VSA OFF switch.

THE BEEPER DRIVE CIRCUIT CHECK

When entering the self-diagnostic mode, the beeper sounds five times.

THE LCD SEGMENT CHECK

When entering the self-diagnostic mode, all the segments blink five times.

THE GAUGE DRIVE CIRCUIT CHECK

GETtheMANUALS.org

When entering the self-diagnostic mode, the speedometer, the tachometer, the fuel gauge, and the engine coolant temperature gauge needles sweep from the minimum position to the maximum position, then return to the minimum position.

NOTE: **After the beeper stops sounding and the gauge needles return to the minimum position, pushing the SEL/RESET button starts the Beeper Drive Circuit Check (one beep) and the Gauge Drive Circuit Check again. The check cannot be started again until the gauge needles return to the minimum position.**

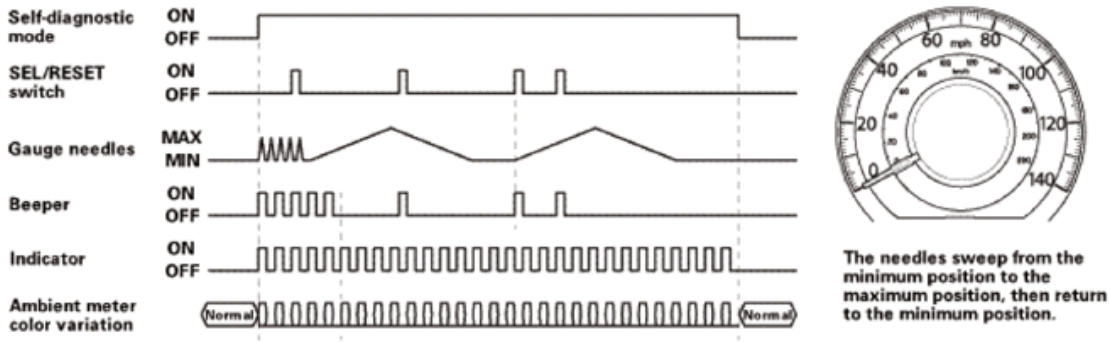

Fig. 2: SEL/RESET Switch Blinking Pattern
Courtesy of AMERICAN HONDA MOTOR CO., INC.

THE COMMUNICATION LINE CHECK

While in the self-diagnostic mode, the Communication Line Check starts after the LCD Segments Check.

If all segments come on, the communication line is OK. If faulty, the word "Error" will be indicated on the LCD display followed by a number or numbers.

ERROR CODE LIST

Error code	Type of communication line(s) error
Error 1	F-CAN communication
Error 2	B-CAN communication
Error 12	F-CAN and B-CAN communication

Indication Example:

GETtheMANUALS.org

Fig. 3: Screen Display - Indication Example
Courtesy of AMERICAN HONDA MOTOR CO., INC.

- Error 1: There is a malfunction in the communication line between the gauge control module and F-CAN. Check for DTCs in the PCM, and troubleshoot the indicated DTCs.
- Error 2: There is a malfunction in the communication line between the gauge control module and B-CAN. Check for DTCs in the body electrical system and troubleshoot the indicated DTCs.

ENDING THE SELF-DIAGNOSTIC FUNCTION

Turn the ignition switch to LOCK (0).

GETtheMANUALS.org

NOTE: **If the vehicle speed exceeds 1.2 mph (2 km/h), the self-diagnostic function ends.**

CENTER DISPLAY UNIT REMOVAL AND INSTALLATION

REMOVAL

1. Inner Vent - Both Sides
    1. Carefully pry out the inner vents (A) with the appropriate trim tool to detach the clips (B), then remove the inner vents.

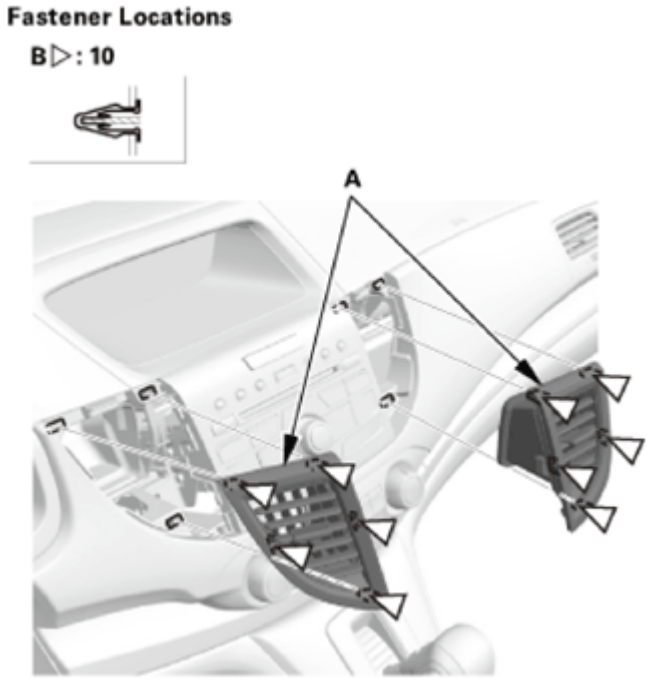

Fig. 4: Identifying Inner Vents And Clips
Courtesy of AMERICAN HONDA MOTOR CO., INC.

2. Audio Unit Assembly

NOTE:

- **Eject the discs before removing the audio unit to prevent damaging the CD player's load mechanism.**
- **If you are replacing the audio unit, write down the audio presets (if possible), then enter them into the new audio unit.**
- **Lay a shop towel under the parts when working on them to protect the face panel from scratches or other damage.**
- **Do not work in a dusty or dirty place.**
- **Discharge static electricity from your body before and during the work.**
- **Do not touch the circuit board(s) with your bare hands.**

GETtheMANUALS.org

- **Do not work with dirty hands.**
- **Do not touch the terminal connector of the flat plate cable with your bare hands (If you have touched it, wipe it off thoroughly.).**

1. Remove the bolts.
2. Disconnect the connectors, then pull out the audio unit (A).

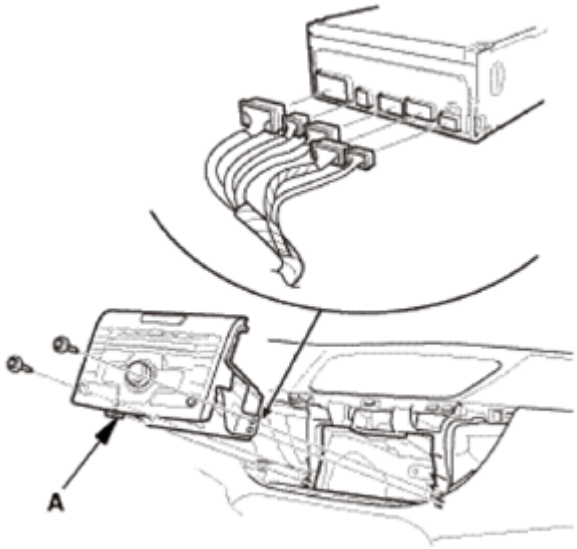

Fig. 5: Identifying Audio Unit And Bolts
Courtesy of AMERICAN HONDA MOTOR CO., INC.

3. Dashboard Center Display Visor Assembly
    1. Remove the dashboard center display visor (A).

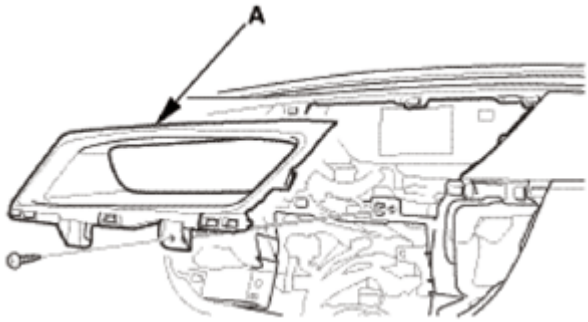

Fig. 6: Identifying Dashboard Center Display Visor With Screws
Courtesy of AMERICAN HONDA MOTOR CO., INC.

4. Center Display Unit Assembly
    1. Remove the center display unit assembly (A).
    2. Disconnect the connectors.

GETtheMANUALS.org

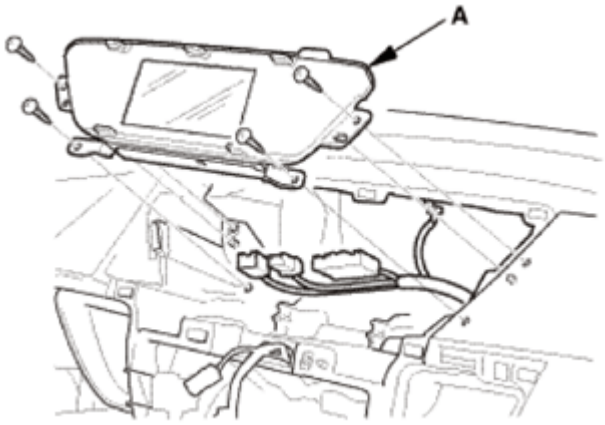

Fig. 7: Identifying Center Display Unit Assembly With Screws
Courtesy of AMERICAN HONDA MOTOR CO., INC.

5. Front Passenger's Airbag Cutoff Indicator
    1. Remove the front passenger's airbag cutoff indicator (A).

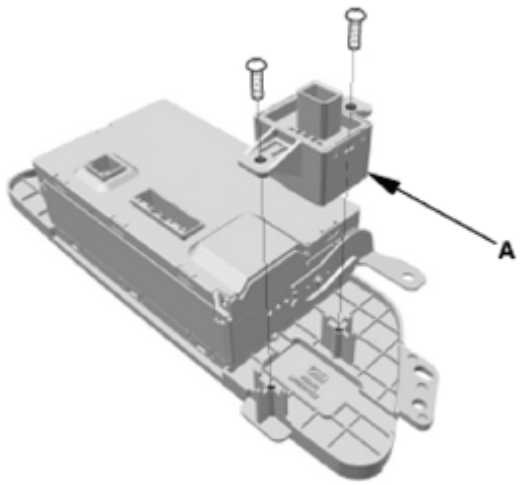

Fig. 8: Identifying Front Passenger's Airbag Cutoff Indicator With Screws
Courtesy of AMERICAN HONDA MOTOR CO., INC.

6. Center Display Unit
    1. Remove the center display unit (A).

GETtheMANUALS.org

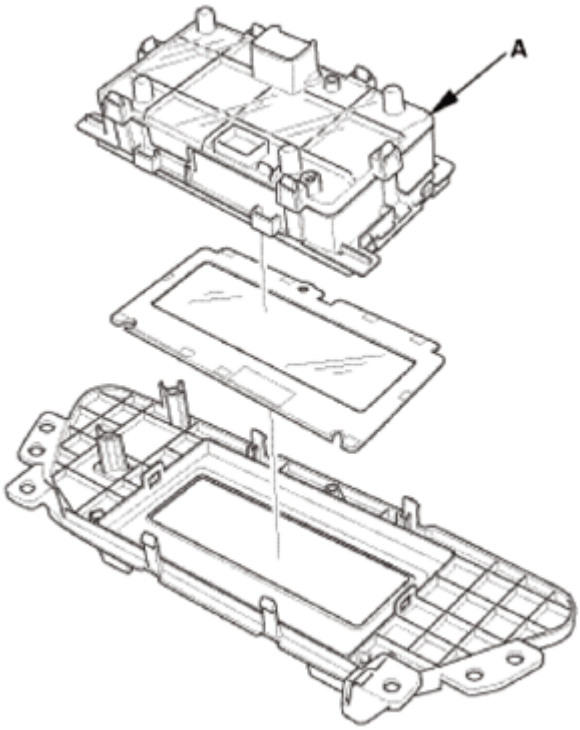

Fig. 9: Identifying Center Display Unit
Courtesy of AMERICAN HONDA MOTOR CO., INC.

INSTALLATION

1. Center Display Unit
    1. Install the center display unit (A).

GETtheMANUALS.org

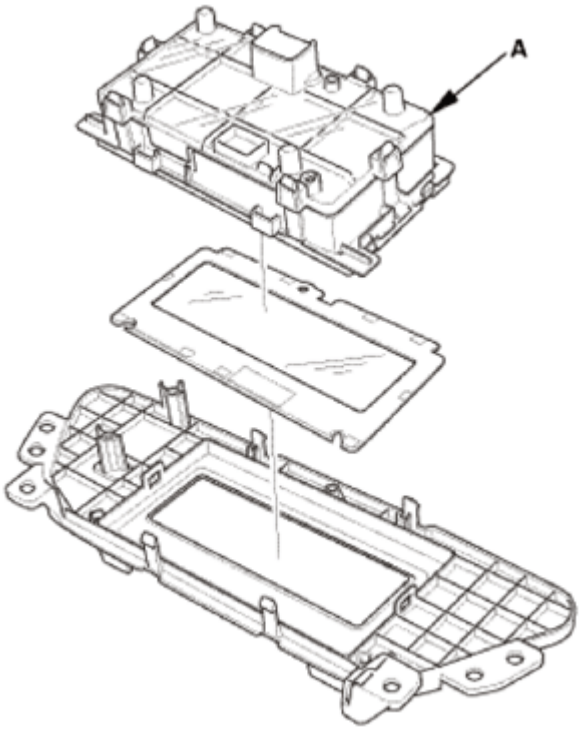

Fig. 10: Identifying Center Display Unit
Courtesy of AMERICAN HONDA MOTOR CO., INC.

2. Front Passenger's Airbag Cutoff Indicator
    1. Install the front passenger's airbag cutoff indicator (A).

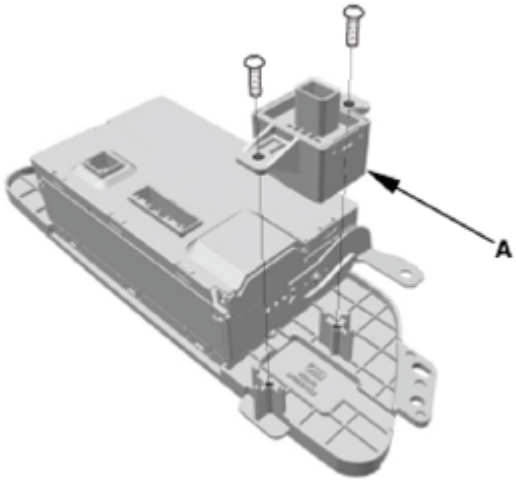

Fig. 11: Identifying Front Passenger's Airbag Cutoff Indicator With Screws
Courtesy of AMERICAN HONDA MOTOR CO., INC.

3. Center Display Unit Assembly
    1. Connect the connectors.

GETtheMANUALS.org

2. Install the center display unit assembly (A).

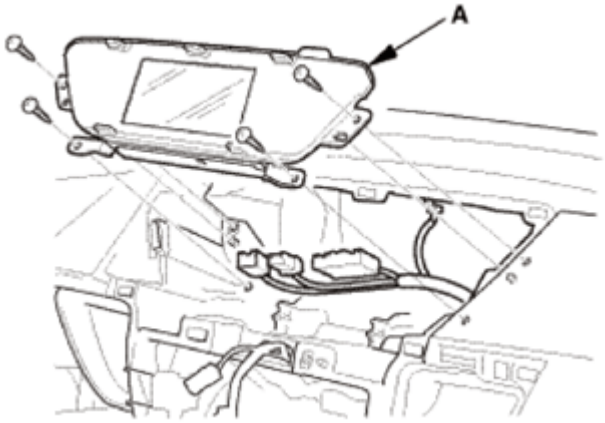

Fig. 12: Identifying Center Display Unit Assembly With Screws
Courtesy of AMERICAN HONDA MOTOR CO., INC.

4. Dashboard Center Display Visor Assembly
    1. Install the dashboard center display visor (A).

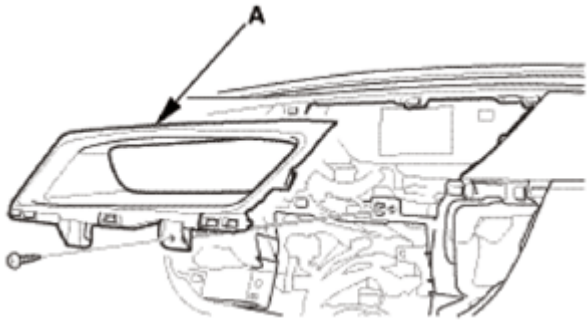

Fig. 13: Identifying Dashboard Center Display Visor With Screw
Courtesy of AMERICAN HONDA MOTOR CO., INC.

5. Audio Unit Assembly
    1. Connect the connectors, then install the audio unit (A).

NOTE: **Make sure all the connectors and the antenna lead are secure.**

    2. Install the bolts (B).

NOTE: **If the audio unit was replaced, enter the audio presets that you saved onto the new unit.**

GETtheMANUALS.org

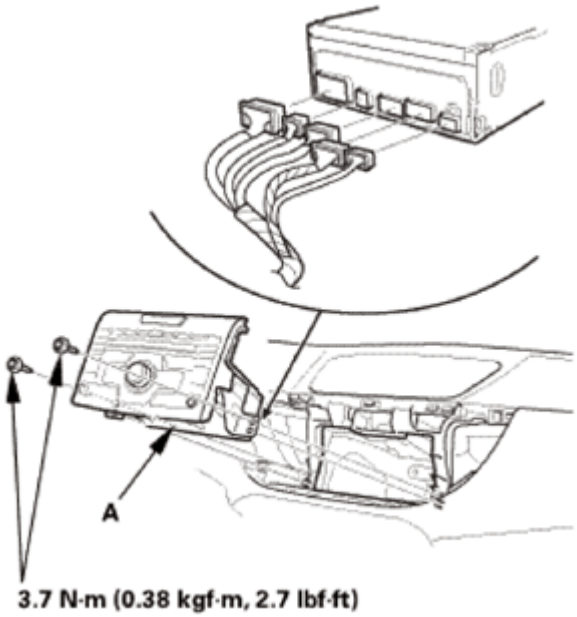

Fig. 14: Identifying Audio Unit And Bolts With Torque Specification
Courtesy of AMERICAN HONDA MOTOR CO., INC.

6. Inner Vent - Both Sides
    1. Install the inner vents (A). Make sure the clips (B) snap into place securely.

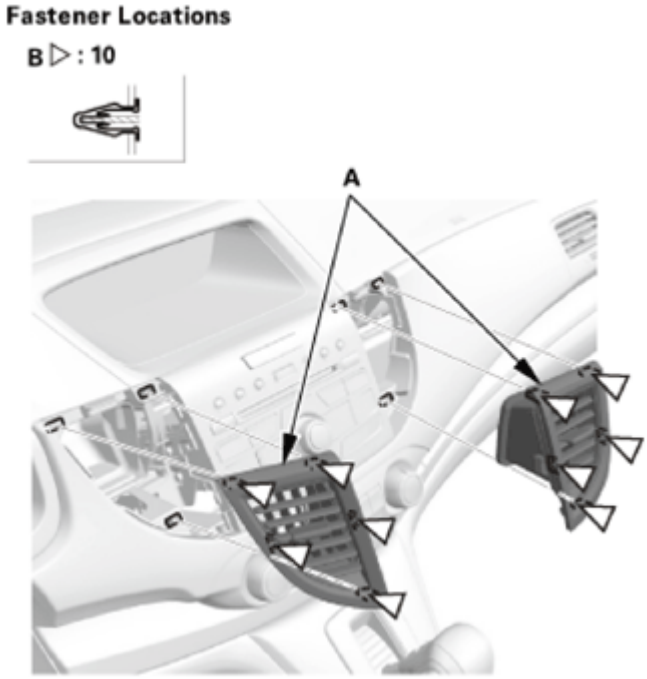

Fig. 15: Identifying Inner Vents And Clips
Courtesy of AMERICAN HONDA MOTOR CO., INC.

GETtheMANUALS.org

FUEL GAUGE SENDING UNIT TEST

SPECIAL TOOL REQUIRED DESCRIPTION

Image	Description/Tool Number
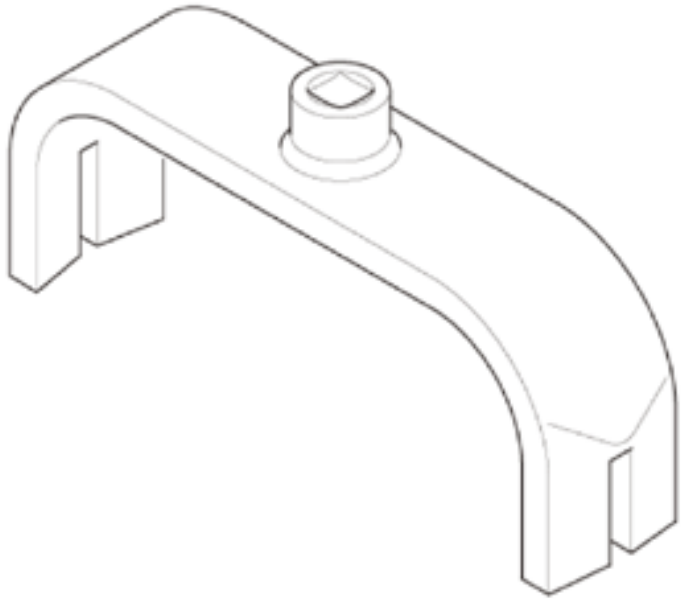	Fuel Nut Wrench 07AAA-T0AA100

TEST

1. Fuel Gauge Sending Unit - DTC Check
    1. Check the No. B5 IG1 METER (10 A) fuse in the under-dash fuse/relay box before testing.
    2. Check for body electrical system DTCs.
        - If no DTCs are found, go to the next procedure.
        - If DTC B1175 or B1176 is indicated, go to the indicated DTC's troubleshooting.

REMOVAL

1. Fuel Gauge Sending Unit Access Panel
    1. Remove the access panel (A) from the floor.
    2. Disconnect the connector (B).

GETtheMANUALS.org

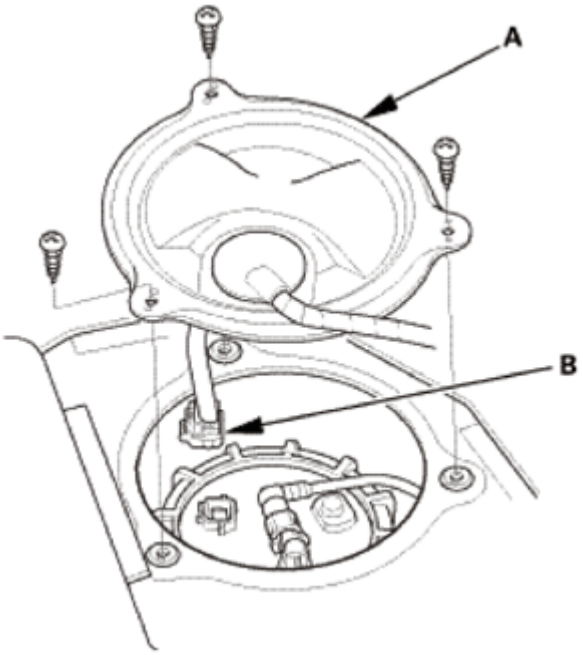

Fig. 16: Identifying Access Panel And Connector With Screws
Courtesy of AMERICAN HONDA MOTOR CO., INC.

TEST

1. Fuel Gauge Sending Unit Harness
    1. Measure the voltage between fuel tank unit 4P connector terminals No. 2 and No. 4 with the ignition switch turned to ON (II). There should be battery voltage.
        - If the voltage is OK, turn the ignition switch to LOCK (0), and go to the next procedure.
        - If the voltage is not as specified, turn the ignition switch to LOCK (0), and check for:
            - a short in the YEL wire to ground.
            - an open in the YEL or PUR wire.
    2. Connect the connector to the fuel tank unit.

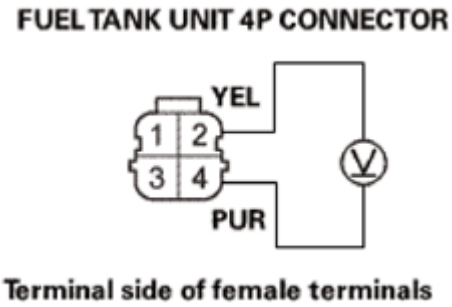

Fig. 17: Measuring Voltage Between Fuel Tank Unit 4P Connector Terminals No. 2 And No. 4 With Ignition Switch
Courtesy of AMERICAN HONDA MOTOR CO., INC.

GETtheMANUALS.org

REMOVAL

1. HDS DLC - Connection
    1. Connect the HDS to the data link connector (DLC) (A) located under the driver's side of the dashboard.
    2. Turn the ignition switch to ON (II).
    3. Make sure the HDS communicates with the vehicle. If it does not communicate, go to the DLC circuit troubleshooting.

Fig. 18: Identifying Data Link Connector Located Under Driver's Side Of Dashboard
Courtesy of AMERICAN HONDA MOTOR CO., INC.

2. Fuel Pump Off
    1. From the INSPECTION MENU of the HDS, select Fuel Pump OFF, then start the engine, and let it idle until it stalls.

NOTE:

- **Do not allow the engine to idle above 1, 000 rpm or the PCM will continue to operate the fuel pump.**
- **Pending or Confirmed DTC may be set during this procedure. Check for DTCs, and clear them as needed.**

    2. Turn the ignition switch to LOCK (0).
3. Battery Terminal - Disconnection
    1. Make sure the ignition switch is in LOCK (0).
    2. Disconnect and isolate the negative cable (A) from the battery.

NOTE: **Always disconnect the negative side first.**

GETtheMANUALS.org

3. Disconnect the positive cable (B) from the battery.

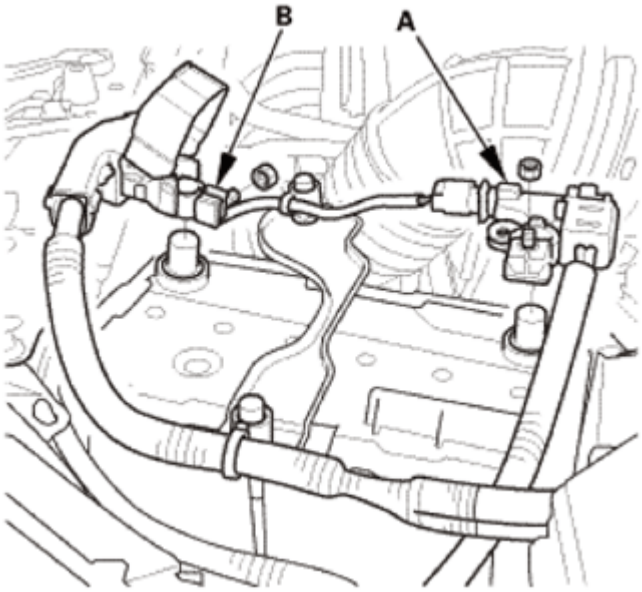

Fig. 19: Identifying Negative Cable And Positive Cable
Courtesy of AMERICAN HONDA MOTOR CO., INC.

4. Fuel Fill Cap
    1. Remove the fuel fill cap to relieve the pressure in the fuel tank.
5. Fuel Pressure - Relieving (Fuel Tank Unit)

NOTE: BEFORE YOU WORK ON THE FUEL LINES AND FITTINGS, READ THE FUEL LINE/QUICK-CONNECT FITTING PRECAUTIONS .

1. Check the fuel quick-connect fitting for dirt, and clean it if needed.
2. Place a rag or shop towel (A) over the quick-connect fitting.

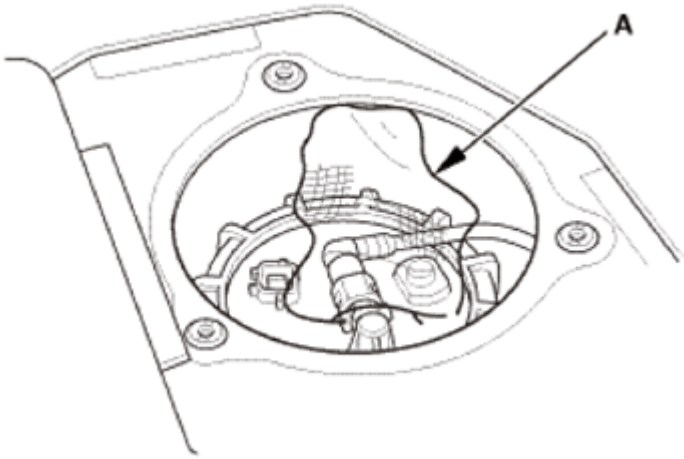

GETtheMANUALS.org

Fig. 20: Placing Rag Or Shop Towel Over Quick-Connect Fitting
Courtesy of AMERICAN HONDA MOTOR CO., INC.

3. Disconnect the quick-connect fitting: Hold the connector (A) with one hand, and squeeze the retainer tabs (B) with the other hand to release them from the locking tabs (C). Pull the connector off.

NOTE:

- **Be careful not to damage the line (D) or other parts.**
- **Do not use tools.**
- **If the connector does not move, keep the retainer tabs pressed down, and alternately pull and push the connector until it comes off easily.**
- **Do not remove the retainer from the line; once removed, the retainer must be replaced with a new one.**

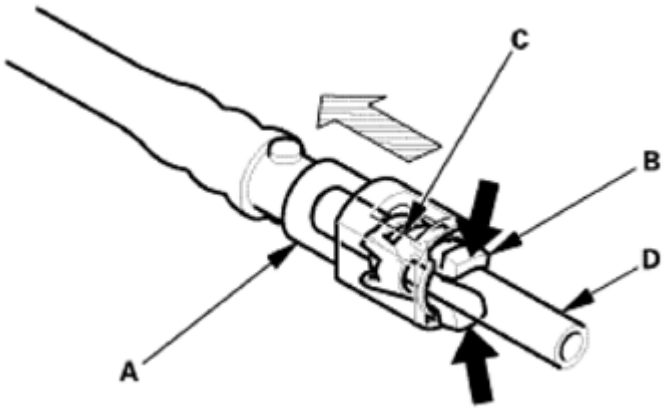

Fig. 21: Disconnecting Quick-Connect Fitting
Courtesy of AMERICAN HONDA MOTOR CO., INC.

6. Fuel Tank Unit
    1. Using the special tool, loosen the locknut (A).

GETtheMANUALS.org

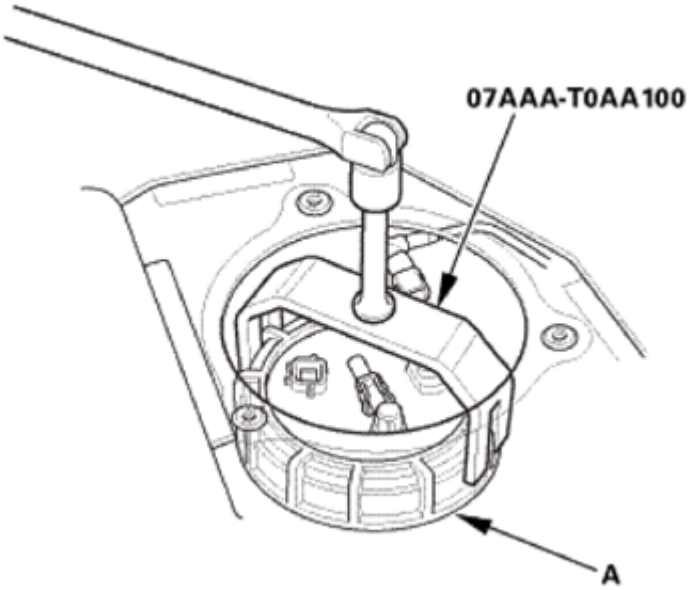

Fig. 22: Loosening Locknut Using Special Tool
Courtesy of AMERICAN HONDA MOTOR CO., INC.

2. Remove the locknut (A).
3. Remove the fuel tank unit (B).

GETtheMANUALS.org

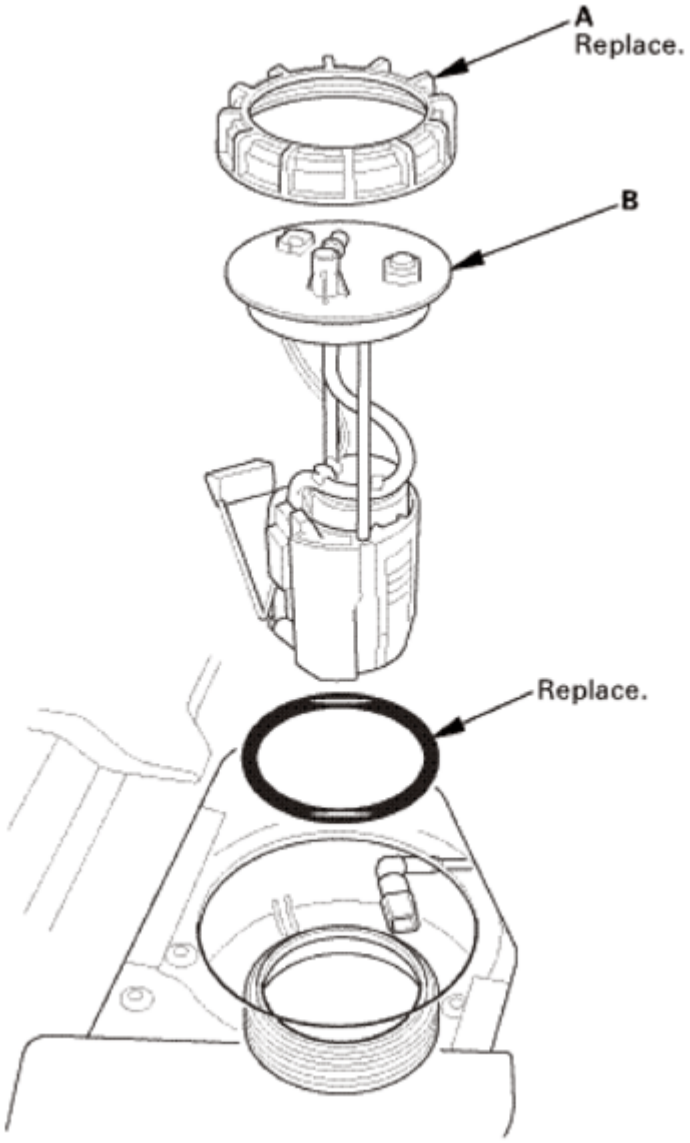

Fig. 23: Identifying Locknut And Fuel Tank Unit
Courtesy of AMERICAN HONDA MOTOR CO., INC.

TEST

1. Fuel Gauge Sending Unit - Test
    1. Measure the resistance between fuel tank unit connector terminals No. 2 and No. 4 with the float at E (EMPTY), LOW (LOW FUEL INDICATOR), 1/2 (HALF FULL), and F (FULL) positions.

       If you do not get the following readings, replace the fuel gauge sending unit.

Float Position	F 8.677 in (220.4 mm)	1/2 6.232 in (158.3 mm)	LOW 2.614 in (66.4 mm)	E 1.657 in (42.1 mm)
Resistance	19 to 21	202 to 212	548.7 to 662.1	772 to 788

GETtheMANUALS.org

(ohms)				

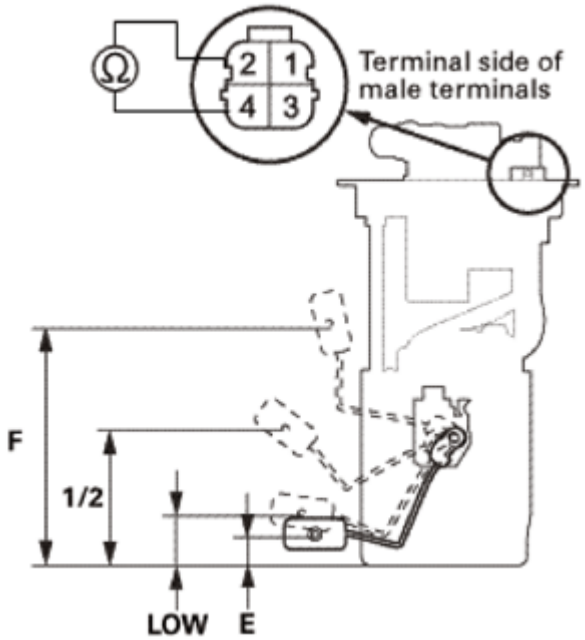

Fig. 24: Measuring Resistance Between Fuel Tank Unit Connector Terminals No. 2 And No. 4
Courtesy of AMERICAN HONDA MOTOR CO., INC.

2. Reconnect the fuel tank unit connector.
3. Remove the No. A29 BACK UP (10 A) fuse from the under-hood fuse/relay box for at least 10 seconds, then reinstall it.
4. Temporarily connect the battery positive and negative cables to the battery.
5. Turn the ignition switch to ON (II).
6. Check that the pointer of the fuel gauge indicates F with the float at F.
   - If the pointer of the fuel gauge does not indicate F, replace the gauge control module.
   - If the gauge is OK, the test is complete.

NOTE:

- **The pointer of the fuel gauge returns to the bottom of the gauge dial when the ignition switch is turned to ACC (I) or LOCK (0), regardless of the fuel level.**
- **Remove the No. A29 BACK UP (10 A) fuse from the under-hood fuse/relay box for at least 10 seconds after completing troubleshooting, otherwise it may take up to 20 minutes for the fuel gauge to indicate the correct fuel level.**

7. Turn the ignition switch to LOCK (0), then disconnect the battery negative and positive cables from the battery.

INSTALLATION

GETtheMANUALS.org

1. Fuel Tank Unit
    1. Insert the fuel tank unit (A) partially into the fuel tank with a new O-ring (B).

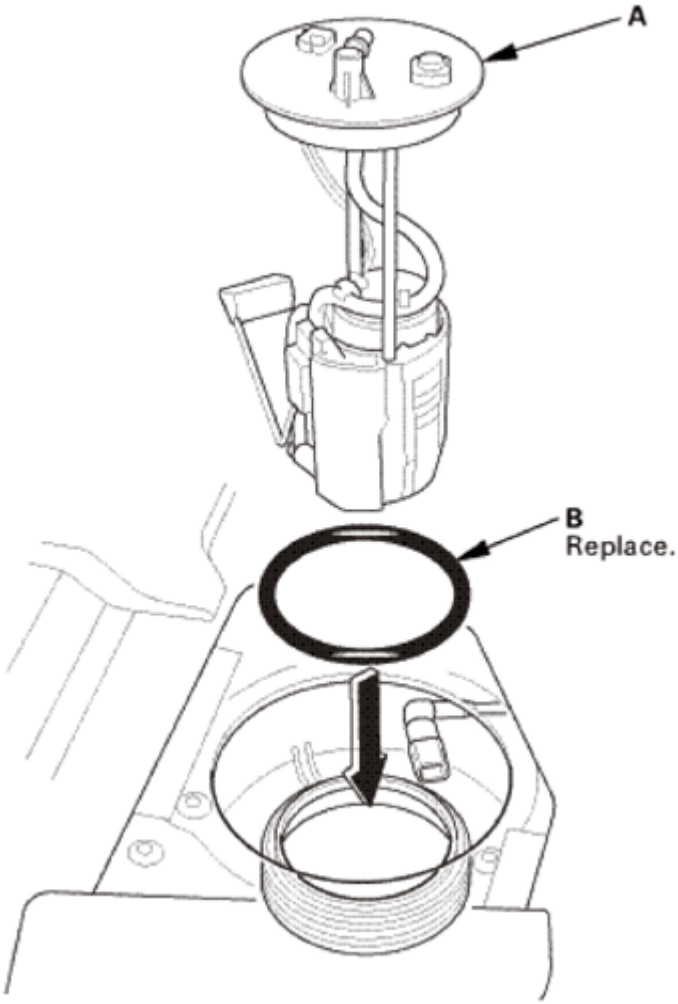

Fig. 25: Inserting Fuel Tank Unit Partially Into Fuel Tank With O-Ring
Courtesy of AMERICAN HONDA MOTOR CO., INC.

2. Align the marks (A) on the fuel tank and fuel tank unit, then insert the fuel tank unit into the fuel tank until.

NOTE: **To avoid a fuel leak, check the base gasket, visually or by hand, to make sure it is not pinched.**

GETtheMANUALS.org

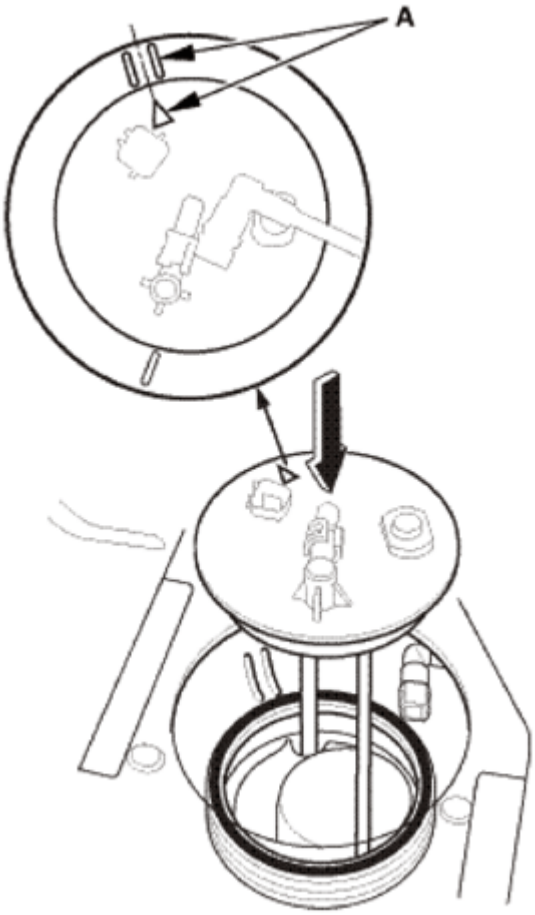

Fig. 26: Aligning Marks On Fuel Tank And Fuel Tank Unit
Courtesy of AMERICAN HONDA MOTOR CO., INC.

3. Tighten a new locknut (A) by hand holding the fuel tank unit vertically.

NOTE: **Before tightening, align the mark (B) on the locknut to the start of the thread (C).**

GETtheMANUALS.org

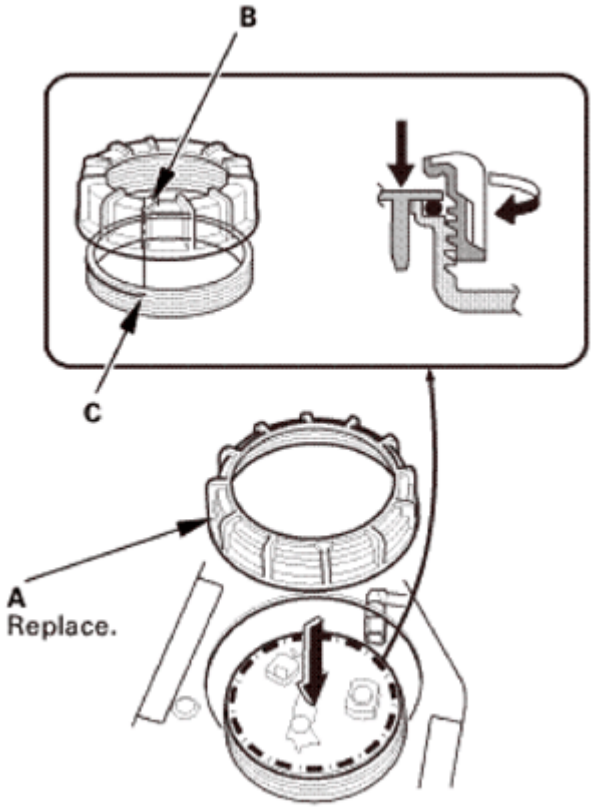

Fig. 27: Tightening Locknut
Courtesy of AMERICAN HONDA MOTOR CO., INC.

4. Using the special tool, tighten the locknut to the specified torque.

NOTE:

- **After tightening, make sure the marks are still aligned.**
- **After installation, check the base gasket, visually or by hand, to make sure it is not pinched.**

GETtheMANUALS.org

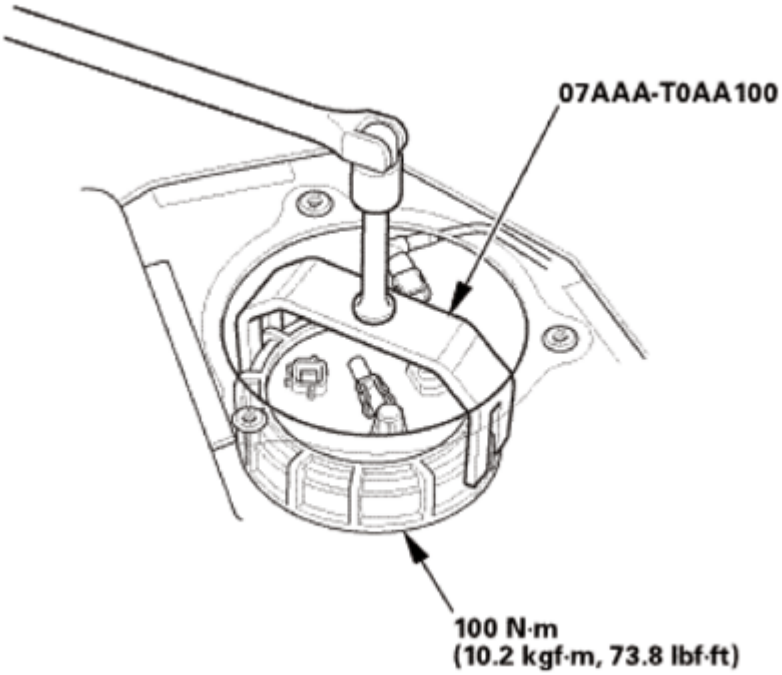

Fig. 28: Tightening Locknut To Specified Torque Using Special Tool
Courtesy of AMERICAN HONDA MOTOR CO., INC.

2. Fuel Line/Quick-Connect Fitting - Connection (Fuel Tank Unit)

NOTE: BEFORE YOU WORK ON THE FUEL LINES AND FITTINGS, READ THE FUEL LINE/QUICK-CONNECT FITTING PRECAUTIONS .

1. Connect the quick-connect fitting (A) to the fuel tank unit (B).

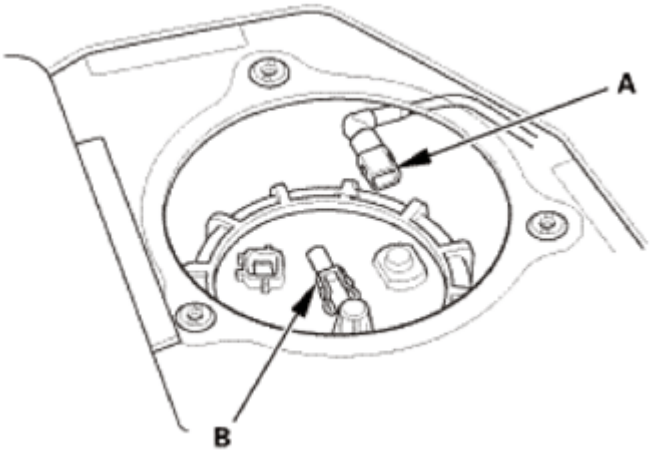

Fig. 29: Identifying Quick-Connect Fitting And Fuel Tank Unit
Courtesy of AMERICAN HONDA MOTOR CO., INC.

3. Fuel Gauge Sending Unit Access Panel

GETtheMANUALS.org

1. Connect the connector (A).
2. Install the access panel (B) to the floor.

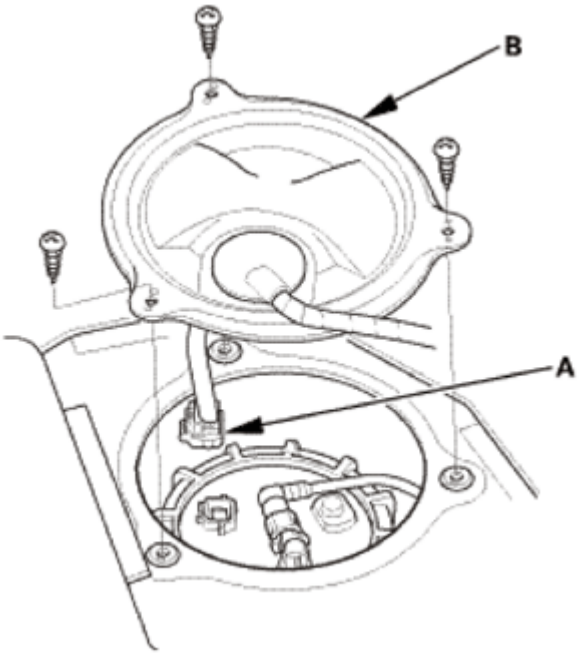

Fig. 30: Identifying Access Panel And Connector With Screws
Courtesy of AMERICAN HONDA MOTOR CO., INC.

4. Fuel Fill Cap
    1. Install the fuel fill cap.
5. Battery Terminal - Reconnection

NOTE: If the battery performance is abnormal, test the battery.

1. Clean the battery terminals.
2. Connect the positive cable (A) to the battery.

NOTE: Always connect the positive side first.

3. Connect the negative cable (B) to the battery.
4. Apply multipurpose grease to the terminals to prevent corrosion.

GETtheMANUALS.org

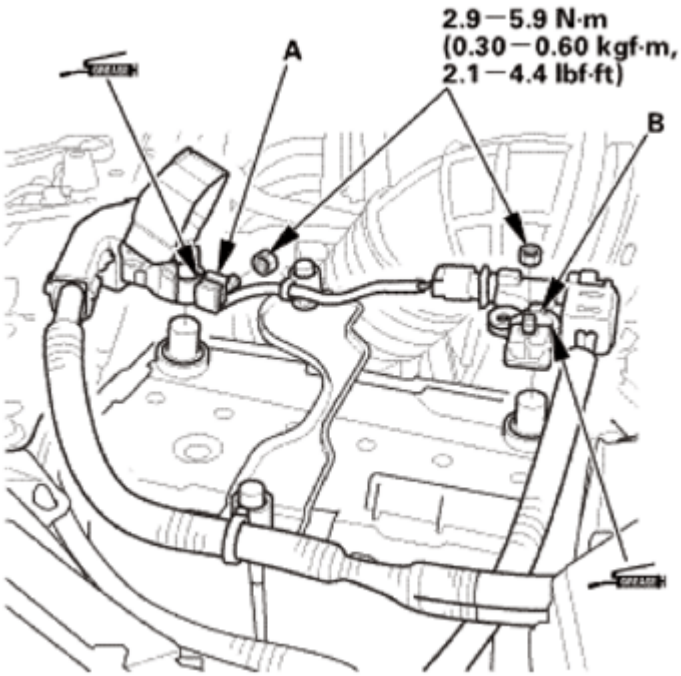

Fig. 31: Identifying Multipurpose Grease Applying Area On Terminals
Courtesy of AMERICAN HONDA MOTOR CO., INC.

6. Fuel Line Leak Check
    1. Turn the ignition switch to ON (II) (but do not operate the starter motor). The fuel pump runs for about 2 seconds, and fuel pressure rises. Repeat this two or three times, then make sure there are no fuel leaks.

GAUGE CONTROL MODULE REMOVAL AND INSTALLATION

REMOVAL

1. Gauge Control Module Data - Rewriting
    1. -
2. Dashboard Meter Visor
    1. Carefully pry out the dashboard meter visor blind cover (A) with the appropriate trim tool to detach the clips (B) and the hook (C), then tuck up the dashboard meter visor blind cover.

GETtheMANUALS.org

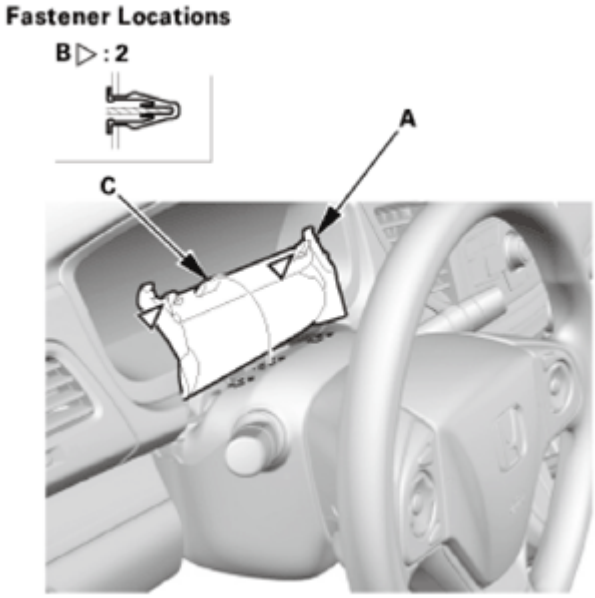

Fig. 32: Identifying Dashboard Meter Visor Blind Cover, Clips And Hook
Courtesy of AMERICAN HONDA MOTOR CO., INC.

2. Pull out the dashboard meter visor assembly (A) with the appropriate trim tool to detach the clips (B, C) and the tabs (D), then remove the dashboard meter visor assembly.

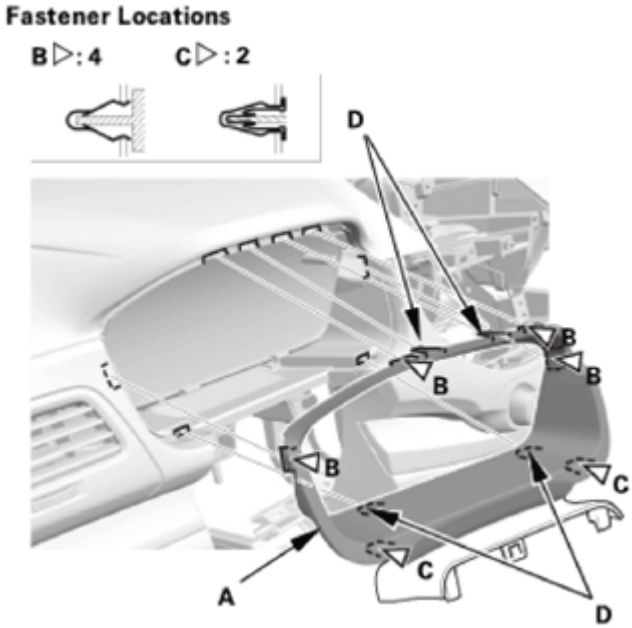

Fig. 33: Identifying Dashboard Meter Visor Assembly, Clips And Tabs
Courtesy of AMERICAN HONDA MOTOR CO., INC.

3. Gauge Control Module

GETtheMANUALS.org

NOTE: **Spread a protective cloth on the upper column cover for protect the upper column cover.**

1. Adjust the steering column to full tilt down position and to the full telescopic pull position.
2. Remove the gauge control module (A).
3. Disconnect the connector.

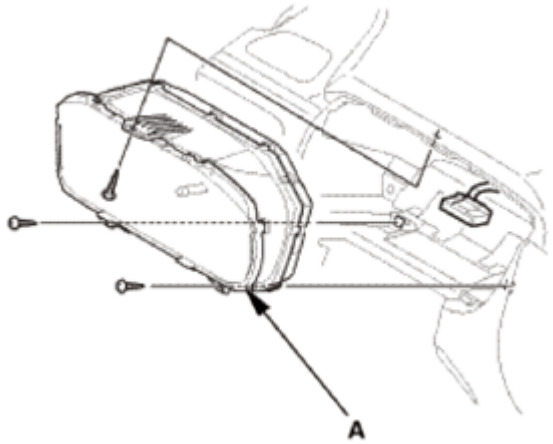

Fig. 34: Identifying Gauge Control Module With Screws
Courtesy of AMERICAN HONDA MOTOR CO., INC.

INSTALLATION

1. Gauge Control Module

NOTE: **Spread a protective cloth on the upper column cover for protect the upper column cover.**

1. Connect the connector.
2. Install the gauge control module (A).

GETtheMANUALS.org

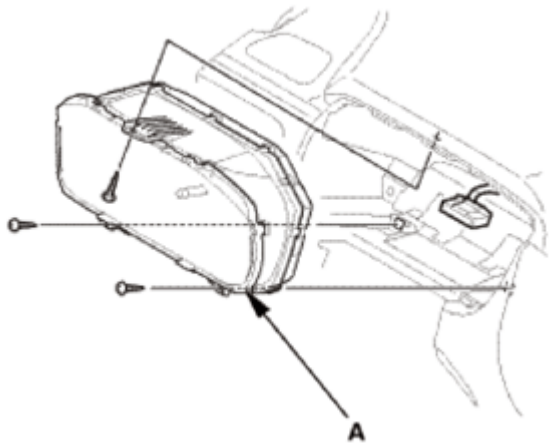

Fig. 35: Identifying Gauge Control Module With Screws
Courtesy of AMERICAN HONDA MOTOR CO., INC.

2. Dashboard Meter Visor
    1. Install the dashboard meter visor assembly (A). Make sure the clips (B, C) and the tabs (D) snap into place securely.

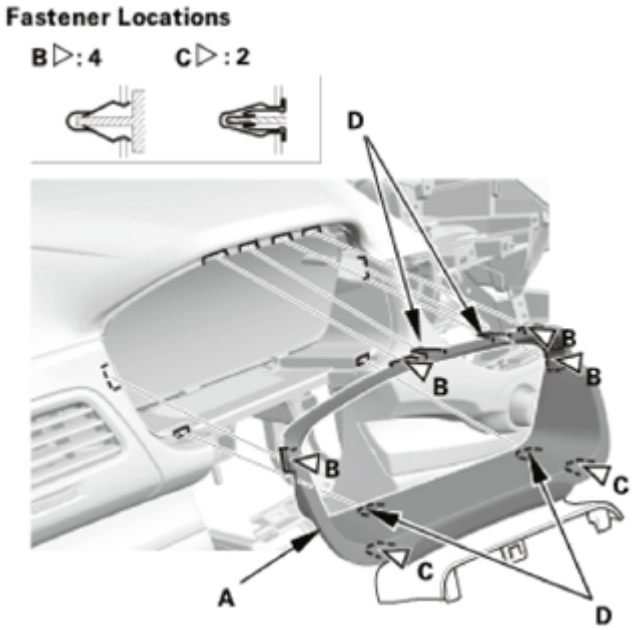

Fig. 36: Identifying Dashboard Meter Visor Assembly, Clips And Tabs
Courtesy of AMERICAN HONDA MOTOR CO., INC.

    2. Install the dashboard meter visor blind cover (A). Make sure the clips (B) and the hook (C) snap into place securely.

GETtheMANUALS.org

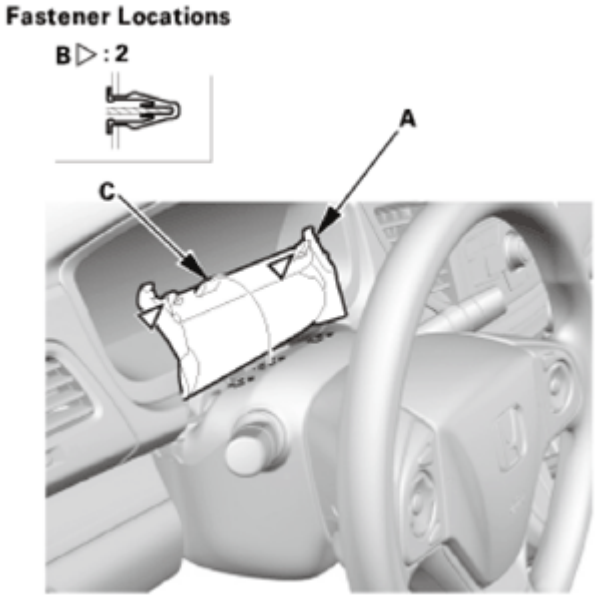

Fig. 37: Identifying Dashboard Meter Visor Blind Cover, Clips And Hook
Courtesy of AMERICAN HONDA MOTOR CO., INC.

3. Rewriting the ODO Data and Transferring the Maintenance Minder™ Data to a New Gauge Control Module
    1. **Do the rewriting the ODO data and transferring the maintenance minder™ data to a new gauge control module** See **GAUGE CONTROL MODULE REMOVAL AND INSTALLATION** or REWRITING THE ODO DATA AND TRANSFERRING THE MAINTENANCE MINDER™ DATA TO A NEW GAUGE CONTROL MODULE

GAUGES COMPONENT LOCATION INDEX

GETtheMANUALS.org

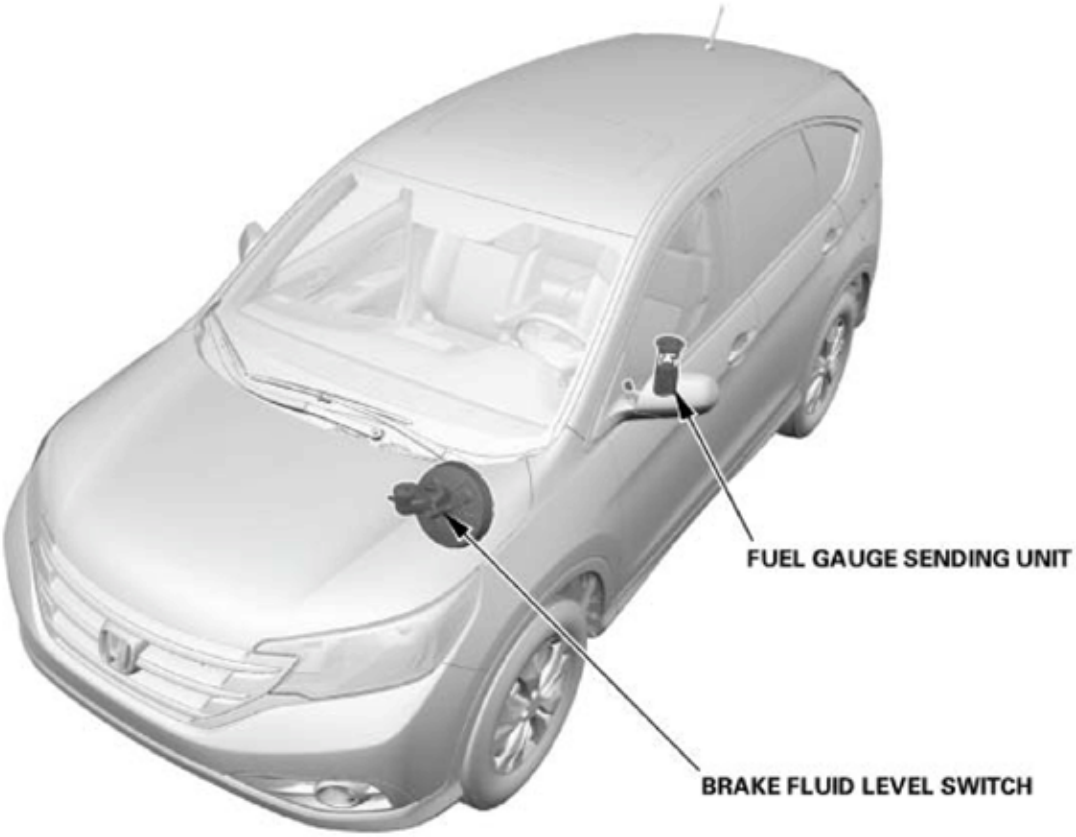

Fig. 38: Identifying Gauges Component Location (1 Of 5)
Courtesy of AMERICAN HONDA MOTOR CO., INC.

GETtheMANUALS.org

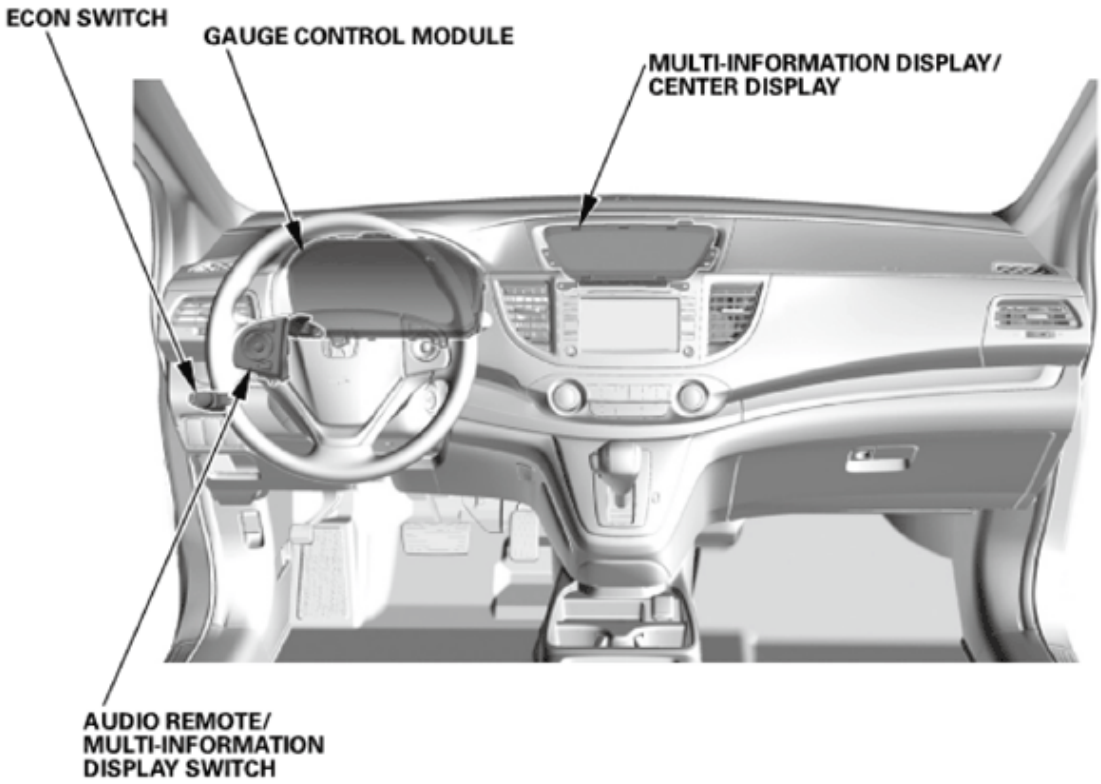

Fig. 39: Identifying Gauges Component Location (2 Of 5)
Courtesy of AMERICAN HONDA MOTOR CO., INC.

GETtheMANUALS.org

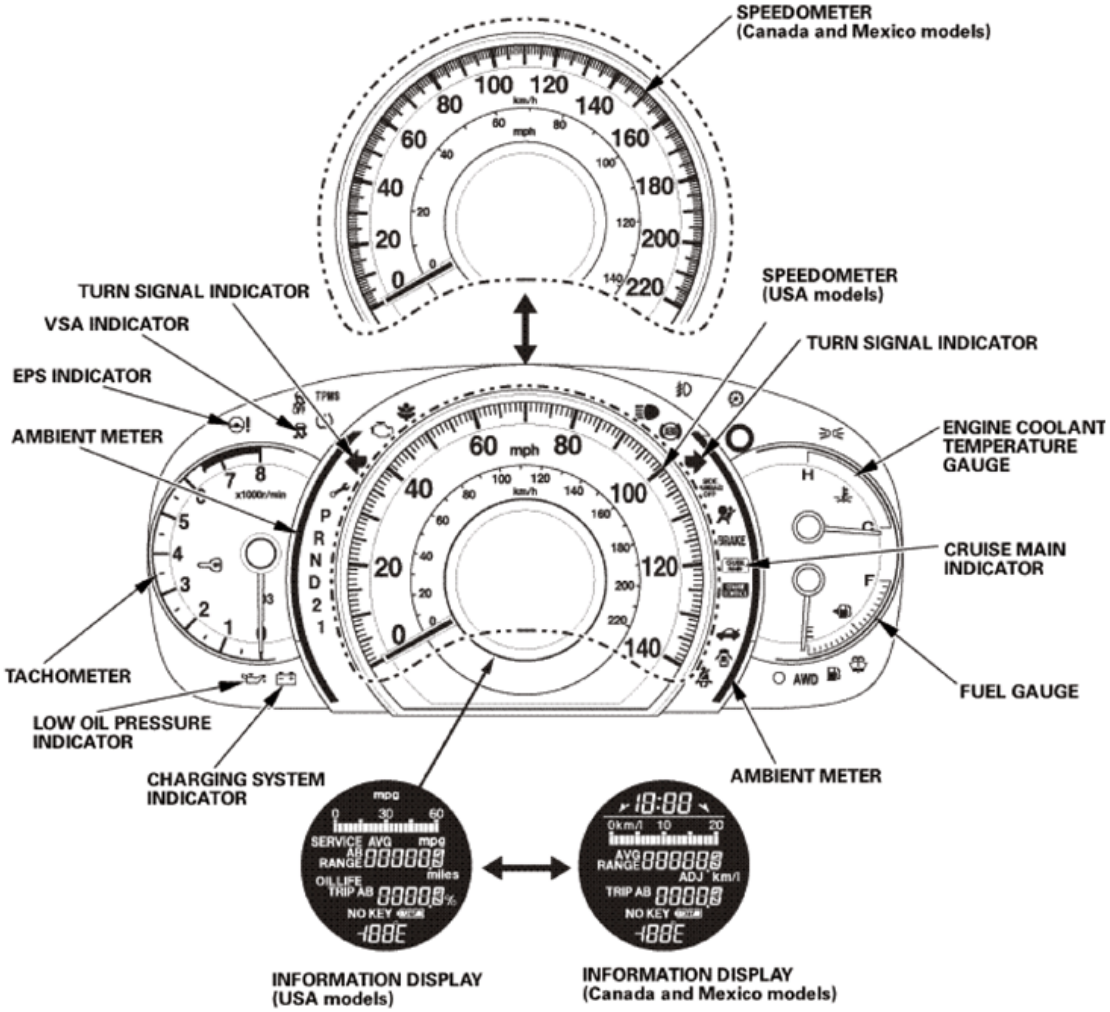

Fig. 40: Identifying Gauges Component Location (3 Of 5)
Courtesy of AMERICAN HONDA MOTOR CO., INC.

GETtheMANUALS.org

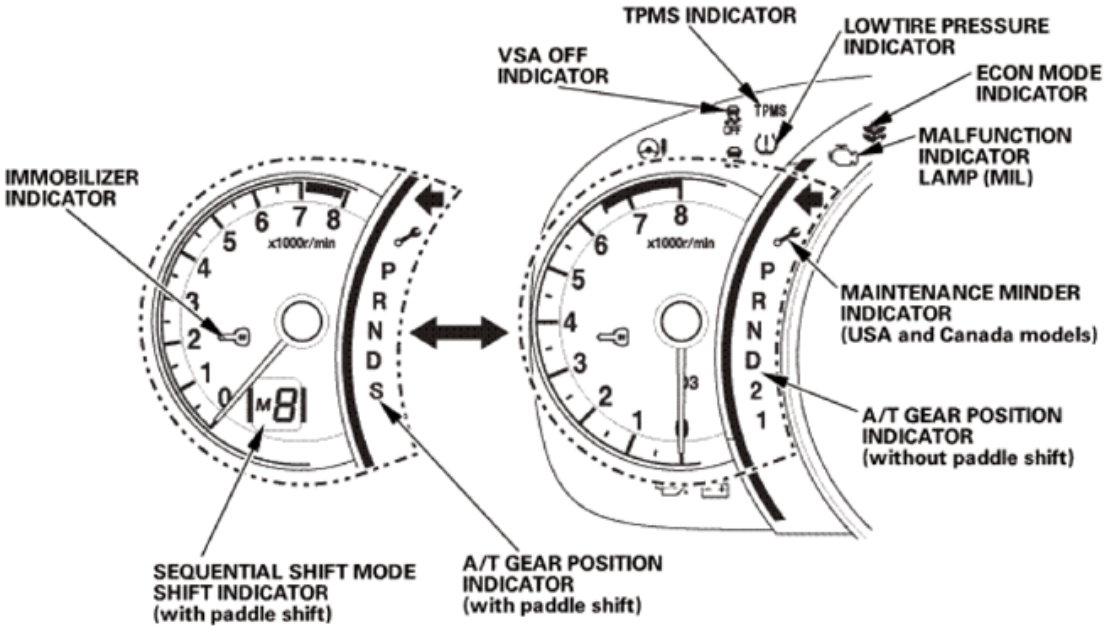

Fig. 41: Identifying Gauges Component Location (4 Of 5)
Courtesy of AMERICAN HONDA MOTOR CO., INC.

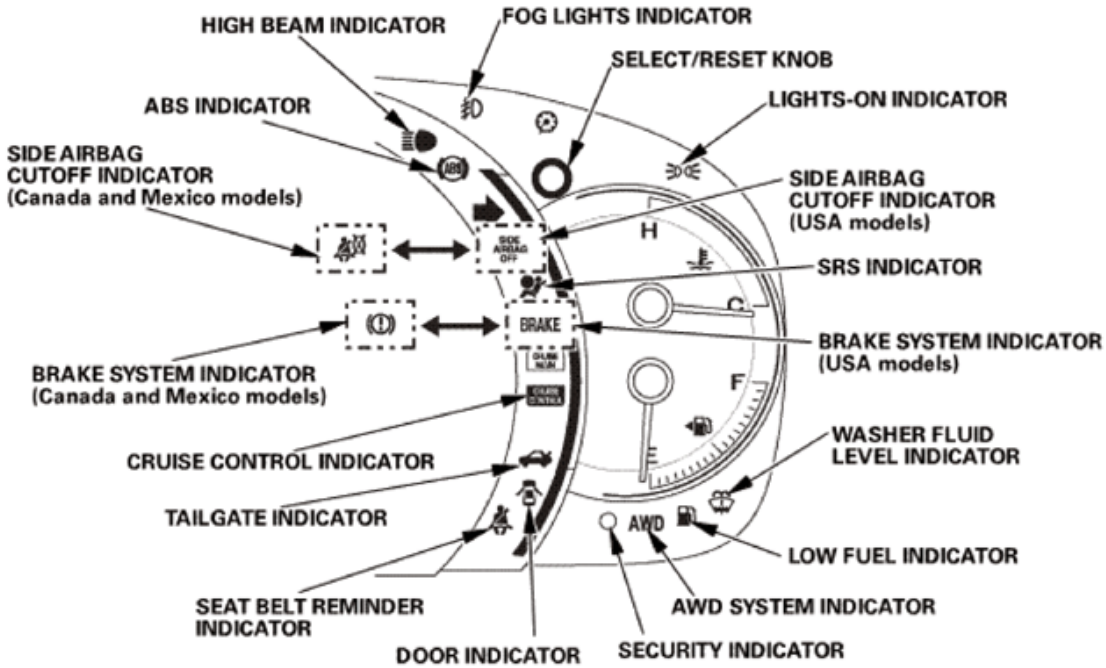

Fig. 42: Identifying Gauges Component Location (5 Of 5)
Courtesy of AMERICAN HONDA MOTOR CO., INC.

GETtheMANUALS.org

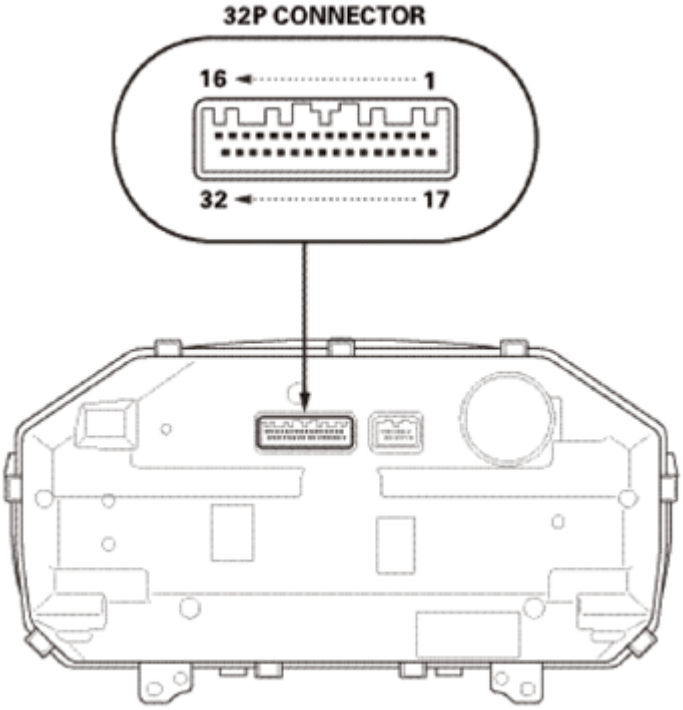

Fig. 43: Identifying 32P Connector Terminals
Courtesy of AMERICAN HONDA MOTOR CO., INC.

AUDIO REMOTE/MULTI-INFORMATION DISPLAY SWITCH	
BRAKE FLUID LEVEL SWITCH	**TEST**
CENTER DISPLAY UNIT	**REMOVAL AND INSTALLATION**
ECON SWITCH	**REMOVAL, INSTALLATION, AND TEST**
FUEL GAUGE SENDING UNIT	**Removal and Installation** See FUEL TANK UNIT DISASSEMBLY AND REASSEMBLY or FUEL TANK UNIT REMOVAL AND INSTALLATION
	TEST
GAUGE CONTROL MODULE	**INPUT TEST**
	OUTSIDE AIR TEMPERATURE INDICATOR CALIBRATION
	Removal and Installation See **GAUGE CONTROL MODULE REMOVAL AND INSTALLATION** or REWRITING THE ODO DATA AND TRANSFERRING THE MAINTENANCE MINDER™ DATA TO A NEW GAUGE CONTROL MODULE
	Rewriting the ODO Data and Tranferring the Maintenance Minder™ Data to a New Gauge Control Module See **GAUGE CONTROL MODULE REMOVAL AND INSTALLATION** or REWRITING THE ODO DATA AND TRANSFERRING THE MAINTENANCE MINDER™

GETtheMANUALS.org

	DATA TO A NEW GAUGE CONTROL MODULE
	SELF-DIAGNOSTIC FUNCTION
MULTI-INFORMATION DISPLAY UNIT	**REMOVAL AND INSTALLATION**

FUEL GAUGE INDICATION DOES NOT RISE

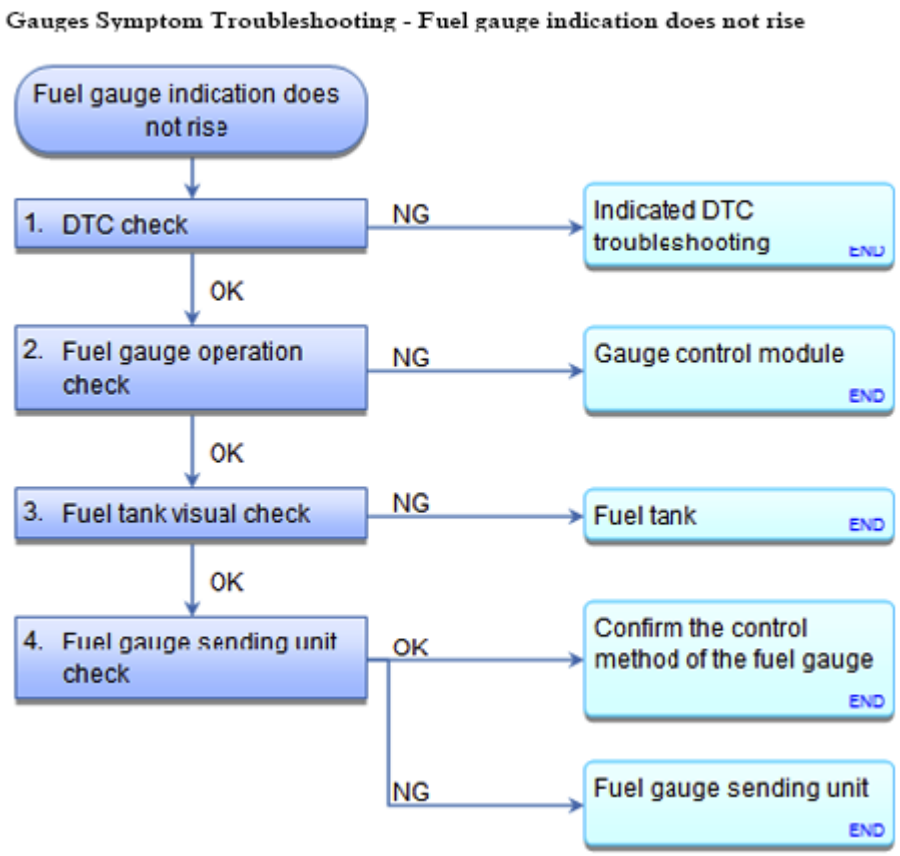

Fig. 44: Gauges Symptom Troubleshooting Flow Chart - Fuel Gauge Indication Does Not Rise
Courtesy of AMERICAN HONDA MOTOR CO., INC.

NOTE:

- **When refueling, the gauge control module shifts to the "refueling mode," moving the fuel gauge indicator only after it detects that 5 liters (approximately 1.25 U.S. gallon) of fuel have been added.**
- **The fuel gauge indication may not rise when refueling a small quantity of fuel and the control mode does not shift to refueling mode.**

SHIFT TO THE REFUELING MODE

GETtheMANUALS.org

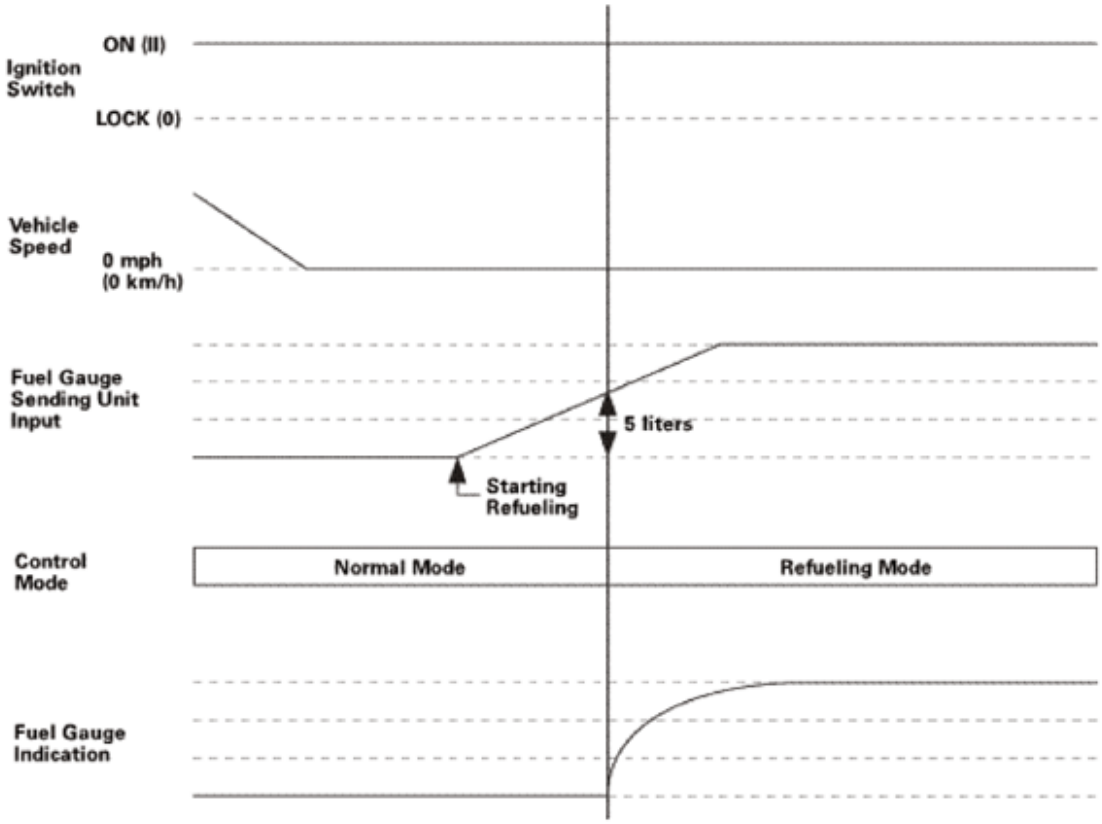

Fig. 45: Shift To Refueling Mode Graph
Courtesy of AMERICAN HONDA MOTOR CO., INC.

1. DTC check:
   - 1. Turn the ignition switch to ON (II).
   - 2. Check the low fuel indicator.

   Does the low fuel indicator flash?

   YES : Check for DTCs. If any DTCs are indicated, do the indicated DTC's troubleshooting. If no DTCs are indicated, **replace the gauge control module** See **GAUGE CONTROL MODULE REMOVAL AND INSTALLATION** or REWRITING THE ODO DATA AND TRANSFERRING THE MAINTENANCE MINDER™ DATA TO A NEW GAUGE CONTROL MODULE.

   NO : Go to step 2.

2. Fuel gauge operation check:
   - 1. Turn the ignition switch to LOCK (0).
   - 2. **DO THE GAUGE SELF-DIAGNOSTIC FUNCTION**.

   Is the fuel gauge OK?

   YES : Go to step 3.

GETtheMANUALS.org

NO : Replace the gauge control module.

3. Fuel tank visual check:
   - 1. Raise the vehicle on a lift.
   - 2. Check the fuel tank for damage.

Is the fuel tank OK?

YES : Go to step 4.

NO : REPLACE THE FUEL TANK .

4. Fuel gauge sending unit check:
   - 1. **TEST THE FUEL GAUGE SENDING UNIT**.

Is the fuel gauge sending unit OK?

YES : Confirm the control method of the fuel gauge.

NO : Replace the fuel gauge sending unit.

OUTSIDE AIR TEMPERATURE INDICATOR DOES NOT CHANGE

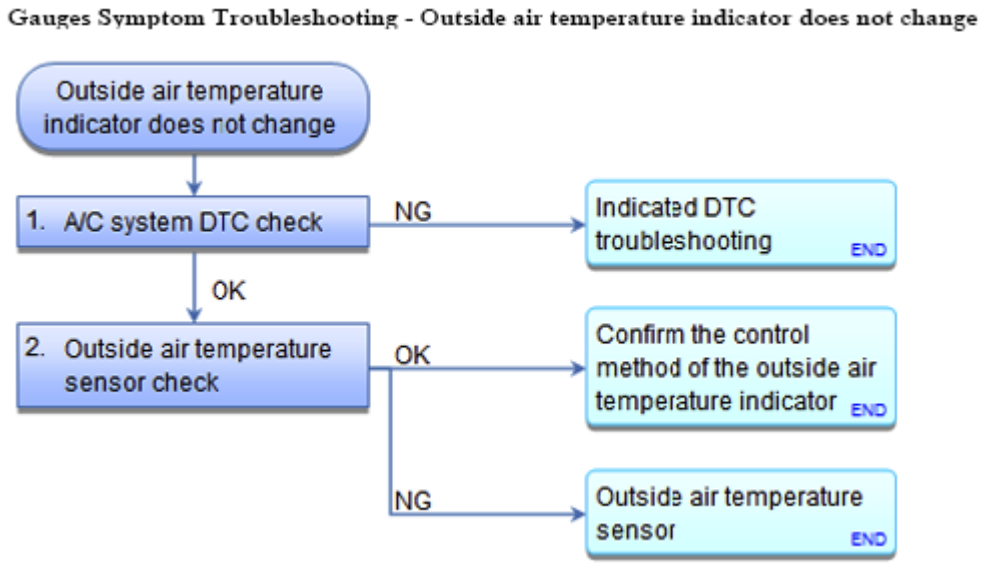

Fig. 46: Gauges Symptom Troubleshooting Flow Chart - Outside Air Temperature Indicator Does Not Change
Courtesy of AMERICAN HONDA MOTOR CO., INC.

NOTE: **Outside air temperature is indicated based on the measurement value of the outside air temperature sensor located behind the center of the front bumper.**

GETtheMANUALS.org

Because of the location of the sensor, it may be affected by heat reflection from the road, engine and radiator heat, or hot exhaust from surrounding traffic. To display the outside air temperature, the gauge control module has an indication mode based on engine coolant temperature and vehicle speed. Some modes do not raise the temperature indication, so the outside air temperature indication may not change when the mode continues.

OUTSIDE AIR TEMPERATURE INDICATION MODE

Indication Mode	Indication Temperature Increase	Indication Temperature Decrease	Notes
Initial Indication	---	---	• If the current outside air temperature is higher than the indicated outside air temperature the last time the ignition switch was turned off, and the engine coolant temperature is higher than 140 °F (60 °C): The last outside air temperature that was indicated before the ignition switch was turned off is displayed. • If the current outside air temperature is higher than the indicated outside air temperature the last time the ignition switch was turned off, and the engine coolant temperature is less than 140 °F (60 °C): The current temperature measured by the outside air temperature sensor is indicated.
Garage Mode	Increases 1 °F (1 °C) every 2 seconds to the current outside air temperature.	Decreases 1 °F (1 °C) every 2 seconds to the current outside air temperature.	• If the engine coolant temperature is less than 140 °F (60 °C) when the ignition switch is turned ON (II), the mode shifts to the garage mode. • The garage mode continues until the engine coolant temperature reaches 140 °F (60 °C).
Vehicle Leaving Mode	---	---	If the engine coolant temperature rises to more than 140 °F (60 °C), and then drops to less than 140 °F (60 °C) when the ignition switch is ON (II), continue handling it as if at 140 °F (60 ° C) without shifting to the garage mode.
		If the outside air temperature is less than	If the engine coolant temperature is

GETtheMANUALS.org

Traffic Jam Mode	---	the indicated temperature, the temperature decreases by 1 °F (1 °C) every 2 seconds.	more than 140 °F (60 °C) and vehicle speed is 0 mph (0 km/h), the mode shifts to the traffic jam mode.
Predictive Mode	If the temperature measured by the outside air temperature sensor is greater than the predicted value, the outside temperature indicator increases by 1 °F (1 °C) per 1 minute.	If the temperature measured by the outside air temperature sensor is smaller than the predicted value, the outside temperature indicator decreases by 1 °F (1 °C) per 1 minute.	Calculates the true outside air temperature from the sensor value at the time the vehicle starts running and the amount of change of the sensor value.

1. A/C system DTC check:
   - 1. Check for DTCs with the HDS.

DTC Description	DTC
B1227 An open in the outside air temperature sensor circuit	
B1228 A short in the outside air temperature sensor circuit	

Is DTC B1227 or B1228 indicated?

YES : Go to the indicated DTC troubleshooting.

NO : Go to step 2.

2. Outside air temperature sensor check:
   - 1. **TEST THE OUTSIDE AIR TEMPERATURE SENSOR** .

Is the outside air temperature sensor OK?

YES : Confirm the control method of the outside air temperature indicator.

NO : **REPLACE THE OUTSIDE AIR TEMPERATURE SENSOR** .

THE FUEL GAUGE INDICATION FLUCTUATES

GETtheMANUALS.org

Gauges Symptom Troubleshooting - The fuel gauge indication fluctuates

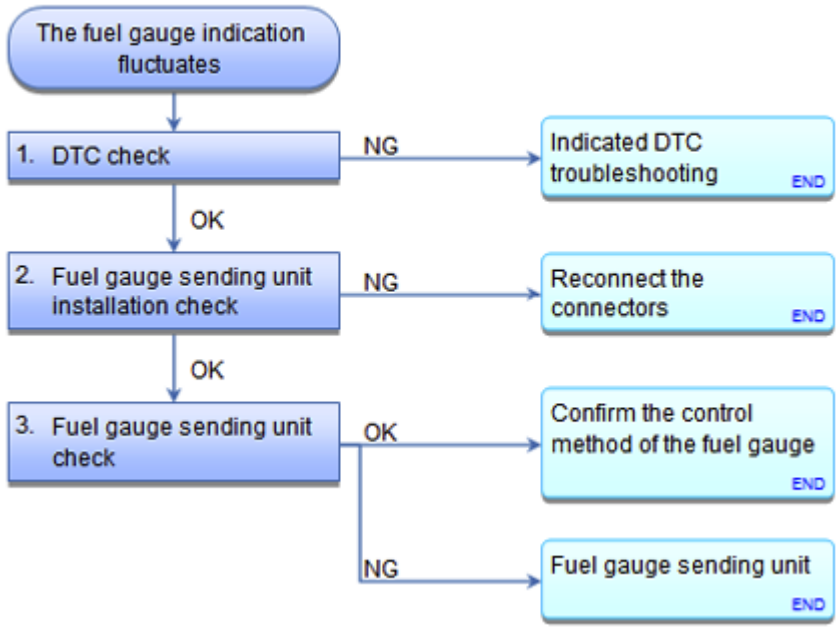

Fig. 47: Gauges Symptom Troubleshooting Flow Chart - Fuel Gauge Indication Fluctuates
Courtesy of AMERICAN HONDA MOTOR CO., INC.

NOTE:

- **The fuel sending unit float level changes frequently due to acceleration, deceleration, cornering, and slopes. As a result, the fuel gauge reading that is displayed is based on inputs it receives from the fuel sending unit, as well as inputs on fuel injector duration.**
- **The following conditions may cause fuel gauge fluctuations:**
  - **Driving uphill and downhill for long periods of time.**
  - **Stopping in a slanted position, such as on a grade.**

1. DTC check:
   - 1. Turn the ignition switch to ON (II).
   - 2. Check the low fuel indicator.

   Does the low fuel indicator flash?

   YES : Check for DTCs. If any DTCs are indicated, do the indicated DTC's troubleshooting. If no DTCs are indicated, replace the gauge control module.

   NO : Go to step 2.

2. Fuel gauge sending unit installation check:
   - 1. Turn the ignition switch to LOCK (0).
   - 2. Check for poor connections and loose terminals.

GETtheMANUALS.org

Are the connections OK?

YES : Go to step 3.

NO : Reconnect the connectors.

3. Fuel gauge sending unit check:
    - 1. **TEST THE FUEL GAUGE SENDING UNIT**.

Is the fuel gauge sending unit OK?

YES : Confirm the control method of the fuel gauge.

NO : Replace the fuel gauge sending unit.

HAZARD WARNING SWITCH REMOVAL, INSTALLATION, AND TEST

REMOVAL

1. Inner Vent - Both Sides
    1. Carefully pry out the inner vents (A) with the appropriate trim tool to detach the clips (B), then remove the inner vents.

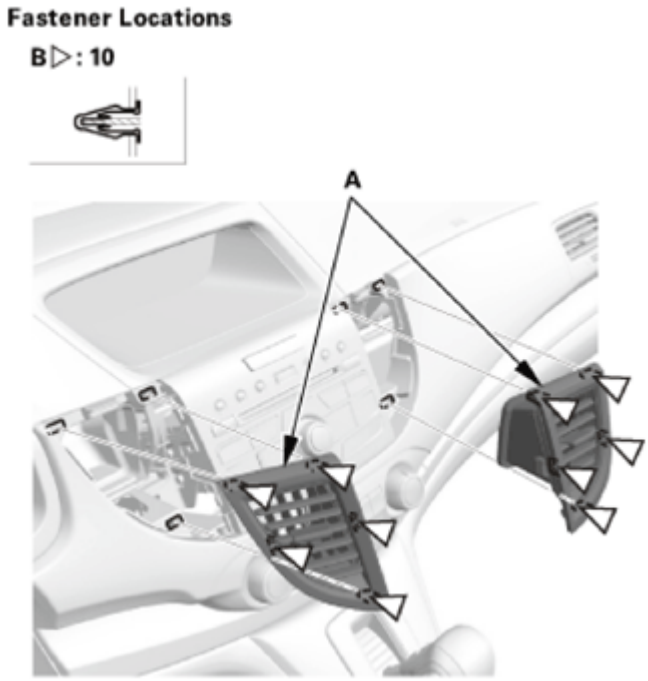

Fig. 48: Identifying Inner Vents And Clips
Courtesy of AMERICAN HONDA MOTOR CO., INC.

2. Audio Unit Assembly (Without Navigation)

GETtheMANUALS.org

NOTE:

- **Eject the CD before disconnecting the audio unit to prevent damaging the CD player's load mechanism.**
- **If you are replacing the audio unit, write down the audio presets (if possible), and enter them into the new audio unit.**
- **Lay a shop towel under the parts when working on them to protect the face panel from scratches or other damage.**
- **Do not work in a dusty or dirty place.**
- **Discharge static electricity from your body before and during the work.**
- **Do not touch the circuit board(s) with your bare hands.**
- **Do not work with dirty hands.**
- **Do not touch the terminal connector of the flat plate cable with your bare hands (If you have touched it, wipe it off thoroughly.).**

1. Remove the bolts.
2. Disconnect the connectors, then pull out the audio unit (A).

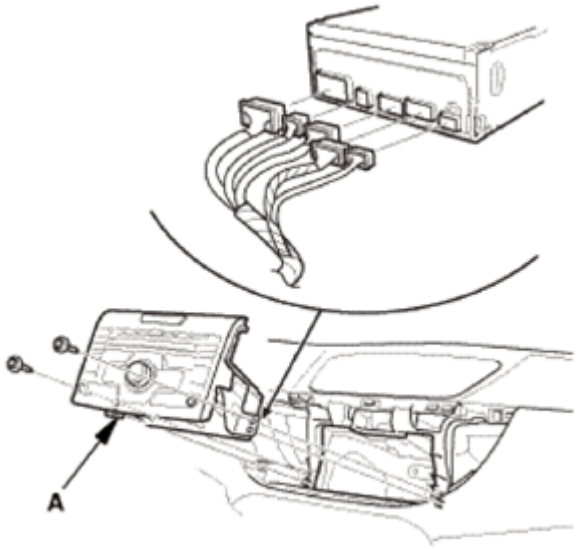

Fig. 49: Identifying Audio Unit And Bolts
Courtesy of AMERICAN HONDA MOTOR CO., INC.

3. Audio-Navigation Unit Assembly (With Navigation)

Except KX

GETtheMANUALS.org

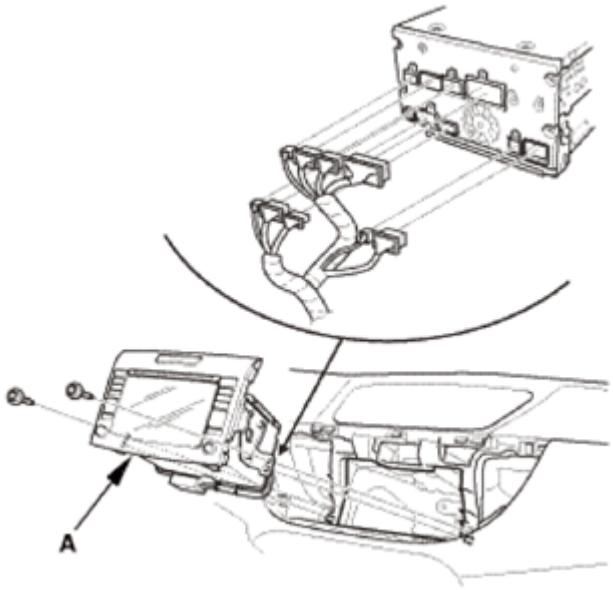

Fig. 50: Identifying Audio-Navigation Unit With Screws (Except KX)
Courtesy of AMERICAN HONDA MOTOR CO., INC.

KX

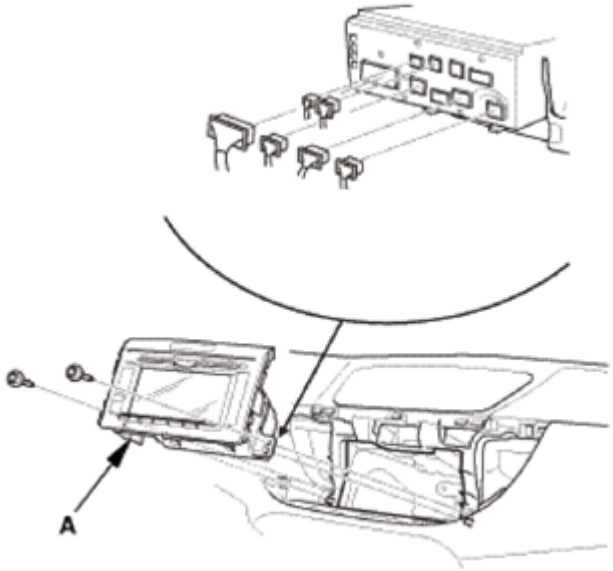

Fig. 51: Identifying Audio-Navigation Unit With Screws (KX)
Courtesy of AMERICAN HONDA MOTOR CO., INC.

NOTE:

- **Eject the discs before removing the audio-navigation unit to prevent damaging the CD/DVD player's load mechanism.**
- **If you are replacing the audio-navigation unit, write down the audio presets (if possible), then enter them into the new audio-navigation**

GETtheMANUALS.org

unit.

- **If the audio-navigation unit is replaced or disconnected, Map Matching must be done.**
- **Lay a shop towel under the parts when working on them to protect the face panel from scratches or other damage.**
- **Do not work in a dusty or dirty place.**
- **Discharge static electricity from your body before and during the work.**
- **Do not touch the circuit board(s) with your bare hands.**
- **Do not work with dirty hands.**
- **Do not touch the terminal connector of the flat plate cable with your bare hands (If you have touched it, wipe it off thoroughly.).**

1. Remove the bolts.
2. Disconnect the connectors, then pull out the audio-navigation unit (A).

4. Hazard Warning Switch
   1. Remove the hazard warning switch (A).

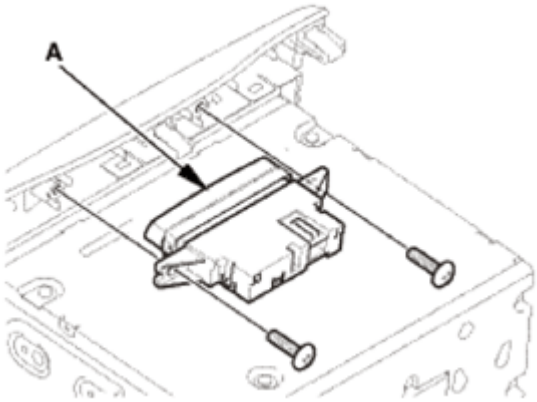

Fig. 52: Identifying Hazard Warning Switch With Screws
Courtesy of AMERICAN HONDA MOTOR CO., INC.

5. Hazard Warning Switch Bulb
   1. Remove the hazard warning switch bulb (A).

GETtheMANUALS.org

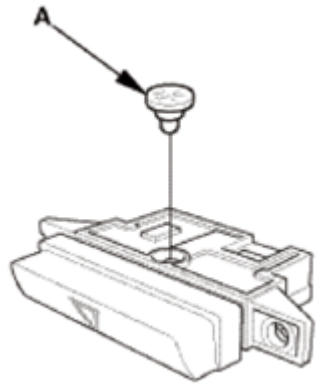

Fig. 53: Identifying Hazard Warning Switch Bulb
Courtesy of AMERICAN HONDA MOTOR CO., INC.

TEST

1. Hazard Warning Switch - Test

NOTE: When doing the hazard warning switch test, install the bulb correctly.

1. Check for continuity between the terminals in each switch position according to the table.
2. If the continuity is not as specified, replace the bulb or replace the hazard warning switch (A).

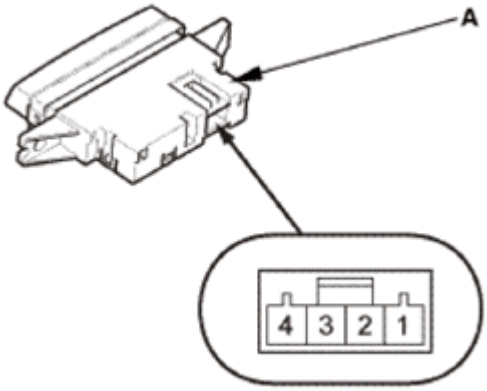

Fig. 54: Identifying Hazard Warning Switch Connector Terminals
Courtesy of AMERICAN HONDA MOTOR CO., INC.

Terminal / Position	1		2	3	4
OFF	○	⊗	○		
ON				○	○

Fig. 55: Hazard Warning Switch Terminal Continuity Chart
Courtesy of AMERICAN HONDA MOTOR CO., INC.

GETtheMANUALS.org

INSTALLATION

1. Hazard Warning Switch Bulb
    1. Install the hazard warning switch bulb (A).

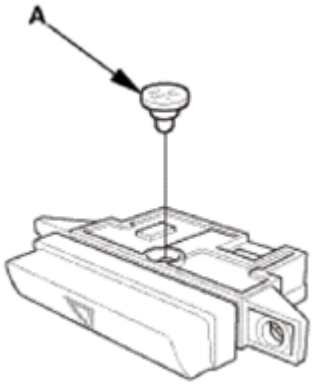

Fig. 56: Identifying Hazard Warning Switch Bulb
Courtesy of AMERICAN HONDA MOTOR CO., INC.

2. Hazard Warning Switch
    1. Install the hazard warning switch (A).

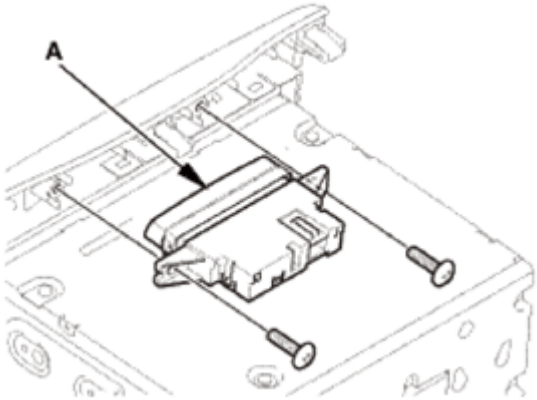

Fig. 57: Identifying Hazard Warning Switch With Screws
Courtesy of AMERICAN HONDA MOTOR CO., INC.

3. Navigation Unit Assembly (With Navigation)
    1. Connect the connectors, then install the audio-navigation unit (A).

NOTE: Make sure all the connectors and the antenna lead are secure.

    2. Install the bolts (B).

Except KX

GETtheMANUALS.org

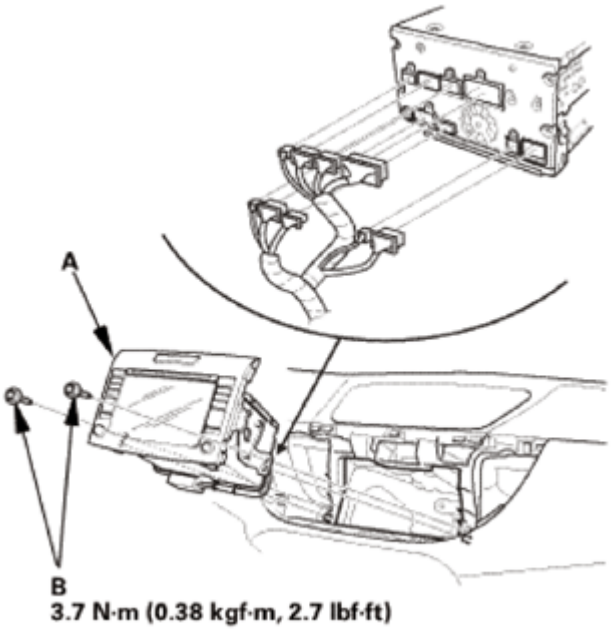

Fig. 58: Identifying Audio-Navigation Unit And Bolts With Torque Specification (Except KX)
Courtesy of AMERICAN HONDA MOTOR CO., INC.

KX

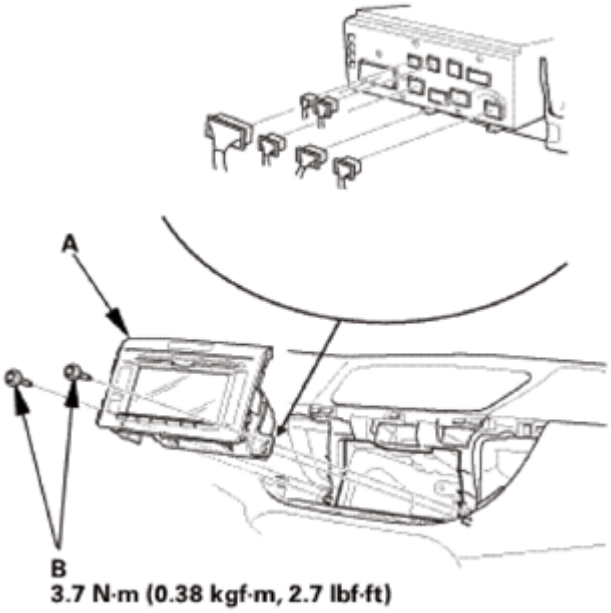

Fig. 59: Identifying Audio-Navigation Unit And Bolts With Torque Specification (Except KX)
Courtesy of AMERICAN HONDA MOTOR CO., INC.

4. Audio Unit Assembly (Without Navigation)
    1. Connect the connectors, then install the audio unit (A).

GETtheMANUALS.org

NOTE: **Make sure all the connectors and the antenna lead are secure.**

2. Install the bolts (B).

NOTE: **If the audio unit was replaced, enter the audio presets that you saved onto the new unit.**

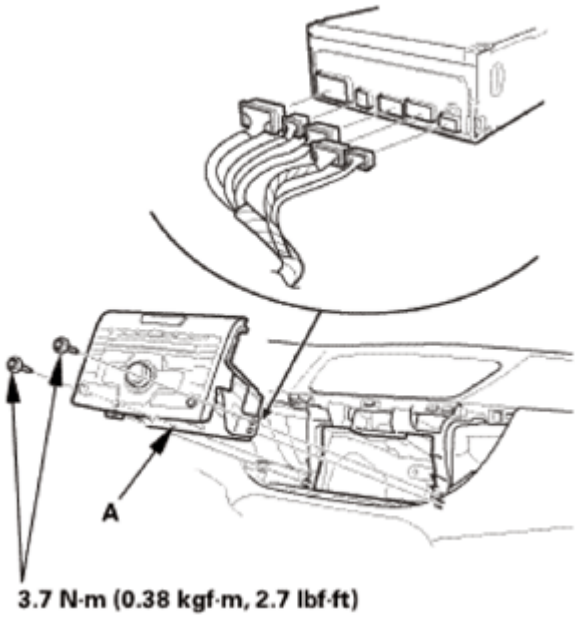

Fig. 60: Identifying Audio Unit And Bolts With Torque Specification
Courtesy of AMERICAN HONDA MOTOR CO., INC.

5. Inner Vent - Both Sides
    1. Install the inner vents (A). Make sure the clips (B) snap into place securely.

GETtheMANUALS.org

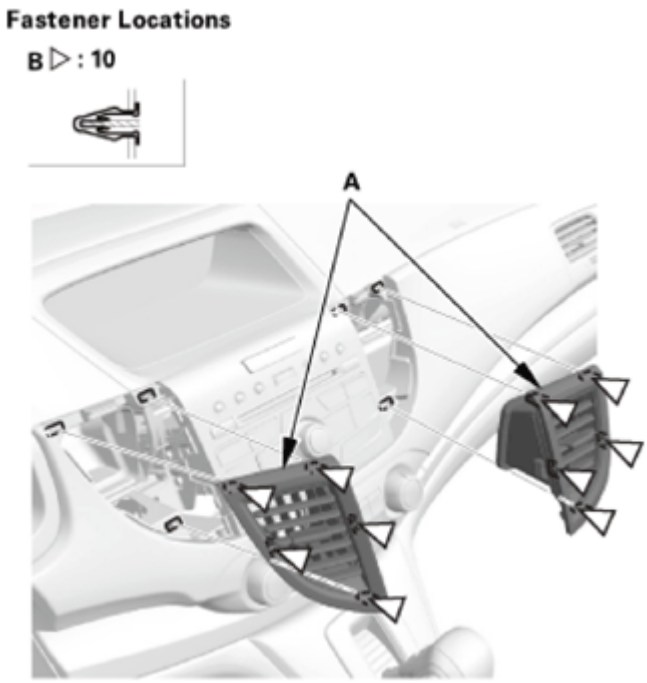

Fig. 61: Identifying Inner Vents And Clips
Courtesy of AMERICAN HONDA MOTOR CO., INC.

LOW FUEL INDICATOR TEST

TEST

1. Low Fuel Indicator - Test
    1. Do the gauge self-diagnostic function.
        - If the low fuel indicator flashes, go to step 2.
        - If the low fuel indicator does not flash, replace the gauge control module.
    2. Check for body electrical system DTCs.
        - If any DTCs are indicated, do the indicated DTCs troubleshooting.
        - If no DTCs are indicated, go to step 3.
    3. Do the fuel gauge sending unit test.

LOW OIL PRESSURE INDICATOR CIRCUIT TROUBLESHOOTING (OPEN)

GETtheMANUALS.org

Low Oil Pressure Indicator Circuit Troubleshooting - Open

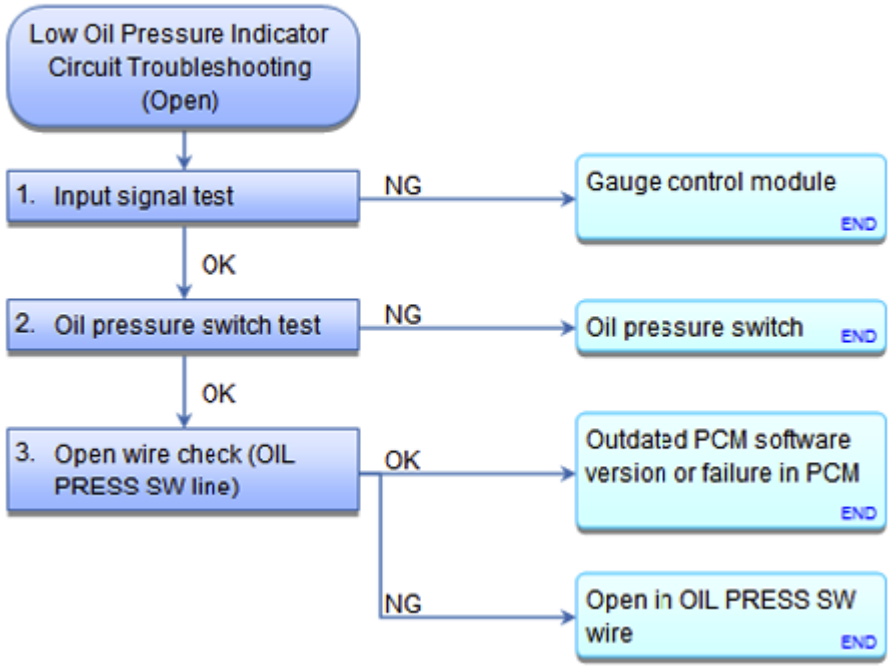

Fig. 62: Low Oil Pressure Indicator Circuit Troubleshooting Flow Chart (Open)
Courtesy of AMERICAN HONDA MOTOR CO., INC.

1. Input signal test:
   - 1. **Connect the HDS to the DLC** See **HOW TO TROUBLESHOOT THE A/T SYSTEM** or **HOW TO TROUBLESHOOT THE FUEL AND EMISSIONS SYSTEMS** .
   - 2. Turn the ignition switch to ON (II).
   - 3. Make sure the HDS communicates with the vehicle and the PCM. If it does not communicate, **TROUBLESHOOT THE DLC CIRCUIT** .
   - 4. **Check for DTCs** See **HOW TO TROUBLESHOOT THE A/T SYSTEM** or **HOW TO TROUBLESHOOT THE FUEL AND EMISSIONS SYSTEMS** . If a DTC is present, diagnose, and repair the cause before continuing with this test.
   - 5. Turn the ignition switch to ON (II), and check the parameter(s) below with the HDS.

Signal	Threshold		Current conditions	
	Values	Unit	Values	Unit
OIL PRESSURE SWITCH	ON			

Do the current condition(s) match the threshold?

YES : **Replace the gauge control module** See **GAUGE CONTROL MODULE REMOVAL AND INSTALLATION** or REWRITING THE ODO DATA AND TRANSFERRING THE MAINTENANCE MINDER™ DATA TO A NEW GAUGE CONTROL MODULE.

NO : The input signal does not match the conditions. Go to step 2.

GETtheMANUALS.org

2. Oil pressure switch test:
    - 1. Turn the ignition switch to LOCK (0).
    - 2. CHECK THE OIL PRESSURE SWITCH .

    Is the oil pressure switch OK?

    YES : The oil pressure switch is OK. Go to step 3.

    NO : REPLACE THE OIL PRESSURE SWITCH .

3. Open wire check (OIL PRESS SW line):
    - 1. Jump the SCS line with the HDS.

      NOTE: This step must be done to protect the PCM from damage.

    - 2. Disconnect the following connectors.

      PCM connector B (49P)

      Oil pressure switch 1P connector

    - 3. Check for continuity between test points 1 and 2.

      Test condition IG LOCK (0)

      PCM connector B (49P): disconnected

      Oil pressure switch 1P connector: disconnected

      Test circuit OIL PRESS SW

      Test point 1 PCM connector B (49P) No. 7 (PNK)

      Test point 2 Oil pressure switch 1P connector No. 1 (PNK)

GETtheMANUALS.org

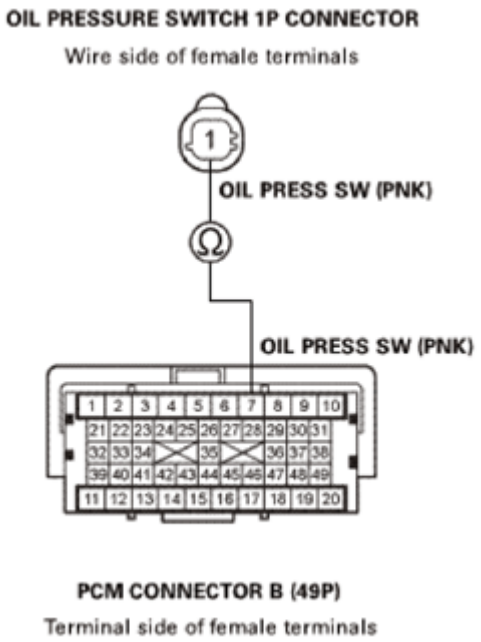

Fig. 63: Checking For Continuity Between PCM Connector B (49P) And Oil Pressure Switch 1P Connector
Courtesy of AMERICAN HONDA MOTOR CO., INC.

Is there continuity?

YES : **Update the PCM if it does not have the latest software** See **PCM REMOVAL AND INSTALLATION** or **PCM UPDATE** , or **substitute a known-good PCM** See **PCM REMOVAL AND INSTALLATION** or **PCM UPDATE** , then recheck. If the PCM was substituted, and the symptom/indication goes away, **replace the original PCM** See **PCM REMOVAL AND INSTALLATION** or **PCM UPDATE** .

NO : Repair an open in the OIL PRESS SW wire between the oil pressure switch and the PCM.

LOW OIL PRESSURE INDICATOR CIRCUIT TROUBLESHOOTING (SHORT)

GETtheMANUALS.org

Low Oil Pressure Indicator Circuit Troubleshooting - Short

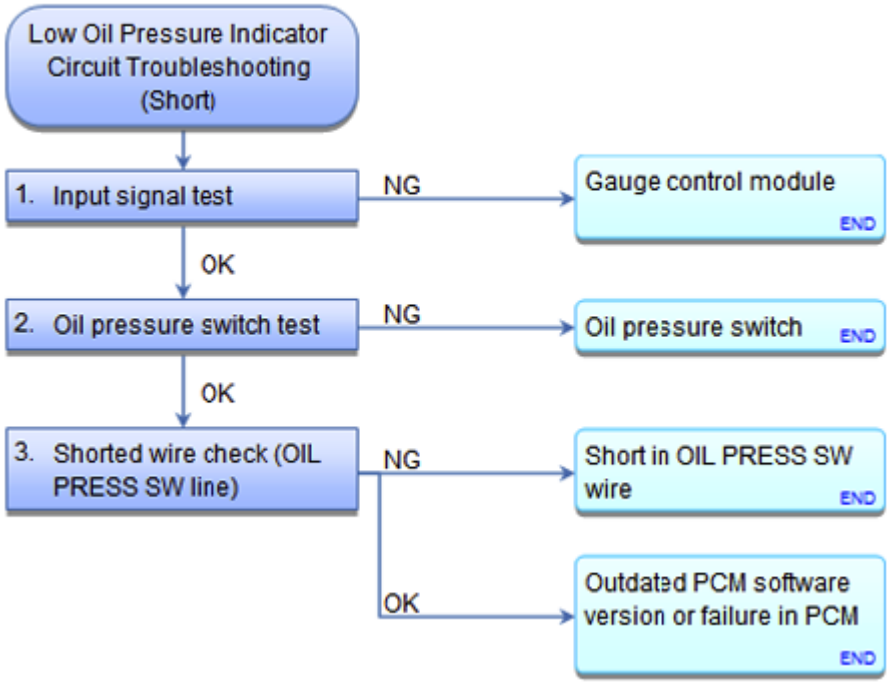

Fig. 64: Low Oil Pressure Indicator Circuit Troubleshooting Flow Chart (Short)
Courtesy of AMERICAN HONDA MOTOR CO., INC.

1. Input signal test:
   - 1. **Connect the HDS to the DLC** See **HOW TO TROUBLESHOOT THE A/T SYSTEM** or **HOW TO TROUBLESHOOT THE FUEL AND EMISSIONS SYSTEMS** .
   - 2. Turn the ignition switch to ON (II).
   - 3. Make sure the HDS communicates with the vehicle and the PCM. If it does not communicate, **TROUBLESHOOT THE DLC CIRCUIT** .
   - 4. **Check for DTCs** See **HOW TO TROUBLESHOOT THE A/T SYSTEM** or **HOW TO TROUBLESHOOT THE FUEL AND EMISSIONS SYSTEMS** . If a DTC is present, diagnose, and repair the cause before continuing with this test.
   - 5. Start the engine, and check the parameter(s) below with the HDS.

Signal	Threshold		Current conditions	
	Values	Unit	Values	Unit
OIL PRESSURE SWITCH	OFF			

Do the current condition(s) match the threshold?

YES : **Replace the gauge control module** See **GAUGE CONTROL MODULE REMOVAL AND INSTALLATION** or REWRITING THE ODO DATA AND TRANSFERRING THE MAINTENANCE MINDER™ DATA TO A NEW GAUGE CONTROL MODULE.

GETtheMANUALS.org

NO : The input signal does not match the conditions. Go to step 2.

2. Oil pressure switch test:
   - 1. Turn the ignition switch to LOCK (0).
   - 2. CHECK THE OIL PRESSURE SWITCH .

Is the oil pressure switch OK?

YES : The oil pressure switch is OK. Go to step 3.

NO : DO THE OIL PRESSURE TEST . If the oil pressure is OK, REPLACE THE OIL PRESSURE SWITCH .

3. Shorted wire check (OIL PRESS SW line):
   - 1. Jump the SCS line with the HDS.

     NOTE: This step must be done to protect the PCM from damage.

   - 2. Disconnect the following connectors.

     PCM connector B (49P)

     Oil pressure switch 1P connector

   - 3. Check for continuity between test points 1 and 2.

     Test condition IG LOCK (0)

     PCM connector B (49P): disconnected

     Oil pressure switch 1P connector: disconnected

     Test circuit OIL PRESS SW

     Test point 1 Oil pressure switch 1P connector No. 1 (PNK)

     Test point 2 Body ground

GETtheMANUALS.org

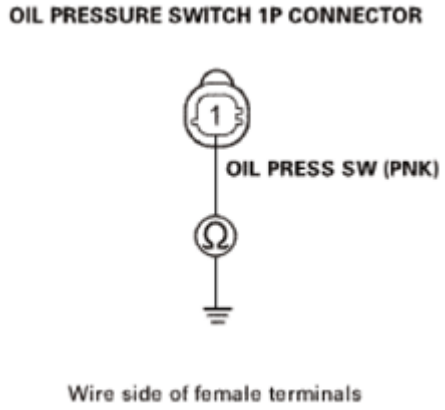

Fig. 65: Checking For Continuity Between Oil Pressure Switch 1P Connector And Body Ground
Courtesy of AMERICAN HONDA MOTOR CO., INC.

Is there continuity?

YES : Repair a short to ground in the OIL PRESS SW wire between the oil pressure switch and the PCM.

NO : **Update the PCM if it does not have the latest software** See **PCM REMOVAL AND INSTALLATION** or **PCM UPDATE** , or **substitute a known-good PCM** See **PCM REMOVAL AND INSTALLATION** or **PCM UPDATE** , then recheck. If the PCM was substituted, and the symptom/indication goes away, **replace the original PCM** See **PCM REMOVAL AND INSTALLATION** or **PCM UPDATE** .

MULTI-INFORMATION DISPLAY UNIT CONNECTOR FOR INPUTS AND OUTPUTS

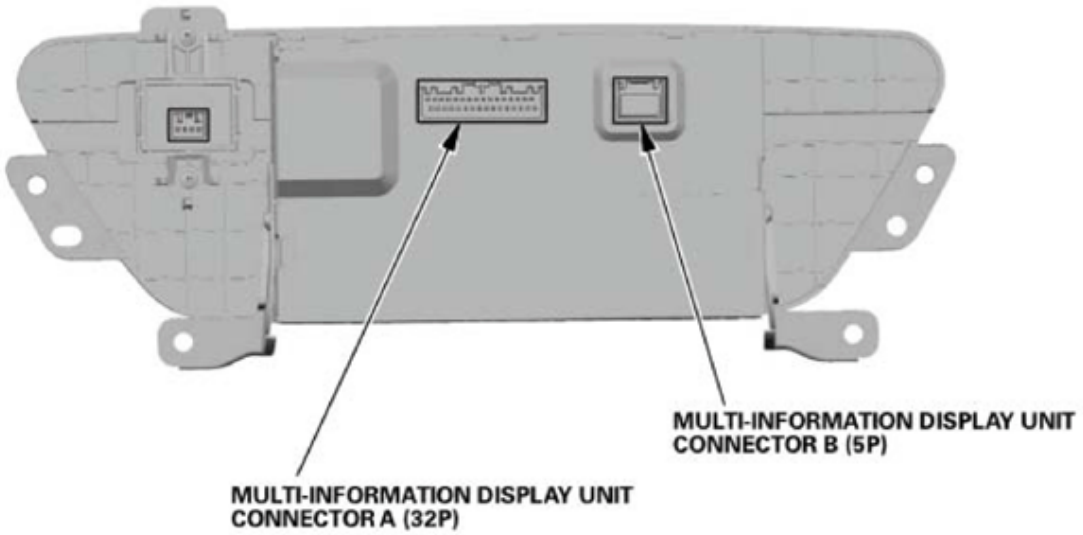

Fig. 66: Identifying Multi-Information Display Unit Connector A (32P) And B (5P)

GETtheMANUALS.org

Courtesy of AMERICAN HONDA MOTOR CO., INC.

MULTI-INFORMATION DISPLAY UNIT CONNECTOR A (32P)

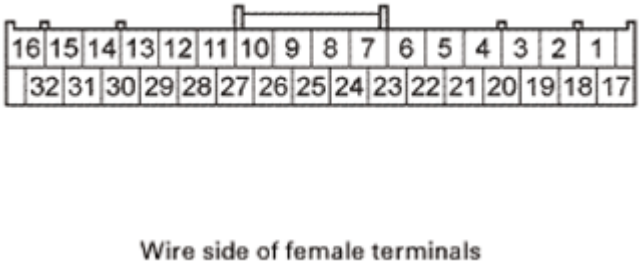

Fig. 67: Identifying Multi-Information Display Unit Connector A (32P) Terminals
Courtesy of AMERICAN HONDA MOTOR CO., INC.

MULTI-INFORMATION DISPLAY UNIT CONNECTOR A (32P) (WITH NAVIGATION)

Cavity	Wire Color	Terminal Name	Description
A1	Not Used	Not Used	-
A2	Not Used	Not Used	-
A3	Not Used	Not Used	-
A4	Not Used	Not Used	-
A5	Not Used	Not Used	-
A6	PNK	AUDIO_REMOTE_SW	Detects control signal from audio remote/multi-information display switch
A7	PUR	TFT_INFO	Detects control signal from audio remote/multi-information display switch
A8(2)	GRN	GA_AUDIO_R+	Outputs sound signal
A9(2)	RED	GA_AUDIO_L+	Outputs sound signal
A10	BRN	GND	Ground for multi-information display unit (G502)
A11	PNK	GA_BUS-	GA-Net bus communication signal
A12	GRY(1)	SH_GA_BUS	Shield for terminals No. 11 and No. 27
A13	Not Used	Not Used	-
A14	Not Used	Not Used	-
A15	BLU	B_CAN-L	Communication signal
A16	RED	+B_BACK_UP	Continuous power source
A17	Not Used	Not Used	-
A18	Not Used	Not Used	-
A19	Not Used	Not Used	-
A20	Not Used	Not Used	-
A21	Not Used	Not Used	-
A22	Not Used	Not Used	-
			Audio remote/multi-information display switch

GETtheMANUALS.org

A23	BRN	REMOTE_SW_GND	ground
A24(2)	BLK	GA_AUDIO_R-	Outputs sound signal
A25(2)	WHT	GA_AUDIO_L-	Outputs sound signal
A26(2)	GRY(1)	SH_GA_AUDIO	Shield for terminals No. 8, No. 9, No. 24, and No. 25
A27	BLU	GA_BUS+	GA-Net bus communication signal
A28	Not Used	Not Used	-
A29	Not Used	Not Used	-
A30	Not Used	Not Used	-
A31	PNK	B_CAN-H	Communication signal
A32	PNK	GA_SYS_ON	Inputs signal for multi-information display unit switching ON/OFF

(1) The shielded wires have a heat-shrink tube insulating the outside of the wire. The color of the insulating tube, typically black or dark gray, may not match the color of the wire shown on the circuit diagram.

(2) Except KX

MULTI-INFORMATION DISPLAY UNIT CONNECTOR A (32P) (WITHOUT NAVIGATION)

Cavity	Wire Color	Terminal Name	Description
A1	Not Used	Not Used	-
A2	GRY(1)	SH_CAMERA	Shield for terminals No. 3, No. 18, No. 19, No. 20, and No. 21
A3	WHT	CAMERA_V_GND	Ground for rearview camera
A4	GRN	CAMERA_BIT0	Mode select signal for rearview camera
A5	BLU	CAMERA_BIT1	Mode select signal for rearview camera
A6	PNK	AUDIO_REMOTE_SW	Detects control signal from audio remote/multi-information display switch
A7	PUR	TFT_INFO	Detects control signal from audio remote/multi-information display switch
A8	GRN	GA_AUDIO_R+	Outputs sound signal
A9	RED	GA_AUDIO_L+	Outputs sound signal
A10	BRN	GND	Ground for multi-information display unit (G502)
A11	PNK	GA_BUS-	GA-Net bus communication signal
A12	GRY(1)	SH_GA_BUS	Shield for terminals No. 11 and No. 27
A13	RED	DUET_RX	Communication signal to audio unit
A14	BRN	BACK_LT	Detects reverse signal of select lever from reverse relay circuit
A15	BLU	B_CAN-L	Communication signal
A16	RED	+B_BACK_UP	Continuous power source
A17	Not Used	Not Used	-
A18	GRN	CAMERA_GND	Ground for rearview camera

GETtheMANUALS.org

A19	RED	CAMERA_V	Video signal for rearview camera
A20	YEL	CAMERA_VCC	Power source for rearview camera
A21	BLK	CAMERA_ADPT	Control signal for rearview camera
A22	Not Used	Not Used	-
A23	BRN	REMOTE_SW_GND	Audio remote/multi-information display switch ground
A24	BLK	GA_AUDIO_R-	Outputs sound signal
A25	WHT	GA_AUDIO_L-	Outputs sound signal
A26	GRY(1)	SH_GA_AUDIO	Shield for terminals No. 8, No. 9, No. 24, and No. 25
A27	BLU	GA_BUS+	GA-Net bus communication signal
A28	Not Used	Not Used	-
A29	GRN	DUET_TX	Communication signal to audio unit
A30	LT	GRN DUET_CONT	DUET control signal
A31	PNK	B_CAN-H	Communication signal
A32	PNK	GA_SYS_ON	Inputs signal for multi-information display unit switching ON/OFF

(1) The shielded wires have a heat-shrink tube insulating the outside of the wire. The color of the insulating tube, typically black or dark gray, may not match the color of the wire shown on the circuit diagram.

MULTI-INFORMATION DISPLAY UNIT CONNECTOR B (5P)

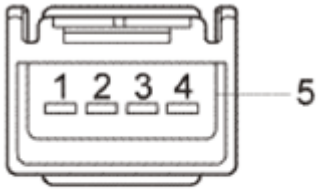

Terminal side of female terminals

Fig. 68: Identifying Multi-Information Display Unit Connector B (5P) Terminals
Courtesy of AMERICAN HONDA MOTOR CO., INC.

MULTI-INFORMATION DISPLAY UNIT CONNECTOR B (5P)

Cavity	Wire Color	Terminal Name	Description
B1	-	USB GND	Ground for communication signal
B2	-	USB DATA+	Communication signal
B3	-	USB DATA-	Communication signal
B4	-	USB VBUS	Outputs power source for USB device
B5	-	USB SH	Shield for terminals No. 1, No. 2, No. 3, and No. 4

MULTI-INFORMATION DISPLAY UNIT REMOVAL AND INSTALLATION

GETtheMANUALS.org

REMOVAL

1. Inner Vent - Both Sides
    1. Carefully pry out the inner vents (A) with the appropriate trim tool to detach the clips (B), then remove the inner vents.

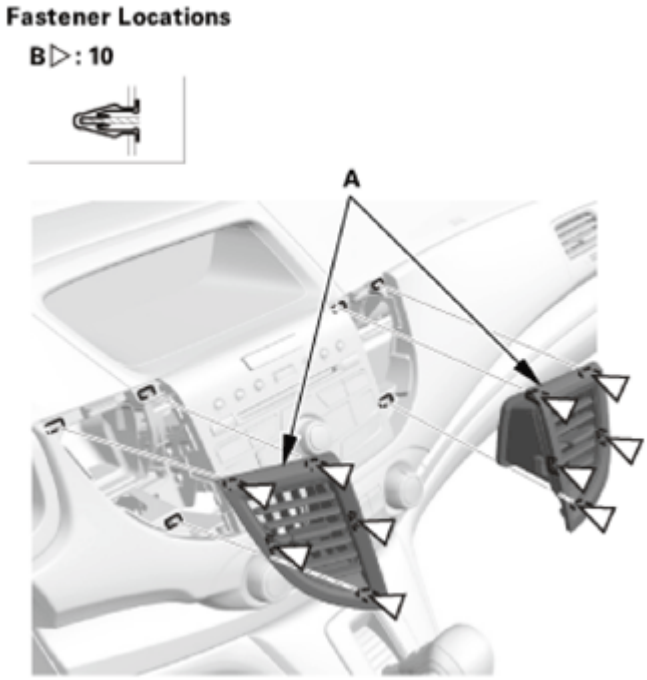

Fig. 69: Identifying Inner Vents And Clips
Courtesy of AMERICAN HONDA MOTOR CO., INC.

2. Audio-Navigation Unit Assembly (With Navigation)

    Except KX

GETtheMANUALS.org

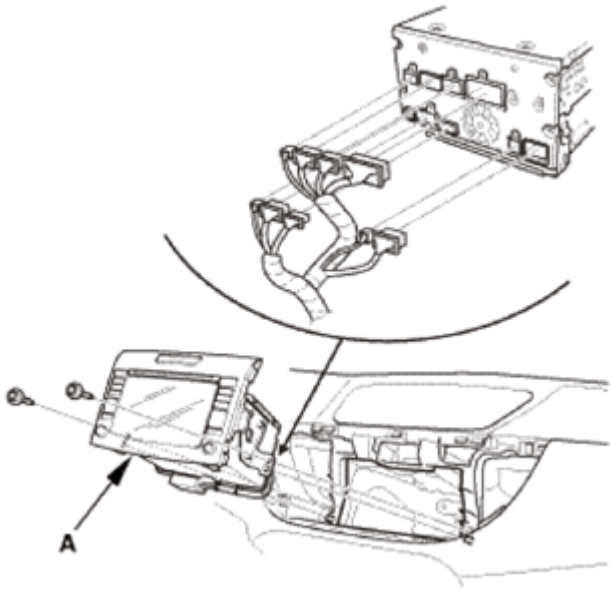

Fig. 70: Identifying Audio-Navigation Unit With Screws (Except KX)
Courtesy of AMERICAN HONDA MOTOR CO., INC.

NOTE:

- **Eject the discs before removing the audio-navigation unit to prevent damaging the CD/DVD player's load mechanism.**
- **If you are replacing the audio-navigation unit, write down the audio presets (if possible), then enter them into the new audio-navigation unit.**
- **If the audio-navigation unit is replaced or disconnected, Map Matching must be done.**
- **Lay a shop towel under the parts when working on them to protect the face panel from scratches or other damage.**
- **Do not work in a dusty or dirty place.**
- **Discharge static electricity from your body before and during the work.**
- **Do not touch the circuit board(s) with your bare hands.**
- **Do not work with dirty hands.**
- **Do not touch the terminal connector of the flat plate cable with your bare hands (If you have touched it, wipe it off thoroughly.).**

1. Remove the bolts.
2. Disconnect the connectors, then pull out the audio-navigation unit (A).

KX

GETtheMANUALS.org

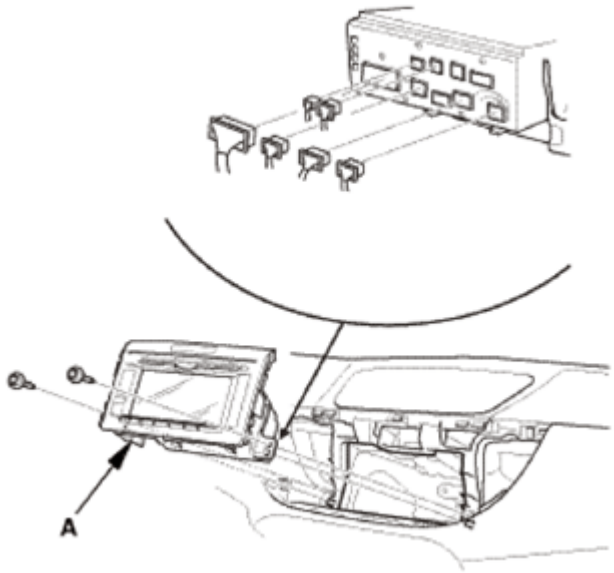

Fig. 71: Identifying Audio-Navigation Unit With Screws (KX)
Courtesy of AMERICAN HONDA MOTOR CO., INC.

3. Audio Unit Assembly (Without Navigation)

NOTE:

- **Eject the CD before disconnecting the audio unit to prevent damaging the CD player's load mechanism.**
- **If you are replacing the audio unit, write down the audio presets (if possible), and enter them into the new audio unit.**
- **Lay a shop towel under the parts when working on them to protect the face panel from scratches or other damage.**
- **Do not work in a dusty or dirty place.**
- **Discharge static electricity from your body before and during the work.**
- **Do not touch the circuit board(s) with your bare hands.**
- **Do not work with dirty hands.**
- **Do not touch the terminal connector of the flat plate cable with your bare hands (If you have touched it, wipe it off thoroughly.).**

1. Remove the bolts.
2. Disconnect the connectors, then pull out the audio unit (A).

GETtheMANUALS.org

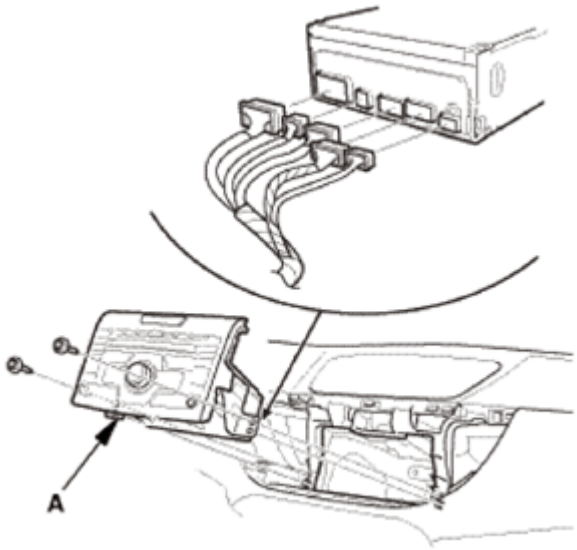

Fig. 72: Identifying Audio Unit And Bolts
Courtesy of AMERICAN HONDA MOTOR CO., INC.

4. Dashboard Center Display Visor Assembly
    1. Remove the dashboard center display visor (A).

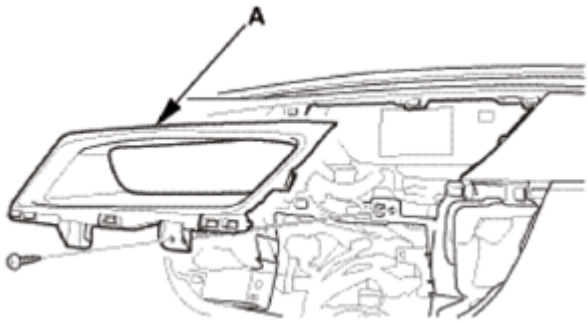

Fig. 73: Identifying Dashboard Center Display Visor With Screws
Courtesy of AMERICAN HONDA MOTOR CO., INC.

5. Multi-Information Display Unit Assembly
    1. Remove the multi-information display unit assembly (A).
    2. Disconnect the connector(s), from the multi-information display unit.

GETtheMANUALS.org

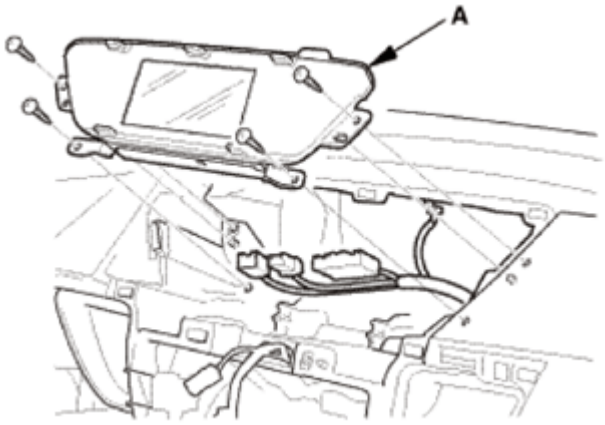

Fig. 74: Identifying Multi-Information Display Unit Assembly With Screws
Courtesy of AMERICAN HONDA MOTOR CO., INC.

6. Front Passenger's Airbag Cutoff Indicator
    1. Remove the front passenger's airbag cutoff indicator (A).

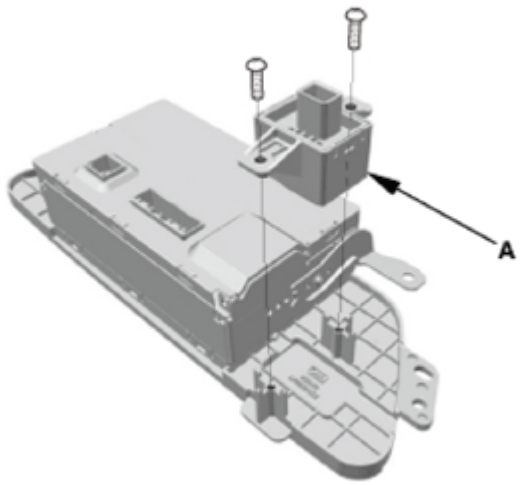

Fig. 75: Identifying Front Passenger's Airbag Cutoff Indicator With Screws
Courtesy of AMERICAN HONDA MOTOR CO., INC.

7. Multi-Information Display Unit
    1. Remove the multi-information display unit (A).

GETtheMANUALS.org

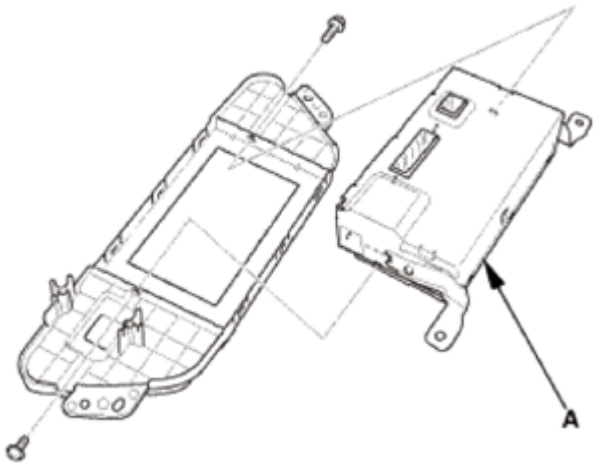

Fig. 76: Identifying Multi-Information Display Unit With Screws
Courtesy of AMERICAN HONDA MOTOR CO., INC.

INSTALLATION

1. Multi-Information Display Unit
    1. Install the multi-information display unit (A).

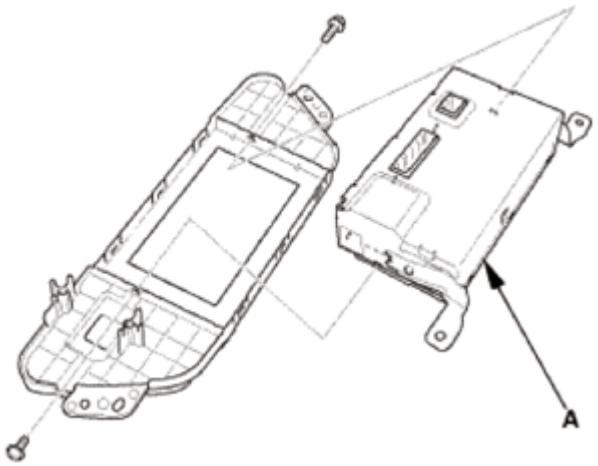

Fig. 77: Identifying Multi-Information Display Unit With Screws
Courtesy of AMERICAN HONDA MOTOR CO., INC.

2. Front Passenger's Airbag Cutoff Indicator
    1. Install the front passenger's airbag cutoff indicator (A).

GETtheMANUALS.org

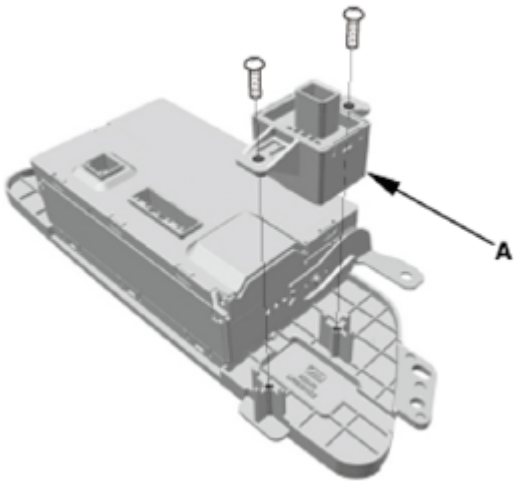

Fig. 78: Identifying Front Passenger's Airbag Cutoff Indicator With Screws
Courtesy of AMERICAN HONDA MOTOR CO., INC.

3. Multi-Information Display Unit Assembly
    1. Connect the connector(s).
    2. Install the multi-information display unit assembly (A).

NOTE: **If you see the In Line Diag screen when it is turned on, refer to In Line Diag (i-MID) under Display Diagnosis to complete the diagnosis.**

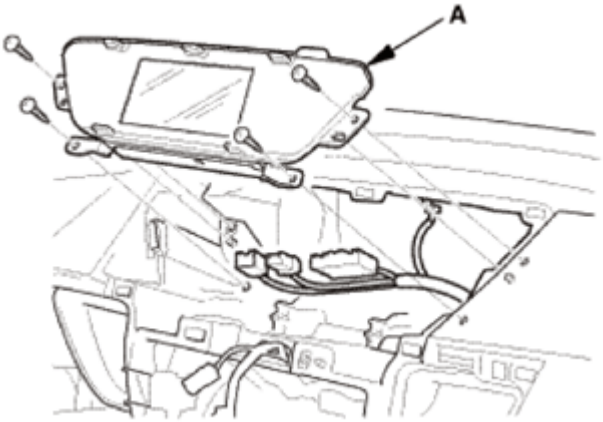

Fig. 79: Identifying Multi-Information Display Unit Assembly With Screws
Courtesy of AMERICAN HONDA MOTOR CO., INC.

4. Dashboard Center Display Visor Assembly
    1. Install the dashboard center display visor (A).

GETtheMANUALS.org

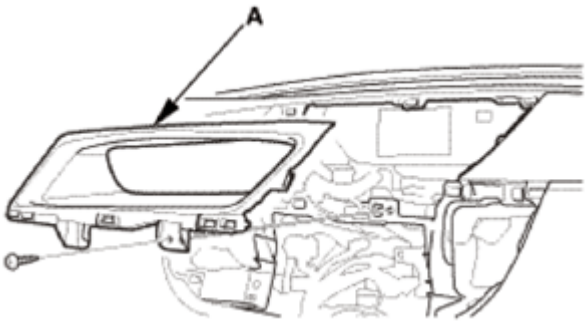

Fig. 80: Identifying Dashboard Center Display Visor With Screw
Courtesy of AMERICAN HONDA MOTOR CO., INC.

5. Audio Unit Assembly (Without Navigation)
    1. Connect the connectors, then install the audio unit (A).

    NOTE: Make sure all the connectors and the antenna lead are secure.

    2. Install the bolts (B).

    NOTE: If the audio unit was replaced, enter the audio presets that you saved onto the new unit.

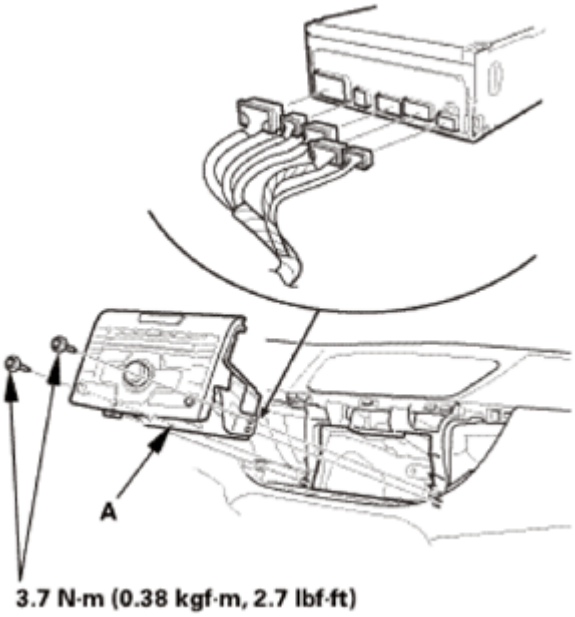

Fig. 81: Identifying Audio Unit And Bolts With Torque Specification
Courtesy of AMERICAN HONDA MOTOR CO., INC.

6. Navigation Unit Assembly (With Navigation)
    1. Connect the connectors, then install the audio-navigation unit (A).

GETtheMANUALS.org

NOTE: **Make sure all the connectors and the antenna lead are secure.**

2. Install the bolts (B).

Except KX

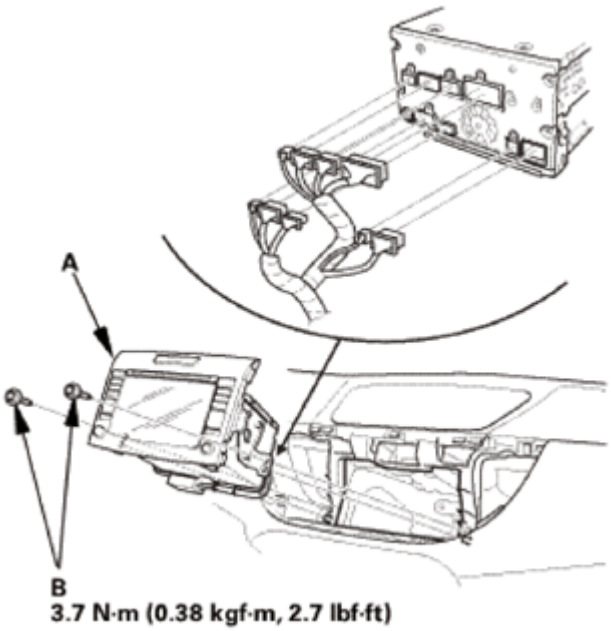

Fig. 82: Identifying Audio-Navigation Unit And Bolts With Torque Specification (Except KX)
Courtesy of AMERICAN HONDA MOTOR CO., INC.

KX

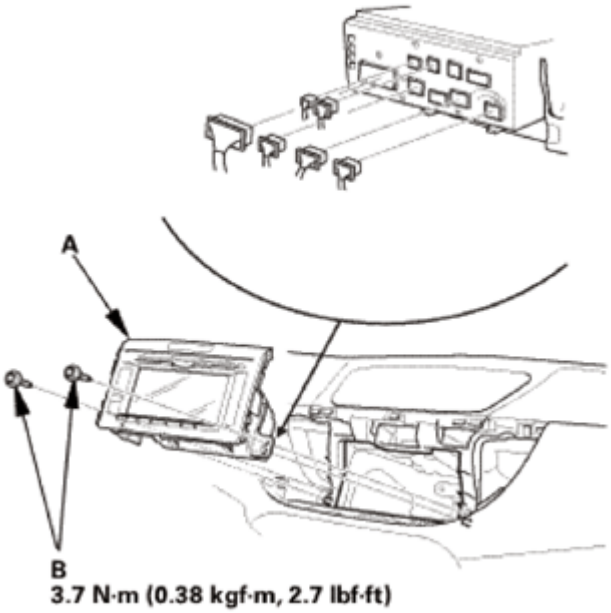

GETtheMANUALS.org

Fig. 83: Identifying Audio-Navigation Unit And Bolts With Torque Specification (Except KX)
Courtesy of AMERICAN HONDA MOTOR CO., INC.

7. Inner Vent - Both Sides
    1. Install the inner vents (A). Make sure the clips (B) snap into place securely.

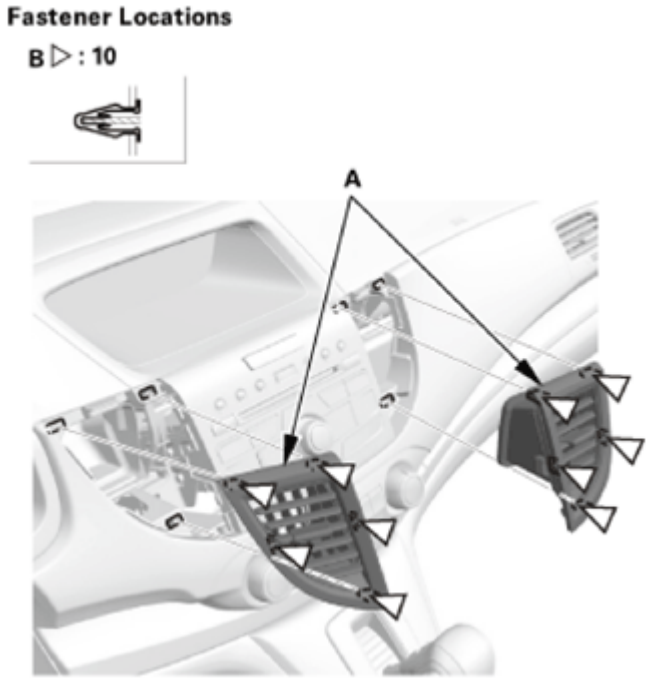

Fig. 84: Identifying Inner Vents And Clips
Courtesy of AMERICAN HONDA MOTOR CO., INC.

REWRITING THE ODO DATA AND TRANSFERRING THE MAINTENANCE MINDER™ DATA TO A NEW GAUGE CONTROL MODULE

PROCEDURE

1. HDS DLC - Connection
    1. Connect the HDS to the data link connector (DLC) (A) located under the driver's side of the dashboard.
    2. Turn the ignition switch to ON (II).
    3. Make sure the HDS communicates with the vehicle. If it does not communicate, go to the DLC circuit troubleshooting.

GETtheMANUALS.org

Fig. 85: Identifying Data Link Connector Located Under Driver's Side Of Dashboard
Courtesy of AMERICAN HONDA MOTOR CO., INC.

2. Rewriting the ODO Data and Transferring the Maintenance Minder™ Data to a New Gauge Control Module

NOTE:

- **Obtain a new gauge control module before starting the rewriting process. Only new gauges can be rewritten.**
- **Rewriting is not possible on a gauge control module that will not communicate with the HDS.**
- **Check the official Honda website for more information on how to write odometer information to a gauge control module that will not communicate with HDS.**
- **Make sure that the HDS shows the correct VIN for the vehicle you are working on.**
- **Once you have started this procedure, you must complete it before removing the HDS from the DLC.**
- **Connect a jumper battery (do not connect a battery charger) to insure that correct battery voltage will be maintained.**

Rewriting and Transferring

1. Select GAUGES from the BODY ELECTRICAL SYSTEM SELECT menu with the HDS.
2. Select GAUGE CONTROL MODULE REPLACEMENT (ODO Rewrite) from the ADJUSTMENT menu, and follow the instructions on the display to retrieve the ODO value.
3. Replace the gauge control module.
4. Select GAUGE CONTROL MODULE REPLACEMENT (ODO Rewrite) from the ADJUSTMENT menu, and select READ OUT DATA and save ODO value and Maintenance Minder Data into the HDS.

GETtheMANUALS.org

5. Select WRITE DATA and following the instructions on the HDS display, and install the ODO value and the Maintenance Minder Data into replaced gauge control module. If the data transfer fails, refer to the instructions below to release the locked ODO value.

How to Release Locked Odometer Mileage to the Original Gauge Control Module

If, after you attempt to transfer mileage to a new gauge control module, the odometer display has dashes (- - -), is garbled, or shows an incorrect value, the original gauge control module can be unlocked and restored to its original state. In this way, it can be used again for additional attempts to transfer the mileage:

1. Confirm that you have the latest HDS version of software.
2. Make sure that the HDS shows the correct VIN for the vehicle you are working on.
3. Turn the ignition switch to LOCK (0), reconnect the original gauge control module.
4. Completely re-boot the HDS.
5. Clear any stored DTCs.
6. Navigate to BODY ELECTRIC/GAUGES/GAUGE CONTROL MODULE REPLACEMENT (ODO REWRITE, etc.).
7. Select 3. RELEASING LOCKED ODO VALUE.
8. Follow the prompts and the odometer mileage will be restored.
9. Start over and make sure the screen prompts are followed.

SAFETY INDICATOR SYSTEM COMPONENT LOCATION INDEX

GETtheMANUALS.org

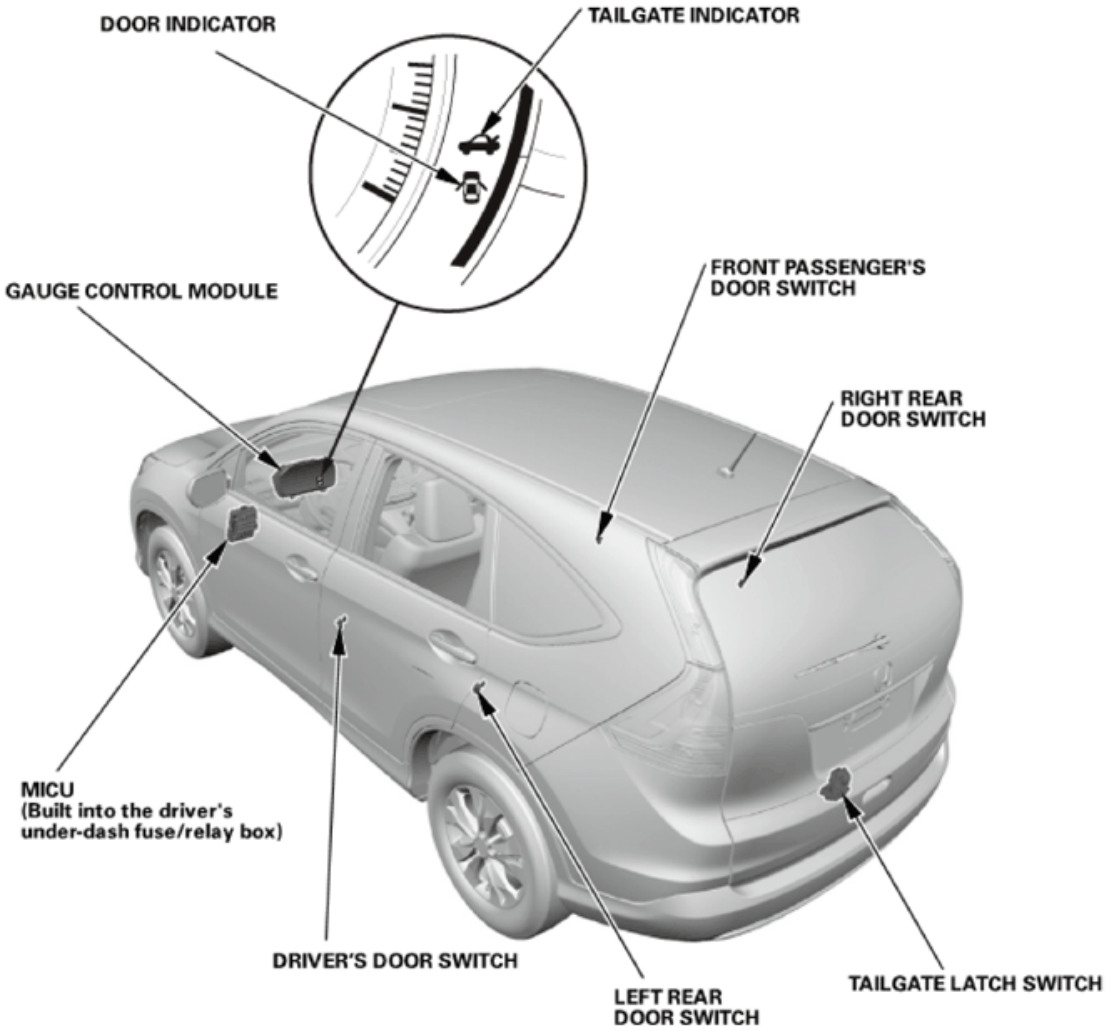

Fig. 86: Identifying Safety Indicator System Component Location
Courtesy of AMERICAN HONDA MOTOR CO., INC.

MICU (Built into the under-dash fuse/relay box)	**INPUT TEST (FOR DOOR SWITCH AND IGNITION KEY SWITCH CIRCUIT)**
	REMOVAL AND INSTALLATION
TAILGATE LATCH SWITCH	**REMOVAL AND INSTALLATION**
	TEST

GAUGE CONTROL MODULE INPUT TEST

NOTE:

- **Before testing, DO THE GAUGE CONTROL MODULE SELF-DIAGNOSTIC FUNCTION, and make sure the B-CAN communication lines are OK.**
- **Before testing, make sure the No. A29 (10 A) fuse in the under-hood fuse/relay box is OK.**
- **Before testing, make sure the No. B5 (10 A) fuse in the under-dash**

GETtheMANUALS.org

fuse/relay box is OK.

1. Turn the ignition switch to LOCK (0).
2. **Disconnect the gauge control module 32P connector** See **GAUGE CONTROL MODULE REMOVAL AND INSTALLATION** or REWRITING THE ODO DATA AND TRANSFERRING THE MAINTENANCE MINDER™ DATA TO A NEW GAUGE CONTROL MODULE.

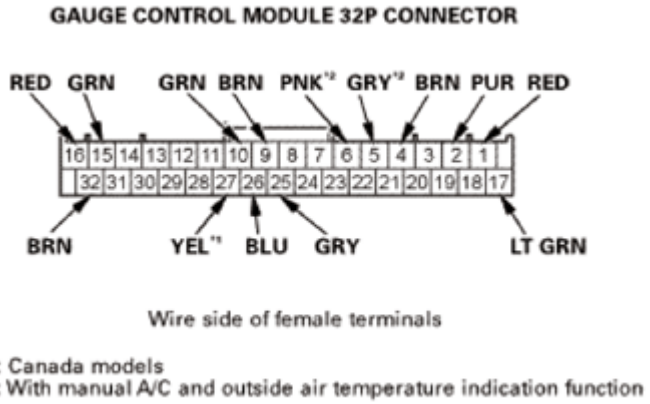

Fig. 87: Identifying Gauge Control Module 32P Connector Terminals
Courtesy of AMERICAN HONDA MOTOR CO., INC.

3. Inspect the connector and socket terminals to be sure they are all making good contact:
   - If the terminals are bent, loose, or corroded, repair them as necessary, and recheck the system.
   - If the terminals are OK, go to step 4.
4. With the connector still disconnected, do the following input tests:
   - If any test indicates a problem, find and correct the cause, then recheck the system.
   - If all the input tests prove OK, go to step 5.

Cavity	Wire	Test condition	Test: Desired result	Possible cause if desired result is not obtained
15	GRN	Combination light switch ON	Connect to ground with a jumper wire: The dashlights should come on full bright.	• Faulty LEDs • An open or high resistance in the wire
16	RED	Combination light switch ON	Connect to ground with a jumper wire: The dashlights should come on full bright.	• Faulty bulbs • An open or high resistance in the wire
		Ignition switch ON	Measure the voltage to ground:	• Faulty MICU • Faulty combination light

GETtheMANUALS.org

9	BRN	(II), turn signal switch to LEFT	There should be battery voltage when the lights are flashing.	switch • An open or high resistance in the wire
10	GRN	Ignition switch ON (II), turn signal switch to RIGHT	Measure the voltage to ground: There should be battery voltage when the lights are flashing.	• Faulty MICU • Faulty combination light switch • An open or high resistance in the wire
5(1)	GRY	Disconnect the outside air temperature sensor 2P connector	Check for continuity between terminal No. 5 and outside air temperature sensor 2P connector terminal No. 2: There should be continuity.	An open or high resistance in the wire
			Check for continuity between terminal No. 5 and body ground: There should be no continuity.	A short to ground in the wire
6(1)	PNK	Disconnect the outside air temperature sensor 2P connector	Check for continuity between terminal No. 6 and outside air temperature sensor 2P connector terminal No. 1: There should be continuity.	An open or high resistance in the wire
			Check for continuity between terminal No. 6 and body ground: There should be no continuity.	A short to ground in the wire
(1) With manual A/C and outside air temperature indication function				

5. Reconnect the connector to the gauge control module, and do the following input tests:
   - If any test indicates a problem, find and correct the cause, then recheck the system.
   - If all the input tests prove OK, **replace the gauge control module** See **GAUGE CONTROL MODULE REMOVAL AND INSTALLATION** or REWRITING THE ODO DATA AND TRANSFERRING THE MAINTENANCE MINDER™ DATA TO A NEW GAUGE CONTROL MODULE.

Cavity	Wire	Test condition	Test: Desired result	Possible cause if desired result is not obtained
1	RED	Under all conditions	Measure the voltage to ground: There should be battery voltage.	• Blown No. A29 (10 A) fuse in the under-hood fuse/relay box • An open or high resistance in the wire

GETtheMANUALS.org

17	LT GRN	Ignition switch ON (II)	Measure the voltage to ground: There should be battery voltage.	• Blown No. B5 (10 A) fuse in the under-dash fuse/relay box • An open or high resistance in the wire
32	BRN	In all ignition switch positions	Measure the voltage to ground: There should be less than 0.2 V.	• Poor ground (G502) • An open or high resistance in the ground wire
4	BRN	In all ignition switch positions	Measure the voltage to ground: There should be less than 0.2 V.	• Poor ground (G502) • An open or high resistance in the ground wire
2	PUR	Ignition switch ON (II), ECON button pushed	Measure the voltage to ground: There should be less than 0.2 V.	• Faulty ECON switch • Poor ground (G501) or an open in the ground wire • An open or high resistance in the wire
		Ignition switch ON (II), ECON button released	Measure the voltage to ground: There should be about 5 V.	• Faulty ECON switch • A short to ground in the wire
25	GRY	Ignition switch ON (II), Brake fluid is at full level in the reservoir	Measure the voltage to ground: There should be about 5 V.	• Faulty brake fluid level switch • A short to ground in the wire
		Ignition switch ON (II), Brake fluid is at lower level in the reservoir	Measure the voltage to ground: There should be less than 0.2 V.	• Faulty brake fluid level switch • Poor ground (G402) or an open in the ground wire • An open or high resistance in the wire
26	BLU	Ignition switch ON (II), Parking brake pedal pressed	Measure the voltage to ground: There should be less than 0.2 V.	• Faulty parking brake switch • Faulty parking brake switch ground • An open or high resistance in the wire
			Measure the	• Faulty parking brake

GETtheMANUALS.org

		Ignition switch ON (II), Parking brake pedal released	voltage to ground: There should be about 5 V.	switch • A short to ground in the wire
27[1]	YEL	Ignition switch ON (II), washer fluid is half or more in the washer reservoir	Measure the voltage to ground: There should be about 5 V.	• Faulty washer fluid level switch • A short to ground in the wire
		Ignition switch ON (II), washer fluid is empty in the washer reservoir	Measure the voltage to ground: There should be less than 0.2 V.	• Faulty washer fluid level switch • Poor ground (G202) or an open in the ground wire • An open or high resistance in the wire
[1] Canada models				

GETtheMANUALS.org

HANDSFREELINK SYSTEM SELF-DIAGNOSTIC FUNCTION

HOW TO CHECK THE HANDSFREELINK SYSTEM STATUS

NOTE:

- **CHECK THE VEHICLE BATTERY CONDITION FIRST .**
- **The self-diagnostic function can only be initiated while the HFL system is in its idle state.**
- **The self-diagnostic function starts after you press and hold the Hang-up/BACK button on the HFL switch for 5 seconds, and ends if the HandsFreeLink control unit returns to its idle state.**

1. Turn the ignition switch to ON (II).
2. Press and hold the Hang-up/BACK button (A) for more than 5 seconds.

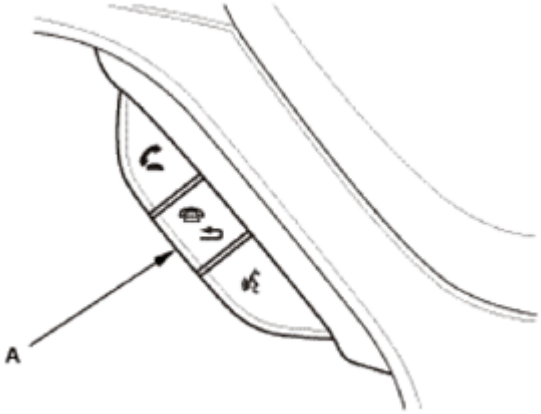

Fig. 1: Identifying Hang-Up/Back Button
Courtesy of AMERICAN HONDA MOTOR CO., INC.

3. When the HFL system enters the self-diagnostic function, the following will occurs:
   - If the HFL system does not respond, go to **HFL DOES NOT RESPOND TROUBLESHOOTING**:
     - **WITH NAVIGATION**
     - **USA AND CANADA MODELS WITHOUT NAVIGATION**
     - **EXCEPT USA AND CANADA MODELS WITHOUT NAVIGATION**
   - If the HFL system is OK, and there are no HFL DTCs, the HFL system says, "The HFT is OK."
   - If there are any HFL DTCs stored, the HFL system says, "The HFT is NG.". **CHECK FOR HFL DTCS**.

GETtheMANUALS.org

HOW TO TROUBLESHOOT THE HANDSFREELINK SYSTEM

HOW TO TROUBLESHOOT THE HANDSFREELINK SYSTEM

Introduction

The HFL system works only with Honda approved Bluetooth-enabled cell phones with a hands-free profile. If you are not sure if your cell phone is compatible with the HFL system or if it is configured correctly, Honda has a dedicated HFL customer service at 888-528-7876 and web site handsfreelink.honda.com, to answer your questions.

The HFL system allows you to make and receive hands-free calls. It cannot control the cell phone's performance (call quality and signal strength). For more information about performance and performance problems, refer to **DROPPED CALLS**.

Always call the HFL customer service first, not Tech Line because the HFL customer service has the latest information about cell phone software versions, settings and other issues.

Most HFL complaints are due to pairing, configuration, or compatibility issues. Contact the HFL customer service before replacing the HandsFreeLink control unit.

The customer service is open Monday thru Friday from 6:00 a.m. to 6:00 p.m. CST; Saturday from 7:00 a.m. to 6:00 p.m. CST; and Sunday from 8:00 a.m. to 6:00 p.m. CST.

Checking Cell Phone Compatibility

The most important step in troubleshooting HFL issues is to identify the customer's cell phone model, the software version, and the cellular carrier that experiences the HFL problem. Not all cell phones with the Bluetooth feature and a hands-free profile are compatible with the Honda HFL system.

The second most important step is to duplicate the customer's concern with their phone. If you do not duplicate the concern, you could replace good components and have the customer come back with the same complaint.

Go to handsfreelink.honda.com or call Honda's dedicated customer service at 888-528-7876, and check if the customer's cell phone is approved to work with the Honda HFL system.

NOTE:

- **These approved, archived, and currently testing cell phone model lists are constantly changing, so make sure you view them frequently.**
- **Phones are added as they are approved, and can be dropped if their specification changes.**
- **cell phones can be removed from the approved list if a software bug is discovered that makes the cell phone incompatible. These cell phones can be added back to the approved list if the phone manufacturer corrects the bug.**
- **If the software bug is corrected, a new software version is created and may be listed in the Supported Features section of the cell phone. If you**

GETtheMANUALS.org

have trouble finding the cell phone's software version, you can call the customer service at 888-528-7876.

- **The Honda web site handsfreelink.honda.com now includes the software versions that are tested and approved. When software versions are listed, you need to know which version is loaded on the cell phone to help you troubleshoot the customer's complaint. If you cannot access the Honda web site, call the customer service at 888-528-7876 for further assistance.**

Voice Tag Tips

HFL voice control and voice recognition is not supported in this model. The HFL system stores a simple voice tag for the Speed Dial. But HFL is controlled by using the navigation voice recognition system. If you want a complete description of this system, please refer to the Owner's Manual.

Pairing a Cell Phone

You must pair an approved Bluetooth-compatible cell phone to the HFL system before you can make and receive calls. For a current list of approved cell phones and specific cell phone pairing instructions for each cell phone, see **CHECKING CELL PHONE COMPATIBILITY**, go to handsfreelink.honda.com, or call the customer service at 888-528-7876.

The following procedure works for most Honda approved cell phones. If you cannot pair your cell phone to the HFL system with this procedure, refer to your cell phone's operating manual, vehicle's Owner's Manual, visit handsfreelink.honda.com, or call the customer service at 888-528-7876.

NOTE:

- **You cannot pair a cell phone while the vehicle is moving.**
- **The phone must be in discovery or search mode when it is pairing. Refer to the phone's owner's manual.**
- **The phone battery may drain faster when it is paired to the HFL.**
- **The default pairing code 0000 is used unless the setting was changed.**
- **If the phone is not ready for pairing, or not found by the system within 3 minutes, the HFL system times out and returns to idle.**
- **A maximum of six approved Bluetooth-compatible cell phones can be paired to the system.**

Automatically Pairing a Cell Phone when There are no Other Cell Phones Paired (with navigation)

NOTE: **The following procedure automatically pairs a phone. Not all phones will pair automatically. If the phone does not pair automatically, go to MANUALLY PAIRING A CELL PHONE WHEN THERE ARE NO OTHER CELL PHONES PAIRED (WITH NAVIGATION).**

1. Turn the ignition switch to ACCESSORY (I), and make sure the cell phone you are pairing is on and in its discovery mode.
2. Select OK on the navigation Confirmation screen.

GETtheMANUALS.org

3. Press the cell phone button on the audio-navigation unit. A cell phone Confirmation screen appears on the display, select Yes to add a new phone.

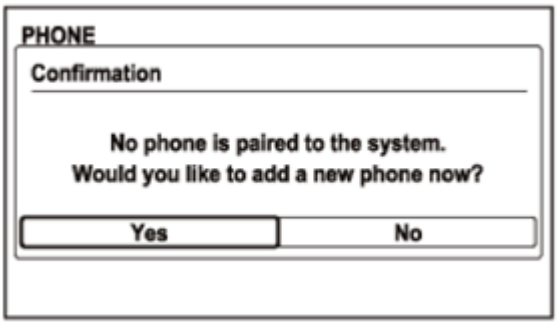

Fig. 2: Display - Cell Phone Confirmation Screen
Courtesy of AMERICAN HONDA MOTOR CO., INC.

4. Confirm the cell phone is in its discovery mode, then select OK.
5. Once the cell phone is discovered by the HFL, select the phone on the screen.

NOTE: **If the HFL does not find the cell phone, select Find Another cell phone, then, when prompted, enter the PIN into the phone.**

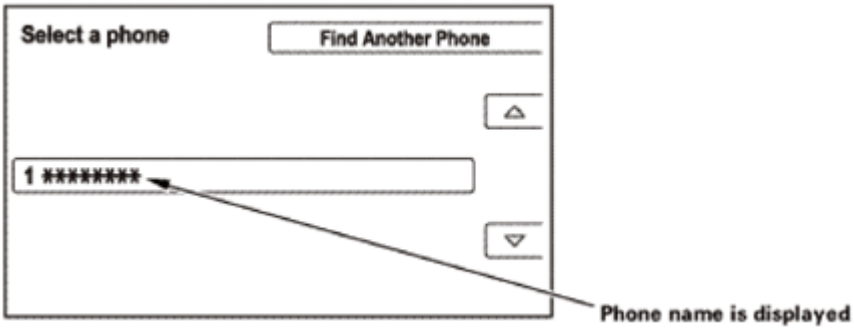

Fig. 3: Display - Cell Phone Name On Screen
Courtesy of AMERICAN HONDA MOTOR CO., INC.

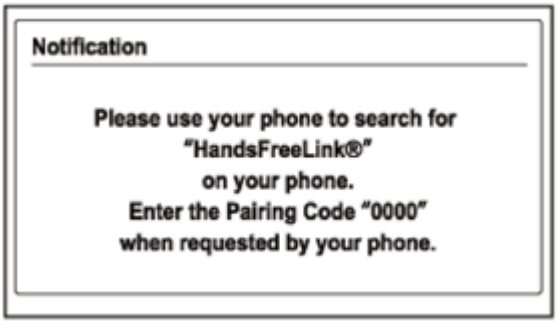

Fig. 4: Display - Cell Phone Notification Screen

GETtheMANUALS.org

Courtesy of AMERICAN HONDA MOTOR CO., INC.

6. When the 4-digit pairing code appears on the audio display, enter this code into the cell phone.
7. Once the cell phone is successfully paired, the screen displays The phone has been added.

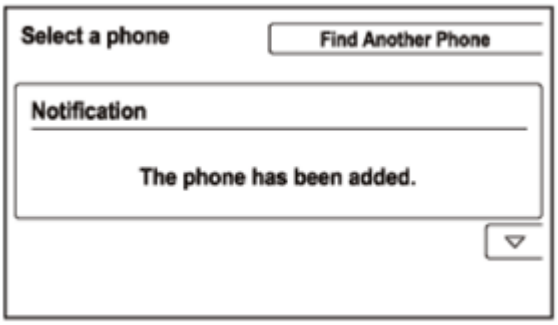

Fig. 5: Display - Cell Phone Successfully Paired Screen
Courtesy of AMERICAN HONDA MOTOR CO., INC.

Manually Pairing a Cell Phone when There are no Other Cell Phones Paired (with navigation)

NOTE: **The following procedure automatically pairs a phone. Not all phones will pair automatically. If the phone does not pair automatically, go to MANUALLY PAIRING A CELL PHONE WHEN THERE ARE NO OTHER CELL PHONES PAIRED (WITH NAVIGATION).**

1. Turn the ignition switch to ACCESSORY (I), and make sure the cell phone you are pairing is on and in its discovery mode.
2. Select OK on the navigation Confirmation screen.
3. Press the cell phone button on the audio-navigation unit. A cell phone Confirmation screen appears on the display, select Yes to add a new phone.

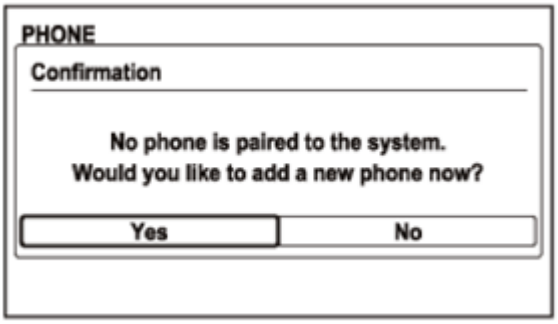

Fig. 6: Display - Other Cell Phone Pairing Confirmation Screen
Courtesy of AMERICAN HONDA MOTOR CO., INC.

4. Press the phone button on the audio-navigation display.
5. Select Phone Setup.

GETtheMANUALS.org

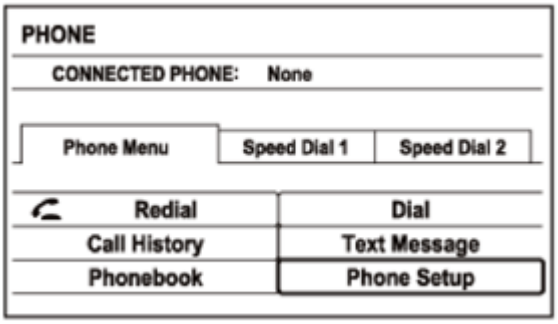

Fig. 7: Display - Cell Phone Setup Selection Screen
Courtesy of AMERICAN HONDA MOTOR CO., INC.

6. Select Add/Select a phone.

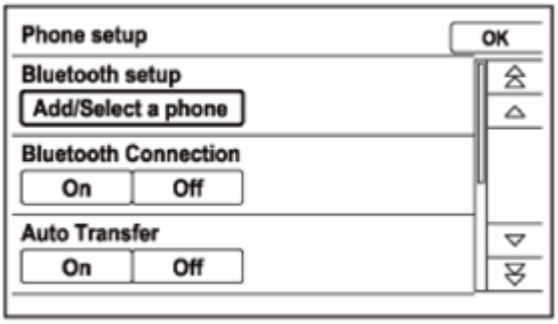

Fig. 8: Display - Add/Select Phone Screen
Courtesy of AMERICAN HONDA MOTOR CO., INC.

7. Select Add a New Phone.

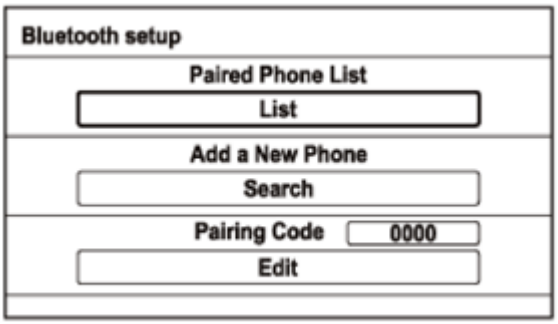

Fig. 9: Display - Other Phone Pairing Screen
Courtesy of AMERICAN HONDA MOTOR CO., INC.

8. Confirm the cell phone is in its discovery mode, then select OK.
9. Once the cell phone is discovered by the HFL, select the phone on the screen.

NOTE: If the HFL does not find the cell phone, select Find Another cell phone,

GETtheMANUALS.org

then, when prompted, enter the PIN into the phone.

10. When the 4-digit pairing code appears on the audio display, enter this code into the cell phone.
11. Once the cell phone is successfully paired, the screen displays The phone has been added.

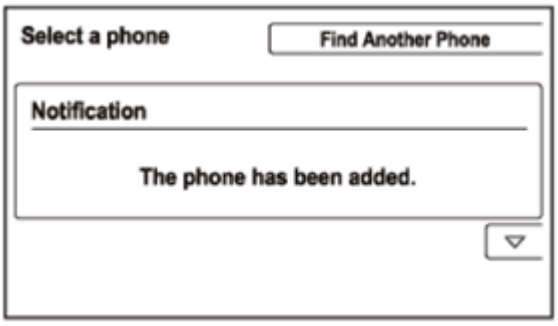

Fig. 10: Display - Cell Phone Successfully Paired Screen
Courtesy of AMERICAN HONDA MOTOR CO., INC.

Pairing a Cell Phone when There are no Other Cell Phones Paired (without navigation)

1. Turn the ignition switch to ACCESSORY (I), and make sure the cell phone you are pairing is on and in its discovery mode.
2. Wait until the time appears on the screen.
3. Press the PHONE button on the audio unit, then select Yes on the confirmation screen by pressing the selector knob.

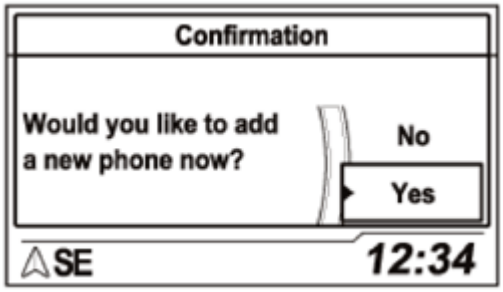

Fig. 11: Display - Other Cell Phone Pairing Confirmation Screen
Courtesy of AMERICAN HONDA MOTOR CO., INC.

4. Confirm the cell phone is in its discovery mode, then press the selector knob.
5. Once the cell phone is discovered by the HFL, rotate the selector knob to select the phone, then press the selector knob to select OK.

NOTE: **If the HFL does not find a cell phone, select cell phone Not Found? from the menu, then, when prompted, enter the PIN into the phone.**

GETtheMANUALS.org

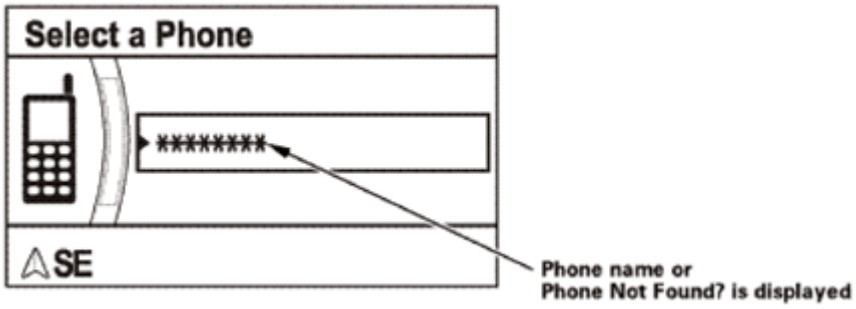

Fig. 12: Display - Cell Phone Name On Screen
Courtesy of AMERICAN HONDA MOTOR CO., INC.

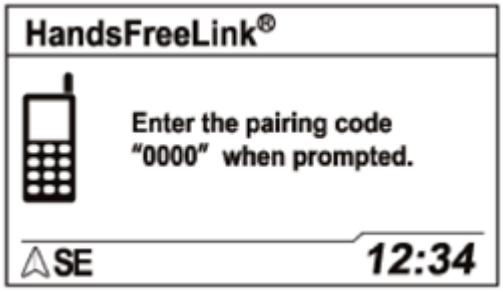

Fig. 13: Display - Cell Phone Pairing Code Screen
Courtesy of AMERICAN HONDA MOTOR CO., INC.

6. When the 4-digit pairing code appears on the audio display, enter this code into the cell phone.
7. Once the cell phone is successfully paired, the screen displays "(phone name) PHONE" has been added.

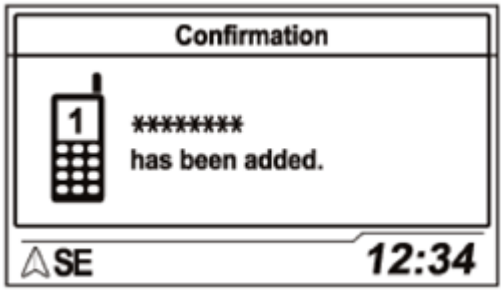

Fig. 14: Display - Cell Phone Pairing Confirmation Screen
Courtesy of AMERICAN HONDA MOTOR CO., INC.

Pairing additional Cell phones (with navigation)

1. Turn the ignition switch to ACCESSORY (I), and make sure the cell phone you are pairing is on and in its discovery mode.
2. Select OK on the navigation Confirmation screen.
3. Press the PHONE button on the audio-navigation unit, then select Phone Setup from the PHONE menu.

GETtheMANUALS.org

If none of the previously paired cell phones are in the vehicle, a cell phone Confirmation screen appears stating there is no cell phone connected. Select No to go to the phone menu. Select Phone Setup, then go to step 4.

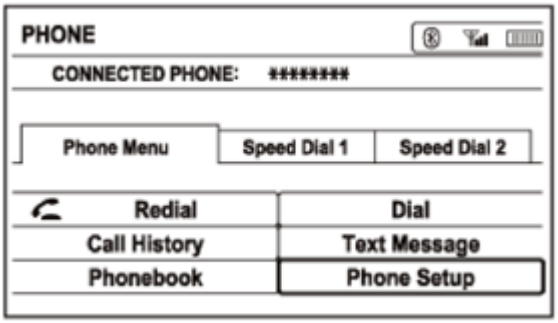

Fig. 15: Display - Cell Phone Menu Screen
Courtesy of AMERICAN HONDA MOTOR CO., INC.

4. Select Add/Select a phone from the Phone Setup menu.

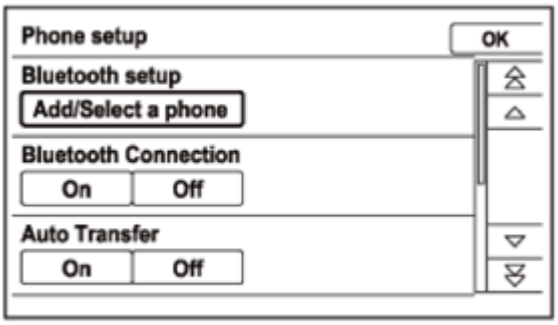

Fig. 16: Display - Add/Select Cell Phone Screen
Courtesy of AMERICAN HONDA MOTOR CO., INC.

5. Select Search from the Bluetooth Setup menu.

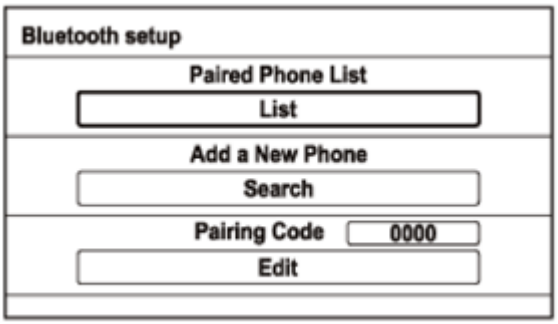

Fig. 17: Display - Bluetooth Setup Menu Screen
Courtesy of AMERICAN HONDA MOTOR CO., INC.

GETtheMANUALS.org

6. Make sure the cell phone is in its discovery mode, and press OK.
7. Once the cell phone is discovered by the HFL, select the phone from the displayed list.

NOTE: **If the HFL does not find the cell phone, select Find Another cell phone, then, when prompted, enter the PIN into the phone.**

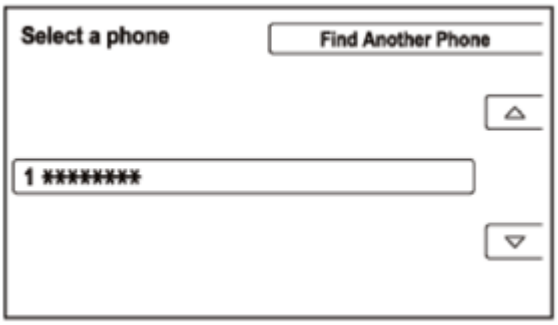

Fig. 18: Display - Cell Phone Pairing Code Screen
Courtesy of AMERICAN HONDA MOTOR CO., INC.

8. When the 4-digit pairing code appears on the audio display, enter this code into the cell phone.
9. Once the cell phone is successfully paired, the screen displays "(phone name) PHONE" has been added.

Pairing additional Cell phones (without navigation)

1. Turn the ignition switch to ACCESSORY (I), and make sure the cell phone you are pairing is on and in its discovery mode.
2. Wait until the time appears on the multi-information display.
3. Press the PHONE button on the audio unit, then select Yes on the confirmation screen by pressing the selector knob.

   If none of the previously paired cell phones are in the vehicle, a phone confirmation screen appears stating there is no cell phone connected. Select No to go to the Phone Setup menu.

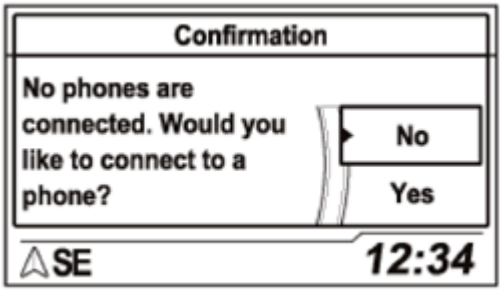

Fig. 19: Display - Cell Phone Connection Confirmation Screen
Courtesy of AMERICAN HONDA MOTOR CO., INC.

4. The HFL menu appears on the display. Rotate the selector knob to highlight Phone Setup, then press the

GETtheMANUALS.org

selector knob.

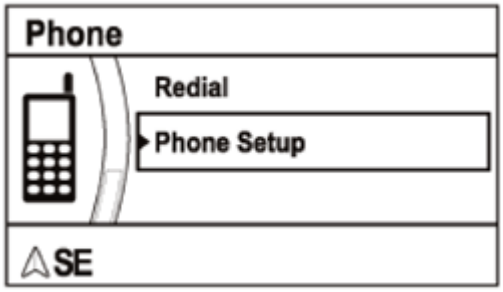

Fig. 20: Display - Phone Setup Screen
Courtesy of AMERICAN HONDA MOTOR CO., INC.

5. On the Phone Setup screen, rotate the selector knob to highlight Connection, then press the selector knob.

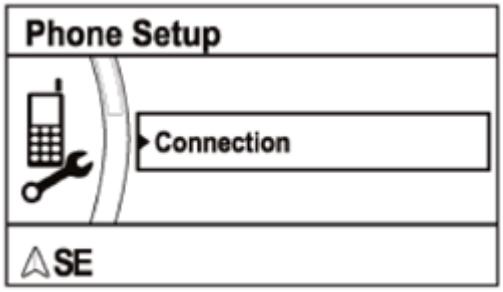

Fig. 21: Display - Phone Setup Connection Screen
Courtesy of AMERICAN HONDA MOTOR CO., INC.

6. Highlight Add A New Phone, then press the selector knob.

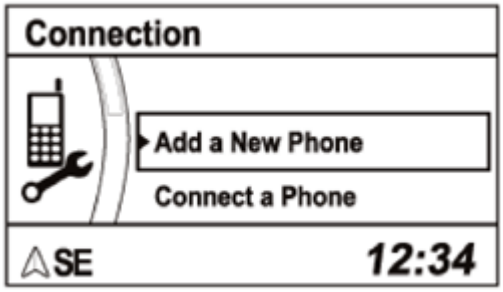

Fig. 22: Display - Add Other Cell Phone Connection Screen
Courtesy of AMERICAN HONDA MOTOR CO., INC.

7. At the Select Location Screen, select an open cell phone location, then press the selector knob.

GETtheMANUALS.org

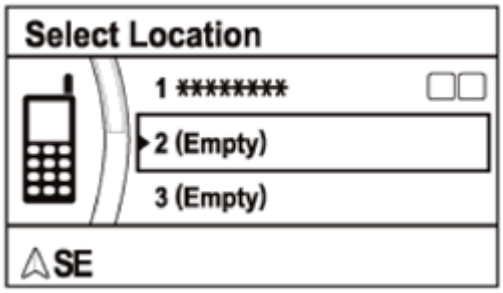

Fig. 23: Display - Selecting Cell Phone Location Screen
Courtesy of AMERICAN HONDA MOTOR CO., INC.

8. Confirm the cell phone is in its discovery mode, then press the audio unit selector knob.
9. Once the cell phone is discovered by the HFL, rotate the selector knob to select the phone, then press the selector knob.

NOTE: **If the HFL does not find a phone, select cell phone Not Found? from the menu, then, when prompted, enter the PIN into the phone.**

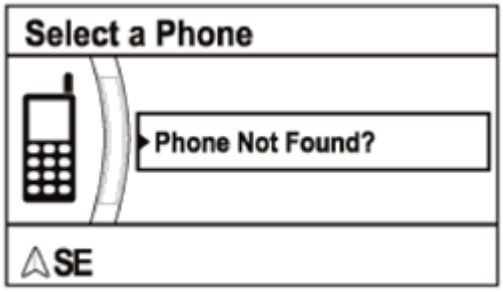

Fig. 24: Display - Cell Phone Not Found Screen
Courtesy of AMERICAN HONDA MOTOR CO., INC.

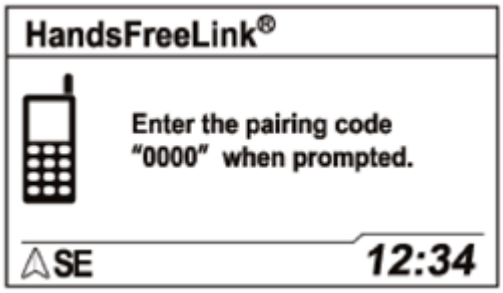

Fig. 25: Display - Cell Phone Pairing Code Screen
Courtesy of AMERICAN HONDA MOTOR CO., INC.

10. When the 4-digit pairing code appears on the audio display, enter this code into the cell phone.
11. Once the cell phone is successfully paired, the screen displays "(phone name) PHONE" has been added.

GETtheMANUALS.org

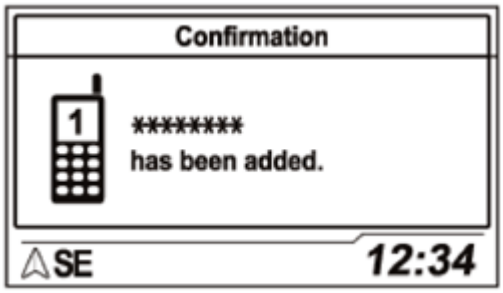

Fig. 26: Display - Cell Phone Pairing Confirmation Screen
Courtesy of AMERICAN HONDA MOTOR CO., INC.

Pairing Troubleshooting

Many pairing issues are resolved by altering the customer's cell phone settings.

If you cannot get an approved HFL cell phone to pair, contact Honda's dedicated customer service at 888-528-7876, or go to handsfreelink.honda.com.

Dropped Calls

Customers may perceive dropped calls as being an HFL system fault, but most dropped calls are resultant from cell phone and cell phone carrier issues. The HFL system does not directly handle the cell phone signal. It allows the cell phones to transmit the cell phone audio over the vehicle's audio system.

Many dropped calls issues can be resolved by changing the customer's cell phone settings. For help on approved HFL settings, contact Honda's dedicated customer service at 888-528-7876, or go to handsfreelink.honda.com.

Always confirm with the Customer if the number of dropped calls is higher while using the HFL system as opposed to using the cell phone only. Customers often confuse problems with their cell phone or carrier as a problem with the HFL system. The HFL system cannot control or determine:

- Cellular connection quality
- Signal strength
- Cellular coverage
- Ambient weather conditions that affect cellular signals

When a customer complains about dropped calls, ask questions about when or where the calls are dropped, such as:

- Do you drive the same route on a regular basis?
- Does the call drop in the same location?
- Where do you keep your cell phone (in a purse or backpack)?
- Have you compared the number of dropped calls using the HFL versus making calls from the handset?
- Are they comparing their HFL performance to a system from a different manufacturer?

GETtheMANUALS.org

There are many reasons for a dropped call that are not related to the HFL system. Here are some causes for dropped calls:

- If the quantity of dropped calls is about the same when the customer uses the HFL system versus the handset, the issue is likely due to the cellular phone or carrier.
- If the cell phone is equipped with a retractable antenna, it needs to be extended to maximize signal strength.
- If a customer also notices that the calls tend to drop in the same areas, the HFL system may be operating normally, but something about the area diminishes cellular coverage to a point where the call drops.
- Hills or mountains can block or interfere with cellular signals.
- High-rise buildings, bridges, or other large structures may block or interfere with cellular signals.
- Electrical storms, heavy rain, or overcast conditions interfere with signal strength.
- Placing the cell phone in a purse, in a metal briefcase, under the seat, in the glove box, or in the trunk can all affect signal reception.
- There are coverage gaps in the cellular service. When driving, a call is typically passed from one tower to another. If the customer drives through an area where there is a coverage gap between towers, the call drops.
- The cell phone battery's state of change can affect signal reception. A low battery may reduce the cell phone's ability to boost the antenna's power and function properly, especially in low signal strength areas. Some cell phone manufacturers trade off signal transmission and reception strength for battery life. As the battery weakens, the signal strength may also weaken. Some cell phones may operate more effectively than others in low signal strength areas especially with a partially charged battery.

Phone will not Automatically Connect to the HFL

NOTE: If they are on the phone when they enter the vehicle, refer to the Automatic Transferring section in the O/M for more information.

If a customer complains that their cell phone is not automatically connecting to the HFL system when they enter the vehicle, do the following:

1. Make sure the Bluetooth feature is turned on in the cell phone.
2. Make sure the cell phone is properly paired to the HFL system.
3. Do a soft reset to the cell phone.
4. Check if the cell phone has an Authorized Connection or Trusted option.
5. Check the battery and signal strength on the cell phone. Pairing a cell phone requires optimal signal strength and a nearly full battery.

How to Check the HFL DTC's (with navigation)

1. Turn the ignition switch to ON (II).
2. Press and hold the MAP/GUIDE, the DEST, and the CANCEL buttons for 3 seconds or more, and the self-diagnosis begins. Select the Detail Information & Setting.

GETtheMANUALS.org

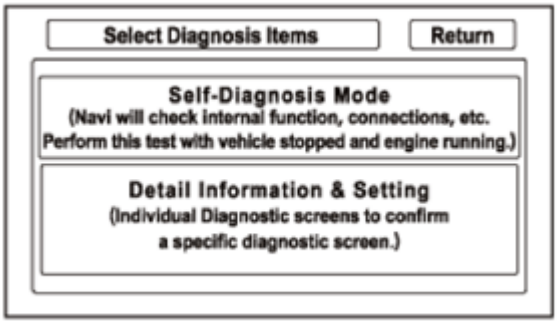

Fig. 27: Display - Self-Diagnosis Mode And Detail Information & Setting Screen
Courtesy of AMERICAN HONDA MOTOR CO., INC.

3. Select the Unit Check from the Detail Information & Setting menu.

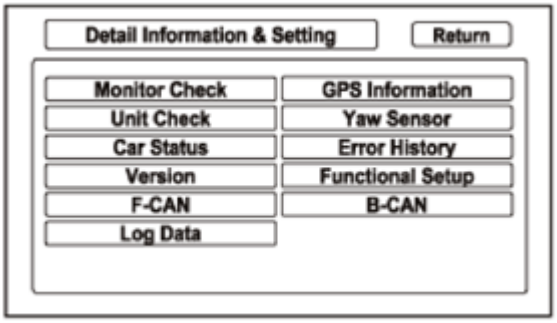

Fig. 28: Display - Detail Information & Setting Menu
Courtesy of AMERICAN HONDA MOTOR CO., INC.

4. Select the HFL from the Unit Check menu.

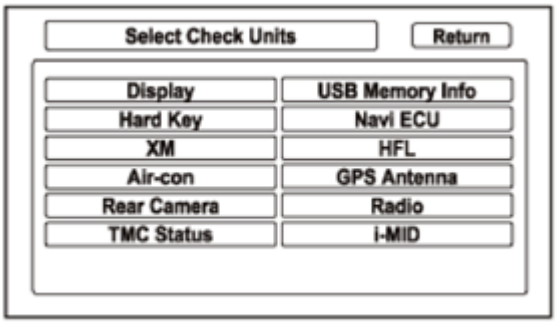

Fig. 29: Display - HFL Unit Check Menu Screen
Courtesy of AMERICAN HONDA MOTOR CO., INC.

5. Check the GA-NET status:
   - If OK, go to step 6.
   - If NG, **GO TO HFL DOES NOT RESPOND (WITH NAVIGATION) TROUBLESHOOTING**.

GETtheMANUALS.org

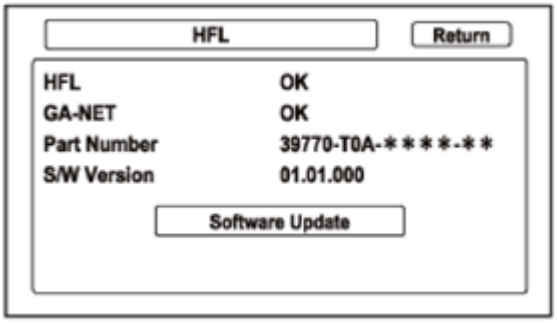

Fig. 30: Display - Software Updation Screen
Courtesy of AMERICAN HONDA MOTOR CO., INC.

6. Check the HFL status:
   - If OK, go to step 7.
   - **IF B1792 IS DISPLAYED, GO TO DTC B1792 TROUBLESHOOTING** .
7. Return to the Detail Information & Setting menu, and select the Functional Setup.

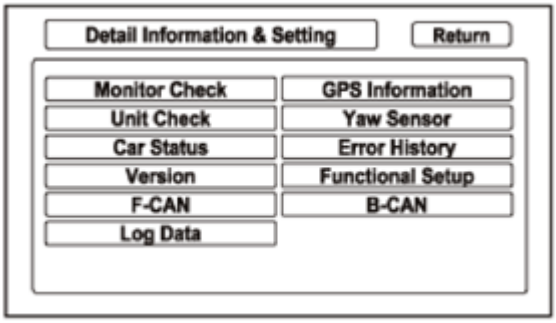

Fig. 31: Display - Detail Information & Setting Menu Screen
Courtesy of AMERICAN HONDA MOTOR CO., INC.

8. Select the Mic Level from the Functional Setup menu.

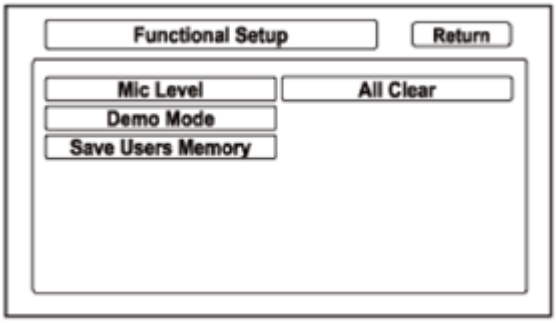

Fig. 32: Display - Functional Setup Menu Mic Level Screen
Courtesy of AMERICAN HONDA MOTOR CO., INC.

9. Check the MIC and the STRG SW status:

GETtheMANUALS.org

- If OK, there was an intermittent failure, the system is OK at this time.
- If any DTC(s) are displayed, troubleshoot the indicated DTC(s).

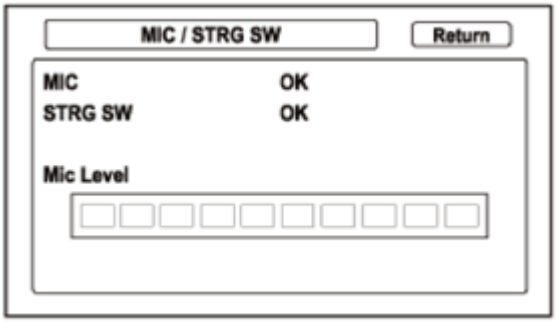

Fig. 33: Display - MIC And STRG SW Status Screen
Courtesy of AMERICAN HONDA MOTOR CO., INC.

10. To end the self-diagnostic function, select the Return, or turn the ignition switch to LOCK (0).

How to Check the HFL DTC's (without navigation)

NOTE: **If there are any paired cell phones connected to the HFL, they are temporarily disconnected during this procedure.**

1. Turn the ignition switch to ON (II).
2. Make sure the audio unit is turned off.
3. Use the DISPLAY button on the steering wheel to select the screen that displays Audio Off.
4. Press and hold the preset No. 1 and No. 6 buttons.
5. While holding the buttons, press the POWER button.
6. Release the buttons, and the self-diagnosis begins (A-Diag is displayed).

GETtheMANUALS.org

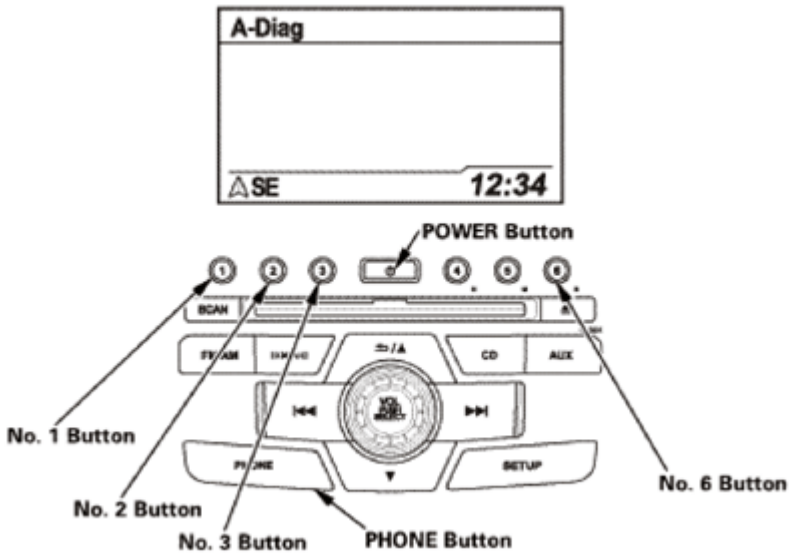

Fig. 34: Display - A-Diag Screen
Courtesy of AMERICAN HONDA MOTOR CO., INC.

7. Press and hold the PHONE button for more than 5 seconds to enter the HFL diagnostic mode.
8. When you are in the HFL diagnostic mode, pressing a preset button starts the diagnostic mode that is assigned to that preset button. To exit this mode, go to step 12. Once you exit this test, you must start again at step 1.
   - No. 1 button: The HFL DTC display mode
   - No. 2 button: The HandsFreeLink control unit software version display mode **(USA and Canada models: HandsFreeLink control unit update function is available)** See **HANDSFREELINK CONTROL UNIT REMOVAL AND INSTALLATION** or **HANDSFREELINK CONTROL UNIT UPDATE**
   - No. 3 button: The HandsFreeLink control unit parts number display mode
9. Check the HandsFreeLink control unit software version (No. 2 button) and parts number (No. 3 button). If the Part number and software version is not displayed, there may be a problem with the GA-Net. Go to **HFL DOES NOT RESPOND TROUBLESHOOTING**; **USA AND CANADA MODELS**, **EXCEPT USA AND CANADA MODELS**.
10. Check the HFL DTC. Each time you press the No. 1 button, the screen displays HFL DTCs in following order:
    - B1775 (OK or NG)
    - B1776 (OK or NG)
    - B1779 (OK or NG)
    - B1780 (OK or NG)
    - B1792 (OK or NG)

GETtheMANUALS.org

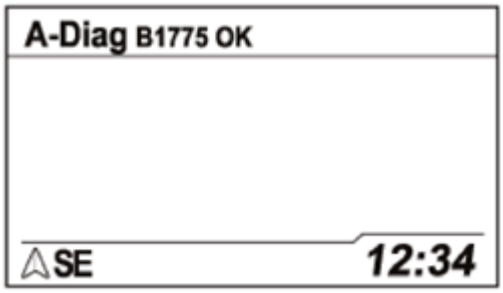

Fig. 35: Display - A-Diag B 1775 Screen
Courtesy of AMERICAN HONDA MOTOR CO., INC.

11. If any HFL DTC is NG, troubleshoot the indicated HFL DTC(s).
12. To end the self-diagnostic function, turn the audio unit off, or turn the ignition switch to LOCK (0).

HANDSFREELINK CONTROL UNIT CONNECTOR FOR INPUTS AND OUTPUTS

HANDSFREELINK CONTROL UNIT CONNECTOR FOR INPUTS AND OUTPUTS (USA AND CANADA MODELS)

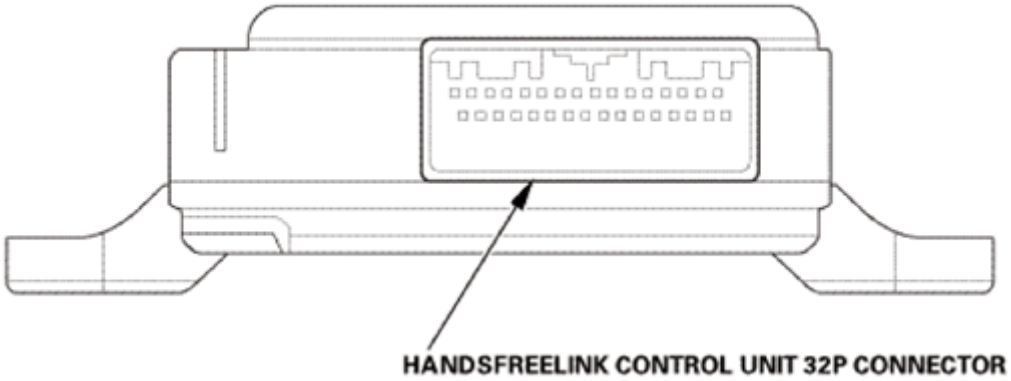

Fig. 36: Identifying Handsfreelink Control Unit Connector Terminals For Inputs And Outputs (USA And Canada Models)
Courtesy of AMERICAN HONDA MOTOR CO., INC.

HANDSFREELINK CONTROL UNIT 32P CONNECTOR

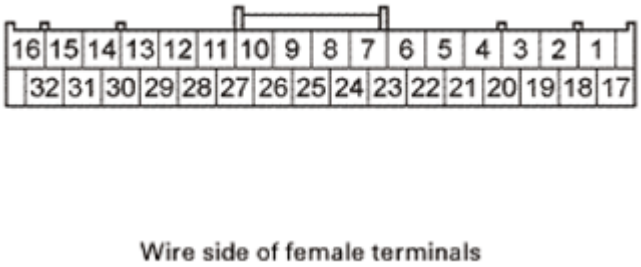

GETtheMANUALS.org

Fig. 37: Identifying Handsfreelink Control Unit 32P Connector Terminals
Courtesy of AMERICAN HONDA MOTOR CO., INC.

HANDSFREELINK CONTROL UNIT 32P CONNECTOR (WITH NAVIGATION)

Cavity	Wire Color	Terminal Name	Description
1	RED	MIC-	Inputs microphone signal negative
2	GRN	MIC+	Inputs microphone signal positive
3	GRY(1)	SH_MIC	Shield for terminals No. 1 and No. 2
4	BRN	TELEM_SIG+	Outputs telephone sound signal to audio-navigation unit
5	RED	GA_AUDIO_L+	Outputs sound signal
6	GRN	GA_AUDIO_R+	Outputs sound signal
7	Not Used	Not Used	-
8	Not Used	Not Used	-
9	Not Used	Not Used	-
10	Not Used	Not Used	-
11	Not Used	Not Used	-
12	PNK	GA_BUS-	GA-Net bus communication signal
13	BLU	GA_BUS+	GA-Net bus communication signal
14	Not Used	Not Used	-
15	YEL	HFL/NAVI_REMOTE_SW	Detects control signal from HFL-voice control switch
16	BLK	GA_GND	Ground for GA audio
17	YEL	HFL-NAVI_MIC-	Outputs microphone signal negative
18	BRN	HFL-NAVI_MIC+	Outputs microphone signal positive
19	GRY(1)	SH_TELEM_SIG	Shield for terminals No. 4 and No. 20
20	YEL	TELEM_SIG-	Outputs telephone sound signal to audio-navigation unit
21	WHT	GA_AUDIO_L-	Outputs sound signal
22	BLK	GA_AUDIO_R-	Outputs sound signal
23	GRY(1)	SH_GA_AUDIO	Shield for terminals No. 5, No. 6, No. 21, and No. 22
24	PNK	GA_SYS_ON	Inputs signal for HandsFreeLink control unit switching ON/OFF
25	Not Used	Not Used	-
26	Not Used	Not Used	-
27	Not Used	Not Used	-
28	GRY(1)	SH_GA_BUS	Shield for terminals No. 12 and No. 13
29	Not Used	Not Used	-
30	Not Used	Not Used	-
31	Not Used	Not Used	-

GETtheMANUALS.org

32	RED	GA+B	Continuous power source for HandsFreeLink control unit

(1) The shielded wires have a heat-shrink tube insulating the outside of the wire. The color of the insulating tube, typically black or dark gray, may not match the color of the wire shown on the circuit diagram.

HANDSFREELINK CONTROL UNIT 32P CONNECTOR (WITHOUT NAVIGATION)

Cavity	Wire Color	Terminal Name	Description
1	RED	MIC-	Inputs microphone signal negative
2	GRN	MIC+	Inputs microphone signal positive
3	GRY(1)	SH_MIC	Shield for terminals No. 1 and No. 2
4	BRN	TELEM_SIG+	Outputs telephone sound signal to audio unit
5	RED	GA_AUDIO_L+	Outputs sound signal
6	GRN	GA_AUDIO_R+	Outputs sound signal
7	Not Used	Not Used	-
8	Not Used	Not Used	-
9	Not Used	Not Used	-
10	Not Used	Not Used	-
11	Not Used	Not Used	-
12	PNK	GA_BUS-	GA-Net bus communication signal
13	BLU	GA_BUS+	GA-Net bus communication signal
14	Not Used	Not Used	-
15	YEL	HFL/NAVI_REMOTE_SW	Detects control signal from HFL switch
16	BLK	GA_GND	Ground for GA audio
17	Not Used	Not Used	-
18	Not Used	Not Used	-
19	GRY(1)	SH_TELEM_SIG	Shield for terminals No. 4 and No. 20
20	YEL	TELEM_SIG-	Outputs telephone sound signal to audio unit
21	WHT	GA_AUDIO_L-	Outputs sound signal
22	BLK	GA_AUDIO_R-	Outputs sound signal
23	GRY(1)	SH_GA_AUDIO	Shield for terminals No. 5, No. 6, No. 21, and No. 22
24	PNK	GA_SYS_ON	Power source for GA-Net bus communication signal
25	Not Used	Not Used	-
26	Not Used	Not Used	-
27	Not Used	Not Used	-
28	GRY(1)	SH_GA_BUS	Shield for terminals No. 12 and No. 13
29	Not Used	Not Used	-
30	Not Used	Not Used	-

GETtheMANUALS.org

31	Not Used	Not Used	-
32	RED	GA+B	Continuous power source for HandsFreeLink control unit
(1) The shielded wires have a heat-shrink tube insulating the outside of the wire. The color of the insulating tube, typically black or dark gray, may not match the color of the wire shown on the circuit diagram.			

HANDSFREELINK CONTROL UNIT CONNECTOR FOR INPUTS AND OUTPUTS (EXCEPT USA AND CANADA MODELS)

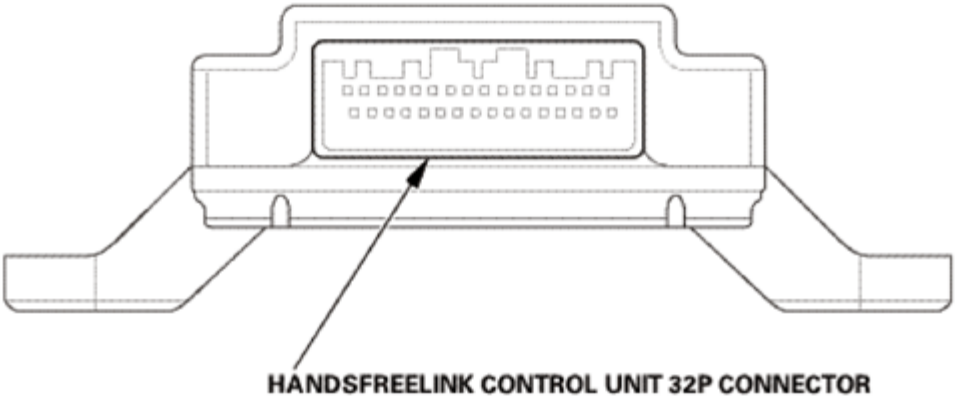

Fig. 38: Identifying Handsfreelink Control Unit Connector Terminals For Inputs And Outputs (Except USA And Canada Models)
Courtesy of AMERICAN HONDA MOTOR CO., INC.

HANDSFREELINK CONTROL UNIT 32P CONNECTOR

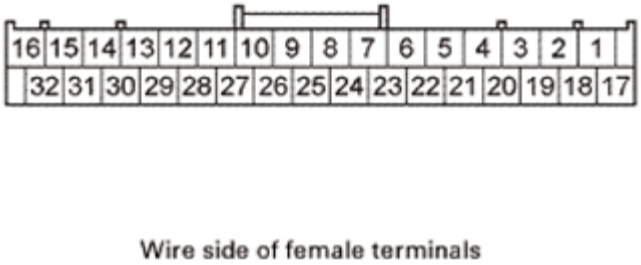

Fig. 39: Identifying Handsfreelink Control Unit 32P Connector Terminals
Courtesy of AMERICAN HONDA MOTOR CO., INC.

HANDSFREELINK CONTROL UNIT 32P CONNECTOR

Cavity	Wire Color	Terminal Name	Description
1	RED	MIC-	Inputs microphone signal negative
2	GRN	MIC+	Inputs microphone signal positive
3	GRY(1)	SH_MIC	Shield for terminals No. 1 and No. 2
4	BRN	TELEM_SIG+	Outputs telephone sound signal to audio unit

GETtheMANUALS.org

5	RED	GA_AUDIO_L+	Outputs sound signal
6	GRN	GA_AUDIO_R+	Outputs sound signal
7	Not Used	Not Used	-
8	Not Used	Not Used	-
9	Not Used	Not Used	-
10	Not Used	Not Used	-
11	Not Used	Not Used	-
12	PNK	GA_BUS-	GA-Net bus communication signal
13	BLU	GA_BUS+	GA-Net bus communication signal
14	Not Used	Not Used	-
15	YEL	HFL/NAVI_REMOTE_SW	Detects control signal from HFL switch
16	BLK	GND	Ground for HandsFreeLink control unit (G503)
17	Not Used	Not Used	-
18	Not Used	Not Used	-
19	GRY(1)	SH_TELEM_SIG	Shield for terminals No. 4 and No. 20
20	YEL	TELEM_SIG-	Outputs telephone sound signal to audio unit
21	WHT	GA_AUDIO_L-	Outputs sound signal
22	BLK	GA_AUDIO_R-	Outputs sound signal
23	GRY(1)	SH_GA_AUDIO	Shield for terminals No. 5, No. 6, No. 21, and No. 22
24	Not Used	Not Used	-
25	Not Used	Not Used	-
26	Not Used	Not Used	-
27	Not Used	Not Used	-
28	GRY(1)	SH_GA_BUS	Shield for terminals No. 12 and No. 13
29	Not Used	Not Used	-
30	Not Used	Not Used	-
31	PUR	ACC	Power source for accessories
32	RED	+B_AUDIO	Continuous power source

(1) The shielded wires have a heat-shrink tube insulating the outside of the wire. The color of the insulating tube, typically black or dark gray, may not match the color of the wire shown on the circuit diagram.

HANDSFREELINK CONTROL UNIT REMOVAL AND INSTALLATION

REMOVAL

1. Center Maintenance Cover
    1. Remove the maintenance cover (A).

GETtheMANUALS.org

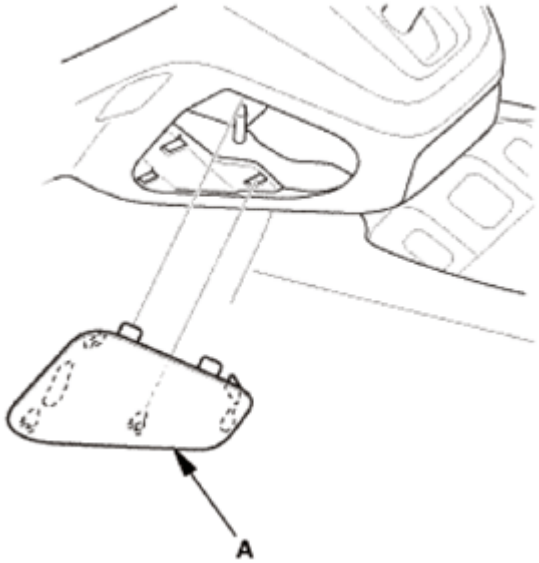

Fig. 40: Identifying Maintenance Cover
Courtesy of AMERICAN HONDA MOTOR CO., INC.

2. Shift Lever Panel (AT)
    1. Carefully pry out the shift lever panel (A) with the appropriate trim tool to detach the clips (B, C) and the hooks (D), then remove the shift lever panel.

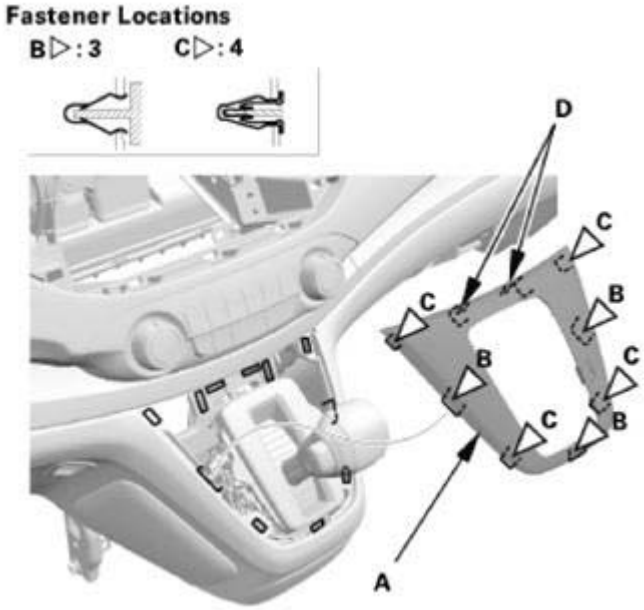

Fig. 41: Identifying Shift Lever Panel, Hooks And Clips
Courtesy of AMERICAN HONDA MOTOR CO., INC.

3. HandsFreeLink Control Unit
    1. Disconnect the connector.

GETtheMANUALS.org

2. Remove the HandsFreeLink control unit (A).

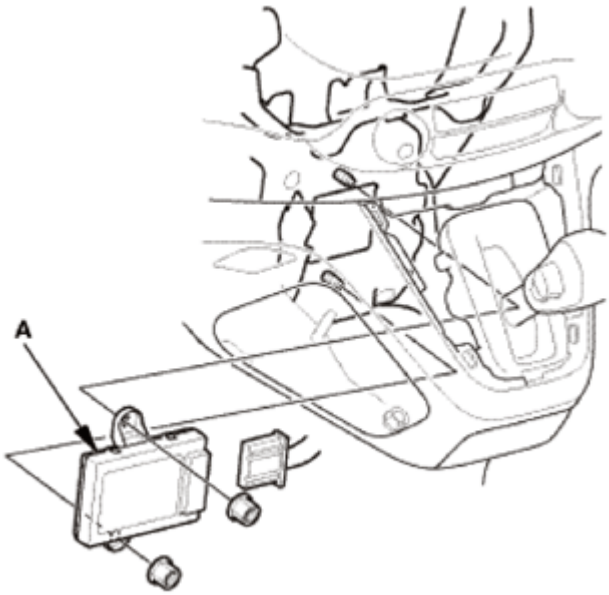

Fig. 42: Identifying Handsfreelink Control Unit
Courtesy of AMERICAN HONDA MOTOR CO., INC.

INSTALLATION

1. HandsFreeLink Control Unit
    1. Connect the connector.
    2. Install the HandsFreeLink control unit (A).

    After replacing the HandsFreeLink control unit, tell the customer:

    - They need to pair their phones to the system.
    - They need to set up their system preferences.
    - Update the HFL if it does not have the latest software.

GETtheMANUALS.org

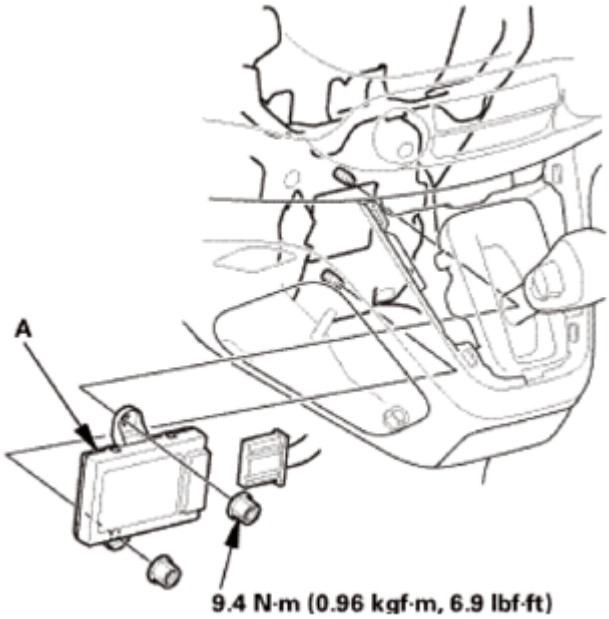

Fig. 43: Identifying Handsfreelink Control Unit With Torque Specifications
Courtesy of AMERICAN HONDA MOTOR CO., INC.

2. Shift Lever Panel (AT)
    1. Install the shift lever panel (A). Make sure the clips (B, C) and the hooks (D) snap into place securely.

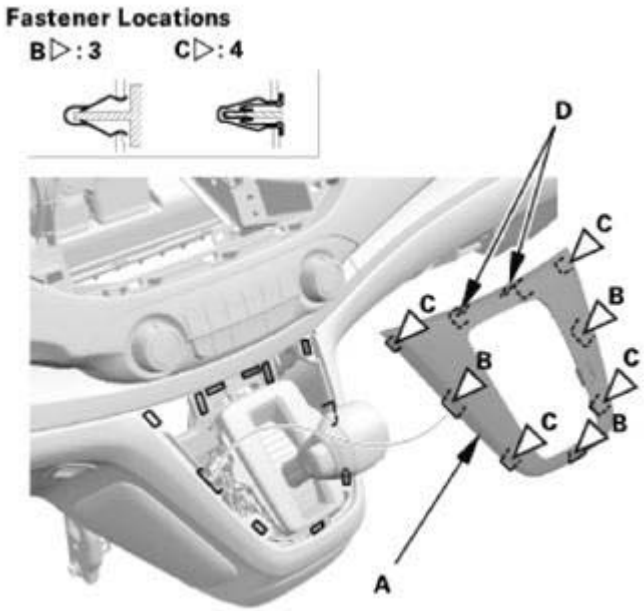

Fig. 44: Identifying Shift Lever Panel, Hooks And Clips
Courtesy of AMERICAN HONDA MOTOR CO., INC.

3. Center Maintenance Cover

GETtheMANUALS.org

1. Install the maintenance cover (A).

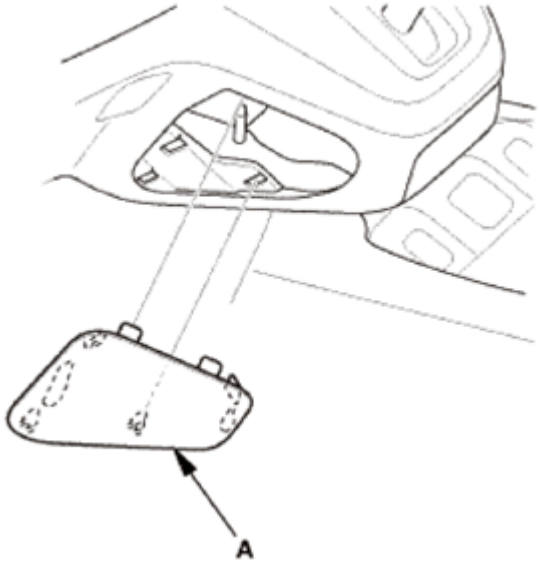

Fig. 45: Identifying Maintenance Cover
Courtesy of AMERICAN HONDA MOTOR CO., INC.

HANDSFREELINK CONTROL UNIT UPDATE

PROCEDURE

- Before you update the HandsFreeLink control unit, make sure the battery in the vehicle is fully charged, and connect a jumper battery (not a battery charger) to maintain system voltage.
- Never turn the ignition switch to ACCESSORY (I) or to LOCK (0) during the update. If there is a problem with the update, leave the ignition switch turned to ON (II).
- To ensure the latest program is installed, do a HandsFreeLink control unit update whenever the HandsFreeLink control unit is substituted or replaced.
- The HandsFreeLink control unit is updated via Bluetooth using the HFL control unit update application on the HDS PC. Make sure the HDS PC is inside the vehicle when updating the HFL control unit.

1. HandsFreeLink Control Unit Update

   With Navigation

   1. Turn the ignition switch to ON (II).

GETtheMANUALS.org

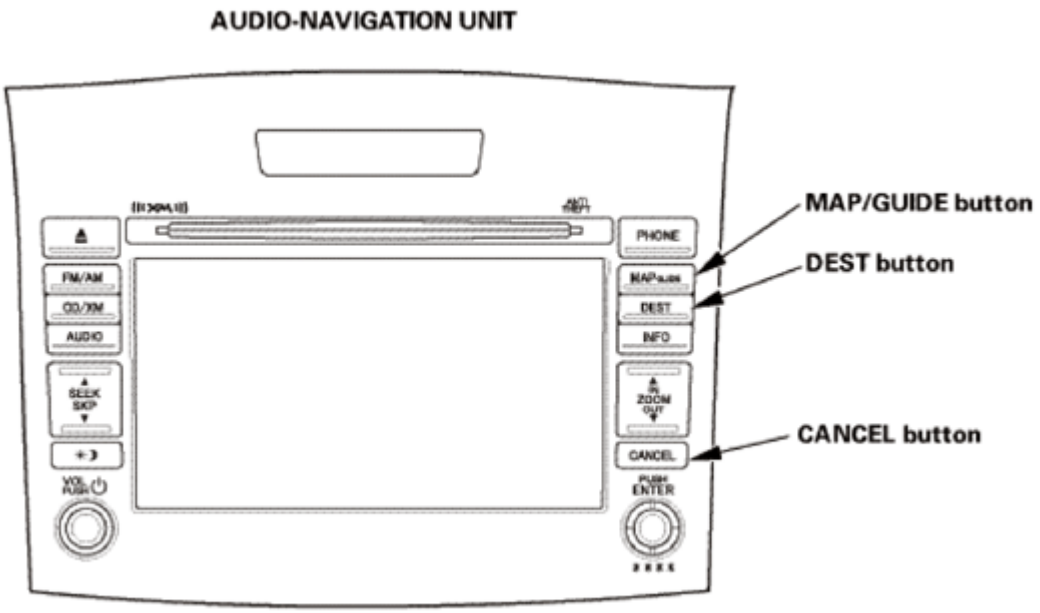

Fig. 46: Identifying Audio Navigation Unit
Courtesy of AMERICAN HONDA MOTOR CO., INC.

2. Press and hold the MAP/GUIDE, DEST, and CANCEL buttons for 3 seconds or more, and the self-diagnosis begins.
3. When the Select Diagnosis Items menu appears, select Self-Diagnosis Mode.

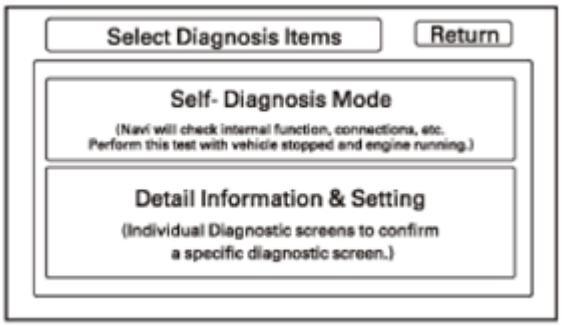

Fig. 47: Display - Self-Diagnosis Mode And Detail Information & Setting Screen
Courtesy of AMERICAN HONDA MOTOR CO., INC.

4. Select the HFL from the System Links menu.

GETtheMANUALS.org

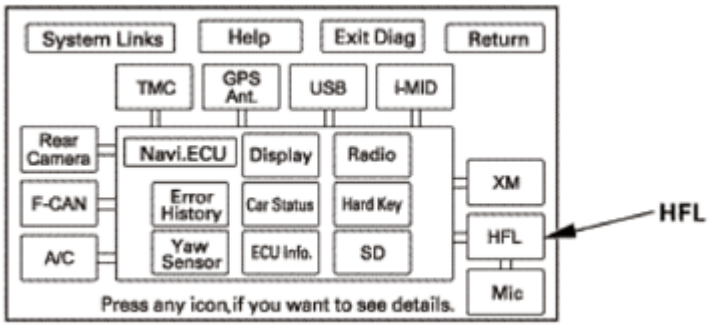

Fig. 48: Display - System Links Menu HFL Screen
Courtesy of AMERICAN HONDA MOTOR CO., INC.

5. Open the HFL control unit update application on the HDS PC.
6. Select the Software Update from the vehicle's HFL menu.

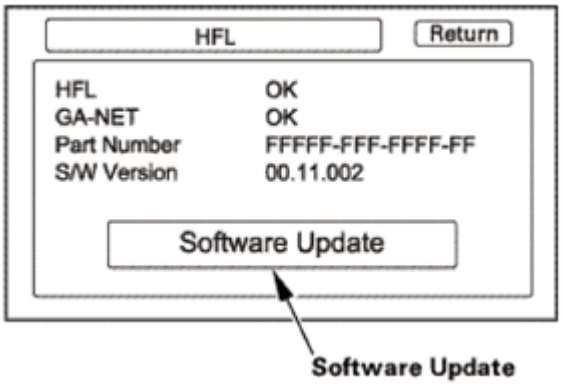

Fig. 49: Display - HFL Menu Software Update Screen
Courtesy of AMERICAN HONDA MOTOR CO., INC.

7. A PASS (pin code) appears on the vehicle's HFL menu. To start the update, enter this PASS into the HFL control unit update application.

NOTE: **If the HFL is not able to connect with the HFL control unit application after 5 minutes, the HFL control unit times out. If the control unit times out, turn the ignition switch to LOCK (0), then go to step 1 and try again.**

GETtheMANUALS.org

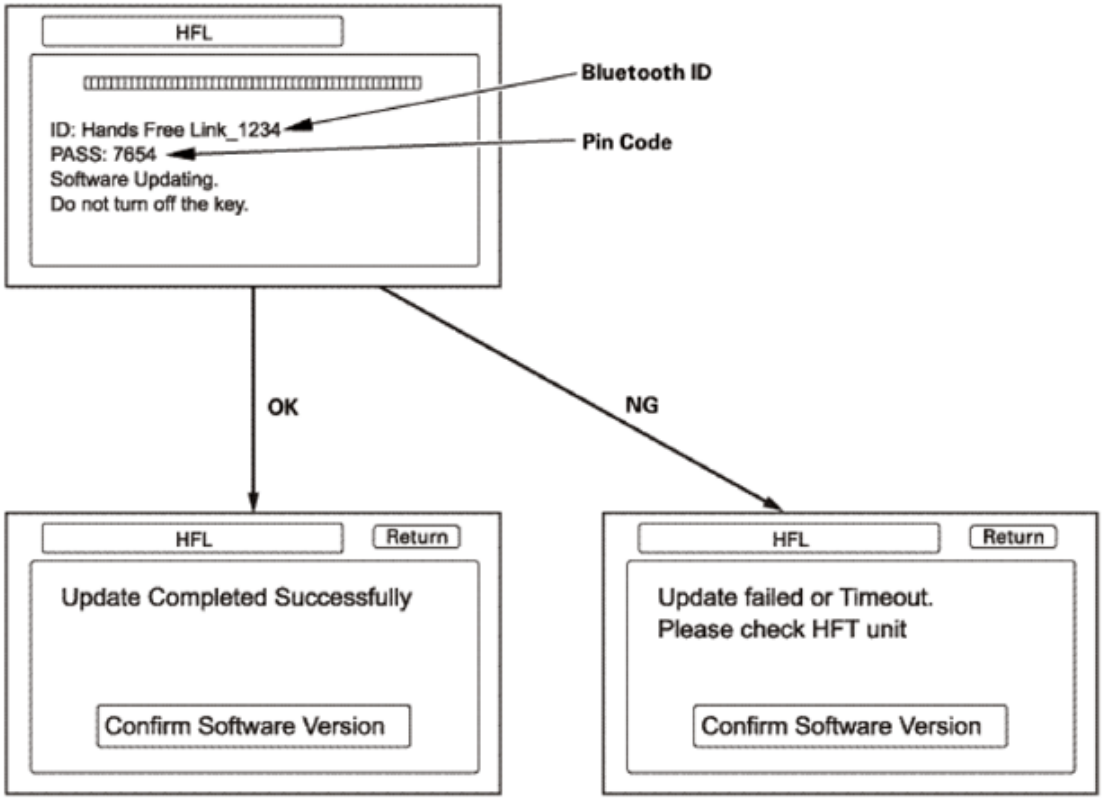

Fig. 50: Identifying Proper And Improper HFL Software Version Screen
Courtesy of AMERICAN HONDA MOTOR CO., INC.

8. When the update finishes, the message Update completed appears on the vehicle's HFL menu. Select Confirm Software Version to check that the HFL control unit is updated. If the unit did not update, turn the ignition switch to LOCK (0), then go to step 1 and try again. To end the System Diagnostic Mode, turn the audio system off, or turn the ignition switch to LOCK (0). If you cannot select the HFL from the System Links menu, go to step 9.
9. Turn the ignition switch to LOCK (0), and then back to ON (II).
10. Open the HFL control unit update application on the HDS PC.
11. Use the previously used PASS to start the HFL control unit update.

NOTE: **If the HFL update was unsuccessful, the previously used pin code is displayed on the HFL control unit update application.**

12. Update HFL unit. If you cannot access the unit, restart your HDS PC, then go to step 9.
13. When the update finishes, turn the ignition switch to LOCK (0), and then back to ON (II).
14. Go to the Self-Diagnosis Mode and check the software version information that appears on the vehicle's HFL menu.

Without Navigation

1. Turn the ignition switch to ON (II).

GETtheMANUALS.org

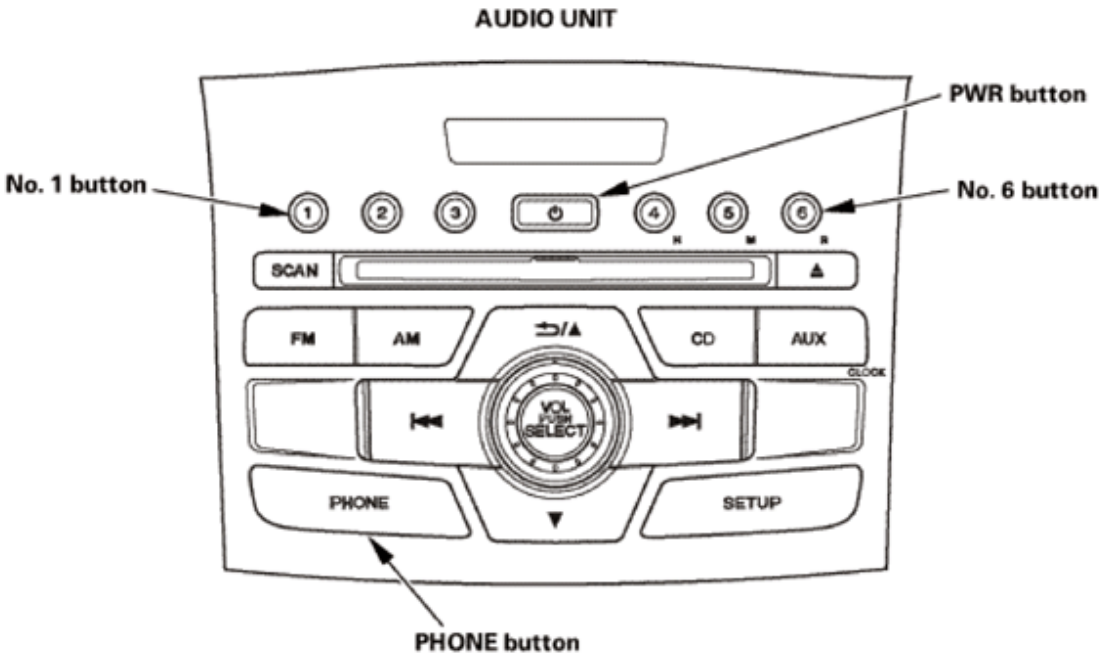

Fig. 51: Identifying Audio Unit
Courtesy of AMERICAN HONDA MOTOR CO., INC.

2. Make sure the audio system is turned off.
3. Push and hold the preset No. 1 and No. 6 buttons.
4. While holding the buttons, press the PWR ( ) button to on.
5. Release all the buttons, and the self-diagnosis begins.
6. Push and hold the PHONE button for 5 seconds.
7. Open the HFL control unit update application on the HDS PC.

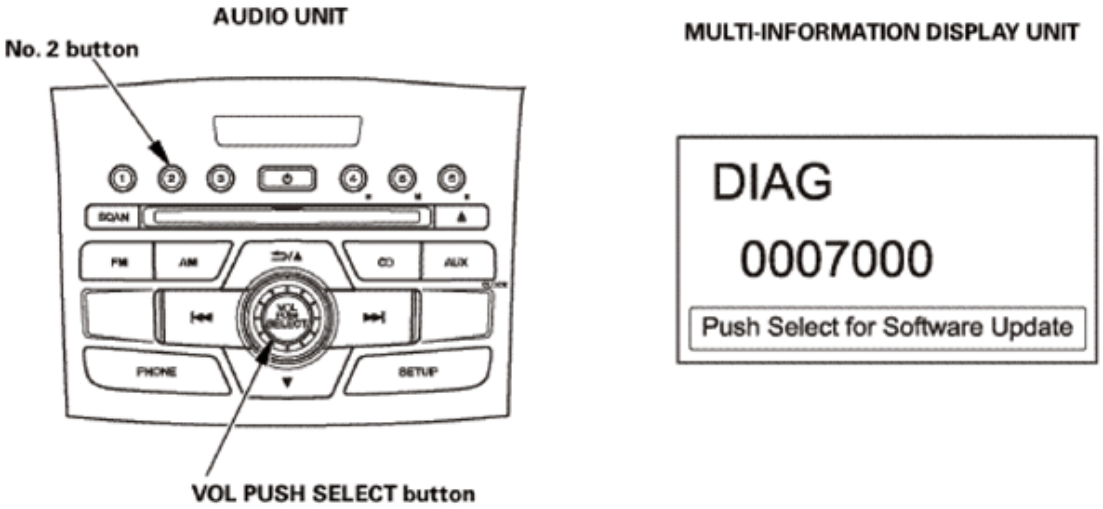

Fig. 52: Identifying Audio Unit And Multi-Information Display Unit
Courtesy of AMERICAN HONDA MOTOR CO., INC.

GETtheMANUALS.org

8. Push the preset No. 2 button several times until update appears on the audio display.
9. Push the VOL PUSH SELECT button.
10. A PASS (pin code) appears on the vehicle's HFL menu. To start the update, enter this PASS into the HFL control unit update application.

NOTE: **If the HFL is not able to connect with the HFL control unit application after 5 minutes, the HFL control unit times out. If the control unit times out, turn the ignition switch to LOCK (0), then go to step 1 and try again.**

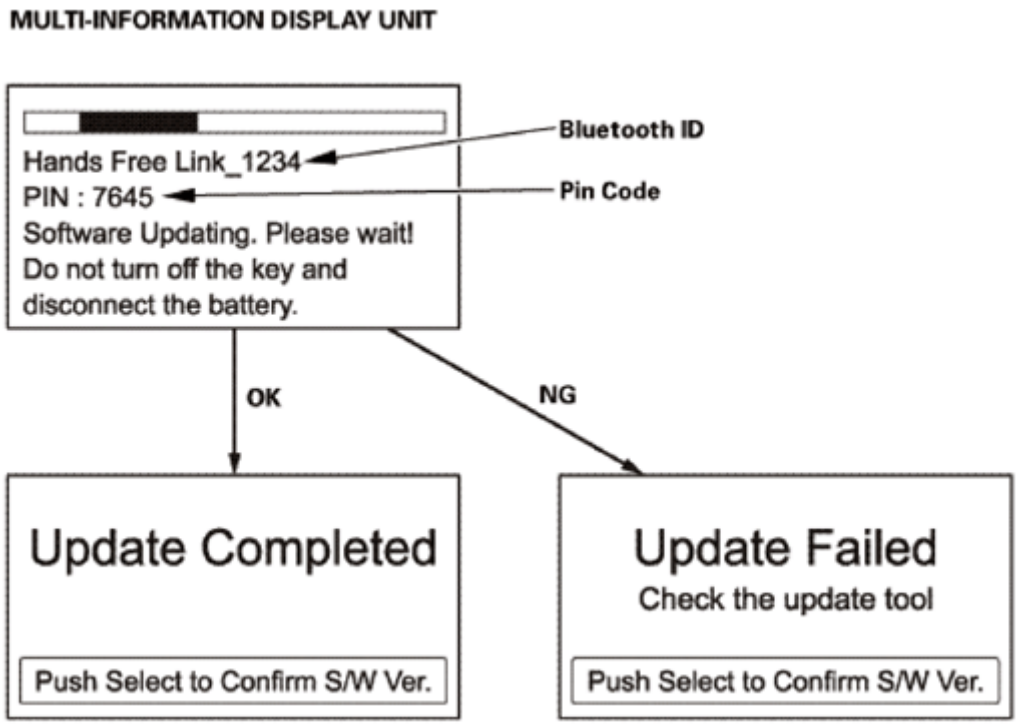

Fig. 53: Identifying Proper And Improper HFL Control Unit Update Application
Courtesy of AMERICAN HONDA MOTOR CO., INC.

11. When the update finishes, the message Update completed appears on the vehicle's HFL menu. Select Confirm Software Version to check that the HFL control unit is updated. If the unit did not update, turn the ignition switch to LOCK (0), then go to step 1 and try again. To end the System Diagnostic Mode, turn the audio system off, or turn the ignition switch to LOCK (0). If you cannot select the HFL from the System Links menu, go to step 12.
12. Turn the ignition switch to LOCK (0), and then back to ON (II).
13. Open the HFL control unit update application on the HDS PC.
14. Use the previously used PASS to start the HFL control unit update.

NOTE: **If the HFL update was unsuccessful, the previously used pin code is displayed on the HFL control unit update application.**

GETtheMANUALS.org

15. Update HFL unit. If you cannot access the unit, restart your HDS PC, then go to step 12.
16. When the update finishes, turn the ignition switch to LOCK (0), and then back to ON (II).
17. Go to Self-Diagnosis Mode and verify the HFL software is updated by pressing the preset No. 2 button several times until the software version information appears.

HANDSFREELINK SYSTEM COMPONENT LOCATION INDEX

WITH NAVIGATION

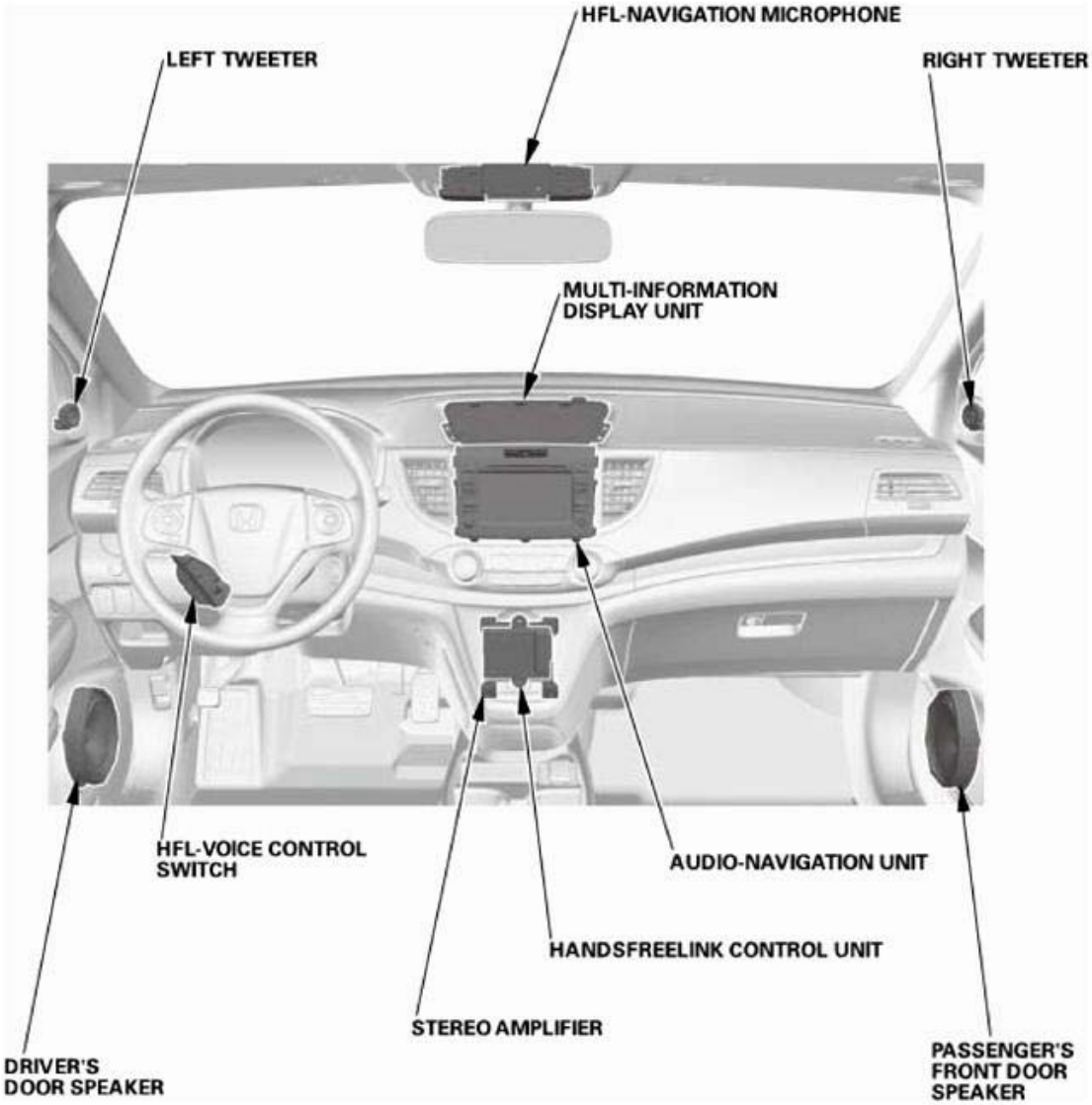

Fig. 54: Handsfreelink System Components Location (With Navigation)
Courtesy of AMERICAN HONDA MOTOR CO., INC.

HANDSFREELINK	**Update** See **HANDSFREELINK CONTROL UNIT REMOVAL AND INSTALLATION** or **HANDSFREELINK CONTROL UNIT UPDATE**

GETtheMANUALS.org

CONTROL UNIT	**Removal and Installation** See **HANDSFREELINK CONTROL UNIT REMOVAL AND INSTALLATION** or **HANDSFREELINK CONTROL UNIT UPDATE**
AUDIO-NAVIGATION UNIT	REMOVAL AND INSTALLATION
	SYSTEM DIAGNOSTIC MODE
HFL-VOICE CONTROL SWITCH	**REMOVAL, INSTALLATION, AND TEST**
HFL-NAVIGATION MICROPHONE	**REMOVAL AND INSTALLATION**
MULTI-INFORMATION DISPLAY UNIT	**REMOVAL AND INSTALLATION**
STEREO AMPLIFIER	REMOVAL AND INSTALLATION
FRONT DOOR SPEAKER	REMOVAL, INSTALLATION, AND TEST
TWEETER	REMOVAL, INSTALLATION, AND TEST

WITHOUT NAVIGATION

GETtheMANUALS.org

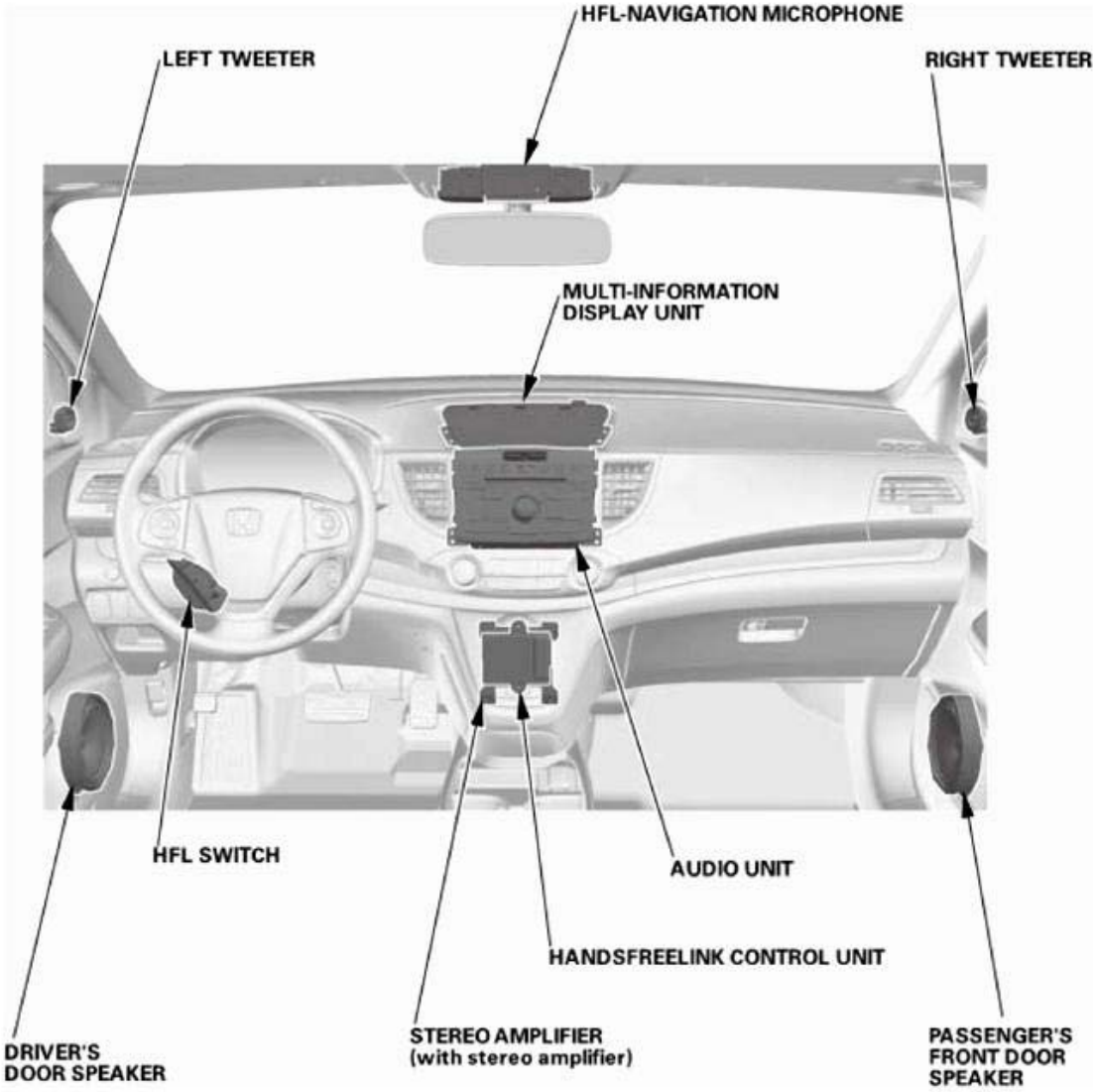

Fig. 55: Handsfreelink System Component Location (Without Navigation)
Courtesy of AMERICAN HONDA MOTOR CO., INC.

HANDSFREELINK CONTROL UNIT	**Update** See **HANDSFREELINK CONTROL UNIT REMOVAL AND INSTALLATION** or **HANDSFREELINK CONTROL UNIT UPDATE**
	Removal and Installation See **HANDSFREELINK CONTROL UNIT REMOVAL AND INSTALLATION** or **HANDSFREELINK CONTROL UNIT UPDATE**
AUDIO UNIT	REMOVAL AND INSTALLATION
	SELF-DIAGNOSTIC FUNCTION
HFL SWITCH	**REMOVAL, INSTALLATION, AND TEST**
HFL-NAVIGATION MICROPHONE	**REMOVAL AND INSTALLATION**
MULTI-INFORMATION DISPLAY UNIT	**REMOVAL AND INSTALLATION**

GETtheMANUALS.org

STEREO AMPLIFIER	REMOVAL AND INSTALLATION
FRONT DOOR SPEAKER	REMOVAL, INSTALLATION, AND TEST
TWEETER	REMOVAL, INSTALLATION, AND TEST

HANDSFREELINK SYSTEM DTC TROUBLESHOOTING INDEX

HANDSFREELINK CONTROL UNIT

DTC	Description	DTC Type
B1775	Microphone input/output shorted to power or open (with moonroof)	Signal error
B1775	Microphone input/output shorted to power or open (without moonroof)	Signal error
B1776	Microphone input/output shorted to ground	Signal error
B1779	HandsFreeLink steering wheel switch failure	Signal error
B1780	HandsFreeLink steering wheel switch line short	Signal error
B1792	HandsFreeLink control module error	Internal error

BLUETOOTH AUDIO DOES NOT WORK (WITH NAVIGATION)

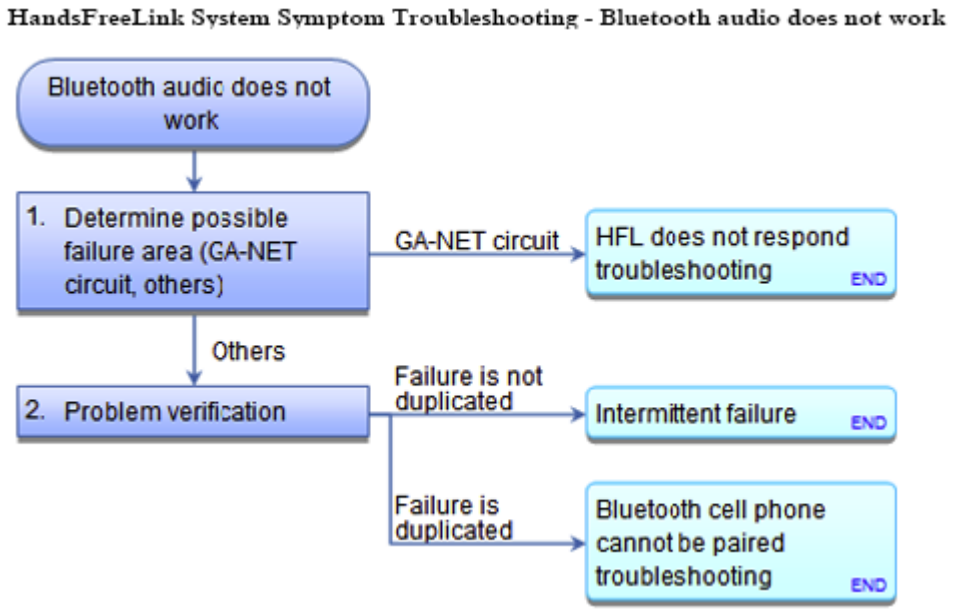

Fig. 56: Handsfreelink System Symptom Troubleshooting Flow Chart (Bluetooth Audio Does Not Work)
Courtesy of AMERICAN HONDA MOTOR CO., INC.

NOTE:

- **CHECK THE VEHICLE BATTERY CONDITION FIRST .**
- **BEFORE YOU TROUBLESHOOT, MAKE SURE TO FOLLOW THE HOW TO TROUBLESHOOT THE HANDSFREELINK SYSTEM.**
- **Make sure the cell phone with Bluetooth is Honda approved and configured correctly. Online, go to handsfreelink.honda.com, or call the HFL customer service at 888-528-7876.**

GETtheMANUALS.org

- **You must be able to duplicate the customer's concern to successfully diagnose the problem. If you cannot duplicate the issue, have the customer demonstrate it.**
- **Once the symptom is duplicated, contact the HFL support desk at 888-528-7876. Many HFL issues are related to the cell phone and not the HFL system.**
- **See if you can duplicate the symptom in a known-good vehicle under the same conditions. If you can, it is probably a characteristic of the system.**
- **Always use the customer's cell phone to successfully diagnose the problem.**

1. Determine possible failure area (GA-NET circuit, others):
   - 1. Turn the ignition switch to ON (II).
   - 2. Press the AUDIO button to check if the navigation display changes to the Bluetooth audio information screen.

   Is the Bluetooth audio information displayed?

   YES : Go to step 2.

   NO : Go to appropriate troubleshooting symptom **HFL does not respond (Navigation)** troubleshooting.

2. Problem verification:
   - 1. Pair an approved known-good cell phone with Bluetooth audio to the vehicle.

   Can you pair an approved cell phone with Bluetooth audio?

   YES : Intermittent failure, the system is OK at this time, or there could be an issue with the customer's cell phone.

   NO : Go to **Bluetooth cell phone cannot be paired** troubleshooting.

BLUETOOTH AUDIO DOES NOT WORK (WITHOUT NAVIGATION)

GETtheMANUALS.org

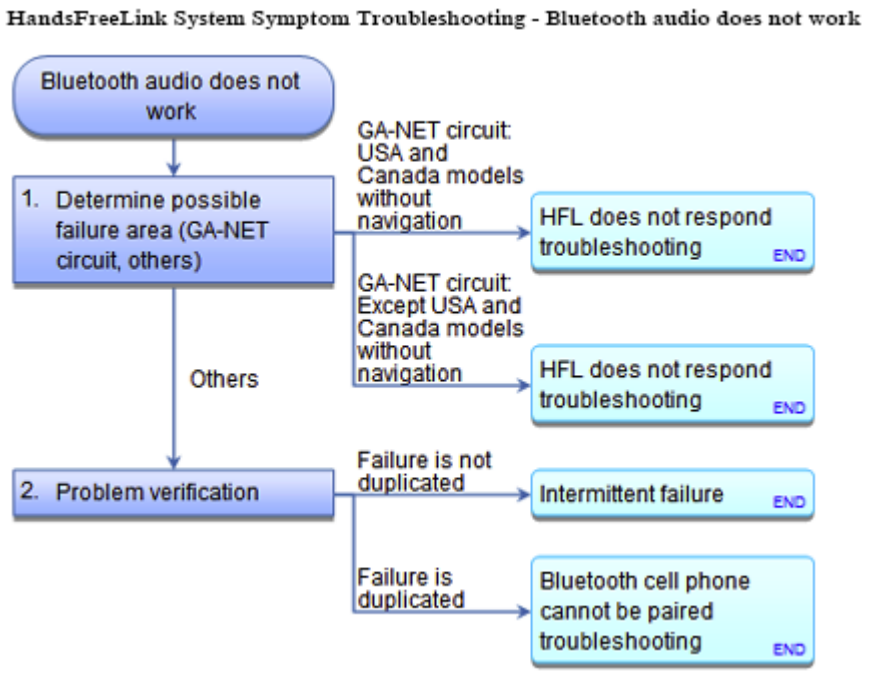

Fig. 57: Handsfreelink System Symptom Troubleshooting Flow Chart (Bluetooth Audio Does Not Work)
Courtesy of AMERICAN HONDA MOTOR CO., INC.

NOTE:

- **CHECK THE VEHICLE BATTERY CONDITION FIRST .**
- **BEFORE YOU TROUBLESHOOT, MAKE SURE TO FOLLOW THE HOW TO TROUBLESHOOT THE HANDSFREELINK SYSTEM.**
- **Make sure the cell phone with Bluetooth is Honda approved and configured correctly. Online, go to handsfreelink.honda.com, or call the HFL customer service at 888-528-7876.**
- **You must be able to duplicate the customer's concern to successfully diagnose the problem. If you cannot duplicate the issue, have the customer demonstrate it.**
- **Once the symptom is duplicated, contact the HFL support desk at 888-528-7876. Many HFL issues are related to the cell phone and not the HFL system.**
- **See if you can duplicate the symptom in a known-good vehicle under the same conditions. If you can, it is probably a characteristic of the system.**
- **Always use the customer's cell phone to successfully diagnose the problem.**

1. Determine possible failure area (GA-NET circuit, others):
    - 1. Turn the ignition switch to ON (II).
    - 2. Turn on the audio unit, and press the AUX button to check if it changes to Bluetooth audio source.

GETtheMANUALS.org

Does the display change to Bluetooth audio source?

YES : Go to step 2.

NO : Go to **HFL does not respond (Without Navigation)** troubleshooting.

NO : Go to **HFL does not respond (Navigation)** troubleshooting.

2. Problem verification:
    - 1. Pair an approved known-good cell phone with Bluetooth audio to the vehicle.

Can you pair an approved cell phone with Bluetooth audio?

YES : Intermittent failure, the system is OK at this time, or there could be an issue with the customer's phone. Recommend that your customer contact the HFL support desk at 888-528-7876 to discuss approved phones and configuration issues.

NO : Go to **Bluetooth cell phone cannot be paired** troubleshooting.

BLUETOOTH CELL PHONE CANNOT BE PAIRED

GETtheMANUALS.org

HandsFreeLink System Symptom Troubleshooting - Bluetooth cell phone can not be paired

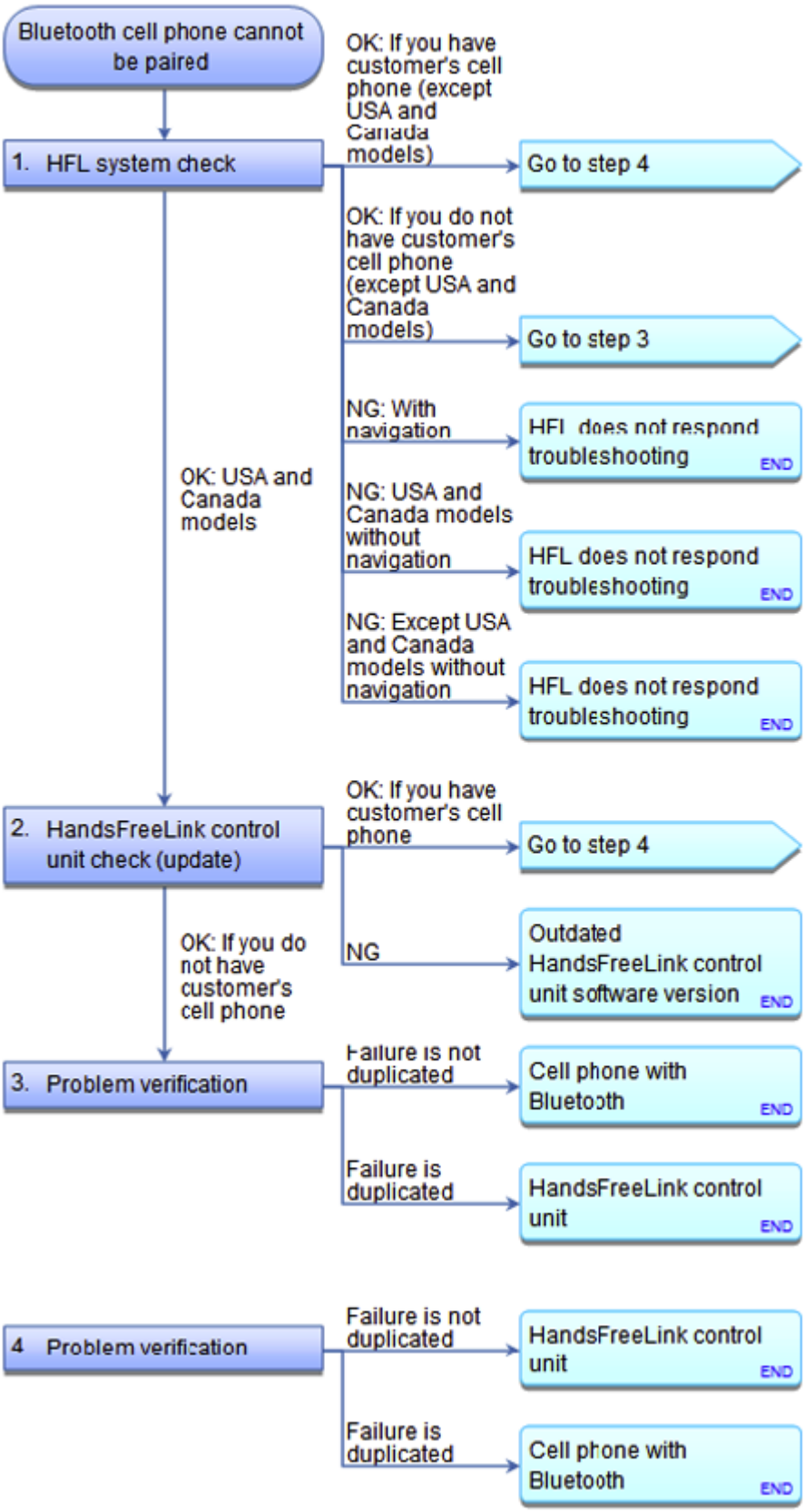

GETtheMANUALS.org

Fig. 58: Handsfreelink System Symptom Troubleshooting Flow Chart (Bluetooth Cell Phone Cannot Be Paired)
Courtesy of AMERICAN HONDA MOTOR CO., INC.

NOTE:

- **CHECK THE VEHICLE BATTERY CONDITION FIRST .**
- **BEFORE YOU TROUBLESHOOT, MAKE SURE TO FOLLOW THE HOW TO TROUBLESHOOT THE HANDSFREELINK SYSTEM.**
- **Make sure the cell phone with Bluetooth is Honda approved and configured correctly. Online, go to handsfreelink.honda.com, or call the HFL customer service at 888-528-7876.**
- **You must be able to duplicate the customer's concern to successfully diagnose the problem. If you cannot duplicate the issue, have the customer demonstrate it.**
- **Once the symptom is duplicated, contact the HFL support desk at 888-528-7876. Many HFL issues are related to the cell phone and not the HFL system.**
- **See if you can duplicate the symptom in a known-good vehicle under the same conditions. If you can, it is probably a characteristic of the system.**
- **Always use the customer's cell phone to successfully diagnose the problem.**

1. HFL system check:
   - 1. Turn the ignition switch to ON (II).
   - 2. **DO THE HFL SELF-DIAGNOSTIC FUNCTION**.

   Do you hear, "The HFT is OK"?

   YES : Go to step 2.

   YES : Go to step 4.

   YES : Go to step 3.

   NO : **GO TO HFL DOES NOT RESPOND (WITH NAVIGATION) TROUBLESHOOTING**.

   NO : **GO TO HFL DOES NOT RESPOND (USA AND CANADA MODELS WITHOUT NAVIGATION) TROUBLESHOOTING**.

   NO : **GO TO HFL DOES NOT RESPOND (EXCEPT USA AND CANADA MODELS WITHOUT NAVIGATION) TROUBLESHOOTING**.

2. HandsFreeLink control unit check (update):
   - 1. **Do the HandsFreeLink control unit Update** See **HANDSFREELINK CONTROL UNIT REMOVAL AND INSTALLATION** or **HANDSFREELINK CONTROL UNIT UPDATE**, and

GETtheMANUALS.org

check if the latest software is installed in the HandsFreeLink control unit.

Is the software the latest version?

YES : If you have the customer's cell phone, go to step 4.

YES : If you do not have the customer's cell phone, go to step 3.

NO : **Update the HandsFreeLink control unit** See **HANDSFREELINK CONTROL UNIT REMOVAL AND INSTALLATION** or **HANDSFREELINK CONTROL UNIT UPDATE**, and recheck.

3. Problem verification:
   - 1. Pair a known-good cell phone with Bluetooth to the customer's vehicle.

Can you pair the cell phone, and does it operate normally?

YES : The customer's cell phone may be defective or not compatible. Recommend that your customer contact the HFL support desk at 888-528-7876 to discuss approved phones and configuration issues.

NO : **Replace the HandsFreeLink control unit** See **HANDSFREELINK CONTROL UNIT REMOVAL AND INSTALLATION** or **HANDSFREELINK CONTROL UNIT UPDATE**.

4. Problem verification:
   - 1. Pair the customer's cell phone with Bluetooth to a known-good vehicle.

Can you pair the cell phone, and does it operate normally?

YES : **Replace the HandsFreeLink control unit** See **HANDSFREELINK CONTROL UNIT REMOVAL AND INSTALLATION** or **HANDSFREELINK CONTROL UNIT UPDATE**.

NO : The customer's cell phone with Bluetooth may be defective or not compatible. Check online at handsfreelink.honda.com, or call the HFL customer service at 888-528-7876 to make sure the customer's cell phone is compatible with the HFL system and that there are no known issues.

HFL DOES NOT RESPOND (WITHOUT NAVIGATION)

GETtheMANUALS.org

HandsFreeLink System Symptom Troubleshooting - HFL does not respond

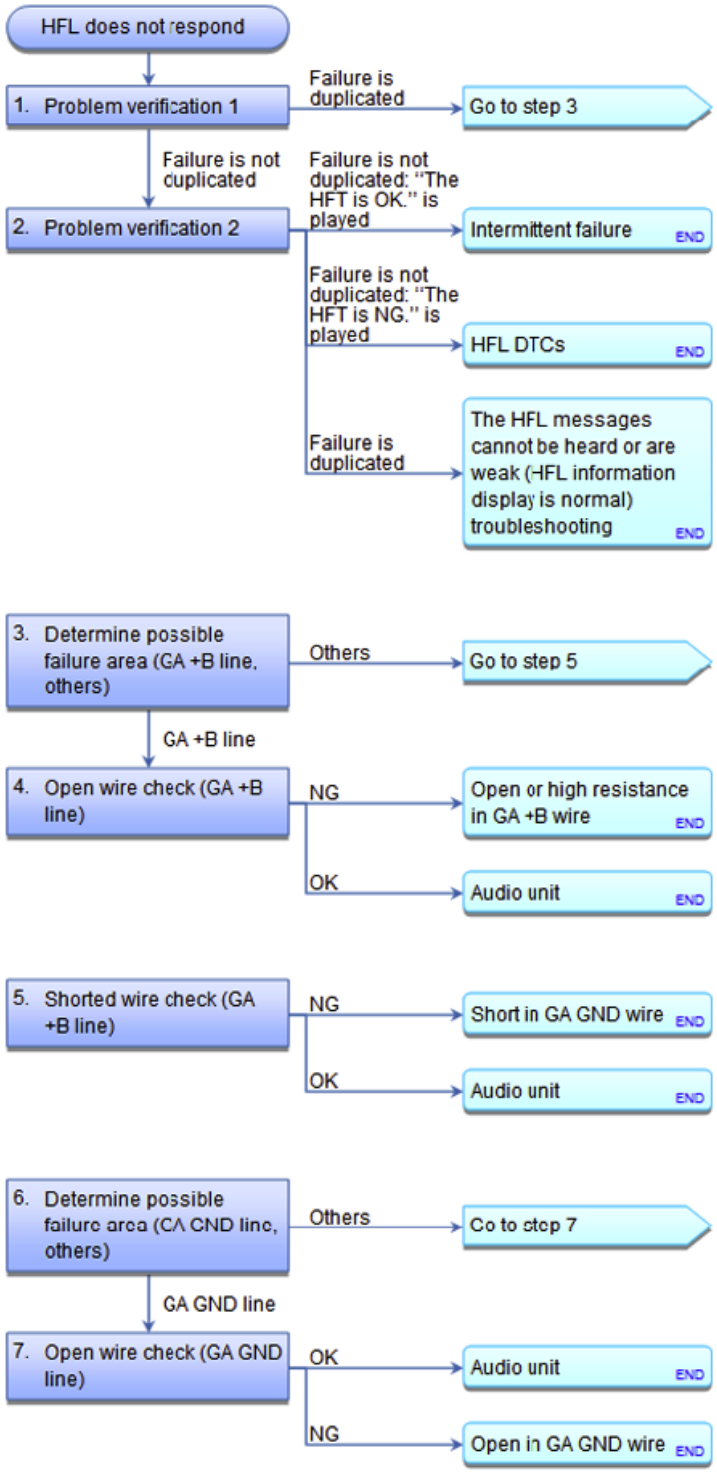

Fig. 59: Handsfreelink System Symptom Troubleshooting Flow Chart - HFL Does Not Respond (1 Of 2)
Courtesy of AMERICAN HONDA MOTOR CO., INC.

GETtheMANUALS.org

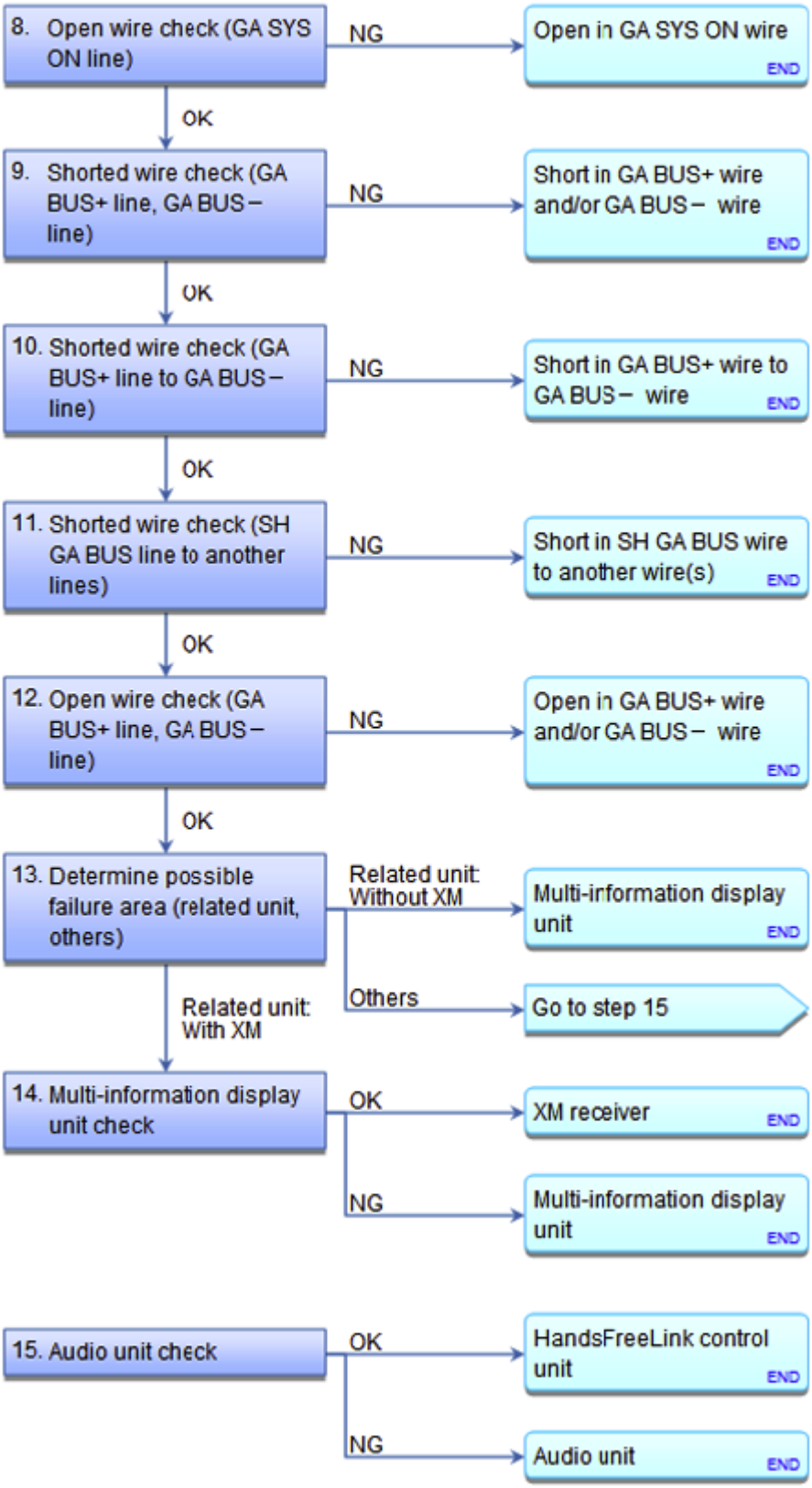

Fig. 60: Handsfreelink System Symptom Troubleshooting Flow Chart - HFL Does Not Respond (2 Of 2)

GETtheMANUALS.org

Courtesy of AMERICAN HONDA MOTOR CO., INC.

NOTE: **CHECK THE VEHICLE BATTERY CONDITION FIRST .**

1. Problem verification 1:
   - 1. Turn the ignition switch to ON (II).
   - 2. Press the PHONE button, and check if the multi-information display changes to the HFL information screen.

   Is the HFL information displayed?

   YES : Go to step 2.

   NO : The failure is duplicated, go to step 3.

2. Problem verification 2:
   - 1. **DO THE HFL SELF-DIAGNOSTIC FUNCTION**.

   Is HFL message played?

   YES : Intermittent failure, the system is OK at this time.

   YES : **CHECK FOR HFL DTCS**.

   NO : **GO TO THE HFL MESSAGES CANNOT BE HEARD OR ARE WEAK (HFL INFORMATION DISPLAY IS NORMAL) (WITHOUT NAVIGATION) TROUBLESHOOTING**.

3. Determine possible failure area (GA +B line, others):
   - 1. Turn the ignition switch to LOCK (0).
   - 2. Measure the voltage between test points 1 and 2.

     Test condition IG LOCK (0)

     Test circuit GA +B

     Test point 1 HandsFreeLink control unit 32P connector No. 32 (RED)

     Test point 2 Body ground

GETtheMANUALS.org

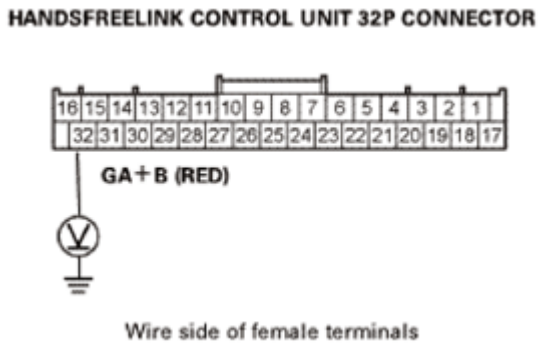

Fig. 61: Measuring Voltage Between Handsfreelink Control Unit 32P Connector No. 32 And Body Ground
Courtesy of AMERICAN HONDA MOTOR CO., INC.

Is there battery voltage?

YES : The GA +B wire is OK. Go to step 6.

NO : Go to step 4.

4. Open wire check (GA +B line):
   - 1. Measure the voltage between test points 1 and 2.

     Test condition IG LOCK (0)

     Test circuit GA +B

     Test point 1 Audio unit connector C (14P) No. 6 (RED)

     Test point 2 Body ground

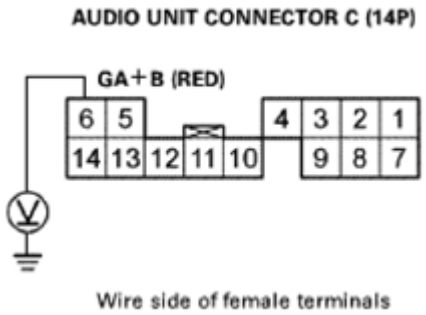

Fig. 62: Measuring Voltage Between Audio Unit Connector C (14P) No. 6 And Body Ground
Courtesy of AMERICAN HONDA MOTOR CO., INC.

Is there battery voltage?

YES : Repair an open or high resistance in the wire between the audio unit and the HandsFreeLink

GETtheMANUALS.org

control unit.

NO : REPLACE THE AUDIO UNIT .

5. Shorted wire check (GA +B line):
    - 1. Turn the ignition switch to LOCK (0).
    - 2. Disconnect the following connectors:

      Audio-navigation unit connector C (14P)

      HandsFreeLink control unit connector (32P)

      XM receiver connector A (14P) (with XM)

    - 3. Check for continuity between test points 1 and 2.

      Test condition IG LOCK (0)

      Audio unit connector C (14P): disconnected

      HandsFreeLink control unit 32P connector: disconnected

      XM receiver A (14) (with XM) connector: disconnected

      Test circuit GA +B

      Test point 1 Audio unit connector C (14P) No. 6 (RED)

      Test point 2 Body ground

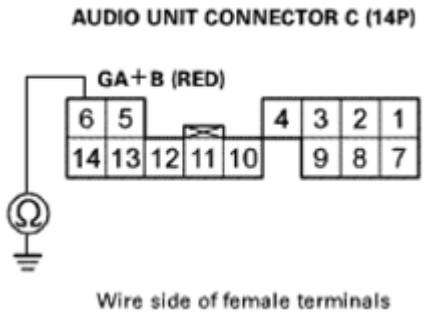

Fig. 63: Checking Continuity Between Audio Unit Connector C (14P) No. 6 And Body Ground
Courtesy of AMERICAN HONDA MOTOR CO., INC.

Is there continuity?

YES : Repair a short to ground in the wire between the audio unit and the HandsFreeLink control unit.

GETtheMANUALS.org

NO : REPLACE THE AUDIO UNIT .

6. Determine possible failure area (GA GND line, others):
    - 1. Turn the ignition switch to ON (II).
    - 2. Measure the voltage between test points 1 and 2.

    Test condition IG ON (II)

    Test circuit GA GND

    Test point 1 HandsFreeLink control unit 32P connector No. 16 (BLK)

    Test point 2 Body ground

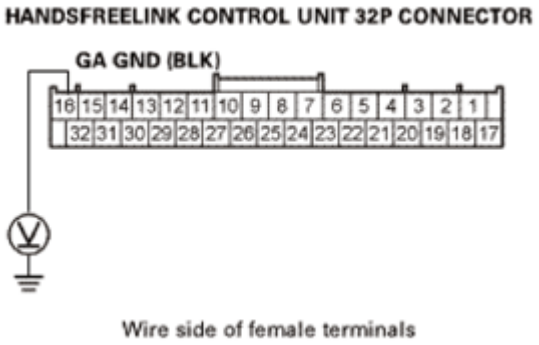

Fig. 64: Measuring Voltage Between Handsfreelink Control Unit 32P Connector No. 16 And Body Ground
Courtesy of AMERICAN HONDA MOTOR CO., INC.

Is there less than 0.2 V?

YES : The GA GND wire is OK. Go to step 8.

NO : Go to step 7.

7. Open wire check (GA GND line):
    - 1. Measure the voltage between test points 1 and 2.

    Test condition IG ON (II)

    Test circuit GA GND

    Test point 1 Audio unit connector C (14P) No. 10 (BLK)

    Test point 2 Body ground

GETtheMANUALS.org

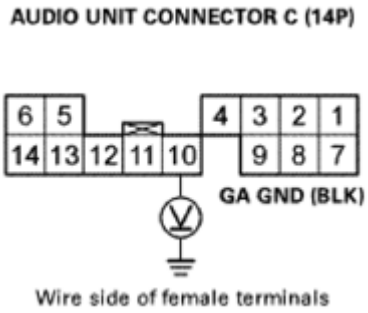

Fig. 65: Measuring Voltage Between Audio Unit Connector C (14P) No. 10 And Body Ground
Courtesy of AMERICAN HONDA MOTOR CO., INC.

Is there any voltage?

YES : REPLACE THE AUDIO UNIT .

NO : Repair an open in the wire between the audio unit and the HandsFreeLink control unit.

8. Open wire check (GA SYS ON line):
   - 1. Check for continuity between test points 1 and 2.

     Test condition IG LOCK (0)

     Audio unit connector C (14P): disconnected

     XM receiver connector A (14P) (with XM): disconnected

     HandsFreeLink control unit 32P connector: disconnected

     Multi-information display unit connector A (32P): disconnected

     Test circuit GA SYS ON

     Test point 1 Audio unit connector C (14P) No. 5 (PNK)

     Test point 2 HandsFreeLink control unit 32P connector No. 24 (PNK)

GETtheMANUALS.org

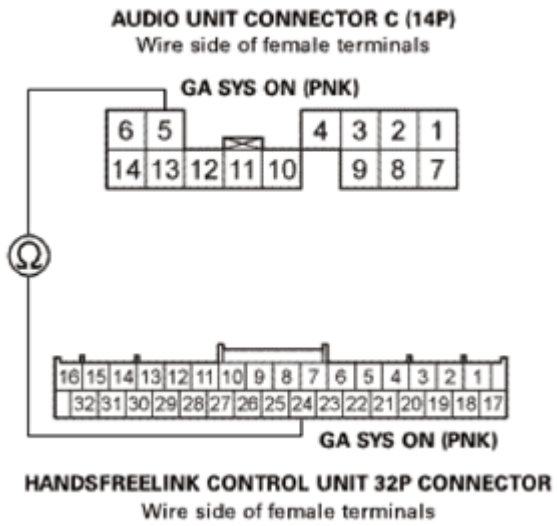

Fig. 66: Checking Continuity Between Audio Unit Connector C (14P) No. 5 And Handsfreelink Control Unit 32P Connector No. 24
Courtesy of AMERICAN HONDA MOTOR CO., INC.

Is there continuity?

YES : The GA SYS ON wire is OK. Go to step 9.

NO : Repair an open in the wire between the audio unit and the HandsFreeLink control unit.

9. Shorted wire check (GA BUS+ line, GA BUS- line):
   - 1. Check for continuity between test points 1 and 2.

     Test condition IG LOCK (0)

     Audio unit connector C (14P): disconnected

     XM receiver connector A (14P) (with XM): disconnected

     HandsFreeLink control unit 32P connector: disconnected

     Multi-information display unit connector A (32P): disconnected

     Test circuit GA BUS-

     Test point 1 HandsFreeLink control unit 32P connector No. 12 (PNK)

     Test point 2 Body ground

     Test circuit GA BUS+

     Test point 1 HandsFreeLink control unit 32P connector No. 13 (BLU)

GETtheMANUALS.org

Test point 2 Body ground

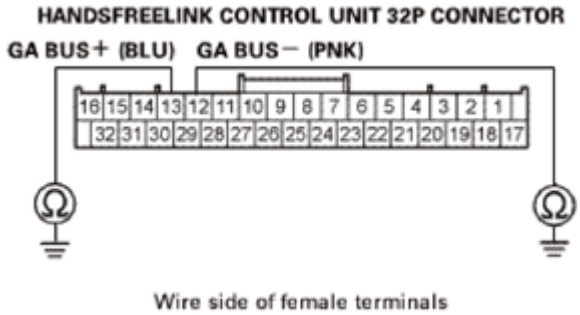

Fig. 67: Checking Continuity Between Handsfreelink Control Unit 32P Connector No. 12, 13 And Body Ground
Courtesy of AMERICAN HONDA MOTOR CO., INC.

Is there continuity?

YES : There is a short to body ground in the wire(s) between the HandsFreeLink control unit and the audio unit. Replace the affected shielded harness.

NO : The GA BUS+ and the GA BUS- wires are not shorted to ground. Go to step 10.

10. Shorted wire check (GA BUS+ line to GA BUS- line):
    - 1. Check for continuity between test points 1 and 2.

      Test condition IG LOCK (0)

      Audio unit connector C (14P): disconnected

      XM receiver connector A (14P) (with XM): disconnected

      HandsFreeLink control unit 32P connector: disconnected

      Multi-information display unit connector A (32P): disconnected

      Test circuit GA BUS-, GA BUS+

      Test point 1 HandsFreeLink control unit 32P connector No. 12 (PNK)

      Test point 2 HandsFreeLink control unit 32P connector No. 13 (BLU)

GETtheMANUALS.org

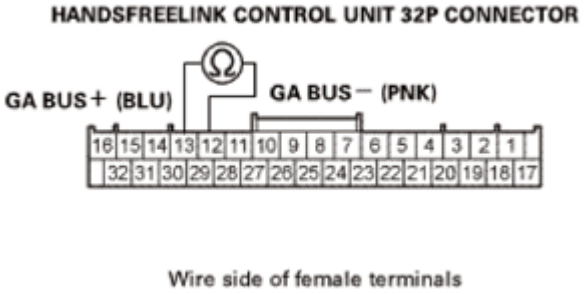

Fig. 68: Checking Continuity Between Handsfreelink Control Unit 32P Connector No. 12 And 13
Courtesy of AMERICAN HONDA MOTOR CO., INC.

Is there continuity?

YES : There is a short in the wires between the HandsFreeLink control unit and the audio unit. Replace the affected shielded harness.

NO : The GA BUS+ and the GA BUS- wires are not shorted. Go to step 11.

11. Shorted wire check (SH GA BUS line to another lines):
    - 1. Check for continuity between test points 1 and 2.

      Test condition IG LOCK (0)

      Audio unit connector C (14P): disconnected

      XM receiver connector A (14P) (with XM): disconnected

      HandsFreeLink control unit 32P connector: disconnected

      Multi-information display unit connector A (32P): disconnected

      Test circuit SH GA BUS, GA BUS-

      Test point 1 HandsFreeLink control unit 32P connector No. 28 (GRY)

      Test point 2 HandsFreeLink control unit 32P connector No. 12 (PNK)

      Test circuit SH GA BUS, GA BUS+

      Test point 1 HandsFreeLink control unit 32P connector No. 28 (GRY)

      Test point 2 HandsFreeLink control unit 32P connector No. 13 (BLU)

GETtheMANUALS.org

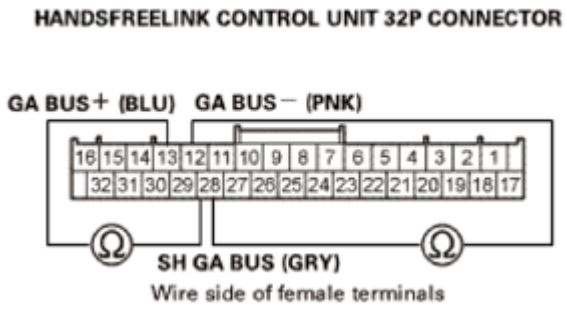

Fig. 69: Checking Continuity Between Handsfreelink Control Unit 32P Connector No. 28 And 12, 13
Courtesy of AMERICAN HONDA MOTOR CO., INC.

Is there continuity?

YES : There is a short in the wires between the HandsFreeLink control unit and the audio unit. Replace the affected shielded harness.

NO : The SH GA BUS wire is OK. Go to step 12.

12. Open wire check (GA BUS+ line, GA BUS- line):
    - 1. Check for continuity between test points 1 and 2.

      Test condition IG LOCK (0)

      Audio unit connector C (14P): disconnected

      XM receiver connector A (14P) (with XM): disconnected

      HandsFreeLink control unit 32P connector: disconnected

      Multi-information display unit connector A (32P): disconnected

      Test circuit GA BUS-

      Test point 1 Audio unit connector C (14P) No. 11 (PNK)

      Test point 2 HandsFreeLink control unit 32P connector No. 12 (PNK)

      Test circuit GA BUS+

      Test point 1 Audio unit connector C (14P) No. 12 (BLU)

      Test point 2 HandsFreeLink control unit 32P connector No. 13 (BLU)

GETtheMANUALS.org

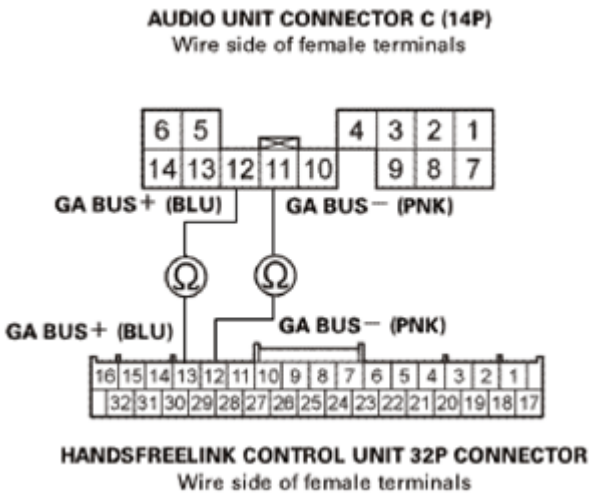

Fig. 70: Checking Continuity Between Audio Unit Connector C (14P) No. 11, 12 And Handsfreelink Control Unit 32P Connector No. 12, 13
Courtesy of AMERICAN HONDA MOTOR CO., INC.

Is there continuity?

YES : The GA BUS+ and the GA BUS- wires are OK. Go to step 13.

NO : There is an open in the wire(s) between the HandsFreeLink control unit and the audio unit. Replace the affected shielded harness.

13. Determine possible failure area (related unit, others):
    - 1. Reconnect the HandsFreeLink control unit 32P connector and audio unit connector C (14P).
    - 2. Turn the ignition switch to ON (II).
    - 3. **DO THE HFL SELF-DIAGNOSTIC FUNCTION**.

Do you hear, "The HFT is OK"?

YES : Go to step 14.

YES : **REPLACE THE MULTI-INFORMATION DISPLAY UNIT** .

NO : Go to step 15.

14. Multi-information display unit check:
    - 1. Turn the ignition switch to LOCK (0).
    - 2. Reconnect multi-information display unit connector A (32P).
    - 3. Turn the ignition switch to ON (II).
    - 4. **DO THE HFL SELF-DIAGNOSTIC FUNCTION**.

Do you hear, "The HFT is OK"?

GETtheMANUALS.org

YES : REPLACE THE XM RECEIVER .

NO : **REPLACE THE MULTI-INFORMATION DISPLAY UNIT** .

15. Audio unit check:
    - 1. Turn the ignition switch to LOCK (0).
    - 2. **Substitute a known-good HandsFreeLink control unit, and recheck** See **HANDSFREELINK CONTROL UNIT REMOVAL AND INSTALLATION** or **HANDSFREELINK CONTROL UNIT UPDATE**.

Does the symptom go away?

YES : Replace the original HandsFreeLink control unit.

NO : REPLACE THE AUDIO UNIT .

HFL DOES NOT RESPOND (NAVIGATION)

GETtheMANUALS.org

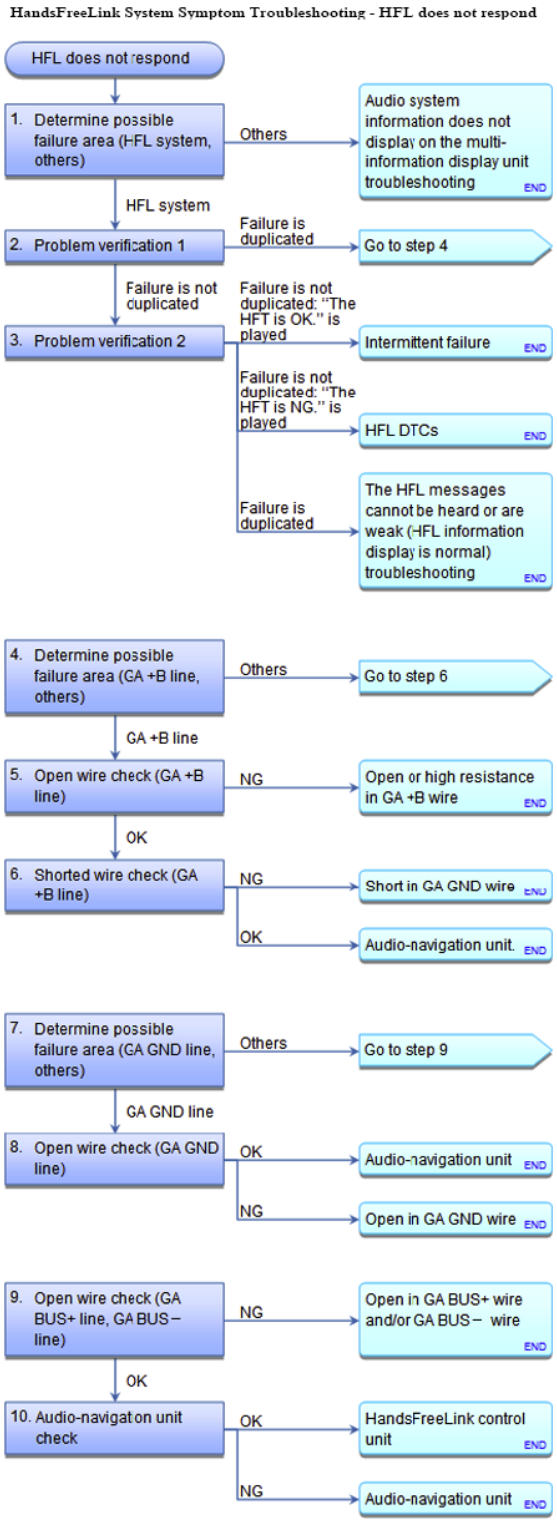

Fig. 71: Handsfreelink System Symptom Troubleshooting Flow Chart (HFL Does Not Respond)
Courtesy of AMERICAN HONDA MOTOR CO., INC.

NOTE: **CHECK THE VEHICLE BATTERY CONDITION FIRST .**

GETtheMANUALS.org

1. Determine possible failure area (HFL system, others):
    - 1. Turn the ignition switch to ON (II).
    - 2. Turn on the audio system, and press the AUDIO button to check if the multi-information display changes to the audio information screen.

    Is the audio information displayed?

    YES : Go to step 2.

    NO : Go to **Audio system information does not display on the multi-information display unit (Navigation)** troubleshooting.

2. Problem verification 1:
    - 1. Press the PHONE button and check if the navigation display changes to the HFL information screen.

    Is the HFL information displayed?

    YES : Go to step 3.

    NO : The failure is duplicated, go to step 4.

3. Problem verification 2:
    - 1. **DO THE HFL SELF-DIAGNOSTIC FUNCTION**.

    Is HFL message played?

    YES : Intermittent failure, the system is OK at this time. If possible, have the customer demonstrate the issue.

    YES : **CHECK FOR HFL DTCS**.

    NO : Go to **HFL does not respond (Navigation)** troubleshooting.

4. Determine possible failure area (GA +B line, others):
    - 1. Turn the ignition switch to LOCK (0).
    - 2. Measure the voltage between test points 1 and 2.

        Test condition IG LOCK (0)

        Test circuit GA +B

        Test point 1 HandsFreeLink control unit 32P connector No. 32 (RED)

        Test point 2 Body ground

GETtheMANUALS.org

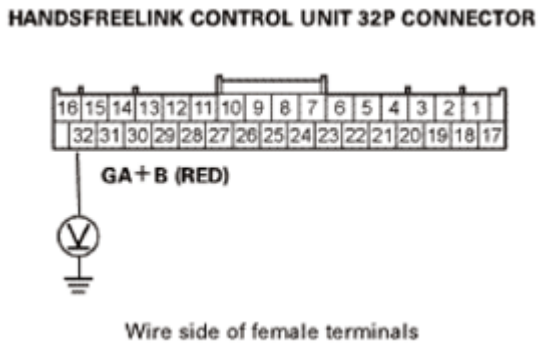

Fig. 72: Measuring Voltage Between Handsfreelink Control Unit 32P Connector No. 32 And Body Ground
Courtesy of AMERICAN HONDA MOTOR CO., INC.

Is there battery voltage?

YES : The GA +B wire is OK. Go to step 7.

NO : Go to step 5.

5. Open wire check (GA +B line):
   - 1. Measure the voltage between test points 1 and 2.

     Test condition IG LOCK (0)

     Test circuit GA +B

     Test point 1 Audio-navigation unit connector C (14P) No. 6 (RED)

     Test point 2 Body ground

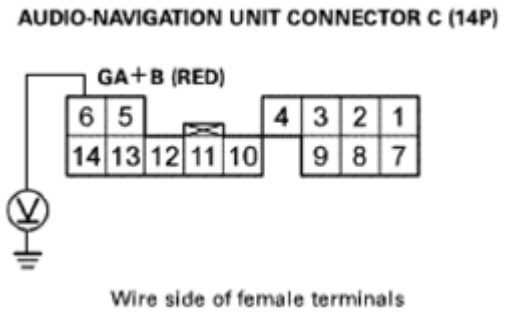

Fig. 73: Measuring Voltage Between Audio-Navigation Unit Connector C (14P) No. 6 And Body Ground
Courtesy of AMERICAN HONDA MOTOR CO., INC.

Is there battery voltage?

GETtheMANUALS.org

YES : Repair an open or high resistance in the wire between the audio-navigation unit and the HandsFreeLink control unit.

NO : Go to step 6.

6. Shorted wire check (GA +B line):
   - 1. Turn the ignition switch to LOCK (0).
   - 2. Disconnect the following connectors:

     Audio unit connector C (14P)

     HandsFreeLink control unit connector (32P)

     XM receiver connector A (14P)

   - 3. Check for continuity between test points 1 and 2.

     Test condition IG LOCK (0)

     Audio-navigation unit connector C (14P): disconnected

     HandsFreeLink control unit 32P connector: disconnected

     XM receiver A (14) connector: disconnected

     Test circuit GA +B

     Test point 1 Audio-navigation unit connector C (14P) No. 6 (RED)

     Test point 2 Body ground

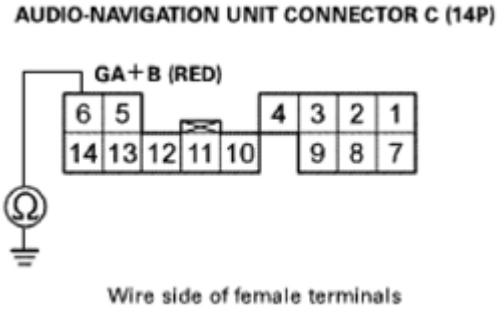

Fig. 74: Checking Continuity Between Audio-Navigation Unit Connector C (14P) No. 6 And Body Ground
Courtesy of AMERICAN HONDA MOTOR CO., INC.

Is there continuity?

GETtheMANUALS.org

YES : Repair a short to ground in the wire between the audio-navigation unit and the HandsFreeLink control unit.

NO : REPLACE THE AUDIO-NAVIGATION UNIT .

7. Determine possible failure area (GA GND line, others):
    - 1. Turn the ignition switch to ON (II).
    - 2. Measure the voltage between test points 1 and 2.

    Test condition IG ON (II)

    Test circuit GA GND

    Test point 1 HandsFreeLink control unit 32P connector No. 16 (BLK)

    Test point 2 Body ground

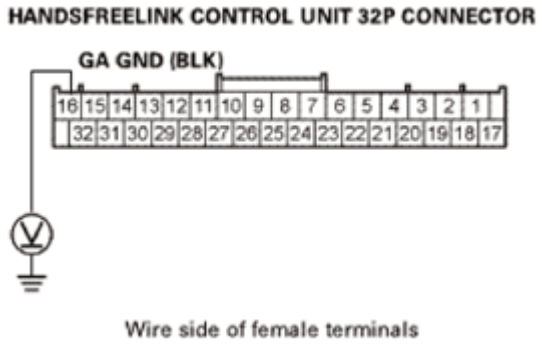

Fig. 75: Measuring Voltage Between Handsfreelink Control Unit 32P Connector No. 16 And Body Ground
Courtesy of AMERICAN HONDA MOTOR CO., INC.

Is there less than 0.2 V?

YES : The GA GND wire is OK. Go to step 9.

NO : Go to step 8.

8. Open wire check (GA GND line):
    - 1. Measure the voltage between test points 1 and 2.

    Test condition IG ON (II)

    Test circuit GA GND

    Test point 1 Audio-navigation unit connector C (14P) No. 10 (BLK)

GETtheMANUALS.org

Test point 2 Body ground

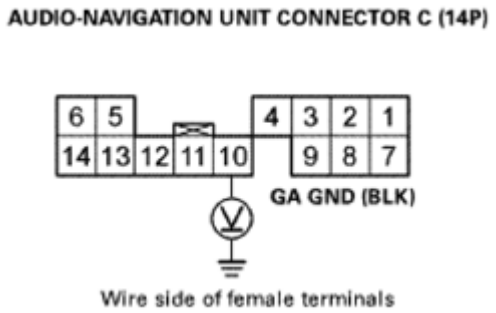

Fig. 76: Measuring Voltage Between Audio-Navigation Unit Connector C (14P) No. 10 And Body Ground
Courtesy of AMERICAN HONDA MOTOR CO., INC.

Is there less than 0.2 V?

YES : REPLACE THE AUDIO-NAVIGATION UNIT .

NO : Repair an open in the wire between the audio-navigation unit and the HandsFreeLink control unit.

9. Open wire check (GA BUS+ line, GA BUS- line):
   - 1. Check for continuity between test points 1 and 2.

     Test condition IG LOCK (0)

     Audio-navigation unit connector C (14P): disconnected

     HandsFreeLink control unit 32P connector: disconnected

     Test circuit GA BUS-

     Test point 1 Audio-navigation unit connector C (14P) No. 11 (PNK)

     Test point 2 HandsFreeLink control unit 32P connector No. 12 (PNK)

     Test circuit GA BUS+

     Test point 1 Audio-navigation unit connector C (14P) No. 12 (BLU)

     Test point 2 HandsFreeLink control unit 32P connector No. 13 (BLU)

GETtheMANUALS.org

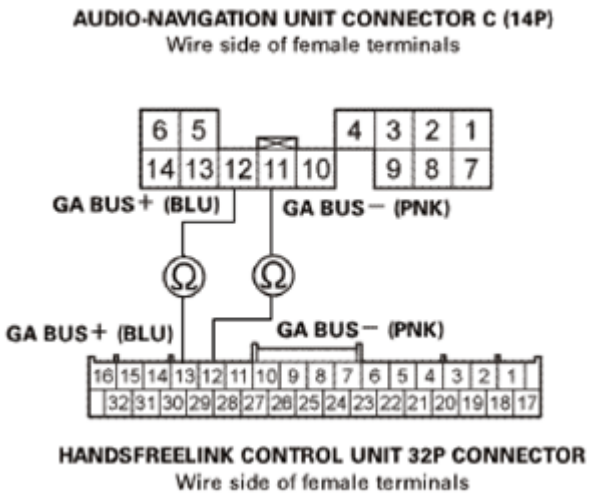

Fig. 77: Checking Continuity Between Audio-Navigation Unit Connector C (14P) No. 11, 12 And Handsfreelink Control Unit 32P Connector No. 12, 13
Courtesy of AMERICAN HONDA MOTOR CO., INC.

Is there continuity?

YES : The GA BUS+ and the GA BUS- wires are OK. Go to step 10.

NO : There is an open in the wire(s) between the HandsFreeLink control unit and the audio-navigation unit. Replace the affected shielded harness.

10. Audio-navigation unit check:
    - 1. **Substitute a known-good HandsFreeLink control unit** See **HANDSFREELINK CONTROL UNIT REMOVAL AND INSTALLATION** or **HANDSFREELINK CONTROL UNIT UPDATE**, and recheck.

Does to symptom go away?

YES : Replace the original HandsFreeLink control unit.

NO : REPLACE THE AUDIO-NAVIGATION UNIT .

NO SOUND WHEN BLUETOOTH AUDIO IS USED

GETtheMANUALS.org

HandsFreeLink System Symptom Troubleshooting - No sound when Bluetooth audio is used

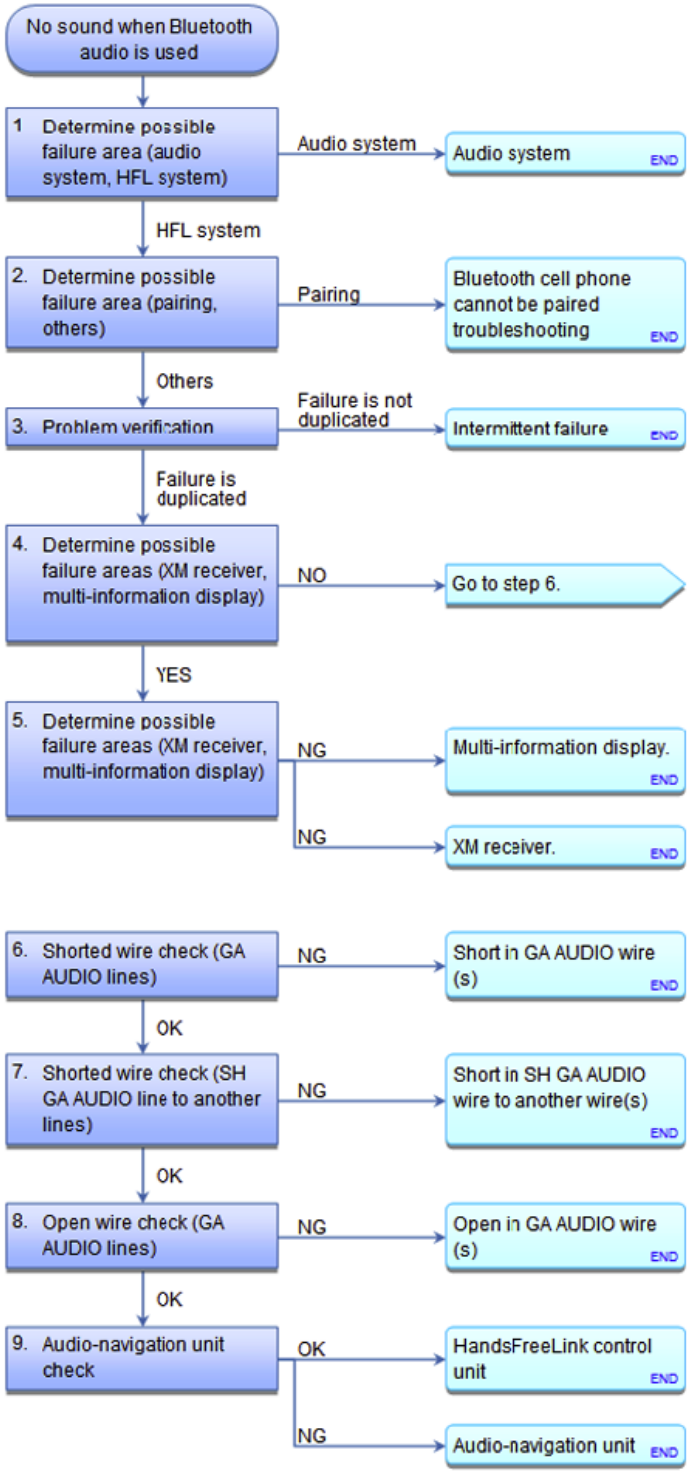

Fig. 78: Handsfreelink System Symptom Troubleshooting Flow Chart (No Sound When Bluetooth Audio Is Used)

Courtesy of AMERICAN HONDA MOTOR CO., INC.

GETtheMANUALS.org

NOTE:

- **<u>CHECK THE VEHICLE BATTERY CONDITION FIRST</u> .**
- **Once the symptom is duplicated, contact the HFL support desk at 888-528-7876. Many HFL issues are related to the cell phone and not the HFL system.**
- **Set the fader and the balance positions to the center.**
- **Check if the cell phone with Bluetooth audio functions normally.**
- **Make sure the cell phone is properly paired.**
- **Make sure the cell phone's Bluetooth volume level is set to max.**
- **Make sure the customer's cell phone with Bluetooth is compatible with the Honda HFL system.**
- **Check the connectors for poor connections or loose terminals.**

1. Determine possible failure area (audio system, HFL system):
   - 1. Turn the ignition switch to ON (II).
   - 2. Check that the audio system is operating normally, from different audio sources (AM/FM and CD) and the speaker sound levels are normal.

   Does the audio system work normally and is the audio output from the speaker normal when playing various audio sources?

   YES : Go to step 2.

   NO : Refer to the audio system Symptom Troubleshooting.

2. Determine possible failure area (pairing, others):
   - 1. Pair an approved known-good cell phone with Bluetooth audio to the vehicle.

   Can you pair an approved cell phone with Bluetooth audio?

   YES : Go to step 3.

   NO : Go to **<u>Bluetooth cell phone cannot be paired</u>** troubleshooting.

3. Problem verification:
   - 1. Check if the cell phone with Bluetooth audio can be played.

   Does the Bluetooth audio play?

   YES : Intermittent failure, the system is OK at this time, or there could be an issue with the customer's phone. Make sure the cell phone's bluetooth volume is set to max.

   NO : The failure is duplicated, go to step 4.

4. Determine possible failure areas (XM receiver, multi-information display)

GETtheMANUALS.org

- 1. Disconnect the following connectors:

  XM receiver connector A (14P)

  Multi-information display connector A (32P)

- 2. Turn the ignition switch to ON (II), and recheck.

Does the symptom go away?

YES : Go to step 5.

NO : Go to step 6.

5. Determine possible failure areas (XM receiver, multi-information display)
   - 1. Reconnect the multi-information display connector A (32P), and recheck.

Does the symptom come back?

YES : **REPLACE THE MULTI-INFORMATION DISPLAY** .

NO : REPLACE THE XM RECEIVER .

6. Shorted wire check (GA AUDIO lines):
   - 1. Turn the ignition switch to LOCK (0).
   - 2. Disconnect the following connectors.

     Audio-navigation unit connector C (14P)

     Multi-information display unit connector A (32P)

     HandsFreeLink control unit 32P connector

     XM receiver connector A (14P)

   - 3. Check for continuity between these test points and body ground individually.

     Test condition IG LOCK (0)

     Audio-navigation unit connector C (14P): disconnected

     Multi-information display unit connector A (32P): disconnected

     HandsFreeLink control unit 32P connector: disconnected

     XM receiver connector A (14P): disconnected

GETtheMANUALS.org

Connector	Test circuit	Terminal
HandsFreeLink control unit 32P connector	GA AUDIO L+	No. 5 (RED)
	GA AUDIO R+	No. 6 (GRN)
	GA AUDIO L-	No. 21 (WHT)
	GA AUDIO R-	No. 22 (BLK)

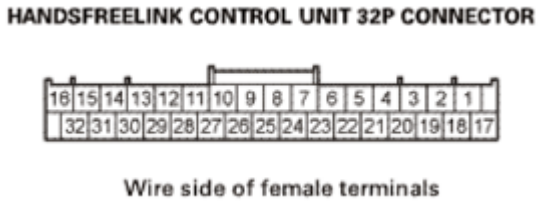

Fig. 79: Identifying Handsfreelink Control Unit 32P Connector Terminals
Courtesy of AMERICAN HONDA MOTOR CO., INC.

Is there continuity?

YES : There is a short to body ground in the wire(s) between the HandsFreeLink control unit and the audio-navigation unit. Replace the affected shielded harness.

NO : The GA AUDIO wires are not shorted to ground. Go to step 7.

7. Shorted wire check (SH GA AUDIO line to another lines):
   - 1. Check for continuity between test points 1 and 2.

     Test condition IG LOCK (0)

     Audio-navigation unit connector C (14P): disconnected

     Multi-information display unit connector A (32P): disconnected

     HandsFreeLink control unit 32P connector: disconnected

     XM receiver connector A (14P): disconnected

Test circuits	HandsFreeLink control unit 32P connector	
	Test point 1	Test points 2
SH GA AUDIO to GA AUDIO L+, GA AUDIO R+, GA AUDIO L-, GA AUDIO R-	No. 23 (GRY)	No. 5 (RED), No. 6 (GRN), No. 21 (WHT), No. 22 (BLK)

GETtheMANUALS.org

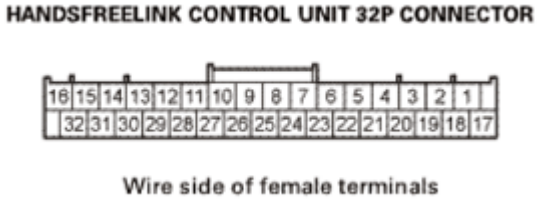

Fig. 80: Identifying Handsfreelink Control Unit 32P Connector Terminals
Courtesy of AMERICAN HONDA MOTOR CO., INC.

Is there continuity between any of the terminals?

YES : There is a short in the wires between the HandsFreeLink control unit and the audio-navigation unit. Replace the affected shielded harness.

NO : The SH GA AUDIO wire is OK. Go to step 8.

8. Open wire check (GA AUDIO lines):
   - 1. Check for continuity between test points 1 and 2.

     Test condition IG LOCK (0)

     Audio-navigation unit connector C (14P): disconnected

     Multi-information display unit connector A (32P): disconnected

     HandsFreeLink control unit 32P connector: disconnected

     XM receiver connector A (14P): disconnected

Test circuit	Test point 1: HandsFreeLink control unit 32P connector	Test point 2: Audio-navigation unit connector C (14P)
GA AUDIO L+	No. 5 (RED)	No. 1 (RED)
GA AUDIO R+	No. 6 (GRN)	No. 2 (GRN)
GA AUDIO L-	No. 21 (WHT)	No. 7 (WHT)
GA AUDIO R-	No. 22 (BLK)	No. 8 (BLK)

GETtheMANUALS.org

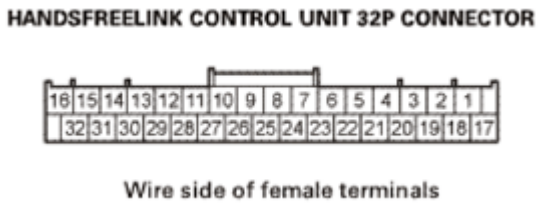

Fig. 81: Identifying Handsfreelink Control Unit 32P Connector Terminals
Courtesy of AMERICAN HONDA MOTOR CO., INC.

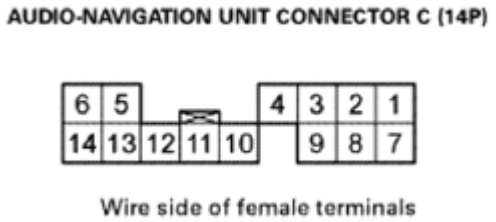

Fig. 82: Identifying Audio-Navigation Unit Connector C (14P) Terminals
Courtesy of AMERICAN HONDA MOTOR CO., INC.

Is there continuity?

YES : The GA AUDIO wires are OK. Go to step 9.

NO : There is an open in the wire(s) between the HandsFreeLink control unit and the audio-navigation unit. Replace the affected shielded harness.

9. Audio-navigation unit check:
   - 1. **Substitute a known-good HandsFreeLink control unit** See **HANDSFREELINK CONTROL UNIT REMOVAL AND INSTALLATION** or **HANDSFREELINK CONTROL UNIT UPDATE**, and recheck.

Does the symptom go away?

YES : Replace the original HandsFreeLink control unit.

NO : REPLACE THE AUDIO-NAVIGATION UNIT .

NO SOUND WHEN BLUETOOTH AUDIO IS USED

GETtheMANUALS.org

HandsFreeLink System Symptom Troubleshooting - No sound when Bluetooth audio is used

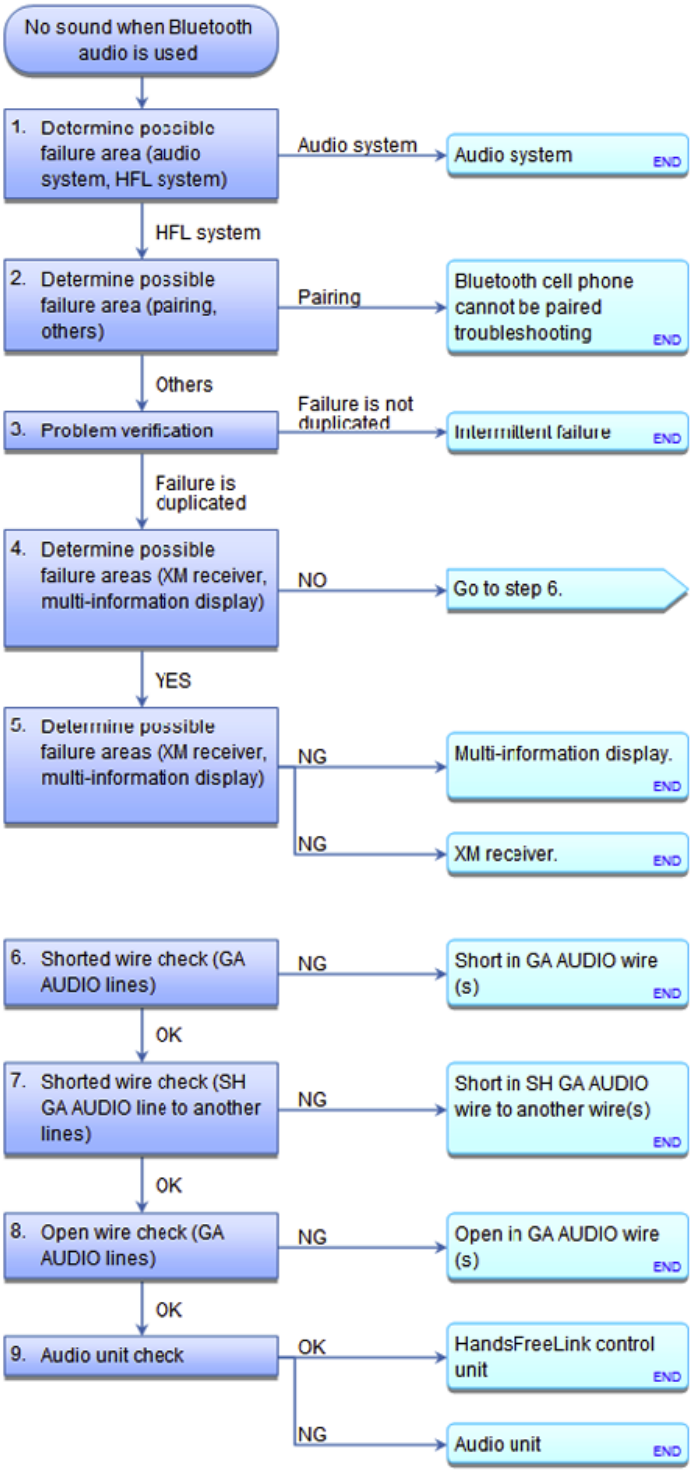

Fig. 83: Handsfreelink System Symptom Troubleshooting Flow Chart (No Sound When Bluetooth Audio Is Used)
Courtesy of AMERICAN HONDA MOTOR CO., INC.

GETtheMANUALS.org

NOTE:

- **<u>CHECK THE VEHICLE BATTERY CONDITION FIRST</u> .**
- **Once the symptom is duplicated, contact the HFL support desk at 888-528-7876. Many HFL issues are related to the cell phone and not the HFL system.**
- **Set the fader and the balance positions to the center.**
- **Check if the cell phone with Bluetooth audio functions normally.**
- **Make sure the cell phone is properly paired.**
- **Make sure the customer's cell phone with Bluetooth is compatible with the Honda HFL system.**
- **Make sure the cell phone's Bluetooth volume level is set to max.**
- **Check the connectors for poor connections or loose terminals.**

1. Determine possible failure area (audio system, HFL system):
   - 1. Turn the ignition switch to ON (II).
   - 2. Check that the audio system is operating normally, from different audio sources (AM/FM and CD) and the speaker sound levels are normal.

   Does the audio system work normally and is the audio output from the speaker normal when playing various audio sources?

   YES : Go to step 2.

   NO : Refer to the audio system Symptom Troubleshooting.

2. Determine possible failure area (pairing, others):
   - 1. Pair an approved known-good cell phone with Bluetooth audio to the vehicle.

   Can you pair an approved cell phone with Bluetooth audio?

   YES : Go to step 3.

   NO : go to **<u>Bluetooth cell phone cannot be paired</u>** troubleshooting.

3. Problem verification:
   - 1. Check if the cell phone with Bluetooth audio can be played.

   Does the Bluetooth audio play?

   YES : Intermittent failure, the system is OK at this time, or there could be an issue with the customer's phone. Make sure the cell phone's bluetooth volume is set to max.

   NO : The failure is duplicated, go to step 4.

4. Determine possible failure areas (XM receiver, multi-information display)

GETtheMANUALS.org

- 1. Disconnect the following connectors:

  XM receiver connector A (14P)

  Multi-information display connector A (32P)

- 2. Turn the ignition switch to ON (II), and recheck.

Does the symptom go away?

YES : Go to step 5.

NO : Go to step 6.

5. Determine possible failure areas (XM receiver, multi-information display)
   - 1. Reconnect the multi-information display connector A (32P), and recheck.

Does the symptom come back?

YES : **REPLACE THE MULTI-INFORMATION DISPLAY**

NO : **REPLACE THE XM RECEIVER** .

6. Shorted wire check (GA AUDIO lines):
   - 1. Turn the ignition switch to LOCK (0).
   - 2. Disconnect the following connectors.

     Audio unit connector C (14P)

     Multi-information display unit connector A (32P)

     HandsFreeLink control unit 32P connector

     XM receiver connector A (14P) (with XM)

   - 3. Check for continuity between these test points and body ground individually.

     Test condition IG LOCK (0)

     Audio unit connector C (14P): disconnected

     Multi-information display unit connector A (32P): disconnected

     HandsFreeLink control unit 32P connector: disconnected

     XM receiver connector A (14P) (with XM): disconnected

GETtheMANUALS.org

Connector	Test circuit	Terminal
HandsFreeLink control unit 32P connector	GA AUDIO L+	No. 5 (RED)
	GA AUDIO R+	No. 6 (GRN)
	GA AUDIO L-	No. 21 (WHT)
	GA AUDIO R-	No. 22 (BLK)

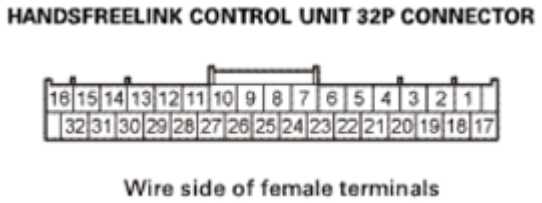

Fig. 84: Identifying Handsfreelink Control Unit 32P Connector Terminals
Courtesy of AMERICAN HONDA MOTOR CO., INC.

Is there continuity?

YES : There is a short to body ground in the wire(s) between the HandsFreeLink control unit and the audio unit. Replace the affected shielded harness.

NO : The GA AUDIO wires are not shorted to ground. Go to step 7.

7. Shorted wire check (SH GA AUDIO line to another lines):
   - 1. Check for continuity between test points 1 and 2.

     Test condition IG LOCK (0)

     Audio unit connector C (14P): disconnected

     Multi-information display unit connector A (32P): disconnected

     HandsFreeLink control unit 32P connector: disconnected

     XM receiver connector A (14P) (with XM): disconnected

Test circuits	HandsFreeLink control unit 32P connector	
	Test point 1	Test points 2
SH GA AUDIO to GA AUDIO L+, GA AUDIO R+, GA AUDIO L-, GA AUDIO R--	No. 23 (GRY)	No. 5 (RED), No. 6 (GRN), No. 21 (WHT), No. 22 (BLK)

GETtheMANUALS.org

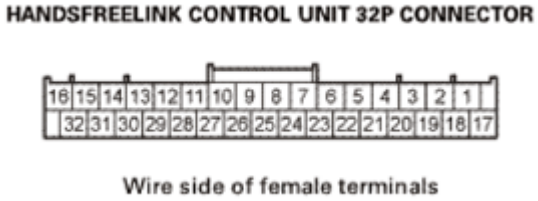

Fig. 85: Identifying Handsfreelink Control Unit 32P Connector Terminals
Courtesy of AMERICAN HONDA MOTOR CO., INC.

Is there continuity between any of the terminals?

YES : There is a short in the wires between the HandsFreeLink control unit and the audio unit. Replace the affected shielded harness.

NO : The SH GA AUDIO wire is OK. Go to step 8.

8. Open wire check (GA AUDIO lines):
   - 1. Check for continuity between test points 1 and 2.

     Test condition IG LOCK (0)

     Audio unit connector C (14P): disconnected

     Multi-information display unit connector A (32P): disconnected

     HandsFreeLink control unit 32P connector: disconnected

     XM receiver connector A (14P) (with XM): disconnected

Test circuit	Test point 1: HandsFreeLink control unit 32P connector	Test point 2: Audio unit connector C (14P)
GA AUDIO L+	No. 5 (RED)	No. 1 (RED)
GA AUDIO R+	No. 6 (GRN)	No. 2 (GRN)
GA AUDIO L-	No. 21 (WHT)	No. 7 (WHT)
GA AUDIO R-	No. 22 (BLK)	No. 8 (BLK)

GETtheMANUALS.org

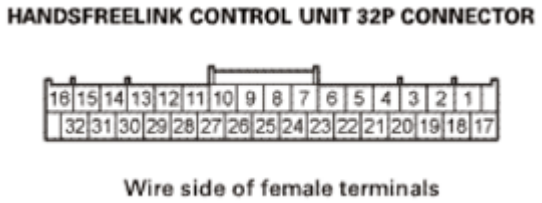

Fig. 86: Identifying Handsfreelink Control Unit 32P Connector Terminals
Courtesy of AMERICAN HONDA MOTOR CO., INC.

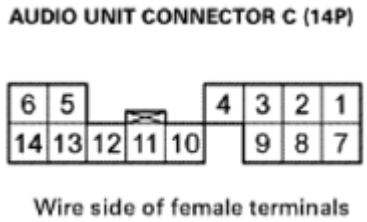

Fig. 87: Identifying Audio Unit Connector C (14P) Terminals
Courtesy of AMERICAN HONDA MOTOR CO., INC.

Is there continuity?

YES : The GA AUDIO wires are OK. Go to step 9.

NO : There is an open in the wire(s) between the HandsFreeLink control unit and the audio unit. Replace the affected shielded harness.

9. Audio unit check:
   - 1. **Substitute a known-good HandsFreeLink control unit** See **HANDSFREELINK CONTROL UNIT REMOVAL AND INSTALLATION** or **HANDSFREELINK CONTROL UNIT UPDATE**, and recheck.

Does the symptom go away?

YES : Replace the original HandsFreeLink control unit.

NO : REPLACE THE AUDIO UNIT .

THE HFL PROMPTS CANNOT BE HEARD OR ARE WEAK (HFL INFORMATION DISPLAY IS NORMAL)

GETtheMANUALS.org

HandsFreeLink System Symptom Troubleshooting - The HFL prompts cannot be heard or are weak (HFL information display is normal)

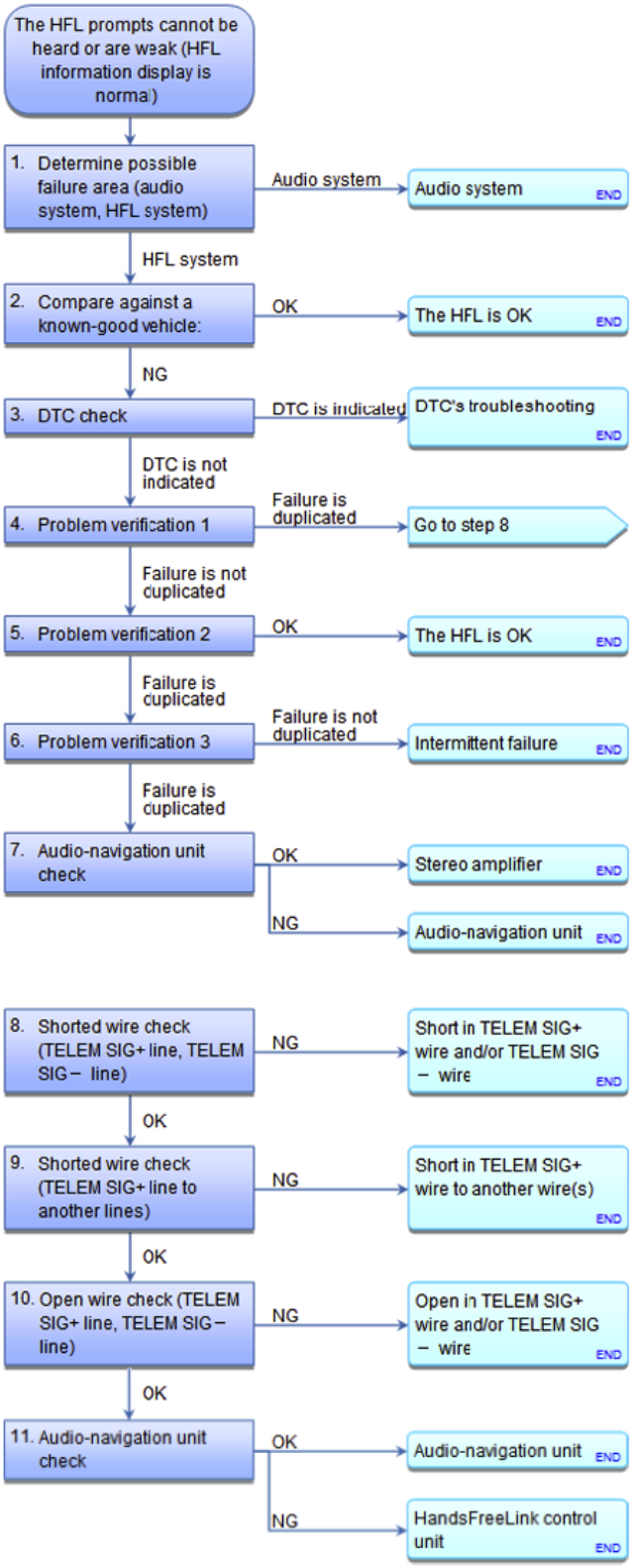

Fig. 88: Handsfreelink System Symptom Troubleshooting Flow Chart (HFL Information Display Is Normal)

GETtheMANUALS.org

Courtesy of AMERICAN HONDA MOTOR CO., INC.

NOTE:

- **CHECK THE VEHICLE BATTERY CONDITION FIRST .**
- **The HFL volume affects both the prompts and the incoming calls. For example, if you turn down the volume during an incoming call, you also turn down the volume on the HFL prompts. Customers may turn down the volume because a call is loud, not realizing they turned down the HFL prompt volume.**
- **Check the connectors for poor connections or loose terminals.**

1. Determine possible failure area (audio system, HFL system):
   - 1. Turn the ignition switch to ON (II).
   - 2. Check that the audio system is operating normally, from different audio sources (AM/FM and CD) and the speaker sound levels are normal.

   Does the audio system work normally, and is the audio output from the speaker normal when playing various audio sources?

   YES : Go to step 2.

   NO : Refer to the audio system Symptom Troubleshooting.

2. Compare against a known-good vehicle:
   - 1. Go to a known-good vehicle of the same year/model/trim, and using the same volume settings, compare the voice prompts.

   Are the voice prompt volume and the clarity the same as the customer's vehicle?

   YES : The HFL is OK.

   NO : Go to step 3.

3. DTC check:
   - 1. **CHECK FOR HFL DTCS**.

   Are there any HFL DTCs indicated?

   YES : Go to indicated DTC's troubleshooting.

   NO : Go to step 4.

4. Problem verification 1:
   - 1. Make sure the HFL is adjusted to a comfortable volume, note the volume level, then do **THE HFL SELF- DIAGNOSTIC FUNCTION**.

GETtheMANUALS.org

Do You hear the prompt, "The HFT is OK." or "The HFT is NG"?

YES : Go to step 5.

NO : The failure is duplicated, go to step 8.

5. Problem verification 2:
   - 1. Go to a known-good vehicle (same model/year/trim) and set the HFL volume to the level noted in step 4, then do the **HFL SELF-DIAGNOSTIC FUNCTION**.

Is the volume and clarity the same as the customer's vehicle?

YES : The HFL is OK.

NO : The failure is duplicated, go to step 6.

6. Problem verification 3:
   - 1. Turn on the audio system, and select audio source (AM/FM or CD).
   - 2. **DO THE HFL SELF-DIAGNOSTIC FUNCTION**.

Does the audio system mute when HFL message is being played?

YES : Intermittent failure, the system is OK at this time.

NO : The failure is duplicated, go to step 7.

7. Audio-navigation unit check:
   - 1. SUBSTITUTE A KNOWN-GOOD STEREO AMPLIFIER , and recheck.

Does the symptom go away?

YES : Replace the original stereo amplifier.

NO : REPLACE THE AUDIO-NAVIGATION UNIT .

8. Shorted wire check (TELEM SIG+ line, TELEM SIG- line):
   - 1. Turn the ignition switch to LOCK (0).
   - 2. Disconnect the following connectors.

     HandsFreeLink control unit 32P connector

     Audio-navigation unit connector E (16P)

   - 3. Check for continuity between test points 1 and 2.

     Test condition IG LOCK (0)

GETtheMANUALS.org

HandsFreeLink control unit 32P connector: disconnected

Audio-navigation unit connector E (16P): disconnected

Test circuit TELEM SIG+

Test point 1 HandsFreeLink control unit 32P connector No. 4 (BRN)

Test point 2 Body ground

Test circuit TELEM SIG-

Test point 1 HandsFreeLink control unit 32P connector No. 20 (YEL)

Test point 2 Body ground

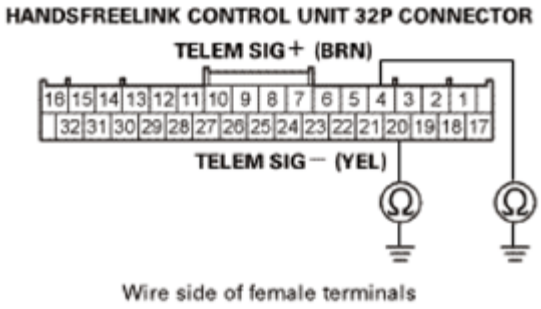

Fig. 89: Checking Continuity Between Handsfreelink Control Unit 32P Connector No. 4, 20 And Body Ground
Courtesy of AMERICAN HONDA MOTOR CO., INC.

Is there continuity?

YES : There is a short to body ground in the wire(s) between the HandsFreeLink control unit and the audio-navigation unit. Replace the affected shielded harness.

NO : The TELEM SIG+ and the TELEM SIG- wires are not shorted to ground. Go to step 9.

9. Shorted wire check (TELEM SIG+ line to another lines):
   - 1. Check for continuity between test points 1 and 2.

     Test condition IG LOCK (0)

     HandsFreeLink control unit 32P connector: disconnected

     Audio-navigation unit connector E (16P): disconnected

     Test circuit TELEM SIG+, SH TELEM SIG

GETtheMANUALS.org

Test point 1 HandsFreeLink control unit 32P connector No. 4 (BRN)

Test point 2 HandsFreeLink control unit 32P connector No. 19 (GRY)

Test circuit TELEM SIG+, TELEM SIG-

Test point 1 HandsFreeLink control unit 32P connector No. 4 (BRN)

Test point 2 HandsFreeLink control unit 32P connector No. 20 (YEL)

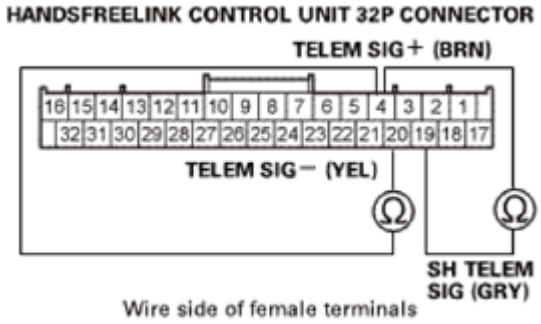

Fig. 90: Checking Continuity Between Handsfreelink Control Unit 32P Connector No. 4 And 19, 20
Courtesy of AMERICAN HONDA MOTOR CO., INC.

Is there continuity?

YES : There is a short in the wires between the HandsFreeLink control unit and the audio-navigation unit. Replace the affected shielded harness.

NO : The TELEM SIG+ wire is not shorted in the wires. Go to step 10.

10. Open wire check (TELEM SIG+ line, TELEM SIG- line):
    - 1. Check for continuity between test points 1 and 2.

      Test condition IG LOCK (0)

      HandsFreeLink control unit 32P connector: disconnected

      Audio-navigation unit connector E (16P): disconnected

      Test circuit TELEM SIG+

      Test point 1 Audio-navigation unit connector E (16P) No. 5 (BRN)

      Test point 2 HandsFreeLink control unit 32P connector No. 4 (BRN)

      Test circuit TELEM SIG-

GETtheMANUALS.org

Test point 1 Audio-navigation unit connector E (16P) No. 13 (YEL)

Test point 2 HandsFreeLink control unit 32P connector No. 20 (YEL)

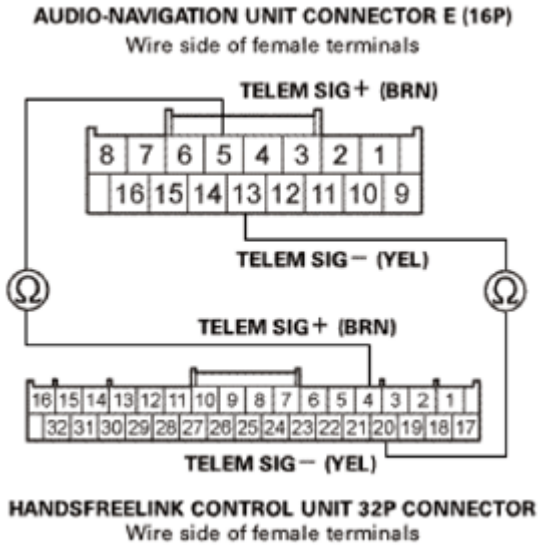

Fig. 91: Checking Continuity Between Audio-Navigation Unit Connector E (16P) No. 5 And Handsfreelink Control Unit 32P Connector No. 4
Courtesy of AMERICAN HONDA MOTOR CO., INC.

Is there continuity?

YES : The TELEM SIG+ and the TELEM SIG- wires are OK. Go to step 11.

NO : There is an open in the wire(s) between the HandsFreeLink control unit and the audio-navigation unit. Replace the affected shielded harness.

11. Audio-navigation unit check:
    - 1. SUBSTITUTE A KNOWN-GOOD AUDIO-NAVIGATION UNIT , and recheck.

Does the symptom go away?

YES : Replace the original audio-navigation unit.

NO : **Replace the HandsFreeLink control unit** See **HANDSFREELINK CONTROL UNIT REMOVAL AND INSTALLATION** or **HANDSFREELINK CONTROL UNIT UPDATE**.

THE HFL PROMPTS CANNOT BE HEARD OR ARE WEAK (HFL INFORMATION DISPLAY IS NORMAL)

GETtheMANUALS.org

HandsFreeLink System Symptom Troubleshooting - The HFL prompts cannot be heard or are weak (HFL information display is normal)

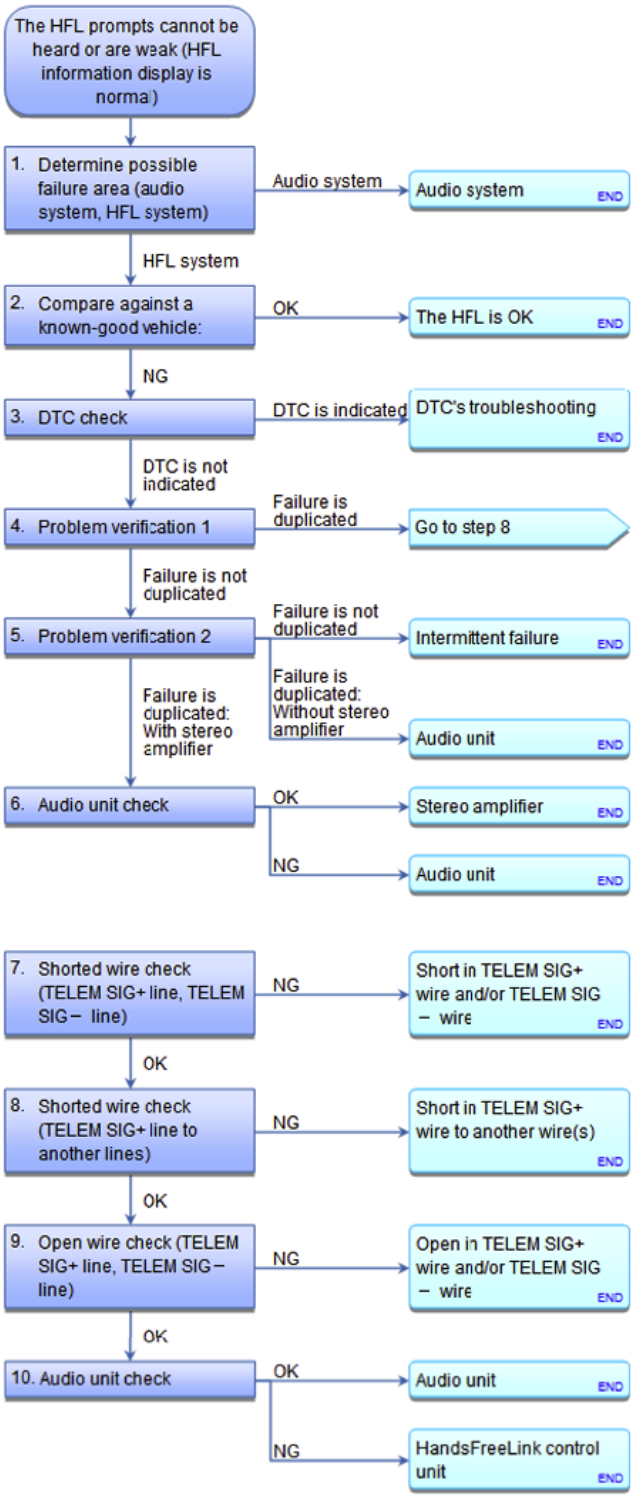

Fig. 92: Handsfreelink System Symptom Troubleshooting Flow Chart (HFL Information Display Is Normal)

Courtesy of AMERICAN HONDA MOTOR CO., INC.

GETtheMANUALS.org

NOTE:

- **<u>CHECK THE VEHICLE BATTERY CONDITION FIRST</u> .**
- **The HFL volume affects both the prompts and the incoming calls. For example, if you turn down the volume during an incoming call, you also turn down the volume on the HFL prompts. Customers may turn down the volume because a call is loud, not realizing they turned down the HFL prompt volume.**
- **Check the connectors for poor connections or loose terminals.**

1. Determine possible failure area (audio system, HFL system):
   - 1. Turn the ignition switch to ON (II).
   - 2. Check that the audio system is operating normally, from different audio sources (AM/FM and CD) and the speaker sound levels are normal.

   Does the audio system work normally, and is the audio output from the speaker normal when playing various audio sources?

   YES : Go to step 2.

   NO : Refer to the audio system Symptom Troubleshooting.

2. Compare against a known-good vehicle:
   - 1. Go to a known-good vehicle of the same year/model/trim, and using the same volume settings, compare the voice prompts.

   Are the voice prompt volume and the clarity the same as the customer's vehicle?

   YES : The HFL is OK.

   NO : Go to step 3.

3. DTC check:
   - 1. **<u>CHECK FOR HFL DTCS</u>**.

   Are there any HFL DTCs indicated?

   YES : Go to indicated DTC's troubleshooting.

   NO : Go to step 4.

4. Problem verification 1:
   - 1. Make sure the HFL is adjusted to a comfortable volume, note the volume level, then do **<u>THE HFL SELF- DIAGNOSTIC FUNCTION</u>**.

   Do You hear the prompt, "The HFT is OK." or "The HFT is NG"?

GETtheMANUALS.org

YES : Go to step 5.

NO : The failure is duplicated, go to step 7.

5. Problem verification 2:
    - 1. Turn on the audio unit, and select audio source (AM/FM or CD).
    - 2. **DO THE HFL SELF-DIAGNOSTIC FUNCTION**.

Does the audio system mute when HFL message is being played?

YES : Intermittent failure, the system is OK at this time.

NO : The failure is duplicated, go to step 6.

NO : REPLACE THE AUDIO UNIT .

6. Audio unit check:
    - 1. SUBSTITUTE A KNOWN-GOOD STEREO AMPLIFIER , and recheck.

Does the symptom go away?

YES : Replace the original stereo amplifier.

NO : REPLACE THE AUDIO UNIT .

7. Shorted wire check (TELEM SIG+ line, TELEM SIG- line):
    - 1. Turn the ignition switch to LOCK (0).
    - 2. Disconnect the following connectors.

      HandsFreeLink control unit 32P connector

      Audio unit connector B (20P)

    - 3. Check for continuity between test points 1 and 2.

      Test condition IG LOCK (0)

      HandsFreeLink control unit 32P connector: disconnected

      Audio unit connector B (20P): disconnected

      Test circuit TELEM SIG+

      Test point 1 HandsFreeLink control unit 32P connector No. 4 (BRN)

      Test point 2 Body ground

GETtheMANUALS.org

Test circuit TELEM SIG-

Test point 1 HandsFreeLink control unit 32P connector No. 20 (YEL)

Test point 2 Body ground

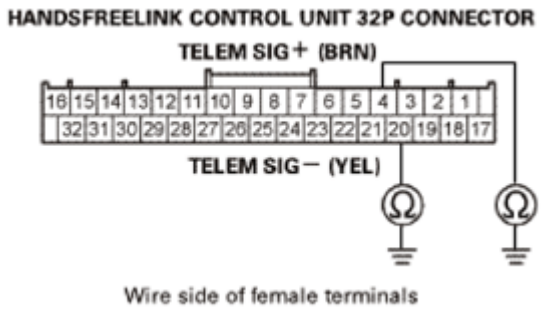

Fig. 93: Checking Continuity Between Handsfreelink Control Unit 32P Connector No. 4, 20 And Body Ground
Courtesy of AMERICAN HONDA MOTOR CO., INC.

Is there continuity?

YES : There is a short to body ground in the wire(s) between the HandsFreeLink control unit and the audio unit. Replace the affected shielded harness.

NO : The TELEM SIG+ and the TELEM SIG wires are not shorted to ground. Go to step 8.

8. Shorted wire check (TELEM SIG+ line to another lines):
   1. Check for continuity between test points 1 and 2.

      Test condition IG LOCK (0)

      HandsFreeLink control unit 32P connector: disconnected

      Audio unit connector B (20P): disconnected

      Test circuit TELEM SIG+, SH TELEM SIG

      Test point 1 HandsFreeLink control unit 32P connector No. 4 (BRN)

      Test point 2 HandsFreeLink control unit 32P connector No. 19 (GRY)

      Test circuit TELEM SIG+, TELEM SIG-

      Test point 1 HandsFreeLink control unit 32P connector No. 4 (BRN)

      Test point 2 HandsFreeLink control unit 32P connector No. 20 (YEL)

GETtheMANUALS.org

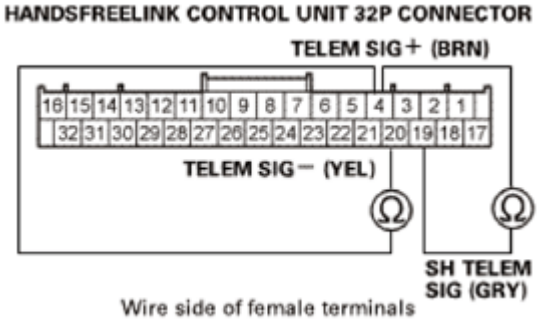

Fig. 94: Checking Continuity Between Handsfreelink Control Unit 32P Connector No. 4 And 19, 20
Courtesy of AMERICAN HONDA MOTOR CO., INC.

Is there continuity?

YES : There is a short in the wires between the HandsFreeLink control unit and the audio unit. Replace the affected shielded harness.

NO : The TELEM SIG+ wire is not shorted in the wires. Go to step 9.

9. Open wire check (TELEM SIG+ line, TELEM SIG- line):
   - 1. Check for continuity between test points 1 and 2.

     Test condition IG LOCK (0)

     HandsFreeLink control unit 32P connector: disconnected

     Audio unit connector B (20P): disconnected

     Test circuit TELEM SIG-

     Test point 1 Audio unit connector B (20P) No. 2 (YEL)

     Test point 2 HandsFreeLink control unit 32P connector No. 20 (YEL)

     Test circuit TELEM SIG+

     Test point 1 Audio unit connector B (20P) No. 12 (BRN)

     Test point 2 HandsFreeLink control unit 32P connector No. 4 (BRN)

GETtheMANUALS.org

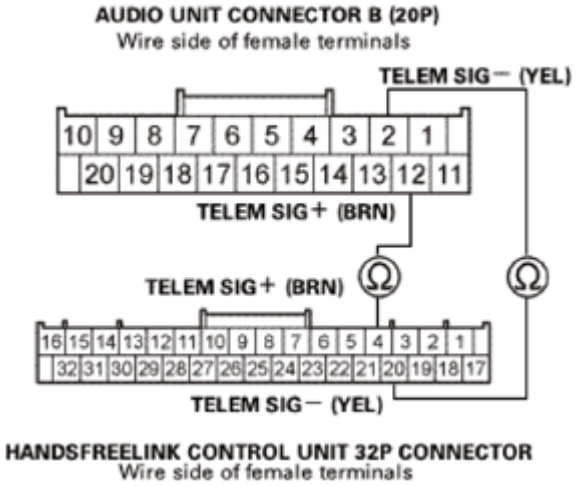

Fig. 95: Checking Continuity Between Audio Unit Connector B (20P) No. 2 And Handsfreelink Control Unit 32P Connector No. 20
Courtesy of AMERICAN HONDA MOTOR CO., INC.

Is there continuity?

YES : The TELEM SIG+ and the TELEM SIG- wires are OK. Go to step 10.

NO : There is an open in the wire(s) between the HandsFreeLink control unit and the audio unit. Replace the affected shielded harness.

10. Audio unit check:
    - 1. SUBSTITUTE A KNOWN-GOOD AUDIO UNIT , and recheck.

Does the symptom go away?

YES : Replace the original audio unit.

NO : **Replace the HandsFreeLink control unit** See **HANDSFREELINK CONTROL UNIT REMOVAL AND INSTALLATION** or **HANDSFREELINK CONTROL UNIT UPDATE**.

HFL SYSTEM TROUBLESHOOTING

GETtheMANUALS.org

HandsFreeLink System Troubleshooting

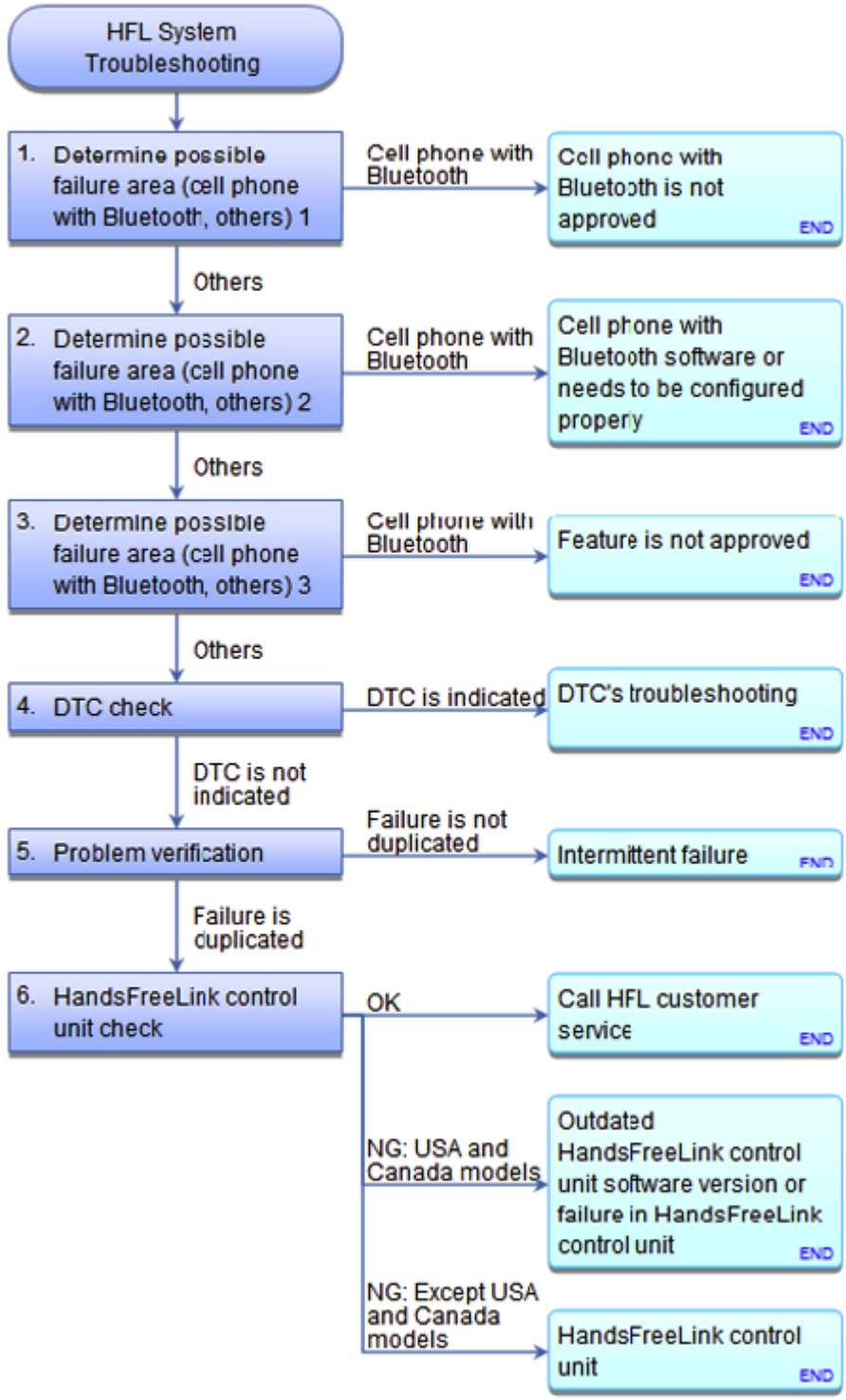

Fig. 96: Handsfreelink System Troubleshooting Flow Chart
Courtesy of AMERICAN HONDA MOTOR CO., INC.

NOTE:

- **CHECK THE VEHICLE BATTERY CONDITION FIRST .**

GETtheMANUALS.org

- **<u>BEFORE YOU TROUBLESHOOT, MAKE SURE TO FOLLOW THE HOW TO TROUBLESHOOT THE HANDSFREELINK SYSTEM</u>.**
- **Make sure the cell phone with Bluetooth is Honda approved and configured correctly. Online, go to handsfreelink.honda.com, or call the HFL customer service at 888-528-7876.**
- **You must be able to duplicate the customer's concern to successfully diagnose the problem. If you cannot duplicate the issue, have the customer demonstrate it.**
- **Once the symptom is duplicated, contact the HFL support desk at 888-528-7876. Many HFL issues are related to the cell phone and not the HFL system.**
- **See if you can duplicate the symptom in a known-good vehicle under the same conditions. If you can, it is probably a characteristic of the system.**
- **Always use the customer's cell phone to successfully diagnose the problem.**

1. Determine possible failure area (cell phone with Bluetooth, others) 1:
   - 1. Make sure the cell phone with Bluetooth is approved by checking handsfreelink.honda.com, or call the HFL customer service at 888-528-7876.

   Is the cell phone with Bluetooth approved?

   YES : Go to step 2.

   NO : Explain to the customer that the cell phone with Bluetooth is not approved or configured correctly. Recommend they contact the HFL support desk at 888-528-7876 to discuss approved phones and configuration issues. Go to handsfreelink.honda.com for a list of approved cell phones with Bluetooth.

2. Determine possible failure area (cell phone with Bluetooth, others) 2:
   - 1. Check if the cell phone with Bluetooth has any special requirements (software version, configuration, etc.). Call the HFL customer service at 888-528-7876 for help.

   Is the correct software version loaded and is the cell phone with Bluetooth properly configured?

   YES : Go to step 3.

   NO : Explain to your customer that the cell phone with Bluetooth software needs to be updated or the cell phone with Bluetooth needs to be configured properly. Recommend they contact the HFL support desk at 888-528-7876 to discuss approved phones and configuration issues.

3. Determine possible failure area (cell phone with Bluetooth, others) 3:
   - 1. Check the features of the approved cell phone with Bluetooth at handsfreelink.honda.com, or call the HFL customer service at 888-528-7876.

   Are all the features approved?

GETtheMANUALS.org

YES : Go to step 4.

NO : Check and see if the phone's feature that is not approved is the same as the customer complaint. If the complaint is about the feature that is not approved, the vehicle is OK. Explain to the customer that the feature is not approved to work with the HFL. Recommend they contact the HFL support desk at 888-528-7876 to discuss approved phones and configuration issues.

4. DTC check:
   - 1. **CHECK FOR HFL DTCS**.

Are there any HFL DTCs indicated?

YES : Go to indicated DTC's troubleshooting.

NO : Go to step 5.

5. Problem verification:
   - 1. Try to duplicate the problem or have the customer demonstrate the problem.

Can you duplicate the problem?

YES : The failure is duplicated, go to step 6.

NO : Intermittent failure, the system is OK at this time. Most HFL concerns are related to the phone or how the customer is using the HFL system. Recommend they contact the HFL support desk at 888-528-7876 to discuss possible phone and configuration issues.

6. HandsFreeLink control unit check:
   - 1. Pair the approved cell phone with Bluetooth to a known-good vehicle (same model, year, and trim), and try duplicate the problem.

Does the cell phone with Bluetooth have the same problem on the known-good vehicle?

YES : Call the HFL customer service at 888-528-7876, not tech line, to make sure the approved cell phone with Bluetooth is configured correctly and has the correct software. If the cell phone with Bluetooth is configured correctly, it is either a characteristic of the HFL system, or a characteristic of the particular approved cell phone with Bluetooth being used. Explain to your customer that this is a system characteristic. Another cell phone from the approved cell phone with Bluetooth list may give more favorable results.

NO : **Update the HandsFreeLink control unit** See **HANDSFREELINK CONTROL UNIT REMOVAL AND INSTALLATION** or **HANDSFREELINK CONTROL UNIT UPDATE** if it does not have the latest software, or **substitute a known-good HandsFreeLink control unit** See **HANDSFREELINK CONTROL UNIT REMOVAL AND INSTALLATION** or **HANDSFREELINK CONTROL UNIT UPDATE**, and recheck.

NO : **Replace the HandsFreeLink control unit** See **HANDSFREELINK CONTROL UNIT**

GETtheMANUALS.org

REMOVAL AND INSTALLATION or **HANDSFREELINK CONTROL UNIT UPDATE**.

HFL SWITCH REMOVAL, INSTALLATION, AND TEST

REMOVAL

SRS components are located in this area. Review the **SRS COMPONENT LOCATIONS** and the **PRECAUTIONS AND PROCEDURES** before doing repairs or service.

1. Battery Terminal (SRS) - Disconnection
    1. Make sure the ignition switch is in LOCK (0).
    2. Disconnect and isolate the negative cable (A) from the battery.

    NOTE: Always disconnect the negative side first.

    3. Disconnect the positive cable (B) from the battery.
    4. Wait at least 3 minutes before starting work.

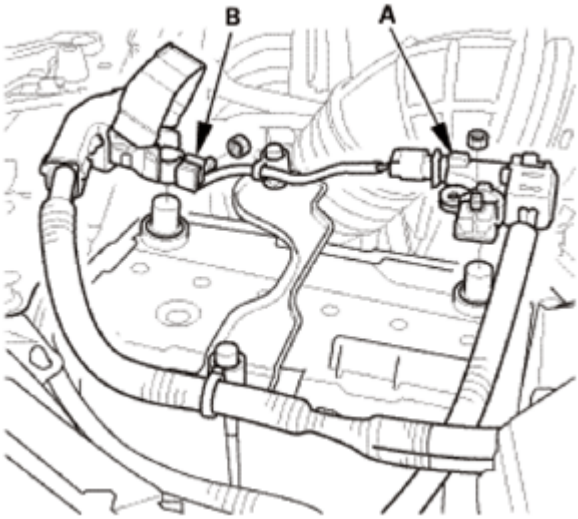

Fig. 97: Identifying Battery Positive And Negative Terminals
Courtesy of AMERICAN HONDA MOTOR CO., INC.

2. Driver's Airbag
    1. Remove the access panel (A).
    2. Disconnect the driver's airbag inflator connector (B) on the cable reel harness.
    3. Disconnect the horn switch connector (C).

GETtheMANUALS.org

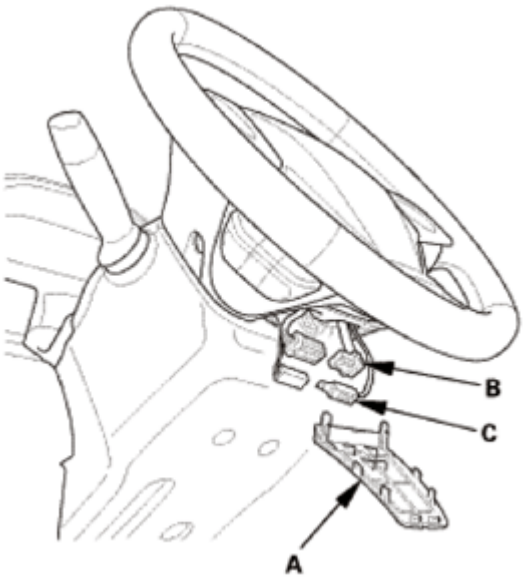

Fig. 98: Identifying Access Panel, Driver's Airbag Inflator Connector And Horn Switch Connector
Courtesy of AMERICAN HONDA MOTOR CO., INC.

4. Remove the TORX bolts using a TORX T30 bit.
5. Remove the driver's airbag (A).

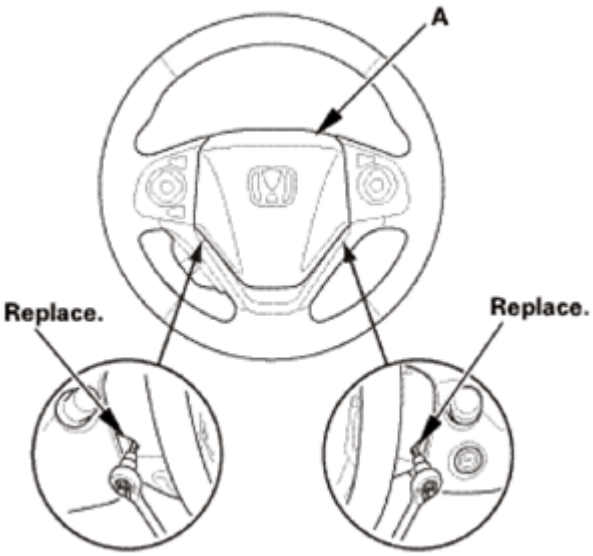

Fig. 99: Identifying Driver's Airbag
Courtesy of AMERICAN HONDA MOTOR CO., INC.

3. Steering Wheel Assembly
    1. Set the front wheels in the straight ahead position.
    2. Disconnect the connector (A).

GETtheMANUALS.org

3. Loosen the steering wheel bolt (B) three turns.

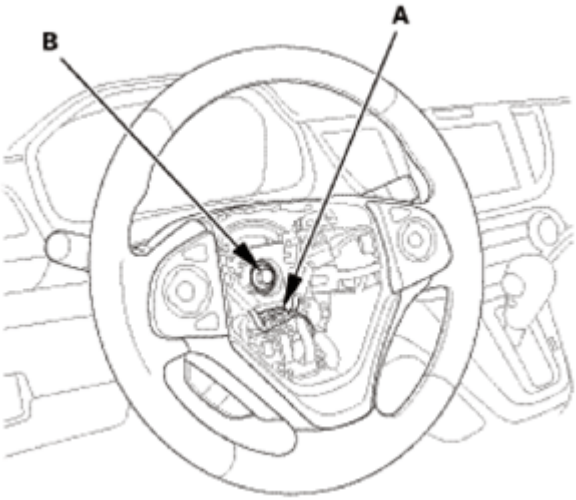

Fig. 100: Identifying Steering Wheel Connector And Bolt
Courtesy of AMERICAN HONDA MOTOR CO., INC.

4. Install a commercially available steering wheel puller (A) on the steering wheel (B).
5. Free the steering wheel from the steering column shaft by turning the pressure bolt (C) of the puller.

   Note these items when removing the steering wheel:

   - Do not tap on the steering wheel or the steering column shaft when removing the steering wheel.
   - If you thread the puller bolts (D) into the wheel hub more than five threads, the bolts will hit the cable reel and damage it. To prevent this, install a pair of jam nuts five threads up on each puller bolt.

GETtheMANUALS.org

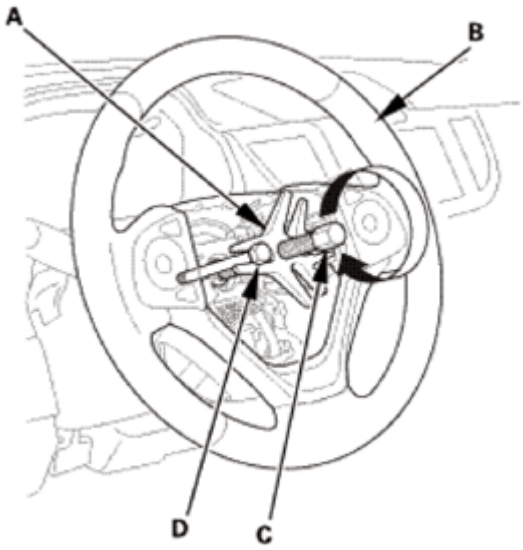

Fig. 101: Turning Steering Wheel Puller Pressure Bolt
Courtesy of AMERICAN HONDA MOTOR CO., INC.

6. Remove the steering wheel puller.
7. Remove the steering wheel (A) from the steering column.

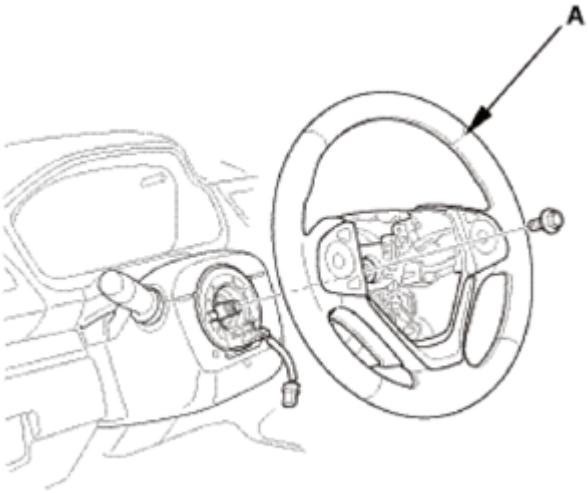

Fig. 102: Identifying Steering Wheel
Courtesy of AMERICAN HONDA MOTOR CO., INC.

4. HFL Switch
    1. Remove the cover (A).
    2. Remove the HFL switch (B).

GETtheMANUALS.org

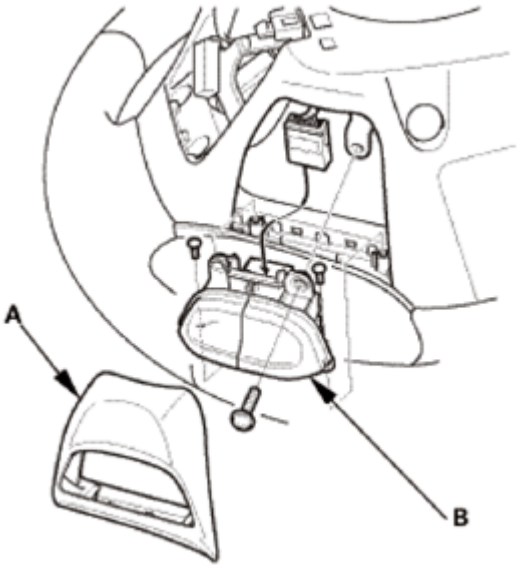

Fig. 103: Identifying HFL Switch And Cover
Courtesy of AMERICAN HONDA MOTOR CO., INC.

TEST

1. HFL Switch - Test
    1. Measure resistance between terminals No. 3 and No. 5 in each switch position according to the table.

    HFL SWITCH

Position	Resistance
No button pressed	About 10 kohms
HANG-UP button pressed	About 47 ohms
PICK-UP button pressed	About 222 ohms

    2. If the resistance is not as specified, replace the HFL switch.

GETtheMANUALS.org

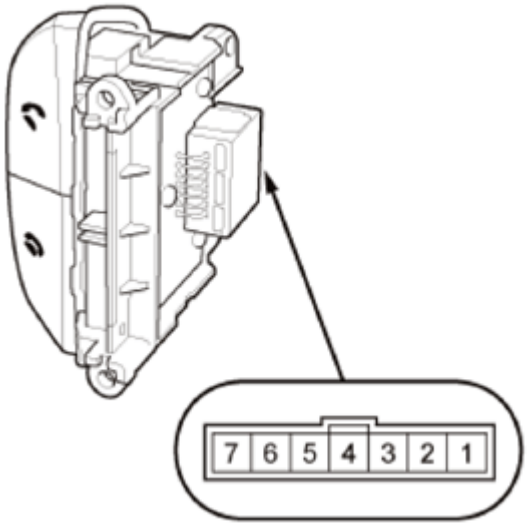

Fig. 104: Identifying HFL Switch Connector Terminals
Courtesy of AMERICAN HONDA MOTOR CO., INC.

INSTALLATION

SRS components are located in this area. Review the **SRS COMPONENT LOCATIONS** and the **PRECAUTIONS AND PROCEDURES** before doing repairs or service.

1. HFL Switch
    1. Install the HFL switch (A).
    2. Install the cover (B).

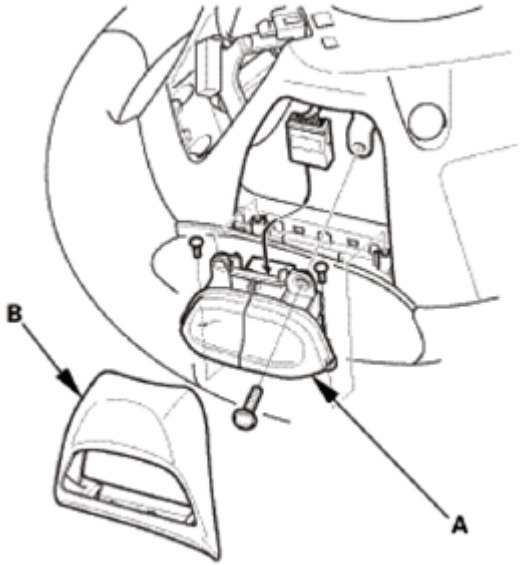

Fig. 105: Identifying HFL Switch And Cover
Courtesy of AMERICAN HONDA MOTOR CO., INC.

GETtheMANUALS.org

2. Steering Wheel Assembly
    1. Make sure the front wheels are pointing straight ahead.
    2. Center the cable reel (A). Do this by first rotating the cable reel clockwise until it stops.
    3. Rotate the cable reel counterclockwise about three full turns. The arrow mark (B) on the cable reel label should point straight up.

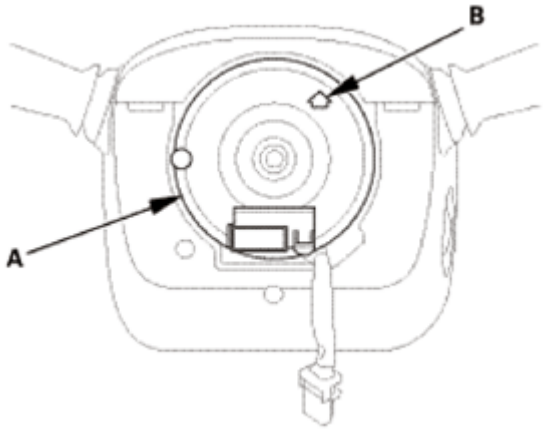

Fig. 106: Identifying Cable Reel With Arrow Mark
Courtesy of AMERICAN HONDA MOTOR CO., INC.

    4. Position the steering wheel hub (A) so that it engages the pin (B) of the cable reel.
    5. Install the steering wheel (C) on to the steering column shaft.

NOTE: **Do not tap on the steering wheel or the steering column shaft when installing the steering wheel.**

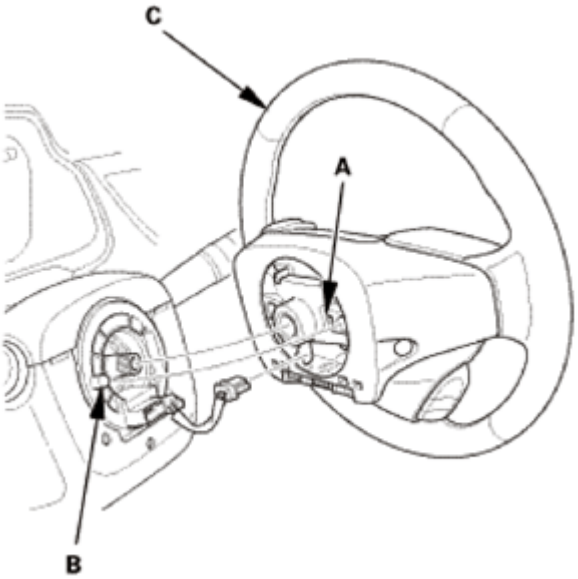

Fig. 107: Identifying Steering Wheel, Hub And Pin

GETtheMANUALS.org

Courtesy of AMERICAN HONDA MOTOR CO., INC.

6. Install the steering wheel bolt (A), and tighten it to the specified torque.
7. Connect the connector (B).
8. Make sure the wire harness is routed and fastened properly.

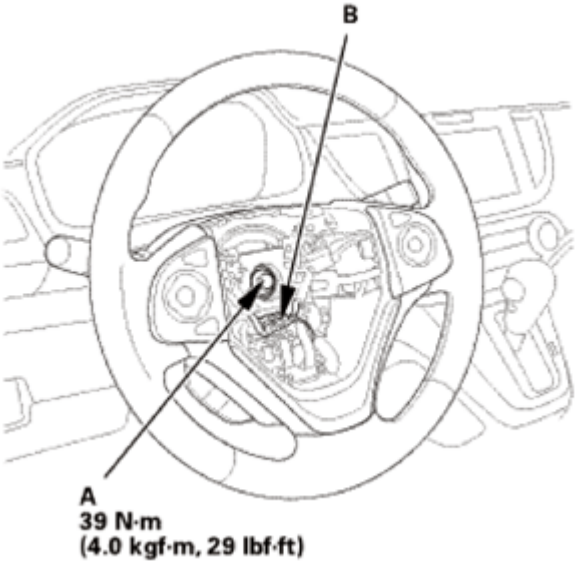

Fig. 108: Identifying Steering Wheel Connector And Bolt With Torque Specification
Courtesy of AMERICAN HONDA MOTOR CO., INC.

3. Driver's Airbag

NOTE: If you are replacing a deployed driver's airbag, inspect the cable reel for heat damage. If there is any damage, replace the cable reel.

1. Place the driver's airbag (A) in the steering wheel.
2. Tighten the new TORX bolts using a TORX T30 bit.

NOTE: Make sure the clearance (B) between the steering wheel and the horn pad is the specified value.

GETtheMANUALS.org

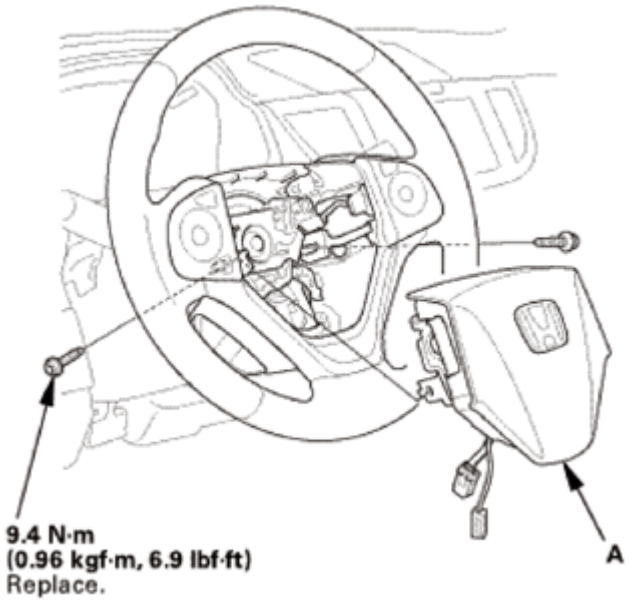

Fig. 109: Identifying Driver's Airbag And Bolt With Torque Specification
Courtesy of AMERICAN HONDA MOTOR CO., INC.

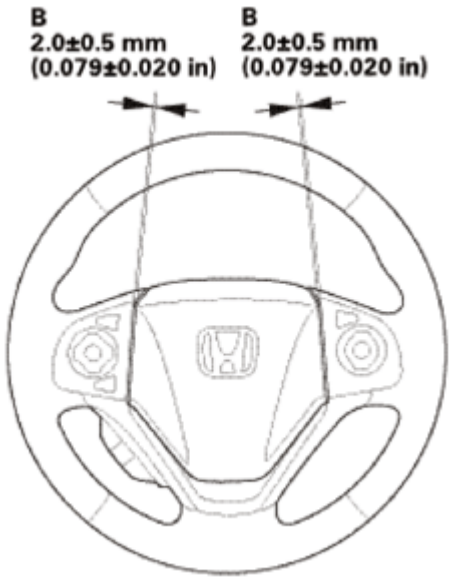

Fig. 110: Identifying Clearance Between Steering Wheel And Horn Pad
Courtesy of AMERICAN HONDA MOTOR CO., INC.

3. Connect the driver's airbag inflator connector (A) on the cable reel harness.
4. Connect the horn switch connector (B).

NOTE: **After reconnecting the negative cable to the battery, make sure the horn works properly.**

GETtheMANUALS.org

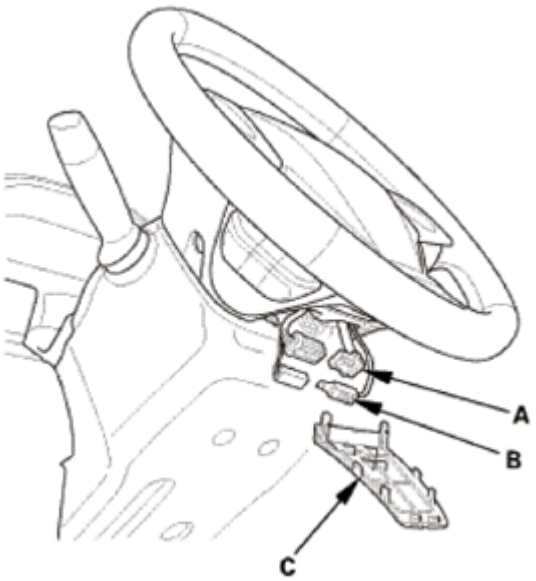

Fig. 111: Identifying Access Panel, Driver's Airbag Inflator Connector And Horn Switch Connector
Courtesy of AMERICAN HONDA MOTOR CO., INC.

5. Install the access panel (C).

4. Battery Terminal (SRS) - Reconnection

NOTE: If the battery performance is abnormal, test the battery.

1. Clean the battery terminals.
2. Connect the positive cable (A) to the battery.

NOTE: Always connect the positive side first.

3. Connect the negative cable (B) to the battery.
4. Apply multipurpose grease to the terminals to prevent corrosion.

GETtheMANUALS.org

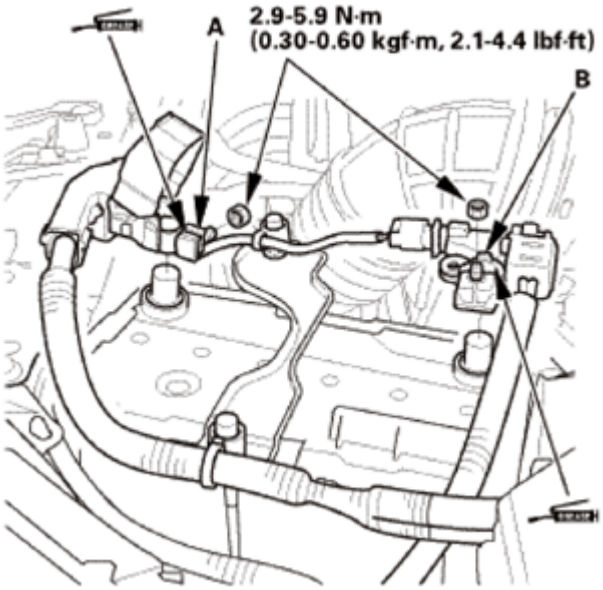

Fig. 112: Identifying Battery Positive And Negative Terminals, Mounting Bolts Ad Nuts With Torque Specification
Courtesy of AMERICAN HONDA MOTOR CO., INC.

5. Steering Wheel Spoke Angle - Check
    1. Check the steering wheel spoke angle.
    2. If steering spoke angles to the right and left are not equal (steering wheel is not centered), correct the engagement of the wheel/column shaft splines.
6. HDS DLC - Connection
    1. Connect the HDS to the data link connector (DLC) (A) located under the driver's side of the dashboard.
    2. Turn the ignition switch to ON (II).
    3. Make sure the HDS communicates with the vehicle. If it does not communicate, go to the DLC circuit troubleshooting.

GETtheMANUALS.org

Fig. 113: Identifying Data Link Connector
Courtesy of AMERICAN HONDA MOTOR CO., INC.

7. VSA Sensor Neutral Position - Memorization
    1. Park the vehicle on a flat and level surface, with the steering wheel in the straight ahead position.
    2. Select VSA ADJUSTMENT, then select ALL SENSORS with the HDS, and follow the screen prompts.

    NOTE: See the HDS Help menu for specific instructions.

8. Steering Angle Sensor Neutral Position - Clear
    1. Select EPS ADJUSTMENT, then select EPS STEERING ANGLE SENSOR VALUE CLEAR and follow the screen prompts on the HDS.

    NOTE: See the HDS Help menu for specific instructions.

HFL-NAVIGATION MICROPHONE CONNECTOR FOR INPUTS AND OUTPUTS

HFL-NAVIGATION MICROPHONE CONNECTOR FOR INPUTS AND OUTPUTS

GETtheMANUALS.org

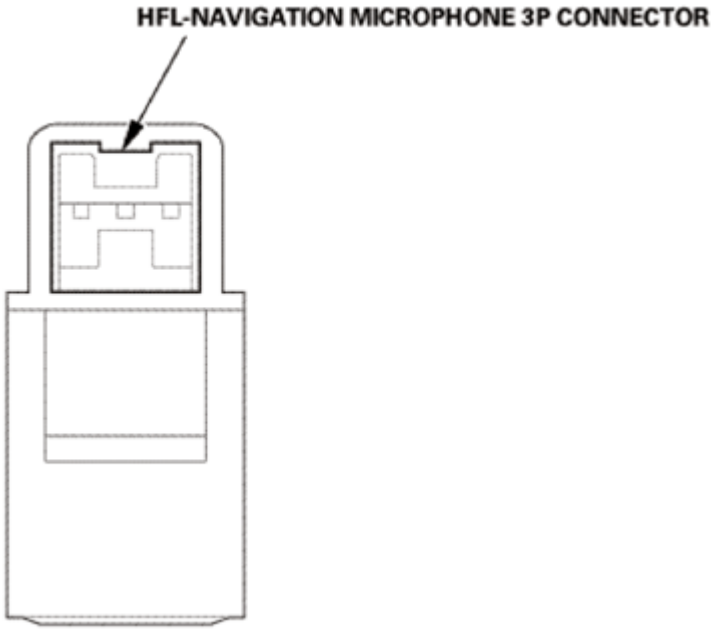

Fig. 114: Identifying HFL-Navigation Microphone 3P Connector
Courtesy of AMERICAN HONDA MOTOR CO., INC.

HFL-NAVIGATION MICROPHONE 3P CONNECTOR

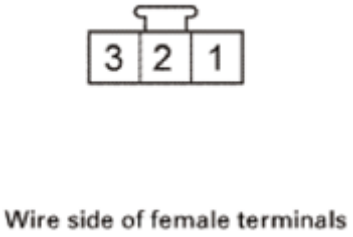

Fig. 115: Identifying HFL-Navigation Microphone 3P Connector Terminals
Courtesy of AMERICAN HONDA MOTOR CO., INC.

HFL-NAVIGATION MICROPHONE 3P CONNECTOR

Cavity	Wire Color	Terminal Name	Description	Voltage (about)	Symptom
1	Not Used	Not Used	-	-	-
2	RED	MIC-	Outputs HFL-navigation microphone signal	0V	If open: Mic icon shown as red in System Links. If short to ground: No effect on voice recognition.
3	GRN	MIC+	Outputs HFL-navigation microphone signal	8V	If open: Mic icon shown as red in System Links. If short to ground: Mic icon shown as red in System Links.

GETtheMANUALS.org

HFL-NAVIGATION MICROPHONE REMOVAL AND INSTALLATION

REMOVAL

1. Front Individual Map Light (with moonroof)
    1. Turn the front individual map light switch OFF.
    2. Carefully pry off the lenses (A) with a flat-tip screwdriver.
    3. Remove the bulbs.
    4. Remove the front individual map light (B).
    5. Disconnect the connectors.

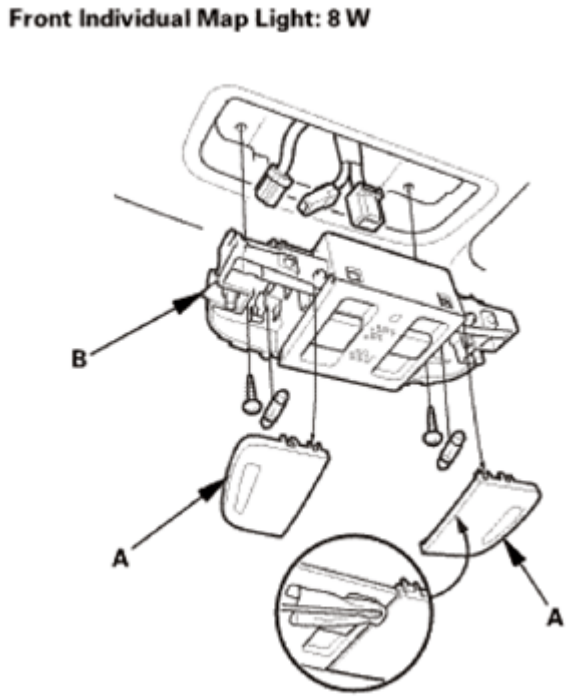

Fig. 116: Identifying Front Individual Map Light And Lenses
Courtesy of AMERICAN HONDA MOTOR CO., INC.

2. HFL-Navigation Microphone
    1. Remove the moonroof switch and the HFL-navigation microphone as an assembly (A).

GETtheMANUALS.org

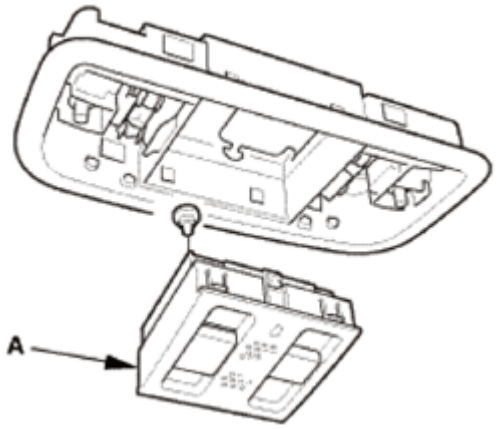

Fig. 117: Identifying HFL-Navigation Microphone Assembly
Courtesy of AMERICAN HONDA MOTOR CO., INC.

2. Remove the cover (A).

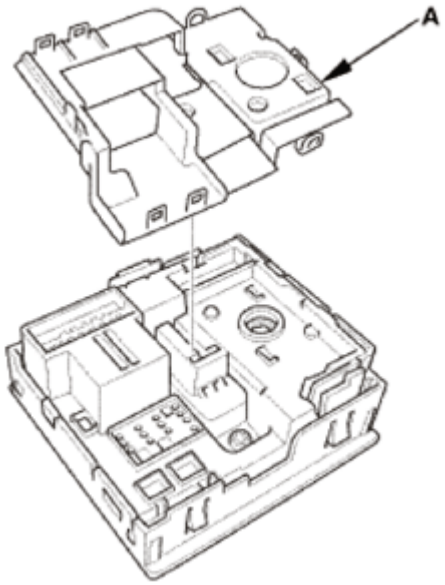

Fig. 118: Identifying HFL-Navigation Microphone Cover
Courtesy of AMERICAN HONDA MOTOR CO., INC.

3. Remove the HFL-navigation microphone (A) from the moonroof switch (B).

GETtheMANUALS.org

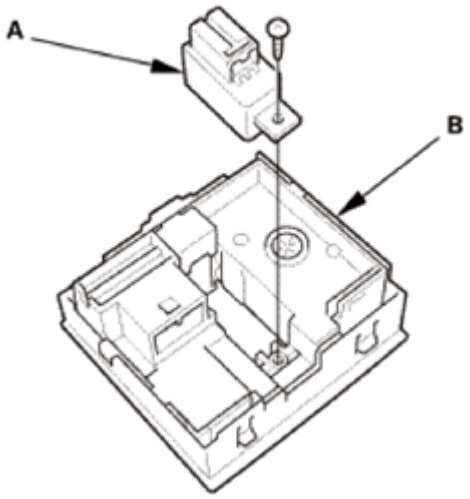

Fig. 119: Identifying HFL-Navigation Microphone And Moonroof Switch
Courtesy of AMERICAN HONDA MOTOR CO., INC.

INSTALLATION

1. HFL-Navigation Microphone
    1. Install the HFL-navigation microphone (A) to the moonroof switch (B).

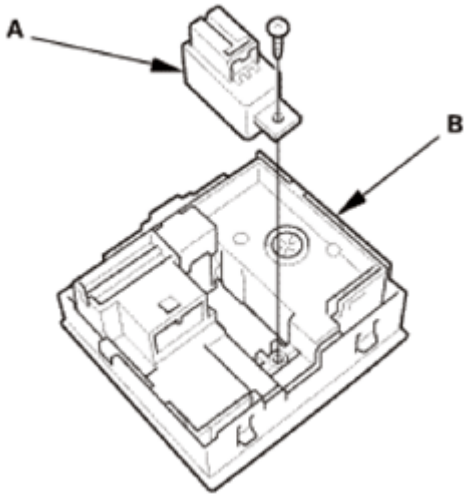

Fig. 120: Identifying HFL-Navigation Microphone And Moonroof Switch
Courtesy of AMERICAN HONDA MOTOR CO., INC.

    2. Install the cover (A).

GETtheMANUALS.org

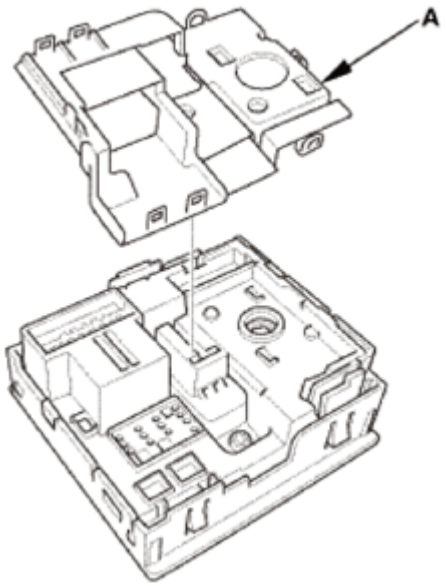

Fig. 121: Identifying HFL-Navigation Microphone Cover
Courtesy of AMERICAN HONDA MOTOR CO., INC.

3. Install the moonroof switch and the HFL-navigation microphone as an assembly (A).

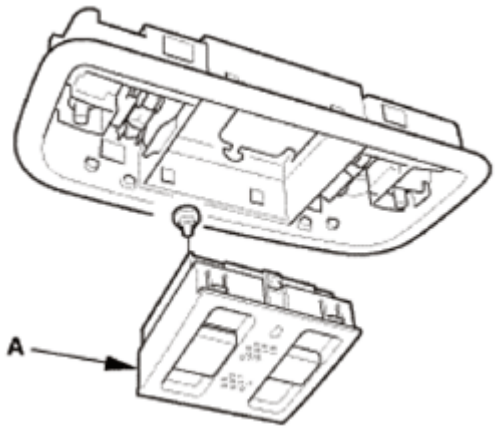

Fig. 122: Identifying HFL-Navigation Microphone Assembly
Courtesy of AMERICAN HONDA MOTOR CO., INC.

2. Front Individual Map Light (with moonroof)
    1. Connect the connectors.
    2. Install the front individual map lights (A).
    3. Install the bulbs.
    4. Carefully install the lenses (B).

GETtheMANUALS.org

Front Individual Map Light: 8 W

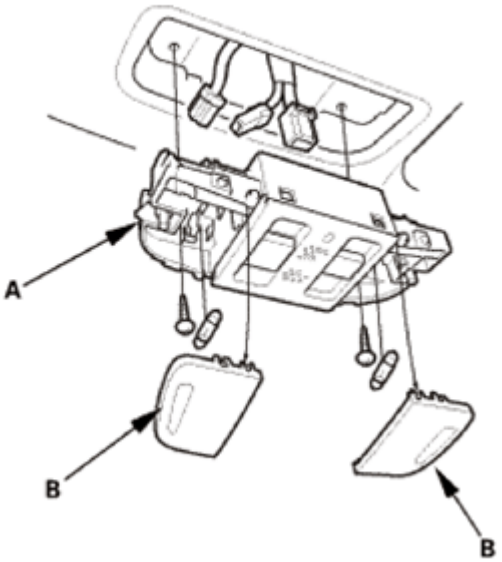

Fig. 123: Identifying Front Individual Map Lights And Lenses
Courtesy of AMERICAN HONDA MOTOR CO., INC.

WIRELESS HEADPHONE BATTERY REMOVAL AND INSTALLATION

REMOVAL

1. Wireless Headphone Battery
    1. Use a small coin to open the battery cover (A), and remove the battery (B).

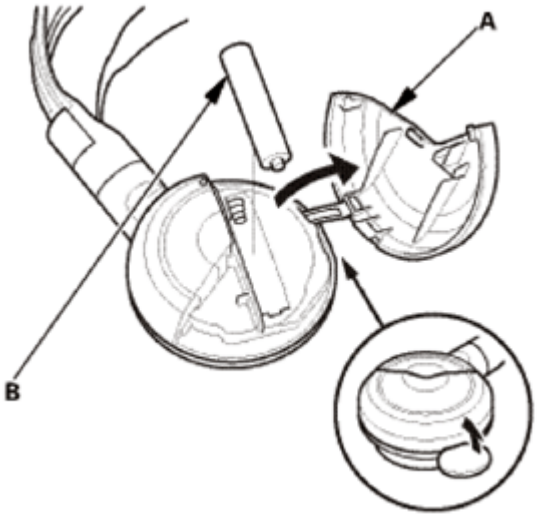

Fig. 124: Removing Wireless Headphone Battery
Courtesy of AMERICAN HONDA MOTOR CO., INC.

GETtheMANUALS.org

INSTALLATION

1. Wireless Headphone Battery
    1. Install a new battery, then close the battery cover.

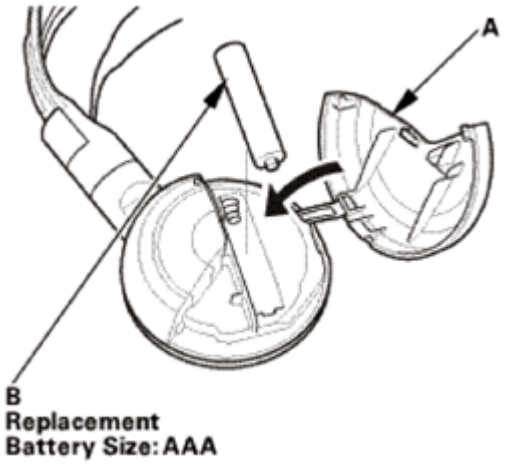

Fig. 125: Installing Wireless Headphone Battery
Courtesy of AMERICAN HONDA MOTOR CO., INC.

2. Turn the left earpiece (A) to ON, and confirm that the indicator (B) comes on after the battery is replaced.

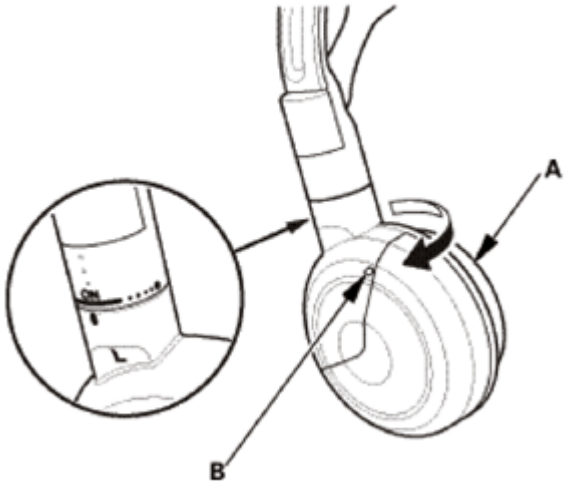

Fig. 126: Turning Wireless Headphone Battery Left Earpiece
Courtesy of AMERICAN HONDA MOTOR CO., INC.

GETtheMANUALS.org

HOOD ADJUSTMENT

REMOVAL

1. Left Windshield Wiper Arm Assembly

NOTE: Set the windshield wiper arms to the auto-stop position before removal.

1. Remove the wiper arm cap (A).
2. Remove the nut (B), then remove the left wiper arm (C).

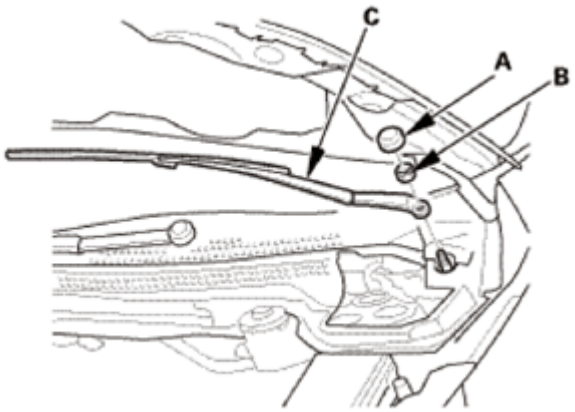

Fig. 1: Identifying Left Wiper Arm, Wiper Arm Cap And Nut
Courtesy of AMERICAN HONDA MOTOR CO., INC.

2. Front Fender Trim - Both Sides

NOTE: Repeat on the opposite side.

1. Remove the clips (A, B).
2. Pull up the front fender trim (C) by hand to detach the clips (D), then remove the trim.

GETtheMANUALS.org

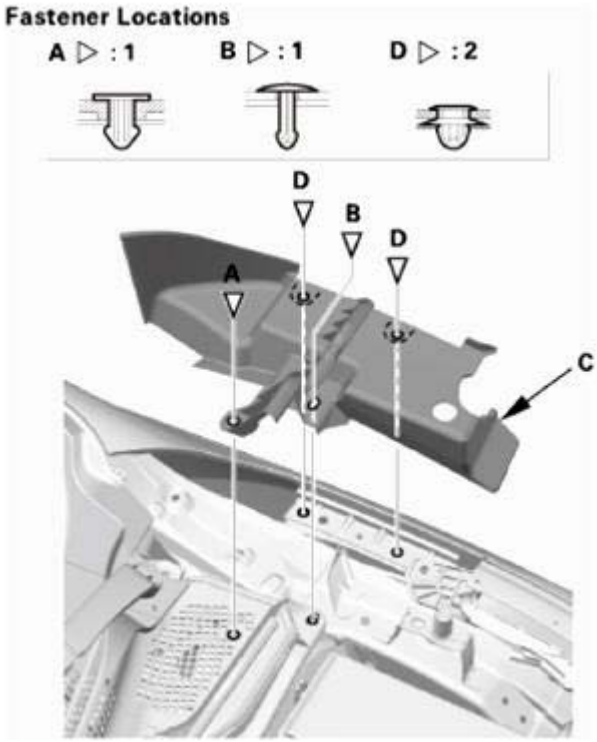

Fig. 2: Identifying Front Fender Trim Fasteners
Courtesy of AMERICAN HONDA MOTOR CO., INC.

3. Cowl Top Cover - Both Sides

NOTE: Repeat this procedure on the opposite side.

1. Remove the clip (A).
2. Pull out the hood rear seal (B).
3. Detach the hooks, and remove the cowl top cover (C).

GETtheMANUALS.org

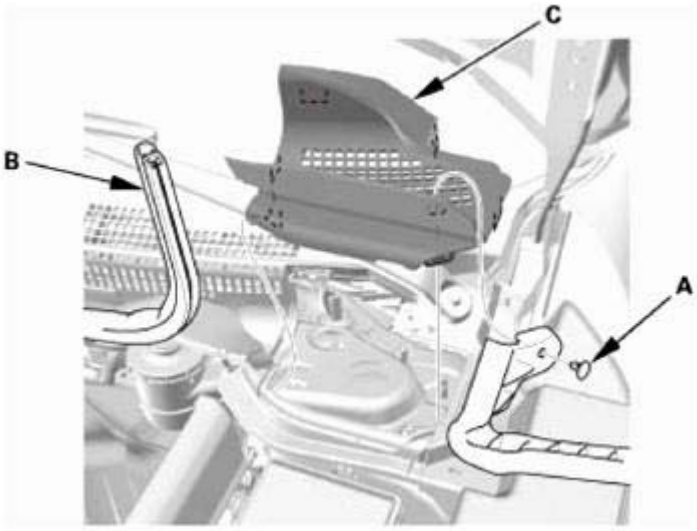

Fig. 3: Identifying Cowl Top Cover, Hood Rear Seal And Clips
Courtesy of AMERICAN HONDA MOTOR CO., INC.

4. Side Cowl Cover - Both Sides

NOTE: Repeat on the opposite side.

1. Detach the hook (A) at the inside of the cowl cover (B).
2. Release the hooks (C) from the cowl cover and the front fender (D), then remove the side cowl cover (E).
3. Right side; Detach the windshield washer tube.

GETtheMANUALS.org

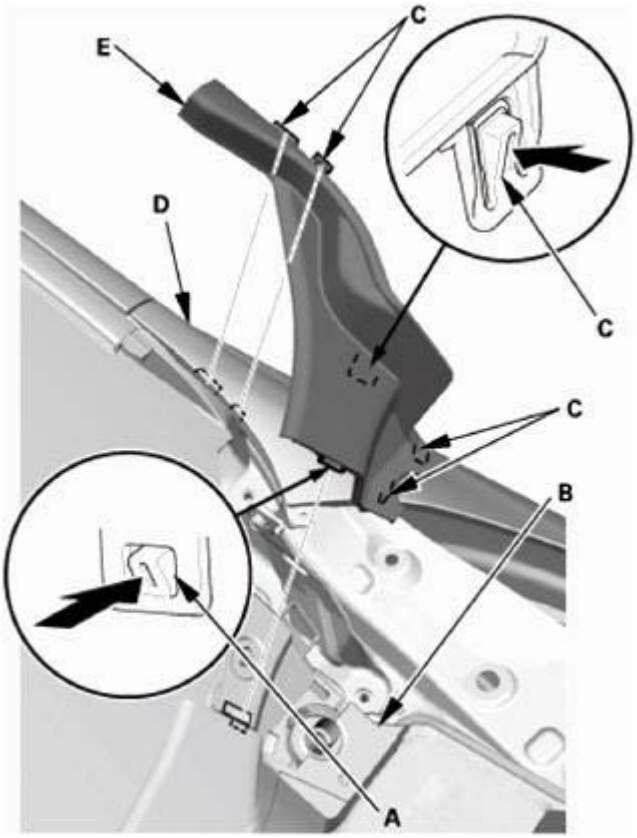

Fig. 4: Removing Side Cowl Cover Hooks
Courtesy of AMERICAN HONDA MOTOR CO., INC.

ADJUSTMENT

1. Hood - Adjustment
    1. Slightly loosen each bolt (A).

GETtheMANUALS.org

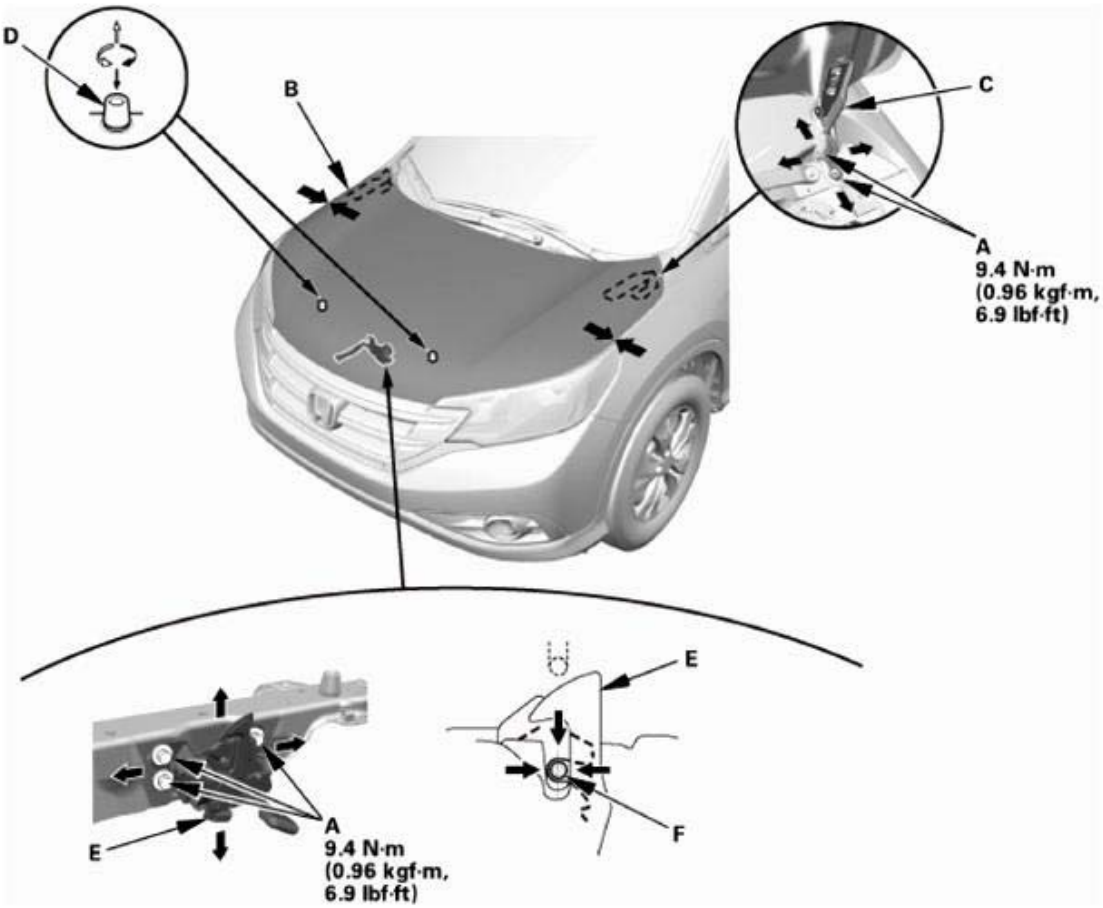

Fig. 5: Adjusting Hood
Courtesy of AMERICAN HONDA MOTOR CO., INC.

2. Adjust the hood (B) alignment in the following sequence:
   - Adjust the hood right and left, as well as forward and rearward, by using the elongated holes in the hood hinges (C).
   - Turn the hood edge cushions (D), in or out as necessary, to make the hood fits flush with the body at the front and the side edges.
3. Adjust the latch (E) to obtain the proper height at the forward edge, and move the latch right or left until the striker (F) is centered in the latch.
4. Tighten each bolt to the specified torque.
5. Make sure the hood opens properly and locks securely.
6. Apply touch-up paint to the hinge mounting bolts and around the hinges, and let the paint dry.
7. Apply multipurpose grease to the hood latch and the hood hinges as indicated by the arrows.

GETtheMANUALS.org

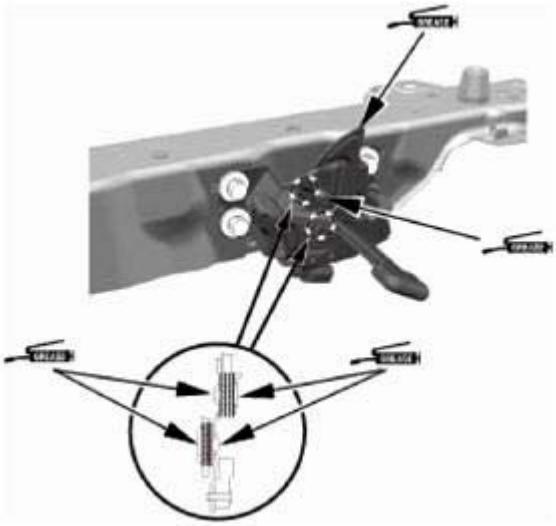

Fig. 6: Identifying Multipurpose Grease Applying Area On Hood Hinges
Courtesy of AMERICAN HONDA MOTOR CO., INC.

Fig. 7: Identifying Multipurpose Grease Applying Area On Hood Latch
Courtesy of AMERICAN HONDA MOTOR CO., INC.

INSTALLATION

1. Side Cowl Cover - Both Sides

NOTE: Repeat on the opposite side.

1. Install the side cowl cover (A). Make sure the hooks (B) snap into place securely.
2. Right side; Install the windshield washer tube.

GETtheMANUALS.org

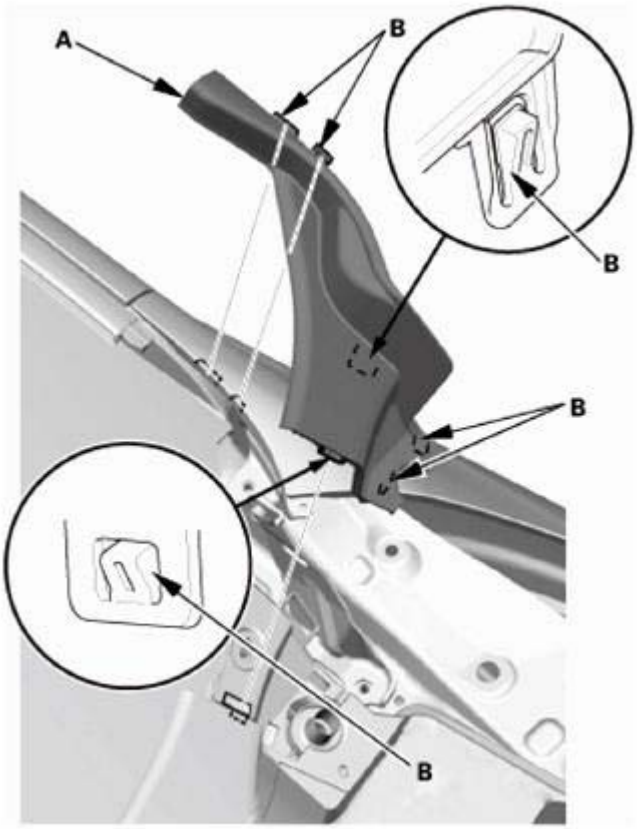

Fig. 8: Identifying Side Cowl Cover And Hooks
Courtesy of AMERICAN HONDA MOTOR CO., INC.

2. Cowl Top Cover - Both Sides

NOTE: Repeat this procedure on the opposite side.

1. Install the cowl top cover (A).
2. Install the hood rear seal (B).
3. Install the clip (C).

GETtheMANUALS.org

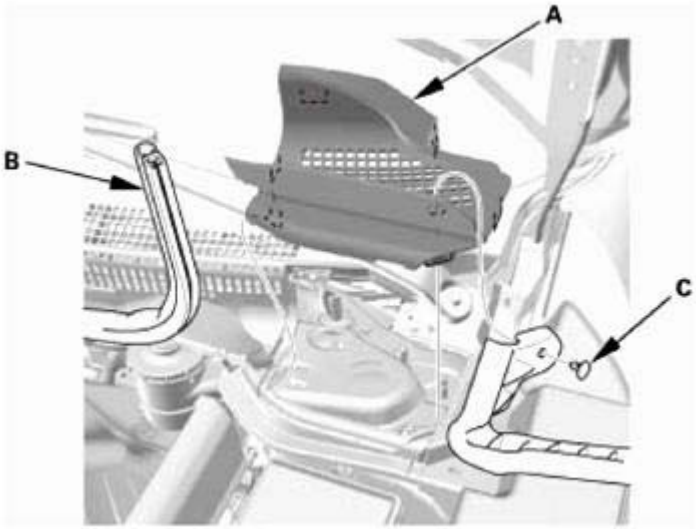

Fig. 9: Identifying Cowl Top Cover, Hood Rear Seal And Clip
Courtesy of AMERICAN HONDA MOTOR CO., INC.

3. Front Fender Trim - Both Sides

NOTE: Repeat on the opposite side.

1. Install the front fender trim (A), then install the clips (B, C). Make sure the clips (D) snap into place securely.

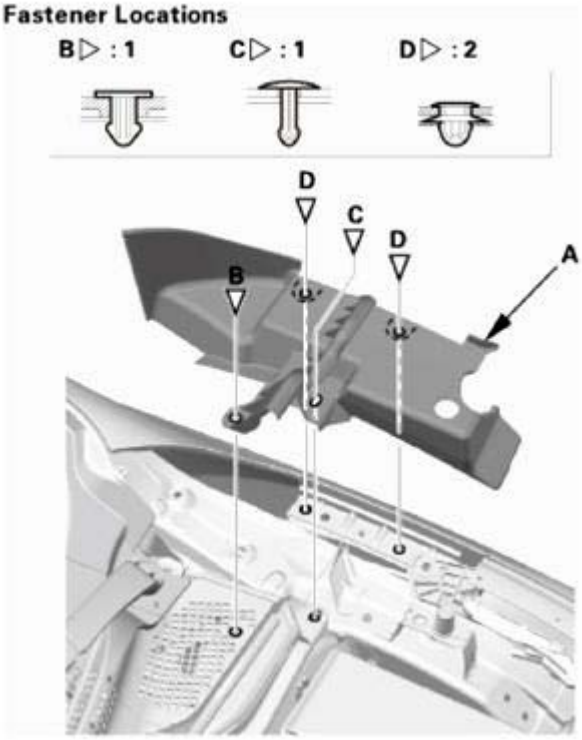

GETtheMANUALS.org

Fig. 10: Identifying Front Fender Trim Fasteners
Courtesy of AMERICAN HONDA MOTOR CO., INC.

4. Left Windshield Wiper Arm Assembly

NOTE: Set the wiper arms to the auto-stop position before installation.

1. Install the wiper arm (A), the nut (B), and the cap (C).

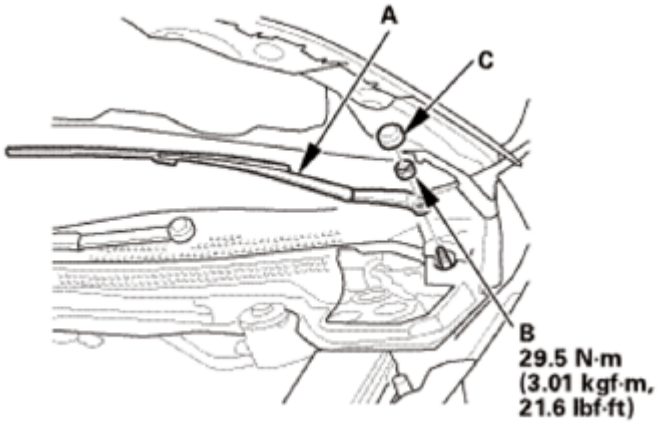

Fig. 11: Identifying Wiper Arm, Cap And Nut With Torque Specification
Courtesy of AMERICAN HONDA MOTOR CO., INC.

5. Windshield Wiper Arm - Adjustment
   1. **Adjust the windshield wiper arms** See **WIPER ARM REMOVAL AND INSTALLATION** or **WIPER ARM/NOZZLE ADJUSTMENT** .

HOOD COMPONENT LOCATION INDEX

GETtheMANUALS.org

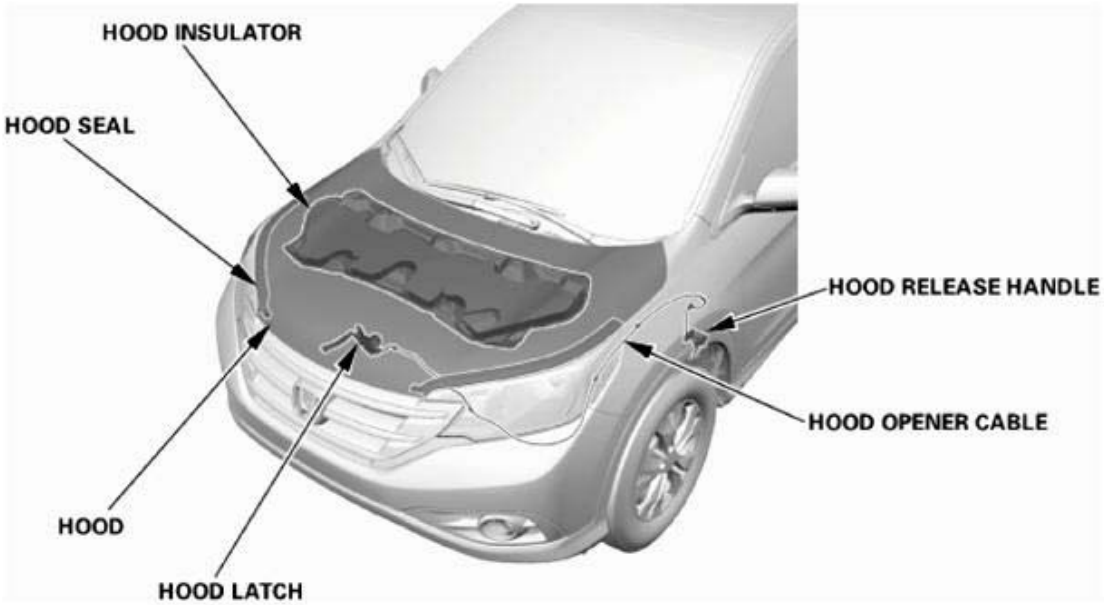

Fig. 12: Hood Components Location
Courtesy of AMERICAN HONDA MOTOR CO., INC.

HOOD	**ADJUSTMENT**
HOOD INSULATOR	**REMOVAL AND INSTALLATION**
HOOD LATCH	**REMOVAL AND INSTALLATION**
HOOD RELEASE HANDLE	**REMOVAL AND INSTALLATION**
HOOD OPENER CABLE	**REMOVAL AND INSTALLATION**
HOOD SEAL	**REMOVAL AND INSTALLATION**

HOOD INSULATOR REMOVAL AND INSTALLATION

REMOVAL

1. Hood Insulator
    1. Detach the clips (A) with a clip remover. Remove the hood insulator (B) by pulling it away from the hooks (C).

GETtheMANUALS.org

Fig. 13: Identifying Hood Insulator And Fasteners
Courtesy of AMERICAN HONDA MOTOR CO., INC.

INSTALLATION

1. Hood Insulator
    1. Install the hood insulator (A). Make sure the clips (B) and the hooks (C) snap into place securely.

Fig. 14: Identifying Hood Insulator And Fasteners
Courtesy of AMERICAN HONDA MOTOR CO., INC.

GETtheMANUALS.org

HOOD LATCH REMOVAL AND INSTALLATION

REMOVAL

1. Hood Latch
    1. Remove the bolts (A), then remove the hood latch (B) from the body. Disconnect the hood opener cable (C) from the latch.
    2. Disconnect the connector (D).

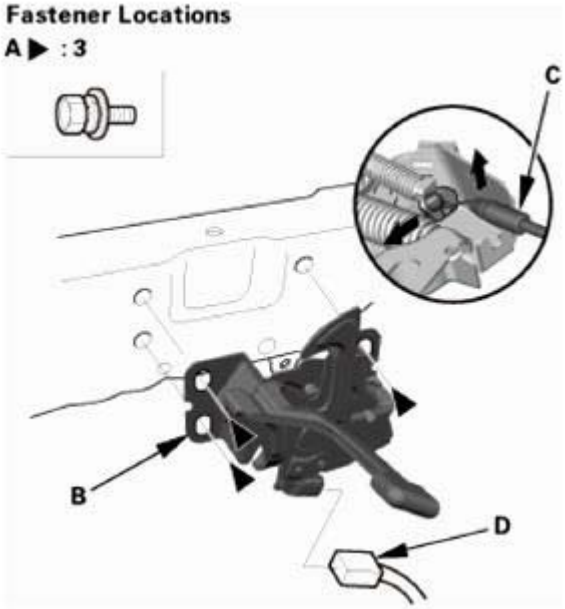

Fig. 15: Disconnecting Hood Opener Cable From Latch
Courtesy of AMERICAN HONDA MOTOR CO., INC.

INSTALLATION

1. Hood Latch

NOTE: **Apply multipurpose grease to the hood latch as indicated by the arrows.**

GETtheMANUALS.org

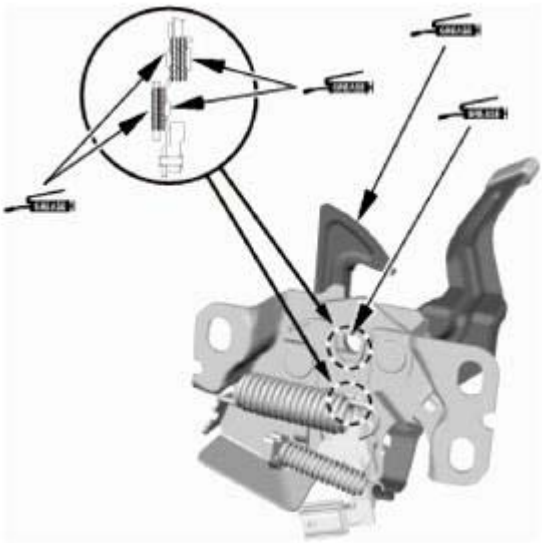

Fig. 16: Identifying Multipurpose Grease Applying Area On Hood Latch
Courtesy of AMERICAN HONDA MOTOR CO., INC.

1. Connect the connector (A).
2. Connect the hood opener cable (B).
3. Install the hood latch (C), then install the bolts (D).

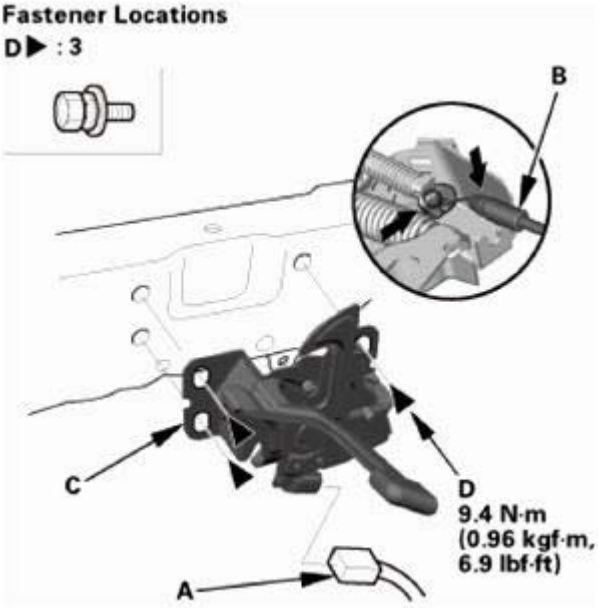

Fig. 17: Installing Hood Latch And Fasteners With Torque Specification
Courtesy of AMERICAN HONDA MOTOR CO., INC.

2. Hood Latch - Adjustment
    1. Slightly loosen the hood latch mounting bolts (A).

GETtheMANUALS.org

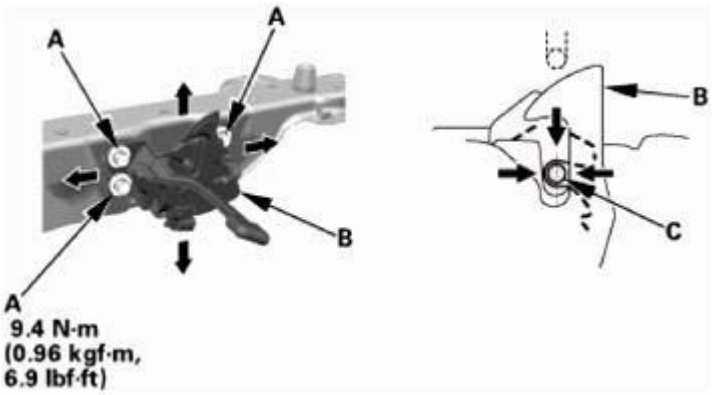

Fig. 18: Adjusting Hood Latch
Courtesy of AMERICAN HONDA MOTOR CO., INC.

2. Adjust the hood latch (B) to obtain the proper height at the forward edge, and move the hood latch right or left until the striker (C) is centered in the hood latch.
3. Tighten the hood latch mounting bolts to the specified torque.
4. Make sure the hood opens properly and locks securely.
5. Apply multipurpose grease to the hood latch as indicated by the arrows.

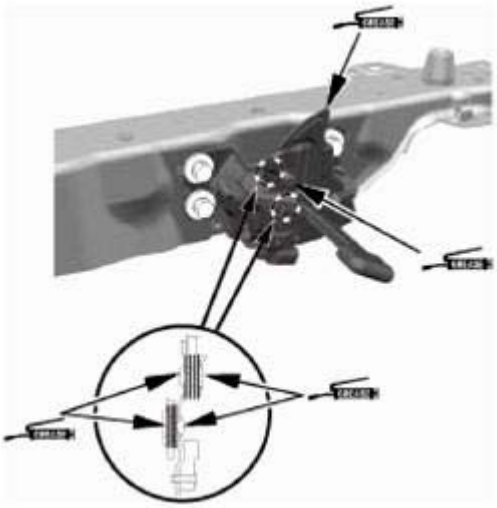

Fig. 19: Identifying Multipurpose Grease Applying Area On Hood Latch
Courtesy of AMERICAN HONDA MOTOR CO., INC.

HOOD OPENER CABLE REMOVAL AND INSTALLATION

REMOVAL

1. Vehicle Lift
    1. Raise the vehicle on a lift, and make sure it is securely supported.
2. Front Wheel

GETtheMANUALS.org

1. Remove the front wheel.

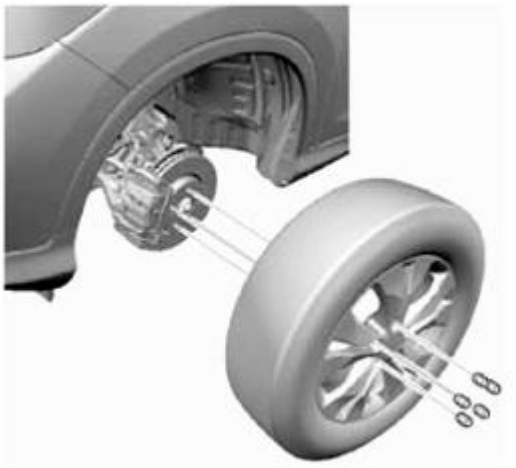

Fig. 20: Identifying Front Wheel And Mounting Bolts
Courtesy of AMERICAN HONDA MOTOR CO., INC.

3. Front Splash Guard
    1. For some models: Remove the screws (A), then remove the front splash guard (B).

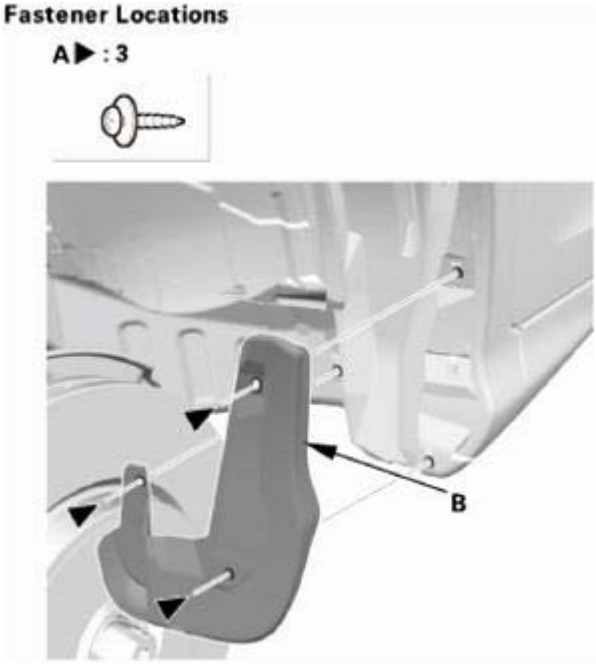

Fig. 21: Identifying Front Splash Guard And Fasteners
Courtesy of AMERICAN HONDA MOTOR CO., INC.

4. Front Inner Fender
    1. Remove the bolt (A), the screws (B), and the clips (C, D, and E) securing the front inner fender (F),

GETtheMANUALS.org

then remove the front inner fender.

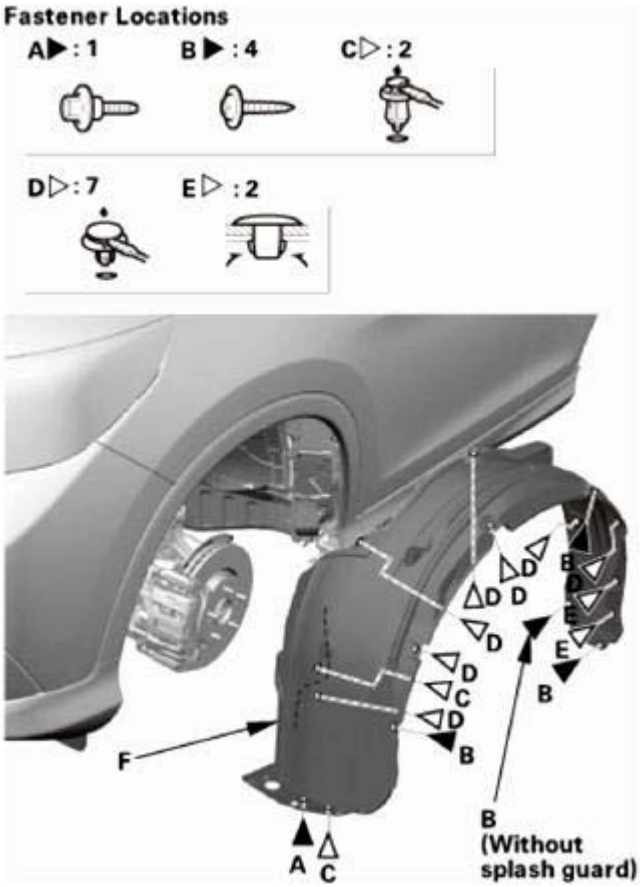

Fig. 22: Identifying Front Inner Fender And Fasteners
Courtesy of AMERICAN HONDA MOTOR CO., INC.

5. Front Door Sill Trim
    1. Detach the hooks (A) and the tabs (B) from the kick panel (C) and the B-pillar lower trim (D), and pull up the front door inner sill trim (E) by hand to detach the clips (F), then remove the trim.

GETtheMANUALS.org

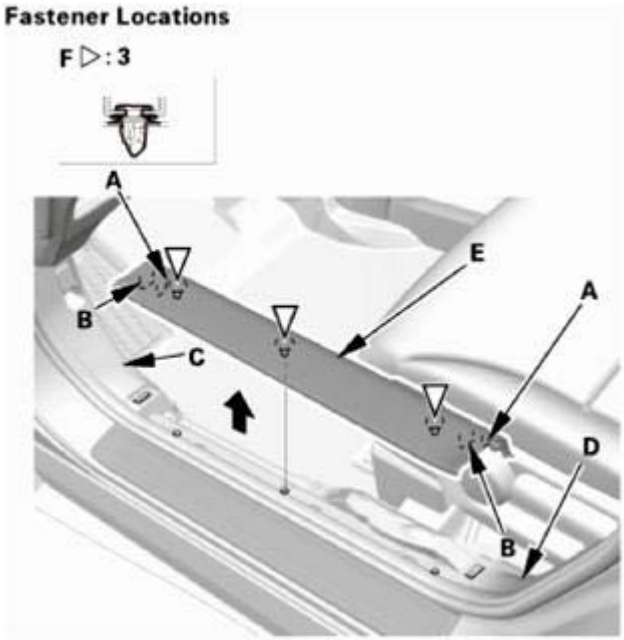

Fig. 23: Identifying Front Door Sill Trim And Fasteners
Courtesy of AMERICAN HONDA MOTOR CO., INC.

6. Front Door Opening Seal As Needed
    1. Pull out the front door opening seal (A) from the trim hooks (B) around the front door opening flange as needed.

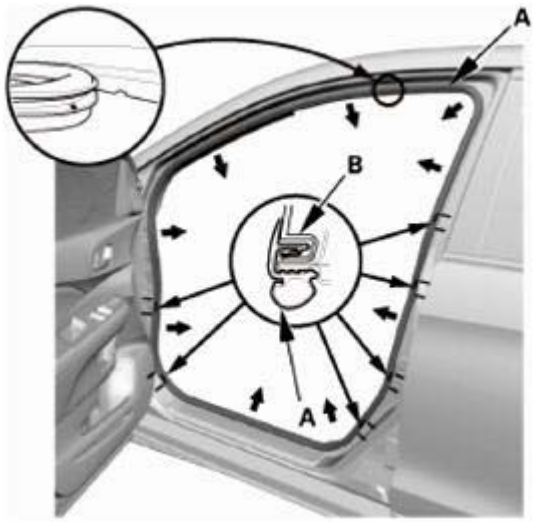

Fig. 24: Pulling Out Front Door Opening Seal From Trim Hooks
Courtesy of AMERICAN HONDA MOTOR CO., INC.

7. Kick Panel
    1. Pull out the front door opening seal (A) as needed from the kick panel hooks and the door opening flange.

GETtheMANUALS.org

2. Pull back the kick panel by hand to detach the clips (B), then remove the driver's side kick panel (C).

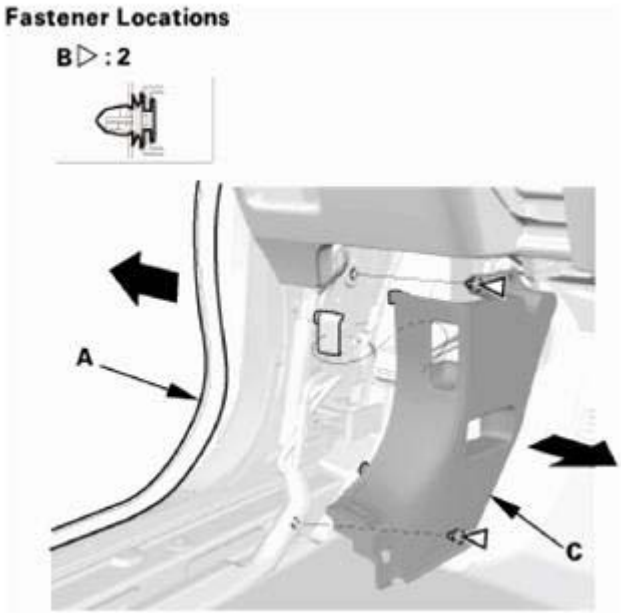

Fig. 25: Removing Driver's Side Kick Panel
Courtesy of AMERICAN HONDA MOTOR CO., INC.

8. Hood Latch
    1. Remove the bolts (A), then remove the hood latch (B) from the body. Disconnect the hood opener cable (C) from the latch.
    2. Disconnect the connector (D).

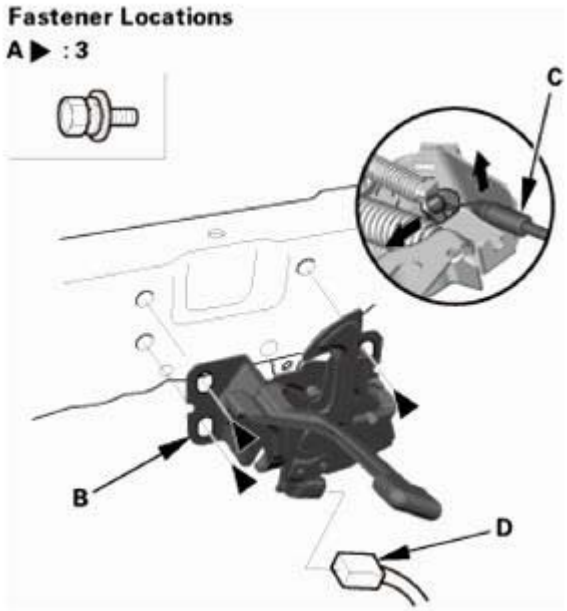

GETtheMANUALS.org

Fig. 26: Disconnecting Hood Opener Cable From Latch
Courtesy of AMERICAN HONDA MOTOR CO., INC.

9. Hood Opener Cable
    1. Detach the clips (A) with a clip remover, and remove the grommet (B) from the body.

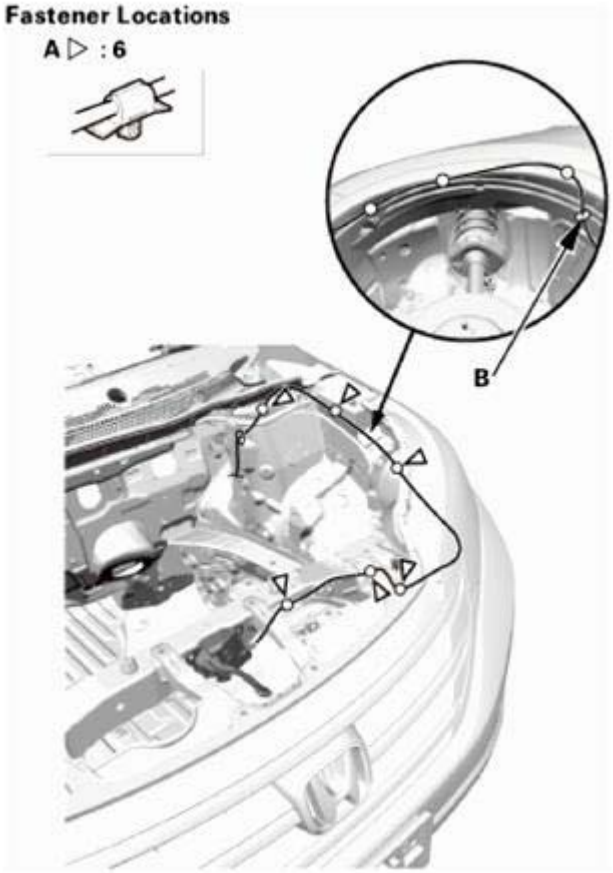

Fig. 27: Identifying Hood Opener Cable Clips
Courtesy of AMERICAN HONDA MOTOR CO., INC.

    2. Remove the bolt (A), then remove the hood release handle/cable (B).
    3. Disconnect the hood opener cable (C) from the hood release handle (D).

GETtheMANUALS.org

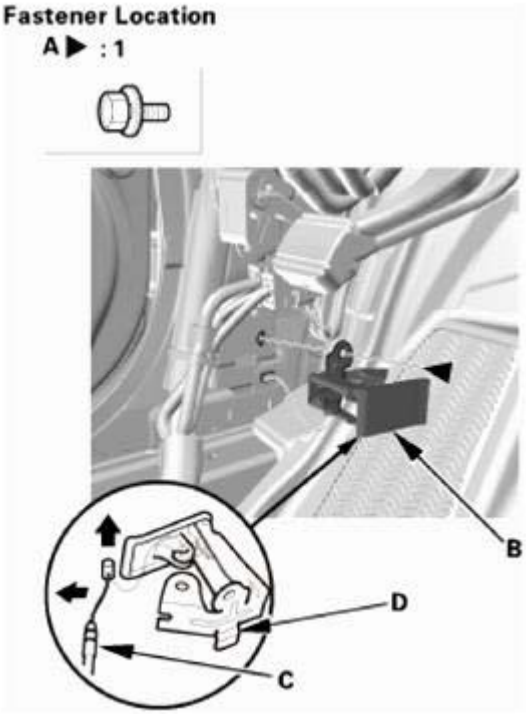

Fig. 28: Disconnecting Hood Opener Cable From Hood Release Handle
Courtesy of AMERICAN HONDA MOTOR CO., INC.

INSTALLATION

1. Hood Opener Cable
    1. Connect the hood opener cable (A) to the hood release handle (B).
    2. Install the hood release handle/cable (C), then install the bolt (D).

GETtheMANUALS.org

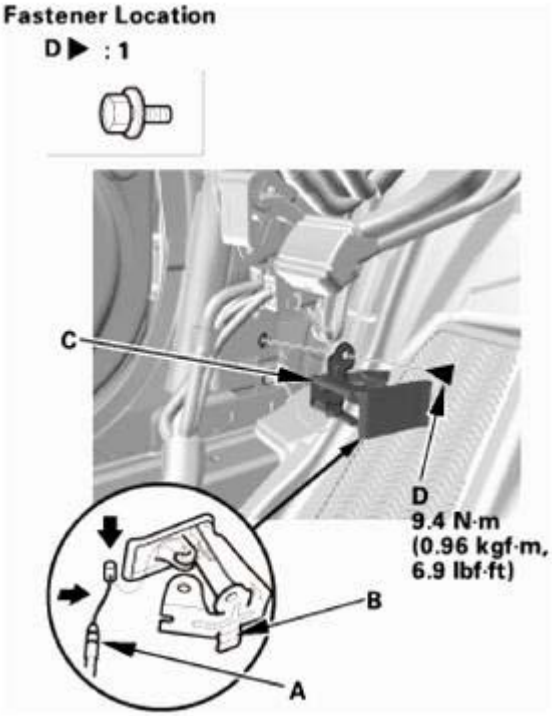

Fig. 29: Installing Hood Opener Cable
Courtesy of AMERICAN HONDA MOTOR CO., INC.

3. Install the clips (A) securing the hood opener cable (B), and install the grommet (C) to the body.

GETtheMANUALS.org

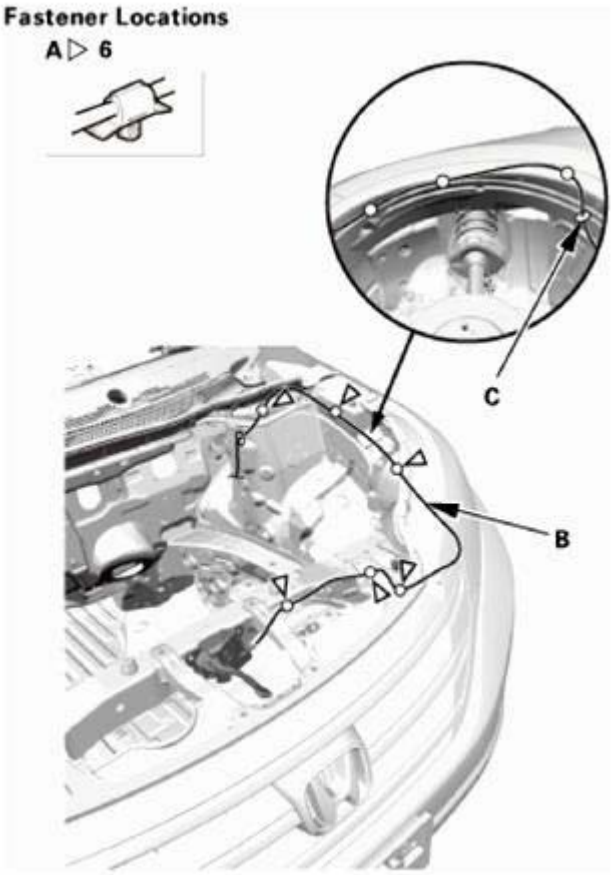

Fig. 30: Identifying Hood Opener Cable And Clips
Courtesy of AMERICAN HONDA MOTOR CO., INC.

2. Hood Latch

NOTE: **Apply multipurpose grease to the hood latch as indicated by the arrows.**

GETtheMANUALS.org

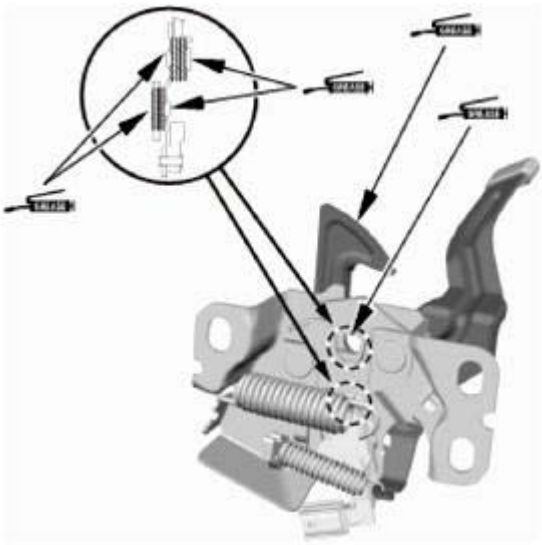

Fig. 31: Identifying Multipurpose Grease Applying Area On Hood Latch
Courtesy of AMERICAN HONDA MOTOR CO., INC.

1. Connect the connector (A).
2. Connect the hood opener cable (B).
3. Install the hood latch (C), then install the bolts (D).

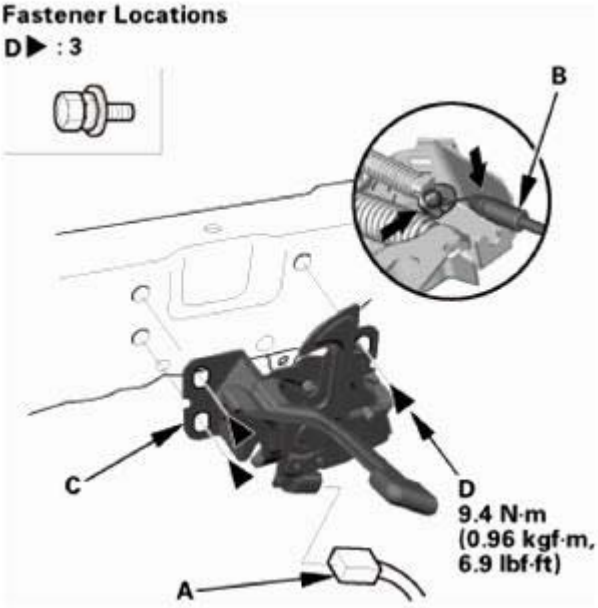

Fig. 32: Installing Hood Opener Cable
Courtesy of AMERICAN HONDA MOTOR CO., INC.

3. Hood Latch - Adjustment
    1. Slightly loosen the hood latch mounting bolts (A).

GETtheMANUALS.org

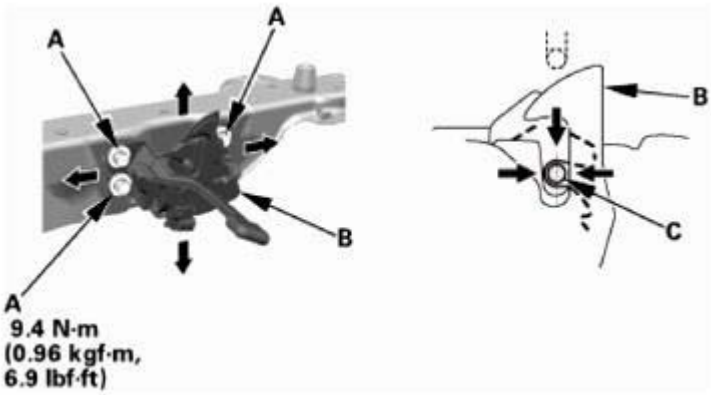

Fig. 33: Adjusting Hood Latch
Courtesy of AMERICAN HONDA MOTOR CO., INC.

2. Adjust the hood latch (B) to obtain the proper height at the forward edge, and move the hood latch right or left until the striker (C) is centered in the hood latch.
3. Tighten the hood latch mounting bolts to the specified torque.
4. Make sure the hood opens properly and locks securely.
5. Apply multipurpose grease to the hood latch as indicated by the arrows.

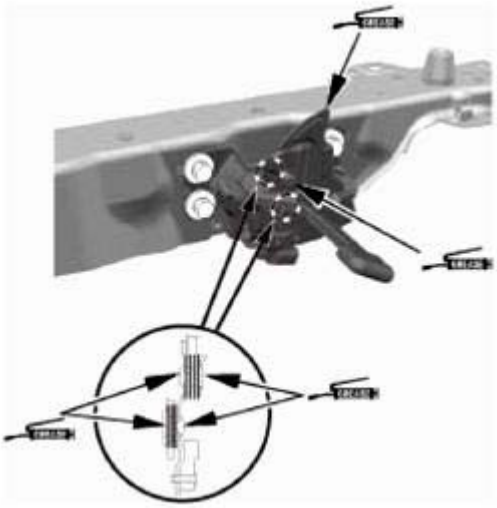

Fig. 34: Identifying Multipurpose Grease Applying Area On Hood Latch
Courtesy of AMERICAN HONDA MOTOR CO., INC.

4. Kick Panel
    1. Install the driver's side kick panel (A). Make sure the clips (B) snap into place securely.
    2. Install the front door opening seal (C).

GETtheMANUALS.org

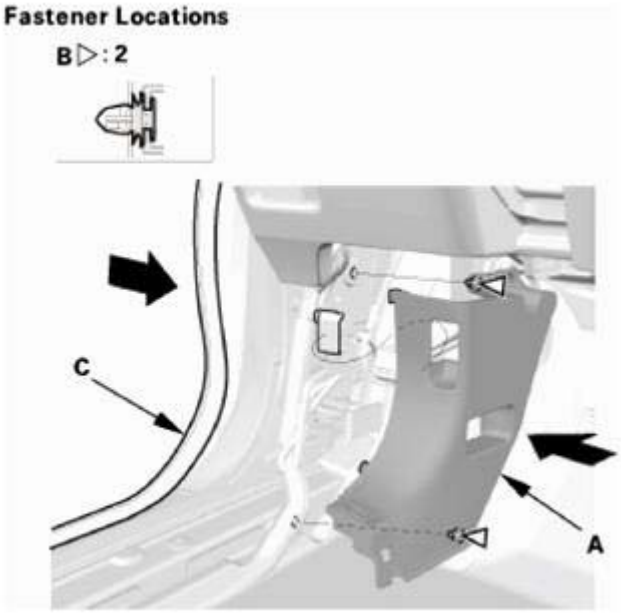

Fig. 35: Installing Driver's Side Kick Panel
Courtesy of AMERICAN HONDA MOTOR CO., INC.

5. Front Door Opening Seal As Needed
    1. Install the front door opening seal (A). Make sure the seal is installed securely into the hooks (B).

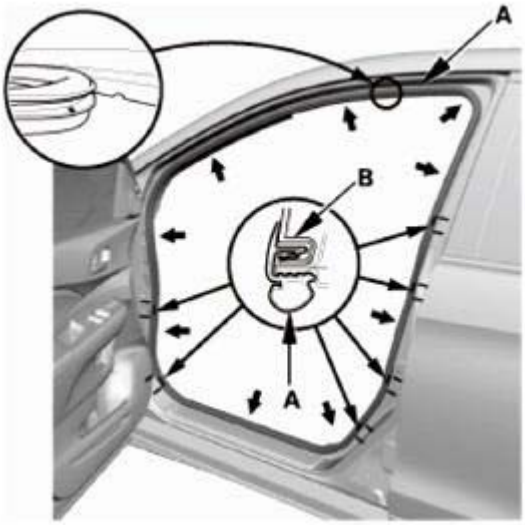

Fig. 36: Installing Front Door Opening Seal
Courtesy of AMERICAN HONDA MOTOR CO., INC.

6. Front Door Sill Trim
    1. Install the front door inner sill trim (A). Make sure the clips (B), the hooks (C), and the tabs (D) snap into place securely.

GETtheMANUALS.org

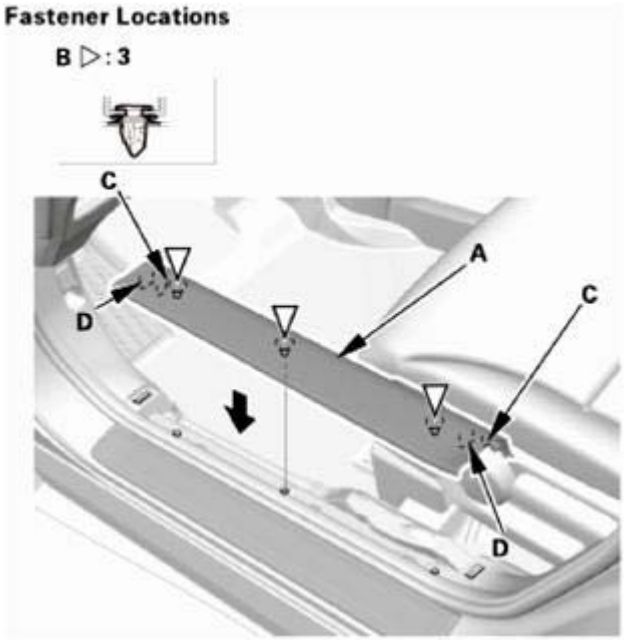

Fig. 37: Installing Front Door Inner Sill Trim
Courtesy of AMERICAN HONDA MOTOR CO., INC.

7. Front Inner Fender
    1. Install the front inner fender (A), then install the bolt (B), the screws (C), and the clips (D, E, and F). Make sure the clips snap into place securely.

GETtheMANUALS.org

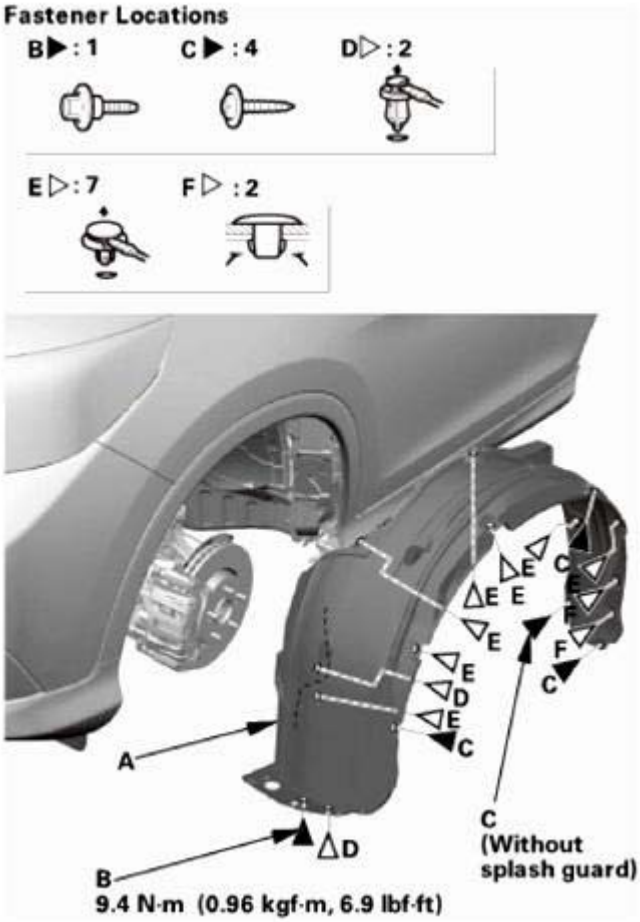

Fig. 38: Identifying Front Inner Fender And Fasteners With Torque Specification
Courtesy of AMERICAN HONDA MOTOR CO., INC.

8. Front Splash Guard
    1. For some models: Install the front splash guard (A), then install the screws (B).

GETtheMANUALS.org

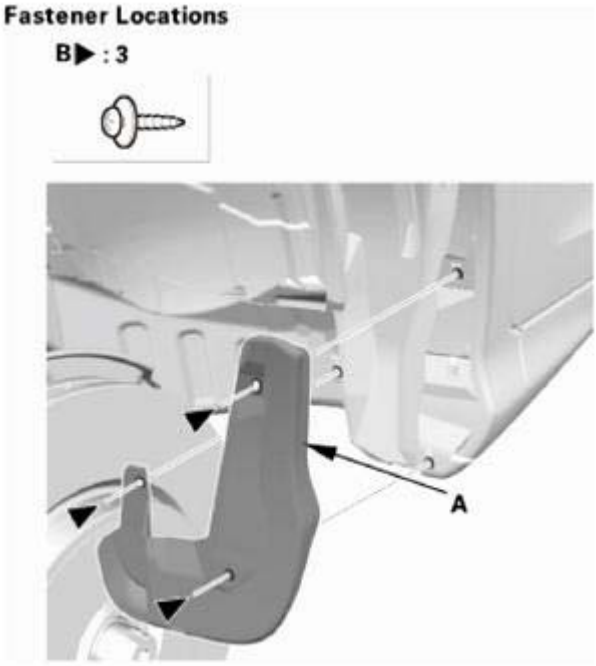

Fig. 39: Identifying Front Splash Guard And Screws
Courtesy of AMERICAN HONDA MOTOR CO., INC.

9. Front Wheel
    1. Install the front wheel.

NOTE: **Before installing the wheel, clean the mating surfaces between the brake disc and the inside of the wheel.**

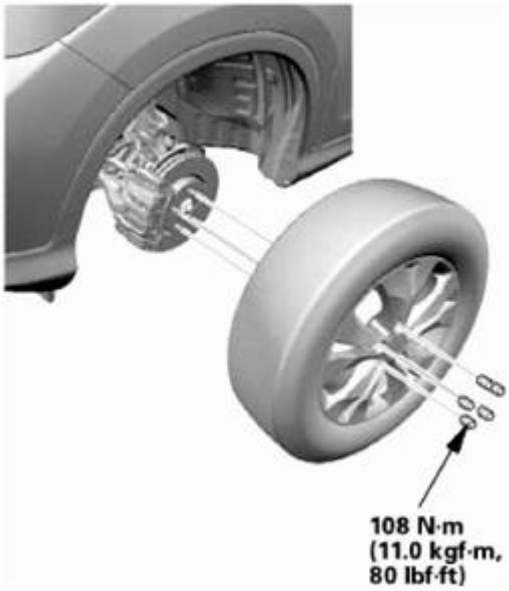

Fig. 40: Identifying Front Wheel And Mounting Bolt With Torque Specification

GETtheMANUALS.org

Courtesy of AMERICAN HONDA MOTOR CO., INC.

HOOD RELEASE HANDLE REMOVAL AND INSTALLATION

REMOVAL

1. Front Door Sill Trim
    1. Detach the hooks (A) and the tabs (B) from the kick panel (C) and the B-pillar lower trim (D), and pull up the front door inner sill trim (E) by hand to detach the clips (F), then remove the trim.

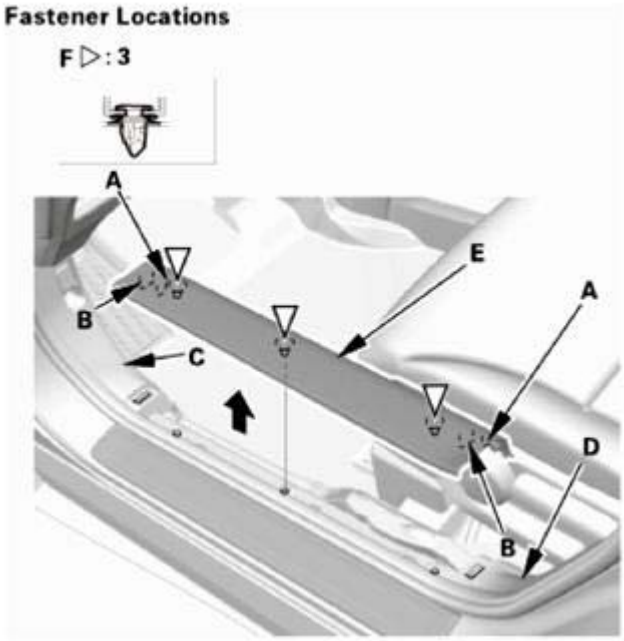

Fig. 41: Pulling Up Front Door Inner Sill Trim
Courtesy of AMERICAN HONDA MOTOR CO., INC.

2. Front Door Opening Seal As Needed
    1. Pull out the front door opening seal (A) from the trim hooks (B) around the front door opening flange as needed.

GETtheMANUALS.org

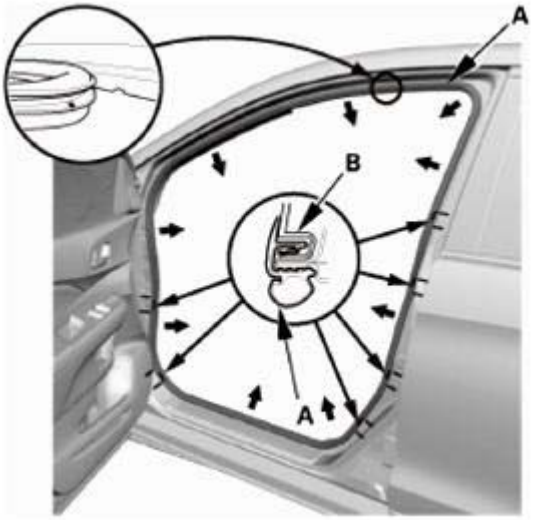

Fig. 42: Pulling Out Front Door Opening Seal From Trim Hooks
Courtesy of AMERICAN HONDA MOTOR CO., INC.

3. Kick Panel
    1. Pull out the front door opening seal (A) as needed from the kick panel hooks and the door opening flange.
    2. Pull back the kick panel by hand to detach the clips (B), then remove the driver's side kick panel (C).

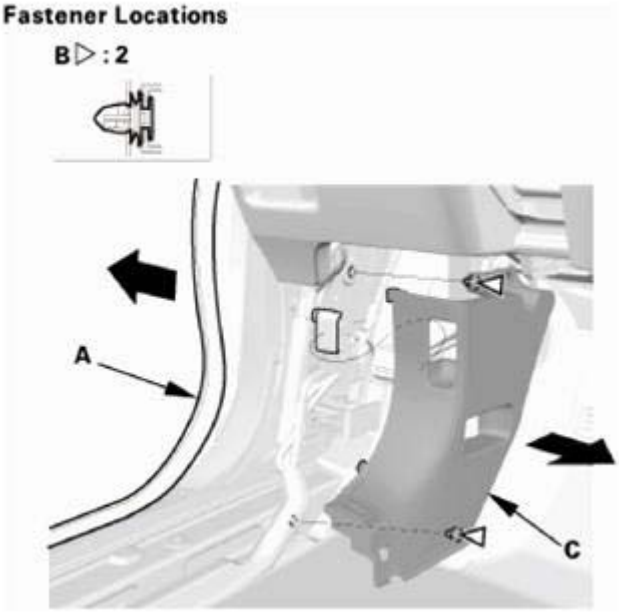

Fig. 43: Removing Driver's Side Kick Panel
Courtesy of AMERICAN HONDA MOTOR CO., INC.

4. Hood Release Handle

GETtheMANUALS.org

1. Remove the bolt (A), then remove the hood release handle/cable (B).
2. Disconnect the hood opener cable (C) from the hood release handle (D).

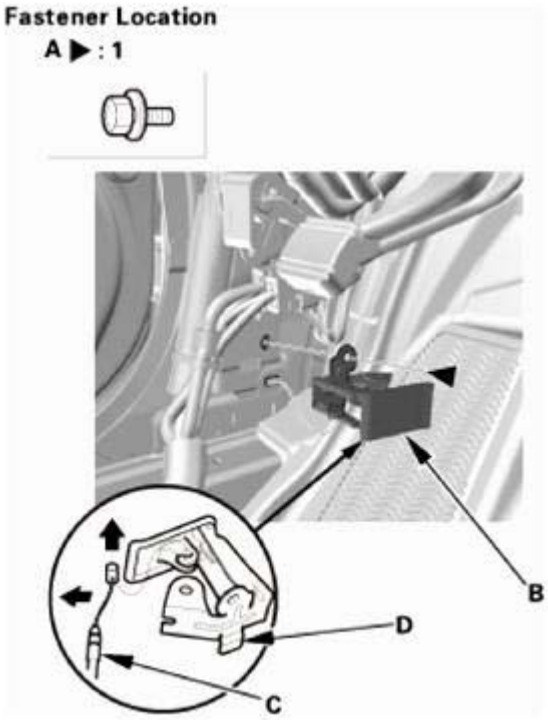

Fig. 44: Disconnecting Hood Opener Cable From Hood Release Handle
Courtesy of AMERICAN HONDA MOTOR CO., INC.

INSTALLATION

1. Hood Release Handle
    1. Connect the hood opener cable (A) to the hood release handle (B).
    2. Install the hood release handle/cable (C), then install the bolt (D).

GETtheMANUALS.org

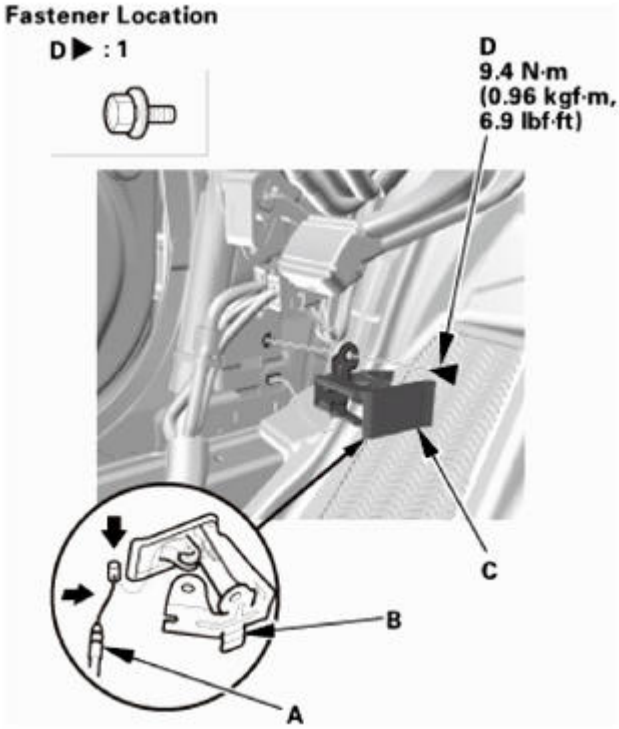

Fig. 45: Installing Hood Opener Cable
Courtesy of AMERICAN HONDA MOTOR CO., INC.

2. Kick Panel
    1. Install the driver's side kick panel (A). Make sure the clips (B) snap into place securely.
    2. Install the front door opening seal (C).

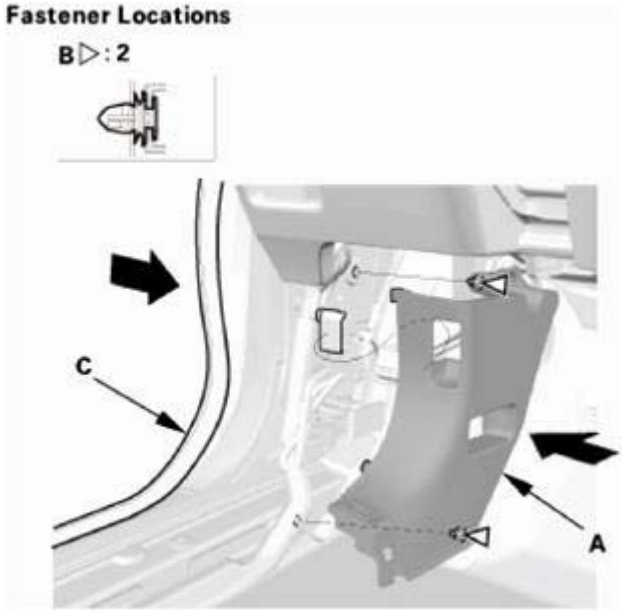

Fig. 46: Installing Driver's Side Kick Panel

GETtheMANUALS.org

Courtesy of AMERICAN HONDA MOTOR CO., INC.

3. Front Door Opening Seal As Needed
    1. Install the front door opening seal (A). Make sure the seal is installed securely into the hooks (B).

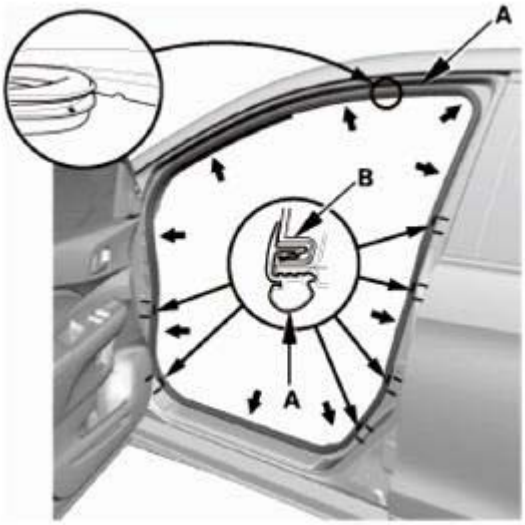

Fig. 47: Installing Front Door Opening Seal
Courtesy of AMERICAN HONDA MOTOR CO., INC.

4. Front Door Sill Trim
    1. Install the front door inner sill trim (A). Make sure the clips (B), the hooks (C), and the tabs (D) snap into place securely.

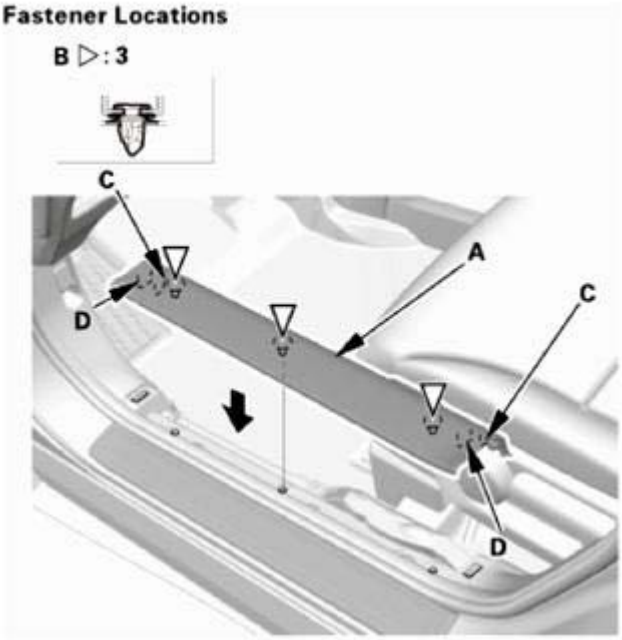

Fig. 48: Installing Front Door Inner Sill Trim

GETtheMANUALS.org

Courtesy of AMERICAN HONDA MOTOR CO., INC.

HOOD SEAL REMOVAL AND INSTALLATION

REMOVAL

1. Hood Seal
    1. Detach the clips (A) with a clip remover, then remove the hood seals (B).

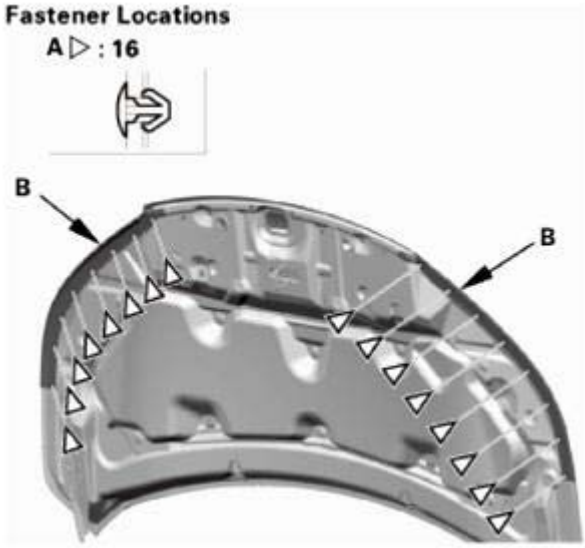

Fig. 49: Identifying Hood Seal And Fasteners
Courtesy of AMERICAN HONDA MOTOR CO., INC.

INSTALLATION

1. Hood Seal
    1. Install the hood seals (A). Make sure the clips (B) snap into place securely.

GETtheMANUALS.org

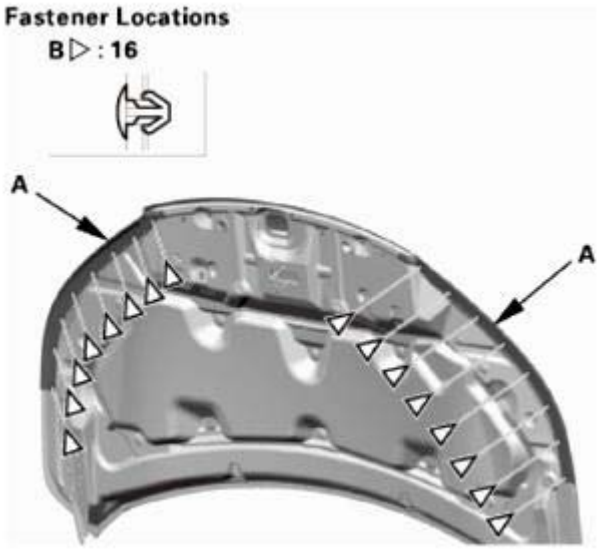

Fig. 50: Identifying Hood Seal And Fasteners
Courtesy of AMERICAN HONDA MOTOR CO., INC.

GETtheMANUALS.org

HORN REMOVAL, INSTALLATION, AND TEST

REMOVAL

NOTE: Steps 1-3 show removing the High Horn, Steps 4-7 show removing the Low Horn.

1. Vehicle Lift
    1. Raise the vehicle on a lift, and make sure it is securely supported.
2. Front Splash Shield As Needed
    1. Remove the bolts (A), then remove the clips (B) that secure the front inner fender and the front splash shield (C) to the body.
    2. From under the front bumper (D), remove the clips (E).
    3. From under the body, remove the clips (F), then pull out the front splash shield.

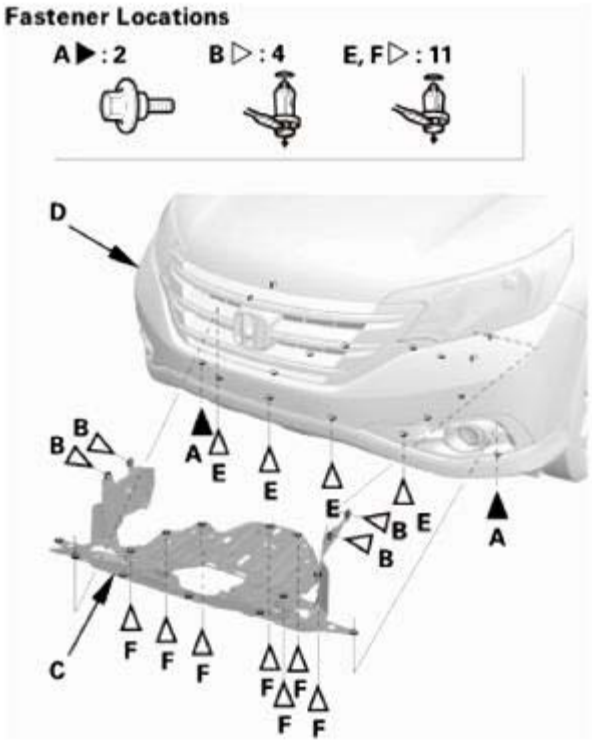

Fig. 1: Identifying Front Splash Shield And Fasteners
Courtesy of AMERICAN HONDA MOTOR CO., INC.

3. Horn - High
    1. Disconnect the connector.

GETtheMANUALS.org

2. Remove the horn (A).

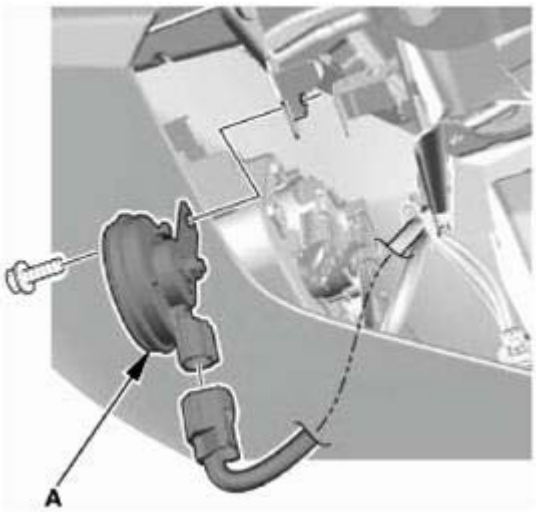

Fig. 2: Identifying Horn And Connector
Courtesy of AMERICAN HONDA MOTOR CO., INC.

4. Front Grille
    1. Apply protective tape (A) to the front grille lower trim (B).

GETtheMANUALS.org

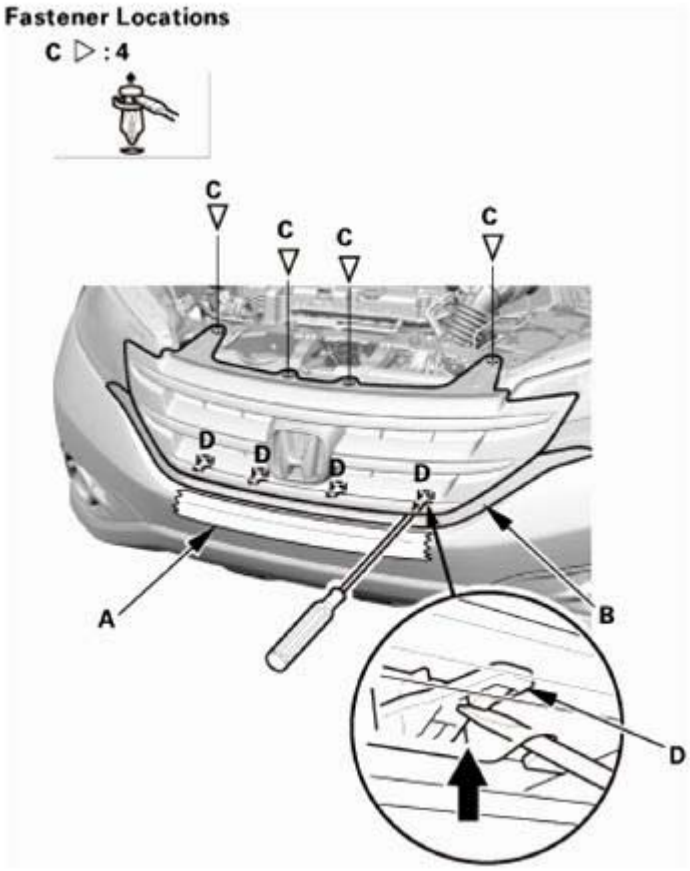

Fig. 3: Disconnecting Front Grille Hooks
Courtesy of AMERICAN HONDA MOTOR CO., INC.

2. Remove the clips (C) and detach the hooks (D).
3. Insert a shop towel (A) between the front grille (B) and the front grille lower trim (C).

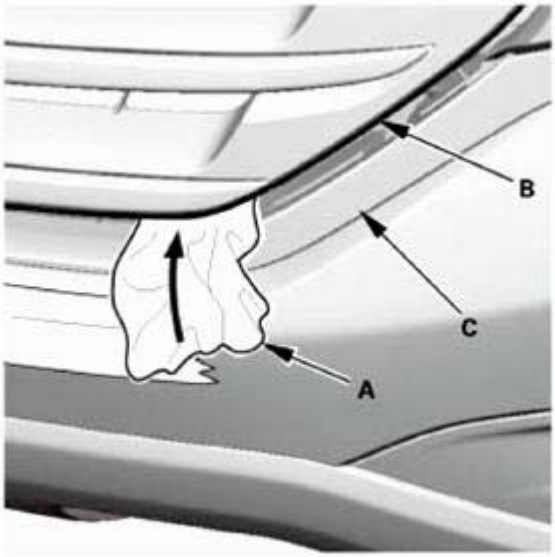

GETtheMANUALS.org

Fig. 4: Inserting Shop Towel Between Front Grille And Front Grille Lower Trim
Courtesy of AMERICAN HONDA MOTOR CO., INC.

4. Insert a flat-tip screwdriver (A) into the opening at the front grille (B), then turn the screwdriver to detach the clip (C).

NOTE: Repeat this procedure on the opposite side.

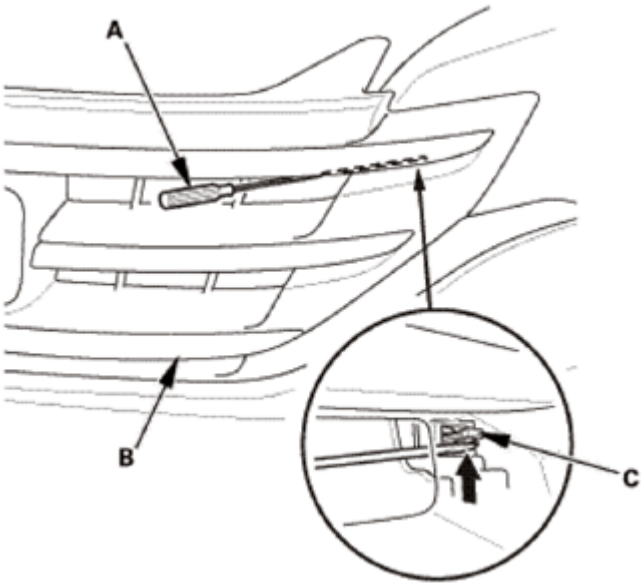

Fig. 5: Disconnecting Front Grille Clips Using Flat-Tip Screwdriver
Courtesy of AMERICAN HONDA MOTOR CO., INC.

5. Remove the front grille (A).

GETtheMANUALS.org

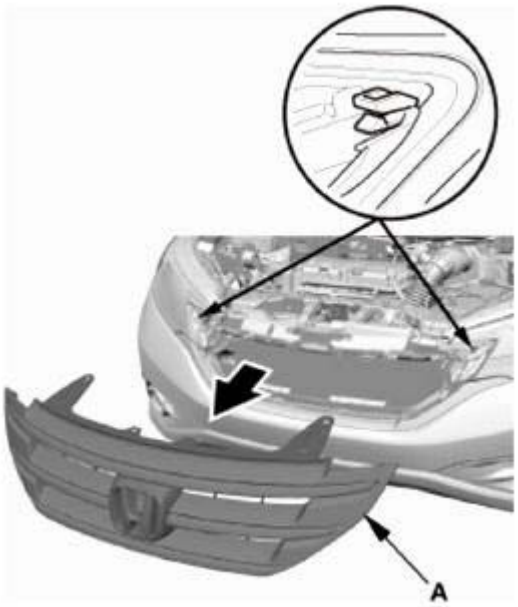

Fig. 6: Removing Front Grille
Courtesy of AMERICAN HONDA MOTOR CO., INC.

5. Front Bumper Upper Duct
    1. Remove the clips (A), then remove the front bumper upper duct (B).

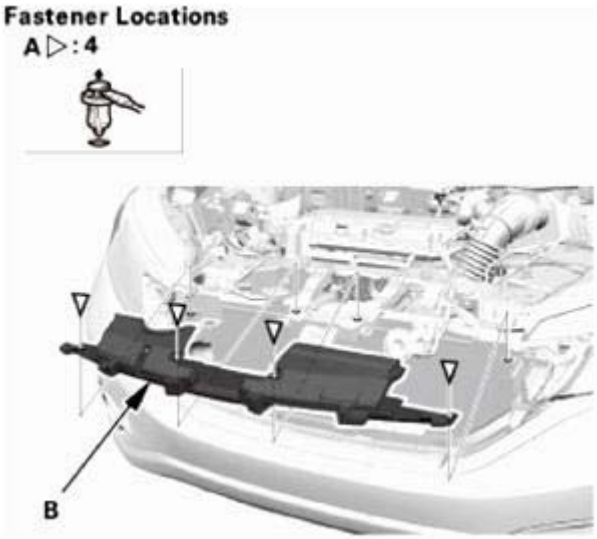

Fig. 7: Identifying Front Bumper Upper Duct Clips
Courtesy of AMERICAN HONDA MOTOR CO., INC.

6. Horn and Bracket Assembly
    1. Disconnect the connector.
    2. Remove the horn (A) and the bracket (B) as an assembly.

GETtheMANUALS.org

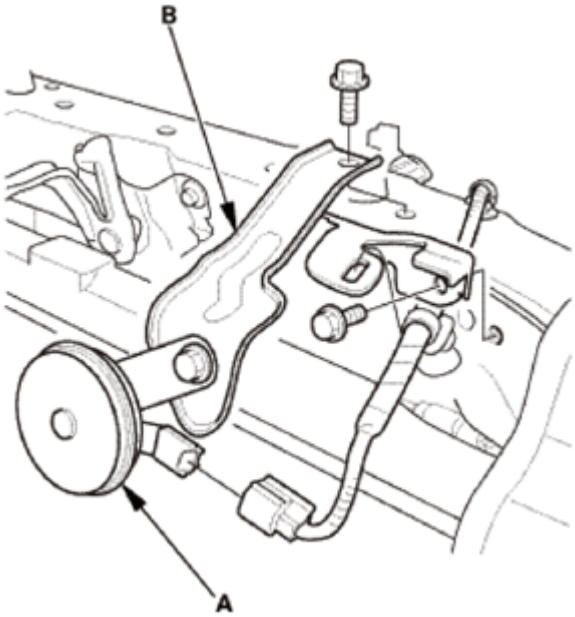

Fig. 8: Identifying Horn And Bracket Assembly
Courtesy of AMERICAN HONDA MOTOR CO., INC.

7. Horn - Low
    1. Remove the horn (A) from the bracket (B).

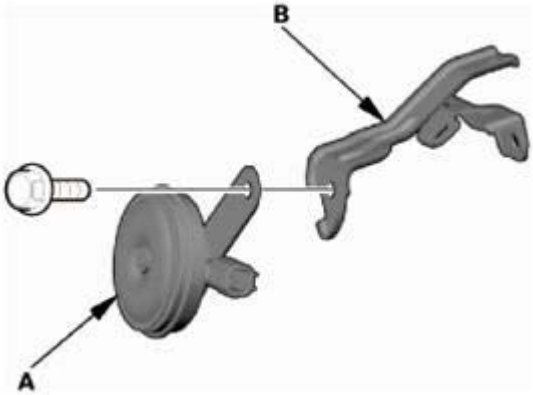

Fig. 9: Identifying Horn And Bracket
Courtesy of AMERICAN HONDA MOTOR CO., INC.

TEST

1. Horn - Test
    1. Test the horn by momentarily connecting battery power to the terminal (A) and grounding the bracket (B). The horn should sound.
    2. If it fails to sound, replace the horn (C).

GETtheMANUALS.org

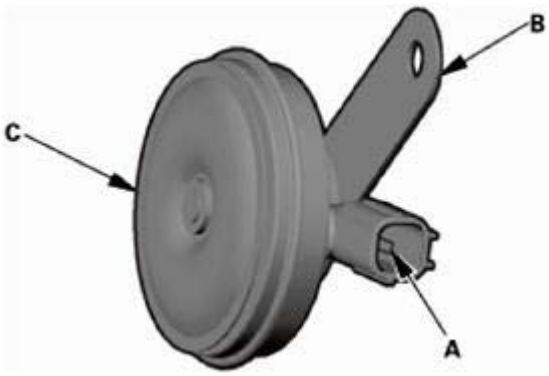

Fig. 10: Identifying Horn, Bracket And Connector Terminals
Courtesy of AMERICAN HONDA MOTOR CO., INC.

INSTALLATION

NOTE: **Steps 1-4 show installing the Low Horn, Steps 5- 6 show installing the High Horn.**

1. Horn - Low
    1. Install the horn (A) to the bracket (B).

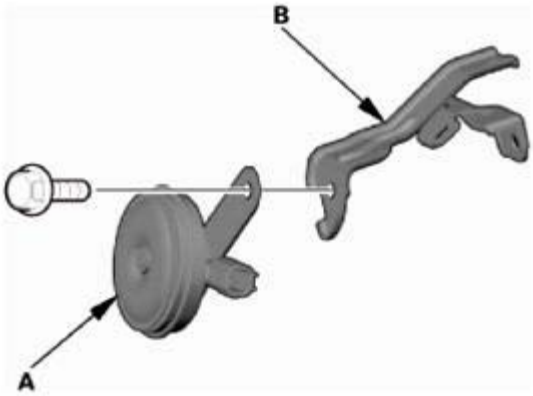

Fig. 11: Identifying Horn, Bracket And Bolt
Courtesy of AMERICAN HONDA MOTOR CO., INC.

2. Horn and Bracket Assembly
    1. Install the horn (A) and the bracket (B) as an assembly.
    2. Connect the connector.

GETtheMANUALS.org

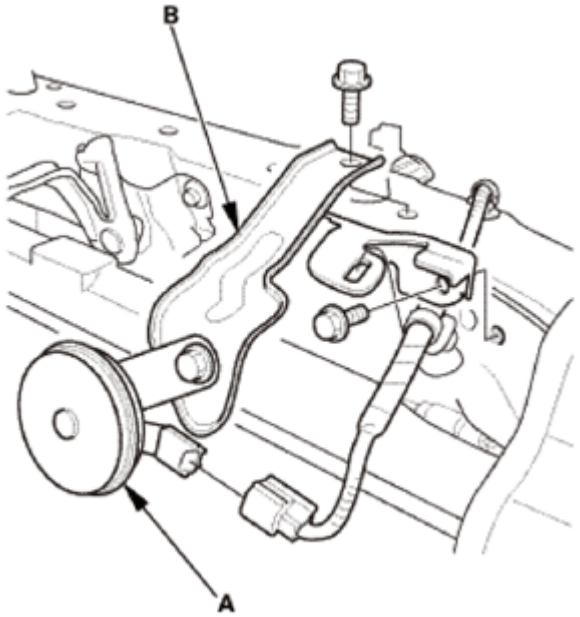

Fig. 12: Identifying Horn And Bracket Assembly
Courtesy of AMERICAN HONDA MOTOR CO., INC.

3. Front Bumper Upper Duct
    1. Install the front bumper upper duct (A). Make sure the clips (B) snap into place securely.

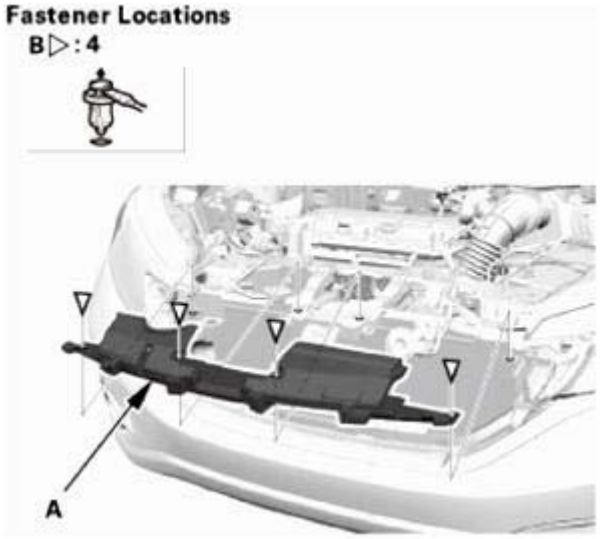

Fig. 13: Identifying Front Bumper Upper Duct And Clips
Courtesy of AMERICAN HONDA MOTOR CO., INC.

4. Front Grille
    1. Install the front grille (A) by pushing on the clip areas until the clips snap into place.
    2. Install the clips (B).

GETtheMANUALS.org

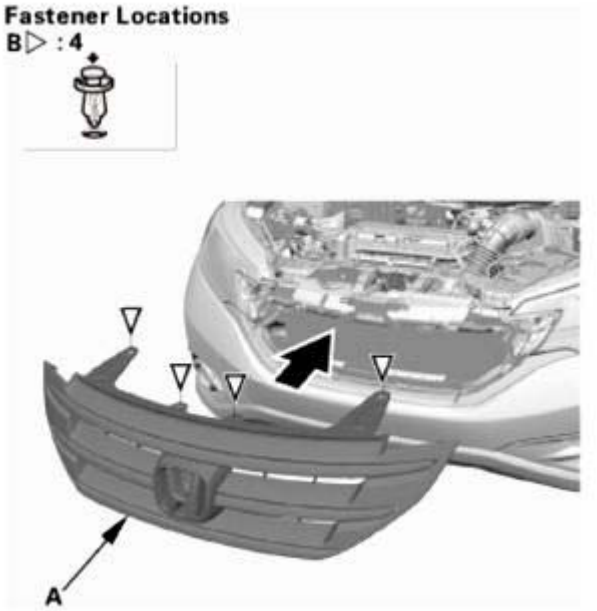

Fig. 14: Installing Front Grille
Courtesy of AMERICAN HONDA MOTOR CO., INC.

5. Horn - High
    1. Install the horn (A).
    2. Connect the connector.

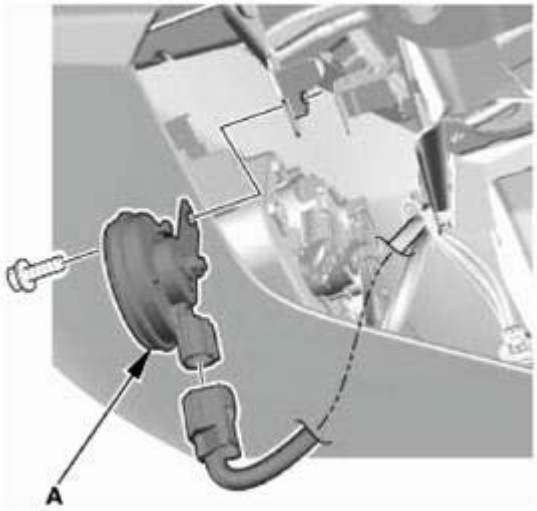

Fig. 15: Identifying Horn
Courtesy of AMERICAN HONDA MOTOR CO., INC.

6. Front Splash Shield (2.4L) As Needed
    1. Install the front splash shield (A), then install the bolts (B) and the clips (C, D). Make sure the clips snap into place securely.

GETtheMANUALS.org

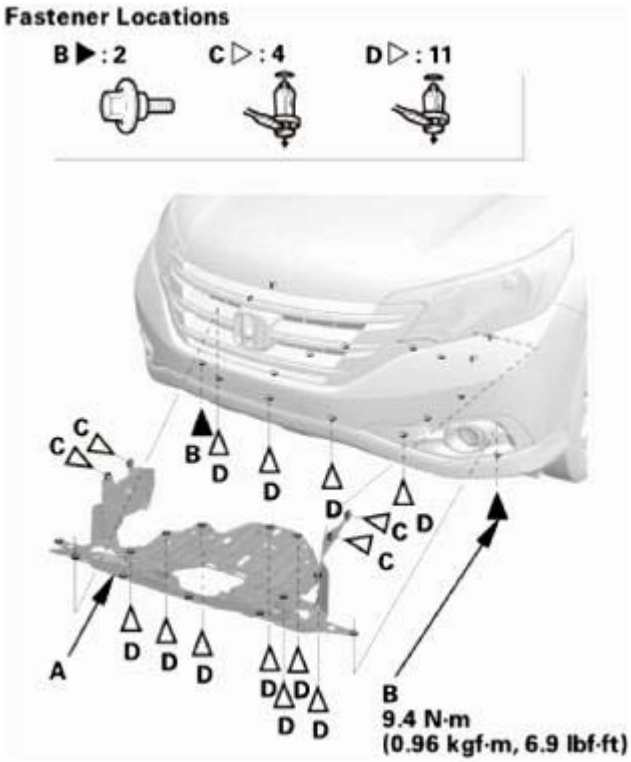

Fig. 16: Identifying Front Splash Shield And Fasteners With Torque Specifications
Courtesy of AMERICAN HONDA MOTOR CO., INC.

HORNS COMPONENT LOCATION INDEX

GETtheMANUALS.org

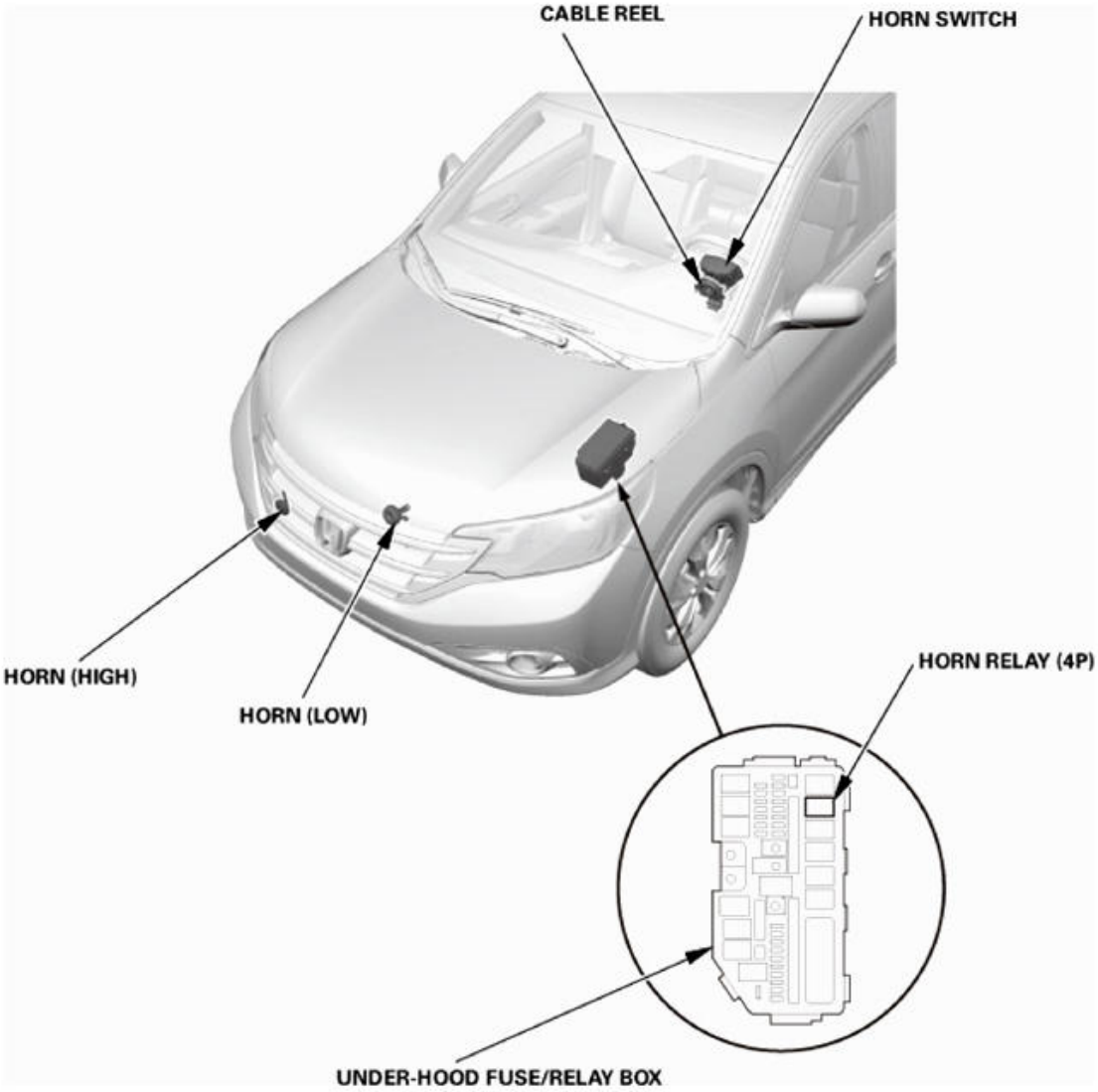

Fig. 17: Horn Components Location
Courtesy of AMERICAN HONDA MOTOR CO., INC.

CABLE REEL	**REMOVAL AND INSTALLATION**
HORN (HIGH)	**REMOVAL, INSTALLATION, AND TEST**
HORN (LOW)	**REMOVAL, INSTALLATION, AND TEST**
HORN RELAY (4P)	**TEST**
HORN SWITCH	**TEST**

HORN SWITCH TEST

NOTE:

- **SRS components are located in this area. Review the SRS COMPONENT LOCATIONS , and PRECAUTIONS AND PROCEDURES before performing repairs or servicing.**

GETtheMANUALS.org

- **Before testing, make sure the No. A14 (10 A) fuse in the under-hood fuse/relay box is OK.**

1. Turn the steering wheel 180° from the center position and remove the cover.
2. Disconnect the horn switch 1P connector.
3. Connect horn switch 1P connector terminal No. 1 and body ground with a jumper wire.

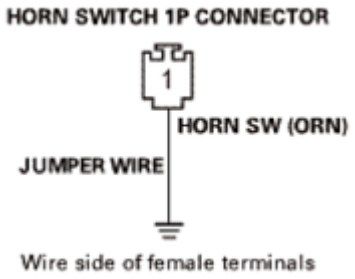

Fig. 18: Connecting Horn Switch 1P Connector Terminal No. 1 And Body Ground
Courtesy of AMERICAN HONDA MOTOR CO., INC.

- If the horns do not sound, go to step **4** .
- If the horns sound, go to step 11.

4. Remove the jumper wire from the horn switch 1P connector.
5. **REMOVE THE DRIVER'S AIRBAG ASSEMBLY** .
6. Disconnect cable reel connector C (20P) from the cable reel.
7. Check for continuity between cable reel connector C (20P) terminal No. 14 and horn switch 1P connector terminal No. 1.

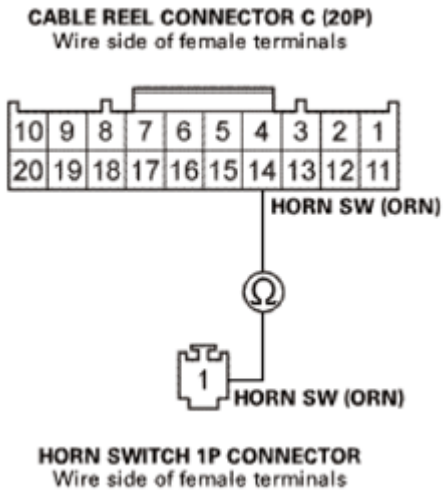

Fig. 19: Checking Continuity Between Cable Reel Connector C (20P) Terminal No. 14 And Horn Switch 1P Connector Terminal No. 1
Courtesy of AMERICAN HONDA MOTOR CO., INC.

GETtheMANUALS.org

- If there is continuity, go to step **8** .
- If there is no continuity, repair an open or high resistance in the wire.

8. **REMOVE THE STEERING COLUMN COVERS** .
9. Disconnect cable reel connector A (20P).
10. Connect cable reel connector A (20P) terminal No. 2 and body ground with a jumper wire.

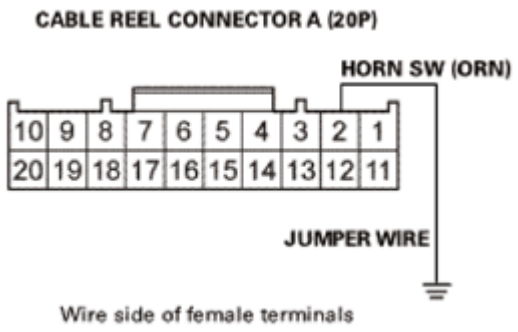

Fig. 20: Connecting Cable Reel Connector A (20P) Terminal No. 2 And Body Ground
Courtesy of AMERICAN HONDA MOTOR CO., INC.

- If the horns sound, **REPLACE THE CABLE REEL** .
- If the horns do not sound, check these items.
  - Horns.
  - Horn relay.
  - An open or high resistance in the wire.
- If OK, the MICU must be faulty. **REPLACE THE UNDER-DASH FUSE/RELAY BOX** .

11. **REMOVE THE DRIVER'S AIRBAG ASSEMBLY** .
12. Check the installation of the driver's airbag assembly and the steering wheel. If the horn switch plate is OK, **REPLACE THE DRIVER'S AIRBAG ASSEMBLY** .

GETtheMANUALS.org

DTC INDICATOR 1: AN OPEN IN THE AIR MIX CONTROL MOTOR CIRCUIT

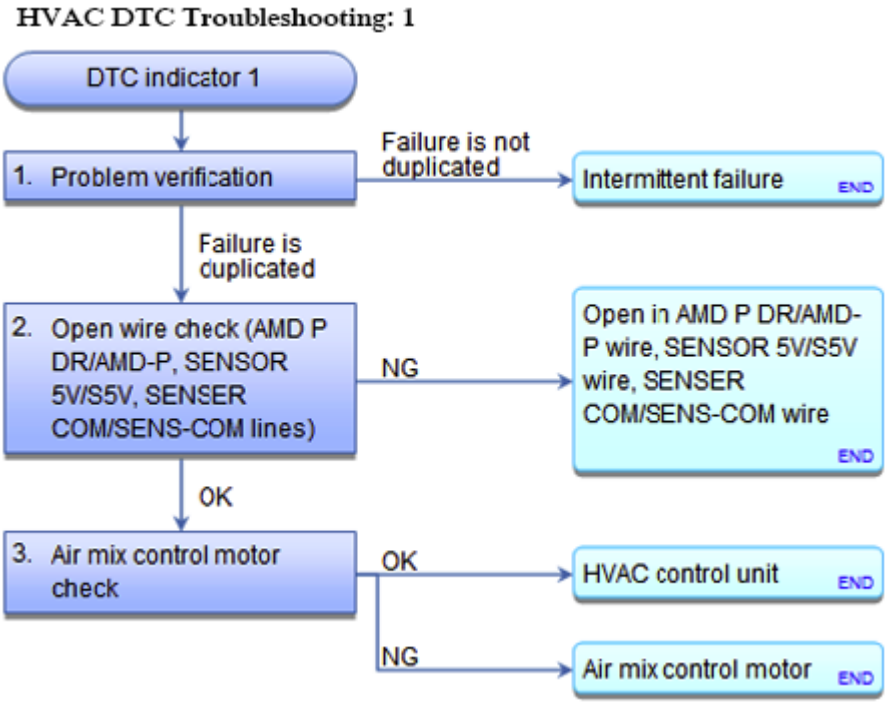

Fig. 1: HVAC DTC Troubleshooting Flow Chart (1)
Courtesy of AMERICAN HONDA MOTOR CO., INC.

1. Problem verification:
   - 1. Turn the ignition switch to LOCK (0), and then back to ON (II).
   - 2. **DO THE SELF-DIAGNOSTIC FUNCTION WITH THE HVAC CONTROL UNIT** .
   - 3. Check for DTCs.

     Is DTC 1 indicated?

     YES : Go to step 2.

     NO : Intermittent failure. Check for loose wires or poor connections on the air mix control motor circuit.

2. Open wire check (AMD P DR/AMD-P, SENSOR 5V/S5V, SENSOR COM/SENS-COM lines):
   - 1. Turn the ignition switch to LOCK (0).
   - 2. Disconnect the following connectors.

GETtheMANUALS.org

HVAC control unit 32P connector

Air mix control motor 7P connector

- 3. Check for continuity between test points 1 and 2 respectively.

Test condition IG LOCK (0)

HVAC control unit 32P connector: disconnected

Air mix control motor 7P connector: disconnected

Test circuit AMD P DR/AMD-P

Test point 1 HVAC control unit 32P connector No. 22 (LT GRN)

Test point 2 Air mix control motor 7P connector No. 2 (GRY)

Test circuit SENSOR 5V/S5V

Test point 1 HVAC control unit 32P connector No. 17 (LT BLU)

Test point 2 Air mix control motor 7P connector No. 3 (BLK)

Test circuit SENSOR COM/SENS-COM

Test point 1 HVAC control unit 32P connector No. 20 (GRY)

Test point 2 Air mix control motor 7P connector No. 1 (RED)

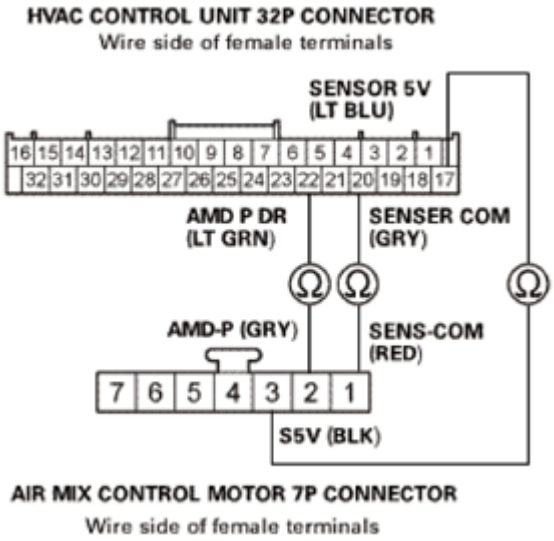

Fig. 2: Checking Continuity Between HVAC Control Unit 32P Connector And Air Mix

GETtheMANUALS.org

Control Motor 7P Connector
Courtesy of AMERICAN HONDA MOTOR CO., INC.

Is there continuity?

YES : The AMD P DR/AMD-P, SENSOR 5V/S5V, and SENSOR COM/SENS-COM wires are OK. Go to step 3.

NO : Repair an open in the wire(s) between the HVAC control unit and the air mix control motor.

3. Air mix control motor check:
   - 1. **Test the air mix control motor** See **AIR MIX CONTROL MOTOR TEST** , **DRIVER'S AIR MIX CONTROL MOTOR TEST** or **PASSENGER'S AIR MIX CONTROL MOTOR TEST** .

     Is the air mix control motor OK?

     YES : **REPLACE THE HVAC CONTROL UNIT** .

     NO : **Replace the air mix control motor** See **AIR MIX CONTROL MOTOR REMOVAL AND INSTALLATION** , **DRIVER'S AIR MIX CONTROL MOTOR REMOVAL AND INSTALLATION** or **PASSENGER'S AIR MIX CONTROL MOTOR REMOVAL AND INSTALLATION** .

DTC INDICATOR 10: A PROBLEM IN THE BLOWER MOTOR CIRCUIT

GETtheMANUALS.org

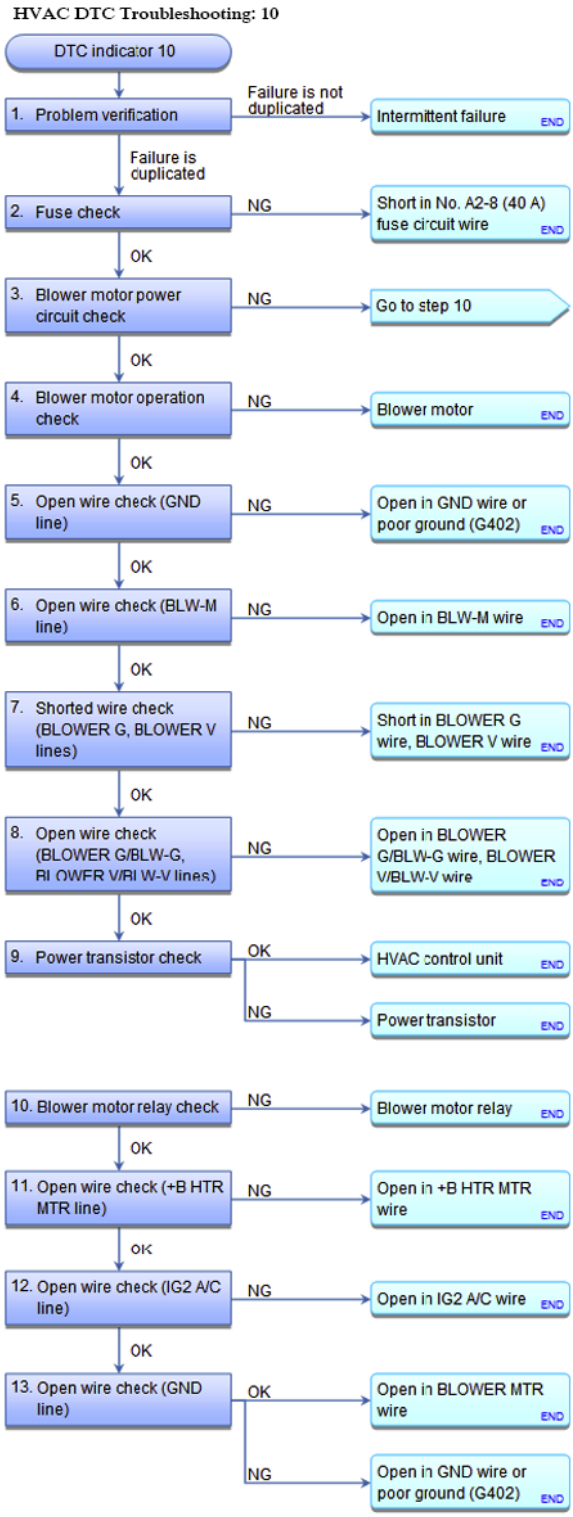

Fig. 3: HVAC DTC Troubleshooting Flow Chart (10)
Courtesy of AMERICAN HONDA MOTOR CO., INC.

1. Problem verification:
    - 1. Turn the ignition switch to LOCK (0), and then back to ON (II).

GETtheMANUALS.org

- 2. **DO THE SELF-DIAGNOSTIC FUNCTION WITH THE HVAC CONTROL UNIT** .
- 3. Check for DTCs.

  Is DTC 10 indicated?

  YES : Go to step 2.

  NO : Intermittent failure. Check for loose wires or poor connections on the blower motor circuit.

2. Fuse check:
   - 1. Turn the ignition switch to LOCK (0).
   - 2. Check the following fuses.

     Fuse No. A2-8 (40 A)

     Location Under dash fuse/relay box

     Fuse No. B22 (7.5A)

     Location Under dash fuse/relay box

     Are the fuses OK?

     YES : Go to step 3.

     NO : Replace the fuse, and recheck. If fuse blows again, check for a short in the No. A2-8 (40 A) and or No. B22 (7.5A)fuse circuits.

3. Blower motor power circuit check:
   - 1. Disconnect the following connector.

     Blower motor 2P connector

   - 2. Turn the ignition switch to ON (II).
   - 3. Measure the voltage between test points 1 and 2.

     Test condition IG ON (II)

     Blower motor 2P connector: disconnected

     Test circuit BLW-RLY

     Test point 1 Blower motor 2P connector No. 2 (WHT)

     Test point 2 Body ground

GETtheMANUALS.org

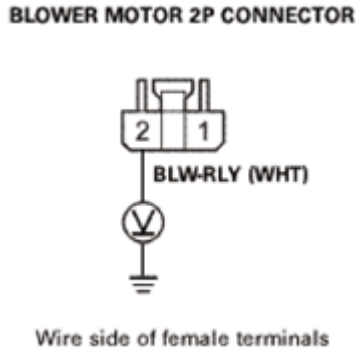

Fig. 4: Measuring Voltage Between Blower Motor 2P Connector No. 2 And Body Ground
Courtesy of AMERICAN HONDA MOTOR CO., INC.

Is there battery voltage?

YES : Go to step 4.

NO : Go to step 10.

4. Blower motor operation check:
   - 1. Turn the ignition switch to LOCK (0).
   - 2. Reconnect the blower motor 2P connector.
   - 3. Connect terminals A and B with a jumper wire.

     Terminal A Blower motor 2P connector No. 1 (GRN)

     Terminal B Body ground

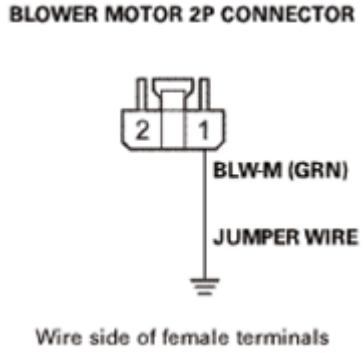

Fig. 5: Connecting Blower Motor 2P Connector Terminal No. 1 And Body Ground Using Jumper Wire
Courtesy of AMERICAN HONDA MOTOR CO., INC.

   - 4. Turn the ignition switch to ON (II).

     Does the blower motor run?

GETtheMANUALS.org

YES : Go to step 5.

NO : **REPLACE THE BLOWER MOTOR** .

5. Open wire check (GND line):
   - 1. Turn the ignition switch to LOCK (0).
   - 2. Disconnect the jumper wire.
   - 3. Disconnect the following connector.

     Power transistor 4P connector

   - 4. Check for continuity between test points 1 and 2.

     Test condition IG LOCK (0)

     Power transistor 4P connector: disconnected

     Test circuit GND

     Test point 1 Power transistor 4P connector No. 3 (BLK)

     Test point 2 Body ground

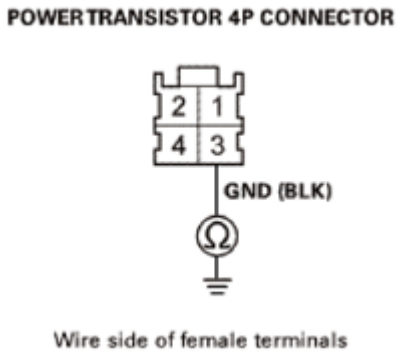

Fig. 6: Checking Continuity Between Power Transistor 4P Connector No. 3 And Body Ground
Courtesy of AMERICAN HONDA MOTOR CO., INC.

Is there continuity?

YES : The GND wire is OK. Go to step 6.

NO : Check for an open in the wire between the power transistor and body ground. If the wire is OK, check for poor ground at G402.

6. Open wire check (BLW-M line):

GETtheMANUALS.org

- 1. Connect terminals A and B with a jumper wire.

  Terminal A Power transistor 4P connector No. 3 (BLK)

  Terminal B Power transistor 4P connector No. 4 (GRN)

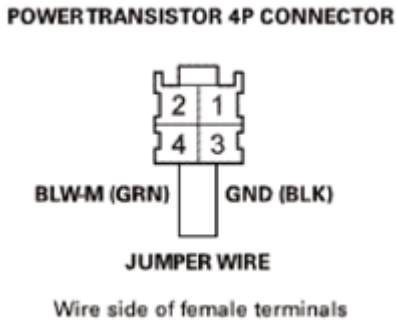

  Fig. 7: Connecting Power Transistor 4P Connector No. 3 And 4 Terminals Using Jumper Wire
  Courtesy of AMERICAN HONDA MOTOR CO., INC.

- 2. Turn the ignition switch to ON (II).

  Does the blower motor run at high speed?

  YES : The BLW-M wire is OK. Go to step 7.

  NO : Repair an open in the wire between the power transistor and the blower motor.

7. Shorted wire check (BLOWER G, BLOWER V lines):
   - 1. Turn the ignition switch to LOCK (0).
   - 2. Disconnect the jumper wire.
   - 3. Disconnect the following connector.

     HVAC control unit 32P connector

   - 4. Check for continuity between test points 1 and 2 individually.

     Test condition IG LOCK (0)

     HVAC control unit 32P connector: disconnected

     Power transistor 4P connector: disconnected

     Test circuit BLOWER G

     Test point 1 HVAC control unit 32P connector No. 9 (GRN)

GETtheMANUALS.org

Test point 2 Body ground

Test circuit BLOWER V

Test point 1 HVAC control unit 32P connector No. 10 (RED)

Test point 2 Body ground

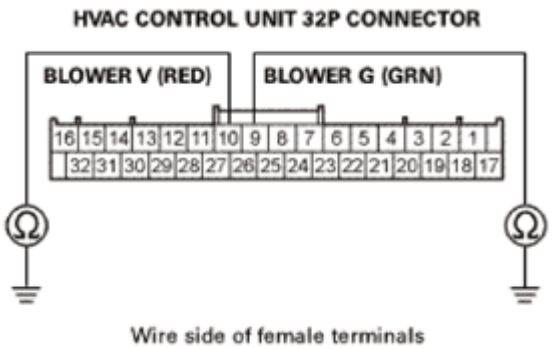

Fig. 8: Checking Continuity Between HVAC Control Unit 32P Connector No. 9, 10 And Body Ground
Courtesy of AMERICAN HONDA MOTOR CO., INC.

Is there continuity?

YES : Repair a short to body ground in the wire(s) between the HVAC control unit and the power transistor.

NO : The BLOWER G and BLOWER V wires are not shorted to ground. Go to step 8.

8. Open wire check (BLOWER G/BLW-G, BLOWER V/BLW-V lines):
   - 1. Check for continuity between test points 1 and 2 respectively.

     Test condition IG LOCK (0)

     HVAC control unit 32P connector: disconnected

     Power transistor 4P connector: disconnected

     Test circuit BLOWER G/BLW-G

     Test point 1 HVAC control unit 32P connector No. 9 (GRN)

     Test point 2 Power transistor 4P connector No. 1 (YEL)

     Test circuit BLOWER V/BLW-V

GETtheMANUALS.org

Test point 1 HVAC control unit 32P connector No. 10 (RED)

Test point 2 Power transistor 4P connector No. 2 (BLU)

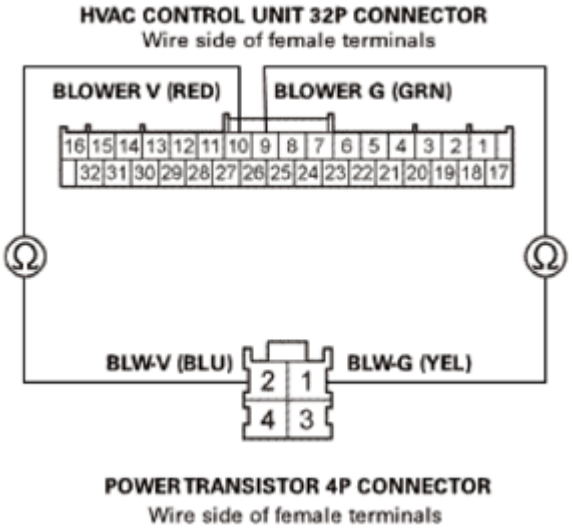

Fig. 9: Checking Continuity Between HVAC Control Unit 32P Connector And Power Transistor 4P Connector Terminals
Courtesy of AMERICAN HONDA MOTOR CO., INC.

Is there continuity?

YES : The BLOWER G/BLW-G and BLOWER V/BLW-V wires are OK. Go to step 9.

NO : Repair an open in the wire between the HVAC control unit and the power transistor.

9. Power transistor check:
   - 1. Reconnect the HVAC control unit 32P connector.
   - 2. **Test the power transistor** See **BLOWER POWER TRANSISTOR TEST** or **BLOWER POWER TRANSISTOR TEST** .

   Is the power transistor OK?

   YES : **REPLACE THE HVAC CONTROL UNIT** .

   NO : **REPLACE THE POWER TRANSISTOR** .

   If the power transistor is faulty, check the blower motor for damage. If necessary, **REPLACE THE BLOWER MOTOR** .

10. Blower motor relay check:
   - 1. Turn the ignition switch to LOCK (0).
   - 2. Remove the blower motor relay from the under-hood fuse/relay box, and **TEST IT** .

GETtheMANUALS.org

Is the relay OK?

YES : Go to step 11.

NO : Replace the blower motor relay.

11. Open wire check (+B HTR MTR line):
    - 1. Measure the voltage between test points 1 and 2.

    Test condition IG LOCK (0)

    Blower motor 2P connector: disconnected

    Blower motor relay: disconnected

    Test circuit +B HTR MTR

    Test point 1 Blower motor relay 5P socket No. 1 (Under-hood fuse/relay box)

    Test point 2 Body ground

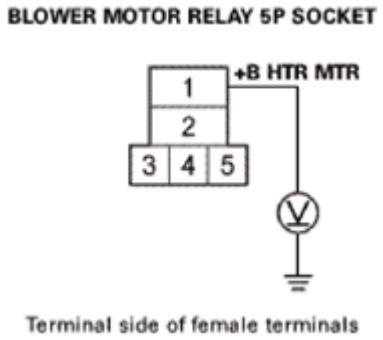

Fig. 10: Measuring Voltage Between Blower Motor Relay 5P Socket No. 1 And Body Ground
Courtesy of AMERICAN HONDA MOTOR CO., INC.

Is there battery voltage?

YES : The +B HTR MTR wire is OK. Go to step 12.

NO : An open in +B HTR MTR wire. **REPLACE THE UNDER-HOOD FUSE/RELAY BOX** .

12. Open wire check (IG2 A/C line):
    - 1. Turn the ignition switch to ON (II).
    - 2. Measure the voltage between test points 1 and 2.

    Test condition IG ON (II)

GETtheMANUALS.org

Blower motor 2P connector: disconnected

Blower motor relay: disconnected

Test circuit IG2 A/C

Test point 1 Blower motor relay 5P socket No. 3 (PNK) (Under-hood fuse/relay box)

Test point 2 Body ground

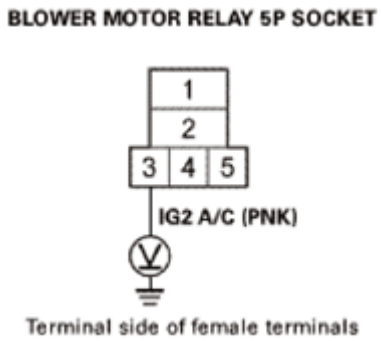

Fig. 11: Measuring Voltage Between Blower Motor Relay 5P Socket No. 3 And Body Ground
Courtesy of AMERICAN HONDA MOTOR CO., INC.

Is there battery voltage?

YES : The IG2 A/C wire is OK. Go to step 13.

NO : Repair an open in the wire between the No. B22 (7.5 A) fuse in the under-dash fuse/relay box and the blower motor relay.

13. Open wire check (GND line):
    - 1. Turn the ignition switch to LOCK (0).
    - 2. Check for continuity between test points 1 and 2.

    Test condition IG LOCK (0)

    Blower motor 2P connector: disconnected

    Blower motor relay: disconnected

    Test circuit GND

    Test point 1 Blower motor relay 5P socket No. 5 (BRN) (Under-hood fuse/relay box)

    Test point 2 Body ground

GETtheMANUALS.org

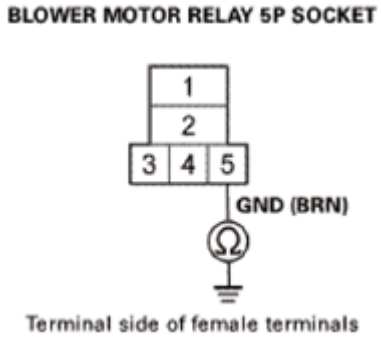

Fig. 12: Checking Continuity Between Blower Motor Relay 5P Socket No. 5 And Body Ground
Courtesy of AMERICAN HONDA MOTOR CO., INC.

Is there continuity?

YES : Repair an open in the wire between the blower motor relay and the blower motor.

NO : Check for an open in the wire between the blower motor relay and body ground. If the wire is OK, check for poor ground at G402.

DTC INDICATOR 11: HVAC CONTROL UNIT INTERNAL ERROR

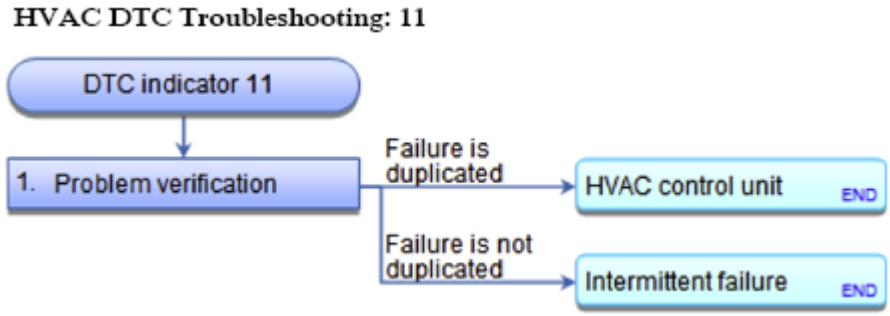

Fig. 13: HVAC DTC Troubleshooting Flow Chart (11)
Courtesy of AMERICAN HONDA MOTOR CO., INC.

1. Problem verification:
   - 1. Turn the ignition switch to LOCK (0), and then back to ON (II).
   - 2. **DO THE SELF-DIAGNOSTIC FUNCTION WITH THE HVAC CONTROL UNIT** .
   - 3. Check for DTCs.

   Is DTC 11 indicated?

   YES : **REPLACE THE HVAC CONTROL UNIT** .

   NO : Intermittent failure, the HVAC control unit is OK at this time.

GETtheMANUALS.org

DTC INDICATOR 12: AN OPEN IN THE EVAPORATOR TEMPERATURE SENSOR CIRCUIT

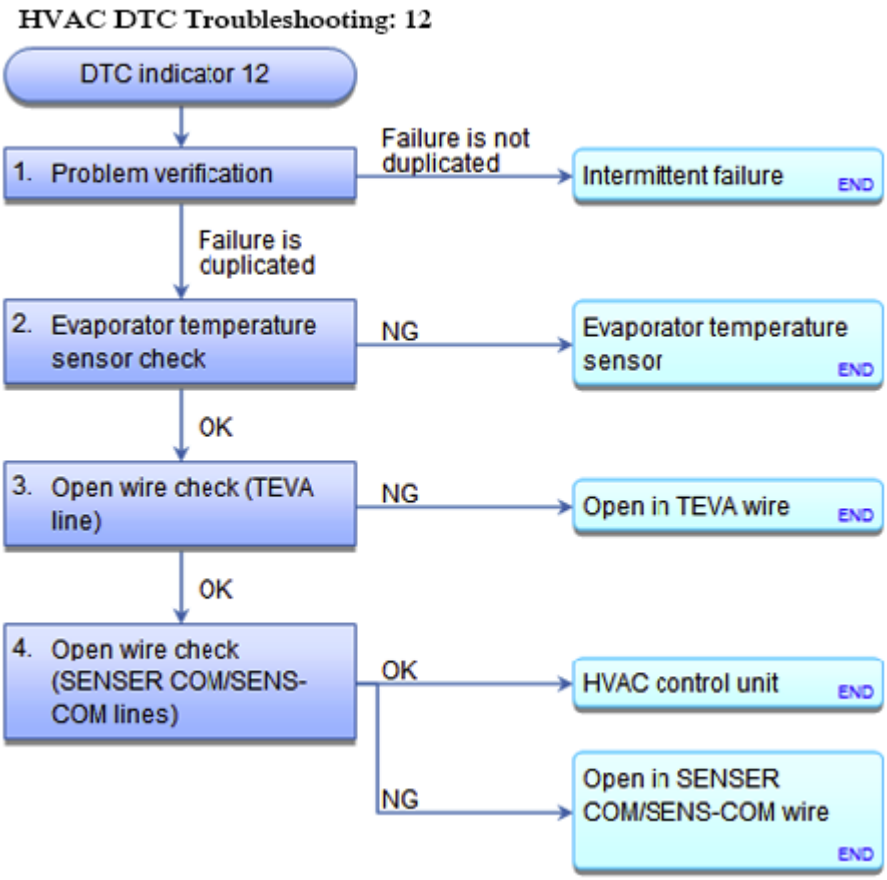

Fig. 14: HVAC DTC Troubleshooting Flow Chart (12)
Courtesy of AMERICAN HONDA MOTOR CO., INC.

1. Problem verification:
   - 1. Turn the ignition switch to LOCK (0), and then back to ON (II).
   - 2. **DO THE SELF-DIAGNOSTIC FUNCTION WITH THE HVAC CONTROL UNIT** .
   - 3. Check for DTCs.

     Is DTC 12 indicated?

     YES : Go to step 2.

     NO : Intermittent failure. Check for loose wires or poor connections on the evaporator temperature sensor circuit.

2. Evaporator temperature sensor check:
   - 1. Turn the ignition switch to LOCK (0).

GETtheMANUALS.org

- 2. **REMOVE THE EVAPORATOR TEMPERATURE SENSOR, AND TEST IT** .

  Is the evaporator temperature sensor OK?

  YES : With the evaporator temperature sensor disconnected, go to step 3.

  NO : **REPLACE THE EVAPORATOR TEMPERATURE SENSOR** .

3. Open wire check (TEVA line):
   - 1. Disconnect the following connector.

     HVAC control unit 32P connector

   - 2. Check for continuity between test points 1 and 2.

     Test condition IG LOCK (0)

     HVAC control panel 32P connector: disconnected

     Evaporator temperature sensor: disconnected

     Test circuit TEVA

     Test point 1 HVAC control unit 32P connector No. 19 (ORN)

     Test point 2 Evaporator temperature sensor 2P connector No. 1 (BRN)

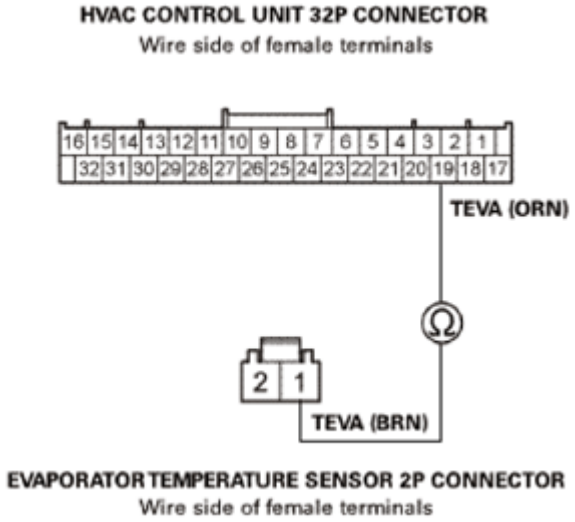

Fig. 15: Checking Continuity Between HVAC Control Unit 32P Connector No. 19 And Evaporator Temperature Sensor 2P Connector No. 1
Courtesy of AMERICAN HONDA MOTOR CO., INC.

GETtheMANUALS.org

Is there continuity?

YES : The TEVA wire is OK. Go to step 4.

NO : Repair an open in the wire between the HVAC control unit and the evaporator temperature sensor.

4. Open wire check (SENSOR COM/SENS-COM lines):
   - 1. Check for continuity between test points 1 and 2.

     Test condition IG LOCK (0)

     HVAC control panel 32P connector: disconnected

     Evaporator temperature sensor: disconnected

     Test circuit SENSOR COM/SENS-COM

     Test point 1 HVAC control unit 32P connector No. 20 (GRY)

     Test point 2 Evaporator temperature sensor 2P connector No. 2 (RED)

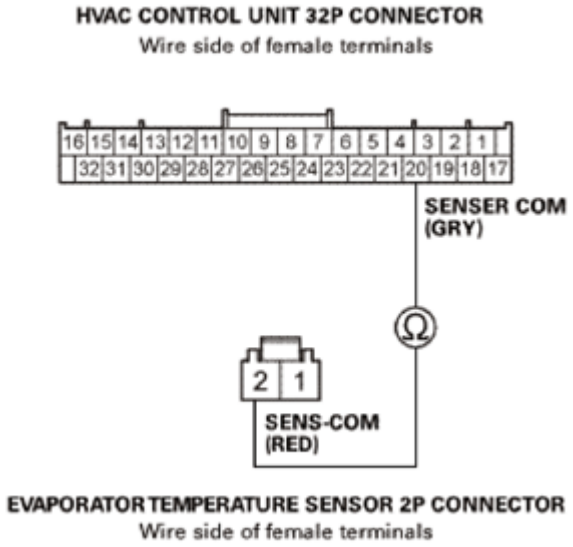

Fig. 16: Checking Continuity Between HVAC Control Unit 32P Connector No. 20 And Evaporator Temperature Sensor 2P Connector No. 2
Courtesy of AMERICAN HONDA MOTOR CO., INC.

Is there continuity?

YES : The SENSOR COM/SENS-COM wires are OK. **REPLACE THE HVAC CONTROL UNIT** .

GETtheMANUALS.org

NO : Repair an open in the wire between the HVAC control unit and the evaporator temperature sensor.

DTC INDICATOR 13: A SHORT IN THE EVAPORATOR TEMPERATURE SENSOR CIRCUIT

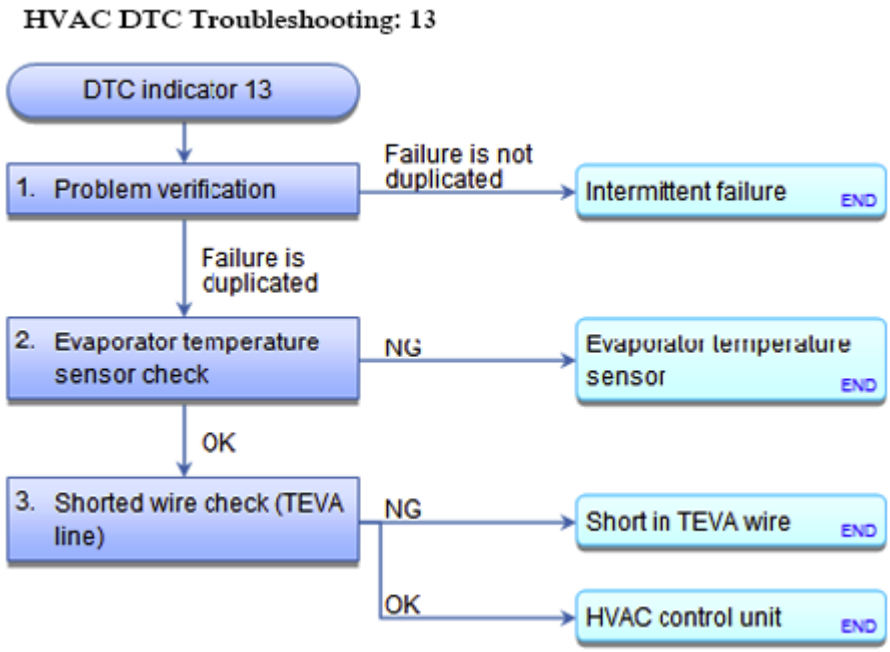

Fig. 17: HVAC DTC Troubleshooting Flow Chart (13)
Courtesy of AMERICAN HONDA MOTOR CO., INC.

1. Problem verification:
   - 1. Turn the ignition switch to LOCK (0), and then back to ON (II).
   - 2. **DO THE SELF-DIAGNOSTIC FUNCTION WITH THE HVAC CONTROL UNIT** .
   - 3. Check for DTCs.

   Is DTC 13 indicated?

   YES : Go to step 2.

   NO : Intermittent failure. Check for loose wires or poor connections on the evaporator temperature circuit.

2. Evaporator temperature sensor check:
   - 1. Turn the ignition switch to LOCK (0).
   - 2. **REMOVE THE EVAPORATOR TEMPERATURE SENSOR, AND TEST IT** .

   Is the evaporator temperature sensor OK?

GETtheMANUALS.org

YES : With the evaporator temperature sensor disconnected, go to step 3.

NO : **REPLACE THE EVAPORATOR TEMPERATURE SENSOR** .

3. Shorted wire check (TEVA line):
   - 1. Disconnect the following connector.

     HVAC control unit 32P connector

   - 2. Check for continuity between test points 1 and 2.

     Test condition IG LOCK (0)

     HVAC control panel 32P connector: disconnected

     Evaporator temperature sensor: disconnected

     Test circuit TEVA

     Test point 1 HVAC control unit 32P connector No. 19 (ORN)

     Test point 2 Body ground

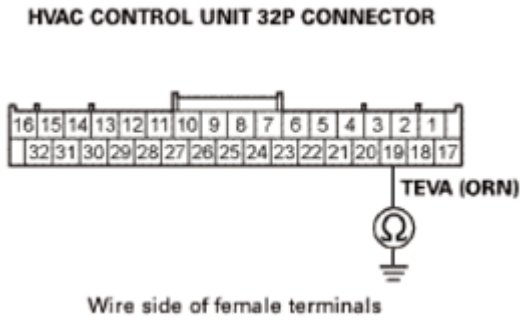

Fig. 18: Checking Continuity Between HVAC Control Unit 32P Connector No. 19 And Body Ground
Courtesy of AMERICAN HONDA MOTOR CO., INC.

Is there continuity?

YES : Repair a short to body ground in the wire between the HVAC control unit and the evaporator temperature sensor.

NO : The TEVA wire is OK. **REPLACE THE HVAC CONTROL UNIT** .

DTC INDICATOR 2: A SHORT IN THE AIR MIX CONTROL MOTOR CIRCUIT

GETtheMANUALS.org

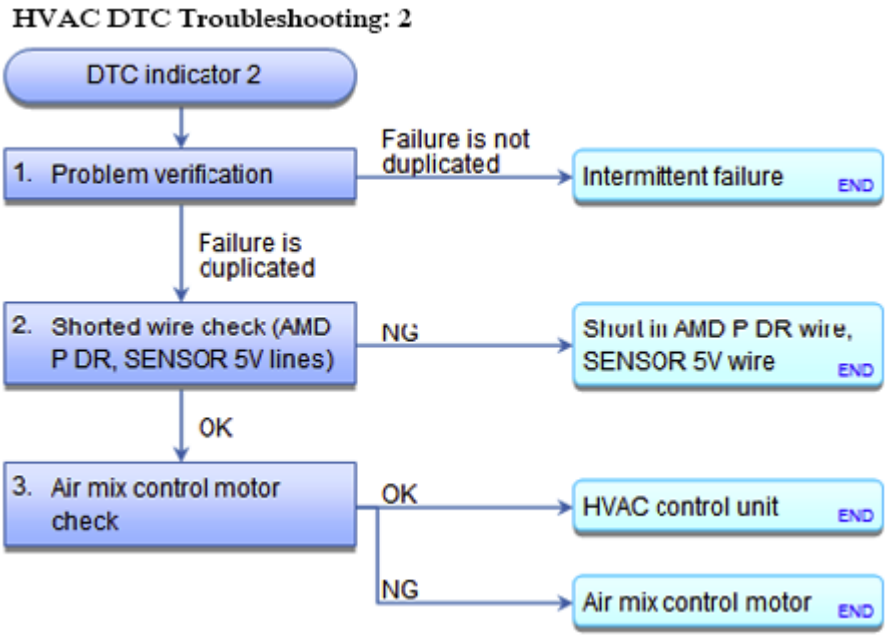

Fig. 19: HVAC DTC Troubleshooting Flow Chart (2)
Courtesy of AMERICAN HONDA MOTOR CO., INC.

1. Problem verification:
   - 1. Turn the ignition switch to LOCK (0), and then back to ON (II).
   - 2. **DO THE SELF-DIAGNOSTIC FUNCTION WITH THE HVAC CONTROL UNIT** .
   - 3. Check for DTCs.

     Is DTC 2 indicated?

     YES : Go to step 2.

     NO : Intermittent failure. Check for loose wires or poor connections on the air mix control motor circuit.

2. Shorted wire check (AMD P DR, SENSOR 5V lines):
   1. Turn the ignition switch to LOCK (0).
   2. Disconnect the following connectors.

      HVAC control unit 32P connector

      Air mix control motor 7P connector

   3. Check for continuity between test points 1 and 2 individually.

      Test condition IG LOCK (0)

GETtheMANUALS.org

HVAC control unit 32P connector: disconnected

Air mix control motor 7P connector: disconnected

Test circuit SENSOR 5V

Test point 1 HVAC control unit 32P connector No. 17 (LT BLU)

Test point 2 Body ground

Test circuit AMD P DR

Test point 1 HVAC control unit 32P connector No. 22 (LT GRN)

Test point 2 Body ground

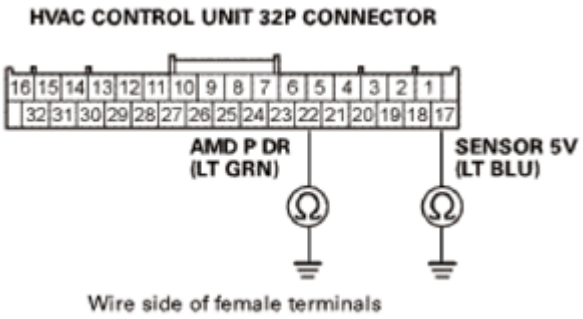

Fig. 20: Checking Continuity Between HVAC Control Unit 32P Connector No. 17, 22 And Body Ground
Courtesy of AMERICAN HONDA MOTOR CO., INC.

Is there continuity?

YES : Repair a short to body ground in the wire(s) between the HVAC control unit and the air mix control motor.

NO : The AMD P DR and SENSOR 5V wires are OK. Go to step 3.

3. Air mix control motor check:
   - 1. **Test the air mix control motor** See **AIR MIX CONTROL MOTOR TEST** , **DRIVER'S AIR MIX CONTROL MOTOR TEST** or **PASSENGER'S AIR MIX CONTROL MOTOR TEST** .

     Is the air mix control motor OK?

     YES : **REPLACE THE HVAC CONTROL UNIT** .

     NO : **Replace the air mix control motor** See **AIR MIX CONTROL MOTOR REMOVAL AND INSTALLATION** , **DRIVER'S AIR MIX CONTROL MOTOR REMOVAL AND**

GETtheMANUALS.org

INSTALLATION or **PASSENGER'S AIR MIX CONTROL MOTOR REMOVAL AND INSTALLATION** .

DTC INDICATOR 3: A PROBLEM IN THE AIR MIX CONTROL MOTOR CIRCUIT, LINKAGE, DOOR, OR MOTOR

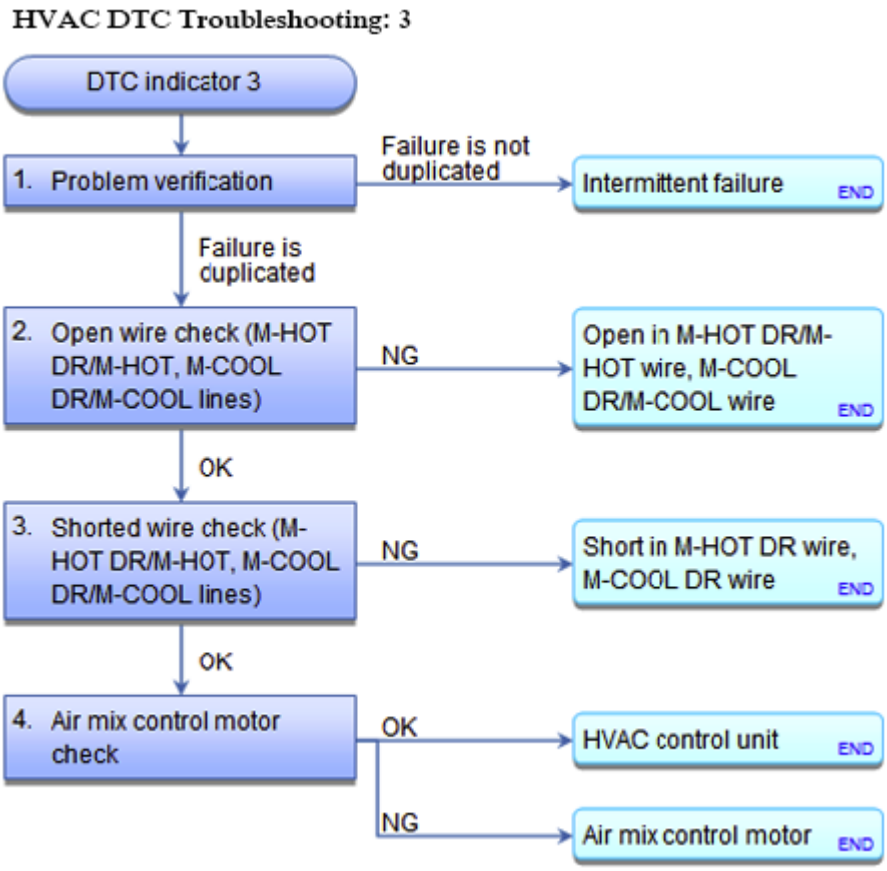

Fig. 21: HVAC DTC Troubleshooting Flow Chart (3)
Courtesy of AMERICAN HONDA MOTOR CO., INC.

1. Problem verification:
   - 1. Turn the ignition switch to LOCK (0), and then back to ON (II).
   - 2. **DO THE SELF-DIAGNOSTIC FUNCTION WITH THE HVAC CONTROL UNIT** .
   - 3. Check for DTCs.

   Is DTC 3 indicated?

   YES : Go to step 2.

   NO : Intermittent failure. Check for loose wires or poor connections in the air mix control motor circuit.

GETtheMANUALS.org

2. Open wire check (M-HOT DR/M-HOT, M-COOL DR/M-COOL lines):
    - 1. Turn the ignition switch to LOCK (0).
    - 2. Disconnect the following connectors.

      HVAC control unit 32P connector

      Air mix control motor 7P connector

    - 3. Check for continuity between test points 1 and 2 respectively.

      Test condition IG LOCK (0)

      HVAC control unit 32P connector: disconnected

      Air mix control motor 7P connector: disconnected

      Test circuit M-HOT DR/M-HOT

      Test point 1 HVAC control unit 32P connector No. 27 (LT BLU)

      Test point 2 Air mix control motor 7P connector No. 7 (LT GRN)

      Test circuit M-COOL DR/M-COOL

      Test point 1 HVAC control unit 32P connector No. 28 (GRN)

      Test point 2 Air mix control motor 7P connector No. 6 (BLU)

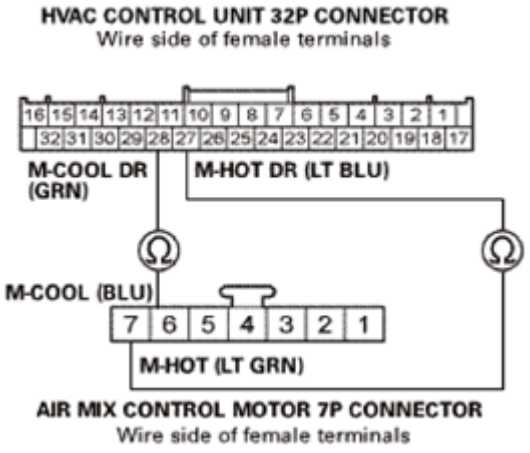

Fig. 22: Checking Continuity Between HVAC Control Unit 32P Connector And Air Mix Control Motor 7P Connector Terminals
Courtesy of AMERICAN HONDA MOTOR CO., INC.

Is there continuity?

GETtheMANUALS.org

YES : The M-HOT DR/M-HOT and M-COOL DR/M-COOL wires are not open. Go to step 3.

NO : Repair an open in the wire(s) between the HVAC control unit and the air mix control motor.

3. Shorted wire check (M-HOT DR/M-HOT, M-COOL DR/M-COOL lines):
   - 1. Check for continuity between test points 1 and 2 individually.

     Test condition IG LOCK (0)

     HVAC control unit 32P connector: disconnected

     Air mix control motor 7P connector: disconnected

     Test circuit M-HOT DR

     Test point 1 HVAC control unit 32P connector No. 27 (LT BLU)

     Test point 2 Body ground

     Test circuit M-COOL DR

     Test point 1 HVAC control unit 32P connector No. 28 (GRN)

     Test point 2 Body ground

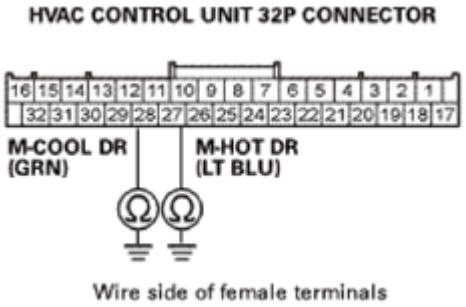

Fig. 23: Checking Continuity Between HVAC Control Unit 32P Connector And Body Ground
Courtesy of AMERICAN HONDA MOTOR CO., INC.

Is there continuity?

YES : Repair a short to body ground in the wire(s) between the HVAC control unit and the air mix control motor.

NO : The M-HOT DR and M-COOL DR wires are OK. Go to step 4.

4. Air mix control motor check:
   - 1. **Test the air mix control motor** See **AIR MIX CONTROL MOTOR TEST** , **DRIVER'S AIR**

GETtheMANUALS.org

MIX CONTROL MOTOR TEST or **PASSENGER'S AIR MIX CONTROL MOTOR TEST** .

Is the air mix control motor OK?

YES : **REPLACE THE HVAC CONTROL UNIT** .

NO : **Replace the air mix control motor** See **AIR MIX CONTROL MOTOR REMOVAL AND INSTALLATION** , **DRIVER'S AIR MIX CONTROL MOTOR REMOVAL AND INSTALLATION** or **PASSENGER'S AIR MIX CONTROL MOTOR REMOVAL AND INSTALLATION** , or repair the air mix control linkage or door.

DTC INDICATOR 4: AN OPEN IN THE MODE CONTROL MOTOR CIRCUIT

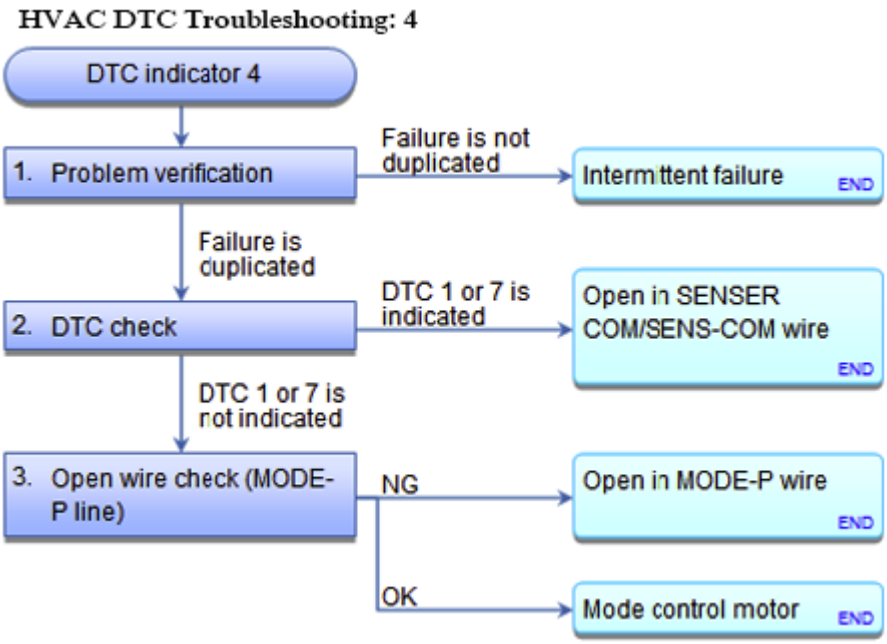

Fig. 24: HVAC DTC Troubleshooting Flow Chart (4)
Courtesy of AMERICAN HONDA MOTOR CO., INC.

1. Problem verification:
   - 1. Turn the ignition switch to LOCK (0), and then back to ON (II).
   - 2. **DO THE SELF-DIAGNOSTIC FUNCTION WITH THE HVAC CONTROL UNIT** .
   - 3. Check for DTCs.

   Is DTC 4 indicated?

   YES : Go to step 2.

   NO : Intermittent failure. Check for loose wires or poor connections on the mode control motor circuit.

GETtheMANUALS.org

2. DTC check:
    - 1. Check for DTCs.

      Is DTC 1 or 7 indicated?

      YES : Repair an open in the wire between the HVAC control unit No. 20 (GRY) and the mode control motor.

      NO : Go to step 3.

3. Open wire check (MODE-P line):
    1. Turn the ignition switch to LOCK (0).
    2. Connect terminals A and B with a jumper wire.

       Terminal A Mode control motor 7P connector No. 2 (BRN)

       Terminal B Body ground

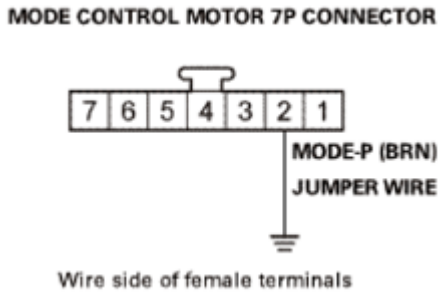

Fig. 25: Connecting Jumper Wire Between Mode Control Motor 7P Connector No. 2 And Body Ground
Courtesy of AMERICAN HONDA MOTOR CO., INC.

    3. Turn the ignition switch to ON (II).
    4. **DO THE SELF-DIAGNOSTIC FUNCTION WITH THE HVAC CONTROL UNIT** .
    5. Check for DTCs.

       Is DTC 4 indicated?

       YES : Repair an open in the wire between the HVAC control unit and the mode control motor.

       NO : The MODE-P wire is OK. **REPLACE THE MODE CONTROL MOTOR** .

DTC INDICATOR 5: A SHORT IN THE MODE CONTROL MOTOR CIRCUIT

GETtheMANUALS.org

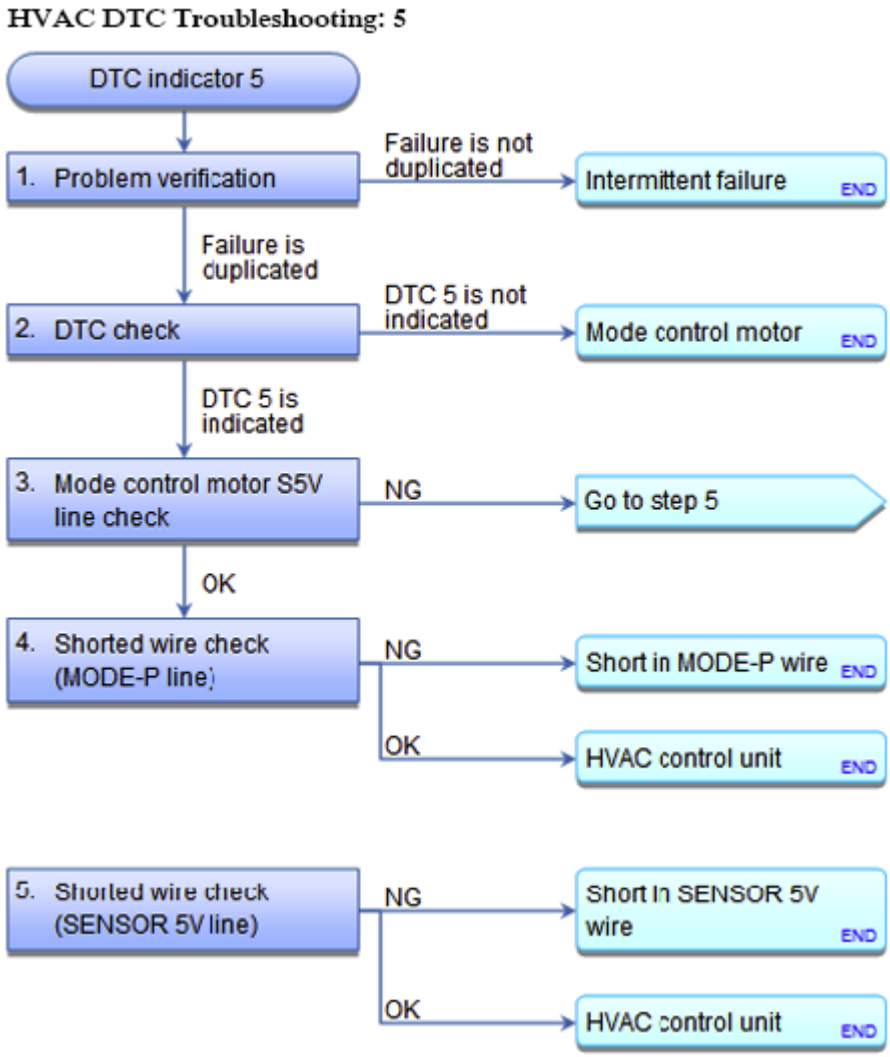

Fig. 26: HVAC DTC Troubleshooting Flow Chart (5)
Courtesy of AMERICAN HONDA MOTOR CO., INC.

1. Problem verification:
   - 1. Turn the ignition switch to LOCK (0), and then back to ON (II).
   - 2. **DO THE SELF-DIAGNOSTIC FUNCTION WITH THE HVAC CONTROL UNIT** .
   - 3. Check for DTCs.

   Is DTC 5 indicated?

   YES : Go to step 2.

   NO : Intermittent failure. Check for loose wires or poor connections on the mode control motor circuit.

2. DTC check:

GETtheMANUALS.org

- 1. Turn the ignition switch to LOCK (0).
- 2. Disconnect the following connector.

  Mode control motor 7P connector

- 3. Turn the ignition switch to ON (II).
- 4. **DO THE SELF-DIAGNOSTIC FUNCTION WITH THE HVAC CONTROL UNIT** .
- 5. Check for DTCs.

  Is DTC 5 indicated?

  YES : Go to step 3.

  NO : **REPLACE THE MODE CONTROL MOTOR** .

3. Mode control motor S5V line check:
   - 1. Measure the voltage between test points 1 and 2.

     Test condition IG ON (II)

     Mode control motor 7P connector: disconnected

     Test circuit S5V

     Test point 1 Mode control motor 7P connector No. 1 (BLK)

     Test point 2 Body ground

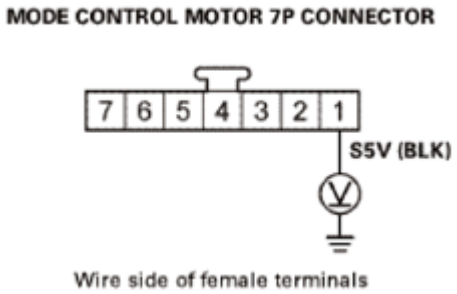

Fig. 27: Measuring Voltage Between Mode Control Motor 7P Connector No. 1 And Body Ground
Courtesy of AMERICAN HONDA MOTOR CO., INC.

Is there about 5 V?

YES : Go to step 4.

NO : Go to step 5.

GETtheMANUALS.org

4. Shorted wire check (MODE-P line):
    - 1. Turn the ignition switch to LOCK (0).
    - 2. Disconnect the following connector.

      HVAC control unit 32P connector

    - 3. Check for continuity between test points 1 and 2.

      Test condition IG LOCK (0)

      HVAC control unit 32P connector: disconnected

      Mode control motor 7P connector: disconnected

      Test circuit MODE-P

      Test point 1 HVAC control unit 32P connector No. 23 (WHT)

      Test point 2 Body ground

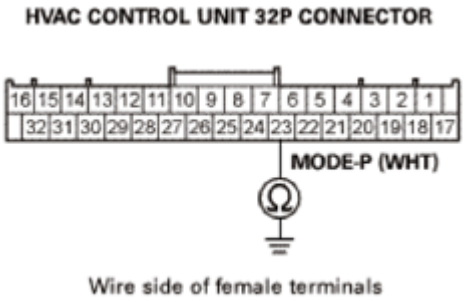

Fig. 28: Checking Continuity Between HVAC Control Unit 32P Connector No. 23 And Body Ground
Courtesy of AMERICAN HONDA MOTOR CO., INC.

Is there continuity?

YES : Repair a short in the wire between the HVAC control unit and the mode control motor.

NO : The MODE-P wire is OK. **REPLACE THE HVAC CONTROL UNIT** .

5. Shorted wire check (SENSOR 5V line):
    - 1. Turn the ignition switch to LOCK (0).
    - 2. Disconnect the following connector.

      HVAC control unit 32P connector

    - 3. Check for continuity between test points 1 and 2.

GETtheMANUALS.org

Test condition IG LOCK (0)

HVAC control unit 32P connector: disconnected

Mode control motor 7P connector: disconnected

Test circuit SENSOR 5V

Test point 1 HVAC control unit 32P connector No. 17 (LT BLU)

Test point 2 Body ground

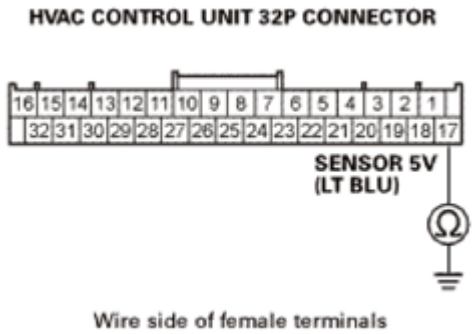

Fig. 29: Checking Continuity Between HVAC Control Unit 32P Connector No. 17 And Body Ground
Courtesy of AMERICAN HONDA MOTOR CO., INC.

Is there continuity?

YES : Repair a short in the wire between the HVAC control unit and the mode control motor.

NO : The SENSOR 5V wire is OK. **REPLACE THE HVAC CONTROL UNIT** .

DTC INDICATOR 6: A PROBLEM IN THE MODE CONTROL MOTOR CIRCUIT, LINKAGE, DOOR, OR MOTOR

GETtheMANUALS.org

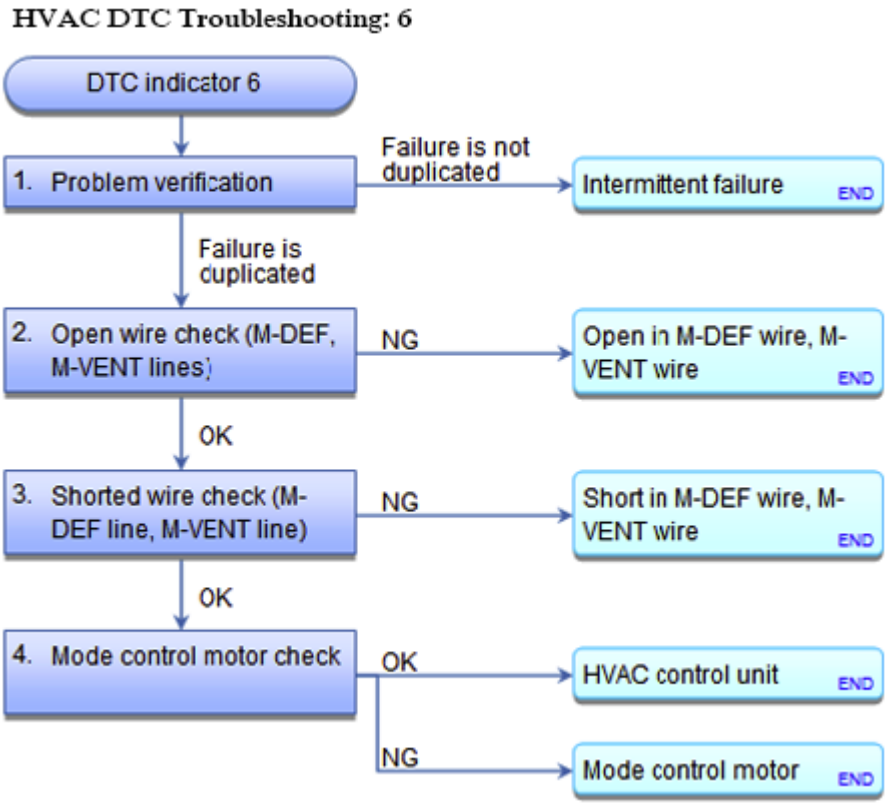

Fig. 30: HVAC DTC Troubleshooting Flow Chart (6)
Courtesy of AMERICAN HONDA MOTOR CO., INC.

1. Problem verification:
   - 1. Turn the ignition switch to LOCK (0), and then back to ON (II).
   - 2. **DO THE SELF-DIAGNOSTIC FUNCTION WITH THE HVAC CONTROL UNIT** .
   - 3. Check for DTCs.

     Is DTC 6 indicated?

     YES : Go to step 2.

     NO : Intermittent failure. Check for loose wires or poor connections on the mode control motor circuit.

2. Open wire check (M-DEF, M-VENT lines):
   - 1. Turn the ignition switch to LOCK (0).
   - 2. Disconnect the following connectors.

     HVAC control unit 32P connector

     Mode control motor 7P connector

GETtheMANUALS.org

- 3. Check for continuity between test points 1 and 2 respectively.

  Test condition IG LOCK (0)

  HVAC control unit 32P connector: disconnected

  Mode control motor 7P connector: disconnected

  Test circuit M-VENT

  Test point 1 HVAC control unit 32P connector No. 29 (PUR)

  Test point 2 Mode control motor 7P connector No. 7 (WHT)

  Test circuit M-DEF

  Test point 1 HVAC control unit 32P connector No. 30 (YEL)

  Test point 2 Mode control motor 7P connector No. 6 (GRN)

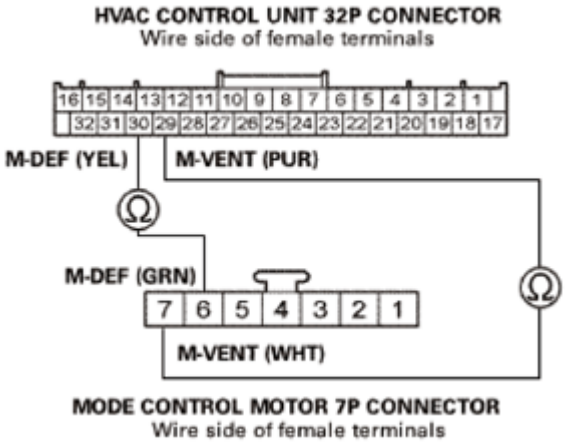

Fig. 31: Checking Continuity Between HVAC Control Unit 32P Connector And Mode Control Motor 7P Connector Terminals
Courtesy of AMERICAN HONDA MOTOR CO., INC.

Is there continuity?

YES : The M-DEF and M-VENT wires are not open. Go to step 3.

NO : Repair an open in the wire(s) between the HVAC control unit and the mode control motor.

3. Shorted wire check (M-DEF line, M-VENT line):
   - 1. Check for continuity between test points 1 and 2 individually.

GETtheMANUALS.org

Test condition IG LOCK (0)

HVAC control unit 32P connector: disconnected

Mode control motor 7P connector: disconnected

Test circuit M-DEF

Test point 1 HVAC control unit 32P connector No. 30 (YEL)

Test point 2 Body ground

Test circuit M-VENT

Test point 1 HVAC control unit 32P connector No. 29 (PUR)

Test point 2 Body ground

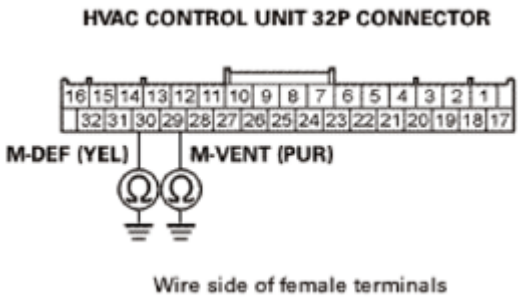

Fig. 32: Checking Continuity Between HVAC Control Unit 32P Connector No. 29, 30 And Body Ground
Courtesy of AMERICAN HONDA MOTOR CO., INC.

Is there continuity?

YES : Repair a short to body ground in the wire(s) between the HVAC control unit and the mode control motor.

NO : The M-DEF and M-VENT wires are OK. Go to step 4.

4. Mode control motor check:
   - 1. **TEST THE MODE CONTROL MOTOR** .

Is the mode control motor OK?

YES : **REPLACE THE HVAC CONTROL UNIT** .

NO : **REPLACE THE MODE CONTROL MOTOR** , or repair the mode control linkage or doors.

GETtheMANUALS.org

DTC INDICATOR 7: AN OPEN IN THE RECIRCULATION CONTROL MOTOR CIRCUIT

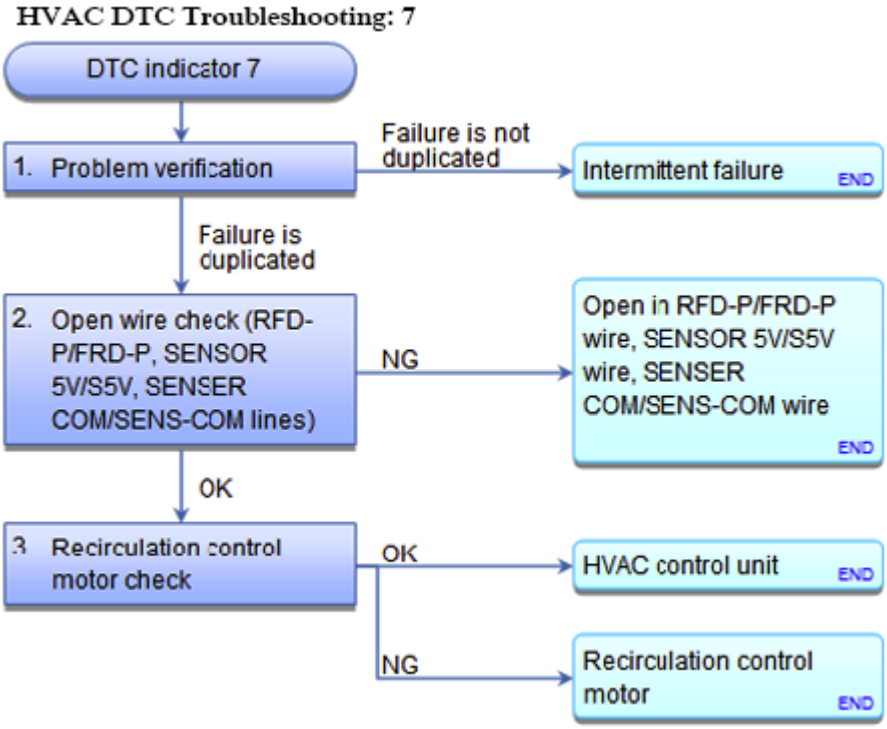

Fig. 33: HVAC DTC Troubleshooting Flow Chart (7)
Courtesy of AMERICAN HONDA MOTOR CO., INC.

1. Problem verification:
   - 1. Turn the ignition switch to LOCK (0), and then back to ON (II).
   - 2. **DO THE SELF-DIAGNOSTIC FUNCTION WITH THE HVAC CONTROL UNIT** .
   - 3. Check for DTCs.

     Is DTC 7 indicated?

     YES : Go to step 2.

     NO : Intermittent failure. Check for loose wires or poor connections on the recirculation control motor circuit.

2. Open wire check (RFD-P/FRD-P, SENSOR 5V/S5V, SENSOR COM/SENS-COM lines):
   - 1. Turn the ignition switch to LOCK (0).
   - 2. Disconnect the following connectors.

     HVAC control unit 32P connector

GETtheMANUALS.org

Recirculation control motor 7P connector

- 3. Check for continuity between test points 1 and 2 respectively.

Test condition IG LOCK (0)

HVAC control unit 32P connector: disconnected

Recirculation control motor 7P connector: disconnected

Test circuit RFD-P/FRD-P

Test point 1 HVAC control unit 32P connector No. 21 (PNK)

Test point 2 Recirculation control motor 7P connector No. 2 (PUR)

Test circuit SENSOR 5V/S5V

Test point 1 HVAC control unit 32P connector No. 17 (LT BLU)

Test point 2 Recirculation control motor 7P connector No. 3 (BLK)

Test circuit SENSOR COM/SENS-COM

Test point 1 HVAC control unit 32P connector No. 20 (GRY)

Test point 2 Recirculation control motor 7P connector No. 1 (RED)

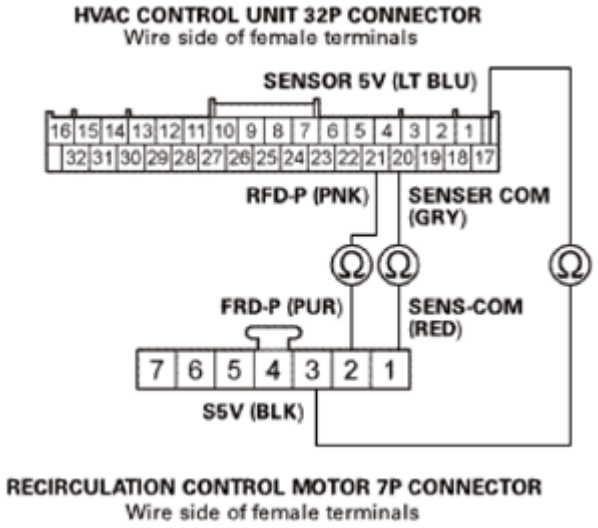

Fig. 34: Checking Continuity Between HVAC Control Unit 32P Connector No. 20 And Recirculation Control Motor 7P Connector No. 1 Terminals
Courtesy of AMERICAN HONDA MOTOR CO., INC.

GETtheMANUALS.org

Is there continuity?

YES : The RFD-P/FRD-P, SENSOR 5V/S5V, and SENSOR COM/SENS-COM wires are OK. Go to step 3.

NO : Repair an open in the wire(s) between the HVAC control unit and the recirculation control motor.

3. Recirculation control motor check:
   - 1. **TEST THE RECIRCULATION CONTROL MOTOR** .

   Is the recirculation control motor OK?

   YES : **REPLACE THE HVAC CONTROL UNIT** .

   NO : **REPLACE THE RECIRCULATION CONTROL MOTOR** .

DTC INDICATOR 8: A SHORT IN THE RECIRCULATION CONTROL MOTOR CIRCUIT

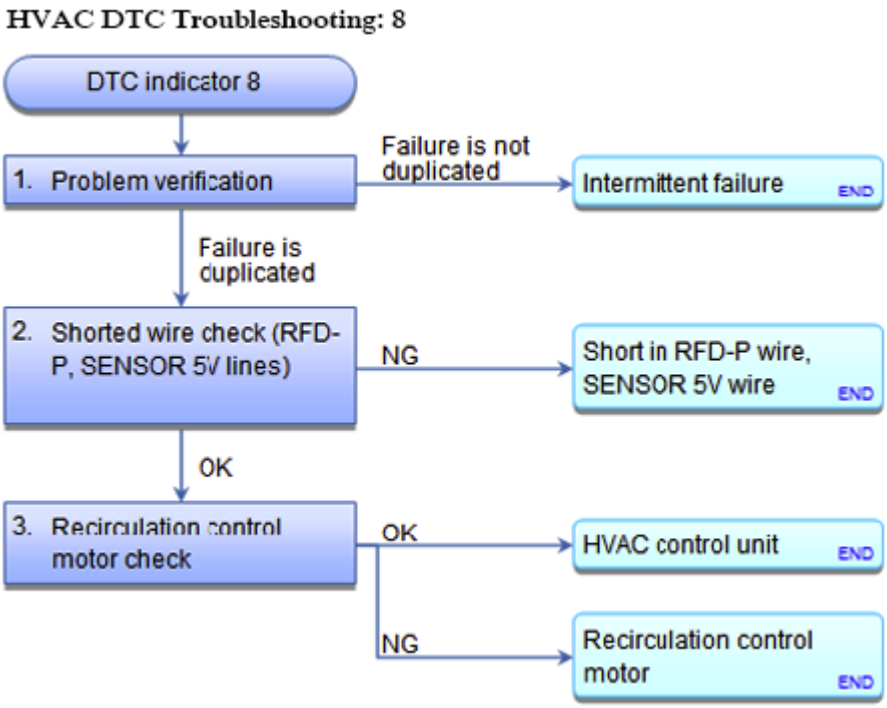

Fig. 35: HVAC DTC Troubleshooting Flow Chart (8)
Courtesy of AMERICAN HONDA MOTOR CO., INC.

1. Problem verification:
   - 1. Turn the ignition switch to LOCK (0), and then back to ON (II).
   - 2. **DO THE SELF-DIAGNOSTIC FUNCTION WITH THE HVAC CONTROL UNIT** .

GETtheMANUALS.org

- 3. Check for DTCs.

  Is DTC 8 indicated?

  YES : Go to step 2.

  NO : Intermittent failure. Check for loose wires or poor connections on the recirculation control motor circuit.

2. Shorted wire check (RFD-P, SENSOR 5V lines):
   - 1. Turn the ignition switch to LOCK (0).
   - 2. Disconnect the following connectors.

     HVAC control unit 32P connector

     Recirculation control motor 7P connector

   - 3. Check for continuity between test points 1 and 2 individually.

     Test condition IG LOCK (0)

     HVAC control unit 32P connector: disconnected

     Recirculation control motor 7P connector: disconnected

     Test circuit RFD-P

     Test point 1 HVAC control unit 32P connector No. 21 (PNK)

     Test point 2 Body ground

     Test circuit SENSOR 5V

     Test point 1 HVAC control unit 32P connector No. 17 (LT BLU)

     Test point 2 Body ground

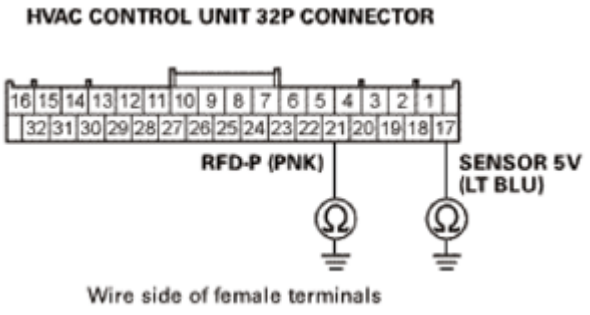

GETtheMANUALS.org

Fig. 36: Checking Continuity Between HVAC Control Unit 32P Connector No. 17, 21 And Body Ground
Courtesy of AMERICAN HONDA MOTOR CO., INC.

Is there continuity?

YES : Repair a short to body ground in the wire(s) between the HVAC control unit and the recirculation control motor.

NO : The RFD-P and SENSOR 5V wires are OK. Go to step 3.

3. Recirculation control motor check:
   - 1. **TEST THE RECIRCULATION CONTROL MOTOR** .

   Is the recirculation control motor OK?

   YES : **REPLACE THE HVAC CONTROL UNIT** .

   NO : **REPLACE THE RECIRCULATION CONTROL MOTOR** .

DTC INDICATOR 9: A PROBLEM IN THE RECIRCULATION CONTROL MOTOR CIRCUIT, LINKAGE, DOOR, OR MOTOR

GETtheMANUALS.org

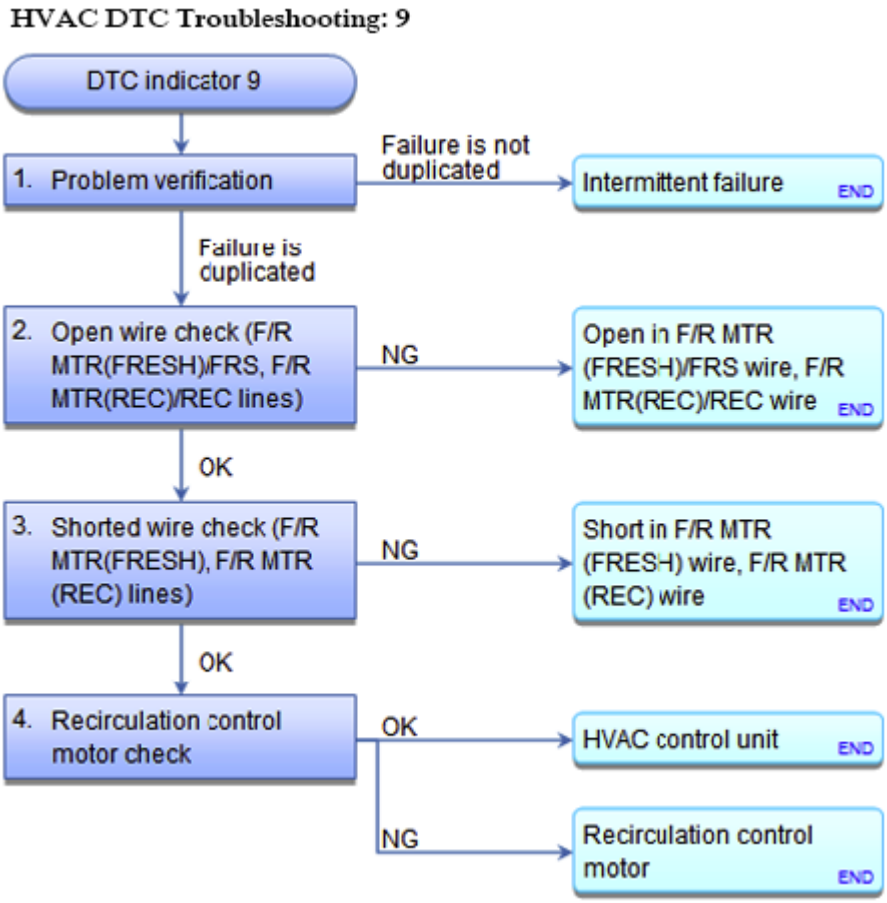

Fig. 37: HVAC DTC Troubleshooting Flow Chart (9)
Courtesy of AMERICAN HONDA MOTOR CO., INC.

1. Problem verification:
   - 1. Turn the ignition switch to LOCK (0), and then back to ON (II).
   - 2. **DO THE SELF-DIAGNOSTIC FUNCTION WITH THE HVAC CONTROL UNIT** .
   - 3. Check for DTCs.

     Is DTC 9 indicated?

     YES : Go to step 2.

     NO : Intermittent failure. Check for loose wires or poor connections on the recirculation control motor circuit.

2. Open wire check (F/R MTR(FRESH)/FRS, F/R MTR(REC)/REC lines):
   - 1. Turn the ignition switch to LOCK (0).
   - 2. Disconnect the following connectors.

     HVAC control unit 32P connector

GETtheMANUALS.org

Recirculation control motor 7P connector

- 3. Check for continuity between test points 1 and 2 respectively.

Test condition IG LOCK (0)

HVAC control unit 32P connector: disconnected

Recirculation control motor 7P connector: disconnected

Test circuit F/R MTR(FRESH)/FRS

Test point 1 HVAC control unit 32P connector No. 32 (BLU)

Test point 2 Recirculation control motor 7P connector No. 6 (RED)

Test circuit F/R MTR(REC)/REC

Test point 1 HVAC control unit 32P connector No. 31 (BLK)

Test point 2 Recirculation control motor 7P connector No. 7 (ORN)

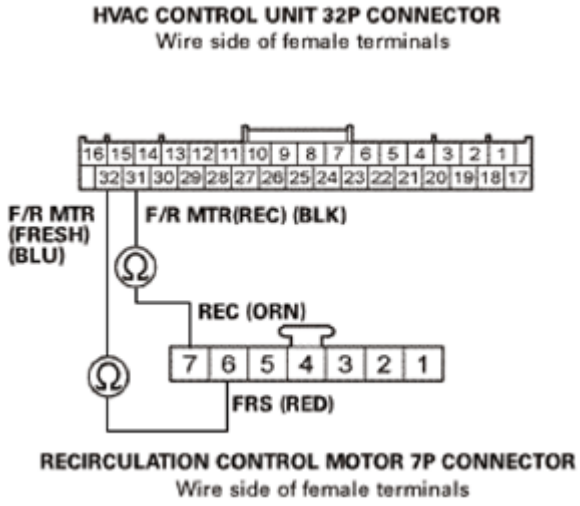

Fig. 38: Checking Continuity Between HVAC Control Unit 32P Connector No. 31 And Recirculation Control Motor 7P Connector No. 7 Terminals
Courtesy of AMERICAN HONDA MOTOR CO., INC.

Is there continuity?

YES : The F/R MTR(FRESH)/FRS and F/R MTR(REC)/REC wires are not open. Go to step 3.

NO : Repair an open in the wire(s) between the HVAC control unit and the recirculation control motor.

GETtheMANUALS.org

3. Shorted wire check (F/R MTR(FRESH), F/R MTR(REC) lines):
    - 1. Check for continuity between test points 1 and 2 individually.

      Test condition IG LOCK (0)

      HVAC control unit 32P connector: disconnected

      Recirculation control motor 7P connector: disconnected

      Test circuit F/R MTR(FRESH)

      Test point 1 HVAC control unit 32P connector No. 32 (BLU)

      Test point 2 Body ground

      Test circuit F/R MTR(REC)

      Test point 1 HVAC control unit 32P connector No. 31 (BLK)

      Test point 2 Body ground

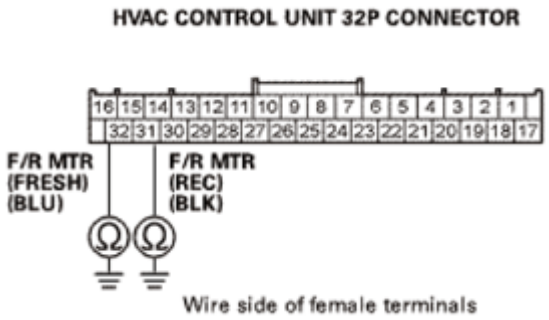

Fig. 39: Checking Continuity Between HVAC Control Unit 32P Connector No. 31, 32 And Body Ground
Courtesy of AMERICAN HONDA MOTOR CO., INC.

Is there continuity?

YES : Repair a short to body ground in the wire(s) between the HVAC control unit and the recirculation control motor.

NO : The F/R MTR(FRESH) and F/R MTR(REC) wires are OK. Go to step 4.

4. Recirculation control motor check:
    - 1. **TEST THE RECIRCULATION CONTROL MOTOR** .

      Is the recirculation control motor OK?

GETtheMANUALS.org

YES : **REPLACE THE HVAC CONTROL UNIT** .

NO : **REPLACE THE RECIRCULATION CONTROL MOTOR, OR REPAIR THE RECIRCULATION CONTROL LINKAGE OR DOOR** .

DTC INDICATOR C0: CLIMATE CONTROL UNIT INTERNAL ERROR

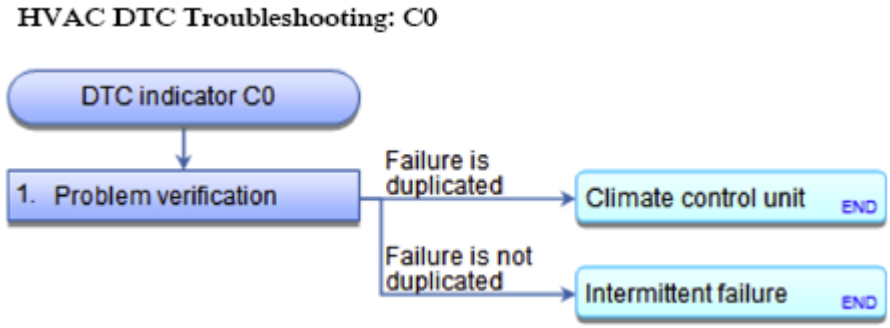

Fig. 40: HVAC DTC Troubleshooting Flow Chart (C0)
Courtesy of AMERICAN HONDA MOTOR CO., INC.

1. Problem verification:
   - 1. Turn the ignition switch to LOCK (0) and then back to ON (II).
   - 2. **Do the Self-Diagnostic Function with the climate control unit** See **HOW TO TROUBLESHOOT THE BODY ELECTRICAL** or **HOW TO TROUBLESHOOT THE CLIMATE CONTROL SYSTEM** .
   - 3. Check for DTCs.

     Is DTC C0 indicated?

     YES : **REPLACE THE CLIMATE CONTROL UNIT** .

     NO : Intermittent failure, the climate control unit is OK at this time.

GETtheMANUALS.org

A/C SERVICE TIPS AND PRECAUTIONS

WARNING:

- **Compressed air mixed with the R-134a forms a combustible vapor.**
- **The vapor can burn or explode causing serious injury.**
- **Never use compressed air to pressure test R-134a service equipment or vehicle air conditioning systems.**

CAUTION:

- **Air conditioning refrigerant or lubricant vapor can irritate your eyes, nose, or throat.**
- **Be careful when connecting service equipment.**
- **Do not breathe refrigerant or vapor.**

The air conditioning system uses HFC-134a (R-134a) refrigerant and polyalkyleneglycol (PAG) refrigerant oil.

Use only service equipment that is U.L.-listed and is certified to meet the requirements of SAE J2788 to remove R-134a from the air conditioning system.

If accidental system discharge occurs, ventilate the work area before resuming service.

R-134a service equipment or vehicle air conditioning systems should not be pressure tested or leak tested with compressed air.

Additional health and safety information may be obtained from the refrigerant and lubricant manufacturers.

- Always disconnect the negative cable from the battery whenever replacing air conditioning parts.
- Keep moisture and dirt out of the system. When disconnecting any lines, plug or cap the fittings immediately; do not remove the caps or plugs until just before you reconnect each line.
- Before connecting any hose or line, apply a few drops of refrigerant oil to the O-ring.
- When tightening or loosening a fitting, use a second wrench to support the matching fitting.
- When discharging the system, use an R-134a refrigerant recovery/recycling/charging station; do not release refrigerant into the atmosphere.

A/C COMPRESSOR CLUTCH CHECK

SPECIAL TOOL REQUIRED DESCRIPTION

Image	Description/Tool Number

GETtheMANUALS.org

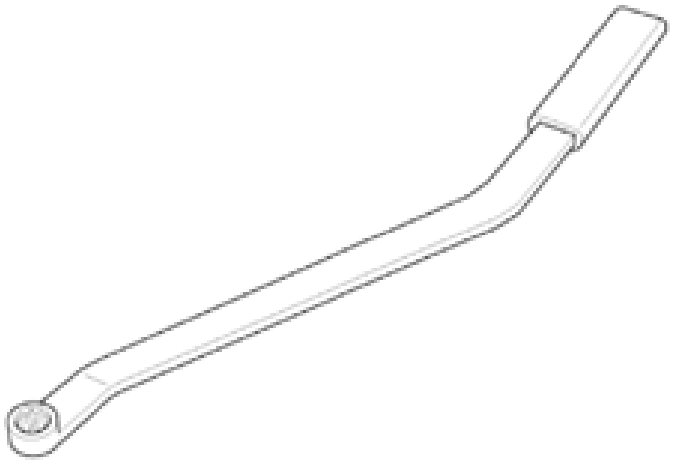	Belt Tension Release Tool Snap-on YA9317, commercially available
	Oil Injector Tool Robinair ROB16256[1], commercially available
	Compact Electronic Vacuum Gauge Robinair ROB14777[1], commercially available

GETtheMANUALS.org

	Leak Detector YGK-H-10PM(1)
	Leak Detector HLD-100(1)
	Leak Detector TIFZX-1(1)

GETtheMANUALS.org

	OPTIMAX Jr. A/C Leak Detection Kit TRP124893(1)
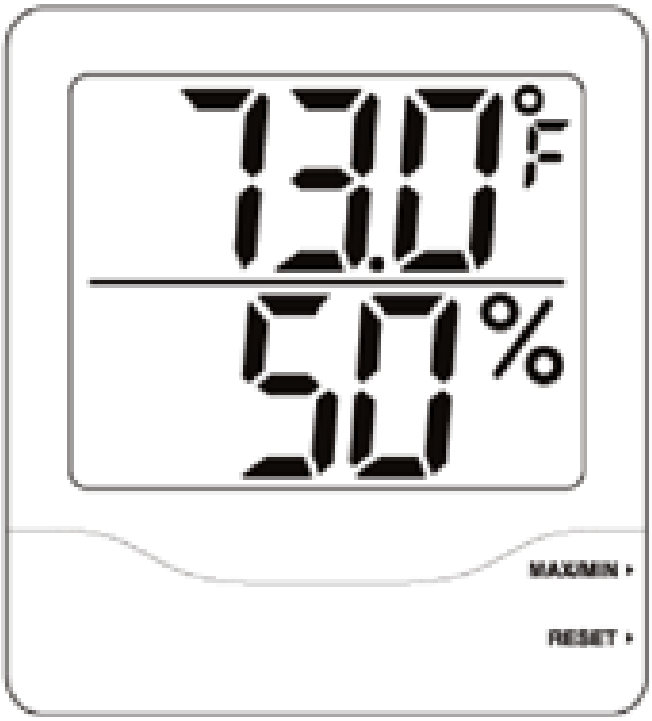	Big Digit Hygro-Thermometer PYR445703, commercially available
	Throttle Pedal Depressor Tool B240B,

GETtheMANUALS.org

	commercially available
(1) These tools are available through the Honda Tool and Equipment Program; call 888-424-6857	

REMOVAL

CAUTION:

- **Air conditioning refrigerant or lubricant vapor can irritate your eyes, nose, or throat.**
- **Be careful when connecting service equipment.**
- **Do not breathe refrigerant or vapor.**

NOTE:

- **If accidental system discharge occurs, ventilate the work area before resuming service.**
- **Additional health and safety information may be obtained from the refrigerant and lubricant manufacturers.**
- **Do not install an A/C compressor into a system unless you are completely sure that the system is free of contamination. Installing the A/C compressor into a contaminated system can result in premature A/C compressor failure.**

1. Vehicle Lift
    1. Raise the vehicle on a lift, and make sure it is securely supported.
2. Glove Box - Move
    1. Detach the glove box damper hook (A), and release both glove box stops (B) by pushing them in, then let glove box (C) hang down.

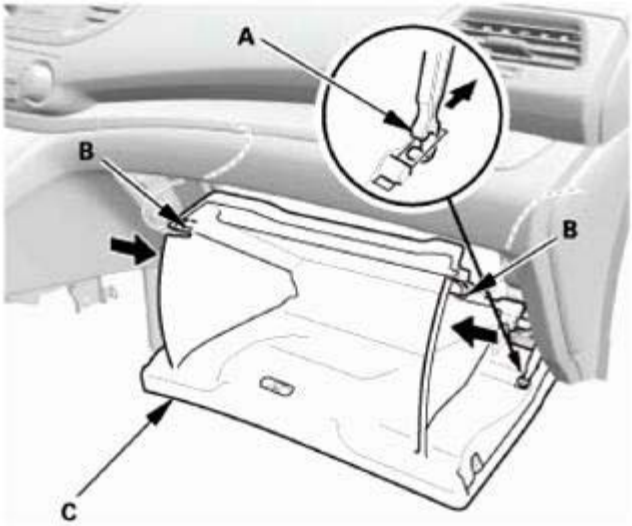

GETtheMANUALS.org

Fig. 1: Detaching Glove Box Damper Hook
Courtesy of AMERICAN HONDA MOTOR CO., INC.

3. R-134a Refrigerant Recovery/Recycling/Charging Station - Connection
    1. Connect an R-134a refrigerant recovery/recycling/charging station (A) to the high-pressure service port (B) and the low-pressure service port (C), as shown, following the equipment manufacturer's instructions.

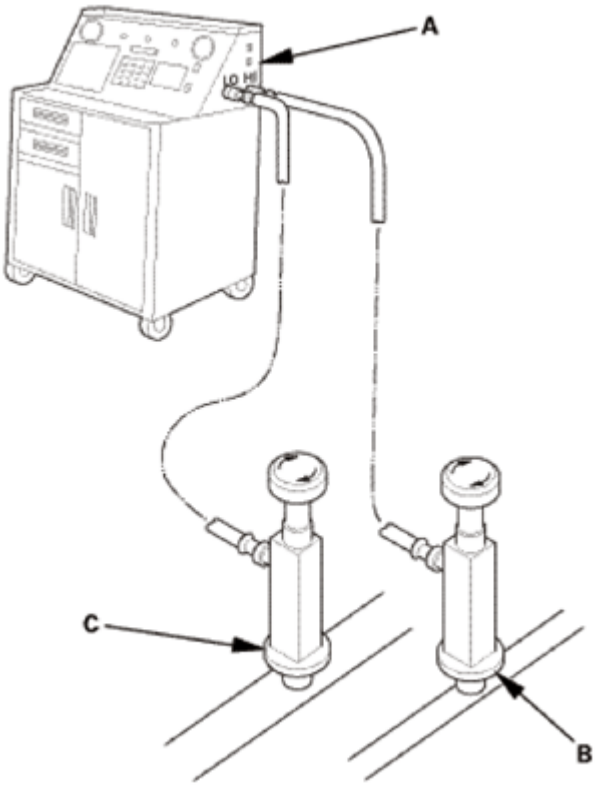

Fig. 2: Connecting R-134A Refrigerant Recovery/Recycling/Charging Station To High-Pressure Service Port And Low-Pressure Service Port
Courtesy of AMERICAN HONDA MOTOR CO., INC.

4. A/C Refrigerant - Recovery
    1. Recover the refrigerant from the A/C system.
    2. Measure the amount of refrigerant oil removed from the A/C system after the recovery process is completed. Be sure to put the same amount of new refrigerant oil back into the A/C system before charging.
5. Battery Terminal - Disconnection
    1. Make sure the ignition switch is in LOCK (0).
    2. Disconnect and isolate the negative cable (A) from the battery.

NOTE: Always disconnect the negative side first.

GETtheMANUALS.org

3. Disconnect the positive cable (B) from the battery.

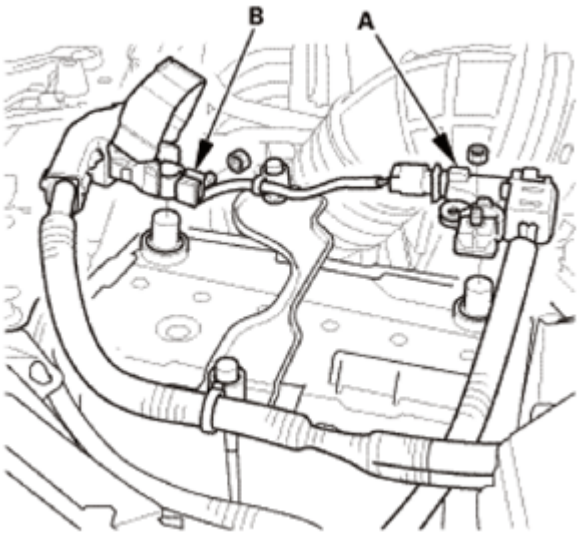

Fig. 3: Identifying Negative Cable And Positive Cable
Courtesy of AMERICAN HONDA MOTOR CO., INC.

6. Drive Belt
    1. Move the auto-tensioner (A) using the belt tension release tool in the direction of the arrow to relieve tension from the drive belt, then remove the drive belt.

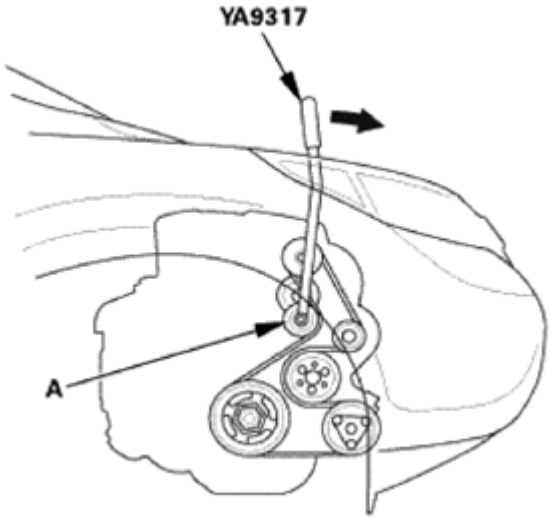

Fig. 4: Moving Auto-Tensioner Using Belt Tension Release Tool
Courtesy of AMERICAN HONDA MOTOR CO., INC.

7. Front Splash Shield
    1. Remove the bolts (A), then remove the clips (B) that secure the front inner fender and the front splash shield (C) to the body.

GETtheMANUALS.org

2. From under the front bumper (D), remove the clips (E).
3. From under the body, remove the clips (F), then pull out the front splash shield.

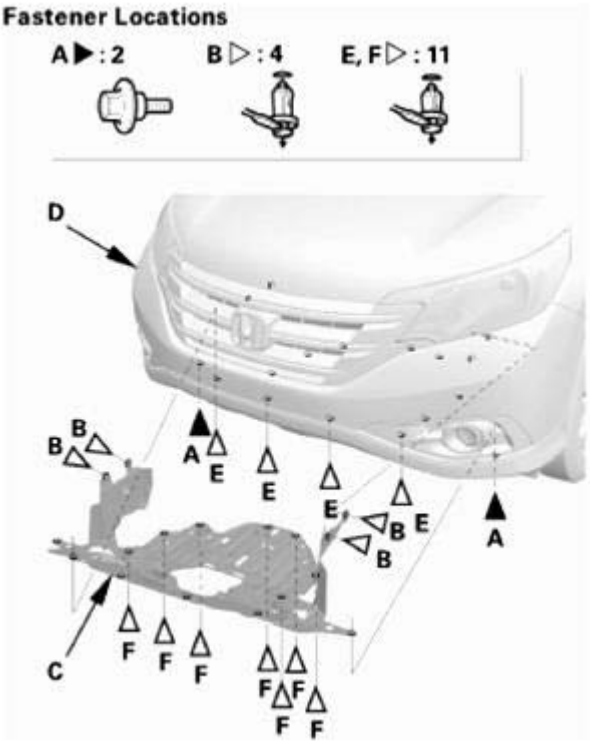

Fig. 5: Identifying Front Splash Shield, Front Bumper, Bolts And Clips
Courtesy of AMERICAN HONDA MOTOR CO., INC.

8. A/C Compressor Assembly
   1. Disconnect the A/C compressor clutch connector (A).
   2. Disconnect the suction hose (B) with a O-ring (C).

      NOTE: Plug or cap the lines immediately after disconnecting them to avoid moisture and dust contamination.

   3. Disconnect the discharge hose (D) with a O-ring (E).

      NOTE: Plug or cap the lines immediately after disconnecting them to avoid moisture and dust contamination.

GETtheMANUALS.org

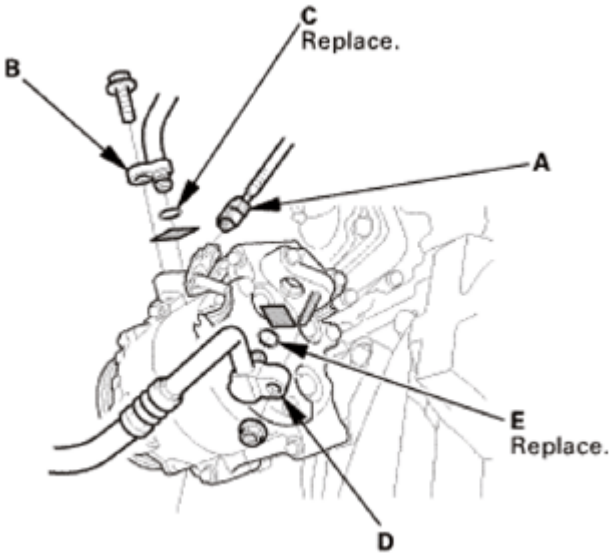

Fig. 6: Identifying A/C Compressor Clutch Connector, Suction Hose, Discharge Hose And O-Ring
Courtesy of AMERICAN HONDA MOTOR CO., INC.

4. Remove the A/C compressor (A).

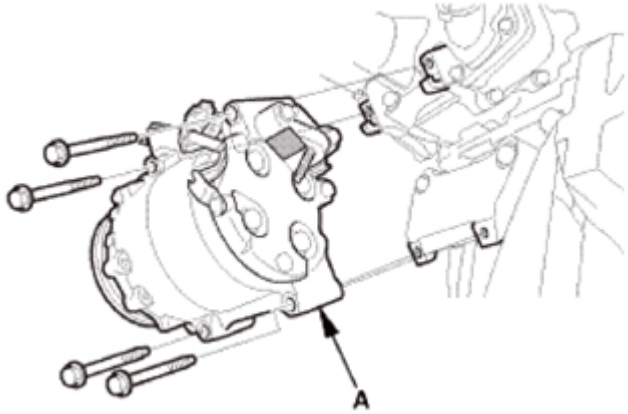

Fig. 7: Identifying A/C Compressor With Mounting Bolts
Courtesy of AMERICAN HONDA MOTOR CO., INC.

CHECK

1. A/C Compressor Clutch - Check
    1. Check the armature plate for discoloration, peeling, or other damage. If there is damage, replace the clutch set.
    2. Check the rotor pulley bearing play and drag by rotating the rotor pulley by hand. Also check for grease leakage from the bearing. Replace the clutch set with a new one if it is noisy, has excessive play/drag, or has bearing grease contamination on the clutch faces.

GETtheMANUALS.org

NOTE: **The rotor pulley and the armature plate were mated at the factory by a burnishing operation. Always replace the rotor pulley and the plate as a set. Replacing only one part of the clutch set will cause clutch slippage.**

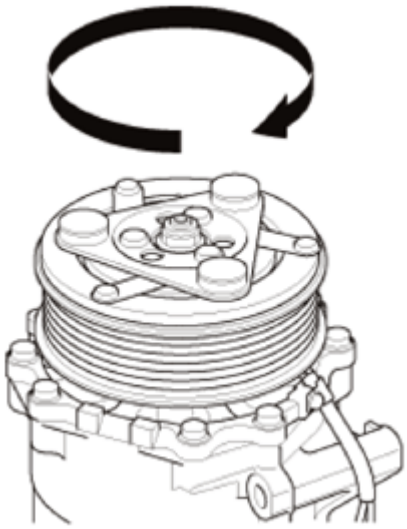

Fig. 8: Checking Rotor Pulley Bearing Play And Drag By Rotating Rotor Pulley
Courtesy of AMERICAN HONDA MOTOR CO., INC.

3. Measure the clearance between the rotor pulley (A) and the armature plate (B) all the way around. If the clearance is not within specified limits, remove the armature plate and add or remove shims as needed to increase or decrease clearance.

Clearance: 0.35-0.65 mm (0.014-0.025 in)

NOTE: **The shims are available in four thicknesses: 0.1 mm, 0.2 mm, 0.4 mm, and 0.5 mm.**

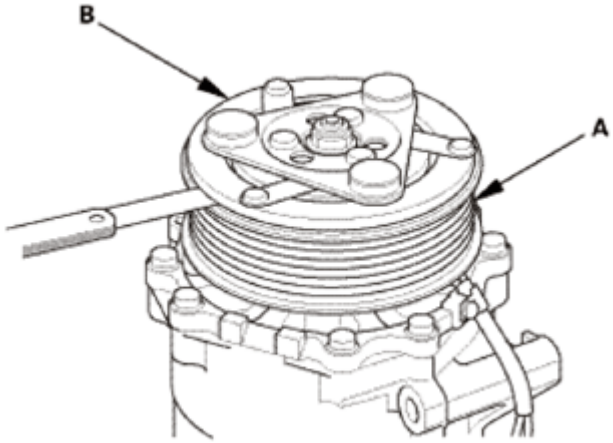

Fig. 9: Measuring Clearance Between Rotor Pulley And Armature Plate

GETtheMANUALS.org

Courtesy of AMERICAN HONDA MOTOR CO., INC.

4. Check for continuity between the A/C compressor clutch connector terminals No. 2 and No. 3. If there is no continuity, replace the thermal protector.

NOTE: **The thermal protector will have no continuity above about 252 to 262 °F (122 to 128 °C). When the temperature drops below about 241 to 219 °F (116 to 104 °C), the thermal protector will have continuity.**

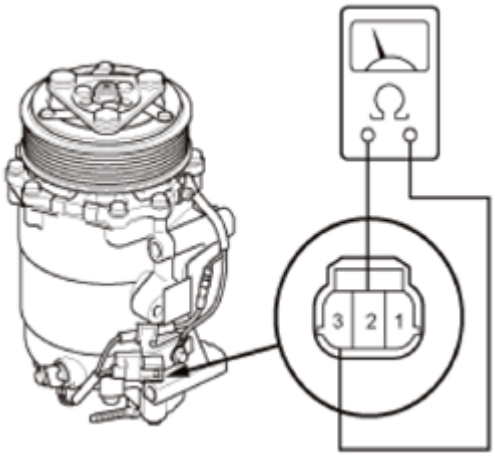

Fig. 10: Checking For Continuity Between A/C Compressor Clutch Connector Terminals No. 2 And No. 3
Courtesy of AMERICAN HONDA MOTOR CO., INC.

5. Disconnect the connector (A).
6. Measure the resistance of the field coil. If resistance is not within specifications, replace the field coil.

Field Coil Resistance: 3.35-3.65 ohms at 68 °F (20 °C)

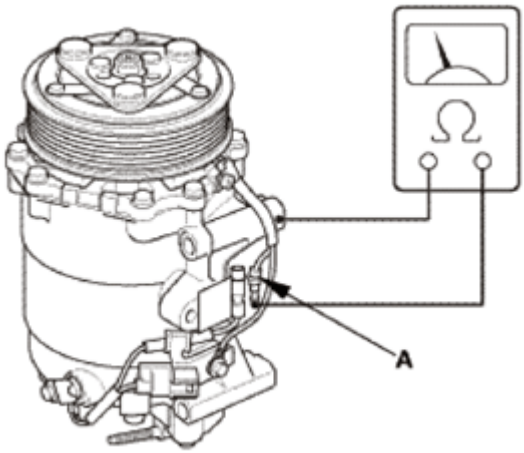

Fig. 11: Measuring Resistance Of Field Coil

GETtheMANUALS.org

Courtesy of AMERICAN HONDA MOTOR CO., INC.

INSTALLATION

CAUTION:

- **Air conditioning refrigerant or lubricant vapor can irritate your eyes, nose, or throat.**
- **Be careful when connecting service equipment.**
- **Do not breathe refrigerant or vapor.**
- **Do not operate the leak detector near flammable vapors. Its sensor operates at high temperatures, and could ignite the vapors, resulting in personal injury and/or damage to the equipment.**

NOTE:

- **If an accidental system discharge occurs, ventilate the work area before resuming service.**
- **Additional health and safety information may be obtained from the refrigerant and lubricant manufacturers.**
- **Check the system for leaks using an R-134a refrigerant leak detector with an accuracy of 14 g (0.5 oz) per year or better.**
- **Do not install an A/C compressor into a system unless you are completely sure that the system is free of contamination. Installing the A/C compressor into a contaminated system can result in premature A/C compressor failure.**
- **Inspect the A/C lines for any signs of contamination.**
- **Replace the O-rings with new ones at each fitting, and apply a thin coat of refrigerant oil before installing them. Be sure to use the correct O-rings for HFC-134a (R-134a) to avoid leakage.**
- **Use only PAG refrigerant oil for HFC-134a A/C systems.**
- **To avoid contamination, do not return the oil to the container once dispensed, and never mix it with other refrigerant oils.**
- **Immediately after using the oil, reinstall the cap on the container, and seal it to avoid moisture absorption.**
- **Do not spill the refrigerant oil on the vehicle; it may damage the paint; if the refrigerant oil contacts the paint, wash it off immediately.**

1. A/C Refrigerant Oil - Replacement

   Recommended PAG oil: SP-10

   P/N 38897-P13-A01AH: 120 mL (4 fl oz)

   It is important to have the correct amount of refrigerant oil in the A/C system to ensure proper lubrication of the A/C compressor. Too little oil damages the A/C compressor; too much oil reduces the cooling capacity of the system, and can produce high vent temperatures.

GETtheMANUALS.org

- To avoid contamination, do not return the oil to the container once dispensed, and never mix it with other refrigerant oils.
- Immediately after using the oil, reinstall the cap on the container, and seal it to avoid moisture absorption.
- Do not spill the refrigerant oil on the vehicle; it may damage the paint; if it gets on the paint, wash it off immediately.

Add the recommended refrigerant oil in the amount listed if you replace any of the following parts.

A/C condenser (including dryer desiccant).....	25 mL (5/6 fl oz)
Evaporator.....	40 mL (1 1/3 fl oz)
Line or hose.....	10 mL (1/3 fl oz)
Dryer desiccant.....	10 mL (1/3 fl oz)
Leakage repair.....	25 mL (5/6 fl oz)
A/C compressor.....	Since the oil separator is equipped inside the A/C compressor for this vehicle, oil drainage is unnecessary at the time of A/C compressor replacement.

2. A/C Compressor Assembly
   1. Install the A/C compressor (A).

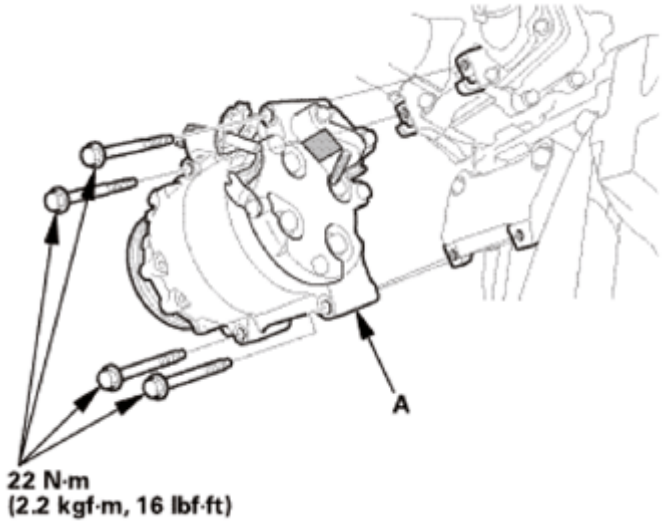

Fig. 12: Identifying A/C Compressor And Mounting Bolts With Torque Specification
Courtesy of AMERICAN HONDA MOTOR CO., INC.

   2. Remove the plugs or caps.
   3. Connect the suction hose (A) with a new O-ring (B) that is lubricated with clean refrigerant oil.
   4. Connect the discharge hose (C) with a new O-ring (D) that is lubricated with clean refrigerant oil.
   5. Connect the A/C compressor clutch connector (E).

GETtheMANUALS.org

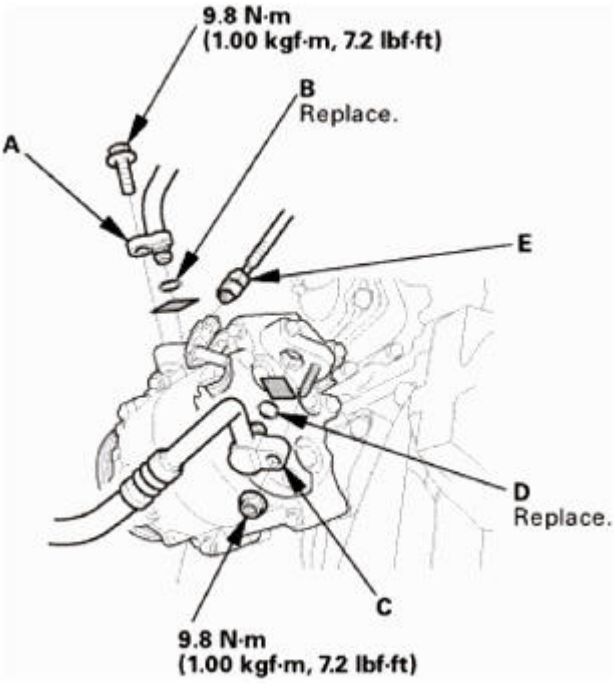

Fig. 13: Identifying A/C Compressor Clutch Connector, Suction Hose, Discharge Hose, O-Ring And Mounting Bolts With Torque Specification
Courtesy of AMERICAN HONDA MOTOR CO., INC.

3. Front Splash Shield
    1. Install the front splash shield (A), then install the bolts (B) and the clips (C, D). Make sure the clips snap into place securely.

GETtheMANUALS.org

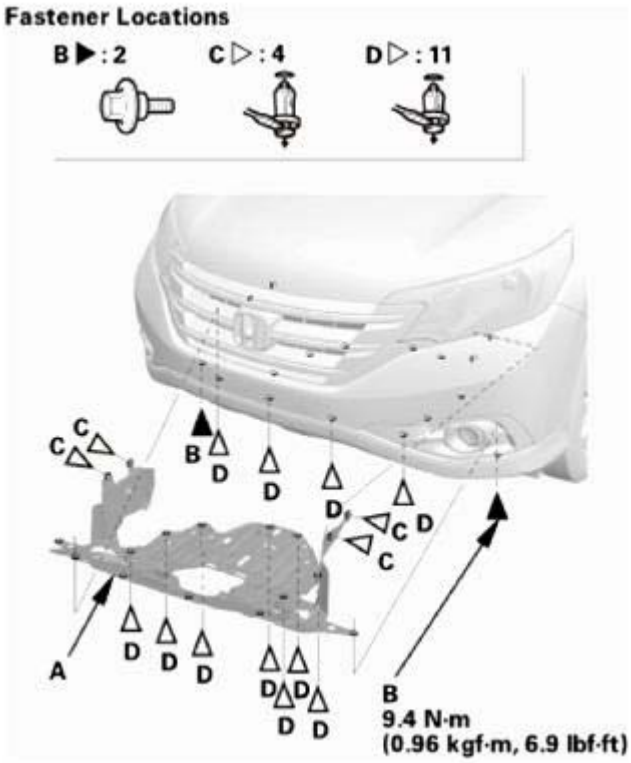

Fig. 14: Identifying Front Splash Shield, Bolts And Clips With Torque Specification
Courtesy of AMERICAN HONDA MOTOR CO., INC.

4. Drive Belt
    1. Install the drive belt.

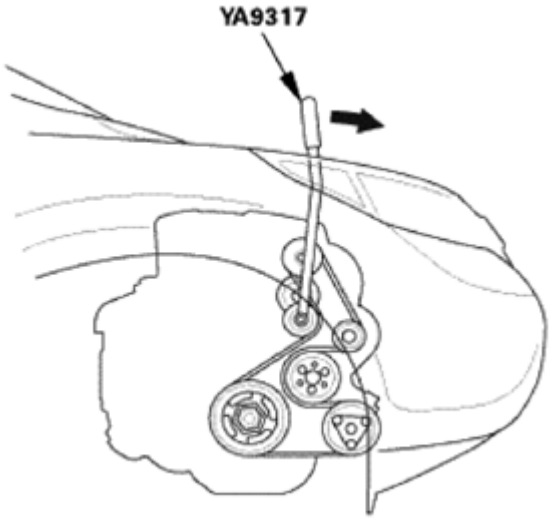

Fig. 15: Installing Drive Belt
Courtesy of AMERICAN HONDA MOTOR CO., INC.

5. Battery Terminal - Reconnection

GETtheMANUALS.org

NOTE: If the battery performance is abnormal, test the battery.

1. Clean the battery terminals.
2. Connect the positive cable (A) to the battery.

   NOTE: Always connect the positive side first.

3. Connect the negative cable (B) to the battery.
4. Apply multipurpose grease to the terminals to prevent corrosion.

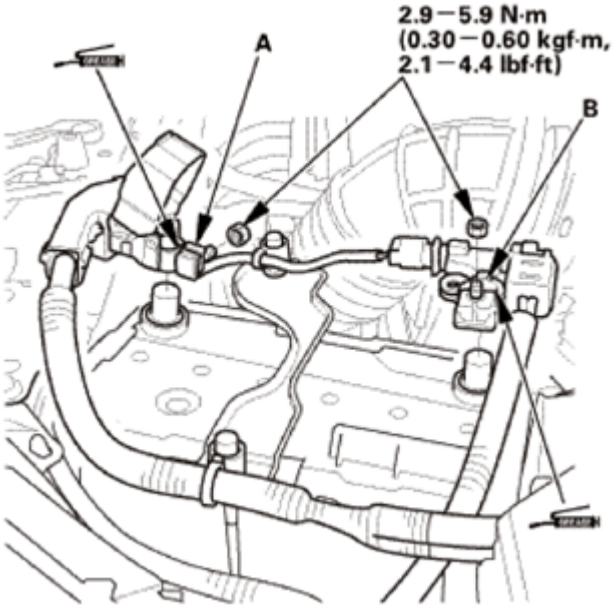

Fig. 16: Identifying Multipurpose Grease Applying Area On Terminals
Courtesy of AMERICAN HONDA MOTOR CO., INC.

6. R-134a Refrigerant Recovery/Recycling/Charging Station - Connection
   1. Connect an R-134a refrigerant recovery/recycling/charging station (A) to the high-pressure service port (B) and the low-pressure service port (C), as shown, following the equipment manufacturer's instructions.

GETtheMANUALS.org

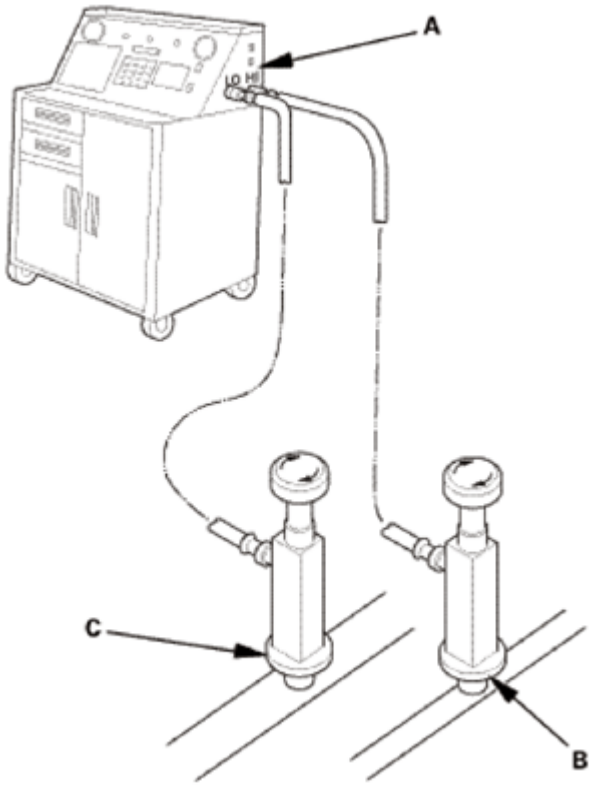

Fig. 17: Connecting R-134A Refrigerant Recovery/Recycling/Charging Station To High-Pressure Service Port And Low-Pressure Service Port
Courtesy of AMERICAN HONDA MOTOR CO., INC.

7. A/C System Evacuation
    1. Evacuate the system. The vacuum pump should run for a minimum of 30 minutes to eliminate all moisture from the system. When the suction gauge reads -93.3 kPa (-700 mmHg, - 27.55 inHg) for at least 30 minutes, close all valves, and turn off the vacuum pump.
    2. If the suction gauge dose not reach approximately -93.3 kPa (-700 mmHg, -27.55 inHg) in 15 minutes, there is probably a large leak in the system. Partially charge the system, and check for leaks.
8. A/C Refrigerant - Charging
    1. Charge the system with the specified amount of R-134a refrigerant. Do not overcharge the system; the A/C compressor will be damaged.

       Select the appropriate units of measure for your refrigerant charging station.

       Refrigerant Capacity:

       385 to 435 g

       13.6 to 15.4 oz

       0.385 to 0.435 kg

GETtheMANUALS.org

0.849 to 0.959 lbs

9. A/C Refrigerant - Leak Check

Leak Detector Usage Tips (Refer to the Operator's Manual for complete operating instructions)

- Position the vehicle in a wind-free work area. This will aid in detecting small leaks.
- When using the leak detector for the first time, allow it to warm up for 2 minutes with the probe in a clean atmosphere. This lets the temperature sensor in the detector stabilize.
- The calibration check should be done in the "Search 2" mode. Once that is done, the other check modes do not need calibrating.
- When leak checking through the HVAC module drain hose, avoid drawing water into the probe. Water can damage the internal pump and sensor.
- Avoid creasing the flexible probe extension. Creases can restrict air flow and give false readings.
- Because the detector recalibrates itself for ambient gases, it may be necessary to move the detector away from the leak to clear the sensor. Once the sensor has cleared, recheck the suspected leak.
- When removing the clear probe tip, be careful not to lose the flow ball.
- R-134a is heavier than air; always check below and to the sides of all potential leak sources.
- Halogen leak detectors are sensitive to chemicals: windshield washing solutions, solvents/cleaners, and some vehicle adhesives. Keep these chemicals out of the area when doing leak detection.

Fluorescent Dye Usage Tips

- Use only Tracer-Stick single dose fluorescent dye capsules from Tracerline®. Other dyes contain solvents that may contaminate the refrigerant oil, leading to component failure.
- Adding excessive amounts of dye can damage the A/C compressor.
- PAG oil is water soluble, so condensation on the evaporator core or the refrigerant lines may wash the PAG oil and fluorescent dye away from the actual leak. Condensation may also carry dye through the HVAC module drain.
- After checking and repairing leaks, thoroughly clean any residual dye from the areas where leaks were found. Use GLO-AWAY dye cleaner, from Tracerline®, and hot water to remove the dye (follow the instructions on the bottle). Residual dye stains can cause misdiagnosis of any future A/C system leaks.
- If any refrigerant dye contacts an exterior paint surface, remove it by doing this:
  - Carefully wash the affected surfaces to remove any dirt, and to prevent paint scratching.
  - Mix water and isopropyl alcohol in a 50/50 mixture. Soak a soft 100 % cotton towel with the water/alcohol mixture, and place the cloth on the affected areas to remove the dye.
  - After removing the dye with the water/alcohol-soaked cloth, carefully wash the affected areas, and check that there is no remaining dye.

1. With the engine OFF, use a halogen leak detector first to detect the leak source. Follow a continuous path in order to ensure that you will not miss any possible leaks. Test the following areas of the system for leaks:

GETtheMANUALS.org

Possible Leak Area	Diagnostic Procedure with the Leak Detector	Notes
Service ports	• Check the service ports with caps installed • If the detector "sniffs" a leak, use fluorescent dye to confirm it	When capping the service ports, ensure that the seals on the port caps are in place, and that the caps are tight. The caps are used as the final seals in the system
A/C condenser	If the detector "sniffs" a leak, use fluorescent dye to confirm it	• Check for joints or connections coated with oily dust • Check for damaged and corroded areas • Check all fittings, couplings, brazed/welded areas and areas around attachment points • Move the probe slowly (1 in/second or less), and keep it within 1/4 in of the component being checked. This maximizes the chance of detecting a leak • If you detect a leak, blow compressed air over the area, then recheck for leaks. For large leaks, clearing the area with compressed air may help you pinpoint the leak source
Evaporator	• Check at the evaporator drain hose • Check at the passenger's side vent and turn the blower on at low speed	
A/C lines	• Wiggle the rubber hoses when checking crimped metal ends • If the detector "sniffs" a leak, use fluorescent dye to confirm it	• Check all fittings, couplings, pressure switches, brazed/welded areas, and areas around attachment points on A/C lines and components • Check for damaged and corroded areas • Move the probe slowly (1 in/second or less), and keep it within 1/4 in of the component being checked. This maximizes the chance of detecting a leak

2. Close the quick coupler valves, then disconnect the quick couplers from the vehicle service ports.
3. Attach the universal connect set, from the Optimax Jr. Leak Detection Kit, to the service valve fitting. Close the control valve (the black knob on the connect set).
4. Attach the charging station low pressure hose quick coupler to the service valve fitting, and open the quick coupler valve. Evacuate the connect set using the charging station vacuum pump, then close the quick coupler valve.
5. Detach the universal connect set, and install a Tracer-Stick® dye capsule between the connect set and the service valve fitting (see the manufacturer's instructions for more detail).

GETtheMANUALS.org

6. Attach the quick coupler on the universal connect set to the low pressure service port on the vehicle. Open the charging station low pressure hose quick coupler valve, but do not open the control valve.
7. Start the engine, and set the A/C system to maximum cooling. Open the control valve to let refrigerant and the dye enter the A/C system through the low pressure service port. Close the control valve when the Tracer-Stick® dye capsule is empty.
8. Run the engine and A/C system for 15 minutes to thoroughly circulate the dye. Then shut the engine off, and inspect the following areas of the system for leaks:

NOTE:

- **Check for leaks in a dark work area, and use the UV light and the special glasses from the leak check kit. Other UV lights may not work well with the Tracer-Stick® dye.**
- **Small leaks may take up to 1 week of vehicle operation (with normal A/C use) to become visible.**

Possible Leak Area	Diagnostic Procedure with Fluorescent Dye
Service ports	If a leak is found, replace the cap/o-ring seal or A/C line as needed
A/C lines	• Use a permanent marker pen to circle the leak area • If a leak is found, remove and replace the A/C line
A/C condenser	• If a leak is found, remove the A/C condenser • Determine whether leak is in the A/C condenser or the receiver/dryer • Use a permanent marker pen to circle the leak area • Replace either the receiver/dryer, or the A/C condenser, depending upon which is leaking
A/C compressor	• Check for leaks at all of the A/C compressor joints, the clutch center, the A/C compressor front housing bolts, and the scroll bolts on the back of the A/C compressor • If a leak is found, use a permanent marker pen to circle the leak area • If the A/C compressor relief valve appears to be leaking, determine whether the leak is coming from the relief valve, or the joint between the A/C compressor casing and the valve. If the leak is from the relief valve, check the A/C system pressures, and refer to the pressure test table in the A/C system test. If the leak is from the casing/valve joint, replace the A/C compressor relief valve • If the leak is coming from the suction hose and/or discharge hose fittings on the A/C compressor, clean the A/C fittings and replace the suction/discharge fitting O-rings • For all other A/C compressor leaks, remove and replace the A/C compressor
	• Start checking for evaporator leaks by illuminating the evaporator drain tube area

GETtheMANUALS.org

Evaporator	• If a leak is found, remove the evaporator core • Determine whether leak is from evaporator or expansion valve • Use a permanent marker pen to circle leak area • Replace the expansion valve, or the evaporator core, depending upon which is leaking

10. A/C System - Test
    1. Insert a thermometer (A) in the center vent.
    2. Place a hygro-thermometer (B) near the blower unit's recirculation inlet duct.
    3. Test conditions:
        - Move the vehicle out of direct sunlight and let it cool down to the surrounding (ambient) temperature. If necessary, wash the vehicle to cool it down more quickly.
        - The blower intake temperature must be at least 68°F (20°C).
        - Open the hood.
        - Open the front doors.
        - Start the engine.
        - Set the temperature control dial or temperature control button to MAX COOL, the mode control button to VENT, and the recirculation control button to RECIRCULATE.
        - Turn the A/C button on and the fan control dial or fan control button to Max.
        - Run the engine at 1, 500 rpm.
        - No driver or passengers in vehicle.

Fig. 18: Inserting Thermometer In Center Vent

GETtheMANUALS.org

4. Inspect the A/C components for the following conditions:
   - A/C compressor clutch not engaged.
   - Abnormal frost areas.
   - Unusual noises.

   If you observe any of these conditions, refer to the Symptom Troubleshooting Index.

5. After running the air conditioning for 10 minutes under the above test conditions, read the delivery temperature from the thermometer in the center vent, the intake temperature near the blower unit, and the discharge (high) and suction (low) pressures on the A/C gauges.
6. To complete the vent (delivery)/intake temperature chart:
   - Mark the vent (delivery) temperature on the vertical line.
   - Mark the intake temperature on the bottom line.
   - Draw a vertical line from the intake temperature mark.
   - Draw a horizontal line from the vent (delivery) temperature mark until it intersects the vertical line.

NOTE: **The vent temperature and intake temperature should intersect in the shaded area. Any measurements outside the line may indicate the need for further inspection.**

GETtheMANUALS.org

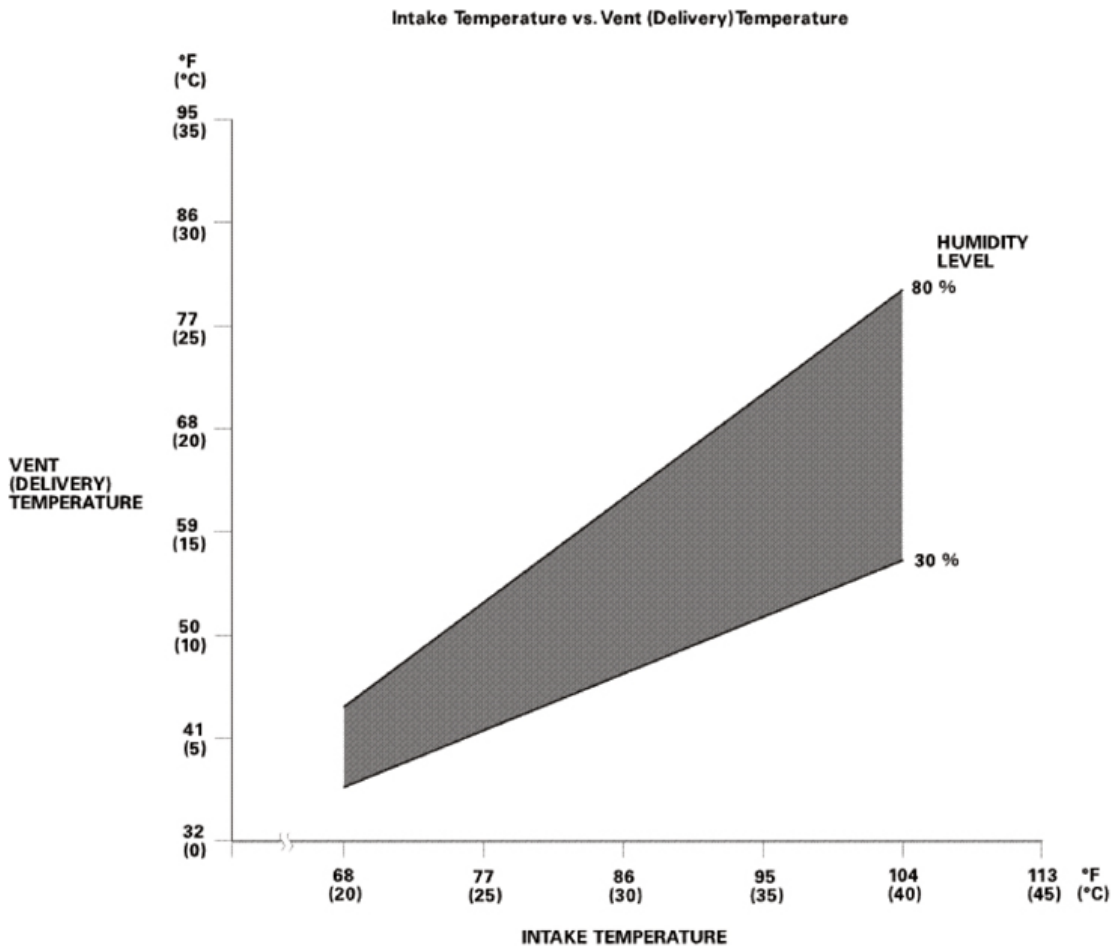

Fig. 19: Intake Temperature And Vent (Delivery) Temperature Graph
Courtesy of AMERICAN HONDA MOTOR CO., INC.

7. To complete the high side (discharge) pressure/intake temperature chart:
   - Mark the high side (discharge) pressure on the vertical line.
   - Mark the intake temperature on the bottom line.
   - Draw a vertical line from the intake temperature mark.
   - Draw a horizontal line from the high side (discharge) pressure mark until it intersects the vertical line.

NOTE: **The high side pressure and intake temperature should intersect in the shaded area. Any measurements outside the line may indicate the need for further inspection.**

GETtheMANUALS.org

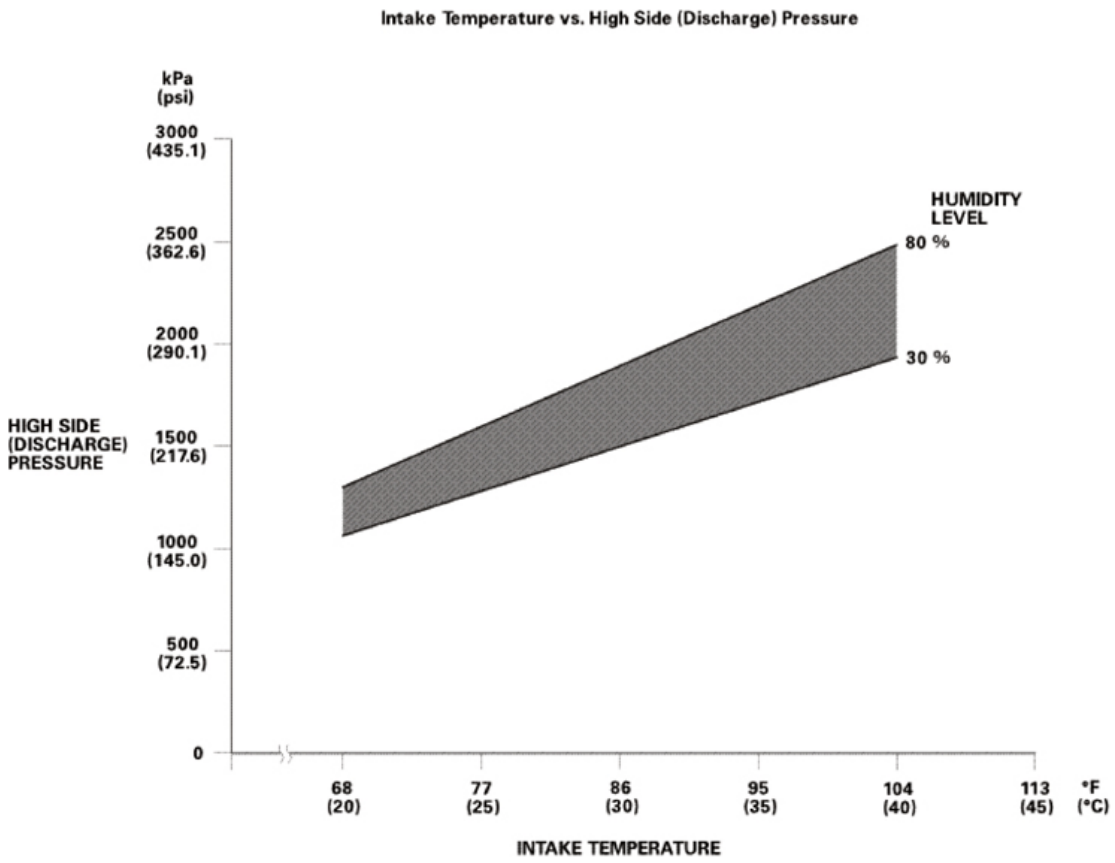

Fig. 20: Intake Temperature And High Side (Discharge) Pressure Graph
Courtesy of AMERICAN HONDA MOTOR CO., INC.

8. To complete the low side (suction) pressure/intake temperature chart:
   - Mark the low side (suction) pressure along the vertical line.
   - Mark the intake temperature along the bottom line.
   - Draw a vertical line from the intake temperature mark.
   - Draw a horizontal line from the low side (suction) pressure mark until it intersects the vertical line.

NOTE: **The low side pressure and intake temperature should intersect in the shaded area. Any measurements outside the line may indicate the need for further inspection.**

GETtheMANUALS.org

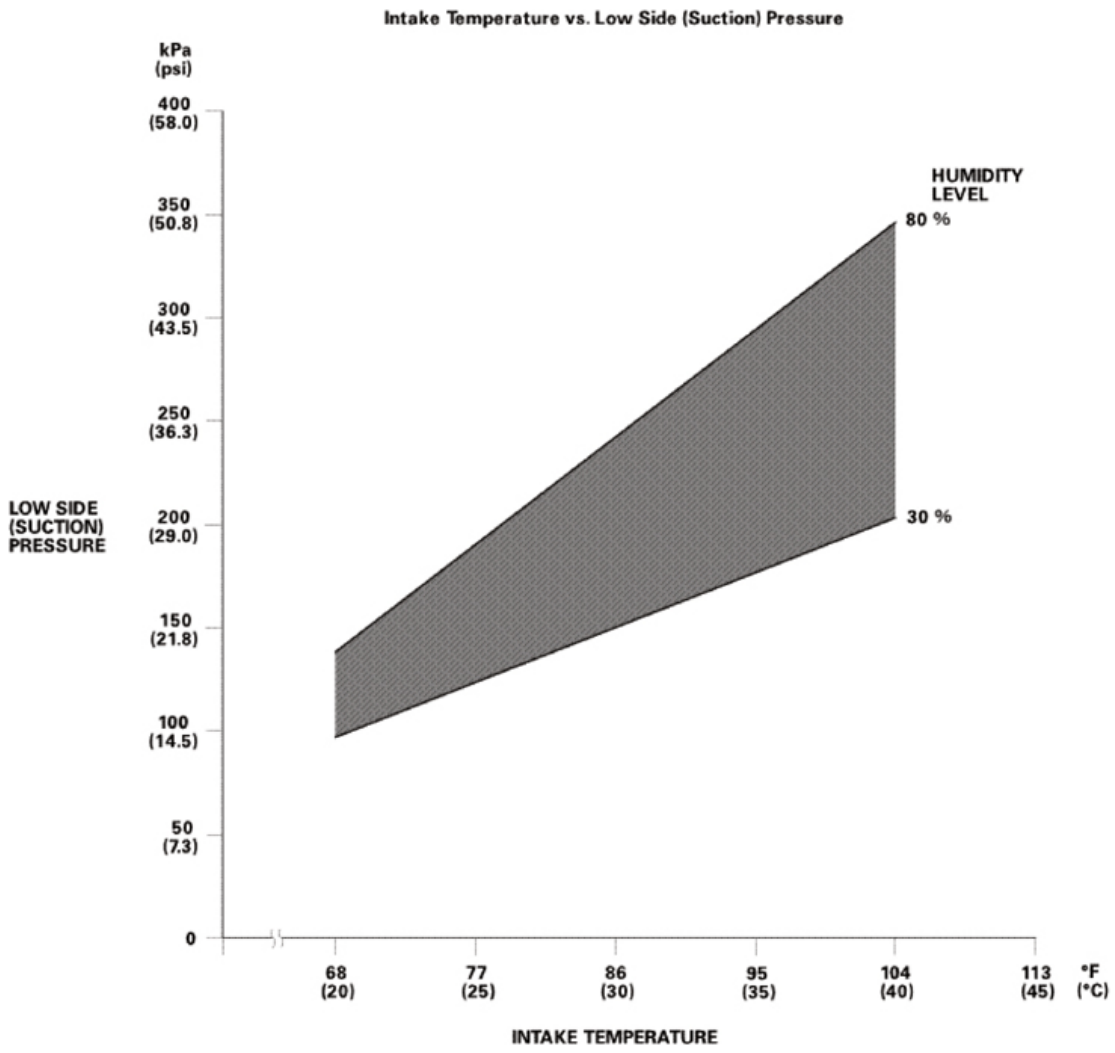

Fig. 21: Intake Temperature And Low Side (Suction) Pressure Graph
Courtesy of AMERICAN HONDA MOTOR CO., INC.

11. Glove Box - Move
    1. Install the glove box (A). Make sure the glove box stops (B) snap into place securely.
    2. Install the glove box damper hook (C).

GETtheMANUALS.org

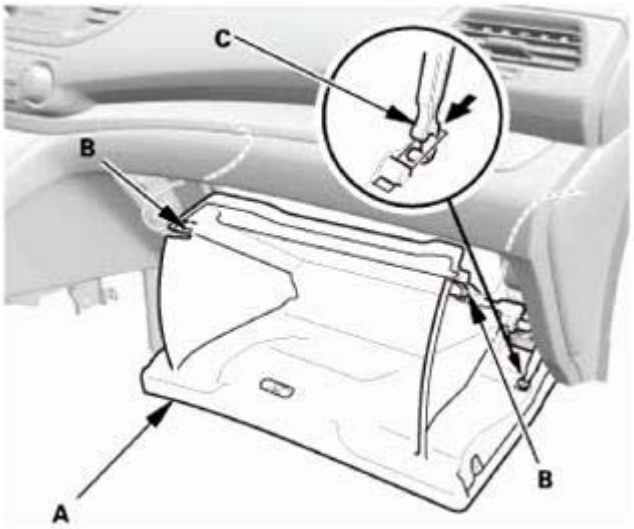

Fig. 22: Installing Glove Box Damper Hook
Courtesy of AMERICAN HONDA MOTOR CO., INC.

A/C COMPRESSOR CLUTCH OVERHAUL

SPECIAL TOOL REQUIRED DESCRIPTION

Image	Description/Tool Number
	A/C Compressor Kit 07AAF-000A150

GETtheMANUALS.org

DISASSEMBLY

1. A/C Compressor Armature Plate
    1. Remove the center nut while holding the armature plate (A) with the A/C clutch holder (B).

NOTE: **Do not hammer or pry on the rotor pulley to remove it. Using a hammer damages the A/C compressor. If the rotor pulley is difficult to remove, use a commercially available pulley removing tool. Make sure the jaws of the pulling tool engage the back face of the rotor pulley, not the rotor pulley grooves.**

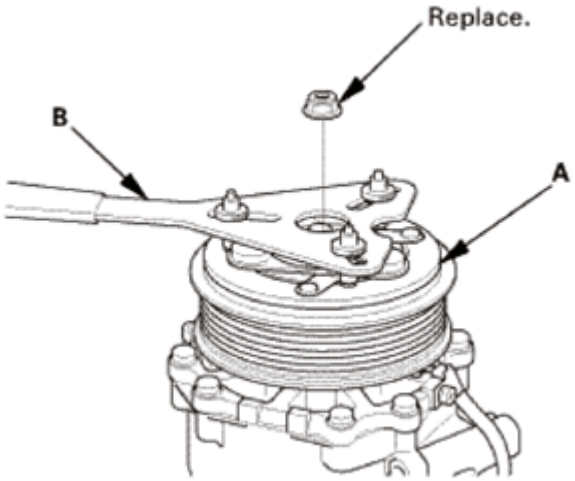

Fig. 23: Removing Center Nut While Holding Armature Plate With A/C Clutch Holder
Courtesy of AMERICAN HONDA MOTOR CO., INC.

2. Remove the armature plate (A) and the shim(s) (B), taking care not to lose the shim(s).

NOTE:

- **Inspect the armature plate and the rotor pulley friction surfaces for wear. If there is excessive wear, roughness, or scoring, replace the clutch set.**
- **If A/C compressor oil is found, replace the A/C compressor.**
- **A leaking A/C compressor front shaft seal should be inspected at this step.**

GETtheMANUALS.org

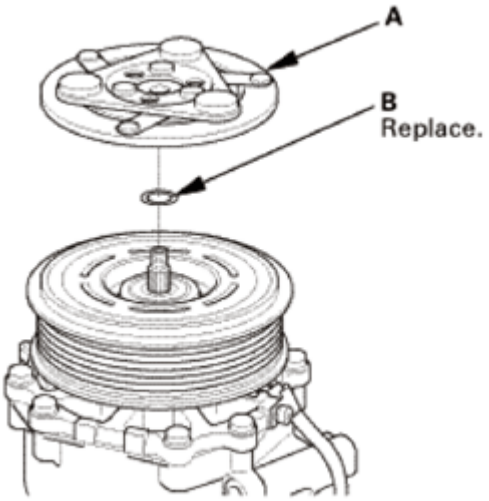

Fig. 24: Identifying Armature Plate And Shim(S)
Courtesy of AMERICAN HONDA MOTOR CO., INC.

2. A/C Compressor Rotor Pulley
    1. Remove the snap ring (A) with the snap ring pliers.
    2. Remove the rotor pulley (B).

NOTE: Be careful not to damage the rotor pulley or the A/C compressor.

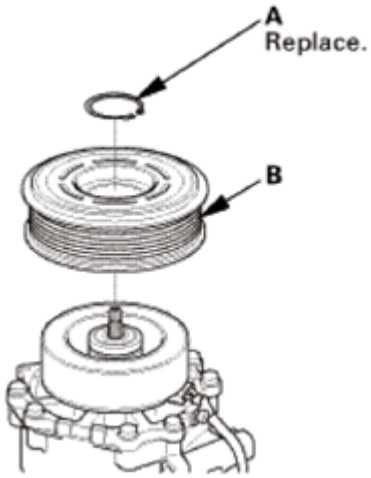

Fig. 25: Identifying Rotor Pulley And Snap Ring
Courtesy of AMERICAN HONDA MOTOR CO., INC.

3. A/C Compressor Field Coil
    1. Remove the holders (A).
    2. Disconnect the connector (B).
    3. Remove the snap ring (C) with the snap ring pliers.

GETtheMANUALS.org

4. Remove the field coil (D). Be careful not to damage the field coil and A/C compressor.

NOTE: **Inspect the friction surfaces and the A/C compressor shaft hub for excess oil. If excess oil is present, and it is not from the engine system, then the A/C compressor shaft seal is leaking. Replace the A/C compressor.**

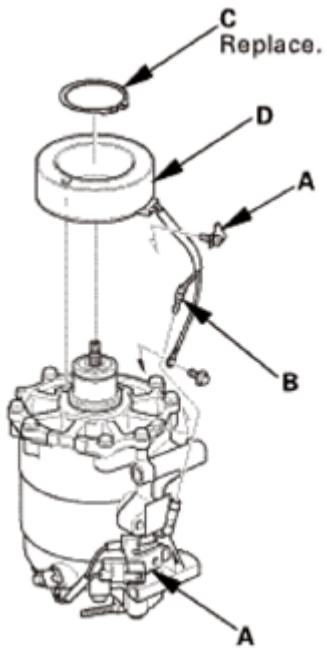

Fig. 26: Identifying Field Coil, Snap Ring, Connector And Holders
Courtesy of AMERICAN HONDA MOTOR CO., INC.

REASSEMBLY

NOTE:

- **When replacing the field coil, check that the new coil has the correct resistance.**
- **Install the field coil with the wire side facing down, and align the boss on the field coil with the hole in the A/C compressor.**
- **Clean the rotor pulley and the armature plate with contact cleaner or other non-petroleum solvent.**
- **Install new snap rings, note the installation direction, and make sure they are fully seated in the grooves.**
- **Make sure that the rotor pulley turns smoothly after it's reassembled.**
- **Route and clamp the wires properly to prevent damage by the rotor pulley.**
- **After reinstallation, cycle the A/C clutch approximately 20 times by running the engine at 1, 500-2, 000 rpm and setting the A/C system to Max Cool mode. This procedure seats the clutch sliding surfaces, and increases clutch torque capacity.**

GETtheMANUALS.org

1. A/C Compressor Field Coil
    1. Install the field coil (A).

        NOTE: Be careful not to damage the field coil and the A/C compressor.

    2. Install the snap ring (B) with the snap ring pliers.
    3. Connect the connector (C).
    4. Install the holders (D).

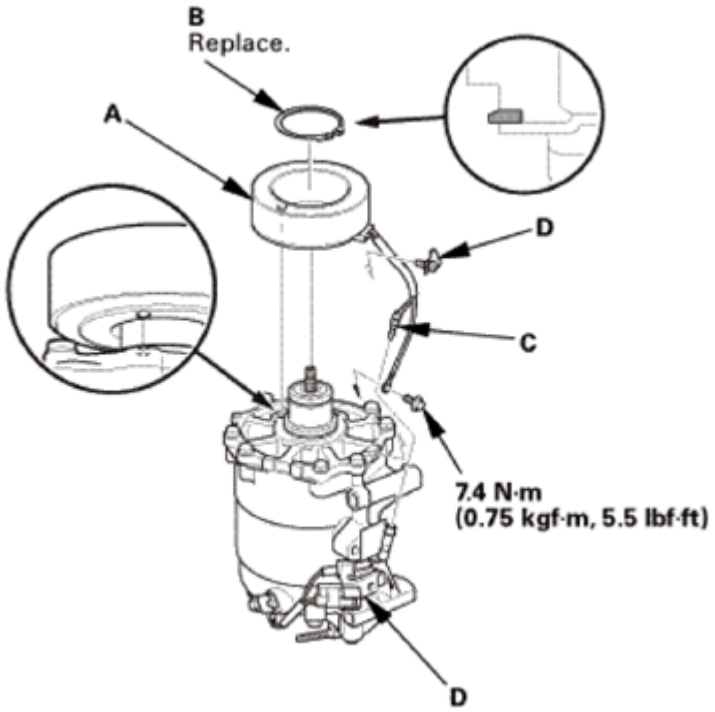

Fig. 27: Identifying Field Coil, Snap Ring, Connector, Holders And Bolt With Torque Specification
Courtesy of AMERICAN HONDA MOTOR CO., INC.

2. A/C Compressor Rotor Pulley
    1. Install the rotor pulley (A).

        NOTE: Be careful not to damage the rotor pulley or the A/C compressor.

    2. Install the snap ring (B) with the snap ring pliers.

GETtheMANUALS.org

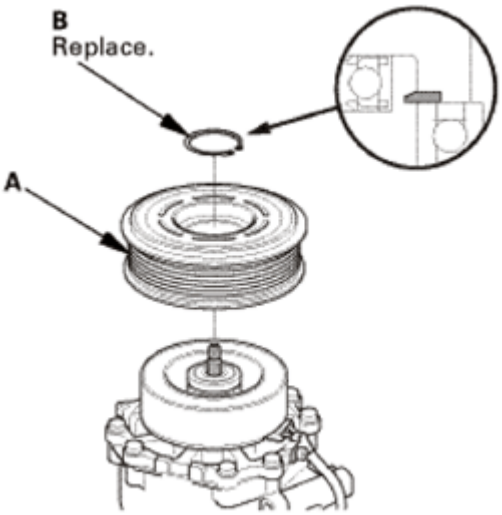

Fig. 28: Identifying Rotor Pulley And Snap Ring
Courtesy of AMERICAN HONDA MOTOR CO., INC.

3. A/C Compressor Armature Plate
    1. Install the armature plate (A) and the shim(s) (B), taking care not to lose the shim(s). If the clutch needs adjustment, increase or decrease the number and thickness of shims as necessary, then reinstall the armature plate, and recheck its clearance.

NOTE: **The shims are available in four thicknesses: 0.1 mm, 0.2 mm, 0.4 mm, and 0.5 mm.**

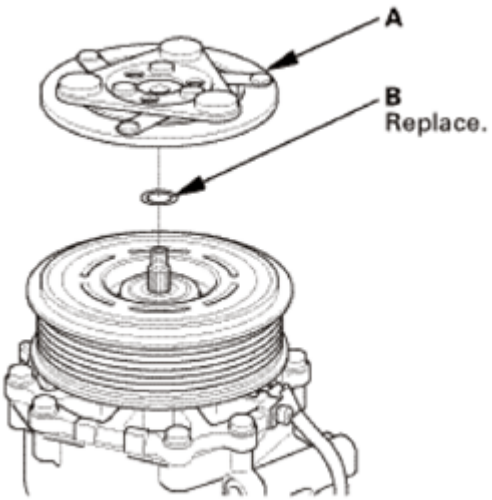

Fig. 29: Identifying Armature Plate And Shim(S)
Courtesy of AMERICAN HONDA MOTOR CO., INC.

2. Install the center nut while holding the armature plate (A) with the A/C clutch holder (B).

GETtheMANUALS.org

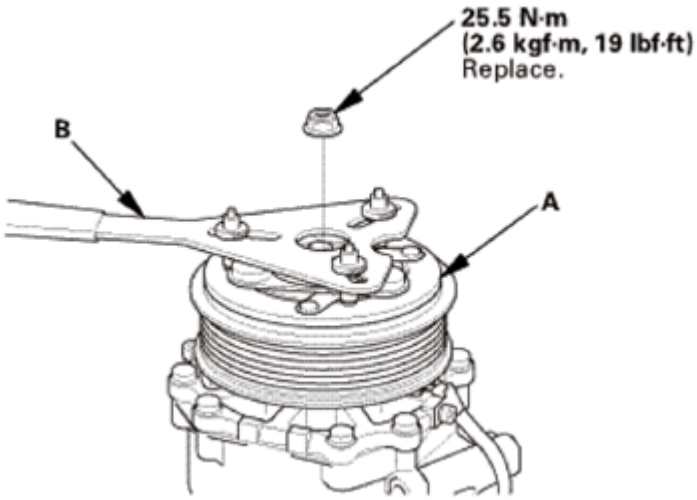

Fig. 30: Installing Center Nut While Holding Armature Plate With A/C Clutch Holder
Courtesy of AMERICAN HONDA MOTOR CO., INC.

4. A/C Compressor Clutch - Check
    1. Check the armature plate for discoloration, peeling, or other damage. If there is damage, replace the clutch set.
    2. Check the rotor pulley bearing play and drag by rotating the rotor pulley by hand. Also check for grease leakage from the bearing. Replace the clutch set with a new one if it is noisy, has excessive play/drag, or has bearing grease contamination on the clutch faces.

NOTE: **The rotor pulley and the armature plate were mated at the factory by a burnishing operation. Always replace the rotor pulley and the plate as a set. Replacing only one part of the clutch set will cause clutch slippage.**

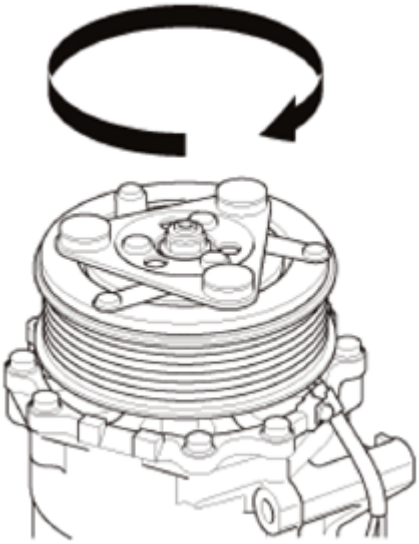

Fig. 31: Checking Rotor Pulley Bearing Play And Drag By Rotating Rotor Pulley

GETtheMANUALS.org

Courtesy of AMERICAN HONDA MOTOR CO., INC.

3. Measure the clearance between the rotor pulley (A) and the armature plate (B) all the way around. If the clearance is not within specified limits, remove the armature plate and add or remove shims as needed to increase or decrease clearance.

   Clearance: 0.35-0.65 mm (0.014-0.025 in)

   NOTE: The shims are available in four thicknesses: 0.1 mm, 0.2 mm, 0.4 mm, and 0.5 mm.

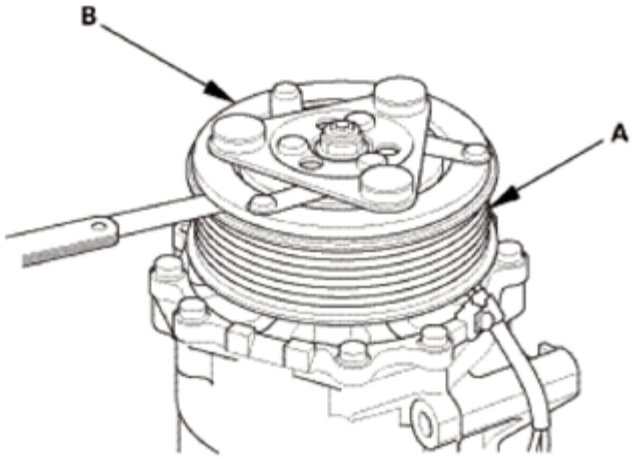

Fig. 32: Measuring Clearance Between Rotor Pulley And Armature Plate
Courtesy of AMERICAN HONDA MOTOR CO., INC.

4. Check for continuity between the A/C compressor clutch connector terminals No. 2 and No. 3. If there is no continuity, replace the thermal protector.

   NOTE: The thermal protector will have no continuity above about 252 to 262 °F (122 to 128 °C). When the temperature drops below about 241 to 219 °F (116 to 104 °C), the thermal protector will have continuity.

GETtheMANUALS.org

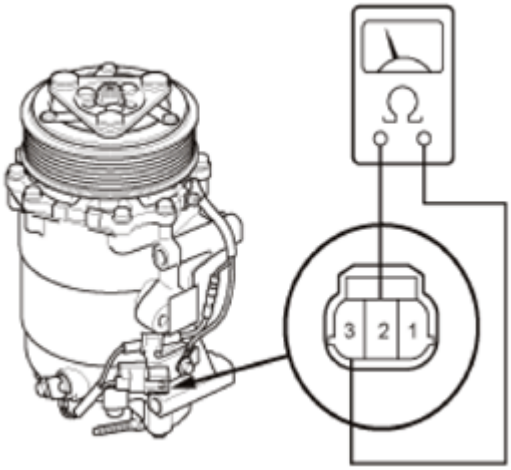

Fig. 33: Checking For Continuity Between A/C Compressor Clutch Connector Terminals No. 2 And No. 3
Courtesy of AMERICAN HONDA MOTOR CO., INC.

5. Disconnect the connector (A).
6. Measure the resistance of the field coil. If resistance is not within specifications, replace the field coil.

Field Coil Resistance: 3.35-3.65 ohms at 68 °F (20 °C)

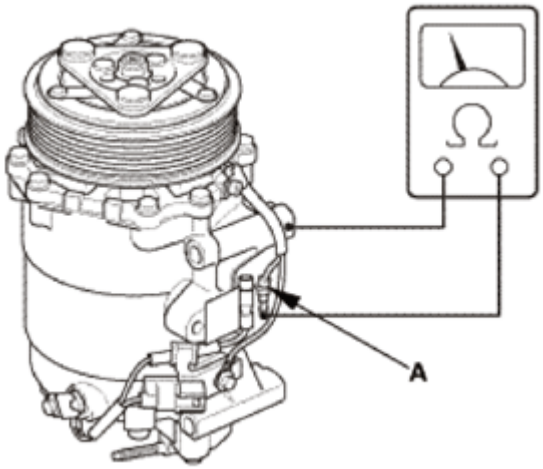

Fig. 34: Measuring Resistance Of Field Coil
Courtesy of AMERICAN HONDA MOTOR CO., INC.

A/C REFRIGERANT LEAK CHECK

SPECIAL TOOL REQUIRED DESCRIPTION

Image	Description/Tool Number

GETtheMANUALS.org

	Compact Electronic Vacuum Gauge Robinair ROB14777(1), commercially available
	Leak Detector YGK-H-10PM(1)
	Leak Detector HLD-100(1)

GETtheMANUALS.org

	Leak Detector TIFZX-1(1)
	OPTIMAX Jr. A/C Leak Detection Kit TRP124893(1)
(1) These tools are available through the Honda Tool and Equipment Program; call 888-424-6857	

TEST

CAUTION:

- **Air conditioning refrigerant or lubricant vapor can irritate your eyes,**

GETtheMANUALS.org

nose, or throat.

- **Be careful when connecting service equipment.**
- **Do not breathe refrigerant or vapor.**
- **Do not operate the leak detector near flammable vapors. Its sensor operates at high temperatures, and could ignite the vapors, resulting in personal injury and/or damage to the equipment.**

NOTE:

- **If an accidental system discharge occurs, ventilate the work area before resuming service.**
- **Additional health and safety information may be obtained from the refrigerant and lubricant manufacturers.**
- **Check the system for leaks using an R-134a refrigerant leak detector with an accuracy of 14 g (0.5 oz) per year or better.**

1. R-134a Refrigerant Recovery/Recycling/Charging Station - Connection
    1. Connect an R-134a refrigerant recovery/recycling/charging station (A) to the high-pressure service port (B) and the low-pressure service port (C), as shown, following the equipment manufacturer's instructions.

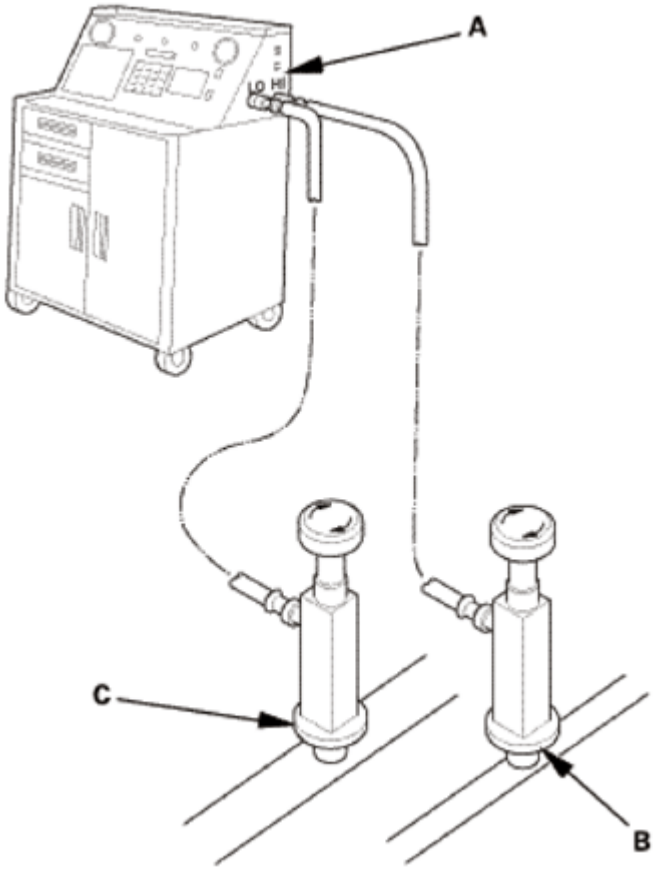

Fig. 35: Connecting R-134A Refrigerant Recovery/Recycling/Charging Station To High-

GETtheMANUALS.org

<u>Pressure Service Port And Low-Pressure Service Port</u>
Courtesy of AMERICAN HONDA MOTOR CO., INC.

2. A/C Refrigerant - Recovery
    1. Recover the refrigerant from the A/C system.
    2. Measure the amount of refrigerant oil removed from the A/C system after the recovery process is completed. Be sure to put the same amount of new refrigerant oil back into the A/C system before charging.
3. A/C System Evacuation
    1. Evacuate the system. The vacuum pump should run for a minimum of 30 minutes to eliminate all moisture from the system. When the suction gauge reads -93.3 kPa (-700 mmHg, - 27.55 inHg) for at least 30 minutes, close all valves, and turn off the vacuum pump.
    2. If the suction gauge dose not reach approximately -93.3 kPa (-700 mmHg, -27.55 inHg) in 15 minutes, there is probably a large leak in the system. Partially charge the system, and check for leaks.
4. A/C Refrigerant - Charging
    1. Charge the system with the specified amount of R-134a refrigerant. Do not overcharge the system; the A/C compressor will be damaged.

       Select the appropriate units of measure for your refrigerant charging station.

       Refrigerant Capacity:

       385 to 435 g

       13.6 to 15.4 oz

       0.385 to 0.435 kg

       0.849 to 0.959 lbs

5. A/C Refrigerant - Leak Check

Leak Detector Usage Tips (Refer to the Operator's Manual for complete operating instructions)

- Position the vehicle in a wind-free work area. This will aid in detecting small leaks.
- When using the leak detector for the first time, allow it to warm up for 2 minutes with the probe in a clean atmosphere. This lets the temperature sensor in the detector stabilize.
- The calibration check should be done in the "Search 2" mode. Once that is done, the other check modes do not need calibrating.
- When leak checking through the HVAC module drain hose, avoid drawing water into the probe. Water can damage the internal pump and sensor.
- Avoid creasing the flexible probe extension. Creases can restrict air flow and give false readings.
- Because the detector recalibrates itself for ambient gases, it may be necessary to move the detector

GETtheMANUALS.org

away from the leak to clear the sensor. Once the sensor has cleared, recheck the suspected leak.

- When removing the clear probe tip, be careful not to lose the flow ball.
- R-134a is heavier than air; always check below and to the sides of all potential leak sources.
- Halogen leak detectors are sensitive to chemicals: windshield washing solutions, solvents/cleaners, and some vehicle adhesives. Keep these chemicals out of the area when doing leak detection.

Fluorescent Dye Usage Tips

- Use only Tracer-Stick single dose fluorescent dye capsules from Tracerline®. Other dyes contain solvents that may contaminate the refrigerant oil, leading to component failure.
- Adding excessive amounts of dye can damage the A/C compressor.
- PAG oil is water soluble, so condensation on the evaporator core or the refrigerant lines may wash the PAG oil and fluorescent dye away from the actual leak. Condensation may also carry dye through the HVAC module drain.
- After checking and repairing leaks, thoroughly clean any residual dye from the areas where leaks were found. Use GLO-AWAY dye cleaner, from Tracerline®, and hot water to remove the dye (follow the instructions on the bottle). Residual dye stains can cause misdiagnosis of any future A/C system leaks.
- If any refrigerant dye contacts an exterior paint surface, remove it by doing this:
  - Carefully wash the affected surfaces to remove any dirt, and to prevent paint scratching.
  - Mix water and isopropyl alcohol in a 50/50 mixture. Soak a soft 100 % cotton towel with the water/alcohol mixture, and place the cloth on the affected areas to remove the dye.
  - After removing the dye with the water/alcohol-soaked cloth, carefully wash the affected areas, and check that there is no remaining dye.

1. With the engine OFF, use a halogen leak detector first to detect the leak source. Follow a continuous path in order to ensure that you will not miss any possible leaks. Test the following areas of the system for leaks:

Possible Leak Area	Diagnostic Procedure with the Leak Detector	Notes
Service ports	• Check the service ports with caps installed • If the detector "sniffs" a leak, use fluorescent dye to confirm it	When capping the service ports, ensure that the seals on the port caps are in place, and that the caps are tight. The caps are used as the final seals in the system
A/C condenser	If the detector "sniffs" a leak, use fluorescent dye to confirm it	• Check for joints or connections coated with oily dust • Check for damaged and corroded areas • Check all fittings, couplings, brazed/welded areas and areas around attachment points • Move the probe slowly (1 in/second or less), and keep it within 1/4 in of the component being checked. This maximizes the chance of

GETtheMANUALS.org

		detecting a leak • If you detect a leak, blow compressed air over the area, then recheck for leaks. For large leaks, clearing the area with compressed air may help you pinpoint the leak source
Evaporator	• Check at the evaporator drain hose • Check at the passenger's side vent and turn the blower on at low speed	
A/C lines	• Wiggle the rubber hoses when checking crimped metal ends • If the detector "sniffs" a leak, use fluorescent dye to confirm it	• Check all fittings, couplings, pressure switches, brazed/welded areas, and areas around attachment points on A/C lines and components • Check for damaged and corroded areas • Move the probe slowly (1 in/second or less), and keep it within 1/4 in of the component being checked. This maximizes the chance of detecting a leak

2. Close the quick coupler valves, then disconnect the quick couplers from the vehicle service ports.
3. Attach the universal connect set, from the Optimax Jr. Leak Detection Kit, to the service valve fitting. Close the control valve (the black knob on the connect set).
4. Attach the charging station low pressure hose quick coupler to the service valve fitting, and open the quick coupler valve. Evacuate the connect set using the charging station vacuum pump, then close the quick coupler valve.
5. Detach the universal connect set, and install a Tracer-Stick® dye capsule between the connect set and the service valve fitting (see the manufacturer's instructions for more detail).
6. Attach the quick coupler on the universal connect set to the low pressure service port on the vehicle. Open the charging station low pressure hose quick coupler valve, but do not open the control valve.
7. Start the engine, and set the A/C system to maximum cooling. Open the control valve to let refrigerant and the dye enter the A/C system through the low pressure service port. Close the control valve when the Tracer-Stick® dye capsule is empty.
8. Run the engine and A/C system for 15 minutes to thoroughly circulate the dye. Then shut the engine off, and inspect the following areas of the system for leaks:

NOTE:

- **Check for leaks in a dark work area, and use the UV light and the special glasses from the leak check kit. Other UV lights may not work well with the Tracer-Stick® dye.**
- **Small leaks may take up to 1 week of vehicle operation (with normal A/C use) to become visible.**

GETtheMANUALS.org

Possible Leak Area	Diagnostic Procedure with Fluorescent Dye
Service ports	If a leak is found, replace the cap/o-ring seal or A/C line as needed
A/C lines	• Use a permanent marker pen to circle the leak area • If a leak is found, remove and replace the A/C line
A/C condenser	• If a leak is found, remove the A/C condenser • Determine whether leak is in the A/C condenser or the receiver/dryer • Use a permanent marker pen to circle the leak area • Replace either the receiver/dryer, or the A/C condenser, depending upon which is leaking
A/C compressor	• Check for leaks at all of the A/C compressor joints, the clutch center, the A/C compressor front housing bolts, and the scroll bolts on the back of the A/C compressor • If a leak is found, use a permanent marker pen to circle the leak area • If the A/C compressor relief valve appears to be leaking, determine whether the leak is coming from the relief valve, or the joint between the A/C compressor casing and the valve. If the leak is from the relief valve, check the A/C system pressures, and refer to the pressure test table in the A/C system test. If the leak is from the casing/valve joint, replace the A/C compressor relief valve • If the leak is coming from the suction hose and/or discharge hose fittings on the A/C compressor, clean the A/C fittings and replace the suction/discharge fitting O-rings • For all other A/C compressor leaks, remove and replace the A/C compressor
Evaporator	• Start checking for evaporator leaks by illuminating the evaporator drain tube area • If a leak is found, remove the evaporator core • Determine whether leak is from evaporator or expansion valve • Use a permanent marker pen to circle leak area • Replace the expansion valve, or the evaporator core, depending upon which is leaking

A/C REFRIGERANT OIL REPLACEMENT

SPECIAL TOOL REQUIRED DESCRIPTION

Image	Description/Tool Number
	Oil Injector Tool Robinair ROB16256(1),

GETtheMANUALS.org

	commercially available
(1) Available through the Honda Tool and Equipment Program; call 888	

REPLACEMENT

1. A/C Refrigerant Oil - Replacement

   Recommended PAG oil: SP-10

   P/N 38897-P13-A01AH: 120 mL (4 fl oz)

   It is important to have the correct amount of refrigerant oil in the A/C system to ensure proper lubrication of the A/C compressor. T oil damages the A/C compressor; too much oil reduces the cooling capacity of the system, and can produce high vent temperatures.

   - To avoid contamination, do not return the oil to the container once dispensed, and never mix it with other refrigerant oils.
   - Immediately after using the oil, reinstall the cap on the container, and seal it to avoid moisture absorption.
   - Do not spill the refrigerant oil on the vehicle; it may damage the paint; if it gets on the paint, wash it off immediately.

   Add the recommended refrigerant oil in the amount listed if you replace any of the following parts.

A/C condenser (including dryer desiccant).....	25 mL (5/6 fl oz)
Evaporator.....	40 mL (1 1/3 fl oz)
Line or hose.....	10 mL (1/3 fl oz)
Dryer desiccant.....	10 mL (1/3 fl oz)
Leakage repair.....	25 mL (5/6 fl oz)
A/C compressor.....	Since the oil separator is equipped inside the A/C compressor for this vehicle, oil drainage is unnecessary at the time of A/C compressor replacement.

A/C REFRIGERANT RECOVERY

PROCEDURE

GETtheMANUALS.org

CAUTION:

- **Air conditioning refrigerant or lubricant vapor can irritate your eyes, nose, or throat.**
- **Be careful when connecting service equipment.**
- **Do not breathe refrigerant or vapor.**

NOTE:

- **If accidental system discharge occurs, ventilate the work area before resuming service.**
- **Additional health and safety information may be obtained from the refrigerant and lubricant manufacturers.**

1. R-134a Refrigerant Recovery/Recycling/Charging Station - Connection
    1. Connect an R-134a refrigerant recovery/recycling/charging station (A) to the high-pressure service port (B) and the low-pressure service port (C), as shown, following the equipment manufacturer's instructions.

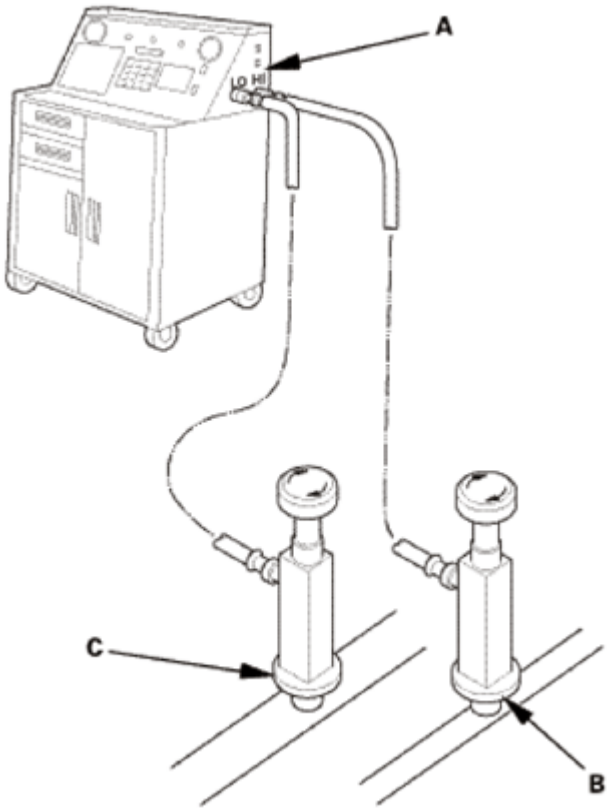

Fig. 36: Connecting R-134A Refrigerant Recovery/Recycling/Charging Station To High-Pressure Service Port And Low-Pressure Service Port
Courtesy of AMERICAN HONDA MOTOR CO., INC.

2. A/C Refrigerant - Recovery
    1. Recover the refrigerant from the A/C system.

GETtheMANUALS.org

2. Measure the amount of refrigerant oil removed from the A/C system after the recovery process is completed. Be sure to put the same amount of new refrigerant oil back into the A/C system before charging.

A/C SYSTEM CHARGING

SPECIAL TOOL REQUIRED DESCRIPTION

Image	Description/Tool Number
	Compact Electronic Vacuum Gauge Robinair ROB14777(1), commercially available
	Leak Detector YGK-H-10PM(1)

GETtheMANUALS.org

	Leak Detector HLD-100(1)
	Leak Detector TIFZX-1(1)
	OPTIMAX Jr. A/C Leak Detection Kit TRP124893(1)

GETtheMANUALS.org

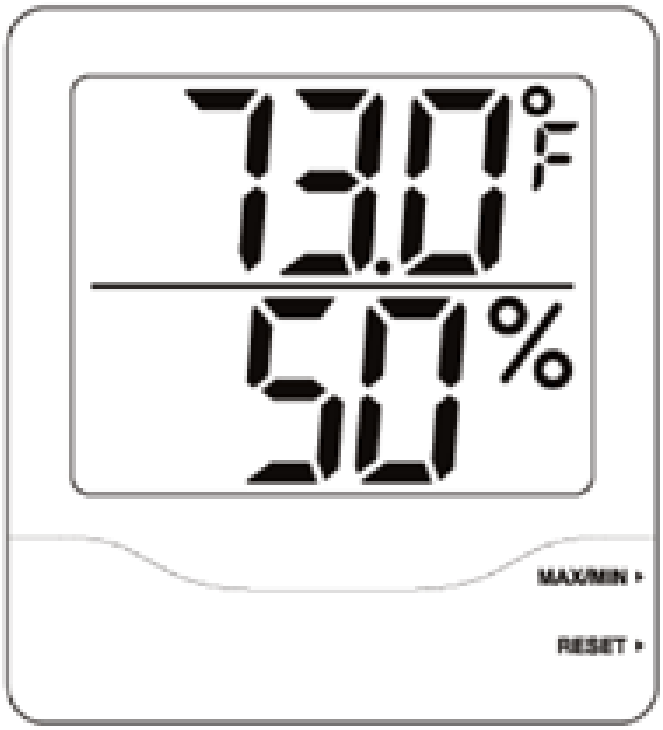	Big Digit Hygro-Thermometer PYR445703, commercially available
	Throttle Pedal Depressor Tool B240B, commercially available
(1) These tools are available through the Honda Tool and Equipment Program; call 888-424-6857	

REMOVAL

1. Glove Box - Move
    1. Detach the glove box damper hook (A), and release both glove box stops (B) by pushing them in, then let glove box (C) hang down.

GETtheMANUALS.org

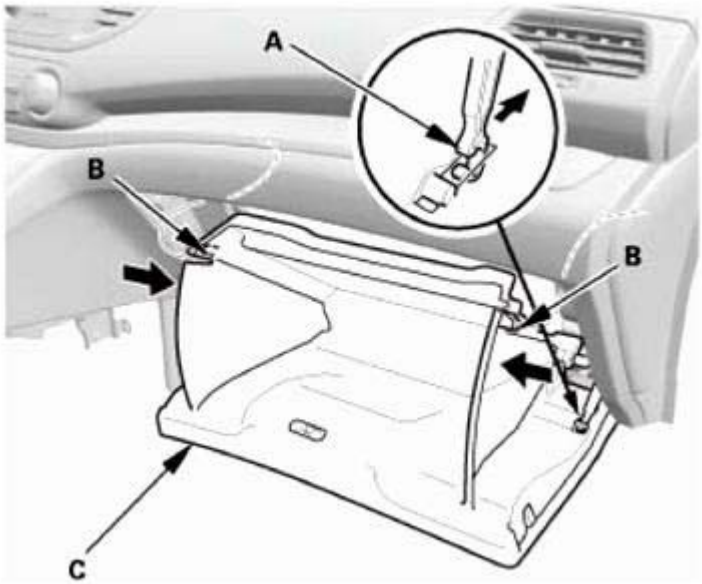

Fig. 37: Detaching Glove Box Damper Hook
Courtesy of AMERICAN HONDA MOTOR CO., INC.

PROCEDURE

CAUTION:

- **Air conditioning refrigerant or lubricant vapor can irritate your eyes, nose, or throat.**
- **Be careful when connecting service equipment.**
- **Do not breathe refrigerant or vapor.**
- **Do not operate the leak detector near flammable vapors. Its sensor operates at high temperatures, and could ignite the vapors, resulting in personal injury and/or damage to the equipment.**

NOTE:

- **If accidental system discharge occurs, ventilate the work area before resuming service.**
- **Additional health and safety information may be obtained from the refrigerant and lubricant manufacturers.**
- **Check the system for leaks using an R-134a refrigerant leak detector with an accuracy of 14 g (0.5 oz) per year or better.**

1. R-134a Refrigerant Recovery/Recycling/Charging Station - Connection
    1. Connect an R-134a refrigerant recovery/recycling/charging station (A) to the high-pressure service port (B) and the low-pressure service port (C), as shown, following the equipment manufacturer's instructions.

GETtheMANUALS.org

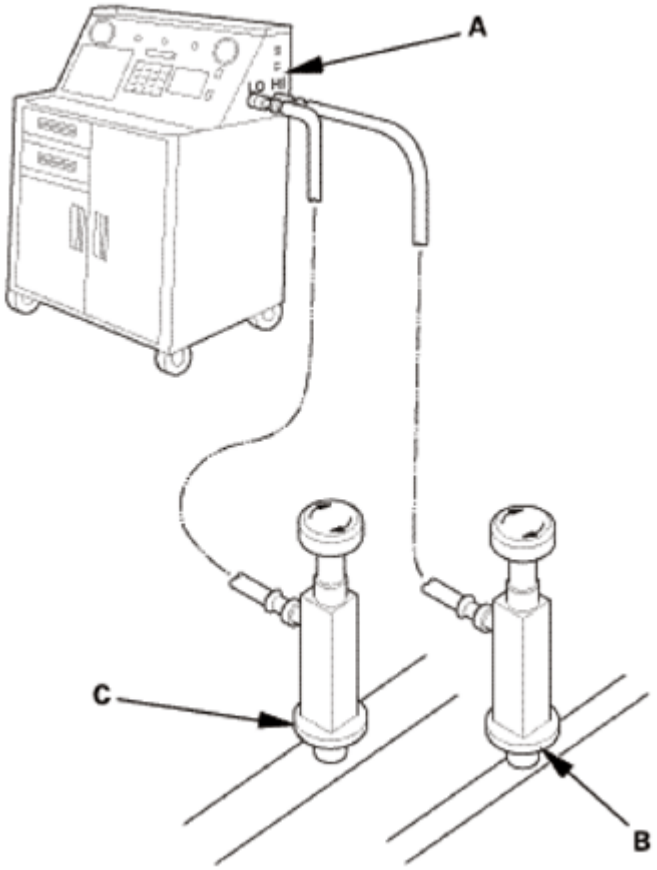

Fig. 38: Connecting R-134A Refrigerant Recovery/Recycling/Charging Station To High-Pressure Service Port And Low-Pressure Service Port
Courtesy of AMERICAN HONDA MOTOR CO., INC.

2. A/C Refrigerant - Recovery
    1. Recover the refrigerant from the A/C system.
    2. Measure the amount of refrigerant oil removed from the A/C system after the recovery process is completed. Be sure to put the same amount of new refrigerant oil back into the A/C system before charging.
3. A/C System Evacuation
    1. Evacuate the system. The vacuum pump should run for a minimum of 30 minutes to eliminate all moisture from the system. When the suction gauge reads -93.3 kPa (-700 mmHg, - 27.55 inHg) for at least 30 minutes, close all valves, and turn off the vacuum pump.
    2. If the suction gauge dose not reach approximately -93.3 kPa (-700 mmHg, -27.55 inHg) in 15 minutes, there is probably a large leak in the system. Partially charge the system, and check for leaks.
4. A/C Refrigerant - Charging
    1. Charge the system with the specified amount of R-134a refrigerant. Do not overcharge the system; the A/C compressor will be damaged.

        Select the appropriate units of measure for your refrigerant charging station.

GETtheMANUALS.org

Refrigerant Capacity:

385 to 435 g

13.6 to 15.4 oz

0.385 to 0.435 kg

0.849 to 0.959 lbs

5. A/C Refrigerant - Leak Check

Leak Detector Usage Tips (Refer to the Operator's Manual for complete operating instructions)

- Position the vehicle in a wind-free work area. This will aid in detecting small leaks.
- When using the leak detector for the first time, allow it to warm up for 2 minutes with the probe in a clean atmosphere. This lets the temperature sensor in the detector stabilize.
- The calibration check should be done in the "Search 2" mode. Once that is done, the other check modes do not need calibrating.
- When leak checking through the HVAC module drain hose, avoid drawing water into the probe. Water can damage the internal pump and sensor.
- Avoid creasing the flexible probe extension. Creases can restrict air flow and give false readings.
- Because the detector recalibrates itself for ambient gases, it may be necessary to move the detector away from the leak to clear the sensor. Once the sensor has cleared, recheck the suspected leak.
- When removing the clear probe tip, be careful not to lose the flow ball.
- R-134a is heavier than air; always check below and to the sides of all potential leak sources.
- Halogen leak detectors are sensitive to chemicals: windshield washing solutions, solvents/cleaners, and some vehicle adhesives. Keep these chemicals out of the area when doing leak detection.

Fluorescent Dye Usage Tips

- Use only Tracer-Stick single dose fluorescent dye capsules from Tracerline®. Other dyes contain solvents that may contaminate the refrigerant oil, leading to component failure.
- Adding excessive amounts of dye can damage the A/C compressor.
- PAG oil is water soluble, so condensation on the evaporator core or the refrigerant lines may wash the PAG oil and fluorescent dye away from the actual leak. Condensation may also carry dye through the HVAC module drain.
- After checking and repairing leaks, thoroughly clean any residual dye from the areas where leaks were found. Use GLO-AWAY dye cleaner, from Tracerline®, and hot water to remove the dye (follow the instructions on the bottle). Residual dye stains can cause misdiagnosis of any future A/C system leaks.
- If any refrigerant dye contacts an exterior paint surface, remove it by doing this:
    - Carefully wash the affected surfaces to remove any dirt, and to prevent paint scratching.
    - Mix water and isopropyl alcohol in a 50/50 mixture. Soak a soft 100 % cotton towel with the

GETtheMANUALS.org

water/alcohol mixture, and place the cloth on the affected areas to remove the dye.

- After removing the dye with the water/alcohol-soaked cloth, carefully wash the affected areas, and check that there is no remaining dye.

1. With the engine OFF, use a halogen leak detector first to detect the leak source. Follow a continuous path in order to ensure that you will not miss any possible leaks. Test the following areas of the system for leaks:

Possible Leak Area	Diagnostic Procedure with the Leak Detector	Notes
Service ports	• Check the service ports with caps installed • If the detector "sniffs" a leak, use fluorescent dye to confirm it	When capping the service ports, ensure that the seals on the port caps are in place, and that the caps are tight. The caps are used as the final seals in the system
A/C condenser	If the detector "sniffs" a leak, use fluorescent dye to confirm it	• Check for joints or connections coated with oily dust • Check for damaged and corroded areas • Check all fittings, couplings, brazed/welded areas and areas around attachment points • Move the probe slowly (1 in/second or less), and keep it within 1/4 in of the component being checked. This maximizes the chance of detecting a leak • If you detect a leak, blow compressed air over the area, then recheck for leaks. For large leaks, clearing the area with compressed air may help you pinpoint the leak source
Evaporator	• Check at the evaporator drain hose • Check at the passenger's side vent and turn the blower on at low speed	
A/C lines	• Wiggle the rubber hoses when checking crimped metal ends • If the detector "sniffs" a leak, use fluorescent dye to confirm it	• Check all fittings, couplings, pressure switches, brazed/welded areas, and areas around attachment points on A/C lines and components • Check for damaged and corroded areas • Move the probe slowly (1 in/second or less), and keep it within 1/4 in of the component being checked. This maximizes the chance of detecting a leak

2. Close the quick coupler valves, then disconnect the quick couplers from the vehicle service ports.

GETtheMANUALS.org

3. Attach the universal connect set, from the Optimax Jr. Leak Detection Kit, to the service valve fitting. Close the control valve (the black knob on the connect set).
4. Attach the charging station low pressure hose quick coupler to the service valve fitting, and open the quick coupler valve. Evacuate the connect set using the charging station vacuum pump, then close the quick coupler valve.
5. Detach the universal connect set, and install a Tracer-Stick® dye capsule between the connect set and the service valve fitting (see the manufacturer's instructions for more detail).
6. Attach the quick coupler on the universal connect set to the low pressure service port on the vehicle. Open the charging station low pressure hose quick coupler valve, but do not open the control valve.
7. Start the engine, and set the A/C system to maximum cooling. Open the control valve to let refrigerant and the dye enter the A/C system through the low pressure service port. Close the control valve when the Tracer-Stick® dye capsule is empty.
8. Run the engine and A/C system for 15 minutes to thoroughly circulate the dye. Then shut the engine off, and inspect the following areas of the system for leaks:

NOTE:

- **Check for leaks in a dark work area, and use the UV light and the special glasses from the leak check kit. Other UV lights may not work well with the Tracer-Stick® dye.**
- **Small leaks may take up to 1 week of vehicle operation (with normal A/C use) to become visible.**

Possible Leak Area	Diagnostic Procedure with Fluorescent Dye
Service ports	If a leak is found, replace the cap/o-ring seal or A/C line as needed
A/C lines	• Use a permanent marker pen to circle the leak area • If a leak is found, remove and replace the A/C line
A/C condenser	• If a leak is found, remove the A/C condenser • Determine whether leak is in the A/C condenser or the receiver/dryer • Use a permanent marker pen to circle the leak area • Replace either the receiver/dryer, or the A/C condenser, depending upon which is leaking
A/C compressor	• Check for leaks at all of the A/C compressor joints, the clutch center, the A/C compressor front housing bolts, and the scroll bolts on the back of the A/C compressor • If a leak is found, use a permanent marker pen to circle the leak area • If the A/C compressor relief valve appears to be leaking, determine whether the leak is coming from the relief valve, or the joint between the A/C compressor casing and the valve. If the leak is from the relief valve, check the A/C system pressures, and refer to the pressure test table in the A/C system test. If the leak is from the casing/valve joint, replace the A/C compressor

GETtheMANUALS.org

	relief valve • If the leak is coming from the suction hose and/or discharge hose fittings on the A/C compressor, clean the A/C fittings and replace the suction/discharge fitting O-rings • For all other A/C compressor leaks, remove and replace the A/C compressor
Evaporator	• Start checking for evaporator leaks by illuminating the evaporator drain tube area • If a leak is found, remove the evaporator core • Determine whether leak is from evaporator or expansion valve • Use a permanent marker pen to circle leak area • Replace the expansion valve, or the evaporator core, depending upon which is leaking

6. A/C System - Test
    1. Insert a thermometer (A) in the center vent.
    2. Place a hygro-thermometer (B) near the blower unit's recirculation inlet duct.
    3. Test conditions:
        - Move the vehicle out of direct sunlight and let it cool down to the surrounding (ambient) temperature. If necessary, wash the vehicle to cool it down more quickly.
        - The blower intake temperature must be at least 68°F (20°C).
        - Open the hood.
        - Open the front doors.
        - Start the engine.
        - Set the temperature control dial or temperature control button to MAX COOL, the mode control button to VENT, and the recirculation control button to RECIRCULATE.
        - Turn the A/C button on and the fan control dial or fan control button to Max.
        - Run the engine at 1, 500 rpm.
        - No driver or passengers in vehicle.
    4. Inspect the A/C components for the following conditions:
        - A/C compressor clutch not engaged.
        - Abnormal frost areas.
        - Unusual noises.

    If you observe any of these conditions, refer to the Symptom Troubleshooting Index.

GETtheMANUALS.org

Fig. 39: Inserting Thermometer In Center Vent
Courtesy of AMERICAN HONDA MOTOR CO., INC.

5. After running the air conditioning for 10 minutes under the above test conditions, read the delivery temperature from the thermometer in the center vent, the intake temperature near the blower unit, and the discharge (high) and suction (low) pressures on the A/C gauges.
6. To complete the vent (delivery)/intake temperature chart:
   - Mark the vent (delivery) temperature on the vertical line.
   - Mark the intake temperature on the bottom line.
   - Draw a vertical line from the intake temperature mark.
   - Draw a horizontal line from the vent (delivery) temperature mark until it intersects the vertical line.

NOTE: **The vent temperature and intake temperature should intersect in the shaded area. Any measurements outside the line may indicate the need for further inspection.**

GETtheMANUALS.org

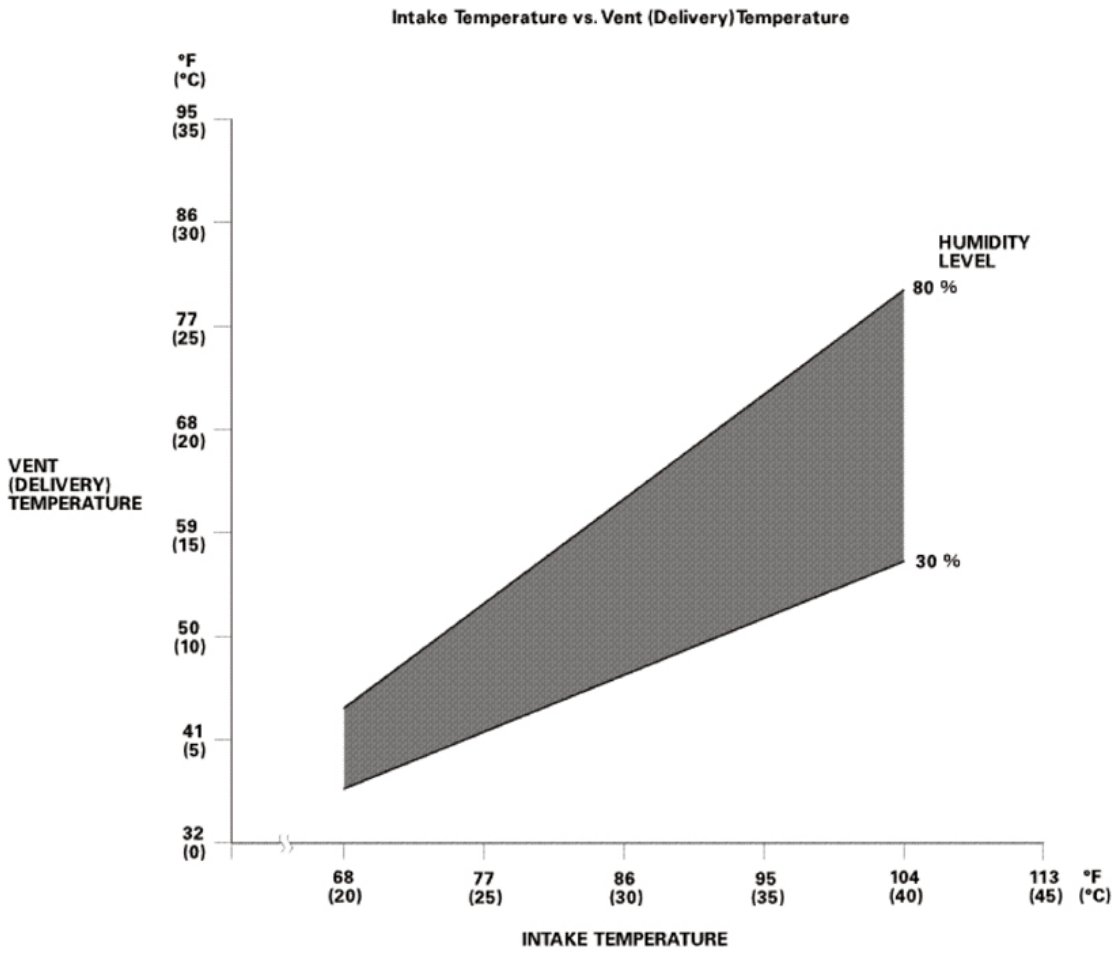

Fig. 40: Intake Temperature And Vent (Delivery) Temperature Graph
Courtesy of AMERICAN HONDA MOTOR CO., INC.

7. To complete the high side (discharge) pressure/intake temperature chart:
   - Mark the high side (discharge) pressure on the vertical line.
   - Mark the intake temperature on the bottom line.
   - Draw a vertical line from the intake temperature mark.
   - Draw a horizontal line from the high side (discharge) pressure mark until it intersects the vertical line.

NOTE: **The high side pressure and intake temperature should intersect in the shaded area. Any measurements outside the line may indicate the need for further inspection.**

GETtheMANUALS.org

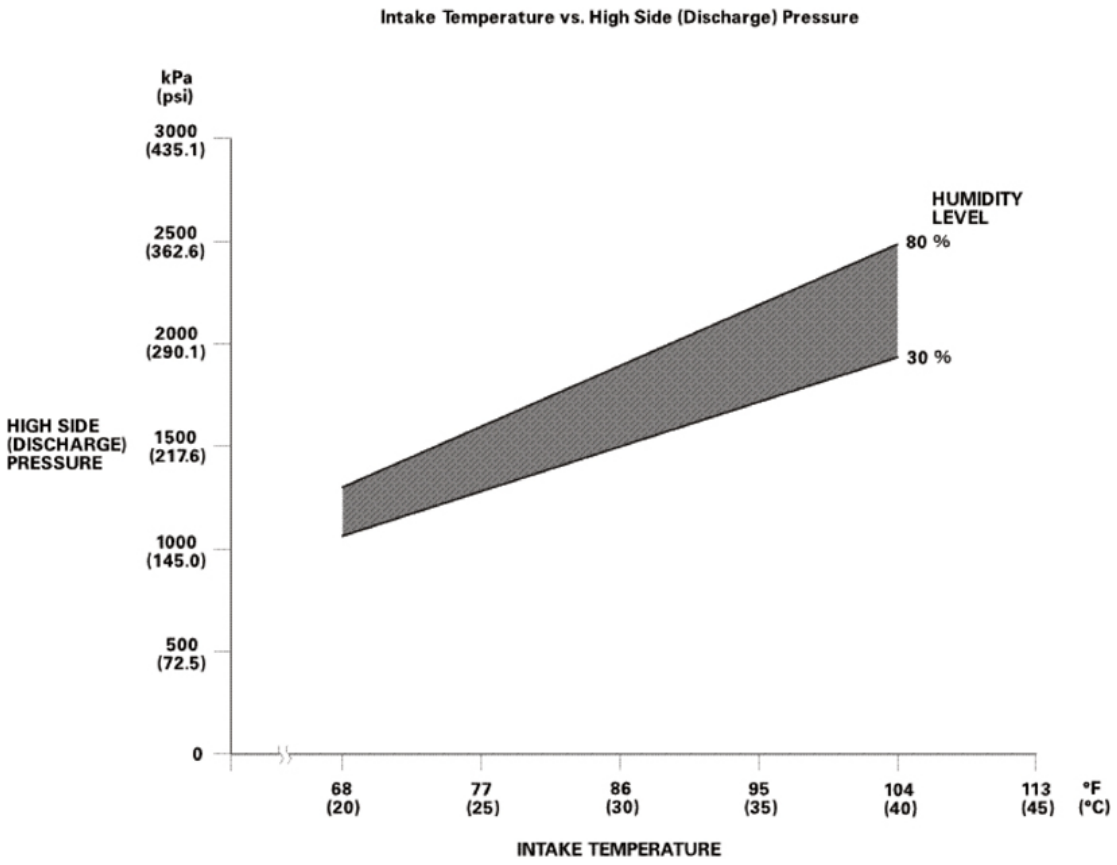

Fig. 41: Intake Temperature And High Side (Discharge) Pressure Graph
Courtesy of AMERICAN HONDA MOTOR CO., INC.

8. To complete the low side (suction) pressure/intake temperature chart:
   - Mark the low side (suction) pressure along the vertical line.
   - Mark the intake temperature along the bottom line.
   - Draw a vertical line from the intake temperature mark.
   - Draw a horizontal line from the low side (suction) pressure mark until it intersects the vertical line.

NOTE: **The low side pressure and intake temperature should intersect in the shaded area. Any measurements outside the line may indicate the need for further inspection.**

GETtheMANUALS.org

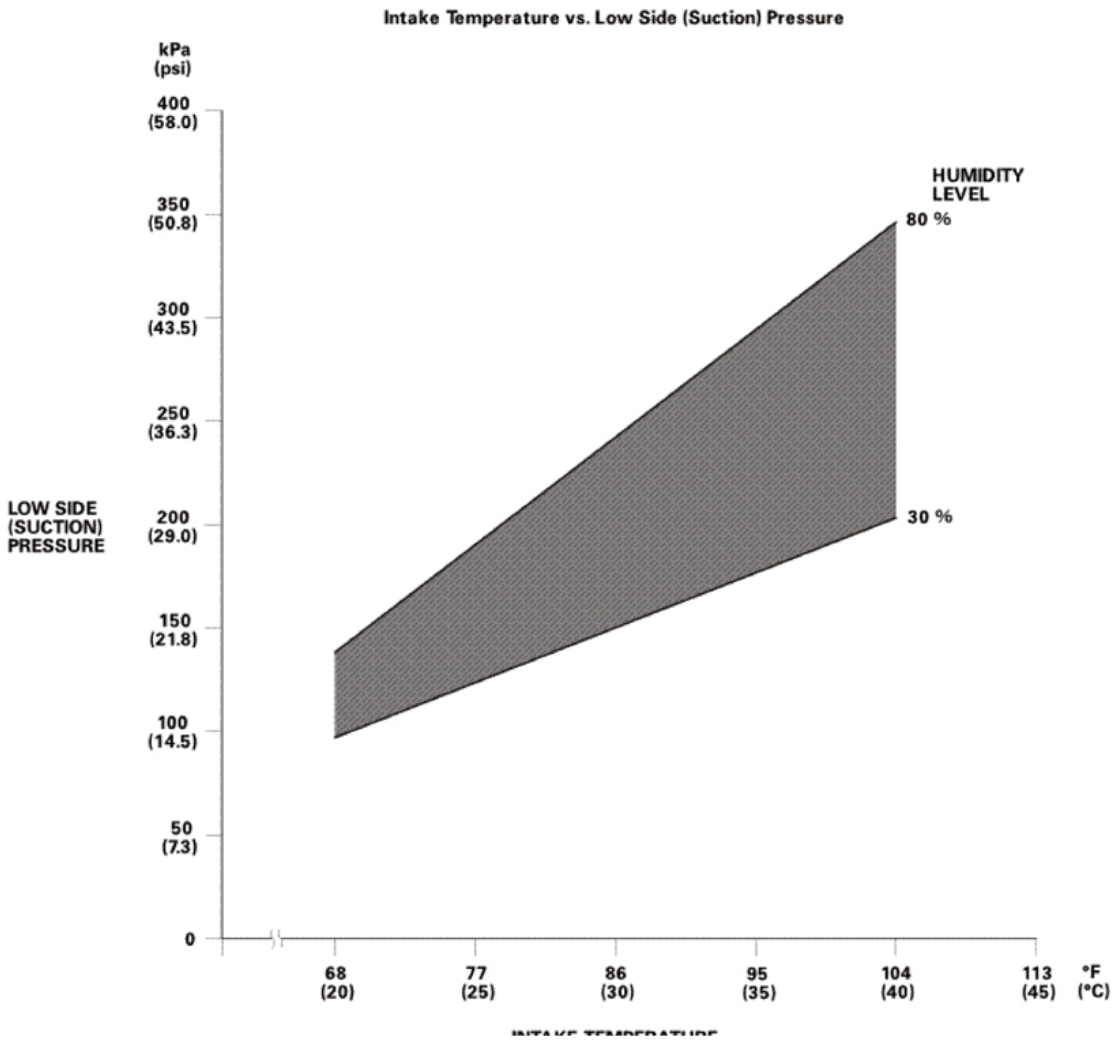

Fig. 42: Intake Temperature And Low Side (Suction) Pressure Graph
Courtesy of AMERICAN HONDA MOTOR CO., INC.

INSTALLATION

1. Glove Box - Move
    1. Install the glove box (A). Make sure the glove box stops (B) snap into place securely.
    2. Install the glove box damper hook (C).

GETtheMANUALS.org

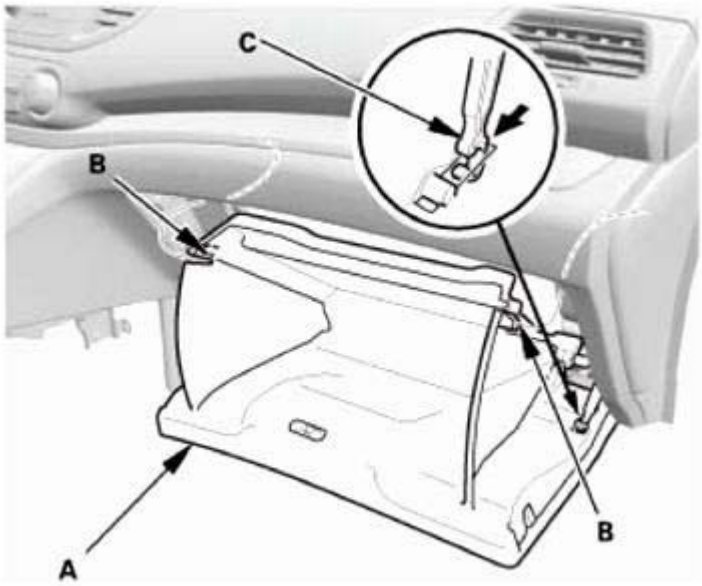

Fig. 43: Installing Glove Box Damper Hook
Courtesy of AMERICAN HONDA MOTOR CO., INC.

A/C SYSTEM CONTAMINATION INSPECTION

INSPECTION

1. A/C System - Contamination Inspection
    1. If A/C compressor failure is diagnosed, always use this inspection to check the extent of contamination in the A/C system.

GETtheMANUALS.org

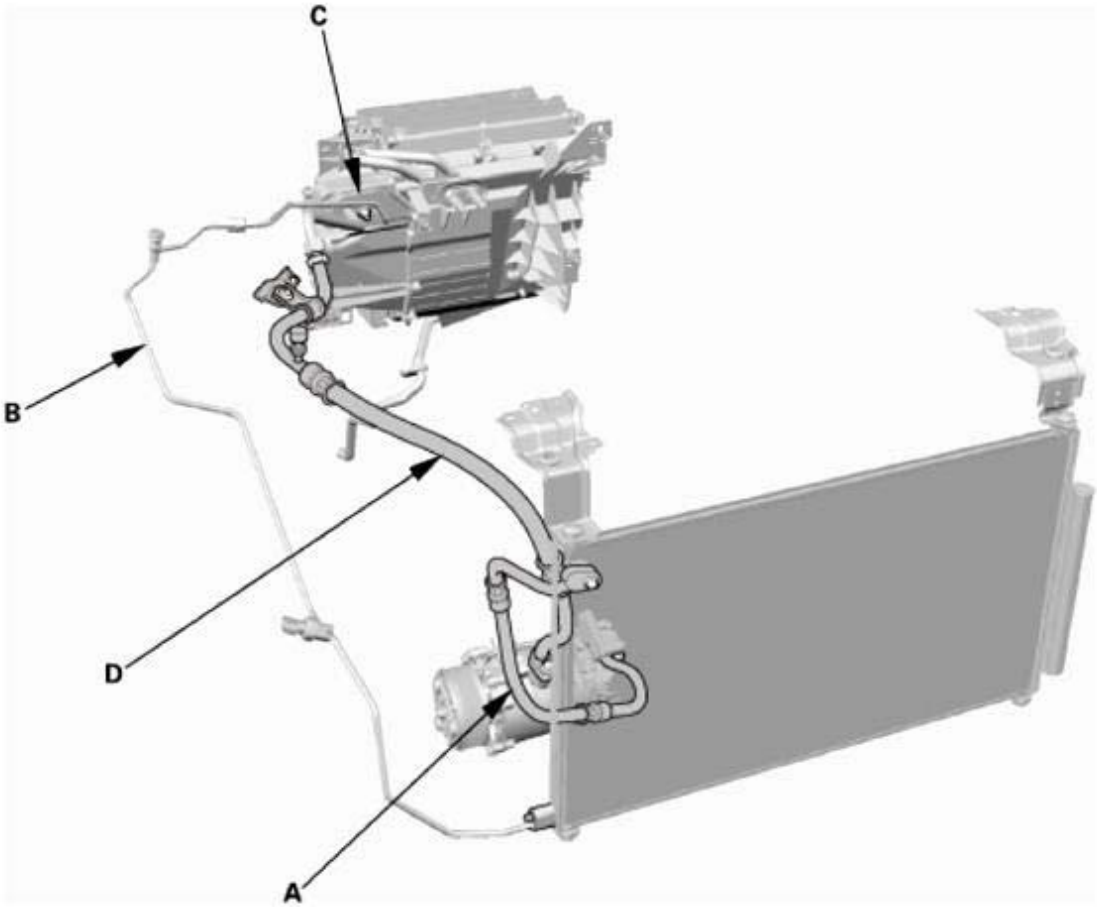

Fig. 44: Identifying Discharge Hose, Suction Hose, Receiver Line And A/C Lines
Courtesy of AMERICAN HONDA MOTOR CO., INC.

2. Remove the discharge hose (A) from the A/C compressor. Then, swab inside the discharge hose and A/C compressor discharge cotton swab.
   - If no metal, dark gray or black residue is found, no contamination is present from the A/C compressor. Replace only the A compressor.
   - If metal, dark gray or black residue is found, go to step 3.
3. Remove the suction hose (D) from the A/C compressor. Then, swab inside the suction hose and A/C compressor suction port w swab.
   - If no metal, dark gray or black residue is found, go to step 4.
   - If metal, dark gray or black residue is found, replace the components listed in Repair Procedure C.
4. Remove the receiver line (B) from the A/C condenser outlet. Then, swab inside the receiver line and A/C condenser outlet with swab.
   - If no metal, dark gray or black residue is found, go to step 6.
   - If metal, dark gray or black residue is found, go to step 5.
5. Remove the A/C lines (C) from the expansion valve. Then, swab inside the expansion valve and the A/C lines with a cotton sw

GETtheMANUALS.org

- If no metal, dark gray or black residue is found, replace the components listed in Repair Procedure B.
- If metal, dark gray or black residue is found, replace the components listed in Repair Procedure C.

6. Remove the discharge hose (A) from the A/C condenser inlet. Then, swab inside the discharge hose and A/C condenser inlet w
   - If no metal, dark gray or black residue is found, replace the components listed in Repair Procedure A.
   - If metal, dark gray or black residue is found, replace the components listed in Repair Procedure B.

REPAIR PROCEDURE LIST

Repair Procedure	Replace Components
A	• Compressor • Discharge hose • Receiver/Dryer • O-rings from removed components
B	• Compressor • Discharge hose • Receiver line and A/C lines • Condenser • Receiver/Dryer • O-rings from removed components
C	• Compressor • Condenser • Receiver/Dryer • Expansion valve • Evaporator • All A/C hoses and lines • O-rings from removed components

A/C SYSTEM EVACUATION

SPECIAL TOOL REQUIRED DESCRIPTION

Image	Description/Tool Number

GETtheMANUALS.org

	Compact Electronic Vacuum Gauge Robinair ROB14777[1], commercially available
[1] Available through the Honda Tool and Equipment Program; call 888-424-6857	

PROCEDURE

CAUTION:

- **Air conditioning refrigerant or lubricant vapor can irritate your eyes, nose, or throat.**
- **Be careful when connecting service equipment.**
- **Do not breathe refrigerant or vapor.**

NOTE:

- **If accidental system discharge occurs, ventilate the work area before resuming service.**
- **Additional health and safety information may be obtained from the refrigerant and lubricant manufacturers.**

When an A/C System has been opened to the atmosphere, such as during installation or repair, it must be evacuated using an R-134a refrigerant recovery/recycling/charging station. If the system has been open for several days, the receiver/dryer should be replaced. Recover the refrigerant, if any, from the A/C system, and the system should be evacuated for several hours.

NOTE:

- **Do not allow moisture to contaminate the A/C system oil. Moisture in the oil is difficult to remove, and it can damage the A/C compressor.**
- **Using a compact electronic vacuum gauge may decrease the required evacuation time because you can measure actual moisture level with this tool.**

A more efficient way to measure moisture removal is with a special tool called a compact electronic vacuum gauge, measuring vacuum levels in microns.

Connect the tool according to the manufacturers instructions and allow the vacuum pump to run until the gauge reads 500 microns.

GETtheMANUALS.org

Shut off and isolate the vacuum pump, then observe the gauge reading:

- If the vacuum level remains stable for at least three minutes, all moisture in the system has been removed.
- A slow increase in the micron reading means there is still moisture boiling out of the system. Restart the vacuum pump and continue evacuating.
- A quick increase of micron levels indicates a leak is present in the system or your service equipment. Determine the cause and correct the leak before continuing.

1. R-134a Refrigerant Recovery/Recycling/Charging Station - Connection
    1. Connect an R-134a refrigerant recovery/recycling/charging station (A) to the high-pressure service port (B) and the low-pressure service port (C), as shown, following the equipment manufacturer's instructions.

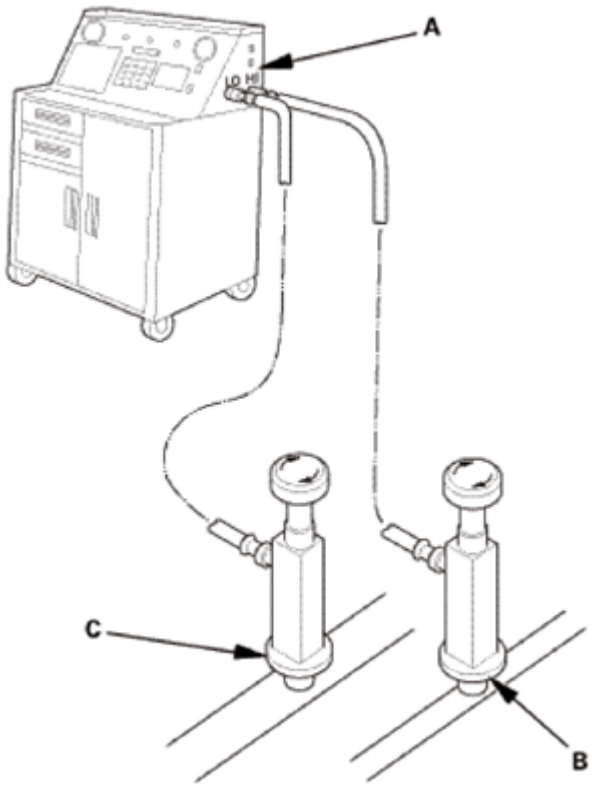

Fig. 45: Connecting R-134A Refrigerant Recovery/Recycling/Charging Station To High-Pressure Service Port And Low-Pressure Service Port
Courtesy of AMERICAN HONDA MOTOR CO., INC.

2. A/C Refrigerant - Recovery
    1. Recover the refrigerant from the A/C system.
    2. Measure the amount of refrigerant oil removed from the A/C system after the recovery process is completed. Be sure to put the same amount of new refrigerant oil back into the A/C system before charging.
3. A/C System Evacuation

GETtheMANUALS.org

1. Evacuate the system. The vacuum pump should run for a minimum of 30 minutes to eliminate all moisture from the system. When the suction gauge reads -93.3 kPa (-700 mmHg, - 27.55 inHg) for at least 30 minutes, close all valves, and turn off the vacuum pump.
2. If the suction gauge dose not reach approximately -93.3 kPa (-700 mmHg, -27.55 inHg) in 15 minutes, there is probably a large leak in the system. Partially charge the system, and check for leaks.

A/C SYSTEM INSPECTION

INSPECTION

1. A/C System Inspection

NOTE: For A/C system noise, go to the A/C SYSTEM NOISE CHECK.

Before troubleshooting any problem with the A/C system, other than noise, do the following:

1. Check that the HVAC air intake plenum at the base of the windshield is not blocked by leaves or debris. Remove any blockage.
2. Check for kinks or sharp bends in the A/C lines and hoses (which can greatly reduce system performance). If any of the A/C lines and hoses are kinked or bent, replace them.
3. Inspect the A/C components, the pressure lines, and the hoses for stains that may indicate a refrigerant or an A/C compressor oil leak. If there is any indication of leaks, do the Refrigerant Leak Check to confirm the leak(s).
4. Inspect the drive belt for physical damage or signs of slippage. If the drive belt is damaged or shows signs of slippage, replace it and recheck.

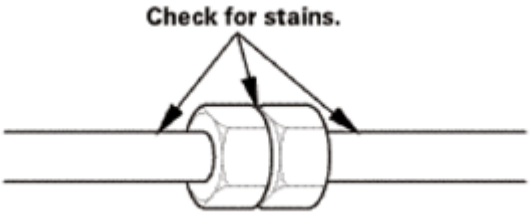

Fig. 46: Inspecting A/C Components, Pressure Lines, And Hoses For Stains
Courtesy of AMERICAN HONDA MOTOR CO., INC.

5. Check the A/C condenser (A) for material clogging the fins (dirt, insects, etc.). If the A/C condenser is clogged or restricted, carefully clean any material from the A/C condenser fins with water and detergent. If deeper cleaning is required, clean the fins with HondaBrite cleaner. Do not perform pressure test until the A/C condenser is completely dry.
6. Check the A/C condenser for fin damage (bent fins). If any of the A/C condenser fins are bent, try to comb them straight. Do the Refrigerant Leak Check to check for leaks if there is visible damage to the A/C condenser. If the A/C condenser is leaking or the fins cannot be straightened, replace the A/C condenser.

GETtheMANUALS.org

7. Check the dust and pollen filter. If the dust and pollen filter is clogged or restricted, replace it.
8. Check for HVAC DTCs using the Self-Diagnostic Function. If there are any DTCs, go to the appropriate troubleshooting.
9. Start the engine, turn the A/C system on, and allow it to run for a few minutes and reach stable operation.

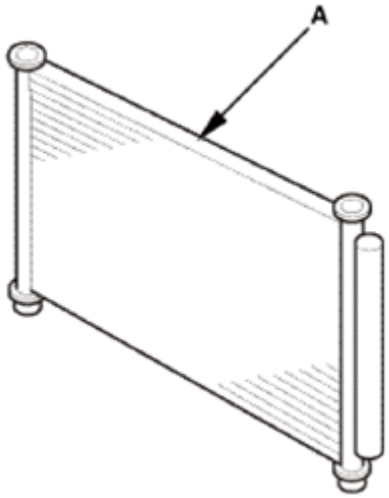

Fig. 47: Identifying A/C Condenser
Courtesy of AMERICAN HONDA MOTOR CO., INC.

10. Check that the A/C operates at each position of the fan control dial or fan control button (except OFF). If the A/C does not operate at all fan control dial or fan control button positions, refer to the symptom troubleshooting.
11. Check that the A/C compressor clutch armature plate (A) is rotating at the same speed as the rotor pulley and is engaging. If the A/C compressor clutch does not engage, go to the **A/C COMPRESSOR CLUTCH CIRCUIT TROUBLESHOOTING**.
12. Check that the A/C condenser fan (B) and the radiator fan (C) operate when the A/C compressor clutch is engaged and blow air toward the engine compartment. If one or both of the fans is not working properly, refer to the symptom troubleshooting.
13. Check that the engine idle speed is correctly maintained when the A/C is switched on and off, (A/C compressor clutch is engaged and disengaged). If the idle speed increases more than 100 rpm when the A/C compressor engages, confirm that the A/C compressor is the cause of the idle speed increase. Replace the A/C compressor, if necessary.

GETtheMANUALS.org

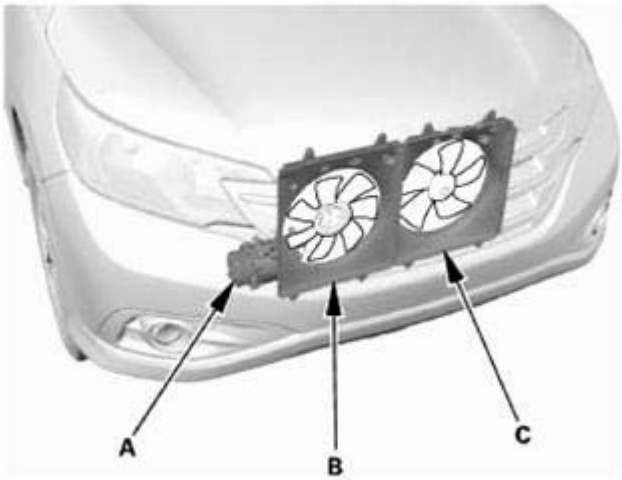

Fig. 48: Identifying A/C Compressor Clutch Armature Plate, A/C Condenser Fan And Radiator Fan
Courtesy of AMERICAN HONDA MOTOR CO., INC.

A/C SYSTEM NOISE CHECK

CHECK

1. A/C System - Noise Check

CAUTION:

- **Air conditioning refrigerant or lubricant vapor can irritate your eyes, nose, or throat.**
- **Be careful when connecting service equipment.**
- **Do not breathe refrigerant or vapor.**

The A/C system noise check will help you determine the source of abnormal A/C system noise.

NOTE:

- **If an accidental system discharge occurs, ventilate the work area before resuming service.**
- **Additional health and safety information may be obtained from the refrigerant and lubricant manufacturers.**
- **Identify the conditions when the noise occurs. The weather, the vehicle speed, the vehicle being in gear or in neutral, the engine temperature, or other conditions may be factors in determining the noise source.**
- **Do the A/C system inspection, and correct any problems found prior to diagnosing abnormal noises.**
- **Abnormal A/C noises can be misleading. For example, a sound similar to a failed bearing may be caused by loose fasteners, loose mounting brackets, or a faulty A/C compressor clutch assembly.**

GETtheMANUALS.org

1. Inspect the air inlet grille in the cowl cover for debris. If debris is present, remove it.
2. Sit inside the vehicle, close the doors and windows, and turn the ignition switch to ON (II), but do not start the engine. Cycle the HVAC system through all blower speeds and all air distribution modes to determine where and when the noise occurs.
3. Operate the blower at each speed with the engine and A/C off, and check for unusual noises and excessive vibration. If noise and/or vibration are present, do the following checks:
    - 1. If the noise or vibration occurs only in a specific mode or setting, then check these items:
        - Operation of the mode control motor, door, and linkage.
        - Operation of the air mix control motor, door, and linkage.
        - Operation of the recirculation control motor, door, and linkage.
    - 2. If there is a squeaking or chirping noise, but no unusual vibration, replace the blower motor.
    - 3. Remove the blower unit, and check for foreign material (leaves or twigs, for example) on the blower motor and fan. If foreign material is present, remove it, and recheck for noise. If you do not find any foreign material, remove the blower motor, and check these items:
        - Check if the fan blades are cracked or broken.
        - Make sure the fan retainer is tight.
        - Inspect the fan alignment on the blower motor shaft.

    Replace the blower motor if any problems are present.

4. Set up the vehicle for the running A/C checks:
    - Select a quiet area for testing.
    - Apply the parking brake.
    - Shift the vehicle in P or N (A/T), or in Neutral (M/T).
    - Start the engine.
    - Set the temperature control dial or temperature control button to MAX COOL.
    - Set the mode control button to VENT.
    - Set the fan control dial or fan control button to minimum (but not OFF).
    - Turn the air conditioning button ON.

    Switch the A/C compressor on and off several times to clearly identify the sound during A/C compressor operation. Listen to the noise while the A/C compressor clutch is engaged and disengaged. Probe the A/C system with a stethoscope to pinpoint the noise.

    NOTE: If the noise does not change when the A/C compressor clutch engages or disengages, the noise may be caused by an engine-related component. Probe the engine area with a stethoscope to pinpoint the noise.

5. Turn the ignition switch to LOCK (0), and check the drive belt for excessive wear, oil contamination, improper routing, or a faulty belt tensioner. Correct any problems found. Start the

GETtheMANUALS.org

engine, run the A/C system, and check if the noise is coming from the drive belt, the belt tensioner or any of the pulleys. Repair or replace any faulty components.

6. Listen for noises coming from the A/C lines, the A/C hoses, the A/C condenser, the evaporator, the receiver/dryer, or the expansion valve, and check these items:
   - Noises caused by A/C components touching other components or the body. Reroute or insulate the A/C component(s) as needed, and recheck for noise.
   - Loose, damaged or excessively worn A/C components or mounting hardware. Repair or replace the faulty component (s) or hardware, and recheck for noise.
   - A moaning noise coming from the A/C suction line. If there is a moaning noise, check the system refrigerant charge. If the refrigerant charge is OK, replace the receiver/dryer.
7. Check the operation of the A/C compressor clutch:
   - Make sure A/C compressor clutch engages without slipping. If the clutch does not engage, troubleshoot the A/C compressor clutch circuit. If the A/C compressor clutch slips, replace the A/C compressor clutch assembly. And if there is a leak from the shaft seal when the A/C compressor clutch slips, replace the A/C compressor also.
   - Make sure the A/C compressor clutch disengages. If the clutch does not disengage, do the A/C compressor clutch check. If the A/C compressor clutch is OK, replace the A/C compressor.
   - Make sure the A/C compressor clutch cycles normally. If the A/C compressor clutch is cycling rapidly, the A/C system is probably low on refrigerant due to a leak. Do the refrigerant leak check. If the refrigerant charge is OK, and there are no leaks, troubleshoot the A/C compressor clutch circuit.
8. Listen with a stethoscope for noises coming from the A/C compressor, and check these items:
   - The noise changes when the A/C compressor clutch disengages. If the noise does not change when the A/C compressor disengages, the noise may be caused by an engine-related component. Probe the engine area with a stethoscope to pinpoint the noise.
   - The A/C system operating pressures are normal. If the system pressures are abnormal, troubleshoot the problem using the pressure test table in the A/C system test. Correct the pressure-related problem(s), and recheck for noise.
   - The A/C compressor hose connections, mounting brackets, and fasteners are in good condition. If any of these components are loose, damaged, or excessively worn, repair or replace the faulty component(s), and recheck for noise. If these components are in good condition, and the noise is still present, replace the A/C compressor.

A/C SYSTEM TEST

SPECIAL TOOL REQUIRED DESCRIPTION

Image	Description/Tool Number

GETtheMANUALS.org

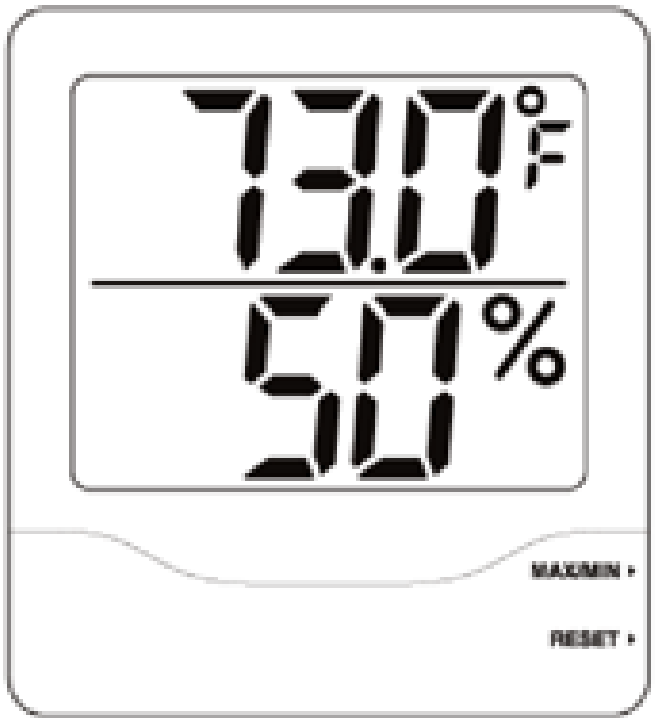	Big Digit Hygro-Thermometer PYR445703, commercially available
	Throttle Pedal Depressor Tool B240B, commercially available

TEST

CAUTION:

- **Air conditioning refrigerant or lubricant vapor can irritate your eyes, nose, or throat.**
- **Be careful when connecting service equipment.**
- **Do not breathe refrigerant or vapor.**

The A/C system test will help determine if the A/C system is operating within specifications.

NOTE:

- **If accidental system discharge occurs, ventilate the work area before resuming service.**
- **Additional health and safety information may be obtained from the refrigerant and lubricant manufacturers.**

1. A/C System Inspection

NOTE: **For A/C system noise, go to the <u>A/C SYSTEM NOISE CHECK</u>.**

GETtheMANUALS.org

Before troubleshooting any problem with the A/C system, other than noise, do the following:

1. Check that the HVAC air intake plenum at the base of the windshield is not blocked by leaves or debris. Remove any blockage.
2. Check for kinks or sharp bends in the A/C lines and hoses (which can greatly reduce system performance). If any of the A/C lines and hoses are kinked or bent, replace them.
3. Inspect the A/C components, the pressure lines, and the hoses for stains that may indicate a refrigerant or an A/C compressor oil leak. If there is any indication of leaks, do the Refrigerant Leak Check to confirm the leak(s).
4. Inspect the drive belt for physical damage or signs of slippage. If the drive belt is damaged or shows signs of slippage, replace it and recheck.

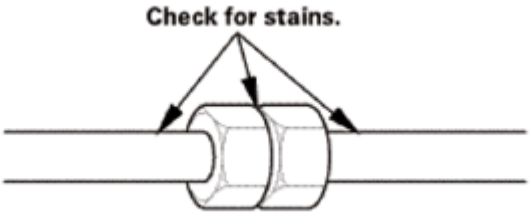

Fig. 49: Inspecting A/C Components, Pressure Lines, And Hoses For Stains
Courtesy of AMERICAN HONDA MOTOR CO., INC.

5. Check the A/C condenser (A) for material clogging the fins (dirt, insects, etc.). If the A/C condenser is clogged or restricted, carefully clean any material from the A/C condenser fins with water and detergent. If deeper cleaning is required, clean the fins with HondaBrite cleaner. Do not perform pressure test until the A/C condenser is completely dry.
6. Check the A/C condenser for fin damage (bent fins). If any of the A/C condenser fins are bent, try to comb them straight. Do the Refrigerant Leak Check to check for leaks if there is visible damage to the A/C condenser. If the A/C condenser is leaking or the fins cannot be straightened, replace the A/C condenser.
7. Check the dust and pollen filter. If the dust and pollen filter is clogged or restricted, replace it.
8. Check for HVAC DTCs using the Self-Diagnostic Function. If there are any DTCs, go to the appropriate troubleshooting.
9. Start the engine, turn the A/C system on, and allow it to run for a few minutes and reach stable operation.
10. Check that the A/C operates at each position of the fan control dial or fan control button (except OFF). If the A/C does not operate at all fan control dial or fan control button positions, refer to the symptom troubleshooting.

GETtheMANUALS.org

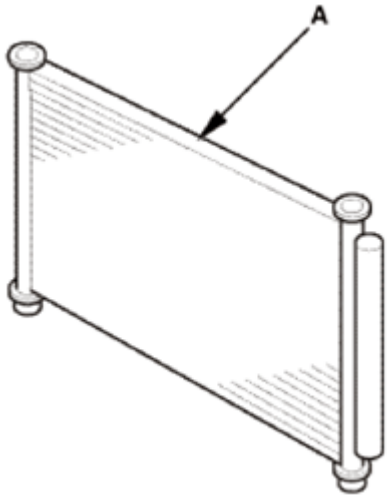

Fig. 50: Identifying A/C Condenser
Courtesy of AMERICAN HONDA MOTOR CO., INC.

11. Check that the A/C compressor clutch armature plate (A) is rotating at the same speed as the rotor pulley and is engaging. If the A/C compressor clutch does not engage, go to the **A/C COMPRESSOR CLUTCH CIRCUIT TROUBLESHOOTING**.
12. Check that the A/C condenser fan (B) and the radiator fan (C) operate when the A/C compressor clutch is engaged and blow air toward the engine compartment. If one or both of the fans is not working properly, refer to the symptom troubleshooting.
13. Check that the engine idle speed is correctly maintained when the A/C is switched on and off, (A/C compressor clutch is engaged and disengaged). If the idle speed increases more than 100 rpm when the A/C compressor engages, confirm that the A/C compressor is the cause of the idle speed increase. Replace the A/C compressor, if necessary.

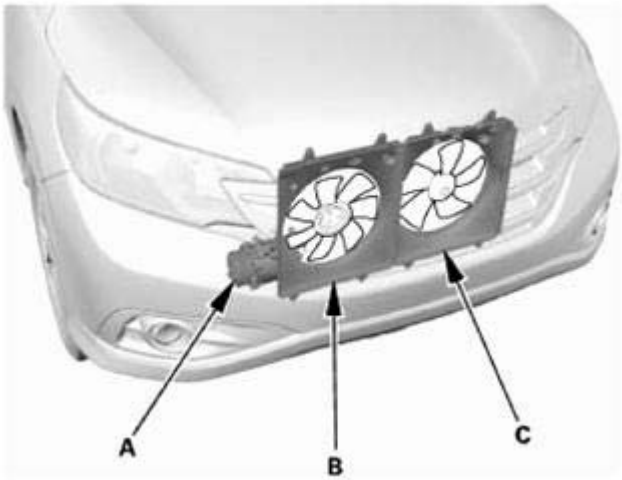

Fig. 51: Identifying A/C Compressor Clutch Armature Plate, A/C Condenser Fan And Radiator Fan
Courtesy of AMERICAN HONDA MOTOR CO., INC.

GETtheMANUALS.org

REMOVAL

CAUTION:

- **Air conditioning refrigerant or lubricant vapor can irritate your eyes, nose, or throat.**
- **Be careful when connecting service equipment.**
- **Do not breathe refrigerant or vapor.**

NOTE:

- **If accidental system discharge occurs, ventilate the work area before resuming service.**
- **Additional health and safety information may be obtained from the refrigerant and lubricant manufacturers.**

1. R-134a Refrigerant Recovery/Recycling/Charging Station - Connection
    1. Connect an R-134a refrigerant recovery/recycling/charging station (A) to the high-pressure service port (B) and the low-pressure service port (C), as shown, following the equipment manufacturer's instructions.

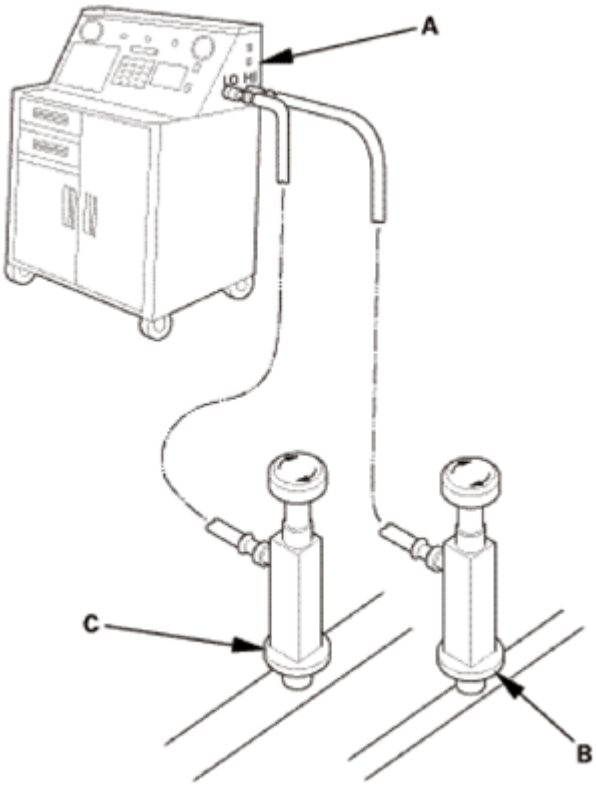

Fig. 52: Connecting R-134A Refrigerant Recovery/Recycling/Charging Station To High-Pressure Service Port And Low-Pressure Service Port
Courtesy of AMERICAN HONDA MOTOR CO., INC.

2. Glove Box - Move

GETtheMANUALS.org

1. Detach the glove box damper hook (A), and release both glove box stops (B) by pushing them in, then let glove box (C) hang down.

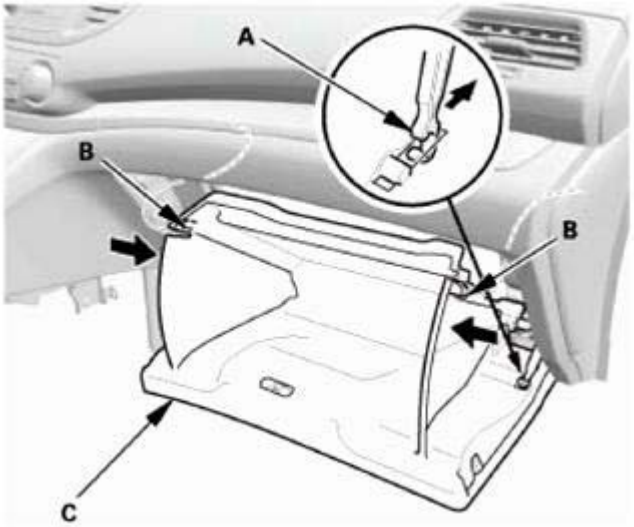

Fig. 53: Detaching Glove Box Damper Hook
Courtesy of AMERICAN HONDA MOTOR CO., INC.

TEST

1. A/C System - Test
    1. Insert a thermometer (A) in the center vent.
    2. Place a hygro-thermometer (B) near the blower unit's recirculation inlet duct.
    3. Test conditions:
        - Move the vehicle out of direct sunlight and let it cool down to the surrounding (ambient) temperature. If necessary, wash the vehicle to cool it down more quickly.
        - The blower intake temperature must be at least 68°F (20°C).
        - Open the hood.
        - Open the front doors.
        - Start the engine.
        - Set the temperature control dial or temperature control button to MAX COOL, the mode control button to VENT, and the recirculation control button to RECIRCULATE.
        - Turn the A/C button on and the fan control dial or fan control button to Max.
        - Run the engine at 1, 500 rpm.
        - No driver or passengers in vehicle.

GETtheMANUALS.org

Fig. 54: Inserting Thermometer In Center Vent
Courtesy of AMERICAN HONDA MOTOR CO., INC.

4. Inspect the A/C components for the following conditions:
   - A/C compressor clutch not engaged.
   - Abnormal frost areas.
   - Unusual noises.

   If you observe any of these conditions, refer to the Symptom Troubleshooting Index.

5. After running the air conditioning for 10 minutes under the above test conditions, read the delivery temperature from the thermometer in the center vent, the intake temperature near the blower unit, and the discharge (high) and suction (low) pressures on the A/C gauges.
6. To complete the vent (delivery)/intake temperature chart:
   - Mark the vent (delivery) temperature on the vertical line.
   - Mark the intake temperature on the bottom line.
   - Draw a vertical line from the intake temperature mark.
   - Draw a horizontal line from the vent (delivery) temperature mark until it intersects the vertical line.

NOTE: **The vent temperature and intake temperature should intersect in the shaded area. Any measurements outside the line may indicate the need for further inspection.**

GETtheMANUALS.org

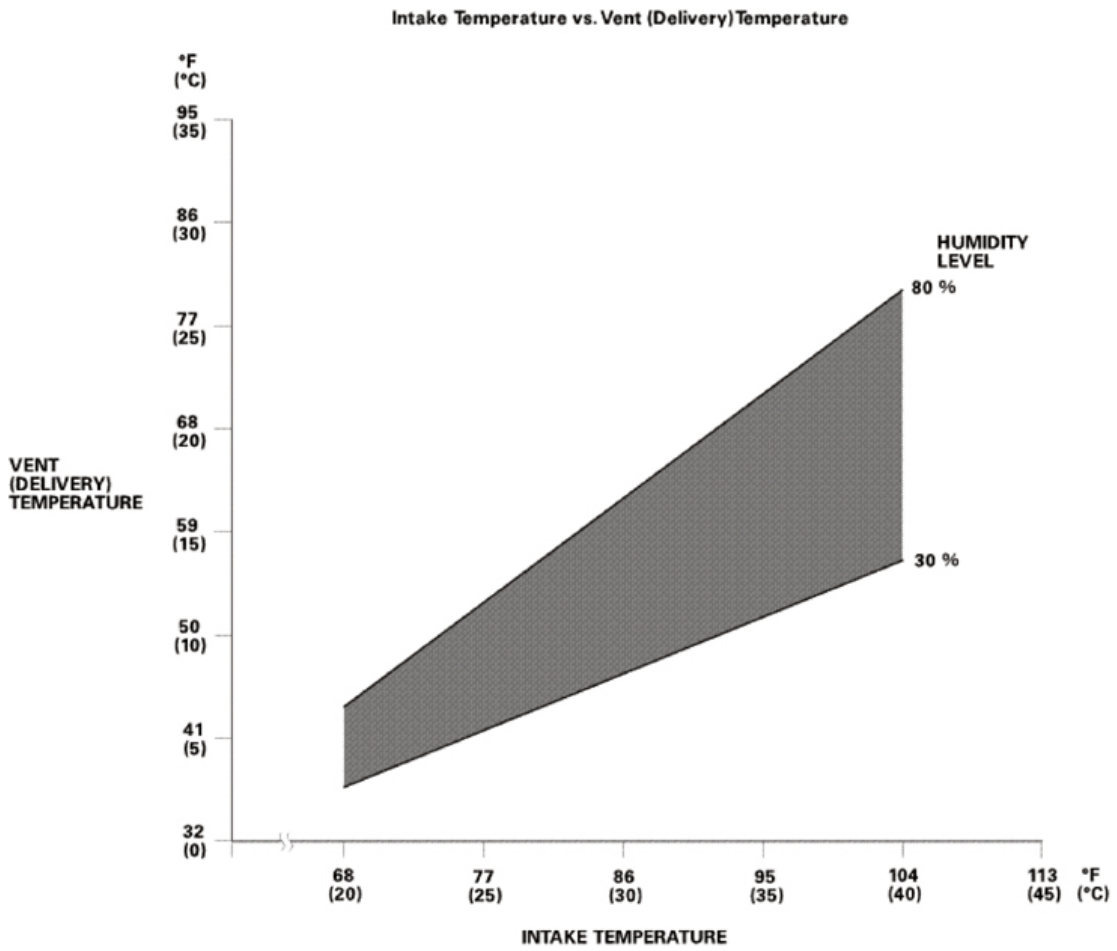

Fig. 55: Intake Temperature And Vent (Delivery) Temperature Graph
Courtesy of AMERICAN HONDA MOTOR CO., INC.

7. To complete the high side (discharge) pressure/intake temperature chart:
   - Mark the high side (discharge) pressure on the vertical line.
   - Mark the intake temperature on the bottom line.
   - Draw a vertical line from the intake temperature mark.
   - Draw a horizontal line from the high side (discharge) pressure mark until it intersects the vertical line.

NOTE: **The high side pressure and intake temperature should intersect in the shaded area. Any measurements outside the line may indicate the need for further inspection.**

GETtheMANUALS.org

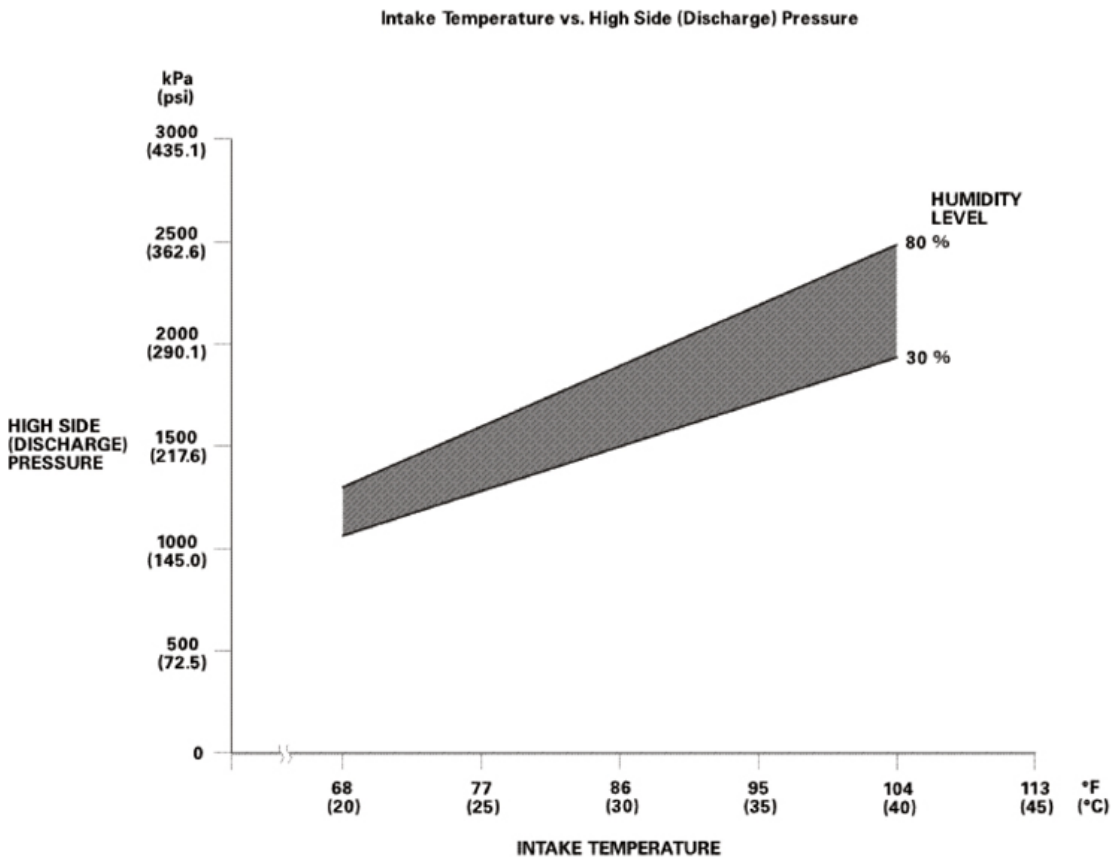

Fig. 56: Intake Temperature And High Side (Discharge) Pressure Graph
Courtesy of AMERICAN HONDA MOTOR CO., INC.

8. To complete the low side (suction) pressure/intake temperature chart:
   - Mark the low side (suction) pressure along the vertical line.
   - Mark the intake temperature along the bottom line.
   - Draw a vertical line from the intake temperature mark.
   - Draw a horizontal line from the low side (suction) pressure mark until it intersects the vertical line.

NOTE: **The low side pressure and intake temperature should intersect in the shaded area. Any measurements outside the line may indicate the need for further inspection.**

GETtheMANUALS.org

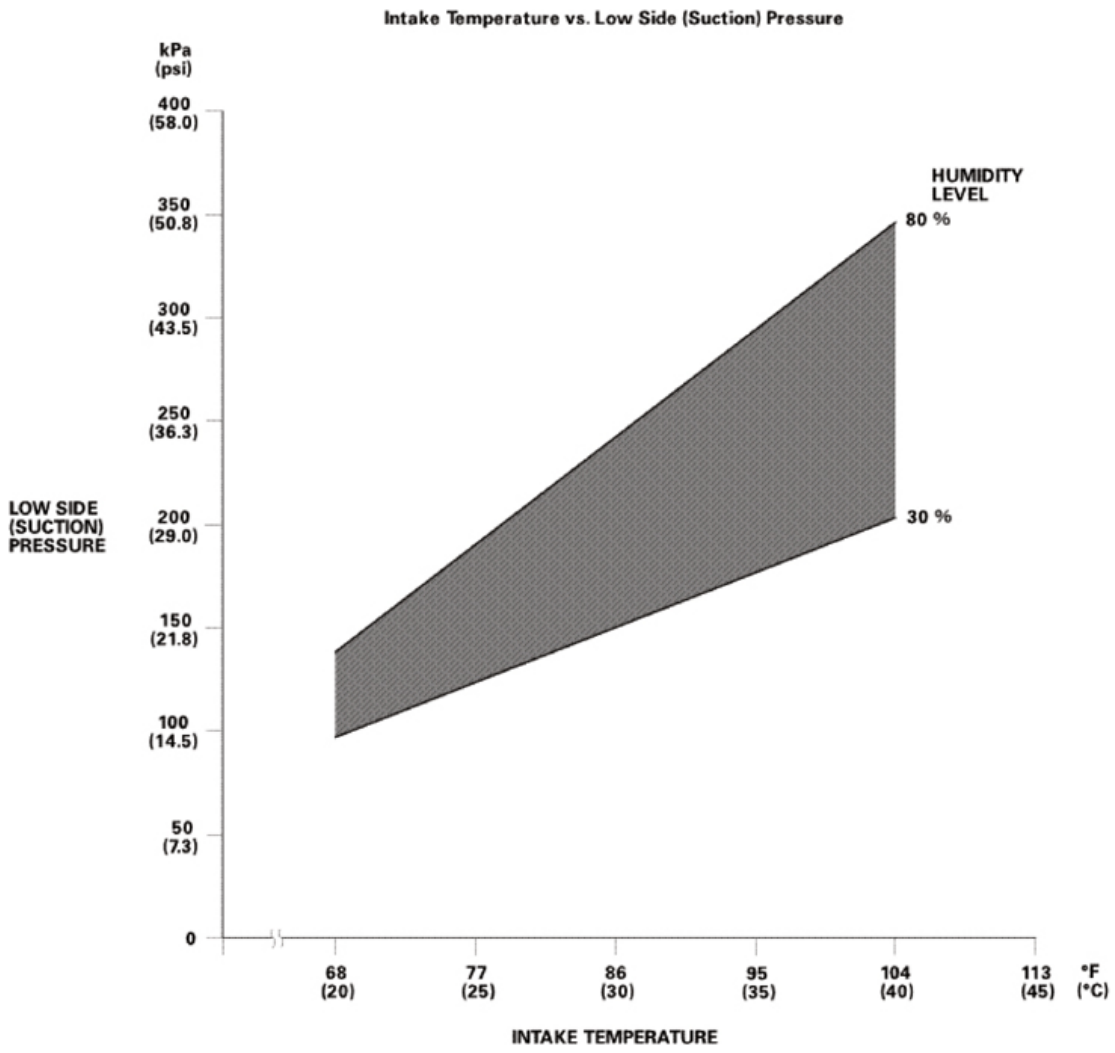

Fig. 57: Intake Temperature And Low Side (Suction) Pressure Graph
Courtesy of AMERICAN HONDA MOTOR CO., INC.

INSTALLATION

1. Glove Box - Move
    1. Install the glove box (A). Make sure the glove box stops (B) snap into place securely.
    2. Install the glove box damper hook (C).

GETtheMANUALS.org

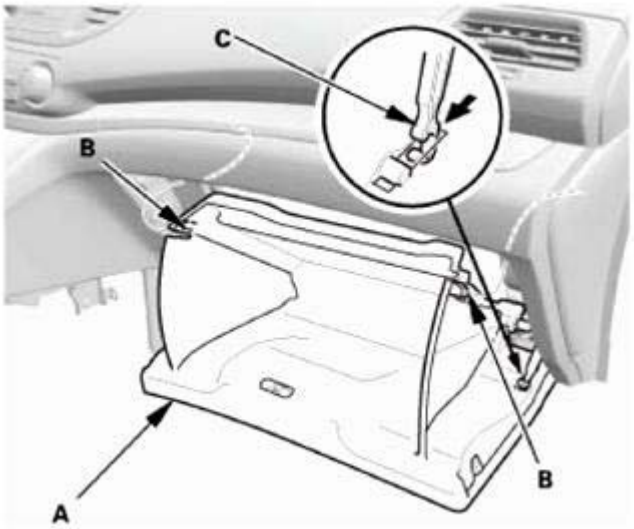

Fig. 58: Installing Glove Box Damper Hook
Courtesy of AMERICAN HONDA MOTOR CO., INC.

CLIMATE CONTROL SYSTEM COMPONENT LOCATION INDEX

GETtheMANUALS.org

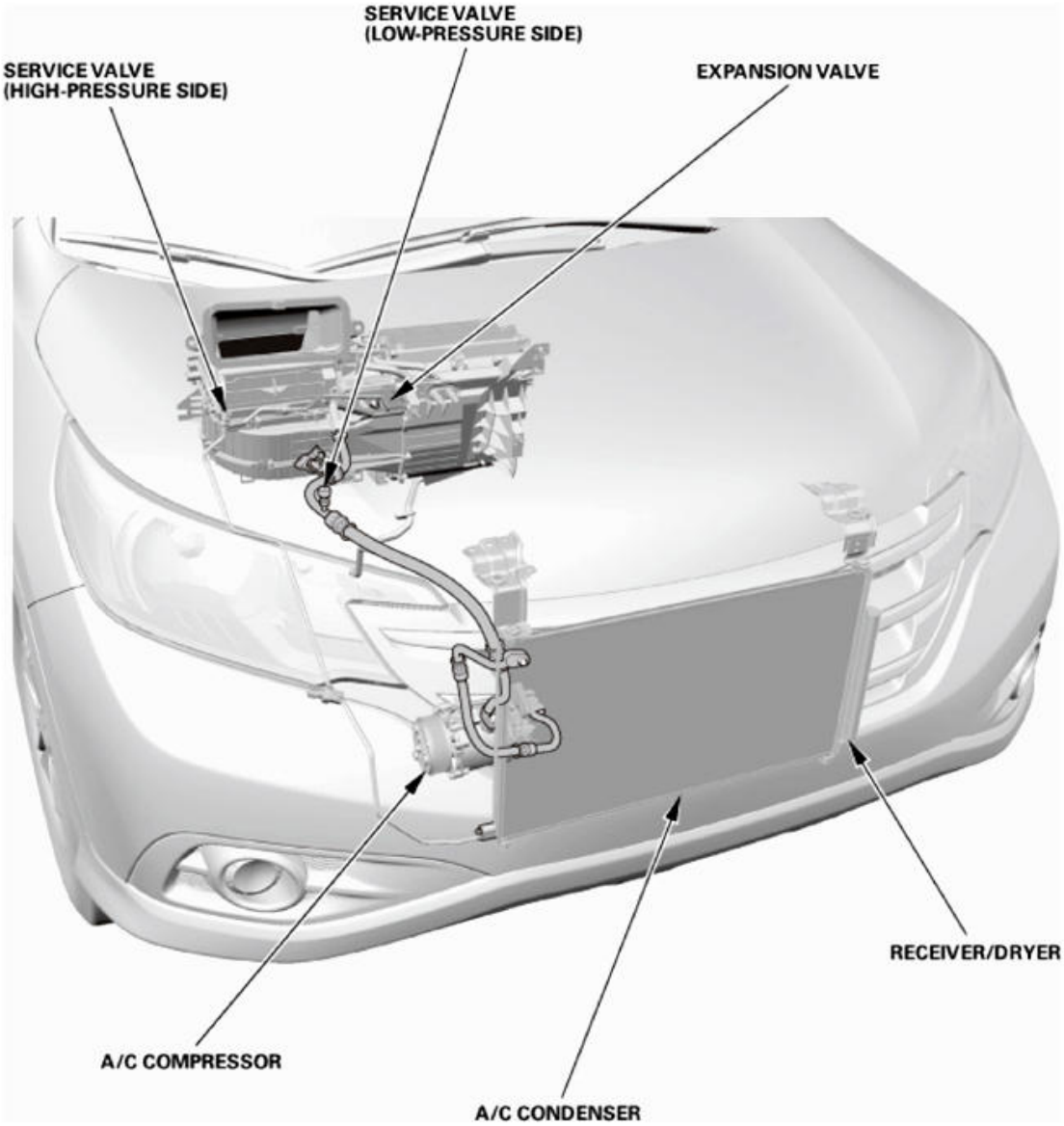

Fig. 59: Identifying Climate Control System Component Location (1 Of 3)
Courtesy of AMERICAN HONDA MOTOR CO., INC.

A/C COMPRESSOR	**REMOVAL AND INSTALLATION**
	CLUTCH CHECK
	CLUTCH OVERHAUL
	THERMAL PROTECTOR REMOVAL AND INSTALLATION
	RELIEF VALVE REPLACEMENT
A/C CONDENSER	**REMOVAL AND INSTALLATION**
EXPANSION VALVE	**REMOVAL AND INSTALLATION**
RECEIVER/DRYER	**DESICCANT REMOVAL AND INSTALLATION**

GETtheMANUALS.org

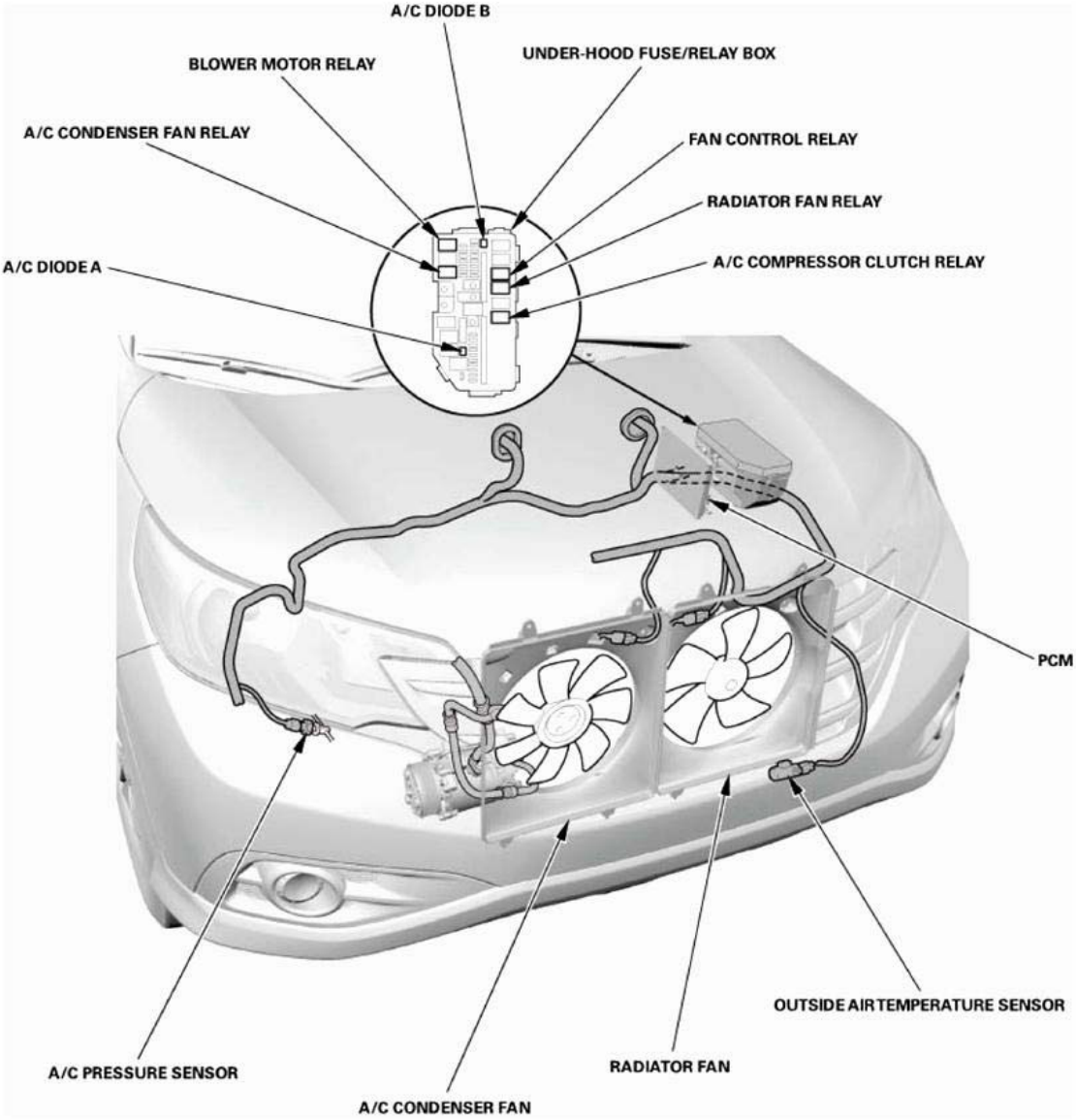

Fig. 60: Identifying Climate Control System Component Location (2 Of 3)
Courtesy of AMERICAN HONDA MOTOR CO., INC.

A/C COMPRESSOR CLUTCH RELAY	**TEST**
A/C CONDENSER FAN	MOTOR TEST
	MOTOR REMOVAL AND INSTALLATION
A/C CONDENSER FAN RELAY	**TEST**
BLOWER MOTOR RELAY	**TEST**
FAN CONTROL RELAY	**TEST**
OUTSIDE AIR TEMPERATURE SENSOR	**REMOVAL, INSTALLATION, AND TEST**
RADIATOR FAN	MOTOR TEST
	MOTOR REMOVAL AND INSTALLATION
RADIATOR FAN RELAY	**TEST**

GETtheMANUALS.org

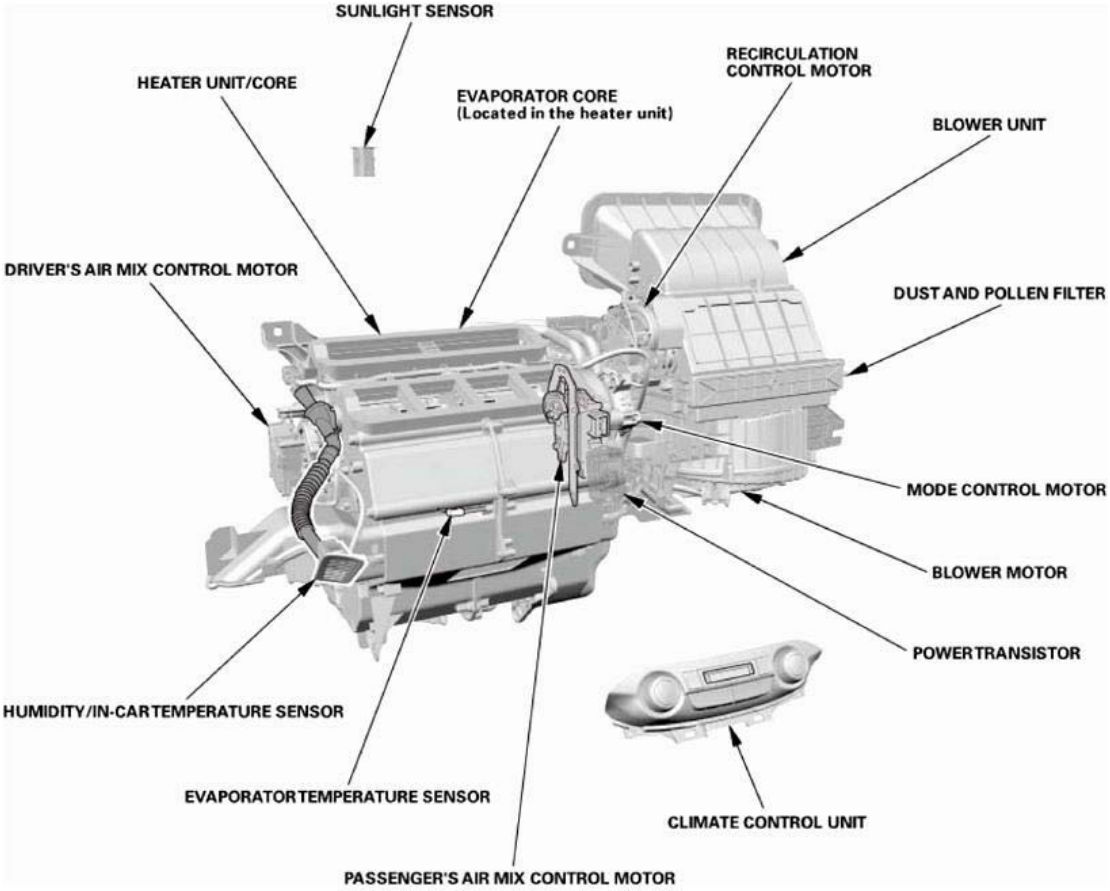

Fig. 61: Identifying Climate Control System Component Location (3 Of 3)
Courtesy of AMERICAN HONDA MOTOR CO., INC.

BLOWER MOTOR	**REMOVAL AND INSTALLATION**
BLOWER UNIT	**REMOVAL AND INSTALLATION**
CLIMATE CONTROL UNIT	**REMOVAL AND INSTALLATION**
DRIVER'S AIR MIX CONTROL MOTOR	**Test** See **AIR MIX CONTROL MOTOR TEST** , **DRIVER'S AIR MIX CONTROL MOTOR TEST** or **PASSENGER'S AIR MIX CONTROL MOTOR TEST**
	Removal and Installation See **AIR MIX CONTROL MOTOR REMOVAL AND INSTALLATION** , **DRIVER'S AIR MIX CONTROL MOTOR REMOVAL AND INSTALLATION** or **PASSENGER'S AIR MIX CONTROL MOTOR REMOVAL AND INSTALLATION**
DUST AND POLLEN FILTER	**REMOVAL AND INSTALLATION**
EVAPORATOR CORE (Located in the heater unit)	**REMOVAL AND INSTALLATION**
EVAPORATOR TEMPERATURE	**REMOVAL, INSTALLATION, AND TEST**

GETtheMANUALS.org

SENSOR	
HEATER UNIT/CORE	**REMOVAL AND INSTALLATION**
HUMIDITY/IN-CAR TEMPERATURE SENSOR	**TEST**
	REMOVAL, INSTALLATION, AND TEST
MODE CONTROL MOTOR	**TEST**
	REMOVAL AND INSTALLATION
PASSENGER'S AIR MIX CONTROL MOTOR	**Test** See **DRIVER'S AIR MIX CONTROL MOTOR TEST** , **DRIVER'S AIR MIX CONTROL MOTOR TEST** or **PASSENGER'S AIR MIX CONTROL MOTOR TEST**
	Removal and Installation See **DRIVER'S AIR MIX CONTROL MOTOR TEST** , **DRIVER'S AIR MIX CONTROL MOTOR TEST** or **PASSENGER'S AIR MIX CONTROL MOTOR TEST**
POWER TRANSISTOR	**Test** See **BLOWER POWER TRANSISTOR TEST** or **BLOWER POWER TRANSISTOR TEST**
	REMOVAL AND INSTALLATION
RECIRCULATION CONTROL MOTOR	**TEST**
	REMOVAL AND INSTALLATION
SUNLIGHT SENSOR	**TEST**
	REMOVAL AND INSTALLATION

HEATING AND A/C SYSTEMS COMPONENT LOCATION INDEX

GETtheMANUALS.org

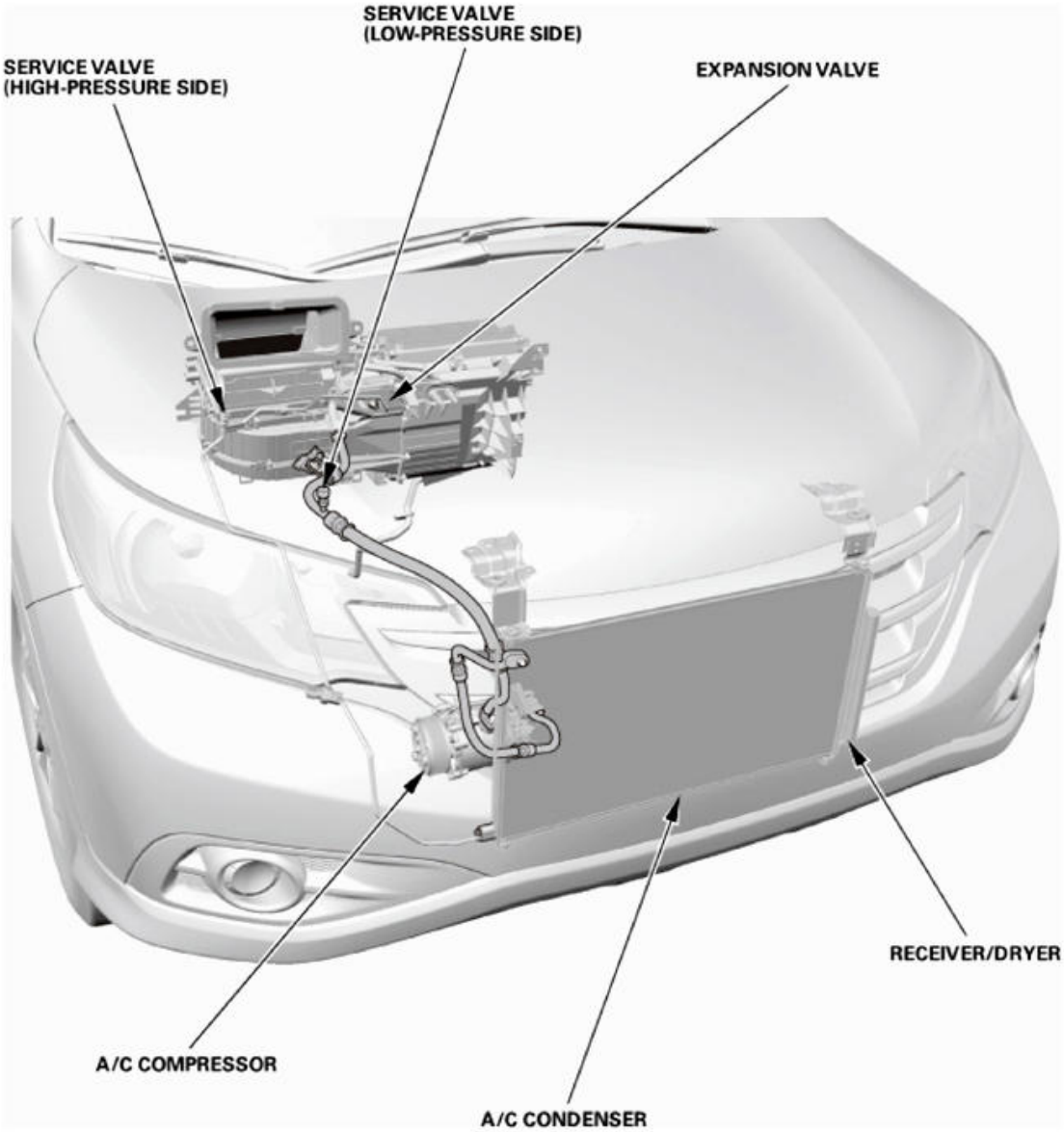

Fig. 62: Identifying Heating And A/C Systems Component Location (1 Of 3)
Courtesy of AMERICAN HONDA MOTOR CO., INC.

A/C COMPRESSOR	**REMOVAL AND INSTALLATION**
	CLUTCH CHECK
	CLUTCH OVERHAUL
	THERMAL PROTECTOR REMOVAL AND INSTALLATION
	RELIEF VALVE REPLACEMENT
A/C CONDENSER	**REMOVAL AND INSTALLATION**
EXPANSION VALVE	**REMOVAL AND INSTALLATION**
RECEIVER/DRYER	**DESICCANT REMOVAL AND INSTALLATION**

GETtheMANUALS.org

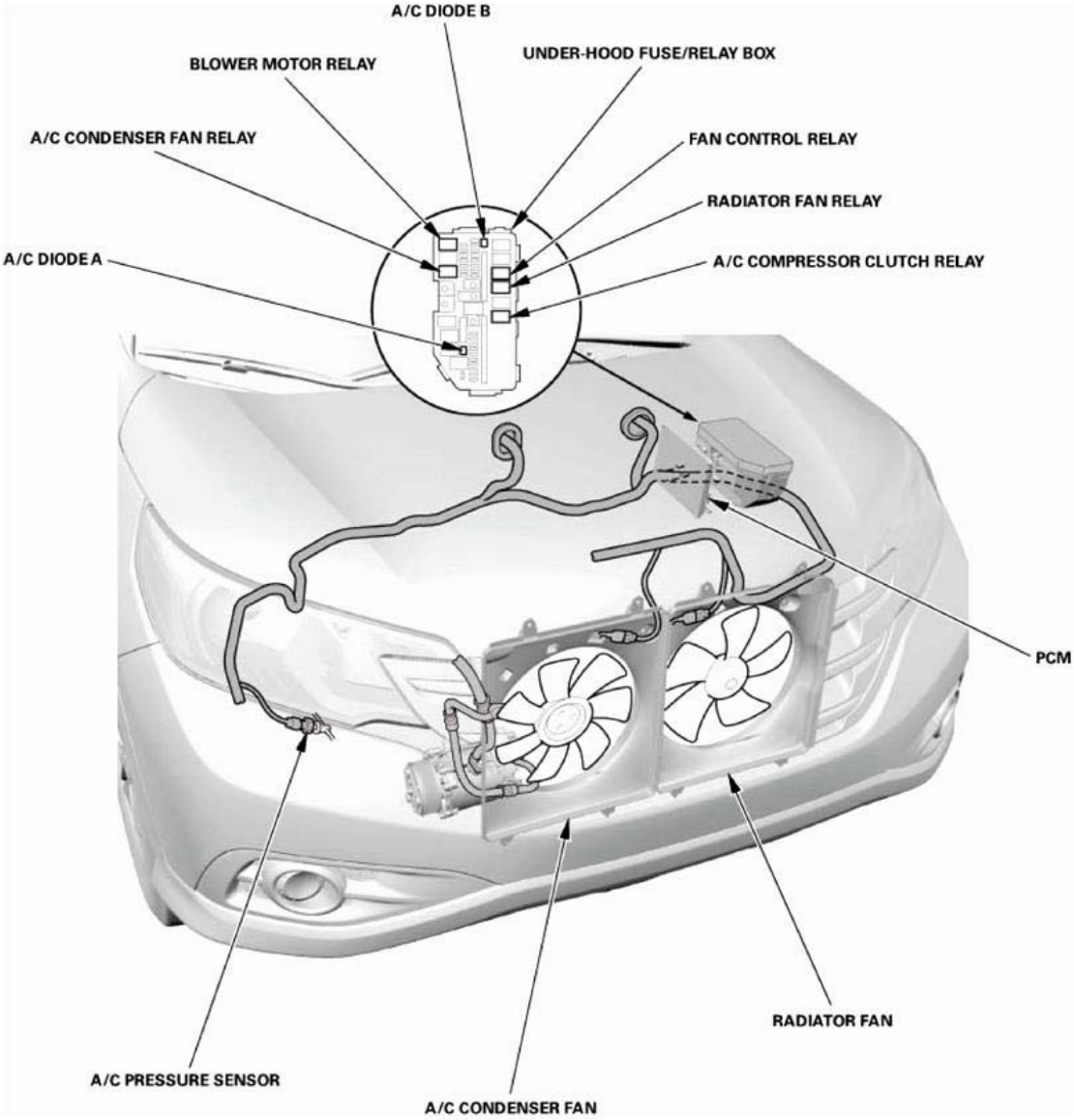

Fig. 63: Identifying Heating And A/C Systems Component Location (2 Of 3)
Courtesy of AMERICAN HONDA MOTOR CO., INC.

A/C COMPRESSOR CLUTCH RELAY	**TEST**
A/C CONDENSER FAN	MOTOR TEST
	MOTOR REMOVAL AND INSTALLATION
A/C CONDENSER FAN RELAY	**TEST**
BLOWER MOTOR RELAY	**TEST**
FAN CONTROL RELAY	**TEST**
RADIATOR FAN	MOTOR TEST
	MOTOR REMOVAL AND INSTALLATION
RADIATOR FAN RELAY	**TEST**

GETtheMANUALS.org

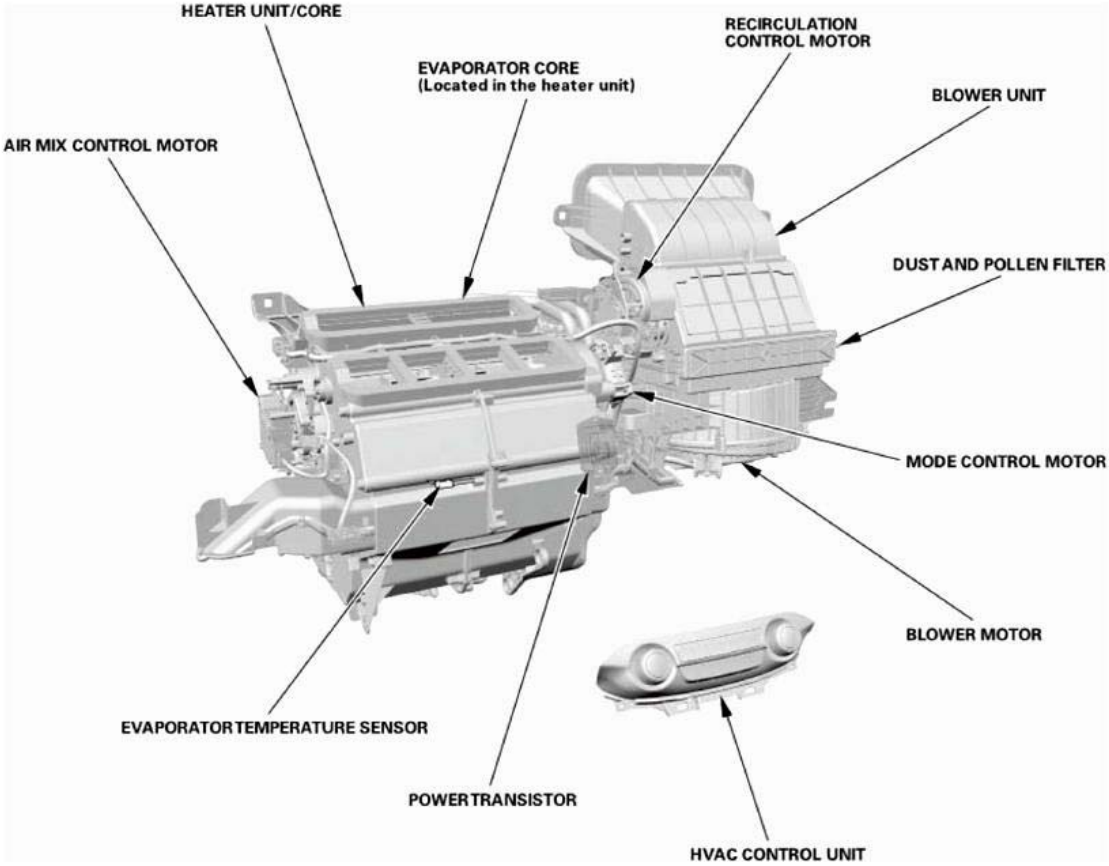

Fig. 64: Identifying Heating And A/C Systems Component Location (3 Of 3)
Courtesy of AMERICAN HONDA MOTOR CO., INC.

AIR MIX CONTROL MOTOR	**Test** See **AIR MIX CONTROL MOTOR TEST** , **DRIVER'S AIR MIX CONTROL MOTOR TEST** or **PASSENGER'S AIR MIX CONTROL MOTOR TEST**
	Removal and Installation See **AIR MIX CONTROL MOTOR TEST** , **DRIVER'S AIR MIX CONTROL MOTOR TEST** or **PASSENGER'S AIR MIX CONTROL MOTOR TEST**
BLOWER MOTOR	**REMOVAL AND INSTALLATION**
BLOWER UNIT	**REMOVAL AND INSTALLATION**
DUST AND POLLEN FILTER	**REMOVAL AND INSTALLATION**
EVAPORATOR CORE (Located in the heater unit)	**REMOVAL AND INSTALLATION**
EVAPORATOR TEMPERATURE SENSOR	**REMOVAL, INSTALLATION, AND TEST**
HEATER UNIT/CORE	**REMOVAL AND INSTALLATION**
HVAC CONTROL UNIT	**REMOVAL AND INSTALLATION**
MODE CONTROL MOTOR	**TEST**
	REMOVAL AND INSTALLATION

GETtheMANUALS.org

POWER TRANSISTOR	**Test** See **BLOWER POWER TRANSISTOR TEST** or **BLOWER POWER TRANSISTOR TEST**
	REMOVAL AND INSTALLATION
RECIRCULATION CONTROL MOTOR	**TEST**
	REMOVAL AND INSTALLATION

GETtheMANUALS.org

A/C COMPRESSOR RELIEF VALVE REMOVAL AND INSTALLATION

SPECIAL TOOL REQUIRED

Image	Description/Tool Number
	Compact Electronic Vacuum Gauge Robinair ROB14777(1), commercially available
	Leak Detector YGK-H-10PM(1)

GETtheMANUALS.org

	Leak Detector HLD-100(1)
	Leak Detector TIFZX-1(1)
	OPTIMAX Jr. A/C Leak Detection Kit TRP124893(1)

GETtheMANUALS.org

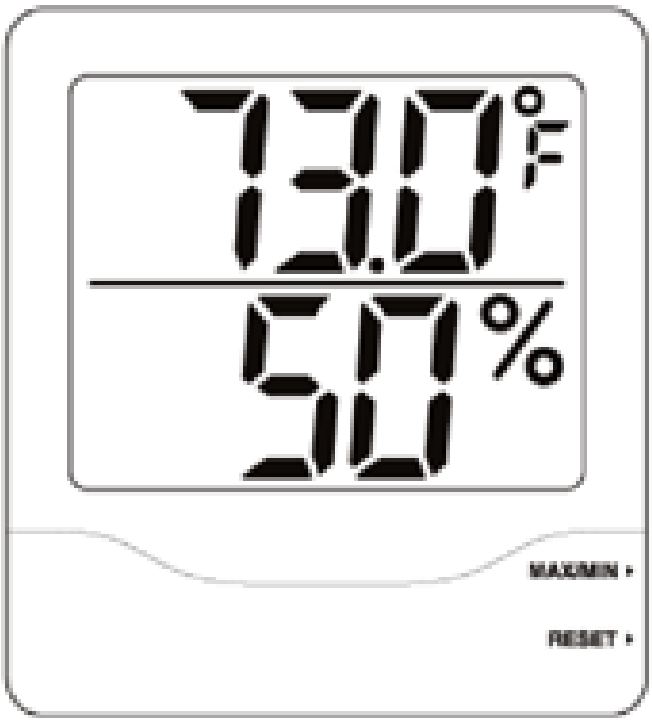	Big Digit Hygro-Thermometer PYR445703, commercially available
	Throttle Pedal Depressor Tool B240B, commercially available
(1) These tools are available through the Honda Tool and Equipment Program; call 888-424-6857	

REMOVAL

CAUTION:

- **Air conditioning refrigerant or lubricant vapor can irritate your eyes, nose, or throat.**
- **Be careful when connecting service equipment.**
- **Do not breathe refrigerant or vapor.**

NOTE:

- **If accidental system discharge occurs, ventilate the work area before resuming service.**
- **Additional health and safety information may be obtained from the refrigerant and lubricant manufacturers.**
- **If the A/C compressor relief valve released refrigerant to the atmosphere, determine and correct the cause of the excessive pressure in the system, then replace the relief valve.**

1. Vehicle Lift

GETtheMANUALS.org

1. Raise the vehicle on a lift, and make sure it is securely supported.

2. Glove Box - Move
    1. Detach the glove box damper hook (A), and release both glove box stops (B) by pushing them in, then let glove box (C) hang down.

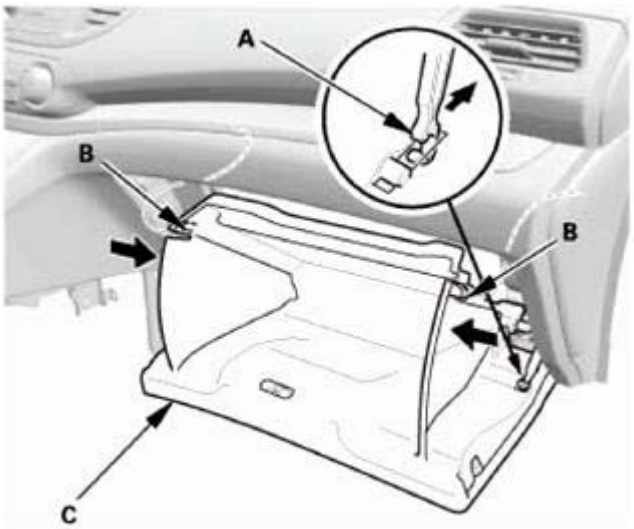

Fig. 1: Detaching Glove Box Damper Hook
Courtesy of AMERICAN HONDA MOTOR CO., INC.

3. R-134a Refrigerant Recovery/Recycling/Charging Station - Connection
    1. Connect an R-134a refrigerant recovery/recycling/charging station (A) to the high-pressure service port (B) and the low-pressure service port (C), as shown, following the equipment manufacturer's instructions.

GETtheMANUALS.org

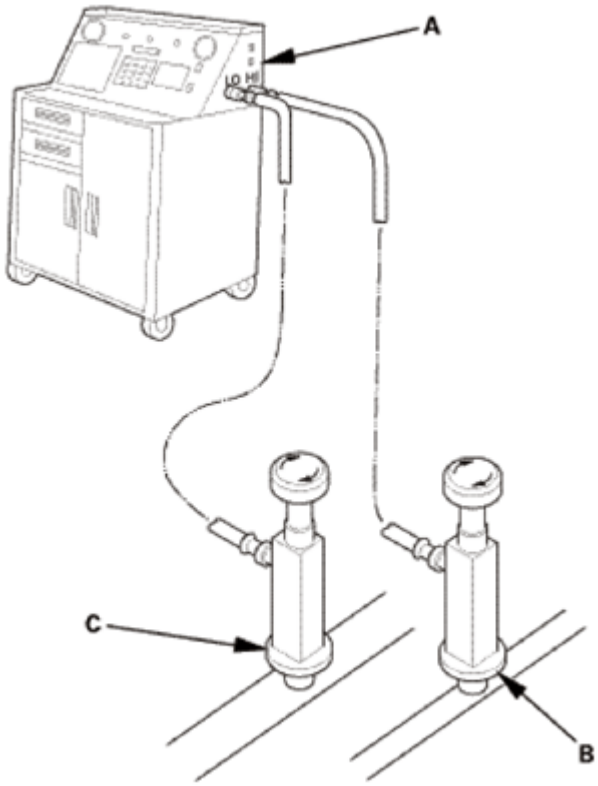

Fig. 2: Identifying Refrigerant Recovery/Recycling/Charging Station, High And Low Pressure Service Port
Courtesy of AMERICAN HONDA MOTOR CO., INC.

4. A/C Refrigerant - Recovery
    1. Recover the refrigerant from the A/C system.
    2. Measure the amount of refrigerant oil removed from the A/C system after the recovery process is completed. Be sure to put the same amount of new refrigerant oil back into the A/C system before charging.
5. Front Splash Shield
    1. Remove the bolts (A), then remove the clips (B) that secure the front inner fender and the front splash shield (C) to the body.
    2. From under the front bumper (D), remove the clips (E).
    3. From under the body, remove the clips (F), then pull out the front splash shield.

GETtheMANUALS.org

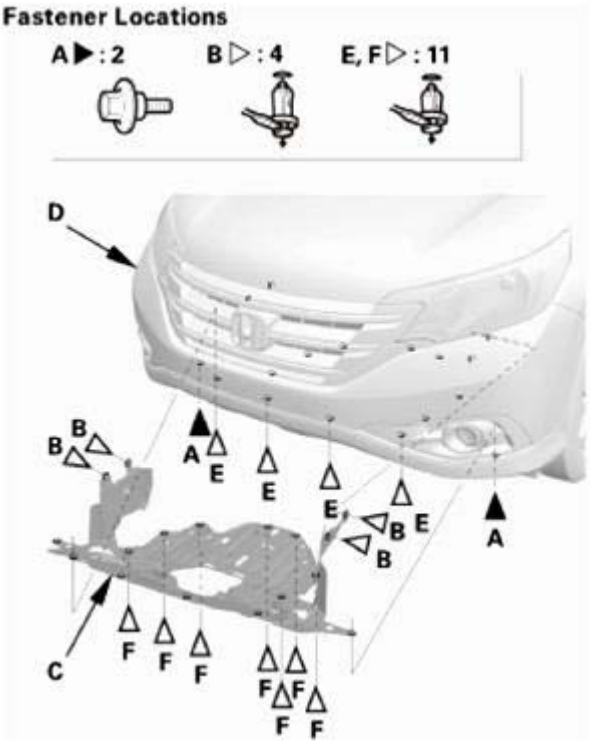

Fig. 3: Identifying Front Splash Shield, Front Bumper, Clips And Bolts
Courtesy of AMERICAN HONDA MOTOR CO., INC.

6. A/C Compressor Relief Valve
   1. Remove the relief valve (A) with a O-ring (B).

NOTE: **Plug the opening to keep moisture and foreign material from entering the system, and the A/C compressor oil from running out.**

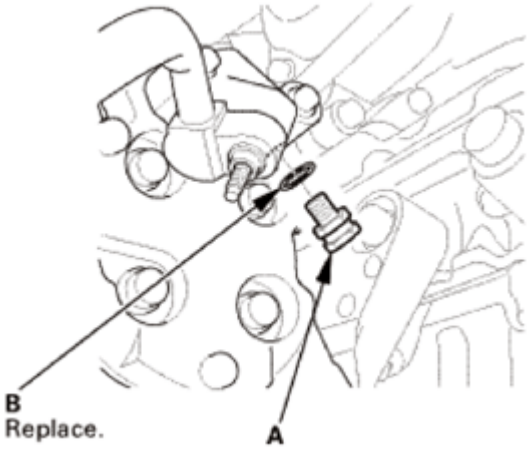

Fig. 4: Identifying A/C Compressor Relief Valve And O-Ring
Courtesy of AMERICAN HONDA MOTOR CO., INC.

GETtheMANUALS.org

INSTALLATION

CAUTION:

- **Air conditioning refrigerant or lubricant vapor can irritate your eyes, nose, or throat.**
- **Be careful when connecting service equipment.**
- **Do not breathe refrigerant or vapor.**
- **Do not operate the leak detector near flammable vapors. Its sensor operates at high temperatures, and could ignite the vapors, resulting in personal injury and/or damage to the equipment.**

NOTE:

- **If an accidental system discharge occurs, ventilate the work area before resuming service.**
- **Additional health and safety information may be obtained from the refrigerant and lubricant manufacturers.**
- **Check the system for leaks using an R-134a refrigerant leak detector with an accuracy of 14 g (0.5 oz) per year or better.**
- **If the A/C compressor relief valve released refrigerant to the atmosphere, determine and correct the cause of the excessive pressure in the system, then replace the relief valve.**
- **Replace the O-rings with new ones at each fitting, and apply a thin coat of refrigerant oil before installing them. Be sure to use the correct O-rings for HFC-134a (R-134a) to avoid leakage.**
- **Use only PAG refrigerant oil for HFC-134a A/C systems.**
- **To avoid contamination, do not return the oil to the container once dispensed, and never mix it with other refrigerant oils.**
- **Immediately after using the oil, reinstall the cap on the container, and seal it to avoid moisture absorption.**
- **Do not spill the refrigerant oil on the vehicle; it may damage the paint; if the refrigerant oil contacts the paint, wash it off immediately.**

1. A/C Compressor Relief Valve
    1. Clean the mating surfaces.
    2. Remove the plug.
    3. Install the relief valve (A) with a new O-ring (B) that is lubricated with clean refrigerant oil.

GETtheMANUALS.org

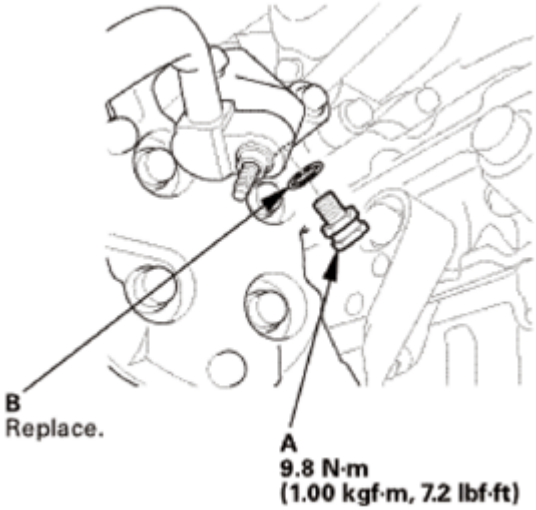

Fig. 5: Identifying A/C Compressor Relief Valve And O-Ring With Torque Specifications
Courtesy of AMERICAN HONDA MOTOR CO., INC.

2. Front Splash Shield
    1. Install the front splash shield (A), then install the bolts (B) and the clips (C, D). Make sure the clips snap into place securely.

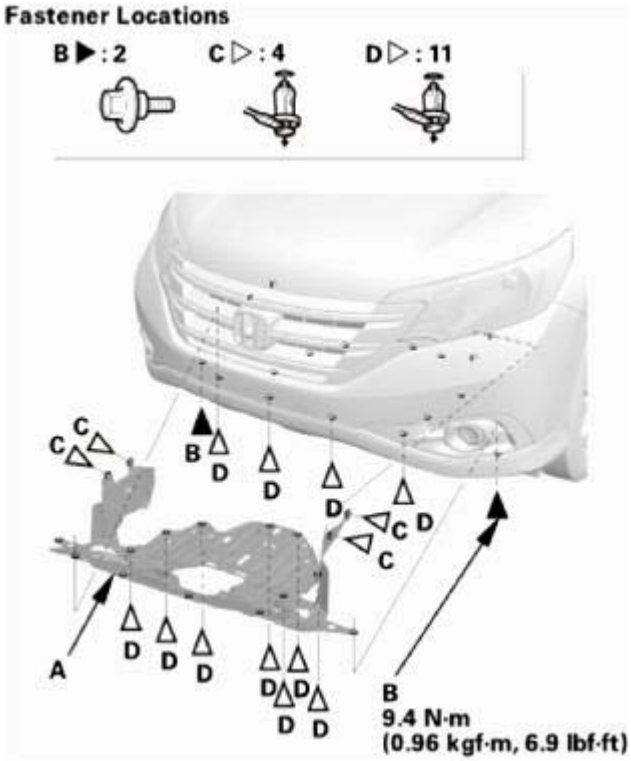

Fig. 6: Identifying Front Splash Shield, Clips And Bolts With Torque Specifications
Courtesy of AMERICAN HONDA MOTOR CO., INC.

GETtheMANUALS.org

3. R-134a Refrigerant Recovery/Recycling/Charging Station - Connection
    1. Connect an R-134a refrigerant recovery/recycling/charging station (A) to the high-pressure service port (B) and the low-pressure service port (C), as shown, following the equipment manufacturer's instructions.

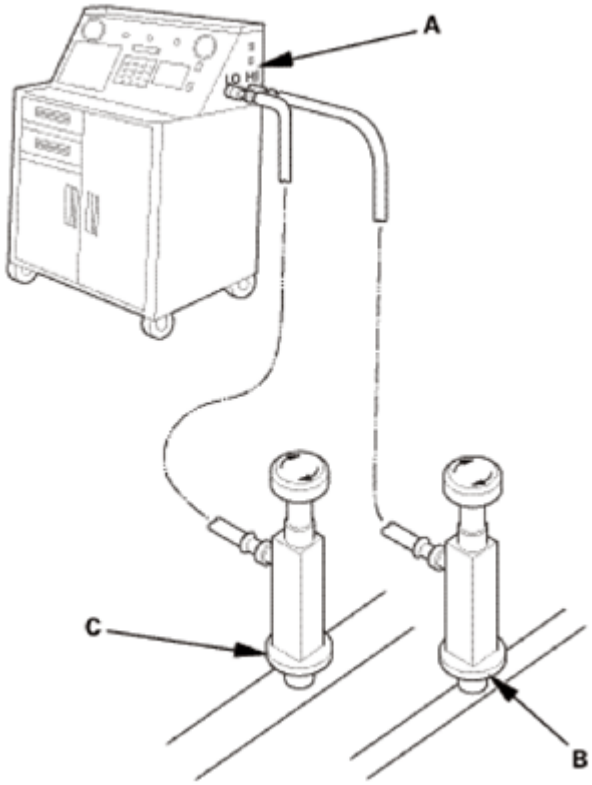

Fig. 7: Identifying Refrigerant Recovery/Recycling/Charging Station, High And Low Pressure Service Port
Courtesy of AMERICAN HONDA MOTOR CO., INC.

4. A/C System Evacuation
    1. Evacuate the system. The vacuum pump should run for a minimum of 30 minutes to eliminate all moisture from the system. When the suction gauge reads -93.3 kPa (-700 mmHg, - 27.55 inHg) for at least 30 minutes, close all valves, and turn off the vacuum pump.
    2. If the suction gauge dose not reach approximately -93.3 kPa (-700 mmHg, -27.55 inHg) in 15 minutes, there is probably a large leak in the system. Partially charge the system, and check for leaks.
5. A/C Refrigerant - Charging
    1. Charge the system with the specified amount of R-134a refrigerant. Do not overcharge the system; the A/C compressor will be damaged.

       Select the appropriate units of measure for your refrigerant charging station.

       Refrigerant Capacity:

GETtheMANUALS.org

385 to 435 g

13.6 to 15.4 oz

0.385 to 0.435 kg

0.849 to 0.959 lbs

6. A/C Refrigerant - Leak Check

Leak Detector Usage Tips (Refer to the Operator's Manual for complete operating instructions)

- Position the vehicle in a wind-free work area. This will aid in detecting small leaks.
- When using the leak detector for the first time, allow it to warm up for 2 minutes with the probe in a clean atmosphere. This lets the temperature sensor in the detector stabilize.
- The calibration check should be done in the "Search 2" mode. Once that is done, the other check modes do not need calibrating.
- When leak checking through the HVAC module drain hose, avoid drawing water into the probe. Water can damage the internal pump and sensor.
- Avoid creasing the flexible probe extension. Creases can restrict air flow and give false readings.
- Because the detector recalibrates itself for ambient gases, it may be necessary to move the detector away from the leak to clear the sensor. Once the sensor has cleared, recheck the suspected leak.
- When removing the clear probe tip, be careful not to lose the flow ball.
- R-134a is heavier than air; always check below and to the sides of all potential leak sources.
- Halogen leak detectors are sensitive to chemicals: windshield washing solutions, solvents/cleaners, and some vehicle adhesives. Keep these chemicals out of the area when doing leak detection.

Fluorescent Dye Usage Tips

- Use only Tracer-Stick single dose fluorescent dye capsules from Tracerline®. Other dyes contain solvents that may contaminate the refrigerant oil, leading to component failure.
- Adding excessive amounts of dye can damage the A/C compressor.
- PAG oil is water soluble, so condensation on the evaporator core or the refrigerant lines may wash the PAG oil and fluorescent dye away from the actual leak. Condensation may also carry dye through the HVAC module drain.
- After checking and repairing leaks, thoroughly clean any residual dye from the areas where leaks were found. Use GLO-AWAY dye cleaner, from Tracerline®, and hot water to remove the dye (follow the instructions on the bottle). Residual dye stains can cause misdiagnosis of any future A/C system leaks.
- If any refrigerant dye contacts an exterior paint surface, remove it by doing this:
    - Carefully wash the affected surfaces to remove any dirt, and to prevent paint scratching.
    - Mix water and isopropyl alcohol in a 50/50 mixture. Soak a soft 100 % cotton towel with the water/alcohol mixture, and place the cloth on the affected areas to remove the dye.
    - After removing the dye with the water/alcohol-soaked cloth, carefully wash the affected

GETtheMANUALS.org

areas, and check that there is no remaining dye.

1. With the engine OFF, use a halogen leak detector first to detect the leak source. Follow a continuous path in order to ensure that you will not miss any possible leaks. Test the following areas of the system for leaks:

Possible Leak Area	Diagnostic Procedure with the Leak Detector	Notes
Service ports	• Check the service ports with caps installed • If the detector "sniffs" a leak, use fluorescent dye to confirm it	When capping the service ports, ensure that the seals on the port caps are in place, and that the caps are tight. The caps are used as the final seals in the system
A/C condenser	If the detector "sniffs" a leak, use fluorescent dye to confirm it	• Check for joints or connections coated with oily dust • Check for damaged and corroded areas • Check all fittings, couplings, brazed/welded areas and areas around attachment points • Move the probe slowly (1 in/second or less), and keep it within 1/4 in of the component being checked. This maximizes the chance of detecting a leak • If you detect a leak, blow compressed air over the area, then recheck for leaks. For large leaks, clearing the area with compressed air may help you pinpoint the leak source
Evaporator	• Check at the evaporator drain hose • Check at the passenger's side vent and turn the blower on at low speed	
A/C lines	• Wiggle the rubber hoses when checking crimped metal ends • If the detector "sniffs" a leak, use fluorescent dye to confirm it	• Check all fittings, couplings, pressure switches, brazed/welded areas, and areas around attachment points on A/C lines and components • Check for damaged and corroded areas • Move the probe slowly (1 in/second or less), and keep it within 1/4 in of the component being checked. This maximizes the chance of detecting a leak

2. Close the quick coupler valves, then disconnect the quick couplers from the vehicle service ports.
3. Attach the universal connect set, from the Optimax Jr. Leak Detection Kit, to the service valve fitting. Close the control valve (the black knob on the connect set).

GETtheMANUALS.org

4. Attach the charging station low pressure hose quick coupler to the service valve fitting, and open the quick coupler valve. Evacuate the connect set using the charging station vacuum pump, then close the quick coupler valve.
5. Detach the universal connect set, and install a Tracer-Stick® dye capsule between the connect set and the service valve fitting (see the manufacturer's instructions for more detail).
6. Attach the quick coupler on the universal connect set to the low pressure service port on the vehicle. Open the charging station low pressure hose quick coupler valve, but do not open the control valve.
7. Start the engine, and set the A/C system to maximum cooling. Open the control valve to let refrigerant and the dye enter the A/C system through the low pressure service port. Close the control valve when the Tracer-Stick® dye capsule is empty.
8. Run the engine and A/C system for 15 minutes to thoroughly circulate the dye. Then shut the engine off, and inspect the following areas of the system for leaks:

NOTE:

- **Check for leaks in a dark work area, and use the UV light and the special glasses from the leak check kit. Other UV lights may not work well with the Tracer-Stick® dye.**
- **Small leaks may take up to 1 week of vehicle operation (with normal A/C use) to become visible.**

Possible Leak Area	Diagnostic Procedure with Fluorescent Dye
Service ports	If a leak is found, replace the cap/o-ring seal or A/C line as needed
A/C lines	• Use a permanent marker pen to circle the leak area • If a leak is found, remove and replace the A/C line
A/C condenser	• If a leak is found, remove the A/C condenser • Determine whether leak is in the A/C condenser or the receiver/dryer • Use a permanent marker pen to circle the leak area • Replace either the receiver/dryer, or the A/C condenser, depending upon which is leaking
A/C compressor	• Check for leaks at all of the A/C compressor joints, the clutch center, the A/C compressor front housing bolts, and the scroll bolts on the back of the A/C compressor • If a leak is found, use a permanent marker pen to circle the leak area • If the A/C compressor relief valve appears to be leaking, determine whether the leak is coming from the relief valve, or the joint between the A/C compressor casing and the valve. If the leak is from the relief valve, check the A/C system pressures, and refer to the pressure test table in the A/C system test. If the leak is from the casing/valve joint, replace the A/C compressor relief valve • If the leak is coming from the suction hose and/or discharge hose fittings on

GETtheMANUALS.org

	the A/C compressor, clean the A/C fittings and replace the suction/discharge fitting O-rings • For all other A/C compressor leaks, remove and replace the A/C compressor
Evaporator	• Start checking for evaporator leaks by illuminating the evaporator drain tube area • If a leak is found, remove the evaporator core • Determine whether leak is from evaporator or expansion valve • Use a permanent marker pen to circle leak area • Replace the expansion valve, or the evaporator core, depending upon which is leaking

7. A/C System - Test
    1. Insert a thermometer (A) in the center vent.
    2. Place a hygro-thermometer (B) near the blower unit's recirculation inlet duct.
    3. Test conditions:
        - Move the vehicle out of direct sunlight and let it cool down to the surrounding (ambient) temperature. If necessary, wash the vehicle to cool it down more quickly.
        - The blower intake temperature must be at least 68°F (20°C).
        - Open the hood.
        - Open the front doors.
        - Start the engine.
        - Set the temperature control dial or temperature control button to MAX COOL, the mode control button to VENT, and the recirculation control button to RECIRCULATE.
        - Turn the A/C button on and the fan control dial or fan control button to Max.
        - Run the engine at 1, 500 rpm.
        - No driver or passengers in vehicle.

GETtheMANUALS.org

Fig. 8: Checking Delivery Temperature From Thermometer In Center Vent
Courtesy of AMERICAN HONDA MOTOR CO., INC.

4. Inspect the A/C components for the following conditions:
   - A/C compressor clutch not engaged.
   - Abnormal frost areas.
   - Unusual noises.

   If you observe any of these conditions, refer to the Symptom Troubleshooting Index.

5. After running the air conditioning for 10 minutes under the above test conditions, read the delivery temperature from the thermometer in the center vent, the intake temperature near the blower unit, and the discharge (high) and suction (low) pressures on the A/C gauges.
6. To complete the vent (delivery)/intake temperature chart:
   - Mark the vent (delivery) temperature on the vertical line.
   - Mark the intake temperature on the bottom line.
   - Draw a vertical line from the intake temperature mark.
   - Draw a horizontal line from the vent (delivery) temperature mark until it intersects the vertical line.

   NOTE: **The vent temperature and intake temperature should intersect in the shaded area. Any measurements outside the line may indicate the need for further inspection.**

GETtheMANUALS.org

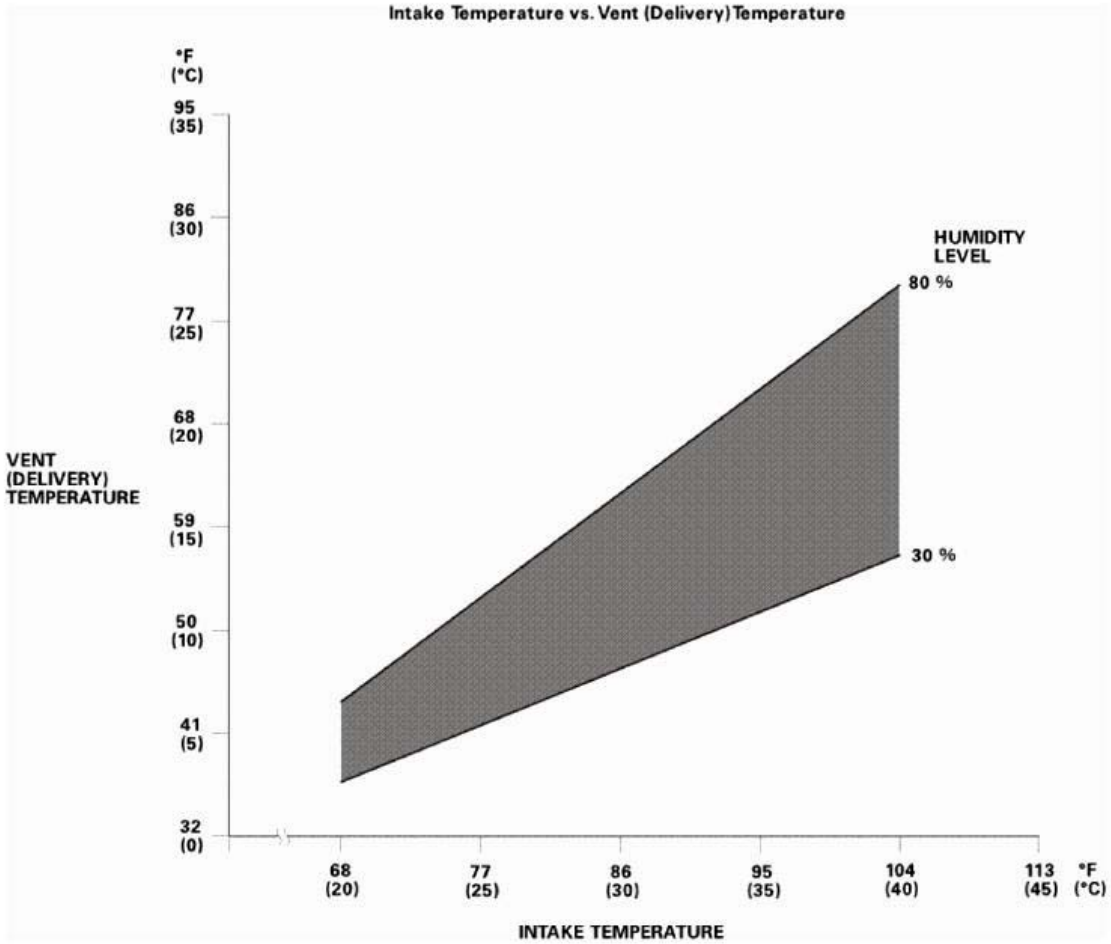

<u>Fig. 9: Intake Temperature Versus Vent (Delivery) Temperature Graph</u>
Courtesy of AMERICAN HONDA MOTOR CO., INC.

7. To complete the high side (discharge) pressure/intake temperature chart:
   - Mark the high side (discharge) pressure on the vertical line.
   - Mark the intake temperature on the bottom line.
   - Draw a vertical line from the intake temperature mark.
   - Draw a horizontal line from the high side (discharge) pressure mark until it intersects the vertical line.

NOTE: **The high side pressure and intake temperature should intersect in the shaded area. Any measurements outside the line may indicate the need for further inspection.**

GETtheMANUALS.org

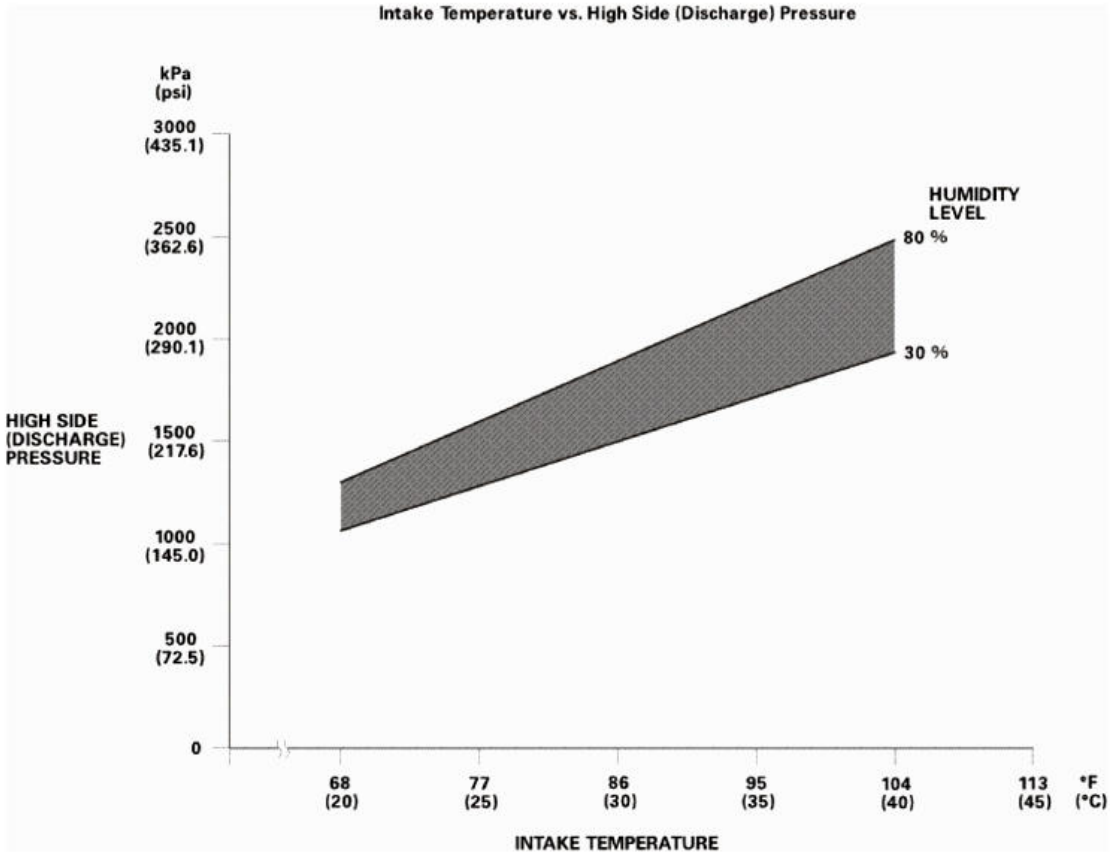

<u>Fig. 10: Intake Temperature Versus High Side (Discharge) Pressure Graph</u>
Courtesy of AMERICAN HONDA MOTOR CO., INC.

8. To complete the low side (suction) pressure/intake temperature chart:
   - Mark the low side (suction) pressure along the vertical line.
   - Mark the intake temperature along the bottom line.
   - Draw a vertical line from the intake temperature mark.
   - Draw a horizontal line from the low side (suction) pressure mark until it intersects the vertical line.

NOTE: **The low side pressure and intake temperature should intersect in the shaded area. Any measurements outside the line may indicate the need for further inspection.**

GETtheMANUALS.org

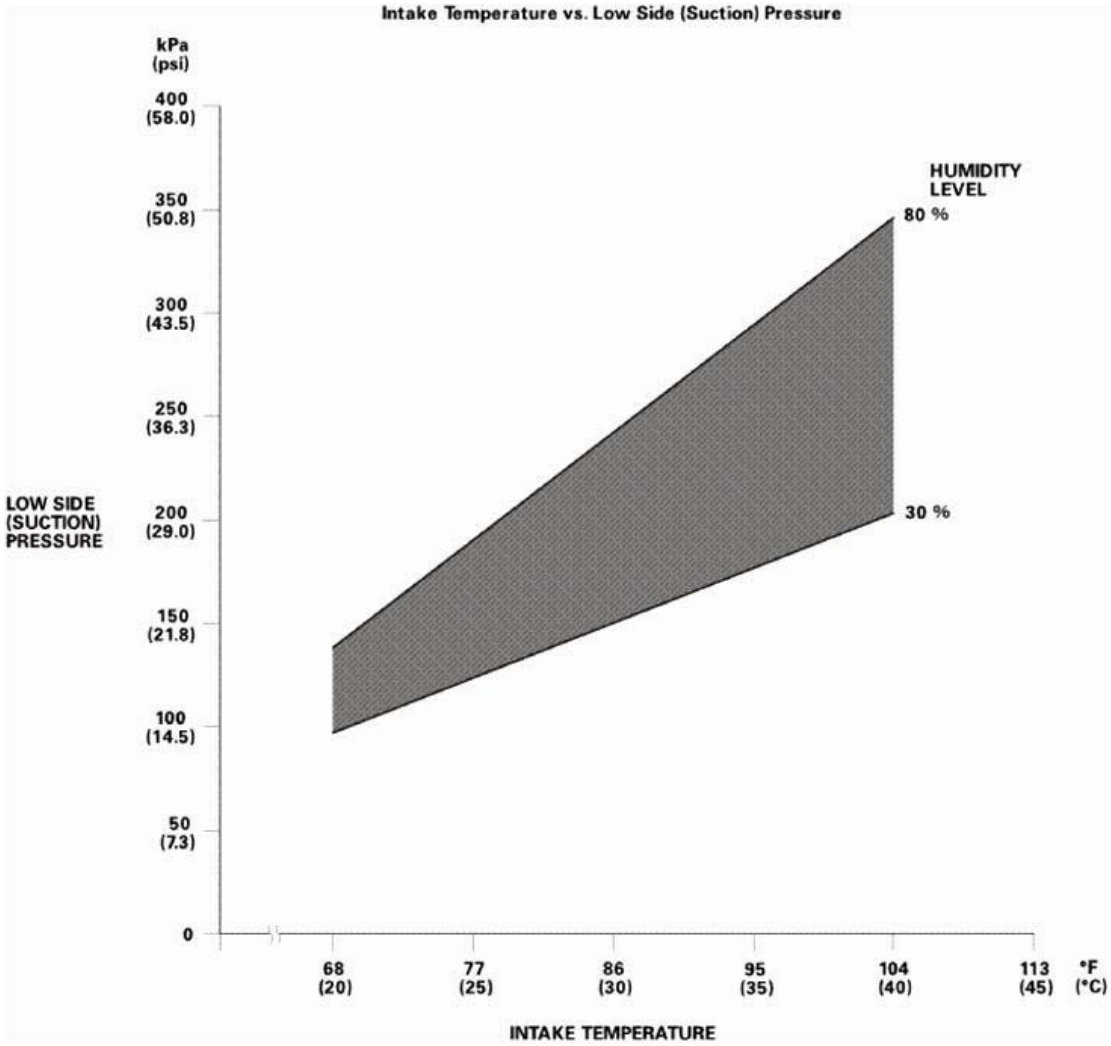

<u>Fig. 11: Intake Temperature Versus Low Side (Suction) Pressure Graph</u>
Courtesy of AMERICAN HONDA MOTOR CO., INC.

8. Glove Box - Move
    1. Install the glove box (A). Make sure the glove box stops (B) snap into place securely.
    2. Install the glove box damper hook (C).

GETtheMANUALS.org

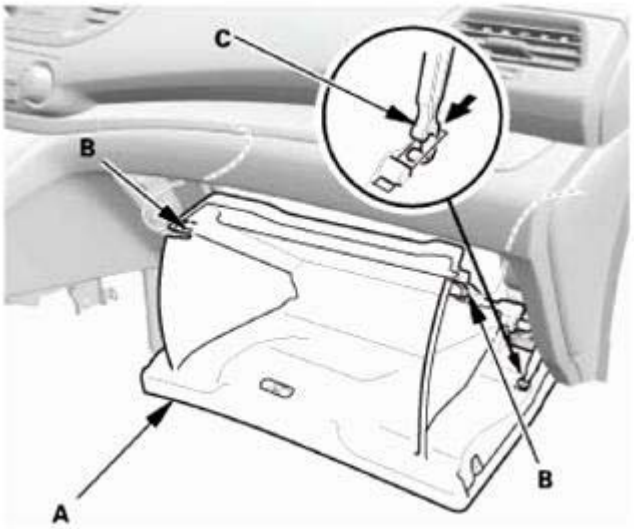

Fig. 12: Installing Glove Box Damper Hook
Courtesy of AMERICAN HONDA MOTOR CO., INC.

A/C COMPRESSOR REMOVAL AND INSTALLATION

SPECIAL TOOL REQUIRED

Image	Description/Tool Number
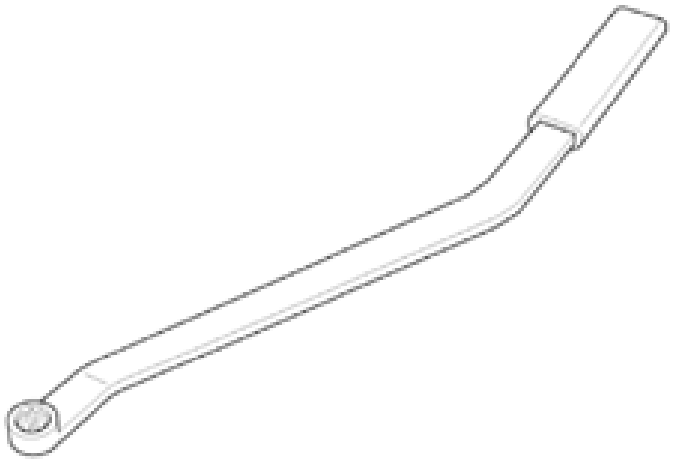	Belt Tension Release Tool Snap-on YA9317, commercially available
	Oil Injector Tool Robinair ROB16256(1), commercially available

GETtheMANUALS.org

	Compact Electronic Vacuum Gauge Robinair ROB14777(1), commercially available
	Leak Detector YGK-H-10PM(1)
	Leak Detector HLD-100(1)

GETtheMANUALS.org

	Leak Detector TIFZX-1(1)
	OPTIMAX Jr. A/C Leak Detection Kit TRP124893(1)

GETtheMANUALS.org

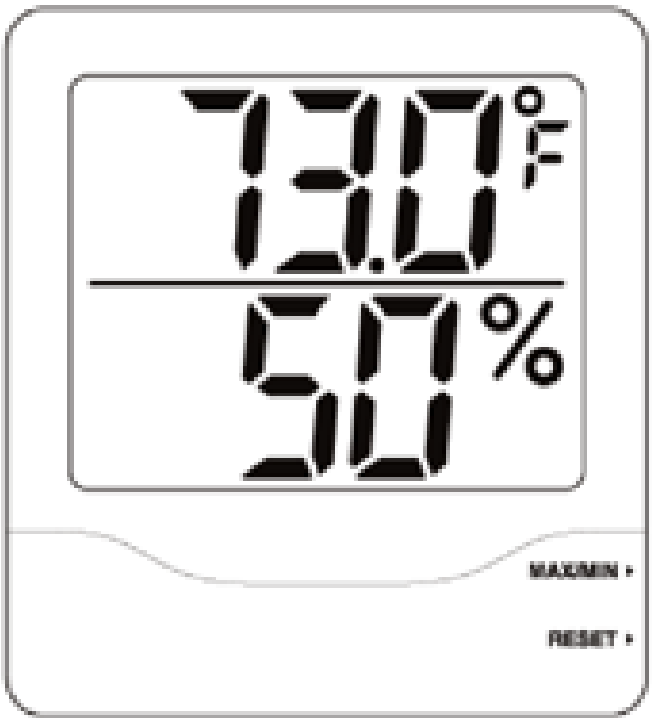	Big Digit Hygro-Thermometer PYR445703, commercially available
	Throttle Pedal Depressor Tool B240B, commercially available
(1) These tools are available through the Honda Tool and Equipment Program; call 888-424-6857	

REMOVAL

CAUTION:

- **Air conditioning refrigerant or lubricant vapor can irritate your eyes, nose, or throat.**
- **Be careful when connecting service equipment.**
- **Do not breathe refrigerant or vapor.**

NOTE:

- **If accidental system discharge occurs, ventilate the work area before resuming service.**
- **Additional health and safety information may be obtained from the refrigerant and lubricant manufacturers.**
- **Do not install an A/C compressor into a system unless you are completely sure that the system is free of contamination. Installing the A/C compressor into a contaminated system can result in premature A/C compressor failure.**

GETtheMANUALS.org

1. Vehicle Lift
    1. Raise the vehicle on a lift, and make sure it is securely supported.
2. Glove Box - Move
    1. Detach the glove box damper hook (A), and release both glove box stops (B) by pushing them in, then let glove box (C) hang down.

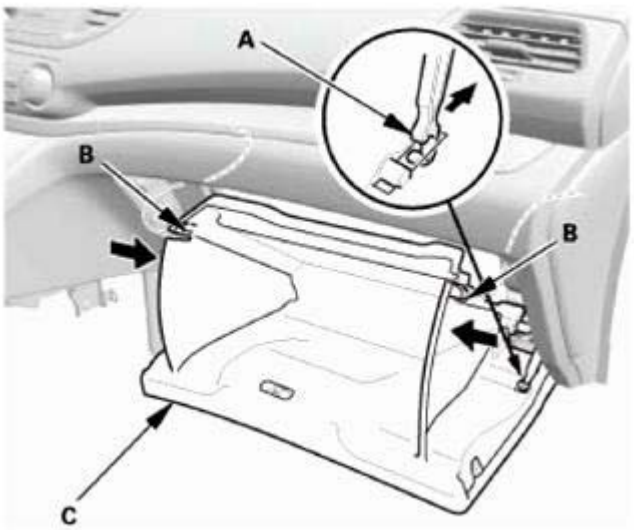

Fig. 13: Detaching Glove Box Damper Hook
Courtesy of AMERICAN HONDA MOTOR CO., INC.

3. R-134a Refrigerant Recovery/Recycling/Charging Station - Connection
    1. Connect an R-134a refrigerant recovery/recycling/charging station (A) to the high-pressure service port (B) and the low-pressure service port (C), as shown, following the equipment manufacturer's instructions.

GETtheMANUALS.org

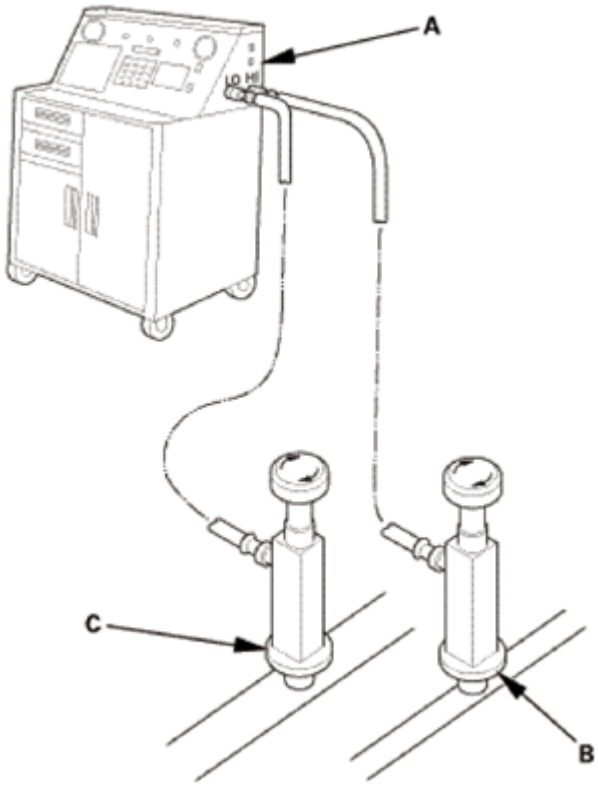

Fig. 14: Identifying Refrigerant Recovery/Recycling/Charging Station, High And Low Pressure Service Port
Courtesy of AMERICAN HONDA MOTOR CO., INC.

4. A/C Refrigerant - Recovery
    1. Recover the refrigerant from the A/C system.
    2. Measure the amount of refrigerant oil removed from the A/C system after the recovery process is completed. Be sure to put the same amount of new refrigerant oil back into the A/C system before charging.
5. Battery Terminal - Disconnection
    1. Make sure the ignition switch is in LOCK (0).
    2. Disconnect and isolate the negative cable (A) from the battery.

    NOTE: Always disconnect the negative side first.

    3. Disconnect the positive cable (B) from the battery.

GETtheMANUALS.org

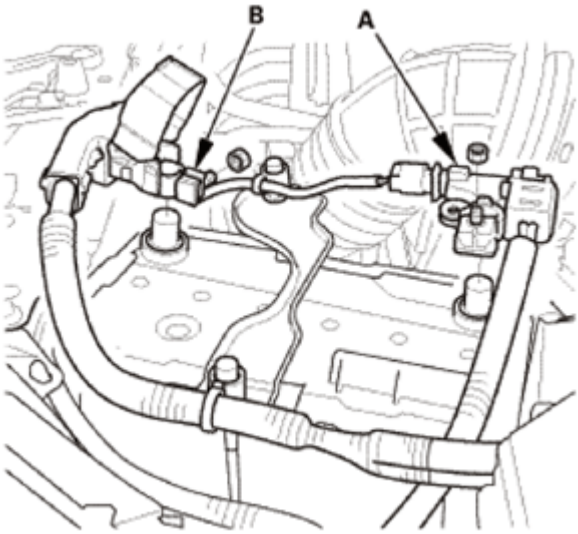

Fig. 15: Identifying Battery Positive And Negative Cable
Courtesy of AMERICAN HONDA MOTOR CO., INC.

6. Drive Belt
    1. Move the auto-tensioner (A) using the belt tension release tool in the direction of the arrow to relieve tension from the drive belt, then remove the drive belt.

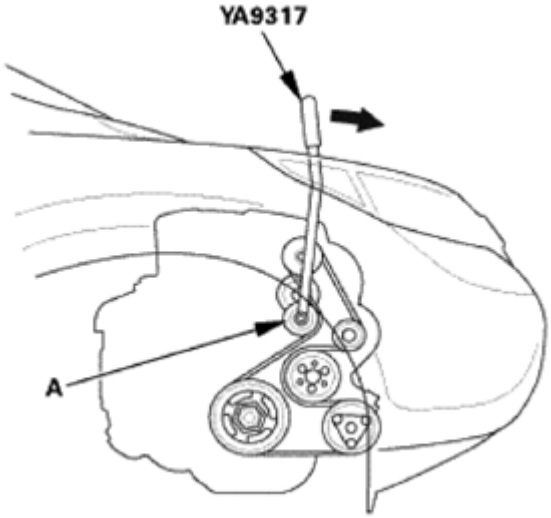

Fig. 16: Moving Auto-Tensioner Using Belt Tension Release Tool
Courtesy of AMERICAN HONDA MOTOR CO., INC.

7. Front Splash Shield
    1. Remove the bolts (A), then remove the clips (B) that secure the front inner fender and the front splash shield (C) to the body.
    2. From under the front bumper (D), remove the clips (E).
    3. From under the body, remove the clips (F), then pull out the front splash shield.

GETtheMANUALS.org

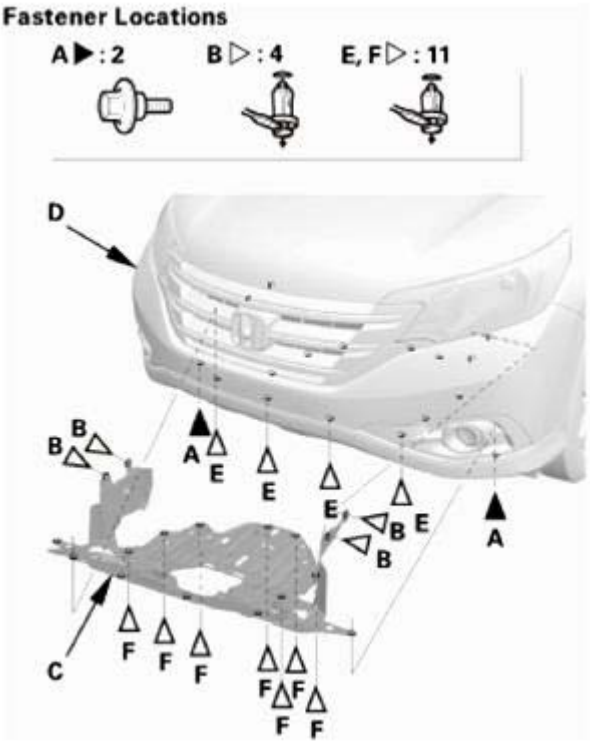

Fig. 17: Identifying Front Splash Shield, Front Bumper, Clips And Bolts
Courtesy of AMERICAN HONDA MOTOR CO., INC.

8. A/C Compressor Assembly
    1. Disconnect the A/C compressor clutch connector (A).
    2. Disconnect the suction hose (B) with a O-ring (C).

    NOTE: **Plug or cap the lines immediately after disconnecting them to avoid moisture and dust contamination.**

    3. Disconnect the discharge hose (D) with a O-ring (E).

    NOTE: **Plug or cap the lines immediately after disconnecting them to avoid moisture and dust contamination.**

GETtheMANUALS.org

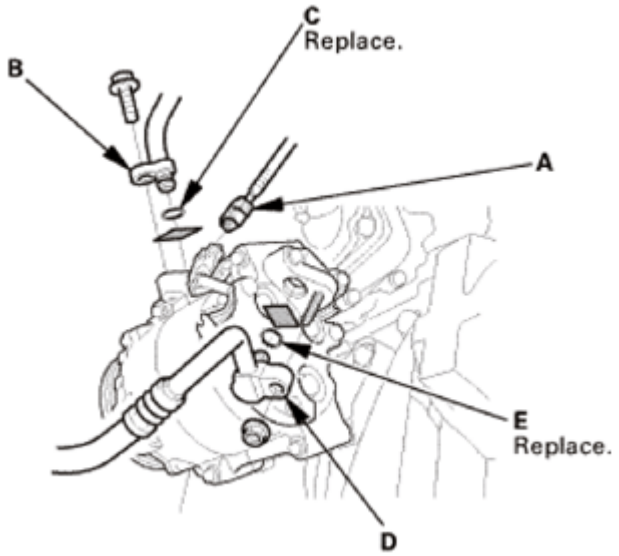

Fig. 18: Identifying A/C Compressor Clutch Connector, Suction, Discharge Hose And O-Ring
Courtesy of AMERICAN HONDA MOTOR CO., INC.

4. Remove the A/C compressor (A).

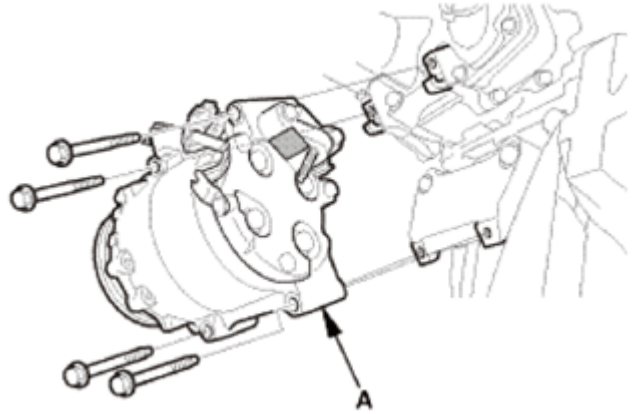

Fig. 19: Identifying A/C Compressor
Courtesy of AMERICAN HONDA MOTOR CO., INC.

INSTALLATION

CAUTION:

- **Air conditioning refrigerant or lubricant vapor can irritate your eyes, nose, or throat.**
- **Be careful when connecting service equipment.**
- **Do not breathe refrigerant or vapor.**
- **Do not operate the leak detector near flammable vapors. Its sensor operates at high temperatures, and could ignite the vapors, resulting in personal injury and/or damage to the equipment.**

GETtheMANUALS.org

NOTE:

- **If an accidental system discharge occurs, ventilate the work area before resuming service.**
- **Additional health and safety information may be obtained from the refrigerant and lubricant manufacturers.**
- **Check the system for leaks using an R-134a refrigerant leak detector with an accuracy of 14 g (0.5 oz) per year or better.**
- **Do not install an A/C compressor into a system unless you are completely sure that the system is free of contamination. Installing the A/C compressor into a contaminated system can result in premature A/C compressor failure.**
- **Inspect the A/C lines for any signs of contamination.**
- **Replace the O-rings with new ones at each fitting, and apply a thin coat of refrigerant oil before installing them. Be sure to use the correct O-rings for HFC-134a (R-134a) to avoid leakage.**
- **Use only PAG refrigerant oil for HFC-134a A/C systems.**
- **To avoid contamination, do not return the oil to the container once dispensed, and never mix it with other refrigerant oils.**
- **Immediately after using the oil, reinstall the cap on the container, and seal it to avoid moisture absorption.**
- **Do not spill the refrigerant oil on the vehicle; it may damage the paint; if the refrigerant oil contacts the paint, wash it off immediately.**

1. A/C Refrigerant Oil - Replacement

   Recommended PAG oil: SP-10

   P/N 38897-P13-A01AH: 120 mL (4 fl oz)

   It is important to have the correct amount of refrigerant oil in the A/C system to ensure proper lubrication of the A/C compressor. Too little oil damages the A/C compressor; too much oil reduces the cooling capacity of the system, and can produce high vent temperatures.

   - To avoid contamination, do not return the oil to the container once dispensed, and never mix it with other refrigerant oils.
   - Immediately after using the oil, reinstall the cap on the container, and seal it to avoid moisture absorption.
   - Do not spill the refrigerant oil on the vehicle; it may damage the paint; if it gets on the paint, wash it off immediately.

   Add the recommended refrigerant oil in the amount listed if you replace any of the following parts.

A/C condenser (including dryer desiccant).....	25 mL (5/6 fl oz)
Evaporator.....	40 mL (1 1/3 fl oz)

GETtheMANUALS.org

Line or hose.....	10 mL (1/3 fl oz)
Dryer desiccant.....	10 mL (1/3 fl oz)
Leakage repair.....	25 mL (5/6 fl oz)
A/C compressor.....	Since the oil separator is equipped inside the A/C compressor for this vehicle, oil drainage is unnecessary at the time of A/C compressor replacement.

2. A/C Compressor Assembly
   1. Install the A/C compressor (A).

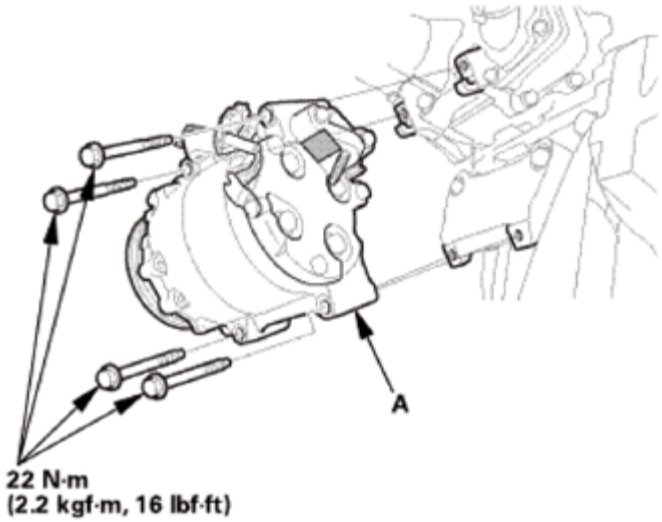

Fig. 20: Identifying A/C Compressor With Torque Specifications
Courtesy of AMERICAN HONDA MOTOR CO., INC.

   2. Remove the plugs or caps.
   3. Connect the suction hose (A) with a new O-ring (B) that is lubricated with clean refrigerant oil.
   4. Connect the discharge hose (C) with a new O-ring (D) that is lubricated with clean refrigerant oil.
   5. Connect the A/C compressor clutch connector (E).

GETtheMANUALS.org

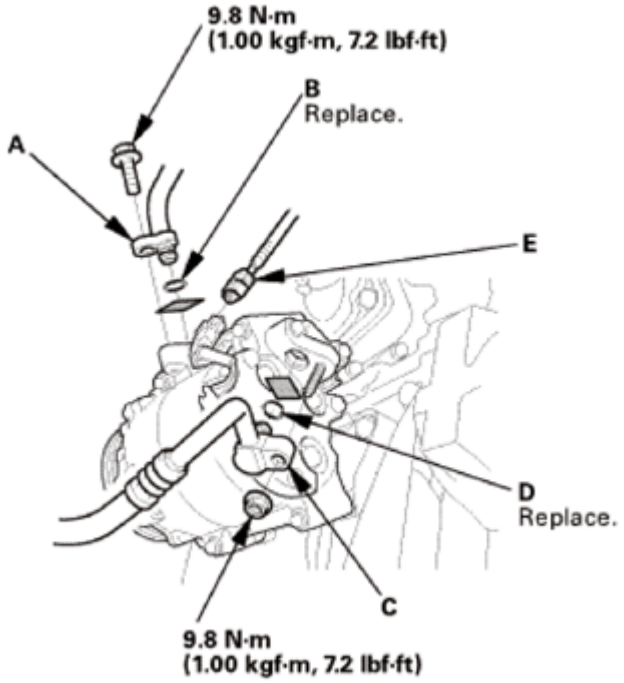

Fig. 21: Identifying A/C Compressor Clutch Connector, Suction, Discharge Hose And O-Ring With Torque Specifications
Courtesy of AMERICAN HONDA MOTOR CO., INC.

3. Front Splash Shield
    1. Install the front splash shield (A), then install the bolts (B) and the clips (C, D). Make sure the clips snap into place securely.

GETtheMANUALS.org

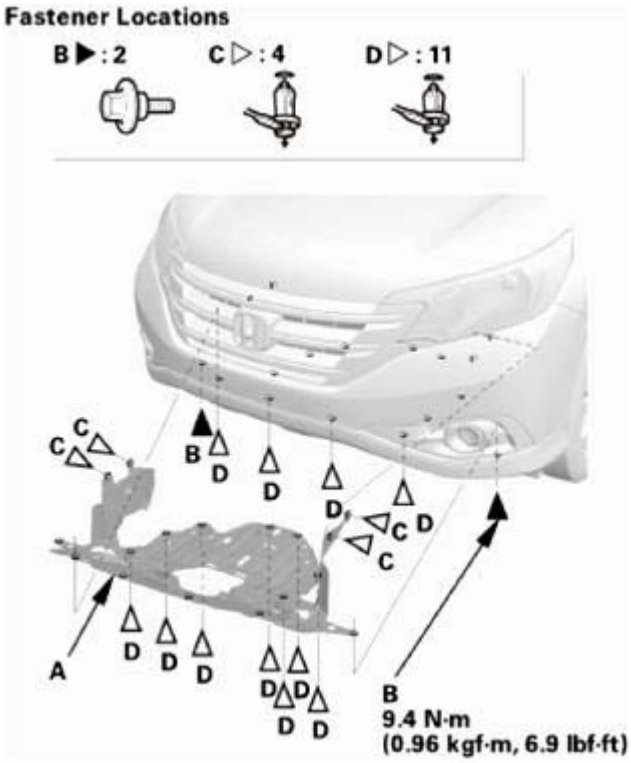

Fig. 22: Identifying Front Splash Shield, Clips And Bolts With Torque Specifications
Courtesy of AMERICAN HONDA MOTOR CO., INC.

4. Drive Belt
    1. Install the drive belt.

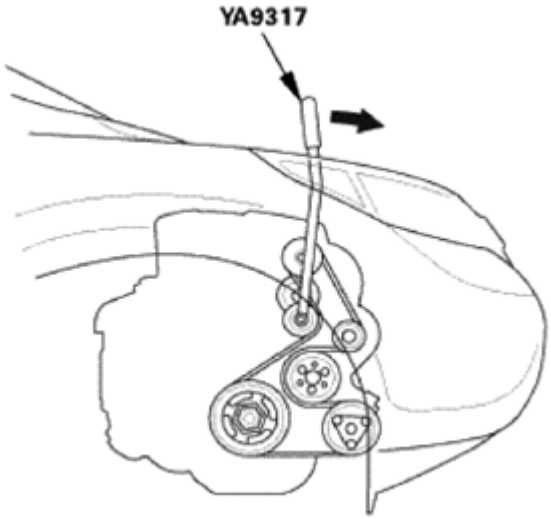

Fig. 23: Installing Drive Belt
Courtesy of AMERICAN HONDA MOTOR CO., INC.

5. Battery Terminal - Reconnection

GETtheMANUALS.org

NOTE: If the battery performance is abnormal, test the battery.

1. Clean the battery terminals.
2. Connect the positive cable (A) to the battery.

   NOTE: Always connect the positive side first.

3. Connect the negative cable (B) to the battery.
4. Apply multipurpose grease to the terminals to prevent corrosion.

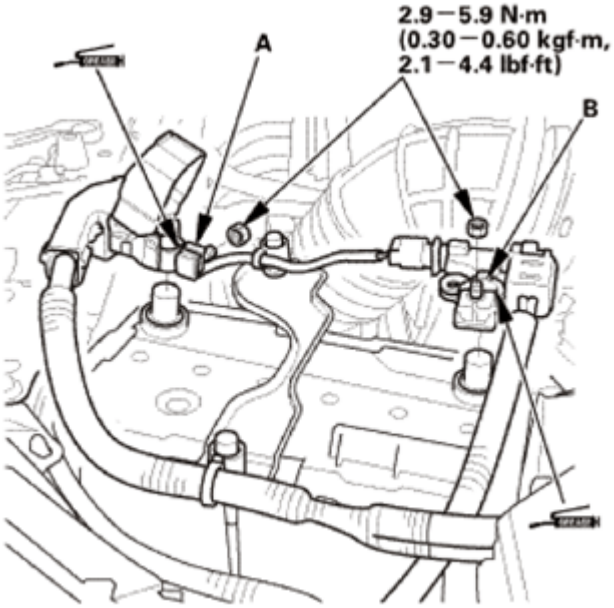

Fig. 24: Identifying Battery Positive And Negative Cable With Torque Specifications
Courtesy of AMERICAN HONDA MOTOR CO., INC.

6. R-134a Refrigerant Recovery/Recycling/Charging Station - Connection
   1. Connect an R-134a refrigerant recovery/recycling/charging station (A) to the high-pressure service port (B) and the low-pressure service port (C), as shown, following the equipment manufacturer's instructions.

GETtheMANUALS.org

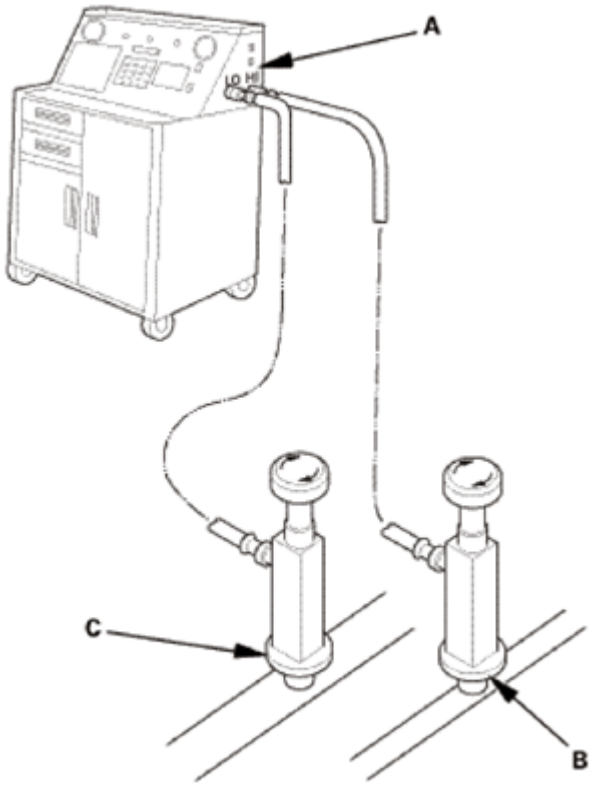

Fig. 25: Identifying Refrigerant Recovery/Recycling/Charging Station, High And Low Pressure Service Port
Courtesy of AMERICAN HONDA MOTOR CO., INC.

7. A/C System Evacuation
    1. Evacuate the system. The vacuum pump should run for a minimum of 30 minutes to eliminate all moisture from the system. When the suction gauge reads -93.3 kPa (-700 mmHg, - 27.55 inHg) for at least 30 minutes, close all valves, and turn off the vacuum pump.
    2. If the suction gauge dose not reach approximately -93.3 kPa (-700 mmHg, -27.55 inHg) in 15 minutes, there is probably a large leak in the system. Partially charge the system, and check for leaks.
8. A/C Refrigerant - Charging
    1. Charge the system with the specified amount of R-134a refrigerant. Do not overcharge the system; the A/C compressor will be damaged.

       Select the appropriate units of measure for your refrigerant charging station.

       Refrigerant Capacity:

       385 to 435 g

       13.6 to 15.4 oz

       0.385 to 0.435 kg

GETtheMANUALS.org

0.849 to 0.959 lbs

9. A/C Refrigerant - Leak Check

Leak Detector Usage Tips (Refer to the Operator's Manual for complete operating instructions)

- Position the vehicle in a wind-free work area. This will aid in detecting small leaks.
- When using the leak detector for the first time, allow it to warm up for 2 minutes with the probe in a clean atmosphere. This lets the temperature sensor in the detector stabilize.
- The calibration check should be done in the "Search 2" mode. Once that is done, the other check modes do not need calibrating.
- When leak checking through the HVAC module drain hose, avoid drawing water into the probe. Water can damage the internal pump and sensor.
- Avoid creasing the flexible probe extension. Creases can restrict air flow and give false readings.
- Because the detector recalibrates itself for ambient gases, it may be necessary to move the detector away from the leak to clear the sensor. Once the sensor has cleared, recheck the suspected leak.
- When removing the clear probe tip, be careful not to lose the flow ball.
- R-134a is heavier than air; always check below and to the sides of all potential leak sources.
- Halogen leak detectors are sensitive to chemicals: windshield washing solutions, solvents/cleaners, and some vehicle adhesives. Keep these chemicals out of the area when doing leak detection.

Fluorescent Dye Usage Tips

- Use only Tracer-Stick single dose fluorescent dye capsules from Tracerline®. Other dyes contain solvents that may contaminate the refrigerant oil, leading to component failure.
- Adding excessive amounts of dye can damage the A/C compressor.
- PAG oil is water soluble, so condensation on the evaporator core or the refrigerant lines may wash the PAG oil and fluorescent dye away from the actual leak. Condensation may also carry dye through the HVAC module drain.
- After checking and repairing leaks, thoroughly clean any residual dye from the areas where leaks were found. Use GLO-AWAY dye cleaner, from Tracerline®, and hot water to remove the dye (follow the instructions on the bottle). Residual dye stains can cause misdiagnosis of any future A/C system leaks.
- If any refrigerant dye contacts an exterior paint surface, remove it by doing this:
  - Carefully wash the affected surfaces to remove any dirt, and to prevent paint scratching.
  - Mix water and isopropyl alcohol in a 50/50 mixture. Soak a soft 100 % cotton towel with the water/alcohol mixture, and place the cloth on the affected areas to remove the dye.
  - After removing the dye with the water/alcohol-soaked cloth, carefully wash the affected areas, and check that there is no remaining dye.

1. With the engine OFF, use a halogen leak detector first to detect the leak source. Follow a continuous path in order to ensure that you will not miss any possible leaks. Test the following areas of the system for leaks:

GETtheMANUALS.org

Possible Leak Area	Diagnostic Procedure with the Leak Detector	Notes
Service ports	• Check the service ports with caps installed • If the detector "sniffs" a leak, use fluorescent dye to confirm it	When capping the service ports, ensure that the seals on the port caps are in place, and that the caps are tight. The caps are used as the final seals in the system
A/C condenser	If the detector "sniffs" a leak, use fluorescent dye to confirm it	• Check for joints or connections coated with oily dust • Check for damaged and corroded areas • Check all fittings, couplings, brazed/welded areas and areas around attachment points • Move the probe slowly (1 in/second or less), and keep it within 1/4 in of the component being checked. This maximizes the chance of detecting a leak • If you detect a leak, blow compressed air over the area, then recheck for leaks. For large leaks, clearing the area with compressed air may help you pinpoint the leak source
Evaporator	• Check at the evaporator drain hose • Check at the passenger's side vent and turn the blower on at low speed	
A/C lines	• Wiggle the rubber hoses when checking crimped metal ends • If the detector "sniffs" a leak, use fluorescent dye to confirm it	• Check all fittings, couplings, pressure switches, brazed/welded areas, and areas around attachment points on A/C lines and components • Check for damaged and corroded areas • Move the probe slowly (1 in/second or less), and keep it within 1/4 in of the component being checked. This maximizes the chance of detecting a leak

2. Close the quick coupler valves, then disconnect the quick couplers from the vehicle service ports.
3. Attach the universal connect set, from the Optimax Jr. Leak Detection Kit, to the service valve fitting. Close the control valve (the black knob on the connect set).
4. Attach the charging station low pressure hose quick coupler to the service valve fitting, and open the quick coupler valve. Evacuate the connect set using the charging station vacuum pump, then close the quick coupler valve.
5. Detach the universal connect set, and install a Tracer-Stick® dye capsule between the connect set and the service valve fitting (see the manufacturer's instructions for more detail).

GETtheMANUALS.org

6. Attach the quick coupler on the universal connect set to the low pressure service port on the vehicle. Open the charging station low pressure hose quick coupler valve, but do not open the control valve.
7. Start the engine, and set the A/C system to maximum cooling. Open the control valve to let refrigerant and the dye enter the A/C system through the low pressure service port. Close the control valve when the Tracer-Stick® dye capsule is empty.
8. Run the engine and A/C system for 15 minutes to thoroughly circulate the dye. Then shut the engine off, and inspect the following areas of the system for leaks:

NOTE:

- **Check for leaks in a dark work area, and use the UV light and the special glasses from the leak check kit. Other UV lights may not work well with the Tracer-Stick® dye.**
- **Small leaks may take up to 1 week of vehicle operation (with normal A/C use) to become visible.**

Possible Leak Area	Diagnostic Procedure with Fluorescent Dye
Service ports	If a leak is found, replace the cap/o-ring seal or A/C line as needed
A/C lines	• Use a permanent marker pen to circle the leak area • If a leak is found, remove and replace the A/C line
A/C condenser	• If a leak is found, remove the A/C condenser • Determine whether leak is in the A/C condenser or the receiver/dryer • Use a permanent marker pen to circle the leak area • Replace either the receiver/dryer, or the A/C condenser, depending upon which is leaking
A/C compressor	• Check for leaks at all of the A/C compressor joints, the clutch center, the A/C compressor front housing bolts, and the scroll bolts on the back of the A/C compressor • If a leak is found, use a permanent marker pen to circle the leak area • If the A/C compressor relief valve appears to be leaking, determine whether the leak is coming from the relief valve, or the joint between the A/C compressor casing and the valve. If the leak is from the relief valve, check the A/C system pressures, and refer to the pressure test table in the A/C system test. If the leak is from the casing/valve joint, replace the A/C compressor relief valve • If the leak is coming from the suction hose and/or discharge hose fittings on the A/C compressor, clean the A/C fittings and replace the suction/discharge fitting O-rings • For all other A/C compressor leaks, remove and replace the A/C compressor
	• Start checking for evaporator leaks by illuminating the evaporator drain tube area

GETtheMANUALS.org

Evaporator	• If a leak is found, remove the evaporator core • Determine whether leak is from evaporator or expansion valve • Use a permanent marker pen to circle leak area • Replace the expansion valve, or the evaporator core, depending upon which is leaking

10. A/C System - Test
    1. Insert a thermometer (A) in the center vent.
    2. Place a hygro-thermometer (B) near the blower unit's recirculation inlet duct.
    3. Test conditions:
        - Move the vehicle out of direct sunlight and let it cool down to the surrounding (ambient) temperature. If necessary, wash the vehicle to cool it down more quickly.
        - The blower intake temperature must be at least 68°F (20°C).
        - Open the hood.
        - Open the front doors.
        - Start the engine.
        - Set the temperature control dial or temperature control button to MAX COOL, the mode control button to VENT, and the recirculation control button to RECIRCULATE.
        - Turn the A/C button on and the fan control dial or fan control button to Max.
        - Run the engine at 1, 500 rpm.
        - No driver or passengers in vehicle.

Fig. 26: Checking Delivery Temperature From Thermometer In Center Vent

GETtheMANUALS.org

4. Inspect the A/C components for the following conditions:
   - A/C compressor clutch not engaged.
   - Abnormal frost areas.
   - Unusual noises.

   If you observe any of these conditions, refer to the Symptom Troubleshooting Index.

5. After running the air conditioning for 10 minutes under the above test conditions, read the delivery temperature from the thermometer in the center vent, the intake temperature near the blower unit, and the discharge (high) and suction (low) pressures on the A/C gauges.
6. To complete the vent (delivery)/intake temperature chart:
   - Mark the vent (delivery) temperature on the vertical line.
   - Mark the intake temperature on the bottom line.
   - Draw a vertical line from the intake temperature mark.
   - Draw a horizontal line from the vent (delivery) temperature mark until it intersects the vertical line.

NOTE: **The vent temperature and intake temperature should intersect in the shaded area. Any measurements outside the line may indicate the need for further inspection.**

GETtheMANUALS.org

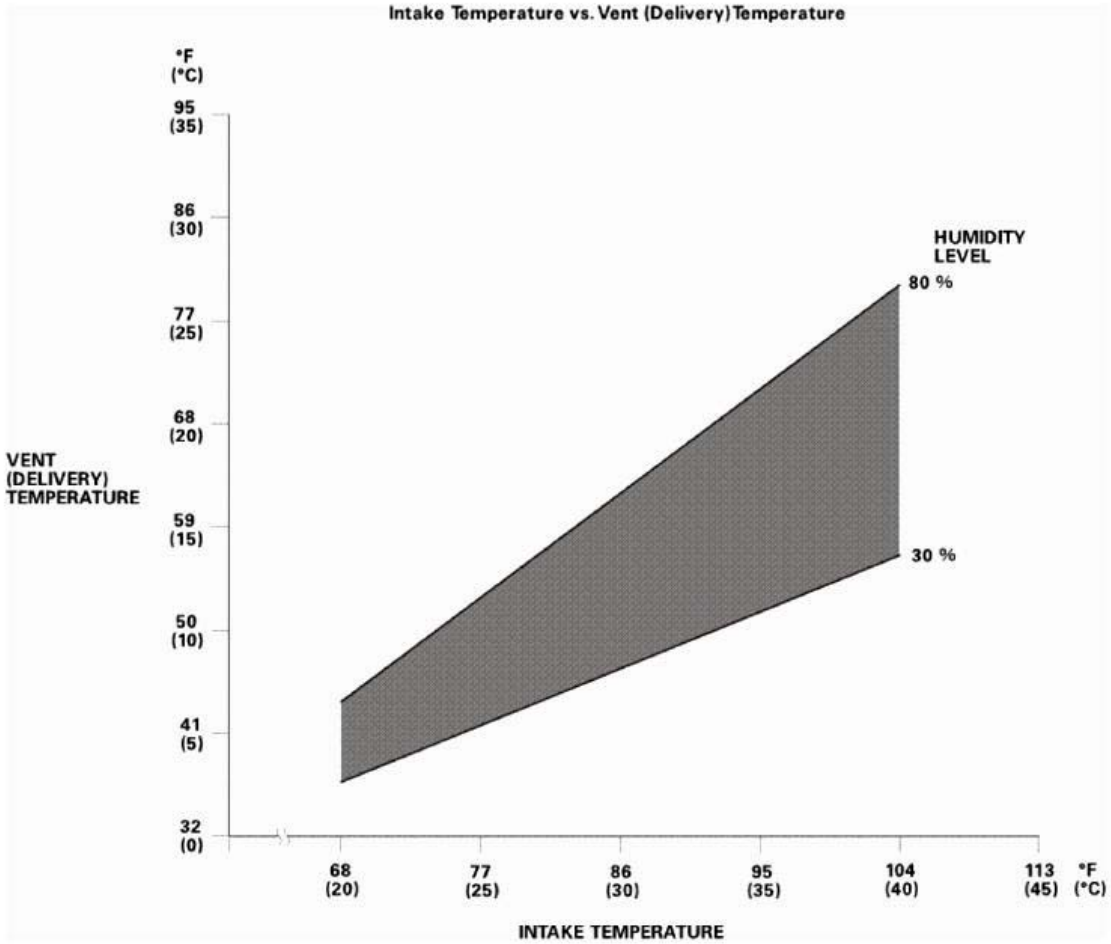

<u>Fig. 27: Intake Temperature Versus Vent (Delivery) Temperature Graph</u>
Courtesy of AMERICAN HONDA MOTOR CO., INC.

7. To complete the high side (discharge) pressure/intake temperature chart:
   - Mark the high side (discharge) pressure on the vertical line.
   - Mark the intake temperature on the bottom line.
   - Draw a vertical line from the intake temperature mark.
   - Draw a horizontal line from the high side (discharge) pressure mark until it intersects the vertical line.

NOTE: **The high side pressure and intake temperature should intersect in the shaded area. Any measurements outside the line may indicate the need for further inspection.**

GETtheMANUALS.org

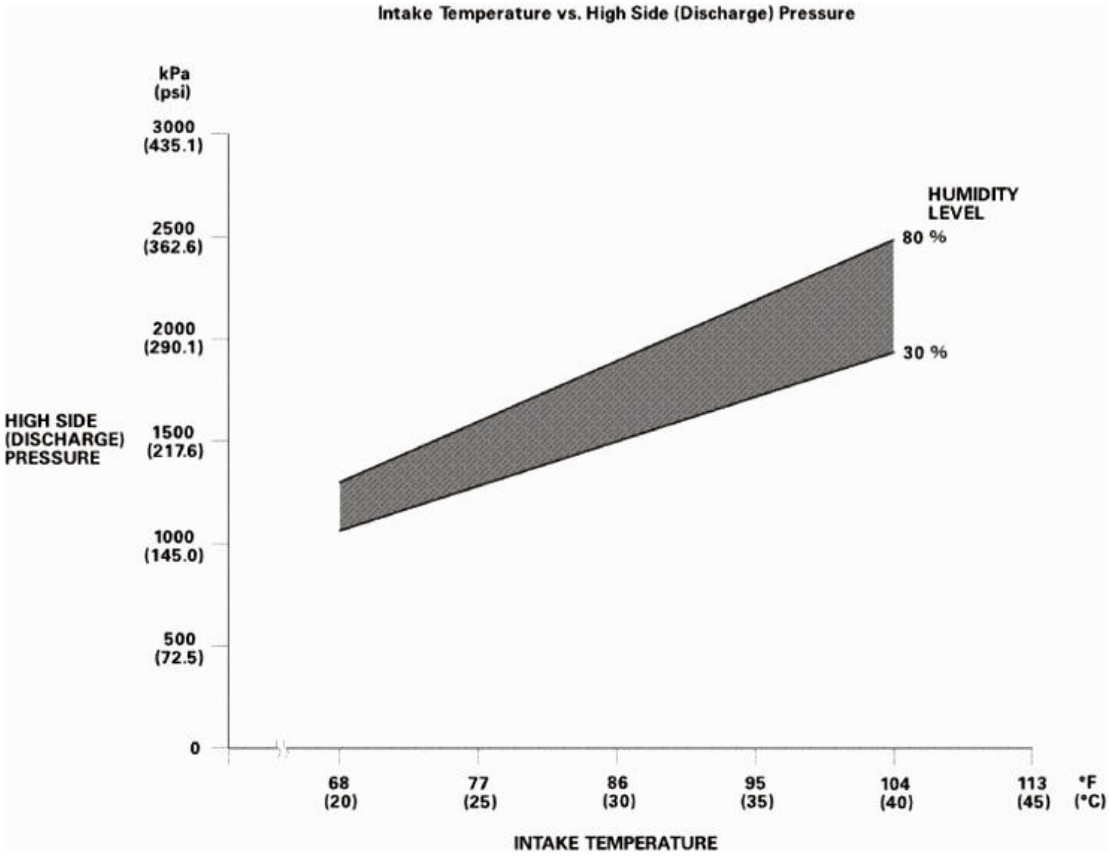

Fig. 28: Intake Temperature Versus High Side (Discharge) Pressure Graph
Courtesy of AMERICAN HONDA MOTOR CO., INC.

8. To complete the low side (suction) pressure/intake temperature chart:
   - Mark the low side (suction) pressure along the vertical line.
   - Mark the intake temperature along the bottom line.
   - Draw a vertical line from the intake temperature mark.
   - Draw a horizontal line from the low side (suction) pressure mark until it intersects the vertical line.

NOTE: **The low side pressure and intake temperature should intersect in the shaded area. Any measurements outside the line may indicate the need for further inspection.**

GETtheMANUALS.org

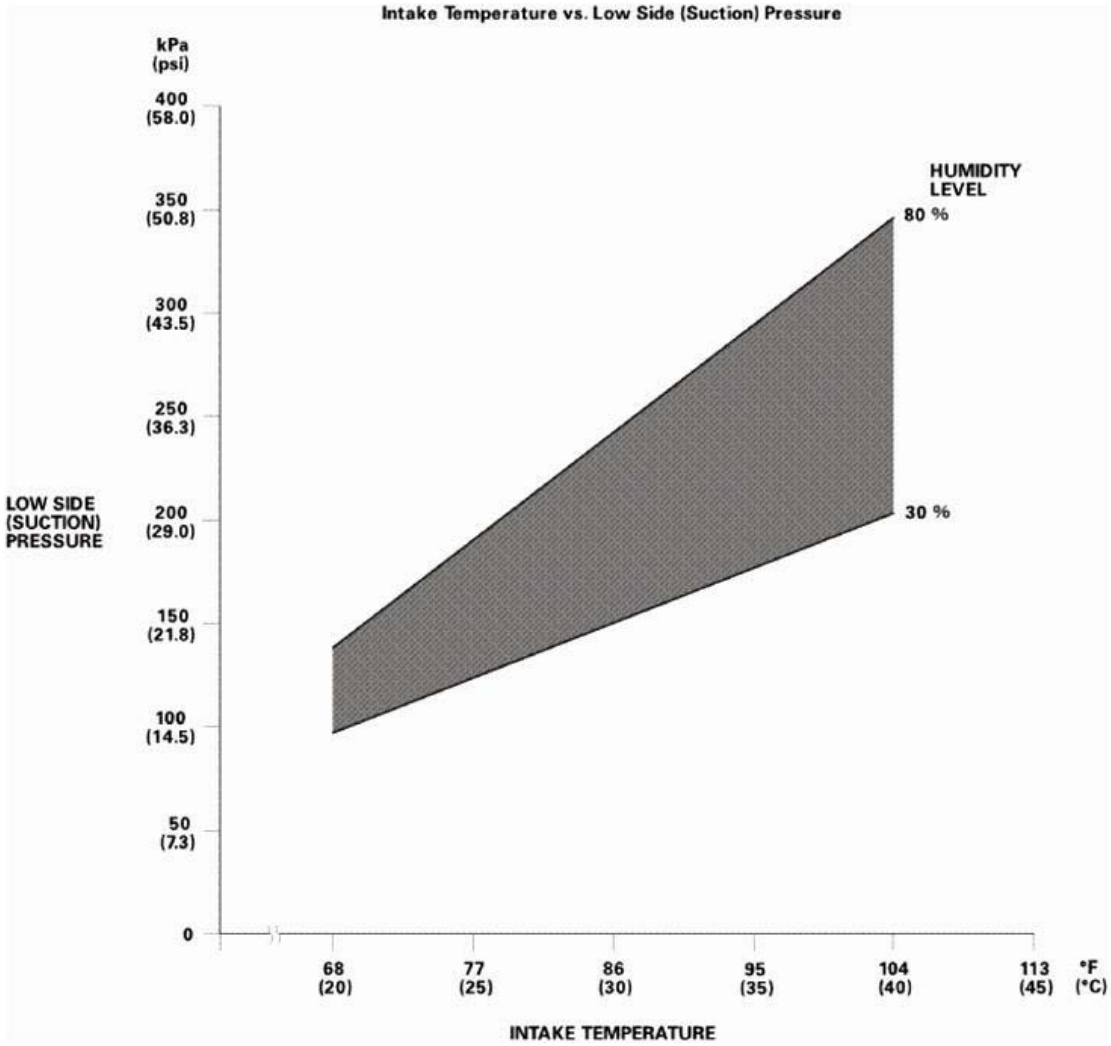

Fig. 29: Intake Temperature Versus Low Side (Suction) Pressure Graph
Courtesy of AMERICAN HONDA MOTOR CO., INC.

11. Glove Box - Move
    1. Install the glove box (A). Make sure the glove box stops (B) snap into place securely.
    2. Install the glove box damper hook (C).

GETtheMANUALS.org

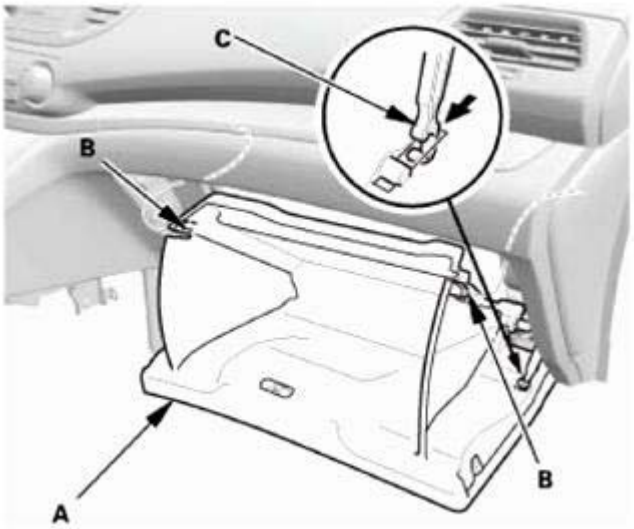

Fig. 30: Installing Glove Box Damper Hook
Courtesy of AMERICAN HONDA MOTOR CO., INC.

A/C COMPRESSOR THERMAL PROTECTOR REMOVAL AND INSTALLATION

REMOVAL

1. Vehicle Lift
    1. Raise the vehicle on a lift, and make sure it is securely supported.
2. Front Splash Shield
    1. Remove the bolts (A), then remove the clips (B) that secure the front inner fender and the front splash shield (C) to the body.
    2. From under the front bumper (D), remove the clips (E).
    3. From under the body, remove the clips (F), then pull out the front splash shield.

GETtheMANUALS.org

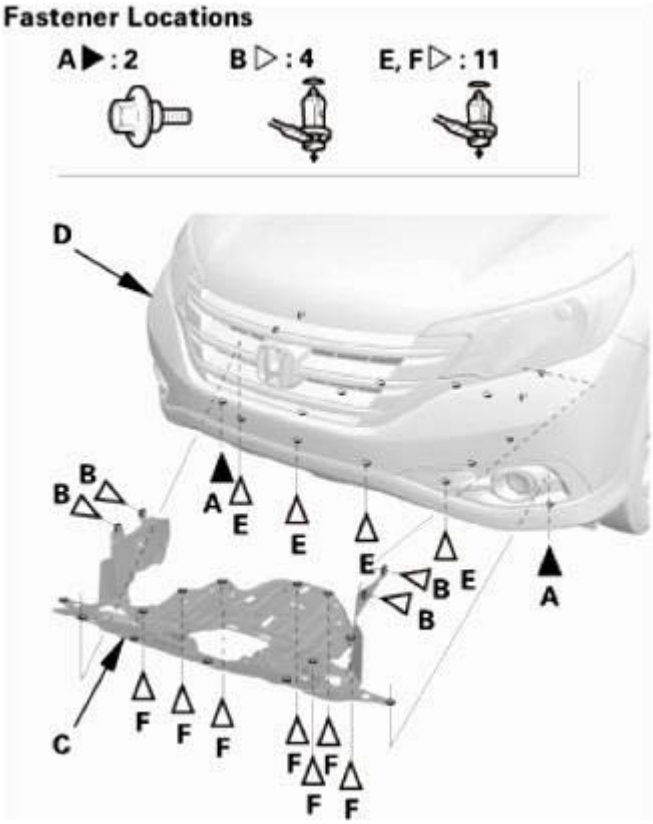

Fig. 31: Identifying Front Splash Shield, Front Bumper, Clips And Bolts
Courtesy of AMERICAN HONDA MOTOR CO., INC.

3. A/C Compressor Thermal Protector
    1. Disconnect the A/C compressor clutch connector (A).
    2. Remove the holders (B).
    3. Disconnect the field coil connector (C).
    4. Remove the thermal protector (D).

GETtheMANUALS.org

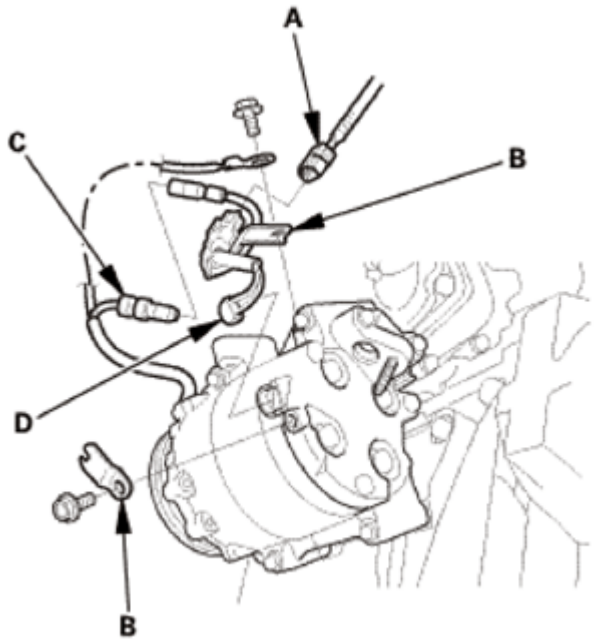

Fig. 32: Identifying A/C Compressor Clutch Connector, Field Coil Connector, Thermal Protector And Holder
Courtesy of AMERICAN HONDA MOTOR CO., INC.

INSTALLATION

1. A/C Compressor Thermal Protector
    1. Replace the thermal protector (A) with a new one, and apply silicone grease (B) to the bottom of the thermal protector.

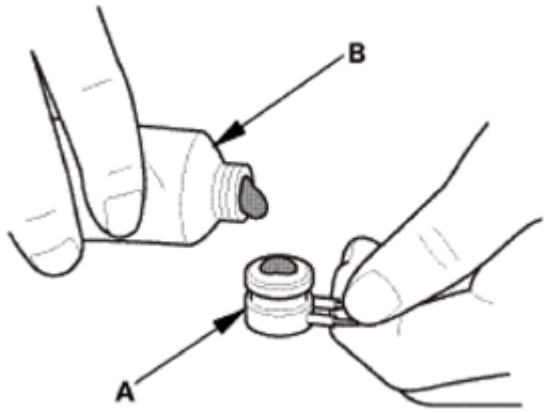

Fig. 33: Applying Grease At Bottom Of Thermal Protector
Courtesy of AMERICAN HONDA MOTOR CO., INC.

2. Install the thermal protector (A).
3. Connect the field coil connector (B).
4. Install the holders (C).

GETtheMANUALS.org

5. Connect the A/C compressor clutch connector (D).

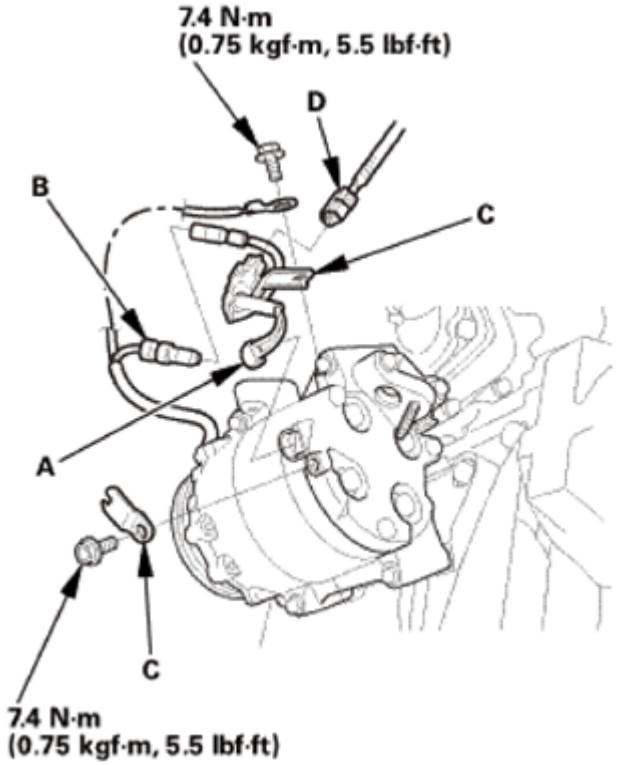

Fig. 34: Identifying A/C Compressor Clutch Connector, Field Coil Connector, Thermal Protector And Holder With Torque Specifications
Courtesy of AMERICAN HONDA MOTOR CO., INC.

2. Front Splash Shield
    1. Install the front splash shield (A), then install the bolts (B) and the clips (C, D). Make sure the clips snap into place securely.

GETtheMANUALS.org

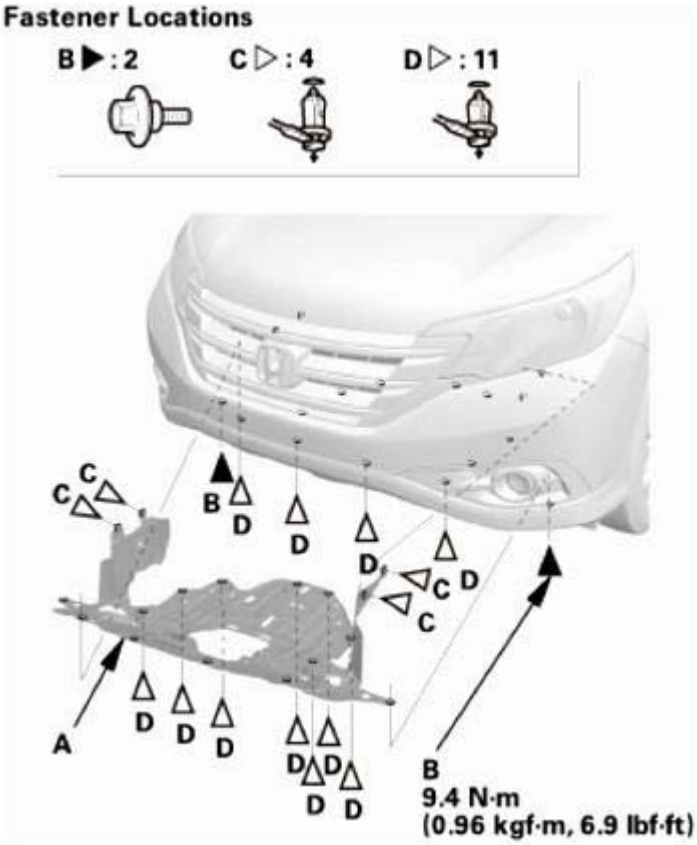

Fig. 35: Identifying Front Splash Shield, Clips And Bolts With Torque Specifications
Courtesy of AMERICAN HONDA MOTOR CO., INC.

A/C CONDENSER FAN MOTOR REMOVAL AND INSTALLATION

REMOVAL

1. Front Grille
    1. Apply protective tape (A) to the front grille lower trim (B).

GETtheMANUALS.org

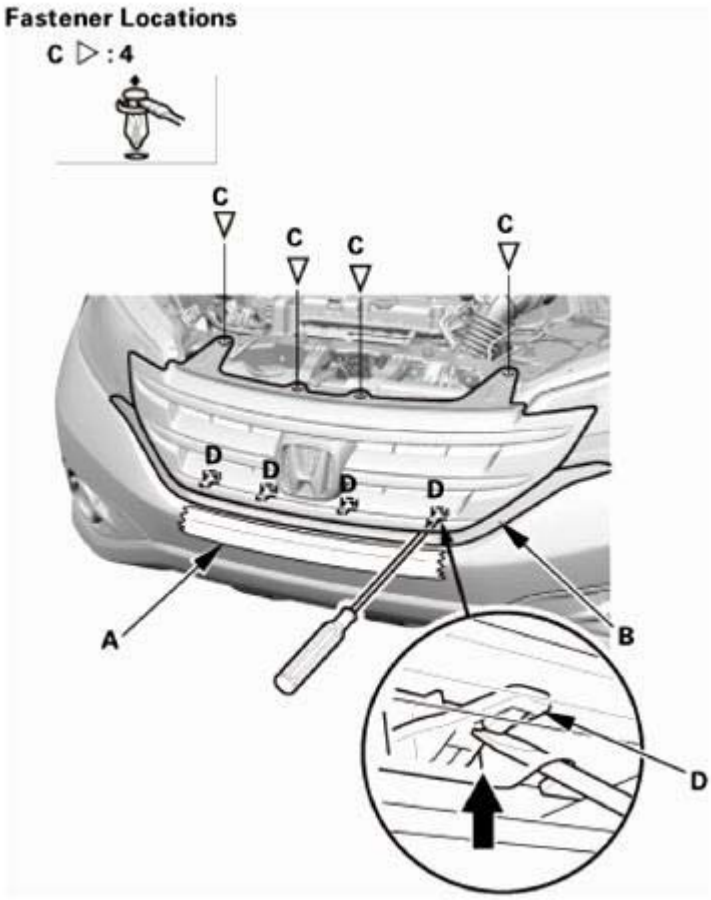

Fig. 36: Applying Protective Tape To Front Grille Lower Trim
Courtesy of AMERICAN HONDA MOTOR CO., INC.

2. Remove the clips (C) and detach the hooks (D).
3. Insert a shop towel (A) between the front grille (B) and the front grille lower trim (C).

GETtheMANUALS.org

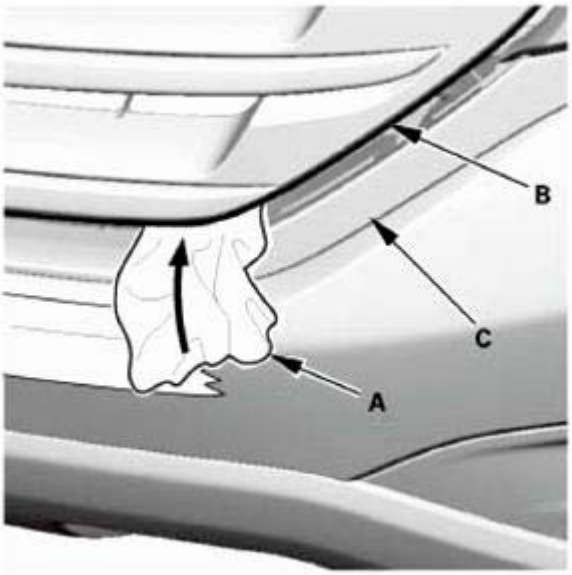

Fig. 37: Inserting Shop Towel Between Front Grille And Front Grille Lower Trim
Courtesy of AMERICAN HONDA MOTOR CO., INC.

4. Insert a flat-tip screwdriver (A) into the opening at the front grille (B), then turn the screwdriver to detach the clip (C).

NOTE: Repeat this procedure on the opposite side.

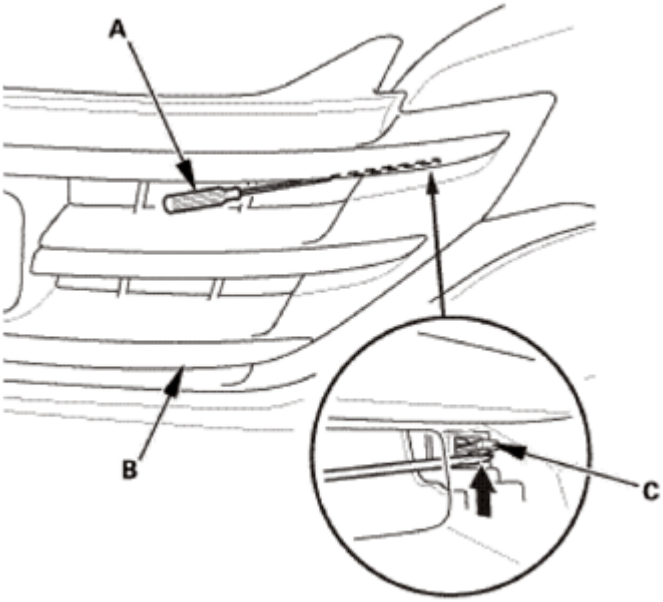

Fig. 38: Inserting Flat-Tip Screwdriver Into Opening At Front Grille
Courtesy of AMERICAN HONDA MOTOR CO., INC.

5. Remove the front grille (A).

GETtheMANUALS.org

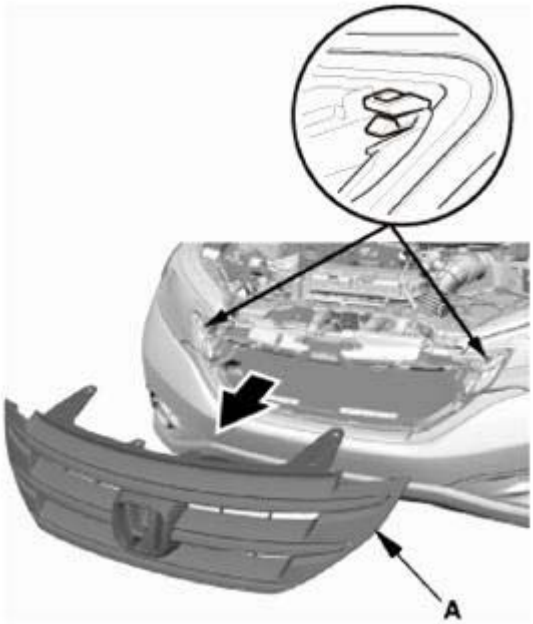

Fig. 39: Removing Front Grille
Courtesy of AMERICAN HONDA MOTOR CO., INC.

2. Front Bumper Upper Duct
    1. Remove the clips (A), then remove the front bumper upper duct (B).

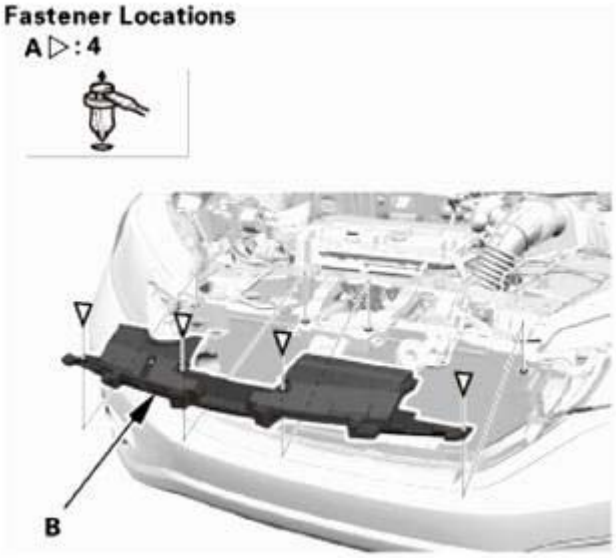

Fig. 40: Identifying Front Bumper Upper Duct And Clips
Courtesy of AMERICAN HONDA MOTOR CO., INC.

3. Front Grille Bracket
    1. Remove the clips (A), then remove the front grille bracket (B).

GETtheMANUALS.org

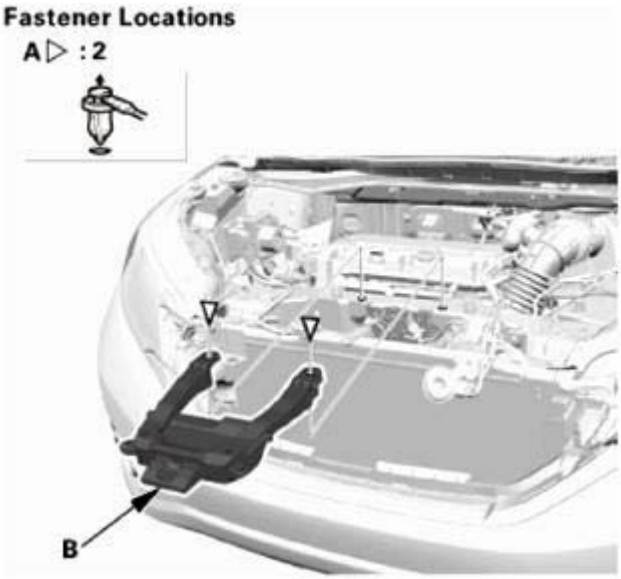

Fig. 41: Identifying Front Grille Bracket And Screws
Courtesy of AMERICAN HONDA MOTOR CO., INC.

4. Horn and Bracket Assembly
    1. Disconnect the connector.
    2. Remove the horn (A) and the bracket (B) as an assembly.

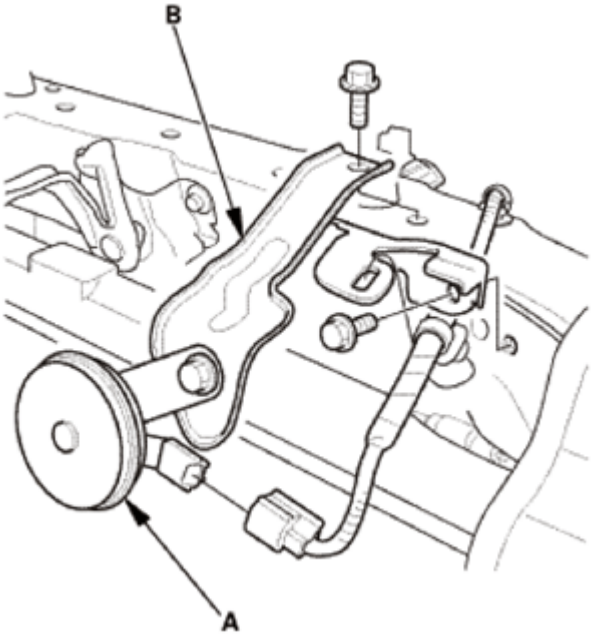

Fig. 42: Identifying Horn And Bracket
Courtesy of AMERICAN HONDA MOTOR CO., INC.

5. Hood Latch

GETtheMANUALS.org

1. Remove the bolts (A), then remove the hood latch (B) from the body. Disconnect the hood opener cable (C) from the latch.
2. Disconnect the connector (D).

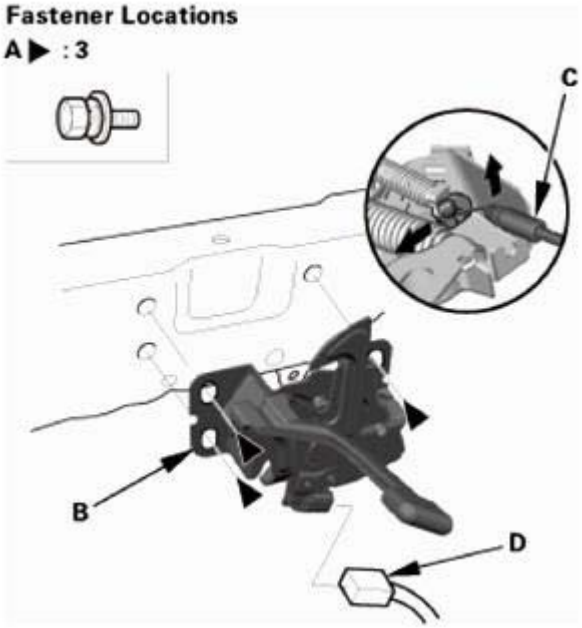

Fig. 43: Disconnecting Hood Opener Cable From Latch
Courtesy of AMERICAN HONDA MOTOR CO., INC.

6. Radiator Mounting Bracket, Upper Both
    1. Remove the radiator mount upper brackets.

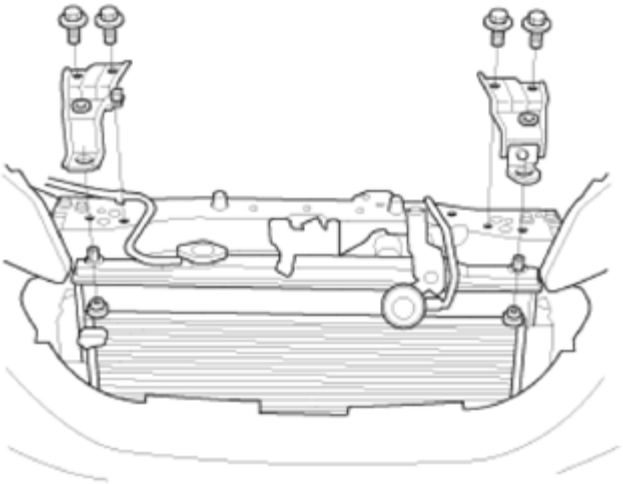

Fig. 44: Identifying Radiator Mount Upper Brackets Assembly
Courtesy of AMERICAN HONDA MOTOR CO., INC.

7. A/C Condenser Fan Shroud Assembly

GETtheMANUALS.org

1. Remove the A/C condenser fan shroud assembly.

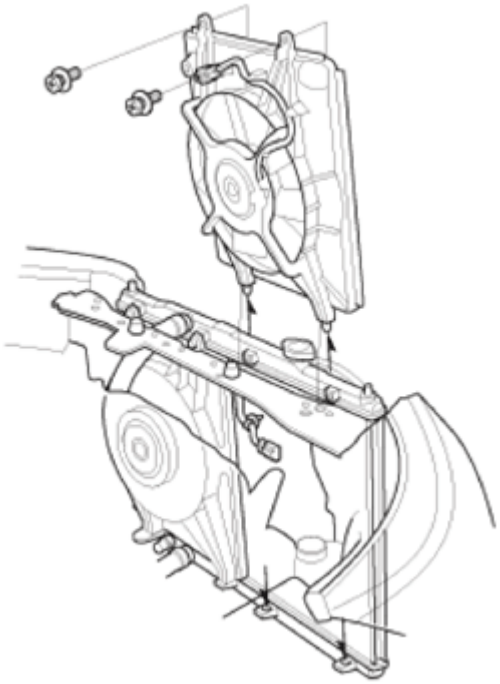

Fig. 45: Identifying A/C Condenser Fan Shroud Assembly
Courtesy of AMERICAN HONDA MOTOR CO., INC.

8. A/C Condenser Fan
    1. Remove the A/C condenser fan (A) from the A/C condenser fan motor (B).

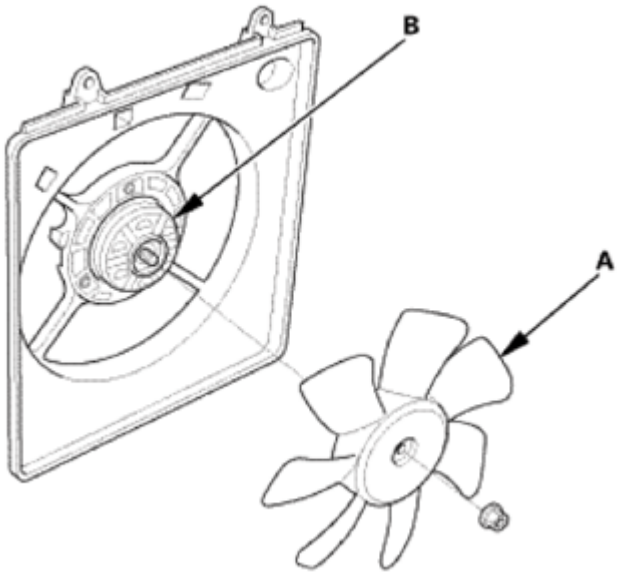

Fig. 46: Identifying A/C Condenser Fan And Motor
Courtesy of AMERICAN HONDA MOTOR CO., INC.

GETtheMANUALS.org

9. A/C Condenser Fan Motor
    1. Remove the A/C condenser fan motor (A) from the A/C condenser fan shroud (B).

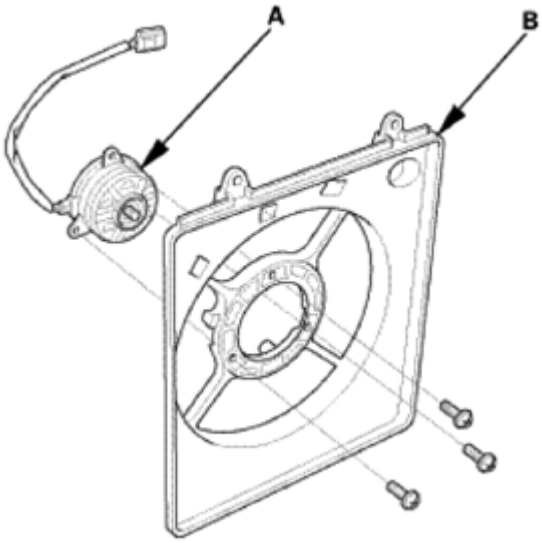

Fig. 47: Identifying A/C Condenser Fan Motor And Shroud
Courtesy of AMERICAN HONDA MOTOR CO., INC.

INSTALLATION

1. A/C Condenser Fan Motor
    1. Install the A/C condenser fan motor (A) to the A/C condenser fan shroud (B).

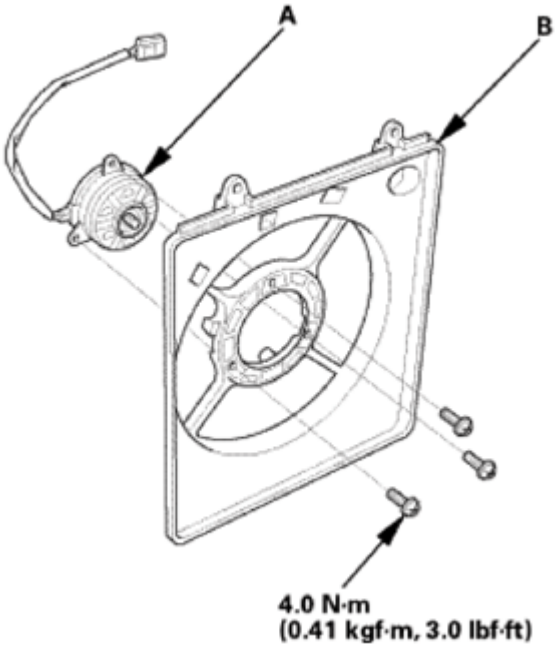

Fig. 48: Identifying A/C Condenser Fan Motor And Shroud With Torque Specifications

GETtheMANUALS.org

Courtesy of AMERICAN HONDA MOTOR CO., INC.

2. A/C Condenser Fan
    1. Install the A/C condenser fan (A) to the A/C condenser fan motor (B).

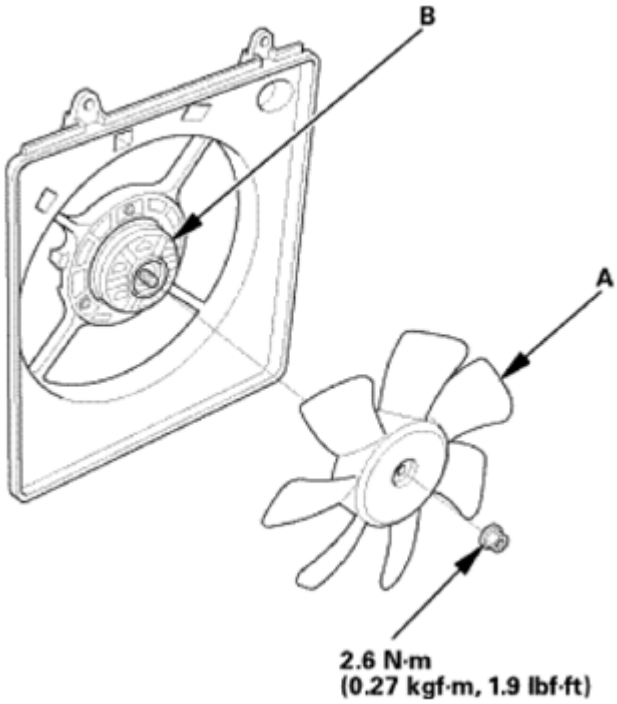

Fig. 49: Identifying A/C Condenser Fan And Motor With Torque Specifications
Courtesy of AMERICAN HONDA MOTOR CO., INC.

3. A/C Condenser Fan Shroud Assembly
    1. Install the A/C condenser fan shroud assembly.

GETtheMANUALS.org

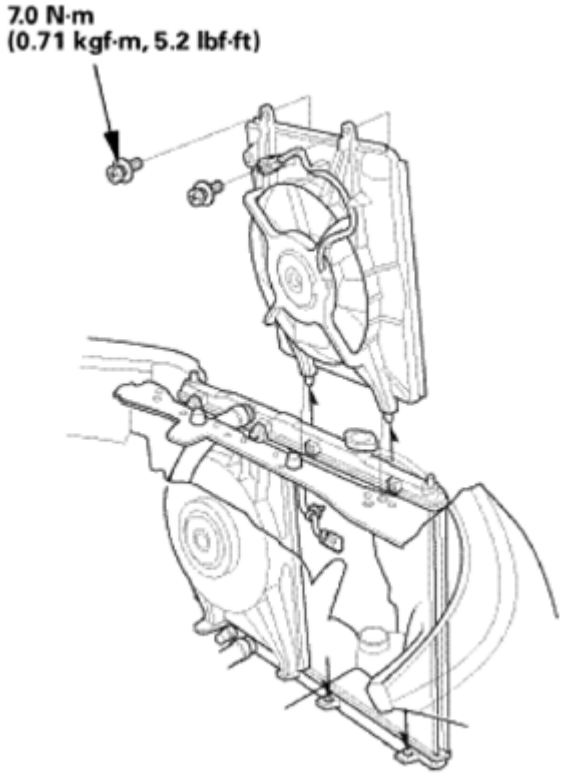

Fig. 50: Identifying A/C Condenser Fan Shroud Assembly With Torque Specifications
Courtesy of AMERICAN HONDA MOTOR CO., INC.

4. Radiator Mounting Bracket, Upper Both
    1. Install the radiator mount upper brackets.

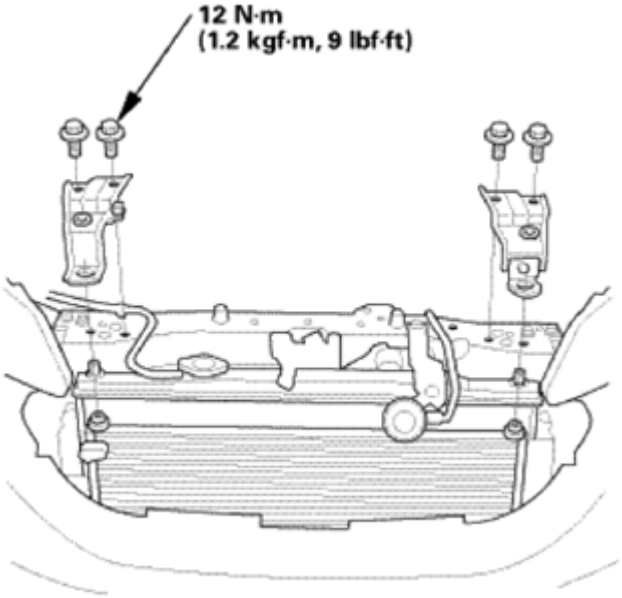

Fig. 51: Identifying Radiator Mounting Bracket Assembly With Torque Specifications

GETtheMANUALS.org

Courtesy of AMERICAN HONDA MOTOR CO., INC.

5. Hood Latch

NOTE: Apply multipurpose grease to the hood latch as indicated by the arrows.

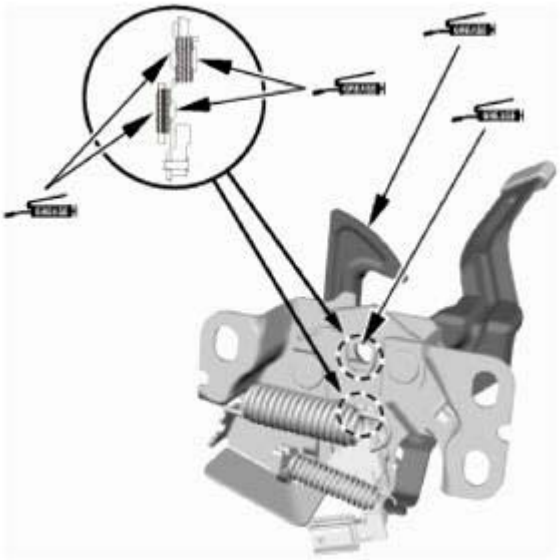

Fig. 52: Identifying Hood Latch Grease Applying Area
Courtesy of AMERICAN HONDA MOTOR CO., INC.

1. Connect the connector (A).
2. Connect the hood opener cable (B).
3. Install the hood latch (C), then install the bolts (D).

GETtheMANUALS.org

Fig. 53: Connecting Hood Opener Cable
Courtesy of AMERICAN HONDA MOTOR CO., INC.

6. Horn and Bracket Assembly
    1. Install the horn (A) and the bracket (B) as an assembly.
    2. Connect the connector.

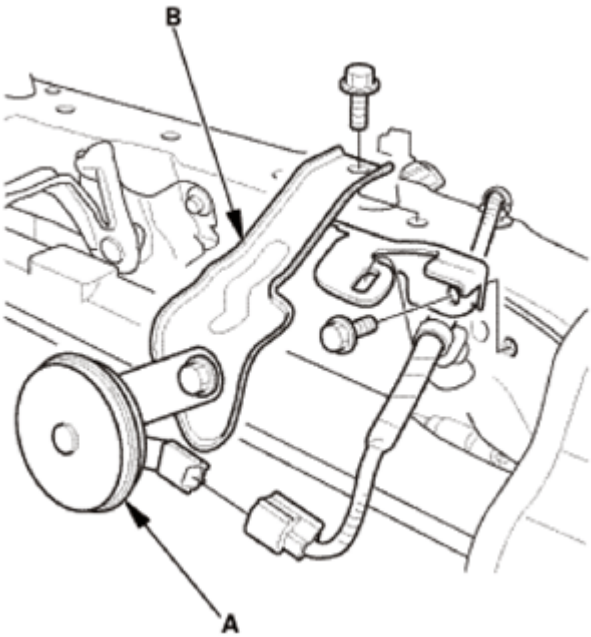

Fig. 54: Identifying Horn And Bracket
Courtesy of AMERICAN HONDA MOTOR CO., INC.

GETtheMANUALS.org

7. Front Grille Bracket
    1. Install the front grille bracket (A). Make sure the clips (B) snap into place securely.

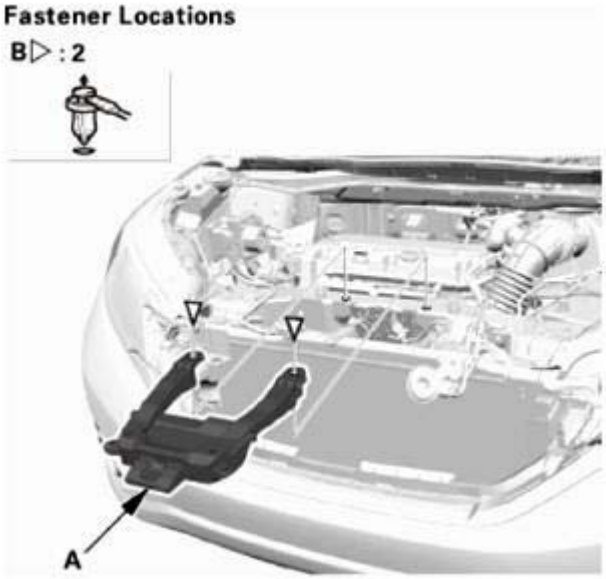

Fig. 55: Identifying Front Grille Bracket And Clips
Courtesy of AMERICAN HONDA MOTOR CO., INC.

8. Front Bumper Upper Duct
    1. Install the front bumper upper duct (A). Make sure the clips (B) snap into place securely.

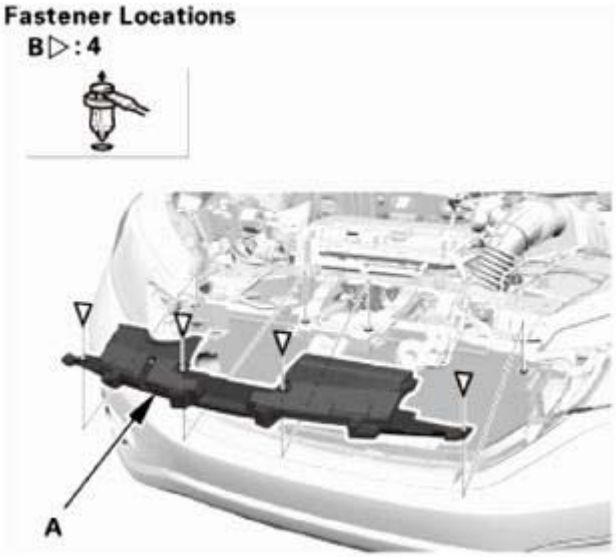

Fig. 56: Identifying Front Bumper Upper Duct And Clips
Courtesy of AMERICAN HONDA MOTOR CO., INC.

9. Front Grille

GETtheMANUALS.org

1. Install the front grille (A) by pushing on the clip areas until the clips snap into place.
2. Install the clips (B).

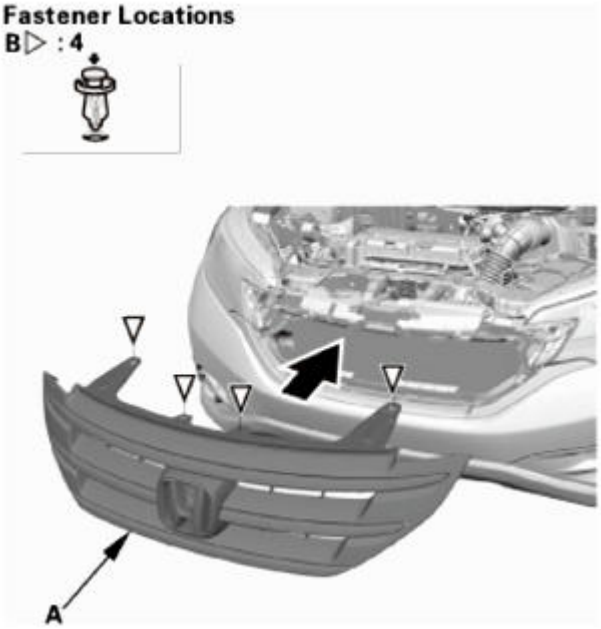

Fig. 57: Installing Front Grille
Courtesy of AMERICAN HONDA MOTOR CO., INC.

10. Hood Latch - Adjustment
    1. Slightly loosen the hood latch mounting bolts (A).

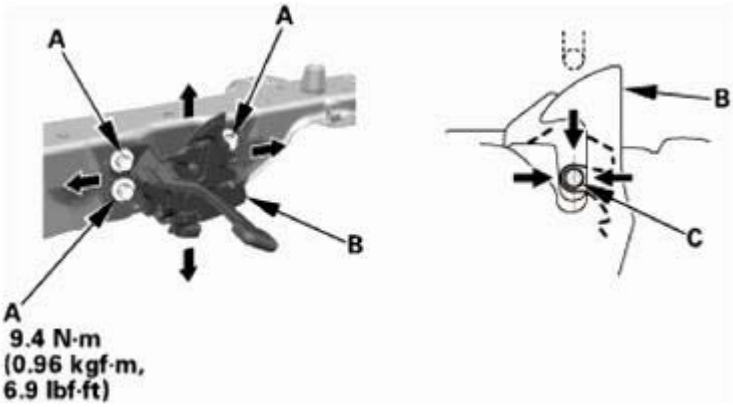

Fig. 58: Adjusting Hood Latch
Courtesy of AMERICAN HONDA MOTOR CO., INC.

    2. Adjust the hood latch (B) to obtain the proper height at the forward edge, and move the hood latch right or left until the striker (C) is centered in the hood latch.
    3. Tighten the hood latch mounting bolts to the specified torque.

GETtheMANUALS.org

4. Make sure the hood opens properly and locks securely.
5. Apply multipurpose grease to the hood latch as indicated by the arrows.

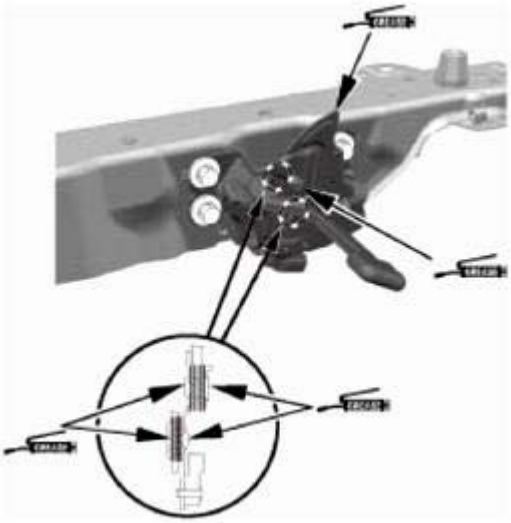

Fig. 59: Identifying Hood Latch Grease Applying Area
Courtesy of AMERICAN HONDA MOTOR CO., INC.

A/C CONDENSER REMOVAL AND INSTALLATION

SPECIAL TOOL REQUIRED

Image	Description/Tool Number
	Oil Injector Tool Robinair ROB16256(1), commercially available
	Compact Electronic Vacuum Gauge Robinair ROB14777(1), commercially available

GETtheMANUALS.org

	Leak Detector YGK-H-10PM(1)
	Leak Detector HLD-100(1)

GETtheMANUALS.org

	Leak Detector TIFZX-1(1)
	OPTIMAX Jr. A/C Leak Detection Kit TRP124893(1)

GETtheMANUALS.org

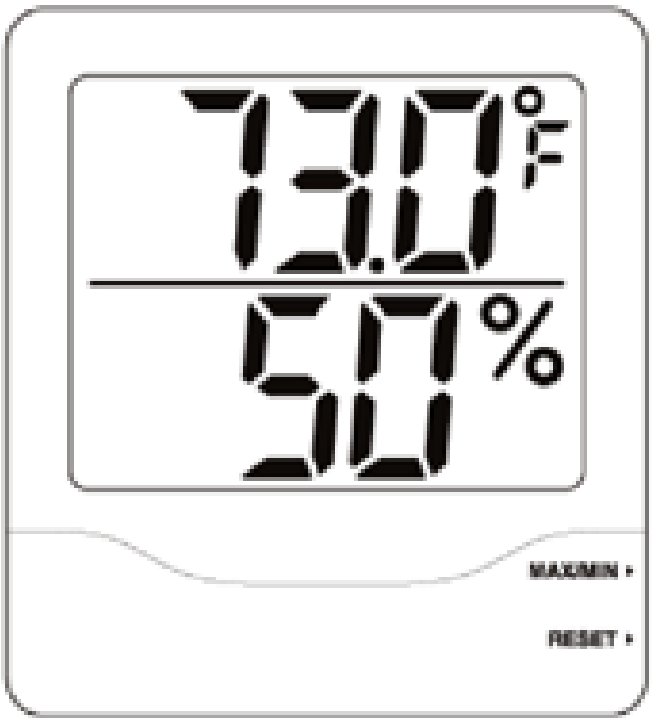	Big Digit Hygro-Thermometer PYR445703, commercially available
	Throttle Pedal Depressor Tool B240B, commercially available
(1) These tools are available through the Honda Tool and Equipment Program; call 888-424-6857	

REMOVAL

CAUTION:

- **Air conditioning refrigerant or lubricant vapor can irritate your eyes, nose, or throat.**
- **Be careful when connecting service equipment.**
- **Do not breathe refrigerant or vapor.**

NOTE:

- **If accidental system discharge occurs, ventilate the work area before resuming service.**
- **Additional health and safety information may be obtained from the refrigerant and lubricant manufacturers.**

1. Glove Box - Move
    1. Detach the glove box damper hook (A), and release both glove box stops (B) by pushing them in, then let glove box (C) hang down.

GETtheMANUALS.org

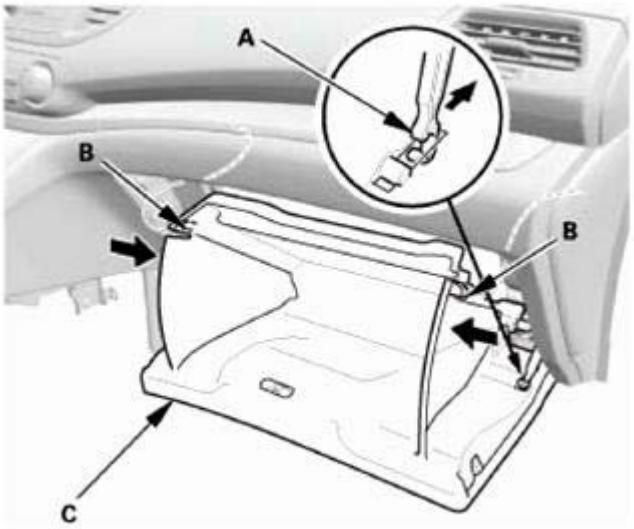

Fig. 60: Detaching Glove Box Damper Hook
Courtesy of AMERICAN HONDA MOTOR CO., INC.

2. R-134a Refrigerant Recovery/Recycling/Charging Station - Connection
    1. Connect an R-134a refrigerant recovery/recycling/charging station (A) to the high-pressure service port (B) and the low-pressure service port (C), as shown, following the equipment manufacturer's instructions.

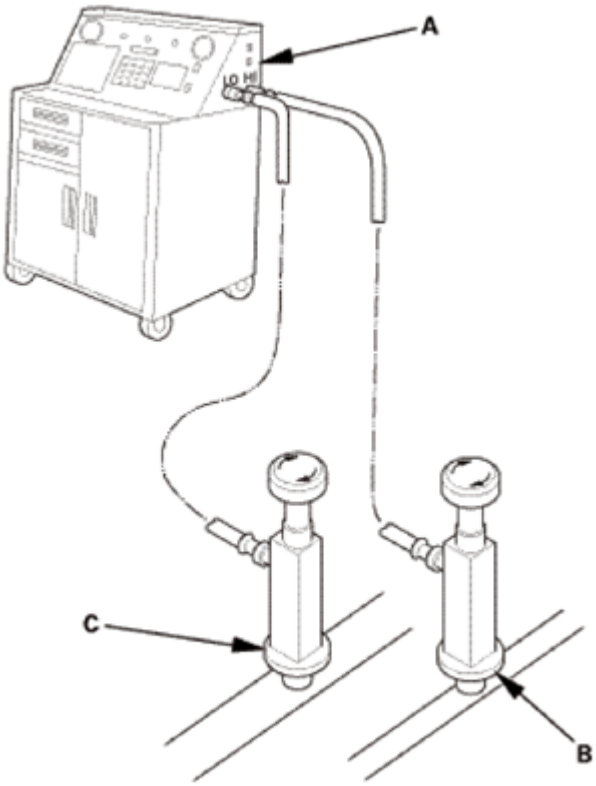

Fig. 61: Identifying Refrigerant Recovery/Recycling/Charging Station, High And Low

GETtheMANUALS.org

Pressure Service Port
Courtesy of AMERICAN HONDA MOTOR CO., INC.

3. A/C Refrigerant - Recovery
    1. Recover the refrigerant from the A/C system.
    2. Measure the amount of refrigerant oil removed from the A/C system after the recovery process is completed. Be sure to put the same amount of new refrigerant oil back into the A/C system before charging.
4. Front Grille
    1. Apply protective tape (A) to the front grille lower trim (B).

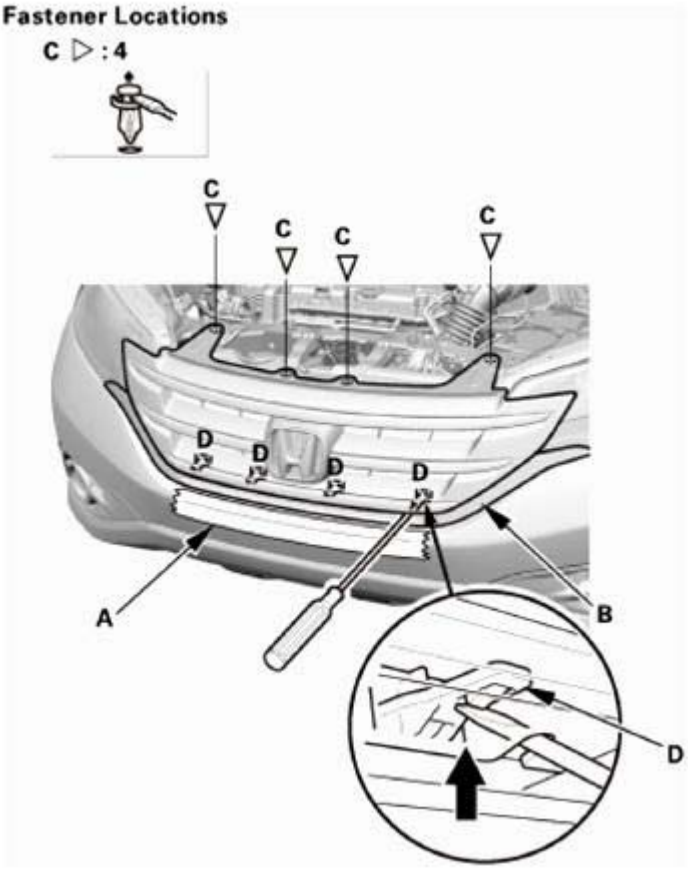

Fig. 62: Applying Protective Tape To Front Grille Lower Trim
Courtesy of AMERICAN HONDA MOTOR CO., INC.

    2. Remove the clips (C) and detach the hooks (D).
    3. Insert a shop towel (A) between the front grille (B) and the front grille lower trim (C).

GETtheMANUALS.org

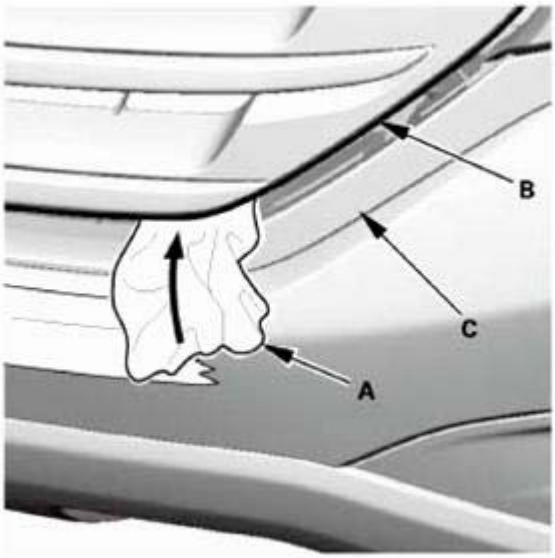

Fig. 63: Inserting Shop Towel Between Front Grille And Front Grille Lower Trim
Courtesy of AMERICAN HONDA MOTOR CO., INC.

4. Insert a flat-tip screwdriver (A) into the opening at the front grille (B), then turn the screwdriver to detach the clip (C).

NOTE: Repeat this procedure on the opposite side.

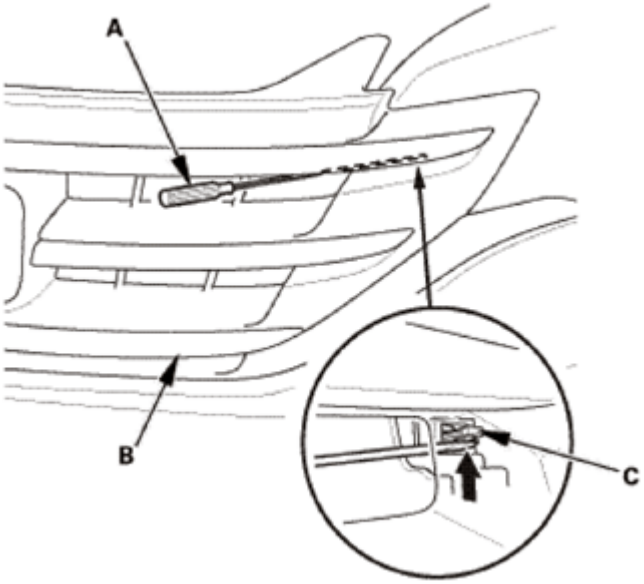

Fig. 64: Inserting Flat-Tip Screwdriver Into Opening At Front Grille
Courtesy of AMERICAN HONDA MOTOR CO., INC.

5. Remove the front grille (A).

GETtheMANUALS.org

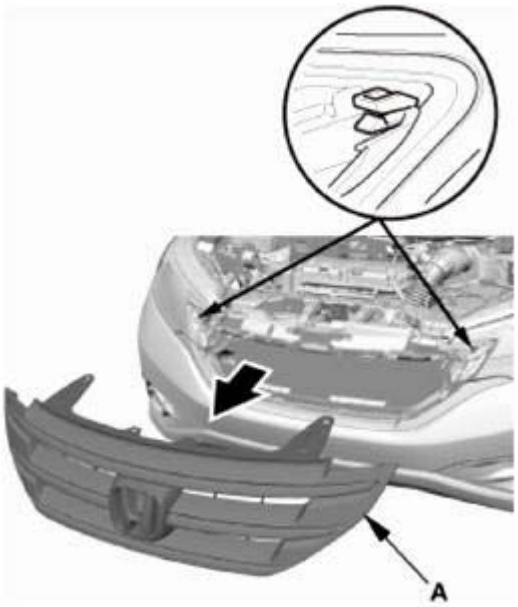

Fig. 65: Removing Front Grille
Courtesy of AMERICAN HONDA MOTOR CO., INC.

5. Front Wheel Arch Protector Front Side As Needed - Both Sides

NOTE: Repeat on the opposite side.

1. Remove the screws (A) and the clips (B) securing the front wheel arch protector (C).
2. Carefully pry out the clip portions of the wheel arch protector with the appropriate trim tool to detach the clips (D, E), then detach the wheel arch protector front side as needed.
3. Put a shop towel (F) in the opening between the front wheel arch protector and the front fender.

GETtheMANUALS.org

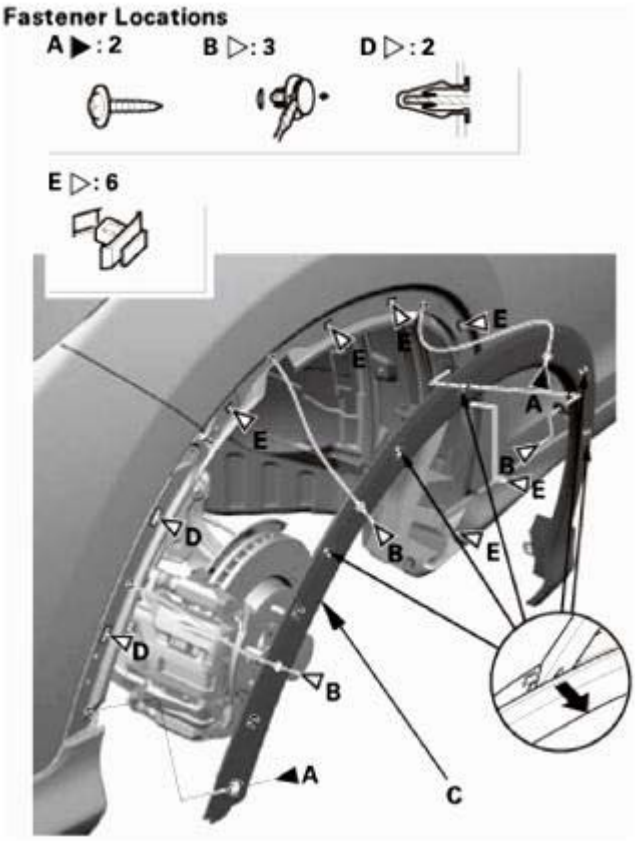

Fig. 66: Removing Wheel Arch Protector Front Side Using Tool
Courtesy of AMERICAN HONDA MOTOR CO., INC.

Fig. 67: Placing Shop Towel In Opening Between Front Wheel Arch Protector And Front Fender
Courtesy of AMERICAN HONDA MOTOR CO., INC.

6. Front Bumper
    1. Remove the screws (A), the bolts (B), and the clips (C) securing the front bumper (D).

GETtheMANUALS.org

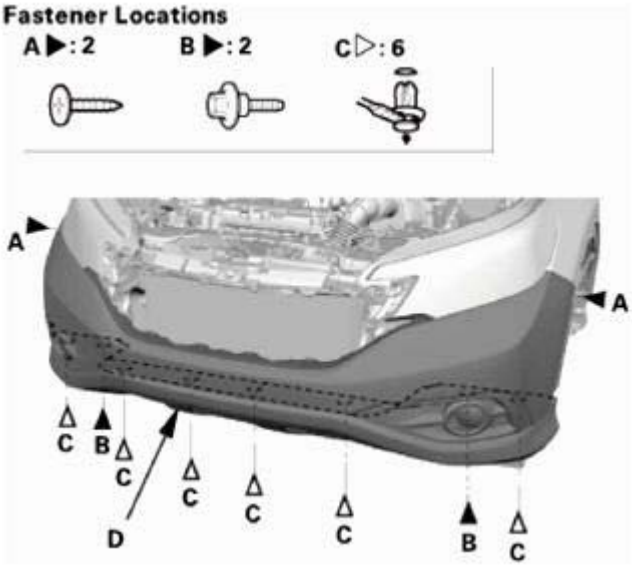

Fig. 68: Identifying Front Bumper, Bolts, Screws And Clips
Courtesy of AMERICAN HONDA MOTOR CO., INC.

2. Pull out the front bumper (A) from the side spacer (B). Repeat this step on the opposite side.

Fig. 69: Removing Front Bumper From Side Spacer
Courtesy of AMERICAN HONDA MOTOR CO., INC.

3. Detach the clip (A). Repeat this step on the opposite side.

GETtheMANUALS.org

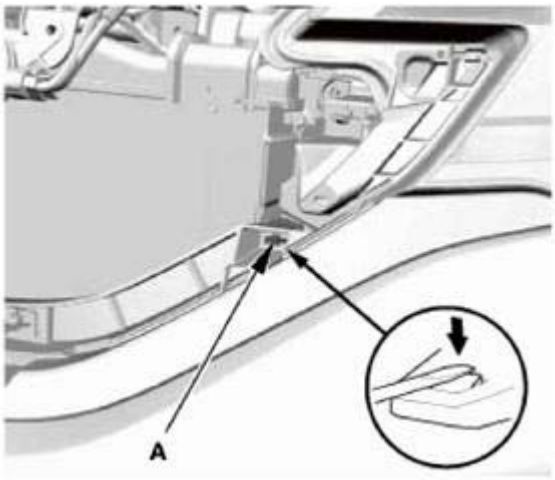

Fig. 70: Removing Front Bumper Clip Using Tool
Courtesy of AMERICAN HONDA MOTOR CO., INC.

4. With the help of an assistant, pull out both sides of the front bumper (A) from the upper beam (B).

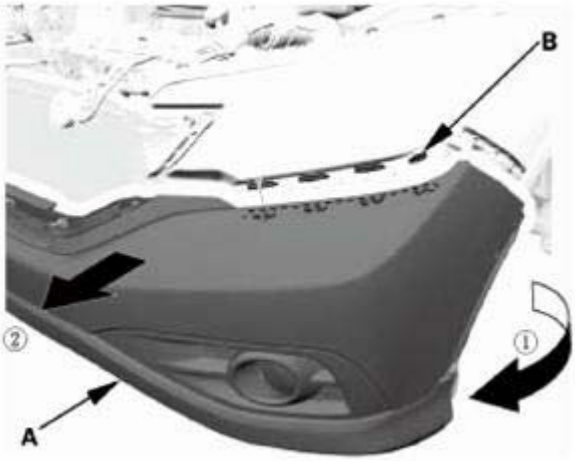

Fig. 71: Removing Front Bumper From Upper Beam
Courtesy of AMERICAN HONDA MOTOR CO., INC.

5. With the help of an assistant, disconnect the connectors (A), then remove the front bumper (B).

GETtheMANUALS.org

Fig. 72: Identifying Front Bumper And Connectors
Courtesy of AMERICAN HONDA MOTOR CO., INC.

7. Front Bumper Upper Duct
    1. Remove the clips (A), then remove the front bumper upper duct (B).

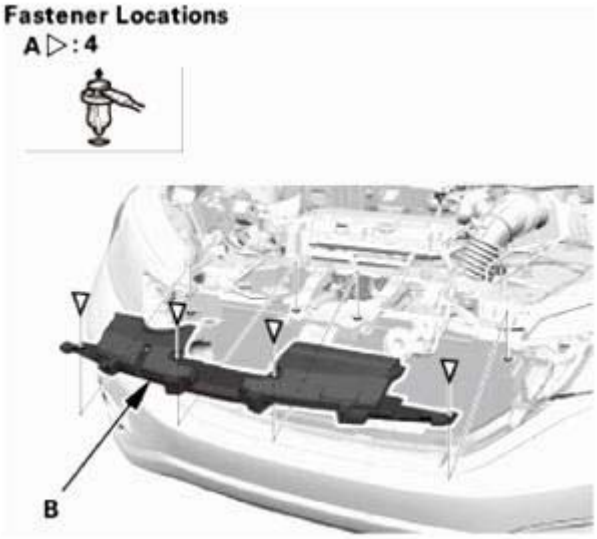

Fig. 73: Identifying Front Bumper Upper Duct And Clips
Courtesy of AMERICAN HONDA MOTOR CO., INC.

8. Front Grille Bracket
    1. Remove the clips (A), then remove the front grille bracket (B).

GETtheMANUALS.org

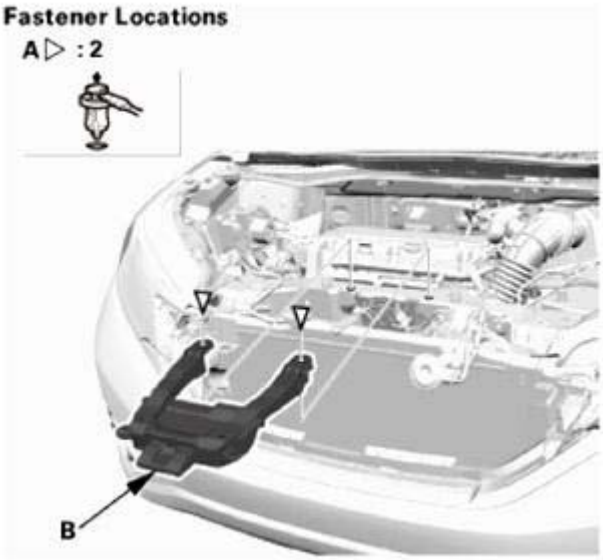

Fig. 74: Identifying Front Grille Bracket And Screws
Courtesy of AMERICAN HONDA MOTOR CO., INC.

9. Horn and Bracket Assembly
    1. Disconnect the connector.
    2. Remove the horn (A) and the bracket (B) as an assembly.

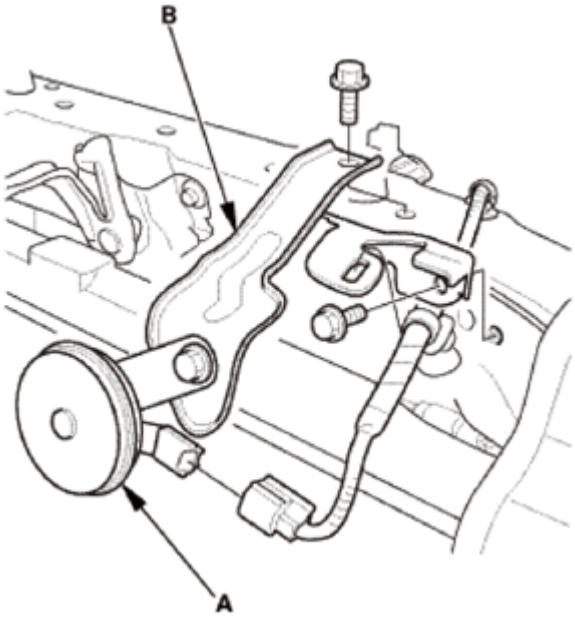

Fig. 75: Identifying Horn And Bracket
Courtesy of AMERICAN HONDA MOTOR CO., INC.

10. Hood Latch
    1. Remove the bolts (A), then remove the hood latch (B) from the body. Disconnect the hood opener

GETtheMANUALS.org

cable (C) from the latch.

2. Disconnect the connector (D).

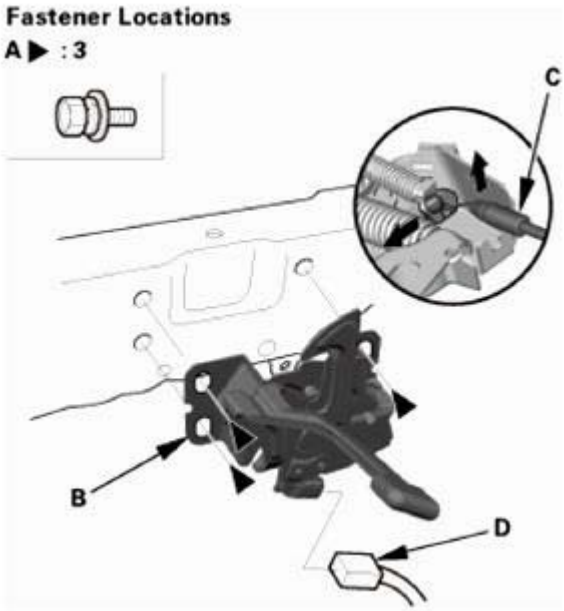

Fig. 76: Disconnecting Hood Opener Cable From Latch
Courtesy of AMERICAN HONDA MOTOR CO., INC.

11. A/C Line - Disconnection (A/C Condenser Side)
    1. Disconnect the discharge hose (A) with a O-ring (B).

NOTE: **Plug or cap the lines immediately after disconnecting them to avoid moisture and dust contamination.**

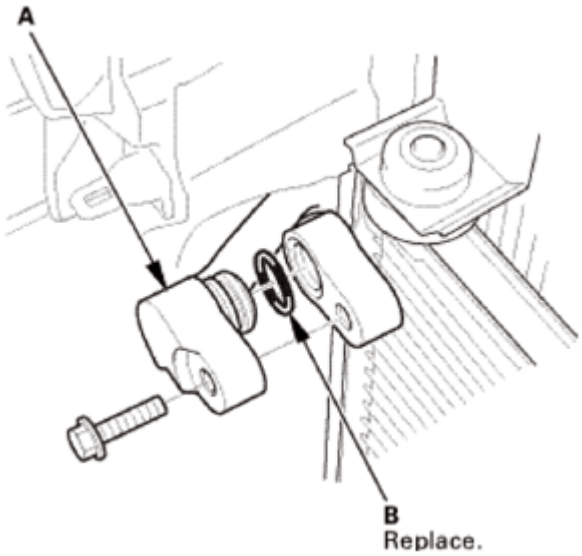

GETtheMANUALS.org

Fig. 77: Identifying A/C Line Discharge Hose And O-Ring
Courtesy of AMERICAN HONDA MOTOR CO., INC.

2. Disconnect the receiver line (A) with a O-ring (B).

NOTE: **Plug or cap the lines immediately after disconnecting them to avoid moisture and dust contamination.**

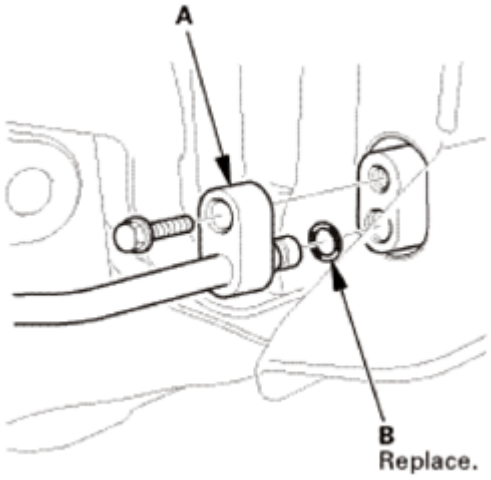

Fig. 78: Identifying A/C Receiver Line And O-Ring
Courtesy of AMERICAN HONDA MOTOR CO., INC.

12. Radiator Mounting Bracket, Upper Both
    1. Remove the radiator mount upper brackets.

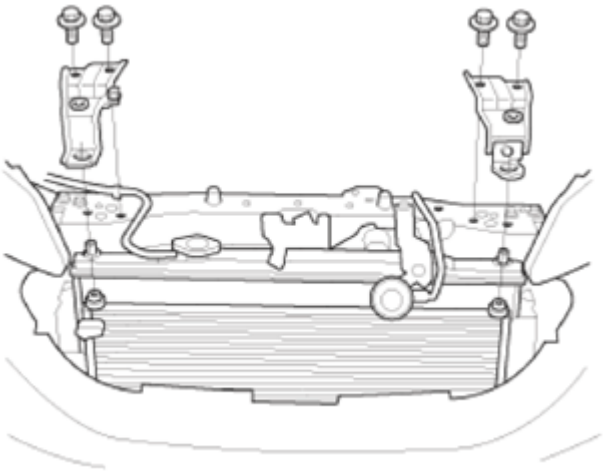

Fig. 79: Identifying Radiator Mount Upper Brackets Assembly
Courtesy of AMERICAN HONDA MOTOR CO., INC.

13. A/C Condenser Assembly

GETtheMANUALS.org

1. Remove the A/C condenser (A).

NOTE: **Be careful not to damage the radiator and A/C condenser fins when removing the A/C condenser.**

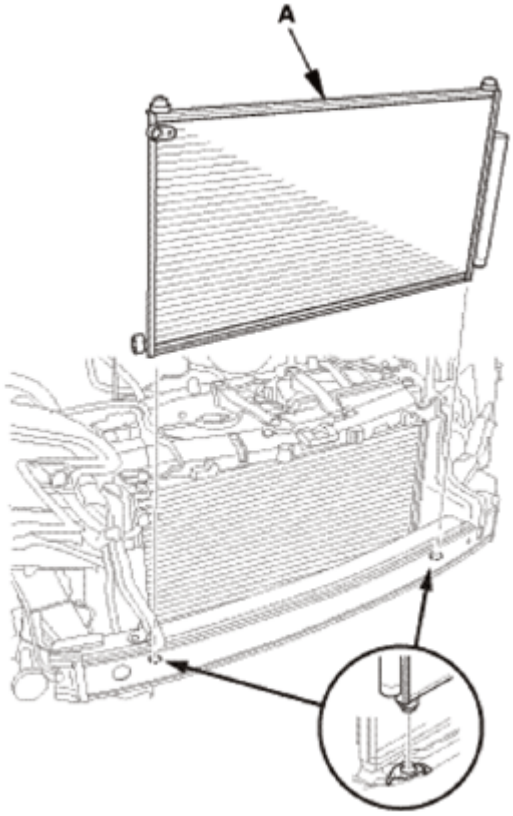

Fig. 80: Identifying A/C Condenser
Courtesy of AMERICAN HONDA MOTOR CO., INC.

INSTALLATION

CAUTION:

- **Air conditioning refrigerant or lubricant vapor can irritate your eyes, nose, or throat.**
- **Be careful when connecting service equipment.**
- **Do not breathe refrigerant or vapor.**
- **Do not operate the leak detector near flammable vapors. Its sensor operates at high temperatures, and could ignite the vapors, resulting in personal injury and/or damage to the equipment.**

NOTE:

- **If an accidental system discharge occurs, ventilate the work area before resuming service.**
- **Additional health and safety information may be obtained from the**

GETtheMANUALS.org

refrigerant and lubricant manufacturers.

- **Check the system for leaks using an R-134a refrigerant leak detector with an accuracy of 14 g (0.5 oz) per year or better.**
- **If you're installing a new A/C condenser, add refrigerant oil.**
- **Replace the O-rings with new ones at each fitting, and apply a thin coat of refrigerant oil before installing them. Be sure to use the correct O-rings for HFC-134a (R-134a) to avoid leakage.**
- **Use only PAG refrigerant oil for HFC-134a A/C systems.**
- **To avoid contamination, do not return the oil to the container once dispensed, and never mix it with other refrigerant oils.**
- **Immediately after using the oil, dispose of any remaining oil in the container, due to moisture absorption and short shelf life.**
- **Do not spill the refrigerant oil on the vehicle; it may damage the paint; if the refrigerant oil contacts the paint, wash it off immediately.**
- **Be careful not to damage the radiator and the A/C condenser fins when installing the A/C condenser.**

1. A/C Refrigerant Oil - Replacement

   Recommended PAG oil: SP-10

   P/N 38897-P13-A01AH: 120 mL (4 fl oz)

   It is important to have the correct amount of refrigerant oil in the A/C system to ensure proper lubrication of the A/C compressor. Too little oil damages the A/C compressor; too much oil reduces the cooling capacity of the system, and can produce high vent temperatures.

   - To avoid contamination, do not return the oil to the container once dispensed, and never mix it with other refrigerant oils.
   - Immediately after using the oil, reinstall the cap on the container, and seal it to avoid moisture absorption.
   - Do not spill the refrigerant oil on the vehicle; it may damage the paint; if it gets on the paint, wash it off immediately.

   Add the recommended refrigerant oil in the amount listed if you replace any of the following parts.

A/C condenser (including dryer desiccant).....	25 mL (5/6 fl oz)
Evaporator.....	40 mL (1 1/3 fl oz)
Line or hose.....	10 mL (1/3 fl oz)
Dryer desiccant.....	10 mL (1/3 fl oz)
Leakage repair.....	25 mL (5/6 fl oz)
A/C compressor.....	Since the oil separator is equipped inside the A/C compressor for this vehicle, oil drainage is unnecessary

GETtheMANUALS.org

at the time of A/C compressor replacement.

2. A/C Condenser Assembly
    1. Install the A/C condenser (A).

NOTE: **Be careful not to damage the radiator and A/C condenser fins when installing the A/C condenser.**

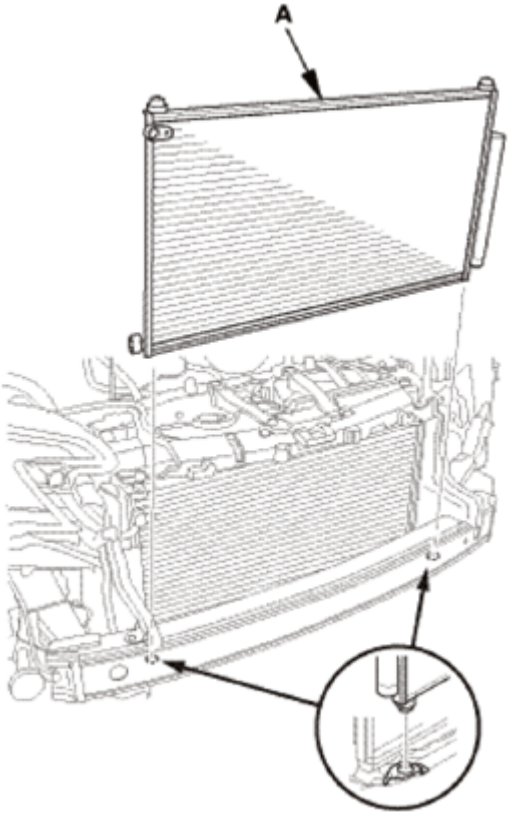

Fig. 81: Identifying A/C Condenser
Courtesy of AMERICAN HONDA MOTOR CO., INC.

3. Radiator Mounting Bracket, Upper Both
    1. Install the radiator mount upper brackets.

GETtheMANUALS.org

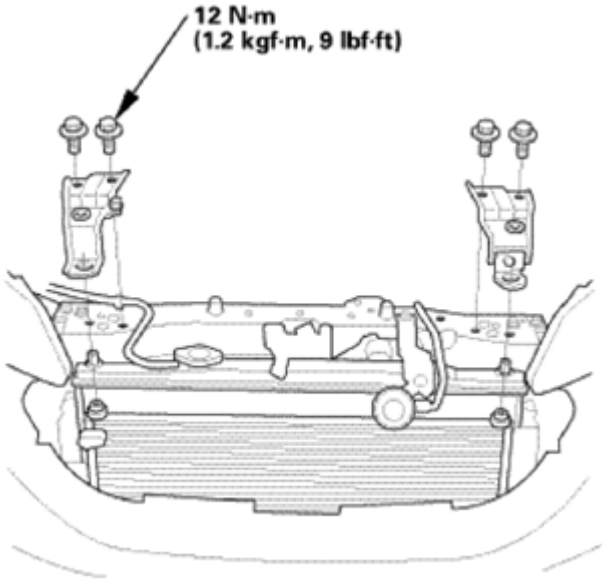

Fig. 82: Identifying Radiator Mount Upper Brackets Assembly With Torque Specifications
Courtesy of AMERICAN HONDA MOTOR CO., INC.

4. A/C Line - Reconnection (A/C Condenser Side)
    1. Remove the plugs or caps.
    2. Connect the receiver line (A) with a new O-ring (B) that is lubricated with clean refrigerant oil.

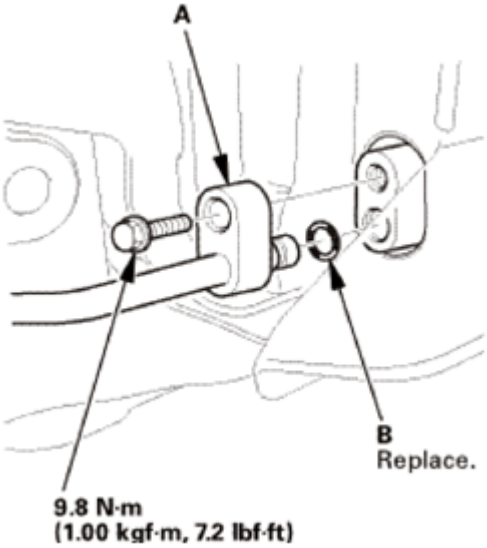

Fig. 83: Identifying A/C Receiver Line And O-Ring With Torque Specifications
Courtesy of AMERICAN HONDA MOTOR CO., INC.

    3. Remove the plugs or caps.
    4. Connect the discharge hose (A) with a new O-ring (B) that is lubricated with clean refrigerant oil.

GETtheMANUALS.org

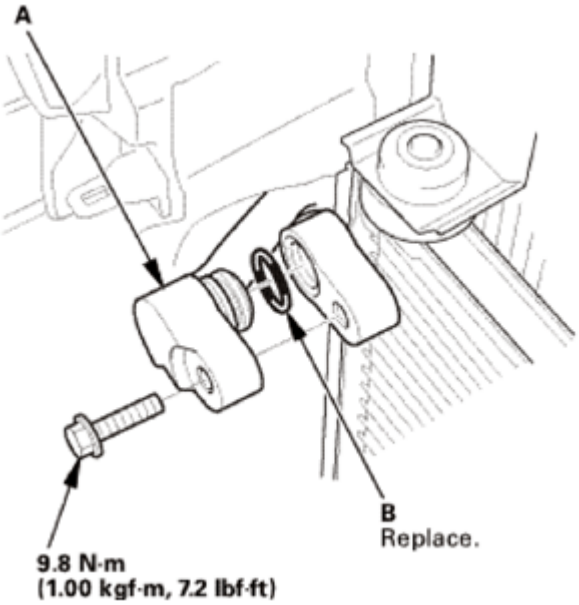

Fig. 84: Identifying A/C Line Discharge Hose And O-Ring With Torque Specifications
Courtesy of AMERICAN HONDA MOTOR CO., INC.

5. Hood Latch

NOTE: Apply multipurpose grease to the hood latch as indicated by the arrows.

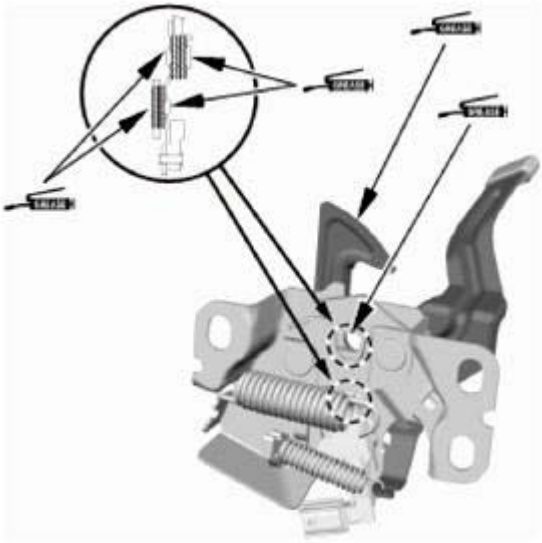

Fig. 85: Identifying Hood Latch Grease Applying Area
Courtesy of AMERICAN HONDA MOTOR CO., INC.

1. Connect the connector (A).
2. Connect the hood opener cable (B).
3. Install the hood latch (C), then install the bolts (D).

GETtheMANUALS.org

Fig. 86: Connecting Hood Opener Cable
Courtesy of AMERICAN HONDA MOTOR CO., INC.

6. Horn and Bracket Assembly
    1. Install the horn (A) and the bracket (B) as an assembly.
    2. Connect the connector.

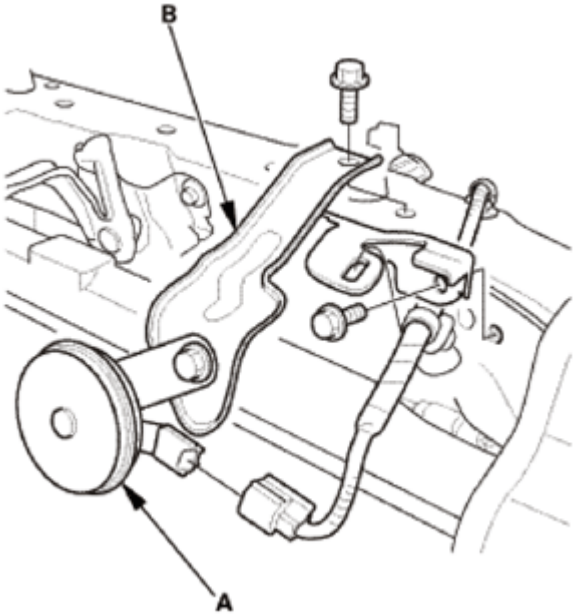

Fig. 87: Identifying Horn And Bracket
Courtesy of AMERICAN HONDA MOTOR CO., INC.

7. Front Grille Bracket

GETtheMANUALS.org

1. Install the front grille bracket (A). Make sure the clips (B) snap into place securely.

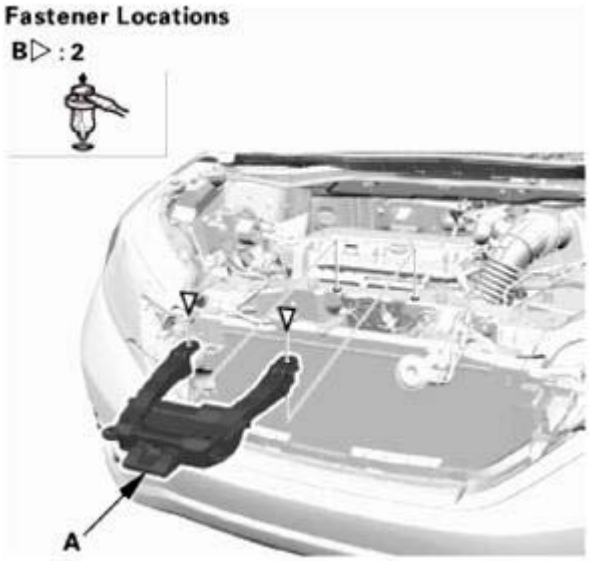

Fig. 88: Identifying Front Grille Bracket And Clips
Courtesy of AMERICAN HONDA MOTOR CO., INC.

8. Front Bumper Upper Duct
    1. Install the front bumper upper duct (A). Make sure the clips (B) snap into place securely.

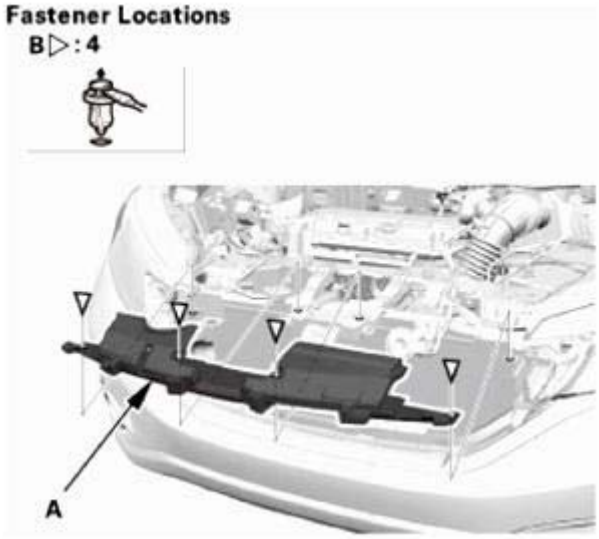

Fig. 89: Identifying Front Bumper Upper Duct And Clips
Courtesy of AMERICAN HONDA MOTOR CO., INC.

9. Front Bumper
    1. With the help of an assistant, connect the connectors (A), then install the front bumper (B).

GETtheMANUALS.org

Fig. 90: Identifying Front Bumper And Connectors
Courtesy of AMERICAN HONDA MOTOR CO., INC.

2. With the help of an assistant, install both sides of the front bumper (A) to the upper beam (B).

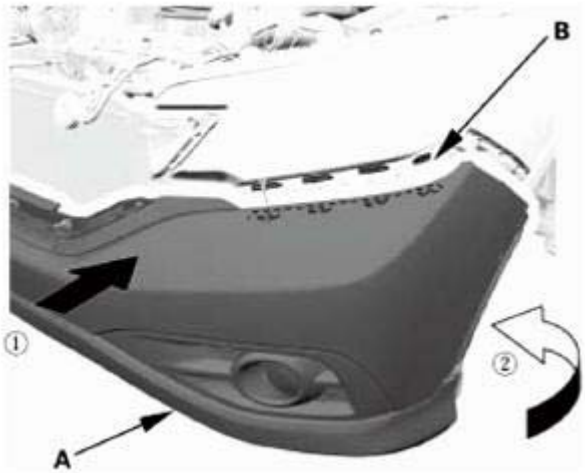

Fig. 91: Installing Front Bumper To Upper Beam
Courtesy of AMERICAN HONDA MOTOR CO., INC.

3. Push the front bumper (A) until the clip (B) snaps into place. Repeat this step on the opposite side.

GETtheMANUALS.org

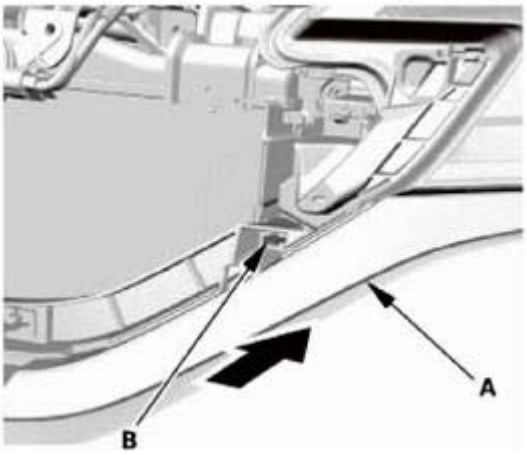

Fig. 92: Pushing Front Bumper
Courtesy of AMERICAN HONDA MOTOR CO., INC.

4. Install the front bumper (A) to the side spacer (B). Repeat this step on the opposite side.

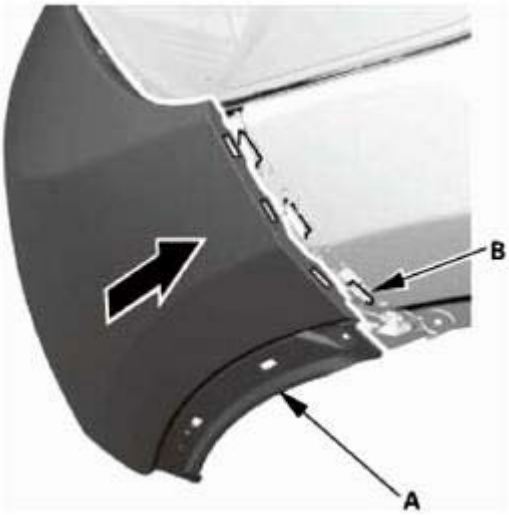

Fig. 93: Installing Front Bumper To Side Spacer
Courtesy of AMERICAN HONDA MOTOR CO., INC.

5. Install the screws (A), the bolts (B), and the clips (C) securing the front bumper (D).

GETtheMANUALS.org

Fig. 94: Identifying Front Bumper, Bolts Screws And Clips With Torque Specifications
Courtesy of AMERICAN HONDA MOTOR CO., INC.

10. Front Wheel Arch Protector Front Side As Needed - Both Sides
    1. Install the front wheel arch protector (A), then install the screws (B) and the clips (C). Make sure the clips (D, E) snap into place securely. Repeat this step on the opposite side.

GETtheMANUALS.org

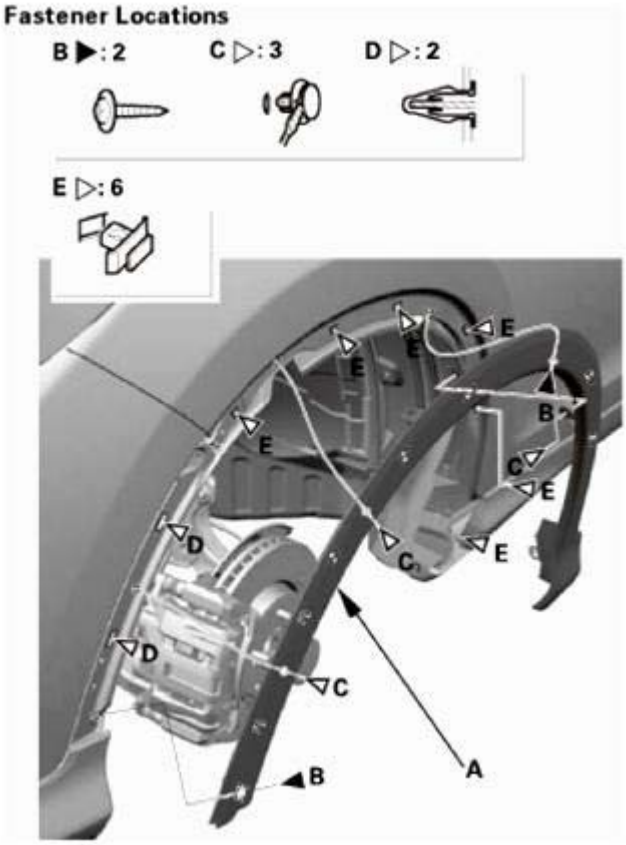

Fig. 95: Identifying Front Wheel Arch Protector, Clips And Screws
Courtesy of AMERICAN HONDA MOTOR CO., INC.

11. Front Grille
    1. Install the front grille (A) by pushing on the clip areas until the clips snap into place.
    2. Install the clips (B).

GETtheMANUALS.org

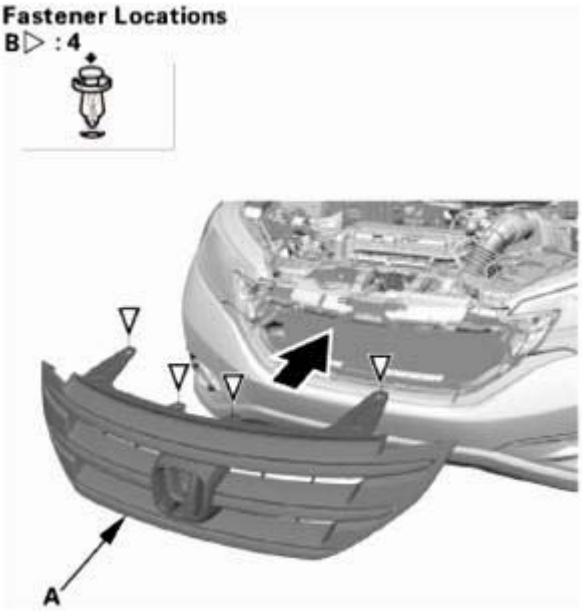

Fig. 96: Installing Front Grille
Courtesy of AMERICAN HONDA MOTOR CO., INC.

12. Hood Latch - Adjustment
    1. Slightly loosen the hood latch mounting bolts (A).

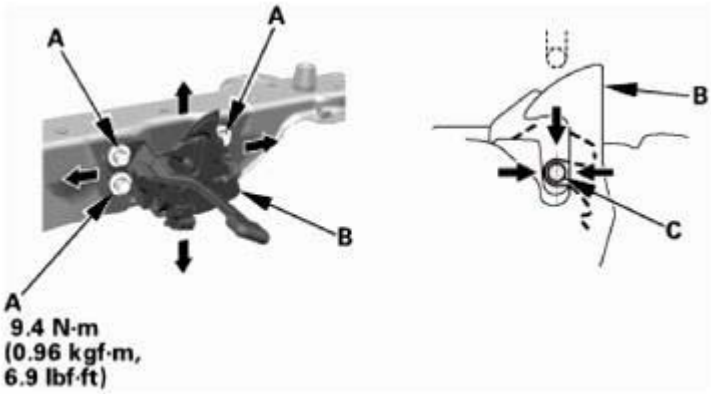

Fig. 97: Adjusting Hood Latch
Courtesy of AMERICAN HONDA MOTOR CO., INC.

    2. Adjust the hood latch (B) to obtain the proper height at the forward edge, and move the hood latch right or left until the striker (C) is centered in the hood latch.
    3. Tighten the hood latch mounting bolts to the specified torque.
    4. Make sure the hood opens properly and locks securely.
    5. Apply multipurpose grease to the hood latch as indicated by the arrows.

GETtheMANUALS.org

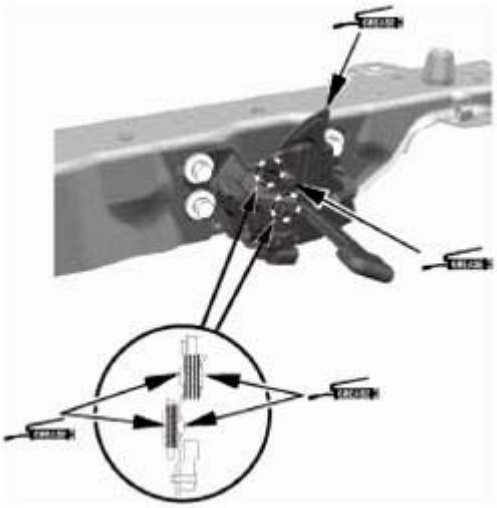

Fig. 98: Identifying Hood Latch Grease Applying Area
Courtesy of AMERICAN HONDA MOTOR CO., INC.

13. R-134a Refrigerant Recovery/Recycling/Charging Station - Connection
    1. Connect an R-134a refrigerant recovery/recycling/charging station (A) to the high-pressure service port (B) and the low-pressure service port (C), as shown, following the equipment manufacturer's instructions.

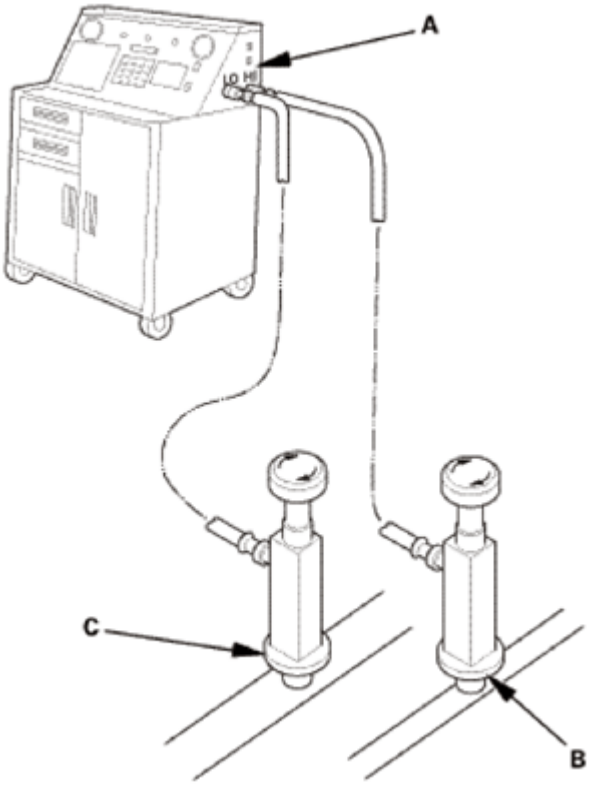

Fig. 99: Identifying Refrigerant Recovery/Recycling/Charging Station, High And Low

GETtheMANUALS.org

<u>Pressure Service Port</u>
Courtesy of AMERICAN HONDA MOTOR CO., INC.

14. A/C System Evacuation
    1. Evacuate the system. The vacuum pump should run for a minimum of 30 minutes to eliminate all moisture from the system. When the suction gauge reads -93.3 kPa (-700 mmHg, - 27.55 inHg) for at least 30 minutes, close all valves, and turn off the vacuum pump.
    2. If the suction gauge dose not reach approximately -93.3 kPa (-700 mmHg, -27.55 inHg) in 15 minutes, there is probably a large leak in the system. Partially charge the system, and check for leaks.
15. A/C Refrigerant - Charging
    1. Charge the system with the specified amount of R-134a refrigerant. Do not overcharge the system; the A/C compressor will be damaged.

       Select the appropriate units of measure for your refrigerant charging station.

       Refrigerant Capacity:

       385 to 435 g

       13.6 to 15.4 oz

       0.385 to 0.435 kg

       0.849 to 0.959 lbs

16. A/C Refrigerant - Leak Check

Leak Detector Usage Tips (Refer to the Operator's Manual for complete operating instructions)

- Position the vehicle in a wind-free work area. This will aid in detecting small leaks.
- When using the leak detector for the first time, allow it to warm up for 2 minutes with the probe in a clean atmosphere. This lets the temperature sensor in the detector stabilize.
- The calibration check should be done in the "Search 2" mode. Once that is done, the other check modes do not need calibrating.
- When leak checking through the HVAC module drain hose, avoid drawing water into the probe. Water can damage the internal pump and sensor.
- Avoid creasing the flexible probe extension. Creases can restrict air flow and give false readings.
- Because the detector recalibrates itself for ambient gases, it may be necessary to move the detector away from the leak to clear the sensor. Once the sensor has cleared, recheck the suspected leak.
- When removing the clear probe tip, be careful not to lose the flow ball.
- R-134a is heavier than air; always check below and to the sides of all potential leak sources.
- Halogen leak detectors are sensitive to chemicals: windshield washing solutions, solvents/cleaners, and some vehicle adhesives. Keep these chemicals out of the area when doing leak detection.

GETtheMANUALS.org

Fluorescent Dye Usage Tips

- Use only Tracer-Stick single dose fluorescent dye capsules from Tracerline®. Other dyes contain solvents that may contaminate the refrigerant oil, leading to component failure.
- Adding excessive amounts of dye can damage the A/C compressor.
- PAG oil is water soluble, so condensation on the evaporator core or the refrigerant lines may wash the PAG oil and fluorescent dye away from the actual leak. Condensation may also carry dye through the HVAC module drain.
- After checking and repairing leaks, thoroughly clean any residual dye from the areas where leaks were found. Use GLO-AWAY dye cleaner, from Tracerline®, and hot water to remove the dye (follow the instructions on the bottle). Residual dye stains can cause misdiagnosis of any future A/C system leaks.
- If any refrigerant dye contacts an exterior paint surface, remove it by doing this:
  - Carefully wash the affected surfaces to remove any dirt, and to prevent paint scratching.
  - Mix water and isopropyl alcohol in a 50/50 mixture. Soak a soft 100 % cotton towel with the water/alcohol mixture, and place the cloth on the affected areas to remove the dye.
  - After removing the dye with the water/alcohol-soaked cloth, carefully wash the affected areas, and check that there is no remaining dye.

1. With the engine OFF, use a halogen leak detector first to detect the leak source. Follow a continuous path in order to ensure that you will not miss any possible leaks. Test the following areas of the system for leaks:

Possible Leak Area	Diagnostic Procedure with the Leak Detector	Notes
Service ports	• Check the service ports with caps installed • If the detector "sniffs" a leak, use fluorescent dye to confirm it	When capping the service ports, ensure that the seals on the port caps are in place, and that the caps are tight. The caps are used as the final seals in the system
A/C condenser	If the detector "sniffs" a leak, use fluorescent dye to confirm it	• Check for joints or connections coated with oily dust • Check for damaged and corroded areas • Check all fittings, couplings, brazed/welded areas and areas around attachment points • Move the probe slowly (1 in/second or less), and keep it within 1/4 in of the component being checked. This maximizes the chance of detecting a leak • If you detect a leak, blow compressed air over the area, then recheck for leaks. For large leaks, clearing the area with compressed air may help you pinpoint the leak source
	• Check at the evaporator	

GETtheMANUALS.org

Evaporator	drain hose • Check at the passenger's side vent and turn the blower on at low speed	
A/C lines	• Wiggle the rubber hoses when checking crimped metal ends • If the detector "sniffs" a leak, use fluorescent dye to confirm it	• Check all fittings, couplings, pressure switches, brazed/welded areas, and areas around attachment points on A/C lines and components • Check for damaged and corroded areas • Move the probe slowly (1 in/second or less), and keep it within 1/4 in of the component being checked. This maximizes the chance of detecting a leak

2. Close the quick coupler valves, then disconnect the quick couplers from the vehicle service ports.
3. Attach the universal connect set, from the Optimax Jr. Leak Detection Kit, to the service valve fitting. Close the control valve (the black knob on the connect set).
4. Attach the charging station low pressure hose quick coupler to the service valve fitting, and open the quick coupler valve. Evacuate the connect set using the charging station vacuum pump, then close the quick coupler valve.
5. Detach the universal connect set, and install a Tracer-Stick® dye capsule between the connect set and the service valve fitting (see the manufacturer's instructions for more detail).
6. Attach the quick coupler on the universal connect set to the low pressure service port on the vehicle. Open the charging station low pressure hose quick coupler valve, but do not open the control valve.
7. Start the engine, and set the A/C system to maximum cooling. Open the control valve to let refrigerant and the dye enter the A/C system through the low pressure service port. Close the control valve when the Tracer-Stick® dye capsule is empty.
8. Run the engine and A/C system for 15 minutes to thoroughly circulate the dye. Then shut the engine off, and inspect the following areas of the system for leaks:

NOTE:

- **Check for leaks in a dark work area, and use the UV light and the special glasses from the leak check kit. Other UV lights may not work well with the Tracer-Stick® dye.**
- **Small leaks may take up to 1 week of vehicle operation (with normal A/C use) to become visible.**

Possible Leak Area	Diagnostic Procedure with Fluorescent Dye
Service ports	If a leak is found, replace the cap/o-ring seal or A/C line as needed
A/C lines	• Use a permanent marker pen to circle the leak area • If a leak is found, remove and replace the A/C line

GETtheMANUALS.org

A/C condenser	• If a leak is found, remove the A/C condenser • Determine whether leak is in the A/C condenser or the receiver/dryer • Use a permanent marker pen to circle the leak area • Replace either the receiver/dryer, or the A/C condenser, depending upon which is leaking
A/C compressor	• Check for leaks at all of the A/C compressor joints, the clutch center, the A/C compressor front housing bolts, and the scroll bolts on the back of the A/C compressor • If a leak is found, use a permanent marker pen to circle the leak area • If the A/C compressor relief valve appears to be leaking, determine whether the leak is coming from the relief valve, or the joint between the A/C compressor casing and the valve. If the leak is from the relief valve, check the A/C system pressures, and refer to the pressure test table in the A/C system test. If the leak is from the casing/valve joint, replace the A/C compressor relief valve • If the leak is coming from the suction hose and/or discharge hose fittings on the A/C compressor, clean the A/C fittings and replace the suction/discharge fitting O-rings • For all other A/C compressor leaks, remove and replace the A/C compressor
Evaporator	• Start checking for evaporator leaks by illuminating the evaporator drain tube area • If a leak is found, remove the evaporator core • Determine whether leak is from evaporator or expansion valve • Use a permanent marker pen to circle leak area • Replace the expansion valve, or the evaporator core, depending upon which is leaking

17. A/C System - Test
    1. Insert a thermometer (A) in the center vent.
    2. Place a hygro-thermometer (B) near the blower unit's recirculation inlet duct.
    3. Test conditions:
        - Move the vehicle out of direct sunlight and let it cool down to the surrounding (ambient) temperature. If necessary, wash the vehicle to cool it down more quickly.
        - The blower intake temperature must be at least 68°F (20°C).
        - Open the hood.
        - Open the front doors.
        - Start the engine.
        - Set the temperature control dial or temperature control button to MAX COOL, the mode control button to VENT, and the recirculation control button to RECIRCULATE.
        - Turn the A/C button on and the fan control dial or fan control button to Max.

GETtheMANUALS.org

- Run the engine at 1, 500 rpm.
- No driver or passengers in vehicle.

Fig. 100: Checking Delivery Temperature From Thermometer In Center Vent
Courtesy of AMERICAN HONDA MOTOR CO., INC.

4. Inspect the A/C components for the following conditions:
   - A/C compressor clutch not engaged.
   - Abnormal frost areas.
   - Unusual noises.

   If you observe any of these conditions, refer to the Symptom Troubleshooting Index.

5. After running the air conditioning for 10 minutes under the above test conditions, read the delivery temperature from the thermometer in the center vent, the intake temperature near the blower unit, and the discharge (high) and suction (low) pressures on the A/C gauges.
6. To complete the vent (delivery)/intake temperature chart:
   - Mark the vent (delivery) temperature on the vertical line.
   - Mark the intake temperature on the bottom line.
   - Draw a vertical line from the intake temperature mark.
   - Draw a horizontal line from the vent (delivery) temperature mark until it intersects the vertical line.

   NOTE: The vent temperature and intake temperature should intersect in the shaded area. Any measurements outside the line may

GETtheMANUALS.org

indicate the need for further inspection.

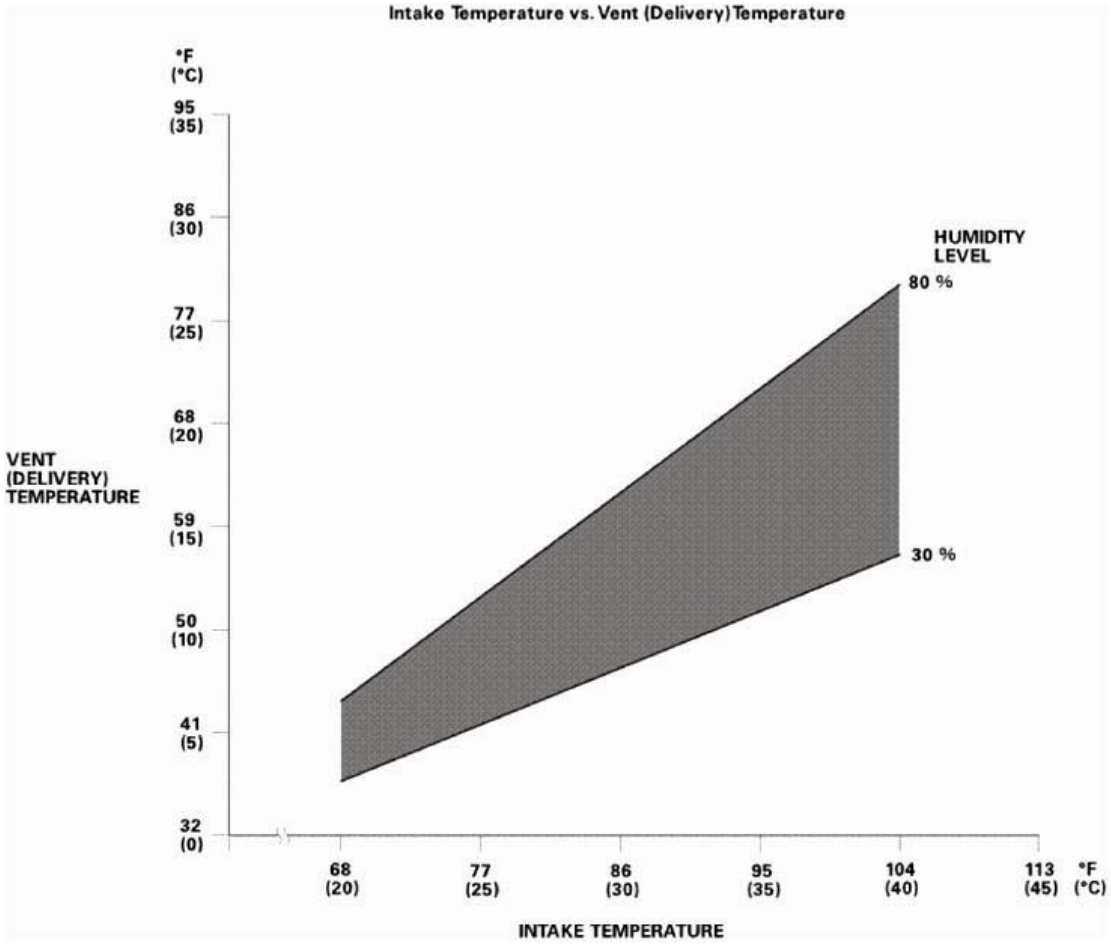

Fig. 101: Intake Temperature Versus Vent (Delivery) Temperature Graph
Courtesy of AMERICAN HONDA MOTOR CO., INC.

7. To complete the high side (discharge) pressure/intake temperature chart:
   - Mark the high side (discharge) pressure on the vertical line.
   - Mark the intake temperature on the bottom line.
   - Draw a vertical line from the intake temperature mark.
   - Draw a horizontal line from the high side (discharge) pressure mark until it intersects the vertical line.

NOTE: **The high side pressure and intake temperature should intersect in the shaded area. Any measurements outside the line may indicate the need for further inspection.**

GETtheMANUALS.org

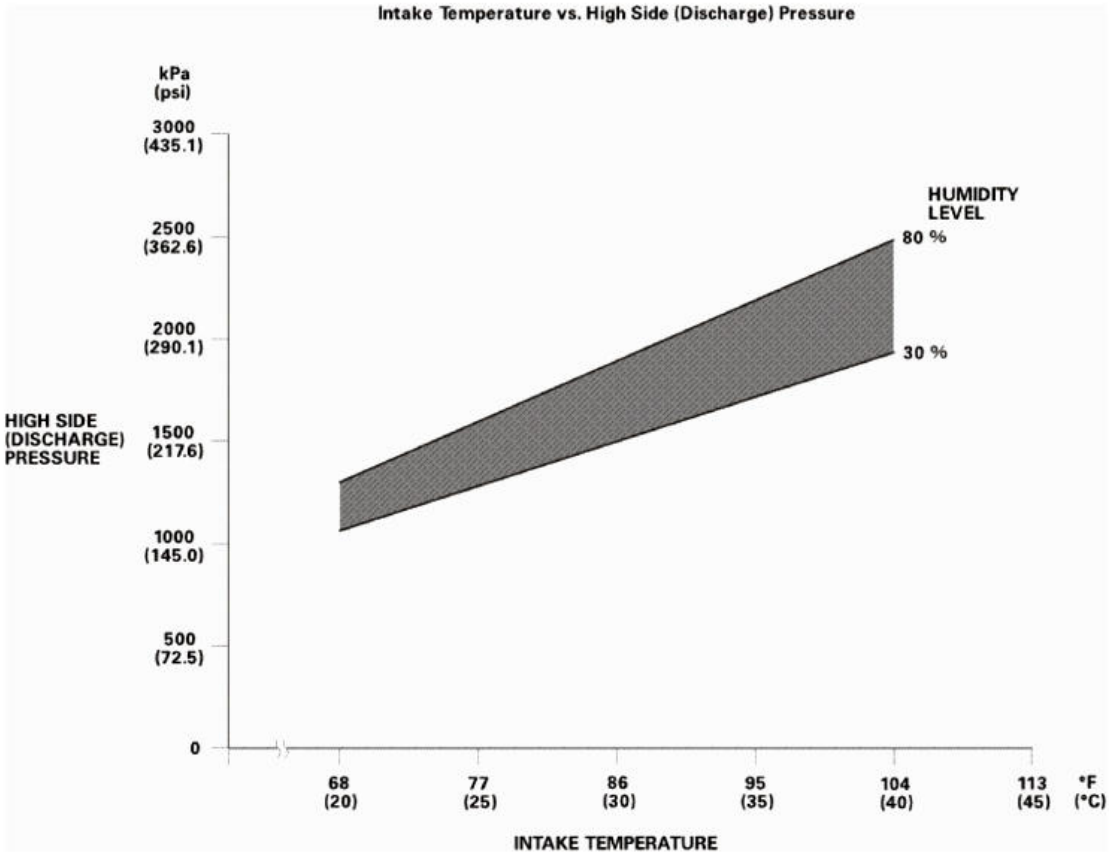

Fig. 102: Intake Temperature Versus High Side (Discharge) Pressure Graph
Courtesy of AMERICAN HONDA MOTOR CO., INC.

8. To complete the low side (suction) pressure/intake temperature chart:
   - Mark the low side (suction) pressure along the vertical line.
   - Mark the intake temperature along the bottom line.
   - Draw a vertical line from the intake temperature mark.
   - Draw a horizontal line from the low side (suction) pressure mark until it intersects the vertical line.

NOTE: **The low side pressure and intake temperature should intersect in the shaded area. Any measurements outside the line may indicate the need for further inspection.**

GETtheMANUALS.org

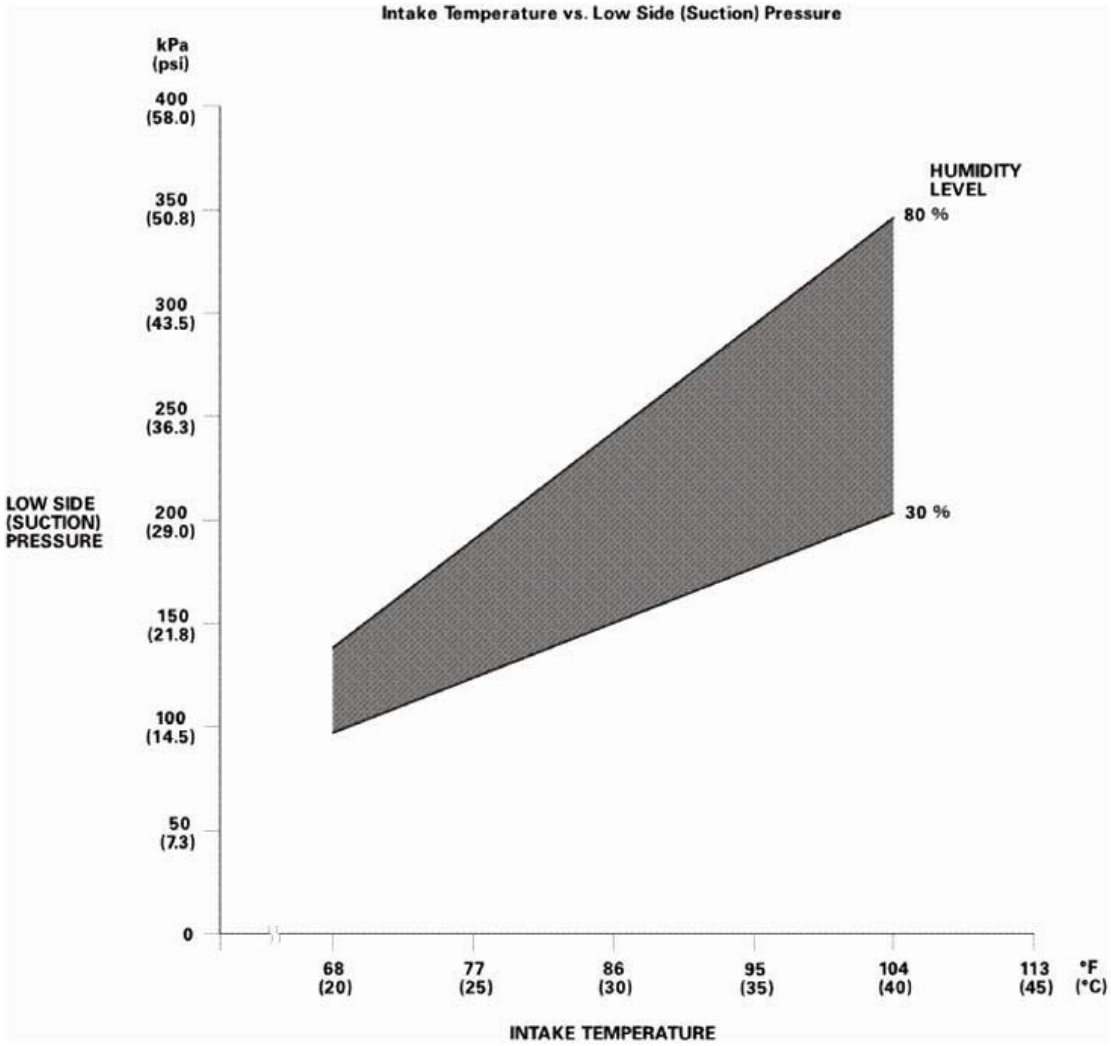

Fig. 103: Intake Temperature Versus Low Side (Suction) Pressure Graph
Courtesy of AMERICAN HONDA MOTOR CO., INC.

18. Glove Box - Move
    1. Install the glove box (A). Make sure the glove box stops (B) snap into place securely.
    2. Install the glove box damper hook (C).

GETtheMANUALS.org

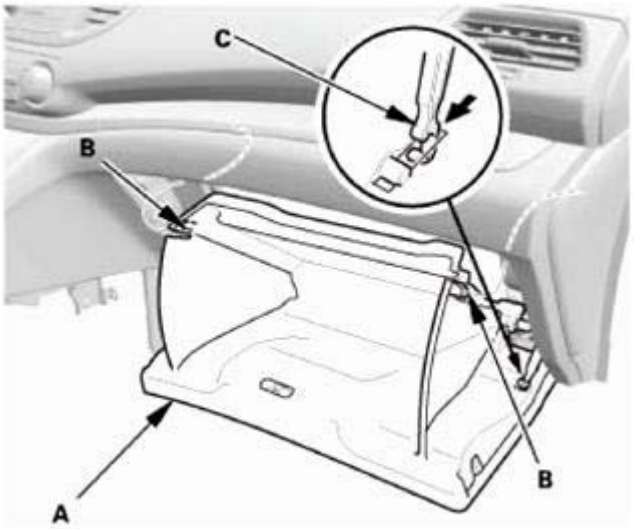

Fig. 104: Installing Glove Box Damper Hook
Courtesy of AMERICAN HONDA MOTOR CO., INC.

A/C LINE REMOVAL AND INSTALLATION

REPLACEMENT

1. A/C Line - Replacement

GETtheMANUALS.org

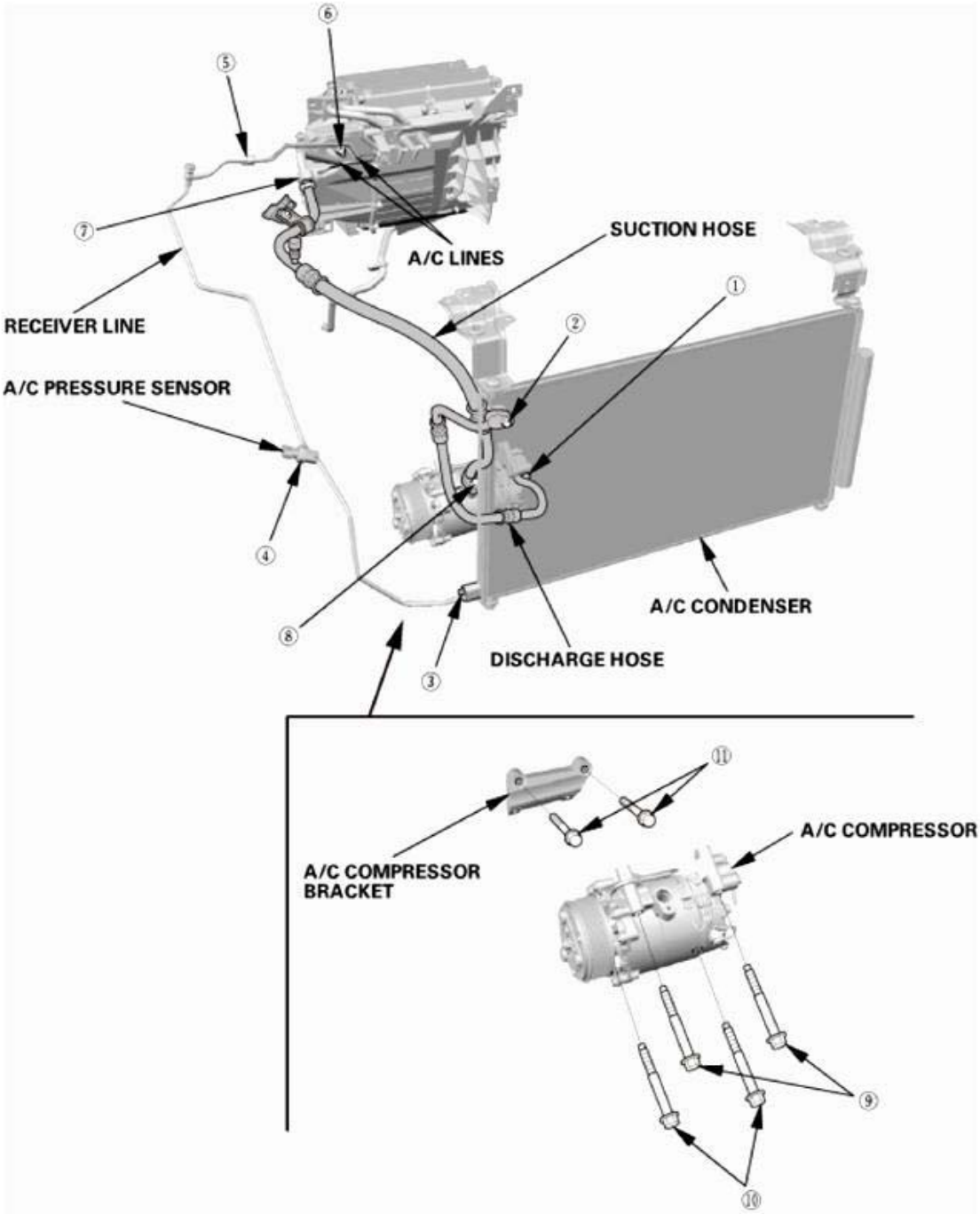

① Discharge hose to the A/C compressor: 9.8 N·m (1.00 kgf·m, 7.2 lbf·ft)
② Discharge hose to the A/C condenser: 9.8 N·m (1.00 kgf·m, 7.2 lbf·ft)
③ Receiver line to the A/C condenser: 9.8 N·m (1.00 kgf·m, 7.2 lbf·ft)
④ A/C pressure sensor to receiver line: 11 N·m (1.1 kgf·m, 8 lbf·ft)
⑤ Receiver line to the A/C line: 13 N·m (1.3 kgf·m, 10 lbf·ft)
⑥ A/C lines to the evaporator: 9.8 N·m (1.00 kgf·m, 7.2 lbf·ft)
⑦ A/C line to the suction hose: 32 N·m (3.3 kgf·m, 24 lbf·ft)
⑧ Suction hose to the A/C compressor: 9.8 N·m (1.00 kgf·m, 7.2 lbf·ft)
⑨ A/C compressor to the water passage: 22 N·m (2.2 kgf·m, 16 lbf·ft)
⑩ A/C compressor to the A/C compressor bracket: 22 N·m (2.2 kgf·m, 16 lbf·ft)
⑪ A/C compressor bracket to the engine block: 45 N·m (4.6 kgf·m, 33 lbf·ft)

GETtheMANUALS.org

Fig. 105: Identifying A/C Line, Compressor And Related Components
Courtesy of AMERICAN HONDA MOTOR CO., INC.

AIR MIX CONTROL MOTOR REMOVAL AND INSTALLATION

REMOVAL

NOTE: Set the MAX COOL position before removing the motor.

1. Air Mix Control Motor
    1. Disconnect the air mix control motor connector (A).
    2. Remove the air mix control motor (B).

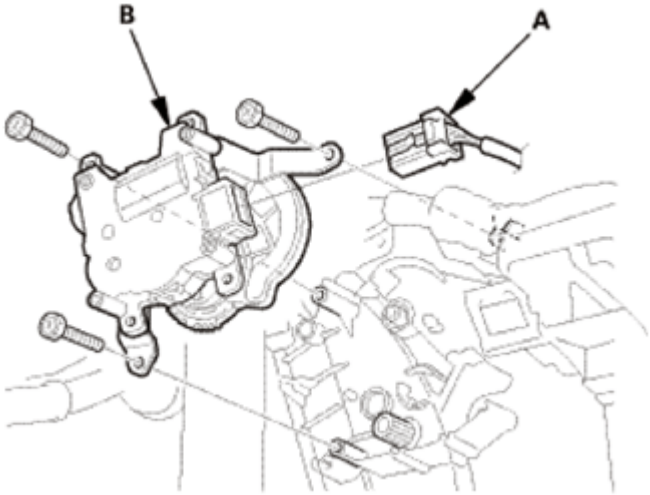

Fig. 106: Identifying Air Mix Control Motor And Connector
Courtesy of AMERICAN HONDA MOTOR CO., INC.

INSTALLATION

1. Air Mix Control Motor
    1. Align the air mix control motor (A) with the gear, then install the motor.
    2. Connect the air mix control motor connector (B).
    3. After installation, make sure the motor runs smoothly.

GETtheMANUALS.org

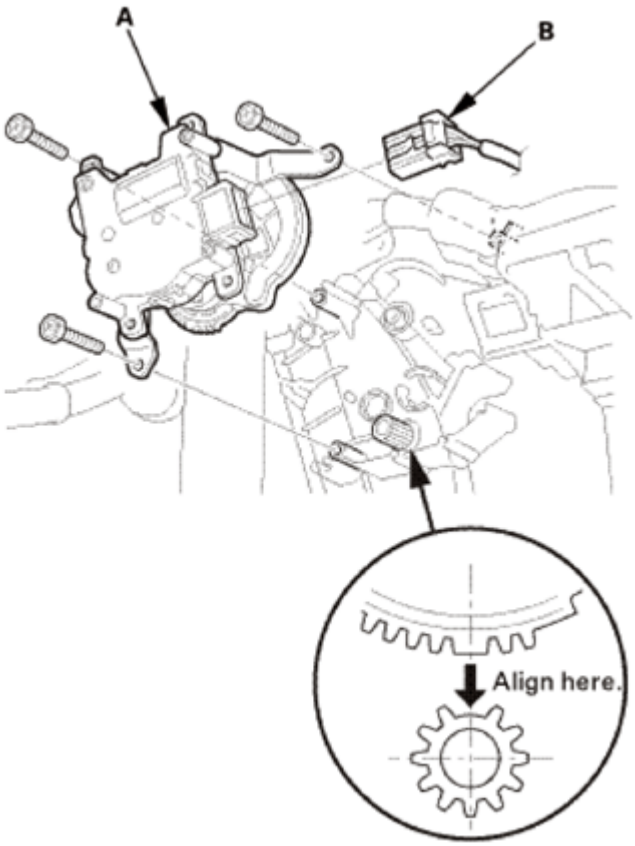

Fig. 107: Aligning Air Mix Control Motor With Gear
Courtesy of AMERICAN HONDA MOTOR CO., INC.

BLOWER MOTOR REMOVAL AND INSTALLATION

REMOVAL

1. Passenger's Dashboard Undercover
    1. Gently pull down the passenger's dashboard undercover (A) to detach the clips (B), then pull away the undercover to release the pins (C) from the holder (D).

GETtheMANUALS.org

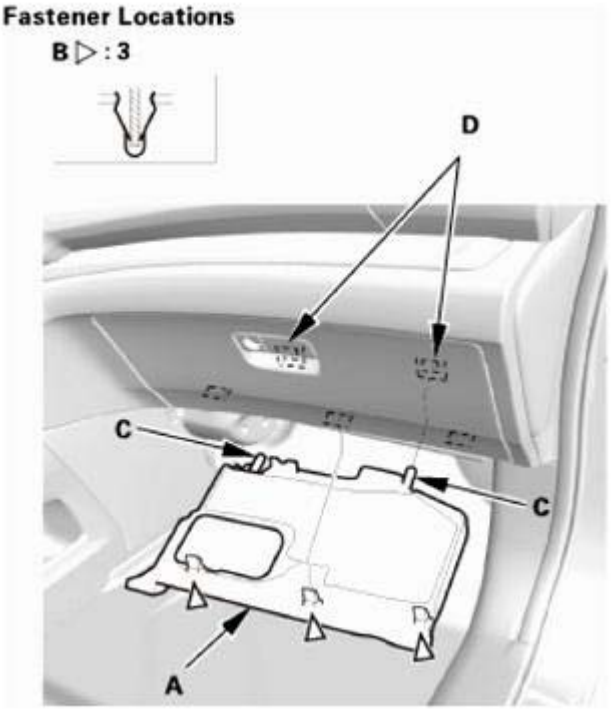

Fig. 108: Identifying Passenger Dashboard Undercover, Holder, Pins And Clips
Courtesy of AMERICAN HONDA MOTOR CO., INC.

2. Glove Box
    1. Remove the bolts (A).

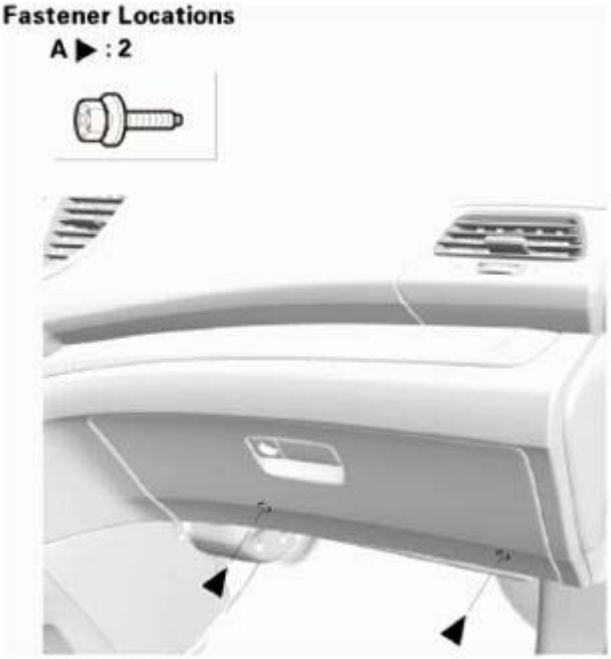

Fig. 109: Identifying Glove Box Mounting Bolts

GETtheMANUALS.org

Courtesy of AMERICAN HONDA MOTOR CO., INC.

2. Release both glove box stops (A) by pushing them in, then let the glove box (B) hang down.

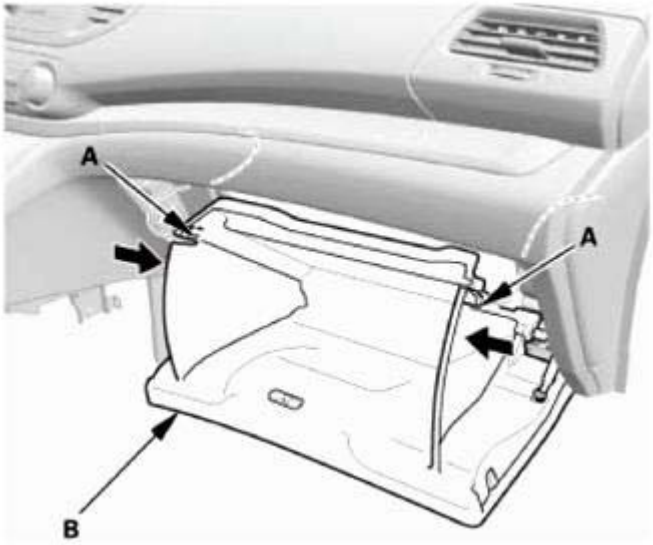

Fig. 110: Releasing Glove Box Stops
Courtesy of AMERICAN HONDA MOTOR CO., INC.

3. Detach the glove box damper hook (A), then remove the glove box (B).

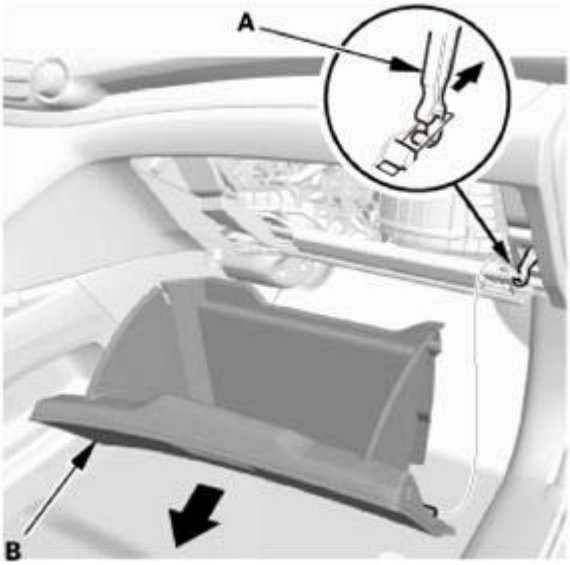

Fig. 111: Removing Glove Box
Courtesy of AMERICAN HONDA MOTOR CO., INC.

3. Glove Box Frame
    1. Remove the glove box frame (A).

GETtheMANUALS.org

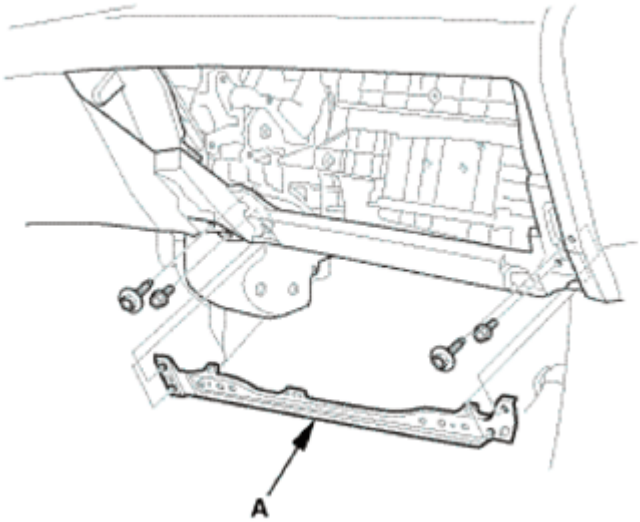

Fig. 112: Identifying Glove Box Frame
Courtesy of AMERICAN HONDA MOTOR CO., INC.

4. Blower Motor
    1. Disconnect the blower motor connector (A).
    2. Detach the harness clip (B).
    3. Remove the blower motor (C).

GETtheMANUALS.org

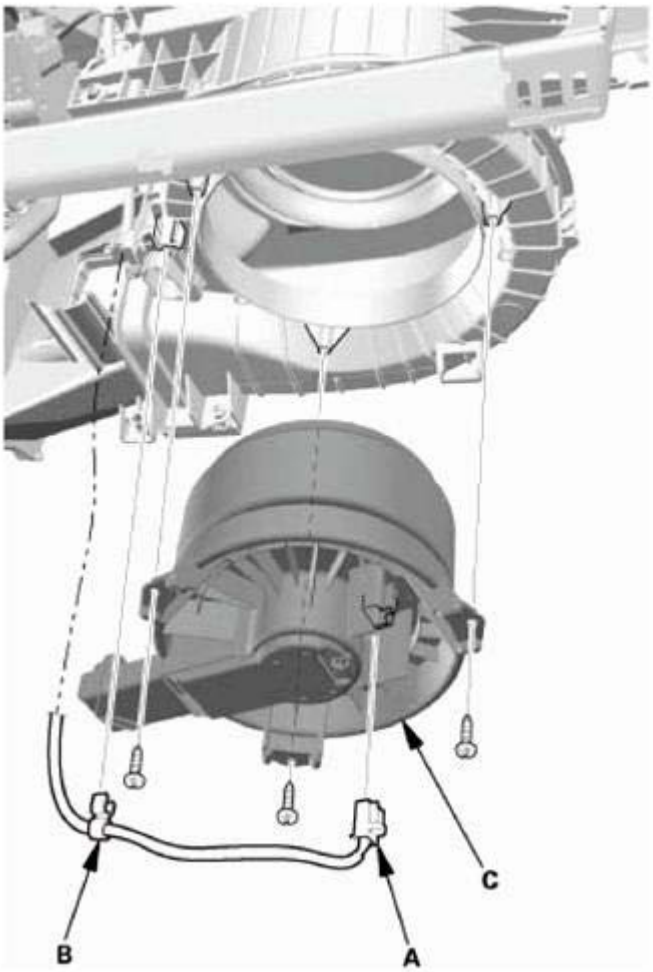

Fig. 113: Identifying Blower Motor, Connector And Clips
Courtesy of AMERICAN HONDA MOTOR CO., INC.

INSTALLATION

1. Blower Motor
    1. Install the blower motor (A).
    2. Connect the blower motor connector (B).
    3. Install the harness clip (C).

GETtheMANUALS.org

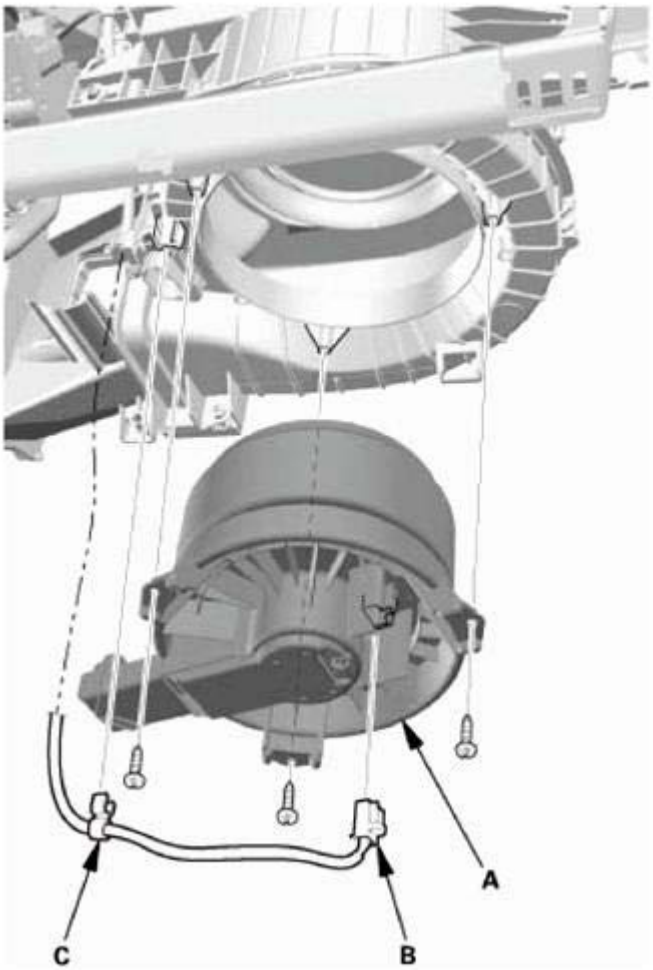

Fig. 114: Identifying Blower Motor, Connector And Clips
Courtesy of AMERICAN HONDA MOTOR CO., INC.

2. Glove Box Frame
    1. Install the glove box frame (A).

GETtheMANUALS.org

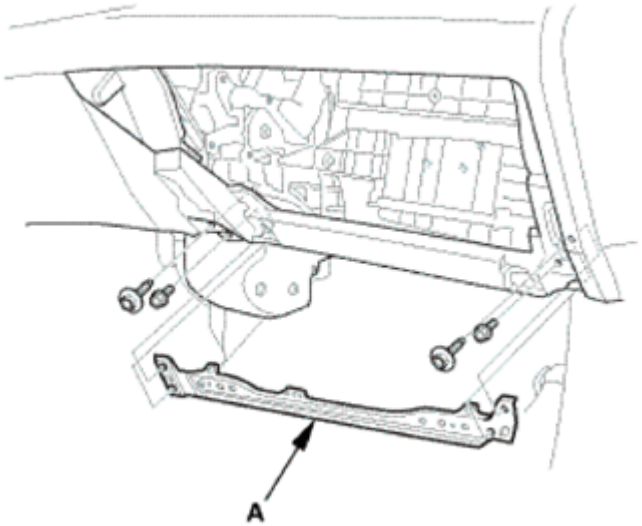

Fig. 115: Identifying Glove Box Frame
Courtesy of AMERICAN HONDA MOTOR CO., INC.

3. Glove Box
    1. Install the glove box (A), then install the glove box damper hook (B).

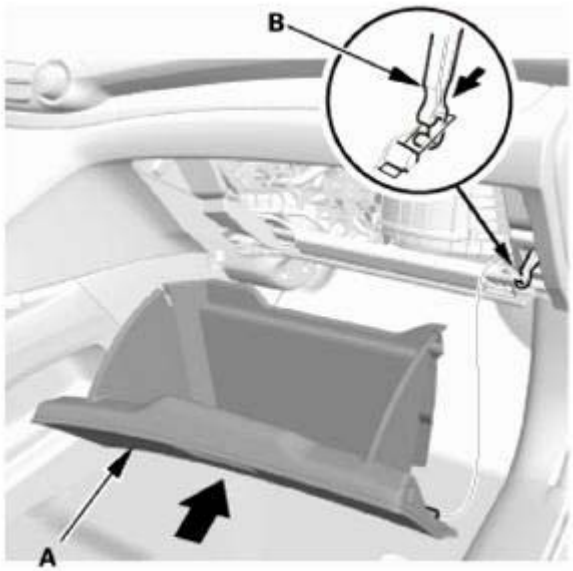

Fig. 116: Installing Glove Box
Courtesy of AMERICAN HONDA MOTOR CO., INC.

    2. Install the bolts (A).

GETtheMANUALS.org

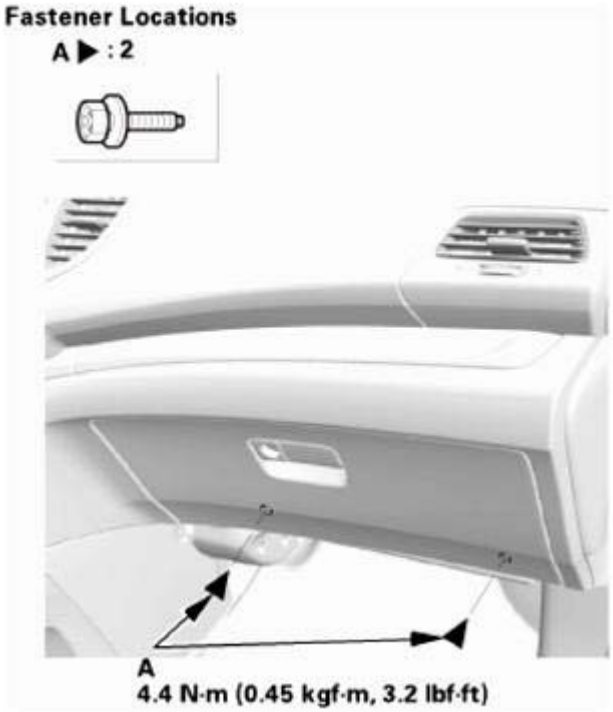

Fig. 117: Identifying Glove Box Mounting Bolts With Torque Specifications
Courtesy of AMERICAN HONDA MOTOR CO., INC.

4. Passenger's Dashboard Undercover
    1. Install the passenger's dashboard undercover (A). Make sure the clips (B) snap into place securely, and the pins (C) into the holder (D) securely.

GETtheMANUALS.org

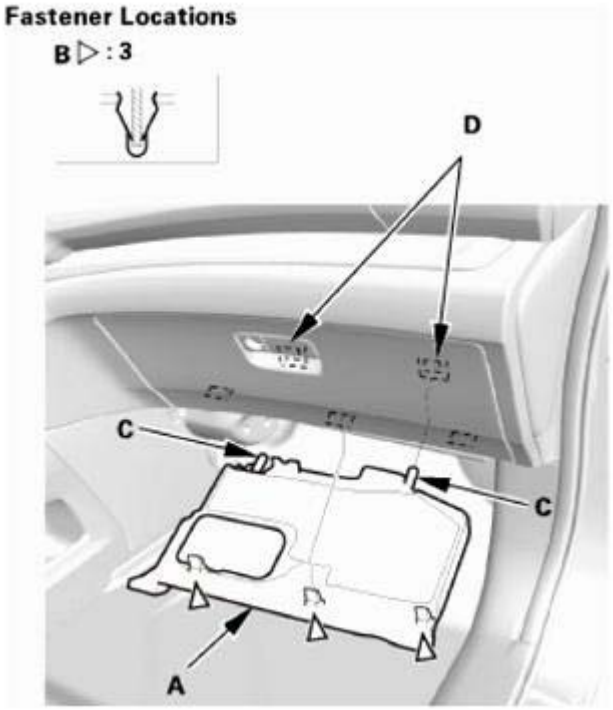

Fig. 118: Identifying Passenger Dashboard Undercover, Holder, Pins And Clips
Courtesy of AMERICAN HONDA MOTOR CO., INC.

BLOWER POWER TRANSISTOR REMOVAL AND INSTALLATION

REMOVAL

1. Passenger's Dashboard Undercover
    1. Gently pull down the passenger's dashboard undercover (A) to detach the clips (B), then pull away the undercover to release the pins (C) from the holder (D).

GETtheMANUALS.org

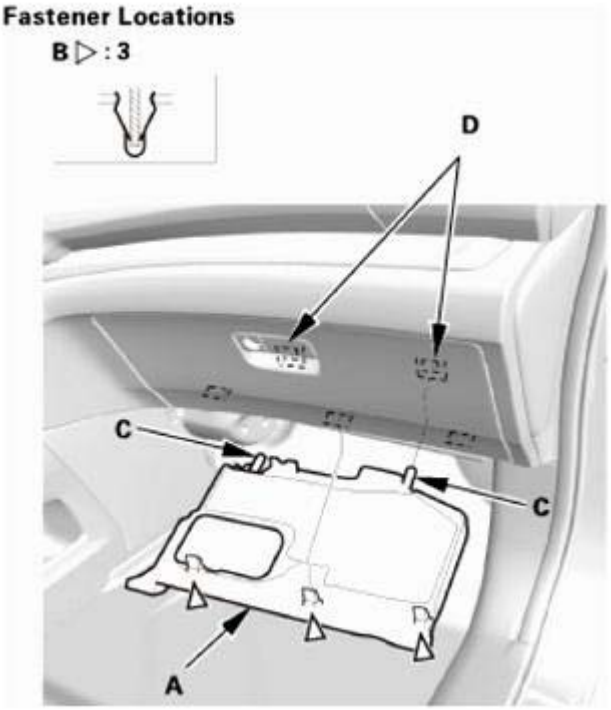

Fig. 119: Identifying Passenger Dashboard Undercover, Holder, Pins And Clips
Courtesy of AMERICAN HONDA MOTOR CO., INC.

2. Glove Box
    1. Remove the bolts (A).

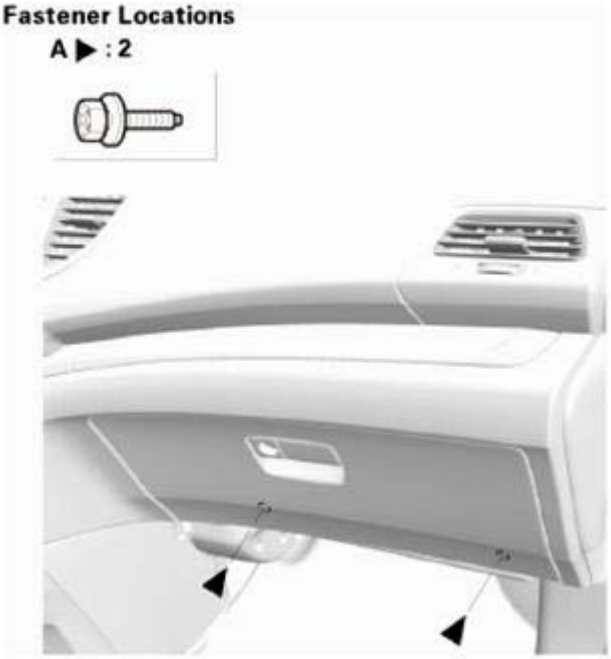

Fig. 120: Identifying Glove Box Mounting Bolts

GETtheMANUALS.org

Courtesy of AMERICAN HONDA MOTOR CO., INC.

2. Release both glove box stops (A) by pushing them in, then let the glove box (B) hang down.

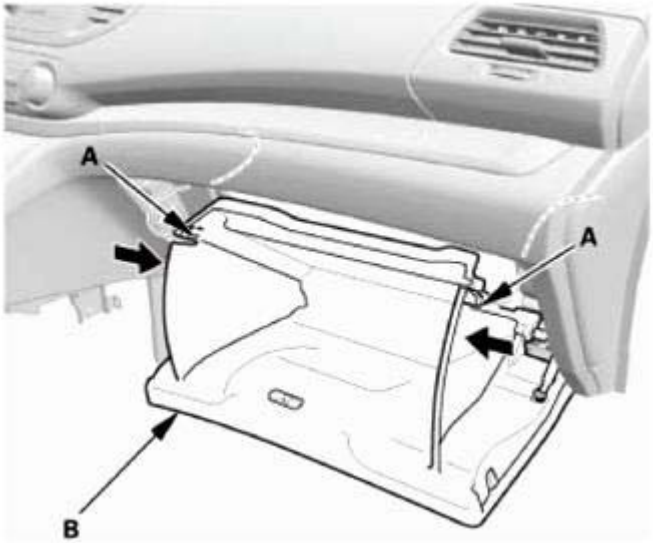

Fig. 121: Releasing Glove Box Stops
Courtesy of AMERICAN HONDA MOTOR CO., INC.

3. Detach the glove box damper hook (A), then remove the glove box (B).

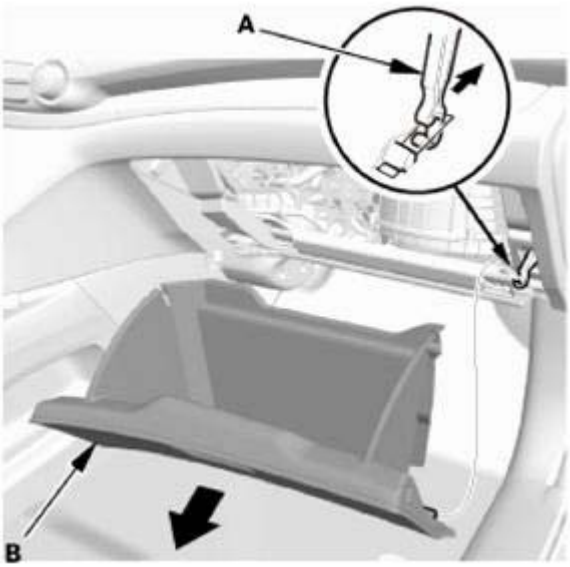

Fig. 122: Removing Glove Box
Courtesy of AMERICAN HONDA MOTOR CO., INC.

3. Glove Box Frame
    1. Remove the glove box frame (A).

GETtheMANUALS.org

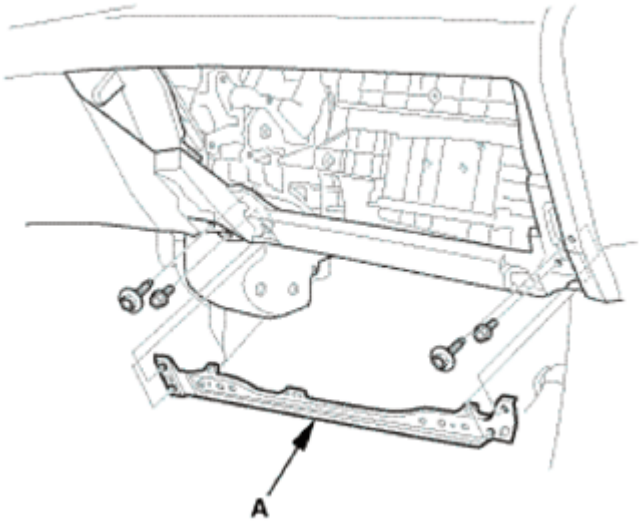

Fig. 123: Identifying Glove Box Frame
Courtesy of AMERICAN HONDA MOTOR CO., INC.

4. Passenger's Heater Duct
    1. Remove the passenger's heater duct (A).

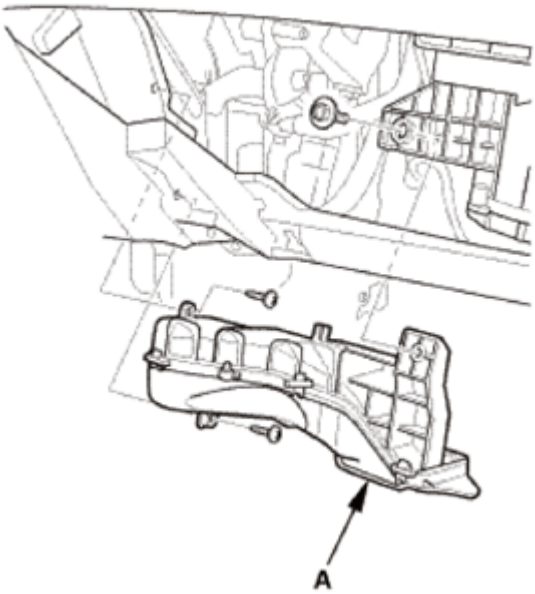

Fig. 124: Identifying Passenger Heater Duct
Courtesy of AMERICAN HONDA MOTOR CO., INC.

5. Power Transistor
    1. Remove the power transistor (A).

GETtheMANUALS.org

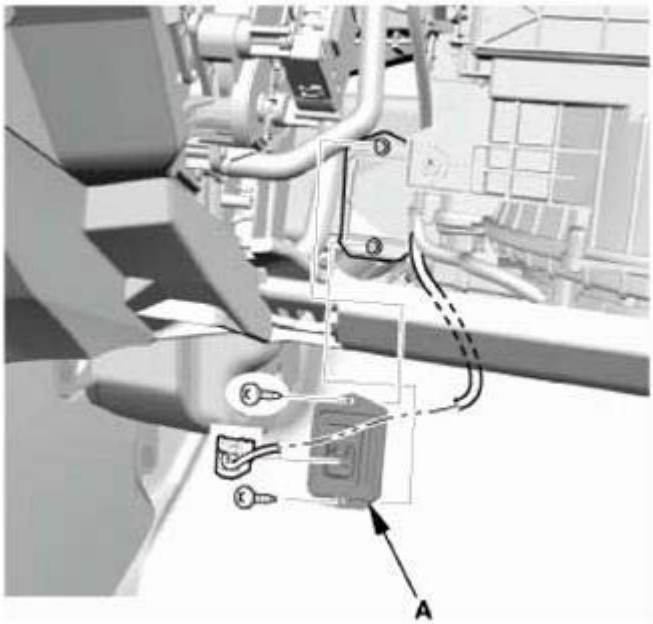

Fig. 125: Identifying Power Transistor
Courtesy of AMERICAN HONDA MOTOR CO., INC.

INSTALLATION

1. Power Transistor
    1. Install the power transistor (A).

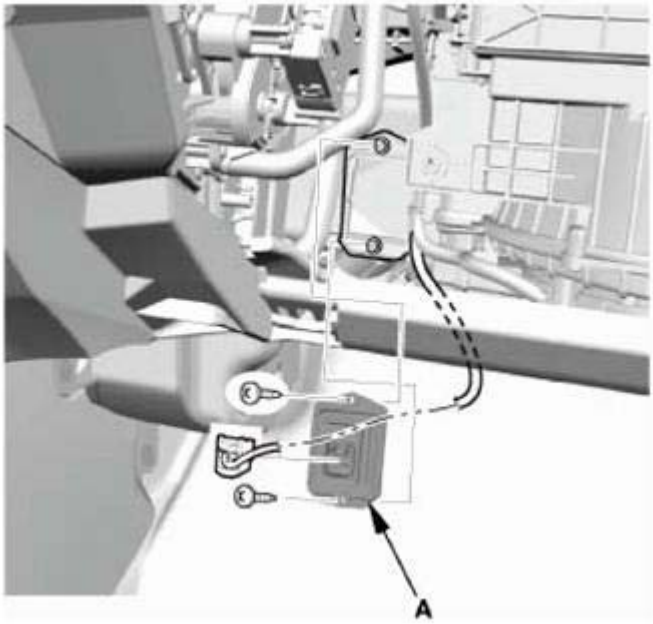

Fig. 126: Identifying Power Transistor
Courtesy of AMERICAN HONDA MOTOR CO., INC.

GETtheMANUALS.org

2. Passenger's Heater Duct
    1. Install the passenger's heater duct (A).

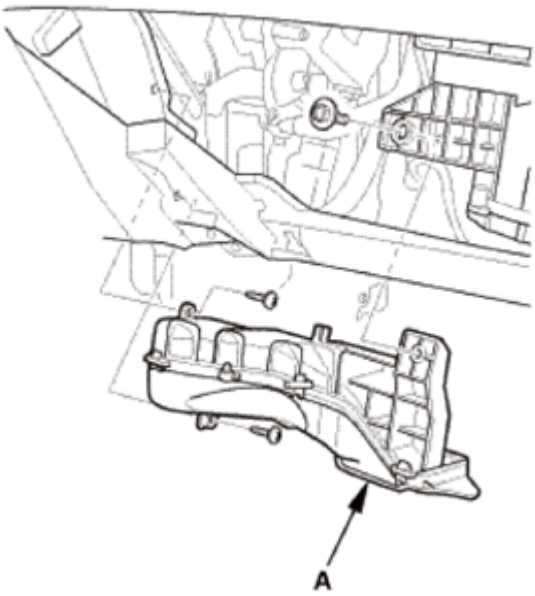

Fig. 127: Identifying Passenger Heater Duct
Courtesy of AMERICAN HONDA MOTOR CO., INC.

3. Glove Box Frame
    1. Install the glove box frame (A).

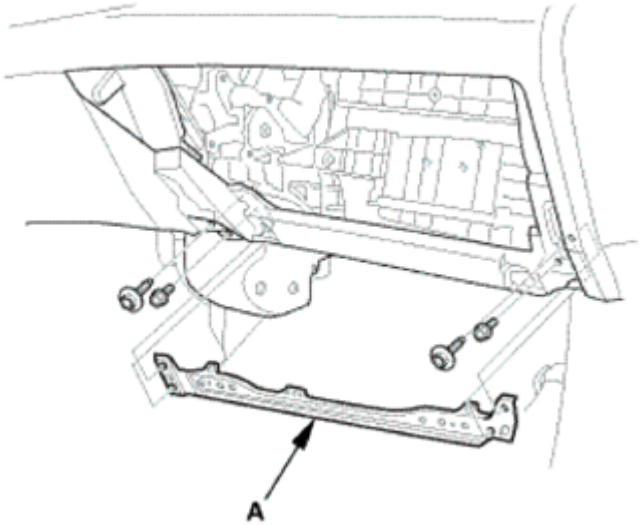

Fig. 128: Identifying Glove Box Frame
Courtesy of AMERICAN HONDA MOTOR CO., INC.

4. Glove Box

GETtheMANUALS.org

1. Install the glove box (A), then install the glove box damper hook (B).

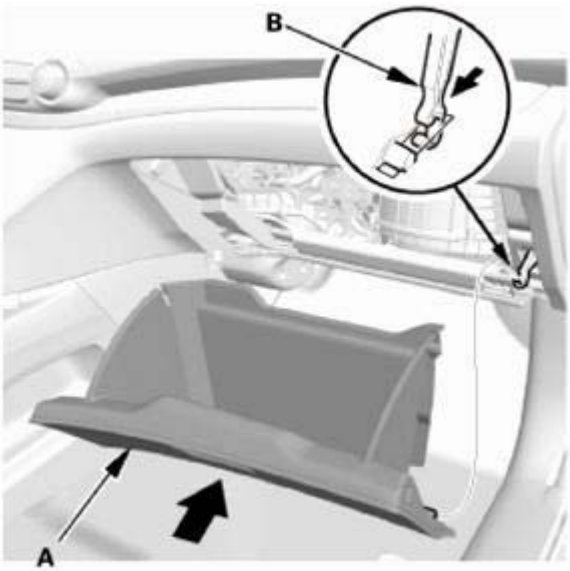

Fig. 129: Installing Glove Box
Courtesy of AMERICAN HONDA MOTOR CO., INC.

2. Install the bolts (A).

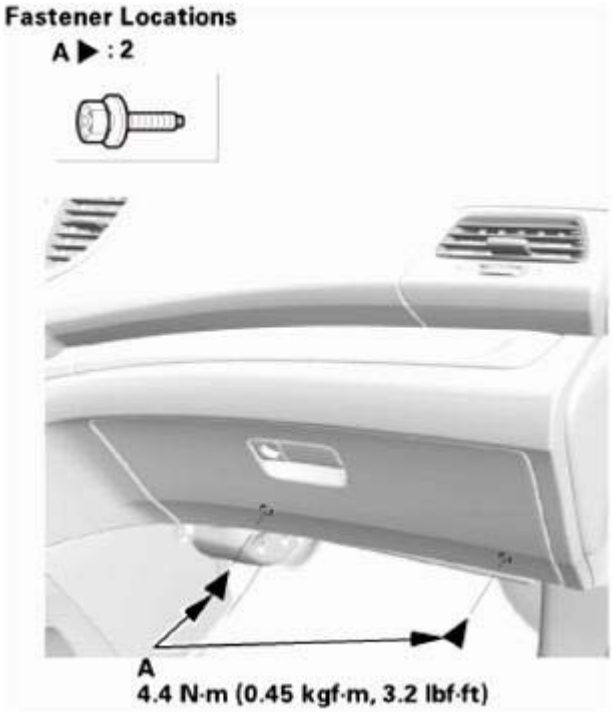

Fig. 130: Identifying Glove Box Mounting Bolts With Torque Specifications
Courtesy of AMERICAN HONDA MOTOR CO., INC.

GETtheMANUALS.org

5. Passenger's Dashboard Undercover
    1. Install the passenger's dashboard undercover (A). Make sure the clips (B) snap into place securely, and the pins (C) into the holder (D) securely.

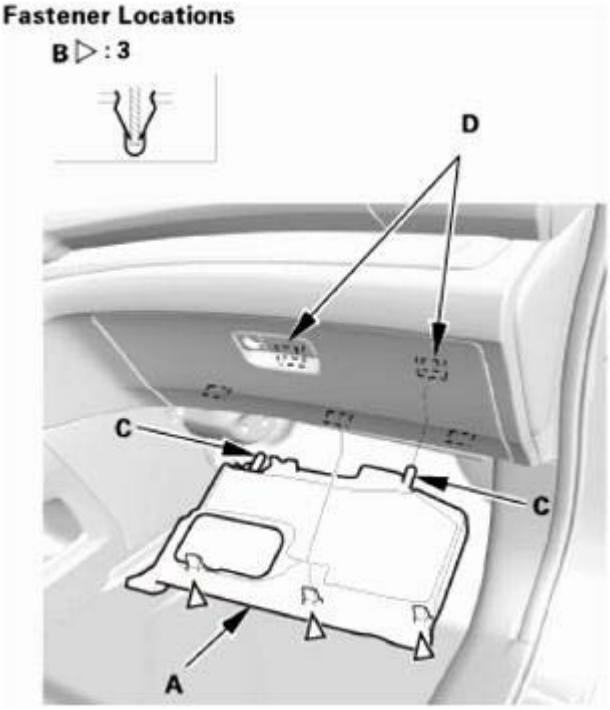

Fig. 131: Identifying Passenger Dashboard Undercover, Holder, Pins And Clips
Courtesy of AMERICAN HONDA MOTOR CO., INC.

BLOWER UNIT REMOVAL AND INSTALLATION

REMOVAL

1. Passenger's Dashboard Undercover
    1. Gently pull down the passenger's dashboard undercover (A) to detach the clips (B), then pull away the undercover to release the pins (C) from the holder (D).

GETtheMANUALS.org

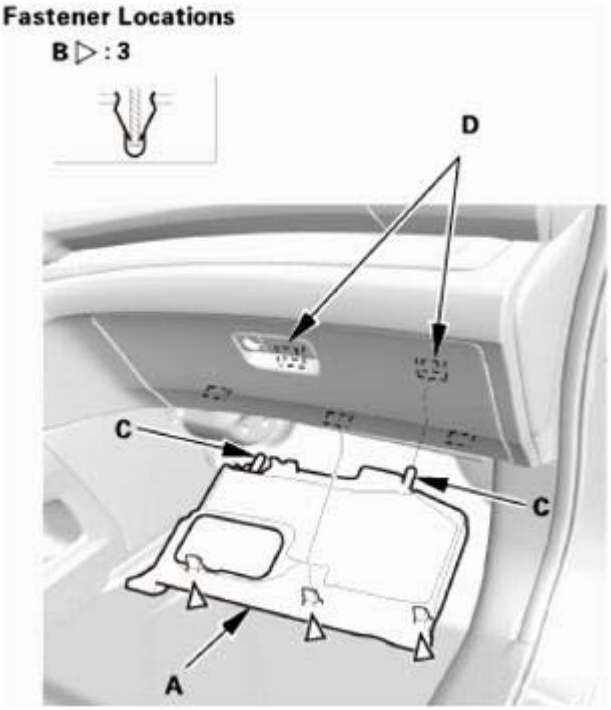

Fig. 132: Identifying Passenger Dashboard Undercover, Holder, Pins And Clips
Courtesy of AMERICAN HONDA MOTOR CO., INC.

2. Glove Box
    1. Remove the bolts (A).

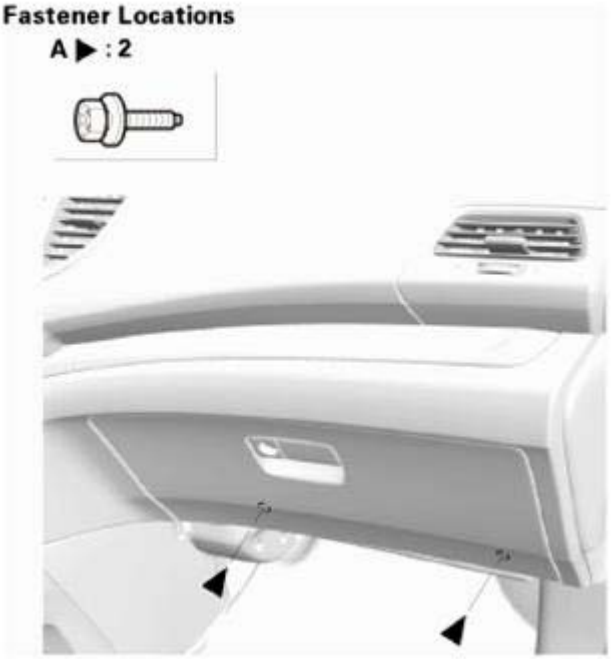

Fig. 133: Identifying Glove Box Mounting Bolts

GETtheMANUALS.org

Courtesy of AMERICAN HONDA MOTOR CO., INC.

2. Release both glove box stops (A) by pushing them in, then let the glove box (B) hang down.

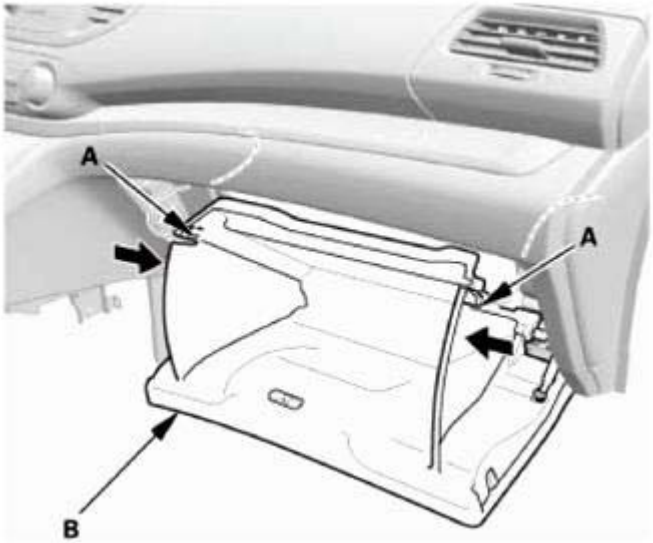

Fig. 134: Releasing Glove Box Stops
Courtesy of AMERICAN HONDA MOTOR CO., INC.

3. Detach the glove box damper hook (A), then remove the glove box (B).

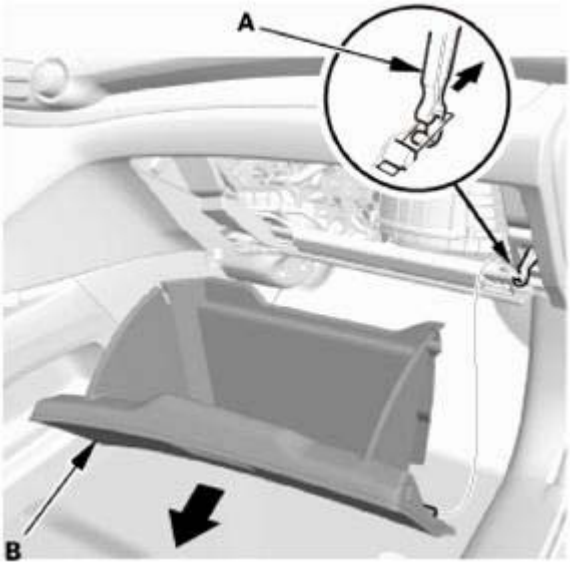

Fig. 135: Removing Glove Box
Courtesy of AMERICAN HONDA MOTOR CO., INC.

3. Glove Box Frame
    1. Remove the glove box frame (A).

GETtheMANUALS.org

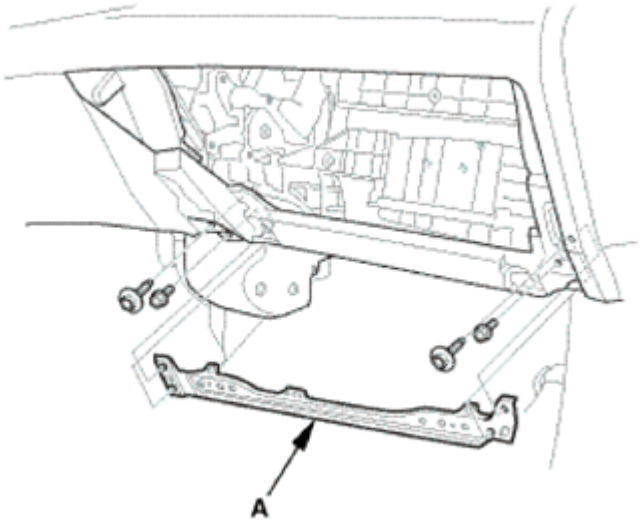

Fig. 136: Identifying Glove Box Frame
Courtesy of AMERICAN HONDA MOTOR CO., INC.

4. Passenger's Heater Duct
    1. Remove the passenger's heater duct (A).

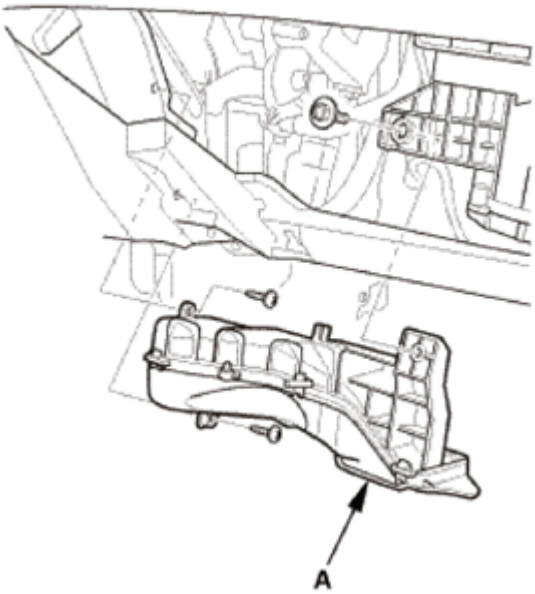

Fig. 137: Identifying Passenger Heater Duct
Courtesy of AMERICAN HONDA MOTOR CO., INC.

5. Cross Brace
    1. Cut the cross brace (A) in the glove box opening with diagonal cutters in the area shown, and remove it.

NOTE: Retain the cross brace to be reinstalled later.

GETtheMANUALS.org

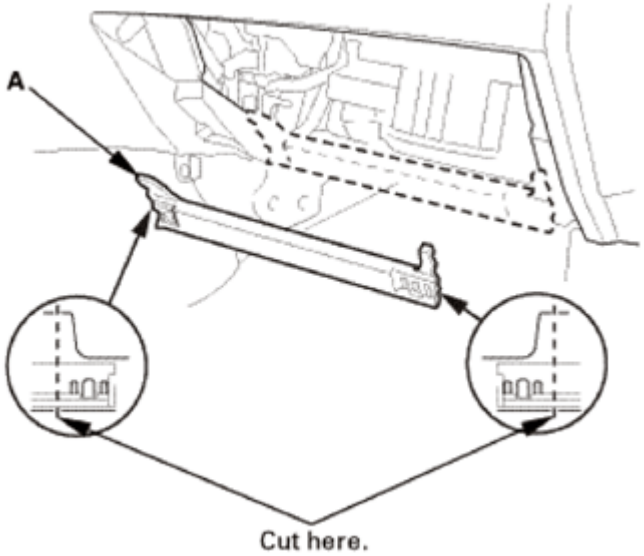

Fig. 138: Identifying Cross Brace Cutting Position
Courtesy of AMERICAN HONDA MOTOR CO., INC.

6. Blower Unit
    1. Disconnect the blower motor connector (A).
    2. Detach the harness clip (B).

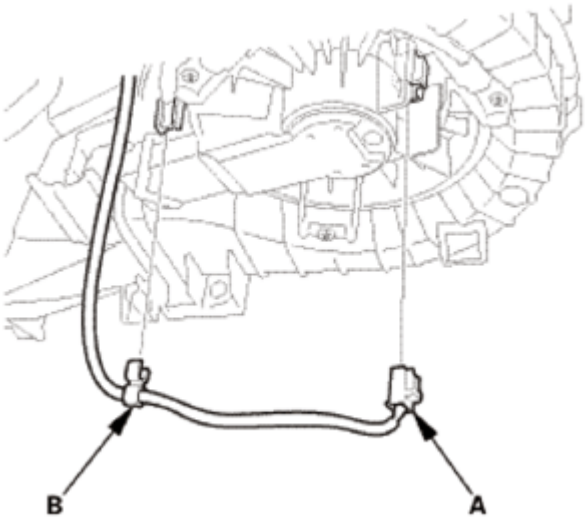

Fig. 139: Identifying Blower Motor Connector And Clips
Courtesy of AMERICAN HONDA MOTOR CO., INC.

    3. Disconnect the recirculation control motor connector (A).
    4. Detach the harness clips (B).

GETtheMANUALS.org

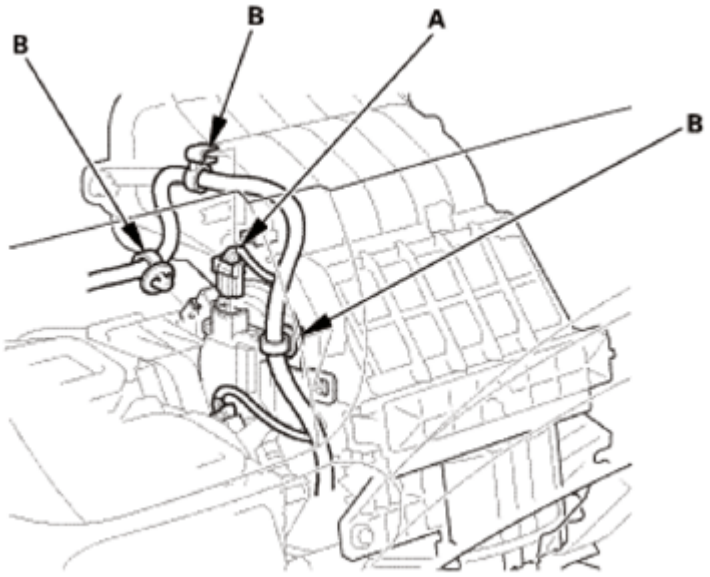

Fig. 140: Identifying Recirculation Control Motor Connectors And Clips
Courtesy of AMERICAN HONDA MOTOR CO., INC.

5. Remove the blower unit (A).

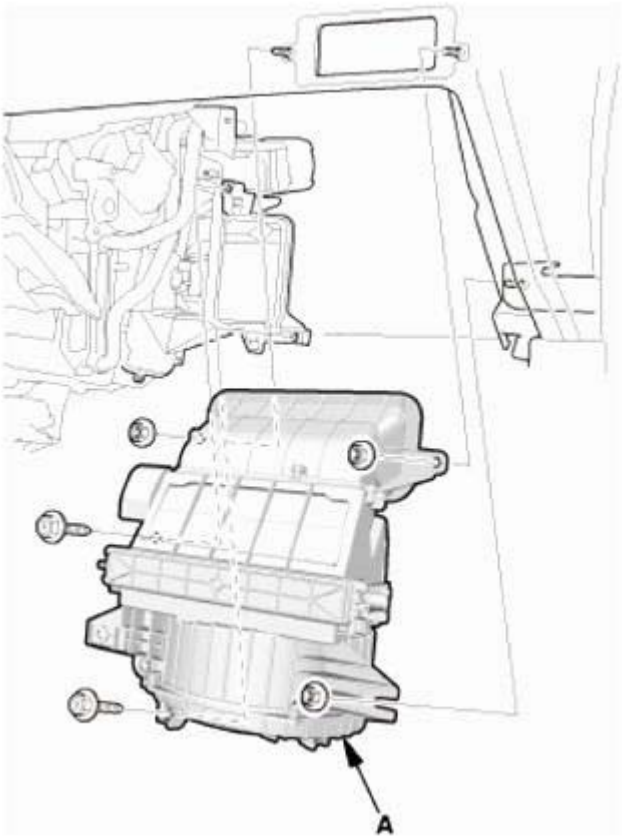

Fig. 141: Identifying Blower Unit

GETtheMANUALS.org

Courtesy of AMERICAN HONDA MOTOR CO., INC.

INSTALLATION

1. Blower Unit
    1. Install the blower unit (A).

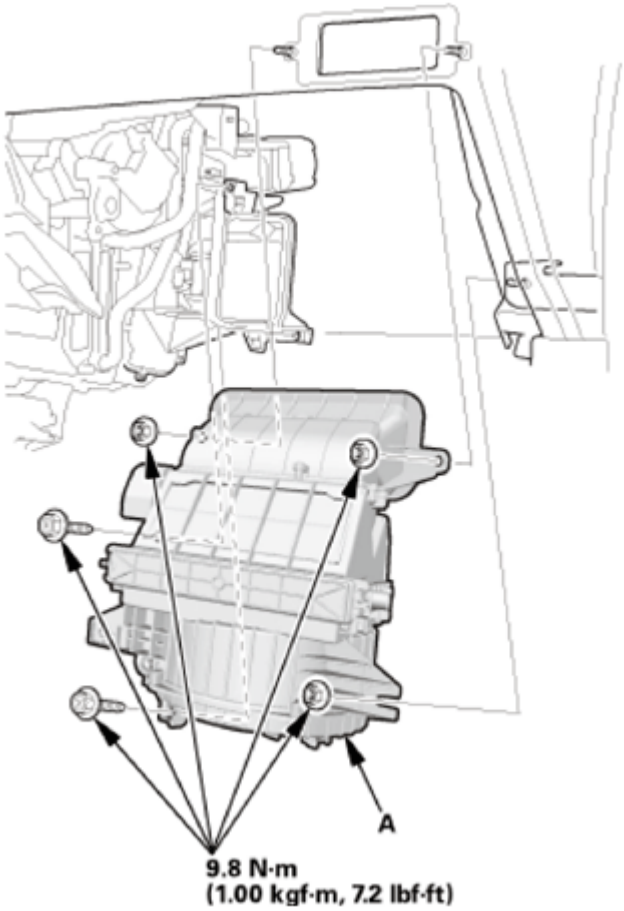

Fig. 142: Identifying Blower Unit With Torque Specifications
Courtesy of AMERICAN HONDA MOTOR CO., INC.

2. Connect the recirculation control motor connector (A).
3. Install the harness clips (B).

GETtheMANUALS.org

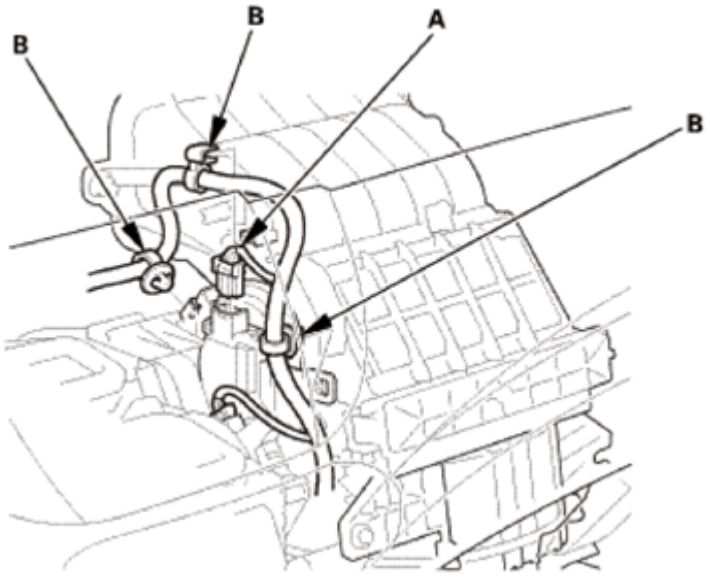

Fig. 143: Identifying Recirculation Control Motor Connectors And Clips
Courtesy of AMERICAN HONDA MOTOR CO., INC.

4. Connect the blower motor connector (A).
5. Install the harness clip (B).

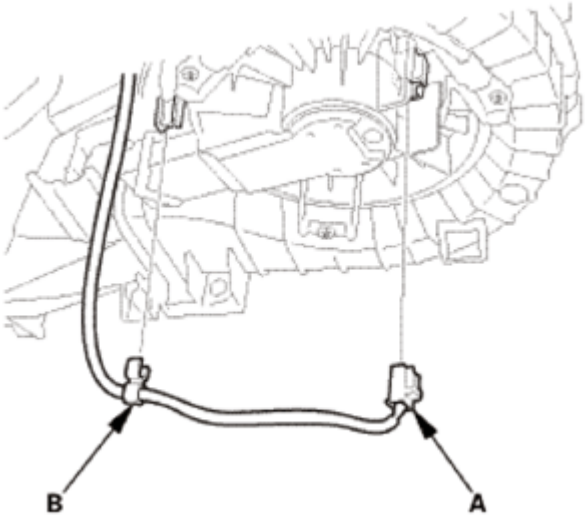

Fig. 144: Identifying Blower Motor Connector And Clip
Courtesy of AMERICAN HONDA MOTOR CO., INC.

2. Passenger's Heater Duct
    1. Install the passenger's heater duct (A).

GETtheMANUALS.org

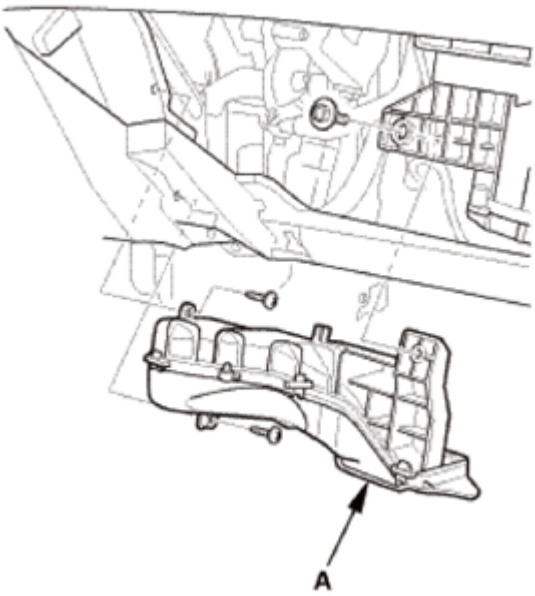

Fig. 145: Identifying Passenger Heater Duct
Courtesy of AMERICAN HONDA MOTOR CO., INC.

3. Glove Box Frame
    1. Install the glove box frame (A).

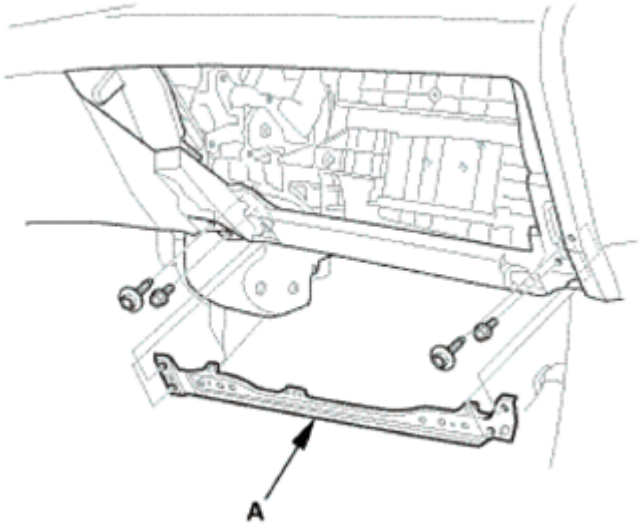

Fig. 146: Identifying Glove Box Frame
Courtesy of AMERICAN HONDA MOTOR CO., INC.

4. Cross Brace
    1. Install the cross brace (A).

GETtheMANUALS.org

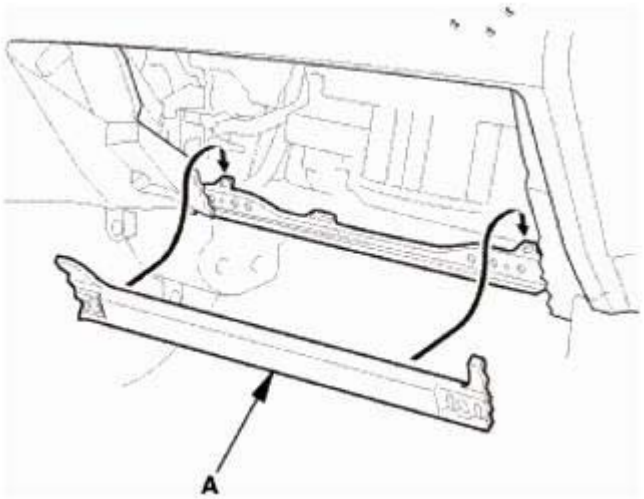

Fig. 147: Installing Cross Brace
Courtesy of AMERICAN HONDA MOTOR CO., INC.

5. Glove Box
    1. Install the glove box (A), then install the glove box damper hook (B).

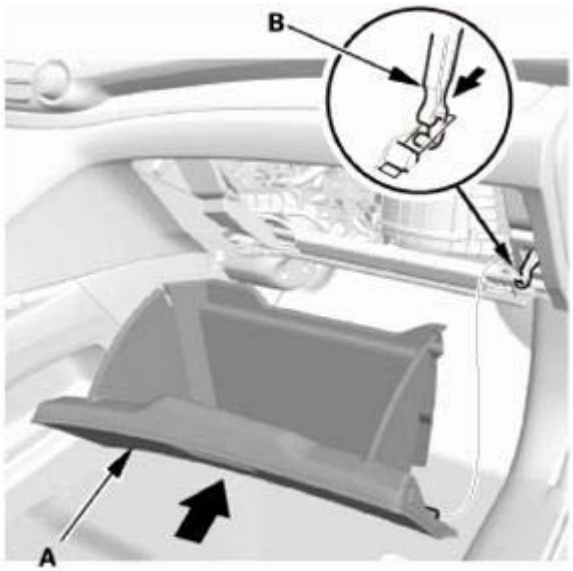

Fig. 148: Installing Glove Box
Courtesy of AMERICAN HONDA MOTOR CO., INC.

    2. Install the bolts (A).

GETtheMANUALS.org

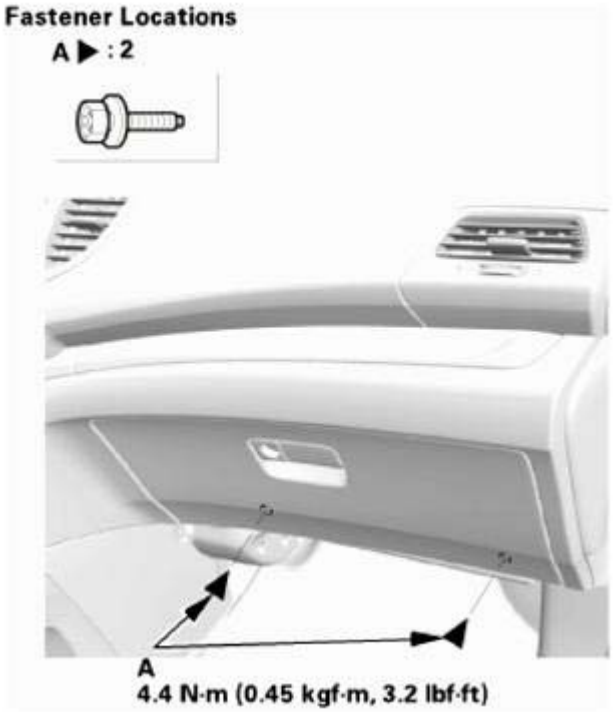

Fig. 149: Identifying Glove Box Mounting Bolts With Torque Specifications
Courtesy of AMERICAN HONDA MOTOR CO., INC.

6. Passenger's Dashboard Undercover
    1. Install the passenger's dashboard undercover (A). Make sure the clips (B) snap into place securely, and the pins (C) into the holder (D) securely.

GETtheMANUALS.org

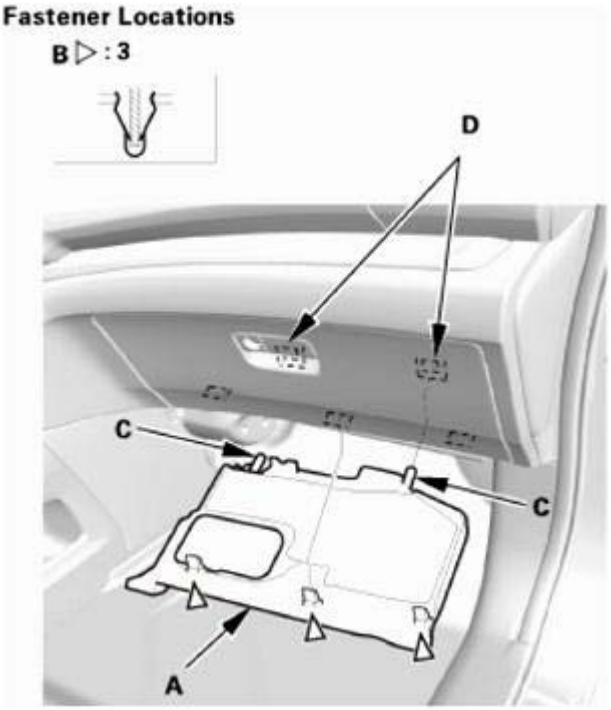

Fig. 150: Identifying Passenger Dashboard Undercover, Holder, Pins And Clips
Courtesy of AMERICAN HONDA MOTOR CO., INC.

CLIMATE CONTROL UNIT REMOVAL AND INSTALLATION

REMOVAL

1. Shift Lever Panel (AT)
    1. Carefully pry out the shift lever panel (A) with the appropriate trim tool to detach the clips (B, C) and the hooks (D), then remove the shift lever panel.

GETtheMANUALS.org

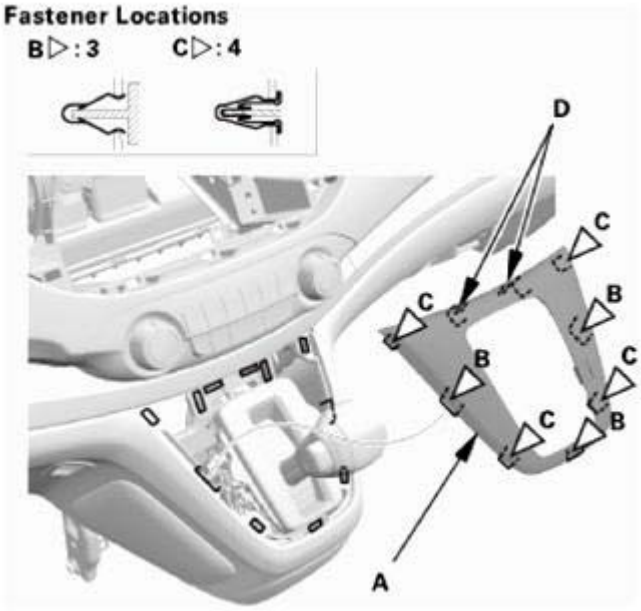

Fig. 151: Identifying Shift Lever Panel, Hooks And Clips
Courtesy of AMERICAN HONDA MOTOR CO., INC.

2. Driver's Inner Dashboard Trim Panel
    1. Carefully pry out the driver's inner dashboard trim panel (A) with the appropriate trim tool to detach the clips (B), then remove the driver's inner dashboard trim panel.

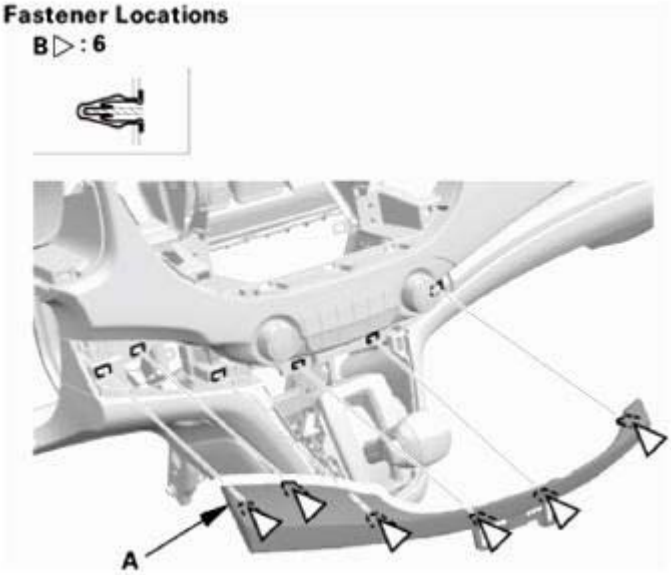

Fig. 152: Identifying Driver Inner Dashboard Trim Panel And Clips
Courtesy of AMERICAN HONDA MOTOR CO., INC.

3. Climate Control Unit Assembly
    1. Remove the climate control unit assembly (A), then disconnect the connector (B).

GETtheMANUALS.org

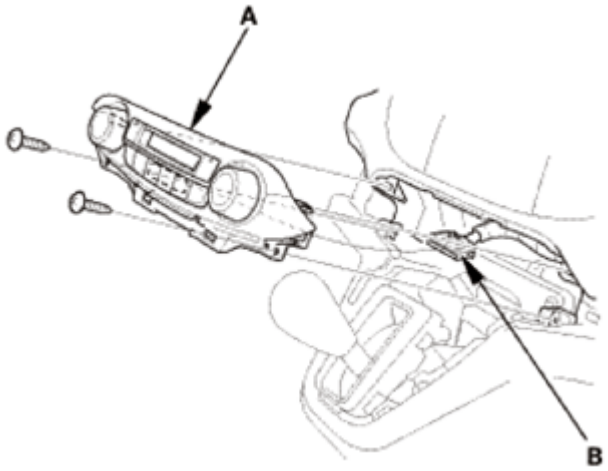

Fig. 153: Identifying Climate Control Unit Assembly And Connector
Courtesy of AMERICAN HONDA MOTOR CO., INC.

4. Climate Control Unit
    1. Remove the dials (A).
    2. Remove the climate control unit (B).

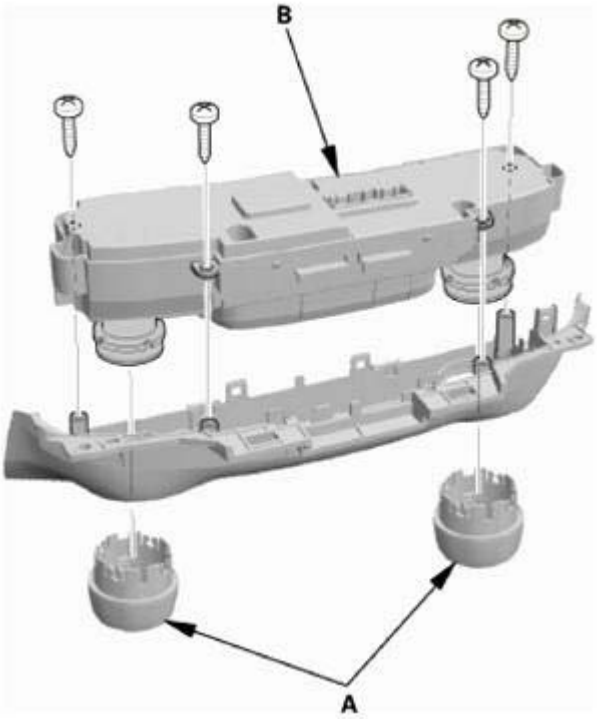

Fig. 154: Identifying Climate Control Unit And Dials
Courtesy of AMERICAN HONDA MOTOR CO., INC.

INSTALLATION

GETtheMANUALS.org

1. Climate Control Unit
    1. Install the climate control unit (A).
    2. Install the dials (B).

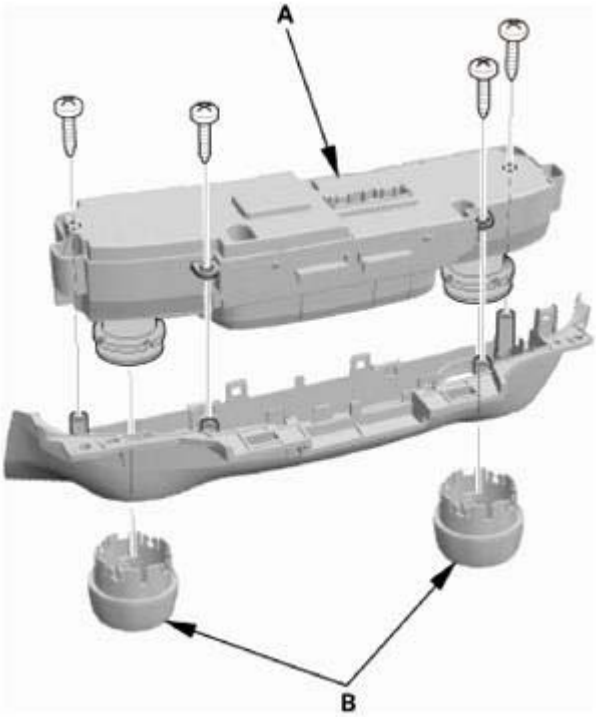

Fig. 155: Identifying Climate Control Unit And Dials
Courtesy of AMERICAN HONDA MOTOR CO., INC.

2. Climate Control Unit Assembly
    1. Connect the connector (A), then install the climate control unit assembly (B).

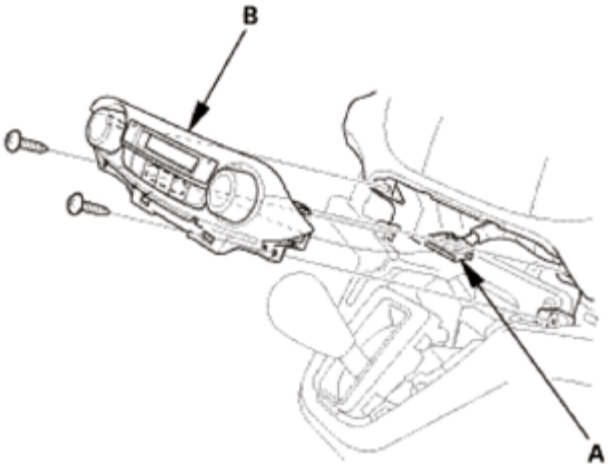

Fig. 156: Identifying Climate Control Unit Assembly And Connector
Courtesy of AMERICAN HONDA MOTOR CO., INC.

GETtheMANUALS.org

3. Driver's Inner Dashboard Trim Panel
    1. Install the driver's inner dashboard trim panel (A). Make sure the clips (B) snap into place securely.

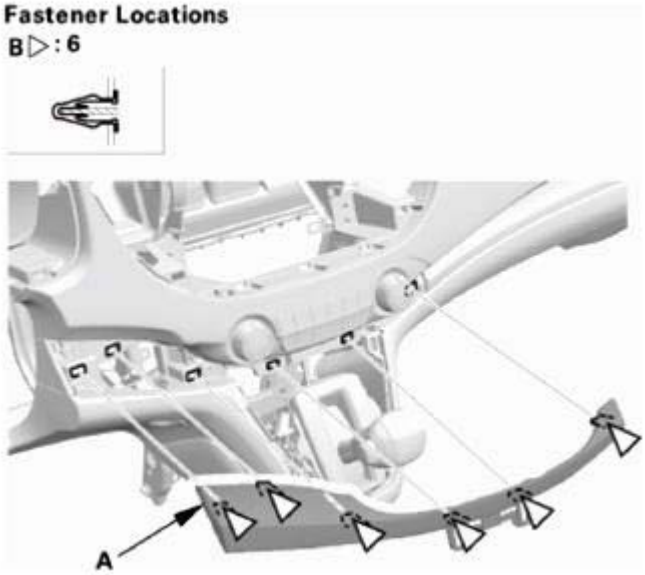

Fig. 157: Identifying Driver Inner Dashboard Trim Panel And Screws
Courtesy of AMERICAN HONDA MOTOR CO., INC.

4. Shift Lever Panel (AT)
    1. Install the shift lever panel (A). Make sure the clips (B, C) and the hooks (D) snap into place securely.

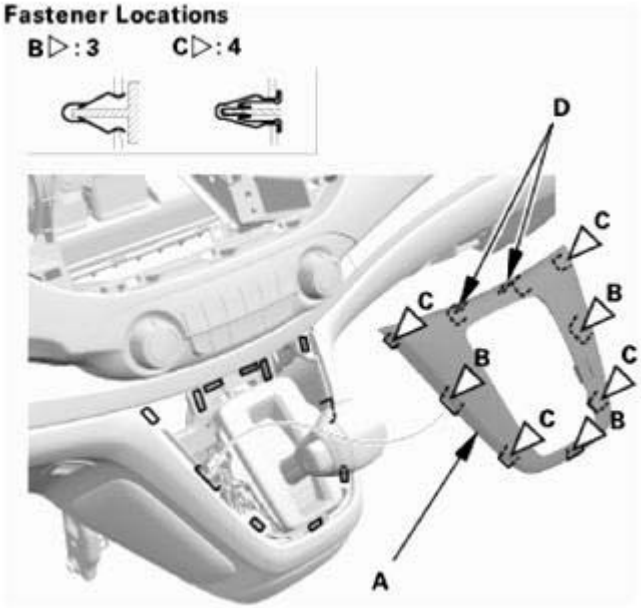

Fig. 158: Identifying Shift Lever Panel, Hooks And Clips
Courtesy of AMERICAN HONDA MOTOR CO., INC.

GETtheMANUALS.org

5. Climate Control Self-Diagnostic Function

How to Use the Self-Diagnostic Function to check for DTCs

1. Turn the ignition switch to LOCK (0) and then back to ON (II).
2. Press and hold the ON/OFF button, then within 10 seconds press and release the REAR WINDOW DEFOGGER button five times. Release the ON/OFF button.
3. All LCD segments come on for 2 seconds, then the self-diagnostic function begins.

NOTE:

- **The self-diagnostic test could take up to about 90 seconds to run.**
- **The blower motor will run at various speeds regardless of what the panel is displaying.**
- **If there is any problem in the system, the system flashes 88. Refer to checking for DTCs.**
- **If there are no problems detected, the segments will not illuminate, and the system will appear to be turned off.**

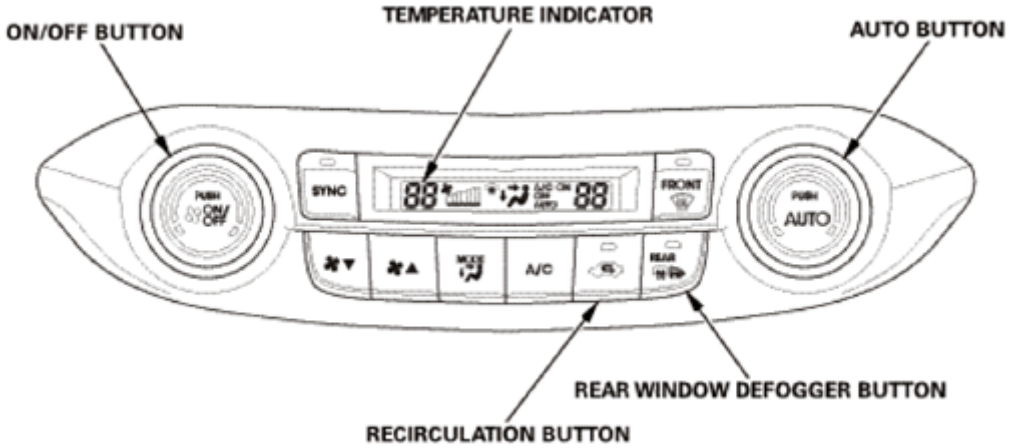

Fig. 159: Identifying Temperature Indicator, Auto, Recirculation, Rear Window Defogger And On/Off Button
Courtesy of AMERICAN HONDA MOTOR CO., INC.

Canceling the Self-Diagnostic Function

4. Turn the ignition switch to LOCK (0) to cancel the self-diagnostic function. After completing the repair work, run the self-diagnostic function again to make sure that there are no other DTCs.

Checking for DTCs

The temperature indicator display indicates single or multiple DTCs. If no DTCs are present, the indicator remains blank.

GETtheMANUALS.org

NOTE: **If temperature indicator segments 05, 07, 09, 40, 43, 49, 55, and 89 are on at the some time, there may be an open in the sensor common ground wire.**

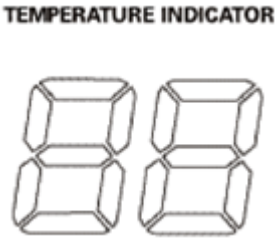

Fig. 160: Identifying Temperature Indicator
Courtesy of AMERICAN HONDA MOTOR CO., INC.

DTC (Temperature Indicator Segments)	Detection Item
05	An open in the outside air temperature sensor circuit
06	A short in the outside air temperature sensor circuit
07	An open in the sunlight sensor circuit
08	A short in the sunlight sensor circuit
09	An open in the evaporator temperature sensor circuit
0A	A short in the evaporator temperature sensor circuit
40	An open in the air mix control motor circuit (driver's)
41	A short in the air mix control motor circuit (driver's)
42	A problem in the air mix control motor circuit, linkage, door, or motor (driver's)
43	An open in the passenger's air mix control motor circuit
44	A short in the passenger's air mix control motor circuit
45	A problem in the passenger's air mix control motor circuit, linkage, door, or motor
49	An open in the mode control motor circuit
4A	A short in the mode control motor circuit
4B	A problem in the mode control motor circuit, linkage, doors, or motor
55	An open in the recirculation control motor circuit
56	A short in the recirculation control motor circuit
57	A problem in the recirculation control motor circuit, linkage, door, or motor
59	A problem in the blower motor circuit
80	Communication bus line error (BUS-OFF)
81	Climate control unit lost communication with gauge control module (ECT message)
	Climate control unit lost communication with gauge control module

GETtheMANUALS.org

83	(VSP message)
89	Humidity/in-car temperature sensor communication error
C0	Climate control unit internal error

Displaying Sensor Inputs at the Climate Control Unit

The climate control unit has a mode that displays the sensor inputs it receives. This mode shows you what the climate control unit is receiving from each of the sensors, one at a time, and it can help you determine if a sensor is faulty.

Checks Before Using the Sensor Input Display Mode

1. Turn the ignition switch to ON (II), and check the recirculation door function; press the RECIRCULATION button to switch from FRESH to RECIRC. The air volume and sound should change slightly.
2. Set the temperature control dial to the desired test temperature:
   - "Lo" temperature setting will default to MAX COOL, VENT, and RECIRC (A/C on) or FRESH (A/C off).
   - "Hi" temperature setting will default to MAX HOT, HEAT or HEAT/DEF, and FRESH.
   - 58 through 86 °F (14 through 30 °C) settings will use the automatic climate control logic.
3. Turn the ignition switch to LOCK (0).

Run the Sensor Input Display Mode

1. Turn the ignition switch to LOCK (0).
2. Press and hold both the AUTO and RECIRCULATION CONTROL buttons, then start the engine.
3. After the engine starts, release both buttons. The climate control unit will flash the sensor number and then the value for that sensor. Record the value displayed.
4. To advance to the next sensor, press the REAR WINDOW DEFOGGER button.

NOTE:

- **The sensor values will be displayed in degrees Celsius (°C) or an alphanumeric code. Use the chart to convert the value to degrees Fahrenheit (°F).**
- **If the sensor value displays "Er", this indicates there is an open or short in the circuit or sensor. Check for DTCs using the HDS, or use the climate control self-diagnostic function.**
- **If necessary, compare the sensor input display to a known-good vehicle under the same test conditions.**
- **If the sensor is out of the normal range, refer to the sensor test or substitute a known-good sensor, and recheck.**

Sensor	Item	Displayed Value

GETtheMANUALS.org

1	Mode positioning	%
2	In-car temperature	°C
3	Outside air temperature	°C
4	Solar radiation sensor value: dark = 00, flashlight = 04, cloudy = 10, sunny = 65	10 kcal/m^2 .h
5	Evaporator outlet air temperature	°C
6	Driver's air mix opening (low value indicates cooler air distribution, higher value indicates warmer air distribution)	% of opening
7	Passenger's air mix opening (low value indicates cooler air distribution, higher value indicates warmer air distribution)	% of opening
8	Recirculation control opening	% of opening
9	Vehicle speed (vehicle must be driven to display speed)	10 km/h
A	Engine coolant temperature	°C
b	Vent temperature air out (TAO) (Driver's)	°C
C	Humidity sensor value	%
d	Ill step	Step
E	Software version	-

CELSIUS TO FAHRENHEIT CONVERSION TABLE

°C	°F	°C	°F	°C	°F	°C	°F	°C	°F
0	32	10	50	20	68	30	86	40	104
1	34	11	52	21	70	31	88	41	106
2	36	12	54	22	72	32	90	42	108
3	37	13	55	23	73	33	91	43	109
4	39	14	57	24	75	34	93	44	111
5	41	15	59	25	77	35	95	45	113
6	43	16	61	26	79	36	97	46	115
7	45	17	63	27	81	37	99	47	117
8	46	18	64	28	82	38	100	48	118
9	48	19	66	29	84	39	102	49	120

°C	°F	°C	°F	°C	°F	°C	°F	°C	°F
50	122	60	140	70	158	80	176	90	194
51	124	61	142	71	160	81	178	91	196
52	126	62	144	72	162	82	180	92	198
53	127	63	145	73	163	83	181	93	199
54	128	64	147	74	165	84	183	94	201
55	131	65	149	75	167	85	185	95	203
56	133	66	151	76	169	86	187	96	205
57	135	67	152	77	170	87	188	97	207
58	136	68	154	78	172	88	190	98	208
59	139	69	158	79	174	89	192	99	210

GETtheMANUALS.org

ALPHANUMERIC CONVERSION TABLE

Display Reading (Alphanumeric)	°C	°F	%
A1 thru A9	-1 thru -9	30 thru 16	-1 thru -9
B0 thru B9	-10 thru -19	14 thru -2	-10 thru -19
C0 thru C9	-20 thru -29	-4 thru -20	-20 thru -29
D0 thru D9	-30 thru -39	-22 thru -38	-30 thru -39
E0 thru E9	-40 thru -49	-40 thru -56	-40 thru -49
F0 thru F9	100 thru 109	212 thru 228	+100 thru +109

ALPHANUMERIC CONVERSION TABLE (MODE POSITIONING)

Display Reading (Alphanumeric)	Mode Position
0	VENT
18	HEAT/VENT-1
32	HEAT/VENT-2
54	HEAT
69	HEAT/DEF-1
84	HEAT/DEF-2
F0	DEF

DRIVER'S AIR MIX CONTROL MOTOR REMOVAL AND INSTALLATION

REMOVAL

NOTE: Set the MAX COOL position before removing the motor.

1. Driver's Air Mix Control Motor
    1. Disconnect the driver's air mix control motor connector (A).
    2. Remove the driver's air mix control motor (B).

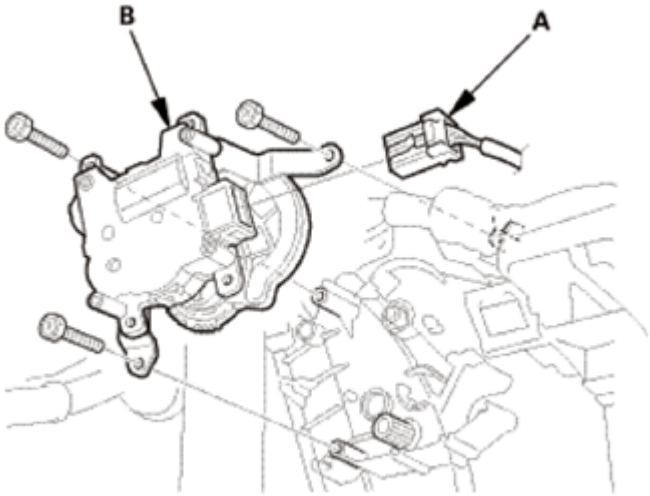

GETtheMANUALS.org

Fig. 161: Identifying Driver Air Mix Control Motor And Connector
Courtesy of AMERICAN HONDA MOTOR CO., INC.

INSTALLATION

1. Driver's Air Mix Control Motor
    1. Align the driver's air mix control motor (A) with the gear, then install the motor.
    2. Connect the driver's air mix control motor connector (B).
    3. After installation, make sure the motor runs smoothly.

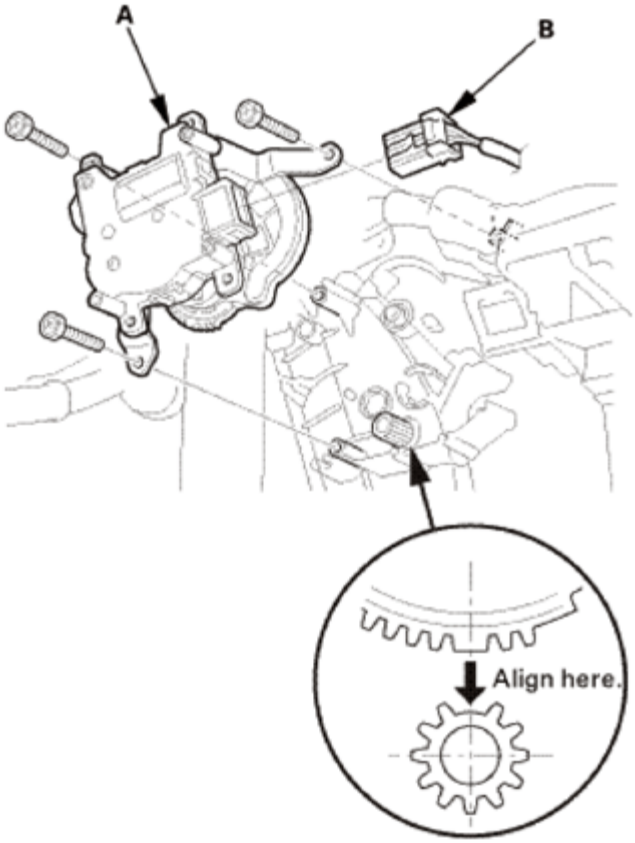

Fig. 162: Identifying Driver Air Mix Control Motor And Gear Align Mark
Courtesy of AMERICAN HONDA MOTOR CO., INC.

DUST AND POLLEN FILTER REMOVAL AND INSTALLATION

REMOVAL

1. Glove Box - Move
    1. Detach the glove box damper hook (A), and release both glove box stops (B) by pushing them in, then let glove box (C) hang down.

GETtheMANUALS.org

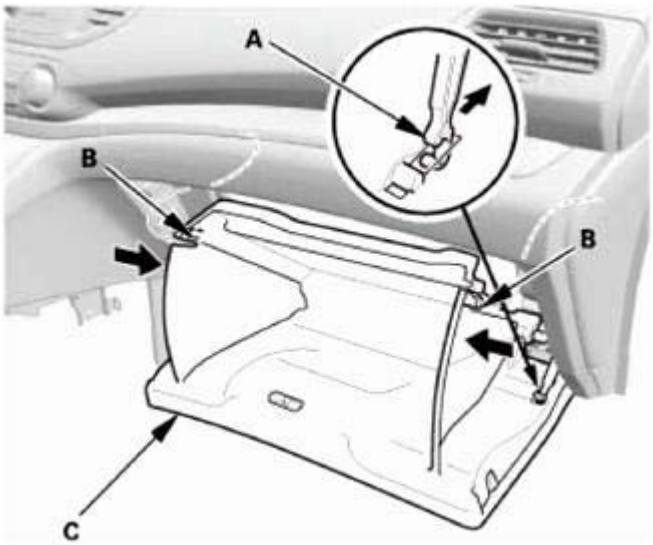

Fig. 163: Detaching Glove Box Damper Hook
Courtesy of AMERICAN HONDA MOTOR CO., INC.

2. Dust and Pollen Filter
    1. Remove the lid (A).
    2. Pull out the dust and pollen filter (B).

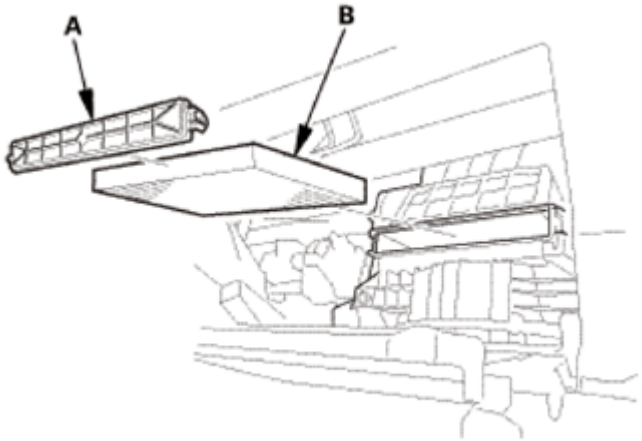

Fig. 164: Identifying LID, Dust And Pollen Filter
Courtesy of AMERICAN HONDA MOTOR CO., INC.

INSTALLATION

1. Dust and Pollen Filter
    1. Install the dust and pollen filter (A).
    2. Install the lid (B).

NOTE: **Make sure there is no air leaking out of the blower unit.**

GETtheMANUALS.org

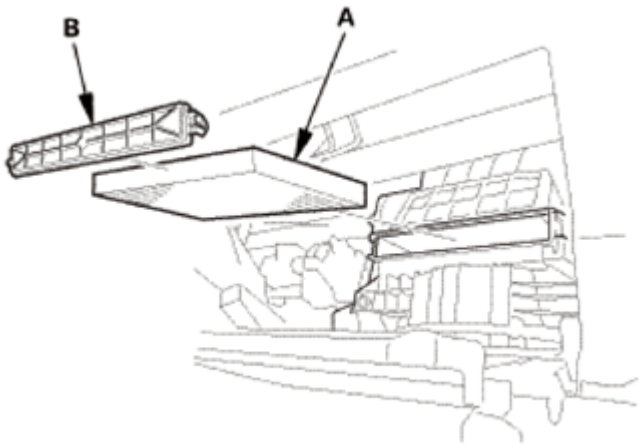

Fig. 165: Identifying LID, Dust And Pollen Filter
Courtesy of AMERICAN HONDA MOTOR CO., INC.

2. Glove Box - Move
    1. Install the glove box (A). Make sure the glove box stops (B) snap into place securely.
    2. Install the glove box damper hook (C).

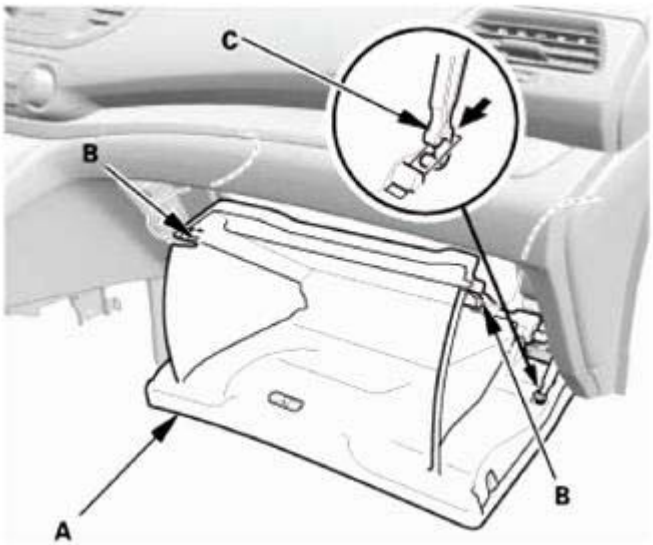

Fig. 166: Installing Glove Box Damper Hook
Courtesy of AMERICAN HONDA MOTOR CO., INC.

EVAPORATOR CORE REMOVAL AND INSTALLATION

SPECIAL TOOL REQUIRED

Image	Description/Tool Number

GETtheMANUALS.org

	Oil Injector Tool Robinair ROB16256[1], commercially available
	Compact Electronic Vacuum Gauge Robinair ROB14777[1], commercially available
	Leak Detector YGK-H-10PM[1]

GETtheMANUALS.org

	Leak Detector HLD-100(1)
	Leak Detector TIFZX-1(1)
	OPTIMAX Jr. A/C Leak Detection Kit TRP124893(1)

GETtheMANUALS.org

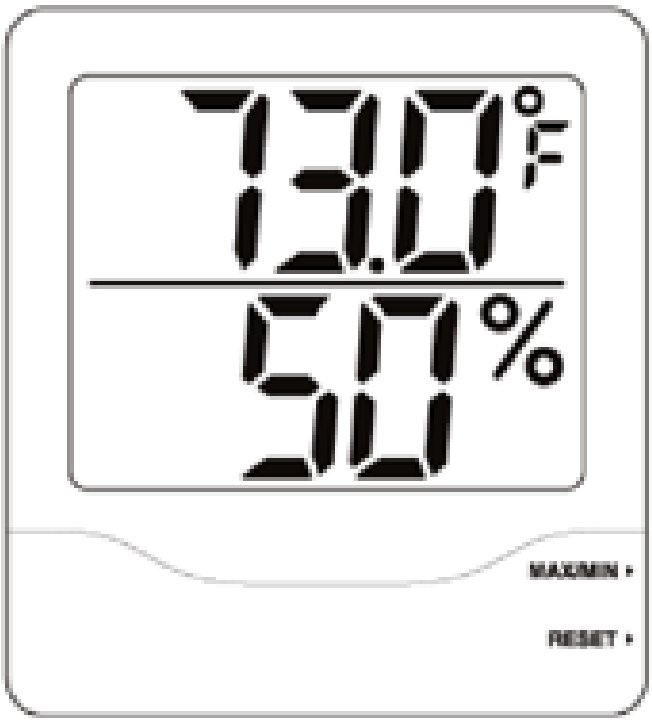	Big Digit Hygro-Thermometer PYR445703, commercially available
	Throttle Pedal Depressor Tool B240B, commercially available
(1) These tools are available through the Honda Tool and Equipment Program; call 888-424-6857	

REMOVAL

CAUTION:

- **Air conditioning refrigerant or lubricant vapor can irritate your eyes, nose, or throat.**
- **Be careful when connecting service equipment.**
- **Do not breathe refrigerant or vapor.**

NOTE:

- **If accidental system discharge occurs, ventilate the work area before resuming service.**
- **Additional health and safety information may be obtained from the refrigerant and lubricant manufacturers.**

1. R-134a Refrigerant Recovery/Recycling/Charging Station - Connection
    1. Connect an R-134a refrigerant recovery/recycling/charging station (A) to the high-pressure service port (B) and the low-pressure service port (C), as shown, following the equipment manufacturer's instructions.

GETtheMANUALS.org

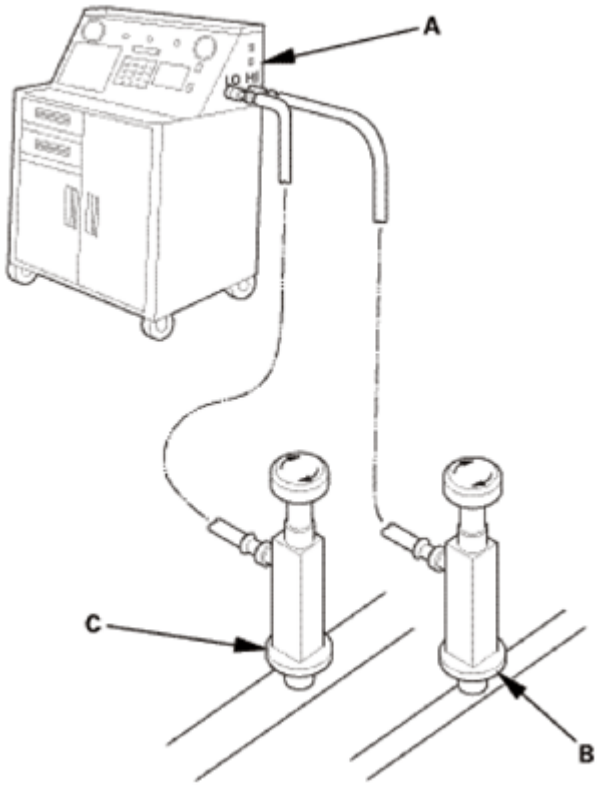

Fig. 167: Identifying Refrigerant Recovery/Recycling/Charging Station, High And Low Pressure Service Port
Courtesy of AMERICAN HONDA MOTOR CO., INC.

2. A/C Refrigerant - Recovery
    1. Recover the refrigerant from the A/C system.
    2. Measure the amount of refrigerant oil removed from the A/C system after the recovery process is completed. Be sure to put the same amount of new refrigerant oil back into the A/C system before charging.
3. A/C Line - Evaporator Side
    1. Remove the bolt.

GETtheMANUALS.org

Fig. 168: Identifying A/C Line Mounting Bolt
Courtesy of AMERICAN HONDA MOTOR CO., INC.

2. Disconnect the A/C line (A) with O-rings (B).

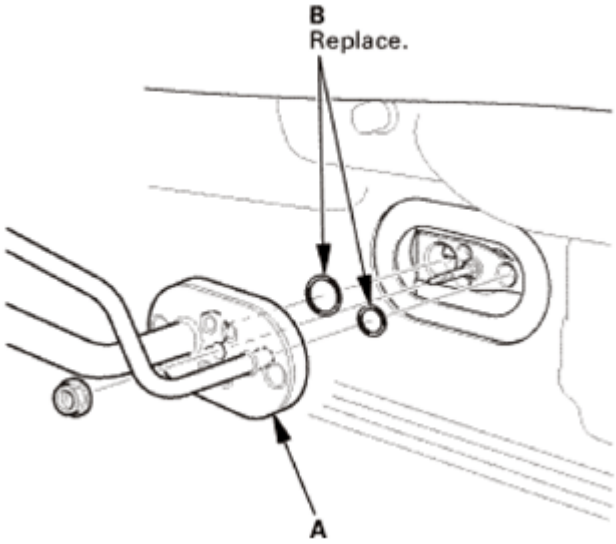

Fig. 169: Identifying A/C Line And O-Ring
Courtesy of AMERICAN HONDA MOTOR CO., INC.

3. Remove the stud bolt (A).

GETtheMANUALS.org

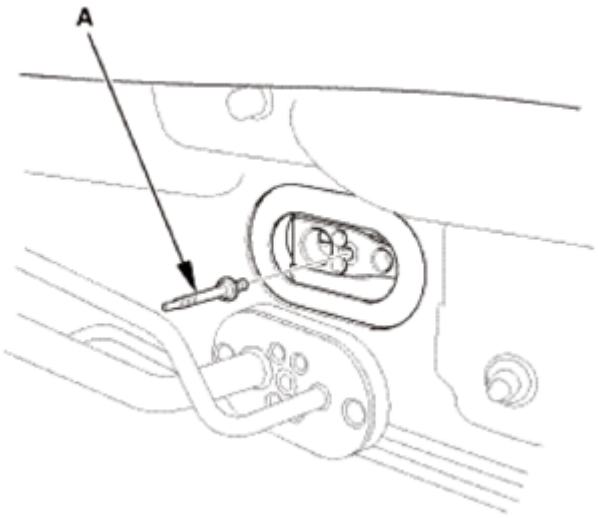

Fig. 170: Identifying A/C Line Stud Bolt
Courtesy of AMERICAN HONDA MOTOR CO., INC.

4. Passenger's Dashboard Undercover
    1. Gently pull down the passenger's dashboard undercover (A) to detach the clips (B), then pull away the undercover to release the pins (C) from the holder (D).

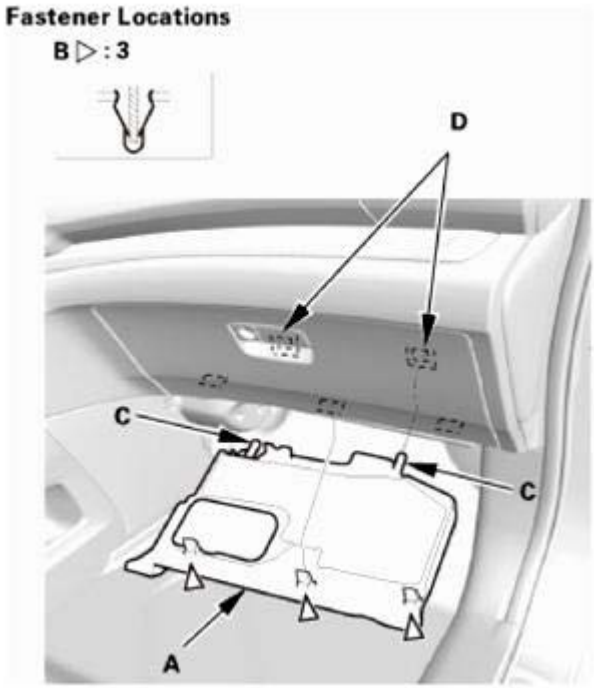

Fig. 171: Identifying Passenger Dashboard Undercover, Holder, Pins And Clips
Courtesy of AMERICAN HONDA MOTOR CO., INC.

5. Glove Box
    1. Remove the bolts (A).

GETtheMANUALS.org

Fig. 172: Identifying Glove Box Mounting Bolts
Courtesy of AMERICAN HONDA MOTOR CO., INC.

2. Release both glove box stops (A) by pushing them in, then let the glove box (B) hang down.

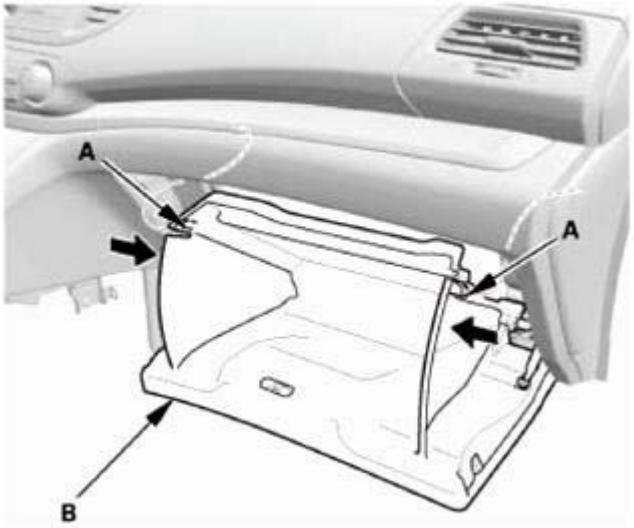

Fig. 173: Releasing Glove Box Stops
Courtesy of AMERICAN HONDA MOTOR CO., INC.

3. Detach the glove box damper hook (A), then remove the glove box (B).

GETtheMANUALS.org

Fig. 174: Removing Glove Box
Courtesy of AMERICAN HONDA MOTOR CO., INC.

6. Glove Box Frame
    1. Remove the glove box frame (A).

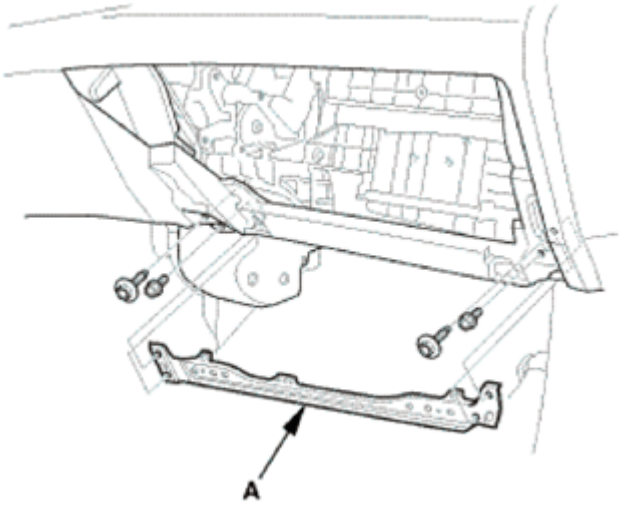

Fig. 175: Identifying Glove Box Frame
Courtesy of AMERICAN HONDA MOTOR CO., INC.

7. Passenger's Heater Duct
    1. Remove the passenger's heater duct (A).

GETtheMANUALS.org

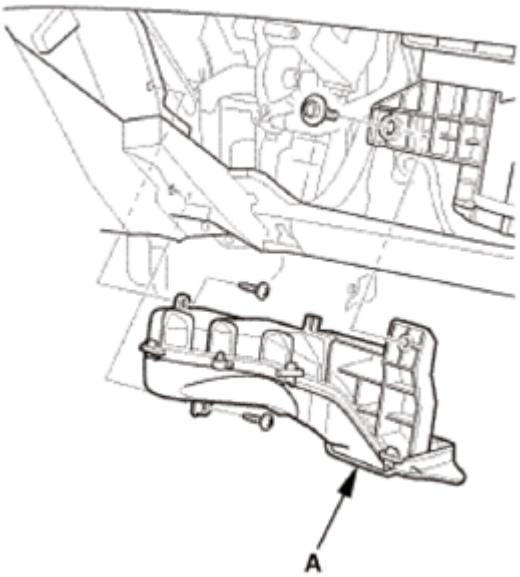

Fig. 176: Identifying Passenger Heater Duct
Courtesy of AMERICAN HONDA MOTOR CO., INC.

8. Cross Brace
    1. Cut the cross brace (A) in the glove box opening with diagonal cutters in the area shown, and remove it.

NOTE: Retain the cross brace to be reinstalled later.

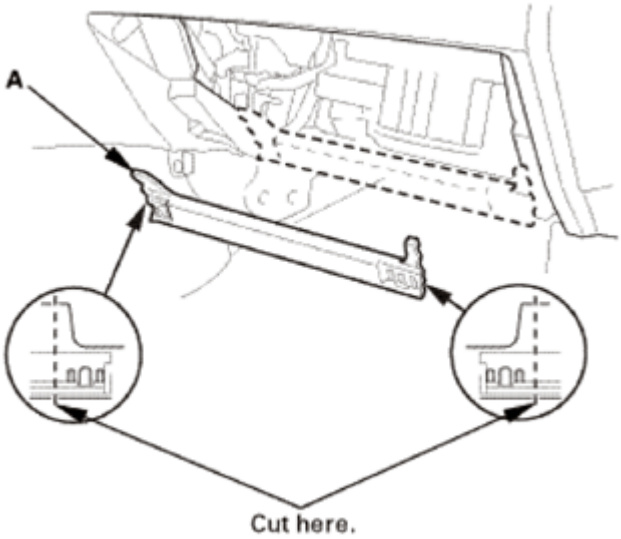

Fig. 177: Identifying Cross Brace Cutting Position
Courtesy of AMERICAN HONDA MOTOR CO., INC.

9. Blower Unit
    1. Disconnect the blower motor connector (A).

GETtheMANUALS.org

2. Detach the harness clip (B).

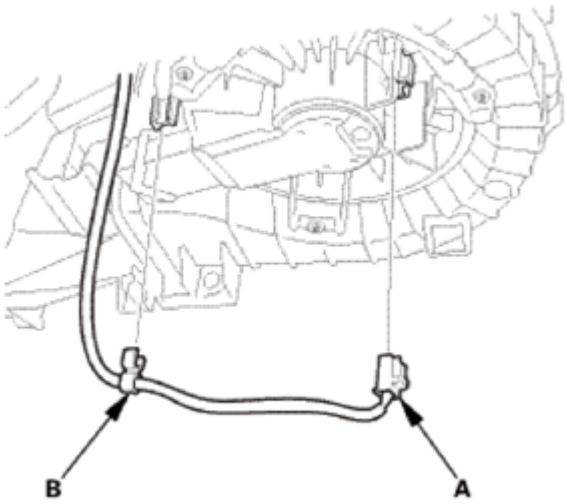

Fig. 178: Identifying Blower Motor Connector And Clips
Courtesy of AMERICAN HONDA MOTOR CO., INC.

3. Disconnect the recirculation control motor connector (A).
4. Detach the harness clips (B).

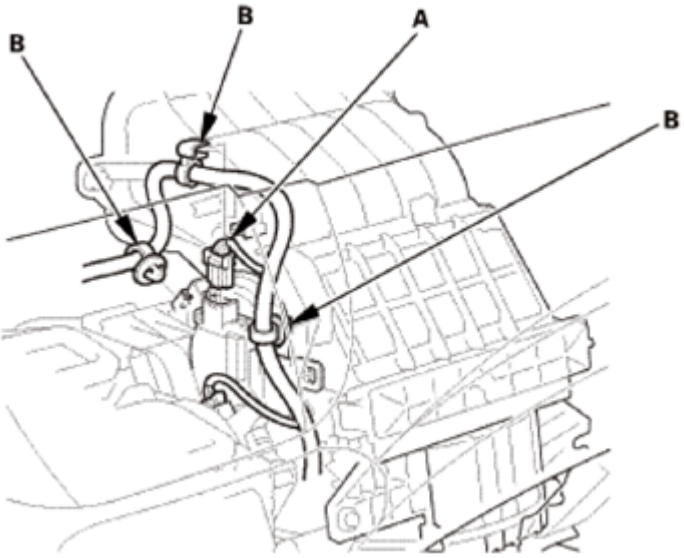

Fig. 179: Identifying Recirculation Control Motor Connectors And Clips
Courtesy of AMERICAN HONDA MOTOR CO., INC.

5. Remove the blower unit (A).

GETtheMANUALS.org

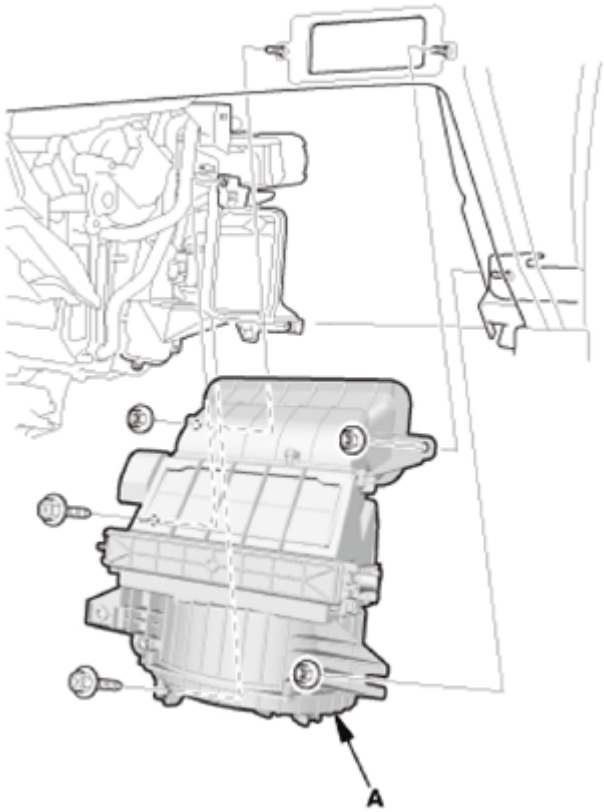

Fig. 180: Identifying Blower Unit
Courtesy of AMERICAN HONDA MOTOR CO., INC.

10. Heater Core Cover
    1. Remove the heater core cover (A).

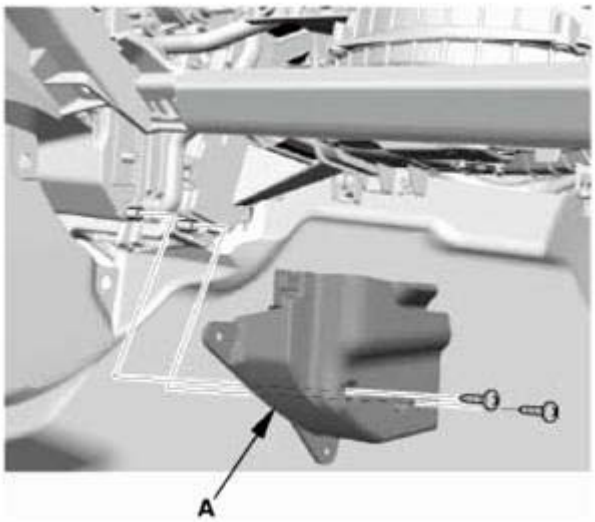

Fig. 181: Identifying Heater Core Cover
Courtesy of AMERICAN HONDA MOTOR CO., INC.

GETtheMANUALS.org

11. Passenger's Air Mix Control Motor (Climate Control)
    1. Disconnect the passenger's air mix control motor connector (A).
    2. Remove the passenger's air mix control motor (B).

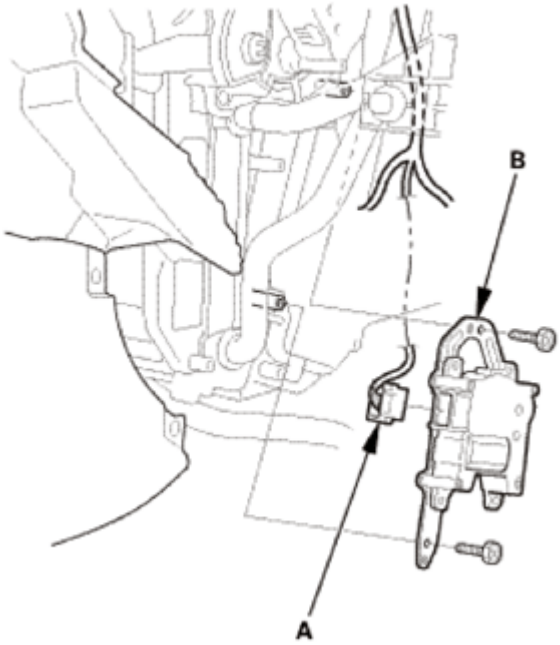

Fig. 182: Identifying Passenger Air Mix Control Motor And Connector
Courtesy of AMERICAN HONDA MOTOR CO., INC.

12. Expansion Valve Cover
    1. Disconnect the evaporator temperature sensor connector (A).
    2. Detach the connector clip (B).
    3. Disconnect the power transistor connector (C).
    4. Remove the expansion valve cover (D), and the seal (E).

GETtheMANUALS.org

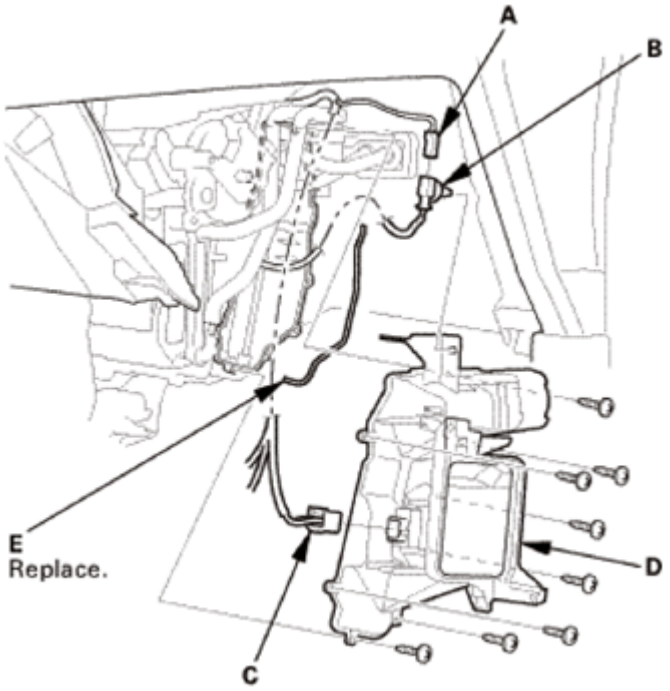

Fig. 183: Identifying Evaporator Temperature Sensor Connector, Power Transistor Connector, Expansion Valve Cover, Seal And Clips
Courtesy of AMERICAN HONDA MOTOR CO., INC.

13. Expansion Valve
    1. Remove the bolts.

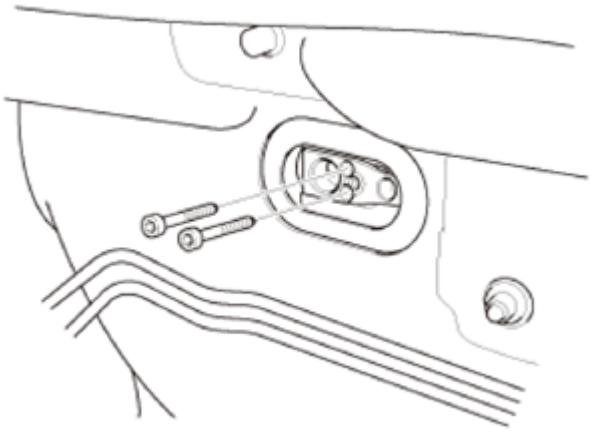

Fig. 184: Identifying Expansion Valve Bolts
Courtesy of AMERICAN HONDA MOTOR CO., INC.

    2. Remove the expansion valve (A) with O-rings (B) and the insulator (C).

GETtheMANUALS.org

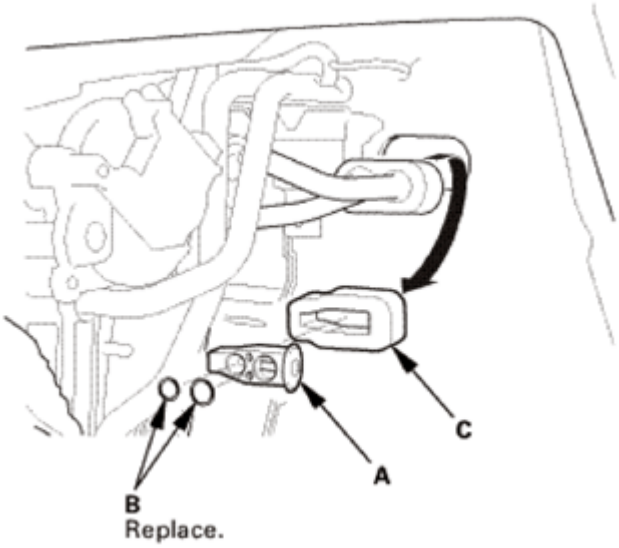

Fig. 185: Removing Expansion Valve
Courtesy of AMERICAN HONDA MOTOR CO., INC.

14. Evaporator Core
    1. Carefully pull out the evaporator core (A) without bending the lines.
    2. Remove the plate (B).

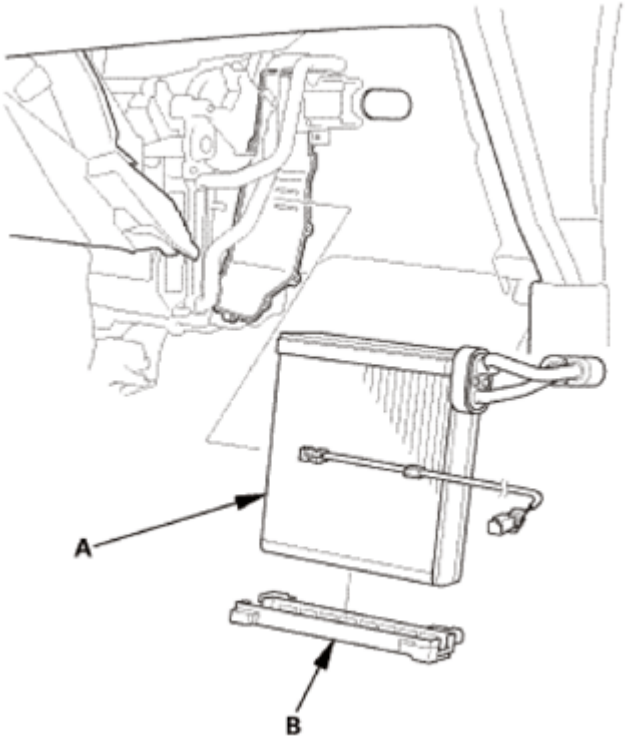

Fig. 186: Identifying Evaporator Core And Plate
Courtesy of AMERICAN HONDA MOTOR CO., INC.

GETtheMANUALS.org

15. Evaporator Temperature Sensor
    1. Remove the evaporator temperature sensor (A).

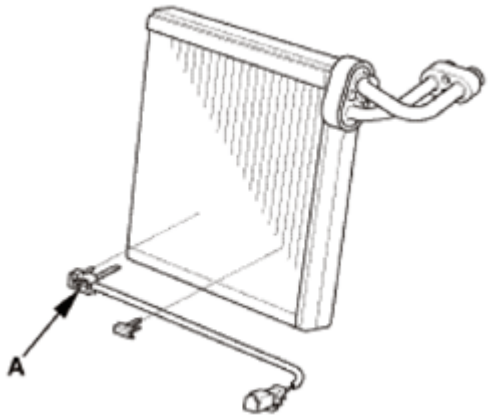

Fig. 187: Identifying Evaporator Temperature Sensor
Courtesy of AMERICAN HONDA MOTOR CO., INC.

INSTALLATION

CAUTION:

- **Air conditioning refrigerant or lubricant vapor can irritate your eyes, nose, or throat.**
- **Be careful when connecting service equipment.**
- **Do not breathe refrigerant or vapor.**
- **Do not operate the leak detector near flammable vapors. Its sensor operates at high temperatures, and could ignite the vapors, resulting in personal injury and/or damage to the equipment.**

NOTE:

- **If an accidental system discharge occurs, ventilate the work area before resuming service.**
- **Additional health and safety information may be obtained from the refrigerant and lubricant manufacturers.**
- **Check the system for leaks using an R-134a refrigerant leak detector with an accuracy of 14 g (0.5 oz) per year or better.**
- **If you are installing a new evaporator core, add refrigerant oil.**
- **Replace the O-rings with new ones at each fitting, and apply a thin coat of refrigerant oil before installing them. Be sure to use the correct O-rings for HFC-134a (R-134a) to avoid leakage.**
- **Use only PAG refrigerant oil for HFC-134a A/C systems.**
- **To avoid contamination, do not return the oil to the container once dispensed, and never mix it with other refrigerant oils.**
- **Immediately after using the oil, reinstall the cap on the container, and seal**

GETtheMANUALS.org

it to avoid moisture absorption.

- **Do not spill the refrigerant oil on the vehicle; it may damage the paint; if the refrigerant oil contacts the paint, wash it off immediately.**
- **Make sure that there is no air leakage.**

1. A/C Refrigerant Oil - Replacement

   Recommended PAG oil: SP-10

   P/N 38897-P13-A01AH: 120 mL (4 fl oz)

   It is important to have the correct amount of refrigerant oil in the A/C system to ensure proper lubrication of the A/C compressor. Too little oil damages the A/C compressor; too much oil reduces the cooling capacity of the system, and can produce high vent temperatures.

   - To avoid contamination, do not return the oil to the container once dispensed, and never mix it with other refrigerant oils.
   - Immediately after using the oil, reinstall the cap on the container, and seal it to avoid moisture absorption.
   - Do not spill the refrigerant oil on the vehicle; it may damage the paint; if it gets on the paint, wash it off immediately.

   Add the recommended refrigerant oil in the amount listed if you replace any of the following parts.

A/C condenser (including dryer desiccant).....	25 mL (5/6 fl oz)
Evaporator.....	40 mL (1 1/3 fl oz)
Line or hose.....	10 mL (1/3 fl oz)
Dryer desiccant.....	10 mL (1/3 fl oz)
Leakage repair.....	25 mL (5/6 fl oz)
A/C compressor.....	Since the oil separator is equipped inside the A/C compressor for this vehicle, oil drainage is unnecessary at the time of A/C compressor replacement.

2. Evaporator Temperature Sensor
   1. Install the evaporator temperature sensor (A) in the evaporator core (B), and note these items:
      - When the evaporator temperature sensor is installed into the new evaporator core, set the sensor into the factory-preset position (C, D).
      - When the evaporator temperature sensor is reinstalled into the original evaporator core, set the sensor into the new position (E, F) because the fin may be deforming by the previous installation.

      Installing into the factory-preset position

GETtheMANUALS.org

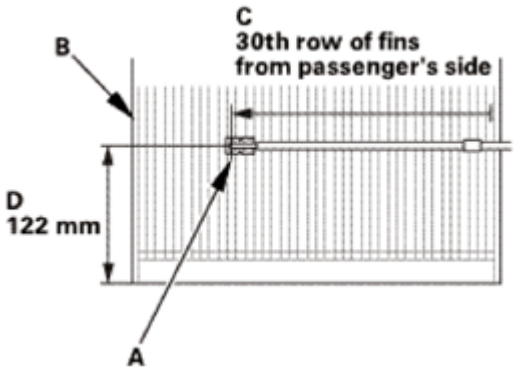

Fig. 188: Identifying Evaporator Temperature Sensor In Evaporator Core Installation Dimension (30th Row)
Courtesy of AMERICAN HONDA MOTOR CO., INC.

Installing into the new position

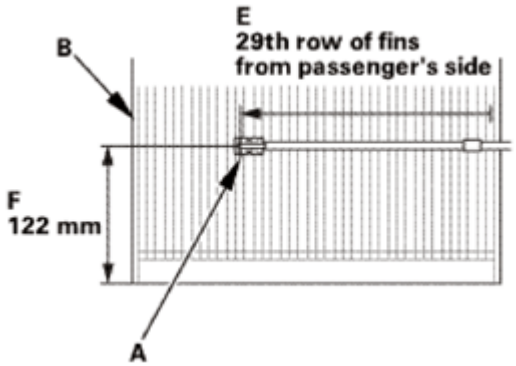

Fig. 189: Identifying Evaporator Temperature Sensor In Evaporator Core Installation Dimension (29th Row)
Courtesy of AMERICAN HONDA MOTOR CO., INC.

2. Install the evaporator temperature sensor (A).

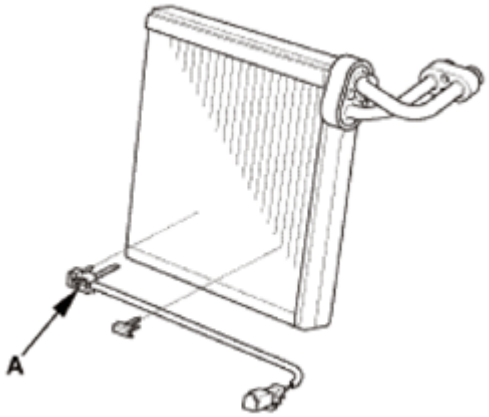

Fig. 190: Identifying Evaporator Temperature Sensor

GETtheMANUALS.org

Courtesy of AMERICAN HONDA MOTOR CO., INC.

3. Evaporator Core
    1. Install the plate (A).
    2. Carefully install the evaporator core (B) without bending the lines.

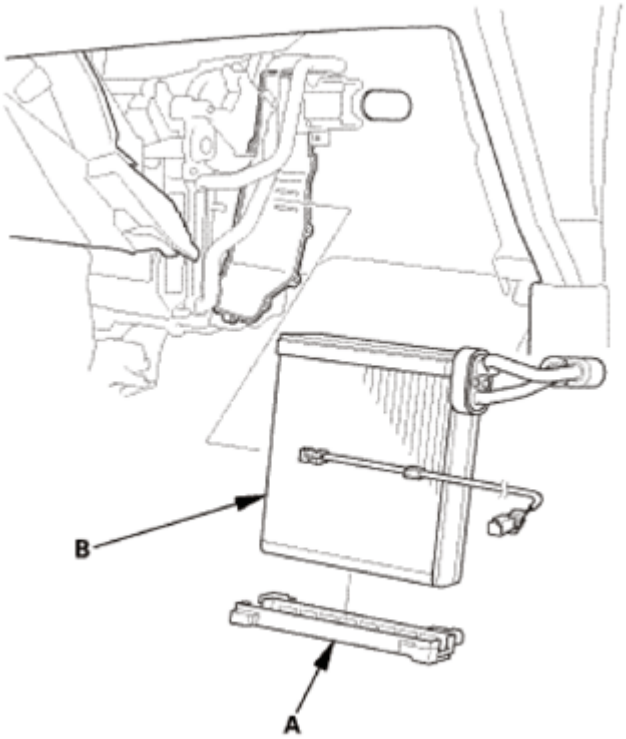

Fig. 191: Identifying Evaporator Core And Plate
Courtesy of AMERICAN HONDA MOTOR CO., INC.

4. Expansion Valve
    1. Install the expansion valve (A) with new O-rings (B) that are lubricated with clean refrigerant oil and the insulator (C).

GETtheMANUALS.org

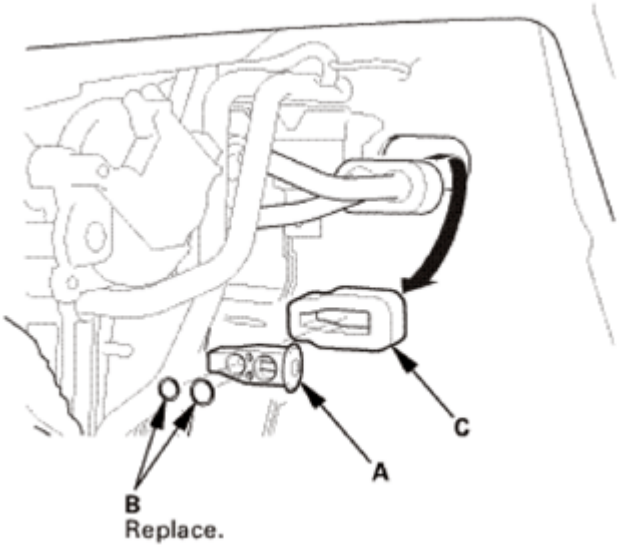

Fig. 192: Installing Expansion Valve
Courtesy of AMERICAN HONDA MOTOR CO., INC.

2. Install the bolts.

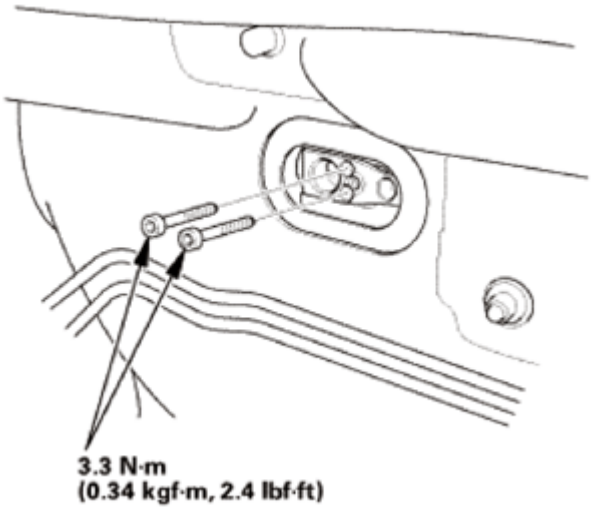

Fig. 193: Identifying Expansion Valve Mounting Bolts
Courtesy of AMERICAN HONDA MOTOR CO., INC.

5. Expansion Valve Cover
    1. Install the expansion valve cover (A), and the new seal (B).
    2. Connect the power transistor connector (C).
    3. Install the connector clip (D).
    4. Connect the evaporator temperature sensor connector (E).

GETtheMANUALS.org

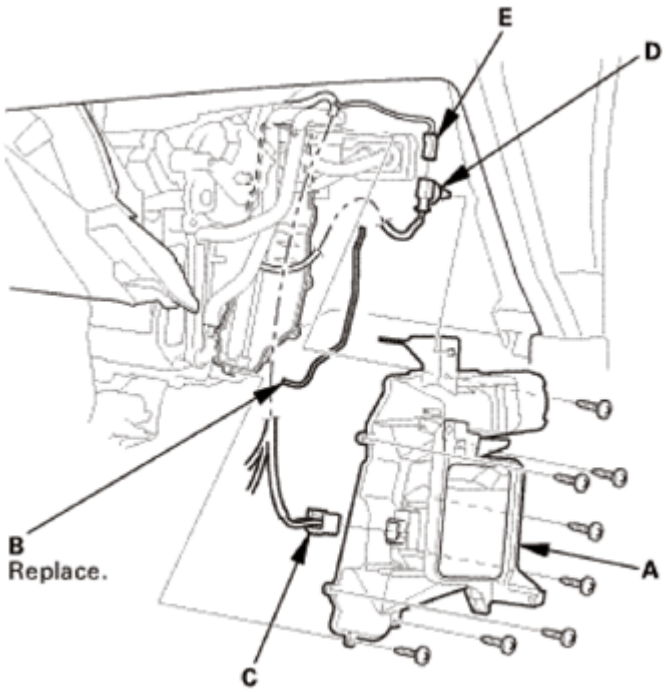

Fig. 194: Identifying Evaporator Temperature Sensor Connector, Power Transistor Connector, Expansion Valve Cover, Seal And Clips
Courtesy of AMERICAN HONDA MOTOR CO., INC.

6. Passenger's Air Mix Control Motor (Climate Control)
    1. Align the passenger's air mix control motor (A) with the gear, then install the motor.
    2. Connect the passenger's air mix control motor connector (B).
    3. After installation, make sure the motor runs smoothly.

GETtheMANUALS.org

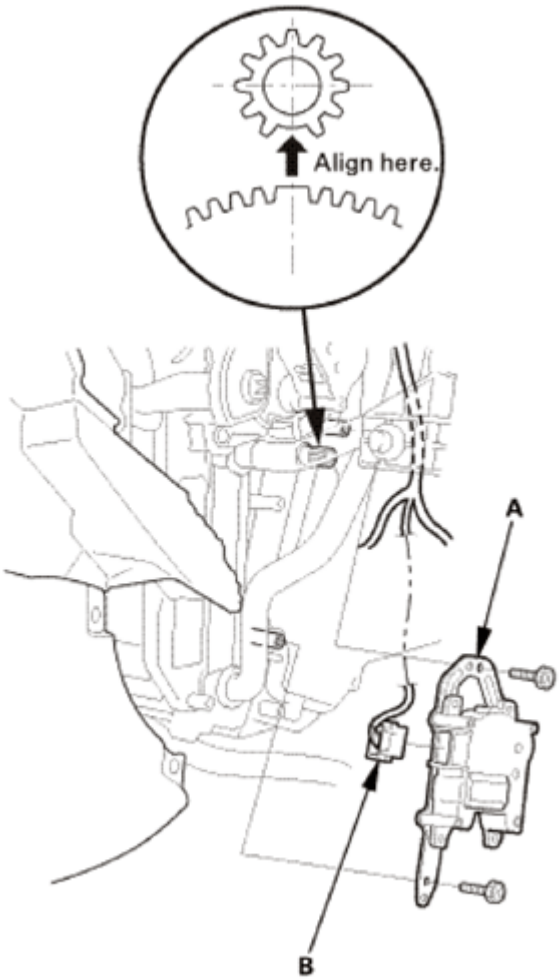

Fig. 195: Identifying Passenger Air Mix Control Motor And Gear Align Mark
Courtesy of AMERICAN HONDA MOTOR CO., INC.

7. Heater Core Cover
    1. Install the heater core cover (A).

GETtheMANUALS.org

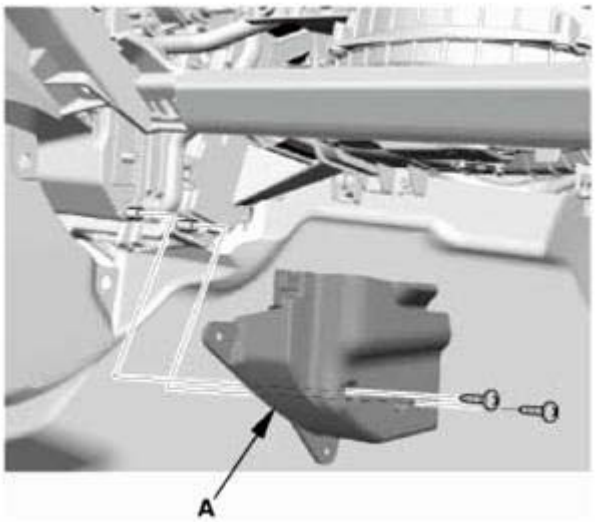

Fig. 196: Identifying Heater Core Cover
Courtesy of AMERICAN HONDA MOTOR CO., INC.

8. Blower Unit
    1. Install the blower unit (A).

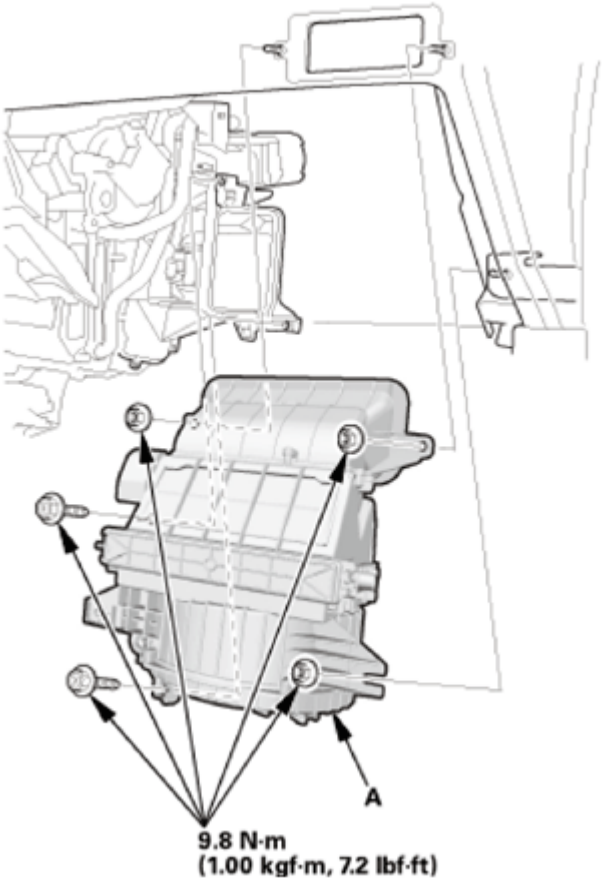

GETtheMANUALS.org

Fig. 197: Identifying Blower Unit With Torque Specifications
Courtesy of AMERICAN HONDA MOTOR CO., INC.

2. Connect the recirculation control motor connector (A).
3. Install the harness clips (B).

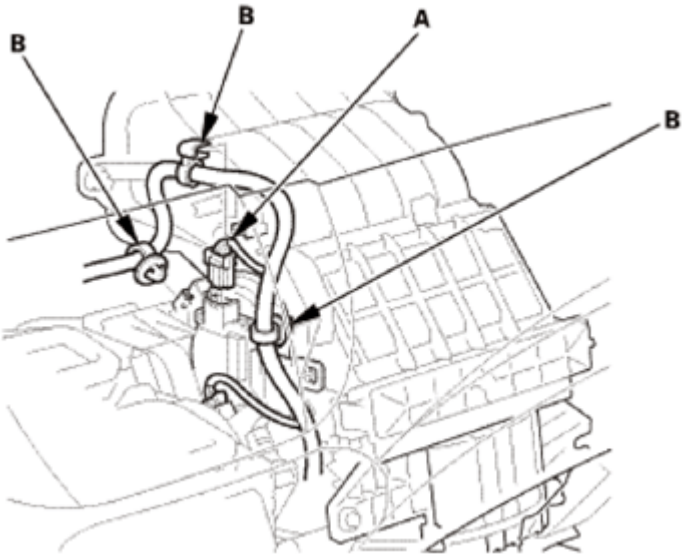

Fig. 198: Identifying Recirculation Control Motor Connectors And Clips
Courtesy of AMERICAN HONDA MOTOR CO., INC.

4. Connect the blower motor connector (A).
5. Install the harness clip (B).

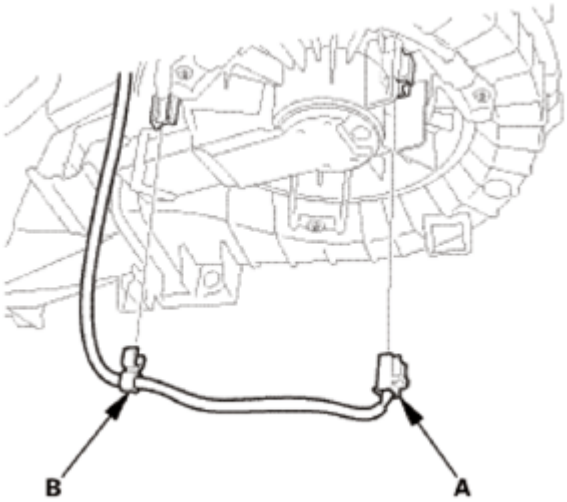

Fig. 199: Identifying Blower Motor Connector And Clip
Courtesy of AMERICAN HONDA MOTOR CO., INC.

9. Passenger's Heater Duct

GETtheMANUALS.org

1. Install the passenger's heater duct (A).

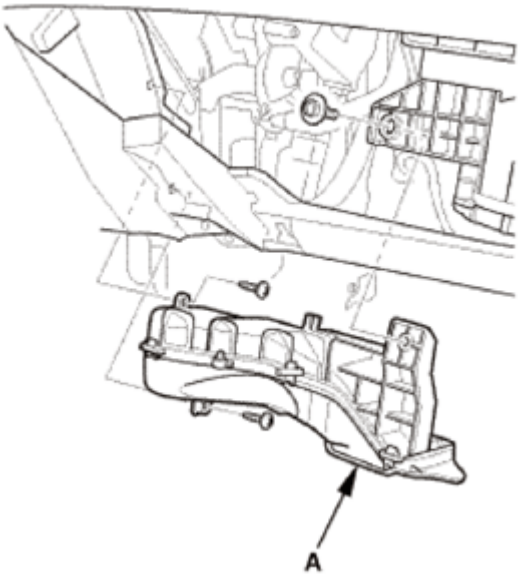

Fig. 200: Identifying Passenger Heater Duct
Courtesy of AMERICAN HONDA MOTOR CO., INC.

10. Glove Box Frame
    1. Install the glove box frame (A).

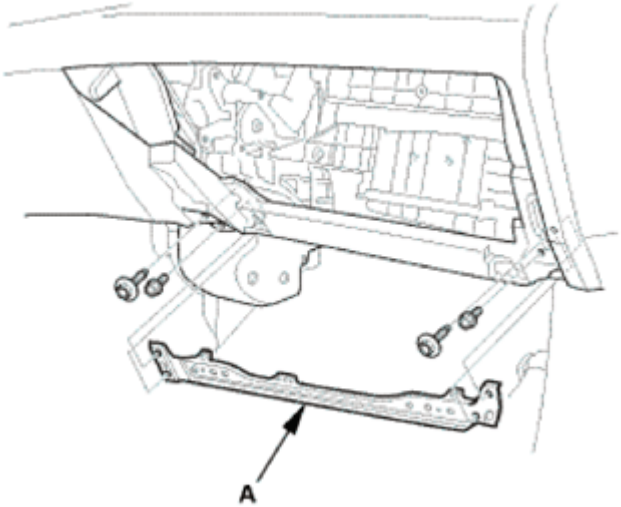

Fig. 201: Identifying Glove Box Frame
Courtesy of AMERICAN HONDA MOTOR CO., INC.

11. A/C Line - Evaporator Side
    1. Install the stud bolt (A).

GETtheMANUALS.org

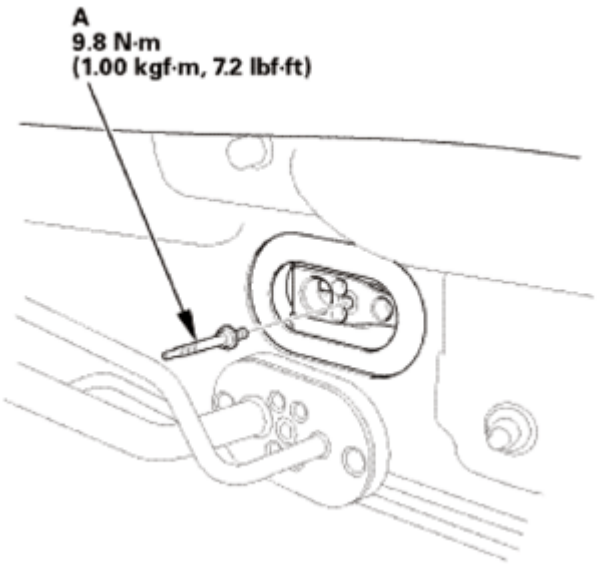

Fig. 202: Identifying A/C Line Stud Bolt With Torque Specifications
Courtesy of AMERICAN HONDA MOTOR CO., INC.

2. Connect the A/C line (A) with new O-rings (B) that are lubricated with clean refrigerant oil.

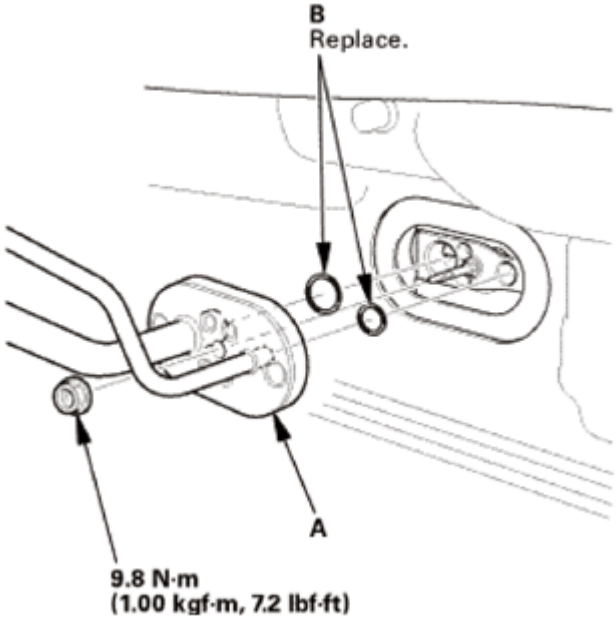

Fig. 203: Identifying A/C Line And O-Rings With Torque Specifications
Courtesy of AMERICAN HONDA MOTOR CO., INC.

3. Install the bolt.

GETtheMANUALS.org

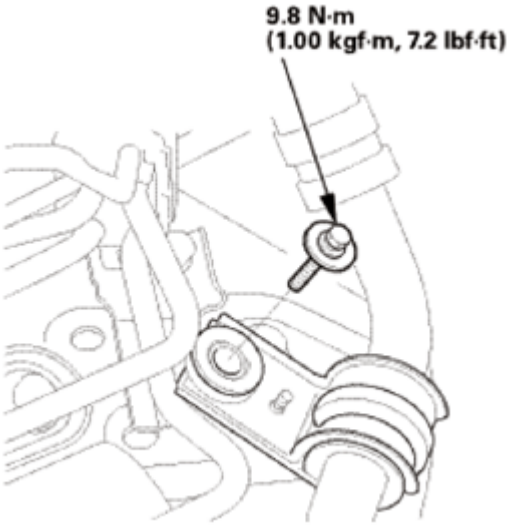

Fig. 204: Identifying A/C Line Mounting Bolt With Torque Specifications
Courtesy of AMERICAN HONDA MOTOR CO., INC.

12. R-134a Refrigerant Recovery/Recycling/Charging Station - Connection
    1. Connect an R-134a refrigerant recovery/recycling/charging station (A) to the high-pressure service port (B) and the low-pressure service port (C), as shown, following the equipment manufacturer's instructions.

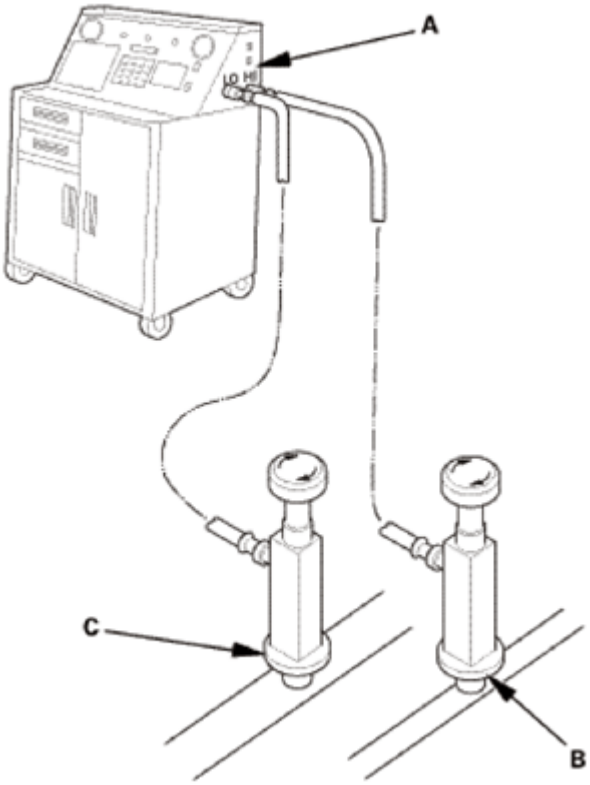

Fig. 205: Identifying Refrigerant Recovery/Recycling/Charging Station, High And Low

GETtheMANUALS.org

<u>Pressure Service Port</u>
Courtesy of AMERICAN HONDA MOTOR CO., INC.

13. A/C System Evacuation
    1. Evacuate the system. The vacuum pump should run for a minimum of 30 minutes to eliminate all moisture from the system. When the suction gauge reads -93.3 kPa (-700 mmHg, - 27.55 inHg) for at least 30 minutes, close all valves, and turn off the vacuum pump.
    2. If the suction gauge dose not reach approximately -93.3 kPa (-700 mmHg, -27.55 inHg) in 15 minutes, there is probably a large leak in the system. Partially charge the system, and check for leaks.
14. A/C Refrigerant - Charging
    1. Charge the system with the specified amount of R-134a refrigerant. Do not overcharge the system; the A/C compressor will be damaged.

       Select the appropriate units of measure for your refrigerant charging station.

       Refrigerant Capacity:

       385 to 435 g

       13.6 to 15.4 oz

       0.385 to 0.435 kg

       0.849 to 0.959 lbs

15. A/C Refrigerant - Leak Check

Leak Detector Usage Tips (Refer to the Operator's Manual for complete operating instructions)

- Position the vehicle in a wind-free work area. This will aid in detecting small leaks.
- When using the leak detector for the first time, allow it to warm up for 2 minutes with the probe in a clean atmosphere. This lets the temperature sensor in the detector stabilize.
- The calibration check should be done in the "Search 2" mode. Once that is done, the other check modes do not need calibrating.
- When leak checking through the HVAC module drain hose, avoid drawing water into the probe. Water can damage the internal pump and sensor.
- Avoid creasing the flexible probe extension. Creases can restrict air flow and give false readings.
- Because the detector recalibrates itself for ambient gases, it may be necessary to move the detector away from the leak to clear the sensor. Once the sensor has cleared, recheck the suspected leak.
- When removing the clear probe tip, be careful not to lose the flow ball.
- R-134a is heavier than air; always check below and to the sides of all potential leak sources.
- Halogen leak detectors are sensitive to chemicals: windshield washing solutions, solvents/cleaners, and some vehicle adhesives. Keep these chemicals out of the area when doing leak detection.

GETtheMANUALS.org

Fluorescent Dye Usage Tips

- Use only Tracer-Stick single dose fluorescent dye capsules from Tracerline®. Other dyes contain solvents that may contaminate the refrigerant oil, leading to component failure.
- Adding excessive amounts of dye can damage the A/C compressor.
- PAG oil is water soluble, so condensation on the evaporator core or the refrigerant lines may wash the PAG oil and fluorescent dye away from the actual leak. Condensation may also carry dye through the HVAC module drain.
- After checking and repairing leaks, thoroughly clean any residual dye from the areas where leaks were found. Use GLO-AWAY dye cleaner, from Tracerline®, and hot water to remove the dye (follow the instructions on the bottle). Residual dye stains can cause misdiagnosis of any future A/C system leaks.
- If any refrigerant dye contacts an exterior paint surface, remove it by doing this:
  - Carefully wash the affected surfaces to remove any dirt, and to prevent paint scratching.
  - Mix water and isopropyl alcohol in a 50/50 mixture. Soak a soft 100 % cotton towel with the water/alcohol mixture, and place the cloth on the affected areas to remove the dye.
  - After removing the dye with the water/alcohol-soaked cloth, carefully wash the affected areas, and check that there is no remaining dye.

1. With the engine OFF, use a halogen leak detector first to detect the leak source. Follow a continuous path in order to ensure that you will not miss any possible leaks. Test the following areas of the system for leaks:

Possible Leak Area	Diagnostic Procedure with the Leak Detector	Notes
Service ports	• Check the service ports with caps installed • If the detector "sniffs" a leak, use fluorescent dye to confirm it	When capping the service ports, ensure that the seals on the port caps are in place, and that the caps are tight. The caps are used as the final seals in the system
A/C condenser	If the detector "sniffs" a leak, use fluorescent dye to confirm it	• Check for joints or connections coated with oily dust • Check for damaged and corroded areas • Check all fittings, couplings, brazed/welded areas and areas around attachment points • Move the probe slowly (1 in/second or less), and keep it within 1/4 in of the component being checked. This maximizes the chance of detecting a leak • If you detect a leak, blow compressed air over the area, then recheck for leaks. For large leaks, clearing the area with compressed air may help you pinpoint the leak source
	• Check at the evaporator	

GETtheMANUALS.org

Evaporator	drain hose • Check at the passenger's side vent and turn the blower on at low speed	
A/C lines	• Wiggle the rubber hoses when checking crimped metal ends • If the detector "sniffs" a leak, use fluorescent dye to confirm it	• Check all fittings, couplings, pressure switches, brazed/welded areas, and areas around attachment points on A/C lines and components • Check for damaged and corroded areas • Move the probe slowly (1 in/second or less), and keep it within 1/4 in of the component being checked. This maximizes the chance of detecting a leak

2. Close the quick coupler valves, then disconnect the quick couplers from the vehicle service ports.
3. Attach the universal connect set, from the Optimax Jr. Leak Detection Kit, to the service valve fitting. Close the control valve (the black knob on the connect set).
4. Attach the charging station low pressure hose quick coupler to the service valve fitting, and open the quick coupler valve. Evacuate the connect set using the charging station vacuum pump, then close the quick coupler valve.
5. Detach the universal connect set, and install a Tracer-Stick® dye capsule between the connect set and the service valve fitting (see the manufacturer's instructions for more detail).
6. Attach the quick coupler on the universal connect set to the low pressure service port on the vehicle. Open the charging station low pressure hose quick coupler valve, but do not open the control valve.
7. Start the engine, and set the A/C system to maximum cooling. Open the control valve to let refrigerant and the dye enter the A/C system through the low pressure service port. Close the control valve when the Tracer-Stick® dye capsule is empty.
8. Run the engine and A/C system for 15 minutes to thoroughly circulate the dye. Then shut the engine off, and inspect the following areas of the system for leaks:

NOTE:

- **Check for leaks in a dark work area, and use the UV light and the special glasses from the leak check kit. Other UV lights may not work well with the Tracer-Stick® dye.**
- **Small leaks may take up to 1 week of vehicle operation (with normal A/C use) to become visible.**

Possible Leak Area	Diagnostic Procedure with Fluorescent Dye
Service ports	If a leak is found, replace the cap/o-ring seal or A/C line as needed
A/C lines	• Use a permanent marker pen to circle the leak area • If a leak is found, remove and replace the A/C line

GETtheMANUALS.org

A/C condenser	• If a leak is found, remove the A/C condenser • Determine whether leak is in the A/C condenser or the receiver/dryer • Use a permanent marker pen to circle the leak area • Replace either the receiver/dryer, or the A/C condenser, depending upon which is leaking
A/C compressor	• Check for leaks at all of the A/C compressor joints, the clutch center, the A/C compressor front housing bolts, and the scroll bolts on the back of the A/C compressor • If a leak is found, use a permanent marker pen to circle the leak area • If the A/C compressor relief valve appears to be leaking, determine whether the leak is coming from the relief valve, or the joint between the A/C compressor casing and the valve. If the leak is from the relief valve, check the A/C system pressures, and refer to the pressure test table in the A/C system test. If the leak is from the casing/valve joint, replace the A/C compressor relief valve • If the leak is coming from the suction hose and/or discharge hose fittings on the A/C compressor, clean the A/C fittings and replace the suction/discharge fitting O-rings • For all other A/C compressor leaks, remove and replace the A/C compressor
Evaporator	• Start checking for evaporator leaks by illuminating the evaporator drain tube area • If a leak is found, remove the evaporator core • Determine whether leak is from evaporator or expansion valve • Use a permanent marker pen to circle leak area • Replace the expansion valve, or the evaporator core, depending upon which is leaking

16. A/C System - Test
    1. Insert a thermometer (A) in the center vent.
    2. Place a hygro-thermometer (B) near the blower unit's recirculation inlet duct.
    3. Test conditions:
        - Move the vehicle out of direct sunlight and let it cool down to the surrounding (ambient) temperature. If necessary, wash the vehicle to cool it down more quickly.
        - The blower intake temperature must be at least 68°F (20°C).
        - Open the hood.
        - Open the front doors.
        - Start the engine.
        - Set the temperature control dial or temperature control button to MAX COOL, the mode control button to VENT, and the recirculation control button to RECIRCULATE.
        - Turn the A/C button on and the fan control dial or fan control button to Max.

GETtheMANUALS.org

- Run the engine at 1, 500 rpm.
- No driver or passengers in vehicle.

Fig. 206: Checking Delivery Temperature From Thermometer In Center Vent
Courtesy of AMERICAN HONDA MOTOR CO., INC.

4. Inspect the A/C components for the following conditions:
   - A/C compressor clutch not engaged.
   - Abnormal frost areas.
   - Unusual noises.

   If you observe any of these conditions, refer to the Symptom Troubleshooting Index.

5. After running the air conditioning for 10 minutes under the above test conditions, read the delivery temperature from the thermometer in the center vent, the intake temperature near the blower unit, and the discharge (high) and suction (low) pressures on the A/C gauges.
6. To complete the vent (delivery)/intake temperature chart:
   - Mark the vent (delivery) temperature on the vertical line.
   - Mark the intake temperature on the bottom line.
   - Draw a vertical line from the intake temperature mark.
   - Draw a horizontal line from the vent (delivery) temperature mark until it intersects the vertical line.

   NOTE: The vent temperature and intake temperature should intersect in the shaded area. Any measurements outside the line may

GETtheMANUALS.org

indicate the need for further inspection.

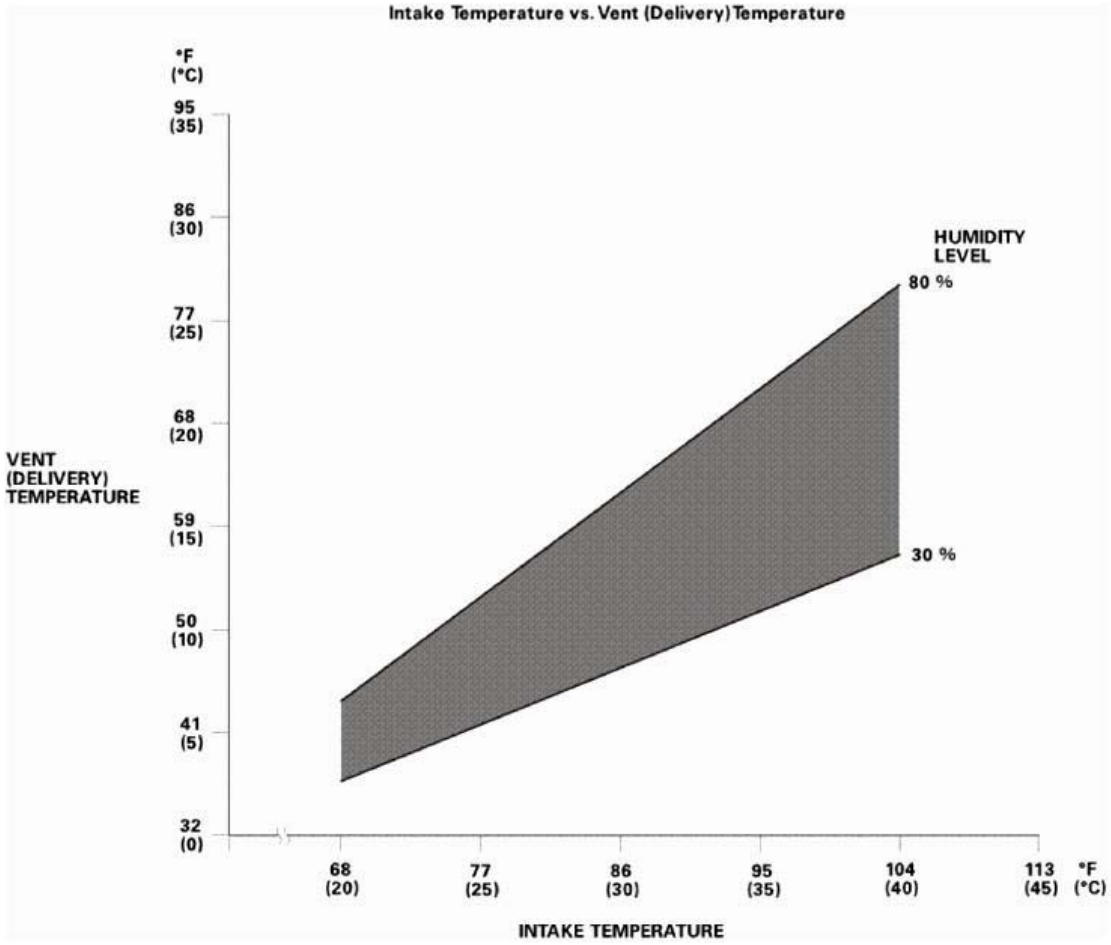

Fig. 207: Intake Temperature Versus Vent (Delivery) Temperature Graph
Courtesy of AMERICAN HONDA MOTOR CO., INC.

7. To complete the high side (discharge) pressure/intake temperature chart:
   - Mark the high side (discharge) pressure on the vertical line.
   - Mark the intake temperature on the bottom line.
   - Draw a vertical line from the intake temperature mark.
   - Draw a horizontal line from the high side (discharge) pressure mark until it intersects the vertical line.

NOTE: **The high side pressure and intake temperature should intersect in the shaded area. Any measurements outside the line may indicate the need for further inspection.**

GETtheMANUALS.org

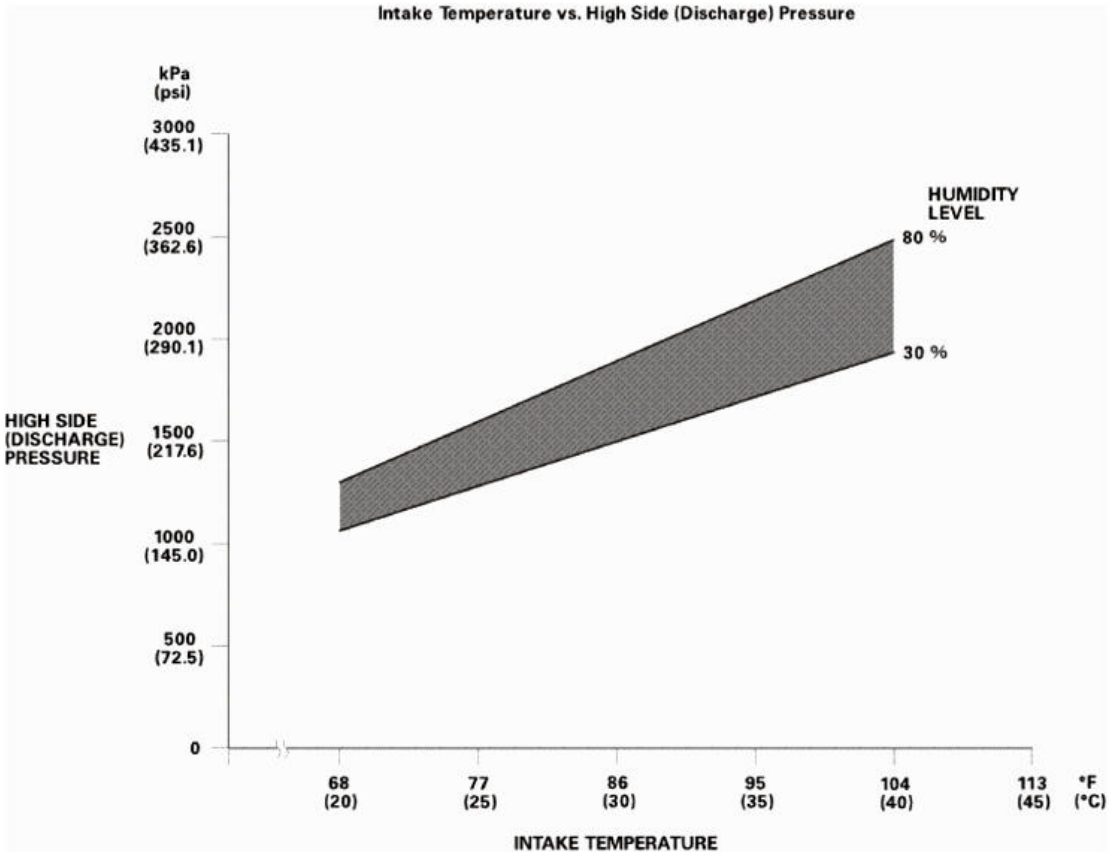

Fig. 208: Intake Temperature Versus High Side (Discharge) Pressure Graph
Courtesy of AMERICAN HONDA MOTOR CO., INC.

8. To complete the low side (suction) pressure/intake temperature chart:
   - Mark the low side (suction) pressure along the vertical line.
   - Mark the intake temperature along the bottom line.
   - Draw a vertical line from the intake temperature mark.
   - Draw a horizontal line from the low side (suction) pressure mark until it intersects the vertical line.

NOTE: **The low side pressure and intake temperature should intersect in the shaded area. Any measurements outside the line may indicate the need for further inspection.**

GETtheMANUALS.org

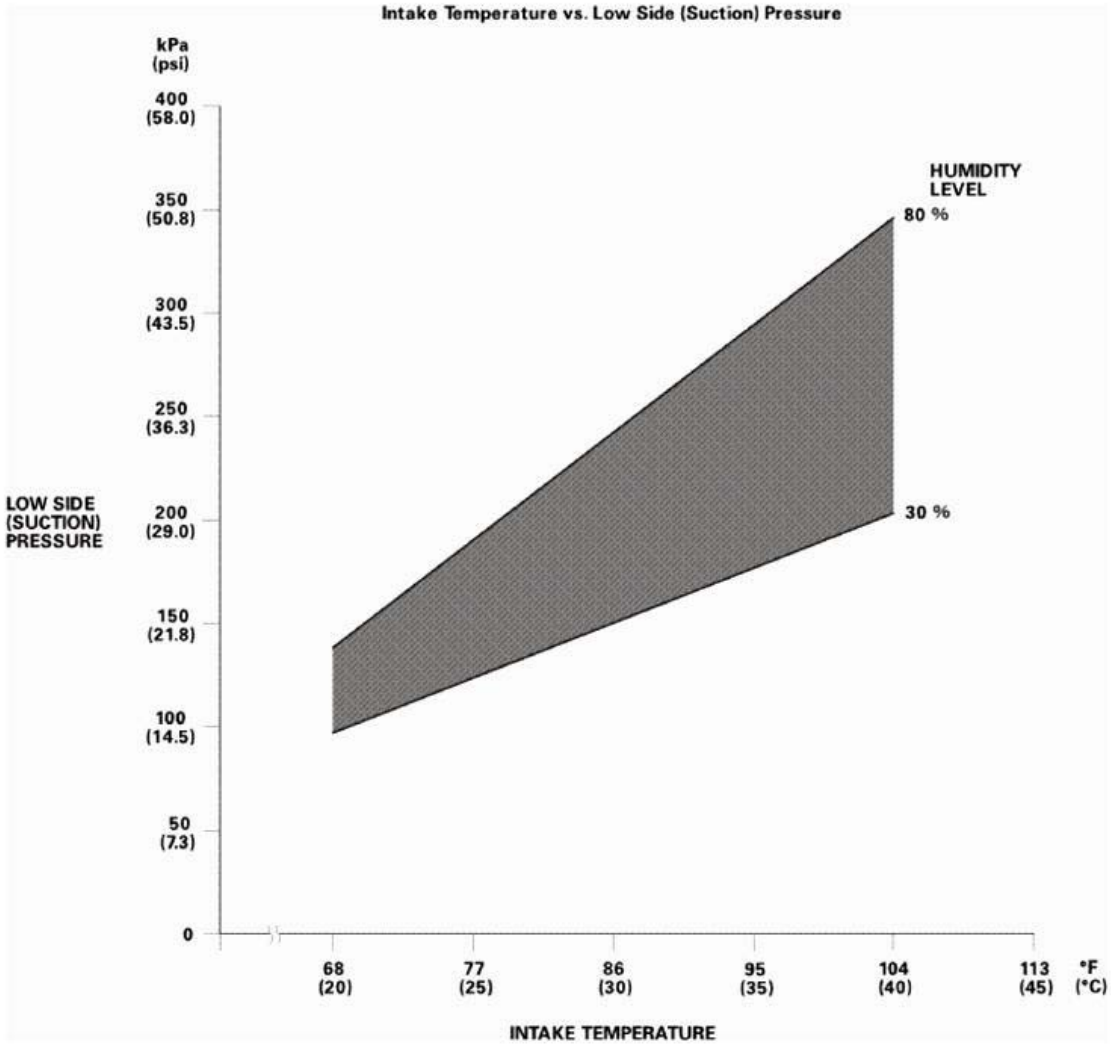

Fig. 209: Intake Temperature Versus Low Side (Suction) Pressure Graph
Courtesy of AMERICAN HONDA MOTOR CO., INC.

17. Cross Brace
    1. Install the cross brace (A).

GETtheMANUALS.org

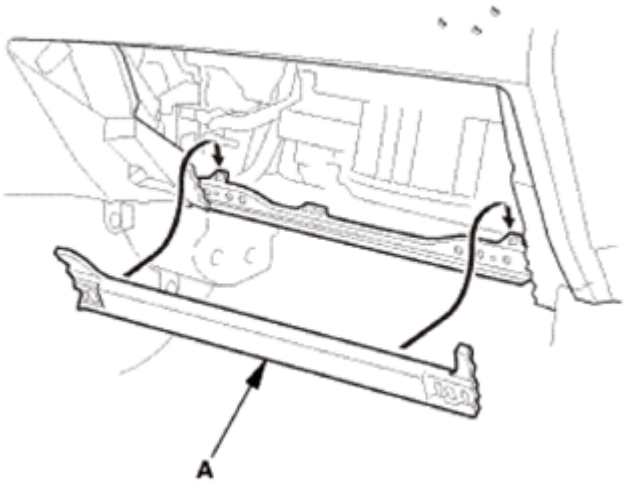

Fig. 210: Installing Cross Brace
Courtesy of AMERICAN HONDA MOTOR CO., INC.

18. Glove Box
    1. Install the glove box (A), then install the glove box damper hook (B).

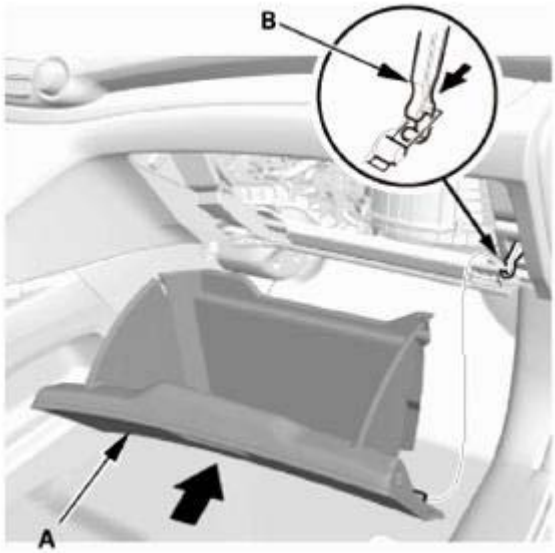

Fig. 211: Installing Glove Box
Courtesy of AMERICAN HONDA MOTOR CO., INC.

    2. Install the bolts (A).

GETtheMANUALS.org

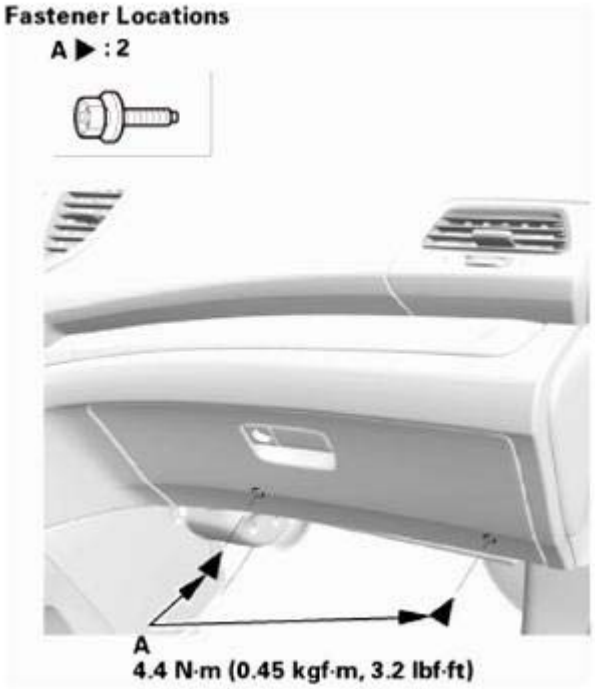

Fig. 212: Identifying Glove Box Mounting Bolts With Torque Specifications
Courtesy of AMERICAN HONDA MOTOR CO., INC.

19. Passenger's Dashboard Undercover
    1. Install the passenger's dashboard undercover (A). Make sure the clips (B) snap into place securely, and the pins (C) into the holder (D) securely.

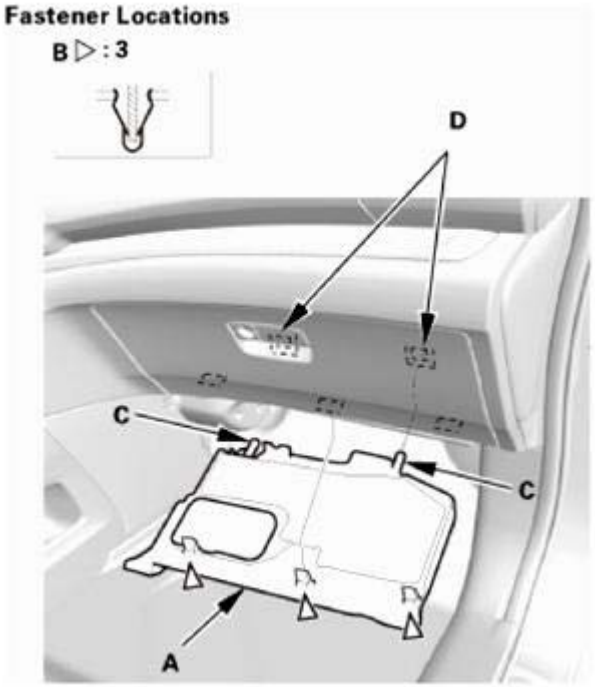

GETtheMANUALS.org

Fig. 213: Identifying Passenger Dashboard Undercover, Holder, Pins And Clips
Courtesy of AMERICAN HONDA MOTOR CO., INC.

EVAPORATOR EXPANSION VALVE REMOVAL AND INSTALLATION

SPECIAL TOOL REQUIRED

Image	Description/Tool Number
	Compact Electronic Vacuum Gauge Robinair ROB14777(1), commercially available
	Leak Detector YGK-H-10PM(1)

GETtheMANUALS.org

	Leak Detector HLD-100(1)
	Leak Detector TIFZX-1(1)
	OPTIMAX Jr. A/C Leak Detection Kit TRP124893(1)

GETtheMANUALS.org

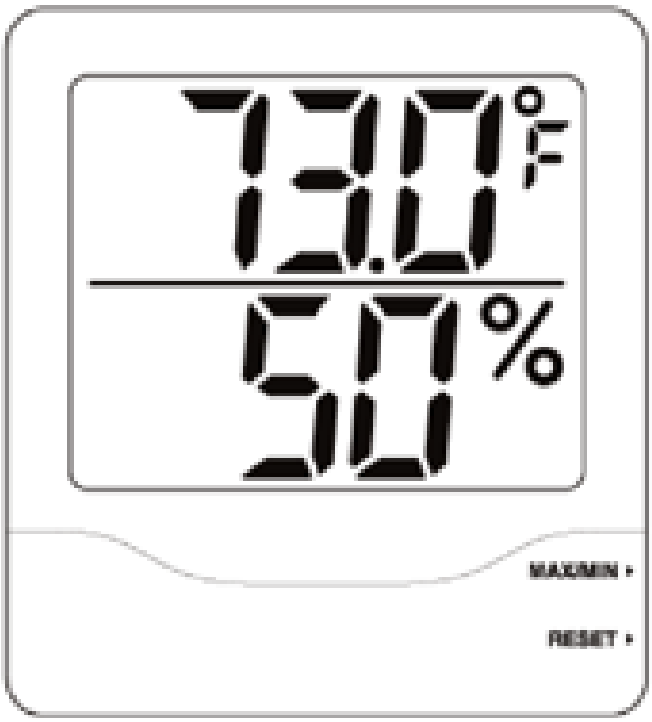	Big Digit Hygro-Thermometer PYR445703, commercially available
	Throttle Pedal Depressor Tool B240B, commercially available
(1) These tools are available through the Honda Tool and Equipment Program; call 888-424-6857	

REMOVAL

CAUTION:

- **Air conditioning refrigerant or lubricant vapor can irritate your eyes, nose, or throat.**
- **Be careful when connecting service equipment.**
- **Do not breathe refrigerant or vapor.**

NOTE:

- **If accidental system discharge occurs, ventilate the work area before resuming service.**
- **Additional health and safety information may be obtained from the refrigerant and lubricant manufacturers.**

1. R-134a Refrigerant Recovery/Recycling/Charging Station - Connection
    1. Connect an R-134a refrigerant recovery/recycling/charging station (A) to the high-pressure service port (B) and the low-pressure service port (C), as shown, following the equipment manufacturer's instructions.

GETtheMANUALS.org

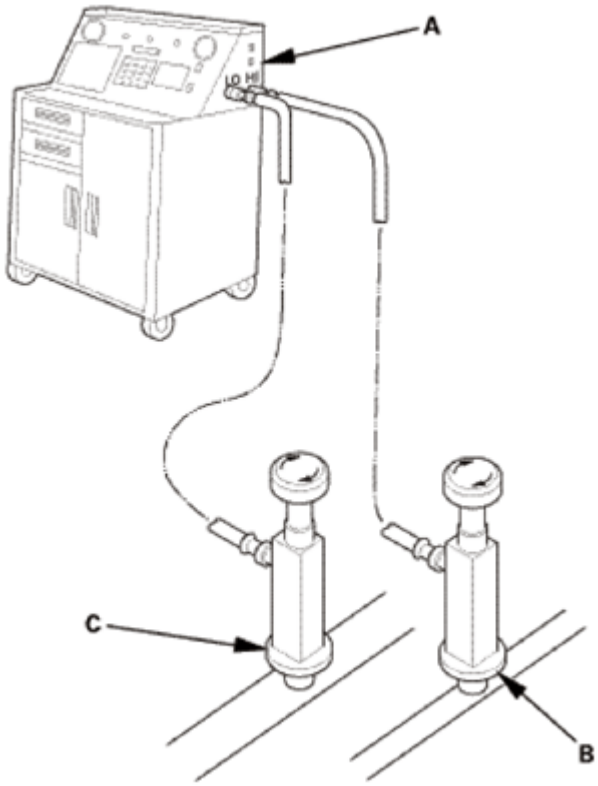

Fig. 214: Identifying Refrigerant Recovery/Recycling/Charging Station, High And Low Pressure Service Port
Courtesy of AMERICAN HONDA MOTOR CO., INC.

2. A/C Refrigerant - Recovery
    1. Recover the refrigerant from the A/C system.
    2. Measure the amount of refrigerant oil removed from the A/C system after the recovery process is completed. Be sure to put the same amount of new refrigerant oil back into the A/C system before charging.
3. A/C Line - Evaporator Side
    1. Remove the bolt.

GETtheMANUALS.org

Fig. 215: Identifying A/C Line Mounting Bolt
Courtesy of AMERICAN HONDA MOTOR CO., INC.

2. Disconnect the A/C line (A) with O-rings (B).

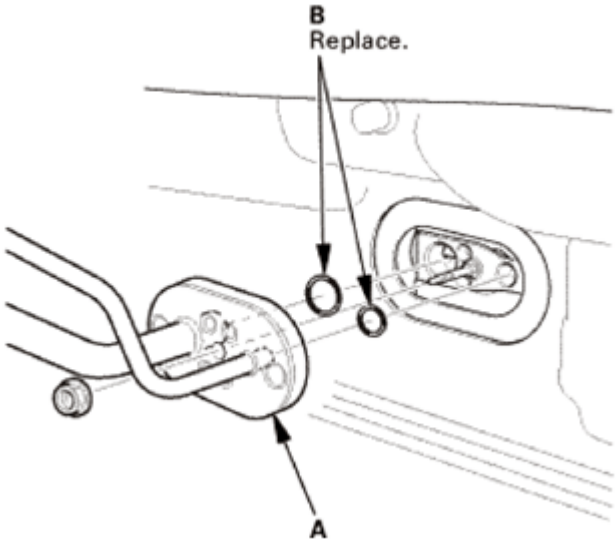

Fig. 216: Identifying A/C Line And O-Rings
Courtesy of AMERICAN HONDA MOTOR CO., INC.

3. Remove the stud bolt (A).

GETtheMANUALS.org

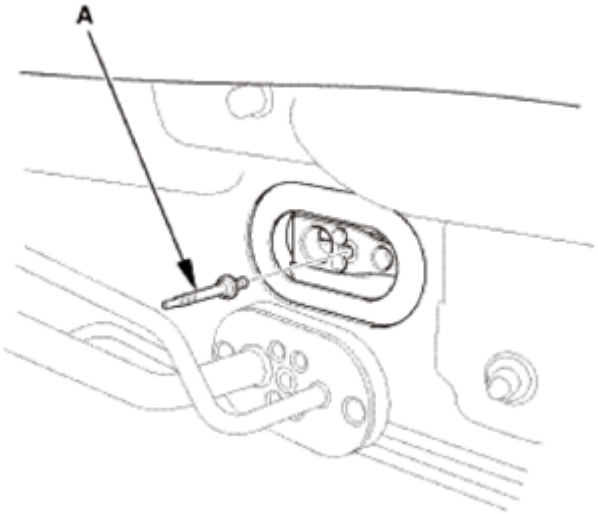

Fig. 217: Identifying A/C Line Stud Bolt
Courtesy of AMERICAN HONDA MOTOR CO., INC.

4. Passenger's Dashboard Undercover
    1. Gently pull down the passenger's dashboard undercover (A) to detach the clips (B), then pull away the undercover to release the pins (C) from the holder (D).

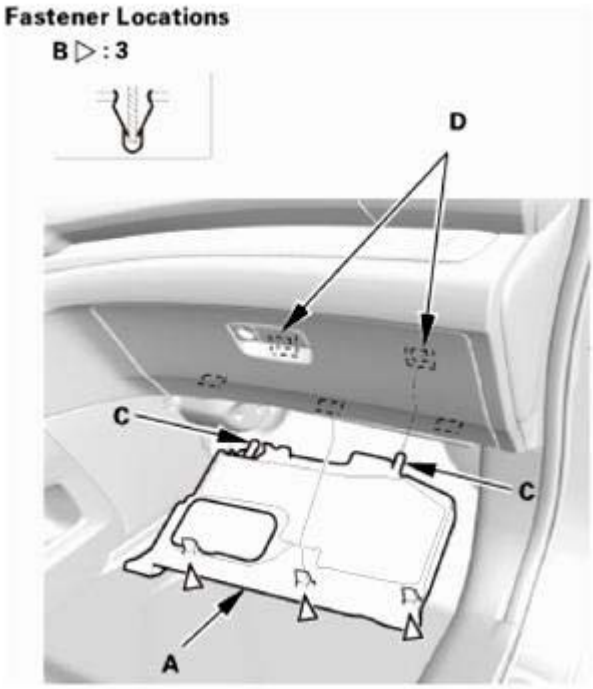

Fig. 218: Identifying Passenger Dashboard Undercover, Holder, Pins And Clips
Courtesy of AMERICAN HONDA MOTOR CO., INC.

5. Glove Box
    1. Remove the bolts (A).

GETtheMANUALS.org

Fig. 219: Identifying Glove Box Mounting Bolts
Courtesy of AMERICAN HONDA MOTOR CO., INC.

2. Release both glove box stops (A) by pushing them in, then let the glove box (B) hang down.

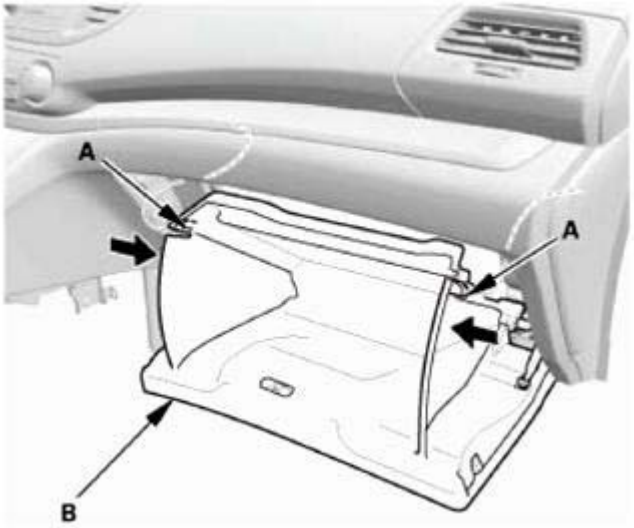

Fig. 220: Releasing Glove Box Stops
Courtesy of AMERICAN HONDA MOTOR CO., INC.

3. Detach the glove box damper hook (A), then remove the glove box (B).

GETtheMANUALS.org

Fig. 221: Removing Glove Box
Courtesy of AMERICAN HONDA MOTOR CO., INC.

6. Glove Box Frame
    1. Remove the glove box frame (A).

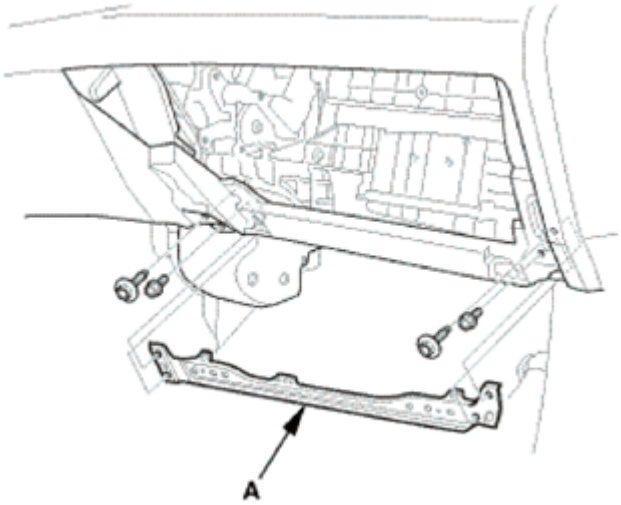

Fig. 222: Identifying Glove Box Frame
Courtesy of AMERICAN HONDA MOTOR CO., INC.

7. Passenger's Heater Duct
    1. Remove the passenger's heater duct (A).

GETtheMANUALS.org

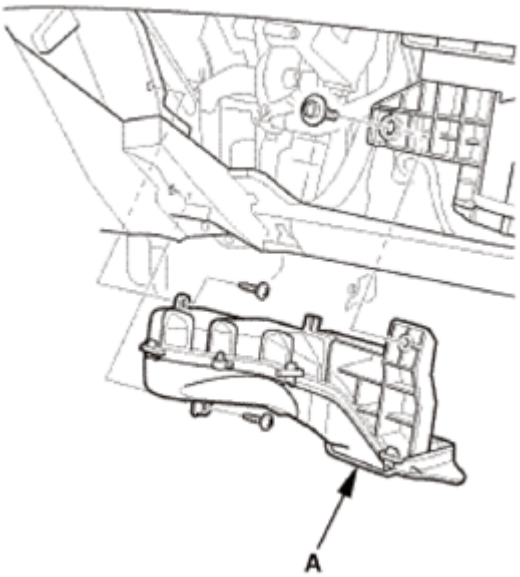

Fig. 223: Identifying Passenger Heater Duct
Courtesy of AMERICAN HONDA MOTOR CO., INC.

8. Cross Brace
    1. Cut the cross brace (A) in the glove box opening with diagonal cutters in the area shown, and remove it.

NOTE: Retain the cross brace to be reinstalled later.

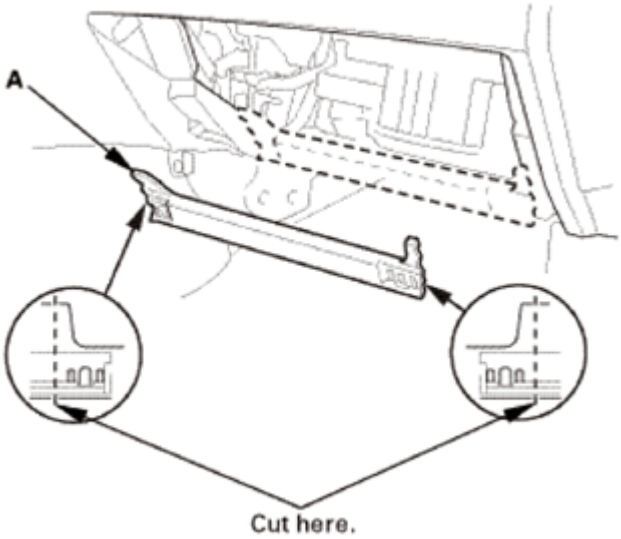

Fig. 224: Identifying Cross Brace Cutting Position
Courtesy of AMERICAN HONDA MOTOR CO., INC.

9. Blower Unit
    1. Disconnect the blower motor connector (A).

GETtheMANUALS.org

2. Detach the harness clip (B).

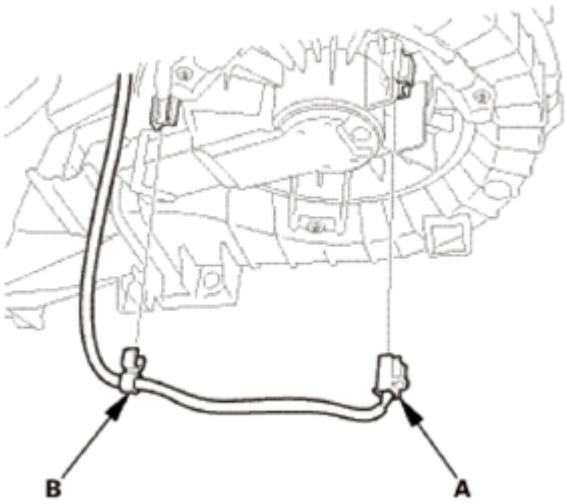

Fig. 225: Identifying Blower Motor Connector And Clips
Courtesy of AMERICAN HONDA MOTOR CO., INC.

3. Disconnect the recirculation control motor connector (A).
4. Detach the harness clips (B).

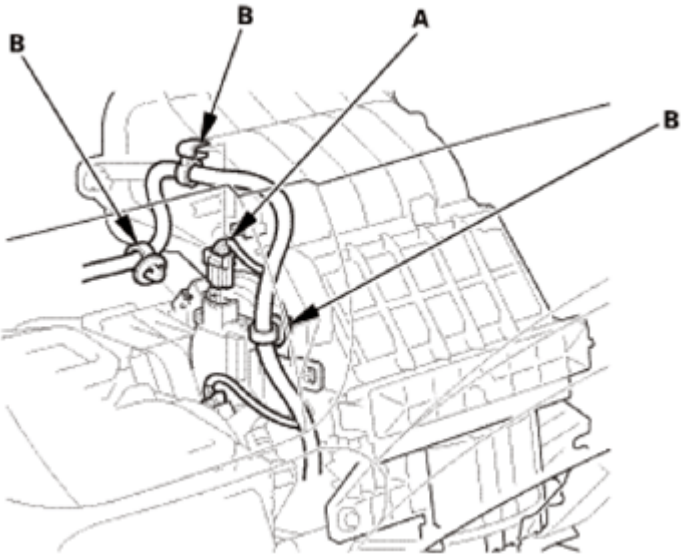

Fig. 226: Identifying Recirculation Control Motor Connectors And Clips
Courtesy of AMERICAN HONDA MOTOR CO., INC.

5. Remove the blower unit (A).

GETtheMANUALS.org

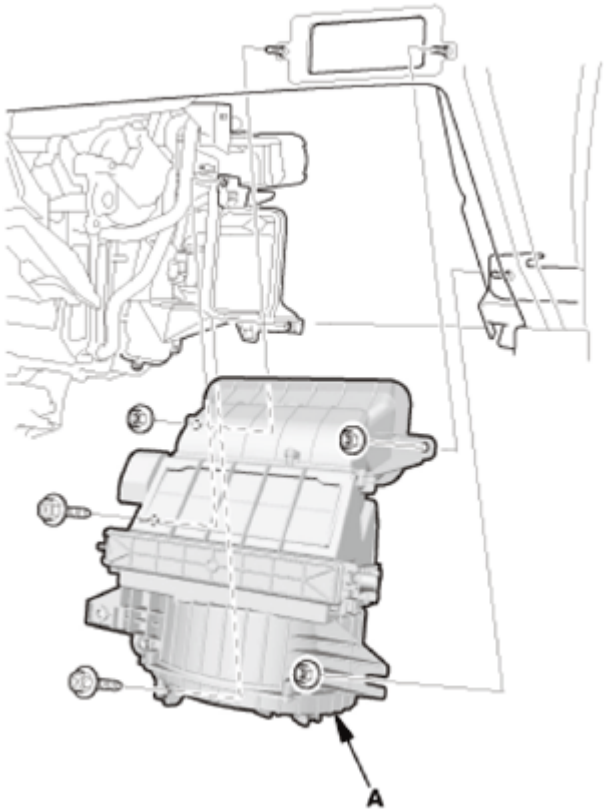

Fig. 227: Identifying Blower Unit
Courtesy of AMERICAN HONDA MOTOR CO., INC.

10. Heater Core Cover
    1. Remove the heater core cover (A).

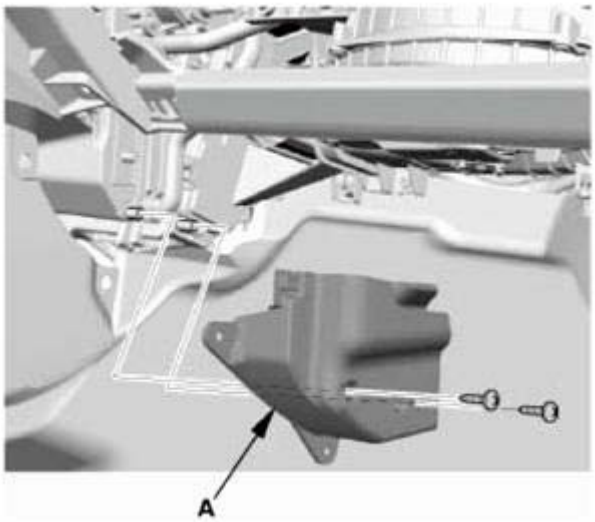

Fig. 228: Identifying Heater Core Cover
Courtesy of AMERICAN HONDA MOTOR CO., INC.

GETtheMANUALS.org

11. Passenger's Air Mix Control Motor (Climate Control)
    1. Disconnect the passenger's air mix control motor connector (A).
    2. Remove the passenger's air mix control motor (B).

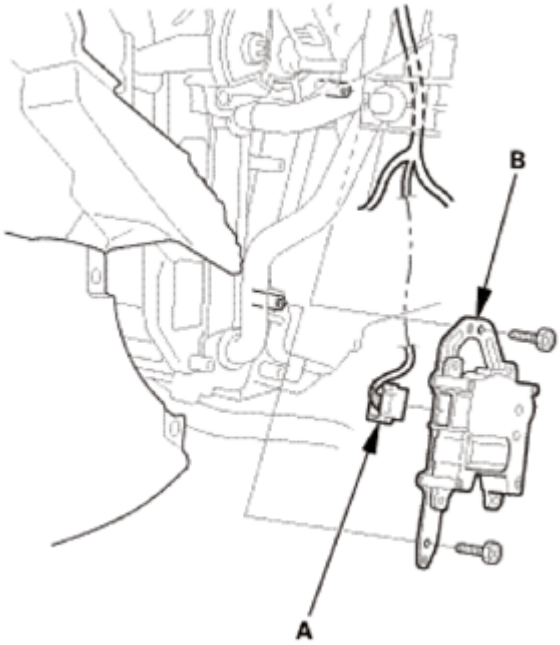

Fig. 229: Identifying Passenger Air Mix Control Motor And Connector
Courtesy of AMERICAN HONDA MOTOR CO., INC.

12. Expansion Valve Cover
    1. Disconnect the evaporator temperature sensor connector (A).
    2. Detach the connector clip (B).
    3. Disconnect the power transistor connector (C).
    4. Remove the expansion valve cover (D), and the seal (E).

GETtheMANUALS.org

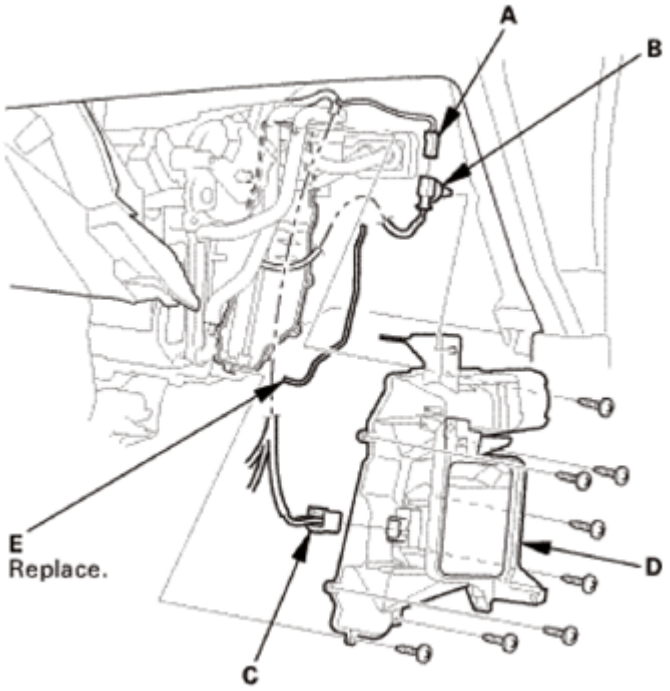

Fig. 230: Identifying Evaporator Temperature Sensor Connector, Power Transistor Connector, Expansion Valve Cover, Seal And Clips
Courtesy of AMERICAN HONDA MOTOR CO., INC.

13. Expansion Valve
    1. Remove the bolts.

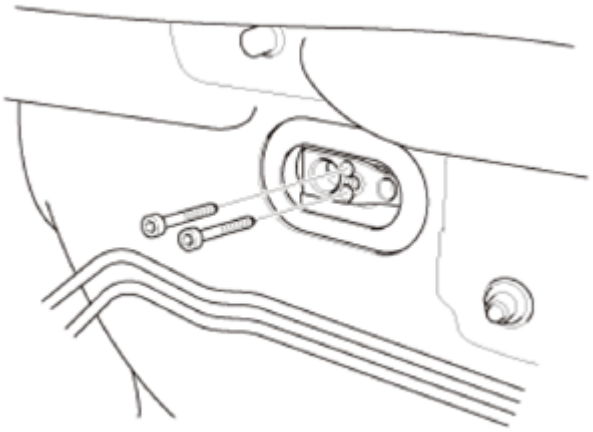

Fig. 231: Identifying Expansion Valve Mounting Bolts
Courtesy of AMERICAN HONDA MOTOR CO., INC.

    2. Remove the expansion valve (A) with O-rings (B) and the insulator (C).

GETtheMANUALS.org

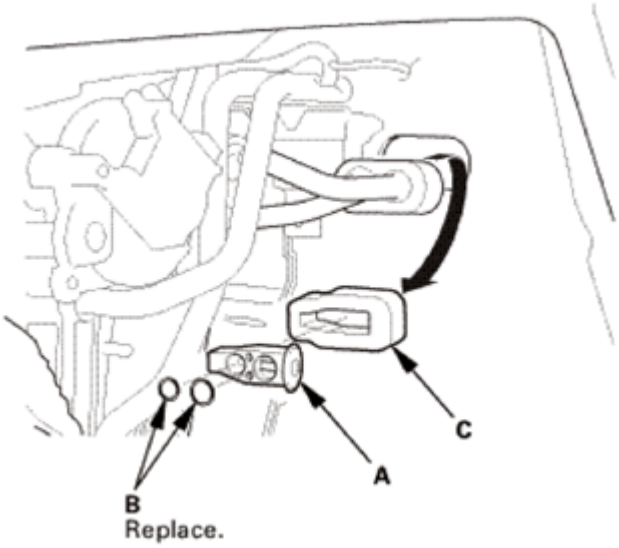

Fig. 232: Removing Expansion Valve
Courtesy of AMERICAN HONDA MOTOR CO., INC.

Installation

CAUTION:

- **Air conditioning refrigerant or lubricant vapor can irritate your eyes, nose, or throat.**
- **Be careful when connecting service equipment.**
- **Do not breathe refrigerant or vapor.**
- **Do not operate the leak detector near flammable vapors. Its sensor operates at high temperatures, and could ignite the vapors, resulting in personal injury and/or damage to the equipment.**

NOTE:

- **If an accidental system discharge occurs, ventilate the work area before resuming service.**
- **Additional health and safety information may be obtained from the refrigerant and lubricant manufacturers.**
- **Check the system for leaks using an R-134a refrigerant leak detector with an accuracy of 14 g (0.5 oz) per year or better.**
- **Replace the O-rings with new ones at each fitting, and apply a thin coat of refrigerant oil before installing them. Be sure to use the correct O-rings for HFC-134a (R-134a) to avoid leakage.**
- **Use only PAG refrigerant oil for HFC-134a A/C systems.**
- **To avoid contamination, do not return the oil to the container once dispensed, and never mix it with other refrigerant oils.**
- **Immediately after using the oil, reinstall the cap on the container, and seal it to avoid moisture absorption.**

GETtheMANUALS.org

- **Do not spill the refrigerant oil on the vehicle; it may damage the paint; if the refrigerant oil contacts the paint, wash it off immediately.**
- **Make sure that there is no air leakage.**

1. Expansion Valve
    1. Install the expansion valve (A) with new O-rings (B) that are lubricated with clean refrigerant oil and the insulator (C).

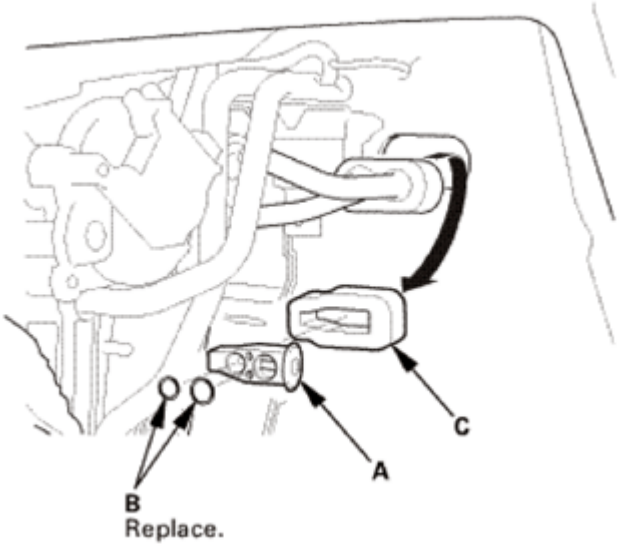

Fig. 233: Installing Expansion Valve
Courtesy of AMERICAN HONDA MOTOR CO., INC.

2. Install the bolts.

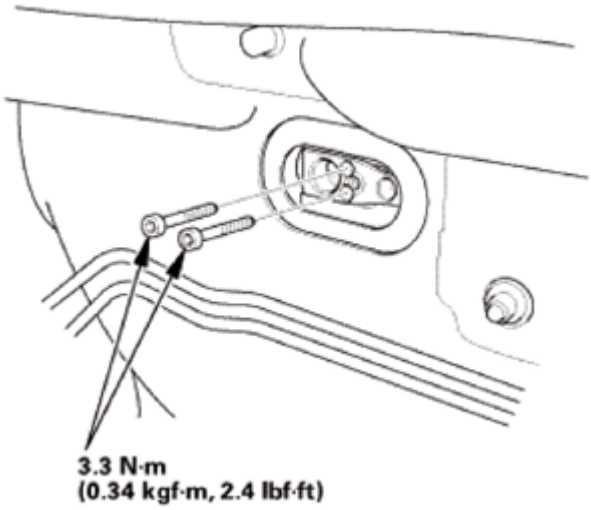

Fig. 234: Identifying Expansion Valve Mounting Bolts With Torque Specifications
Courtesy of AMERICAN HONDA MOTOR CO., INC.

GETtheMANUALS.org

2. Expansion Valve Cover
    1. Install the expansion valve cover (A), and the new seal (B).
    2. Connect the power transistor connector (C).
    3. Install the connector clip (D).
    4. Connect the evaporator temperature sensor connector (E).

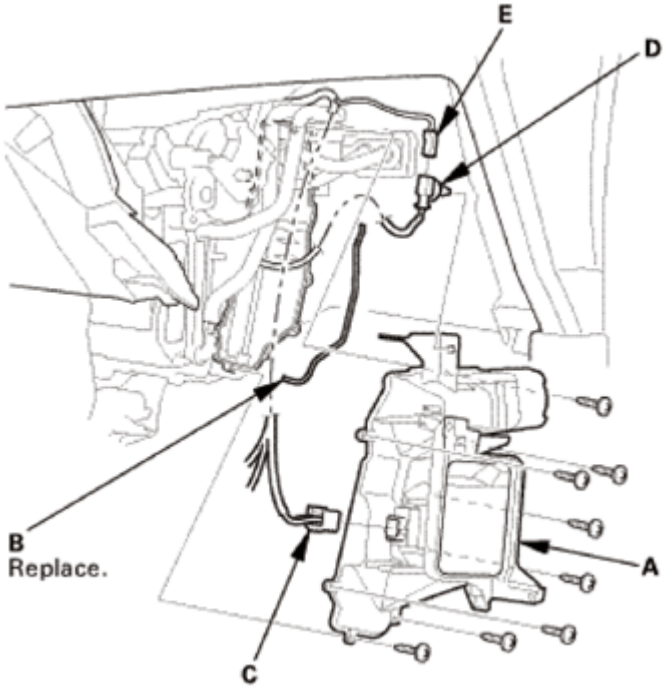

Fig. 235: Identifying Evaporator Temperature Sensor Connector, Power Transistor Connector, Expansion Valve Cover, Seal And Clips
Courtesy of AMERICAN HONDA MOTOR CO., INC.

3. Passenger's Air Mix Control Motor (Climate Control)
    1. Align the passenger's air mix control motor (A) with the gear, then install the motor.
    2. Connect the passenger's air mix control motor connector (B).
    3. After installation, make sure the motor runs smoothly.

GETtheMANUALS.org

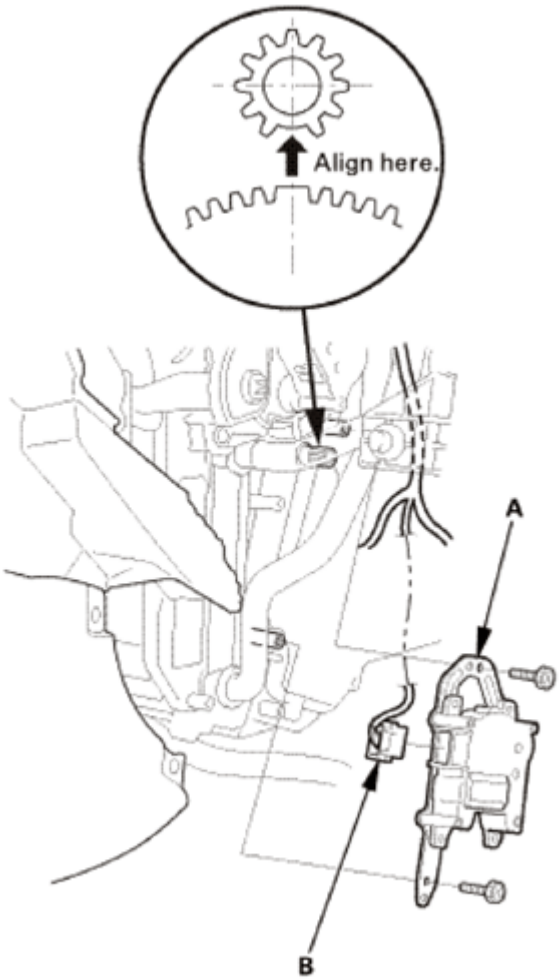

Fig. 236: Identifying Passenger Air Mix Control Motor And Gear Align Mark
Courtesy of AMERICAN HONDA MOTOR CO., INC.

4. Heater Core Cover
    1. Install the heater core cover (A).

GETtheMANUALS.org

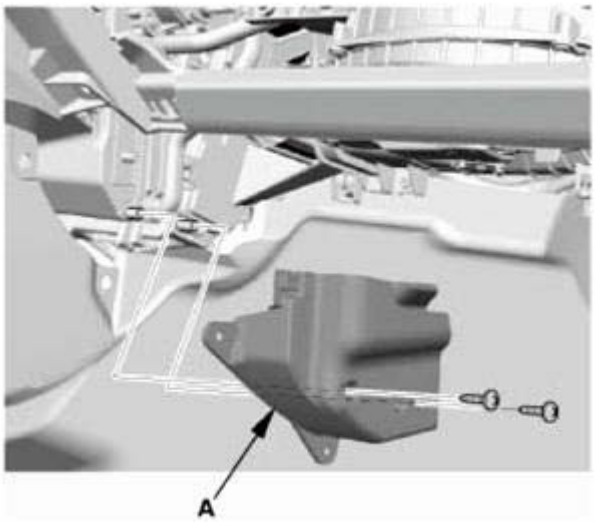

Fig. 237: Identifying Heater Core Cover
Courtesy of AMERICAN HONDA MOTOR CO., INC.

5. Blower Unit
    1. Install the blower unit (A).

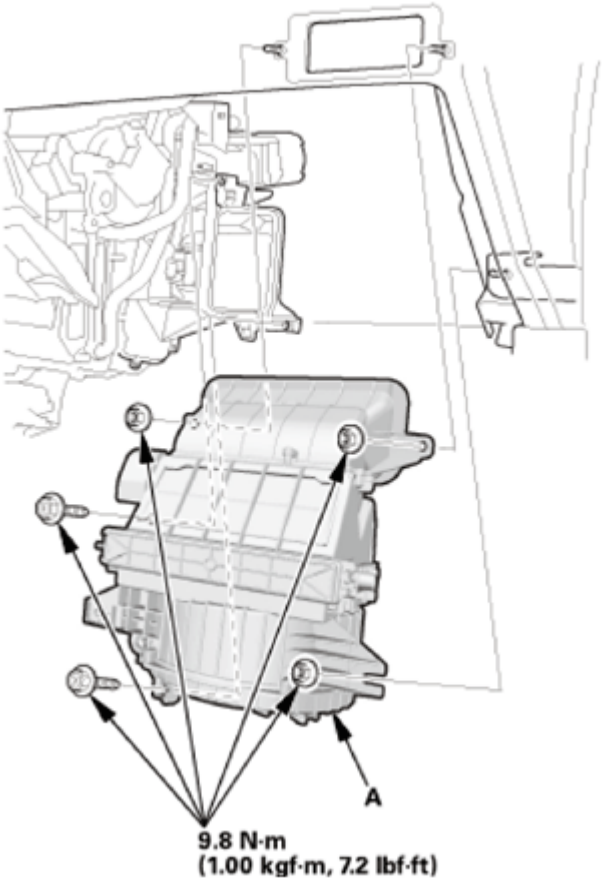

GETtheMANUALS.org

Fig. 238: Identifying Blower Unit With Torque Specifications
Courtesy of AMERICAN HONDA MOTOR CO., INC.

2. Connect the recirculation control motor connector (A).
3. Install the harness clips (B).

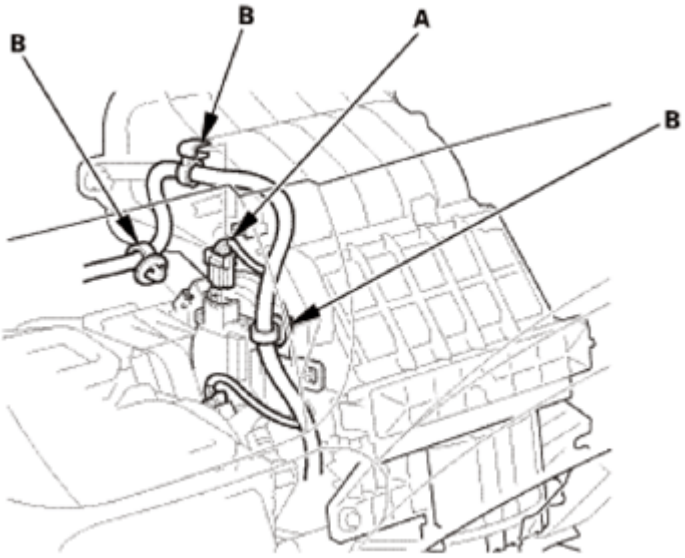

Fig. 239: Identifying Recirculation Control Motor Connectors And Clips
Courtesy of AMERICAN HONDA MOTOR CO., INC.

4. Connect the blower motor connector (A).
5. Install the harness clip (B).

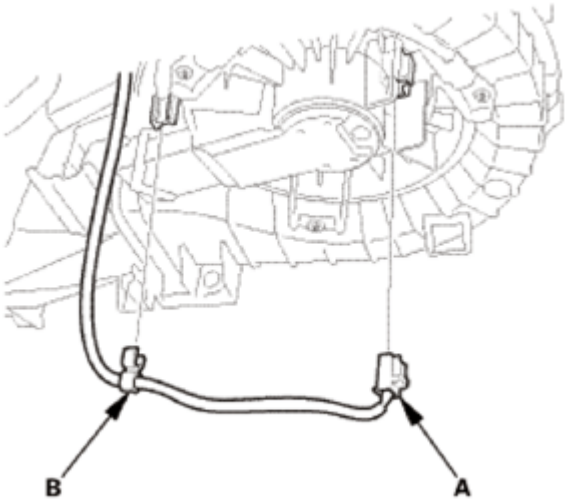

Fig. 240: Identifying Blower Motor Connector And Clip
Courtesy of AMERICAN HONDA MOTOR CO., INC.

6. Passenger's Heater Duct

GETtheMANUALS.org

1. Install the passenger's heater duct (A).

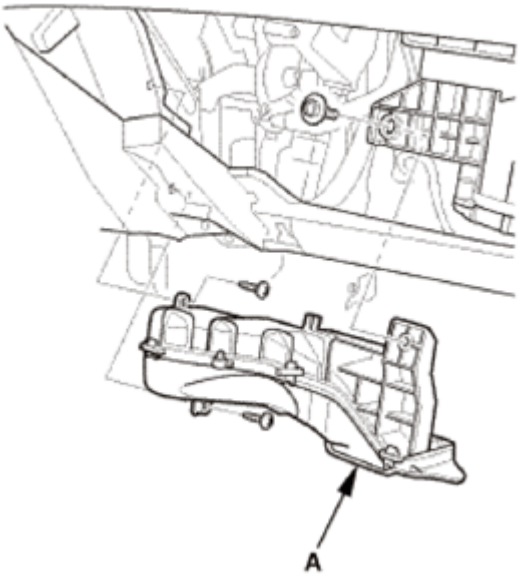

Fig. 241: Identifying Passenger Heater Duct
Courtesy of AMERICAN HONDA MOTOR CO., INC.

7. Glove Box Frame
    1. Install the glove box frame (A).

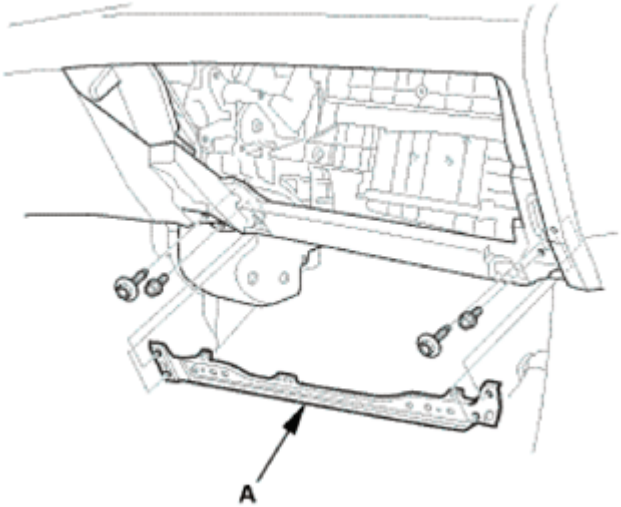

Fig. 242: Identifying Glove Box Frame
Courtesy of AMERICAN HONDA MOTOR CO., INC.

8. A/C Line - Evaporator Side
    1. Install the stud bolt (A).

GETtheMANUALS.org

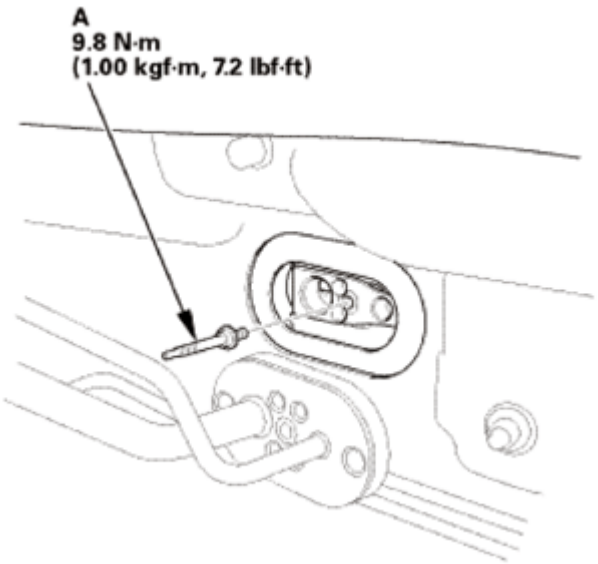

Fig. 243: Identifying A/C Line Stud Bolts With Torque Specifications
Courtesy of AMERICAN HONDA MOTOR CO., INC.

2. Connect the A/C line (A) with new O-rings (B) that are lubricated with clean refrigerant oil.

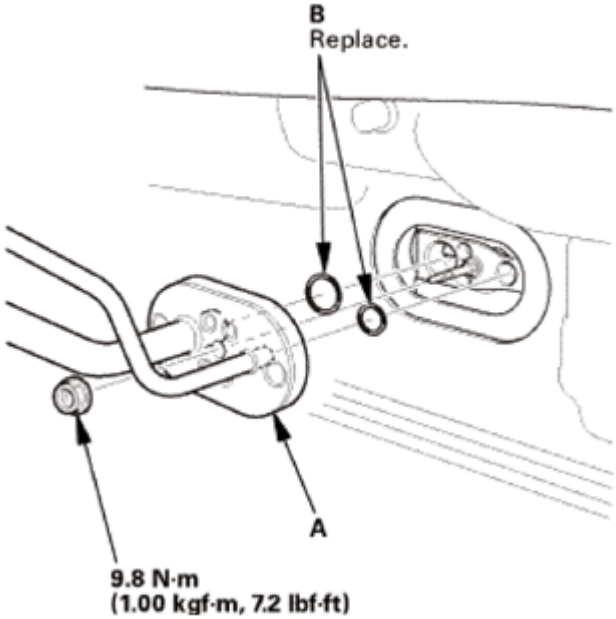

Fig. 244: Identifying A/C Line And O-Rings With Torque Specifications
Courtesy of AMERICAN HONDA MOTOR CO., INC.

3. Install the bolt.

GETtheMANUALS.org

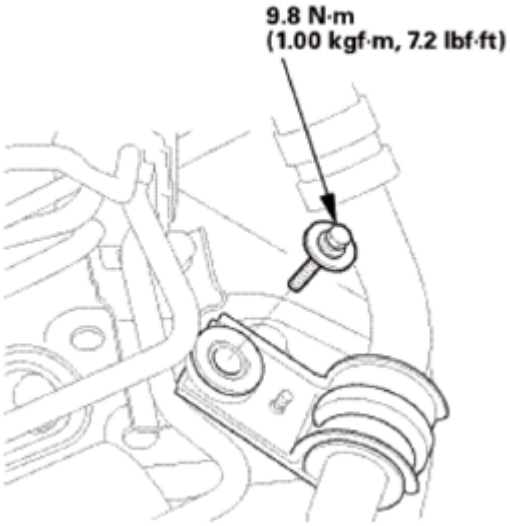

Fig. 245: Identifying A/C Line Mounting Bolts With Torque Specifications
Courtesy of AMERICAN HONDA MOTOR CO., INC.

9. R-134a Refrigerant Recovery/Recycling/Charging Station - Connection
    1. Connect an R-134a refrigerant recovery/recycling/charging station (A) to the high-pressure service port (B) and the low-pressure service port (C), as shown, following the equipment manufacturer's instructions.

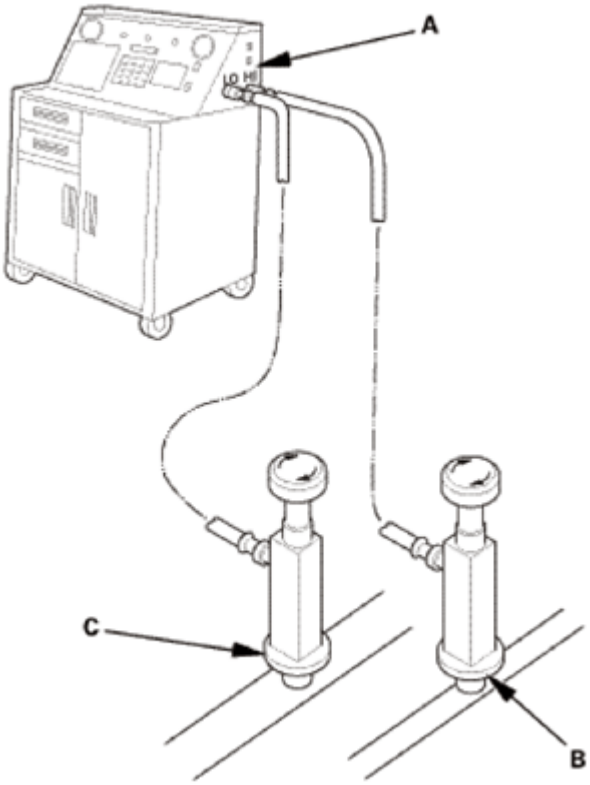

Fig. 246: Identifying Refrigerant Recovery/Recycling/Charging Station, High And Low

GETtheMANUALS.org

<u>Pressure Service Port</u>
Courtesy of AMERICAN HONDA MOTOR CO., INC.

10. A/C System Evacuation
    1. Evacuate the system. The vacuum pump should run for a minimum of 30 minutes to eliminate all moisture from the system. When the suction gauge reads -93.3 kPa (-700 mmHg, - 27.55 inHg) for at least 30 minutes, close all valves, and turn off the vacuum pump.
    2. If the suction gauge dose not reach approximately -93.3 kPa (-700 mmHg, -27.55 inHg) in 15 minutes, there is probably a large leak in the system. Partially charge the system, and check for leaks.
11. A/C Refrigerant - Charging
    1. Charge the system with the specified amount of R-134a refrigerant. Do not overcharge the system; the A/C compressor will be damaged.

       Select the appropriate units of measure for your refrigerant charging station.

       Refrigerant Capacity:

       385 to 435 g

       13.6 to 15.4 oz

       0.385 to 0.435 kg

       0.849 to 0.959 lbs

12. A/C Refrigerant - Leak Check

Leak Detector Usage Tips (Refer to the Operator's Manual for complete operating instructions)

- Position the vehicle in a wind-free work area. This will aid in detecting small leaks.
- When using the leak detector for the first time, allow it to warm up for 2 minutes with the probe in a clean atmosphere. This lets the temperature sensor in the detector stabilize.
- The calibration check should be done in the "Search 2" mode. Once that is done, the other check modes do not need calibrating.
- When leak checking through the HVAC module drain hose, avoid drawing water into the probe. Water can damage the internal pump and sensor.
- Avoid creasing the flexible probe extension. Creases can restrict air flow and give false readings.
- Because the detector recalibrates itself for ambient gases, it may be necessary to move the detector away from the leak to clear the sensor. Once the sensor has cleared, recheck the suspected leak.
- When removing the clear probe tip, be careful not to lose the flow ball.
- R-134a is heavier than air; always check below and to the sides of all potential leak sources.
- Halogen leak detectors are sensitive to chemicals: windshield washing solutions, solvents/cleaners, and some vehicle adhesives. Keep these chemicals out of the area when doing leak detection.

GETtheMANUALS.org

Fluorescent Dye Usage Tips

- Use only Tracer-Stick single dose fluorescent dye capsules from Tracerline®. Other dyes contain solvents that may contaminate the refrigerant oil, leading to component failure.
- Adding excessive amounts of dye can damage the A/C compressor.
- PAG oil is water soluble, so condensation on the evaporator core or the refrigerant lines may wash the PAG oil and fluorescent dye away from the actual leak. Condensation may also carry dye through the HVAC module drain.
- After checking and repairing leaks, thoroughly clean any residual dye from the areas where leaks were found. Use GLO-AWAY dye cleaner, from Tracerline®, and hot water to remove the dye (follow the instructions on the bottle). Residual dye stains can cause misdiagnosis of any future A/C system leaks.
- If any refrigerant dye contacts an exterior paint surface, remove it by doing this:
  - Carefully wash the affected surfaces to remove any dirt, and to prevent paint scratching.
  - Mix water and isopropyl alcohol in a 50/50 mixture. Soak a soft 100 % cotton towel with the water/alcohol mixture, and place the cloth on the affected areas to remove the dye.
  - After removing the dye with the water/alcohol-soaked cloth, carefully wash the affected areas, and check that there is no remaining dye.

1. With the engine OFF, use a halogen leak detector first to detect the leak source. Follow a continuous path in order to ensure that you will not miss any possible leaks. Test the following areas of the system for leaks:

Possible Leak Area	Diagnostic Procedure with the Leak Detector	Notes
Service ports	• Check the service ports with caps installed • If the detector "sniffs" a leak, use fluorescent dye to confirm it	When capping the service ports, ensure that the seals on the port caps are in place, and that the caps are tight. The caps are used as the final seals in the system
A/C condenser	If the detector "sniffs" a leak, use fluorescent dye to confirm it	• Check for joints or connections coated with oily dust • Check for damaged and corroded areas • Check all fittings, couplings, brazed/welded areas and areas around attachment points • Move the probe slowly (1 in/second or less), and keep it within 1/4 in of the component being checked. This maximizes the chance of detecting a leak • If you detect a leak, blow compressed air over the area, then recheck for leaks. For large leaks, clearing the area with compressed air may help you pinpoint the leak source
	• Check at the evaporator	

GETtheMANUALS.org

Evaporator	drain hose • Check at the passenger's side vent and turn the blower on at low speed	
A/C lines	• Wiggle the rubber hoses when checking crimped metal ends • If the detector "sniffs" a leak, use fluorescent dye to confirm it	• Check all fittings, couplings, pressure switches, brazed/welded areas, and areas around attachment points on A/C lines and components • Check for damaged and corroded areas • Move the probe slowly (1 in/second or less), and keep it within 1/4 in of the component being checked. This maximizes the chance of detecting a leak

2. Close the quick coupler valves, then disconnect the quick couplers from the vehicle service ports.
3. Attach the universal connect set, from the Optimax Jr. Leak Detection Kit, to the service valve fitting. Close the control valve (the black knob on the connect set).
4. Attach the charging station low pressure hose quick coupler to the service valve fitting, and open the quick coupler valve. Evacuate the connect set using the charging station vacuum pump, then close the quick coupler valve.
5. Detach the universal connect set, and install a Tracer-Stick® dye capsule between the connect set and the service valve fitting (see the manufacturer's instructions for more detail).
6. Attach the quick coupler on the universal connect set to the low pressure service port on the vehicle. Open the charging station low pressure hose quick coupler valve, but do not open the control valve.
7. Start the engine, and set the A/C system to maximum cooling. Open the control valve to let refrigerant and the dye enter the A/C system through the low pressure service port. Close the control valve when the Tracer-Stick® dye capsule is empty.
8. Run the engine and A/C system for 15 minutes to thoroughly circulate the dye. Then shut the engine off, and inspect the following areas of the system for leaks:

NOTE:

- **Check for leaks in a dark work area, and use the UV light and the special glasses from the leak check kit. Other UV lights may not work well with the Tracer-Stick® dye.**
- **Small leaks may take up to 1 week of vehicle operation (with normal A/C use) to become visible.**

Possible Leak Area	Diagnostic Procedure with Fluorescent Dye
Service ports	If a leak is found, replace the cap/o-ring seal or A/C line as needed
A/C lines	• Use a permanent marker pen to circle the leak area • If a leak is found, remove and replace the A/C line

GETtheMANUALS.org

A/C condenser	• If a leak is found, remove the A/C condenser • Determine whether leak is in the A/C condenser or the receiver/dryer • Use a permanent marker pen to circle the leak area • Replace either the receiver/dryer, or the A/C condenser, depending upon which is leaking
A/C compressor	• Check for leaks at all of the A/C compressor joints, the clutch center, the A/C compressor front housing bolts, and the scroll bolts on the back of the A/C compressor • If a leak is found, use a permanent marker pen to circle the leak area • If the A/C compressor relief valve appears to be leaking, determine whether the leak is coming from the relief valve, or the joint between the A/C compressor casing and the valve. If the leak is from the relief valve, check the A/C system pressures, and refer to the pressure test table in the A/C system test. If the leak is from the casing/valve joint, replace the A/C compressor relief valve • If the leak is coming from the suction hose and/or discharge hose fittings on the A/C compressor, clean the A/C fittings and replace the suction/discharge fitting O-rings • For all other A/C compressor leaks, remove and replace the A/C compressor
Evaporator	• Start checking for evaporator leaks by illuminating the evaporator drain tube area • If a leak is found, remove the evaporator core • Determine whether leak is from evaporator or expansion valve • Use a permanent marker pen to circle leak area • Replace the expansion valve, or the evaporator core, depending upon which is leaking

13. A/C System - Test
    1. Insert a thermometer (A) in the center vent.
    2. Place a hygro-thermometer (B) near the blower unit's recirculation inlet duct.
    3. Test conditions:
        - Move the vehicle out of direct sunlight and let it cool down to the surrounding (ambient) temperature. If necessary, wash the vehicle to cool it down more quickly.
        - The blower intake temperature must be at least 68°F (20°C).
        - Open the hood.
        - Open the front doors.
        - Start the engine.
        - Set the temperature control dial or temperature control button to MAX COOL, the mode control button to VENT, and the recirculation control button to RECIRCULATE.
        - Turn the A/C button on and the fan control dial or fan control button to Max.

GETtheMANUALS.org

- Run the engine at 1, 500 rpm.
- No driver or passengers in vehicle.

Fig. 247: Checking Delivery Temperature From Thermometer In Center Vent
Courtesy of AMERICAN HONDA MOTOR CO., INC.

4. Inspect the A/C components for the following conditions:
   - A/C compressor clutch not engaged.
   - Abnormal frost areas.
   - Unusual noises.

   If you observe any of these conditions, refer to the Symptom Troubleshooting Index.

5. After running the air conditioning for 10 minutes under the above test conditions, read the delivery temperature from the thermometer in the center vent, the intake temperature near the blower unit, and the discharge (high) and suction (low) pressures on the A/C gauges.
6. To complete the vent (delivery)/intake temperature chart:
   - Mark the vent (delivery) temperature on the vertical line.
   - Mark the intake temperature on the bottom line.
   - Draw a vertical line from the intake temperature mark.
   - Draw a horizontal line from the vent (delivery) temperature mark until it intersects the vertical line.

   NOTE: The vent temperature and intake temperature should intersect in the shaded area. Any measurements outside the line may

GETtheMANUALS.org

indicate the need for further inspection.

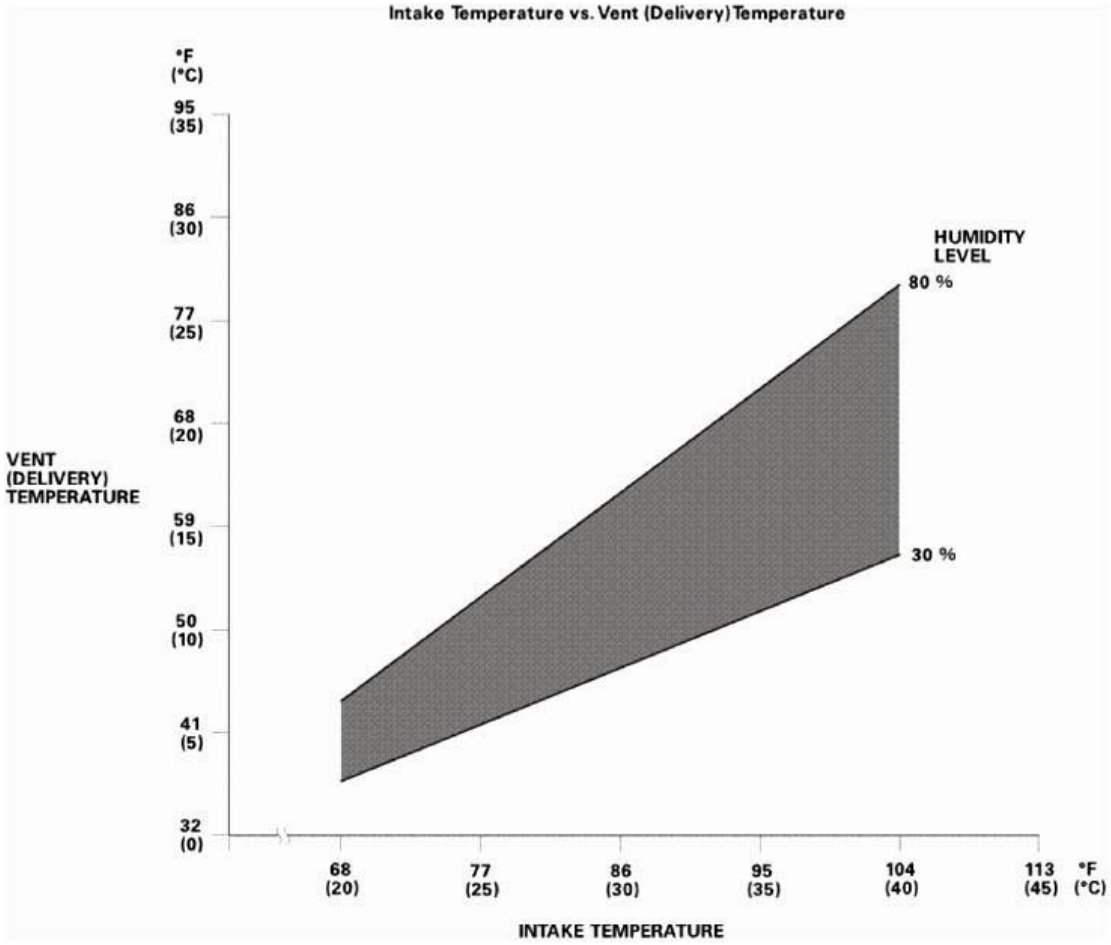

Fig. 248: Intake Temperature Versus Vent (Delivery) Temperature Graph
Courtesy of AMERICAN HONDA MOTOR CO., INC.

7. To complete the high side (discharge) pressure/intake temperature chart:
   - Mark the high side (discharge) pressure on the vertical line.
   - Mark the intake temperature on the bottom line.
   - Draw a vertical line from the intake temperature mark.
   - Draw a horizontal line from the high side (discharge) pressure mark until it intersects the vertical line.

NOTE: **The high side pressure and intake temperature should intersect in the shaded area. Any measurements outside the line may indicate the need for further inspection.**

GETtheMANUALS.org

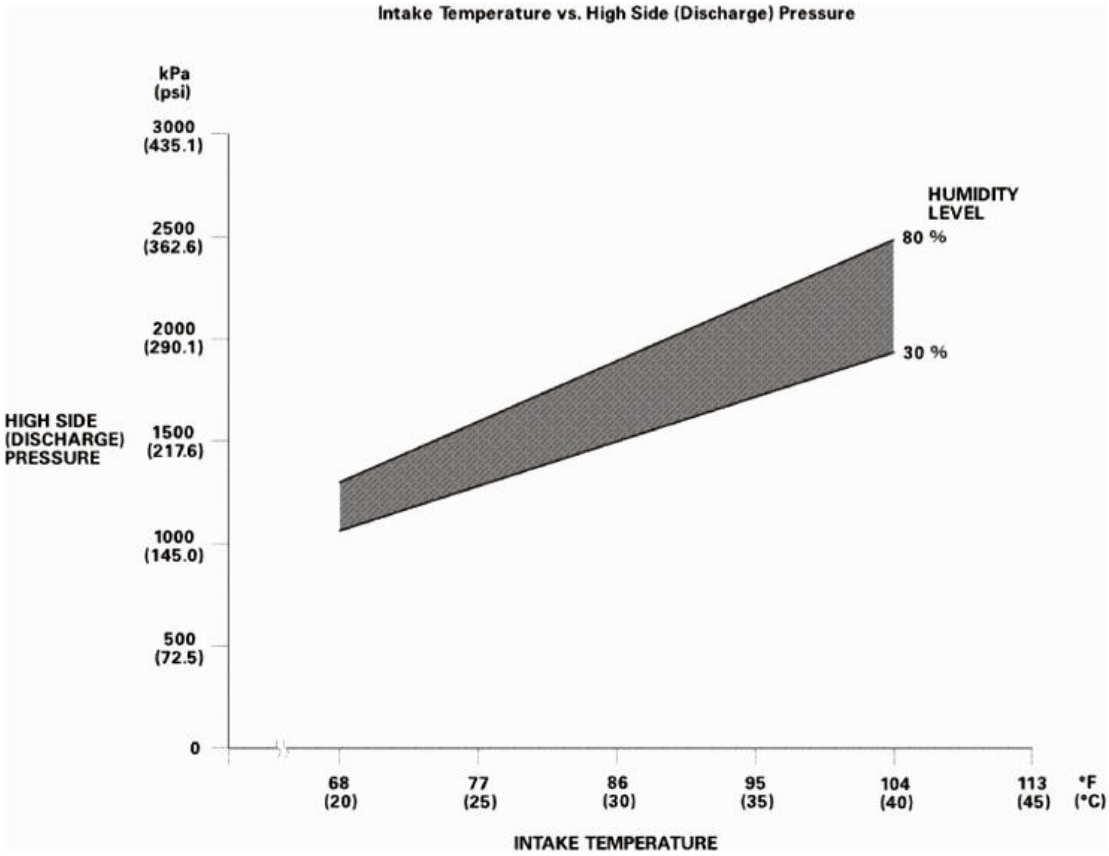

Fig. 249: Intake Temperature Versus High Side (Discharge) Pressure Graph
Courtesy of AMERICAN HONDA MOTOR CO., INC.

8. To complete the low side (suction) pressure/intake temperature chart:
   - Mark the low side (suction) pressure along the vertical line.
   - Mark the intake temperature along the bottom line.
   - Draw a vertical line from the intake temperature mark.
   - Draw a horizontal line from the low side (suction) pressure mark until it intersects the vertical line.

NOTE: **The low side pressure and intake temperature should intersect in the shaded area. Any measurements outside the line may indicate the need for further inspection.**

GETtheMANUALS.org

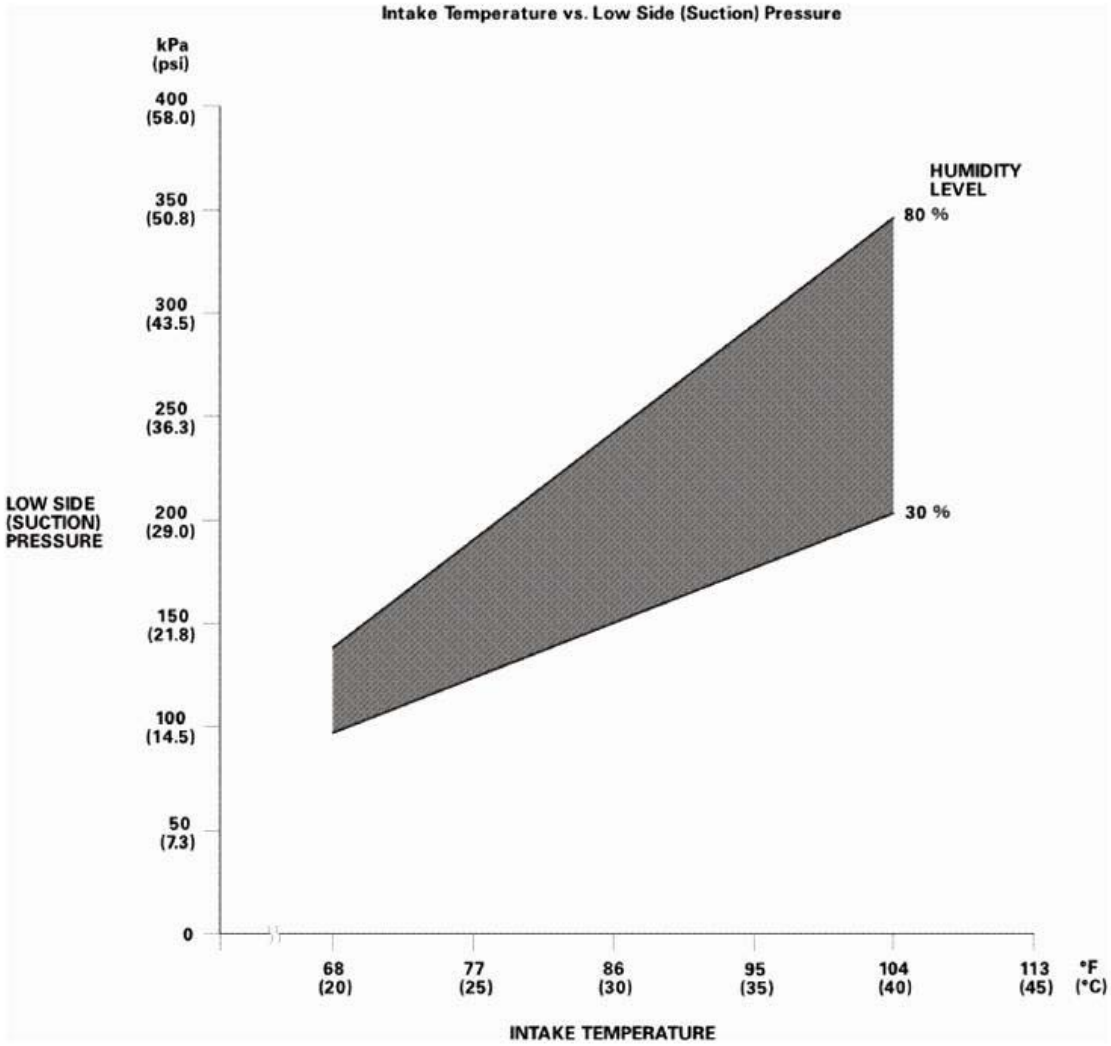

Fig. 250: Intake Temperature Versus Low Side (Suction) Pressure Graph
Courtesy of AMERICAN HONDA MOTOR CO., INC.

14. Cross Brace
    1. Install the cross brace (A).

GETtheMANUALS.org

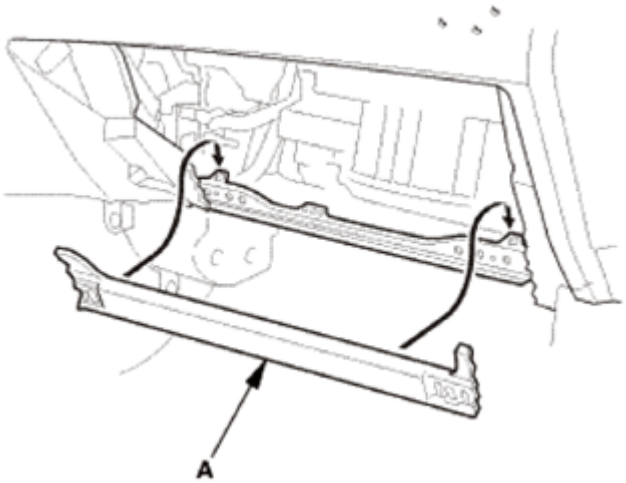

Fig. 251: Installing Cross Brace
Courtesy of AMERICAN HONDA MOTOR CO., INC.

15. Glove Box
    1. Install the glove box (A), then install the glove box damper hook (B).

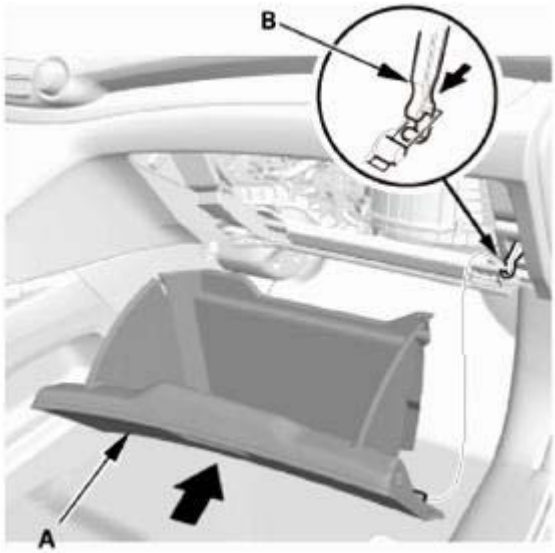

Fig. 252: Installing Glove Box
Courtesy of AMERICAN HONDA MOTOR CO., INC.

    2. Install the bolts (A).

GETtheMANUALS.org

Fig. 253: Identifying Glove Box Mounting Bolts With Torque Specifications
Courtesy of AMERICAN HONDA MOTOR CO., INC.

16. Passenger's Dashboard Undercover
    1. Install the passenger's dashboard undercover (A). Make sure the clips (B) snap into place securely, and the pins (C) into the holder (D) securely.

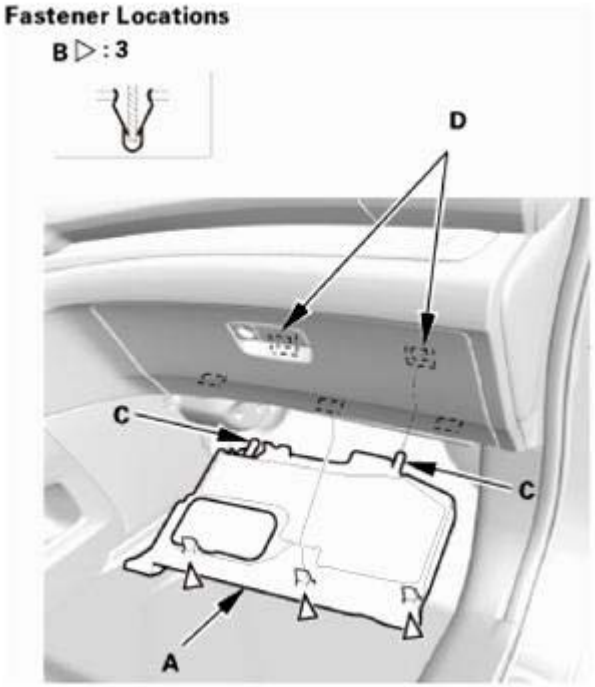

GETtheMANUALS.org

Fig. 254: Identifying Passenger Dashboard Undercover, Holder, Pins And Clips
Courtesy of AMERICAN HONDA MOTOR CO., INC.

EVAPORATOR TEMPERATURE SENSOR REMOVAL, INSTALLATION, AND TEST

SPECIAL TOOL REQUIRED

Image	Description/Tool Number
	Compact Electronic Vacuum Gauge Robinair ROB14777(1), commercially available
	Leak Detector YGK-H-10PM(1)

GETtheMANUALS.org

	Leak Detector HLD-100(1)
	Leak Detector TIFZX-1(1)
	OPTIMAX Jr. A/C Leak Detection Kit TRP124893(1)

GETtheMANUALS.org

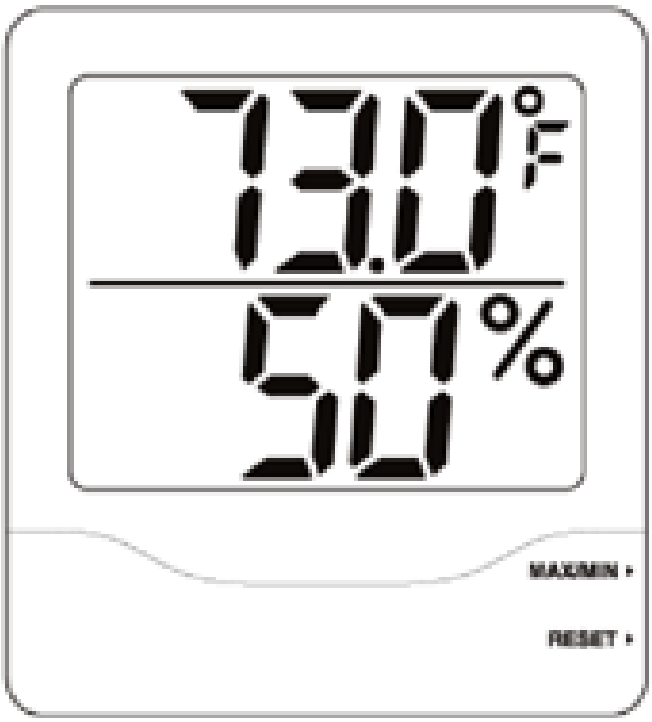	Big Digit Hygro-Thermometer PYR445703, commercially available
	Throttle Pedal Depressor Tool B240B, commercially available
(1) These tools are available through the Honda Tool and Equipment Program; call 888-424-6857	

REMOVAL

CAUTION:

- **Air conditioning refrigerant or lubricant vapor can irritate your eyes, nose, or throat.**
- **Be careful when connecting service equipment.**
- **Do not breathe refrigerant or vapor.**

NOTE:

- **If accidental system discharge occurs, ventilate the work area before resuming service.**
- **Additional health and safety information may be obtained from the refrigerant and lubricant manufacturers.**

1. R-134a Refrigerant Recovery/Recycling/Charging Station - Connection
    1. Connect an R-134a refrigerant recovery/recycling/charging station (A) to the high-pressure service port (B) and the low-pressure service port (C), as shown, following the equipment manufacturer's instructions.

GETtheMANUALS.org

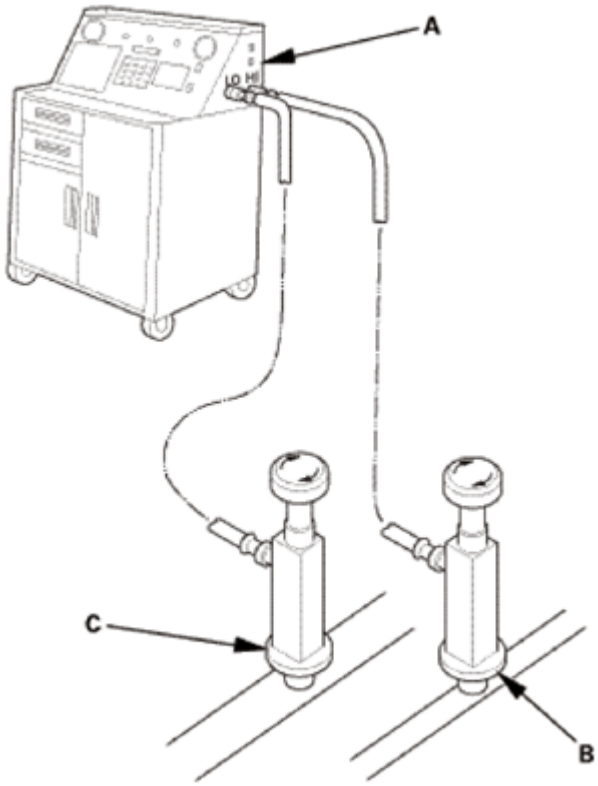

Fig. 255: Identifying Refrigerant Recovery/Recycling/Charging Station, High And Low Pressure Service Port
Courtesy of AMERICAN HONDA MOTOR CO., INC.

2. A/C Refrigerant - Recovery
    1. Recover the refrigerant from the A/C system.
    2. Measure the amount of refrigerant oil removed from the A/C system after the recovery process is completed. Be sure to put the same amount of new refrigerant oil back into the A/C system before charging.
3. A/C Line - Evaporator Side
    1. Remove the bolt.

GETtheMANUALS.org

Fig. 256: Identifying A/C Line Mounting Bolt
Courtesy of AMERICAN HONDA MOTOR CO., INC.

2. Disconnect the A/C line (A) with O-rings (B).

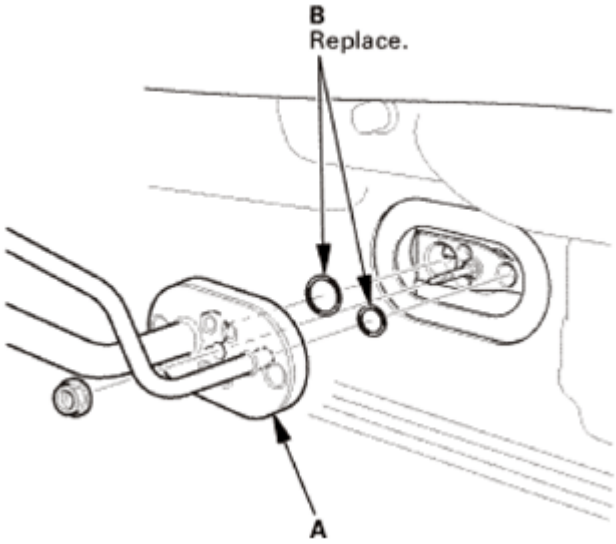

Fig. 257: Identifying A/C Line And O-Rings
Courtesy of AMERICAN HONDA MOTOR CO., INC.

3. Remove the stud bolt (A).

GETtheMANUALS.org

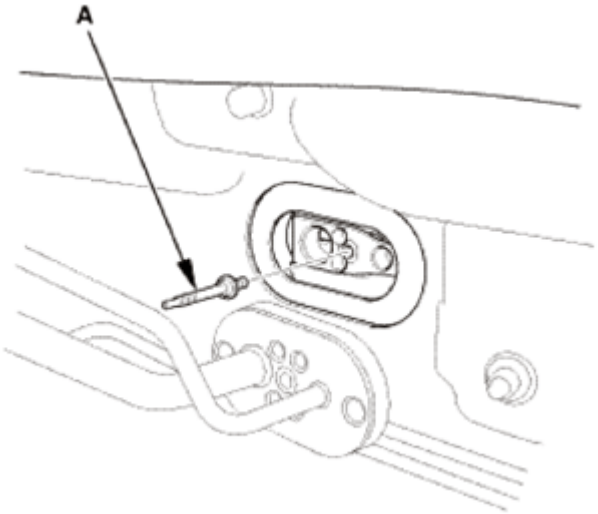

Fig. 258: Identifying A/C Line Stud Bolt
Courtesy of AMERICAN HONDA MOTOR CO., INC.

4. Passenger's Dashboard Undercover
    1. Gently pull down the passenger's dashboard undercover (A) to detach the clips (B), then pull away the undercover to release the pins (C) from the holder (D).

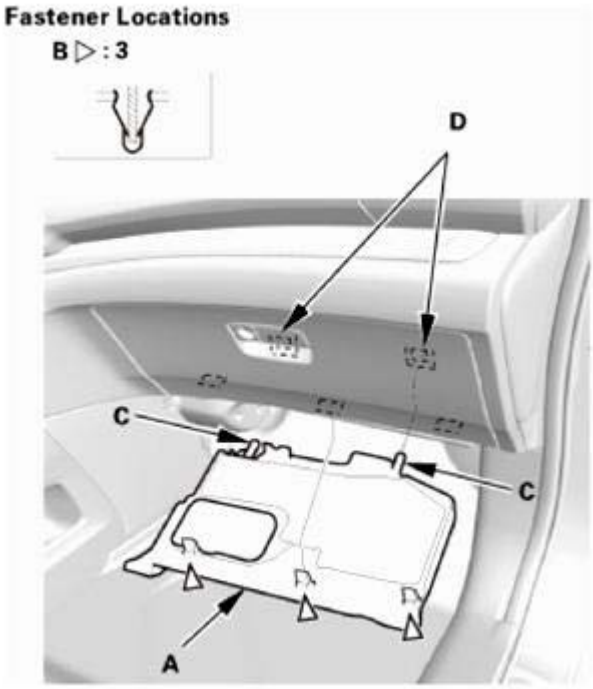

Fig. 259: Identifying Passenger Dashboard Undercover, Holder, Pins And Clips
Courtesy of AMERICAN HONDA MOTOR CO., INC.

5. Glove Box
    1. Remove the bolts (A).

GETtheMANUALS.org

Fig. 260: Identifying Glove Box Mounting Bolts
Courtesy of AMERICAN HONDA MOTOR CO., INC.

2. Release both glove box stops (A) by pushing them in, then let the glove box (B) hang down.

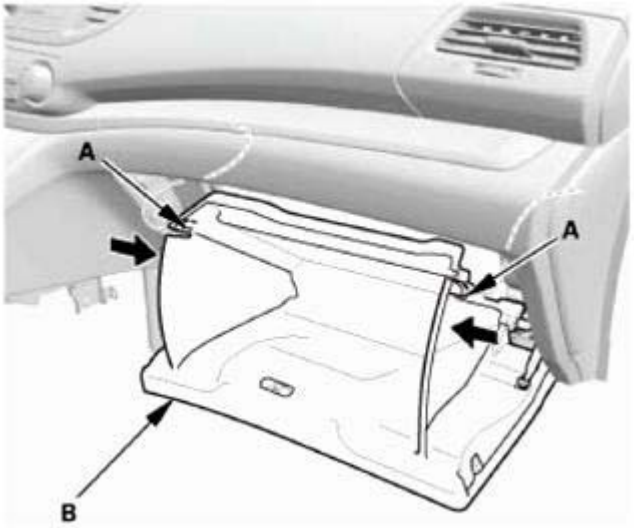

Fig. 261: Releasing Glove Box Stops
Courtesy of AMERICAN HONDA MOTOR CO., INC.

3. Detach the glove box damper hook (A), then remove the glove box (B).

GETtheMANUALS.org

Fig. 262: Removing Glove Box
Courtesy of AMERICAN HONDA MOTOR CO., INC.

6. Glove Box Frame
    1. Remove the glove box frame (A).

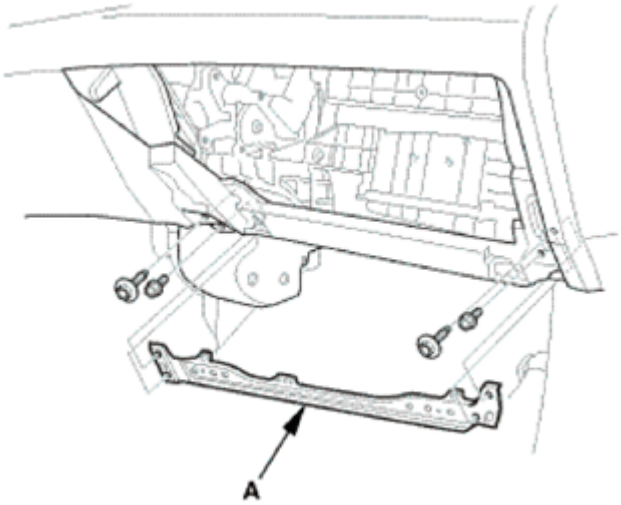

Fig. 263: Identifying Glove Box Frame
Courtesy of AMERICAN HONDA MOTOR CO., INC.

7. Passenger's Heater Duct
    1. Remove the passenger's heater duct (A).

GETtheMANUALS.org

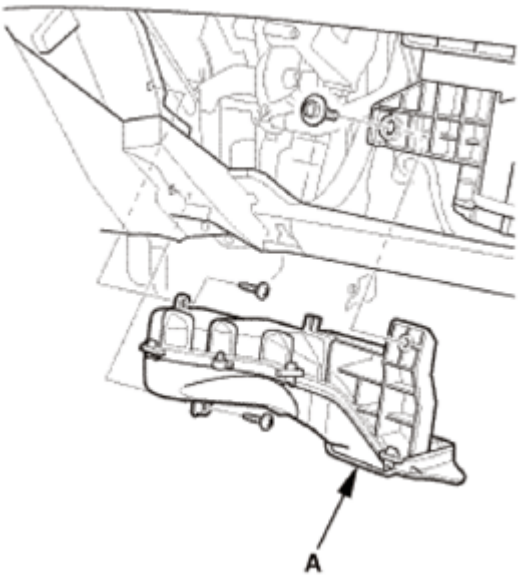

Fig. 264: Identifying Passenger Heater Duct
Courtesy of AMERICAN HONDA MOTOR CO., INC.

8. Cross Brace
    1. Cut the cross brace (A) in the glove box opening with diagonal cutters in the area shown, and remove it.

NOTE: Retain the cross brace to be reinstalled later.

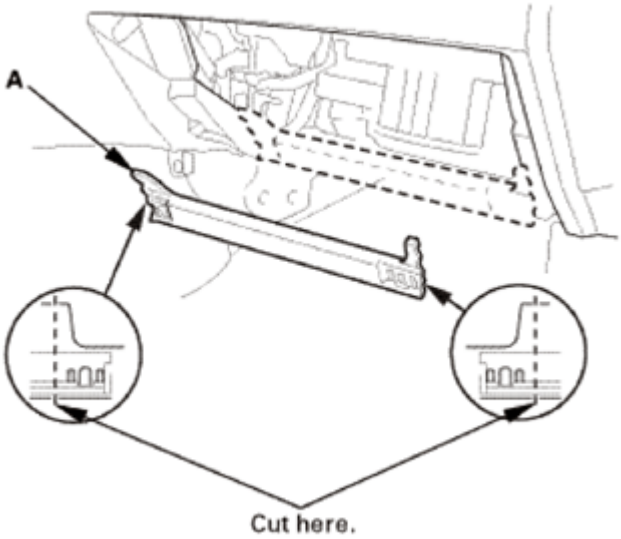

Fig. 265: Identifying Cross Brace Cutting Position
Courtesy of AMERICAN HONDA MOTOR CO., INC.

9. Blower Unit
    1. Disconnect the blower motor connector (A).

GETtheMANUALS.org

2. Detach the harness clip (B).

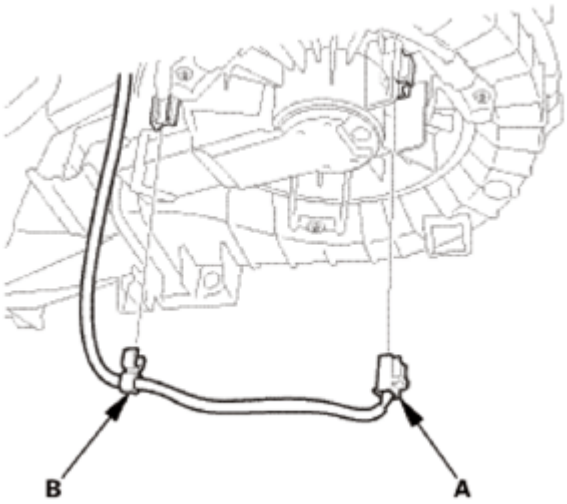

Fig. 266: Identifying Blower Motor Connector And Clips
Courtesy of AMERICAN HONDA MOTOR CO., INC.

3. Disconnect the recirculation control motor connector (A).
4. Detach the harness clips (B).

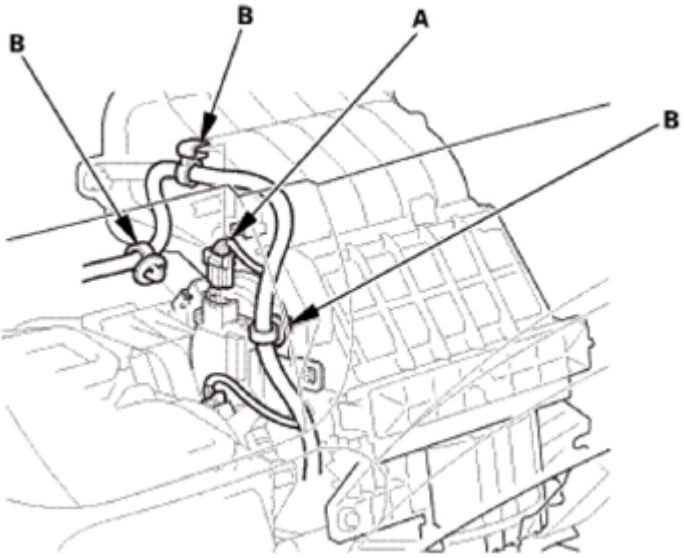

Fig. 267: Identifying Recirculation Control Motor Connectors And Clips
Courtesy of AMERICAN HONDA MOTOR CO., INC.

5. Remove the blower unit (A).

GETtheMANUALS.org

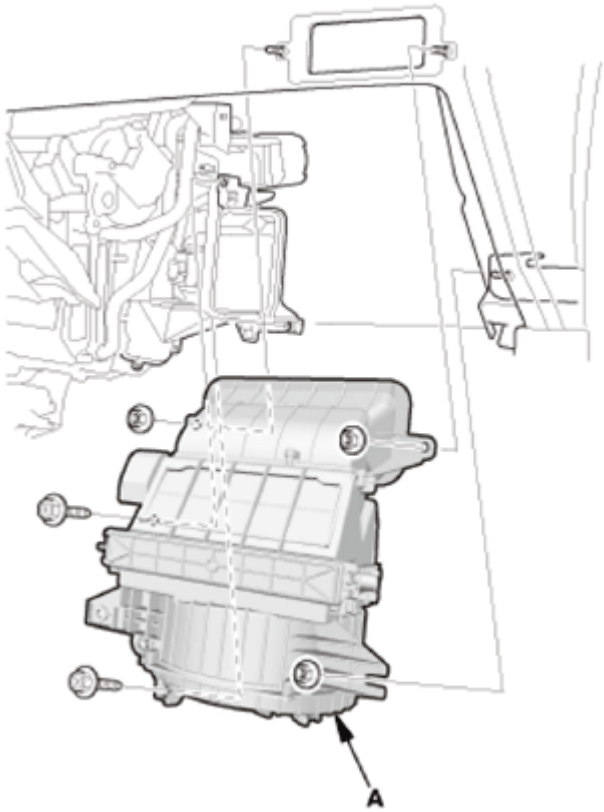

Fig. 268: Identifying Blower Unit
Courtesy of AMERICAN HONDA MOTOR CO., INC.

10. Heater Core Cover
    1. Remove the heater core cover (A).

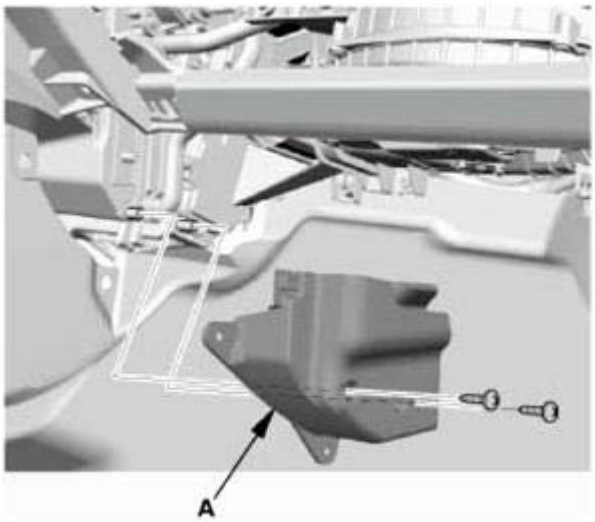

Fig. 269: Identifying Heater Core Cover
Courtesy of AMERICAN HONDA MOTOR CO., INC.

GETtheMANUALS.org

11. Passenger's Air Mix Control Motor (Climate Control)
    1. Disconnect the passenger's air mix control motor connector (A).
    2. Remove the passenger's air mix control motor (B).

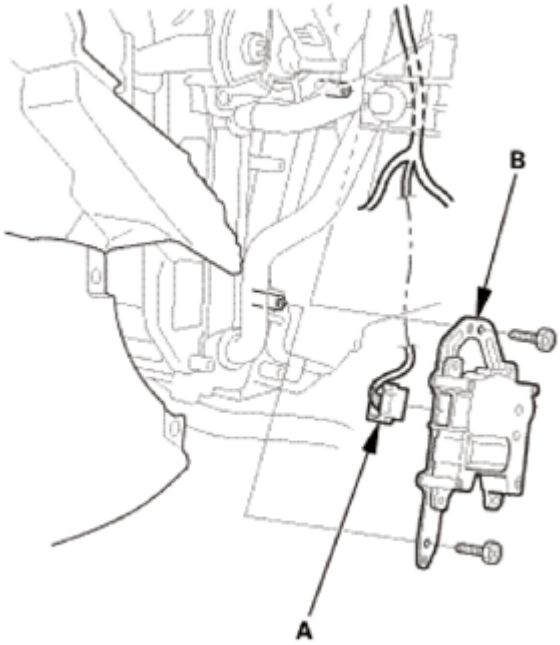

Fig. 270: Identifying Passenger Air Mix Control Motor And Connector
Courtesy of AMERICAN HONDA MOTOR CO., INC.

12. Expansion Valve Cover
    1. Disconnect the evaporator temperature sensor connector (A).
    2. Detach the connector clip (B).
    3. Disconnect the power transistor connector (C).
    4. Remove the expansion valve cover (D), and the seal (E).

GETtheMANUALS.org

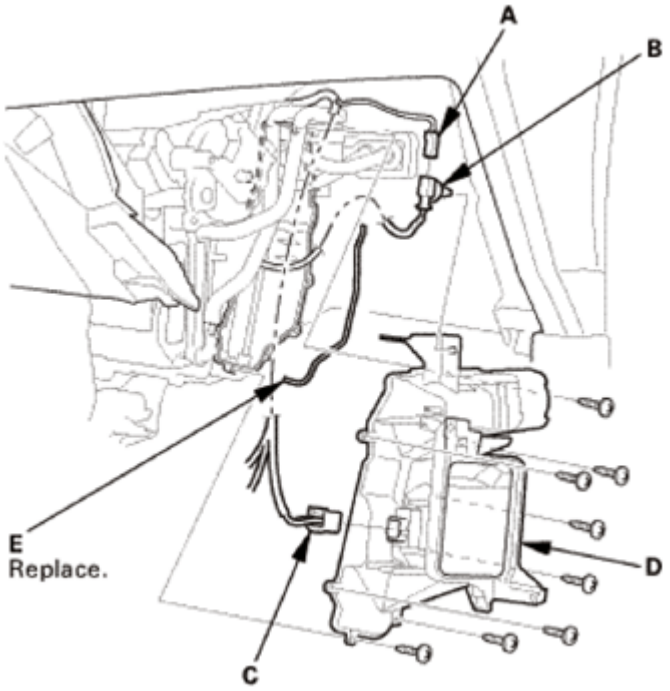

Fig. 271: Identifying Evaporator Temperature Sensor Connector, Power Transistor Connector, Expansion Valve Cover, Seal And Clips
Courtesy of AMERICAN HONDA MOTOR CO., INC.

13. Expansion Valve
    1. Remove the bolts.

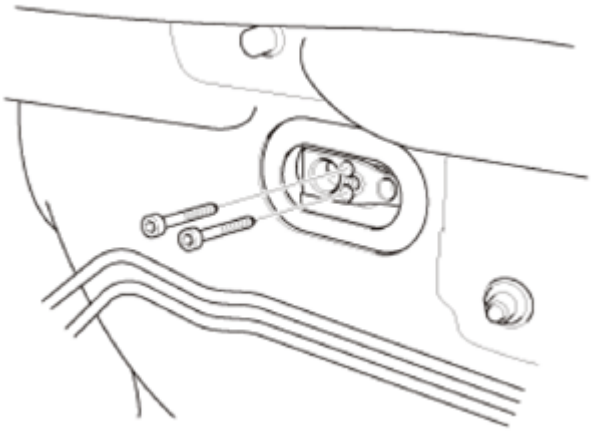

Fig. 272: Identifying Expansion Valve Mounting Bolts
Courtesy of AMERICAN HONDA MOTOR CO., INC.

    2. Remove the expansion valve (A) with O-rings (B) and the insulator (C).

GETtheMANUALS.org

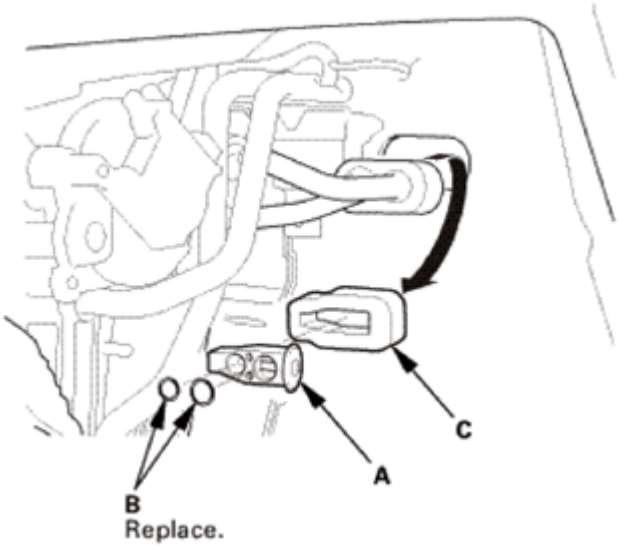

Fig. 273: Removing Expansion Valve
Courtesy of AMERICAN HONDA MOTOR CO., INC.

14. Evaporator Core
    1. Carefully pull out the evaporator core (A) without bending the lines.
    2. Remove the plate (B).

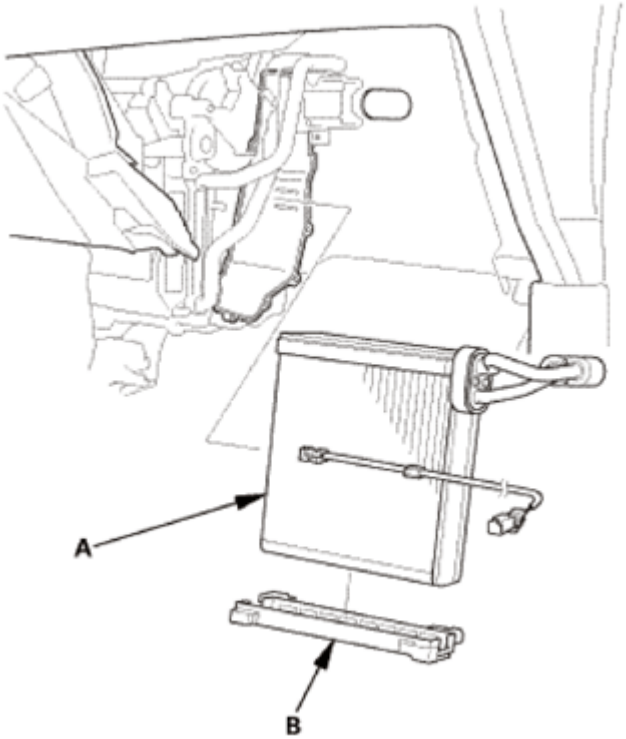

Fig. 274: Identifying Evaporator Core And Plate
Courtesy of AMERICAN HONDA MOTOR CO., INC.

GETtheMANUALS.org

15. Evaporator Temperature Sensor
    1. Remove the evaporator temperature sensor (A).

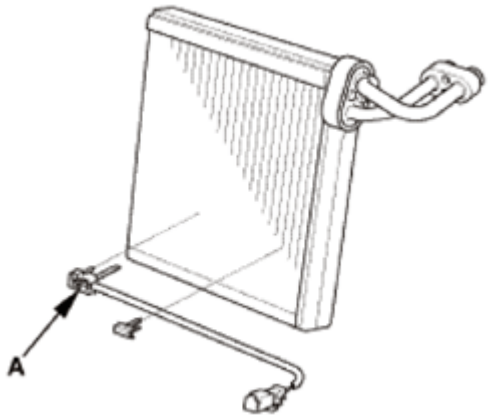

Fig. 275: Identifying Evaporator Temperature Sensor
Courtesy of AMERICAN HONDA MOTOR CO., INC.

TEST

1. Evaporator Temperature Sensor - Test
    1. Dip the sensor in ice water, and measure the resistance between terminals No. 1 and No. 2.
    2. Then pour warm water on the sensor, and check for a change in resistance.

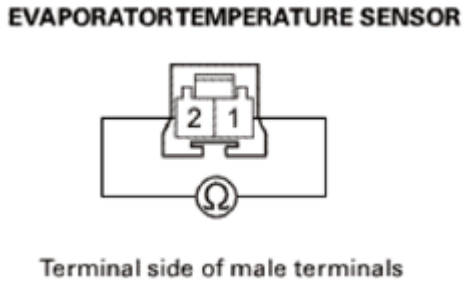

Fig. 276: Checking Evaporator Temperature Sensor For Resistance Change
Courtesy of AMERICAN HONDA MOTOR CO., INC.

    3. Compare the resistance readings with the specifications shown in the graph; the resistance should be within the specifications.

GETtheMANUALS.org

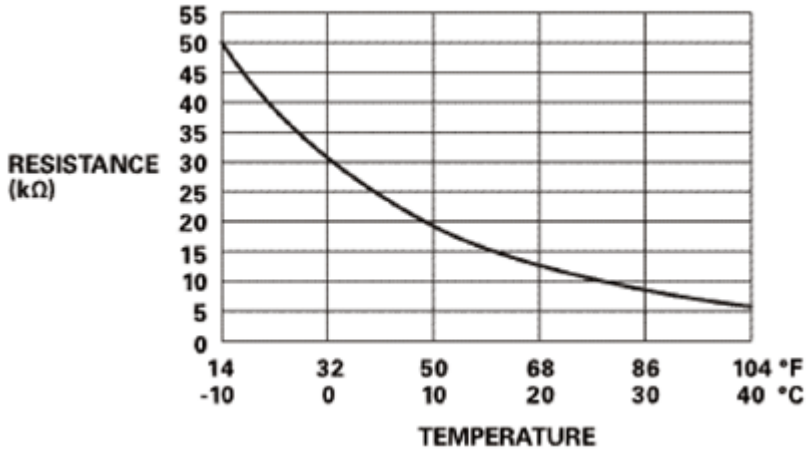

Fig. 277: Evaporator Temperature Sensor Resistance Graph
Courtesy of AMERICAN HONDA MOTOR CO., INC.

4. If the resistance is not as specified, replace the evaporator temperature sensor.

INSTALLATION

CAUTION:

- **Air conditioning refrigerant or lubricant vapor can irritate your eyes, nose, or throat.**
- **Be careful when connecting service equipment.**
- **Do not breathe refrigerant or vapor.**
- **Do not operate the leak detector near flammable vapors. Its sensor operates at high temperatures, and could ignite the vapors, resulting in personal injury and/or damage to the equipment.**

NOTE:

- **If an accidental system discharge occurs, ventilate the work area before resuming service.**
- **Additional health and safety information may be obtained from the refrigerant and lubricant manufacturers.**
- **Check the system for leaks using an R-134a refrigerant leak detector with an accuracy of 14 g (0.5 oz) per year or better.**
- **Replace the O-rings with new ones at each fitting, and apply a thin coat of refrigerant oil before installing them. Be sure to use the correct O-rings for HFC-134a (R-134a) to avoid leakage.**
- **Use only PAG refrigerant oil for HFC-134a A/C systems.**
- **To avoid contamination, do not return the oil to the container once dispensed, and never mix it with other refrigerant oils.**
- **Immediately after using the oil, reinstall the cap on the container, and seal it to avoid moisture absorption.**
- **Do not spill the refrigerant oil on the vehicle; it may damage the paint; if**

GETtheMANUALS.org

the refrigerant oil contacts the paint, wash it off immediately.

- **Make sure that there is no air leakage.**

1. Evaporator Temperature Sensor
    1. Install the evaporator temperature sensor (A) in the evaporator core (B), and note these items:
        - When the evaporator temperature sensor is installed into the new evaporator core, set the sensor into the factory-preset position (C, D).
        - When the evaporator temperature sensor is reinstalled into the original evaporator core, set the sensor into the new position (E, F) because the fin may be deforming by the previous installation.

Installing into the factory-presset position

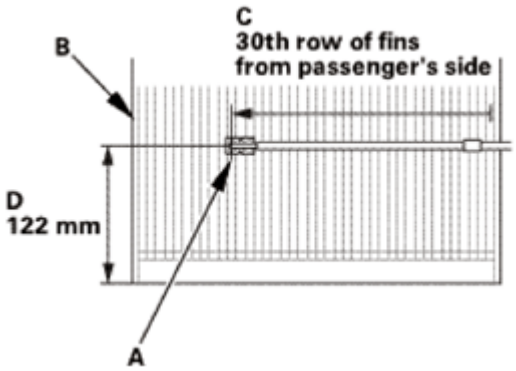

Fig. 278: Identifying Evaporator Temperature Sensor In Evaporator Core Installation Position (30th Row)
Courtesy of AMERICAN HONDA MOTOR CO., INC.

Installing into the new position

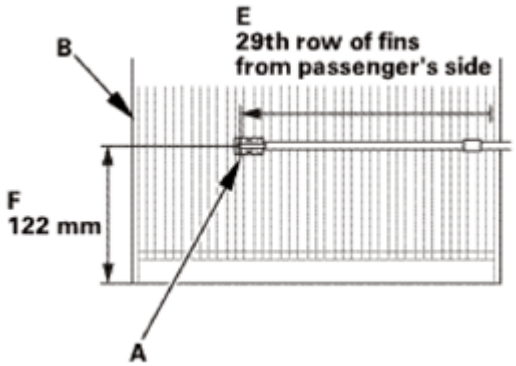

Fig. 279: Identifying Evaporator Temperature Sensor In Evaporator Core Installation Position (29th Row)
Courtesy of AMERICAN HONDA MOTOR CO., INC.

2. Install the evaporator temperature sensor (A).

GETtheMANUALS.org

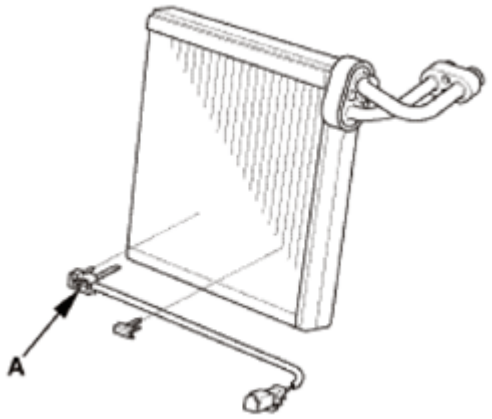

Fig. 280: Identifying Evaporator Temperature Sensor
Courtesy of AMERICAN HONDA MOTOR CO., INC.

2. Evaporator Core
    1. Install the plate (A).
    2. Carefully install the evaporator core (B) without bending the lines.

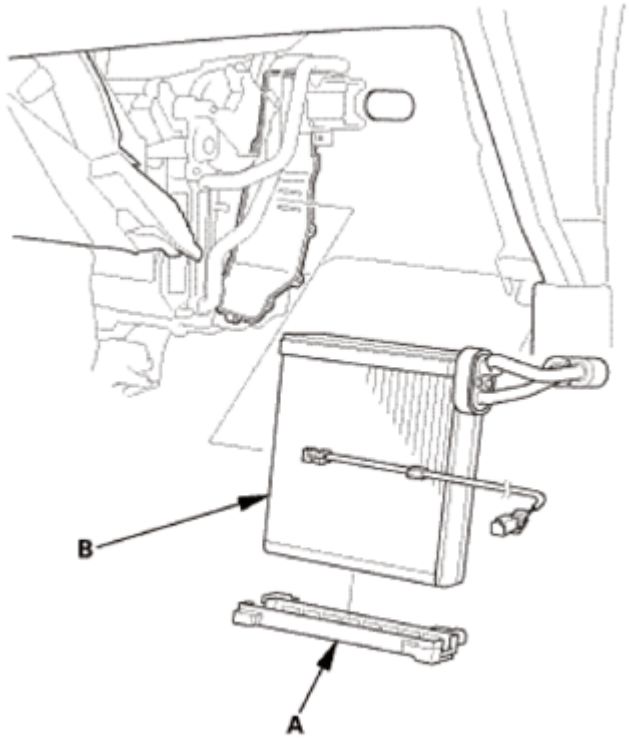

Fig. 281: Identifying Evaporator Core And Plate
Courtesy of AMERICAN HONDA MOTOR CO., INC.

3. Expansion Valve
    1. Install the expansion valve (A) with new O-rings (B) that are lubricated with clean refrigerant oil and the insulator (C).

GETtheMANUALS.org

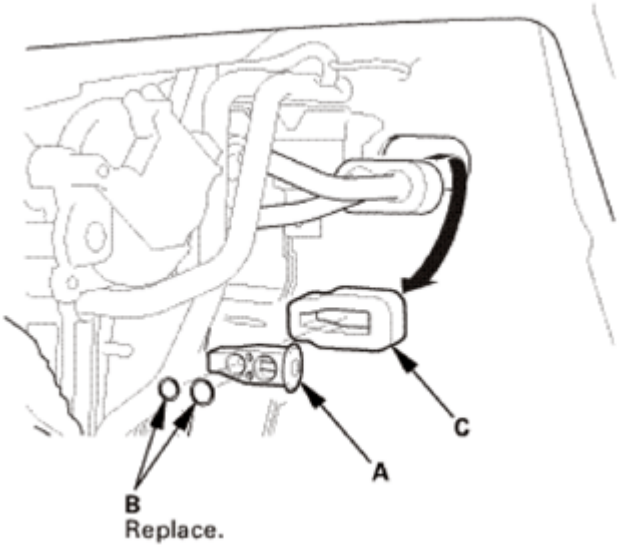

Fig. 282: Installing Expansion Valve
Courtesy of AMERICAN HONDA MOTOR CO., INC.

2. Install the bolts.

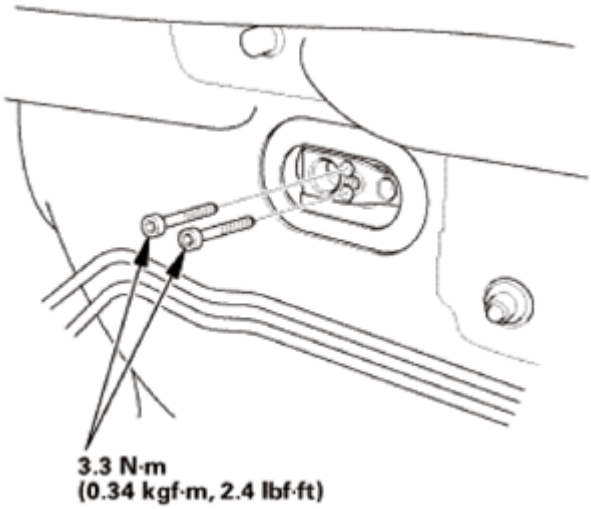

Fig. 283: Identifying Expansion Valve Mounting Bolts With Torque Specifications
Courtesy of AMERICAN HONDA MOTOR CO., INC.

4. Expansion Valve Cover
    1. Install the expansion valve cover (A), and the new seal (B).
    2. Connect the power transistor connector (C).
    3. Install the connector clip (D).
    4. Connect the evaporator temperature sensor connector (E).

GETtheMANUALS.org

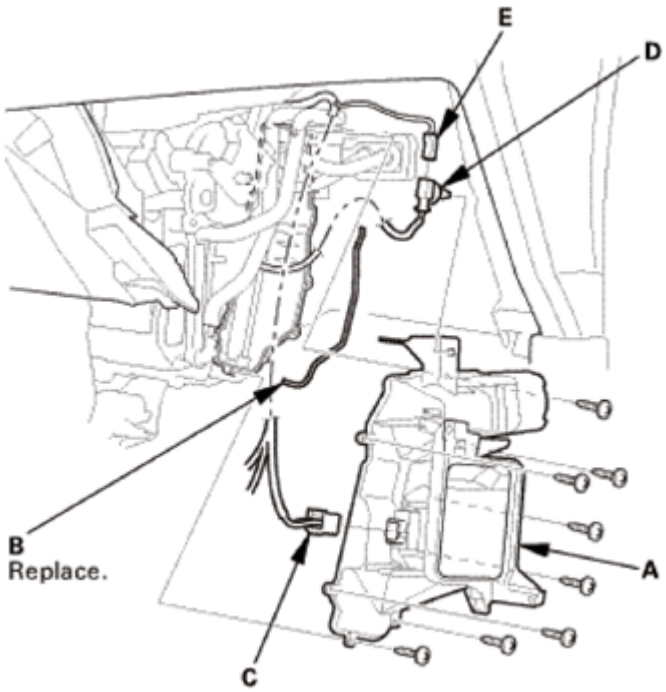

Fig. 284: Identifying Evaporator Temperature Sensor Connector, Power Transistor Connector, Expansion Valve Cover, Seal And Clips
Courtesy of AMERICAN HONDA MOTOR CO., INC.

5. Passenger's Air Mix Control Motor (Climate Control)
    1. Align the passenger's air mix control motor (A) with the gear, then install the motor.
    2. Connect the passenger's air mix control motor connector (B).
    3. After installation, make sure the motor runs smoothly.

GETtheMANUALS.org

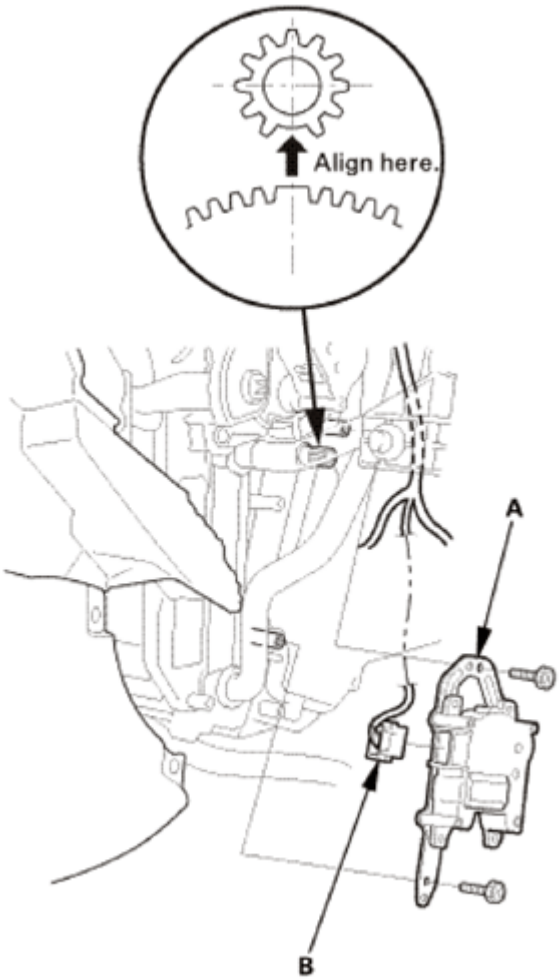

Fig. 285: Identifying Passenger Air Mix Control Motor And Gear Align Mark
Courtesy of AMERICAN HONDA MOTOR CO., INC.

6. Heater Core Cover
    1. Install the heater core cover (A).

GETtheMANUALS.org

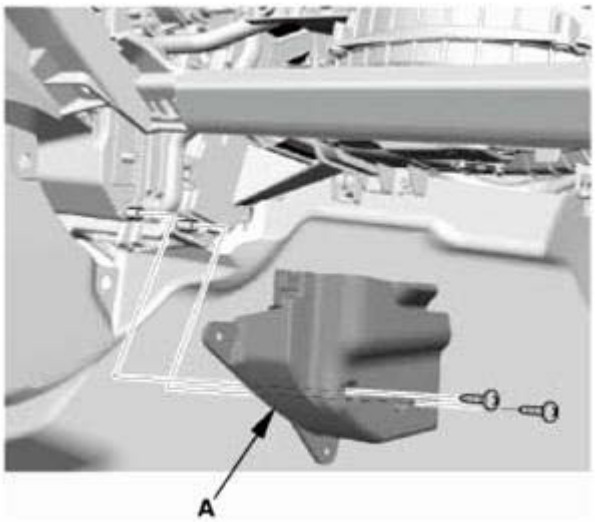

Fig. 286: Identifying Heater Core Cover
Courtesy of AMERICAN HONDA MOTOR CO., INC.

7. Blower Unit
    1. Install the blower unit (A).

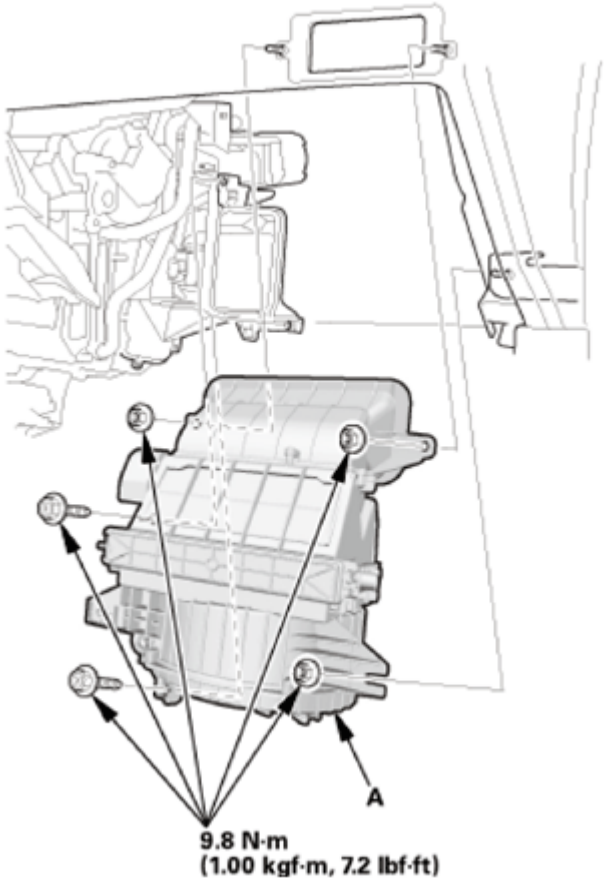

GETtheMANUALS.org

Fig. 287: Identifying Blower Unit With Torque Specifications
Courtesy of AMERICAN HONDA MOTOR CO., INC.

2. Connect the recirculation control motor connector (A).
3. Install the harness clips (B).

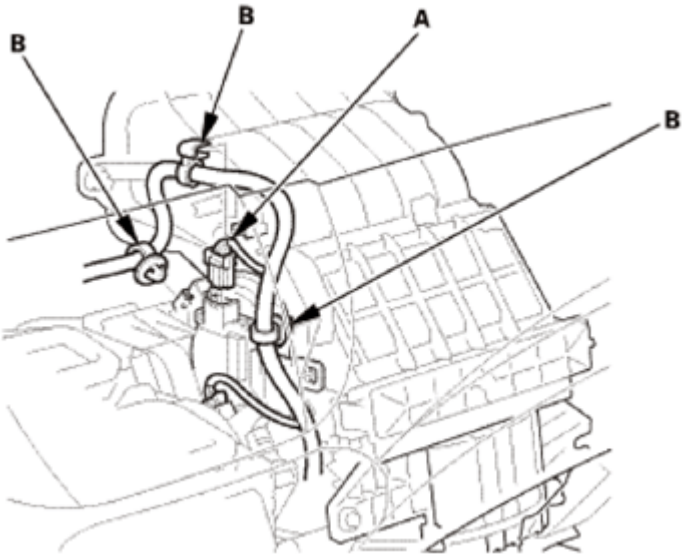

Fig. 288: Identifying Recirculation Control Motor Connectors And Clips
Courtesy of AMERICAN HONDA MOTOR CO., INC.

4. Connect the blower motor connector (A).
5. Install the harness clip (B).

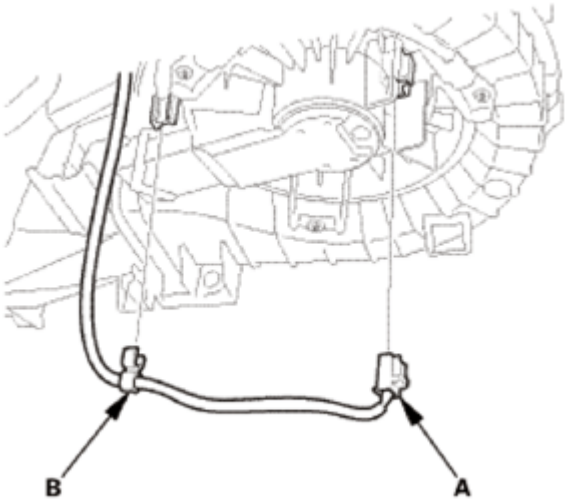

Fig. 289: Identifying Blower Motor Connector And Clip
Courtesy of AMERICAN HONDA MOTOR CO., INC.

8. Passenger's Heater Duct

GETtheMANUALS.org

1. Install the passenger's heater duct (A).

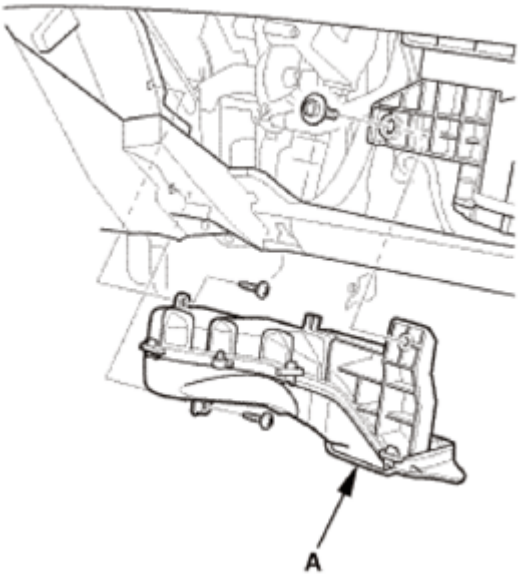

Fig. 290: Identifying Passenger Heater Duct
Courtesy of AMERICAN HONDA MOTOR CO., INC.

9. Glove Box Frame
    1. Install the glove box frame (A).

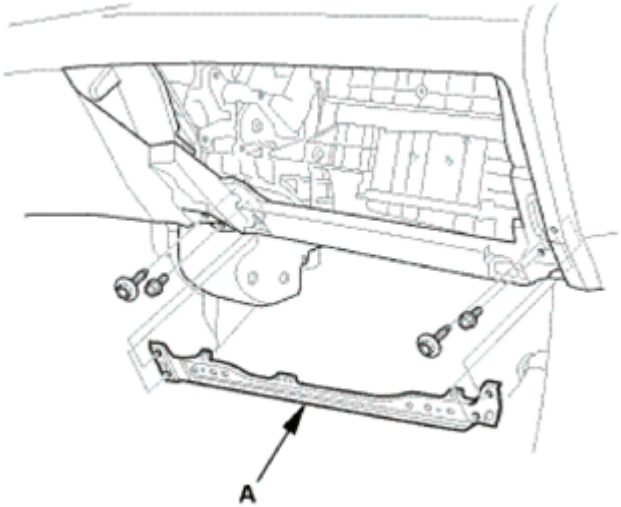

Fig. 291: Identifying Glove Box Frame
Courtesy of AMERICAN HONDA MOTOR CO., INC.

10. A/C Line - Evaporator Side
    1. Install the stud bolt (A).

GETtheMANUALS.org

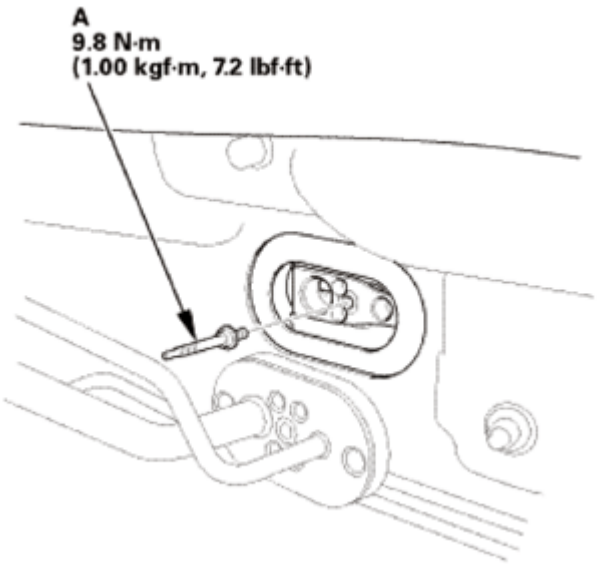

Fig. 292: Identifying A/C Line Stud Bolts With Torque Specifications
Courtesy of AMERICAN HONDA MOTOR CO., INC.

2. Connect the A/C line (A) with new O-rings (B) that are lubricated with clean refrigerant oil.

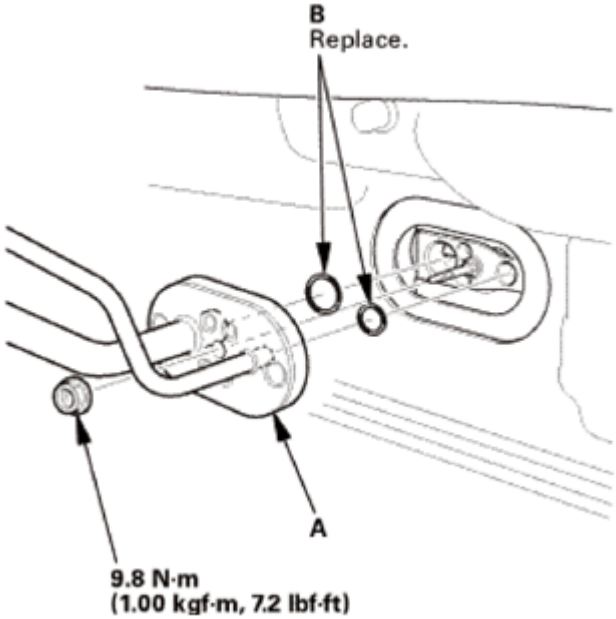

Fig. 293: Identifying A/C Line And O-Rings With Torque Specifications
Courtesy of AMERICAN HONDA MOTOR CO., INC.

3. Install the bolt.

GETtheMANUALS.org

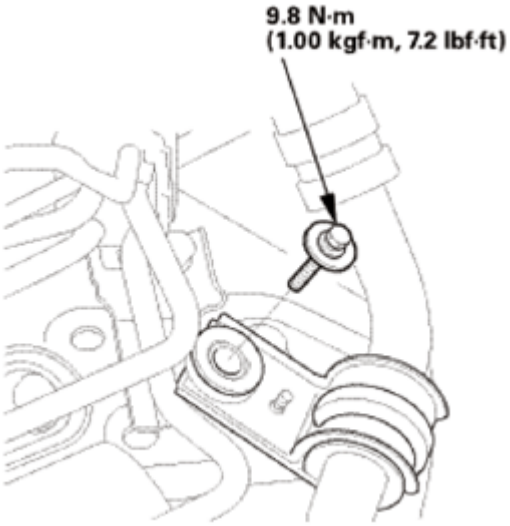

Fig. 294: Identifying A/C Line Mounting Bolts With Torque Specifications
Courtesy of AMERICAN HONDA MOTOR CO., INC.

11. R-134a Refrigerant Recovery/Recycling/Charging Station - Connection
    1. Connect an R-134a refrigerant recovery/recycling/charging station (A) to the high-pressure service port (B) and the low-pressure service port (C), as shown, following the equipment manufacturer's instructions.

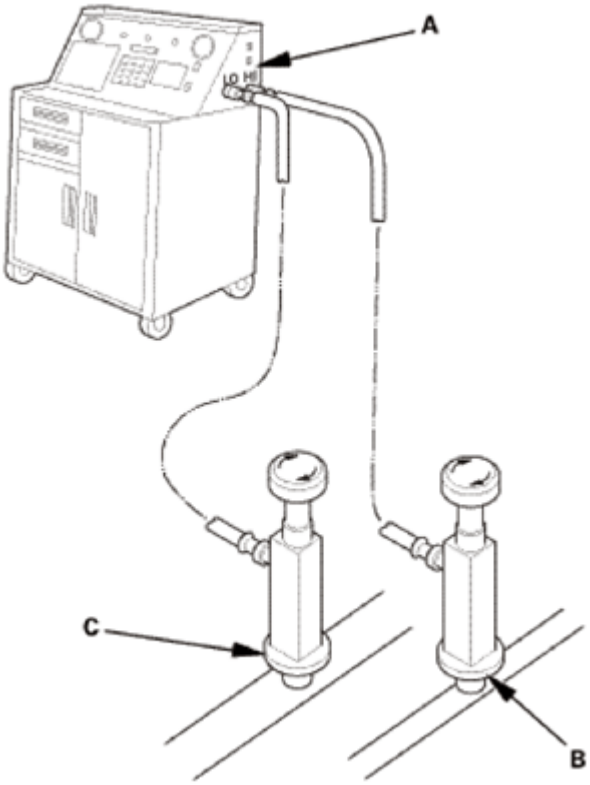

Fig. 295: Identifying Refrigerant Recovery/Recycling/Charging Station, High And Low

GETtheMANUALS.org

<u>Pressure Service Port</u>
Courtesy of AMERICAN HONDA MOTOR CO., INC.

12. A/C System Evacuation
    1. Evacuate the system. The vacuum pump should run for a minimum of 30 minutes to eliminate all moisture from the system. When the suction gauge reads -93.3 kPa (-700 mmHg, - 27.55 inHg) for at least 30 minutes, close all valves, and turn off the vacuum pump.
    2. If the suction gauge dose not reach approximately -93.3 kPa (-700 mmHg, -27.55 inHg) in 15 minutes, there is probably a large leak in the system. Partially charge the system, and check for leaks.
13. A/C Refrigerant - Charging
    1. Charge the system with the specified amount of R-134a refrigerant. Do not overcharge the system; the A/C compressor will be damaged.

       Select the appropriate units of measure for your refrigerant charging station.

       Refrigerant Capacity:

       385 to 435 g

       13.6 to 15.4 oz

       0.385 to 0.435 kg

       0.849 to 0.959 lbs

14. A/C Refrigerant - Leak Check

Leak Detector Usage Tips (Refer to the Operator's Manual for complete operating instructions)

- Position the vehicle in a wind-free work area. This will aid in detecting small leaks.
- When using the leak detector for the first time, allow it to warm up for 2 minutes with the probe in a clean atmosphere. This lets the temperature sensor in the detector stabilize.
- The calibration check should be done in the "Search 2" mode. Once that is done, the other check modes do not need calibrating.
- When leak checking through the HVAC module drain hose, avoid drawing water into the probe. Water can damage the internal pump and sensor.
- Avoid creasing the flexible probe extension. Creases can restrict air flow and give false readings.
- Because the detector recalibrates itself for ambient gases, it may be necessary to move the detector away from the leak to clear the sensor. Once the sensor has cleared, recheck the suspected leak.
- When removing the clear probe tip, be careful not to lose the flow ball.
- R-134a is heavier than air; always check below and to the sides of all potential leak sources.
- Halogen leak detectors are sensitive to chemicals: windshield washing solutions, solvents/cleaners, and some vehicle adhesives. Keep these chemicals out of the area when doing leak detection.

GETtheMANUALS.org

Fluorescent Dye Usage Tips

- Use only Tracer-Stick single dose fluorescent dye capsules from Tracerline®. Other dyes contain solvents that may contaminate the refrigerant oil, leading to component failure.
- Adding excessive amounts of dye can damage the A/C compressor.
- PAG oil is water soluble, so condensation on the evaporator core or the refrigerant lines may wash the PAG oil and fluorescent dye away from the actual leak. Condensation may also carry dye through the HVAC module drain.
- After checking and repairing leaks, thoroughly clean any residual dye from the areas where leaks were found. Use GLO-AWAY dye cleaner, from Tracerline®, and hot water to remove the dye (follow the instructions on the bottle). Residual dye stains can cause misdiagnosis of any future A/C system leaks.
- If any refrigerant dye contacts an exterior paint surface, remove it by doing this:
  - Carefully wash the affected surfaces to remove any dirt, and to prevent paint scratching.
  - Mix water and isopropyl alcohol in a 50/50 mixture. Soak a soft 100 % cotton towel with the water/alcohol mixture, and place the cloth on the affected areas to remove the dye.
  - After removing the dye with the water/alcohol-soaked cloth, carefully wash the affected areas, and check that there is no remaining dye.

1. With the engine OFF, use a halogen leak detector first to detect the leak source. Follow a continuous path in order to ensure that you will not miss any possible leaks. Test the following areas of the system for leaks:

Possible Leak Area	Diagnostic Procedure with the Leak Detector	Notes
Service ports	• Check the service ports with caps installed • If the detector "sniffs" a leak, use fluorescent dye to confirm it	When capping the service ports, ensure that the seals on the port caps are in place, and that the caps are tight. The caps are used as the final seals in the system
A/C condenser	If the detector "sniffs" a leak, use fluorescent dye to confirm it	• Check for joints or connections coated with oily dust • Check for damaged and corroded areas • Check all fittings, couplings, brazed/welded areas and areas around attachment points • Move the probe slowly (1 in/second or less), and keep it within 1/4 in of the component being checked. This maximizes the chance of detecting a leak • If you detect a leak, blow compressed air over the area, then recheck for leaks. For large leaks, clearing the area with compressed air may help you pinpoint the leak source
	• Check at the evaporator	

GETtheMANUALS.org

Evaporator	drain hose • Check at the passenger's side vent and turn the blower on at low speed	
A/C lines	• Wiggle the rubber hoses when checking crimped metal ends • If the detector "sniffs" a leak, use fluorescent dye to confirm it	• Check all fittings, couplings, pressure switches, brazed/welded areas, and areas around attachment points on A/C lines and components • Check for damaged and corroded areas • Move the probe slowly (1 in/second or less), and keep it within 1/4 in of the component being checked. This maximizes the chance of detecting a leak

2. Close the quick coupler valves, then disconnect the quick couplers from the vehicle service ports.
3. Attach the universal connect set, from the Optimax Jr. Leak Detection Kit, to the service valve fitting. Close the control valve (the black knob on the connect set).
4. Attach the charging station low pressure hose quick coupler to the service valve fitting, and open the quick coupler valve. Evacuate the connect set using the charging station vacuum pump, then close the quick coupler valve.
5. Detach the universal connect set, and install a Tracer-Stick® dye capsule between the connect set and the service valve fitting (see the manufacturer's instructions for more detail).
6. Attach the quick coupler on the universal connect set to the low pressure service port on the vehicle. Open the charging station low pressure hose quick coupler valve, but do not open the control valve.
7. Start the engine, and set the A/C system to maximum cooling. Open the control valve to let refrigerant and the dye enter the A/C system through the low pressure service port. Close the control valve when the Tracer-Stick® dye capsule is empty.
8. Run the engine and A/C system for 15 minutes to thoroughly circulate the dye. Then shut the engine off, and inspect the following areas of the system for leaks:

NOTE:

- **Check for leaks in a dark work area, and use the UV light and the special glasses from the leak check kit. Other UV lights may not work well with the Tracer-Stick® dye.**
- **Small leaks may take up to 1 week of vehicle operation (with normal A/C use) to become visible.**

Possible Leak Area	Diagnostic Procedure with Fluorescent Dye
Service ports	If a leak is found, replace the cap/o-ring seal or A/C line as needed
A/C lines	• Use a permanent marker pen to circle the leak area • If a leak is found, remove and replace the A/C line

GETtheMANUALS.org

A/C condenser	• If a leak is found, remove the A/C condenser • Determine whether leak is in the A/C condenser or the receiver/dryer • Use a permanent marker pen to circle the leak area • Replace either the receiver/dryer, or the A/C condenser, depending upon which is leaking
A/C compressor	• Check for leaks at all of the A/C compressor joints, the clutch center, the A/C compressor front housing bolts, and the scroll bolts on the back of the A/C compressor • If a leak is found, use a permanent marker pen to circle the leak area • If the A/C compressor relief valve appears to be leaking, determine whether the leak is coming from the relief valve, or the joint between the A/C compressor casing and the valve. If the leak is from the relief valve, check the A/C system pressures, and refer to the pressure test table in the A/C system test. If the leak is from the casing/valve joint, replace the A/C compressor relief valve • If the leak is coming from the suction hose and/or discharge hose fittings on the A/C compressor, clean the A/C fittings and replace the suction/discharge fitting O-rings • For all other A/C compressor leaks, remove and replace the A/C compressor
Evaporator	• Start checking for evaporator leaks by illuminating the evaporator drain tube area • If a leak is found, remove the evaporator core • Determine whether leak is from evaporator or expansion valve • Use a permanent marker pen to circle leak area • Replace the expansion valve, or the evaporator core, depending upon which is leaking

15. A/C System - Test
    1. Insert a thermometer (A) in the center vent.
    2. Place a hygro-thermometer (B) near the blower unit's recirculation inlet duct.
    3. Test conditions:
        - Move the vehicle out of direct sunlight and let it cool down to the surrounding (ambient) temperature. If necessary, wash the vehicle to cool it down more quickly.
        - The blower intake temperature must be at least 68°F (20°C).
        - Open the hood.
        - Open the front doors.
        - Start the engine.
        - Set the temperature control dial or temperature control button to MAX COOL, the mode control button to VENT, and the recirculation control button to RECIRCULATE.
        - Turn the A/C button on and the fan control dial or fan control button to Max.

GETtheMANUALS.org

- Run the engine at 1, 500 rpm.
- No driver or passengers in vehicle.

Fig. 296: Checking Delivery Temperature From Thermometer In Center Vent
Courtesy of AMERICAN HONDA MOTOR CO., INC.

4. Inspect the A/C components for the following conditions:
   - A/C compressor clutch not engaged.
   - Abnormal frost areas.
   - Unusual noises.

   If you observe any of these conditions, refer to the Symptom Troubleshooting Index.

5. After running the air conditioning for 10 minutes under the above test conditions, read the delivery temperature from the thermometer in the center vent, the intake temperature near the blower unit, and the discharge (high) and suction (low) pressures on the A/C gauges.
6. To complete the vent (delivery)/intake temperature chart:
   - Mark the vent (delivery) temperature on the vertical line.
   - Mark the intake temperature on the bottom line.
   - Draw a vertical line from the intake temperature mark.
   - Draw a horizontal line from the vent (delivery) temperature mark until it intersects the vertical line.

   NOTE: The vent temperature and intake temperature should intersect in the shaded area. Any measurements outside the line may

GETtheMANUALS.org

indicate the need for further inspection.

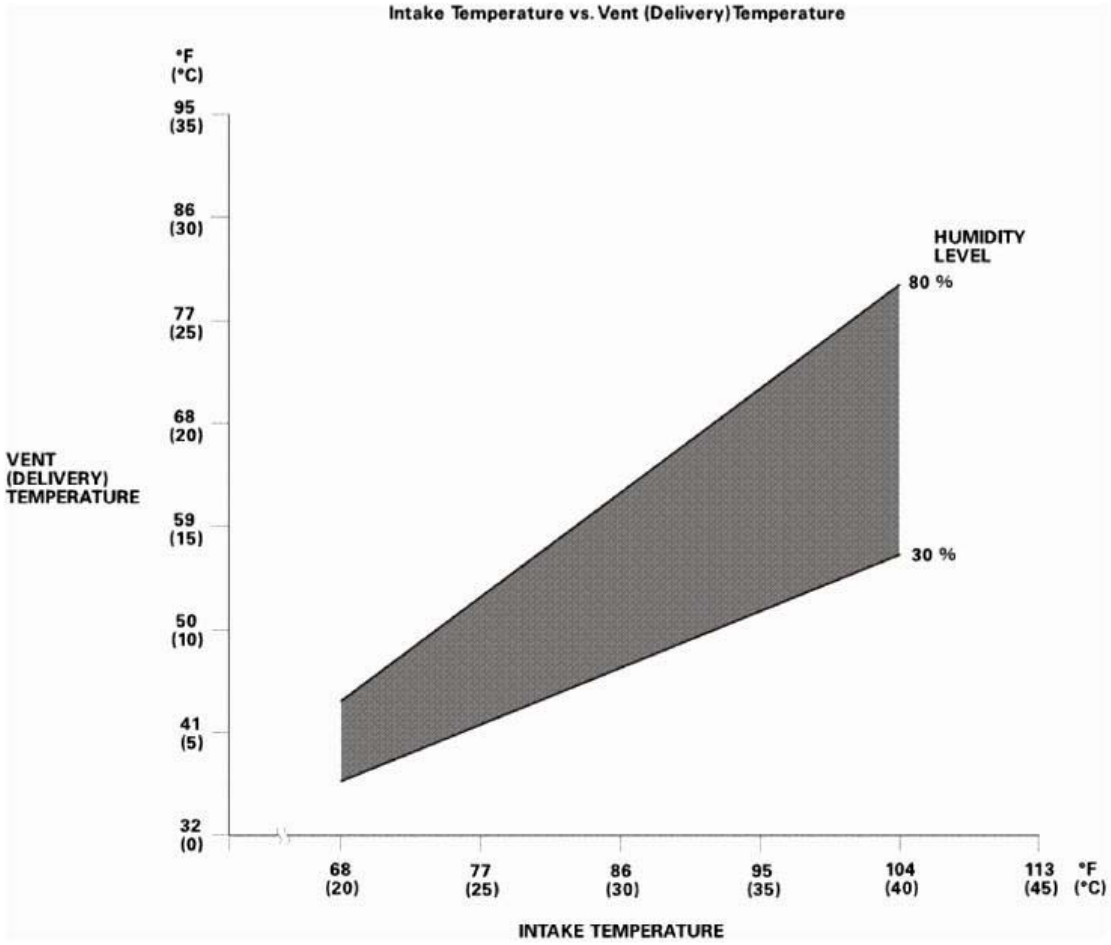

Fig. 297: Intake Temperature Versus Vent (Delivery) Temperature Graph
Courtesy of AMERICAN HONDA MOTOR CO., INC.

7. To complete the high side (discharge) pressure/intake temperature chart:
   - Mark the high side (discharge) pressure on the vertical line.
   - Mark the intake temperature on the bottom line.
   - Draw a vertical line from the intake temperature mark.
   - Draw a horizontal line from the high side (discharge) pressure mark until it intersects the vertical line.

NOTE: **The high side pressure and intake temperature should intersect in the shaded area. Any measurements outside the line may indicate the need for further inspection.**

GETtheMANUALS.org

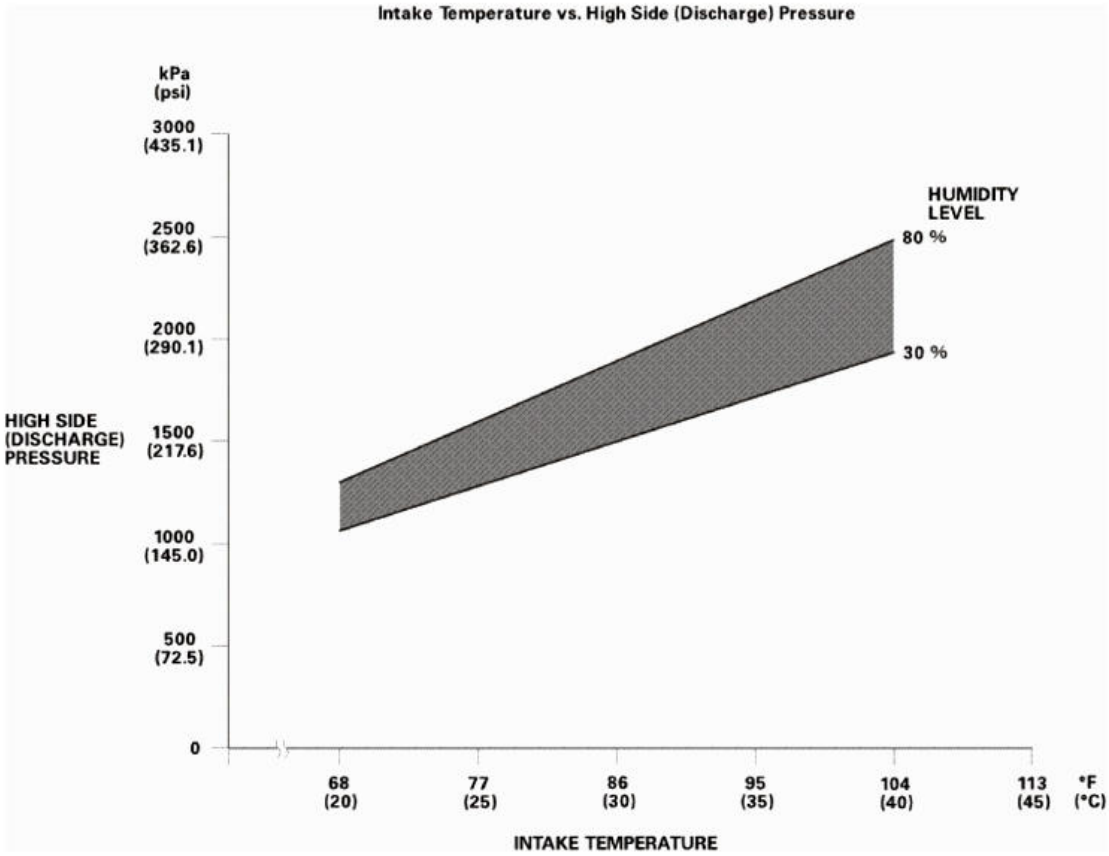

Fig. 298: Intake Temperature Versus High Side (Discharge) Pressure Graph
Courtesy of AMERICAN HONDA MOTOR CO., INC.

8. To complete the low side (suction) pressure/intake temperature chart:
   - Mark the low side (suction) pressure along the vertical line.
   - Mark the intake temperature along the bottom line.
   - Draw a vertical line from the intake temperature mark.
   - Draw a horizontal line from the low side (suction) pressure mark until it intersects the vertical line.

NOTE: **The low side pressure and intake temperature should intersect in the shaded area. Any measurements outside the line may indicate the need for further inspection.**

GETtheMANUALS.org

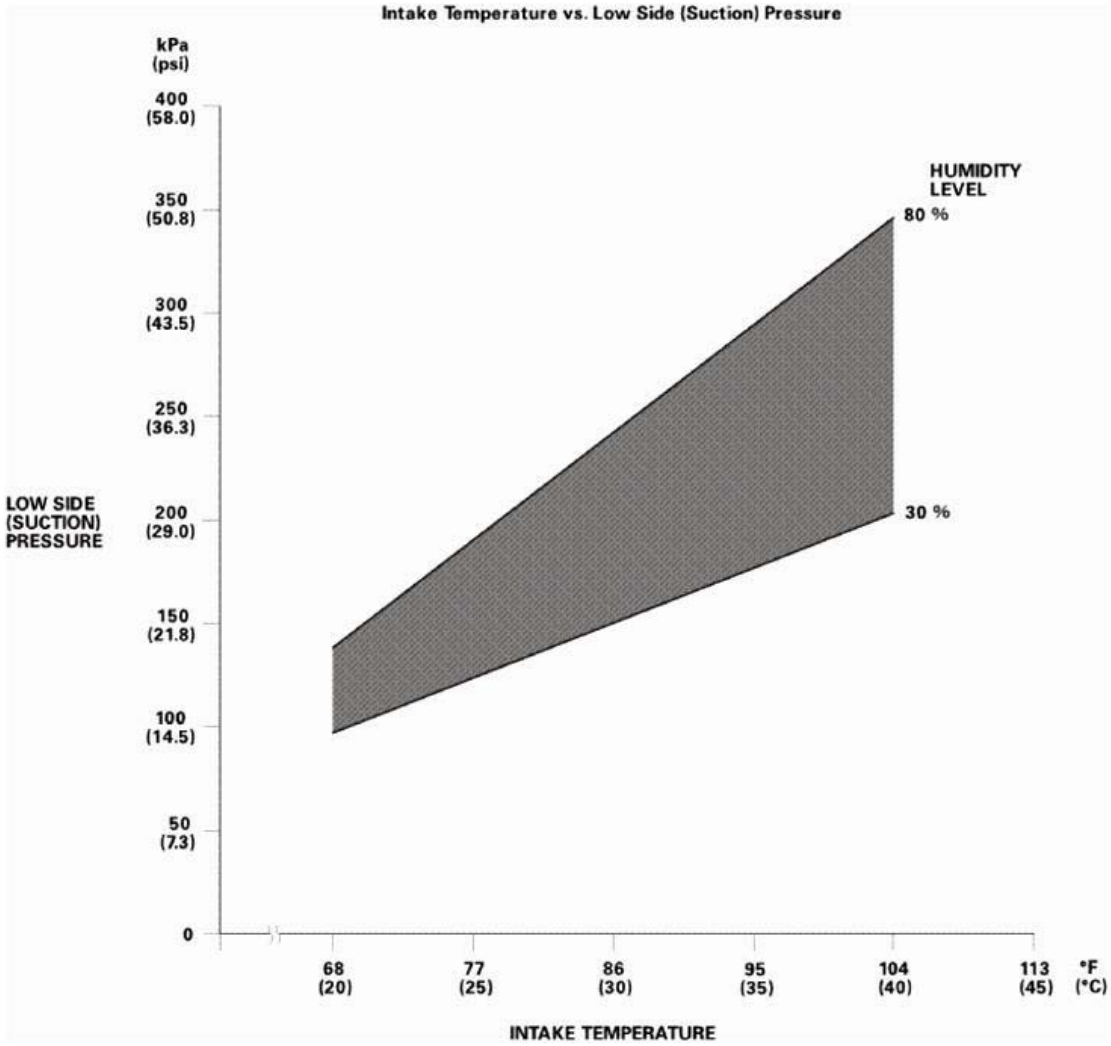

Fig. 299: Intake Temperature Versus Low Side (Suction) Pressure Graph
Courtesy of AMERICAN HONDA MOTOR CO., INC.

16. Cross Brace
    1. Install the cross brace (A).

GETtheMANUALS.org

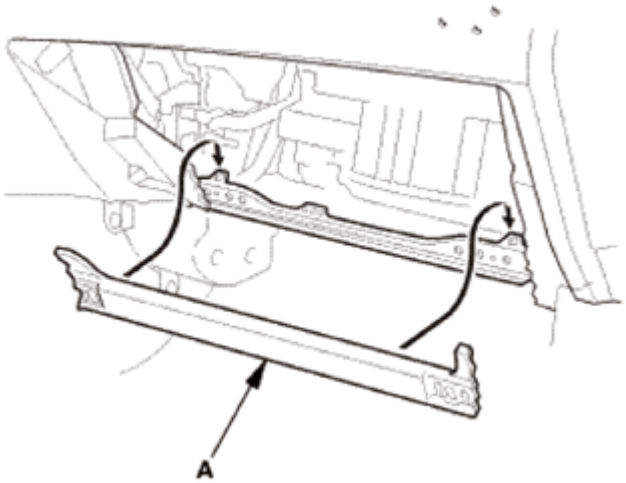

Fig. 300: Installing Cross Brace
Courtesy of AMERICAN HONDA MOTOR CO., INC.

17. Glove Box
    1. Install the glove box (A), then install the glove box damper hook (B).

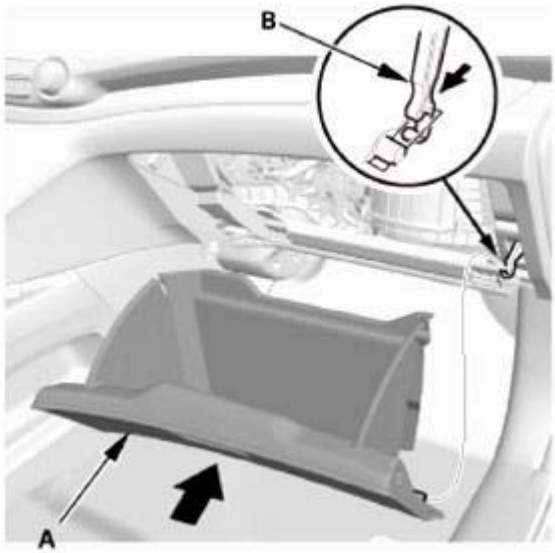

Fig. 301: Installing Glove Box
Courtesy of AMERICAN HONDA MOTOR CO., INC.

    2. Install the bolts (A).

GETtheMANUALS.org

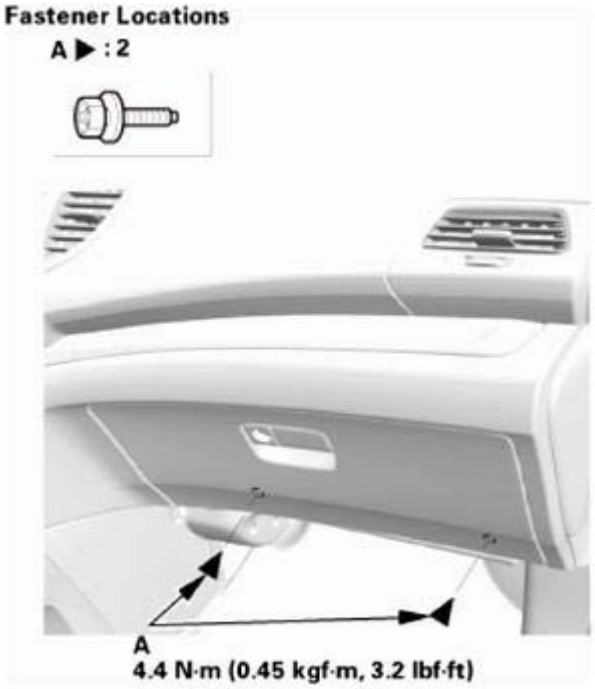

Fig. 302: Identifying Glove Box Mounting Bolts With Torque Specifications
Courtesy of AMERICAN HONDA MOTOR CO., INC.

18. Passenger's Dashboard Undercover
    1. Install the passenger's dashboard undercover (A). Make sure the clips (B) snap into place securely, and the pins (C) into the holder (D) securely.

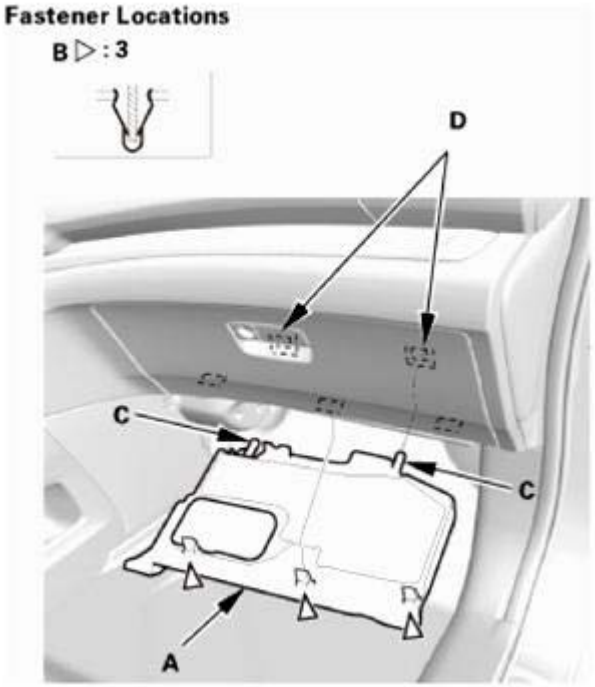

GETtheMANUALS.org

Fig. 303: Identifying Passenger Dashboard Undercover, Holder, Pins And Clips
Courtesy of AMERICAN HONDA MOTOR CO., INC.

HEATER UNIT/CORE REMOVAL AND INSTALLATION

SPECIAL TOOL REQUIRED

Image	Description/Tool Number
	Compact Electronic Vacuum Gauge Robinair ROB14777(1), commercially available
	Leak Detector YGK-H-10PM(1)

GETtheMANUALS.org

	Leak Detector HLD-100(1)
	Leak Detector TIFZX-1(1)
	OPTIMAX Jr. A/C Leak Detection Kit TRP124893(1)

GETtheMANUALS.org

	Big Digit Hygro-Thermometer PYR445703, commercially available
	Throttle Pedal Depressor Tool B240B, commercially available
(1) These tools are available through the Honda Tool and Equipment Program; call 888-424-6857	

REMOVAL

CAUTION:

- **Air conditioning refrigerant or lubricant vapor can irritate your eyes, nose, or throat.**
- **Be careful when connecting service equipment.**
- **Do not breathe refrigerant or vapor.**

SRS components are located in this area. Review the **SRS COMPONENT LOCATIONS** and the **PRECAUTIONS AND PROCEDURES** before doing repair or servicing.

NOTE:

- **If accidental system discharge occurs, ventilate the work area before resuming service.**
- **Additional health and safety information may be obtained from the refrigerant and lubricant manufacturers.**

1. Vehicle Lift

GETtheMANUALS.org

1. Raise the vehicle on a lift, and make sure it is securely supported.

2. Battery Terminal (SRS) - Disconnection
    1. Make sure the ignition switch is in LOCK (0).
    2. Disconnect and isolate the negative cable (A) from the battery.

    NOTE: Always disconnect the negative side first.

    3. Disconnect the positive cable (B) from the battery.
    4. Wait at least 3 minutes before starting work.

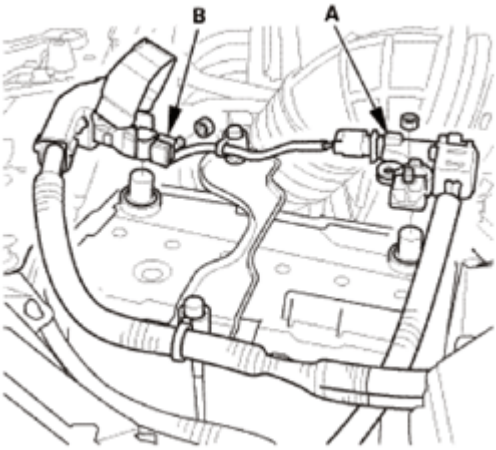

Fig. 304: Identifying Battery Positive And Negative Cable
Courtesy of AMERICAN HONDA MOTOR CO., INC.

3. R-134a Refrigerant Recovery/Recycling/Charging Station - Connection
    1. Connect an R-134a refrigerant recovery/recycling/charging station (A) to the high-pressure service port (B) and the low-pressure service port (C), as shown, following the equipment manufacturer's instructions.

GETtheMANUALS.org

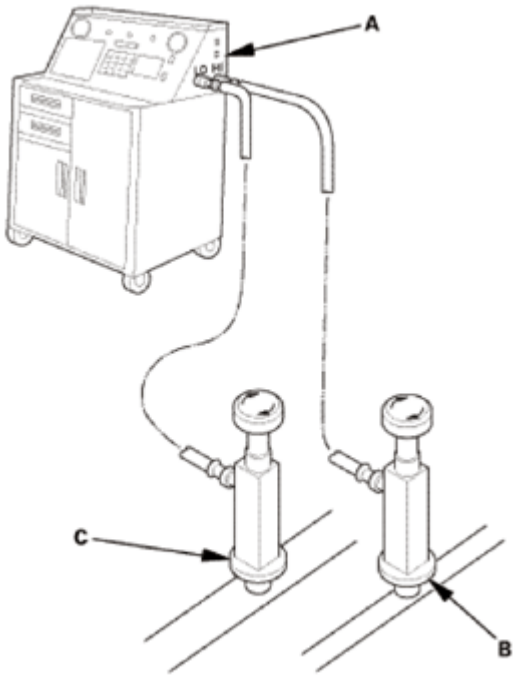

Fig. 305: Identifying Refrigerant Recovery/Recycling/Charging Station, High And Low Pressure Service Port
Courtesy of AMERICAN HONDA MOTOR CO., INC.

4. A/C Refrigerant - Recovery
    1. Recover the refrigerant from the A/C system.
    2. Measure the amount of refrigerant oil removed from the A/C system after the recovery process is completed. Be sure to put the same amount of new refrigerant oil back into the A/C system before charging.
5. A/C Line - Evaporator Side
    1. Remove the bolt.

Fig. 306: Identifying A/C Line Mounting Bolt

GETtheMANUALS.org

Courtesy of AMERICAN HONDA MOTOR CO., INC.

2. Disconnect the A/C line (A) with O-rings (B).

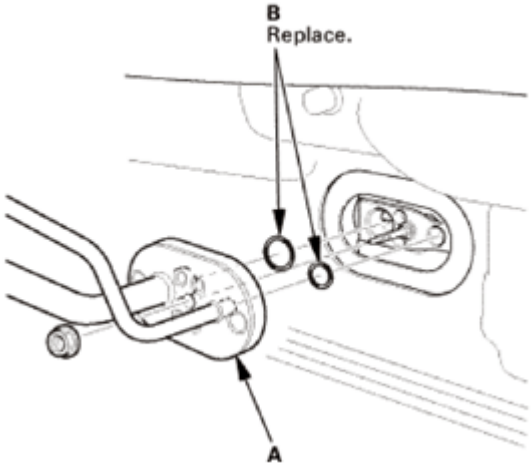

Fig. 307: Identifying A/C Line And O-Rings
Courtesy of AMERICAN HONDA MOTOR CO., INC.

3. Remove the stud bolt (A).

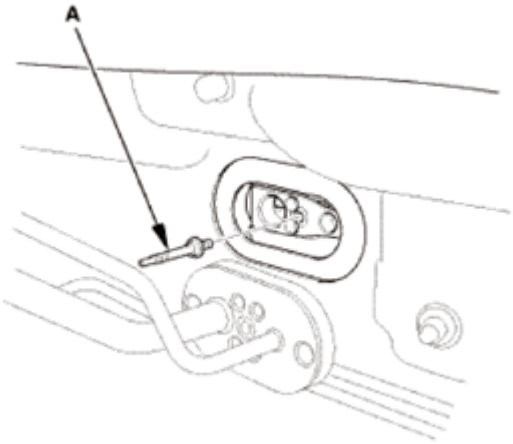

Fig. 308: Identifying A/C Line Stud Bolt
Courtesy of AMERICAN HONDA MOTOR CO., INC.

6. Radiator Cap
    1. Wait until the engine is cool, then carefully remove the radiator cap.
7. Radiator Coolant - Replacement
    1. Loosen the drain plug (A), and drain the coolant.
    2. After the coolant has drained, tighten the drain plug securely.

GETtheMANUALS.org

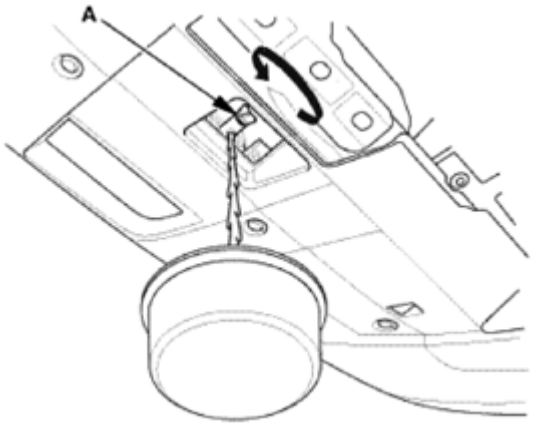

Fig. 309: Loosening Radiator Coolant Drain Plug
Courtesy of AMERICAN HONDA MOTOR CO., INC.

8. Heater Hose - Body Side

NOTE:

- **Engine coolant will run out when the hoses are disconnected; drain it into a clean drip pan. Be sure not to let coolant spill on the electrical parts or the painted surfaces. If any coolant spills, rinse it off immediately.**
- **Note the layout of the hose.**

1. Disconnect the inlet heater hose (A).
2. Disconnect the outlet heater hose (B).

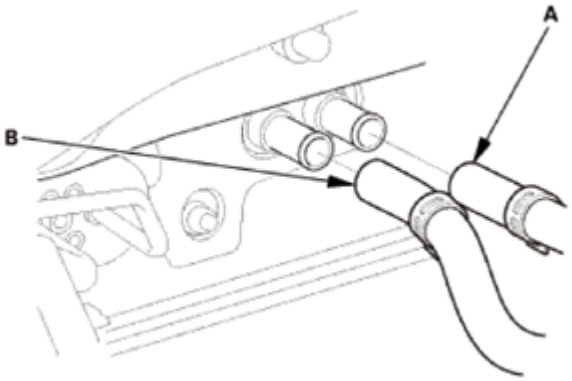

Fig. 310: Identifying Inlet And Outlet Heater Hose
Courtesy of AMERICAN HONDA MOTOR CO., INC.

3. Remove the nut.

NOTE: **Take care not to damage or bend the fuel lines or brake lines, etc.**

GETtheMANUALS.org

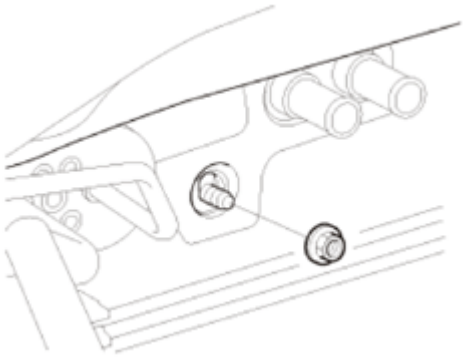

Fig. 311: Identifying Heater Hose Nut
Courtesy of AMERICAN HONDA MOTOR CO., INC.

9. Front Door Opening Seal As Needed - Both Sides

NOTE: Repeat on the opposite side.

1. Pull out the front door opening seal (A) from the trim hooks (B) around the front door opening flange, then detach the seal as needed.

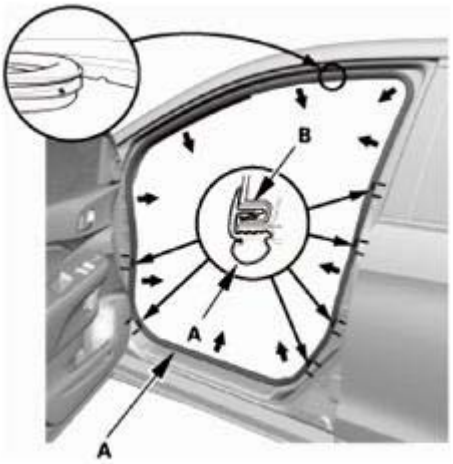

Fig. 312: Removing Front Door Opening Seal From Trim Hooks
Courtesy of AMERICAN HONDA MOTOR CO., INC.

10. A-Pillar Trim - Both Sides

NOTE: Repeat this procedure on the opposite side.

1. Pull out the A-pillar trim (A) by hand to release the clips (B, C).

GETtheMANUALS.org

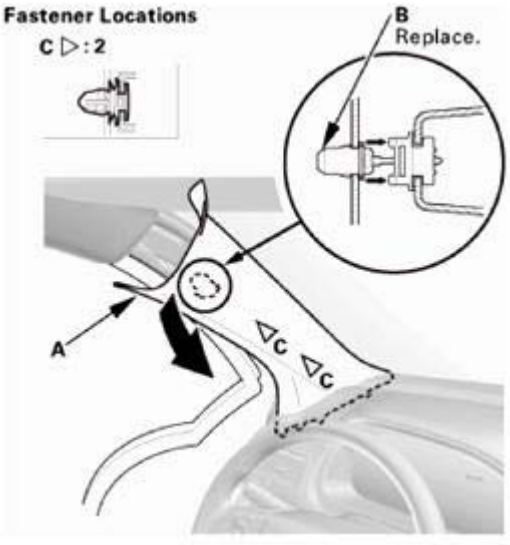

Fig. 313: Removing A-Pillar Trim
Courtesy of AMERICAN HONDA MOTOR CO., INC.

2. Put a shop towel (A) in the opening between the A-pillar trim (B) and the dashboard to prevent dropping the A-pillar clips.

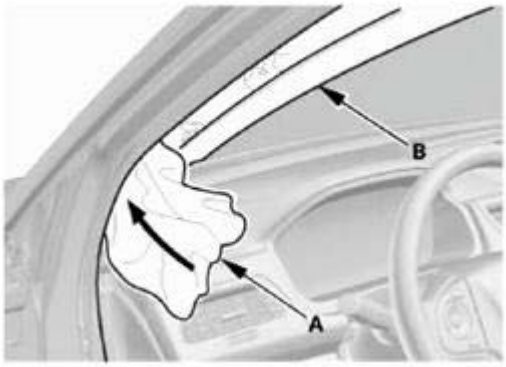

Fig. 314: Placing Shop Towel In Opening Between A-Pillar Trim And Dashboard
Courtesy of AMERICAN HONDA MOTOR CO., INC.

3. Pull out and up on the A-pillar trim (A) to release it from the dashboard.

NOTE: The upper clip will stay in the body.

GETtheMANUALS.org

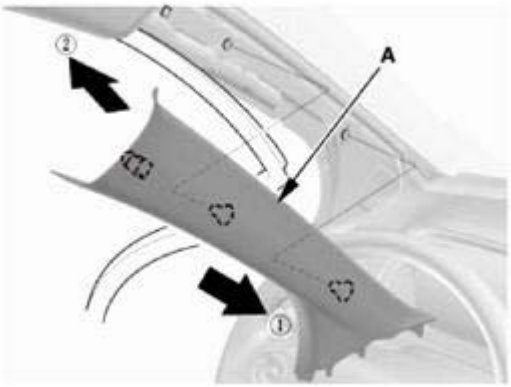

Fig. 315: Removing A-Pillar Trim
Courtesy of AMERICAN HONDA MOTOR CO., INC.

4. Remove the upper clip (A) from the body.

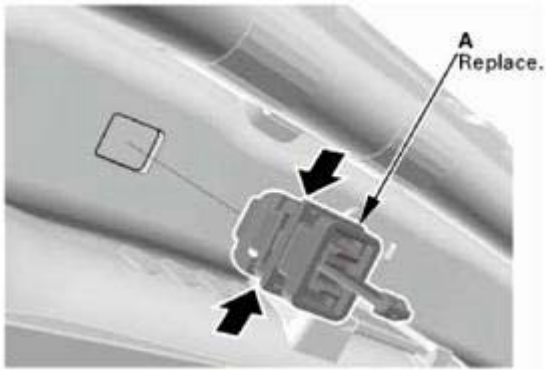

Fig. 316: Removing A-Pillar Trim Upper Clip
Courtesy of AMERICAN HONDA MOTOR CO., INC.

11. Driver's Dashboard Undercover
    1. Turn the lock knob (A) 90 °, then gently pull down the front edge of the driver's dashboard undercover (B) to detach the clip (C).
    2. Pull away the undercover to release the pin (D) from the holder (E), then remove the driver's dashboard undercover.

GETtheMANUALS.org

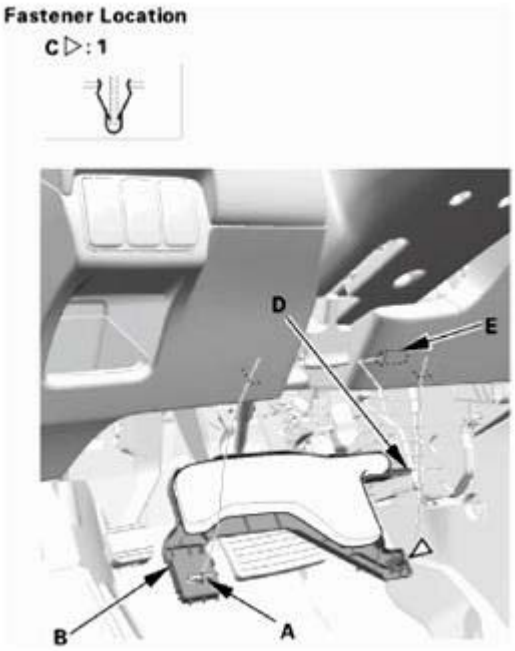

Fig. 317: Identifying Driver Dashboard Undercover, Holder, Lock Knob, Pin And Clips
Courtesy of AMERICAN HONDA MOTOR CO., INC.

12. Passenger's Dashboard Undercover
    1. Gently pull down the passenger's dashboard undercover (A) to detach the clips (B), then pull away the undercover to release the pins (C) from the holder (D).

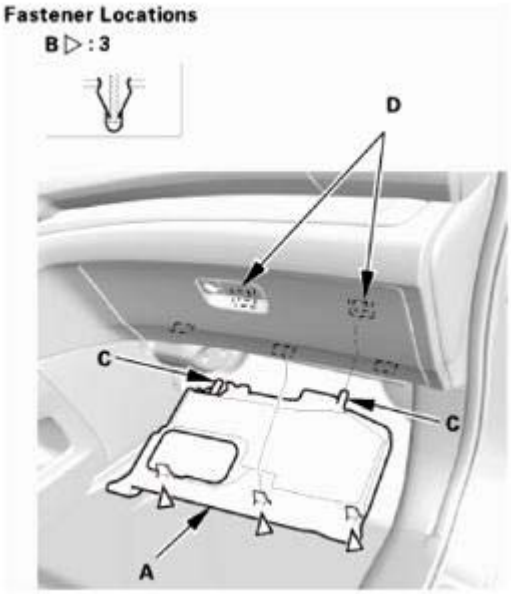

Fig. 318: Identifying Passenger Dashboard Undercover, Holder, Pins And Clips
Courtesy of AMERICAN HONDA MOTOR CO., INC.

13. Driver's Dashboard Panel Assembly

GETtheMANUALS.org

1. Carefully pry out the driver's dashboard panel assembly (A) with the appropriate trim tool to detach the clips (B).
2. Disconnect the connector (C), then remove the driver's dashboard panel assembly.

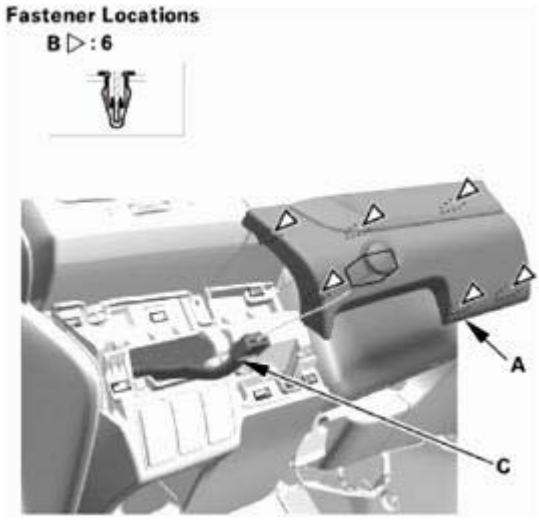

Fig. 319: Identifying Driver Dashboard Panel Assembly, Connector And Clips
Courtesy of AMERICAN HONDA MOTOR CO., INC.

14. Driver's Dashboard Lower Cover
    1. Carefully pry out the driver's dashboard lower cover (A) with the appropriate trim tool to detach the clips (B).
    2. Disconnect the connector (C), then remove the driver's dashboard lower cover.

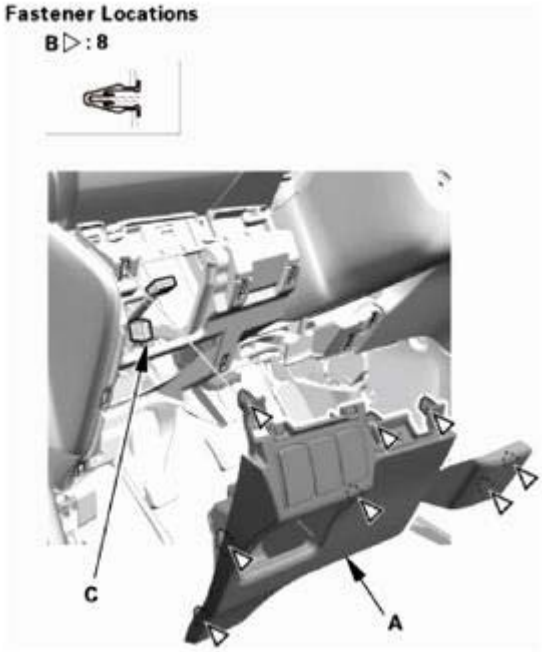

GETtheMANUALS.org

Fig. 320: Identifying Driver Dashboard Lower Cover, Connector And Clips
Courtesy of AMERICAN HONDA MOTOR CO., INC.

15. Kick Panel - Both Sides
    1. Pull out the front door opening seal (A) as needed from the kick panel hooks and the door opening flange.
    2. Pull back the kick panel by hand to detach the clips (B), then remove the driver's side kick panel (C) and the passenger's side kick panel (D).

    Driver's side

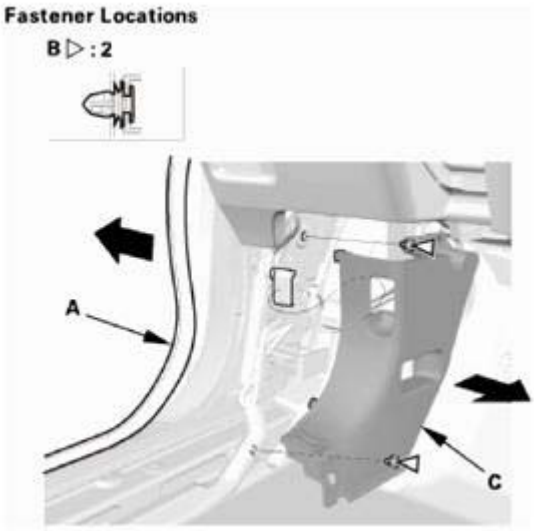

Fig. 321: Removing Front Door Opening Seal (Driver Side)
Courtesy of AMERICAN HONDA MOTOR CO., INC.

Passenger's side

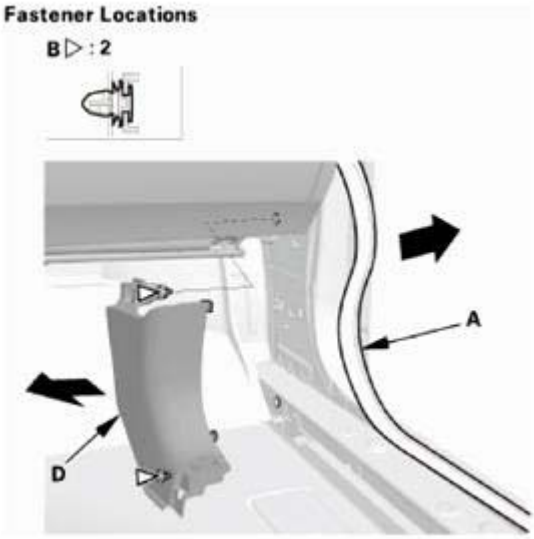

GETtheMANUALS.org

Fig. 322: Removing Front Door Opening Seal (Passenger Side)
Courtesy of AMERICAN HONDA MOTOR CO., INC.

16. Glove Box - Move
    1. Detach the glove box damper hook (A), and release both glove box stops (B) by pushing them in, then let glove box (C) hang down.

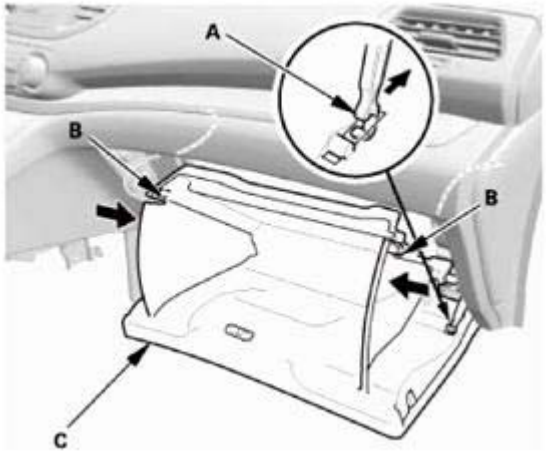

Fig. 323: Detaching Glove Box Damper Hook
Courtesy of AMERICAN HONDA MOTOR CO., INC.

17. Front Console Cover - Both Sides
    1. Remove the clips (A).
    2. Detach the clips (B), then remove the front console covers (C).

    Left side

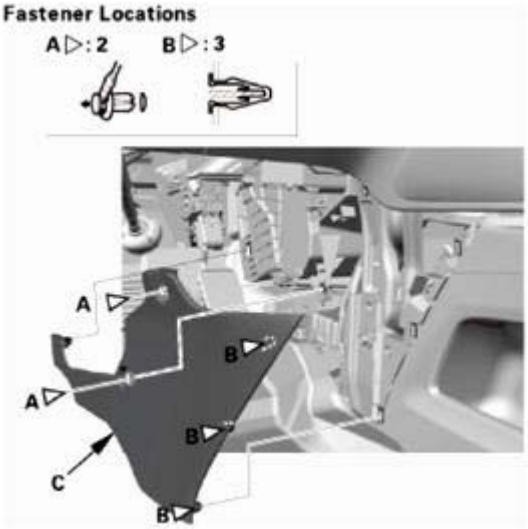

Fig. 324: Identifying Front Console Cover And Clips (Left Side)

GETtheMANUALS.org

Courtesy of AMERICAN HONDA MOTOR CO., INC.

Right side

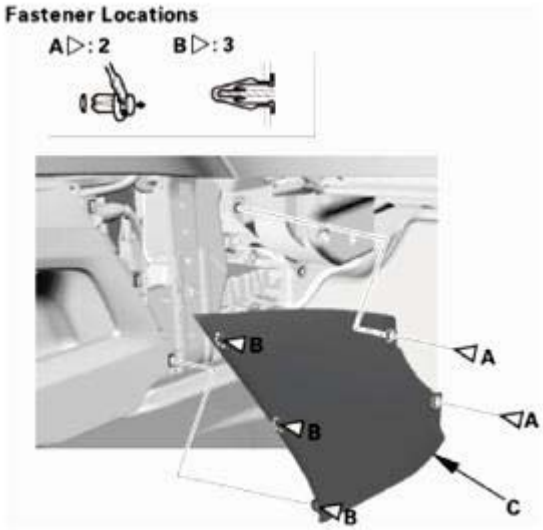

Fig. 325: Identifying Front Console Cover And Clips (Right Side)
Courtesy of AMERICAN HONDA MOTOR CO., INC.

18. Center Console Rear Trim
    1. Carefully pry out the center console rear trim (A) with the appropriate trim tool to detach the clips (B) and the hooks (C), then remove the center console rear trim.

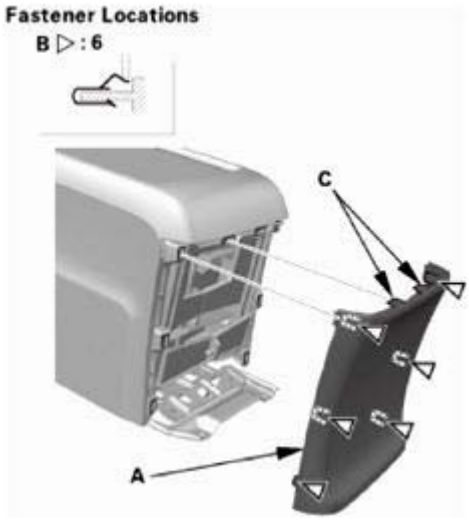

Fig. 326: Identifying Center Console Rear Trim, Hooks And Clips
Courtesy of AMERICAN HONDA MOTOR CO., INC.

19. Center Console
    1. Carefully pry out the center lower cover (A) with the appropriate trim tool to detach the clips (B),

GETtheMANUALS.org

then remove the center lower cover.

2. Remove the bolt (C).

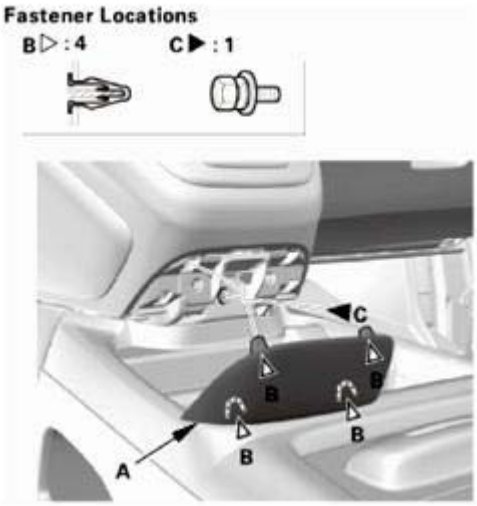

Fig. 327: Identifying Center Lower Cover, Clips And Bolts
Courtesy of AMERICAN HONDA MOTOR CO., INC.

3. Remove the bolts (A).

Fig. 328: Identifying Center Console Mounting Bolts
Courtesy of AMERICAN HONDA MOTOR CO., INC.

4. Remove the console box mat (A), then remove the bolts (B).

GETtheMANUALS.org

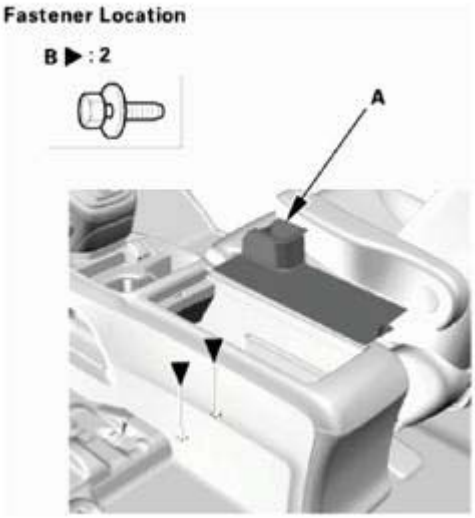

Fig. 329: Identifying Console Box Mat And Bolt
Courtesy of AMERICAN HONDA MOTOR CO., INC.

5. Disconnect the connectors (A), and remove the clips (B).

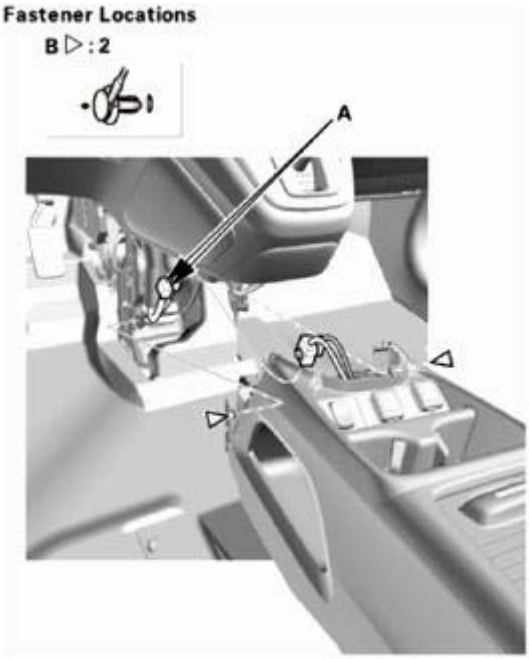

Fig. 330: Identifying Center Console Connector And Clips
Courtesy of AMERICAN HONDA MOTOR CO., INC.

6. Slide both front seats fully rearward, and recline the seat-backs around two thirds to the rear.
7. Remove the center console (A).

GETtheMANUALS.org

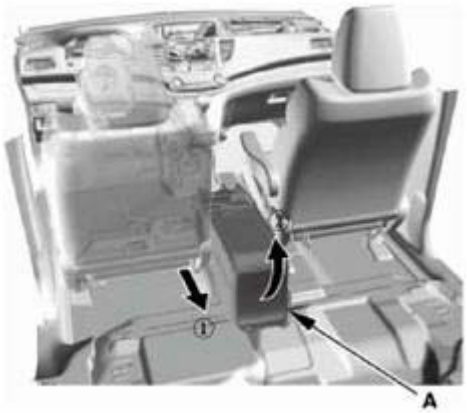

Fig. 331: Removing Center Console
Courtesy of AMERICAN HONDA MOTOR CO., INC.

20. Driver's Airbag
    1. Remove the access panel (A).
    2. Disconnect the driver's airbag inflator connector (B) on the cable reel harness.
    3. Disconnect the horn switch connector (C).

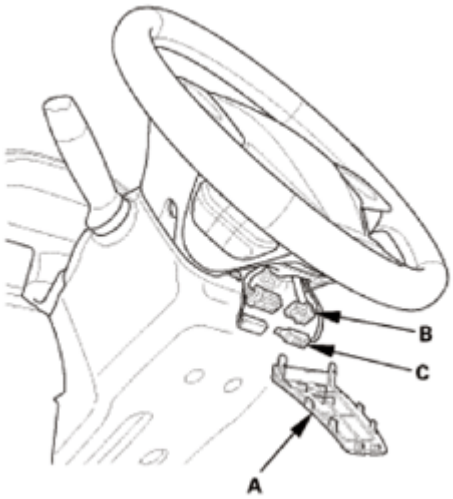

Fig. 332: Identifying Driver Airbag Inflator Connector, Horn Switch Connector And Access Panel
Courtesy of AMERICAN HONDA MOTOR CO., INC.

    4. Remove the TORX bolts using a TORX T30 bit.
    5. Remove the driver's airbag (A).

GETtheMANUALS.org

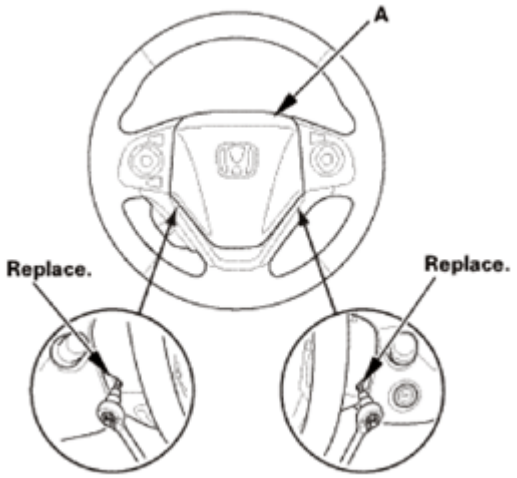

Fig. 333: Identifying Driver Airbag
Courtesy of AMERICAN HONDA MOTOR CO., INC.

21. Steering Wheel Assembly
    1. Set the front wheels in the straight ahead position.
    2. Disconnect the connector (A).
    3. Loosen the steering wheel bolt (B) three turns.

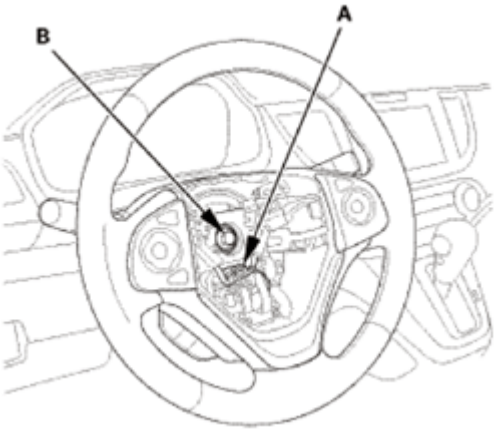

Fig. 334: Identifying Steering Wheel Connector And Bolt
Courtesy of AMERICAN HONDA MOTOR CO., INC.

    4. Install a commercially available steering wheel puller (A) on the steering wheel (B).
    5. Free the steering wheel from the steering column shaft by turning the pressure bolt (C) of the puller.

    Note these items when removing the steering wheel:

    - Do not tap on the steering wheel or the steering column shaft when removing the steering wheel.

GETtheMANUALS.org

- If you thread the puller bolts (D) into the wheel hub more than five threads, the bolts will hit the cable reel and damage it. To prevent this, install a pair of jam nuts five threads up on each puller bolt.

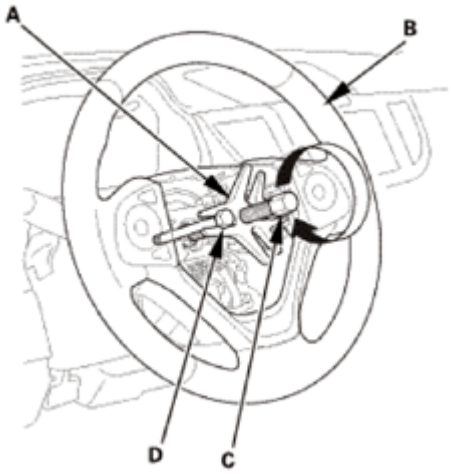

Fig. 335: Removing Steering Wheel From Steering Column Shaft
Courtesy of AMERICAN HONDA MOTOR CO., INC.

6. Remove the steering wheel puller.
7. Remove the steering wheel (A) from the steering column.

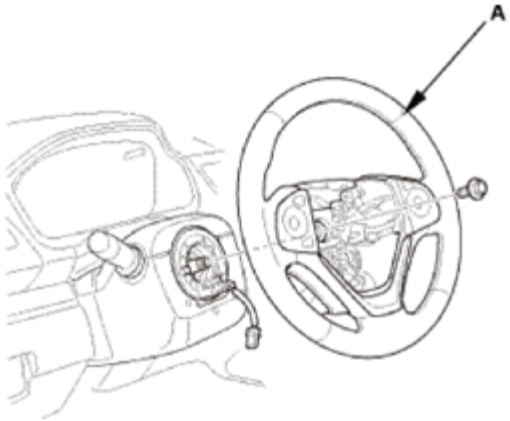

Fig. 336: Identifying Steering Wheel
Courtesy of AMERICAN HONDA MOTOR CO., INC.

22. Upper Column Cover
    1. Carefully pry out the dashboard meter visor blind cover (A) with the appropriate trim tool to detach the clips (B) and the hook (C), then tuck up the dashboard meter visor blind cover.

GETtheMANUALS.org

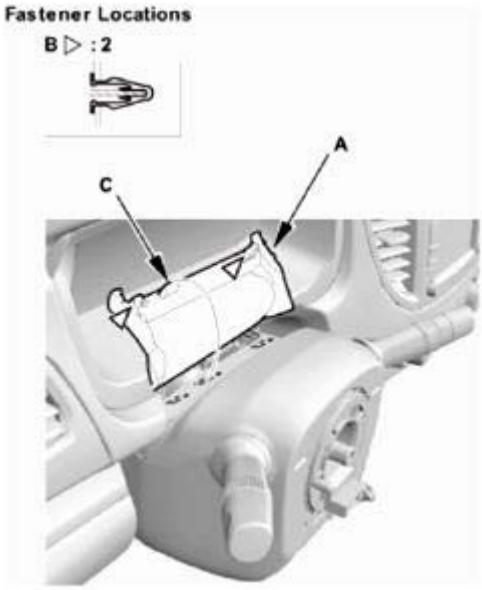

Fig. 337: Identifying Dashboard Meter Visor Blind Cover, Clips And Hooks
Courtesy of AMERICAN HONDA MOTOR CO., INC.

2. Remove the upper column cover (A).

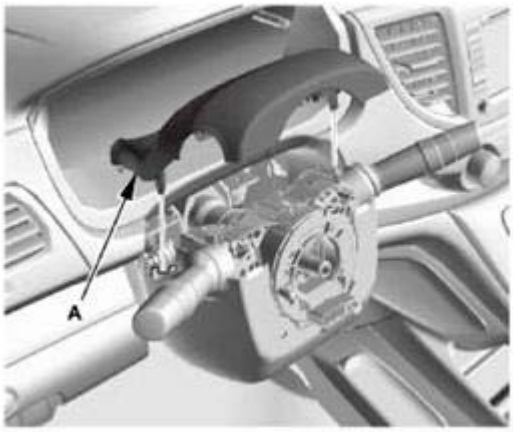

Fig. 338: Identifying Upper Column Cover
Courtesy of AMERICAN HONDA MOTOR CO., INC.

23. Lower Column Cover
    1. Remove the screws (A) securing the lower column cover (B) from the front side.

GETtheMANUALS.org

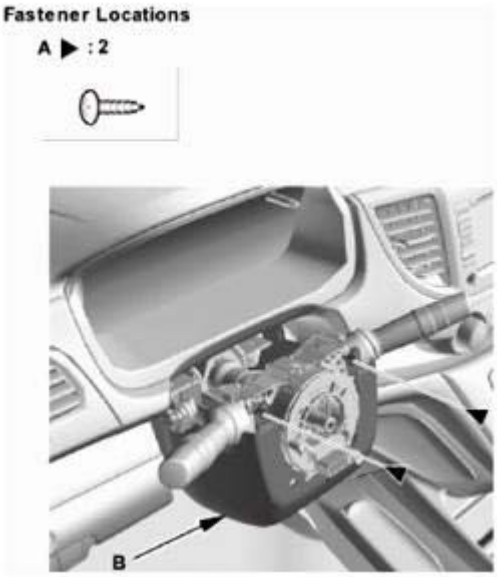

Fig. 339: Identifying Lower Column Cover And Screws (Front Side)
Courtesy of AMERICAN HONDA MOTOR CO., INC.

2. Remove the screw (A), then remove the lower column cover (B).

Fig. 340: Identifying Lower Column Cover And Screws
Courtesy of AMERICAN HONDA MOTOR CO., INC.

24. Combination Switch Body Assembly
    1. Disconnect the connectors (A).
    2. Remove the clip (B).

GETtheMANUALS.org

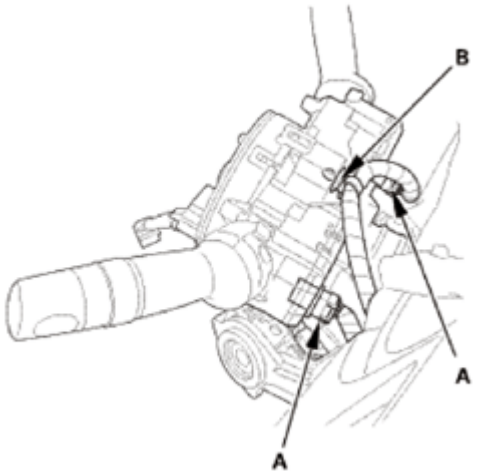

Fig. 341: Identifying Combination Switch Connector And Clips
Courtesy of AMERICAN HONDA MOTOR CO., INC.

3. Disconnect the connectors (A).

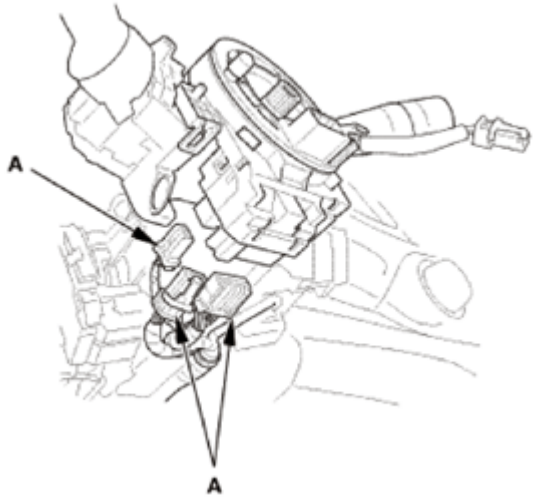

Fig. 342: Identifying Combination Switch Connectors
Courtesy of AMERICAN HONDA MOTOR CO., INC.

4. Remove the combination switch body assembly (A) from the steering column shaft.

GETtheMANUALS.org

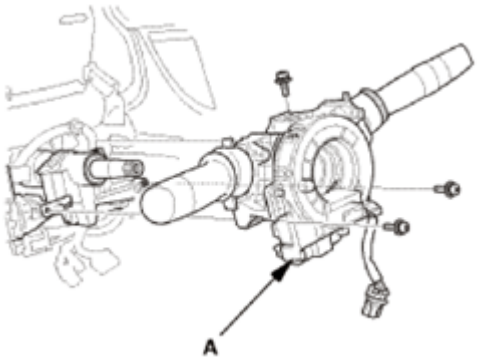

Fig. 343: Identifying Combination Switch Body Assembly
Courtesy of AMERICAN HONDA MOTOR CO., INC.

25. Steering Joint Cover
    1. Remove the steering joint cover (A).

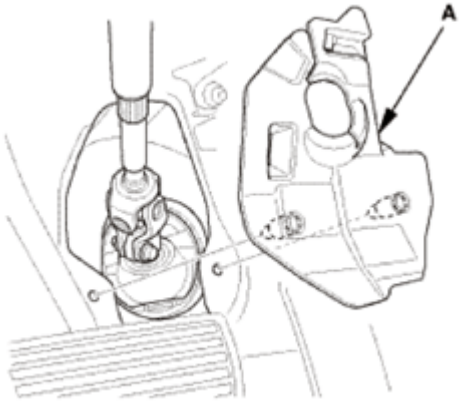

Fig. 344: Identifying Steering Joint Cover
Courtesy of AMERICAN HONDA MOTOR CO., INC.

26. Steering Column Lower Slide Shaft - Hold
    1. Set the steering column to the center tilt position, and to the center telescopic position.
    2. Hold the lower slide shaft (A) on the column with a piece of wire (B) between the joint yoke (C) of the lower slide shaft and the joint yoke (D) of the upper shaft to prevent the lower slider shaft from pulling out.

GETtheMANUALS.org

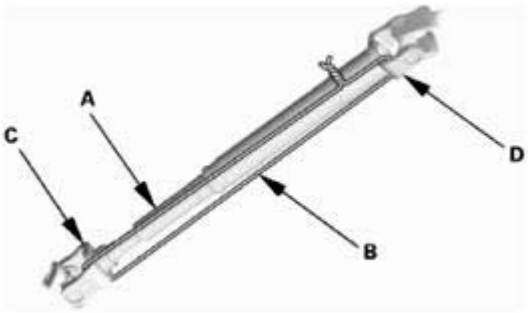

Fig. 345: Identifying Lower Slide Shaft, Yoke And Wire
Courtesy of AMERICAN HONDA MOTOR CO., INC.

27. Steering Joint - Disconnection
    1. Remove the steering joint bolt (A).
    2. Disconnect the steering joint (B) from the pinion shaft.

NOTE:

- **If the center guide (C) is in place and has not moved, leave it in place.**
- **If the center guide has come off, discard it.**

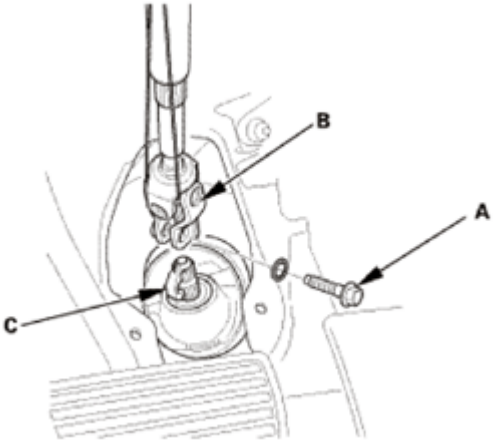

Fig. 346: Identifying Steering Joint, Center Guide And Bolt
Courtesy of AMERICAN HONDA MOTOR CO., INC.

28. Steering Column
    1. Disconnect the connectors (A) from the ignition switch (B).

GETtheMANUALS.org

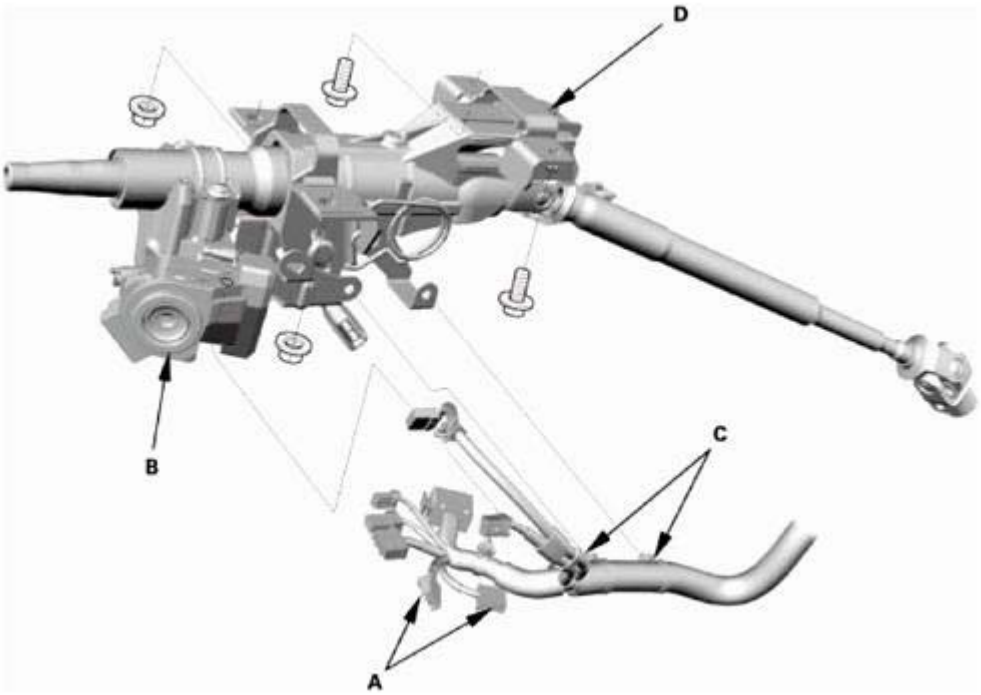

Fig. 347: Identifying Steering Column, Ignition Switch, Connector And Clips
Courtesy of AMERICAN HONDA MOTOR CO., INC.

2. Detach the wire harness clips (C) from the steering column.
3. Remove the steering column (D).

NOTE: **Do not release the lock lever until the steering column is installed. If the lock lever is released before installation, adjust the steering column after installation.**

29. Center Maintenance Cover
    1. Remove the maintenance cover (A).

GETtheMANUALS.org

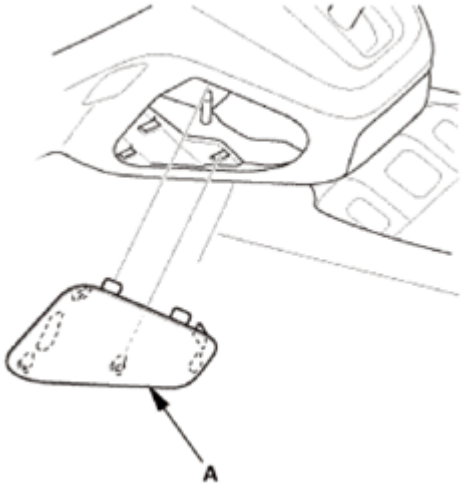

Fig. 348: Identifying Maintenance Cover
Courtesy of AMERICAN HONDA MOTOR CO., INC.

30. Shift Lever Panel (AT)
    1. Carefully pry out the shift lever panel (A) with the appropriate trim tool to detach the clips (B, C) and the hooks (D), then remove the shift lever panel.

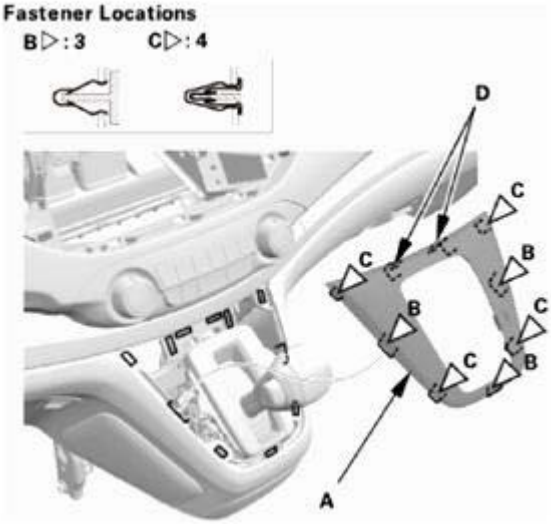

Fig. 349: Identifying Shift Lever Panel, Hooks And Clips
Courtesy of AMERICAN HONDA MOTOR CO., INC.

31. Shift Cable - Disconnection Lever Side
    1. Shift the shift lever to R.
    2. Insert a 6.0 mm (0.236 in) pin (A) into the positioning holes (B).

NOTE: Use only a 6.0 mm (0.236 in) pin with no burrs.

GETtheMANUALS.org

3. Remove the nut (C) securing the shift cable end (D).

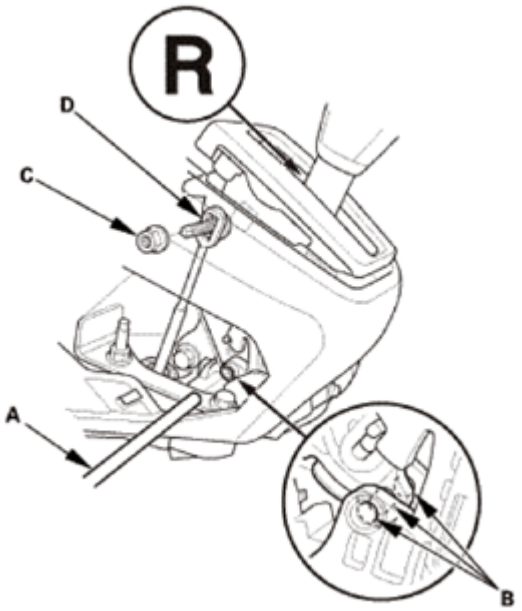

Fig. 350: Shifting Lever To R Position
Courtesy of AMERICAN HONDA MOTOR CO., INC.

4. Unlock the retainer lock (A).

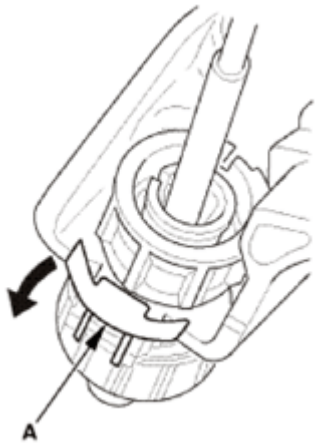

Fig. 351: Unlocking Retainer Lock
Courtesy of AMERICAN HONDA MOTOR CO., INC.

5. Rotate the socket holder retainer (A) counterclockwise (B) until it stops, and push the retainer lock (C) into the socket holder retainer to lock the retainer.

GETtheMANUALS.org

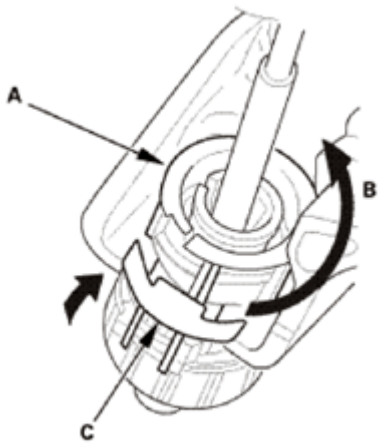

Fig. 352: Rotating Socket Holder Retainer
Courtesy of AMERICAN HONDA MOTOR CO., INC.

6. Slide the socket holder (A) away from the bracket as shown to remove the shift cable (B) from the shift cable bracket (C).

NOTE: Do not remove the shift cable by pulling the shift cable guide (D).

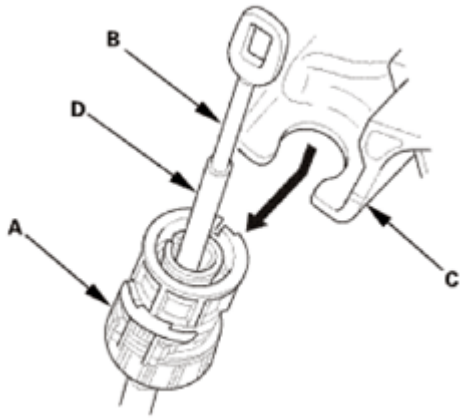

Fig. 353: Sliding Socket Holder Away From Bracket
Courtesy of AMERICAN HONDA MOTOR CO., INC.

32. Dashboard/Steering Hanger Beam
    1. At the A-pillar, disconnect the connector(s) (A).

       Driver's side

GETtheMANUALS.org

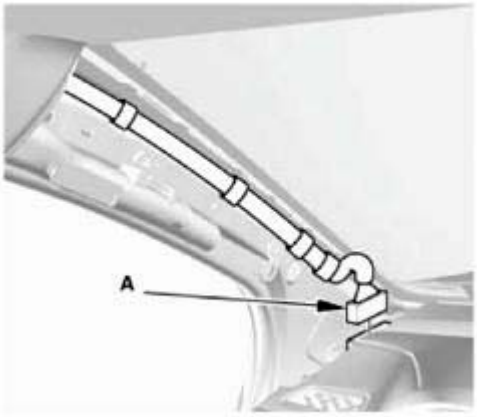

Fig. 354: Identifying Dashboard/Steering Hanger Beam Connector (Driver Side)
Courtesy of AMERICAN HONDA MOTOR CO., INC.

Passenger's side

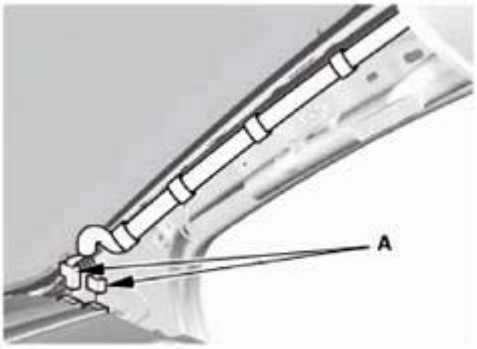

Fig. 355: Identifying Dashboard/Steering Hanger Beam Connectors (Passenger Side)
Courtesy of AMERICAN HONDA MOTOR CO., INC.

2. From under the dash, disconnect the connectors (A).

GETtheMANUALS.org

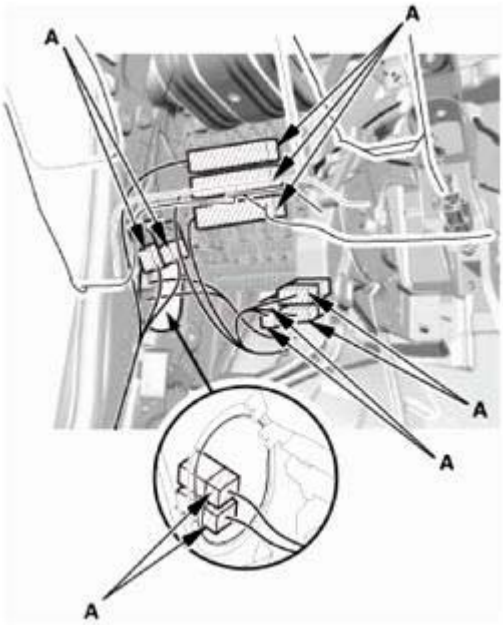

Fig. 356: Identifying Dashboard/Steering Hanger Beam Connectors
Courtesy of AMERICAN HONDA MOTOR CO., INC.

3. From under the dash, remove the nut (A) and the bolt (B).

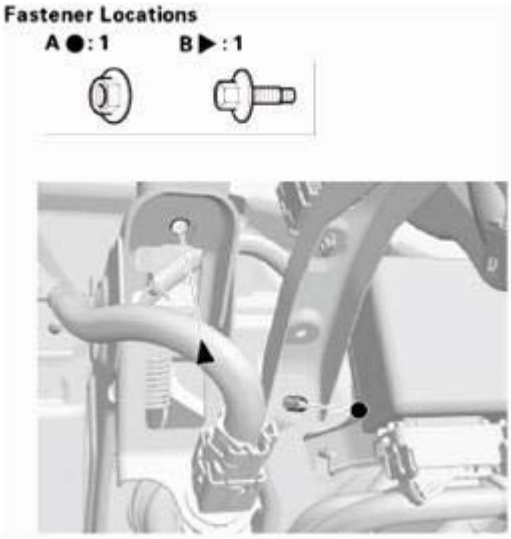

Fig. 357: Identifying Dashboard/Steering Hanger Beam Nut And Bolt
Courtesy of AMERICAN HONDA MOTOR CO., INC.

4. With climate control: Disconnect the aspirator hose (A).
5. Disconnect the connector (B).

GETtheMANUALS.org

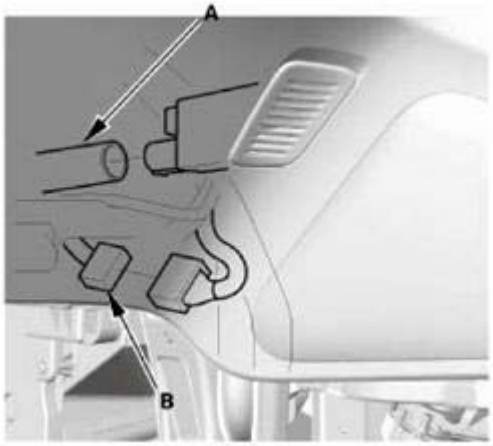

Fig. 358: Identifying Aspirator Hose And Connector (With Climate Control)
Courtesy of AMERICAN HONDA MOTOR CO., INC.

6. From under the dash, disconnect the connectors (A).
7. Remove the bolts (B, C), and remove the ground bolt (D) with a TORX T30 bit.

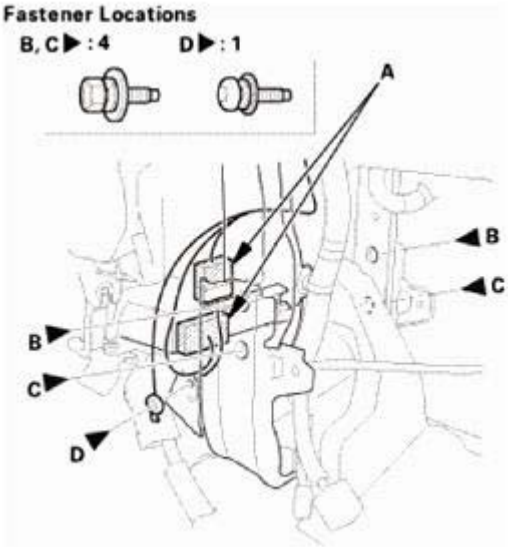

Fig. 359: Identifying Dashboard/Steering Hanger Beam Connector, Bolt And Ground Bolt
Courtesy of AMERICAN HONDA MOTOR CO., INC.

8. From under the dash, disconnect the connectors (A), and detach the harness clips (B).

GETtheMANUALS.org

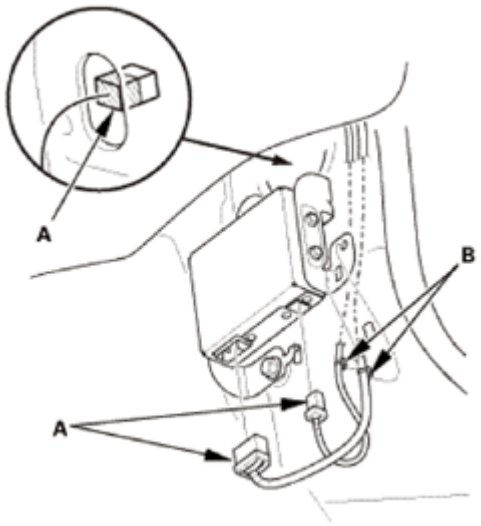

Fig. 360: Identifying Dashboard/Steering Hanger Beam Connectors And Clips
Courtesy of AMERICAN HONDA MOTOR CO., INC.

9. Loosen the special bolts (A) until they disengage from the threads on the hanger beam side bracket (B), and engage the inside threads of the collar bolts (C). The thread lock on the special bolts makes the special bolts and the collar bolts turn together.
10. Continue loosening the special bolts to turn the collar bolts into the fixed space adjusters (D) until the collar bolts engage the stops (E). This creates a gap (F) between the collar bolts and the body.
11. Loosen the special bolts to disengage them from the collar bolts, then remove them.

GETtheMANUALS.org

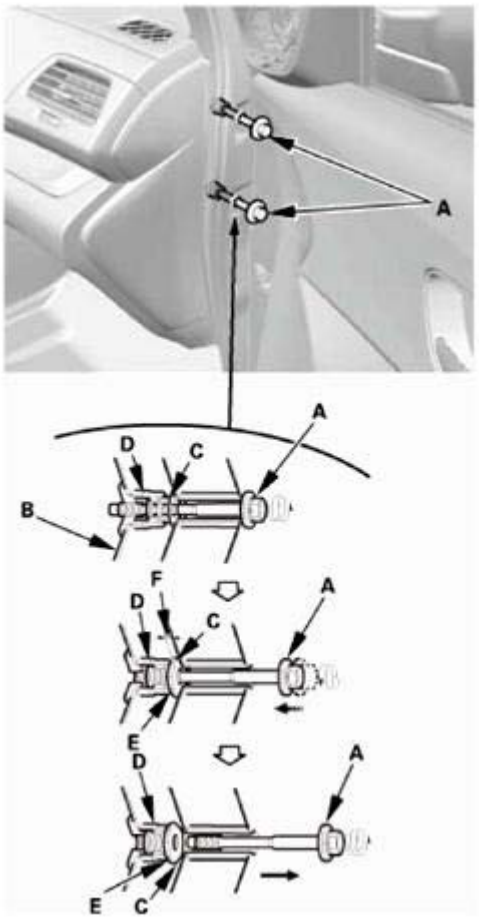

Fig. 361: Loosening Dashboard/Steering Hanger Beam Special Bolts
Courtesy of AMERICAN HONDA MOTOR CO., INC.

12. Check that the collar bolts (A) are seated in the fixed space adjusters (B).

NOTE: **If either collar bolt was not seated, replace the special bolts.**

GETtheMANUALS.org

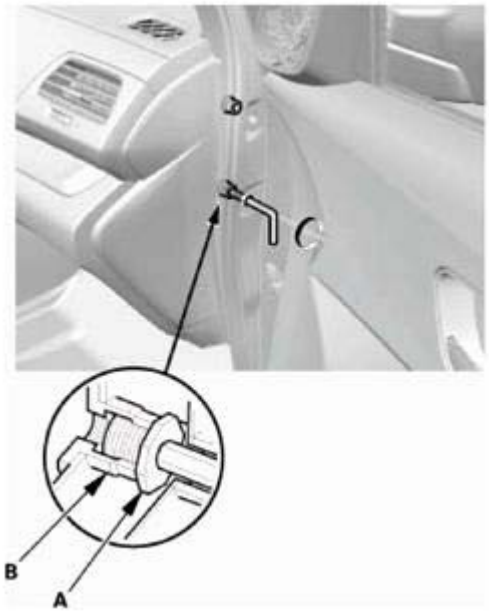

Fig. 362: Identifying Dashboard/Steering Hanger Beam Collar Bolts And Space Adjuster
Courtesy of AMERICAN HONDA MOTOR CO., INC.

13. Remove the bolts (A, B).

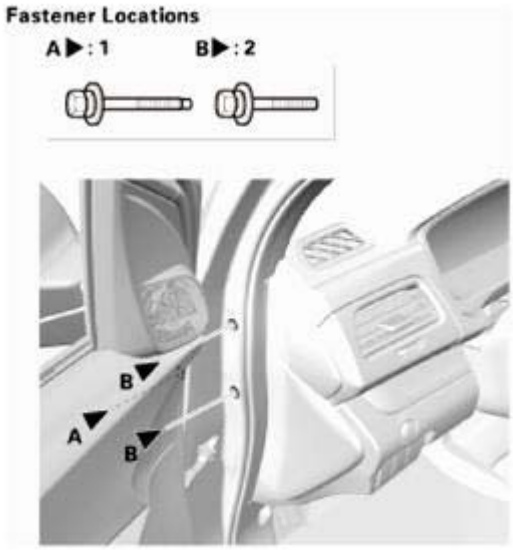

Fig. 363: Identifying Dashboard/Steering Hanger Beam Mounting Bolts
Courtesy of AMERICAN HONDA MOTOR CO., INC.

14. Remove the dashboard/steering hanger beam (A).

GETtheMANUALS.org

Fig. 364: Removing Dashboard/Steering Hanger Beam
Courtesy of AMERICAN HONDA MOTOR CO., INC.

15. If necessary, detach the hooks (A), then remove the dashboard upper side cover (B).

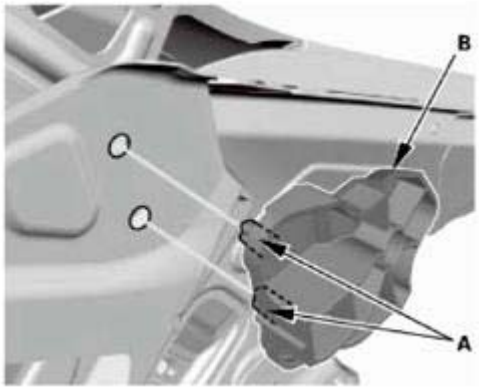

Fig. 365: Identifying Dashboard Upper Side Cover And Hooks
Courtesy of AMERICAN HONDA MOTOR CO., INC.

33. Blower-Heater Unit
    1. Disconnect the engine compartment wire harness connector (A).

GETtheMANUALS.org

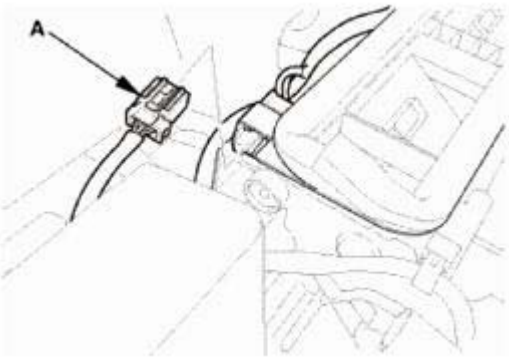

Fig. 366: Identifying Engine Compartment Wire Harness Connector
Courtesy of AMERICAN HONDA MOTOR CO., INC.

2. Disconnect the drain hose (A).
3. Remove the blower-heater unit (B).

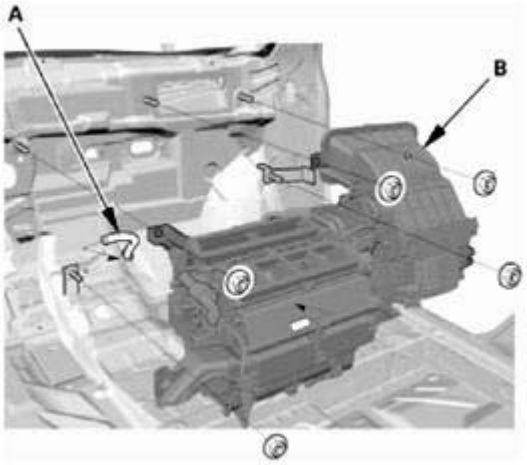

Fig. 367: Identifying Blower-Heater Unit And Drain Hose
Courtesy of AMERICAN HONDA MOTOR CO., INC.

34. Passenger's Heater Duct
    1. Remove the passenger's heater duct (A).

GETtheMANUALS.org

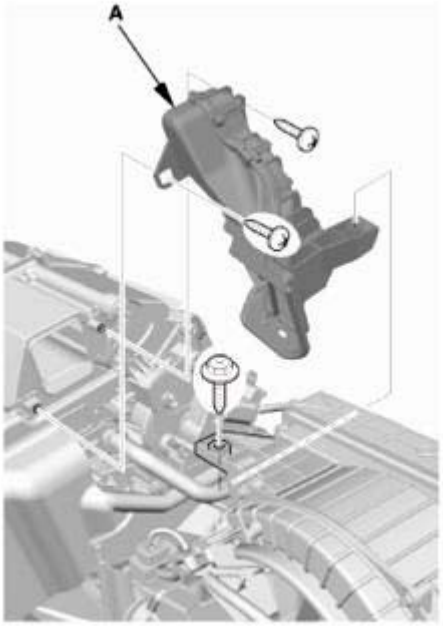

Fig. 368: Identifying Passenger Heater Duct
Courtesy of AMERICAN HONDA MOTOR CO., INC.

35. A/C Wire Harness
    1. Disconnect the blower motor connector (A).
    2. Detach the harness clip (B).
    3. Disconnect the power transistor connector (C).
    4. With climate control: Disconnect the passenger's air mix control motor connector (D).

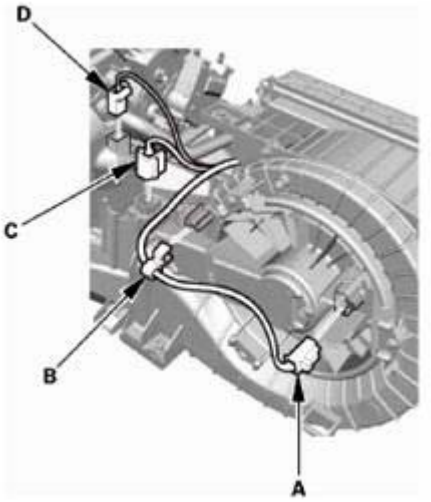

Fig. 369: Identifying Evaporator Temperature Sensor Connector, Power Transistor Connector, Expansion Valve Cover, Seal And Clips
Courtesy of AMERICAN HONDA MOTOR CO., INC.

GETtheMANUALS.org

5. Disconnect the mode control motor connector (A).
6. Disconnect the recirculation control motor connector (B).
7. Disconnect the evaporator temperature sensor connector (C).
8. Detach the harness clips (D).

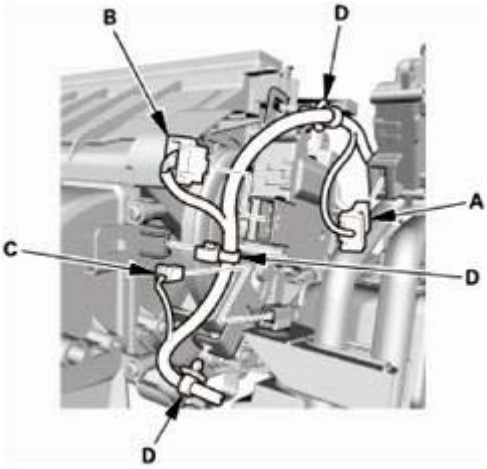

Fig. 370: Identifying Mode Control, Recirculation Control, Evaporator Temperature Sensor Motor Connector And Clips
Courtesy of AMERICAN HONDA MOTOR CO., INC.

9. Disconnect the air mix control motor connector (A).
10. Detach the harness clips (B).

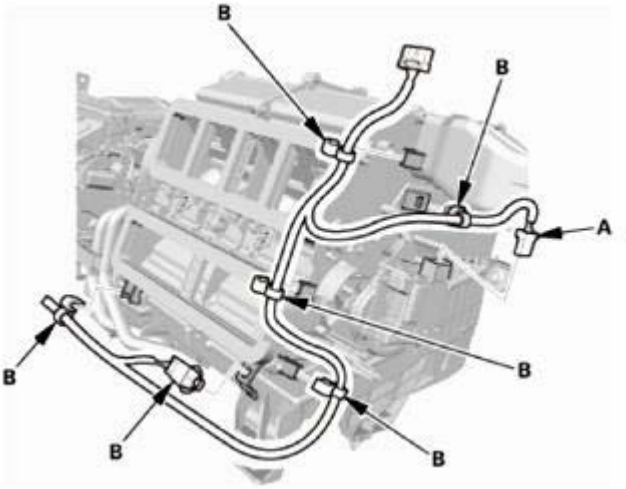

Fig. 371: Identifying Air Mix Control Motor And Connector
Courtesy of AMERICAN HONDA MOTOR CO., INC.

36. Blower Unit
    1. Remove the blower unit (A).

GETtheMANUALS.org

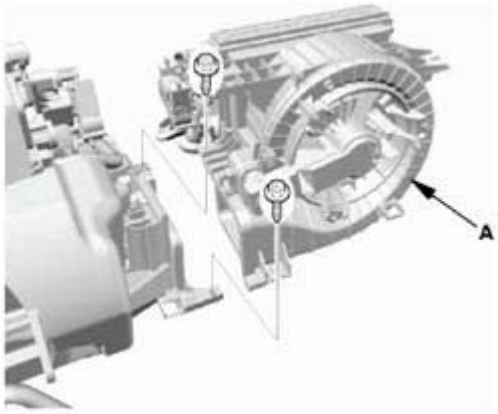

Fig. 372: Identifying Blower Unit
Courtesy of AMERICAN HONDA MOTOR CO., INC.

37. Heater Core Cover
    1. Remove the heater core cover (A).

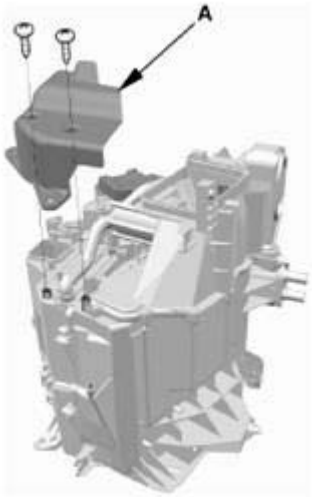

Fig. 373: Identifying Heater Core Cover
Courtesy of AMERICAN HONDA MOTOR CO., INC.

38. Passenger's Air Mix Control Motor (Climate Control)
    1. Remove the passenger's air mix control motor (A).

GETtheMANUALS.org

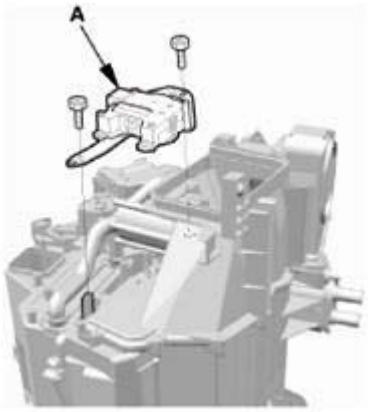

Fig. 374: Identifying Passenger Air Mix Control Motor
Courtesy of AMERICAN HONDA MOTOR CO., INC.

39. Expansion Valve Cover
    1. Detach the connector clip (A).
    2. Remove the expansion valve cover (B) and the seal (C).

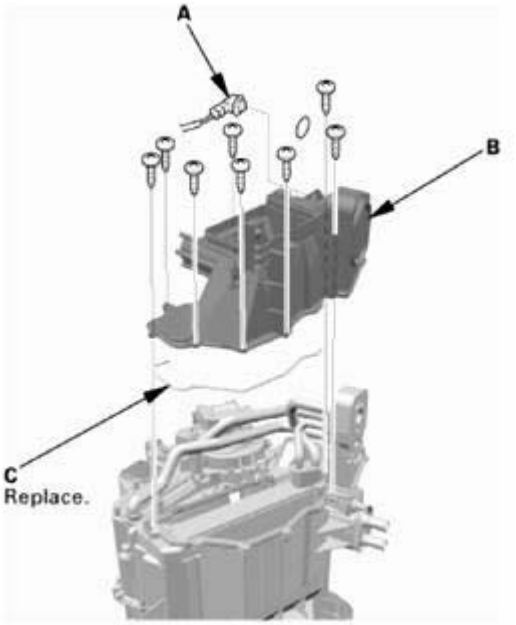

Fig. 375: Identifying Expansion Valve Cover, Seal And Connector Clip
Courtesy of AMERICAN HONDA MOTOR CO., INC.

40. Evaporator Core
    1. Carefully pull out the evaporator core (A) without bending the lines.
    2. Remove the plate (B).

GETtheMANUALS.org

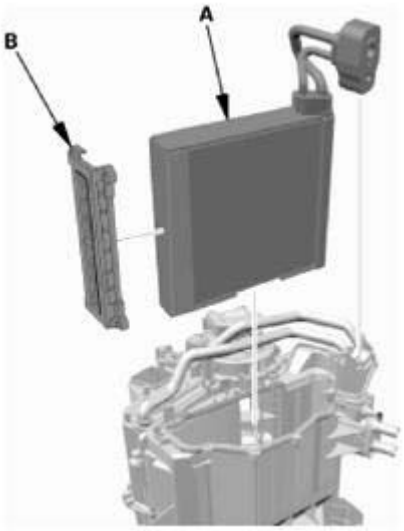

Fig. 376: Identifying Evaporator Core And Plate
Courtesy of AMERICAN HONDA MOTOR CO., INC.

41. Expansion Valve Bracket
    1. Remove the expansion valve bracket (A).

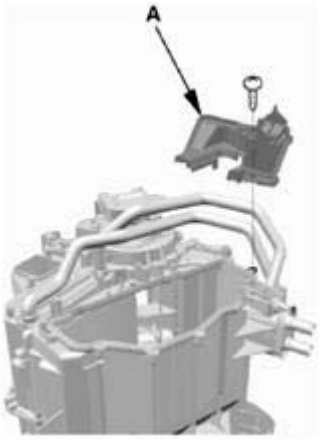

Fig. 377: Identifying Expansion Valve Bracket
Courtesy of AMERICAN HONDA MOTOR CO., INC.

42. Heater Core
    1. Remove the grommet (A).
    2. Remove the heater pipe bracket (B).
    3. Carefully pull out the heater core (C) without bending the lines.

GETtheMANUALS.org

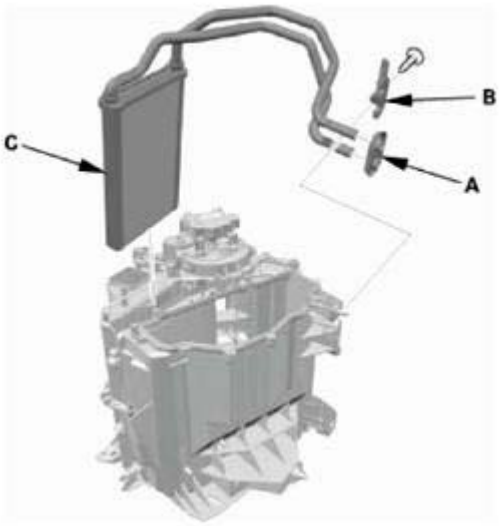

Fig. 378: Identifying Heater Core, Bracket And Grommet
Courtesy of AMERICAN HONDA MOTOR CO., INC.

INSTALLATION

CAUTION:

- **Air conditioning refrigerant or lubricant vapor can irritate your eyes, nose, or throat.**
- **Be careful when connecting service equipment.**
- **Do not breathe refrigerant or vapor.**
- **Do not operate the leak detector near flammable vapors. Its sensor operates at high temperatures, and could ignite the vapors, resulting in personal injury and/or damage to the equipment.**

SRS components are located in this area. Review the **SRS COMPONENT LOCATIONS** and the **PRECAUTIONS AND PROCEDURES** before doing repair or servicing.

NOTE:

- **If an accidental system discharge occurs, ventilate the work area before resuming service.**
- **Additional health and safety information may be obtained from the refrigerant and lubricant manufacturers.**
- **Check the system for leaks using an R-134a refrigerant leak detector with an accuracy of 14 g (0.5 oz) per year or better.**
- **Replace the O-rings with new ones at each fitting, and apply a thin coat of refrigerant oil before installing them. Be sure to use the correct O-rings for HFC-134a (R-134a) to avoid leakage.**
- **Use only PAG refrigerant oil for HFC-134a A/C systems.**
- **To avoid contamination, do not return the oil to the container once dispensed, and never mix it with other refrigerant oils.**

GETtheMANUALS.org

- **Immediately after using the oil, reinstall the cap on the container, and seal it to avoid moisture absorption.**
- **Do not spill the refrigerant oil on the vehicle; it may damage the paint; if the refrigerant oil contacts the paint, wash it off immediately.**
- **Do not interchange the inlet and outlet heater hoses, and install the hose clamps securely.**
- **Make sure that there is no coolant leakage.**
- **Make sure that there is no air leakage.**

1. Heater Core
    1. Carefully install the heater core (A) without bending the lines.
    2. Install the heater pipe bracket (B).
    3. Install the grommet (C).

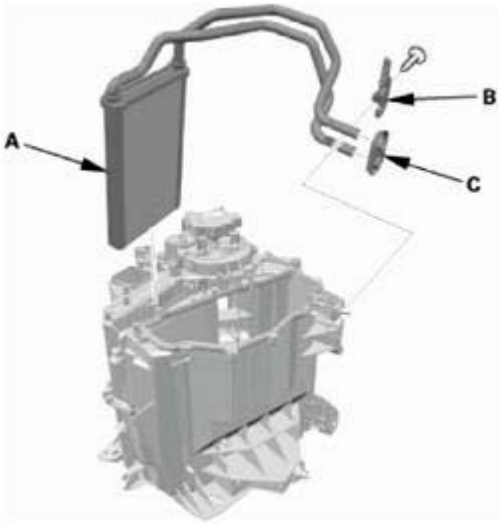

Fig. 379: Identifying Heater Core, Bracket And Grommet
Courtesy of AMERICAN HONDA MOTOR CO., INC.

2. Expansion Valve Bracket
    1. Install the expansion valve bracket (A).

GETtheMANUALS.org

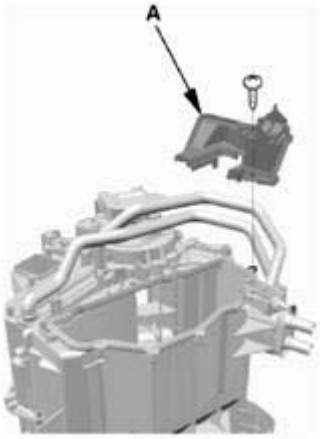

Fig. 380: Identifying Expansion Valve Bracket
Courtesy of AMERICAN HONDA MOTOR CO., INC.

3. Evaporator Core
    1. Install the plate (A).
    2. Carefully install the evaporator core (B) without bending the lines.

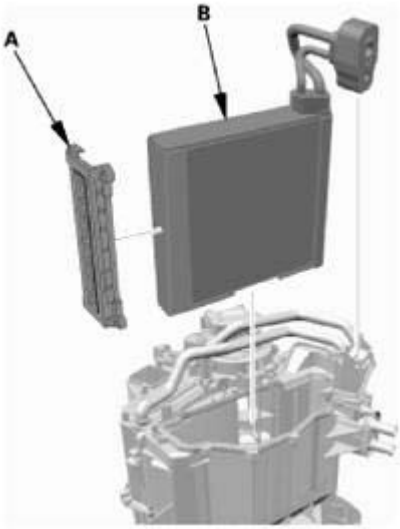

Fig. 381: Identifying Evaporator Core And Plate
Courtesy of AMERICAN HONDA MOTOR CO., INC.

4. Expansion Valve Cover
    1. Install the new seal (A) and the expansion valve cover (B).
    2. Install the connector clip (C).

GETtheMANUALS.org

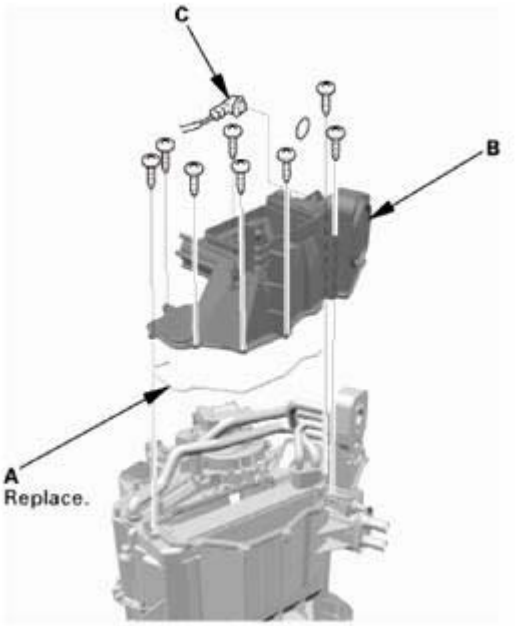

Fig. 382: Identifying Expansion Valve Cover, Seal And Connector Clip
Courtesy of AMERICAN HONDA MOTOR CO., INC.

5. Passenger's Air Mix Control Motor (Climate Control)
    1. Align the passenger's air mix control motor (A) with the gear, then install the motor.
    2. After installation, make sure the motor runs smoothly.

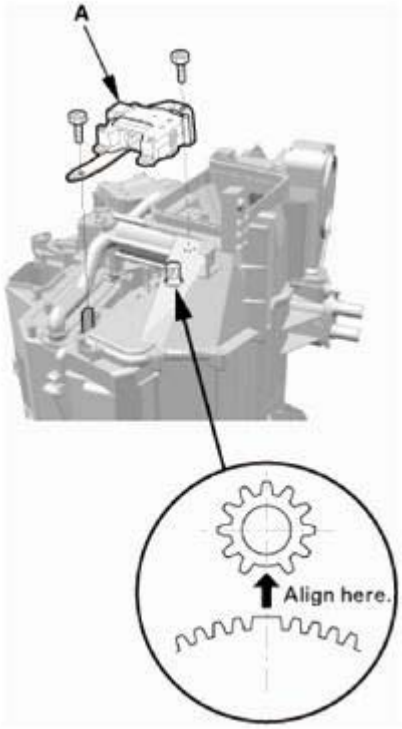

GETtheMANUALS.org

Fig. 383: Identifying Passenger Air Mix Control Motor And Gear Align Marks
Courtesy of AMERICAN HONDA MOTOR CO., INC.

6. Heater Core Cover
    1. Install the heater core cover (A).

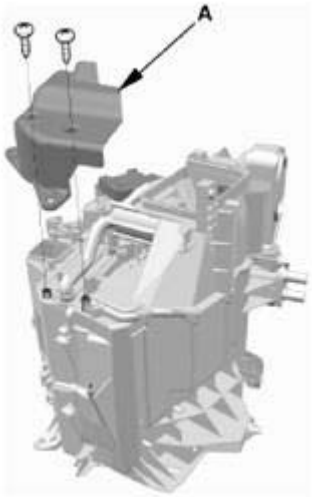

Fig. 384: Identifying Heater Core Cover
Courtesy of AMERICAN HONDA MOTOR CO., INC.

7. Blower Unit
    1. Install the blower unit (A).

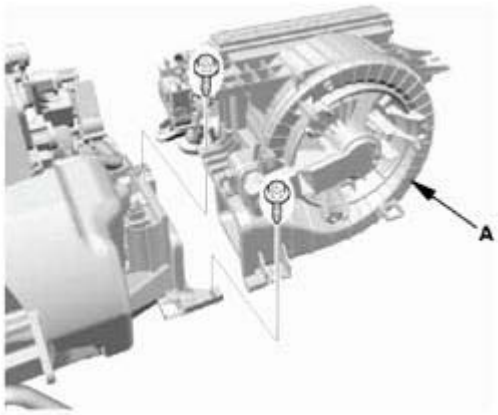

Fig. 385: Identifying Blower Unit With Torque Specifications
Courtesy of AMERICAN HONDA MOTOR CO., INC.

8. A/C Wire Harness
    1. Connect the air mix control motor connector (A).
    2. Install the harness clips (B).

GETtheMANUALS.org

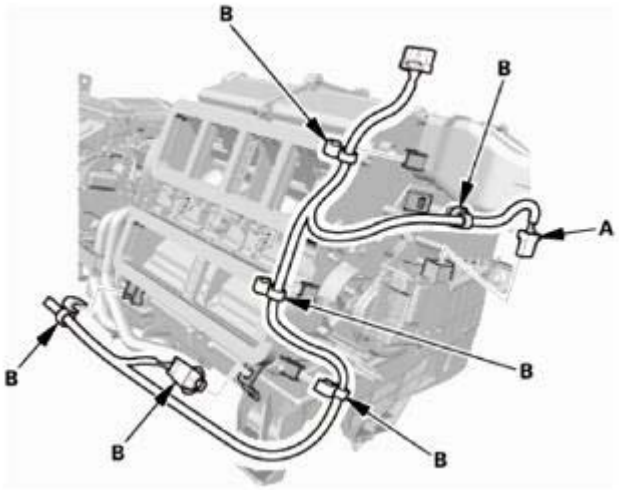

Fig. 386: Identifying Air Mix Control Motor Connector And Clips
Courtesy of AMERICAN HONDA MOTOR CO., INC.

3. Connect the evaporator temperature sensor connector (A).
4. Connect the recirculation control motor connector (B).
5. Connect the mode control motor connector (C).
6. Install the harness clips (D).

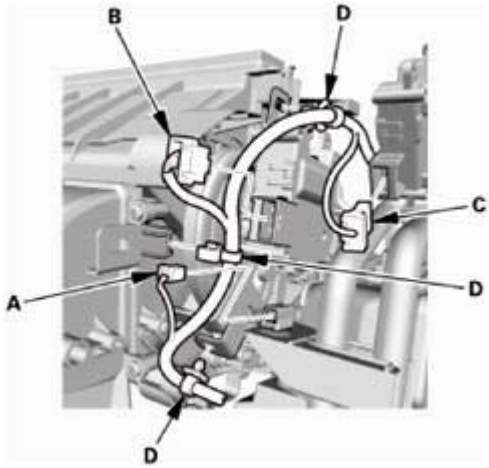

Fig. 387: Identifying Mode Control, Recirculation Control, Evaporator Temperature Sensor Motor Connector And Clips
Courtesy of AMERICAN HONDA MOTOR CO., INC.

7. With climate control: Connect the passenger's air mix control motor connector (A).
8. Connect the power transistor connector (B).
9. Connect the blower motor connector (C).
10. Install the harness clip (D).

GETtheMANUALS.org

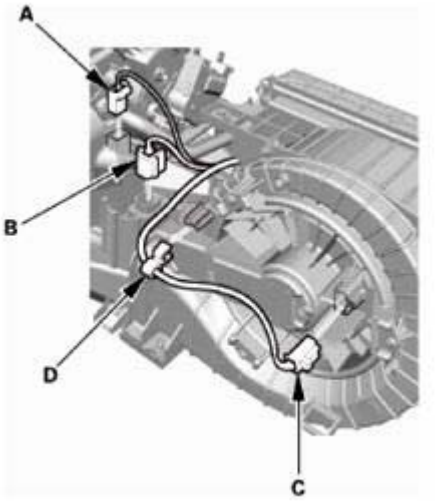

Fig. 388: Identifying Passenger Air Mix Control Motor Connector, Power Transistor Connector, Blower Motor Connector And Clips
Courtesy of AMERICAN HONDA MOTOR CO., INC.

9. Passenger's Heater Duct
    1. Install the passenger's heater duct (A).

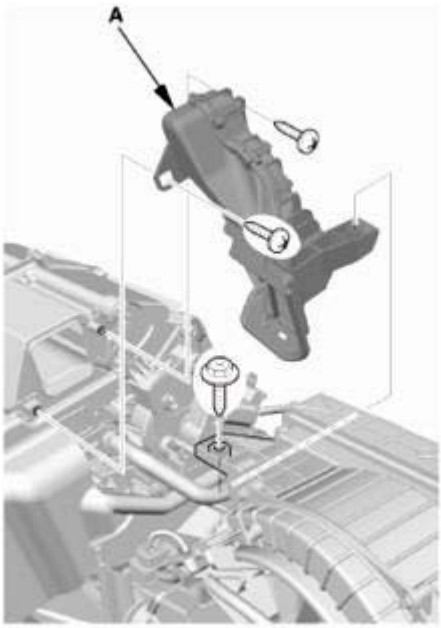

Fig. 389: Identifying Passenger Heater Duct
Courtesy of AMERICAN HONDA MOTOR CO., INC.

10. Blower-Heater Unit
    1. Install the blower-heater unit (A).
    2. Connect the drain hose (B).

GETtheMANUALS.org

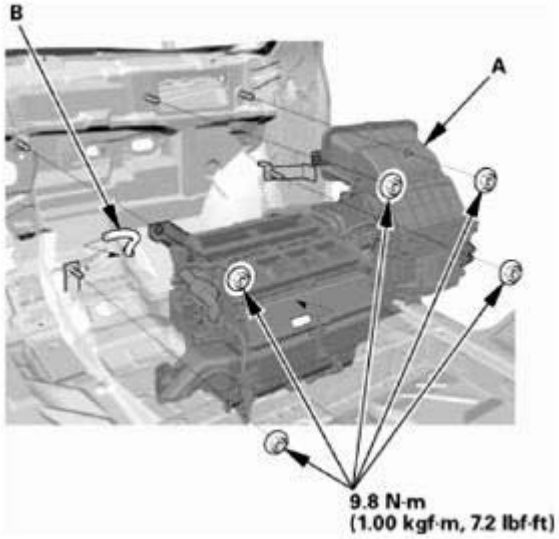

Fig. 390: Identifying Blower-Heater Unit And Drain Hose With Torque Specifications
Courtesy of AMERICAN HONDA MOTOR CO., INC.

3. Connect the engine compartment wire harness connector (A).

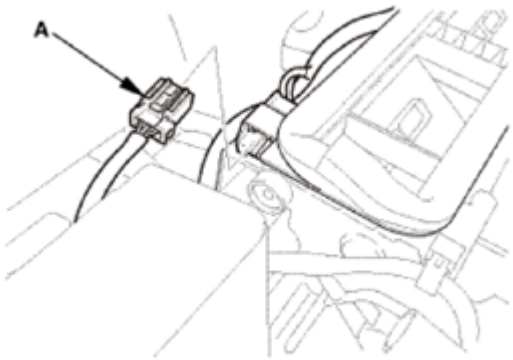

Fig. 391: Identifying Engine Compartment Wire Harness Connector
Courtesy of AMERICAN HONDA MOTOR CO., INC.

11. Dashboard/Steering Hanger Beam

GETtheMANUALS.org

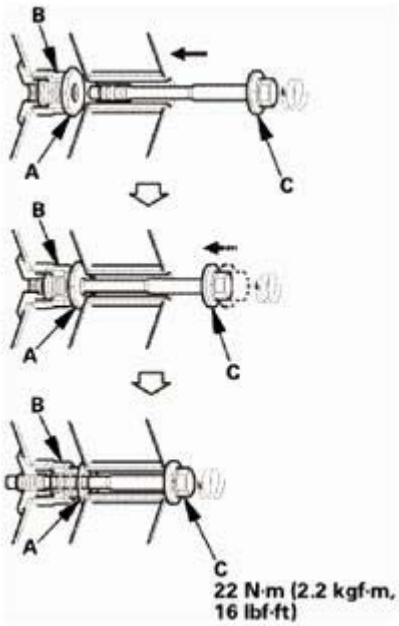

Fig. 392: Tightening Dashboard/Steering Hanger Beam Special Bolts
Courtesy of AMERICAN HONDA MOTOR CO., INC.

NOTE:

- **Make sure the collar bolts (A) turn easily by hand in the fixed space adjusters (B). Tighten the collar bolts by hand until they engage the fixed space adjusters before reinstalling the dashboard.**
- **Before reinstalling the dashboard, screw the special bolts (C) into the collar bolts, and check that they turn together. If they do not turn together, replace the special bolts.**
- **After setting the dashboard/steering hanger beam in the body, install all of the mounting bolts but do not tighten them. First tighten the driver's side bracket bolts to the specified torque. Next, tighten the special bolts to turn the collar bolts. As you tighten the bolts, the collar bolts screw out of the fixed space adjuster until they contact the body. Continue tightening the special bolts to the specified torque.**

1. Install the dashboard upper side cover (A). Make sure the hooks (B) snap into place securely.

GETtheMANUALS.org

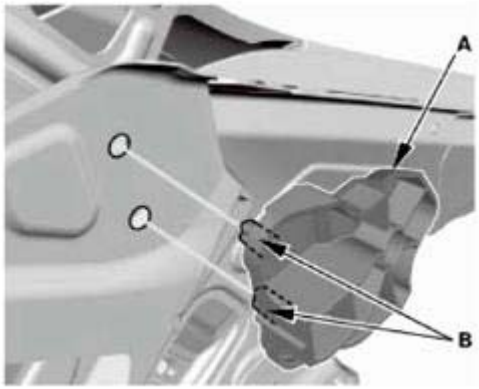

Fig. 393: Identifying Dashboard Upper Side Cover And Clips
Courtesy of AMERICAN HONDA MOTOR CO., INC.

2. Install the dashboard/steering hanger beam (A).

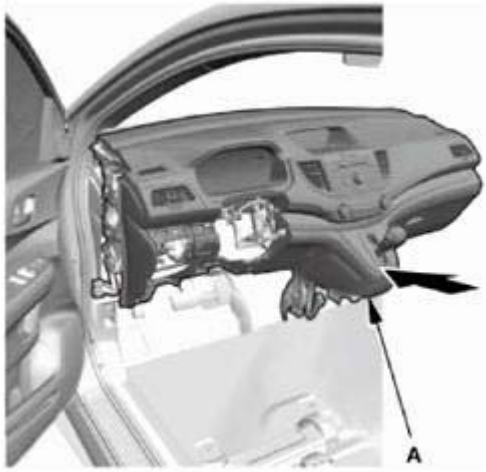

Fig. 394: Installing Dashboard/Steering Hanger Beam
Courtesy of AMERICAN HONDA MOTOR CO., INC.

3. Install the bolts (A, B).

GETtheMANUALS.org

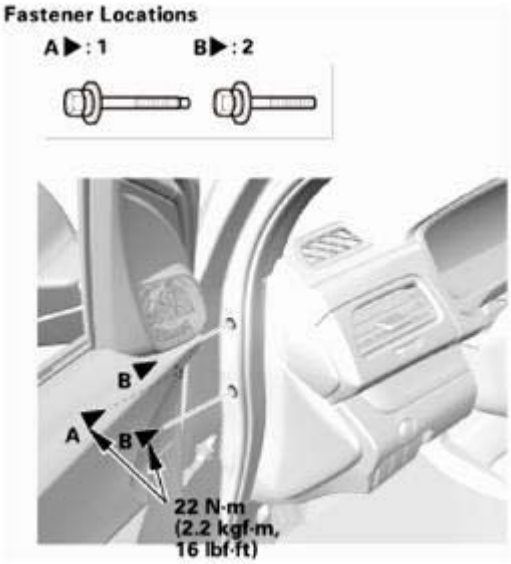

Fig. 395: Identifying Dashboard/Steering Hanger Beam Mounting Bolts With Torque Specifications
Courtesy of AMERICAN HONDA MOTOR CO., INC.

4. Install the special bolts (A).

GETtheMANUALS.org

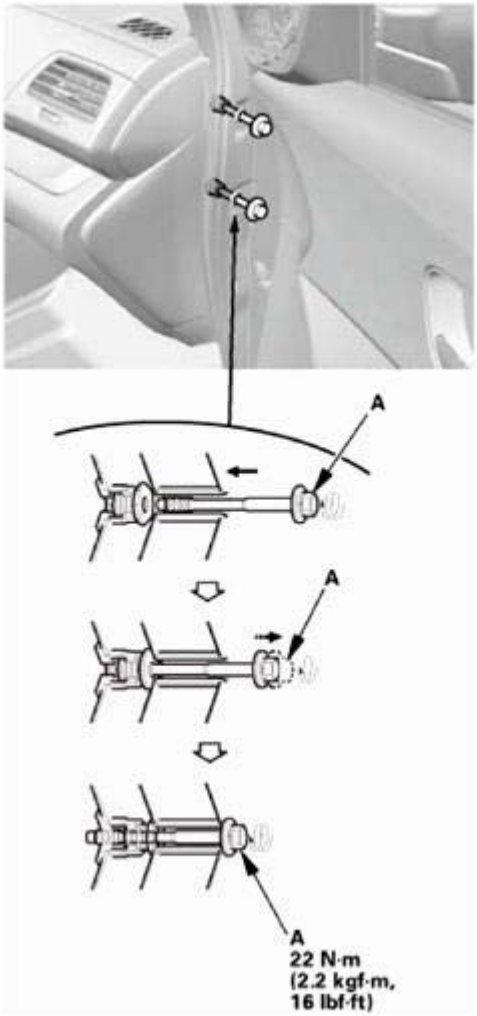

Fig. 396: Install Dashboard/Steering Hanger Beam Special Bolts
Courtesy of AMERICAN HONDA MOTOR CO., INC.

5. From under the dash, connect the connectors (A).
6. Install the bolts (B, C), and install the ground bolt (D) with a TORX T30 bit.

NOTE: **Apply medium strength liquid thread lock to the mounting bolts (C) before installation.**

GETtheMANUALS.org

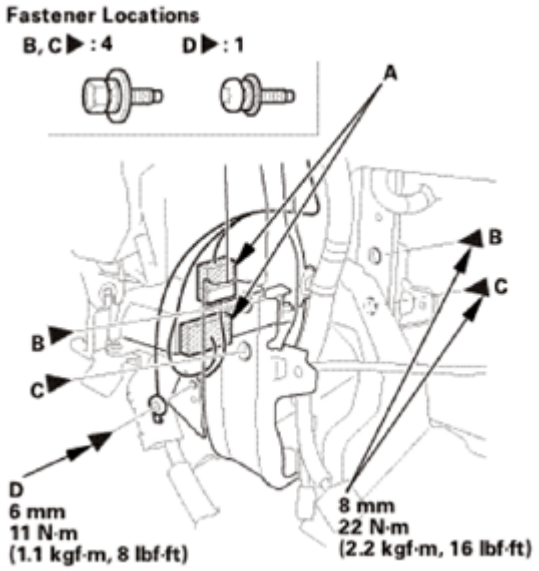

Fig. 397: Identifying Dashboard/Steering Hanger Beam Connector And Mounting Bolts With Torque Specifications
Courtesy of AMERICAN HONDA MOTOR CO., INC.

7. From under the dash, connect the connectors (A), and install the harness clips (B).

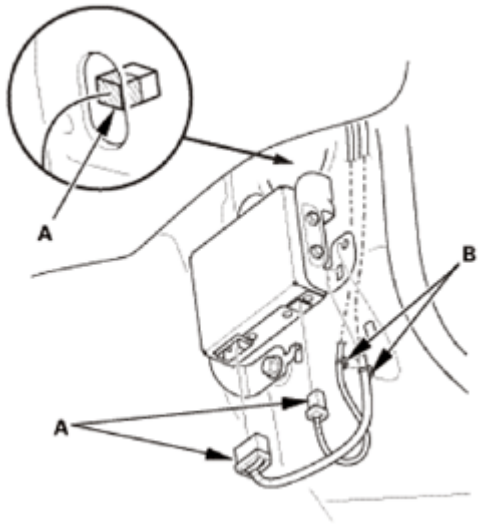

Fig. 398: Identifying Dashboard/Steering Hanger Beam Connectors And Clips
Courtesy of AMERICAN HONDA MOTOR CO., INC.

8. With climate control: Connect the aspirator hose (A).
9. Connect the connector (B).

GETtheMANUALS.org

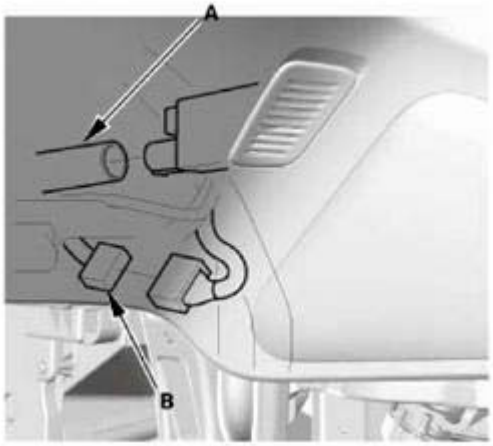

Fig. 399: Identifying Aspirator Hose And Connector (With Climate Control)
Courtesy of AMERICAN HONDA MOTOR CO., INC.

10. From under the dash, install the nut (A) and the bolt (B).

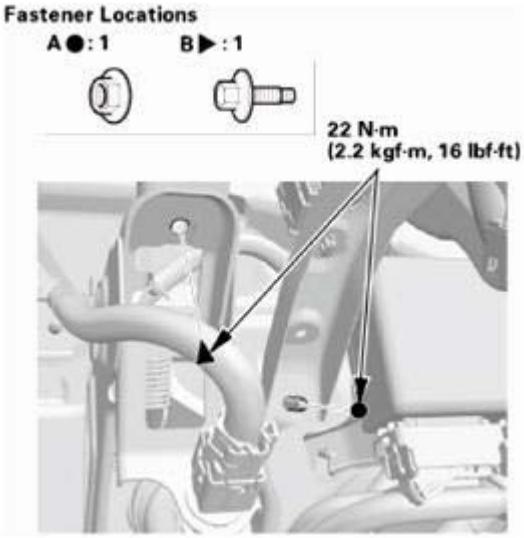

Fig. 400: Identifying Dashboard/Steering Hanger Beam Nut And Bolt With Torque Specifications
Courtesy of AMERICAN HONDA MOTOR CO., INC.

11. From under the dash, connect the connectors (A).

GETtheMANUALS.org

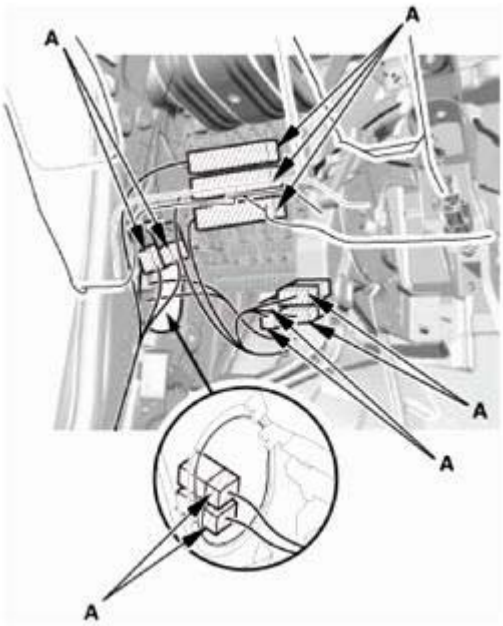

Fig. 401: Identifying Dashboard/Steering Hanger Beam Connectors
Courtesy of AMERICAN HONDA MOTOR CO., INC.

12. At the A-pillar, connect the connector(s) (A).

    Driver's side

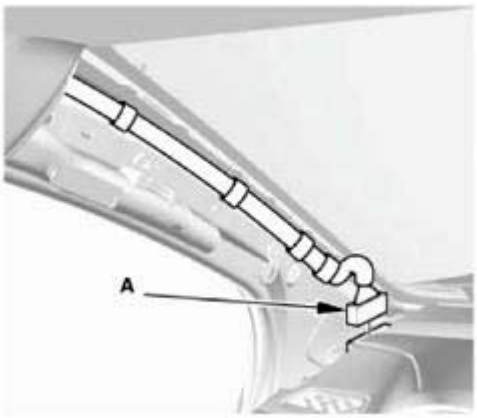

Fig. 402: Identifying Dashboard/Steering Hanger Beam Connector At A-Pillar (Driver Side)
Courtesy of AMERICAN HONDA MOTOR CO., INC.

Passenger's side

GETtheMANUALS.org

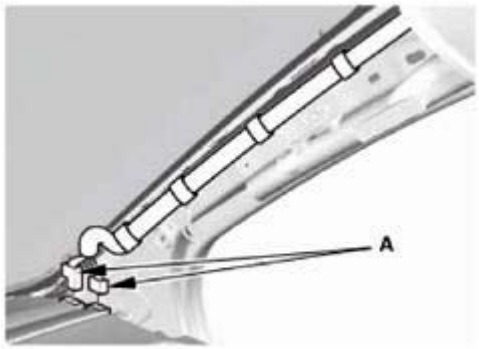

Fig. 403: Identifying Dashboard/Steering Hanger Beam Connectors At A-Pillar (Passenger Side)
Courtesy of AMERICAN HONDA MOTOR CO., INC.

12. Steering Column
    1. Install the steering column (A).

NOTE: **Do not release the lock lever until the steering column is installed. If the lock lever is released before installation, adjust the steering column after installation.**

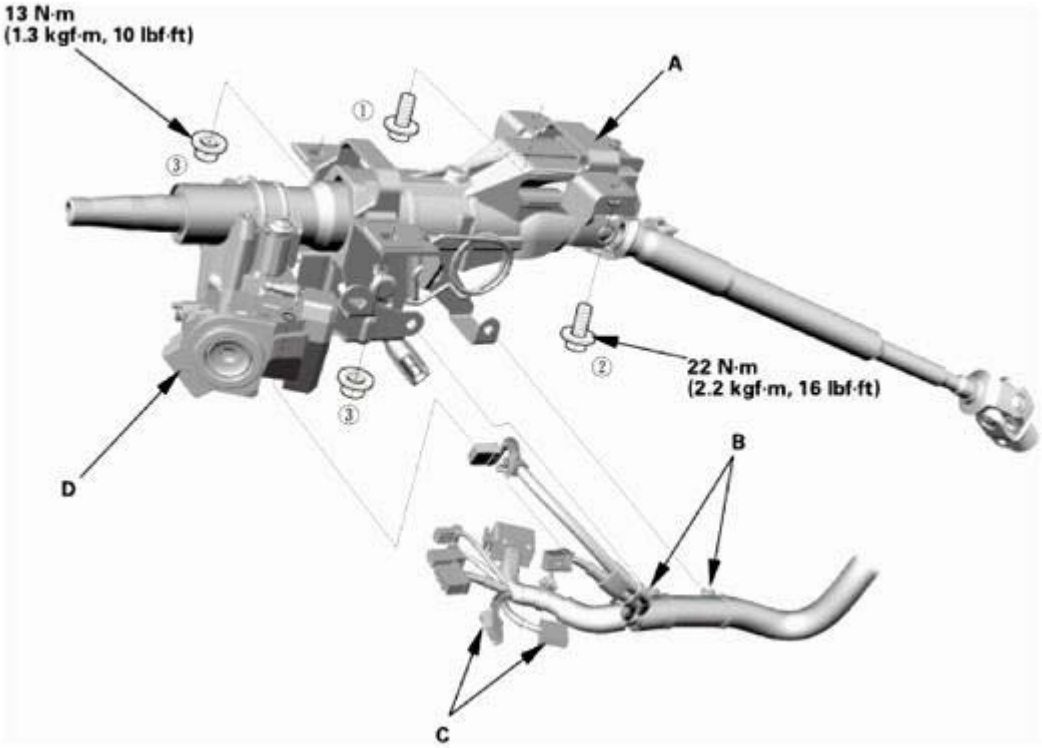

Fig. 404: Identifying Steering Column, Ignition Switch, Connector And Clips With Torque Specifications
Courtesy of AMERICAN HONDA MOTOR CO., INC.

GETtheMANUALS.org

2. Loosely tighten the attaching nuts and bolts.
3. Tighten the attaching nuts and bolts to the specified torque in the sequence shown.
4. Install the wire harness clips (B) to the steering column.
5. Connect the connectors (C) to the ignition switch (D).

13. Steering Column Lower Slide Shaft - Release
    1. Cut the wire (A).

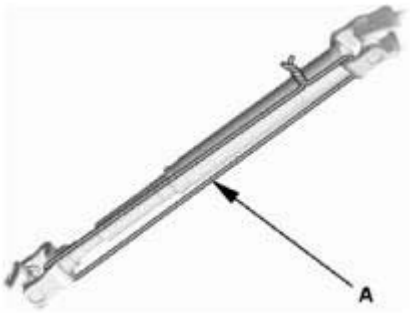

Fig. 405: Identifying Steering Column Lower Slide Shaft Wire
Courtesy of AMERICAN HONDA MOTOR CO., INC.

14. Steering Joint - Reconnection
    1. Place the rack in the straight ahead driving position.
    2. Slip the lower end of the steering joint (A) onto the pinion shaft (B).

NOTE:

- **Pinion shaft with center guide: Install the steering joint by aligning the center guide (C).**
- **Pinion shaft without center guide: Position the steering column by aligning the gap (D) within the angle.**

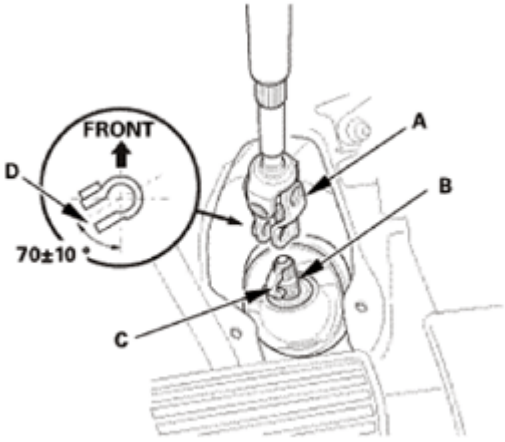

Fig. 406: Identifying Steering Joint, Center Guide And Align Gap
Courtesy of AMERICAN HONDA MOTOR CO., INC.

GETtheMANUALS.org

3. Align the bolt hole (A) on the steering joint with the groove (B) around the pinion shaft.
4. Loosely install the steering joint bolt (C).
5. Be sure that the joint bolt is securely in the groove in the pinion shaft.
6. Pull on the steering joint to make sure that the steering joint is fully seated.
7. Tighten the steering joint bolt to the specified torque.

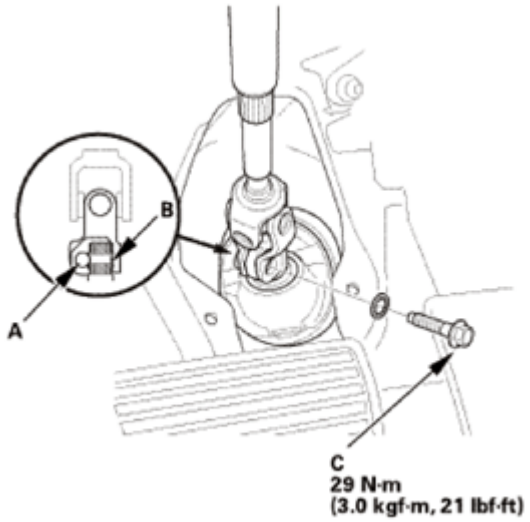

Fig. 407: Identifying Steering Joint Groove, Bolt And Hole With Torque Specifications
Courtesy of AMERICAN HONDA MOTOR CO., INC.

15. Steering Joint Cover
    1. Install the steering joint cover (A).

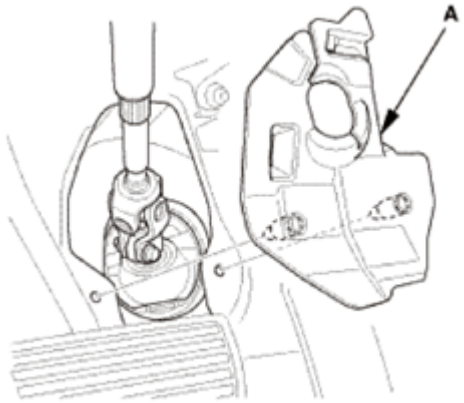

Fig. 408: Identifying Steering Joint Cover
Courtesy of AMERICAN HONDA MOTOR CO., INC.

16. Combination Switch Body Assembly
    1. Install the combination switch body assembly (A).
    2. Tighten three screws (B) in the sequence shown.

GETtheMANUALS.org

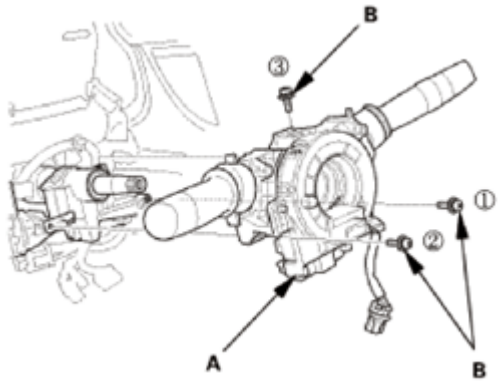

Fig. 409: Identifying Combination Switch Body Assembly And Screws
Courtesy of AMERICAN HONDA MOTOR CO., INC.

3. Connect the connectors (A).

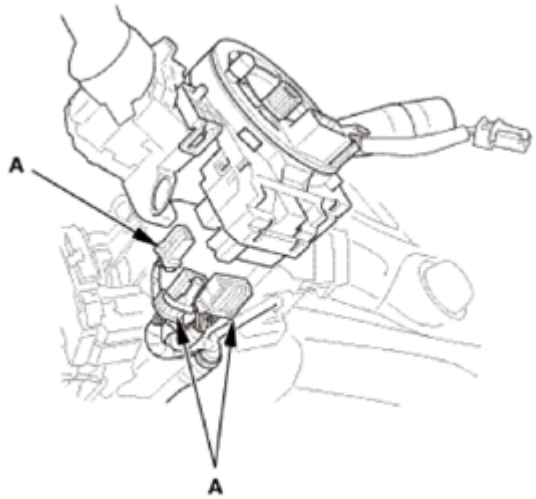

Fig. 410: Identifying Combination Switch Body Assembly Connectors
Courtesy of AMERICAN HONDA MOTOR CO., INC.

4. Connect the connectors (A).
5. Install the clip (B).

GETtheMANUALS.org

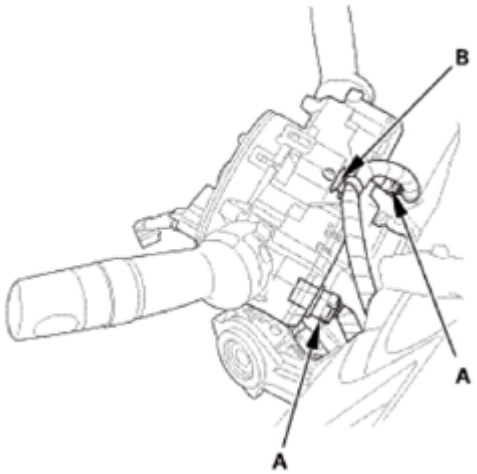

Fig. 411: Identifying Combination Switch Connectors And Clips
Courtesy of AMERICAN HONDA MOTOR CO., INC.

17. Lower Column Cover
    1. Push in on the lower column cover just above ignition switch opening (A) to engage the column cover with the locking tab (B).

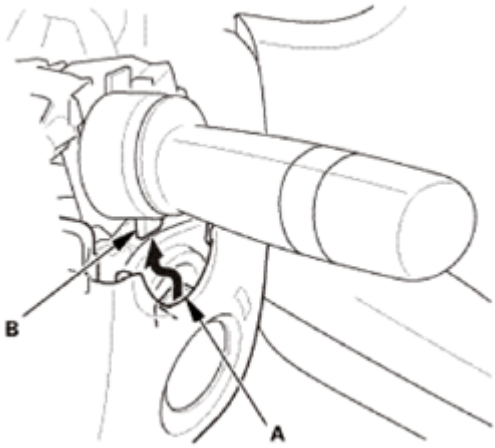

Fig. 412: Engaging Column Cover With Locking Tab
Courtesy of AMERICAN HONDA MOTOR CO., INC.

    2. Install the lower column cover (A), then install the screw (B).

GETtheMANUALS.org

Fig. 413: Identifying Lower Column Cover And Screw
Courtesy of AMERICAN HONDA MOTOR CO., INC.

3. Install the screws (A) securing the lower column cover (B) from the front side.

Fig. 414: Identifying Lower Column Cover And Screws
Courtesy of AMERICAN HONDA MOTOR CO., INC.

18. Upper Column Cover
    1. Install the upper column cover (A).

GETtheMANUALS.org

Fig. 415: Identifying Upper Column Cover
Courtesy of AMERICAN HONDA MOTOR CO., INC.

2. Install the dashboard meter visor blind cover (A). Make sure the clips (B) and the hook (C) snap into place securely.

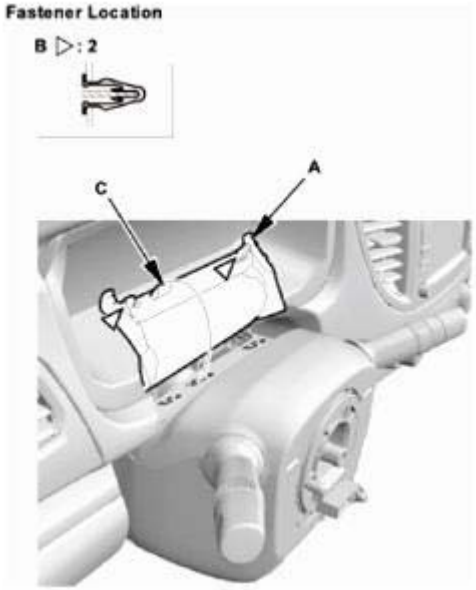

Fig. 416: Identifying Dashboard Meter Visor Blind Cover, Hooks And Clips
Courtesy of AMERICAN HONDA MOTOR CO., INC.

19. Steering Wheel Assembly
    1. Make sure the front wheels are pointing straight ahead.
    2. Center the cable reel (A). Do this by first rotating the cable reel clockwise until it stops.
    3. Rotate the cable reel counterclockwise about three full turns. The arrow mark (B) on the cable reel label should point straight up.

GETtheMANUALS.org

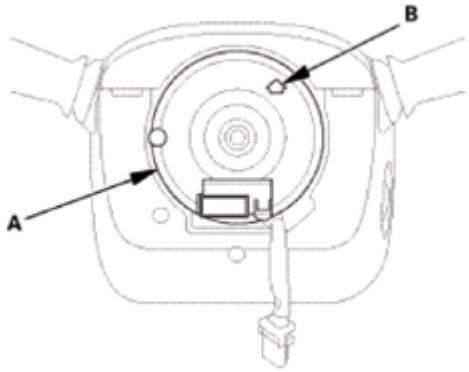

Fig. 417: Identifying Cable Reel And Label Mark
Courtesy of AMERICAN HONDA MOTOR CO., INC.

4. Position the steering wheel hub (A) so that it engages the pin (B) of the cable reel.
5. Install the steering wheel (C) on to the steering column shaft.

NOTE: **Do not tap on the steering wheel or the steering column shaft when installing the steering wheel.**

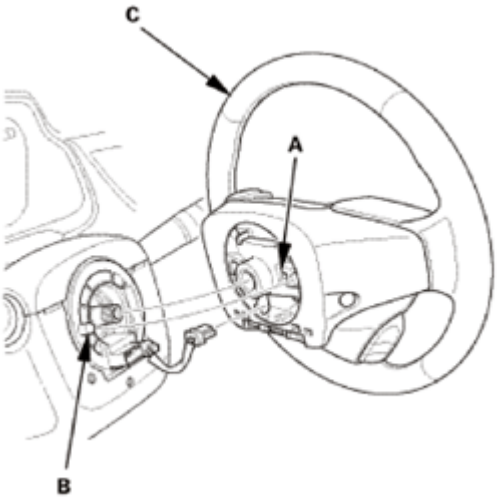

Fig. 418: Identifying Steering Wheel, Hub And Cable Reel Pin
Courtesy of AMERICAN HONDA MOTOR CO., INC.

6. Install the steering wheel bolt (A), and tighten it to the specified torque.
7. Connect the connector (B).
8. Make sure the wire harness is routed and fastened properly.

GETtheMANUALS.org

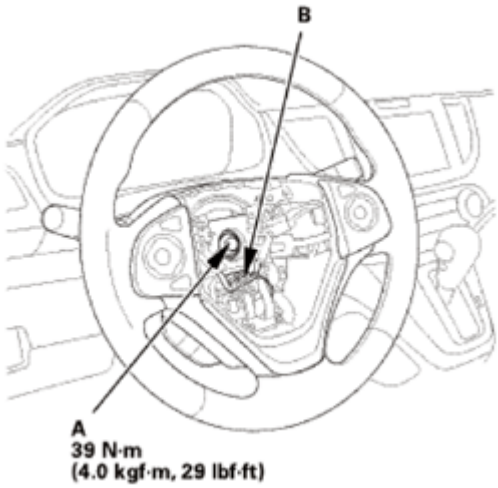

Fig. 419: Identifying Steering Wheel Connector And Bolt With Torque Specifications
Courtesy of AMERICAN HONDA MOTOR CO., INC.

20. Driver's Airbag

NOTE: **If you are replacing a deployed driver's airbag, inspect the cable reel for heat damage. If there is any damage, replace the cable reel.**

1. Place the driver's airbag (A) in the steering wheel.
2. Tighten the new TORX bolts using a TORX T30 bit.

NOTE: **Make sure the clearance (B) between the steering wheel and the horn pad is the specified value.**

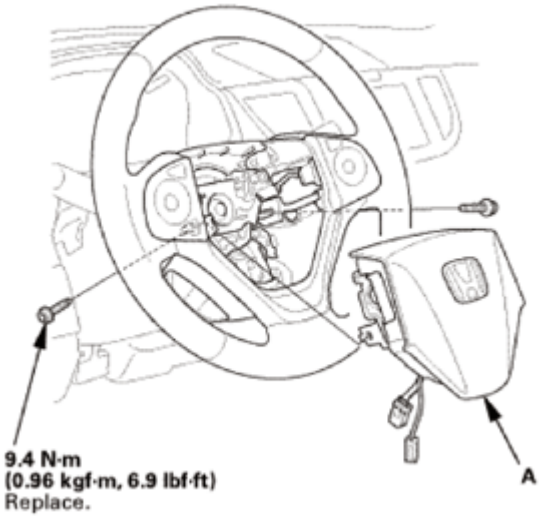

Fig. 420: Identifying Driver Airbag With Torque Specifications
Courtesy of AMERICAN HONDA MOTOR CO., INC.

GETtheMANUALS.org

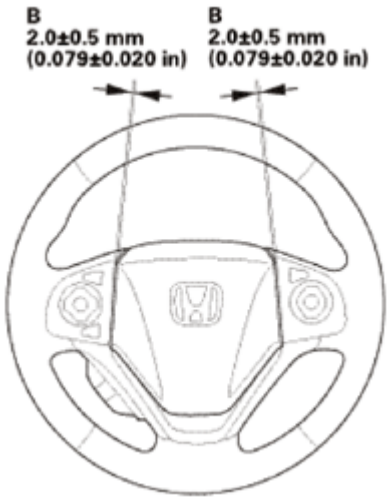

Fig. 421: Identifying Clearance Between Steering Wheel And Horn Pad
Courtesy of AMERICAN HONDA MOTOR CO., INC.

3. Connect the driver's airbag inflator connector (A) on the cable reel harness.
4. Connect the horn switch connector (B).

NOTE: **After reconnecting the negative cable to the battery, make sure the horn works properly.**

5. Install the access panel (C).

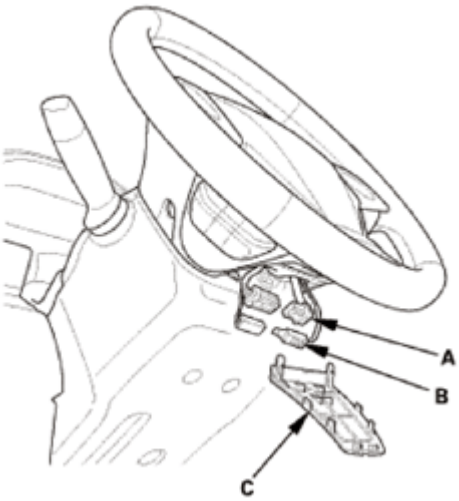

Fig. 422: Identifying Driver Airbag Inflator Connector, Horn Switch Connector And Access Panel
Courtesy of AMERICAN HONDA MOTOR CO., INC.

21. Kick Panel - Both Sides
    1. Install the driver's side kick panel (A) and the passenger's side kick panel (B). Make sure the clips

GETtheMANUALS.org

(C) snap into place securely.

2. Install the front door opening seal (D).

Driver's side

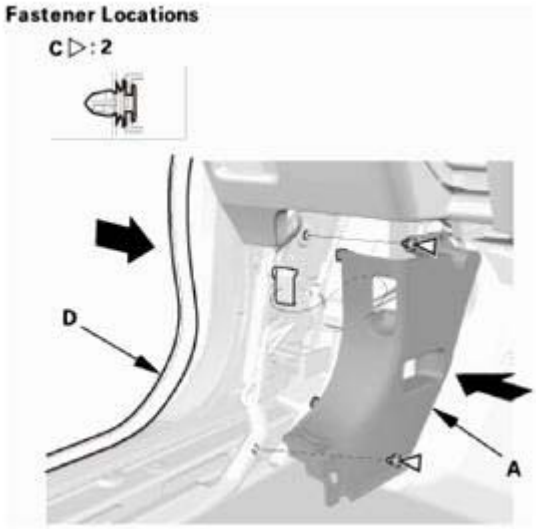

Fig. 423: Installing Driver Side Kick Panel
Courtesy of AMERICAN HONDA MOTOR CO., INC.

Passenger's side

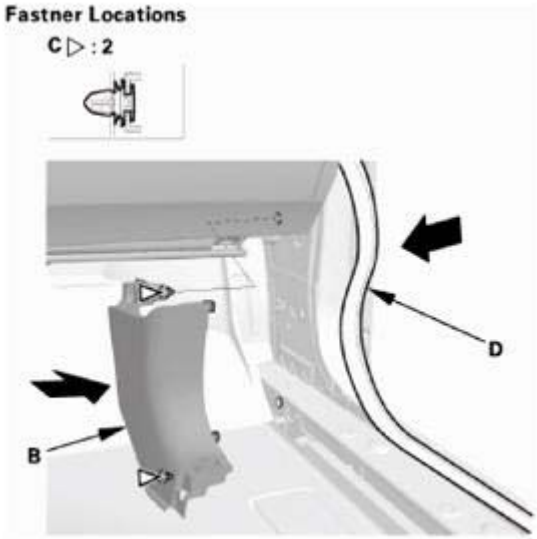

Fig. 424: Installing Passenger Side Kick Panel
Courtesy of AMERICAN HONDA MOTOR CO., INC.

22. Driver's Dashboard Lower Cover
    1. Connect the connector (A), then install the driver's dashboard lower cover (B). Make sure the clips

GETtheMANUALS.org

(C) snap into place securely.

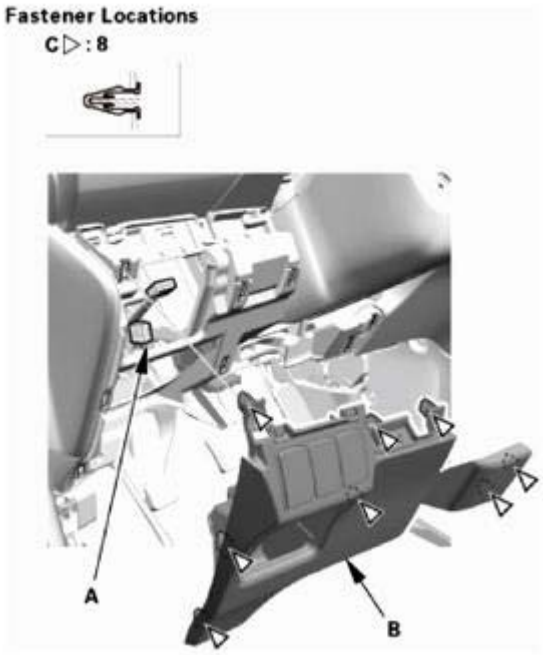

Fig. 425: Identifying Driver Dashboard Lower Cover, Connector And Clips
Courtesy of AMERICAN HONDA MOTOR CO., INC.

23. Driver's Dashboard Panel Assembly
    1. Connect the connector (A), then install the driver's dashboard panel assembly (B). Make sure the clips (C) snap into place securely.

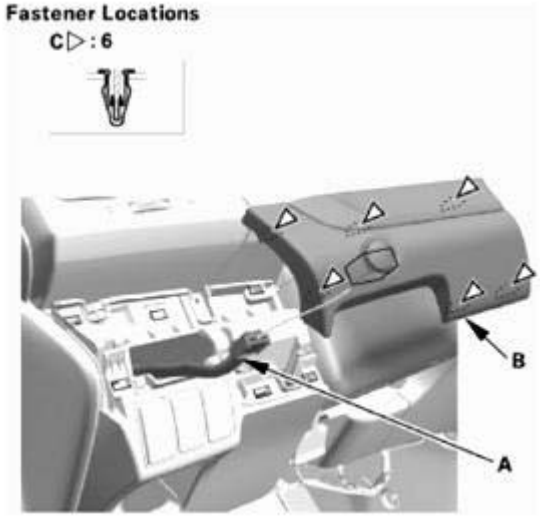

Fig. 426: Identifying Driver Dashboard Panel Assembly, Connector And Clips
Courtesy of AMERICAN HONDA MOTOR CO., INC.

24. Passenger's Dashboard Undercover

GETtheMANUALS.org

1. Install the passenger's dashboard undercover (A). Make sure the clips (B) snap into place securely, and the pins (C) into the holder (D) securely.

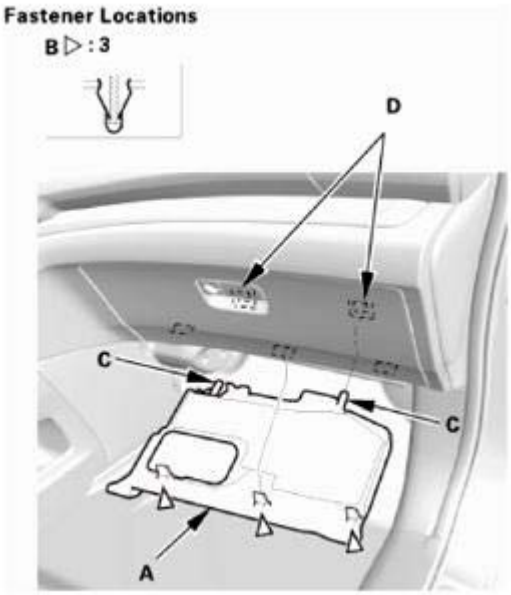

Fig. 427: Identifying Passenger Dashboard Undercover, Holder, Pins And Clips
Courtesy of AMERICAN HONDA MOTOR CO., INC.

25. Driver's Dashboard Undercover
    1. Install the driver's dashboard undercover (A). Make sure the clip (B) snap into place securely, and the pin (C) into the holder (D) securely.
    2. Turn the lock knob (E) 90 °.

GETtheMANUALS.org

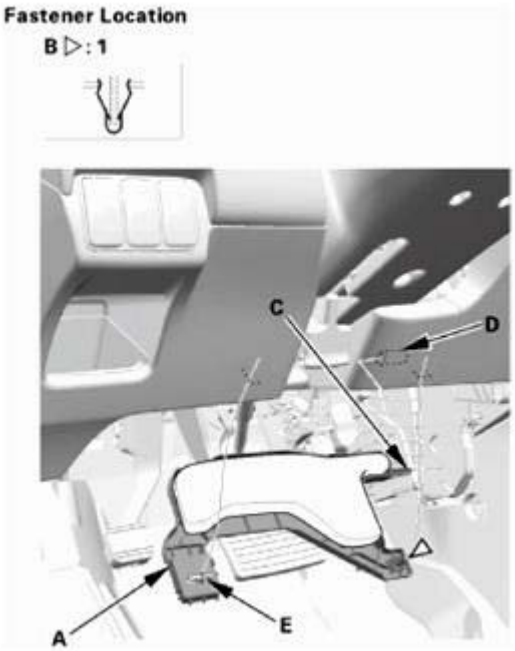

Fig. 428: Identifying Passenger Dashboard Undercover, Lock Knob, Holder, Pins And Clips
Courtesy of AMERICAN HONDA MOTOR CO., INC.

26. A-Pillar Trim - Check
    1. If the side curtain airbag has deployed, replace the A-pillar trim (A), along with the other parts listed for side curtain airbag deployment.
    2. If the side curtain airbag has not deployed, check the A-pillar trim and note the following items:
        - To prevent the side curtain airbags from deploying improperly and possibly causing injury, inspect the A-pillar trim and replace it with a new one if it has any of the following damage:
            - Any cracks, deformations, or stress-whitened areas in the A-pillar trim
            - Any cracks or stress-whitening in the clip seating surfaces (B)
        - After checking and adjusting the overlap between the headliner and the A-pillar trim, replace the upper clip (C) with a new one.
        - If the clips (D) are damaged or stress-whitened, replace them with new ones.

GETtheMANUALS.org

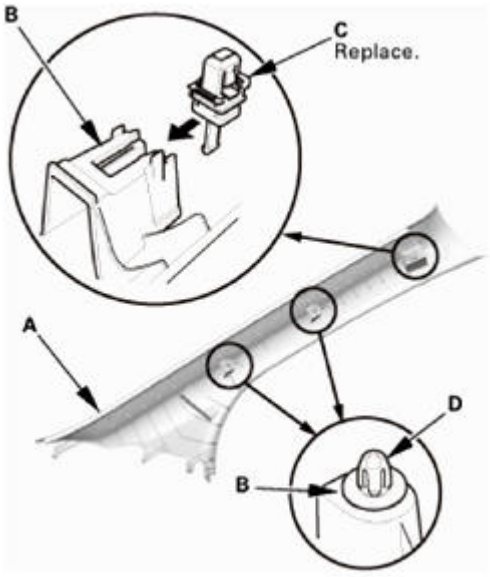

Fig. 429: Installing Upper Clip To A-Pillar Trim
Courtesy of AMERICAN HONDA MOTOR CO., INC.

27. Headliner/Pillar Trim Overlap - Check

Checking and Adjusting the Headliner/Pillar Trim Overlap

To prevent the side curtain airbag from deploying and damaging the pillar trim (A-pillar trim, B-pillar trim, quarter pillar trim), the overlap between the headliner and pillar trim must be 8.0+0/-2.0 mm (0.31+0/-0.08 in). To check the overlap, do this:

1. Install the headliner (A) and the pillar trim (B).

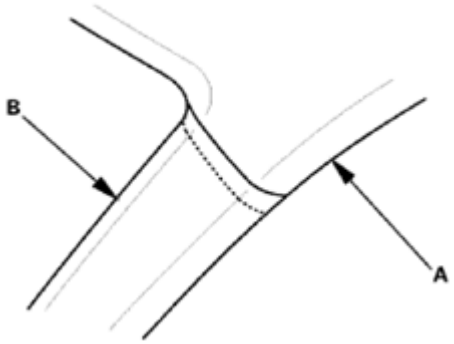

Fig. 430: Identifying Headliner And Pillar Trim
Courtesy of AMERICAN HONDA MOTOR CO., INC.

This illustration shows the A-pillar.

2. Apply masking tape (A) to the headliner (B) to mark the upper edge of the pillar trim (C).

GETtheMANUALS.org

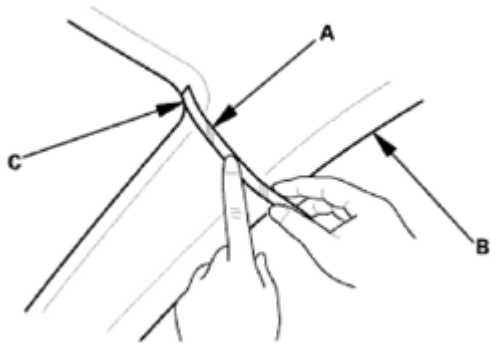

Fig. 431: Applying Masking Tape To Headliner
Courtesy of AMERICAN HONDA MOTOR CO., INC.

This illustration shows the A-pillar.

3. Remove the pillar trim, and measure the headliner overlap.
   - If the overlap is 8.0+0/-2.0 mm (0.31+0/-0.08 in), remove the tape, and install the pillar trim.
   - If the overlap is more than 8.0 mm (0.31 in), go to step 4.

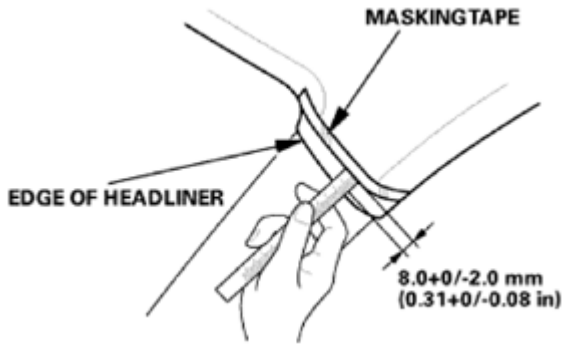

Fig. 432: Measuring Headliner Overlap
Courtesy of AMERICAN HONDA MOTOR CO., INC.

This illustration shows the A-pillar.

4. Carefully trim the headliner with a utility knife, reducing the overlap to 8.0+0/-2.0 mm (0.31+0/-0.08 in).
5. Remove the tape, and install the pillar trim.

GETtheMANUALS.org

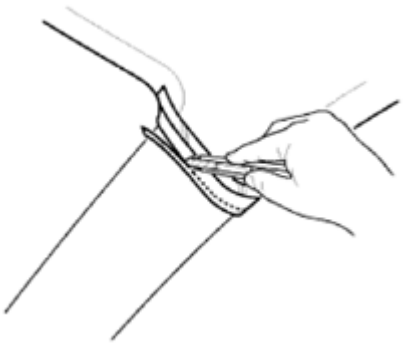

Fig. 433: Timing Headliner Using Utility Knife
Courtesy of AMERICAN HONDA MOTOR CO., INC.

This illustration shows the A-pillar.

28. A-Pillar Trim - Both Sides

NOTE: Repeat this procedure on the opposite side.

1. Carefully install a new upper clip (A) to the A-pillar trim (B).

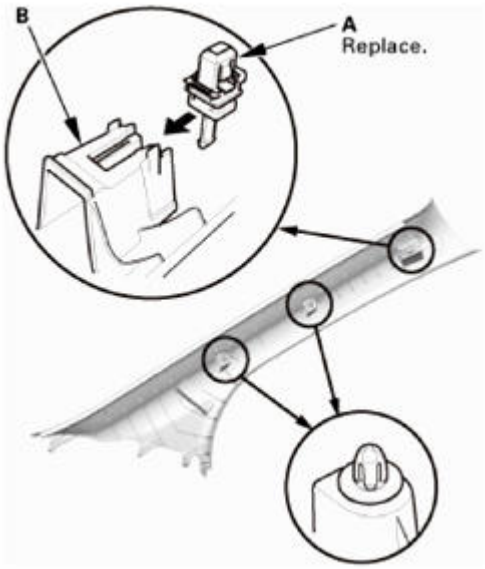

Fig. 434: Installing Upper Clip To A-Pillar Trim
Courtesy of AMERICAN HONDA MOTOR CO., INC.

2. Insert the bottom portion of the A-pillar trim (A) into the dashboard (B). Place the trim over the A-pillar (C), and fit its upper clip (D) and the other clips (E) into the holes (F) in the A-pillar, then lightly push the trim into place.

NOTE:

- **Make sure the side curtain airbag is not tucked under the clips**

GETtheMANUALS.org

or the trim ribs.

- **Do not push too hard on the A-pillar trim. If you push too hard, the clip will be damaged, and it will not hold the trim properly.**
- **Gently tug on the A-pillar trim to verify that all clips are securely fastened.**

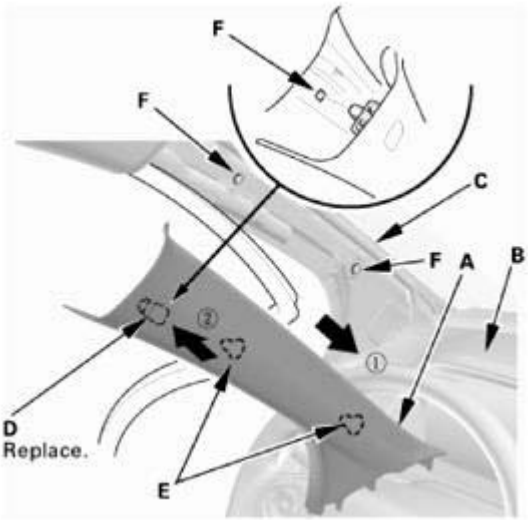

Fig. 435: Inserting Bottom Portion Of A-Pillar Trim Into Dashboard
Courtesy of AMERICAN HONDA MOTOR CO., INC.

29. Front Door Opening Seal As Needed - Both Sides

NOTE: Repeat this procedure on the opposite side.

1. Install the front door opening seal (A). Make sure the seal is installed securely into the hooks (B).

Fig. 436: Installing Front Door Opening Seal
Courtesy of AMERICAN HONDA MOTOR CO., INC.

GETtheMANUALS.org

30. Shift Cable - Adjustment
    1. Push the shift cable (A) until it stops, then release it. Pull the shift cable back one step so that the shift position is in R.

NOTE: Do not hold the shift cable guide (B) to adjust the shift cable.

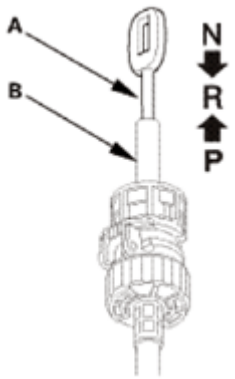

Fig. 437: Identifying Shift Lever Position
Courtesy of AMERICAN HONDA MOTOR CO., INC.

    2. Turn the ignition switch to ON (II).
    3. Check that the R position indicator comes on.
    4. Turn the ignition switch to LOCK (0).

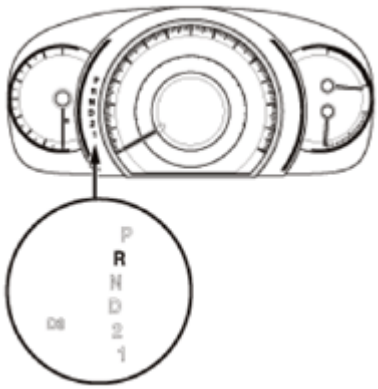

Fig. 438: Identifying R Position Indicator
Courtesy of AMERICAN HONDA MOTOR CO., INC.

    5. Unlock the retainer lock (A).

GETtheMANUALS.org

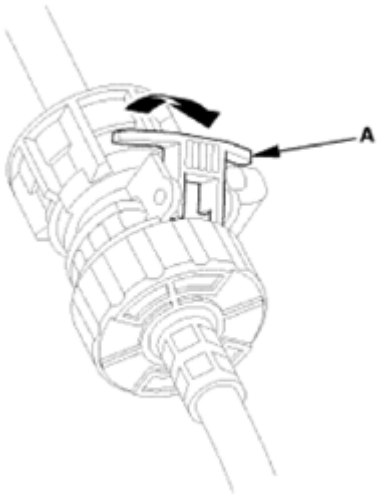

Fig. 439: Unlocking Retainer Lock
Courtesy of AMERICAN HONDA MOTOR CO., INC.

6. Rotate the socket holder retainer (A) in arrow direction (B) until it stops to create clearance (C) between the socket holder (D) and holder retainer, and push the retainer lock (E) into the socket holder retainer to lock the retainer.

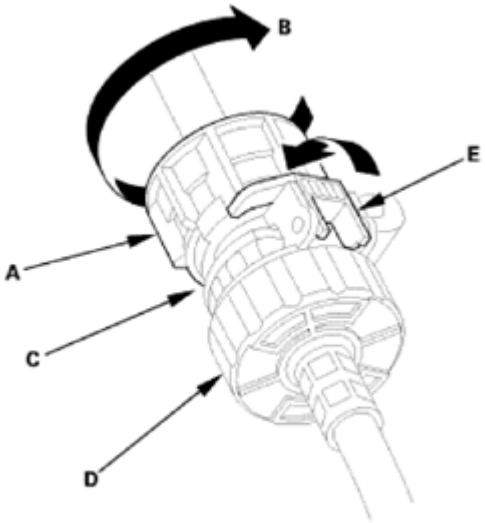

Fig. 440: Rotating Socket Holder Retainer
Courtesy of AMERICAN HONDA MOTOR CO., INC.

7. Align the shift cable slot (A) between the socket holder (B) and the socket holder retainer (C) with the opening (D) in the shift cable bracket (E), then slide the holder into the bracket while installing the shift cable end (F) over the mounting stud (G) by aligning its square hole (H) with the square fitting (I) at the bottom of the stud.

NOTE:

- **Do not install the shift cable by holding the shift cable guide (J).**

GETtheMANUALS.org

- **When the socket holder is installed in the shift cable bracket, the retainer lock is unhinged and releases the holder retainer lock, then the holder retainer returns under spring force to secure the shift cable.**

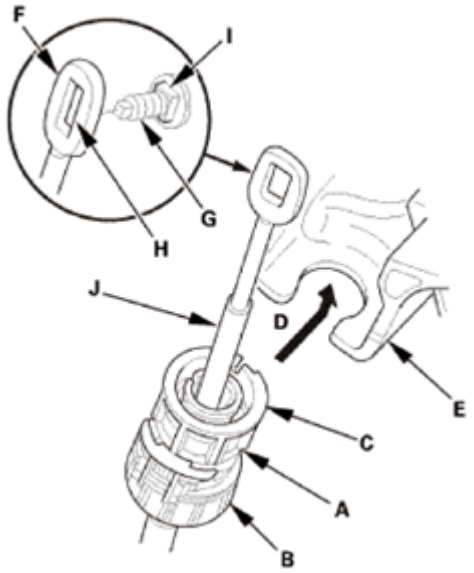

Fig. 441: Installing Socket Holder In Shift Cable Bracket
Courtesy of AMERICAN HONDA MOTOR CO., INC.

8. Push the retainer lock (A) fully to lock the socket holder retainer (B), and make sure that the retainer lock fits into the hinged-joint (C). If the retainer lock does not fit with the edge of the hinged-joint, rotate the holder retainer counterclockwise while pushing the retainer lock until it locks.

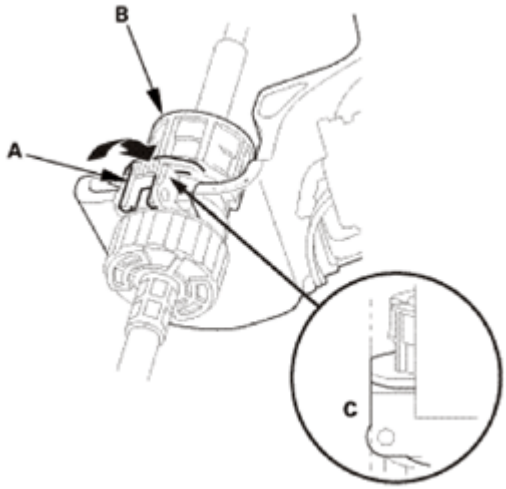

Fig. 442: Locking Socket Holder Retainer
Courtesy of AMERICAN HONDA MOTOR CO., INC.

GETtheMANUALS.org

9. Make sure that the shift cable end (A) is properly installed on the mounting stud (B).
    - If the shift cable end is out of position with the mounting stud, remove the shift cable from the shift cable bracket, then reinstall the cable end over the mounting stud before reinstalling the shift cable to the shift cable bracket. Do not install the shift cable end on the mounting stud with the shift cable install on the shift cable bracket.
    - If the shift cable end does not ride at the bottom of the mounting stud, rotate the stud to align the square fitting with the hole.

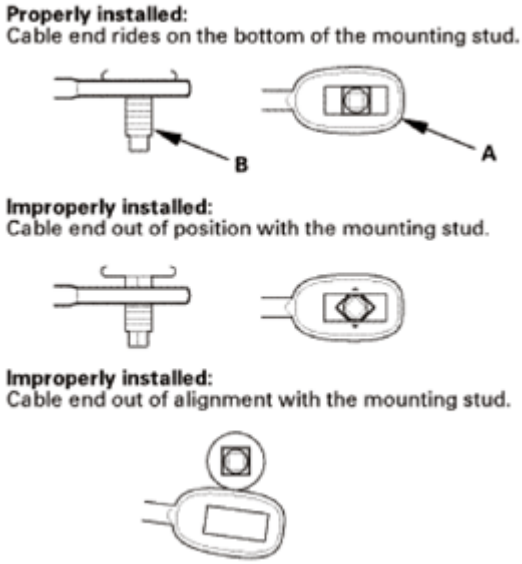

Fig. 443: Identifying Shift Cable End And Mounting Stud Installation Position (Proper/Improper)
Courtesy of AMERICAN HONDA MOTOR CO., INC.

10. Install the shift cable end nut (A).
11. Remove the 6.0 mm (0.236 in) pin (B) that was installed to hold the shift lever.
12. Turn the ignition switch to ON (II).
13. Move the shift lever to each position, and check that the A/T gear position indicator follows the transmission range switch.
14. Shift the shift lever to P.
15. Check that the shift lock works properly.
16. Push the shift lock release, and check that the shift lever releases. Also check that the shift lever locks when it is shifted back to P.

GETtheMANUALS.org

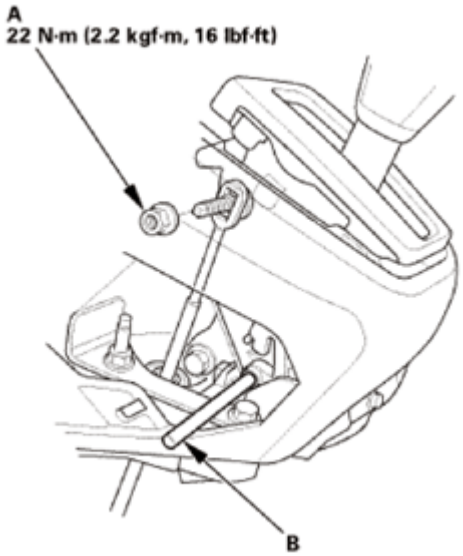

Fig. 444: Identifying Shift Cable End Nut And Pin With Torque Specifications
Courtesy of AMERICAN HONDA MOTOR CO., INC.

31. Shift Lever Panel (AT)
    1. Install the shift lever panel (A). Make sure the clips (B, C) and the hooks (D) snap into place securely.

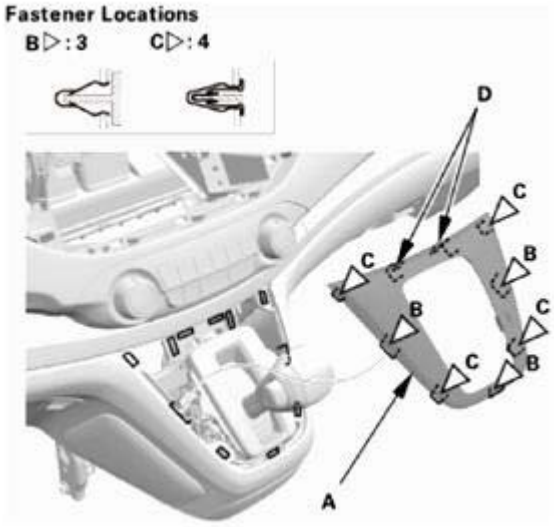

Fig. 445: Identifying Shift Lever Panel, Hooks And Clips
Courtesy of AMERICAN HONDA MOTOR CO., INC.

32. Center Maintenance Cover
    1. Install the maintenance cover (A).

GETtheMANUALS.org

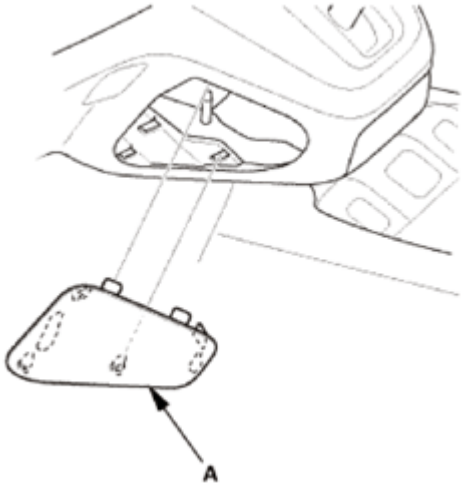

Fig. 446: Identifying Maintenance Cover
Courtesy of AMERICAN HONDA MOTOR CO., INC.

33. Center Console
    1. Install the center console (A).

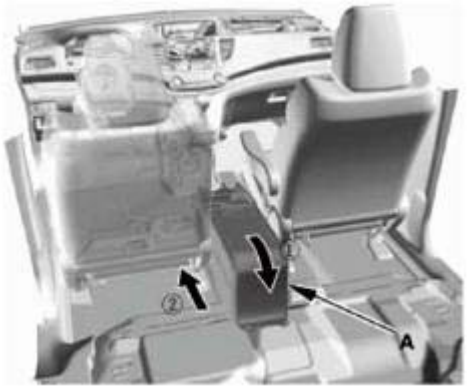

Fig. 447: Installing Center Console
Courtesy of AMERICAN HONDA MOTOR CO., INC.

    2. Connect the connectors (A), and install the clips (B).

GETtheMANUALS.org

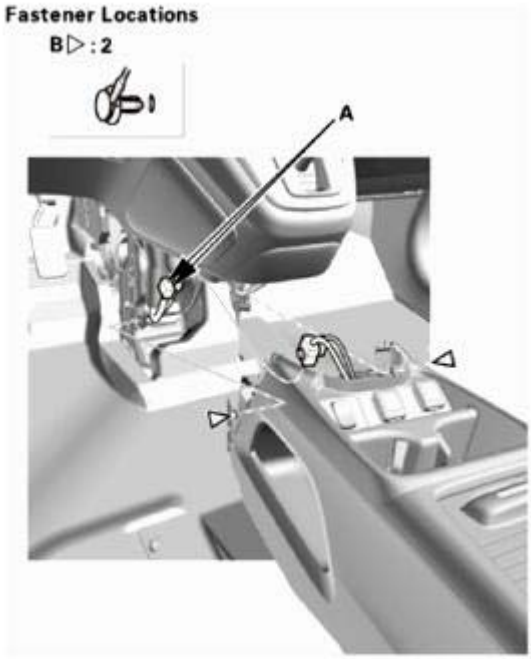

Fig. 448: Identifying Center Console Connectors And Clips
Courtesy of AMERICAN HONDA MOTOR CO., INC.

3. Install the bolts (A), then install the console box mat (B).

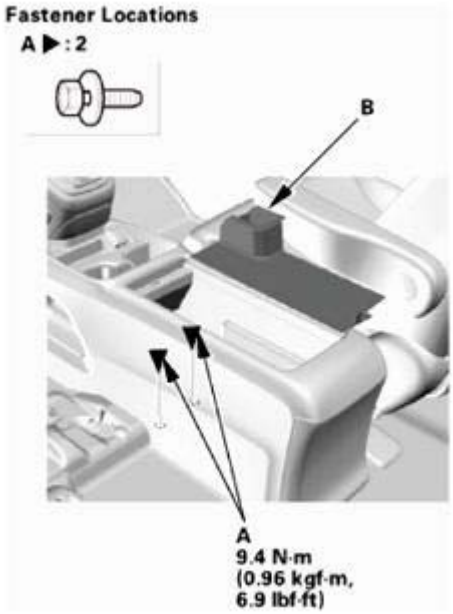

Fig. 449: Identifying Console Box Mat And Bolts With Torque Specifications
Courtesy of AMERICAN HONDA MOTOR CO., INC.

4. Install the bolts (A).

GETtheMANUALS.org

Fig. 450: Identifying Center Console Mounting Bolts With Torque Specifications
Courtesy of AMERICAN HONDA MOTOR CO., INC.

5. Install the bolt (A), then install the center lower cover (B). Make sure the clips (C) snap into place securely.

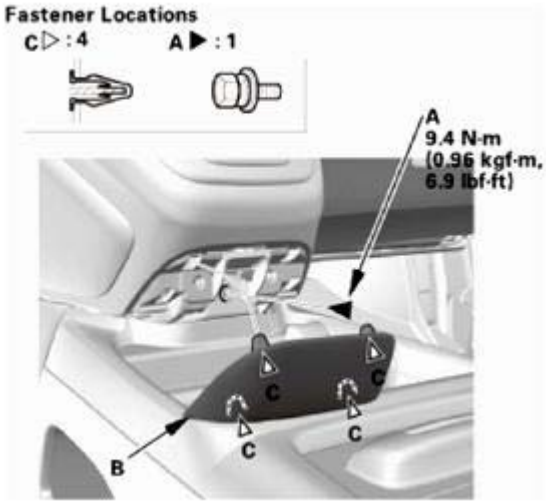

Fig. 451: Identifying Center Lower Cover, Bolt And Clips With Torque Specifications
Courtesy of AMERICAN HONDA MOTOR CO., INC.

34. Center Console Rear Trim
    1. Install the center console rear trim (A). Make sure the clips (B) and the hooks (C) snap into place securely.

GETtheMANUALS.org

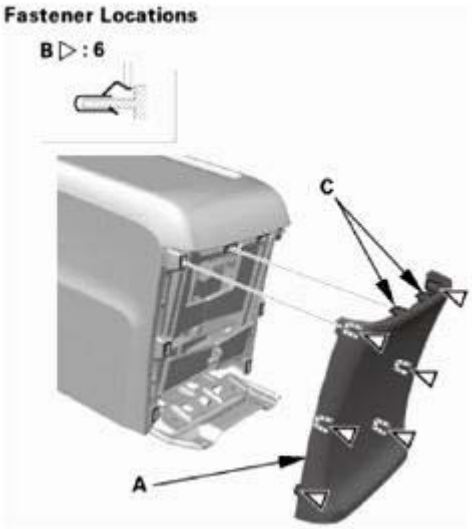

Fig. 452: Identifying Center Console Rear Trim, Clips And Hooks With Torque Specifications
Courtesy of AMERICAN HONDA MOTOR CO., INC.

35. Front Console Cover - Both Sides
    1. Install the front console covers (A). Make sure the clips (B, C) snap into place securely.

       Left side

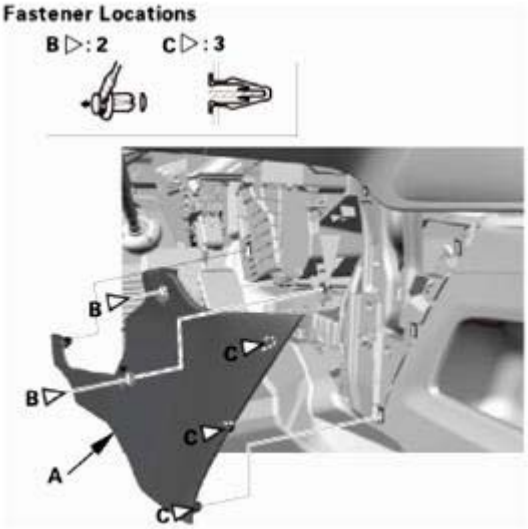

Fig. 453: Identifying Front Console Cover And Clips (Left Side)
Courtesy of AMERICAN HONDA MOTOR CO., INC.

Right side

GETtheMANUALS.org

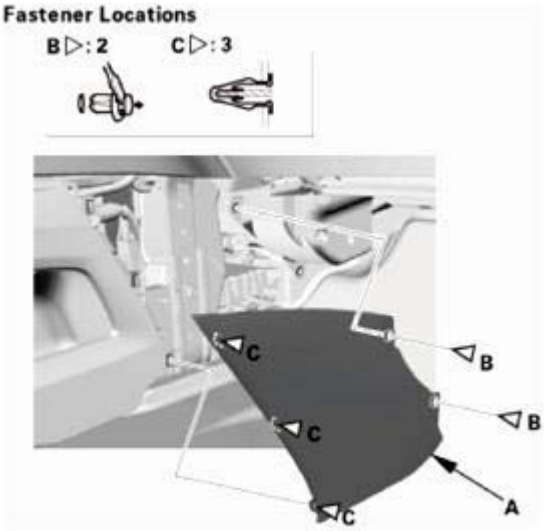

Fig. 454: Identifying Front Console Cover And Clips (Right Side)
Courtesy of AMERICAN HONDA MOTOR CO., INC.

36. Heater Hose - Body Side
    1. Install the nut.

NOTE: **Take care not to damage or bend the fuel lines or brake lines, etc.**

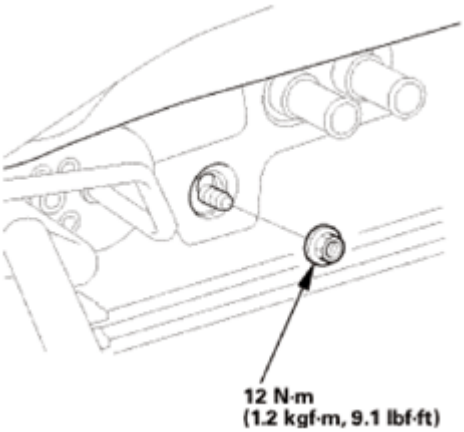

Fig. 455: Identifying Heater Hose Nut With Torque Specifications
Courtesy of AMERICAN HONDA MOTOR CO., INC.

    2. Connect the inlet heater hose (A).
    3. Connect the outlet heater hose (B).

GETtheMANUALS.org

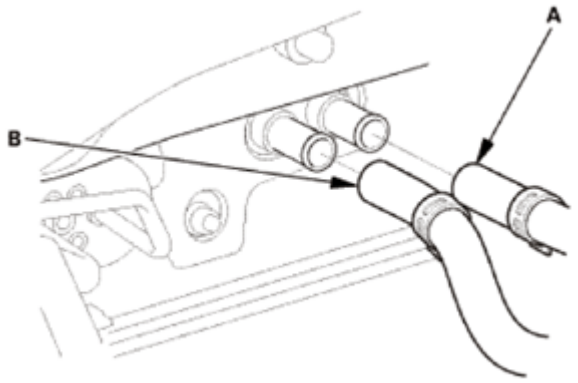

Fig. 456: Identifying Inlet And Outlet Heater Hose
Courtesy of AMERICAN HONDA MOTOR CO., INC.

37. A/C Line - Evaporator Side
    1. Install the stud bolt (A).

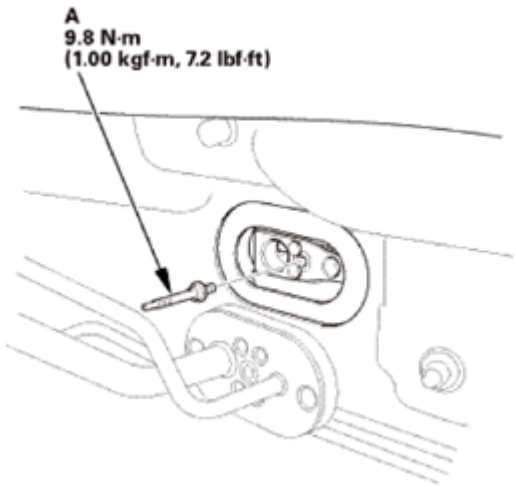

Fig. 457: Identifying A/C Line Stud Bolts With Torque Specifications
Courtesy of AMERICAN HONDA MOTOR CO., INC.

    2. Connect the A/C line (A) with new O-rings (B) that are lubricated with clean refrigerant oil.

GETtheMANUALS.org

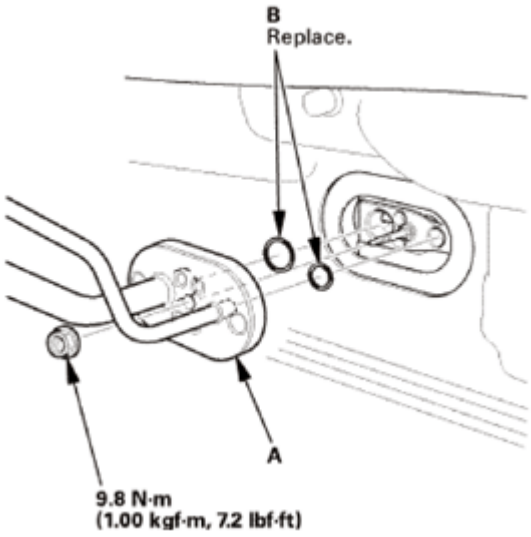

Fig. 458: Identifying A/C Line And O-Rings With Torque Specifications
Courtesy of AMERICAN HONDA MOTOR CO., INC.

3. Install the bolt.

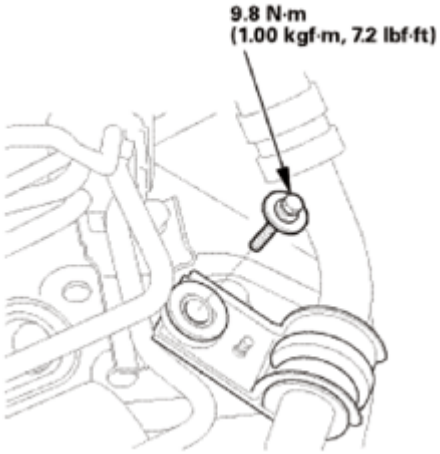

Fig. 459: Identifying A/C Line Bolts With Torque Specifications
Courtesy of AMERICAN HONDA MOTOR CO., INC.

38. Battery Terminal (SRS) - Reconnection

NOTE: If the battery performance is abnormal, test the battery.

1. Clean the battery terminals.
2. Connect the positive cable (A) to the battery.

NOTE: Always connect the positive side first.

GETtheMANUALS.org

3. Connect the negative cable (B) to the battery.
4. Apply multipurpose grease to the terminals to prevent corrosion.

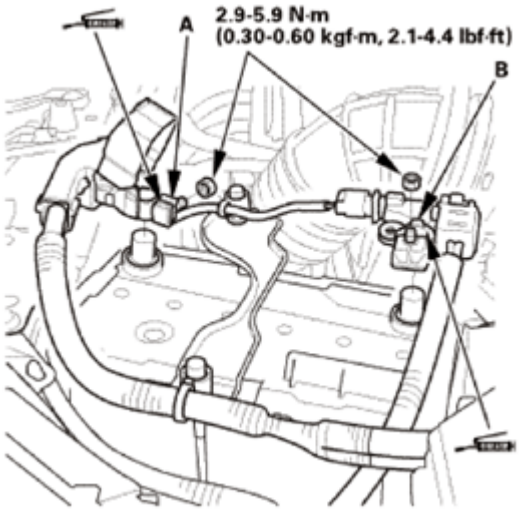

Fig. 460: Identifying Battery Positive And Negative Cable With Torque Specifications
Courtesy of AMERICAN HONDA MOTOR CO., INC.

39. Radiator Coolant - Replacement
    1. Follow the chart and pour coolant into the radiator up to the base of the filler neck.

NOTE:

- **Always use Honda Long Life Antifreeze/Coolant Type 2 or Honda Extreme Cold Weather Antifreeze/Coolant Type 2. Using a non-Honda coolant can result in corrosion, causing the cooling system to malfunction or fail.**
- **Honda Long Life Antifreeze/Coolant Type 2 is a mixture of 50 % antifreeze and 50 % water. Honda Extreme Cold Weather Antifreeze/Coolant Type 2 is a 100% concentration coolant. Do not add water to either coolant.**
- **If the vehicle is regularly used in very low temperatures (under -22 °F (-30 °C)) a 60% concentration of coolant should be used.**

Operation	Vehicle Usage (Desired Mixture)	Current Mixture	Coolant Drain	Add Amount of Honda Extreme Cold Weather Antifreeze/Coolant Type 2 (100% concentrate)	Then add Honda Long Life Antifreeze/Coolant Type 2 (50/50)
Coolant Change	Normal Area (50/50)	50/50 60/40 unknown	Drain radiator and reservoir	None	
	Very Cold Area (60/40)	50/50 unknown		About 1.5 L (51 fl oz)	
		60/40		About 1.3L (44 fl oz)	

GETtheMANUALS.org

Engine Overhaul	Normal Area (50/50)	-	-	None	Top off the cooling system
	Very Cold Area (60/40)	-	-	About 1.5 L (51 fl oz)	
Coolant Winterizing	Very Cold Area (60/40)	50/50	Drain about 2.0 L (68 fl oz) from radiator	About 1.5 L (51 fl oz)	
		unknown (1)	Drain radiator and reservoir		
(1) When you want to winterize the coolant with the minimum amount of coolant change but the current coolant concentration in the vehicle is unknown, you must drain all coolant from the cooling system.					

Engine Coolant Capacities (Including the coolant reservoir capacity of 0.62 L (0.164 US gal))	
At Coolant Change:	6.23 L (1.646 US gal)
After Engine Overhaul:	7.44 L (1.966 US gal)

Fig. 461: Adding Engine Coolant To Radiator
Courtesy of AMERICAN HONDA MOTOR CO., INC.

2. Loosely install the radiator cap.
3. Start the engine and let it run until the radiator fan comes on at least twice. Do not operate the air conditioning system.
4. Turn off the engine. Check the level in the radiator and add Honda Long Life Antifreeze/Coolant Type 2 if needed.
5. Put the radiator cap securely, then start the engine again, and check for leaks.
6. Clean up any spilled engine coolant.
7. Fill the coolant reservoir to the MAX mark (A) with Honda Long Life Antifreeze/Coolant Type 2.

GETtheMANUALS.org

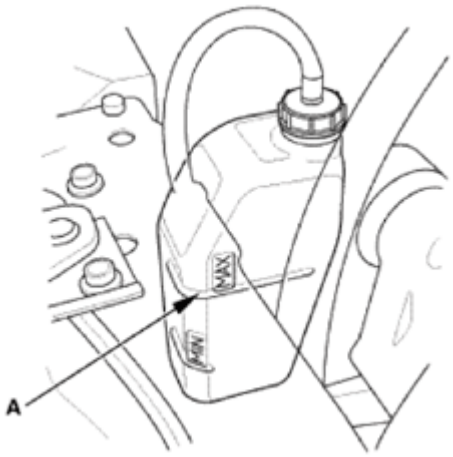

Fig. 462: Identifying Coolant Reservoir MAX Mark
Courtesy of AMERICAN HONDA MOTOR CO., INC.

40. R-134a Refrigerant Recovery/Recycling/Charging Station - Connection
    1. Connect an R-134a refrigerant recovery/recycling/charging station (A) to the high-pressure service port (B) and the low-pressure service port (C), as shown, following the equipment manufacturer's instructions.

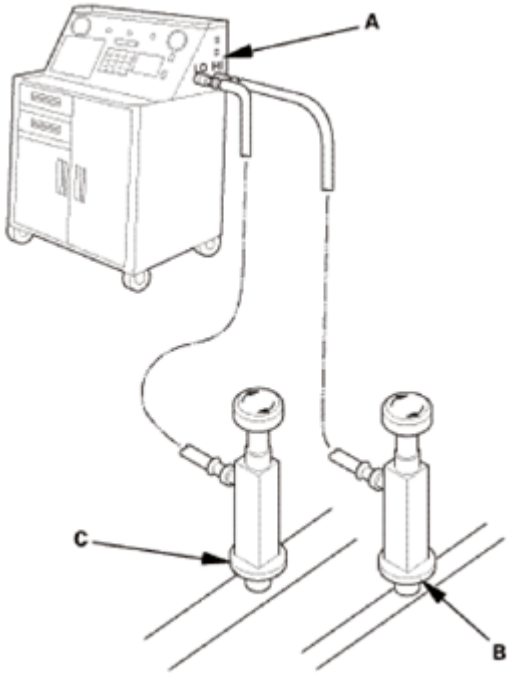

Fig. 463: Identifying Refrigerant Recovery/Recycling/Charging Station, High And Low Pressure Service Port
Courtesy of AMERICAN HONDA MOTOR CO., INC.

41. A/C System Evacuation
    1. Evacuate the system. The vacuum pump should run for a minimum of 30 minutes to eliminate all

GETtheMANUALS.org

moisture from the system. When the suction gauge reads -93.3 kPa (-700 mmHg, - 27.55 inHg) for at least 30 minutes, close all valves, and turn off the vacuum pump.

2. If the suction gauge dose not reach approximately -93.3 kPa (-700 mmHg, -27.55 inHg) in 15 minutes, there is probably a large leak in the system. Partially charge the system, and check for leaks.

42. A/C Refrigerant - Charging
    1. Charge the system with the specified amount of R-134a refrigerant. Do not overcharge the system; the A/C compressor will be damaged.

       Select the appropriate units of measure for your refrigerant charging station.

       Refrigerant Capacity:

       385 to 435 g

       13.6 to 15.4 oz

       0.385 to 0.435 kg

       0.849 to 0.959 lbs

43. A/C Refrigerant - Leak Check

Leak Detector Usage Tips (Refer to the Operator's Manual for complete operating instructions)

- Position the vehicle in a wind-free work area. This will aid in detecting small leaks.
- When using the leak detector for the first time, allow it to warm up for 2 minutes with the probe in a clean atmosphere. This lets the temperature sensor in the detector stabilize.
- The calibration check should be done in the "Search 2" mode. Once that is done, the other check modes do not need calibrating.
- When leak checking through the HVAC module drain hose, avoid drawing water into the probe. Water can damage the internal pump and sensor.
- Avoid creasing the flexible probe extension. Creases can restrict air flow and give false readings.
- Because the detector recalibrates itself for ambient gases, it may be necessary to move the detector away from the leak to clear the sensor. Once the sensor has cleared, recheck the suspected leak.
- When removing the clear probe tip, be careful not to lose the flow ball.
- R-134a is heavier than air; always check below and to the sides of all potential leak sources.
- Halogen leak detectors are sensitive to chemicals: windshield washing solutions, solvents/cleaners, and some vehicle adhesives. Keep these chemicals out of the area when doing leak detection.

Fluorescent Dye Usage Tips

- Use only Tracer-Stick single dose fluorescent dye capsules from Tracerline®. Other dyes contain solvents that may contaminate the refrigerant oil, leading to component failure.

GETtheMANUALS.org

- Adding excessive amounts of dye can damage the A/C compressor.
- PAG oil is water soluble, so condensation on the evaporator core or the refrigerant lines may wash the PAG oil and fluorescent dye away from the actual leak. Condensation may also carry dye through the HVAC module drain.
- After checking and repairing leaks, thoroughly clean any residual dye from the areas where leaks were found. Use GLO-AWAY dye cleaner, from Tracerline®, and hot water to remove the dye (follow the instructions on the bottle). Residual dye stains can cause misdiagnosis of any future A/C system leaks.
- If any refrigerant dye contacts an exterior paint surface, remove it by doing this:
  - Carefully wash the affected surfaces to remove any dirt, and to prevent paint scratching.
  - Mix water and isopropyl alcohol in a 50/50 mixture. Soak a soft 100 % cotton towel with the water/alcohol mixture, and place the cloth on the affected areas to remove the dye.
  - After removing the dye with the water/alcohol-soaked cloth, carefully wash the affected areas, and check that there is no remaining dye.

1. With the engine OFF, use a halogen leak detector first to detect the leak source. Follow a continuous path in order to ensure that you will not miss any possible leaks. Test the following areas of the system for leaks:

Possible Leak Area	Diagnostic Procedure with the Leak Detector	Notes
Service ports	• Check the service ports with caps installed • If the detector "sniffs" a leak, use fluorescent dye to confirm it	When capping the service ports, ensure that the seals on the port caps are in place, and that the caps are tight. The caps are used as the final seals in the system
A/C condenser	If the detector "sniffs" a leak, use fluorescent dye to confirm it	• Check for joints or connections coated with oily dust • Check for damaged and corroded areas • Check all fittings, couplings, brazed/welded areas and areas around attachment points • Move the probe slowly (1 in/second or less), and keep it within 1/4 in of the component being checked. This maximizes the chance of detecting a leak • If you detect a leak, blow compressed air over the area, then recheck for leaks. For large leaks, clearing the area with compressed air may help you pinpoint the leak source
Evaporator	• Check at the evaporator drain hose • Check at the passenger's side vent and turn the blower on	

GETtheMANUALS.org

	at low speed	
A/C lines	• Wiggle the rubber hoses when checking crimped metal ends • If the detector "sniffs" a leak, use fluorescent dye to confirm it	• Check all fittings, couplings, pressure switches, brazed/welded areas, and areas around attachment points on A/C lines and components • Check for damaged and corroded areas • Move the probe slowly (1 in/second or less), and keep it within 1/4 in of the component being checked. This maximizes the chance of detecting a leak

2. Close the quick coupler valves, then disconnect the quick couplers from the vehicle service ports.
3. Attach the universal connect set, from the Optimax Jr. Leak Detection Kit, to the service valve fitting. Close the control valve (the black knob on the connect set).
4. Attach the charging station low pressure hose quick coupler to the service valve fitting, and open the quick coupler valve. Evacuate the connect set using the charging station vacuum pump, then close the quick coupler valve.
5. Detach the universal connect set, and install a Tracer-Stick® dye capsule between the connect set and the service valve fitting (see the manufacturer's instructions for more detail).
6. Attach the quick coupler on the universal connect set to the low pressure service port on the vehicle. Open the charging station low pressure hose quick coupler valve, but do not open the control valve.
7. Start the engine, and set the A/C system to maximum cooling. Open the control valve to let refrigerant and the dye enter the A/C system through the low pressure service port. Close the control valve when the Tracer-Stick® dye capsule is empty.
8. Run the engine and A/C system for 15 minutes to thoroughly circulate the dye. Then shut the engine off, and inspect the following areas of the system for leaks:

NOTE:

- **Check for leaks in a dark work area, and use the UV light and the special glasses from the leak check kit. Other UV lights may not work well with the Tracer-Stick® dye.**
- **Small leaks may take up to 1 week of vehicle operation (with normal A/C use) to become visible.**

Possible Leak Area	Diagnostic Procedure with Fluorescent Dye
Service ports	If a leak is found, replace the cap/o-ring seal or A/C line as needed
A/C lines	• Use a permanent marker pen to circle the leak area • If a leak is found, remove and replace the A/C line
A/C condenser	• If a leak is found, remove the A/C condenser • Determine whether leak is in the A/C condenser or the receiver/dryer • Use a permanent marker pen to circle the leak area

GETtheMANUALS.org

	• Replace either the receiver/dryer, or the A/C condenser, depending upon which is leaking
A/C compressor	• Check for leaks at all of the A/C compressor joints, the clutch center, the A/C compressor front housing bolts, and the scroll bolts on the back of the A/C compressor • If a leak is found, use a permanent marker pen to circle the leak area • If the A/C compressor relief valve appears to be leaking, determine whether the leak is coming from the relief valve, or the joint between the A/C compressor casing and the valve. If the leak is from the relief valve, check the A/C system pressures, and refer to the pressure test table in the A/C system test. If the leak is from the casing/valve joint, replace the A/C compressor relief valve • If the leak is coming from the suction hose and/or discharge hose fittings on the A/C compressor, clean the A/C fittings and replace the suction/discharge fitting O-rings • For all other A/C compressor leaks, remove and replace the A/C compressor
Evaporator	• Start checking for evaporator leaks by illuminating the evaporator drain tube area • If a leak is found, remove the evaporator core • Determine whether leak is from evaporator or expansion valve • Use a permanent marker pen to circle leak area • Replace the expansion valve, or the evaporator core, depending upon which is leaking

44. Steering After Install - Check
    1. After installation, check these items:
        - Start the engine, allow it to idle, and turn the steering wheel from lock to lock several times.
        - Check that the EPS indicator does not come on.
        - Check the steering wheel spoke angle. If steering spoke angles to the right and left are not equal (steering wheel and rack are not centered), correct the engagement of the joint/pinion shaft splines.
45. HDS DLC - Connection
    1. Connect the HDS to the data link connector (DLC) (A) located under the driver's side of the dashboard.
    2. Turn the ignition switch to ON (II).
    3. Make sure the HDS communicates with the vehicle. If it does not communicate, go to the DLC circuit troubleshooting.

GETtheMANUALS.org

Fig. 464: Identifying Data Link Connector
Courtesy of AMERICAN HONDA MOTOR CO., INC.

46. DTC - Clear
    1. Clear the DTC(s) by following the screen prompts on the HDS.
    2. Turn the ignition switch to LOCK (0), then wait for 10 seconds.
47. Confirm Proper SRS Operation
    1. Turn the ignition switch to ON (II), and check that the SRS indicator comes on for about 6 seconds and then goes off.
48. A/C System - Test
    1. Insert a thermometer (A) in the center vent.
    2. Place a hygro-thermometer (B) near the blower unit's recirculation inlet duct.
    3. Test conditions:
        - Move the vehicle out of direct sunlight and let it cool down to the surrounding (ambient) temperature. If necessary, wash the vehicle to cool it down more quickly.
        - The blower intake temperature must be at least 68°F (20°C).
        - Open the hood.
        - Open the front doors.
        - Start the engine.
        - Set the temperature control dial or temperature control button to MAX COOL, the mode control button to VENT, and the recirculation control button to RECIRCULATE.
        - Turn the A/C button on and the fan control dial or fan control button to Max.
        - Run the engine at 1, 500 rpm.
        - No driver or passengers in vehicle.

GETtheMANUALS.org

Fig. 465: Checking Delivery Temperature From Thermometer In Center Vent
Courtesy of AMERICAN HONDA MOTOR CO., INC.

4. Inspect the A/C components for the following conditions:
   - A/C compressor clutch not engaged.
   - Abnormal frost areas.
   - Unusual noises.

   If you observe any of these conditions, refer to the Symptom Troubleshooting Index.

5. After running the air conditioning for 10 minutes under the above test conditions, read the delivery temperature from the thermometer in the center vent, the intake temperature near the blower unit, and the discharge (high) and suction (low) pressures on the A/C gauges.
6. To complete the vent (delivery)/intake temperature chart:
   - Mark the vent (delivery) temperature on the vertical line.
   - Mark the intake temperature on the bottom line.
   - Draw a vertical line from the intake temperature mark.
   - Draw a horizontal line from the vent (delivery) temperature mark until it intersects the vertical line.

   NOTE: **The vent temperature and intake temperature should intersect in the shaded area. Any measurements outside the line may indicate the need for further inspection.**

GETtheMANUALS.org

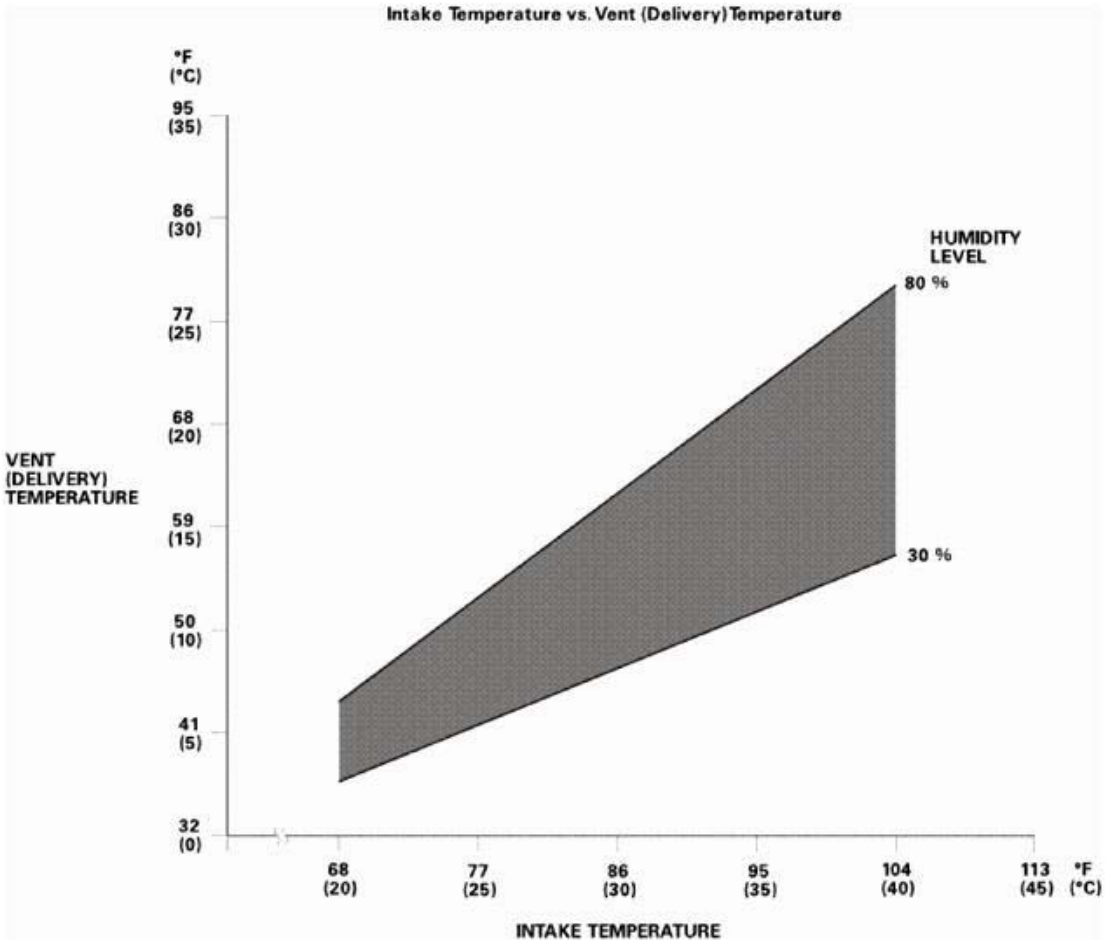

Fig. 466: Intake Temperature Versus Vent (Delivery) Temperature Graph
Courtesy of AMERICAN HONDA MOTOR CO., INC.

7. To complete the high side (discharge) pressure/intake temperature chart:
   - Mark the high side (discharge) pressure on the vertical line.
   - Mark the intake temperature on the bottom line.
   - Draw a vertical line from the intake temperature mark.
   - Draw a horizontal line from the high side (discharge) pressure mark until it intersects the vertical line.

NOTE: **The high side pressure and intake temperature should intersect in the shaded area. Any measurements outside the line may indicate the need for further inspection.**

GETtheMANUALS.org

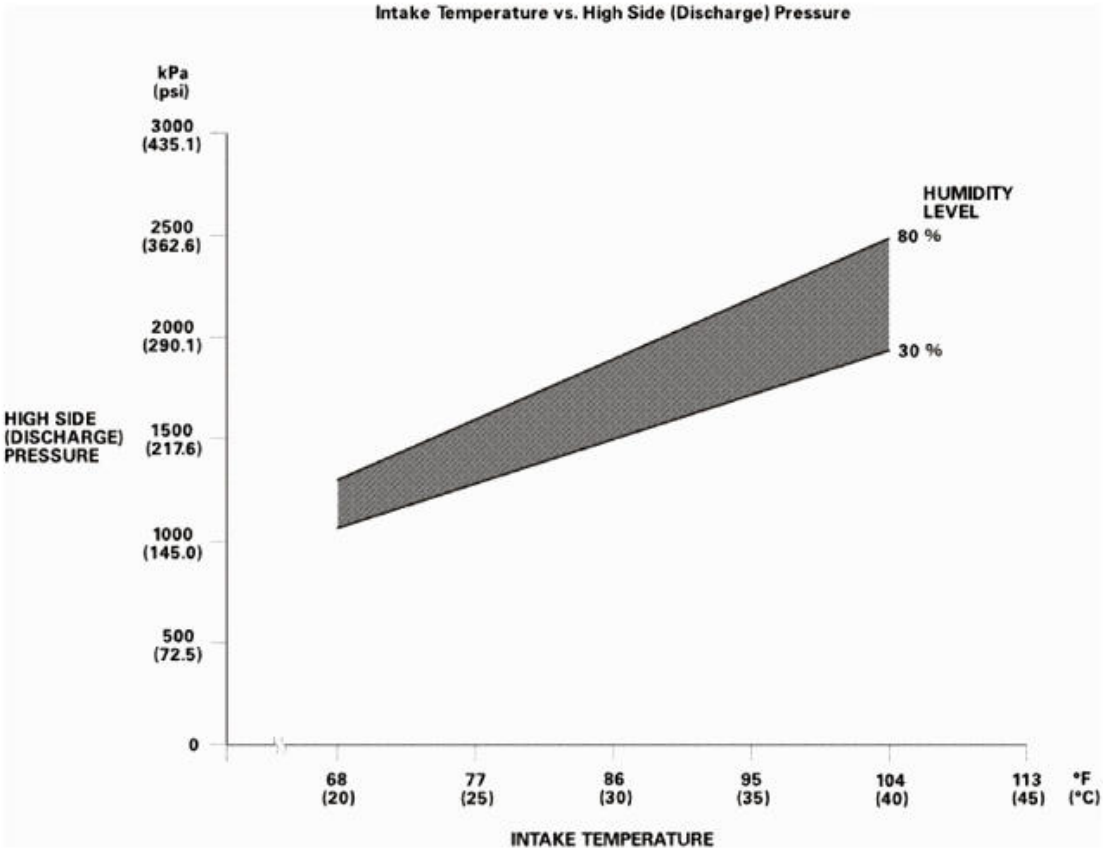

Fig. 467: Intake Temperature Versus High Side (Discharge) Pressure Graph
Courtesy of AMERICAN HONDA MOTOR CO., INC.

8. To complete the low side (suction) pressure/intake temperature chart:
   - Mark the low side (suction) pressure along the vertical line.
   - Mark the intake temperature along the bottom line.
   - Draw a vertical line from the intake temperature mark.
   - Draw a horizontal line from the low side (suction) pressure mark until it intersects the vertical line.

NOTE: **The low side pressure and intake temperature should intersect in the shaded area. Any measurements outside the line may indicate the need for further inspection.**

GETtheMANUALS.org

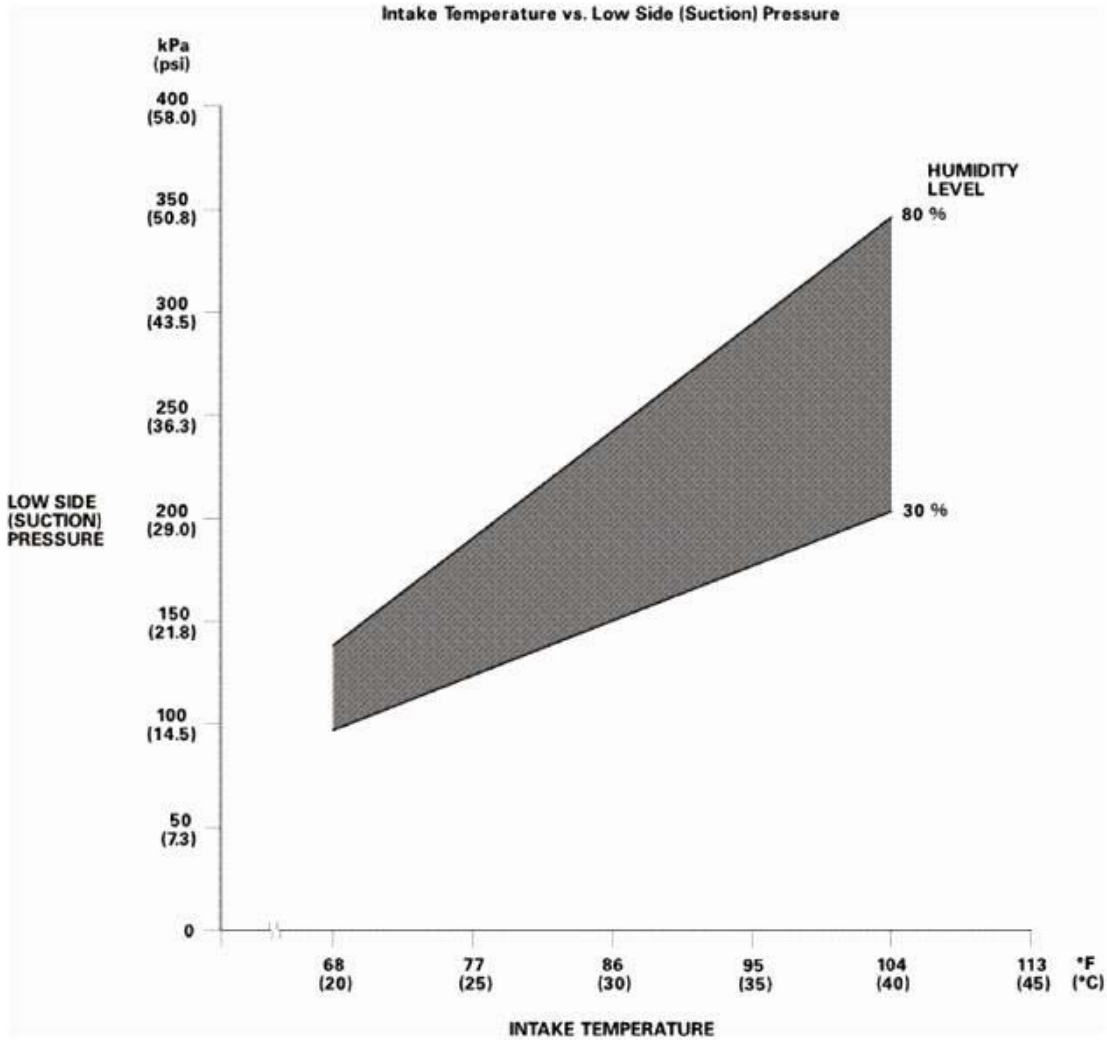

Fig. 468: Intake Temperature Versus Low Side (Suction) Pressure Graph
Courtesy of AMERICAN HONDA MOTOR CO., INC.

49. Glove Box - Move
    1. Install the glove box (A). Make sure the glove box stops (B) snap into place securely.
    2. Install the glove box damper hook (C).

GETtheMANUALS.org

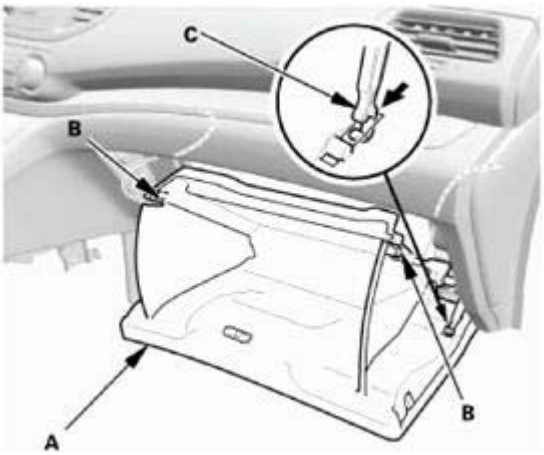

Fig. 469: Installing Glove Box Damper Hook
Courtesy of AMERICAN HONDA MOTOR CO., INC.

50. VSA Sensor Neutral Position - Memorization
    1. Park the vehicle on a flat and level surface, with the steering wheel in the straight ahead position.
    2. Select VSA ADJUSTMENT, then select ALL SENSORS with the HDS, and follow the screen prompts.

    NOTE: See the HDS Help menu for specific instructions.

51. Steering Angle Sensor Neutral Position - Clear
    1. Select EPS ADJUSTMENT, then select EPS STEERING ANGLE SENSOR VALUE CLEAR and follow the screen prompts on the HDS.

    NOTE: See the HDS Help menu for specific instructions.

52. Maintenance Minder Reset
    1. **RESET THE MAINTENANCE MINDER** .

HUMIDITY/IN-CAR TEMPERATURE SENSOR REMOVAL AND INSTALLATION

REMOVAL

1. Center Maintenance Cover
    1. Remove the maintenance cover (A).

GETtheMANUALS.org

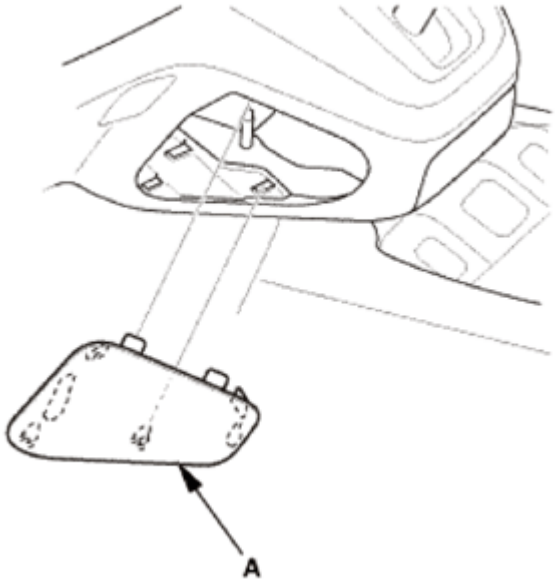

Fig. 470: Identifying Maintenance Cover
Courtesy of AMERICAN HONDA MOTOR CO., INC.

2. Shift Lever Panel (AT)
    1. Carefully pry out the shift lever panel (A) with the appropriate trim tool to detach the clips (B, C) and the hooks (D), then remove the shift lever panel.

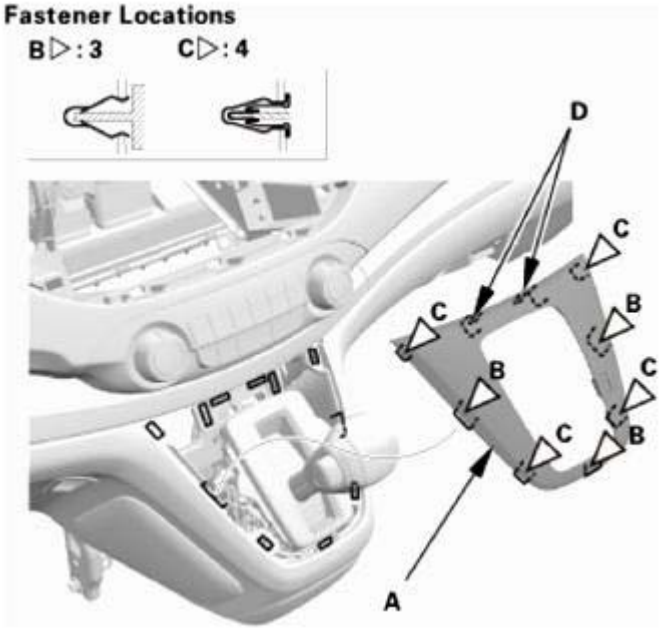

Fig. 471: Identifying Shift Lever Panel, Hooks And Clips
Courtesy of AMERICAN HONDA MOTOR CO., INC.

3. TPMS Control Unit - Move

GETtheMANUALS.org

1. Press the tab (A), and remove the TPMS control unit (B) with connector connected.

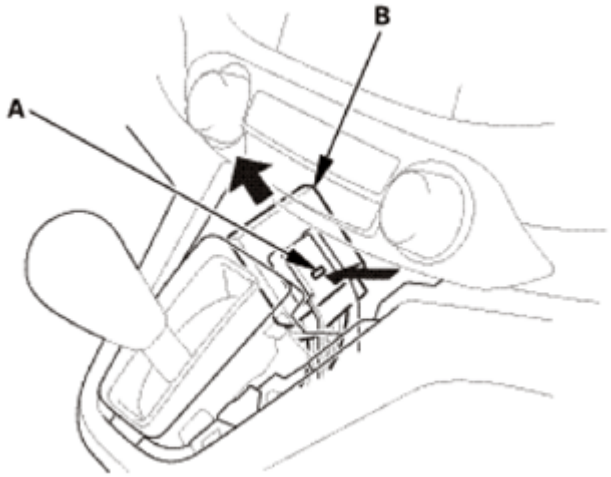

Fig. 472: Removing TPMS Control Unit
Courtesy of AMERICAN HONDA MOTOR CO., INC.

4. Humidity/In-Car Temperature Sensor
    1. Push out the humidity/in-car temperature sensor (A) by press the tab (B) from back.
    2. Disconnect the aspirator hose (C) and the connector (D).

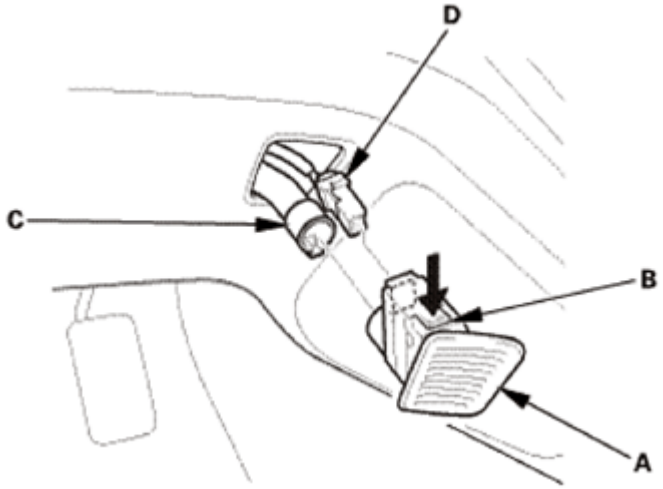

Fig. 473: Removing Humidity/In-Car Temperature Sensor
Courtesy of AMERICAN HONDA MOTOR CO., INC.

INSTALLATION

1. Humidity/In-Car Temperature Sensor
    1. Connect the aspirator hose (A) and the connector (B).
    2. Install the humidity/in-car temperature sensor (C).

GETtheMANUALS.org

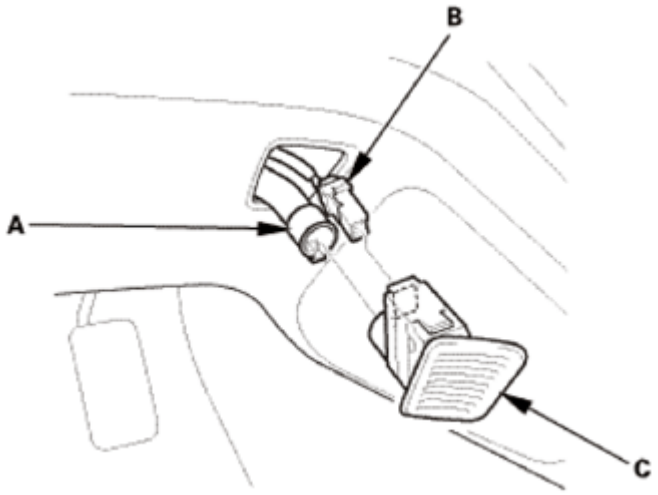

Fig. 474: Identifying Humidity/In-Car Temperature Sensor, Connector And Aspirator Hose
Courtesy of AMERICAN HONDA MOTOR CO., INC.

2. TPMS Control Unit - Move
    1. Install the TPMS control unit (A) with connector connected.

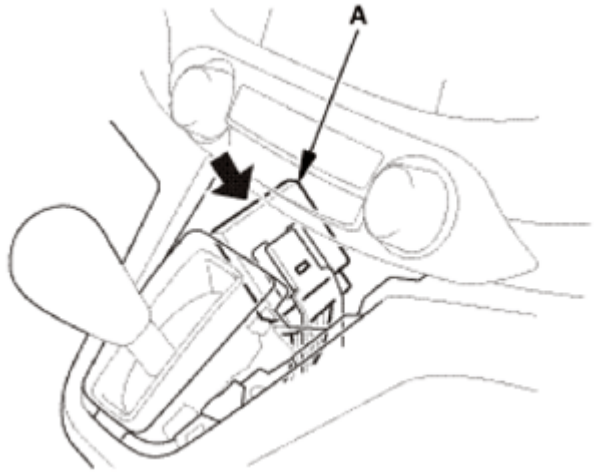

Fig. 475: Installing TPMS Control Unit
Courtesy of AMERICAN HONDA MOTOR CO., INC.

3. Shift Lever Panel (AT)
    1. Install the shift lever panel (A). Make sure the clips (B, C) and the hooks (D) snap into place securely.

GETtheMANUALS.org

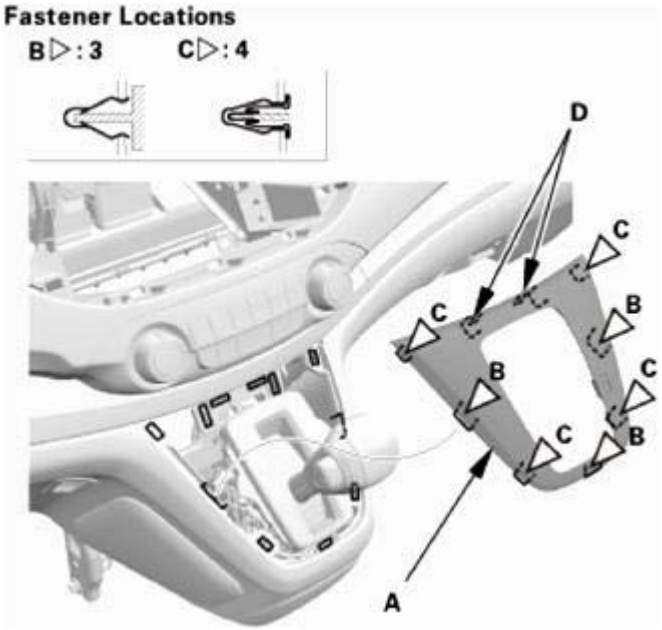

Fig. 476: Identifying Shift Lever Panel, Hooks And Clips
Courtesy of AMERICAN HONDA MOTOR CO., INC.

4. Center Maintenance Cover
    1. Install the maintenance cover (A).

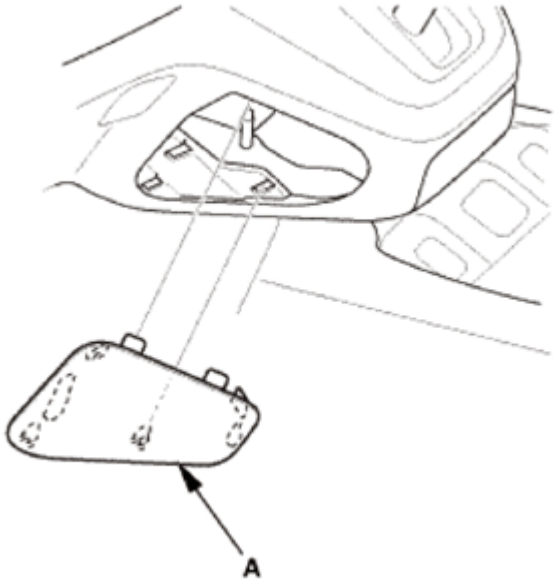

Fig. 477: Identifying Maintenance Cover
Courtesy of AMERICAN HONDA MOTOR CO., INC.

HVAC CONTROL UNIT REMOVAL AND INSTALLATION

GETtheMANUALS.org

REMOVAL

1. Shift Lever Panel (AT)
    1. Carefully pry out the shift lever panel (A) with the appropriate trim tool to detach the clips (B, C) and the hooks (D), then remove the shift lever panel.

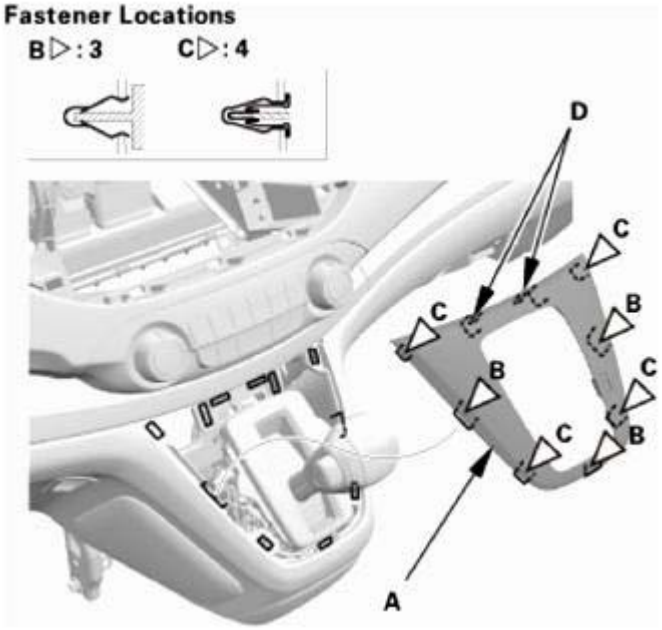

Fig. 478: Identifying Shift Lever Panel, Hooks And Clips
Courtesy of AMERICAN HONDA MOTOR CO., INC.

2. Driver's Inner Dashboard Trim Panel
    1. Carefully pry out the driver's inner dashboard trim panel (A) with the appropriate trim tool to detach the clips (B), then remove the driver's inner dashboard trim panel.

GETtheMANUALS.org

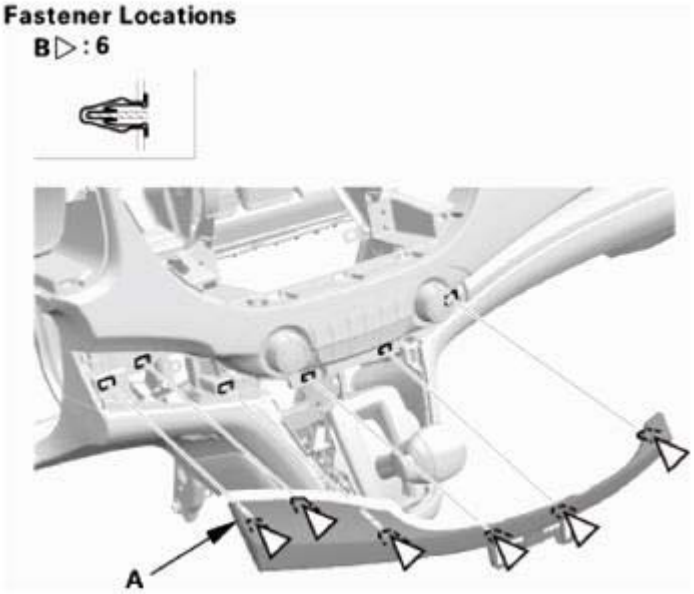

Fig. 479: Identifying Driver Inner Dashboard Trim Panel And Clips
Courtesy of AMERICAN HONDA MOTOR CO., INC.

3. HVAC Control Unit Assembly
    1. Remove the HVAC control unit assembly (A), then disconnect the connector (B).

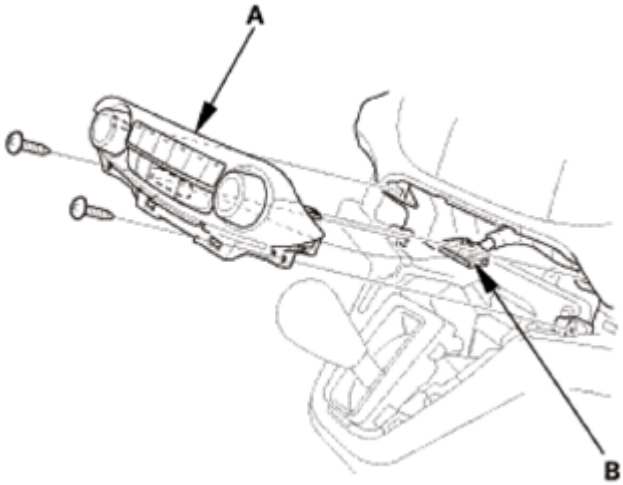

Fig. 480: Identifying HVAC Control Unit Assembly And Connector
Courtesy of AMERICAN HONDA MOTOR CO., INC.

4. HVAC Control Unit
    1. Remove the dials (A).
    2. Remove the HVAC control unit (B).

GETtheMANUALS.org

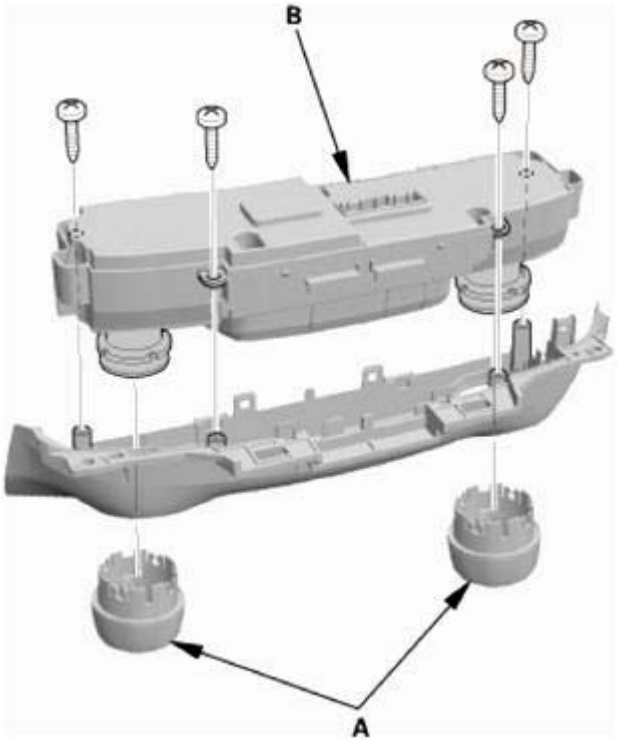

Fig. 481: Identifying HVAC Control Unit And Dials
Courtesy of AMERICAN HONDA MOTOR CO., INC.

INSTALLATION

1. HVAC Control Unit
    1. Install the HVAC control unit (A).
    2. Install the dials (B).

GETtheMANUALS.org

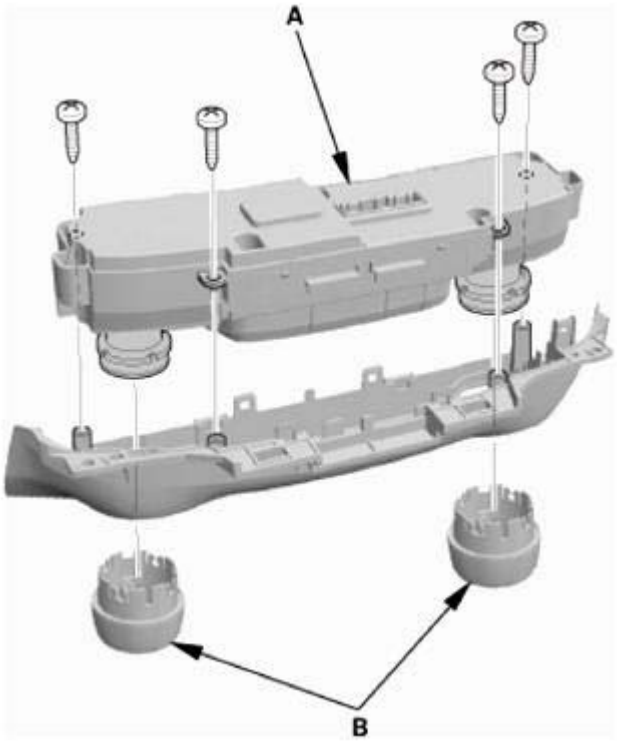

Fig. 482: Identifying HVAC Control Unit And Dials
Courtesy of AMERICAN HONDA MOTOR CO., INC.

2. HVAC Control Unit Assembly
    1. Connect the connector (A), then install the HVAC control unit assembly (B).

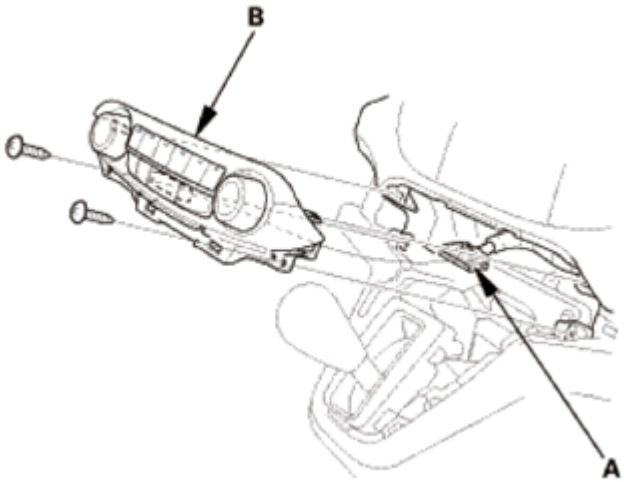

Fig. 483: Identifying HVAC Control Unit Assembly And Connector
Courtesy of AMERICAN HONDA MOTOR CO., INC.

3. Driver's Inner Dashboard Trim Panel
    1. Install the driver's inner dashboard trim panel (A). Make sure the clips (B) snap into place securely.

GETtheMANUALS.org

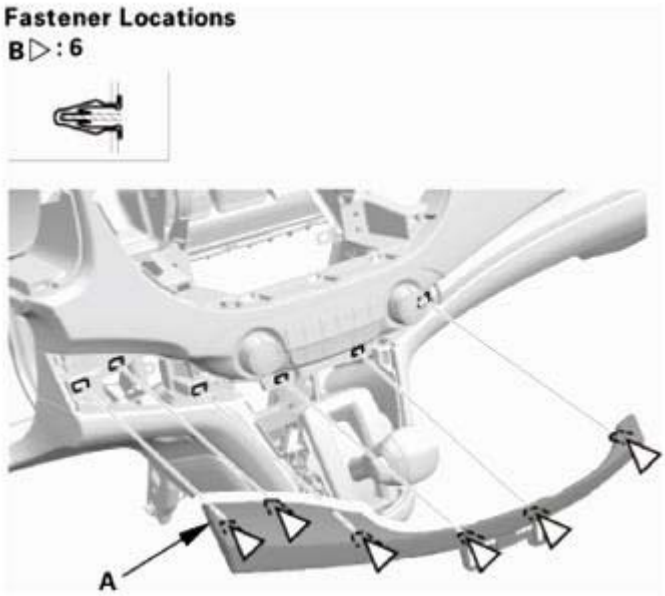

Fig. 484: Identifying Driver Inner Dashboard Trim Panel And Screws
Courtesy of AMERICAN HONDA MOTOR CO., INC.

4. Shift Lever Panel (AT)
    1. Install the shift lever panel (A). Make sure the clips (B, C) and the hooks (D) snap into place securely.

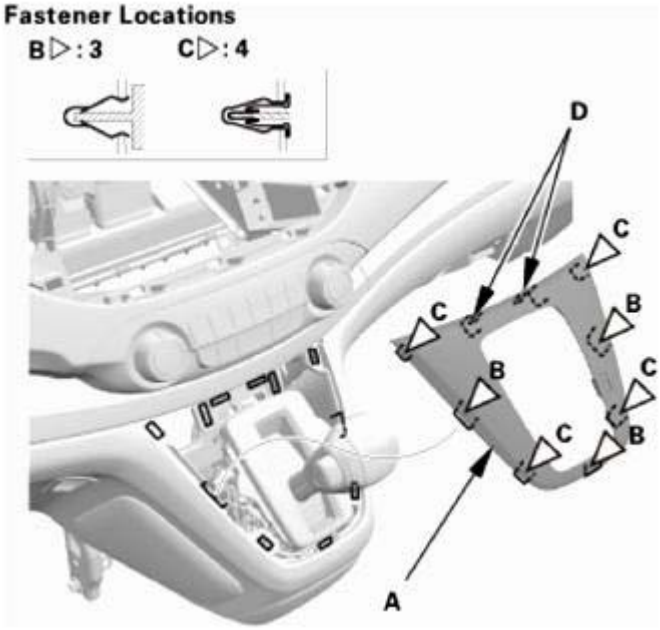

Fig. 485: Identifying Shift Lever Panel, Hooks And Clips
Courtesy of AMERICAN HONDA MOTOR CO., INC.

5. HVAC Self-Diagnostic Function

GETtheMANUALS.org

How to Use the Self-Diagnostic Function to Check for DTCs

1. Turn the ignition switch to LOCK (0) and then back to ON (II).
2. Set the FAN CONTROL dial to OFF, the TEMPERATURE CONTROL dial to Max Cool, and select the VENT mode.
3. Press and hold the RECIRCULATION button, then within 10 seconds press and release the REAR WINDOW DEFOGGER button five times. Release the RECIRCULATION button.
4. The RECIRCULATION indicator blinks two times, then the self-diagnostic function begins.

NOTE:

- **The self-diagnostic test could take up to about 90 seconds to run.**
- **The blower motor will run at various speeds when in the self-diagnostic mode.**
- **If there is any problem in the system after the self-diagnostic function is finished, the recirculation indicator blinks Diagnostic Trouble Code (DTC) number 1 through 13. In the case of multiple problems, the recirculation indicator blinks in sequence from the lowest DTC number to the highest.**
- **If no DTCs are found, the indicator will not blink.**

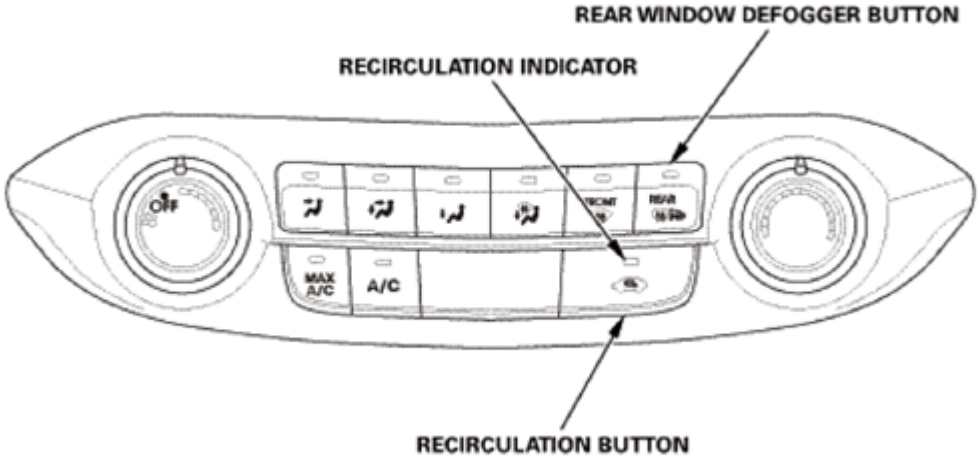

Fig. 486: Identifying Rear Window Defogger Button, Recirculation Indicator And Button
Courtesy of AMERICAN HONDA MOTOR CO., INC.

Example of DTC Indication Pattern (DTC 3)

GETtheMANUALS.org

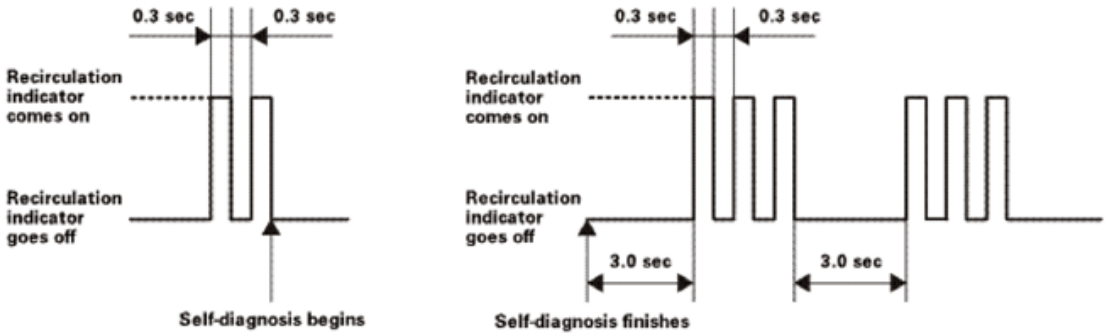

Fig. 487: Example Of DTC Indication Pattern (DTC 3)
Courtesy of AMERICAN HONDA MOTOR CO., INC.

Example of DTCs Indication Pattern (DTC 2 and 4)

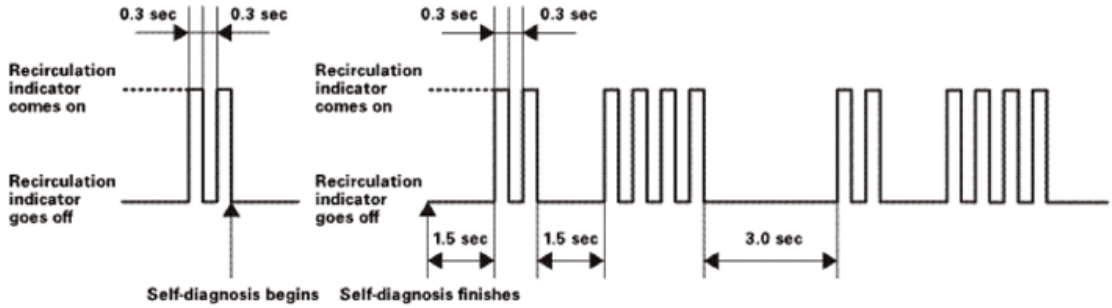

Fig. 488: Example Of DTC Indication Pattern (DTC 2 And 4)
Courtesy of AMERICAN HONDA MOTOR CO., INC.

DTC (Recirculation Indicator Blinks)	Detection Item
1	An open in the air mix control motor circuit
2	A short in the air mix control motor circuit
3	A problem in the air mix control motor circuit, linkage, door, or motor
4	An open in the mode control motor circuit
5	A short in the mode control motor circuit
6	A problem in the mode control motor circuit, linage, doors, or, motor
7	An open in the recirculation control motor
8	A short in the recirculation control motor
9	A problem in the recirculation control motor circuit, linkage, door, or, motor
10	A problem in the blower motor circuit
11	HVAC control unit internal error
12	An open in the evaporator temperature sensor circuit
13	A short in the evaporator temperature sensor circuit

GETtheMANUALS.org

Canceling the Self-Diagnostic Function

5. Turn the ignition switch to LOCK (0) to cancel the self-diagnostic function. After completing the repair work, run the self-diagnostic function again to make sure that there are no other DTCs.

MODE CONTROL MOTOR REMOVAL AND INSTALLATION

REMOVAL

NOTE: Set the VENT position before removing the motor.

1. Glove Box - Move
    1. Detach the glove box damper hook (A), and release both glove box stops (B) by pushing them in, then let glove box (C) hang down.

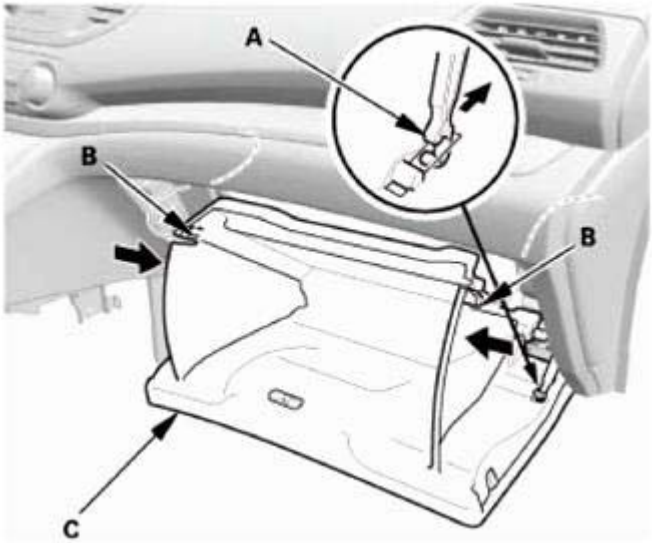

Fig. 489: Detaching Glove Box Damper Hook
Courtesy of AMERICAN HONDA MOTOR CO., INC.

2. Mode Control Motor
    1. Disconnect the mode control motor connector (A).
    2. Remove the mode control motor (B).

GETtheMANUALS.org

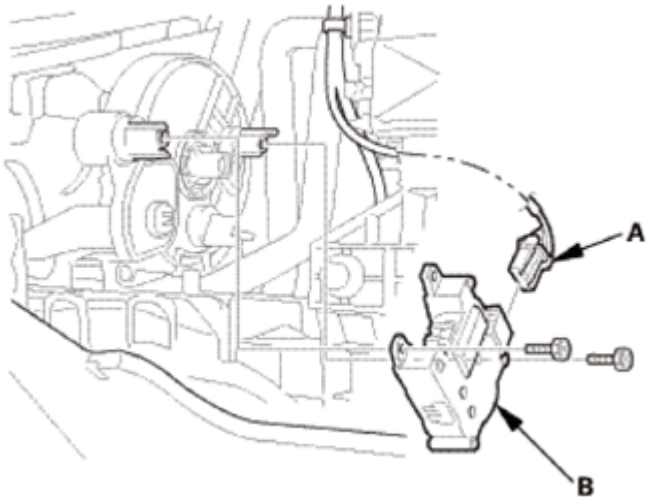

Fig. 490: Identifying Mode Control Motor And Connector
Courtesy of AMERICAN HONDA MOTOR CO., INC.

INSTALLATION

1. Mode Control Motor
    1. Install the mode control motor (A).
    2. Connect the mode control motor connector (B).
    3. After installation, make sure the motor runs smoothly.

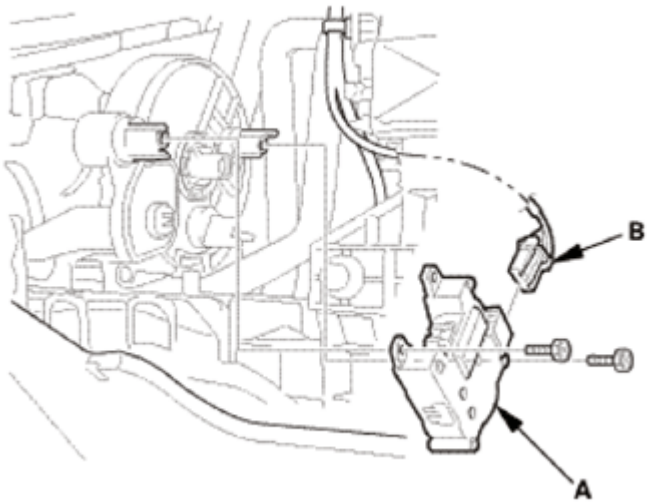

Fig. 491: Identifying Mode Control Motor And Connector
Courtesy of AMERICAN HONDA MOTOR CO., INC.

2. Glove Box - Move
    1. Install the glove box (A). Make sure the glove box stops (B) snap into place securely.
    2. Install the glove box damper hook (C).

GETtheMANUALS.org

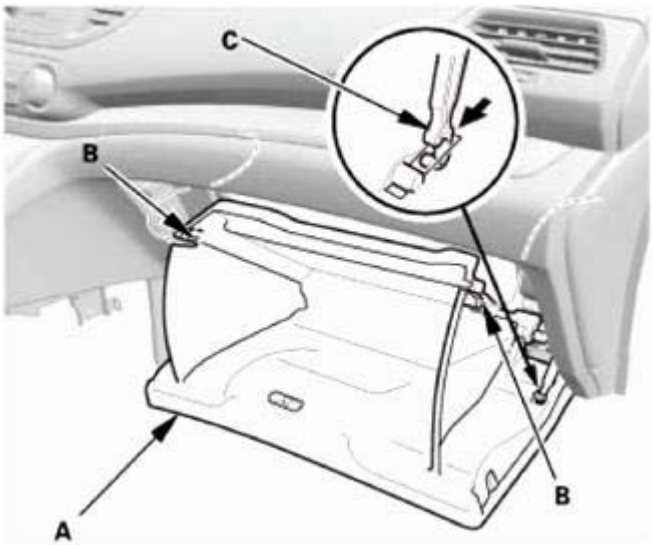

Fig. 492: Installing Glove Box Damper Hook
Courtesy of AMERICAN HONDA MOTOR CO., INC.

OUTSIDE AIR TEMPERATURE SENSOR REMOVAL, INSTALLATION, AND TEST

REMOVAL

1. Outside Air Temperature Sensor
    1. Disconnect the outside air temperature sensor connector (A).
    2. Lift the tab (B) to release the lock, and remove the outside air temperature sensor (C).

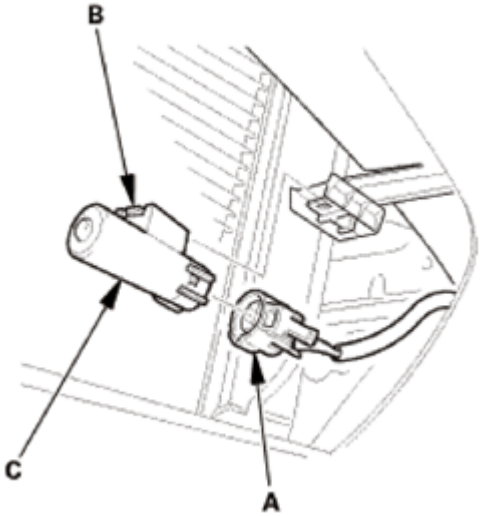

Fig. 493: Identifying Outside Air Temperature Sensor, Connector And Tab
Courtesy of AMERICAN HONDA MOTOR CO., INC.

GETtheMANUALS.org

TEST

NOTE: Before testing the sensor, check for climate control DTCs.

1. Outside Air Temperature Sensor - Test
    1. Dip the sensor in ice water, and measure the resistance. Then pour warm water on the sensor, and check for a change in resistance.
    2. Compare the resistance reading between terminals No. 1 and No. 2 of the outside air temperature sensor with the specifications shown in the graph; the resistance should be within the specifications.
    3. If the resistance is not as specified, replace the outside air temperature sensor.

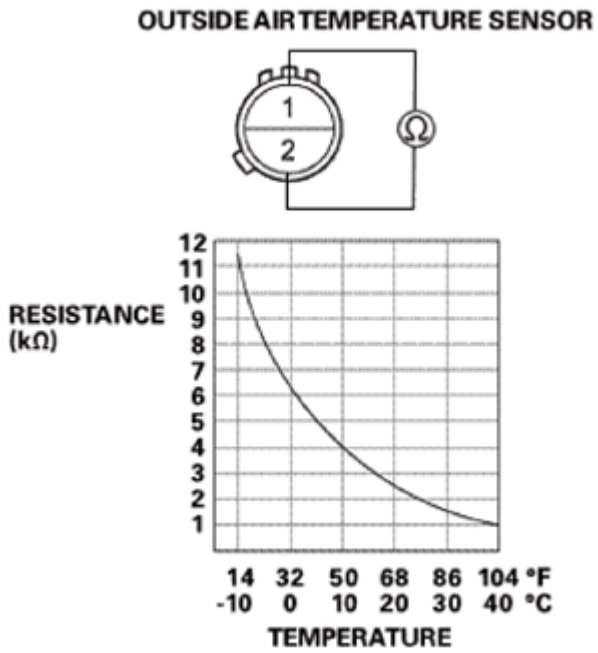

Fig. 494: Outside Air Temperature Sensor Resistance Graph
Courtesy of AMERICAN HONDA MOTOR CO., INC.

INSTALLATION

1. Outside Air Temperature Sensor
    1. Install the outside air temperature sensor (A).
    2. Connect the outside air temperature sensor connector (B).

GETtheMANUALS.org

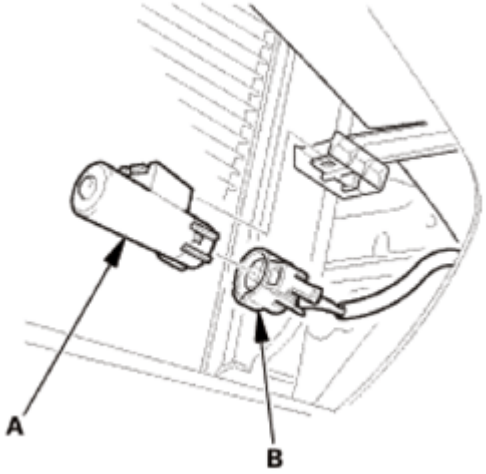

Fig. 495: Identifying Outside Air Temperature Sensor And Connector
Courtesy of AMERICAN HONDA MOTOR CO., INC.

PASSENGER'S AIR MIX CONTROL MOTOR REMOVAL AND INSTALLATION

REMOVAL

NOTE: Set the MAX COOL position before removing the motor.

1. Passenger's Dashboard Undercover
    1. Gently pull down the passenger's dashboard undercover (A) to detach the clips (B), then pull away the undercover to release the pins (C) from the holder (D).

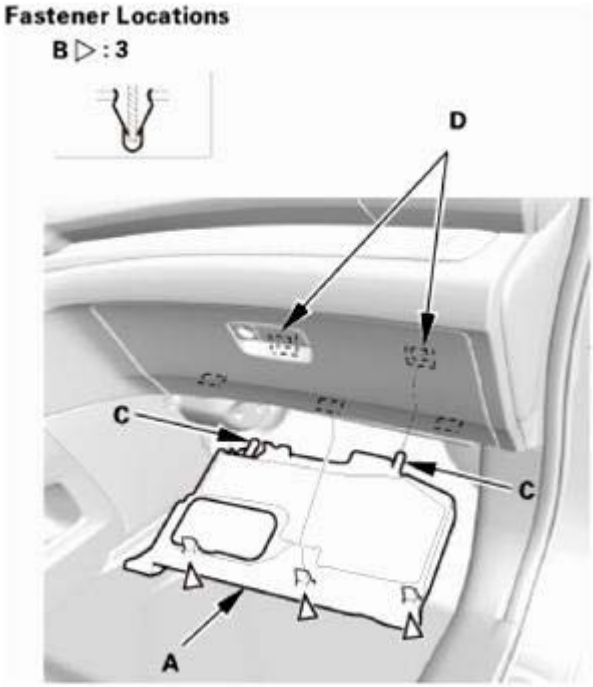

GETtheMANUALS.org

Fig. 496: Identifying Passenger Dashboard Undercover, Holder, Pins And Clips
Courtesy of AMERICAN HONDA MOTOR CO., INC.

2. Glove Box
    1. Remove the bolts (A).

Fig. 497: Identifying Glove Box Mounting Bolts
Courtesy of AMERICAN HONDA MOTOR CO., INC.

    2. Release both glove box stops (A) by pushing them in, then let the glove box (B) hang down.

Fig. 498: Releasing Glove Box Stops
Courtesy of AMERICAN HONDA MOTOR CO., INC.

GETtheMANUALS.org

3. Detach the glove box damper hook (A), then remove the glove box (B).

Fig. 499: Removing Glove Box
Courtesy of AMERICAN HONDA MOTOR CO., INC.

3. Glove Box Frame
    1. Remove the glove box frame (A).

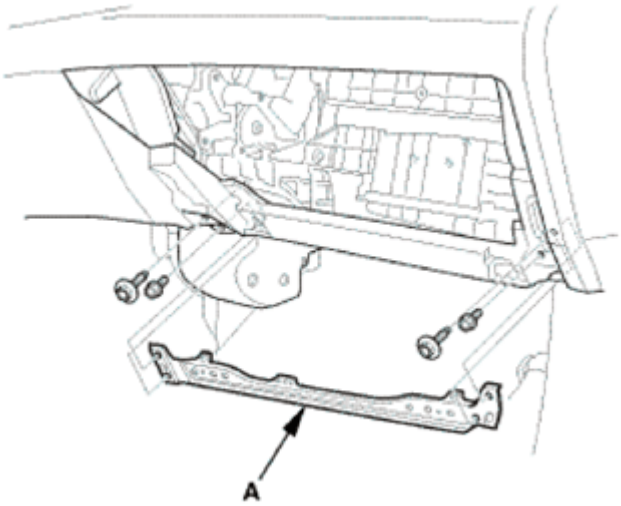

Fig. 500: Identifying Glove Box Frame
Courtesy of AMERICAN HONDA MOTOR CO., INC.

4. Passenger's Heater Duct
    1. Remove the passenger's heater duct (A).

GETtheMANUALS.org

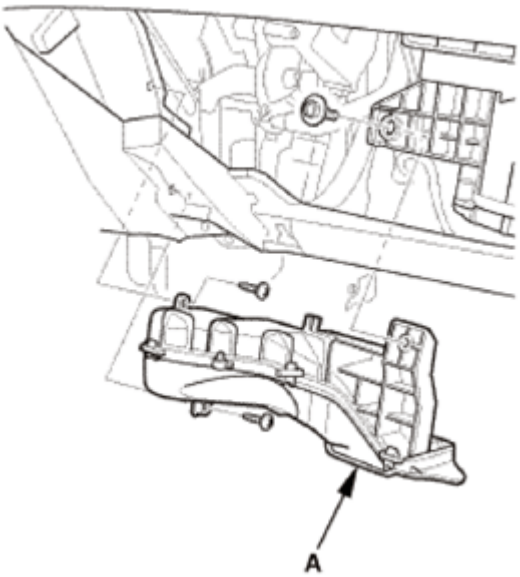

Fig. 501: Identifying Passenger Heater Duct
Courtesy of AMERICAN HONDA MOTOR CO., INC.

5. Heater Core Cover
    1. Remove the heater core cover (A).

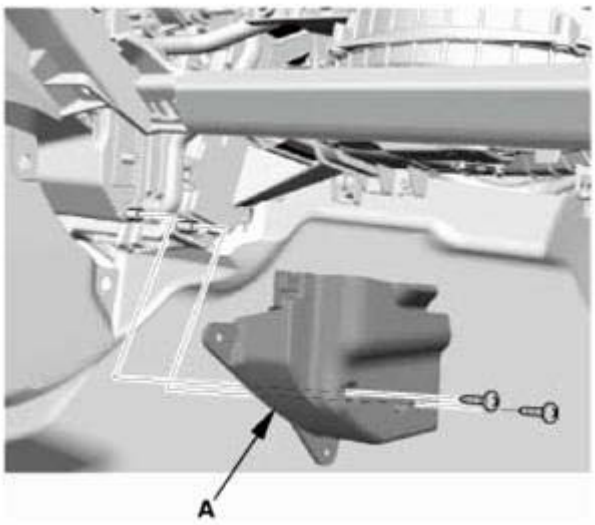

Fig. 502: Identifying Heater Core Cover
Courtesy of AMERICAN HONDA MOTOR CO., INC.

6. Passenger's Air Mix Control Motor
    1. Disconnect the passenger's air mix control motor connector (A).
    2. Remove the Passenger's air mix control motor (B).

GETtheMANUALS.org

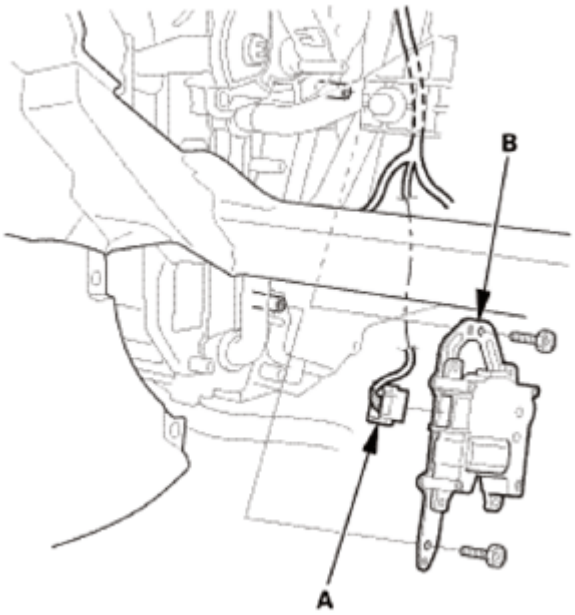

Fig. 503: Identifying Passenger Air Mix Control Motor And Connector
Courtesy of AMERICAN HONDA MOTOR CO., INC.

INSTALLATION

1. Passenger's Air Mix Control Motor
    1. Align the passenger's air mix control motor (A) with the gear, then install the motor.
    2. Connect the passenger's air mix control motor connector (B).
    3. After installation, make sure the motor runs smoothly.

GETtheMANUALS.org

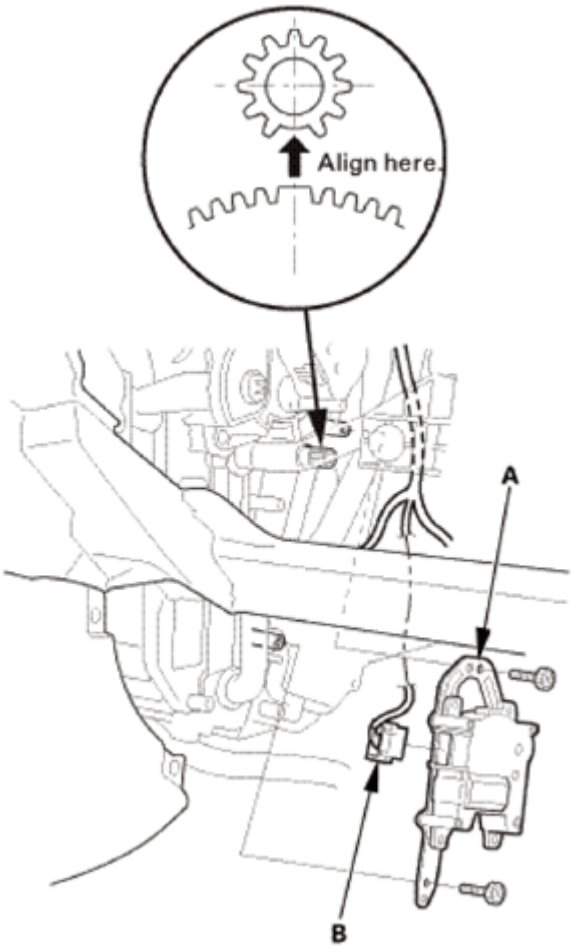

Fig. 504: Identifying Passenger Air Mix Control Motor And Gear Align Mark
Courtesy of AMERICAN HONDA MOTOR CO., INC.

2. Heater Core Cover
    1. Install the heater core cover (A).

GETtheMANUALS.org

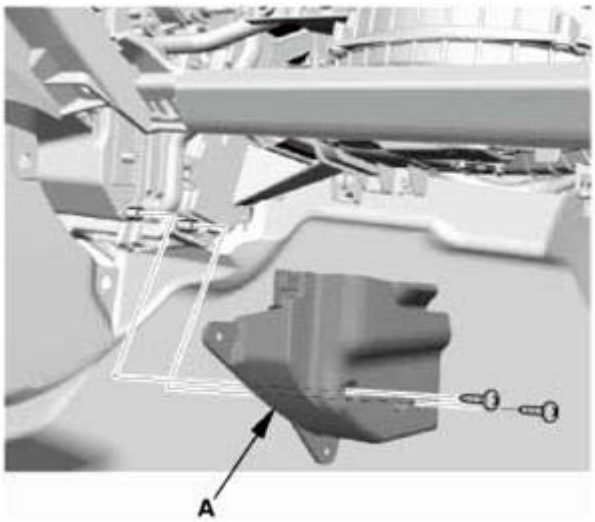

Fig. 505: Identifying Heater Core Cover
Courtesy of AMERICAN HONDA MOTOR CO., INC.

3. Passenger's Heater Duct
    1. Install the passenger's heater duct (A).

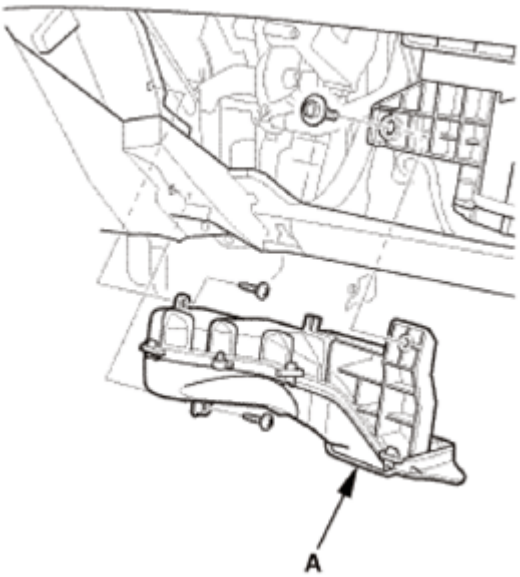

Fig. 506: Identifying Passenger Heater Duct
Courtesy of AMERICAN HONDA MOTOR CO., INC.

4. Glove Box Frame
    1. Install the glove box frame (A).

GETtheMANUALS.org

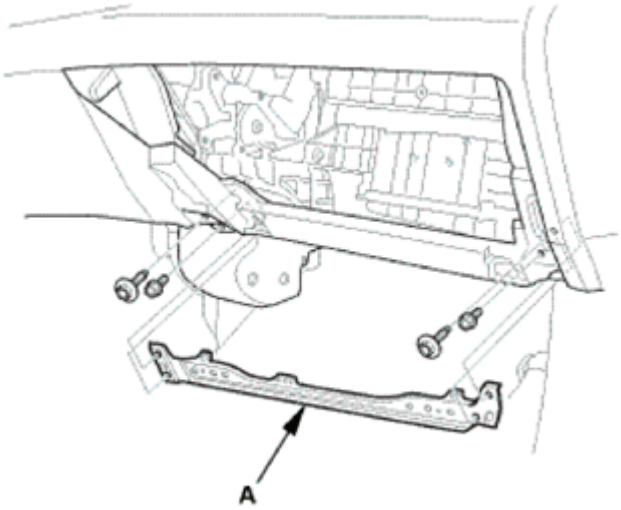

Fig. 507: Identifying Glove Box Frame
Courtesy of AMERICAN HONDA MOTOR CO., INC.

5. Glove Box
    1. Install the glove box (A), then install the glove box damper hook (B).

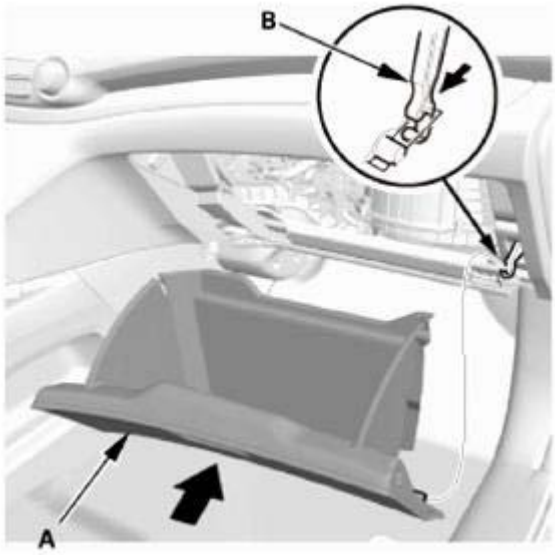

Fig. 508: Installing Glove Box Damper Hook
Courtesy of AMERICAN HONDA MOTOR CO., INC.

    2. Install the bolts (A).

GETtheMANUALS.org

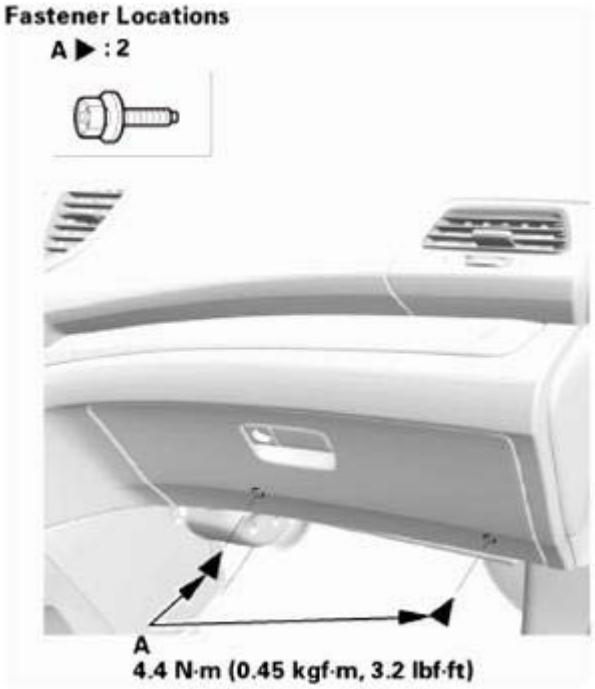

Fig. 509: Identifying Glove Box Mounting Bolts With Torque Specifications
Courtesy of AMERICAN HONDA MOTOR CO., INC.

6. Passenger's Dashboard Undercover
    1. Install the passenger's dashboard undercover (A). Make sure the clips (B) snap into place securely, and the pins (C) into the holder (D) securely.

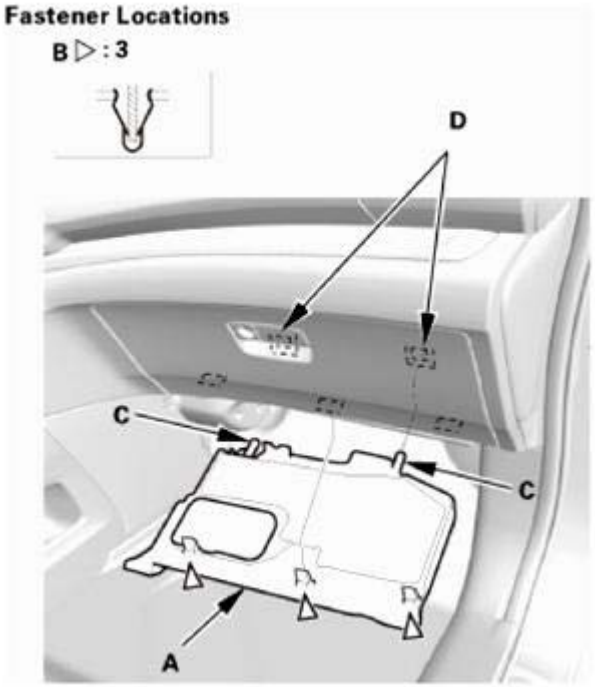

GETtheMANUALS.org

Fig. 510: Identifying Passenger Dashboard Undercover, Holder, Pins And Clips
Courtesy of AMERICAN HONDA MOTOR CO., INC.

PASSENGER'S DASHBOARD UNDERCOVER REMOVAL AND INSTALLATION

REMOVAL

1. Passenger's Dashboard Undercover
    1. Gently pull down the passenger's dashboard undercover (A) to detach the clips (B), then pull away the undercover to release the pins (C) from the holder (D).

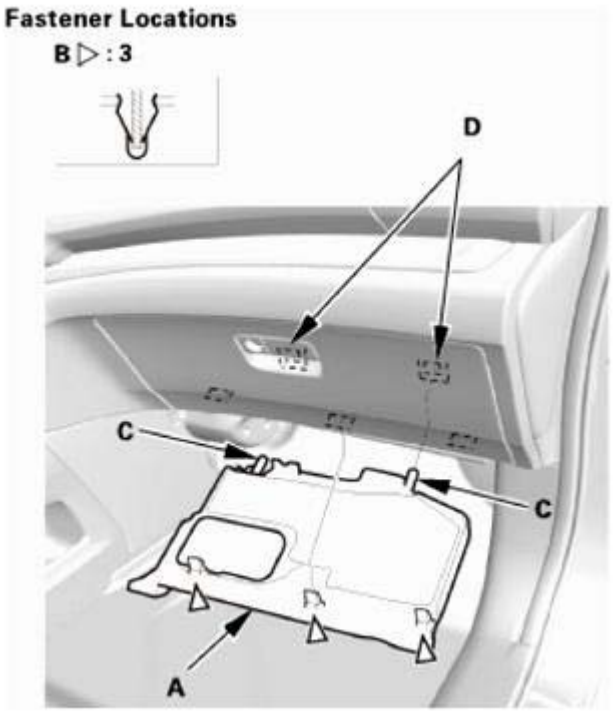

Fig. 511: Identifying Passenger Dashboard Undercover, Holder, Pins And Clips
Courtesy of AMERICAN HONDA MOTOR CO., INC.

INSTALLATION

1. Passenger's Dashboard Undercover
    1. Install the passenger's dashboard undercover (A). Make sure the clips (B) snap into place securely, and the pins (C) into the holder (D) securely.

GETtheMANUALS.org

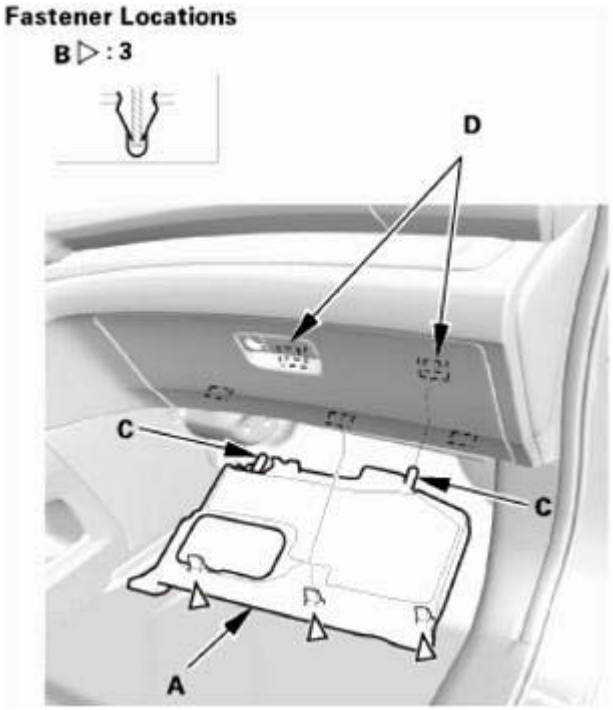

Fig. 512: Identifying Passenger Dashboard Undercover, Holder, Pins And Clips
Courtesy of AMERICAN HONDA MOTOR CO., INC.

REAR AIR OUTLET REMOVAL AND INSTALLATION

REMOVAL

1. Tailgate Weatherstrip As Needed
    1. Detach the tailgate weatherstrip (A) as needed.

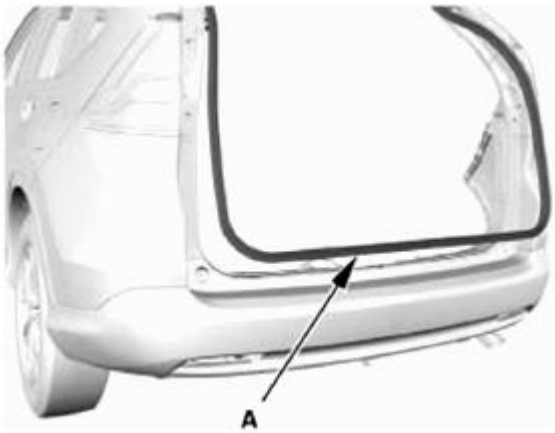

Fig. 513: Identifying Tailgate Weatherstrip
Courtesy of AMERICAN HONDA MOTOR CO., INC.

GETtheMANUALS.org

2. Rear Splash Guard (For Some Models) - Both Sides
    1. Remove the screws (A) and the clip (B), then remove the rear splash guards (C).

Left side

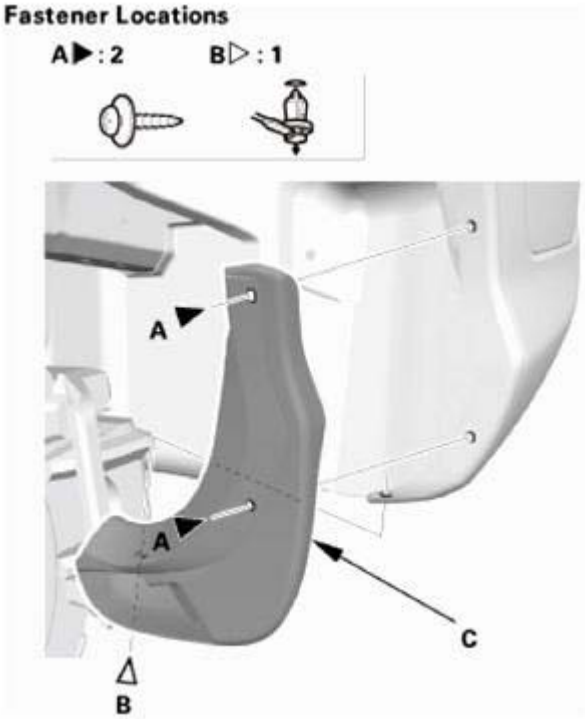

Fig. 514: Identifying Rear Splash Guard, Clips And Screws (Left Side)
Courtesy of AMERICAN HONDA MOTOR CO., INC.

Right side

GETtheMANUALS.org

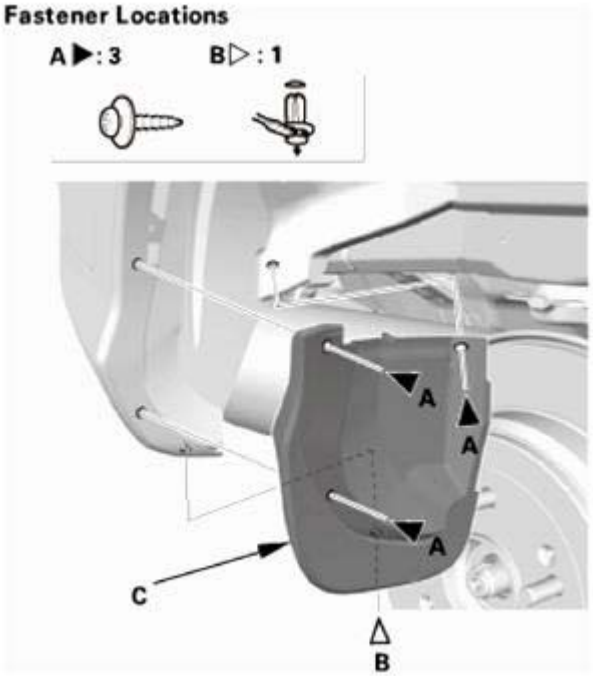

Fig. 515: Identifying Rear Splash Guard, Clips And Screws (Right Side)
Courtesy of AMERICAN HONDA MOTOR CO., INC.

3. Rear Wheel Arch Protector Rear Side As Needed - Both Sides

NOTE: Repeat this procedure on the opposite side.

1. Remove the screws (A) and the clip (B) securing the rear wheel arch protector (C).
2. Carefully pry out the clip portions of the wheel arch protector with the appropriate trim tool to detach the clips (D, E), then detach the wheel arch protector rear side as needed.
3. Put a shop towel (F) in the opening between the rear wheel arch protector and the rear fender.

GETtheMANUALS.org

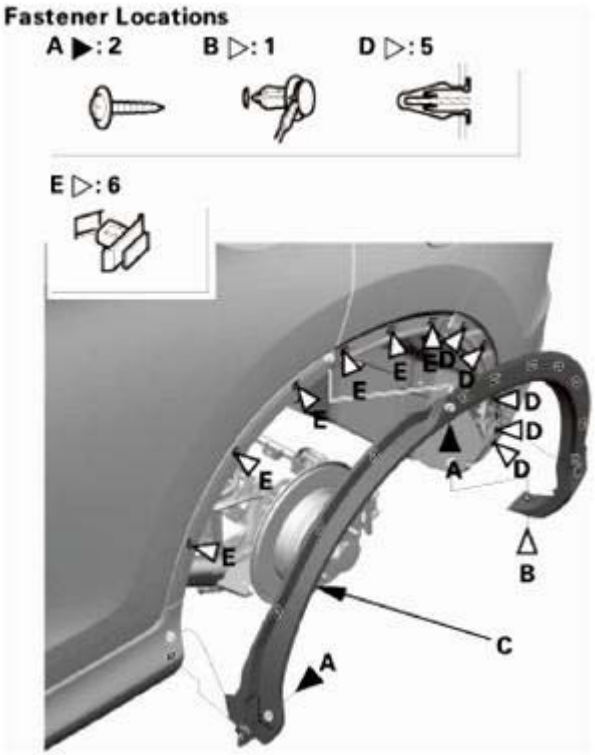

Fig. 516: Identifying Wheel Arch Protector Rear Side, Clips And Screws
Courtesy of AMERICAN HONDA MOTOR CO., INC.

Fig. 517: Placing Shop Towel In Opening Between Rear Wheel Arch Protector And Rear Fender
Courtesy of AMERICAN HONDA MOTOR CO., INC.

4. Rear Bumper
    1. Remove the caps (A), then remove the bolts (B).
    2. Remove the bolts (C), the screws (D), and the clips (E, F) securing the rear bumper (G).

GETtheMANUALS.org

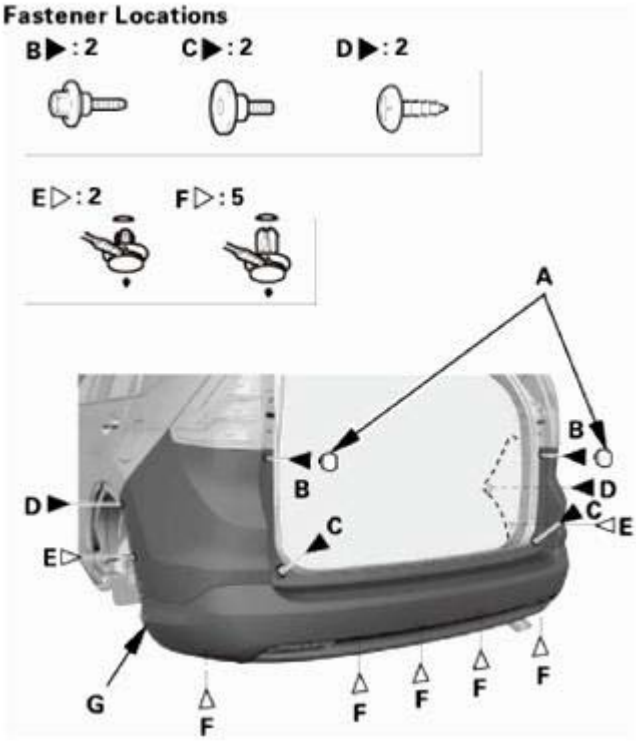

Fig. 518: Identifying Rear Bumper, Caps, Bolts And Clips
Courtesy of AMERICAN HONDA MOTOR CO., INC.

3. Pull out the rear bumper (A) from the side spacer (B).

NOTE: Repeat this procedure on the opposite side.

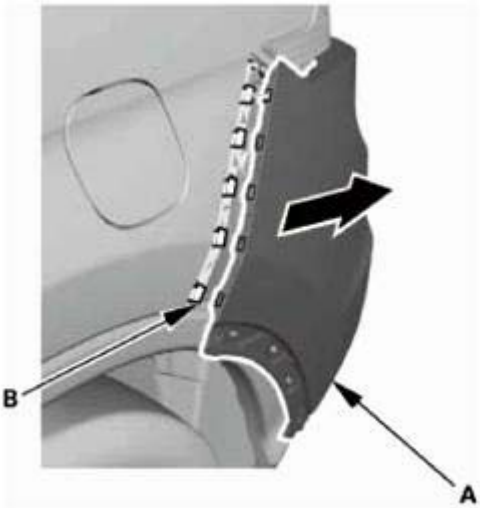

Fig. 519: Removing Rear Bumper From Side Spacer
Courtesy of AMERICAN HONDA MOTOR CO., INC.

GETtheMANUALS.org

4. With the help of an assistant, pull out the rear bumper (A) from the side bracket (B).

NOTE: Repeat this procedure on the opposite side.

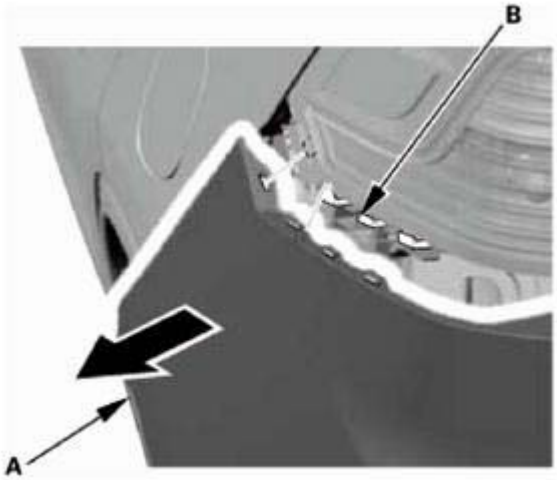

Fig. 520: Pulling Rear Bumper From Side Bracket
Courtesy of AMERICAN HONDA MOTOR CO., INC.

5. With the help of an assistant, remove the rear bumper (A).

Fig. 521: Identifying Rear Bumper
Courtesy of AMERICAN HONDA MOTOR CO., INC.

5. Rear Air Outlet
    1. Detach the hooks (A), then remove the rear air outlet (B).

GETtheMANUALS.org

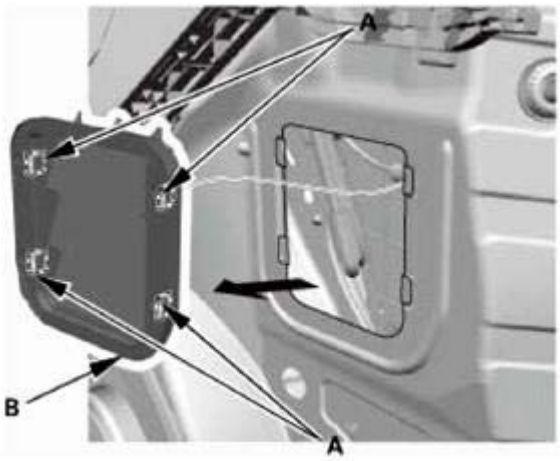

Fig. 522: Removing Rear Air Outlet
Courtesy of AMERICAN HONDA MOTOR CO., INC.

INSTALLATION

1. Rear Air Outlet
    1. Install the rear air outlet (A). Make sure the hooks (B) snap into place securely.

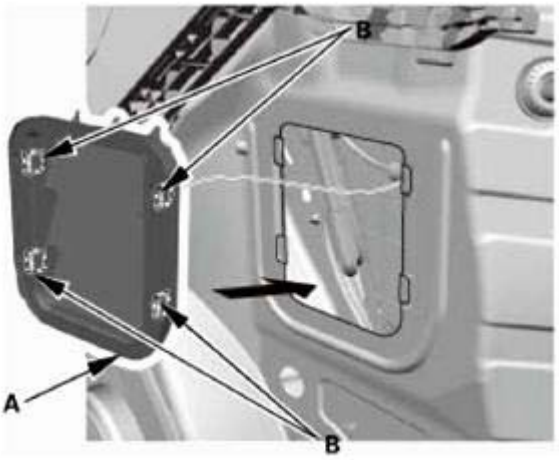

Fig. 523: Installing Rear Air Outlet
Courtesy of AMERICAN HONDA MOTOR CO., INC.

2. Rear Bumper
    1. With the help of an assistant, install the rear bumper (A).

GETtheMANUALS.org

Fig. 524: Identifying Rear Bumper
Courtesy of AMERICAN HONDA MOTOR CO., INC.

2. With the help of an assistant, install the rear bumper (A) to the side bracket (B).

NOTE: Repeat this procedure on the opposite side.

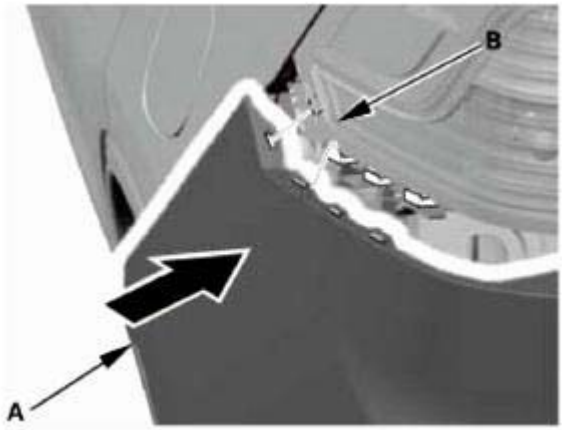

Fig. 525: Installing Rear Bumper To Side Bracket
Courtesy of AMERICAN HONDA MOTOR CO., INC.

3. Install the rear bumper (A) to the side spacer (B).

NOTE: Repeat this procedure on the opposite side.

GETtheMANUALS.org

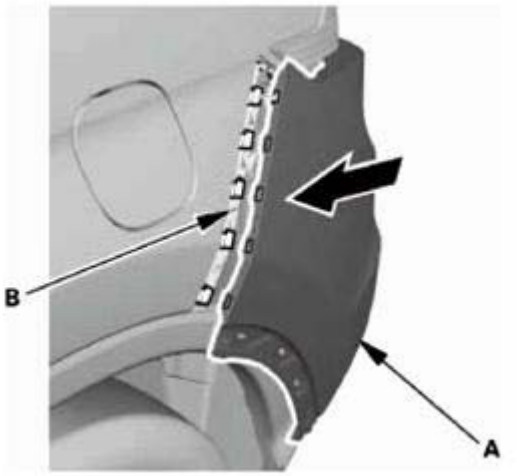

Fig. 526: Installing Rear Bumper To Side Spacer
Courtesy of AMERICAN HONDA MOTOR CO., INC.

4. Install the bolts (A, B), the screws (C), and the clips (D, E) securing the rear bumper (F), then install the caps (G).

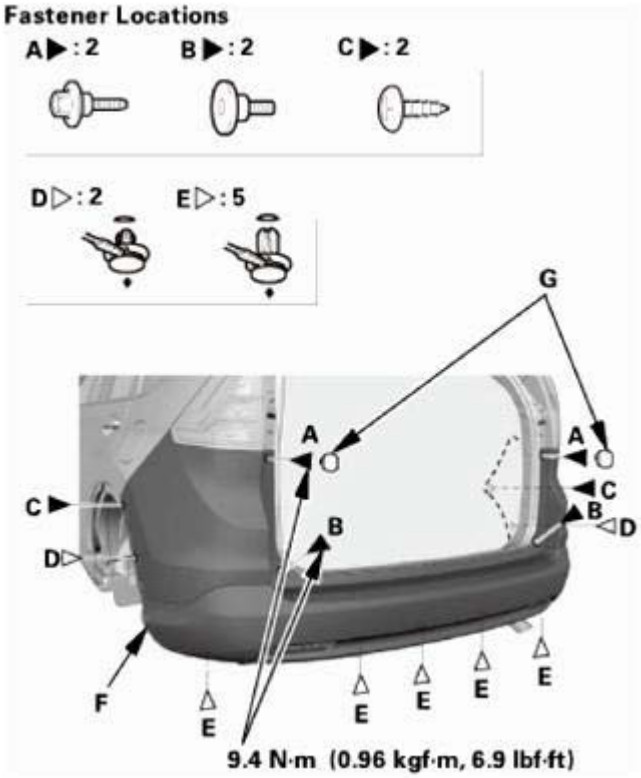

Fig. 527: Identifying Rear Bumper, Caps, Clips, Bolts And Screws With Torque Specifications
Courtesy of AMERICAN HONDA MOTOR CO., INC.

3. Rear Wheel Arch Protector Rear Side As Needed - Both Sides

GETtheMANUALS.org

NOTE: **Repeat this procedure on the opposite side.**

1. Install the rear wheel arch protector (A), then install the screws (B) and the clip (C). Make sure the clips (D, E) snap into place securely.

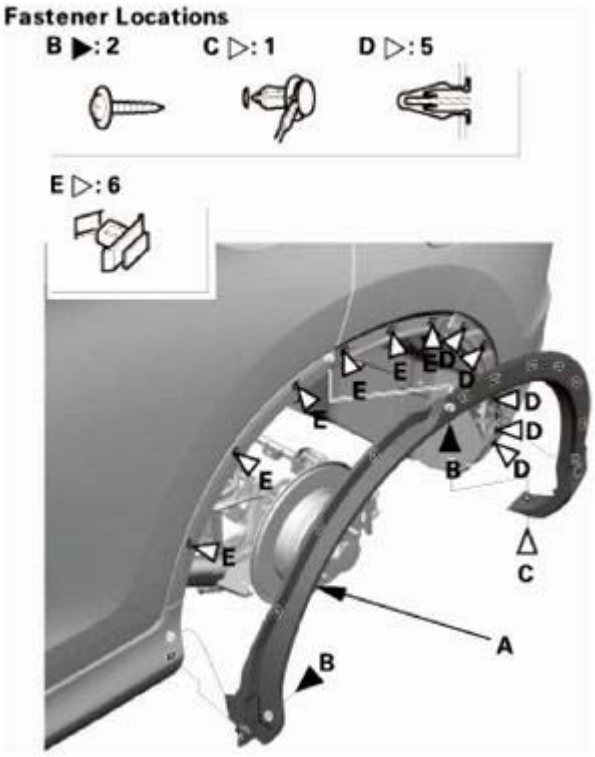

Fig. 528: Identifying Rear Wheel Arch Protector, Clips And Screws
Courtesy of AMERICAN HONDA MOTOR CO., INC.

4. Rear Splash Guard (For Some Models) - Both Sides
   1. Install the rear splash guards (A), then install the screws (B) and the clip (C). Make sure the clips snap into place securely.

      Left side

GETtheMANUALS.org

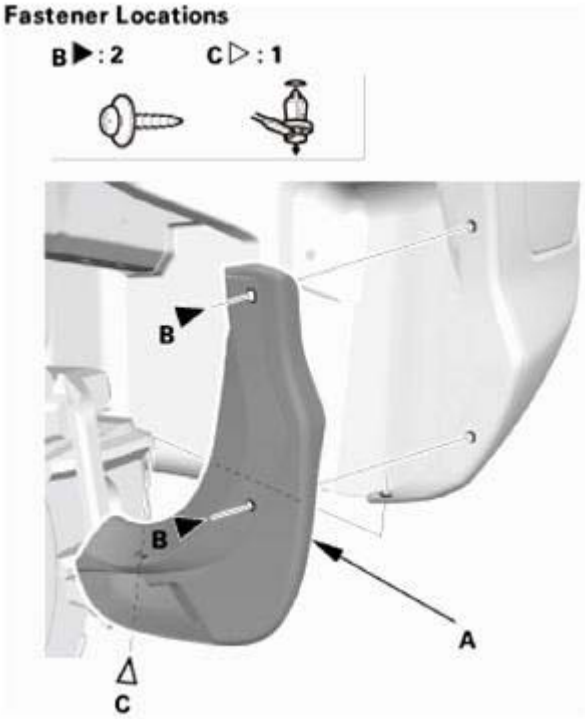

Fig. 529: Identifying Rear Splash Guards, Screws And Clips (Left Side)
Courtesy of AMERICAN HONDA MOTOR CO., INC.

Right side

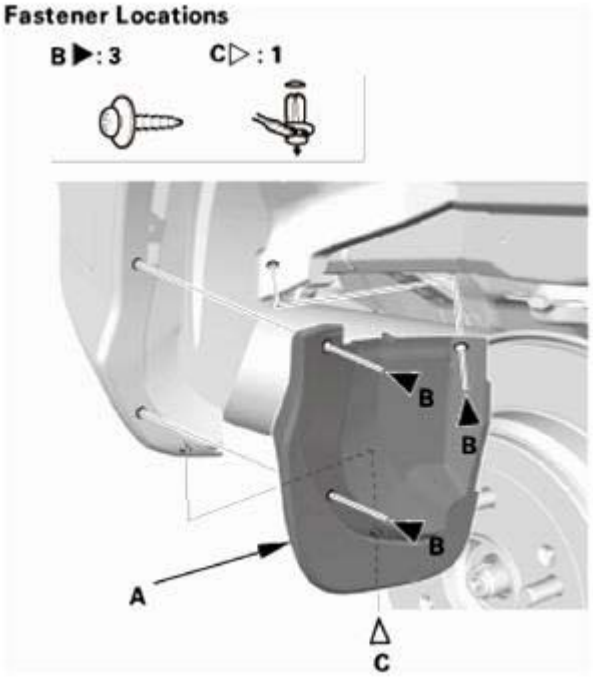

Fig. 530: Identifying Rear Splash Guards, Screws And Clips (Right Side)
Courtesy of AMERICAN HONDA MOTOR CO., INC.

GETtheMANUALS.org

5. Tailgate Weatherstrip As Needed
    1. Locate the alignment mark (A) of the tailgate weatherstrip (B). Align the alignment mark (C) with the center of the lower area on the tailgate opening, then install the tailgate weatherstrip all the way around.

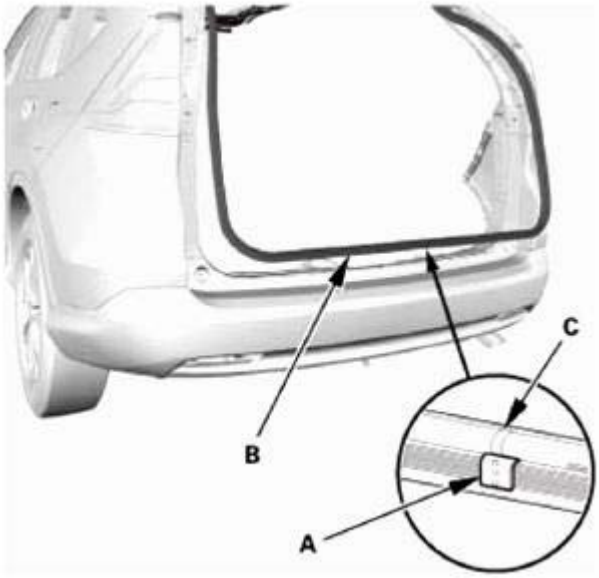

Fig. 531: Identifying Tailgate Weatherstrip Alignment Mark
Courtesy of AMERICAN HONDA MOTOR CO., INC.

RECEIVER/DRYER DESICCANT REMOVAL AND INSTALLATION

SPECIAL TOOL REQUIRED

Image	Description/Tool Number
	Oil Injector Tool Robinair ROB16256(1), commercially available
	Compact Electronic Vacuum Gauge Robinair ROB14777(1), commercially available

GETtheMANUALS.org

	Leak Detector YGK-H-10PM(1)
	Leak Detector HLD-100(1)

GETtheMANUALS.org

	Leak Detector TIFZX-1(1)
	OPTIMAX Jr. A/C Leak Detection Kit TRP124893(1)

GETtheMANUALS.org

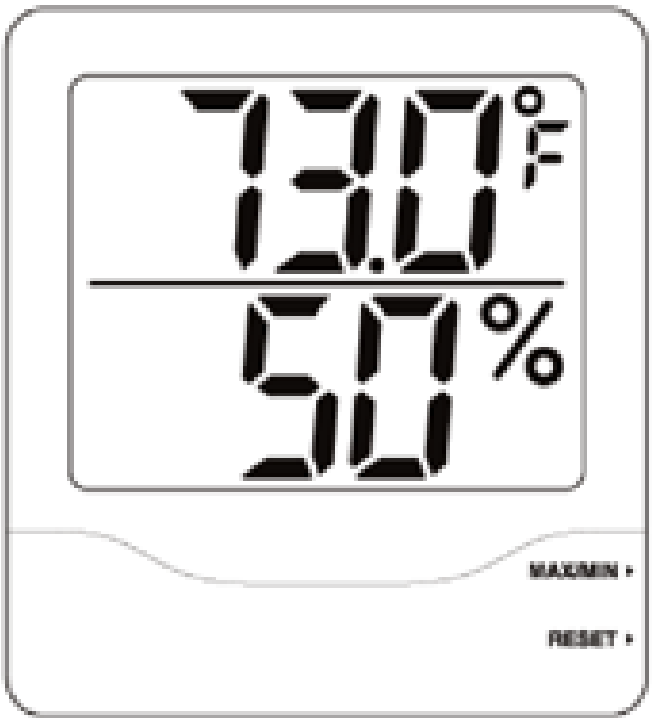	Big Digit Hygro-Thermometer PYR445703, commercially available
	Throttle Pedal Depressor Tool B240B, commercially available
(1) These tools are available through the Honda Tool and Equipment Program; call 888-424-6857	

REMOVAL

CAUTION:

- **Air conditioning refrigerant or lubricant vapor can irritate your eyes, nose, or throat.**
- **Be careful when connecting service equipment.**
- **Do not breathe refrigerant or vapor.**

NOTE:

- **If accidental system discharge occurs, ventilate the work area before resuming service.**
- **Additional health and safety information may be obtained from the refrigerant and lubricant manufacturers.**
- **Install the desiccant as quickly as possible to prevent the system from absorbing moisture from the air.**

1. Glove Box - Move
    1. Detach the glove box damper hook (A), and release both glove box stops (B) by pushing them in,

GETtheMANUALS.org

then let glove box (C) hang down.

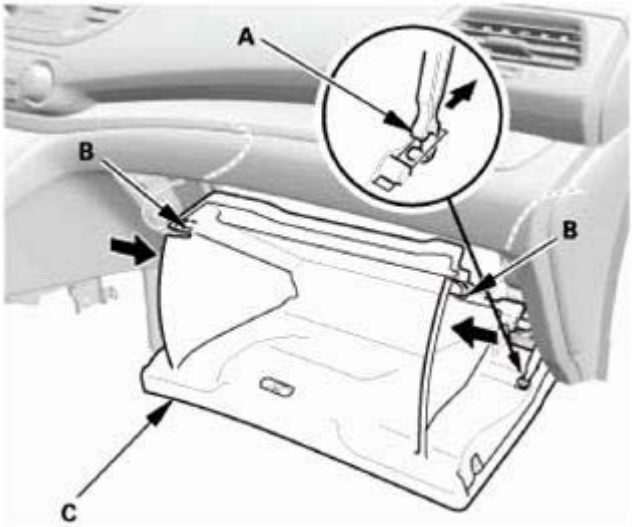

Fig. 532: Detaching Glove Box Damper Hook
Courtesy of AMERICAN HONDA MOTOR CO., INC.

2. R-134a Refrigerant Recovery/Recycling/Charging Station - Connection
    1. Connect an R-134a refrigerant recovery/recycling/charging station (A) to the high-pressure service port (B) and the low-pressure service port (C), as shown, following the equipment manufacturer's instructions.

GETtheMANUALS.org

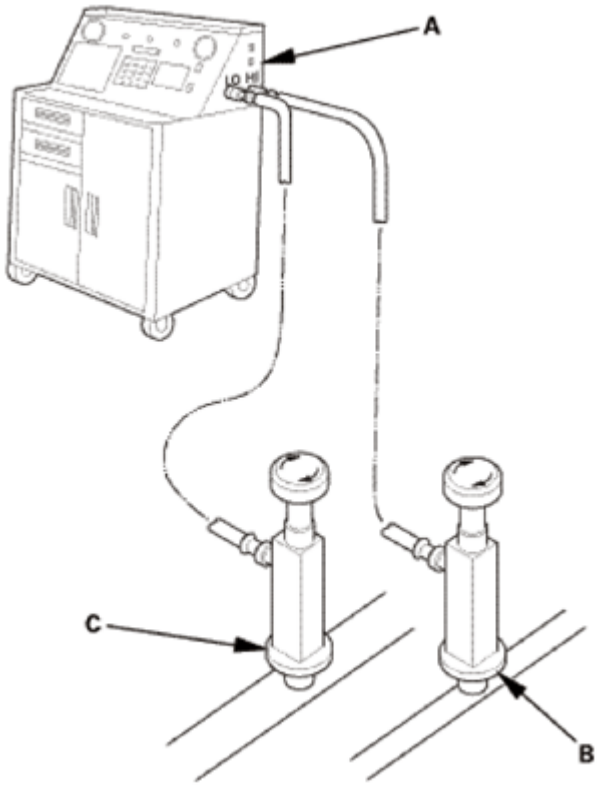

Fig. 533: Identifying Refrigerant Recovery/Recycling/Charging Station, High And Low Pressure Service Port
Courtesy of AMERICAN HONDA MOTOR CO., INC.

3. A/C Refrigerant - Recovery
    1. Recover the refrigerant from the A/C system.
    2. Measure the amount of refrigerant oil removed from the A/C system after the recovery process is completed. Be sure to put the same amount of new refrigerant oil back into the A/C system before charging.
4. Front Grille
    1. Apply protective tape (A) to the front grille lower trim (B).

GETtheMANUALS.org

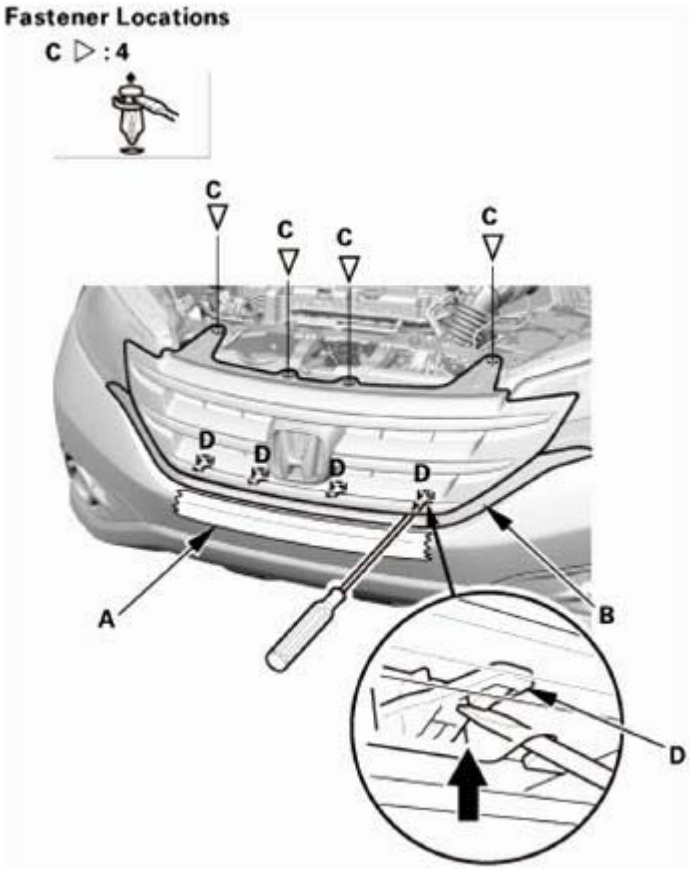

Fig. 534: Applying Protective Tape To Front Grille Lower Trim
Courtesy of AMERICAN HONDA MOTOR CO., INC.

2. Remove the clips (C) and detach the hooks (D).
3. Insert a shop towel (A) between the front grille (B) and the front grille lower trim (C).

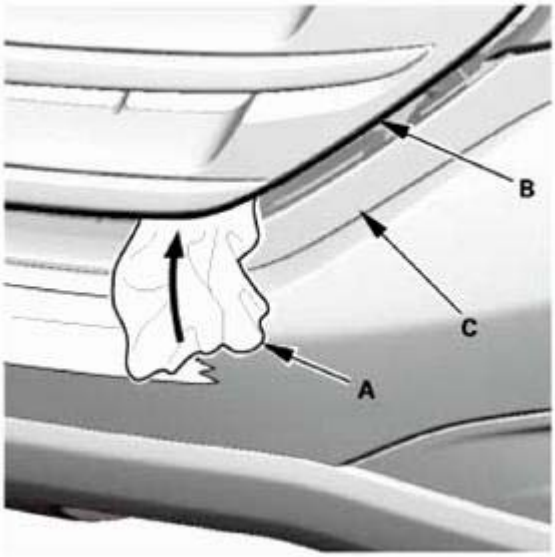

GETtheMANUALS.org

Fig. 535: Inserting Shop Towel Between Front Grille And Front Grille Lower Trim
Courtesy of AMERICAN HONDA MOTOR CO., INC.

4. Insert a flat-tip screwdriver (A) into the opening at the front grille (B), then turn the screwdriver to detach the clip (C).

NOTE: Repeat this procedure on the opposite side.

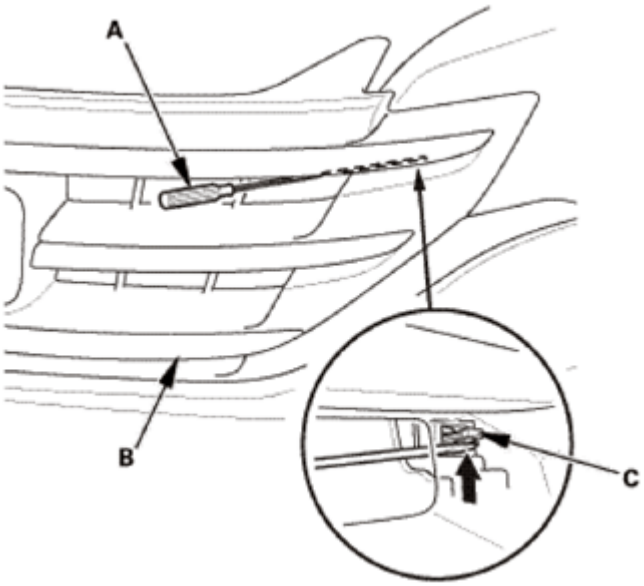

Fig. 536: Inserting Flat-Tip Screwdriver Into Opening At Front Grille
Courtesy of AMERICAN HONDA MOTOR CO., INC.

5. Remove the front grille (A).

GETtheMANUALS.org

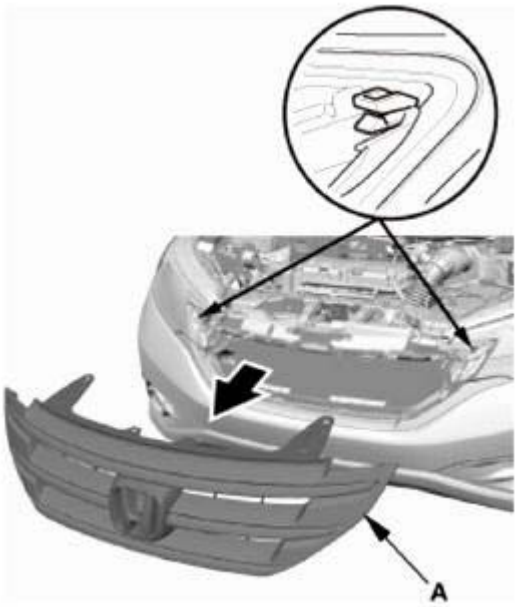

Fig. 537: Removing Front Grille
Courtesy of AMERICAN HONDA MOTOR CO., INC.

5. Front Wheel Arch Protector Front Side As Needed - Both Sides

NOTE: Repeat on the opposite side.

1. Remove the screws (A) and the clips (B) securing the front wheel arch protector (C).
2. Carefully pry out the clip portions of the wheel arch protector with the appropriate trim tool to detach the clips (D, E), then detach the wheel arch protector front side as needed.
3. Put a shop towel (F) in the opening between the front wheel arch protector and the front fender.

GETtheMANUALS.org

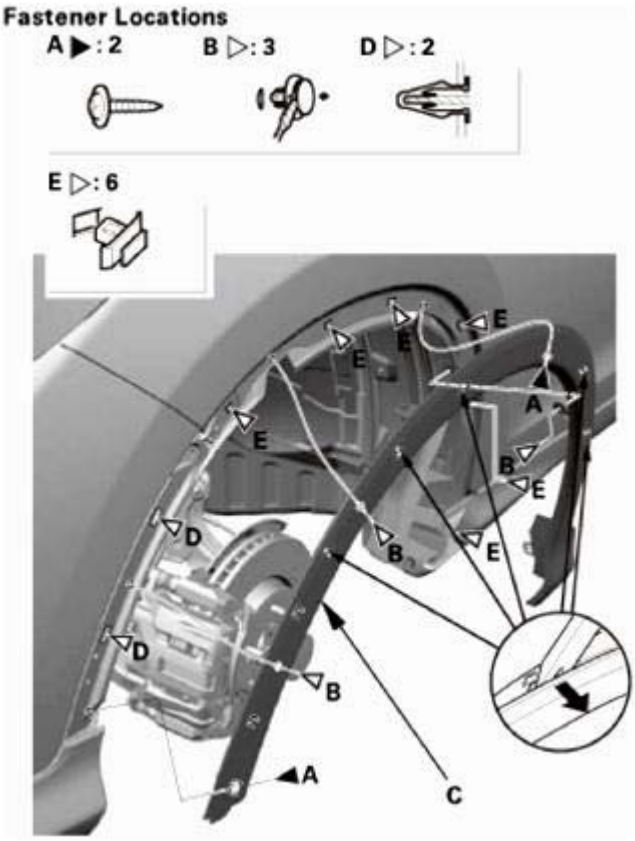

Fig. 538: Removing Wheel Arch Protector Front Side Using Tool
Courtesy of AMERICAN HONDA MOTOR CO., INC.

Fig. 539: Placing Shop Towel In Opening Between Front Wheel Arch Protector And Front Fender
Courtesy of AMERICAN HONDA MOTOR CO., INC.

6. Front Bumper
    1. Remove the screws (A), the bolts (B), and the clips (C) securing the front bumper (D).

GETtheMANUALS.org

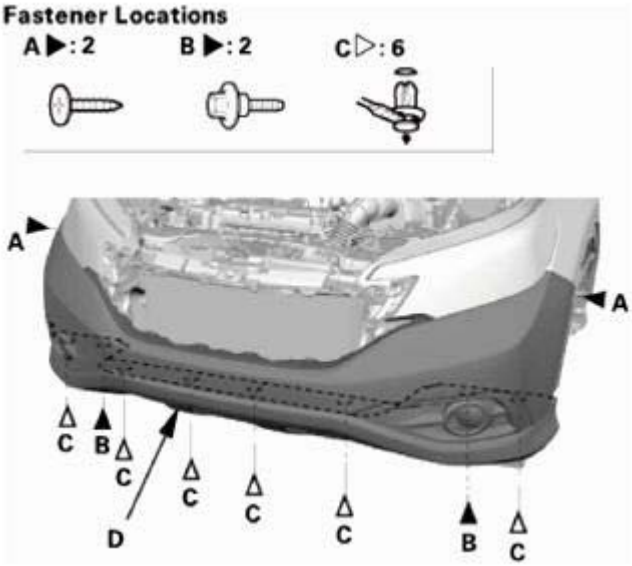

Fig. 540: Identifying Front Bumper, Bolts, Screws And Clips
Courtesy of AMERICAN HONDA MOTOR CO., INC.

2. Pull out the front bumper (A) from the side spacer (B). Repeat this step on the opposite side.

Fig. 541: Removing Front Bumper From Side Spacer
Courtesy of AMERICAN HONDA MOTOR CO., INC.

3. Detach the clip (A). Repeat this step on the opposite side.

GETtheMANUALS.org

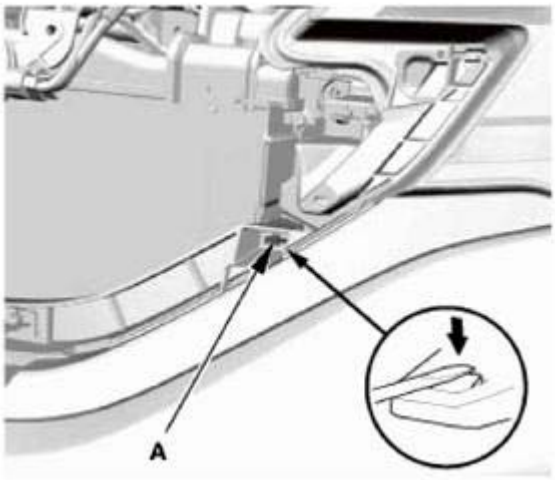

Fig. 542: Removing Front Bumper Clip Using Tool
Courtesy of AMERICAN HONDA MOTOR CO., INC.

4. With the help of an assistant, pull out both sides of the front bumper (A) from the upper beam (B).

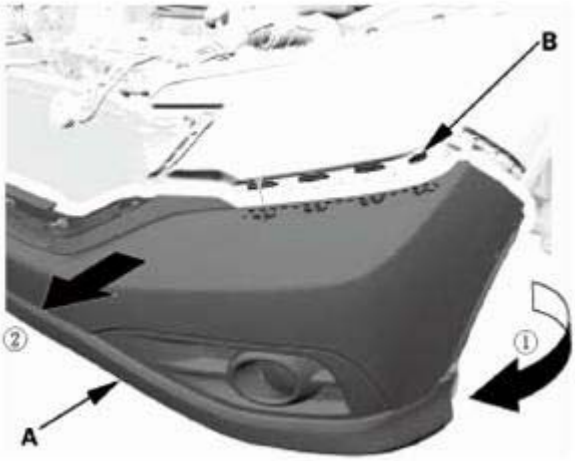

Fig. 543: Removing Front Bumper From Upper Beam
Courtesy of AMERICAN HONDA MOTOR CO., INC.

5. With the help of an assistant, disconnect the connectors (A), then remove the front bumper (B).

GETtheMANUALS.org

Fig. 544: Identifying Front Bumper And Connectors
Courtesy of AMERICAN HONDA MOTOR CO., INC.

7. Front Bumper Upper Duct
    1. Remove the clips (A), then remove the front bumper upper duct (B).

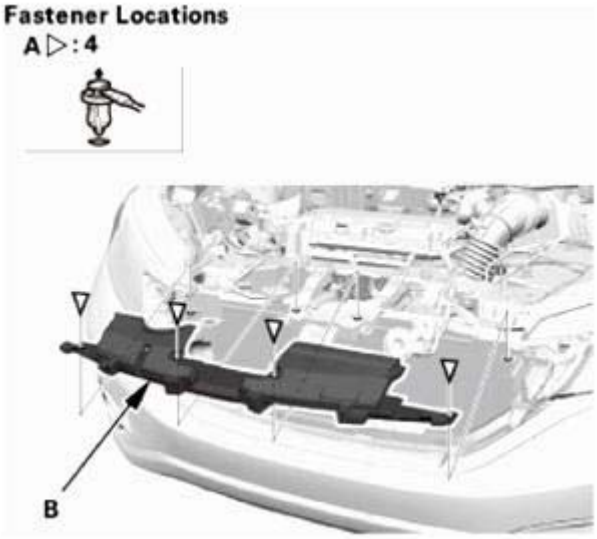

Fig. 545: Identifying Front Bumper Upper Duct And Clips
Courtesy of AMERICAN HONDA MOTOR CO., INC.

8. Front Grille Bracket
    1. Remove the clips (A), then remove the front grille bracket (B).

GETtheMANUALS.org

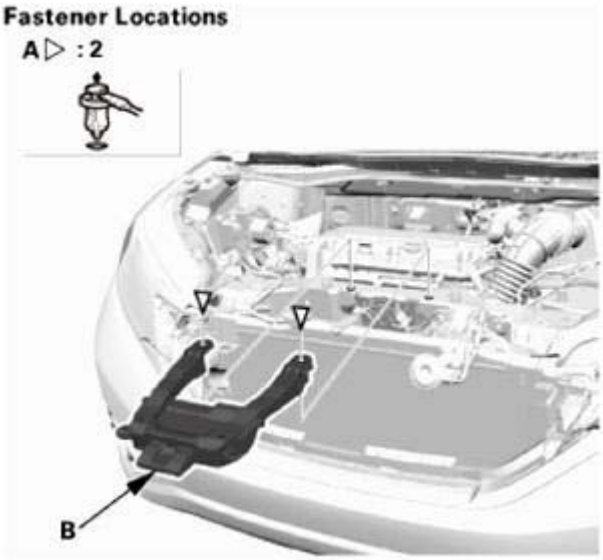

Fig. 546: Identifying Front Grille Bracket And Screws
Courtesy of AMERICAN HONDA MOTOR CO., INC.

9. Horn and Bracket Assembly
    1. Disconnect the connector.
    2. Remove the horn (A) and the bracket (B) as an assembly.

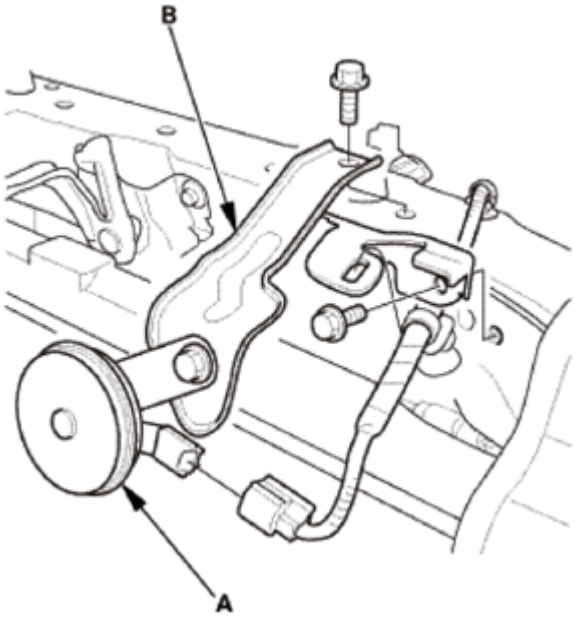

Fig. 547: Identifying Horn And Bracket
Courtesy of AMERICAN HONDA MOTOR CO., INC.

10. Hood Latch
    1. Remove the bolts (A), then remove the hood latch (B) from the body. Disconnect the hood opener

GETtheMANUALS.org

cable (C) from the latch.

2. Disconnect the connector (D).

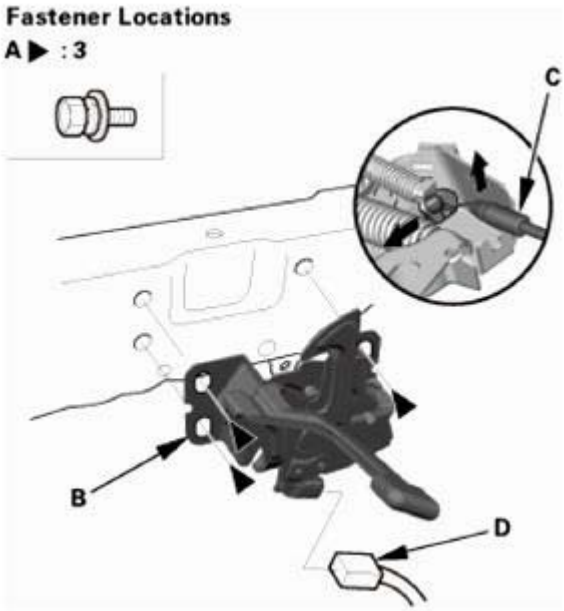

Fig. 548: Disconnecting Hood Opener Cable From Latch
Courtesy of AMERICAN HONDA MOTOR CO., INC.

11. A/C Line - Disconnection (A/C Condenser Side)
    1. Disconnect the discharge hose (A) with a O-ring (B).

NOTE: **Plug or cap the lines immediately after disconnecting them to avoid moisture and dust contamination.**

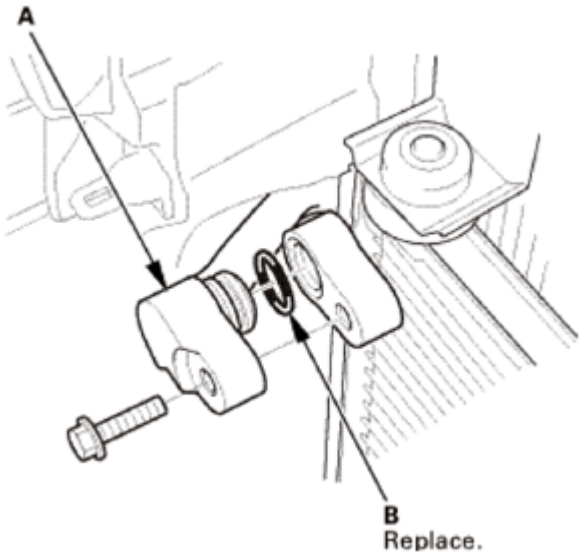

GETtheMANUALS.org

Fig. 549: Identifying A/C Line Discharge Hose And O-Ring
Courtesy of AMERICAN HONDA MOTOR CO., INC.

2. Disconnect the receiver line (A) with a O-ring (B).

NOTE: **Plug or cap the lines immediately after disconnecting them to avoid moisture and dust contamination.**

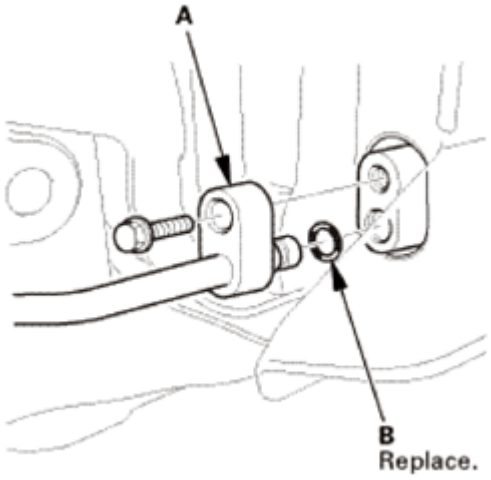

Fig. 550: Identifying A/C Receiver Line And O-Ring
Courtesy of AMERICAN HONDA MOTOR CO., INC.

12. Radiator Mounting Bracket, Upper Both
    1. Remove the radiator mount upper brackets.

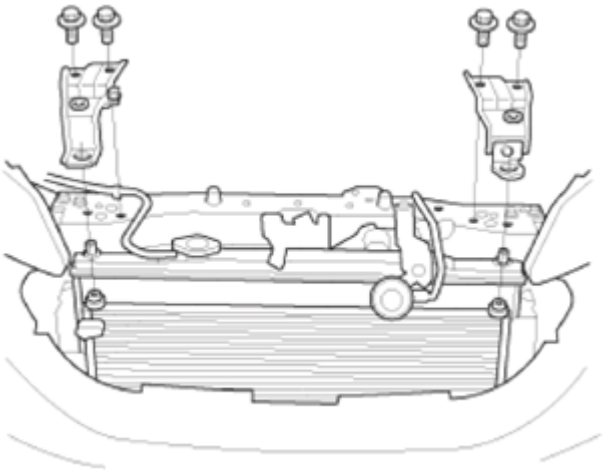

Fig. 551: Identifying Radiator Mount Upper Brackets Assembly
Courtesy of AMERICAN HONDA MOTOR CO., INC.

13. A/C Condenser Assembly

GETtheMANUALS.org

1. Remove the A/C condenser (A).

NOTE: **Be careful not to damage the radiator and A/C condenser fins when removing the A/C condenser.**

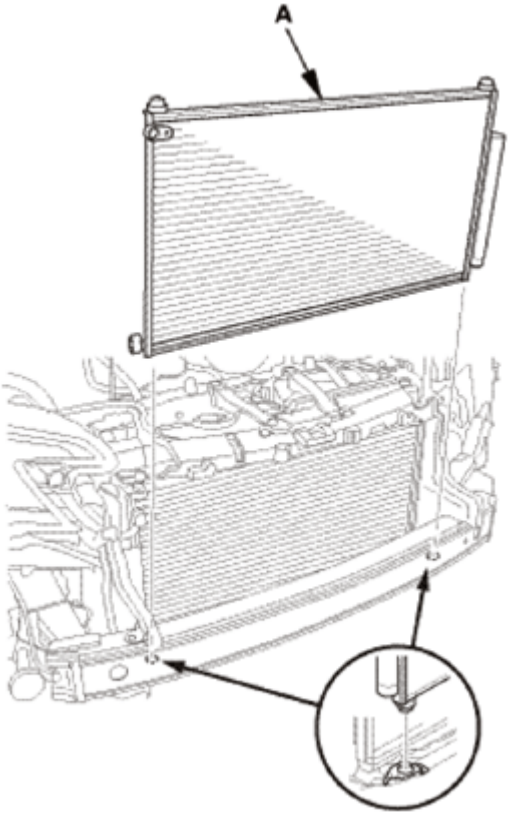

Fig. 552: Identifying A/C Condenser
Courtesy of AMERICAN HONDA MOTOR CO., INC.

14. Receiver/Dryer Desiccant
    1. Remove the cap (A) and the O-ring (B).
    2. Remove the desiccant (C).

GETtheMANUALS.org

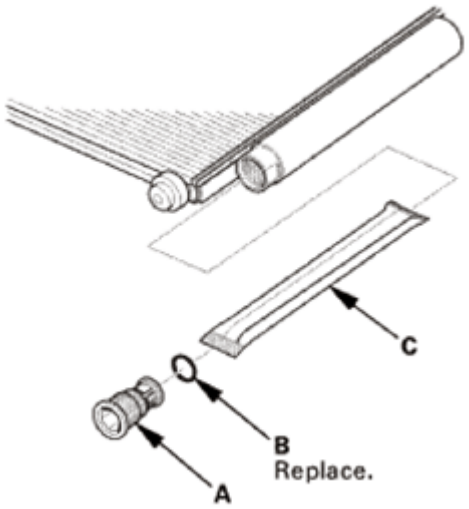

Fig. 553: Identifying Receiver/Dryer Desiccant, Cap And O-Ring
Courtesy of AMERICAN HONDA MOTOR CO., INC.

INSTALLATION

CAUTION:

- **Air conditioning refrigerant or lubricant vapor can irritate your eyes, nose, or throat.**
- **Be careful when connecting service equipment.**
- **Do not breathe refrigerant or vapor.**
- **Do not operate the leak detector near flammable vapors. Its sensor operates at high temperatures, and could ignite the vapors, resulting in personal injury and/or damage to the equipment.**

NOTE:

- **If an accidental system discharge occurs, ventilate the work area before resuming service.**
- **Additional health and safety information may be obtained from the refrigerant and lubricant manufacturers.**
- **Check the system for leaks using an R-134a refrigerant leak detector with an accuracy of 14 g (0.5 oz) per year or better.**
- **If you're installing a new desiccant, add refrigerant oil.**
- **Replace the O-rings with new ones at each fitting, and apply a thin coat of refrigerant oil before installing them. Be sure to use the correct O-rings for HFC-134a (R-134a) to avoid leakage.**
- **Use only PAG refrigerant oil for HFC-134a A/C systems.**
- **To avoid contamination, do not return the oil to the container once dispensed, and never mix it with other refrigerant oils.**
- **Immediately after using the oil, dispose of any remaining oil in the container, due to moisture absorption and short shelf life.**

GETtheMANUALS.org

- **Do not spill the refrigerant oil on the vehicle; it may damage the paint; if the refrigerant oil contacts the paint, wash it off immediately.**
- **Be careful not to damage the radiator and the A/C condenser fins when installing the A/C condenser.**

1. A/C Refrigerant Oil - Replacement

   Recommended PAG oil: SP-10

   P/N 38897-P13-A01AH: 120 mL (4 fl oz)

   It is important to have the correct amount of refrigerant oil in the A/C system to ensure proper lubrication of the A/C compressor. Too little oil damages the A/C compressor; too much oil reduces the cooling capacity of the system, and can produce high vent temperatures.

   - To avoid contamination, do not return the oil to the container once dispensed, and never mix it with other refrigerant oils.
   - Immediately after using the oil, reinstall the cap on the container, and seal it to avoid moisture absorption.
   - Do not spill the refrigerant oil on the vehicle; it may damage the paint; if it gets on the paint, wash it off immediately.

   Add the recommended refrigerant oil in the amount listed if you replace any of the following parts.

   A/C condenser

(including dryer desiccant).....	25 mL (5/6 fl oz)
Evaporator.....	40 mL (1 1/3 fl oz)
Line or hose.....	10 mL (1/3 fl oz)
Dryer desiccant.....	10 mL (1/3 fl oz)
Leakage repair.....	25 mL (5/6 fl oz)
A/C compressor.....	Since the oil separator is equipped inside the A/C compressor for this vehicle, oil drainage is unnecessary at the time of A/C compressor replacement.

2. Receiver/Dryer Desiccant
   1. Install the desiccant (A).
   2. Install the cap (B) with a new O-ring (C) that is lubricated with clean refrigerant oil.

GETtheMANUALS.org

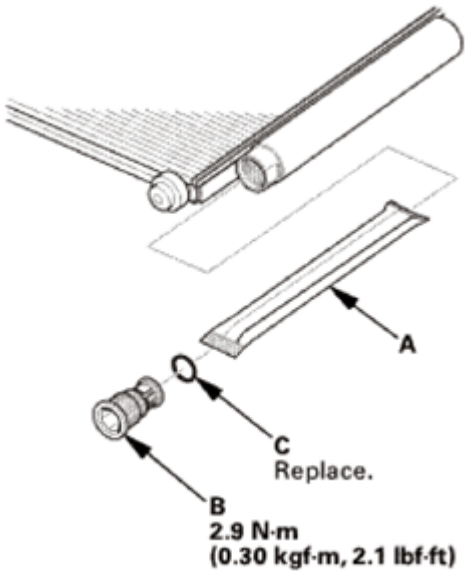

Fig. 554: Identifying Receiver/Dryer Desiccant, Cap And O-Ring With Torque Specifications
Courtesy of AMERICAN HONDA MOTOR CO., INC.

3. A/C Condenser Assembly
    1. Install the A/C condenser (A).

NOTE: **Be careful not to damage the radiator and A/C condenser fins when installing the A/C condenser.**

GETtheMANUALS.org

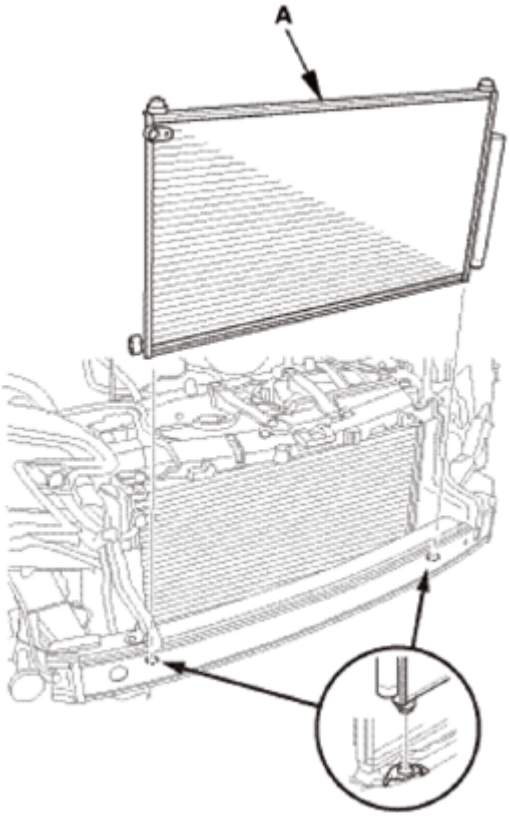

Fig. 555: Identifying A/C Condenser
Courtesy of AMERICAN HONDA MOTOR CO., INC.

4. Radiator Mounting Bracket, Upper Both
    1. Install the radiator mount upper brackets.

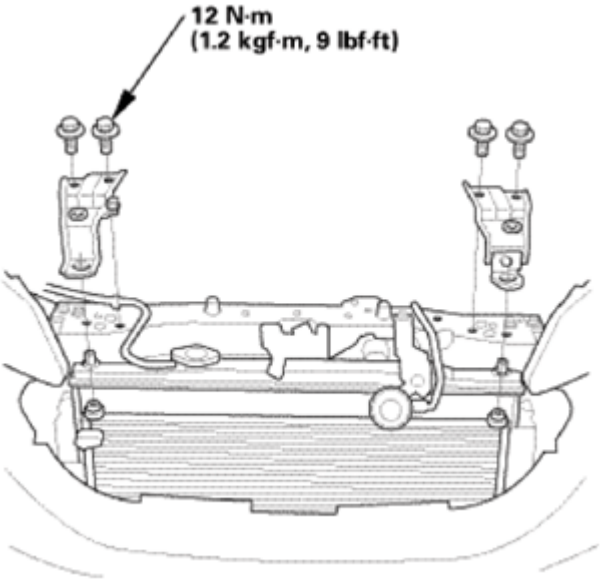

Fig. 556: Identifying Radiator Mount Upper Brackets With Torque Specifications

GETtheMANUALS.org

Courtesy of AMERICAN HONDA MOTOR CO., INC.

5. A/C Line - Reconnection (A/C Condenser Side)
    1. Remove the plugs or caps.
    2. Connect the receiver line (A) with a new O-ring (B) that is lubricated with clean refrigerant oil.

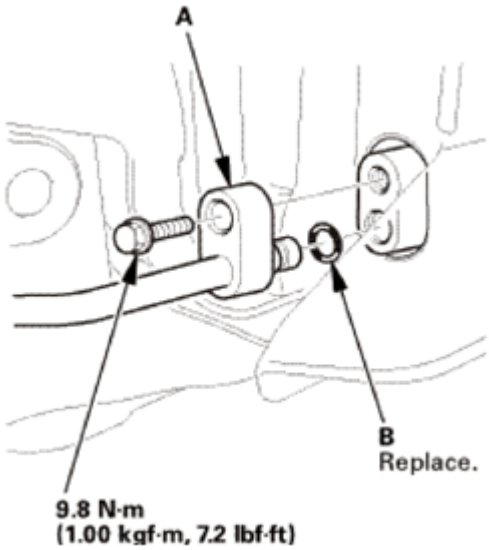

Fig. 557: Identifying A/C Receiver Line And O-Ring With Torque Specifications
Courtesy of AMERICAN HONDA MOTOR CO., INC.

3. Remove the plugs or caps.
4. Connect the discharge hose (A) with a new O-ring (B) that is lubricated with clean refrigerant oil.

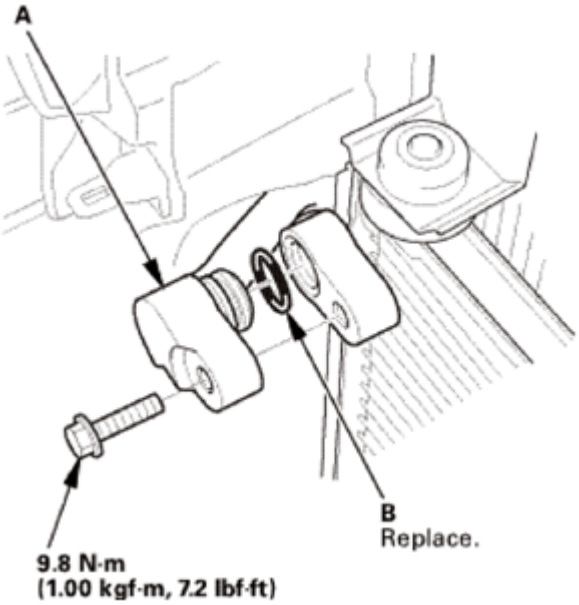

Fig. 558: Identifying A/C Line Discharge Hose And O-Ring With Torque Specifications

GETtheMANUALS.org

Courtesy of AMERICAN HONDA MOTOR CO., INC.

6. Hood Latch

NOTE: Apply multipurpose grease to the hood latch as indicated by the arrows.

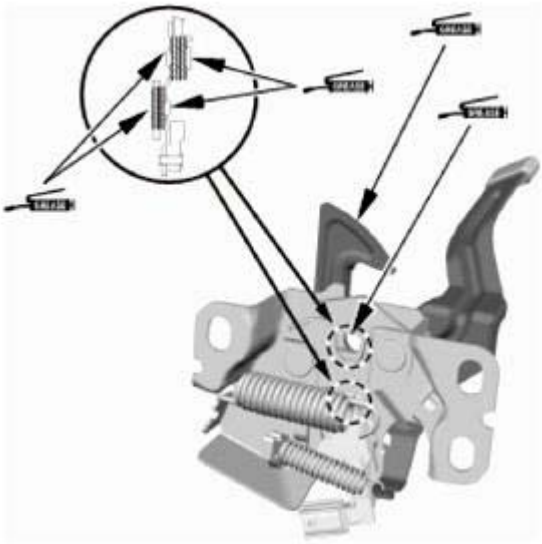

Fig. 559: Identifying Hood Latch Grease Applying Area
Courtesy of AMERICAN HONDA MOTOR CO., INC.

1. Connect the connector (A).
2. Connect the hood opener cable (B).
3. Install the hood latch (C), then install the bolts (D).

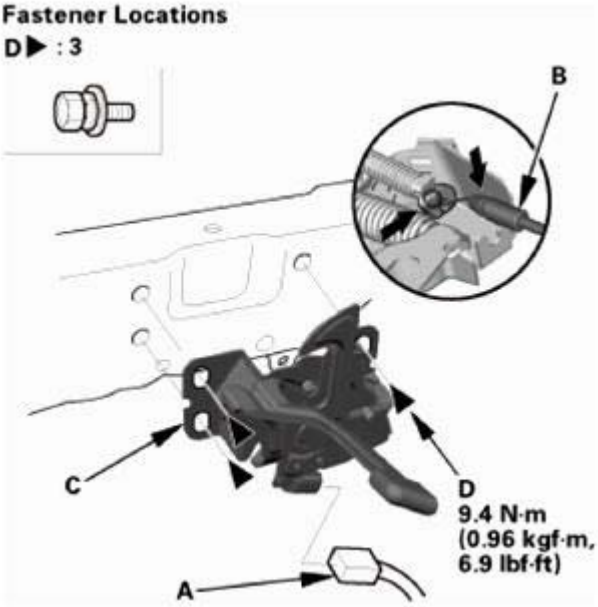

GETtheMANUALS.org

Fig. 560: Installing Hood Latch
Courtesy of AMERICAN HONDA MOTOR CO., INC.

7. Horn and Bracket Assembly
    1. Install the horn (A) and the bracket (B) as an assembly.
    2. Connect the connector.

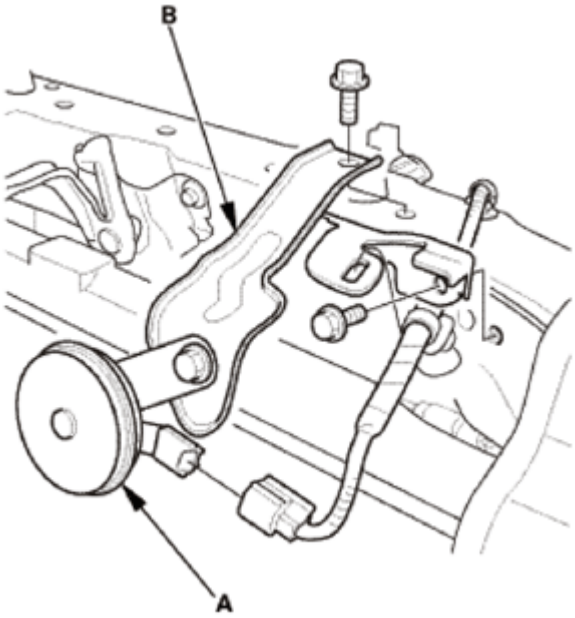

Fig. 561: Identifying Horn And Bracket
Courtesy of AMERICAN HONDA MOTOR CO., INC.

8. Front Grille Bracket
    1. Install the front grille bracket (A). Make sure the clips (B) snap into place securely.

GETtheMANUALS.org

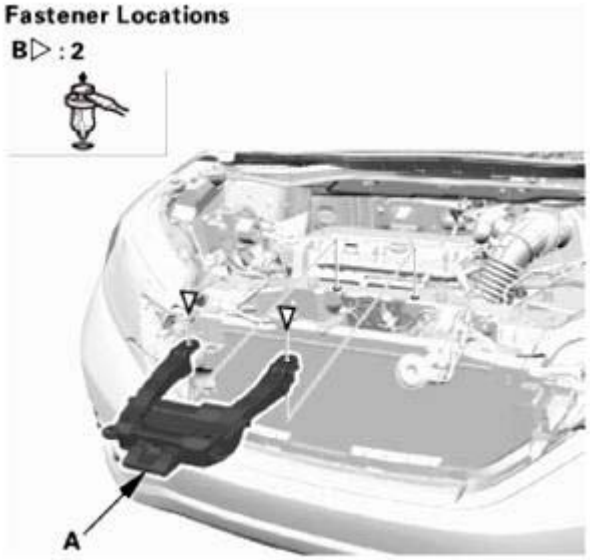

Fig. 562: Identifying Front Grille Bracket And Clips
Courtesy of AMERICAN HONDA MOTOR CO., INC.

9. Front Bumper Upper Duct
    1. Install the front bumper upper duct (A). Make sure the clips (B) snap into place securely.

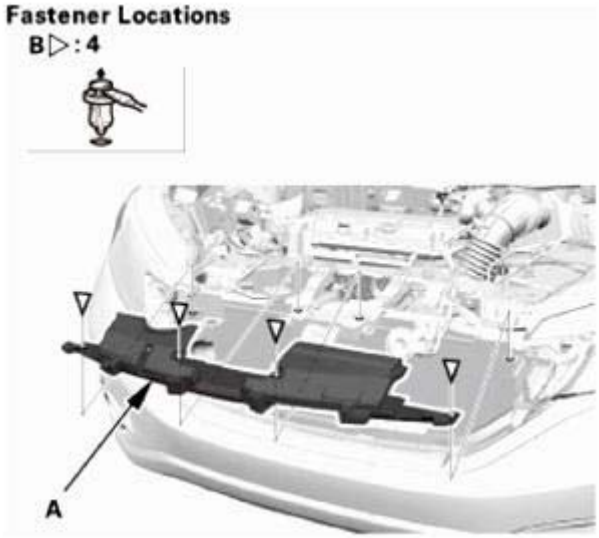

Fig. 563: Identifying Front Bumper Upper Duct And Clips
Courtesy of AMERICAN HONDA MOTOR CO., INC.

10. Front Bumper
    1. With the help of an assistant, connect the connectors (A), then install the front bumper (B).

GETtheMANUALS.org

Fig. 564: Identifying Front Bumper And Connectors
Courtesy of AMERICAN HONDA MOTOR CO., INC.

2. With the help of an assistant, install both sides of the front bumper (A) to the upper beam (B).

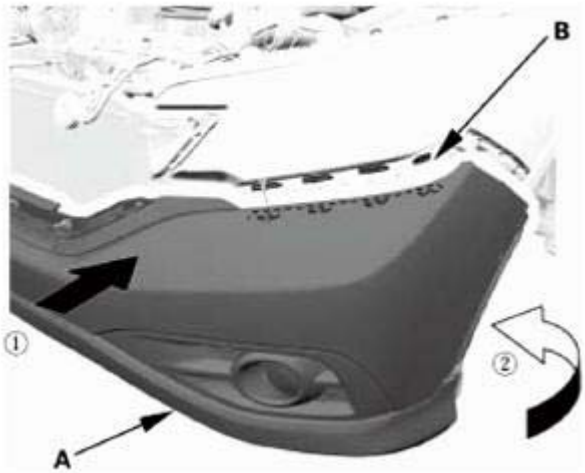

Fig. 565: Installing Front Bumper To Upper Beam
Courtesy of AMERICAN HONDA MOTOR CO., INC.

3. Push the front bumper (A) until the clip (B) snaps into place. Repeat this step on the opposite side.

GETtheMANUALS.org

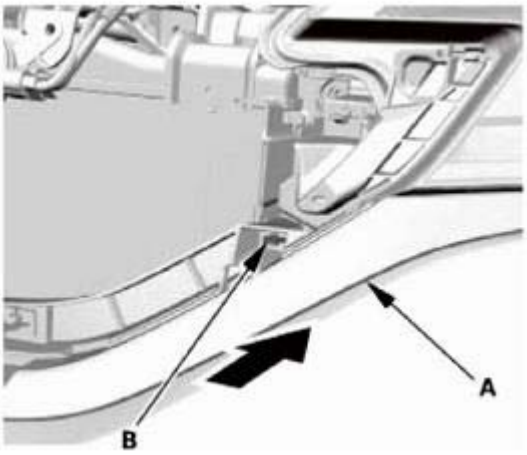

Fig. 566: Pushing Front Bumper
Courtesy of AMERICAN HONDA MOTOR CO., INC.

4. Install the front bumper (A) to the side spacer (B). Repeat this step on the opposite side.

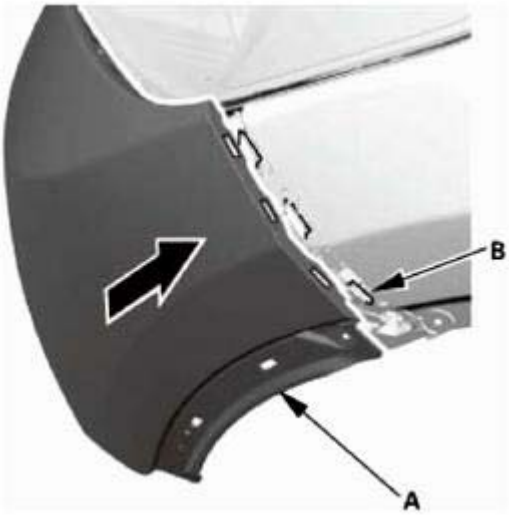

Fig. 567: Installing Front Bumper To Side Spacer
Courtesy of AMERICAN HONDA MOTOR CO., INC.

5. Install the screws (A), the bolts (B), and the clips (C) securing the front bumper (D).

GETtheMANUALS.org

Fig. 568: Identifying Front Bumper, Bolts, Screws And Clips With Torque Specifications
Courtesy of AMERICAN HONDA MOTOR CO., INC.

11. Front Wheel Arch Protector Front Side As Needed - Both Sides
    1. Install the front wheel arch protector (A), then install the screws (B) and the clips (C). Make sure the clips (D, E) snap into place securely. Repeat this step on the opposite side.

GETtheMANUALS.org

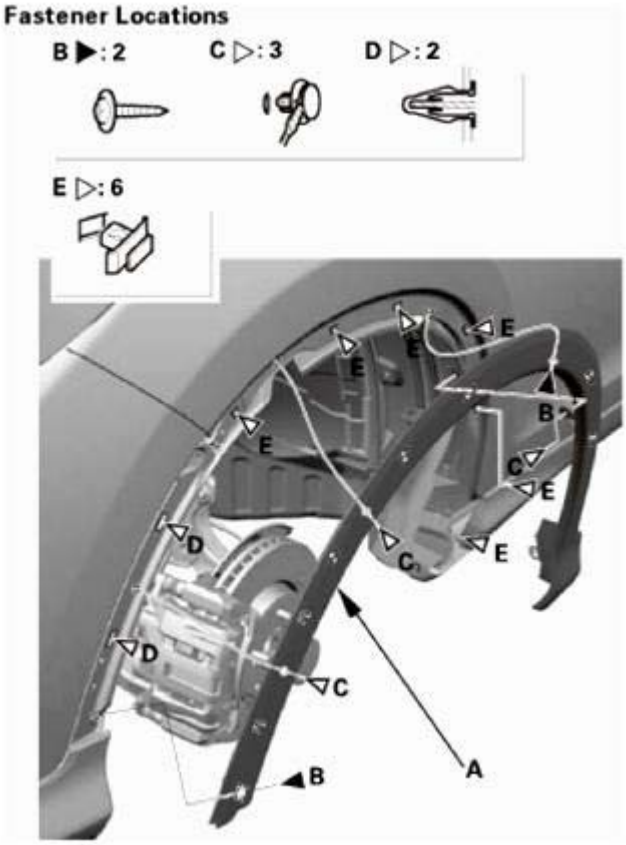

Fig. 569: Identifying Front Wheel Arch Protector, Clips And Screws
Courtesy of AMERICAN HONDA MOTOR CO., INC.

12. Front Grille
    1. Install the front grille (A) by pushing on the clip areas until the clips snap into place.
    2. Install the clips (B).

GETtheMANUALS.org

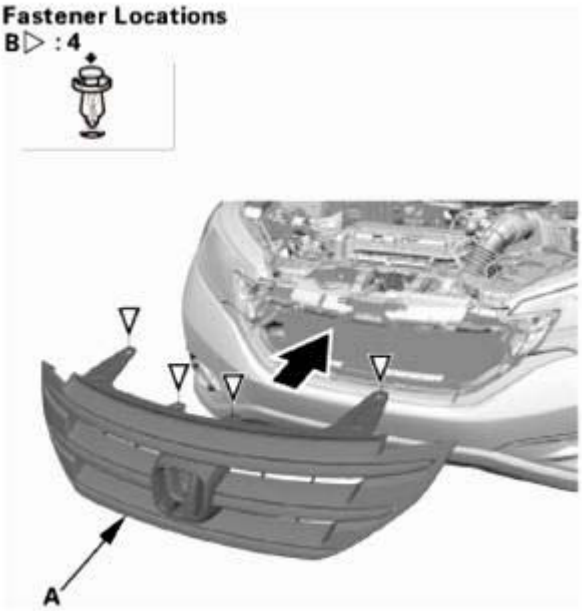

Fig. 570: Installing Front Grille
Courtesy of AMERICAN HONDA MOTOR CO., INC.

13. Hood Latch - Adjustment
    1. Slightly loosen the hood latch mounting bolts (A).

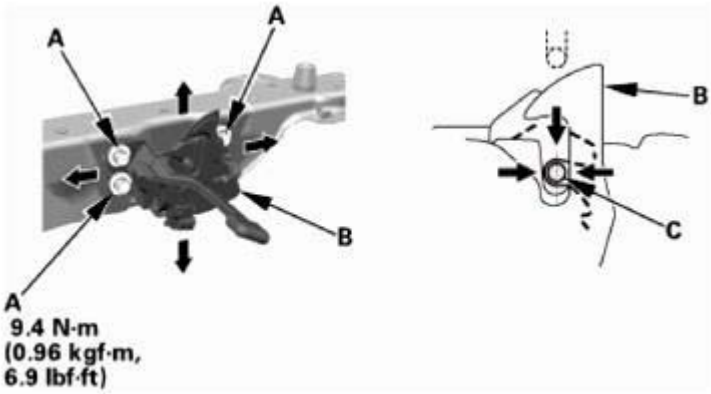

Fig. 571: Adjusting Hood Latch
Courtesy of AMERICAN HONDA MOTOR CO., INC.

    2. Adjust the hood latch (B) to obtain the proper height at the forward edge, and move the hood latch right or left until the striker (C) is centered in the hood latch.
    3. Tighten the hood latch mounting bolts to the specified torque.
    4. Make sure the hood opens properly and locks securely.
    5. Apply multipurpose grease to the hood latch as indicated by the arrows.

GETtheMANUALS.org

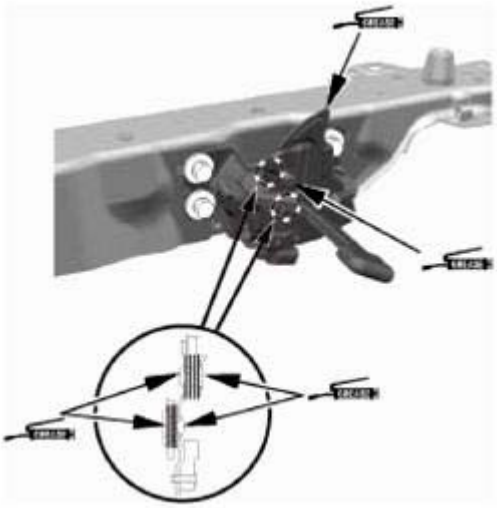

Fig. 572: Identifying Hood Latch Grease Applying Area
Courtesy of AMERICAN HONDA MOTOR CO., INC.

14. R-134a Refrigerant Recovery/Recycling/Charging Station - Connection
    1. Connect an R-134a refrigerant recovery/recycling/charging station (A) to the high-pressure service port (B) and the low-pressure service port (C), as shown, following the equipment manufacturer's instructions.

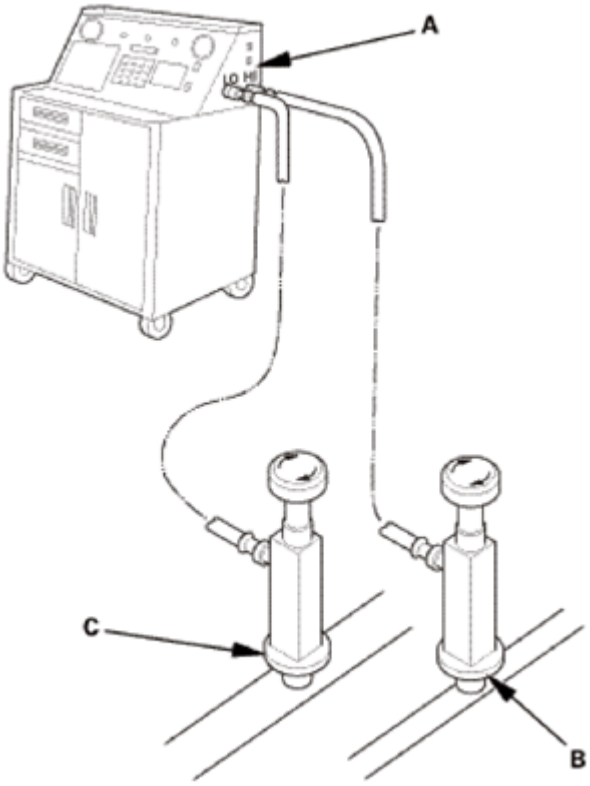

Fig. 573: Identifying Refrigerant Recovery/Recycling/Charging Station, High And Low

GETtheMANUALS.org

<u>Pressure Service Port</u>
Courtesy of AMERICAN HONDA MOTOR CO., INC.

15. A/C System Evacuation
    1. Evacuate the system. The vacuum pump should run for a minimum of 30 minutes to eliminate all moisture from the system. When the suction gauge reads -93.3 kPa (-700 mmHg, - 27.55 inHg) for at least 30 minutes, close all valves, and turn off the vacuum pump.
    2. If the suction gauge dose not reach approximately -93.3 kPa (-700 mmHg, -27.55 inHg) in 15 minutes, there is probably a large leak in the system. Partially charge the system, and check for leaks.
16. A/C Refrigerant - Charging
    1. Charge the system with the specified amount of R-134a refrigerant. Do not overcharge the system; the A/C compressor will be damaged.

       Select the appropriate units of measure for your refrigerant charging station.

       Refrigerant Capacity:

       385 to 435 g

       13.6 to 15.4 oz

       0.385 to 0.435 kg

       0.849 to 0.959 lbs

17. A/C Refrigerant - Leak Check

Leak Detector Usage Tips (Refer to the Operator's Manual for complete operating instructions)

- Position the vehicle in a wind-free work area. This will aid in detecting small leaks.
- When using the leak detector for the first time, allow it to warm up for 2 minutes with the probe in a clean atmosphere. This lets the temperature sensor in the detector stabilize.
- The calibration check should be done in the "Search 2" mode. Once that is done, the other check modes do not need calibrating.
- When leak checking through the HVAC module drain hose, avoid drawing water into the probe. Water can damage the internal pump and sensor.
- Avoid creasing the flexible probe extension. Creases can restrict air flow and give false readings.
- Because the detector recalibrates itself for ambient gases, it may be necessary to move the detector away from the leak to clear the sensor. Once the sensor has cleared, recheck the suspected leak.
- When removing the clear probe tip, be careful not to lose the flow ball.
- R-134a is heavier than air; always check below and to the sides of all potential leak sources.
- Halogen leak detectors are sensitive to chemicals: windshield washing solutions, solvents/cleaners, and some vehicle adhesives. Keep these chemicals out of the area when doing leak detection.

GETtheMANUALS.org

Fluorescent Dye Usage Tips

- Use only Tracer-Stick single dose fluorescent dye capsules from Tracerline®. Other dyes contain solvents that may contaminate the refrigerant oil, leading to component failure.
- Adding excessive amounts of dye can damage the A/C compressor.
- PAG oil is water soluble, so condensation on the evaporator core or the refrigerant lines may wash the PAG oil and fluorescent dye away from the actual leak. Condensation may also carry dye through the HVAC module drain.
- After checking and repairing leaks, thoroughly clean any residual dye from the areas where leaks were found. Use GLO-AWAY dye cleaner, from Tracerline®, and hot water to remove the dye (follow the instructions on the bottle). Residual dye stains can cause misdiagnosis of any future A/C system leaks.
- If any refrigerant dye contacts an exterior paint surface, remove it by doing this:
  - Carefully wash the affected surfaces to remove any dirt, and to prevent paint scratching.
  - Mix water and isopropyl alcohol in a 50/50 mixture. Soak a soft 100 % cotton towel with the water/alcohol mixture, and place the cloth on the affected areas to remove the dye.
  - After removing the dye with the water/alcohol-soaked cloth, carefully wash the affected areas, and check that there is no remaining dye.

1. With the engine OFF, use a halogen leak detector first to detect the leak source. Follow a continuous path in order to ensure that you will not miss any possible leaks. Test the following areas of the system for leaks:

Possible Leak Area	Diagnostic Procedure with the Leak Detector	Notes
Service ports	• Check the service ports with caps installed • If the detector "sniffs" a leak, use fluorescent dye to confirm it	When capping the service ports, ensure that the seals on the port caps are in place, and that the caps are tight. The caps are used as the final seals in the system
A/C condenser	If the detector "sniffs" a leak, use fluorescent dye to confirm it	• Check for joints or connections coated with oily dust • Check for damaged and corroded areas • Check all fittings, couplings, brazed/welded areas and areas around attachment points • Move the probe slowly (1 in/second or less), and keep it within 1/4 in of the component being checked. This maximizes the chance of detecting a leak • If you detect a leak, blow compressed air over the area, then recheck for leaks. For large leaks, clearing the area with compressed air may help you pinpoint the leak source
	• Check at the evaporator	

GETtheMANUALS.org

Evaporator	drain hose • Check at the passenger's side vent and turn the blower on at low speed	
A/C lines	• Wiggle the rubber hoses when checking crimped metal ends • If the detector "sniffs" a leak, use fluorescent dye to confirm it	• Check all fittings, couplings, pressure switches, brazed/welded areas, and areas around attachment points on A/C lines and components • Check for damaged and corroded areas • Move the probe slowly (1 in/second or less), and keep it within 1/4 in of the component being checked. This maximizes the chance of detecting a leak

2. Close the quick coupler valves, then disconnect the quick couplers from the vehicle service ports.
3. Attach the universal connect set, from the Optimax Jr. Leak Detection Kit, to the service valve fitting. Close the control valve (the black knob on the connect set).
4. Attach the charging station low pressure hose quick coupler to the service valve fitting, and open the quick coupler valve. Evacuate the connect set using the charging station vacuum pump, then close the quick coupler valve.
5. Detach the universal connect set, and install a Tracer-Stick® dye capsule between the connect set and the service valve fitting (see the manufacturer's instructions for more detail).
6. Attach the quick coupler on the universal connect set to the low pressure service port on the vehicle. Open the charging station low pressure hose quick coupler valve, but do not open the control valve.
7. Start the engine, and set the A/C system to maximum cooling. Open the control valve to let refrigerant and the dye enter the A/C system through the low pressure service port. Close the control valve when the Tracer-Stick® dye capsule is empty.
8. Run the engine and A/C system for 15 minutes to thoroughly circulate the dye. Then shut the engine off, and inspect the following areas of the system for leaks:

NOTE:

- **Check for leaks in a dark work area, and use the UV light and the special glasses from the leak check kit. Other UV lights may not work well with the Tracer-Stick® dye.**
- **Small leaks may take up to 1 week of vehicle operation (with normal A/C use) to become visible.**

Possible Leak Area	Diagnostic Procedure with Fluorescent Dye
Service ports	If a leak is found, replace the cap/o-ring seal or A/C line as needed
A/C lines	• Use a permanent marker pen to circle the leak area • If a leak is found, remove and replace the A/C line

GETtheMANUALS.org

A/C condenser	• If a leak is found, remove the A/C condenser • Determine whether leak is in the A/C condenser or the receiver/dryer • Use a permanent marker pen to circle the leak area • Replace either the receiver/dryer, or the A/C condenser, depending upon which is leaking
A/C compressor	• Check for leaks at all of the A/C compressor joints, the clutch center, the A/C compressor front housing bolts, and the scroll bolts on the back of the A/C compressor • If a leak is found, use a permanent marker pen to circle the leak area • If the A/C compressor relief valve appears to be leaking, determine whether the leak is coming from the relief valve, or the joint between the A/C compressor casing and the valve. If the leak is from the relief valve, check the A/C system pressures, and refer to the pressure test table in the A/C system test. If the leak is from the casing/valve joint, replace the A/C compressor relief valve • If the leak is coming from the suction hose and/or discharge hose fittings on the A/C compressor, clean the A/C fittings and replace the suction/discharge fitting O-rings • For all other A/C compressor leaks, remove and replace the A/C compressor
Evaporator	• Start checking for evaporator leaks by illuminating the evaporator drain tube area • If a leak is found, remove the evaporator core • Determine whether leak is from evaporator or expansion valve • Use a permanent marker pen to circle leak area • Replace the expansion valve, or the evaporator core, depending upon which is leaking

18. A/C System - Test
    1. Insert a thermometer (A) in the center vent.
    2. Place a hygro-thermometer (B) near the blower unit's recirculation inlet duct.
    3. Test conditions:
        - Move the vehicle out of direct sunlight and let it cool down to the surrounding (ambient) temperature. If necessary, wash the vehicle to cool it down more quickly.
        - The blower intake temperature must be at least 68°F (20°C).
        - Open the hood.
        - Open the front doors.
        - Start the engine.
        - Set the temperature control dial or temperature control button to MAX COOL, the mode control button to VENT, and the recirculation control button to RECIRCULATE.
        - Turn the A/C button on and the fan control dial or fan control button to Max.

GETtheMANUALS.org

- Run the engine at 1, 500 rpm.
- No driver or passengers in vehicle.

Fig. 574: Checking Delivery Temperature From Thermometer In Center Vent
Courtesy of AMERICAN HONDA MOTOR CO., INC.

4. Inspect the A/C components for the following conditions:
   - A/C compressor clutch not engaged.
   - Abnormal frost areas.
   - Unusual noises.

   If you observe any of these conditions, refer to the Symptom Troubleshooting Index.

5. After running the air conditioning for 10 minutes under the above test conditions, read the delivery temperature from the thermometer in the center vent, the intake temperature near the blower unit, and the discharge (high) and suction (low) pressures on the A/C gauges.
6. To complete the vent (delivery)/intake temperature chart:
   - Mark the vent (delivery) temperature on the vertical line.
   - Mark the intake temperature on the bottom line.
   - Draw a vertical line from the intake temperature mark.
   - Draw a horizontal line from the vent (delivery) temperature mark until it intersects the vertical line.

   NOTE: The vent temperature and intake temperature should intersect in the shaded area. Any measurements outside the line may

GETtheMANUALS.org

indicate the need for further inspection.

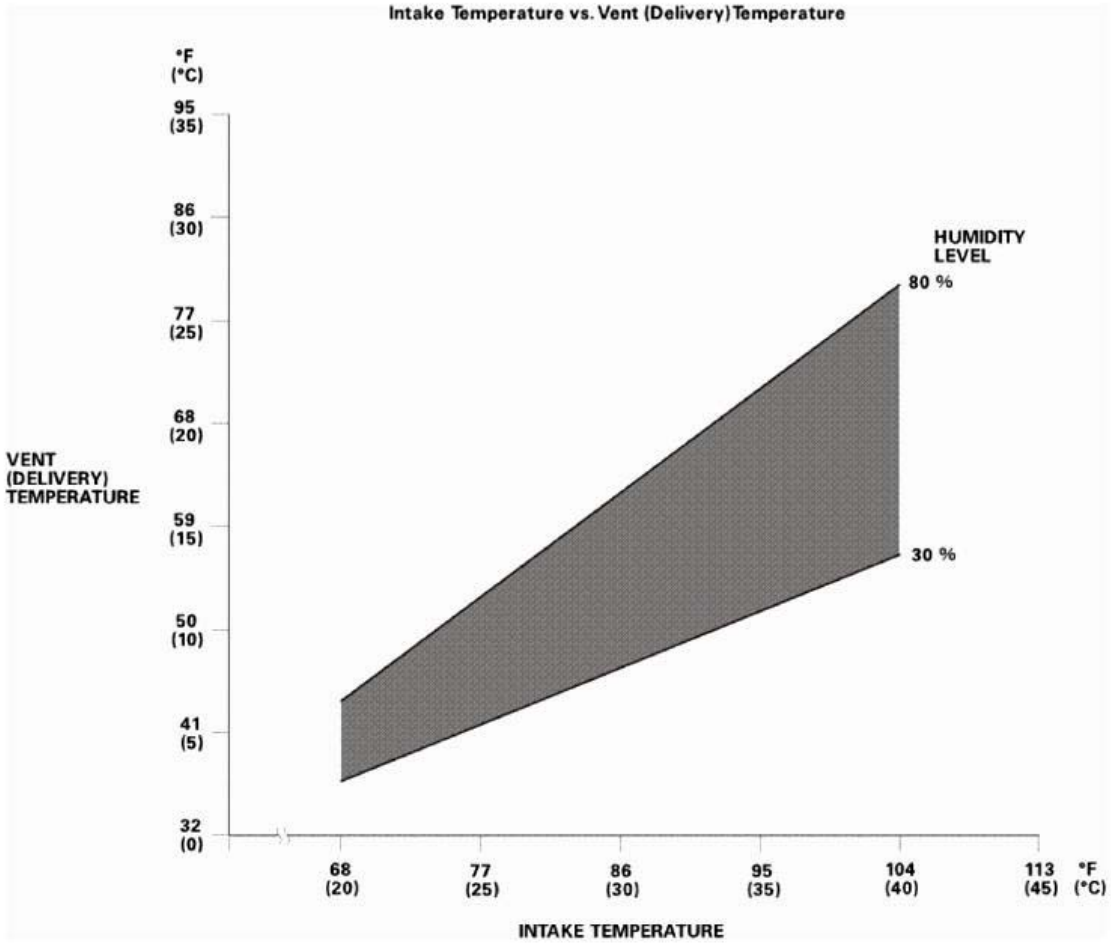

Fig. 575: Intake Temperature Versus Vent (Delivery) Temperature Graph
Courtesy of AMERICAN HONDA MOTOR CO., INC.

7. To complete the high side (discharge) pressure/intake temperature chart:
   - Mark the high side (discharge) pressure on the vertical line.
   - Mark the intake temperature on the bottom line.
   - Draw a vertical line from the intake temperature mark.
   - Draw a horizontal line from the high side (discharge) pressure mark until it intersects the vertical line.

NOTE: **The high side pressure and intake temperature should intersect in the shaded area. Any measurements outside the line may indicate the need for further inspection.**

GETtheMANUALS.org

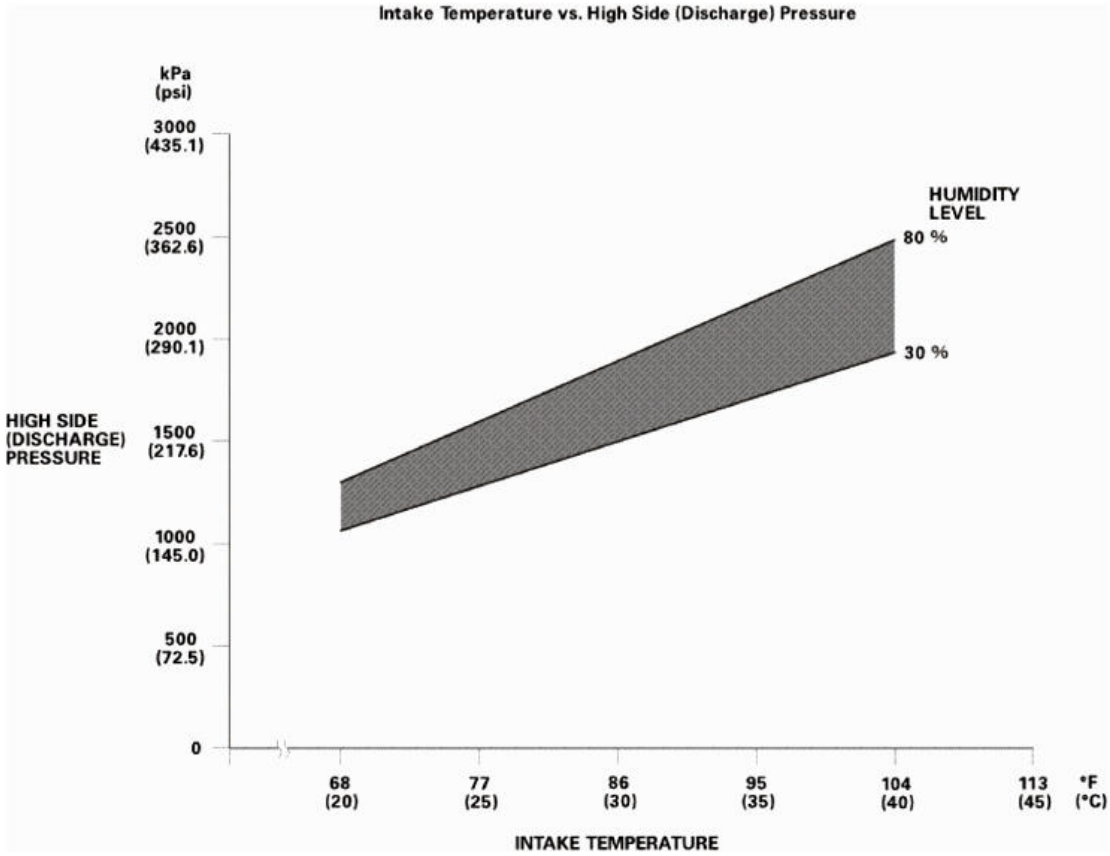

Fig. 576: Intake Temperature Versus High Side (Discharge) Pressure Graph
Courtesy of AMERICAN HONDA MOTOR CO., INC.

8. To complete the low side (suction) pressure/intake temperature chart:
   - Mark the low side (suction) pressure along the vertical line.
   - Mark the intake temperature along the bottom line.
   - Draw a vertical line from the intake temperature mark.
   - Draw a horizontal line from the low side (suction) pressure mark until it intersects the vertical line.

NOTE: **The low side pressure and intake temperature should intersect in the shaded area. Any measurements outside the line may indicate the need for further inspection.**

GETtheMANUALS.org

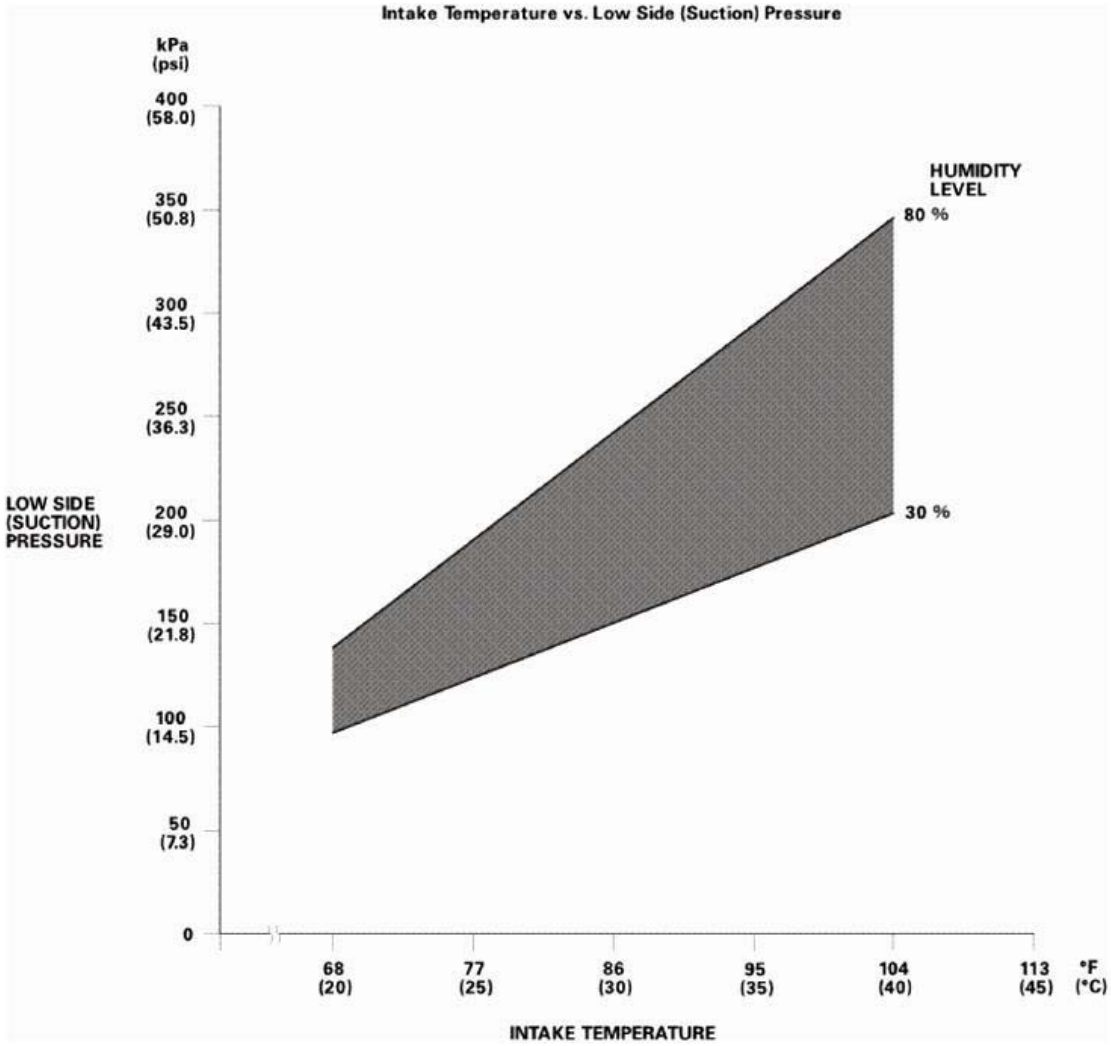

Fig. 577: Intake Temperature Versus Low Side (Suction) Pressure Graph
Courtesy of AMERICAN HONDA MOTOR CO., INC.

19. Glove Box - Move
    1. Install the glove box (A). Make sure the glove box stops (B) snap into place securely.
    2. Install the glove box damper hook (C).

GETtheMANUALS.org

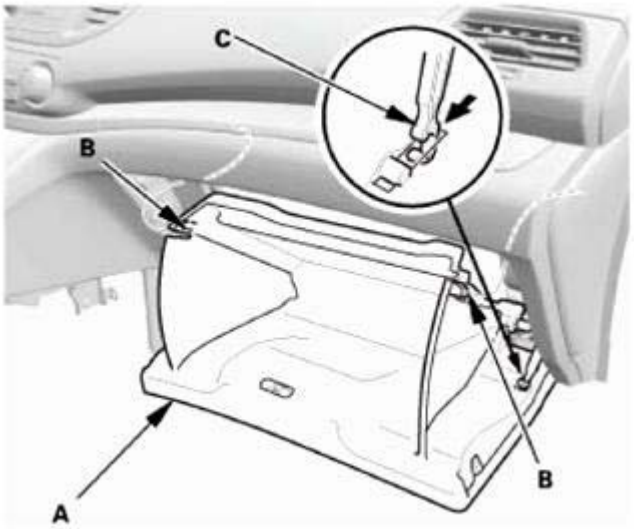

Fig. 578: Installing Glove Box Damper Hook
Courtesy of AMERICAN HONDA MOTOR CO., INC.

RECIRCULATION CONTROL MOTOR REMOVAL AND INSTALLATION

REMOVAL

1. Passenger's Dashboard Undercover
    1. Gently pull down the passenger's dashboard undercover (A) to detach the clips (B), then pull away the undercover to release the pins (C) from the holder (D).

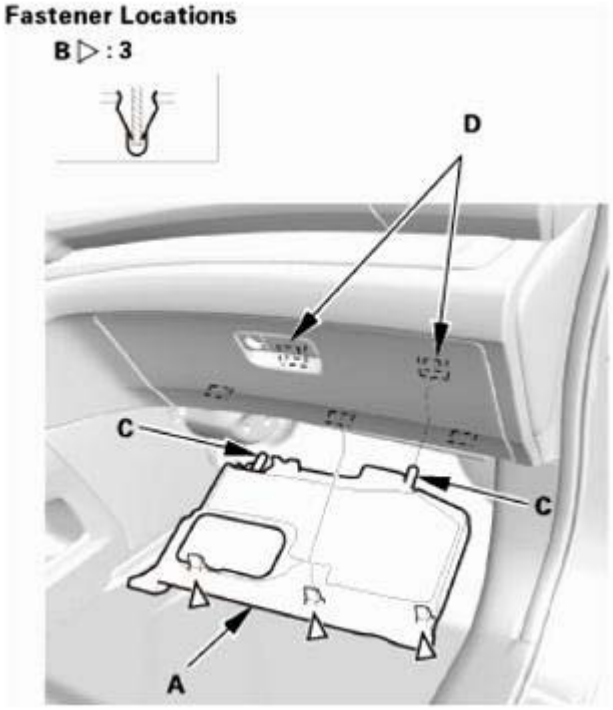

GETtheMANUALS.org

Fig. 579: Identifying Passenger Dashboard Undercover, Holder, Pins And Clips
Courtesy of AMERICAN HONDA MOTOR CO., INC.

2. Glove Box
    1. Remove the bolts (A).

Fig. 580: Identifying Glove Box Mounting Bolts
Courtesy of AMERICAN HONDA MOTOR CO., INC.

    2. Release both glove box stops (A) by pushing them in, then let the glove box (B) hang down.

Fig. 581: Releasing Glove Box Stops

GETtheMANUALS.org

Courtesy of AMERICAN HONDA MOTOR CO., INC.

3. Detach the glove box damper hook (A), then remove the glove box (B).

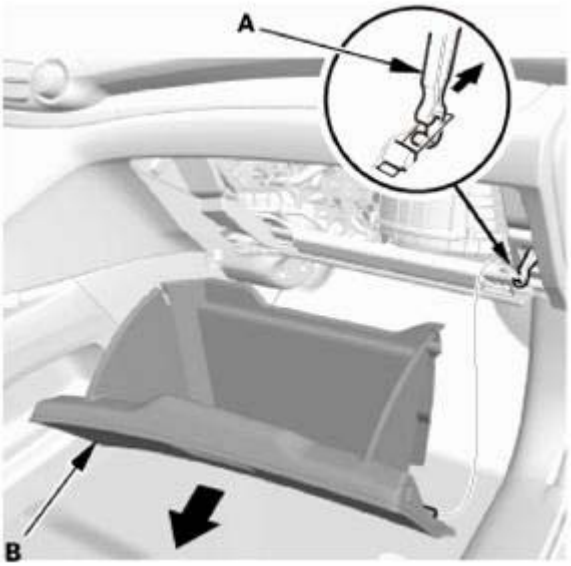

Fig. 582: Removing Glove Box
Courtesy of AMERICAN HONDA MOTOR CO., INC.

3. Glove Box Frame
    1. Remove the glove box frame (A).

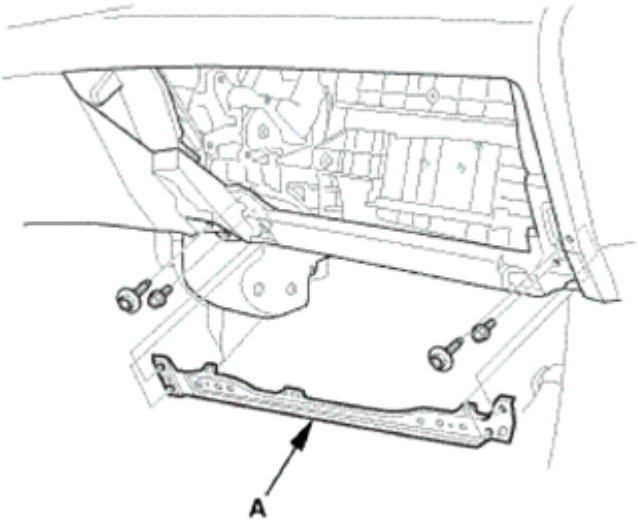

Fig. 583: Identifying Glove Box Frame
Courtesy of AMERICAN HONDA MOTOR CO., INC.

4. Passenger's Heater Duct
    1. Remove the passenger's heater duct (A).

GETtheMANUALS.org

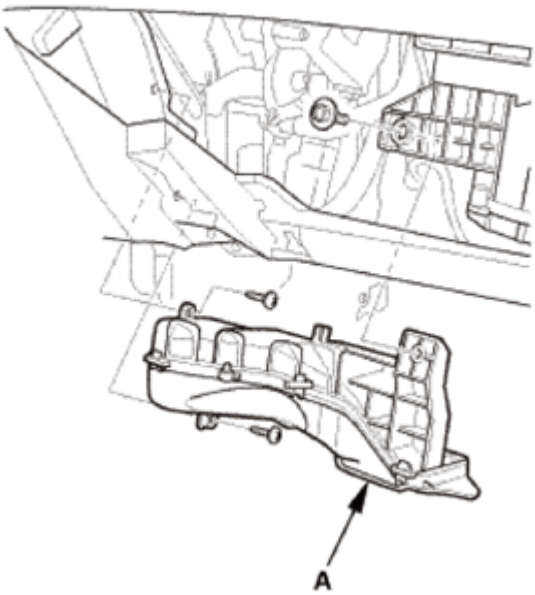

Fig. 584: Identifying Passenger Heater Duct
Courtesy of AMERICAN HONDA MOTOR CO., INC.

5. Cross Brace
    1. Cut the cross brace (A) in the glove box opening with diagonal cutters in the area shown, and remove it.

NOTE: Retain the cross brace to be reinstalled later.

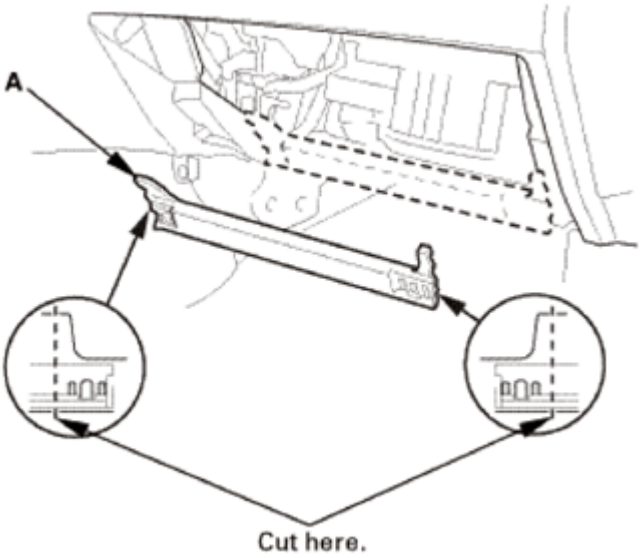

Fig. 585: Identifying Cross Brace Cutting Position
Courtesy of AMERICAN HONDA MOTOR CO., INC.

6. Blower Unit

GETtheMANUALS.org

1. Disconnect the blower motor connector (A).
2. Detach the harness clip (B).

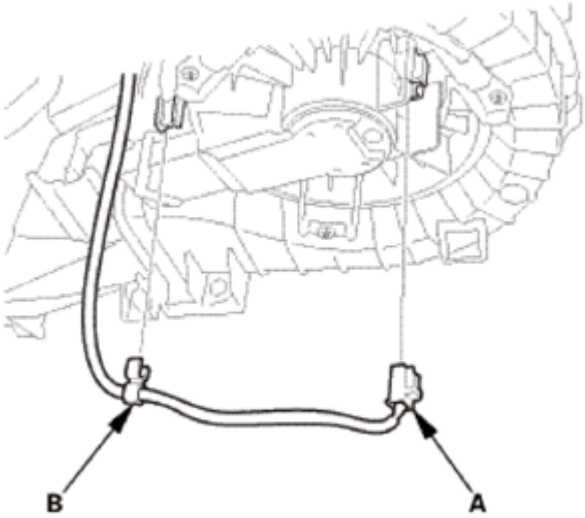

Fig. 586: Identifying Blower Motor Connector And Clips
Courtesy of AMERICAN HONDA MOTOR CO., INC.

3. Disconnect the recirculation control motor connector (A).
4. Detach the harness clips (B).

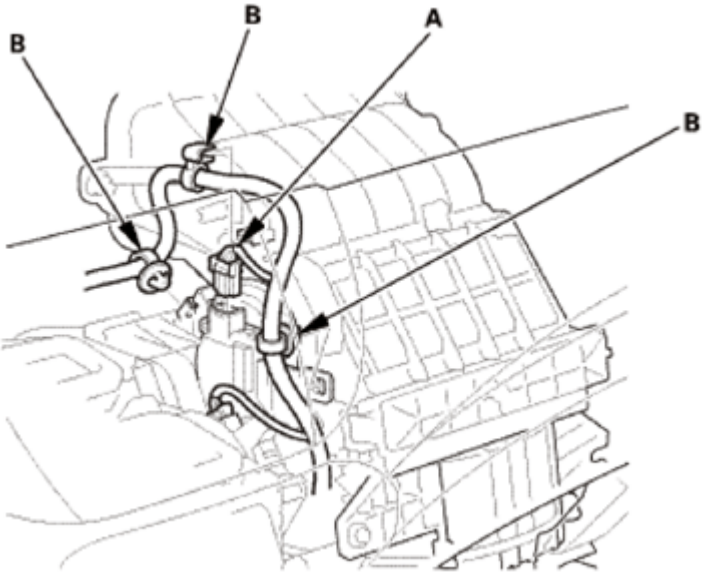

Fig. 587: Identifying Recirculation Control Motor Connectors And Clips
Courtesy of AMERICAN HONDA MOTOR CO., INC.

5. Remove the blower unit (A).

GETtheMANUALS.org

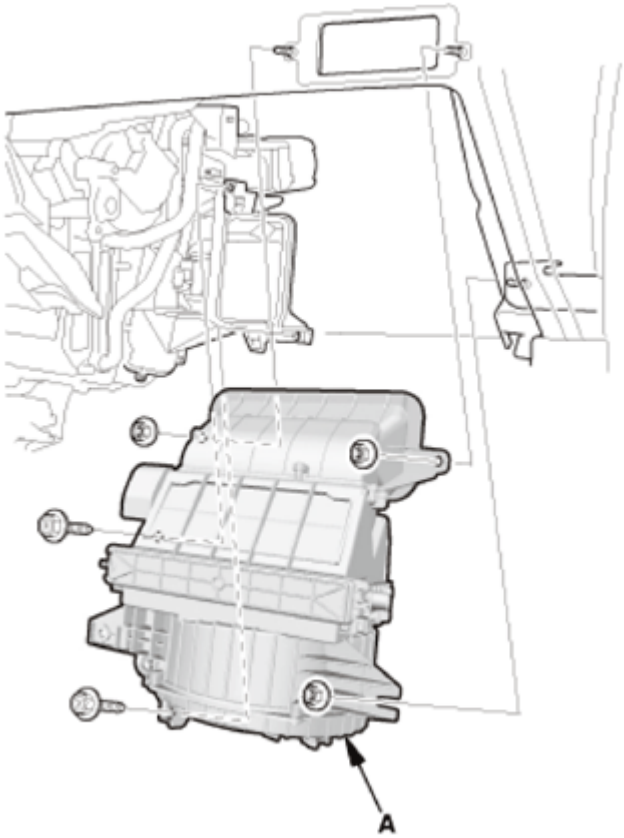

Fig. 588: Identifying Blower Unit
Courtesy of AMERICAN HONDA MOTOR CO., INC.

7. Recirculation Control Motor
    1. Remove the recirculation control motor (A).

GETtheMANUALS.org

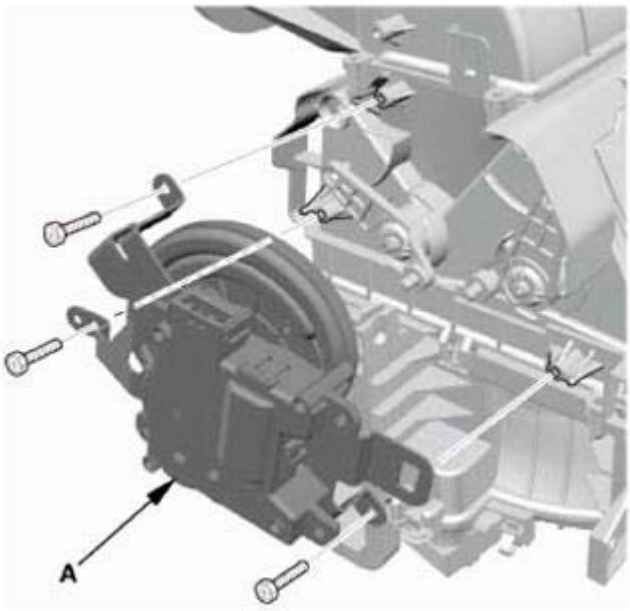

Fig. 589: Identifying Recirculation Control Motor
Courtesy of AMERICAN HONDA MOTOR CO., INC.

INSTALLATION

1. Recirculation Control Motor
    1. Make sure the damper lever pins in the motor lever are visible through the holes.
    2. While holding the recirculation control motor (A), install the self-tapping screws.
    3. After installation, make sure the motor runs smoothly.

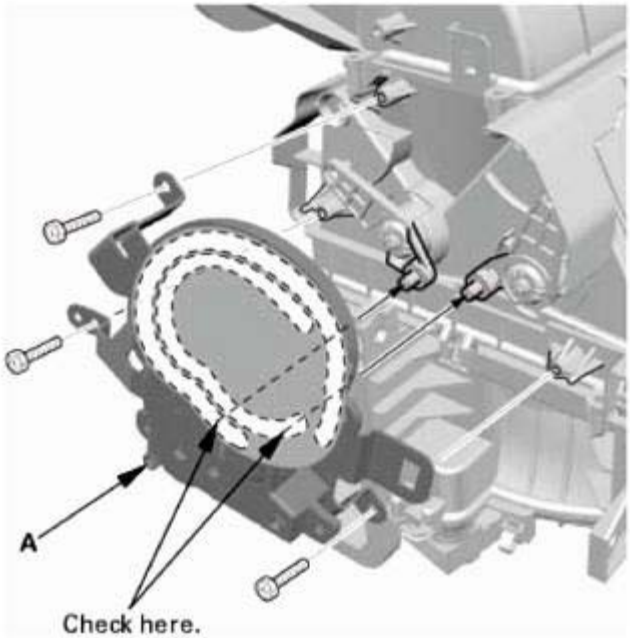

GETtheMANUALS.org

Fig. 590: Identifying Recirculation Control Motor
Courtesy of AMERICAN HONDA MOTOR CO., INC.

2. Blower Unit
    1. Install the blower unit (A).

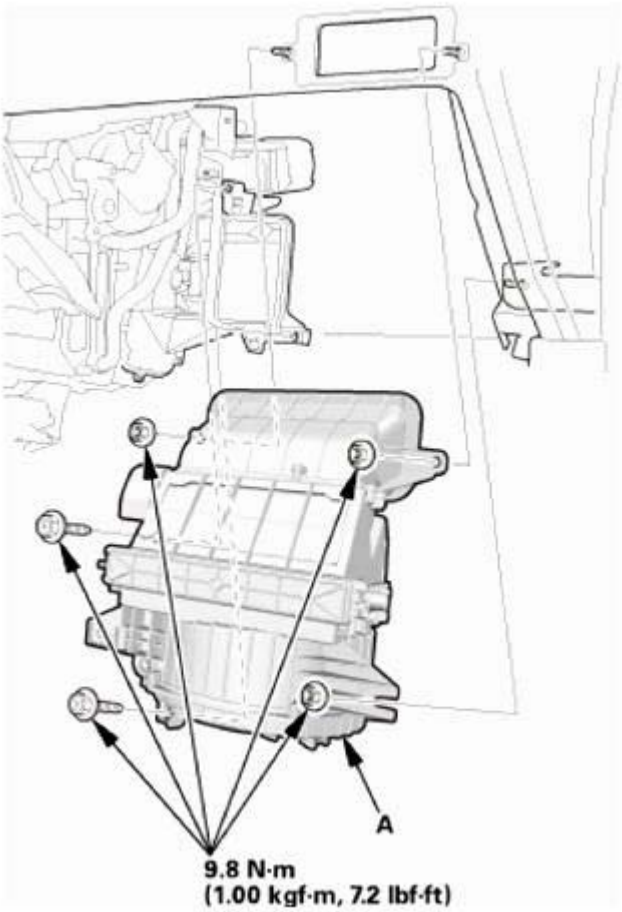

Fig. 591: Identifying Blower Unit With Torque Specifications
Courtesy of AMERICAN HONDA MOTOR CO., INC.

    2. Connect the recirculation control motor connector (A).
    3. Install the harness clips (B).

GETtheMANUALS.org

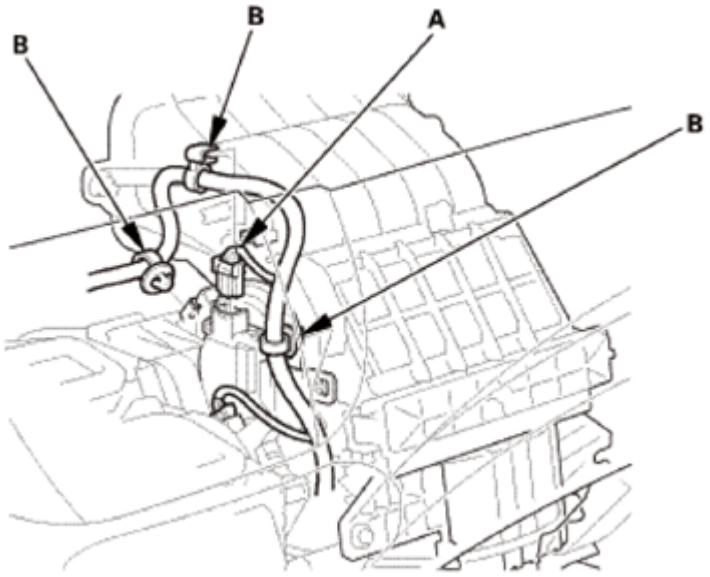

Fig. 592: Identifying Recirculation Control Motor Connectors And Clips
Courtesy of AMERICAN HONDA MOTOR CO., INC.

4. Connect the blower motor connector (A).
5. Install the harness clip (B).

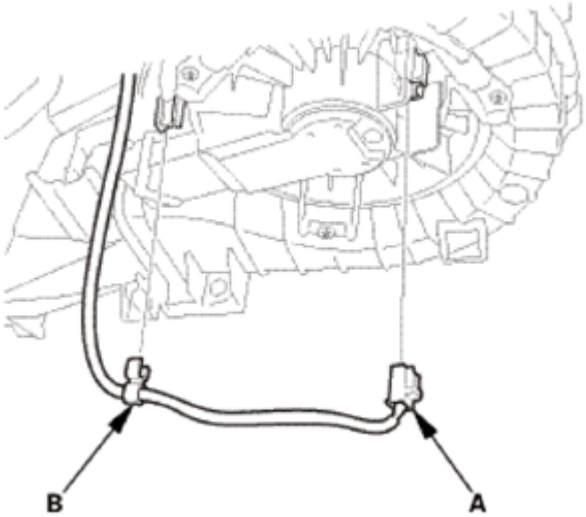

Fig. 593: Identifying Blower Motor Connector And Clip
Courtesy of AMERICAN HONDA MOTOR CO., INC.

3. Passenger's Heater Duct
    1. Install the passenger's heater duct (A).

GETtheMANUALS.org

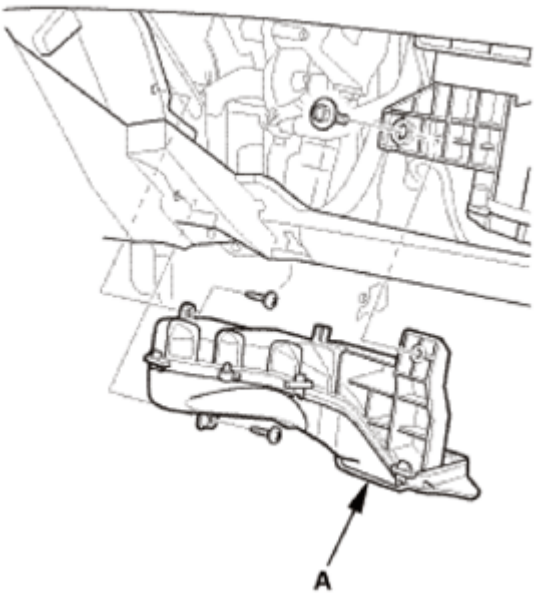

Fig. 594: Identifying Passenger Heater Duct
Courtesy of AMERICAN HONDA MOTOR CO., INC.

4. Glove Box Frame
    1. Install the glove box frame (A).

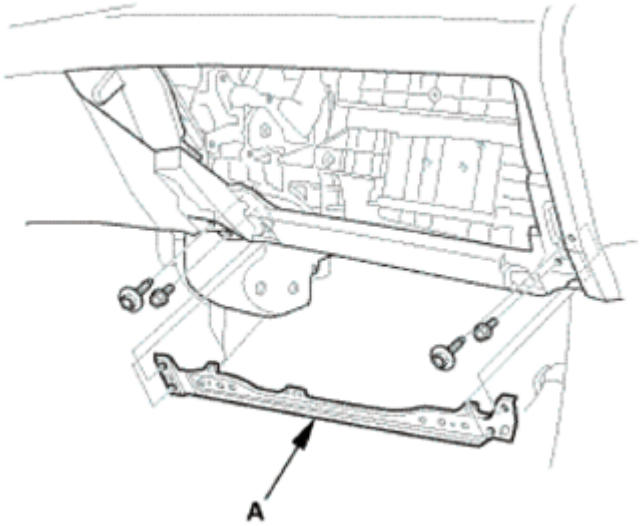

Fig. 595: Identifying Glove Box Frame
Courtesy of AMERICAN HONDA MOTOR CO., INC.

5. Cross Brace
    1. Install the cross brace (A).

GETtheMANUALS.org

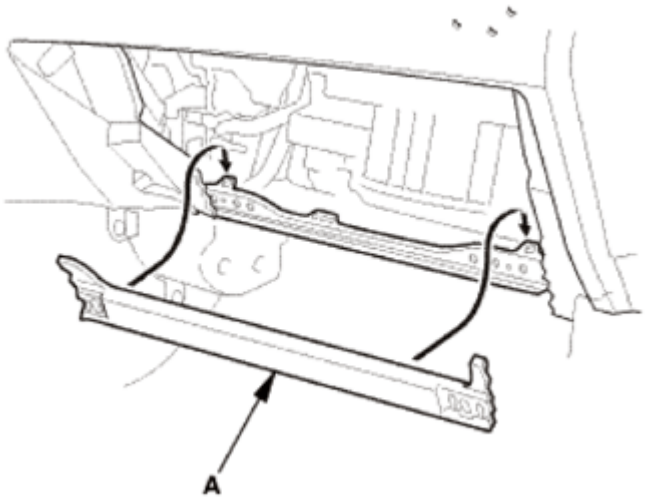

Fig. 596: Installing Cross Brace
Courtesy of AMERICAN HONDA MOTOR CO., INC.

6. Glove Box
    1. Install the glove box (A), then install the glove box damper hook (B).

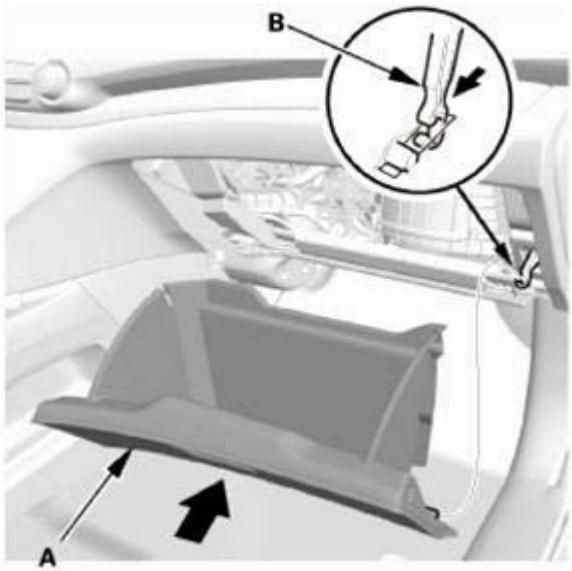

Fig. 597: Installing Glove Box
Courtesy of AMERICAN HONDA MOTOR CO., INC.

    2. Install the bolts (A).

GETtheMANUALS.org

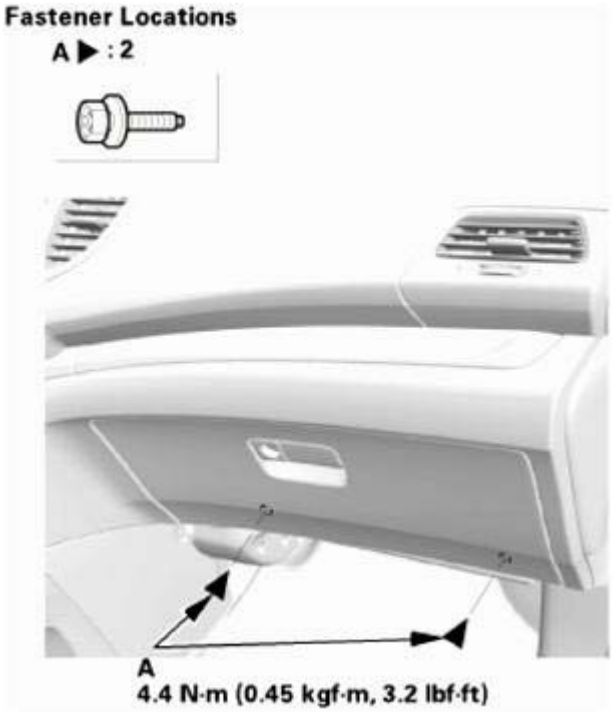

Fig. 598: Identifying Glove Box Mounting Bolts With Torque Specifications
Courtesy of AMERICAN HONDA MOTOR CO., INC.

7. Passenger's Dashboard Undercover
    1. Install the passenger's dashboard undercover (A). Make sure the clips (B) snap into place securely, and the pins (C) into the holder (D) securely.

GETtheMANUALS.org

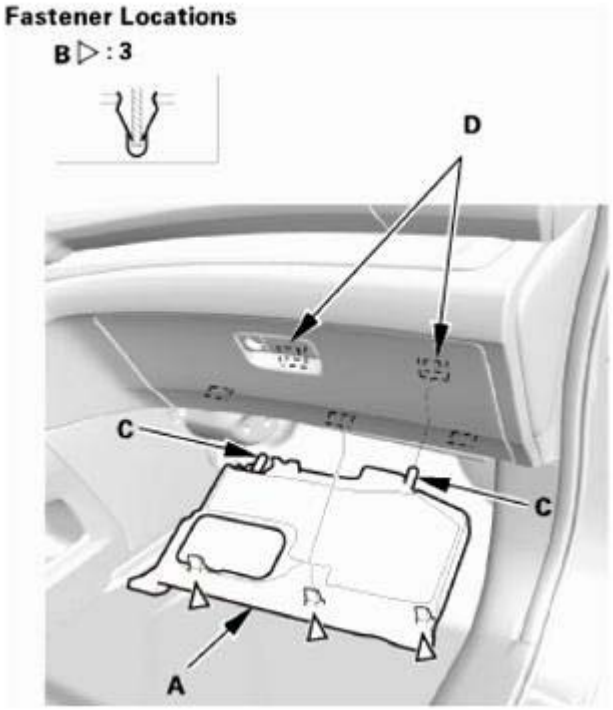

Fig. 599: Identifying Passenger Dashboard Undercover, Holder, Pins And Clips
Courtesy of AMERICAN HONDA MOTOR CO., INC.

SUNLIGHT SENSOR REMOVAL AND INSTALLATION

REMOVAL

1. Sunlight Sensor
    1. Using a flat-tip screwdriver wrapped with protective tape, pry up the sunlight sensor (A).
    2. Disconnect the sunlight sensor connector (B).

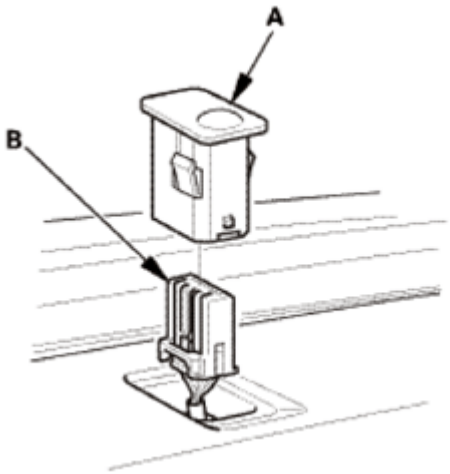

Fig. 600: Identifying Sunlight Sensor And Connector

GETtheMANUALS.org

Courtesy of AMERICAN HONDA MOTOR CO., INC.

INSTALLATION

1. Sunlight Sensor
    1. Connect the sunlight sensor connector (A).
    2. Install the sunlight sensor (B).

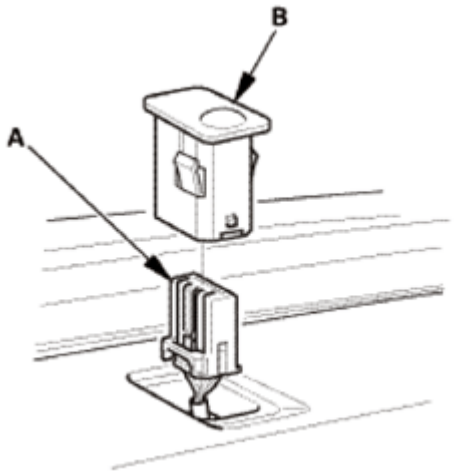

Fig. 601: Identifying Sunlight Sensor And Connector
Courtesy of AMERICAN HONDA MOTOR CO., INC.

GETtheMANUALS.org

HOW TO TROUBLESHOOT THE CLIMATE CONTROL SYSTEM

HOW TO CHECK FOR DTCS WITH THE HDS

NOTE:

- **There are three methods used to check for DTCs. The recommended method is to use the Honda Diagnostic System (HDS) with the appropriate software, plugged into the data link connector (DLC).**
- **The second method is to run the self-diagnostic function built into the climate control unit.**
- **The third method is to use the B-CAN SYSTEM DIAGNOSIS TEST MODE A .**

1. Make sure the ignition switch is in LOCK (0).
2. Connect the HDS to the DLC (A) located under the driver's side of the dashboard.

Fig. 1: Identifying Data Link Connector (DLC)
Courtesy of AMERICAN HONDA MOTOR CO., INC.

3. Turn the ignition switch to ON (II).
4. Make sure the HDS communicates with the vehicle and the climate control unit. If it does not, go to the **DLC CIRCUIT TROUBLESHOOTING** .
5. Select HVAC/Climate Control in the BODY ELECTRICAL menu.
6. Select DTCs in the HVAC/Climate Control Mode Menu.
7. Check for DTCs. If any DTCs are indicated, write down the DTCs, then go to the indicated DTC troubleshooting. If no DTCs are indicated, do all system scan, then refer to symptom troubleshooting.

GETtheMANUALS.org

NOTE:

- **After troubleshooting, clear the DTCs with the HDS.**
- **For specific operations, refer to the user's manual that came with the HDS.**

HOW TO USE THE SELF-DIAGNOSTIC FUNCTION WITH THE HDS

NOTE: **This method is only available if the HDS can communicate with the climate control unit.**

1. Make sure the ignition switch is in LOCK (0).
2. Connect the HDS to the DLC.
3. Turn the ignition switch to ON (II).
4. Make sure the HDS communicates with the vehicle and the climate control unit. If it does not, go to the **DLC CIRCUIT TROUBLESHOOTING** .
5. Select HVAC/Climate Control in the BODY ELECTRICAL menu.
6. Select Inspection in the HVAC/Climate Control Mode Menu.
7. Select Climate Control Unit Self Test in the Inspection Menu.
8. Check for DTCs. If any DTCs are indicated, write down the DTCs, then go to the indicated DTC troubleshooting.

NOTE:

- **After troubleshooting, clear the DTCs with the HDS.**
- **For specific operations, refer to the user's manual that came with the HDS.**

HOW TO USE THE SELF-DIAGNOSTIC FUNCTION WITHOUT THE HDS

The climate control unit has a self-diagnostic function. To run the self-diagnostic function, do the following:

1. Turn the ignition switch to LOCK (0), and then back to ON (II).
2. Press and hold the ON/OFF button, then within 10 seconds press and release the REAR WINDOW DEFOGGER/MIRROR DEFOGGER* button five times. Release the ON/OFF button.

   *: With mirror defogger

3. ALL LCD segments come on for 2 seconds, then the self-diagnostic function begins.

NOTE:

- **The blower motor will run at various speeds regardless of what the panel is displaying.**
- **If there is any problem in the system, the system flashes 88 or alternately flashes 88. Refer to CHECKING FOR DTCS.**
- **If there is more than one DTC, they are displayed one at a time in sequence followed by a pause (all the display indicator segment**

GETtheMANUALS.org

illuminate) between the DTCs.

- **If there are no problems detected, the system will flashes no.**

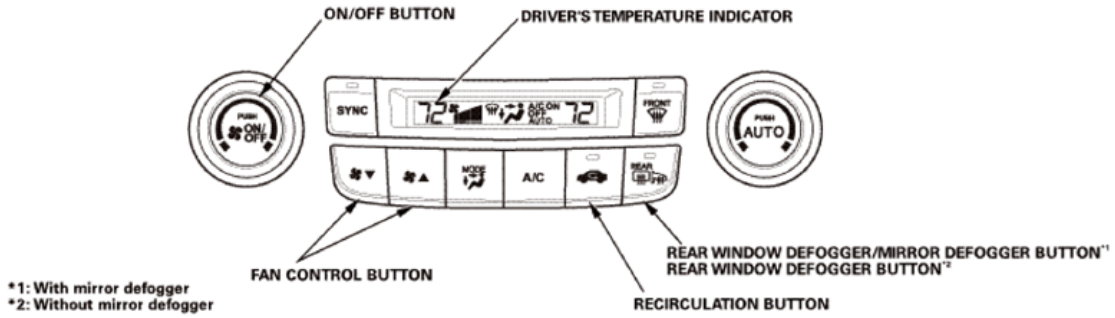

Fig. 2: Identifying Fan Control And ON/OFF Buttons And Driver's Temperature Indicator
Courtesy of AMERICAN HONDA MOTOR CO., INC.

Canceling the Self-Diagnostic Function

4. Turn the ignition switch to LOCK (0) to cancel the self-diagnostic function. After completing repair work, run the self-diagnostic function again to make sure that there are no other DTCs.

HOW TO CHECK THE PAST DTC'S

The climate control unit can record DTCs of the past trouble. How to read the past DTC is as follows.

1. Turn the ignition switch to LOCK (0), and then back to ON (II).
2. Press and hold both the AUTO and ON/OFF buttons.
3. During press and hold both the AUTO and ON/OFF buttons, the past trouble is indicate.

NOTE:

- **If there is any problem in the system, the system flashes 88 or alternately flashes 88. Refer to CHECKING FOR DTCS.**
- **If there is more than one DTC, they are displayed one at a time in sequence followed by a pause (all the display indicator segment illuminate) between the DTCs.**
- **If there are no problems detected, the system will flashes no.**

GETtheMANUALS.org

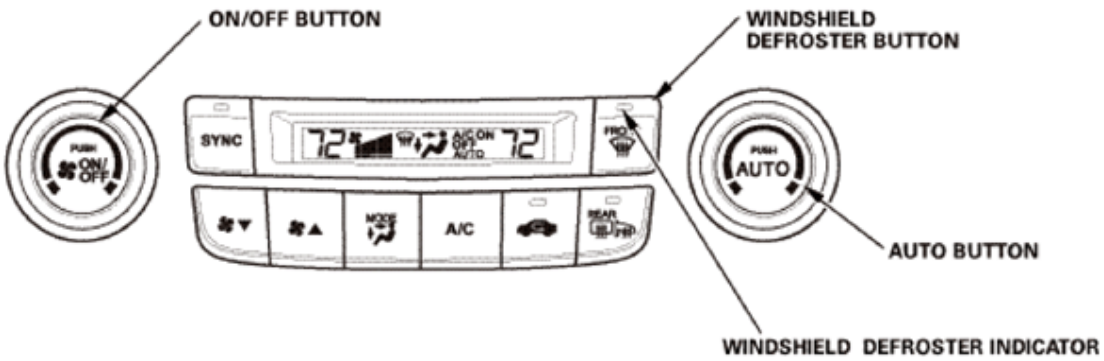

Fig. 3: Identifying ON/OFF, Auto And Windshield Defroster Buttons And Windshield Defroster Indicator
Courtesy of AMERICAN HONDA MOTOR CO., INC.

Canceling the read past DTC's

4. Turn the ignition switch to LOCK (0), to cancel the read past DTC's. After completing the repair work, clear the DTCs.

HOW TO CLEAR THE PAST DTC'S

1. Turn the ignition switch to LOCK (0).
2. Press and hold both the AUTO and WINDSHIELD DEFROSTER buttons, then turn the ignition switch to ON (II).
3. After about 5 seconds the windshield defroster indicator starts to blink, release the buttons. The indicator will blink 5 times then stop.
4. Do the How to check the past DTC's to verify DTC's have been cleared.

CHECKING FOR DTCS

The driver's temperature indicator indicates single or multiple DTCs. If no DTCs are present, the indicator will flashes no.

NOTE: **If the driver's temperature indicator segments 05, 07, 09, 40, 43, 49, 55, and 89 indicator are on at the same time, there may be an open in the sensor common ground wire.**

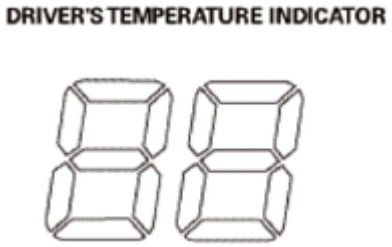

Fig. 4: Identifying Driver's Temperature Indicator

GETtheMANUALS.org

Courtesy of AMERICAN HONDA MOTOR CO., INC.

DTC (Driver's Temperature Indicator Segments)	DTC	Detection Item
05	**B1227**	An open in the outside air temperature sensor circuit
06	**B1228**	A short in the outside air temperature sensor circuit
07	**B1229**	An open in the sunlight sensor circuit
08	**B1230**	A short in the sunlight sensor circuit
09	**B1231**	An open in the evaporator temperature sensor circuit
0A	**B1232**	A short in the evaporator temperature sensor circuit
40	**B1233**	An open in the air mix control motor circuit (driver's)
41	**B1234**	A short in the air mix control motor circuit (driver's)
42	**B1235**	A problem in the air mix control motor circuit, linkage, door, or motor (driver's)
43	**B1236**	An open in the passenger's air mix control motor circuit
44	**B1237**	A short in the passenger's air mix control motor circuit
45	**B1238**	A problem in the passenger's air mix control motor circuit, linkage, door, or motor
49	**B121A**	An open in the mode control motor circuit
4A	**B121B**	A short in the mode control motor circuit
4B	**B1240**	A problem in the mode control motor circuit, linkage, door, or motor
55	**B2986**	An open in the recirculation control motor circuit
56	**B1220**	A short in the recirculation control motor circuit
57	**B2983**	A problem in the recirculation control motor circuit, linkage, door, or motor
59	**B1241**	A problem in the blower motor circuit
80	**U1280**	Communication bus line error (BUS-OFF)
81	**U128D**	Climate control unit lost communication with gauge control module (ECT message)
83	**U128D**	Climate control unit lost communication with gauge control module (VSP message)
89	**B121D**	Humidity/in-car temperature sensor communication error
C0	---	Climate control unit internal error

DISPLAYING SENSOR INPUTS AT THE CLIMATE CONTROL UNIT

The climate control unit has a mode that displays the sensor inputs it receives. This mode shows you what the climate control unit is receiving from each of the sensors, one at a time, and it can help you determine if a sensor is faulty.

CHECKS BEFORE USING THE SENSOR INPUT DISPLAY MODE

1. Turn the ignition switch to ON (II), and check the recirculation door function; press the

GETtheMANUALS.org

RECIRCULATION button to switch from FRESH to RECIRC. The air volume and sound should change slightly.

2. Set the temperature control dial to the desired test temperature:
   - "Lo" temperature setting will default to MAX COOL, VENT, and RECIRC (A/C on) or FRESH (A/C off).
   - "Hi" temperature setting will default to MAX HOT, HEAT or HEAT/DEF, and FRESH.
   - 58 through 86 °F (14 through 30 °C) settings will use the automatic climate control logic.
3. Turn the ignition switch to LOCK (0).

RUN THE SENSOR INPUT DISPLAY MODE

1. Turn the ignition switch to LOCK (0), and then back to ON (II).
2. Press and hold both the AUTO and RECIRCULATION buttons, then start the engine.

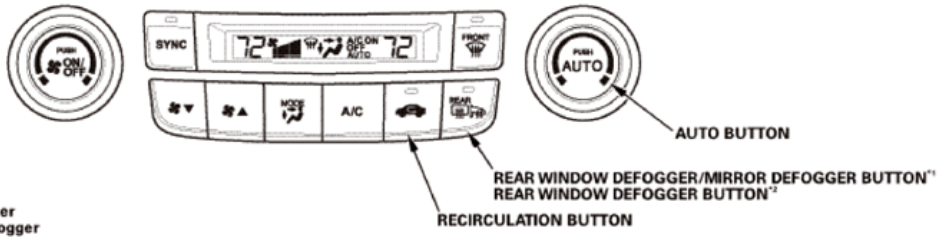

Fig. 5: Identifying Recirculation And Auto Buttons
Courtesy of AMERICAN HONDA MOTOR CO., INC.

3. After the engine starts, release both buttons. The climate control unit will flash the sensor number and then the value for that sensor. Record the value displayed.
4. To advance to the next sensor, press the REAR WINDOW DEFOGGER/MIRROR DEFOGGER* button.

   *: With mirror defogger

NOTE:

- **The sensor values will be displayed in degrees Celsius (°C) or an alphanumeric code. Use the chart to convert the value to degree Fahrenheit (°F).**
- **If the sensor value displays "Er", this indicates there is an open or short in the circuit or sensor. Check for DTCs using the HDS, o use the climate control self-diagnostic function.**
- **If necessary, compare the sensor input display to a known-good vehicle under the same test conditions.**
- **If the sensor displayed value is out of the normal range, refer to the sensor test or substitute a known-good sensor, and recheck.**

Sensor	Item	Displayed Value

GETtheMANUALS.org

1	Mode positioning	%
2	In-car temperature	°C
3	Outside air temperature	°C
4	Solar radiation sensor value: dark = 00, flashlight = 04, cloudy = 10, sunny = 65	10 kcal/m^2 .h
5	Evaporator outlet air temperature	°C
6	Driver's air mix opening (low value indicates cooler air distribution, higher value indicates warmer air distribution)	% of opening
7	Passenger's air mix opening (low value indicates cooler air distribution, higher value indicates warmer air distribution)	% of opening
8	Recirculation control opening	% of opening
9	Vehicle speed (vehicle must be driven to display speed)	10 km/h
A	Engine coolant temperature	°C
b	Vent temperature air out (TAO) (driver's)	°C
C	Humidity sensor value	%
d	Illumination duty	Step
e	Software version	-----

CELSIUS TO FAHRENHEIT CONVERSION

°C	°F	°C	°F	°C	°F	°C	°F	°C	°F
0	32	10	50	20	68	30	86	40	104
1	34	11	52	21	70	31	88	41	106
2	36	12	54	22	72	32	90	42	108
3	37	13	55	23	73	33	91	43	109
4	39	14	57	24	75	34	93	44	111
5	41	15	59	25	77	35	95	45	113
6	43	16	61	26	79	36	97	46	115
7	45	17	63	27	81	37	99	47	117
8	46	18	64	28	82	38	100	48	118
9	48	19	66	29	84	39	102	49	120

°C	°F	°C	°F	°C	°F	°C	°F	°C	°F
50	122	60	140	70	158	80	176	90	194
51	124	61	142	71	160	81	178	91	196
52	126	62	144	72	162	82	180	92	198
53	127	63	145	73	163	83	181	93	199
54	129	64	147	74	165	84	183	94	201
55	131	65	149	75	167	85	185	95	203
56	133	66	151	76	169	86	187	96	205
57	135	67	153	77	170	87	189	97	207
58	136	68	154	78	172	88	190	98	208
59	138	69	156	79	174	89	192	99	210

GETtheMANUALS.org

ALPHANUMERIC CONVERSION

Display Reading (Alphanumeric)	°C	°F	%
A1 thru A9	-1 thru -9	30 thru 16	-1 thru -10
B0 thru B9	-10 thru -19	14 thru -2	-10 thru -19
C0 thru C9	-20 thru -29	-4 thru -20	-20 thru -29
D0 thru D9	-30 thru -39	-22 thru -38	-30 thru -39
E0 thru E9	-40 thru -49	-40 thru -56	-40 thru -49
E9	-50 or less	-58 or less	-50 or less

ALPHANUMERIC CONVERSION (MODE POSITIONING)

Display Reading (Alphanumeric)	Mode Position
0	VENT
18	HEAT/VENT-1
32	HEAT/VENT-2
54	HEAT
69	HEAT/DEF-1
84	HEAT/DEF-2
F0	DEF

HOW TO TROUBLESHOOT THE HEATING AND A/C SYSTEMS

HOW TO USE THE SELF-DIAGNOSTIC FUNCTION

The HVAC control unit has a self-diagnostic function for the heating, ventilation, and air conditioning system. To run the self-diagnostic function, do the following:

1. Turn the ignition switch to LOCK (0), and then back to ON (II).
2. Set the fan control dial to OFF, temperature control dial to Max Cool, the VENTILATION button to ON.
3. Press and hold the RECIRCULATION button, then within 10 seconds press and release the REAR WINDOW DEFOGGER/MIRROR DEFOGGER* button five times. Release the RECIRCULATION button.

   *: With mirror defogger

4. The recirculation indicator turns on for 2 seconds, then the self-diagnostic function begins.

NOTE:

- **The blower motor will run at various speeds when in the self-diagnostic mode.**
- **Once the self-diagnostic function is finished, the recirculation indicator blinks, and the number of blinks indicates the Diagnostic Trouble Code (DTC) number. If there are multiple DTCs, the indicator blinks each DTC in sequence from the lowest DTC number to the highest.**

GETtheMANUALS.org

- **The indicator pauses 3 seconds, then repeats the DTC blink sequence.**
- **If no DTCs are found, the indicator will not blink.**
- **When the problem is repaired, DTCs will automatically clear.**

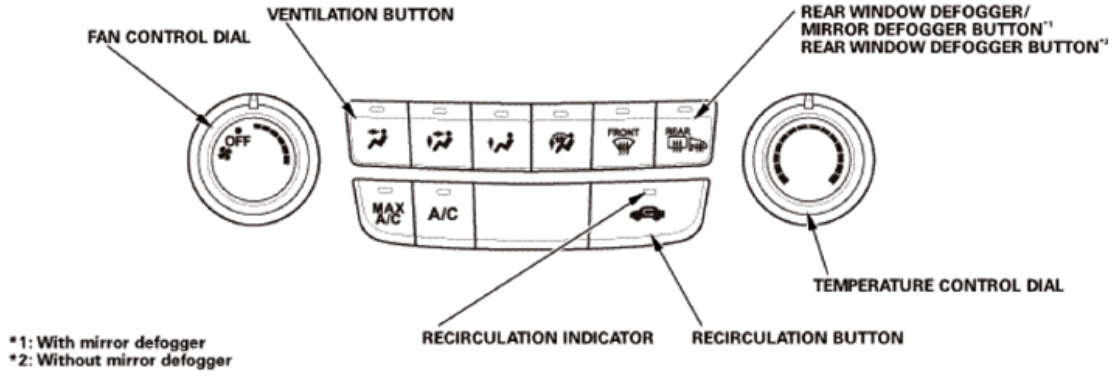

Fig. 6: Identifying Fan Control Dial, Recirculation Indicator, Recirculation Button And Temperature Control Dial
Courtesy of AMERICAN HONDA MOTOR CO., INC.

Example of DTC Indication Pattern (DTC 3)

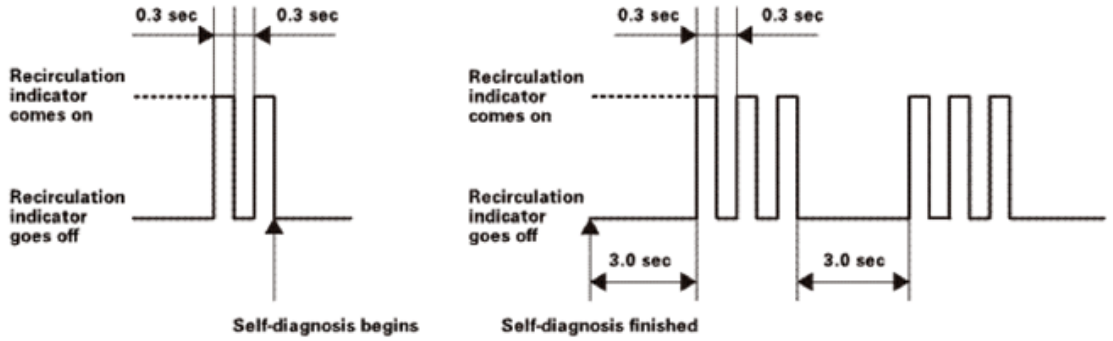

Fig. 7: Example Of DTC Indication Pattern (DTC 3)
Courtesy of AMERICAN HONDA MOTOR CO., INC.

Example of DTCs Indication Pattern (DTC 2 and 4)

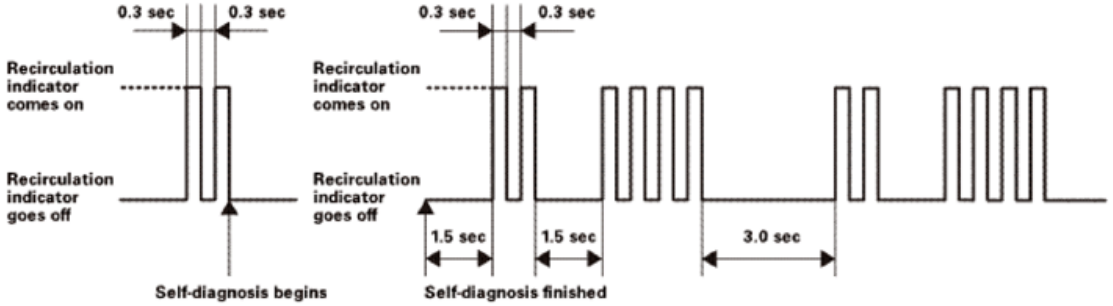

GETtheMANUALS.org

Fig. 8: Example Of DTCs Indication Pattern (DTC 2 And 4)
Courtesy of AMERICAN HONDA MOTOR CO., INC.

DTC (Recirculation Indicator Blinks)	Detection Item
1	An open in the air mix control motor circuit
2	A short in the air mix control motor circuit
3	A problem in the air mix control motor circuit, linkage, door, or motor
4	An open in the mode control motor circuit
5	A short in the mode control motor circuit
6	A problem in the mode control motor circuit, linkage, door, or, motor
7	An open in the recirculation control motor circuit
8	A short in the recirculation control motor circuit
9	A problem in the recirculation control motor circuit, linkage, door, or, motor
10	A problem in the blower motor circuit
11	HVAC control unit internal error
12	An open in the evaporator temperature sensor circuit
13	A short in the evaporator temperature sensor circuit

Canceling the Self-Diagnostic Function

5. Turn the ignition switch to LOCK (0), to cancel the self-diagnostic function. After completing the repair work, run the self-diagnostic function again to make sure that there are no other DTCs.

HOW TO CHECK THE PAST DTC'S

The HVAC control unit can record DTCs of the past trouble. How to read the past DTC is as follows.

1. Turn the ignition switch to LOCK (0).
2. Set the fan control dial to OFF, temperature control dial to Max Cool, the VENTILATION button to ON.
3. Press and hold both the RECIRCULATION and the VENTILATION buttons, and turn the ignition switch ON (II).
4. The ventilation indicator turns on for 2 seconds, then the past trouble is indicated.

NOTE:

- **In the case of multiple problems, the ventilation indicator will blink the lowest number DTC first.**
- **If no DTCs are found, the indicator will only blink two times.**

GETtheMANUALS.org

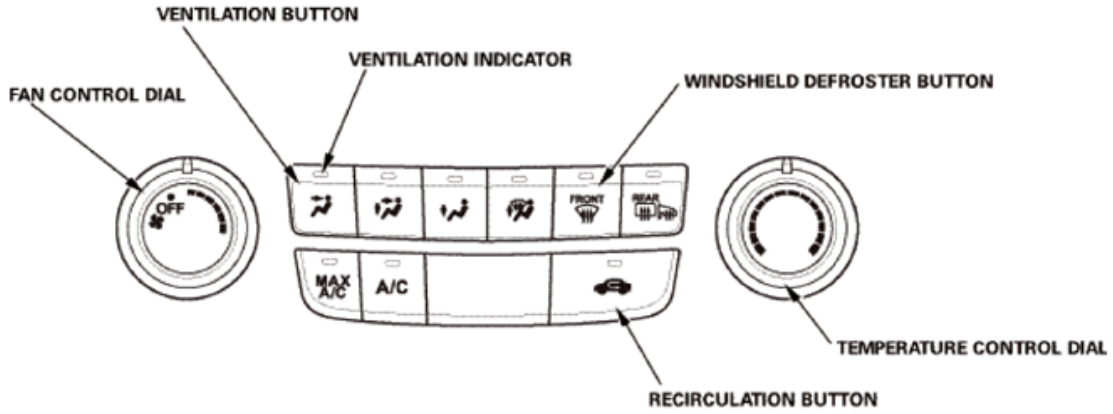

Fig. 9: Identifying Fan Control Dial, Ventilation Indicator, Windshield Defroster Button, Temperature Control Dial
Courtesy of AMERICAN HONDA MOTOR CO., INC.

Example of DTC Indication Pattern (DTC 3)

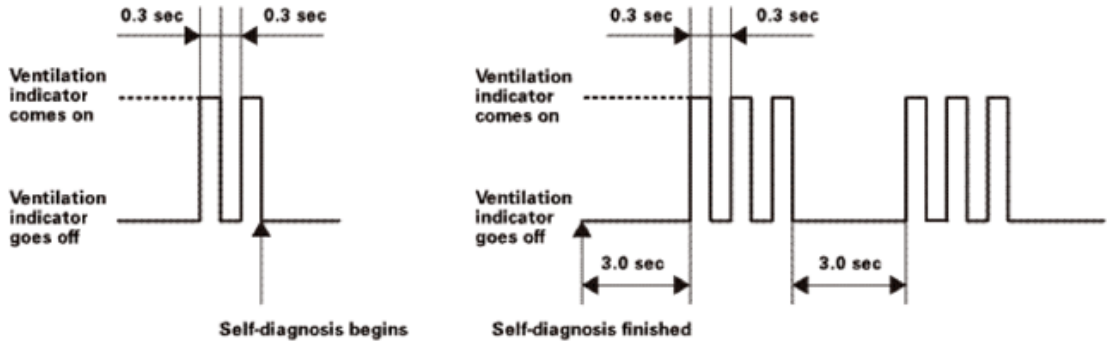

Fig. 10: Example Of DTC Indication Pattern (DTC 3)
Courtesy of AMERICAN HONDA MOTOR CO., INC.

Example of DTCs Indication Pattern (DTC 2 and 4)

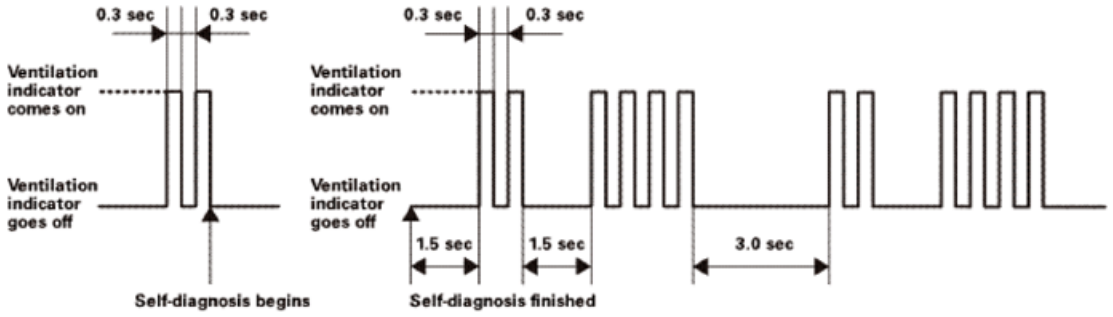

Fig. 11: Example Of DTCs Indication Pattern (DTC 2 And 4)
Courtesy of AMERICAN HONDA MOTOR CO., INC.

DTC (Ventilation Indicator	Detection Item

GETtheMANUALS.org

Blinks)	
1	An open in the air mix control motor circuit
2	A short in the air mix control motor circuit
3	A problem in the air mix control motor circuit, linkage, door, or motor
4	An open in the mode control motor circuit
5	A short in the mode control motor circuit
6	A problem in the mode control motor circuit, linkage, door, or, motor
7	An open in the recirculation control motor circuit
8	A short in the recirculation control motor circuit
9	A problem in the recirculation control motor circuit, linkage, door, or, motor
10	A problem in the blower motor circuit
11	HVAC control unit internal error
12	An open in the evaporator temperature sensor circuit
13	A short in the evaporator temperature sensor circuit

Canceling the read past DTC's

5. Turn the ignition switch to LOCK (0), to cancel the read past DTC's. After completing the repair work, clear the DTCs.

HOW TO CLEAR THE PAST DTC'S

1. Turn the ignition switch to LOCK (0).
2. Set the fan control dial to OFF, temperature control dial to Max Cool, the VENTILATION button to ON.
3. Press and hold both the RECIRCULATION and WINDSHIELD DEFROSTER buttons, then turn the ignition switch to ON (II).
4. After about 5 seconds the windshield defroster indicator starts to blink, release the buttons. The indicator will blink 5 times then stop.
5. Do the display DTC function to verify DTC's have been cleared.

CLIMATE CONTROL SYSTEM SYMPTOM TROUBLESHOOTING INDEX

Symptom	Diagnostic Procedure	Also Check for
The blower and the heater controls and the A/C system do not	Probable cause: Climate control unit malfunction **DO THE CLIMATE CONTROL POWER AND GROUND CIRCUIT**	• **Climate control DTCs** See **HOW TO TROUBLESHOOT THE BODY ELECTRICAL** or **HOW TO TROUBLESHOOT THE CLIMATE CONTROL SYSTEM**

GETtheMANUALS.org

work	**TROUBLESHOOTING**	• Blown fuse No. B22 (7.5 A) in the under-dash fuse/relay box • Poor ground at G502 • Poor or loose connections at the terminals
The A/C compressor clutch and the A/C condenser/radiator fans are inoperative, but the blower and heater controls work	Probable cause: A/C pressure sensor circuit malfunction Troubleshoot the ACS circuit: • **A/C PRESSURE SENSOR CIRCUIT LOW VOLTAGE** • **A/C PRESSURE SENSOR CIRCUIT HIGH VOLTAGE** **NOTE:** **The ACS circuit can malfunction without setting a DTC**	• **Climate control DTCs** See **HOW TO TROUBLESHOOT THE BODY ELECTRICAL** or **HOW TO TROUBLESHOOT THE CLIMATE CONTROL SYSTEM** • **PGM-FI DTCs** See **HOW TO TROUBLESHOOT THE BODY ELECTRICAL** or **HOW TO TROUBLESHOOT THE CLIMATE CONTROL SYSTEM** • **A/C SIGNAL CIRCUIT TROUBLESHOOTING** • Poor or loose connections at the terminals
The A/C compressor clutch does not engage, but the A/C condenser/radiator fans operate, and the blower and heater controls work	Probable cause: No power to the A/C compressor clutch Do the **A/C COMPRESSOR CLUTCH CIRCUIT TROUBLESHOOTING**	• **Climate control DTCs** See **HOW TO TROUBLESHOOT THE BODY ELECTRICAL** or **HOW TO TROUBLESHOOT THE CLIMATE CONTROL SYSTEM** • Blown fuse No. A27 (7.5 A) in the under-hood fuse/relay box • **A/C System Test** • Poor or loose connections at the terminals
		• **Climate control DTCs** See **HOW TO TROUBLESHOOT THE BODY ELECTRICAL** or **HOW TO TROUBLESHOOT THE CLIMATE CONTROL**

GETtheMANUALS.org

The A/C condenser fan and the radiator fan do not run at low speed with the A/C on, but the blower and heater controls work normally	Probable cause: A/C condenser/radiator fan low speed circuit malfunction Do the **RADIATOR AND A/C CONDENSER FAN LOW SPEED CIRCUIT TROUBLESHOOTING**	**SYSTEM** • **PGM-FI DTCs** See **HOW TO TROUBLESHOOT THE A/T SYSTEM** or **HOW TO TROUBLESHOOT THE FUEL AND EMISSIONS SYSTEMS** • Blown fuse No. A2-11 (20 A) in the under-hood fuse/relay box • Poor ground at G302 • Poor or loose connections at the terminals
The A/C condenser/radiator fans do not run at high speed, but do run at low speed with the A/C on	Probable cause: Malfunction in the fan(s) high speed circuit Do the following troubleshooting as needed: • **A/C CONDENSER FAN HIGH SPEED CIRCUIT TROUBLESHOOTING** • RADIATOR FAN HIGH SPEED CIRCUIT TROUBLESHOOTING	• **Climate control DTCs** See **HOW TO TROUBLESHOOT THE BODY ELECTRICAL** or **HOW TO TROUBLESHOOT THE CLIMATE CONTROL SYSTEM** • **PGM-FI DTCs** See **HOW TO TROUBLESHOOT THE A/T SYSTEM** or **HOW TO TROUBLESHOOT THE FUEL AND EMISSIONS SYSTEMS** • Poor ground at G302 • Poor or loose connections at the terminals
Blower fan runs slower than expected in cold weather (when in AUTO mode) **NOTE:** **It is normal for the blower fan to run slowly until the coolant temperature rises when in AUTO mode**	Probable cause: Engine coolant temperature (ECT) circuit malfunction Troubleshooting the ECT sensor circuit: • **ECT SENSOR 2 CIRCUIT LOW VOLTAGE** • **ECT SENSOR 2 CIRCUIT HIGH VOLTAGE**	• **Climate control DTCs** See **HOW TO TROUBLESHOOT THE BODY ELECTRICAL** or **HOW TO TROUBLESHOOT THE CLIMATE CONTROL SYSTEM** • **PGM-FI DTCs** See **HOW TO TROUBLESHOOT THE A/T SYSTEM** or **HOW TO TROUBLESHOOT THE FUEL AND EMISSIONS SYSTEMS**

GETtheMANUALS.org

		• Blower motor operation
The A/C compressor clutch cycles rapidly on and off	Probable cause: • A/C system is overcharged • Radiator and/or A/C condenser fan inoperative • Excessive pressure on high side of system causing pressure sensor to turn A/C compressor off • Thermal protector problem • Low idle speed	**Climate control DTCs** See **HOW TO TROUBLESHOOT THE BODY ELECTRICAL** or **HOW TO TROUBLESHOOT THE CLIMATE CONTROL SYSTEM**
HDS does not communicate with the climate control unit or the vehicle	**TROUBLESHOOT THE DLC CIRCUIT**	
Insufficient heating	1. **Check the motor linkage** See **AIR MIX CONTROL MOTOR REMOVAL AND INSTALLATION** , **DRIVER'S AIR MIX CONTROL MOTOR REMOVAL AND INSTALLATION** or **PASSENGER'S AIR MIX CONTROL MOTOR REMOVAL AND INSTALLATION** 2. CHECK THE COOLANT LEVEL 3. **CHECK THE RADIATOR CAP** 4. Check the engine coolant temperature (ECT) during normal operation with the HDS 5. Check the heater core inlet hose temperature: • If it is COLD, check for restrictions in the hose, a damaged or leaking thermostat, or a damaged or leaking water pump • If it is HOT, check for restrictions in the heater core. Back flush or **replace the heater core** See **AIR MIX CONTROL MOTOR TEST** or **DRIVER'S AIR MIX CONTROL MOTOR TEST**	• CLIMATE CONTROL DTCS • Damaged cylinder head gasket

GETtheMANUALS.org

	or **PASSENGER'S AIR MIX CONTROL MOTOR TEST** 6. **Do the driver's air mix control motor test and passenger's air mix control motor test** See **HOW TO TROUBLESHOOT THE BODY ELECTRICAL** or **HOW TO TROUBLESHOOT THE CLIMATE CONTROL SYSTEM** 7. Check the blower motor unit for obstructions 8. Check for air leaks around the ducts and vents	

HEATING AND A/C SYSTEMS SYMPTOM TROUBLESHOOTING INDEX

Symptom	Diagnostic Procedure	Also Check for
The blower and the heater controls and the A/C system do not work	Probable cause: HVAC control unit malfunction **DO THE HVAC CONTROL POWER AND GROUND CIRCUIT TROUBLESHOOTING**	• **HVAC DTCS** • Blown fuse No. B22 (7.5 A) in the under-dash fuse/relay box • Faulty blower motor relay • Poor ground at G502 • Poor or loose connections at the terminals
The A/C compressor clutch and the A/C condenser/radiator fans are inoperative, but the blower and heater controls work	Probable cause: A/C request or thermal protector circuit malfunction Do the A/C troubleshooting: • **A/C CIRCUIT LOW VOLTAGE** • **A/C CIRCUIT HIGH VOLTAGE** **NOTE:** **The A/C pressure sensor circuit can malfunction without setting a DTC**	• **HVAC DTCS** • **PGM-FI DTCs** See **HOW TO TROUBLESHOOT THE A/T SYSTEM** or **HOW TO TROUBLESHOOT THE FUEL AND EMISSIONS SYSTEMS** • **A/C signal circuit troubleshooting** See **A/C SIGNAL CIRCUIT TROUBLESHOOTING** or **A/C SIGNAL CIRCUIT TROUBLESHOOTING** • Poor or loose connections at the terminals
The A/C compressor clutch does not engage, but the A/C	Probable cause: No power to the A/C compressor clutch	• **HVAC DTCS** • Blown fuse No. A27 (7.5 A) in the under-hood fuse/relay box

GETtheMANUALS.org

condenser/radiator fans operate, and the blower and heater controls work	Do the **A/C COMPRESSOR CLUTCH CIRCUIT TROUBLESHOOTING**	• **A/C System Test** • Poor or loose connections at the terminals
The A/C condenser fan and the radiator fan do not run at low speed with the A/C on, but the blower and heater controls work normally	Probable cause: A/C condenser/radiator fan low speed circuit malfunction Do the **radiator and A/C condenser fan low speed circuit troubleshooting** See **RADIATOR AND A/C CONDENSER FAN LOW SPEED CIRCUIT TROUBLESHOOTING** or **RADIATOR AND A/C CONDENSER FAN LOW SPEED CIRCUIT TROUBLESHOOTING**	• **HVAC DTCS** • **PGM-FI DTCs** See **HOW TO TROUBLESHOOT THE A/T SYSTEM** or **HOW TO TROUBLESHOOT THE FUEL AND EMISSIONS SYSTEMS** • Blown fuse No. A2-11 (20 A) in the under-hood fuse/relay box • Poor ground at G302 • Poor or loose connections at the terminals
The A/C condenser fan and/or the radiator fan do not run at high speed, but do run at low speed with the A/C on	Probable cause: Malfunction in the fan(s) high speed circuit Do the following troubleshooting as needed: • **A/C CONDENSER FAN HIGH SPEED CIRCUIT TROUBLESHOOTING** • RADIATOR FAN HIGH SPEED CIRCUIT TROUBLESHOOTING	• **HVAC DTCS** • **PGM-FI DTCs** See **HOW TO TROUBLESHOOT THE A/T SYSTEM** or **HOW TO TROUBLESHOOT THE FUEL AND EMISSIONS SYSTEMS** • Poor ground at G302 • Poor or loose connections at the terminals
The A/C compressor clutch cycles rapidly on and off	Probable cause: • A/C system is overcharged • Radiator and/or A/C condenser fan inoperative • Excessive pressure on high side of system causing pressure sensor to turn A/C compressor off • Thermal protector problem • Low idle speed	**HVAC DTCS**
	1. **Check the motor linkage** See **AIR MIX CONTROL MOTOR TEST**, **DRIVER'S AIR MIX CONTROL MOTOR TEST** or **PASSENGER'S AIR MIX CONTROL MOTOR TEST**	

GETtheMANUALS.org

Insufficient heating	2. CHECK THE COOLANT LEVEL 3. CHECK THE RADIATOR CAP 4. Check the engine coolant temperature (ECT) during normal operation with the HDS 5. Check the heater core inlet hose temperature: • If it is COLD, check for restrictions in the hose, a damaged or leaking thermostat, or a damaged or leaking water pump • If it is HOT, check for restrictions in the heater core. Back flush or **replace the heater core** See **AIR MIX CONTROL MOTOR TEST**, **DRIVER'S AIR MIX CONTROL MOTOR TEST** or **PASSENGER'S AIR MIX CONTROL MOTOR TEST** 6. **DO THE AIR MIX CONTROL MOTOR TEST** 7. Check the blower motor unit for obstructions 8. Check for air leaks around the ducts and vents	• **HVAC DTCS** • Damaged cylinder head gasket

A/C COMPRESSOR CLUTCH CIRCUIT TROUBLESHOOTING (CLIMATE CONTROL)

GETtheMANUALS.org

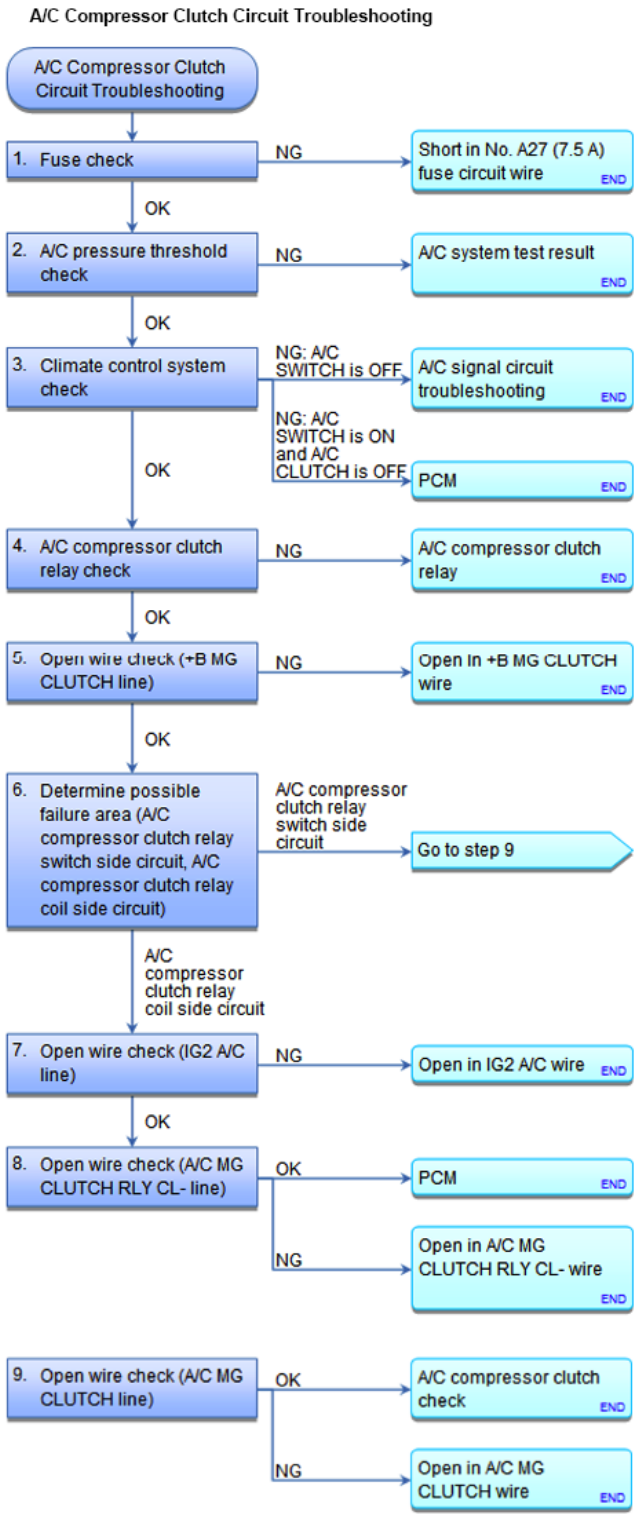

Fig. 12: A/C Compressor Clutch Circuit Troubleshooting Flow Chart
Courtesy of AMERICAN HONDA MOTOR CO., INC.

NOTE:

- **It is normal for the A/C compressor to turn off under certain conditions,**

GETtheMANUALS.org

such as low idle, high engine coolant temperature, or hard acceleration.

- **Do not use this troubleshooting procedure if the fans are also inoperative with the A/C on. Refer to the symptom troubleshooting index.**
- **Before doing symptom troubleshooting, check for PGM-FI DTCs See HOW TO TROUBLESHOOT THE A/T SYSTEM or HOW TO TROUBLESHOOT THE FUEL AND EMISSIONS SYSTEMS .**

1. Fuse check:
   - 1. Check the following fuse.

     Fuse No. A27 (7.5 A)

     Location Under-hood fuse/relay box

   Is the fuse OK?

   YES : Go to step 2.

   NO : Replace the fuse, and recheck. If the fuse blows again, check for a short in the No. A27 (7.5 A) fuse circuit.

2. A/C pressure threshold check:
   - 1. Connect the HDS to the DLC.
   - 2. Start the engine.
   - 3. Set the A/C button and the fan control button to ON.
   - 4. Using the HDS, check the under following conditions:

Signal	Threshold		Current conditions	
	Values	Unit	Values	Unit
ENGINE SPEED	710 - 810	rpm		
ECT SENSOR 2	176 - 212	°F		
	80 - 100	°C		
TP SENSOR	About 0.5	V		

   - 5. Check the parameter(s) below with the HDS.

Signal	Threshold		Current conditions	
	Values	Unit	Values	Unit
A/C PRESSURE	196 - 3, 38	kPa		
	2.00 - 32.00	kgf/cm^2		
	28.4 - 455.1	psi		

   Do the current condition(s) match the threshold?

GETtheMANUALS.org

YES : Go to step 3.

NO : Go to the **A/C SYSTEM TEST RESULT**.

3. Climate control system check:
   - 1. Check the parameter(s) below with the HDS.

Signal	Threshold		Current conditions	
	Values	Unit	Values	Unit
A/C SWITCH	ON			
A/C CLUTCH	ON			

Do the current condition(s) match the threshold?

YES : Go to step 4.

NO : A/C SWITCH is OFF, go to the **A/C SIGNAL CIRCUIT TROUBLESHOOTING**.

NO : A/C SWITCH is ON and A/C CLUTCH is OFF, **update the PCM** See **PCM REMOVAL AND INSTALLATION** or **PCM UPDATE** if it does not have the latest software, or **substitute a known-good PCM** See **PCM REMOVAL AND INSTALLATION** or **PCM UPDATE** , and recheck.

4. A/C compressor clutch relay check:
   - 1. Turn the ignition switch to LOCK (0).
   - 2. Remove the A/C compressor clutch relay from the under-hood fuse/relay box, and **test it** See **POWER RELAY TEST** or **POWER RELAY TEST** .

Is the relay OK?

YES : Go to step 5.

NO : Replace the A/C compressor clutch relay.

5. Open wire check (+B MG CLUTCH line):
   - 1. Measure the voltage between test points 1 and 2.

     Test condition IG LOCK (0)

     A/C compressor clutch relay: disconnected

     Test circuit +B MG CLUTCH

     Test point 1 A/C compressor clutch relay 4P socket No. 1 (PNK) (Built into the under-hood fuse/relay box)

GETtheMANUALS.org

Test point 2 Body ground

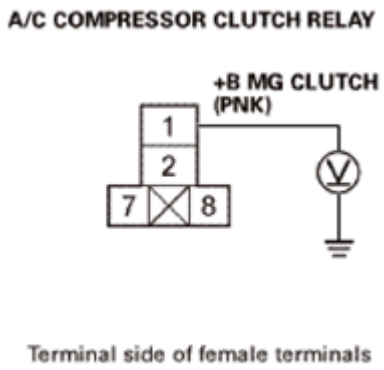

Fig. 13: Measuring Voltage Between Test Points 1 And 2
Courtesy of AMERICAN HONDA MOTOR CO., INC.

Is there battery voltage?

YES : The +B MG CLUTCH wire is OK. Go to step 6.

NO : An open in the +B MG CLUTCH wire. **REPLACE THE UNDER-HOOD FUSE/RELAY BOX** .

6. Determine possible failure area (A/C compressor clutch relay switch side circuit, A/C compressor clutch relay coil side circuit):
   - 1. Connect terminals A and B with a jumper wire.

     Terminal A A/C compressor clutch relay 4P socket No. 1 (PNK) (Built into the under-hood fuse/relay box)

     Terminal B A/C compressor clutch relay 4P socket No. 2 (PUR) (Built into the under-hood fuse/relay box)

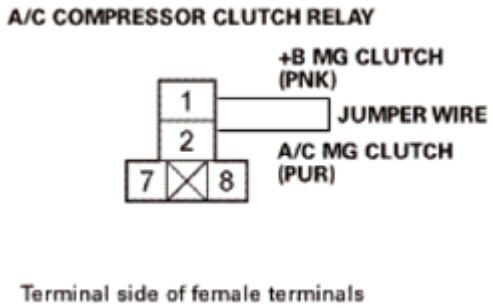

Fig. 14: Connecting Terminals A And B Using Jumper Wire
Courtesy of AMERICAN HONDA MOTOR CO., INC.

Does the A/C compressor clutch click?

YES : Go to step 7.

GETtheMANUALS.org

NO : Go to step 9.

7. Open wire check (IG2 A/C line):
    - 1. Disconnect the jumper wire.
    - 2. Turn the ignition switch to ON (II).
    - 3. Measure the voltage between test points 1 and 2.

    Test condition IG ON (II)

    A/C compressor clutch relay: disconnected

    Test circuit IG2 A/C

    Test point 1 A/C compressor clutch relay 4P socket No. 7 (PNK) (Built into the under-hood fuse/relay box)

    Test point 2 Body ground

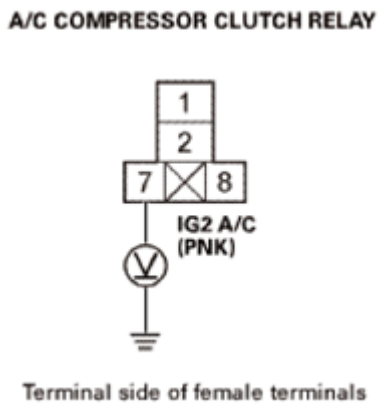

Fig. 15: Measuring Voltage Between Test Points 1 And 2
Courtesy of AMERICAN HONDA MOTOR CO., INC.

Is there battery voltage?

YES : The IG2 A/C wire is OK. Go to step 8.

NO : Repair an open in the wire between the No. B22 (7.5 A) fuse in under-dash fuse/relay box and the A/C compressor clutch relay.

8. Open wire check (A/C MG CLUTCH RLY CL- line):
    - 1. Turn the ignition switch to LOCK (0).
    - 2. Reinstall the A/C compressor clutch relay.
    - 3. Jump the SCS line with the HDS.

GETtheMANUALS.org

NOTE: **This step must be done to protect the PCM from damage.**

- 4. Disconnect the following connector.

  PCM connector A (49P)

- 5. Connect terminals A and B with a jumper wire.

  Terminal A PCM connector A (49P) terminal No. 12 (GRN)

  Terminal B Body ground

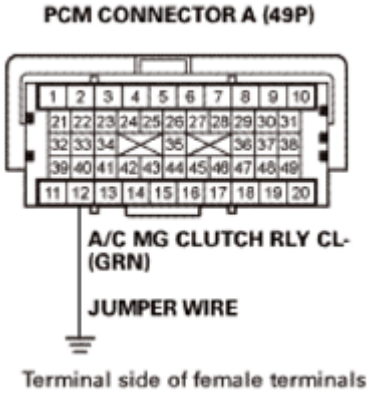

Fig. 16: Connecting Terminals A And B Using Jumper Wire
Courtesy of AMERICAN HONDA MOTOR CO., INC.

- 6. Turn the ignition switch to ON (II).

Does the A/C compressor clutch click?

YES : **Update the PCM** See **PCM REMOVAL AND INSTALLATION** or **PCM UPDATE** if it does not have the latest software, or **substitute a known-good PCM** See **PCM REMOVAL AND INSTALLATION** or **PCM UPDATE** , and recheck.

NO : Repair an open in the wire between the A/C compressor clutch relay and the PCM.

9. Open wire check (A/C MG CLUTCH line):
   - 1. Disconnect the jumper wire.
   - 2. Disconnect the following connector.

     A/C compressor clutch 3P connector

   - 3. Check for continuity between test points 1 and 2.

     Test condition IG LOCK (0)

GETtheMANUALS.org

A/C compressor clutch relay: disconnected

A/C compressor clutch 3P connector: disconnected

Test circuit A/C MG CLUTCH

Test point 1 A/C compressor clutch relay 4P socket No. 2 (PUR) (Built into the under-hood fuse/relay box)

Test point 2 A/C compressor clutch 3P connector No. 1 (BLU)

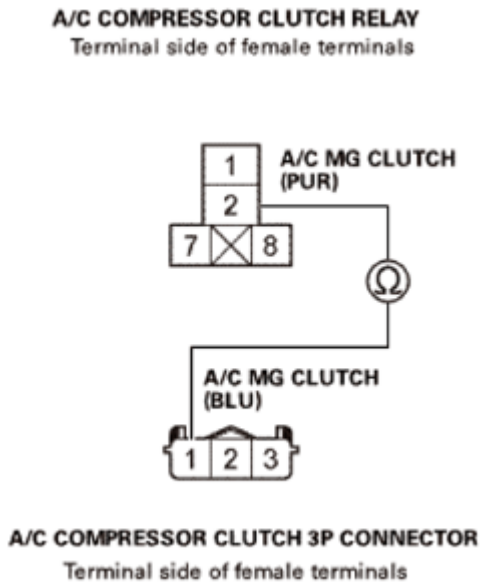

Fig. 17: Checking For Continuity Between Test Points 1 And 2
Courtesy of AMERICAN HONDA MOTOR CO., INC.

Is there continuity?

YES : The A/C MG CLUTCH wire is OK. Check the **A/C COMPRESSOR CLUTCH CLEARANCE** and the **A/C COMPRESSOR CLUTCH FIELD COIL** . Repair as needed.

NO : Repair an open in the wire between the A/C compressor clutch relay and the A/C compressor clutch.

A/C COMPRESSOR CLUTCH CIRCUIT TROUBLESHOOTING (MANUAL A/C)

GETtheMANUALS.org

A/C Compressor Clutch Circuit Troubleshooting

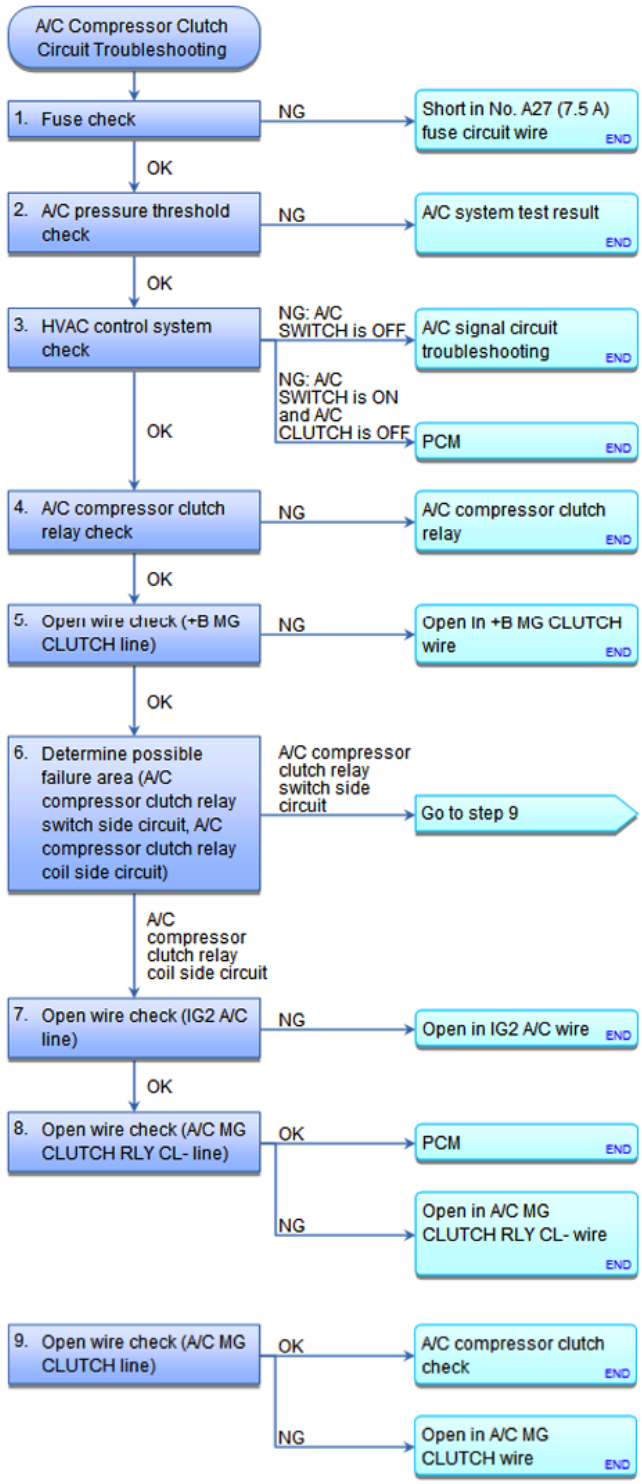

Fig. 18: A/C Compressor Clutch Circuit Troubleshooting Flow Chart
Courtesy of AMERICAN HONDA MOTOR CO., INC.

NOTE:

- **It is normal for the A/C compressor to turn off under certain conditions,**

GETtheMANUALS.org

such as low idle, high engine coolant temperature, or hard acceleration.

- **Do not use this troubleshooting procedure if the radiator and A/C condenser fans are also inoperative with the A/C on. Refer to the symptom troubleshooting index.**
- **Before doing symptom troubleshooting, check for PGM-FI DTCs See HOW TO TROUBLESHOOT THE A/T SYSTEM or HOW TO TROUBLESHOOT THE FUEL AND EMISSIONS SYSTEMS .**

1. Fuse check:
   - 1. Check the following fuse.

     Fuse No. A27 (7.5 A)

     Location Under-hood fuse/relay box

   Is the fuse OK?

   YES : Go to step 2.

   NO : Replace the fuse, and recheck. If the fuse blows again, check for a short in the No. A27 (7.5 A) fuse circuit.

2. A/C pressure threshold check:
   - 1. Connect the HDS to the DLC.
   - 2. Start the engine.
   - 3. Set the A/C button and the fan control dial to ON.
   - 4. Using the HDS, check the under following conditions:

Signal	Threshold		Current conditions	
	Values	Unit	Values	Unit
ENGINE SPEED	710 - 810	rpm		
ECT SENSOR 2	176 - 212	°F		
	80 - 100	°C		
TP SENSOR	About 0.5	V		

   - 5. Check the parameter(s) below with the HDS.

Signal	Threshold		Current conditions	
	Values	Unit	Values	Unit
A/C PRESSURE	196 - 3, 38	kPa		
	2.00 - 32.00	kgf/cm^2		
	28.4 - 455.1	psi		

GETtheMANUALS.org

Do the current condition(s) match the threshold?

YES : Go to step 3.

NO : Go to the **A/C SYSTEM TEST RESULT**.

3. HVAC control system check:
   - 1. Check the parameter(s) below with the HDS.

Signal	Threshold		Current conditions	
	Values	Unit	Values	Unit
A/C SWITCH	ON			
A/C CLUTCH	ON			

Do the current condition(s) match the threshold?

YES : Go to step 4.

NO : A/C SWITCH is OFF, go to the **A/C SIGNAL CIRCUIT TROUBLESHOOTING**.

NO : A/C SWITCH is ON and A/C CLUTCH is OFF, **UPDATE THE PCM substitute a known-good PCM** See **PCM REMOVAL AND INSTALLATION** or **PCM UPDATE** , and recheck.

4. A/C compressor clutch relay check:
   - 1. Turn the ignition switch to LOCK (0).
   - 2. Remove the A/C compressor clutch relay from the under-hood fuse/relay box, and **TEST IT** .

Is the relay OK?

YES : Go to step 5.

NO : Replace the A/C compressor clutch relay.

5. Open wire check (+B MG CLUTCH line):
   - 1. Measure the voltage between test points 1 and 2.

     Test condition IG LOCK (0)

     A/C compressor clutch relay: disconnected

     Test circuit +B MG CLUTCH

     Test point 1 A/C compressor clutch relay 4P socket No. 1 (PNK) (Built into the under-hood fuse/relay box)

GETtheMANUALS.org

Test point 2 Body ground

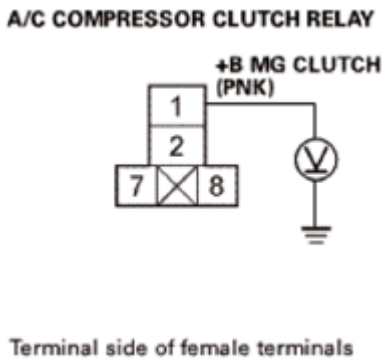

Fig. 19: Measuring Voltage Between Test Points 1 And 2
Courtesy of AMERICAN HONDA MOTOR CO., INC.

Is there battery voltage?

YES : The +B MG CLUTCH wire is OK. Go to step 6.

NO : An open in the +B MG CLUTCH wire. **REPLACE THE UNDER-HOOD FUSE/RELAY BOX** .

6. Determine possible failure area (A/C compressor clutch relay switch side circuit, A/C compressor clutch relay coil side circuit):
   - 1. Connect terminals A and B with a jumper wire.

     Terminal A A/C compressor clutch relay 4P socket No. 1 (PNK) (Built into the under-hood fuse/relay box)

     Terminal B A/C compressor clutch relay 4P socket No. 2 (PUR) (Built into the under-hood fuse/relay box)

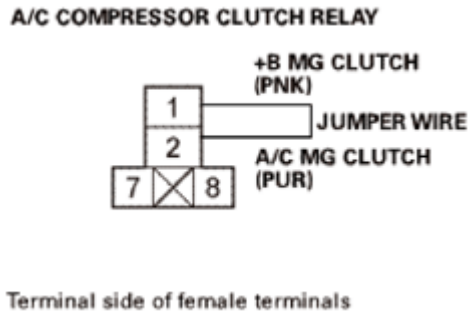

Fig. 20: Connecting Terminals A And B Using Jumper Wire
Courtesy of AMERICAN HONDA MOTOR CO., INC.

Does the A/C compressor clutch click?

YES : Go to step 7.

GETtheMANUALS.org

NO : Go to step 9.

7. Open wire check (IG2 A/C line):
    - 1. Disconnect the jumper wire.
    - 2. Turn the ignition switch to ON (II).
    - 3. Measure the voltage between test points 1 and 2.

    Test condition IG ON (II)

    A/C compressor clutch relay: disconnected

    Test circuit IG2 A/C

    Test point 1 A/C compressor clutch relay 4P socket No. 7 (PNK) (Built into the under-hood fuse/relay box)

    Test point 2 Body ground

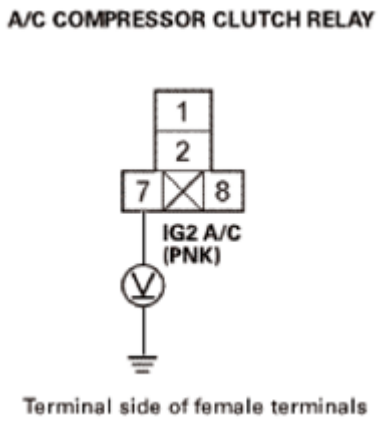

Fig. 21: Measuring Voltage Between Test Points 1 And 2
Courtesy of AMERICAN HONDA MOTOR CO., INC.

Is there battery voltage?

YES : The IG2 A/C wire is OK. Go to step 8.

NO : Repair an open in the wire between the No. B22 (7.5 A) fuse in the under-dash fuse/relay box and the A/C compressor clutch relay.

8. Open wire check (A/C MG CLUTCH RLY CL- line):
    - 1. Turn the ignition switch to LOCK (0).
    - 2. Reinstall the A/C compressor clutch relay.
    - 3. Jump the SCS line with the HDS.

GETtheMANUALS.org

NOTE: **This step must be done to protect the PCM from damage.**

- 4. Disconnect the following connector.

  PCM connector A (49P)

- 5. Connect terminals A and B with a jumper wire.

  Terminal A PCM connector A (49P) No. 12 (GRN)

  Terminal B Body ground

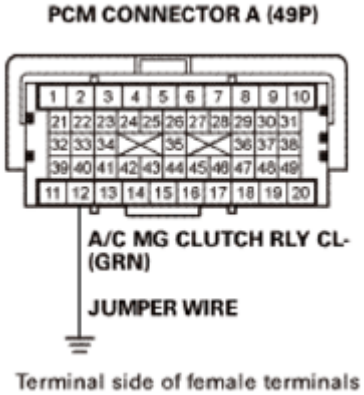

Fig. 22: Connecting Terminals A And B With Jumper Wire
Courtesy of AMERICAN HONDA MOTOR CO., INC.

- 6. Turn the ignition switch to ON (II).

Does the A/C compressor clutch click?

YES : **Update the PCM** See **PCM REMOVAL AND INSTALLATION** or **PCM UPDATE** if it does not have the latest software, or **substitute a known-good PCM** See **PCM REMOVAL AND INSTALLATION** or **PCM UPDATE** , and recheck.

NO : Repair an open in the wire between the A/C compressor clutch relay and the PCM.

9. Open wire check (A/C MG CLUTCH line):
   - 1. Disconnect the jumper wire.
   - 2. Disconnect the following connector.

     A/C compressor clutch 3P connector

   - 3. Check for continuity between test points 1 and 2.

     Test condition IG LOCK (0)

GETtheMANUALS.org

A/C compressor clutch relay: disconnected

A/C compressor clutch 3P connector: disconnected

Test circuit A/C MG CLUTCH

Test point 1 A/C compressor clutch relay 4P socket No. 2 (PUR) (Built into the under-hood fuse/relay box)

Test point 2 A/C compressor clutch 3P connector No. 1 (BLU)

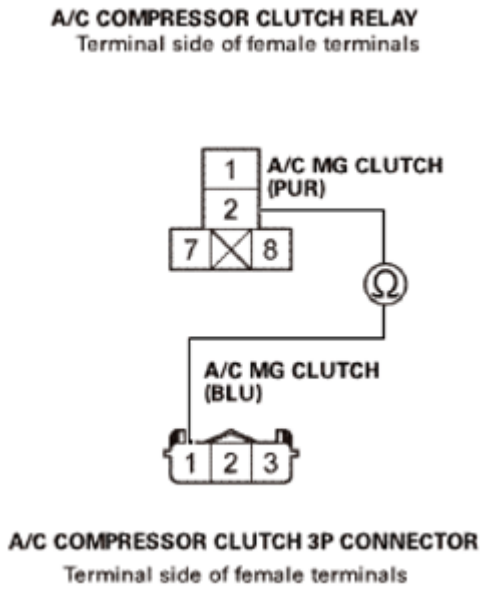

Fig. 23: Checking For Continuity Between Test Points 1 And 2
Courtesy of AMERICAN HONDA MOTOR CO., INC.

Is there continuity?

YES : The A/C MG CLUTCH wire is OK. Check the **A/C COMPRESSOR CLUTCH CLEARANCE** and the **A/C COMPRESSOR CLUTCH FIELD COIL** . Repair as needed.

NO : Repair an open in the wire between the A/C compressor clutch relay and the A/C compressor clutch.

A/C CONDENSER FAN HIGH SPEED CIRCUIT TROUBLESHOOTING (CLIMATE CONTROL)

GETtheMANUALS.org

A/C Condenser Fan High Speed Circuit Troubleshooting

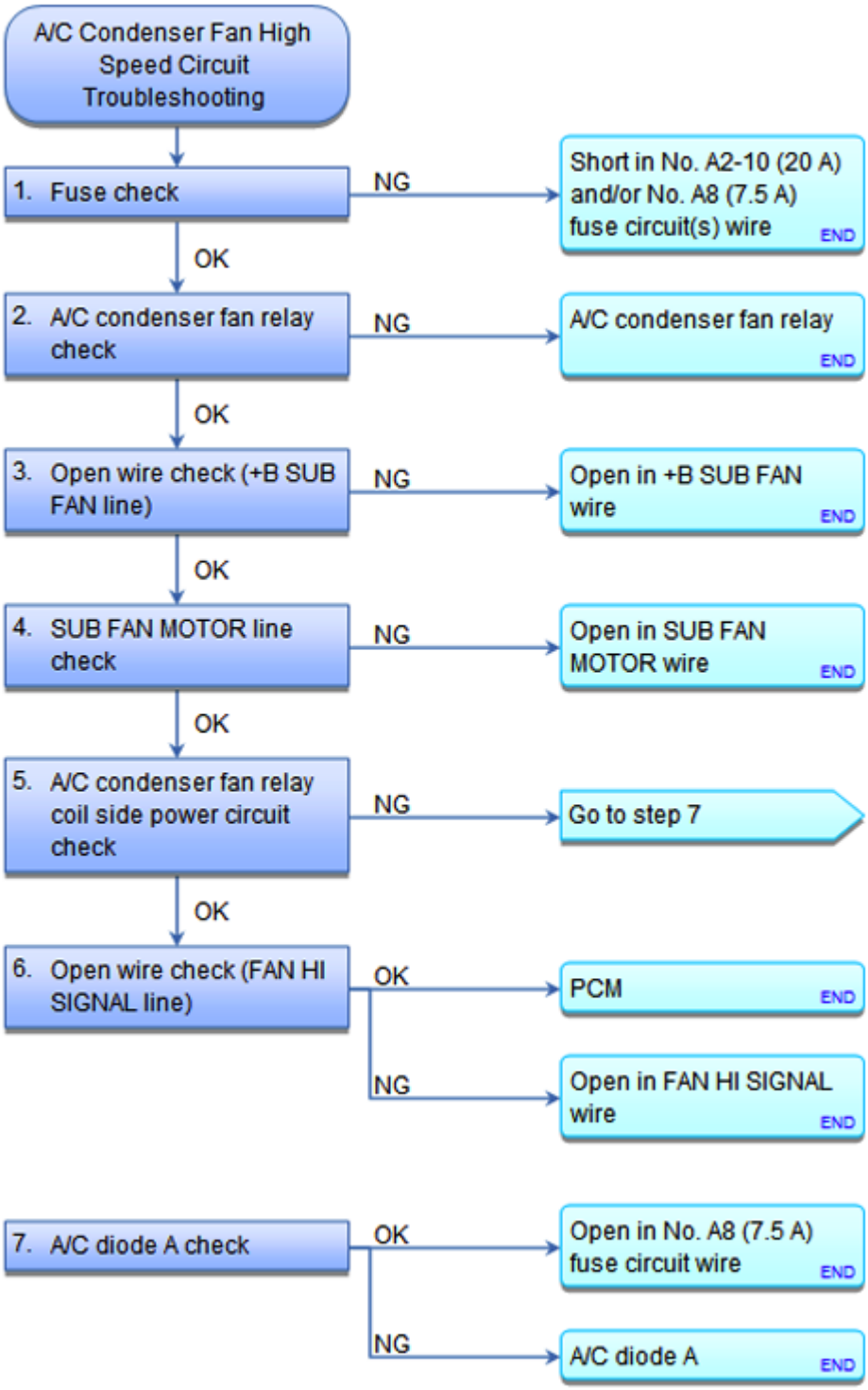

Fig. 24: A/C Condenser Fan High Speed Circuit Troubleshooting Flow Chart
Courtesy of AMERICAN HONDA MOTOR CO., INC.

NOTE:

- **Do not use this troubleshooting procedure if the A/C compressor is**

GETtheMANUALS.org

inoperative. Refer to the symptom troubleshooting index.

- **If A/C refrigerant pressure is abnormal, the radiator and A/C condenser fans are controlled based only on engine coolant temperature.**
- **Before doing symptom troubleshooting, check for PGM-FI DTCs See HOW TO TROUBLESHOOT THE A/T SYSTEM or HOW TO TROUBLESHOOT THE FUEL AND EMISSIONS SYSTEMS .**

1. Fuse check:
   - 1. Check the following fuses.

     Fuse No. A2-10 (20 A)

     Location Under-hood fuse/relay box

     Fuse No. A8 (7.5 A)

     Location Under-hood fuse/relay box

   Are the fuses OK?

   YES : Go to step 2.

   NO : Replace the fuse(s), and recheck. If the fuse(s) blow again, check for a short in the No. A2-10 (20 A) fuse and/or the No. A8 (7.5 A) fuse circuit(s).

2. A/C condenser fan relay check:
   - 1. Remove the A/C condenser fan relay from the under-hood fuse/relay box, and **TEST IT** .

   Is the relay OK?

   YES : Go to step 3.

   NO : Replace the A/C condenser fan relay.

3. Open wire check (+B SUB FAN line):
   - 1. Measure the voltage between test points 1 and 2.

     Test condition IG LOCK (0)

     A/C condenser fan relay: disconnected

     Test circuit +B SUB FAN

     Test point 1 A/C condenser fan relay 4P socket No. 1

     Test point 2 Body ground

GETtheMANUALS.org

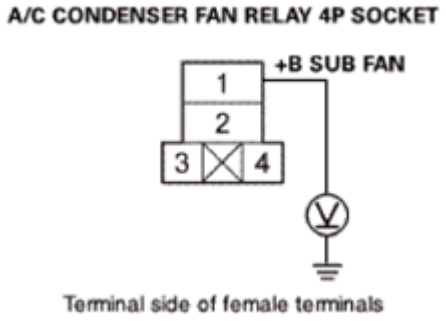

Fig. 25: Measuring Voltage Between Test Points 1 And 2
Courtesy of AMERICAN HONDA MOTOR CO., INC.

Is there battery voltage?

YES : The +B SUB FAN wire is OK. Go to step 4.

NO : An open in the +B SUB FAN wire. **REPLACE THE UNDER-HOOD FUSE/RELAY BOX** .

4. SUB FAN MOTOR line check:
   - 1. Connect terminals A and B with a jumper wire.

     Terminal A A/C condenser fan relay 4P socket No. 1

     Terminal B A/C condenser fan relay 4P socket No. 2 (YEL)

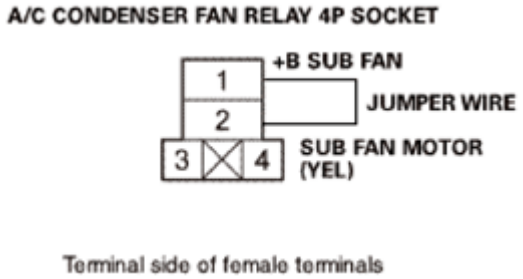

Fig. 26: Connecting Terminals A And B With A Jumper Wire
Courtesy of AMERICAN HONDA MOTOR CO., INC.

Does the A/C condenser fan run on high?

YES : The SUB FAN MOTOR wire is OK. Go to step 5.

NO : Repair an open in the wire between the A/C condenser fan relay and the A/C condenser fan motor.

5. A/C condenser fan relay coil side power circuit check:
   - 1. Disconnect the jumper wire.
   - 2. Turn the ignition switch to ON (II).

GETtheMANUALS.org

- 3. Measure the voltage between test points 1 and 2.

  Test condition IG ON (II)

  A/C condenser fan relay: disconnected

  Test circuit SUB FAN DIODE-

  Test point 1 A/C condenser fan relay 4P socket No. 3 (WHT)

  Test point 2 Body ground

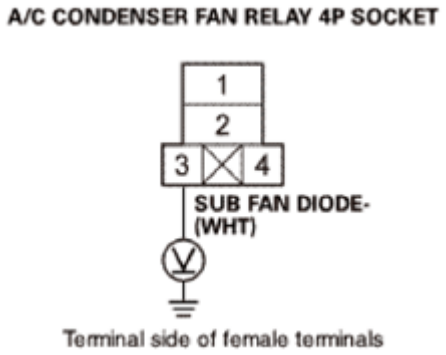

Fig. 27: Measuring Voltage Between Test Points 1 And 2
Courtesy of AMERICAN HONDA MOTOR CO., INC.

Is there battery voltage?

YES : The No. A8 (7.5 A) fuse circuit wire is OK. Go to step 6.

NO : Go to step 7.

6. Open wire check (FAN HI SIGNAL line):
   1. Turn the ignition switch to LOCK (0).
   2. Reinstall the A/C condenser fan relay.
   3. Jump the SCS line with the HDS.

   NOTE: This step must be done to protect the PCM from damage.

   4. Disconnect the following connector.

      PCM connector A (49P)

   5. Connect terminals A and B with a jumper wires.

      Terminal A PCM connector A (49P) No. 16 (GRY)

GETtheMANUALS.org

Terminal B Body ground

Terminal A PCM connector A (49P) No. 20 (WHT)

Terminal B Body ground

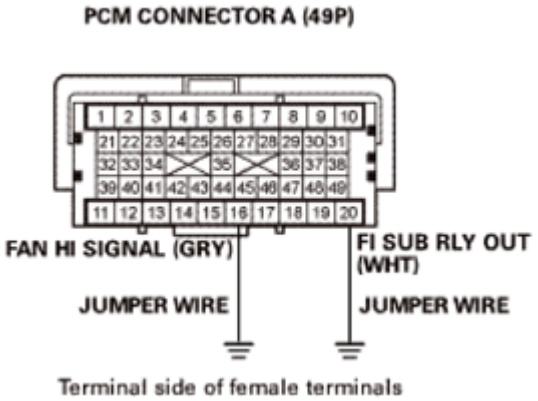

Fig. 28: Connecting Terminals A And B With Jumper Wires
Courtesy of AMERICAN HONDA MOTOR CO., INC.

6. Turn the ignition switch to ON (II).

Does the A/C condenser fan run on high?

YES : **Update the PCM** See **PCM REMOVAL AND INSTALLATION** or **PCM UPDATE** if it does not have the latest software, or **substitute a known-good PCM** See **PCM REMOVAL AND INSTALLATION** or **PCM UPDATE** , and recheck.

NO : Repair an open in the wire between the A/C condenser fan relay and the PCM.

7. A/C diode A check:
   - 1. Turn the ignition switch to LOCK (0).
   - 2. Using the diode setting ( ) on a DVOM, check for current flow in both directions between A/C diode A terminals No. 1 and No. 2.

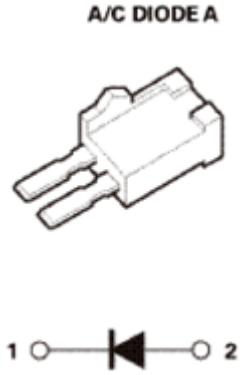

GETtheMANUALS.org

Fig. 29: Identifying A/C Diode A
Courtesy of AMERICAN HONDA MOTOR CO., INC.

Is there current flow in only one direction?

YES : An open in the No. A8 (7.5 A) fuse circuit wire. **REPLACE THE UNDER-HOOD FUSE/RELAY BOX** .

NO : Replace A/C diode A.

A/C CONDENSER FAN HIGH SPEED CIRCUIT TROUBLESHOOTING (MANUAL A/C)

GETtheMANUALS.org

A/C Condenser Fan High Speed Circuit Troubleshooting

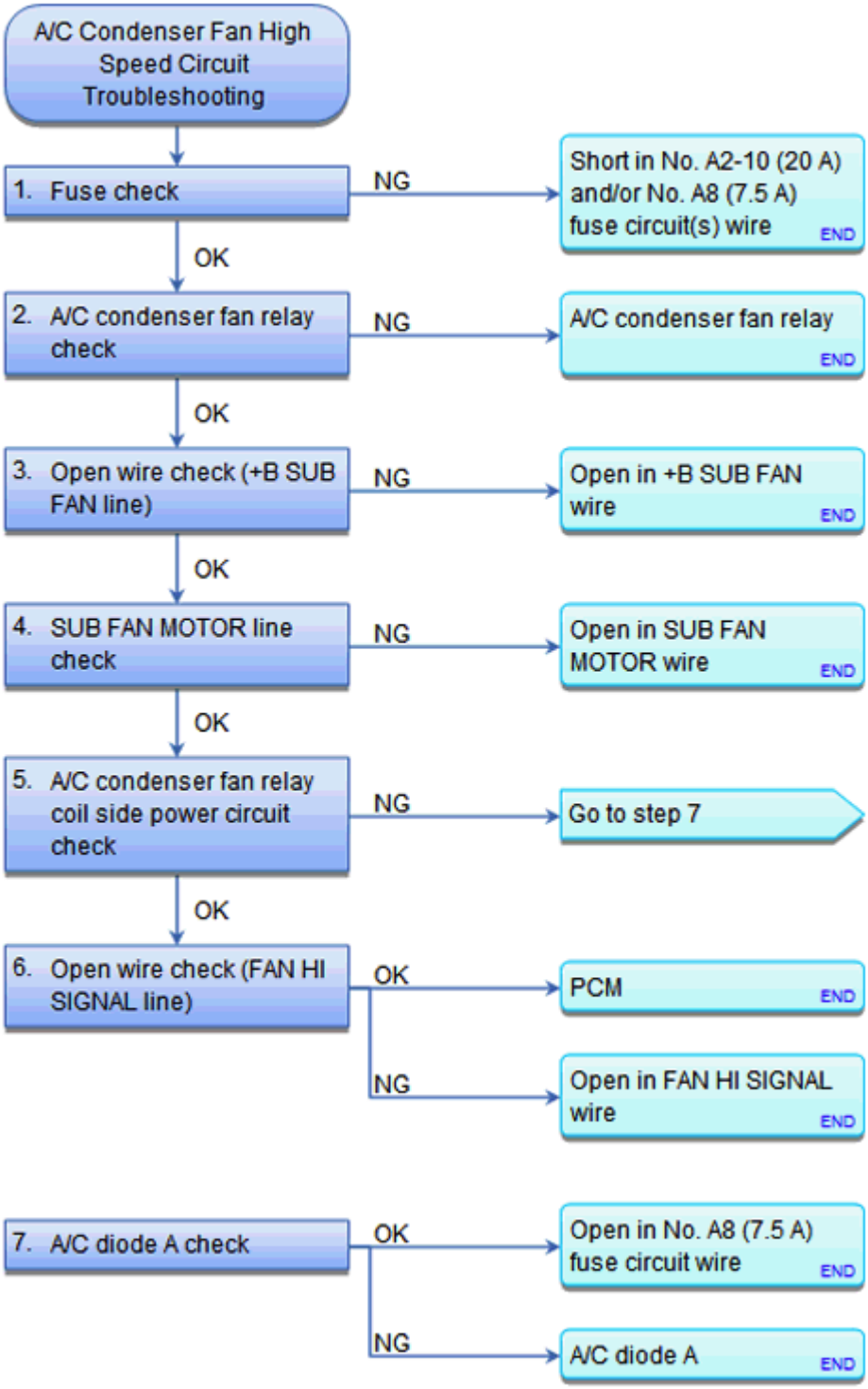

Fig. 30: A/C Condenser Fan High Speed Circuit Troubleshooting Flow Chart
Courtesy of AMERICAN HONDA MOTOR CO., INC.

NOTE:

- **Do not use this troubleshooting procedure if the A/C compressor is**

GETtheMANUALS.org

inoperative. Refer to the symptom troubleshooting index.

- **If A/C refrigerant pressure is abnormal, the radiator and A/C condenser fans are controlled based only on engine coolant temperature.**
- **Before doing symptom troubleshooting, check for PGM-FI DTCs See HOW TO TROUBLESHOOT THE A/T SYSTEM or HOW TO TROUBLESHOOT THE FUEL AND EMISSIONS SYSTEMS .**

1. Fuse check:
   - 1. Check the following fuses.

     Fuse No. A2-10 (20 A)

     Location Under-hood fuse/relay box

     Fuse No. A8 (7.5 A)

     Location Under-hood fuse/relay box

   Are the fuses OK?

   YES : Go to step 2.

   NO : Replace the fuse(s), and recheck. If the fuse(s) blow again, check for a short in the No. A2-10 (20 A) fuse and/or the No. A8 (7.5 A) fuse circuit(s).

2. A/C condenser fan relay check:
   - 1. Remove the A/C condenser fan relay from the under-hood fuse/relay box, and **TEST IT** .

   Is the relay OK?

   YES : Go to step 3.

   NO : Replace the A/C condenser fan relay.

3. Open wire check (+B SUB FAN line):
   - 1. Measure the voltage between test points 1 and 2.

     Test condition IG LOCK (0)

     A/C condenser fan relay: disconnected

     Test circuit +B SUB FAN

     Test point 1 A/C condenser fan relay 4P socket No. 1

     Test point 2 Body ground

GETtheMANUALS.org

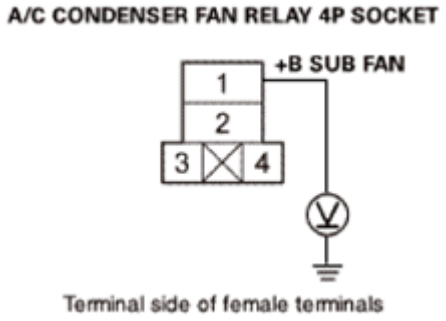

Fig. 31: Measuring Voltage Between Test Points 1 And 2
Courtesy of AMERICAN HONDA MOTOR CO., INC.

Is there battery voltage?

YES : The +B SUB FAN wire is OK. Go to step 4.

NO : An open in the +B SUB FAN wire. **REPLACE THE UNDER-HOOD FUSE/RELAY BOX** .

4. SUB FAN MOTOR line check:
   - 1. Connect terminals A and B with a jumper wire.

     Terminal A A/C condenser fan relay 4P socket No. 1

     Terminal B A/C condenser fan relay 4P socket No. 2 (YEL)

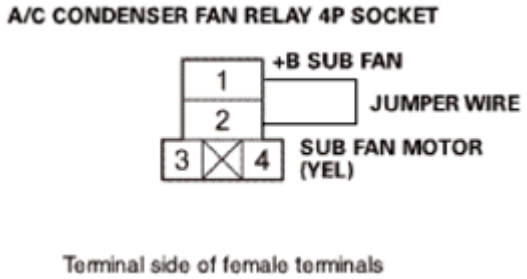

Fig. 32: Connecting Terminals A And B With Jumper Wire
Courtesy of AMERICAN HONDA MOTOR CO., INC.

Does the A/C condenser fan run on high?

YES : The SUB FAN MOTOR wire is OK. Go to step 5.

NO : Repair an open in the wire between the A/C condenser fan relay and the A/C condenser fan motor.

5. A/C condenser fan relay coil side power circuit check:
   - 1. Disconnect the jumper wire.
   - 2. Turn the ignition switch to ON (II).

GETtheMANUALS.org

- 3. Measure the voltage between test points 1 and 2.

  Test condition IG ON (II)

  A/C condenser fan relay: disconnected

  Test circuit SUB FAN DIODE-

  Test point 1 A/C condenser fan relay 4P socket No. 3 (WHT)

  Test point 2 Body ground

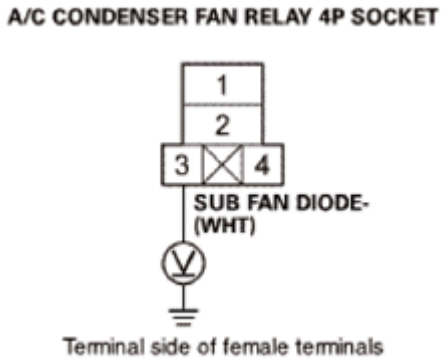

Fig. 33: Measuring Voltage Between Test Points 1 And 2
Courtesy of AMERICAN HONDA MOTOR CO., INC.

Is there battery voltage?

YES : The No. A8 (7.5 A) fuse circuit wire is OK. Go to step 6.

NO : Go to step 7.

6. Open wire check (FAN HI SIGNAL line):
   - 1. Turn the ignition switch to LOCK (0).
   - 2. Reinstall the A/C condenser fan relay.
   - 3. Jump the SCS line with the HDS.

     NOTE: This step must be done to protect the PCM from damage.

   - 4. Disconnect the following connector.

     PCM connector A (49P)

   - 5. Connect terminals A and B with a jumper wire.

     Terminal A PCM connector A (49P) No. 16 (GRY)

GETtheMANUALS.org

Terminal B Body ground

Terminal A PCM connector A (49P) No. 20 (WHT)

Terminal B Body ground

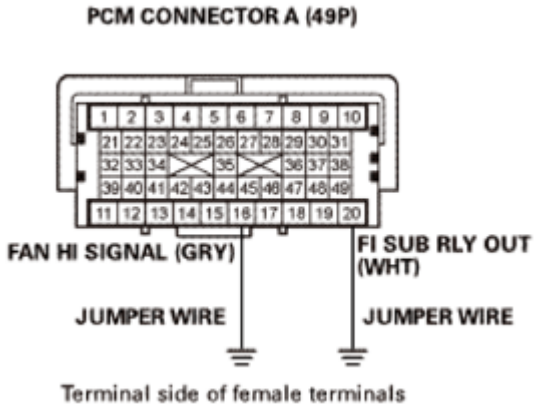

Fig. 34: Connecting Terminals A And B Using Jumper Wire
Courtesy of AMERICAN HONDA MOTOR CO., INC.

- 6. Turn the ignition switch to ON (II).

Does the A/C condenser fan run on high?

YES : **Update the PCM** See **PCM REMOVAL AND INSTALLATION** or **PCM UPDATE** if it does not have the latest software, or **substitute a known-good PCM** See **PCM REMOVAL AND INSTALLATION** or **PCM UPDATE** , and recheck.

NO : Repair an open in the wire between the A/C condenser fan relay and the PCM.

7. A/C diode A check:
   - 1. Turn the ignition switch to LOCK (0).
   - 2. Using the diode setting on a DVOM, check for current flow in both directions between A/C diode A terminals No. 1 and No. 2.

GETtheMANUALS.org

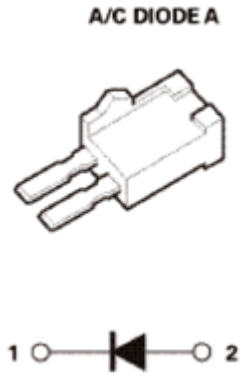

Fig. 35: Identifying A/C Diode A
Courtesy of AMERICAN HONDA MOTOR CO., INC.

Is there current flow in only one direction?

YES : An open in No. A8 (7.5 A) fuse circuit wire. **REPLACE THE UNDER-HOOD FUSE/RELAY BOX** .

NO : Replace A/C diode A.

A/C DIAGNOSTIC PROCESS

When a customer presents A/C concern, do the following procedure to identify the cause of the problem.

1. Confirm the type of concern.
   - If a customer presents about A/C noise problem, do the **A/C System Noise Check** .
   - If a customer presents about A/C performance problem, go to step 2.
2. Do the **A/C System Inspection** and repair any problems. If no problems are found, then go to step 3.
3. **Recover the refrigerant from the A/C system** See **A/C REFRIGERANT RECOVERY** , **A/C SYSTEM CHARGING** or **A/C System Evacuation** and measure the refrigerant charge from the A/C system using a recovery/recycling/charging station that meets SAE J2788 standards.
   - If the refrigerant charge is within specifications, **evacuate** See **A/C REFRIGERANT RECOVERY** , **A/C SYSTEM CHARGING** or **A/C System Evacuation** and **recharge the system** See **A/C REFRIGERANT RECOVERY** , **A/C SYSTEM CHARGING** or **A/C System Evacuation** . Then go to step 4.
   - If the refrigerant charge is significantly under specifications, then go to step 5.
   - If the refrigerant charge is significantly over specifications, **evacuate** See **A/C REFRIGERANT RECOVERY** , **A/C SYSTEM CHARGING** or **A/C System Evacuation** and **recharge the system** See **A/C REFRIGERANT RECOVERY** , **A/C SYSTEM CHARGING** or **A/C System Evacuation** . Then go to step 7.
4. Do the **A/C System Test** .
   - If vent temperature or suction/discharge pressures are not within specifications, diagnose and repair the A/C system as needed. Then go to step 6.

GETtheMANUALS.org

- If no problems are found, the A/C system is operating as designed and the A/C diagnostic process is complete.

5. Do the **REFRIGERANT LEAK CHECK** .
   - If any leaks are found, repair the A/C system as needed. Then go to step 6.
   - If no leaks are found, go to step 7.
6. **Evacuate** See **A/C REFRIGERANT RECOVERY** , **A/C SYSTEM CHARGING** or **A/C System Evacuation** and **recharge the system** See **A/C REFRIGERANT RECOVERY** , **A/C SYSTEM CHARGING** or **A/C System Evacuation** . Then go to step 7.
7. Do the **A/C System Test** to confirm your repairs.
   - If vent temperature or suction/discharge pressures are within specifications, the repair is confirmed and the A/C diagnostic process is complete.
   - If vent temperature or suction/discharge pressures are not within specifications, a problem may still exist. Return to step 1 and recheck your test procedures.

A/C SIGNAL CIRCUIT TROUBLESHOOTING (CLIMATE CONTROL)

GETtheMANUALS.org

A/C Signal Circuit Troubleshooting

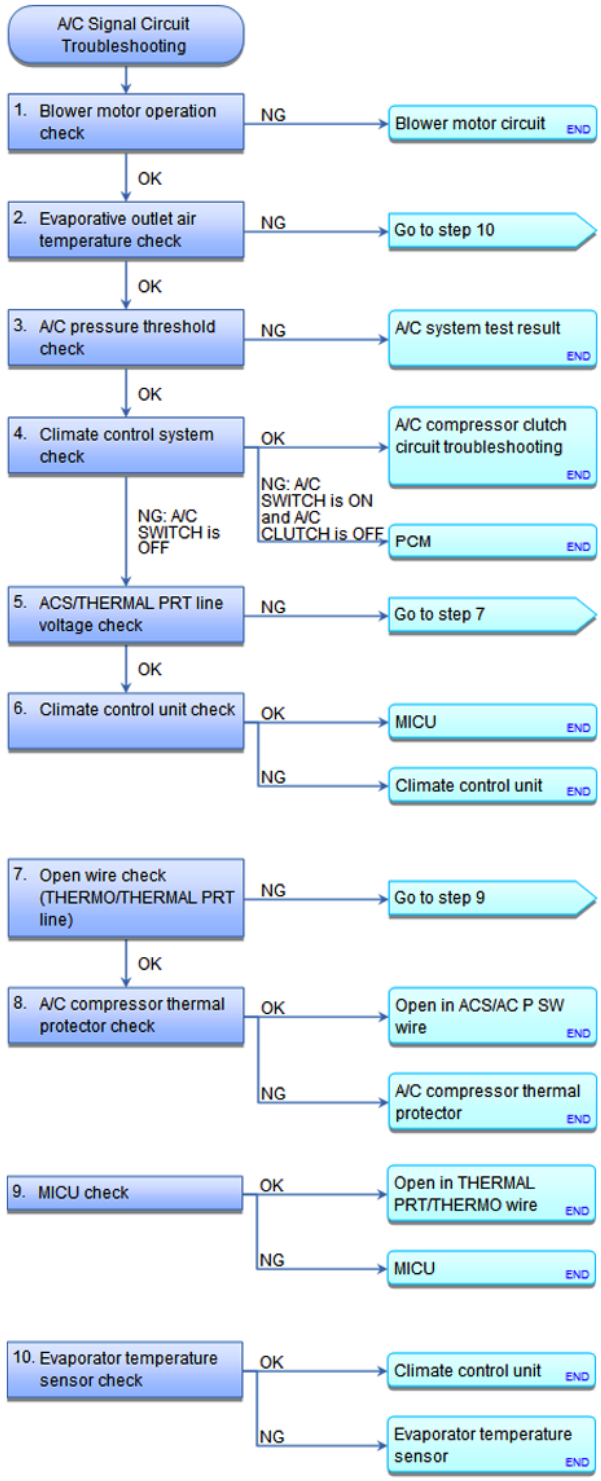

Fig. 36: A/C Signal Circuit Troubleshooting Flow Chart
Courtesy of AMERICAN HONDA MOTOR CO., INC.

NOTE:

- **Do not use this troubleshooting procedure if any of the following items are**

GETtheMANUALS.org

operative with the A/C button and the fan control dial to ON: The A/C condenser fan, the radiator fan, or the A/C compressor. Refer to the symptom troubleshooting index.

- **Do not use this troubleshooting procedure if the A/C system pressure is abnormal.**
- **Before doing symptom troubleshooting, check for PGM-FI DTCs See HOW TO TROUBLESHOOT THE A/T SYSTEM or HOW TO TROUBLESHOOT THE FUEL AND EMISSIONS SYSTEMS .**

1. Blower motor operation check:
   - 1. Turn the ignition switch to ON (II).
   - 2. Check that the blower motor operates at all speeds.

   Does the blower motor operate at all speeds?

   YES : Go to step 2.

   NO : **REPAIR THE PROBLEM IN THE BLOWER MOTOR CIRCUIT** .

2. Evaporative outlet air temperature check:
   - 1. Start the engine.
   - 2. Set the A/C button and the fan control button to ON.
   - 3. **Do the sensor input display mode** See **HOW TO TROUBLESHOOT THE BODY ELECTRICAL** or **HOW TO TROUBLESHOOT THE CLIMATE CONTROL SYSTEM**.

   Is Sensor #5 (evaporative outlet air temperature) above 3°C?

   YES : Go to step 3.

   NO : Go to step 10.

3. A/C pressure threshold check:
   - 1. Turn the ignition switch to LOCK (0).
   - 2. Connect the HDS to the DLC.
   - 3. Start the engine.
   - 4. Set the A/C button and the fan control button to ON.
   - 5. Check the parameter(s) below with the HDS.

Signal	Threshold		Current conditions	
	Values	Unit	Values	Unit
A/C PRESSURE	196 - 3, 38	kPa		
	2.00 - 32.00	kgf/cm^2		
	28.4 - 455.1	psi		

GETtheMANUALS.org

Do the current condition(s) match the threshold?

YES : Go to step 4.

NO : Go to the **A/C SYSTEM TEST RESULT**.

4. Climate control system check:
   - 1. Using the HDS, confirm the following values in the PGM-FI Data List at idle.

Signal	Threshold		Current conditions	
	Values	Unit	Values	Unit
A/C SWITCH	ON			
A/C CLUTCH	ON			

Do the current condition(s) match the threshold?

YES : Go to the **A/C COMPRESSOR CLUTCH CIRCUIT TROUBLESHOOTING**.

NO : A/C SWITCH is OFF, go to step 5.

NO : A/C SWITCH is ON and A/C CLUTCH is OFF, high ETC 2 will cause the clutch to be off and switch on, **update the PCM** See **PCM REMOVAL AND INSTALLATION** or **PCM UPDATE** if it does not have the latest software, or **substitute a known-good PCM** See **PCM REMOVAL AND INSTALLATION** or **PCM UPDATE** , and recheck.

5. ACS/THERMAL PRT line voltage check:
   - 1. Turn the ignition switch to LOCK (0)
   - 2. Disconnect the following connector.

     Climate control unit 32P connector

   - 3. Turn the ignition switch to ON (II).
   - 4. Measure the voltage between test points 1 and 2.

     Test condition IG ON (II)

     Climate control unit 32P connector: disconnected

     Test circuit ACS

     Test point 1 Climate control unit 32P connector No. 24 (LT GRN)

     Test point 2 Body ground

GETtheMANUALS.org

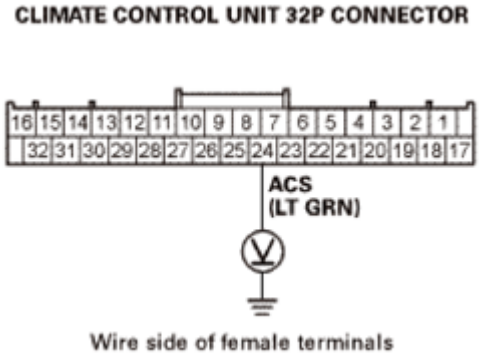

Fig. 37: Measuring Voltage Between Test Points 1 And 2
Courtesy of AMERICAN HONDA MOTOR CO., INC.

Is there battery voltage?

YES : The ACS/THERMAL PRT wire is OK. Go to step 6.

NO : Go to step 7.

6. Climate control unit check:
   - 1. Turn the ignition switch to LOCK (0).
   - 2. Reconnect the climate control unit 32P connector.
   - 3. Start the engine.
   - 4. Set the A/C button and the fan control button to ON.
   - 5. Measure the voltage between test points 1 and 2.

     Test condition IG ON (II)

     Test circuit ACS

     Test point 1 Climate control unit 32P connector No. 24 (LT GRN)

     Test point 2 Body ground

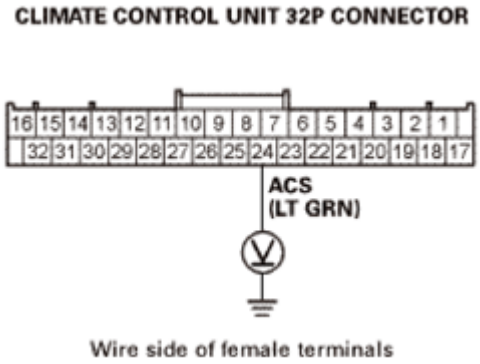

GETtheMANUALS.org

Fig. 38: Measuring Voltage Between Test Points 1 And 2
Courtesy of AMERICAN HONDA MOTOR CO., INC.

Is there 0.2 V or less?

YES : **REPLACE THE UNDER-DASH FUSE/RELAY BOX** .

NO : **REPLACE THE CLIMATE CONTROL UNIT** .

7. Open wire check (THERMO/THERMAL PRT line):
   - 1. Turn the ignition switch to LOCK (0).
   - 2. Disconnect the following connector.

     A/C compressor clutch 3P connector

   - 3. Turn the ignition switch to ON (II).
   - 4. Measure the voltage between test points 1 and 2.

     Test condition IG ON (II)

     Climate control unit 32P connector: disconnected

     A/C compressor clutch 3P connector: disconnected

     Test circuit THERMO

     Test point 1 A/C compressor clutch 3P connector No. 2 (LT BLU)

     Test point 2 Body ground

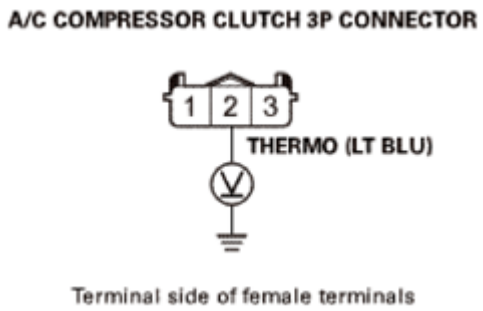

Fig. 39: Measuring Voltage Between Test Points 1 And 2
Courtesy of AMERICAN HONDA MOTOR CO., INC.

Is there battery voltage?

YES : THERMO/THERMAL PRT wire is OK. Go to step 8.

GETtheMANUALS.org

NO : Go to step 9.

8. A/C compressor thermal protector check:
   - 1. Turn the ignition switch to LOCK (0).
   - 2. **TEST THE A/C COMPRESSOR THERMAL PROTECTOR** .

Is the A/C compressor thermal protector OK?

YES : Repair an open in the wire between the climate control unit and the A/C compressor.

NO : **REPLACE THE A/C COMPRESSOR THERMAL PROTECTOR** .

9. MICU check:
   - 1. Measure the voltage between test points 1 and 2.

     Test condition IG ON (II)

     Climate control unit 32P connector: disconnected

     A/C compressor clutch 3P connector: disconnected

     Test circuit THERMAL PRT

     Test point 1 Under-dash fuse/relay box connector D (32P) No. 31 (WHT)

     Test point 2 Body ground

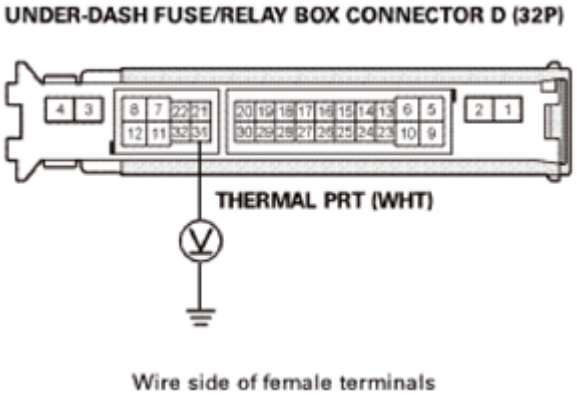

Fig. 40: Measuring Voltage Between Test Points 1 And 2
Courtesy of AMERICAN HONDA MOTOR CO., INC.

Is there battery voltage?

YES : Repair an open in the wire between the A/C compressor and the under-dash fuse/relay box.

GETtheMANUALS.org

NO : **REPLACE THE UNDER-DASH FUSE/RELAY BOX** .

10. Evaporator temperature sensor check:
    - 1. Turn the ignition switch to LOCK (0).
    - 2. Disconnect the following connector.

      Climate control unit 32P connector

    - 3. Measure the resistance between test points 1 and 2.

      Test condition IG LOCK (0)

      Climate control unit 32P connector: disconnected

      Test circuit TEVA, SENSOR COM

      Test point 1 Climate control unit 32P connector No. 18 (ORN)

      Test point 2 Climate control unit 32P connector No. 23 (GRY)

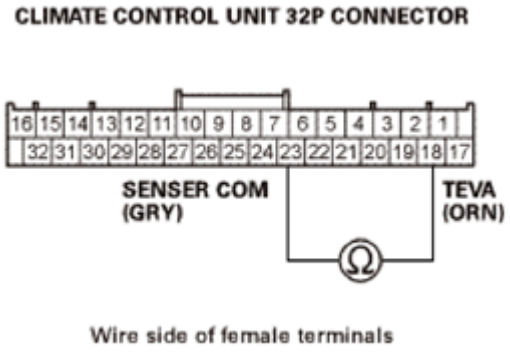

Fig. 41: Measuring Resistance Between Test Points 1 And 2
Courtesy of AMERICAN HONDA MOTOR CO., INC.

Is the resistance less than 24 kohms?

YES : **REPLACE THE CLIMATE CONTROL UNIT** .

NO : **TEST THE EVAPORATOR TEMPERATURE SENSOR** .

A/C SIGNAL CIRCUIT TROUBLESHOOTING (MANUAL A/C)

GETtheMANUALS.org

A/C Signal Circuit Troubleshooting

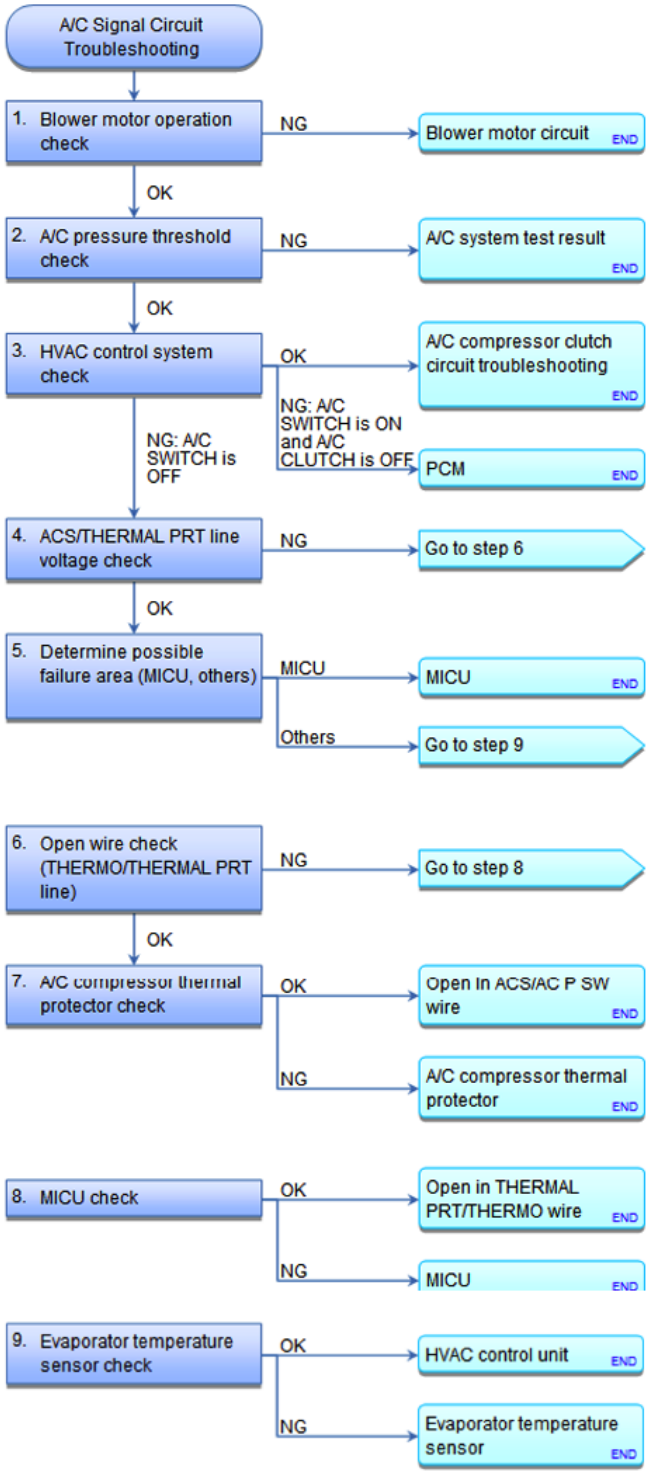

Fig. 42: A/C Signal Circuit Troubleshooting Flow Chart
Courtesy of AMERICAN HONDA MOTOR CO., INC.

NOTE:

- **Do not use this troubleshooting procedure if any of the following items are**

GETtheMANUALS.org

operative with the A/C button and the fan control dial to ON: The A/C condenser fan, the radiator fan, or the A/C compressor. Refer to the symptom troubleshooting index.

- **Before doing symptom troubleshooting, check for PGM-FI DTCs See HOW TO TROUBLESHOOT THE A/T SYSTEM or HOW TO TROUBLESHOOT THE FUEL AND EMISSIONS SYSTEMS .**
- **Do not use this troubleshooting procedure if the A/C system pressure is abnormal.**

1. Blower motor operation check:
   - 1. Turn the ignition switch to ON (II).
   - 2. Check if the blower motor operates at all speeds.

   Does the blower motor operate at all speeds?

   YES : Go to step 2.

   NO : **REPAIR THE PROBLEM IN THE BLOWER MOTOR CIRCUIT** .

2. A/C pressure threshold check:
   - 1. Turn the ignition switch to LOCK (0).
   - 2. Connect the HDS to the DLC.
   - 3. Start the engine.
   - 4. Set the A/C button and the fan control dial to ON.
   - 5. Check the parameter(s) below with the HDS.

Signal	Threshold		Current conditions	
	Values	Unit	Values	Unit
A/C PRESSURE	196 - 3, 38	kPa		
	2.00 - 32.00	kgf/cm^2		
	28.4 - 455.1	psi		

   Do the current condition(s) match the threshold?

   YES : Go to step 3.

   NO : Go to the **A/C SYSTEM TEST RESULT**.

3. HVAC control system check:
   - 1. Check the parameter(s) below with the HDS.

Signal	Threshold		Current conditions	
	Values	Unit	Values	Unit

GETtheMANUALS.org

A/C SWITCH	ON			
A/C CLUTCH	ON			

Do the current condition(s) match the threshold?

YES : Go to the **A/C COMPRESSOR CLUTCH CIRCUIT TROUBLESHOOTING**.

NO : A/C SWITCH is OFF, go to step 4.

NO : A/C SWITCH is ON and A/C CLUTCH is OFF, high ETC 2 will cause the clutch to be off and switch on, **update the PCM** See **PCM REMOVAL AND INSTALLATION** or **PCM UPDATE** if it does not have the latest software, or **substitute a known-good PCM** See **PCM REMOVAL AND INSTALLATION** or **PCM UPDATE** , and recheck.

4. ACS/THERMAL PRT line voltage check:
   - 1. Turn the ignition switch to LOCK (0).
   - 2. Disconnect the following connector.

     HVAC control unit 32P connector

   - 3. Turn the ignition switch to ON (II).
   - 4. Measure the voltage between test points 1 and 2.

     Test condition IG ON (II)

     HVAC control unit 32P connector: disconnected

     Test circuit ACS

     Test point 1 HVAC control unit 32P connector No. 25 (LT GRN)

     Test point 2 Body ground

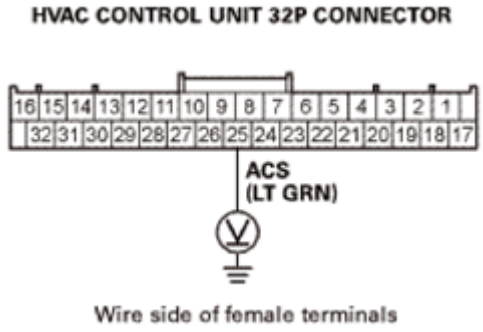

Fig. 43: Measuring Voltage Between Test Points 1 And 2
Courtesy of AMERICAN HONDA MOTOR CO., INC.

GETtheMANUALS.org

Is there battery voltage?

YES : Go to step 5.

NO : Go to step 6.

5. Determine possible failure area (MICU, others):
    - 1. Turn the ignition switch to LOCK (0).
    - 2. Reconnect the HVAC control unit 32P connector.
    - 3. Start the engine.
    - 4. Set the A/C button and the fan control dial to ON.
    - 5. Measure the voltage between test points 1 and 2.

    Test condition IG ON (II)

    Test circuit ACS

    Test point 1 HVAC control unit 32P connector No. 25 (LT GRN)

    Test point 2 Body ground

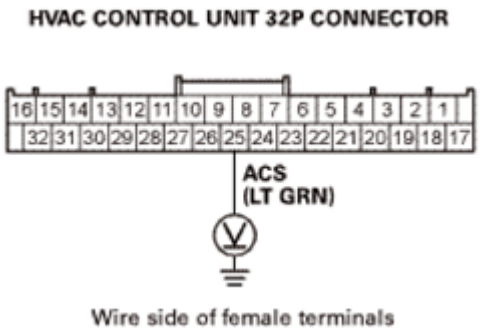

Fig. 44: Measuring Voltage Between Test Points 1 And 2
Courtesy of AMERICAN HONDA MOTOR CO., INC.

Is there 0.2 V or less?

YES : **REPLACE THE UNDER-DASH FUSE/RELAY BOX** .

NO : Go to step 9.

6. Open wire check (THERMO/THERMAL PRT line):
    - 1. Turn the ignition switch to LOCK (0).
    - 2. Disconnect the following connector.

    A/C compressor clutch 3P connector

GETtheMANUALS.org

- 3. Turn the ignition switch to ON (II).
- 4. Measure the voltage between test points 1 and 2.

  Test condition IG ON (II)

  HVAC control unit 32P connector: disconnected

  A/C compressor clutch 3P connector: disconnected

  Test circuit THERMO

  Test point 1 A/C compressor clutch 3P connector No. 2 (LT BLU)

  Test point 2 Body ground

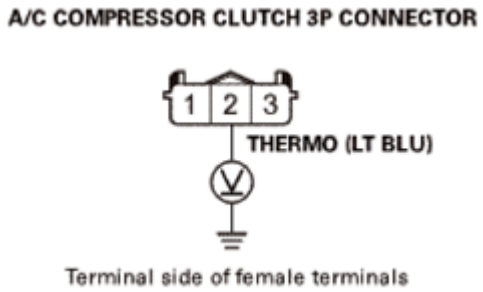

Fig. 45: Measuring Voltage Between Test Points 1 And 2
Courtesy of AMERICAN HONDA MOTOR CO., INC.

Is there battery voltage?

YES : THERMO/THERMAL PRT wire is OK. Go to step 7.

NO : Go to step 8.

7. A/C compressor thermal protector check:
   - 1. Turn the ignition switch to LOCK (0).
   - 2. **TEST THE A/C COMPRESSOR THERMAL PROTECTOR** .

Is the A/C compressor thermal protector OK?

YES : Repair an open in the wire between the HVAC control unit and the A/C compressor.

NO : **REPLACE THE A/C COMPRESSOR THERMAL PROTECTOR** .

8. MICU check:
   - 1. Measure the voltage between test points 1 and 2.

GETtheMANUALS.org

Test condition IG ON (II)

Test circuit THERMAL PRT

HVAC control unit 32P connector: disconnected

A/C compressor clutch 3P connector: disconnected

Test point 1 Under-dash fuse/relay box connector D (32P) No. 31 (WHT)

Test point 2 Body ground

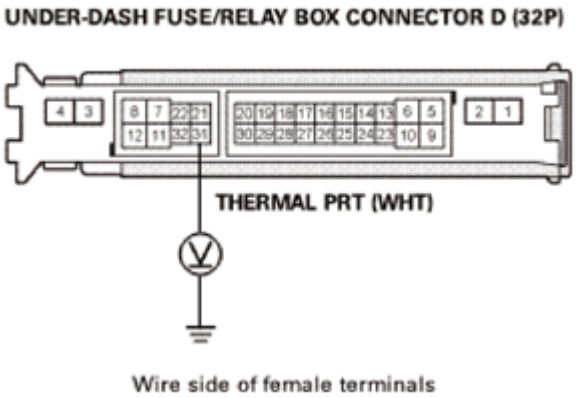

Fig. 46: Measuring Voltage Between Test Points 1 And 2
Courtesy of AMERICAN HONDA MOTOR CO., INC.

Is there battery voltage?

YES : Repair an open in the wire between the A/C compressor and the under-dash fuse/relay box.

NO : **REPLACE THE UNDER-DASH FUSE/RELAY BOX** .

9. Evaporator temperature sensor check:
   - 1. Turn the ignition switch to LOCK (0).
   - 2. Measure the resistance between test points 1 and 2.

   Test condition IG LOCK (0)

   HVAC control unit 32P connector: disconnected

   Test circuit TEVA, SENSOR COM

   Test point 1 HVAC control unit 32P connector No. 19 (ORN)

   Test point 2 HVAC control unit 32P connector No. 20 (GRY)

GETtheMANUALS.org

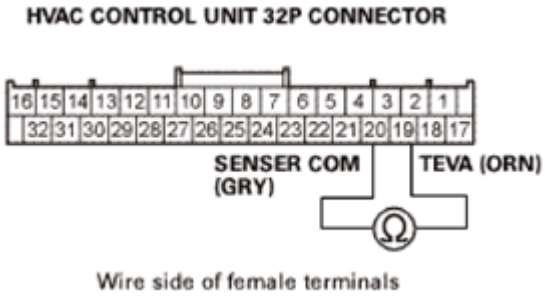

Fig. 47: Measuring Resistance Between Test Points 1 And 2
Courtesy of AMERICAN HONDA MOTOR CO., INC.

Is resistance less than 24 kohms?

YES : **REPLACE THE HVAC CONTROL UNIT** .

NO : **TEST THE EVAPORATOR TEMPERATURE SENSOR** .

A/C SIGNAL CIRCUIT TROUBLESHOOTING IDLE CONTROL SYSTEM

GETtheMANUALS.org

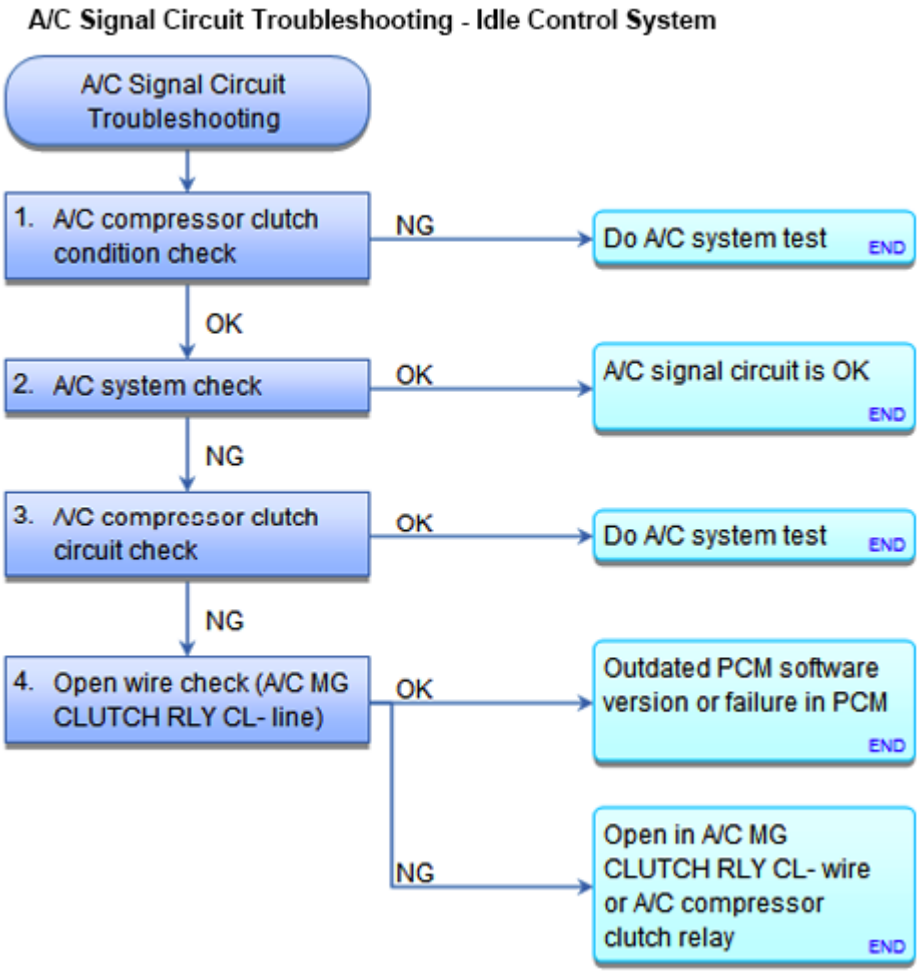

Fig. 48: A/C Signal Circuit Troubleshooting Flow Chart
Courtesy of AMERICAN HONDA MOTOR CO., INC.

1. A/C compressor clutch condition check:
    - 1. Start the engine, and let it idle.
    - 2. Turn the blower switch on.
    - 3. Turn the A/C switch on.
    - 4. Check the parameter(s) below with the HDS.

Signal	Threshold		Current conditions	
	Values	Unit	Values	Unit
A/C CLUTCH	ON			

Do the current condition(s) match the threshold?

YES : Go to step 2.

NO : Do the **A/C System Test**

GETtheMANUALS.org

2. A/C system check:
    - 1. Check the A/C system.

    Does the A/C system operate?

    YES : The A/C system circuit is OK.

    NO : Go to step 3.

3. A/C compressor clutch circuit check:
    - 1. Turn the ignition switch to LOCK (0).
    - 2. Turn the ignition switch to ON (II).
    - 3. Activate the A/C CLUTCH in the INSPECTION MENU with the HDS.

    Is there a clicking noise from the A/C compressor clutch?

    YES : The A/C compressor clutch circuit is OK. Do the **A/C System Test** .

    NO : Go to step 4.

4. Open wire check (A/C MG CLUTCH RLY CL- line):
    - 1. Turn the ignition switch to LOCK (0).
    - 2. Jump the SCS line with the HDS.
    - 3. Disconnect the following connector.

      PCM connector A (49P)

    - 4. Turn the ignition switch to ON (II).
    - 5. Connect terminals A and B with a jumper wire.

      Terminal A PCM connector A (49P) No. 12 (GRN)

      Terminal B Body ground

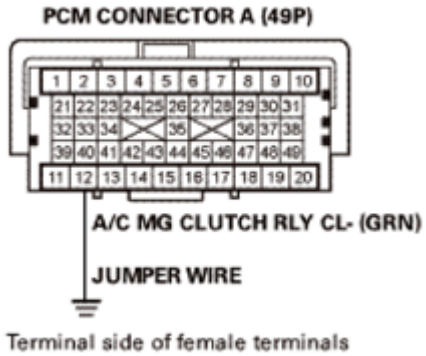

GETtheMANUALS.org

Fig. 49: Connecting Terminals A And B With Jumper Wire
Courtesy of AMERICAN HONDA MOTOR CO., INC.

Is there a clicking noise from the A/C compressor clutch?

YES : The A/C MG CLUTCH RLY CL- wire is OK. **Update the PCM** See **PCM REMOVAL AND INSTALLATION** or **PCM UPDATE** if it does not have the latest software, or **substitute a known-good PCM** See **PCM REMOVAL AND INSTALLATION** or **PCM UPDATE** , then recheck. If the symptom/indication goes away and the PCM was updated, troubleshooting is complete. If the symptom/indication goes away and the PCM was substituted, **replace the original PCM** See **PCM REMOVAL AND INSTALLATION** or **PCM UPDATE** .

NO : Check for poor connections or loose terminals at the A/C compressor clutch relay and the PCM. If the connections and terminals are OK, check the A/C compressor clutch relay. If needed, repair open in the A/C MG CLUTCH RLY CL- wire between the PCM (A12) and the A/C compressor clutch relay, or other parts in the A/C systems.

AIR MIX CONTROL MOTOR TEST

SPECIAL TOOL DESCRIPTION

Image	Description/Tool Number
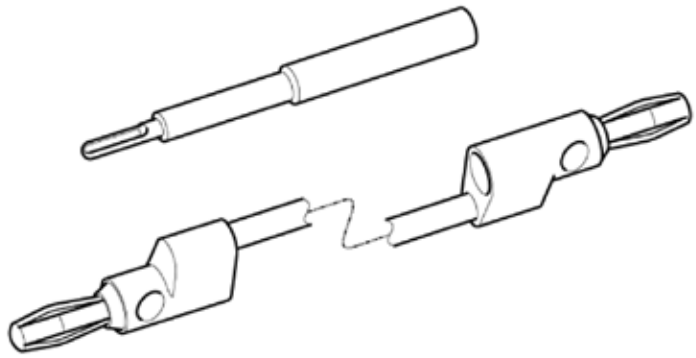	Backprobe Set 07SAZ-001000A (2)

TEST

NOTE: Before testing the motor, check for HVAC DTCs.

1. Air Mix Control Motor - Test
    1. Disconnect the air mix control motor connector.

NOTE: Incorrectly applying power and ground to the air mix control motor will damage it. Follow the instructions carefully.

GETtheMANUALS.org

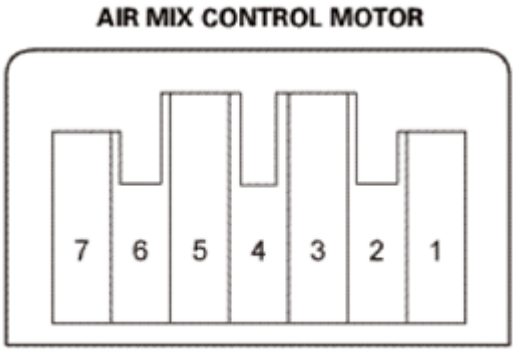

Fig. 50: Identifying Air Mix Control Motor Connector
Courtesy of AMERICAN HONDA MOTOR CO., INC.

2. Connect battery power to terminal No. 7 of the air mix control motor, and ground terminal No. 6; the air mix control motor should run smoothly, and stop at MAX HOT. If it does not, reverse the connections; the air mix control motor should run smoothly, and stop at MAX COOL. When the air mix control motor stops running, disconnect battery power immediately.
3. If the air mix control motor did not run in step 2, remove it, then check the air mix control linkage and door for smooth movement.
   - If the linkage and door move smoothly, go to step 4.
   - If the linkage or door sticks or binds, repair them as needed.
4. Measure the resistance between terminals No. 1 and No. 3. It should be between 4.2 kohms and 7.8 kohms.
5. Reconnect the air mix control motor connector.
6. Turn the ignition switch to ON (II).
7. Using the backprobe set, measure the voltage between terminals No. 1 and No. 2.

   MAX COOL: About 0.5 V

   MAX HOT: About 4.0 V

8. If either the resistance or the voltage readings are not as specified, replace the air mix control motor.

BLOWER POWER TRANSISTOR TEST (CLIMATE CONTROL)

REMOVAL

1. Passenger's Dashboard Undercover
   1. Gently pull down the passenger's dashboard undercover (A) to detach the clips (B), then pull away the undercover to release the pins (C) from the holder (D).

GETtheMANUALS.org

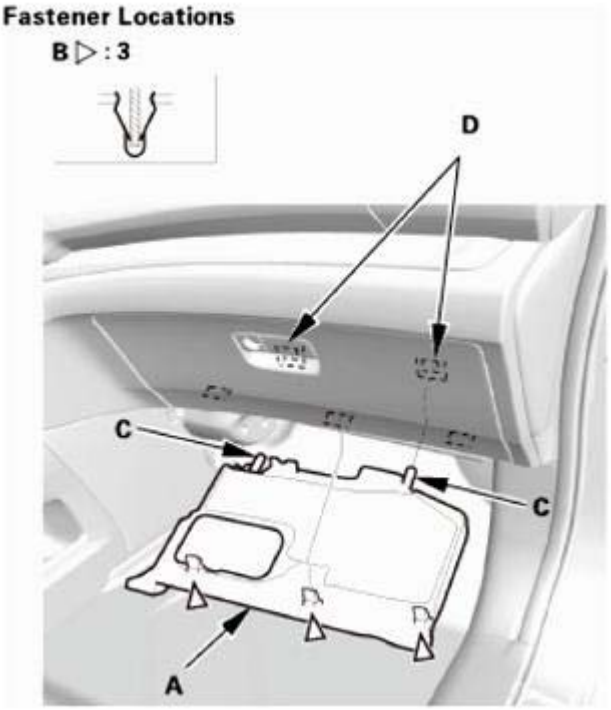

Fig. 51: Identifying Passenger's Dashboard Undercover, Clips, Pins And Holder
Courtesy of AMERICAN HONDA MOTOR CO., INC.

2. Glove Box
    1. Remove the bolts (A).

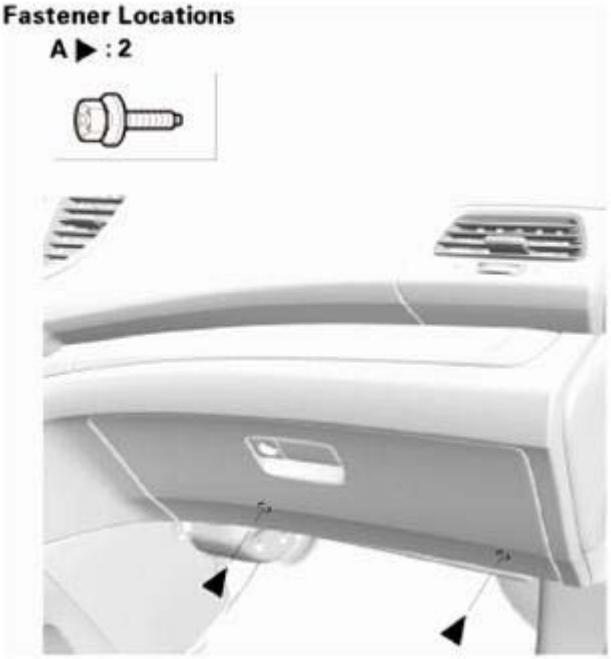

Fig. 52: Identifying Glove Box Bolts

GETtheMANUALS.org

Courtesy of AMERICAN HONDA MOTOR CO., INC.

2. Release both glove box stops (A) by pushing them in, then let the glove box (B) hang down.

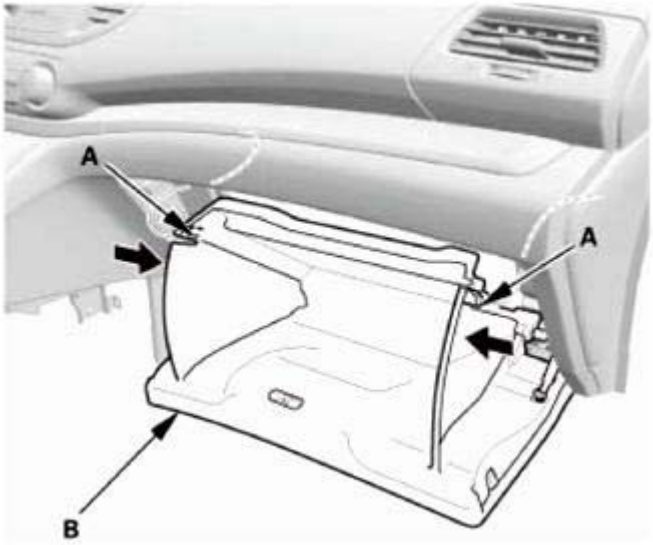

Fig. 53: Identifying Glove Box Stops And Glove Box
Courtesy of AMERICAN HONDA MOTOR CO., INC.

3. Detach the glove box damper hook (A), then remove the glove box (B).

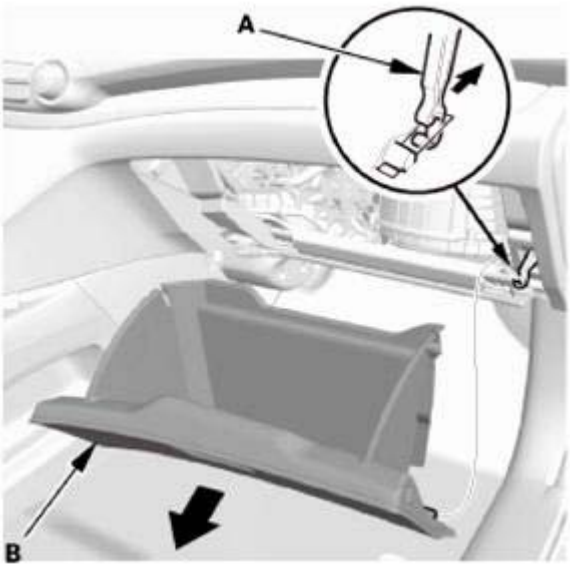

Fig. 54: Removing Glove Box
Courtesy of AMERICAN HONDA MOTOR CO., INC.

3. Glove Box Frame
    1. Remove the glove box frame (A).

GETtheMANUALS.org

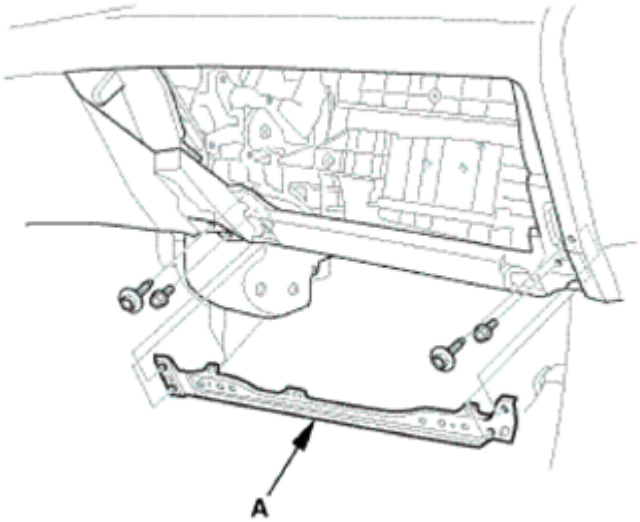

Fig. 55: Identifying Glove Box Frame
Courtesy of AMERICAN HONDA MOTOR CO., INC.

4. Passenger's Heater Duct
    1. Remove the passenger's heater duct (A).

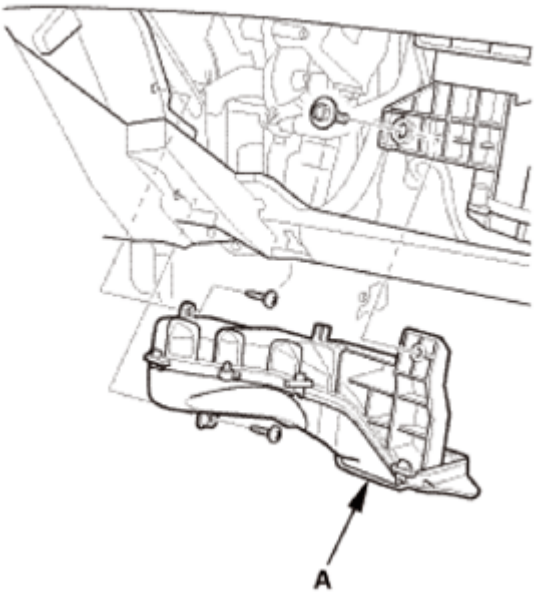

Fig. 56: Identifying Passenger's Heater Duct
Courtesy of AMERICAN HONDA MOTOR CO., INC.

5. Power Transistor
    1. Remove the power transistor (A).

GETtheMANUALS.org

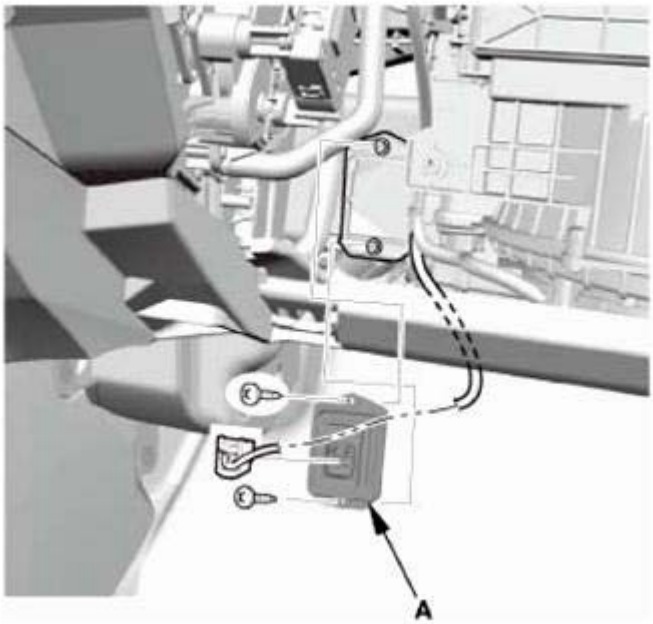

Fig. 57: Identifying Power Transistor
Courtesy of AMERICAN HONDA MOTOR CO., INC.

6. Shift Lever Panel (AT)
    1. Carefully pry out the shift lever panel (A) with the appropriate trim tool to detach the clips (B, C) and the hooks (D), then remove the shift lever panel.

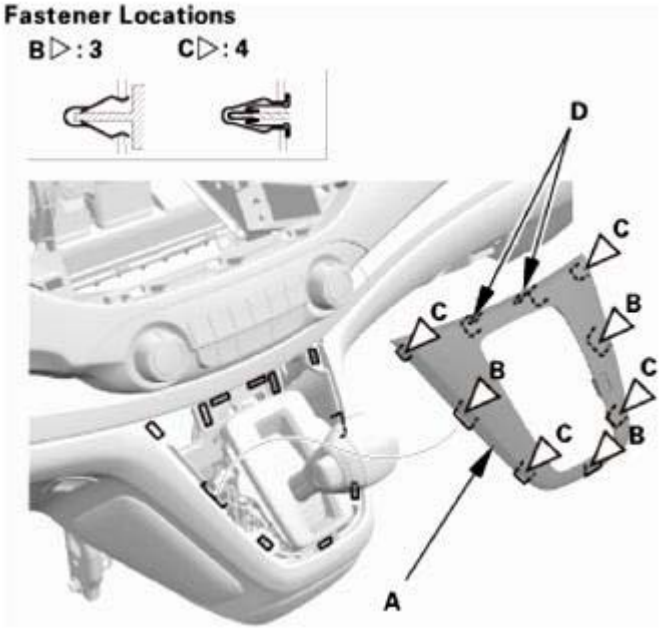

Fig. 58: Identifying Shift Lever Panel, Clips And Hooks
Courtesy of AMERICAN HONDA MOTOR CO., INC.

GETtheMANUALS.org

7. Driver's Inner Dashboard Trim Panel
    1. Carefully pry out the driver's inner dashboard trim panel (A) with the appropriate trim tool to detach the clips (B), then remove the driver's inner dashboard trim panel.

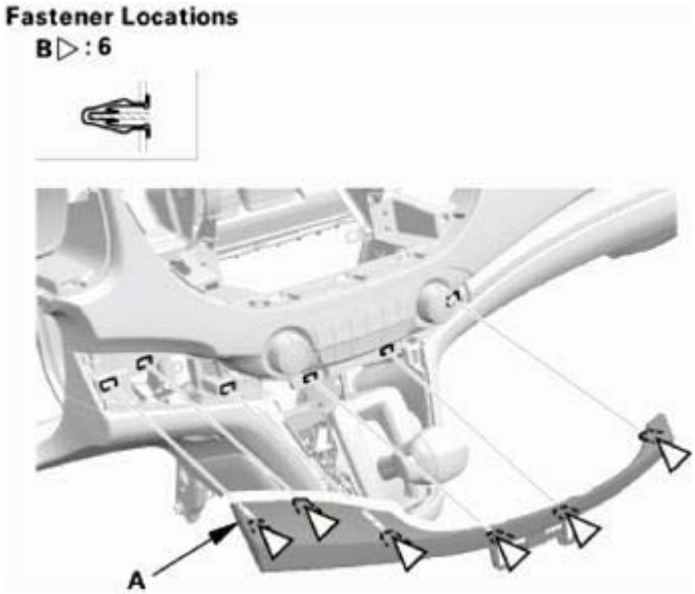

Fig. 59: Identifying Driver's Inner Dashboard Trim Panel
Courtesy of AMERICAN HONDA MOTOR CO., INC.

8. Climate Control Unit Assembly
    1. Remove the climate control unit assembly (A), then disconnect the connector (B).

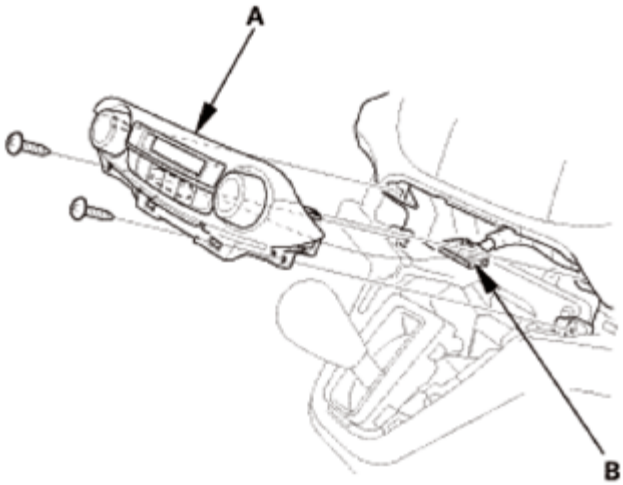

Fig. 60: Identifying Climate Control Unit Assembly And Connector
Courtesy of AMERICAN HONDA MOTOR CO., INC.

TEST

GETtheMANUALS.org

1. Power Transistor - Test
    1. Measure the resistance between terminals No. 2 and No. 4 of the power transistor. It should be about 1.5 kohms.
        - If the resistance is within the specifications, go to step 3.
        - If the resistance is not within the specifications, replace the power transistor.

        NOTE: Also check the blower motor. Power transistor failure can be caused by a defective blower motor.

    2. Reconnect the power transistor connector.

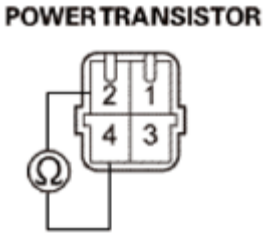

Fig. 61: Identifying Power Transistor Connector
Courtesy of AMERICAN HONDA MOTOR CO., INC.

3. Connect climate control unit connector terminals No. 7 and No. 12 with a jumper wire.
4. Turn the ignition switch to ON (II).
5. Check that the blower motor runs.
    - If the blower motor does not run, replace the power transistor.

    NOTE: A faulty blower motor can cause the power transistor to fail. Before replacing the power transistor, check the blower motor for binding, and replace it if necessary.

    - If the blower motor runs, the power transistor is OK.

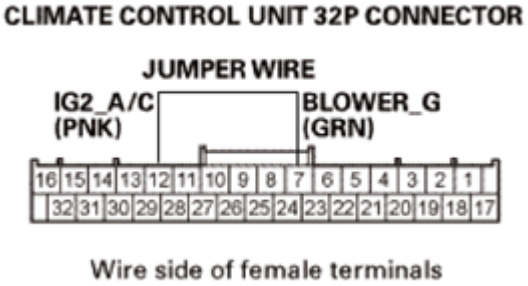

Fig. 62: Climate Control Unit 32 P Connector Terminals Layout
Courtesy of AMERICAN HONDA MOTOR CO., INC.

INSTALLATION

GETtheMANUALS.org

1. Climate Control Unit Assembly
    1. Connect the connector (A), then install the climate control unit assembly (B).

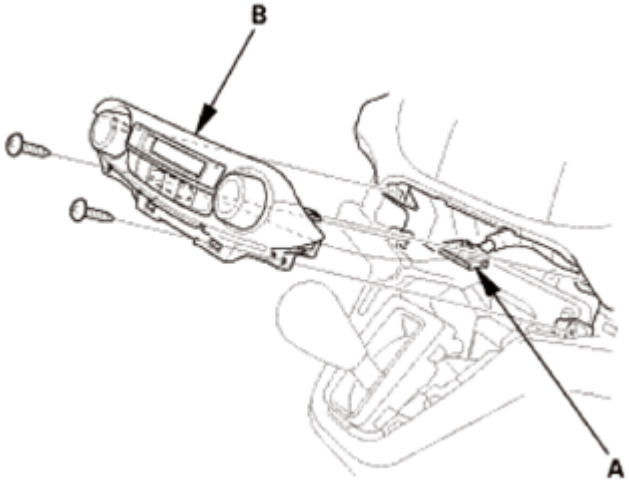

Fig. 63: Identifying Climate Control Unit Assembly And Connector
Courtesy of AMERICAN HONDA MOTOR CO., INC.

2. Driver's Inner Dashboard Trim Panel
    1. Install the driver's inner dashboard trim panel (A). Make sure the clips (B) snap into place securely.

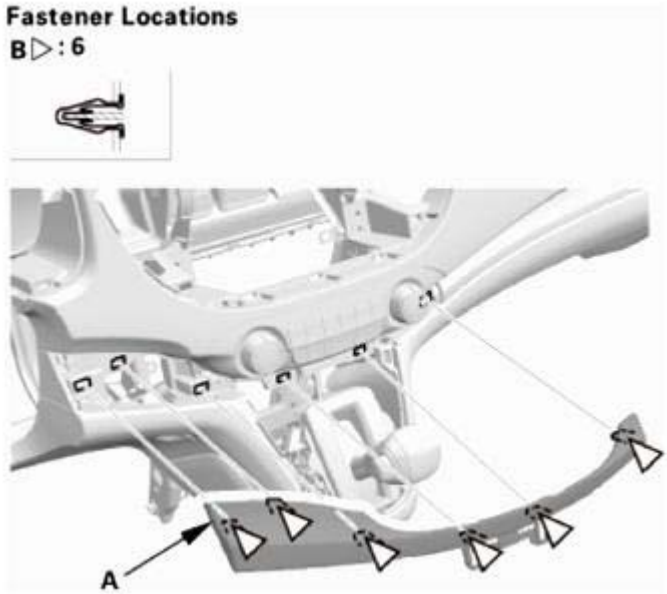

Fig. 64: Identifying Driver's Inner Dashboard Trim Panel And Clips
Courtesy of AMERICAN HONDA MOTOR CO., INC.

3. Shift Lever Panel (AT)
    1. Install the shift lever panel (A). Make sure the clips (B, C) and the hooks (D) snap into place

GETtheMANUALS.org

securely.

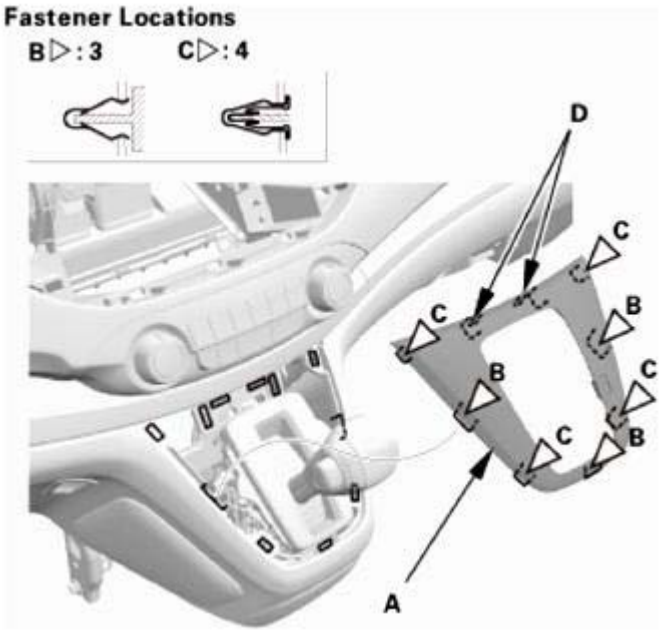

Fig. 65: Identifying Shift Lever Panel, Clips And Hooks
Courtesy of AMERICAN HONDA MOTOR CO., INC.

4. Power Transistor
    1. Install the power transistor (A).

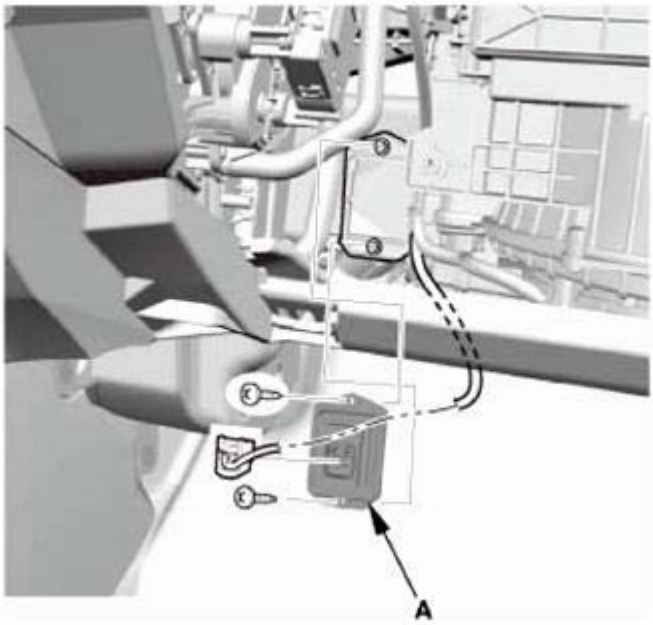

Fig. 66: Identifying Power Transistor
Courtesy of AMERICAN HONDA MOTOR CO., INC.

GETtheMANUALS.org

5. Passenger's Heater Duct
    1. Install the passenger's heater duct (A).

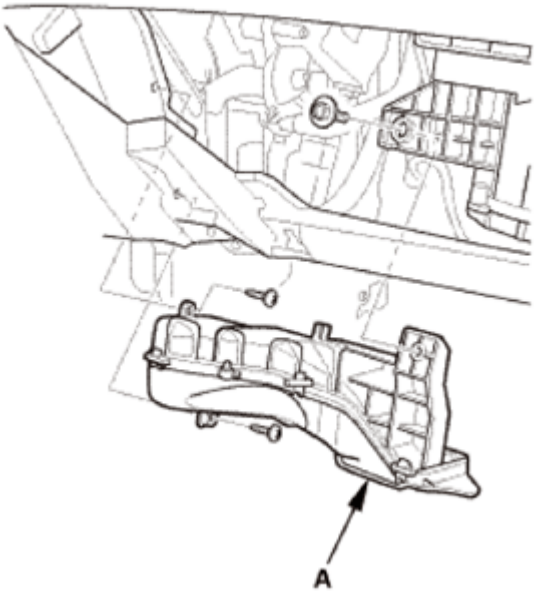

Fig. 67: Identifying Passenger's Heater Duct
Courtesy of AMERICAN HONDA MOTOR CO., INC.

6. Glove Box Frame
    1. Install the glove box frame (A).

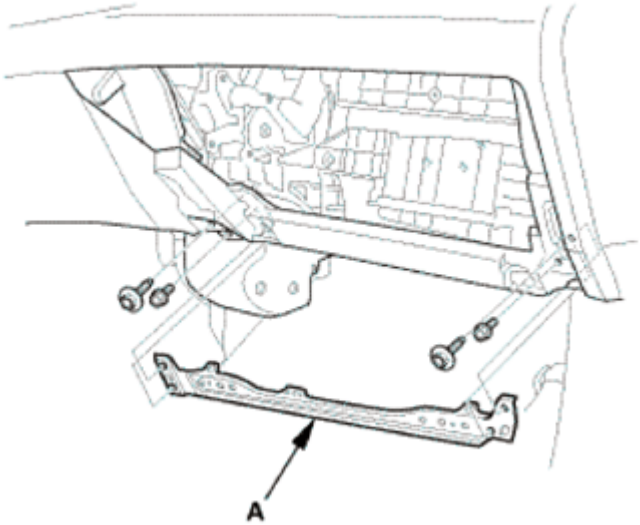

Fig. 68: Identifying Glove Box Frame
Courtesy of AMERICAN HONDA MOTOR CO., INC.

7. Glove Box

GETtheMANUALS.org

1. Install the glove box (A), then install the glove box damper hook (B).

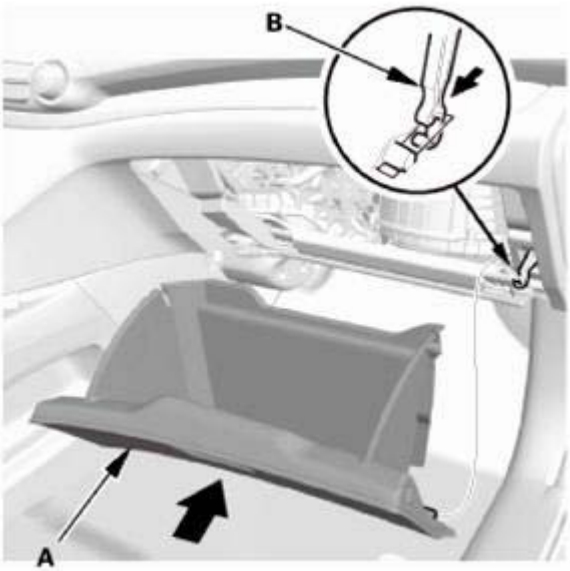

Fig. 69: Installing Glove Box
Courtesy of AMERICAN HONDA MOTOR CO., INC.

2. Install the bolts (A).

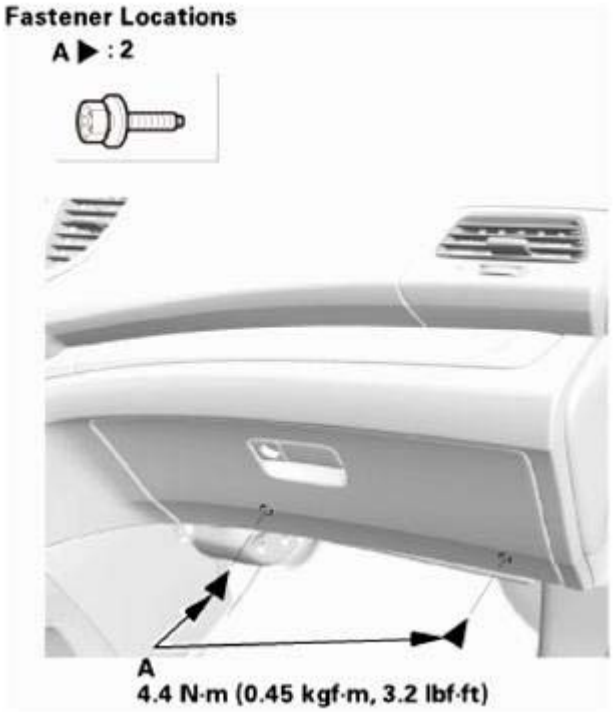

Fig. 70: Identifying Glove Box Bolts With Torque Specifications
Courtesy of AMERICAN HONDA MOTOR CO., INC.

GETtheMANUALS.org

8. Passenger's Dashboard Undercover
    1. Install the passenger's dashboard undercover (A). Make sure the clips (B) snap into place securely, and the pins (C) into the holder (D) securely.

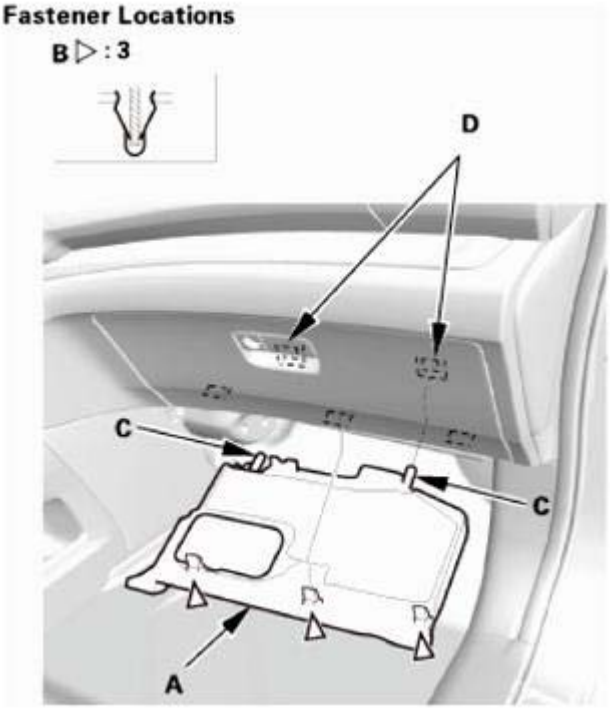

Fig. 71: Identifying Passenger's Dashboard Undercover, Clips And Pins
Courtesy of AMERICAN HONDA MOTOR CO., INC.

BLOWER POWER TRANSISTOR TEST (MANUAL A/C)

REMOVAL

1. Passenger's Dashboard Undercover
    1. Gently pull down the passenger's dashboard undercover (A) to detach the clips (B), then pull away the undercover to release the pins (C) from the holder (D).

GETtheMANUALS.org

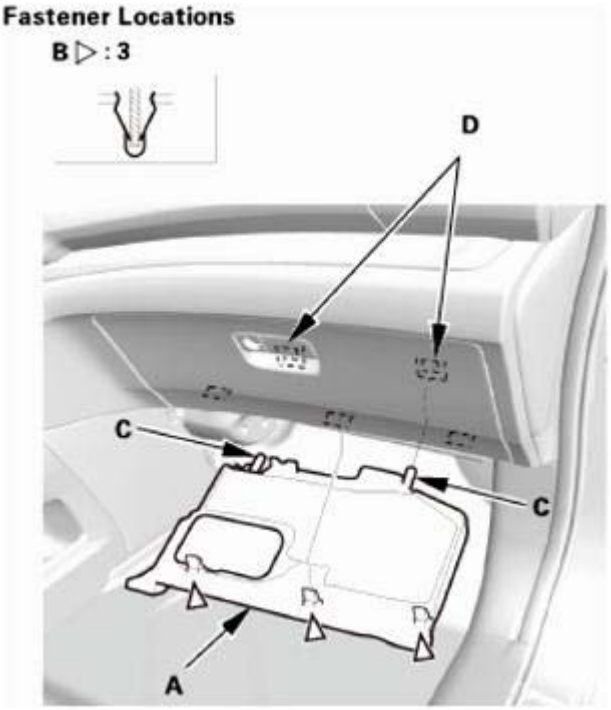

Fig. 72: Identifying Passenger's Dashboard Undercover, Clips, Pins And Holder
Courtesy of AMERICAN HONDA MOTOR CO., INC.

2. Glove Box
    1. Remove the bolts (A).

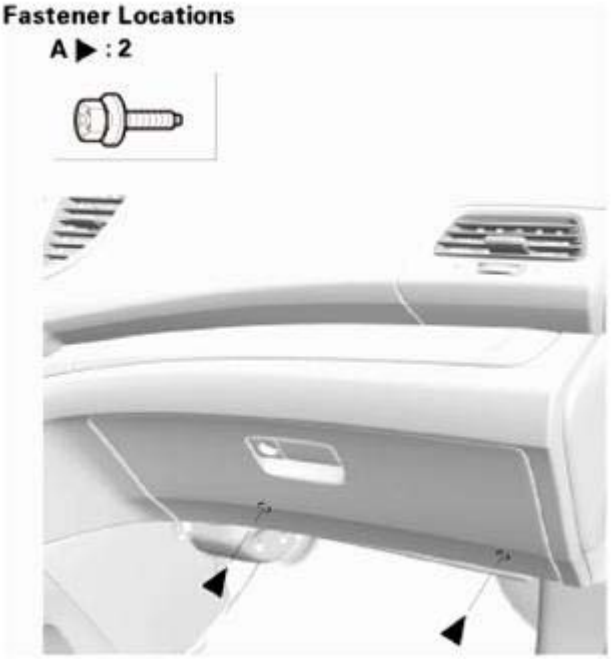

Fig. 73: Identifying Glove Box Bolts

GETtheMANUALS.org

Courtesy of AMERICAN HONDA MOTOR CO., INC.

2. Release both glove box stops (A) by pushing them in, then let the glove box (B) hang down.

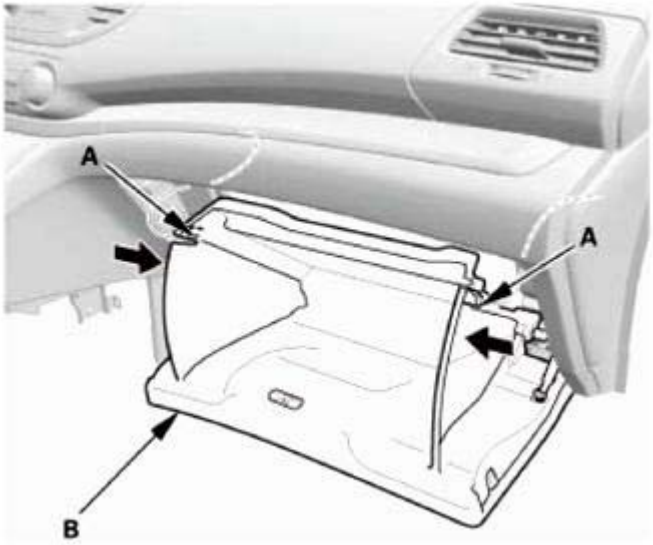

Fig. 74: Pushing Glove Box Stops
Courtesy of AMERICAN HONDA MOTOR CO., INC.

3. Detach the glove box damper hook (A), then remove the glove box (B).

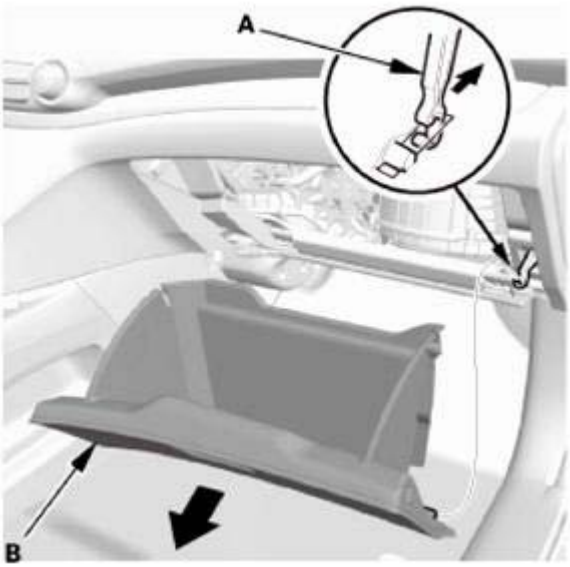

Fig. 75: Removing Glove Box
Courtesy of AMERICAN HONDA MOTOR CO., INC.

3. Glove Box Frame
    1. Remove the glove box frame (A).

GETtheMANUALS.org

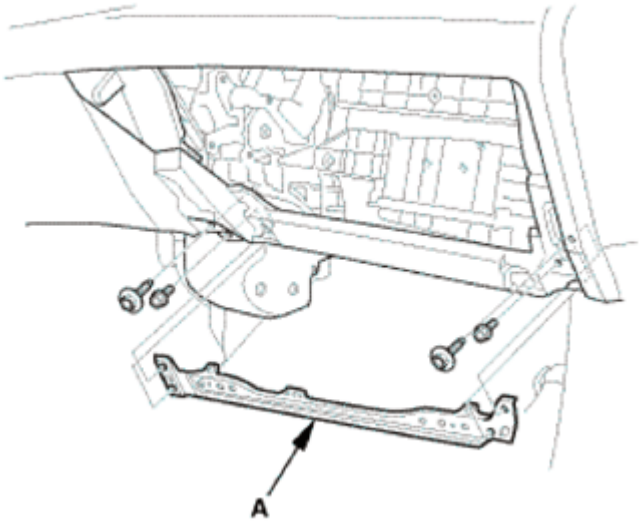

Fig. 76: Identifying Glove Box Frame
Courtesy of AMERICAN HONDA MOTOR CO., INC.

4. Passenger's Heater Duct
    1. Remove the passenger's heater duct (A).

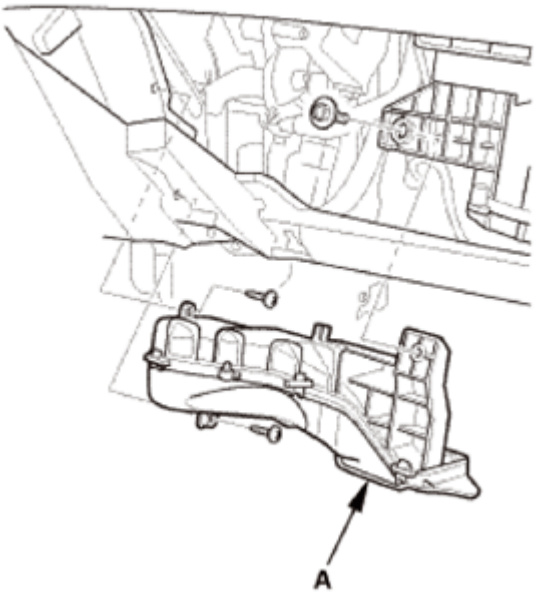

Fig. 77: Identifying Passenger's Heater Duct
Courtesy of AMERICAN HONDA MOTOR CO., INC.

5. Power Transistor
    1. Remove the power transistor (A).

GETtheMANUALS.org

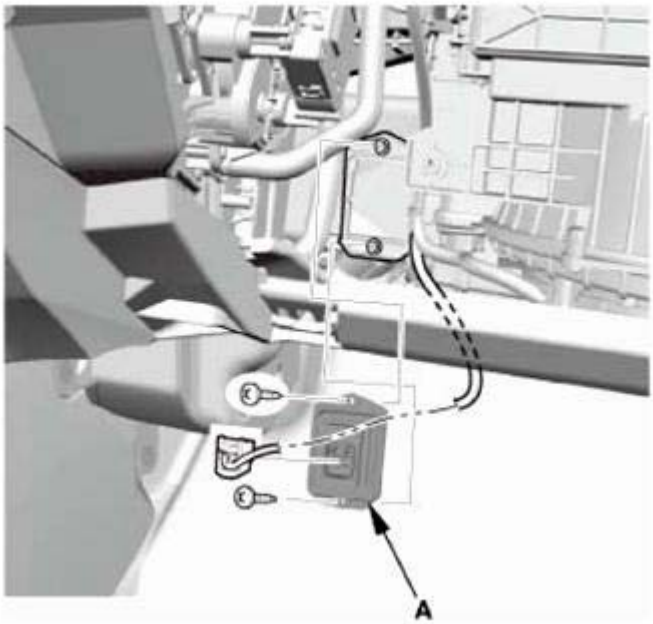

Fig. 78: Identifying Power Transistor
Courtesy of AMERICAN HONDA MOTOR CO., INC.

6. Shift Lever Panel (AT)
    1. Carefully pry out the shift lever panel (A) with the appropriate trim tool to detach the clips (B, C) and the hooks (D), then remove the shift lever panel.

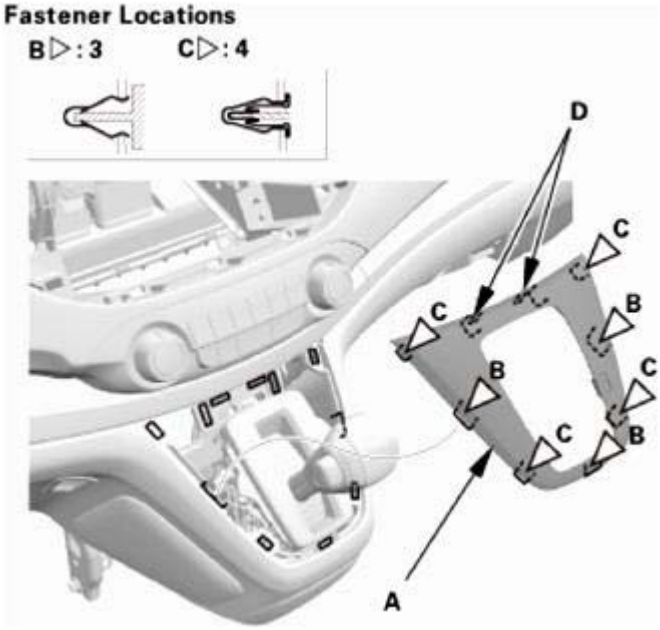

Fig. 79: Identifying Shift Lever Panel, Clips And Hooks
Courtesy of AMERICAN HONDA MOTOR CO., INC.

GETtheMANUALS.org

7. Driver's Inner Dashboard Trim Panel
    1. Carefully pry out the driver's inner dashboard trim panel (A) with the appropriate trim tool to detach the clips (B), then remove the driver's inner dashboard trim panel.

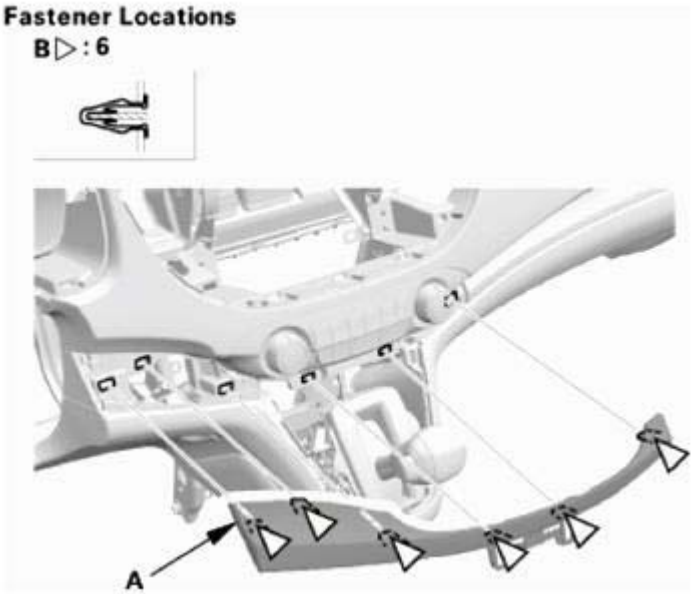

Fig. 80: Identifying Driver's Inner Dashboard Trim Panel
Courtesy of AMERICAN HONDA MOTOR CO., INC.

8. HVAC Control Unit Assembly
    1. Remove the HVAC control unit assembly (A), then disconnect the connector (B).

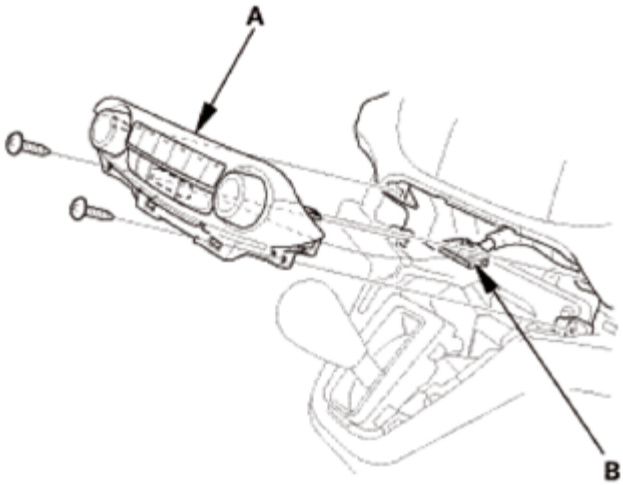

Fig. 81: Identifying HVAC Control Unit Assembly And Connector
Courtesy of AMERICAN HONDA MOTOR CO., INC.

TEST

GETtheMANUALS.org

1. Power Transistor - Test
    1. Measure the resistance between terminals No. 2 and No. 4 of the power transistor. It should be about 1.5 kohms.
        - If the resistance is within the specifications, go to step 3.
        - If the resistance is not within the specifications, replace the power transistor.

        NOTE: Also check the blower motor. Power transistor failure can be caused by a defective blower motor.

    2. Reconnect the power transistor connector.

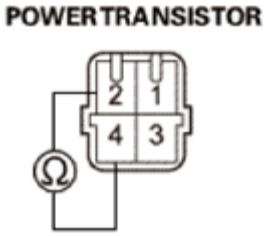

Fig. 82: Power Transistor Connector Terminals Layout
Courtesy of AMERICAN HONDA MOTOR CO., INC.

3. Connect HVAC control unit connector terminals No. 9 and No. 12 with a jumper wire.
4. Turn the ignition switch to ON (II).
5. Check that the blower motor runs.
    - If the blower motor does not run, replace the power transistor.

    NOTE: A faulty blower motor can cause the power transistor to fail. Before replacing the power transistor, check the blower motor for binding, and replace it if necessary.

    - If the blower motor runs, the power transistor is OK.

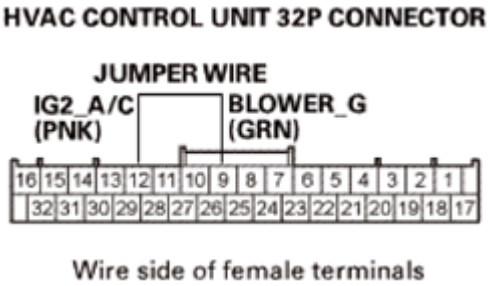

Fig. 83: HVAC Control Unit 32P Connector Terminal Layout
Courtesy of AMERICAN HONDA MOTOR CO., INC.

INSTALLATION

GETtheMANUALS.org

1. HVAC Control Unit Assembly
    1. Connect the connector (A), then install the HVAC control unit assembly (B).

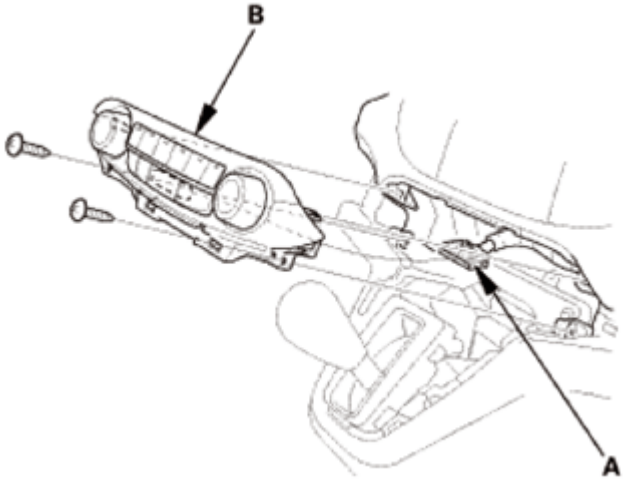

Fig. 84: Identifying HVAC Control Unit Assembly And Connector
Courtesy of AMERICAN HONDA MOTOR CO., INC.

2. Driver's Inner Dashboard Trim Panel
    1. Install the driver's inner dashboard trim panel (A). Make sure the clips (B) snap into place securely.

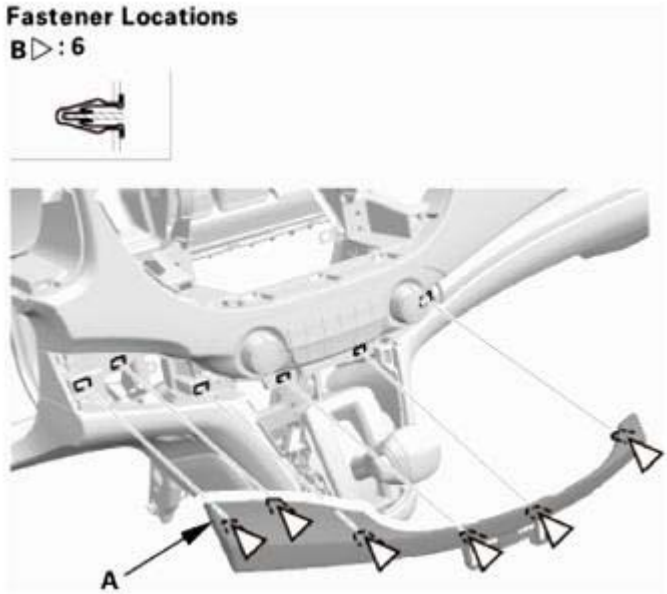

Fig. 85: Identifying Driver's Inner Dashboard Trim Panel And Clips
Courtesy of AMERICAN HONDA MOTOR CO., INC.

3. Shift Lever Panel (AT)
    1. Install the shift lever panel (A). Make sure the clips (B, C) and the hooks (D) snap into place securely.

GETtheMANUALS.org

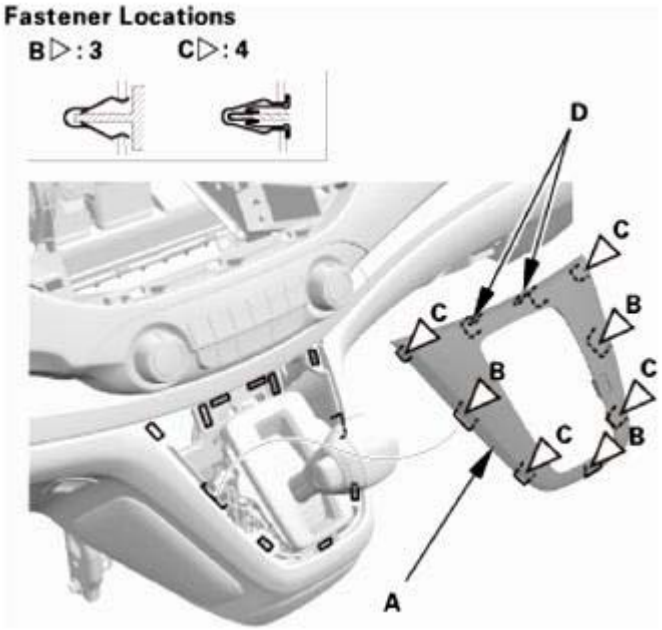

Fig. 86: Identifying Shift Lever Panel, Clips And Hooks
Courtesy of AMERICAN HONDA MOTOR CO., INC.

4. Power Transistor
    1. Install the power transistor (A).

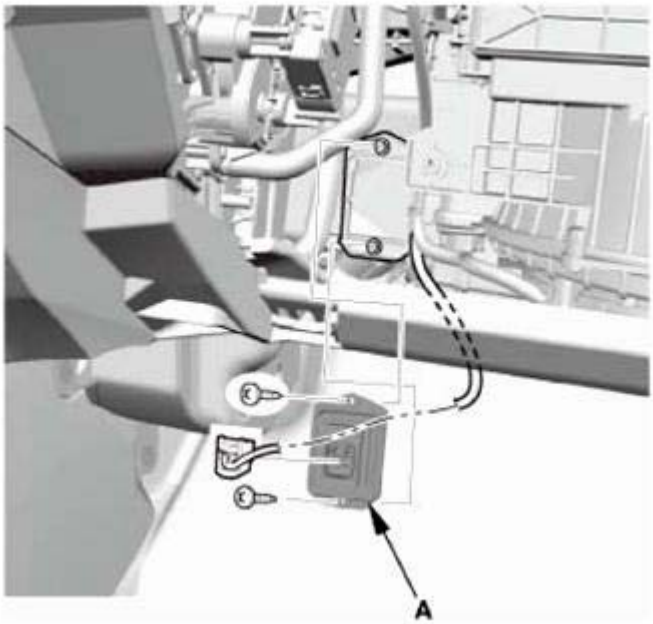

Fig. 87: Identifying Power Transistor
Courtesy of AMERICAN HONDA MOTOR CO., INC.

5. Passenger's Heater Duct

GETtheMANUALS.org

1. Install the passenger's heater duct (A).

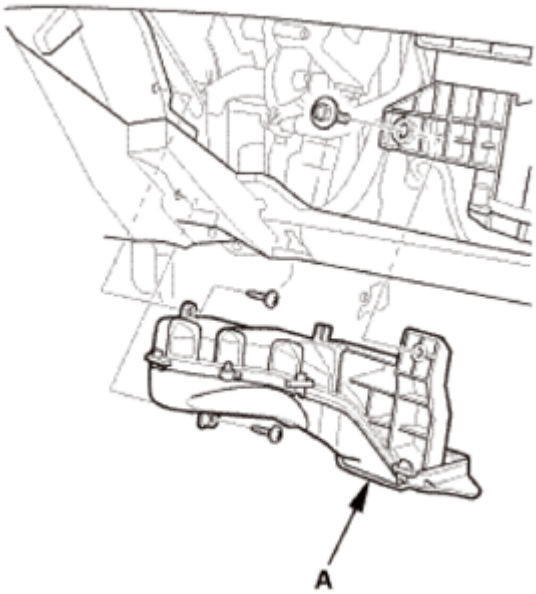

Fig. 88: Identifying Passenger's Heater Duct
Courtesy of AMERICAN HONDA MOTOR CO., INC.

6. Glove Box Frame
    1. Install the glove box frame (A).

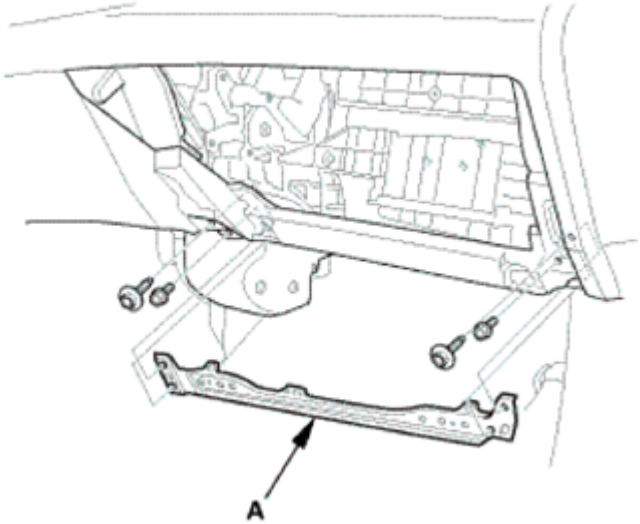

Fig. 89: Identifying Glove Box Frame
Courtesy of AMERICAN HONDA MOTOR CO., INC.

7. Glove Box
    1. Install the glove box (A), then install the glove box damper hook (B).

GETtheMANUALS.org

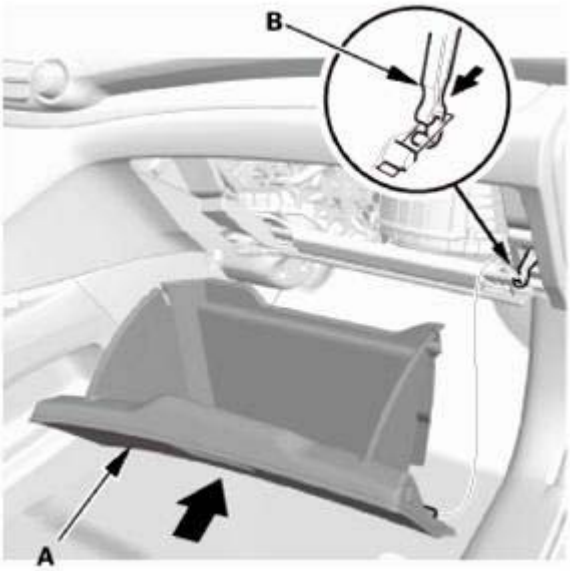

Fig. 90: Installing Glove Box
Courtesy of AMERICAN HONDA MOTOR CO., INC.

2. Install the bolts (A).

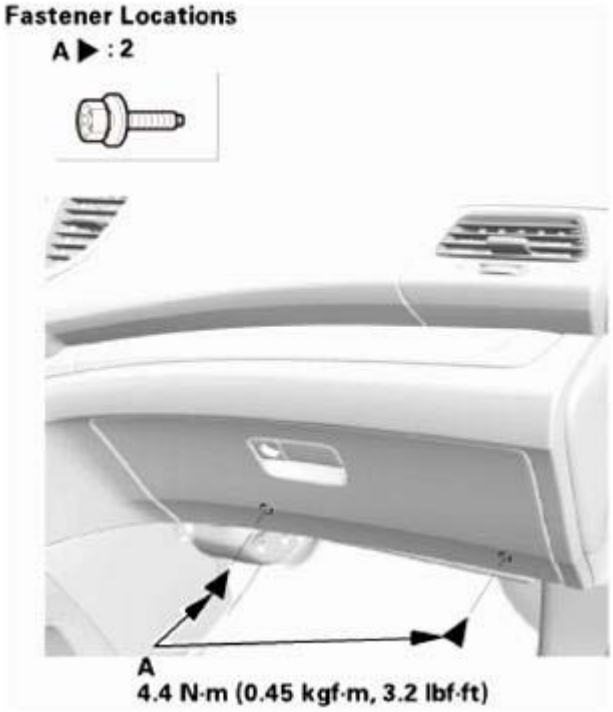

Fig. 91: Identifying Glove Box Bolts
Courtesy of AMERICAN HONDA MOTOR CO., INC.

8. Passenger's Dashboard Undercover
    1. Install the passenger's dashboard undercover (A). Make sure the clips (B) snap into place securely,

GETtheMANUALS.org

and the pins (C) into the holder (D) securely.

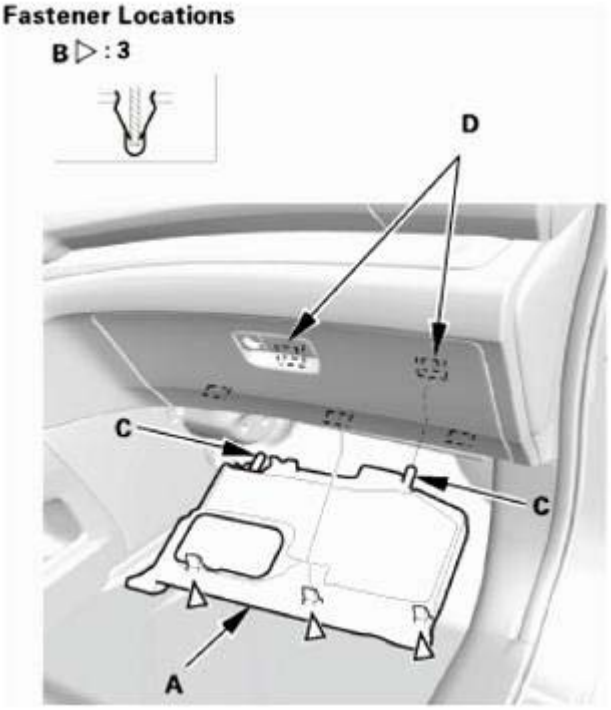

Fig. 92: Identifying Passenger's Dashboard Undercover, Clips, Pins And Holder
Courtesy of AMERICAN HONDA MOTOR CO., INC.

CLIMATE CONTROL SYSTEM DTC TROUBLESHOOTING INDEX

DTC	Detection Item or Symptom	ECU	DTC type
U1280	Communication bus line error (BUS-OFF)	Climate control unit	Loss of communication
U128D	Lost communication > with gauge control module (climate control unit)	Climate control unit	Loss of communication
B121A	An open in the mode control motor circuit	Climate control unit	Signal error
B121B	A short in the mode control motor circuit	Climate control unit	Signal error
B121D	Humidity/in-car temperature sensor communication error	Climate control unit	Lost of communication
B1220	A short in the recirculation control motor circuit	Climate control unit	Signal error
B1227	An open in the outside air temperature sensor circuit	Climate control unit	Signal error
B1228	A short in the outside air temperature sensor circuit	Climate control unit	Signal error
		Climate control	

GETtheMANUALS.org

B1229	An open in the sunlight sensor circuit	unit	Signal error
B1230	A short in the sunlight sensor circuit	Climate control unit	Signal error
B1231	An open in the evaporator temperature sensor circuit	Climate control unit	Signal error
B1232	A short in the evaporator temperature sensor circuit	Climate control unit	Signal error
B1233	An open in the air mix control motor circuit (driver's)	Climate control unit	Signal error
B1234	A short in the air mix control motor circuit (driver's)	Climate control unit	Signal error
B1235	A problem in the air mix control motor circuit, linkage, door, or motor (driver's)	Climate control unit	Signal error
B1236	An open in the passenger's air mix control motor circuit	Climate control unit	Signal error
B1237	A short in the passenger's air mix control motor circuit	Climate control unit	Signal error
B1238	A problem in the passenger's air mix control motor circuit, linkage, door, or motor	Climate control unit	Signal error
B1240	A problem in the mode control motor circuit, linkage, door, or motor	Climate control unit	Signal error
B1241	A problem in the blower motor circuit	Climate control unit	Signal error
B2969	Climate control unit lost communication with MICU (WIPSW message)	Climate control unit	Loss of communication
B2983	A problem in the recirculation control motor circuit, linkage, door, or motor	Climate control unit	Signal error
B2986	An open in the recirculation control motor circuit	Climate control unit	Signal error

CLIMATE CONTROL UNIT CONNECTOR FOR INPUTS AND OUTPUTS

CLIMATE CONTROL UNIT INPUTS AND OUTPUTS

CLIMATE CONTROL UNIT 32P CONNECTOR

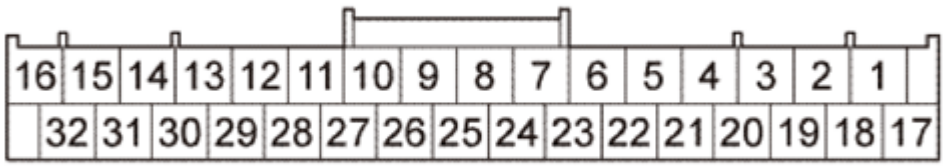

Wire side of female terminals

GETtheMANUALS.org

Fig. 93: Climate Control Unit 32P Connector Terminal Layout
Courtesy of AMERICAN HONDA MOTOR CO., INC.

Cavity	Wire color	Terminal name	Description	Signal
1	BRN	GND	Ground for climate control unit (G502)	Less than 0.2 V at all times
2	Not used	Not used	---	---
3	PUR	TSUN	Detects sunlight sensor signal	With ignition switch ON (II), sunlight sensor out of direct sunlight: 3.56 V or more With ignition switch ON (II), sunlight sensor in direct sunlight: less than 3.56 V
4	ORN	HUM_DATA	Humidity sensor communication signal	With ignition switch ON (II): pulses
5	RED	HUM_CLK	In-car temperature sensor communication signal	With ignition switch ON (II): pulses
6	PNK	RFD-P	Detects potentiometer signal of recirculation control motor	With ignition switch ON (II): about 0.5-4.5 V (depending on recirculation control motor position)
7	GRN	BLOWER_G	Outputs power transistor gate voltage	With ignition switch ON (II), and fan control dial OFF: less than 0.2 V With ignition switch ON (II), and fan control dial ON: about 4.0 V-battery voltage (depending on blower motor control)
8	RED	BLOWER_V	Feedback signal of power transistor drain voltage	With ignition switch ON (II): about 0 V-battery voltage (depending on blower motor speed)
9	GRY	ILLUMI+	Power source for illumination	With combination light switch ON: battery voltage
10	YEL	M-DEF	Outputs to drive mode control motor to DEF side	With ignition switch ON (II), and mode control motor moving to DEF: battery voltage
11	PUR	M-VENT	Outputs to drive mode control motor to VENT side	With ignition switch ON (II), and mode control motor moving to VENT: battery voltage
12	PNK	IG2_A/C	IG2 power source	With ignition switch ON (II): battery voltage
13	LT BLU	M-HOT_DR	Output to drive driver's air mix control motor to HOT side	With ignition switch ON (II), driver's air mix control motor moving to HOT: battery voltage
14	GRN	M-COOL_DR	Output to drive driver's air mix control motor to COOL	With ignition switch ON (II), driver's air mix control motor moving to

GETtheMANUALS.org

			side	COOL: battery voltage
15	BLU	B_CAN-L	B_CAN-L communication signal	With ignition switch ON (II): pulses
16	PNK	B_CAN-H	B_CAN-H communication signal	With ignition switch ON (II): pulses
17	LT BLU	SENSOR_5V	Outputs sensor 5 V	With ignition switch ON (II): about 5.0 V
18	ORN	TEVA	Detects evaporator temperature sensor signal	With ignition switch ON (II): about 1.0-4.0 V (depending on evaporator temperature)
19	PNK	TAM	Detects outside air temperature sensor signal	With ignition switch ON (II): about 1.0-4.0 V (depending on outside air temperature)
20	LT GRN	AMD_P_DR	Detects potentiometer signal of driver's air mix control motor	With ignition switch ON (II): about 0.5-4.0 V (depending on driver's air mix control motor position)
21	BRN	AMD_P_AS	Detects potentiometer signal of passenger's air mix control motor	With ignition switch ON (II): about 0.5-4.0 V (depending on passenger's air mix control motor position)
22	WHT	MODE-P	Detects potentiometer signal of mode control motor	With ignition switch ON (II): about 0.5-4.5 V (depending on mode control motor position)
23	GRY	SENSOR_COM	Sensor ground	Less than 0.2 V at all times
24	LT GRN	ACS	Outputs A/C on/off signal	With ignition switch ON (II), normal A/C pressure, and A/C switch ON: less than 0.5 V With ignition switch ON (II), normal A/C pressure, and A/C switch OFF: battery voltage
25	BRN	GND	Ground for climate control unit (G502)	Less than 0.2 V at all times
26	GRN	ILL- (LED)	Detects illumination control signal	With combination light switch ON: changed voltage (depending on dashlights brightness controller)
27	BLU	F/R_MTR (FRESH)	Output to drive recirculation control motor to FRESH side	With ignition switch ON (II), and recirculation control motor moving to FRESH: battery voltage
28	BLK	F/R_MTR (REC)	Output to drive recirculation control motor to RECIRCULATE side	With ignition switch ON (II), and recirculation control motor moving to RECIRCU: battery voltage
29	WHT	M-HOT_AS	Output to drive passenger's air mix control motor to HOT side	With ignition switch ON (II), passenger's air mix control motor moving to HOT: battery voltage
30	PUR	M-COOL_AS	Output to drive passenger's air mix control motor to	With ignition switch ON (II), passenger's air mix control motor

GETtheMANUALS.org

			COOL side	moving to COOL: battery voltage
31	Not used	Not used	---	---
32	RED	RR_DEF_RLY_CL-	Signal for rear window defogger relay	With ignition switch ON (II), and rear window defogger switch ON: about 0 V With ignition switch ON (II), and rear window defogger switch OFF: battery voltage

CLIMATE CONTROL UNIT POWER AND GROUND CIRCUIT TROUBLESHOOTING

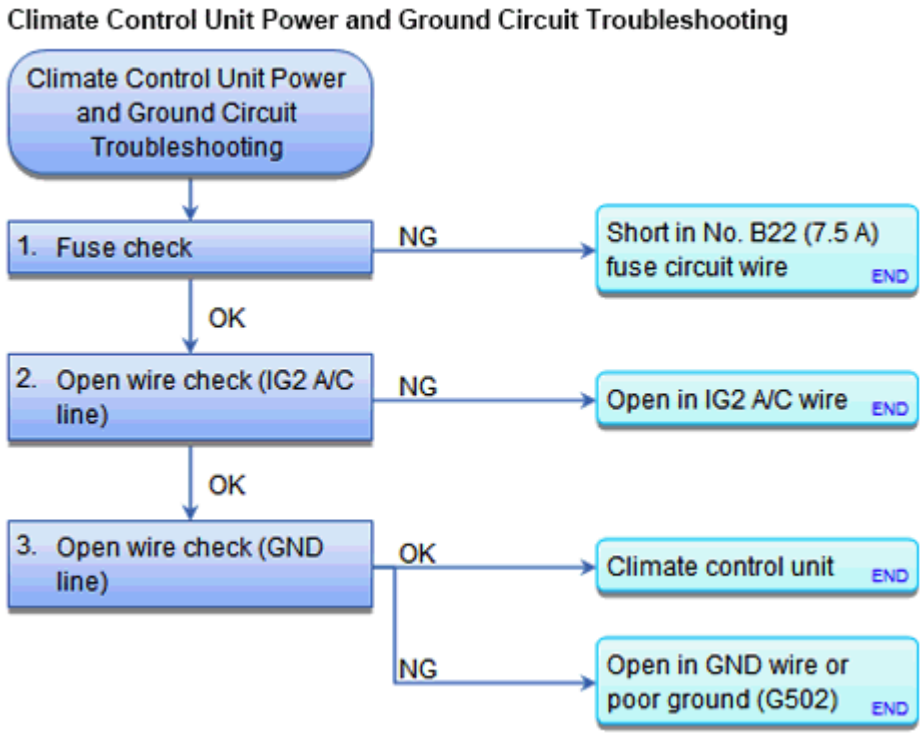

Fig. 94: Climate Control Unit Power And Ground Circuit Troubleshooting Flow Chart
Courtesy of AMERICAN HONDA MOTOR CO., INC.

NOTE: **Do this troubleshooting procedure only if sent here by symptom troubleshooting.**

1. Fuse check:
   - 1. Check the following fuse.

     Fuse No. B22 (7.5 A)

GETtheMANUALS.org

Location Under-dash fuse/relay box

Is the fuse OK?

YES : Go to step 2.

NO : Replace the fuse, and recheck. If the fuse blows again, check for a short in the No. B22 (7.5 A) fuse circuit.

2. Open wire check (IG2 A/C line):
   - 1. Disconnect the following connector.

     Climate control unit 32P connector

   - 2. Turn the ignition switch to ON (II).
   - 3. Measure the voltage between test points 1 and 2.

     Test condition IG ON (II)

     Climate control unit 32P connector: disconnected

     Test circuit IG2 A/C

     Test point 1 Climate control unit 32P connector No. 12 (PNK)

     Test point 2 Body ground

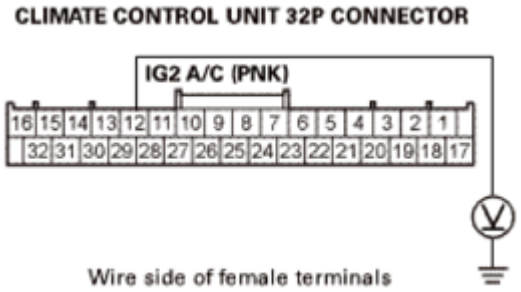

Fig. 95: Measuring Voltage Between Test Points 1 And 2
Courtesy of AMERICAN HONDA MOTOR CO., INC.

Is there battery voltage?

YES : The IG2 A/C wire is OK. Go to step 3.

NO : Repair an open in the wire between the No. B22 (7.5 A) fuse in the under-dash fuse/relay box and the climate control unit.

3. Open wire check (GND line):

GETtheMANUALS.org

- 1. Turn the ignition switch to LOCK (0).
- 2. Check for continuity between test points 1 and 2.

Test condition IG LOCK (0)

Climate control unit 32P connector: disconnected

Test circuit GND

Test point 1 Climate control unit 32P connector No. 25 (BRN)

Test point 2 Body ground

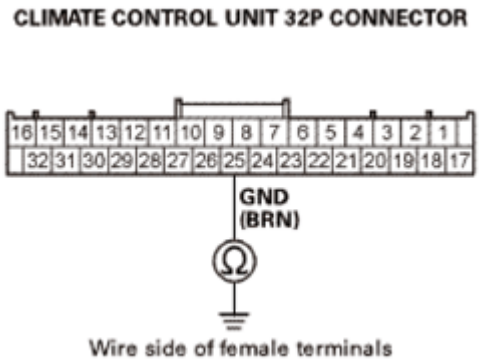

Fig. 96: Checking For Continuity Between Test Points 1 And 2
Courtesy of AMERICAN HONDA MOTOR CO., INC.

Is there continuity?

YES : The GND wire is OK. **REPLACE THE CLIMATE CONTROL UNIT** .

NO : Check for an open in the wire between the climate control unit and body ground. If the wire is OK, check for poor ground at G502.

DRIVER'S AIR MIX CONTROL MOTOR TEST

SPECIAL TOOL DESCRIPTION

Image	Description/Tool Number
	Backprobe Set 07SAZ-001000A (2)

GETtheMANUALS.org

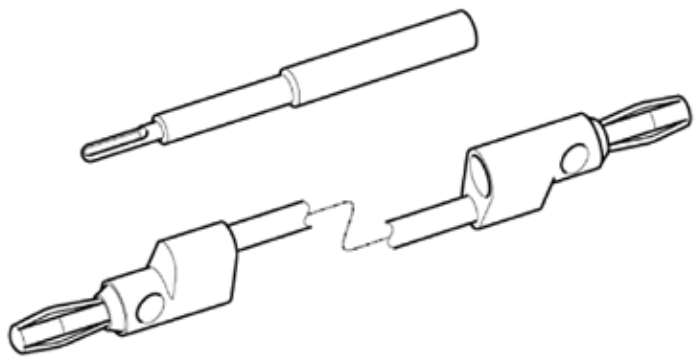

TEST

NOTE: Before testing the motor, check for climate control DTCs.

1. Driver's Air Mix Control Motor - Test
    1. Disconnect the driver's air mix control motor connector.

NOTE: Incorrectly applying power and ground to the driver's air mix control motor will damage it. Follow the instructions carefully.

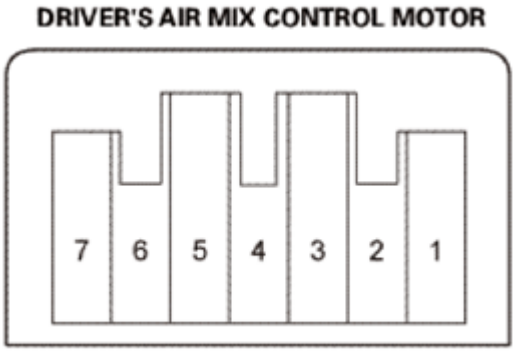

Fig. 97: Identifying Driver's Air Mix Control Motor Connector
Courtesy of AMERICAN HONDA MOTOR CO., INC.

2. Connect battery power to terminal No. 7 of the driver's air mix control motor, and ground terminal No. 6; the driver's air mix control motor should run smoothly, and stop at MAX HOT. If it does not, reverse the connections; the driver's air mix control motor should run smoothly, and stop at MAX COOL. When the driver's air mix control motor stops running, disconnect battery power immediately.
3. If the driver's air mix control motor did not run in step 2, remove it, then check the driver's air mix control linkage and door for smooth movement.
    - If the linkage and door move smoothly, go to step 4.
    - If the linkage or door sticks or binds, repair them as needed.
4. Measure the resistance between terminals No. 1 and No. 3. It should be between 4.2 kohms and 7.8

GETtheMANUALS.org

kohms.

5. Reconnect the driver's air mix control motor connector.
6. Turn the ignition switch to ON (II).
7. Using the backprobe set, measure the voltage between terminals No. 1 and No. 2.

   MAX COOL: About 0.5 V

   MAX HOT: About 4.0 V

8. If either the resistance or the voltage readings are not as specified, replace the driver's air mix control motor.

HUMIDITY/IN-CAR TEMPERATURE SENSOR TEST

TEST

NOTE: Before testing the sensor, check for climate control DTCs.

1. Humidity Sensor - Test

   NOTE: The climate control unit receives humidity (%) data via digital transmission.

   1. Turn the ignition switch to LOCK (0).
   2. Press and hold both the AUTO (A) and RECIRCULATION (B) buttons, then start the engine.
   3. After the engine starts, release both buttons. The climate control unit will flash the sensor number and then the value for that sensor.
   4. Press the REAR WINDOW DEFOGGER button (C) until the humidity "C" is displayed. For details about the displayed content.
   5. If the value is far from the actual humidity, replace the humidity/in-car temperature sensor.

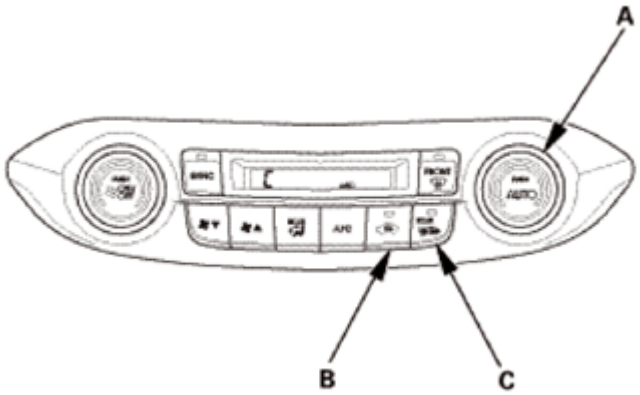

Fig. 98: Identifying Auto, Recirculation And Rear Window Defogger Buttons
Courtesy of AMERICAN HONDA MOTOR CO., INC.

GETtheMANUALS.org

2. In-Car Temperature Sensor - Test

NOTE: The climate control unit receives in-car temperature (° C) data via digital transmission.

1. Turn the ignition switch to LOCK (0).
2. Press and hold both the AUTO (A) and RECIRCULATION (B) buttons, then start the engine.
3. After the engine starts, release both buttons. The climate control unit will flash the sensor number and then the value for that sensor.
4. Press the REAR WINDOW DEFOGGER button (C) until the in-car temperature "2" is displayed. For details about the displayed content.
5. If the value is far from the actual in-car temperature, replace the humidity/in-car temperature sensor.

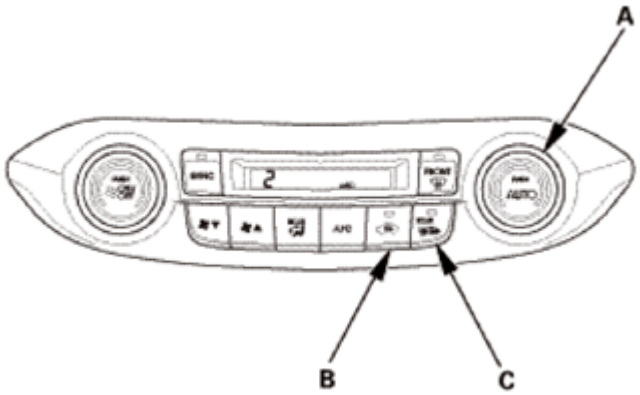

Fig. 99: Identifying Auto, Recirculation And Rear Window Defogger Buttons
Courtesy of AMERICAN HONDA MOTOR CO., INC.

HVAC CONTROL POWER AND GROUND CIRCUIT TROUBLESHOOTING

GETtheMANUALS.org

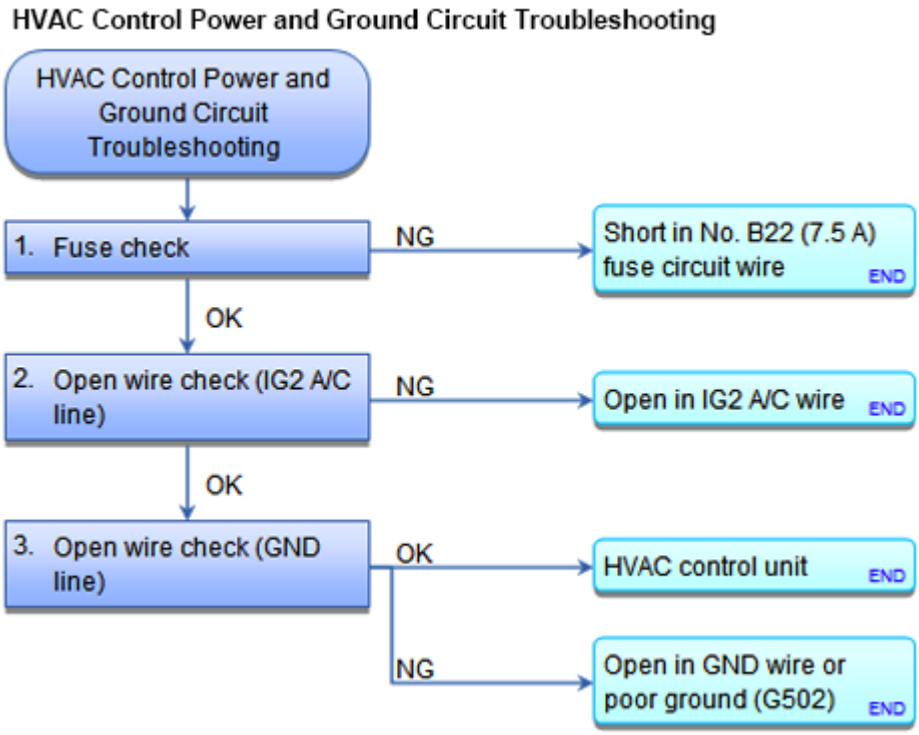

Fig. 100: HVAC Control Power And Ground Circuit Troubleshooting Flow Chart
Courtesy of AMERICAN HONDA MOTOR CO., INC.

NOTE: **Do this troubleshooting procedure only if sent here by symptom troubleshooting.**

1. Fuse check:
   - 1. Check the following fuse.

     Fuse No. B22 (7.5 A)

     Location Under-dash fuse/relay box

   Is the fuse OK?

   YES : Go to step 2.

   NO : Replace the fuse, and recheck. If the fuse blows again, check for a short in the No. B22 (7.5 A) fuse circuit.

2. Open wire check (IG2 A/C line):
   - 1. Disconnect the following connector.

     HVAC control unit 32P connector

GETtheMANUALS.org

- 2. Turn the ignition switch to ON (II).
- 3. Measure the voltage between test points 1 and 2.

  Test condition IG ON (II)

  HVAC control unit 32P connector: disconnected

  Test circuit IG2 A/C

  Test point 1 HVAC control unit 32P connector No. 12 (PNK)

  Test point 2 Body ground

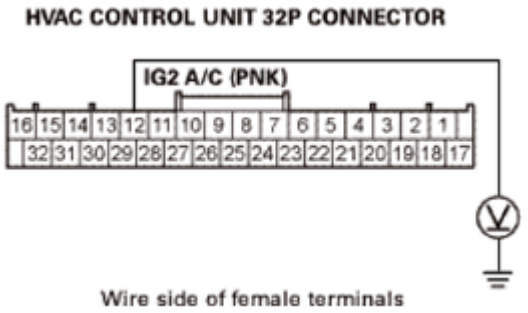

Fig. 101: Measuring Voltage Between Test Points 1 And 2
Courtesy of AMERICAN HONDA MOTOR CO., INC.

Is there battery voltage?

YES : The IG2 A/C wire is OK. Go to step 3.

NO : Repair an open in the wire between the No. B22 (7.5 A) fuse in the under-dash fuse/relay box and the HVAC control unit.

3. Open wire check (GND line):
   - 1. Turn the ignition switch to LOCK (0).
   - 2. Check for continuity between test points 1 and 2.

     Test condition IG LOCK (0)

     HVAC control unit 32P connector: disconnected

     Test circuit GND

     Test point 1 HVAC control unit 32P connector No. 5 (BRN)

     Test point 2 Body ground

GETtheMANUALS.org

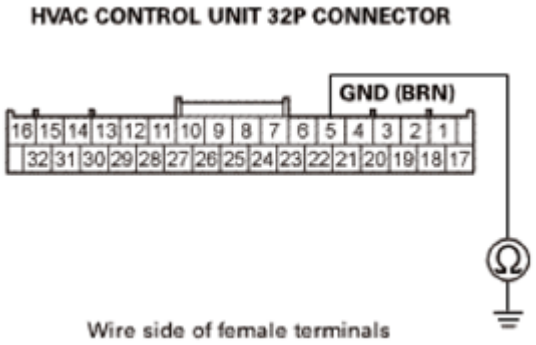

Fig. 102: Checking For Continuity Between Test Points 1 And 2
Courtesy of AMERICAN HONDA MOTOR CO., INC.

Is there continuity?

YES : The GND wire is OK. **REPLACE THE HVAC CONTROL UNIT** .

NO : Check for an open in the wire between the HVAC control unit and body ground. If the wire is OK, check for poor ground at G502.

HVAC CONTROL UNIT CONNECTOR FOR INPUTS AND OUTPUTS

HVAC CONTROL UNIT INPUTS AND OUTPUTS

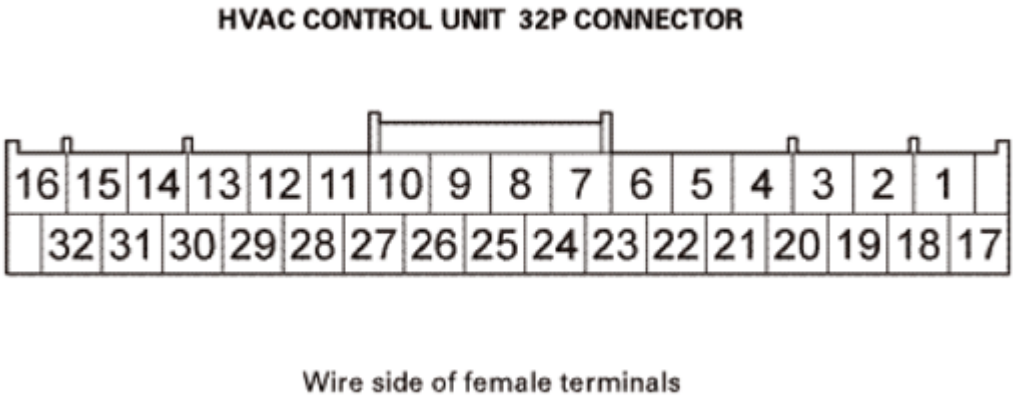

Fig. 103: HVAC Control Unit 32P Connector Terminals Layout
Courtesy of AMERICAN HONDA MOTOR CO., INC.

Cavity	Wire color	Terminal name	Description	Signal
1	RED	RR_DEF_RLY_CL-	Signal for rear window defogger relay	With ignition switch ON (II), and rear window defogger switch ON: about 0 V With ignition switch ON (II), and rear window defogger switch OFF: battery

GETtheMANUALS.org

				voltage
2	Not used	Not used	---	---
3	YEL	ECON_OUT	Inputs E-CON control signal	With ignition switch ON (II), and ECON OFF mode: battery voltage With ignition switch ON (II), and ECON ON mode: less than 0.5 V
4	Not used	Not used	---	---
5	BRN	GND	Ground for HVAC control unit (G502)	Less than 0.2 V at all times
6	Not used	Not used	---	---
7	BLU	A/C_CUT	Outputs A/C off prohibition signal	---
8	Not used	Not used	---	---
9	GRN	BLOWER_G	Outputs power transistor gate voltage	With ignition switch ON (II), and fan control dial OFF: less than 0.2 V With ignition switch ON (II), and fan control dial ON: about 4.0 V-battery voltage (depending on blower motor control)
10	RED	BLOWER_V	Feedback signal of power transistor drain voltage	With ignition switch ON (II): about 0 V-battery voltage (depending on blower motor speed)
11	Not used	Not used	---	---
12	PNK	IG2_A/C	IG2 power source	With ignition switch ON (II): battery voltage
13	Not used	Not used	---	---
14	GRN	ILL- (LED)	Detects illumination control signal	With illumination switch ON: changed voltage (depending on dashlights brightness controller)
15	Not used	Not used	---	---
16	GRY	ILLUMI+	Power source for illumination	With combination light switch ON: battery voltage
17	LT BLU	SENSOR_5V	Outputs sensor 5 V	With ignition switch ON (II): about 5.0 V
18	Not used	Not used	---	---
19	ORN	TEVA	Detects evaporator	With ignition switch ON (II): about 1.0 - 4.0 V (depending on evaporator

GETtheMANUALS.org

			temperature sensor signal	temperature)
20	GRY	SENSOR_COM	Sensor ground	Less than 0.2 V at all times
21	PNK	RFD-P	Detects potentiometer signal of recirculation control motor	With ignition switch ON (II): about 0.5-4.5 V (depending on recirculation control motor position)
22	LT GRN	AMD_P_DR	Detects potentiometer signal of air mix control motor	With ignition switch ON (II): about 0.5-4.0 V (depending on air mix control motor position)
23	WHT	MODE-P	Detects potentiometer signal of mode control motor	With ignition switch ON (II): about 0.5-4.5 V (depending on mode control motor position)
24	Not used	Not used	---	---
25	LT GRN	ACS	Outputs A/C on/off signal	With ignition switch ON (II), normal A/C pressure, and A/C switch ON: less than 0.5 V With ignition switch ON (II), normal A/C pressure, and A/C switch OFF: battery voltage
26	Not used	Not used	---	---
27	LT BLU	M-HOT_DR	Output to drive air mix control motor to HOT side	With ignition switch ON (II), air mix control motor moving to HOT: battery voltage
28	GRN	M-COOL_DR	Output to drive air mix control motor to COOL side	With ignition switch ON (II), air mix control motor moving to COOL: battery voltage
29	PUR	M-VENT	Outputs to drive mode control motor to VENT side	With ignition switch ON (II), and mode control motor moving to VENT: battery voltage
30	YEL	M-DEF	Output to drive mode control motor to DEF side	With ignition switch ON (II), and mode control motor moving to DEF: battery voltage
31	BLK	F/R_MTR (REC)	Output to drive recirculation control motor to RECIRCULATE side	With ignition switch ON (II), and recirculation control motor moving to RECIRCU: battery voltage
32	BLU	F/R_MTR (FRESH)	Output to drive recirculation control motor to FRESH side	With ignition switch ON (II), and recirculation control motor moving to FRESH: battery voltage

MODE CONTROL MOTOR TEST

SPECIAL TOOL DESCRIPTION

Image	Description/Tool Number

GETtheMANUALS.org

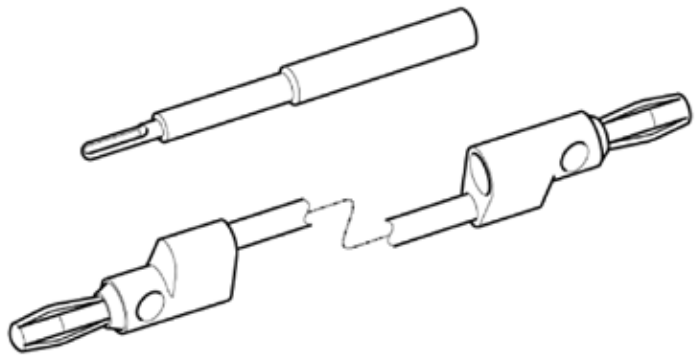	Backprobe Set 07SAZ-001000A (2)

REMOVAL

1. Glove Box - Move
    1. Detach the glove box damper hook (A), and release both glove box stops (B) by pushing them in, then let glove box (C) hang down.

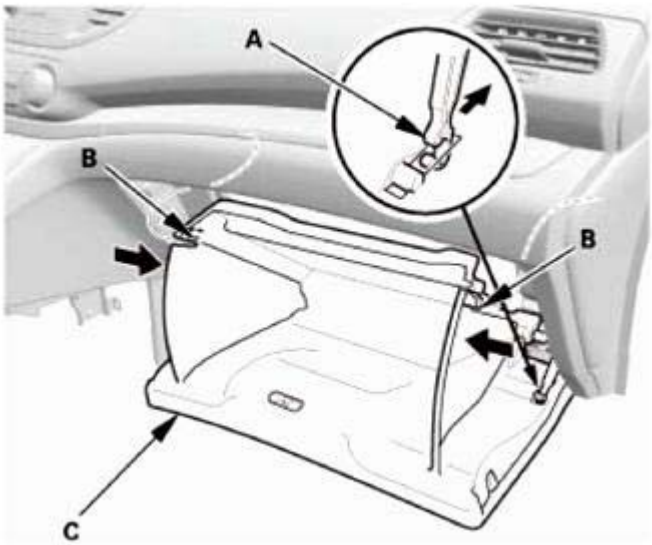

Fig. 104: Pushing Glove Box Stops
Courtesy of AMERICAN HONDA MOTOR CO., INC.

TEST

NOTE: Before testing the motor, check for HVAC DTCs or climate control DTCs.

1. Mode Control Motor - Test
    1. Disconnect the mode control motor connector.

NOTE: Incorrectly applying power and ground to the mode control motor will damage it. Follow the instructions carefully.

GETtheMANUALS.org

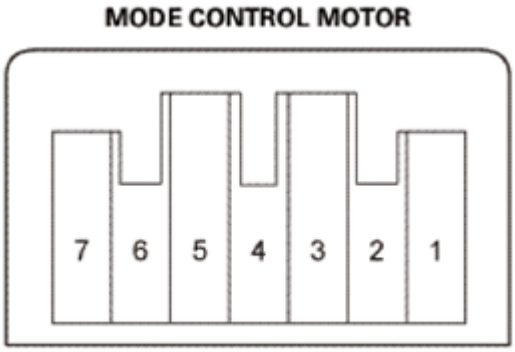

Fig. 105: Identifying Mode Control Motor Connector
Courtesy of AMERICAN HONDA MOTOR CO., INC.

2. Connect battery power to terminal No. 6 of the mode control motor, and ground terminal No. 7; the mode control motor should run smoothly, and stop at DEFROST. If it does not, reverse the connections; the mode control motor should run smoothly, and stop at VENT. When the mode control motor stops running, disconnect battery power immediately.
3. If the mode control motor did not run in step 2, remove it, then check the mode control linkage and door for smooth movement.
   - If the linkage and door move smoothly, go to step 4.
   - If the linkage or door sticks or binds, repair them as needed.
4. Measure the resistance between terminals No. 1 and No. 3. It should be between 4.2 kohms and 7.8 kohms.
5. Reconnect the mode control motor connector.
6. Turn the ignition switch to ON (II).
7. Using the backprobe set, measure the voltage between terminals No. 2 and No. 3.

   VENT: About 0.5 V

   DEFROST: About 4.5 V

8. If either the resistance or the voltage readings are not as specified, replace the mode control motor.

INSTALLATION

1. Glove Box - Move
   1. Install the glove box (A). Make sure the glove box stops (B) snap into place securely.
   2. Install the glove box damper hook (C).

GETtheMANUALS.org

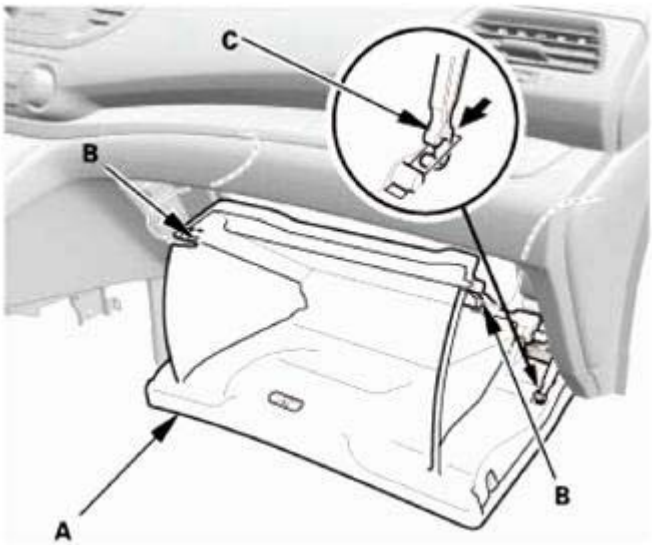

Fig. 106: Identifying Glove Box, Stops And Damper Hook
Courtesy of AMERICAN HONDA MOTOR CO., INC.

OUTSIDE AIR TEMPERATURE INDICATOR CALIBRATION

PROCEDURE

NOTE: To test the outside air temperature sensor, refer to the outside air temperature sensor test procedure.

1. Outside Air Temperature Indicator - Calibration

   Description

   The outside air temperature sensor is located behind the center of the front bumper. The gauge control module uses measurements from this sensor, plus analog with data provided by the climate control unit via the B-CAN communication line, to display the outside air temperature. Because of the location of the sensor, it may be affected by heat reflection from the road, engine and radiator or hot exhaust from surrounding traffic.

   These conditions can soak the outside air temperature sensor in heat and cause inaccurate readings. Logic has been written into the gauge control module to help prevent abnormal or fluctuating outside air temperature indicator readings.

   Outside Air Temperature Indicator Logic

   Initial outside air temperature is indicated after the ignition switch is turned ON (II):

   - Engine coolant temperature is 140 °F (60 °C) or higher:

     If the engine coolant temperature is 140 °F (60 °C) or higher when the ignition switch is turned ON

GETtheMANUALS.org

(II), the outside air temperature indicated the last time the key was turned off is displayed regardless of the current temperature measured by the outside air temperature sensor.

- Engine coolant temperature is 138 °F (59 °C) or lower:

  If the engine coolant temperature is 138 °F (59 °C) or lower when the ignition switch is turned ON (II), the current temperature measured by the outside air temperature sensor is indicated.

Information Update to the Outside Air Temperature Indicator While Driving

- Engine coolant temperature is 140 °F (60 °C) or higher:

  If the temperature measured by the outside air temperature sensor is greater than the temperature on the outside air temperature indicator, the outside air temperature indicator increases by 1 °F (1 °C) per minute after vehicle speed is greater than 19 mph (30 km/h) for more than 33 seconds (one minute). It continues to increase until the current outside air temperature is indicated. So, the first change to the outside air temperature indicator is 33 seconds (one minute) after vehicle speed is greater than 19 mph (30 km/h). If the vehicle speed drops below 19 mph (30 km/h), the indicator does not update again until the vehicle speed has increased to 19 mph (30 km/h) or more for more than 33 seconds (one minute) again.

- Engine coolant temperature is 138 °F (59 °C) or lower:

  If the outside air temperature is less than the indicated temperature, the temperature decreases 1 °F (1 °C) every 2 seconds until the current outside air temperature is indicated regardless of vehicle speed.

Troubleshooting

If the indicator displays - - - °F for more than 2 seconds after selecting the outside air temperature display mode, the gauge control module is not receiving outside temperature data from the climate control unit via the B-CAN. Check for and resolve all B-CAN related DTCs, then check the climate control system or multiplex integrated control system for DTCs. (see B-CAN System Diagnosis Test Mode A)

Fahrenheit:

Fig. 107: Indicator Displays Temperature In Fahrenheit
Courtesy of AMERICAN HONDA MOTOR CO., INC.

Celsius:

GETtheMANUALS.org

Fig. 108: Indicator Displays Temperature In Celsius
Courtesy of AMERICAN HONDA MOTOR CO., INC.

Calibration

NOTE: The outside air temperature indicator's displayed temperature can be recalibrated 5 °F (3 °C) to meet the customer's expectations.

1. Turn the ignition switch to ON (II).
2. Select the odometer/trip A or odometer/trip B display.
3. Select the outside air temperature display and press and hold the SELECT/RESET knob for 10 seconds. While you continue to hold the button, the display will scroll through temperature setting from +5 °F (+3 °C) to -5 °F (-3 °C) as shown.

   Fahrenheit:

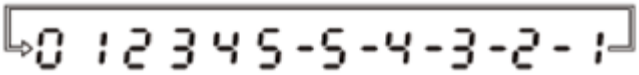

Fig. 109: Display Outside Air Temperature In Fahrenheit
Courtesy of AMERICAN HONDA MOTOR CO., INC.

   Celsius:

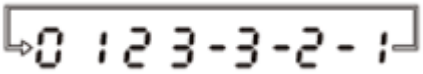

Fig. 110: Display Outside Air Temperature In Celsius
Courtesy of AMERICAN HONDA MOTOR CO., INC.

4. When the desired correction value appears on the display, release the button, and the recalibrated outside air temperature will be displayed.

   NOTE: The recalibration temperature is not the value the sensor detects. Therefore the temperature can only be adjusted 5 °F (3 °C) from sensors reading.

   Example:

   Incorrect value = 68 °F (20 °C)

GETtheMANUALS.org

Desired correction value = +2 °F (+1 °C)

Correct value = 70 °F (21 °C)

Desired correction value = -2 °F (-1 °C)

Correct value = 66 °F (19 °C)

NOTE: **To recalibrate the display to the true temperature, remove the outside air temperature sensor (A), but leave it connected. Submerge the sensor and a thermometer (B) in a container of ice water (C). Select the calibration mode as described above, then recalibrate the display to the true temperature.**

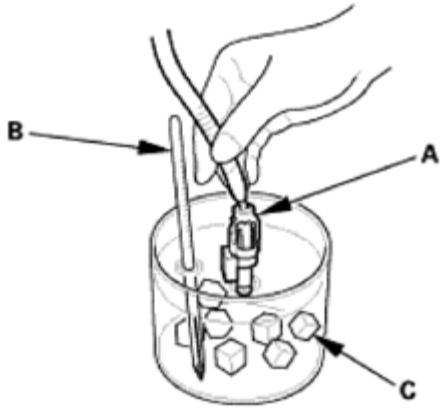

Fig. 111: Submerging Sensor And A Thermometer Into Container
Courtesy of AMERICAN HONDA MOTOR CO., INC.

PASSENGER'S AIR MIX CONTROL MOTOR TEST

SPECIAL TOOL DESCRIPTION

Image	Description/Tool Number
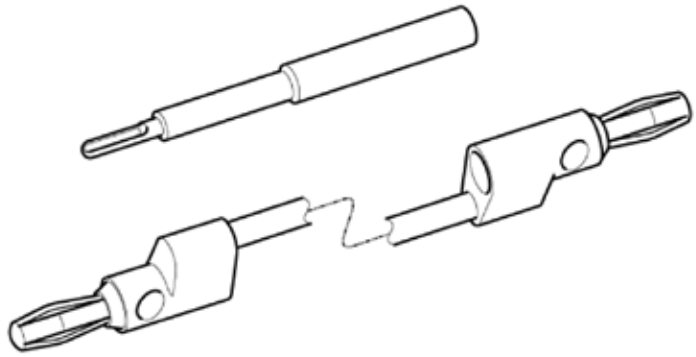	Backprobe Set 07SAZ-001000A (2)

REMOVAL

GETtheMANUALS.org

1. Passenger's Dashboard Undercover
    1. Gently pull down the passenger's dashboard undercover (A) to detach the clips (B), then pull away the undercover to release the pins (C) from the holder (D).

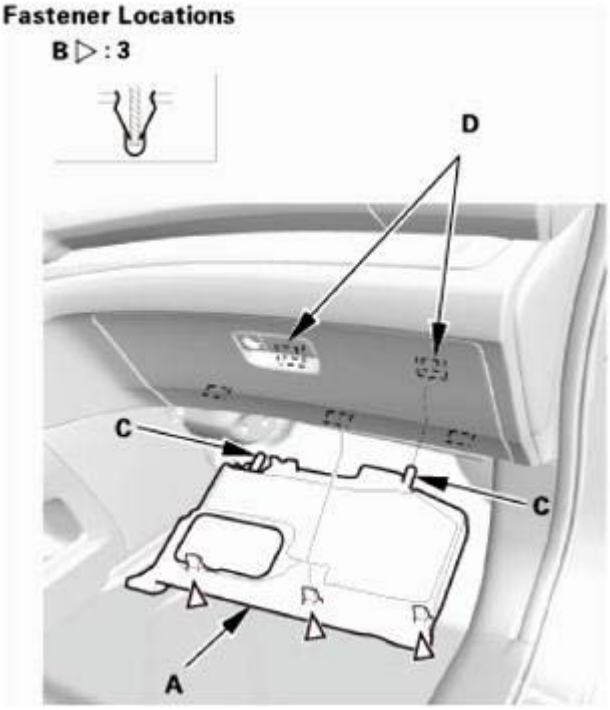

Fig. 112: Identifying Passenger's Dashboard Undercover, Clips, Pins And Holder
Courtesy of AMERICAN HONDA MOTOR CO., INC.

2. Glove Box
    1. Remove the bolts (A).

GETtheMANUALS.org

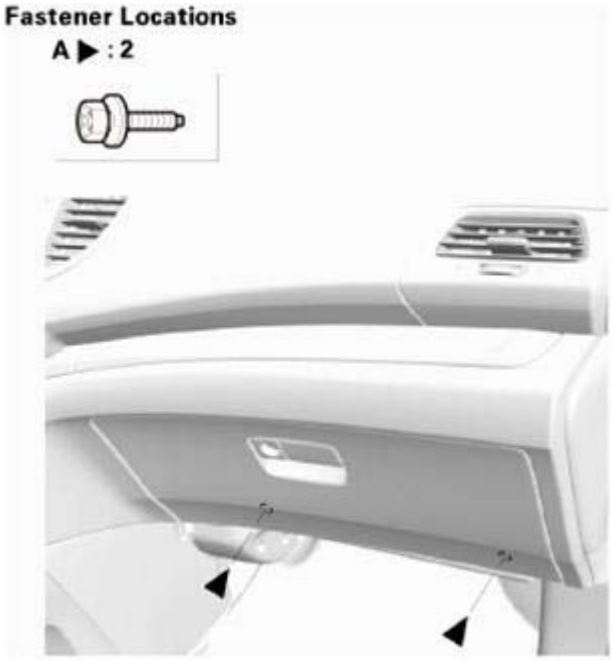

Fig. 113: Identifying Glove Box Bolts
Courtesy of AMERICAN HONDA MOTOR CO., INC.

2. Release both glove box stops (A) by pushing them in, then let the glove box (B) hang down.

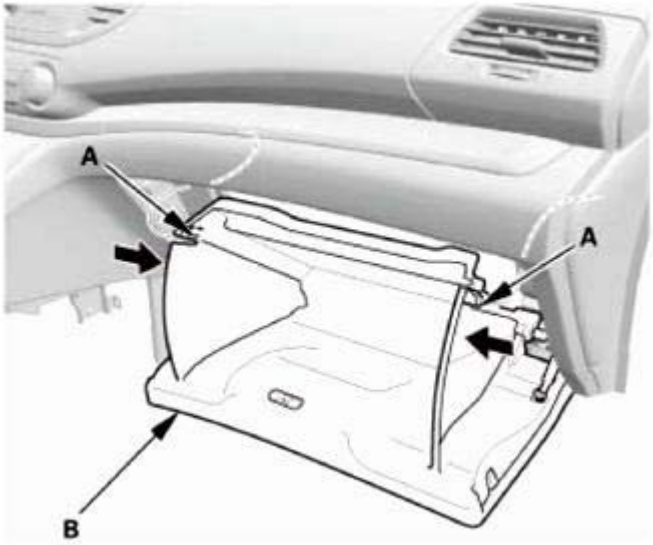

Fig. 114: Pushing Glove Box Stops
Courtesy of AMERICAN HONDA MOTOR CO., INC.

3. Detach the glove box damper hook (A), then remove the glove box (B).

GETtheMANUALS.org

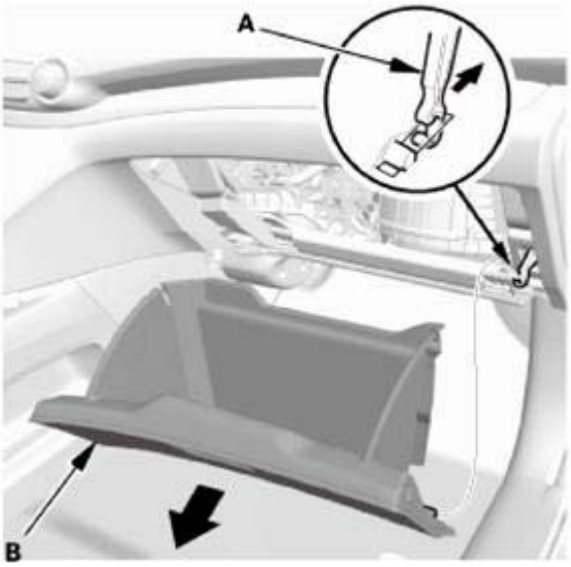

Fig. 115: Removing Glove Box
Courtesy of AMERICAN HONDA MOTOR CO., INC.

3. Glove Box Frame
    1. Remove the glove box frame (A).

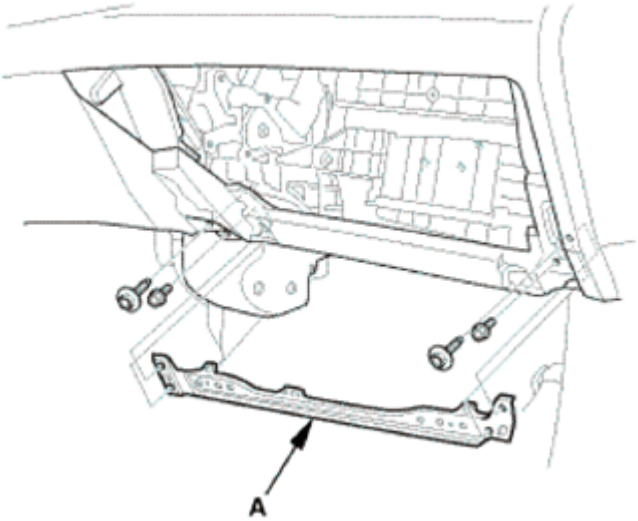

Fig. 116: Identifying Glove Box Frame
Courtesy of AMERICAN HONDA MOTOR CO., INC.

4. Passenger's Heater Duct
    1. Remove the passenger's heater duct (A).

GETtheMANUALS.org

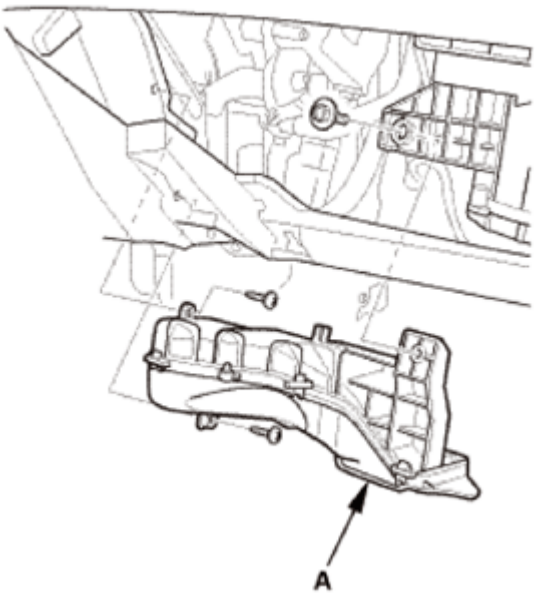

Fig. 117: Identifying Passenger's Heater Duct
Courtesy of AMERICAN HONDA MOTOR CO., INC.

TEST

NOTE: Before testing the motor, check for climate control DTCs.

1. Passenger's Air Mix Control Motor - Test
    1. Disconnect the passenger's air mix control motor connector.

NOTE: Incorrectly applying power and ground to the passenger's air mix control motor will damage it. Follow the instructions carefully.

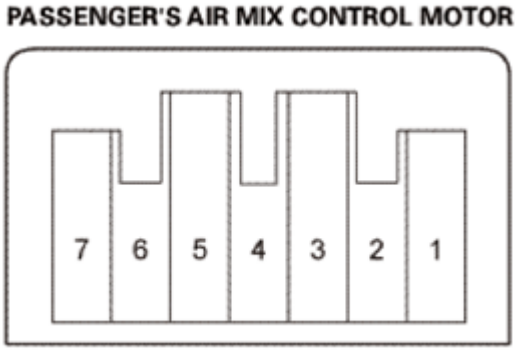

Fig. 118: Identifying Passenger's Air Mix Control Motor Connector
Courtesy of AMERICAN HONDA MOTOR CO., INC.

2. Connect battery power to terminal No. 6 of the passenger's air mix control motor, and ground terminal No. 7; the passenger's air mix control motor should run smoothly, and stop at MAX HOT.

GETtheMANUALS.org

If it does not, reverse the connections; the passenger's air mix control motor should run smoothly, and stop at MAX COOL. When the passenger's air mix control motor stops running, disconnect battery power immediately.

3. If the passenger's air mix control motor did not run in step 2, remove it, then check the passenger's air mix control linkage and door for smooth movement.
   - If the linkage and door move smoothly, go to step 4.
   - If the linkage or door sticks or binds, repair them as needed.
4. Measure the resistance between terminals No. 1 and No. 3. It should be between 4.2 kohms and 7.8 kohms.
5. Reconnect the passenger's air mix control motor connector.
6. Turn the ignition switch to ON (II).
7. Using the backprobe set, measure the voltage between terminals No. 2 and No. 3.

   MAX COOL: About 1.0 V

   MAX HOT: About 4.0 V

8. If either the resistance or the voltage readings are not as specified, replace the passenger's air mix control motor.

INSTALLATION

1. Passenger's Heater Duct
   1. Install the passenger's heater duct (A).

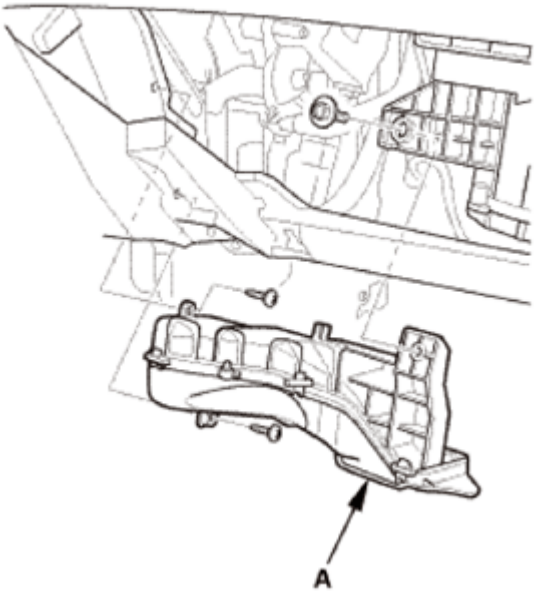

Fig. 119: Identifying Passenger's Heater Duct
Courtesy of AMERICAN HONDA MOTOR CO., INC.

GETtheMANUALS.org

2. Glove Box Frame
    1. Install the glove box frame (A).

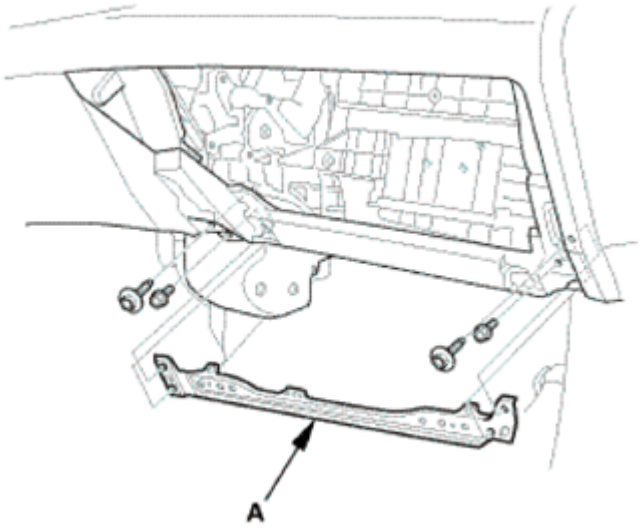

Fig. 120: Identifying Glove Box Frame
Courtesy of AMERICAN HONDA MOTOR CO., INC.

3. Glove Box
    1. Install the glove box (A), then install the glove box damper hook (B).

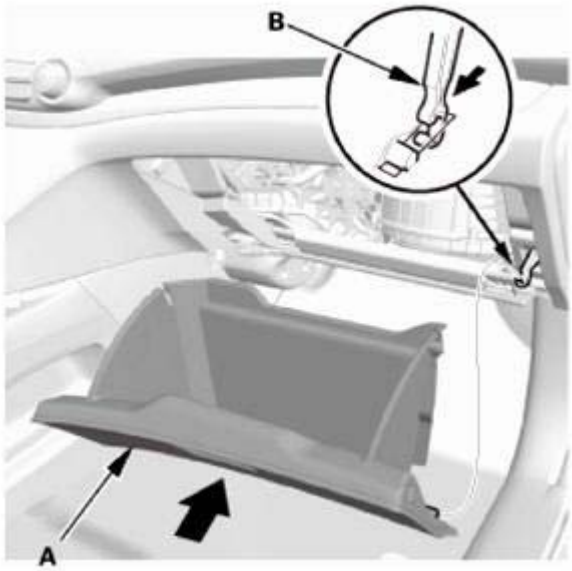

Fig. 121: Installing Glove Box
Courtesy of AMERICAN HONDA MOTOR CO., INC.

    2. Install the bolts (A).

GETtheMANUALS.org

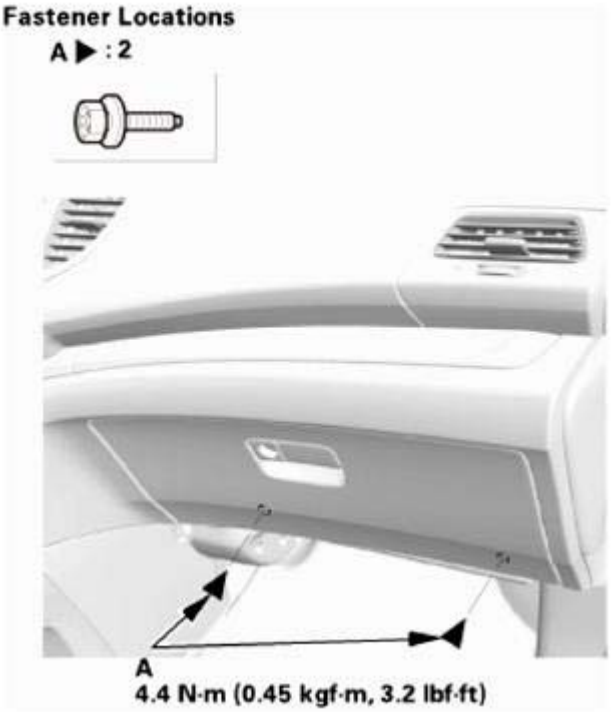

Fig. 122: Identifying Glove Box Bolts With Torque Specifications
Courtesy of AMERICAN HONDA MOTOR CO., INC.

4. Passenger's Dashboard Undercover
    1. Install the passenger's dashboard undercover (A). Make sure the clips (B) snap into place securely, and the pins (C) into the holder (D) securely.

GETtheMANUALS.org

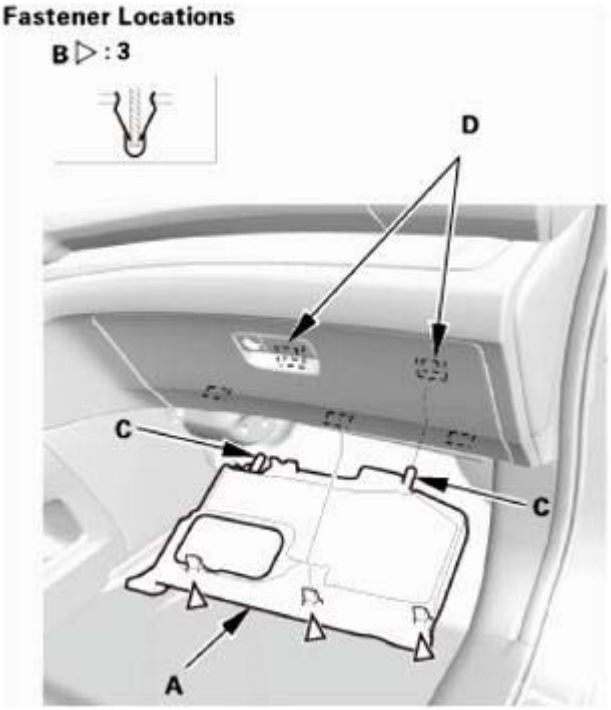

Fig. 123: Identifying Passenger's Dashboard Undercover, Clips, Pins And Holder
Courtesy of AMERICAN HONDA MOTOR CO., INC.

RADIATOR AND A/C CONDENSER FAN LOW SPEED CIRCUIT TROUBLESHOOTING (CLIMATE CONTROL)

GETtheMANUALS.org

Radiator and A/C Condenser Fan Low Speed Circuit Troubleshooting

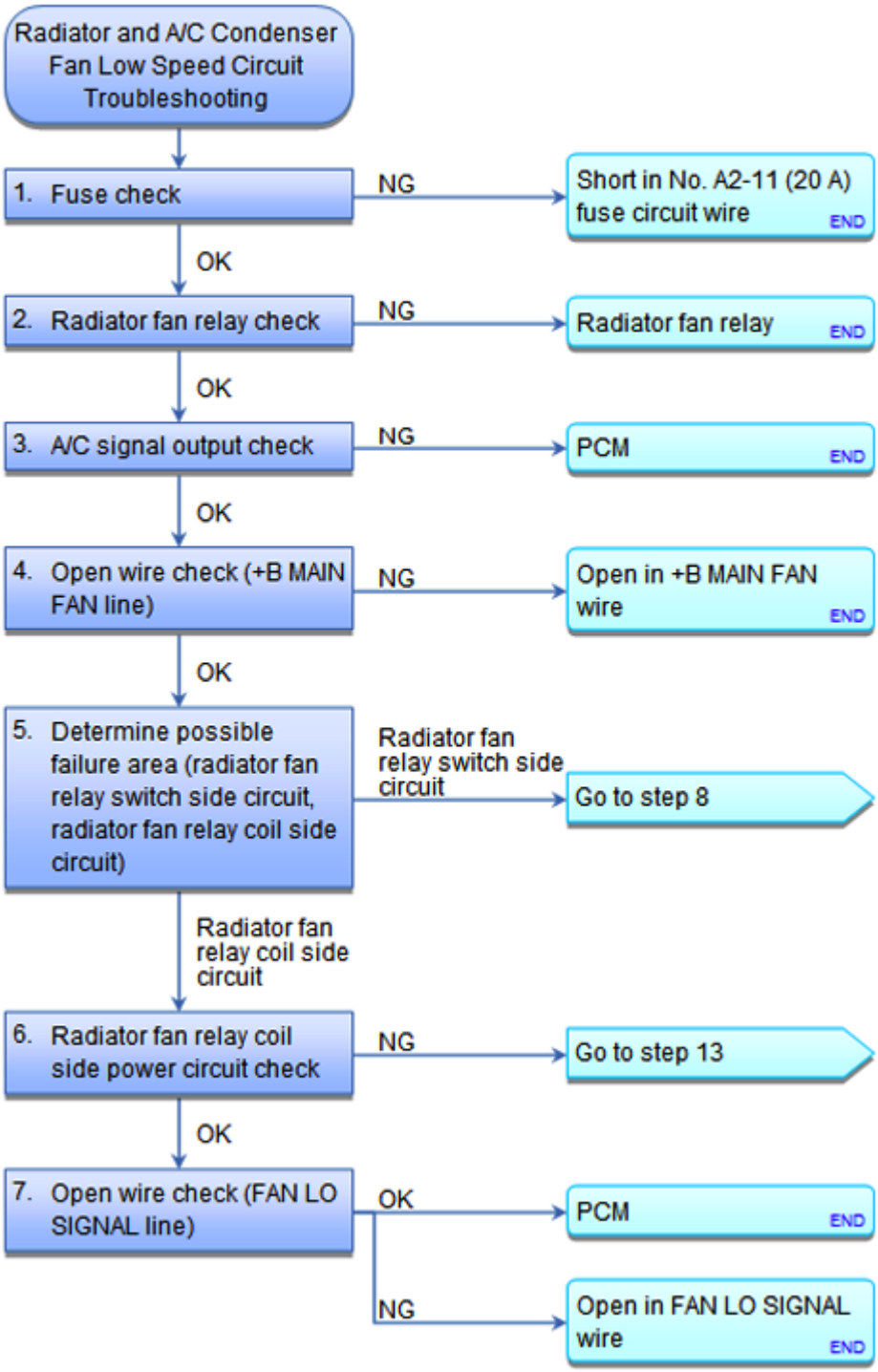

Fig. 124: Radiator And A/C Condenser Fan Low Speed Circuit Troubleshooting Flow Chart (1 Of 2)
Courtesy of AMERICAN HONDA MOTOR CO., INC.

GETtheMANUALS.org

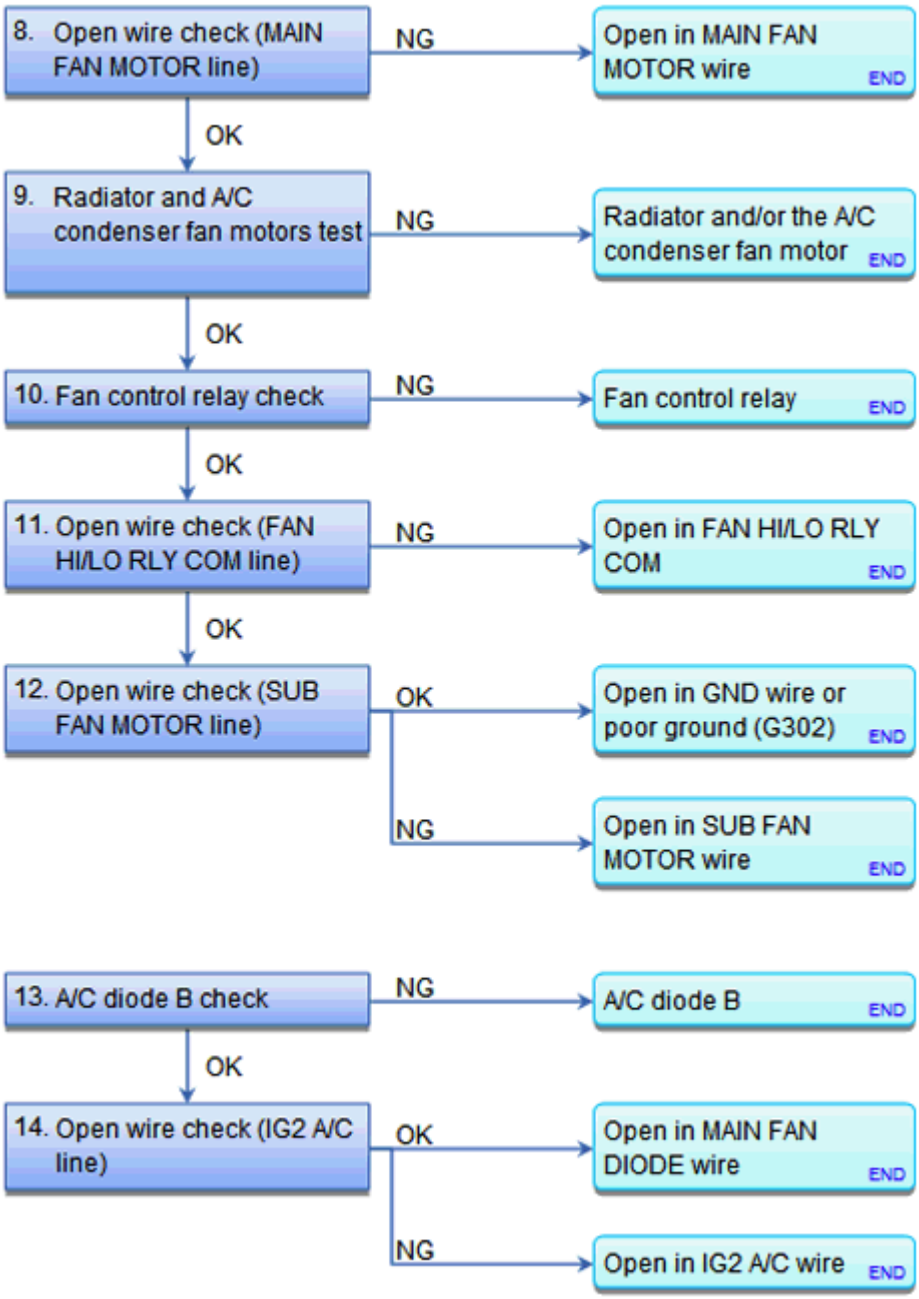

Fig. 125: Radiator And A/C Condenser Fan Low Speed Circuit Troubleshooting Flow Chart (2 Of 2)
Courtesy of AMERICAN HONDA MOTOR CO., INC.

NOTE:

- **Do not use this troubleshooting procedure if the A/C compressor is inoperative. Refer to the symptom troubleshooting index.**
- **If A/C refrigerant pressure is abnormal, the radiator and condenser fans are controlled based only on engine coolant temperature.**
- **Before doing symptom troubleshooting, check for PGM-FI DTCs See HOW TO TROUBLESHOOT THE A/T SYSTEM or HOW TO TROUBLESHOOT THE**

GETtheMANUALS.org

FUEL AND EMISSIONS SYSTEMS .

1. Fuse check:
   - 1. Check the following fuse.

     Fuse No. A2-11 (20 A)

     Location Under-hood fuse/relay box

   Is the fuse OK?

   YES : Go to step 2.

   NO : Replace the fuse, and recheck. If the fuse blows again, check for a short in the No. A2-11 (20 A) fuse circuit.

2. Radiator fan relay check:
   - 1. Remove the radiator fan relay from the under-hood fuse/relay box, and **TEST IT** .

   Is the relay OK?

   YES : Go to step 3.

   NO : Replace the radiator fan relay.

3. A/C signal output check:
   - 1. Connect the HDS to the DLC.
   - 2. Turn the ignition switch to ON (II). Make sure the A/C system is OFF, then start the engine.
   - 3. Press the fan control button ON, then momentarily turn ON the A/C with the A/C button.

     NOTE: Do not run the A/C for more than a few seconds with the engine running or damage to the A/C system will result.

   - 4. Check the parameter(s) below with the HDS.

Signal	Threshold		Current conditions	
	Values	Unit	Values	Unit
FAN LOW CTRL	ON			

   Is the FAN LOW CTRL on with the A/C on?

   YES : Go to step 4.

   NO : **Update the PCM** See **PCM REMOVAL AND INSTALLATION** or **PCM UPDATE** if it does not have the latest software, or **substitute a known-good PCM** See **PCM REMOVAL AND**

GETtheMANUALS.org

INSTALLATION or **PCM UPDATE** , and recheck.

4. Open wire check (+B MAIN FAN line):
   - 1. Turn the ignition switch to LOCK (0).
   - 2. Measure the voltage between test points 1 and 2.

     Test condition IG LOCK (0)

     Radiator fan relay: disconnected

     Test circuit +B MAIN FAN

     Test point 1 Radiator fan relay 4P socket No. 1 (PUR) (Built into the under-hood fuse/relay box)

     Test point 2 Body ground

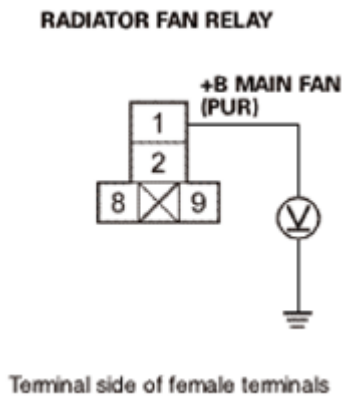

Fig. 126: Measuring Voltage Between Test Points 1 And 2
Courtesy of AMERICAN HONDA MOTOR CO., INC.

Is there battery voltage?

YES : The +B MAIN FAN wire is OK. Go to step 5.

NO : An open in the +B MAIN FAN wire. **REPLACE THE UNDER-HOOD FUSE/RELAY BOX** .

5. Determine possible failure area (radiator fan relay switch side circuit, radiator fan relay coil side circuit):
   - 1. Connect terminals A and B with a jumper wire.

     Terminal A Radiator fan relay 4P socket No. 1 (PUR) (Built into the under-hood fuse/relay box)

     Terminal B Radiator fan relay 4P socket No. 2 (PNK) (Built into the under-hood fuse/relay box)

GETtheMANUALS.org

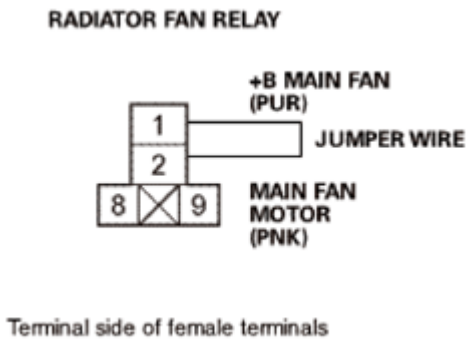

Fig. 127: Connecting Terminals A And B With Jumper Wire
Courtesy of AMERICAN HONDA MOTOR CO., INC.

Do the A/C condenser and radiator fans run on low?

YES : Go to step 6.

NO : Go to step 8.

6. Radiator fan relay coil side power circuit check:
   - 1. Disconnect the jumper wire.
   - 2. Turn the ignition switch to ON (II).
   - 3. Measure the voltage between test points 1 and 2.

   Test condition IG ON (II)

   Radiator fan relay: disconnected

   Test circuit MAIN FAN DIODE-

   Test point 1 Radiator fan relay 4P socket No. 8 (LT BLU) (Built into the under-hood fuse/relay box)

   Test point 2 Body ground

GETtheMANUALS.org

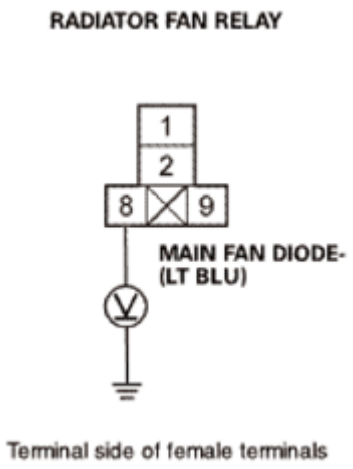

Fig. 128: Measuring Voltage Between Test Points 1 And 2
Courtesy of AMERICAN HONDA MOTOR CO., INC.

Is there battery voltage?

YES : Go to step 7.

NO : Go to step 13.

7. Open wire check (FAN LO SIGNAL line):
   - 1. Turn the ignition switch to LOCK (0).
   - 2. Reinstall the radiator fan relay.
   - 3. Jump the SCS line with the HDS.

NOTE: **This step must be done to protect the PCM from damage.**

   - 4. Disconnect the following connector.

     PCM connector A (49P)

   - 5. Connect terminals A and B with a jumper wire.

     Terminal A PCM connector A (49P) No. 15 (PUR)

     Terminal B Body ground

GETtheMANUALS.org

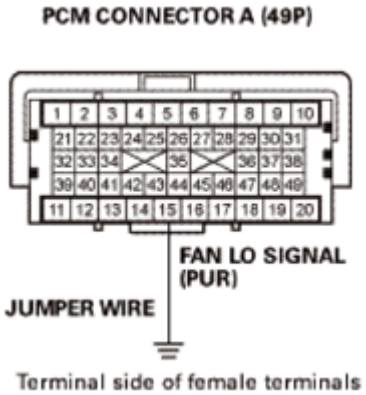

Fig. 129: Connecting Terminals A And B With Jumper Wire
Courtesy of AMERICAN HONDA MOTOR CO., INC.

- 6. Turn the ignition switch to ON (II).

Do the A/C condenser and radiator fans run on low?

YES : **Update the PCM** See **PCM REMOVAL AND INSTALLATION** or **PCM UPDATE** if it does not have the latest software, or **substitute a known-good PCM** See **PCM REMOVAL AND INSTALLATION** or **PCM UPDATE** , and recheck.

NO : Repair an open in the wire between the radiator fan relay and the PCM.

8. Open wire check (MAIN FAN MOTOR line):
   - 1. Disconnect the jumper wire.
   - 2. Reinstall the radiator fan relay.
   - 3. Disconnect the following connector.

     Radiator fan motor 2P connector

   - 4. Turn the ignition switch to ON (II). Make sure the A/C system is OFF, then start the engine.
   - 5. Press the fan control button ON, then momentarily turn ON the A/C with the A/C button.

     NOTE: Do not run the A/C for more than a few seconds with the engine running or damage to the A/C system will result.

   - 6. Measure the voltage between test points 1 and 2.

     Test condition IG ON (II)

     Radiator fan motor 2P connector: disconnected

     Test circuit MAIN FAN MOTOR

GETtheMANUALS.org

Test point 1 Radiator fan motor 2P connector No. 1 (PNK)

Test point 2 Body ground

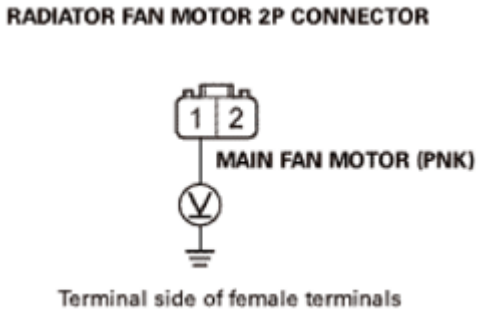

Fig. 130: Measuring Voltage Between Test Points 1 And 2
Courtesy of AMERICAN HONDA MOTOR CO., INC.

Is there battery voltage with the A/C on?

YES : The MAIN FAN MOTOR wire is OK. Go to step 9.

NO : Repair an open in the wire between the radiator fan relay and the radiator fan motor.

9. Radiator and A/C condenser fan motors test:
   - 1. Turn the ignition switch to LOCK (0).
   - 2. TEST THE RADIATOR AND THE A/C CONDENSER FAN MOTORS .

Are the radiator and A/C condenser fan motors OK?

YES : Go to step 10.

NO : Replace the RADIATOR FAN MOTOR and/or the **A/C CONDENSER FAN MOTOR** .

10. Fan control relay check:
    - 1. Remove the fan control relay from the under-hood fuse/relay box, and **TEST IT** .

Is the relay OK?

YES : Go to step 11.

NO : Replace the fan control relay.

11. Open wire check (FAN HI/LO RLY COM line):
    - 1. Reconnect the radiator fan motor 2P connector.
    - 2. Turn the ignition switch to ON (II). Make sure the A/C system is OFF, then start the engine.
    - 3. Turn the fan control button ON, then momentarily turn ON the A/C with the A/C button.

GETtheMANUALS.org

NOTE: **Do not run the A/C for more than a few seconds with the engine running or damage to the A/C system will result.**

- 4. Measure the voltage between test points 1 and 2.

  Test condition IG ON (II)

  Fan control relay: disconnected

  Test circuit FAN HI/LO RLY COM

  Test point 1 Fan control relay 5P socket No. 4 (LT GRN) (Built into the under-hood fuse/relay box)

  Test point 2 Body ground

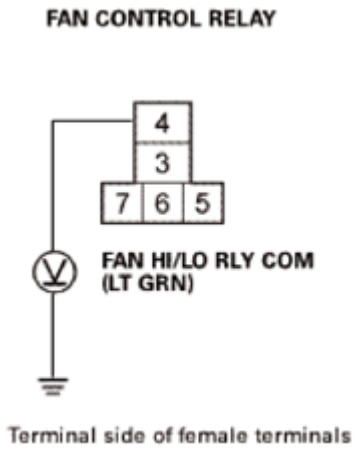

Fig. 131: Measuring Voltage Between Test Points 1 And 2
Courtesy of AMERICAN HONDA MOTOR CO., INC.

Is there battery voltage with the A/C on?

YES : The FAN HI/LO RLY COM wire is OK. Go to step 12.

NO : Repair an open in the wire between the radiator fan motor and the fan control relay.

12. Open wire check (SUB FAN MOTOR line):
    - 1. Then turn the ignition switch to LOCK (0).
    - 2. Disconnect the following connector.

      A/C condenser fan motor 2P connector

    - 3. Check for continuity between test points 1 and 2.

      Test condition IG LOCK (0)

GETtheMANUALS.org

Fan control relay: disconnected

A/C condenser fan motor 2P connector: disconnected

Test circuit SUB FAN MOTOR

Test point 1 Fan control relay 5P socket No. 6 (YEL) (Built into the under-hood fuse/relay box)

Test point 2 A/C condenser fan motor 2P connector No. 1 (YEL)

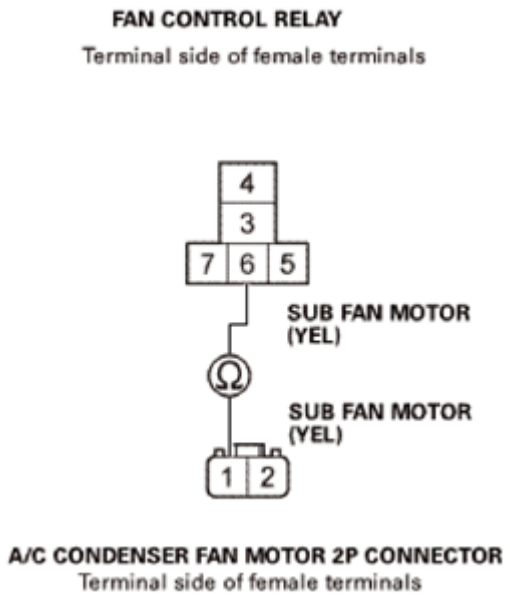

Fig. 132: Checking For Continuity Between Test Points 1 And 2
Courtesy of AMERICAN HONDA MOTOR CO., INC.

Is there continuity?

YES : Check for an open in the wire between the A/C condenser fan motor and body ground. If the wire is OK, check for poor ground at G302.

NO : Repair an open in the wire between the fan control relay and the A/C condenser fan motor.

13. A/C diode B check:
    - 1. Turn the ignition switch to LOCK (0).
    - 2. Remove A/C diode B from the under-hood fuse/relay box.
    - 3. Using the diode setting ( ) on a DVOM, check for current flow in both directions between A/C diode B terminals No. 1 and No. 2.

GETtheMANUALS.org

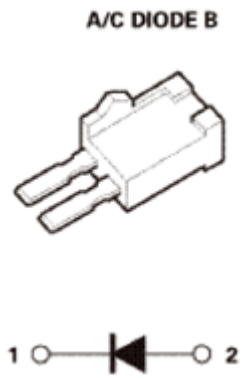

Fig. 133: Identifying A/C Diode B
Courtesy of AMERICAN HONDA MOTOR CO., INC.

Is there current flow in only one direction?

YES : Go to step 14.

NO : Replace the A/C diode B.

14. Open wire check (IG2 A/C line):
    - 1. Turn the ignition switch to ON (II).
    - 2. Measure the voltage between test points 1 and 2.

    Test condition IG ON (II)

    Radiator fan relay: disconnected

    A/C diode B: disconnected

    Test circuit IG2 A/C

    Test point 1 A/C diode B 2P socket No. 2 (PNK)

    Test point 2 Body ground

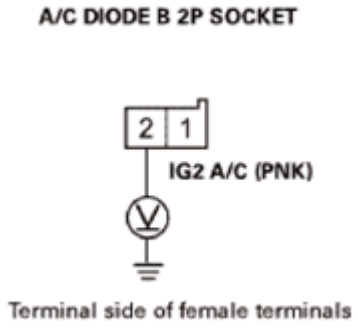

GETtheMANUALS.org

Fig. 134: Measuring Voltage Between Test Points 1 And 2
Courtesy of AMERICAN HONDA MOTOR CO., INC.

Is there battery voltage?

YES : The IG2 A/C wire is OK. **REPLACE THE UNDER-HOOD FUSE/RELAY BOX** .

NO : Repair an open in the wire between the No. B22 (7.5 A) fuse in the under-dash fuse/relay box and the A/C diode B.

RADIATOR AND A/C CONDENSER FAN LOW SPEED CIRCUIT TROUBLESHOOTING (MANUAL A/C)

GETtheMANUALS.org

Radiator and A/C Condenser Fan Low Speed Circuit Troubleshooting

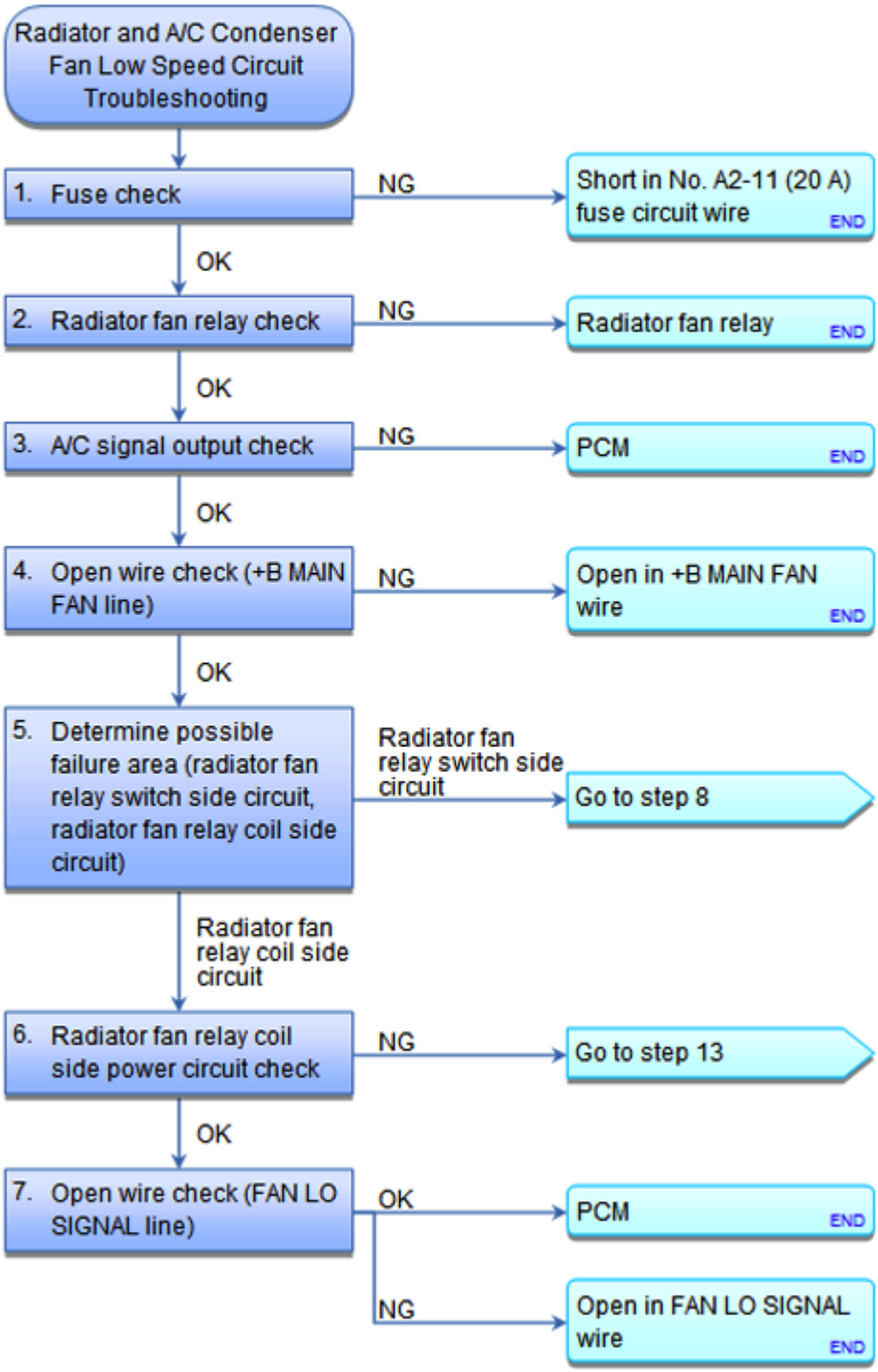

Fig. 135: Radiator And A/C Condenser Fan Low Speed Circuit Troubleshooting Flow Chart (1 Of 2)
Courtesy of AMERICAN HONDA MOTOR CO., INC.

GETtheMANUALS.org

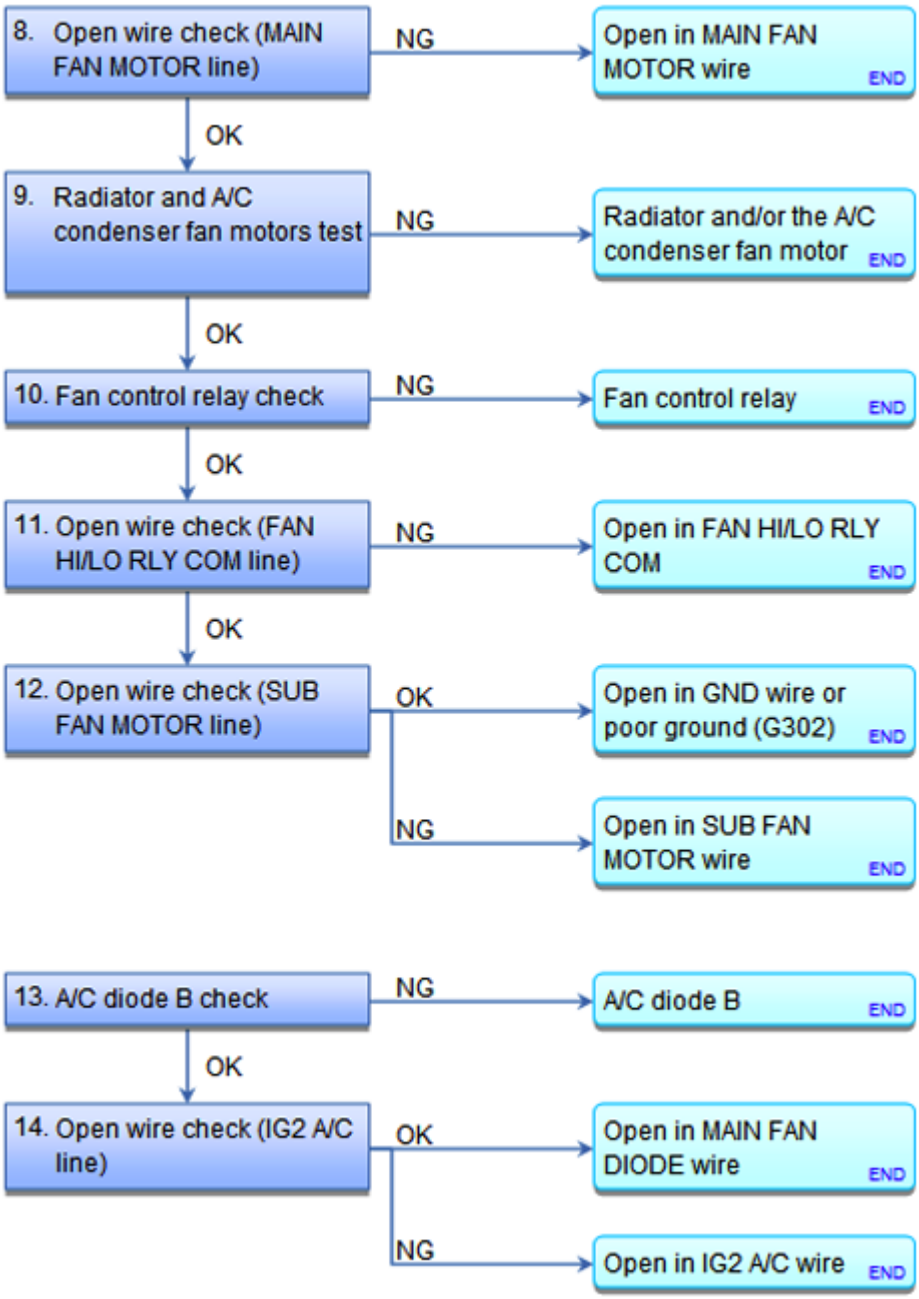

Fig. 136: Radiator And A/C Condenser Fan Low Speed Circuit Troubleshooting Flow Chart (2 Of 2)
Courtesy of AMERICAN HONDA MOTOR CO., INC.

NOTE:

- **Do not use this troubleshooting procedure if the A/C compressor is inoperative. Refer to the symptom troubleshooting index.**
- **If A/C refrigerant pressure is abnormal, the radiator and condenser fans are controlled based only on engine coolant temperature.**
- **Before doing symptom troubleshooting, check for PGM-FI DTCs See HOW TO TROUBLESHOOT THE A/T SYSTEM or HOW TO TROUBLESHOOT THE**

GETtheMANUALS.org

FUEL AND EMISSIONS SYSTEMS .

1. Fuse check:
   - 1. Check the following fuse.

     Fuse No. A2-11 (20 A)

     Location Under-hood fuse/relay box

   Is the fuse OK?

   YES : Go to step 2.

   NO : Replace the fuse, and recheck. If the fuse blows again, check for a short in the No. A2-11 (20 A) fuse circuit.

2. Radiator fan relay check:
   - 1. Remove the radiator fan relay from the under-hood fuse/relay box, and **TEST IT** .

   Is the relay OK?

   YES : Go to step 3.

   NO : Replace the radiator fan relay.

3. A/C signal output check:
   - 1. Connect the HDS to the DLC.
   - 2. Turn the ignition switch to ON (II). Make sure the A/C system is OFF, then start the engine.
   - 3. Turn the fan control dial ON, then momentarily turn ON the A/C with the A/C button.

     NOTE: Do not run the A/C for more than a few seconds with the engine running or damage to the A/C system will result.

   - 4. Check the parameter(s) below with the HDS.

Signal	Threshold		Current conditions	
	Values	Unit	Values	Unit
FAN LOW CTRL	ON			

   Is the FAN LOW CTRL on with the A/C on?

   YES : Go to step 4.

   NO : **Update the PCM** See **PCM REMOVAL AND INSTALLATION** or **PCM UPDATE** if it does not have the latest software, or **substitute a known-good PCM** See **PCM REMOVAL AND**

GETtheMANUALS.org

INSTALLATION or **PCM UPDATE** , and recheck.

4. Open wire check (+B MAIN FAN line):
   - 1. Turn the ignition switch to LOCK (0).
   - 2. Measure the voltage between test points 1 and 2.

     Test condition IG LOCK (0)

     Radiator fan relay: disconnected

     Test circuit +B MAIN FAN

     Test point 1 Radiator fan relay 4P socket No. 1 (PUR) (Built into the under-hood fuse/relay box)

     Test point 2 Body ground

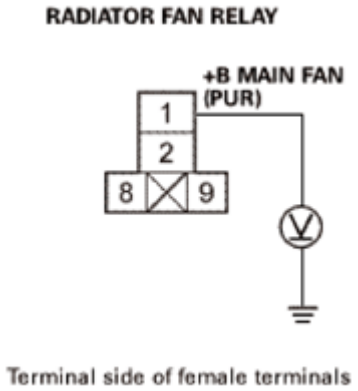

Fig. 137: Measuring Voltage Between Test Points 1 And 2
Courtesy of AMERICAN HONDA MOTOR CO., INC.

Is there battery voltage?

YES : The +B MAIN FAN wire is OK. Go to step 5.

NO : An open in the +B MAIN FAN wire. **REPLACE THE UNDER-HOOD FUSE/RELAY BOX** .

5. Determine possible failure area (radiator fan relay switch side circuit, radiator fan relay coil side circuit):
   - 1. Connect terminals A and B with a jumper wire.

     Terminal A Radiator fan relay 4P socket No. 1 (PUR) (Built into the under-hood fuse/relay box)

     Terminal B Radiator fan relay 4P socket No. 2 (PNK) (Built into the under-hood fuse/relay box)

GETtheMANUALS.org

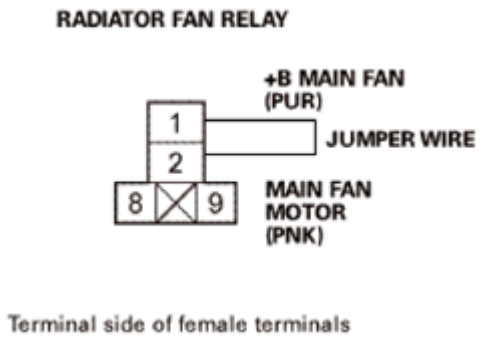

Fig. 138: Connecting Terminals A And B With A Jumper Wire
Courtesy of AMERICAN HONDA MOTOR CO., INC.

Do the A/C condenser and radiator fans run on low?

YES : Go to step 6.

NO : Go to step 8.

6. Radiator fan relay coil side power circuit check:
   - 1. Disconnect the jumper wire.
   - 2. Turn the ignition switch to ON (II).
   - 3. Measure the voltage between test points 1 and 2.

   Test condition IG ON (II)

   Radiator fan relay: disconnected

   Test circuit MAIN FAN DIODE-

   Test point 1 Radiator fan relay 4P socket No. 8 (LT BLU) (Built into the under-hood fuse/relay box)

   Test point 2 Body ground

GETtheMANUALS.org

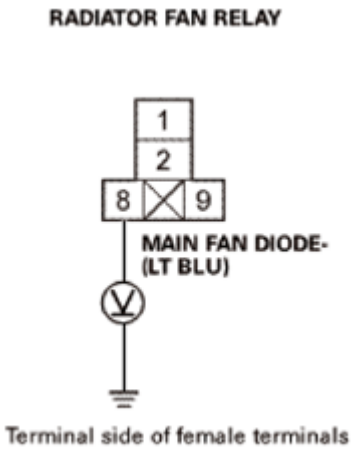

Fig. 139: Measuring Voltage Between Test Points 1 And 2
Courtesy of AMERICAN HONDA MOTOR CO., INC.

Is there battery voltage?

YES : Go to step 7.

NO : Go to step 13.

7. Open wire check (FAN LO SIGNAL line):
   - 1. Turn the ignition switch to LOCK (0).
   - 2. Reinstall the radiator fan relay.
   - 3. Jump the SCS line with the HDS.

     NOTE: This step must be done to protect the PCM from damage.

   - 4. Disconnect the following connector.

     PCM connector A (49P)

   - 5. Connect terminals A and B with a jumper wire.

     Terminal A PCM connector A (49P) No. 15 (PUR)

     Terminal B Body ground

GETtheMANUALS.org

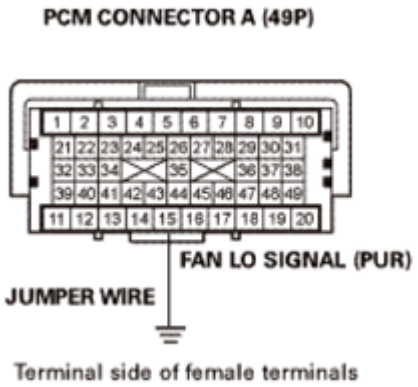

Fig. 140: Connecting Terminals A And B With Jumper Wire
Courtesy of AMERICAN HONDA MOTOR CO., INC.

- 6. Turn the ignition switch to ON (II).

Do the A/C condenser and radiator fans run on low?

YES : **Update the PCM** See **PCM REMOVAL AND INSTALLATION** or **PCM UPDATE** if it does not have the latest software, or **substitute a known-good PCM** See **PCM REMOVAL AND INSTALLATION** or **PCM UPDATE** , and recheck.

NO : Repair an open in the wire between the radiator fan relay and the PCM.

8. Open wire check (MAIN FAN MOTOR line):
   - 1. Disconnect the jumper wire.
   - 2. Reinstall the radiator fan relay.
   - 3. Disconnect the following connector.

     Radiator fan motor 2P connector

   - 4. Turn the ignition switch to ON (II). Make sure the A/C system is OFF, then start the engine.
   - 5. Turn the fan control dial ON, then momentarily turn ON the A/C with the A/C button.

     NOTE: Do not run the A/C for more than a few seconds with the engine running or damage to the A/C system will result.

   - 6. Measure the voltage between test points 1 and 2.

     Test condition IG ON (II)

     Radiator fan motor 2P connector: disconnected

     Test circuit MAIN FAN MOTOR

GETtheMANUALS.org

Test point 1 Radiator fan motor 2P connector No. 1 (PNK)

Test point 2 Body ground

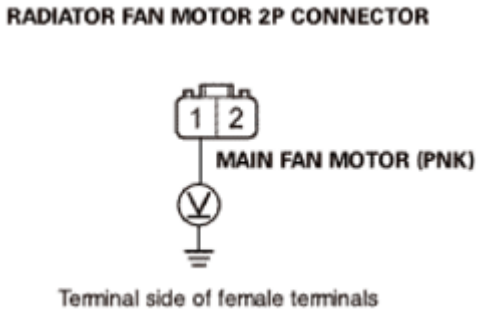

Fig. 141: Measuring Voltage Between Test Points 1 And 2
Courtesy of AMERICAN HONDA MOTOR CO., INC.

Is there battery voltage with the A/C on?

YES : The MAIN FAN MOTOR wire is OK. Go to step 9.

NO : Repair an open in the wire between the radiator fan relay and the radiator fan motor.

9. Radiator and A/C condenser fan motors test:
   - 1. Turn the ignition switch to LOCK (0).
   - 2. TEST THE RADIATOR AND A/C CONDENSER FAN MOTORS .

Are the radiator and A/C condenser fan motors OK?

YES : Go to step 10.

NO : Replace the RADIATOR FAN MOTOR and/or the **A/C CONDENSER FAN MOTOR** .

10. Fan control relay check:
    - 1. Remove the fan control relay from the under-hood fuse/relay box, and **TEST IT** .

Is the relay OK?

YES : Go to step 11.

NO : Replace the fan control relay.

11. Open wire check (FAN HI/LO RLY COM line):
    - 1. Reconnect the radiator fan motor 2P connector.
    - 2. Turn the ignition switch to ON (II). Make sure the A/C system is OFF, then start the engine.
    - 3. Turn the fan control dial ON, then momentarily turn ON the A/C with the A/C button.

GETtheMANUALS.org

NOTE: **Do not run the A/C for more than a few seconds with the engine running or damage to the A/C system will result.**

- 4. Measure the voltage between test points 1 and 2.

  Test condition IG ON (II)

  Fan control relay: disconnected

  Test circuit FAN HI/LO RLY COM

  Test point 1 Fan control relay 5P socket No. 4 (LT GRN) (Built into the under-hood fuse/relay box)

  Test point 2 Body ground

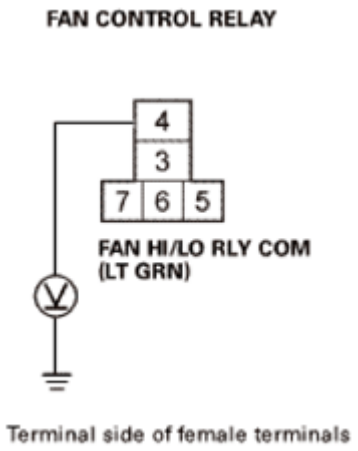

Fig. 142: Measuring Voltage Between Test Points 1 And 2
Courtesy of AMERICAN HONDA MOTOR CO., INC.

Is there battery voltage with the A/C on?

YES : The FAN HI/LO RLY COM wire is OK. Go to step 12.

NO : Repair an open in the wire between the radiator fan motor and the fan control relay.

12. Open wire check (SUB FAN MOTOR line):
    - 1. Then turn the ignition switch to LOCK (0).
    - 2. Disconnect the following connector.

      A/C condenser fan motor 2P connector

    - 3. Check for continuity between test points 1 and 2.

      Test condition IG LOCK (0)

GETtheMANUALS.org

Fan control relay: disconnected

A/C condenser fan motor 2P connector: disconnected

Test circuit SUB FAN MOTOR

Test point 1 Fan control relay 5P socket No. 6 (YEL) (Built into the under-hood fuse/relay box)

Test point 2 A/C condenser fan motor 2P connector No. 1 (YEL)

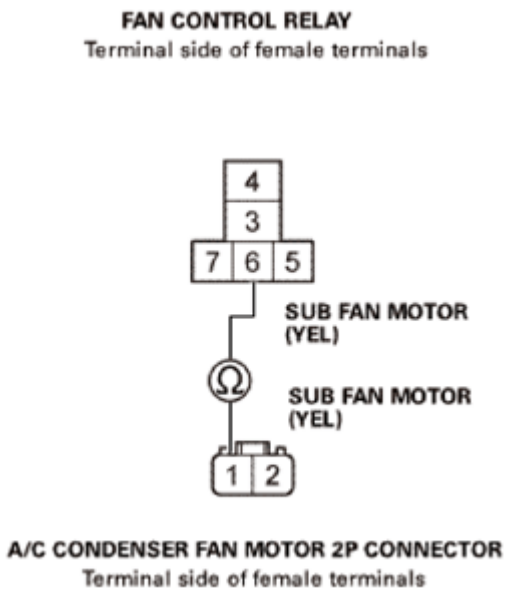

Fig. 143: Checking For Continuity Between Test Points 1 And 2
Courtesy of AMERICAN HONDA MOTOR CO., INC.

Is there continuity?

YES : Check for an open in the wire between the A/C condenser fan motor and body ground. If the wire is OK, check for poor ground at G302.

NO : Repair an open in the wire between the fan control relay and the A/C condenser fan motor.

13. A/C diode B check:
    - 1. Turn the ignition switch to LOCK (0).
    - 2. Remove A/C diode B from the under-hood fuse/relay box.
    - 3. Using the diode setting ( ) on a DVOM, check for current flow in both directions between A/C diode B terminals No. 1 and No. 2.

GETtheMANUALS.org

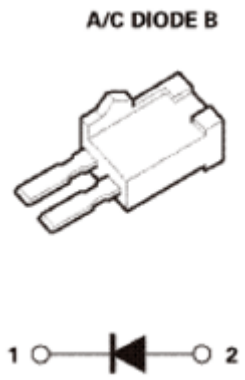

Fig. 144: Identifying A/C Diode B
Courtesy of AMERICAN HONDA MOTOR CO., INC.

Is there current flow in only one direction?

YES : Go to step 14.

NO : Replace the A/C diode B.

14. Open wire check (IG2 A/C line):
    - 1. Turn the ignition switch to ON (II).
    - 2. Measure the voltage between test points 1 and 2.

    Test condition IG ON (II)

    Radiator fan relay: disconnected

    A/C diode B: disconnected

    Test circuit IG2 A/C

    Test point 1 A/C diode B 2P socket No. 2 (PNK)

    Test point 2 Body ground

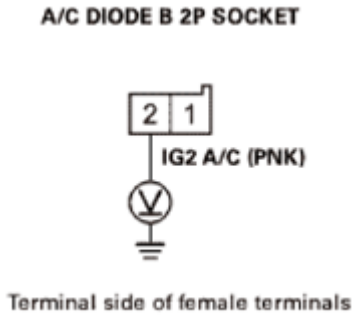

Fig. 145: Measuring Voltage Between Test Points 1 And 2

GETtheMANUALS.org

Courtesy of AMERICAN HONDA MOTOR CO., INC.

Is there battery voltage?

YES : The IG2 A/C wire is OK. **REPLACE THE UNDER-HOOD FUSE/RELAY BOX** .

NO : Repair an open in the wire between the No. B22 (7.5 A) fuse in the under-dash fuse/relay box and the A/C diode B.

RECIRCULATION CONTROL MOTOR TEST

SPECIAL TOOL DESCRIPTION

Image	Description/Tool Number
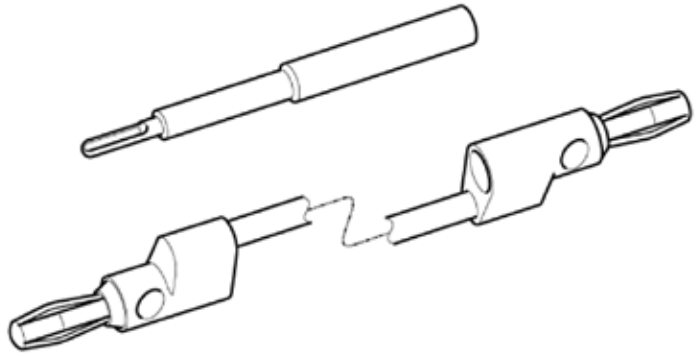	Backprobe Set 07SAZ-001000A (2)

REMOVAL

1. Glove Box - Move
    1. Detach the glove box damper hook (A), and release both glove box stops (B) by pushing them in, then let glove box (C) hang down.

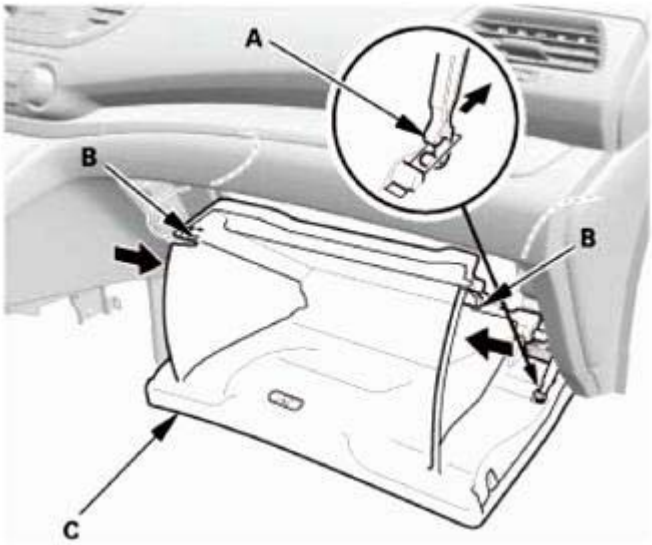

GETtheMANUALS.org

Fig. 146: Pushing Glove Box Stops
Courtesy of AMERICAN HONDA MOTOR CO., INC.

TEST

NOTE: Before testing the motor, check for HVAC DTCs or climate control DTCs.

1. Recirculation Control Motor - Test
    1. Disconnect the recirculation control motor connector.

NOTE: Incorrectly applying power and ground to the recirculation control motor will damage it. Follow the instructions carefully.

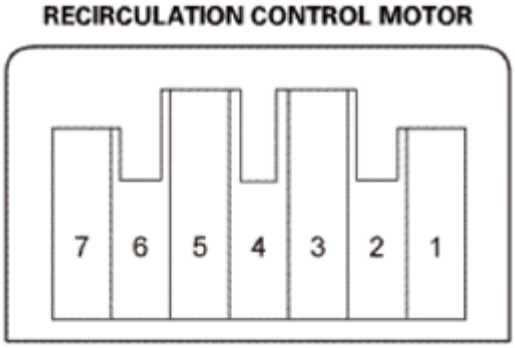

Fig. 147: Identifying Recirculation Control Motor Connector
Courtesy of AMERICAN HONDA MOTOR CO., INC.

2. Connect battery power to terminal No. 6 of the recirculation control motor, and ground terminal No. 7; the recirculation control motor should run smoothly, and stop at FRESH. If it does not, reverse the connections; the recirculation control motor should run smoothly, and stop at RECIRCULATE. When the recirculation control motor stops running, disconnect battery power immediately.
3. If the recirculation control motor did not run in step 2, remove it, then check the recirculation control linkage and door for smooth movement.
    - If the linkage and door move smoothly, go to step 4.
    - If the linkage or door sticks or binds, repair them as needed.
4. Measure the resistance between terminals No. 1 and No. 3. It should be between 4.2 kohms and 7.8 kohms.
5. Reconnect the recirculation control motor connector.
6. Turn the ignition switch to ON (II).
7. Using the backprobe set, measure the voltage between terminals No. 1 and No. 2.

RECIRCULATE: About 2.8 V

FRESH: About 0.5 V

GETtheMANUALS.org

8. If either the resistance or voltage readings are not as specified, replace the recirculation control motor.

INSTALLATION

1. Glove Box - Move
    1. Install the glove box (A). Make sure the glove box stops (B) snap into place securely.
    2. Install the glove box damper hook (C).

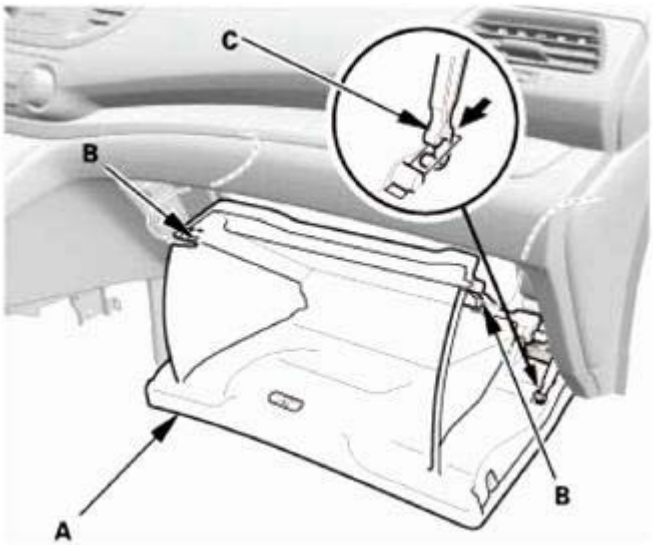

Fig. 148: Identifying Glove Box, Stops And Damper Hook
Courtesy of AMERICAN HONDA MOTOR CO., INC.

SUNLIGHT SENSOR TEST

TEST

NOTE:

- **When prying with a flat-tip screwdriver, wrap it with protective tape to prevent damage.**
- **Before testing the sensor, check for climate control DTCs.**

1. Sunlight Sensor - Test
    1. Remove the sunlight sensor (A) with connector connected.
    2. Turn the ignition switch to ON (II).
    3. Measure the voltage between (+) probe on terminal No. 2 and (-) probe on terminal No. 3 with the connector connected.

NOTE: **The voltage readings will not change under the light of a flashlight or a fluorescent lamp.**

GETtheMANUALS.org

Voltage should be:

- 3.56 V with no sunlight or sensor covered up
- Less than 3.56 V with sunlight on sensor (depending on sunlight intensity)

4. If the voltage is not as specified, replace the sunlight sensor.

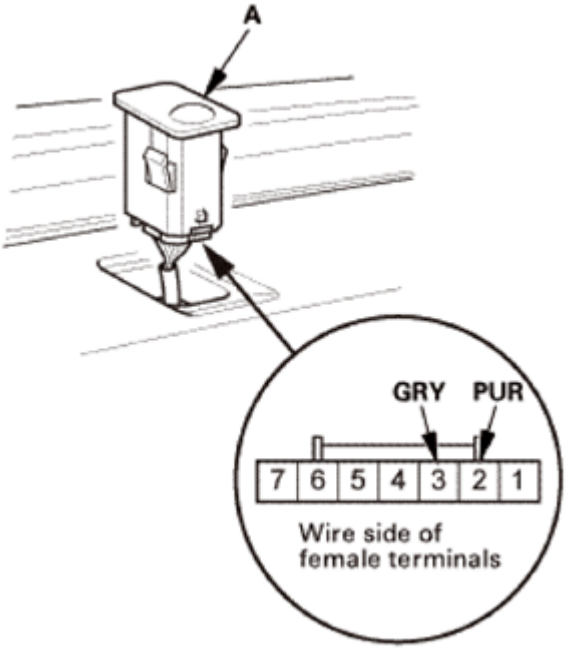

Fig. 149: Identifying Sunlight Sensor And Connector
Courtesy of AMERICAN HONDA MOTOR CO., INC.

A/C SYSTEM TEST RESULT (CLIMATE CONTROL)

Test Results	Related Symptoms	Probable Cause
Driver's and passenger's side A/C vent temperatures may vary by approximately 20° F (11°C) or more	Suction pressure may be low	• Low refrigerant charge • Expansion valve not opening sufficiently
	Driver's or passenger's air mix door DTCs present	One air mix door stuck or inoperative
Discharge pressure abnormally High	Discharge pressure reduced when A/C condenser cooled with water spray	Significant refrigerant overcharge
	• Restricted/weak airflow through A/C condenser • With doors open, fresh air selected, and radiator and A/C condenser fans run on high speed, temperature drop across A/C condenser inlet to outlet is less than about 41 °F (5 °C) while A/C	• Dirty A/C condenser or damaged fins • Debris between A/C condenser and radiator • Radiator and/or A/C condenser fan(s)

GETtheMANUALS.org

	compressor is running	malfunctioning
Discharge pressure abnormally Low	• Suction and discharge pressures equalize rapidly after stopping A/C compressor • Suction pressure higher than normal	Faulty A/C compressor discharge valve or seal
Suction pressure abnormally Low	Weak or insufficient airflow across evaporator	Restricted blower intake or dust and pollen filter
	Suction pressure varies from near normal to a vacuum, as moisture freezes in expansion valve orifice	• Moisture in the system • Faulty expansion valve
	• Reduced airflow from vents • Vent temperature is very low	• Evaporator freezing • Faulty evaporator temperature sensor (check DTC) • Faulty expansion valve or A/C compressor clutch relay stuck in the on position
Suction pressure abnormally High	• Lack of slight suction pressure variation at 1, 00 rpm when "Recirculated" airflow is switched to "Fresh Air" • Discharge pressure near normal	Expansion valve stuck open or open too long
Suction and Discharge pressures abnormally High	• A sheet of paper does not stick to front of A/C condenser surface with cooling fans on • With doors open, fresh air selected and radiator and A/C condenser fan run on high speed, temperature drop across A/C condenser inlet to outlet is less than about 41 °F (5 °C)	Radiator and/or A/C condenser fan motor(s) inoperative or wires reversed
	• A/C compressor clutch remains engaged during off cycle • A/C compressor relief valve may open	• Insufficient A/C compressor clutch clearance • A/C compressor clutch relay stuck in the on position or circuit problem • Excessive air in system
	Suction line from expansion valve to A/C compressor is not cold	Excessively low refrigerant charge
	Lack of slight suction pressure variation at 1, 00 rpm when "Recirculated" airflow is switched to "Fresh Air"	Expansion valve clogged with debris/desiccant, stuck closed, or not opening sufficiently
		Blocked or restricted A/C

GETtheMANUALS.org

Suction and Discharge pressures abnormally Low	More than 50 - 60 °F (10 - 16 °C) temperature drop across A/C condenser inlet to outlet pipes	condenser internal passages or lines/components restricting refrigerant flow
	Significant temperature difference along high or low side A/C lines or components **NOTE:** **Some restrictions may not show up until 3, 00 rpm**	Restriction in A/C suction or discharge lines or components (check temperatures to isolate)
Suction pressure High and Discharge pressure Low	• Excessive A/C compressor noise • Pressures equalize quickly and noise after A/C compressor turns off	A/C compressor internal damage (Check for A/C system debris contamination)
Suction and discharge pressures slightly low	Vent temperature too high	• Slightly low refrigerant charge • Air mix door sticking, misadjusted or inoperative • Excessive refrigerant oil in system
	Static pressures high with A/C system equalized. (After engine is off 4 - 12 hours)	• Air/Non-condensable gasses in system • Contaminated or incorrect refrigerant

A/C SYSTEM TEST RESULT (MANUAL A/C)

Test Results	Related Symptoms	Probable Cause
Driver's and passenger's side A/C vent temperatures may vary by approximately 20° F (11°C) or more	Suction pressure may be low	• Low refrigerant charge • Expansion valve not opening sufficiently
	Air mix door DTCs present	Air mix door stuck or inoperative
Discharge pressure abnormally High	Discharge pressure reduced when A/C condenser cooled with water spray	Significant refrigerant overcharge
	• Restricted/weak airflow through A/C condenser • With doors open, fresh air selected, and radiator and A/C condenser fans run on high speed, temperature drop across A/C condenser inlet to outlet is less than about 41 °F (5 °C) while A/C compressor is running	• Dirty A/C condenser or damaged fins • Debris between A/C condenser and radiator • Radiator and/or A/C condenser fan(s) malfunctioning

GETtheMANUALS.org

Discharge pressure abnormally Low	• Suction and discharge pressures equalize rapidly after stopping A/C compressor • Suction pressure higher than normal	Faulty A/C compressor discharge valve or seal
Suction pressure abnormally Low	Weak or insufficient airflow across evaporator	Restricted blower intake or dust and pollen filter
	Suction pressure varies from near normal to a vacuum, as moisture freezes in expansion valve orifice	• Moisture in the system • Faulty expansion valve
	• Reduced airflow from vents • Vent temperature is very low	• Evaporator freezing • Faulty evaporator temperature sensor (check DTC) • Faulty expansion valve or A/C compressor clutch relay stuck in the on position
Suction pressure abnormally High	• Lack of slight suction pressure variation at 1, 00 rpm when "Recirculated" airflow is switched to "Fresh Air" • Discharge pressure near normal	Expansion valve stuck open or open too long
Suction and Discharge pressures abnormally High	• A sheet of paper does not stick to front of A/C condenser surface with cooling fans on • With doors open, fresh air selected and radiator and A/C condenser fan run on high speed, temperature drop across A/C condenser inlet to outlet is less than about 41 °F (5 °C)	• Radiator and/or A/C condenser fan motor(s) inoperative or wires reversed
	• A/C compressor clutch remains engaged during off cycle • A/C compressor relief valve may open	• Insufficient A/C compressor clutch clearance • A/C compressor clutch relay stuck in the on position or circuit problem • Excessive air in system
Suction and Discharge	Suction line from expansion valve to A/C compressor is not cold	Excessively low refrigerant charge
	Lack of slight suction pressure variation at 1, 00 rpm when "Recirculated" airflow is switched to "Fresh Air"	Expansion valve clogged with debris/desiccant, stuck closed, or not opening sufficiently
	More than 50 - 60 °F (10 - 16 °C) temperature	Blocked or restricted A/C condenser internal passages or

GETtheMANUALS.org

pressures abnormally Low	drop across A/C condenser inlet to outlet pipes	lines/components restricting refrigerant flow
	Significant temperature difference along high or low side A/C lines or components **NOTE:** **Some restrictions may not show up until 3, 00 rpm**	Restriction in A/C suction or discharge lines or components (check temperatures to isolate)
Suction pressure High and Discharge pressure Low	• Excessive A/C compressor noise • Pressures equalize quickly and noise after A/C compressor turns off	A/C compressor internal damage (Check for A/C system debris contamination)
Suction and discharge pressures slightly low	Vent temperature too high	• Slightly low refrigerant charge • Air mix door sticking, misadjusted or inoperative • Excessive refrigerant oil in system
	Static pressures high with A/C system equalized. (After engine is off 4 - 12 hours)	• Air/Non-condensable gasses in system • Contaminated or incorrect refrigerant

GETtheMANUALS.org

IGNITION KEY LIGHT TEST

REMOVAL

SRS components are located in this area. Review the **SRS COMPONENT LOCATIONS** and the **PRECAUTIONS AND PROCEDURES** before doing repairs or service.

1. Upper Column Cover
    1. Carefully pry out the dashboard meter visor blind cover (A) with the appropriate trim tool to detach the clips (B) and the hook (C), then tuck up the dashboard meter visor blind cover.

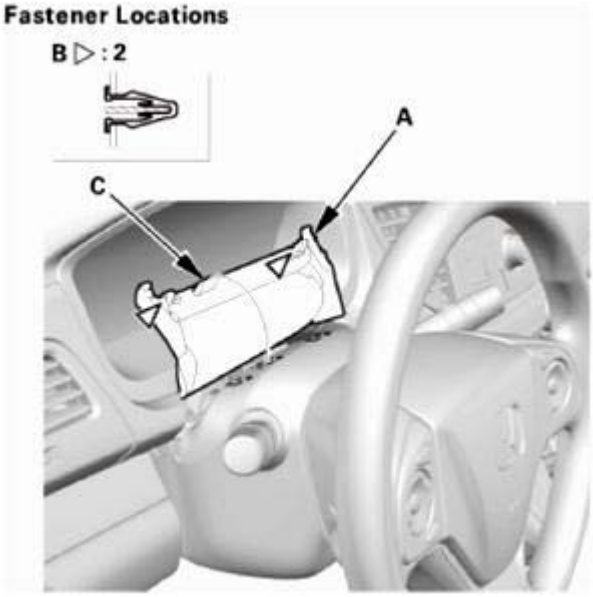

Fig. 1: Removing Dashboard Meter Visor Blind Cover
Courtesy of AMERICAN HONDA MOTOR CO., INC.

    2. Detach the hooks (A), then remove the upper column cover (B).

GETtheMANUALS.org

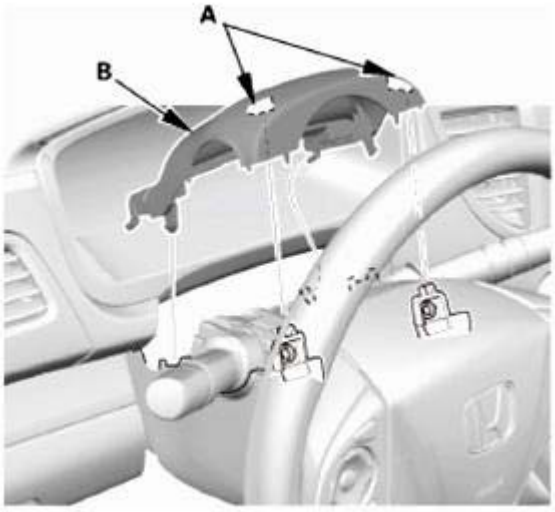

Fig. 2: Identifying Upper Column Cover And Hooks
Courtesy of AMERICAN HONDA MOTOR CO., INC.

2. Lower Column Cover
    1. Turn the steering wheel to the left. Remove the screw (A) securing the lower column cover (B) from the front side.
    2. Turn the steering wheel to the right. Remove the screw securing the lower column cover from the front side.

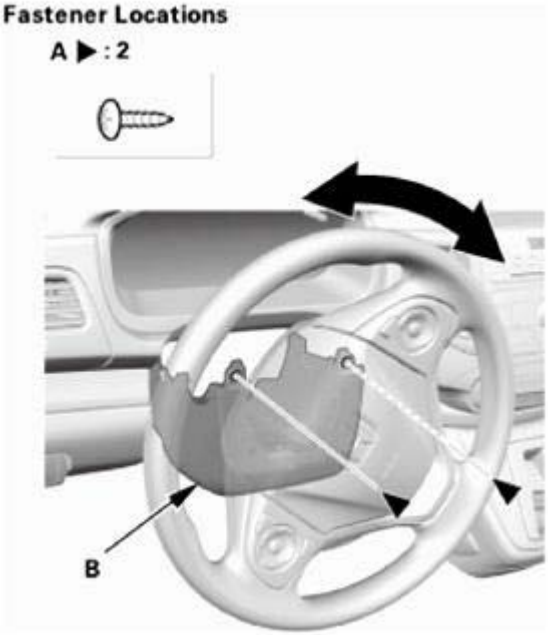

Fig. 3: Turning Steering Wheel
Courtesy of AMERICAN HONDA MOTOR CO., INC.

3. Remove the screw (A), then remove the lower column cover (B).

GETtheMANUALS.org

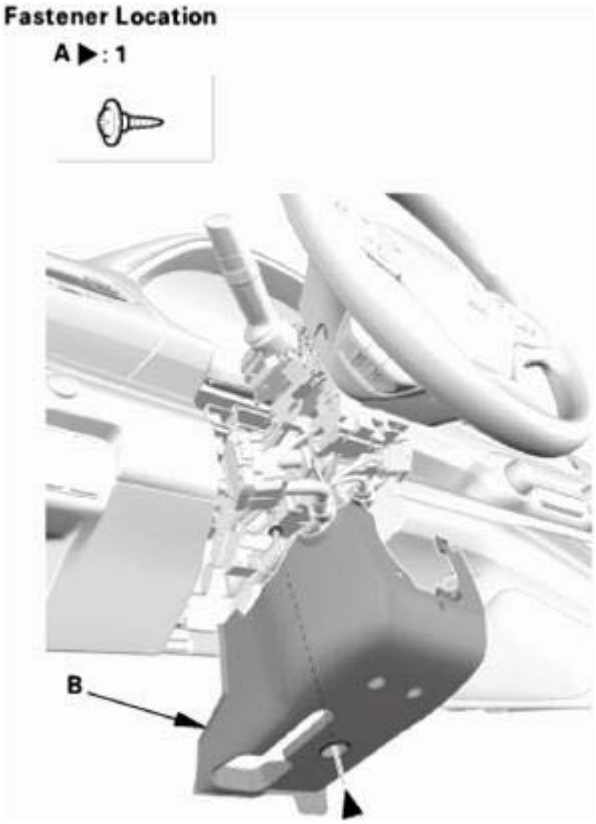

Fig. 4: Identifying Lower Column Cover And Screw
Courtesy of AMERICAN HONDA MOTOR CO., INC.

TEST

1. Ignition Key Light - Test
    1. Disconnect the connector.
    2. The LED should come on when power is connected to terminal No. 3 and ground is connected to terminal No. 2.
    3. If the LED does not come on, replace the steering lock assembly.
    4. Connect the connector.

GETtheMANUALS.org

Fig. 5: Identifying Ignition Key Light Connector Terminals
Courtesy of AMERICAN HONDA MOTOR CO., INC.

INSTALLATION

SRS components are located in this area. Review the **SRS COMPONENT LOCATIONS** and the **PRECAUTIONS AND PROCEDURES** before doing repairs or service.

1. Lower Column Cover
    1. Push in on the lower column cover just above ignition switch opening (A) to engage the column cover with the locking tab (B).

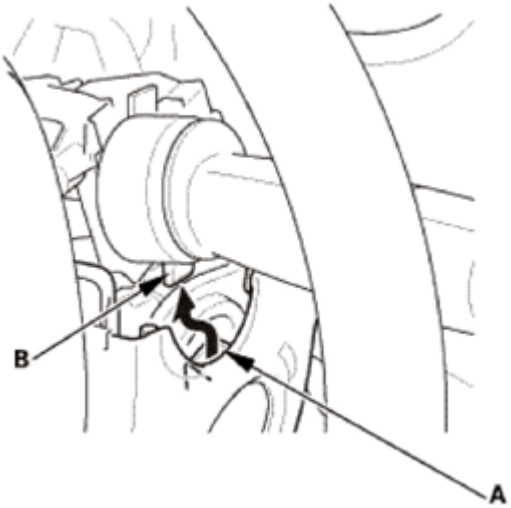

GETtheMANUALS.org

Fig. 6: Engaging Column Cover And Locking Tab
Courtesy of AMERICAN HONDA MOTOR CO., INC.

2. Install the lower column cover (A), then install the screw (B).

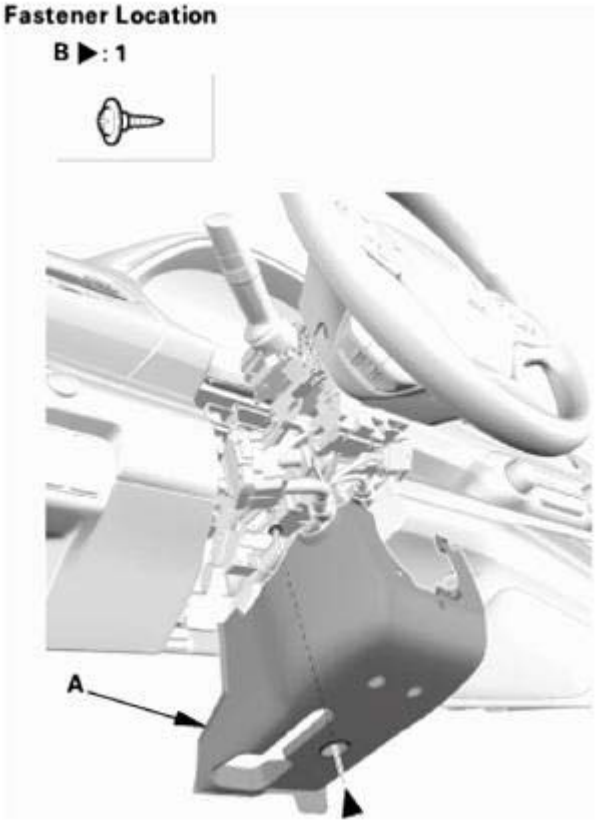

Fig. 7: Identifying Lower Column Cover And Screw
Courtesy of AMERICAN HONDA MOTOR CO., INC.

3. Turn the steering wheel to the left. Install the screw (A) securing the lower column cover (B) from the front side.
4. Turn the steering wheel to the right. Install the screw securing the lower column cover from the front side.

GETtheMANUALS.org

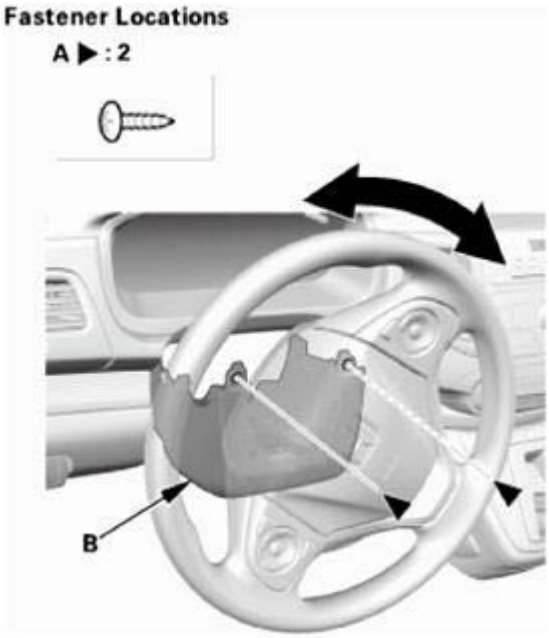

Fig. 8: Turning Steering Wheel
Courtesy of AMERICAN HONDA MOTOR CO., INC.

2. Upper Column Cover
    1. Install the upper column cover (A). Make sure the hooks (B) snap into place securely.

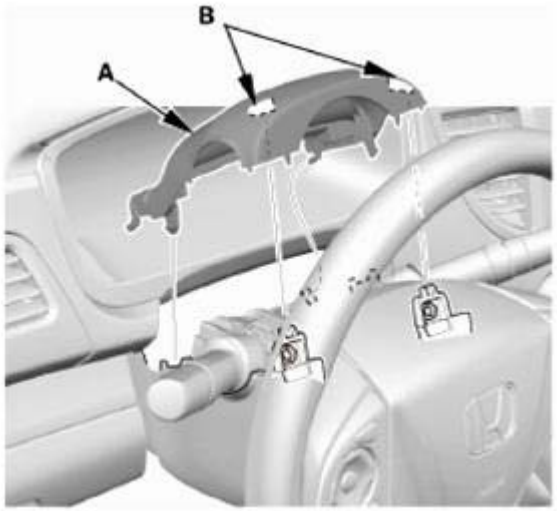

Fig. 9: Identifying Upper Column Cover And Hooks
Courtesy of AMERICAN HONDA MOTOR CO., INC.

    2. Install the dashboard meter visor blind cover (A). Make sure the clips (B) and the hook (C) snap into place securely

GETtheMANUALS.org

Fig. 10: Installing Dashboard Meter Visor Blind Cover
Courtesy of AMERICAN HONDA MOTOR CO., INC.

IGNITION KEY SWITCH TEST

REMOVAL

SRS components are located in this area. Review the **SRS COMPONENT LOCATIONS** and the **PRECAUTIONS AND PROCEDURES** before doing repairs or service.

1. Upper Column Cover
    1. Carefully pry out the dashboard meter visor blind cover (A) with the appropriate trim tool to detach the clips (B) and the hook (C), then tuck up the dashboard meter visor blind cover.

GETtheMANUALS.org

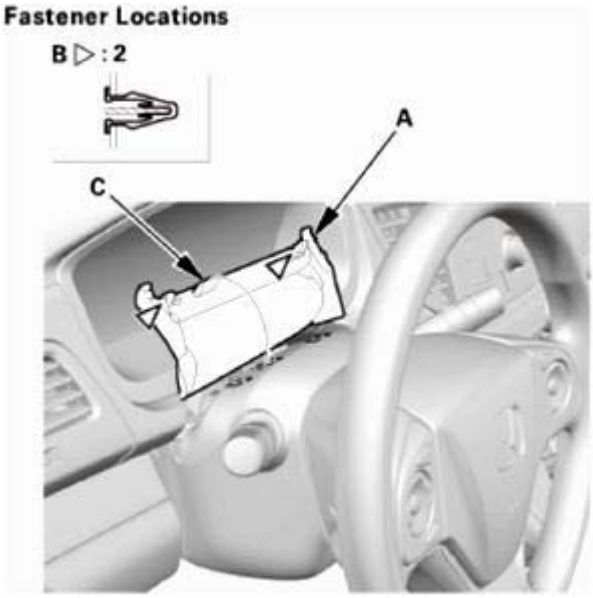

Fig. 11: Removing Dashboard Meter Visor Blind Cover
Courtesy of AMERICAN HONDA MOTOR CO., INC.

2. Detach the hooks (A), then remove the upper column cover (B).

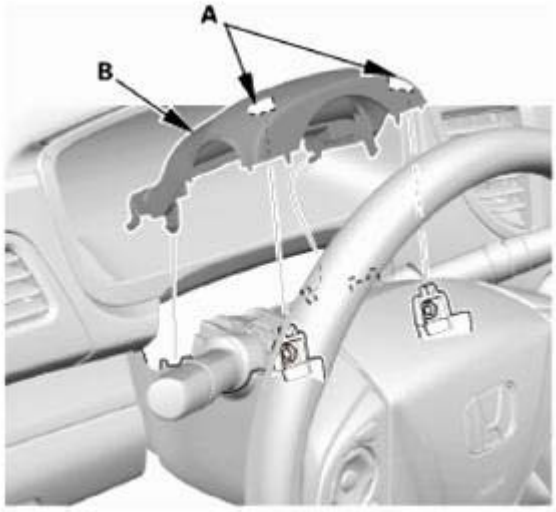

Fig. 12: Identifying Upper Column Cover And Hooks
Courtesy of AMERICAN HONDA MOTOR CO., INC.

2. Lower Column Cover
    1. Turn the steering wheel to the left. Remove the screw (A) securing the lower column cover (B) from the front side.
    2. Turn the steering wheel to the right. Remove the screw securing the lower column cover from the front side.

GETtheMANUALS.org

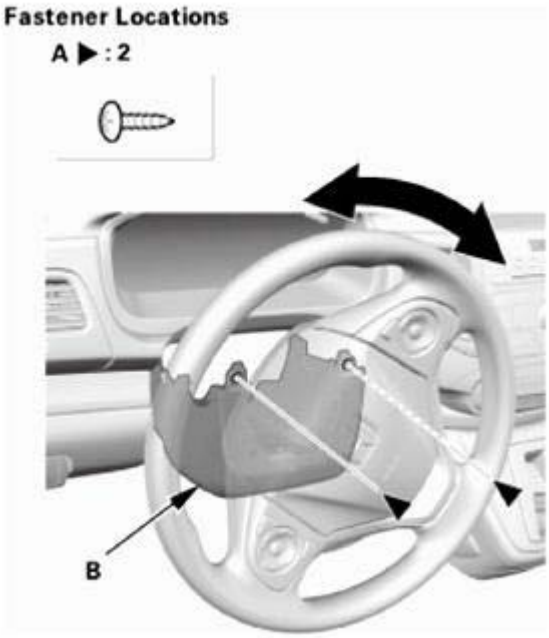

Fig. 13: Turning Steering Wheel
Courtesy of AMERICAN HONDA MOTOR CO., INC.

3. Remove the screw (A), then remove the lower column cover (B).

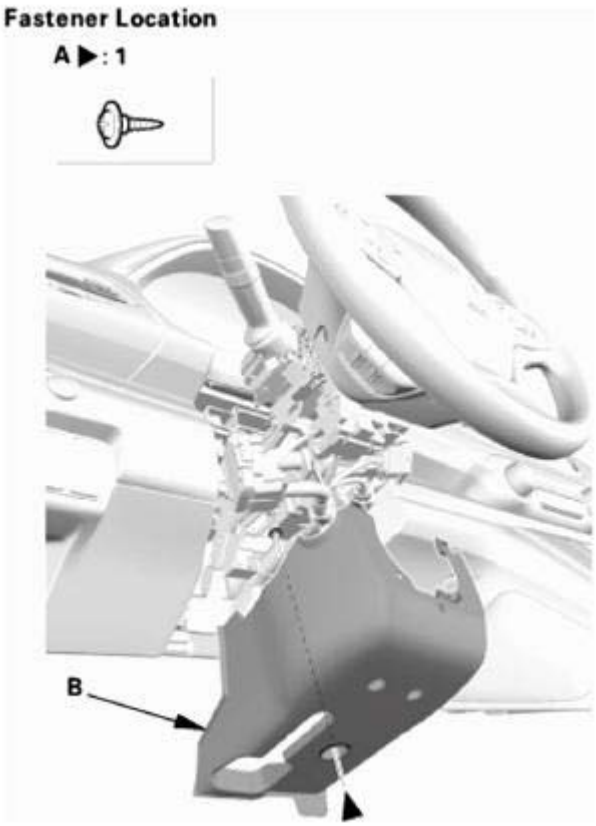

GETtheMANUALS.org

Fig. 14: Identifying Lower Column Cover And Screw
Courtesy of AMERICAN HONDA MOTOR CO., INC.

TEST

1. Ignition Key Switch - Test
    1. Disconnect the connector.
    2. Check for continuity between the terminals in each switch condition according to the table.
    3. If the continuity is not as specified, replace the steering lock assembly.
    4. Connect the connector.

Fig. 15: Identifying Ignition Key Switch Connector
Courtesy of AMERICAN HONDA MOTOR CO., INC.

Terminal / Condition	6	7
ON (Key inserted)	○	○
OFF (Key removed)		

Fig. 16: Ignition Key Switch Continuity Reference Chart
Courtesy of AMERICAN HONDA MOTOR CO., INC.

INSTALLATION

SRS components are located in this area. Review the **SRS COMPONENT LOCATIONS** and the **PRECAUTIONS AND PROCEDURES** before doing repairs or service.

1. Lower Column Cover
    1. Push in on the lower column cover just above ignition switch opening (A) to engage the column

GETtheMANUALS.org

cover with the locking tab (B).

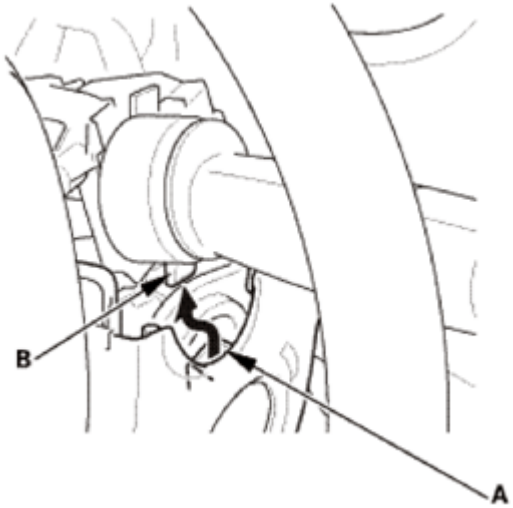

Fig. 17: Engaging Column Cover And Locking Tab
Courtesy of AMERICAN HONDA MOTOR CO., INC.

2. Install the lower column cover (A), then install the screw (B).

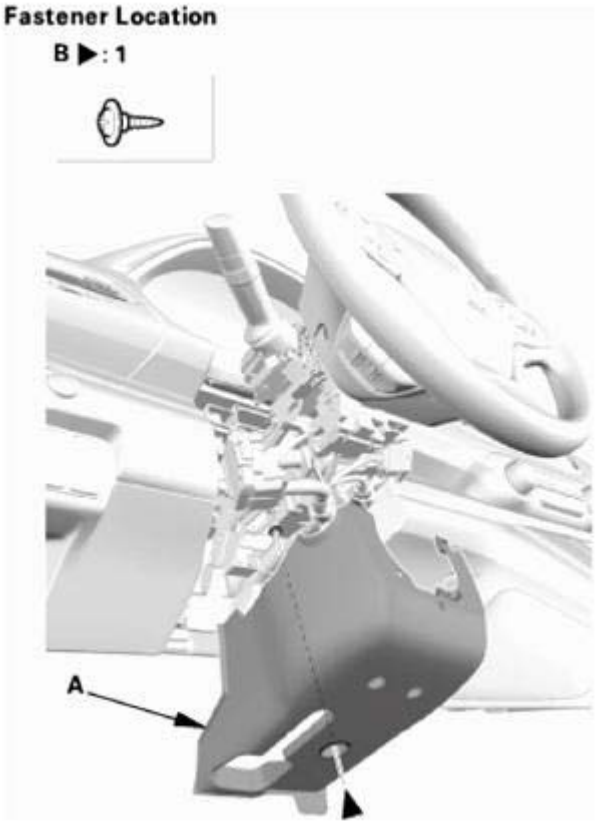

Fig. 18: Identifying Lower Column Cover And Screw
Courtesy of AMERICAN HONDA MOTOR CO., INC.

GETtheMANUALS.org

3. Turn the steering wheel to the left. Install the screw (A) securing the lower column cover (B) from the front side.
4. Turn the steering wheel to the right. Install the screw securing the lower column cover from the front side.

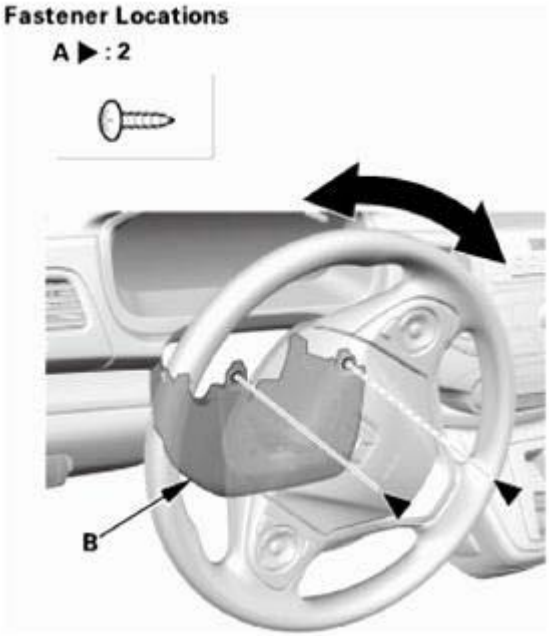

Fig. 19: Turning Steering Wheel
Courtesy of AMERICAN HONDA MOTOR CO., INC.

2. Upper Column Cover
    1. Install the upper column cover (A). Make sure the hooks (B) snap into place securely.

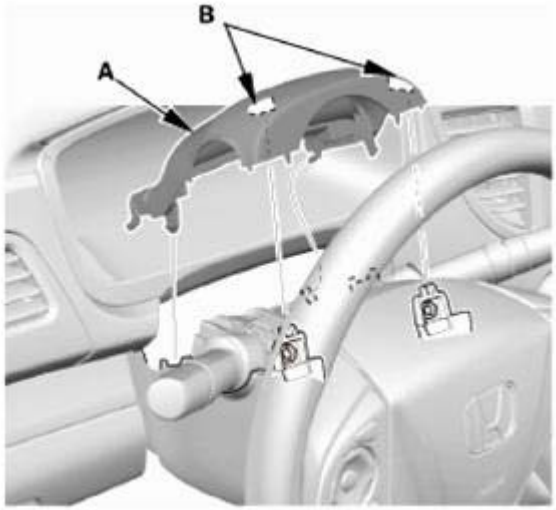

Fig. 20: Identifying Upper Column Cover And Hooks
Courtesy of AMERICAN HONDA MOTOR CO., INC.

GETtheMANUALS.org

2. Install the dashboard meter visor blind cover (A). Make sure the clips (B) and the hook (C) snap into place securely

Fig. 21: Installing Dashboard Meter Visor Blind Cover
Courtesy of AMERICAN HONDA MOTOR CO., INC.

IGNITION SWITCH COMPONENT LOCATION INDEX

GETtheMANUALS.org

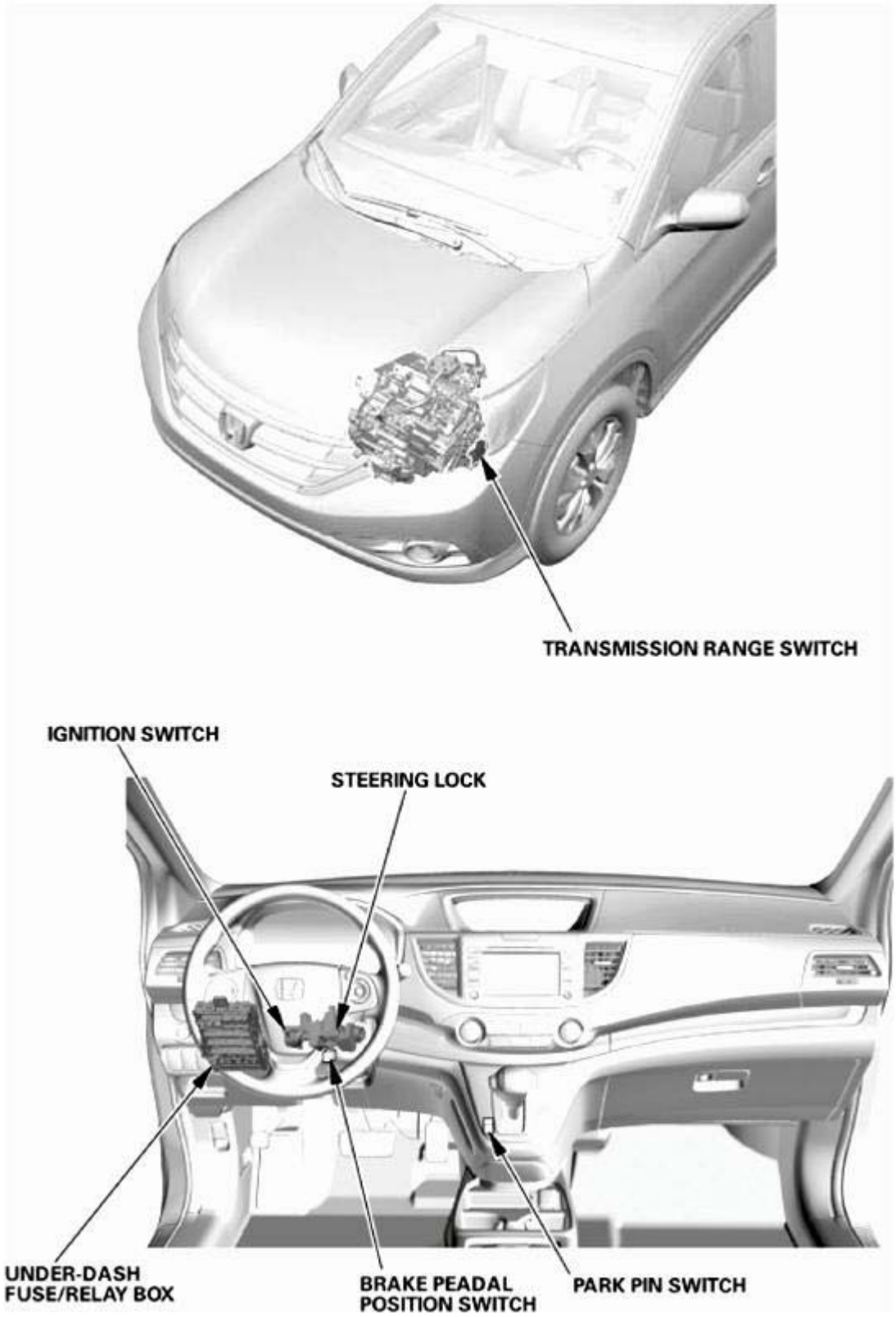

Fig. 22: Ignition Switch Components Location
Courtesy of AMERICAN HONDA MOTOR CO., INC.

GETtheMANUALS.org

IGNITION SWITCH	**TEST**
	REMOVAL AND INSTALLATION
PARK PIN SWITCH	**KEY INTERLOCK SYSTEM CIRCUIT TROUBLESHOOTING**
	TEST
	REMOVAL AND INSTALLATION
STEERING LOCK	**KEY INTERLOCK SYSTEM CIRCUIT TROUBLESHOOTING**
	KEY INTERLOCK SOLENOID TEST
	REMOVAL AND INSTALLATION
TRANSMISSION RANGE SWITCH	**REMOVAL AND INSTALLATION**
	TEST
UNDER-DASH FUSE/RELAY BOX	**REMOVAL AND INSTALLATION**

IGNITION SWITCH REMOVAL AND INSTALLATION

REMOVAL

SRS components are located in this area. Review the **SRS COMPONENT LOCATIONS** and the **PRECAUTIONS AND PROCEDURES** before doing repairs or service.

1. Upper Column Cover
    1. Carefully pry out the dashboard meter visor blind cover (A) with the appropriate trim tool to detach the clips (B) and the hook (C), then tuck up the dashboard meter visor blind cover.

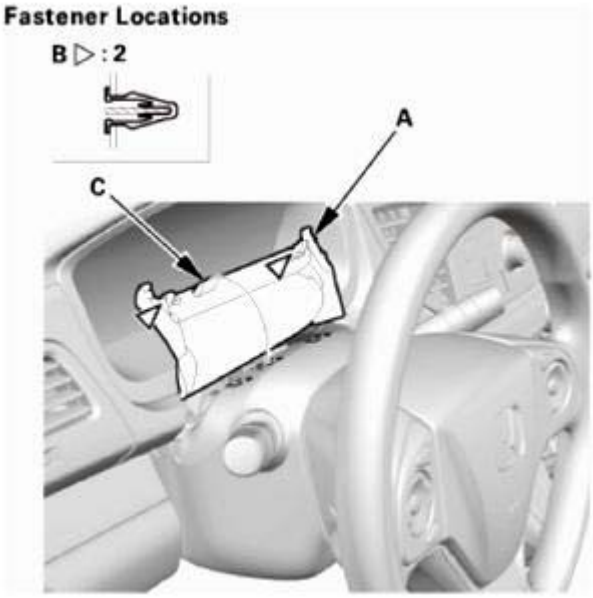

Fig. 23: Removing Dashboard Meter Visor Blind Cover
Courtesy of AMERICAN HONDA MOTOR CO., INC.

GETtheMANUALS.org

2. Detach the hooks (A), then remove the upper column cover (B).

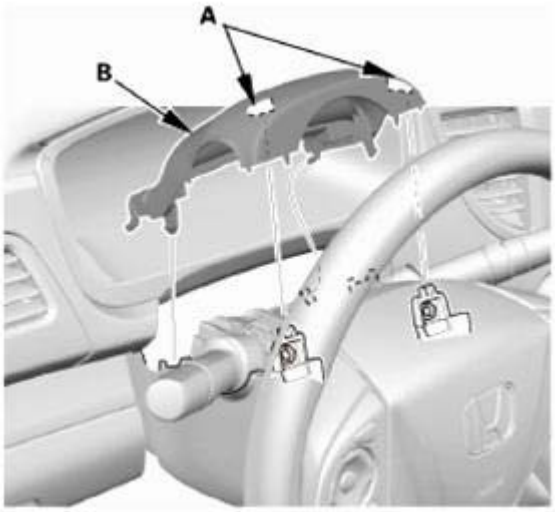

Fig. 24: Identifying Upper Column Cover And Hooks
Courtesy of AMERICAN HONDA MOTOR CO., INC.

2. Lower Column Cover
    1. Turn the steering wheel to the left. Remove the screw (A) securing the lower column cover (B) from the front side.
    2. Turn the steering wheel to the right. Remove the screw securing the lower column cover from the front side.

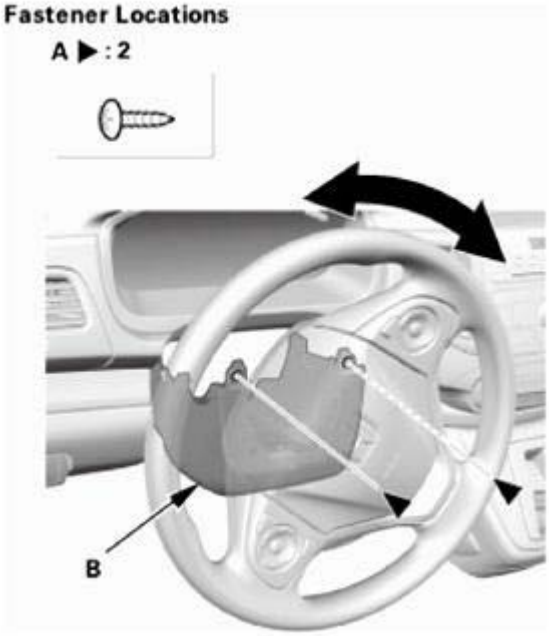

Fig. 25: Turning Steering Wheel
Courtesy of AMERICAN HONDA MOTOR CO., INC.

GETtheMANUALS.org

3. Remove the screw (A), then remove the lower column cover (B).

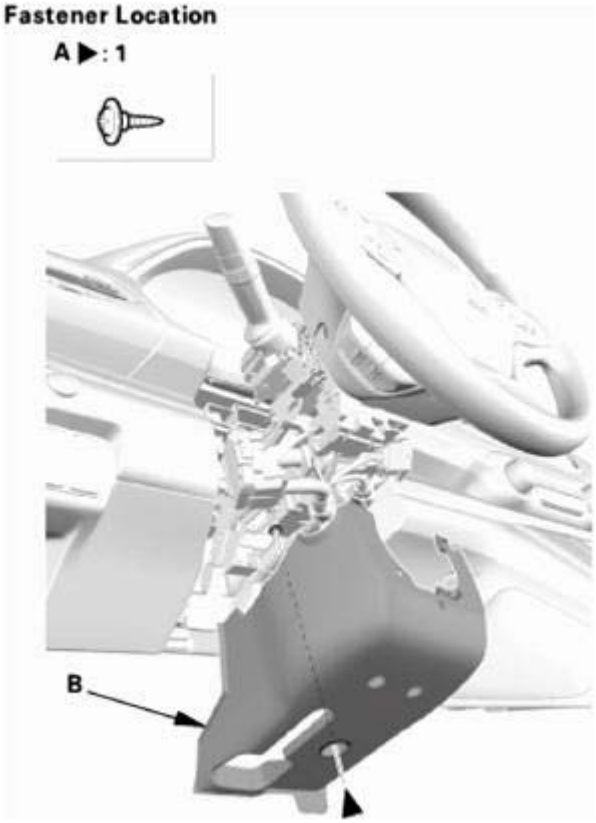

Fig. 26: Identifying Lower Column Cover And Screw
Courtesy of AMERICAN HONDA MOTOR CO., INC.

3. Driver's Dashboard Panel Assembly
    1. Carefully pry out the driver's dashboard panel assembly (A) with the appropriate trim tool to detach the clips (B).
    2. Disconnect the connector (C), then remove the driver's dashboard panel assembly.

GETtheMANUALS.org

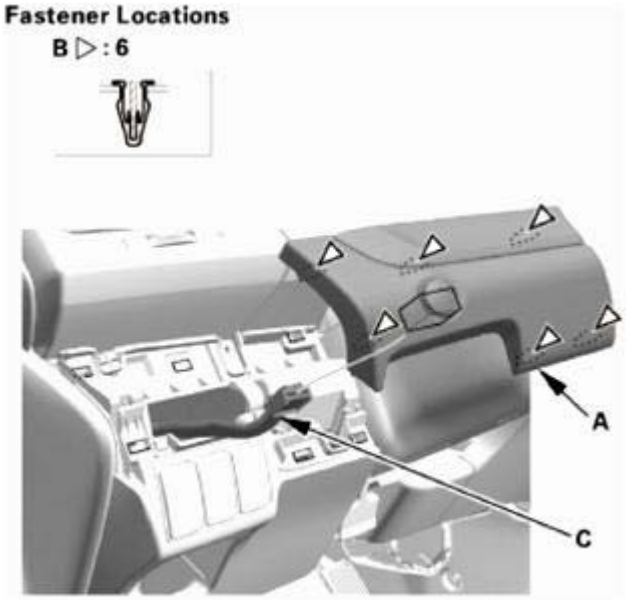

Fig. 27: Identifying Driver's Dashboard Panel Assembly, Connector And Clips
Courtesy of AMERICAN HONDA MOTOR CO., INC.

4. Ignition Switch
    1. Disconnect the connector.
    2. Remove the ignition switch (A).

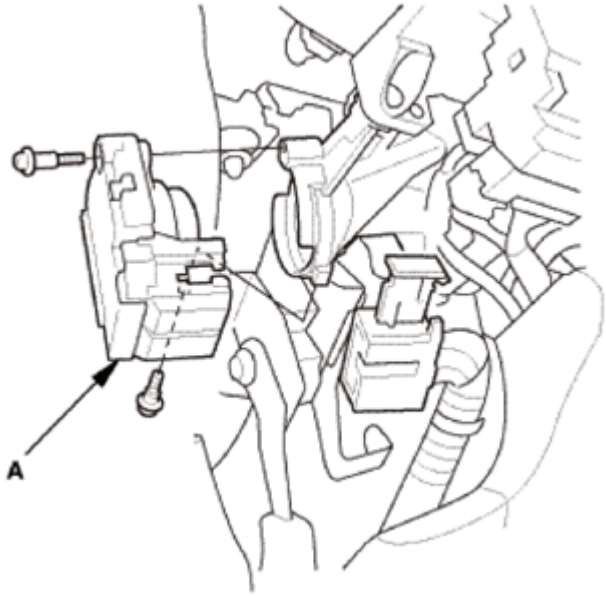

Fig. 28: Identifying Ignition Switch And Mounting Bolts
Courtesy of AMERICAN HONDA MOTOR CO., INC.

INSTALLATION

GETtheMANUALS.org

SRS components are located in this area. Review the **SRS COMPONENT LOCATIONS** and the **PRECAUTIONS AND PROCEDURES** before doing repairs or service.

1. Ignition Switch
    1. Install the ignition switch (A).
    2. Connect the connector.

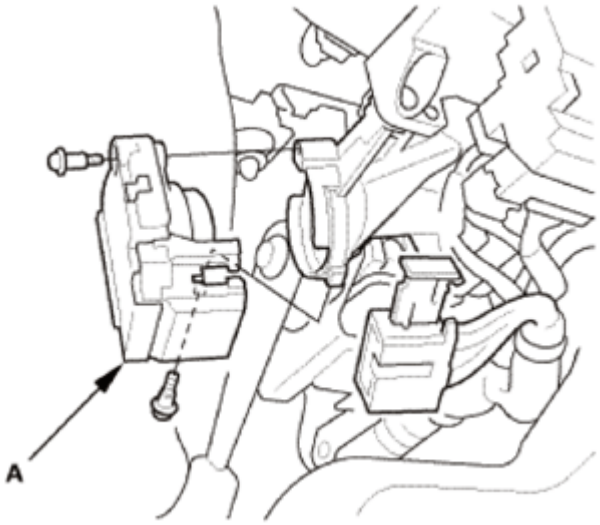

Fig. 29: Identifying Ignition Switch And Mounting Bolts
Courtesy of AMERICAN HONDA MOTOR CO., INC.

2. Driver's Dashboard Panel Assembly
    1. Connect the connector (A), then install the driver's dashboard panel assembly (B). Make sure the clips (C) snap into place securely.

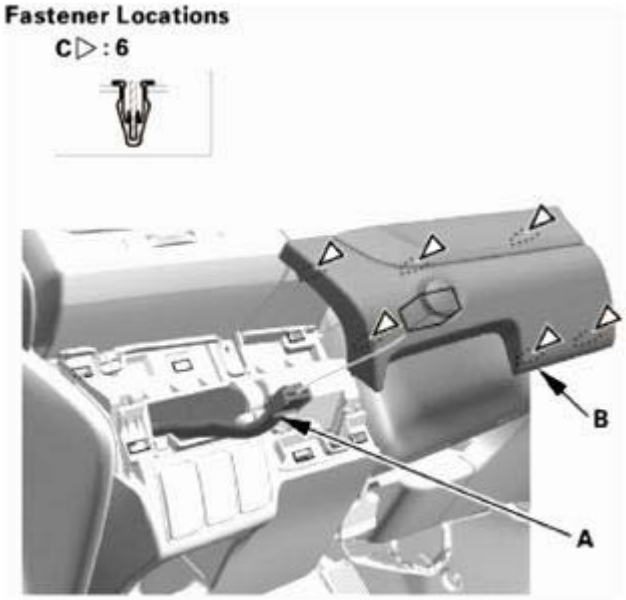

GETtheMANUALS.org

Fig. 30: Identifying Driver's Dashboard Panel Assembly, Connector And Clips
Courtesy of AMERICAN HONDA MOTOR CO., INC.

3. Lower Column Cover
    1. Push in on the lower column cover just above ignition switch opening (A) to engage the column cover with the locking tab (B).

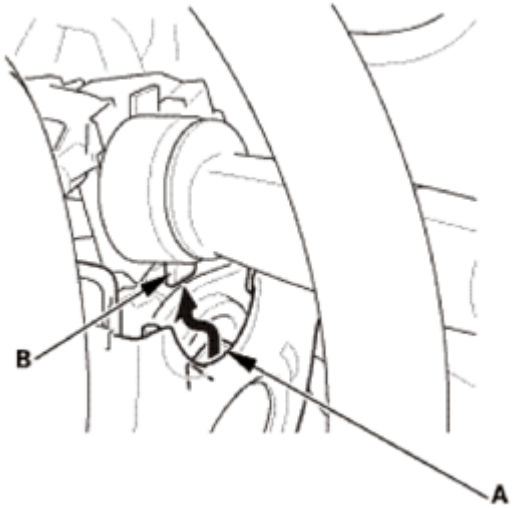

Fig. 31: Engaging Column Cover And Locking Tab
Courtesy of AMERICAN HONDA MOTOR CO., INC.

    2. Install the lower column cover (A), then install the screw (B).

GETtheMANUALS.org

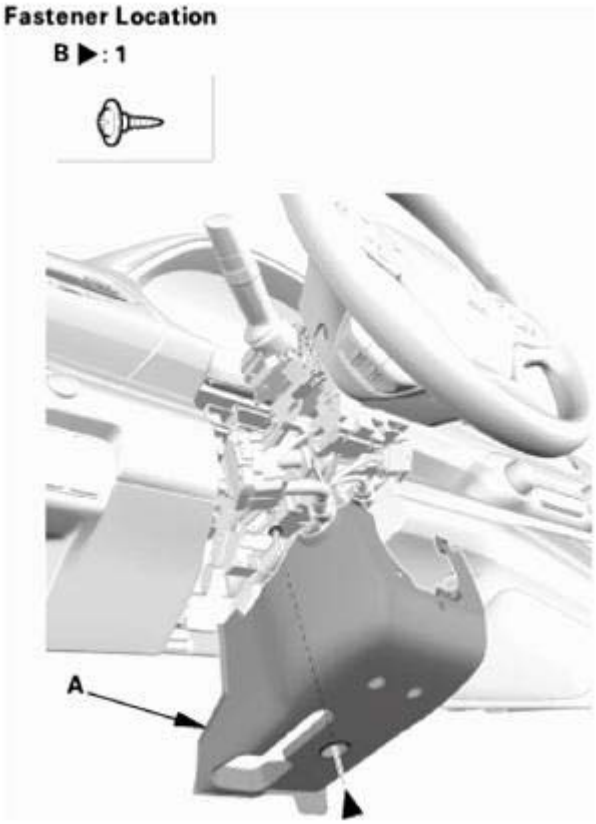

Fig. 32: Identifying Lower Column Cover And Screw
Courtesy of AMERICAN HONDA MOTOR CO., INC.

3. Turn the steering wheel to the left. Install the screw (A) securing the lower column cover (B) from the front side.
4. Turn the steering wheel to the right. Install the screw securing the lower column cover from the front side.

GETtheMANUALS.org

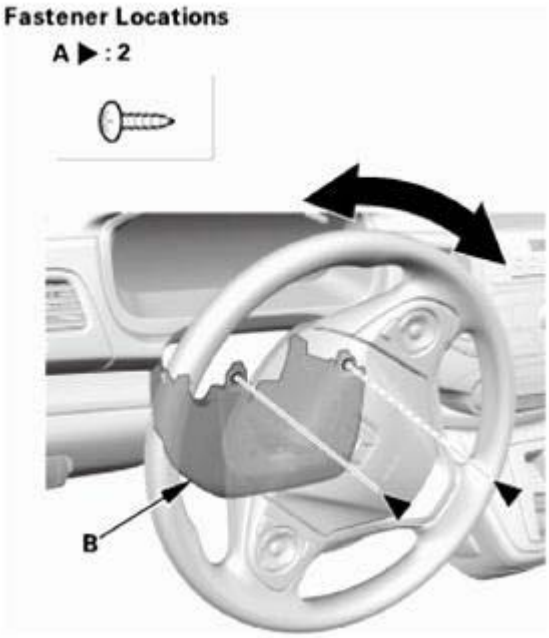

Fig. 33: Turning Steering Wheel
Courtesy of AMERICAN HONDA MOTOR CO., INC.

4. Upper Column Cover
    1. Install the upper column cover (A). Make sure the hooks (B) snap into place securely.

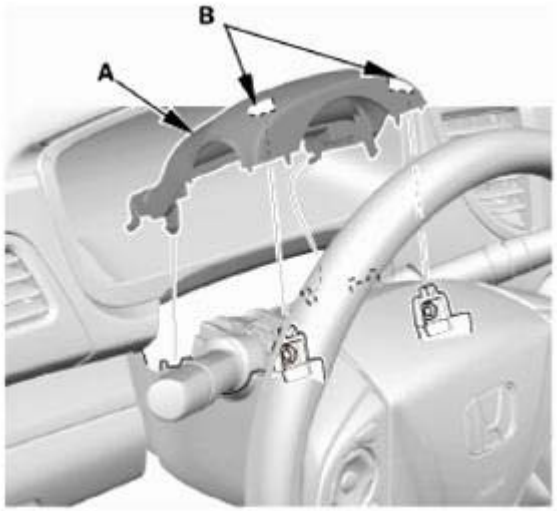

Fig. 34: Identifying Upper Column Cover And Hooks
Courtesy of AMERICAN HONDA MOTOR CO., INC.

    2. Install the dashboard meter visor blind cover (A). Make sure the clips (B) and the hook (C) snap into place securely

GETtheMANUALS.org

Fig. 35: Installing Dashboard Meter Visor Blind Cover
Courtesy of AMERICAN HONDA MOTOR CO., INC.

IGNITION SWITCH TEST

REMOVAL

SRS components are located in this area. Review the **SRS COMPONENT LOCATIONS** and the **PRECAUTIONS AND PROCEDURES** before doing repairs or service.

1. Upper Column Cover
    1. Carefully pry out the dashboard meter visor blind cover (A) with the appropriate trim tool to detach the clips (B) and the hook (C), then tuck up the dashboard meter visor blind cover.

GETtheMANUALS.org

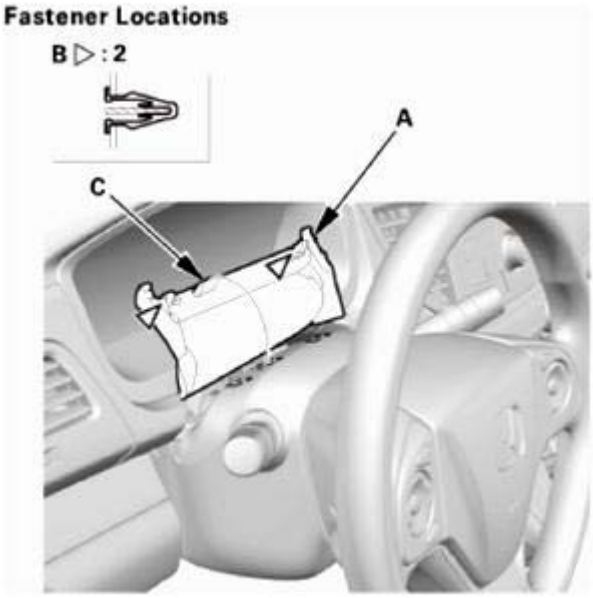

Fig. 36: Removing Dashboard Meter Visor Blind Cover
Courtesy of AMERICAN HONDA MOTOR CO., INC.

2. Detach the hooks (A), then remove the upper column cover (B).

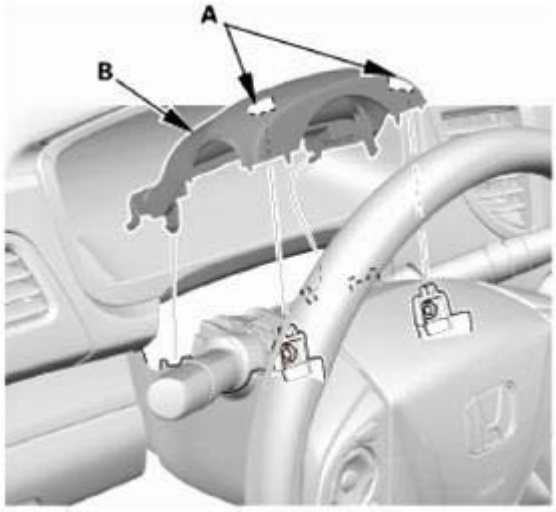

Fig. 37: Identifying Upper Column Cover And Hooks
Courtesy of AMERICAN HONDA MOTOR CO., INC.

2. Lower Column Cover
    1. Turn the steering wheel to the left. Remove the screw (A) securing the lower column cover (B) from the front side.
    2. Turn the steering wheel to the right. Remove the screw securing the lower column cover from the front side.

GETtheMANUALS.org

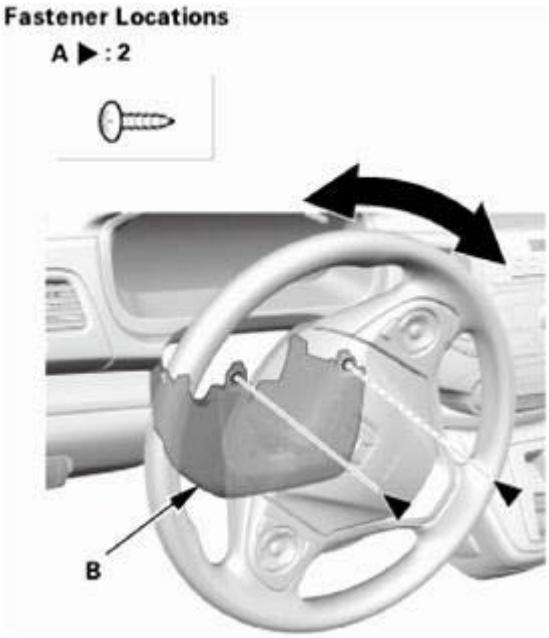

Fig. 38: Turning Steering Wheel
Courtesy of AMERICAN HONDA MOTOR CO., INC.

3. Remove the screw (A), then remove the lower column cover (B).

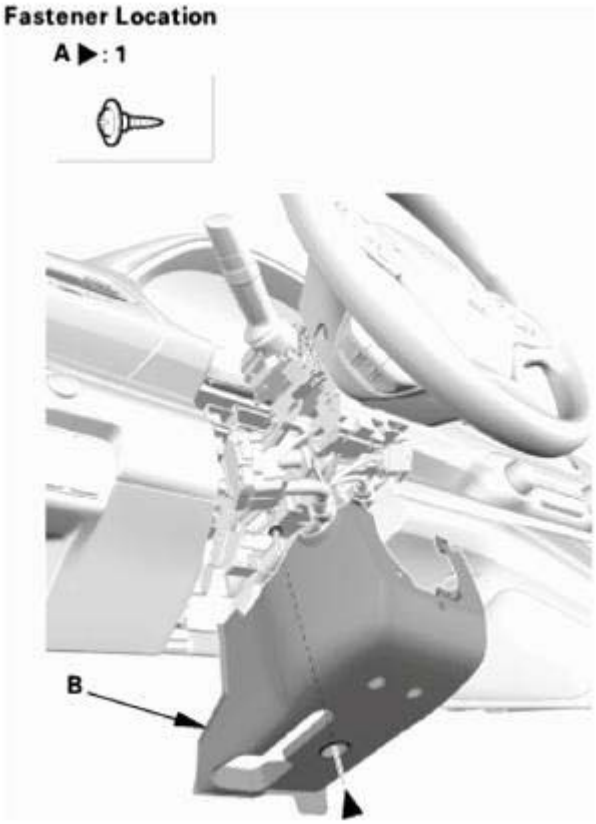

GETtheMANUALS.org

Fig. 39: Identifying Lower Column Cover And Screw
Courtesy of AMERICAN HONDA MOTOR CO., INC.

TEST

1. Ignition Switch - Test
    1. Disconnect the connector.
    2. Check for continuity between the terminals in each switch position according to the table.
    3. If continuity is not as specified, replace the ignition switch (A).
    4. Connect the connector.

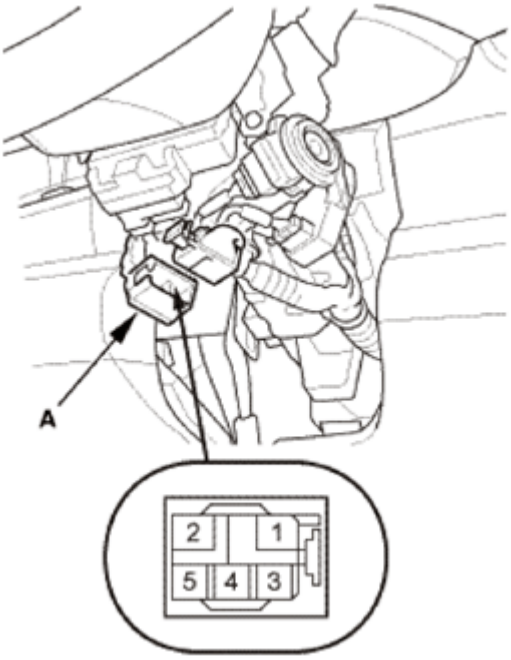

Fig. 40: Identifying Ignition Switch Connector
Courtesy of AMERICAN HONDA MOTOR CO., INC.

Terminal / Position	1 (BAT)	2 (IG1)	3 (ACC)	4 (IG2)	5 (ST)
0 (LOCK)					
I (ACC)	○	—	○		
II (ON)	○	—	○		
	○	○			
	○	—	—	○	
III (START)	○	—			
	○	○	—	—	○

Fig. 41: Ignition Switch Continuity Reference Chart
Courtesy of AMERICAN HONDA MOTOR CO., INC.

INSTALLATION

GETtheMANUALS.org

SRS components are located in this area. Review the **SRS COMPONENT LOCATIONS** and the **PRECAUTIONS AND PROCEDURES** before doing repairs or service.

1. Lower Column Cover
    1. Push in on the lower column cover just above ignition switch opening (A) to engage the column cover with the locking tab (B).

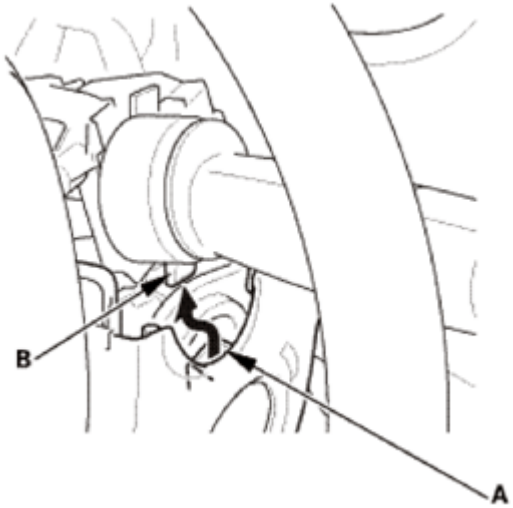

Fig. 42: Engaging Column Cover And Locking Tab
Courtesy of AMERICAN HONDA MOTOR CO., INC.

    2. Install the lower column cover (A), then install the screw (B).

GETtheMANUALS.org

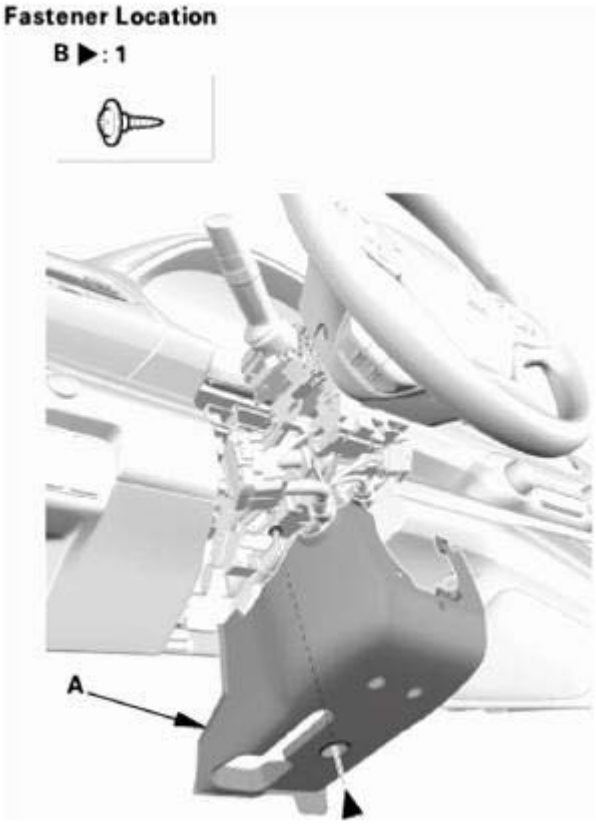

Fig. 43: Identifying Lower Column Cover And Screw
Courtesy of AMERICAN HONDA MOTOR CO., INC.

3. Turn the steering wheel to the left. Install the screw (A) securing the lower column cover (B) from the front side.
4. Turn the steering wheel to the right. Install the screw securing the lower column cover from the front side.

GETtheMANUALS.org

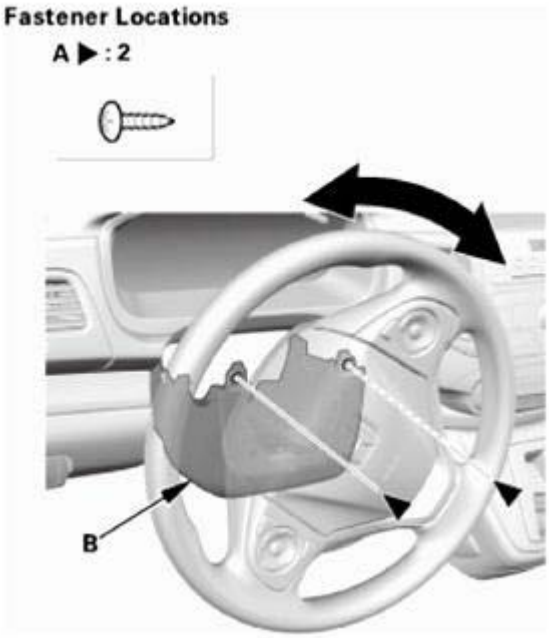

Fig. 44: Turning Steering Wheel
Courtesy of AMERICAN HONDA MOTOR CO., INC.

2. Upper Column Cover
    1. Install the upper column cover (A). Make sure the hooks (B) snap into place securely.

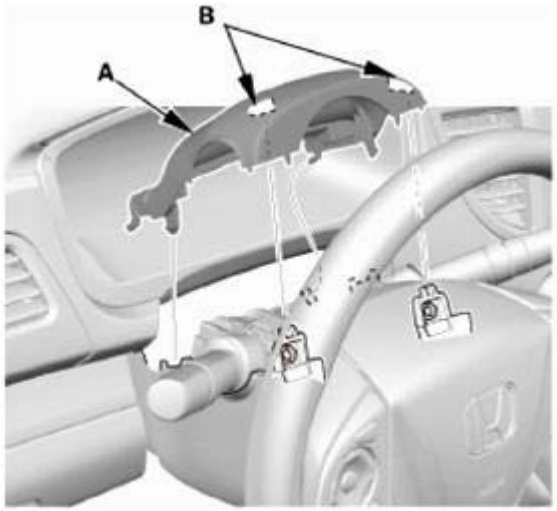

Fig. 45: Identifying Upper Column Cover And Hooks
Courtesy of AMERICAN HONDA MOTOR CO., INC.

    2. Install the dashboard meter visor blind cover (A). Make sure the clips (B) and the hook (C) snap into place securely

GETtheMANUALS.org

Fig. 46: Installing Dashboard Meter Visor Blind Cover
Courtesy of AMERICAN HONDA MOTOR CO., INC.

KEY INTERLOCK SOLENOID TEST

REMOVAL

SRS components are located in this area. Review the **SRS COMPONENT LOCATIONS** and the **PRECAUTIONS AND PROCEDURES** before doing repairs or service.

1. Upper Column Cover
    1. Carefully pry out the dashboard meter visor blind cover (A) with the appropriate trim tool to detach the clips (B) and the hook (C), then tuck up the dashboard meter visor blind cover.

GETtheMANUALS.org

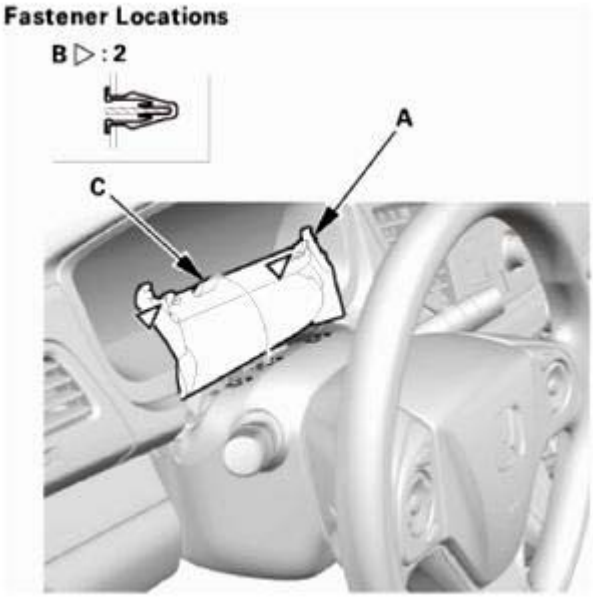

Fig. 47: Removing Dashboard Meter Visor Blind Cover
Courtesy of AMERICAN HONDA MOTOR CO., INC.

2. Detach the hooks (A), then remove the upper column cover (B).

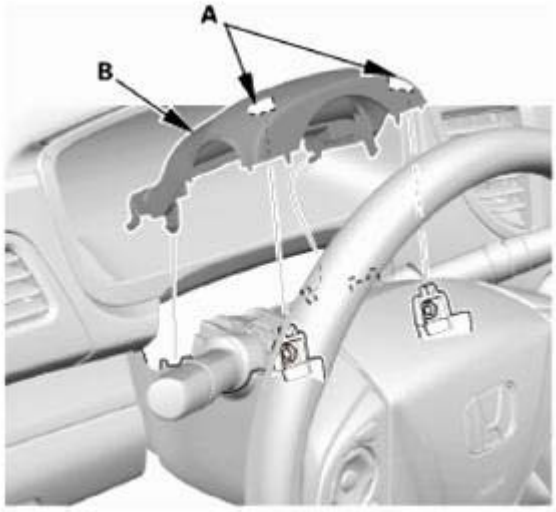

Fig. 48: Identifying Upper Column Cover And Hooks
Courtesy of AMERICAN HONDA MOTOR CO., INC.

2. Lower Column Cover
    1. Turn the steering wheel to the left. Remove the screw (A) securing the lower column cover (B) from the front side.
    2. Turn the steering wheel to the right. Remove the screw securing the lower column cover from the front side.

GETtheMANUALS.org

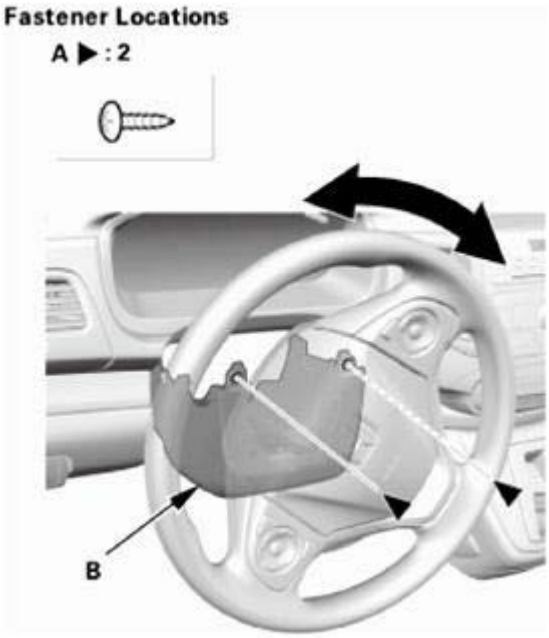

Fig. 49: Turning Steering Wheel
Courtesy of AMERICAN HONDA MOTOR CO., INC.

3. Remove the screw (A), then remove the lower column cover (B).

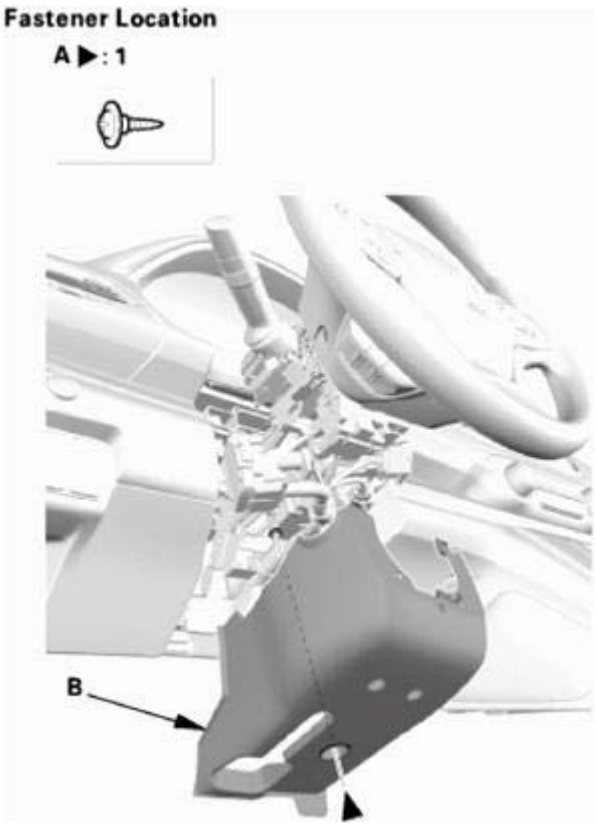

GETtheMANUALS.org

Fig. 50: Identifying Lower Column Cover And Screw
Courtesy of AMERICAN HONDA MOTOR CO., INC.

TEST

1. Key Interlock Solenoid - Test
    1. Disconnect the connector.
    2. Turn the ignition key to ACCESSORY (I).
    3. Connect power to steering lock connector terminal No. 1, and ground steering lock connector terminal No. 4. Check that the ignition key cannot be turned to LOCK (0). Disconnect power and check that the key can be turned to the LOCK (0) position and removed from the cylinder.
    4. If the key interlock solenoid works improperly, the key interlock solenoid is faulty; replace the steering lock.
    5. Connect the connector.

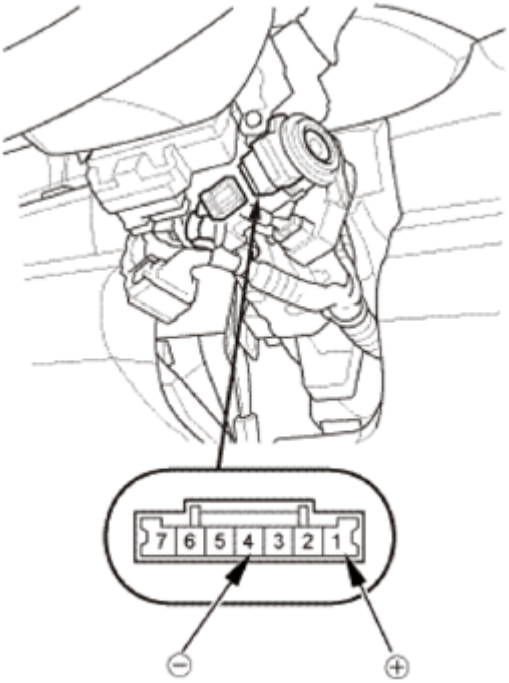

Fig. 51: Identifying Key Interlock Solenoid Connector
Courtesy of AMERICAN HONDA MOTOR CO., INC.

INSTALLATION

SRS components are located in this area. Review the **SRS COMPONENT LOCATIONS** and the **PRECAUTIONS AND PROCEDURES** before doing repairs or service.

1. Lower Column Cover
    1. Push in on the lower column cover just above ignition switch opening (A) to engage the column cover with the locking tab (B).

GETtheMANUALS.org

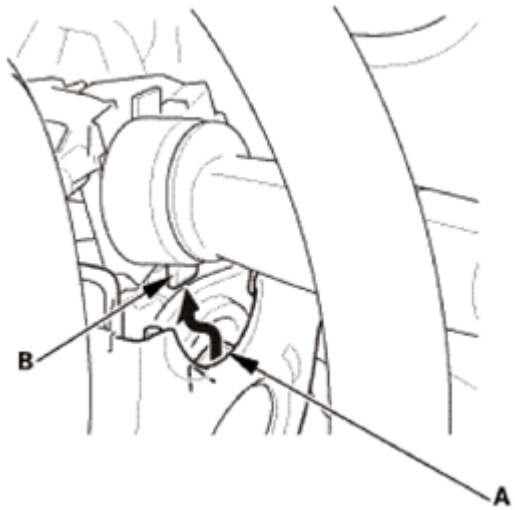

Fig. 52: Engaging Column Cover And Locking Tab
Courtesy of AMERICAN HONDA MOTOR CO., INC.

2. Install the lower column cover (A), then install the screw (B).

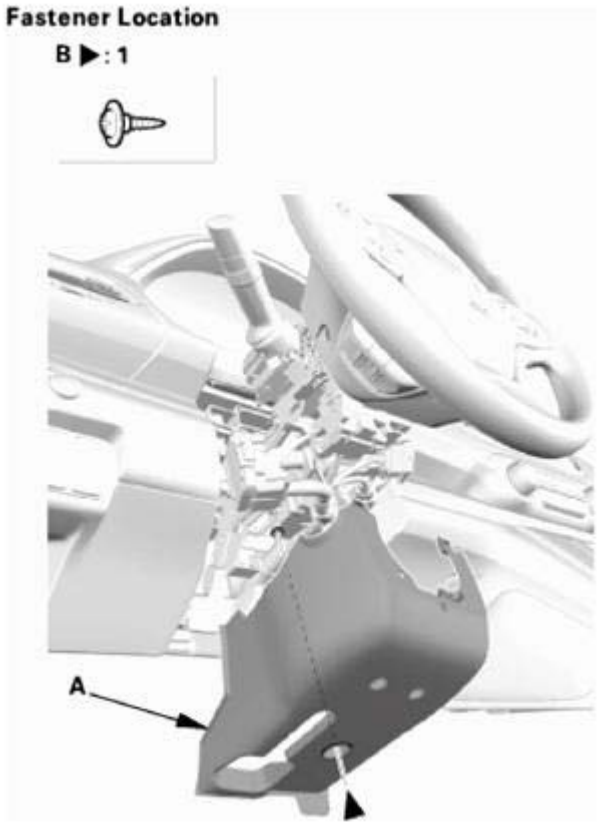

Fig. 53: Identifying Lower Column Cover And Screw
Courtesy of AMERICAN HONDA MOTOR CO., INC.

3. Turn the steering wheel to the left. Install the screw (A) securing the lower column cover (B) from

GETtheMANUALS.org

the front side.

4. Turn the steering wheel to the right. Install the screw securing the lower column cover from the front side.

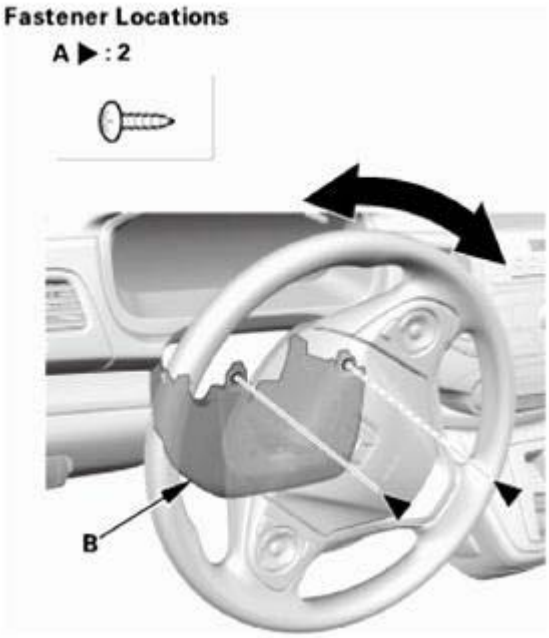

Fig. 54: Turning Steering Wheel
Courtesy of AMERICAN HONDA MOTOR CO., INC.

2. Upper Column Cover
    1. Install the upper column cover (A). Make sure the hooks (B) snap into place securely.

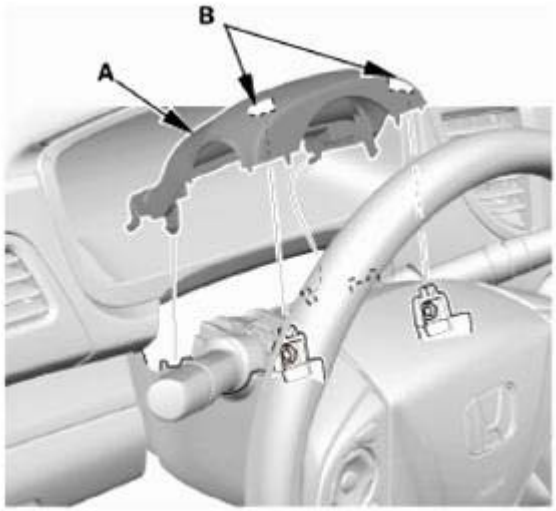

Fig. 55: Identifying Upper Column Cover And Hooks
Courtesy of AMERICAN HONDA MOTOR CO., INC.

GETtheMANUALS.org

2. Install the dashboard meter visor blind cover (A). Make sure the clips (B) and the hook (C) snap into place securely

Fig. 56: Installing Dashboard Meter Visor Blind Cover
Courtesy of AMERICAN HONDA MOTOR CO., INC.

KEY INTERLOCK SYSTEM CIRCUIT TROUBLESHOOTING

GETtheMANUALS.org

Key Interlock System Circuit Troubleshooting

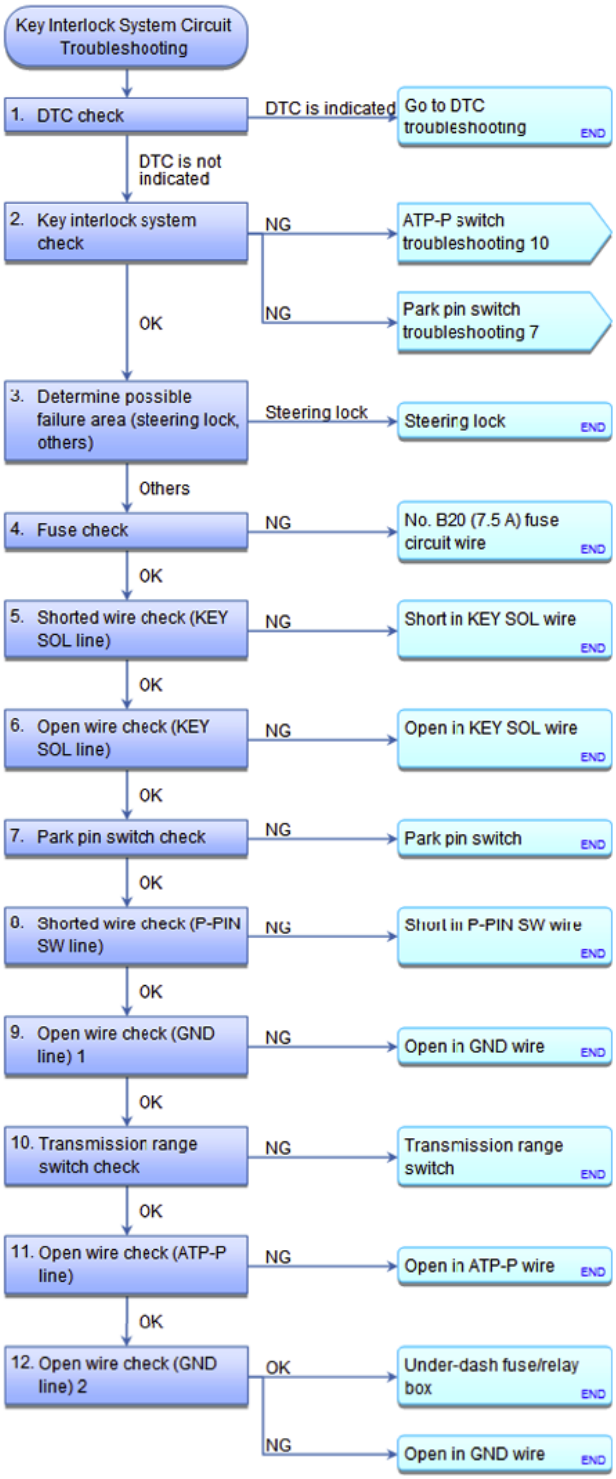

Fig. 57: Key Interlock System Circuit Troubleshooting Workflow Chart
Courtesy of AMERICAN HONDA MOTOR CO., INC.

NOTE:

- **SRS COMPONENTS ARE LOCATED IN THIS AREA. REVIEW THE SRS**

GETtheMANUALS.org

COMPONENT LOCATIONS , and PRECAUTIONS AND PROCEDURES before doing repairs or servicing.

- **Refer to the Electrical Wiring Diagrams for the location of the under-dash fuse/relay box connectors.**

1. DTC check:
   - 1. Check the A/T system DTCs with the HDS.

DTC Description	Confirmed DTC	Pending DTC

Are DTCs indicated?

YES : Go to DTC troubleshooting.

NO : Go to step 2.

2. Key interlock system check:
   - 1. Check the A/T system DATA LIST with the HDS.

Signal	Current conditions	
	Values	Unit
ATP-P Switch		
Park Pin Switch		

Are the ATP-P and Park Pin Switch indicating when the shift lever is in P, and does the transmission range switch indicate OFF when the shift lever is shifted to any position other than P?

YES : Go to step 3.

NO : ATP-P switch troubleshooting 10.

NO : Park pin switch troubleshooting 7.

3. Determine possible failure area (steering lock, others):
   - 1. Move the shift lever to P and set the parking brake.
   - 2. Remove the steering column covers.
   - 3. Disconnect the following connector.

     Steering lock 7P connector

   - 4. Turn the ignition switch to ACCESSORY (I).
   - 5. Check if the ignition switch can be turned to LOCK (0).

GETtheMANUALS.org

Can the ignition switch be turned to LOCK (0)?

YES : Go to step 4.

NO : Faulty key interlock solenoid; **REPLACE THE STEERING LOCK** .

4. Fuse check:
   - 1. Check the following fuse.

     Fuse No. B20 (7.5 A)

     Location Under-dash fuse/relay box

Is the fuse OK?

YES : Go to step 5.

NO : Replace the fuse. If the fuse blows again, repair a short to ground in the No. B20 (7.5 A) fuse circuit.

5. Shorted wire check (KEY SOL line):
   - 1. Make sure the ignition switch is turned to LOCK (0).
   - 2. Disconnect the following connector.

     Under-dash fuse/relay box connector P (20P)

   - 3. Check for continuity between test points 1 and 2.

     Test condition IG LOCK (0)

     Steering lock 7P connector: disconnected

     Under-dash fuse/relay box connector P (20P): disconnected

     Test circuit KEY SOL

     Test point 1 Steering lock 7P connector No. 4 (PUR)

     Test point 2 Body ground

GETtheMANUALS.org

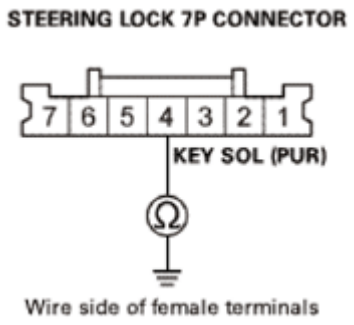

Fig. 58: Checking Continuity Between Steering Lock 7P Connector No. 4 (PUR) And Body Ground
Courtesy of AMERICAN HONDA MOTOR CO., INC.

Is there continuity?

YES : Repair a short to body ground in the wire.

NO : The KEY SOL wire is OK. Go to step 6.

6. Open wire check (KEY SOL line):
   - 1. Check for continuity between test points 1 and 2.

     Test condition IG LOCK (0)

     Steering lock 7P connector: disconnected

     Under-dash fuse/relay box connector P (20P): disconnected

     Test circuit KEY SOL

     Test point 1 Under-dash fuse/relay box connector P (20P) No. 10 (PUR)

     Test point 2 Steering lock 7P connector No. 4 (PUR)

GETtheMANUALS.org

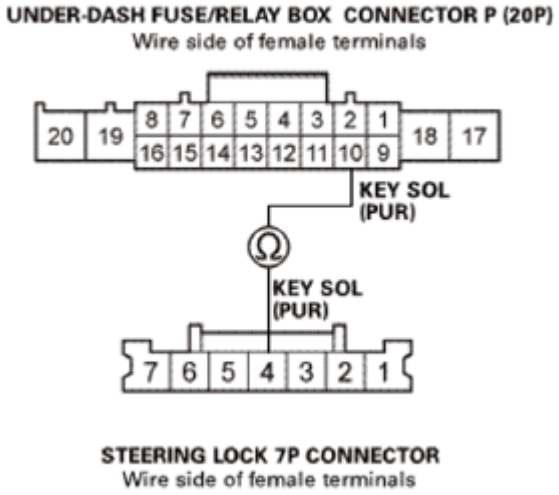

Fig. 59: Checking Continuity Between Under-Dash Fuse/Relay Box Connector P (20P) No. 10 (PUR) And Steering Lock 7P Connector No. 4 (PUR)
Courtesy of AMERICAN HONDA MOTOR CO., INC.

Is there continuity?

YES : The KEY SOL wire is OK. Go to step 7.

NO : Repair an open or high resistance in the wire.

7. Park pin switch check:
   - 1. Remove the center console.
   - 2. Disconnect the following connectors.

     Select lever 12P connector

   - 3. **DO THE PARK PIN SWITCH TEST** .

Is switch OK?

YES : Go to step 8.

NO : **REPLACE THE PARK PIN SWITCH** .

8. Shorted wire check (P-PIN SW line):
   - 1. Check for continuity between test points 1 and 2.

     Test condition IG LOCK (0)

     Steering lock 7P connector: disconnected

     Under-dash fuse/relay box connector P (20P): disconnected

GETtheMANUALS.org

Select lever 12P connector: disconnected

Test circuit P-PIN SW

Test point 1 Select lever 12P connector No. 6 (LT BLU)

Test point 2 Body ground

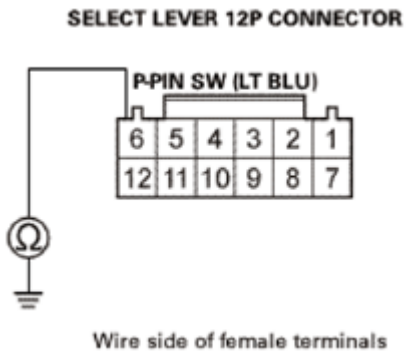

Fig. 60: Checking Continuity Between Select Lever 12P Connector No. 6 (LT BLU) And Body Ground
Courtesy of AMERICAN HONDA MOTOR CO., INC.

Is there continuity?

YES : Repair a short to body ground in the wire.

NO : The P-PIN SW wire is OK. Go to step 9.

9. Open wire check (GND line) 1:
   - 1. Check for continuity between test points 1 and 2.

     Test condition IG LOCK (0)

     Steering lock 7P connector: disconnected

     Under-dash fuse/relay box connector P (20P): disconnected

     Select lever 12P connector: disconnected

     Test circuit GND

     Test point 1 Select lever 12P connector No. 5 (BLK)

     Test point 2 Body ground

GETtheMANUALS.org

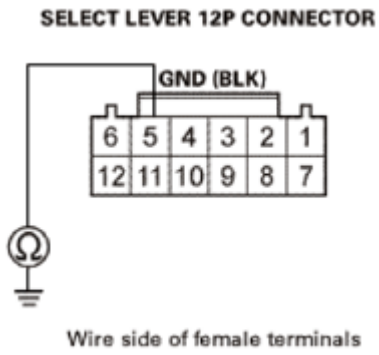

Fig. 61: Checking Continuity Between Select Lever 12P Connector No. 5 (BLK) And Body Ground
Courtesy of AMERICAN HONDA MOTOR CO., INC.

Is there continuity?

YES : The GND wire is OK. Go to step 10.

NO : Repair an open or high resistance in the wire.

10. Transmission range switch check:
    - 1. **DO THE TRANSMISSION RANGE SWITCH TEST** .

Is switch OK?

YES : Go to step 11.

NO : **REPLACE THE TRANSMISSION RANGE SWITCH** .

11. Open wire check (ATP-P line):
    - 1. Disconnect the following connectors.

      Under-dash fuse/relay box connector D (32P)

      Transmission range switch 10P connector

    - 2. Check for continuity between test points 1 and 2.

      Test condition IG LOCK (0)

      Steering lock 7P connector: disconnected

      Under-dash fuse/relay box connector P (20P): disconnected

      Select lever 12P connector: disconnected

GETtheMANUALS.org

Under-dash fuse/relay box connector D (32P): disconnected

Transmission range switch 10P connector: disconnected

Test circuit ATP-P

Test point 1 Under-dash fuse/relay box connector D (32P) No. 22 (YEL)

Test point 2 Transmission range switch 10P connector No. 10 (BLK/BLU)

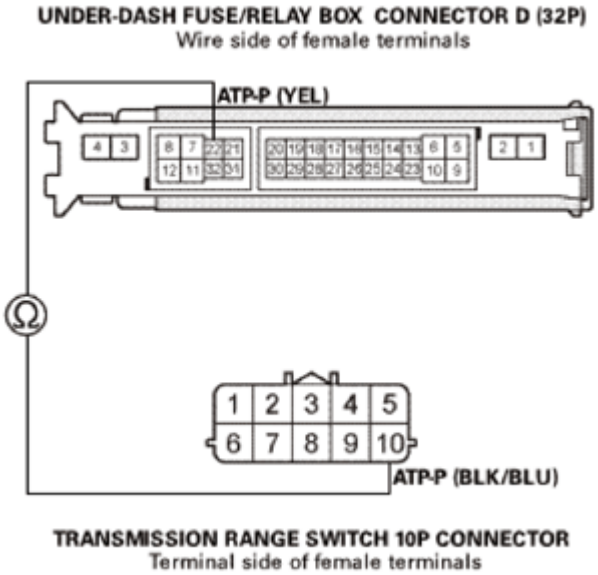

Fig. 62: Checking Continuity Between Under-Dash Fuse/Relay Box Connector D (32P) No. 22 (YEL) And Transmission Range Switch 10P Connector No. 10 (BLK/BLU)
Courtesy of AMERICAN HONDA MOTOR CO., INC.

Is there continuity?

YES : The ATP-P wire is OK. Go to step 12.

NO : Repair an open or high resistance in the wire.

12. Open wire check (GND line) 2:
    - 1. Check for continuity between test points 1 and 2.

      Test condition IG LOCK (0)

      Steering lock 7P connector: disconnected

      Under-dash fuse/relay box connector P (20P): disconnected

      Select lever 12P connector: disconnected

GETtheMANUALS.org

Under-dash fuse/relay box connector D (32P): disconnected

Transmission range switch 10P connector: disconnected

Test circuit GND

Test point 1 Transmission range switch 10P connector No. 6 (BLK)

Test point 2 Body ground

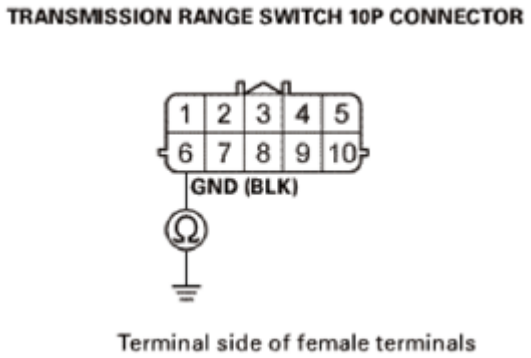

Fig. 63: Checking Continuity Between Transmission Range Switch 10P Connector No. 6 (BLK) And Body Ground
Courtesy of AMERICAN HONDA MOTOR CO., INC.

Is there continuity?

YES : The GND wire is OK. Faulty MICU; **REPLACE THE UNDER-DASH FUSE/RELAY BOX** .

NO : Repair an open or high resistance in the wire.

GETtheMANUALS.org

IMMOBILIZER SYSTEM SYMPTOM TROUBLESHOOTING INFORMATION

GENERAL CHECK BEFORE TROUBLESHOOTING

Before troubleshooting the immobilizer system, check the following general items and resolve any issues, if applicable:

- The battery is low; charge the battery fully, then troubleshoot the immobilizer system.
- The ignition key is not a genuine Honda part; use a Honda-approved key blank, register the key, then troubleshoot the immobilizer system.
- If a key ring or a key case is used; remove the key from it, and troubleshoot the immobilizer system with the key only.
- An aftermarket electrical part is installed; remove it, then troubleshoot the immobilizer system.

SYMPTOM TROUBLESHOOTING USING THE IMMOBILIZER INDICATOR LIGHTING PATTERN

The pattern of the immobilizer indicator can help troubleshoot the condition of the immobilizer system. Here are descriptions of the four possible patterns:

Normal operation

If the immobilizer code is identified, the immobilizer indicator quickly flashes once when the ignition switch is turned to ON (II).

The immobilizer indicator does not come on when the ignition switch is turned to LOCK (0).

Immobilizer code is not identified

If the immobilizer code is not identified, the immobilizer indicator will quickly flash once, then will blink until the ignition switch is turned to LOCK (0). When the ignition switch is turned to LOCK (0), the indicator will blink ten times, then go OFF to show the system is correctly reset.

The state of the immobilizer key registration and the S-NET line can be checked by **DOING A SYSTEM CHECK** with the HDS.

Immobilizer indicator does not come on

If the immobilizer indicator does not come on after turning the ignition switch to ON (II), there is an open or short in the F-CAN lines between the PCM and the gauge control module. Watch the malfunction indicator lamp (MIL). If the MIL stays on, **go to PGM-FI system troubleshooting** See **HOW TO TROUBLESHOOT THE A/T SYSTEM** or **HOW TO TROUBLESHOOT THE FUEL AND EMISSIONS SYSTEMS** .

GETtheMANUALS.org

Immobilizer indicator does not go off

If the immobilizer indicator does not go off after turning the ignition switch to ON (II), **DO THE GAUGE CONTROL MODULE SELF-DIAGNOSTIC FUNCTION** . If the indicator drive circuit is OK, **DO THE SYSTEM CHECK** and **STATUS LOG** with the HDS.

SYMPTOM TROUBLESHOOTING USING MALFUNCTIONING CIRCUIT FUNCTIONS

If a malfunction occurs in the immobilizer circuit, use the table to cross-reference the malfunction criteria to the line(s) that should be checked in the table:

Function / Line Error		Immobilizer Indicator	Engine Start	Key Registration	Tester Communication	Keyless Operation
Terminal No. (Wire Color)	**Cause of Malfunction**					
1 (BRM)	GND line open	Blinking	Impossible	Impossible	Impossible	Impossible
2 (YEL)	S-NET line open or short	Blinking	Impossible	Impossible	Impossible	Possible
3 (LT BLU)	K_LINE line open or short	Comes on, then goes off.	Possible	Impossible	Impossible	Possible
4 (PNK)	B_CAN-H line open or short	Comes on, then goes off.	Possible	Possible	Immobilizer: Possible Keyless: Impossible	Impossible
5 (BLU)	B_CAN-L line open or short	Comes on, then goes off.	Possible	Possible	Immobilizer: Possible Keyless: Impossible	Impossible
6 (BLU)	IG1_FUEL_PUMP line open or short	Blinking	Impossible	Impossible	Impossible	Possible
7 (RED)	+B_BACK_UP line open or short	Comes on, then goes off.	Possible	Impossible	Possible	Impossible

SYSTEM CHECK (CURRENT STATUS) AND STATUS LOG (HISTORY LOG IF THE IMMOBILIZER SYSTEM KEPT ENGINE FROM RUNNING)

NOTE: The HDS can be used to:

- **Check the state of the immobilizer key registration and the S-NET line by doing a SYSTEM CHECK.**
- **Check the number of times the immobilizer-keyless control unit did not permit the engine to run by checking the STATUS LOG.**

1. Connect the HDS to the data link connector (DLC), then turn the ignition switch to ON (II) and follow the

GETtheMANUALS.org

prompts to the SYSTEM SELECTION MENU.

NOTE: **If the HDS does not communicate with the vehicle, GO TO THE DLC CIRCUIT TROUBLESHOOTING .**

2. At SYSTEM SELECTION MENU, enter IMMOBI, then select the IMMOBILIZER SETUP.
3. **DO THE SYSTEM CHECK**. If there is a system check number, do the troubleshooting for the item indicated.
4. Check the STATUS LOG using the HDS. Troubleshoot the line with the highest counts first. If all the lines are 0 (zero), the problem may not be caused by the immobilizer system; check for ignition or fuel problems. Refer to PGM-FI System Symptom Troubleshooting.

NOTE: **Once repaired, clear the status log by removing the No. A29 (10 A) fuse in the under-hood fuse/relay box or disconnecting the battery.**

IMMOBILIZER SYSTEM SYMPTOM TROUBLESHOOTING INDEX

Troubleshoot the immobilizer system in the order shown:

Order of Priority	Symptom	Possible cause
1	Immobilizer indicator blinks.	**Immobilizer indicator blinks**.
2	Engine does not start with the immobilizer key.	**Engine does not start with the immobilizer key**.
3	Immobilizer indicator does not come on.	Check the MIL indication. If the MIL comes on, **GO TO PGM-FI SYSTEM MIL CIRCUIT TROUBLESHOOTING** .
4	Immobilizer indicator does not go off.	**Immobilizer indicator does not go off**.

IMMOBILIZER KEY REGISTRATION

PROCEDURE

1. HDS DLC - Connection
    1. Connect the HDS to the data link connector (DLC) (A) located under the driver's side of the dashboard.
    2. Turn the ignition switch to ON (II).
    3. Make sure the HDS communicates with the vehicle. If it does not communicate, go to the DLC circuit troubleshooting.

GETtheMANUALS.org

Fig. 1: Identifying Data Link Connector (DLC)
Courtesy of AMERICAN HONDA MOTOR CO., INC.

2. Immobilizer Key Registration

NOTE:

- **The HDS is required for registration of the immobilizer keys.**
- **Programming the immobilizer also programs the keyless transmitter.**
- **Check for aftermarket electrical equipment that can cause problems with transponder operation.**
- **The immobilizer-keyless control unit can store up to six immobilizer keys.**

Add One New Key/Keyless Transmitter

1. Have a registered key, a new immobilizer key, and the first password from the iN system.
2. Select IMMOBI from the SYSTEM SELECTION MENU, then select IMMOBILIZER SETUP.
3. Select ADD AND DELETE KEYS, then ADD 1 KEY.
4. Do the registration according to the instructions on the HDS screen.
5. Check that the engine can be started with the newly registered key.
6. When prompted by the HDS, do the keyless transmitter programming.
7. Make sure the keyless transmitter operation works properly.

Add and Delete Key/Keyless Transmitter, Then Select Delete or Add Keys

1. Have a registered key, a new immobilizer key, and the first password from the iN system.
2. Select IMMOBI from the SYSTEM SELECTION MENU, then select IMMOBILIZER SETUP.
3. Select ADD AND DELETE KEYS, or DELETE OR ADD MULTIPLE KEYS.
4. Do the registration according to the instructions on the HDS screen.

GETtheMANUALS.org

5. Check that the engine can be started with the newly registered key.
6. When prompted by the HDS, do the keyless transmitter programming.
7. Make sure the keyless transmitter operation works properly.

All Keys are Lost

1. Prepare all new keys and have the immobilizer PCM code.
2. Select IMMOBI from the SYSTEM SELECTION MENU, then select IMMOBILIZER SETUP.
3. Select ADD AND DELETE KEYS, then ALL KEYS LOST.
4. Do the registration according to the instructions on the HDS screen.
5. Check that the engine can be started with the newly registered keys.
6. When prompted by the HDS, do the keyless transmitter programming.
7. Make sure the keyless transmitter operation works properly.

IMMOBILIZER SYSTEM CHECK

1. Connect the HDS to the data link connector (DLC).
2. Turn the ignition switch to ON (II).
3. Monitor the SYSTEM CHECK in IMMOBILIZER INFO with the HDS.

NOTE: If the HDS does not communicate with the immobilizer-keyless control unit, check the power, ground, and K-line connections.

4. If the HDS displays NORMAL N-1, the immobilizer system is OK at this time and you should refer to the STATUS LOG. If the HDS displays any messages, check as follows:

System Check No.	Status Log. Indication	System Check	Possible Cause
A-1	Possible	The key is not registered (Incorrect key code)	• This key is not registered in the immobilizer-keyless control unit. Try to register keys using the HDS. • No communication between the antenna and the immobilizer key because of interference from metal such as key chains/key rings/other keys. • Low battery voltage.
			• Intermittent interruption between transponder and immobilizer-keyless control unit. • The immobilizer key type is different. It is not for this vehicle but for another

GETtheMANUALS.org

A-2	Possible	Communication error between the key and immobilizer-keyless control unit (Incorrect key code format)	vehicle or for another company's vehicle. • Key failure (transponder failure) • No communication between the antenna and the immobilizer key because of interference from metal such as key chains/key rings/other keys. • Low battery voltage.
A-3	Possible	No communication between the key and immobilizer-keyless control unit (No transponder detected)	• The ignition switch was turned ON (II) with a non-immobilizer key. • The immobilizer key type is different. It is not for this vehicle but for another vehicle or for another company's vehicle. • Key failure (transponder failure) • No communication between the antenna and the immobilizer key because of interference from metal such as key chains/key rings/other keys. • Low battery voltage. • Immobilizer-keyless control unit failure
B-1	Possible	The PCM is not registered	• The PCM was not registered. Try to register the PCM using the HDS. • No communication between the PCM and the immobilizer-keyless control unit because of low battery voltage. • No communication between the immobilizer-keyless control unit and the PCM because of electrical interference. • Open in the IG1 line
B-2	Possible	Error of communication format in PCM (Incorrect registration format)	• The PCM was not registered. Try to register the PCM using the HDS. • No communication between the PCM and the immobilizer-keyless control unit because of low battery voltage. • No communication between the immobilizer-keyless control unit and the PCM because of electrical interference.
			• Imoes unit was not registered. • No communication between the imoes unit and the immobilizer-keyless control unit because of low battery voltage.

GETtheMANUALS.org

C-1	Possible	Imoes unit is not registered	• No communication between the imoes unit and the immobilizer-keyless control unit because of interference. • Try to register the imoes unit with the HDS.
C-2	Possible	Error of communication format in imoes unit	• Imoes unit was not registered. • No communication between the imoes unit and the immobilizer-keyless control unit because of low battery voltage. • No communication between the imoes unit and the immobilizer-keyless control unit because of electrical interference. • Try to register the imoes unit with the HDS.
D-1	Possible	S-NET line short	• S-NET line short from the PCM to the imoes unit or the immobilizer-keyless control unit. • No communication between the PCM and the immobilizer-keyless control unit because of low battery voltage. • No communication between the immobilizer-keyless control unit and the PCM because of electrical interference. • Immobilizer-keyless control unit failure • PCM failure
D-2	Possible	No communication between imoes unit and immobilizer-keyless control unit (S-NET line)	• Blown fuse • S-NET line open from the imoes unit to the immobilizer-keyless control unit. • No communication between the imoes unit and the immobilizer-keyless control unit because of low battery voltage. • No communication between the imoes unit and the immobilizer-keyless control unit because of electrical interference. • Immobilizer-keyless control unit failure • Imoes unit failure
D-3	Possible	No communication between PCM and immobilizer-keyless	• Blown fuse • S-NET line open from the PCM to the immobilizer-keyless control unit. • No communication between the PCM and the immobilizer-keyless control unit because of low battery voltage.

GETtheMANUALS.org

		control unit (S-NET line)	• No communication between the immobilizer-keyless control unit and the PCM because of electrical interference. • Immobilizer-keyless control unit failure • PCM failure
E-1	---------	Initial registration of immobilizer-keyless control unit is not completed	The immobilizer-keyless control unit is not registered. Try to register the immobilizer-keyless control unit using the HDS.
E-2			
E-3			
E-4			
E-5			
F-1	---------	Special Mode	Turn the ignition switch to ON (II) and to LOCK (0) with the registered key.
F-2			
F-3			
F-4			
F-5			

IMMOBILIZER SYSTEM COMPONENT LOCATION INDEX

Fig. 2: Identifying PCM
Courtesy of AMERICAN HONDA MOTOR CO., INC.

GETtheMANUALS.org

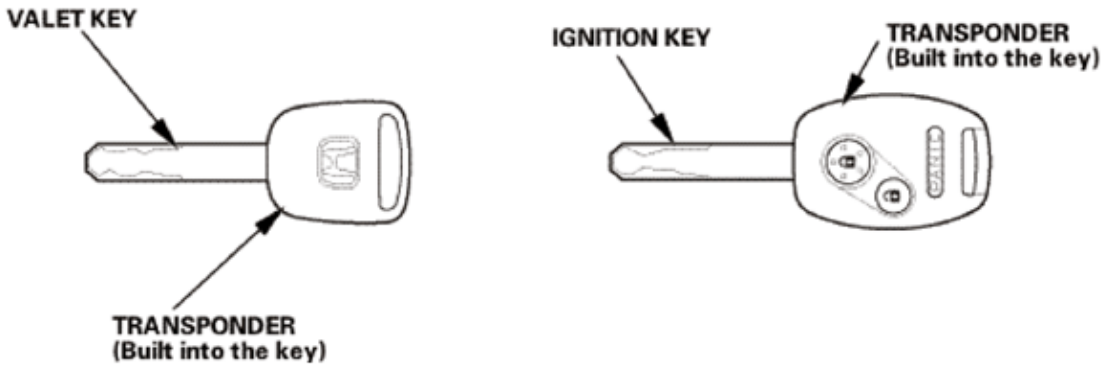

Fig. 3: Identifying Valet Key, Transponder And Ignition Key
Courtesy of AMERICAN HONDA MOTOR CO., INC.

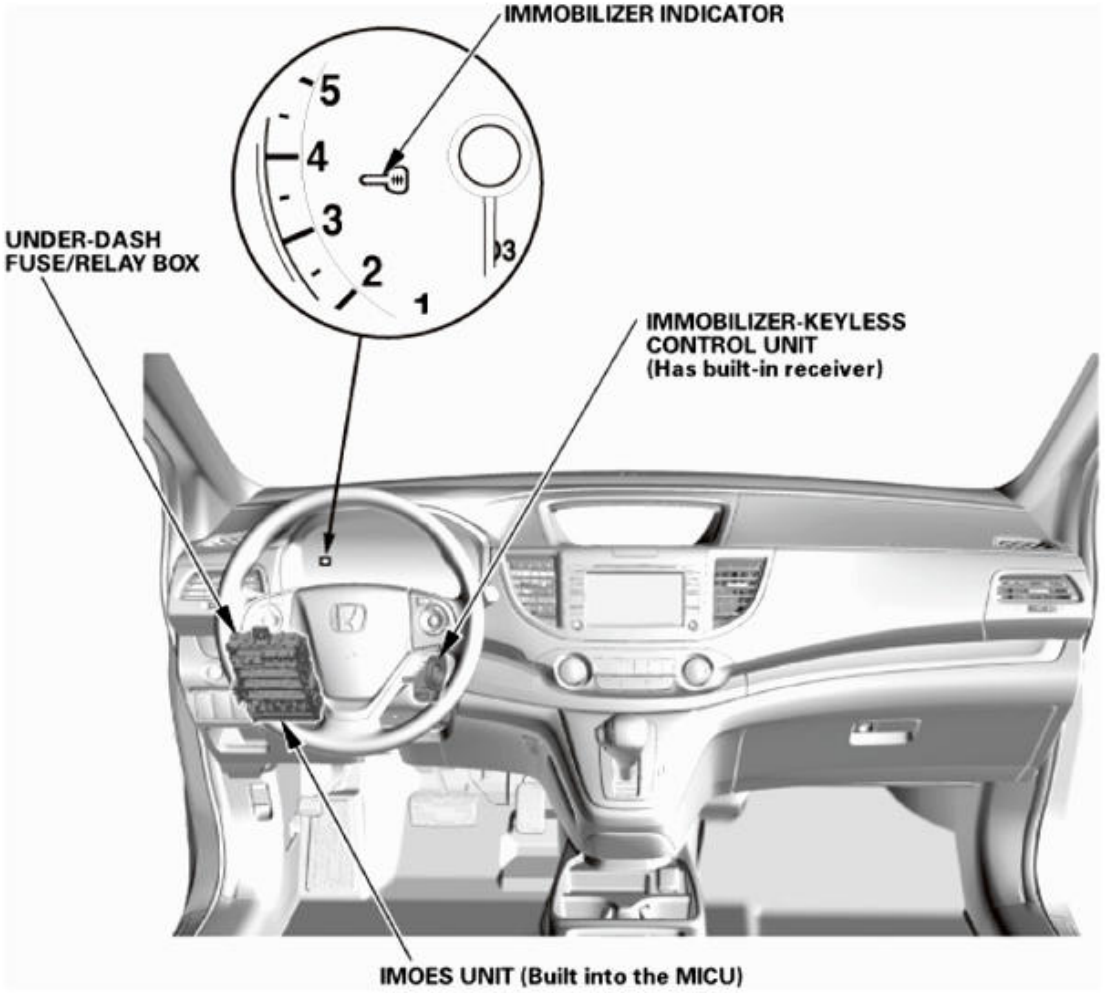

Fig. 4: Identifying Immobilizer Indicator, Under-Dash Fuse/Relay Box And Immobilizer-Keyless Control Unit
Courtesy of AMERICAN HONDA MOTOR CO., INC.

IMMOBILIZER KEY	**REGISTRATION**

GETtheMANUALS.org

IMMOBILIZER-KEYLESS CONTROL UNIT (Has built-in receiver)	**SYMPTOM TROUBLESHOOTING**
	STATUS LOG
	SYSTEM CHECK
	INPUT TEST
	Registration See **IMMOBILIZER-KEYLESS CONTROL UNIT REGISTRATION** or **IMMOBILIZER-KEYLESS CONTROL UNIT REMOVAL AND INSTALLATION**
	Removal and Installation See **IMMOBILIZER-KEYLESS CONTROL UNIT REGISTRATION** or **IMMOBILIZER-KEYLESS CONTROL UNIT REMOVAL AND INSTALLATION**
IMOES UNIT (Built into the MICU)	**REMOVAL AND INSTALLATION**
PCM	**Removal and Installation** See **PCM REMOVAL AND INSTALLATION** or **PCM UPDATE**

ENGINE DOES NOT START WITH THE IMMOBILIZER KEY

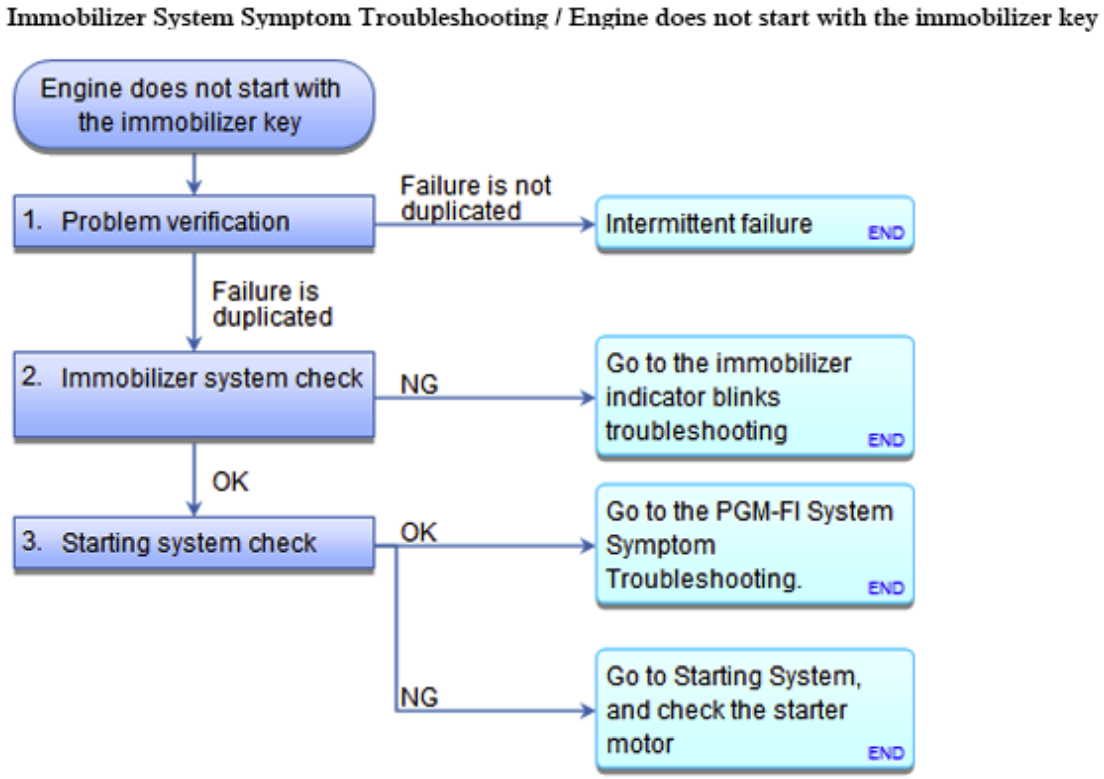

Fig. 5: Immobilizer System Symptom Troubleshooting Flow Chart (Engine Does Not Start With Immobilizer Key)
Courtesy of AMERICAN HONDA MOTOR CO., INC.

NOTE: **Before troubleshooting, CHECK THE ITEMS LISTED IN GENERAL CHECK BEFORE TROUBLESHOOTING.**

GETtheMANUALS.org

1. Problem verification:
    - 1. Try to start the engine.

    Does the engine start?

    YES : Intermittent failure, the vehicle is OK at this time.

    NO : Go to step 2.

2. Immobilizer system check:
    - 1. Turn the ignition switch to LOCK (0).
    - 2. Turn the ignition switch to ON (II), and check the immobilizer indicator.

    Does the indicator blink once, then stay off?

    YES : Go to step 3.

    NO : Go to the **Immobilizer indicator blinks**.

3. Starting system check:
    - 1. Turn the ignition switch to START (III).

    Does the starter motor run?

    YES : **Go to the PGM-FI System Symptom Troubleshooting** .

    NO : Go to Starting System, and See **Starter Overhaul** or **Starter Removal, Installation, and Performance Test** .

IMMOBILIZER INDICATOR BLINKS

GETtheMANUALS.org

Immobilizer System Symptom Troubleshooting / Immobilizer indicator blinks

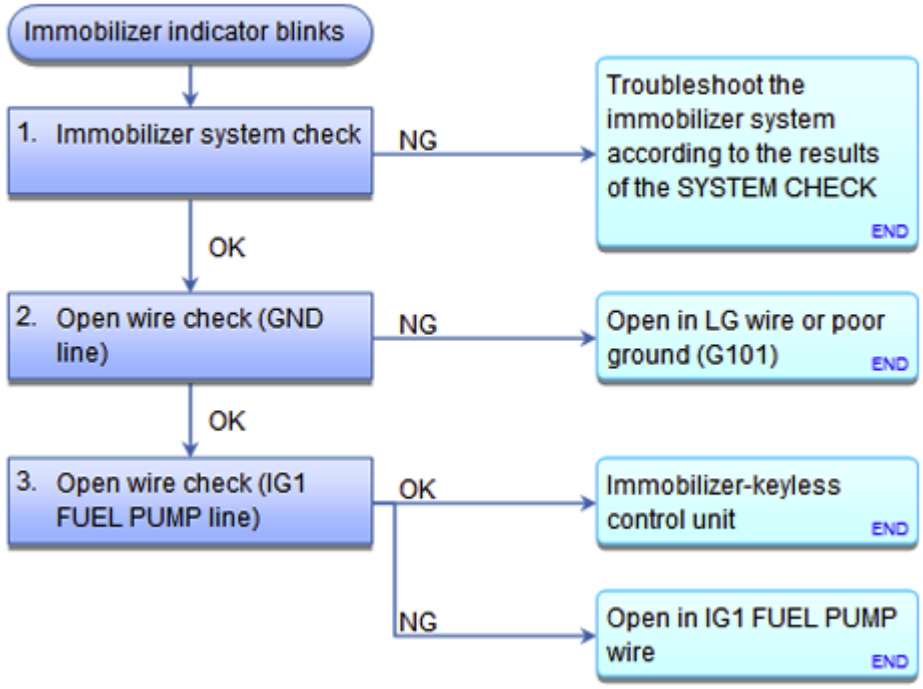

Fig. 6: Immobilizer System Symptom Troubleshooting Flow Chart (Immobilizer Indicator Blinks)
Courtesy of AMERICAN HONDA MOTOR CO., INC.

NOTE: Before troubleshooting, check the items listed in General Check before Troubleshooting.

1. Immobilizer system check:
   - 1. Turn the ignition switch to LOCK (0).
   - 2. Connect the HDS, then turn the ignition switch to ON (II).
   - 3. From the SYSTEM SELECTION MENU, enter IMMOBI, then select IMMOBILIZER SETUP.

     NOTE: If the HDS does not communicate with the immobilizer-keyless control unit, check the power, ground, and K-line connections.

   - 4. Select the SYSTEM CHECK from the IMMOBILIZER INFO.

   Is SYSTEM CHECK indicated?

   YES : **TROUBLESHOOT THE IMMOBILIZER SYSTEM ACCORDING TO THE RESULTS OF THE SYSTEM CHECK**.

   NO : Go to step 2.

2. Open wire check (GND line):

GETtheMANUALS.org

- 1. With the ignition key removed from the ignition switch and with all the doors closed, operate the keyless transmitter LOCK and UNLOCK several times in the vehicle.

Do the door lock actuators work normally?

YES : The GND wire is OK. Go to step 3.

NO : Repair an open or high resistance in the ground wire or poor ground (G101).

3. Open wire check (IG1 FUEL PUMP line):
   - 1. Turn the ignition switch to ON (II).
   - 2. Measure the voltage between test points 1 and 2.

     Test condition IG ON (II)

     Test circuit IG1 FUEL PUMP

     Test point 1 Immobilizer-keyless control unit 7P connector No. 6 (BLU)

     Test point 2 Body ground

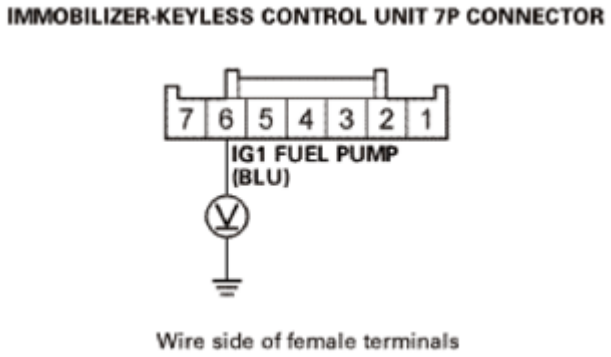

Fig. 7: Measuring Voltage Between Test Points 1 And 2
Courtesy of AMERICAN HONDA MOTOR CO., INC.

Is there battery voltage?

YES : The IG1 FUEL PUMP wire is OK. **Replace the immobilizer-keyless control unit** See **IMMOBILIZER-KEYLESS CONTROL UNIT REGISTRATION** or **IMMOBILIZER-KEYLESS CONTROL UNIT REMOVAL AND INSTALLATION**.

NO : Repair an open or high resistance in the wire.

IMMOBILIZER INDICATOR DOES NOT GO OFF

GETtheMANUALS.org

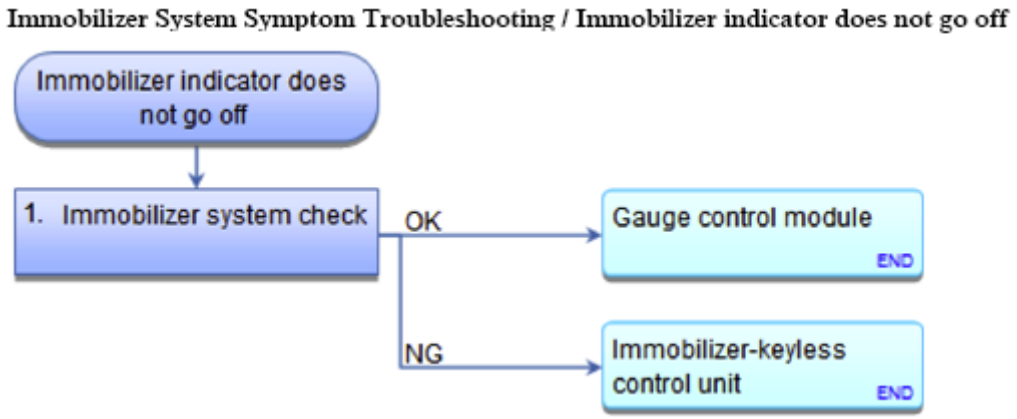

Fig. 8: Immobilizer System Symptom Troubleshooting Flow Chart (Immobilizer Indicator Does Not Go Off)
Courtesy of AMERICAN HONDA MOTOR CO., INC.

1. Immobilizer system check:
   - 1. Turn the ignition switch to LOCK (0).
   - 2. Connect the HDS to the data link connector (DLC).
   - 3. Turn the ignition switch to ON (II).
   - 4. From the SYSTEM SELECTION MENU, enter IMMOBI, then select IMMOBILIZER INFO.

     NOTE: **If the HDS does not communicate with the immobilizer-keyless control unit, check the power, ground, and K-line connections.**

   - 5. Do the SYSTEM CHECK from the IMMOBILIZER INFO.

   Is N-1 OK indicated?

   YES : **Replace the gauge control module** See **GAUGE CONTROL MODULE REMOVAL AND INSTALLATION** or **Rewriting the ODO Data and Transferring the Maintenance Minder™ Data to a New Gauge Control Module**

   NO : **Replace the immobilizer-keyless control unit** See **IMMOBILIZER-KEYLESS CONTROL UNIT REGISTRATION** or **IMMOBILIZER-KEYLESS CONTROL UNIT REMOVAL AND INSTALLATION**.

IMMOBILIZER-KEYLESS CONTROL UNIT REGISTRATION

PROCEDURE

1. HDS DLC - Connection
   1. Connect the HDS to the data link connector (DLC) (A) located under the driver's side of the dashboard.
   2. Turn the ignition switch to ON (II).

GETtheMANUALS.org

3. Make sure the HDS communicates with the vehicle. If it does not communicate, go to the DLC circuit troubleshooting.

Fig. 9: Identifying Data Link Connector (DLC)
Courtesy of AMERICAN HONDA MOTOR CO., INC.

2. Immobilizer Keyless Control Unit Registration
    1. Have all registered keys and the ECM/PCM code.
    2. Select IMMOBI from the SYSTEM SELECTION MENU, then select IMMOBILIZER SETUP.
    3. Select REPLACE IMMOBILIZER RECEIVER/KEYLESS CONTROL UNIT.
    4. Do the registration according to the instructions on the HDS screen.
    5. Check that the engine can be started with the newly registered keys.
    6. When prompted by the HDS, do the keyless transmitter programming.
    7. Make sure the keyless transmitter operation works properly.

IMMOBILIZER-KEYLESS CONTROL UNIT REMOVAL AND INSTALLATION

REMOVAL

SRS components are located in this area. Review the **SRS COMPONENT LOCATIONS** and the **PRECAUTIONS AND PROCEDURES** before doing repairs or service.

1. Upper Column Cover
    1. Carefully pry out the dashboard meter visor blind cover (A) with the appropriate trim tool to detach the clips (B) and the hook (C), then tuck up the dashboard meter visor blind cover.

GETtheMANUALS.org

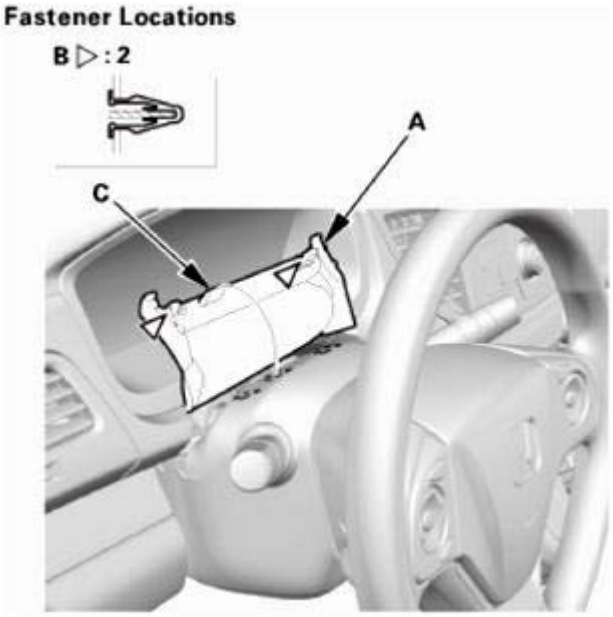

Fig. 10: Identifying Dashboard Meter Visor Blind Cover, Clips And Hook
Courtesy of AMERICAN HONDA MOTOR CO., INC.

2. Detach the hooks (A), then remove the upper column cover (B).

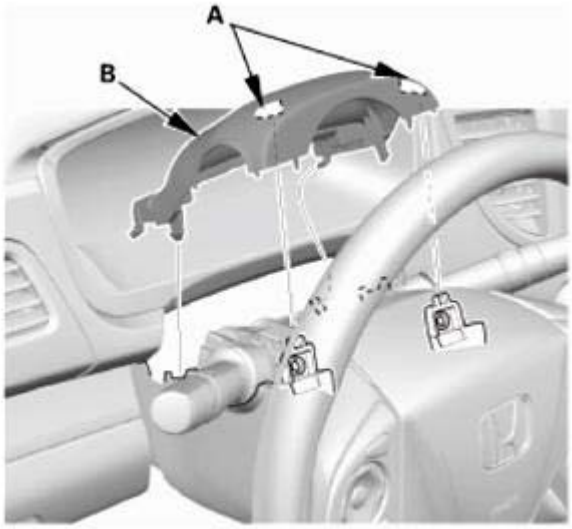

Fig. 11: Identifying Upper Column Cover And Hooks
Courtesy of AMERICAN HONDA MOTOR CO., INC.

2. Lower Column Cover
    1. Turn the steering wheel to the left. Remove the screw (A) securing the lower column cover (B) from the front side.
    2. Turn the steering wheel to the right. Remove the screw securing the lower column cover from the front side.

GETtheMANUALS.org

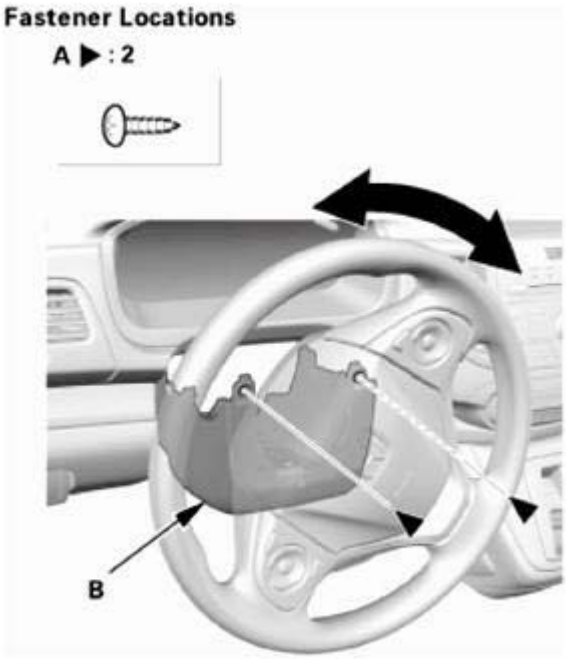

Fig. 12: Turning Steering Wheel
Courtesy of AMERICAN HONDA MOTOR CO., INC.

3. Remove the screw (A), then remove the lower column cover (B).

GETtheMANUALS.org

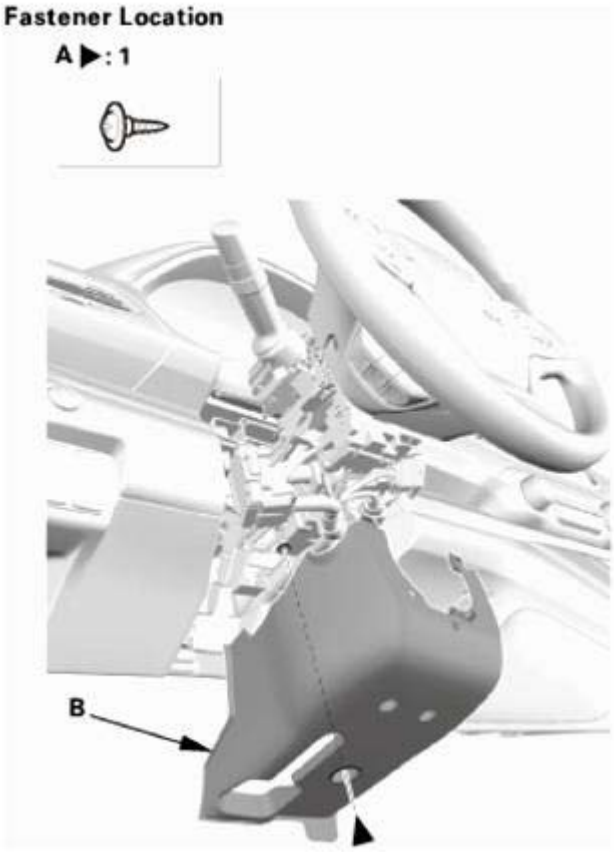

Fig. 13: Identifying Lower Column Cover And Screw
Courtesy of AMERICAN HONDA MOTOR CO., INC.

3. Immobilizer-Keyless Control Unit
    1. Disconnect the connector.
    2. Remove the immobilizer-keyless control unit (A).

GETtheMANUALS.org

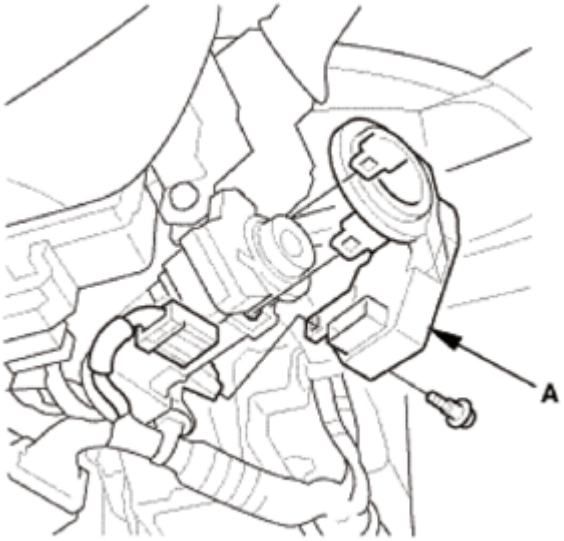

Fig. 14: Identifying Immobilizer-Keyless Control Unit
Courtesy of AMERICAN HONDA MOTOR CO., INC.

INSTALLATION

SRS components are located in this area. Review the **SRS COMPONENT LOCATIONS** and the **PRECAUTIONS AND PROCEDURES** before doing repairs or service.

1. Immobilizer-Keyless Control Unit
    1. Install the immobilizer-keyless control unit (A).
    2. Connect the connector.

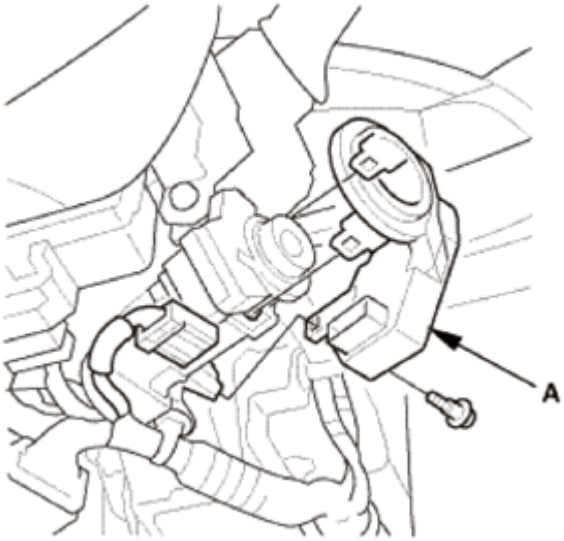

Fig. 15: Identifying Immobilizer-Keyless Control Unit
Courtesy of AMERICAN HONDA MOTOR CO., INC.

GETtheMANUALS.org

2. Lower Column Cover
    1. Push in on the lower column cover just above ignition switch opening (A) to engage the column cover with the locking tab (B).

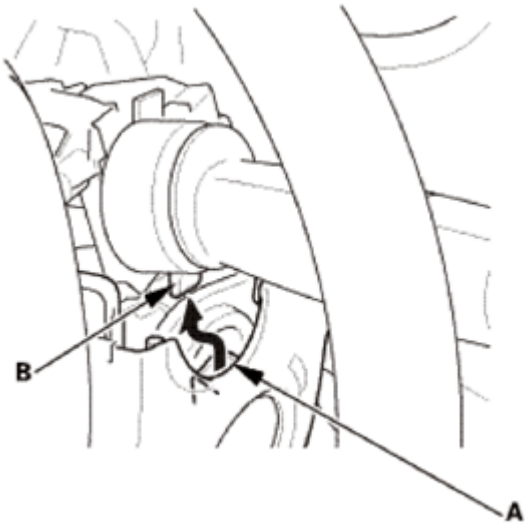

Fig. 16: Identifying Ignition Switch Opening And Locking Tab
Courtesy of AMERICAN HONDA MOTOR CO., INC.

    2. Install the lower column cover (A), then install the screw (B).

GETtheMANUALS.org

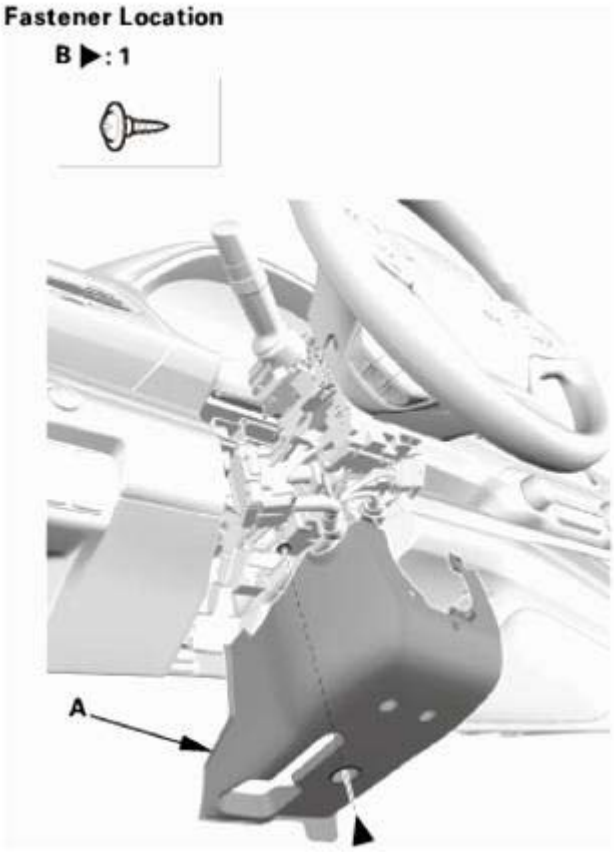

Fig. 17: Identifying Lower Column Cover And Screw
Courtesy of AMERICAN HONDA MOTOR CO., INC.

3. Turn the steering wheel to the left. Install the screw (A) securing the lower column cover (B) from the front side.
4. Turn the steering wheel to the right. Install the screw securing the lower column cover from the front side.

GETtheMANUALS.org

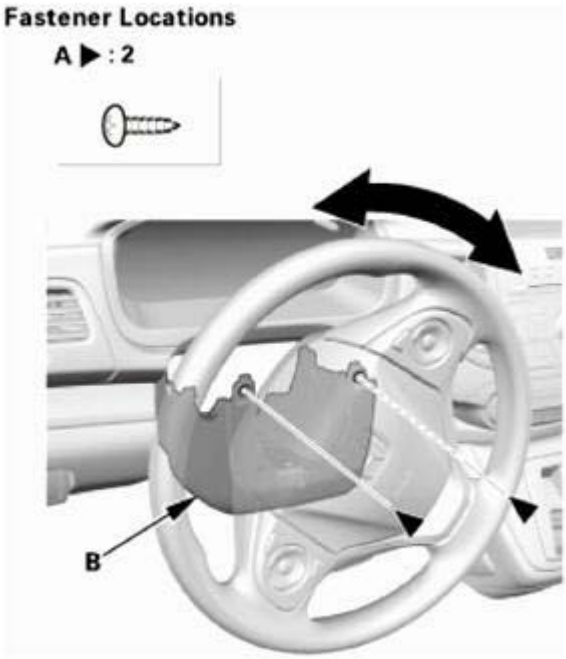

Fig. 18: Turning Steering Wheel
Courtesy of AMERICAN HONDA MOTOR CO., INC.

3. Upper Column Cover
    1. Install the upper column cover (A). Make sure the hooks (B) snap into place securely.

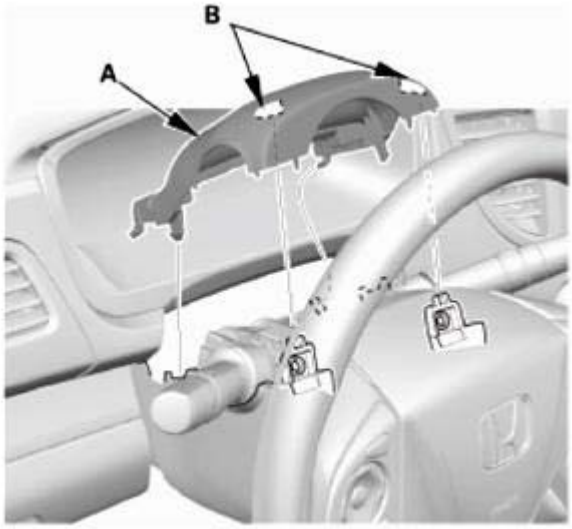

Fig. 19: Identifying Upper Column Cover And Hooks
Courtesy of AMERICAN HONDA MOTOR CO., INC.

    2. Install the dashboard meter visor blind cover (A). Make sure the clips (B) and the hook (C) snap into place securely

GETtheMANUALS.org

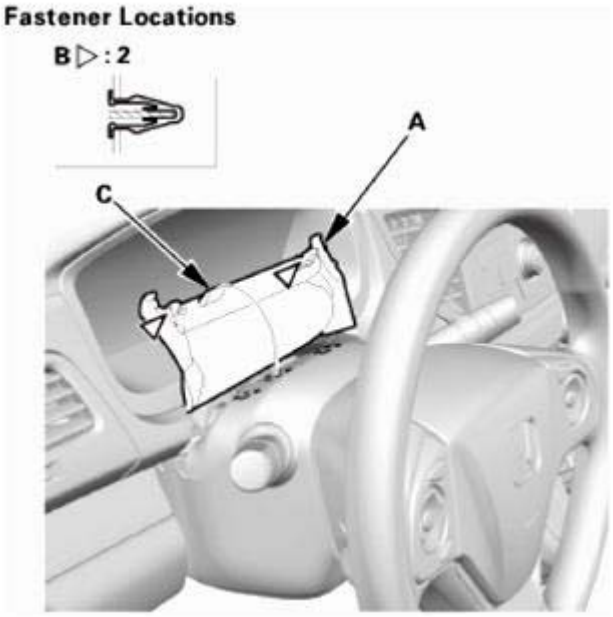

Fig. 20: Identifying Dashboard Meter Visor Blind Cover, Clips And Hook
Courtesy of AMERICAN HONDA MOTOR CO., INC.

4. HDS DLC - Connection
    1. Connect the HDS to the data link connector (DLC) (A) located under the driver's side of the dashboard.
    2. Turn the ignition switch to ON (II).
    3. Make sure the HDS communicates with the vehicle. If it does not communicate, go to the DLC circuit troubleshooting.

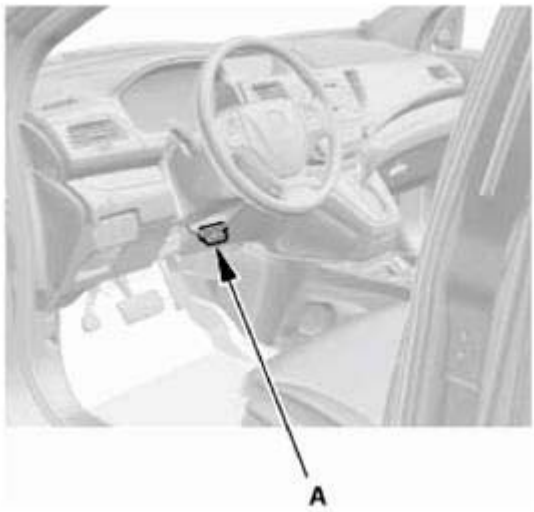

Fig. 21: Identifying Data Link Connector (DLC)
Courtesy of AMERICAN HONDA MOTOR CO., INC.

GETtheMANUALS.org

5. Immobilizer keyless Control Unit - Registration
    1. **Do the immobilizer keyless control unit registration** See **IMMOBILIZER-KEYLESS CONTROL UNIT REGISTRATION** or **IMMOBILIZER-KEYLESS CONTROL UNIT REMOVAL AND INSTALLATION**.
6. Immobilizer Key - Registration
    1. **DO THE IMMOBILIZER KEY REGISTRATION**.

IMMOBILIZER SYSTEM STATUS LOG

If you suspect there is an immobilizer system problem, check the status log in the HDS.

1. Connect the HDS to the data link connector (DLC).
2. Turn the ignition switch to ON (II).
3. On the HDS screen, at SYSTEM SELECTION MENU, enter IMMOBI, then select IMMOBILIZER SETUP, select SYSTEM CHECK, NUMBER of KEYS and STATUS LOG, then select STATUS LOG.
4. Check the STATUS LOG count. Troubleshoot the status with the highest count first. If no counts are listed, the immobilizer system is OK. Continue with normal symptom troubleshooting.

Status Log No.	Detected Item	Probable Cause
A-1	KEY CODE MISMATCH 1 (Code format correct, but code data does not match)	• The key was not registered • Interference from metal such as key chains • Low battery voltage
A-2	KEY CODE MISMATCH 2 (Incorrect code format)	• Ignition switch was turned to ON (II) with another type of immobilizer key or aftermarket key • Interference from metal such as key chains • Low battery voltage
A-3	KEY CODE MISMATCH 3 (No transponder detected)	• Ignition switch was turned to ON (II) with another type of immobilizer key or aftermarket key • Interference from metal such as key chains • Low battery voltage • Key failure • Immobilizer-keyless control unit failure
B-1	PCM CODE MISMATCH 1 (Code format correct, but code data does not match)	• PCM was not registered correctly • Low battery voltage • Poor or loose terminal connections at the immobilizer-keyless control unit • Communication line electrical noise
		• PCM was not registered correctly • Low battery voltage

GETtheMANUALS.org

B-2	PCM MISMATCH 2 (Incorrect code format)	• Poor or loose terminal connections at the immobilizer-keyless control unit • Communication line electrical noise
C-1	IMOES UNIT MISMATCH 1 (Code format correct, but data does not match)	• Imoes unit was not registered correctly • Communication was not good between the imoes unit and the immobilizer-keyless control unit because of low battery voltage • Communication was not good between the imoes unit and the immobilizer-keyless control unit because of electrical noise
C-2	IMOES UNIT MISMATCH 2 (Incorrect code format)	• Imoes unit was not registered correctly • Communication was not good between the imoes unit and the immobilizer-keyless control unit because of low battery voltage • Communication was not good between the imoes unit and the immobilizer-keyless control unit because of electrical noise
D-1	S-NET LINE PROBLEM 1 (Short to ground)	• Low battery voltage • Poor or loose terminal connections at the immobilizer-keyless control unit and the PCM • Communication line electrical noise
D-2	S-NET LINE PROBLEM 2 (No communication)	• Blown fuse • Harness open from imoes unit to immobilizer-keyless control unit • Communication was not good between the imoes unit and the immobilizer-keyless control unit because of low battery voltage • Communication was not good between the imoes unit and the immobilizer-keyless control unit because of electrical interference • Imoes unit failure • Immobilizer-keyless control unit failure
D-3	S-NET LINE PROBLEM 3 (Open line or PCM failure)	• Open or short in the harness from the PCM to the immobilizer-keyless control unit • Low battery voltage • Poor or loose terminal connections at the immobilizer-keyless control unit and the PCM • Poor S-NET data communication due to electrical interference

IMMOBILIZER-KEYLESS CONTROL UNIT INPUT TEST

GETtheMANUALS.org

NOTE: **SRS COMPONENTS ARE LOCATED IN THIS AREA. REVIEW THE SRS COMPONENT LOCATIONS , and PRECAUTIONS AND PROCEDURES before doing repairs or servicing.**

1. Turn the ignition switch to LOCK (0).
2. **Disconnect the immobilizer-keyless control unit 7P connector** See **IMMOBILIZER-KEYLESS CONTROL UNIT REGISTRATION** or **IMMOBILIZER-KEYLESS CONTROL UNIT REMOVAL AND INSTALLATION**.

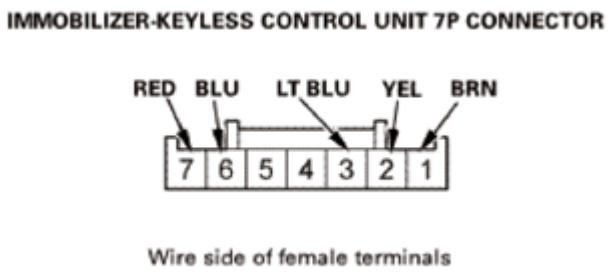

Fig. 22: Immobilizer-Keyless Control Unit 7P Connector Terminal Layout
Courtesy of AMERICAN HONDA MOTOR CO., INC.

3. Inspect the connector and socket terminals to be sure they are all making good contact:
   - If the terminals are bent, loose, or corroded, repair them as necessary, and recheck the system.
   - If the terminals are OK, go to step 4.
4. With the connector still disconnected, do the following input tests:
   - If any test indicates a problem, find and correct the cause, then recheck the system.
   - If all the input tests prove OK, go to step 5.

Cavity	Wire	Terminal name	Test condition	Test: Desired result	Possible cause if desired result is not obtained
2	YEL	S-NET	Jump the SCS line with the HDS, **disconnect PCM connector A (49P)** See **HOW TO TROUBLESHOOT THE A/T SYSTEM** or **HOW TO TROUBLESHOOT THE FUEL AND EMISSIONS SYSTEMS**	Measure the voltage to ground: There should be about 5 V.	• An open or high resistance in the wire • A short to ground in the wire
				Check for continuity between the terminal and PCM connector A (49P) terminal No. 17: There should be	• An open or high resistance in the wire • Faulty under-dash fuse/relay

GETtheMANUALS.org

				continuity.	box
			Disconnect the battery negative terminal	Measure the resistance between the terminal and body ground: There should be more than 50 kohms.	• Faulty under-dash fuse/relay box • Poor ground (G101) • An open or high resistance in the ground wire

5. Reconnect the connector to the immobilizer-keyless control unit, and do the following input tests:
   - If any test indicates a problem, find and correct the cause, then recheck the system.
   - If all the input tests prove OK, **replace the immobilizer-keyless control unit** See **IMMOBILIZER-KEYLESS CONTROL UNIT REGISTRATION** or **IMMOBILIZER-KEYLESS CONTROL UNIT REMOVAL AND INSTALLATION**.

NOTE: **After replacing the immobilizer-keyless control unit, DO THE IMMOBILIZER KEY REGISTRATION.**

Cavity	Wire	Terminal name	Test condition	Test: Desired result	Possible cause if desired result is not obtained
7	RED	+B BACK UP	Under all conditions	Measure the voltage to ground: There should be battery voltage.	• Blown No. A29 (10 A) fuse in the under-hood fuse/relay box • Faulty under-dash fuse/relay box • An open or high resistance in the wire
6	BLU	IG1 FUEL PUMP	Ignition switch ON (II)	Measure the voltage to ground: There should be battery voltage.	• Blown No. B4 (15 A) fuse in the under-dash fuse/relay box • An open or high resistance in the wire
1	BRN	GND	In all ignition switch positions	Measure the voltage to ground: There should be less than 0.2 V.	• Poor ground (G502) • An open or high resistance in the ground wire
3	LT BLU	K LINE	Under all conditions	Measure the voltage to ground: There should be pulse voltage (digital	• Faulty control unit on the K-LINE

GETtheMANUALS.org

				signal).	• Short to ground in the K-LINE wire

GETtheMANUALS.org

INTAKE AIR SYSTEM AND EXHAUST SYSTEM COMPONENT LOCATION INDEX

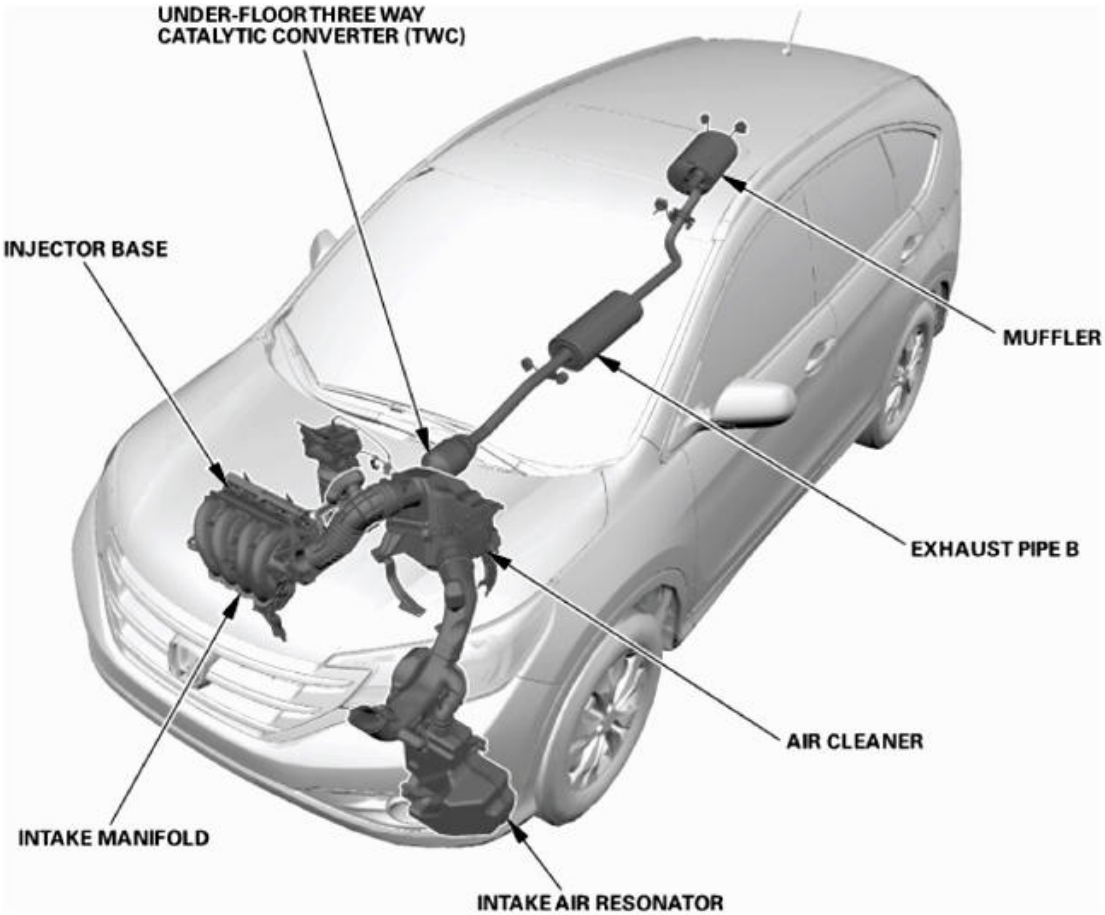

Fig. 1: Intake Air System And Exhaust System Components Location With Torque Specifications
Courtesy of AMERICAN HONDA MOTOR CO., INC.

AIR CLEANER	**REMOVAL AND INSTALLATION**
	ELEMENT REMOVAL, INSPECTION, AND INSTALLATION
EXHAUST PIPE	**REMOVAL AND INSTALLATION**
INJECTOR BASE	REMOVAL AND INSTALLATION
INTAKE AIR RESONATOR	**REMOVAL AND INSTALLATION**
INTAKE MANIFOLD	**REMOVAL AND INSTALLATION**
MUFFLER	**REMOVAL AND INSTALLATION**
UNDER-FLOOR THREE WAY CATALYTIC CONVERTER	**Removal and Installation** See **UNDER-FLOOR TWC REMOVAL AND INSTALLATION** or **WARM UP TWC**

GETtheMANUALS.org

EXHAUST PIPE AND MUFFLER REMOVAL AND INSTALLATION

REPLACEMENT

NOTE: Use new gaskets, new self-locking nuts, and new bolts when reassembling.

1. Exhaust Pipe and Muffler

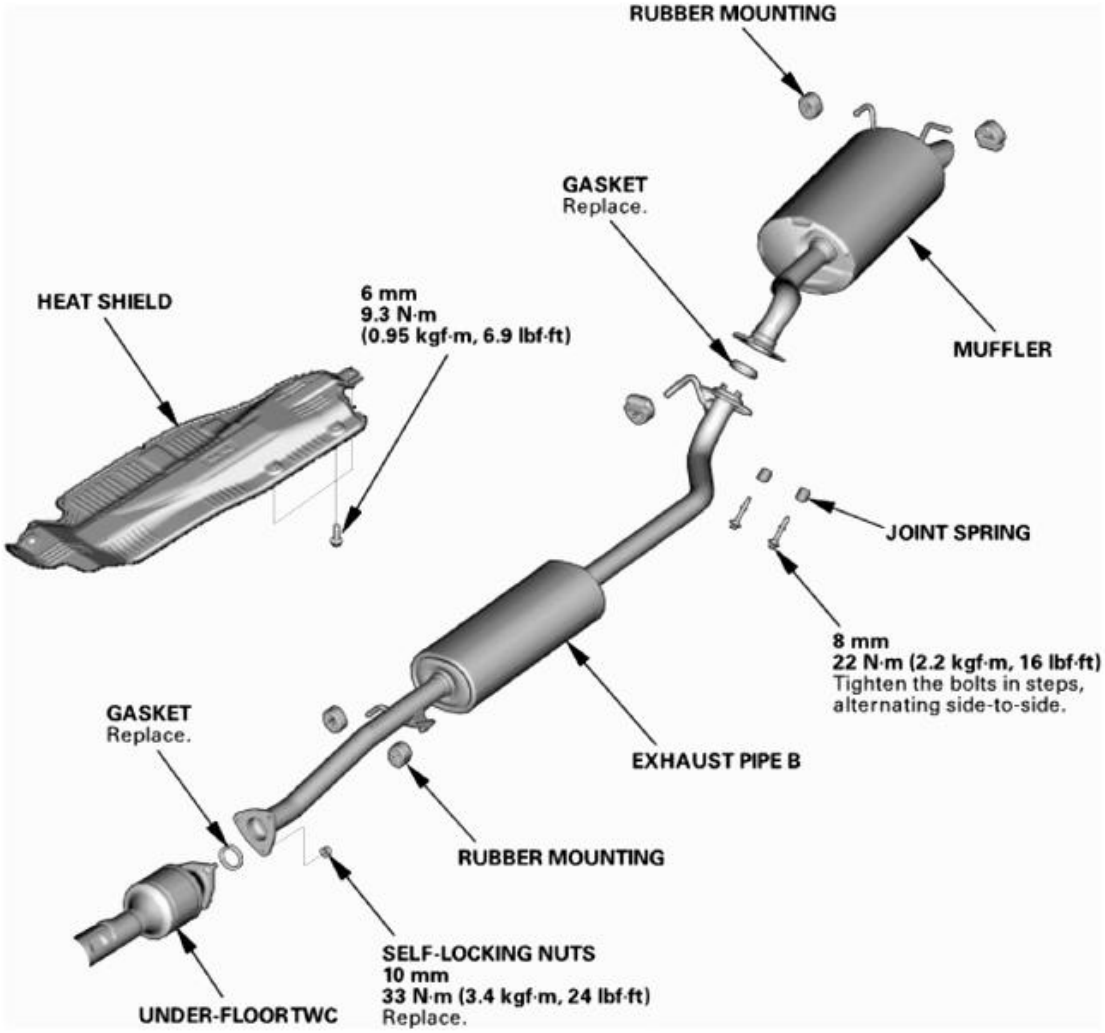

Fig. 2: Identifying Exhaust Pipe And Muffler Components
Courtesy of AMERICAN HONDA MOTOR CO., INC.

INTAKE AIR RESONATOR REMOVAL AND INSTALLATION

REMOVAL

GETtheMANUALS.org

1. Front Grille
    1. Apply protective tape (A) to the front grille lower trim (B).

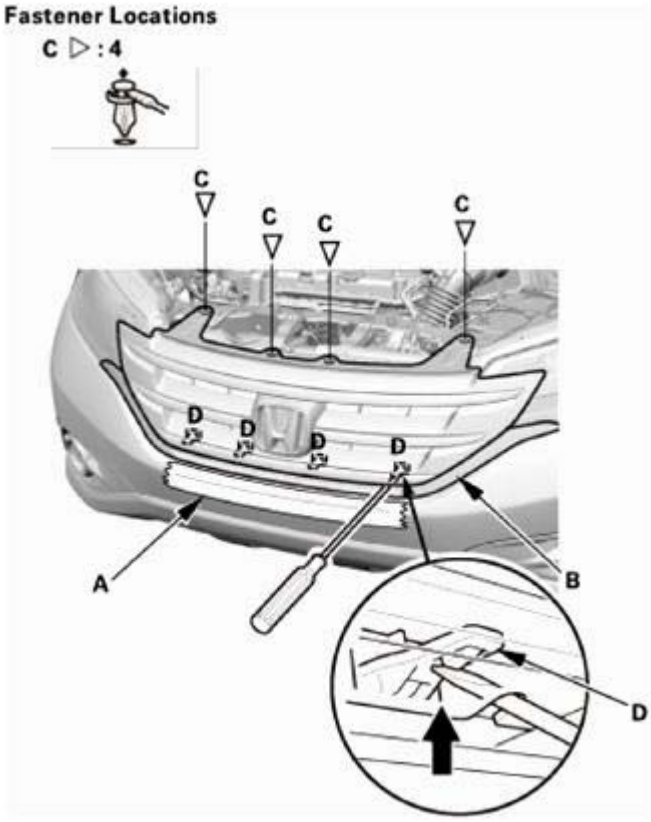

Fig. 3: Removing Front Grille Hooks Using Flat-Tip Screwdriver
Courtesy of AMERICAN HONDA MOTOR CO., INC.

2. Remove the clips (C) and detach the hooks (D).
3. Insert a shop towel (A) between the front grille (B) and the front grille lower trim (C).

GETtheMANUALS.org

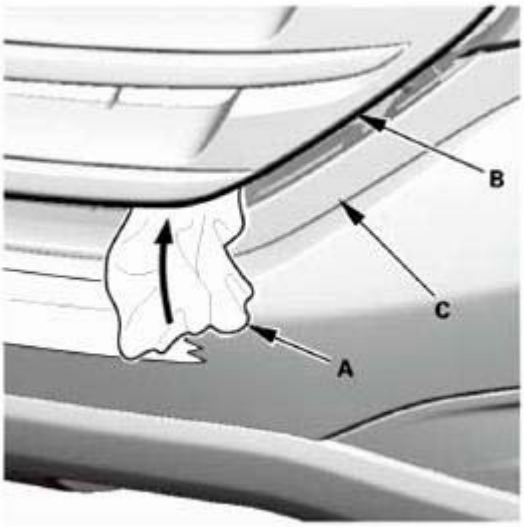

Fig. 4: Inserting Shop Towel Between Front Grille And Front Grille Lower Trim
Courtesy of AMERICAN HONDA MOTOR CO., INC.

4. Insert a flat-tip screwdriver (A) into the opening at the front grille (B), then turn the screwdriver to detach the clip (C).

NOTE: Repeat this procedure on the opposite side.

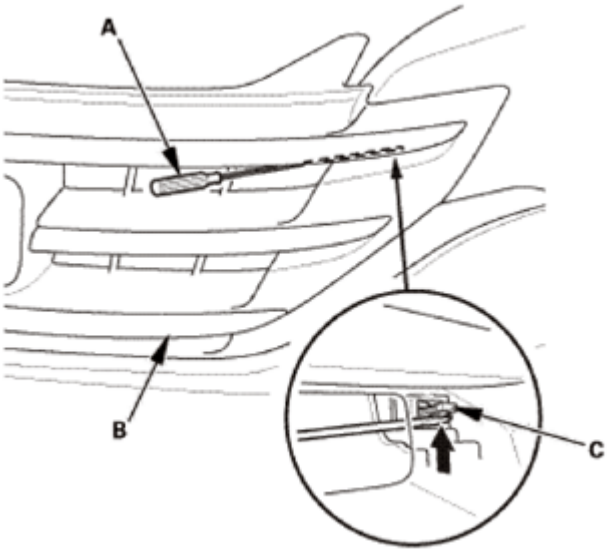

Fig. 5: Removing Front Grille Clip Using Flat-Tip Screwdriver
Courtesy of AMERICAN HONDA MOTOR CO., INC.

5. Remove the front grille (A).

GETtheMANUALS.org

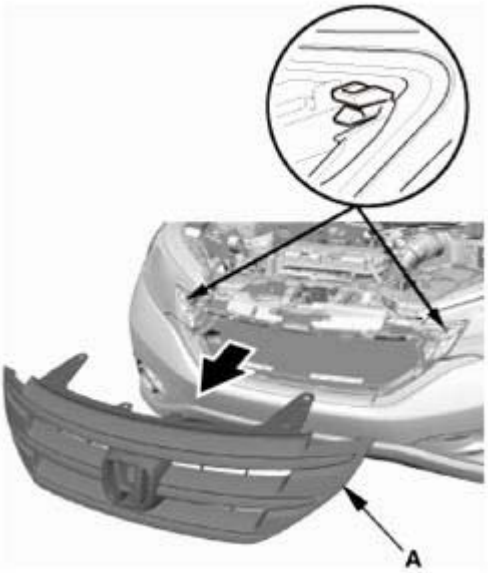

Fig. 6: Removing Front Grille
Courtesy of AMERICAN HONDA MOTOR CO., INC.

2. Front Wheel Arch Protector Front Side As Needed - Both Sides

NOTE: Repeat on the opposite side.

1. Remove the screws (A) and the clips (B) securing the front wheel arch protector (C).
2. Carefully pry out the clip portions of the wheel arch protector with the appropriate trim tool to detach the clips (D, E), then detach the wheel arch protector front side as needed.
3. Put a shop towel (F) in the opening between the front wheel arch protector and the front fender.

GETtheMANUALS.org

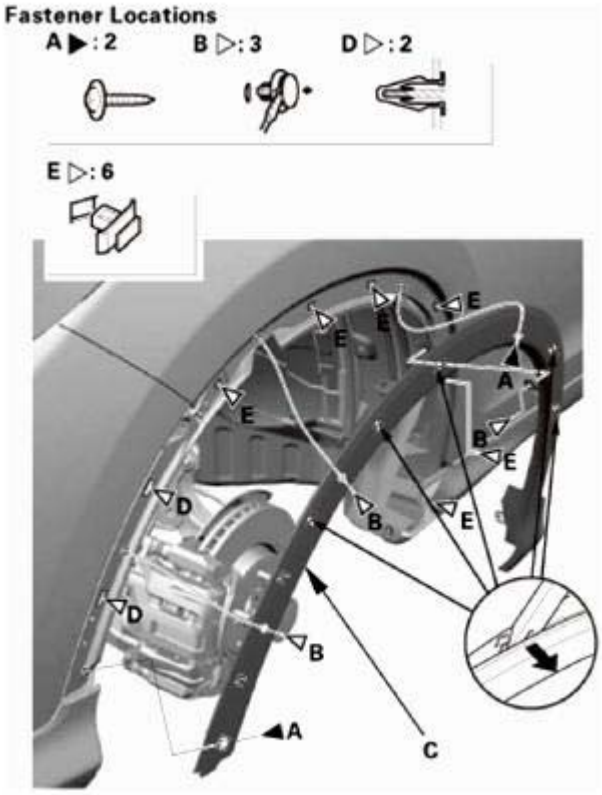

Fig. 7: Removing Front Wheel Arch Protector Fasteners
Courtesy of AMERICAN HONDA MOTOR CO., INC.

Fig. 8: Positioning Shop Towel Between Front Wheel Arch Protector And Front Fender
Courtesy of AMERICAN HONDA MOTOR CO., INC.

3. Front Bumper
    1. Remove the screws (A), the bolts (B), and the clips (C) securing the front bumper (D).

GETtheMANUALS.org

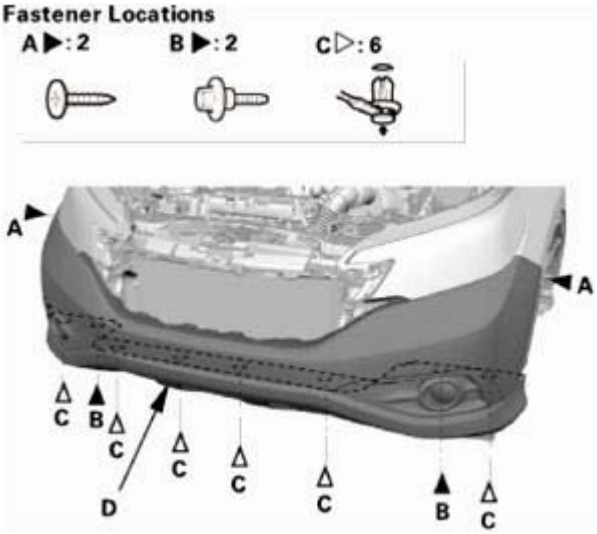

Fig. 9: Identifying Front Bumper Fasteners
Courtesy of AMERICAN HONDA MOTOR CO., INC.

2. Pull out the front bumper (A) from the side spacer (B). Repeat this step on the opposite side.

Fig. 10: Removing Front Bumper From Side Spacer
Courtesy of AMERICAN HONDA MOTOR CO., INC.

3. Detach the clip (A). Repeat this step on the opposite side.

GETtheMANUALS.org

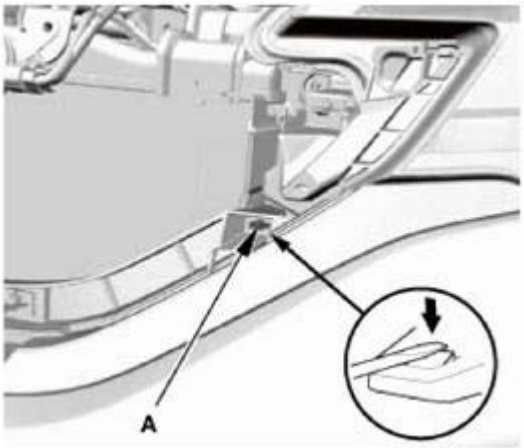

Fig. 11: Disconnecting Clip Using Tool
Courtesy of AMERICAN HONDA MOTOR CO., INC.

4. With the help of an assistant, pull out both sides of the front bumper (A) from the upper beam (B).

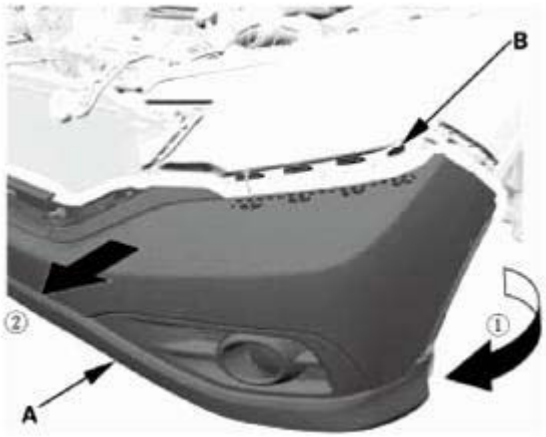

Fig. 12: Pulling Out Front Bumper From Upper Beam
Courtesy of AMERICAN HONDA MOTOR CO., INC.

5. With the help of an assistant, disconnect the connectors (A), then remove the front bumper (B).

GETtheMANUALS.org

Fig. 13: Identifying Front Bumper And Connectors
Courtesy of AMERICAN HONDA MOTOR CO., INC.

4. Intake Air Resonator Assembly
    1. Remove the intake air resonator.

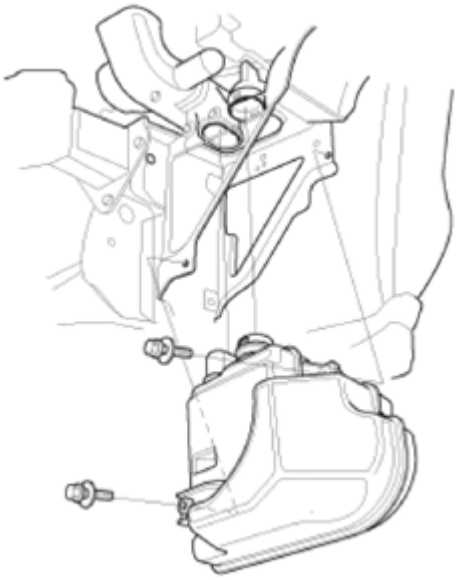

Fig. 14: Identifying Intake Air Resonator Assembly And Bolts
Courtesy of AMERICAN HONDA MOTOR CO., INC.

    2. Remove the intake air pipe.

GETtheMANUALS.org

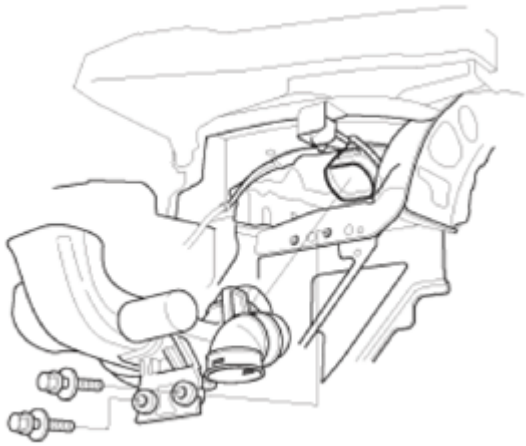

Fig. 15: Identifying Intake Air Pipe And Bolts
Courtesy of AMERICAN HONDA MOTOR CO., INC.

INSTALLATION

1. Intake Air Resonator Assembly
    1. Install the intake air pipe.

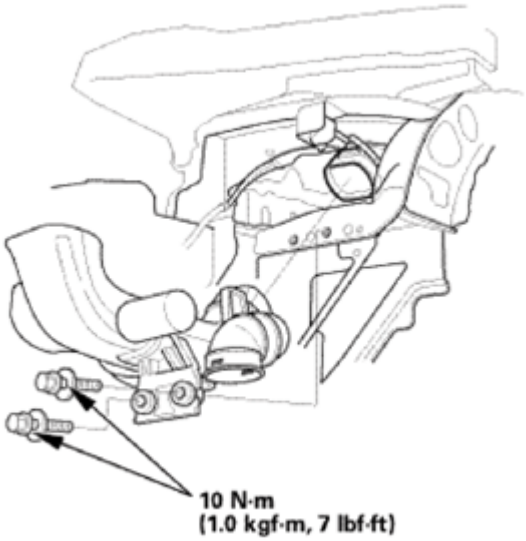

Fig. 16: Identifying Intake Air Pipe Mounting Bolts With Torque Specifications
Courtesy of AMERICAN HONDA MOTOR CO., INC.

    2. Install the intake air resonator.

GETtheMANUALS.org

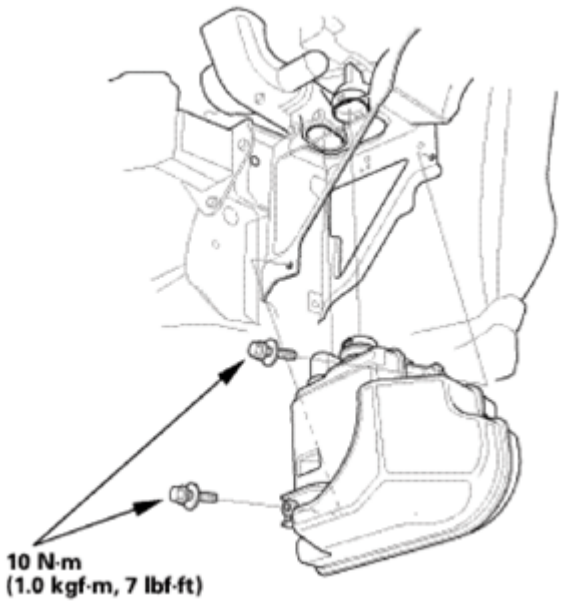

Fig. 17: Identifying Intake Air Resonator Mounting Bolts With Torque Specifications
Courtesy of AMERICAN HONDA MOTOR CO., INC.

2. Front Bumper
    1. With the help of an assistant, connect the connectors (A), then install the front bumper (B).

Fig. 18: Identifying Front Bumper And Connectors
Courtesy of AMERICAN HONDA MOTOR CO., INC.

    2. With the help of an assistant, install both sides of the front bumper (A) to the upper beam (B).

GETtheMANUALS.org

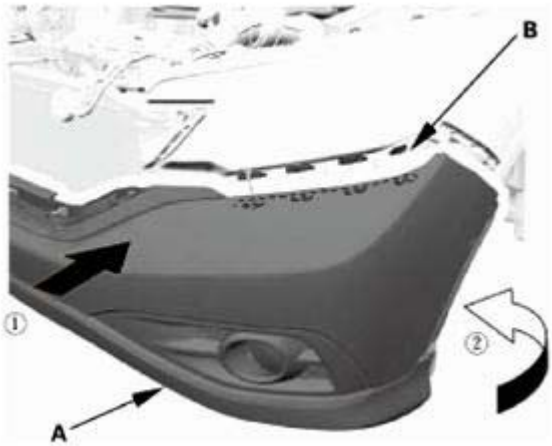

Fig. 19: Installing Front Bumper To Upper Beam
Courtesy of AMERICAN HONDA MOTOR CO., INC.

3. Push the front bumper (A) until the clip (B) snaps into place. Repeat this step on the opposite side.

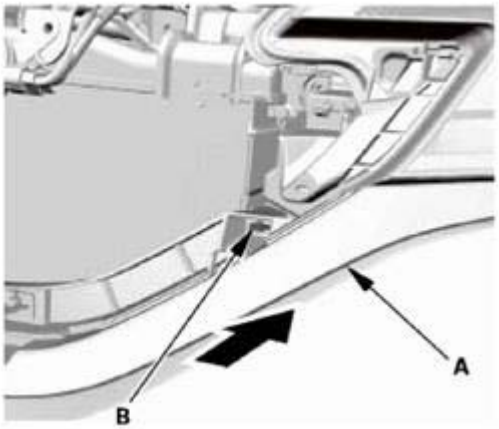

Fig. 20: Pushing Front Bumper
Courtesy of AMERICAN HONDA MOTOR CO., INC.

4. Install the front bumper (A) to the side spacer (B). Repeat this step on the opposite side.

GETtheMANUALS.org

Fig. 21: Installing Front Bumper To Side Spacer
Courtesy of AMERICAN HONDA MOTOR CO., INC.

5. Install the screws (A), the bolts (B), and the clips (C) securing the front bumper (D).

Fig. 22: Identifying Front Bumper And Fasteners With Torque Specifications
Courtesy of AMERICAN HONDA MOTOR CO., INC.

3. Front Wheel Arch Protector Front Side As Needed - Both Sides
    1. Install the front wheel arch protector (A), then install the screws (B) and the clips (C). Make sure the clips (D, E) snap into place securely. Repeat this step on the opposite side.

GETtheMANUALS.org

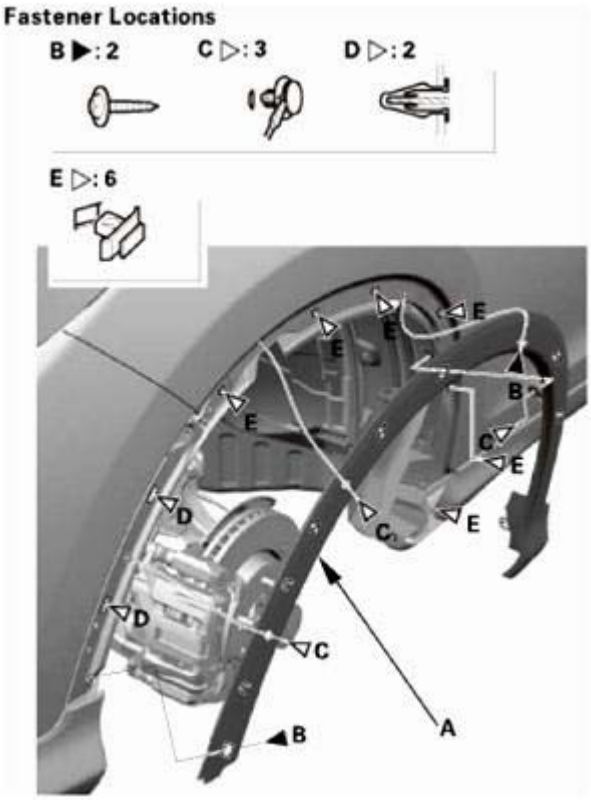

Fig. 23: Identifying Front Wheel Arch Protector And Fasteners
Courtesy of AMERICAN HONDA MOTOR CO., INC.

4. Front Grille
    1. Install the front grille (A) by pushing on the clip areas until the clips snap into place.
    2. Install the clips (B).

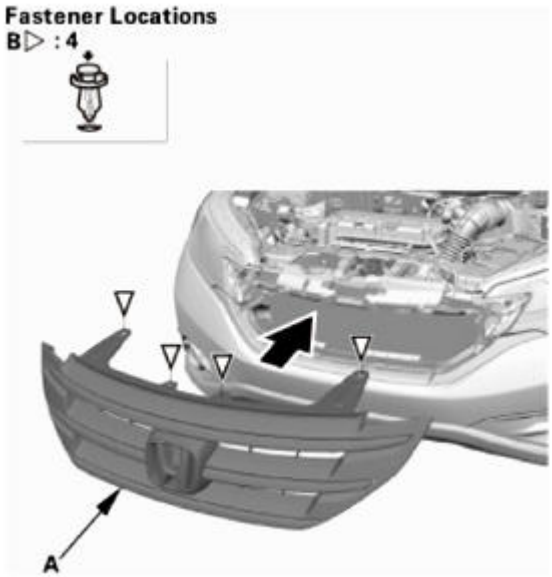

GETtheMANUALS.org

Fig. 24: Installing Front Grille
Courtesy of AMERICAN HONDA MOTOR CO., INC.

INTAKE MANIFOLD REMOVAL AND INSTALLATION

EXPLODED VIEW

1. Intake Manifold Exploded View

Exploded View

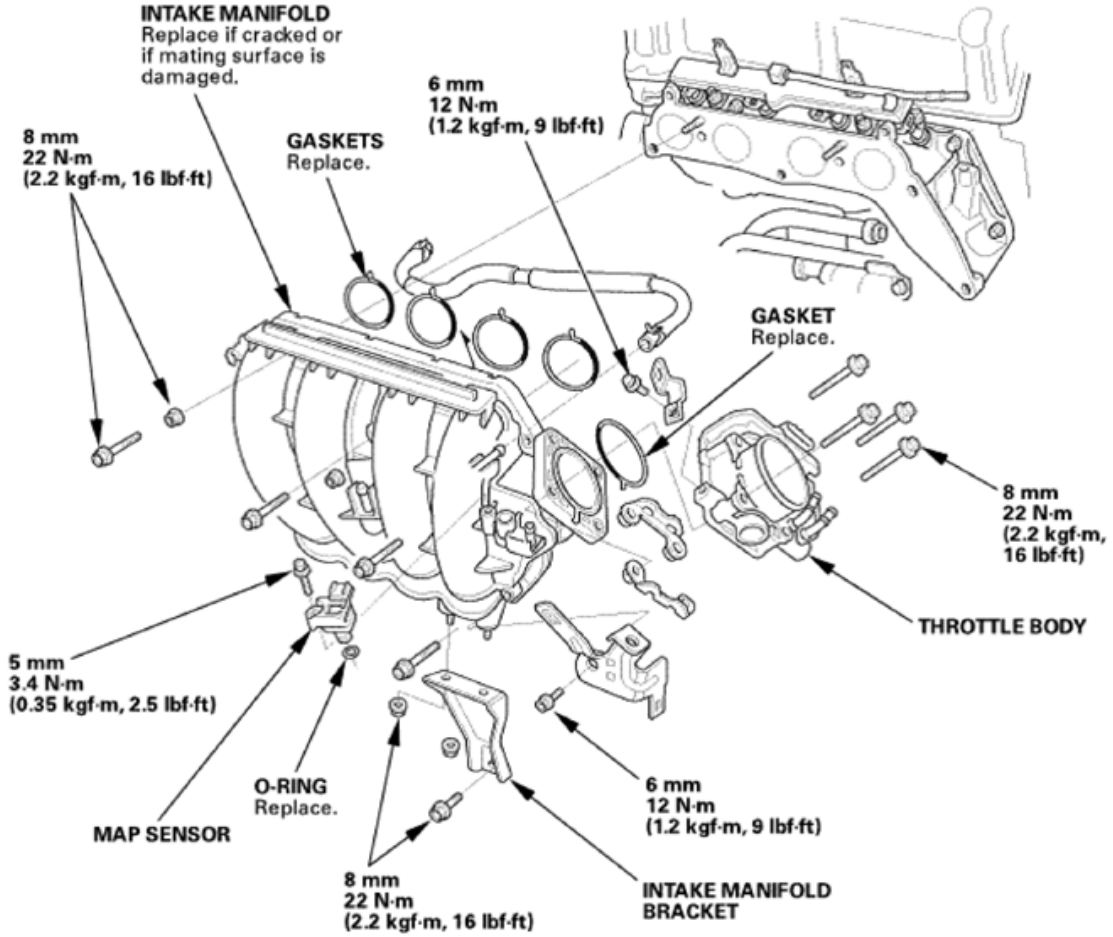

Fig. 25: Exploded View Of Intake Manifold With Torque Specifications
Courtesy of AMERICAN HONDA MOTOR CO., INC.

REMOVAL

NOTE: Refer to the Exploded View if needed during this procedure.

1. Intake Air Duct
    1. Remove the intake air duct.

GETtheMANUALS.org

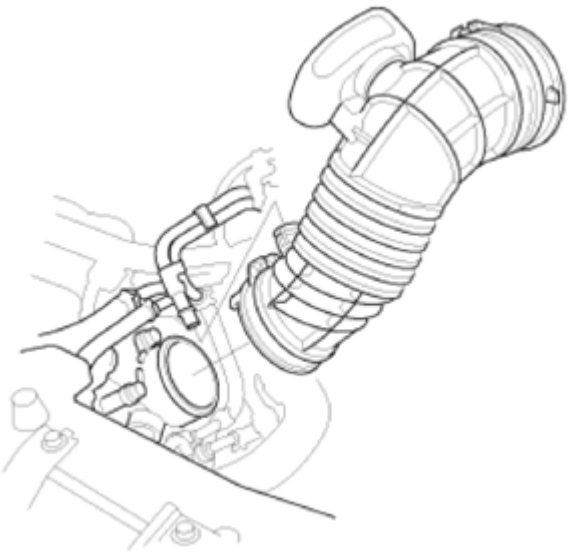

Fig. 26: Identifying Intake Air Duct
Courtesy of AMERICAN HONDA MOTOR CO., INC.

2. Throttle Body - Move
    1. Disconnect the EVAP canister hose (A) and the brake booster vacuum hose (B).

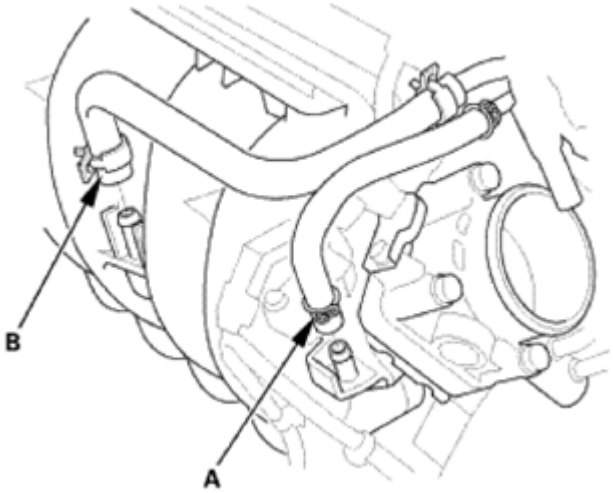

Fig. 27: Identifying EVAP Canister Hose And Brake Booster Vacuum Hose
Courtesy of AMERICAN HONDA MOTOR CO., INC.

    2. Disconnect the connector (A).
    3. Remove the harness clamp bracket (B).

GETtheMANUALS.org

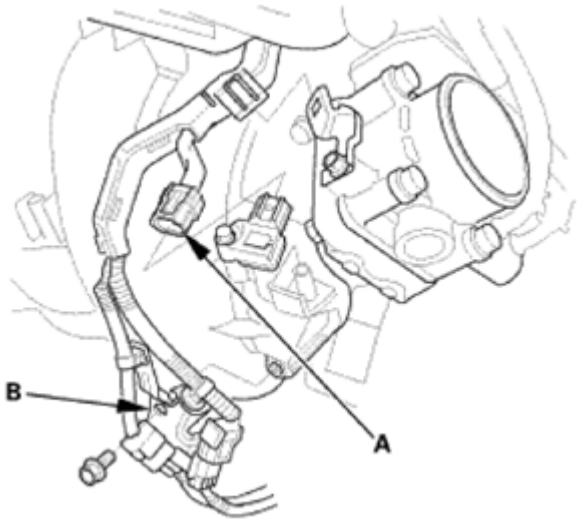

Fig. 28: Identifying Connector And Harness Clamp Bracket
Courtesy of AMERICAN HONDA MOTOR CO., INC.

4. Move the throttle body without disconnecting the hoses.

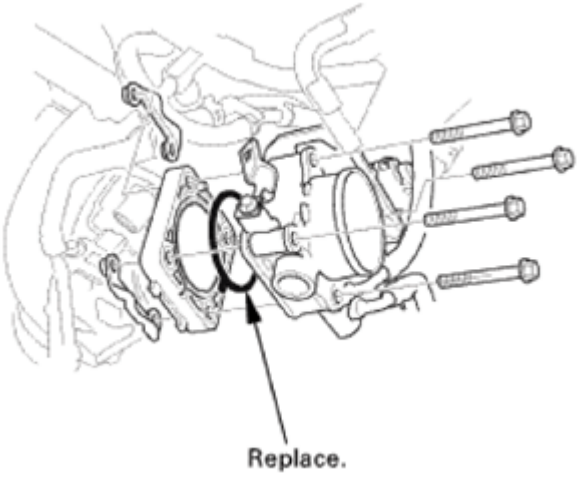

Fig. 29: Identifying O-Ring
Courtesy of AMERICAN HONDA MOTOR CO., INC.

3. Intake Manifold Assembly
    1. Remove the intake manifold lower bracket.

GETtheMANUALS.org

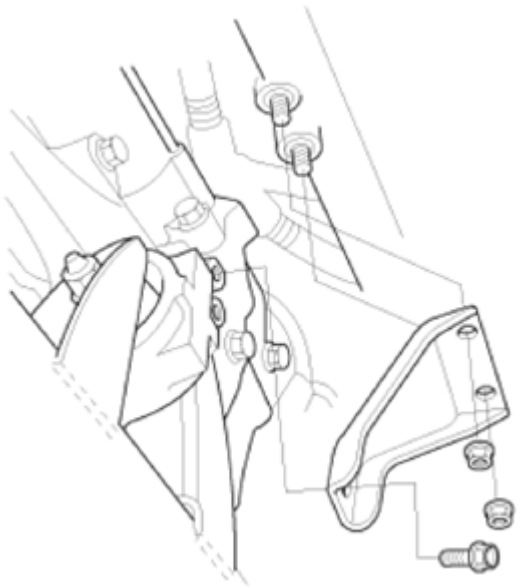

Fig. 30: Identifying Intake Manifold Lower Bracket And Mounting Bolts
Courtesy of AMERICAN HONDA MOTOR CO., INC.

2. Remove the intake manifold (A).

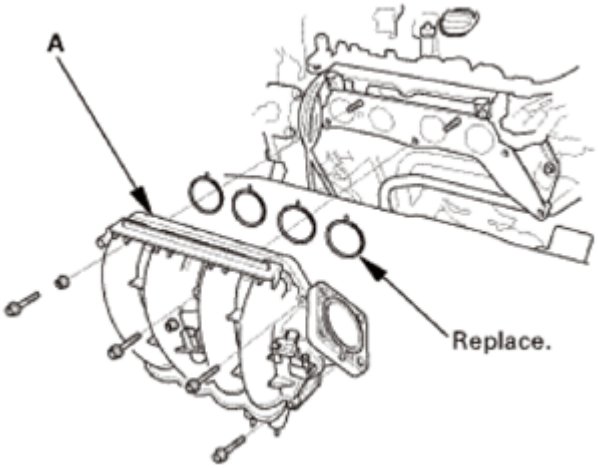

Fig. 31: Identifying Intake Manifold And Mounting Bolts
Courtesy of AMERICAN HONDA MOTOR CO., INC.

3. Disconnect the PCV hose (A).

GETtheMANUALS.org

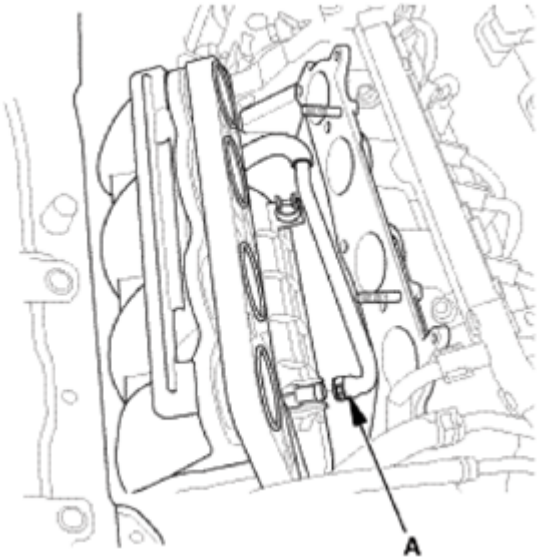

Fig. 32: Identifying PCV Hose
Courtesy of AMERICAN HONDA MOTOR CO., INC.

INSTALLATION

NOTE: Refer to the Exploded View if needed during this procedure.

1. Intake Manifold Assembly
    1. Connect the PCV hose (A).

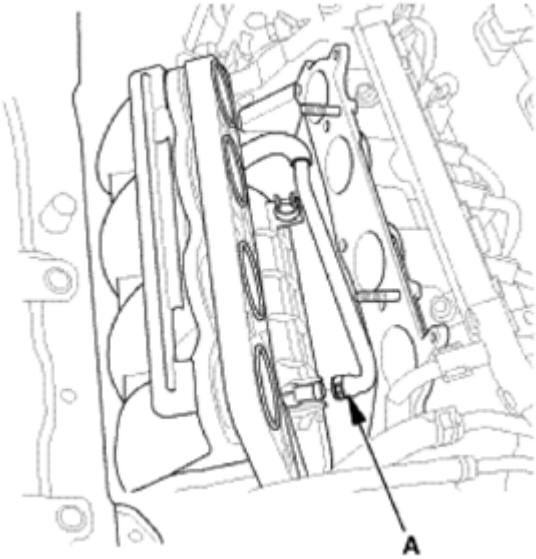

Fig. 33: Identifying PCV Hose
Courtesy of AMERICAN HONDA MOTOR CO., INC.

2. Install the intake manifold (A) with new gaskets (B).

GETtheMANUALS.org

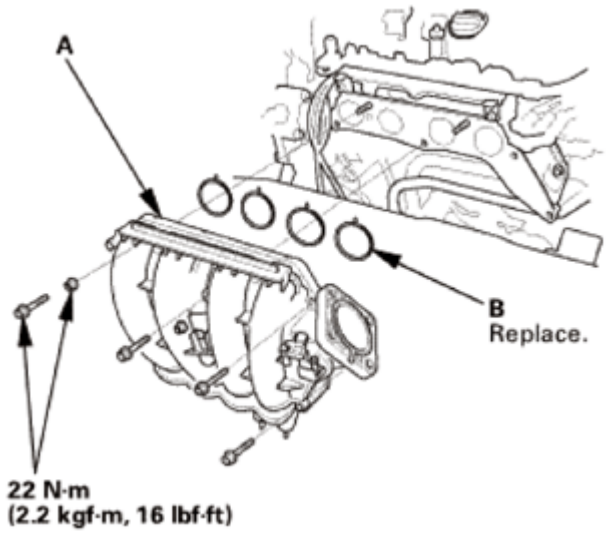

Fig. 34: Identifying Intake Manifold, Gasket And Mounting Bolts With Torque Specifications
Courtesy of AMERICAN HONDA MOTOR CO., INC.

3. Install the intake manifold lower bracket.

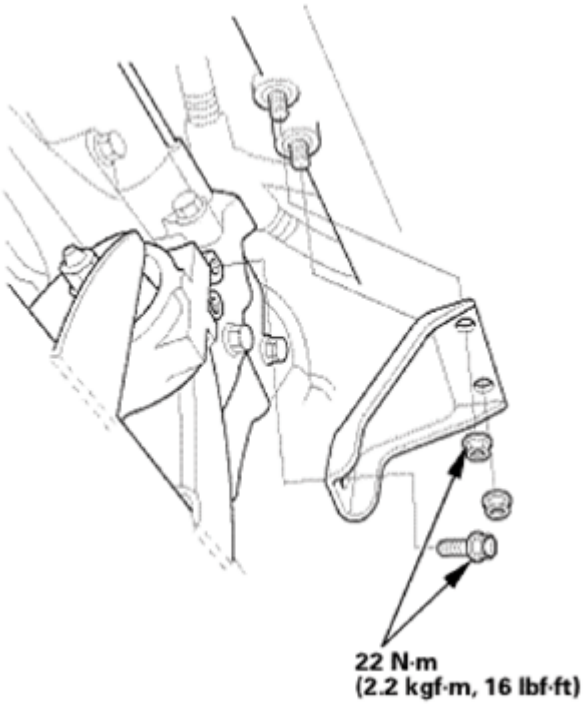

Fig. 35: Identifying Intake Manifold Lower Bracket And Mounting Bolts With Torque Specifications
Courtesy of AMERICAN HONDA MOTOR CO., INC.

2. Throttle Body - Move
    1. Install the throttle body (A) with a new gasket (B).

GETtheMANUALS.org

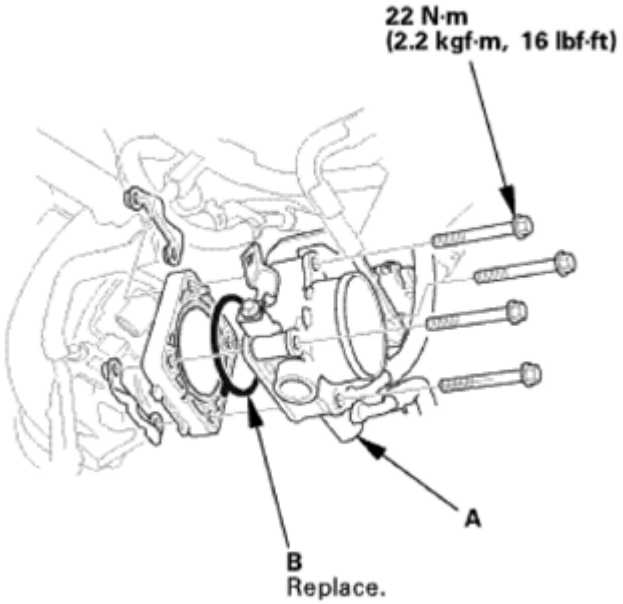

Fig. 36: Identifying Throttle Body, Gasket And Mounting Bolts With Torque Specifications
Courtesy of AMERICAN HONDA MOTOR CO., INC.

2. Install the harness clamp bracket (A).
3. Connect the connector (B).

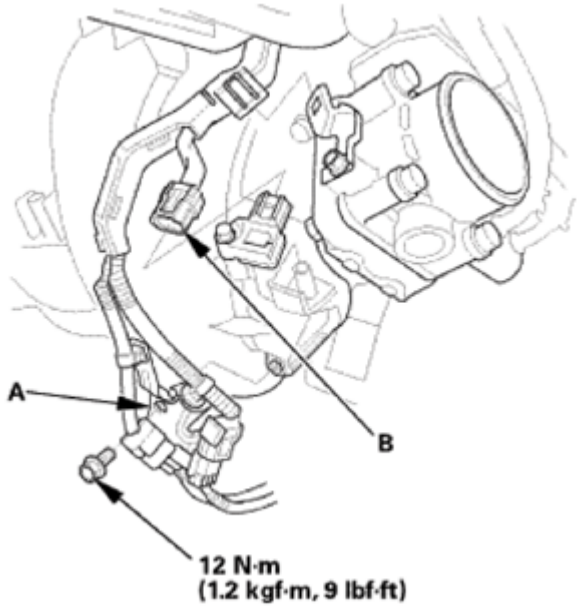

Fig. 37: Identifying Harness Clamp Bracket And Connector With Torque Specifications
Courtesy of AMERICAN HONDA MOTOR CO., INC.

4. Connect the EVAP canister hose (A) and the brake booster vacuum hose (B).

GETtheMANUALS.org

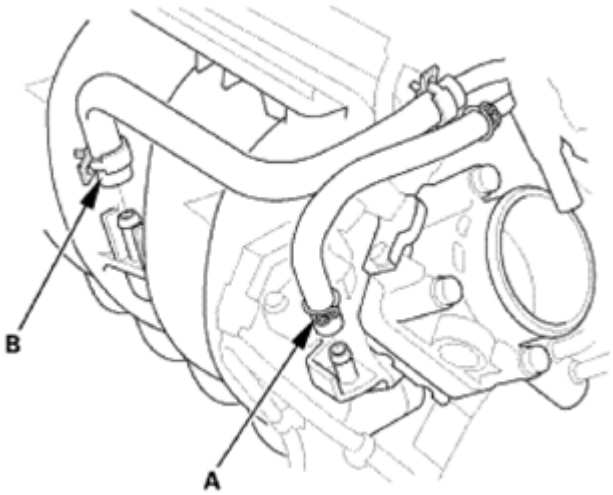

Fig. 38: Identifying EVAP Canister Hose And Brake Booster Vacuum Hose
Courtesy of AMERICAN HONDA MOTOR CO., INC.

3. Intake Air Duct
    1. Install the intake air duct.

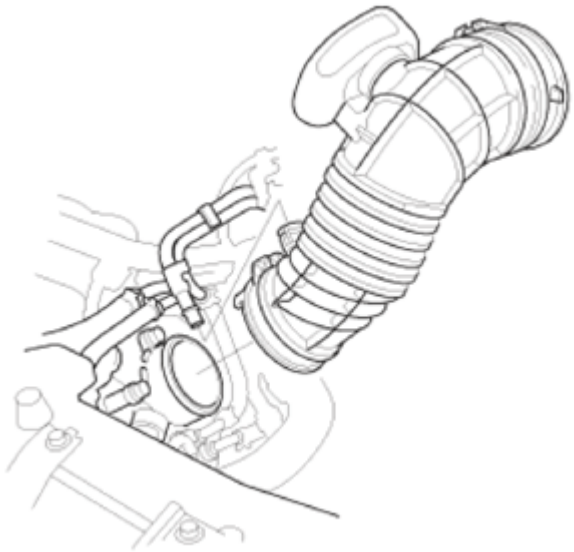

Fig. 39: Identifying Intake Air Duct
Courtesy of AMERICAN HONDA MOTOR CO., INC.

4. Tubes, Hoses, and Connectors After Installation Check
    1. After installation, check that all tubes, hoses, and connectors are installed correctly.

GETtheMANUALS.org

AMBIENT LIGHT REMOVAL, INSTALLATION, AND TEST

REMOVAL

NOTE: **Step 1 shows removing the vehicle without moonroof, step 2 shows removing the vehicle with moonroof.**

1. Front Individual Map Light (without moonroof)
    1. Turn the front individual map light switch OFF.
    2. Carefully pry off the lenses (A) with a flat-tip screwdriver.
    3. Remove the bulbs.
    4. Remove the front individual map light (B).
    5. Disconnect the connectors.

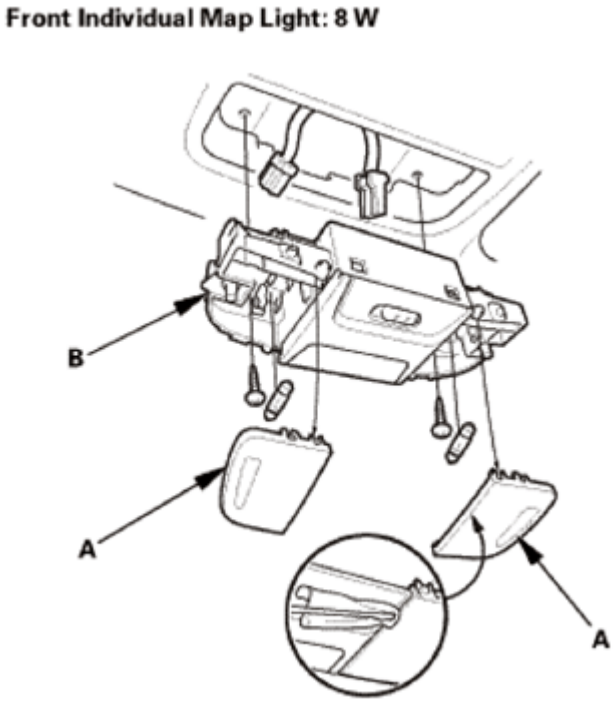

Fig. 1: Identifying Lenses And Front Individual Map Light
Courtesy of AMERICAN HONDA MOTOR CO., INC.

2. Front Individual Map Light (with moonroof)
    1. Turn the front individual map light switch OFF.
    2. Carefully pry off the lenses (A) with a flat-tip screwdriver.

GETtheMANUALS.org

3. Remove the bulbs.
4. Remove the front individual map light (B).
5. Disconnect the connectors.

Front Individual Map Light: 8 W

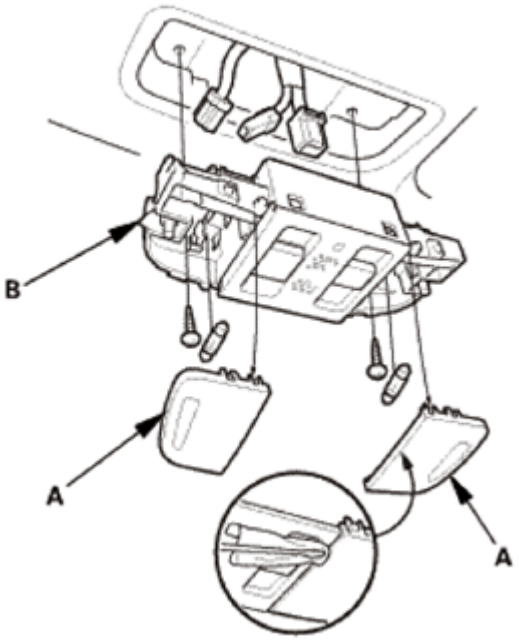

Fig. 2: Identifying Lenses And Front Individual Map Light
Courtesy of AMERICAN HONDA MOTOR CO., INC.

TEST

NOTE: **Step 1 shows testing the vehicle without moonroof, step 2 shows testing the vehicle with moonroof.**

1. Ambient Light - Test (without moonroof)
    1. Remove the interior light switch (A) from the individual map light (B).

GETtheMANUALS.org

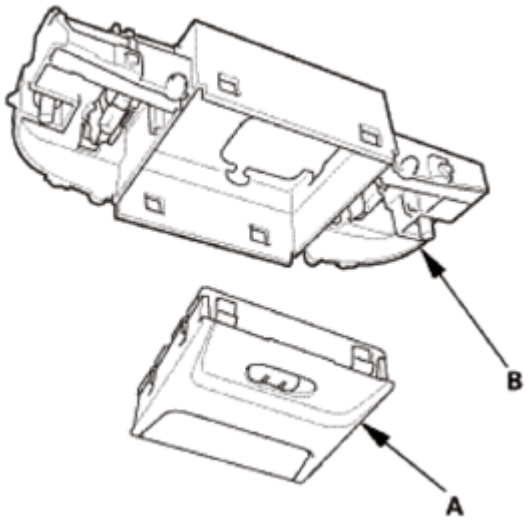

Fig. 3: Identifying Interior Light Switch And Individual Map Light
Courtesy of AMERICAN HONDA MOTOR CO., INC.

2. Connect battery power to terminal No. 7 and ground to terminal No. 6. The ambient light should come on.
3. If the ambient light does not come on, the ambient light is faulty; replace the interior light switch (A).

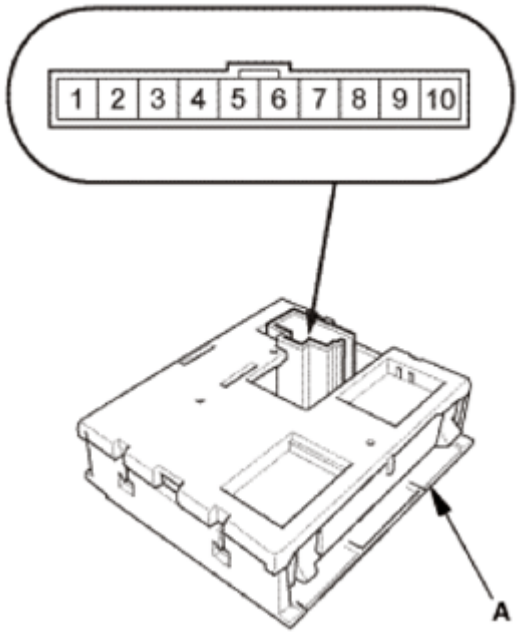

Fig. 4: Identifying Interior Light Switch
Courtesy of AMERICAN HONDA MOTOR CO., INC.

2. Ambient Light - Test (with moonroof)
    1. Remove the moonroof switch (A) from the individual map light (B).

GETtheMANUALS.org

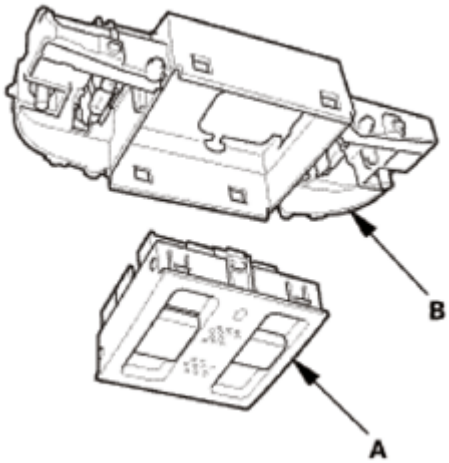

Fig. 5: Identifying Moonroof Switch And Individual Map Light
Courtesy of AMERICAN HONDA MOTOR CO., INC.

2. Connect battery power to terminal No. 4 and ground to terminal No. 6. The ambient light should come on.
3. If the ambient light does not come on, the ambient light is faulty; replace the moonroof switch (A).

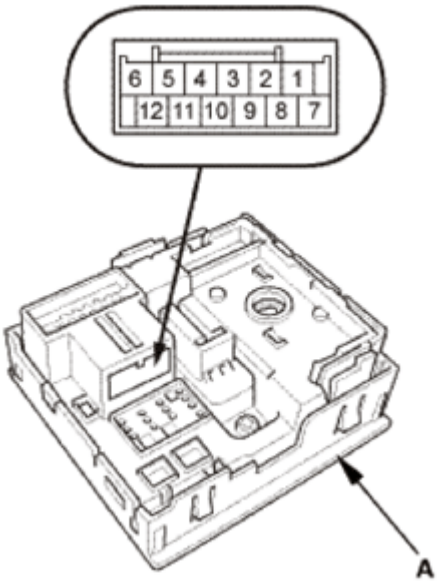

Fig. 6: Identifying Moonroof Switch
Courtesy of AMERICAN HONDA MOTOR CO., INC.

INSTALLATION

NOTE: **Step 1 shows installing the vehicle with moonroof, step 2 shows installing the vehicle without moonroof.**

1. Front Individual Map Light (with moonroof)

GETtheMANUALS.org

1. Connect the connectors.
2. Install the front individual map lights (A).
3. Install the bulbs.
4. Carefully install the lenses (B).

Front Individual Map Light: 8 W

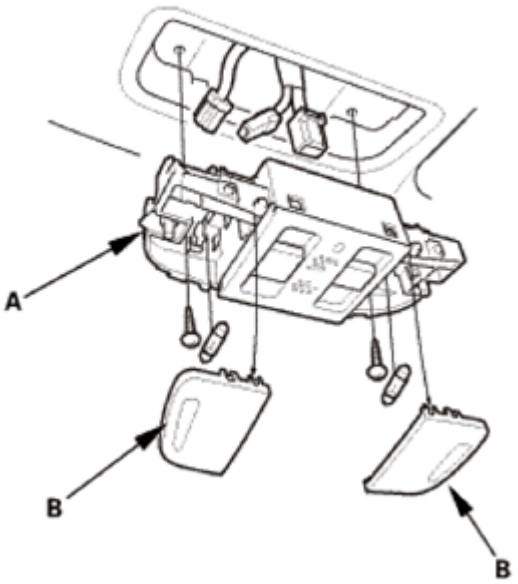

Fig. 7: Identifying Front Individual Map Lights And Lenses
Courtesy of AMERICAN HONDA MOTOR CO., INC.

2. Front Individual Map Light (without moonroof)
    1. Connect the connectors.
    2. Install the front individual map light (A).
    3. Install the bulbs.
    4. Carefully install the lenses (B).

GETtheMANUALS.org

Front Individual Map Light: 8 W

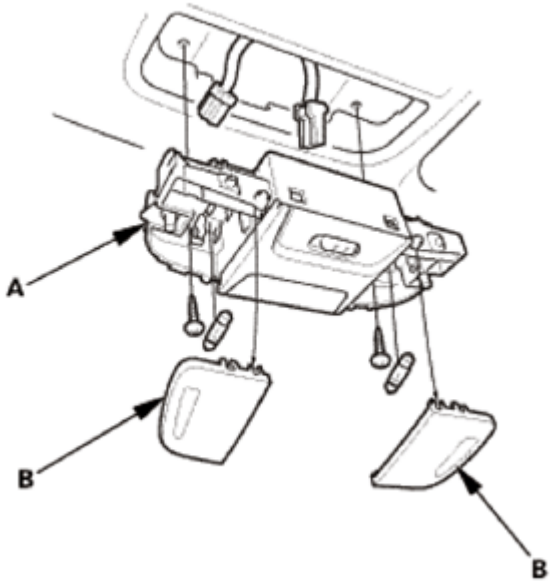

Fig. 8: Identifying Front Individual Map Light And Lenses
Courtesy of AMERICAN HONDA MOTOR CO., INC.

CARGO AREA LIGHT REMOVAL, INSTALLATION, AND TEST

REMOVAL

1. Cargo Area Light
    1. Turn the cargo area light switch OFF.
    2. Carefully pry off the lens (A).
    3. Remove the bulb.
    4. Remove the cargo area light (B).
    5. Disconnect the connector.

GETtheMANUALS.org

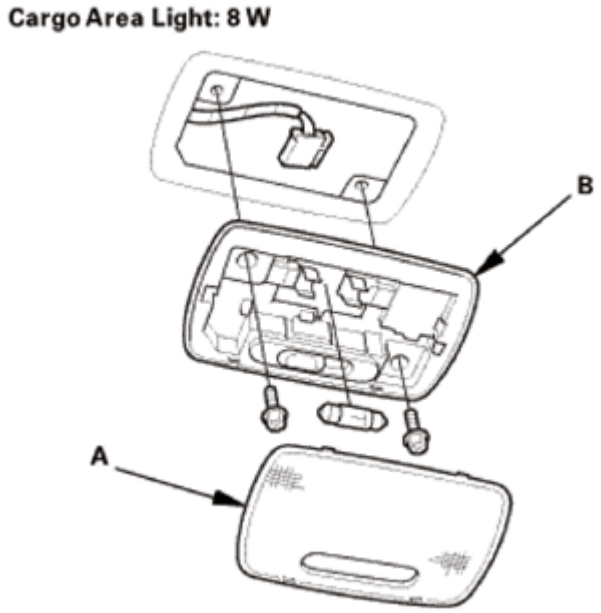

Fig. 9: Identifying Cargo Area Light And Lens
Courtesy of AMERICAN HONDA MOTOR CO., INC.

TEST

1. Cargo Area Light - Test
    1. Check for continuity between the terminals in each switch position according to the table.
    2. If the continuity is not as specified, replace the bulb or the cargo area light (A).

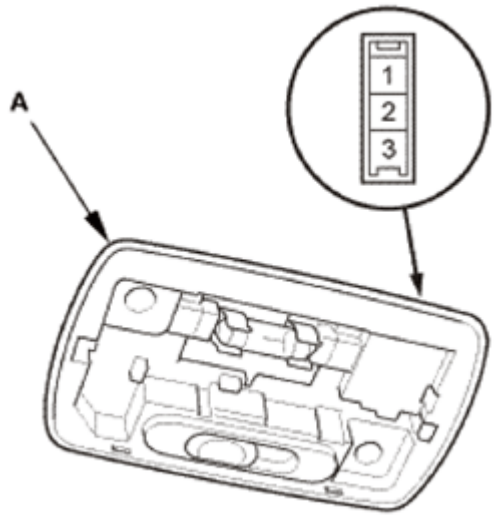

Fig. 10: Identifying Cargo Area Light
Courtesy of AMERICAN HONDA MOTOR CO., INC.

GETtheMANUALS.org

Terminal / Position	1	Body ground		2
ON		○	⊖	○
OFF				
DOOR	○		⊖	○

Fig. 11: Cargo Area Light Connector Terminal Continuity Chart
Courtesy of AMERICAN HONDA MOTOR CO., INC.

INSTALLATION

1. Cargo Area Light
    1. Connect the connector.
    2. Install the cargo area light (A).
    3. Install the bulb.
    4. Carefully install the lens (B).

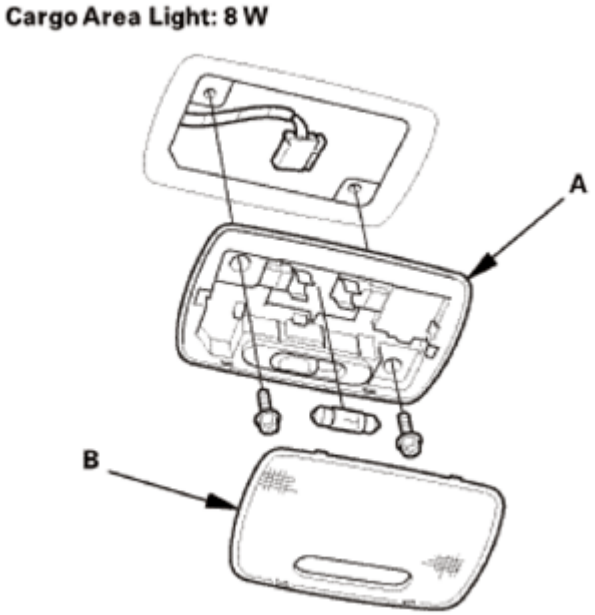

Fig. 12: Identifying Cargo Area Light And Lens
Courtesy of AMERICAN HONDA MOTOR CO., INC.

CEILING LIGHT REMOVAL, INSTALLATION, AND TEST

REMOVAL

NOTE: **Step 1 shows removing the vehicle without RES, step 2 shows removing the vehicle with RES.**

GETtheMANUALS.org

1. Ceiling Light (without RES)
    1. Turn the ceiling light switch OFF.
    2. Carefully pry off the lens (A).
    3. Remove the bulb.
    4. Remove the ceiling light (B).
    5. Disconnect the connector.

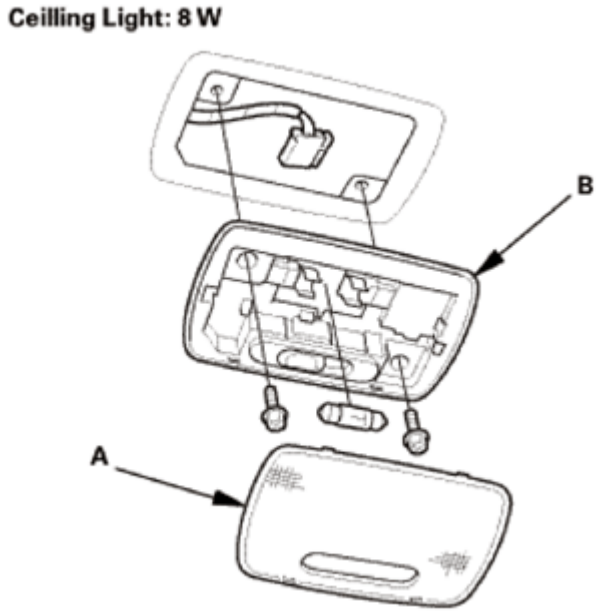

Fig. 13: Identifying Lens And Ceiling Light
Courtesy of AMERICAN HONDA MOTOR CO., INC.

2. Ceiling Light (with RES)
    1. Turn the ceiling light switch OFF.
    2. Carefully pry off the lenses (A) with a flat-tip screwdriver.
    3. Remove the bulbs.
    4. Remove the ceiling light (B).
    5. Disconnect the connector.

GETtheMANUALS.org

Fig. 14: Identifying Lenses And Ceiling Light
Courtesy of AMERICAN HONDA MOTOR CO., INC.

TEST

NOTE: **Step 1 shows testing the vehicle without RES, step 2 shows testing the vehicle with RES.**

1. Ceiling Light - Test (without RES)

NOTE: **When doing the ceiling light test, install the bulb correctly.**

1. Check for continuity between the terminals in each switch position according to the table.
2. If the continuity is not as specified, replace the bulb or the ceiling light (A).

GETtheMANUALS.org

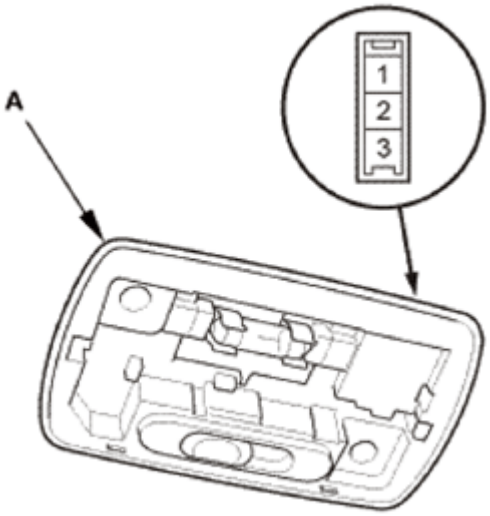

Fig. 15: Identifying Ceiling Light
Courtesy of AMERICAN HONDA MOTOR CO., INC.

Terminal / Position	1		2		3	Body ground
ON			○	◎	○	○
OFF						
DOOR	○	◎	○			

Fig. 16: Ceiling Light Connector Terminal Continuity Chart
Courtesy of AMERICAN HONDA MOTOR CO., INC.

2. Ceiling Light - Test (with RES)

NOTE: When doing the ceiling light test, install the bulbs correctly.

1. Check for continuity between the terminals in each switch position according to the table.
2. If the continuity is not as specified, replace the bulb or the ceiling light (A).

GETtheMANUALS.org

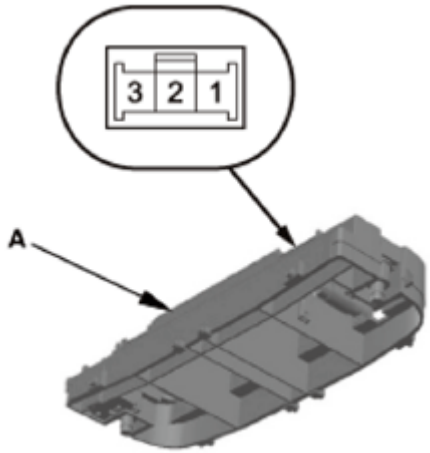

Fig. 17: Identifying Ceiling Light And Connector
Courtesy of AMERICAN HONDA MOTOR CO., INC.

Terminal / Position	1		2	Body ground	3
ON	○	⊗	○	○	
OFF	○	⊗			○

Fig. 18: Ceiling Light Connector Terminal Chart
Courtesy of AMERICAN HONDA MOTOR CO., INC.

INSTALLATION

NOTE: **Step 1 shows installing the vehicle with RES, step 2 shows installing the vehicle without RES.**

1. Ceiling Light (with RES)
    1. Connect the connector.
    2. Install the ceiling light (A).
    3. Install the bulbs.
    4. Carefully install the lens (B).

GETtheMANUALS.org

Fig. 19: Identifying Ceiling Light And Lens
Courtesy of AMERICAN HONDA MOTOR CO., INC.

2. Ceiling Light (without RES)
    1. Connect the connector.
    2. Install the ceiling light (A).
    3. Install the bulb.
    4. Carefully install the lens (B).

GETtheMANUALS.org

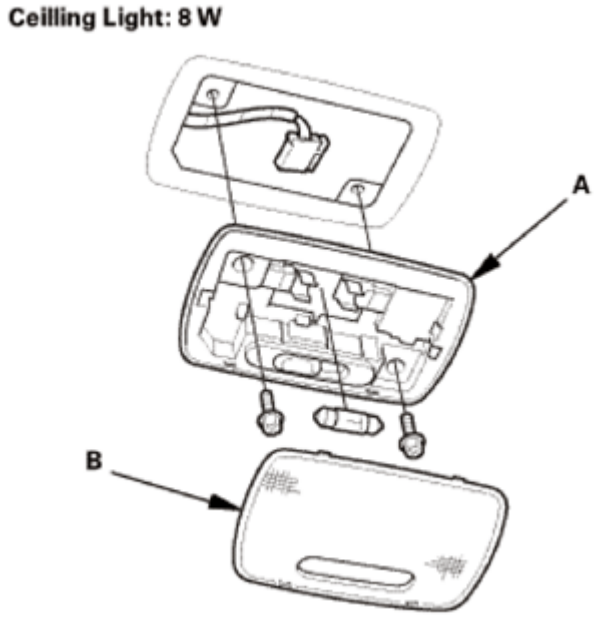

Fig. 20: Identifying Ceiling Light And Lens
Courtesy of AMERICAN HONDA MOTOR CO., INC.

COMBINATION LIGHT SWITCH REMOVAL, INSTALLATION, AND TEST

REMOVAL

SRS components are located in this area. Review the **SRS COMPONENT LOCATIONS** and the **PRECAUTIONS AND PROCEDURES** before doing repairs or service.

1. Upper Column Cover
    1. Carefully pry out the dashboard meter visor blind cover (A) with the appropriate trim tool to detach the clips (B) and the hook (C), then tuck up the dashboard meter visor blind cover.

GETtheMANUALS.org

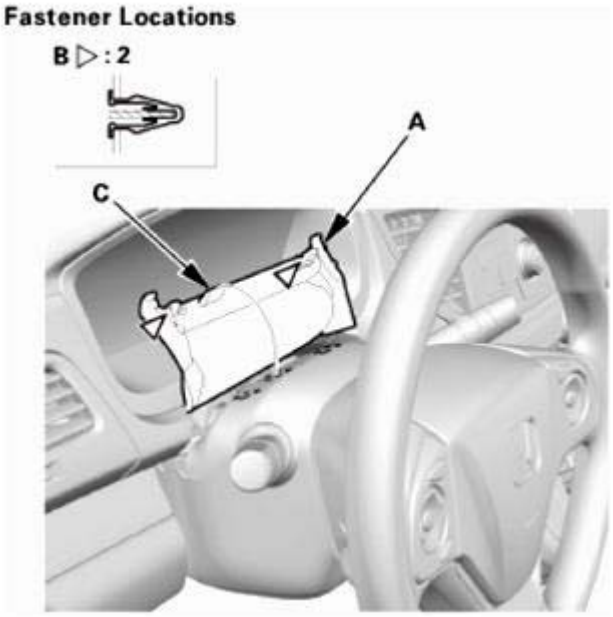

Fig. 21: Identifying Dashboard Meter Visor Blind Cover, Clips And Hook
Courtesy of AMERICAN HONDA MOTOR CO., INC.

2. Detach the hooks (A), then remove the upper column cover (B).

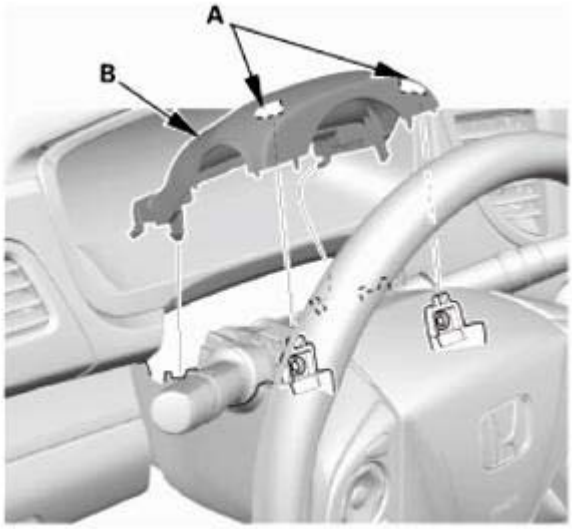

Fig. 22: Identifying Upper Column Cover And Hooks
Courtesy of AMERICAN HONDA MOTOR CO., INC.

2. Lower Column Cover
    1. Turn the steering wheel to the left. Remove the screw (A) securing the lower column cover (B) from the front side.
    2. Turn the steering wheel to the right. Remove the screw securing the lower column cover from the front side.

GETtheMANUALS.org

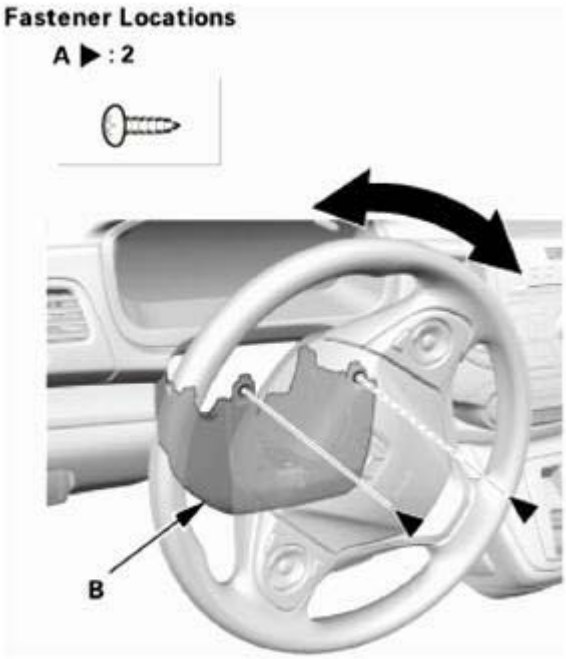

Fig. 23: Turning Steering Wheel
Courtesy of AMERICAN HONDA MOTOR CO., INC.

3. Remove the screw (A), then remove the lower column cover (B).

GETtheMANUALS.org

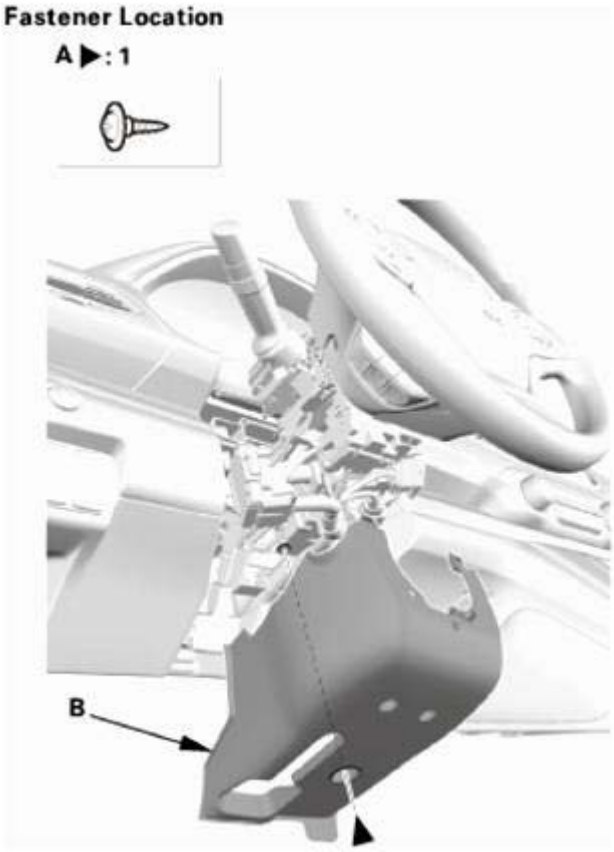

Fig. 24: Identifying Lower Column Cover And Screw
Courtesy of AMERICAN HONDA MOTOR CO., INC.

3. Combination Light Switch
    1. Disconnect the connector.
    2. Remove the combination light switch (A) by pushing the tabs.

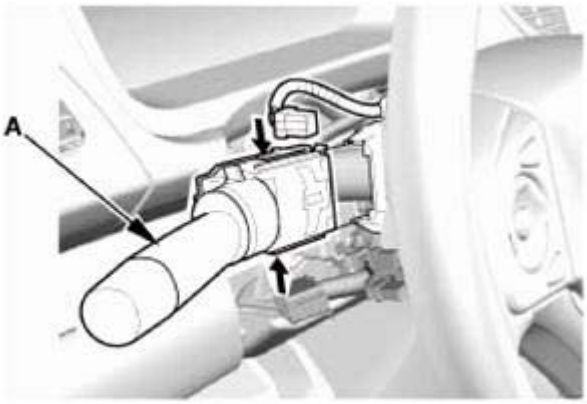

Fig. 25: Pushing Combination Light Switch Tabs
Courtesy of AMERICAN HONDA MOTOR CO., INC.

GETtheMANUALS.org

TEST

1. Combination Light Switch - Test
    1. Inspect the connector terminals to be sure they are all making good contact.
        - If the terminals are bent, loose or corroded, repair them as necessary, and recheck the system.
        - If the terminals are OK, go to step 2.

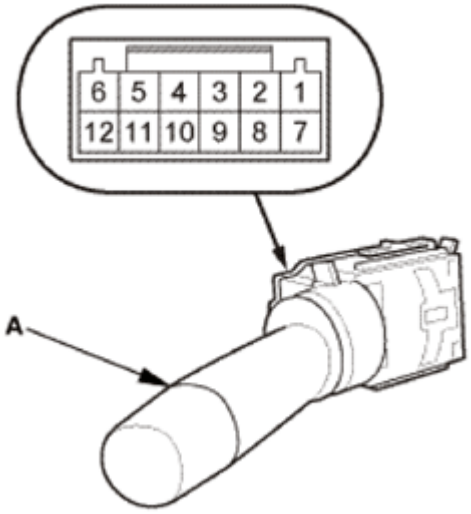

Fig. 26: Identifying Combination Light Switch And Connector
Courtesy of AMERICAN HONDA MOTOR CO., INC.

    2. Check for continuity between the terminals in each switch position according to the table.

GETtheMANUALS.org

Light switch (Without automatic lighting)

Position \ Terminal			1	6	7	8	11	12
Headlight switch	OFF		○	○				
	≡DC≡			○		○		
	≡D	LOW		○	○	○		
		HIGH		○	○	○		
				○			○	
Passing switch	OFF							
	ON			○				○

Light switch (With automatic lighting)

Position \ Terminal			1	6	7	8	11	12
Headlight switch	OFF		○	○				
	≡DC≡			○		○		
	≡D	LOW		○	○	○		
		HIGH		○	○	○		
				○			○	
	AUTO	HIGH		○			○	
		PASSING		○				○
Passing switch	OFF							
	ON			○				○

Turn signal switch

Position \ Terminal	6	9	10
Left	○	○	
Neutral			
Right	○		○

Fog light switch

Position \ Terminal	2		6
ON	○		○
OFF			

Fig. 27: Light Switch Connector Terminal Continuity Chart
Courtesy of AMERICAN HONDA MOTOR CO., INC.

3. If the continuity is not as specified, replace the combination light switch (A).

INSTALLATION

SRS components are located in this area. Review the **SRS COMPONENT LOCATIONS** and the **PRECAUTIONS AND PROCEDURES** before doing repairs or service.

GETtheMANUALS.org

1. Combination Light Switch
    1. Install the combination light switch (A).
    2. Connect the connector.

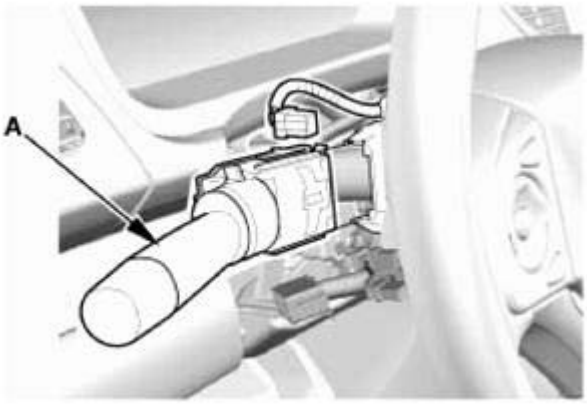

Fig. 28: Identifying Combination Light Switch
Courtesy of AMERICAN HONDA MOTOR CO., INC.

2. Lower Column Cover
    1. Push in on the lower column cover just above ignition switch opening (A) to engage the column cover with the locking tab (B).

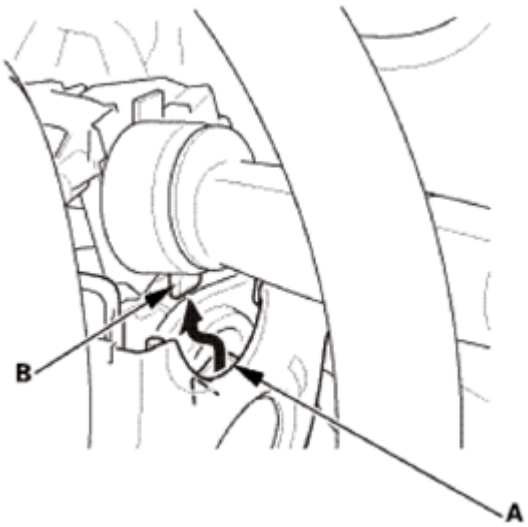

Fig. 29: Identifying Ignition Switch Opening And Locking Tab
Courtesy of AMERICAN HONDA MOTOR CO., INC.

    2. Install the lower column cover (A), then install the screw (B).

GETtheMANUALS.org

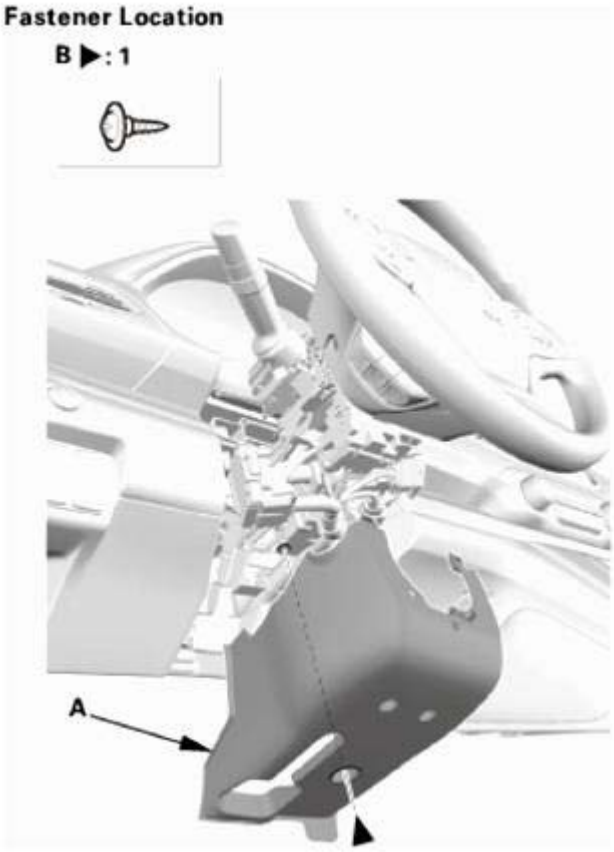

Fig. 30: Identifying Lower Column Cover And Screw
Courtesy of AMERICAN HONDA MOTOR CO., INC.

3. Turn the steering wheel to the left. Install the screw (A) securing the lower column cover (B) from the front side.
4. Turn the steering wheel to the right. Install the screw securing the lower column cover from the front side.

GETtheMANUALS.org

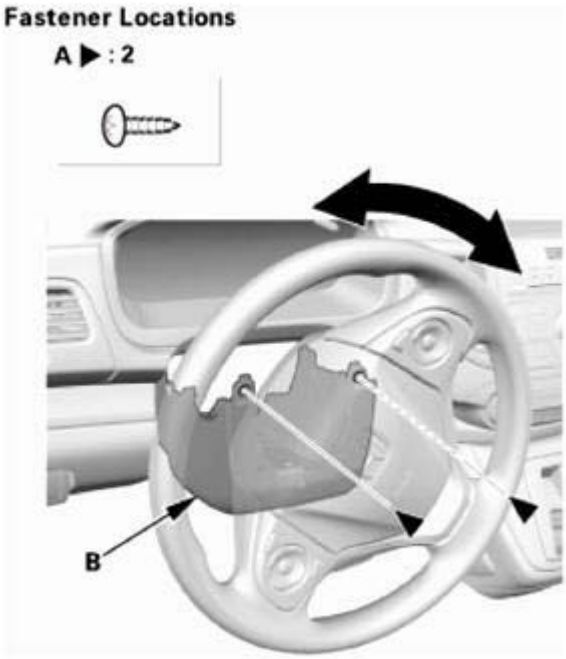

Fig. 31: Turning Steering Wheel
Courtesy of AMERICAN HONDA MOTOR CO., INC.

3. Upper Column Cover
    1. Install the upper column cover (A). Make sure the hooks (B) snap into place securely.

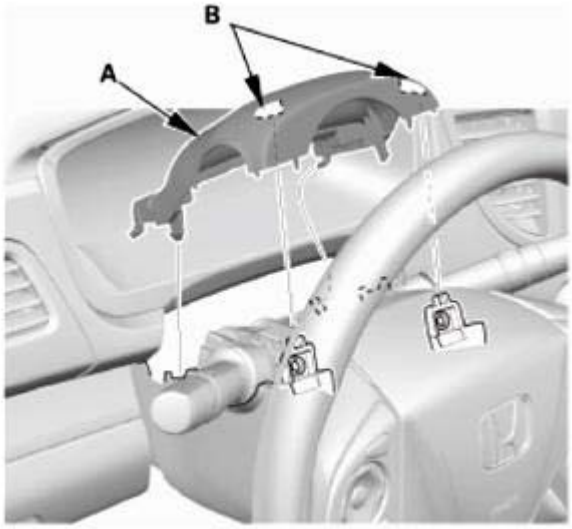

Fig. 32: Identifying Upper Column Cover And Hooks
Courtesy of AMERICAN HONDA MOTOR CO., INC.

    2. Install the dashboard meter visor blind cover (A). Make sure the clips (B) and the hook (C) snap into place securely

GETtheMANUALS.org

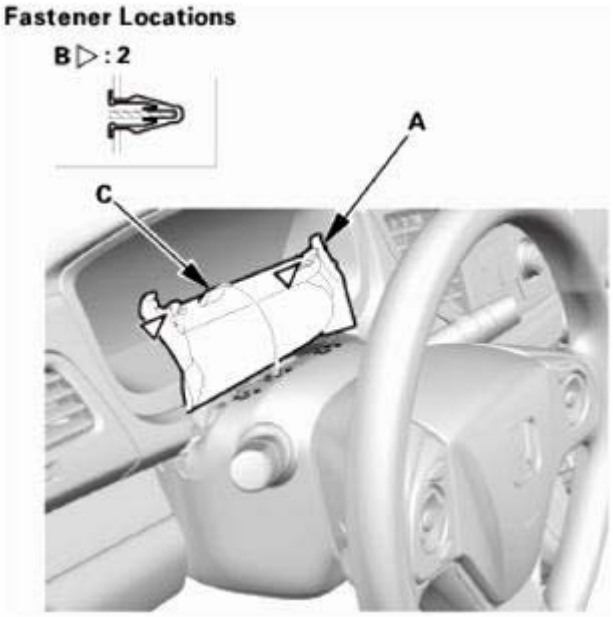

Fig. 33: Identifying Dashboard Meter Visor Blind Cover, Clips And Hook
Courtesy of AMERICAN HONDA MOTOR CO., INC.

ENTRY LIGHTS CONTROL SYSTEM COMPONENT LOCATION INDEX

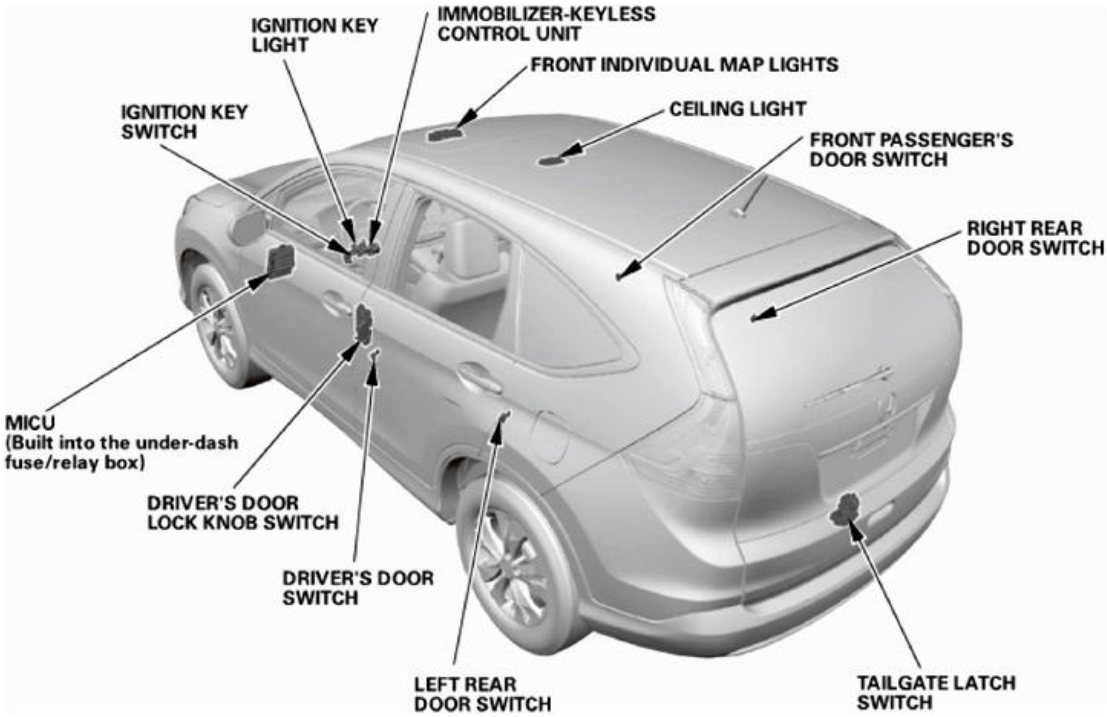

Fig. 34: Entry Lights Control System Component Location
Courtesy of AMERICAN HONDA MOTOR CO., INC.

GETtheMANUALS.org

CEILING LIGHT	**REMOVAL, INSTALLATION, AND TEST**
DRIVER'S DOOR LOCK KNOB SWITCH (Built into the door latch)	**TEST**
FRONT INDIVIDUAL MAP LIGHT	**REMOVAL, INSTALLATION, AND TEST**
IGNITION KEY LIGHT	**TEST**
IGNITION KEY SWITCH	**TEST**
IMMOBILIZER-KEYLESS CONTROL UNIT (Has built-in receiver)	**Removal and Installation** See **IMMOBILIZER-KEYLESS CONTROL UNIT REGISTRATION** or **IMMOBILIZER-KEYLESS CONTROL UNIT REMOVAL AND INSTALLATION**
MICU (Built into the under-dash fuse/relay box)	**INPUT TEST**
	REMOVAL AND INSTALLATION
TAILGATE LATCH SWITCH	**TEST**
	REMOVAL AND INSTALLATION

FRONT INDIVIDUAL MAP LIGHT REMOVAL, INSTALLATION, AND TEST

REMOVAL

NOTE: **Step 1 shows removing the vehicle without moonroof, step 2 shows removing the vehicle with moonroof.**

1. Front Individual Map Light (without moonroof)
    1. Turn the front individual map light switch OFF.
    2. Carefully pry off the lenses (A) with a flat-tip screwdriver.
    3. Remove the bulbs.
    4. Remove the front individual map light (B).
    5. Disconnect the connectors.

GETtheMANUALS.org

Front Individual Map Light: 8 W

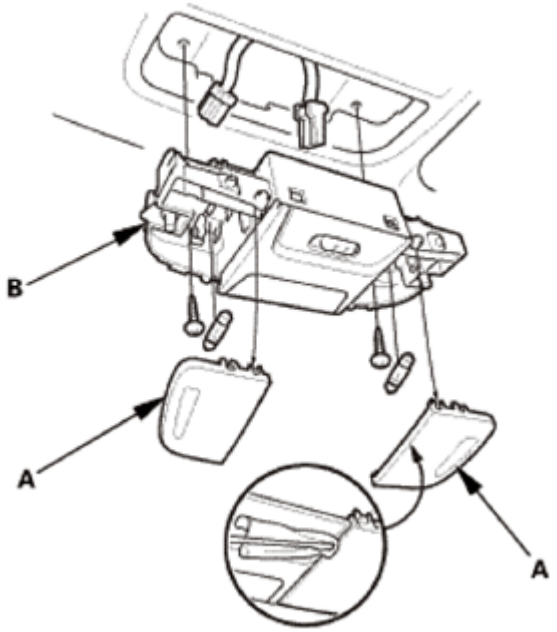

Fig. 35: Identifying Lenses And Front Individual Map Light
Courtesy of AMERICAN HONDA MOTOR CO., INC.

2. Front Individual Map Light (with moonroof)
    1. Turn the front individual map light switch OFF.
    2. Carefully pry off the lenses (A) with a flat-tip screwdriver.
    3. Remove the bulbs.
    4. Remove the front individual map light (B).
    5. Disconnect the connectors.

GETtheMANUALS.org

Front Individual Map Light: 8 W

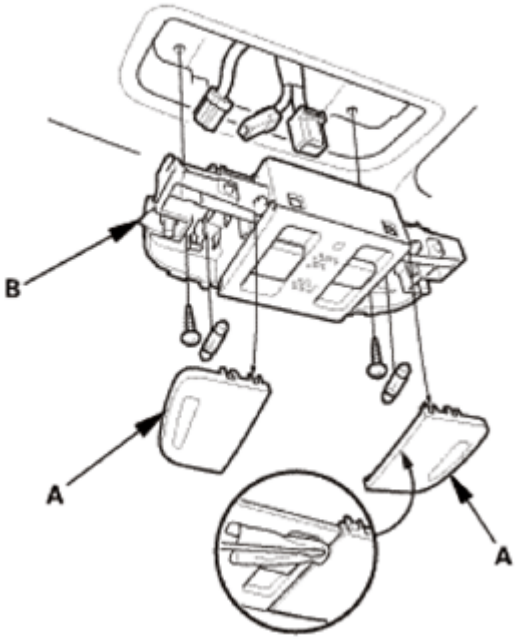

Fig. 36: Identifying Front Individual Map Light And Lenses
Courtesy of AMERICAN HONDA MOTOR CO., INC.

TEST

NOTE: **Step 1 shows testing the vehicle without moonroof, step 2 shows testing the vehicle with moonroof.**

1. Front Individual Map Light - Test (without moonroof)

NOTE: **When doing the individual map light test, install the bulb correctly.**

1. Check for continuity between the terminals in each switch position according to the table.
2. If the continuity is not as specified, replace the bulb or the individual map light (A).

GETtheMANUALS.org

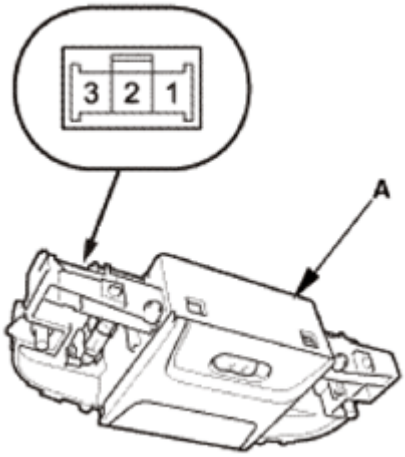

Fig. 37: Identifying Individual Map Light And Connector
Courtesy of AMERICAN HONDA MOTOR CO., INC.

Position \ Terminal		1		2	Body ground	3
LEFT	ON	○	⊗	○	○	
	OFF	○	⊗			○
RIGHT	ON	○	⊗	○	○	
	OFF	○	⊗			○

Fig. 38: Individual Map Light Connector Terminal Chart
Courtesy of AMERICAN HONDA MOTOR CO., INC.

2. Front Individual Map Light - Test (with moonroof)

NOTE: When doing the individual map light test, install the bulb correctly.

1. Check for continuity between the terminals in each switch position according to the table.
2. If the continuity is not as specified, replace the bulb or the individual map light (A).

GETtheMANUALS.org

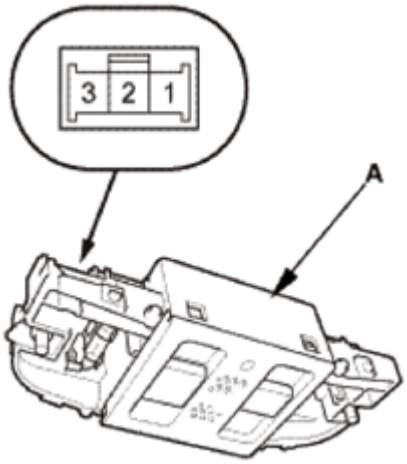

Fig. 39: Identifying Individual Map Light
Courtesy of AMERICAN HONDA MOTOR CO., INC.

Position \ Terminal		1		2	Body ground	3
LEFT	ON	○	⊕	○	○	
	OFF	○	⊕			○
RIGHT	ON	○	⊕	○	○	
	OFF	○	⊕			○

Fig. 40: Individual Map Light Connector Terminal Continuity Chart
Courtesy of AMERICAN HONDA MOTOR CO., INC.

INSTALLATION

NOTE: **Step 1 shows installing the vehicle with moonroof, step 2 shows installing the vehicle without moonroof.**

1. Front Individual Map Light (with moonroof)
    1. Connect the connectors.
    2. Install the front individual map lights (A).
    3. Install the bulbs.
    4. Carefully install the lenses (B).

GETtheMANUALS.org

Front Individual Map Light: 8 W

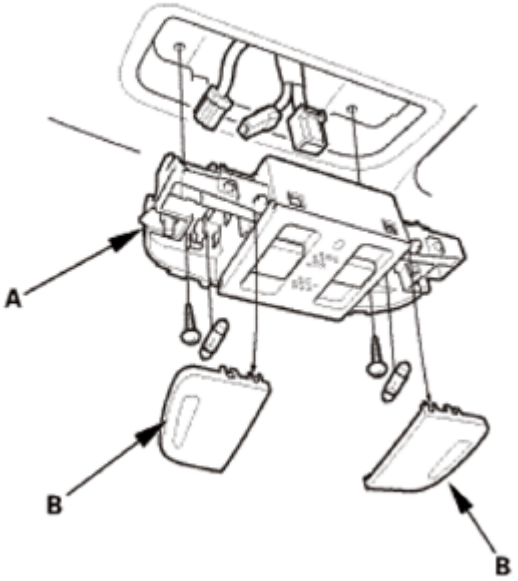

Fig. 41: Identifying Front Individual Map Lights And Lenses
Courtesy of AMERICAN HONDA MOTOR CO., INC.

2. Front Individual Map Light (without moonroof)
    1. Connect the connectors.
    2. Install the front individual map light (A).
    3. Install the bulbs.
    4. Carefully install the lenses (B).

Front Individual Map Light: 8 W

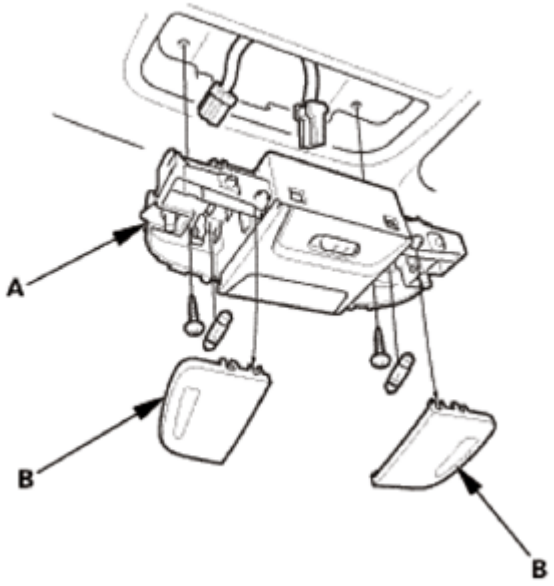

GETtheMANUALS.org

Fig. 42: Identifying Front Individual Map Light And Lenses
Courtesy of AMERICAN HONDA MOTOR CO., INC.

INTERIOR LIGHTS COMPONENT LOCATION INDEX

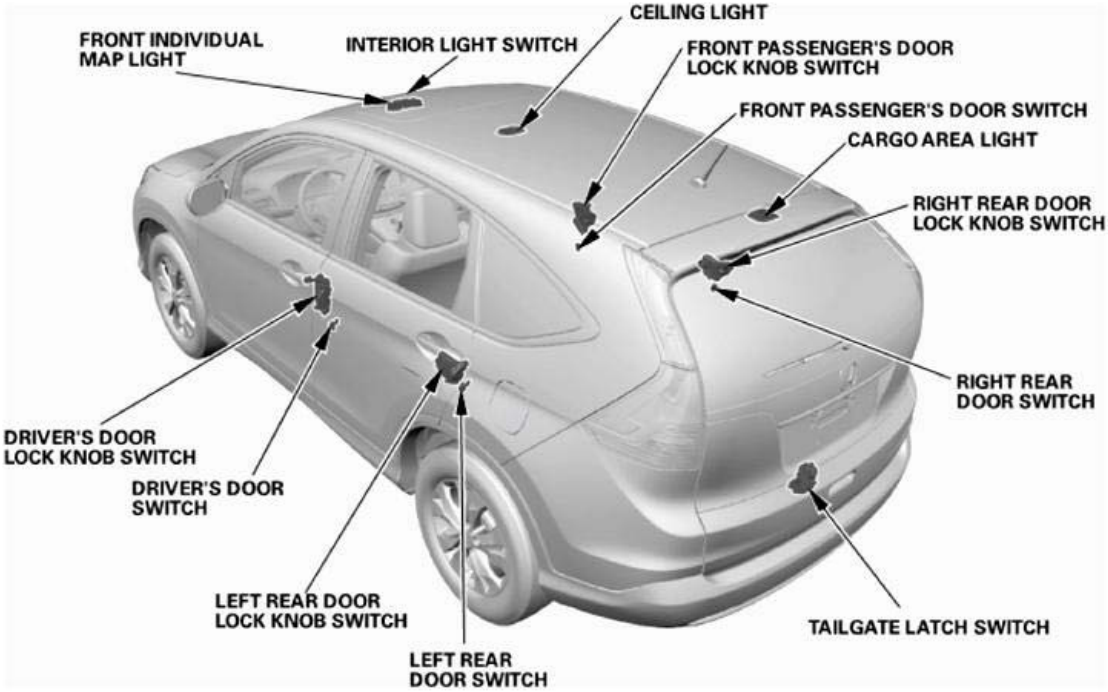

Fig. 43: Interior Lights Component Location (1 Of 2)
Courtesy of AMERICAN HONDA MOTOR CO., INC.

GETtheMANUALS.org

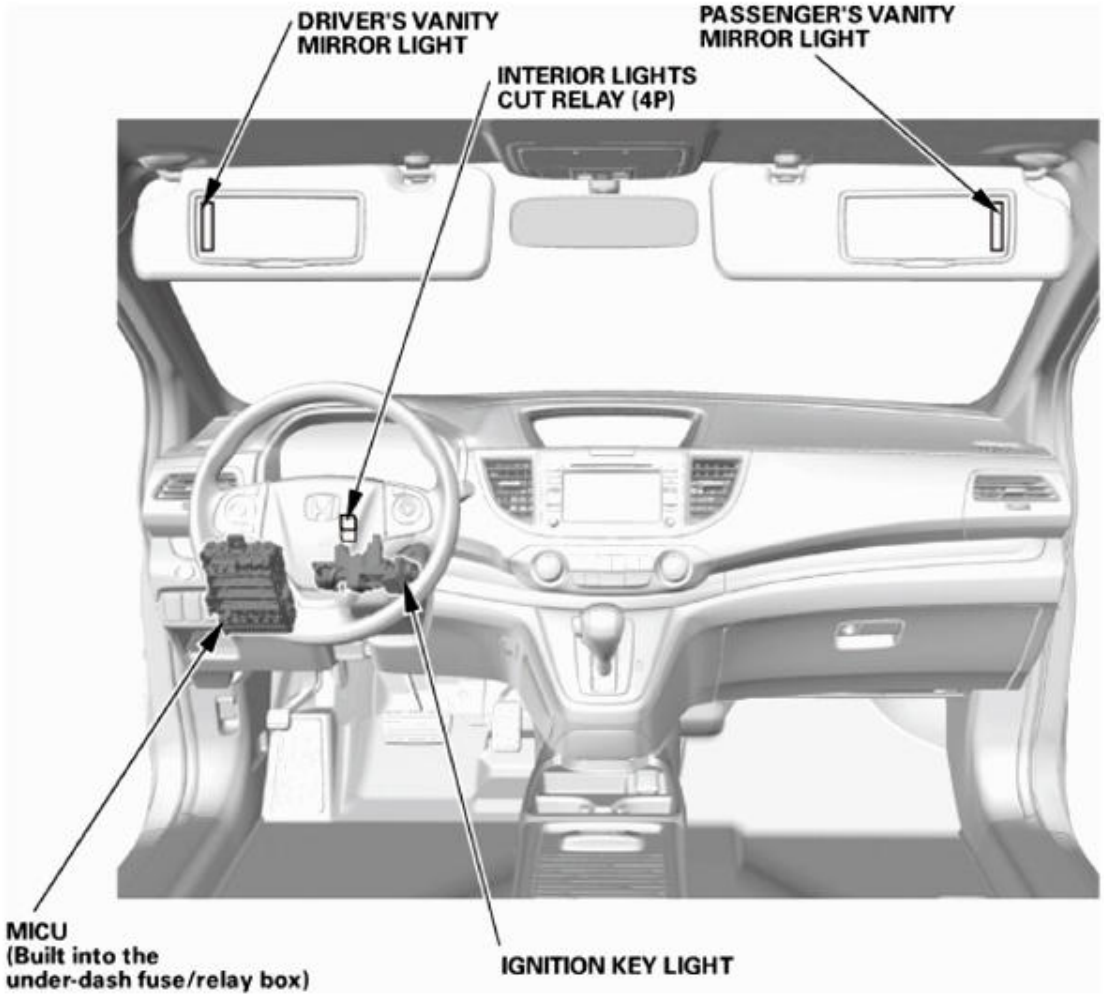

Fig. 44: Interior Lights Component Location (2 Of 2)
Courtesy of AMERICAN HONDA MOTOR CO., INC.

CARGO AREA LIGHT	**REMOVAL, INSTALLATION, AND TEST**
CEILING LIGHT	**REMOVAL, INSTALLATION, AND TEST**
FRONT INDIVIDUAL MAP LIGHT	**REMOVAL, INSTALLATION, AND TEST**
INTERIOR LIGHT CUT RELAY (4P)	**TEST**
INTERIOR LIGHT SWITCH	**REMOVAL, INSTALLATION, AND TEST**
MICU (Built into the under-dash fuse/relay box)	**REMOVAL AND INSTALLATION**
TAILGATE LATCH SWITCH (Built into the tailgate latch)	**REMOVAL AND INSTALLATION**
	TEST
VANITY MIRROR LIGHT	**TEST**

GETtheMANUALS.org

INTERIOR LIGHTS SWITCH REMOVAL, INSTALLATION, AND TEST

REMOVAL

NOTE: **Step 1 shows removing the vehicle without moonroof, step 2 shows removing the vehicle with moonroof.**

1. Front Individual Map Light (without moonroof)
    1. Turn the front individual map light switch OFF.
    2. Carefully pry off the lenses (A) with a flat-tip screwdriver.
    3. Remove the bulbs.
    4. Remove the front individual map light (B).
    5. Disconnect the connectors.

Front Individual Map Light: 8 W

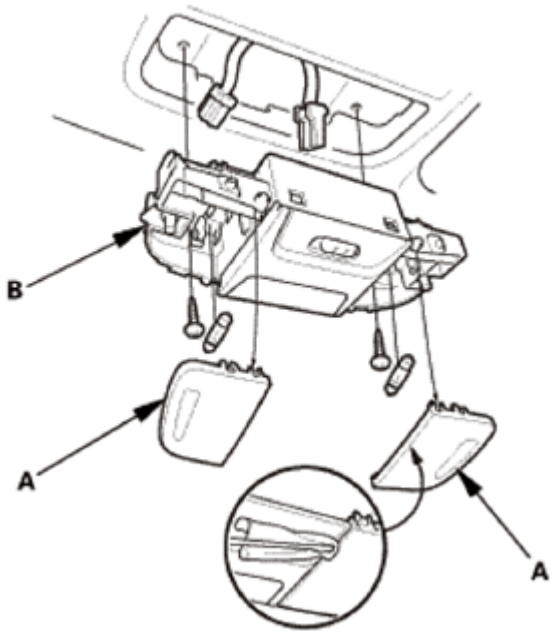

Fig. 45: Identifying Front Individual Map Light And Lenses
Courtesy of AMERICAN HONDA MOTOR CO., INC.

2. Front Individual Map Light (with moonroof)
    1. Turn the front individual map light switch OFF.
    2. Carefully pry off the lenses (A) with a flat-tip screwdriver.
    3. Remove the bulbs.
    4. Remove the front individual map light (B).
    5. Disconnect the connectors.

GETtheMANUALS.org

Front Individual Map Light: 8 W

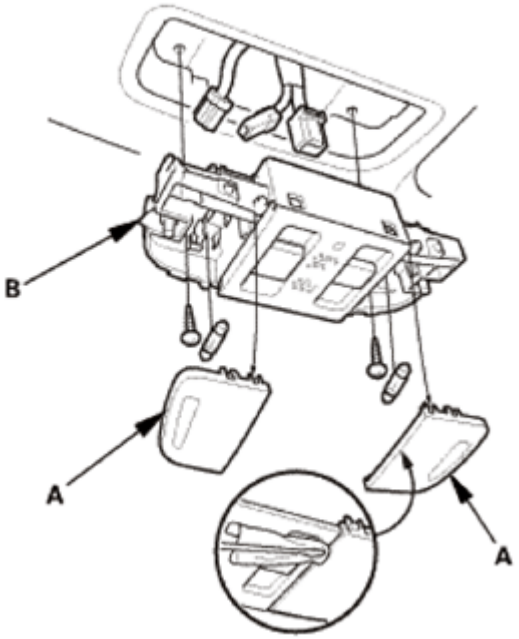

Fig. 46: Identifying Front Individual Map Light And Lenses
Courtesy of AMERICAN HONDA MOTOR CO., INC.

TEST

NOTE: **Step 1 shows testing the vehicle without moonroof, step 2 shows testing the vehicle with moonroof.**

1. Interior Light Switch - Test (without moonroof)
    1. Remove the interior light switch (A) from the individual map light (B).

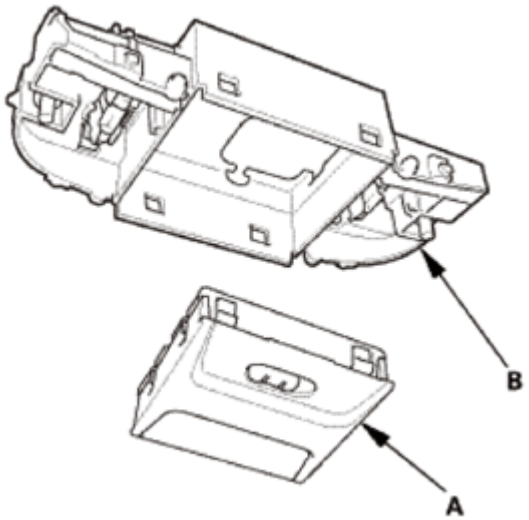

GETtheMANUALS.org

Fig. 47: Identifying Interior Light Switch And Individual Map Light
Courtesy of AMERICAN HONDA MOTOR CO., INC.

2. Check for continuity between the terminals in each switch position according to the table.
3. If the continuity is not as specified, replace the bulb or the interior light switch (A).

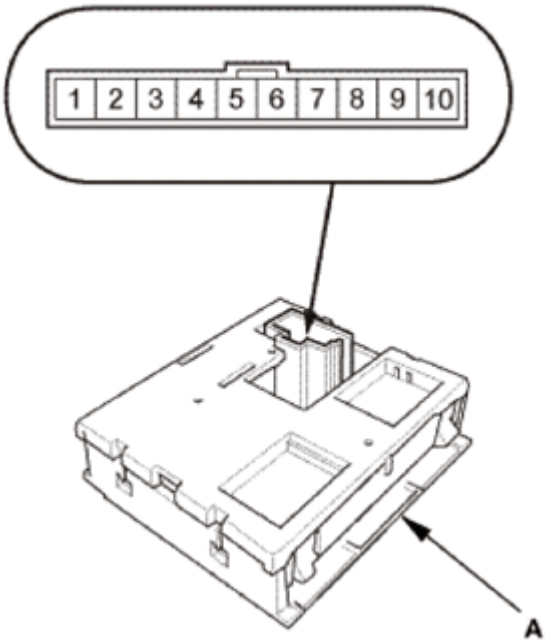

Fig. 48: Identifying Interior Light Switch And Connector
Courtesy of AMERICAN HONDA MOTOR CO., INC.

Terminal / Position	1	10
ON	○	○
OFF		

Fig. 49: Interior Light Switch Connector Terminals Layout
Courtesy of AMERICAN HONDA MOTOR CO., INC.

2. Interior Light Switch - Test (with moonroof)
    1. Remove the moonroof switch (A) from the individual map light (B).

GETtheMANUALS.org

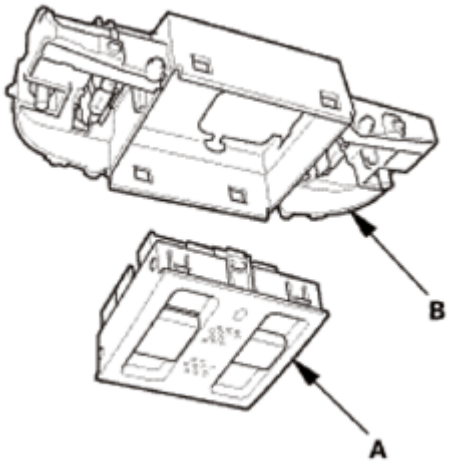

Fig. 50: Identifying Moonroof Switch And Individual Map Light
Courtesy of AMERICAN HONDA MOTOR CO., INC.

2. Check for continuity between the terminals in each switch position according to the table.
3. If the continuity is not as specified, replace the bulb or the moonroof switch (A).

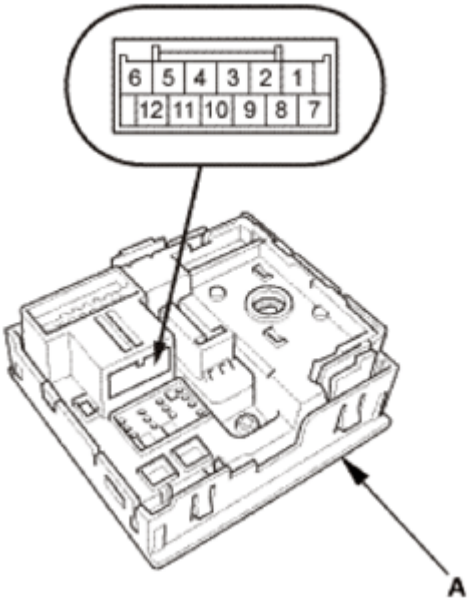

Fig. 51: Identifying Moonroof Switch
Courtesy of AMERICAN HONDA MOTOR CO., INC.

Terminal / Position	10	12
DOOR	○———	———○
OFF		

GETtheMANUALS.org

Fig. 52: Moonroof Switch Connector Terminal Continuity Chart
Courtesy of AMERICAN HONDA MOTOR CO., INC.

INSTALLATION

NOTE: **Step 1 shows installing the vehicle with moonroof, step 2 shows installing the vehicle without moonroof.**

1. Front Individual Map Light (with moonroof)
    1. Connect the connectors.
    2. Install the front individual map lights (A).
    3. Install the bulbs.
    4. Carefully install the lenses (B).

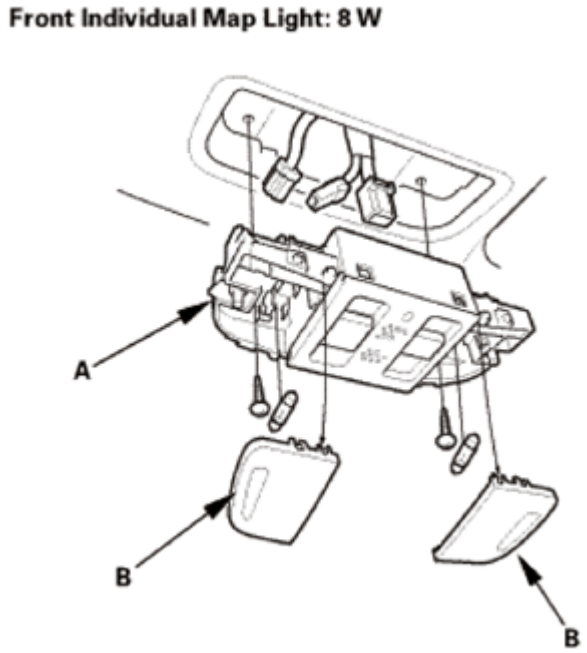

Fig. 53: Identifying Front Individual Map Lights And Lenses
Courtesy of AMERICAN HONDA MOTOR CO., INC.

2. Front Individual Map Light (without moonroof)
    1. Connect the connectors.
    2. Install the front individual map light (A).
    3. Install the bulbs.
    4. Carefully install the lenses (B).

GETtheMANUALS.org

Front Individual Map Light: 8 W

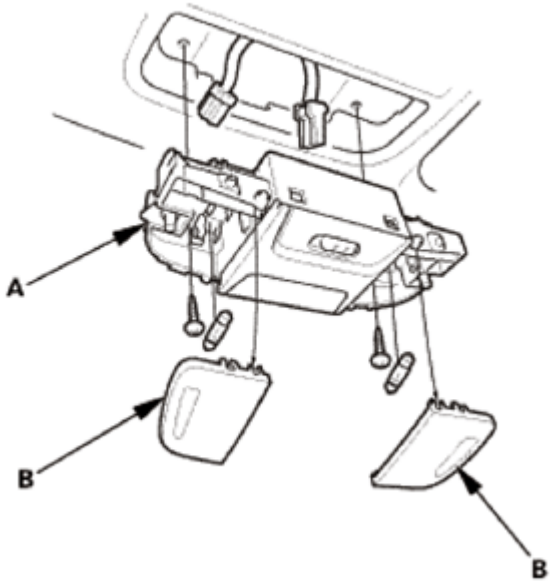

Fig. 54: Identifying Front Individual Map Light And Lenses
Courtesy of AMERICAN HONDA MOTOR CO., INC.

GETtheMANUALS.org

A-PILLAR CORNER TRIM REMOVAL AND INSTALLATION

REMOVAL

1. A-Pillar Corner Trim
    1. Open the front door.
    2. Apply protective tape around the body to prevent damage, carefully insert a appropriate trim tool next to the upper clip (A), and detach the clip by prying on the A-pillar corner trim (B). Pull back the A-pillar corner trim by hand to detach the lower clips (C), then remove the trim.

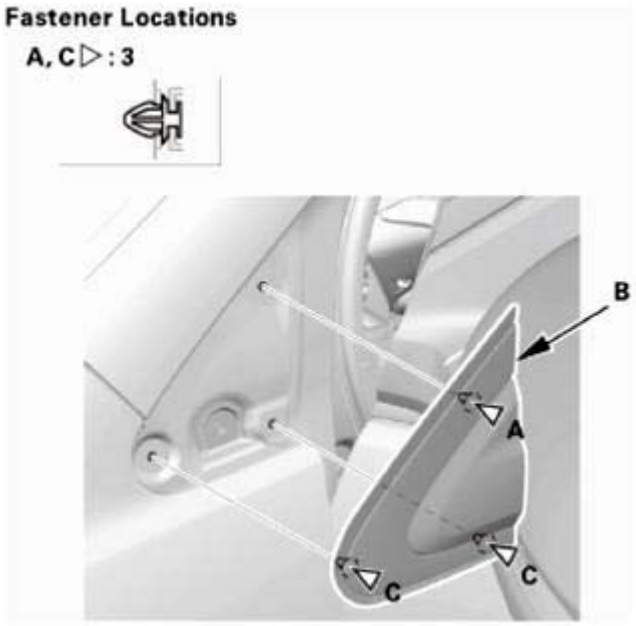

Fig. 1: Identifying Upper Clip And Lower Clips
Courtesy of AMERICAN HONDA MOTOR CO., INC.

INSTALLATION

1. A-Pillar Corner Trim
    1. Install the A-pillar corner trim (A). Make sure the clips (B) snap into place securely.

GETtheMANUALS.org

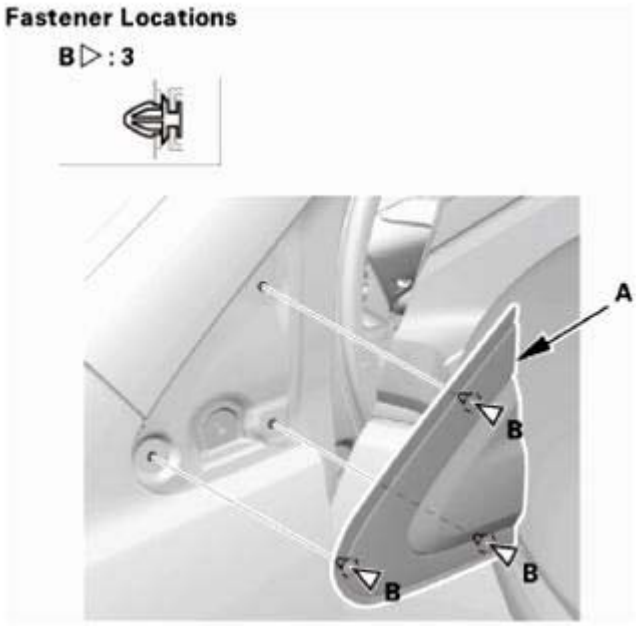

Fig. 2: Identifying A-Pillar Corner Trim And Clips
Courtesy of AMERICAN HONDA MOTOR CO., INC.

CARPET REMOVAL AND INSTALLATION

REMOVAL

1. Front Console Cover - Both Sides
    1. Remove the clips (A).
    2. Detach the clips (B), then remove the front console covers (C).

    Left side

GETtheMANUALS.org

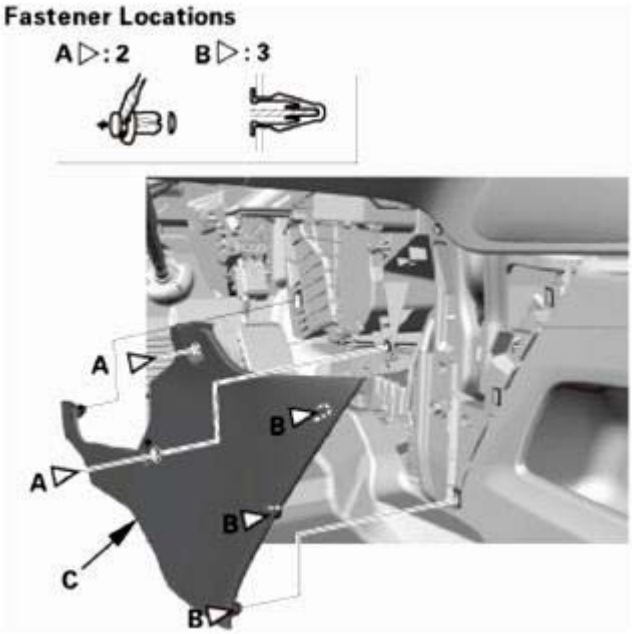

Fig. 3: Identifying Front Console Covers And Clips (Left Side)
Courtesy of AMERICAN HONDA MOTOR CO., INC.

Right side

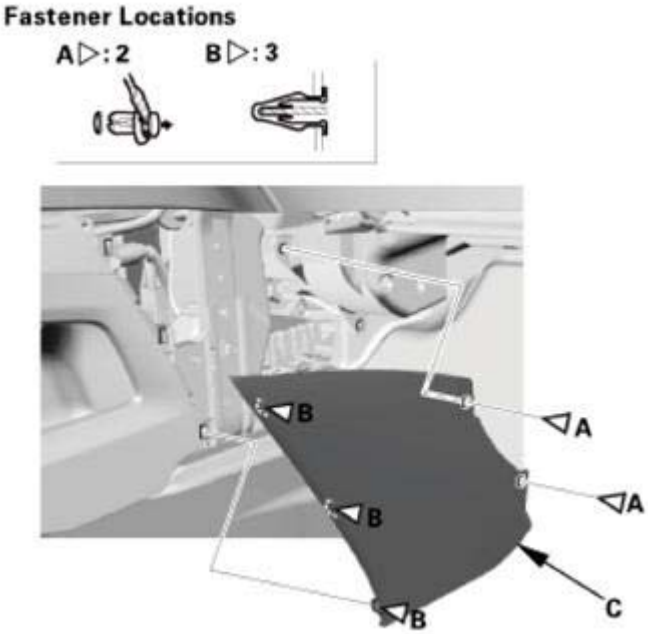

Fig. 4: Identifying Front Console Covers And Clips (Right Side)
Courtesy of AMERICAN HONDA MOTOR CO., INC.

2. Center Console Rear Trim
    1. Carefully pry out the center console rear trim (A) with the appropriate trim tool to detach the clips

GETtheMANUALS.org

(B) and the hooks (C), then remove the center console rear trim.

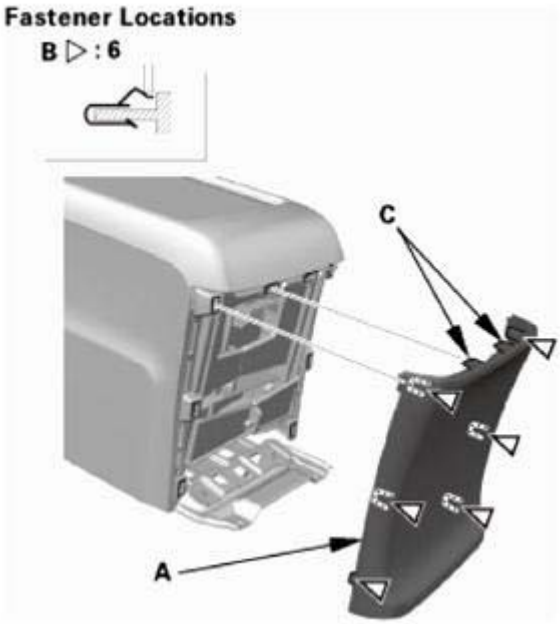

Fig. 5: Identifying Center Console Rear Trim, Clips And Hooks
Courtesy of AMERICAN HONDA MOTOR CO., INC.

3. Center Console
    1. Carefully pry out the center lower cover (A) with the appropriate trim tool to detach the clips (B), then remove the center lower cover.
    2. Remove the bolt (C).

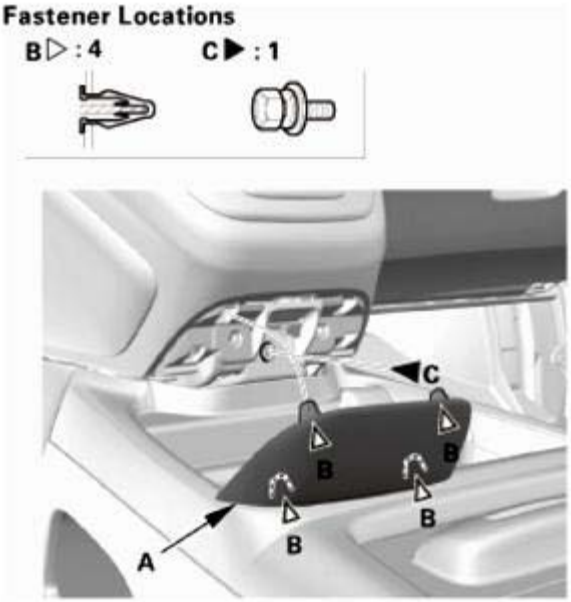

Fig. 6: Identifying Center Lower Cover, Clips And Bolts

GETtheMANUALS.org

Courtesy of AMERICAN HONDA MOTOR CO., INC.

3. Remove the bolts (A).

Fig. 7: Identifying Center Console Bolts
Courtesy of AMERICAN HONDA MOTOR CO., INC.

4. Remove the console box mat (A), then remove the bolts (B).

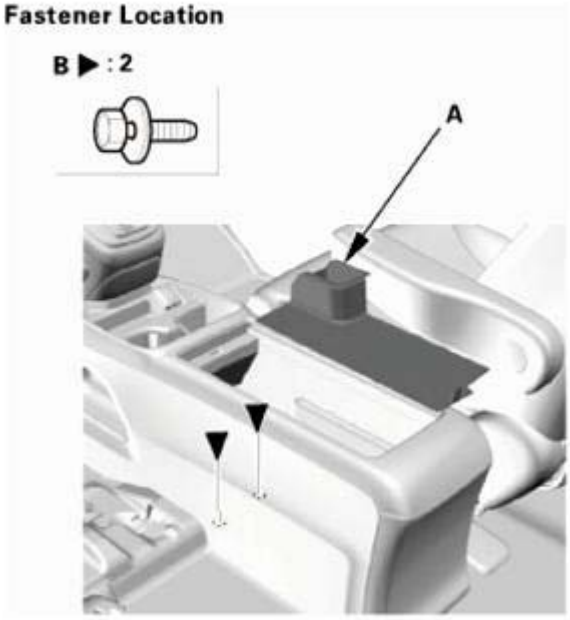

Fig. 8: Identifying Console Box Mat And Bolts
Courtesy of AMERICAN HONDA MOTOR CO., INC.

GETtheMANUALS.org

5. Disconnect the connectors (A), and remove the clips (B).

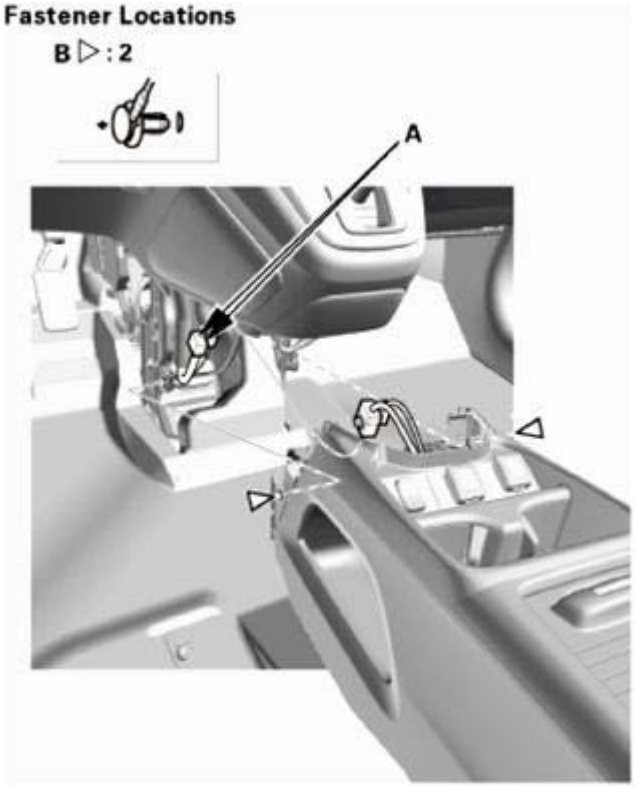

Fig. 9: Identifying Connectors And Clips
Courtesy of AMERICAN HONDA MOTOR CO., INC.

6. Slide both front seats fully rearward, and recline the seat-backs around two thirds to the rear.
7. Remove the center console (A).

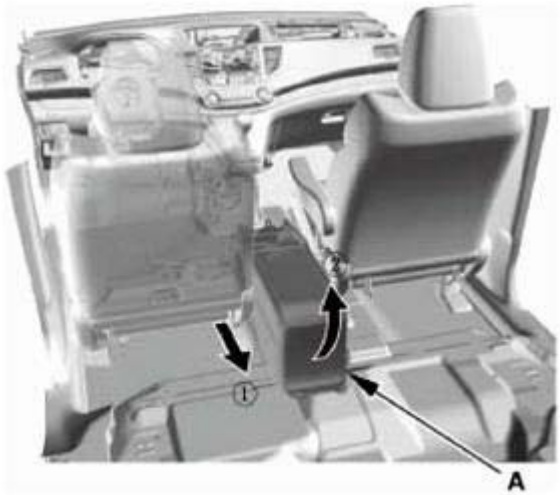

Fig. 10: Removing Center Console

GETtheMANUALS.org

Courtesy of AMERICAN HONDA MOTOR CO., INC.

4. Front Seat Belt Lower Anchor Bolt - Both Sides

NOTE: Repeat this procedure on the opposite side.

1. Slide the front seat forward fully, carefully pry up on the bottom edge of the anchor cover (A) at the pry point (B) with the appropriate trim tool to release the hooks (C) and the tab (D), then remove the cover by pulling it up.

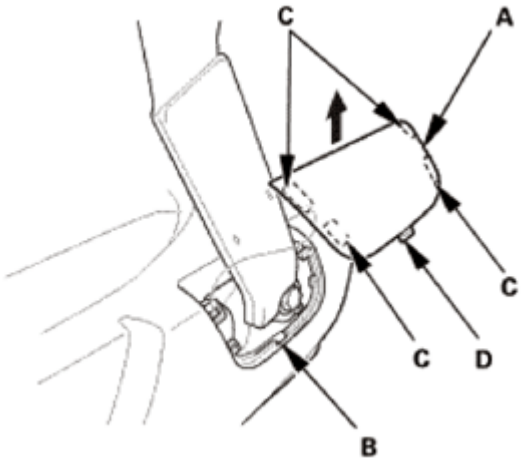

Fig. 11: Identifying Anchor Cover, Pry Points, Hooks And Tab
Courtesy of AMERICAN HONDA MOTOR CO., INC.

2. Remove the lower anchor bolt.

Fig. 12: Removing Lower Anchor Bolt
Courtesy of AMERICAN HONDA MOTOR CO., INC.

5. Battery Terminal (SRS) - Disconnection
   1. Make sure the ignition switch is in LOCK (0).

GETtheMANUALS.org

2. Disconnect and isolate the negative cable (A) from the battery.

NOTE: Always disconnect the negative side first.

3. Disconnect the positive cable (B) from the battery.
4. Wait at least 3 minutes before starting work.

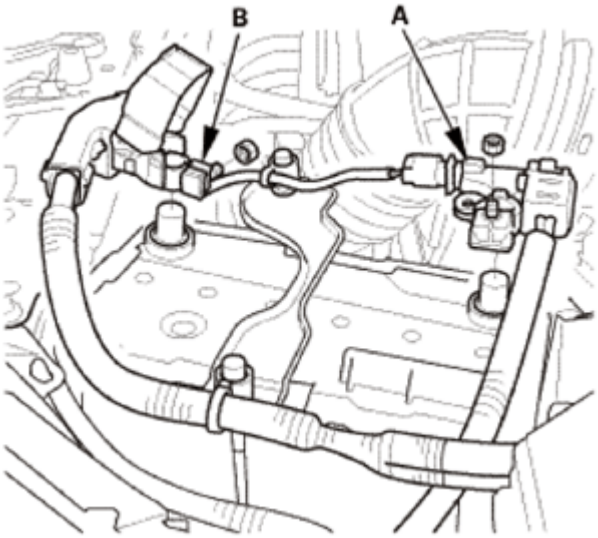

Fig. 13: Identifying Positive And Negative Cables Of Battery
Courtesy of AMERICAN HONDA MOTOR CO., INC.

6. Front Seat - Both Sides

NOTE: Repeat this procedure on the opposite side.

1. Detach the hooks (A), then remove both seat track end covers (B).
2. The driver's seat is shown; repeat on the passenger's seat.

GETtheMANUALS.org

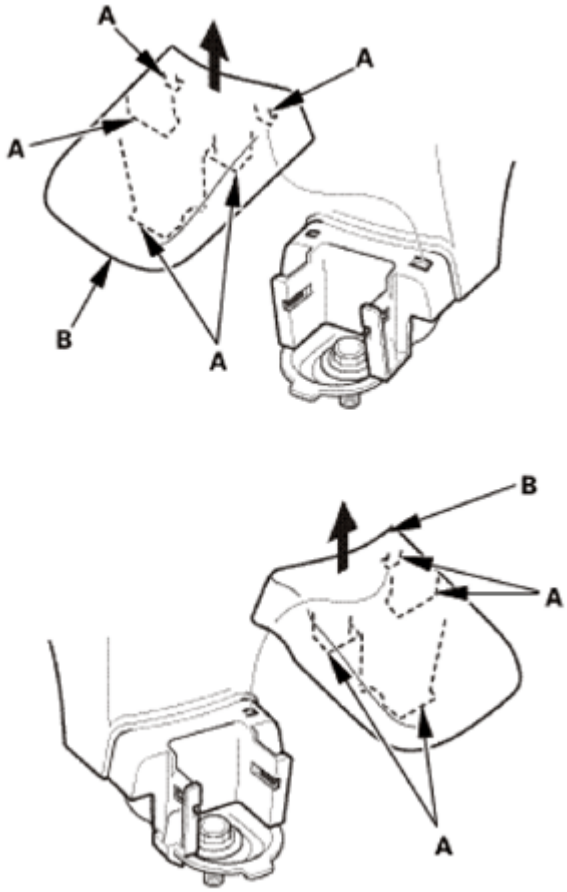

Fig. 14: Removing Seat Track
Courtesy of AMERICAN HONDA MOTOR CO., INC.

Front

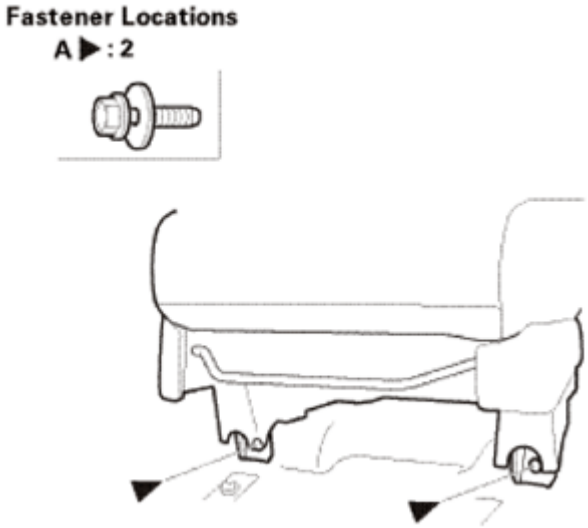

Fig. 15: Identifying Seat Mounting Bolts (Front)

GETtheMANUALS.org

Courtesy of AMERICAN HONDA MOTOR CO., INC.

Rear

3. Remove the seat mounting bolts (A).

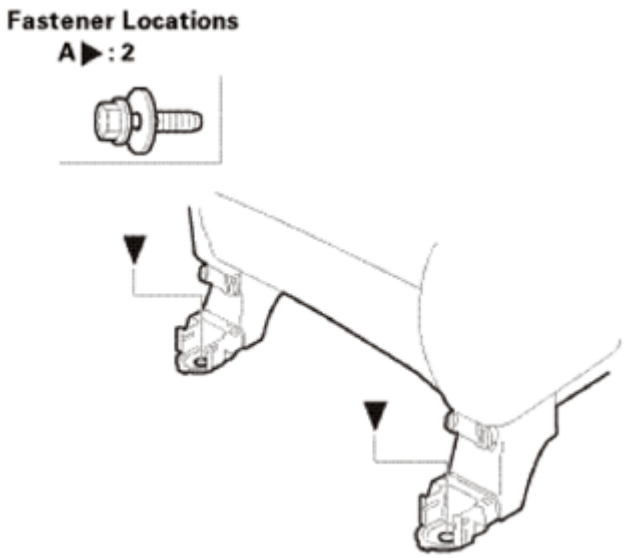

Fig. 16: Identifying Seat Mounting Bolts (Rear)
Courtesy of AMERICAN HONDA MOTOR CO., INC.

4. Push the head restraint release button (A), then remove the head restraint (B).
5. The driver's seat is shown; repeat on the passenger's seat.

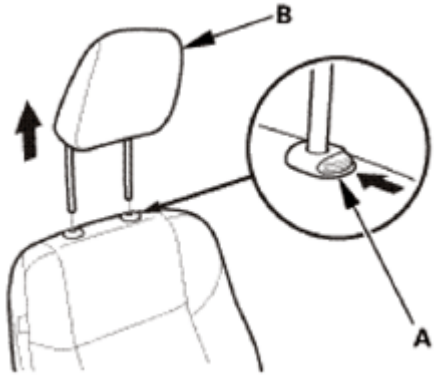

Fig. 17: Removing Head Restraint
Courtesy of AMERICAN HONDA MOTOR CO., INC.

6. Lift up the front seat, then disconnect the connectors (A) and detach the harness clip (B).
7. With the help of an assistant, carefully remove both front seats through the front door opening.

Driver's seat

GETtheMANUALS.org

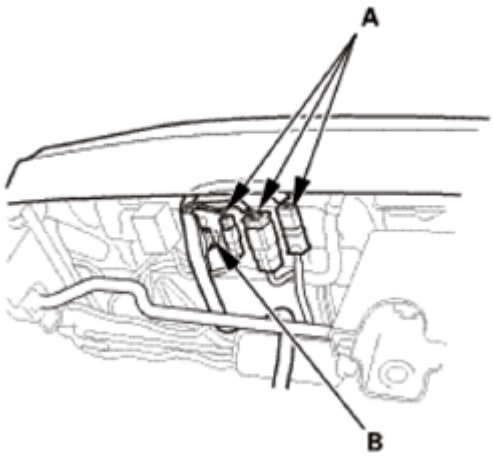

Fig. 18: Identifying Front Seat Connector And Harness Clip
Courtesy of AMERICAN HONDA MOTOR CO., INC.

Passenger's seat (Without subwoofer)

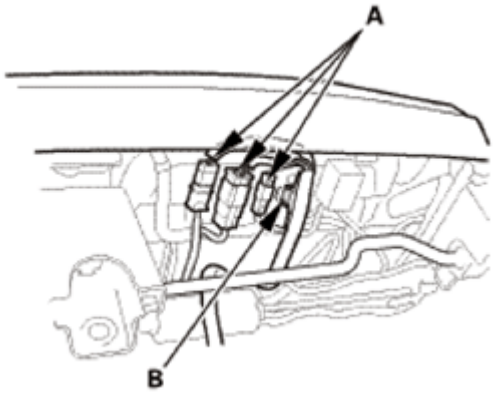

Fig. 19: Identifying Passenger's Seat Connector And Harness Clip (Without Subwoofer)
Courtesy of AMERICAN HONDA MOTOR CO., INC.

Passenger's seat (With subwoofer)

GETtheMANUALS.org

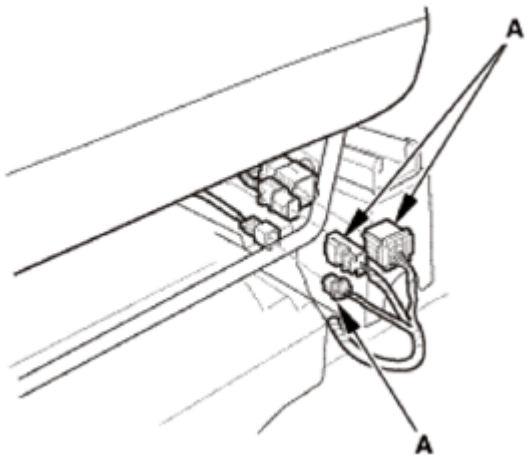

Fig. 20: Identifying Passenger's Seat Connector And Harness Clip (With Subwoofer)
Courtesy of AMERICAN HONDA MOTOR CO., INC.

7. Front Door Sill Trim - Both Sides

NOTE: Repeat on the opposite side.

1. Detach the hooks (A) and the tabs (B) from the kick panel (C) and the B-pillar lower trim (D), and pull up the front door inner sill trim (E) by hand to detach the clips (F), then remove the trim.

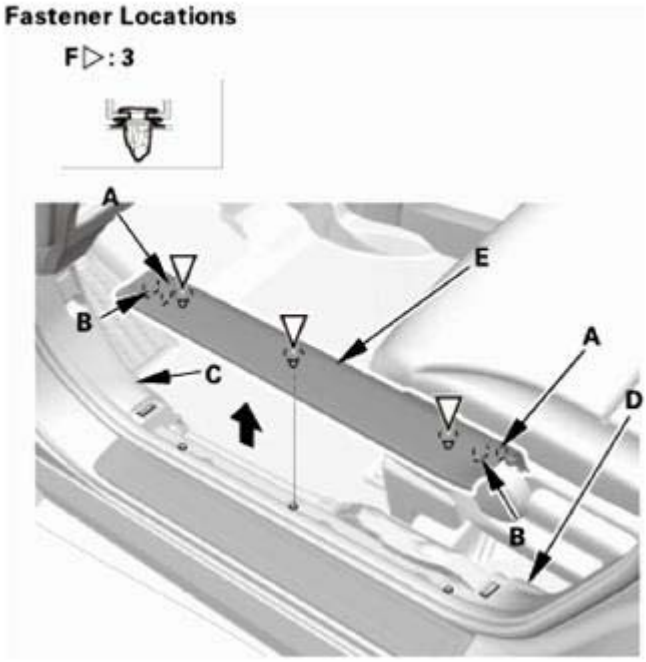

Fig. 21: Identifying B-Pillar Lower Trim, Hooks, Tabs And Front Door Inner Sill Trim
Courtesy of AMERICAN HONDA MOTOR CO., INC.

8. Rear Door Sill Trim - Both Sides

GETtheMANUALS.org

NOTE: **Repeat this procedure on the opposite side.**

1. Pull the release strap to fold down the rear seat, then lift-up and latch the rear seat-back in the upright position.
2. Detach the hooks (A) and the tab (B) from the B-pillar lower trim (C) and the rear side trim panel (D), and pull up the rear door inner sill trim (E) by hand to detach the clips (F, G), then remove the trim.

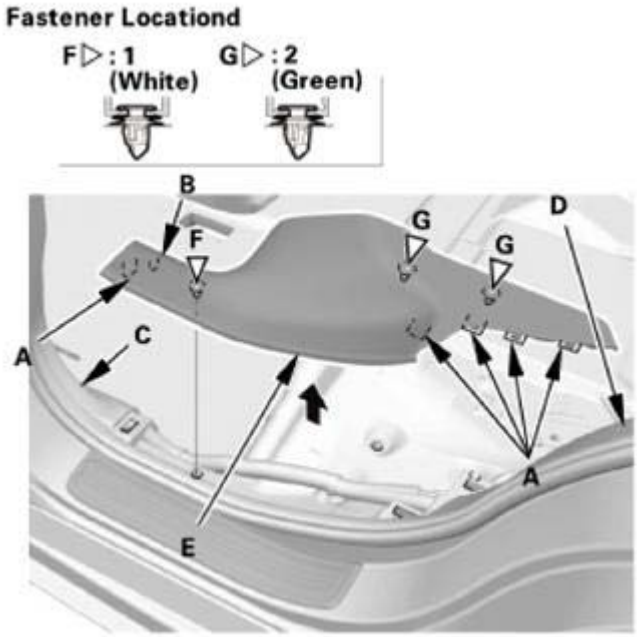

Fig. 22: Pulling Up Rear Door Inner Sill Trim
Courtesy of AMERICAN HONDA MOTOR CO., INC.

9. Front Door Opening Seal As Needed - Both Sides

NOTE: **Repeat on the opposite side.**

1. Pull out the front door opening seal (A) from the trim hooks (B) around the front door opening flange, then detach the seal as needed.

GETtheMANUALS.org

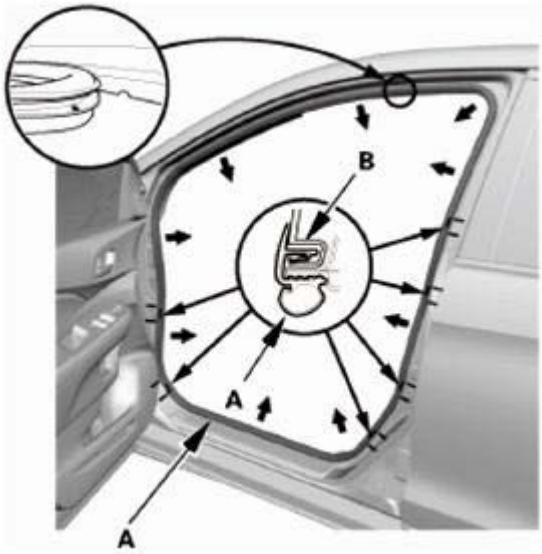

Fig. 23: Identifying Front Door Opening Seal And Trim Hooks
Courtesy of AMERICAN HONDA MOTOR CO., INC.

10. Rear Door Opening Seal As Needed - Both Sides

NOTE: Repeat this procedure on the opposite side.

1. Pull out the rear door opening seal (A) from the trim hooks (B) around the rear door opening flange, then detach the seal as needed.

Fig. 24: Identifying Rear Door Opening Seal And Trim Hooks
Courtesy of AMERICAN HONDA MOTOR CO., INC.

11. Kick Panel - Both Sides
    1. Pull out the front door opening seal (A) as needed from the kick panel hooks and the door opening

GETtheMANUALS.org

flange.

2. Pull back the kick panel by hand to detach the clips (B), then remove the driver's side kick panel (C) and the passenger's side kick panel (D).

Driver's side

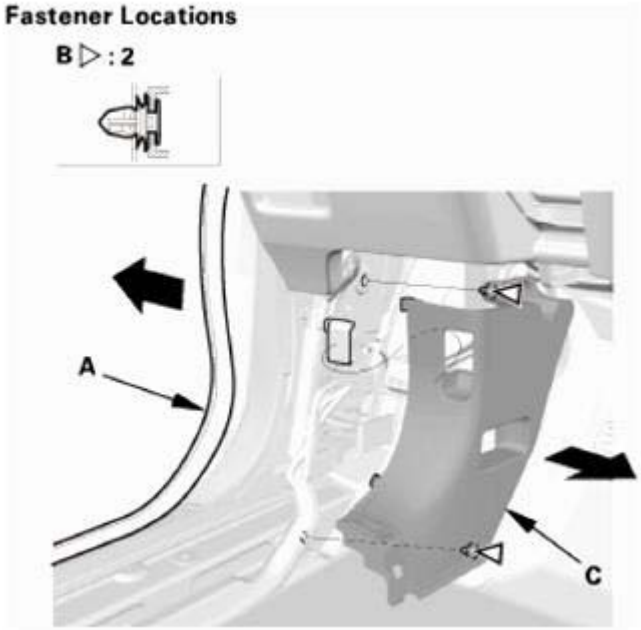

Fig. 25: Identifying Front Door Opening Seal And Trim Hooks (Driver's Side)
Courtesy of AMERICAN HONDA MOTOR CO., INC.

Passenger's side

GETtheMANUALS.org

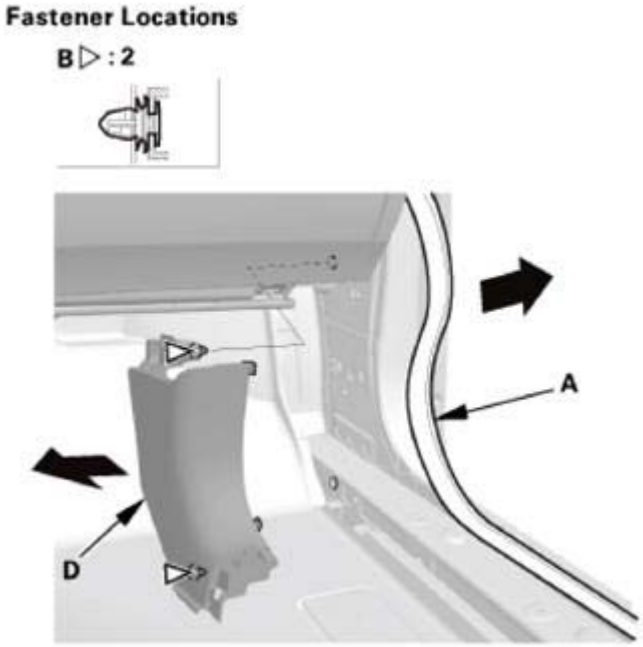

Fig. 26: Identifying Front Door Opening Seal And Trim Hooks (Passenger's Side)
Courtesy of AMERICAN HONDA MOTOR CO., INC.

12. B-Pillar Lower Trim - Both Sides (After Removing Seats)

NOTE: Repeat this procedure on the opposite side.

1. Pull back the bottom portion of the B-pillar lower trim (A) by hand to detach the clips (B).
2. Pull back the upper portion of the B-pillar lower trim to detach the hooks (C), then remove the B-pillar lower trim.

GETtheMANUALS.org

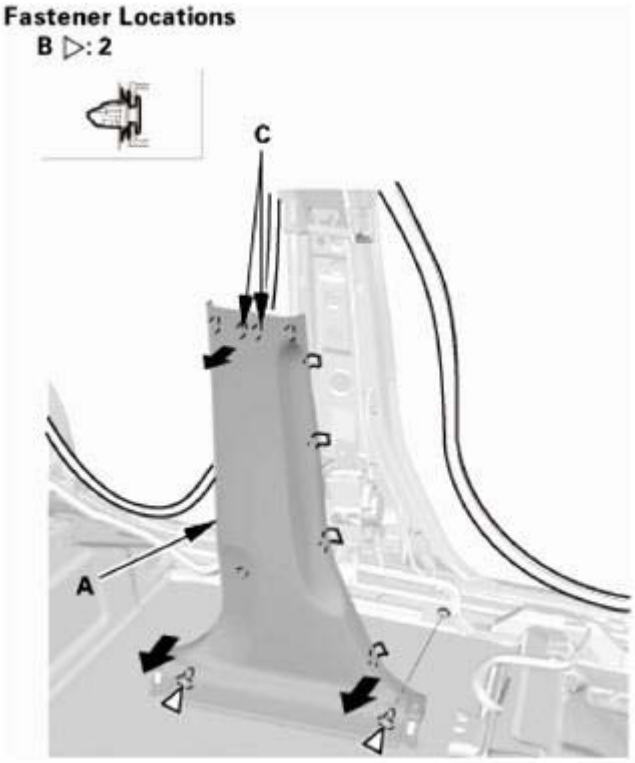

Fig. 27: Pulling B-Pillar Lower Trim
Courtesy of AMERICAN HONDA MOTOR CO., INC.

13. Rear Damper Maintenance Cover - Both Sides

NOTE: Repeat this procedure on the opposite side.

1. Fold down the rear seat-back.
2. Pull up the rear damper maintenance cover (A) by hand to detach the hooks (B), then remove the rear damper maintenance cover.

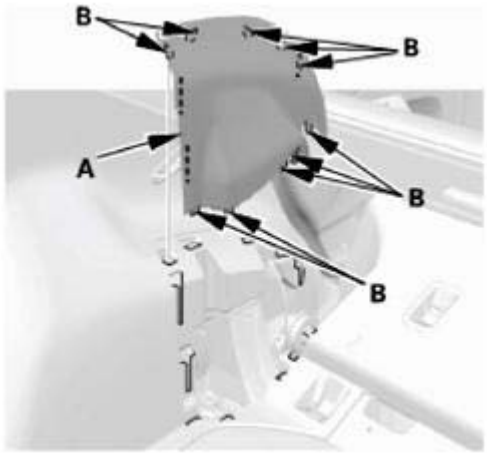

GETtheMANUALS.org

Fig. 28: Identifying Rear Damper Maintenance Cover And Hooks
Courtesy of AMERICAN HONDA MOTOR CO., INC.

14. Rear Seat Cushion Foot Cover - Both Sides
    1. Pull up the rear seat cushion foot covers (A) by hand to detach the clips (B).
    2. Detach the hooks (C), then remove the rear seat cushion foot covers.

Left side

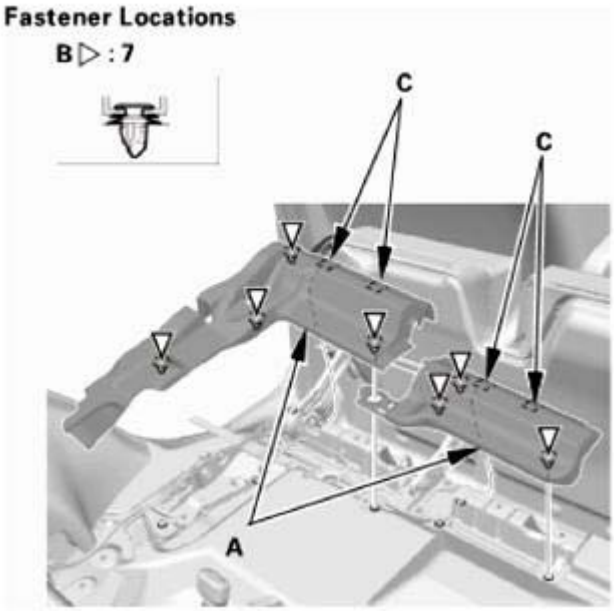

Fig. 29: Identifying Rear Seat Cushion Foot Covers And Clips (Left Side)
Courtesy of AMERICAN HONDA MOTOR CO., INC.

Right side

GETtheMANUALS.org

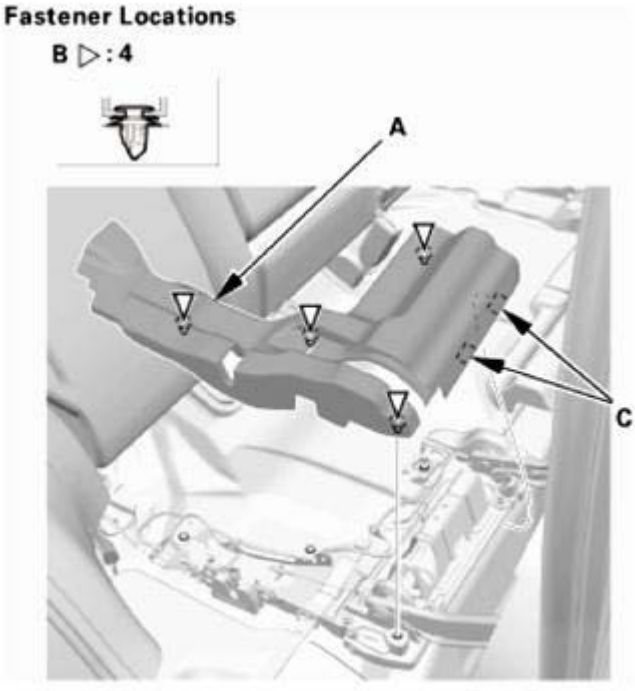

Fig. 30: Identifying Rear Seat Cushion Foot Covers And Clips (Right Side)
Courtesy of AMERICAN HONDA MOTOR CO., INC.

15. Left Rear Seat Cushion Assembly
    1. Detach the cables (A) from the cable brackets (B), and detach the cable clip (C), then disconnect the cables from the seat cushion assembly (D).

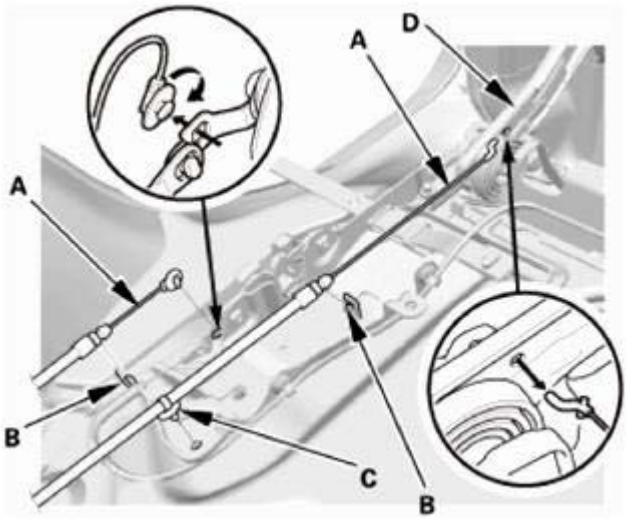

Fig. 31: Identifying Cables, Cable Brackets, Cable Clip And Seat Cushion Assembly
Courtesy of AMERICAN HONDA MOTOR CO., INC.

    2. Remove the bolts (A) securing the left rear seat cushion assembly (B), then remove the left rear seat cushion assembly.

GETtheMANUALS.org

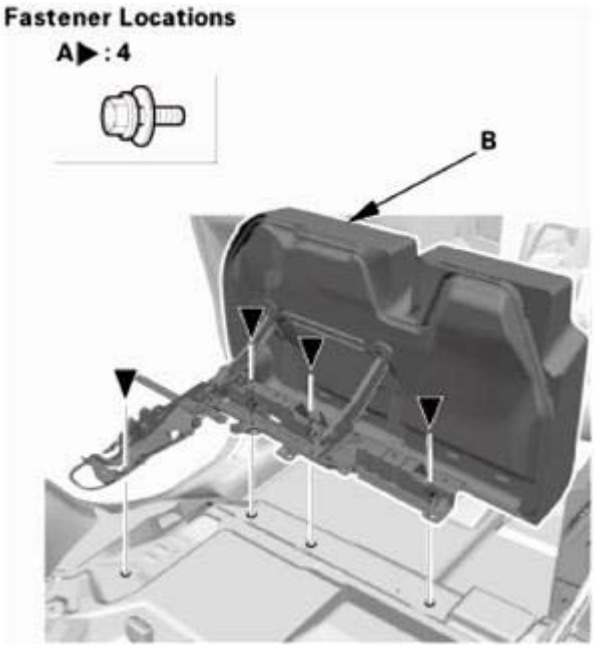

Fig. 32: Identifying Left Rear Seat Cushion Assembly And Bolts
Courtesy of AMERICAN HONDA MOTOR CO., INC.

16. Right Rear Seat Cushion Assembly
    1. Detach the cables (A) from the cable brackets (B), and detach the cable clip (C), then disconnect the cables from the seat cushion assembly (D).

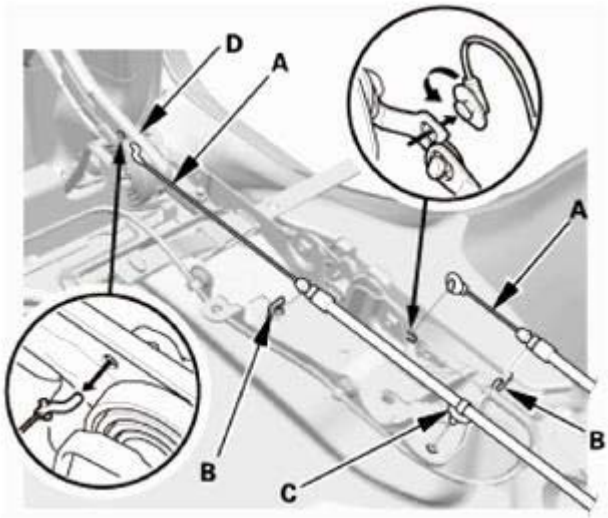

Fig. 33: Identifying Cable And Cable Brackets
Courtesy of AMERICAN HONDA MOTOR CO., INC.

    2. Remove the bolts (A) securing the right rear seat cushion assembly (B), then remove the right rear seat cushion assembly.

GETtheMANUALS.org

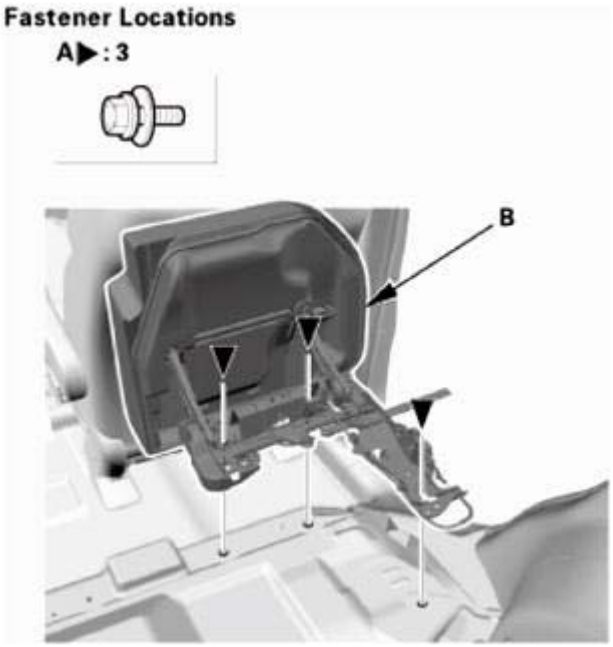

Fig. 34: Identifying Right Rear Seat Cushion Assembly And Bolts
Courtesy of AMERICAN HONDA MOTOR CO., INC.

17. Rear Seat-Back Assembly - Both Sides

NOTE: Repeat this procedure on the opposite side.

1. Detach the clips (A) from the rear carpet trim (B).
2. Remove the bolts (C, D) securing the rear seat-back assembly (E), then remove the rear seat-back assembly.

Left side

GETtheMANUALS.org

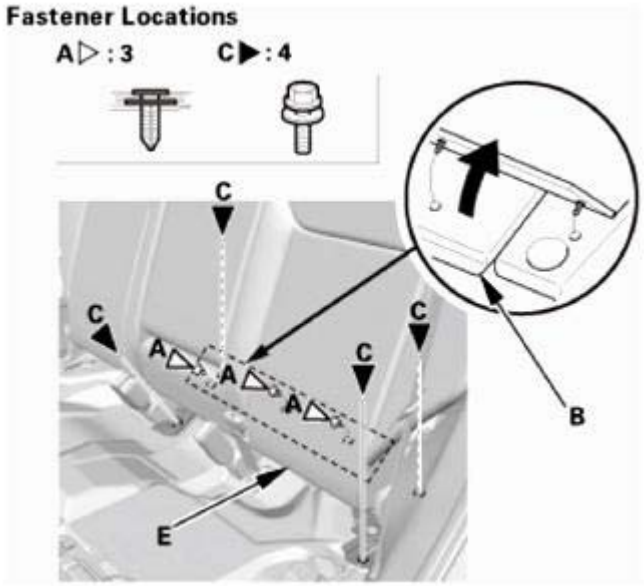

Fig. 35: Removing Rear Carpet Trim (Left Side)
Courtesy of AMERICAN HONDA MOTOR CO., INC.

Right side

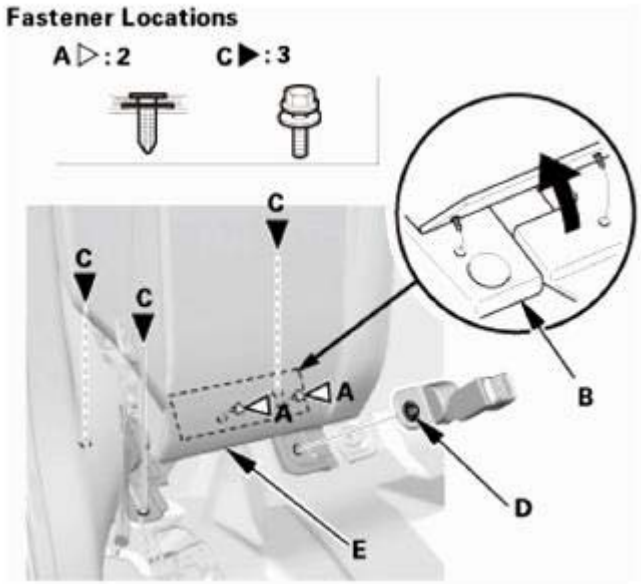

Fig. 36: Removing Rear Carpet Trim (Right Side)
Courtesy of AMERICAN HONDA MOTOR CO., INC.

18. Rear Carpet Trim - Both Sides
    1. Detach the hooks (A) from the rear side trim panel (B), and pull up the rear carpet trims (C) by hand to detach the clips (D), then remove the rear carpet trims.

    Left side

GETtheMANUALS.org

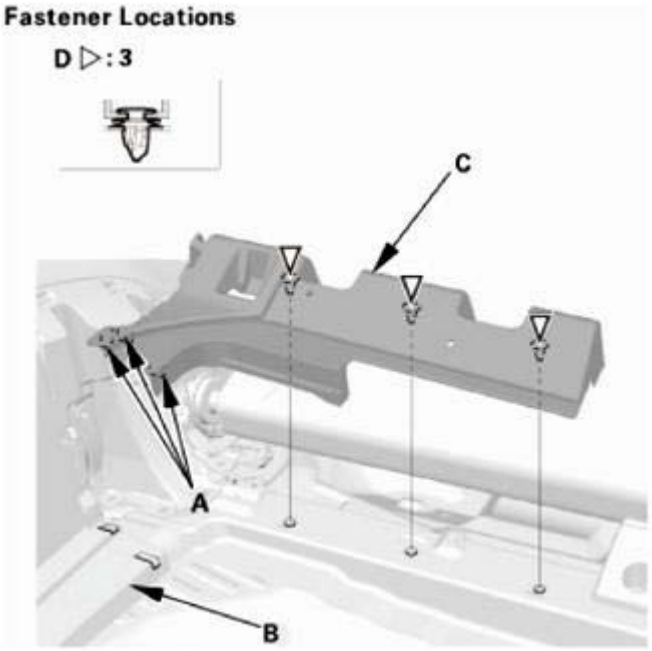

Fig. 37: Identifying Rear Side Trim Panel, Hooks, Clips (Left Side)
Courtesy of AMERICAN HONDA MOTOR CO., INC.

Right side

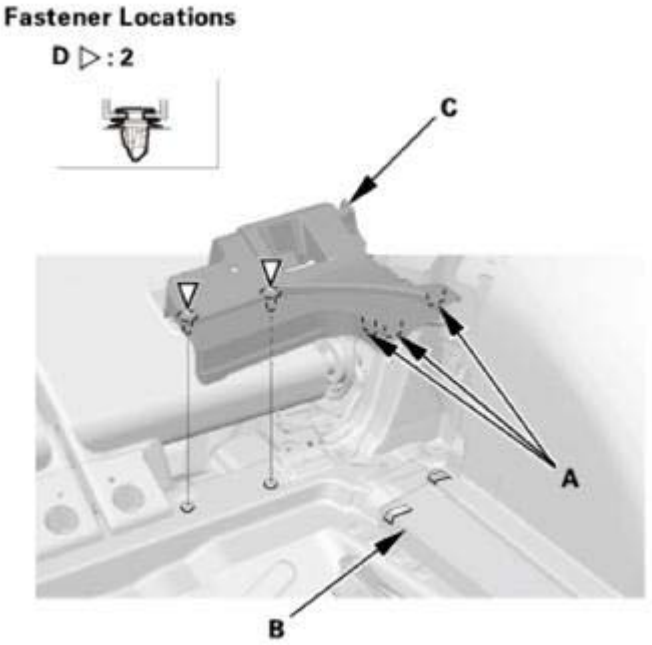

Fig. 38: Identifying Rear Side Trim Panel, Hooks, Clips (Right Side)
Courtesy of AMERICAN HONDA MOTOR CO., INC.

19. Steering Joint Cover

GETtheMANUALS.org

1. Remove the steering joint cover (A).

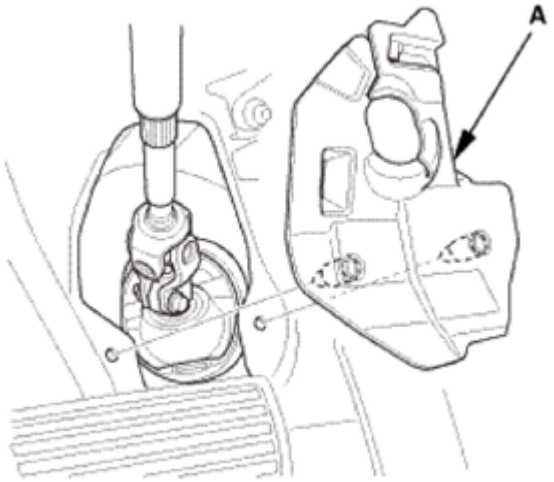

Fig. 39: Identifying Steering Joint Cover
Courtesy of AMERICAN HONDA MOTOR CO., INC.

20. Floor Carpet
    1. Detach the clips (A).
    2. Pull out the floor wire harnesses (B) through the hole in the carpet (C), then remove the carpet.

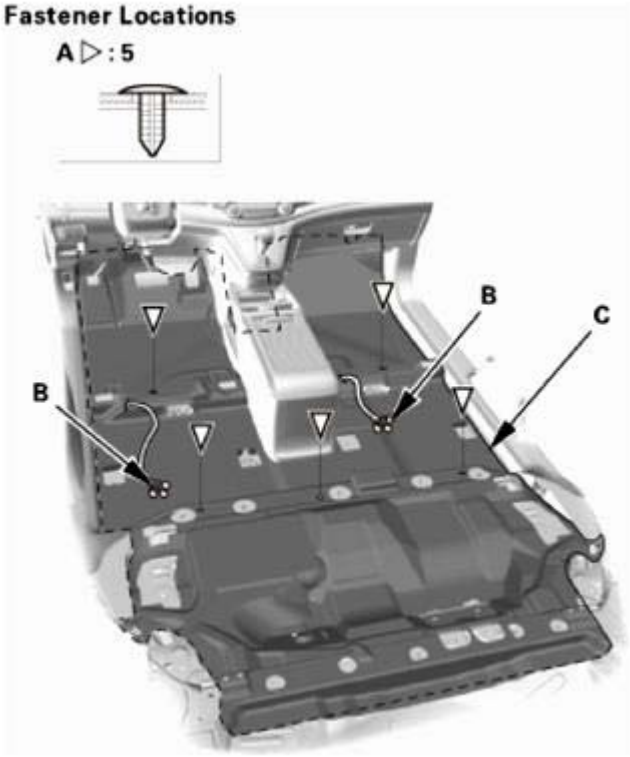

Fig. 40: Identifying Carpet, Clips And Floor Wire Harness

GETtheMANUALS.org

Courtesy of AMERICAN HONDA MOTOR CO., INC.

3. If necessary, remove the floor mat holder (A).

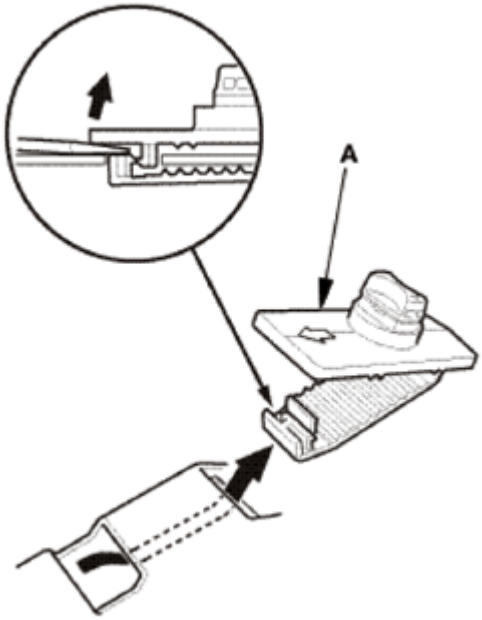

<u>Fig. 41: Removing Floor Mat Holder</u>
Courtesy of AMERICAN HONDA MOTOR CO., INC.

21. Foot Stopper
    1. If necessary, remove the clips (A), then remove the foot stopper (B).

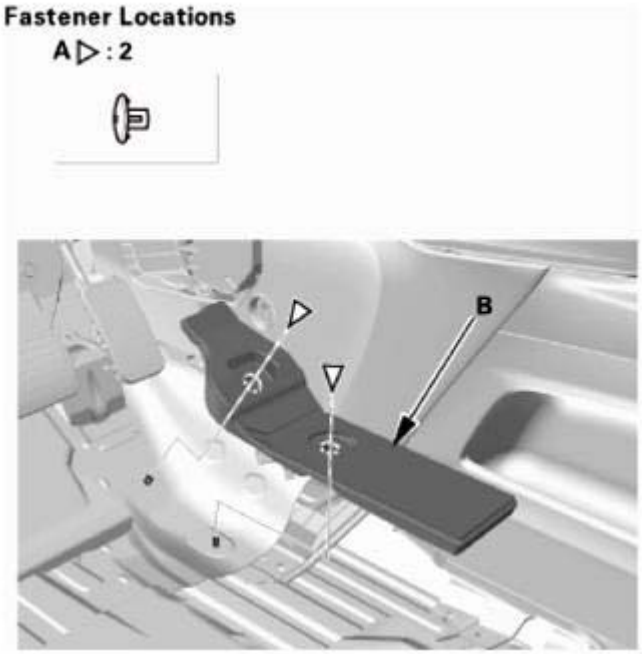

GETtheMANUALS.org

Fig. 42: Identifying Foot Stopper And Clips
Courtesy of AMERICAN HONDA MOTOR CO., INC.

22. Rear Wheelhouse Gusset
    1. If necessary, remove the bolts and the nuts, then remove the rear wheelhouse gusset (A).

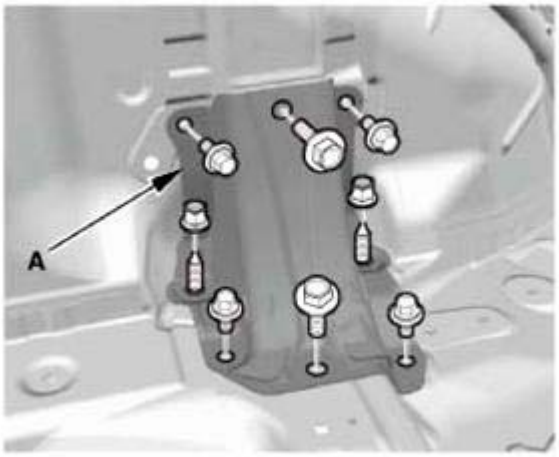

Fig. 43: Identifying Rear Wheelhouse Gusset
Courtesy of AMERICAN HONDA MOTOR CO., INC.

INSTALLATION

1. Rear Wheelhouse Gusset
    1. Install the rear wheelhouse gusset (A), then install the bolts and the nuts.

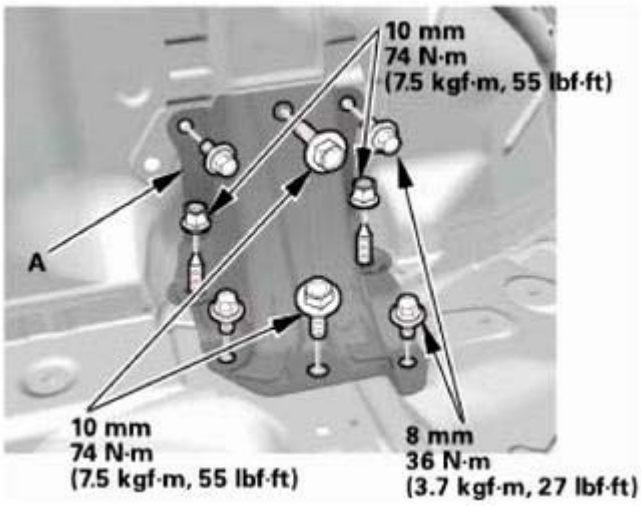

Fig. 44: Identifying Rear Wheelhouse Gusset With Torque Specifications
Courtesy of AMERICAN HONDA MOTOR CO., INC.

2. Foot Stopper

GETtheMANUALS.org

1. Install the foot stopper (A). Make sure the clips (B) snap into place securely.

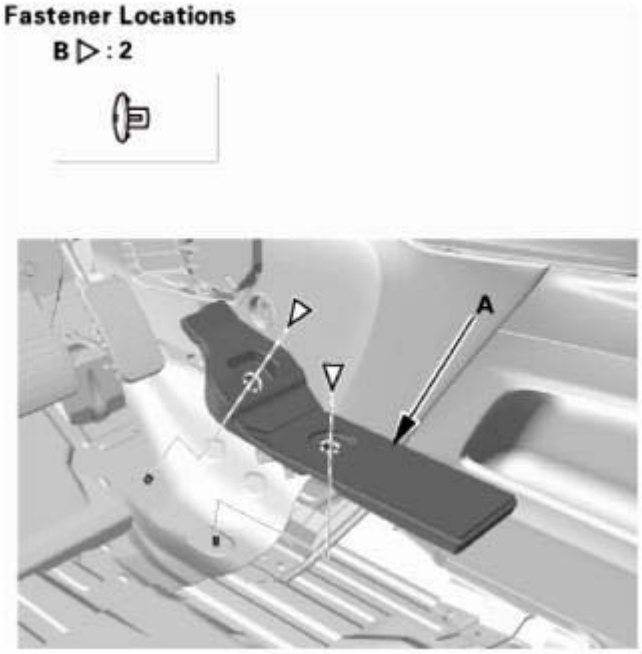

Fig. 45: Identifying Foot Stopper And Clips
Courtesy of AMERICAN HONDA MOTOR CO., INC.

3. Floor Carpet
    1. Install the floor mat holder (A).

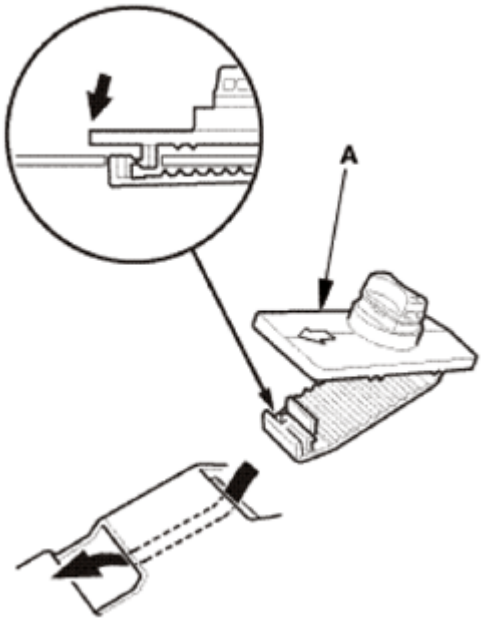

Fig. 46: Installing Floor Mat Holder
Courtesy of AMERICAN HONDA MOTOR CO., INC.

GETtheMANUALS.org

2. Pass the floor wire harnesses (A) through the hole in the carpet (B), then install the carpet.
3. Install the clips (C).

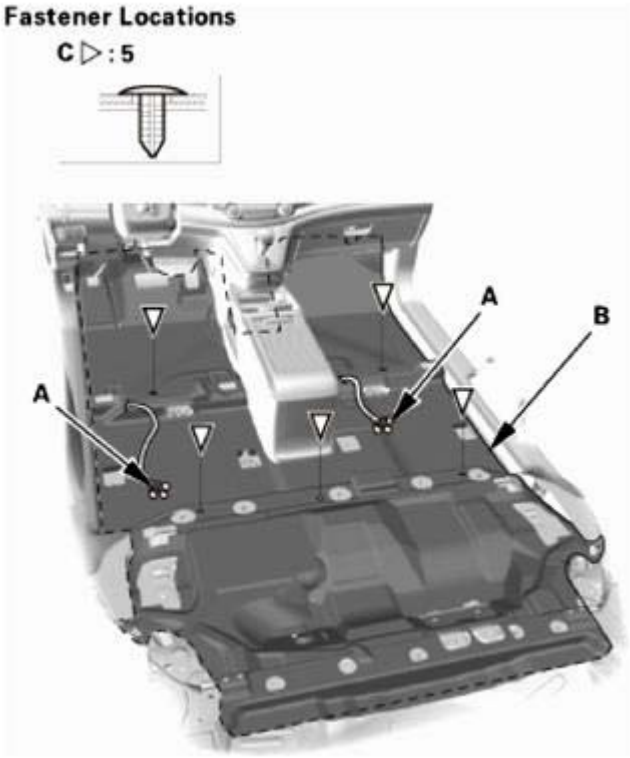

Fig. 47: Identifying Floor Wire Harness, Carpet And Clips
Courtesy of AMERICAN HONDA MOTOR CO., INC.

4. Steering Joint Cover
    1. Install the steering joint cover (A).

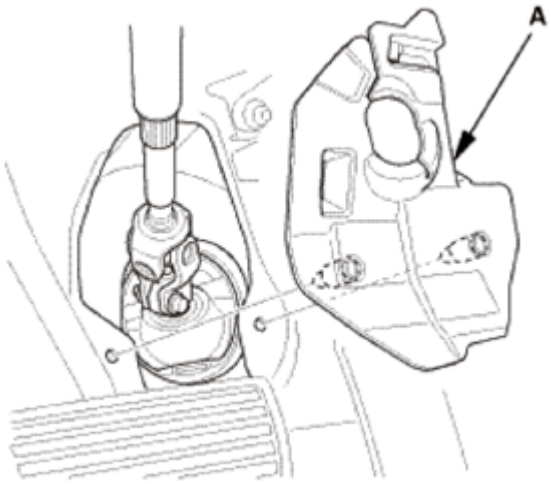

Fig. 48: Identifying Steering Joint Cover

GETtheMANUALS.org

Courtesy of AMERICAN HONDA MOTOR CO., INC.

5. Rear Carpet Trim - Both Sides
    1. Install the rear carpet trims (A). Make sure the clips (B) and the hooks (C) snap into place securely.

Left side

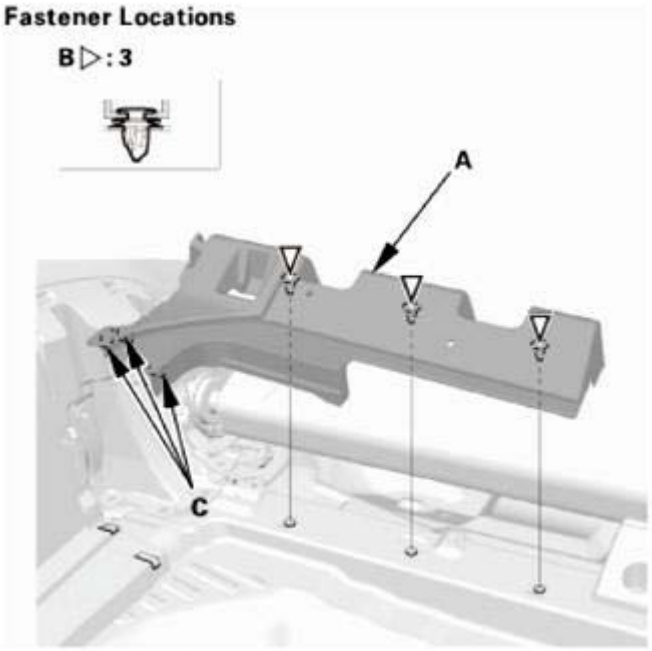

Fig. 49: Identifying Rear Carpet Trims, Clips And Hooks (Left Side)
Courtesy of AMERICAN HONDA MOTOR CO., INC.

Right side

GETtheMANUALS.org

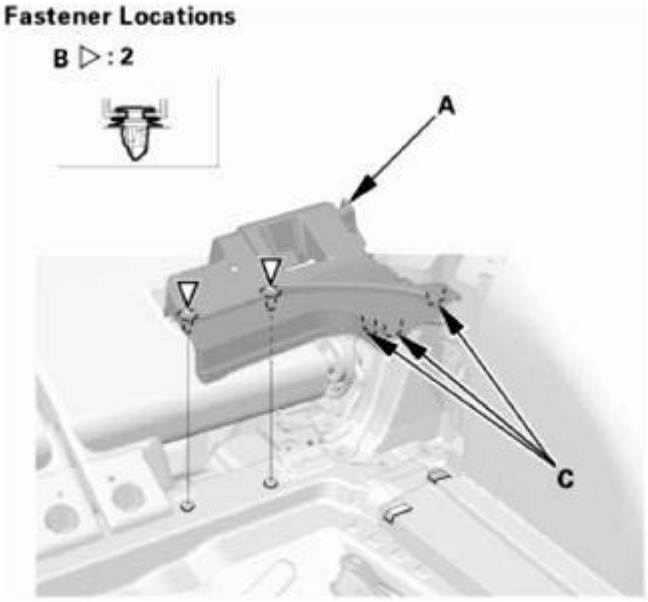

Fig. 50: Identifying Rear Carpet Trims, Clips And Hooks (Right Side)
Courtesy of AMERICAN HONDA MOTOR CO., INC.

6. Rear Seat-Back Assembly - Both Sides
    1. Install the rear seat-back assembly (A).

    NOTE: **Tighten the bolts (B, C) by hand first, then tighten them to the specified torque.**

    2. Install the rear seat-back cover (D). Make sure the clips (E) snap into place securely.

    Left side

GETtheMANUALS.org

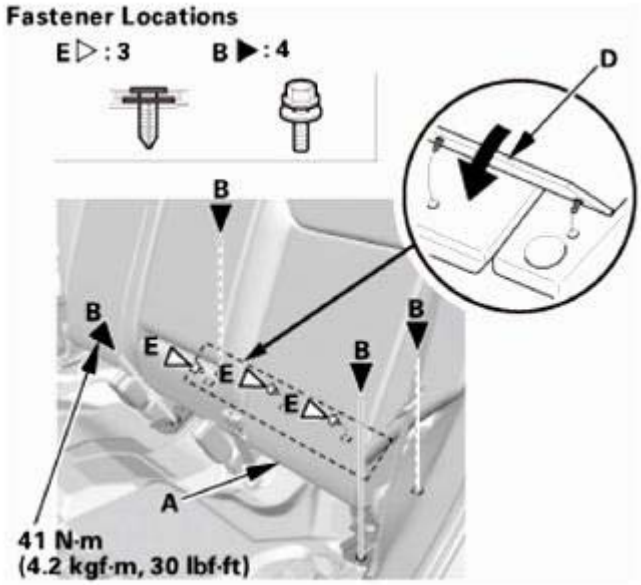

Fig. 51: Installing Rear Seat-Back Cover (Left Side)
Courtesy of AMERICAN HONDA MOTOR CO., INC.

Right side

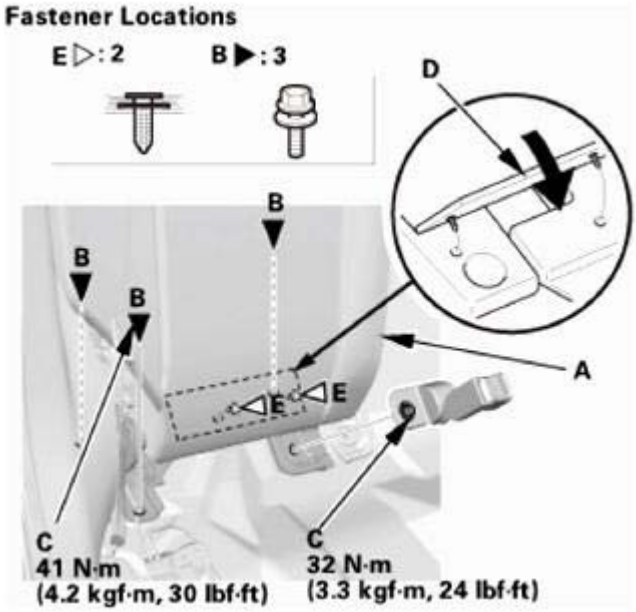

Fig. 52: Installing Rear Seat-Back Cover (Right Side)
Courtesy of AMERICAN HONDA MOTOR CO., INC.

7. Right Rear Seat Cushion Assembly
    1. Install the right rear seat cushion assembly (A).

NOTE: Tighten the bolts (B) by hand first, then tighten them to the specified

GETtheMANUALS.org

torque.

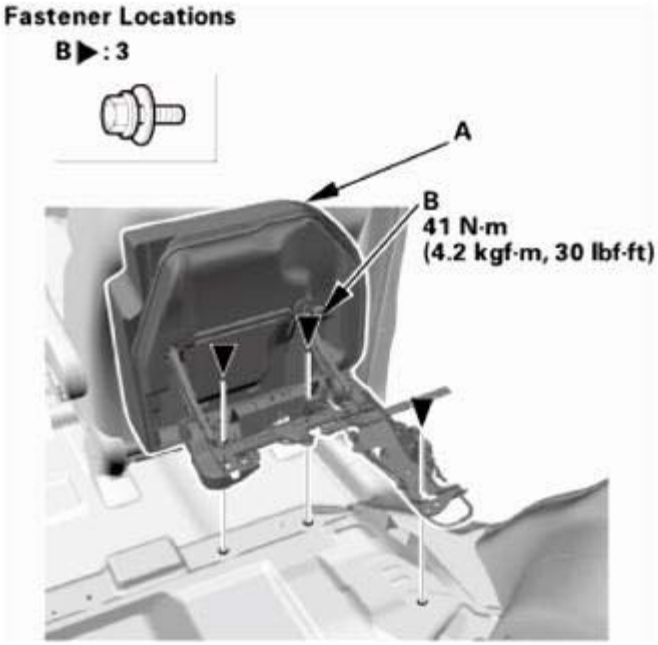

Fig. 53: Identifying Right Rear Seat Cushion Assembly And Bolts
Courtesy of AMERICAN HONDA MOTOR CO., INC.

2. Connect the cables (A) to the rear seat cushion assembly (B), then install the cables to the cable brackets (C), and install the cable clip (D).

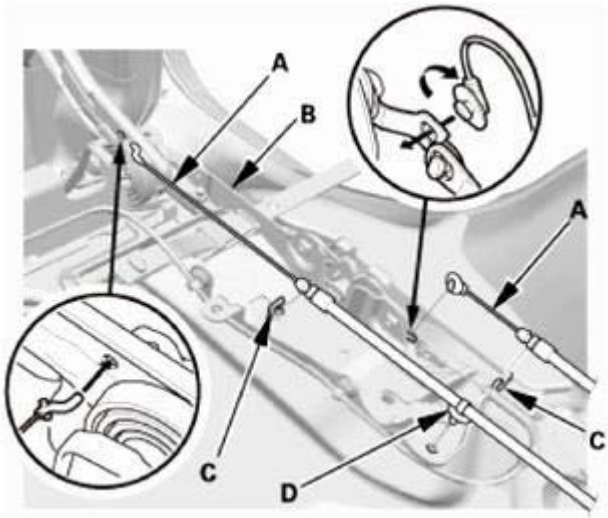

Fig. 54: Identifying Rear Seat Cushion Assembly, Cables, Bracket And Cable Clip
Courtesy of AMERICAN HONDA MOTOR CO., INC.

8. Left Rear Seat Cushion Assembly

GETtheMANUALS.org

1. Install the left rear seat cushion assembly (A).

NOTE: **Tighten the bolts (B) by hand first, then tighten them to the specified torque.**

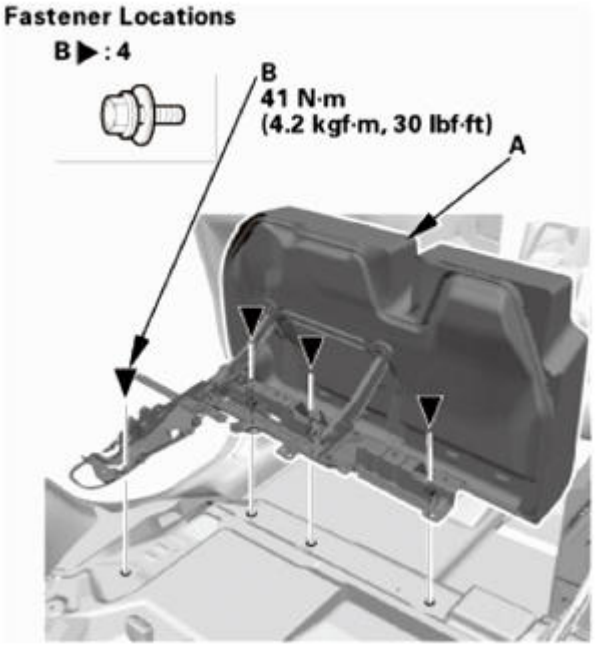

Fig. 55: Identifying Left Rear Seat Cushion Assembly And Bolts
Courtesy of AMERICAN HONDA MOTOR CO., INC.

2. Connect the cables (A) to the rear seat cushion assembly (B), then install the cables to the cable brackets (C), and install the cable clip (D).

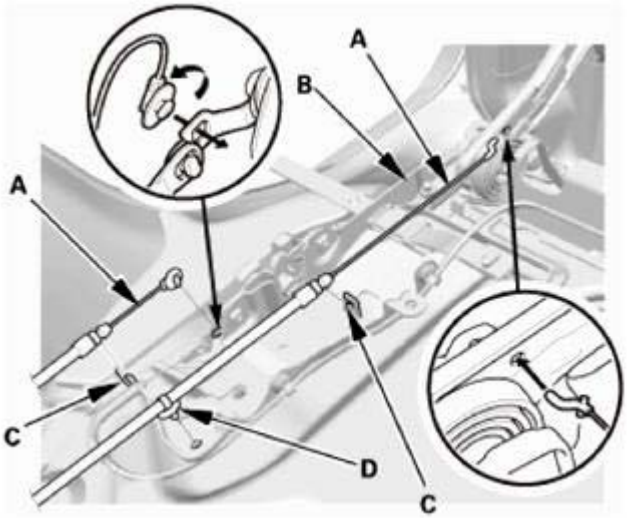

Fig. 56: Identifying Rear Seat Cushion Assembly, Cable, Brackets And Clip

GETtheMANUALS.org

Courtesy of AMERICAN HONDA MOTOR CO., INC.

9. Rear Seat Cushion Foot Cover - Both Sides
    1. Install the rear seat cushion foot covers (A). Make sure the clips (B) and the hooks (C) snap into place securely.

Left side

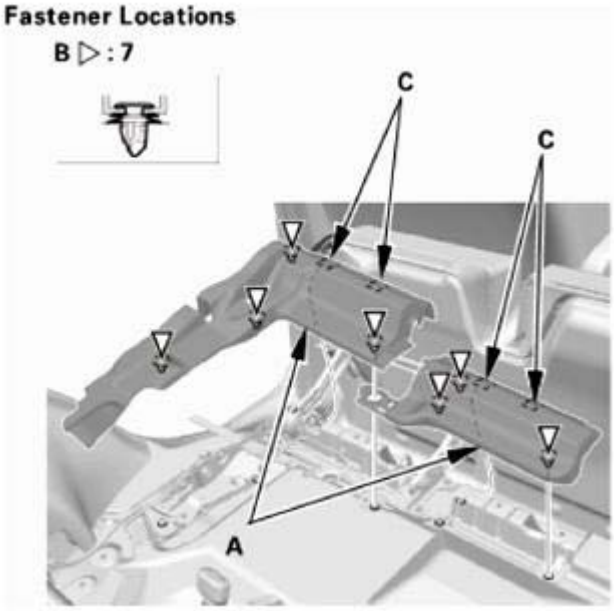

Fig. 57: Identifying Rear Seat Cushion Foot Covers, Clips And Hooks (Left Side)
Courtesy of AMERICAN HONDA MOTOR CO., INC.

Right side

GETtheMANUALS.org

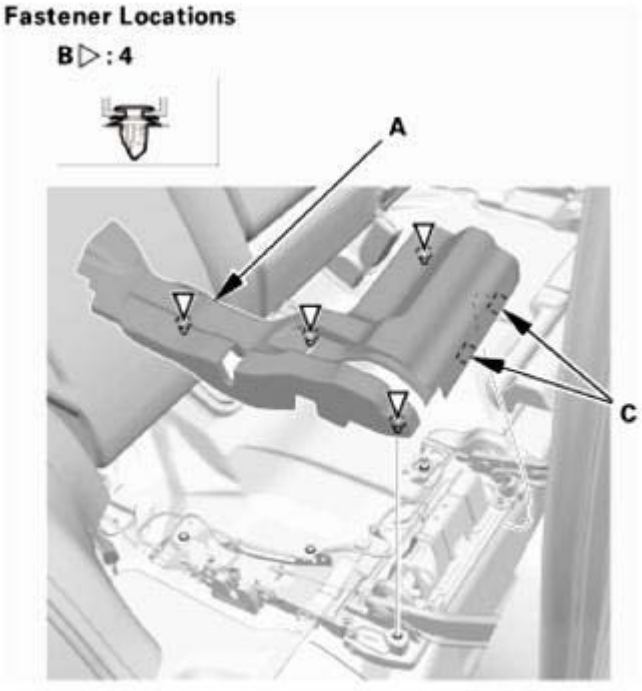

Fig. 58: Identifying Rear Seat Cushion Foot Covers, Clips And Hooks (Right Side)
Courtesy of AMERICAN HONDA MOTOR CO., INC.

10. Rear Damper Maintenance Cover - Both Sides

NOTE: Repeat this procedure on the opposite side.

1. Fold down the rear seat-back.
2. Install the rear damper maintenance cover (A). Make sure the hooks (B) snap into place securely.

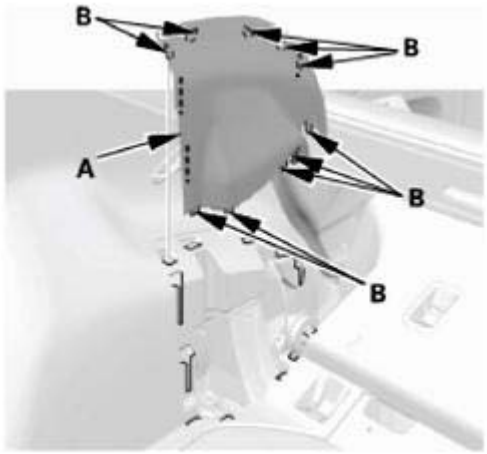

Fig. 59: Identifying Rear Damper Maintenance Cover And Hooks
Courtesy of AMERICAN HONDA MOTOR CO., INC.

GETtheMANUALS.org

11. B-Pillar Lower Trim - Both Sides (After Removing Seats)

NOTE: Repeat this procedure on the opposite side.

1. Install the B-pillar lower trim (A). Make sure the clips (B) and the hooks (C) snap into place securely.

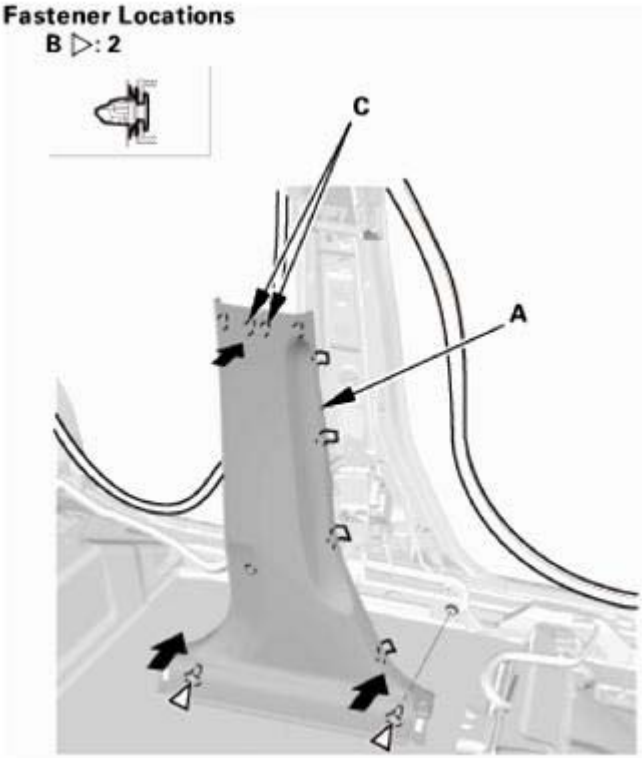

Fig. 60: Installing B-Pillar Lower Trim
Courtesy of AMERICAN HONDA MOTOR CO., INC.

12. Kick Panel - Both Sides
    1. Install the driver's side kick panel (A) and the passenger's side kick panel (B). Make sure the clips (C) snap into place securely.
    2. Install the front door opening seal (D).

Driver's side

GETtheMANUALS.org

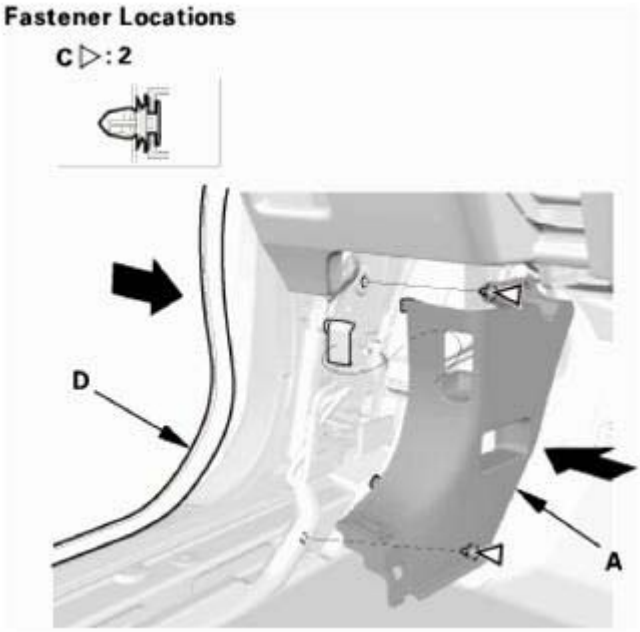

Fig. 61: Installing Driver's Side Kick Panel
Courtesy of AMERICAN HONDA MOTOR CO., INC.

Passenger's side

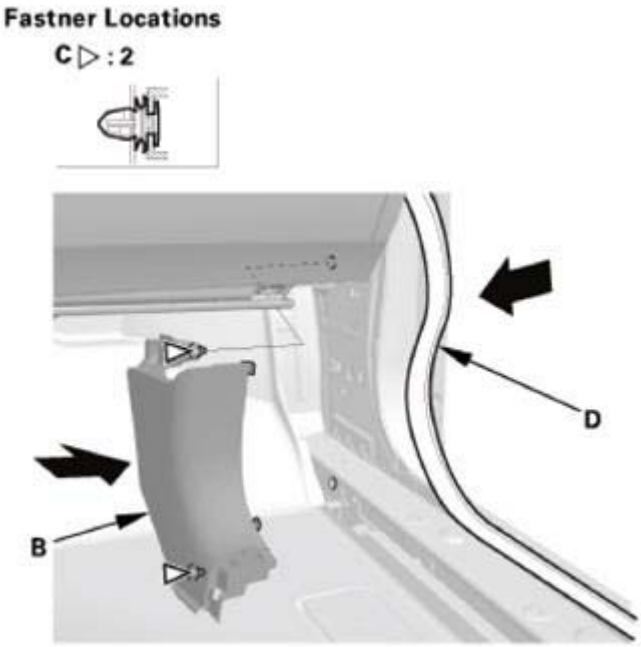

Fig. 62: Installing Passenger's Side Kick Panel
Courtesy of AMERICAN HONDA MOTOR CO., INC.

13. Rear Door Opening Seal As Needed - Both Sides

GETtheMANUALS.org

NOTE: **Repeat this procedure on the opposite side.**

1. Install the rear door opening seal (A). Make sure the seal is installed securely into the hooks (B).

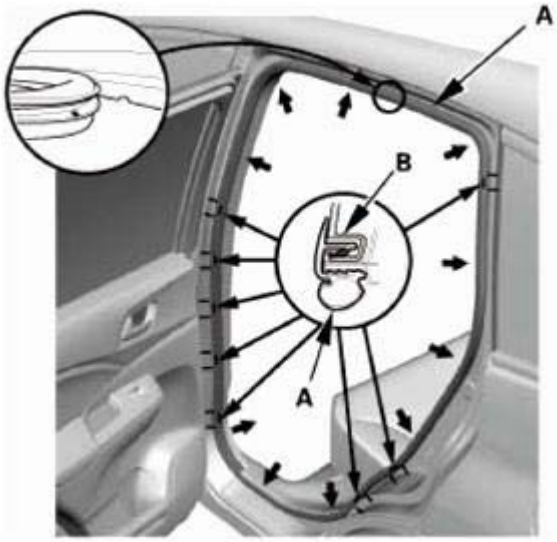

Fig. 63: Identifying Rear Door Opening Seal And Hooks
Courtesy of AMERICAN HONDA MOTOR CO., INC.

14. Front Door Opening Seal As Needed - Both Sides

NOTE: **Repeat this procedure on the opposite side.**

1. Install the front door opening seal (A). Make sure the seal is installed securely into the hooks (B).

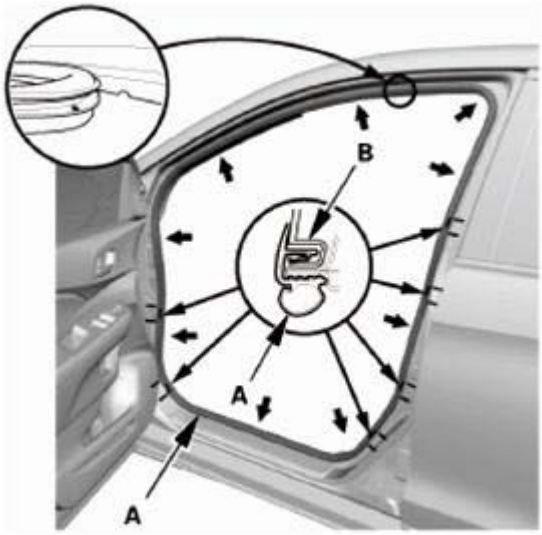

Fig. 64: Identifying Front Door Opening Seal And Hooks
Courtesy of AMERICAN HONDA MOTOR CO., INC.

GETtheMANUALS.org

15. Rear Door Sill Trim - Both Sides

NOTE: Repeat this procedure on the opposite side.

1. Pull the release strap to fold down the rear seat, then lift-up and latch the rear seat-back in the upright position.
2. Install the rear door inner sill trim (A). Make sure the clips (B, C), the hooks (D), and the tab (E) snap into place securely.

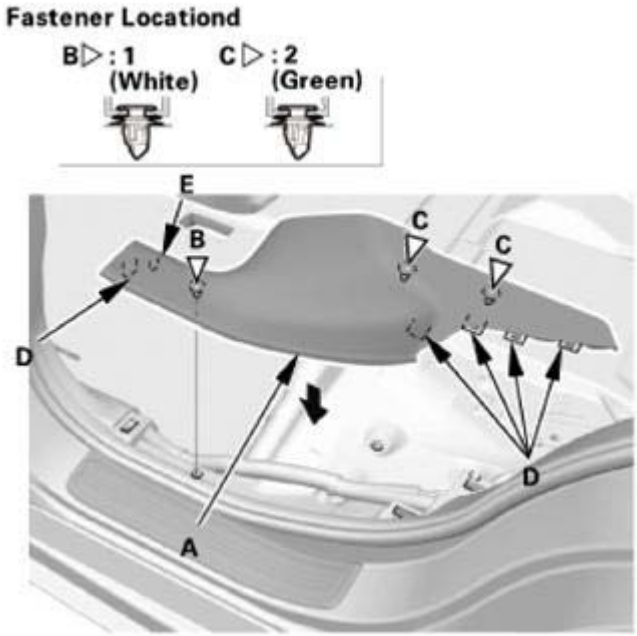

Fig. 65: Installing Rear Door Inner Sill Trim
Courtesy of AMERICAN HONDA MOTOR CO., INC.

16. Front Door Sill Trim - Both Sides

NOTE: Repeat this procedure on the opposite side.

1. Install the front door inner sill trim (A). Make sure the clips (B), the hooks (C), and the tabs (D) snap into place securely.

GETtheMANUALS.org

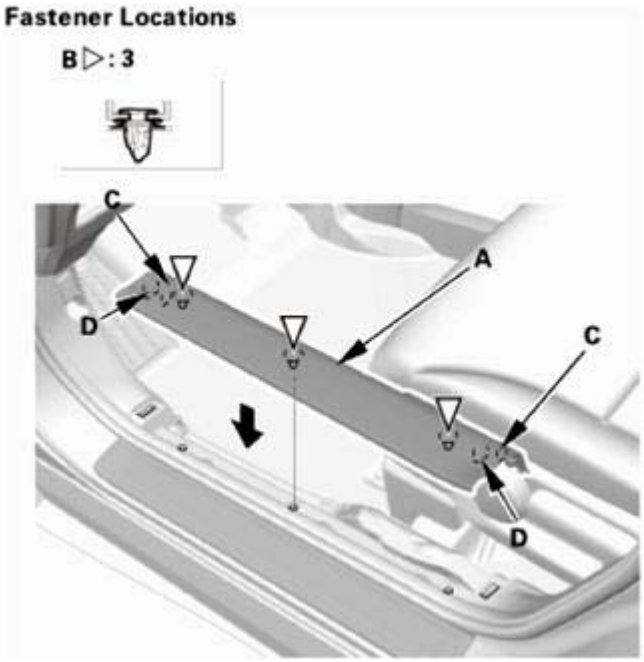

Fig. 66: Installing Front Door Inner Sill Trim
Courtesy of AMERICAN HONDA MOTOR CO., INC.

17. Front Seat - Both Sides
    1. With the help of an assistant, carefully install both front seats through the front door opening.
    2. Lift up the front seat, then connect the connectors (A) and install the harness clip (B).

Driver's seat

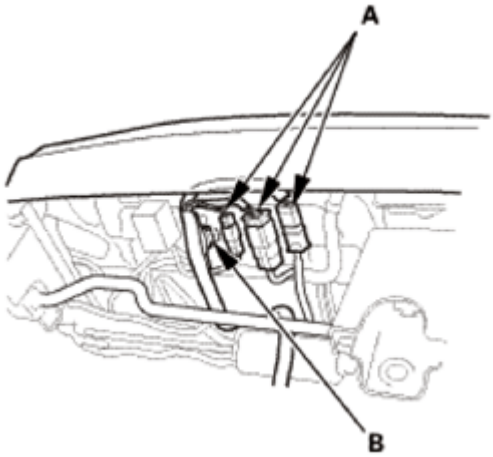

Fig. 67: Identifying Driver's Seat Connector And Harness Clip
Courtesy of AMERICAN HONDA MOTOR CO., INC.

Passenger's seat (Without subwoofer)

GETtheMANUALS.org

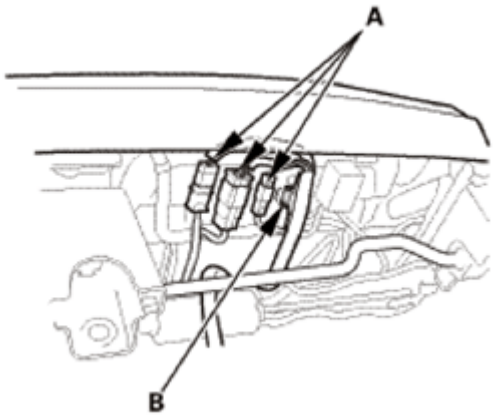

Fig. 68: Identifying Passenger's Seat Connector And Harness Clip (Without Subwoofer)
Courtesy of AMERICAN HONDA MOTOR CO., INC.

Passenger's seat (With subwoofer)

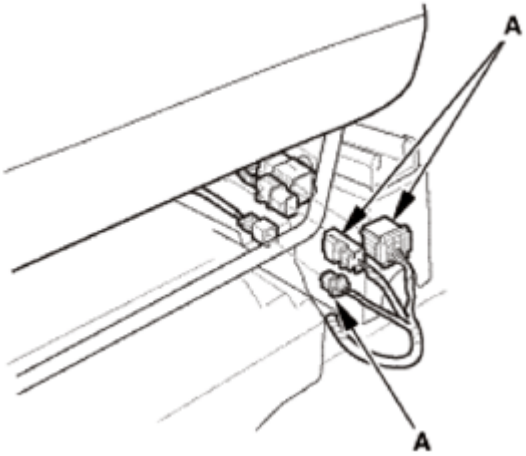

Fig. 69: Identifying Passenger's Seat Connector And Harness Clip (With Subwoofer)
Courtesy of AMERICAN HONDA MOTOR CO., INC.

3. Insert the head restraint (A) into the seat-back as shown.
4. The driver's seat is shown; repeat on the passenger's seat.

GETtheMANUALS.org

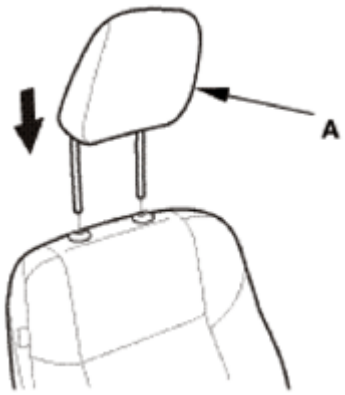

Fig. 70: Inserting Head Restraint
Courtesy of AMERICAN HONDA MOTOR CO., INC.

5. Install the seat mounting bolts (A).

NOTE: Tighten the bolts to the specified torque in the sequence shown.

- Tighten the bolts by hand first, then tighten them to the specified torque.
- Tighten the seat mounting bolts to the specified torque in the sequence shown. Slide the seat all the way back and tighten 1 and 2, then slide it forward and tighten 3 and 4.

6. The driver's seat is shown; repeat on the passenger's seat.

Front

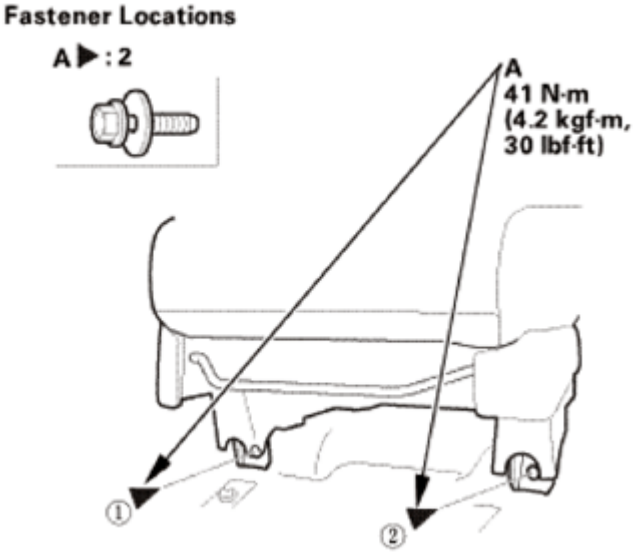

Fig. 71: Identifying Front Seat Mounting Bolts With Torque Specifications
Courtesy of AMERICAN HONDA MOTOR CO., INC.

Rear

GETtheMANUALS.org

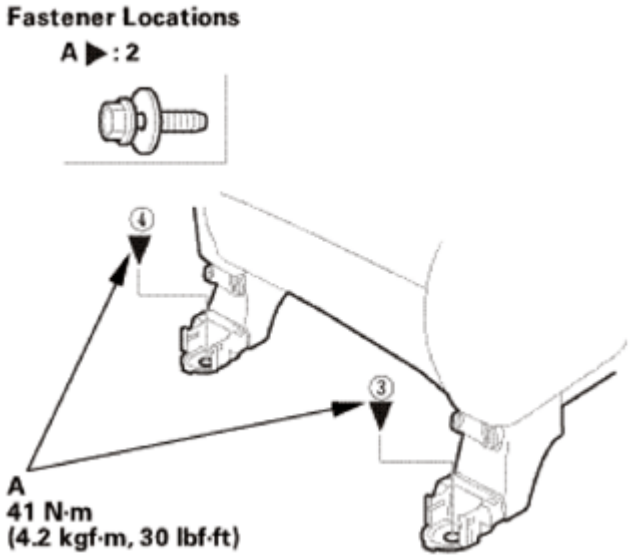

Fig. 72: Identifying Rear Seat Mounting Bolts With Torque Specifications
Courtesy of AMERICAN HONDA MOTOR CO., INC.

7. Install both seat track end covers (A). Make sure the hooks (B) snap into place securely.
8. The driver's seat is shown; repeat on the passenger's seat.

GETtheMANUALS.org

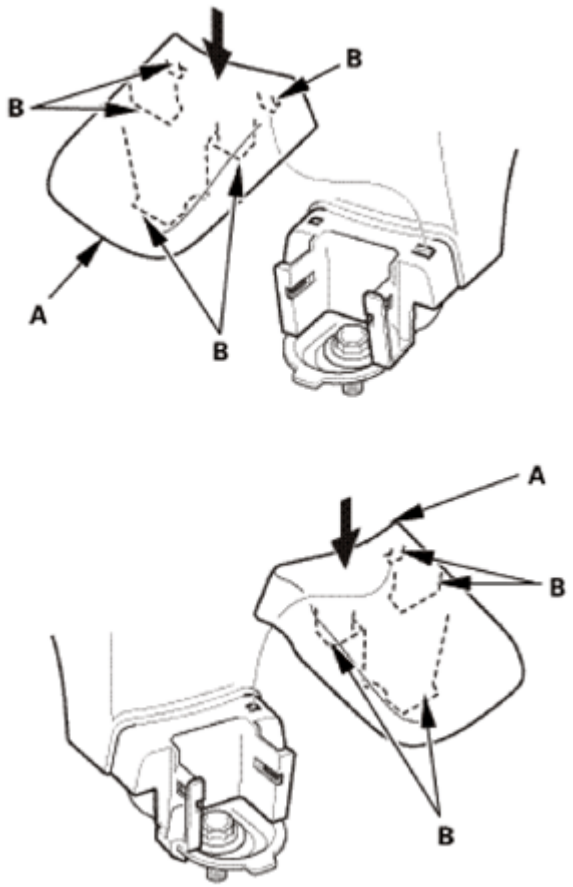

Fig. 73: Installing Seat Track End Covers
Courtesy of AMERICAN HONDA MOTOR CO., INC.

18. Battery Terminal (SRS) - Reconnection

NOTE: If the battery performance is abnormal, test the battery.

1. Clean the battery terminals.
2. Connect the positive cable (A) to the battery.

NOTE: Always connect the positive side first.

3. Connect the negative cable (B) to the battery.
4. Apply multipurpose grease to the terminals to prevent corrosion.

GETtheMANUALS.org

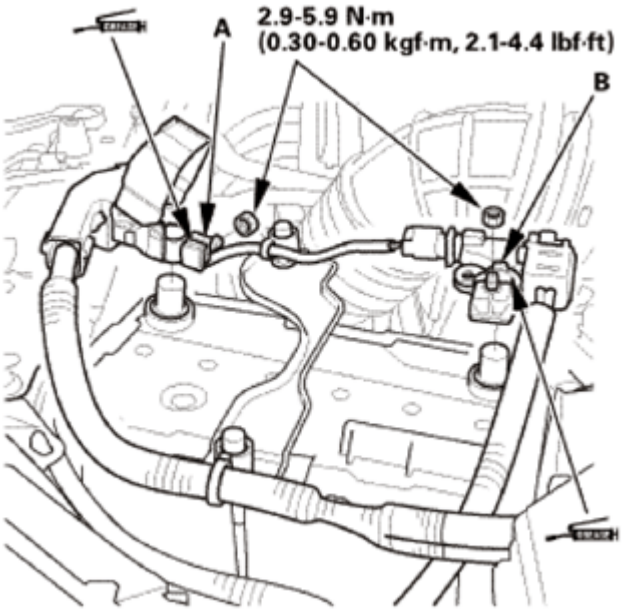

Fig. 74: Identifying Positive And Negative Cables Of Battery
Courtesy of AMERICAN HONDA MOTOR CO., INC.

19. Front Seat Belt Lower Anchor Bolt - Both Sides

NOTE: Repeat this procedure on the opposite side.

1. Install the lower anchor bolt.

NOTE: Before installing the anchor bolt, make sure there are no twists or kinks in the seat belt.

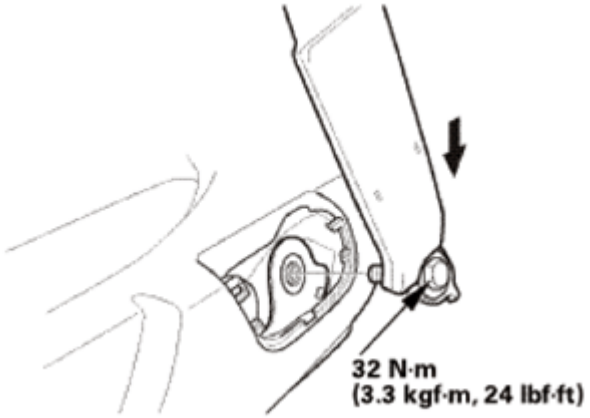

Fig. 75: Installing Lower Anchor Bolt
Courtesy of AMERICAN HONDA MOTOR CO., INC.

2. Install the anchor cover (A). Make sure the hooks (B) and the tab (C) snap into place securely.

GETtheMANUALS.org

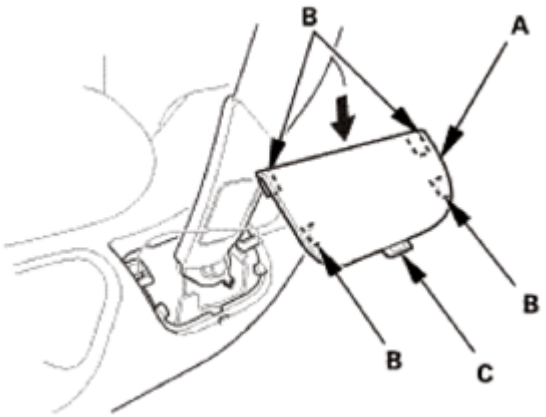

Fig. 76: Installing Anchor Cover
Courtesy of AMERICAN HONDA MOTOR CO., INC.

20. Center Console
    1. Install the center console (A).

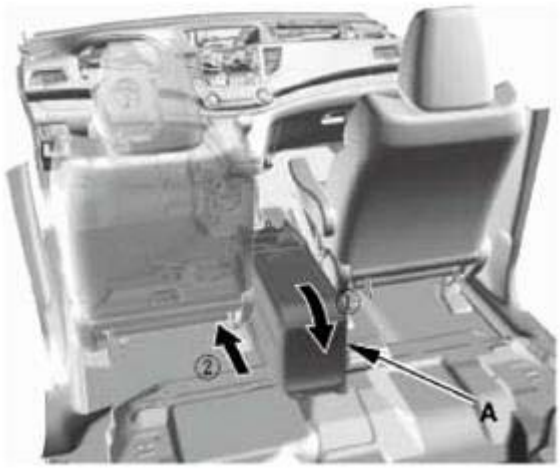

Fig. 77: Installing Center Console
Courtesy of AMERICAN HONDA MOTOR CO., INC.

    2. Connect the connectors (A), and install the clips (B).

GETtheMANUALS.org

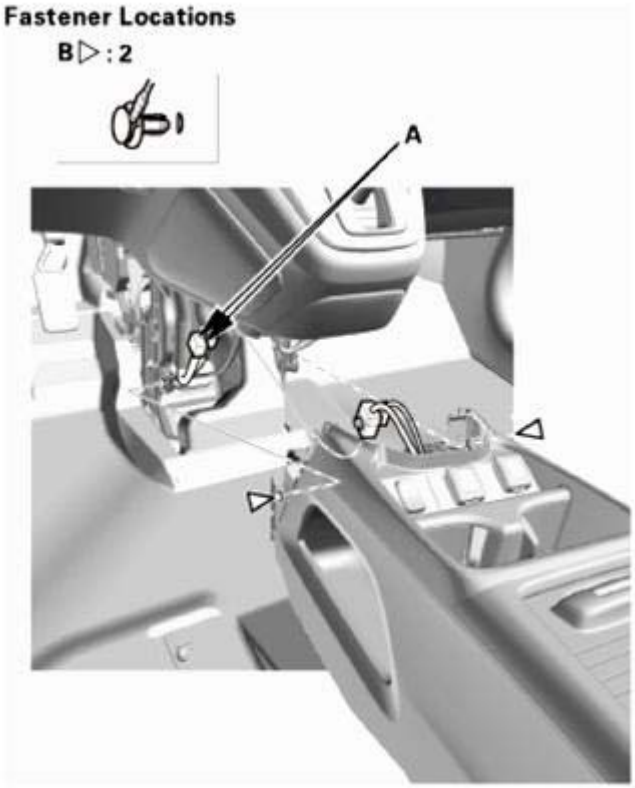

Fig. 78: Identifying Connectors And Clips
Courtesy of AMERICAN HONDA MOTOR CO., INC.

3. Install the bolts (A), then install the console box mat (B).

GETtheMANUALS.org

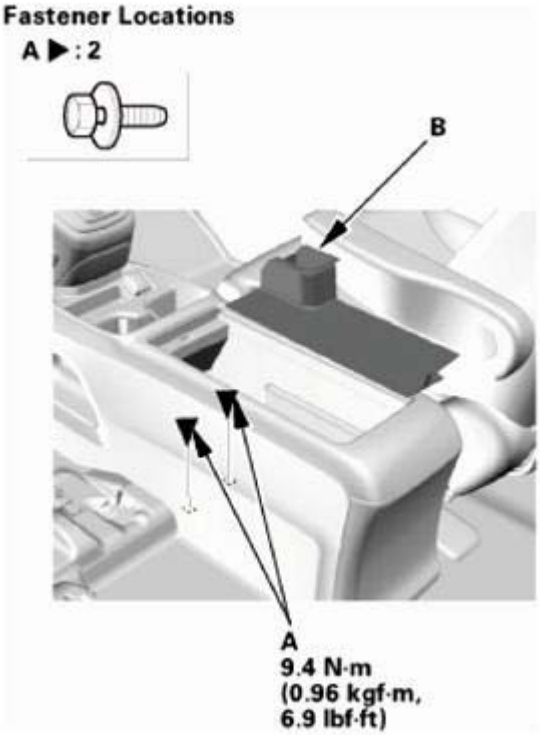

Fig. 79: Identifying Console Box Mat And Bolts
Courtesy of AMERICAN HONDA MOTOR CO., INC.

4. Install the bolts (A).

Fig. 80: Identifying Bolts With Torque Specifications
Courtesy of AMERICAN HONDA MOTOR CO., INC.

GETtheMANUALS.org

5. Install the bolt (A), then install the center lower cover (B). Make sure the clips (C) snap into place securely.

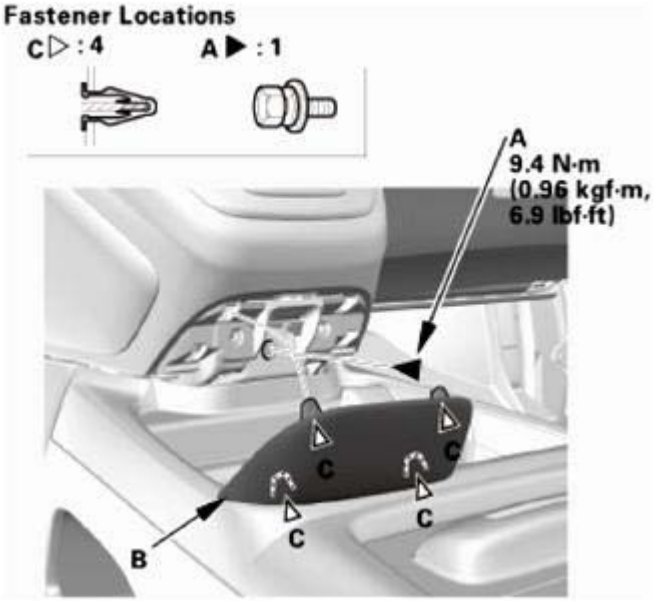

Fig. 81: Identifying Center Lower Cover, Clips And Bolts
Courtesy of AMERICAN HONDA MOTOR CO., INC.

21. Center Console Rear Trim
    1. Install the center console rear trim (A). Make sure the clips (B) and the hooks (C) snap into place securely.

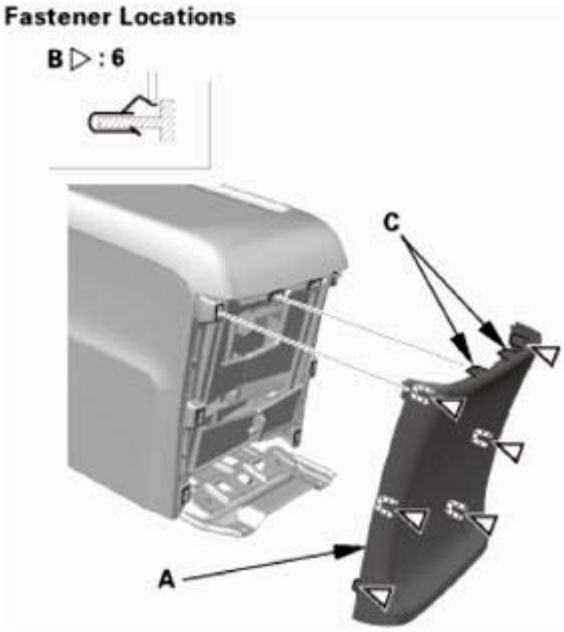

Fig. 82: Identifying Center Console Rear Trim, Clips And Hooks

GETtheMANUALS.org

Courtesy of AMERICAN HONDA MOTOR CO., INC.

22. Front Console Cover - Both Sides
    1. Install the front console covers (A). Make sure the clips (B, C) snap into place securely.

Left side

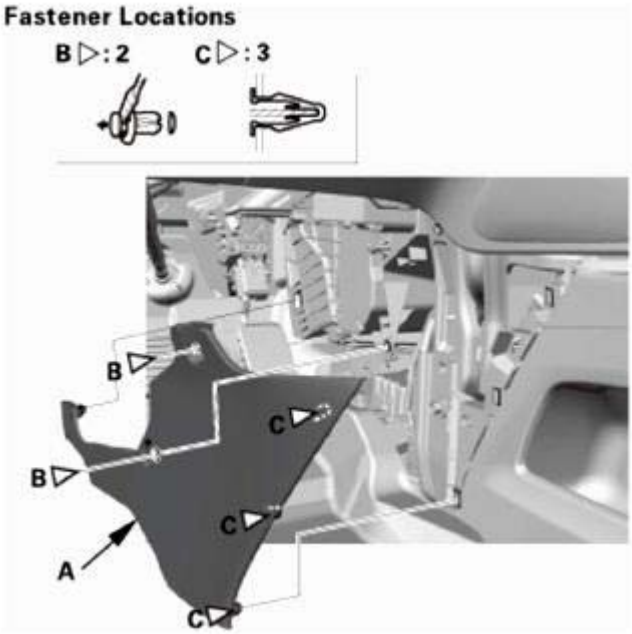

Fig. 83: Identifying Front Console Covers And Clips (Left Side)
Courtesy of AMERICAN HONDA MOTOR CO., INC.

Right side

GETtheMANUALS.org

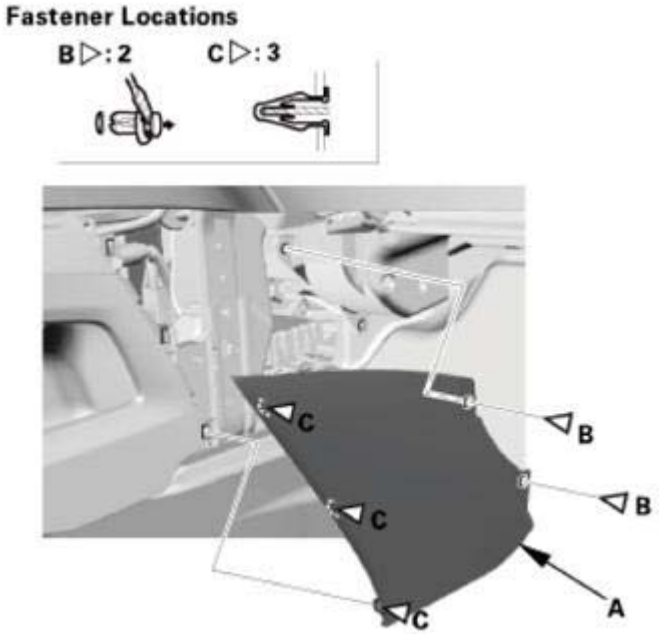

Fig. 84: Identifying Front Console Covers And Clips (Right Side)
Courtesy of AMERICAN HONDA MOTOR CO., INC.

GRAB HANDLE REMOVAL AND INSTALLATION

SPECIAL TOOL DESCRIPTION

Image	Description/Tool Number
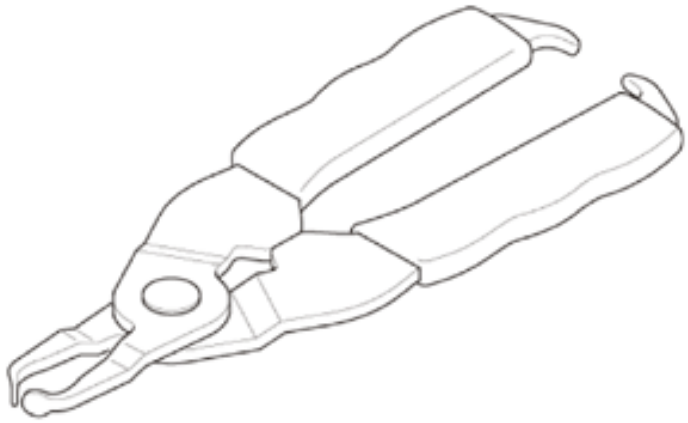	Push Pin/Grab Rail Cap Pliers 07AAC-001A100

REMOVAL

1. Grab Handle
    1. Lower the grab handle (A).
    2. Insert the tips of the push pin/grab rail cap pliers (B) into the notch.

GETtheMANUALS.org

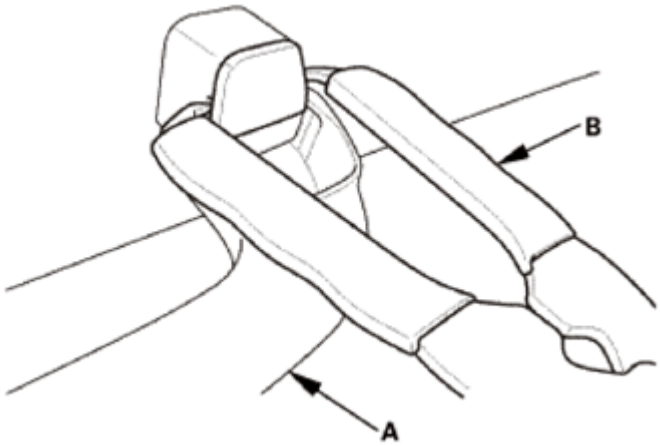

Fig. 85: Inserting Tips Of Push Pin/Grab Rail Cap Pliers Into Notch
Courtesy of AMERICAN HONDA MOTOR CO., INC.

3. Gently squeeze the handles of the push pin/grab rail cap pliers (A), and pull the cap (B) straight out.

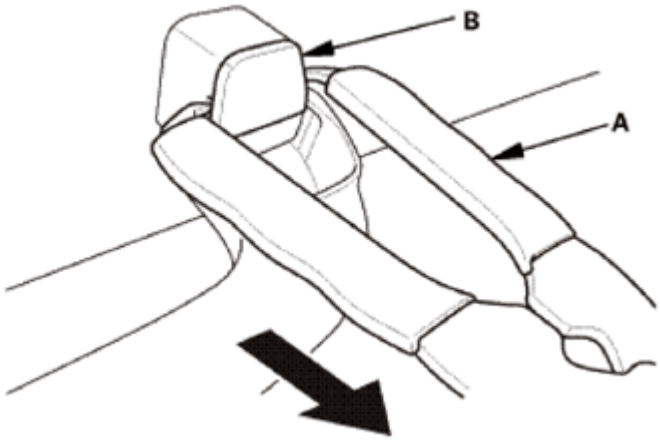

Fig. 86: Pulling Cap
Courtesy of AMERICAN HONDA MOTOR CO., INC.

4. Remove the grab handle (A).

GETtheMANUALS.org

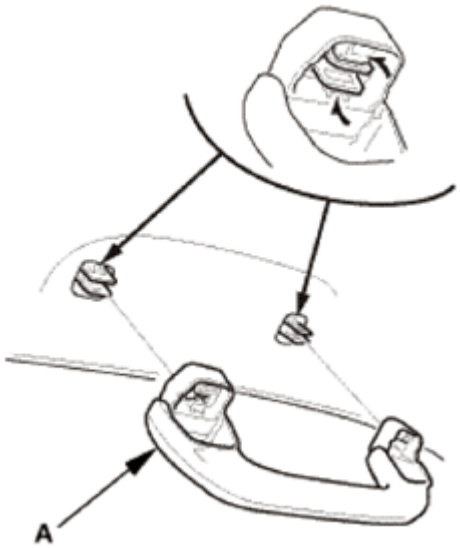

Fig. 87: Identifying Grab Handle
Courtesy of AMERICAN HONDA MOTOR CO., INC.

5. Remove the clips (A).

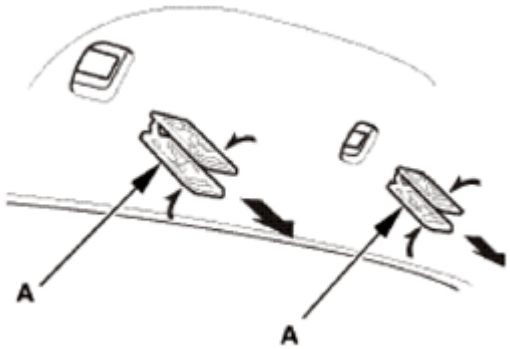

Fig. 88: Removing Clips
Courtesy of AMERICAN HONDA MOTOR CO., INC.

INSTALLATION

1. Grab Handle - Check
    1. If the side curtain airbag has not deployed, inspect the grab handle (A) for damage. A damaged grab handle may cause the side curtain airbag to deploy improperly, possibly causing injury. Replace the grab handle if it has any of the following damage:
        - Any cracks or breakage in the grab handle
        - Any cracks or stress-whitening in the caps (B)

GETtheMANUALS.org

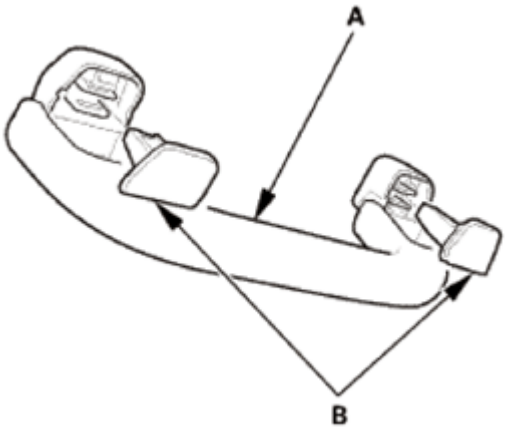

Fig. 89: Identifying Grab Handle And Caps
Courtesy of AMERICAN HONDA MOTOR CO., INC.

2. Grab Handle
    1. Install the clips (A) on the grab handle (B).
    2. Install the caps (C) fully into the clips.

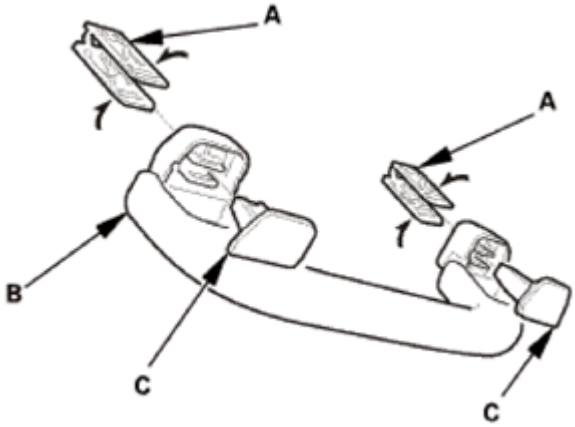

Fig. 90: Installing Caps On Grab Handle
Courtesy of AMERICAN HONDA MOTOR CO., INC.

3. Position the grab handle (A) on the grab handle bracket (B).
4. Push on the grab handle until the clips (C) snap into place securely.

GETtheMANUALS.org

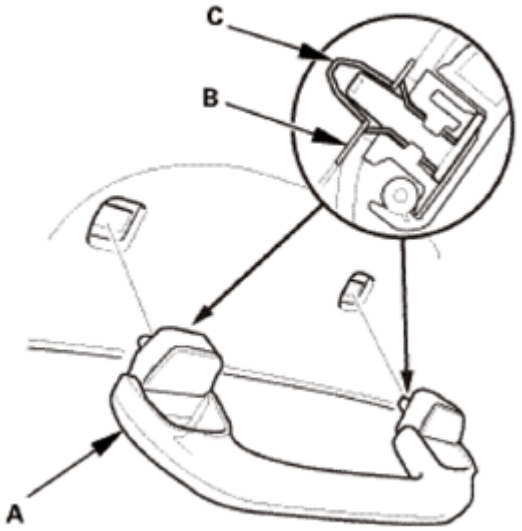

Fig. 91: Identifying Grab Handle, Bracket And Clips
Courtesy of AMERICAN HONDA MOTOR CO., INC.

HEADLINER REMOVAL AND INSTALLATION

SPECIAL TOOL DESCRIPTION

Image	Description/Tool Number
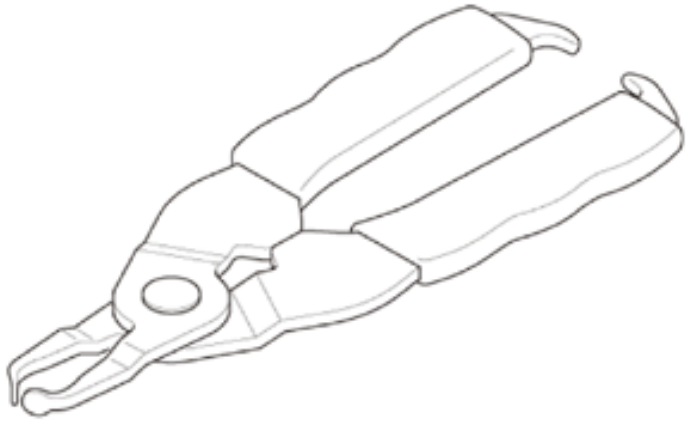	Push Pin/Grab Rail Cap Pliers 07AAC-001A100

REMOVAL

SRS components are located in this area. Review the **SRS COMPONENT LOCATIONS** and the **PRECAUTIONS AND PROCEDURES** before doing repairs or service.

1. Battery Terminal (SRS) - Disconnection
    1. Make sure the ignition switch is in LOCK (0).
    2. Disconnect and isolate the negative cable (A) from the battery.

GETtheMANUALS.org

NOTE: Always disconnect the negative side first.

3. Disconnect the positive cable (B) from the battery.
4. Wait at least 3 minutes before starting work.

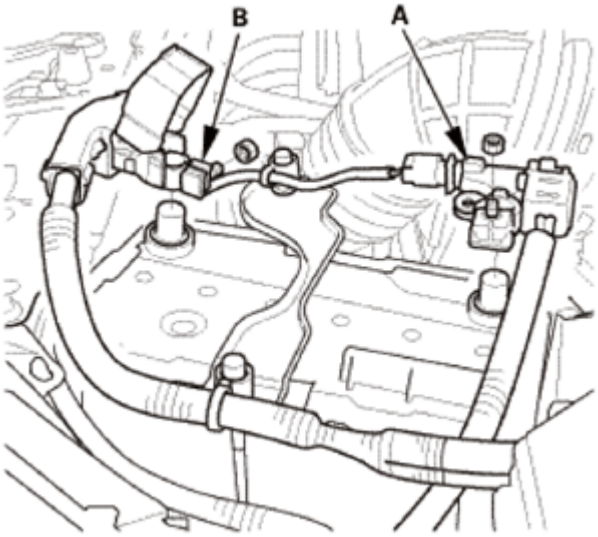

Fig. 92: Identifying Positive And Negative Cables Of Battery
Courtesy of AMERICAN HONDA MOTOR CO., INC.

2. Front Door Sill Trim - Both Sides

NOTE: Repeat on the opposite side.

1. Detach the hooks (A) and the tabs (B) from the kick panel (C) and the B-pillar lower trim (D), and pull up the front door inner sill trim (E) by hand to detach the clips (F), then remove the trim.

GETtheMANUALS.org

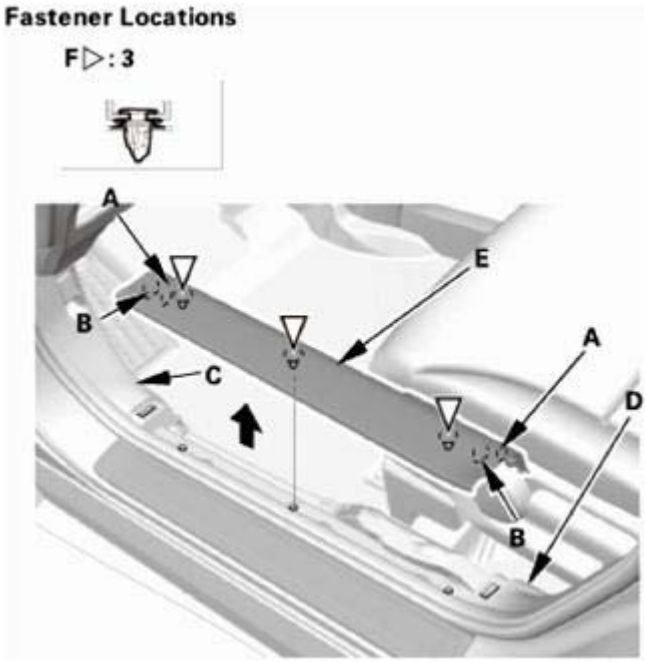

Fig. 93: Pulling Up Front Door Inner Sill Trim
Courtesy of AMERICAN HONDA MOTOR CO., INC.

3. Front Door Opening Seal As Needed - Both Sides

NOTE: Repeat on the opposite side.

1. Pull out the front door opening seal (A) from the trim hooks (B) around the front door opening flange, then detach the seal as needed.

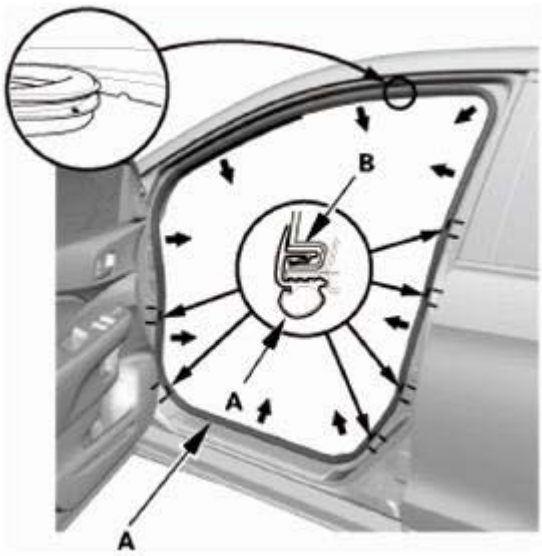

Fig. 94: Identifying Front Door Opening Seal And Trim Hooks

GETtheMANUALS.org

Courtesy of AMERICAN HONDA MOTOR CO., INC.

4. A-Pillar Trim - Both Sides

NOTE: Repeat this procedure on the opposite side.

1. Pull out the A-pillar trim (A) by hand to release the clips (B, C).

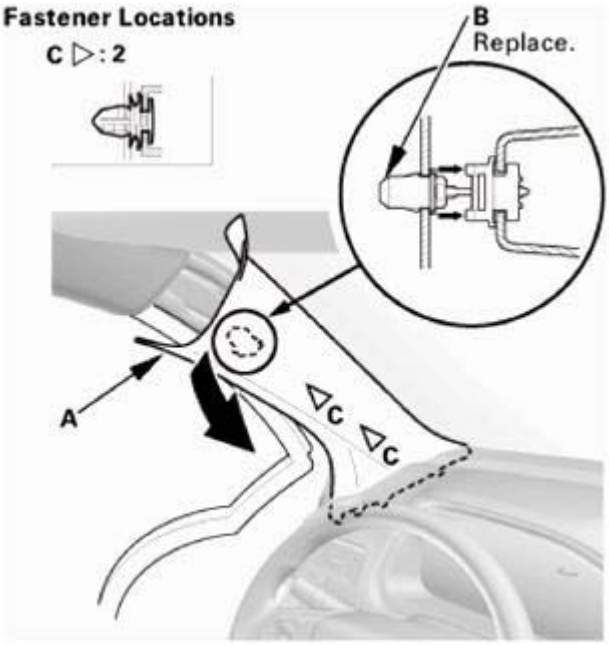

Fig. 95: Pulling Out A-Pillar Trim
Courtesy of AMERICAN HONDA MOTOR CO., INC.

2. Put a shop towel (A) in the opening between the A-pillar trim (B) and the dashboard to prevent dropping the A-pillar clips.

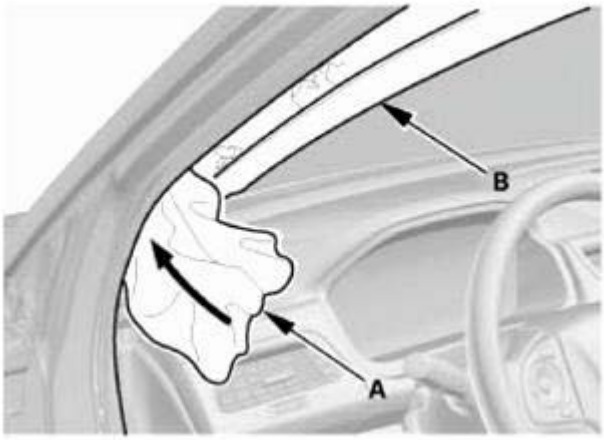

Fig. 96: Putting Shop Towel In Opening Between A-Pillar Trim (B) And Dashboard

GETtheMANUALS.org

Courtesy of AMERICAN HONDA MOTOR CO., INC.

3. Pull out and up on the A-pillar trim (A) to release it from the dashboard.

NOTE: The upper clip will stay in the body.

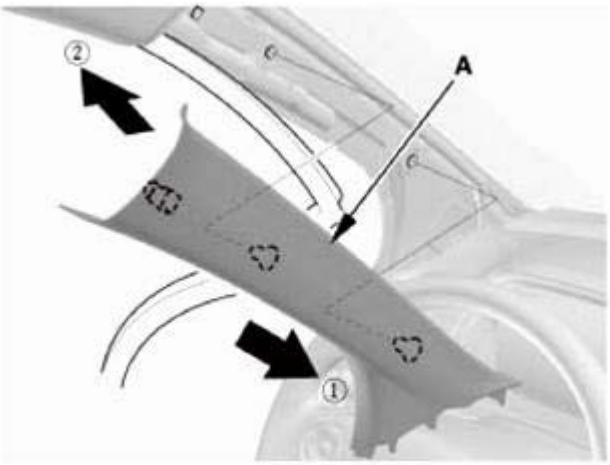

Fig. 97: Pulling Out And Up On A-Pillar Trim
Courtesy of AMERICAN HONDA MOTOR CO., INC.

4. Remove the upper clip (A) from the body.

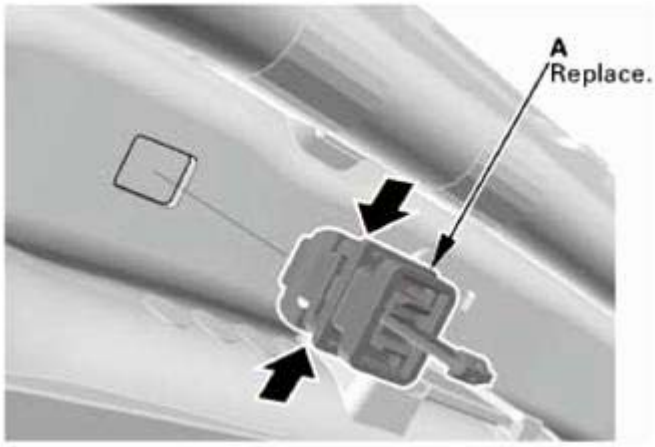

Fig. 98: Removing Upper Clip From Body
Courtesy of AMERICAN HONDA MOTOR CO., INC.

5. Rear Door Sill Trim - Both Sides

NOTE: Repeat this procedure on the opposite side.

1. Pull the release strap to fold down the rear seat, then lift-up and latch the rear seat-back in the

GETtheMANUALS.org

upright position.

2. Detach the hooks (A) and the tab (B) from the B-pillar lower trim (C) and the rear side trim panel (D), and pull up the rear door inner sill trim (E) by hand to detach the clips (F, G), then remove the trim.

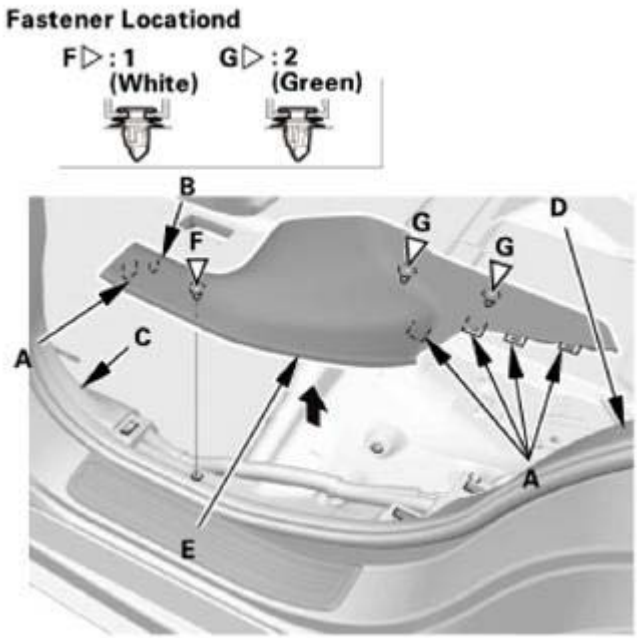

Fig. 99: Pulling Up Rear Door Inner Sill Trim
Courtesy of AMERICAN HONDA MOTOR CO., INC.

6. Rear Door Opening Seal As Needed - Both Sides

NOTE: Repeat this procedure on the opposite side.

1. Pull out the rear door opening seal (A) from the trim hooks (B) around the rear door opening flange, then detach the seal as needed.

GETtheMANUALS.org

Fig. 100: Identifying Rear Door Opening Seal And Hooks
Courtesy of AMERICAN HONDA MOTOR CO., INC.

7. B-Pillar Lower Trim - Both Sides

NOTE: Repeat this procedure on the opposite side.

1. Slide the front seat forward fully.
2. Pull back the bottom portion of the B-pillar lower trim (A) by hand to detach the clips (B).
3. Pull back the upper portion of the B-pillar lower trim to detach the upper hooks (C), then remove the B-pillar lower trim.

GETtheMANUALS.org

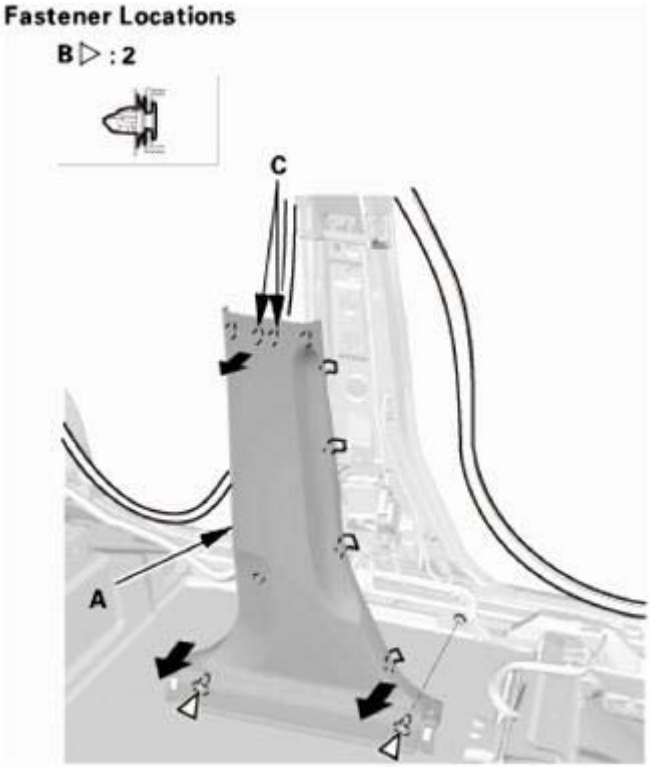

Fig. 101: Pulling Back Bottom Portion Of B-Pillar Lower Trim
Courtesy of AMERICAN HONDA MOTOR CO., INC.

8. Front Seat Belt Upper Anchor Bolt - Both Sides

NOTE: Repeat this procedure on the opposite side.

1. Remove the front seat belt shoulder anchor adjuster cap (A), then remove the front seat belt upper anchor bolt.

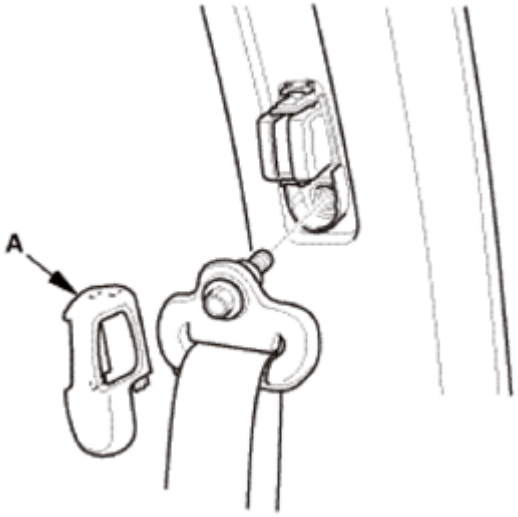

GETtheMANUALS.org

Fig. 102: Identifying Front Seat Belt Shoulder Anchor Adjuster Cap
Courtesy of AMERICAN HONDA MOTOR CO., INC.

9. B-Pillar Upper Trim - Both Sides

NOTE: Repeat this procedure on the opposite side.

1. Pull back the bottom portion of the B-pillar upper trim (A) by hand to detach the hooks (B). Pull down the trim to release the upper hook (C) from the hole (D) in the body, then remove the B-pillar upper trim.

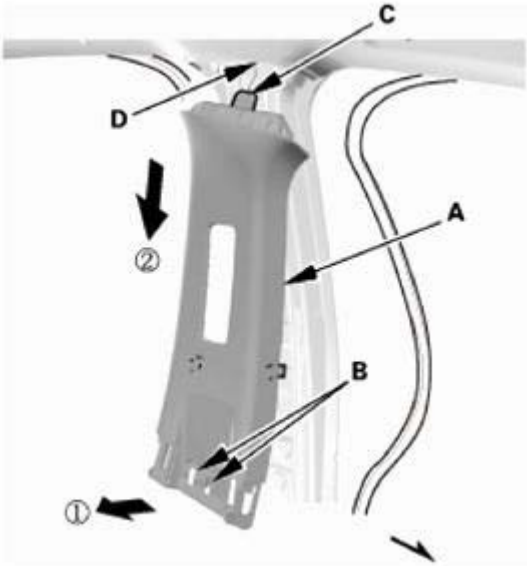

Fig. 103: Pulling Back Bottom Portion Of B-Pillar Upper Trim
Courtesy of AMERICAN HONDA MOTOR CO., INC.

10. Tonneau Cover (For Some Models)
    1. Remove the tonneau cover (A).

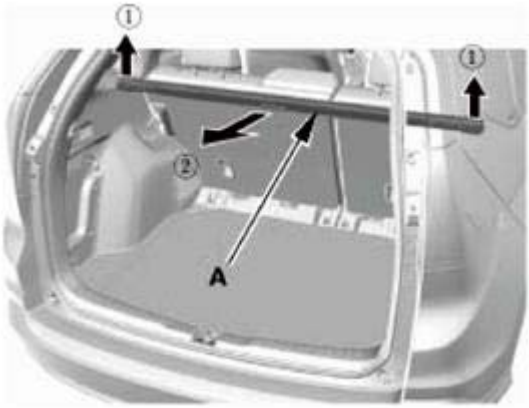

Fig. 104: Removing Tonneau Cover

GETtheMANUALS.org

Courtesy of AMERICAN HONDA MOTOR CO., INC.

11. Cargo Floor Cover
    1. Remove the cargo floor cover (A).

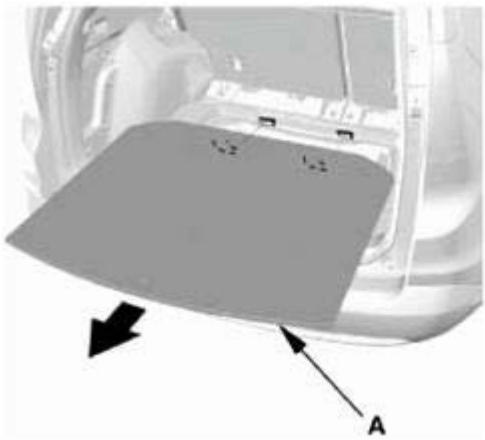

Fig. 105: Removing Cargo Floor Cover
Courtesy of AMERICAN HONDA MOTOR CO., INC.

12. Tailgate Weatherstrip As Needed
    1. Detach the tailgate weatherstrip (A) as needed.

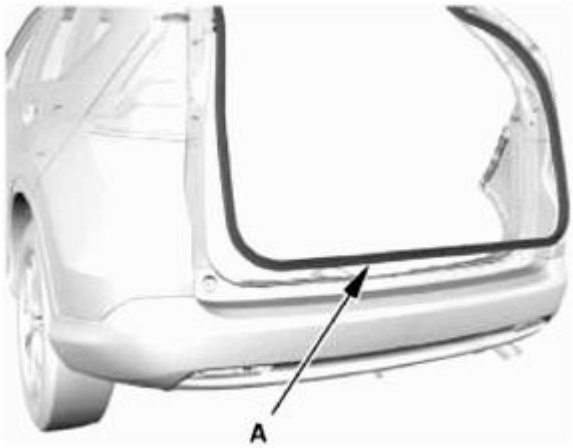

Fig. 106: Identifying Tailgate Weatherstrip
Courtesy of AMERICAN HONDA MOTOR CO., INC.

13. Rear Trim Panel
    1. Remove the clips (A).
    2. Detach the hooks (B) and the tabs (C) from the rear side trim panels (D), and pull up the rear trim panel (E) by hand to detach the clips (F, G), then remove the rear trim panel.

GETtheMANUALS.org

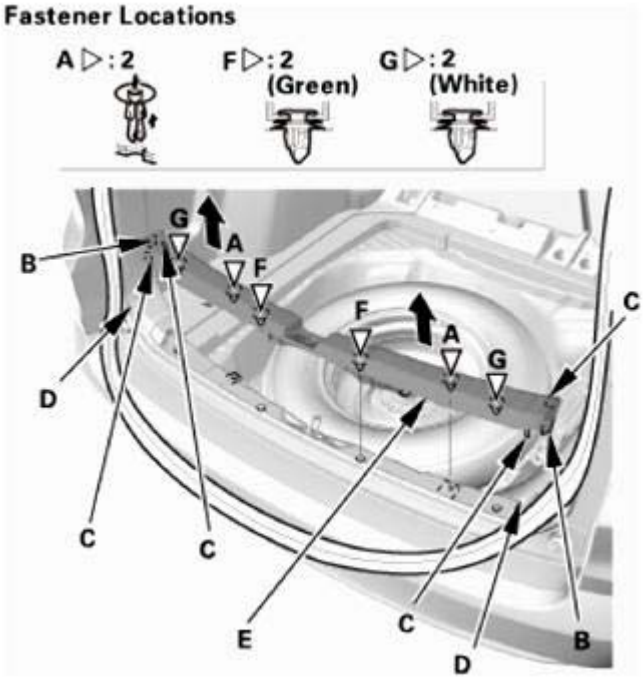

Fig. 107: Pulling Up Rear Trim Panel
Courtesy of AMERICAN HONDA MOTOR CO., INC.

14. Rear Damper Maintenance Cover - Both Sides

NOTE: Repeat this procedure on the opposite side.

1. Fold down the rear seat-back.
2. Pull up the rear damper maintenance cover (A) by hand to detach the hooks (B), then remove the rear damper maintenance cover.

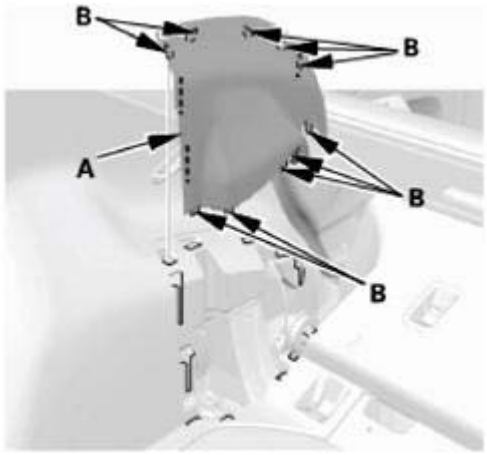

Fig. 108: Identifying Rear Damper Maintenance Cover And Hooks
Courtesy of AMERICAN HONDA MOTOR CO., INC.

GETtheMANUALS.org

15. Rear Carpet Trim - Both Sides
    1. Detach the clips (A), then tuck up the rear seat-back cover (B).

       Left side

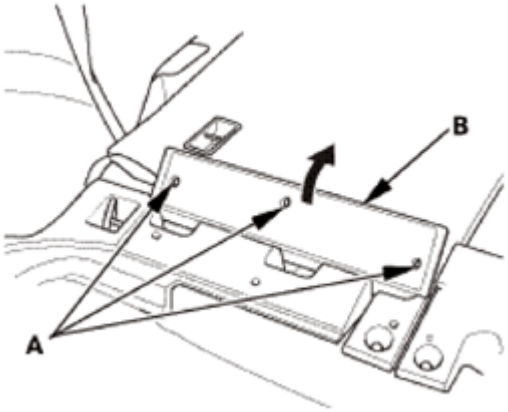

Fig. 109: Tucking Up Rear Seat-Back Cover (Left Side)
Courtesy of AMERICAN HONDA MOTOR CO., INC.

       Right side

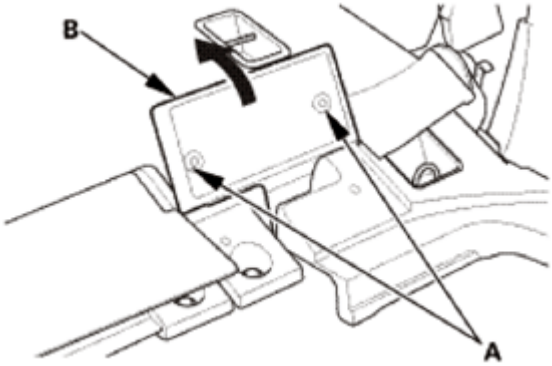

Fig. 110: Tucking Up Rear Seat-Back Cover (Right Side)
Courtesy of AMERICAN HONDA MOTOR CO., INC.

    2. Detach the hooks (A) from the rear side trim panel (B), and pull up the rear carpet trims (C) by hand to detach the clips (D), then remove the rear carpet trims.

       Left side

GETtheMANUALS.org

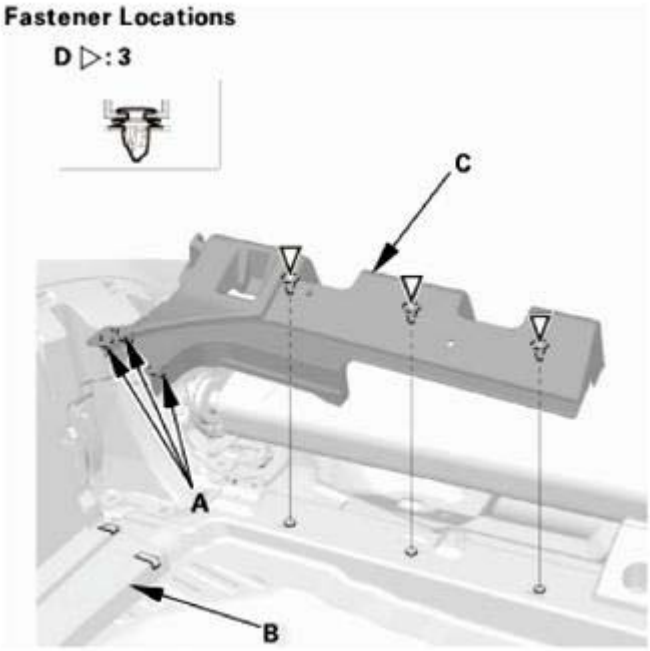

Fig. 111: Identifying Hooks, Rear Side Trim Panel And Clips (Left Side)
Courtesy of AMERICAN HONDA MOTOR CO., INC.

Right side

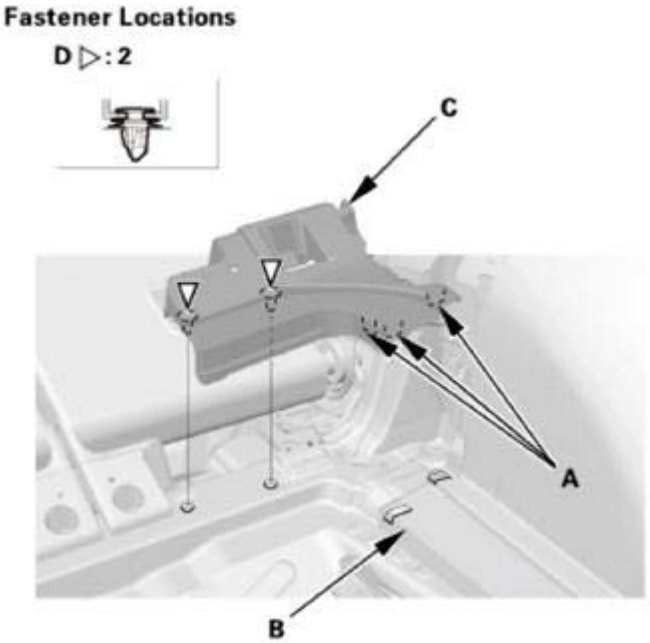

Fig. 112: Identifying Hooks, Rear Side Trim Panel And Clips (Right Side)
Courtesy of AMERICAN HONDA MOTOR CO., INC.

16. Rear Seat Cushion Foot Cover - Both Sides (Remove The Outer Left Side Only)

GETtheMANUALS.org

1. Pull up the rear seat cushion foot cover (A) by hand to detach the clips (B).
2. Detach the hooks (C), then remove the rear seat cushion foot cover.

Left side

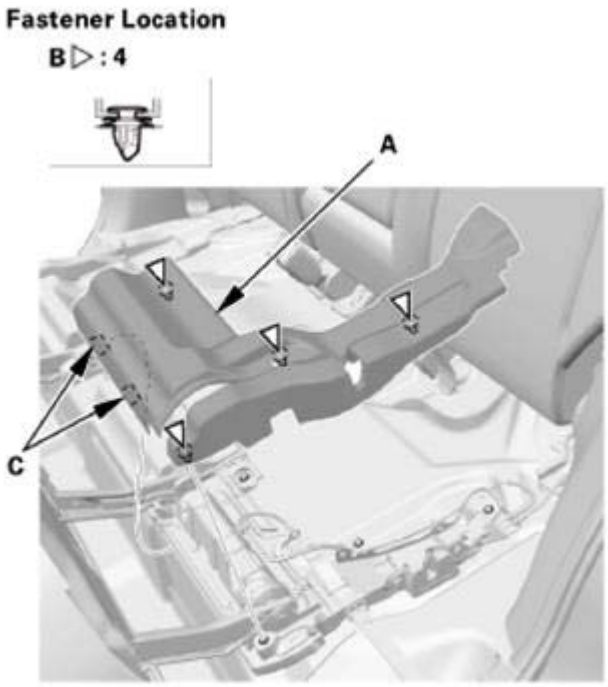

Fig. 113: Identifying Rear Seat Cushion Foot Cover And Hooks (Left Side)
Courtesy of AMERICAN HONDA MOTOR CO., INC.

Right side

GETtheMANUALS.org

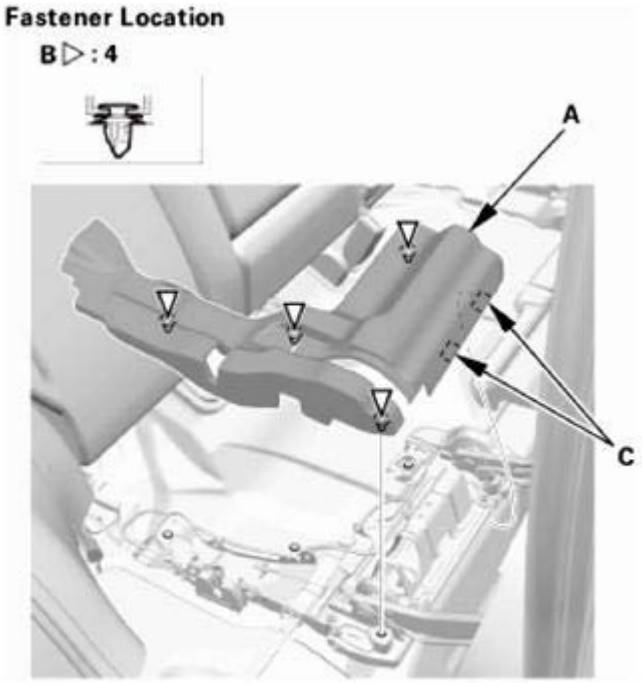

Fig. 114: Identifying Rear Seat Cushion Foot Cover And Hooks (Right Side)
Courtesy of AMERICAN HONDA MOTOR CO., INC.

17. Rear Seat Belt Lower Anchor Bolt - Both Sides

NOTE: Repeat this procedure on the opposite side.

1. Remove the rear seat belt lower anchor bolt (A).

GETtheMANUALS.org

Fig. 115: Removing Rear Seat Belt Lower Anchor Bolt
Courtesy of AMERICAN HONDA MOTOR CO., INC.

18. Rear Side Trim Panel - Both Sides

NOTE: Repeat this procedure on the opposite side.

1. Carefully pry out on the upper hook (A) in the rear seat release lever cap (B) with the appropriate trim tool, then pull back the rear seat release lever cap to remove it.
2. Remove the screws (C).

GETtheMANUALS.org

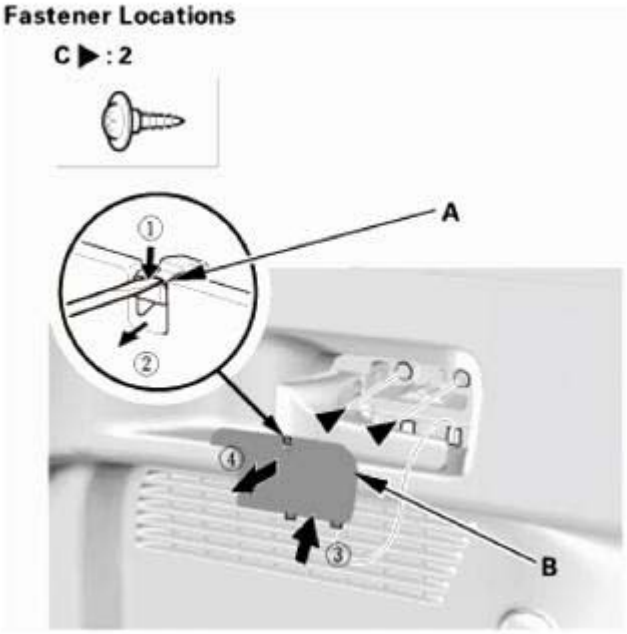

Fig. 116: Prying Out Upper Hook
Courtesy of AMERICAN HONDA MOTOR CO., INC.

3. Push in the center pin (A), then remove the trunk hook (B).

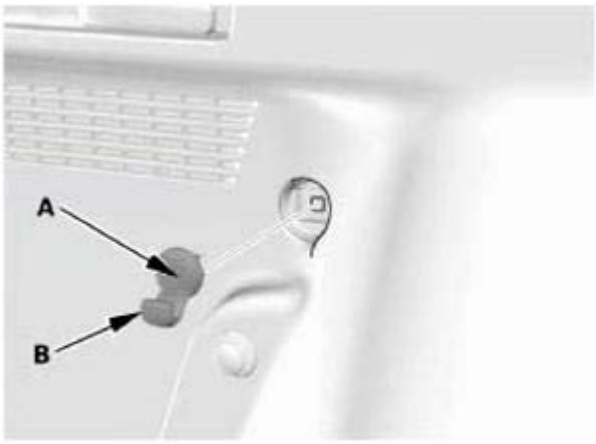

Fig. 117: Identifying Center Pin And Trunk Hook
Courtesy of AMERICAN HONDA MOTOR CO., INC.

4. Remove the bolt (A), then remove the tie-down hook (B).

GETtheMANUALS.org

Fig. 118: Identifying Tie-Down Hook And Bolt
Courtesy of AMERICAN HONDA MOTOR CO., INC.

5. Detach the clips (A, B).
6. Detach the hooks (C) and the tabs (D) from the quarter pillar trim (E), and pull out the rear side trim panel (F) by hand to detach the clips (G, H).

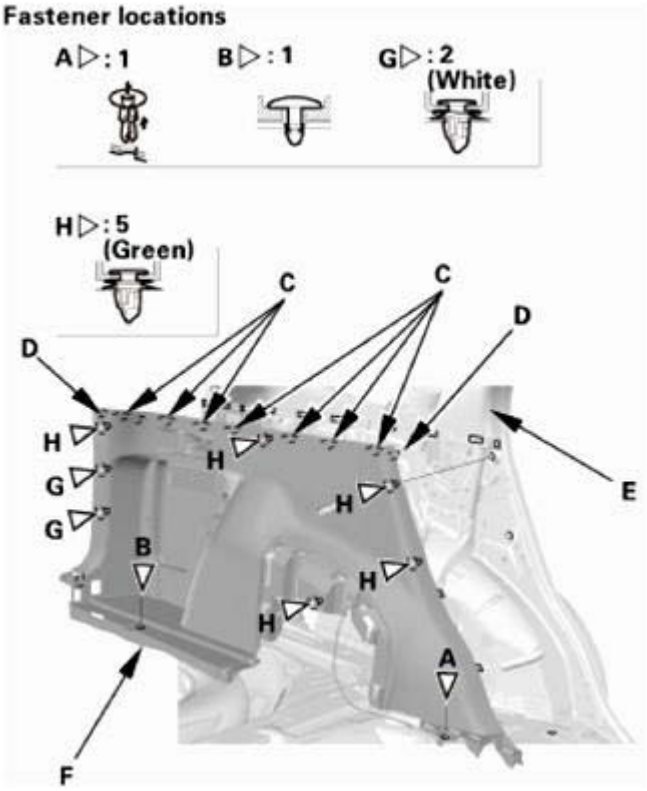

GETtheMANUALS.org

Fig. 119: Identifying Quarter Pillar Trim, Hooks, Clips And Tabs
Courtesy of AMERICAN HONDA MOTOR CO., INC.

7. Remove the rear seat release lever (A) from the rear side trim panel (B).

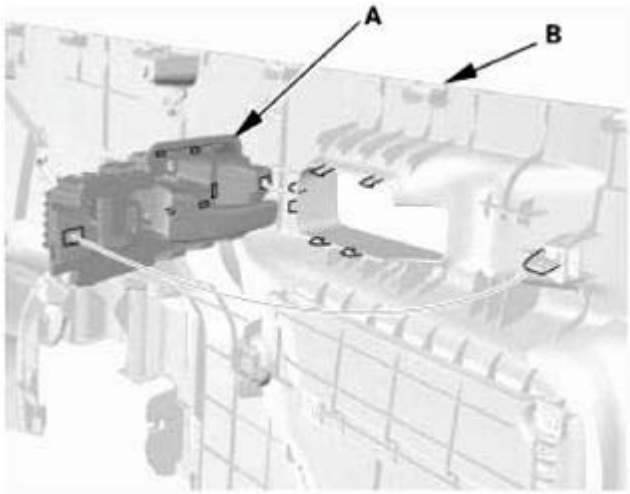

Fig. 120: Identifying Rear Seat Release Lever And Rear Side Trim Panel
Courtesy of AMERICAN HONDA MOTOR CO., INC.

8. Detach the rear seat release cable (A) from the clips of the rear side trim panel (B), then remove the rear side trim panel.

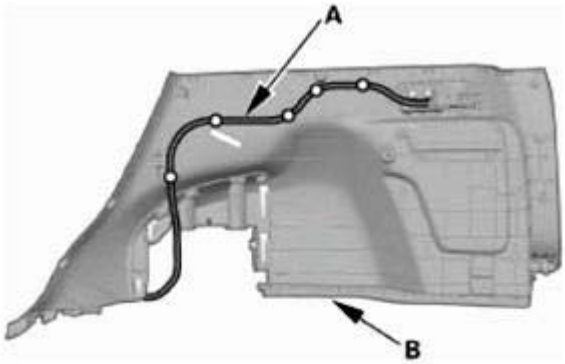

Fig. 121: Identifying Rear Seat Release Cable And Rear Side Trim Panel
Courtesy of AMERICAN HONDA MOTOR CO., INC.

19. Quarter Pillar Trim - Both Sides

NOTE: Repeat this procedure on the opposite side.

1. Pull out the quarter pillar trim (A) by hand to detach the clips (B, C, and D).
2. Pass the rear seat belt lower anchor (E) out through the hole in the quarter pillar trim, then remove the quarter pillar trim.

GETtheMANUALS.org

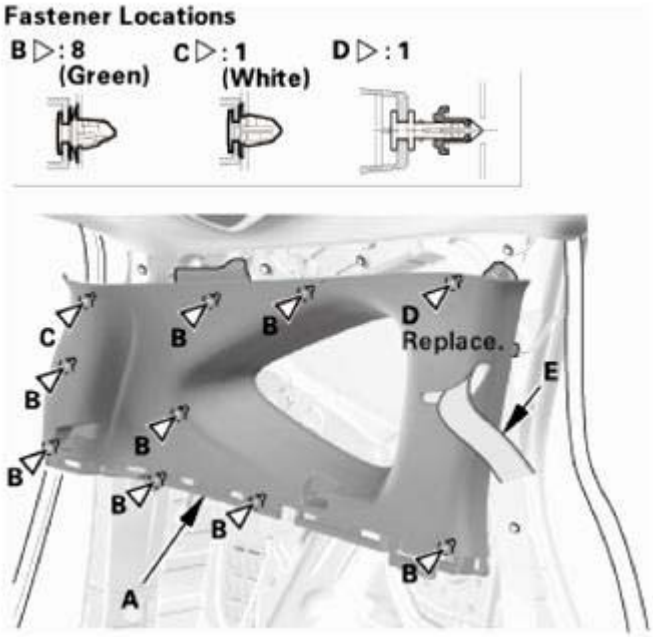

Fig. 122: Identifying Quarter Pillar Trim, Clips And Rear Seat Belt Lower Anchor
Courtesy of AMERICAN HONDA MOTOR CO., INC.

20. Roof Console Assembly
    1. Remove the lenses (A), then remove the screws (B).
    2. Open the console, then remove the screws (C).
    3. Disconnect the connectors (D), then remove the roof console assembly (E).

GETtheMANUALS.org

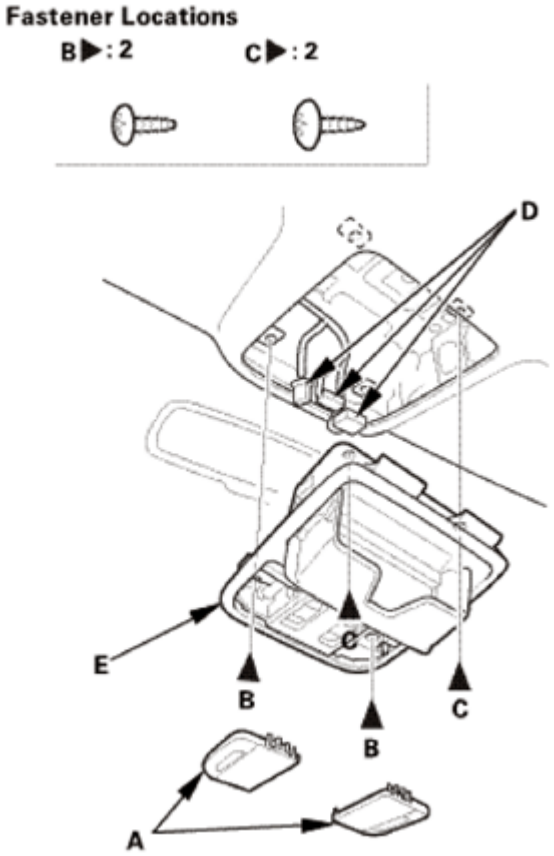

Fig. 123: Identifying Lenses, Screws, Connector And Roof Console Assembly
Courtesy of AMERICAN HONDA MOTOR CO., INC.

21. Ceiling Light (without RES)
    1. Turn the ceiling light switch OFF.
    2. Carefully pry off the lens (A).
    3. Remove the bulb.
    4. Remove the ceiling light (B).
    5. Disconnect the connector.

GETtheMANUALS.org

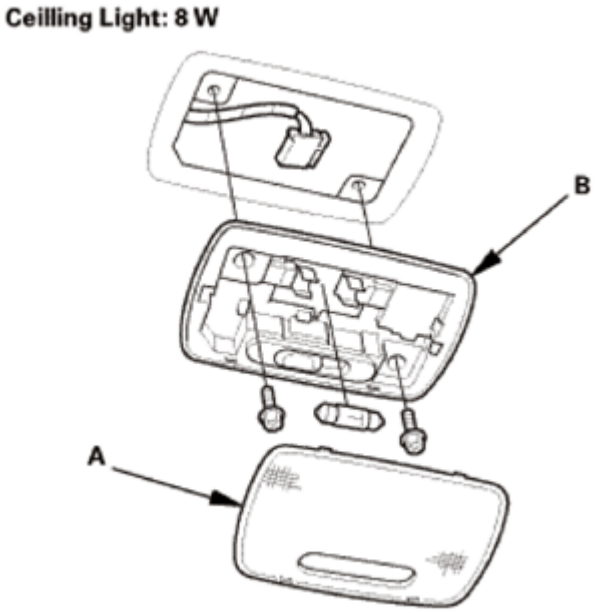

Fig. 124: Identifying Lens And Ceiling Light
Courtesy of AMERICAN HONDA MOTOR CO., INC.

22. Rear Display Cover (With RES)
    1. Turn the ceiling light switch OFF.
    2. Carefully pry off the lenses (A) with a flat-tip screwdriver.
    3. Remove the ceiling light (B).
    4. Disconnect the connector.

GETtheMANUALS.org

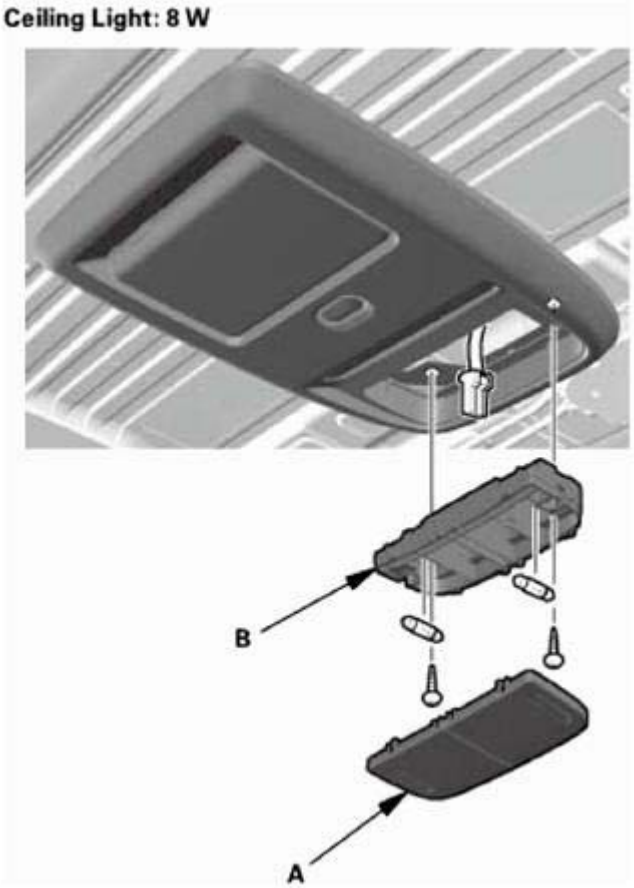

Fig. 125: Identifying Ceiling Light And Lenses
Courtesy of AMERICAN HONDA MOTOR CO., INC.

5. Remove the rear display cover (A).

GETtheMANUALS.org

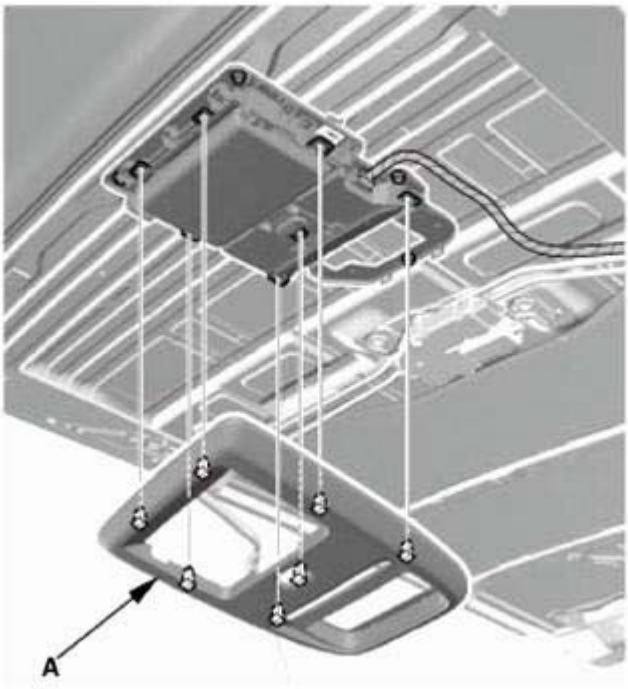

Fig. 126: Identifying Rear Display Cover
Courtesy of AMERICAN HONDA MOTOR CO., INC.

23. Rear Controller and Screen (With RES)
    1. Disconnect the connector.
    2. Remove the rear controller and screen (A).

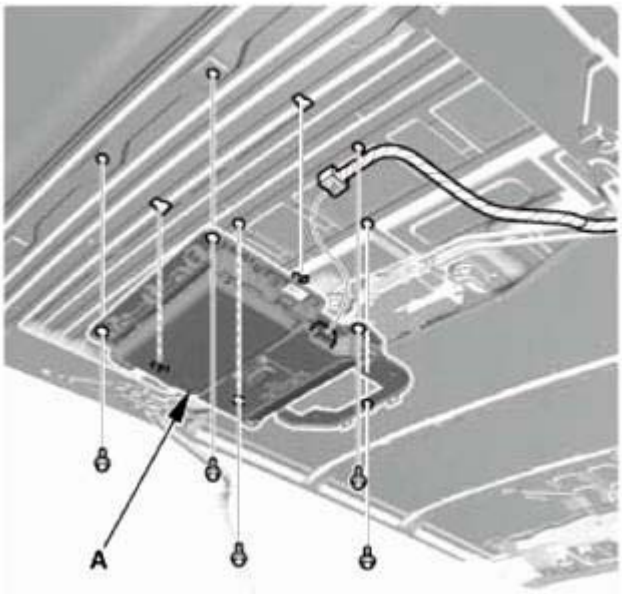

Fig. 127: Identifying Rear Controller And Screen
Courtesy of AMERICAN HONDA MOTOR CO., INC.

GETtheMANUALS.org

24. Cargo Area Light
    1. Turn the cargo area light switch OFF.
    2. Carefully pry off the lens (A).
    3. Remove the bulb.
    4. Remove the cargo area light (B).
    5. Disconnect the connector.

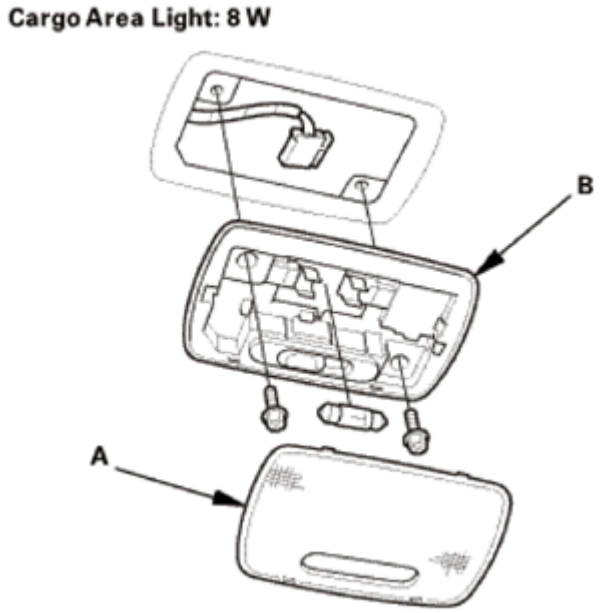

Fig. 128: Identifying Lens And Cargo Area Light
Courtesy of AMERICAN HONDA MOTOR CO., INC.

25. Grab Handles for One Vehicle
    1. Lower the grab handle (A).
    2. Insert the tips of the push pin/grab rail cap pliers (B) into the notch.

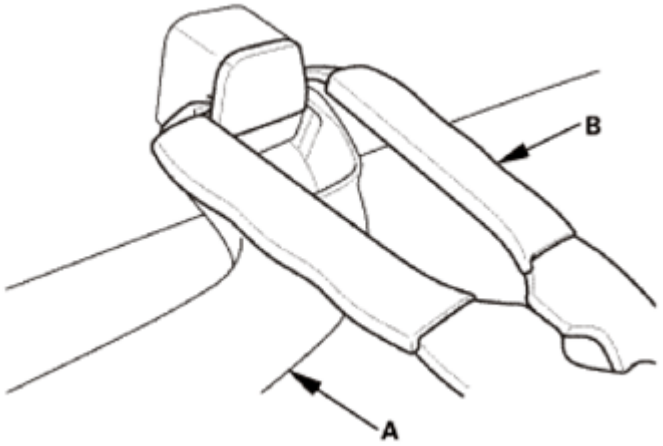

GETtheMANUALS.org

Fig. 129: Lowering Grab Handle
Courtesy of AMERICAN HONDA MOTOR CO., INC.

3. Gently squeeze the handles of the push pin/grab rail cap pliers (A), and pull the cap (B) straight out.

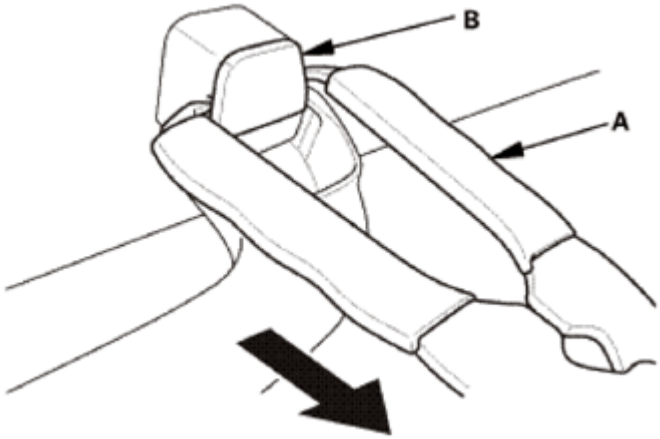

Fig. 130: Pulling Cap
Courtesy of AMERICAN HONDA MOTOR CO., INC.

4. Remove the grab handle (A).

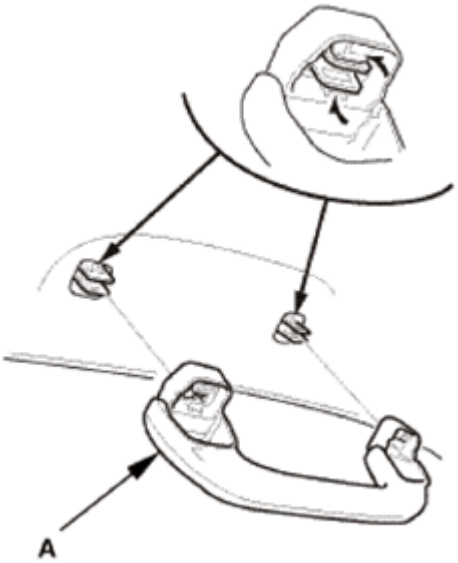

Fig. 131: Identifying Grab Handle
Courtesy of AMERICAN HONDA MOTOR CO., INC.

5. Remove the clips (A).

GETtheMANUALS.org

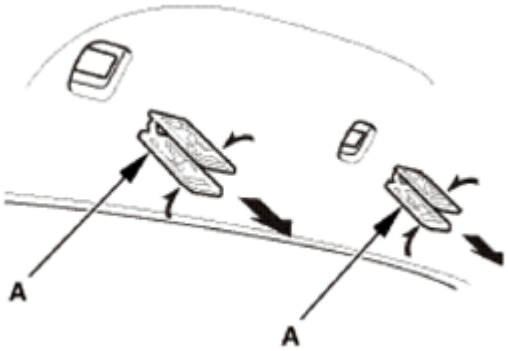

Fig. 132: Removing Clips
Courtesy of AMERICAN HONDA MOTOR CO., INC.

26. Sunvisor - Both Sides

NOTE: Repeat this procedure on the opposite side.

1. Push the tab (A) with a flat-tip screwdriver through the hole in the front side of the bracket cover (B).

NOTE: Make sure the tab is unlocked.

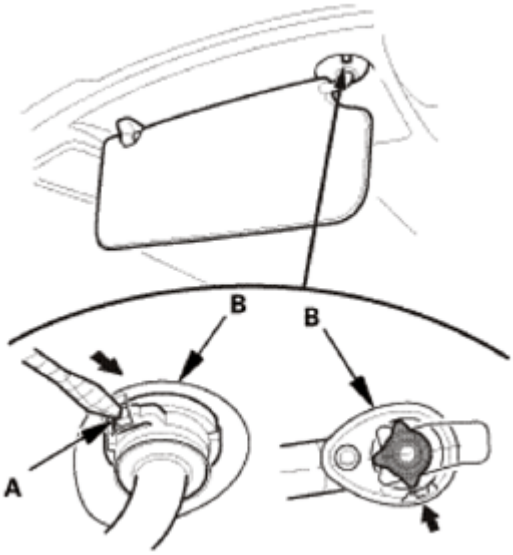

Fig. 133: Pushing Tab
Courtesy of AMERICAN HONDA MOTOR CO., INC.

2. While pushing in the tab (A) with a flat-tip screwdriver, release the sunvisor (B) from the holder (C), and rotate the sunvisor backward 45 °.

NOTE: Make sure the tab slides into the bracket cover as you rotate the

GETtheMANUALS.org

sunvisor.

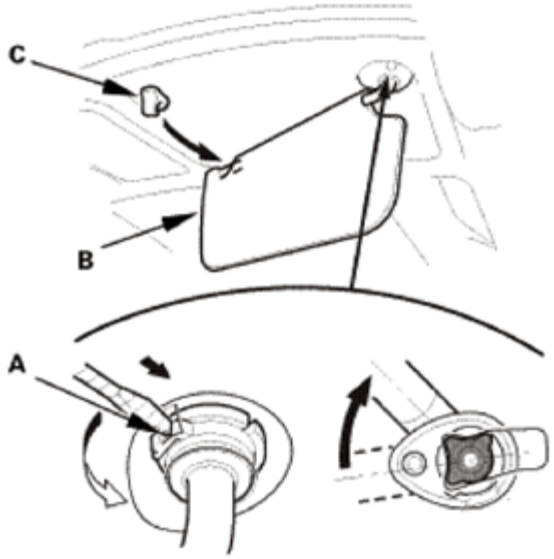

Fig. 134: Pushing Tab
Courtesy of AMERICAN HONDA MOTOR CO., INC.

3. Disconnect the connector (A), then remove the sunvisor (B).

NOTE: **If the sunvisor cannot be removed, the tab has not rotated into the bracket cover. Repeat step 2 to rotate the tab.**

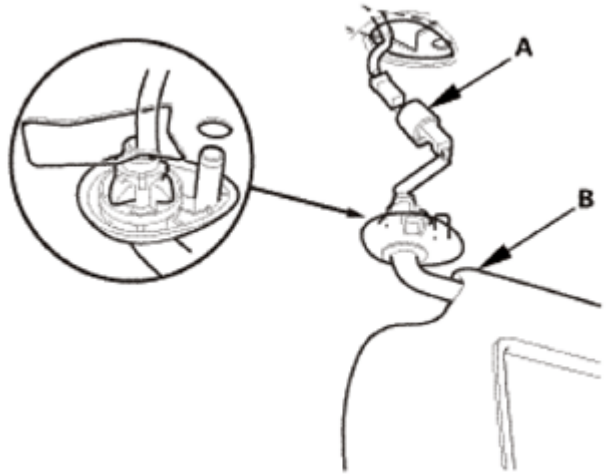

Fig. 135: Identifying Connector And Sunvisor
Courtesy of AMERICAN HONDA MOTOR CO., INC.

27. Sunvisor Holder - Both Sides

NOTE: **Repeat this procedure on the opposite side.**

GETtheMANUALS.org

1. Turn the sunvisor holder (A) 45 ° counterclockwise, then remove it from the holder grommet (B).

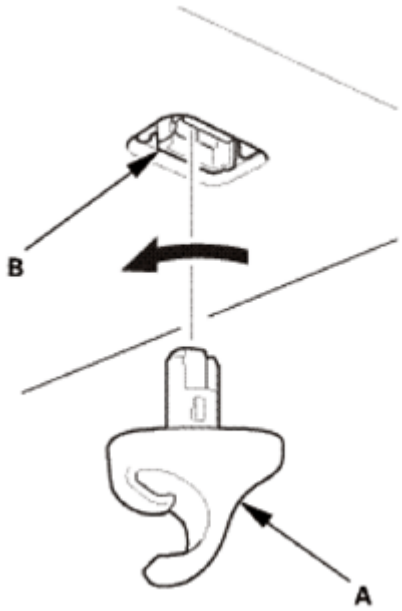

Fig. 136: Turning Sunvisor Holder
Courtesy of AMERICAN HONDA MOTOR CO., INC.

2. Remove the holder grommet (A).

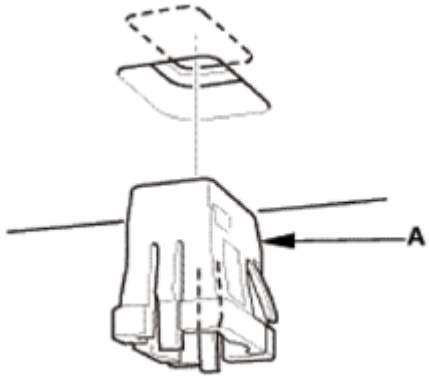

Fig. 137: Identifying Holder Grommet
Courtesy of AMERICAN HONDA MOTOR CO., INC.

28. Headliner
    1. Without moonroof: Disconnect the connector (A), and detach the harness clips (B) from the driver's side A-pillar.

GETtheMANUALS.org

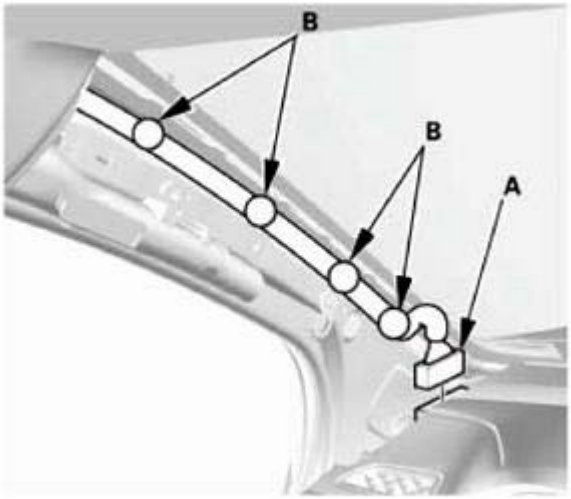

Fig. 138: Identifying Connector And Harness Clips
Courtesy of AMERICAN HONDA MOTOR CO., INC.

2. Disconnect the connectors (A), and detach the harness clips (B) from the passenger's side A-pillar.

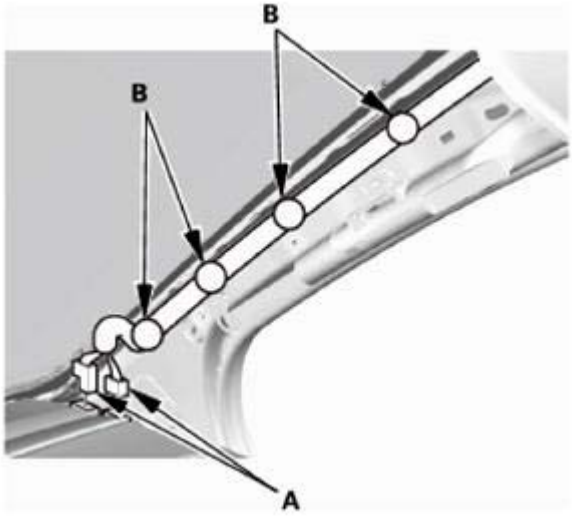

Fig. 139: Identifying Passenger's Side A-Pillar Connectors And Harness Clips
Courtesy of AMERICAN HONDA MOTOR CO., INC.

3. Disconnect the connectors (A), and detach the connector clips (B) and the harness clip (C) from the right quarter pillar.

GETtheMANUALS.org

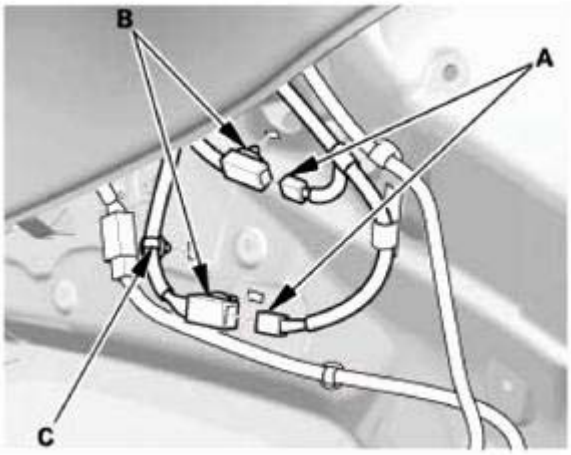

Fig. 140: Identifying Connectors, Connector Clips And Henrness Clip Of Right Quarter Pillar
Courtesy of AMERICAN HONDA MOTOR CO., INC.

4. Slide the front seats all the way back, and recline the seat-back fully.
5. Fold down the rear seats.
6. Detach the clips (A) and release the fasteners (B) from the headliner (C) by pulling it down.
7. With the help of an assistant, lower the headliner.

Without moonroof

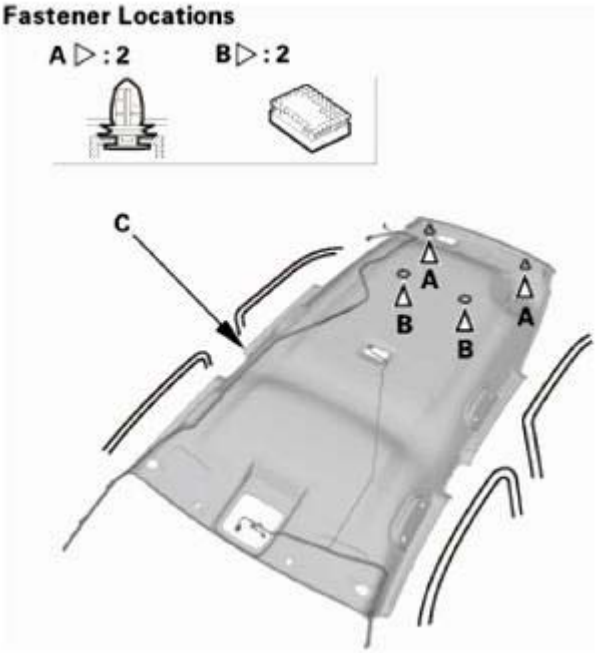

Fig. 141: Identifying Headliner, Clips And Fastners (Without Moonroof)
Courtesy of AMERICAN HONDA MOTOR CO., INC.

GETtheMANUALS.org

With moonroof

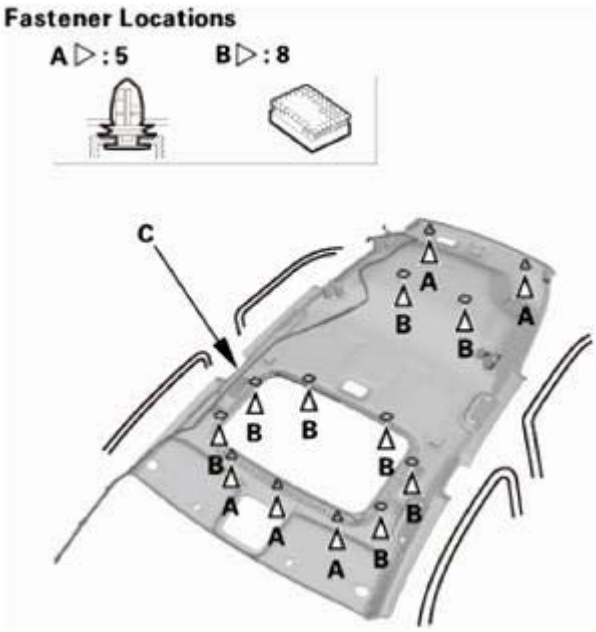

Fig. 142: Identifying Headliner, Clips And Fastners (With Moonroof)
Courtesy of AMERICAN HONDA MOTOR CO., INC.

8. With the help of an assistant, remove the headliner (A) through the tailgate opening.

NOTE: **Do not bend the headliner. Bending the headliner will crease and damage it.**

Fig. 143: Identifying Headliner
Courtesy of AMERICAN HONDA MOTOR CO., INC.

29. Grab Handle Bracket

GETtheMANUALS.org

1. If necessary, remove the grab handle mounting bolts (A).
2. Detach the hooks (B), then remove the front side grab handle bracket (C).

Front side

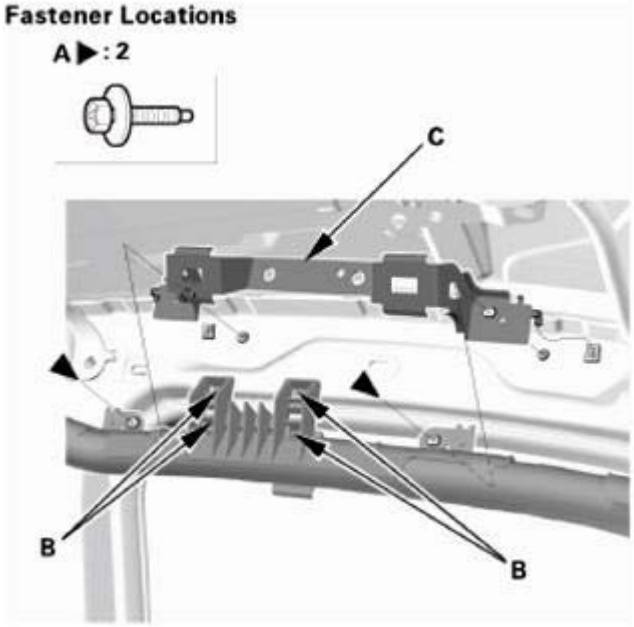

Fig. 144: Identifying Grab Handle Mounting Bolt, Bracket And Hooks
Courtesy of AMERICAN HONDA MOTOR CO., INC.

30. Headliner Cushion Tape
    1. If necessary, remove the cushion tapes (A), then remove the roof wire harness (B) and the antenna lead (C) from the headliner (D).

    Without moonroof

GETtheMANUALS.org

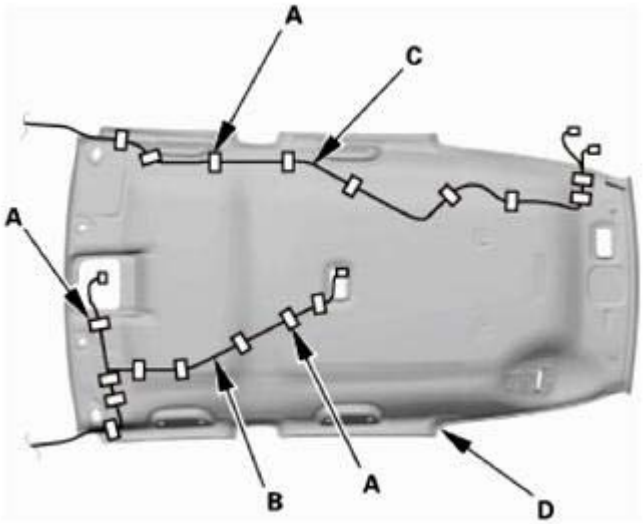

Fig. 145: Identifying Cushion Tapes, Roof Wire Harness, Antenna Lead And Headliner (Without Moonroof)
Courtesy of AMERICAN HONDA MOTOR CO., INC.

With moonroof

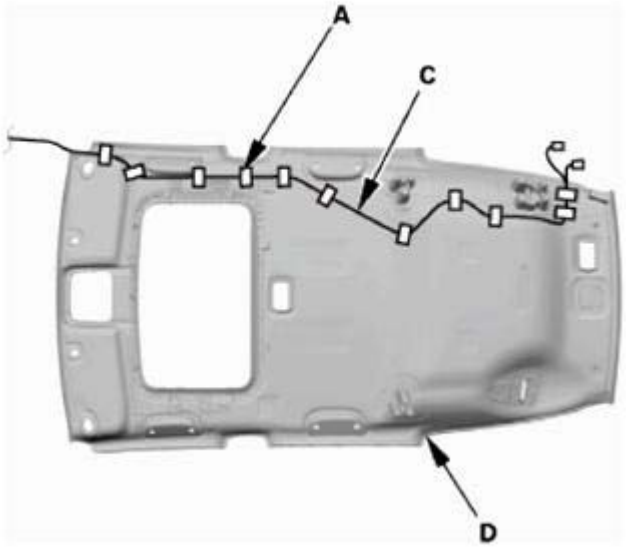

Fig. 146: Identifying Cushion Tapes, Roof Wire Harness, Antenna Lead And Headliner (With Moonroof)
Courtesy of AMERICAN HONDA MOTOR CO., INC.

INSTALLATION

SRS components are located in this area. Review the **SRS COMPONENT LOCATIONS** and the **PRECAUTIONS AND PROCEDURES** before doing repairs or service.

1. Headliner Cushion Tape

GETtheMANUALS.org

1. Install the roof wire harness (A) and the antenna lead (B) to the headliner (C), then install the cushion tapes (D).

Without moonroof

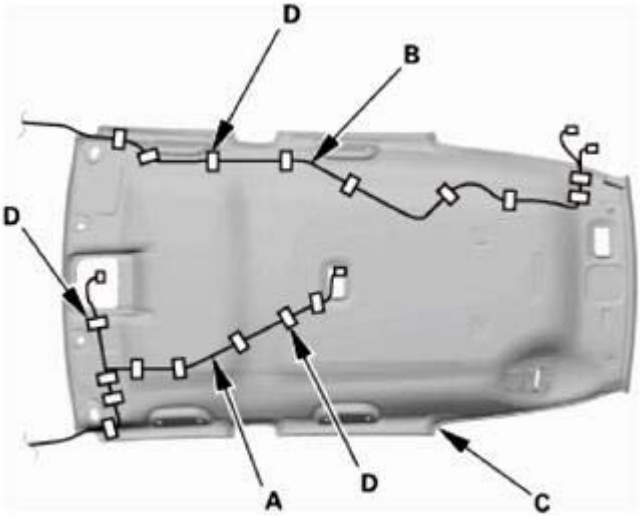

Fig. 147: Identifying Roof Wire Harness, Antenna Lead, Headliner And Cushion Tapes (Without Moonroof)
Courtesy of AMERICAN HONDA MOTOR CO., INC.

With moonroof

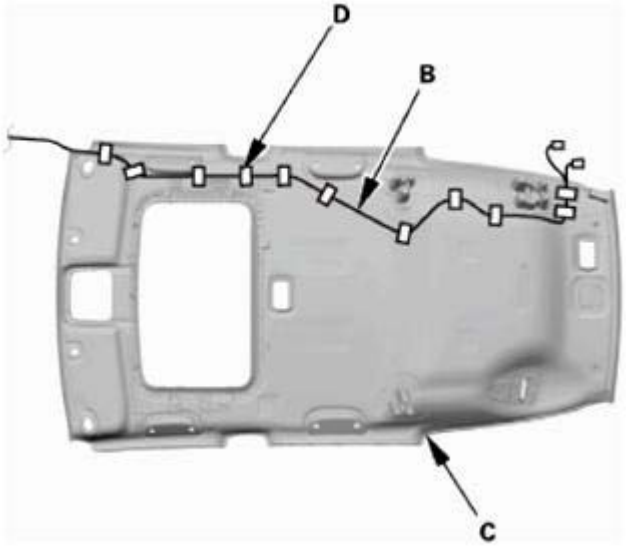

Fig. 148: Identifying Roof Wire Harness, Antenna Lead, Headliner And Cushion Tapes (With Moonroof)
Courtesy of AMERICAN HONDA MOTOR CO., INC.

2. Grab Handle Bracket

GETtheMANUALS.org

1. Install the front side grab handle bracket (A), then install the grab handle bracket mounting bolts (B). Make sure the hooks (C) snap into place securely.

   Front side

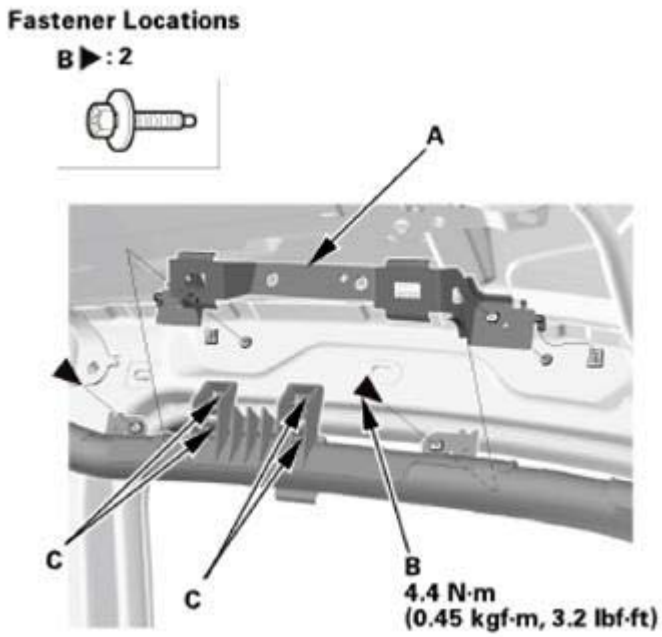

   Fig. 149: Identifying Front Side Grab Handle Bracket, Mounting Bolts And Hooks
   Courtesy of AMERICAN HONDA MOTOR CO., INC.

3. Headliner - Check
   1. If the side curtain airbag has deployed, replace the headliner and removed trim pieces, along with the other parts listed for side curtain airbag deployment.
   2. To prevent the side curtain airbags from deploying improperly and possibly causing injury, inspect the headliner and all removed trim. Replace any pieces with the following damage:
      - Any creases or tears in the headliner (A)
      - Any damages around the grab handle holes (B) or the sunvisor holes (C) in the headliner
      - Any clip bases (D) which have come off the headliner
      - Any fasteners (E) or clip bases (F) which have come off the headliner

GETtheMANUALS.org

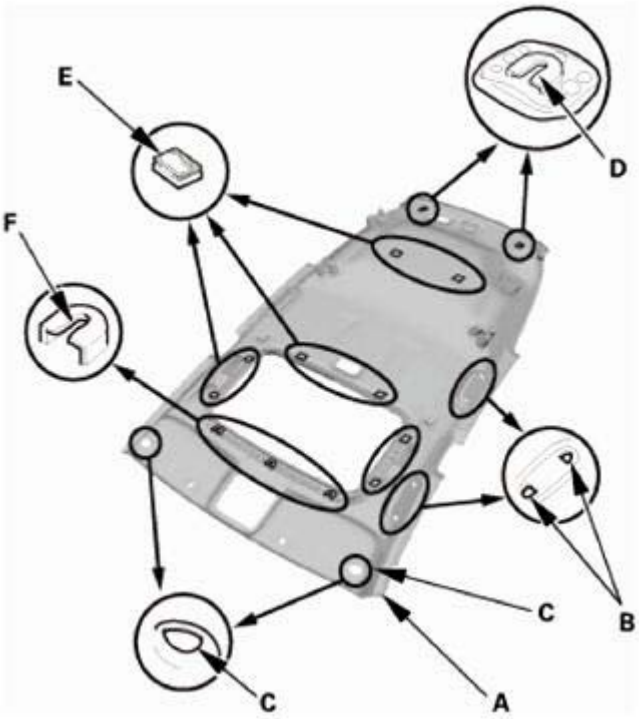

Fig. 150: Identifying Headliner, Grab Handle Holes, Sunvisor Holes And Clip Bases
Courtesy of AMERICAN HONDA MOTOR CO., INC.

4. Headliner
    1. With the help of an assistant, slide the headliner (A) through the tailgate opening.

NOTE: **Do not bend the headliner. Bending the headliner will crease and damage it.**

Fig. 151: Identifying Headliner
Courtesy of AMERICAN HONDA MOTOR CO., INC.

GETtheMANUALS.org

2. With the help of an assistant, install the headliner (A), then push on the clips (B) and the fasteners (C) which will snap into place securely.

Without moonroof

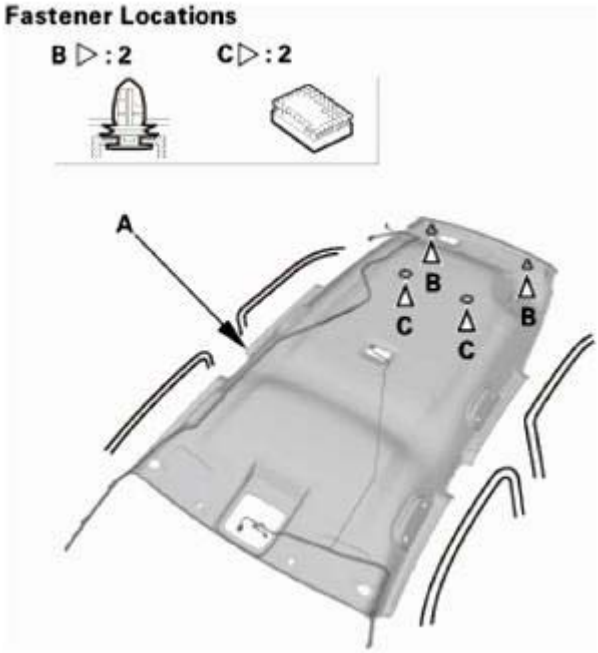

Fig. 152: Identifying Headliner, Clips And Fasteners (Without Moonroof)
Courtesy of AMERICAN HONDA MOTOR CO., INC.

With moonroof

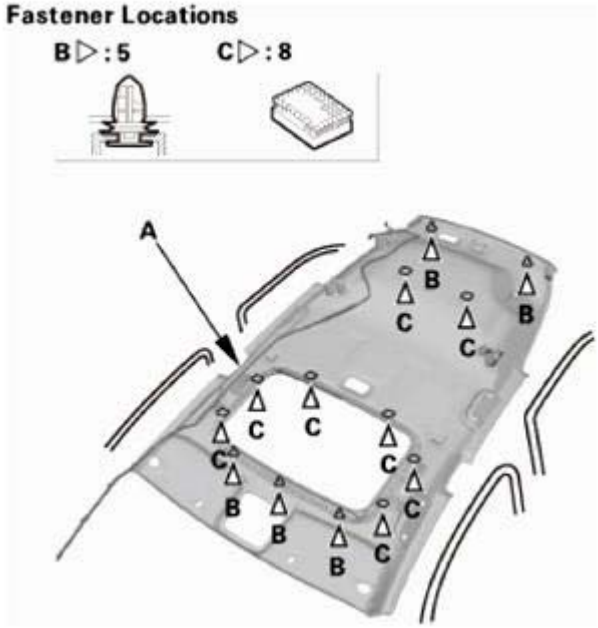

GETtheMANUALS.org

Fig. 153: Identifying Headliner, Clips And Fasteners (With Moonroof)
Courtesy of AMERICAN HONDA MOTOR CO., INC.

3. At the right quarter pillar, connect the connectors (A), and install the connector clips (B) and the harness clip (C).

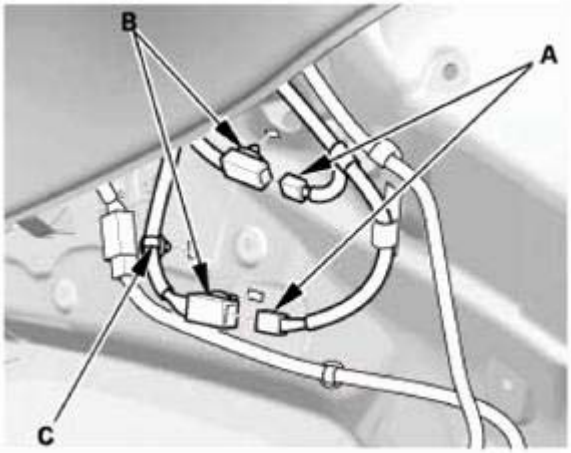

Fig. 154: Identifying Connectors, Clips And Harness Clip
Courtesy of AMERICAN HONDA MOTOR CO., INC.

4. At the passenger's A-pillar, connect the connectors (A), and install the harness clips (B).

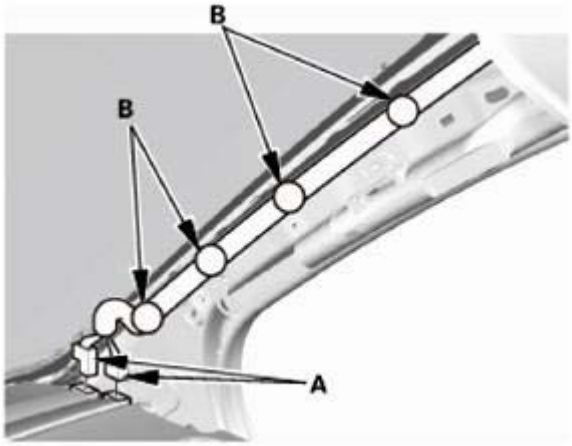

Fig. 155: Identifying Passenger's A-pillar Connectors And Harness Clips
Courtesy of AMERICAN HONDA MOTOR CO., INC.

5. Without moonroof: At the driver's A-pillar, connect the connector (A), and install the harness clips (B).

GETtheMANUALS.org

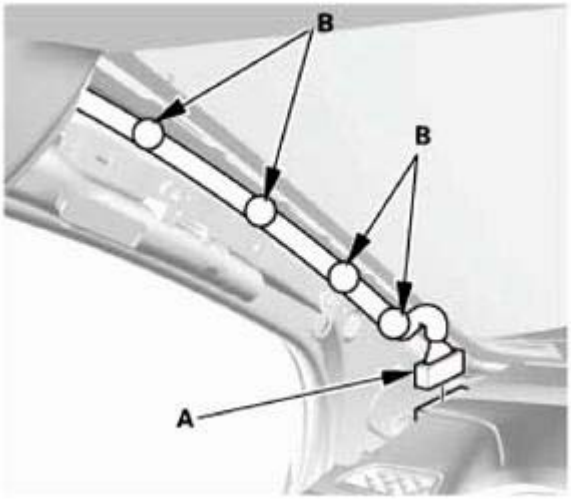

Fig. 156: Identifying Driver's A-pillar Connector And Harness Clips
Courtesy of AMERICAN HONDA MOTOR CO., INC.

5. Sunvisor Holder
    1. Install the holder (A) into the holder grommet (B) by turning it 45 ° clockwise.
    2. Install the holder and the holder grommet as an assembly into the body by pushing it until the hooks snap into place securely.

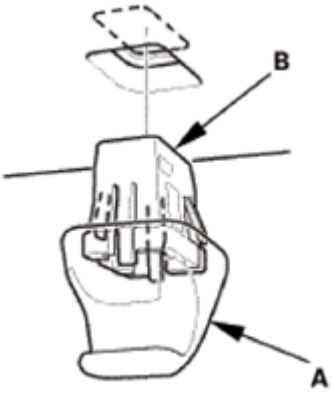

Fig. 157: Identifying Holder And Holder Grommet
Courtesy of AMERICAN HONDA MOTOR CO., INC.

6. Sunvisor - Check
    1. If the side curtain airbag has deployed, replace the sunvisor, along with the other parts listed for side curtain airbag deployment.
    2. If the side curtain airbag has not deployed, inspect the sunvisor for damage. A damaged sunvisor may cause the side curtain airbags to deploy improperly, possibly causing injury. Replace the sunvisor if it has any of the following damage:
        - Any cracks in the sunvisor bracket (A)
        - Any cracks in the sunvisor bracket cover (B)

GETtheMANUALS.org

- Any bends or cracks in the sunvisor shaft (C)
- Any cracks in the sunvisor base (D)
- Any cracks in the vanity mirror base (E)

3. If the holder grommet is damaged or stress-whitened, replace the holder grommet and the holder as an assembly.

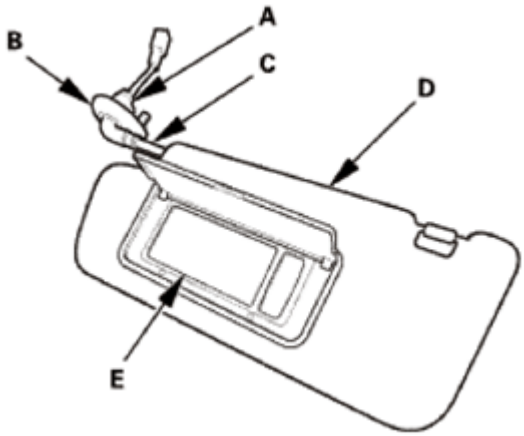

Fig. 158: Identifying Cracks On Sunvisor Bracket, Cover, Shaft, Survisor And Vanity Mirror Base
Courtesy of AMERICAN HONDA MOTOR CO., INC.

7. Sunvisor - Both Sides

NOTE: Repeat this procedure on the opposite side.

1. Connect the connector (A), and install the sunvisor (B).

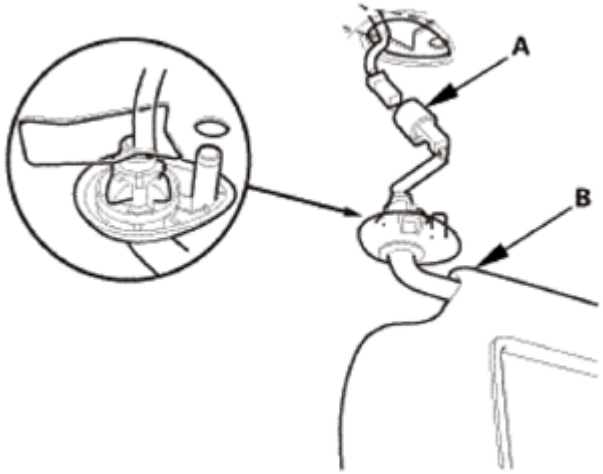

Fig. 159: Identifying Sunvisor And Connector
Courtesy of AMERICAN HONDA MOTOR CO., INC.

GETtheMANUALS.org

2. While holding the bracket cover (A), rotate the sunvisor (B) forward until the tab (C) snaps into place.
3. Gently pull down on the sunvisor to make sure it is properly secured in the body.
4. Rotate the sunvisor into the holder (D).

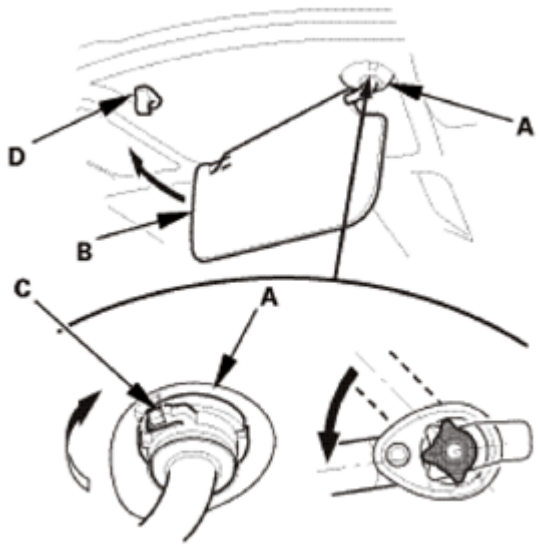

Fig. 160: Rotating Sunvisor
Courtesy of AMERICAN HONDA MOTOR CO., INC.

8. Grab Handle - Check
   1. If the side curtain airbag has not deployed, inspect the grab handle (A) for damage. A damaged grab handle may cause the side curtain airbag to deploy improperly, possibly causing injury. Replace the grab handle if it has any of the following damage:
      - Any cracks or breakage in the grab handle
      - Any cracks or stress-whitening in the caps (B)

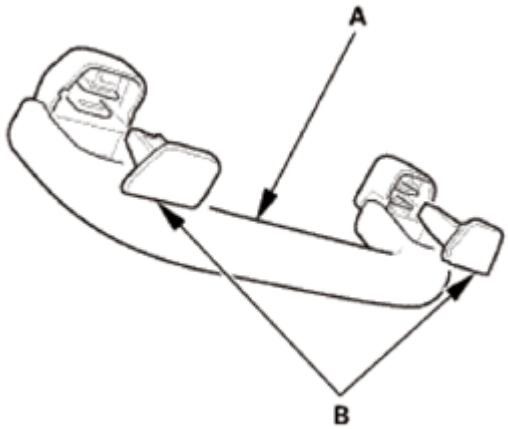

Fig. 161: Identifying Grab Handle And Caps
Courtesy of AMERICAN HONDA MOTOR CO., INC.

GETtheMANUALS.org

9. Grab Handles for One Vehicle
    1. Install the clips (A) on the grab handle (B).
    2. Install the caps (C) fully into the clips.

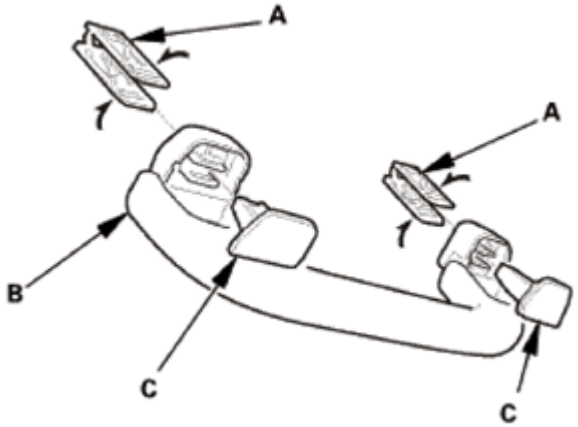

Fig. 162: Installing Clips On Grab Handle
Courtesy of AMERICAN HONDA MOTOR CO., INC.

    3. Position the grab handle (A) on the grab handle bracket (B).
    4. Push on the grab handle until the clips (C) snap into place securely.

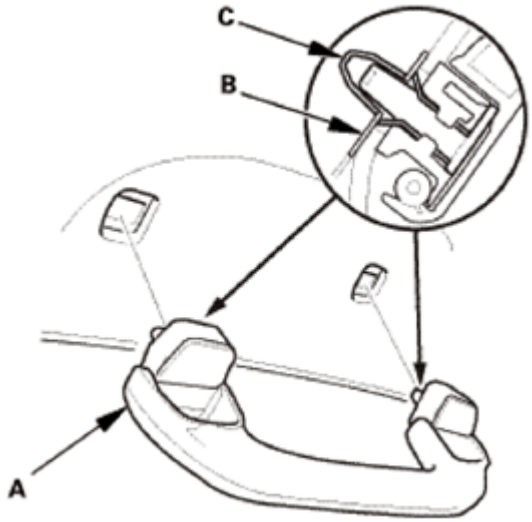

Fig. 163: Identifying Grab Handle, Bracket And Clips
Courtesy of AMERICAN HONDA MOTOR CO., INC.

10. Cargo Area Light
    1. Connect the connector.
    2. Install the cargo area light (A).
    3. Install the bulb.

GETtheMANUALS.org

4. Carefully install the lens (B).

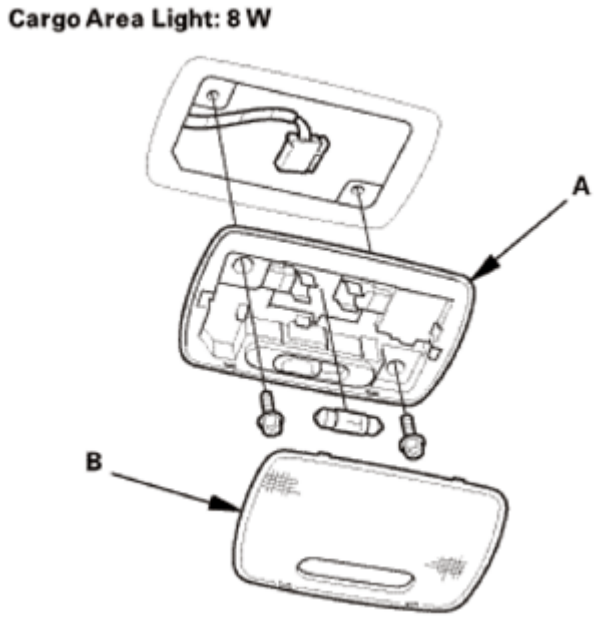

Fig. 164: Identifying Cargo Area Light And Lens
Courtesy of AMERICAN HONDA MOTOR CO., INC.

11. Rear Controller and Screen (With RES)
    1. Install the rear controller and screen (A).
    2. Connect the connector.

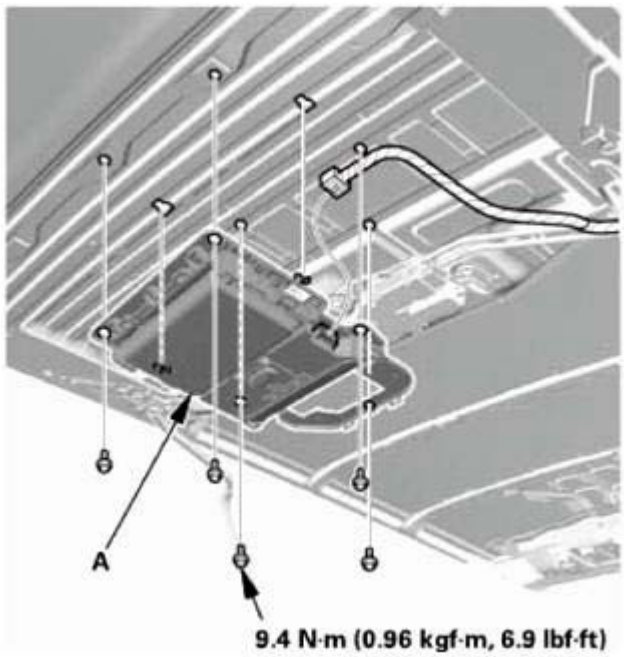

GETtheMANUALS.org

Fig. 165: Identifying Rear Controller And Screen
Courtesy of AMERICAN HONDA MOTOR CO., INC.

12. Rear Display Cover (With RES)
    1. Install the rear display cover (A).

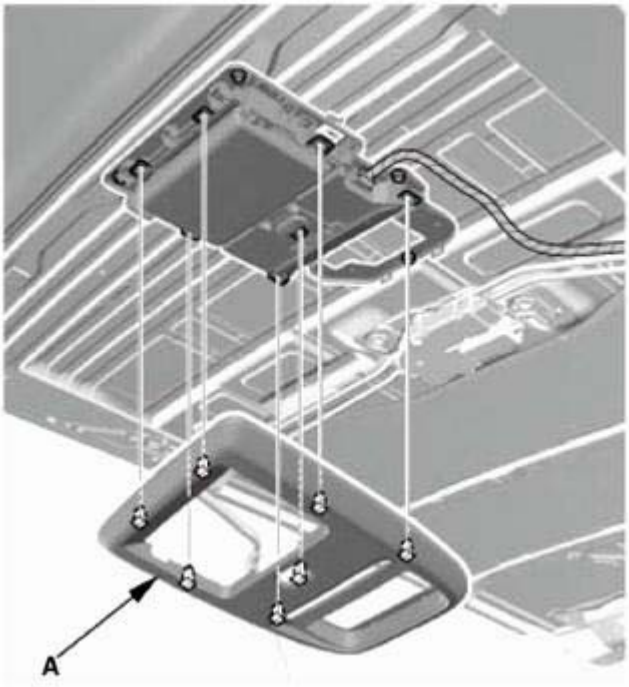

Fig. 166: Identifying Rear Display Cover
Courtesy of AMERICAN HONDA MOTOR CO., INC.

    2. Connect the connector.
    3. Install the ceiling light (B).
    4. Carefully install the lenses (C).

GETtheMANUALS.org

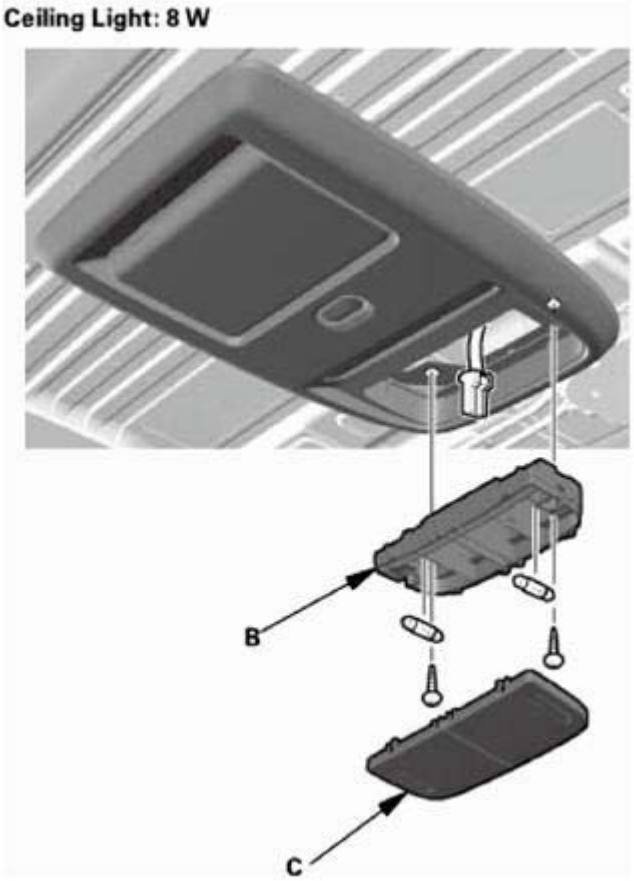

Fig. 167: Identifying Ceiling Light And Lenses
Courtesy of AMERICAN HONDA MOTOR CO., INC.

13. Ceiling Light (without RES)
    1. Connect the connector.
    2. Install the ceiling light (A).
    3. Install the bulb.
    4. Carefully install the lens (B).

GETtheMANUALS.org

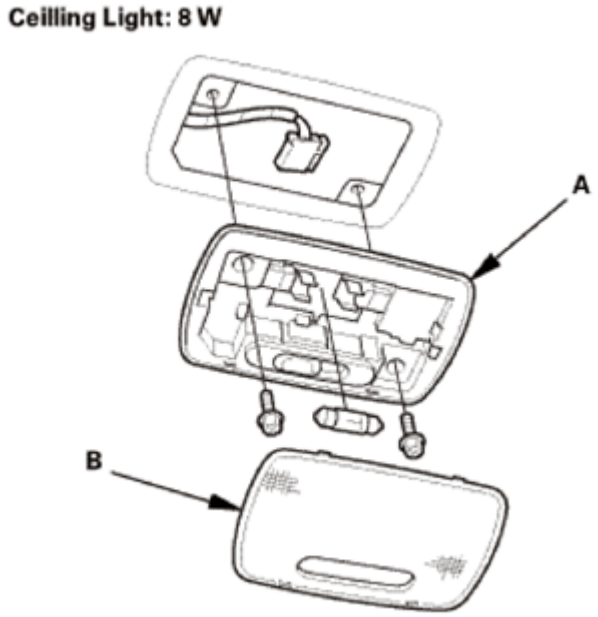

Fig. 168: Identifying Ceiling Light And Lens
Courtesy of AMERICAN HONDA MOTOR CO., INC.

14. Roof Console Assembly
    1. Connect the connectors (A), then install the roof console assembly (B).
    2. Install the screws (C, D), then install the lenses (E).

GETtheMANUALS.org

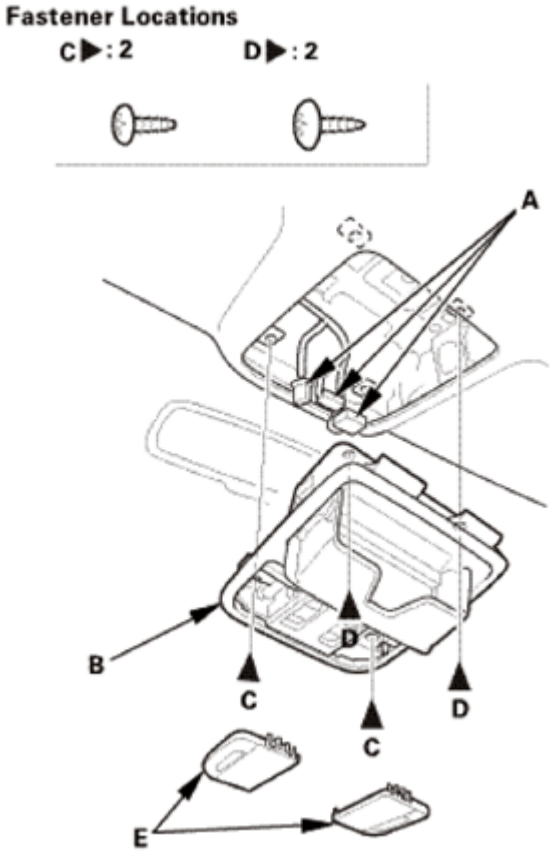

Fig. 169: Identifying Roof Console Assembly, Connectors And Screws
Courtesy of AMERICAN HONDA MOTOR CO., INC.

15. Quarter Pillar Trim - Check
    1. If the side curtain airbag has deployed, replace the quarter pillar trim (A), along with the other parts listed for side curtain airbag deployment.
    2. If the side curtain airbag has not deployed, check the quarter pillar trim and note the following items:
        - To prevent the side curtain airbags from deploying improperly and possibly causing injury, inspect the quarter pillar trim and replace it with a new one if it has any of the following damage:
            - Any cracks, deformations, or stress-whitening in the quarter pillar trim
            - Any cracks or stress-whitened areas in the clip seating surfaces (B)
        - After checking and adjusting the overlap between the headliner and the quarter pillar trim, replace the upper clip (C) with a new one.
        - If the clips (D) are damaged or stress-whitened, replace them with new ones.

GETtheMANUALS.org

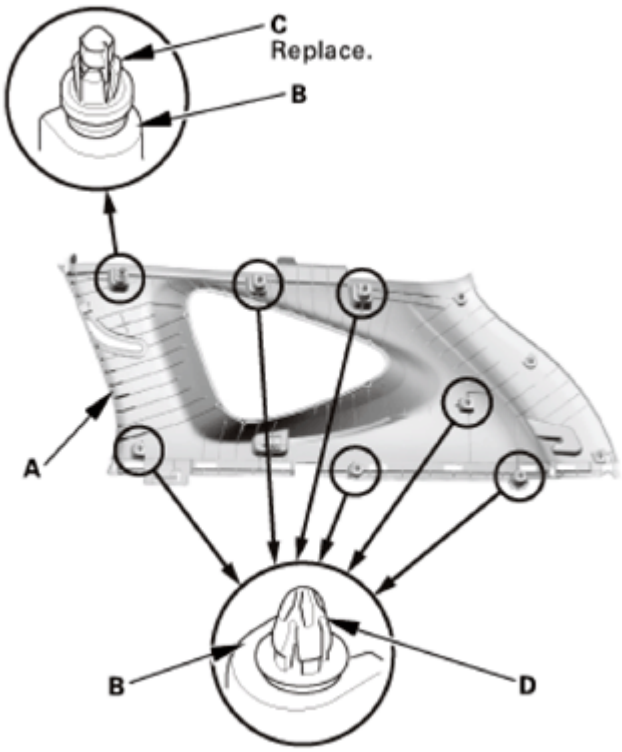

Fig. 170: Identifying Quarter Pillar Trim, Clip Seating Surfaces And Clips
Courtesy of AMERICAN HONDA MOTOR CO., INC.

16. Headliner/Pillar Trim Overlap - Check

Checking and Adjusting the Headliner/Pillar Trim Overlap

To prevent the side curtain airbag from deploying and damaging the pillar trim (A-pillar trim, B-pillar trim, quarter pillar trim), the overlap between the headliner and pillar trim must be 8.0+0/-2.0 mm (0.31+0/-0.08 in). To check the overlap, do this:

1. Install the headliner (A) and the pillar trim (B).

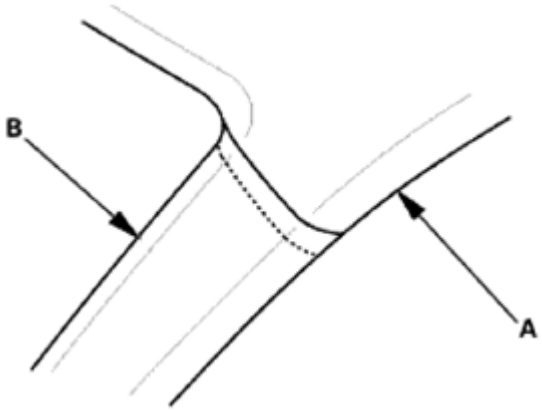

GETtheMANUALS.org

Fig. 171: Identifying Headliner And Pillar Trim
Courtesy of AMERICAN HONDA MOTOR CO., INC.

This illustration shows A-pillar .

2. Apply masking tape (A) to the headliner (B) to mark the upper edge of the pillar trim (C).

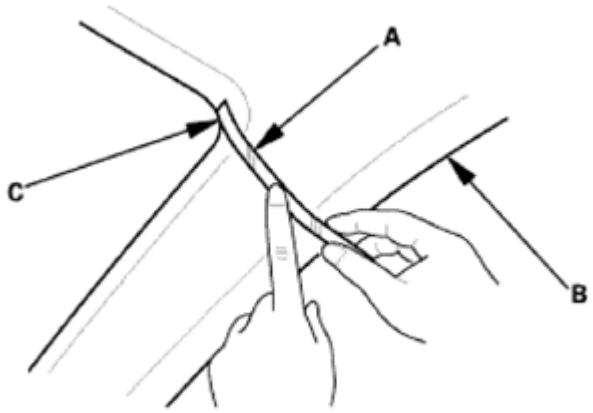

Fig. 172: Applying Masking Tape To Headliner
Courtesy of AMERICAN HONDA MOTOR CO., INC.

This illustration shows A-pillar .

3. Remove the pillar trim, and measure the headliner overlap.
   - If the overlap is 8.0+0/-2.0 mm (0.31+0/-0.08 in), remove the tape, and install the pillar trim.
   - If the overlap is more than 8.0 mm (0.31 in), go to step 4.

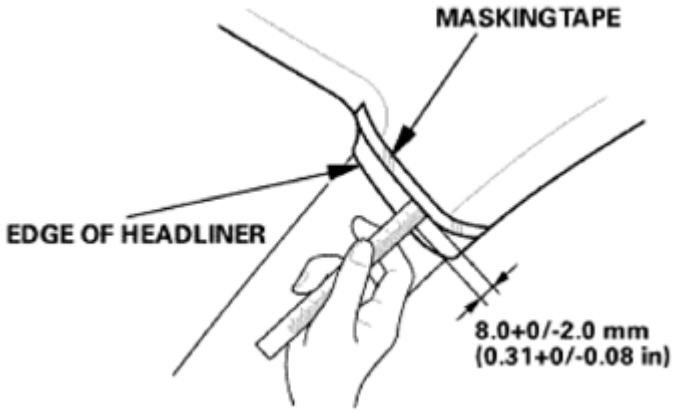

Fig. 173: Measuring Healiner Overlap
Courtesy of AMERICAN HONDA MOTOR CO., INC.

This illustration shows A-pillar .

4. Carefully trim the headliner with a utility knife, reducing the overlap to 8.0+0/-2.0 mm (0.31+0/-

GETtheMANUALS.org

0.08 in).

5. Remove the tape, and install the pillar trim.

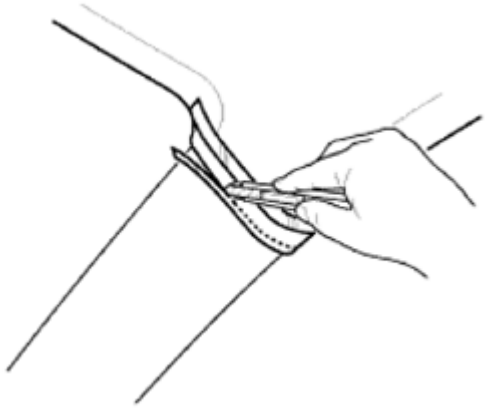

Fig. 174: Triming Headliner Using Utility Knife
Courtesy of AMERICAN HONDA MOTOR CO., INC.

This illustration shows A-pillar .

17. Quarter Pillar Trim - Both Sides
    1. Install a new clip (A) to the quarter pillar trim (B).

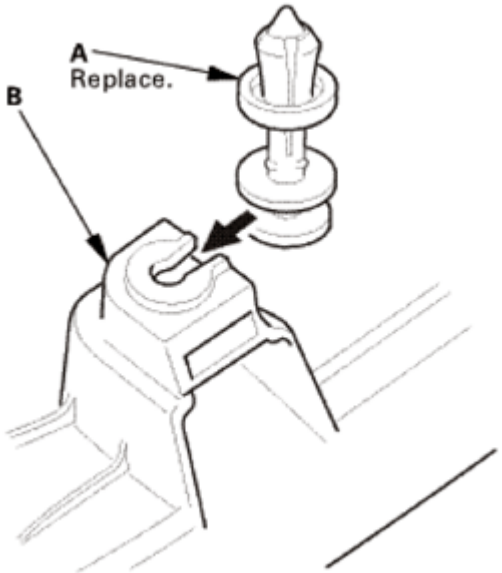

Fig. 175: Installing Clip To Quarter Pillar Trim
Courtesy of AMERICAN HONDA MOTOR CO., INC.

    2. Pass the rear seat belt lower anchor (A) through the hole in the quarter pillar trim (B).
    3. Fit the clips into the holes in the quarter pillar.
    4. Lightly push the quarter pillar trim into place, then install the trim.

GETtheMANUALS.org

NOTE:

- **Make sure the side curtain airbag is not tucked under the clips or the ribs.**
- **Do not push too hard on the quarter pillar trim. If you push too hard, the clip will be damaged, and it will not hold the trim properly.**
- **Gently tug on the quarter pillar trim to verify that all clips are securely fastened.**
- **Make sure the clips (C, D, and E) snap into place securely.**

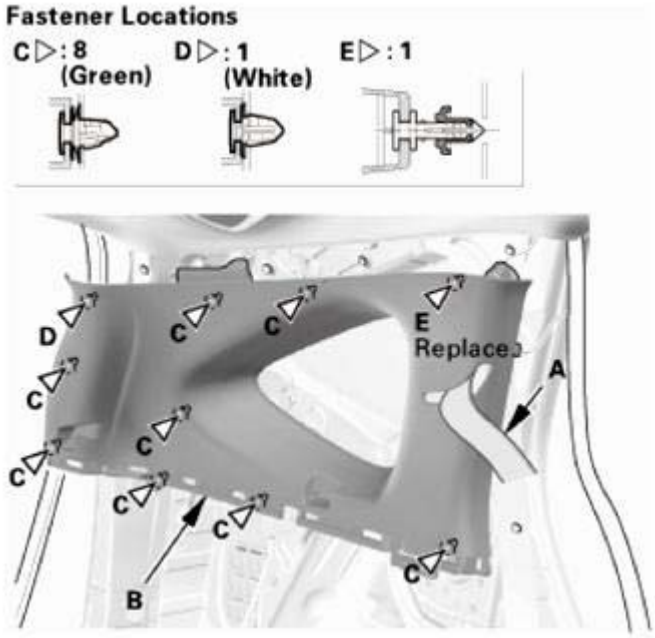

Fig. 176: Identifying Rear Seat Belt Lower Anchor, Quarter Pillar Trim And Clips
Courtesy of AMERICAN HONDA MOTOR CO., INC.

18. Rear Side Trim Panel - Both Sides

NOTE: **Repeat this procedure on the opposite side.**

1. Install the rear seat release cable (A) to the clips (B) of the rear side trim panel (C).

NOTE: **Align the marks (D) with the clips as shown.**

GETtheMANUALS.org

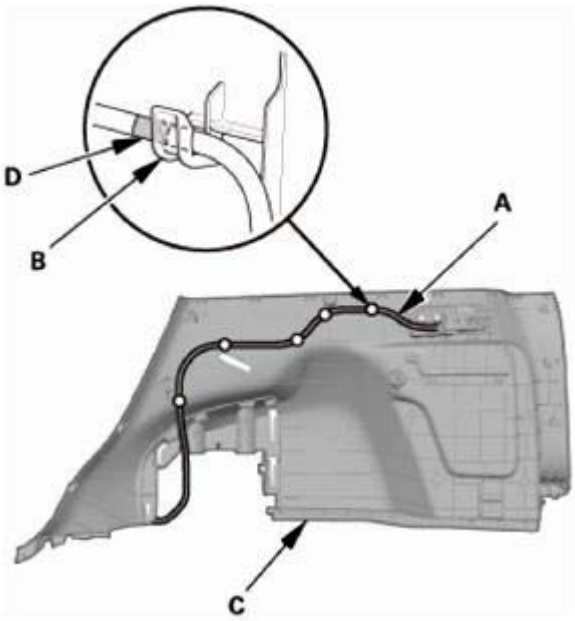

Fig. 177: Identifying Rear Seat Release Cable And Clips Of Rear Side Trim Panel
Courtesy of AMERICAN HONDA MOTOR CO., INC.

2. Install the rear seat release lever (A) to the rear side trim panel (B).

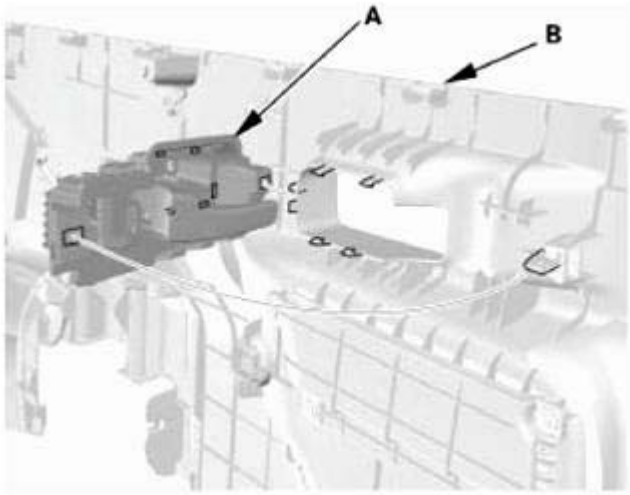

Fig. 178: Identifying Rear Seat Release Lever And Rear Side Trim Panel
Courtesy of AMERICAN HONDA MOTOR CO., INC.

3. Install the rear side trim panel (A). Make sure the hooks (B), the tabs (C), and the clips (D, E) snap into place securely.
4. Install the clips (F, G).

GETtheMANUALS.org

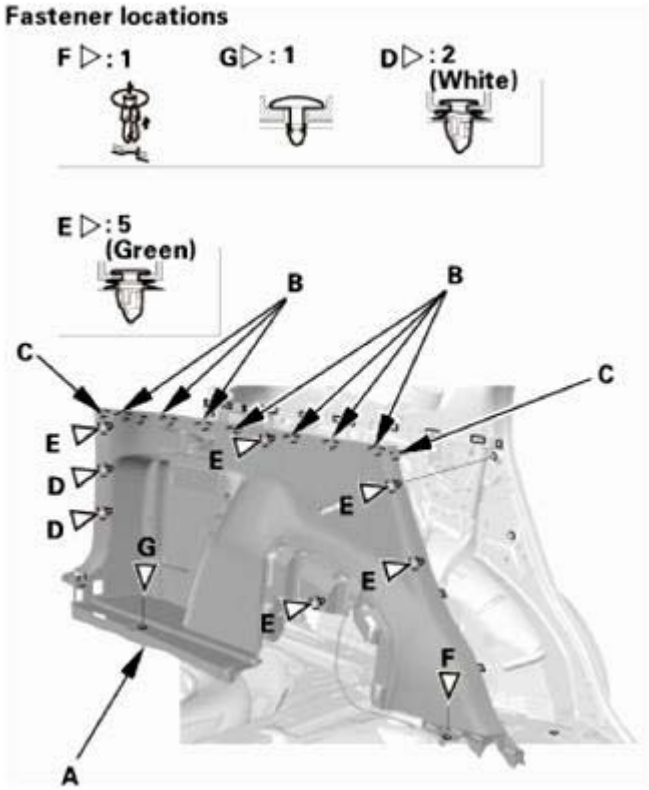

Fig. 179: Identifying Rear Side Trim Panel, Hooks, Tabs And Clips
Courtesy of AMERICAN HONDA MOTOR CO., INC.

5. Install the tie-down hook (A), then install the bolt (B).

Fig. 180: Identifying Tie-Down Hook And Bolt

GETtheMANUALS.org

Courtesy of AMERICAN HONDA MOTOR CO., INC.

6. Install the trunk hook (A).

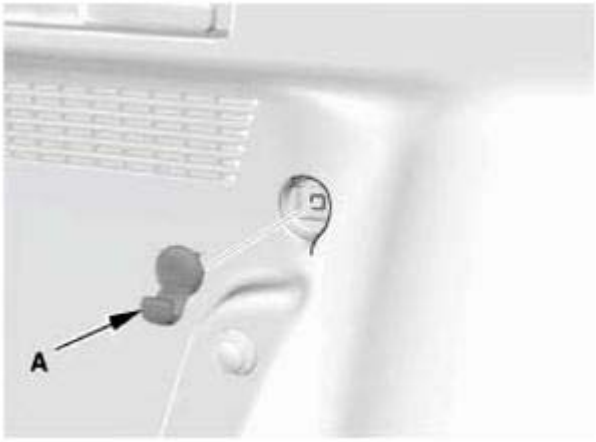

Fig. 181: Identifying Trunk Hook
Courtesy of AMERICAN HONDA MOTOR CO., INC.

7. Install the screws (A), then install the rear seat release lever cap (B). Make sure the upper hook (C) and the lower hooks (D) snap into place securely.

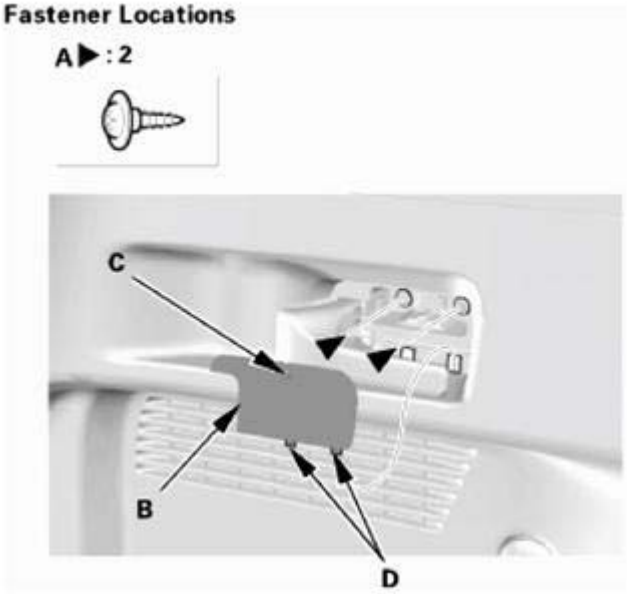

Fig. 182: Identifying Screws, Rear Seat Release Lever Cap, Upper Hook And Lower Hooks
Courtesy of AMERICAN HONDA MOTOR CO., INC.

19. Rear Seat Belt Lower Anchor Bolt - Both Sides

NOTE: Repeat this procedure on the opposite side.

GETtheMANUALS.org

1. Install the rear seat belt lower anchor bolt (A).

NOTE: **Before installing the anchor bolt, make sure there are no twists or kinks in the seat belt.**

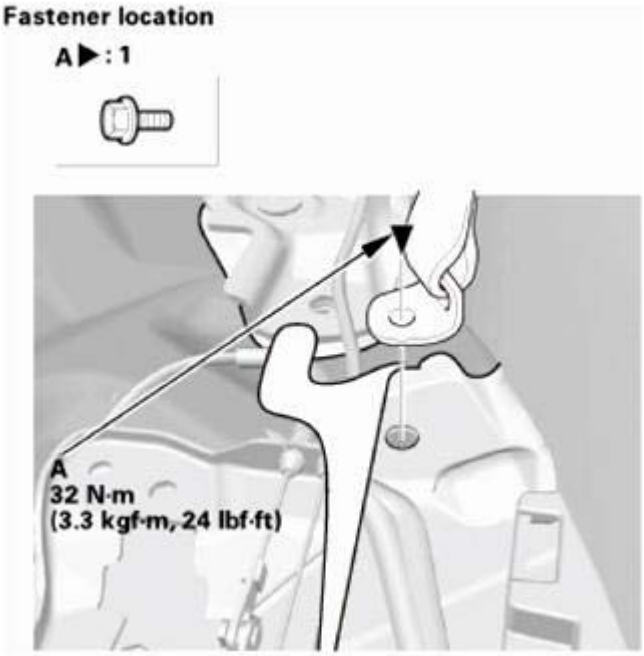

Fig. 183: Installing Rear Seat Belt Lower Anchor Bolt
Courtesy of AMERICAN HONDA MOTOR CO., INC.

20. Rear Seat Cushion Foot Cover - Both Sides (Remove The Outer Left Side Only)
    1. Install the rear seat cushion foot cover (A). Make sure the clips (B) and the hooks (C) snap into place securely.

    Left side

GETtheMANUALS.org

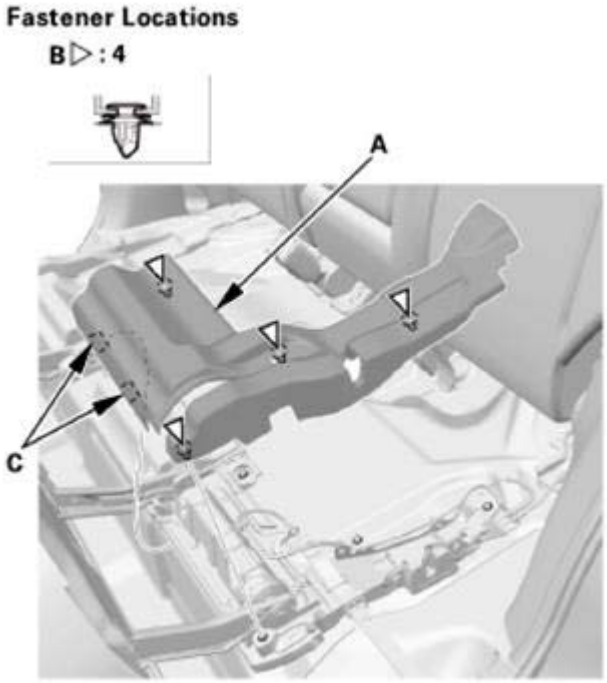

Fig. 184: Identifying Rear Seat Cushion Foot Cover, Clips And Hooks (Left Side)
Courtesy of AMERICAN HONDA MOTOR CO., INC.

Right side

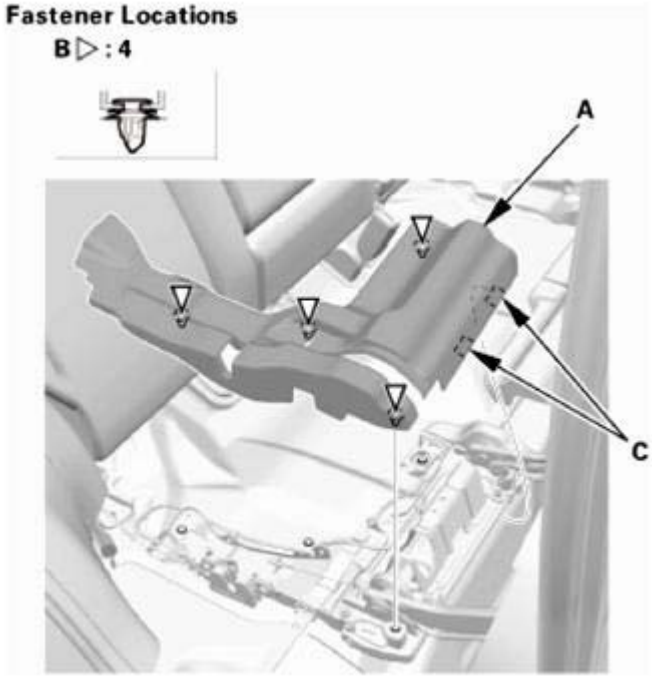

Fig. 185: Identifying Rear Seat Cushion Foot Cover, Clips And Hooks (Right Side)
Courtesy of AMERICAN HONDA MOTOR CO., INC.

GETtheMANUALS.org

21. Rear Carpet Trim - Both Sides
    1. Install the rear carpet trims (A). Make sure the clips (B) and the hooks (C) snap into place securely.

Left side

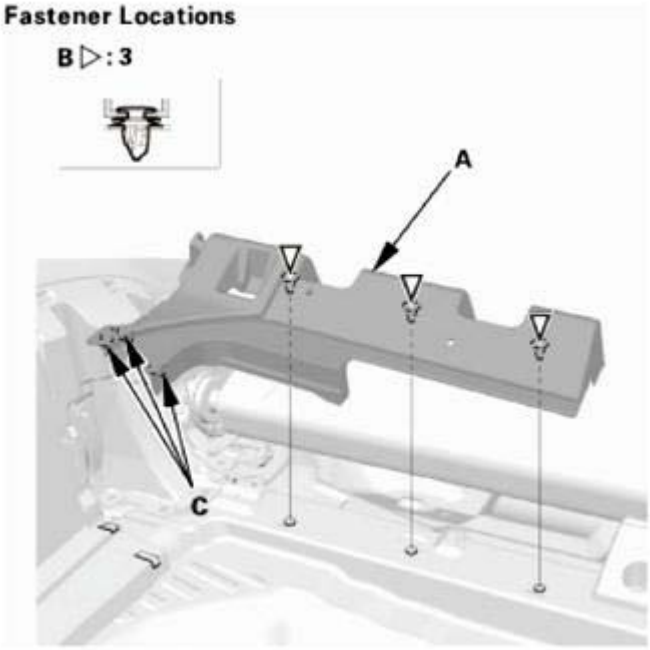

Fig. 186: Identifying Rear Carpet Trims, Clips And Hooks (Left Side)
Courtesy of AMERICAN HONDA MOTOR CO., INC.

Right side

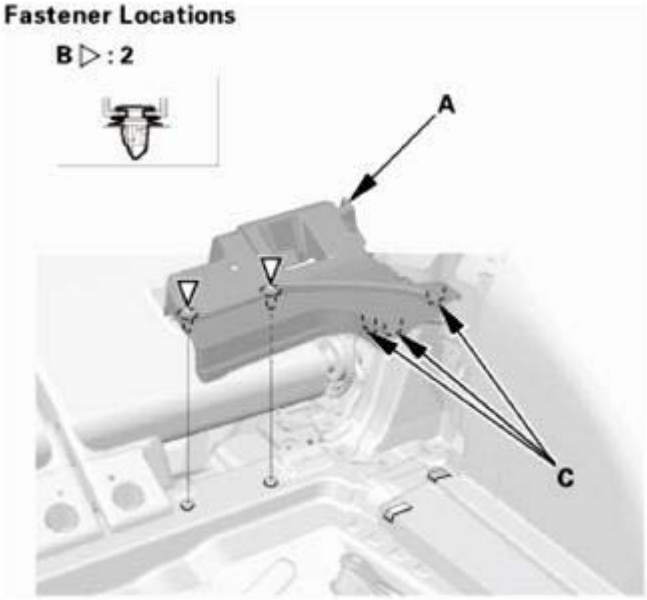

GETtheMANUALS.org

Fig. 187: Identifying Rear Carpet Trims, Clips And Hooks (Right Side)
Courtesy of AMERICAN HONDA MOTOR CO., INC.

2. Install the rear seat-back cover (A). Make sure the clips (B) snap into place securely.

Left side

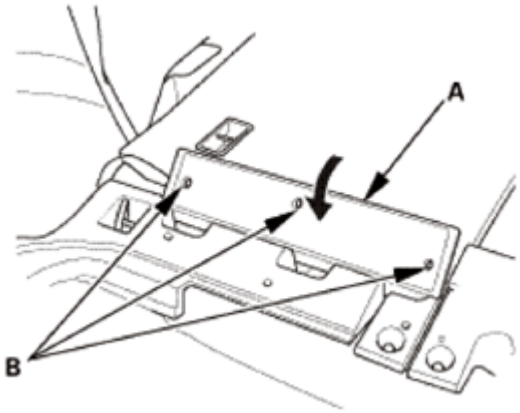

Fig. 188: Installing Rear Seat-Back Cover And Clips (Left Side)
Courtesy of AMERICAN HONDA MOTOR CO., INC.

Right side

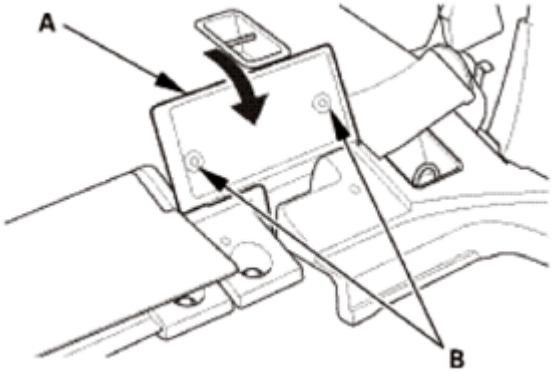

Fig. 189: Installing Rear Seat-Back Cover And Clips (Right Side)
Courtesy of AMERICAN HONDA MOTOR CO., INC.

22. Rear Damper Maintenance Cover - Both Sides

NOTE: Repeat this procedure on the opposite side.

1. Fold down the rear seat-back.
2. Install the rear damper maintenance cover (A). Make sure the hooks (B) snap into place securely.

GETtheMANUALS.org

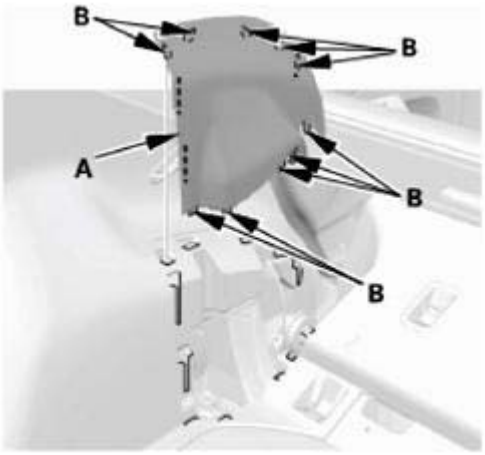

Fig. 190: Identifying Rear Damper Maintenance Cover And Hooks
Courtesy of AMERICAN HONDA MOTOR CO., INC.

23. Rear Trim Panel
    1. Install the rear trim panel (A). Make sure the clips (B, C), the hooks (D), and the tabs (E) snap into place securely.
    2. Install the clips (F).

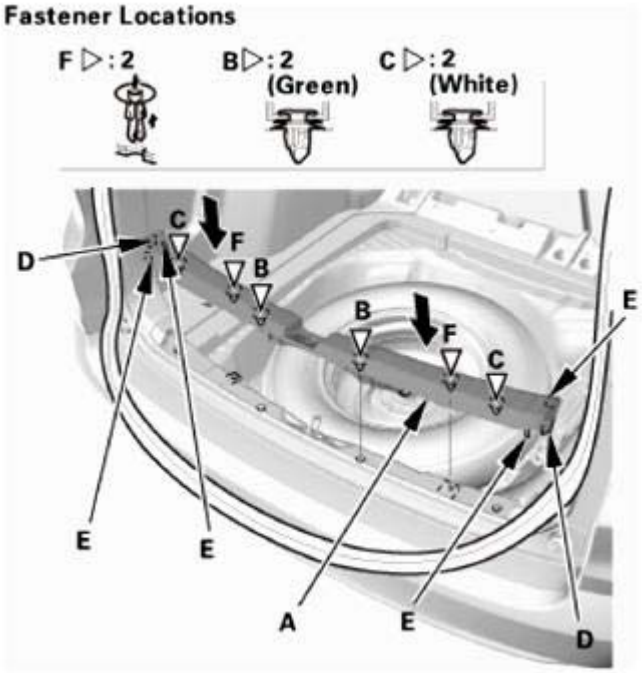

Fig. 191: Installing Rear Trim Panel
Courtesy of AMERICAN HONDA MOTOR CO., INC.

24. Tailgate Weatherstrip As Needed
    1. Locate the alignment mark (A) of the tailgate weatherstrip (B). Align the alignment mark (C) with

GETtheMANUALS.org

the center of the lower area on the tailgate opening, then install the tailgate weatherstrip all the way around.

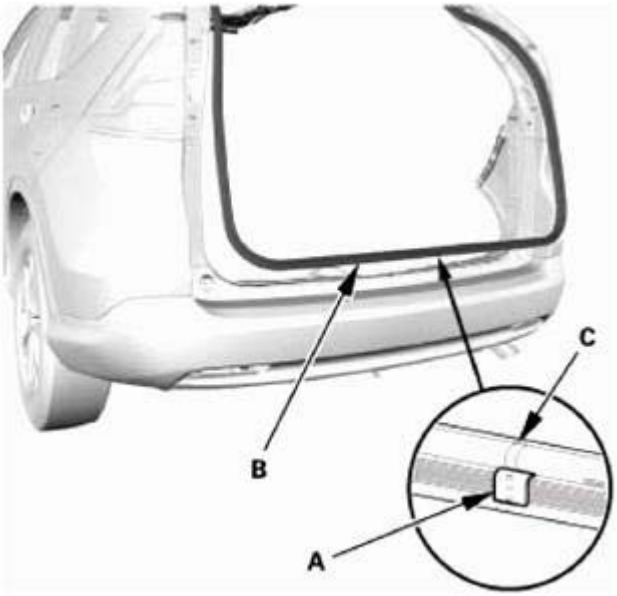

Fig. 192: Identifying Alignment Mark Of Tailgate Weatherstrip
Courtesy of AMERICAN HONDA MOTOR CO., INC.

25. Cargo Floor Cover
    1. Install the cargo floor cover (A).

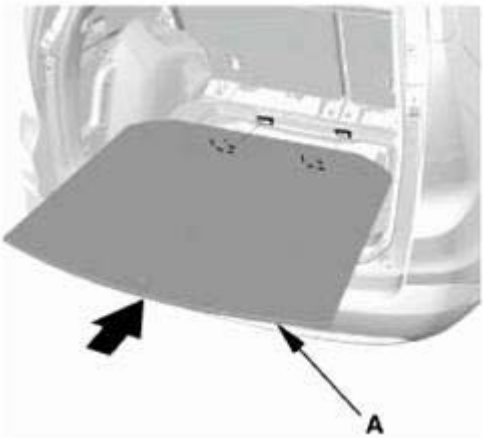

Fig. 193: Installing Cargo Floor Cover
Courtesy of AMERICAN HONDA MOTOR CO., INC.

26. Tonneau Cover (For Some Models)
    1. Install the tonneau cover (A).

GETtheMANUALS.org

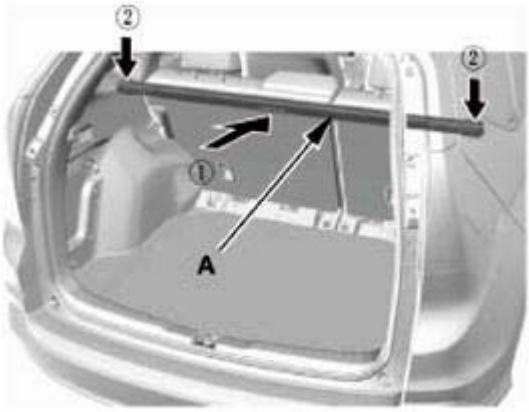

Fig. 194: Installing Tonneau Cover
Courtesy of AMERICAN HONDA MOTOR CO., INC.

27. B-Pillar Upper/Lower Trim - Check
    1. If the side curtain airbag has deployed, replace the B-pillar upper trim (A) and the B-pillar lower trim (B), along with the other parts listed for side curtain airbag deployment.
    2. If the side curtain airbag has not deployed, check the B-pillar upper/lower trim and note the following items:
        - To prevent the side curtain airbags from deploying improperly and possibly causing injury, inspect the trim and replace it with a new one if it has any of the following damage:
            - Any cracks or deformations in the B-pillar upper trim or the upper hooks (C), or any stress-whitened areas in the upper part of the trim
            - Any cracks or deformations in the B-pillar lower trim, or any breakages in the part (D) fitted with the B-pillar upper trim
            - Any cracks or stress-whitening areas in the clip seating surfaces (E)
        - If the clips (F) are damaged or stress-whitened, replace them with new ones.

Trim inspection

GETtheMANUALS.org

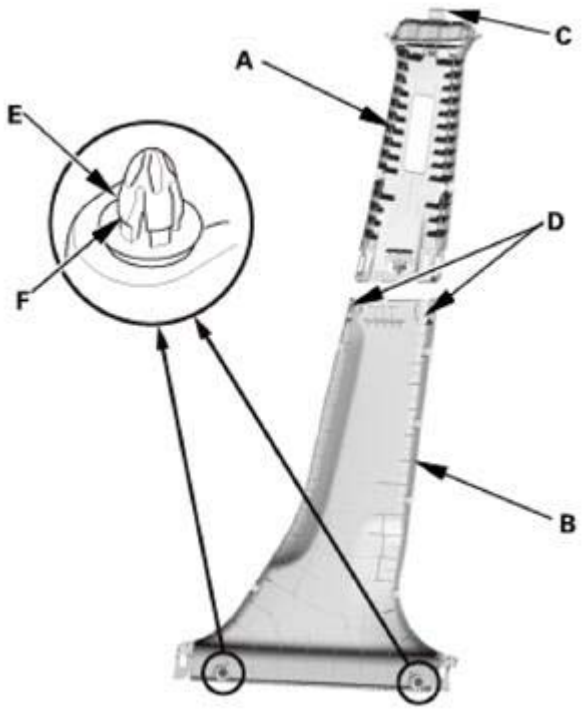

Fig. 195: Identifying B-Pillar Upper Trim, Lower Trim, Upper Hook And Clip Seating Surfaces
Courtesy of AMERICAN HONDA MOTOR CO., INC.

28. Headliner/Pillar Trim Overlap - Check

Checking and Adjusting the Headliner/Pillar Trim Overlap

To prevent the side curtain airbag from deploying and damaging the pillar trim (A-pillar trim, B-pillar trim, quarter pillar trim), the overlap between the headliner and pillar trim must be 8.0+0/-2.0 mm (0.31+0/-0.08 in). To check the overlap, do this:

1. Install the headliner (A) and the pillar trim (B).

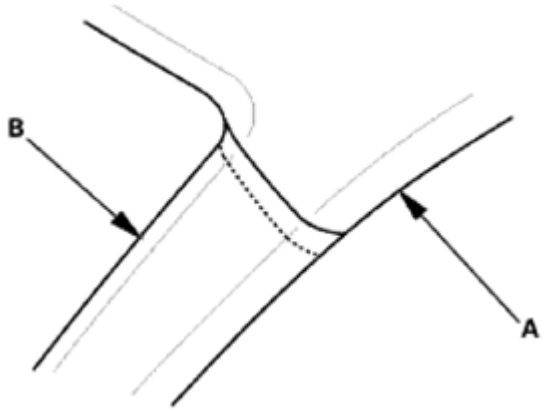

GETtheMANUALS.org

Fig. 196: Identifying Headliner And Pillar Trim
Courtesy of AMERICAN HONDA MOTOR CO., INC.

This illustration shows A-pillar .

2. Apply masking tape (A) to the headliner (B) to mark the upper edge of the pillar trim (C).

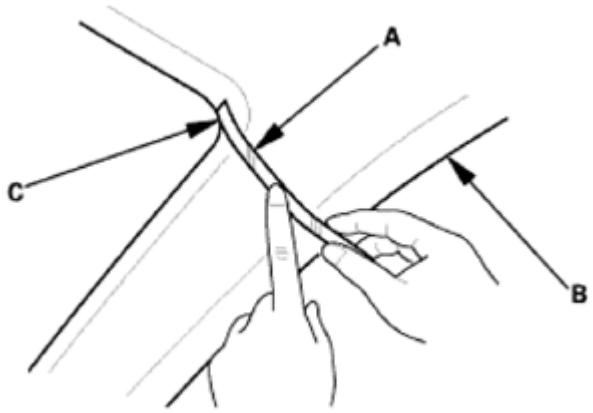

Fig. 197: Applying Masking Tape To Headliner
Courtesy of AMERICAN HONDA MOTOR CO., INC.

This illustration shows A-pillar .

3. Remove the pillar trim, and measure the headliner overlap.
   - If the overlap is 8.0+0/-2.0 mm (0.31+0/-0.08 in), remove the tape, and install the pillar trim.
   - If the overlap is more than 8.0 mm (0.31 in), go to step 4.

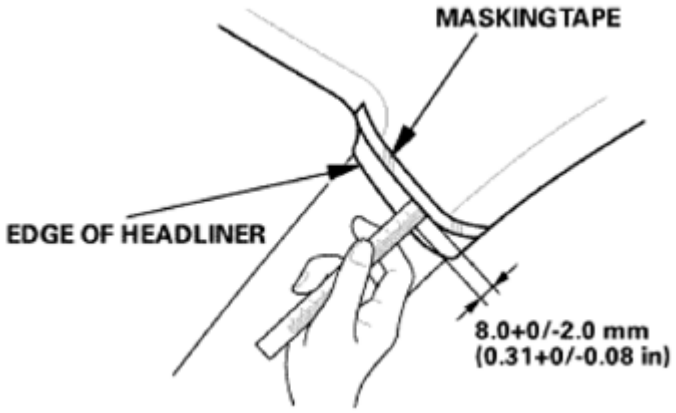

Fig. 198: Measuring Headliner Overlap
Courtesy of AMERICAN HONDA MOTOR CO., INC.

This illustration shows A-pillar .

4. Carefully trim the headliner with a utility knife, reducing the overlap to 8.0+0/-2.0 mm (0.31+0/-

GETtheMANUALS.org

0.08 in).

5. Remove the tape, and install the pillar trim.

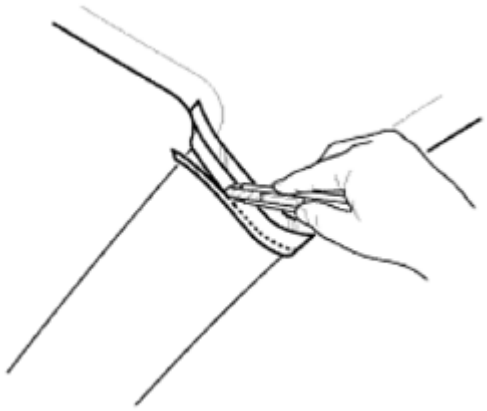

Fig. 199: Removing Tape
Courtesy of AMERICAN HONDA MOTOR CO., INC.

This illustration shows A-pillar .

29. B-Pillar Upper Trim - Both Sides

NOTE: Repeat this procedure on the opposite side.

1. Install the upper hook (A) of the B-pillar upper trim (B) to the hole in the body. Push the bottom portion of the B-pillar upper trim to install the lower hooks (C). Make sure the hooks snap into place securely.

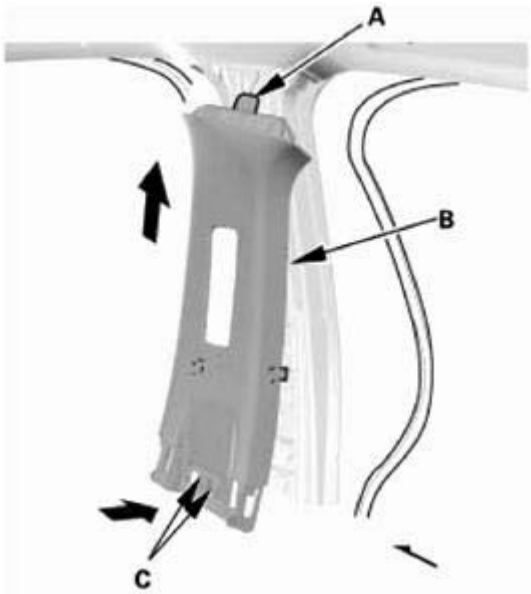

Fig. 200: Installing Upper Hook

GETtheMANUALS.org

Courtesy of AMERICAN HONDA MOTOR CO., INC.

30. Front Seat Belt Upper Anchor Bolt - Both Sides

NOTE: Repeat this procedure on the opposite side.

1. Install the front seat belt upper anchor bolt, then install the front seat belt shoulder anchor adjuster cap (A).

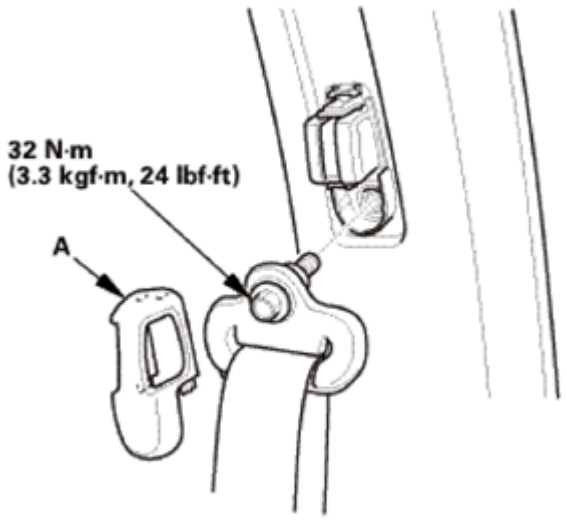

Fig. 201: Identifying Front Seat Belt Shoulder Anchor Adjuster Cap
Courtesy of AMERICAN HONDA MOTOR CO., INC.

31. B-Pillar Lower Trim - Both Sides

NOTE: Repeat this procedure on the opposite side.

1. Install the B-pillar lower trim (A). Make sure the clips (B) and the hooks (C) snap into place securely.

GETtheMANUALS.org

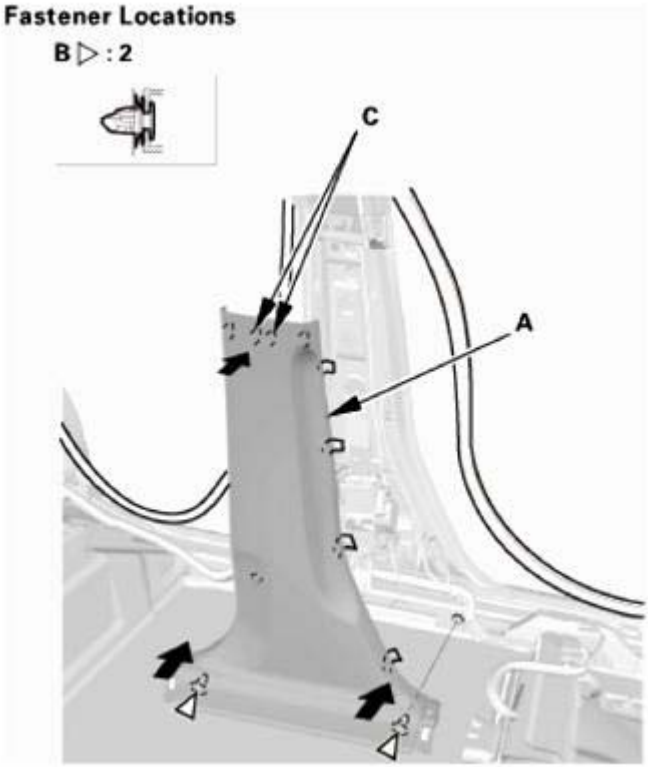

Fig. 202: Identifying B-Pillar Lower Trim, Clips And Hooks
Courtesy of AMERICAN HONDA MOTOR CO., INC.

32. Rear Door Opening Seal As Needed - Both Sides

NOTE: Repeat this procedure on the opposite side.

1. Install the rear door opening seal (A). Make sure the seal is installed securely into the hooks (B).

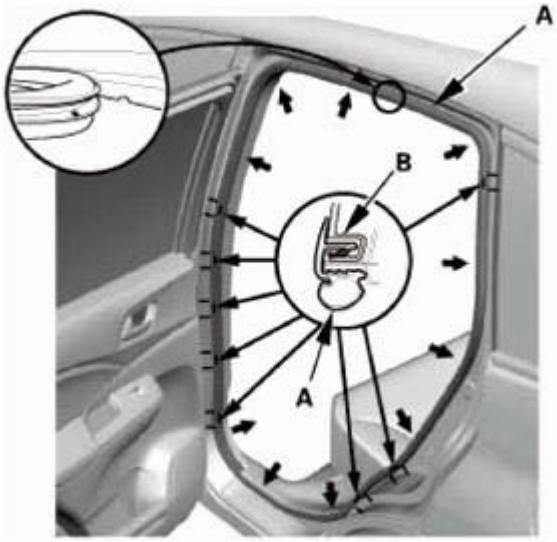

GETtheMANUALS.org

Fig. 203: Identifying Rear Door Opening Seal And Hooks
Courtesy of AMERICAN HONDA MOTOR CO., INC.

33. Rear Door Sill Trim - Both Sides

NOTE: Repeat this procedure on the opposite side.

1. Pull the release strap to fold down the rear seat, then lift-up and latch the rear seat-back in the upright position.
2. Install the rear door inner sill trim (A). Make sure the clips (B, C), the hooks (D), and the tab (E) snap into place securely.

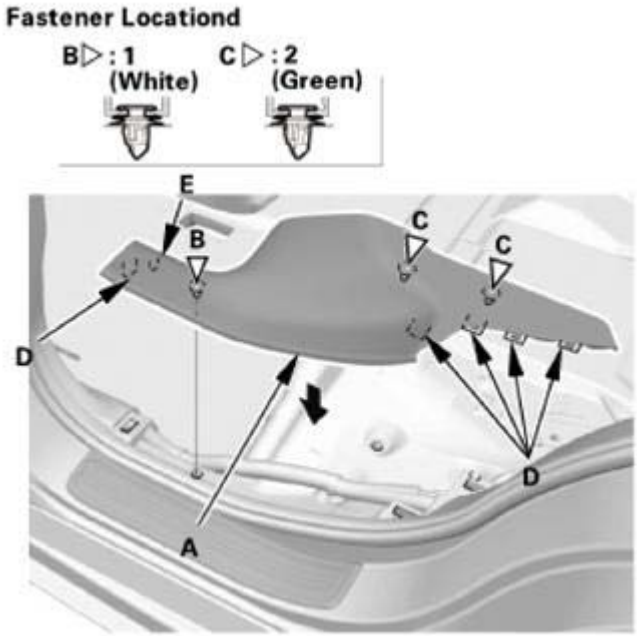

Fig. 204: Identifying Rear Door Inner Sill Trim, Clips, Hooks And Tab
Courtesy of AMERICAN HONDA MOTOR CO., INC.

34. A-Pillar Trim - Check
    1. If the side curtain airbag has deployed, replace the A-pillar trim (A), along with the other parts listed for side curtain airbag deployment.
    2. If the side curtain airbag has not deployed, check the A-pillar trim and note the following items:
        - To prevent the side curtain airbags from deploying improperly and possibly causing injury, inspect the A-pillar trim and replace it with a new one if it has any of the following damage:
            - Any cracks, deformations, or stress-whitened areas in the A-pillar trim
            - Any cracks or stress-whitening in the clip seating surfaces (B)
        - After checking and adjusting the overlap between the headliner and the A-pillar trim, replace the upper clip (C) with a new one.
        - If the clips (D) are damaged or stress-whitened, replace them with new ones.

GETtheMANUALS.org

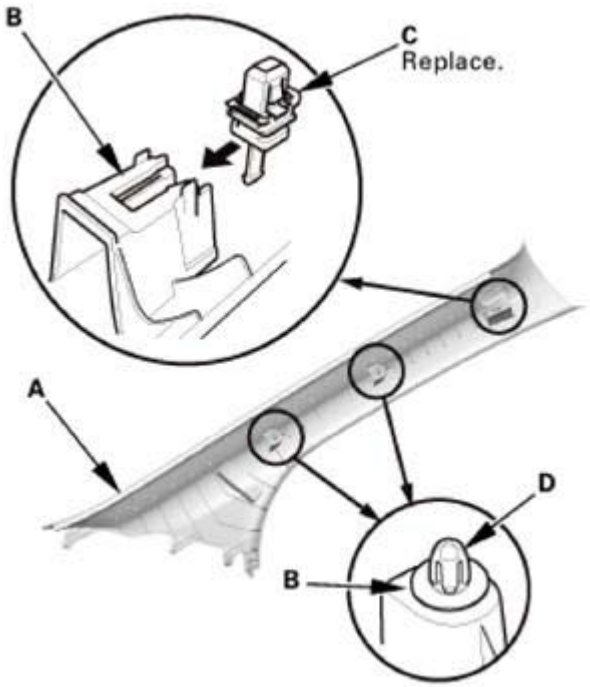

Fig. 205: Replacing Upper Clip
Courtesy of AMERICAN HONDA MOTOR CO., INC.

35. Headliner/Pillar Trim Overlap - Check

Checking and Adjusting the Headliner/Pillar Trim Overlap

To prevent the side curtain airbag from deploying and damaging the pillar trim (A-pillar trim, B-pillar trim, quarter pillar trim), the overlap between the headliner and pillar trim must be 8.0+0/-2.0 mm (0.31+0/-0.08 in). To check the overlap, do this:

1. Install the headliner (A) and the pillar trim (B).

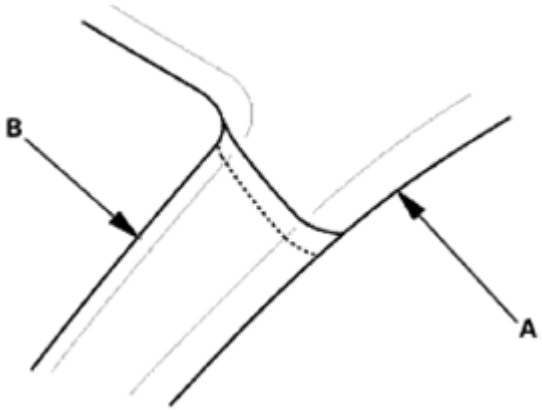

Fig. 206: Identifying Headliner And Pillar Trim
Courtesy of AMERICAN HONDA MOTOR CO., INC.

GETtheMANUALS.org

This illustration shows A-pillar .

2. Apply masking tape (A) to the headliner (B) to mark the upper edge of the pillar trim (C).

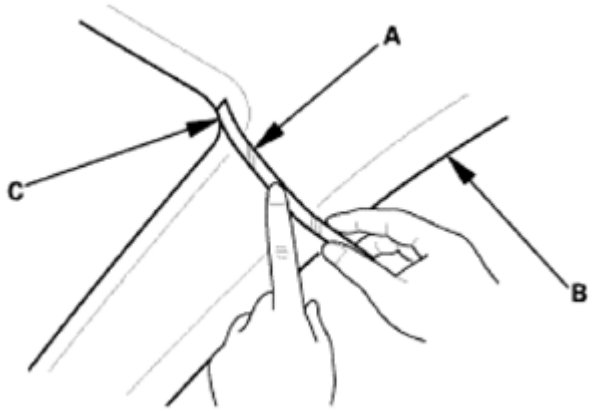

Fig. 207: Applying Masking Tape (A) To Headliner
Courtesy of AMERICAN HONDA MOTOR CO., INC.

This illustration shows A-pillar .

3. Remove the pillar trim, and measure the headliner overlap.
   - If the overlap is 8.0+0/-2.0 mm (0.31+0/-0.08 in), remove the tape, and install the pillar trim.
   - If the overlap is more than 8.0 mm (0.31 in), go to step 4.

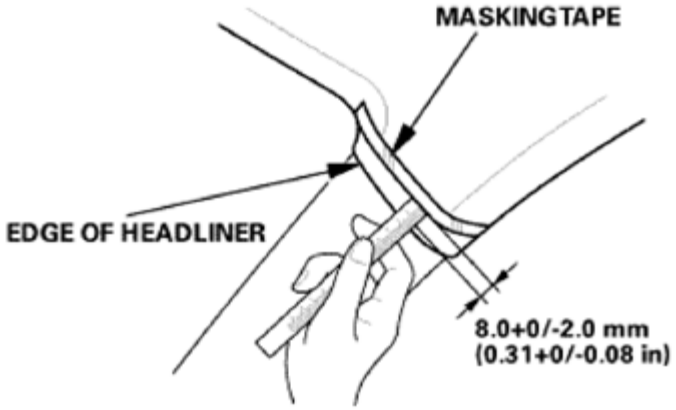

Fig. 208: Measuring Headliner Overlap
Courtesy of AMERICAN HONDA MOTOR CO., INC.

This illustration shows A-pillar .

4. Carefully trim the headliner with a utility knife, reducing the overlap to 8.0+0/-2.0 mm (0.31+0/-0.08 in).
5. Remove the tape, and install the pillar trim.

GETtheMANUALS.org

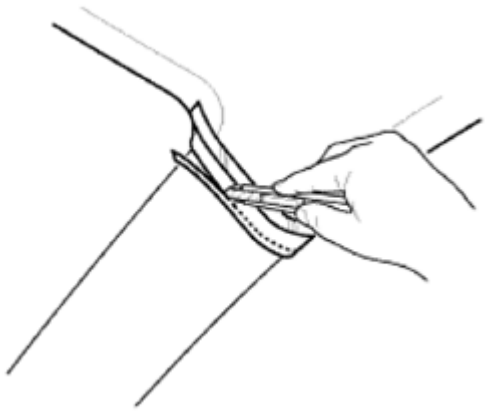

Fig. 209: Triming Headliner With Utility Knife
Courtesy of AMERICAN HONDA MOTOR CO., INC.

This illustration shows A-pillar .

36. A-Pillar Trim - Both Sides

NOTE: Repeat this procedure on the opposite side.

1. Carefully install a new upper clip (A) to the A-pillar trim (B).

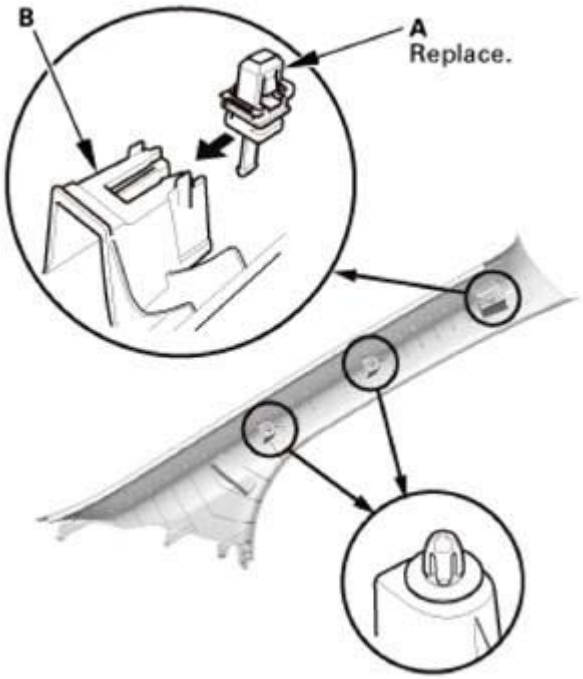

Fig. 210: Installing Upper Clip Into A-Pillar Trim
Courtesy of AMERICAN HONDA MOTOR CO., INC.

2. Insert the bottom portion of the A-pillar trim (A) into the dashboard (B). Place the trim over the A-

GETtheMANUALS.org

pillar (C), and fit its upper clip (D) and the other clips (E) into the holes (F) in the A-pillar, then lightly push the trim into place.

NOTE:

- **Make sure the side curtain airbag is not tucked under the clips or the trim ribs.**
- **Do not push too hard on the A-pillar trim. If you push too hard, the clip will be damaged, and it will not hold the trim properly.**
- **Gently tug on the A-pillar trim to verify that all clips are securely fastened.**

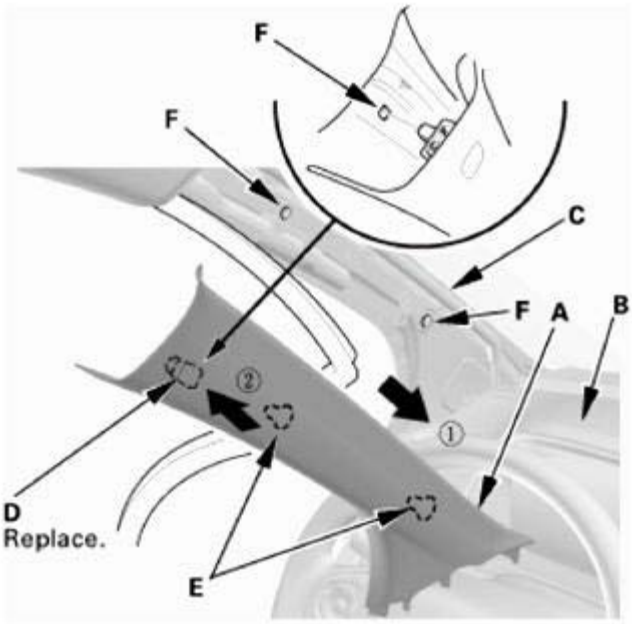

Fig. 211: Inserting Bottom Portion Of A-Pillar Trim Into Dashboard
Courtesy of AMERICAN HONDA MOTOR CO., INC.

37. Front Door Opening Seal As Needed - Both Sides

NOTE: **Repeat this procedure on the opposite side.**

1. Install the front door opening seal (A). Make sure the seal is installed securely into the hooks (B).

GETtheMANUALS.org

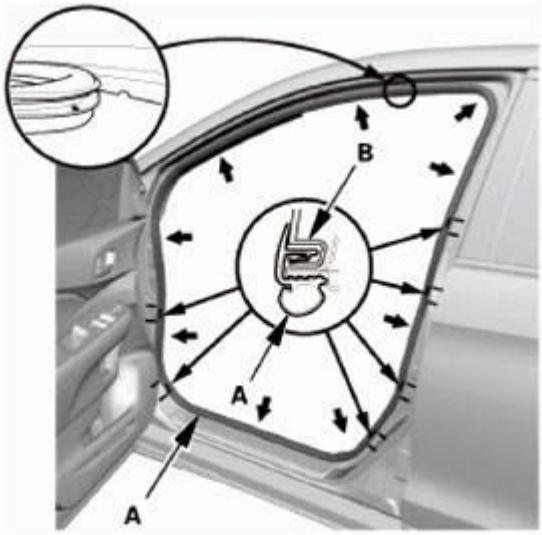

Fig. 212: Identifying Front Door Opening Seal And Hooks
Courtesy of AMERICAN HONDA MOTOR CO., INC.

38. Front Door Sill Trim - Both Sides

NOTE: Repeat this procedure on the opposite side.

1. Install the front door inner sill trim (A). Make sure the clips (B), the hooks (C), and the tabs (D) snap into place securely.

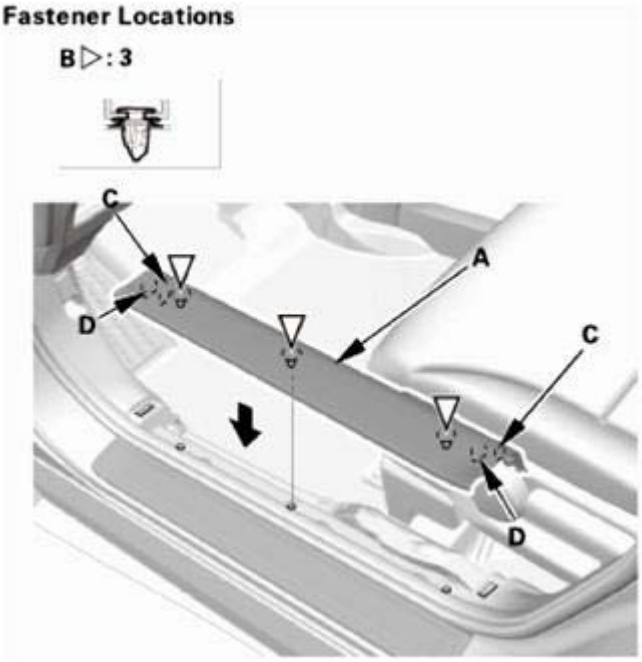

Fig. 213: Installing Front Door Opening Seal
Courtesy of AMERICAN HONDA MOTOR CO., INC.

GETtheMANUALS.org

39. Battery Terminal (SRS) - Reconnection

NOTE: If the battery performance is abnormal, test the battery.

1. Clean the battery terminals.
2. Connect the positive cable (A) to the battery.

NOTE: Always connect the positive side first.

3. Connect the negative cable (B) to the battery.
4. Apply multipurpose grease to the terminals to prevent corrosion.

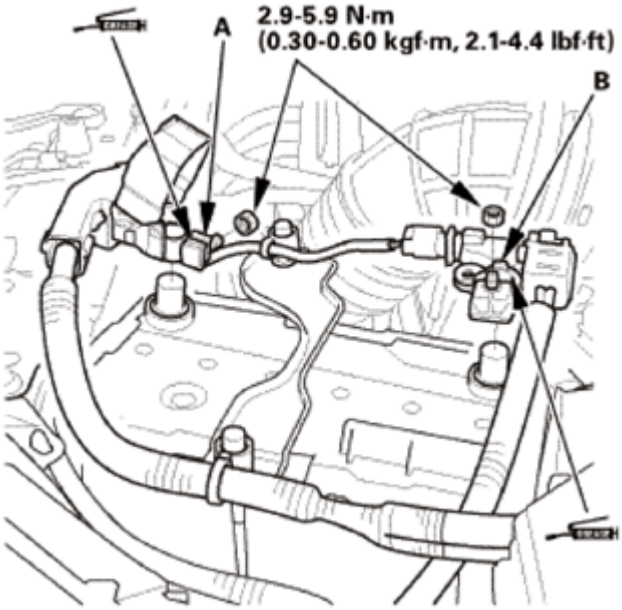

Fig. 214: Identifying Positive And Negative Cables Of Battery
Courtesy of AMERICAN HONDA MOTOR CO., INC.

INTERIOR TRIM COMPONENT LOCATION INDEX

GETtheMANUALS.org

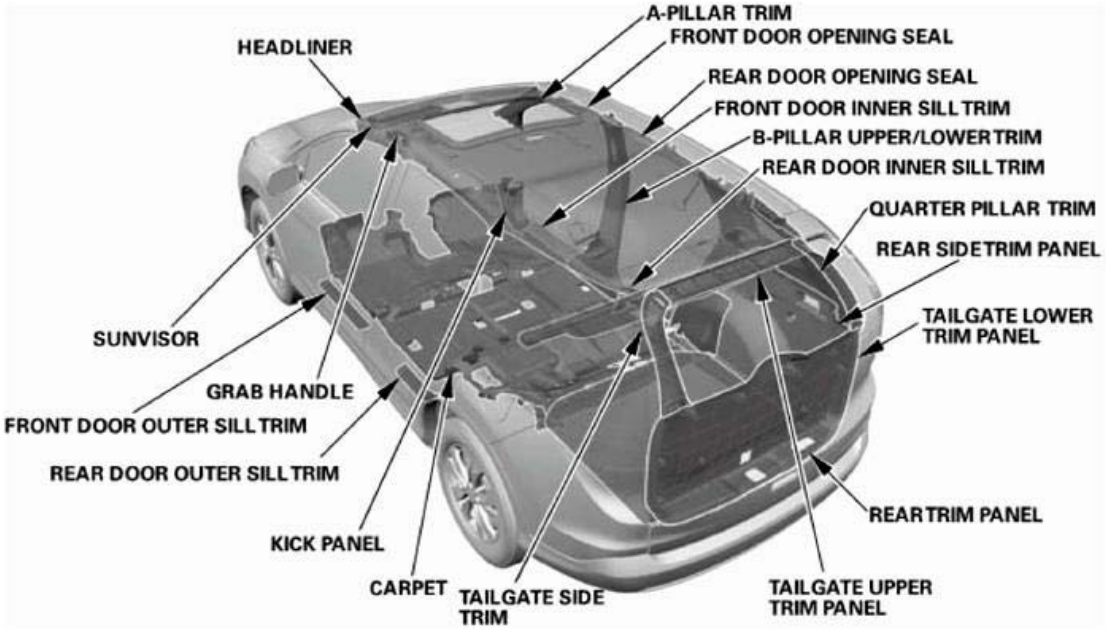

Fig. 215: Interior Trim Component Location
Courtesy of AMERICAN HONDA MOTOR CO., INC.

CARPET	**REMOVAL AND INSTALLATION**
A-PILLAR TRIM	**Interior Trim Removal and Installation - Pillar Areas**
B-PILLAR UPPER/LOWER TRIM	**Interior Trim Removal and Installation - Pillar Areas**
QUARTER PILLAR TRIM	**Interior Trim Removal and Installation - Pillar Areas**
FRONT DOOR INNER SILL TRIM	**Interior Trim Removal and Installation - Pillar Areas**
FRONT DOOR OUTER SILL TRIM	**Interior Trim Removal and Installation - Door Areas**
REAR DOOR INNER SILL TRIM	**Interior Trim Removal and Installation - Door Areas**
REAR DOOR OUTER SILL TRIM	**Interior Trim Removal and Installation - Door Areas**
KICK PANEL	**Interior Trim Removal and Installation - Door Areas**
FRONT DOOR OPENING SEAL	**Interior Trim Removal and Installation - Door Areas**
REAR DOOR OPENING SEAL	**Interior Trim Removal and Installation - Door Areas**
HEADLINER	**Headliner Removal and Installation**
GRAB HANDLE	**REMOVAL AND INSTALLATION**
SUNVISOR	**REMOVAL AND INSTALLATION**
REAR TRIM PANEL	**Interior Trim Removal and Installation - Door Areas**
TAILGATE UPPER TRIM PANEL	**Interior Trim Removal and Installation - Tailgate Areas**
TAILGATE SIDE TRIM	**Interior Trim Removal and Installation - Tailgate Areas**
TAILGATE LOWER TRIM PANEL	**Interior Trim Removal and Installation - Tailgate Areas**
REAR SIDE TRIM PANEL	**Interior Trim Removal and Installation - Tailgate Areas**

INTERIOR TRIM REMOVAL AND INSTALLATION - CARGO AREA

GETtheMANUALS.org

REMOVAL

SRS components are located in this area. Review the **SRS COMPONENT LOCATIONS** and the **PRECAUTIONS AND PROCEDURES** before doing repairs or service.

1. Tonneau Cover (For Some Models)
    1. Remove the tonneau cover (A).

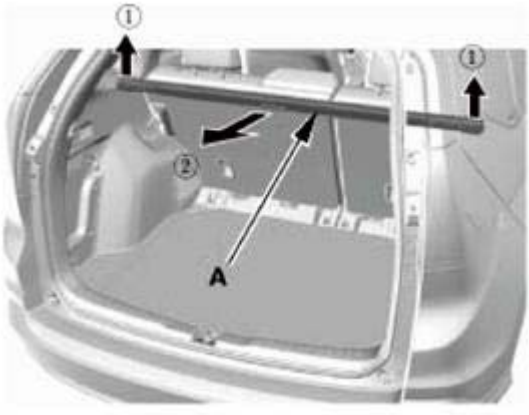

Fig. 216: Removing Tonneau Cover
Courtesy of AMERICAN HONDA MOTOR CO., INC.

2. Cargo Floor Cover
    1. Remove the cargo floor cover (A).

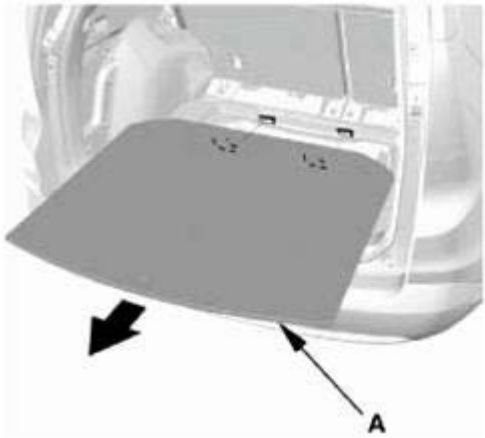

Fig. 217: Removing Cargo Floor Cover
Courtesy of AMERICAN HONDA MOTOR CO., INC.

3. Rear Door Sill Trim
    1. Pull the release strap to fold down the rear seat, then lift-up and latch the rear seat-back in the upright position.
    2. Detach the hooks (A) and the tab (B) from the B-pillar lower trim (C) and the rear side trim panel

GETtheMANUALS.org

(D), and pull up the rear door inner sill trim (E) by hand to detach the clips (F, G), then remove the trim.

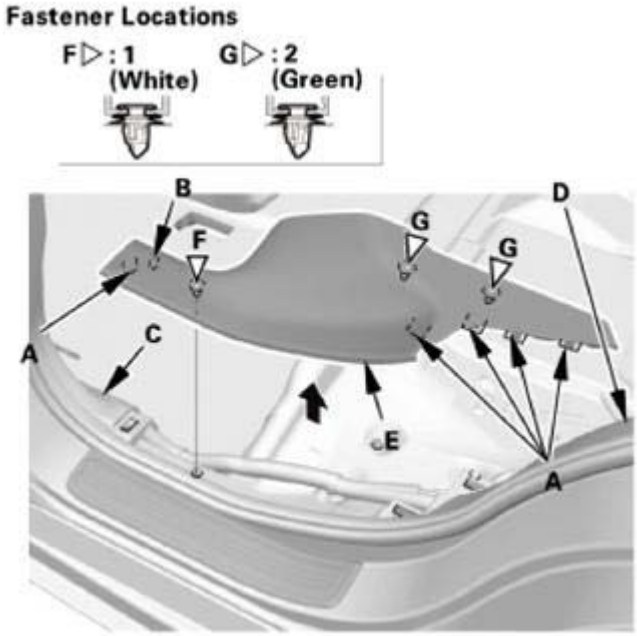

Fig. 218: Pulling Rear Door Inner Sill Trim
Courtesy of AMERICAN HONDA MOTOR CO., INC.

4. Rear Door Opening Seal As Needed
    1. Pull out the rear door opening seal (A) from the trim hooks (B) around the rear door opening flange as needed.

Fig. 219: Identifying Rear Door Opening Seal
Courtesy of AMERICAN HONDA MOTOR CO., INC.

GETtheMANUALS.org

5. Rear Seat Cushion Foot Cover
    1. Pull up the rear seat cushion foot covers (A) by hand to detach the clips (B).
    2. Detach the hooks (C), then remove the rear seat cushion foot cover.

Left side

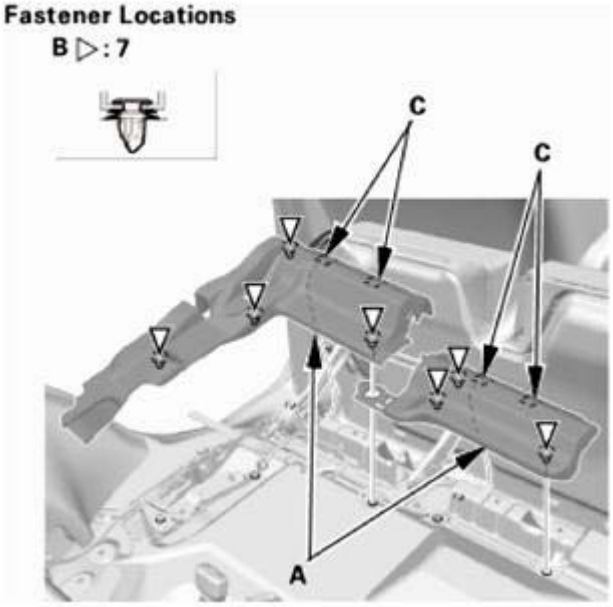

Fig. 220: Identifying Rear Seat Cushion Foot Covers And Clips (Left Side)
Courtesy of AMERICAN HONDA MOTOR CO., INC.

Right side

GETtheMANUALS.org

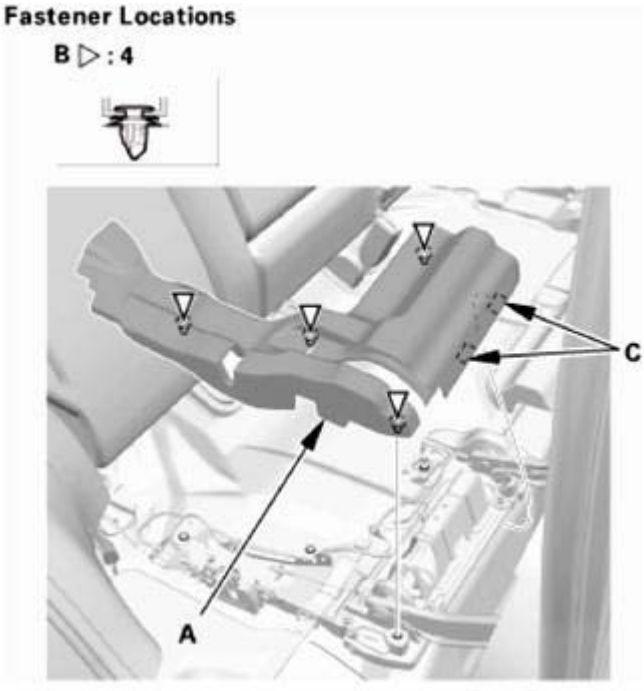

Fig. 221: Identifying Rear Seat Cushion Foot Covers And Clips (Right Side)
Courtesy of AMERICAN HONDA MOTOR CO., INC.

6. Rear Damper Maintenance Cover
    1. Fold down the rear seat-back.
    2. Pull up the rear damper maintenance cover (A) by hand to detach the hooks (B), then remove the rear damper maintenance cover.

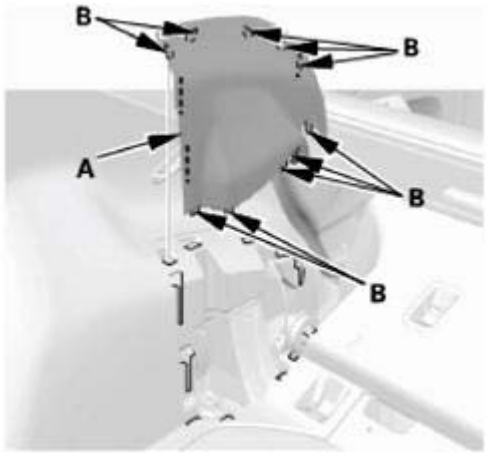

Fig. 222: Identifying Rear Damper Maintenance Cover And Hooks
Courtesy of AMERICAN HONDA MOTOR CO., INC.

7. Rear Carpet Trim
    1. Detach the clips (A), then tuck up the rear seat-back cover (B).

GETtheMANUALS.org

Left side

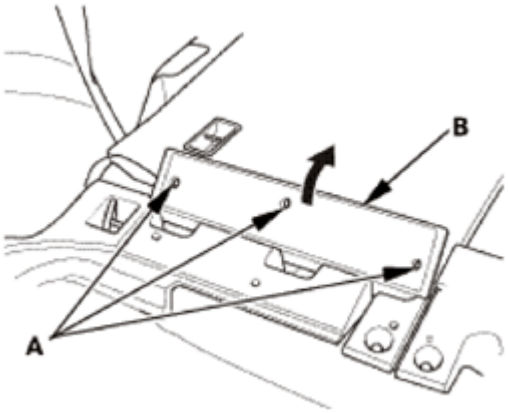

Fig. 223: Tucking Up Rear Seat-Back Cover And Clips (Left Side)
Courtesy of AMERICAN HONDA MOTOR CO., INC.

Right side

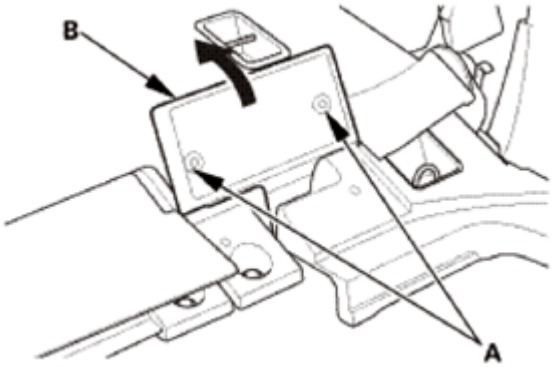

Fig. 224: Tucking Up Rear Seat-Back Cover And Clips (Right Side)
Courtesy of AMERICAN HONDA MOTOR CO., INC.

2. Detach the hooks (A) from the rear side trim panel (B), and pull up the rear carpet trim (C) by hand to detach the clips (D), then remove the rear carpet trims.

Left side

GETtheMANUALS.org

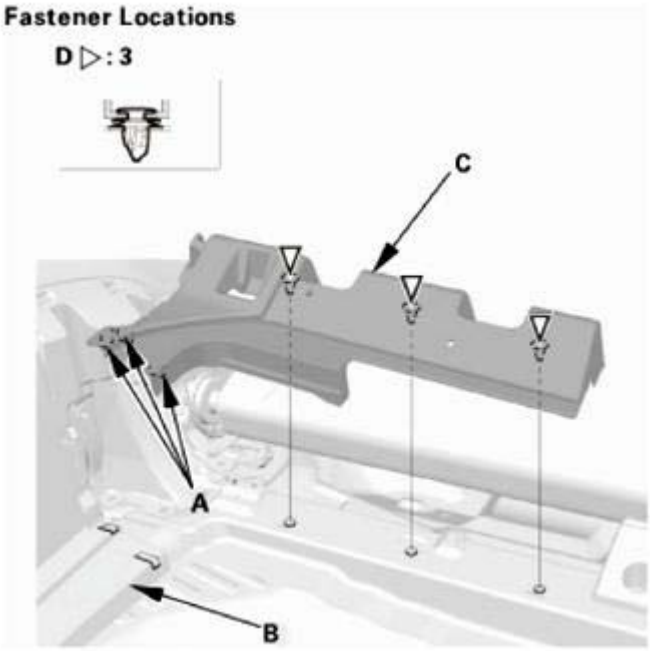

Fig. 225: Identifying Rear Side Trim Panel, Rear Carpet Trim, Hooks And Clips (Left Side)
Courtesy of AMERICAN HONDA MOTOR CO., INC.

Right side

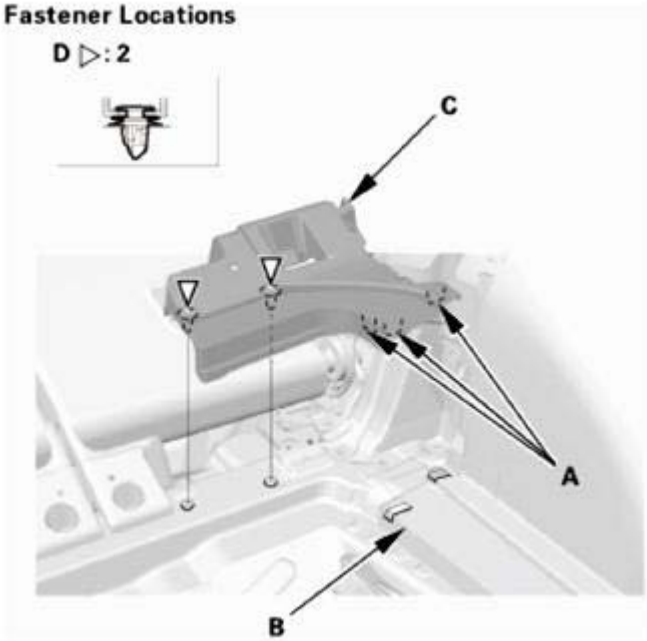

Fig. 226: Identifying Rear Side Trim Panel, Rear Carpet Trim, Hooks And Clips (Right Side)
Courtesy of AMERICAN HONDA MOTOR CO., INC.

8. Tailgate Weatherstrip As Needed

GETtheMANUALS.org

1. Detach the tailgate weatherstrip (A) as needed.

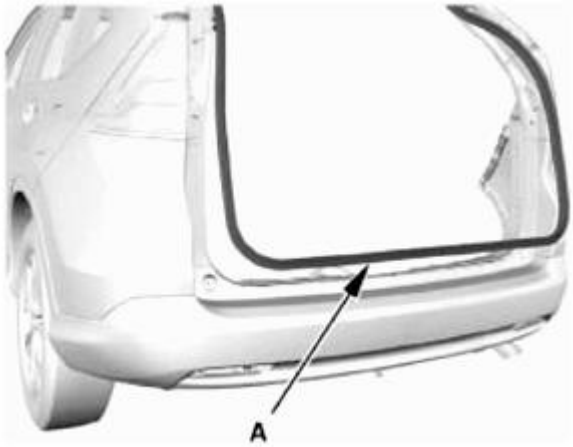

Fig. 227: Identifying Tailgate Weatherstrip
Courtesy of AMERICAN HONDA MOTOR CO., INC.

9. Rear Trim Panel
    1. Remove the clips (A).
    2. Detach the hooks (B) and the tabs (C) from the rear side trim panels (D), and pull up the rear trim panel (E) by hand to detach the clips (F, G), then remove the rear trim panel.

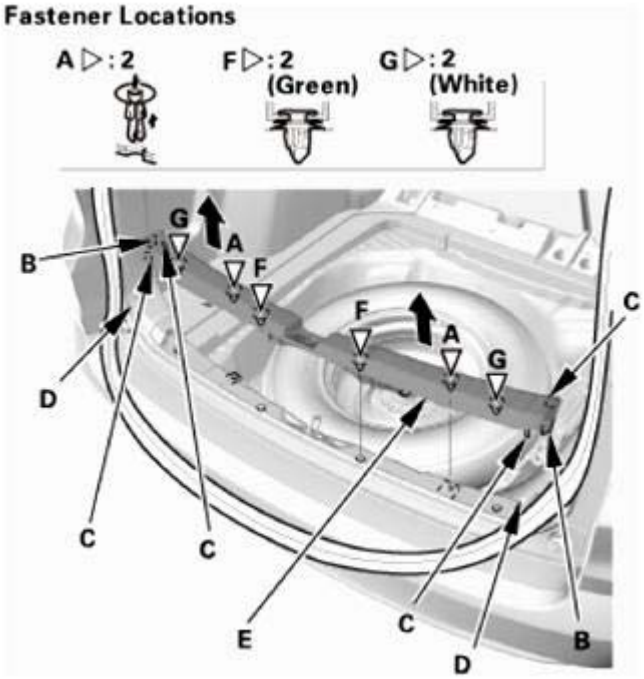

Fig. 228: Pulling Up Rear Trim Panel
Courtesy of AMERICAN HONDA MOTOR CO., INC.

GETtheMANUALS.org

10. Rear Side Trim Panel
    1. Carefully pry out on the upper hook (A) in the rear seat release lever cap (B) with the appropriate trim tool, then pull back the rear seat release lever cap to remove it.
    2. Remove the screws (C).

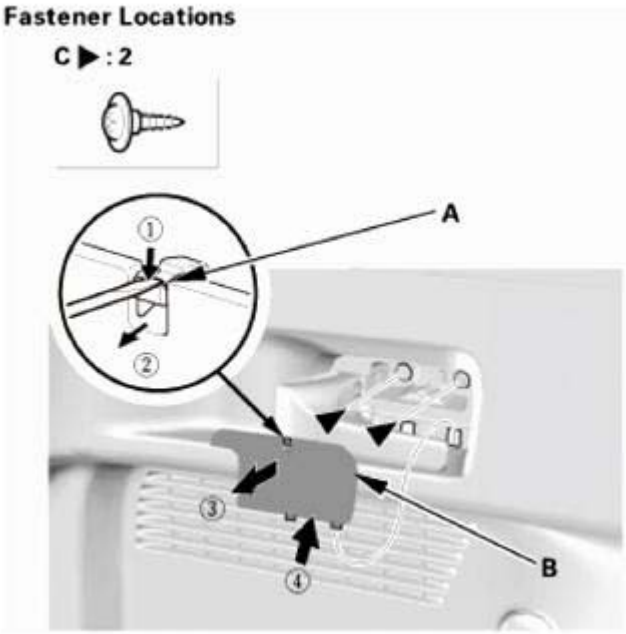

Fig. 229: Prying Out On Upper Hook
Courtesy of AMERICAN HONDA MOTOR CO., INC.

3. Push in the center pin (A), then remove the trunk hook (B).

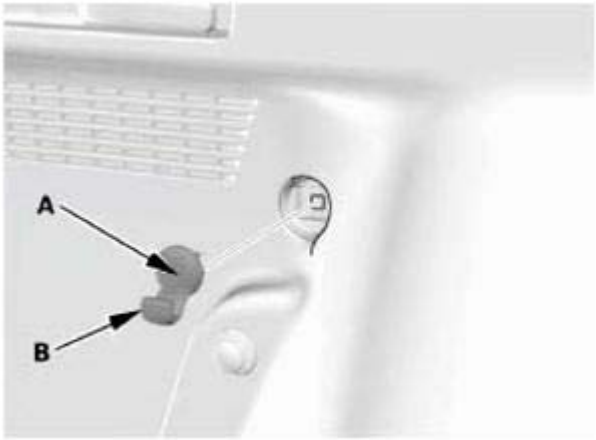

Fig. 230: Identifying Center Pin And Trunk Hook
Courtesy of AMERICAN HONDA MOTOR CO., INC.

4. Remove the bolt (A), then remove the tie-down hook (B).

GETtheMANUALS.org

Fig. 231: Identifying Tie-Down Hook And Bolt
Courtesy of AMERICAN HONDA MOTOR CO., INC.

5. Remove the clips (A, B).
6. Detach the hooks (C) and the tabs (D) from the quarter pillar trim (E), and pull out the rear side trim panel (F) by hand to detach the clips (G, H).

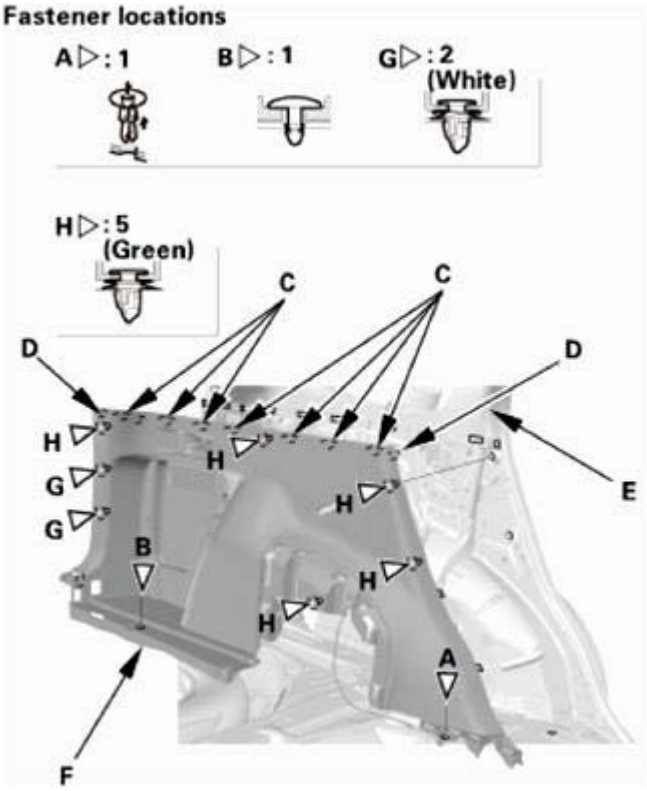

GETtheMANUALS.org

Fig. 232: Identifying Quarter Pillar Trim, Hooks, Clips And Tabs
Courtesy of AMERICAN HONDA MOTOR CO., INC.

7. Remove the rear seat release lever (A) from the rear side trim panel (B).

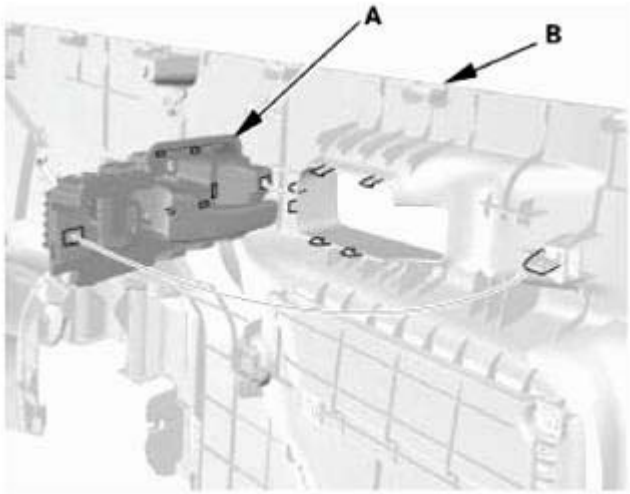

Fig. 233: Identifying Rear Seat Release Lever And Rear Side Trim Panel
Courtesy of AMERICAN HONDA MOTOR CO., INC.

8. Detach the rear seat release cable (A) from the clips of the rear side trim panel (B), then remove the rear side trim panel.

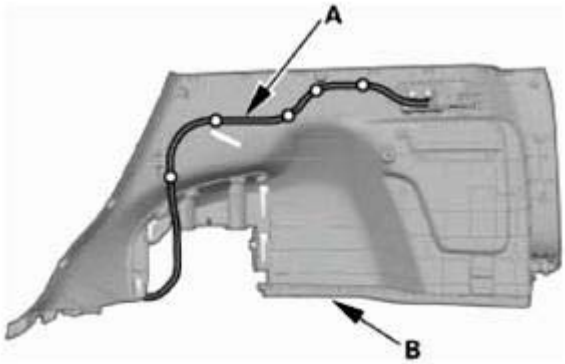

Fig. 234: Identifying Rear Seat Release Cable And Rear Side Trim Panel
Courtesy of AMERICAN HONDA MOTOR CO., INC.

INSTALLATION

SRS components are located in this area. Review the **SRS COMPONENT LOCATIONS** and the **PRECAUTIONS AND PROCEDURES** before doing repairs or service.

1. Rear Side Trim Panel
    1. Install the rear seat release cable (A) to the clips (B) of the rear side trim panel (C).

GETtheMANUALS.org

NOTE: **Align the marks (D) with the clips as shown.**

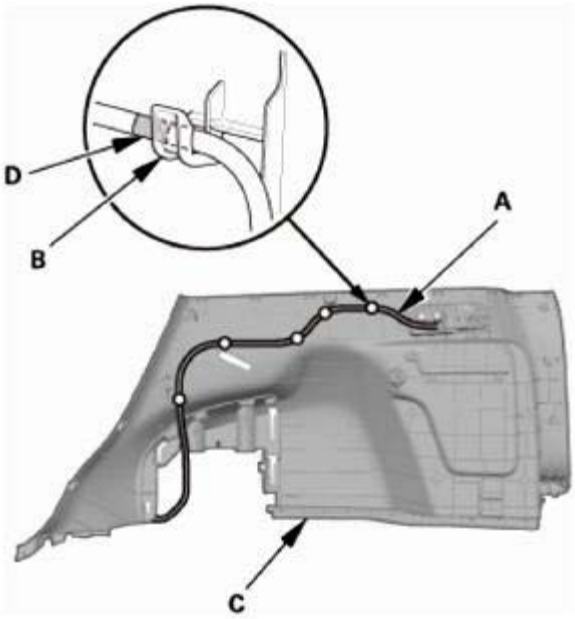

Fig. 235: Identifying Rear Seat Release Cable And Rear Side Trim Panel
Courtesy of AMERICAN HONDA MOTOR CO., INC.

2. Install the rear seat release lever (A) to the rear side trim panel (B).

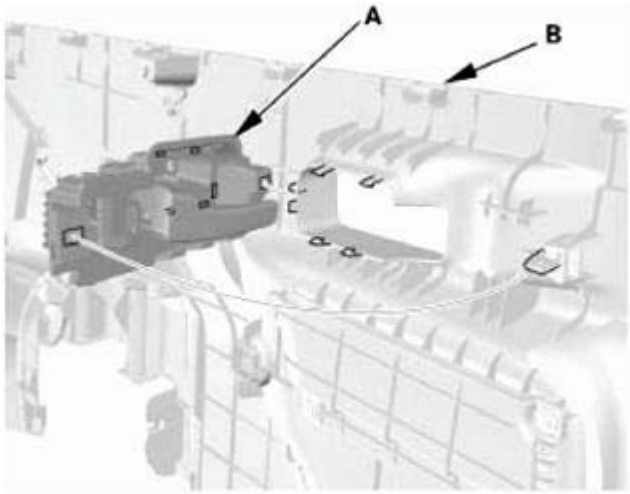

Fig. 236: Identifying Rear Seat Release Lever And Rear Side Trim Panel
Courtesy of AMERICAN HONDA MOTOR CO., INC.

3. Install the rear side trim panel (A). Make sure the hooks (B), the tabs (C), and the clips (D, E) snap into place securely.
4. Install the clips (F, G).

GETtheMANUALS.org

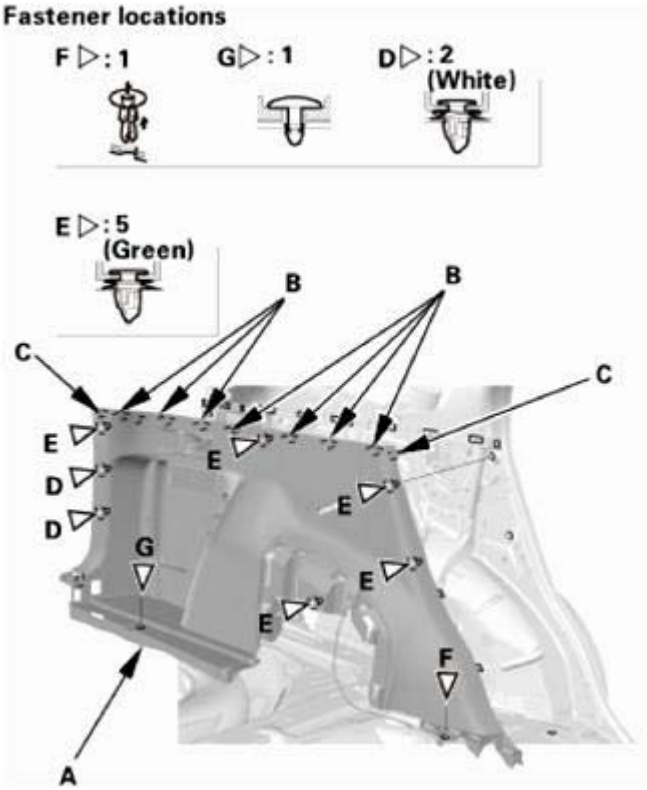

Fig. 237: Identifying Rear Side Trim Panel, Hooks, Tabs Abd Clips
Courtesy of AMERICAN HONDA MOTOR CO., INC.

5. Install the tie-down hook (A), then install the bolt (B).

Fig. 238: Identifying Tie-Down Hook And Bolt

GETtheMANUALS.org

Courtesy of AMERICAN HONDA MOTOR CO., INC.

6. Install the trunk hook (A).

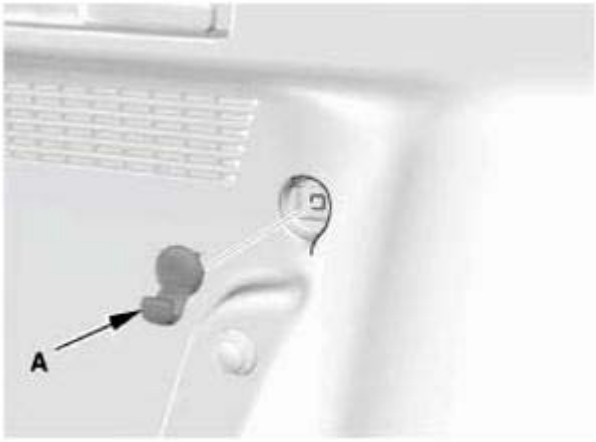

Fig. 239: Identifying Trunk Hook
Courtesy of AMERICAN HONDA MOTOR CO., INC.

7. Install the screws (A), then install the rear seat release lever cap (B). Make sure the upper hook (C) and the lower hooks (D) snap into place securely.

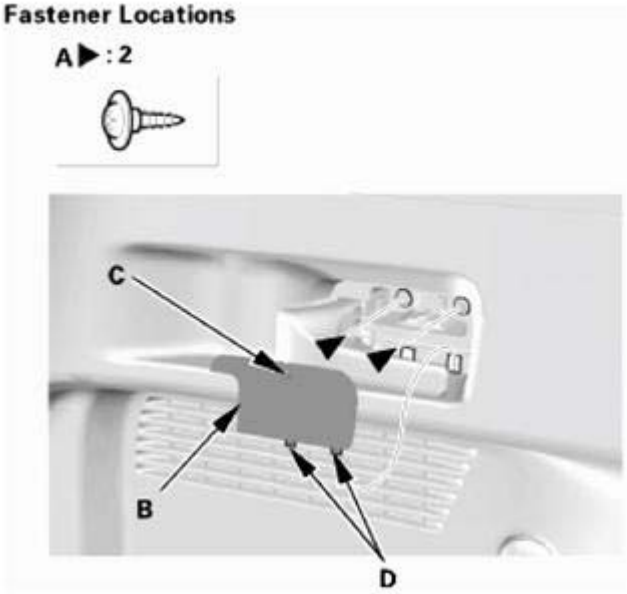

Fig. 240: Identifying Screws, Rear Seat Release Lever Cap, Upper Hook And Lower Hooks
Courtesy of AMERICAN HONDA MOTOR CO., INC.

2. Rear Trim Panel
    1. Install the rear trim panel (A). Make sure the clips (B, C), the hooks (D), and the tabs (E) snap into place securely.

GETtheMANUALS.org

2. Install the clips (F).

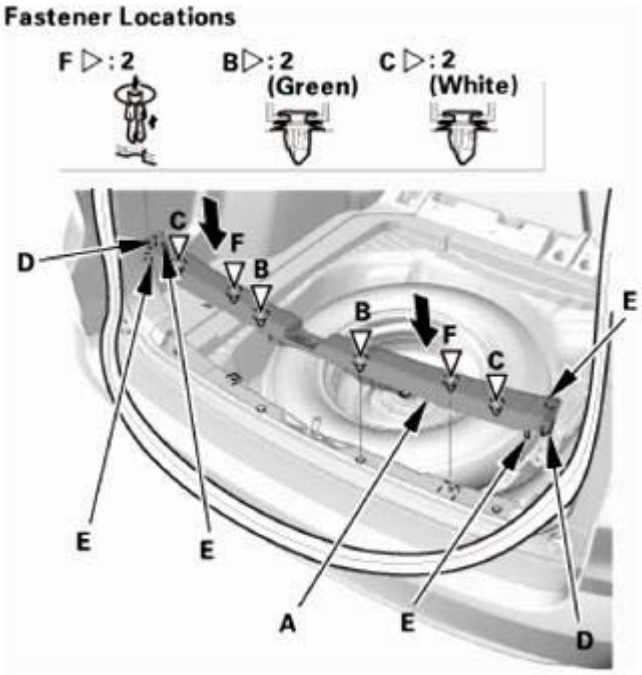

Fig. 241: Installing Rear Trim Panel
Courtesy of AMERICAN HONDA MOTOR CO., INC.

3. Tailgate Weatherstrip As Needed
    1. Locate the alignment mark (A) of the tailgate weatherstrip (B). Align the alignment mark (C) with the center of the lower area on the tailgate opening, then install the tailgate weatherstrip all the way around.

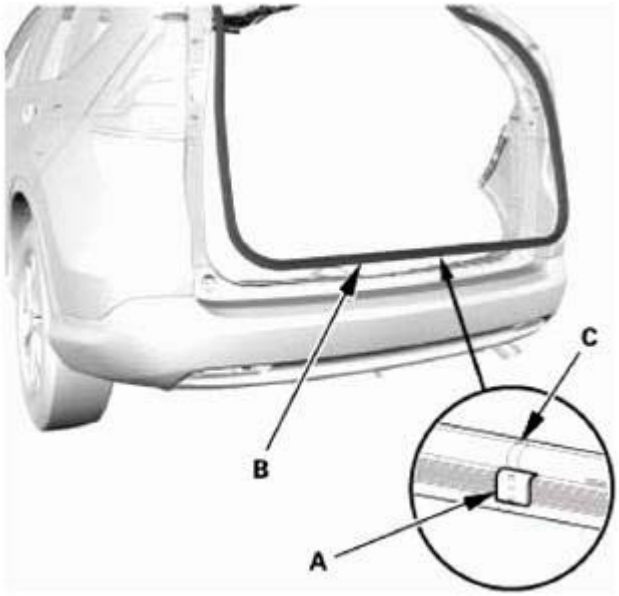

GETtheMANUALS.org

Fig. 242: Identifying Alignment Mark Of Tailgate Weatherstrip
Courtesy of AMERICAN HONDA MOTOR CO., INC.

4. Rear Carpet Trim
    1. Install the rear carpet trim (A). Make sure the clips (B) and the hooks (C) snap into place securely.

Left side

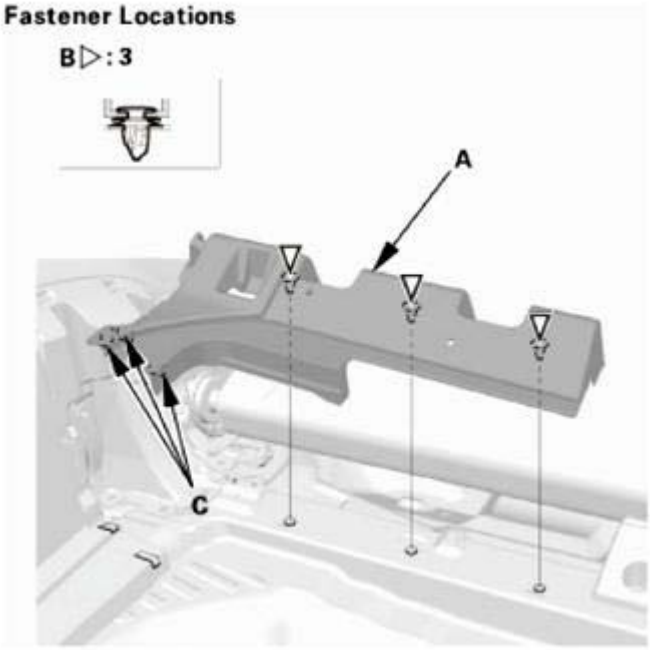

Fig. 243: Identifying Rear Carpet Trims, Clips And Hooks (Left Side)
Courtesy of AMERICAN HONDA MOTOR CO., INC.

Right side

GETtheMANUALS.org

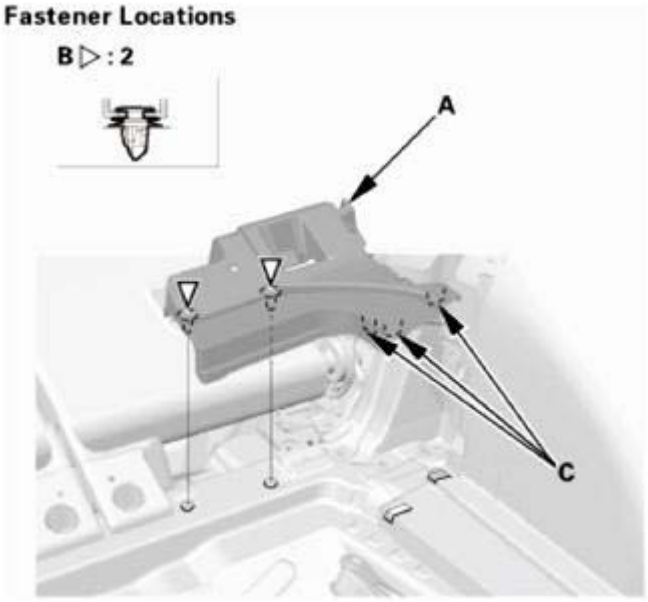

Fig. 244: Identifying Rear Carpet Trims, Clips And Hooks (Right Side)
Courtesy of AMERICAN HONDA MOTOR CO., INC.

2. Install the rear seat-back cover (A). Make sure the clips (B) snap into place securely.

Left side

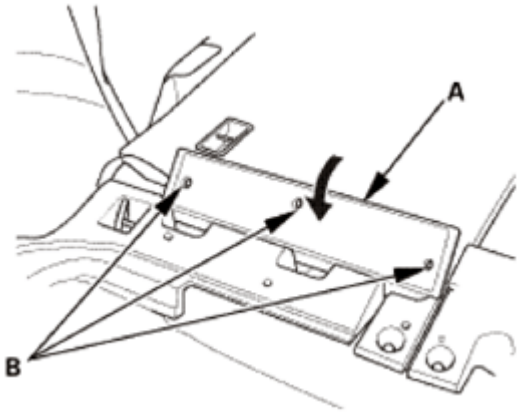

Fig. 245: Installing Rear Seat-Back Cover (Left Side)
Courtesy of AMERICAN HONDA MOTOR CO., INC.

Right side

GETtheMANUALS.org

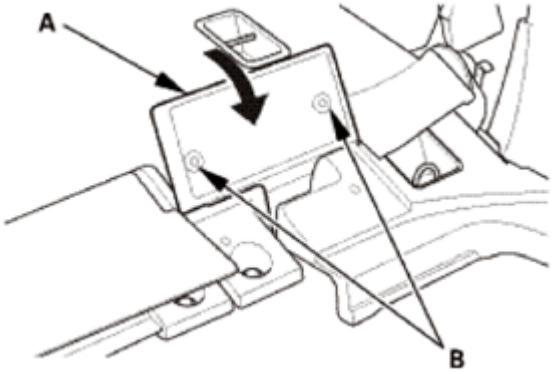

Fig. 246: Installing Rear Seat-Back Cover (Right Side)
Courtesy of AMERICAN HONDA MOTOR CO., INC.

5. Rear Damper Maintenance Cover
    1. Fold down the rear seat-back.
    2. Install the rear damper maintenance cover (A). Make sure the hooks (B) snap into place securely.

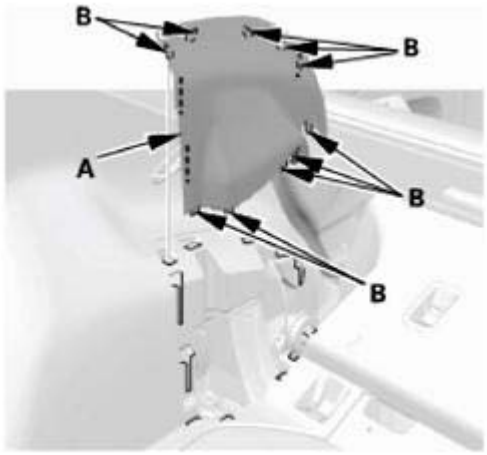

Fig. 247: Identifying Rear Damper Maintenance Cover And Hooks
Courtesy of AMERICAN HONDA MOTOR CO., INC.

6. Rear Seat Cushion Foot Cover
    1. Install the rear seat cushion foot covers (A). Make sure the clips (B) and the hooks (C) snap into place securely.

    Left side

GETtheMANUALS.org

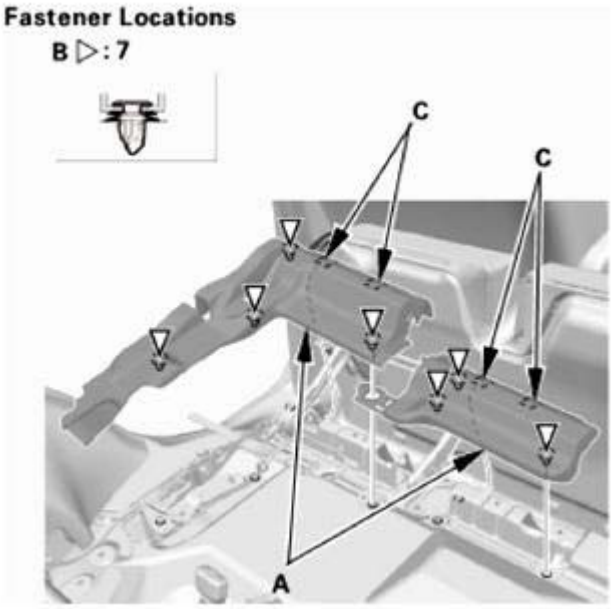

Fig. 248: Identifying Rear Seat Cushion Foot Covers, Clips And Hooks (Left Side)
Courtesy of AMERICAN HONDA MOTOR CO., INC.

Right side

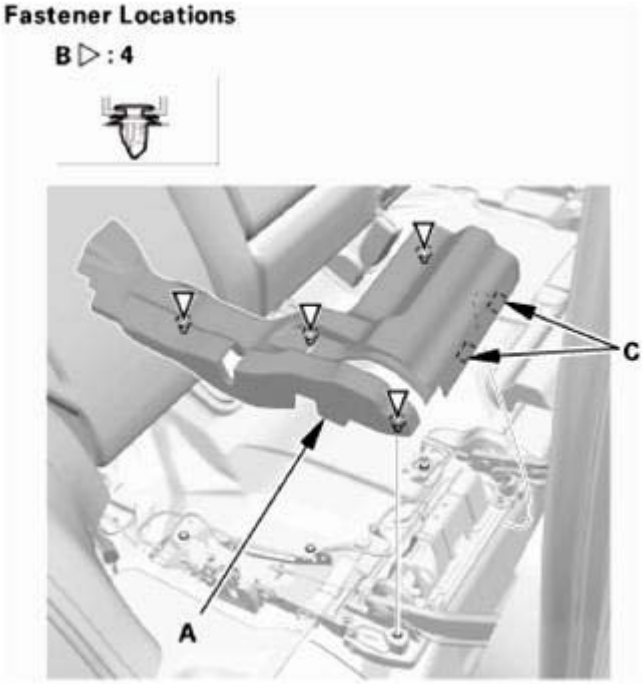

Fig. 249: Identifying Rear Seat Cushion Foot Covers, Clips And Hooks (Right Side)
Courtesy of AMERICAN HONDA MOTOR CO., INC.

7. Rear Door Opening Seal As Needed

GETtheMANUALS.org

1. Install the rear door opening seal (A). Make sure the seal is installed securely into the hooks (B).

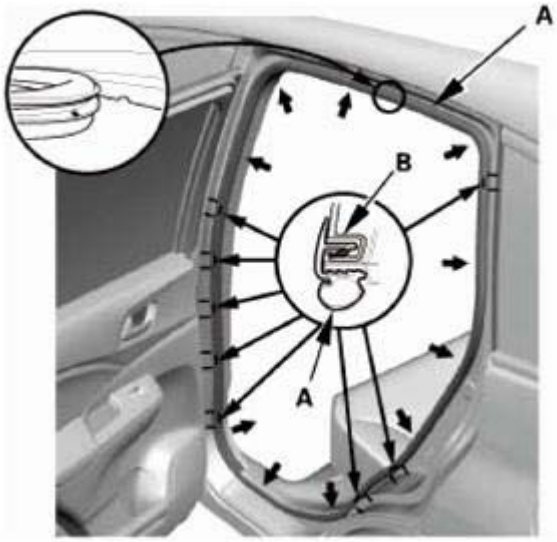

Fig. 250: Identifying Rear Door Opening Seal And Hooks
Courtesy of AMERICAN HONDA MOTOR CO., INC.

8. Rear Door Sill Trim
    1. Pull the release strap to fold down the rear seat, then lift-up and latch the rear seat-back in the upright position.
    2. Install the rear door inner sill trim (A). Make sure the clips (B, C), the hooks (D), and the tab (E) snap into place securely.

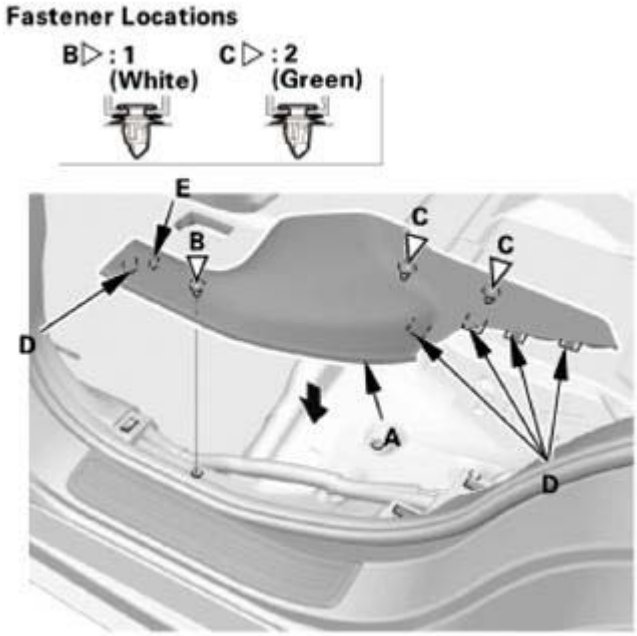

Fig. 251: Installing Rear Door Inner Sill Trim

GETtheMANUALS.org

Courtesy of AMERICAN HONDA MOTOR CO., INC.

9. Cargo Floor Cover
    1. Install the cargo floor cover (A).

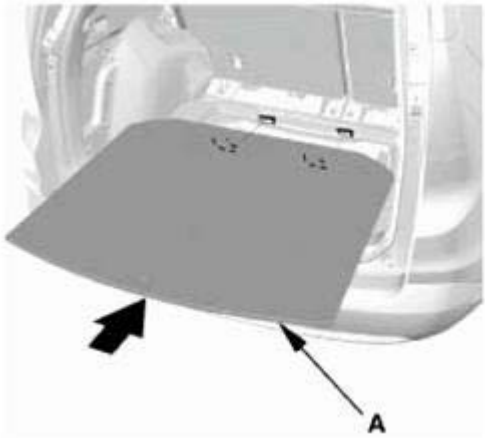

Fig. 252: Installing Cargo Floor Cover
Courtesy of AMERICAN HONDA MOTOR CO., INC.

10. Tonneau Cover (For Some Models)
    1. Install the tonneau cover (A).

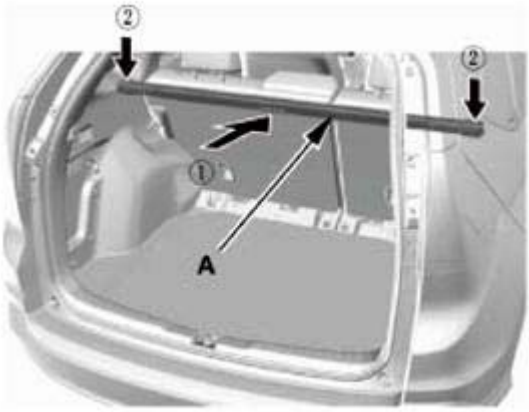

Fig. 253: Installing Tonneau Cover
Courtesy of AMERICAN HONDA MOTOR CO., INC.

INTERIOR TRIM REMOVAL AND INSTALLATION - DOOR AREAS

REMOVAL

1. Front Door Sill Trim
    1. Detach the hooks (A) and the tabs (B) from the kick panel (C) and the B-pillar lower trim (D), and pull up the front door inner sill trim (E) by hand to detach the clips (F), then remove the trim.

GETtheMANUALS.org

2. If necessary, detach the front door opening seal (G) as needed, then pull up the front door outer sill trim (H) by hand to detach the clips (I), then remove the trim.

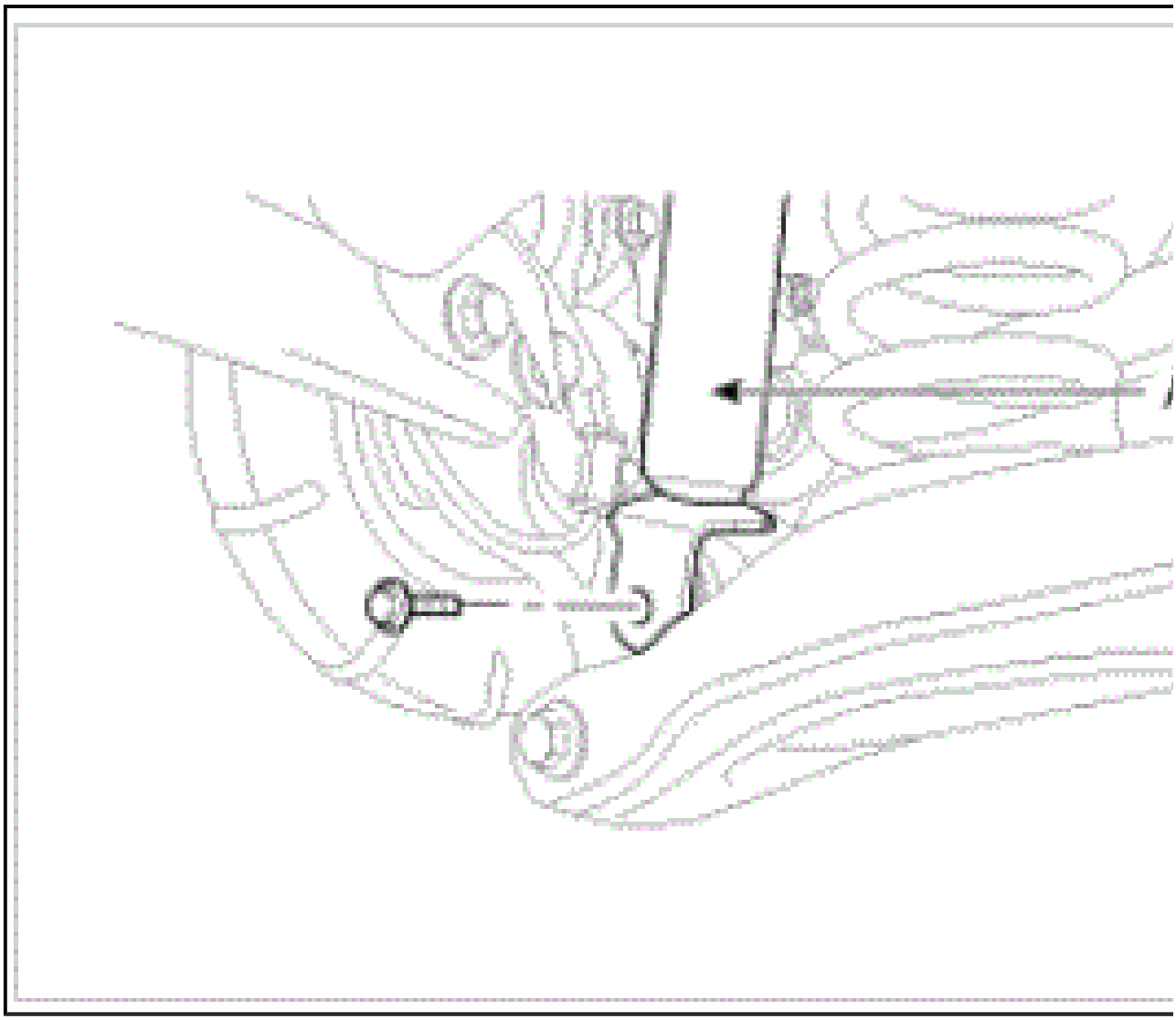

2. Kick Panel (For Removal/Installation)
    1. Pull out the front door opening seal (A) as needed from the kick panel hooks and the door opening flange.
    2. Pull back the kick panel by hand to detach the clips (B), then remove the driver's side kick panel (C) or the passenger's side kick panel (D).

GETtheMANUALS.org

Driver's side

Fastener Locations

B ▷ : 2

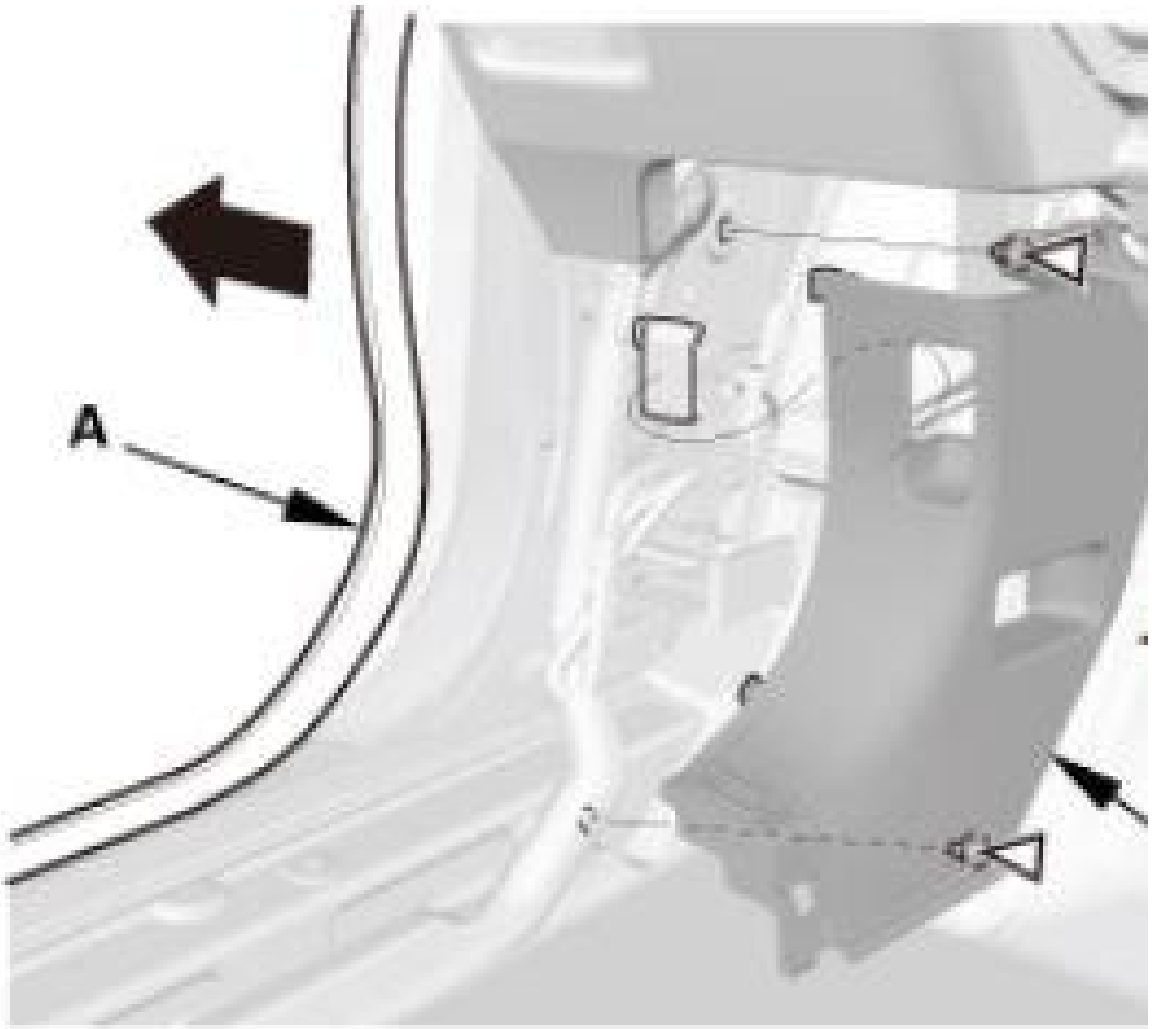

GETtheMANUALS.org

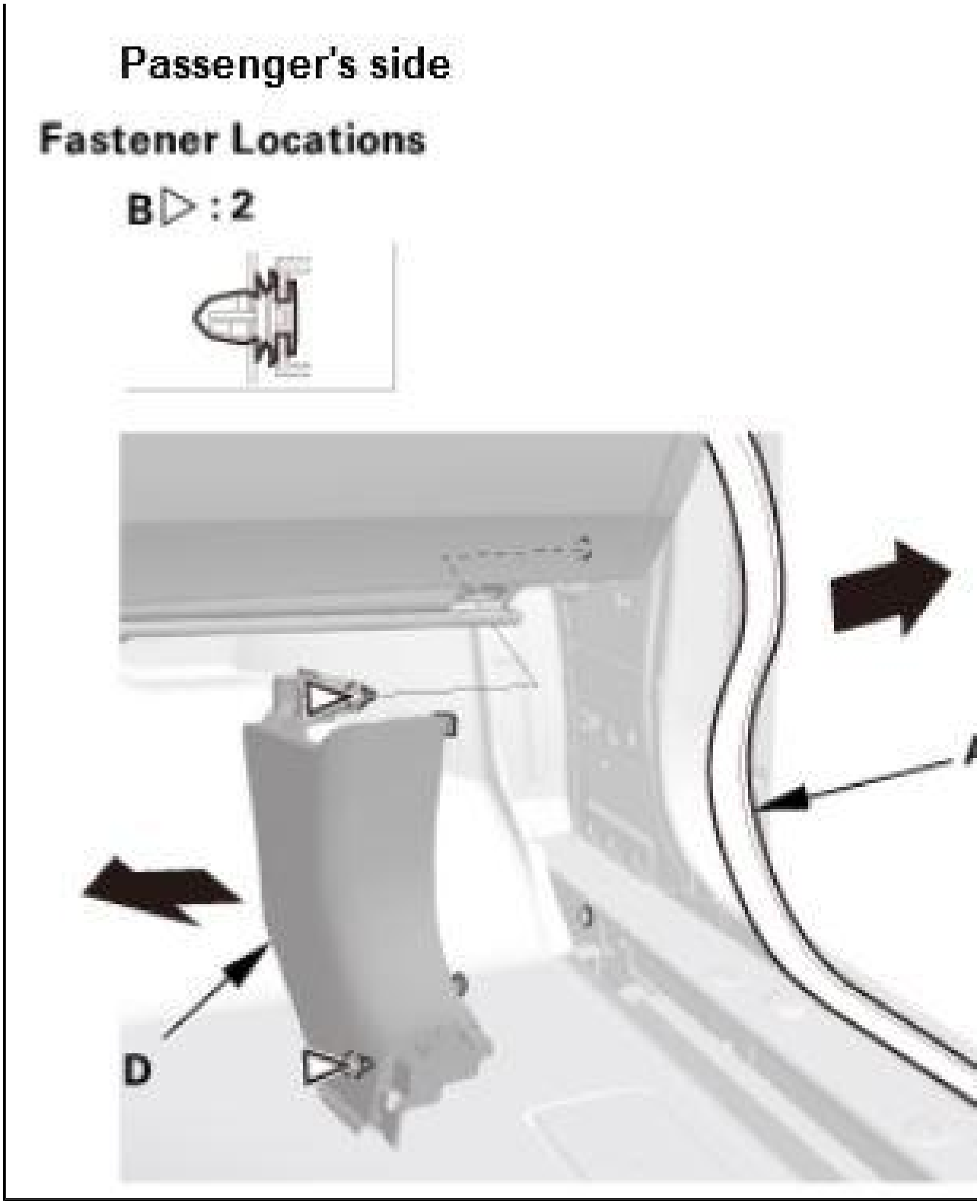

3. Front Door Opening Seal
    1. Pull out the front door opening seal (A) from the trim hooks (B) around the front door opening flange.

GETtheMANUALS.org

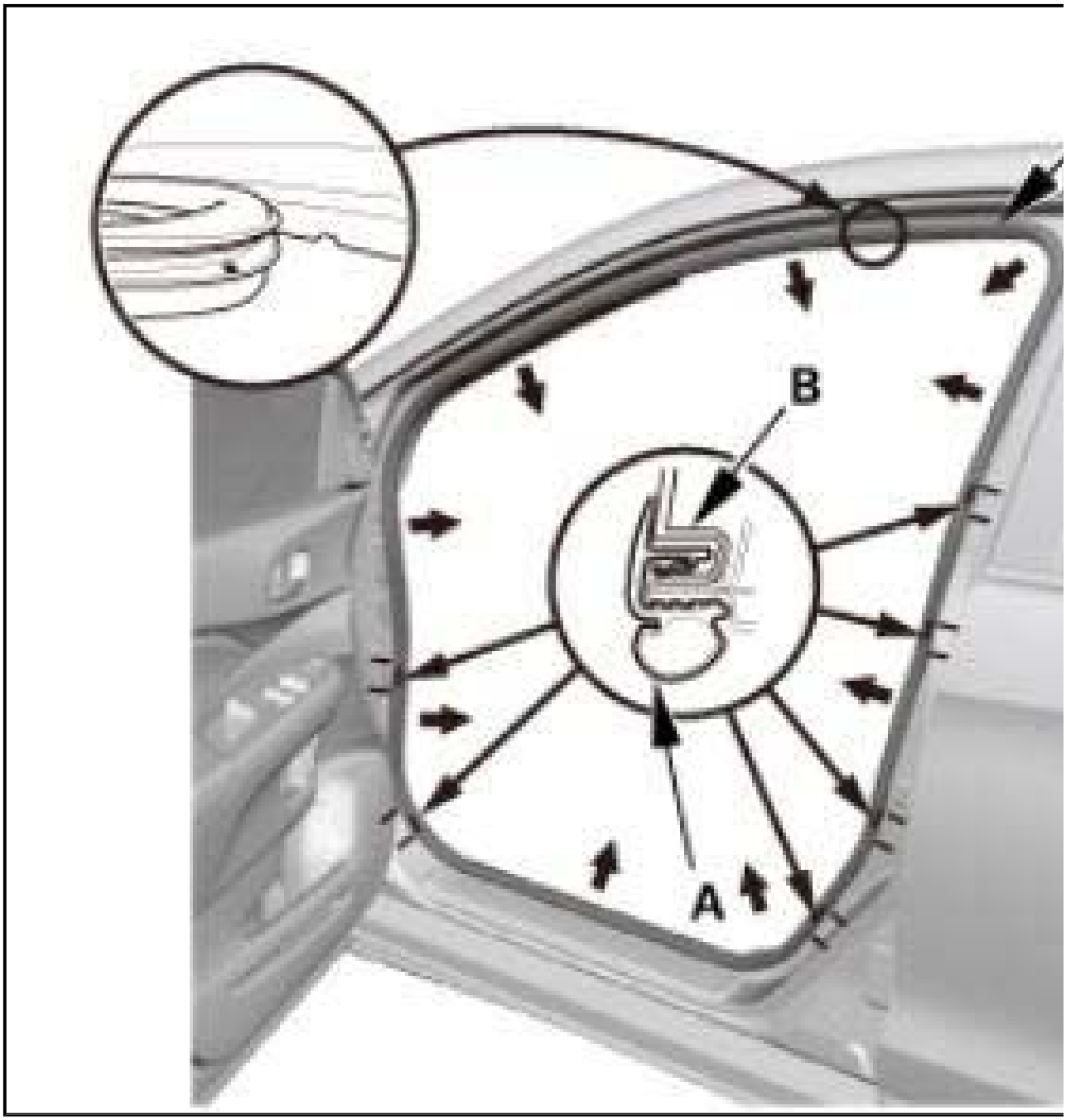

4. Rear Door Sill Trim
    1. Pull the release strap to fold down the rear seat, then lift-up and latch the rear seat-back in the upright position.
    2. Detach the hooks (A) and the tab (B) from the B-pillar lower trim (C) and the rear side trim panel (D), and pull up the rear door inner sill trim (E) by hand to detach the clips (F, G), then remove the trim.
    3. If necessary, detach the rear door opening seal (H) as needed, then pull up the rear door outer sill trim (I) by hand to detach the clips (J), then remove the trim.

GETtheMANUALS.org

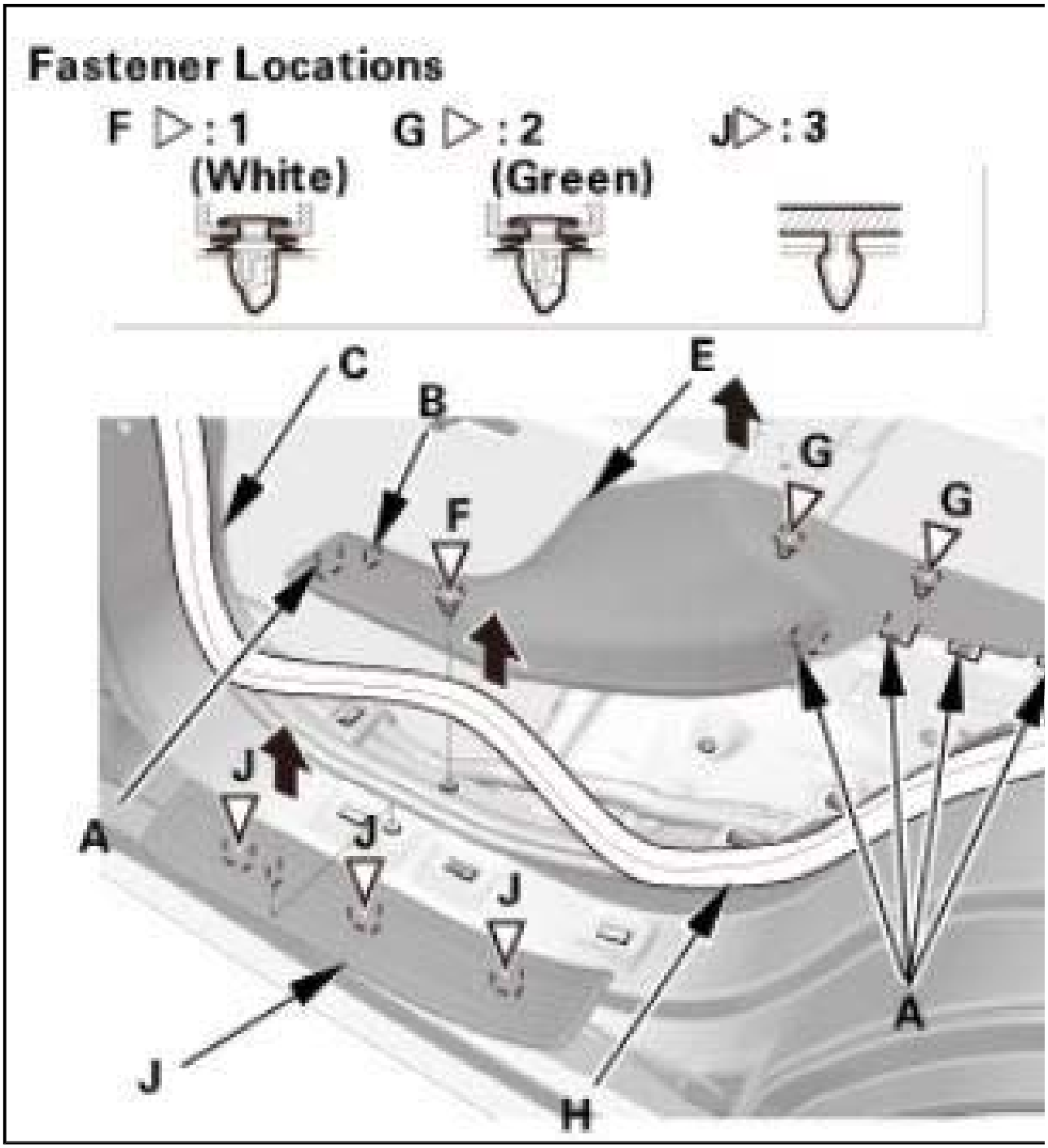

5. Rear Door Opening Seal
    1. Pull out the rear door opening seal (A) from the trim hooks (B) around the rear door opening flange, then remove the seal.

GETtheMANUALS.org

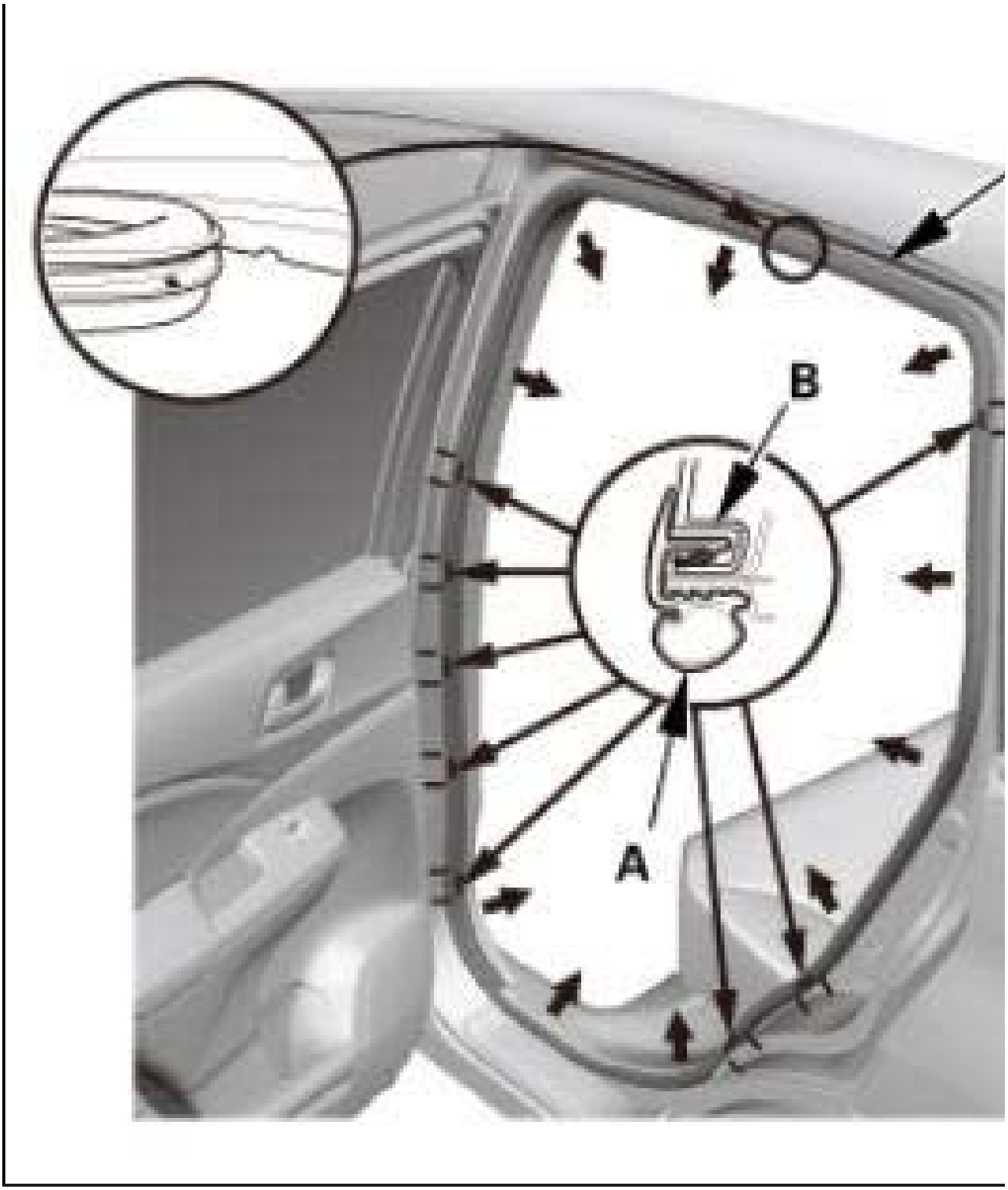

INSTALLATION

1. Rear Door Opening Seal
    1. Install the rear door opening seal (A). Make sure the seal is installed securely into the hooks (B).

GETtheMANUALS.org

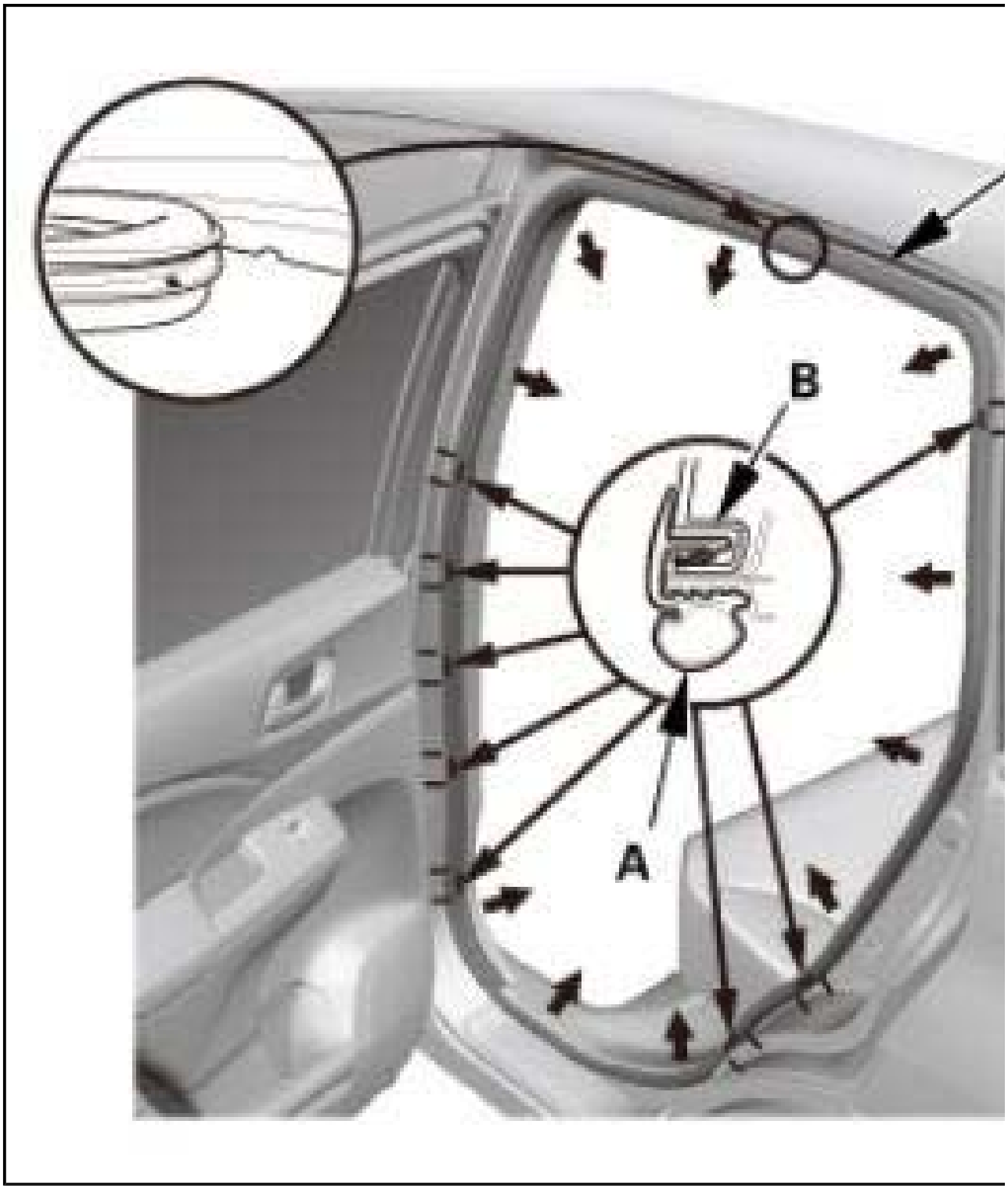

2. Rear Door Sill Trim
    1. Tip up the rear seat cushions.
    2. Install the rear door outer sill trim (A), then install the rear door opening seal (B).
    3. Install the rear door inner sill trim (C). Make sure the clips (D, E, and F), the tab (G), and the hooks

GETtheMANUALS.org

(H) snap into place securely.

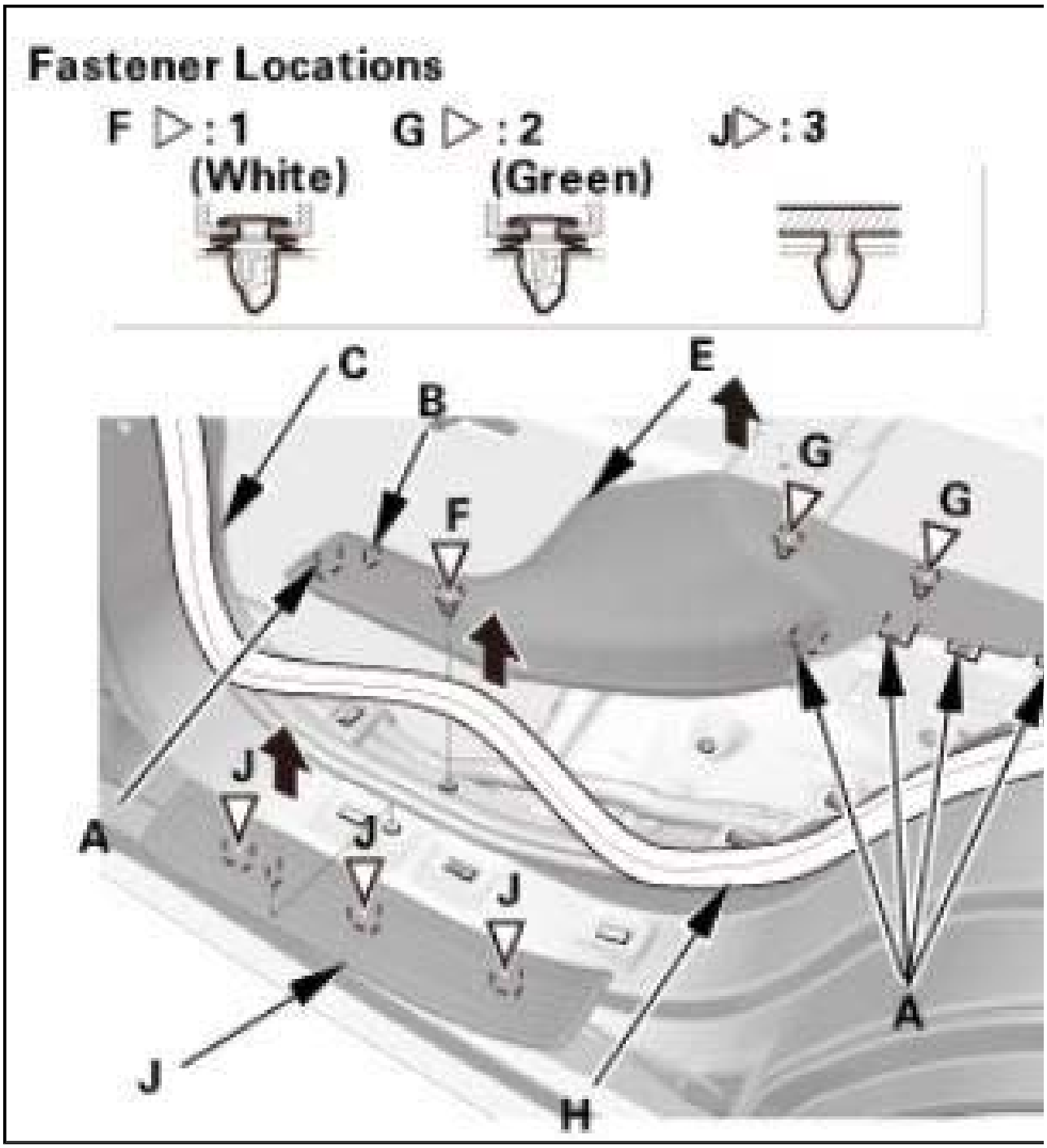

3. Front Door Opening Seal As Needed
    1. Install the front door opening seal (A). Make sure the seal is installed securely into the hooks (B).

GETtheMANUALS.org

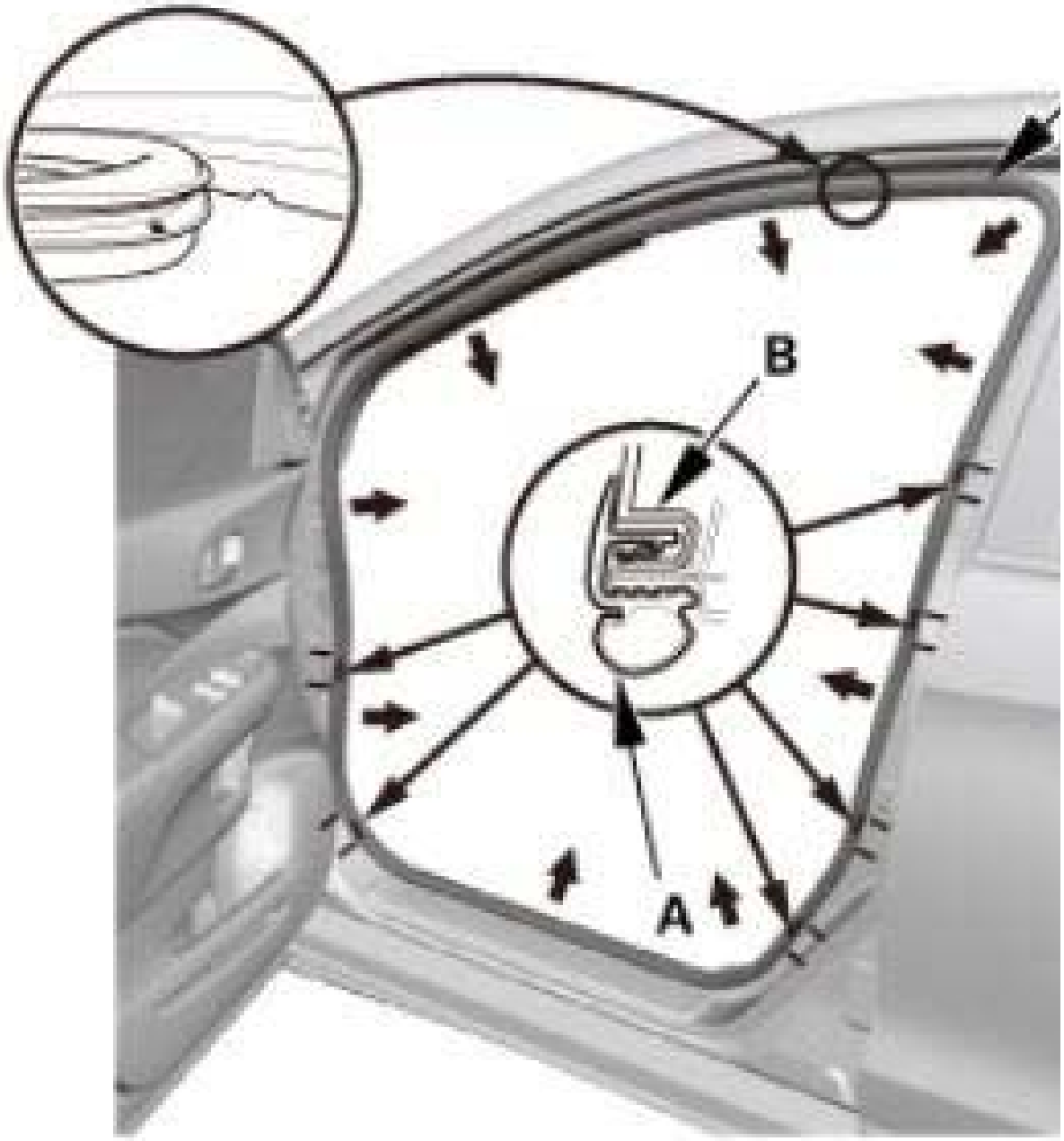

4. Kick Panel (For Removal/Installation)
    1. Install the driver's side kick panel (A) or the passenger's side kick panel (B). Make sure the clips (C) snap into place securely.
    2. Install the front door opening seal (D).

GETtheMANUALS.org

Driver's side

Fastener Locations

B ▷ : 2

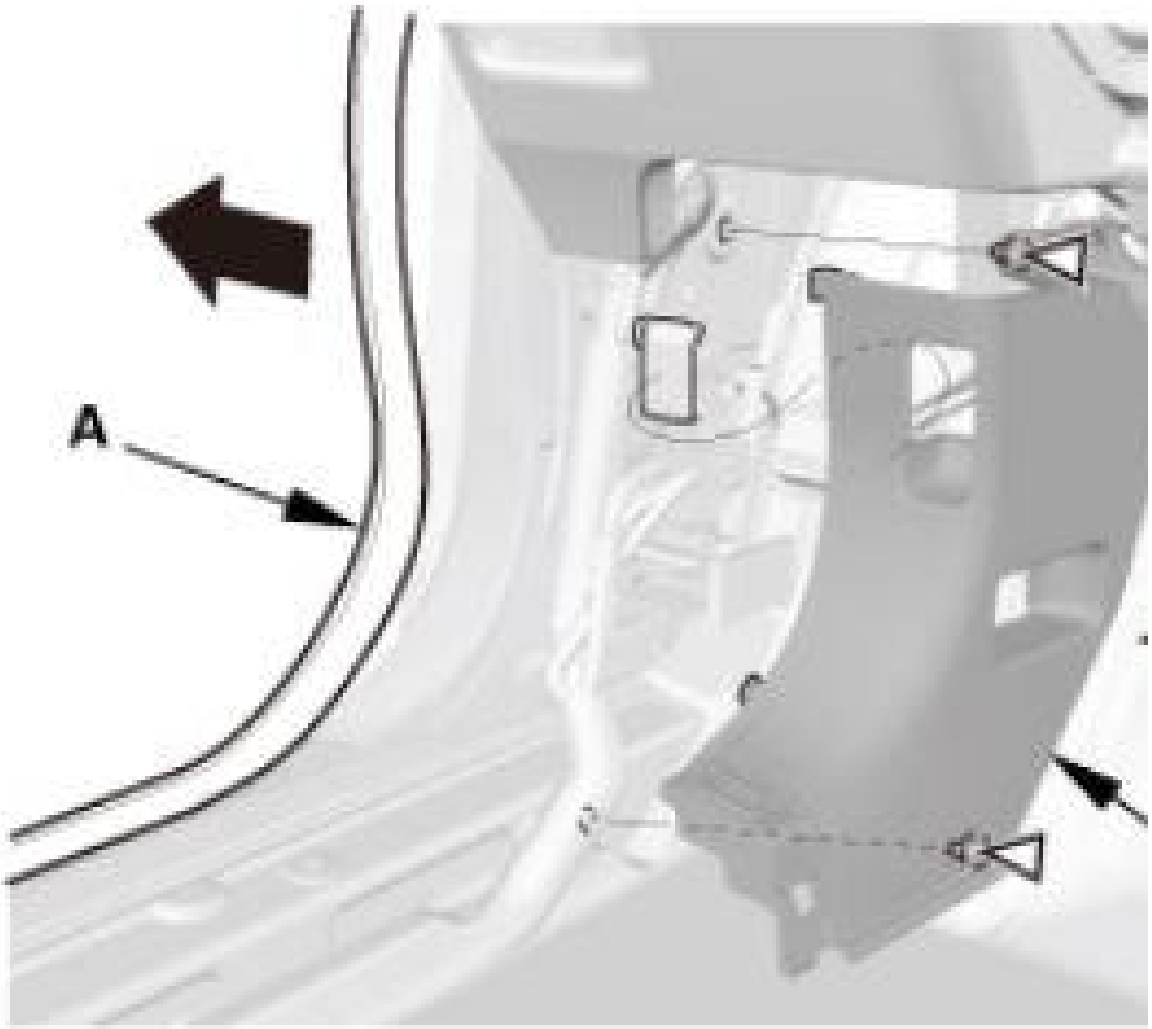

GETtheMANUALS.org

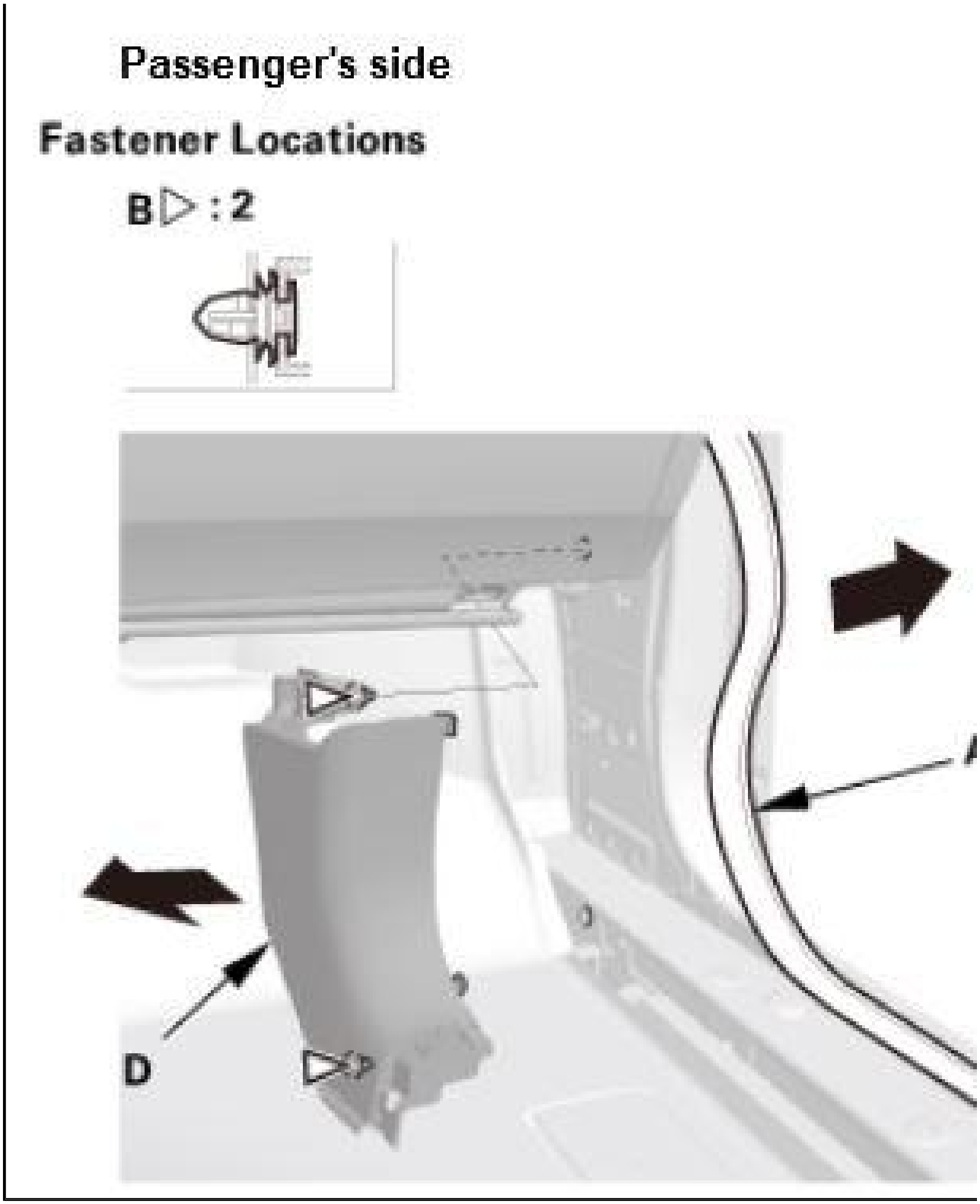

5. Front Door Sill Trim
    1. Install the front door outer sill trim (A), then install the front door opening seal (B).

GETtheMANUALS.org

2. Install the front door inner sill trim (C). Make sure the clips (D, E), the tabs (F), and the hooks (G) snap into place securely.

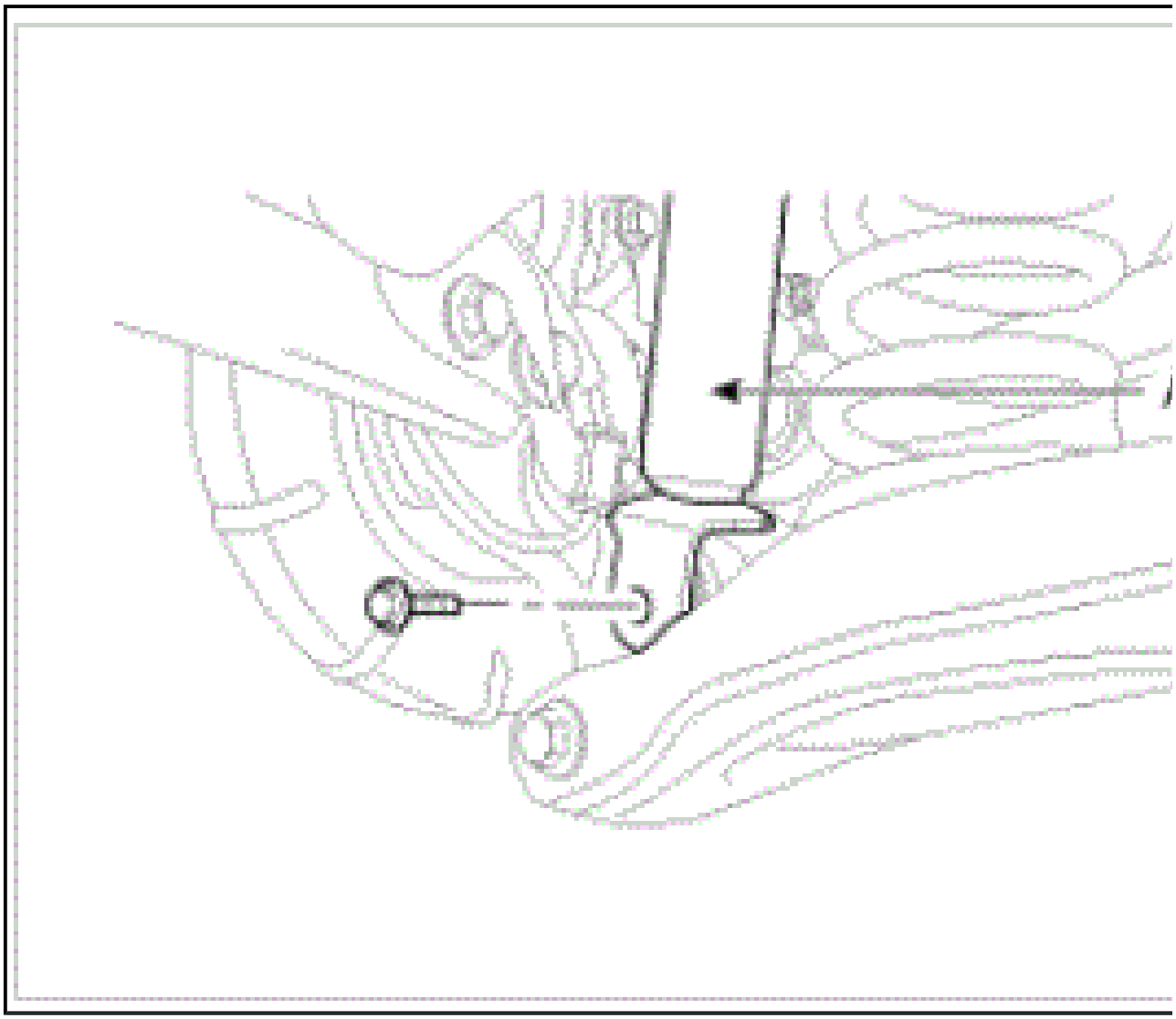

INTERIOR TRIM REMOVAL AND INSTALLATION - PILLAR AREAS

REMOVAL

SRS components are located in this area. Review the **SRS COMPONENT LOCATIONS** and the **PRECAUTIONS AND PROCEDURES** before doing repairs or service.

1. Front Door Opening Seal As Needed
    1. Pull out the front door opening seal (A) from the trim hooks (B) around the front door opening flange as needed.

GETtheMANUALS.org

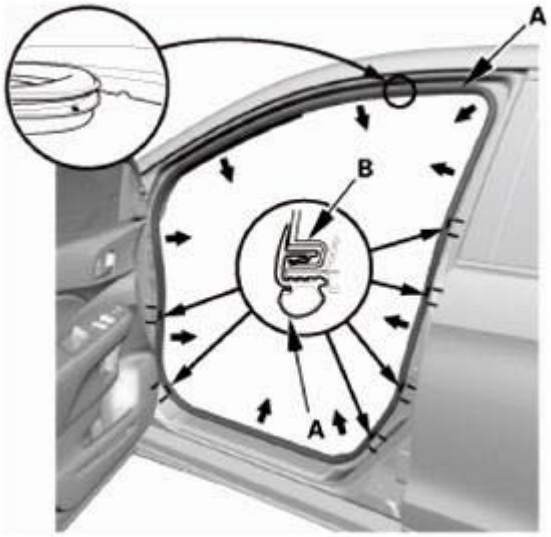

Fig. 254: Identifying Front Door Opening Seal And Trim Hooks
Courtesy of AMERICAN HONDA MOTOR CO., INC.

2. A-Pillar Trim
    1. Pull out the A-pillar trim (A) by hand to release the clips (B, C).

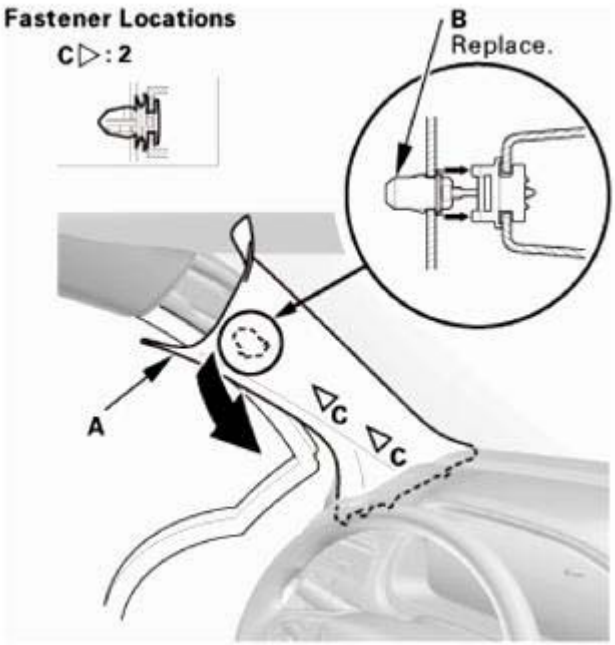

Fig. 255: Pulling Out A-Pillar Trim
Courtesy of AMERICAN HONDA MOTOR CO., INC.

    2. Put a shop towel (A) in the opening between the A-pillar trim (B) and the dashboard to prevent dropping the A-pillar clips.

GETtheMANUALS.org

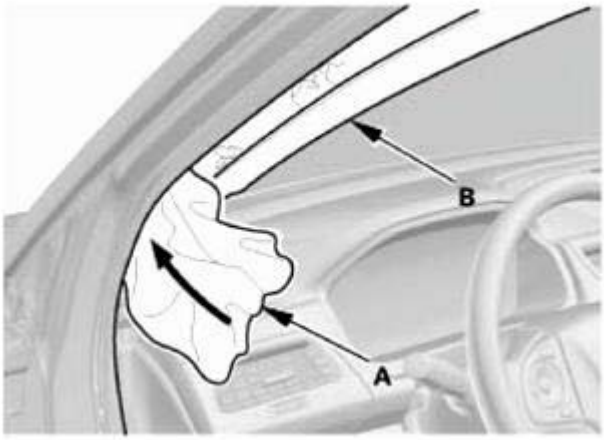

Fig. 256: Putting Shop Towel In Opening Between A-Pillar Trim (B) And Dashboard
Courtesy of AMERICAN HONDA MOTOR CO., INC.

3. Pull out and up on the A-pillar trim (A) to release it from the dashboard.

NOTE: The upper clip will stay in the body.

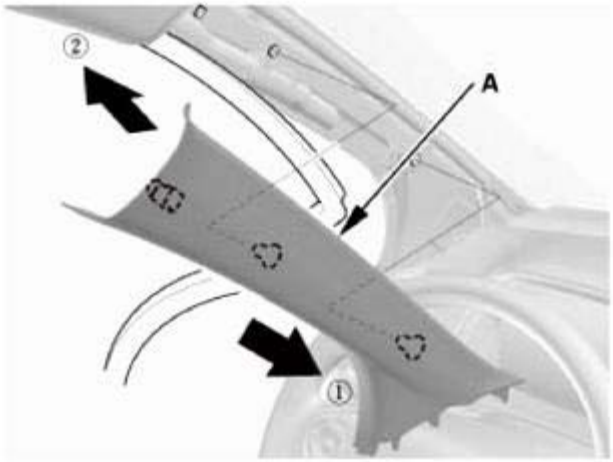

Fig. 257: Pulling Out And Up On A-Pillar Trim
Courtesy of AMERICAN HONDA MOTOR CO., INC.

4. Remove the upper clip (A) from the body.

GETtheMANUALS.org

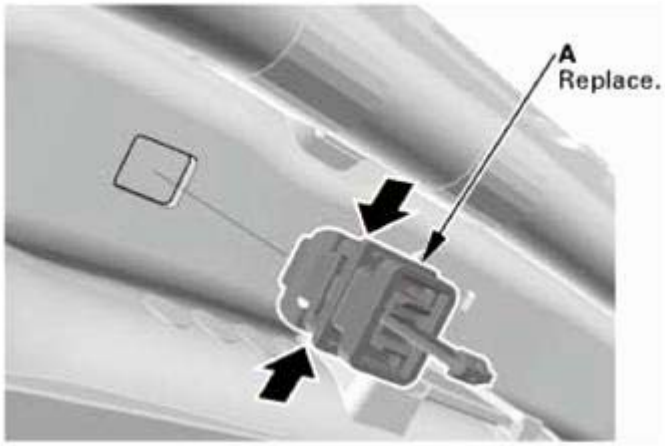

Fig. 258: Removing Upper Clip From Body
Courtesy of AMERICAN HONDA MOTOR CO., INC.

3. Front Door Sill Trim
    1. Detach the hooks (A) and the tabs (B) from the kick panel (C) and the B-pillar lower trim (D), and pull up the front door inner sill trim (E) by hand to detach the clips (F), then remove the trim.

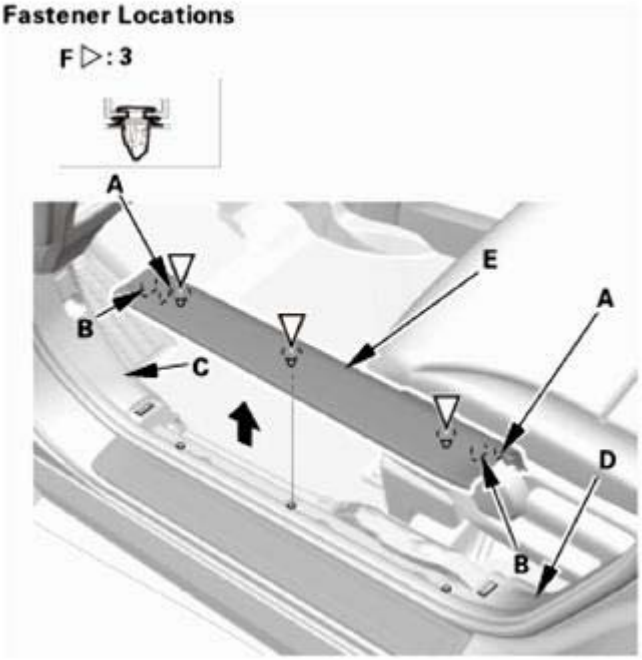

Fig. 259: Pulling Up Front Door Inner Sill Trim
Courtesy of AMERICAN HONDA MOTOR CO., INC.

4. Rear Door Sill Trim
    1. Pull the release strap to fold down the rear seat, then lift-up and latch the rear seat-back in the upright position.
    2. Detach the hooks (A) and the tab (B) from the B-pillar lower trim (C) and the rear side trim panel

GETtheMANUALS.org

(D), and pull up the rear door inner sill trim (E) by hand to detach the clips (F, G), then remove the trim.

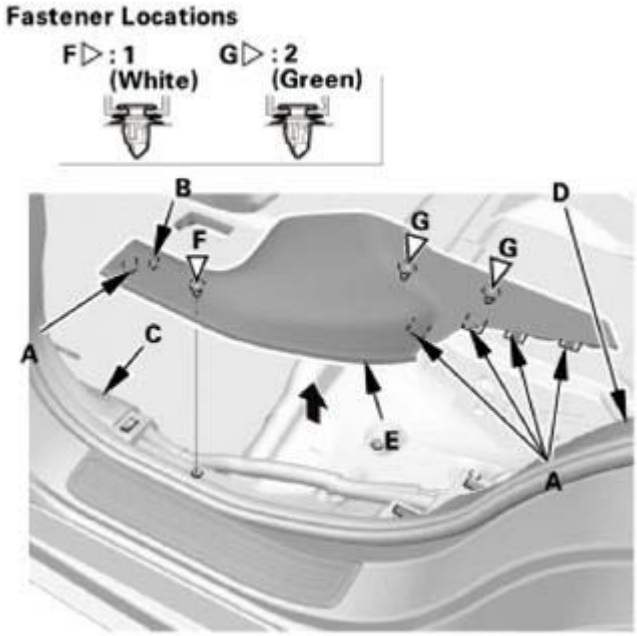

Fig. 260: Pulling Up Rear Door Inner Sill Trim
Courtesy of AMERICAN HONDA MOTOR CO., INC.

5. Front/Rear Door Opening Seals As Needed
    1. Pull out the door opening seals (A) from the trim hooks (B) around the door opening flange as needed.

Front

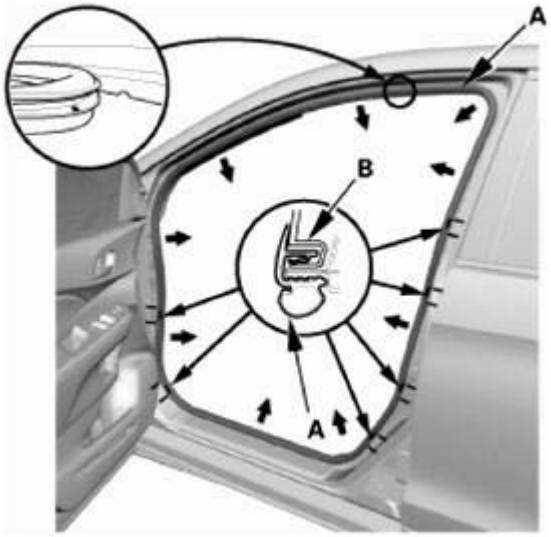

Fig. 261: Identifying Front Door Opening Seals And Trim Hooks

GETtheMANUALS.org

Courtesy of AMERICAN HONDA MOTOR CO., INC.

Rear

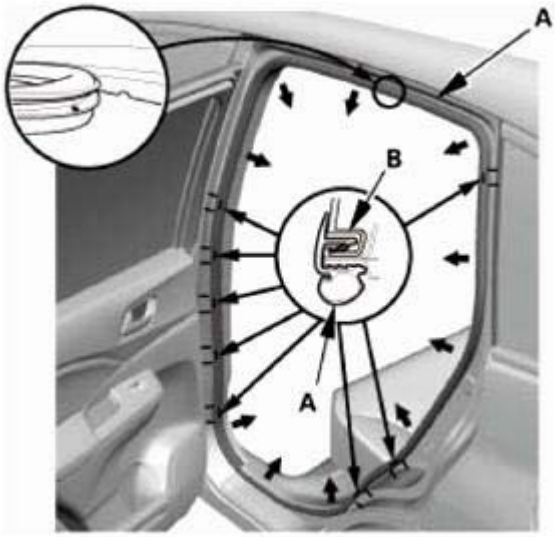

Fig. 262: Identifying Rear Door Opening Seals And Trim Hooks
Courtesy of AMERICAN HONDA MOTOR CO., INC.

6. B-Pillar Lower Trim
    1. Slide the front seat forward fully.
    2. Pull back the bottom portion of the B-pillar lower trim (A) by hand to detach the clips (B).
    3. Pull back the upper portion of the B-pillar lower trim to detach the upper hooks (C), then remove the B-pillar lower trim.

GETtheMANUALS.org

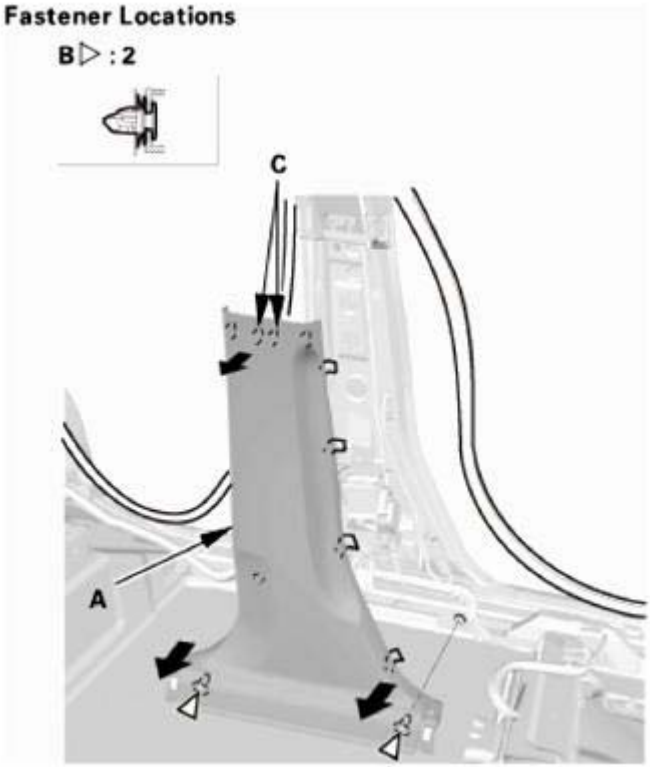

Fig. 263: Pulling Back Bottom Portion Of B-Pillar Lower Trim
Courtesy of AMERICAN HONDA MOTOR CO., INC.

7. Front Seat Belt Upper Anchor Bolt
    1. Remove the front seat belt shoulder anchor adjuster cap (A), then remove the front seat belt upper anchor bolt (B).

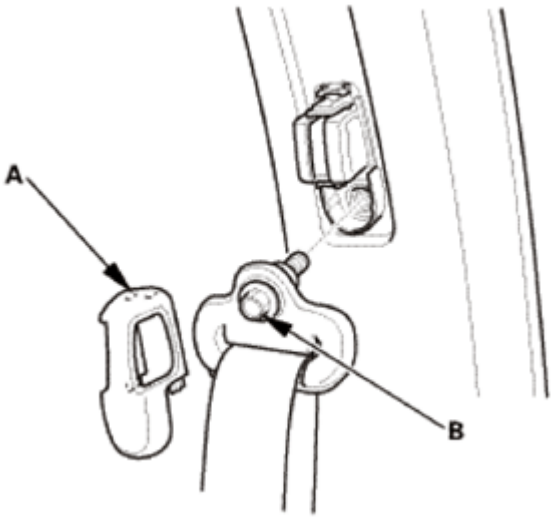

Fig. 264: Identifying Front Seat Belt Shoulder Anchor Adjuster Cap
Courtesy of AMERICAN HONDA MOTOR CO., INC.

GETtheMANUALS.org

8. B-Pillar Upper Trim
    1. Pull back the bottom portion of the B-pillar upper trim (A) by hand to detach the hooks (B). Pull down the trim to release the upper hook (C) from the hole (D) in the body, then remove the B-pillar upper trim.

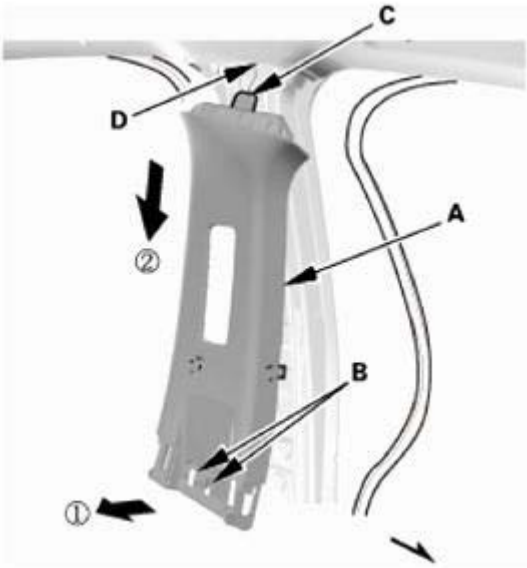

Fig. 265: Pulling Back Bottom Portion Of B-Pillar Upper Trim
Courtesy of AMERICAN HONDA MOTOR CO., INC.

9. Tonneau Cover (For Some Models)
    1. Remove the tonneau cover (A).

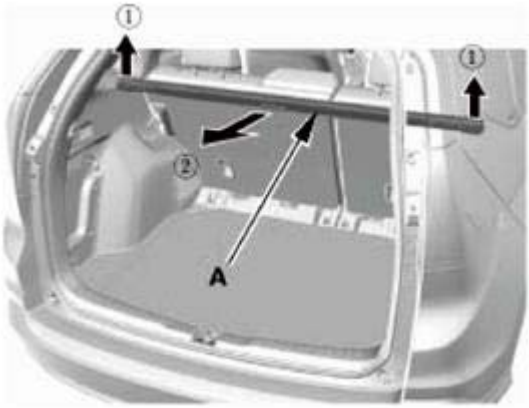

Fig. 266: Removing Tonneau Cover
Courtesy of AMERICAN HONDA MOTOR CO., INC.

10. Cargo Floor Cover
    1. Remove the cargo floor cover (A).

GETtheMANUALS.org

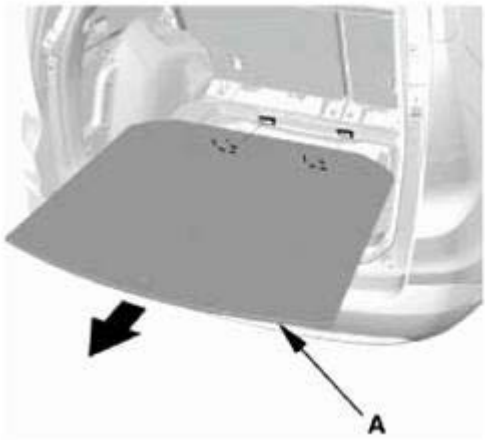

Fig. 267: Removing Cargo Floor Cover
Courtesy of AMERICAN HONDA MOTOR CO., INC.

11. Tailgate Weatherstrip As Needed
    1. Detach the tailgate weatherstrip (A) as needed.

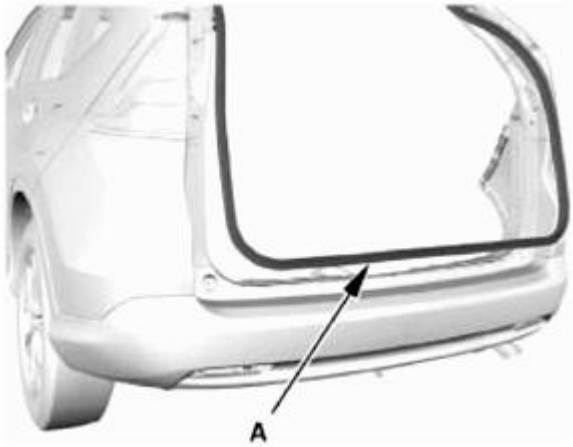

Fig. 268: Identifying Tailgate Weatherstrip
Courtesy of AMERICAN HONDA MOTOR CO., INC.

12. Rear Trim Panel
    1. Remove the clips (A).
    2. Detach the hooks (B) and the tabs (C) from the rear side trim panels (D), and pull up the rear trim panel (E) by hand to detach the clips (F, G), then remove the rear trim panel.

GETtheMANUALS.org

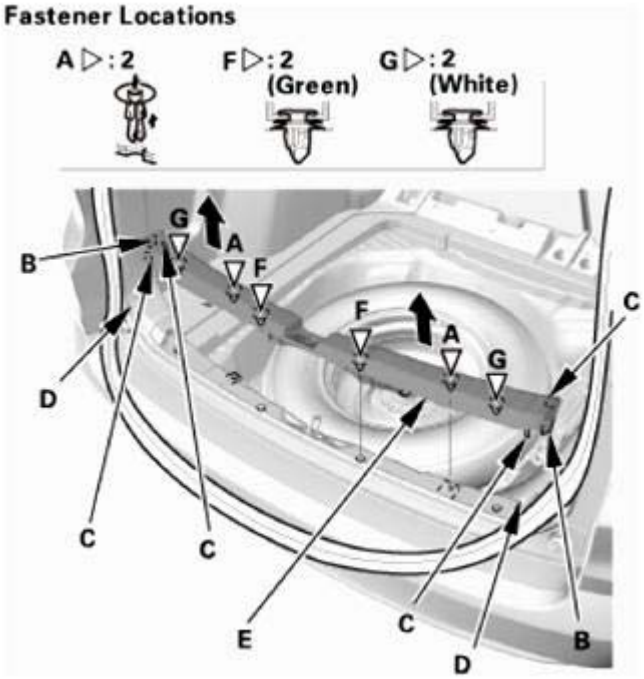

Fig. 269: Pulling Up Rear Trim Panel
Courtesy of AMERICAN HONDA MOTOR CO., INC.

13. Rear Damper Maintenance Cover
    1. Fold down the rear seat-back.
    2. Pull up the rear damper maintenance cover (A) by hand to detach the hooks (B), then remove the rear damper maintenance cover.

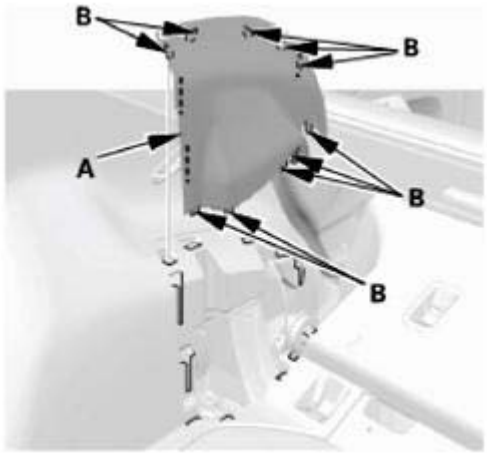

Fig. 270: Identifying Rear Damper Maintenance Cover And Hooks
Courtesy of AMERICAN HONDA MOTOR CO., INC.

14. Rear Carpet Trim
    1. Detach the clips (A), then tuck up the rear seat-back cover (B).

GETtheMANUALS.org

Left side

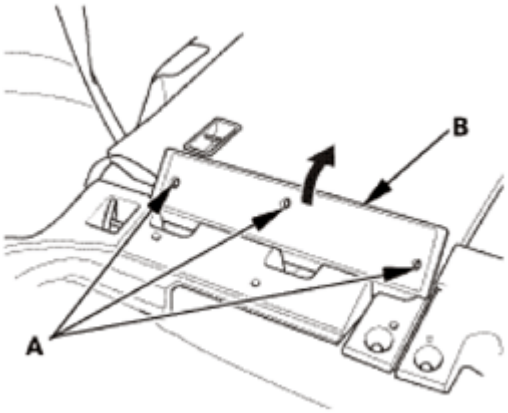

Fig. 271: Tucking Up Rear Seat-Back Cover (Left Side)
Courtesy of AMERICAN HONDA MOTOR CO., INC.

Right side

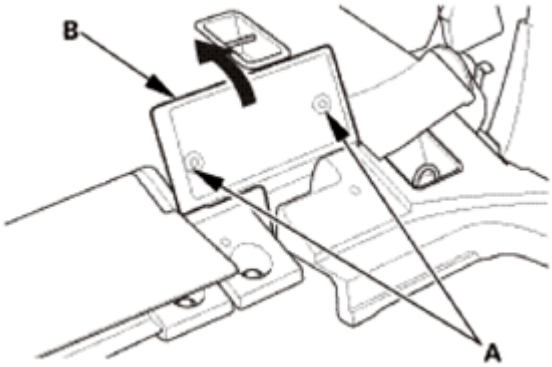

Fig. 272: Tucking Up Rear Seat-Back Cover (Right Side)
Courtesy of AMERICAN HONDA MOTOR CO., INC.

2. Detach the hooks (A) from the rear side trim panel (B), and pull up the rear carpet trim (C) by hand to detach the clips (D), then remove the rear carpet trims.

Left side

GETtheMANUALS.org

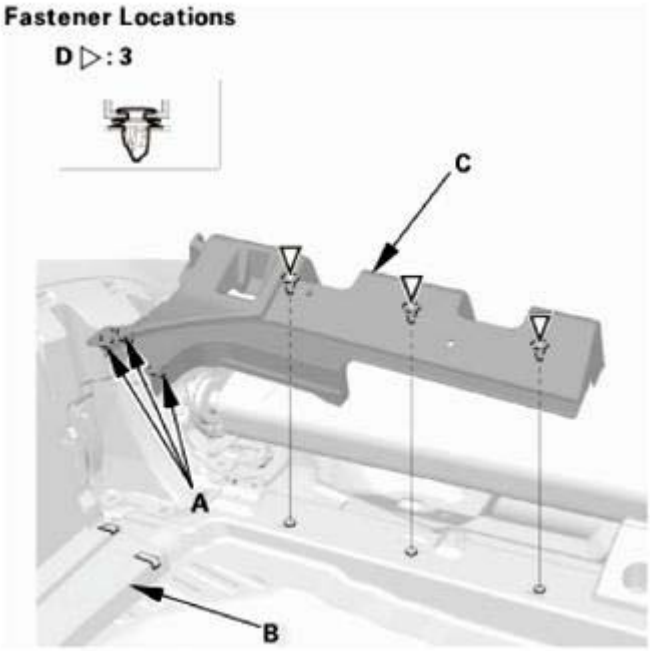

Fig. 273: Identifying Hooks, Rear Side Trim Panel And Clips (Left Side)
Courtesy of AMERICAN HONDA MOTOR CO., INC.

Right side

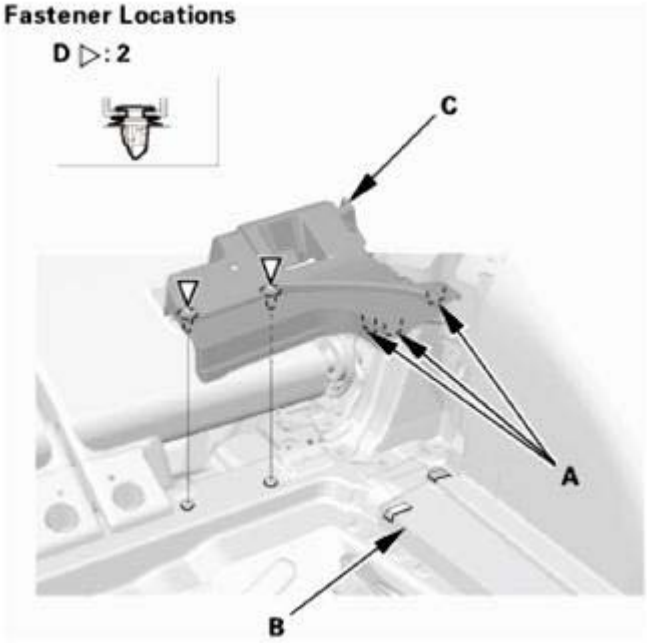

Fig. 274: Identifying Hooks, Rear Side Trim Panel And Clips (Right Side)
Courtesy of AMERICAN HONDA MOTOR CO., INC.

15. Rear Seat Foot Cover

GETtheMANUALS.org

1. Pull up the rear seat foot cover (A) by hand to detach the clips (B).
2. Detach the hooks (C), then remove the rear seat foot cover.

Left Side

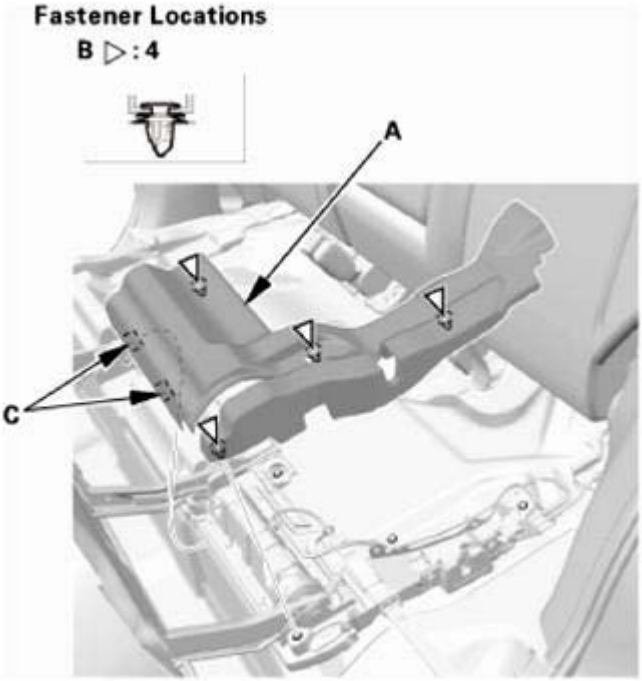

Fig. 275: Identifying Rear Seat Cushion Foot Cover And Hooks (Left Side)
Courtesy of AMERICAN HONDA MOTOR CO., INC.

Right Side

GETtheMANUALS.org

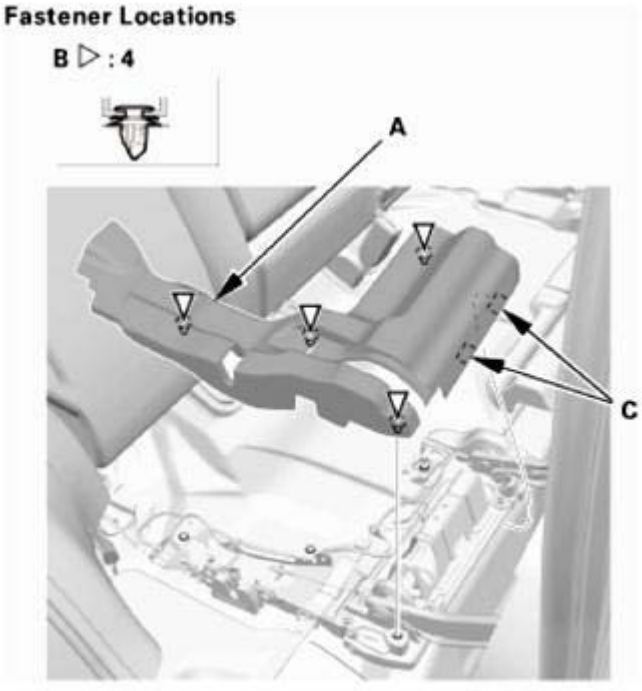

Fig. 276: Identifying Rear Seat Cushion Foot Cover And Hooks (Right Side)
Courtesy of AMERICAN HONDA MOTOR CO., INC.

16. Rear Seat Belt Lower Anchor Bolt
    1. Remove the rear seat belt lower anchor bolt (A).

Fig. 277: Removing Rear Seat Belt Lower Anchor Bolt
Courtesy of AMERICAN HONDA MOTOR CO., INC.

GETtheMANUALS.org

17. Rear Side Trim Panel
    1. Carefully pry out on the upper hook (A) in the rear seat release lever cap (B) with the appropriate trim tool, then pull back the rear seat release lever cap to remove it.
    2. Remove the screws (C).

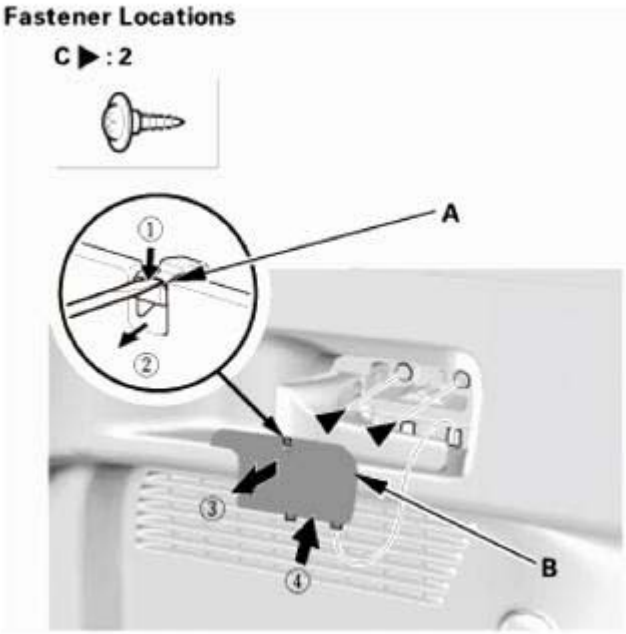

Fig. 278: Prying Out Upper Hook
Courtesy of AMERICAN HONDA MOTOR CO., INC.

3. Push in the center pin (A), then remove the trunk hook (B).

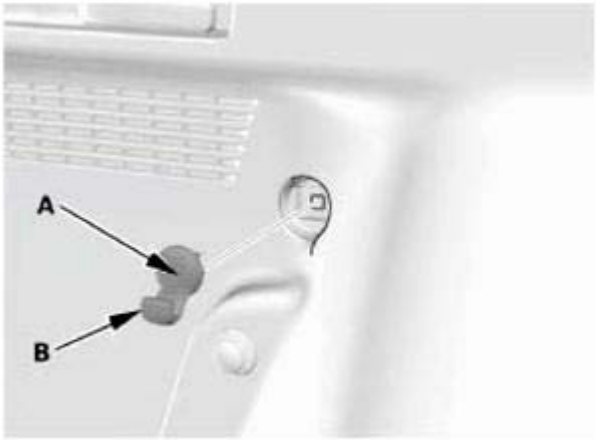

Fig. 279: Identifying Center Pin And Trunk Hook
Courtesy of AMERICAN HONDA MOTOR CO., INC.

4. Remove the bolt (A), then remove the tie-down hook (B).

GETtheMANUALS.org

Fig. 280: Identifying Tie-Down Hook And Bolt
Courtesy of AMERICAN HONDA MOTOR CO., INC.

5. Remove the clips (A, B).
6. Detach the hooks (C) and the tabs (D) from the quarter pillar trim (E), and pull out the rear side trim panel (F) by hand to detach the clips (G, H).

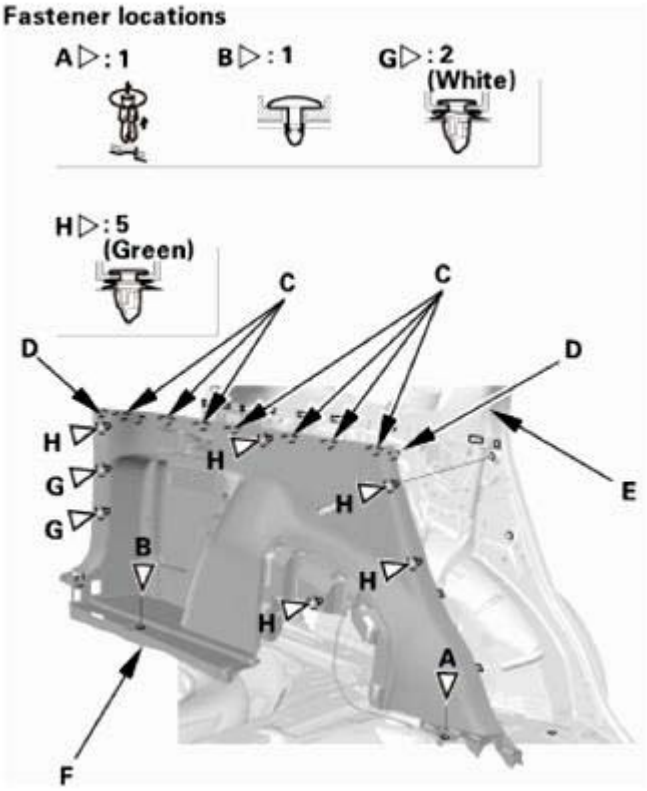

GETtheMANUALS.org

Fig. 281: Identifying Quarter Pillar Trim, Hooks, Clips And Tabs
Courtesy of AMERICAN HONDA MOTOR CO., INC.

7. Remove the rear seat release lever (A) from the rear side trim panel (B).

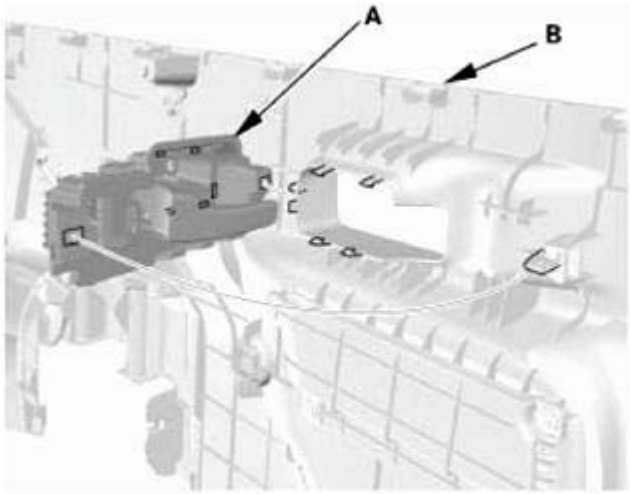

Fig. 282: Identifying Rear Seat Release Lever And Rear Side Trim Panel
Courtesy of AMERICAN HONDA MOTOR CO., INC.

8. Detach the rear seat release cable (A) from the clips of the rear side trim panel (B), then remove the rear side trim panel.

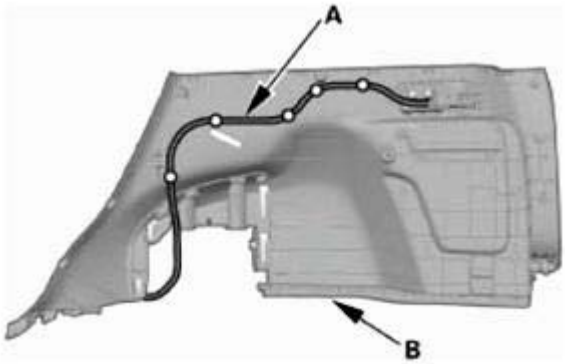

Fig. 283: Identifying Rear Seat Release Cable And Rear Side Trim Panel
Courtesy of AMERICAN HONDA MOTOR CO., INC.

18. Quarter Pillar Trim
    1. Pull out the quarter pillar trim (A) by hand to detach the clips (B, C, and D).
    2. Pass the rear seat belt lower anchor (E) out through the hole in the quarter pillar trim, then remove the quarter pillar trim.

GETtheMANUALS.org

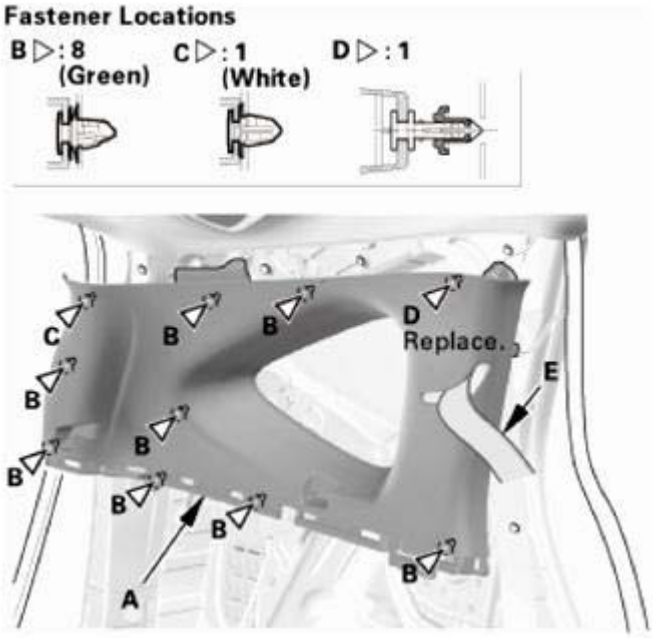

Fig. 284: Identifying Quarter Pillar Trim, Clips And Rear Seat Belt Lower Anchor
Courtesy of AMERICAN HONDA MOTOR CO., INC.

INSTALLATION

SRS components are located in this area. Review the **SRS COMPONENT LOCATIONS** and the **PRECAUTIONS AND PROCEDURES** before doing repairs or service.

1. Quarter Pillar Trim - Check
    1. If the side curtain airbag has deployed, replace the quarter pillar trim (A), along with the other parts listed for side curtain airbag deployment.
    2. If the side curtain airbag has not deployed, check the quarter pillar trim and note the following items:
        - To prevent the side curtain airbags from deploying improperly and possibly causing injury, inspect the quarter pillar trim and replace it with a new one if it has any of the following damage:
            - Any cracks, deformations, or stress-whitening in the quarter pillar trim
            - Any cracks or stress-whitened areas in the clip seating surfaces (B)
        - After checking and adjusting the overlap between the headliner and the quarter pillar trim, replace the upper clip (C) with a new one.
        - If the clips (D) are damaged or stress-whitened, replace them with new ones.

GETtheMANUALS.org

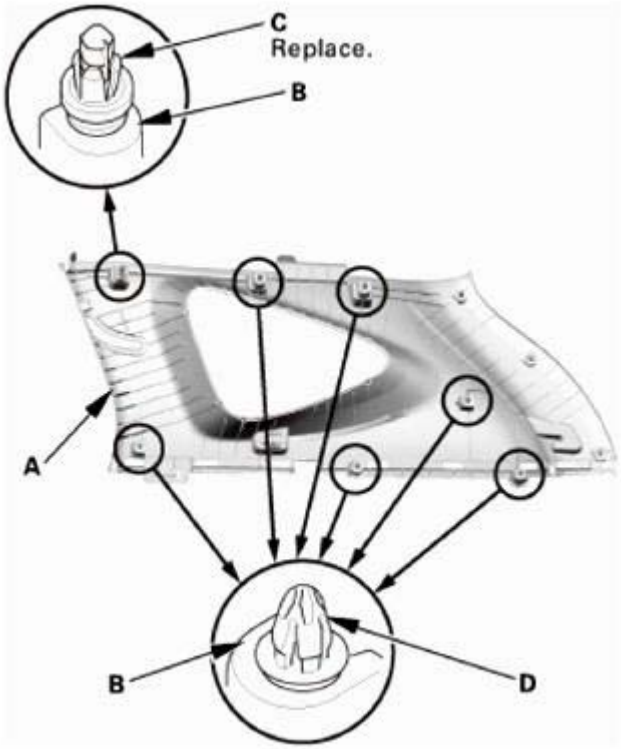

Fig. 285: Identifying quarter pillar trim
Courtesy of AMERICAN HONDA MOTOR CO., INC.

2. Headliner/Pillar Trim Overlap - Check

Checking and Adjusting the Headliner/Pillar Trim Overlap

To prevent the side curtain airbag from deploying and damaging the pillar trim (A-pillar trim, B-pillar trim, quarter pillar trim), the overlap between the headliner and pillar trim must be 8.0+0/-2.0 mm (0.31+0/-0.08 in). To check the overlap, do this:

1. Install the headliner (A) and the pillar trim (B).

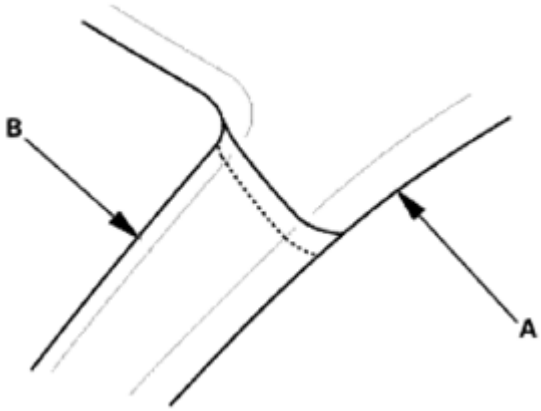

GETtheMANUALS.org

Fig. 286: Identifying Headliner And Pillar Trim
Courtesy of AMERICAN HONDA MOTOR CO., INC.

This illustration shows A-pillar .

2. Apply masking tape (A) to the headliner (B) to mark the upper edge of the pillar trim (C).

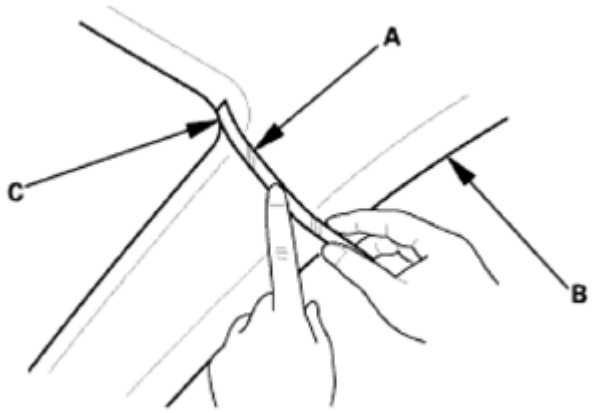

Fig. 287: Applying Masking Tape To Headliner
Courtesy of AMERICAN HONDA MOTOR CO., INC.

This illustration shows A-pillar .

3. Remove the pillar trim, and measure the headliner overlap.
   - If the overlap is 8.0+0/-2.0 mm (0.31+0/-0.08 in), remove the tape, and install the pillar trim.
   - If the overlap is more than 8.0 mm (0.31 in), go to step 4.

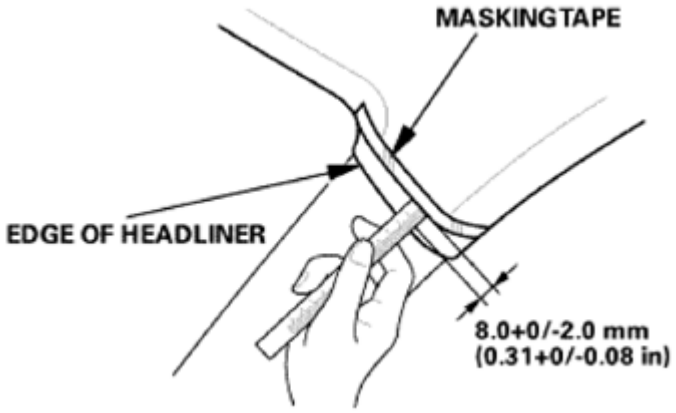

Fig. 288: Measuring Healiner Overlap
Courtesy of AMERICAN HONDA MOTOR CO., INC.

This illustration shows A-pillar .

4. Carefully trim the headliner with a utility knife, reducing the overlap to 8.0+0/-2.0 mm (0.31+0/-

GETtheMANUALS.org

0.08 in).

5. Remove the tape, and install the pillar trim.

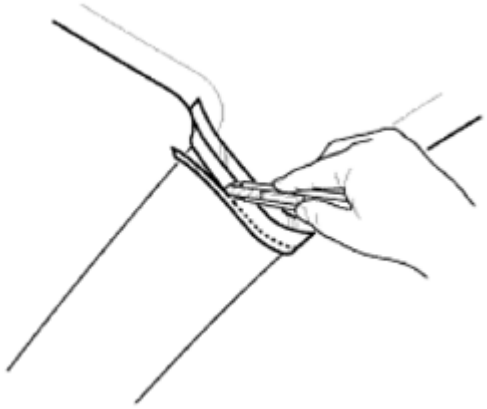

Fig. 289: Triming Headliner Using Utility Knife
Courtesy of AMERICAN HONDA MOTOR CO., INC.

This illustration shows A-pillar .

3. Quarter Pillar Trim
   1. Install a new clip (A) to the quarter pillar trim (B).

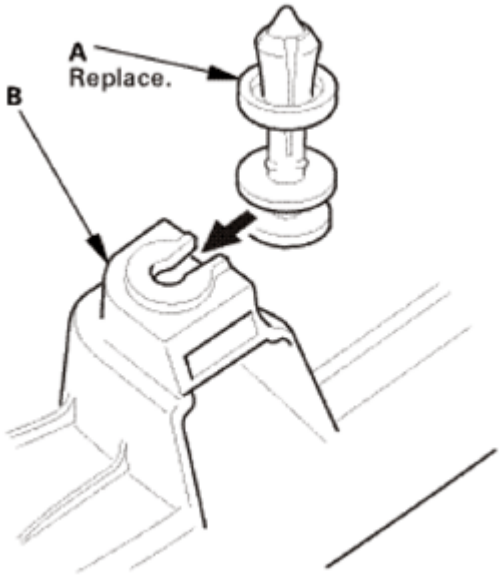

Fig. 290: Installing Clip To Quarter Pillar Trim
Courtesy of AMERICAN HONDA MOTOR CO., INC.

   2. Pass the rear seat belt lower anchor (A) through the hole in the quarter pillar trim (B).
   3. Fit the clips into the holes in the quarter pillar.
   4. Lightly push the quarter pillar trim into place, then install the trim.

GETtheMANUALS.org

NOTE:

- **Make sure the side curtain airbag is not tucked under the clips or the ribs.**
- **Do not push too hard on the quarter pillar trim. If you push too hard, the clip will be damaged, and it will not hold the trim properly.**
- **Gently tug on the quarter pillar trim to verify that all clips are securely fastened.**
- **Make sure the clips (C, D, and E) snap into place securely.**

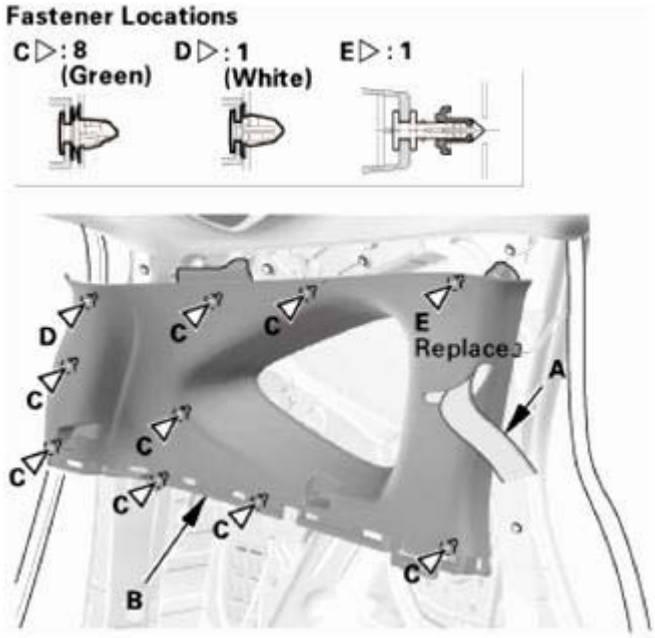

Fig. 291: Identifying Rear Seat Belt Lower Anchor, Quarter Pillar Trim And Clips
Courtesy of AMERICAN HONDA MOTOR CO., INC.

4. Rear Side Trim Panel
    1. Install the rear seat release cable (A) to the clips (B) of the rear side trim panel (C).

NOTE: **Align the marks (D) with the clips as shown.**

GETtheMANUALS.org

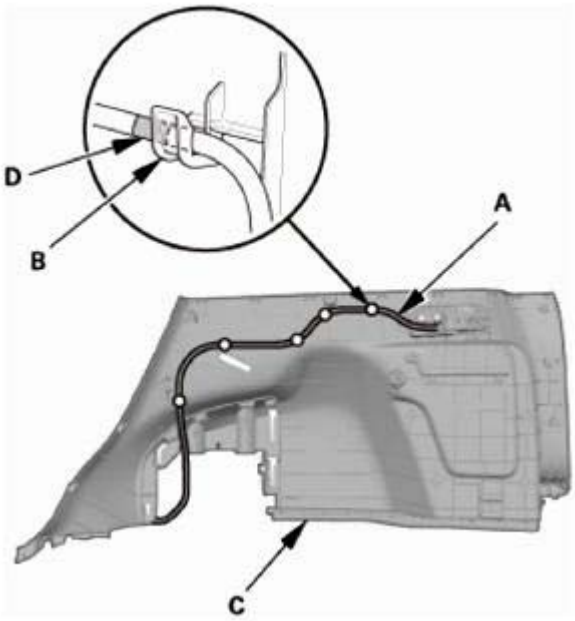

Fig. 292: Identifying Rear Seat Release Cable And Clips Of Rear Side Trim Panel
Courtesy of AMERICAN HONDA MOTOR CO., INC.

2. Install the rear seat release lever (A) to the rear side trim panel (B).

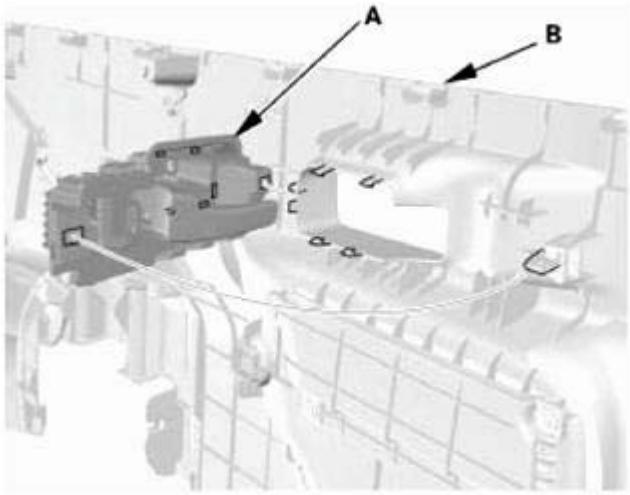

Fig. 293: Identifying Rear Seat Release Lever And Rear Side Trim Panel
Courtesy of AMERICAN HONDA MOTOR CO., INC.

3. Install the rear side trim panel (A). Make sure the hooks (B), the tabs (C), and the clips (D, E) snap into place securely.
4. Install the clips (F, G).

GETtheMANUALS.org

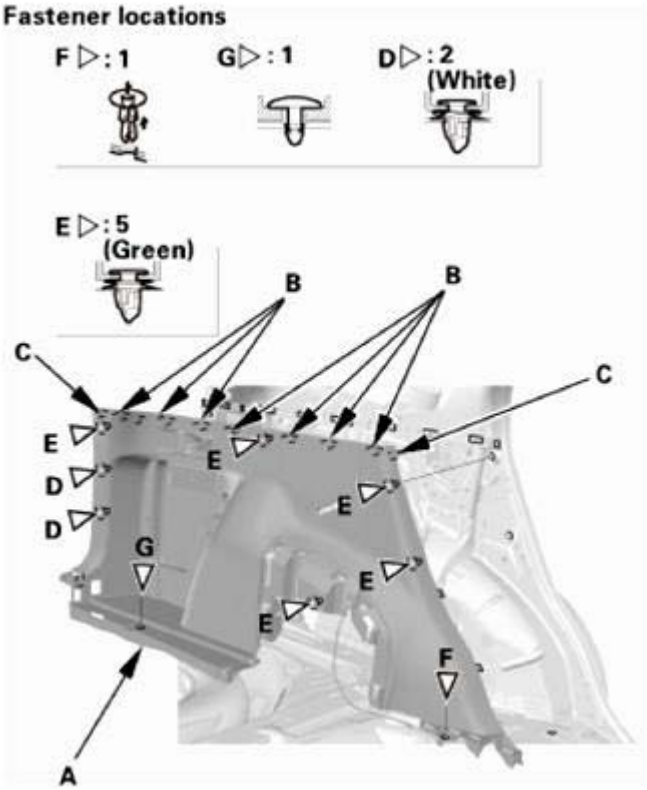

Fig. 294: Identifying Rear Side Trim Panel, Hooks, Tabs And Clips
Courtesy of AMERICAN HONDA MOTOR CO., INC.

5. Install the tie-down hook (A), then install the bolt (B).

Fig. 295: Identifying Tie-Down Hook And Bolt

GETtheMANUALS.org

Courtesy of AMERICAN HONDA MOTOR CO., INC.

6. Install the trunk hook (A).

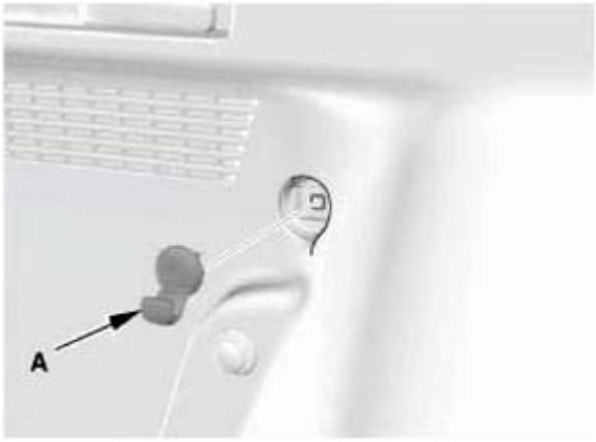

Fig. 296: Identifying Trunk Hook
Courtesy of AMERICAN HONDA MOTOR CO., INC.

7. Install the screws (A), then install the rear seat release lever cap (B). Make sure the upper hook (C) and the lower hooks (D) snap into place securely.

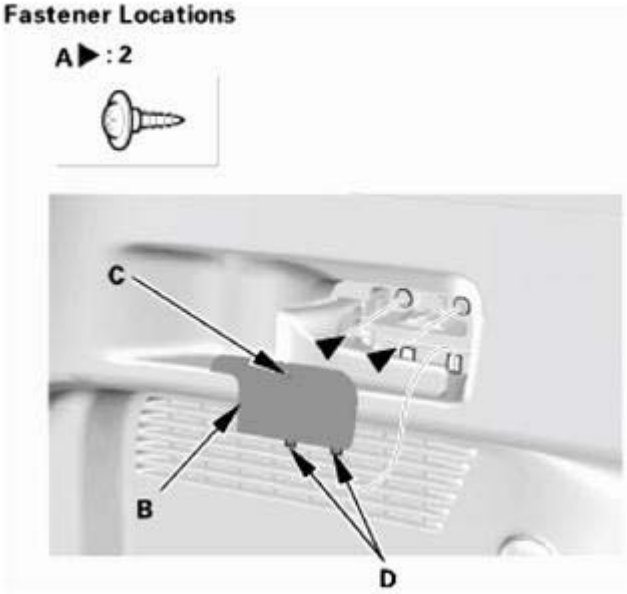

Fig. 297: Identifying Screws, Rear Seat Release Lever Cap, Upper Hook And Lower Hooks
Courtesy of AMERICAN HONDA MOTOR CO., INC.

5. Rear Seat Belt Lower Anchor Bolt
    1. Install the rear seat belt lower anchor bolt (A).

GETtheMANUALS.org

NOTE: **Before installing the anchor bolt, make sure there are no twists or kinks in the seat belt.**

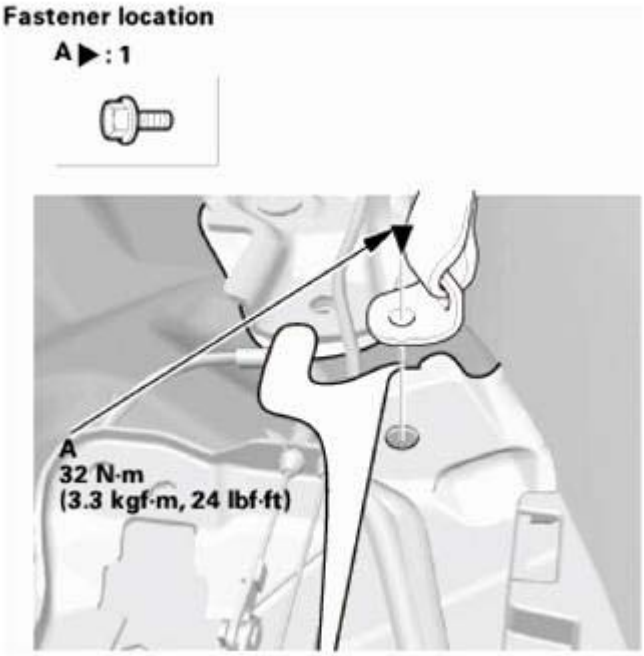

Fig. 298: Installing Rear Seat Belt Lower Anchor Bolt
Courtesy of AMERICAN HONDA MOTOR CO., INC.

6. Rear Seat Foot Cover
    1. Install the rear seat cushion foot cover (A). Make sure the clips (B) and the hooks (C) snap into place securely.

    Left Side

GETtheMANUALS.org

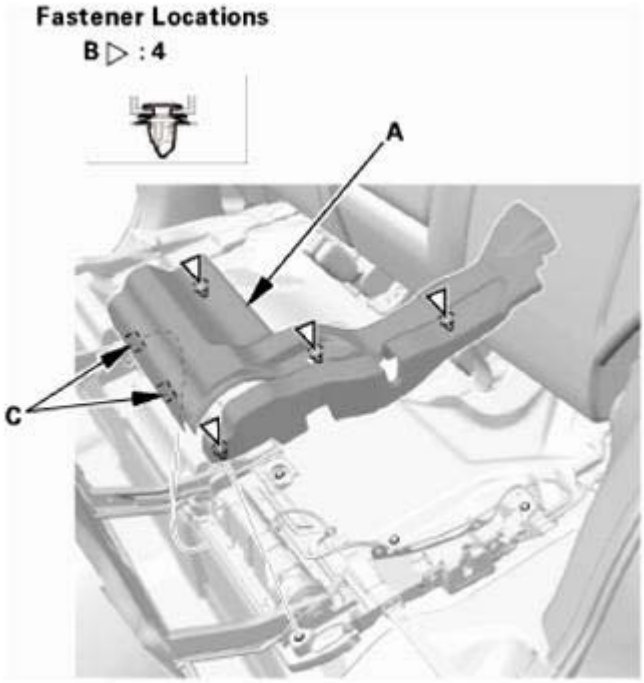

Fig. 299: Identifying Rear Seat Cushion Foot Cover, Clips And Hooks (Left Side)
Courtesy of AMERICAN HONDA MOTOR CO., INC.

Right Side

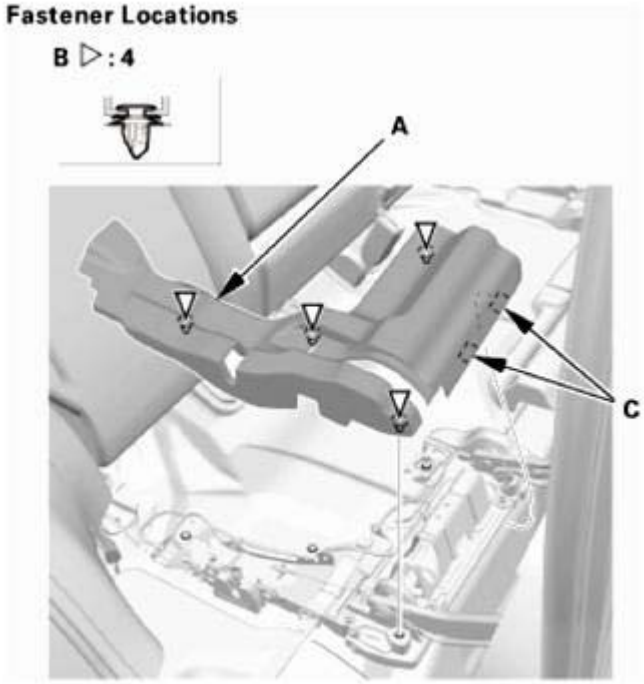

Fig. 300: Identifying Rear Seat Cushion Foot Cover, Clips And Hooks (Right Side)
Courtesy of AMERICAN HONDA MOTOR CO., INC.

GETtheMANUALS.org

7. Rear Carpet Trim
    1. Install the rear carpet trim (A). Make sure the clips (B) and the hooks (C) snap into place securely.

Left side

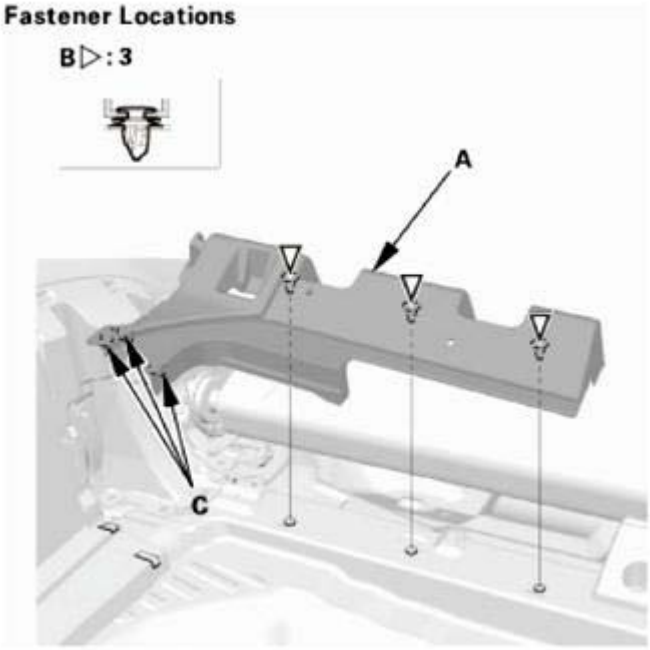

Fig. 301: Identifying Rear Carpet Trims, Clips And Hooks (Left Side)
Courtesy of AMERICAN HONDA MOTOR CO., INC.

Right side

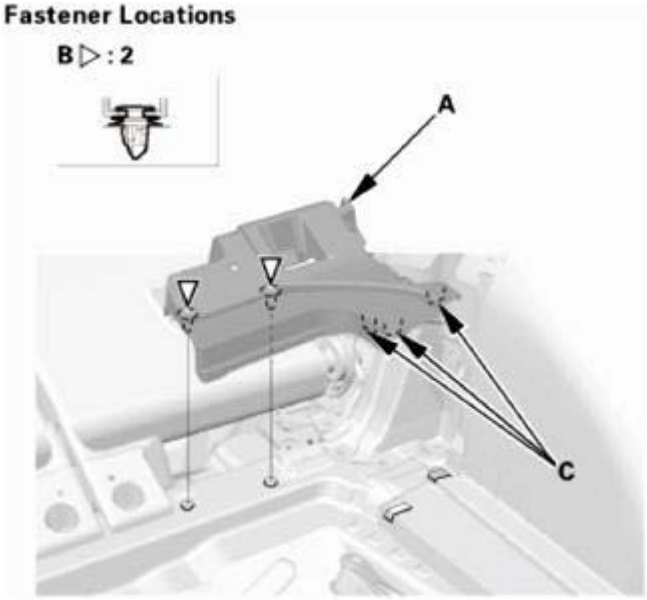

GETtheMANUALS.org

Fig. 302: Identifying Rear Carpet Trims, Clips And Hooks (Right Side)
Courtesy of AMERICAN HONDA MOTOR CO., INC.

2. Install the rear seat-back cover (A). Make sure the clips (B) snap into place securely.

Left side

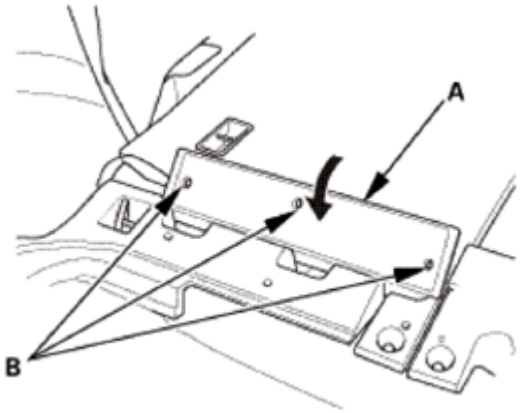

Fig. 303: Installing Rear Seat-Back Cover And Clips (Left Side)
Courtesy of AMERICAN HONDA MOTOR CO., INC.

Right side

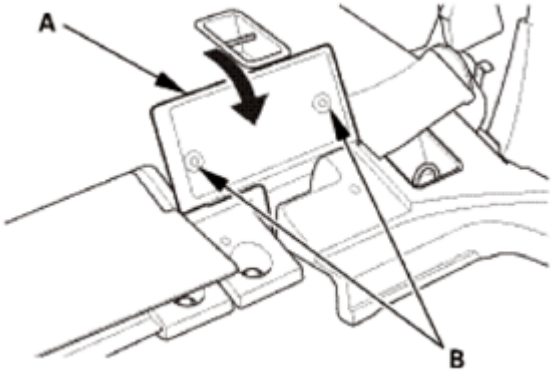

Fig. 304: Installing Rear Seat-Back Cover And Clips (Right Side)
Courtesy of AMERICAN HONDA MOTOR CO., INC.

8. Rear Damper Maintenance Cover
    1. Fold down the rear seat-back.
    2. Install the rear damper maintenance cover (A). Make sure the hooks (B) snap into place securely.

GETtheMANUALS.org

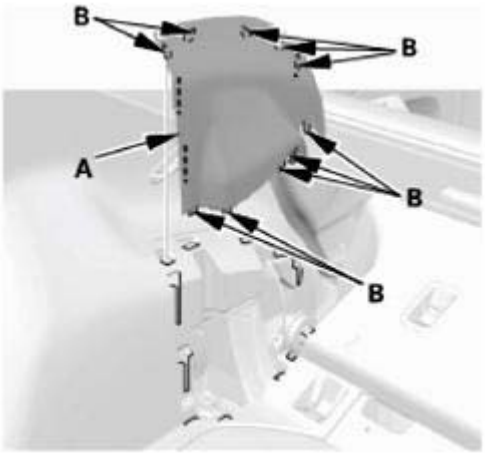

Fig. 305: Identifying Rear Damper Maintenance Cover And Hooks
Courtesy of AMERICAN HONDA MOTOR CO., INC.

9. Rear Trim Panel
    1. Install the rear trim panel (A). Make sure the clips (B, C), the hooks (D), and the tabs (E) snap into place securely.
    2. Install the clips (F).

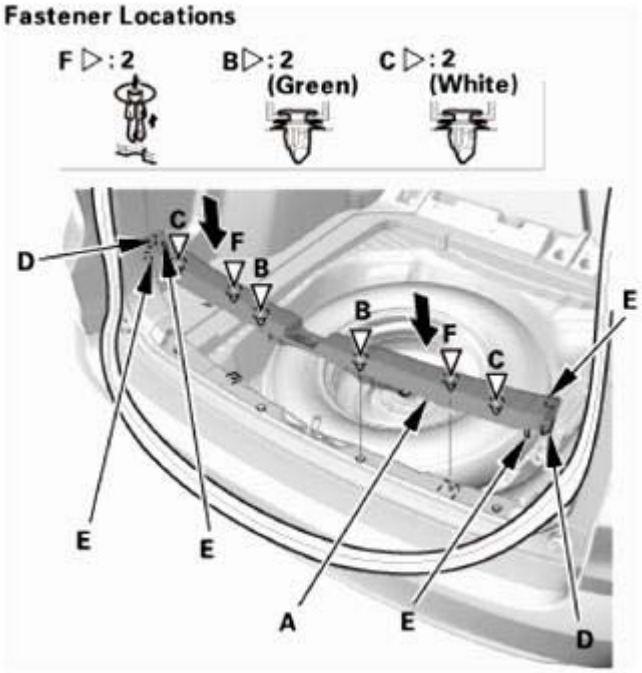

Fig. 306: Installing Rear Trim Panel
Courtesy of AMERICAN HONDA MOTOR CO., INC.

10. Tailgate Weatherstrip As Needed
    1. Locate the alignment mark (A) of the tailgate weatherstrip (B). Align the alignment mark (C) with

GETtheMANUALS.org

the center of the lower area on the tailgate opening, then install the tailgate weatherstrip all the way around.

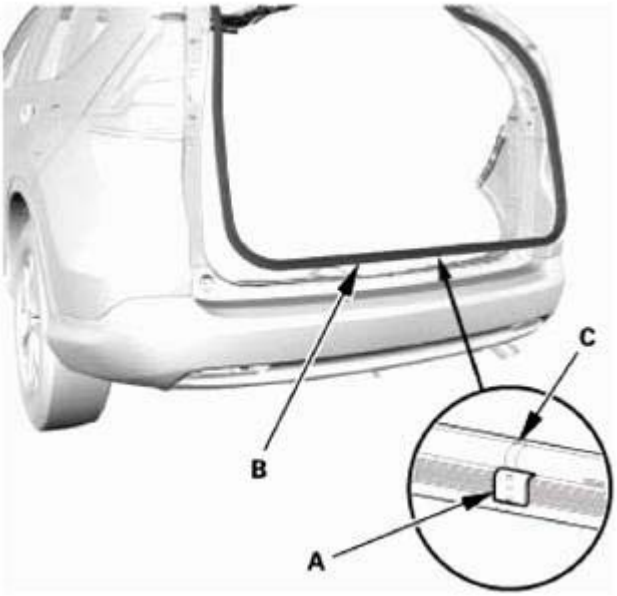

Fig. 307: Identifying Tailgate Weatherstrip
Courtesy of AMERICAN HONDA MOTOR CO., INC.

11. Cargo Floor Cover
    1. Install the cargo floor cover (A).

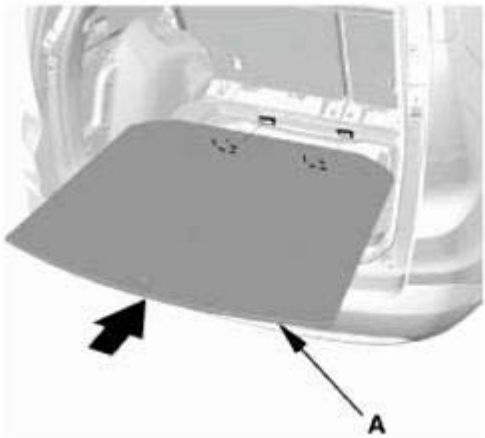

Fig. 308: Installing Cargo Floor Cover
Courtesy of AMERICAN HONDA MOTOR CO., INC.

12. Tonneau Cover (For Some Models)
    1. Install the tonneau cover (A).

GETtheMANUALS.org

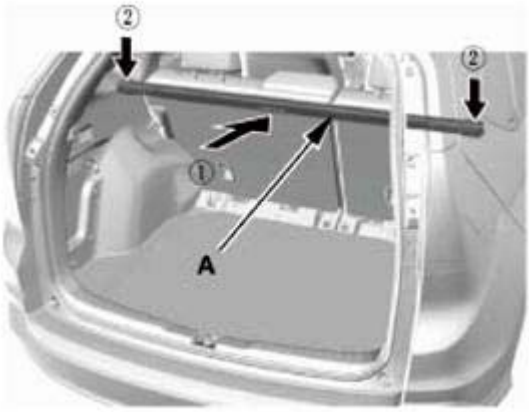

Fig. 309: Installing Tonneau Cover
Courtesy of AMERICAN HONDA MOTOR CO., INC.

13. B-Pillar Upper/Lower Trim - Check
    1. If the side curtain airbag has deployed, replace the B-pillar upper trim (A) and the B-pillar lower trim (B), along with the other parts listed for side curtain airbag deployment.
    2. If the side curtain airbag has not deployed, check the B-pillar upper/lower trim and note the following items:
        - To prevent the side curtain airbags from deploying improperly and possibly causing injury, inspect the trim and replace it with a new one if it has any of the following damage:
            - Any cracks or deformations in the B-pillar upper trim or the upper hooks (C), or any stress-whitened areas in the upper part of the trim
            - Any cracks or deformations in the B-pillar lower trim, or any breakages in the part (D) fitted with the B-pillar upper trim
            - Any cracks or stress-whitening areas in the clip seating surfaces (E)
        - If the clips (F) are damaged or stress-whitened, replace them with new ones.

Trim inspection

GETtheMANUALS.org

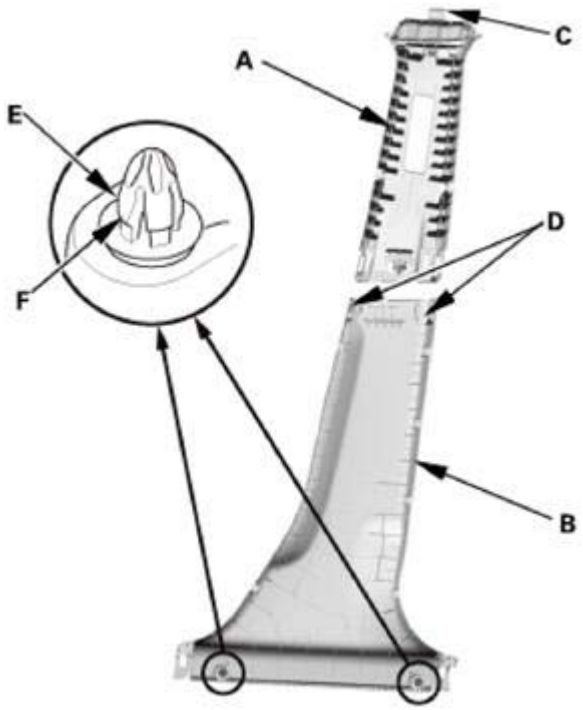

Fig. 310: Identifying B-Pillar Upper Trim, Lower Trim, Upper Hook And Clip Seating Surfaces
Courtesy of AMERICAN HONDA MOTOR CO., INC.

14. Headliner/Pillar Trim Overlap - Check

Checking and Adjusting the Headliner/Pillar Trim Overlap

To prevent the side curtain airbag from deploying and damaging the pillar trim (A-pillar trim, B-pillar trim, quarter pillar trim), the overlap between the headliner and pillar trim must be 8.0+0/-2.0 mm (0.31+0/-0.08 in). To check the overlap, do this:

1. Install the headliner (A) and the pillar trim (B).

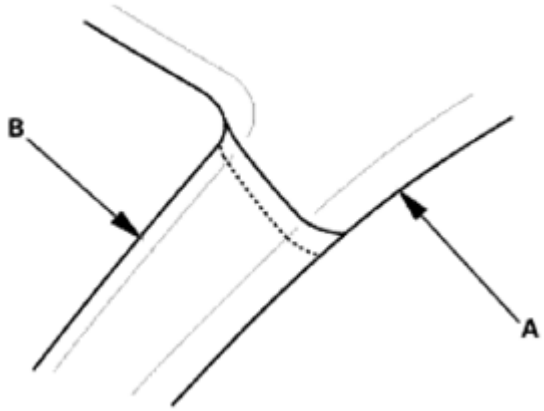

GETtheMANUALS.org

Fig. 311: Identifying Headliner And Pillar Trim
Courtesy of AMERICAN HONDA MOTOR CO., INC.

This illustration shows A-pillar .

2. Apply masking tape (A) to the headliner (B) to mark the upper edge of the pillar trim (C).

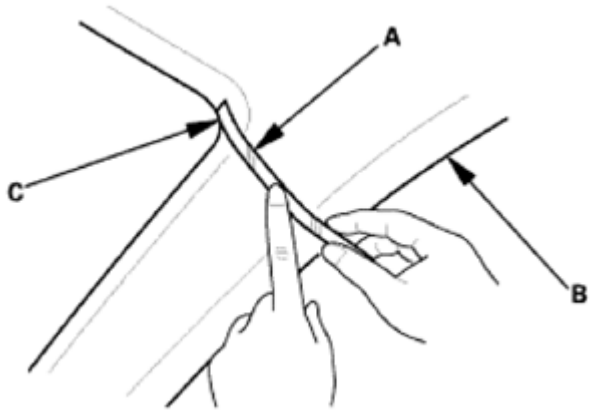

Fig. 312: Applying Masking Tape To Headliner
Courtesy of AMERICAN HONDA MOTOR CO., INC.

This illustration shows A-pillar .

3. Remove the pillar trim, and measure the headliner overlap.
   - If the overlap is 8.0+0/-2.0 mm (0.31+0/-0.08 in), remove the tape, and install the pillar trim.
   - If the overlap is more than 8.0 mm (0.31 in), go to step 4.

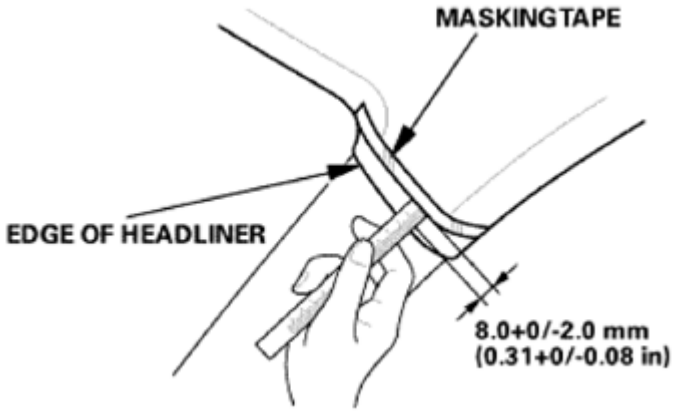

Fig. 313: Measuring Headliner Overlap
Courtesy of AMERICAN HONDA MOTOR CO., INC.

This illustration shows A-pillar .

4. Carefully trim the headliner with a utility knife, reducing the overlap to 8.0+0/-2.0 mm (0.31+0/-

GETtheMANUALS.org

0.08 in).

5. Remove the tape, and install the pillar trim.

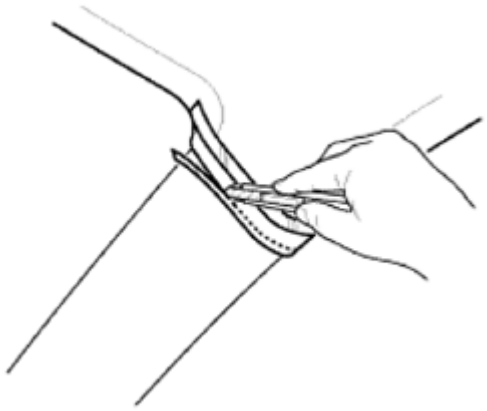

Fig. 314: Removing Tape
Courtesy of AMERICAN HONDA MOTOR CO., INC.

This illustration shows A-pillar .

15. B-Pillar Upper Trim
    1. Install the upper hook (A) of the B-pillar upper trim (B) to the hole in the body. Push the bottom portion of the B-pillar upper trim to install the lower hooks (C). Make sure the hooks snap into place securely.

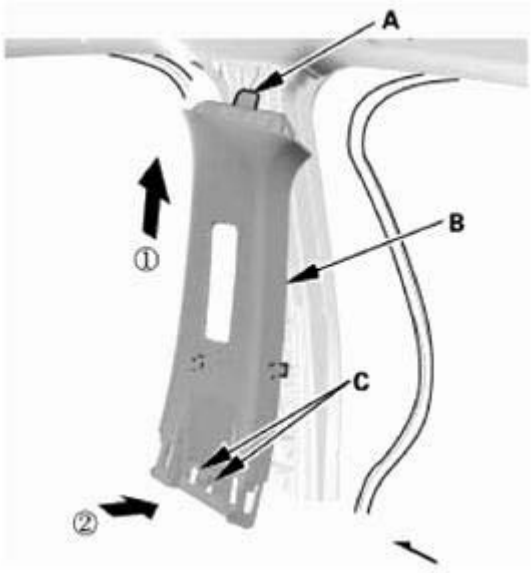

Fig. 315: Installing Upper Hook
Courtesy of AMERICAN HONDA MOTOR CO., INC.

16. Front Seat Belt Upper Anchor Bolt

GETtheMANUALS.org

1. Assemble the washer, the collar, and the bushing on the upper anchor bolt as shown.

NOTE: Apply medium strength liquid thread lock to the upper anchor bolt before installation.

Fig. 316: Identifying Washer, Collar, And Bushing On Upper Anchor Bolt
Courtesy of AMERICAN HONDA MOTOR CO., INC.

2. Install the front seat belt upper anchor bolt (A), then install the front seat belt shoulder anchor adjuster cap (B).

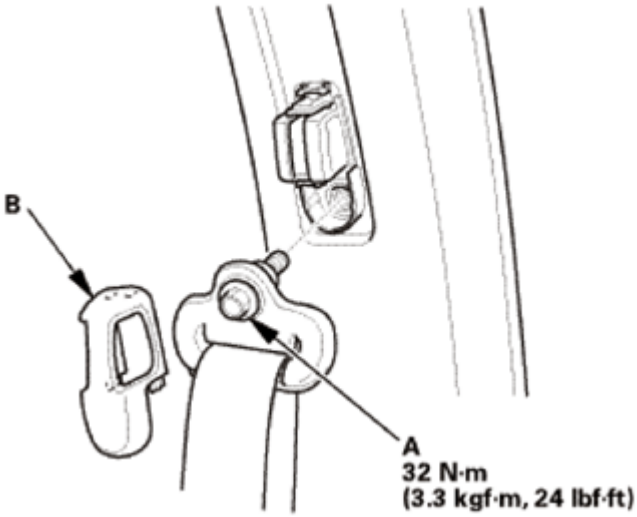

Fig. 317: Identifying Front Seat Belt Shoulder Anchor Adjuster Cap
Courtesy of AMERICAN HONDA MOTOR CO., INC.

17. B-Pillar Lower Trim
    1. Install the B-pillar lower trim (A). Make sure the clips (B) and the hooks (C) snap into place securely.

GETtheMANUALS.org

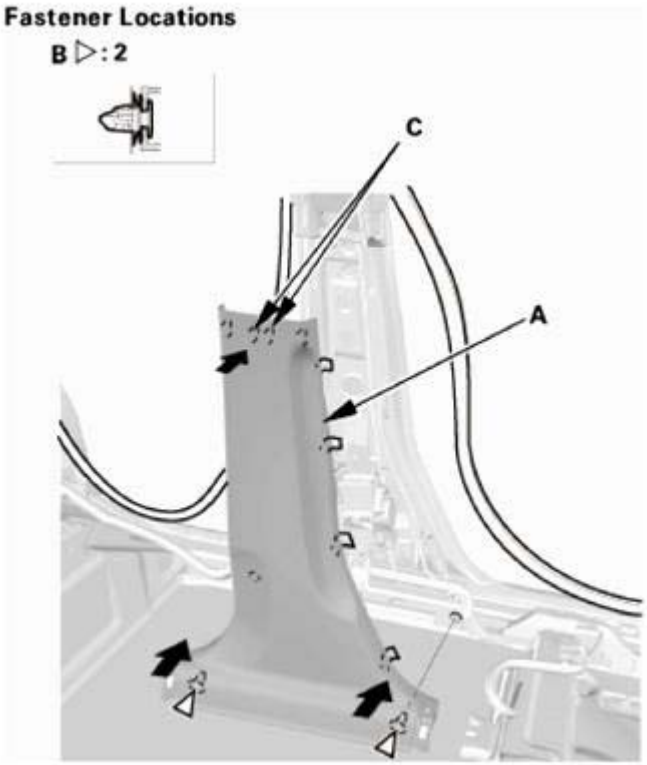

Fig. 318: Identifying B-Pillar Lower Trim, Clips And Hooks
Courtesy of AMERICAN HONDA MOTOR CO., INC.

18. Front/Rear Door Opening Seals As Needed
    1. Install the door opening seals (A). Make sure the seal is installed securely into the hooks (B).

Front

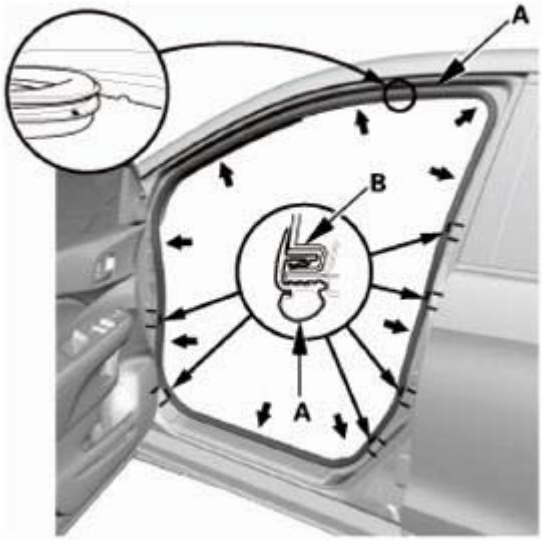

Fig. 319: Identifying Front Door Opening Seals And Trim Hooks

GETtheMANUALS.org

Courtesy of AMERICAN HONDA MOTOR CO., INC.

Rear

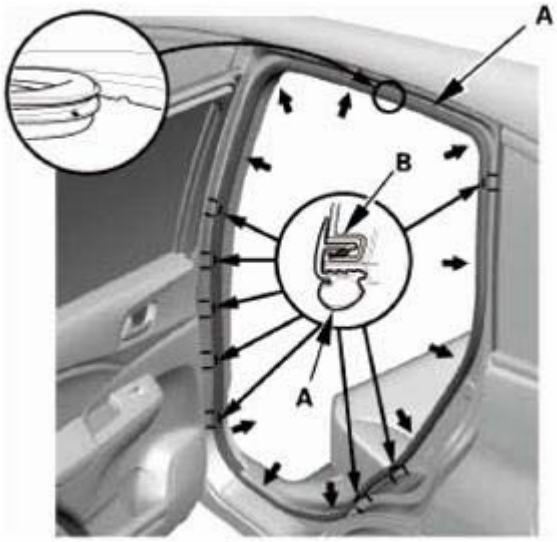

Fig. 320: Identifying Rear Door Opening Seals And Trim Hooks
Courtesy of AMERICAN HONDA MOTOR CO., INC.

19. Rear Door Sill Trim
    1. Pull the release strap to fold down the rear seat, then lift-up and latch the rear seat-back in the upright position.
    2. Install the rear door inner sill trim (A). Make sure the clips (B, C), the hooks (D), and the tab (E) snap into place securely.

GETtheMANUALS.org

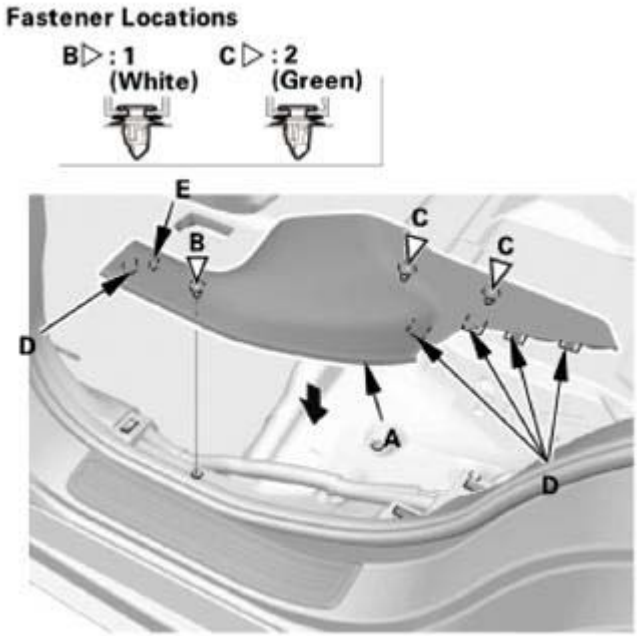

Fig. 321: Pulling Rear Door Inner Sill Trim
Courtesy of AMERICAN HONDA MOTOR CO., INC.

20. Front Door Sill Trim
    1. Install the front door inner sill trim (A). Make sure the clips (B), the hooks (C), and the tabs (D) snap into place securely.

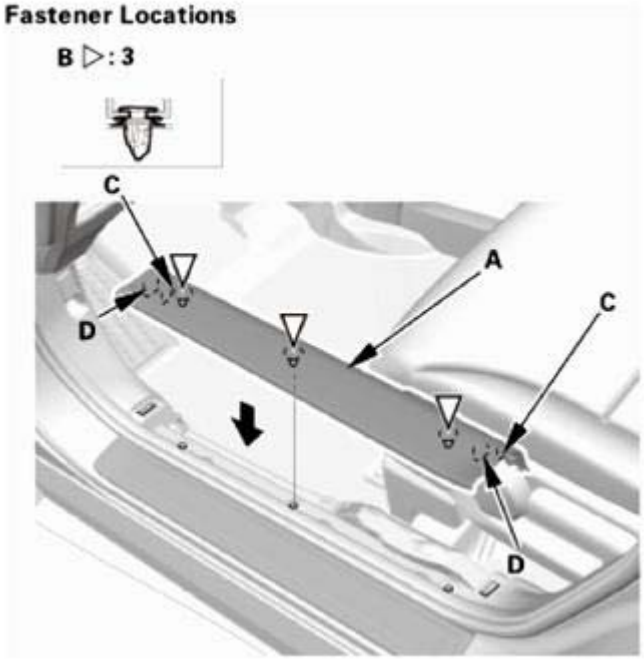

Fig. 322: Installing Front Door Inner Sill Trim
Courtesy of AMERICAN HONDA MOTOR CO., INC.

GETtheMANUALS.org

21. A-Pillar Trim - Check
    1. If the side curtain airbag has deployed, replace the A-pillar trim (A), along with the other parts listed for side curtain airbag deployment.
    2. If the side curtain airbag has not deployed, check the A-pillar trim and note the following items:
        - To prevent the side curtain airbags from deploying improperly and possibly causing injury, inspect the A-pillar trim and replace it with a new one if it has any of the following damage:
            - Any cracks, deformations, or stress-whitened areas in the A-pillar trim
            - Any cracks or stress-whitening in the clip seating surfaces (B)
        - After checking and adjusting the overlap between the headliner and the A-pillar trim, replace the upper clip (C) with a new one.
        - If the clips (D) are damaged or stress-whitened, replace them with new ones.

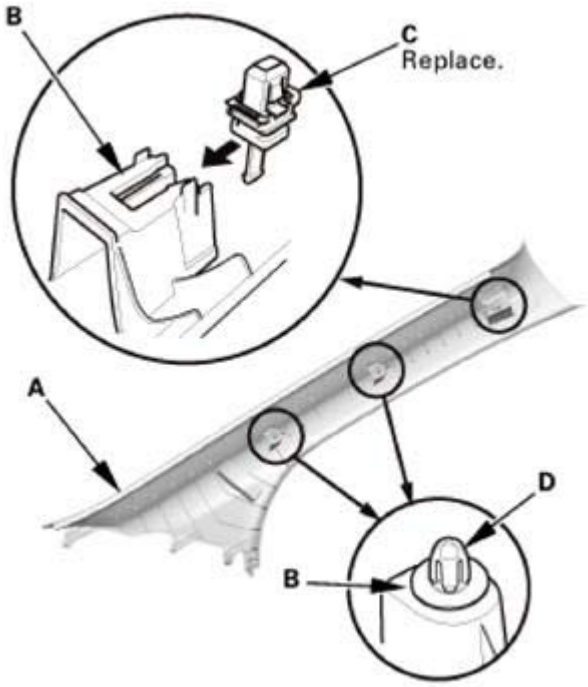

Fig. 323: Replacing Upper Clip
Courtesy of AMERICAN HONDA MOTOR CO., INC.

22. Headliner/Pillar Trim Overlap - Check

Checking and Adjusting the Headliner/Pillar Trim Overlap

To prevent the side curtain airbag from deploying and damaging the pillar trim (A-pillar trim, B-pillar trim, quarter pillar trim), the overlap between the headliner and pillar trim must be 8.0+0/-2.0 mm (0.31+0/-0.08 in). To check the overlap, do this:

1. Install the headliner (A) and the pillar trim (B).

GETtheMANUALS.org

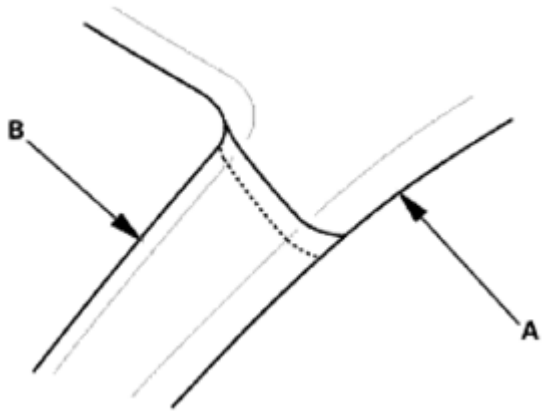

Fig. 324: Identifying Headliner And Pillar Trim
Courtesy of AMERICAN HONDA MOTOR CO., INC.

This illustration shows A-pillar .

2. Apply masking tape (A) to the headliner (B) to mark the upper edge of the pillar trim (C).

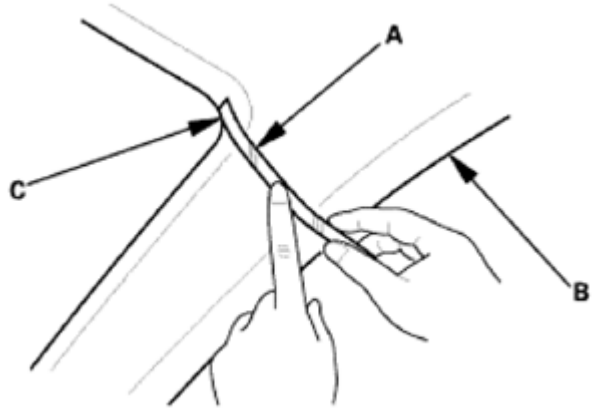

Fig. 325: Applying Masking Tape To Headliner
Courtesy of AMERICAN HONDA MOTOR CO., INC.

This illustration shows A-pillar .

3. Remove the pillar trim, and measure the headliner overlap.
   - If the overlap is 8.0+0/-2.0 mm (0.31+0/-0.08 in), remove the tape, and install the pillar trim.
   - If the overlap is more than 8.0 mm (0.31 in), go to step 4.

GETtheMANUALS.org

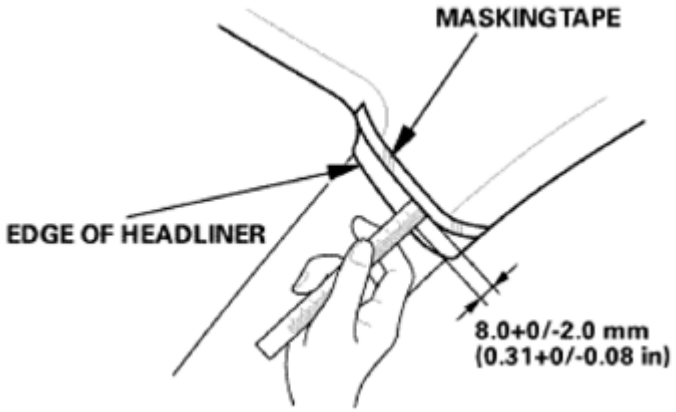

Fig. 326: Measuring Healiner Overlap
Courtesy of AMERICAN HONDA MOTOR CO., INC.

This illustration shows A-pillar .

4. Carefully trim the headliner with a utility knife, reducing the overlap to 8.0+0/-2.0 mm (0.31+0/-0.08 in).
5. Remove the tape, and install the pillar trim.

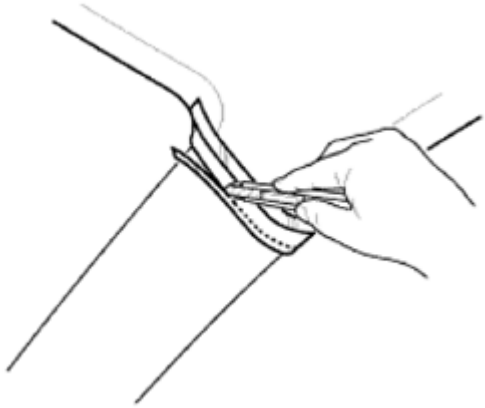

Fig. 327: Triming Headliner Using Utility Knife
Courtesy of AMERICAN HONDA MOTOR CO., INC.

This illustration shows A-pillar .

23. A-Pillar Trim
    1. Carefully install a new upper clip (A) to the A-pillar trim (B).

GETtheMANUALS.org

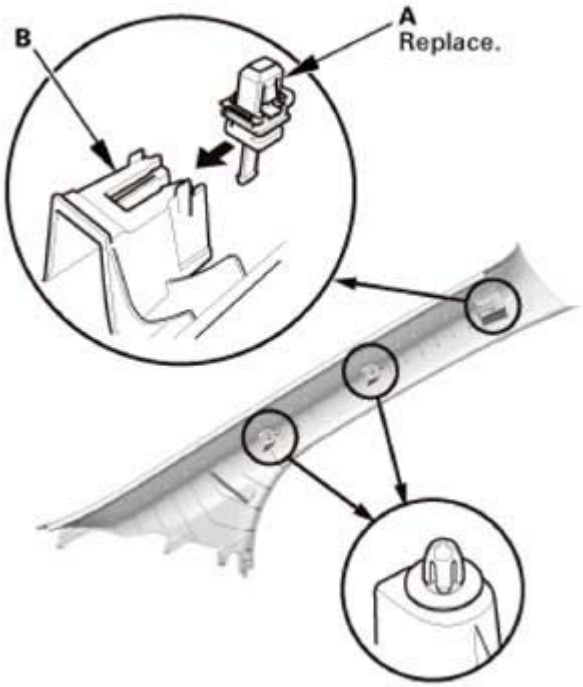

Fig. 328: Installing Upper Clip Into A-Pillar Trim
Courtesy of AMERICAN HONDA MOTOR CO., INC.

2. Insert the bottom portion of the A-pillar trim (A) into the dashboard (B). Place the trim over the A-pillar (C), and fit its upper clip (D) and the other clips (E) into the holes (F) in the A-pillar, then lightly push the trim into place.

NOTE:

- **Make sure the side curtain airbag is not tucked under the clips or the trim ribs.**
- **Do not push too hard on the A-pillar trim. If you push too hard, the clip will be damaged, and it will not hold the trim properly.**
- **Gently tug on the A-pillar trim to verify that all clips are securely fastened.**

GETtheMANUALS.org

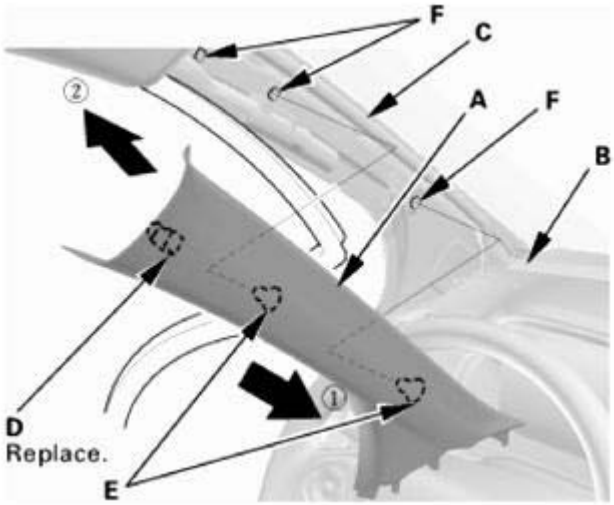

Fig. 329: Inserting Bottom Portion Of A-Pillar Trim Into Dashboard
Courtesy of AMERICAN HONDA MOTOR CO., INC.

24. Front Door Opening Seal As Needed
    1. Install the front door opening seal (A). Make sure the seal is installed securely into the hooks (B).

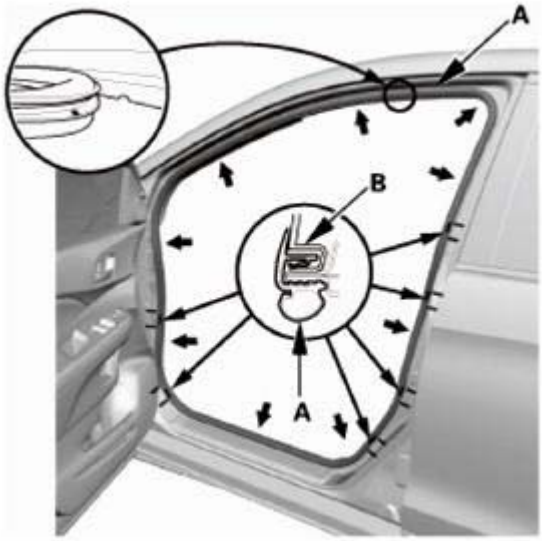

Fig. 330: Identifying Front Door Opening Seal And Hooks
Courtesy of AMERICAN HONDA MOTOR CO., INC.

INTERIOR TRIM REMOVAL AND INSTALLATION - TAILGATE AREAS

REMOVAL

1. Tailgate Upper Trim Panel
    1. Carefully pry out the notch (A) in the tailgate upper trim (B) with the appropriate trim tool to detach the hooks (C) and the tabs (D) from the tailgate side trims (E), and pull back the tailgate

GETtheMANUALS.org

upper trim panel by hand to detach the clips (F), then remove the tailgate upper trim panel.

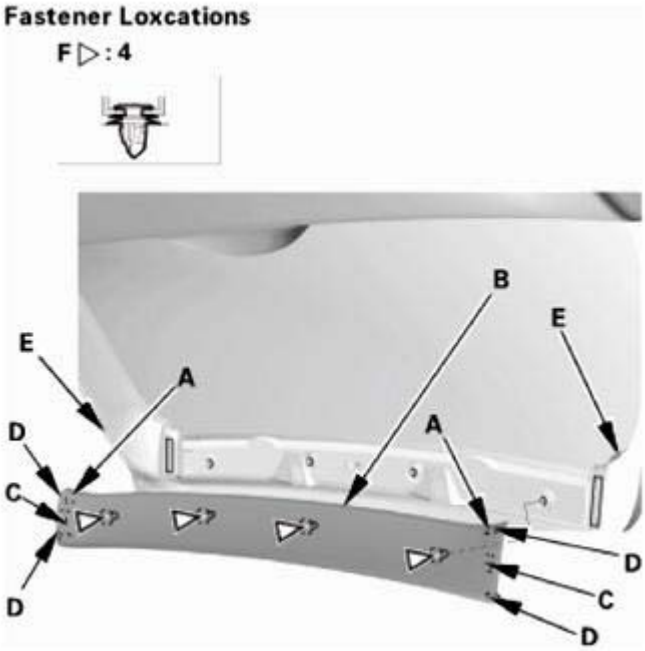

Fig. 331: Identifying Tailgate Upper Trim, Notch, Hooks, Tabs, Side Trim And Clips
Courtesy of AMERICAN HONDA MOTOR CO., INC.

2. Tailgate Side Trim - Both Sides

NOTE: Repeat this procedure on the opposite side.

1. Detach the hook (A) and the tabs (B) from the tailgate lower trim panel (C), and pull back the tailgate side trim (D) by hand to detach the clips (E), then remove the tailgate side trim.

GETtheMANUALS.org

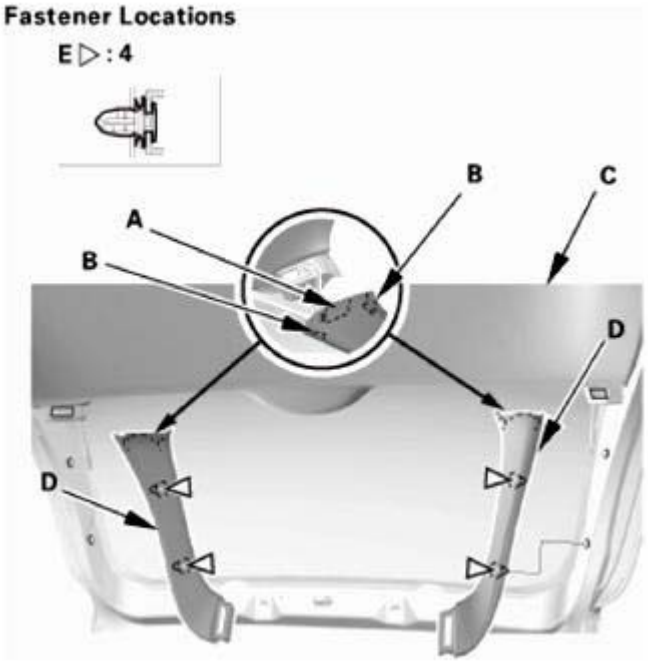

Fig. 332: Identifying Hook, Tabs, Tailgate Lower Trim Panel And Clips
Courtesy of AMERICAN HONDA MOTOR CO., INC.

3. Tailgate Lower Trim Panel
    1. Remove the screw (A), then remove the tailgate pull pocket (B).

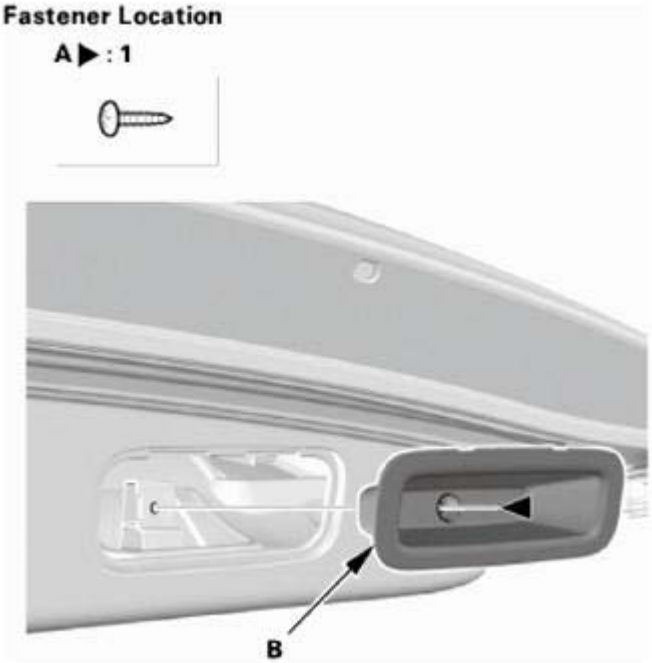

Fig. 333: Identifying Tailgate Pull Pocket And Screw
Courtesy of AMERICAN HONDA MOTOR CO., INC.

GETtheMANUALS.org

2. Pull out the tailgate lower trim panel (A) by hand to detach the clips (B, C), then remove the tailgate lower trim panel.

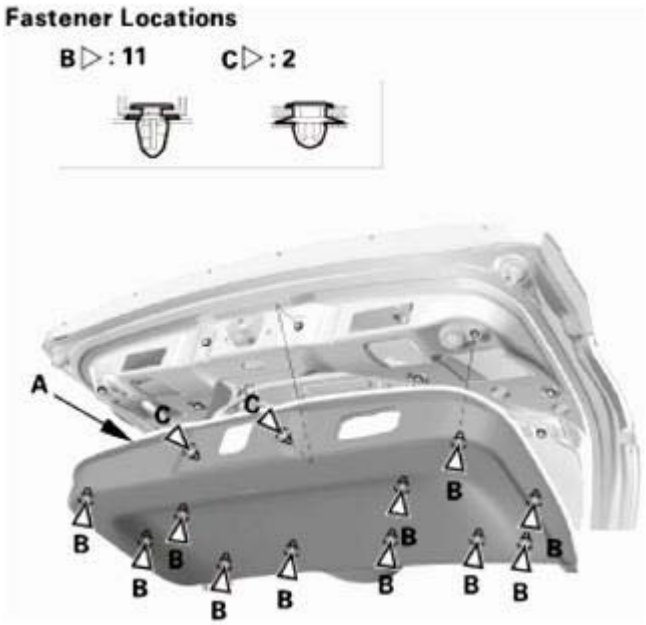

Fig. 334: Identifying Tailgate Lower Trim Panel And Clips
Courtesy of AMERICAN HONDA MOTOR CO., INC.

INSTALLATION

1. Tailgate Lower Trim Panel
    1. Hold up the tailgate lower trim panel (A), and fit the clips into the holes in the tailgate.
    2. Push on the trim until the clips (B, C) securely snap into place.

GETtheMANUALS.org

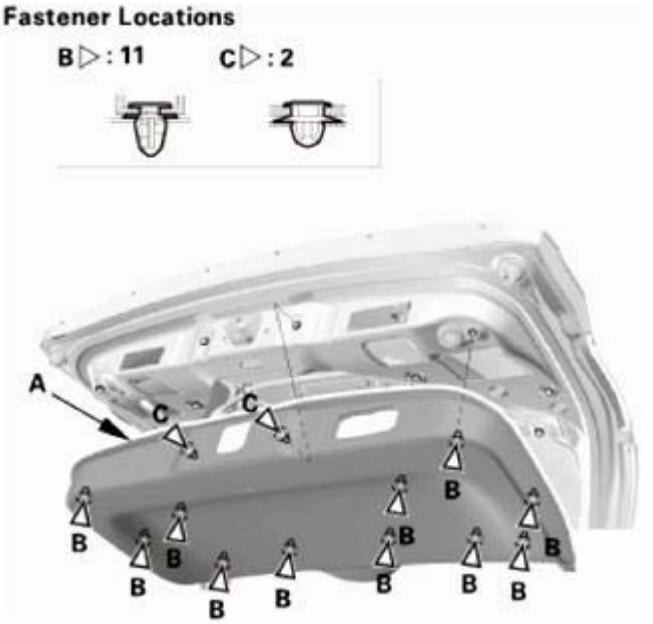

Fig. 335: Identifying Tailgate Lower Trim Panel And Clips
Courtesy of AMERICAN HONDA MOTOR CO., INC.

3. Install the tailgate pull pocket (A), then install the screw (B).

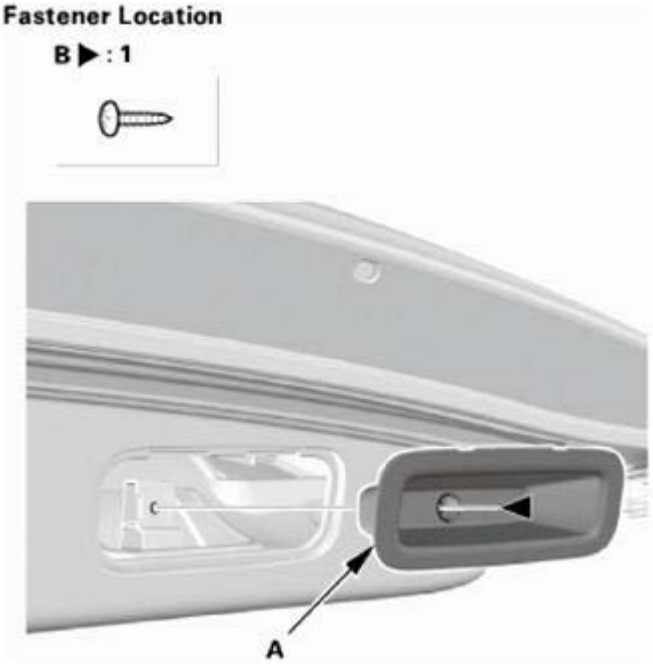

Fig. 336: Identifying Tailgate Pull Pocket And Screw
Courtesy of AMERICAN HONDA MOTOR CO., INC.

2. Tailgate Side Trim - Both Sides

GETtheMANUALS.org

NOTE: **Repeat this procedure on the opposite side.**

1. Install the tailgate side trim (A). Make sure the hook (B), the tabs (C), and the clips (D) snap into place securely.

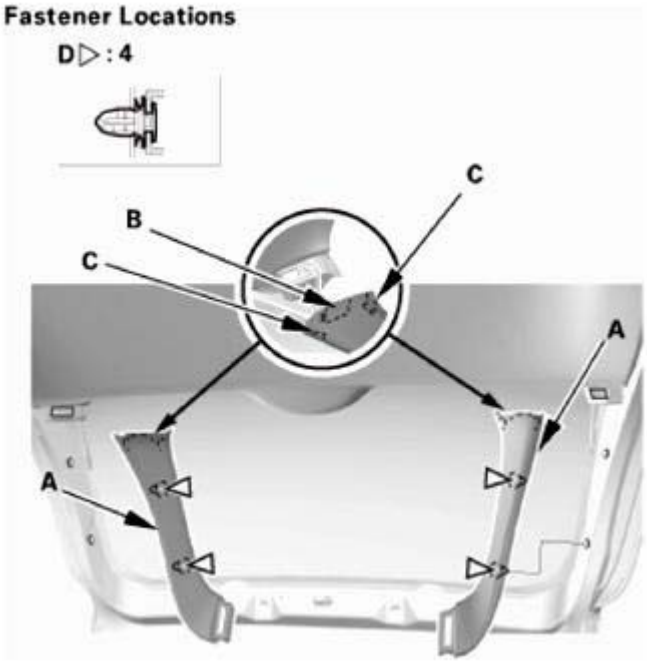

Fig. 337: Identifying Tailgate Side Trim, Hook, Tabs And Clips
Courtesy of AMERICAN HONDA MOTOR CO., INC.

3. Tailgate Upper Trim Panel
   1. Install the tailgate upper trim panel (A). Make sure the hooks (B), the tabs (C), and the clips (D) snap into place securely.

GETtheMANUALS.org

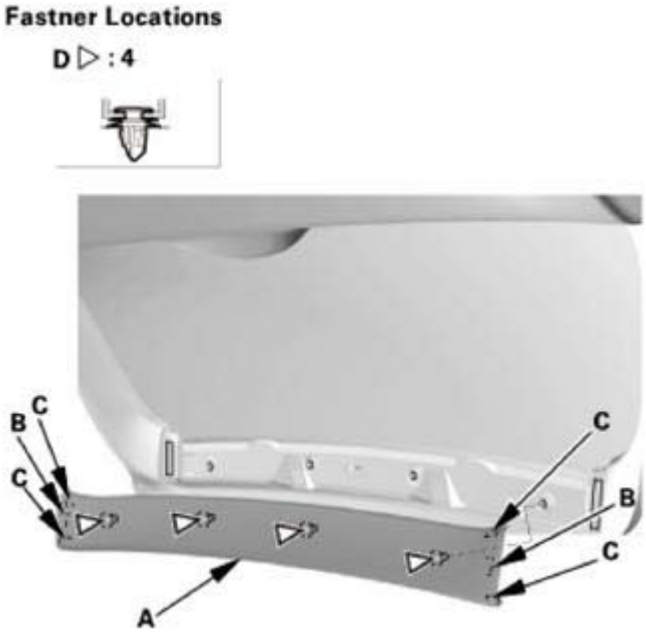

Fig. 338: Identifying Tailgate Upper Trim Panel, Tabs And Clips
Courtesy of AMERICAN HONDA MOTOR CO., INC.

SIDE SILL PANEL REMOVAL AND INSTALLATION

REMOVAL

1. Vehicle Lift
    1. Raise the vehicle on a lift, and make sure it is securely supported.
2. Front Splash Guard
    1. For some models: Remove the screws (A), then remove the front splash guard (B).

GETtheMANUALS.org

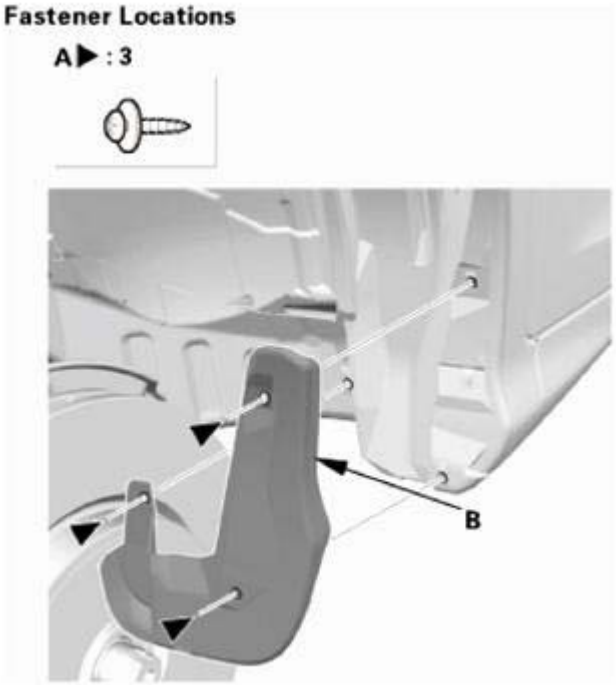

Fig. 339: Identifying Front Splash Guard And Screws
Courtesy of AMERICAN HONDA MOTOR CO., INC.

3. Front Wheel Arch Protector Rear Side As Needed
    1. Remove the screws (A) and the clips (B) securing the front wheel arch protector (C).
    2. Carefully pry out the clip portions of the wheel arch protector with the appropriate trim tool to detach the clips (D, E), then detach the wheel arch protector rear side as needed.
    3. Put a shop towel (F) in the opening between the front wheel arch protector and the front fender.

GETtheMANUALS.org

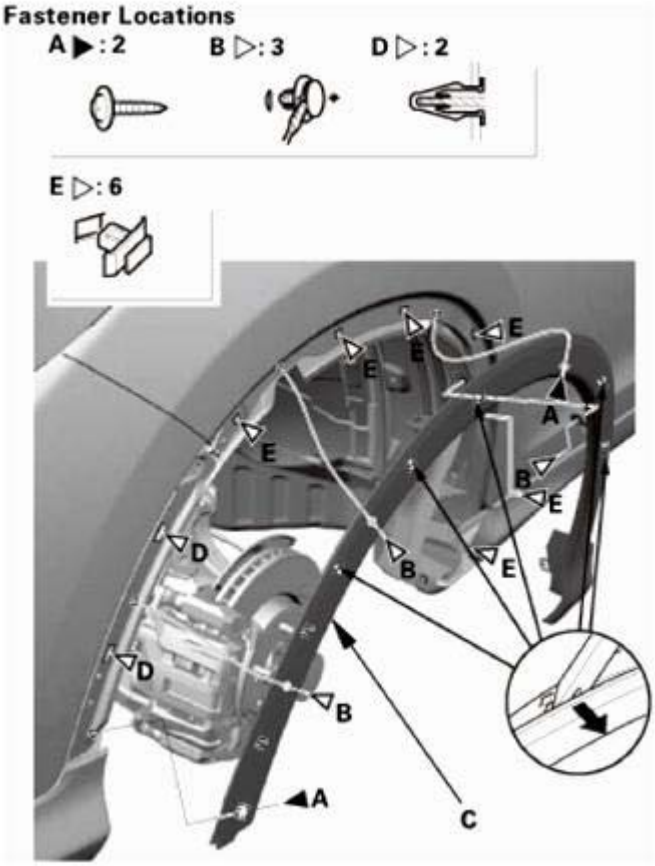

Fig. 340: Identifying Front Wheel Arch Protector Securing Clips And Screws
Courtesy of AMERICAN HONDA MOTOR CO., INC.

Fig. 341: Putting Shop Towel In Opening Between Front Wheel Arch Protector And Front Fender
Courtesy of AMERICAN HONDA MOTOR CO., INC.

4. Rear Splash Guard (For Some Models)

GETtheMANUALS.org

1. Remove the screws (A) and the clip (B), then remove the rear splash guard (C).

Left side

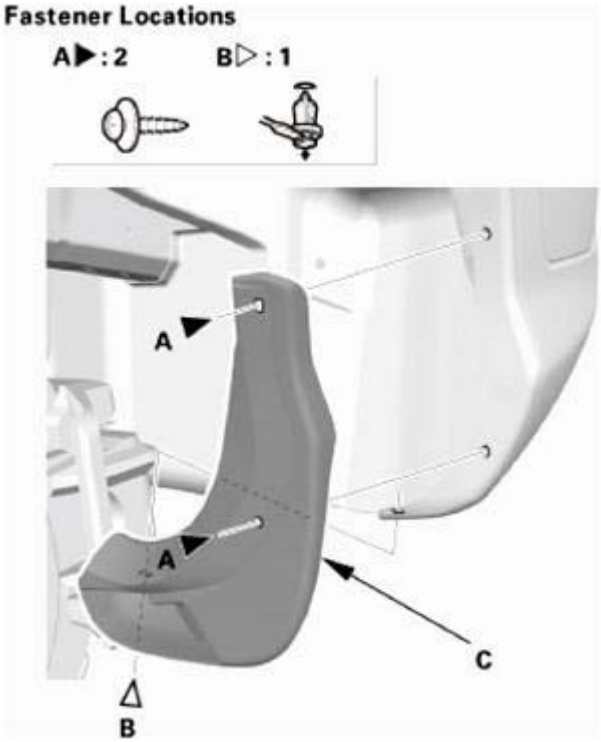

Fig. 342: Identifying Rear Splash Guard, Screws And Clip (Left Side)
Courtesy of AMERICAN HONDA MOTOR CO., INC.

Right side

GETtheMANUALS.org

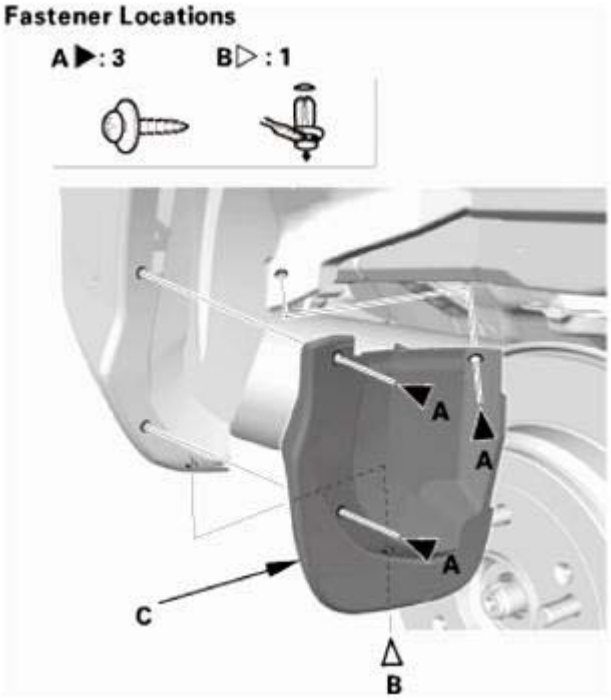

Fig. 343: Identifying Rear Splash Guard, Screws And Clip (Right Side)
Courtesy of AMERICAN HONDA MOTOR CO., INC.

5. Rear Wheel Arch Protector Front Side As Needed
    1. Remove the screws (A) and the clip (B) securing the rear wheel arch protector (C).
    2. Carefully pry out the clip portions of the wheel arch protector with the appropriate trim tool to detach the clips (D, E), then detach the wheel arch protector front side as needed.
    3. Put a shop towel (F) in the opening between the rear wheel arch protector and the rear fender.

GETtheMANUALS.org

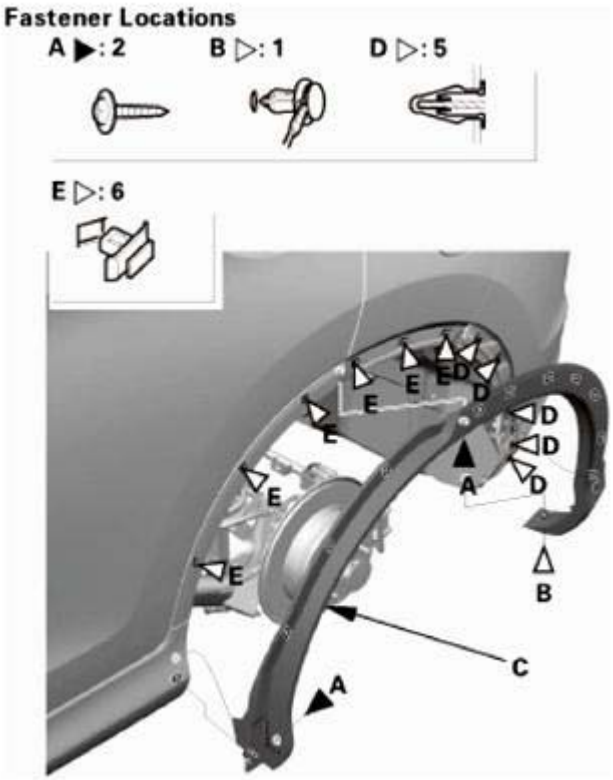

Fig. 344: Identifying Rear Wheel Arch Protector Clips And Screws
Courtesy of AMERICAN HONDA MOTOR CO., INC.

Fig. 345: Putting Shop Towel In Opening Between Front Wheel Arch Protector And Rear Fender
Courtesy of AMERICAN HONDA MOTOR CO., INC.

6. Side Sill Panel
    1. Remove the clips (A) and the screws (B).
    2. Slide the side sill panel (C) forward and remove it. The clips (D) will stay in the body. Remove the clips by turning them 45°.

GETtheMANUALS.org

3. Install the clips on the side sill panel.

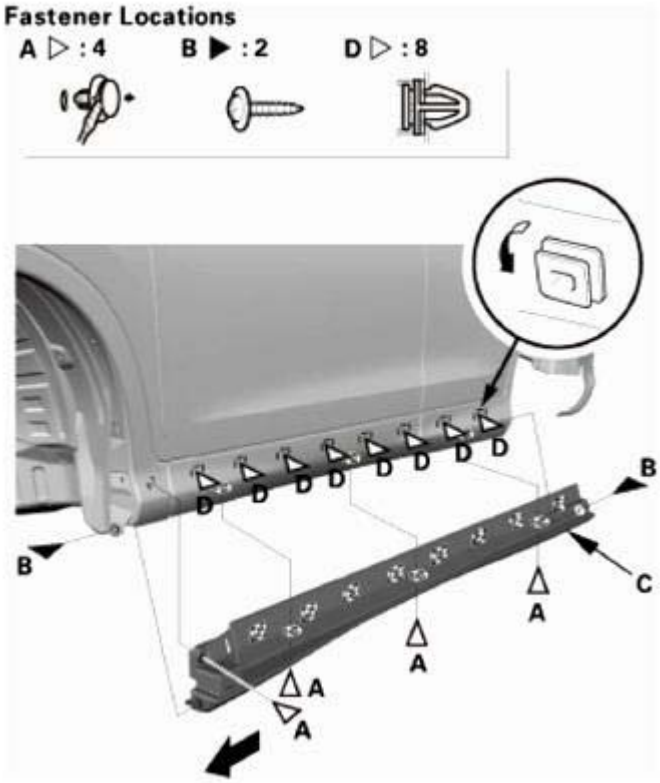

Fig. 346: Sliding Side Sill Panel
Courtesy of AMERICAN HONDA MOTOR CO., INC.

INSTALLATION

1. Side Sill Panel
    1. Hold up the side sill panel (A). Fit the clips (B) into the holes in the body, and push on the side sill panel until the clips snap into place.
    2. Install the clips (C) and the screw (D).

GETtheMANUALS.org

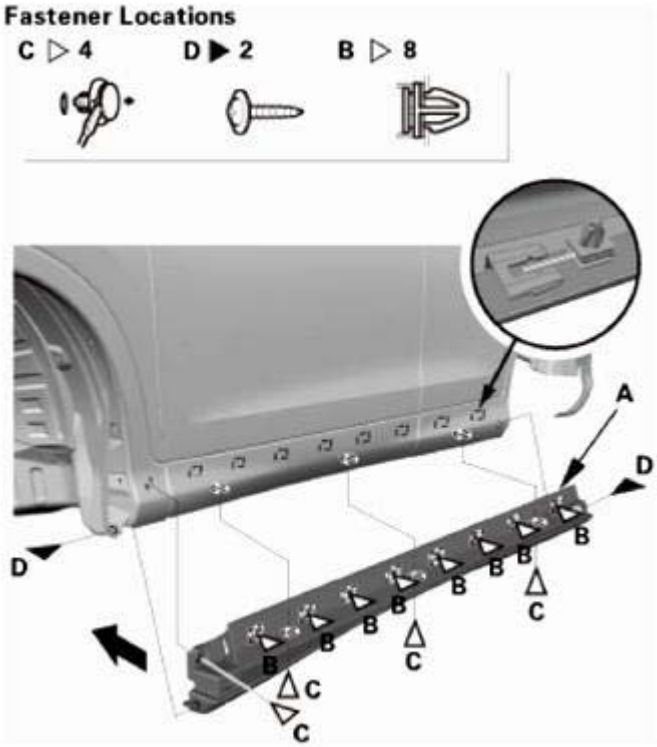

Fig. 347: Pushing Side Sill Panel
Courtesy of AMERICAN HONDA MOTOR CO., INC.

2. Rear Wheel Arch Protector Front Side As Needed
    1. Install the rear wheel arch protector (A), then install the screws (B) and the clip (C). Make sure the clips (D, E) snap into place securely.

GETtheMANUALS.org

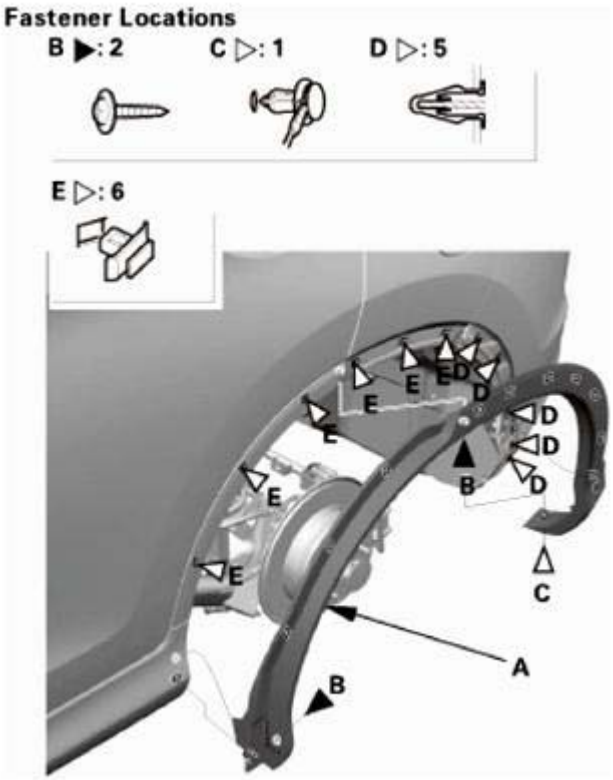

Fig. 348: Identifying Rear Wheel Arch Protector, Screws And Clip
Courtesy of AMERICAN HONDA MOTOR CO., INC.

3. Rear Splash Guard (For Some Models)
    1. Install the rear splash guard (A), then install the screws (B) and the clip (C). Make sure the clip snaps into place securely.

    Left side

GETtheMANUALS.org

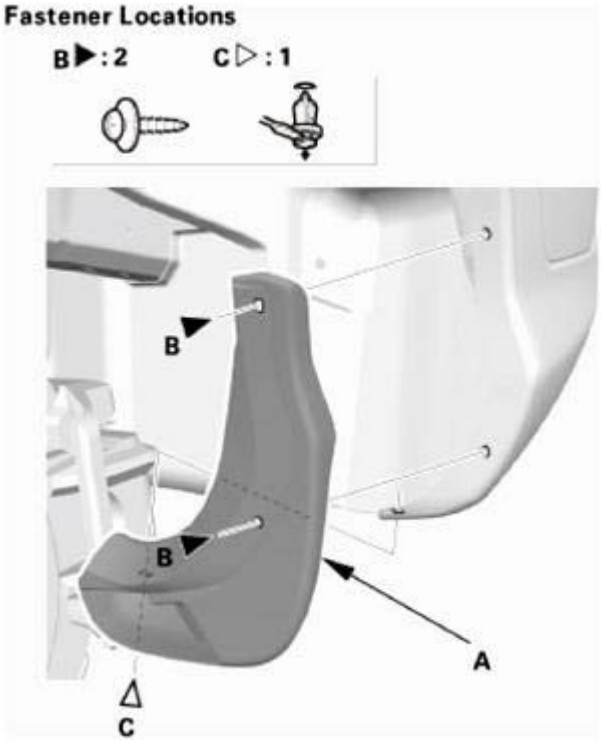

Fig. 349: Identifying Rear Splash Guard, Screws And Clip (Left Side)
Courtesy of AMERICAN HONDA MOTOR CO., INC.

Right side

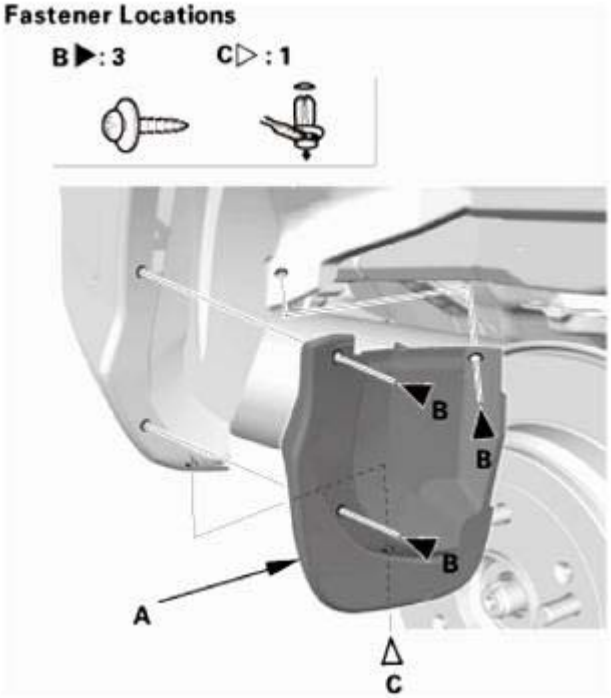

Fig. 350: Identifying Rear Splash Guard, Screws And Clip (Right Side)

GETtheMANUALS.org

Courtesy of AMERICAN HONDA MOTOR CO., INC.

4. Front Wheel Arch Protector Rear Side As Needed
    1. Install the front wheel arch protector (A), then install the screws (B) and the clips (C). Make sure the clips (D, E) snap into place securely.

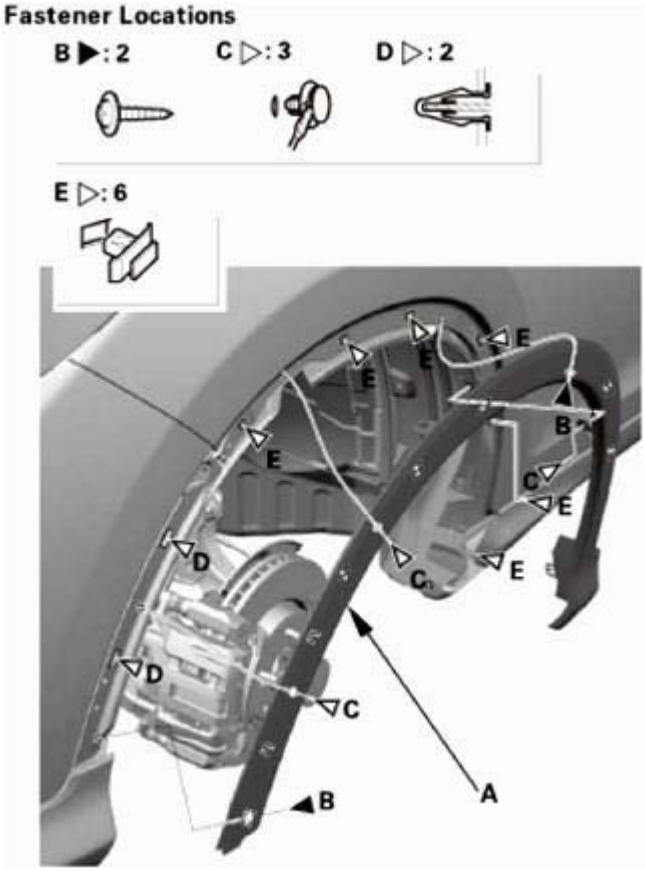

<u>Fig. 351: Identifying Front Wheel Arch Protector, Screws And Clips</u>
Courtesy of AMERICAN HONDA MOTOR CO., INC.

5. Front Splash Guard
    1. For some models: Install the front splash guard (A), then install the screws (B).

GETtheMANUALS.org

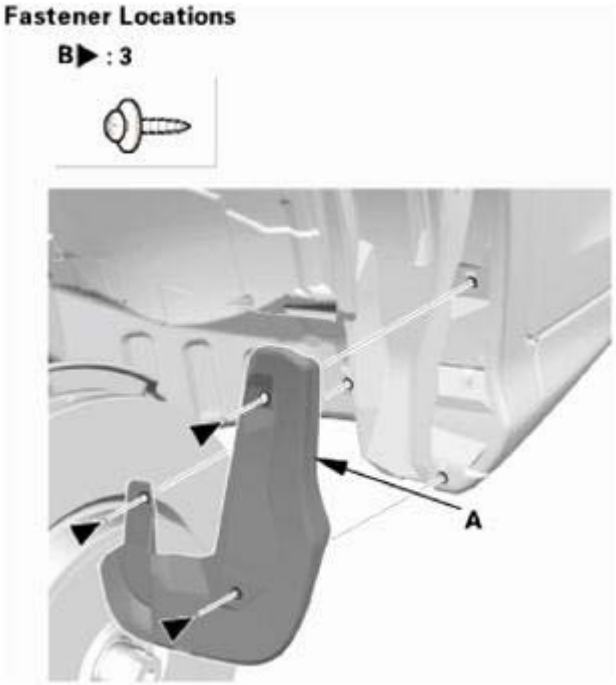

Fig. 352: Identifying Front Splash Guard And Screws
Courtesy of AMERICAN HONDA MOTOR CO., INC.

SIDE WINDSHIELD TRIM REMOVAL AND INSTALLATION

REMOVAL

1. Left Windshield Wiper Arm Assembly

NOTE: Set the windshield wiper arms to the auto-stop position before removal.

1. Remove the wiper arm cap (A).
2. Remove the nut (B), then remove the left wiper arm (C).

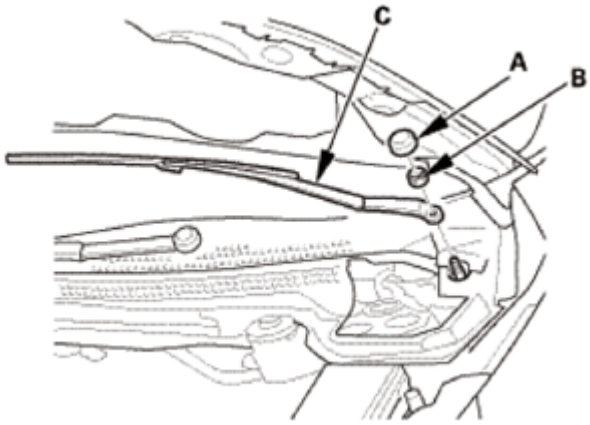

GETtheMANUALS.org

Fig. 353: Identifying Wiper Arm Cap, Left Wiper Arm And Nut
Courtesy of AMERICAN HONDA MOTOR CO., INC.

2. Front Fender Trim
    1. Remove the clips (A, B).
    2. Pull up the front fender trim (C) by hand to detach the clips (D), then remove the trim.

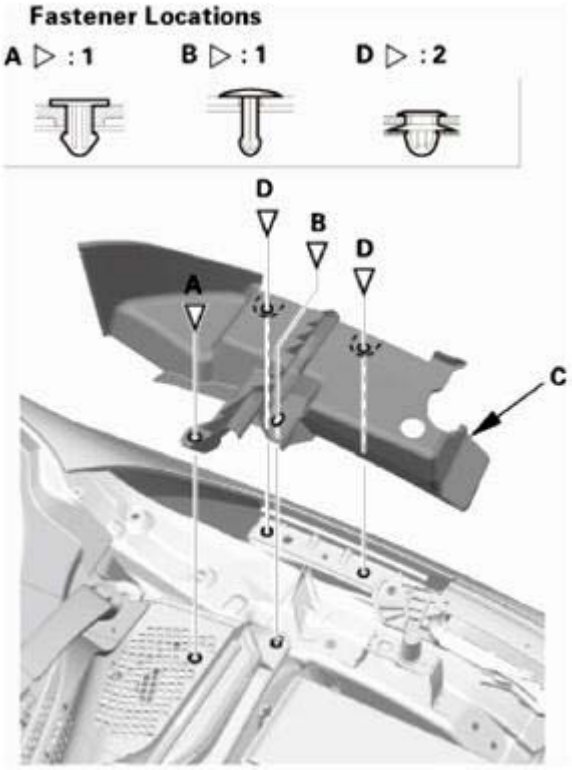

Fig. 354: Identifying Front Fender Trim And Clips
Courtesy of AMERICAN HONDA MOTOR CO., INC.

3. Left Cowl Top Cover
    1. Remove the clip (A).
    2. Pull out the hood rear seal (B).
    3. Detach the hooks, and remove the cowl top cover (C).

GETtheMANUALS.org

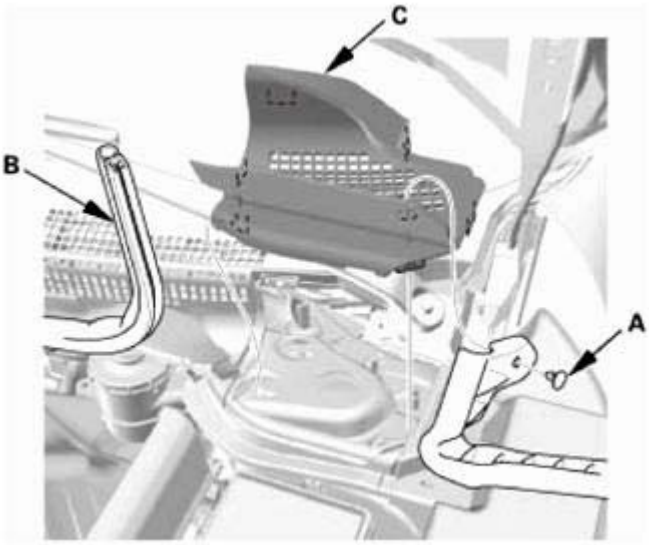

Fig. 355: Identifying Hood Rear Seal, Clip And Cowl Top Cover
Courtesy of AMERICAN HONDA MOTOR CO., INC.

4. Side Cowl Cover
    1. Detach the hook (A) at the inside of the cowl cover (B).
    2. Release the hooks (C) from the cowl cover and the front fender (D), then remove the side cowl cover (E).
    3. Right side: Detach the windshield washer tube.

GETtheMANUALS.org

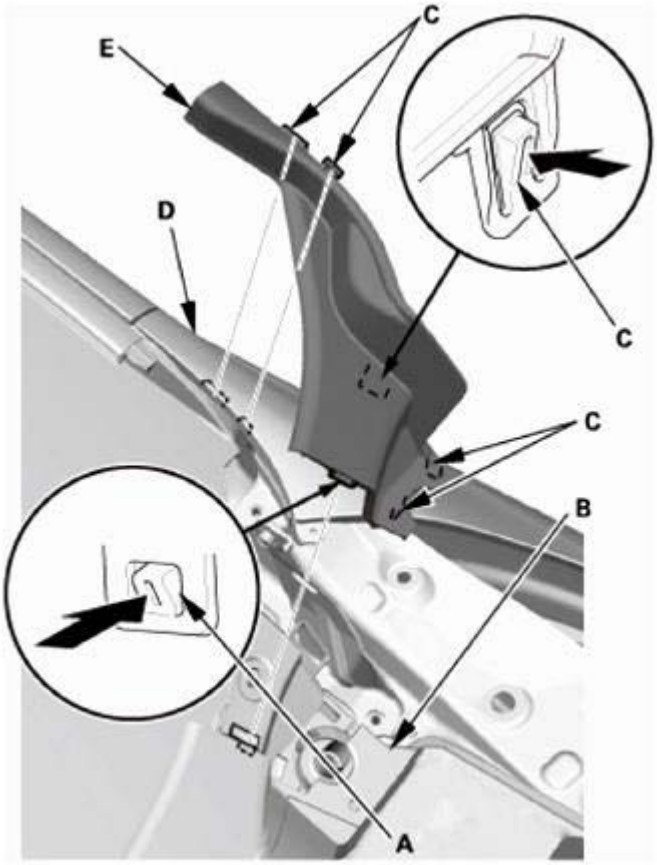

Fig. 356: Releasing Hooks
Courtesy of AMERICAN HONDA MOTOR CO., INC.

5. Roof Rail
    1. Remove the caps (A). (4 Places)

Fig. 357: Identifying Caps
Courtesy of AMERICAN HONDA MOTOR CO., INC.

GETtheMANUALS.org

2. Remove the roof rail (A).

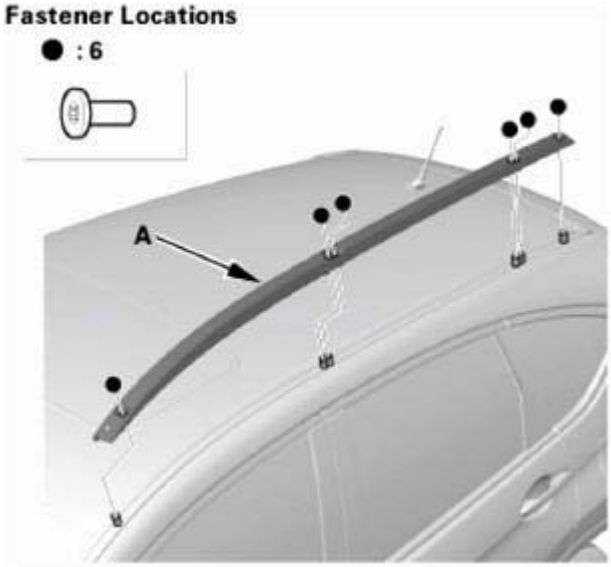

Fig. 358: Identifying Roof Rail
Courtesy of AMERICAN HONDA MOTOR CO., INC.

3. If necessary, slide the rear roof side trim (A) forward to release it from the body.

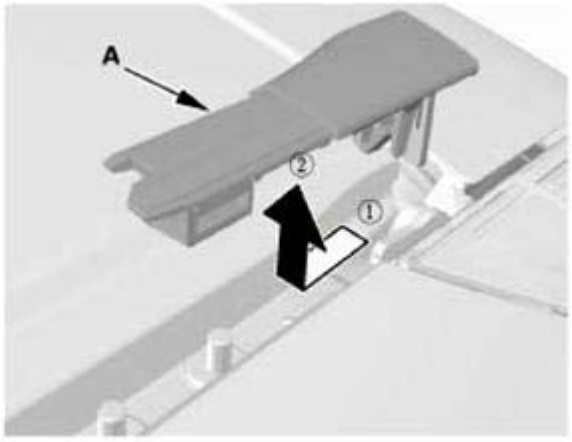

Fig. 359: Sliding Rear Roof Side Trim
Courtesy of AMERICAN HONDA MOTOR CO., INC.

6. Side Windshield Trim
   1. Carefully insert the trim tool (A) under the trim next to the lower clip (B).
   2. While pulling up the clip area of the trim by hand, push each of the six small hooks (C) to release the clip from the retainer (D) on the A-pillar. Do not pry up the clip if it is hard to release it from the clip on the A-pillar.
   3. Gradually work your way up to release each of the upper clips (E, F, and G).

GETtheMANUALS.org

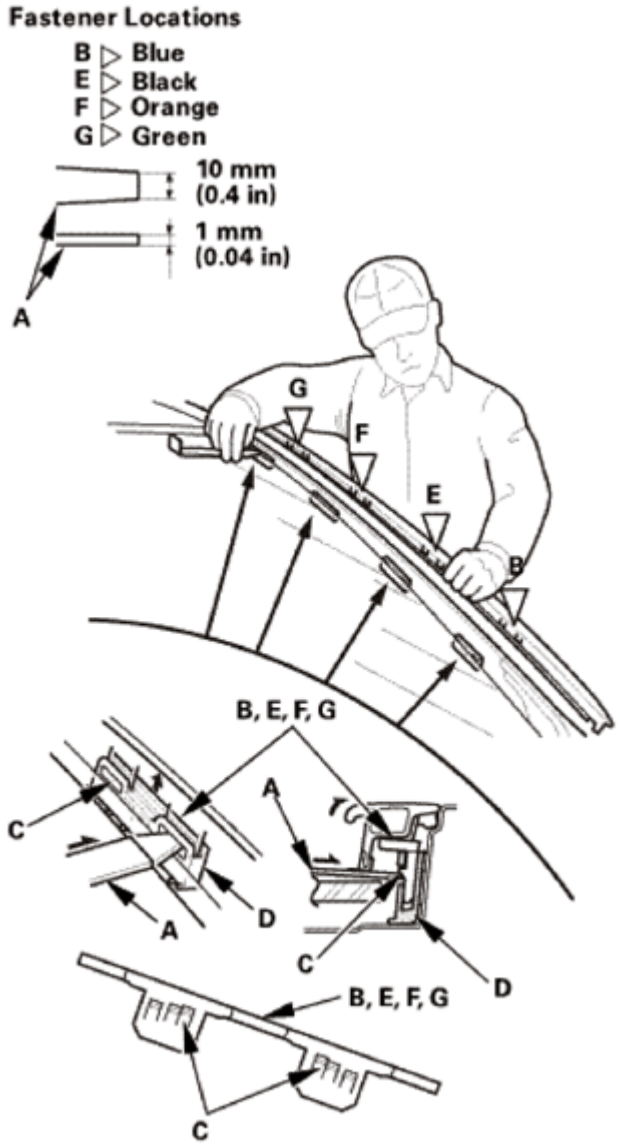

Fig. 360: Pulling Clip Area Of Trim
Courtesy of AMERICAN HONDA MOTOR CO., INC.

4. If necessary, remove the retainers (A, B) from the A-pillar.
5. Carefully rub off the adhesive tape (C) under the retainers while heating it with a heat gun.
6. Clean the body bonding surface with a shop towel dampened in isopropyl alcohol. After cleaning, keep oil, grease, and water from getting on the clean surface.

GETtheMANUALS.org

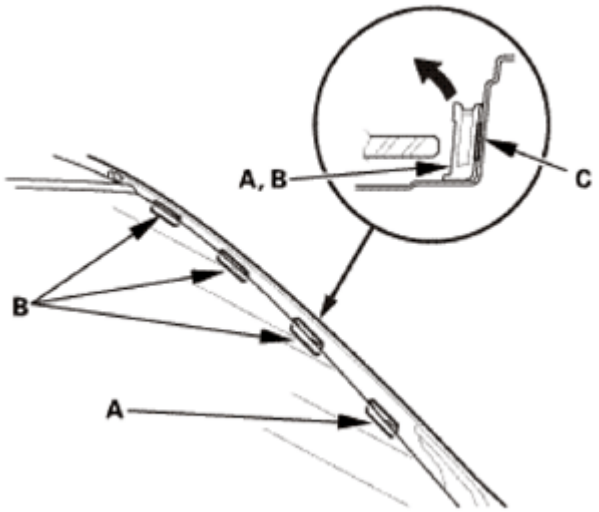

Fig. 361: Removing Retainers From A-Pillar
Courtesy of AMERICAN HONDA MOTOR CO., INC.

INSTALLATION

1. Side Windshield Trim
    1. Install the retainers (A, B) on the A-pillar.
    2. Peel the adhesive backing away from the upper retainers and the lower retainer.
    3. Line up the retainers with the alignment marks (C) on the body, and attach the retainers with adhesive tape (D).
    4. Apply epoxy two-part adhesive (E) around the edge of the retainers as shown.

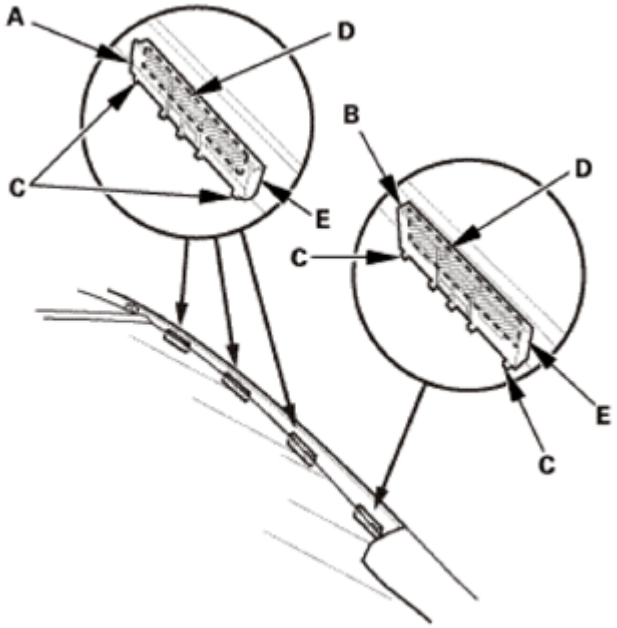

Fig. 362: Identifying Alignment Marks And Retainers

GETtheMANUALS.org

Courtesy of AMERICAN HONDA MOTOR CO., INC.

5. Install the side windshield trim (A).
6. Make sure the side windshield trim is installed securely.

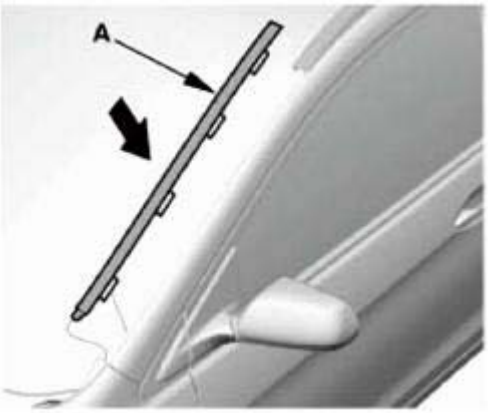

Fig. 363: Installing Side Windshield Trim
Courtesy of AMERICAN HONDA MOTOR CO., INC.

2. Roof Rail
   1. Slide the rear roof side trim (A) rearward to install it to the body.

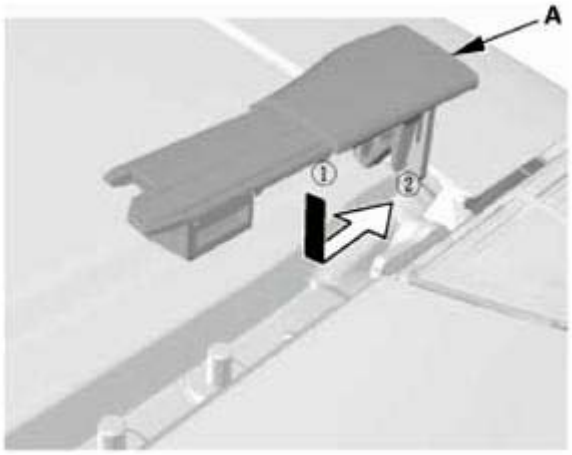

Fig. 364: Sliding Rear Roof Side Trim
Courtesy of AMERICAN HONDA MOTOR CO., INC.

   2. Install the roof rail (A), then install the nuts (B).

GETtheMANUALS.org

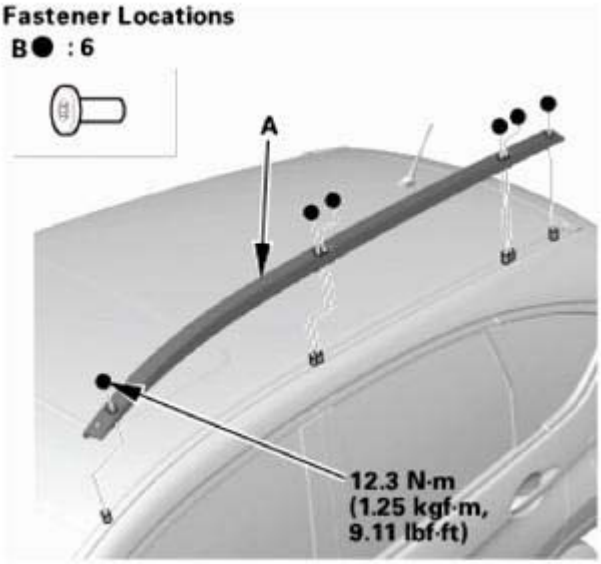

Fig. 365: Identifying Roof Rail And Nuts With Torque Specifications
Courtesy of AMERICAN HONDA MOTOR CO., INC.

3. Install the caps (A). (4 Places)

Fig. 366: Identifying Caps
Courtesy of AMERICAN HONDA MOTOR CO., INC.

3. Side Cowl Cover
    1. Install the side cowl cover (A). Make sure the hooks (B) snap into place securely.
    2. Right side: Install the windshield washer tube.

GETtheMANUALS.org

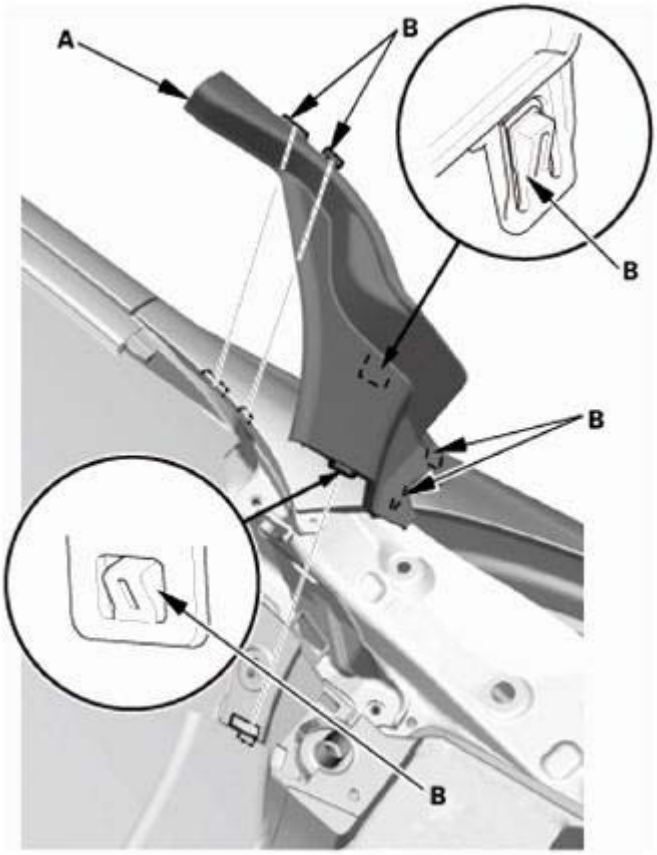

Fig. 367: Identifying Side Cowl Cover And Hooks
Courtesy of AMERICAN HONDA MOTOR CO., INC.

4. Left Cowl Top Cover
    1. Install the cowl top cover (A).
    2. Install the hood rear seal (B).
    3. Install the clip (C).

GETtheMANUALS.org

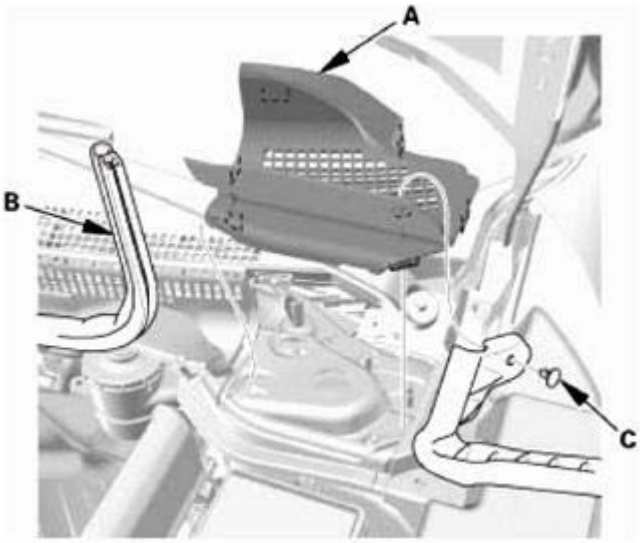

Fig. 368: Identifying Cowl Top Cover, Hood Rear Seal And Clips
Courtesy of AMERICAN HONDA MOTOR CO., INC.

5. Front Fender Trim
    1. Install the front fender trim (A), then install the clips (B, C). Make sure the clips (D) snap into place securely.

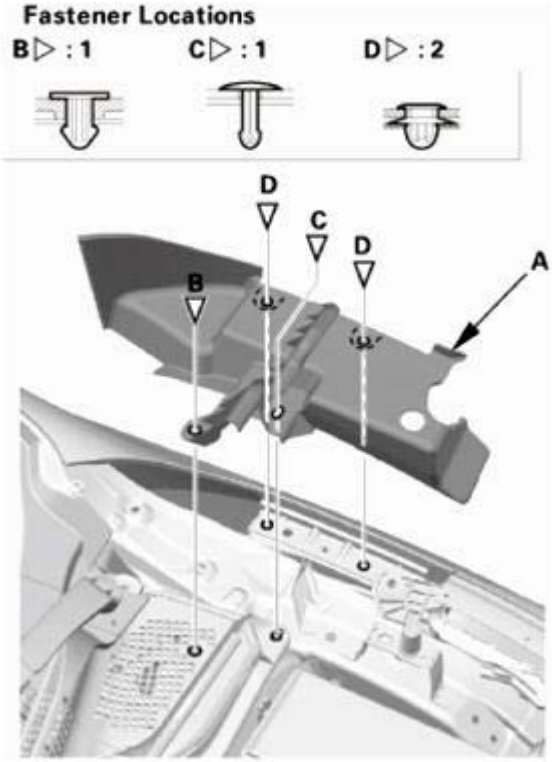

Fig. 369: Identifying Front Fender Trim And Clips
Courtesy of AMERICAN HONDA MOTOR CO., INC.

GETtheMANUALS.org

6. Left Windshield Wiper Arm Assembly

NOTE: Set the wiper arms to the auto-stop position before installation.

1. Install the wiper arm (A), the nut (B), and the cap (C).

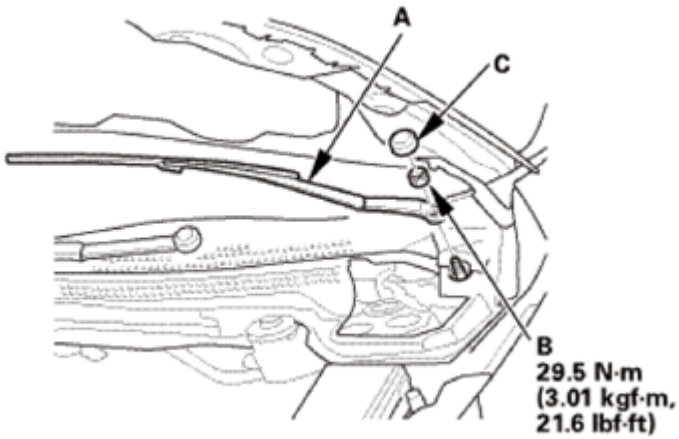

Fig. 370: Identifying Wiper Arm, Nut And Cap
Courtesy of AMERICAN HONDA MOTOR CO., INC.

7. Windshield Wiper Arm - Adjustment
   1. **Adjust the windshield wiper arms** See **WIPER ARM REMOVAL AND INSTALLATION** or **WIPER ARM/NOZZLE ADJUSTMENT** .

SUNVISOR REMOVAL AND INSTALLATION

REMOVAL

1. Sunvisor
   1. Push the tab (A) with a flat-tip screwdriver through the hole in the front side of the bracket cover (B).

NOTE: Make sure the tab is unlocked.

GETtheMANUALS.org

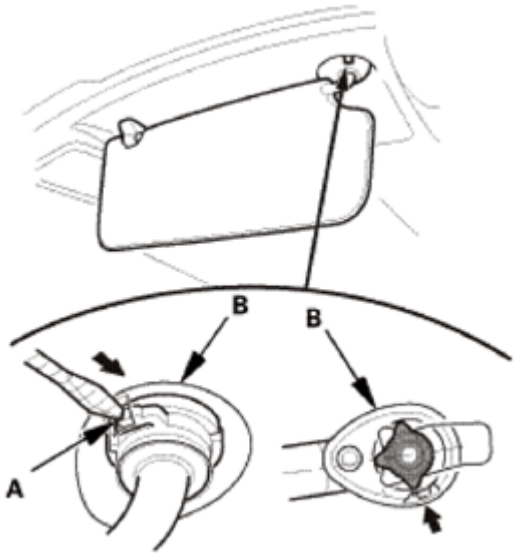

Fig. 371: Pushing Tab
Courtesy of AMERICAN HONDA MOTOR CO., INC.

2. While pushing in the tab (A) with a flat-tip screwdriver, release the sunvisor (B) from the holder (C), and rotate the sunvisor backward 45 °.

NOTE: **Make sure the tab slides into the bracket cover as you rotate the sunvisor.**

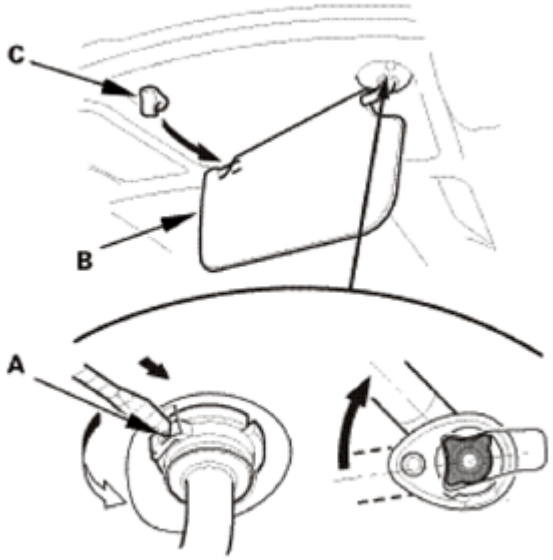

Fig. 372: Releasing Sunvisor From Holder
Courtesy of AMERICAN HONDA MOTOR CO., INC.

3. Disconnect the connector (A), then remove the sunvisor (B).

GETtheMANUALS.org

NOTE: **If the sunvisor cannot be removed, the tab has not rotated into the bracket cover. Repeat step 2 to rotate the tab.**

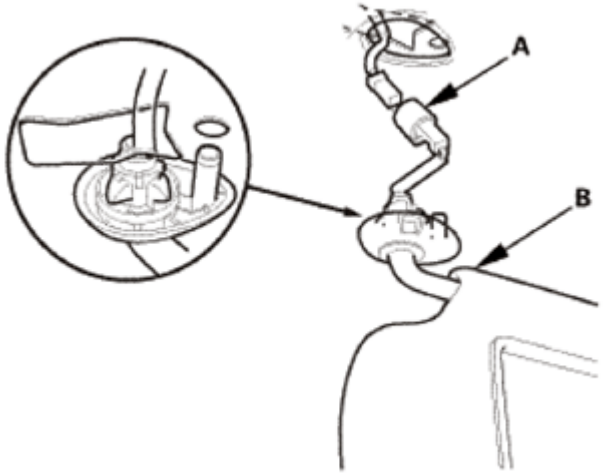

Fig. 373: Identifying Connector And Sunvisor
Courtesy of AMERICAN HONDA MOTOR CO., INC.

2. Sunvisor Holder
    1. If necessary, turn the sunvisor holder (A) 45 ° counterclockwise, then remove it from the holder grommet (B).

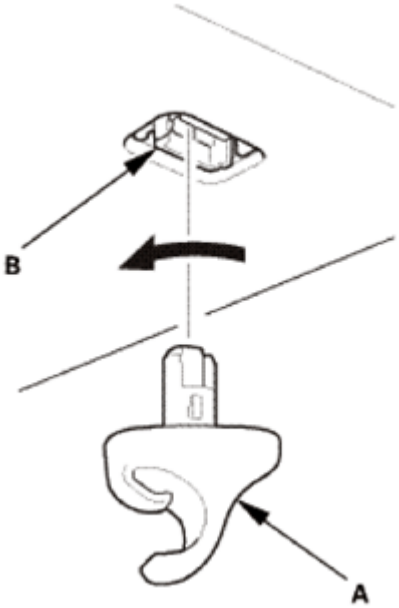

Fig. 374: Turning Sunvisor Holder
Courtesy of AMERICAN HONDA MOTOR CO., INC.

    2. If necessary, remove the holder grommet (A).

GETtheMANUALS.org

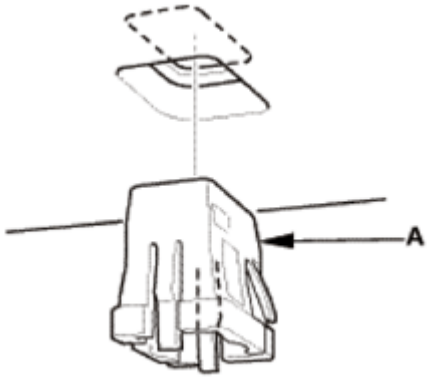

Fig. 375: Identifying Holder Grommet
Courtesy of AMERICAN HONDA MOTOR CO., INC.

INSTALLATION

1. Sunvisor - Check
    1. If the side curtain airbag has deployed, replace the sunvisor, along with the other parts listed for side curtain airbag deployment.
    2. If the side curtain airbag has not deployed, inspect the sunvisor for damage. A damaged sunvisor may cause the side curtain airbags to deploy improperly, possibly causing injury. Replace the sunvisor if it has any of the following damage:
        - Any cracks in the sunvisor bracket (A)
        - Any cracks in the sunvisor bracket cover (B)
        - Any bends or cracks in the sunvisor shaft (C)
        - Any cracks in the sunvisor base (D)
        - Any cracks in the vanity mirror base (E)
    3. If the holder grommet is damaged or stress-whitened, replace the holder grommet and the holder as an assembly.

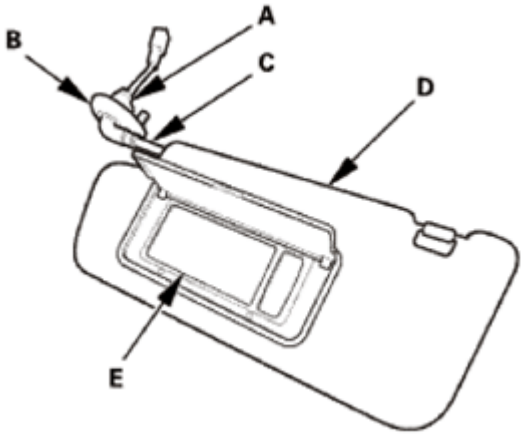

Fig. 376: Identifying Cracks On Sunvisor Bracket, Cover, Shaft, Sunvisior And Vanity Mirror Base

GETtheMANUALS.org

Courtesy of AMERICAN HONDA MOTOR CO., INC.

2. Sunvisor Holder
    1. Install the holder (A) into the holder grommet (B) by turning it 45 ° clockwise.
    2. Install the holder and the holder grommet as an assembly into the body by pushing it until the hooks snap into place securely.

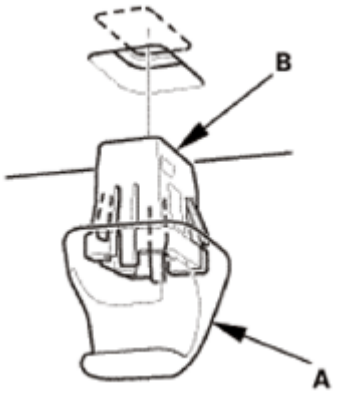

Fig. 377: Identifying Sunvisor And Connector
Courtesy of AMERICAN HONDA MOTOR CO., INC.

3. Sunvisor
    1. Connect the connector (A), and install the sunvisor (B).

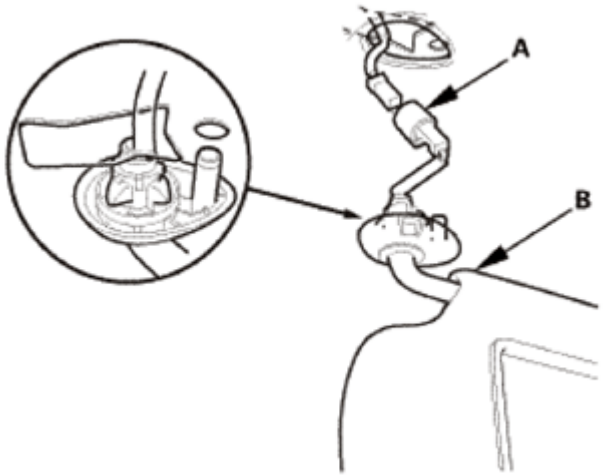

Fig. 378: Identifying Sunvisor And Connector
Courtesy of AMERICAN HONDA MOTOR CO., INC.

    2. While holding the bracket cover (A), rotate the sunvisor (B) forward until the tab (C) snaps into place.
    3. Gently pull down on the sunvisor to make sure it is properly secured in the body.
    4. Rotate the sunvisor into the holder (D).

GETtheMANUALS.org

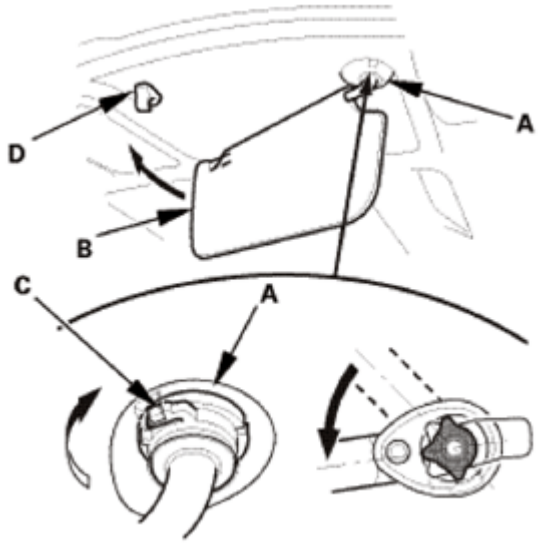

Fig. 379: Rotating Sunvisor
Courtesy of AMERICAN HONDA MOTOR CO., INC.

GETtheMANUALS.org

KEYLESS/POWER DOOR LOCKS/SECURITY SYSTEM TRIPPED SENSOR RECALL

The security system stores information on the last tripped sensor if the security system has been actuated. The information can be retrieved using the HDS.

To retrieve the last tripped sensor data, do this:

1. Select SECURITY from the BODY ELECTRICAL SYSTEM SELECT menu, enter HISTORY DATA.
2. Scroll through the data list.
   - Sensors that were actuated will indicate ON.
   - Sensors that were not actuated will indicate NONE.
3. Inspect the ON circuit for these problems:
   - Misadjusted or damaged switch.
   - Loose or corroded connections.
   - Intermittent short to ground.

NOTE: **If PANIC FRAME RECEPTION is indicated ON, inform the customer that it could have been set by something pressing the panic button of one of the registered transmitter (in a pocket or purse, under a stack of papers, etc.).**

KEYLESS/POWER DOOR LOCKS/SECURITY SYSTEM SYMPTOM TROUBLESHOOTING INDEX

NOTE: **If the door lock system and the keyless operation do not work, troubleshoot the door locks first. The system does not function when the ignition switch is ON (II).**

Symptom	Check Items	Also check for
The security system sounds randomly while the doors are locked.	**TRIPPED SENSOR HISTORY**	
All the doors will not lock or unlock with driver's door key cylinder or door lock switch or keyless transmitter.	• Poor ground (G402, G501, G604) • Blown No. B41 (20 A) fuse in the under-dash fuse/relay box • **MICU INPUT TEST**	

GETtheMANUALS.org

	• Transmitter test	
Driver's door will not lock or unlock.	• Poor ground (G402, G501, G604) • Blown No. B15 (10 A) and/or No. B30 (10 A) fuse in the under-dash fuse/relay box • Door switch test (check the door switch ON/OFF information with the HDS) • **ACTUATOR TEST**	
Left rear door will not lock or unlock.	• Poor ground (G402, G501, G601, G604) • Blown No. B9 (10 A) and/or No. B33 (15 A) fuse in the under-dash fuse/relay box • **MICU INPUT TEST** • Door switch test (check the door switch ON/OFF information with the HDS) • **ACTUATOR TEST**	
Front passenger's and right rear doors will not lock or unlock.	• Poor ground (G402, G501, G503, G604) • Blown No. B8 (15 A) and/or No. B32 (15 A) fuse in the under-dash fuse/relay box • **MICU INPUT TEST** • Door switch test (check the door switch ON/OFF information with the HDS) • **ACTUATOR TEST**	
Keyless operation does not work (LOCK, UNLOCK, PANIC).	**Keyless operation does not work (LOCK, UNLOCK, PANIC)**	
Passenger doors will not unlock with the transmitter or key cylinder switch, but will unlock with the inside door unlock switch.	Driver's door lock knob switch test (check for door lock knob switch ON/OFF information with the HDS)	
Doors automatically relock 30 seconds after being unlocked with the transmitter even though a door has been opened.	• **Doors automatically relock 30 seconds after being unlocked with the transmitter even though a door has been opened** • Door switch test (check the door switch ON/OFF information with the HDS)	
The horn does not sound and/or the headlights do not flash when the PANIC button on the transmitter is pressed.	**The horn does not sound and/or the headlights do not flash when the PANIC button on the transmitter is pressed**	
Security alarm system will not arm.	**Security alarm system will not arm**	
Auto door unlock does not work.	**Auto door unlock does not work**	

DOOR KEY CYLINDER SWITCH TEST

REMOVAL

GETtheMANUALS.org

1. Door Mirror Cover
    1. Carefully pry out the door mirror cover (A) with the appropriate trim tool to detach the clips (B), then remove the door mirror cover.
    2. With tweeter: Disconnect the connector (C).

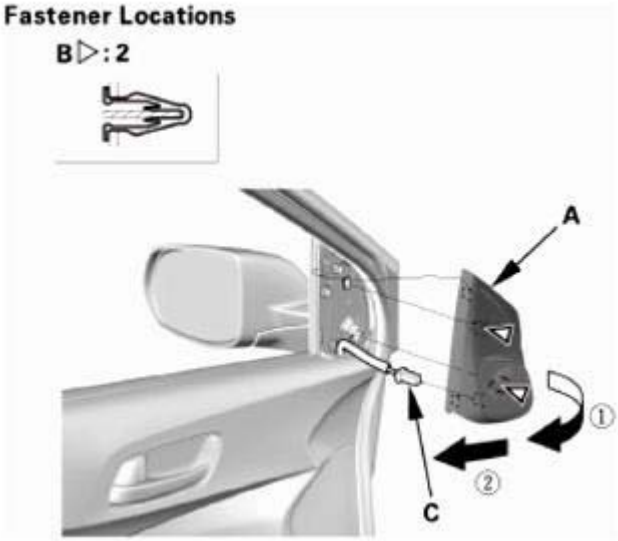

Fig. 1: Removing Door Mirror Cover
Courtesy of AMERICAN HONDA MOTOR CO., INC.

2. Front Door Power Window Switch Panel
    1. Carefully pry out on the notch (A) in the power window switch panel (B) with the appropriate trim tool to detach the clips (C) and the hooks (D). Disconnect the connectors (E), then remove the power window switch panel.

GETtheMANUALS.org

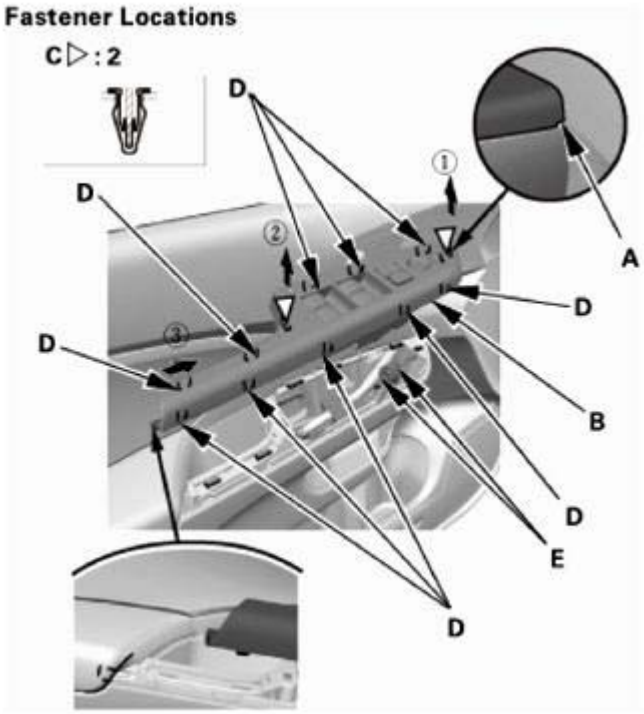

Fig. 2: Removing Power Window Switch Panel
Courtesy of AMERICAN HONDA MOTOR CO., INC.

3. Front Door Panel
    1. Carefully pry out on the upper hook (A) in the inner handle cap (B) with the appropriate trim tool, then pull back the inner handle cap to remove it.

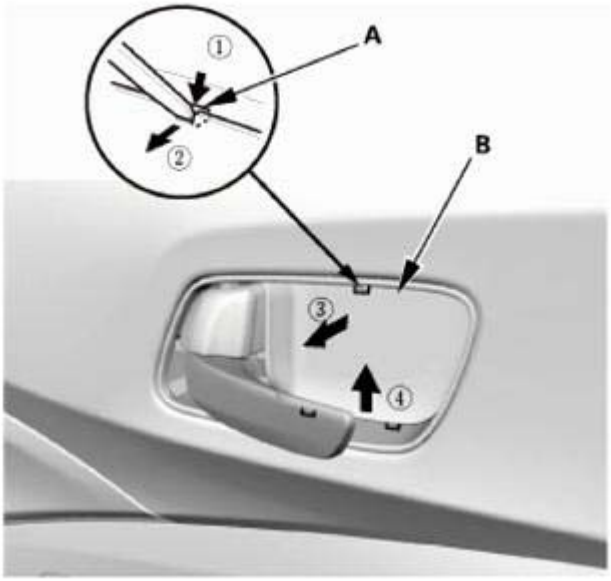

Fig. 3: Removing Power Window Switch Panel
Courtesy of AMERICAN HONDA MOTOR CO., INC.

GETtheMANUALS.org

2. Remove the screws (A) securing the inner handle (B).

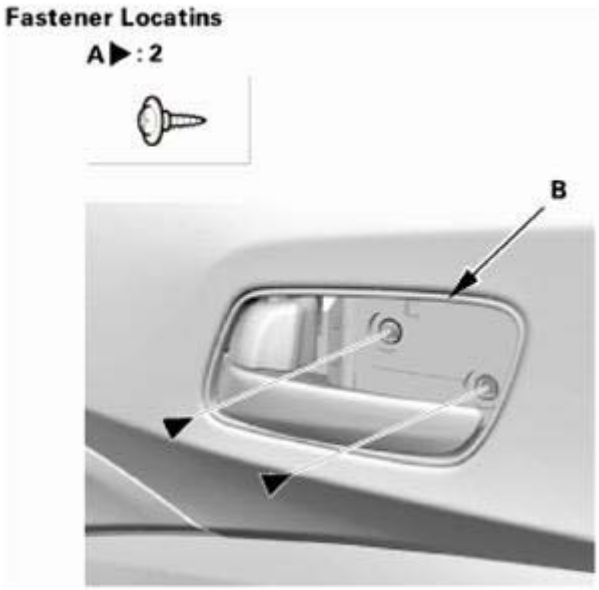

Fig. 4: Identifying Inner Handle And Screws
Courtesy of AMERICAN HONDA MOTOR CO., INC.

3. Remove the pull pocket mat (A), then remove the screw (B).

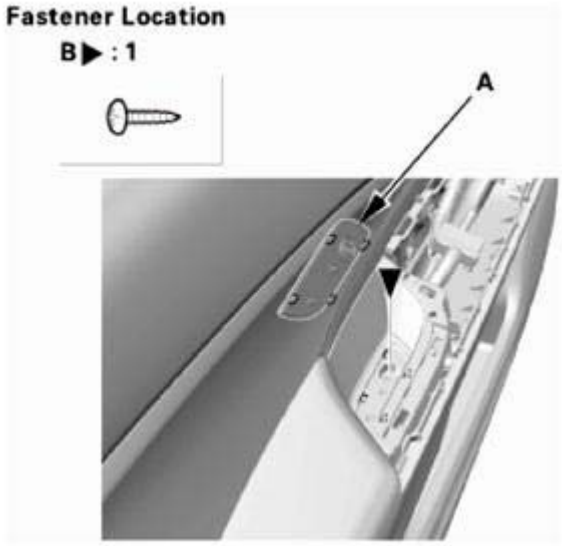

Fig. 5: Identifying Pull Pocket Mat And Screws
Courtesy of AMERICAN HONDA MOTOR CO., INC.

4. Starting at the bottom edge of the door panel (A), detach the clips (B) with a commercially available trim pad remover.
5. Starting at the rear, pull the door panel upward.

GETtheMANUALS.org

6. Remove the inner handle (C) from the door panel, then remove the door panel.

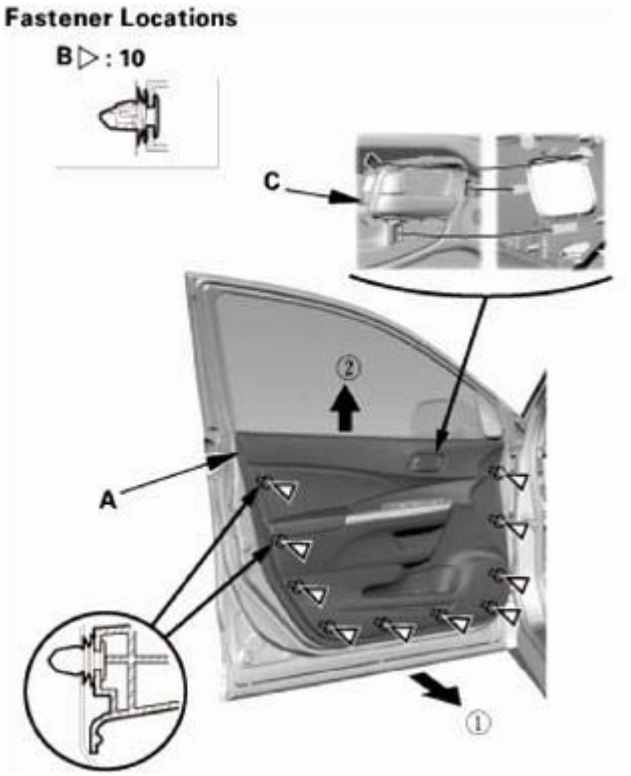

Fig. 6: Removing Door Panel
Courtesy of AMERICAN HONDA MOTOR CO., INC.

TEST

1. Door Key Cylinder Switch - Test
    1. Disconnect the connector.
    2. Check for continuity between the terminals in each switch position according to the table.
    3. If the continuity is not as specified, the door key cylinder switch is faulty; replace the driver's door latch (A).
    4. Connect the connector.

GETtheMANUALS.org

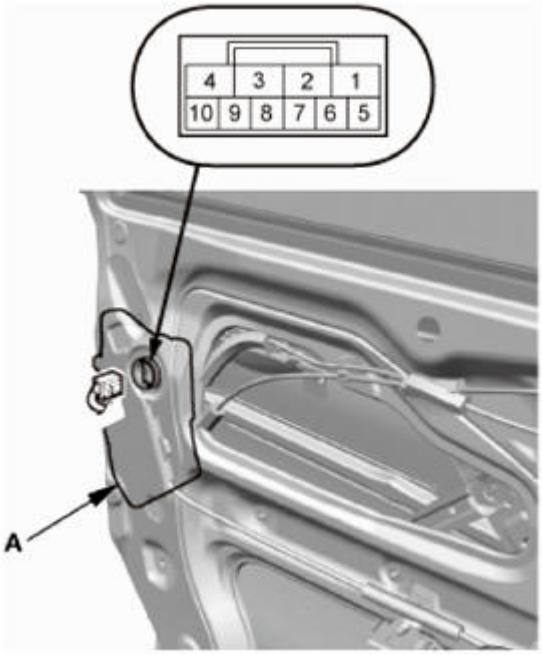

Fig. 7: Identifying Driver Door Latch Connector Terminals
Courtesy of AMERICAN HONDA MOTOR CO., INC.

Terminal / Position	7	9	10
LOCK	○	○	
NEUTRAL			
UNLOCK	○		○

Fig. 8: Driver Door Latch Switch Continuity Reference Chart
Courtesy of AMERICAN HONDA MOTOR CO., INC.

INSTALLATION

1. Front Door Panel
    1. Install the inner handle (A) in the door panel (B).
    2. Install the door panel. Make sure the clips (C) snap into place securely.

GETtheMANUALS.org

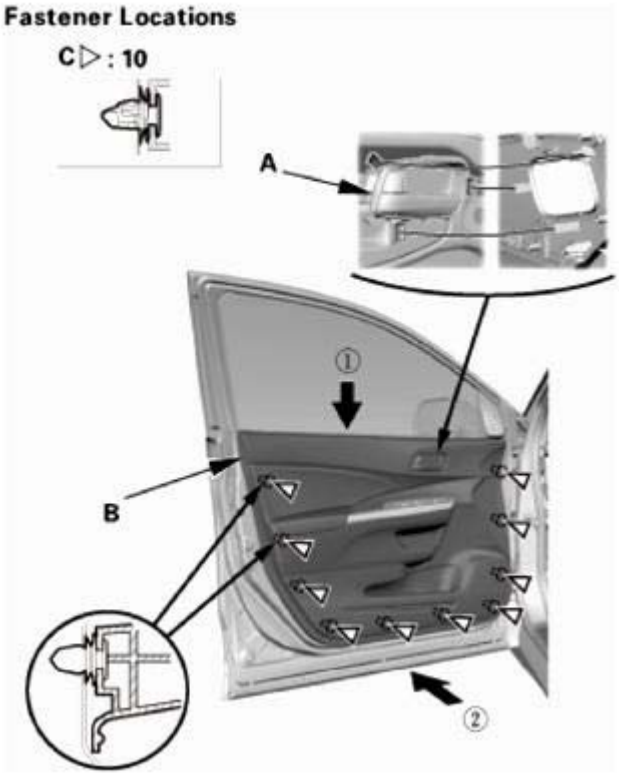

Fig. 9: Installing Front Door Panel
Courtesy of AMERICAN HONDA MOTOR CO., INC.

3. Install the screw (A), then install the pull pocket mat (B).

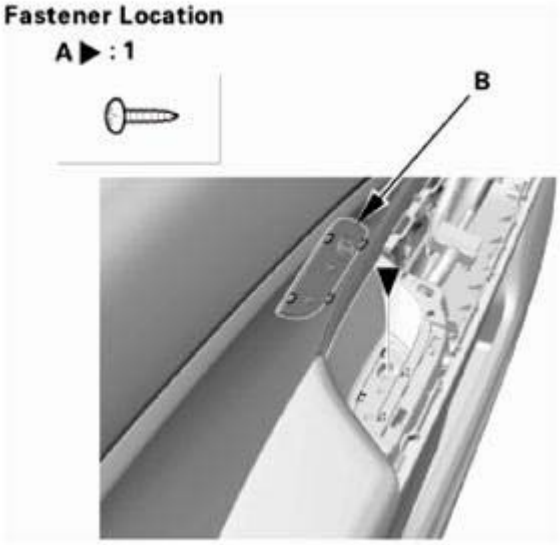

Fig. 10: Identifying Pull Pocket Mat And Screws
Courtesy of AMERICAN HONDA MOTOR CO., INC.

4. Install the screws (A) securing the inner handle (B).

GETtheMANUALS.org

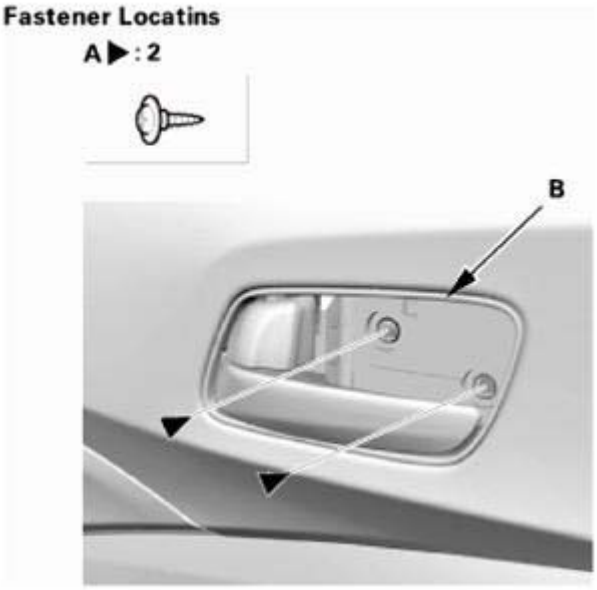

Fig. 11: Identifying Inner Handle And Screws
Courtesy of AMERICAN HONDA MOTOR CO., INC.

5. Install the inner handle cap (A). Make sure the upper hook (B) and the lower hooks (C) snap into place securely.

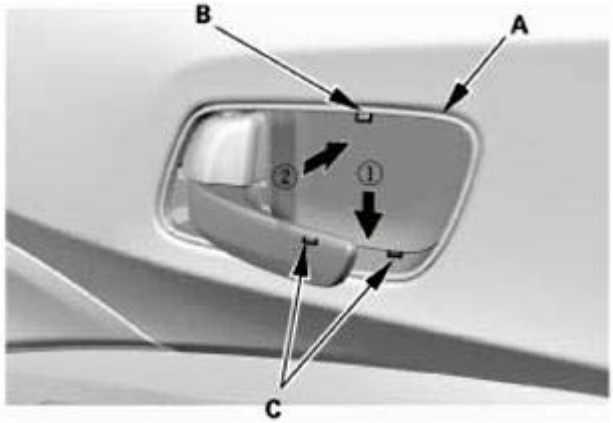

Fig. 12: Installing Inner Handle Cap
Courtesy of AMERICAN HONDA MOTOR CO., INC.

2. Front Door Power Window Switch Panel
    1. Connect the connectors (A), then install the power window switch panel (B). Make sure the clips (C) and the hooks (D) snap into place securely.

GETtheMANUALS.org

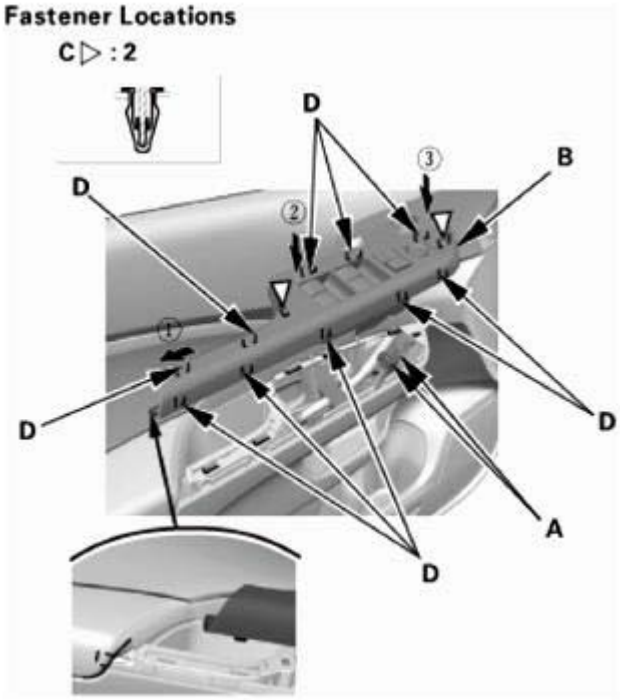

Fig. 13: Installing Front Door Power Window Switch Panel
Courtesy of AMERICAN HONDA MOTOR CO., INC.

3. Door Mirror Cover
    1. With tweeter: Connect the connector (A).
    2. Install the door mirror cover (B). Make sure the clips (C) snap into place securely.

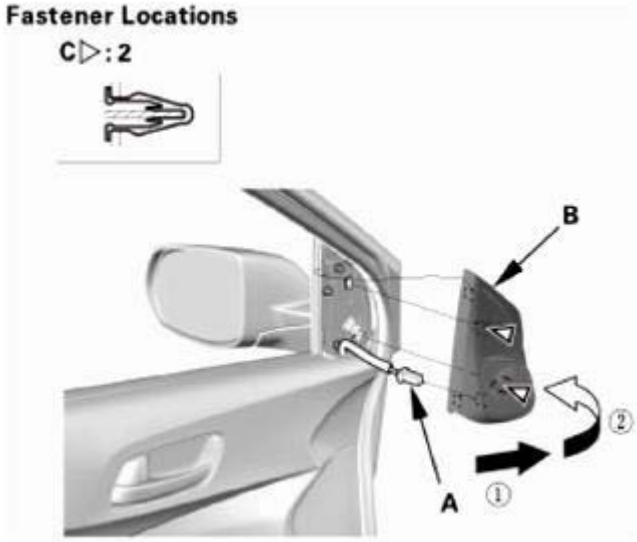

Fig. 14: Installing Door Mirror Cover
Courtesy of AMERICAN HONDA MOTOR CO., INC.

GETtheMANUALS.org

DOOR LOCK ACTUATOR TEST

REMOVAL

1. Door Mirror Cover
    1. Carefully pry out the door mirror cover (A) with the appropriate trim tool to detach the clips (B), then remove the door mirror cover.
    2. With tweeter: Disconnect the connector (C).

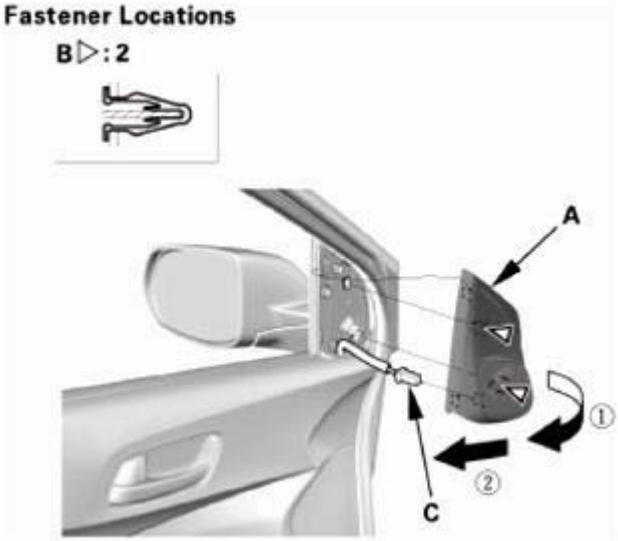

Fig. 15: Removing Door Mirror Cover
Courtesy of AMERICAN HONDA MOTOR CO., INC.

2. Front Door Power Window Switch Panel
    1. Carefully pry out on the notch (A) in the power window switch panel (B) with the appropriate trim tool to detach the clips (C) and the hooks (D). Disconnect the connectors (E), then remove the power window switch panel.

GETtheMANUALS.org

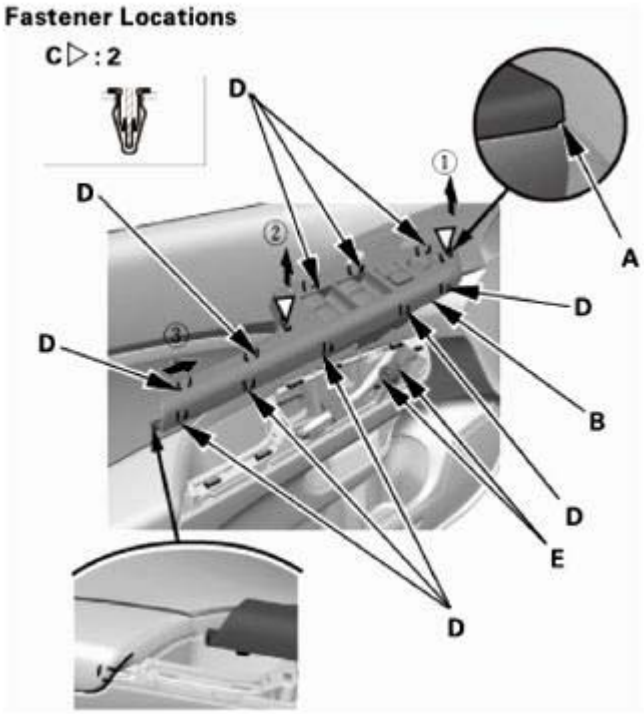

Fig. 16: Removing Power Window Switch Panel
Courtesy of AMERICAN HONDA MOTOR CO., INC.

3. Front Door Panel
    1. Carefully pry out on the upper hook (A) in the inner handle cap (B) with the appropriate trim tool, then pull back the inner handle cap to remove it.

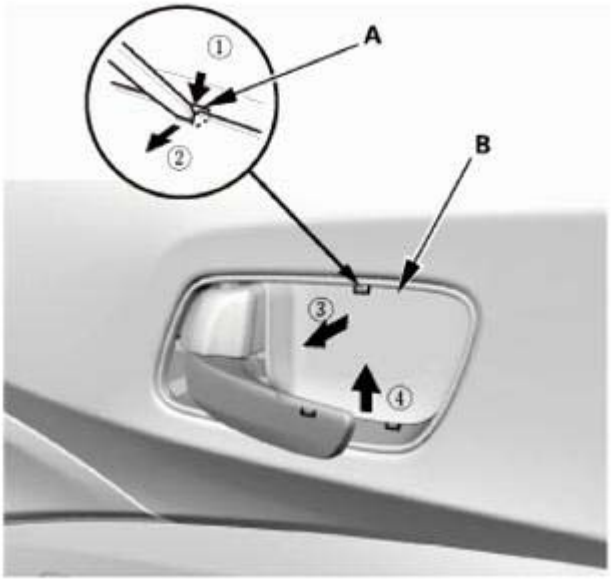

Fig. 17: Removing Inner Handle Cap
Courtesy of AMERICAN HONDA MOTOR CO., INC.

GETtheMANUALS.org

2. Remove the screws (A) securing the inner handle (B).

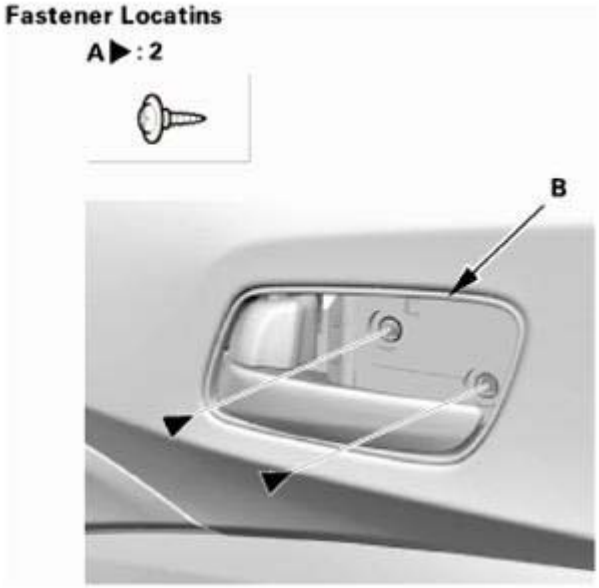

Fig. 18: Identifying Inner Handle And Screws
Courtesy of AMERICAN HONDA MOTOR CO., INC.

3. Remove the pull pocket mat (A), then remove the screw (B).

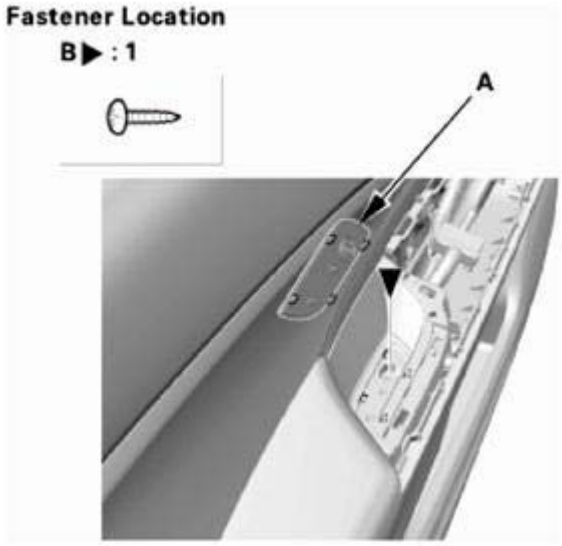

Fig. 19: Identifying Pull Pocket Mat And Screws
Courtesy of AMERICAN HONDA MOTOR CO., INC.

4. Starting at the bottom edge of the door panel (A), detach the clips (B) with a commercially available trim pad remover.
5. Starting at the rear, pull the door panel upward.

GETtheMANUALS.org

6. Remove the inner handle (C) from the door panel, then remove the door panel.

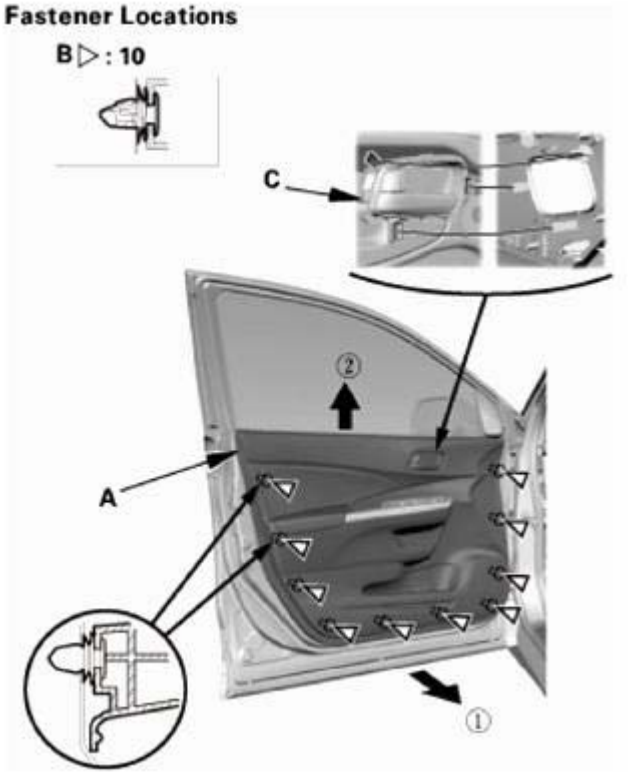

Fig. 20: Removing Door Panel
Courtesy of AMERICAN HONDA MOTOR CO., INC.

4. Rear Door Power Window Switch Panel
    1. Carefully pry out on the notch (A) in the power window switch panel (B) with the appropriate trim tool to detach the clips (C) and the hooks (D). Disconnect the connector (E), then remove the power window switch panel.

GETtheMANUALS.org

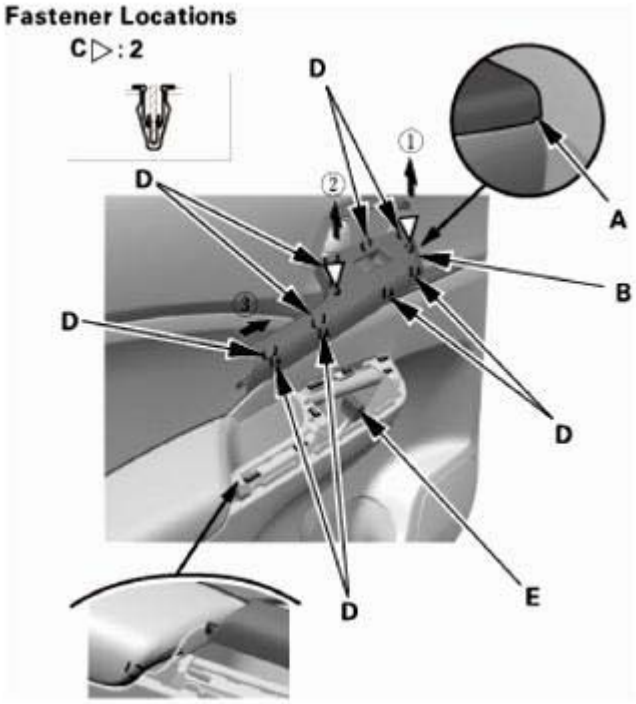

Fig. 21: Removing Power Window Switch Panel
Courtesy of AMERICAN HONDA MOTOR CO., INC.

5. Rear Door Panel
    1. Detach the clip (A) and the hooks (B), then remove the rear door quarter inner trim (C).

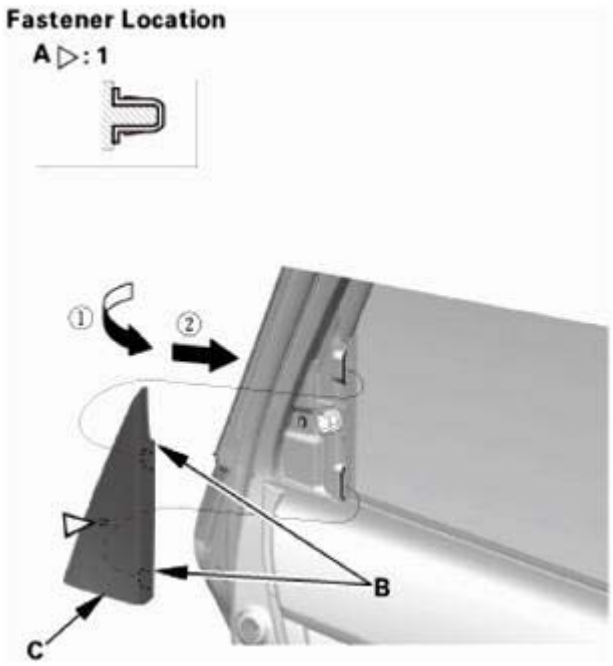

Fig. 22: Removing Rear Door Quarter Inner Trim

GETtheMANUALS.org

Courtesy of AMERICAN HONDA MOTOR CO., INC.

2. Carefully pry out on the upper hook (A) in the inner handle cap (B) with the appropriate trim tool, then pull back the inner handle cap to remove it.

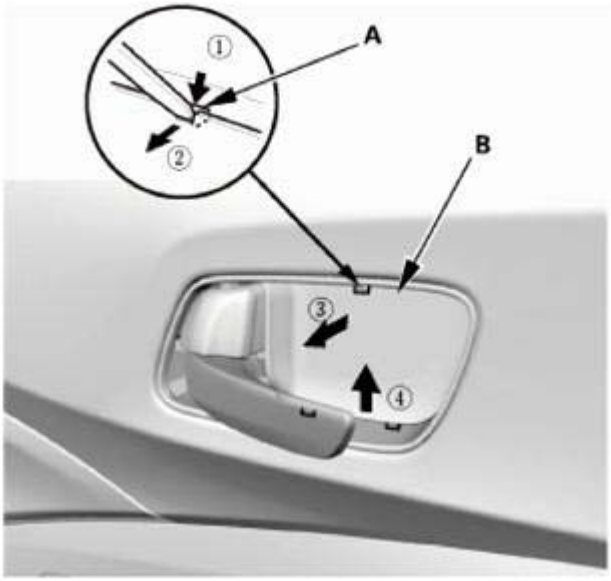

Fig. 23: Removing Inner Handle Cap
Courtesy of AMERICAN HONDA MOTOR CO., INC.

3. Remove the screws (A) securing the inner handle (B).

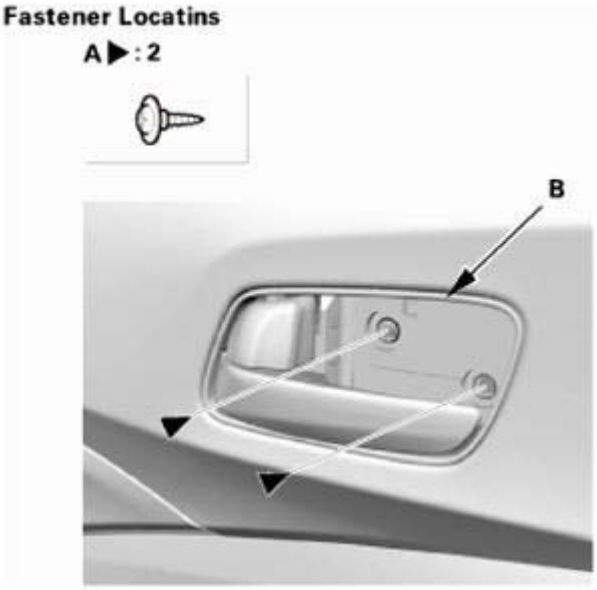

Fig. 24: Identifying Inner Handle And Screws
Courtesy of AMERICAN HONDA MOTOR CO., INC.

GETtheMANUALS.org

4. Remove the pull pocket mat (A), then remove the screw (B).

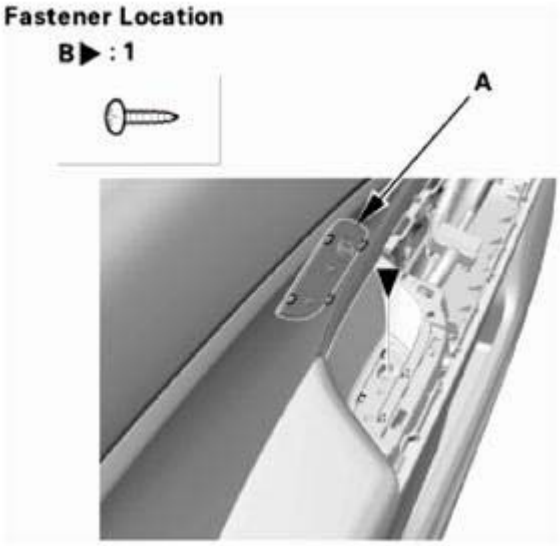

Fig. 25: Identifying Pull Pocket Mat And Screws
Courtesy of AMERICAN HONDA MOTOR CO., INC.

5. Starting at the bottom edge of the door panel (A), detach the clips (B) with a commercially available trim pad remover.
6. Starting at the rear, pull the door panel up.
7. Remove the inner handle (C) from the door panel, then remove the door panel.

GETtheMANUALS.org

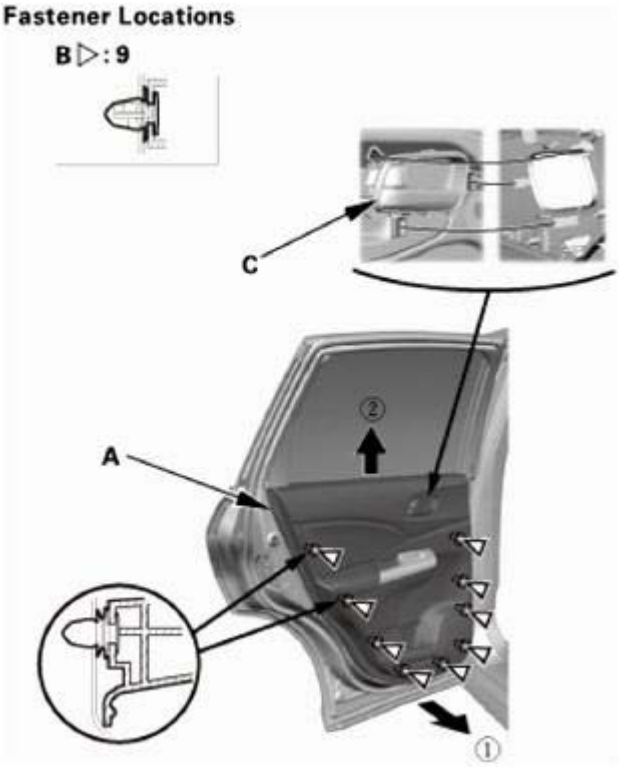

Fig. 26: Removing Door Panel
Courtesy of AMERICAN HONDA MOTOR CO., INC.

TEST

1. Front Door Lock Actuator - Test
    1. Disconnect the connector.
    2. Check the actuator operation by connecting power and ground according to the table.

    NOTE: To prevent damage to the actuator, apply battery voltage only momentarily.

    3. If the actuator does not operate as specified, the front door lock actuator is faulty; replace the front door latch (A).
    4. Connect the connector.

GETtheMANUALS.org

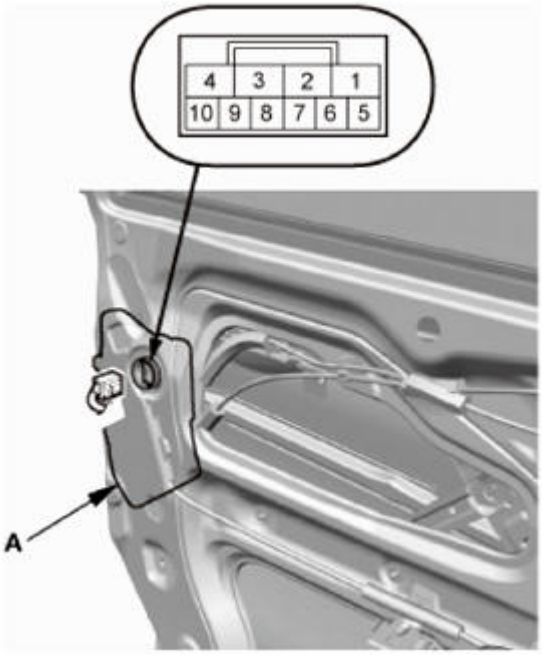

Fig. 27: Identifying Front Door Latch Connector Terminals
Courtesy of AMERICAN HONDA MOTOR CO., INC.

Position \ Terminal	1	4
LOCK	⊖	⊕
UNLOCK	⊕	⊖

Fig. 28: Front Door Latch Switch Continuity Reference Chart
Courtesy of AMERICAN HONDA MOTOR CO., INC.

2. Rear Door Lock Actuator - Test
    1. Disconnect the connector.
    2. Check the actuator operation by connecting power and ground according to the table.

    NOTE: **To prevent damage to the actuator, apply battery voltage only momentarily.**

    3. If the actuator does not operate as specified, the rear door lock actuator is faulty; replace the rear door latch (A).
    4. Connect the connector.

GETtheMANUALS.org

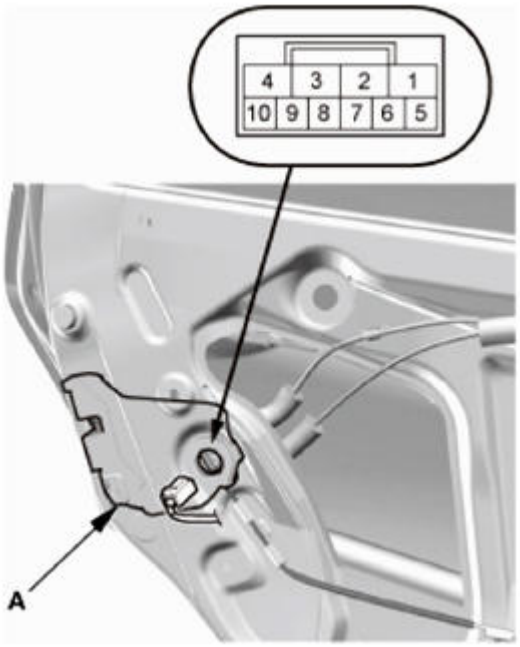

Fig. 29: Identifying Rear Door Latch Connector Terminals
Courtesy of AMERICAN HONDA MOTOR CO., INC.

Position \ Terminal	1	4
LOCK	⊖	⊕
UNLOCK	⊕	⊖

Fig. 30: Rear Door Latch Switch Continuity Reference Chart
Courtesy of AMERICAN HONDA MOTOR CO., INC.

INSTALLATION

1. Rear Door Panel
    1. Install the inner handle (A) in the door panel (B).
    2. Install the door panel. Make sure the clips (C) snap into place securely.

GETtheMANUALS.org

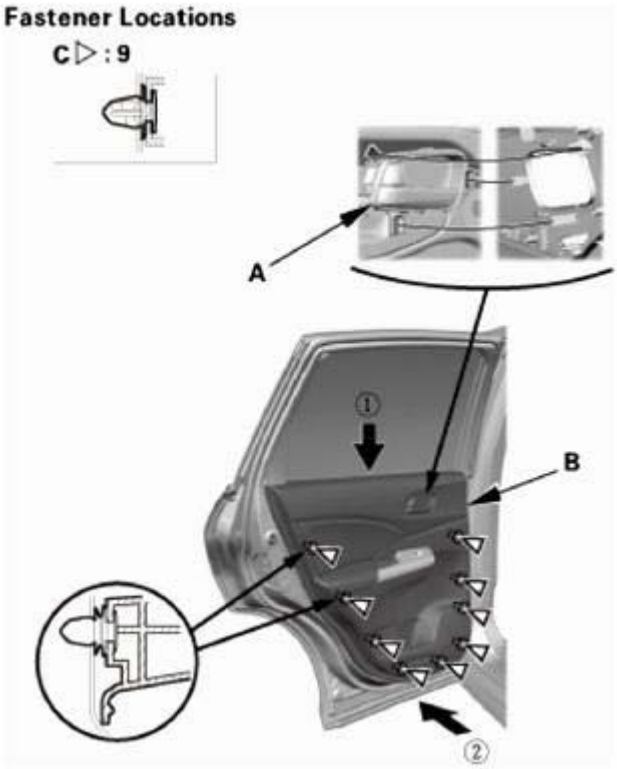

Fig. 31: Installing Front Door Panel
Courtesy of AMERICAN HONDA MOTOR CO., INC.

3. Install the screw (A), then install the pull pocket mat (B).

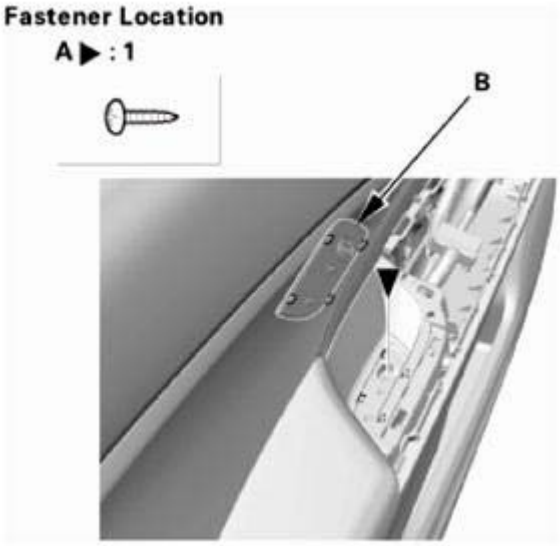

Fig. 32: Identifying Pull Pocket Mat And Screws
Courtesy of AMERICAN HONDA MOTOR CO., INC.

4. Install the screws (A) securing the inner handle (B).

GETtheMANUALS.org

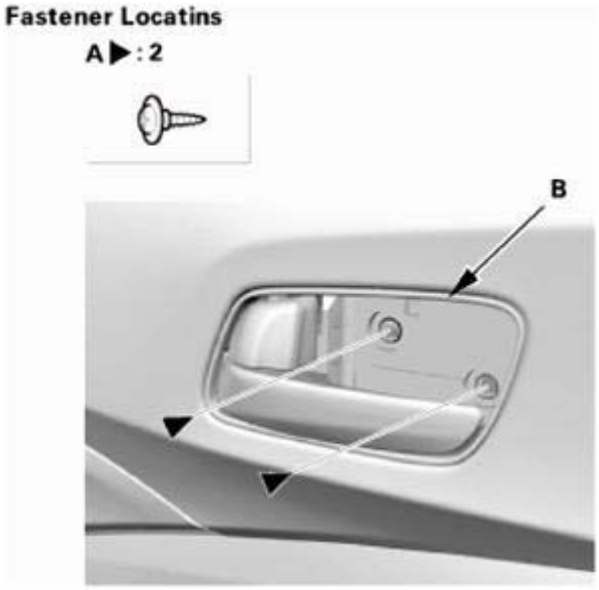

Fig. 33: Identifying Inner Handle And Screws
Courtesy of AMERICAN HONDA MOTOR CO., INC.

5. Install the inner handle cap (A). Make sure the upper hook (B) and the lower hooks (C) snap into place securely.

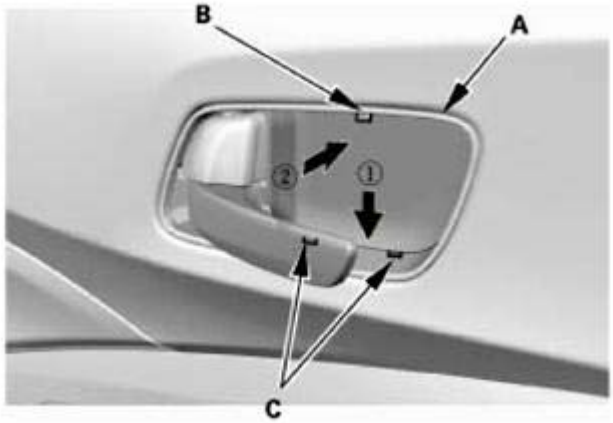

Fig. 34: Installing Inner Handle Cap
Courtesy of AMERICAN HONDA MOTOR CO., INC.

6. Install the rear door quarter inner trim (A). Make sure the clip (B) and the hooks (C) snap into place securely.

GETtheMANUALS.org

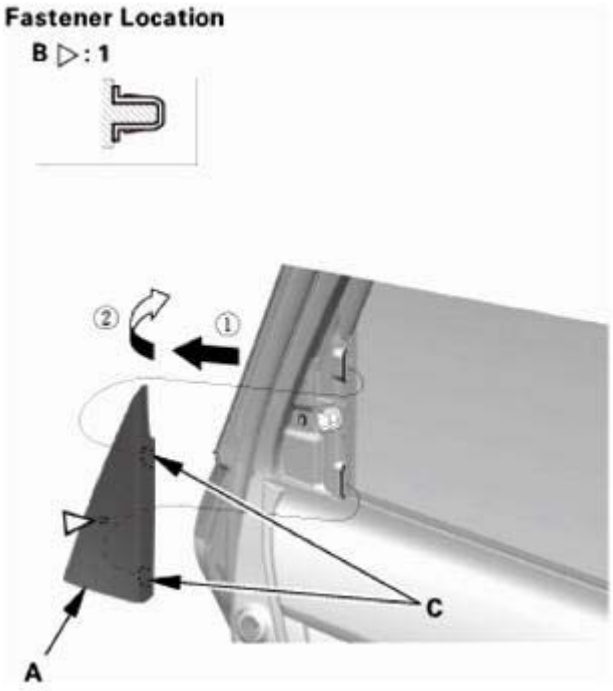

Fig. 35: Installing Rear Door Quarter Inner Trim
Courtesy of AMERICAN HONDA MOTOR CO., INC.

2. Rear Door Power Window Switch Panel
    1. Connect the connector (A), then install the power window switch panel (B). Make sure the clips (C) and the hooks (D) snap into place securely.

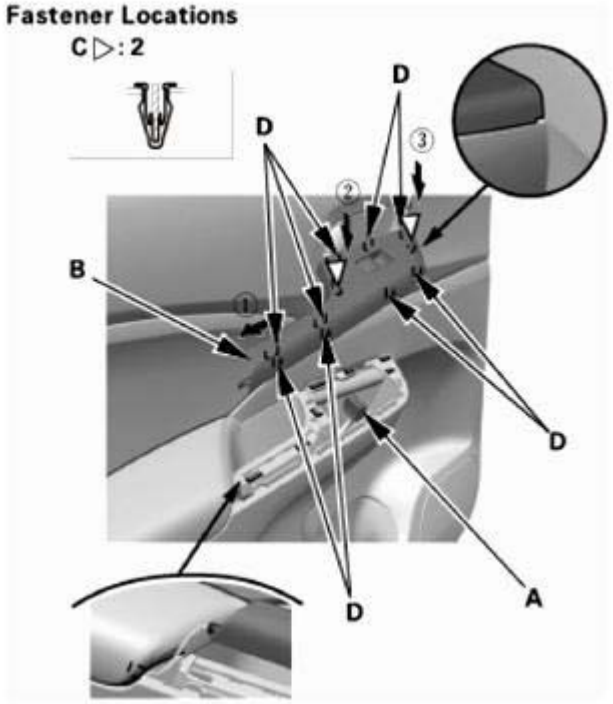

GETtheMANUALS.org

Fig. 36: Installing Rear Door Power Window Switch Panel
Courtesy of AMERICAN HONDA MOTOR CO., INC.

3. Front Door Panel
    1. Install the inner handle (A) in the door panel (B).
    2. Install the door panel. Make sure the clips (C) snap into place securely.

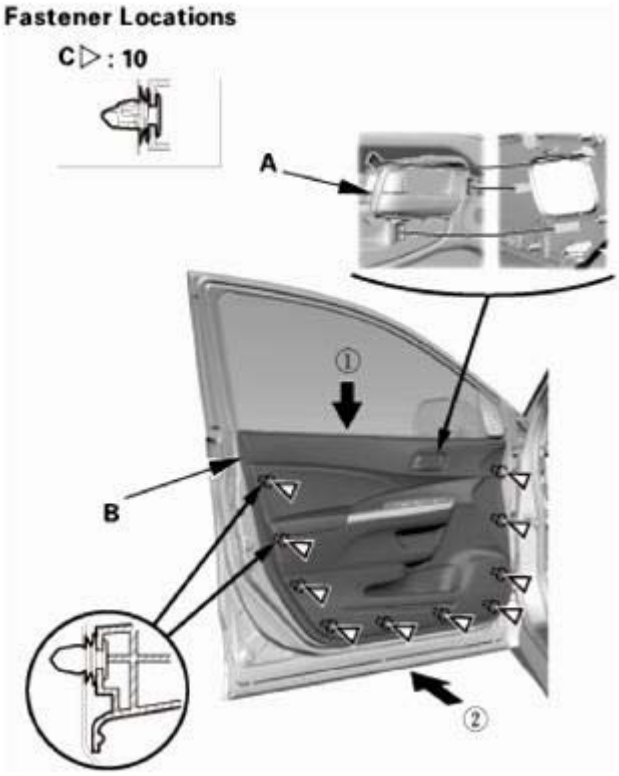

Fig. 37: Installing Front Door Panel
Courtesy of AMERICAN HONDA MOTOR CO., INC.

3. Install the screw (A), then install the pull pocket mat (B).

GETtheMANUALS.org

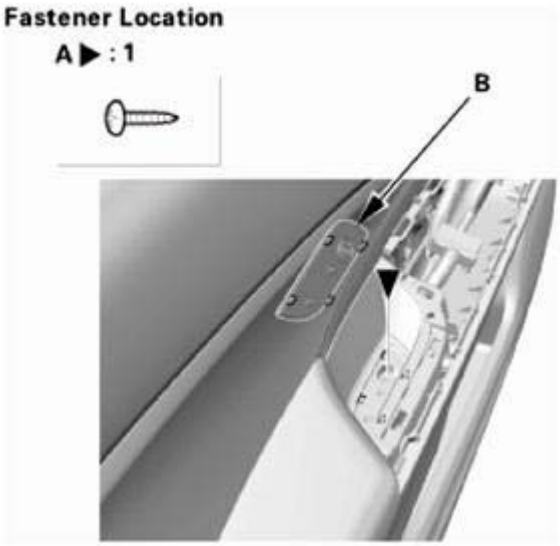

Fig. 38: Identifying Pull Pocket Mat And Screws
Courtesy of AMERICAN HONDA MOTOR CO., INC.

4. Install the screws (A) securing the inner handle (B).

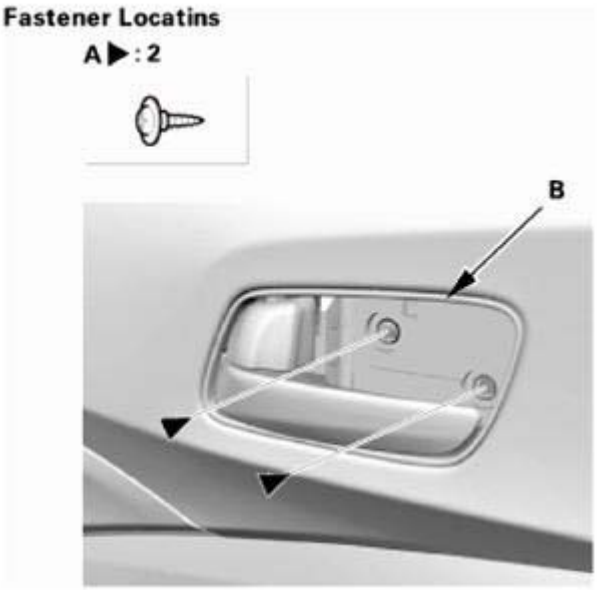

Fig. 39: Identifying Inner Handle And Screws
Courtesy of AMERICAN HONDA MOTOR CO., INC.

5. Install the inner handle cap (A). Make sure the upper hook (B) and the lower hooks (C) snap into place securely.

GETtheMANUALS.org

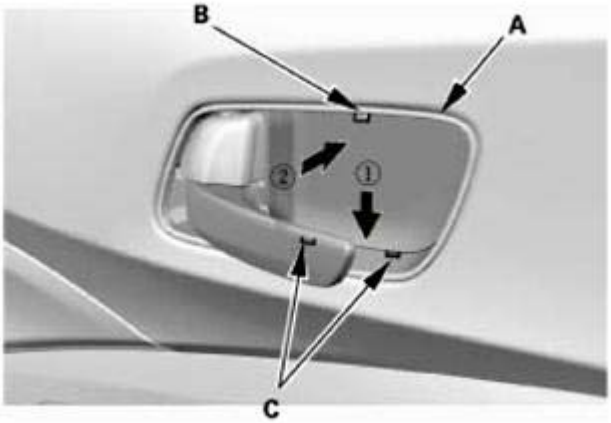

Fig. 40: Installing Inner Handle Cap
Courtesy of AMERICAN HONDA MOTOR CO., INC.

4. Front Door Power Window Switch Panel
    1. Connect the connectors (A), then install the power window switch panel (B). Make sure the clips (C) and the hooks (D) snap into place securely.

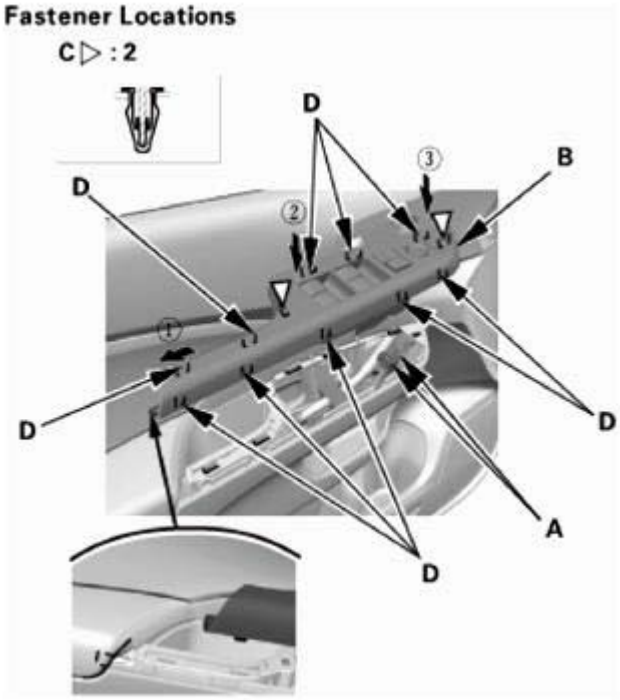

Fig. 41: Installing Front Door Power Window Switch Panel
Courtesy of AMERICAN HONDA MOTOR CO., INC.

5. Door Mirror Cover
    1. With tweeter: Connect the connector (A).
    2. Install the door mirror cover (B). Make sure the clips (C) snap into place securely.

GETtheMANUALS.org

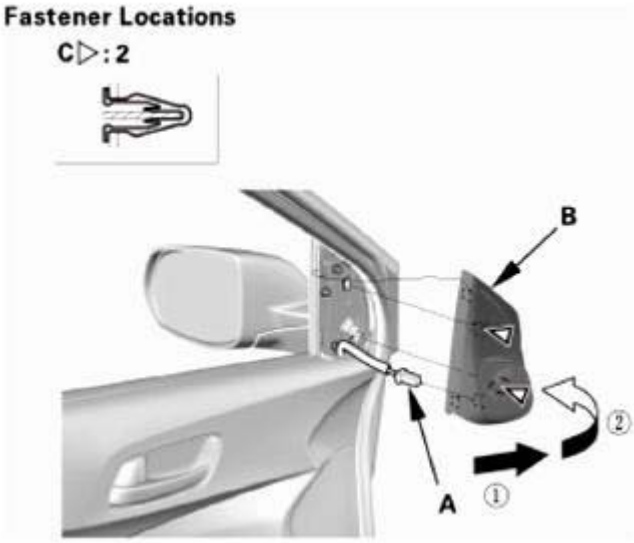

Fig. 42: Installing Door Mirror Cover
Courtesy of AMERICAN HONDA MOTOR CO., INC.

DOOR LOCK KNOB SWITCH TEST

REMOVAL

1. Door Mirror Cover
    1. Carefully pry out the door mirror cover (A) with the appropriate trim tool to detach the clips (B), then remove the door mirror cover.
    2. With tweeter: Disconnect the connector (C).

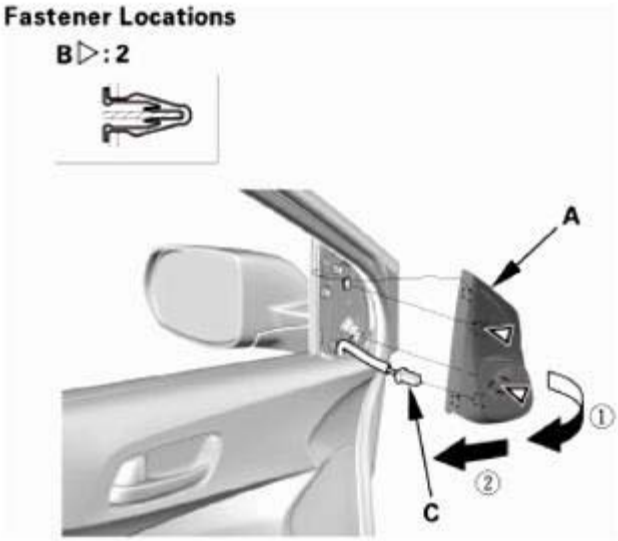

Fig. 43: Removing Door Mirror Cover
Courtesy of AMERICAN HONDA MOTOR CO., INC.

GETtheMANUALS.org

2. Front Door Power Window Switch Panel
    1. Carefully pry out on the notch (A) in the power window switch panel (B) with the appropriate trim tool to detach the clips (C) and the hooks (D). Disconnect the connectors (E), then remove the power window switch panel.

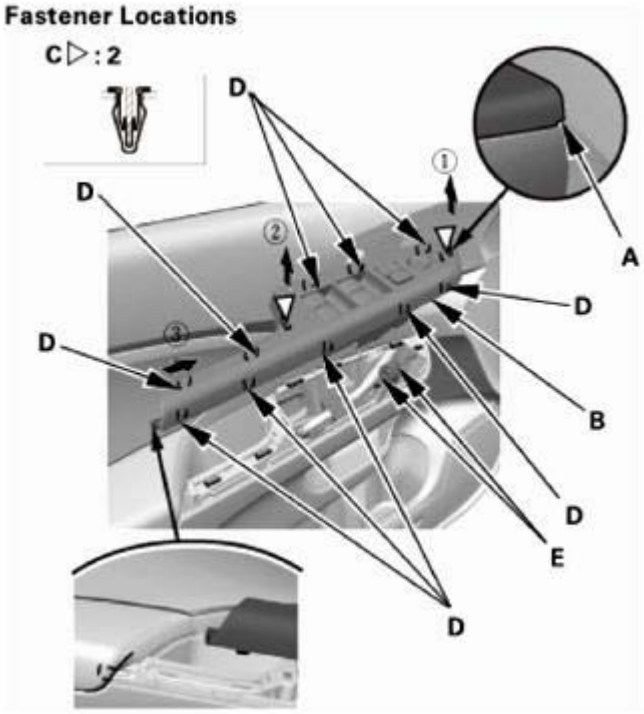

Fig. 44: Removing Power Window Switch Panel
Courtesy of AMERICAN HONDA MOTOR CO., INC.

3. Front Door Panel
    1. Carefully pry out on the upper hook (A) in the inner handle cap (B) with the appropriate trim tool, then pull back the inner handle cap to remove it.

GETtheMANUALS.org

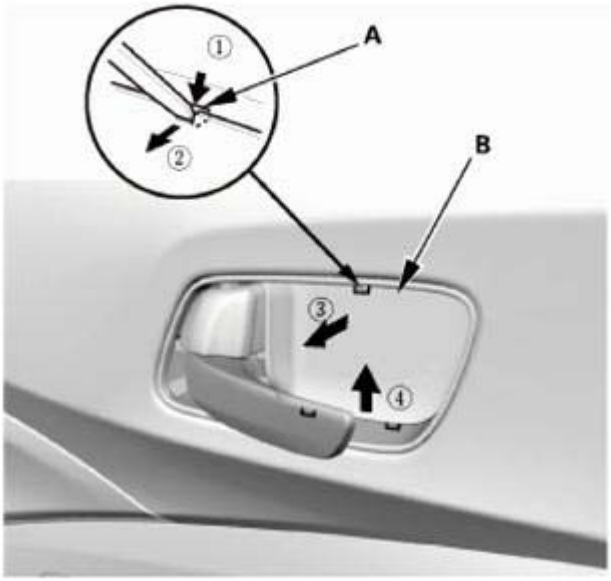

Fig. 45: Removing Inner Handle Cap
Courtesy of AMERICAN HONDA MOTOR CO., INC.

2. Remove the screws (A) securing the inner handle (B).

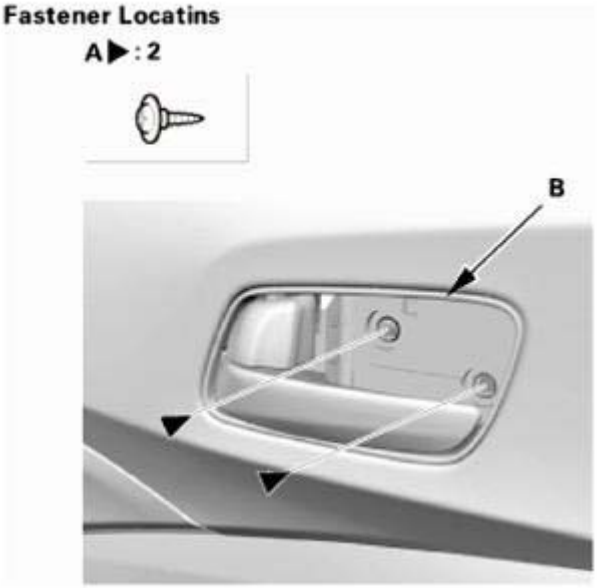

Fig. 46: Identifying Inner Handle And Screws
Courtesy of AMERICAN HONDA MOTOR CO., INC.

3. Remove the pull pocket mat (A), then remove the screw (B).

GETtheMANUALS.org

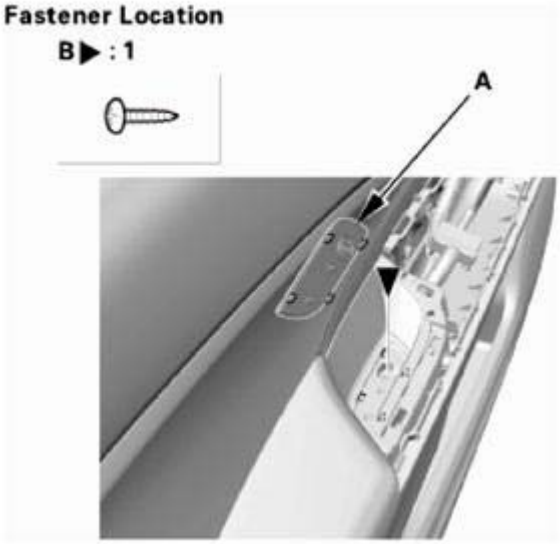

Fig. 47: Identifying Pull Pocket Mat And Screws
Courtesy of AMERICAN HONDA MOTOR CO., INC.

4. Starting at the bottom edge of the door panel (A), detach the clips (B) with a commercially available trim pad remover.
5. Starting at the rear, pull the door panel upward.
6. Remove the inner handle (C) from the door panel, then remove the door panel.

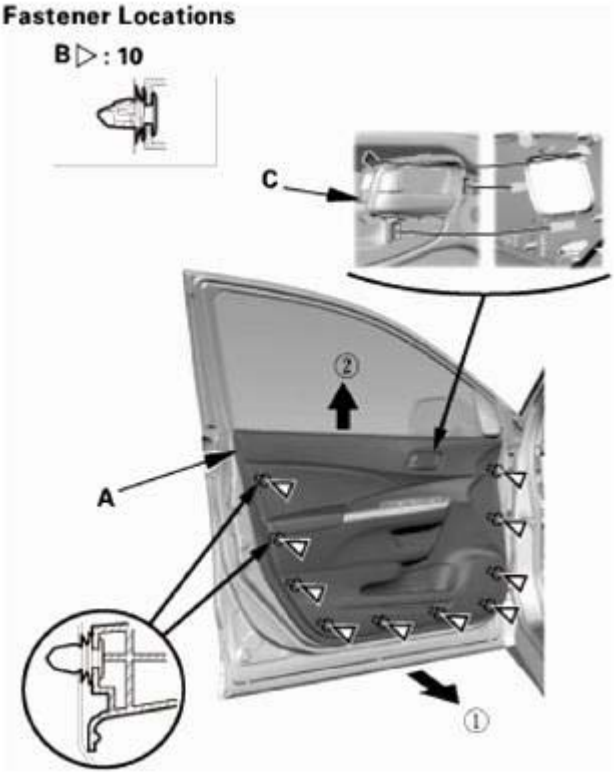

GETtheMANUALS.org

Fig. 48: Removing Door Panel
Courtesy of AMERICAN HONDA MOTOR CO., INC.

4. Rear Door Power Window Switch Panel
    1. Carefully pry out on the notch (A) in the power window switch panel (B) with the appropriate trim tool to detach the clips (C) and the hooks (D). Disconnect the connector (E), then remove the power window switch panel.

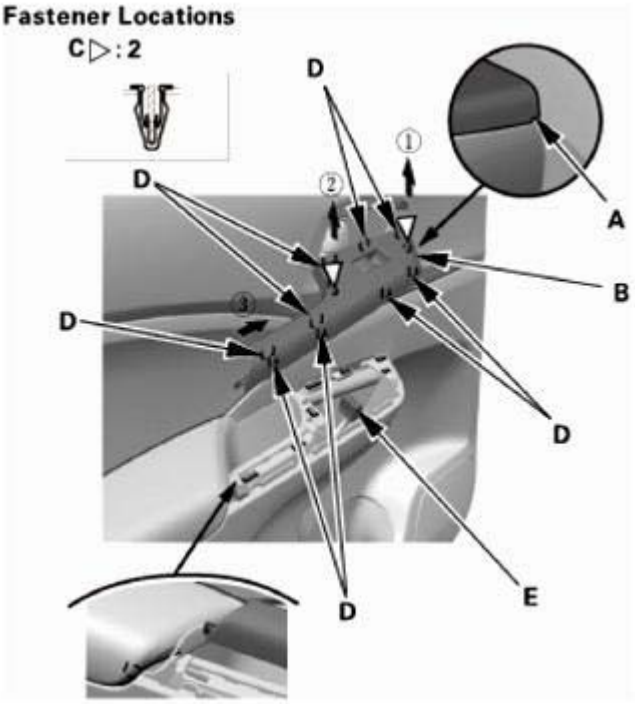

Fig. 49: Removing Power Window Switch Panel
Courtesy of AMERICAN HONDA MOTOR CO., INC.

5. Rear Door Panel
    1. Detach the clip (A) and the hooks (B), then remove the rear door quarter inner trim (C).

GETtheMANUALS.org

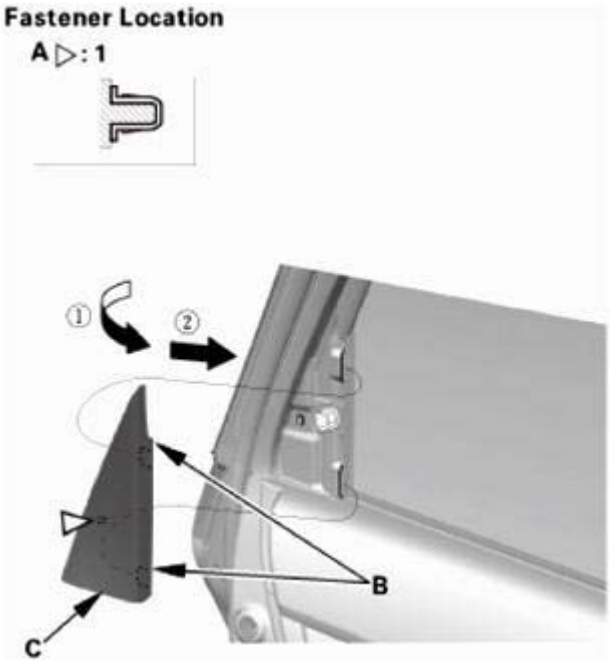

Fig. 50: Removing Rear Door Quarter Inner Trim
Courtesy of AMERICAN HONDA MOTOR CO., INC.

2. Carefully pry out on the upper hook (A) in the inner handle cap (B) with the appropriate trim tool, then pull back the inner handle cap to remove it.

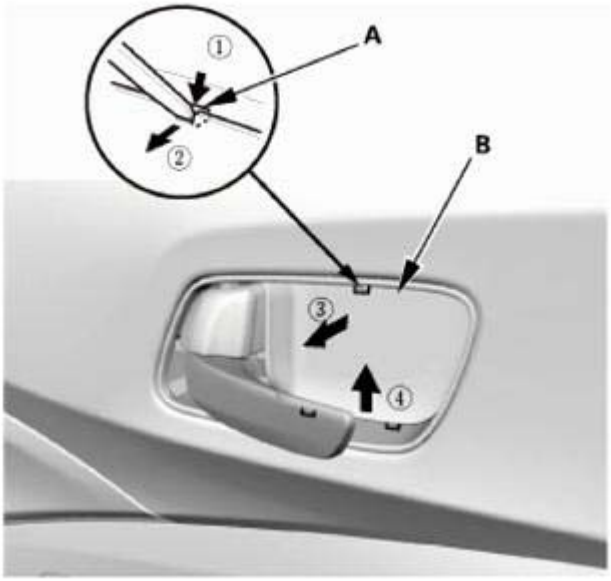

Fig. 51: Removing Inner Handle Cap
Courtesy of AMERICAN HONDA MOTOR CO., INC.

3. Remove the screws (A) securing the inner handle (B).

GETtheMANUALS.org

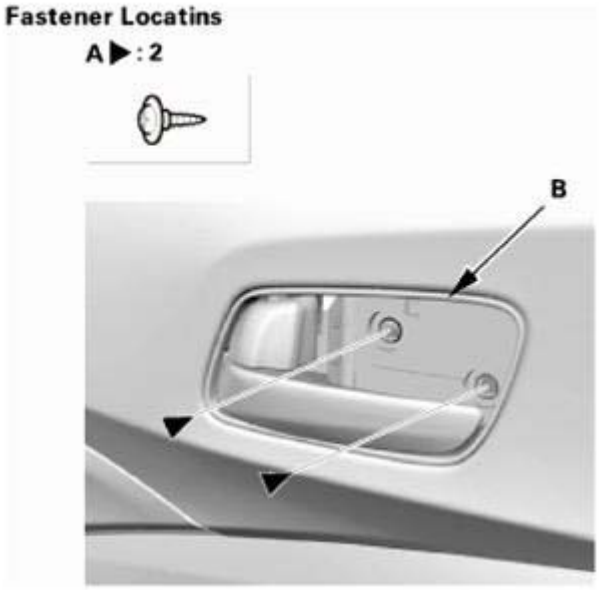

Fig. 52: Identifying Inner Handle And Screws
Courtesy of AMERICAN HONDA MOTOR CO., INC.

4. Remove the pull pocket mat (A), then remove the screw (B).

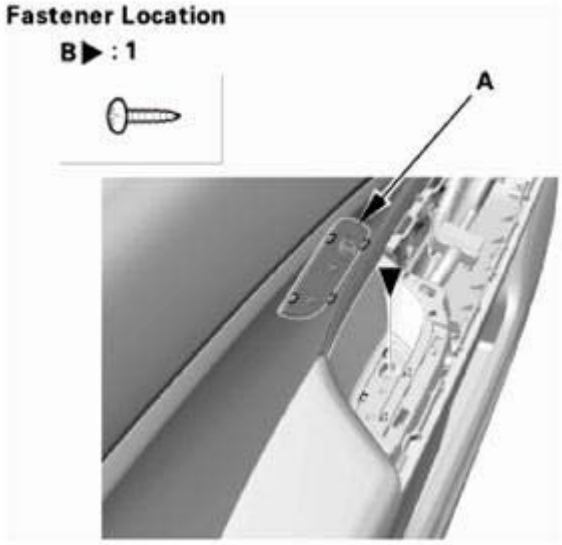

Fig. 53: Identifying Pull Pocket Mat And Screws
Courtesy of AMERICAN HONDA MOTOR CO., INC.

5. Starting at the bottom edge of the door panel (A), detach the clips (B) with a commercially available trim pad remover.
6. Starting at the rear, pull the door panel up.
7. Remove the inner handle (C) from the door panel, then remove the door panel.

GETtheMANUALS.org

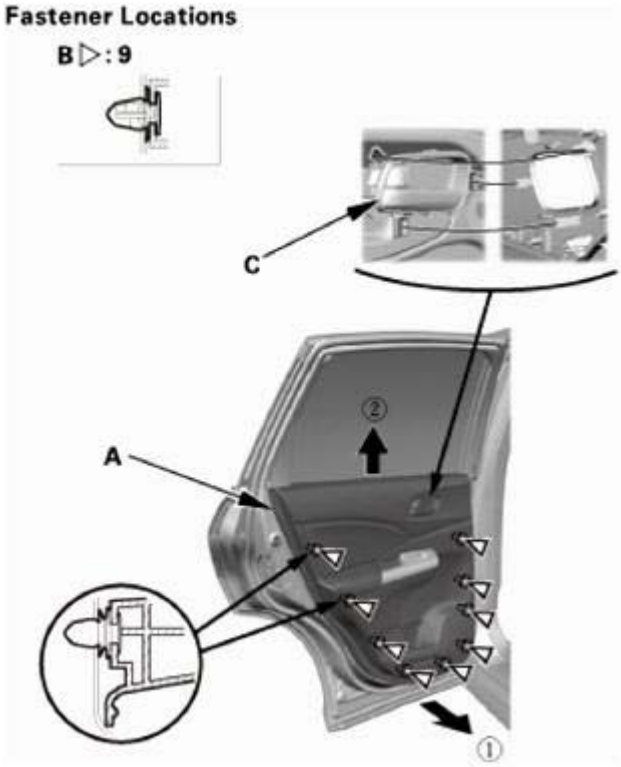

Fig. 54: Removing Door Panel
Courtesy of AMERICAN HONDA MOTOR CO., INC.

TEST

1. Front Door Lock Knob Switch - Test
    1. Disconnect the connector.
    2. Check for continuity between the terminals in each switch position according to the table.
    3. If the continuity is not as specified, the front door lock knob switch is faulty; replace the front door latch (A).
    4. Connect the connector.

GETtheMANUALS.org

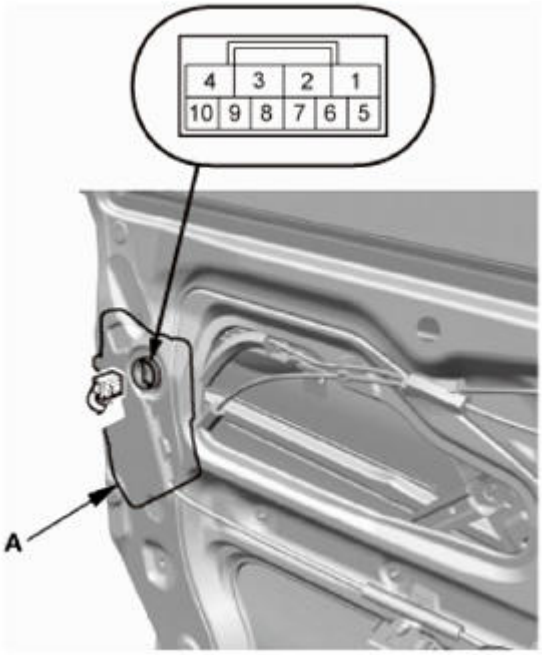

Fig. 55: Identifying Driver Door Latch Connector Terminals
Courtesy of AMERICAN HONDA MOTOR CO., INC.

Driver's door

Position \ Terminal	5	6	7
LOCK		○——	——○
UNLOCK	○——	——	——○

Fig. 56: Driver Door Latch Switch Continuity Reference Chart
Courtesy of AMERICAN HONDA MOTOR CO., INC.

Passenger's door

Position \ Terminal	8	10
LOCK		
UNLOCK	○——	——○

Fig. 57: Passenger Door Latch Switch Continuity Reference Chart
Courtesy of AMERICAN HONDA MOTOR CO., INC.

2. Rear Door Lock Knob Switch - Test
    1. Disconnect the connector.

GETtheMANUALS.org

2. Check the actuator operation by connecting power and ground according to the table.
3. If the continuity is not as specified, the door lock knob switch is faulty; replace the rear door latch (A).
4. Connect the connector.

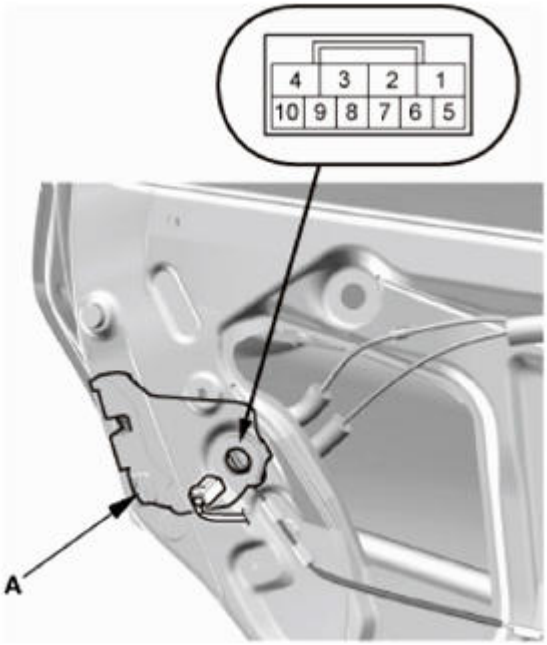

Fig. 58: Identifying Rear Door Latch Connector Terminals
Courtesy of AMERICAN HONDA MOTOR CO., INC.

Position \ Terminal	6 [9]	9 [6]
LOCK		
UNLOCK	○——	——○

[ ]: Right side

Fig. 59: Rear Door Latch Switch Continuity Reference Chart
Courtesy of AMERICAN HONDA MOTOR CO., INC.

INSTALLATION

1. Rear Door Panel
    1. Install the inner handle (A) in the door panel (B).
    2. Install the door panel. Make sure the clips (C) snap into place securely.

GETtheMANUALS.org

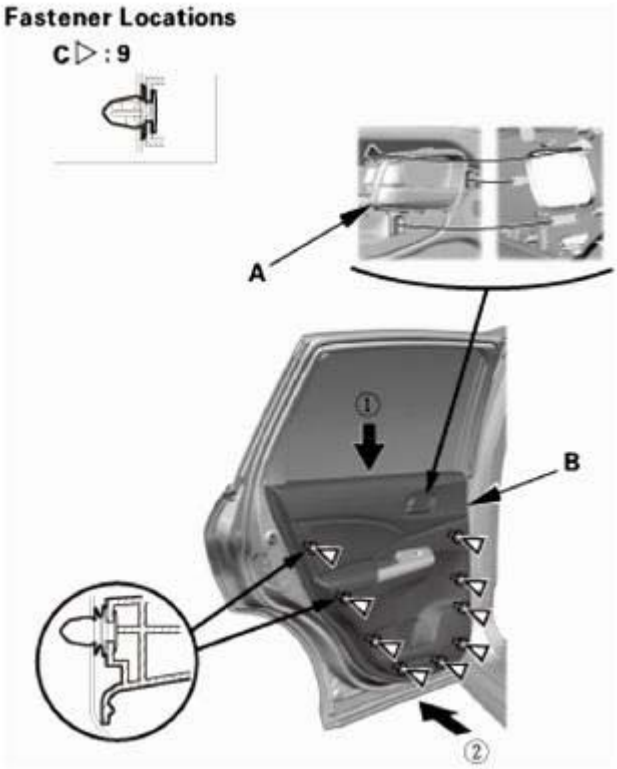

Fig. 60: Installing Rear Door Panel
Courtesy of AMERICAN HONDA MOTOR CO., INC.

3. Install the screw (A), then install the pull pocket mat (B).

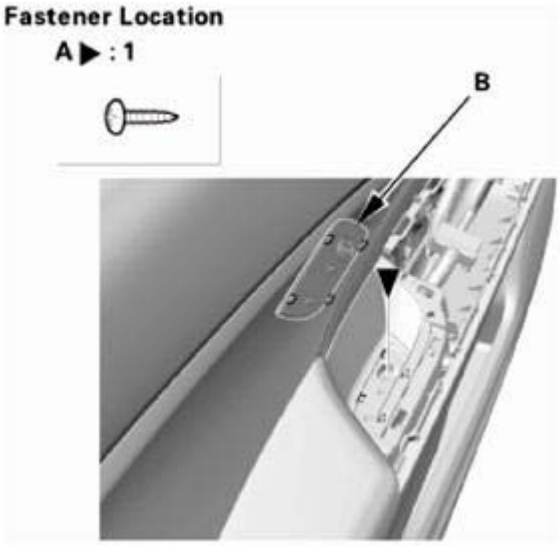

Fig. 61: Identifying Pull Pocket Mat And Screws
Courtesy of AMERICAN HONDA MOTOR CO., INC.

4. Install the screws (A) securing the inner handle (B).

GETtheMANUALS.org

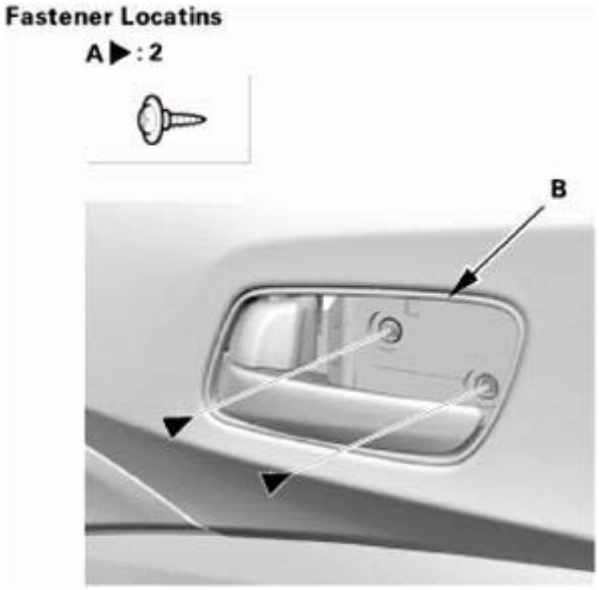

Fig. 62: Identifying Inner Handle And Screws
Courtesy of AMERICAN HONDA MOTOR CO., INC.

5. Install the inner handle cap (A). Make sure the upper hook (B) and the lower hooks (C) snap into place securely.

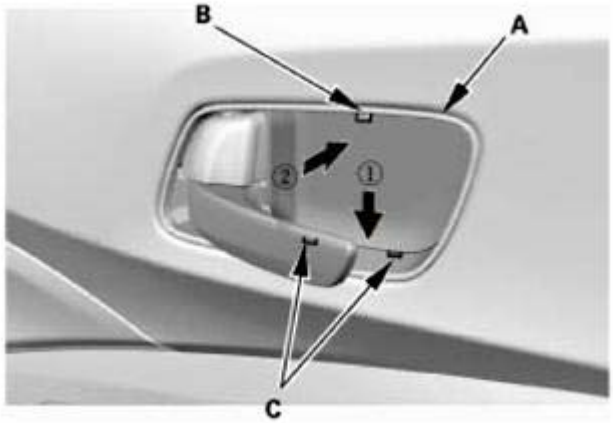

Fig. 63: Installing Inner Handle Cap
Courtesy of AMERICAN HONDA MOTOR CO., INC.

6. Install the rear door quarter inner trim (A). Make sure the clip (B) and the hooks (C) snap into place securely.

GETtheMANUALS.org

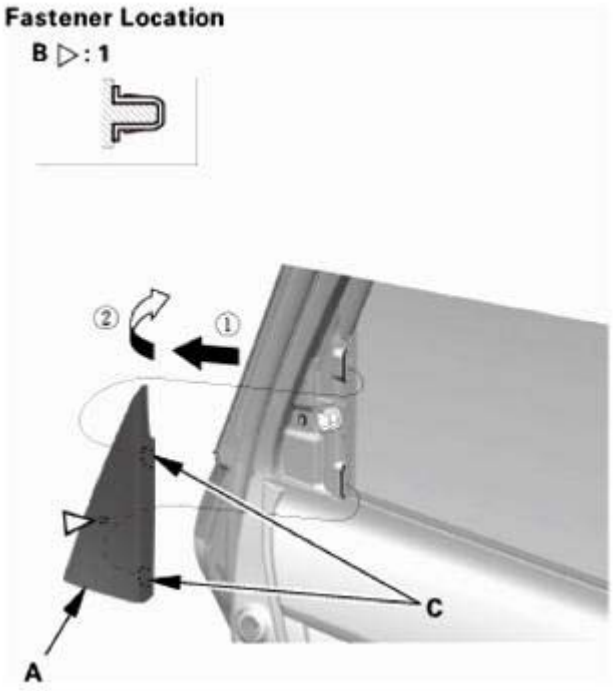

Fig. 64: Installing Rear Door Quarter Inner Trim
Courtesy of AMERICAN HONDA MOTOR CO., INC.

2. Rear Door Power Window Switch Panel
    1. Connect the connector (A), then install the power window switch panel (B). Make sure the clips (C) and the hooks (D) snap into place securely.

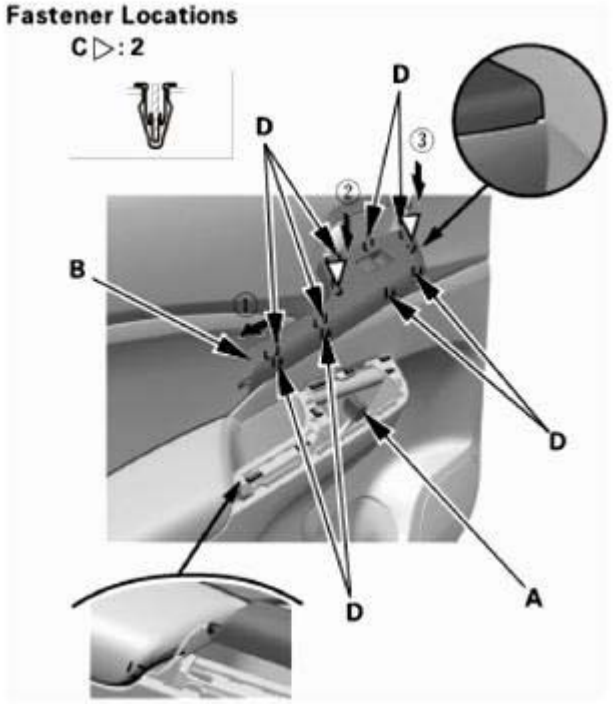

GETtheMANUALS.org

Fig. 65: Installing Rear Door Power Window Switch Panel
Courtesy of AMERICAN HONDA MOTOR CO., INC.

3. Front Door Panel
    1. Install the inner handle (A) in the door panel (B).
    2. Install the door panel. Make sure the clips (C) snap into place securely.

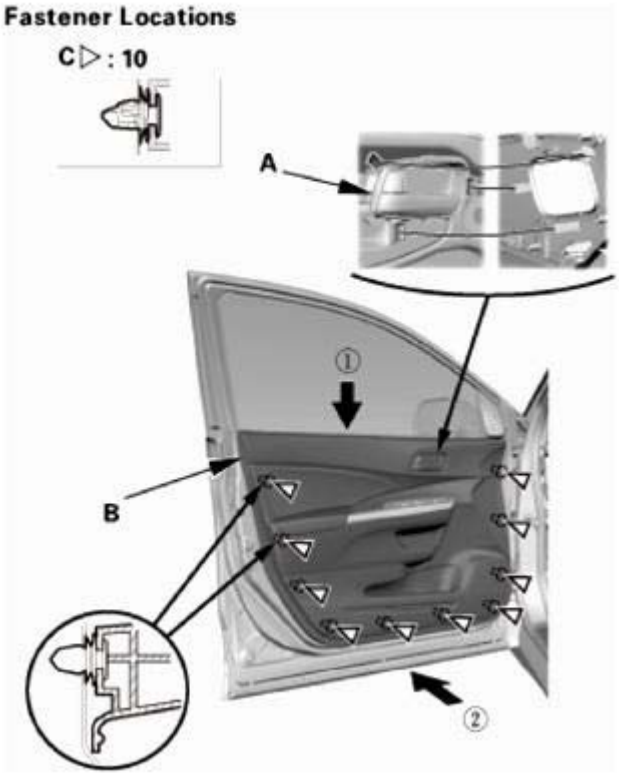

Fig. 66: Installing Front Door Panel
Courtesy of AMERICAN HONDA MOTOR CO., INC.

3. Install the screw (A), then install the pull pocket mat (B).

GETtheMANUALS.org

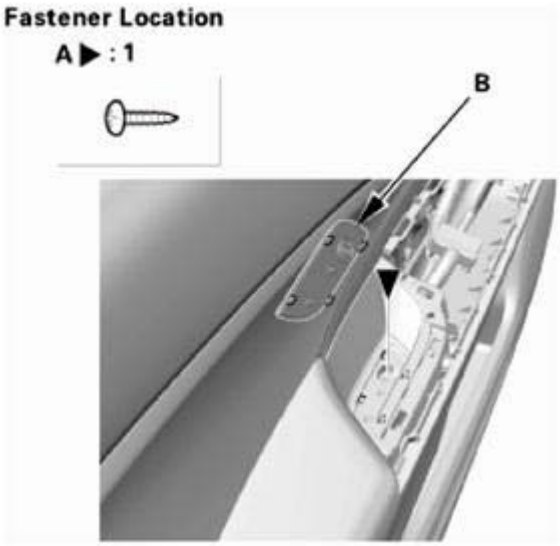

Fig. 67: Identifying Pull Pocket Mat And Screws
Courtesy of AMERICAN HONDA MOTOR CO., INC.

4. Install the screws (A) securing the inner handle (B).

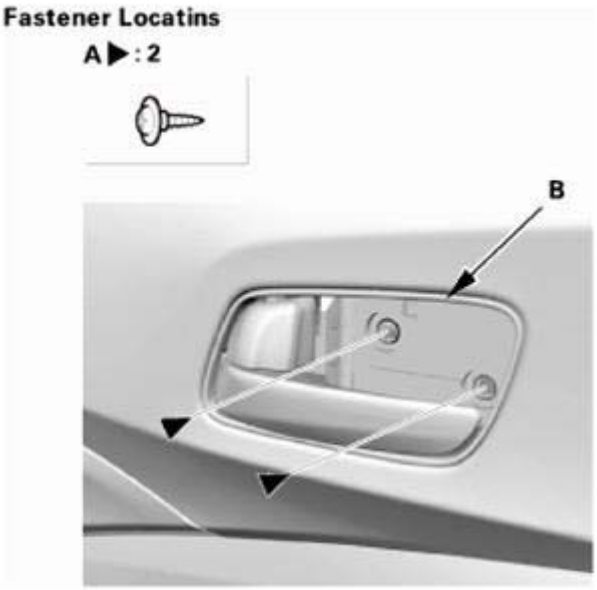

Fig. 68: Identifying Inner Handle And Screws
Courtesy of AMERICAN HONDA MOTOR CO., INC.

5. Install the inner handle cap (A). Make sure the upper hook (B) and the lower hooks (C) snap into place securely.

GETtheMANUALS.org

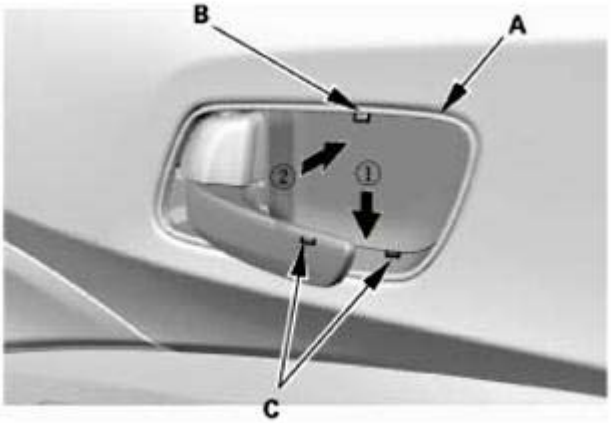

Fig. 69: Installing Inner Handle Cap
Courtesy of AMERICAN HONDA MOTOR CO., INC.

4. Front Door Power Window Switch Panel
    1. Connect the connectors (A), then install the power window switch panel (B). Make sure the clips (C) and the hooks (D) snap into place securely.

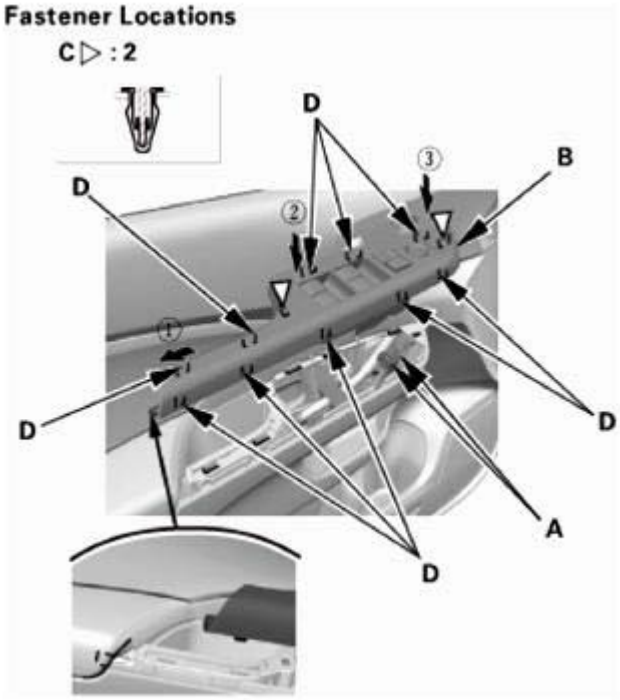

Fig. 70: Installing Front Door Power Window Switch Panel
Courtesy of AMERICAN HONDA MOTOR CO., INC.

5. Door Mirror Cover
    1. With tweeter: Connect the connector (A).
    2. Install the door mirror cover (B). Make sure the clips (C) snap into place securely.

GETtheMANUALS.org

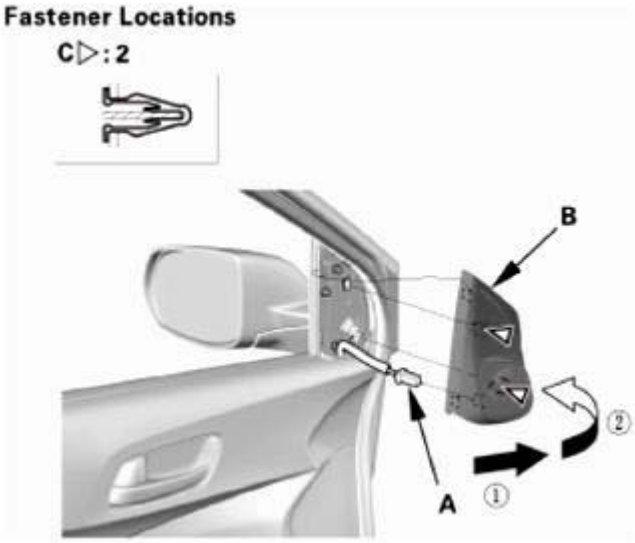

Fig. 71: Installing Door Mirror Cover
Courtesy of AMERICAN HONDA MOTOR CO., INC.

KEYLESS ENTRY TRANSMITTER TEST

TEST

1. HDS DLC - Connection
    1. Connect the HDS to the data link connector (DLC) (A) located under the driver's side of the dashboard.
    2. Turn the ignition switch to ON (II).
    3. Make sure the HDS communicates with the vehicle. If it does not communicate, go to the DLC circuit troubleshooting.

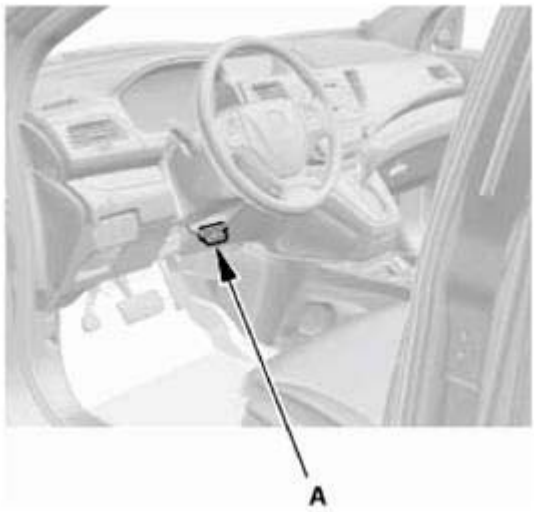

Fig. 72: Identifying Data Link Connector

GETtheMANUALS.org

Courtesy of AMERICAN HONDA MOTOR CO., INC.

2. Transmitter - Test

NOTE:

- **If the doors unlock or lock with the transmitter, but the LED on the transmitter does not come on, the LED is faulty; replace the transmitter.**
- **If any door is open, you cannot lock the doors with the transmitter.**
- **If you unlocked the doors with the transmitter, but do not open any of the doors within 30 seconds, the doors relock automatically.**
- **The doors do not lock or unlock, and PANIC does not work with the transmitter if the ignition key is inserted in the ignition switch.**

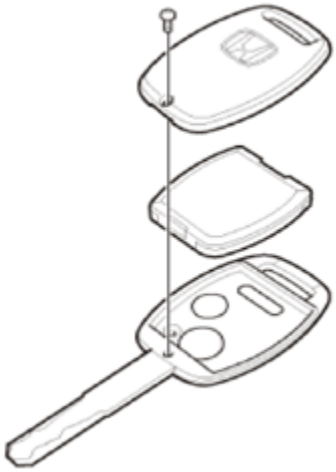

Fig. 73: Identifying Transmitter (With HDS)
Courtesy of AMERICAN HONDA MOTOR CO., INC.

With HDS

1. Press the transmitter lock or unlock button at least 10 times to reset the transmitter:
   - If the locks work, the transmitter is OK.
   - If any of the transmitter buttons do not work, replace the transmitter, then register the new transmitter.
   - If the locks don't work, go to step 2.
2. Select KEYLESS TRANSMITTER from the BODY ELECTRICAL SYSTEM SELECT menu, next select inspection then select INSPECTION, then KEYLESS CHECK.
3. Press the lock, unlock, or panic button and check the response on the screen of the HDS.

NOTE: **The door lock actuators may or may not cycle when receiving input from the transmitter:**

GETtheMANUALS.org

- **If KEYLESS ENTRY TRANSMITTER CODE WAS RECEIVED is indicated, the transmitter is OK.**
- **If DIFFERENT KEYLESS ENTRY TRANSMITTER CODE WAS RECEIVED is working but indicated, the transmitter is not registered to the vehicle. If necessary, register the transmitter.**
- **If KEYLESS ENTRY TRANSMITTER CODE WAS NOT RECEIVED is indicated, go to step 4.**

4. Open the transmitter and check for water damage:
   - If you find any water damage, replace the transmitter, then register the new transmitter.
   - If there is no water damage, go to step 5.
5. Replace the transmitter battery (A) (CR1616) with a new one, and press the lock or unlock button and check the response on the screen of the HDS:
   - If KEYLESS ENTRY TRANSMITTER CODE WAS RECEIVED is indicated, the transmitter is OK.
   - If KEYLESS ENTRY TRANSMITTER CODE WAS NOT RECEIVED is indicated, go to step 6.
6. Use a different known-good transmitter assembly and repeat steps 3 and 4.

NOTE: **The transmitter does not need to be programmed to the vehicle for this test:**

- **If DIFFERENT KEYLESS ENTRY TRANSMITTER CODE WAS RECEIVED is indicated, replace the transmitter and do the immobilizer system registration.**
- **If KEYLESS ENTRY TRANSMITTER CODE WAS NOT RECEIVED is indicated, the immobilizer-keyless control unit is faulty, replace it and do the immobilizer system registration.**

NOTE: **The transmitter is combined with the immobilizer transponder, so when the transponder is registered by the HDS, the transmitter programming is completed automatically.**

GETtheMANUALS.org

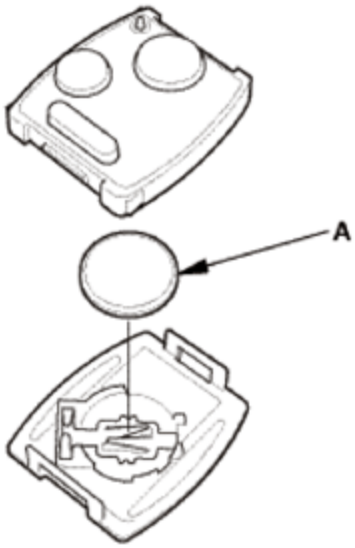

Fig. 74: Identifying Transmitter Battery (With HDS)
Courtesy of AMERICAN HONDA MOTOR CO., INC.

Without HDS

1. Press the transmitter lock or unlock button at least 10 times to reset the transmitter:
   - If the locks work, the transmitter is OK.
   - If the locks do not work, go to step 2.
2. Open the transmitter, and check for water damage:
   - If you find any water damage, replace the transmitter and register the new transmitter.
   - If there is no water damage, go to step 3.

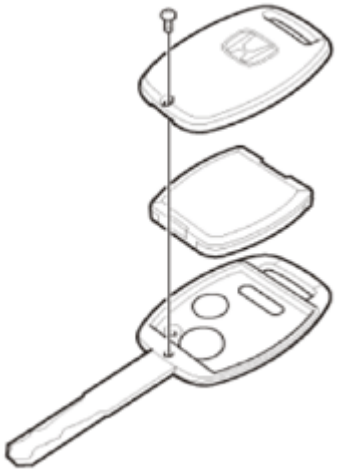

Fig. 75: Identifying Transmitter (Without HDS)
Courtesy of AMERICAN HONDA MOTOR CO., INC.

GETtheMANUALS.org

3. Replace the transmitter battery (A) (CR1616) with a new one, and try to lock and unlock the doors with the transmitter by pressing the lock or unlock button at least 10 times:
   - If the doors lock and unlock, the transmitter is OK.
   - If the doors do not lock and unlock, go to step 4.
4. Reprogram and register the transmitter, then try to lock and unlock the doors:
   - If the doors lock and unlock, the transmitter is OK.
   - If the doors do not lock and unlock, substitute a known-good transmitter, register it and recheck. If still not operating, replace the immobilizer-keyless control unit.

NOTE: **As the keyless transmitter is combined with the immobilizer transponder, when the transponder is registered by the HDS, the keyless transmitter is also registered automatically.**

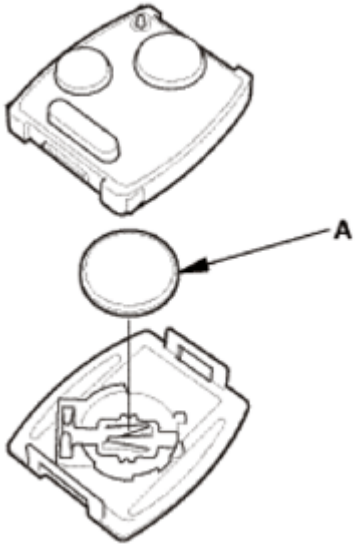

Fig. 76: Identifying Transmitter Battery (Without HDS)
Courtesy of AMERICAN HONDA MOTOR CO., INC.

KEYLESS/POWER DOOR LOCKS/SECURITY SYSTEM COMPONENT LOCATION INDEX

GETtheMANUALS.org

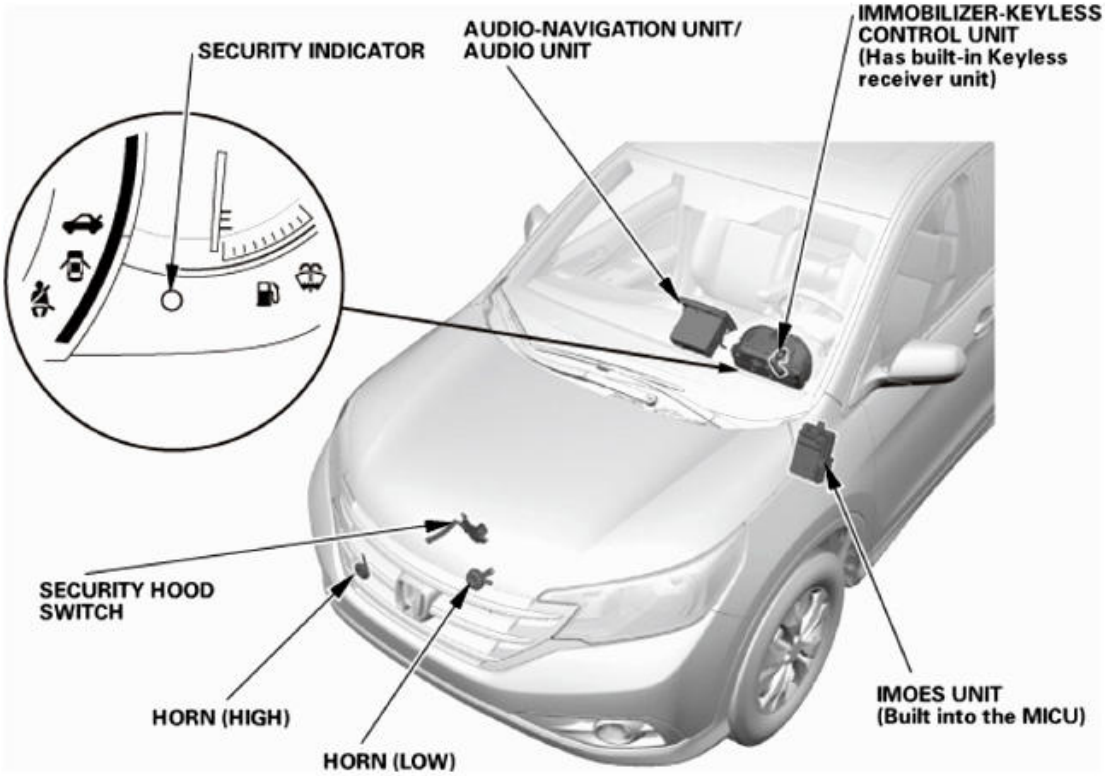

Fig. 77: Keyless/Power Door Locks/Security System Components Location (1 Of 3)
Courtesy of AMERICAN HONDA MOTOR CO., INC.

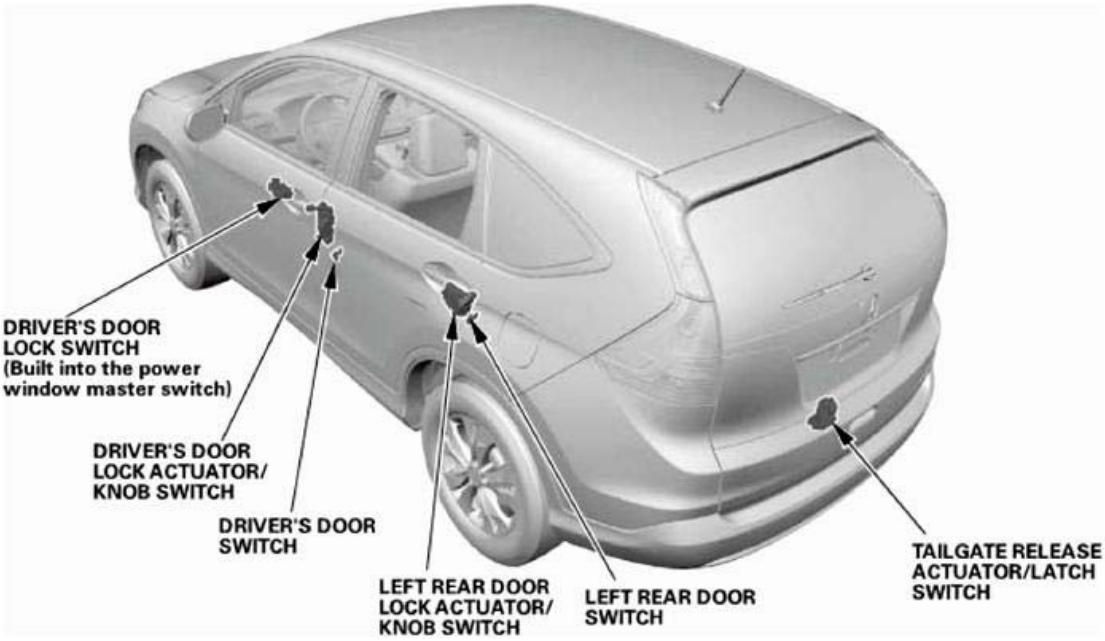

Fig. 78: Keyless/Power Door Locks/Security System Components Location (2 Of 3)
Courtesy of AMERICAN HONDA MOTOR CO., INC.

GETtheMANUALS.org

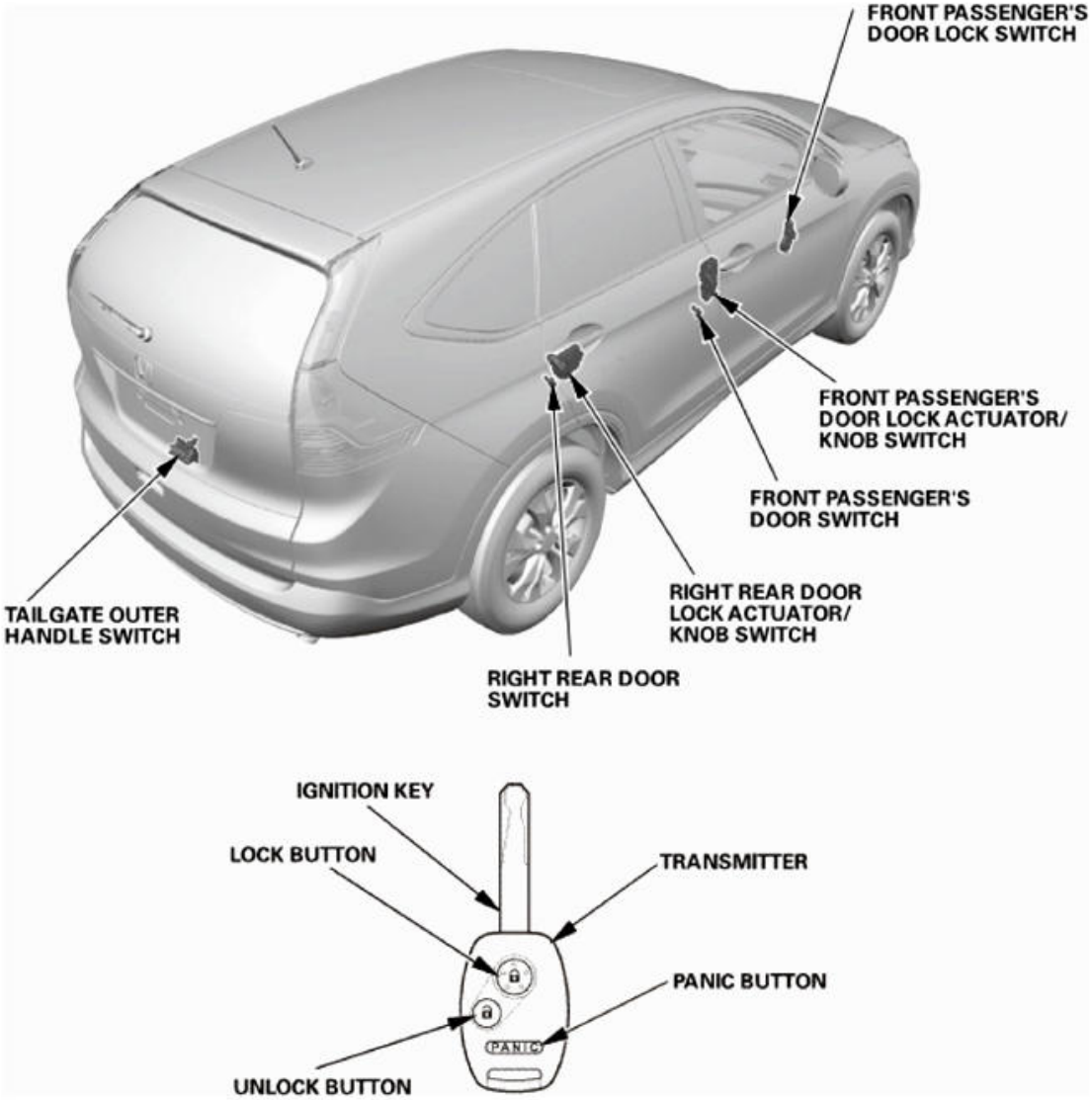

Fig. 79: Keyless/Power Door Locks/Security System Components Location (3 Of 3)
Courtesy of AMERICAN HONDA MOTOR CO., INC.

DRIVER'S DOOR LOCK ACTUATOR/KNOB SWITCH/KEY CYLINDER SWITCH (Built into the front door latch)	**DOOR LOCK ACTUATOR TEST**
	DOOR KEY CYLINDER SWITCH TEST
	DOOR LOCK KNOB SWITCH TEST
	DOOR LATCH REMOVAL AND INSTALLATION
DRIVER'S DOOR LOCK SWITCH (Built into the power window master switch)	**REMOVAL AND INSTALLATION**
	TEST
FRONT PASSENGER'S DOOR LOCK ACTUATOR/KNOB SWITCH	**DOOR LOCK ACTUATOR TEST**
	DOOR LOCK KNOB SWITCH TEST
	DOOR LATCH REMOVAL AND INSTALLATION
FRONT PASSENGER'S DOOR LOCK	**Removal and Installation** See **FRONT PASSENGER'S POWER WINDOW SWITCH REMOVAL AND**

GETtheMANUALS.org

SWITCH (Built into the front passenger's power window switch)	**INSTALLATION** or **REAR POWER WINDOW SWITCH REMOVAL AND INSTALLATION**
	TEST
IMMOBILIZER-KEYLESS CONTROL UNIT (With built-in receiver)	**INPUT TEST**
	Removal and Installation See **IMMOBILIZER-KEYLESS CONTROL UNIT REGISTRATION** or **IMMOBILIZER-KEYLESS CONTROL UNIT REMOVAL AND INSTALLATION**
LEFT REAR DOOR LOCK ACTUATOR/KNOB SWITCH	**DOOR LOCK ACTUATOR TEST**
	DOOR LOCK KNOB SWITCH TEST
	DOOR LATCH REMOVAL AND INSTALLATION
MICU (Built into the under-dash fuse/relay box)	**INPUT TEST**
	REMOVAL AND INSTALLATION
RIGHT REAR DOOR LOCK ACTUATOR/KNOB SWITCH	**DOOR LOCK ACTUATOR TEST**
	DOOR LOCK KNOB SWITCH TEST
	DOOR LATCH REMOVAL AND INSTALLATION
SECURITY HOOD SWITCH	**TEST**
TAILGATE LATCH SWITCH	**REMOVAL AND INSTALLATION**
	TEST
TAILGATE OUTER HANDLE SWITCH	**REMOVAL AND INSTALLATION**
	TEST
TAILGATE RELEASE ACTUATOR	**REMOVAL AND INSTALLATION**
	TEST
TRANSMITTER	**TEST**

AUTO DOOR UNLOCK DOES NOT WORK

GETtheMANUALS.org

Keyless/Power Door Locks/Security System Symptom Troubleshooting - Auto door unlock does not work

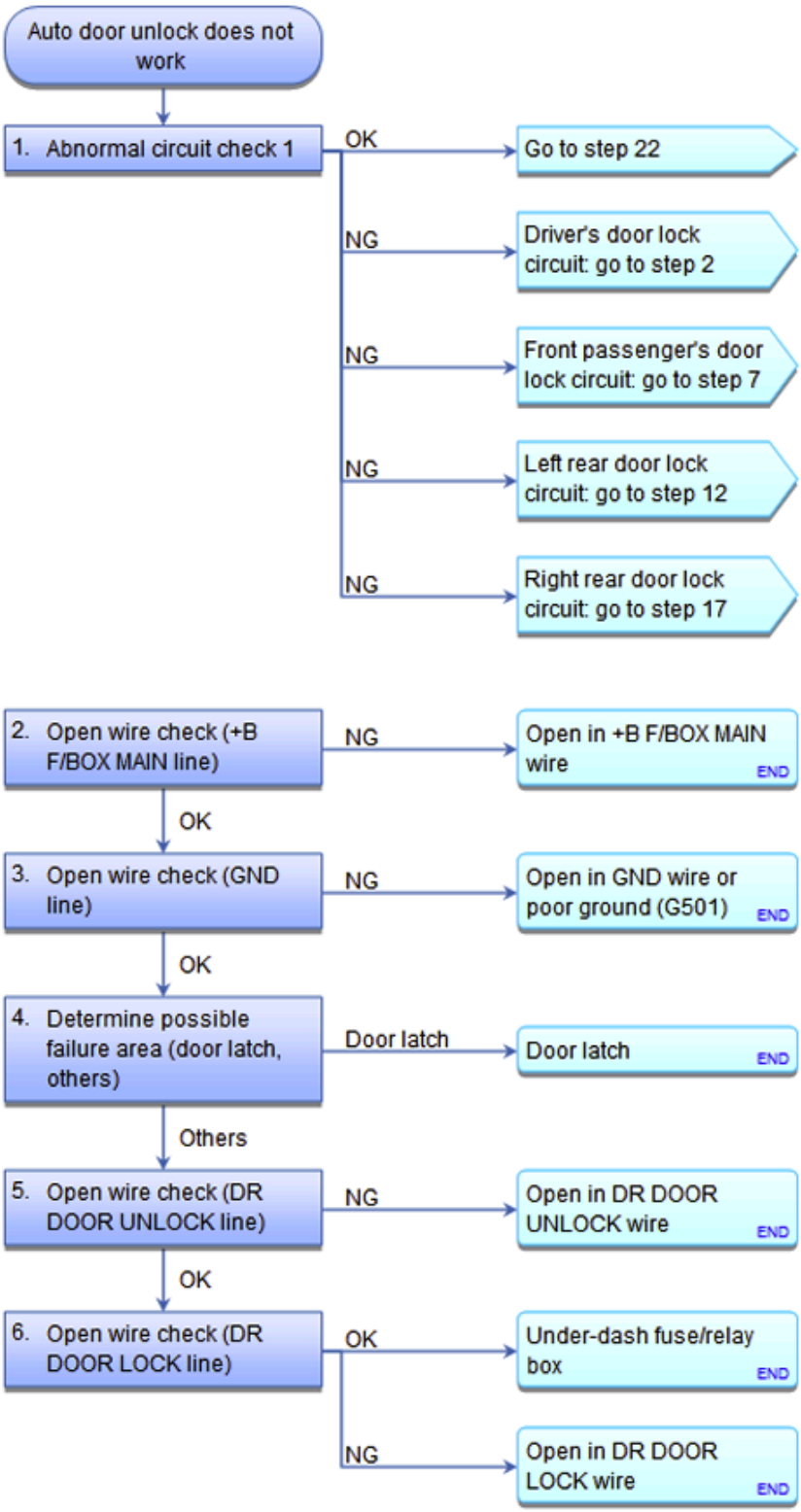

Fig. 80: Keyless/Power Door Locks/Security System Symptom Troubleshooting Flow Chart (Auto Door Unlock; 1 Of 7)

GETtheMANUALS.org

Courtesy of AMERICAN HONDA MOTOR CO., INC.

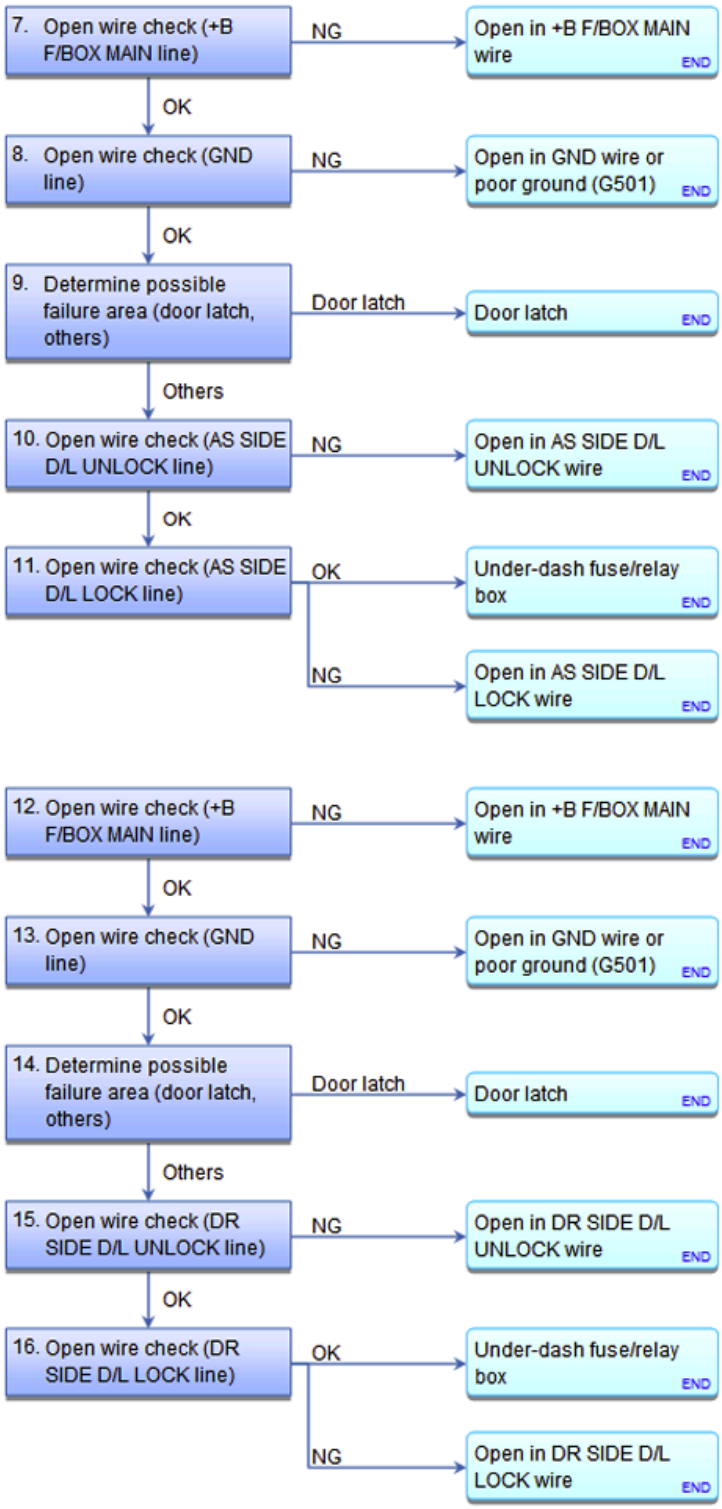

Fig. 81: Keyless/Power Door Locks/Security System Symptom Troubleshooting Flow Chart (Auto Door Unlock; 2 Of 7)
Courtesy of AMERICAN HONDA MOTOR CO., INC.

GETtheMANUALS.org

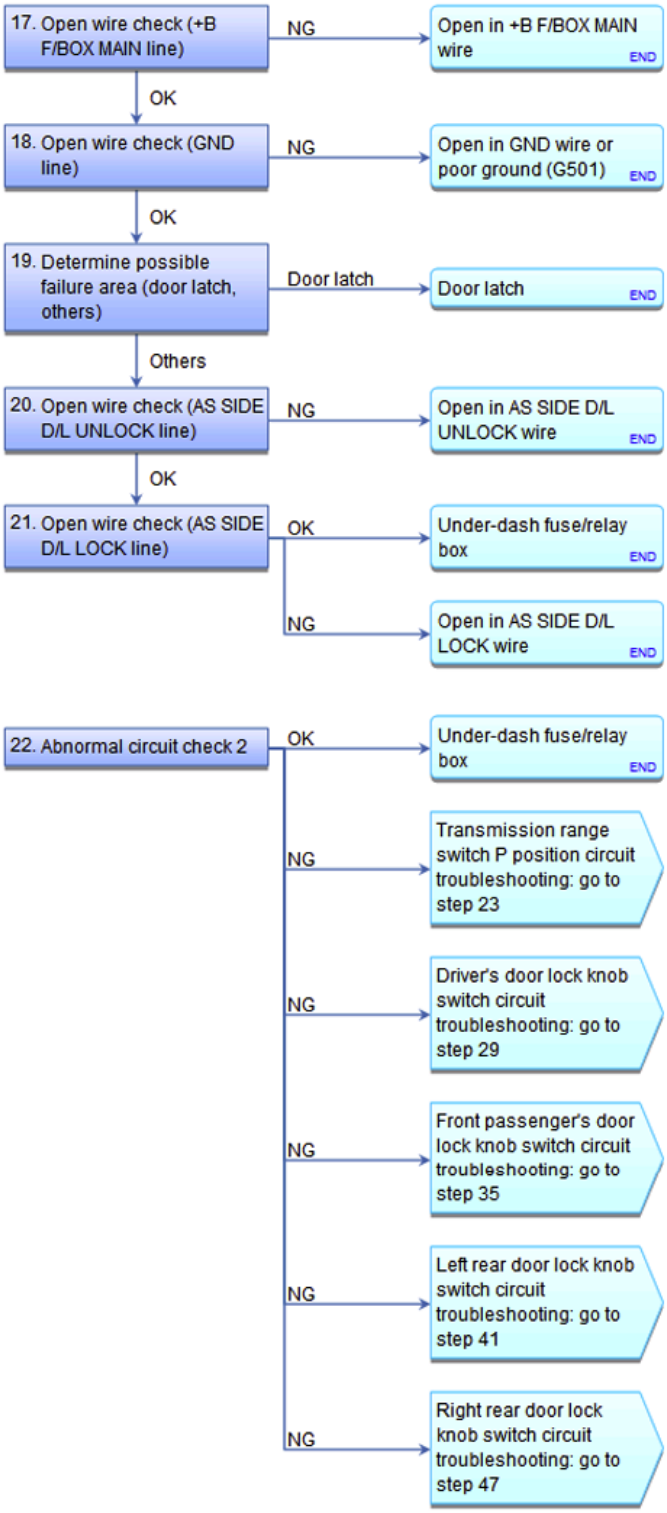

Fig. 82: Keyless/Power Door Locks/Security System Symptom Troubleshooting Flow Chart (Auto Door Unlock; 3 Of 7)
Courtesy of AMERICAN HONDA MOTOR CO., INC.

GETtheMANUALS.org

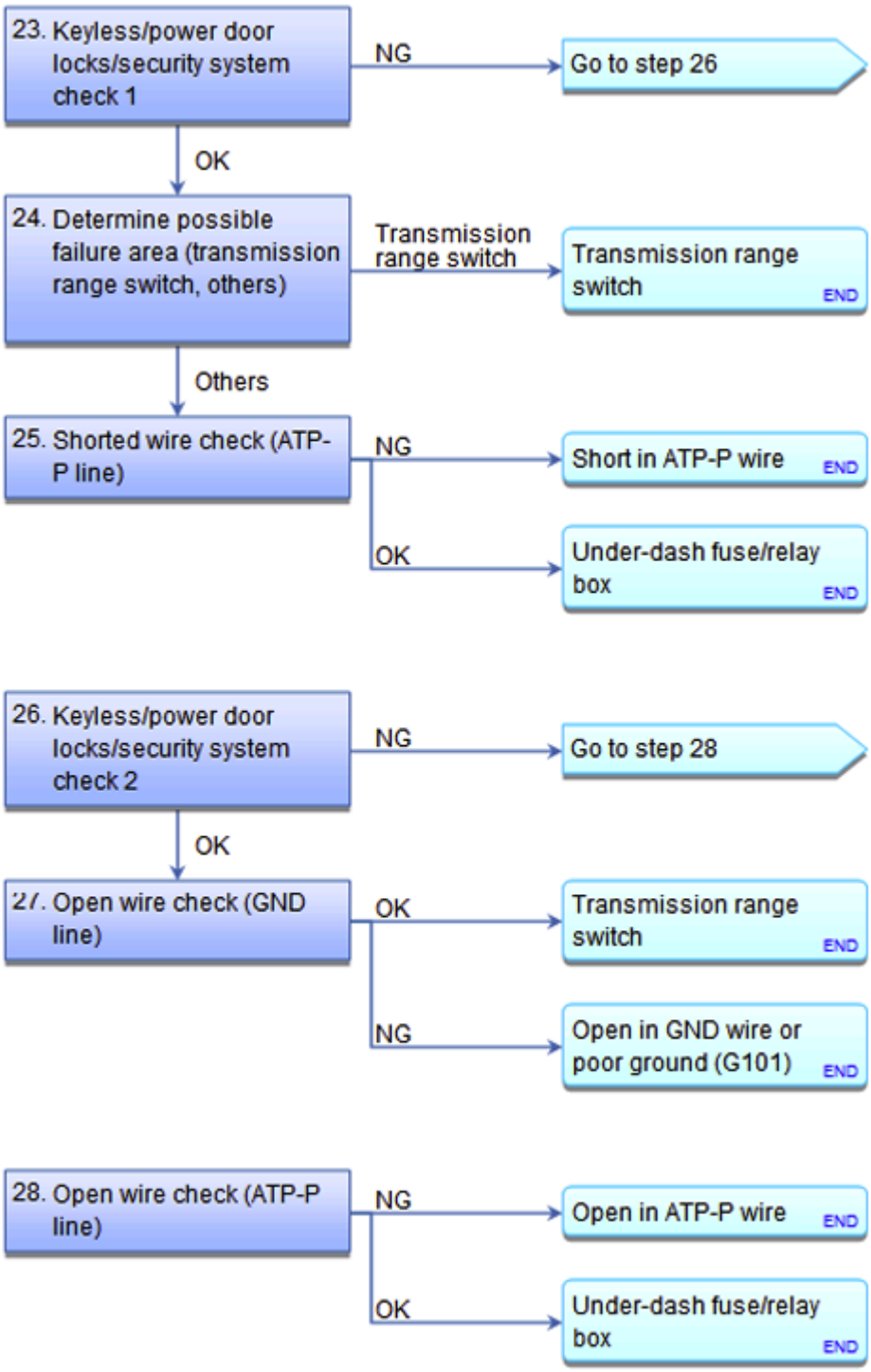

Fig. 83: Keyless/Power Door Locks/Security System Symptom Troubleshooting Flow Chart (Auto Door Unlock; 4 Of 7)
Courtesy of AMERICAN HONDA MOTOR CO., INC.

GETtheMANUALS.org

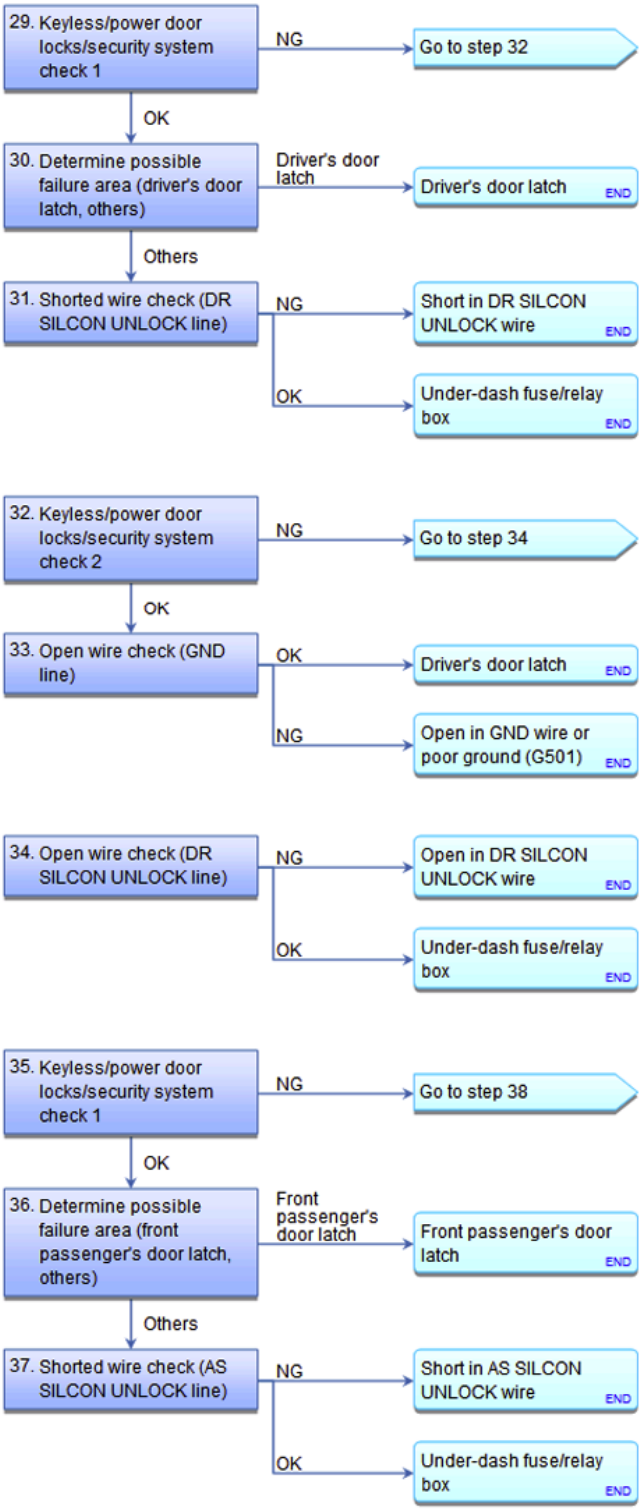

Fig. 84: Keyless/Power Door Locks/Security System Symptom Troubleshooting Flow Chart (Auto Door Unlock; 5 Of 7)
Courtesy of AMERICAN HONDA MOTOR CO., INC.

GETtheMANUALS.org

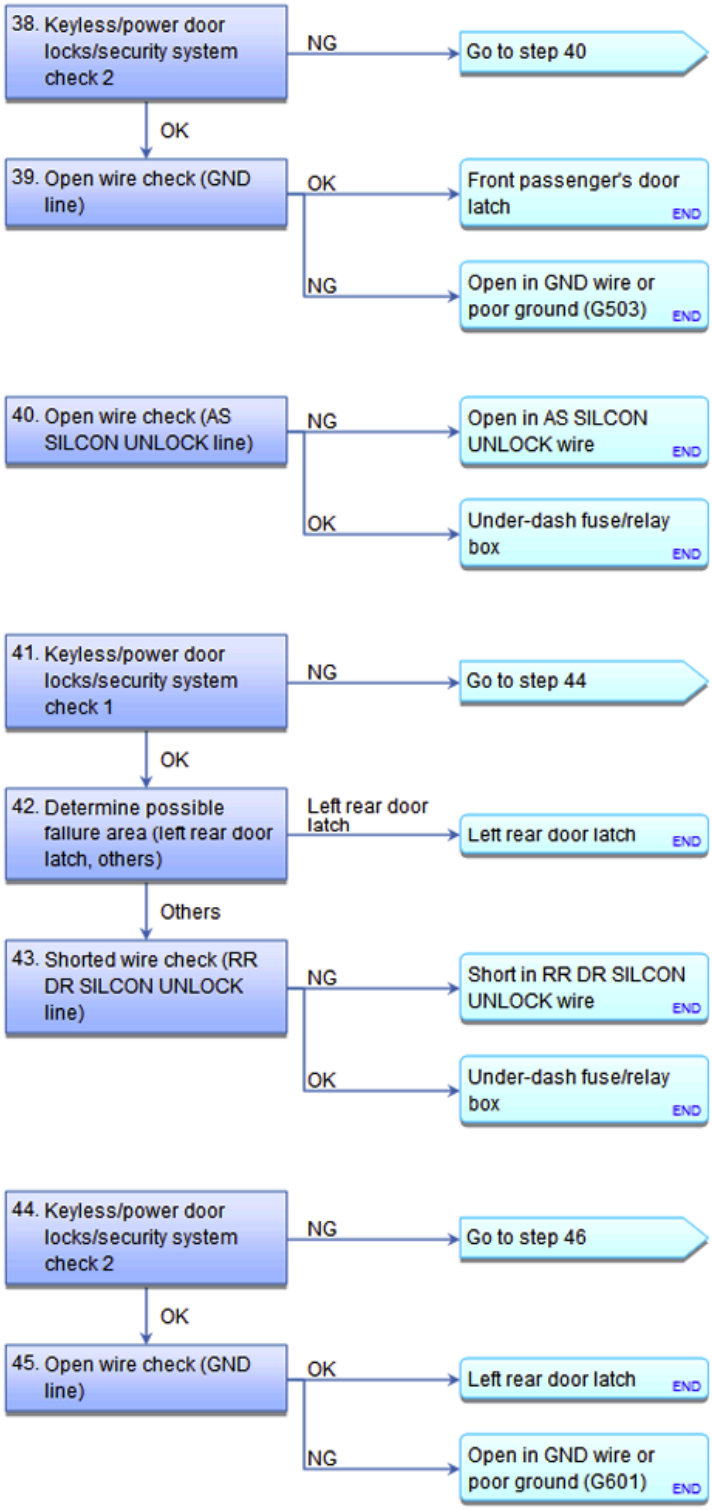

Fig. 85: Keyless/Power Door Locks/Security System Symptom Troubleshooting Flow Chart (Auto Door Unlock; 6 Of 7)
Courtesy of AMERICAN HONDA MOTOR CO., INC.

GETtheMANUALS.org

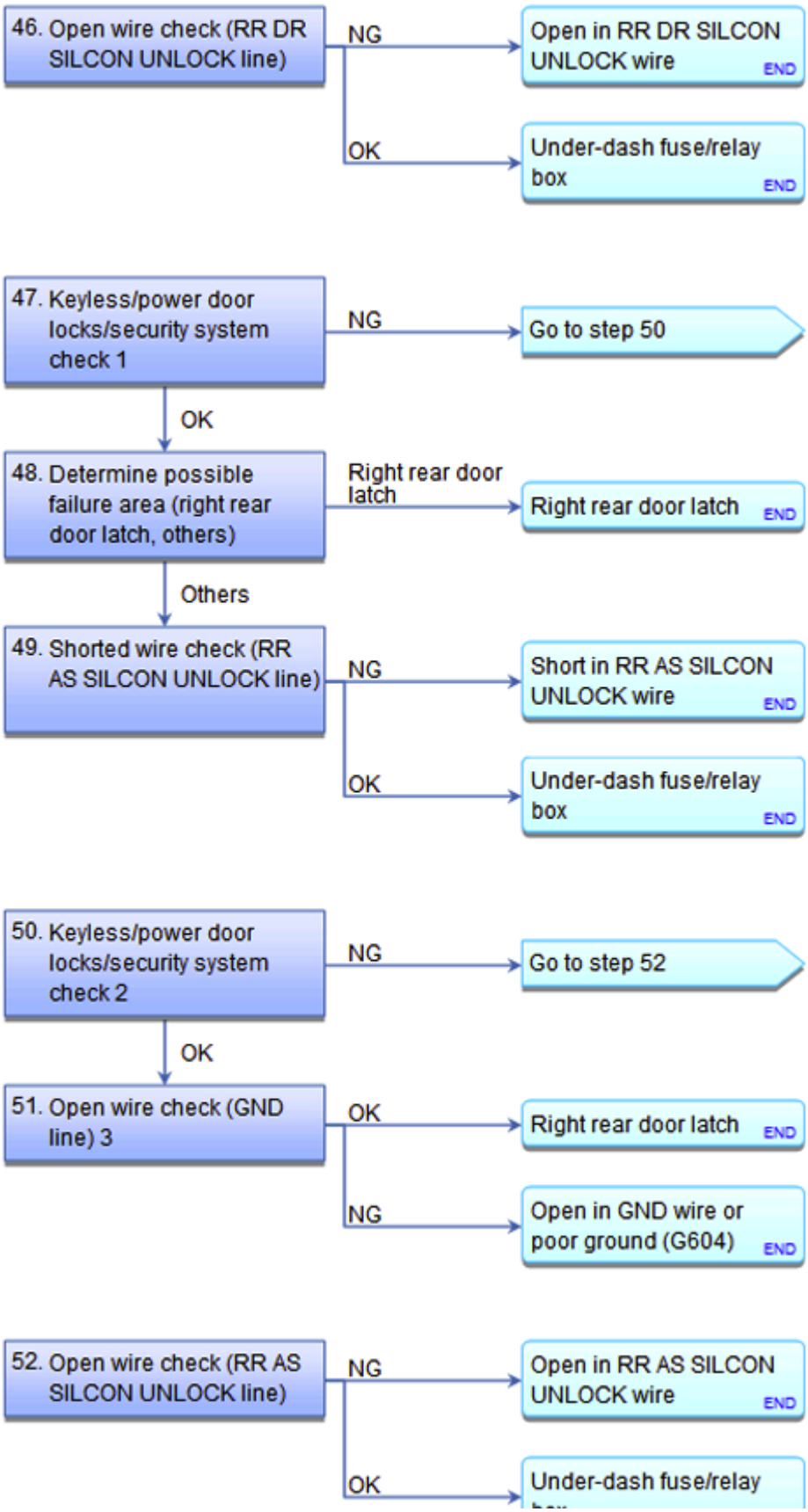

GETtheMANUALS.org

Fig. 86: Keyless/Power Door Locks/Security System Symptom Troubleshooting Flow Chart (Auto Door Unlock; 7 Of 7)
Courtesy of AMERICAN HONDA MOTOR CO., INC.

NOTE:

- **Refer to the Electrical Wiring Diagrams for the location of the under-dash fuse/relay box connectors.**
- **Before testing, check the No. B8 (15 A), No. B9 (10 A), No. B15 (10 A), No. B30 (10 A), No. B32 (15 A), No. B33 (15 A), and No. B41 (20 A) fuses in the under-dash fuse/relay box.**
- **There are two pairs of fuses in the same circuit (No. B8 and No. B32 fuses, No. B9 and No. B33 fuses, No. B15 and No. B30 fuses). If one fuse is blown, make sure to check the other fuse in the same circuit. If necessary, replace the blown fuse(s).**

1. Abnormal circuit check 1:
   - 1. **Connect the HDS to the data link connector (DLC)** See **HOW TO TROUBLESHOOT THE A/T SYSTEM** or **HOW TO TROUBLESHOOT THE FUEL AND EMISSIONS SYSTEMS** .
   - 2. Select DOOR LOCKS from the BODY ELECTRICAL SYSTEM SELECT menu with the HDS, and enter FUNCTION TESTS.
   - 3. Select UNLOCK ALL DOORS with the HDS.

   Do the door lock actuators work normally?

   YES : Go to step 22.

   NO : Driver's door lock circuit: go to step 2.

   NO : Front passenger's door lock circuit: go to step 7.

   NO : Left rear door lock circuit: go to step 12.

   NO : Right rear door lock circuit: go to step 17.

2. Open wire check (+B F/BOX MAIN line):
   - 1. Turn the ignition switch to LOCK (0).
   - 2. Measure the voltage between test points 1 and 2 individually.

     Test condition IG LOCK (0)

     Test circuit +B F/BOX MAIN

     Test point 1 Under-dash fuse/relay box connector D (32P) No. 2 (BLU)

     Test point 2 Body ground

GETtheMANUALS.org

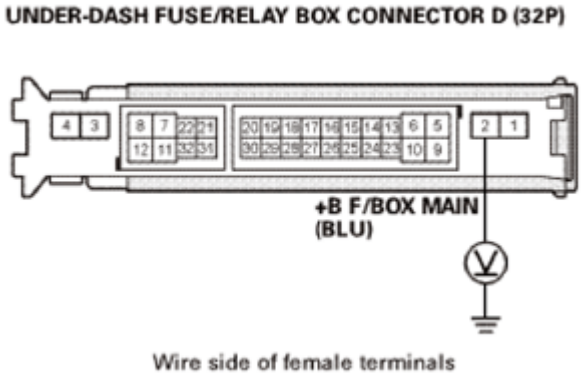

Fig. 87: Measuring Voltage Between Under-Dash Fuse/Relay Box Connector D (32P) No. 2 And Body Ground
Courtesy of AMERICAN HONDA MOTOR CO., INC.

Is there battery voltage?

YES : The +B F/BOX MAIN wire is OK. Go to step 3.

NO : Repair an open or high resistance in the wire.

3. Open wire check (GND line):
   - 1. Disconnect the following connector.

     Under-dash fuse/relay box connector R (8P)

   - 2. Check for continuity between test points 1 and 2.

     Test condition IG LOCK (0)

     Under-dash fuse/relay box connector R (8P): disconnected

     Test circuit GND

     Test point 1 Under-dash fuse/relay box connector R (8P) No. 7 (BLK)

     Test point 2 Body ground

GETtheMANUALS.org

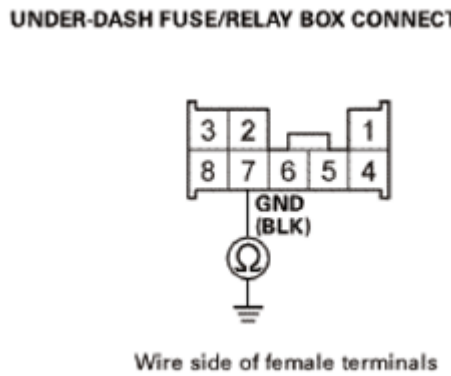

Fig. 88: Checking Continuity Between Under-Dash Fuse/Relay Box Connector R (8P) No. 7 And Body Ground
Courtesy of AMERICAN HONDA MOTOR CO., INC.

Is there continuity?

YES : The GND wire is OK. Go to step 4.

NO : Repair an open or high resistance in the ground wire or poor ground (G501).

4. Determine possible failure area (door latch, others):
   - 1. Disconnect the following connector.

     Driver's door latch 10P connector

   - 2. **TEST THE DOOR LOCK ACTUATOR**.

Is the door lock actuator OK?

YES : Go to step 5.

NO : Faulty door lock actuator; **REPLACE THE DOOR LATCH** .

5. Open wire check (DR DOOR UNLOCK line):
   - 1. Disconnect the following connector.

     Under-dash fuse/relay box connector N (13P)

   - 2. Check for continuity between test points 1 and 2.

     Test condition IG LOCK (0)

     Under-dash fuse/relay box connector R (8P): disconnected

     Driver's door latch 10P connector: disconnected

GETtheMANUALS.org

Under-dash fuse/relay box connector N (13P): disconnected

Test circuit DR DOOR UNLOCK

Test point 1 Under-dash fuse/relay box connector N (13P) No. 12 (GRY)

Test point 2 Driver's door latch 10P connector No. 1 (BLK)

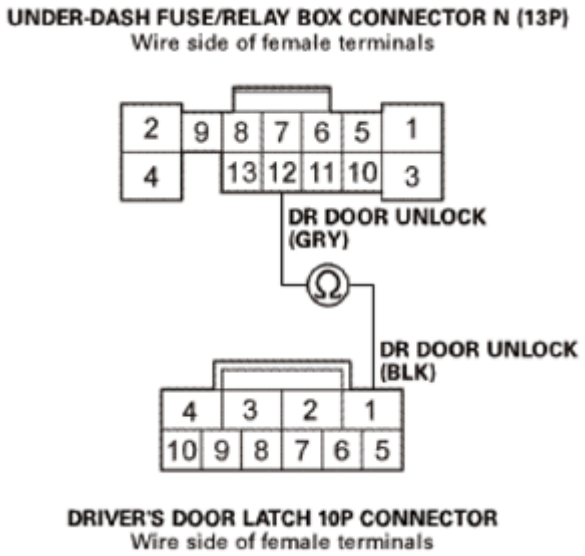

Fig. 89: Checking Continuity Between Under-Dash Fuse/Relay Box Connector N (13P) No. 12 And Driver Door Latch 10P Connector No. 1
Courtesy of AMERICAN HONDA MOTOR CO., INC.

Is there continuity?

YES : The DR DOOR UNLOCK wire is OK. Go to step 6.

NO : Repair an open or high resistance in the wire.

6. Open wire check (DR DOOR LOCK line):
   - 1. Check for continuity between test points 1 and 2.

     Test condition IG LOCK (0)

     Under-dash fuse/relay box connector R (8P): disconnected

     Driver's door latch 10P connector: disconnected

     Under-dash fuse/relay box connector N (13P): disconnected

     Test circuit DR DOOR LOCK

GETtheMANUALS.org

Test point 1 Under-dash fuse/relay box connector N (13P) No. 10 (PNK)

Test point 2 Driver's door latch 10P connector No. 4 (PNK)

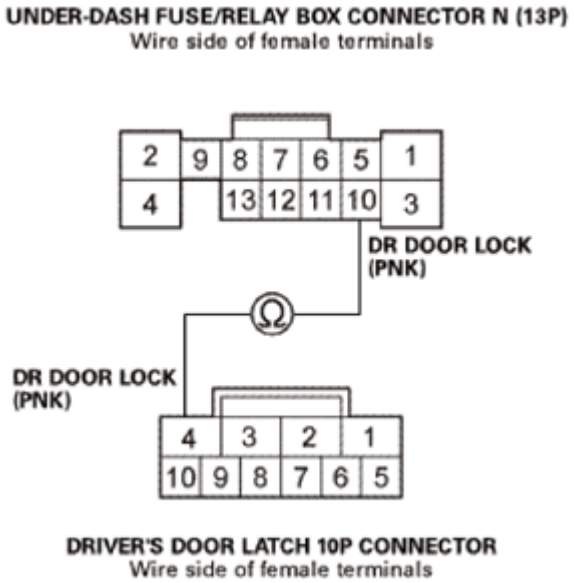

Fig. 90: Checking Continuity Between Under-Dash Fuse/Relay Box Connector N (13P) No. 10 And Driver Door Latch 10P Connector No. 4
Courtesy of AMERICAN HONDA MOTOR CO., INC.

Is there continuity?

YES : The DR DOOR LOCK wire is OK. Faulty MICU; **REPLACE THE UNDER-DASH FUSE/RELAY BOX** .

NO : Repair an open or high resistance in the wire.

7. Open wire check (+B F/BOX MAIN line):
   - 1. Turn the ignition switch to LOCK (0).
   - 2. Measure the voltage between test points 1 and 2 individually.

   Test condition IG LOCK (0)

   Test circuit +B F/BOX MAIN

   Test point 1 Under-dash fuse/relay box connector D (32P) No. 2 (BLU)

   Test point 2 Body ground

GETtheMANUALS.org

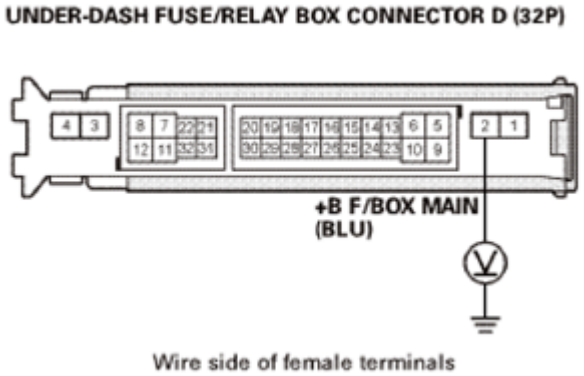

Fig. 91: Measuring Voltage Between Under-Dash Fuse/Relay Box Connector D (32P) No. 2 And Body Ground
Courtesy of AMERICAN HONDA MOTOR CO., INC.

Is there battery voltage?

YES : The +B F/BOX MAIN wire is OK. Go to step 8.

NO : Repair an open or high resistance in the wire.

8. Open wire check (GND line):
   - 1. Disconnect the following connector.

     Under-dash fuse/relay box connector R (8P)

   - 2. Check for continuity between test points 1 and 2.

     Test condition IG LOCK (0)

     Under-dash fuse/relay box connector R (8P): disconnected

     Test circuit GND

     Test point 1 Under-dash fuse/relay box connector R (8P) No. 7 (BLK)

     Test point 2 Body ground

GETtheMANUALS.org

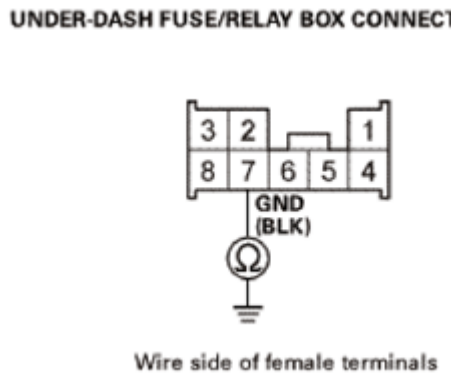

Fig. 92: Checking Continuity Between Under-Dash Fuse/Relay Box Connector R (8P) No. 7 And Body Ground
Courtesy of AMERICAN HONDA MOTOR CO., INC.

Is there continuity?

YES : The GND wire is OK. Go to step 9.

NO : Repair an open or high resistance in the ground wire or poor ground (G501).

9. Determine possible failure area (door latch, others):
   - 1. Disconnect the following connector.

     Front passenger's door latch 10P connector

   - 2. **TEST THE DOOR LOCK ACTUATOR**.

Is the door lock actuator OK?

YES : Go to step 10.

NO : Faulty door lock actuator; **REPLACE THE DOOR LATCH** .

10. Open wire check (AS SIDE D/L UNLOCK line):
    - 1. Disconnect the following connector.

      Under-dash fuse/relay box connector S (10P)

    - 2. Check for continuity between test points 1 and 2.

      Test condition IG LOCK (0)

      Under-dash fuse/relay box connector R (8P): disconnected

      Front passenger's door latch 10P connector: disconnected

GETtheMANUALS.org

Under-dash fuse/relay box connector S (10P): disconnected

Test circuit AS SIDE D/L UNLOCK

Test point 1 Under-dash fuse/relay box connector S (10P) No. 1 (YEL)

Test point 2 Front passenger's door latch 10P connector No. 1 (BLK)

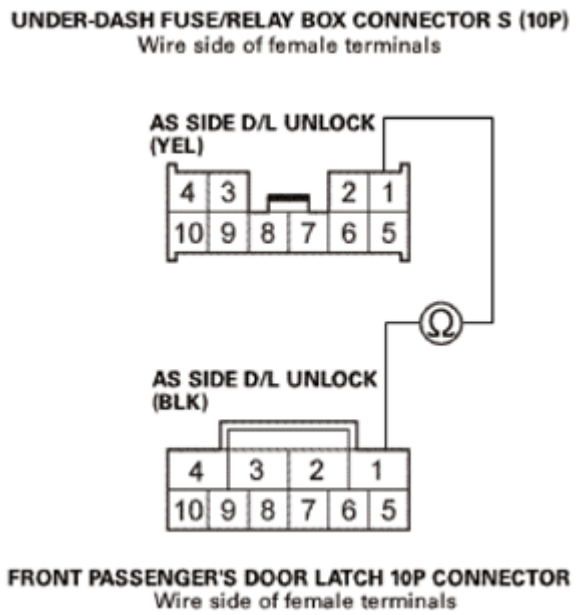

Fig. 93: Checking Continuity Between Under-Dash Fuse/Relay Box Connector N (10P) No. 1 And Front Passenger Door Latch 10P Connector No. 1
Courtesy of AMERICAN HONDA MOTOR CO., INC.

Is there continuity?

YES : The AS SIDE D/L UNLOCK wire is OK. Go to step 11.

NO : Repair an open or high resistance in the wire.

11. Open wire check (AS SIDE D/L LOCK line):
    - 1. Check for continuity between test points 1 and 2.

      Test condition IG LOCK (0)

      Under-dash fuse/relay box connector R (8P): disconnected

      Front passenger's door latch 10P connector: disconnected

      Under-dash fuse/relay box connector S (10P): disconnected

GETtheMANUALS.org

Test circuit AS SIDE D/L LOCK

Test point 1 Under-dash fuse/relay box connector S (10P) No. 3 (RED)

Test point 2 Front passenger's door latch 10P connector No. 4 (RED)

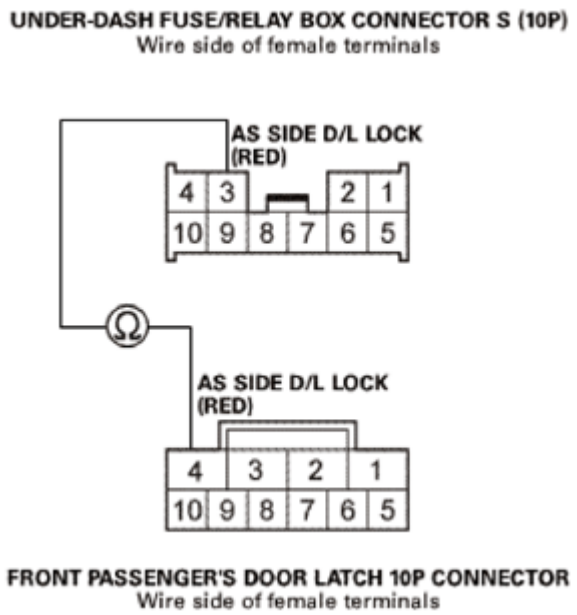

Fig. 94: Checking Continuity Between Under-Dash Fuse/Relay Box Connector N (10P) No. 3 And Front Passenger Door Latch 10P Connector No. 4
Courtesy of AMERICAN HONDA MOTOR CO., INC.

Is there continuity?

YES : The AS SIDE D/L LOCK wire is OK. Faulty MICU; **REPLACE THE UNDER-DASH FUSE/RELAY BOX** .

NO : Repair an open or high resistance in the wire.

12. Open wire check (+B F/BOX MAIN line):
    - 1. Turn the ignition switch to LOCK (0).
    - 2. Measure the voltage between test points 1 and 2 individually.

    Test condition IG LOCK (0)

    Test circuit +B F/BOX MAIN

    Test point 1 Under-dash fuse/relay box connector D (32P) No. 2 (BLU)

    Test point 2 Body ground

GETtheMANUALS.org

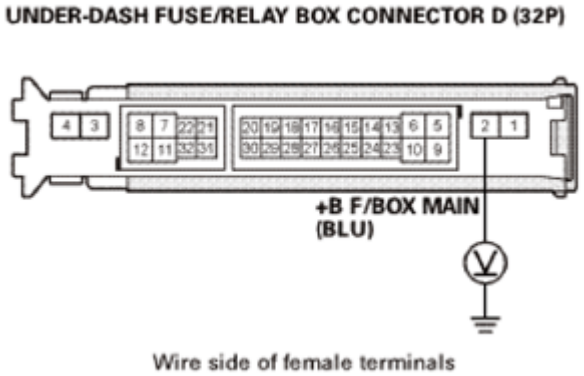

Fig. 95: Measuring Voltage Between Under-Dash Fuse/Relay Box Connector D (32P) No. 2 And Body Ground
Courtesy of AMERICAN HONDA MOTOR CO., INC.

Is there battery voltage?

YES : The +B F/BOX MAIN wire is OK. Go to step 13.

NO : Repair an open or high resistance in the wire.

13. Open wire check (GND line):
    - 1. Disconnect the following connector.

      Under-dash fuse/relay box connector R (8P)

    - 2. Check for continuity between test points 1 and 2.

      Test condition IG LOCK (0)

      Under-dash fuse/relay box connector R (8P): disconnected

      Test circuit GND

      Test point 1 Under-dash fuse/relay box connector R (8P) No. 7 (BLK)

      Test point 2 Body ground

GETtheMANUALS.org

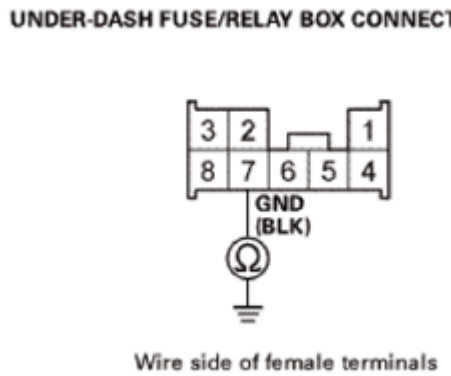

Fig. 96: Checking Continuity Between Under-Dash Fuse/Relay Box Connector R (8P) No. 7 And Body Ground
Courtesy of AMERICAN HONDA MOTOR CO., INC.

Is there continuity?

YES : The GND wire is OK. Go to step 14.

NO : Repair an open or high resistance in the ground wire or poor ground (G501).

14. Determine possible failure area (door latch, others):
    - 1. Disconnect the following connector.

      Left rear door latch 10P connector

    - 2. **TEST THE DOOR LOCK ACTUATOR**.

Is the door lock actuator OK?

YES : Go to step 15.

NO : Faulty door lock actuator; **REPLACE THE DOOR LATCH** .

15. Open wire check (DR SIDE D/L UNLOCK line):
    - 1. Disconnect the following connector.

      Under-dash fuse/relay box connector B (44P)

    - 2. Check for continuity between test points 1 and 2.

      Test condition IG LOCK (0)

      Under-dash fuse/relay box connector R (8P): disconnected

      Left rear door latch 10P connector: disconnected

GETtheMANUALS.org

Under-dash fuse/relay box connector B (44P): disconnected

Test circuit DR SIDE D/L UNLOCK

Test point 1 Under-dash fuse/relay box connector B (44P) No. 11 (PUR)

Test point 2 Left rear door latch 10P connector No. 1 (PUR)

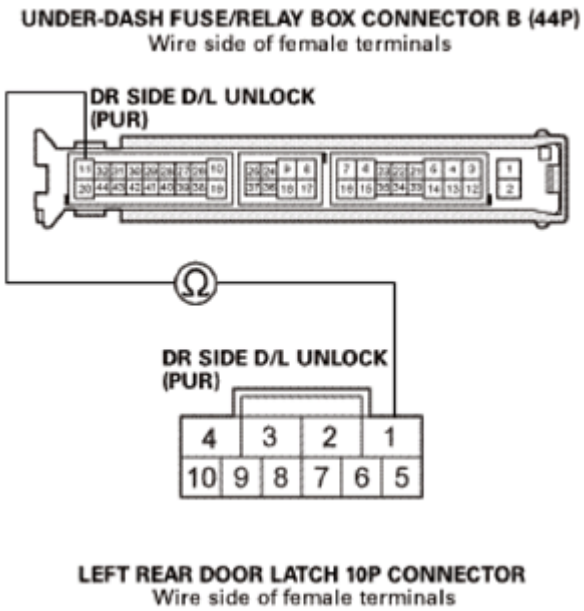

Fig. 97: Checking Continuity Between Under-Dash Fuse/Relay Box Connector B (44P) No. 11 And Left Rear Door Latch 10P Connector No. 1
Courtesy of AMERICAN HONDA MOTOR CO., INC.

Is there continuity?

YES : The DR SIDE D/L UNLOCK wire is OK. Go to step 16.

NO : Repair an open or high resistance in the wire.

16. Open wire check (DR SIDE D/L LOCK line):
    - 1. Check for continuity between test points 1 and 2.

      Test condition IG LOCK (0)

      Under-dash fuse/relay box connector R (8P): disconnected

      Left rear door latch 10P connector: disconnected

      Under-dash fuse/relay box connector B (44P): disconnected

GETtheMANUALS.org

Test circuit DR SIDE D/L LOCK

Test point 1 Under-dash fuse/relay box connector B (44P) No. 16 (PNK)

Test point 2 Left rear door latch 10P connector No. 4 (YEL)

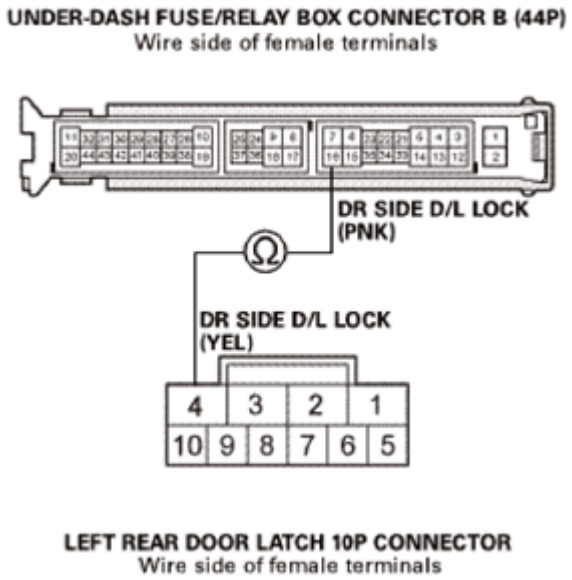

Fig. 98: Checking Continuity Between Under-Dash Fuse/Relay Box Connector B (44P) No. 16 And Left Rear Door Latch 10P Connector No. 4
Courtesy of AMERICAN HONDA MOTOR CO., INC.

Is there continuity?

YES : The DR SIDE D/L LOCK wire is OK. Faulty MICU; **REPLACE THE UNDER-DASH FUSE/RELAY BOX** .

NO : Repair an open or high resistance in the wire.

17. Open wire check (+B F/BOX MAIN line):
    - 1. Turn the ignition switch to LOCK (0).
    - 2. Measure the voltage between test points 1 and 2 individually.

    Test condition IG LOCK (0)

    Test circuit +B F/BOX MAIN

    Test point 1 Under-dash fuse/relay box connector D (32P) No. 2 (BLU)

    Test point 2 Body ground

GETtheMANUALS.org

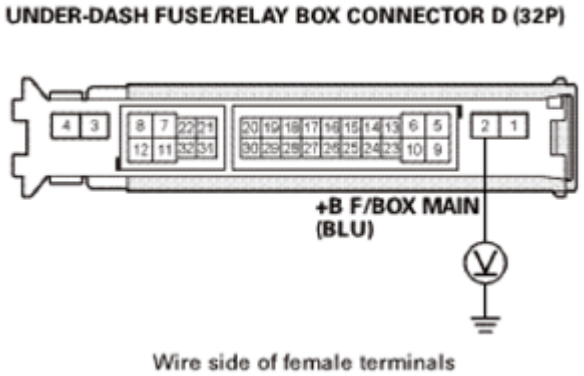

Fig. 99: Measuring Voltage Between Under-Dash Fuse/Relay Box Connector D (32P) No. 2 And Body Ground
Courtesy of AMERICAN HONDA MOTOR CO., INC.

Is there battery voltage?

YES : The +B F/BOX MAIN wire is OK. Go to step 18.

NO : Repair an open or high resistance in the wire.

18. Open wire check (GND line):
    - 1. Disconnect the following connector.

      Under-dash fuse/relay box connector R (8P)

    - 2. Check for continuity between test points 1 and 2.

      Test condition IG LOCK (0)

      Under-dash fuse/relay box connector R (8P): disconnected

      Test circuit GND

      Test point 1 Under-dash fuse/relay box connector R (8P) No. 7 (BLK)

      Test point 2 Body ground

GETtheMANUALS.org

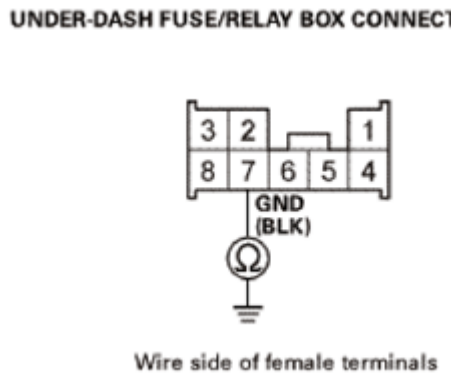

Fig. 100: Checking Continuity Between Under-Dash Fuse/Relay Box Connector D (8P) No. 7 And Body Ground
Courtesy of AMERICAN HONDA MOTOR CO., INC.

Is there continuity?

YES : The GND wire is OK. Go to step 19.

NO : Repair an open or high resistance in the ground wire or poor ground (G501).

19. Determine possible failure area (door latch, others):
    - 1. Disconnect the following connector.

      Right rear door latch 10P connector

    - 2. **TEST THE DOOR LOCK ACTUATOR**.

Is the door lock actuator OK?

YES : Go to step 20.

NO : Faulty door lock actuator; **REPLACE THE DOOR LATCH** .

20. Open wire check (AS SIDE D/L UNLOCK line):
    - 1. Disconnect the following connector.

      Under-dash fuse/relay box connector B (44P)

    - 2. Check for continuity between test points 1 and 2.

      Test condition IG LOCK (0)

      Under-dash fuse/relay box connector R (8P): disconnected

      Right rear door latch 10P connector: disconnected

GETtheMANUALS.org

Under-dash fuse/relay box connector B (44P): disconnected

Test circuit AS SIDE D/L UNLOCK

Test point 1 Under-dash fuse/relay box connector B (44P) No. 9 (YEL)

Test point 2 Right rear door latch 10P connector No. 1 (YEL)

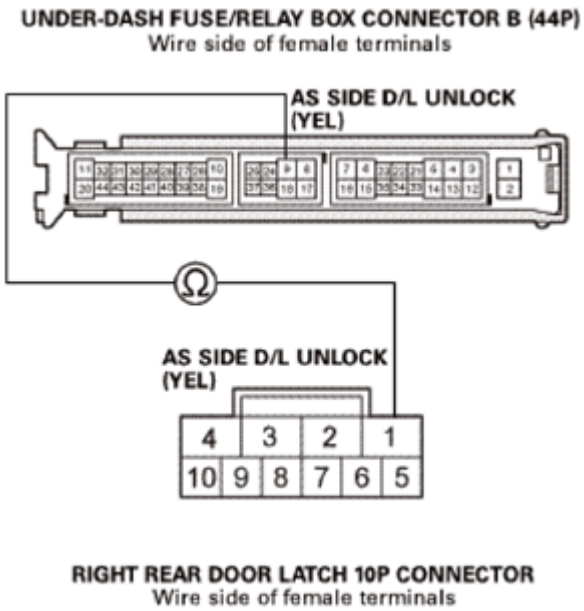

Fig. 101: Checking Continuity Between Under-Dash Fuse/Relay Box Connector B (44P) No. 9 And Right Rear Door Latch 10P Connector No. 1
Courtesy of AMERICAN HONDA MOTOR CO., INC.

Is there continuity?

YES : The AS SIDE D/L UNLOCK wire is OK. Go to step 21.

NO : Repair an open or high resistance in the wire.

21. Open wire check (AS SIDE D/L LOCK line):
    - 1. Check for continuity between test points 1 and 2.

      Test condition IG LOCK (0)

      Under-dash fuse/relay box connector R (8P): disconnected

      Right rear door latch 10P connector: disconnected

      Under-dash fuse/relay box connector B (44P): disconnected

GETtheMANUALS.org

Test circuit AS SIDE D/L LOCK

Test point 1 Under-dash fuse/relay box connector B (44P) No. 18 (LT GRN)

Test point 2 Right rear door latch 10P connector No. 4 (PNK)

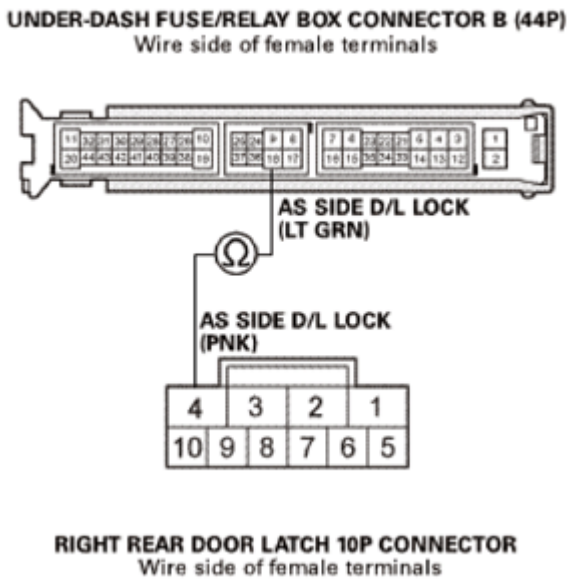

Fig. 102: Checking Continuity Between Under-Dash Fuse/Relay Box Connector B (44P) No. 18 And Right Rear Door Latch 10P Connector No. 4
Courtesy of AMERICAN HONDA MOTOR CO., INC.

Is there continuity?

YES : The AS SIDE D/L LOCK wire is OK. Faulty MICU; **REPLACE THE UNDER-DASH FUSE/RELAY BOX** .

NO : Repair an open or high resistance in the wire.

22. Abnormal circuit check 2:
    - 1. Check the parameter(s) below with the HDS when each switch is operating.

Signal	Current conditions	
	Value	Unit
A/T Gear Position Switch (P)		
Driver's Door Lock Knob Switch (UNLOCK)		
Front Passenger's Door Lock Knob Sw. (UNLOCK)		
Driver's Rear Door Lock Knob Switch (UNLOCK)		
Passenger's Rear Door Lock Knob Sw. (UNLOCK)		

Is each switch information OK?

GETtheMANUALS.org

YES : Faulty MICU; **REPLACE THE UNDER-DASH FUSE/RELAY BOX** .

NO : Transmission range switch P position circuit troubleshooting: go to step 23.

NO : Driver's door lock knob switch circuit troubleshooting: go to step 29.

NO : Front passenger's door lock knob switch circuit troubleshooting: go to step 35.

NO : Left rear door lock knob switch circuit troubleshooting: go to step 41.

NO : Right rear door lock knob switch circuit troubleshooting: go to step 47.

23. Keyless/power door locks/security system check 1:
    - 1. With the transmission range switch in P position, check the parameter(s) below with the HDS.

Signal	Current conditions	
	Value	Unit
A/T Gear Position Switch (P)		

Is information indicator ON?

YES : Go to step 24.

NO : Go to step 26.

24. Determine possible failure area (transmission range switch, others):
    - 1. Turn the ignition switch to LOCK (0).
    - 2. Disconnect the following connector.

      Transmission range switch 10P connector

    - 3. Check the parameter(s) below with the HDS.

Signal	Current conditions	
	Value	Unit
A/T Gear Position Switch (P)		

Is information indicator OFF?

YES : **REPLACE THE TRANSMISSION RANGE SWITCH** .

NO : Go to step 25.

25. Shorted wire check (ATP-P line):
    - 1. Turn the ignition switch to LOCK (0).

GETtheMANUALS.org

- 2. Disconnect the following connector.

  Under-dash fuse/relay box connector D (32P)

- 3. Check for continuity between test points 1 and 2.

  Test condition IG LOCK (0)

  Disconnect the transmission range switch 10P connector: disconnected

  Under-dash fuse/relay box connector D (32P): disconnected

  Test circuit ATP-P

  Test point 1 Under-dash fuse/relay box connector D (32P) No. 22 (YEL)

  Test point 2 Body ground

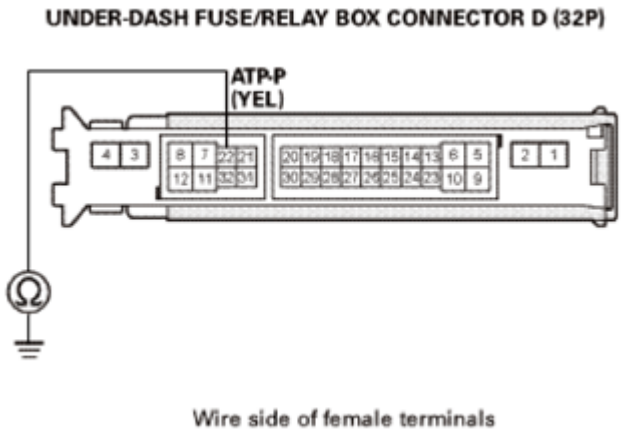

Fig. 103: Checking Continuity Under-Dash Fuse/Relay Box Connector D (32P) No. 22 And Body Ground
Courtesy of AMERICAN HONDA MOTOR CO., INC.

Is there continuity?

YES : Repair a short to ground in the wire.

NO : The ATP-P wire is OK. Faulty MICU; **REPLACE THE UNDER-DASH FUSE/RELAY BOX** .

26. Keyless/power door locks/security system check 2:
    - 1. Turn the ignition switch to LOCK (0).
    - 2. Disconnect the following connector.

      Transmission range switch 10P connector

GETtheMANUALS.org

- 3. Connect terminals A and B with a jumper wire.

  Terminal A Transmission range switch 10P connector No. 10 (BLK/BLU)

  Terminal B Body ground

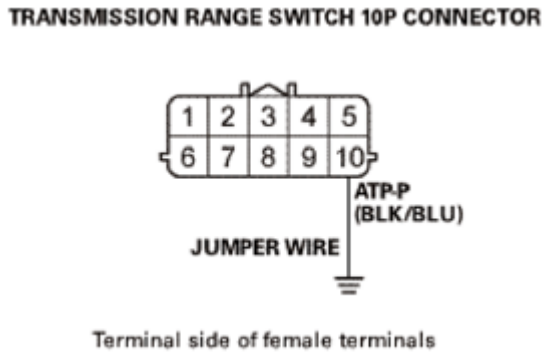

Fig. 104: Connecting Jumper Wire Between Transmission Range Switch 10P Connector No. 10 And Body Ground
Courtesy of AMERICAN HONDA MOTOR CO., INC.

- 4. Check the parameter(s) below with the HDS.

Signal	Current conditions	
	Value	Unit
A/T Gear Position Switch (P)		

Is information indicator ON?

YES : Go to step 27.

NO : Go to step 28.

27. Open wire check (GND line):
    - 1. Turn the ignition switch to LOCK (0).
    - 2. Check for continuity between test points 1 and 2.

      Test condition IG LOCK (0)

      Transmission range switch 10P connector: disconnected

      Test circuit GND

      Test point 1 Transmission range switch 10P connector No. 6 (BLK)

      Test point 2 Body ground

GETtheMANUALS.org

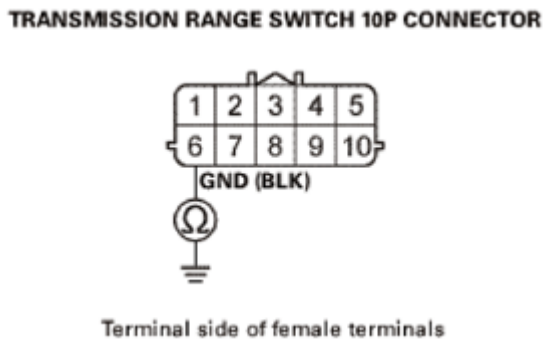

Fig. 105: Checking Continuity Between Transmission Range Switch 10P Connector No. 6 And Body Ground
Courtesy of AMERICAN HONDA MOTOR CO., INC.

Is there continuity?

YES : The GND wire is OK. **REPLACE THE TRANSMISSION RANGE SWITCH** .

NO : Repair an open or high resistance in the ground wire or poor ground (G101).

28. Open wire check (ATP-P line):
    - 1. Connect terminals A and B with a jumper wire.

      Terminal A Under-dash fuse/relay box connector D (32P) No. 22 (YEL)

      Terminal B Body ground

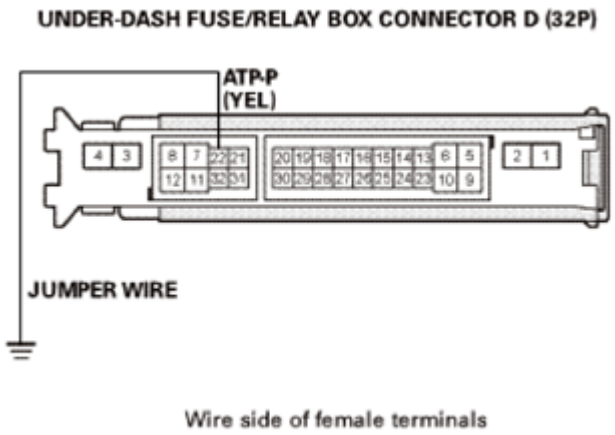

Fig. 106: Connecting Jumper Wire Between Under-Dash Fuse/Relay Box Connector D (32P) No. 22 And Body Ground
Courtesy of AMERICAN HONDA MOTOR CO., INC.

    - 2. Check the parameter(s) below with the HDS.

	Current conditions

GETtheMANUALS.org

Signal	Value	Unit
A/T Gear Position Switch (P)		

Is information indicator ON?

YES : Repair an open or high resistance in the wire.

NO : The ATP-P wire is OK. Faulty MICU; **REPLACE THE UNDER-DASH FUSE/RELAY BOX** .

29. Keyless/power door locks/security system check 1:
    - 1. With the driver's door lock knob switch in LOCK position, check the parameter(s) below with the HDS.

Signal	Current conditions	
	Value	Unit
Driver's Door Lock Knob Switch (UNLOCK)		

Is information indicator ON?

YES : Go to step 30.

NO : Go to step 32.

30. Determine possible failure area (driver's door latch, others):
    - 1. Turn the ignition switch to LOCK (0).
    - 2. Disconnect the following connector.

      Driver's door latch 10P connector

    - 3. Check the parameter(s) below with the HDS.

Signal	Current conditions	
	Value	Unit
Driver's Door Lock Knob Switch (UNLOCK)		

Is information indicator OFF?

YES : Faulty driver's door lock knob switch; **REPLACE THE DRIVER'S DOOR LATCH** .

NO : Go to step 31.

31. Shorted wire check (DR SILCON UNLOCK line):
    - 1. Turn the ignition switch to LOCK (0).
    - 2. Disconnect the following connector.

GETtheMANUALS.org

Under-dash fuse/relay box connector X (10P)

- 3. Check for continuity between test points 1 and 2.

  Test condition IG LOCK (0)

  Driver's door latch 10P connector: disconnected

  Under-dash fuse/relay box connector X (10P): disconnected

  Test circuit DR SILCON UNLOCK

  Test point 1 Under-dash fuse/relay box connector X (10P) No. 4 (WHT)

  Test point 2 Body ground

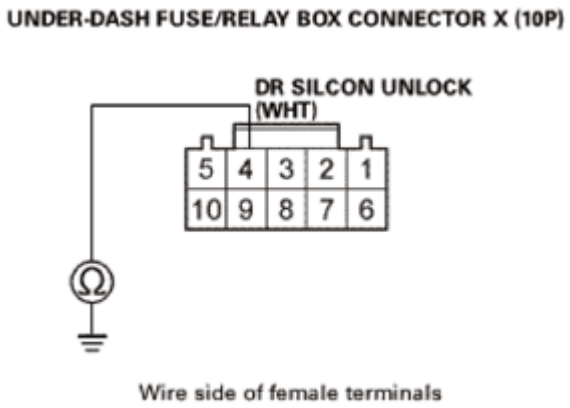

Fig. 107: Checking Continuity Between Terminals Under-Dash Fuse/Relay Box Connector X (10P) No. 4 And Body Ground
Courtesy of AMERICAN HONDA MOTOR CO., INC.

Is there continuity?

YES : Repair a short to ground in the wire.

NO : The DR SILCON UNLOCK wire is OK. Faulty MICU; **REPLACE THE UNDER-DASH FUSE/RELAY BOX** .

32. Keyless/power door locks/security system check 2:
    - 1. Turn the ignition switch to LOCK (0).
    - 2. Disconnect the following connector.

      Driver's door latch 10P connector

    - 3. Connect terminals A and B with a jumper wire.

GETtheMANUALS.org

Terminal A Driver's door latch 10P connector No. 5 (WHT)

Terminal B Body ground

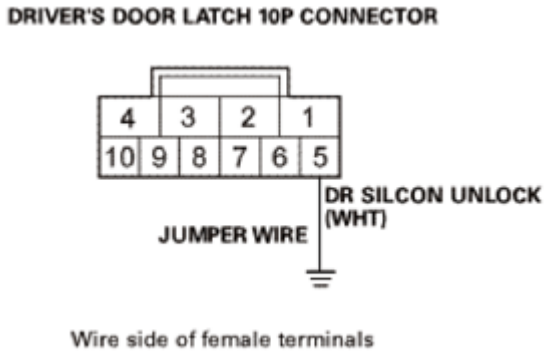

Fig. 108: Connecting Jumper Wire Between Driver Door Latch 10P Connector No. 5 And Body Ground
Courtesy of AMERICAN HONDA MOTOR CO., INC.

- 4. Check the parameter(s) below with the HDS.

Signal	Current conditions	
	Value	Unit
Driver's Door Lock Knob Switch (UNLOCK)		

Is information indicator ON?

YES : Go to step 33.

NO : Go to step 34.

33. Open wire check (GND line):
    - 1. Turn the ignition switch to LOCK (0).
    - 2. Check for continuity between test points 1 and 2.

    Test condition IG LOCK (0)

    Driver's door latch 10P connector: disconnected

    Test circuit GND

    Test point 1 Driver's door latch 10P connector No. 7 (BLK)

    Test point 2 Body ground

GETtheMANUALS.org

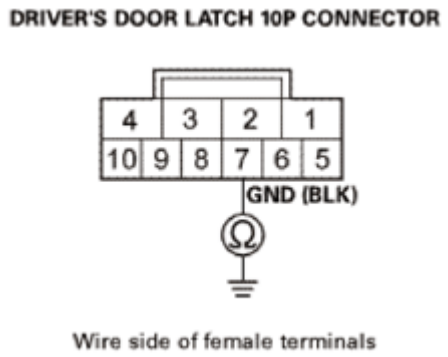

Fig. 109: Checking Continuity Between Driver Door Latch 10P Connector No. 7 And Body Ground
Courtesy of AMERICAN HONDA MOTOR CO., INC.

Is there continuity?

YES : The GND wire is OK. Faulty driver's door lock knob switch; **REPLACE THE DRIVER'S DOOR LATCH** .

NO : Repair an open or high resistance in the wire or poor ground (G501).

34. Open wire check (DR SILCON UNLOCK line):
    - 1. Connect terminals A and B with a jumper wire.

      Terminal A Under-dash fuse/relay box connector X (10P) No. 4 (WHT)

      Terminal B Body ground

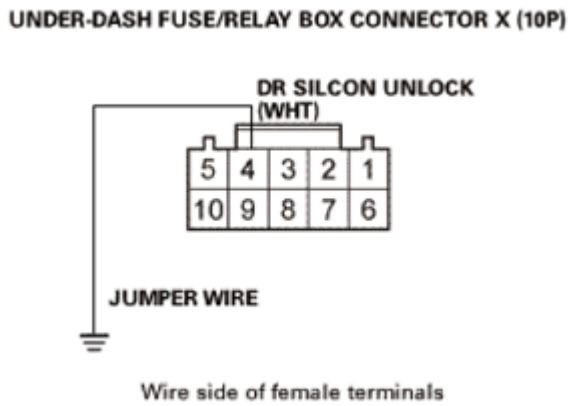

Fig. 110: Connecting Jumper Wire Between Under-Dash Fuse/Relay Box Connector X (10P) No. 4 And Body Ground
Courtesy of AMERICAN HONDA MOTOR CO., INC.

    - 2. Check the parameter(s) below with the HDS.

GETtheMANUALS.org

Signal	Current conditions	
	Value	Unit
Driver's Door Lock Knob Switch (UNLOCK)		

Is information indicator ON?

YES : Repair an open or high resistance in the wire.

NO : The DR SILCON UNLOCK wire is OK. Faulty MICU; **REPLACE THE UNDER-DASH FUSE/RELAY BOX** .

35. Keyless/power door locks/security system check 1:
    - 1. With the front passenger's door lock knob switch in LOCK position, check the parameter(s) below with the HDS.

Signal	Current conditions	
	Value	Unit
Front Passenger's Door Lock Knob Sw. (UNLOCK)		

Is information indicator ON?

YES : Go to step 36.

NO : Go to step 38.

36. Determine possible failure area (front passenger's door latch, others):
    - 1. Turn the ignition switch to LOCK (0).
    - 2. Disconnect the following connector.

      Front passenger's door latch 10P connector

    - 3. Check the parameter(s) below with the HDS.

Signal	Current conditions	
	Value	Unit
Front Passenger's Door Lock Knob Sw. (UNLOCK)		

Is information indicator OFF?

YES : Faulty front passenger's door lock knob switch; **REPLACE THE FRONT PASSENGER'S DOOR LATCH** .

NO : Go to step 37.

37. Shorted wire check (AS SILCON UNLOCK line):

GETtheMANUALS.org

- 1. Turn the ignition switch to LOCK (0).
- 2. Disconnect the following connector.

  Under-dash fuse/relay box connector W (24P)

- 3. Check for continuity between test points 1 and 2.

  Test condition IG LOCK (0)

  Front passenger's door latch 10P connector: disconnected

  Under-dash fuse/relay box connector W (24P): disconnected

  Test circuit AS SILCON UNLOCK

  Test point 1 Under-dash fuse/relay box connector W (24P) No. 10 (LT BLU)

  Test point 2 Body ground

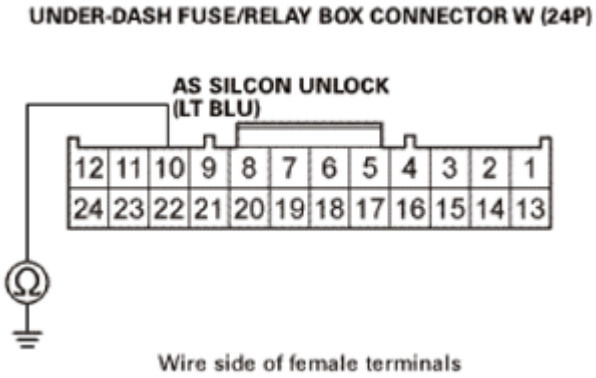

Fig. 111: Checking Continuity Between Under-Dash Fuse/Relay Box Connector W (24P) No. 10 And Body Ground
Courtesy of AMERICAN HONDA MOTOR CO., INC.

Is there continuity?

YES : Repair a short to ground in the wire.

NO : The AS SILCON UNLOCK wire is OK. Faulty MICU; **REPLACE THE UNDER-DASH FUSE/RELAY BOX** .

38. Keyless/power door locks/security system check 2:
    - 1. Turn the ignition switch to LOCK (0).
    - 2. Disconnect the following connector.

      Front passenger's door latch 10P connector

GETtheMANUALS.org

- 3. Connect terminals A and B with a jumper wire.

  Terminal A Front passenger's door latch 10P connector No. 10 (LT BLU)

  Terminal B Body ground

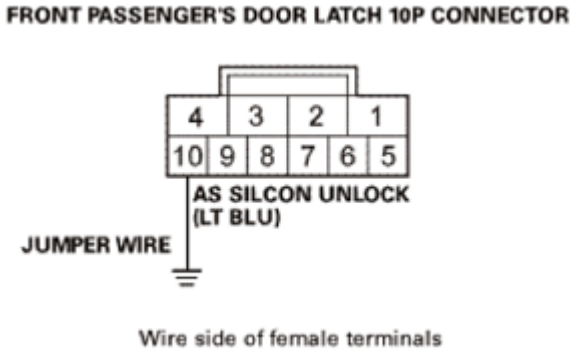

Fig. 112: Connecting Jumper Wire Between Front Passenger Door Latch 10P Connector No. 10 And Body Ground
Courtesy of AMERICAN HONDA MOTOR CO., INC.

- 4. Check the parameter(s) below with the HDS.

Signal	Current conditions	
	Value	Unit
Front Passenger's Door Lock Knob Sw. (UNLOCK)		

Is information indicator ON?

YES : Go to step 39.

NO : Go to step 40.

39. Open wire check (GND line):
    - 1. Turn the ignition switch to LOCK (0).
    - 2. Check for continuity between test points 1 and 2.

      Test condition IG LOCK (0)

      Front passenger's door latch 10P connector: disconnected

      Test circuit GND

      Test point 1 Front passenger's door latch 10P connector No. 8 (BLK)

      Test point 2 Body ground

GETtheMANUALS.org

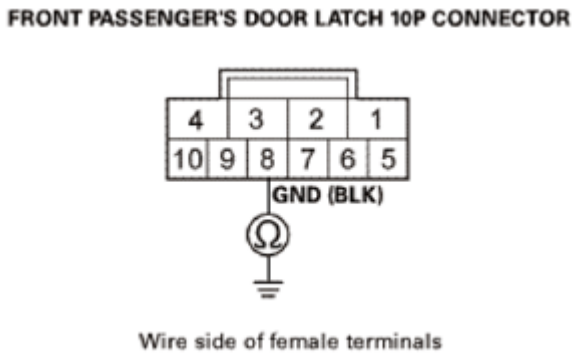

Fig. 113: Checking Continuity Between Front Passenger Door Latch 10P Connector No. 8 And Body Ground
Courtesy of AMERICAN HONDA MOTOR CO., INC.

Is there continuity?

YES : The GND wire is OK. Faulty front passenger's door lock knob switch; **REPLACE THE FRONT PASSENGER'S DOOR LATCH** .

NO : Repair an open or high resistance in the ground wire or poor ground (G503).

40. Open wire check (AS SILCON UNLOCK line):
    - 1. Connect terminals A and B with a jumper wire.

      Terminal A Under-dash fuse/relay box connector W (24P) No. 10 (LT BLU)

      Terminal B Body ground

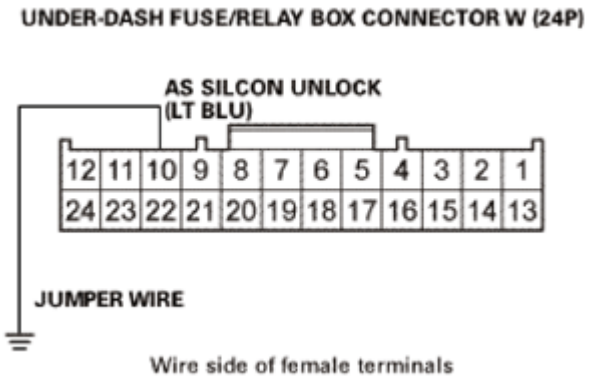

Fig. 114: Connecting Jumper Wire Between Under-Dash Fuse/Relay Box Connector W (24P) No. 10 And Body Ground
Courtesy of AMERICAN HONDA MOTOR CO., INC.

    - 2. Check the parameter(s) below with the HDS.

	Current conditions

GETtheMANUALS.org

Signal	Value	Unit
Front Passenger's Door Lock Knob Sw. (UNLOCK)		

Is information indicator ON?

YES : Repair an open or high resistance in the wire.

NO : The AS SILCON UNLOCK wire is OK. Faulty MICU; **REPLACE THE UNDER-DASH FUSE/RELAY BOX** .

41. Keyless/power door locks/security system check 1:
    - 1. With the left rear door lock knob switch in LOCK position, check the parameter(s) below with the HDS.

Signal	Current conditions	
	Value	Unit
Driver's Rear Door Lock Knob Switch (UNLOCK)		

Is information indicator ON?

YES : Go to step 42.

NO : Go to step 44.

42. Determine possible failure area (left rear door latch, others):
    - 1. Turn the ignition switch to LOCK (0).
    - 2. Disconnect the following connector.

      Left rear door latch 10P connector

    - 3. Check the parameter(s) below with the HDS.

Signal	Current conditions	
	Value	Unit
Driver's Rear Door Lock Knob Switch (UNLOCK)		

Is information indicator OFF?

YES : Faulty left rear door lock knob switch; **REPLACE THE LEFT REAR DOOR LATCH** .

NO : Go to step 43.

43. Shorted wire check (RR DR SILCON UNLOCK line):
    - 1. Turn the ignition switch to LOCK (0).

GETtheMANUALS.org

- 2. Disconnect the following connector.

  Under-dash fuse/relay box connector W (24P)

- 3. Check for continuity between test points 1 and 2.

  Test condition IG LOCK (0)

  Left rear door latch 10P connector: disconnected

  Under-dash fuse/relay box connector W (24P): disconnected

  Test circuit RR DR SILCON UNLOCK

  Test point 1 Under-dash fuse/relay box connector W (24P) No. 5 (BLU)

  Test point 2 Body ground

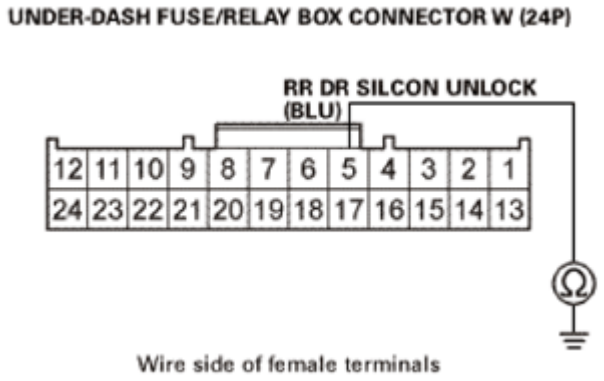

Fig. 115: Checking Continuity Between Under-Dash Fuse/Relay Box Connector W (24P) No. 5 And Body Ground
Courtesy of AMERICAN HONDA MOTOR CO., INC.

Is there continuity?

YES : Repair a short to ground in the wire.

NO : The RR DR SILCON UNLOCK wire is OK. Faulty MICU; **REPLACE THE UNDER-DASH FUSE/RELAY BOX** .

44. Keyless/power door locks/security system check 2:
    - 1. Turn the ignition switch to LOCK (0).
    - 2. Disconnect the following connector.

      Left rear door latch 10P connector

GETtheMANUALS.org

- 3. Connect terminals A and B with a jumper wire.

  Terminal A Left rear door latch 10P connector No. 9 (PUR)

  Terminal B Body ground

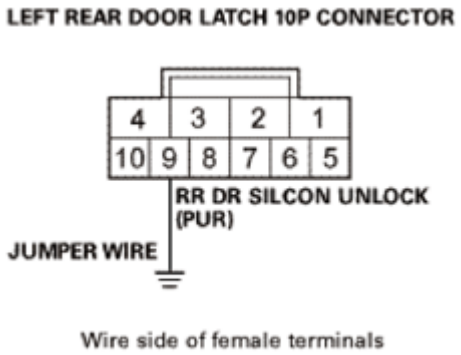

Fig. 116: Connecting Jumper Wire Between Left Rear Door Latch 10P Connector No. 9 And Body Ground
Courtesy of AMERICAN HONDA MOTOR CO., INC.

- 4. Check the parameter(s) below with the HDS.

Signal	Current conditions	
	Value	Unit
Driver's Rear Door Lock Knob Switch (UNLOCK)		

Is information indicator ON?

YES : Go to step 45.

NO : Go to step 46.

45. Open wire check (GND line):
    - 1. Turn the ignition switch to LOCK (0).
    - 2. Check for continuity between test points 1 and 2.

      Test condition IG LOCK (0)

      Left rear door latch 10P connector: disconnected

      Test circuit GND

      Test point 1 Left rear door latch 10P connector No. 6 (BLK)

      Test point 2 Body ground

GETtheMANUALS.org

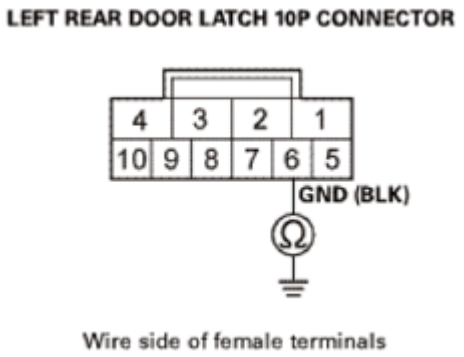

Fig. 117: Checking Continuity Between Left Rear Door Latch 10P Connector No. 6 And Body Ground
Courtesy of AMERICAN HONDA MOTOR CO., INC.

Is there continuity?

YES : The GND wire is OK. Faulty left rear door lock knob switch; **REPLACE THE LEFT REAR DOOR LATCH** .

NO : Repair an open or high resistance in the ground wire or poor ground (G601).

46. Open wire check (RR DR SILCON UNLOCK line):
    - 1. Connect terminals A and B with a jumper wire.

      Terminal A Under-dash fuse/relay box connector W (24P) No. 5 (BLU)

      Terminal B Body ground

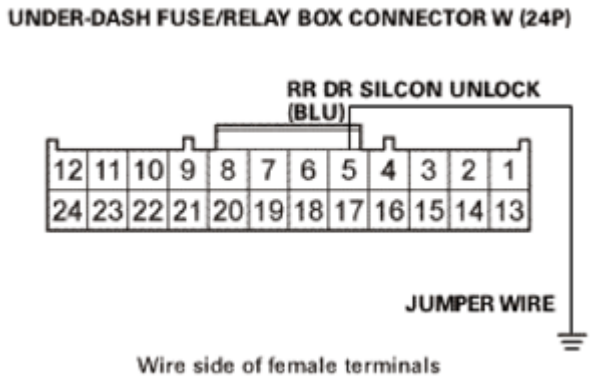

Fig. 118: Connecting Jumper Wire Between Under-Dash Fuse/Relay Box Connector W (24P) No. 5 And Body Ground
Courtesy of AMERICAN HONDA MOTOR CO., INC.

    - 2. Check the parameter(s) below with the HDS.

	Current conditions

GETtheMANUALS.org

Signal	Value	Unit
Driver's Rear Door Lock Knob Switch (UNLOCK)		

Is information indicator ON?

YES : Repair an open or high resistance in the wire.

NO : The RR DR SILCON UNLOCK wire is OK. Faulty MICU; **REPLACE THE UNDER-DASH FUSE/RELAY BOX** .

47. Keyless/power door locks/security system check 1:
    - 1. With the right rear door lock knob switch in LOCK position, check the parameter(s) below with the HDS.

Signal	Current conditions	
	Value	Unit
Passenger's Rear Door Lock Knob Sw. (UNLOCK)		

Is information indicator ON?

YES : Go to step 48.

NO : Go to step 50.

48. Determine possible failure area (right rear door latch, others):
    - 1. Turn the ignition switch to LOCK (0).
    - 2. Disconnect the following connector.

      Right rear door latch 10P connector

    - 3. Check the parameter(s) below with the HDS.

Signal	Current conditions	
	Value	Unit
Passenger's Rear Door Lock Knob Sw. (UNLOCK)		

Is information indicator OFF?

YES : Faulty right rear door lock knob switch; **REPLACE THE RIGHT REAR DOOR LATCH** .

NO : Go to step 49.

49. Shorted wire check (RR AS SILCON UNLOCK line):
    - 1. Turn the ignition switch to LOCK (0).

GETtheMANUALS.org

- 2. Disconnect the following connector.

  Under-dash fuse/relay box connector W (24P)

- 3. Check for continuity between test points 1 and 2.

  Test condition IG LOCK (0)

  Right rear door latch 10P connector: disconnected

  Under-dash fuse/relay box connector W (24P): disconnected

  Test circuit RR AS SILCON UNLOCK

  Test point 1 Under-dash fuse/relay box connector W (24P) No. 4 (ORN)

  Test point 2 Body ground

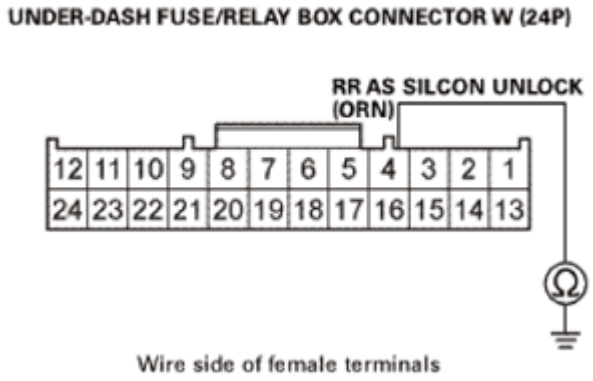

Fig. 119: Checking Continuity Between Under-Dash Fuse/Relay Box Connector W (24P) No. 4 And Body Ground
Courtesy of AMERICAN HONDA MOTOR CO., INC.

Is there continuity?

YES : Repair a short to ground in the wire.

NO : The RR AS SILCON UNLOCK wire is OK. Faulty MICU; **REPLACE THE UNDER-DASH FUSE/RELAY BOX** .

50. Keyless/power door locks/security system check 2:
    - 1. Turn the ignition switch to LOCK (0).
    - 2. Disconnect the following connector.

      Right rear door latch 10P connector

GETtheMANUALS.org

- 3. Connect terminals A and B with a jumper wire.

  Terminal A Right rear door latch 10P connector No. 6 (LT BLU)

  Terminal B Body ground

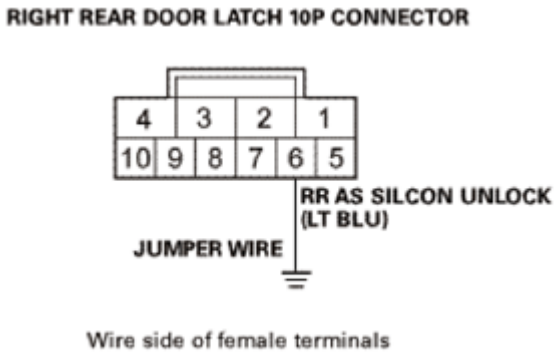

Fig. 120: Connecting Jumper Wire Between Right Rear Door Latch 10P Connector No. 6 And Body Ground
Courtesy of AMERICAN HONDA MOTOR CO., INC.

- 4. Check the parameter(s) below with the HDS.

Signal	Current conditions	
Value	Unit	
Passenger's Rear Door Lock Knob Sw. (UNLOCK)		

Is information indicator ON?

YES : Go to step 51.

NO : Go to step 52.

51. Open wire check (GND line) 3:
    - 1. Turn the ignition switch to LOCK (0).
    - 2. Check for continuity between test points 1 and 2.

      Test condition IG LOCK (0)

      Right rear door latch 10P connector: disconnected

      Test circuit GND

      Test point 1 Right rear door latch 10P connector No. 9 (BLK)

      Test point 2 Body ground

GETtheMANUALS.org

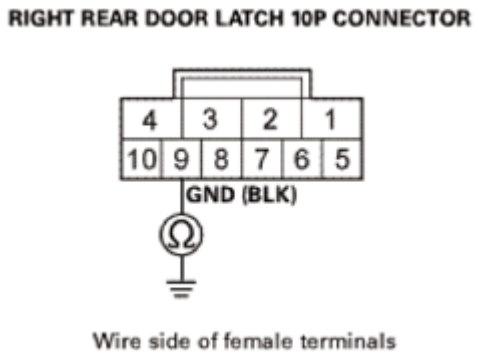

Fig. 121: Checking Continuity Between Right Rear Door Latch 10P Connector No. 9 And Body Ground
Courtesy of AMERICAN HONDA MOTOR CO., INC.

Is there continuity?

YES : The GND wire is OK. Faulty right rear door lock knob switch; **REPLACE THE RIGHT REAR DOOR LATCH** .

NO : Repair an open or high resistance in the ground wire or poor ground (G604).

52. Open wire check (RR AS SILCON UNLOCK line):
    - 1. Connect terminals A and B with a jumper wire.

      Terminal A Under-dash fuse/relay box connector W (24P) No. 4 (ORN)

      Terminal B Body ground

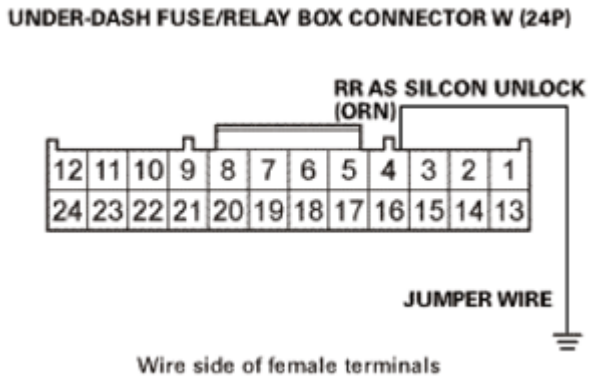

Fig. 122: Connecting Jumper Wire Between Under-Dash Fuse/Relay Box Connector W (24P) No. 4 And Body Ground
Courtesy of AMERICAN HONDA MOTOR CO., INC.

    - 2. Check the parameter(s) below with the HDS.

	Current conditions

GETtheMANUALS.org

Signal	Value	Unit
Passenger's Rear Door Lock Knob Sw. (UNLOCK)		

Is information indicator ON?

YES : Repair an open or high resistance in the wire.

NO : The RR AS SILCON UNLOCK wire is OK. Faulty MICU; **REPLACE THE UNDER-DASH FUSE/RELAY BOX** .

DOORS AUTOMATICALLY RELOCK 30 SECONDS AFTER BEING UNLOCKED WITH THE TRANSMITTER EVEN THOUGH A DOOR HAS BEEN OPENED

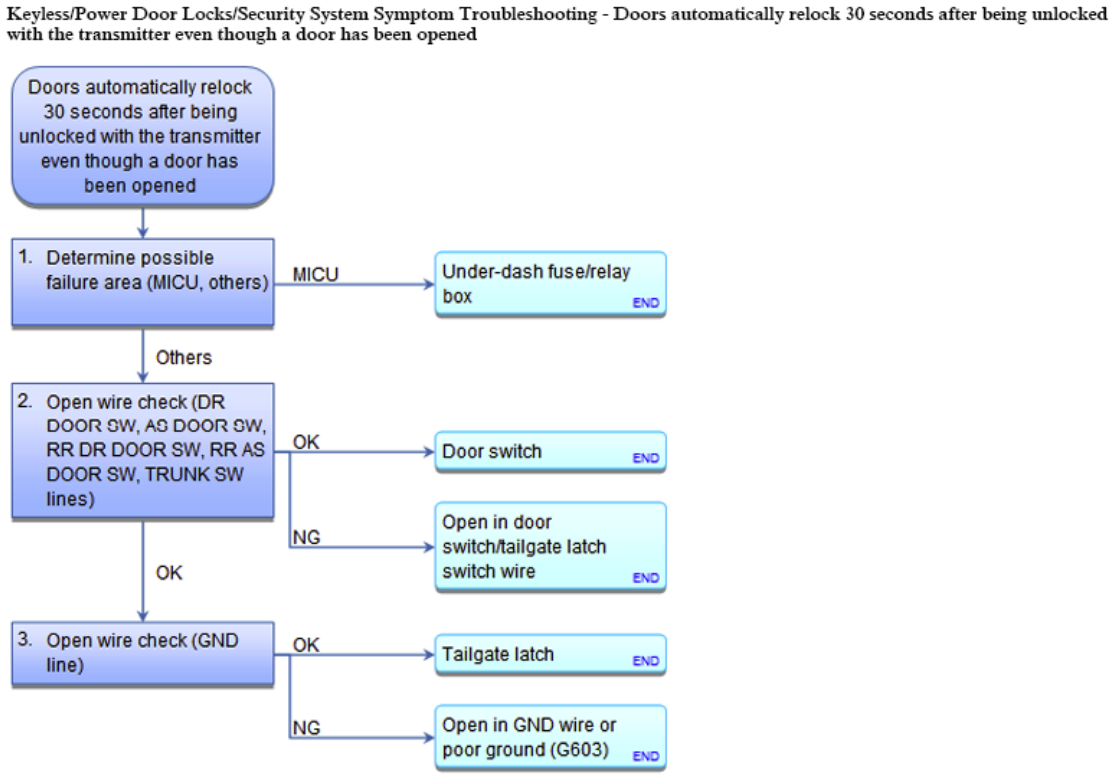

Fig. 123: Keyless/Power Door Locks/Security System Symptom Troubleshooting Flowchart
Courtesy of AMERICAN HONDA MOTOR CO., INC.

NOTE: **Before troubleshooting, check the B-CAN DTCs. If any DTC is indicated, troubleshoot the indicated DTC first.**

1. Determine possible failure area (MICU, others):
   - 1. Move the interior light switch to the DOOR position.
   - 2. Turn the ignition switch to LOCK (0).

GETtheMANUALS.org

- 3. Watch the individual map light and the door/tailgate indicators on the gauge control module.

Do the individual map light and door/tailgate indicators come on when the door/tailgate is open, and go off when the door/tailgate is closed?

YES : Faulty MICU, **REPLACE THE UNDER-DASH FUSE/RELAY BOX** .

NO : Go to step 2.

2. Open wire check (DR DOOR SW, AS DOOR SW, RR DR DOOR SW, RR AS DOOR SW, TRUNK SW lines):
   - 1. Disconnect the following connectors.

     Under-dash fuse/relay box connector B (44P)

     Each door switch 1P connector

     Tailgate latch switch 4P connector

   - 2. Check for continuity between test points 1 and 2.

     Driver's door switch

     Test condition IG LOCK (0)

     Under-dash fuse/relay box connector B (44P): disconnected

     Each door switch 1P connector: disconnected

     Tailgate latch switch 4P connector: disconnected

     Test circuit DR DOOR SW line

     Test point 1 Under-dash fuse/relay box connector B (44P) No. 40 (GRN)

     Test point 2 Driver's door switch 1P connector No. 1 (GRN)

GETtheMANUALS.org

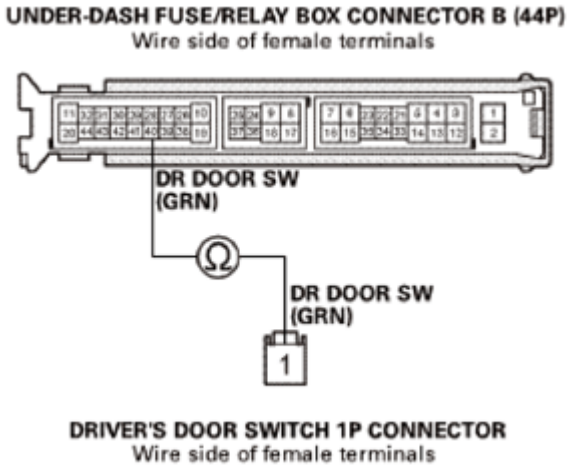

Fig. 124: Checking Continuity Between Under-Dash Fuse/Relay Box Connector B (44P) No. 40 And Driver Door Switch 1P Connector No. 1
Courtesy of AMERICAN HONDA MOTOR CO., INC.

Front passenger's door switch

Test condition IG LOCK (0)

Under-dash fuse/relay box connector B (44P): disconnected

Each door switch 1P connector: disconnected

Tailgate latch switch 4P connector: disconnected

Test circuit AS DOOR SW line

Test point 1 Under-dash fuse/relay box connector B (44P) No. 29 (BRN)

Test point 2 Front passenger's door switch 1P connector No. 1 (BRN)

GETtheMANUALS.org

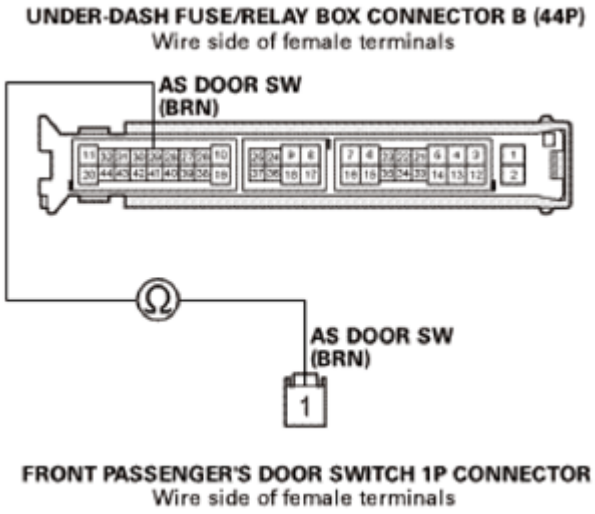

Fig. 125: Checking Continuity Between Under-Dash Fuse/Relay Box Connector B (44P) No. 29 And Front Passenger Door Switch 1P Connector No. 1
Courtesy of AMERICAN HONDA MOTOR CO., INC.

Left rear door switch

Test condition IG LOCK (0)

Under-dash fuse/relay box connector B (44P): disconnected

Each door switch 1P connector: disconnected

Tailgate latch switch 4P connector: disconnected

Test circuit RR DR DOOR SW line

Test point 1 Under-dash fuse/relay box connector B (44P) No. 33 (WHT)

Test point 2 Left rear door switch 1P connector No. 1 (WHT)

GETtheMANUALS.org

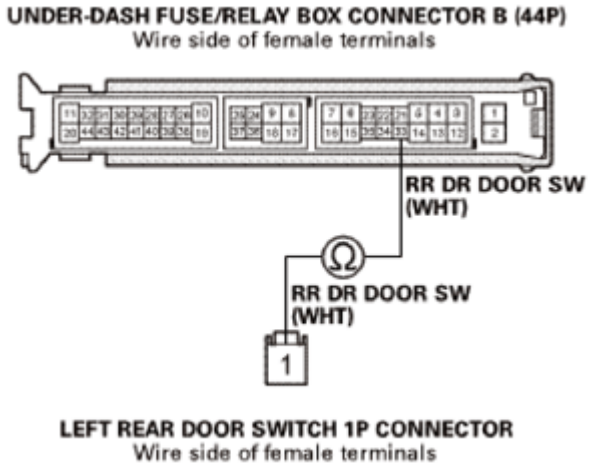

Fig. 126: Checking Continuity Between Under-Dash Fuse/Relay Box Connector B (44P) No. 33 And Left Rear Door Switch 1P Connector No. 1
Courtesy of AMERICAN HONDA MOTOR CO., INC.

Right rear door switch

Test condition IG LOCK (0)

Under-dash fuse/relay box connector B (44P): disconnected

Each door switch 1P connector: disconnected

Tailgate latch switch 4P connector: disconnected

Test circuit RR AS DOOR SW line

Test point 1 Under-dash fuse/relay box connector B (44P) No. 34 (GRY)

Test point 2 Right rear door switch 1P connector No. 1 (GRY)

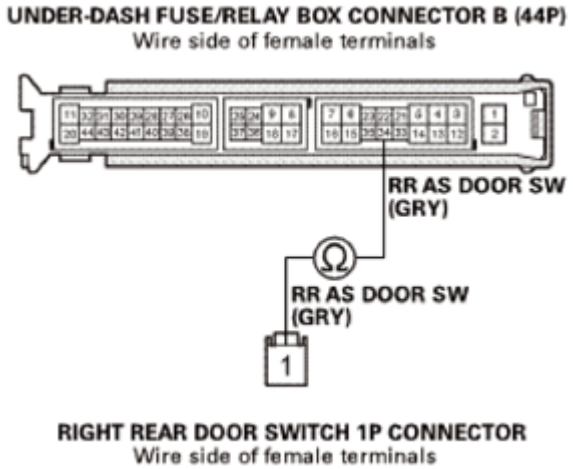

GETtheMANUALS.org

Fig. 127: Checking Continuity Between Under-Dash Fuse/Relay Box Connector B (44P) No. 34 And Right Rear Door Switch 1P Connector No. 1
Courtesy of AMERICAN HONDA MOTOR CO., INC.

Tailgate latch switch

Test condition IG LOCK (0)

Under-dash fuse/relay box connector B (44P): disconnected

Each door switch 1P connector: disconnected

Tailgate latch switch 4P connector: disconnected

Test circuit TRUNK SW line

Test point 1 Under-dash fuse/relay box connector B (44P) No. 22 (PNK)

Test point 2 Tailgate latch switch 4P connector No. 1 (PNK)

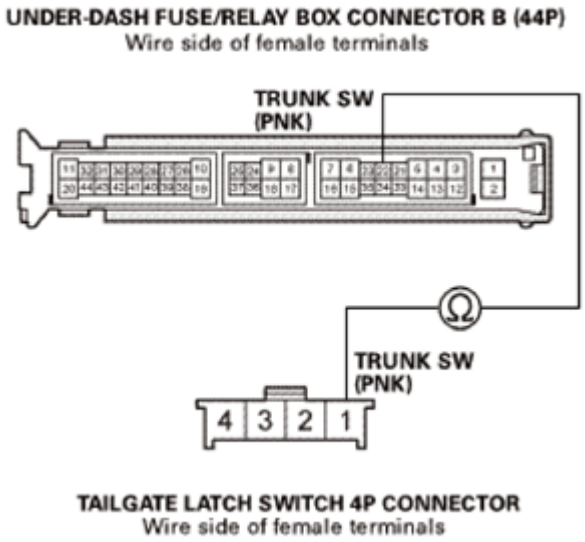

Fig. 128: Checking Continuity Between Under-Dash Fuse/Relay Box Connector B (44P) No. 22 And Tailgate Latch Switch 4P Connector No. 1
Courtesy of AMERICAN HONDA MOTOR CO., INC.

Is there continuity?

YES : The DR DOOR SW, AS DOOR SW, RR DR DOOR SW, and RR AS DOOR SW wires are OK. Replace the bad door switch.

YES : The TRUNK SW wire is OK. Faulty tailgate latch switch or GND line, go to step 3.

GETtheMANUALS.org

NO : Repair an open or high resistance in the wire between the MICU and the door switch/tailgate latch switch.

3. Open wire check (GND line):
   - 1. Check for continuity between test points 1 and 2.

     Test condition IG LOCK (0)

     Under-dash fuse/relay box connector B (44P): disconnected

     Each door switch 1P connector: disconnected

     Tailgate latch switch 4P connector: disconnected

     Test circuit GND line

     Test point 1 Tailgate latch switch 4P connector No. 2 (BLK)

     Test point 2 Body ground

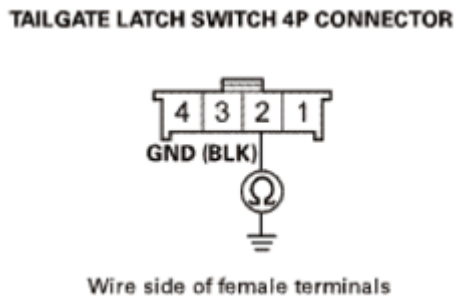

Fig. 129: Checking Continuity Between Tailgate Latch Switch 4P Connector No. 2 And Body Ground
Courtesy of AMERICAN HONDA MOTOR CO., INC.

Is there continuity?

YES : The GND wire is OK. Faulty tailgate latch switch; **REPLACE THE TAILGATE LATCH** .

NO : Repair an open or high resistance in the ground wire or poor ground (G603).

DOORS WILL NOT UNLOCK (OR LOCK) WITH THE TRANSMITTER, BUT WILL UNLOCK (OR LOCK) WITH THE DOOR LOCK SWITCH AND THE DOOR KEY CYLINDER SWITCH

GETtheMANUALS.org

Keyless/Power Door Locks/Security System Symptom Troubleshooting - Doors will not unlock (or lock) with the transmitter, but will unlock (or lock) with the door lock switch and the door key cylinder switch

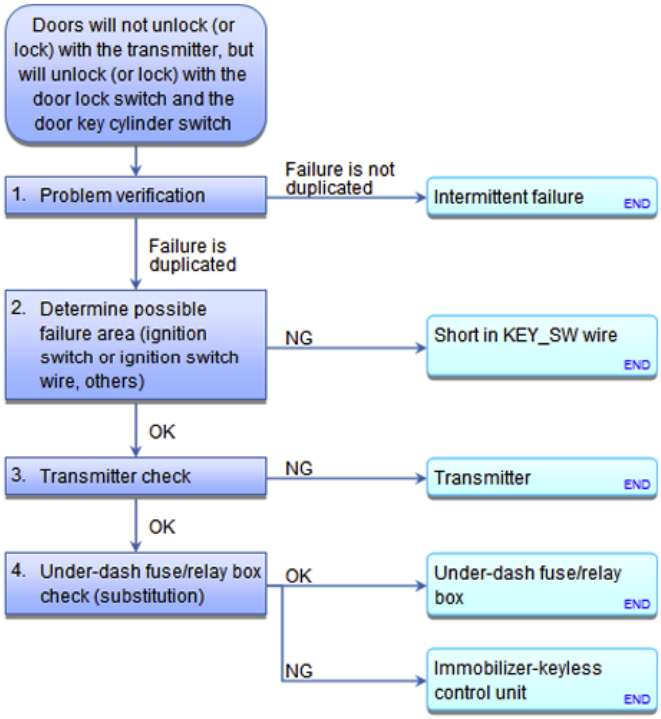

Fig. 130: Keyless/Power Door Locks/Security System Symptom Troubleshooting Flowchart
Courtesy of AMERICAN HONDA MOTOR CO., INC.

NOTE: **Before troubleshooting, check the B-CAN DTCs. If any DTC is indicated, troubleshoot the indicated DTC first.**

1. Problem verification:
   - 1. Turn the ignition switch to LOCK (0).
   - 2. Remove the ignition key from the ignition switch.
   - 3. Close all the doors.
   - 4. Try to lock/unlock the doors with the keyless transmitter.

   Do the door lock actuators work normally?

   YES : Intermittent failure, the system is OK at this time.

   NO : Go to step 2.

2. Determine possible failure area (ignition switch or ignition switch wire, others):
   - 1. Open the driver's door.

   Does the key-in reminder chime sound?

   YES : Check for a short to ground in the KEY_SW wire. If OK, replace the ingition switch.

GETtheMANUALS.org

NO : Go to step 3.

3. Transmitter check:
   - 1. **DO THE TRANSMITTER TEST**.

   Is the transmitter OK?

   YES : Go to step 4.

   NO : Replace the transmitter, then **REGISTER THE NEW TRANSMITTER** .

4. Under-dash fuse/relay box check (substitution):
   - 1. Substitute a known-good under-dash fuse/relay box.
   - 2. Recheck the system.

   Is the system normal?

   YES : **REPLACE THE ORIGINAL UNDER-DASH FUSE/RELAY BOX** .

   NO : **Replace the immobilizer-keyless control unit** See **IMMOBILIZER-KEYLESS CONTROL UNIT REGISTRATION** or **IMMOBILIZER-KEYLESS CONTROL UNIT REMOVAL AND INSTALLATION** .

KEYLESS OPERATION DOES NOT WORK (LOCK, UNLOCK, PANIC)

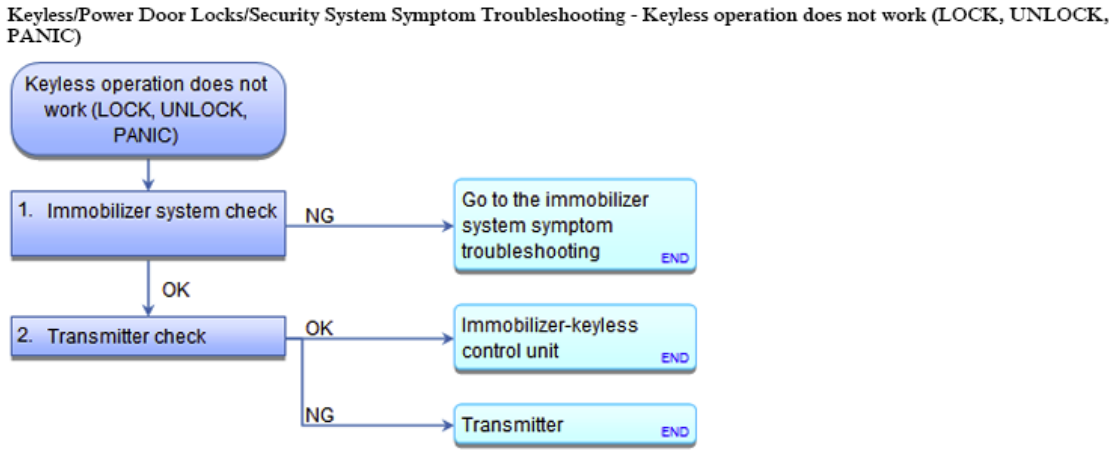

Fig. 131: Keyless/Power Door Locks/Security System Symptom Troubleshooting Flowchart (Keyless Not Work)
Courtesy of AMERICAN HONDA MOTOR CO., INC.

NOTE: **Before troubleshooting, check the B-CAN DTCs. If any DTC is indicated, troubleshoot the indicated DTC first.**

1. Immobilizer system check:

GETtheMANUALS.org

- 1. Try to start the engine.

Does the engine start?

YES : Go to step 2.

NO : **GO TO THE IMMOBILIZER SYSTEM SYMPTOM TROUBLESHOOTING** .

2. Transmitter check:
   - 1. Turn the ignition switch to LOCK (0).
   - 2. **TEST THE TRANSMITTER**.

Is the transmitter OK?

YES : **Replace the immobilizer-keyless control unit** See **IMMOBILIZER-KEYLESS CONTROL UNIT REGISTRATION** or **IMMOBILIZER-KEYLESS CONTROL UNIT REMOVAL AND INSTALLATION** .

NO : Replace the transmitter, then **REGISTER THE NEW TRANSMITTER** .

SECURITY ALARM SYSTEM WILL NOT ARM

GETtheMANUALS.org

Keyless/Power Door Locks/Security System Symptom Troubleshooting - Security alarm system will not arm

Fig. 132: Keyless/Power Door Locks/Security System Symptom Troubleshooting Flowchart (Security System Not Work; 1 Of 9)
Courtesy of AMERICAN HONDA MOTOR CO., INC.

GETtheMANUALS.org

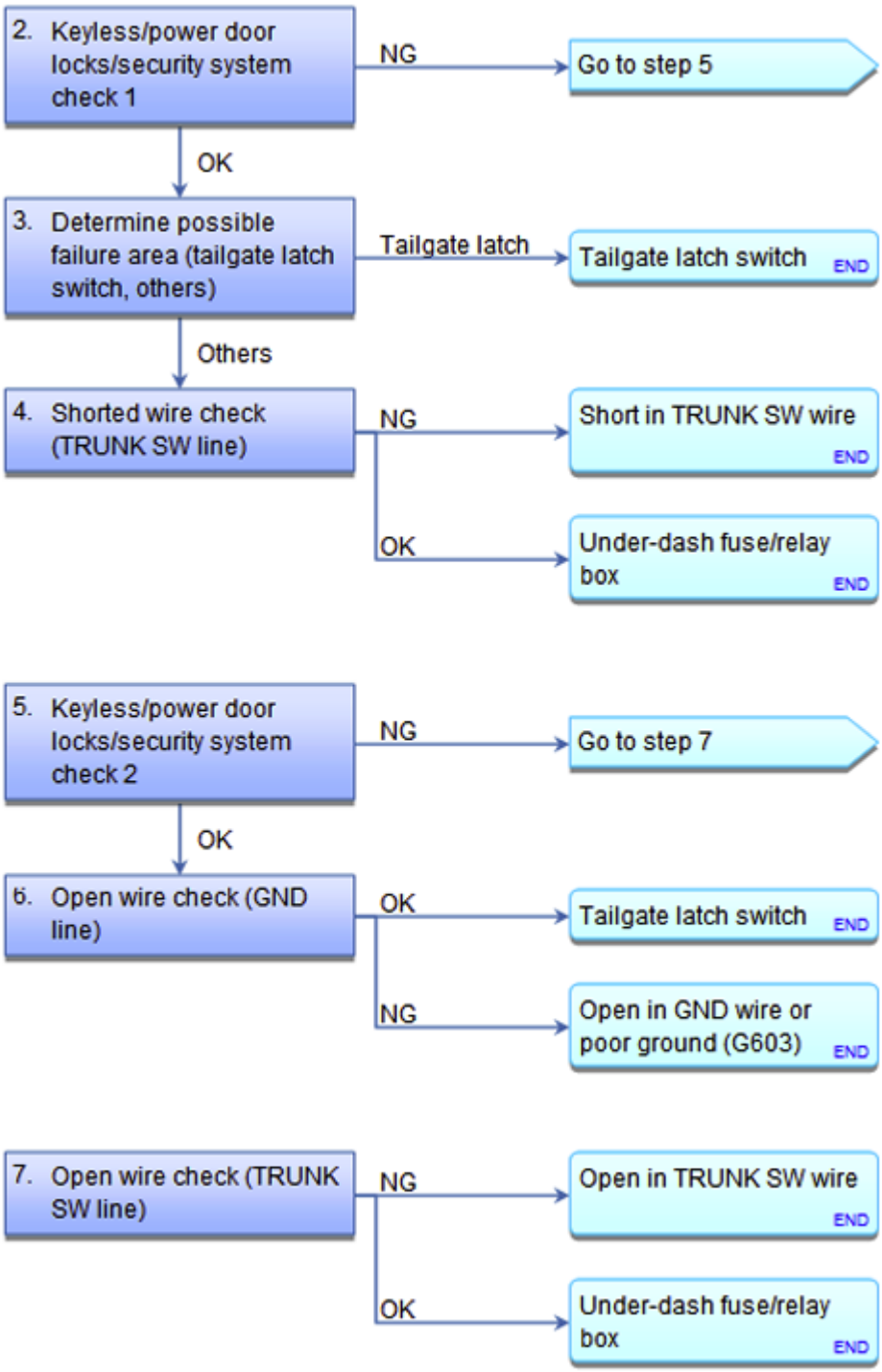

Fig. 133: Keyless/Power Door Locks/Security System Symptom Troubleshooting Flowchart (Security System Not Work; 2 Of 9)
Courtesy of AMERICAN HONDA MOTOR CO., INC.

GETtheMANUALS.org

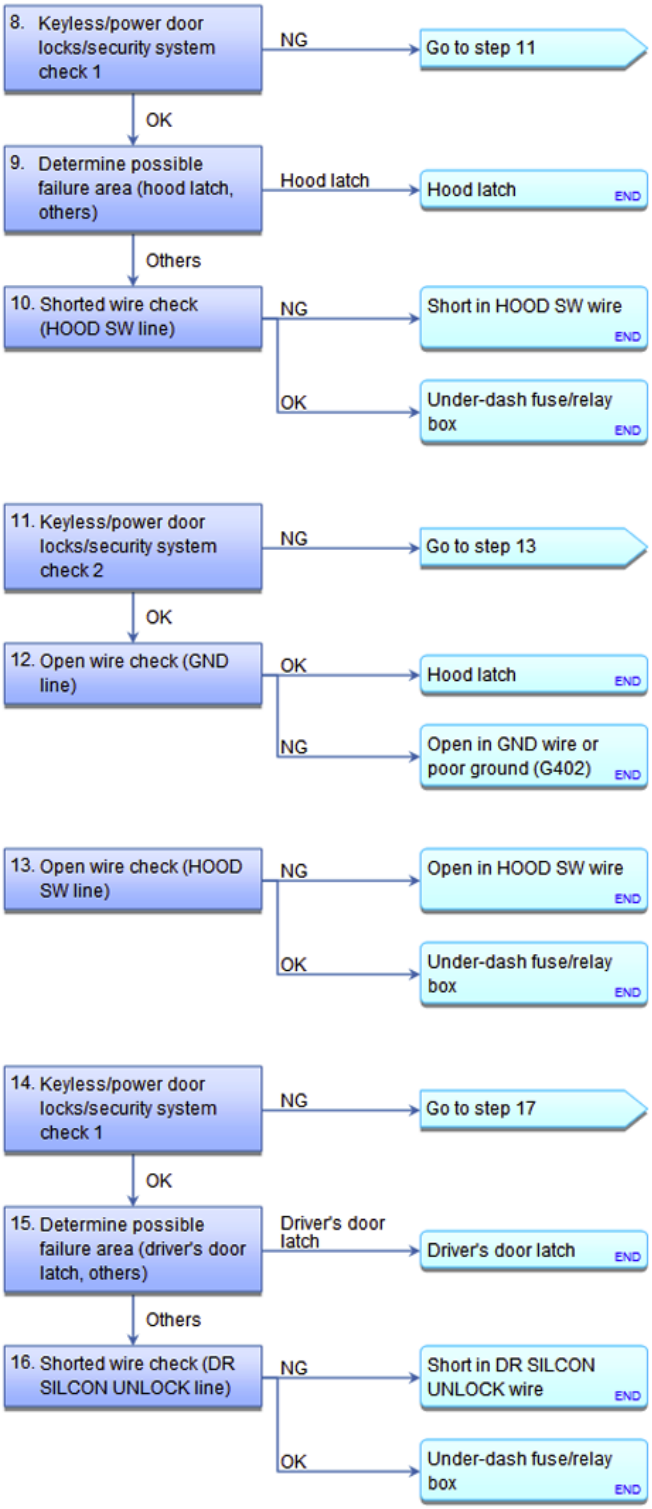

Fig. 134: Keyless/Power Door Locks/Security System Symptom Troubleshooting Flowchart (Security System Not Work; 3 Of 9)
Courtesy of AMERICAN HONDA MOTOR CO., INC.

GETtheMANUALS.org

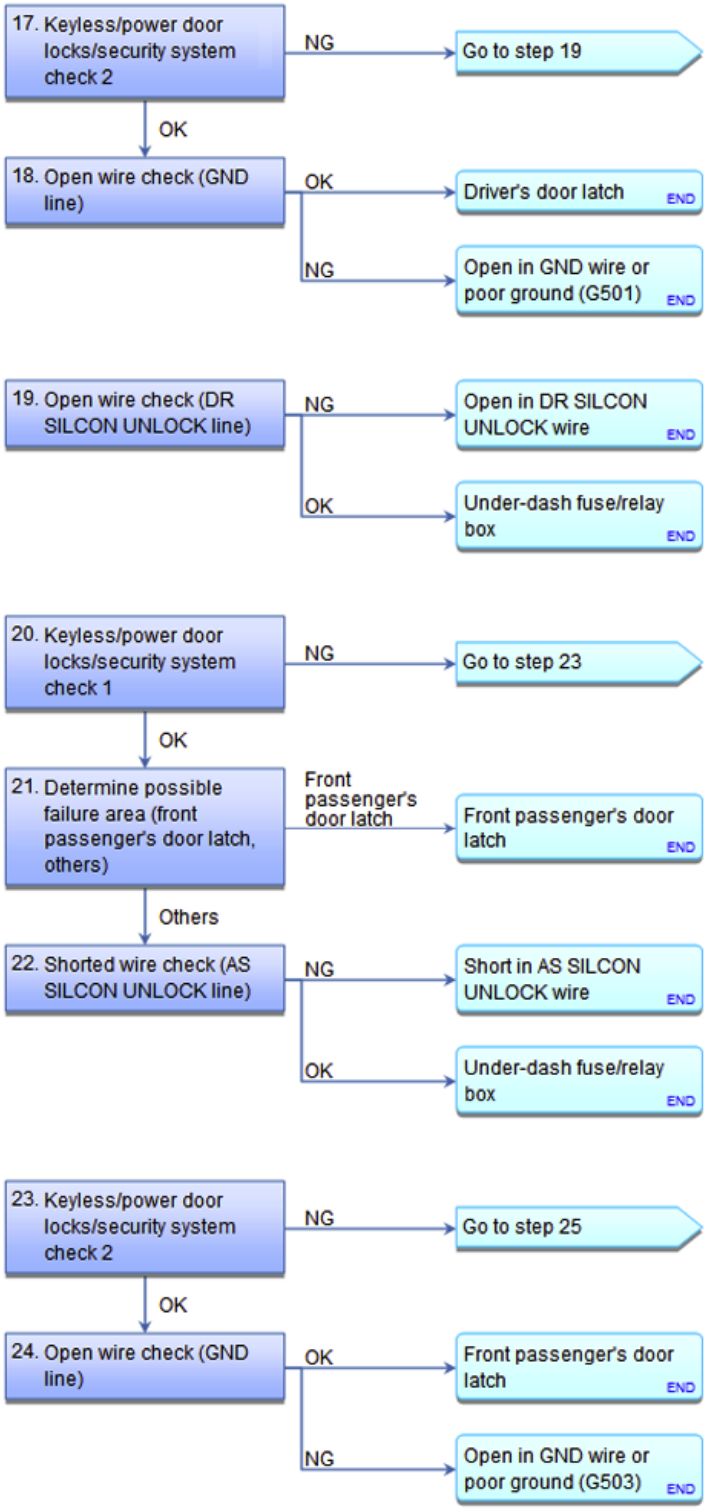

Fig. 135: Keyless/Power Door Locks/Security System Symptom Troubleshooting Flowchart (Security System Not Work; 4 Of 9)
Courtesy of AMERICAN HONDA MOTOR CO., INC.

GETtheMANUALS.org

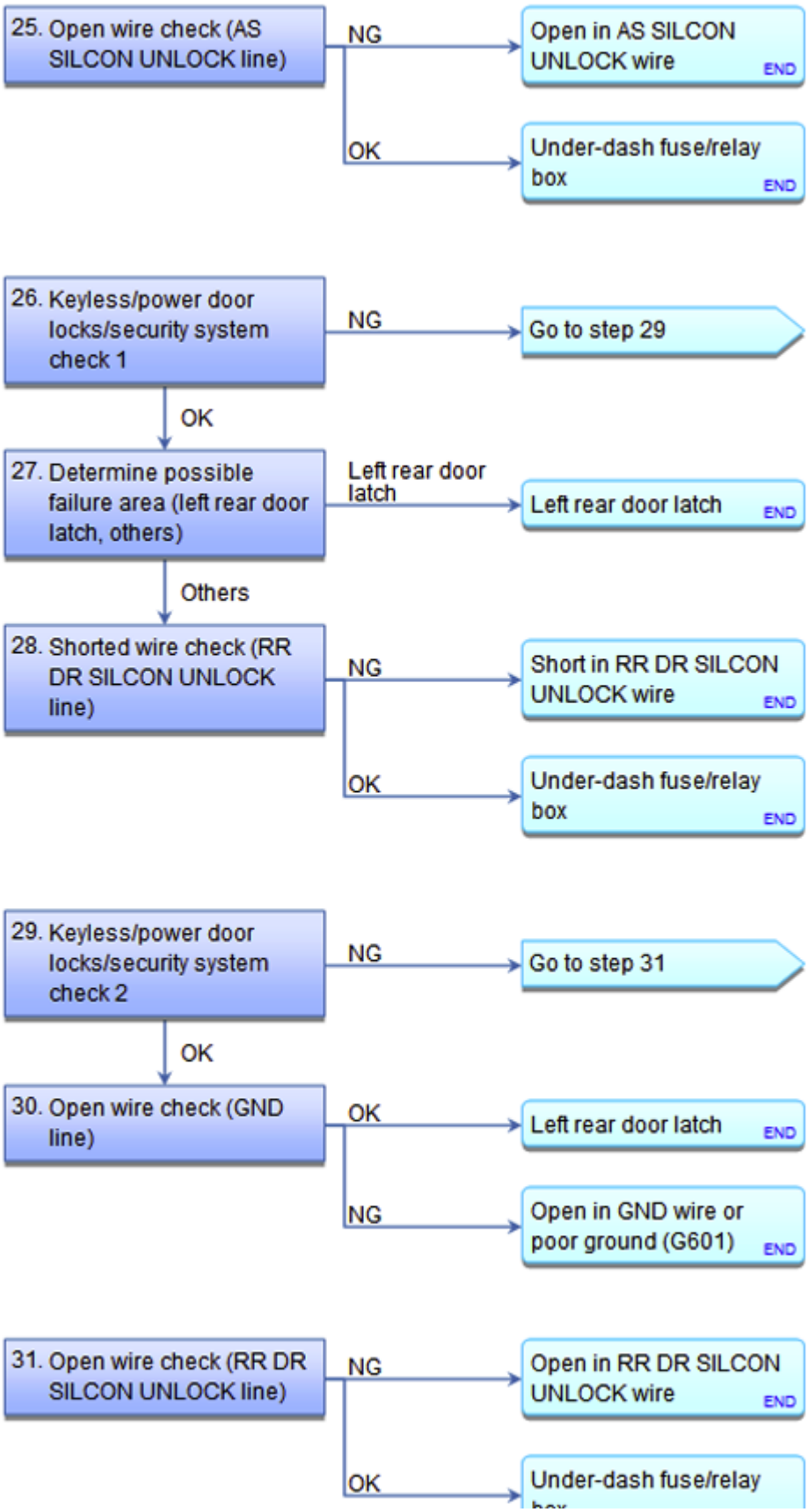

GETtheMANUALS.org

Fig. 136: Keyless/Power Door Locks/Security System Symptom Troubleshooting Flowchart (Security System Not Work; 5 Of 9)
Courtesy of AMERICAN HONDA MOTOR CO., INC.

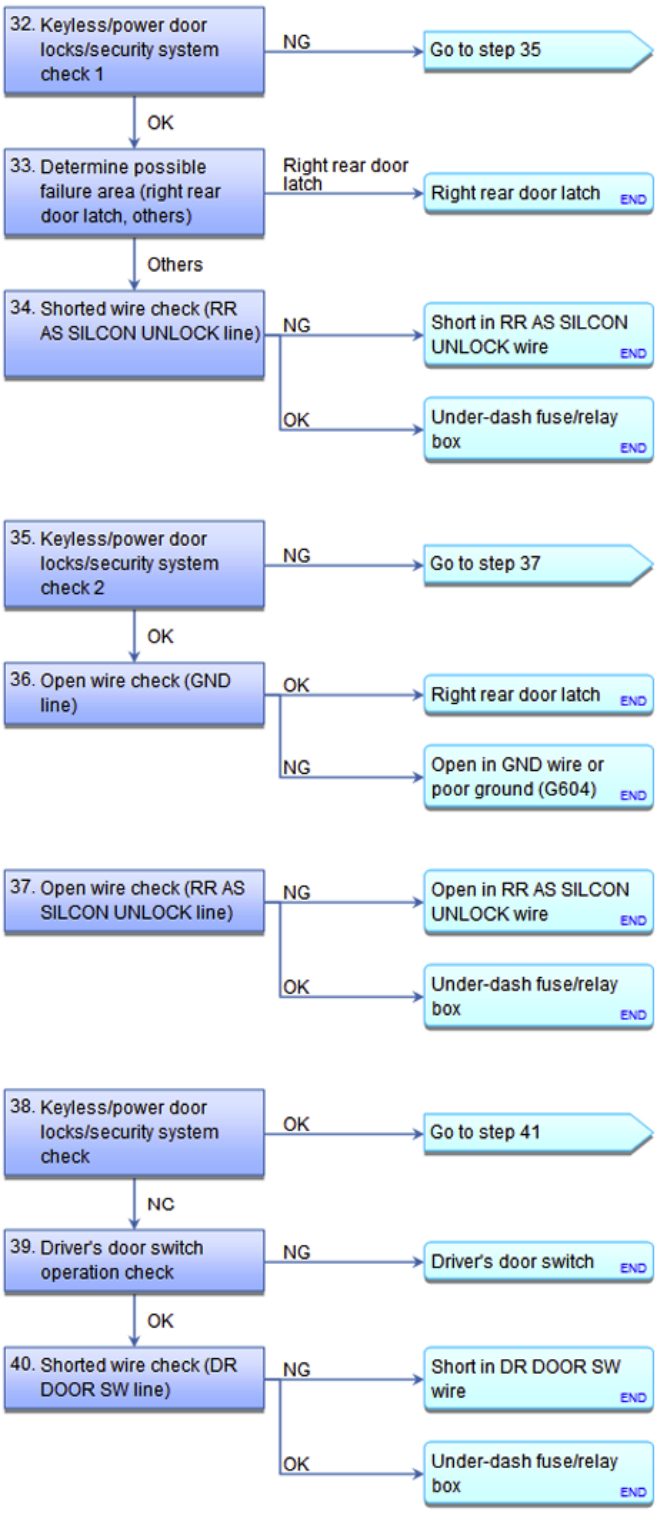

Fig. 137: Keyless/Power Door Locks/Security System Symptom Troubleshooting Flowchart (Security

GETtheMANUALS.org

System Not Work; 6 Of 9)
Courtesy of AMERICAN HONDA MOTOR CO., INC.

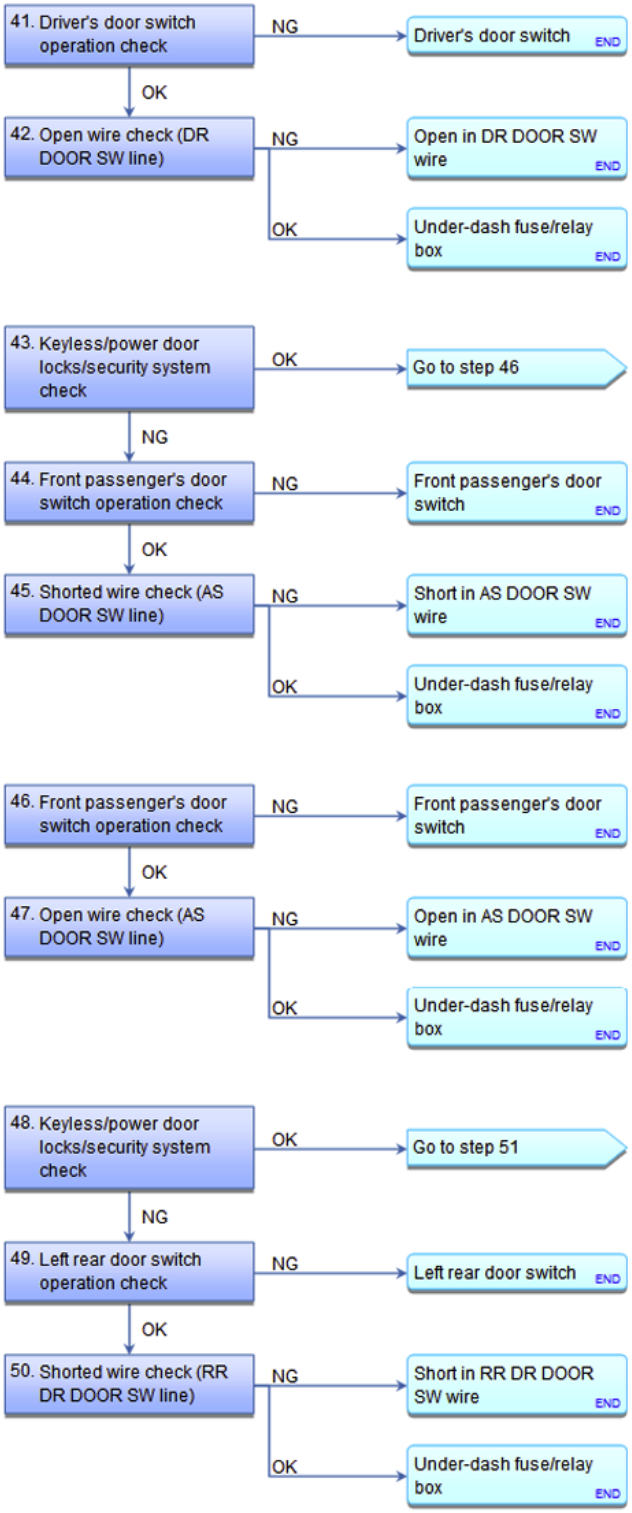

Fig. 138: Keyless/Power Door Locks/Security System Symptom Troubleshooting Flowchart (Security System Not Work; 7 Of 9)

GETtheMANUALS.org

Courtesy of AMERICAN HONDA MOTOR CO., INC.

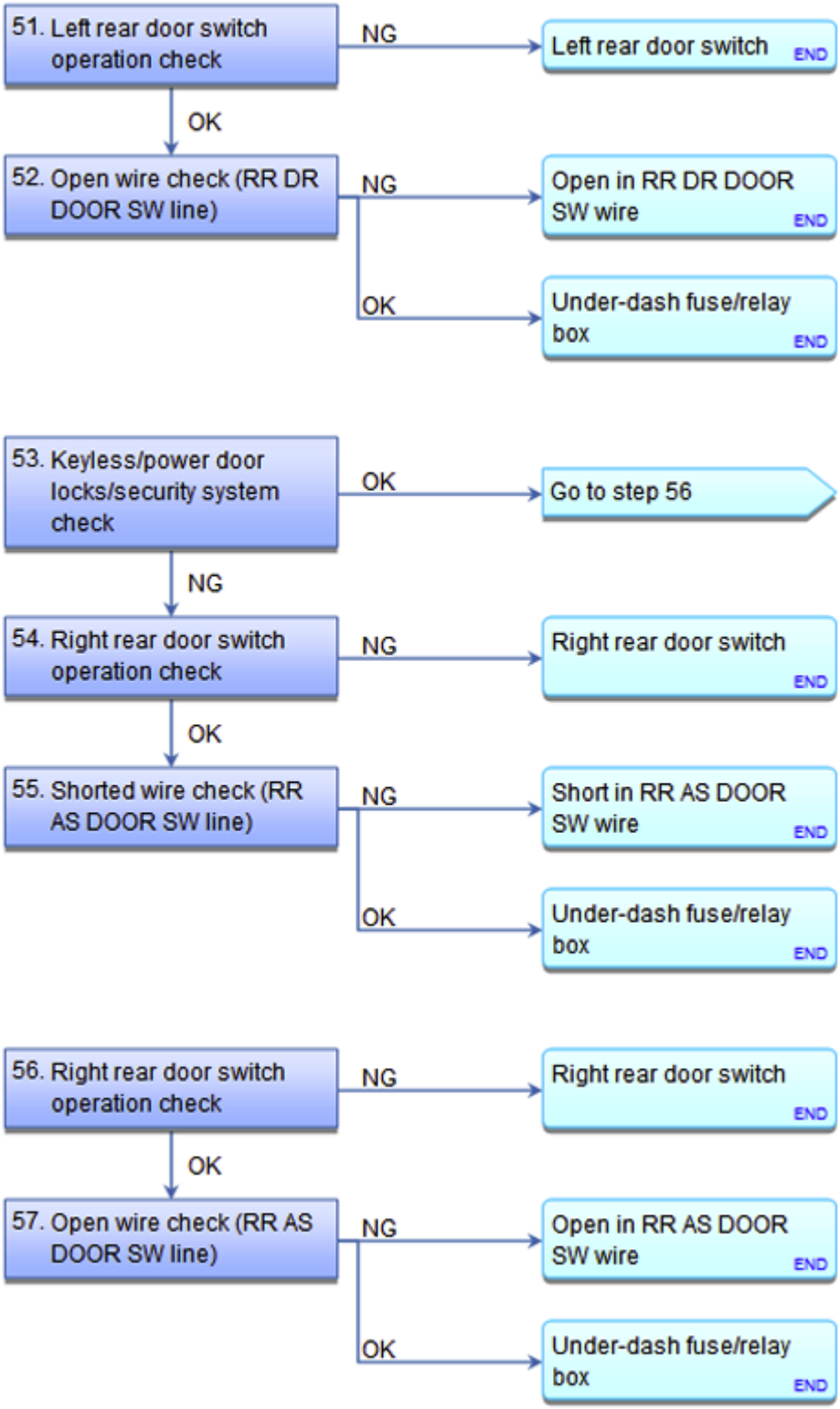

Fig. 139: Keyless/Power Door Locks/Security System Symptom Troubleshooting Flowchart (Security System Not Work; 8 Of 9)

GETtheMANUALS.org

Courtesy of AMERICAN HONDA MOTOR CO., INC.

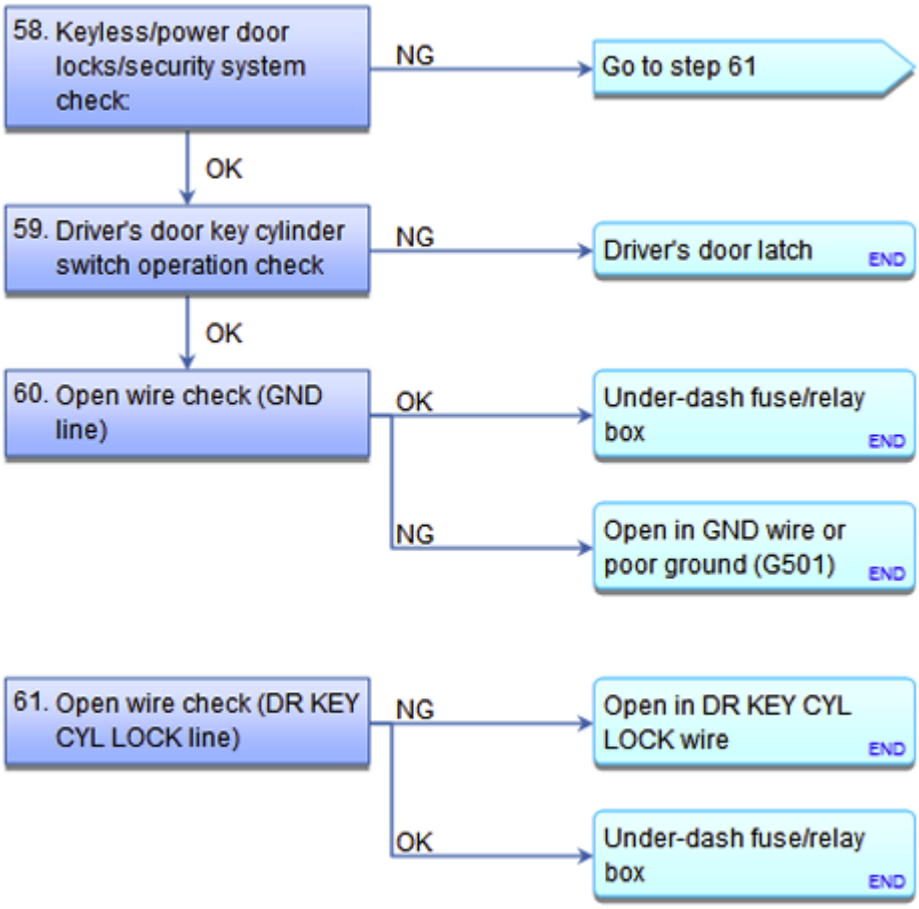

Fig. 140: Keyless/Power Door Locks/Security System Symptom Troubleshooting Flowchart (Security System Not Work; 9 Of 9)
Courtesy of AMERICAN HONDA MOTOR CO., INC.

NOTE:

- **Refer to the Electrical Wiring Diagrams for the location of the under-dash fuse/relay box connectors.**
- **Before troubleshooting, check the B-CAN DTCs. If any DTC is indicated, troubleshoot the indicated DTC first.**

1. Switch information check:
   - 1. Turn the ignition switch to ON (II).
   - 2. Check the parameter(s) below with the HDS.

Signal	Current conditions	
	Value	Unit
Trunk Lid/Tailgate Switch		
Security Hood Switch		

GETtheMANUALS.org

Driver's Door Lock Knob Switch (UNLOCK)		
Front Passenger's Door Lock Knob Sw. (UNLOCK)		
Driver's Rear Door Lock Knob Switch (UNLOCK)		
Passenger's Rear Door Lock Knob Sw. (UNLOCK)		
Driver's Door Switch		
Front Passenger's Door Switch		
Driver's Rear Door Switch		
Passenger's Rear Door Switch		
Driver's Door Key Cylinder Switch (LOCK)		
Driver's Door Key Cylinder Switch (UNLOCK)		

Is each switch information OK?

YES : Intermittent failure, the system is OK at this time.

NG : Tailgate latch switch circuit troubleshooting: go to step 2.

NG : Security hood switch circuit troubleshooting: go to step 8.

NG : Driver's door lock knob switch circuit troubleshooting: go to step 14.

NG : Front passenger's door lock knob switch circuit troubleshooting: go to step 20.

NG : Left rear door lock knob switch circuit troubleshooting: go to step 26.

NG : Right rear door lock knob switch circuit troubleshooting: go to step 32.

NG : Driver's door switch circuit troubleshooting: go to step 38.

NG : Front passenger's door switch circuit troubleshooting: go to step 43.

NG : Left rear door switch circuit troubleshooting: go to step 48.

NG : Right rear door switch circuit troubleshooting: go to step 53.

NG : Driver's door key cylinder switch circuit troubleshooting: go to step 58.

2. Keyless/power door locks/security system check 1:
   - 1. Check the parameter(s) below with the HDS.

Signal	**Current conditions**	
	Value	**Unit**
Trunk Lid/Tailgate Switch		

Is information indicator ON?

GETtheMANUALS.org

YES : Go to step 3.

NO : Go to step 5.

3. Determine possible failure area (tailgate latch switch, others):
   - 1. Turn the ignition switch to LOCK (0).
   - 2. Disconnect the following connector.

     Tailgate latch switch 4P connector

   - 3. Check the parameter(s) below with the HDS.

Signal	Current conditions	
	Value	Unit
Trunk Lid/Tailgate Switch		

Is information indicator OFF?

YES : Faulty tailgate latch switch; **REPLACE THE TAILGATE LATCH** .

NO : Go to step 4.

4. Shorted wire check (TRUNK SW line):
   - 1. Disconnect the following connector.

     Under-dash fuse/relay box connector B (44P)

   - 2. Check for continuity between test points 1 and 2.

     Test condition IG LOCK (0)

     Tailgate latch switch 4P connector: disconnected

     Under-dash fuse/relay box connector B (44P): disconnected

     Test circuit TRUNK SW

     Test point 1 Under-dash fuse/relay box connector B (44P) No. 22 (PNK)

     Test point 2 Body ground

GETtheMANUALS.org

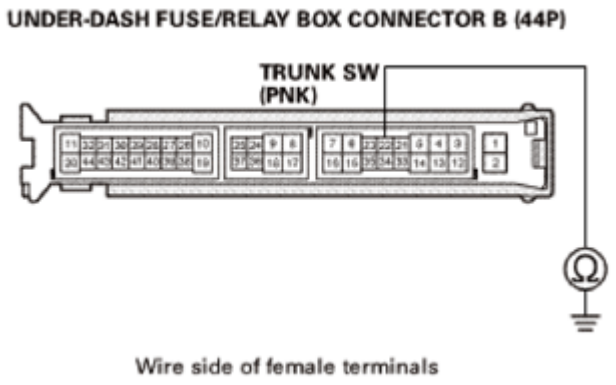

Fig. 141: Checking Continuity Between Under-Dash Fuse/Relay Box Connector B (44P) No. 22 And Body Ground
Courtesy of AMERICAN HONDA MOTOR CO., INC.

Is there continuity?

YES : Repair a short to ground in the wire.

NO : The TRUNK SW wire is OK. Faulty MICU; **REPLACE THE UNDER-DASH FUSE/RELAY BOX** .

5. Keyless/power door locks/security system check 2:
   - 1. Turn the ignition switch to LOCK (0).
   - 2. Disconnect the following connector.

     Tailgate latch switch 4P connector

   - 3. Connect terminals A and B with a jumper wire.

     Terminal A Tailgate latch switch 4P connector No. 1 (PNK)

     Terminal B Body ground

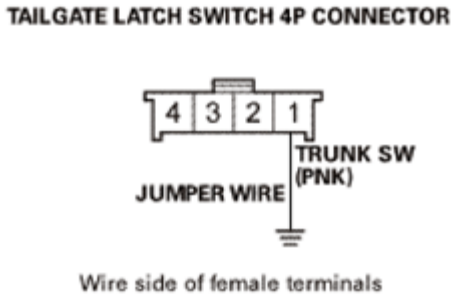

Fig. 142: Connecting Jumper Wire Between Tailgate Latch Switch 4P Connector No. 1 And Body Ground
Courtesy of AMERICAN HONDA MOTOR CO., INC.

GETtheMANUALS.org

- 4. Check the parameter(s) below with the HDS.

Signal	Current conditions	
	Value	Unit
Trunk Lid/Tailgate Switch		

Is information indicator ON?

YES : Go to step 6.

NO : Go to step 7.

6. Open wire check (GND line):
   - 1. Check for continuity between test points 1 and 2.

     Test condition IG LOCK (0)

     Tailgate latch switch 4P connector: disconnected

     Test circuit GND

     Test point 1 Tailgate latch switch 4P connector No. 2 (BLK)

     Test point 2 Body ground

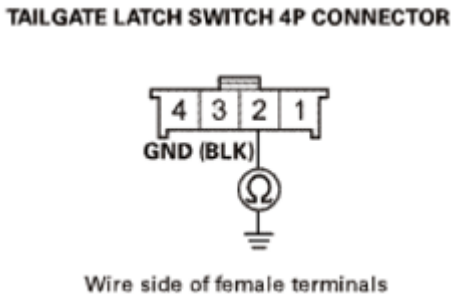

Fig. 143: Checking Continuity Between Tailgate Latch Switch 4P Connector No. 2 And Body Ground
Courtesy of AMERICAN HONDA MOTOR CO., INC.

Is there continuity?

YES : The GND wire is OK. Faulty tailgate latch switch; **REPLACE THE TAILGATE LATCH** .

NO : Repair an open or high resistance in the ground wire or poor ground (G603).

7. Open wire check (TRUNK SW line):
   - 1. Connect terminals A and B with a jumper wire.

GETtheMANUALS.org

Terminal A Under-dash fuse/relay box connector B (44P) No. 22 (PNK)

Terminal B Body ground

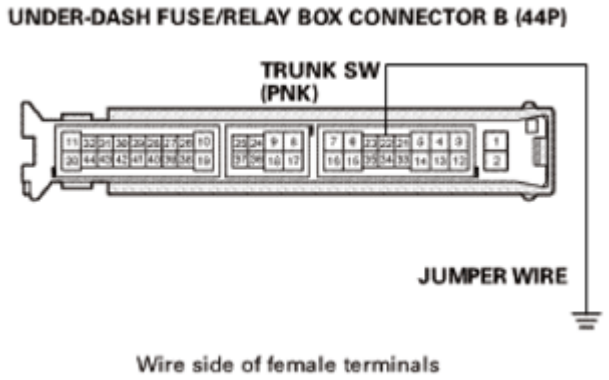

Fig. 144: Connecting Jumper Wire Between Under-Dash Fuse/Relay Box Connector B (44P) No. 22 And Body Ground
Courtesy of AMERICAN HONDA MOTOR CO., INC.

- 2. Check the parameter(s) below with the HDS.

Signal	Current conditions	
	Value	Unit
Trunk Lid/Tailgate Switch		

Is information indicator ON?

YES : Repair an open or high resistance in the wire.

NO : The TRUNK SW wire is OK. Faulty MICU; **REPLACE THE UNDER-DASH FUSE/RELAY BOX** .

8. Keyless/power door locks/security system check 1:
   - 1. With the hood opened, check the parameter(s) below with the HDS.

Signal	Current conditions	
	Value	Unit
Security Hood Switch		

Is information indicator ON?

YES : Go to step 9.

NO : Go to step 11.

GETtheMANUALS.org

9. Determine possible failure area (hood latch, others):
   - 1. Turn the ignition switch to LOCK (0).
   - 2. Disconnect the following connector.

     Security hood switch 2P connector

   - 3. Check the parameter(s) below with the HDS.

Signal	Current conditions	
	Value	Unit
Security Hood Switch		

Is information indicator OFF?

YES : Faulty security hood switch; **REPLACE THE HOOD LATCH** .

NO : Go to step 10.

10. Shorted wire check (HOOD SW line):
    - 1. Disconnect the following connector.

      Under-dash fuse/relay box connector C (38P)

    - 2. Check for continuity between test points 1 and 2.

      Test condition IG LOCK (0)

      Security hood switch 2P connector: disconnected

      Under-dash fuse/relay box connector C (38P): disconnected

      Test circuit HOOD SW

      Test point 1 Under-dash fuse/relay box connector C (38P) No. 27 (LT BLU)

      Test point 2 Body ground

GETtheMANUALS.org

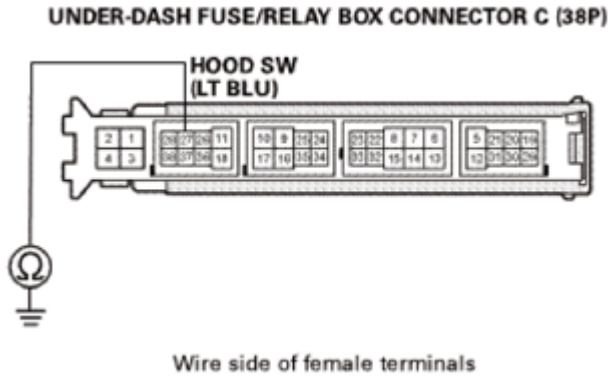

Fig. 145: Checking Continuity Between Under-Dash Fuse/Relay Box Connector C (38P) No. 27 And Body Ground
Courtesy of AMERICAN HONDA MOTOR CO., INC.

Is there continuity?

YES : Repair a short to ground in the wire.

NO : The HOOD SW wire is OK. Faulty MICU; **REPLACE THE UNDER-DASH FUSE/RELAY BOX** .

11. Keyless/power door locks/security system check 2:
    - 1. Turn the ignition switch to LOCK (0).
    - 2. Disconnect the following connector.

      Security hood switch 2P connector

    - 3. Connect terminals A and B with a jumper wire.

      Terminal A Security hood switch 2P connector No. 1 (LT BLU)

      Terminal B Body ground

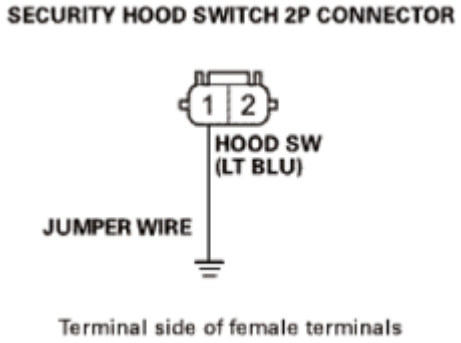

Fig. 146: Connecting Jumper Wire Between Security Hood Switch 2P Connector No. 1 And Body Ground

GETtheMANUALS.org

Courtesy of AMERICAN HONDA MOTOR CO., INC.

- 4. Check the parameter(s) below with the HDS.

Signal	Current conditions	
	Value	Unit
Security Hood Switch		

Is information indicator ON?

YES : Go to step 12.

NO : Go to step 13.

12. Open wire check (GND line):
    - 1. Check for continuity between test points 1 and 2.

      Test condition IG LOCK (0)

      Security hood switch 2P connector: disconnected

      Test circuit GND

      Test point 1 Security hood switch 2P connector No. 2 (BLK)

      Test point 2 Body ground

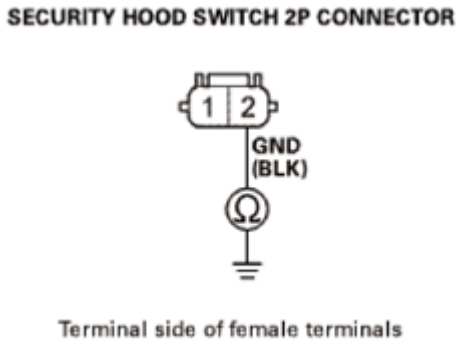

Fig. 147: Checking Continuity Between Security Hood Switch 2P Connector No. 2 And Body Ground
Courtesy of AMERICAN HONDA MOTOR CO., INC.

Is there continuity?

YES : The GND wire is OK. Faulty security hood switch; **REPLACE THE HOOD LATCH** .

NO : Repair an open or high resistance in the ground wire or poor ground (G402).

GETtheMANUALS.org

13. Open wire check (HOOD SW line):
    - 1. Connect terminals A and B with a jumper wire.

      Terminal A Under-dash fuse/relay box connector C (38P) No. 27 (LT BLU)

      Terminal B Body ground

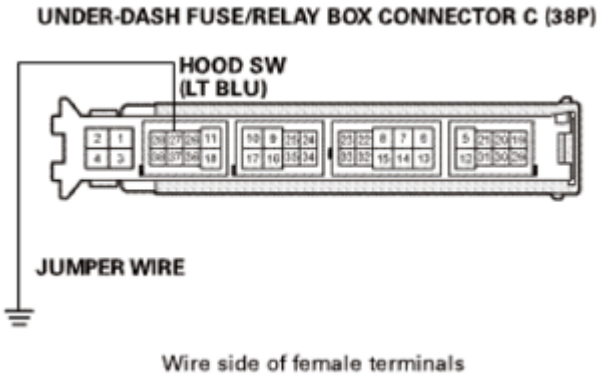

Fig. 148: Connecting Jumper Wire Between Under-Dash Fuse/Relay Box Connector C (38P) No. 27 And Body Ground
Courtesy of AMERICAN HONDA MOTOR CO., INC.

    - 2. Check the parameter(s) below with the HDS.

Signal	Current conditions	
	Value	Unit
Security Hood Switch		

Is information indicator ON?

YES : Repair an open or high resistance in the wire.

NO : The HOOD SW wire is OK. Faulty MICU; **REPLACE THE UNDER-DASH FUSE/RELAY BOX** .

14. Keyless/power door locks/security system check 1:
    - 1. With the driver's door lock knob switch in LOCK position, check the parameter(s) below with the HDS.

Signal	Current conditions	
	Value	Unit
Driver's Door Lock Knob Switch (UNLOCK)		

Is information indicator ON?

GETtheMANUALS.org

YES : Go to step 15.

NO : Go to step 17.

15. Determine possible failure area (driver's door latch, others):
    - 1. Turn the ignition switch to LOCK (0).
    - 2. Disconnect the following connector.

      Driver's door latch 10P connector

    - 3. Check the parameter(s) below with the HDS.

Signal	Current conditions	
	Value	Unit
Driver's Door Lock Knob Switch (UNLOCK)		

Is information indicator OFF?

YES : Faulty driver's door lock knob switch; **REPLACE THE DRIVER'S DOOR LATCH** .

NO : Go to step 16.

16. Shorted wire check (DR SILCON UNLOCK line):
    - 1. Disconnect the following connector.

      Under-dash fuse/relay box connector X (10P)

    - 2. Check for continuity between test points 1 and 2.

      Test condition IG LOCK (0)

      Driver's door latch 10P connector: disconnected

      Under-dash fuse/relay box connector X (10P): disconnected

      Test circuit DR SILCON UNLOCK

      Test point 1 Under-dash fuse/relay box connector X (10P) No. 4 (WHT)

      Test point 2 Body ground

GETtheMANUALS.org

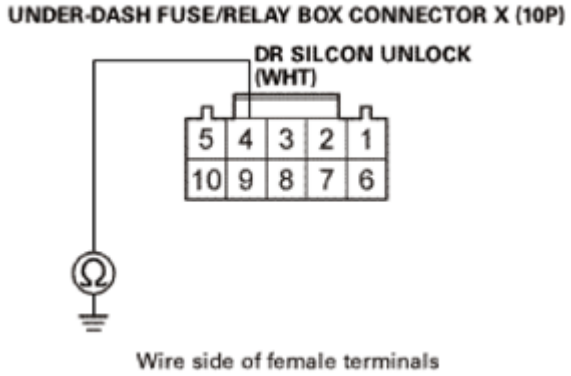

Fig. 149: Checking Continuity Between Under-Dash Fuse/Relay Box Connector X (10P) No. 4 And Body Ground
Courtesy of AMERICAN HONDA MOTOR CO., INC.

Is there continuity?

YES : Repair a short to ground in the wire.

NO : The DR SILCON UNLOCK wire is OK. Faulty MICU; **REPLACE THE UNDER-DASH FUSE/RELAY BOX** .

17. Keyless/power door locks/security system check 2:
    - 1. Turn the ignition switch to LOCK (0).
    - 2. Disconnect the following connector.

      Driver's door latch 10P connector

    - 3. Connect terminals A and B with a jumper wire.

      Terminal A Driver's door latch 10P connector No. 5 (WHT)

      Terminal B Body ground

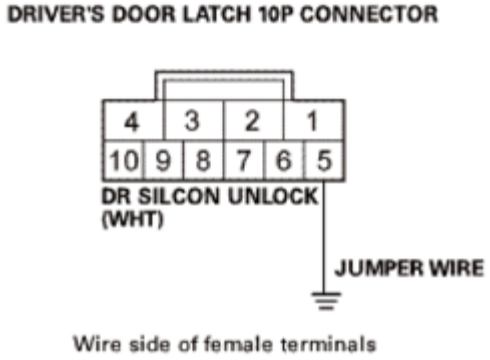

Fig. 150: Connecting Jumper Wire Between Driver Door Latch 10P Connector No. 5 And

GETtheMANUALS.org

Body Ground
Courtesy of AMERICAN HONDA MOTOR CO., INC.

- 4. Check the parameter(s) below with the HDS.

Signal	Current conditions	
	Value	Unit
Driver's Door Lock Knob Switch (UNLOCK)		

Is information indicator ON?

YES : Go to step 18.

NO : Go to step 19.

18. Open wire check (GND line):
    - 1. Check for continuity between test points 1 and 2.

      Test condition IG LOCK (0)

      Driver's door latch 10P connector: disconnected

      Test circuit GND

      Test point 1 Driver's door latch 10P connector No. 7 (BLK)

      Test point 2 Body ground

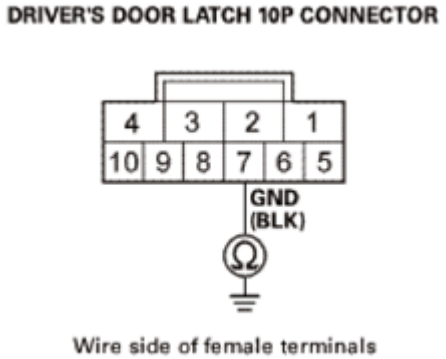

Fig. 151: Checking Continuity Between Driver Door Latch 10P Connector No. 7 And Body Ground
Courtesy of AMERICAN HONDA MOTOR CO., INC.

Is there continuity?

YES : The GND wire is OK. Faulty driver's door lock knob switch; **REPLACE THE DRIVER'S**

GETtheMANUALS.org

DOOR LATCH .

NO : Repair an open or high resistance in the ground wire or poor ground (G501).

19. Open wire check (DR SILCON UNLOCK line):
    - 1. Connect terminals A and B with a jumper wire.

      Terminal A Under-dash fuse/relay box connector X (10P) No. 4 (WHT)

      Terminal B Body ground

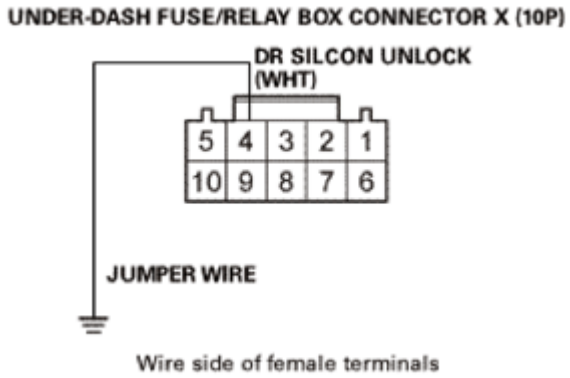

Fig. 152: Connecting Jumper Wire Between Under-Dash Fuse/Relay Box Connector X (10P) No. 4 And Body Ground
Courtesy of AMERICAN HONDA MOTOR CO., INC.

    - 2. Check the parameter(s) below with the HDS.

Signal	Current conditions	
	Value	Unit
Driver's Door Lock Knob Switch (UNLOCK)		

Is information indicator ON?

YES : Repair an open or high resistance in the wire.

NO : The DR SILCON UNLOCK wire is OK. Faulty MICU; **REPLACE THE UNDER-DASH FUSE/RELAY BOX** .

20. Keyless/power door locks/security system check 1:
    - 1. With the front passenger's door lock knob switch in LOCK position, check the parameter(s) below with the HDS.

Signal	Current conditions	
	Value	Unit

GETtheMANUALS.org

Front Passenger's Door Lock Knob Sw. (UNLOCK)		

Is information indicator ON?

YES : Go to step 21.

NO : Go to step 23.

21. Determine possible failure area (front passenger's door latch, others):
    - 1. Turn the ignition switch to LOCK (0).
    - 2. Disconnect the following connector.

      Front passenger's door latch 10P connector

    - 3. Check the parameter(s) below with the HDS.

Signal	Current conditions	
	Value	Unit
Front Passenger's Door Lock Knob Sw. (UNLOCK)		

Is information indicator OFF?

YES : Faulty front passenger's door lock knob switch; **REPLACE THE FRONT PASSENGER'S DOOR LATCH** .

NO : Go to step 22.

22. Shorted wire check (AS SILCON UNLOCK line):
    - 1. Disconnect the following connector.

      Under-dash fuse/relay box connector W (24P)

    - 2. Check for continuity between test points 1 and 2.

      Test condition IG LOCK (0)

      Front passenger's door latch 10P connector: disconnected

      Under-dash fuse/relay box connector W (24P): disconnected

      Test circuit AS SILCON UNLOCK

      Test point 1 Under-dash fuse/relay box connector W (24P) No. 10 (LT BLU)

      Test point 2 Body ground

GETtheMANUALS.org

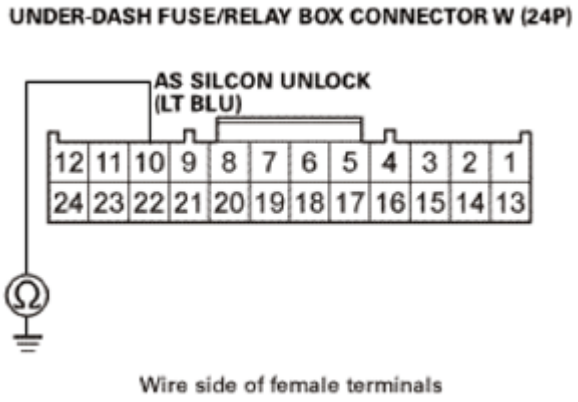

Fig. 153: Checking Continuity Between Under-Dash Fuse/Relay Box Connector W (24P) No. 10 And Body Ground
Courtesy of AMERICAN HONDA MOTOR CO., INC.

Is there continuity?

YES : Repair a short to ground in the wire.

NO : The AS SILCON UNLOCK wire is OK. Faulty MICU; **REPLACE THE UNDER-DASH FUSE/RELAY BOX** .

23. Keyless/power door locks/security system check 2:
    - 1. Turn the ignition switch to LOCK (0).
    - 2. Disconnect the following connector.

      Front passenger's door latch 10P connector

    - 3. Connect terminals A and B with a jumper wire.

      Terminal A Front passenger's door latch 10P connector No. 10 (LT BLU)

      Terminal B Body ground

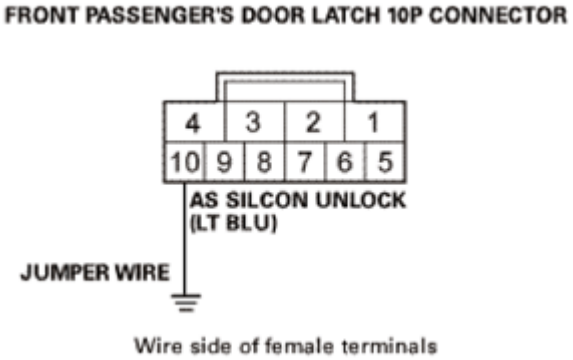

Fig. 154: Connecting Jumper Wire Between Front Passenger Door Latch 10P Connector No.

GETtheMANUALS.org

10 And Body Ground
Courtesy of AMERICAN HONDA MOTOR CO., INC.

- 4. Check the parameter(s) below with the HDS.

Signal	Current conditions	
	Value	Unit
Front Passenger's Door Lock Knob Sw. (UNLOCK)		

Is information indicator ON?

YES : Go to step 24.

NO : Go to step 25.

24. Open wire check (GND line):
    - 1. Check for continuity between test points 1 and 2.

      Test condition IG LOCK (0)

      Front passenger's door latch 10P connector: disconnected

      Test circuit GND

      Test point 1 Front passenger's door latch 10P connector No. 8 (BLK)

      Test point 2 Body ground

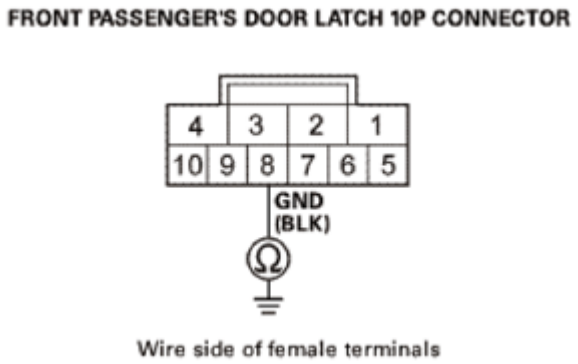

Fig. 155: Checking Continuity Between Front Passenger Door Latch 10P Connector No. 8 And Body Ground
Courtesy of AMERICAN HONDA MOTOR CO., INC.

Is there continuity?

YES : The GND wire is OK. Faulty front passenger's door lock knob switch; **REPLACE THE FRONT**

GETtheMANUALS.org

PASSENGER'S DOOR LATCH .

NO : Repair an open or high resistance in the ground wire or poor ground (G503).

25. Open wire check (AS SILCON UNLOCK line):
    - 1. Connect terminals A and B with a jumper wire.

      Terminal A Under-dash fuse/relay box connector W (24P) No. 10 (LT BLU)

      Terminal B Body ground

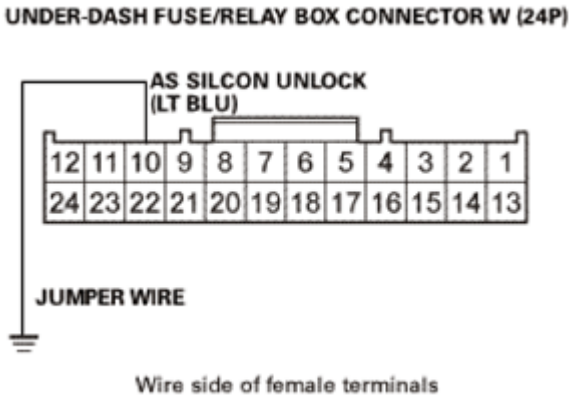

Fig. 156: Connecting Jumper Wire Between Under-Dash Fuse/Relay Box Connector W (24P) No. 10 And Body Ground
Courtesy of AMERICAN HONDA MOTOR CO., INC.

    - 2. Check the parameter(s) below with the HDS.

Signal	Current conditions	
	Value	Unit
Front Passenger's Door Lock Knob Sw. (UNLOCK)		

Is information indicator ON?

YES : Repair an open or high resistance in the wire.

NO : The AS SILCON UNLOCK wire is OK. Faulty MICU; **REPLACE THE UNDER-DASH FUSE/RELAY BOX** .

26. Keyless/power door locks/security system check 1:
    - 1. With the left rear door lock knob switch in LOCK position, check the parameter(s) below with the HDS.

Signal	Current conditions	
	Value	Unit

GETtheMANUALS.org

Driver's Rear Door Lock Knob Switch (UNLOCK)		

Is information indicator ON?

YES : Go to step 27.

NO : Go to step 29.

27. Determine possible failure area (left rear door latch, others):
    - 1. Turn the ignition switch to LOCK (0).
    - 2. Disconnect the following connector.

      Left rear door latch 10P connector

    - 3. Check the parameter(s) below with the HDS.

Signal	Current conditions	
	Value	Unit
Driver's Rear Door Lock Knob Switch (UNLOCK)		

Is information indicator OFF?

YES : Faulty left rear door lock knob switch; **REPLACE THE LEFT REAR DOOR LATCH** .

NO : Go to step 28.

28. Shorted wire check (RR DR SILCON UNLOCK line):
    - 1. Disconnect the following connector.

      Under-dash fuse/relay box connector W (24P)

    - 2. Check for continuity between test points 1 and 2.

      Test condition IG LOCK (0)

      Left rear door latch 10P connector: disconnected

      Under-dash fuse/relay box connector W (24P): disconnected

      Test circuit RR DR SILCON UNLOCK

      Test point 1 Under-dash fuse/relay box connector W (24P) No. 5 (BLU)

      Test point 2 Body ground

GETtheMANUALS.org

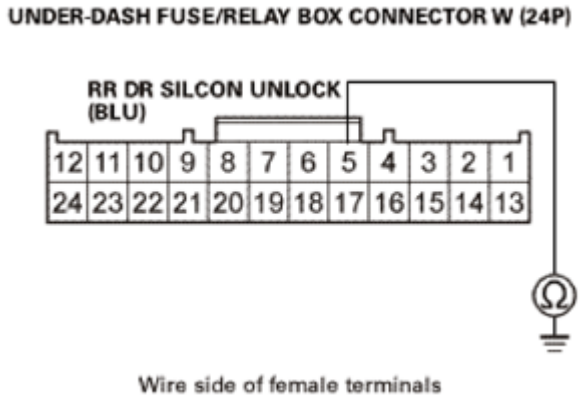

Fig. 157: Checking Continuity Between Under-Dash Fuse/Relay Box Connector W (24P) No. 5 And Body Ground
Courtesy of AMERICAN HONDA MOTOR CO., INC.

Is there continuity?

YES : Repair a short to ground in the wire.

NO : The RR DR SILCON UNLOCK wire is OK. Faulty MICU; **REPLACE THE UNDER-DASH FUSE/RELAY BOX** .

29. Keyless/power door locks/security system check 2:
    - 1. Turn the ignition switch to LOCK (0).
    - 2. Disconnect the following connector.

      Left rear door latch 10P connector

    - 3. Connect terminals A and B with a jumper wire.

      Terminal A Left rear door latch 10P connector No. 9 (PUR)

      Terminal B Body ground

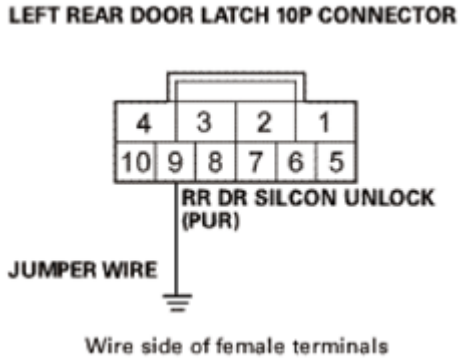

Fig. 158: Connecting Jumper Wire Between Left Rear Door Latch 10P Connector No. 9 And

GETtheMANUALS.org

Body Ground
Courtesy of AMERICAN HONDA MOTOR CO., INC.

- 4. Check the parameter(s) below with the HDS.

Signal	Current conditions	
	Value	Unit
Driver's Rear Door Lock Knob Switch (UNLOCK)		

Is information indicator ON?

YES : Go to step 30.

NO : Go to step 31.

30. Open wire check (GND line):
    - 1. Check for continuity between test points 1 and 2.

      Test condition IG LOCK (0)

      Left rear door latch 10P connector: disconnected

      Test circuit GND

      Test point 1 Left rear door latch 10P connector No. 6 (BLK)

      Test point 2 Body ground

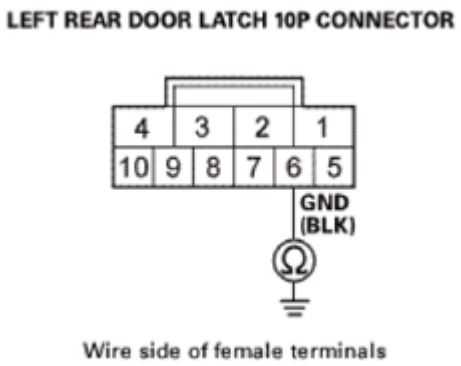

Fig. 159: Checking Continuity Between Left Rear Door Latch 10P Connector No. 6 And Body Ground
Courtesy of AMERICAN HONDA MOTOR CO., INC.

Is there continuity?

YES : The GND wire is OK. Faulty left rear door lock knob switch; **REPLACE THE LEFT REAR**

GETtheMANUALS.org

DOOR LATCH .

NO : Repair an open or high resistance in the ground wire or poor ground (G601).

31. Open wire check (RR DR SILCON UNLOCK line):
    - 1. Connect terminals A and B with a jumper wire.

      Terminal A Under-dash fuse/relay box connector W (24P) No. 5 (BLU)

      Terminal B Body ground

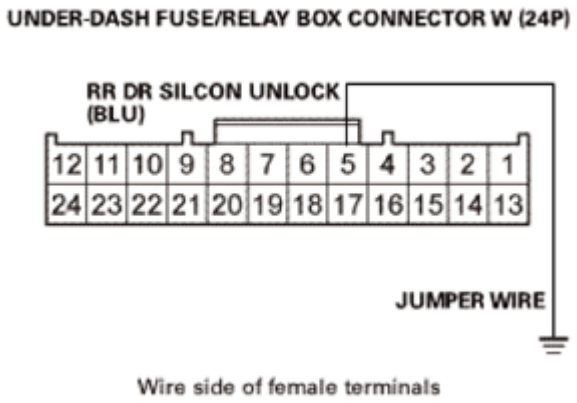

Fig. 160: Connecting Jumper Wire Between Under-Dash Fuse/Relay Box Connector W (24P) No. 5 And Body Ground
Courtesy of AMERICAN HONDA MOTOR CO., INC.

    - 2. Check the parameter(s) below with the HDS.

Signal	Current conditions	
	Value	Unit
Driver's Rear Door Lock Knob Switch (UNLOCK)		

Is information indicator ON?

YES : Repair an open or high resistance in the wire.

NO : The RR DR SILCON UNLOCK wire is OK. Faulty MICU; **REPLACE THE UNDER-DASH FUSE/RELAY BOX** .

32. Keyless/power door locks/security system check 1:
    - 1. With the right rear door lock knob switch in LOCK position, check the parameter(s) below with the HDS.

Signal	Current conditions	
	Value	Unit

GETtheMANUALS.org

Passenger's Rear Door Lock Knob Sw. (UNLOCK)		

Is information indicator ON?

YES : Go to step 33.

NO : Go to step 35.

33. Determine possible failure area (right rear door latch, others):
    - 1. Turn the ignition switch to LOCK (0).
    - 2. Disconnect the following connector.

      Right rear door latch 10P connector

    - 3. Check the parameter(s) below with the HDS.

Signal	Current conditions	
	Value	Unit
Passenger's Rear Door Lock Knob Sw. (UNLOCK)		

Is information indicator OFF?

YES : Faulty right rear door lock knob switch; **REPLACE THE RIGHT REAR DOOR LATCH** .

NO : Go to step 34.

34. Shorted wire check (RR AS SILCON UNLOCK line):
    - 1. Disconnect the following connector.

      Under-dash fuse/relay box connector W (24P)

    - 2. Check for continuity between test points 1 and 2.

      Test condition IG LOCK (0)

      Right rear door latch 10P connector: disconnected

      Under-dash fuse/relay box connector W (24P): disconnected

      Test circuit RR AS SILCON UNLOCK

      Test point 1 Under-dash fuse/relay box connector W (24P) No. 4 (ORN)

      Test point 2 Body ground

GETtheMANUALS.org

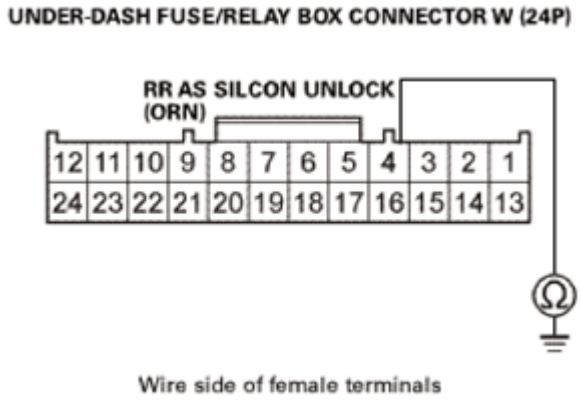

Fig. 161: Checking Continuity Between Under-Dash Fuse/Relay Box Connector W (24P) No. 4 And Body Ground
Courtesy of AMERICAN HONDA MOTOR CO., INC.

Is there continuity?

YES : Repair a short to ground in the wire.

NO : The RR AS SILCON UNLOCK wire is OK. Faulty MICU; **REPLACE THE UNDER-DASH FUSE/RELAY BOX** .

35. Keyless/power door locks/security system check 2:
    - 1. Turn the ignition switch to LOCK (0).
    - 2. Disconnect the following connector.

      Right rear door latch 10P connector

    - 3. Connect terminals A and B with a jumper wire.

      Terminal A Right rear door latch 10P connector No. 6 (LT BLU)

      Terminal B Body ground

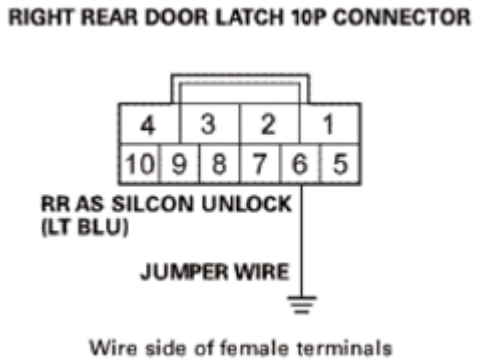

Fig. 162: Connecting Jumper Wire Between Right Rear Door Latch 10P Connector No. 6

GETtheMANUALS.org

And Body Ground
Courtesy of AMERICAN HONDA MOTOR CO., INC.

- 4. Check the parameter(s) below with the HDS.

Signal	Current conditions	
	Value	Unit
Passenger's Rear Door Lock Knob Sw. (UNLOCK)		

Is information indicator ON?

YES : Go to step 36.

NO : Go to step 37.

36. Open wire check (GND line):
    - 1. Check for continuity between test points 1 and 2.

      Test condition IG LOCK (0)

      Right rear door latch 10P connector: disconnected

      Test circuit GND

      Test point 1 Right rear door latch 10P connector No. 9 (BLK)

      Test point 2 Body ground

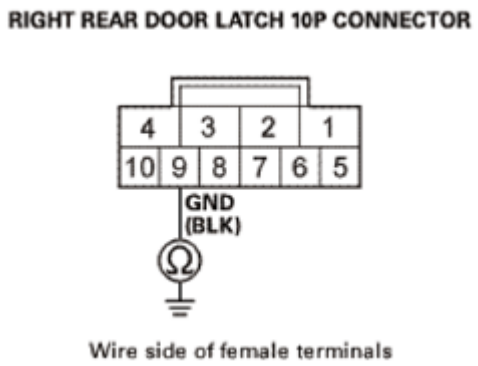

Fig. 163: Checking Continuity Between Right Rear Door Latch 10P Connector No. 9 And Body Ground
Courtesy of AMERICAN HONDA MOTOR CO., INC.

Is there continuity?

YES : The GND wire is OK. Faulty right rear door lock knob switch; **REPLACE THE RIGHT REAR**

GETtheMANUALS.org

DOOR LATCH .

NO : Repair an open or high resistance in the ground wire or poor ground (G604).

37. Open wire check (RR AS SILCON UNLOCK line):
    - 1. Connect terminals A and B with a jumper wire.

      Terminal A Under-dash fuse/relay box connector W (24P) No. 4 (ORN)

      Terminal B Body ground

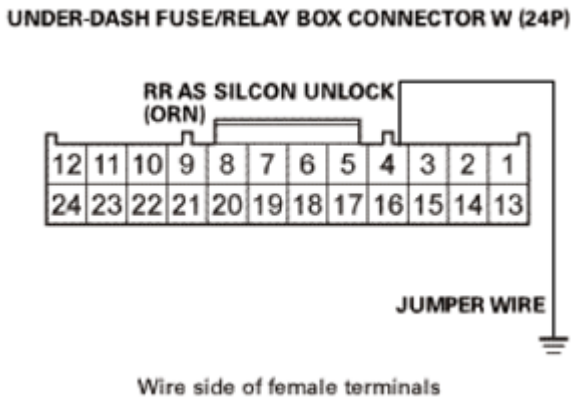

Fig. 164: Connecting Jumper Wire Between Under-Dash Fuse/Relay Box Connector W (24P) No. 4 And Body Ground
Courtesy of AMERICAN HONDA MOTOR CO., INC.

    - 2. Check the parameter(s) below with the HDS.

Signal	Current conditions	
	Value	Unit
Passenger's Rear Door Lock Knob Sw. (UNLOCK)		

Is information indicator ON?

YES : Repair an open or high resistance in the wire.

NO : The RR AS SILCON UNLOCK wire is OK. Faulty MICU; **REPLACE THE UNDER-DASH FUSE/RELAY BOX** .

38. Keyless/power door locks/security system check:
    - 1. With the driver's door closed, check the parameter(s) below with the HDS.

Signal	Current conditions	
	Value	Unit
Driver's Door Switch		

GETtheMANUALS.org

Is information indicator ON?

YES : Go to step 39.

NO : Go to step 41.

39. Driver's door switch operation check:
    - 1. Turn the ignition switch to LOCK (0).
    - 2. Remove the driver's door switch.
    - 3. Disconnect the following connector.

      Driver's door switch 1P connector

    - 4. Check for continuity between test points 1 and 2.

      Test point 1 Driver's door switch 1P connector

      Test point 2 Switch ground

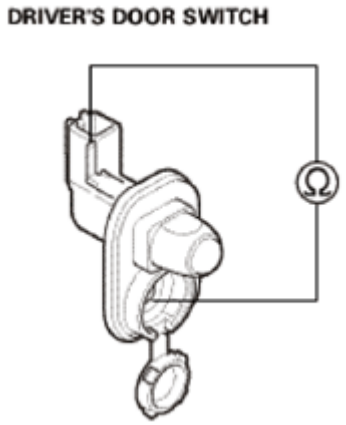

Fig. 165: Checking Continuity Between Driver Door Switch 1P Connector And Body Ground
Courtesy of AMERICAN HONDA MOTOR CO., INC.

Is there no continuity when you push the switch and is there continuity when you release the switch?

YES : Go to step 40.

NO : Replace the driver's door switch.

40. Shorted wire check (DR DOOR SW line):
    - 1. Disconnect the following connector.

      Under-dash fuse/relay box connector B (44P)

GETtheMANUALS.org

- 2. Check for continuity between test points 1 and 2.

  Test condition IG LOCK (0)

  Driver's door switch 1P connector: disconnected

  Under-dash fuse/relay box connector B (44P): disconnected

  Test circuit DR DOOR SW

  Test point 1 Under-dash fuse/relay box connector B (44P) No. 40 (GRN)

  Test point 2 Body ground

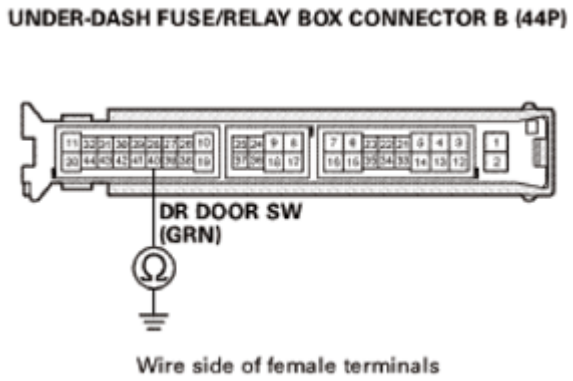

Fig. 166: Checking Continuity Between Under-Dash Fuse/Relay Box Connector B (44P) No. 40 And Body Ground
Courtesy of AMERICAN HONDA MOTOR CO., INC.

Is there continuity?

YES : Repair a short to ground in the wire.

NO : The DR DOOR SW wire is OK. Faulty MICU; **REPLACE THE UNDER-DASH FUSE/RELAY BOX** .

41. Driver's door switch operation check:
    - 1. Turn the ignition switch to LOCK (0).
    - 2. Remove the driver's door switch.
    - 3. Disconnect the following connector.

      Driver's door switch 1P connector

    - 4. Check for continuity between test points 1 and 2.

      Test point 1 Driver's door switch 1P connector

GETtheMANUALS.org

Test point 2 Switch ground

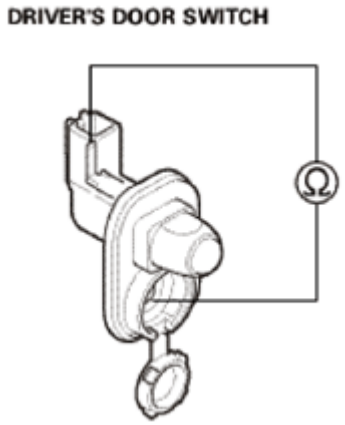

Fig. 167: Checking Continuity Between Driver Door Switch 1P Connector And Switch Ground
Courtesy of AMERICAN HONDA MOTOR CO., INC.

Is there no continuity when you push the switch and is there continuity when you release the switch?

YES : Go to step 42.

NO : Replace the driver's door switch.

42. Open wire check (DR DOOR SW line):
    - 1. Connect terminals A and B with a jumper wire.

    Terminal A Under-dash fuse/relay box connector B (44P) No. 40 (GRN)

    Terminal B Body ground

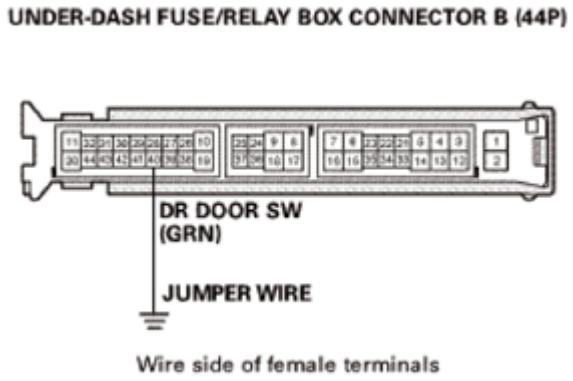

Fig. 168: Connecting Jumper Wire Between Under-Dash Fuse/Relay Box Connector B (44P) No. 40 And Body Ground
Courtesy of AMERICAN HONDA MOTOR CO., INC.

GETtheMANUALS.org

- 2. Check the parameter(s) below with the HDS.

Signal	Current conditions	
	Value	Unit
Driver's Door Switch		

Is information indicator ON?

YES : Repair an open or high resistance in the wire.

NO : The DR DOOR SW wire is OK. Faulty MICU; **REPLACE THE UNDER-DASH FUSE/RELAY BOX** .

43. Keyless/power door locks/security system check:
    - 1. With the front passenger's door closed, check the parameter(s) below with the HDS.

Signal	Current conditions	
	Value	Unit
Front Passenger's Door Switch		

Is information indicator ON?

YES : Go to step 44.

NO : Go to step 46.

44. Front passenger's door switch operation check:
    - 1. Turn the ignition switch to LOCK (0).
    - 2. Remove the front passenger's door switch.
    - 3. Disconnect the following connector.

      Front passenger's door switch 1P connector

    - 4. Check for continuity between test points 1 and 2.

      Test point 1 Front passenger's door switch 1P connector

      Test point 2 Switch ground

GETtheMANUALS.org

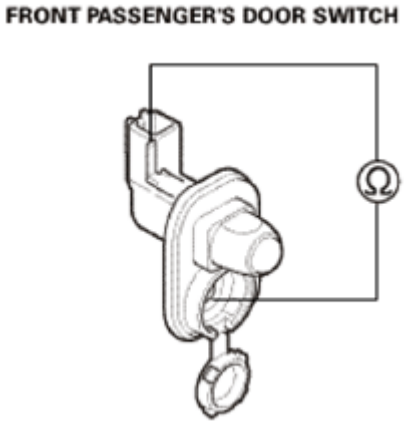

Fig. 169: Checking Continuity Between Front Passenger Door Switch 1P Connector And Body Ground
Courtesy of AMERICAN HONDA MOTOR CO., INC.

Is there no continuity when you push the switch and is there continuity when you release the switch?

YES : Go to step 45.

NO : Replace the front passenger's door switch.

45. Shorted wire check (AS DOOR SW line):
    - 1. Disconnect the following connector.

      Under-dash fuse/relay box connector B (44P)

    - 2. Check for continuity between test points 1 and 2.

      Test condition IG LOCK (0)

      Front passenger's door switch 1P connector: disconnected

      Under-dash fuse/relay box connector B (44P): disconnected

      Test circuit AS DOOR SW

      Test point 1 Under-dash fuse/relay box connector B (44P) No. 29 (BRN)

      Test point 2 Body ground

GETtheMANUALS.org

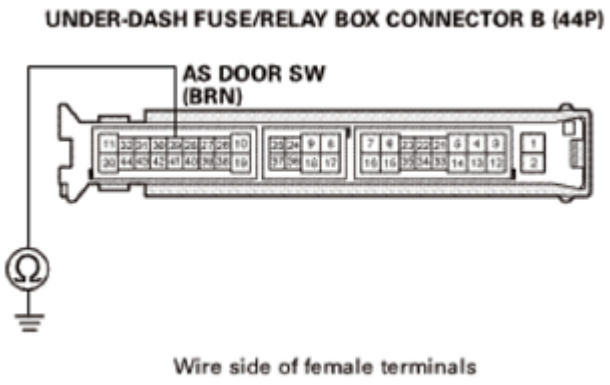

Fig. 170: Checking Continuity Between Under-Dash Fuse/Relay Box Connector B (44P) No. 29 And Body Ground
Courtesy of AMERICAN HONDA MOTOR CO., INC.

Is there continuity?

YES : Repair a short to ground in the wire.

NO : The AS DOOR SW wire is OK. Faulty MICU; **REPLACE THE UNDER-DASH FUSE/RELAY BOX** .

46. Front passenger's door switch operation check:
    - 1. Turn the ignition switch to LOCK (0).
    - 2. Remove the front passenger's door switch.
    - 3. Disconnect the following connector.

      Front passenger's door switch 1P connector

    - 4. Check for continuity between test points 1 and 2.

      Test point 1 Front passenger's door switch 1P connector

      Test point 2 Switch ground

GETtheMANUALS.org

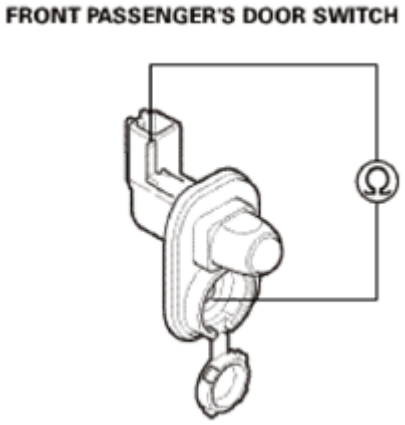

Fig. 171: Checking Continuity Between Front Passenger Door Switch 1P Connector And Switch Ground
Courtesy of AMERICAN HONDA MOTOR CO., INC.

Is there no continuity when you push the switch and is there continuity when you release the switch?

YES : Go to step 47.

NO : Replace the front passenger's door switch.

47. Open wire check (AS DOOR SW line):
    - 1. Connect terminals A and B with a jumper wire.

      Terminal A Under-dash fuse/relay box connector B (44P) No. 29 (BRN)

      Terminal B Body ground

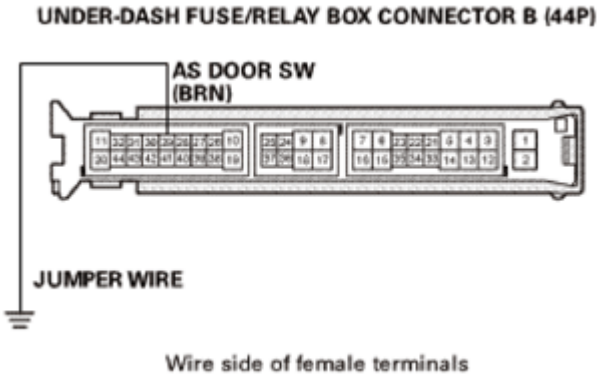

Fig. 172: Connecting Jumper Wire Between Under-Dash Fuse/Relay Box Connector B (44P) No. 29 And Body Ground
Courtesy of AMERICAN HONDA MOTOR CO., INC.

    - 2. Check the parameter(s) below with the HDS.

GETtheMANUALS.org

Signal	Current conditions	
	Value	Unit
Front Passenger's Door Switch		

Is information indicator ON?

YES : Repair an open or high resistance in the wire.

NO : The AS DOOR SW wire is OK. Faulty MICU; **REPLACE THE UNDER-DASH FUSE/RELAY BOX** .

48. Keyless/power door locks/security system check:
    - 1. With the left rear door closed, check the parameter(s) below with the HDS.

Signal	Current conditions	
	Value	Unit
Driver's Rear Door Switch		

Is information indicator ON?

YES : Go to step 49.

NO : Go to step 51.

49. Left rear door switch operation check:
    - 1. Turn the ignition switch to LOCK (0).
    - 2. Remove the left rear door switch.
    - 3. Disconnect the following connector.

      Left rear door switch 1P connector

    - 4. Check for continuity between test points 1 and 2.

      Test point 1 Left rear door switch 1P connector

      Test point 2 Switch ground

GETtheMANUALS.org

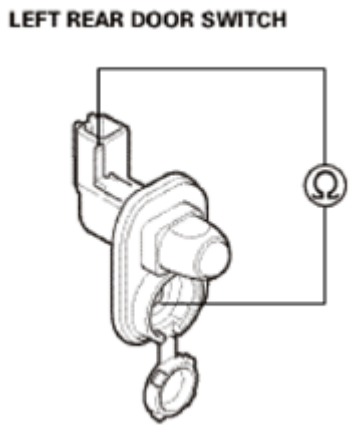

Fig. 173: Checking Continuity Between Left Rear Door Switch 1P Connector And Switch Ground
Courtesy of AMERICAN HONDA MOTOR CO., INC.

Is there no continuity when you push the switch and is there continuity when you release the switch?

YES : Go to step 50.

NO : Replace the left rear door switch.

50. Shorted wire check (RR DR DOOR SW line):
    - 1. Disconnect the following connector.

      Under-dash fuse/relay box connector B (44P)

    - 2. Check for continuity between test points 1 and 2.

      Test condition IG LOCK (0)

      Left rear door switch 1P connector: disconnected

      Under-dash fuse/relay box connector B (44P): disconnected

      Test circuit RR DR DOOR SW

      Test point 1 Under-dash fuse/relay box connector B (44P) No. 33 (WHT)

      Test point 2 Body ground

GETtheMANUALS.org

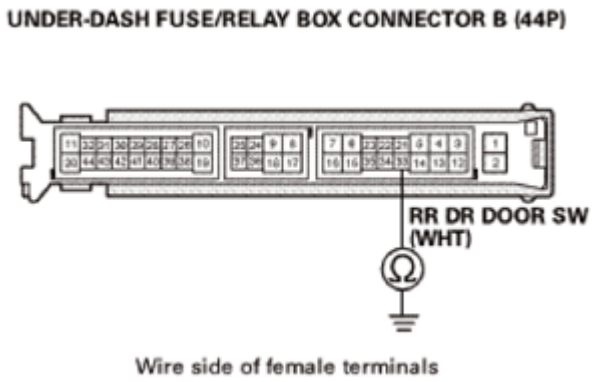

Fig. 174: Checking Continuity Between Under-Dash Fuse/Relay Box Connector B (44P) No. 33 And Body Ground
Courtesy of AMERICAN HONDA MOTOR CO., INC.

Is there continuity?

YES : Repair a short to ground in the wire.

NO : The RR DR DOOR SW wire is OK. Faulty MICU; **REPLACE THE UNDER-DASH FUSE/RELAY BOX** .

51. Left rear door switch operation check:
    - 1. Turn the ignition switch to LOCK (0).
    - 2. Remove the left rear door switch.
    - 3. Disconnect the following connector.

      Left rear door switch 1P connector

    - 4. Check for continuity between test points 1 and 2.

      Test point 1 Left rear door switch 1P connector

      Test point 2 Switch ground

GETtheMANUALS.org

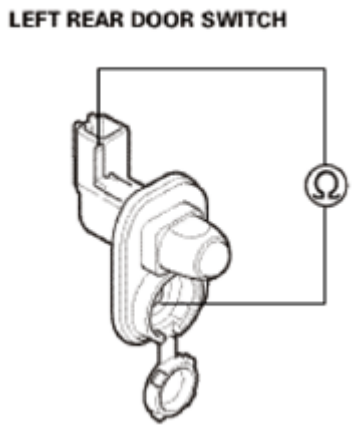

Fig. 175: Checking Continuity Between Left Rear Door Switch 1P Connector And Switch Ground
Courtesy of AMERICAN HONDA MOTOR CO., INC.

Is there no continuity when you push the switch and is there continuity when you release the switch?

YES : Go to step 52.

NO : Replace the left rear door switch.

52. Open wire check (RR DR DOOR SW line):
    - 1. Connect terminals A and B with a jumper wire.

      Terminal A Under-dash fuse/relay box connector B (44P) No. 33 (WHT)

      Terminal B Body ground

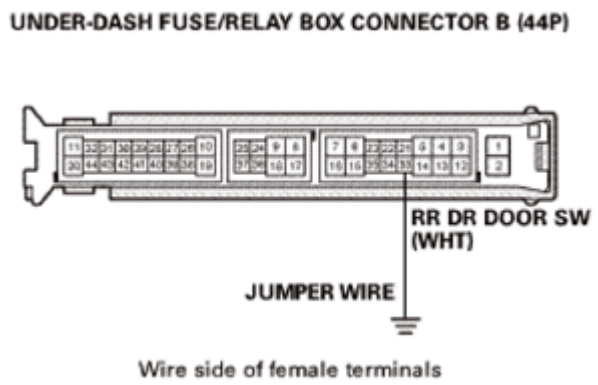

Fig. 176: Connecting Jumper Wire Between Under-Dash Fuse/Relay Box Connector B (44P) No. 33 And Body Ground
Courtesy of AMERICAN HONDA MOTOR CO., INC.

    - 2. Check the parameter(s) below with the HDS.

GETtheMANUALS.org

Signal	Current conditions	
	Value	Unit
Driver's Rear Door Switch		

Is information indicator ON?

YES : Repair an open or high resistance in the wire.

NO : The RR DR DOOR SW wire is OK. Faulty MICU; **REPLACE THE UNDER-DASH FUSE/RELAY BOX** .

53. Keyless/power door locks/security system check:
    - 1. With the right rear door closed, check the parameter(s) below with the HDS.

Signal	Current conditions	
	Value	Unit
Passenger's Rear Door Switch		

Is information indicator ON?

YES : Go to step 54.

NO : Go to step 56.

54. Right rear door switch operation check:
    - 1. Turn the ignition switch to LOCK (0).
    - 2. Remove the right rear door switch.
    - 3. Disconnect the following connector.

      Right rear door switch 1P connector

    - 4. Check for continuity between test points 1 and 2.

      Test point 1 Right rear door switch 1P connector

      Test point 2 Switch ground

GETtheMANUALS.org

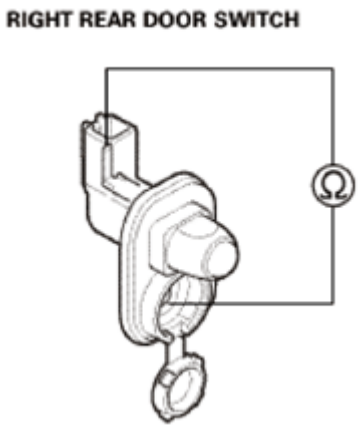

Fig. 177: Checking Continuity Between Right Rear Door Switch 1P Connector And Switch Ground
Courtesy of AMERICAN HONDA MOTOR CO., INC.

Is there no continuity when you push the switch and is there continuity when you release the switch?

YES : Go to step 55.

NO : Replace the right rear door switch.

55. Shorted wire check (RR AS DOOR SW line):
    - 1. Disconnect the following connector.

      Under-dash fuse/relay box connector B (44P)

    - 2. Check for continuity between test points 1 and 2.

      Test condition IG LOCK (0)

      Right rear door switch 1P connector: disconnected

      Under-dash fuse/relay box connector B (44P): disconnected

      Test circuit RR AS DOOR SW

      Test point 1 Under-dash fuse/relay box connector B (44P) No. 34 (GRY)

      Test point 2 Body ground

GETtheMANUALS.org

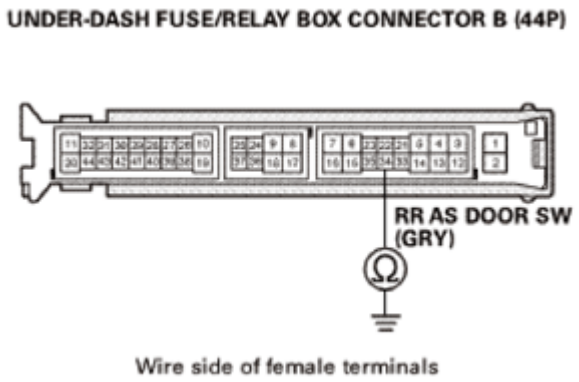

Fig. 178: Checking Continuity Between Under-Dash Fuse/Relay Box Connector B (44P) No. 34 And Body Ground
Courtesy of AMERICAN HONDA MOTOR CO., INC.

Is there continuity?

YES : Repair a short to ground in the wire.

NO : The RR AS DOOR SW wire is OK. Faulty MICU; **REPLACE THE UNDER-DASH FUSE/RELAY BOX** .

56. Right rear door switch operation check:
    - 1. Turn the ignition switch to LOCK (0).
    - 2. Remove the right rear door switch.
    - 3. Disconnect the following connector.

      Right rear door switch 1P connector

    - 4. Check for continuity between test points 1 and 2.

      Test point 1 Right rear door switch 1P connector

      Test point 2 Switch ground

GETtheMANUALS.org

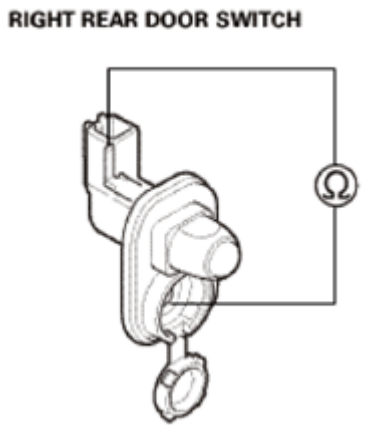

Fig. 179: Checking Continuity Between Right Rear Door Switch 1P Connector And Switch Ground
Courtesy of AMERICAN HONDA MOTOR CO., INC.

Is there no continuity when you push the switch and is there continuity when you release the switch?

YES : Go to step 57.

NO : Replace the right rear door switch.

57. Open wire check (RR AS DOOR SW line):
    - 1. Connect terminals A and B with a jumper wire.

      Terminal A Under-dash fuse/relay box connector B (44P) No. 34 (GRY)

      Terminal B Body ground

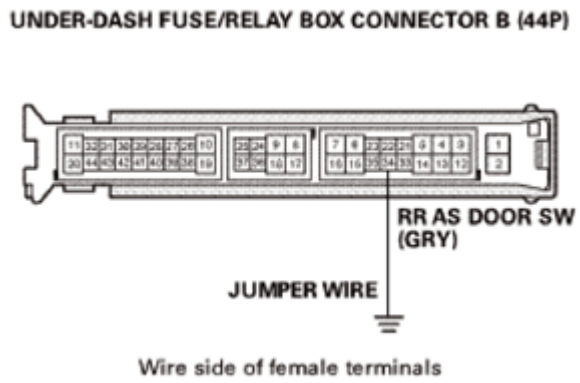

Fig. 180: Connecting Jumper Wire Between Under-Dash Fuse/Relay Box Connector B (44P) No. 34 And Body Ground
Courtesy of AMERICAN HONDA MOTOR CO., INC.

    - 2. Check the parameter(s) below with the HDS.

GETtheMANUALS.org

Signal	Current conditions	
	Value	Unit
Passenger's Rear Door Switch		

Is information indicator ON?

YES : Repair an open or high resistance in the wire.

NO : The RR AS DOOR SW wire is OK. Faulty MICU; **REPLACE THE UNDER-DASH FUSE/RELAY BOX** .

58. Keyless/power door locks/security system check:
    - 1. Turn the ignition switch to LOCK (0).
    - 2. Disconnect the following connector.

      Driver's door latch 10P connector

    - 3. Connect terminals A and B with a jumper wire.

      Terminal A Driver's door latch 10P connector No. 9 (PNK)

      Terminal B Body ground

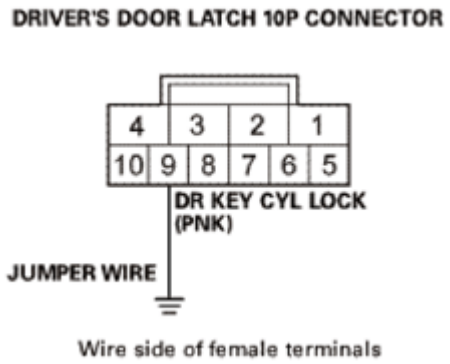

Fig. 181: Connecting Jumper Wire Between Driver Door Latch 10P Connector No. 9 And Body Ground
Courtesy of AMERICAN HONDA MOTOR CO., INC.

    - 4. Check the parameter(s) below with the HDS.

Signal	Current conditions	
	Value	Unit
Driver's Door Key Cylinder Switch (LOCK)		

Is information indicator ON?

GETtheMANUALS.org

YES : Go to step 59.

NO : Go to step 61.

59. Driver's door key cylinder switch operation check:
    - 1. Turn the ignition switch to LOCK (0).
    - 2. **TEST THE DRIVER'S DOOR KEY CYLINDER SWITCH**.

Is the switch OK?

YES : Go to step 60.

NO : Faulty driver's door key cylinder switch; **REPLACE THE DRIVER'S DOOR LATCH** .

60. Open wire check (GND line):
    - 1. Check for continuity between test points 1 and 2.

      Test condition IG LOCK (0)

      Driver's door latch 10P connector: disconnected

      Test circuit GND

      Test point 1 Driver's door latch 10P connector No. 7 (BLK)

      Test point 2 Body ground

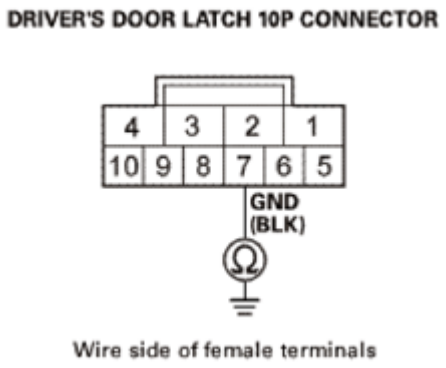

Fig. 182: Checking Continuity Between Driver Door Latch 10P Connector No. 7 And Body Ground
Courtesy of AMERICAN HONDA MOTOR CO., INC.

Is there continuity?

YES : The GND wire is OK. Faulty MICU; **REPLACE THE UNDER-DASH FUSE/RELAY BOX** .

GETtheMANUALS.org

NO : Repair an open or high resistance in the ground wire or poor ground (G501).

61. Open wire check (DR KEY CYL LOCK line):
    - 1. Connect terminals A and B with a jumper wire.

      Terminal A Under-dash fuse/relay box connector X (10P) No. 10 (PNK)

      Terminal B Body ground

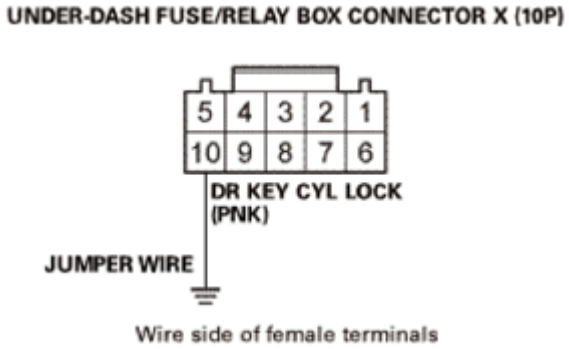

Fig. 183: Connecting Jumper Wire Between Under-Dash Fuse/Relay Box Connector X (10P) No. 10 And Body Ground
Courtesy of AMERICAN HONDA MOTOR CO., INC.

    - 2. Check the parameter(s) below with the HDS.

Signal	Current conditions	
	Value	Unit
Driver's Door Key Cylinder Switch (LOCK)		

Is information indicator ON?

YES : Repair an open or high resistance in the wire.

NO : The DR KEY CYL LOCK wire is OK. Faulty MICU; **REPLACE THE UNDER-DASH FUSE/RELAY BOX** .

THE HORN DOES NOT SOUND AND/OR THE HEADLIGHTS DO NOT FLASH WHEN THE PANIC BUTTON ON THE TRANSMITTER IS PRESSED

GETtheMANUALS.org

Keyless/Power Door Locks/Security System Symptom Troubleshooting - The horn does not sound and/or the headlights do not flash when the PANIC button on the transmitter is pressed

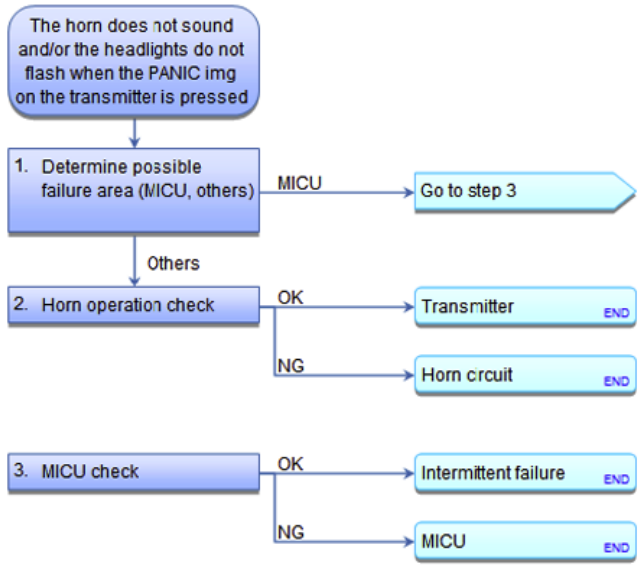

Fig. 184: Keyless/Power Door Locks/Security System Symptom Troubleshooting Flowchart
Courtesy of AMERICAN HONDA MOTOR CO., INC.

NOTE: **Before troubleshooting, check the B-CAN DTCs. If any DTC is indicated, troubleshoot the indicated DTC first.**

1. Determine possible failure area (MICU, others):
   - 1. Press the PANIC button.

   Do the horns sound?

   YES : Go to step 3.

   NO : Go to step 2.

2. Horn operation check:
   - 1. Press the horn button.

   Do the horns sound?

   YES : Replace the transmitter, then **REGISTER THE NEW TRANSMITTER** .

   NO : Check the horn circuit.

3. MICU check:
   - 1. Turn the headlight switch ON.

   Do the headlights come on?

GETtheMANUALS.org

YES : Intermittent failure, the system is OK at this time.

NO : Check the lighting circuit. **DO THE MICU INPUT TEST** .

SECURITY HOOD SWITCH TEST

REMOVAL

1. Hood Latch
    1. Remove the bolts (A), then remove the hood latch (B) from the body. Disconnect the hood opener cable (C) from the latch.
    2. Disconnect the connector (D).

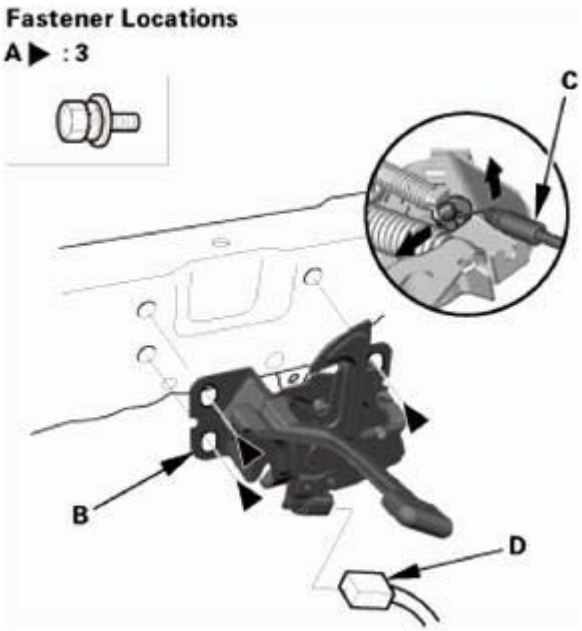

Fig. 185: Removing Hood Latch
Courtesy of AMERICAN HONDA MOTOR CO., INC.

TEST

1. Security Hood Switch - Test
    1. Check for continuity between the terminals in each switch position according to the table.
    2. If the continuity is not as specified, the security hood switch is faulty; replace the hood latch (A).

GETtheMANUALS.org

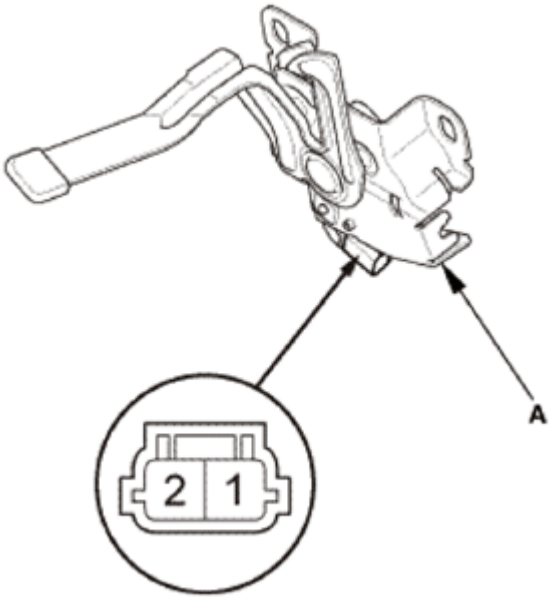

Fig. 186: Identifying Security Hood Switch Connector Terminals
Courtesy of AMERICAN HONDA MOTOR CO., INC.

Terminal / Position	1	2
RELEASE (Open)	○	○
LOCK (Close)		

Fig. 187: Security Hood Switch Continuity Reference Chart
Courtesy of AMERICAN HONDA MOTOR CO., INC.

INSTALLATION

1. Hood Latch

NOTE: **Apply multipurpose grease to the hood latch as indicated by the arrows.**

GETtheMANUALS.org

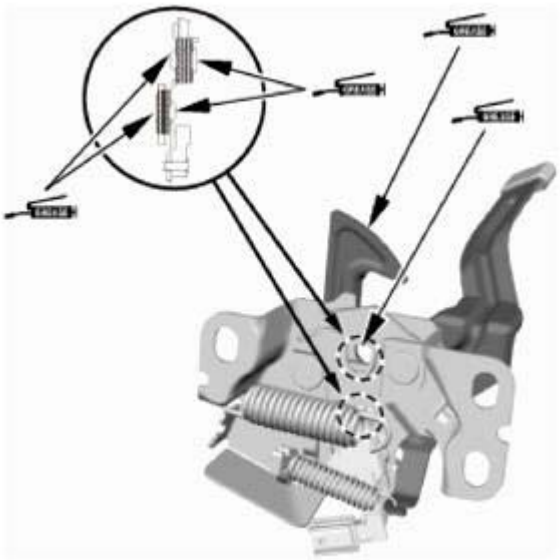

Fig. 188: Identifying Hood Latch Grease Applying Area
Courtesy of AMERICAN HONDA MOTOR CO., INC.

1. Connect the connector (A).
2. Connect the hood opener cable (B).
3. Install the hood latch (C), then install the bolts (D).

Fig. 189: Installing Hood Latch
Courtesy of AMERICAN HONDA MOTOR CO., INC.

2. Hood Latch - Adjustment
    1. **DO THE HOOD ADJUSTMENT** .

GETtheMANUALS.org

WIRELESS REMOTE CONTROL BATTERY REMOVAL AND INSTALLATION

REMOVAL

1. Wireless Remote Control Battery
    1. Remove the cover from the wireless remote control (A).
    2. Remove the battery (B).

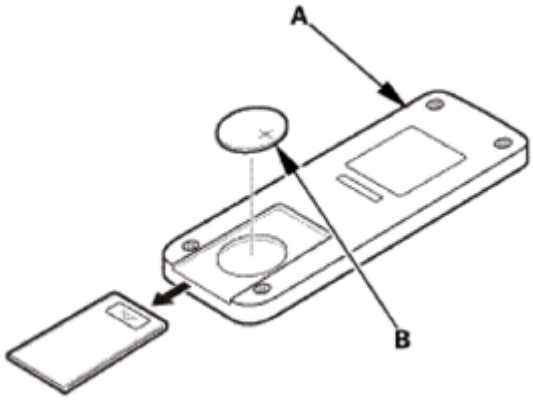

Fig. 190: Removing Wireless Remote Control Battery
Courtesy of AMERICAN HONDA MOTOR CO., INC.

INSTALLATION

1. Wireless Remote Control Battery
    1. Install the battery (A).
    2. Install the cover from the wireless remote control (B).
    3. Confirm that each operation works normally after replacing the battery.

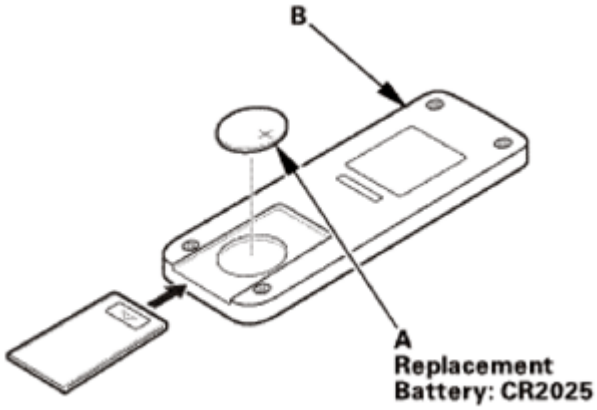

Fig. 191: Installing Wireless Remote Control Battery
Courtesy of AMERICAN HONDA MOTOR CO., INC.

GETtheMANUALS.org

REMINDER INDICATOR RESET

PROCEDURES Honda

ENGINE OIL LIFE INDICATOR

NOTE: **To determine the appropriate reset procedure, refer to ENGINE OIL LIFE INDICATOR RESET INDEX.**

ENGINE OIL LIFE INDICATOR RESET INDEX

Model & Year	Reset Procedure
Accord	
2006-14	**Engine Oil Life Indicator - Procedure 1**
Accord Hybrid	
2014	**Engine Oil Life Indicator - Procedure 12**
Civic	
2006-12	**Engine Oil Life Indicator - Procedure 1**
2013-14	Models With Information Display: **Engine Oil Life Indicator - Procedure 1** Models With i-MID: **Engine Oil Life Indicator - Procedure 11**
Civic Hybrid	
2013-14	**Engine Oil Life Indicator - Procedure 11**
CR-V	
2006-11	**Engine Oil Life Indicator - Procedure 2**
2012-14	Models With Information Display: **Engine Oil Life Indicator - Procedure 1** Models With i-MID: **Engine Oil Life Indicator - Procedure 11**
CR-Z	
2011-13	**Engine Oil Life Indicator - Procedure 9**
2014	**Engine Oil Life Indicator - Procedure 10**
Crosstour	
2012-14	**Engine Oil Life Indicator - Procedure 1**
Element	
2007-11	**Engine Oil Life Indicator - Procedure 1**
Fit	
2007-13	**Engine Oil Life Indicator - Procedure 1**
Fit EV	
2013-15	**Engine Oil Life Indicator - Procedure 1**
Insight	
2010-14	**Engine Oil Life Indicator - Procedure 6**

GETtheMANUALS.org

Odyssey (Except Touring Model) (1)	
2005-10	**Engine Oil Life Indicator - Procedure 1**
2011-14	**Engine Oil Life Indicator - Procedure 10**
Odyssey (Touring Model)	
2005-10	**Engine Oil Life Indicator - Procedure 3**
2011-14	**Engine Oil Life Indicator - Procedure 9**
Pilot (Except Touring Model) (1)	
2006-13	**Engine Oil Life Indicator - Procedure 1**
2014-15	**Engine Oil Life Indicator - Procedure 10**
Pilot (Touring Model)	
2010-13	**Engine Oil Life Indicator - Procedure 6**
2014-15	**Engine Oil Life Indicator - Procedure 10**
Ridgeline (Without Navigation)	
2007-08	**Engine Oil Life Indicator - Procedure 4**
2009-14	**Engine Oil Life Indicator - Procedure 7**
Ridgeline (With Navigation)	
2009-14	**Engine Oil Life Indicator - Procedure 8**
S2000	
2006-09	**Engine Oil Life Indicator - Procedure 5**
(1) Beginning with 2012 models, Honda no longers indicates whether the higher-end Multi-Information Display, that was previously only installed in the Touring models, continues to be available only in Touring. If you find a non-Touring model with a Multi-Information Diplay (identified by the steering wheel controls), use the Touring reset procedure.	

ENGINE OIL LIFE INDICATOR - PROCEDURE 1

1. Turn ignition switch to ON (II).
2. Press SELECT/RESET knob repeatedly until engine oil life indicator is displayed. See **Fig. 1**.
3. Press SELECT/RESET knob for 10 seconds. Engine oil life indicator and the maintenance item code(s) will blink.
4. Press SELECT/RESET knob again for more than 5 seconds. Maintenance items code(s) will disappear and engine oil life indicator will reset to "100."

GETtheMANUALS.org

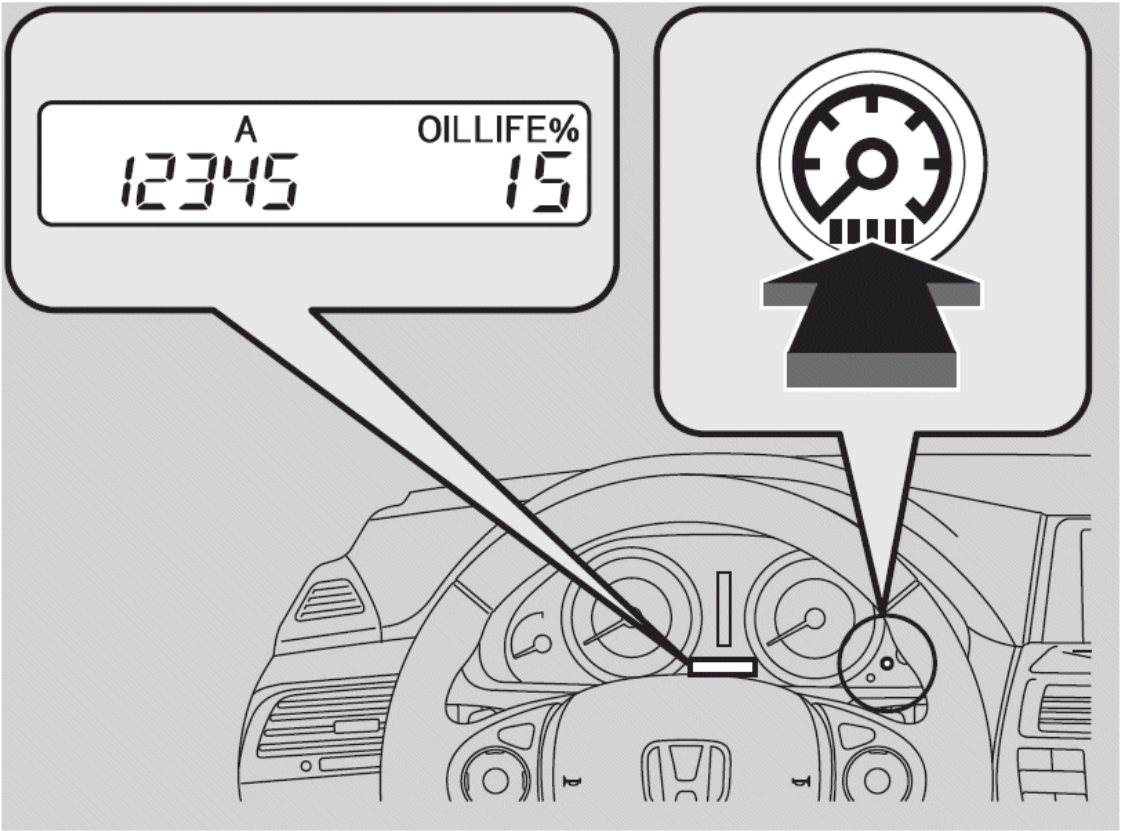

Fig. 1: Oil Life Display Controls (Maintenance Minder) - Typical Instrument Panel
Courtesy of AMERICAN HONDA MOTOR CO., INC.

ENGINE OIL LIFE INDICATOR - PROCEDURE 2

NOTE:

- **The vehicle must be stopped to reset the display. If a required service is done and the display is not reset, or if the maintenance display is reset without doing the service, the system will not show the proper maintenance timing. This can lead to serious mechanical problems because there will be no accurate record of when the required maintenance is needed.**
- **The engine oil life and the maintenance items can be reset independently only with the HDS.**

1. Turn the ignition switch to ON (II).
2. Push and release the Select/Reset knob repeatedly until the engine oil life indicator is displayed.
3. Press and hold the Select/Reset knob for about 10 seconds. The information display shows the reset mode display.

NOTE: **If you are resetting the display when the engine oil life is more than 15%, make sure any maintenance item(s) requiring service are done before resetting the display.**

GETtheMANUALS.org

Fig. 2: Screen Display - Reset Knob Cancels
Courtesy of AMERICAN HONDA MOTOR CO., INC.

4. Twist the Select/Reset knob to select OIL LIFE, the display will begin to blink.
5. Push in on the Select/Reset knob to enter this selection, the OIL LIFE and the maintenance item code(s) will begin to blink.
6. Press and hold the Select/Reset knob again for about 5 seconds. The maintenance item code(s) will disappear, and the engine oil life will reset to 100%.

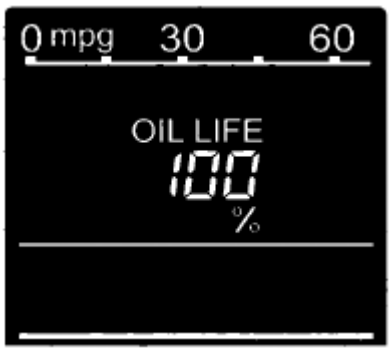

Fig. 3: Screen Display - Select/Reset Knob
Courtesy of AMERICAN HONDA MOTOR CO., INC.

ENGINE OIL LIFE INDICATOR - PROCEDURE 3

1. Turn ignition switch to ON (II). Press SELECT/RESET button on steering wheel until engine oil life is displayed.
2. Press SELECT/RESET button on steering wheel for 10 seconds. Display will change to "CUSTOM SETUP" mode. Press SELECT/RESET button on steering wheel. Maintenance item code(s) will disappear and engine oil life will reset to 100%.
3. To cancel resetting press INFO button on steering wheel. Press SELECT/RESET button. This cancels resetting procedure and normal display mode returns. Select "RESET" button and press SELECT/RESET button multi-information will.

ENGINE OIL LIFE INDICATOR - PROCEDURE 4

GETtheMANUALS.org

1. Turn ignition switch to ON (II) position.
2. Press SELECT button repeatedly until engine oil life display or service message is displayed.
3. Press the RESET button for about 10 seconds. A "MAINT RESET" message will appear.
4. Select appropriate answer - "MAINT RESET >N" (NO) or "MAINT RESET >Y" (YES) by pressing the select button. ">N" or ">Y" is displayed on the outside temperature display.
5. Select the "MAINT RESET >Y" (YES), and press and hold RESET button again to reset engine oil life to 100%.

ENGINE OIL LIFE INDICATOR - PROCEDURE 5

1. Turn ignition switch to ON (II). Press TRIP button until engine oil life indicator is displayed.
2. Press TRIP knob for 10 seconds. Engine oil life indicator and the maintenance item code(s) will blink. Press TRIP knob for more than 5 seconds. Maintenance items code(s) will disappear and engine oil life indicator will reset to 100%.

ENGINE OIL LIFE INDICATOR - PROCEDURE 6

1. Turn ignition switch to the ON (II) position.
2. If the engine oil life is not displayed, press the SEL/RESET button on the steering wheel repeatedly to display oil life.
3. Press and hold the SEL/RESET button on the steering wheel for more than 10 seconds. The remaining engine oil life reset mode will be shown on the multi-information display.
4. Select RESET by pressing the INFO button (ARROWS), then press the SEL/RESET button to reset the engine oil life display. The maintenance item code(s) will disappear, and the engine oil life will reset to 100%.

GETtheMANUALS.org

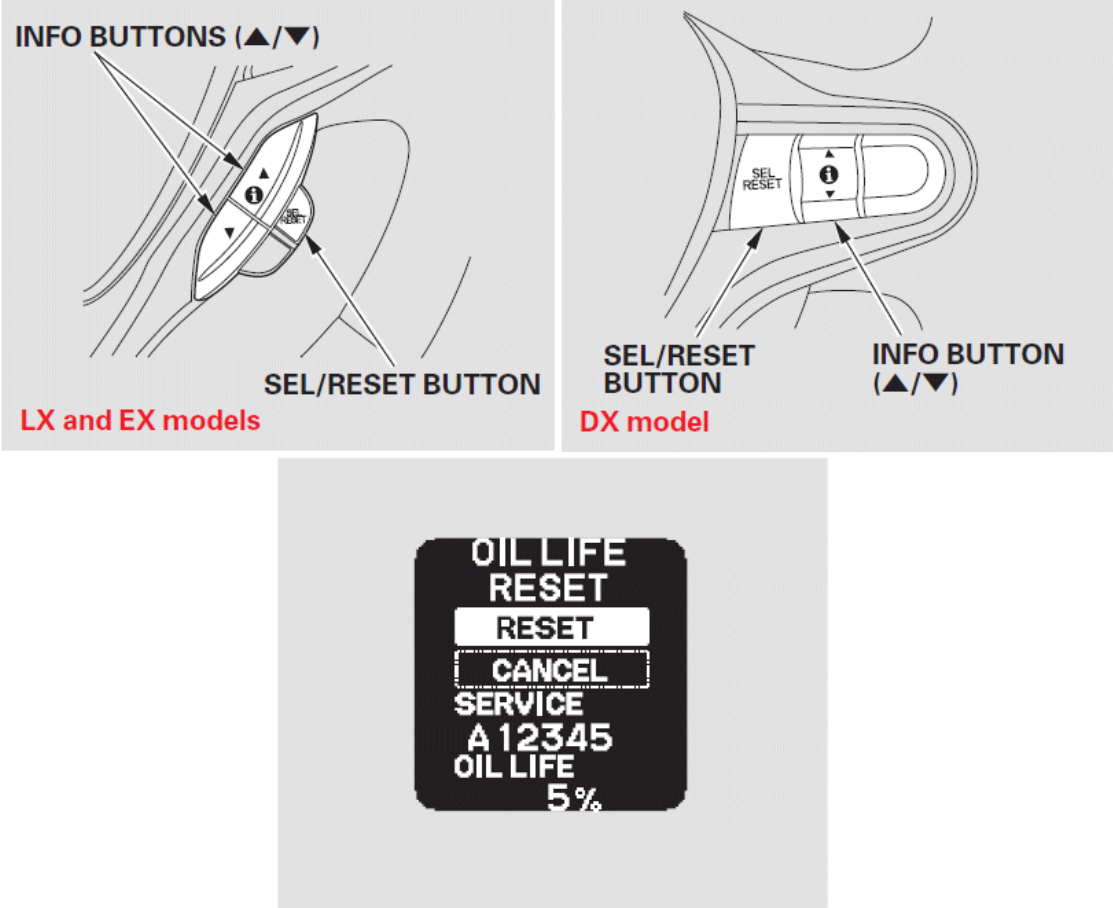

Fig. 4: Oil Life Display Controls (Maintenance Minder)
Courtesy of AMERICAN HONDA MOTOR CO., INC.

ENGINE OIL LIFE INDICATOR - PROCEDURE 7

NOTE: Use this procedure if the vehicle IS NOT equipped with a navigation system.

1. Turn ignition switch to ON (II) position.
2. Press the SELECT button repeatedly until the engine oil life is displayed.
3. Press the TRIP/RESET button for about 10 seconds. The engine oil life and the maintenance item code(s) will blink.
4. Press the TRIP/RESET button again for 5 seconds. The maintenance item code(s) will disappear, and the engine oil life will reset to 100%.

ENGINE OIL LIFE INDICATOR - PROCEDURE 8

NOTE: Use this procedure if the vehicle IS equipped with a navigation system.

1. Turn ignition switch to ON (II) position.
2. Press the SEL/RESET button on the dashboard until you see the engine oil life display.

GETtheMANUALS.org

3. Press and hold the SEL/RESET button for 10 seconds. The multi-information display will ask for a confirmation.
    - If you are sure you want to reset the display, press SEL/RESET button to select OK.
    - If you do not want to reset the display, press the INFO (ARROW) button to select CANCEL.

ENGINE OIL LIFE INDICATOR - PROCEDURE 9

1. Turn the ignition switch to ON (II).

NOTE: If system message(s) are displayed, press the INFO button to cancel the display.

2. Push the ARROW buttons repeatedly until the engine oil life indicator is displayed. See **Fig. 5**.
3. Select RESET with the ARROW buttons
4. Press the SEL/RESET button. The service code will disappear and the engine oil life display will return to 100%.
5. To cancel the oil life reset mode, select CANCEL, then press the SEL/RESET button.

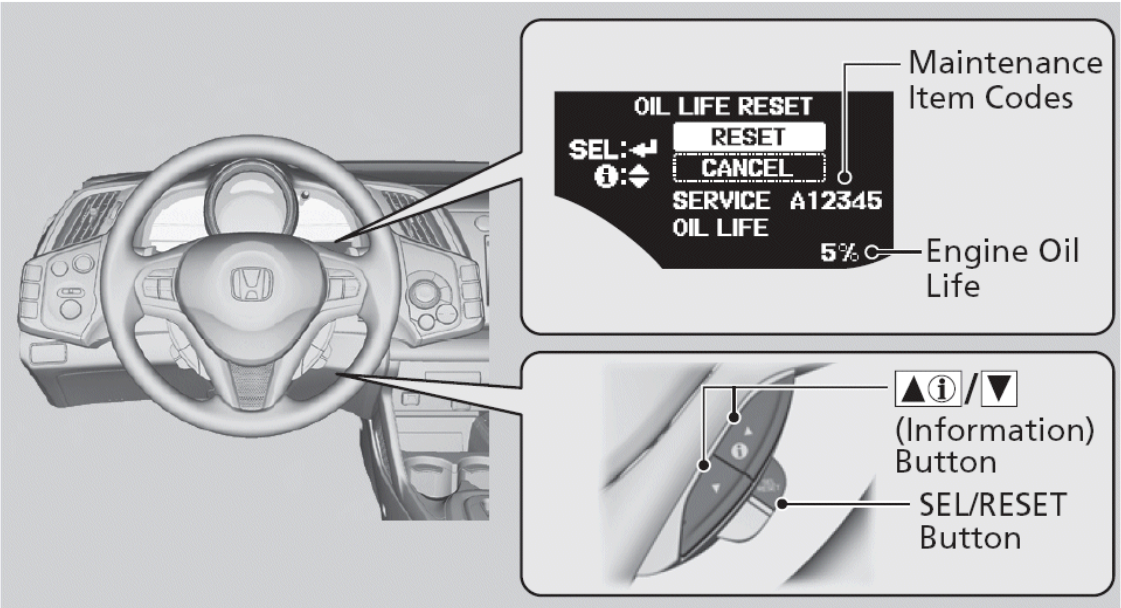

Fig. 5: Resetting Oil Life Display (Maintenance Minder) - Typical
Courtesy of AMERICAN HONDA MOTOR CO., INC.

ENGINE OIL LIFE INDICATOR - PROCEDURE 10

Maintenance Minder messages beginning appearing when engine oil life is less than 15%. The Maintenance Minder indicator (wrench) stays on in the instrument panel after the engine oil life becomes 0%.

1. Turn the ignition switch to the ON (II) position.

GETtheMANUALS.org

NOTE: **Models with the smart entry system have an ENGINE START/STOP button instead of an ignition switch.**

2. Press the SELECT/RESET knob (on instrument cluster - lower right) repeatedly until the engine oil life is displayed. On models with steering wheel controls, press SEL/RESET button repeatedly until the engine oil life is displayed.
3. Press the SELECT/RESET knob for about 10 seconds. With steering wheel controls, press and hold the SEL/RESET button for 10 seconds or more. The information display shows the reset mode initial display.
4. Select the OIL LIFE display by pressing and releasing the SELECT/RESET knob. Press the SELECT/RESET knob for a few seconds to enter the oil life reset mode. With steering wheel controls, select RESET with the ARROW buttons to enter the oil life reset mode.
5. Press and hold the SELECT/RESET knob again for 5 seconds. With steering wheel controls, press the SEL/RESET button. The maintenance item code(s) will disappear and the engine oil life will reset to 100%.

ENGINE OIL LIFE INDICATOR - PROCEDURE 11

Maintenance Minder messages begin appearing on the i-MID when engine oil life is less than 15%. The system message indicator comes on along with the Maintenance Minder message.

1. Turn the ignition switch to ON (II).
2. Press the MENU button to go to the VEHICLE MENU screen. See **Fig. 6**.
3. Select VEHICLE INFORMATION with the PLUS (+) button, then press the SOURCE button.
4. Press the SOURCE button again to go to the MAINTENANCE INFO screen. The engine oil life appears on the i-MID.
5. Select YES with the MINUS (-) button, then press the SOURCE button. The displayed maintenance items disappear, and the engine oil life display returns to 100%. Any maintenance items that are necessary for this vehicle at the next maintenance service will appear.
6. To cancel the oil life reset mode, select No, then press the SOURCE button.

GETtheMANUALS.org

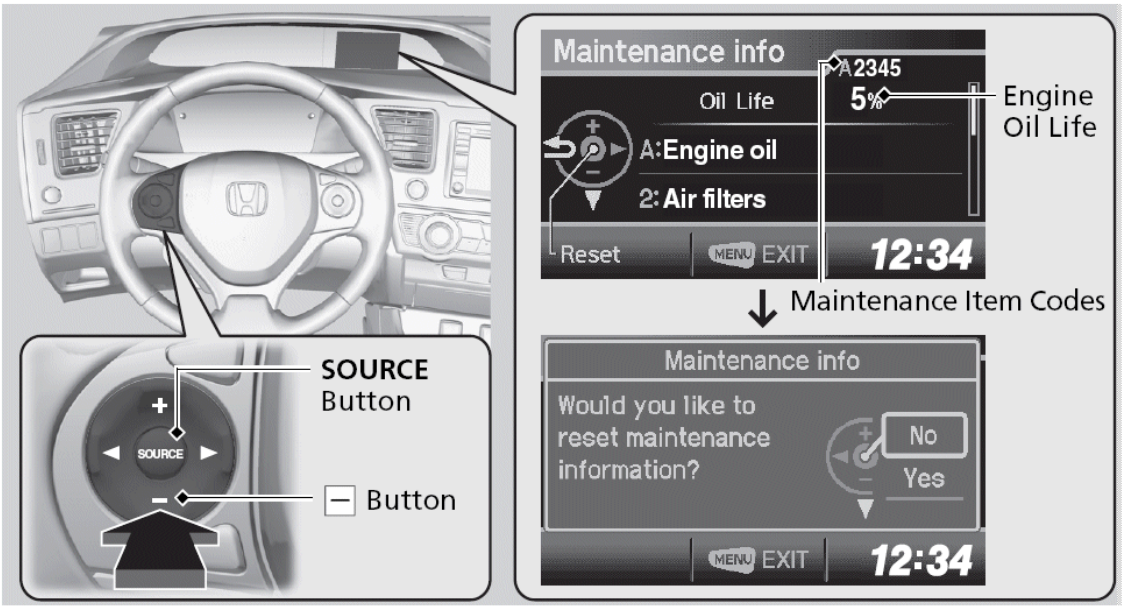

Fig. 6: Resetting Oil Life Display (Maintenance Minder)
Courtesy of AMERICAN HONDA MOTOR CO., INC.

ENGINE OIL LIFE INDICATOR - PROCEDURE 12

1. Set the power mode to ON.
2. Press ARROWS button (right side of steering wheel) to select VEHICLE SETTINGS, then press the SEL/RESET button.
3. Press ARROWS button until MAINTENANCE MINDER RESET appears on the display.
4. Press the SEL/RESET button. The MAINTENANCE MINDER reset mode is displayed on the multi-information display.
5.
   - **To reset all due items at once** , select ALL DUE ITEMS with the ARROWS button, then press the SEL/RESET button. The displayed maintenance items disappear.
   - **To reset each item separately** , select ITEM # ONLY with the ARROWS button, then press the SEL/RESET button. The displayed maintenance item (i.e. #) disappears.

NOTE: **To cancel the Maintenance Minder reset mode, select CANCEL, then press the SEL/ RESET button.**

You can also reset the Maintenance Minder display using the audio/information screen. With the power mode in ON, press the SETTINGS button. Rotate to select: Vehicle Settings > Maintenance Info. > Maintenance Minder Reset.

ENGINE OIL LIFE INDICATOR - PROCEDURE 13

1. Press and hold the SEL/RESET button (right side of steering wheel), and turn the power switch ON. Make sure that the light control switch is in OFF.

GETtheMANUALS.org

2. Continue holding the SEL/RESET button for 10 seconds or more. The service reminder information reset mode is displayed on the multi-information display.
3. Select RESET using the ARROW buttons, then press the SEL/RESET button. The service information will disappear.
4. To cancel the service reminder information reset mode, select CANCEL, then press the SEL/RESET button.

MAINTENANCE REQUIRED REMINDER LIGHT

NOTE: **To determine the appropriate reset procedure, refer to MAINTENANCE REQUIRED REMINDER LIGHT RESET INDEX.**

MAINTENANCE REQUIRED REMINDER LIGHT RESET INDEX

Model & Year	Reset Procedure
Accord	
1991-97	Maintenance Required Reminder Light Reset - Procedure 1
1998-05	Maintenance Required Reminder Light Reset - Procedure 2
Civic	
1996-00	Maintenance Required Reminder Light Reset - Procedure 2
2001-05	Maintenance Required Reminder Light Reset - Procedure 3
CR-V	
1998-01	Maintenance Required Reminder Light Reset - Procedure 1
2002-05	Maintenance Required Reminder Light Reset - Procedure 2
Element	
2003-05	Maintenance Required Reminder Light Reset - Procedure 3
Insight	
2000-05	Maintenance Required Reminder Light Reset - Procedure 4
Odyssey	
1996-97	Maintenance Required Reminder Light Reset - Procedure 1
1998-04	Maintenance Required Reminder Light Reset - Procedure 2
Pilot	
2003-06	Maintenance Required Reminder Light Reset - Procedure 2
Prelude	
1998-01	Maintenance Required Reminder Light Reset - Procedure 1
S2000	
2000-05	Maintenance Required Reminder Light Reset - Procedure 2

MAINTENANCE REQUIRED REMINDER LIGHT RESET - PROCEDURE 1

1. At each 7500 mile service interval, the MAINTENANCE REQUIRED light will change from Green to Yellow. If service is not performed (and light is not reset), the MAINTENANCE REQUIRED light will change from Yellow to Red.

GETtheMANUALS.org

2. When service has been completed, reset MAINTENANCE REQUIRED reminder light. To reset reminder light, turn ignition off. Insert ignition key in slot provided to the right of tachometer (or beside the indicator). See **Fig. 7**.

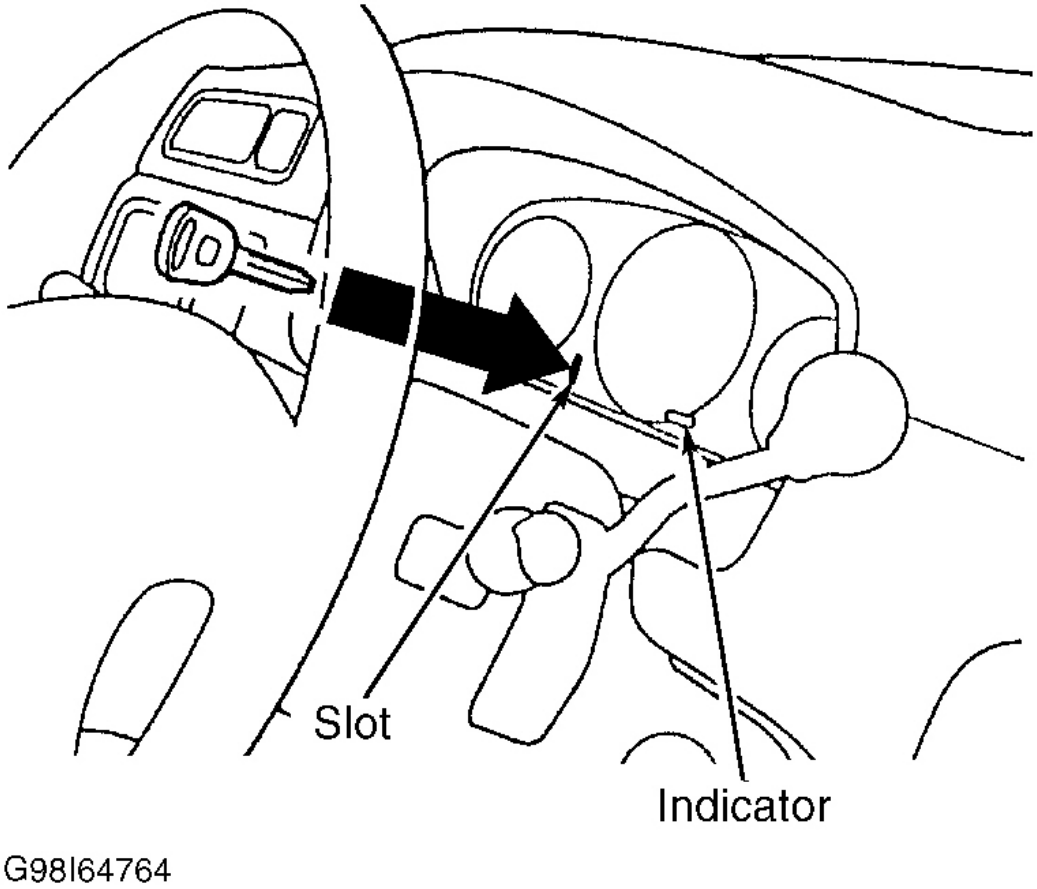

Fig. 7: Maintenance Reminder Light Reset
Courtesy of AMERICAN HONDA MOTOR CO., INC.

MAINTENANCE REQUIRED REMINDER LIGHT RESET - PROCEDURE 2

To reset MAINT REQ'D indicator light, turn ignition switch to OFF position. Push and hold the SELECT/RESET button and turn ignition switch to ON (II) position. Continue to hold button for more than 10 seconds or until MAINT REQ'D light goes out.

MAINTENANCE REQUIRED REMINDER LIGHT RESET - PROCEDURE 3

1. For the first 8000 miles after maintenance required indicator is reset, the MAINT REQ'D indicator light illuminates when the ignition is turned on, then will go out after 2 seconds. When mileage is 8000-10,000

GETtheMANUALS.org

miles, the MAINT REQ'D reminder light will illuminate for 2 seconds, then blink for 10 seconds, and then go out. When mileage exceeds 10,000 miles, MAINT REQ'D indicator light illuminates and stays on while ignition switch is in ON (II) position.

2. To reset the MAINT REQ'D indicator light, turn ignition switch to OFF position. Press and hold the SELECT/RESET button. While still holding button, turn ignition switch to ON position, with engine off. Hold SELECT/RESET button for about 10 seconds until indicator resets.
3. If MAINT REQ'D reminder light does not reset, ensure headlights, parking lights, or both are turned off when resetting reminder light. The MAINT REQ'D indicator cannot be reset if any of these lights are on. If vehicle is equipped with daytime running lights and lights come on when ignition switch is turned to ON (II) position, daytime running lights must be disabled before indicator light can be reset.

MAINTENANCE REQUIRED REMINDER LIGHT RESET - PROCEDURE 4

1. When distance driven since maintenance required indicator was reset is 6000 miles, the MAINT REQ'D reminder light will start to blink. After exceeding 7500 miles without having scheduled maintenance performed and MAINT REQ'D reminder light reset, light will remain on until it is reset.
2. To reset the light, turn ignition switch to OFF position. Press and hold TRIP button, located on lower right side of instrument cluster. While still holding TRIP button, turn ignition switch to ON position with engine off. Hold button for about 10 seconds until indicator resets.

OXYGEN SENSOR WARNING LIGHT

NOTE: To determine the appropriate reset procedure, refer to OXYGEN SENSOR WARNING LIGHT RESET INDEX.

OXYGEN SENSOR WARNING LIGHT RESET INDEX

Model & Year	Reset Procedure
Passport DX	
1994-95	Oxygen Sensor Warning Light Reset - Procedure 1

OXYGEN SENSOR WARNING LIGHT RESET - PROCEDURE 1

1. Heated Oxygen Sensor (HO2S) must be replaced every 90,000 miles. When odometer reaches 90,000 miles, O2S indicator light on dash will illuminate, and then every subsequent 90,000 miles. After servicing, turn off or reset warning light.

NOTE: Reset procedure is for first 90,000 mile reset. At every subsequent 90,000 mile reset, move screw back to previous hole.

2. To reset warning light, remove instrument cluster. Remove masking tape from hole "B". See **Fig. 8** or **Fig. 9** . Remove screw from hole "A" and insert into hole "B". Apply new masking tape to hole "A".

GETtheMANUALS.org

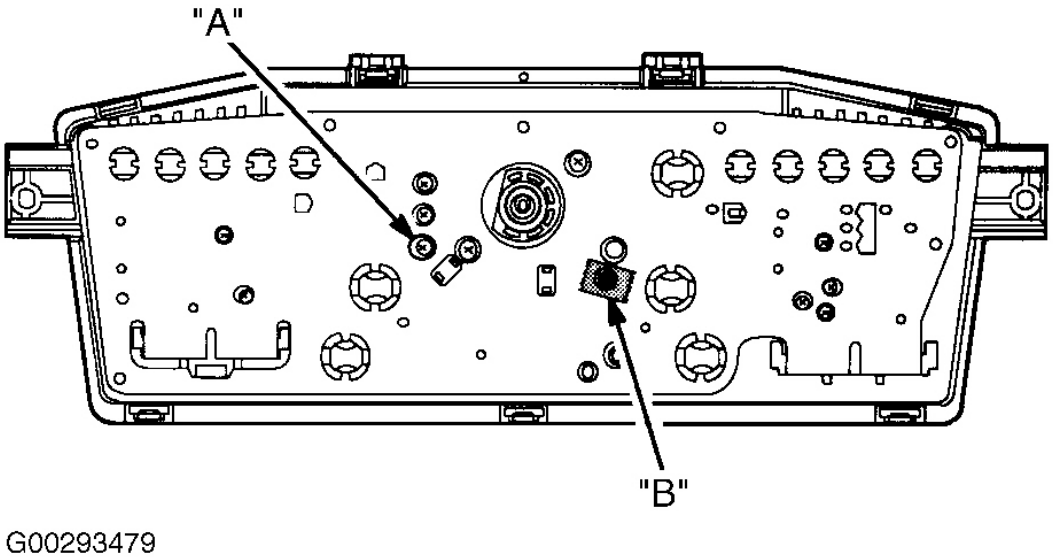

Fig. 8: Identifying Oxygen Sensor Warning Light Reset Holes (2.6L)
Courtesy of AMERICAN HONDA MOTOR CO., INC.

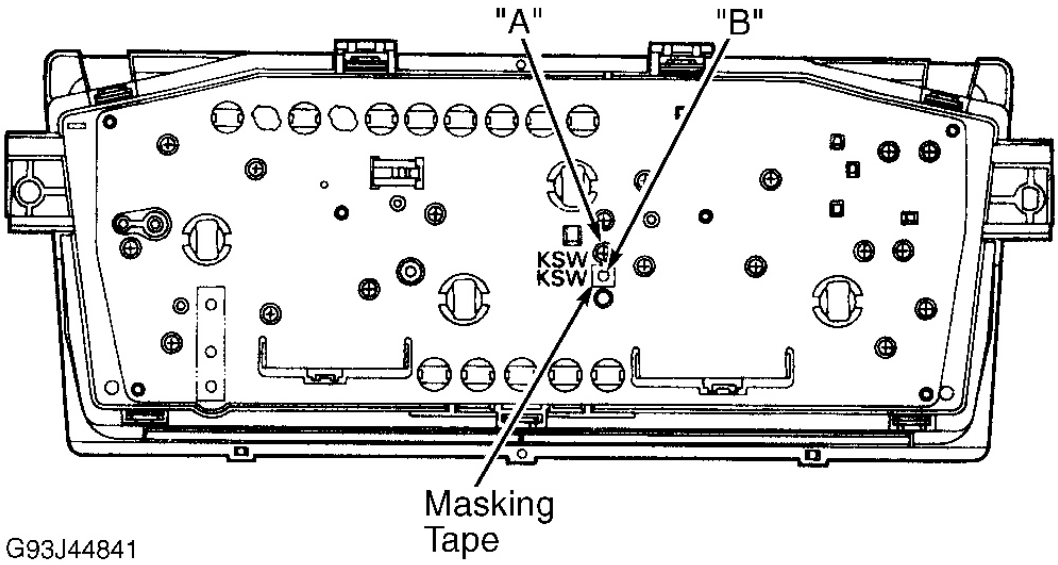

Fig. 9: Identifying Oxygen Sensor Warning Light Reset Holes (3.2L)
Courtesy of ISUZU MOTOR CO.

SERVICE INTERVAL REMINDER

GETtheMANUALS.org

NOTE: **To determine the appropriate reset procedure, refer to SERVICE INTERVAL REMINDER RESET INDEX.**

SERVICE INTERVAL REMINDER RESET INDEX

Model & Year	Reset Procedure
Accord	
1982-85	Service Interval Reminder Reset - Procedure 1

SERVICE INTERVAL REMINDER RESET - PROCEDURE 1

Oil, filter and service interval indicator flags/lights activate every 7500 miles. To reset indicators, insert ignition key into appropriate slot below glowing indicator flags/lights at lower right corner of instrument cluster. Push key in until reminder window changes from Red to Green.

TIRE PRESSURE MONITOR SYSTEM (TPMS)

NOTE: **To determine the appropriate reset procedure, refer to TPMS RESET INDEX.**

TPMS RESET INDEX

Model & Year	Reset Procedure
Accord	
2008-12	(1) TPMS Reset - Procedure 1
2013-14	(2) TPMS Reset - Procedure 3
Accord Crosstour	
2010-11	(1) TPMS Reset - Procedure 1
Civic	
2006-13	(1) TPMS Reset - Procedure 1
2014	TPMS Reset - Procedure 4
Crosstour	
2012-14	(1) TPMS Reset - Procedure 1
CR-V	
2007-13	(1) TPMS Reset - Procedure 1
2014	(2) TPMS Reset - Procedure 3
CR-Z	
2011-14	(1) TPMS Reset - Procedure 1
Element	
2007-11	(1) TPMS Reset - Procedure 1
Fit	
2007-13	(1) TPMS Reset - Procedure 1
2014-15	(2) TPMS Reset - Procedure 3

GETtheMANUALS.org

Fit EV	
2013-14	(1) **TPMS Reset - Procedure 1**
Insight	
2010-14	(1) **TPMS Reset - Procedure 1**
Odyssey (Except Touring)	
2005-06	**TPMS Reset - Procedure 2**
2007-10	(1) **TPMS Reset - Procedure 1**
Odyssey (Touring)	
2007-10	**TPMS Reset - Procedure 2**
Odyssey (All Models)	
2011-14	(1) **TPMS Reset - Procedure 1**
Pilot	
2005-15	**TPMS Reset - Procedure 2**
Ridgeline	
2006-14	**TPMS Reset - Procedure 2**
S2000	
2007-09	(1) **TPMS Reset - Procedure 1**

(1) There are no TPMS reset procedures required for these models. Ensure tires are inflated to recommend pressure. Tire pressure sensor IDs need to be memorized if new sensor or TPMS control unit is installed.

(2) This vehicle is equipped with an Indirect TPMS that does not use tire-mounted pressure sensors.

TPMS RESET - PROCEDURE 1

NOTE: **There is no TPMS reset procedure when re-inflating tires to the correct specification. Ensure tires are inflated to recommend pressure, and the TPMS indicator will go out shortly.**

NOTE: **If a flat tire is replaced with the spare tire, and the flat tire is stored in the cargo area, the low pressure indicator will stay on but the appropriate tire indicator will go off. This prevents the customer from thinking there is a problem with the spare tire. When the flat tire is taken out of the vehicle for repair, the TPMS indicator will come on because the system is no longer receiving the signal from the tire's transmitter.**

All four tire pressure sensor IDs must be memorized to the TPMS control unit whenever you do any of these actions

- Replace the TPMS control unit.
- Replace the tire pressure sensor
- Substitute a known-good wheel with tire pressure sensor

GETtheMANUALS.org

When doing a tire rotation, memorizing the sensors in not needed.

Memorizing The Tire Pressure Sensor IDs

NOTE: **For vehicles that use this procedure, a tire pressure sensor trigger tool is needed. As early as 2007 Honda started requiring the use, on some models, of the TPMS Trigger Tool ATEQ VT55 instead of the standard Sensor Initializer Tool AKS0620006 or Trigger Tool Bartec Wheelrite Tech 300-J-48714. Honda is not entirely clear on which models the VT55 only can be used. The models listed below have ID memorizing procedures that name the VT55 only. The procedures for all other models name the VT55 and one of the older type trigger tools, or just an older trigger tool. The VT55 can be used on all models with initiator-less TPM Systems.**

- **Crosstour, CR-V (2007-12), CR-Z, Fit (2009 & later): Only use the TPMS Trigger Tool ATEQ VT55**
- **All Other Models: Can use either TPMS Sensor Initializer Tool AKS0620006 or TPMS Trigger Tool Bartec Wheelrite Tech 300-J-48714**

NOTE: **To ensure the control unit memorizes the correct ID, the vehicle with the new sensor must be at least 10 ft (3 m) away from other vehicles that have tire pressure sensors.**

1. With the ignition switch in LOCK (0), connect the HDS to the data link connector (DLC) located under the driver's side of the dashboard.
2. Turn the ignition switch to ON (II)
3. Make sure the HDS communicates with the vehicle and the TPMS control unit. If it doesn't, troubleshoot the DLC circuit.
4. Select Sensor ID Learning from the mode menu on the HDS.
5. Follow HDS screen prompts to turn on the TPMS sensor initializer tool.

NOTE: **On the TPMS Sensor Initializer Tool (AKS0620006), verify that the power switch (B) is in the "Low" position. See Fig. 10. If the power switch is in the "High" position, more than one sensor or sensors on other vehicles may be activated. Make sure the power switch is in the "Low" position.**

GETtheMANUALS.org

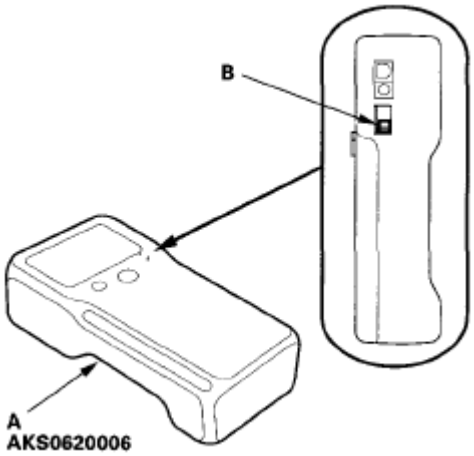

Fig. 10: Identifying TPMS Sensor Initializer Tool (AKS0620006) & Power Switch
Courtesy of AMERICAN HONDA MOTOR CO., INC.

6. Hold the TPMS sensor initializer tool near one wheel, memorize the pressure sensor ID by following the screen prompts on the HDS. See **Fig. 11**.

NOTE:

- **If you turn the ignition switch to LOCK (0) before memorizing all four sensor IDs, the memorizing ID is cancelled.**
- **If more than one sensor ID is displayed on the HDS, verify that the power switch is in the "LOW" position, the vehicle has not been driven for 5 minutes, and there are no other vehicles within 10 ft (3 m).**
- **See the HDS Help menu for specific instructions.**

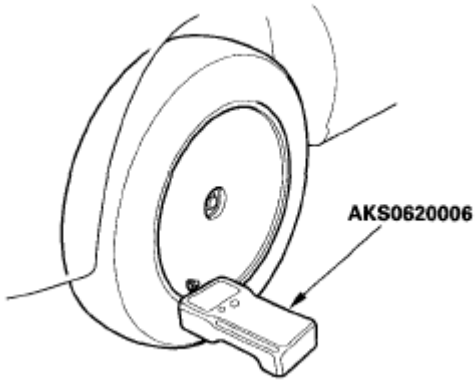

Fig. 11: Identifying TPMS Sensor Initializer Tool (AKS0620006) On Wheel (ATEQ VT55 & Tech 300-J-48714 Are Similar)
Courtesy of AMERICAN HONDA MOTOR CO., INC.

7. Repeat step 6 for each wheel until all four sensor IDs are memorized. When all four IDs are memorized, the low tire pressure indicator blinks
8. Turn the ignition switch to LOCK (0).

GETtheMANUALS.org

9. Disconnect the HDS from the DLC.
10. Test-drive the vehicle at 28 mph (45 km/h) or more for at least 1 minute.
11. Make sure the low tire pressure indicator does not blink.
12. Make sure the tires are inflated to the specified tire pressure listed on the doorjamb sticker.

TPMS RESET - PROCEDURE 2

NOTE: **When a tire pressure sensor is replaced, the sensor ID must be memorized by the TPMS control unit.**

NOTE: **If a flat tire is replaced with the spare tire, and the flat tire is stored in the cargo area, the low pressure indicator will stay on but the appropriate tire indicator will go off. This prevents the customer from thinking there is a problem with the spare tire. When the flat tire is taken out of the vehicle for repair, the TPMS indicator will come on because the system is no longer receiving the signal from the tire's transmitter.**

Memorizing a Sensor ID Automatically

After rotating the tires or replacing a tire pressure sensor, drive the vehicle for at least 40 seconds at a speed of 15 mph (24 km/h) or more, and all the sensor IDs will be memorized automatically.

NOTE: **When replacing the TPMS control unit, use the HDS to memorize IDs. After the IDs are memorized, reduce the pressure in all four tires to less than the appropriate specification, and check to see that the four tire indicators come on.**

Memorizing a Sensor ID with the HDS

NOTE: **To ensure the control unit memorizes the correct ID, the vehicle with the new sensor must be at least 3 m (10 ft) from any other TPMS pressure sensor not installed on that vehicle.**

The HDS can memorize the ID of a new tire pressure sensor or a previously memorized ID.

1. With the ignition switch OFF, connect the HDS to the data link connector (DLC) located under the left side of the dashboard.
2. Turn the ignition switch ON (II), and memorize the ID of the tire pressure sensor by following the screen prompts on the HDS.

NOTE:

- **See the HDS Help menu for specific instructions.**
- **When replacing the TPMS control unit, use the HDS to memorize IDs.**
- **After the IDs are memorized, reduce the pressure in all four tires to less than the appropriate specification, and check to see that the four**

GETtheMANUALS.org

tire indicators come on.an indirect TPMS that doesnt use tire pressure sensors mounted inside the tires. It uses the existing VSA wheel speed sensors to monitor and compare tire characteristics while driving.

TPMS RESET - PROCEDURE 3

This vehicle is equipped with an indirect TPMS that doesnt use tire pressure sensors mounted inside the tires. It uses the existing VSA wheel speed sensors to monitor and compare tire characteristics while driving.

TPMS calibration is required after performing any of the following actions:

- Adjusting tire pressures
- Rotating the tires
- Replacing the tire(s)
- Updating/replacing the VSA modulator-control unit

Calibration begins when TPMS switch is pressed or Calibration is selected through the Multi-information display (MID). The process finishes automatically as the customer drives the vehicle. This takes about 30 minutes of cumulative driving at 30 to 60 mph.

Calibration - Models Without Multi-Information Display (MID)

1. Make sure the tires are inflated to the specified tire pressure listed on the doorjamb label. Vehicle must be stopped with the transmission in neutral (M/T) or P or N (A/T, CVT).
2. Turn the ignition switch to ON (II), or press the engine start/stop button to select the ON mode.
3. Press the TPMS switch (lower dash, left of steering wheel) for 3 seconds.
4. When the calibration successfully begins, the TPMS indicator (instrument cluster, center left) blinks twice.
5. Calibration is completed after driving 31 to 62 mph (50 to 100 km/h), steadily without much acceleration or deceleration for about 30 minutes.

Calibration - Models With Multi-Information Display (MID)

1. Make sure the tires are inflated to the specified tire pressure listed on the doorjamb label. Vehicle must be stopped with the transmission in neutral (M/T) or P or N (A/T, CVT).
2. Turn the ignition switch to ON (II), or press the engine start/stop button to select the ON mode.
3. Use ARROW buttons (right side of steering wheel) to select VEHICLE SETTINGS, then press the SEL/RESET button. TPMS CALIBRATION appears on the display.
4. Press the SEL/RESET button. The display switches to the customization setup screen, where you can select CANCEL or CALIBRATE.
5. Use ARROW buttons to select CALIBRATE, then press the SEL/RESET button. CALIBRATION STARTED screen appears, then the display returns to the customization menu screen

GETtheMANUALS.org

NOTE: **If the CALIBRATION FAILED TO START message appears, repeat steps 4 and 5.**

6. Calibration is completed after driving 31 to 62 mph (50 to 100 km/h), steadily without much acceleration or deceleration for about 30 minutes.

TPMS RESET - PROCEDURE 4

NOTE: **Make sure the tire pressure is properly adjusted to the specified tire pressure listed on the doorjamb label before doing the TPMS calibration.**

Do the TPMS calibration after doing the following items:

- Adjust the tire pressure
- Rotating the tires
- Replacing the tire(s)
- Update/replace the VSA modulator-control unit

The calibration begins when the calibration is selected through the MID (multi-information display). The calibration is completed after driving in an ideal driving condition (28 to 65 mph (45 to 105 km/h), driving steadily without much acceleration or deceleration) for about 18 minutes. Full functionality of the system cannot be performed properly if the calibration is not completed.

1. Turn the ignition switch to ON (II), or the engine start/stop button is pressed to select the ON mode.

NOTE: **Vehicle must be stopped with the transmission in neutral (M/T) or P or N (A/T and CVT).**

2. Press the MENU button (left side of steering wheel) to enter the customizing mode.
3. Press the AUDIO REMOTE + or - button to select CUSTOMIZE SETTINGS > TPMS CALIBRATION > INITIALISE.
4. Press the AUDIO REMOTE + or - button to select YES.
5. When the calibration successfully begins, "TPMS CALIBRATION HAS BEEN INITIALIZED" gets displayed on MID when the system received the calibration.

NOTE: **If the calibration does not begin successfully, "UNABLE TO INITIALIZE TPMS CALIBRATION" gets displayed on MID. Troubleshoot the TPMS.**

GETtheMANUALS.org

LUBRICANTS AND FLUIDS

Application	Lubricant or Fluid
Engine	Honda Motor Oil: 0W-20 Look for the API certification seal on the oil container. Make sure it says "For Gasoline Engines." SAE Viscosity: See chart.
Automatic transmission	Honda Automatic Transmission Fluid (ATF DW-1) Always use Honda ATF DW-1. Using a non-Honda ATF can affect shift quality.
Rear differential (AWD models)	Honda Dual Pump Fluid II
Brake system (including VSA lines)	Honda DOT 3 Brake Fluid: Always use Honda DOT 3 Brake Fluid. Using a non-Honda brake fluid can cause corrosion and decrease the life of the system.
Cooling system	Always use Honda Long Life Antifreeze/Coolant Type 2 **NOTE:** **For prolonged cold temperatures below -22°F (-30°C), add Honda Extreme Cold Weather Antifreeze/Coolant Type 2 (concentrate)**

API CERTIFICATION SEAL

Fig. 1: Identifying API Certification Seal
Courtesy of AMERICAN HONDA MOTOR CO., INC.

GETtheMANUALS.org

Recommended Engine oil
Engine oil viscosity for ambient temperature ranges.

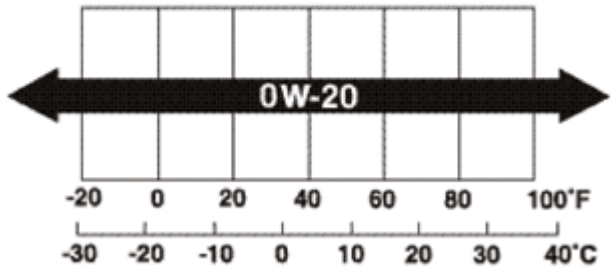

Fig. 2: Engine Oil Viscosity Chart
Courtesy of AMERICAN HONDA MOTOR CO., INC.

For the details of the lubrication points and the type of lubricants to be applied, refer to the illustrated index and the various work procedures (such as Assembly/Reassembly, Replacement, Overhaul, Installation, etc.) contained in each section.

Application		Lubricant or Fluid
A	Brake booster clevis pin	Multipurpose grease
B	Battery terminals	
C	Fuel fill door	
D	Hood hinges and hood latch	
E	Tailgate hinges	
F	Caliper piston boots and caliper piston seals	Honda silicone grease: P/N 08C30-B0234M
G	Caliper pins and caliper pin boots	Honda caliper grease: P/N 08C30-B0224M
H	Parking brake shoe linkage (drum in disc)	Molykote 44MA Grease
I	Air conditioning compressor	Compressor Oil: SP-10 (P/N 38897-P13-A01AH) for refrigerant HFC-134a (R-134a)

NOTE:

- **Lubricate the following areas using the recommended lubricants and fluids.**
- **In corrosive areas, more frequent lubrication is necessary.**

GETtheMANUALS.org

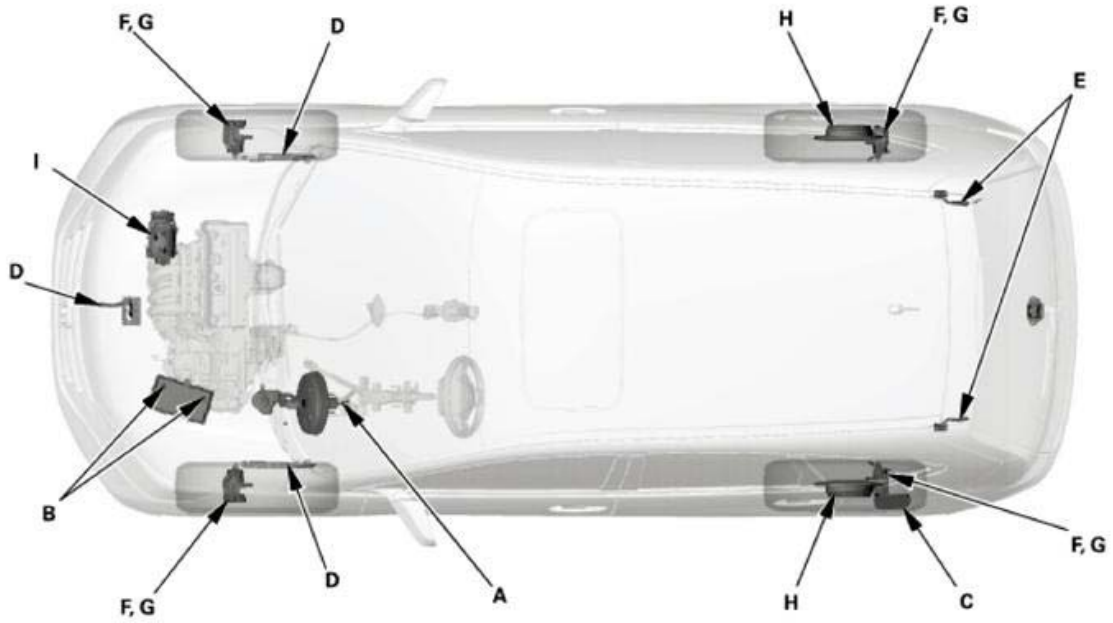

Fig. 3: Identifying Lubricant Applying Area
Courtesy of AMERICAN HONDA MOTOR CO., INC.

MAINTENANCE MINDER™ GENERAL INFORMATION

MAINTENANCE MINDER

The Maintenance Minder is an important feature of the information display. Based on engine and transmission operating conditions, and accumulated engine revolutions, the CR-V's onboard computer (PCM) calculates the remaining engine oil and the transmission fluid life. The system also displays the remaining engine oil life along with the code(s) for other scheduled maintenance items needing service.

Dashboard

GETtheMANUALS.org

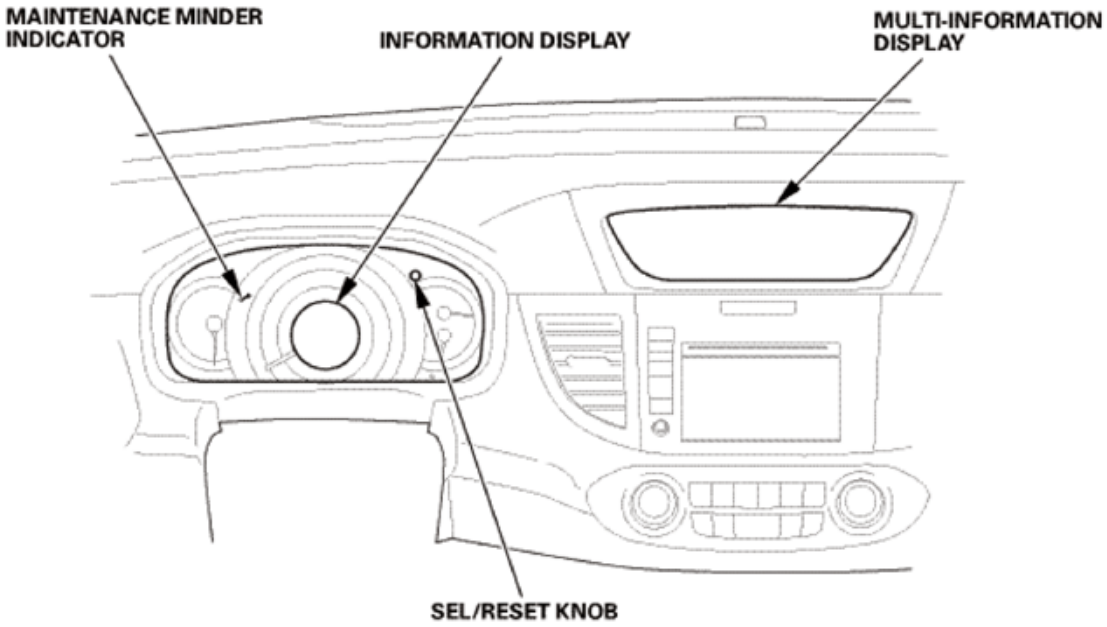

Fig. 4: Identifying Maintenance Minder Indicator, Information Display, Multi-Information Display And SEL/Reset Knob (Dashboard)
Courtesy of AMERICAN HONDA MOTOR CO., INC.

Steering Wheel

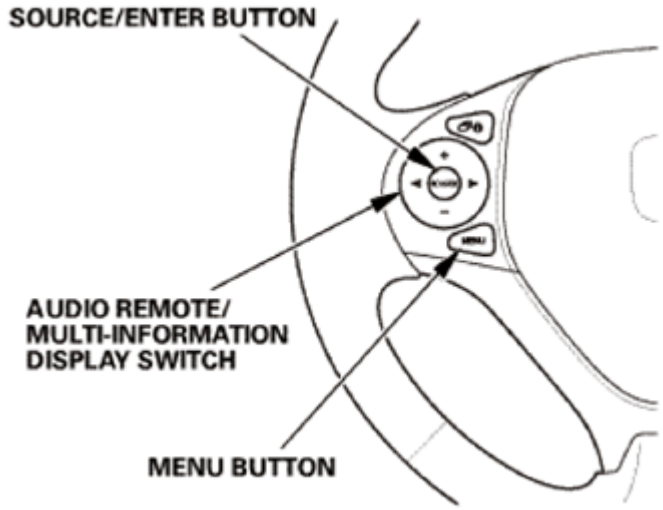

Fig. 5: Identifying Source/Enter Button, Audio Remote/Multi-Information Display Switch And Menu Button
Courtesy of AMERICAN HONDA MOTOR CO., INC.

Service Information (information display)

1. The remaining engine oil life (A) is shown as a percentage on the information display. To see the current engine oil life, turn the ignition switch to ON (II), then push and release the SEL/RESET knob repeatedly until the engine oil life displays.

GETtheMANUALS.org

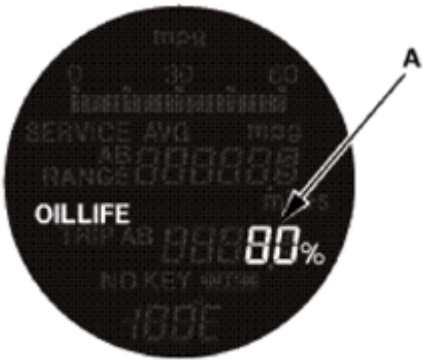

Fig. 6: Display - Remaining Engine Oil Life
Courtesy of AMERICAN HONDA MOTOR CO., INC.

2. When the ignition switch is ON (II), and the remaining engine oil life is 15 % to 6 %, the remaining engine oil life (A) and other scheduled maintenance item(s) needing service are displayed. The Maintenance Minder indicator (B) also comes on when the engine oil life is 15 % or less.

   To cancel the display and the indicator, press the SEL/RESET knob.

   - COMPLETE LIST OF MAINTENANCE MAIN ITEMS (C) .
   - **Complete list of maintenance sub items (D)** See **MAINTENANCE MINDER™ MAINTENANCE MAIN ITEMS** or **MAINTENANCE MINDER™ MAINTENANCE SUB ITEMS**.

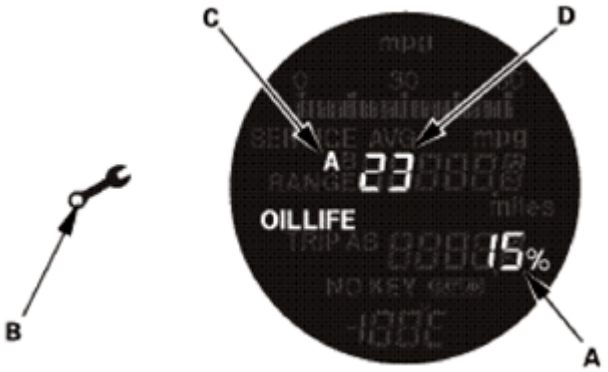

Fig. 7: Display - Remaining Engine Oil Life, Maintenance Minder Indicator, Maintenance Main And Sub Items
Courtesy of AMERICAN HONDA MOTOR CO., INC.

3. When the ignition switch is ON (II), and the remaining engine oil life is 5 % to 1 %, the message "SERVICE" (A) is displayed along with engine oil life and the same maintenance item code(s).

GETtheMANUALS.org

Fig. 8: Display - Service Message
Courtesy of AMERICAN HONDA MOTOR CO., INC.

4. When the ignition switch is ON (II), and the remaining engine oil life is 0 %, the engine oil life indicator (A) blinks. Pressing the SEL/RESET knob cancels the display, but the Maintenance Minder indicator stays on.

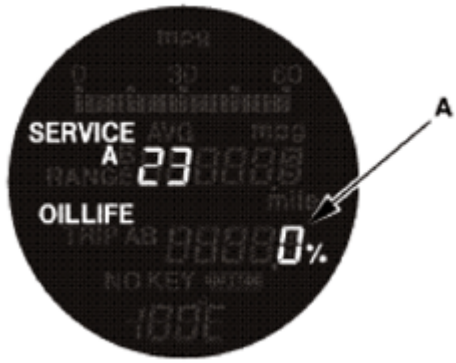

Fig. 9: Display - Engine Oil Life Indicator
Courtesy of AMERICAN HONDA MOTOR CO., INC.

5. If the indicated maintenance is not done, the engine oil life indicator shows a negative distance traveled, for example "-10 miles" on the display.

   If the negative distance traveled is between 0 and -9, the indicator is displayed for only a few seconds when the ignition switch is turned to ON (II). The negative distance traveled (A) remains displayed after the vehicle is driven more than 10 miles (for USA models) or 10 km (for Canada models) after 0 % oil life is reached, and the display cannot be canceled.

   This means the indicated maintenance item(s) should have been done more than 10 miles (or 10 km) ago.

GETtheMANUALS.org

Fig. 10: Display - Engine Oil Life Indicator (Negative Distance)
Courtesy of AMERICAN HONDA MOTOR CO., INC.

SERVICE INFORMATION (MULTI-INFORMATION DISPLAY)

Maintenance items, which should be serviced at the same time that you replace the engine oil (A), appear on the multi-information display. You can view them on the "Maintenance info" screen at any time.

How to access Maintenance Minder

1. Turn the ignition switch to ON (II).
2. Press the MENU button to go to the "Vehicle Menu" screen.
3. Select "Vehicle Information" with the Audio Remote/Multi-Information Display Switch, then press the Source/Enter Button.
4. Press the Source/Enter Button again to go to the "Maintenance info" screen. The maintenance item(s) appears on the Maintenance Minder.

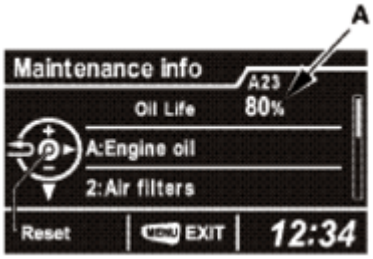

Fig. 11: Display - Maintenance Info Screen
Courtesy of AMERICAN HONDA MOTOR CO., INC.

RESETTING THE MAINTENANCE MINDER

NOTE:

- **The vehicle must be stopped to reset the Maintenance Minder.**
- **If a required service is done and the Maintenance Minder is not reset, or if the Maintenance Minder is reset without doing the service, the system will not show the proper maintenance timing. This can lead to serious mechanical problems because there will be no accurate record of when**

GETtheMANUALS.org

the required maintenance is needed.

- **The engine oil life and the maintenance item(s) can be independently reset with the HDS.**

INFORMATION DISPLAY

1. Turn the ignition switch to ON (II).
2. Push the SEL/RESET knob repeatedly until the engine oil life indicator is displayed.
3. Press and hold the SEL/RESET knob for about 10 seconds. The engine oil life indicator and the maintenance item code(s) will blink, then release the knob.

NOTE: **If you are resetting the Maintenance Minder when the engine oil life is more than 15 %, make sure any maintenance item(s) requiring service are done before resetting the display.**

4. Press and hold the SEL/RESET knob for another 5 seconds. The maintenance item code(s) will disappear, and the engine oil life will reset to "100 %."

Fig. 12: Display - Engine Oil Life Indicator Screen
Courtesy of AMERICAN HONDA MOTOR CO., INC.

MULTI-INFORMATION DISPLAY

1. Turn the ignition switch to ON (II).
2. Refer to the **HOW TO ACCESS MAINTENANCE MINDER** procedure, and go to the "Maintenance info" screen, then displaying maintenance item(s).
3. Press the Source/Enter Button to change into maintenance item(s) reset mode.

NOTE:

- **If you are resetting the Maintenance Minder when the engine oil life is more than 15 %, make sure any maintenance item(s) requiring service are done before resetting the display.**
- **To cancel the reset mode, select "NO", then press the Source/Enter Button.**

GETtheMANUALS.org

Fig. 13: Display - Maintenance Info Reset Screen
Courtesy of AMERICAN HONDA MOTOR CO., INC.

4. To reset the Maintenance Minder, select "YES" with the Audio Remote/Multi-Information Display Switch, then press the Source/Enter Button. The displayed maintenance items disappear, and the engine oil life display returns to "100 %." The display will return to the Maintenance Minder, and you will see any maintenance items that are necessary for your vehicle at the next maintenance service will appear.

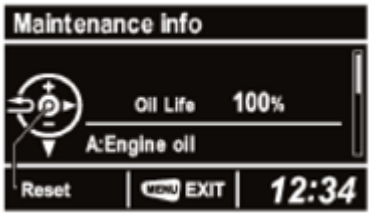

Fig. 14: Display - Engine Oil Life Indicator Screen
Courtesy of AMERICAN HONDA MOTOR CO., INC.

RESETTING INDIVIDUAL MAINTENANCE ITEM

1. **Connect the Honda Diagnostic System (HDS) to the data link connector (DLC)** See **MAINTENANCE MINDER™ MAINTENANCE MAIN ITEMS** or **MAINTENANCE MINDER™ MAINTENANCE SUB ITEMS**.
2. Turn the ignition switch to ON (II).
3. Make sure the HDS communicates with the vehicle and the powertrain control module (PCM). **If it does not communicate, troubleshoot the DLC circuit** See **PCM REMOVAL AND INSTALLATION** or **PCM UPDATE** .
4. Select GAUGES in the BODY ELECTRICAL with the HDS.
5. Select ADJUSTMENT in the GAUGES with the HDS.
6. Select MAINTENANCE MINDER in the ADJUSTMENT with the HDS.
7. Select RESET in the MAINTENANCE MINDER with the HDS.
8. Select the individual maintenance item you wish to reset with the HDS.

MAINTENANCE MINDER™ MAINTENANCE MAIN ITEMS

If the message "SERVICE" or "SERVICE DUE NOW" does not appear more than 12 months after the display is reset, change the engine oil every year.

GETtheMANUALS.org

NOTE:

- **Inspect idle speed every 160, 000 miles (256, 000 km).**
- **Adjust the valves during services A, B, 1, 2, or 3 if they are noisy.**
- **Replace the brake fluid every 3 years (independent of the maintenance messages in the information display).**

Symbol	Maintenance Main Items
A	**REPLACE ENGINE OIL** ○ Engine oil capacity without oil filter: 3.8 L (4.0 US qt)
B	REPLACE ENGINE OIL AND OIL FILTER ○ Engine oil capacity with oil filter: 4.0 L (4.2 US qt)
	CHECK FRONT AND REAR BRAKES • Check brake pads and disc thickness. Check for damage. • Check calipers for damage, leaks, and tightness. • Check parking brake linings for cracking, glazing, wear, and for oil or grease contamination.
	CHECK PARKING BRAKE ADJUSTMENT ○ Check number of clicks (5 to 6) when parking brake pedal is pressed with 294 N (30.0 kgf, 66.1 lbf) of force.
	Inspect tie-rod ends, steering gearbox, and gearbox boots See **PARKING BRAKE INSPECTION** or **PARKING BRAKE INSPECTION AND ADJUSTMENT** • Check steering linkage. • Check boots for damage and leaking grease.
	INSPECT SUSPENSION COMPONENTS • Check bolts for tightness. • Check condition of ball joint boots for deterioration and damage.
	INSPECT DRIVESHAFT BOOTS ○ Check boots for cracks and boot bands for tightness.
	INSPECT BRAKE HOSES AND LINES INCLUDING VSA LINES ○ Check master cylinder and VSA modulator-control unit for damage or leakage.
	Inspect all fluid levels and condition of fluids • **ENGINE COOLANT** • AUTOMATIC TRANSMISSION FLUID • **Rear Differential Fluid Inspection** • **BRAKE FLUID**

GETtheMANUALS.org

	• Windshield washer fluid
	INSPECT EXHAUST SYSTEM * ○ Check catalytic converter heat shields, exhaust pipes, and mufflers for damaged, leaks, and tightness.
	INSPECT FUEL LINES and CONNECTIONS * ○ Check for loose connections, cracks, and deterioration; retighten loose connections and replace damaged parts.

NOTE: **According to state and federal regulations, failure to do the maintenance items marked with an asterisk (*) will not void the customer's emissions warranties. However, Honda recommends that all maintenance services be done at the recommended interval, to ensure long-term reliability.**

MAINTENANCE MINDER™ MAINTENANCE SUB ITEMS

Number	Maintenance Sub Items
1	Rotate tires, and check tire inflation and condition ○ Follow the pattern shown in the Owner's Manual.
2	REPLACE AIR CLEANER ELEMENT ○ If the vehicle is driven primarily in dusty conditions, replace every 15, 000 miles (24, 000 km).
	REPLACE DUST AND POLLEN FILTER ○ If the vehicle is driven mostly in areas that have high concentrations of dust, pollen, or soot in the air, replace every 15, 000 miles (24, 000 km). ○ Replace filter whenever airflow from the heating and air conditioning system is less than normal.
	INSPECT DRIVE BELT ○ Look for cracks and damage, then check the position of drive belt auto-tensioner indicator.
3	**REPLACE AUTOMATIC TRANSMISSION FLUID** • Use Honda ATF DW-1. • Automatic transmission fluid capacity: ○ 2WD models: 2.2 L (2.3 US qt) ○ AWD models: 2.6 L (2.7 US qt) • If you tow a CR-V behind a motor home, transmission fluid must be changed every 2 years or 30, 000 miles (48, 000 km), whichever comes first.

GETtheMANUALS.org

4	**REPLACE SPARK PLUGS** ○ Use ILZKR7B-11S (NGK) or SXU22HCR11S (DENSO).
	INSPECT VALVE CLEARANCE (COLD) • Intake: 0.21-0.25 mm (0.009-0.009 in) • Exhaust: 0.25-0.29 mm (0.010-0.011 in)
5	**Replace engine coolant** See VALVE CLEARANCE ADJUSTMENT or VALVE, SPRING, AND VALVE SEAL REMOVAL AND INSTALLATION • Use Honda Long Life Antifreeze/Coolant Type 2, and if necessary, add Honda Extreme Cold Weather Antifreeze/Coolant Type 2 (concentrate) as need for prolong cold temperatures below -22°F (-30°C). • Capacity (including reservoir): 6.23 L (1.646 US gal)
6	REPLACE REAR DIFFERENTIAL FLUID (AWD MODELS) • Use Honda Dual Pump Fluid II. • Capacity: 1.2 L (1.3 US qt)

GETtheMANUALS.org

AUTOMATIC DIMMING INSIDE MIRROR MECHANICAL COMPONENT LOCATION INDEX

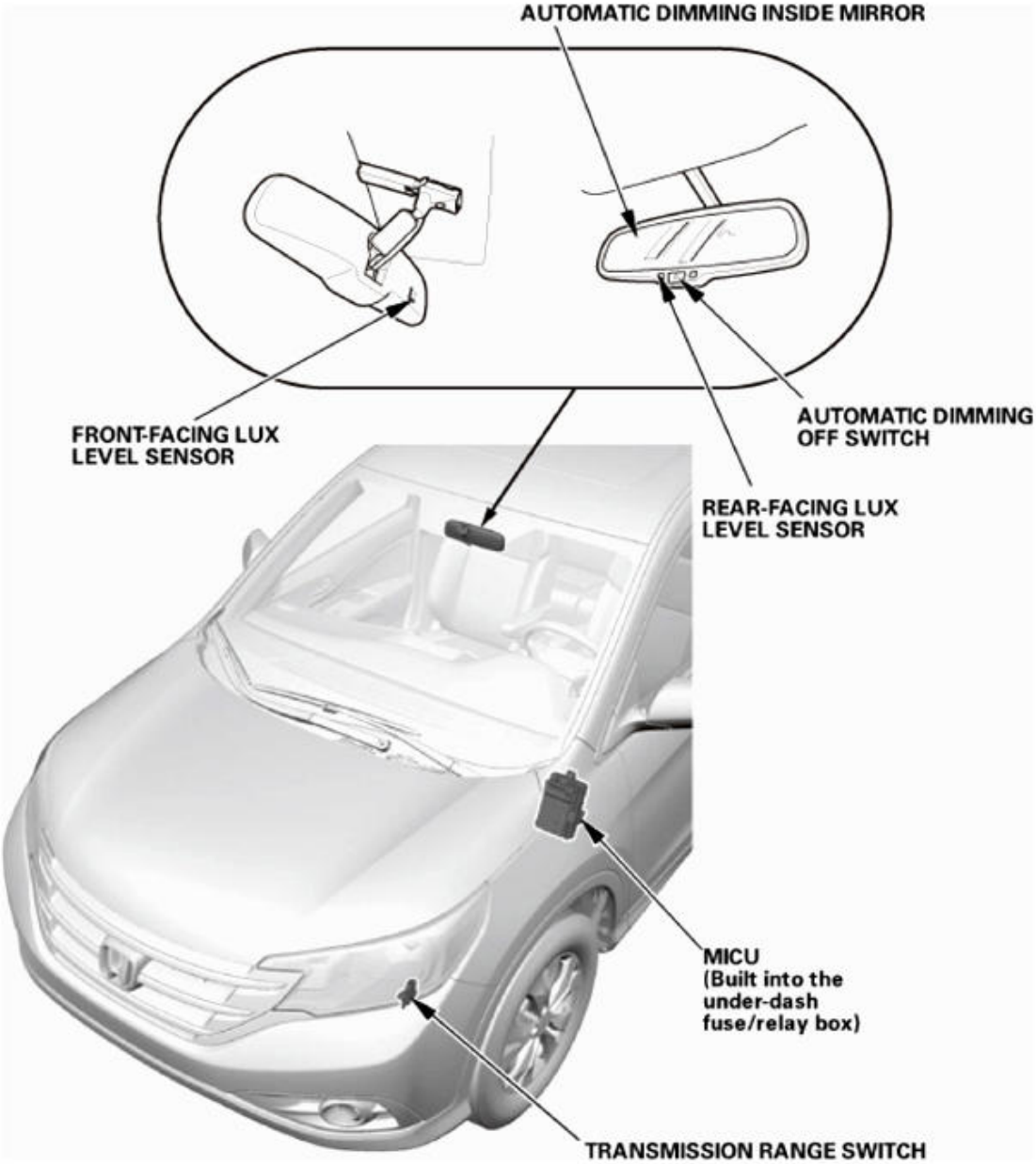

Fig. 1: Automatic Dimming Inside Mirror Mechanical Components Location
Courtesy of AMERICAN HONDA MOTOR CO., INC.

Automatic Dimming Inside Mirror	**Rearview Mirror Removal and Installation**

GETtheMANUALS.org

MIRROR HOLDER REMOVAL AND INSTALLATION

REMOVAL

1. Mirror Holder
    1. Carefully push on the top edge of the mirror holder (A) by hand.
    2. Release the bottom hooks (B) with a flat-tip screwdriver.

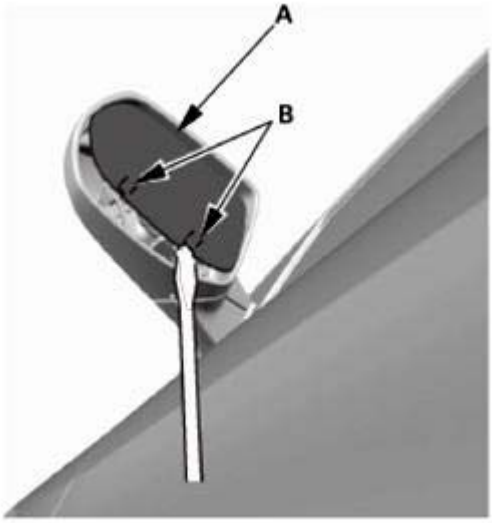

Fig. 2: Removing Bottom Hooks Using Flat-Tip Screwdriver
Courtesy of AMERICAN HONDA MOTOR CO., INC.

3. Apply heat with a heat gun to the gap between the mirror holder (A) and the mirror housing (B). Carefully pull out the bottom edge of the mirror holder to separate the adhesive (C).

NOTE: Do not heat the plastic parts too much or you may damage them.

4. Separate the mirror holder from the actuator (D) by releasing the hooks (E). If equipped, disconnect the mirror defogger connectors (F) from the heater pad terminal.

GETtheMANUALS.org

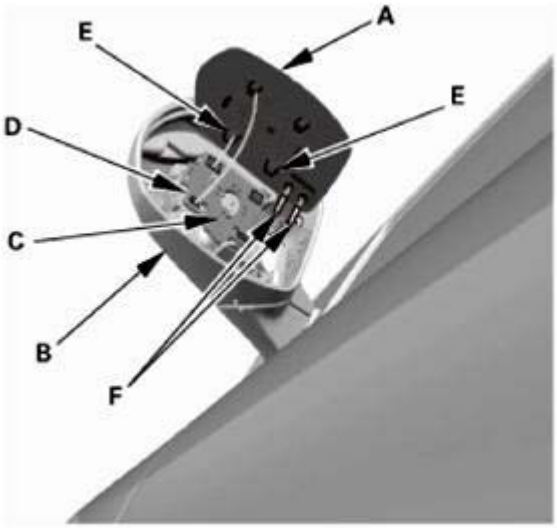

Fig. 3: Identifying Mirror Housing, Mirror Holder, Actuator, Mirror Defogger Connectors
Courtesy of AMERICAN HONDA MOTOR CO., INC.

INSTALLATION

1. Mirror Holder
    1. Before reinstalling the mirror holder to the inner holder (A) of the actuator, check the actuator rods (B) and the actuator boots (C).

NOTE: **Make sure each actuator rod is inserted into the actuator securely, and each actuator boot is fully seated on the actuator.**

GETtheMANUALS.org

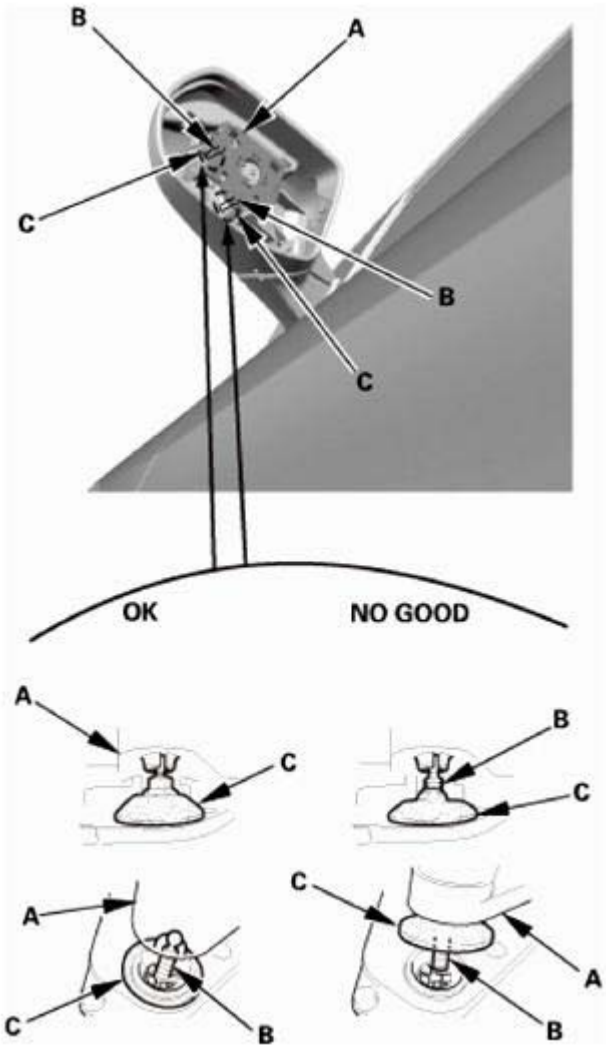

Fig. 4: Identifying Proper And Improper Mirror Holder
Courtesy of AMERICAN HONDA MOTOR CO., INC.

2. Connect the mirror defogger connectors (A), if equipped.
3. Attach the hooks (B) of the mirror holder (C) to the actuator (D), then position the mirror holder on the actuator. Carefully push on the hooks (E) of the mirror holder until the mirror holder locks into place.
4. Check the actuator operation.

GETtheMANUALS.org

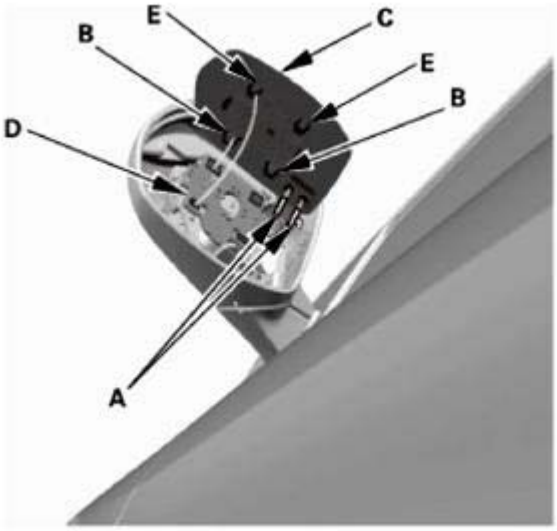

Fig. 5: Identifying Mirror Defogger Connectors, Mirror Holder, Actuator And Hooks
Courtesy of AMERICAN HONDA MOTOR CO., INC.

MIRROR HOUSING COVER REMOVAL AND INSTALLATION

REMOVAL

1. Mirror Holder
    1. Carefully push on the top edge of the mirror holder (A) by hand.
    2. Release the bottom hooks (B) with a flat-tip screwdriver.

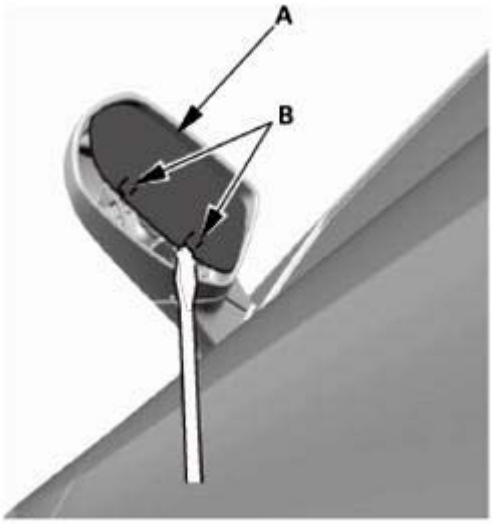

Fig. 6: Removing Bottom Hooks Using Flat-Tip Screwdriver
Courtesy of AMERICAN HONDA MOTOR CO., INC.

3. Apply heat with a heat gun to the gap between the mirror holder (A) and the mirror housing (B).

GETtheMANUALS.org

Carefully pull out the bottom edge of the mirror holder to separate the adhesive (C).

NOTE: Do not heat the plastic parts too much or you may damage them.

4. Separate the mirror holder from the actuator (D) by releasing the hooks (E). If equipped, disconnect the mirror defogger connectors (F) from the heater pad terminal.

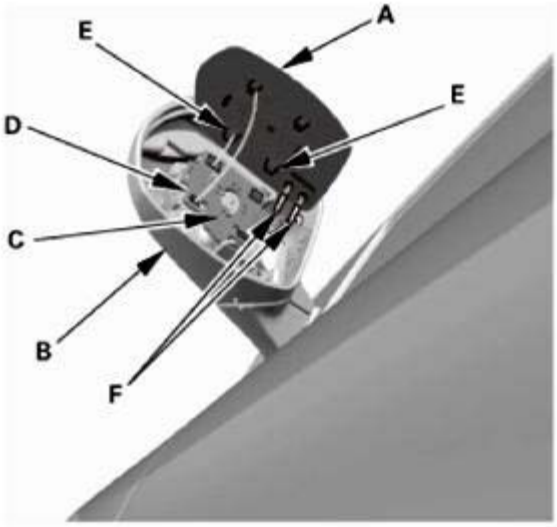

Fig. 7: Identifying Mirror Defogger Connectors, Mirror Holder, Actuator And Hooks
Courtesy of AMERICAN HONDA MOTOR CO., INC.

2. Mirror Housing Cover
   1. Release the hooks (A), then remove the mirror housing cover (B).

Fig. 8: Identifying Mirror Housing Cover And Hooks
Courtesy of AMERICAN HONDA MOTOR CO., INC.

INSTALLATION

GETtheMANUALS.org

1. Mirror Housing Cover
    1. Install the mirror housing cover (A). Make sure the hooks (B) snap into place securely.

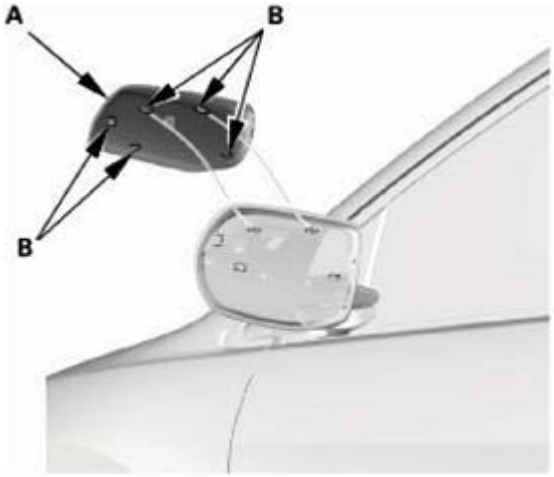

Fig. 9: Identifying Mirror Housing Cover And Hooks
Courtesy of AMERICAN HONDA MOTOR CO., INC.

2. Mirror Holder
    1. Before reinstalling the mirror holder to the inner holder (A) of the actuator, check the actuator rods (B) and the actuator boots (C).

NOTE: **Make sure each actuator rod is inserted into the actuator securely, and each actuator boot is fully seated on the actuator.**

GETtheMANUALS.org

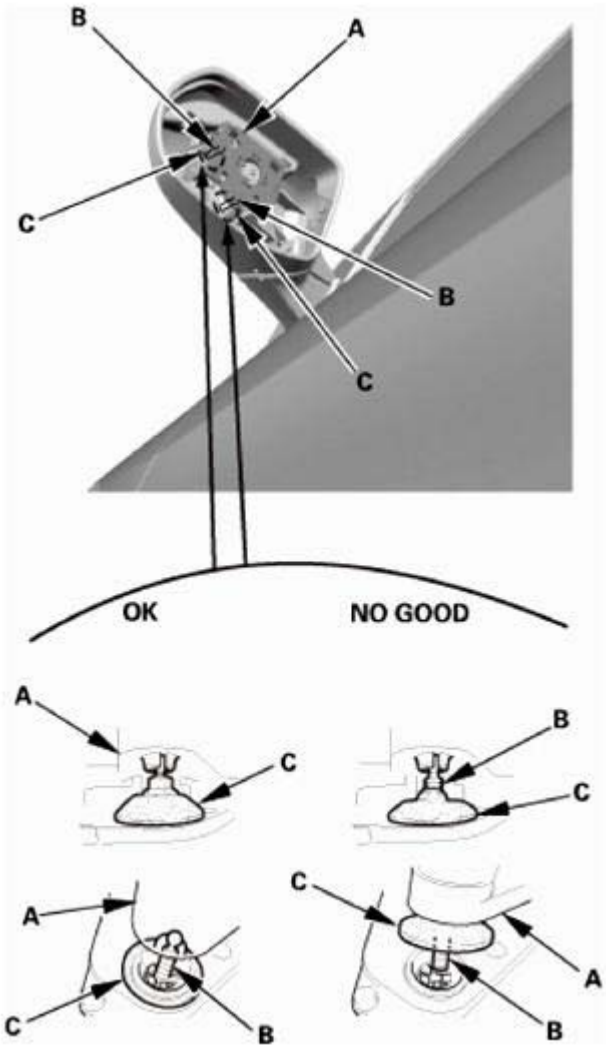

Fig. 10: Identifying Mirror Defogger Connectors, Hooks, Mirror Holder, Actuator
Courtesy of AMERICAN HONDA MOTOR CO., INC.

2. Connect the mirror defogger connectors (A), if equipped.
3. Attach the hooks (B) of the mirror holder (C) to the actuator (D), then position the mirror holder on the actuator. Carefully push on the hooks (E) of the mirror holder until the mirror holder locks into place.
4. Check the actuator operation.

GETtheMANUALS.org

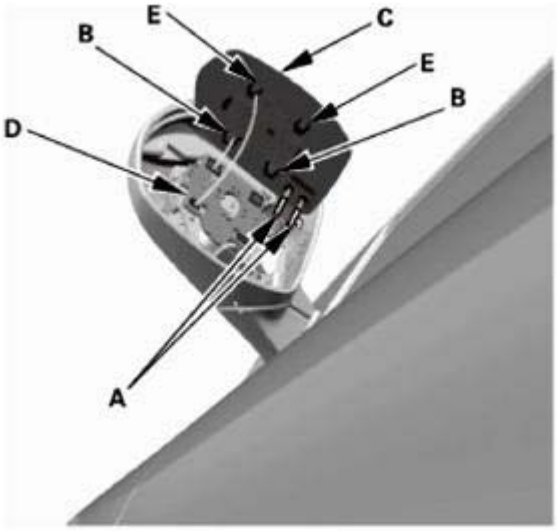

Fig. 11: Identifying Mirror Defogger Connectors, Mirror Holder, Actuator And Hooks
Courtesy of AMERICAN HONDA MOTOR CO., INC.

MIRRORS COMPONENT LOCATION INDEX

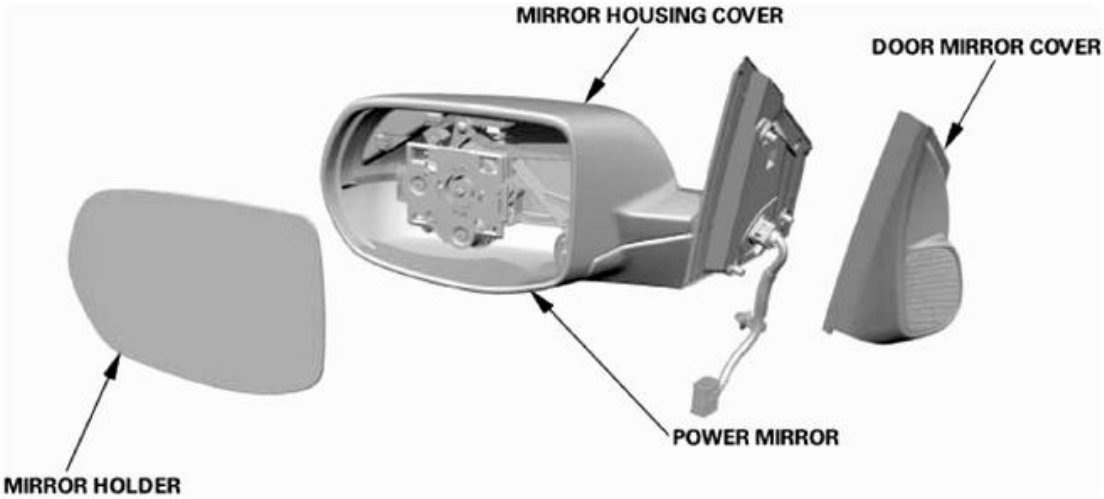

Fig. 12: Mirrors Components Location
Courtesy of AMERICAN HONDA MOTOR CO., INC.

MIRROR HOLDER	**REMOVAL AND INSTALLATION**
MIRROR HOUSING COVER	**REMOVAL AND INSTALLATION**
DOOR MIRROR COVER	**REMOVAL AND INSTALLATION**
POWER MIRROR	**REMOVAL AND INSTALLATION**

Without Auto Diming

GETtheMANUALS.org

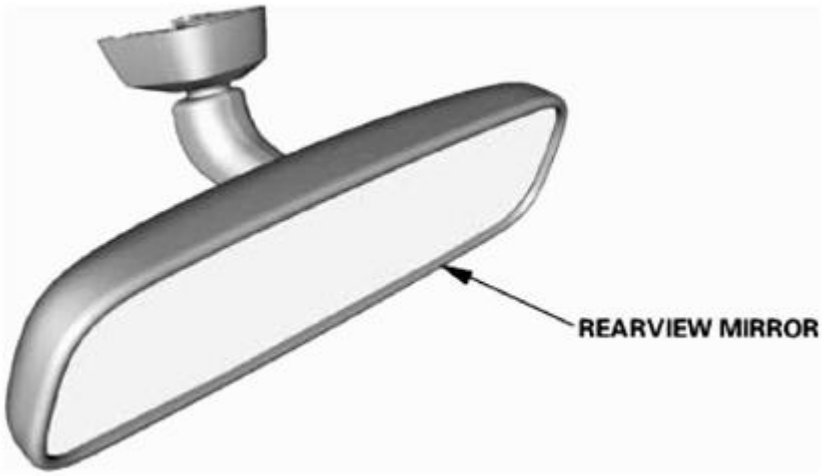

Fig. 13: Identifying Rearview Mirror (Without Auto Diming)
Courtesy of AMERICAN HONDA MOTOR CO., INC.

With Auto Diming

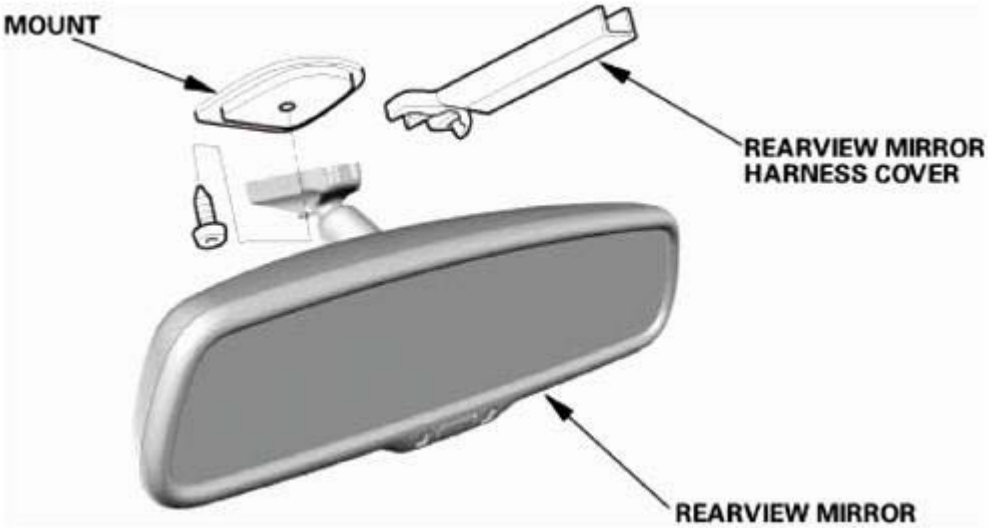

Fig. 14: Identifying Rearview Mirror, Harness Cover And Mount (With Auto Diming)
Courtesy of AMERICAN HONDA MOTOR CO., INC.

REARVIEW MIRROR	**REMOVAL AND INSTALLATION**

POWER MIRROR ACTUATOR TEST

REMOVAL

1. Door Mirror Cover
    1. Carefully pry out the door mirror cover (A) with the appropriate trim tool to detach the clips (B), then remove the door mirror cover.

GETtheMANUALS.org

2. With tweeter: Disconnect the connector (C).

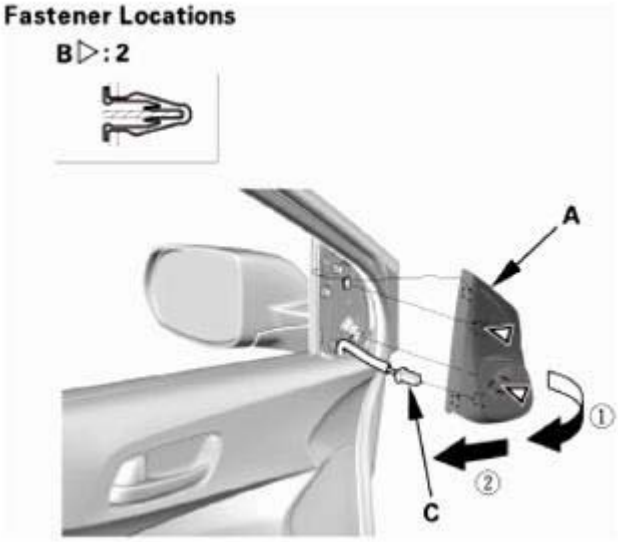

Fig. 15: Removing Door Mirror Cover
Courtesy of AMERICAN HONDA MOTOR CO., INC.

2. Front Door Power Window Switch Panel
    1. Carefully pry out on the notch (A) in the power window switch panel (B) with the appropriate trim tool to detach the clips (C) and the hooks (D). Disconnect the connectors (E), then remove the power window switch panel.

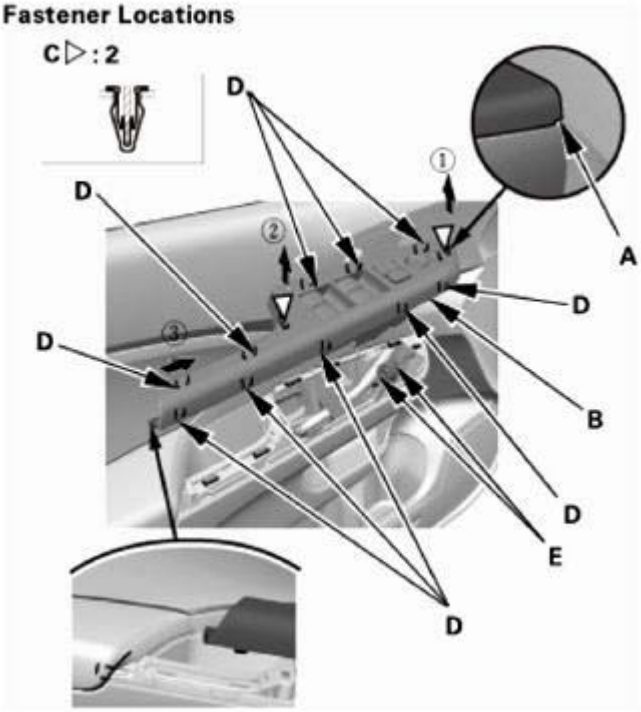

GETtheMANUALS.org

Fig. 16: Identifying Connector, Clips, Hooks And Notch
Courtesy of AMERICAN HONDA MOTOR CO., INC.

3. Front Door Panel
    1. Carefully pry out on the upper hook (A) in the inner handle cap (B) with the appropriate trim tool, then pull back the inner handle cap to remove it.

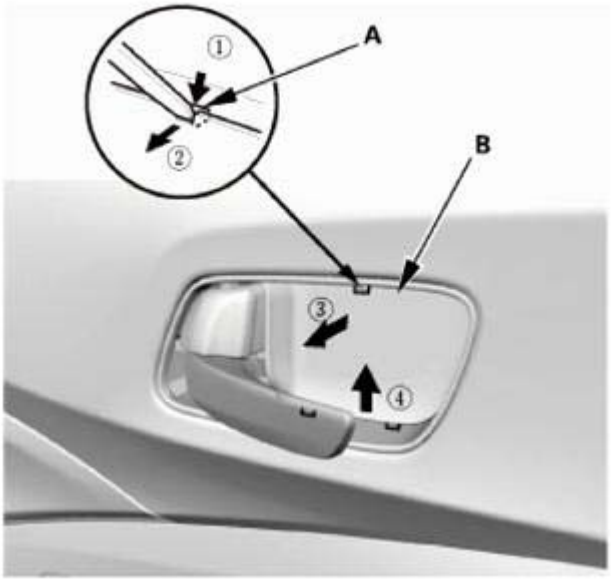

Fig. 17: Removing Inner Handle Cap
Courtesy of AMERICAN HONDA MOTOR CO., INC.

    2. Remove the screws (A) securing the inner handle (B).

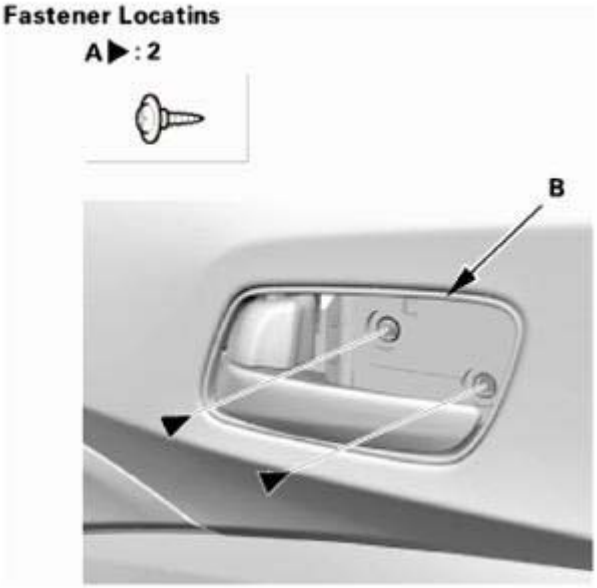

Fig. 18: Identifying Inner Handle And Screws

GETtheMANUALS.org

Courtesy of AMERICAN HONDA MOTOR CO., INC.

3. Remove the pull pocket mat (A), then remove the screw (B).

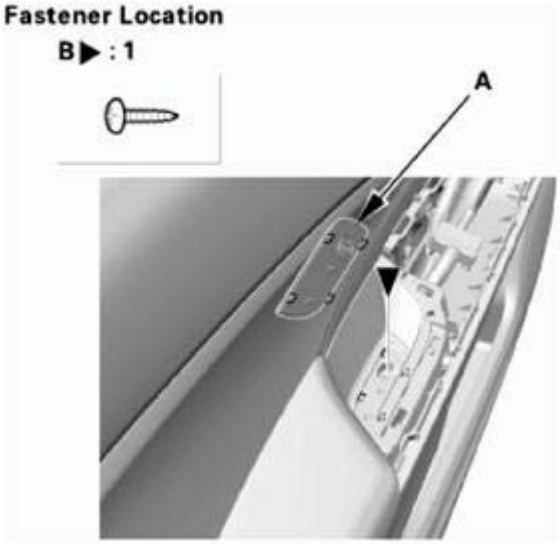

Fig. 19: Identifying Pull Pocket Mat And Screw
Courtesy of AMERICAN HONDA MOTOR CO., INC.

4. Starting at the bottom edge of the door panel (A), detach the clips (B) with a commercially available trim pad remover.
5. Starting at the rear, pull the door panel upward.
6. Remove the inner handle (C) from the door panel, then remove the door panel.

GETtheMANUALS.org

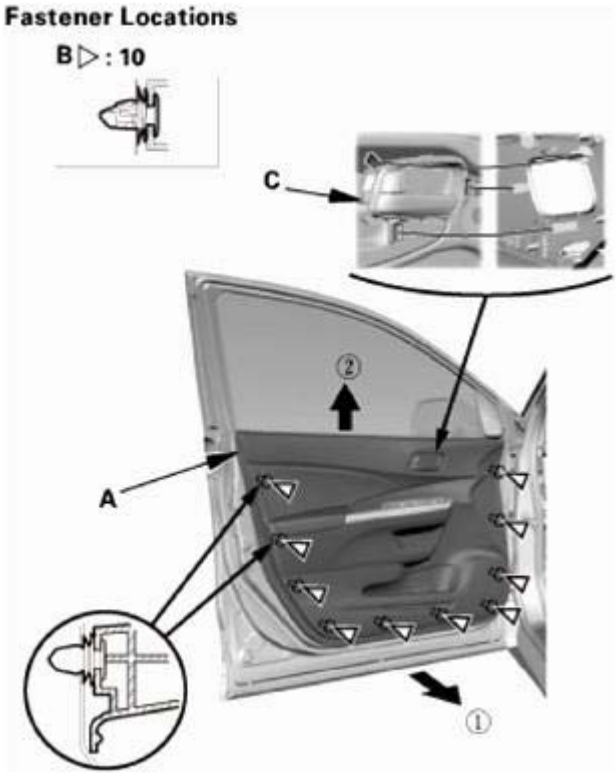

Fig. 20: Removing Door Panel
Courtesy of AMERICAN HONDA MOTOR CO., INC.

TEST

1. Power Mirror Actuator - Test
    1. Disconnect the connector.
    2. Check actuator operation by connecting power and ground according to the table.
    3. If the mirror fails to work properly, the power mirror actuator is faulty; replace the power mirror.

    Defogger Test

    4. Check for continuity between power mirror connector terminals No. 4 and No. 12. There should be continuity. If the resistance is not as specified, check for an open or high resistance in the wire between the connector and mirror holder. If the wire is OK, replace the mirror holder.

GETtheMANUALS.org

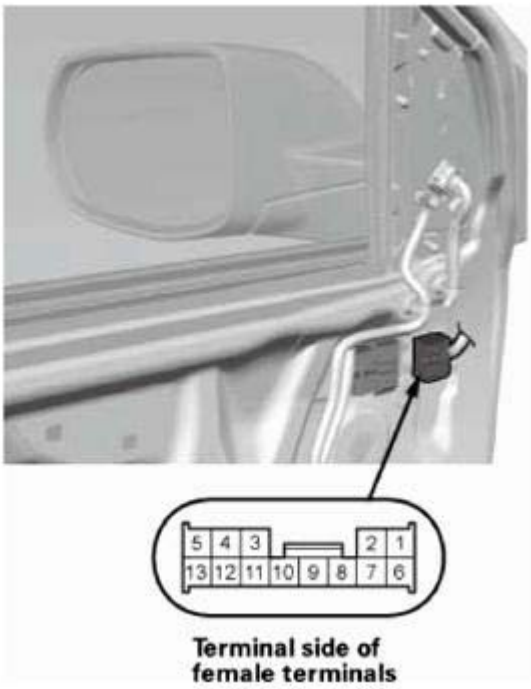

Fig. 21: Identifying Power Mirror Actuator Connector Terminals
Courtesy of AMERICAN HONDA MOTOR CO., INC.

Terminal / Position	6	7	8
TILT UP	⊕	⊖	
TILT DOWN	⊖	⊕	
SWING LEFT		⊕	⊖
SWING RIGHT		⊖	⊕

Fig. 22: Identifying Power Mirror Actuator Connector Condition Chart
Courtesy of AMERICAN HONDA MOTOR CO., INC.

INSTALLATION

1. Front Door Panel
    1. Install the inner handle (A) in the door panel (B).
    2. Install the door panel. Make sure the clips (C) snap into place securely.

GETtheMANUALS.org

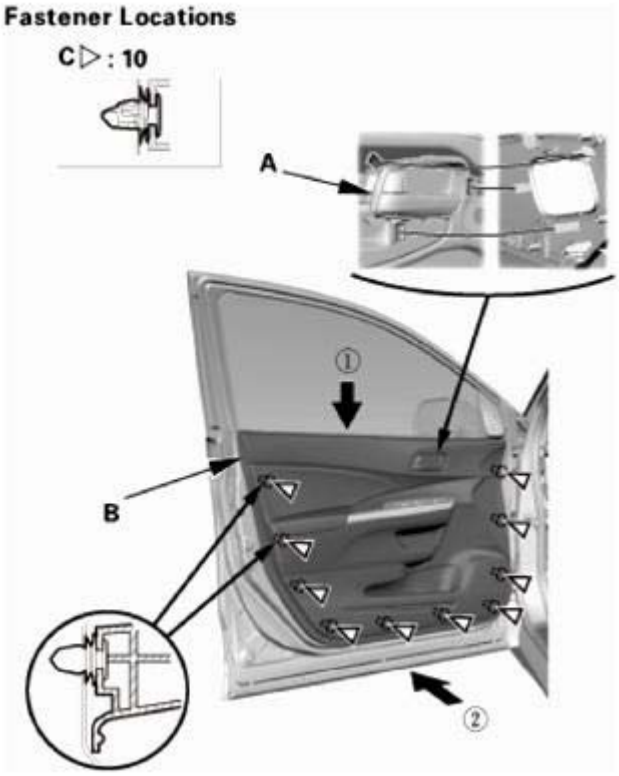

Fig. 23: Installing Door Panel
Courtesy of AMERICAN HONDA MOTOR CO., INC.

3. Install the screw (A), then install the pull pocket mat (B).

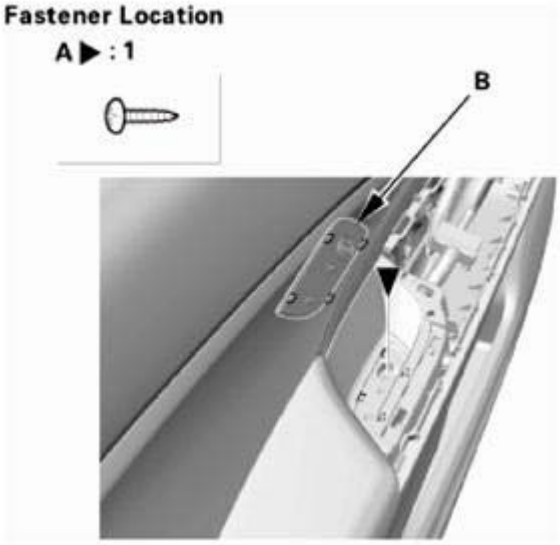

Fig. 24: Identifying Pull Pocket Mat And Screw
Courtesy of AMERICAN HONDA MOTOR CO., INC.

4. Install the screws (A) securing the inner handle (B).

GETtheMANUALS.org

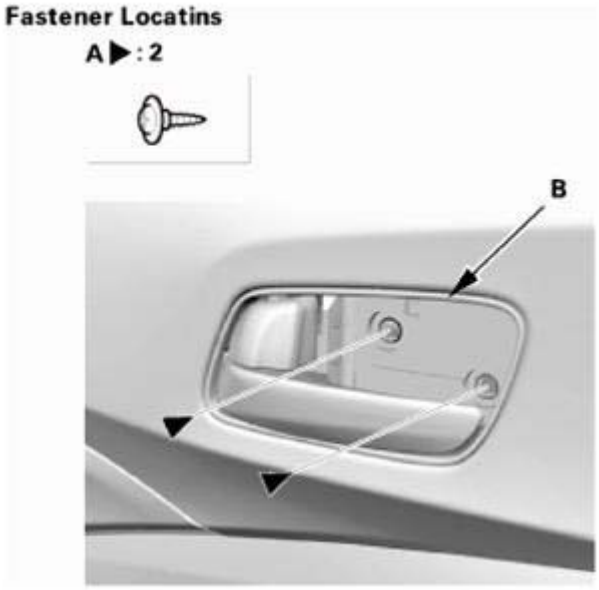

Fig. 25: Identifying Inner Handle And Screws
Courtesy of AMERICAN HONDA MOTOR CO., INC.

5. Install the inner handle cap (A). Make sure the upper hook (B) and the lower hooks (C) snap into place securely.

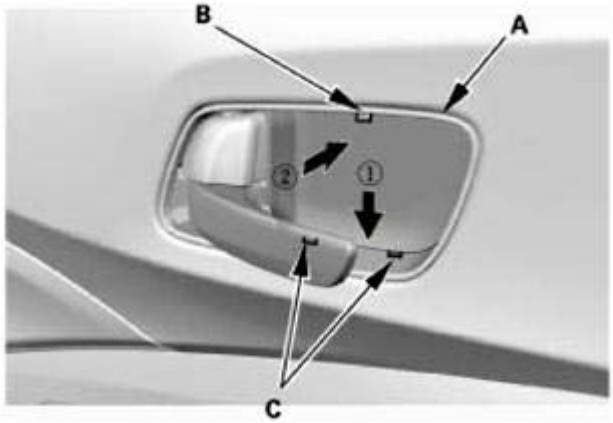

Fig. 26: Installing Inner Handle Cap
Courtesy of AMERICAN HONDA MOTOR CO., INC.

2. Front Door Power Window Switch Panel
    1. Connect the connectors (A), then install the power window switch panel (B). Make sure the clips (C) and the hooks (D) snap into place securely.

GETtheMANUALS.org

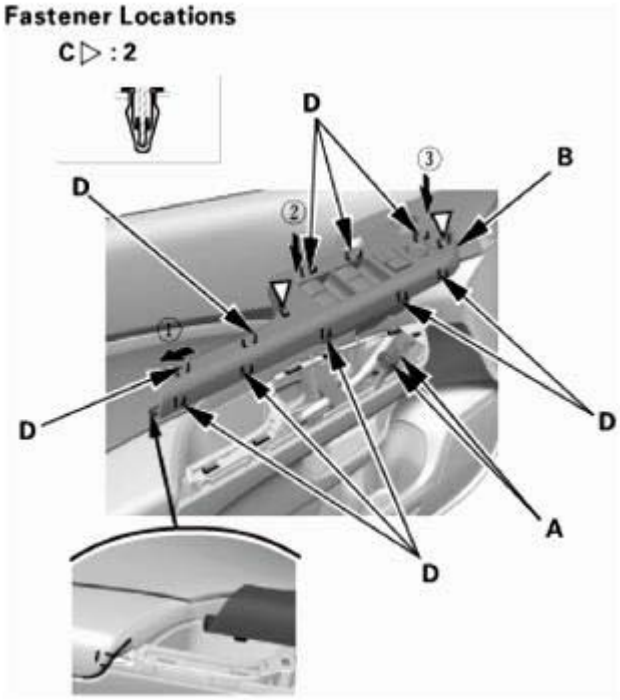

Fig. 27: Identifying Connectors, Power Window Switch Panel, Hooks And Clips
Courtesy of AMERICAN HONDA MOTOR CO., INC.

3. Door Mirror Cover
    1. With tweeter: Connect the connector (A).
    2. Install the door mirror cover (B). Make sure the clips (C) snap into place securely.

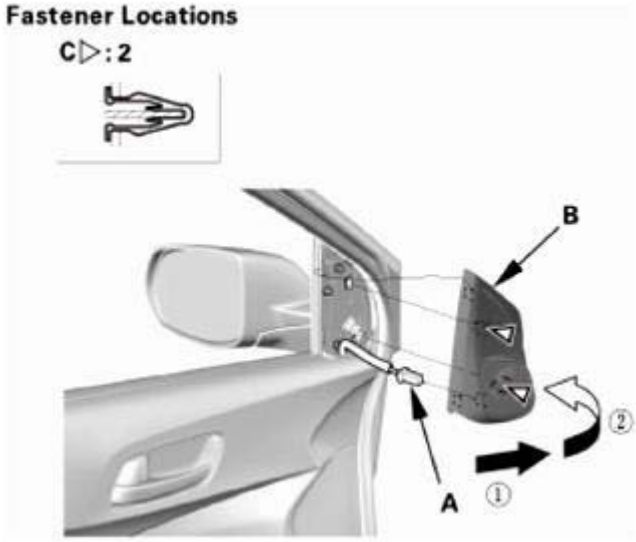

Fig. 28: Installing Door Mirror Cover
Courtesy of AMERICAN HONDA MOTOR CO., INC.

GETtheMANUALS.org

POWER MIRROR REMOVAL AND INSTALLATION

REMOVAL

1. Door Mirror Cover
    1. Carefully pry out the door mirror cover (A) with the appropriate trim tool to detach the clips (B), then remove the door mirror cover.
    2. With tweeter: Disconnect the connector (C).

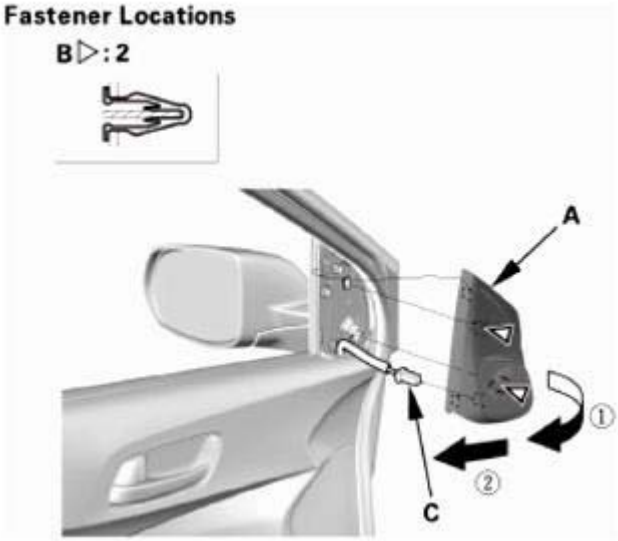

Fig. 29: Removing Door Mirror Cover
Courtesy of AMERICAN HONDA MOTOR CO., INC.

2. Front Door Power Window Switch Panel
    1. Carefully pry out on the notch (A) in the power window switch panel (B) with the appropriate trim tool to detach the clips (C) and the hooks (D). Disconnect the connectors (E), then remove the power window switch panel.

GETtheMANUALS.org

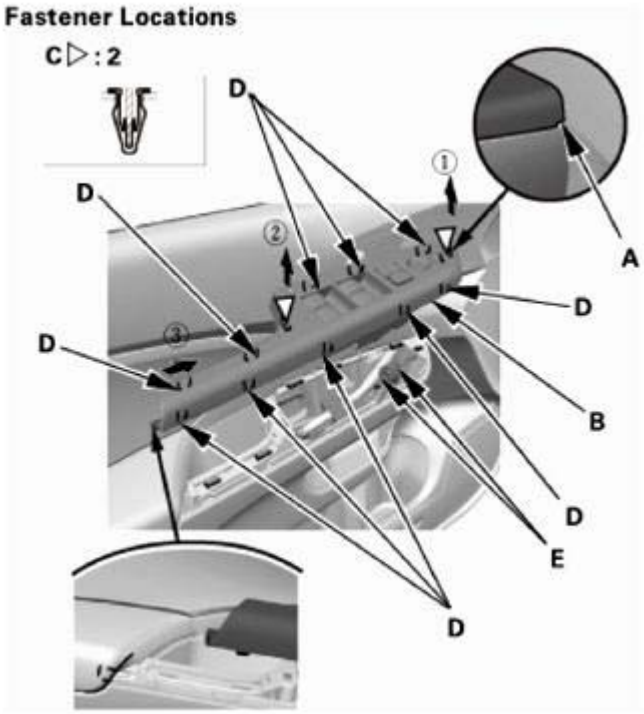

Fig. 30: Identifying Connector, Clips, Hooks And Notch
Courtesy of AMERICAN HONDA MOTOR CO., INC.

3. Front Door Panel
    1. Carefully pry out on the upper hook (A) in the inner handle cap (B) with the appropriate trim tool, then pull back the inner handle cap to remove it.

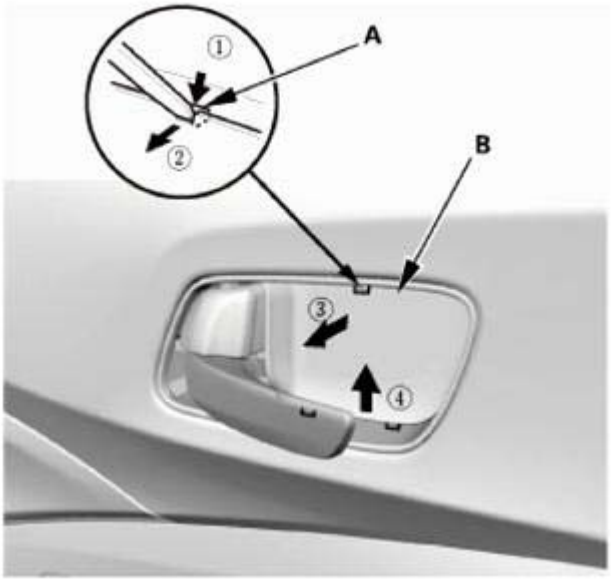

Fig. 31: Prying Out On Upper Hook
Courtesy of AMERICAN HONDA MOTOR CO., INC.

GETtheMANUALS.org

2. Remove the screws (A) securing the inner handle (B).

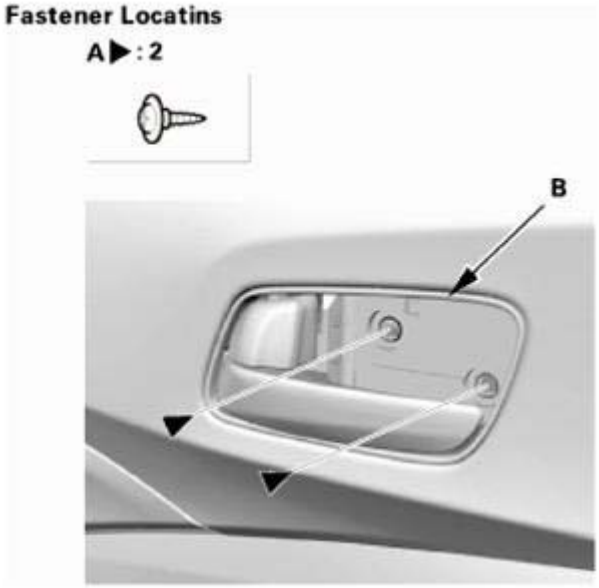

Fig. 32: Identifying Inner Handle And Screws
Courtesy of AMERICAN HONDA MOTOR CO., INC.

3. Remove the pull pocket mat (A), then remove the screw (B).

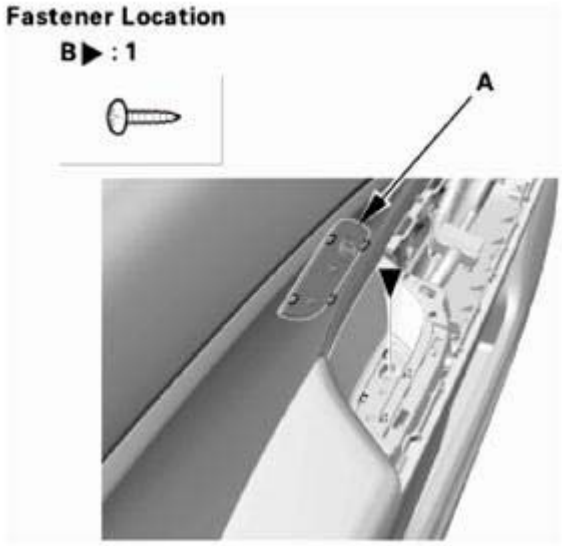

Fig. 33: Identifying Pull Pocket Mat And Screw
Courtesy of AMERICAN HONDA MOTOR CO., INC.

4. Starting at the bottom edge of the door panel (A), detach the clips (B) with a commercially available trim pad remover.
5. Starting at the rear, pull the door panel upward.

GETtheMANUALS.org

6. Remove the inner handle (C) from the door panel, then remove the door panel.

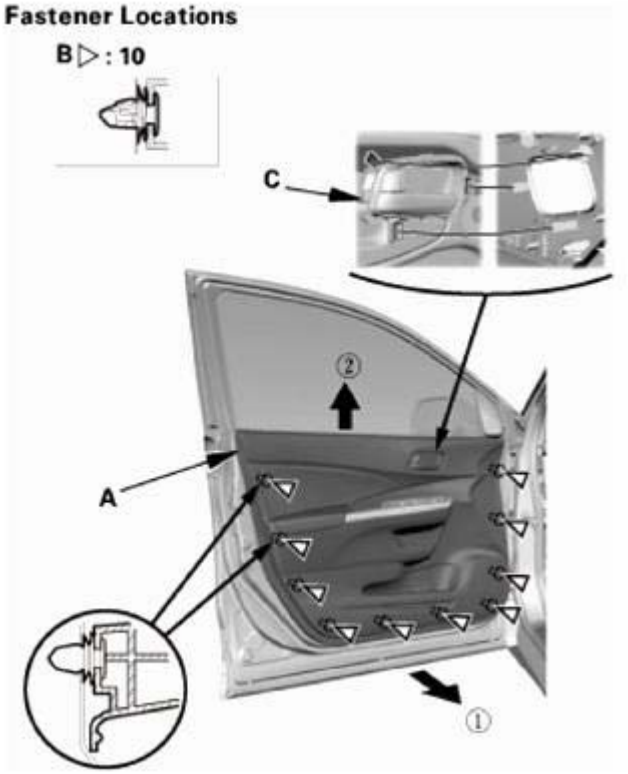

Fig. 34: Removing Door Panel
Courtesy of AMERICAN HONDA MOTOR CO., INC.

4. Door Mirror
    1. Disconnect the connector.
    2. Detach the harness clip (A).
    3. While holding the power mirror (B), remove the nuts (C) securing the mirror.

GETtheMANUALS.org

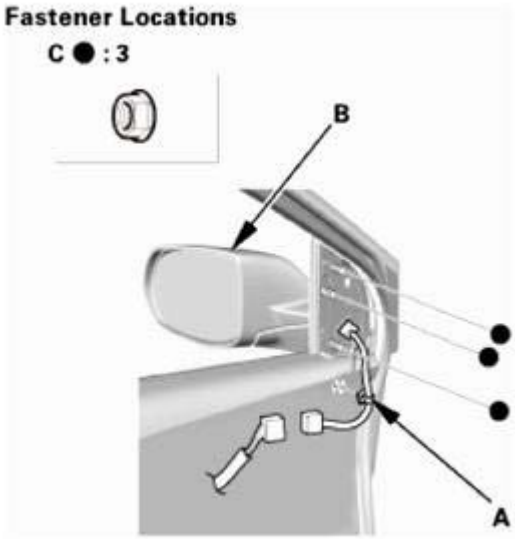

Fig. 35: Identifying Power Mirror, Nuts And Harness Clip
Courtesy of AMERICAN HONDA MOTOR CO., INC.

4. Remove the power mirror (A) and carefully pull out the harness (B).

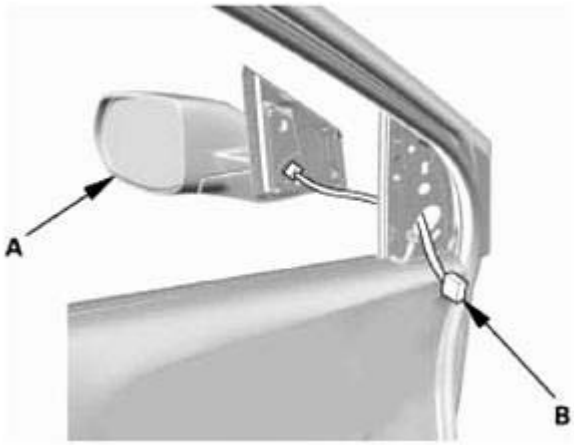

Fig. 36: Identifying Power Mirror And Harness
Courtesy of AMERICAN HONDA MOTOR CO., INC.

INSTALLATION

1. Door Mirror
    1. Insert the harness (A) into the hole in the door, then install the power mirror (B).

GETtheMANUALS.org

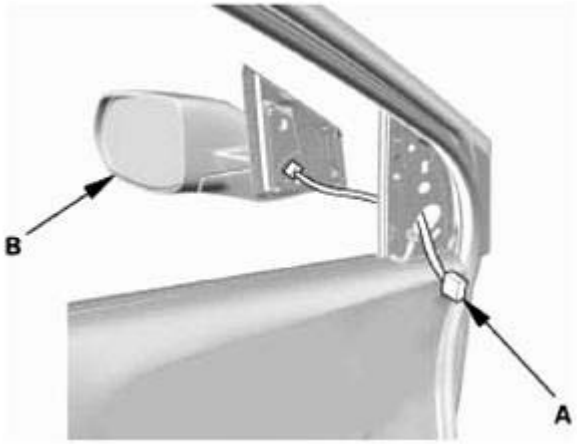

Fig. 37: Identifying Harness And Power Mirror
Courtesy of AMERICAN HONDA MOTOR CO., INC.

2. Install the nuts (A).
3. Attach the harness clip (B).
4. Connect the connector.

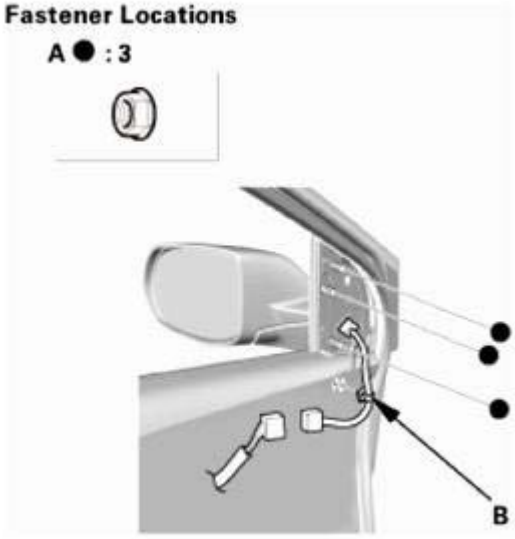

Fig. 38: Identifying Harness Clip And Nuts
Courtesy of AMERICAN HONDA MOTOR CO., INC.

2. Front Door Panel
    1. Install the inner handle (A) in the door panel (B).
    2. Install the door panel. Make sure the clips (C) snap into place securely.

GETtheMANUALS.org

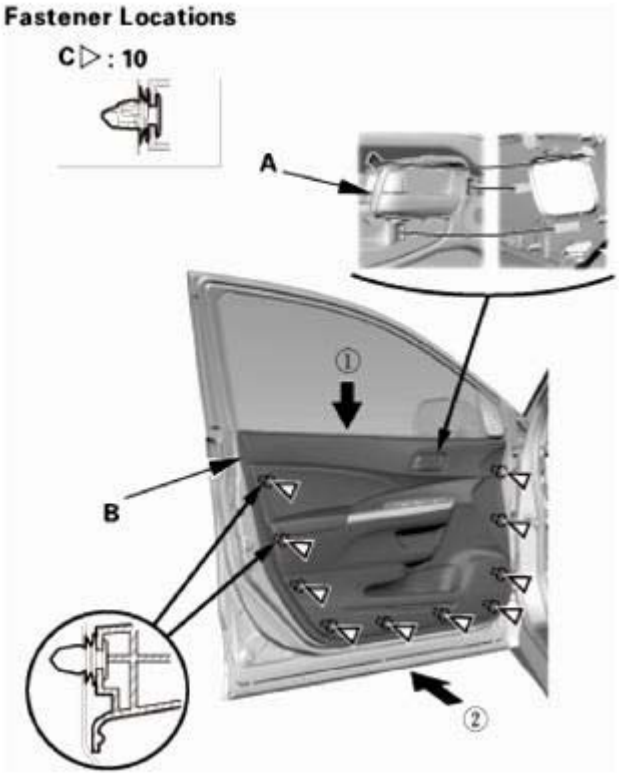

Fig. 39: Installing Door Panel
Courtesy of AMERICAN HONDA MOTOR CO., INC.

3. Install the screw (A), then install the pull pocket mat (B).

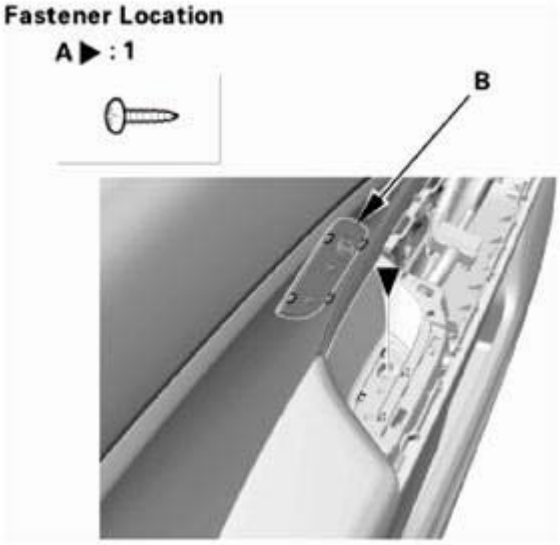

Fig. 40: Identifying Pull Pocket Mat And Screw
Courtesy of AMERICAN HONDA MOTOR CO., INC.

4. Install the screws (A) securing the inner handle (B).

GETtheMANUALS.org

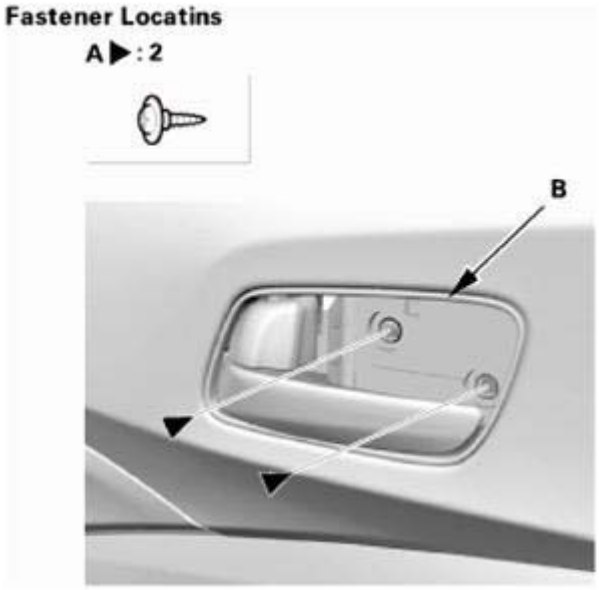

Fig. 41: Identifying Inner Handle And Screws
Courtesy of AMERICAN HONDA MOTOR CO., INC.

5. Install the inner handle cap (A). Make sure the upper hook (B) and the lower hooks (C) snap into place securely.

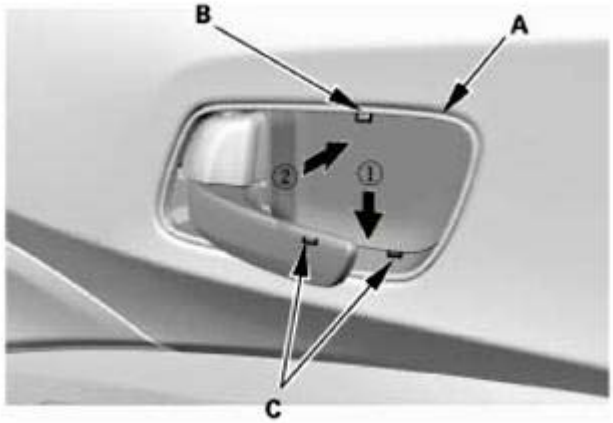

Fig. 42: Installing Inner Handle Cap
Courtesy of AMERICAN HONDA MOTOR CO., INC.

3. Front Door Power Window Switch Panel
    1. Connect the connectors (A), then install the power window switch panel (B). Make sure the clips (C) and the hooks (D) snap into place securely.

GETtheMANUALS.org

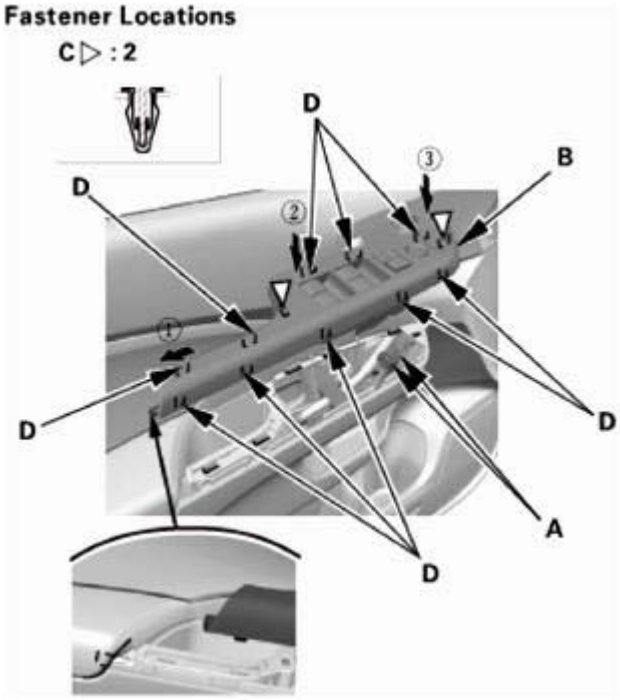

Fig. 43: Installing Power Window Switch Panel
Courtesy of AMERICAN HONDA MOTOR CO., INC.

4. Door Mirror Cover
    1. With tweeter: Connect the connector (A).
    2. Install the door mirror cover (B). Make sure the clips (C) snap into place securely.

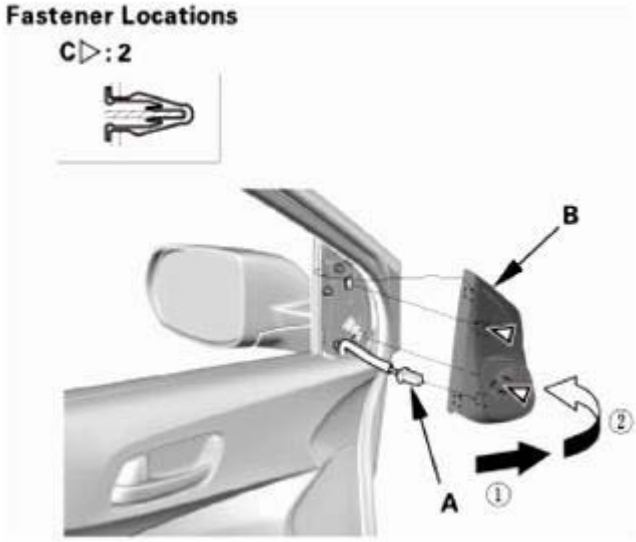

Fig. 44: Installing Door Mirror Cover
Courtesy of AMERICAN HONDA MOTOR CO., INC.

GETtheMANUALS.org

POWER MIRROR SWITCH REMOVAL, INSTALLATION, AND TEST

REMOVAL

1. Door Mirror Cover
    1. Carefully pry out the door mirror cover (A) with the appropriate trim tool to detach the clips (B), then remove the door mirror cover.
    2. With tweeter: Disconnect the connector (C).

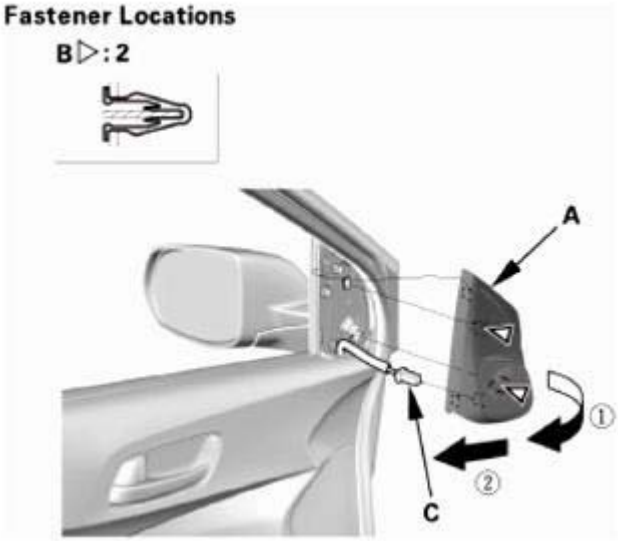

Fig. 45: Removing Door Mirror Cover
Courtesy of AMERICAN HONDA MOTOR CO., INC.

2. Front Door Power Window Switch Panel
    1. Carefully pry out on the notch (A) in the power window switch panel (B) with the appropriate trim tool to detach the clips (C) and the hooks (D). Disconnect the connectors (E), then remove the power window switch panel.

GETtheMANUALS.org

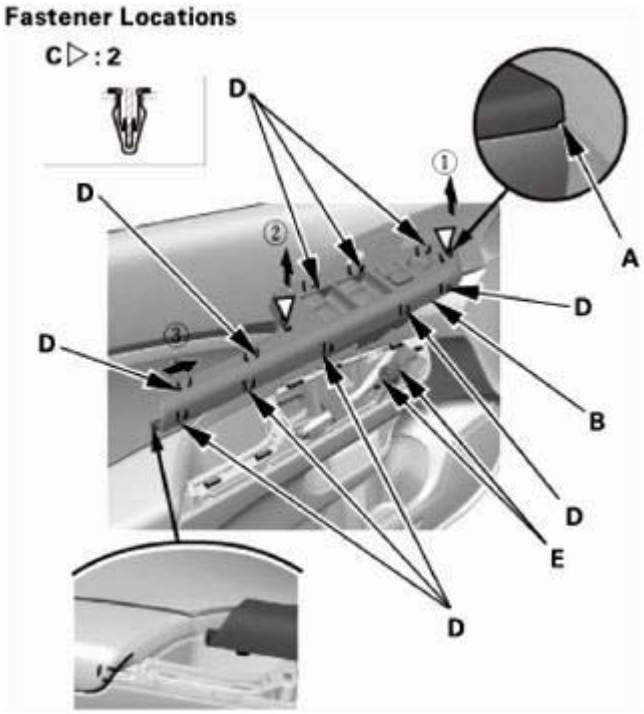

Fig. 46: Identifying Connector, Clips, Hooks And Notch
Courtesy of AMERICAN HONDA MOTOR CO., INC.

3. Power Mirror Switch
    1. Remove the power mirror switch (A).

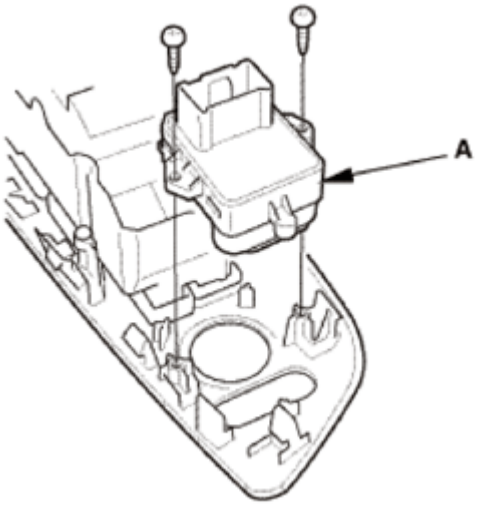

Fig. 47: Identifying Power Mirror Switch
Courtesy of AMERICAN HONDA MOTOR CO., INC.

TEST

GETtheMANUALS.org

1. Power Mirror Switch - Test
    1. Check for continuity between the terminals in each switch position according to the table.
    2. If the continuity is not as specified, replace the power mirror switch (A).

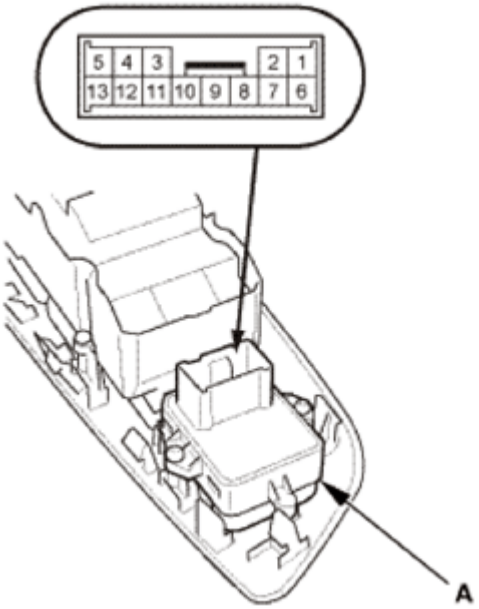

Fig. 48: Identifying Power Mirror Switch
Courtesy of AMERICAN HONDA MOTOR CO., INC.

Position \ Terminal		1	4	6	7	8	9	13
L	UP	○	○				*○	○
	DOWN	*○	○				○	○
	LEFT		○		*○		○	○
	RIGHT		○		○		*○	○
R	UP	○		○		*○		○
	DOWN	*○	○			○		○
	LEFT		○	*○		○		○
	RIGHT		○	○		*○		○

*: There is continuity without operating a switch.

Fig. 49: Continuity Reference Chart
Courtesy of AMERICAN HONDA MOTOR CO., INC.

INSTALLATION

1. Power Mirror Switch
    1. Install the power mirror switch (A).

GETtheMANUALS.org

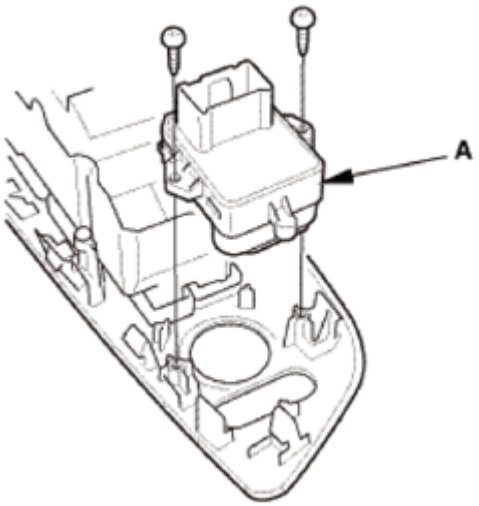

Fig. 50: Identifying Power Mirror Switch
Courtesy of AMERICAN HONDA MOTOR CO., INC.

2. Front Door Power Window Switch Panel
    1. Connect the connectors (A), then install the power window switch panel (B). Make sure the clips (C) and the hooks (D) snap into place securely.

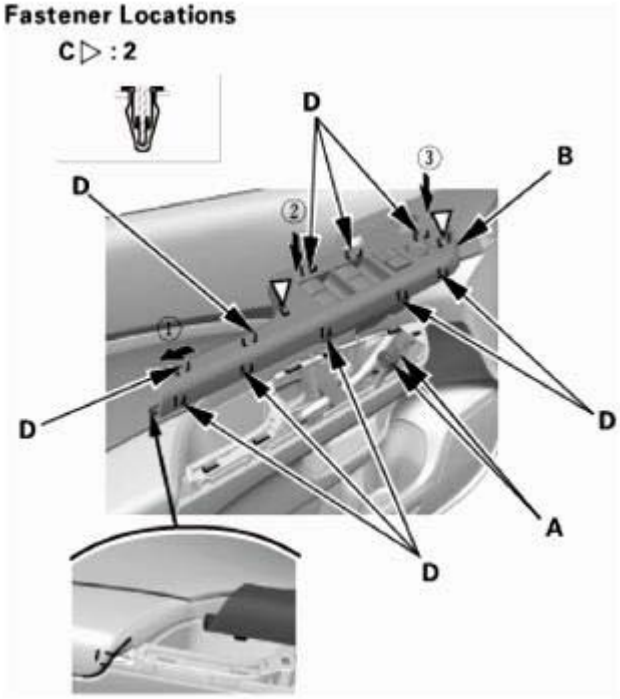

Fig. 51: Identifying Connectors, Power Window Switch Panel, Hooks And Clips
Courtesy of AMERICAN HONDA MOTOR CO., INC.

3. Door Mirror Cover

GETtheMANUALS.org

1. With tweeter: Connect the connector (A).
2. Install the door mirror cover (B). Make sure the clips (C) snap into place securely.

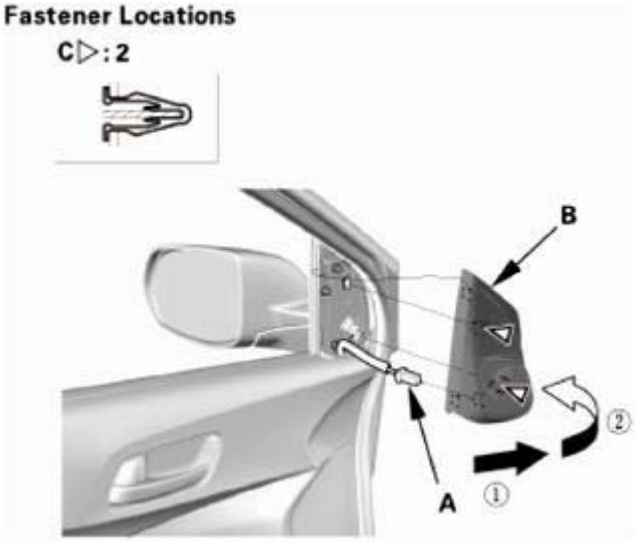

Fig. 52: Installing Door Mirror Cover
Courtesy of AMERICAN HONDA MOTOR CO., INC.

POWER MIRRORS COMPONENT LOCATION INDEX

GETtheMANUALS.org

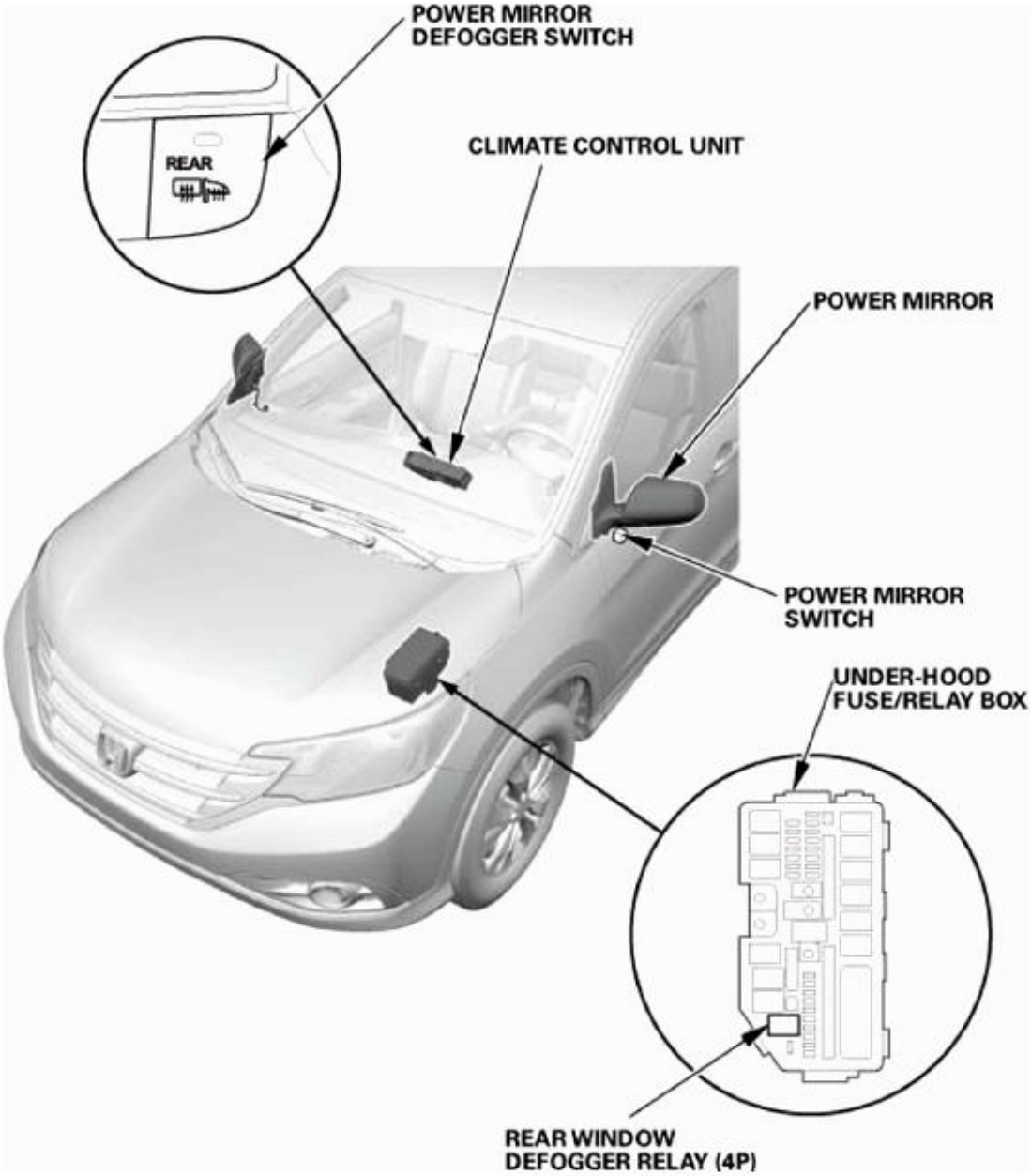

Fig. 53: Power Mirrors Components Location
Courtesy of AMERICAN HONDA MOTOR CO., INC.

POWER MIRROR	**ACTUATOR TEST**
	FUNCTION TEST
	REMOVAL AND INSTALLATION
POWER MIRROR SWITCH	**REMOVAL, INSTALLATION, AND TEST**
REAR WINDOW DEFOGGER RELAY (4P)	**TEST**

REARVIEW MIRROR HARNESS COVER BASE REMOVAL AND

GETtheMANUALS.org

INSTALLATION

REMOVAL

1. Rearview Mirror (Auto Diming Type)
    1. Carefully pry out the rearview mirror harness cover (A) to release the hooks (B), then slide the cover rearward.
    2. Release the rearview mirror harness cover from the hooks (C) of the rearview mirror harness cover base (D).

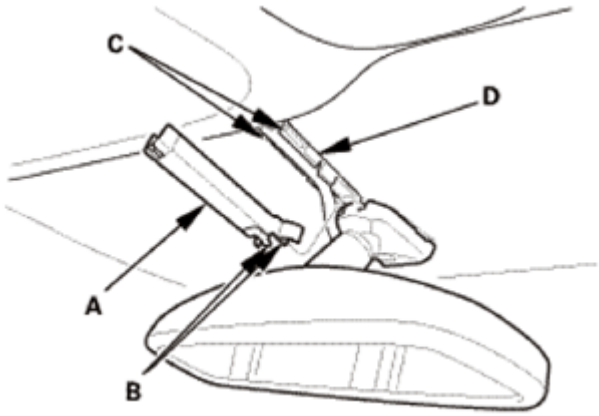

Fig. 54: Rearview Mirror Harness Cover Base, Hooks And Hook
Courtesy of AMERICAN HONDA MOTOR CO., INC.

3. Disconnect the rearview mirror harness connector (A).

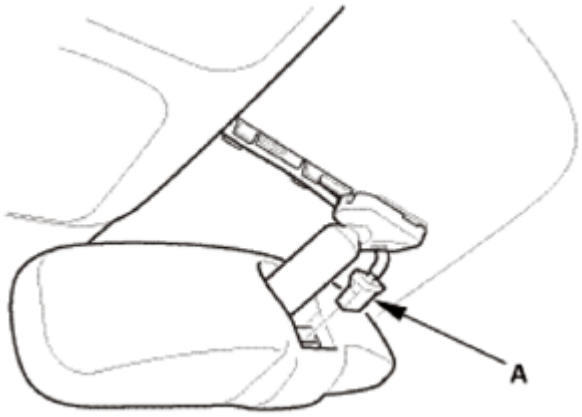

Fig. 55: Identifying Rearview Mirror Harness Connector
Courtesy of AMERICAN HONDA MOTOR CO., INC.

4. Loosen the screw (A) with a TORX T20 bit, then slide the rearview mirror (B) rearward and off the mount (C).

GETtheMANUALS.org

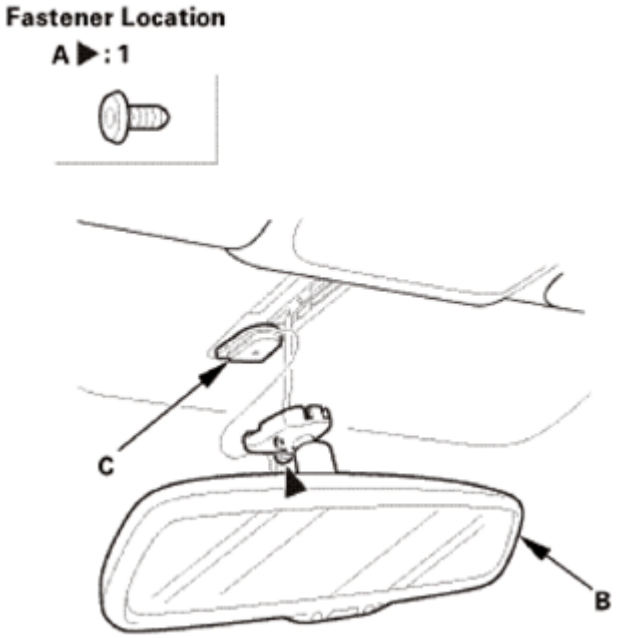

Fig. 56: Rearview Mirror, Mount, Screw
Courtesy of AMERICAN HONDA MOTOR CO., INC.

2. Rearview Mirror Harness Cover Base
    1. Carefully cut through the adhesive tape under the rearview mirror harness cover base (A) using a piano wire, then remove the base.
    2. Use a putty knife to scrape off of the old adhesive tape from the windshield. Clean the bonding surface with a shop towel dampened with isopropyl alcohol. After cleaning, keep oil, grease and water from getting on the clean surface.
    3. If the original rearview mirror harness cover base will be installed, use a putty knife to scrape off all of the old adhesive tape from the base. Clean the base surface with a shop towel dampened with isopropyl alcohol. After cleaning, keep oil, grease and water from getting on the clean surface. Apply primer to the area where the new double-sided adhesive tape will be applied to the base, and attach the adhesive tape to the base.

       Adhesive tape: Thickness 0.8 mm (0.031 in)

       Width 7 mm (0.28 in)

GETtheMANUALS.org

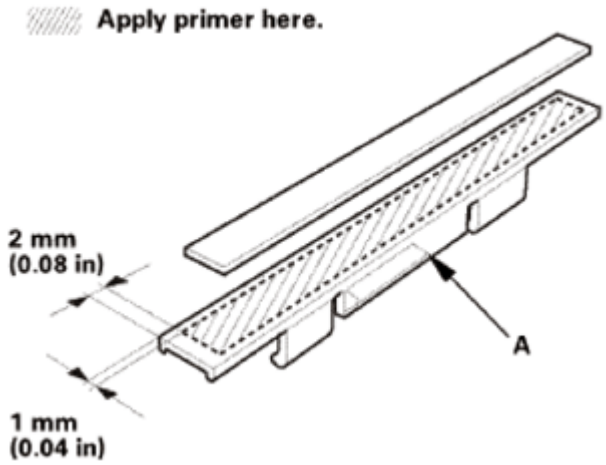

Fig. 57: Identifying Rearview Mirror Harness Cover Base
Courtesy of AMERICAN HONDA MOTOR CO., INC.

INSTALLATION

1. Rearview Mirror Harness Cover Base
    1. Before installing the rearview mirror harness cover base, apply primer to the area where the harness cover base will be installed to the inside face of the windshield. Let the primer dry at least 10 minutes, then attach it to the windshield within 12 hours.

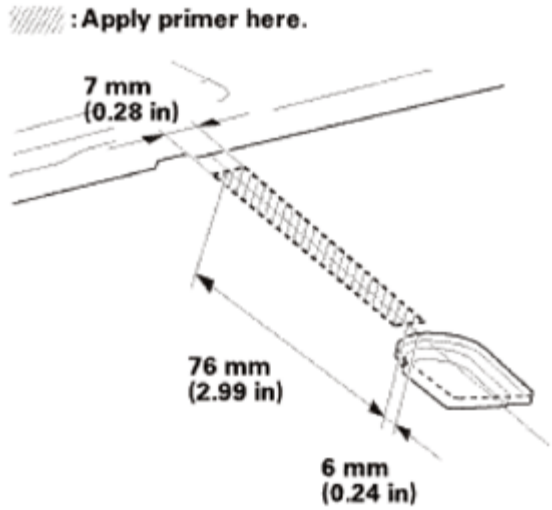

Fig. 58: Identifying Applying Area On Rearview Mirror Harness Cover Base
Courtesy of AMERICAN HONDA MOTOR CO., INC.

    2. Attach the rearview mirror harness cover base (A) with the adhesive tape (B) to the inside face of the windshield as shown, then press the adhesive portions into place securely.

GETtheMANUALS.org

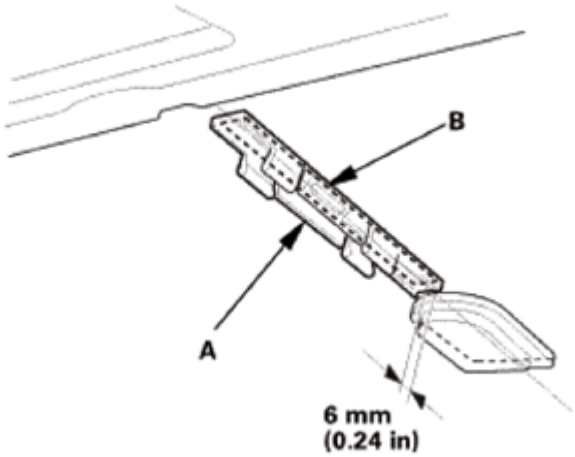

Fig. 59: Identifying Mirror Harness Cover Base And Adhesive Tape
Courtesy of AMERICAN HONDA MOTOR CO., INC.

2. Rearview Mirror (Auto Diming Type)
    1. Slide the rearview mirror (A) forward to the mount (B), then tighten the screw (C) with the TORX T20 bit.

NOTE: **Before installing the mirror, remove the screw, and apply medium strength liquid thread lock to it.**

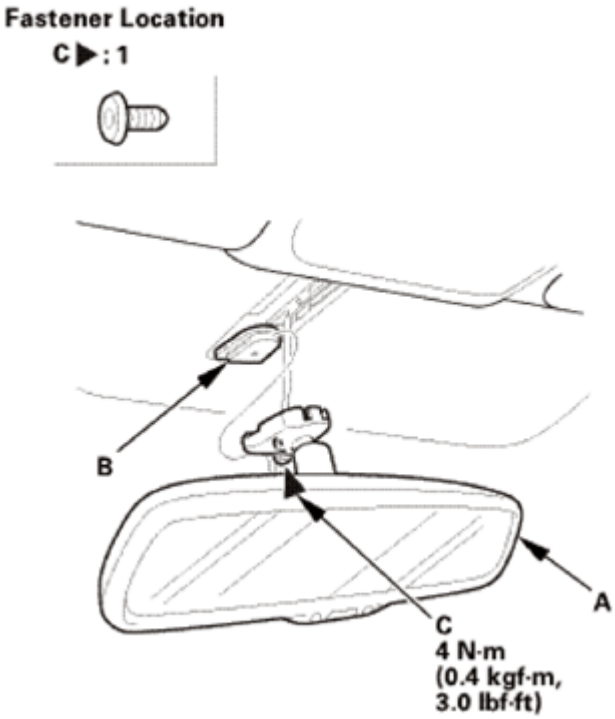

Fig. 60: Identifying Rearview Mirror, Mount And Screw With Torque Specifications
Courtesy of AMERICAN HONDA MOTOR CO., INC.

GETtheMANUALS.org

2. Connect the rearview mirror harness connector (A).

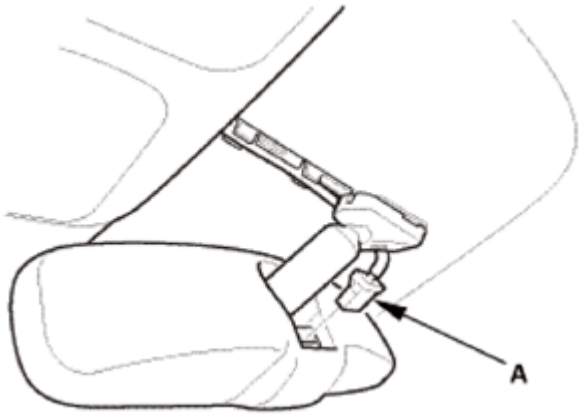

Fig. 61: Identifying Rearview Mirror Harness Connector
Courtesy of AMERICAN HONDA MOTOR CO., INC.

3. Install the rearview mirror harness cover (A). Make sure the hooks (B, C) snap into place securely.

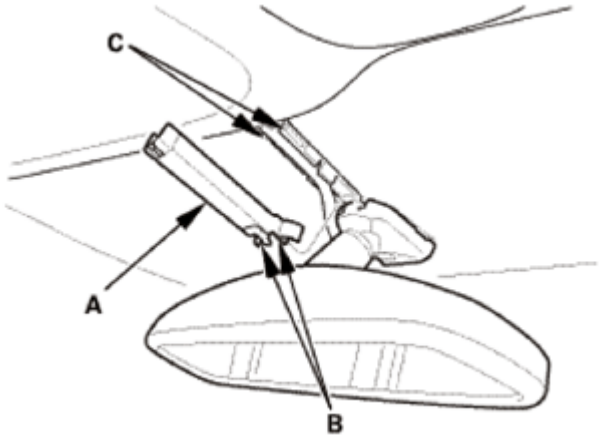

Fig. 62: Identifying Rearview Mirror Harness Cover And Hooks
Courtesy of AMERICAN HONDA MOTOR CO., INC.

REARVIEW MIRROR REMOVAL AND INSTALLATION

REMOVAL

1. Rearview Mirror

Without auto dimming mirror

1. Using a plastic trim tool, press down on the tab, slide the mirror base (A) rearward, then remove the rearview mirror.

GETtheMANUALS.org

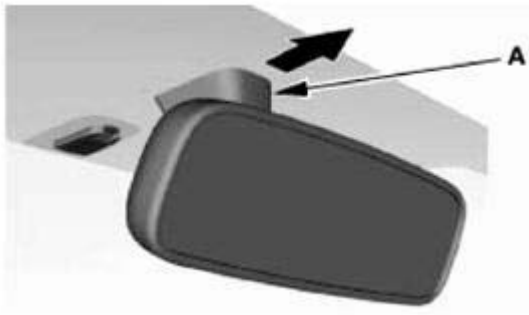

Fig. 63: Removing Rearview Mirror
Courtesy of AMERICAN HONDA MOTOR CO., INC.

With auto dimming mirror

1. Carefully pry out the rearview mirror harness cover (A) to release the hooks (B), then slide the cover rearward.
2. Release the rearview mirror harness cover from the hooks (C) of the rearview mirror harness cover base (D).

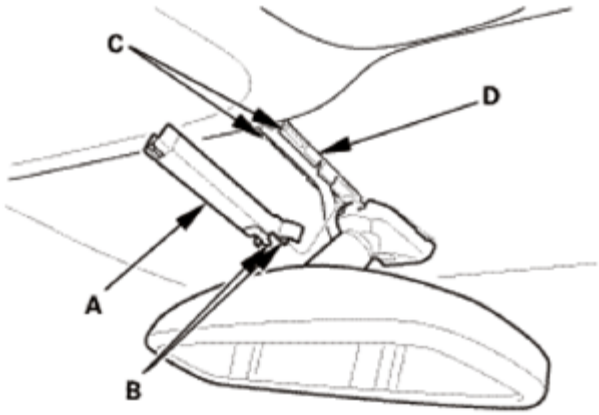

Fig. 64: Identifying Rearview Mirror Harness Cover, Hooks And Base
Courtesy of AMERICAN HONDA MOTOR CO., INC.

3. Disconnect the rearview mirror connector (A).

GETtheMANUALS.org

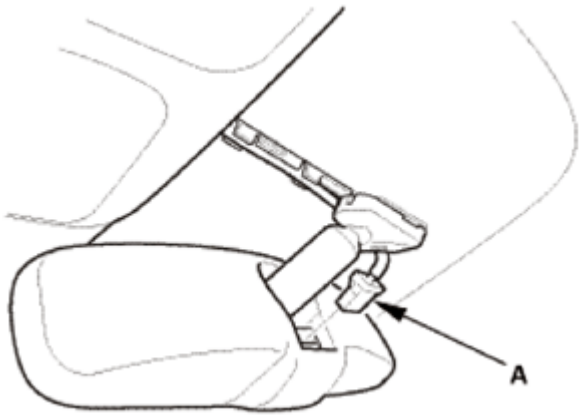

Fig. 65: Identifying Rearview Mirror Connector
Courtesy of AMERICAN HONDA MOTOR CO., INC.

4. Loosen the screw (A) with a TORX T20 bit, then slide the rearview mirror (B) rearward and off the mount (C).

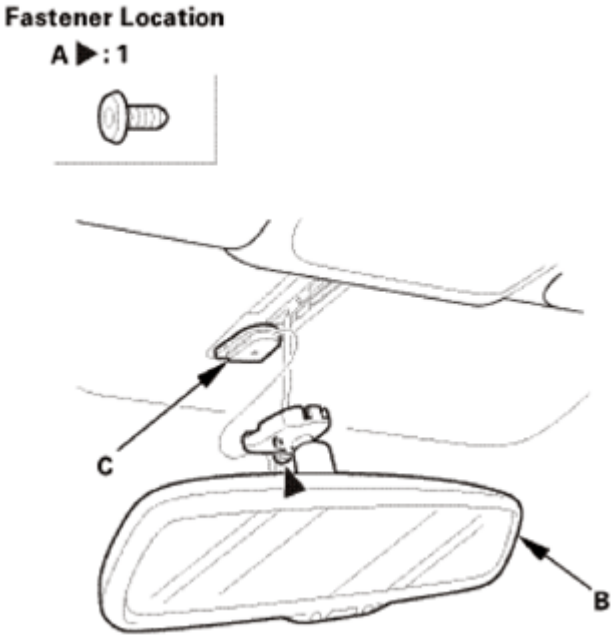

Fig. 66: Identifying Rearview Mirror, Mount And Screw
Courtesy of AMERICAN HONDA MOTOR CO., INC.

INSTALLATION

1. Rearview Mirror

Without auto dimming mirror

1. Fit the mirror base (A) over the mount (B), and secure the rearview mirror.

GETtheMANUALS.org

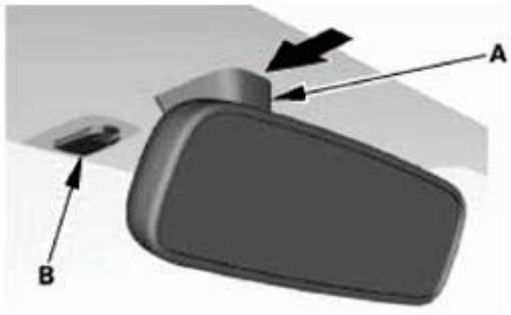

Fig. 67: Identifying Rearview Mirror, Mount And Screw (Without Auto Diming Mirror)
Courtesy of AMERICAN HONDA MOTOR CO., INC.

With auto dimming mirror

1. Slide the rearview mirror (A) forward to the mount (B), then tighten the screw (C) with the TORX T20 bit.

NOTE: **Before installing the mirror, remove the screw, and apply medium strength liquid thread lock to it.**

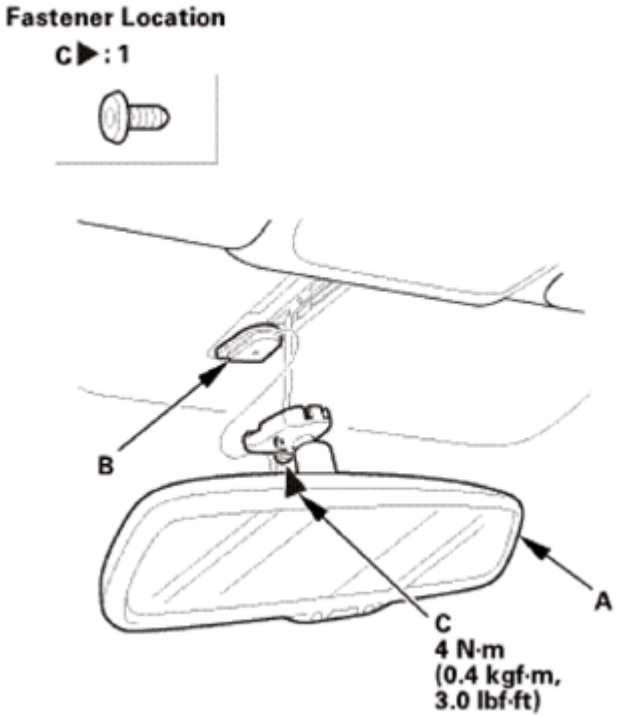

Fig. 68: Identifying Rearview Mirror, Mount And Screw (With Auto Diming Mirror) With torque Specifications
Courtesy of AMERICAN HONDA MOTOR CO., INC.

2. Connect the rearview mirror connector (A).

GETtheMANUALS.org

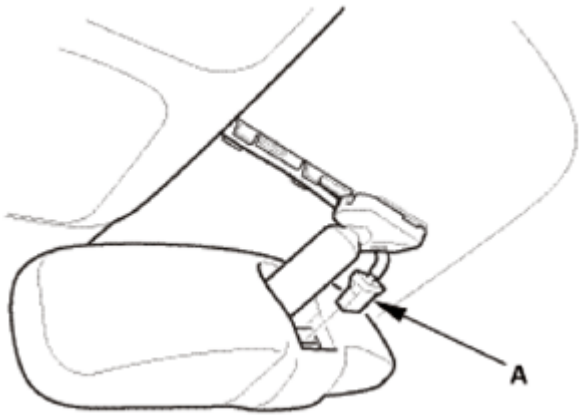

Fig. 69: Identifying Rearview Mirror Connector
Courtesy of AMERICAN HONDA MOTOR CO., INC.

3. Install the rearview mirror harness cover (A). Make sure the hooks (B, C) snap into place securely.

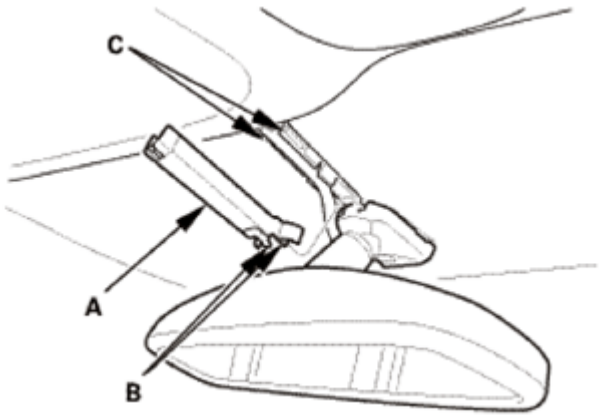

Fig. 70: Identifying Rearview Mirror Harness Cover And Hooks
Courtesy of AMERICAN HONDA MOTOR CO., INC.

VANITY MIRROR LIGHT TEST

REMOVAL

1. Sunvisor
    1. Push the tab (A) with a flat-tip screwdriver through the hole in the front side of the bracket cover (B).

NOTE: Make sure the tab is unlocked.

GETtheMANUALS.org

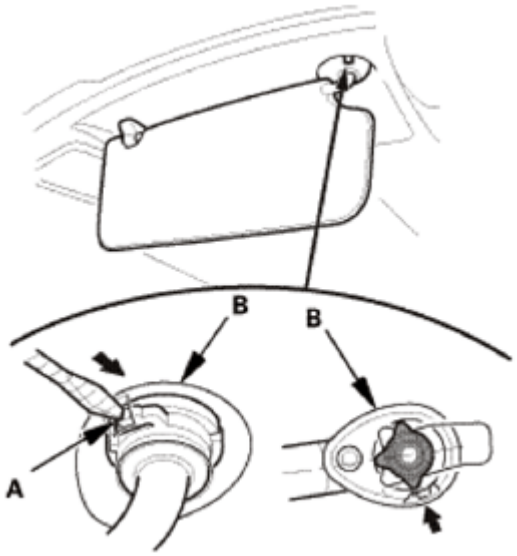

Fig. 71: Pushing Tab Using Flat-Tip Screwdriver
Courtesy of AMERICAN HONDA MOTOR CO., INC.

2. While pushing in the tab (A) with a flat-tip screwdriver, release the sunvisor (B) from the holder (C), and rotate the sunvisor backward 45 °.

NOTE: **Make sure the tab slides into the bracket cover as you rotate the sunvisor.**

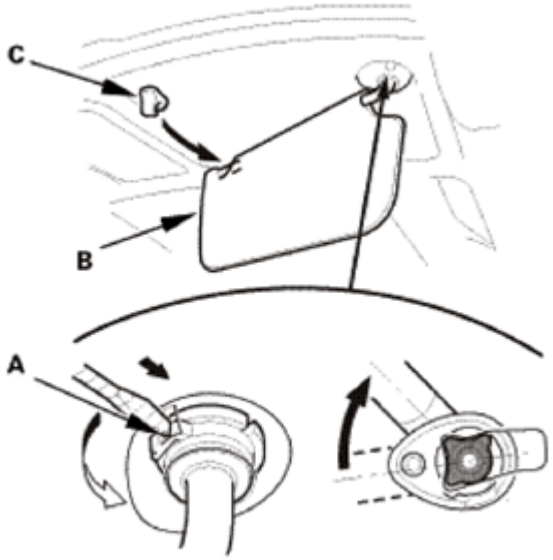

Fig. 72: Rotating Sunvisor
Courtesy of AMERICAN HONDA MOTOR CO., INC.

3. Disconnect the connector (A), then remove the sunvisor (B).

GETtheMANUALS.org

NOTE: **If the sunvisor cannot be removed, the tab has not rotated into the bracket cover. Repeat step 2 to rotate the tab.**

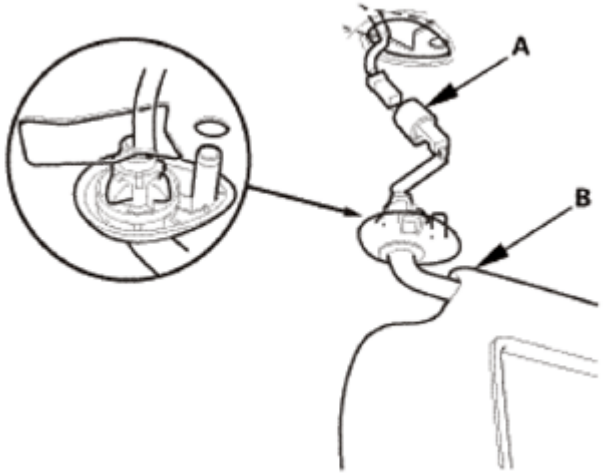

Fig. 73: Identifying Connector And Sunvisor
Courtesy of AMERICAN HONDA MOTOR CO., INC.

TEST

1. Vanity Mirror Light - Test

NOTE: **When doing the vanity mirror light test, install the bulb correctly.**

1. Check for continuity between the terminals in each vanity mirror cover (A) position according to the table.
2. If the continuity is not as specified, carefully pry off the lens (B), and replace the bulb or the sunvisor.

GETtheMANUALS.org

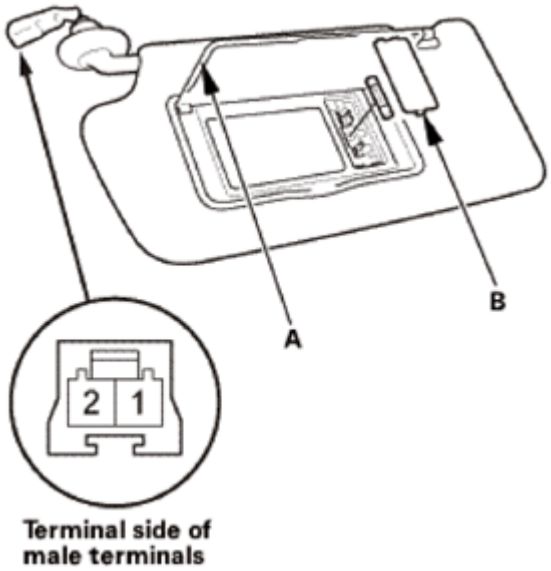

Fig. 74: Identifying Vanity Mirror Cover And Lens
Courtesy of AMERICAN HONDA MOTOR CO., INC.

Terminal / Position	1		2
Open	○	⊗	○
Closed			

Fig. 75: Continuity Reference Chart
Courtesy of AMERICAN HONDA MOTOR CO., INC.

INSTALLATION

1. Sunvisor
    1. Connect the connector (A), and install the sunvisor (B).

GETtheMANUALS.org

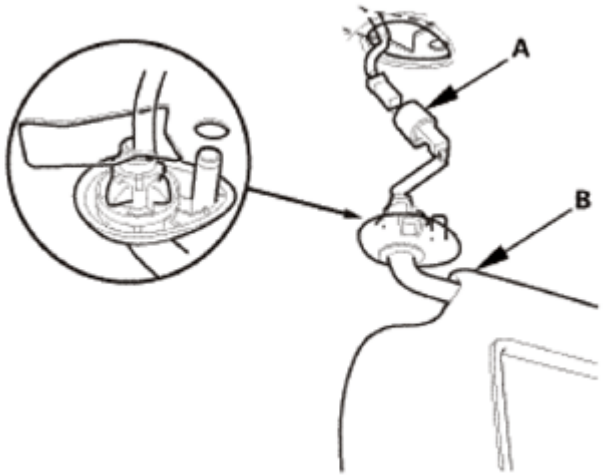

Fig. 76: Identifying Connector And Sunvisor
Courtesy of AMERICAN HONDA MOTOR CO., INC.

2. While holding the bracket cover (A), rotate the sunvisor (B) forward until the tab (C) snaps into place.
3. Gently pull down on the sunvisor to make sure it is properly secured in the body.
4. Rotate the sunvisor into the holder (D).

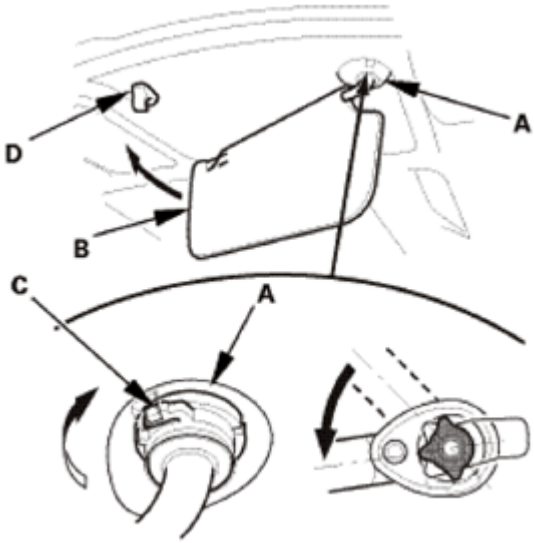

Fig. 77: Rotating Sunvisor Into Holder
Courtesy of AMERICAN HONDA MOTOR CO., INC.

AUTOMATIC DIMMING INSIDE MIRROR TEST

1. Turn the ignition switch to ON (II).
2. Measure the voltage between terminal No. 6 and body ground.
    - If there is less than 0.2 V, go to step 3.

GETtheMANUALS.org

- If there is more than 0.2 V, check for:
  - Poor ground (G501).
  - An open or high resistance in the ground wire.

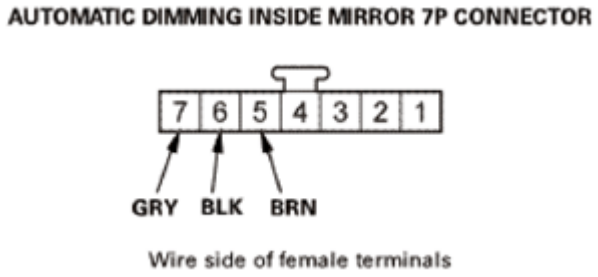

Fig. 78: Identifying Automatic Dimming Inside Mirror 7P Connectors Terminals
Courtesy of AMERICAN HONDA MOTOR CO., INC.

3. Measure the voltage between terminal No. 7 and body ground.
   - If there is battery voltage, go to step 4.
   - If there is no voltage, check for:
     - Blown No. B6 (7.5 A) fuse in the under-dash fuse/relay box.
     - An open or high resistance in the ground wire.
4. Measure the voltage between terminal No. 5 and body ground with the transmission range switch in R position.
   - If there is battery voltage, **REPLACE THE MIRROR ASSEMBLY**.
   - If there is no voltage, check for:
     - Blown No. B5 (10 A) fuse in the under-dash fuse/relay box.
     - Faulty MICU.
     - Faulty transmission range switch.
     - An open or high resistance in the wire.

POWER MIRROR FUNCTION TEST

1. Remove the power mirror switch and disconnect 13P connector from it.

GETtheMANUALS.org

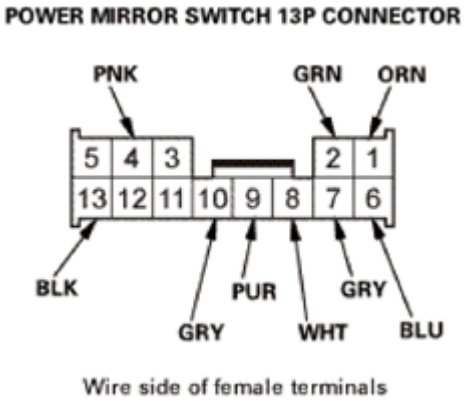

Fig. 79: Identifying Power Mirror Switch 13P Connector
Courtesy of AMERICAN HONDA MOTOR CO., INC.

2. Choose the appropriate test based on the symptom:
   - Both mirrors do not work, go to step 3.
   - Left mirror does not work, go to step 5.
   - Right mirror does not work, go to step 6.
   - Mirror defoggers do not work, go to step 7.

Both Mirrors

3. Measure the voltage between terminal No. 4 and body ground with the ignition switch ON (II). There should be battery voltage.
   - If there is no battery voltage, check for:
     - Blown No. B22 (7.5 A) fuse in the under-dash fuse/relay box.
     - An open or high resistance in the PNK wire.
   - If there is battery voltage, go to step 4.
4. Check for continuity between terminal No. 13 and body ground.
   - If there is no continuity, check for:
     - An open or high resistance in the BLK wire.
     - Poor ground (G501).
   - If there is continuity, check both mirrors individually.

Left Mirror

5. Connect terminals No. 4 and No. 9, and terminals No. 1 (or No. 7) and No. 13 with jumper wires, and turn the ignition switch to ON (II).

   The left mirror should tilt down (or swing left).

   - If the left mirror does not tilt down (or does not swing left), check for an open or high resistance in the ORN (or GRY) wire between the left mirror and the 13P connector.

GETtheMANUALS.org

If the wire is OK, **CHECK THE LEFT MIRROR ACTUATOR**.

- If the mirror neither tilts down nor swings left, repair the PUR wire.
- If the mirror works properly, **CHECK THE MIRROR SWITCH**.

Right Mirror

6. Connect terminals No. 4 and No. 8, and terminals No. 1 (or No. 6) and No. 13 with jumper wires, and turn the ignition switch to ON (II). The right mirror should tilt down (or swing left).
   - If the mirror does not tilt down (or does not swing left), check for an open or high resistance in the ORN or PUR (or BLU) wire between the right mirror and the 13P connector. If the wire is OK, **CHECK THE RIGHT MIRROR ACTUATOR**.
   - If the mirror neither tilts down nor swings left, repair the WHT wire.
   - If the mirror works properly, **CHECK THE MIRROR SWITCH**.

Defogger

7. Remove the rear window defogger relay from the under-hood fuse/relay box, then connect rear window defogger relay terminals No. 1 and No. 2 in the under-hood fuse/relay box with a jumper wire. Measure the voltage between terminal No. 4 of the mirror connector and body ground. There should be battery voltage and both mirrors should warm up.
   - If there is no voltage or neither mirror warms up, check for:
     - An open or high resistance in the ORN wire.
     - Blown No. A10 (7.5 A) fuse in the under-hood fuse/relay box.
     - Blown No. B22 (7.5 A) fuse in the under-dash fuse/relay box.
   - If one fails to warm up, check for:
     - Faulty defogger.
     - Poor ground (G501, G503).
   - If both warm up, check for:
     - Faulty rear window defogger relay.
     - Faulty climate control unit or HVAC control unit.

GETtheMANUALS.org

DTC U0029: F-CAN MALFUNCTION (BUS-OFF (PCM))

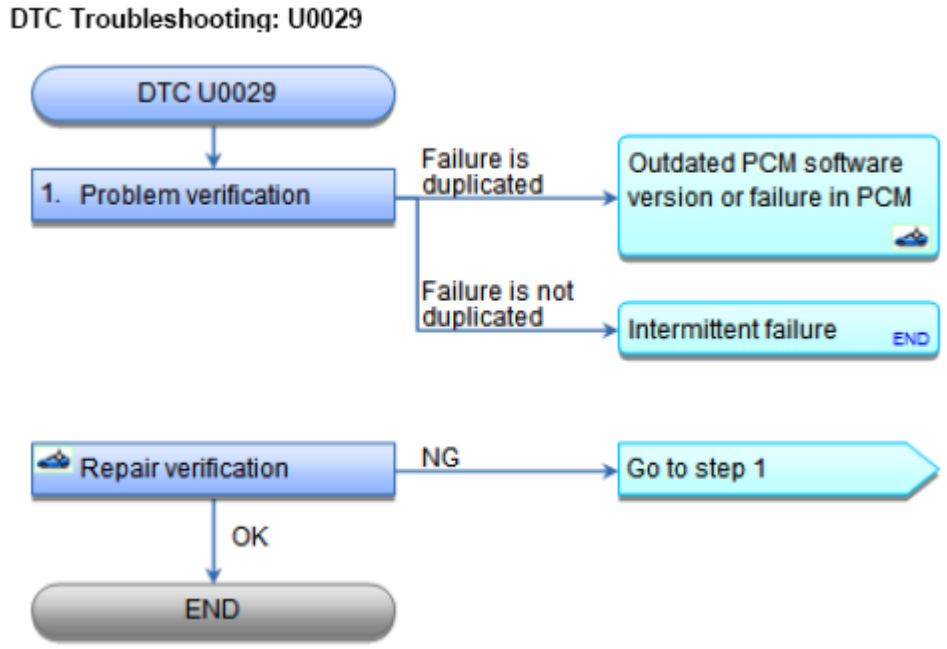

Fig. 1: DTC Troubleshooting Chart (U0029)
Courtesy of AMERICAN HONDA MOTOR CO., INC.

NOTE: **Before you troubleshoot, record all freeze data and any on-board snapshot, and review the general troubleshooting information See HOW TO TROUBLESHOOT THE A/T SYSTEM or HOW TO TROUBLESHOOT THE FUEL AND EMISSIONS SYSTEMS .**

DTC Description	Confirmed DTC	Pending DTC	Freeze Frame
U0029 F-CAN MALFUNCTION (BUS-OFF (PCM))			

1. Problem verification:
   - 1. Turn the ignition switch to ON (II).
   - 2. **Clear the DTC with the HDS** See **HOW TO TROUBLESHOOT THE A/T SYSTEM** or **HOW TO TROUBLESHOOT THE FUEL AND EMISSIONS SYSTEMS** .
   - 3. Check for Pending or Confirmed DTCs with the HDS.

DTC Description	Confirmed DTC	Pending DTC	Freeze Frame
U0029 F-CAN MALFUNCTION (BUS-OFF			

GETtheMANUALS.org

(PCM))			

Is DTC U0029 indicated?

YES : The failure is duplicated. **Update the PCM** See **PCM REMOVAL AND INSTALLATION** or **PCM UPDATE** if it does not have the latest software, or **substitute a known-good PCM** See **PCM UPDATE** or **PCM REMOVAL AND INSTALLATION** , then **do the repair verification** .

NO : Intermittent failure, the system is OK at this time.

REPAIR VERIFICATION

- Check for Pending or Confirmed DTCs with the HDS.

DTC Description	Confirmed DTC	Pending DTC	Freeze Frame
U0029 F-CAN MALFUNCTION (BUS-OFF (PCM))			

Is DTC U0029 indicated?

YES : If the PCM was updated, **substitute a known-good PCM** See **PCM UPDATE** or **PCM REMOVAL AND INSTALLATION** , then recheck. If the PCM was substituted, go to step 1.

NO : If the PCM was updated, troubleshooting is complete. If the PCM was substituted, **replace the original PCM** See **PCM UPDATE** or **PCM REMOVAL AND INSTALLATION** . If any other Pending or Confirmed DTCs are indicated, go to the indicated DTC's troubleshooting.

DTC U0029: F-CAN COMMUNICATION LINE ERROR

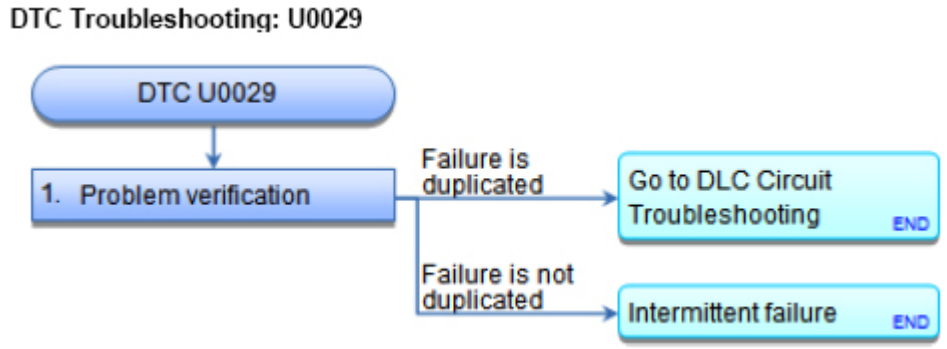

Fig. 2: DTC Troubleshooting Chart (U0029)
Courtesy of AMERICAN HONDA MOTOR CO., INC.

DTC Description	DTC
U0029 F-CAN Communication Line Error	

1. Problem verification:

GETtheMANUALS.org

- 1. Clear the DTCs with the HDS.
- 2. Turn the ignition switch to LOCK (0) and then back to ON (II).
- 3. Wait for at least 6 seconds.
- 4. Check for DTCs with the HDS.

DTC Description	DTC
U0029 F-CAN Communication Line Error	

Is DTC U0029 indicated?

YES : **GO TO DLC CIRCUIT TROUBLESHOOTING** .

NO : Intermittent failure, the system is OK at this time.

DTC U0100: GAUGE CONTROL MODULE LOST COMMUNICATION WITH PCM

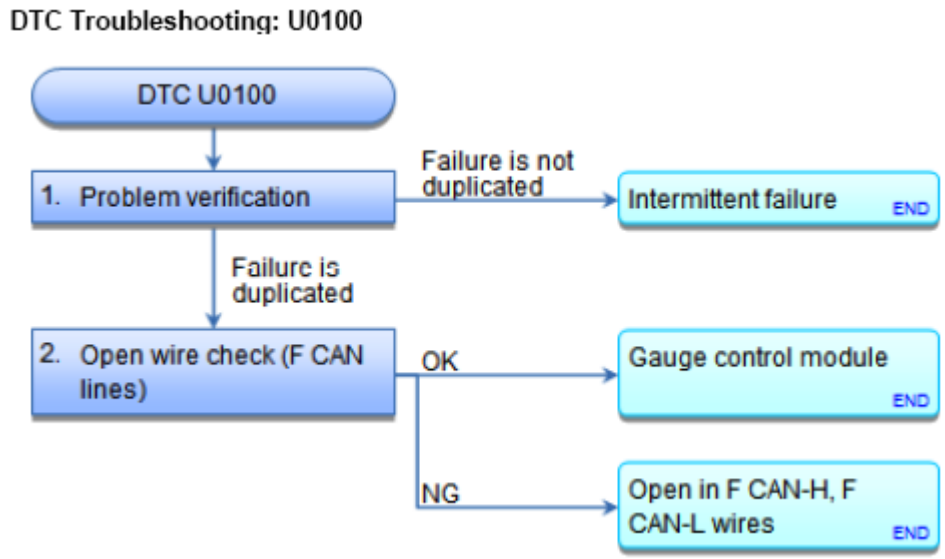

Fig. 3: DTC Troubleshooting Chart (U0100)
Courtesy of AMERICAN HONDA MOTOR CO., INC.

DTC Description	DTC
U0100 Gauge Control Module Lost Communication With PCM	

NOTE:

- **If you have any loss of communication DTCs for the PCM, troubleshoot those DTCs first.**
- **If you are troubleshooting multiple DTCs, be sure to follow the instructions in B-CAN System Diagnosis Test Mode A.**

GETtheMANUALS.org

1. Problem verification:
    - 1. Clear the DTCs with the HDS.
    - 2. Turn the ignition switch to LOCK (0) and then back to ON (II).
    - 3. Wait for at least 6 seconds.
    - 4. Check for DTCs with the HDS.

DTC Description	DTC
U0100 Gauge Control Module Lost Communication With PCM	

Is DTC U0100 indicated?

YES : Go to step 2.

NO : Intermittent failure, the system is OK at this time. Check for loose or poor connections.

2. Open wire check (F CAN lines):
    - 1. Turn the ignition switch to LOCK (0).
    - 2. Jump the SCS line with the HDS.
    - 3. Disconnect the following connectors.

      PCM connector A (49P)

      Gauge control module 32P connector

    - 4. Check for continuity between test points 1 and 2 respectively.

      Test condition IG LOCK (0)

      PCM connector A (49P): disconnected

      Gauge control module 32P connector: disconnected

      Test circuit F CAN-H

      Test point 1 Gauge control module 32P connector No. 19 (WHT)

      Test point 2 PCM connector A (49P) No. 3 (WHT)

      Test circuit F CAN-L

      Test point 1 Gauge control module 32P connector No. 20 (RED)

      Test point 2 PCM connector A (49P) No. 4 (RED)

GETtheMANUALS.org

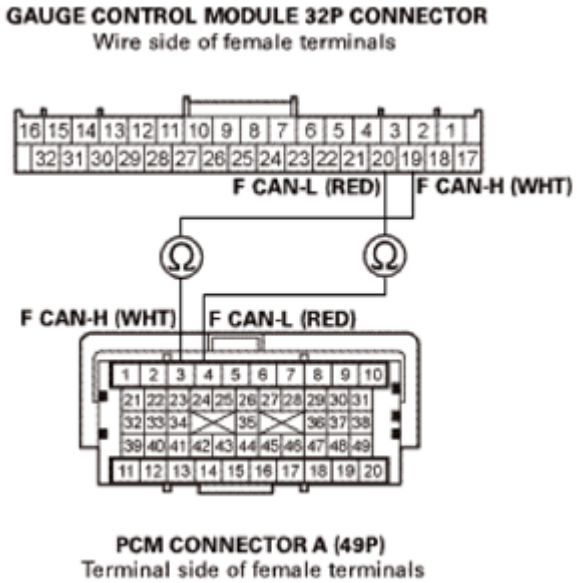

Fig. 4: Checking Continuity Between Gauge Control Module 32P Connector And PCM Connector A (49P) Terminals
Courtesy of AMERICAN HONDA MOTOR CO., INC.

Is there continuity?

YES : The F CAN wires are OK. **Replace the gauge control module** See **Rewriting the ODO Data and Transferring the Maintenance Minder™ Data to a New Gauge Control Module** or **GAUGE CONTROL MODULE REMOVAL AND INSTALLATION** .

NO : An open or poor connection in the F CAN wires between the PCM and the gauge control module.

DTC U0100-00: F-CAN MALFUNCTION (LOST COMMUNICATION WITH POWERTRAIN CONTROL MODULE (PCM)); DTC U0101-00: F-CAN MALFUNCTION (LOST COMMUNICATION WITH A/T CONTROL SYSTEM); DTC U0122-00: F-CAN MALFUNCTION (LOST COMMUNICATION WITH VSA MODULATOR-CONTROL UNIT); DTC U0126-00: F-CAN MALFUNCTION (LOST COMMUNICATION WITH STEERING ANGLE SENSOR)

GETtheMANUALS.org

DTC Troubleshooting: U0100-00, U0101-00, U0122-00, U0126-00

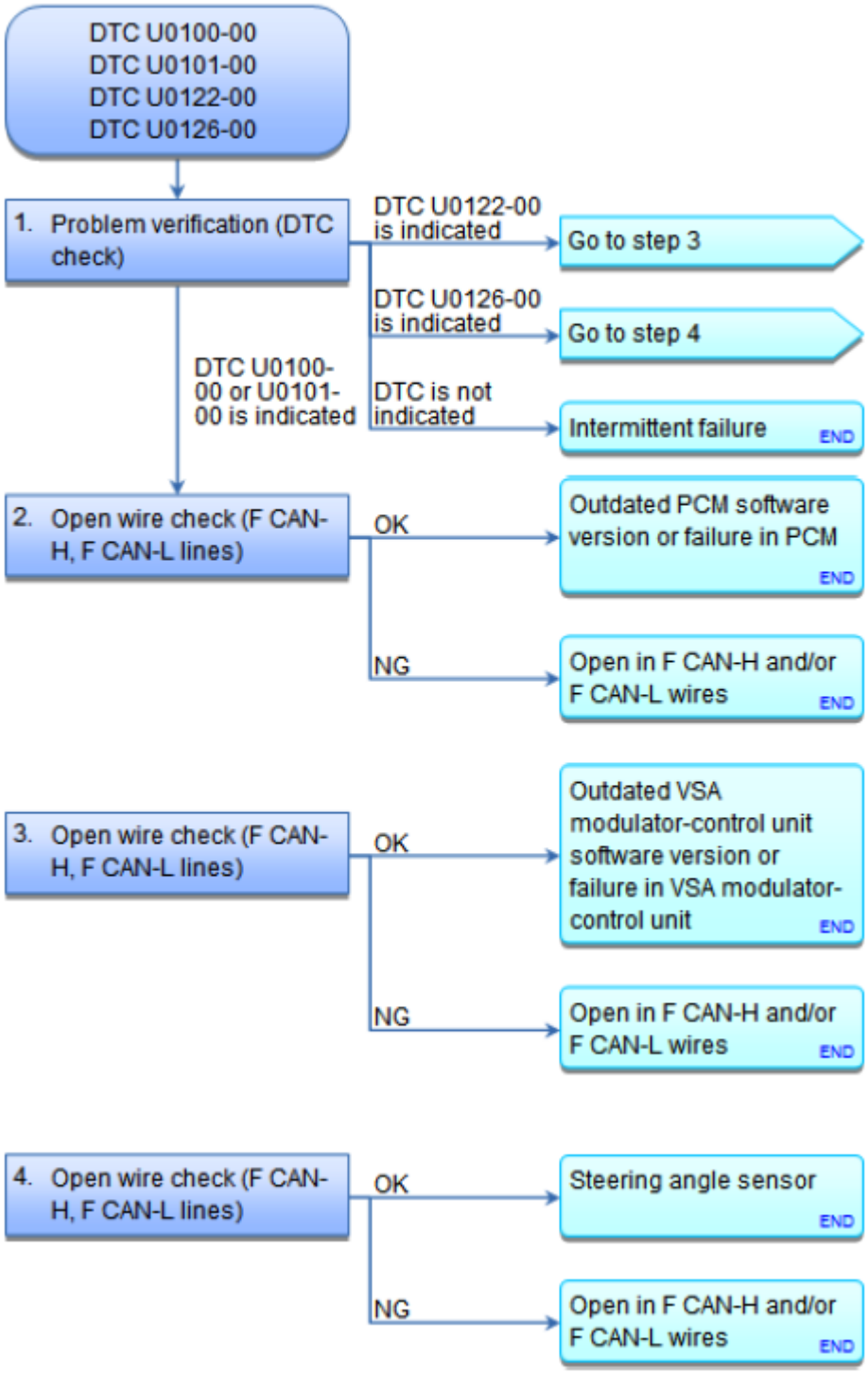

Fig. 5: DTC Troubleshooting Chart (U0100-00, U0101-00, U0122-00, U0126-00)
Courtesy of AMERICAN HONDA MOTOR CO., INC.

NOTE: **Before you troubleshoot, REVIEW THE HOW TO TROUBLESHOOT THE REAL**

GETtheMANUALS.org

TIME AWD SYSTEM .

DTC Description	DTC	Freeze Frame
U0100-00 F-CAN Malfunction (Lost Communication with Powertrain Control Module (PCM))		
U0101-00 F-CAN Malfunction (Lost Communication with A/T Control System)		
U0122-00 F-CAN Malfunction (Lost Communication with VSA Modulator-Control Unit)		
U0126-00 F-CAN Malfunction (Lost Communication with Steering Angle Sensor)		

1. Problem verification (DTC check):
   - 1. Turn the ignition switch to ON (II).
   - 2. Clear the DTC with the HDS.
   - 3. Turn the ignition switch to LOCK (0).
   - 4. Start the engine.
   - 5. Check for DTCs with the HDS.

DTC Description	DTC	Freeze Frame
U0100-00 F-CAN Malfunction (Lost Communication with Powertrain Control Module (PCM))		
U0101-00 F-CAN Malfunction (Lost Communication with A/T Control System)		
U0122-00 F-CAN Malfunction (Lost Communication with VSA Modulator-Control Unit)		
U0126-00 F-CAN Malfunction (Lost Communication with Steering Angle Sensor)		

Is DTC U0100-00, U0101-00, U0122-00, or U0126-00 indicated?

DTC U0100-00 or U0101-00 is indicated : Go to step 2.

DTC U0122-00 is indicated : Go to step 3.

DTC U0126-00 is indicated : Go to step 4.

DTC is not indicated : Intermittent failure, the system is OK at this time.

2. Open wire check (F CAN-H, F CAN-L lines):
   - 1. Turn the ignition switch to LOCK (0).
   - 2. Jump the SCS line with the HDS.
   - 3. Disconnect the following connectors.

GETtheMANUALS.org

Real time AWD control unit 24P connector

PCM connector A (49P)

- 4. Check for continuity between test points 1 and 2.

Test condition IG LOCK (0)

Real time AWD control unit 24P connector: disconnected

PCM connector A (49P): disconnected

Test circuit F CAN-H

Test point 1 Real time AWD control unit 24P connector No. 14 (WHT)

Test point 2 PCM connector A (49P) No. 3 (WHT)

Test circuit F CAN-L

Test point 1 Real time AWD control unit 24P connector No. 24 (RED)

Test point 2 PCM connector A (49P) No. 4 (RED)

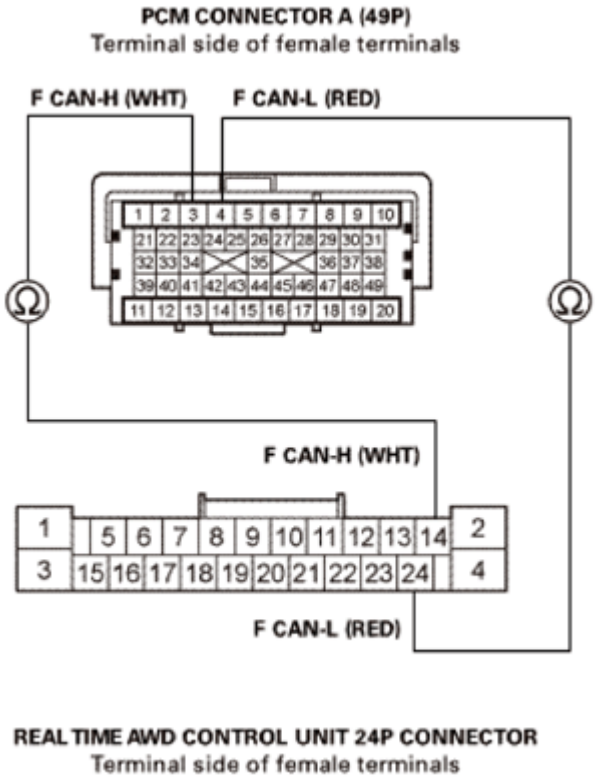

Fig. 6: Checking Continuity Between Real Time AWD Control Unit 24P Connector And

GETtheMANUALS.org

PCM Connector A (49P) Terminals
Courtesy of AMERICAN HONDA MOTOR CO., INC.

Is there continuity?

YES : **Update the PCM if it does not have the latest software** See **PCM REMOVAL AND INSTALLATION** or **PCM UPDATE** , or **substitute a known-good PCM** See **PCM UPDATE** or **PCM REMOVAL AND INSTALLATION** , and recheck. If the symptom/indication goes away with the updated PCM, troubleshooting is complete. If the symptom/indication goes away with a known-good PCM, **replace the original PCM** See **PCM REMOVAL AND INSTALLATION** or **PCM UPDATE** .

NO : Repair an open in the F CAN-H and/or F CAN-L wires between the real time AWD control unit and the PCM.

3. Open wire check (F CAN-H, F CAN-L lines):
   - 1. Turn the ignition switch to LOCK (0).
   - 2. Disconnect the following connectors.

     Real time AWD control unit 24P connector

     VSA modulator-control unit 38P connector

   - 3. Check for continuity between test points 1 and 2.

     Test condition IG LOCK (0)

     Real time AWD control unit 24P connector: disconnected

     VSA modulator-control unit 38P connector: disconnected

     Test circuit F CAN-H

     Test point 1 Real time AWD control unit 24P connector No. 14 (WHT)

     Test point 2 VSA modulator-control unit 38P connector No. 38 (WHT)

     Test circuit F CAN-L

     Test point 1 Real time AWD control unit 24P connector No. 24 (RED)

     Test point 2 VSA modulator-control unit 38P connector No. 26 (RED)

GETtheMANUALS.org

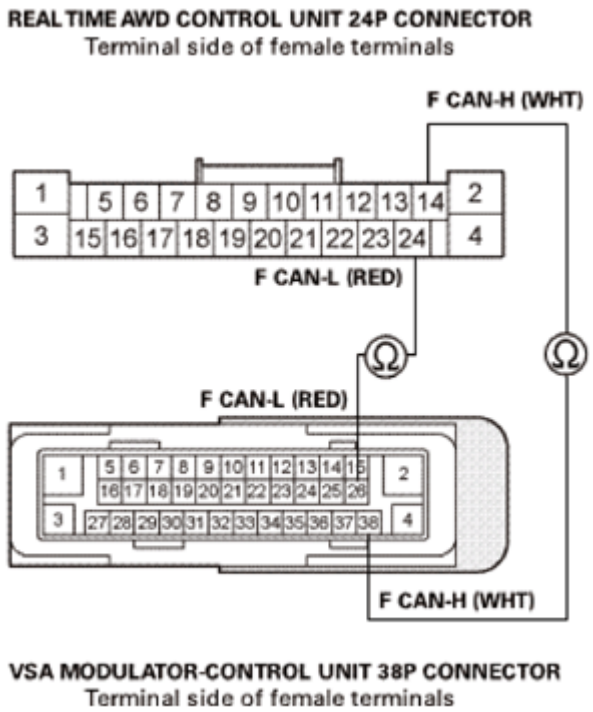

Fig. 7: Checking Continuity Between Real Time AWD Control Unit 24P Connector And VSA Modulator-Control Unit 38P Connector Terminals
Courtesy of AMERICAN HONDA MOTOR CO., INC.

Is there continuity?

YES : **Update the VSA modulator-control unit if it does not have the latest software** See **VSA SENSOR NEUTRAL POSITION MEMORIZATION** , **VSA MODULATOR-CONTROL UNIT REMOVAL AND INSTALLATION** or **VSA MODULATOR-CONTROL UNIT UPDATE** , and recheck. If the symptom/indication goes away with the updated VSA modulator-control unit, troubleshooting is complete. If the symptom/indication goes away with the updated the VSA modulator-control unit, **replace the original VSA modulator-control unit** See **VSA SENSOR NEUTRAL POSITION MEMORIZATION** , **VSA MODULATOR-CONTROL UNIT UPDATE** or **VSA MODULATOR-CONTROL UNIT REMOVAL AND INSTALLATION** .

NO : Repair an open in the F CAN-H and/or F CAN-L wires between the real time AWD control unit and the VSA modulator-control unit.

4. Open wire check (F CAN-H, F CAN-L lines):
   - 1. Turn the ignition switch to LOCK (0).
   - 2. Disconnect the following connectors.

     Real time AWD control unit 24P connector

     Steering angle sensor 4P connector

GETtheMANUALS.org

- 3. Check for continuity between test points 1 and 2.

  Test condition IG LOCK (0)

  Real time AWD control unit 24P connector: disconnected

  Steering angle sensor 4P connector: disconnected

  Test circuit F CAN-H

  Test point 1 Real time AWD control unit 24P connector No. 14 (WHT)

  Test point 2 Steering angle sensor 4P connector No. 2 (WHT)

  Test circuit F CAN-L

  Test point 1 Real time AWD control unit 24P connector No. 24 (RED)

  Test point 2 Steering angle sensor 4P connector No. 3 (RED)

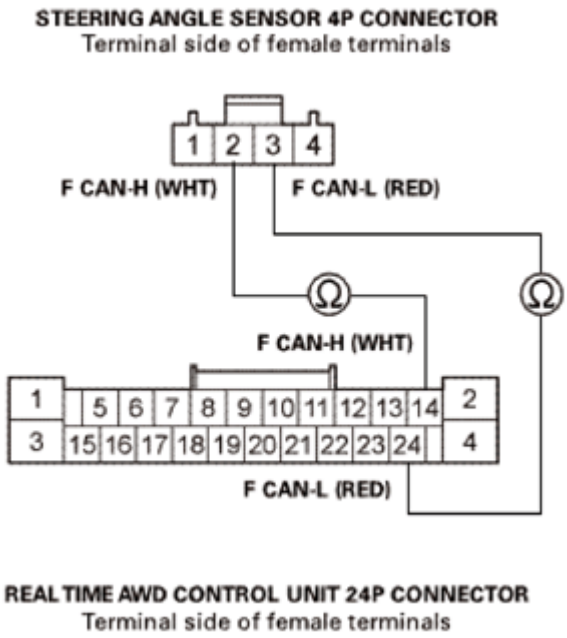

<u>Fig. 8: Checking Continuity Between Real Time AWD Control Unit 24P Connector And Steering Angle Sensor 4P Connector Terminals</u>
Courtesy of AMERICAN HONDA MOTOR CO., INC.

Is there continuity?

YES : **<u>REPLACE THE STEERING ANGLE SENSOR</u>** .

GETtheMANUALS.org

NO : Repair an open in the F CAN-H and/or F CAN-L wires between the real time AWD control unit and the steering angle sensor.

DTC U0114: F-CAN MALFUNCTION (PCM-AWD CONTROL UNIT)

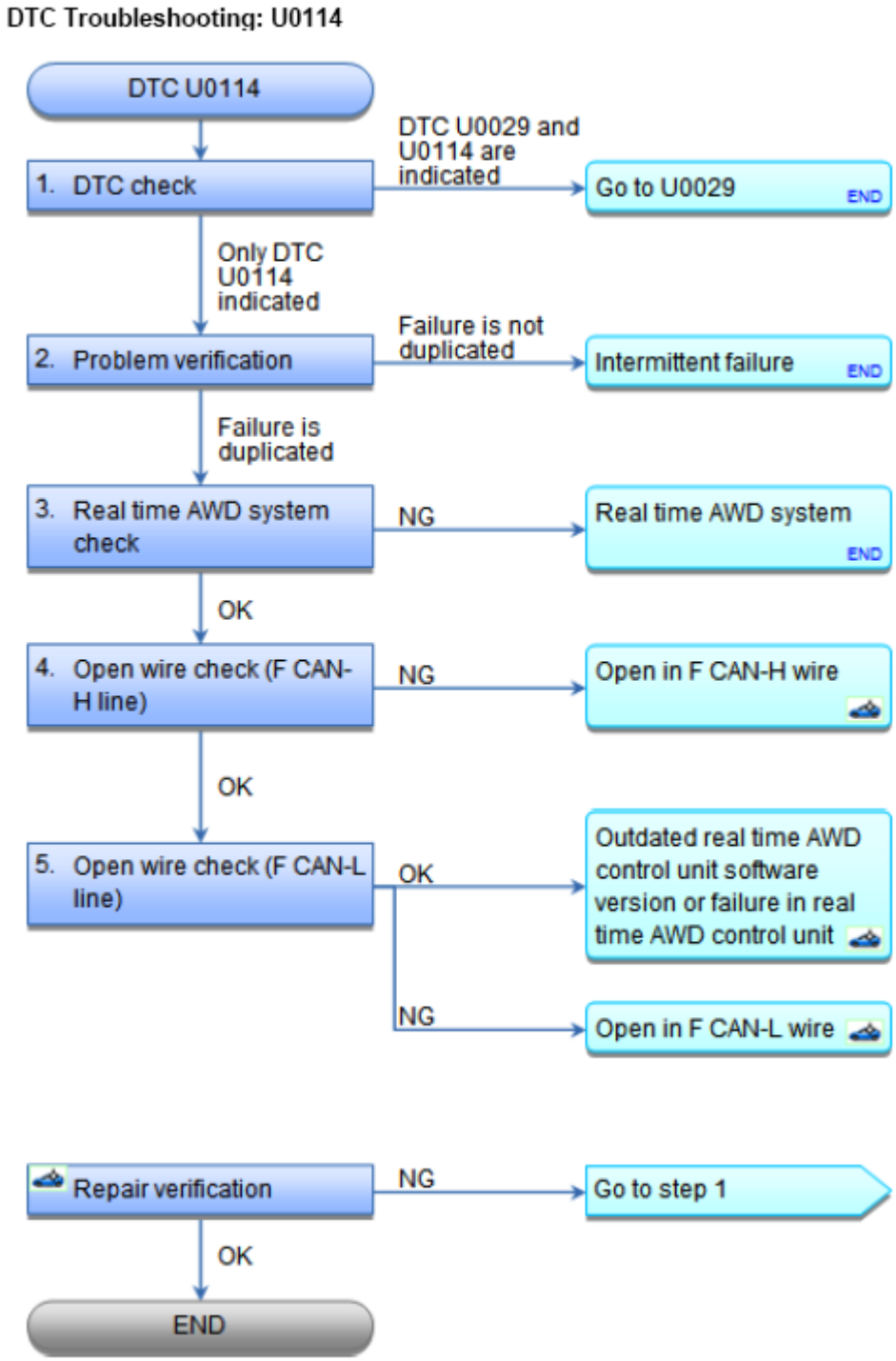

Fig. 9: DTC Troubleshooting Chart (U0114)
Courtesy of AMERICAN HONDA MOTOR CO., INC.

GETtheMANUALS.org

NOTE: **Before you troubleshoot, record all freeze data and any on-board snapshot, and review the general troubleshooting information See HOW TO TROUBLESHOOT THE A/T SYSTEM or HOW TO TROUBLESHOOT THE FUEL AND EMISSIONS SYSTEMS .**

DTC Description	Confirmed DTC	Pending DTC	Freeze Frame
U0114 F-CAN MALFUNCTION (AWD CONTROL UNIT-PCM)			

1. DTC check:
   - 1. Turn the ignition switch to ON (II).
   - 2. Check for Pending or Confirmed DTCs with the HDS.

DTC Description	Confirmed DTC	Pending DTC	Freeze Frame
U0029 F-CAN MALFUNCTION (BUS-OFF(PCM))			
U0114 F-CAN MALFUNCTION (AWD CONTROL UNIT-PCM)			

Are DTC U0029 and U0114 indicated at the same time?

YES : **DO THE TROUBLESHOOTING FOR DTC U0029**.

NO : Go to step 2.

2. Problem verification:
   - 1. **Clear the DTC with the HDS** See **HOW TO TROUBLESHOOT THE A/T SYSTEM** or **HOW TO TROUBLESHOOT THE FUEL AND EMISSIONS SYSTEMS** .
   - 2. Check for Pending or Confirmed DTCs with the HDS.

DTC Description	Confirmed DTC	Pending DTC	Freeze Frame
U0114 F-CAN MALFUNCTION (AWD CONTROL UNIT-PCM)			

Is DTC U0114 indicated?

YES : The failure is duplicated. Go to step 3.

NO : Intermittent failure, the system is OK at this time. Check for poor connections or loose terminals at the real time AWD control unit and the PCM.

3. Real time AWD system check:

GETtheMANUALS.org

- 1. Check for communication to the Real time AWD system with the HDS.

Does the HDS communicate with the real time AWD control unit?

YES : Go to step 4.

NO : Go to the real time AWD symptom troubleshooting for HDS does not communicate.

4. Open wire check (F CAN-H line):
   - 1. Turn the ignition switch to LOCK (0).
   - 2. Jump the SCS line with the HDS.
   - 3. Disconnect the following connectors.

     PCM connector A (49P)

     Real time AWD control unit 24P connector

   - 4. Check for continuity between test points 1 and 2.

     Test condition IG LOCK (0)

     PCM connector A (49P): disconnected

     Real time AWD control unit 24P connector: disconnected

     Test circuit F CAN-H

     Test point 1 PCM connector A (49P) No. 3 (WHT)

     Test point 2 Real time AWD control unit 24P connector No. 14 (WHT)

GETtheMANUALS.org

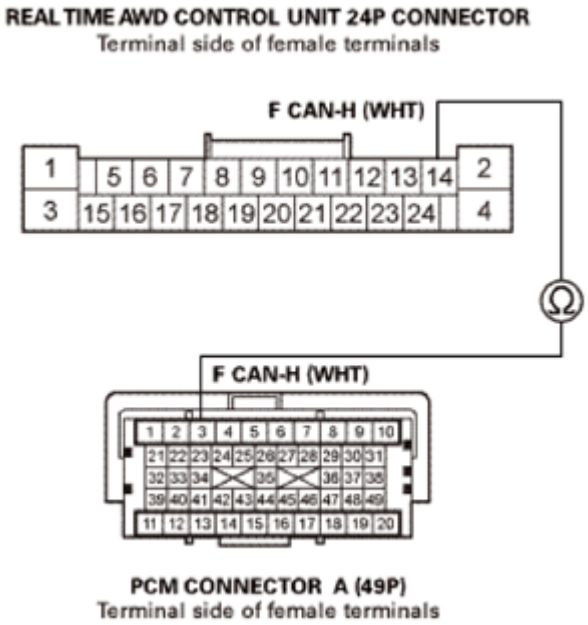

Fig. 10: Checking Continuity Between PCM Connector A (49P) No. 3 And Real Time AWD Control Unit 24P Connector No. 14 Terminals
Courtesy of AMERICAN HONDA MOTOR CO., INC.

Is there continuity?

YES : The F CAN-H wire is OK. Go to step 5.

NO : Repair an open in the F CAN-H wire between the PCM (A3) and the real time AWD control unit, then **do the repair verification** .

5. Open wire check (F CAN-L line):
   - 1. Check for continuity between test points 1 and 2.

     Test condition IG LOCK (0)

     PCM connector A (49P): disconnected

     Real time AWD control unit 24P connector: disconnected

     Test circuit F CAN-L

     Test point 1 PCM connector A (49P) No. 4 (RED)

     Test point 2 Real time AWD control unit 24P connector No. 24 (RED)

GETtheMANUALS.org

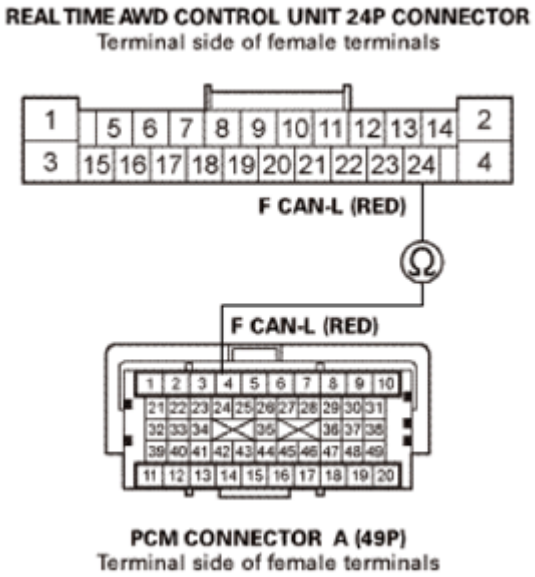

Fig. 11: Checking Continuity Between PCM Connector A (49P) No. 4 And Real Time AWD Control Unit 24P Connector No. 24 Terminals
Courtesy of AMERICAN HONDA MOTOR CO., INC.

Is there continuity?

YES : The F CAN-L wire is OK. **Update the real time AWD control unit** See **VSA MODULATOR-CONTROL UNIT REMOVAL AND INSTALLATION** , **VSA MODULATOR-CONTROL UNIT UPDATE** or **VSA SENSOR NEUTRAL POSITION MEMORIZATION** if it does not have the latest software, then **do the repair verification** . If DTC U0114 is indicated after updated, **replace the original real time AWD control unit** See **VSA MODULATOR-CONTROL UNIT REMOVAL AND INSTALLATION** , **VSA MODULATOR-CONTROL UNIT UPDATE** or **VSA SENSOR NEUTRAL POSITION MEMORIZATION** , then **do the repair verification** .

NO : Repair an open in the F CAN-L wire between the PCM (A4) and the real time AWD control unit, then **do the repair verification** .

REPAIR VERIFICATION

- Turn the ignition switch to LOCK (0).
- Reconnect all connectors.
- Turn the ignition switch to ON (II).
- **Reset the PCM with the HDS** See **HOW TO TROUBLESHOOT THE FUEL AND EMISSIONS SYSTEMS** or **HOW TO TROUBLESHOOT THE A/T SYSTEM** .
- **DO THE PCM IDLE LEARN PROCEDURE** .
- Check for Pending or Confirmed DTCs with the HDS.

DTC Description	Confirmed DTC	Pending DTC	Freeze Frame

GETtheMANUALS.org

U0114 F-CAN MALFUNCTION (AWD CONTROL UNIT-PCM)			

Is DTC U0114 indicated?

YES : Check for poor connections or loose terminals at the real time AWD control unit and the PCM then go to step 1.

NO : Troubleshooting is complete. If any other Pending or Confirmed DTCs are indicated, go to the indicated DTC's troubleshooting.

DTC U0114: GAUGE CONTROL MODULE LOST COMMUNICATION WITH REAL TIME AWD CONTROL UNIT

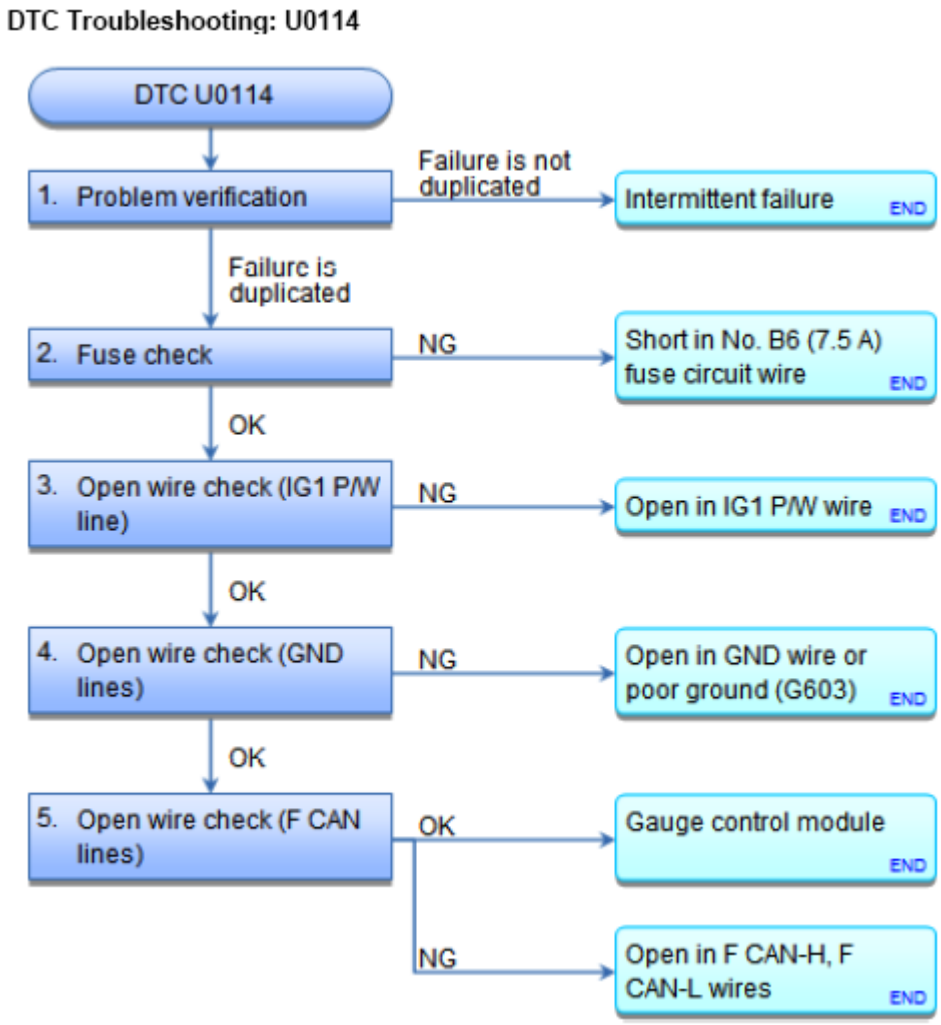

Fig. 12: DTC Troubleshooting Chart (U0114)
Courtesy of AMERICAN HONDA MOTOR CO., INC.

GETtheMANUALS.org

DTC Description	DTC
U0114 Gauge Control Module Lost Communication With Real Time AWD Control Unit	

NOTE:

- **If you have any loss of communication DTCs for the PCM, troubleshoot those DTCs first.**
- **If you are troubleshooting multiple DTCs, be sure to follow the instructions in B-CAN System Diagnosis Test Mode A.**

1. Problem verification:
   - 1. Clear the DTCs with the HDS.
   - 2. Turn the ignition switch to LOCK (0) and then back to ON (II).
   - 3. Wait for at least 6 seconds.
   - 4. Check for DTCs with the HDS.

DTC Description	DTC
U0114 Gauge Control Module Lost Communication With Real Time AWD Control Unit	

Is DTC U0114 indicated?

YES : Go to step 2.

NO : Intermittent failure, the system is OK at this time. Check for loose or poor connections.

2. Fuse check:
   - 1. Check the following fuse.

     Fuse No. B6 (7.5 A)

     Location Under-dash fuse/relay box

Is the fuse OK?

YES : Go to step 3.

NO : Replace the fuse. If the fuse blows again, repair a short to ground in the No. B6 (7.5 A) fuse circuit.

3. Open wire check (IG1 P/W line):
   - 1. Turn the ignition switch to LOCK (0).
   - 2. Disconnect the following connector.

     Real time AWD control unit 24P connector

   - 3. Turn the ignition switch to ON (II).

GETtheMANUALS.org

- 4. Measure the voltage between test points 1 and 2.

  Test condition IG ON (II)

  Real time AWD control unit 24P connector: disconnected

  Test circuit IG1 P/W

  Test point 1 Real time AWD control unit 24P connector No. 12 (RED)

  Test point 2 Body ground

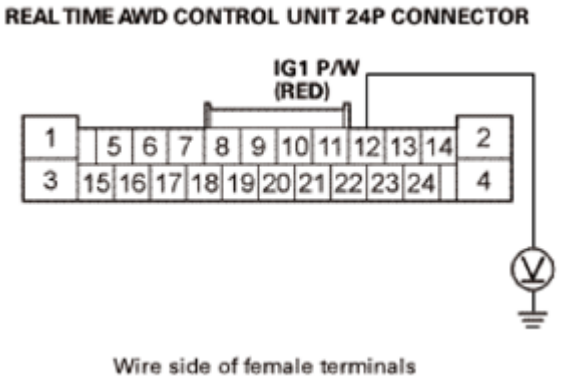

Fig. 13: Measuring Voltage Between Real Time AWD Control Unit 24P Connector No. 12 And Body Ground
Courtesy of AMERICAN HONDA MOTOR CO., INC.

Is there battery voltage?

YES : The IG1 P/W wire is OK. Go to step 4.

NO : Repair an open or high resistance in the wire.

4. Open wire check (GND lines):
   - 1. Turn the ignition switch to LOCK (0).
   - 2. Check for continuity between test points 1 and 2.

     Test condition IG LOCK (0)

     Real time AWD control unit 24P connector: disconnected

     Test circuit GND

     Test point 1 Real time AWD control unit 24P connector No. 4 (BLK)

     Test point 2 Body ground

GETtheMANUALS.org

Test circuit GND

Test point 1 Real time AWD control unit 24P connector No. 8 (BLK)

Test point 2 Body ground

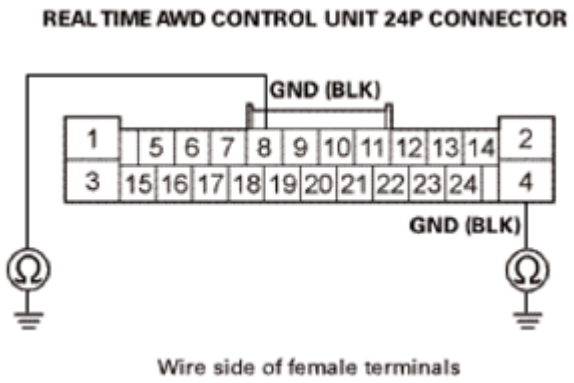

Fig. 14: Checking Continuity Between Real Time AWD Control Unit 24P Connector No. 4, 8 And Body Ground
Courtesy of AMERICAN HONDA MOTOR CO., INC.

Is there continuity?

YES : The GND wires are OK. Go to step 5.

NO : Repair an open or high resistance in the ground wire or poor ground (G603).

5. Open wire check (F CAN lines):
   - 1. Disconnect the following connector.

     Gauge control module 32P connector

   - 2. Check for continuity between test points 1 and 2 respectively.

     Test condition IG LOCK (0)

     Real time AWD control unit 24P connector: disconnected

     Gauge control module 32P connector: disconnected

     Test circuit F CAN-H

     Test point 1 Real time AWD control unit 24P connector No. 14 (WHT)

     Test point 2 Gauge control module 32P connector No. 19 (WHT)

     Test circuit F CAN-L

GETtheMANUALS.org

Test point 1 Real time AWD control unit 24P connector No. 24 (RED)

Test point 2 Gauge control module 32P connector No. 20 (RED)

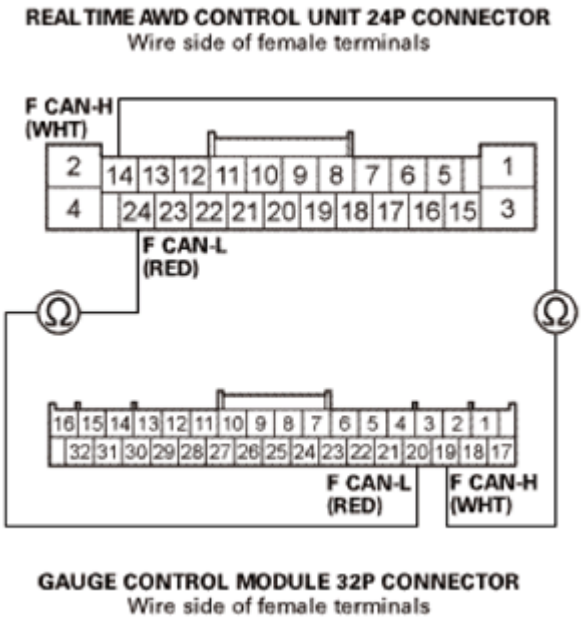

Fig. 15: Checking Continuity Between Real Time AWD Control Unit 24P Connector And Gauge Control Module 32P Connector Terminals
Courtesy of AMERICAN HONDA MOTOR CO., INC.

Is there continuity?

YES : The F CAN wires are OK. **Replace the gauge control module** See **Rewriting the ODO Data and Transferring the Maintenance Minder™ Data to a New Gauge Control Module** or **GAUGE CONTROL MODULE REMOVAL AND INSTALLATION** .

NO : An open or poor connection in the F CAN wires between the real time AWD control unit and the gauge control module.

DTC U0122: F-CAN MALFUNCTION (PCM-VSA MODULATOR-CONTROL UNIT)

GETtheMANUALS.org

DTC Troubleshooting: U0122

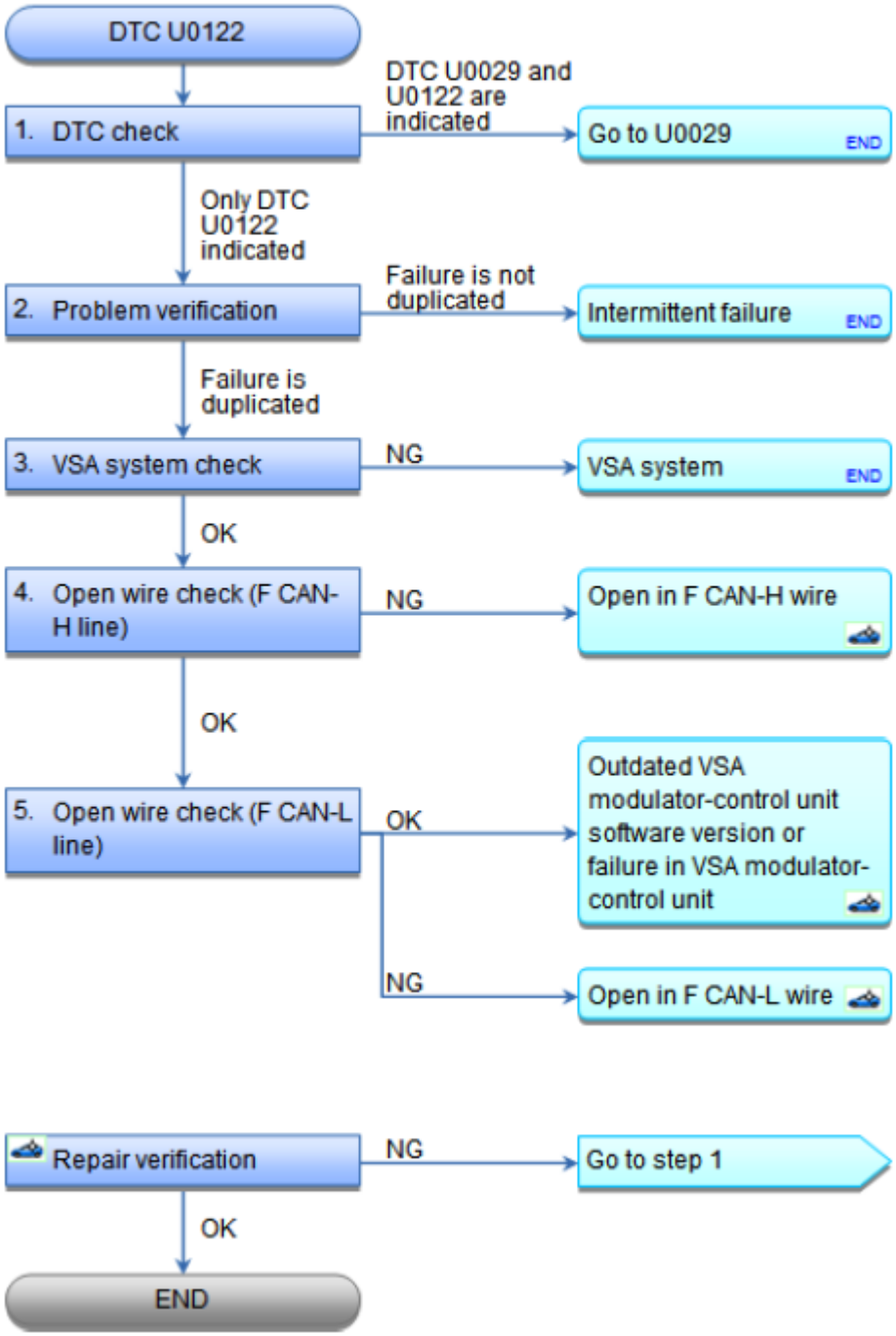

Fig. 16: DTC Troubleshooting Chart (U0122)
Courtesy of AMERICAN HONDA MOTOR CO., INC.

NOTE: **Before you troubleshoot, record all freeze data and any on-board snapshot, and review the general troubleshooting information See HOW TO TROUBLESHOOT THE A/T SYSTEM or HOW TO TROUBLESHOOT THE FUEL AND EMISSIONS SYSTEMS .**

GETtheMANUALS.org

DTC Description	Confirmed DTC	Pending DTC	Freeze Frame
U0122 F-CAN MALFUNCTION (PCM-VSA MODULATOR CONTROL UNIT)			

1. DTC check:
   - 1. Turn the ignition switch to ON (II).
   - 2. Check for Pending or Confirmed DTCs with the HDS.

DTC Description	Confirmed DTC	Pending DTC	Freeze Frame
U0029 F-CAN MALFUNCTION (BUS-OFF(PCM))			
U0122 F-CAN MALFUNCTION (PCM-VSA MODULATOR CONTROL UNIT)			

Are DTC U0029 and U0122 indicated at the same time?

YES : **DO THE TROUBLESHOOTING FOR DTC U0029**.

NO : Go to step 2.

2. Problem verification:
   - 1. **Clear the DTC with the HDS** See **HOW TO TROUBLESHOOT THE FUEL AND EMISSIONS SYSTEMS** or **HOW TO TROUBLESHOOT THE A/T SYSTEM** .
   - 2. Check for Pending or Confirmed DTCs with the HDS.

DTC Description	Confirmed DTC	Pending DTC	Freeze Frame
U0122 F-CAN MALFUNCTION (PCM-VSA MODULATOR CONTROL UNIT)			

Is DTC U0122 indicated?

YES : The failure is duplicated. Go to step 3.

NO : Intermittent failure, the system is OK at this time. Check for poor connections or loose terminals at the VSA modulator-control unit and the PCM.

3. VSA system check:
   - 1. Check for communication to the VSA system with the HDS.

Does the HDS communicate with the VSA modulator-control unit?

YES : Go to step 4.

GETtheMANUALS.org

NO : **GO TO THE SYMPTOM TROUBLESHOOTING FOR ABS INDICATOR, BRAKE SYSTEM INDICATOR, AND VSA INDICATOR DO NOT GO OFF** .

4. Open wire check (F CAN-H line):
   - 1. Turn the ignition switch to LOCK (0).
   - 2. Jump the SCS line with the HDS.
   - 3. Disconnect the following connectors.

     PCM connector A (49P)

     VSA modulator-control unit 38P connector

   - 4. Check for continuity between test points 1 and 2.

     Test condition IG LOCK (0)

     PCM connector A (49P): disconnected

     VSA modulator-control unit 38P connector: disconnected

     Test circuit F CAN-H

     Test point 1 PCM connector A (49P) No. 3 (WHT)

     Test point 2 VSA modulator-control unit 38P connector No. 38 (WHT)

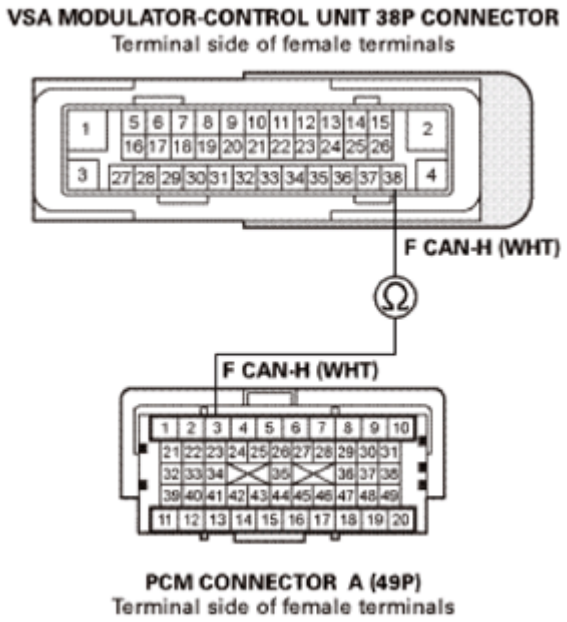

Fig. 17: Checking Continuity Between PCM Connector A (49P) No. 3 And VSA Modulator-Control Unit 38P Connector No. 38 Terminals

GETtheMANUALS.org

Courtesy of AMERICAN HONDA MOTOR CO., INC.

Is there continuity?

YES : The F CAN-H wire is OK. Go to step 5.

NO : Repair an open in the F CAN-H wire between the PCM (A3) and the VSA modulator-control unit, then **do the repair verification** .

5. Open wire check (F CAN-L line):
   - 1. Check for continuity between test points 1 and 2.

     Test condition IG LOCK (0)

     PCM connector A (49P): disconnected

     VSA modulator-control unit 38P connector: disconnected

     Test circuit F CAN-L

     Test point 1 PCM connector A (49P) No. 4 (RED)

     Test point 2 VSA modulator-control unit 38P connector No. 26 (RED)

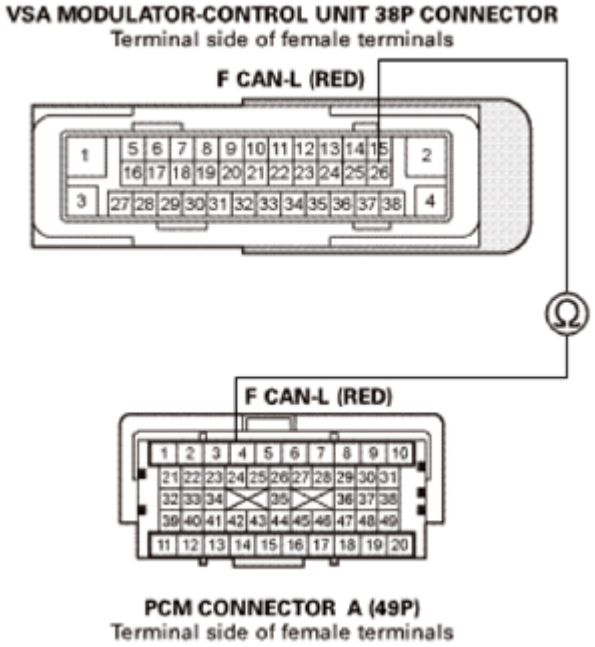

Fig. 18: Checking Continuity Between PCM Connector A (49P) No. 4 And VSA Modulator-Control Unit 38P Connector No. 26 Terminals
Courtesy of AMERICAN HONDA MOTOR CO., INC.

GETtheMANUALS.org

Is there continuity?

YES : The F CAN-L wire is OK. **Update the VSA modulator-control unit** See **VSA MODULATOR-CONTROL UNIT REMOVAL AND INSTALLATION** , **VSA MODULATOR-CONTROL UNIT UPDATE** or **VSA SENSOR NEUTRAL POSITION MEMORIZATION** if it does not have the latest software, then **do the repair verification** . If DTC U0122 is indicated after updated, **replace the VSA modulator-control unit** See **VSA MODULATOR-CONTROL UNIT REMOVAL AND INSTALLATION** , **VSA MODULATOR-CONTROL UNIT UPDATE** or **VSA SENSOR NEUTRAL POSITION MEMORIZATION** , then **do the repair verification** .

NO : Repair an open in the F CAN-L wire between the PCM (A4) and the VSA modulator-control unit, then **do the repair verification** .

REPAIR VERIFICATION

- Turn the ignition switch to LOCK (0).
- Reconnect all connectors.
- Turn the ignition switch to ON (II).
- **Reset the PCM with the HDS** See **HOW TO TROUBLESHOOT THE A/T SYSTEM** or **HOW TO TROUBLESHOOT THE FUEL AND EMISSIONS SYSTEMS** .
- **DO THE PCM IDLE LEARN PROCEDURE** .
- Check for Pending or Confirmed DTCs with the HDS.

DTC Description	Confirmed DTC	Pending DTC	Freeze Frame
U0122 F-CAN MALFUNCTION (PCM-VSA MODULATOR CONTROL UNIT)			

Is DTC U0122 indicated?

YES : Check for poor connections or loose terminals at the VSA modulator-control unit and the PCM then go to step 1.

NO : Troubleshooting is complete. If any other Pending or Confirmed DTCs are indicated, go to the indicated DTC's troubleshooting.

DTC U0122: GAUGE CONTROL MODULE LOST COMMUNICATION WITH VSA MODULATOR-CONTROL UNIT (VSA MESSAGE)

GETtheMANUALS.org

DTC Troubleshooting: U0122

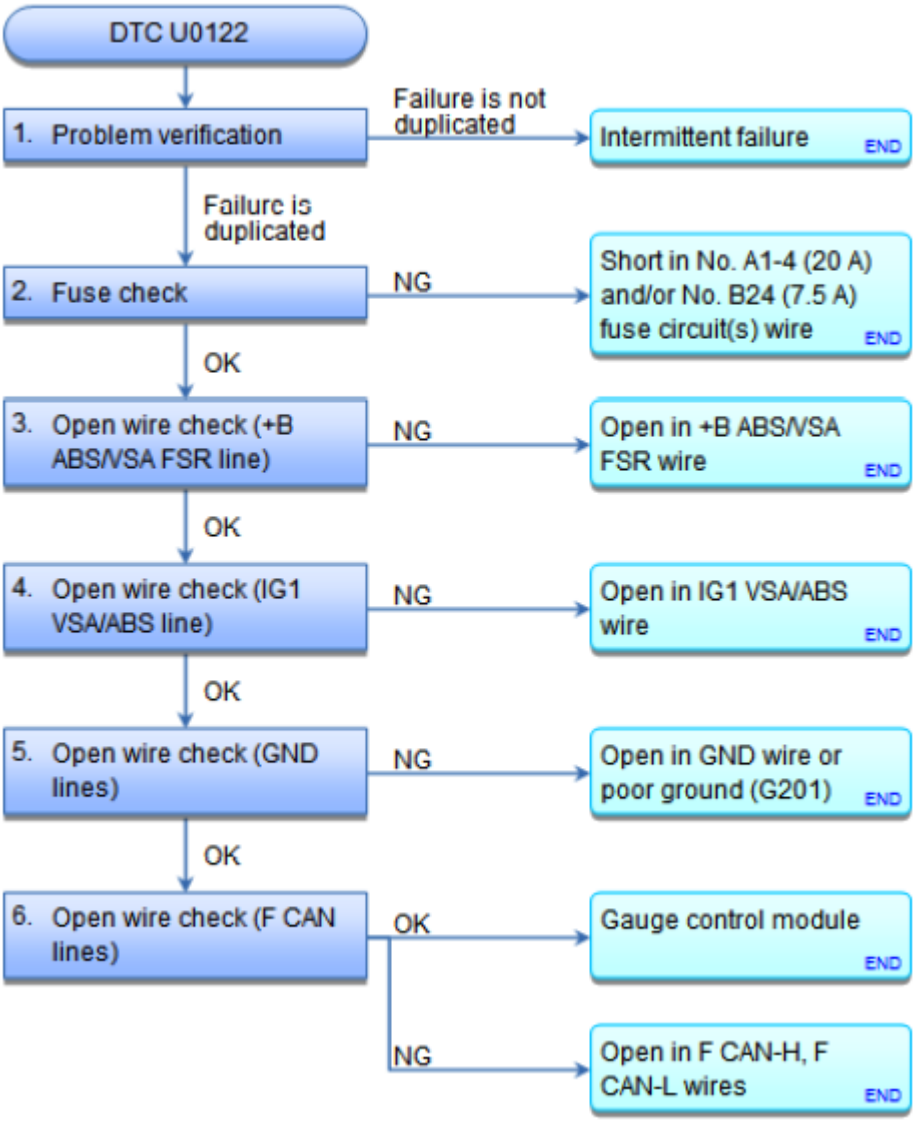

Fig. 19: DTC Troubleshooting Chart (U0122)
Courtesy of AMERICAN HONDA MOTOR CO., INC.

DTC Description	DTC
U0122 Gauge Control Module Lost Communication With VSA Modulator- Control Unit (VSA Message)	

NOTE:

- **If you have any loss of communication DTCs for the PCM, troubleshoot those DTCs first.**
- **If you are troubleshooting multiple DTCs, be sure to follow the instructions in B-CAN System Diagnosis Test Mode A.**

GETtheMANUALS.org

1. Problem verification:
   - 1. Clear the DTCs with the HDS.
   - 2. Turn the ignition switch to LOCK (0) and then back to ON (II).
   - 3. Wait for at least 6 seconds.
   - 4. Check for DTCs with the HDS.

DTC Description	DTC
U0122 Gauge Control Module Lost Communication With VSA Modulator- Control Unit (VSA Message)	

Is DTC U0122 indicated?

YES : Go to step 2.

NO : Intermittent failure, the system is OK at this time. Check for loose or poor connections.

2. Fuse check:
   - 1. Check the following fuses.

     Fuse No. A1-4 (20 A)

     Location Under-hood fuse/relay box

     Fuse No. B24 (7.5 A)

     Location Under-dash fuse/relay box

Is each fuse OK?

YES : Go to step 3.

NO : Replace the fuse. If the fuse blows again, repair a short to ground in the No. A1-4 (20 A) and/or No. B24 (7.5 A) fuse circuit(s).

3. Open wire check (+B ABS/VSA FSR line):
   - 1. Turn the ignition switch to LOCK (0).
   - 2. Disconnect the following connector.

     VSA modulator-control unit 38P connector

   - 3. Measure the voltage between test points 1 and 2.

     Test condition IG LOCK (0)

     VSA modulator-control unit 38P connector: disconnected

GETtheMANUALS.org

Test circuit +B ABS/VSA FSR

Test point 1 VSA modulator control unit 38P connector No. 4 (WHT)

Test point 2 Body ground

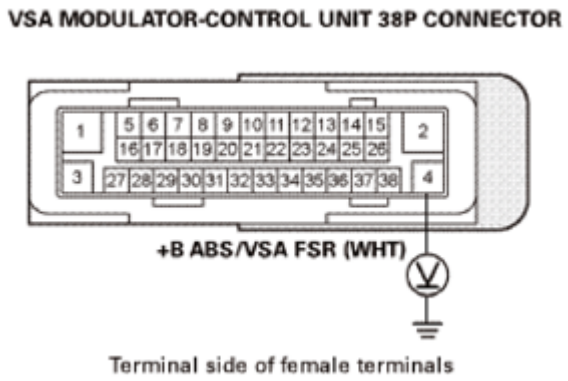

Fig. 20: Measuring Voltage Between VSA Modulator Control Unit 38P Connector No. 4 And Body Ground
Courtesy of AMERICAN HONDA MOTOR CO., INC.

Is there battery voltage?

YES : The +B ABS/VSA FSR wire is OK. Go to step 4.

NO : Repair an open or high resistance in the wire.

4. Open wire check (IG1 VSA/ABS line):
   - 1. Turn the ignition switch to ON (II).
   - 2. Measure the voltage between test points 1 and 2.

     Test condition IG ON (II)

     VSA modulator-control unit 38P connector: disconnected

     Test circuit IG1 VSA/ABS

     Test point 1 VSA modulator-control unit 38P connector No. 36 (PUR)

     Test point 2 Body ground

GETtheMANUALS.org

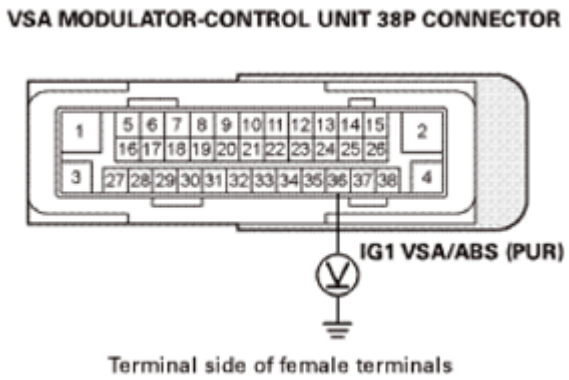

Fig. 21: Measuring Voltage Between VSA Modulator-Control Unit 38P Connector No. 36 And Body Ground
Courtesy of AMERICAN HONDA MOTOR CO., INC.

Is there battery voltage?

YES : The IG1 VSA/ABS wire is OK. Go to step 5.

NO : Repair an open or high resistance in the wire.

5. Open wire check (GND lines):
   - 1. Turn the ignition switch to LOCK (0).
   - 2. Check for continuity between test points 1 and 2.

   Test condition IG LOCK (0)

   VSA modulator-control unit 38P connector: disconnected

   Test circuit GND

   Test point 1 VSA modulator control unit 38P connector No. 1 (BLK)

   Test point 2 Body ground

   Test circuit GND

   Test point 1 VSA modulator control unit 38P connector No. 3 (BLK)

   Test point 2 Body ground

GETtheMANUALS.org

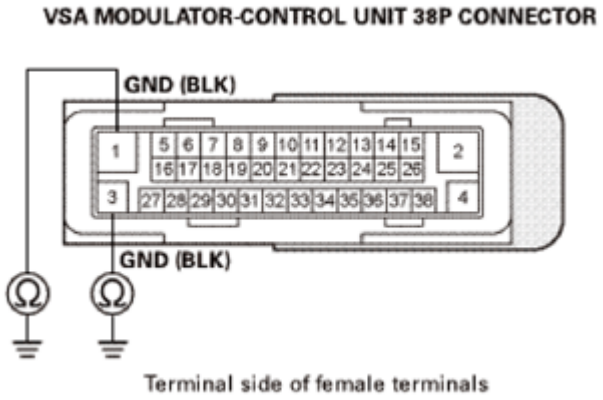

Fig. 22: Checking Continuity Between VSA Modulator Control Unit 38P Connector No. 1, 3 And Body Ground
Courtesy of AMERICAN HONDA MOTOR CO., INC.

Is there continuity?

YES : The GND wires are OK. Go to step 6.

NO : Repair an open or high resistance in the ground wire or poor ground (G201).

6. Open wire check (F CAN lines):
   - 1. Disconnect the following connector.

     Gauge control module 32P connector

   - 2. Check for continuity between test points 1 and 2 respectively.

     Test condition IG LOCK (0)

     VSA modulator-control unit 38P connector: disconnected

     Gauge control module 32P connector: disconnected

     Test circuit F CAN-H

     Test point 1 Gauge control module 32P connector No. 19 (WHT)

     Test point 2 VSA modulator-control unit 38P connector No. 38 (WHT)

     Test circuit F CAN-L

     Test point 1 Gauge control module 32P connector No. 20 (RED)

     Test point 2 VSA modulator-control unit 38P connector No. 26 (RED)

GETtheMANUALS.org

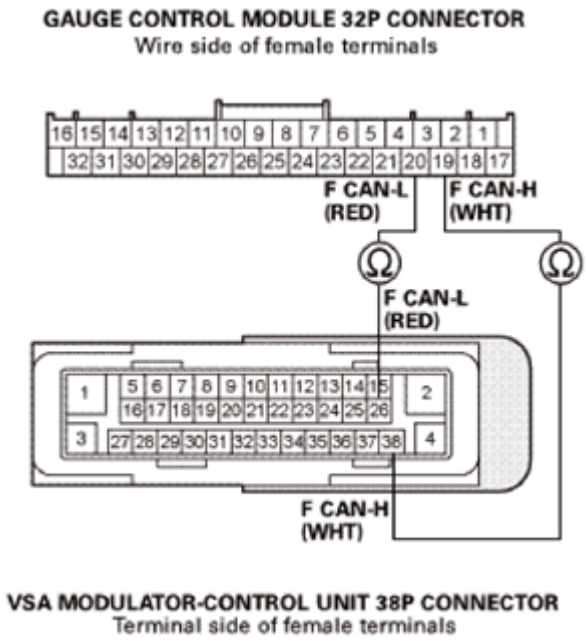

Fig. 23: Checking Continuity Between Gauge Control Module 32P Connector And VSA Modulator-Control Unit 38P Connector Terminals
Courtesy of AMERICAN HONDA MOTOR CO., INC.

Is there continuity?

YES : The F CAN wires are OK. **Replace the gauge control module** See **GAUGE CONTROL MODULE REMOVAL AND INSTALLATION** or **Rewriting the ODO Data and Transferring the Maintenance Minder™ Data to a New Gauge Control Module** .

NO : An open or poor connection in the F CAN wires between the VSA modulator-control unit and the gauge control module.

DTC U0127: GAUGE CONTROL MODULE LOST COMMUNICATION WITH TPMS CONTROL UNIT (TPMS MESSAGE)

GETtheMANUALS.org

DTC Troubleshooting: U0127

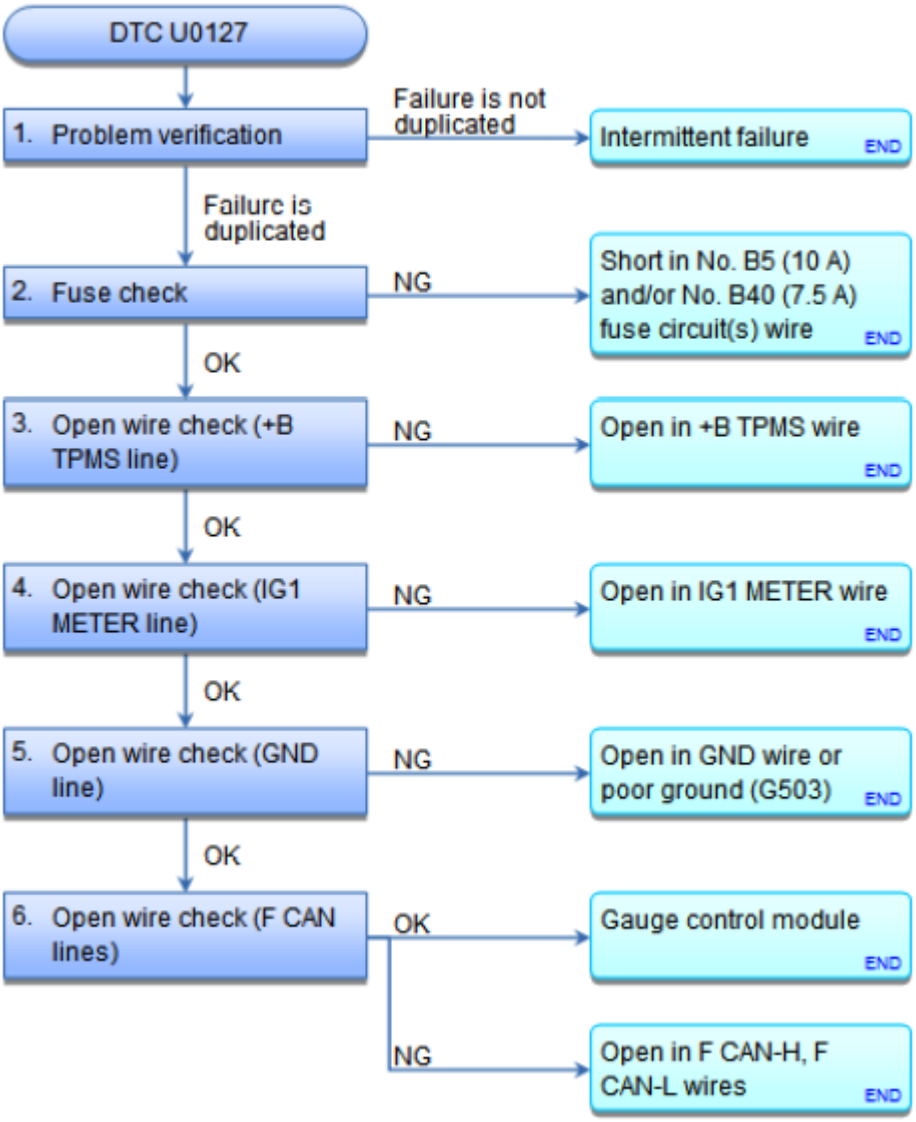

Fig. 24: DTC Troubleshooting Chart (U0127)
Courtesy of AMERICAN HONDA MOTOR CO., INC.

DTC Description	DTC
U0127 Gauge Control Module Lost Communication With TPMS Control Unit (TPMS Message)	

NOTE:

- **If you have any loss of communication DTCs for the PCM, troubleshoot those DTCs first.**
- **If you are troubleshooting multiple DTCs, be sure to follow the instructions in B-CAN System Diagnosis Test Mode A.**

1. Problem verification:

GETtheMANUALS.org

- 1. Clear the DTCs with the HDS.
- 2. Turn the ignition switch to LOCK (0) and then back to ON (II).
- 3. Wait for at least 6 seconds.
- 4. Check for DTCs with the HDS.

DTC Description	DTC
U0127 Gauge Control Module Lost Communication With TPMS Control Unit (TPMS Message)	

Is DTC U0127 indicated?

YES : Go to step 2.

NO : Intermittent failure, the system is OK at this time. Check for loose or poor connections.

2. Fuse check:
   - 1. Check the following fuses.

     Fuse No. B5 (10 A)

     No. B40 (7.5 A)

     Location Under-dash fuse/relay box

Is each fuse OK?

YES : Go to step 3.

NO : Replace the fuse. If the fuse blows again, repair a short to ground in the No. B5 (10 A) and/or No. B40 (7.5 A) fuse circuit(s).

3. Open wire check (+B TPMS line):
   - 1. Turn the ignition switch to LOCK (0).
   - 2. Disconnect the following connector.

     TPMS control unit 20P connector

   - 3. Measure the voltage between test points 1 and 2.

     Test condition IG LOCK (0)

     TPMS control unit 20P connector: disconnected

     Test circuit +B TPMS

GETtheMANUALS.org

Test point 1 TPMS control unit 20P connector No. 1 (RED)

Test point 2 Body ground

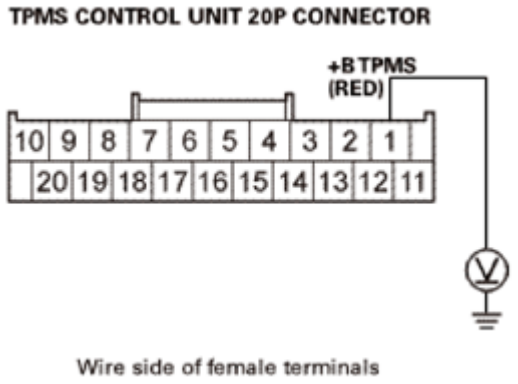

Fig. 25: Measuring Voltage Between TPMS Control Unit 20P Connector No. 1 And Body Ground
Courtesy of AMERICAN HONDA MOTOR CO., INC.

Is there battery voltage?

YES : The +B TPMS wire is OK. Go to step 4.

NO : Repair an open or high resistance in the wire.

4. Open wire check (IG1 METER line):
   - 1. Turn the ignition switch to ON (II).
   - 2. Measure the voltage between test points 1 and 2.

     Test condition IG ON (II)

     TPMS control unit 20P connector: disconnected

     Test circuit IG1 METER

     Test point 1 TPMS control unit 20P connector No. 3 (LT GRN)

     Test point 2 Body ground

GETtheMANUALS.org

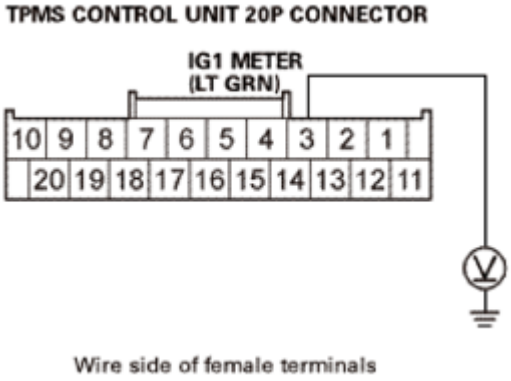

Fig. 26: Measuring Voltage Between TPMS Control Unit 20P Connector No. 3 And Body Ground
Courtesy of AMERICAN HONDA MOTOR CO., INC.

Is there battery voltage?

YES : The IG1 METER wire is OK. Go to step 5.

NO : Repair an open or high resistance in the wire.

5. Open wire check (GND line):
   - 1. Turn the ignition switch to LOCK (0).
   - 2. Check for continuity between test points 1 and 2.

   Test condition IG LOCK (0)

   TPMS control unit 20P connector: disconnected

   Test circuit GND

   Test point 1 TPMS control unit 20P connector No. 8 (BLK)

   Test point 2 Body ground

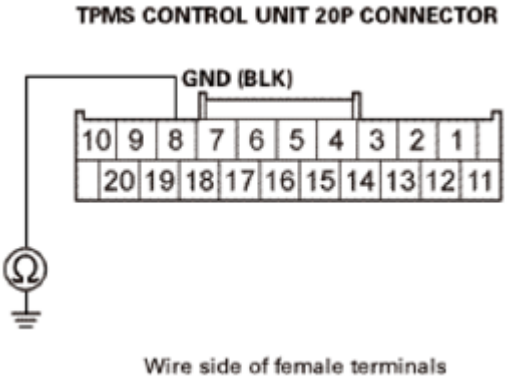

GETtheMANUALS.org

Fig. 27: Checking Continuity Between TPMS Control Unit 20P Connector No. 8 And Body Ground
Courtesy of AMERICAN HONDA MOTOR CO., INC.

Is there continuity?

YES : The GND wire is OK. Go to step 6.

NO : Repair an open or high resistance in the ground wire or poor ground (G503).

6. Open wire check (F CAN lines):
   - 1. Disconnect the following connector.

     Gauge control module 32P connector

   - 2. Check for continuity between test points 1 and 2 respectively.

     Test condition IG LOCK (0)

     TPMS control unit 20P connector: disconnected

     Gauge control module 32P connector: disconnected

     Test circuit F CAN-H

     Test point 1 TPMS control unit 20P connector No. 9 (WHT)

     Test point 2 Gauge control module 32P connector No. 19 (WHT)

     Test circuit F CAN-L

     Test point 1 TPMS control unit 20P connector No. 20 (RED)

     Test point 2 Gauge control module 32P connector No. 20 (RED)

GETtheMANUALS.org

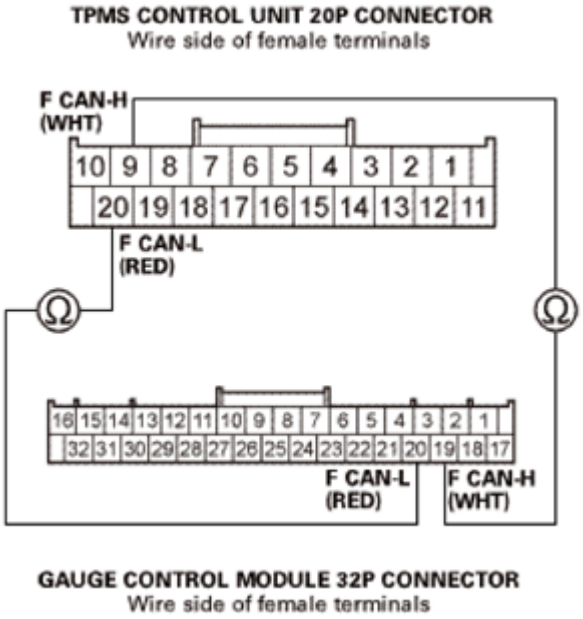

Fig. 28: Checking Continuity Between TPMS Control Unit 20P Connector And Gauge Control Module 32P Connector Terminals
Courtesy of AMERICAN HONDA MOTOR CO., INC.

Is there continuity?

YES : The F CAN wires are OK. **Replace the gauge control module** See **Rewriting the ODO Data and Transferring the Maintenance Minder™ Data to a New Gauge Control Module** or **GAUGE CONTROL MODULE REMOVAL AND INSTALLATION** .

NO : An open or poor connection in the F CAN wires between the TPMS control unit and the gauge control module.

DTC U0131: F-CAN MALFUNCTION (PCM-EPS CONTROL UNIT)

GETtheMANUALS.org

DTC Troubleshooting: U0131

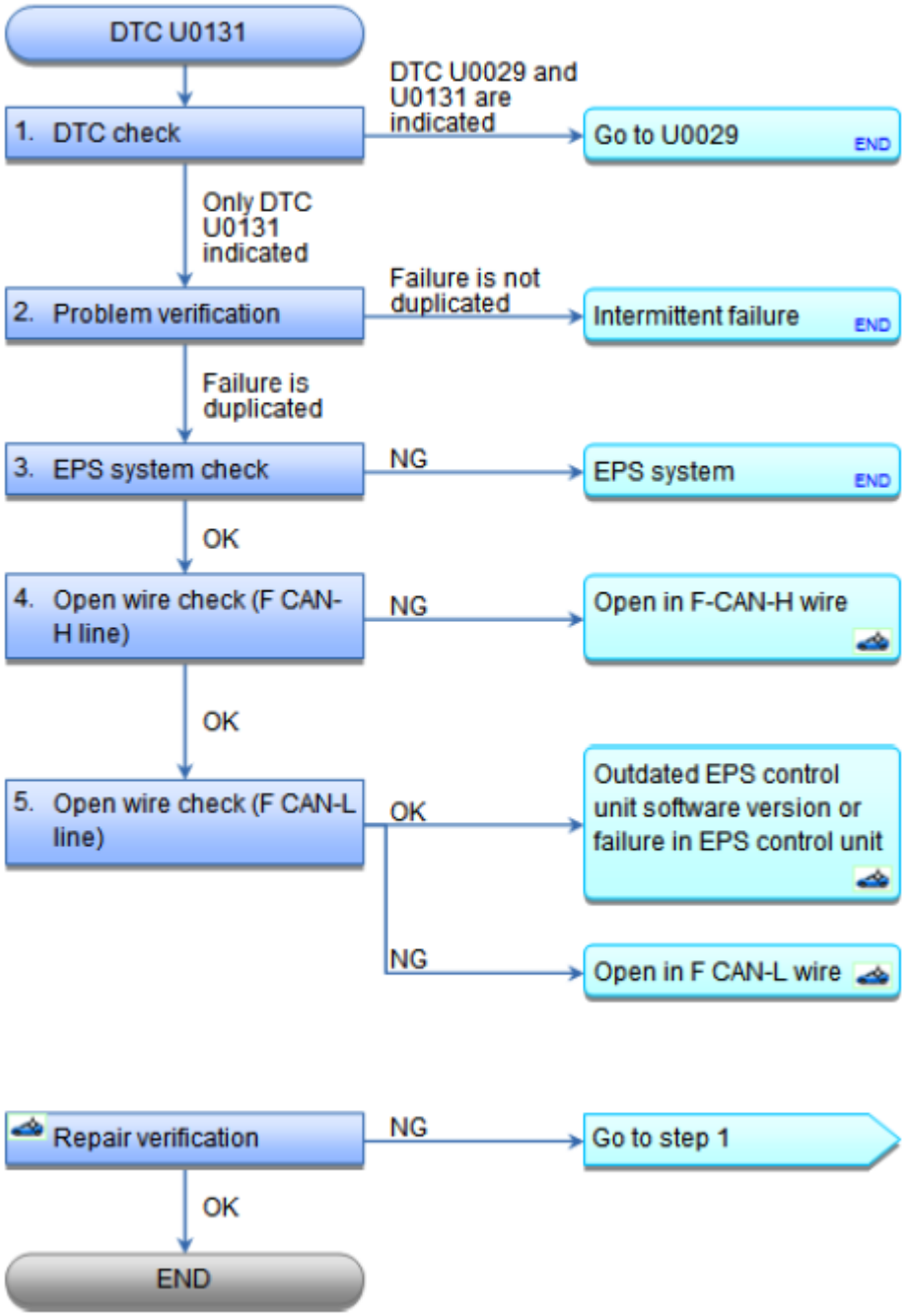

Fig. 29: DTC Troubleshooting Chart (U0131)
Courtesy of AMERICAN HONDA MOTOR CO., INC.

NOTE: **Before you troubleshoot, record all freeze data and any on-board snapshot, and review the general troubleshooting information See HOW TO TROUBLESHOOT THE FUEL AND EMISSIONS SYSTEMS or HOW TO TROUBLESHOOT THE A/T SYSTEM .**

GETtheMANUALS.org

DTC Description	Confirmed DTC	Pending DTC	Freeze Frame
U0131 F-CAN MALFUNCTION (PCM-EPS CONTROL UNIT)			

1. DTC check:
   - 1. Turn the ignition switch to ON (II).
   - 2. Check for Pending or Confirmed DTCs with the HDS.

DTC Description	Confirmed DTC	Pending DTC	Freeze Frame
U0029 F-CAN MALFUNCTION (BUS-OFF(PCM))			
U0131 F-CAN MALFUNCTION (PCM-EPS CONTROL UNIT)			

Are DTC U0029 and U0131 indicated at the same time?

YES : Go to **THE TROUBLESHOOTING FOR DTC U0029**.

NO : Go to step 2.

2. Problem verification:
   - 1. **Clear the DTC with the HDS** See **HOW TO TROUBLESHOOT THE A/T SYSTEM** or **HOW TO TROUBLESHOOT THE FUEL AND EMISSIONS SYSTEMS** .
   - 2. Check for Pending or Confirmed DTCs with the HDS.

DTC Description	Confirmed DTC	Pending DTC	Freeze Frame
U0131 F-CAN MALFUNCTION (PCM-EPS CONTROL UNIT)			

Is DTC U0131 indicated?

YES : The failure is duplicated. Go to step 3.

NO : Intermittent failure, the system is OK at this time. Check for poor connections or loose terminals at the EPS control unit and the PCM.

3. EPS system check:
   - 1. Check that the HDS communicates with the EPS system.

Does the HDS communicate with the EPS control unit?

YES : Go to step 4.

GETtheMANUALS.org

NO : **GO TO THE SYMPTOM TROUBLESHOOTING FOR AN EPS INDICATOR DOES NOT GO OFF, AND NO DTCS ARE STORED** .

4. Open wire check (F CAN-H line):
   - 1. Turn the ignition switch to LOCK (0).
   - 2. Jump the SCS line with the HDS.
   - 3. Disconnect the following connectors.

     PCM connector A (49P)

     EPS control unit connect A (11P)

   - 4. Check for continuity between test points 1 and 2.

     Test condition IG LOCK (0)

     PCM connector A (49P): disconnected

     EPS control unit connect A (11P): disconnected

     Test circuit F CAN-H

     Test point 1 PCM connector A (49P) No. 3 (WHT)

     Test point 2 EPS control unit connector A (11P) No. 7 (WHT)

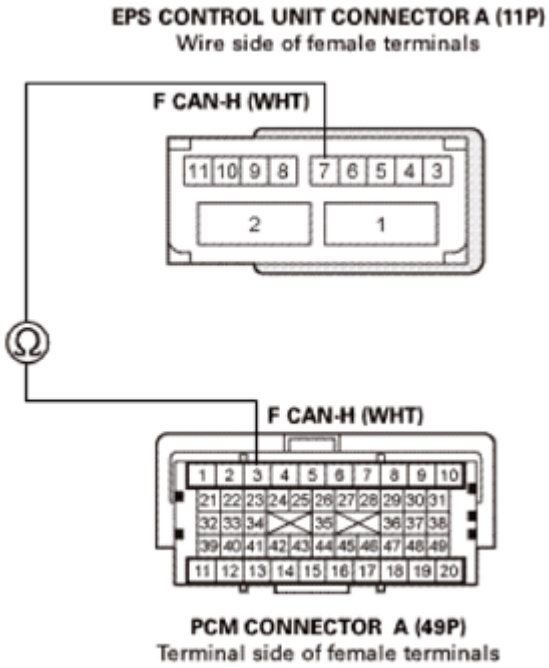

Fig. 30: Checking Continuity Between PCM Connector A (49P) No. 3 And EPS Control Unit

GETtheMANUALS.org

Connector A (11P) No. 7
Courtesy of AMERICAN HONDA MOTOR CO., INC.

Is there continuity?

YES : The F CAN-H wire is OK. Go to step 5.

NO : Repair an open in the F CAN-H wire between the PCM (A3) and the EPS control unit, then **do the repair verification** .

5. Open wire check (F CAN-L line):
   - 1. Check for continuity between test points 1 and 2.

     Test condition IG LOCK (0)

     PCM connector A (49P): disconnected

     EPS control unit connect A (11P): disconnected

     Test circuit F CAN-L

     Test point 1 PCM connector A (49P) No. 4 (RED)

     Test point 2 EPS control unit connector A (11P) No. 9 (RED)

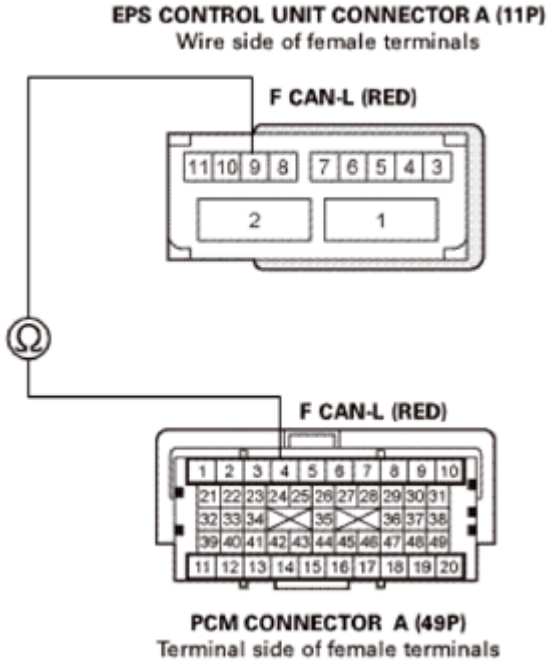

Fig. 31: Checking Continuity Between PCM Connector A (49P) No. 4 And EPS Control Unit Connector A (11P) No. 9
Courtesy of AMERICAN HONDA MOTOR CO., INC.

GETtheMANUALS.org

Is there continuity?

YES : The F CAN-L wire is OK. **Update the EPS control unit** See **EPS CONTROL UNIT UPDATE** or **EPS CONTROL UNIT REMOVAL AND INSTALLATION** if it does not have the latest software, or **substitute a known-good EPS control unit** See **EPS CONTROL UNIT UPDATE** or **EPS CONTROL UNIT REMOVAL AND INSTALLATION** , then **do the repair verification** . If DTC U0131 is not indicated after substitution, **replace the original EPS control unit** See **EPS CONTROL UNIT REMOVAL AND INSTALLATION** or **EPS CONTROL UNIT UPDATE** , then **do the repair verification** .

NO : Repair an open in the F CAN-L wire between the PCM (A4) and the EPS control unit, then **do the repair verification** .

REPAIR VERIFICATION

- Reconnect all connectors.
- Turn the ignition switch to ON (II).
- **Reset the PCM with the HDS** See **HOW TO TROUBLESHOOT THE FUEL AND EMISSIONS SYSTEMS** or **HOW TO TROUBLESHOOT THE A/T SYSTEM** .
- **DO THE PCM IDLE LEARN PROCEDURE** .
- Check for Pending or Confirmed DTCs with the HDS.

DTC Description	Confirmed DTC	Pending DTC	Freeze Frame
U0131 F-CAN MALFUNCTION (PCM-EPS CONTROL UNIT)			

Is DTC U0131 indicated?

YES : Check for poor connections or loose terminals at the EPS control unit and the PCM, then go to step 1.

NO : Troubleshooting is complete. If any other Pending or Confirmed DTCs are indicated, go to the indicated DTC's troubleshooting.

DTC U0131: GAUGE CONTROL MODULE LOST COMMUNICATION WITH EPS CONTROL UNIT

GETtheMANUALS.org

DTC Troubleshooting: U0131

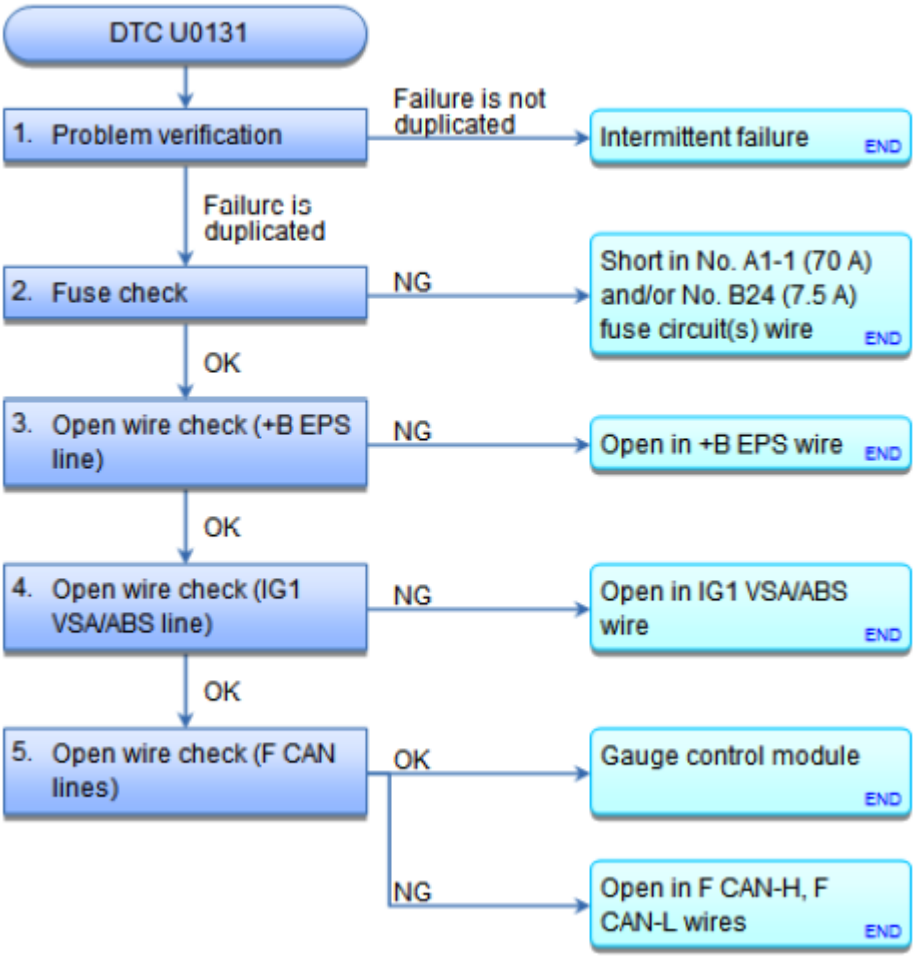

Fig. 32: DTC Troubleshooting Chart (U0131)
Courtesy of AMERICAN HONDA MOTOR CO., INC.

DTC Description	DTC
U0131 Gauge Control Module Lost Communication With EPS Control Unit	

NOTE:

- **If you have any loss of communication DTCs for the PCM, troubleshoot those DTCs first.**
- **If you are troubleshooting multiple DTCs, be sure to follow the instructions in B-CAN System Diagnosis Test Mode A.**

1. Problem verification:
    - 1. Clear the DTCs with the HDS.
    - 2. Turn the ignition switch to LOCK (0) and then back to ON (II).
    - 3. Wait for at least 6 seconds.
    - 4. Check for DTCs with the HDS.

GETtheMANUALS.org

DTC Description	DTC
U0131 Gauge Control Module Lost Communication With EPS Control Unit	

Is DTC U0131 indicated?

YES : Go to step 2.

NO : Intermittent failure, the system is OK at this time. Check for loose or poor connections.

2. Fuse check:
   - 1. Check the following fuses.

     Fuse No. A1-1 (70 A)

     Location Under-hood fuse/relay box

     Fuse No. B24 (7.5 A)

     Location Under-dash fuse/relay box

Is each fuse OK?

YES : Go to step 3.

NO : Replace the fuse. If the fuse blows again, repair a short to ground in the No. A1-1 (70 A) and/or No. B24 (7.5 A) fuse circuit(s).

3. Open wire check (+B EPS line):
   - 1. Turn the ignition switch to LOCK (0).
   - 2. Disconnect the following connector.

     EPS control unit connector A (11P)

   - 3. Measure the voltage between test points 1 and 2.

     Test condition IG LOCK (0)

     EPS control unit connector A (11P): disconnected

     Test circuit +B EPS

     Test point 1 EPS control unit connector A (11P) No. 2 (WHT)

     Test point 2 Body ground

GETtheMANUALS.org

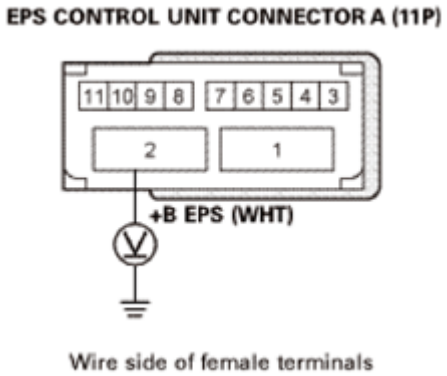

Fig. 33: Measuring Voltage Between EPS Control Unit Connector A (11P) No. 2 And Body Ground
Courtesy of AMERICAN HONDA MOTOR CO., INC.

Is there battery voltage?

YES : The +B EPS wire is OK. Go to step 4.

NO : Repair an open or high resistance in the wire.

4. Open wire check (IG1 VSA/ABS line):
   - 1. Turn the ignition switch to ON (II).
   - 2. Measure the voltage between test points 1 and 2.

     Test condition IG ON (II)

     EPS control unit connector A (11P): disconnected

     Test circuit IG1 VSA/ABS

     Test point 1 EPS control unit connector A (11P) No. 11 (PUR)

     Test point 2 Body ground

GETtheMANUALS.org

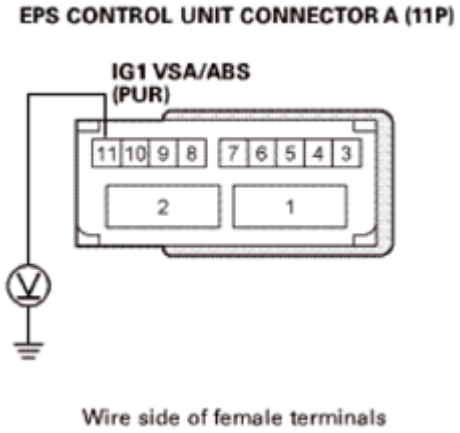

Fig. 34: Measuring Voltage Between EPS Control Unit Connector A (11P) No. 11 And Body Ground
Courtesy of AMERICAN HONDA MOTOR CO., INC.

Is there battery voltage?

YES : The IG1 VSA/ABS wire is OK. Go to step 5.

NO : Repair an open or high resistance in the wire.

5. Open wire check (F CAN lines):
   - 1. Turn the ignition switch to LOCK (0).
   - 2. Disconnect the following connector.

     Gauge control module 32P connector

   - 3. Check for continuity between test points 1 and 2 respectively.

     Test condition IG LOCK (0)

     EPS control unit connector A (11P): disconnected

     Gauge control module 32P connector: disconnected

     Test circuit F CAN-H

     Test point 1 Gauge control module 32P connector No. 19 (WHT)

     Test point 2 EPS control unit connector A (11P) No. 7 (WHT)

     Test circuit F CAN-L

     Test point 1 Gauge control module 32P connector No. 20 (RED)

GETtheMANUALS.org

Test point 2 EPS control unit connector A (11P) No. 9 (RED)

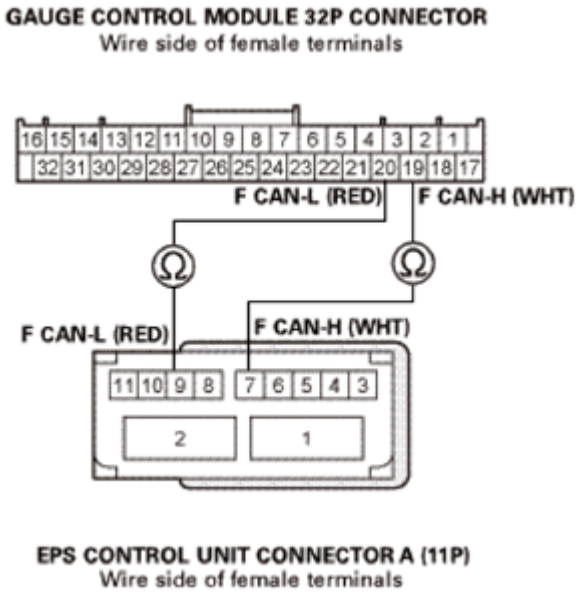

Fig. 35: Checking Continuity Between Gauge Control Module 32P Connector And EPS Control Unit Connector A (11P) Terminals
Courtesy of AMERICAN HONDA MOTOR CO., INC.

Is there continuity?

YES : The F CAN wires are OK. **Replace the gauge control module** See **Rewriting the ODO Data and Transferring the Maintenance Minder™ Data to a New Gauge Control Module** or **GAUGE CONTROL MODULE REMOVAL AND INSTALLATION** .

NO : An open or poor connection in the F CAN wires between the EPS control unit and the gauge control module.

DTC U0151: GAUGE CONTROL MODULE LOST COMMUNICATION WITH SRS UNIT (SRS MESSAGE)

GETtheMANUALS.org

DTC Troubleshooting: U0151

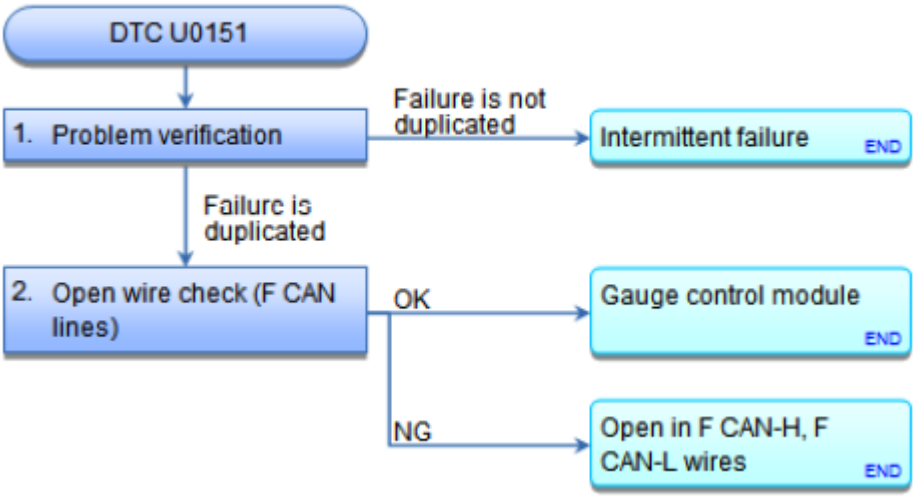

Fig. 36: DTC Troubleshooting Chart (U0151)
Courtesy of AMERICAN HONDA MOTOR CO., INC.

DTC Description	DTC
U0151 Gauge Control Module Lost Communication With SRS Unit (SRS Message)	

NOTE:

- **If you have any loss of communication DTCs for the PCM, troubleshoot those DTCs first.**
- **If you are troubleshooting multiple DTCs, be sure to follow the instructions in B-CAN System Diagnosis Test Mode A.**

*: Wire colors may be substituted for SRS circuits.

1. Problem verification:
   - 1. Clear the DTCs with the HDS.
   - 2. Turn the ignition switch to LOCK (0) and then back to ON (II).
   - 3. Wait for at least 6 seconds.
   - 4. Check for DTCs with the HDS.

DTC Description	DTC
U0151 Gauge Control Module Lost Communication With SRS Unit (SRS Message)	

Is DTC U0151 indicated?

YES : Go to step 2.

NO : Intermittent failure, the system is OK at this time. Check for loose or poor connections.

GETtheMANUALS.org

2. Open wire check (F CAN lines):
    - 1. Turn the ignition switch to LOCK (0).
    - 2. Disconnect the following connectors.

      Gauge control module 32P connector

      SRS unit connector A (39P)

    - 3. Check for continuity between test points 1 and 2.

      Test condition IG LOCK (0)

      Gauge control module 32P connector: disconnected

      SRS unit connector A (39P): disconnected

      Test circuit F CAN-H

      Test point 1 Gauge control module 32P connector No. 19 (WHT)

      Test point 2 SRS unit connector A (39P) No. 20 (WHT*)

      Test circuit F CAN-L

      Test point 1 Gauge control module 32P connector No. 20 (RED)

      Test point 2 SRS unit connector A (39P) No. 21 (RED*)

GETtheMANUALS.org

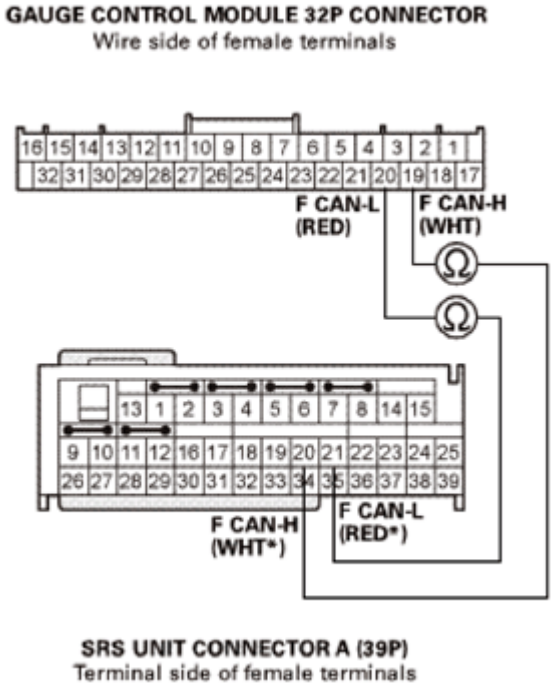

Fig. 37: Checking Continuity Between Gauge Control Module 32P Connector And SRS Unit Connector A (39P) Terminals
Courtesy of AMERICAN HONDA MOTOR CO., INC.

Is there continuity?

YES : The F CAN wires are OK. **Replace the gauge control module** See **Rewriting the ODO Data and Transferring the Maintenance Minder™ Data to a New Gauge Control Module** or **GAUGE CONTROL MODULE REMOVAL AND INSTALLATION** .

NO : An open or poor connection in the F CAN wires between the SRS unit and the gauge control module.

DTC U0155: F-CAN MALFUNCTION (PCM-GAUGE CONTROL MODULE)

GETtheMANUALS.org

DTC Troubleshooting: U0155

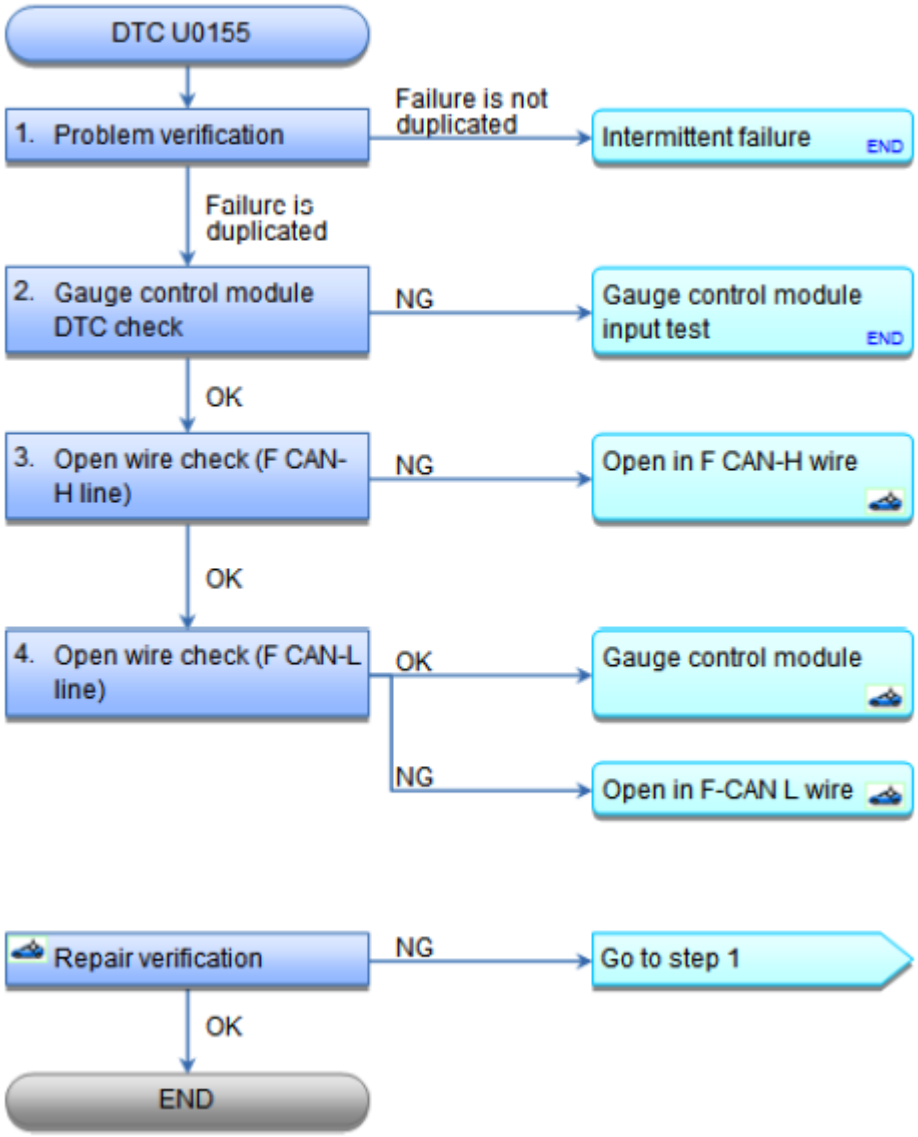

Fig. 38: DTC Troubleshooting Chart (U0155)
Courtesy of AMERICAN HONDA MOTOR CO., INC.

NOTE: **Before you troubleshoot, record all freeze data and any on-board snapshot, and review the general troubleshooting information See HOW TO TROUBLESHOOT THE FUEL AND EMISSIONS SYSTEMS or HOW TO TROUBLESHOOT THE A/T SYSTEM .**

DTC Description	Confirmed DTC	Pending DTC	Freeze Frame
U0155 F-CAN MALFUNCTION (PCM-GAUGE CONTROL MODULE)			

GETtheMANUALS.org

1. Problem verification:
   - 1. Turn the ignition switch to ON (II).
   - 2. **Clear the DTC with the HDS** See **HOW TO TROUBLESHOOT THE A/T SYSTEM** or **HOW TO TROUBLESHOOT THE FUEL AND EMISSIONS SYSTEMS** .
   - 3. Check for Pending or Confirmed DTCs with the HDS.

DTC Description	Confirmed DTC	Pending DTC	Freeze Frame
U0155 F-CAN MALFUNCTION (PCM-GAUGE CONTROL MODULE)			

Is DTC U0155 indicated?

YES : The failure is duplicated. Go to step 2.

NO : Intermittent failure, the system is OK at this time. Check for poor connections or loose terminals at the gauge control module and the PCM.

2. Gauge control module DTC check:
   - 1. Check for gauge control module DTCs with the HDS.

GAUGE CONTROL MODULE

DTC Description	DTC	Freeze Frame
U0029 F-CAN communication line error		
U0100 Gauge control module lost communication with ENG/AT		

Is DTC U0029 and/or U0100 indicated?

YES : Go to step 3.

NO : **DO THE GAUGE CONTROL MODULE INPUT TEST** .

3. Open wire check (F CAN-H line):
   - 1. Turn the ignition switch to LOCK (0).
   - 2. Jump the SCS line with the HDS.
   - 3. Disconnect the following connectors.

     PCM connector A (49P)

     Gauge control module 32P connector

   - 4. Check for continuity between test points 1 and 2.

     Test condition IG LOCK (0)

GETtheMANUALS.org

PCM connector A (49P): disconnected

Gauge control module 32P connector: disconnected

Test circuit F CAN-H

Test point 1 PCM connector A (49P) No. 3 (WHT)

Test point 2 Gauge control module 32P connector No. 19 (WHT)

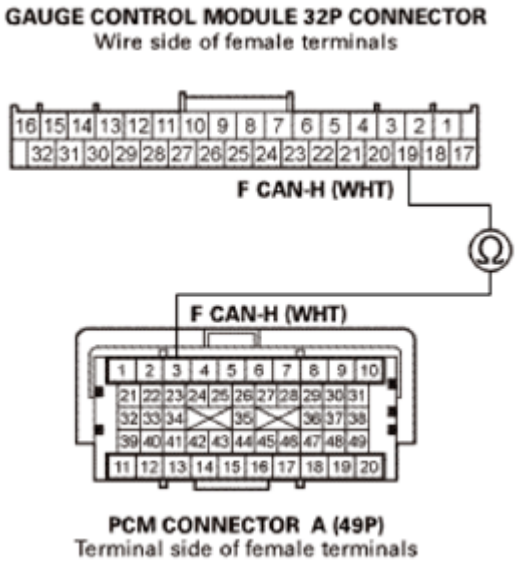

Fig. 39: Checking Continuity Between PCM Connector A (49P) No. 3 And Gauge Control Module 32P Connector No. 19 Terminals
Courtesy of AMERICAN HONDA MOTOR CO., INC.

Is there continuity?

YES : The F CAN-H wire is OK. Go to step 4.

NO : Repair an open in the F CAN-H wire between the PCM (A3) and the gauge control module, then **do the repair verification** .

4. Open wire check (F CAN-L line):
   - 1. Check for continuity between test points 1 and 2.

     Test condition IG LOCK (0)

     PCM connector A (49P): disconnected

     Gauge control module 32P connector: disconnected

GETtheMANUALS.org

Test circuit F CAN-L

Test point 1 PCM connector A (49P) No. 4 (RED)

Test point 2 Gauge control module 32P connector No. 20 (RED)

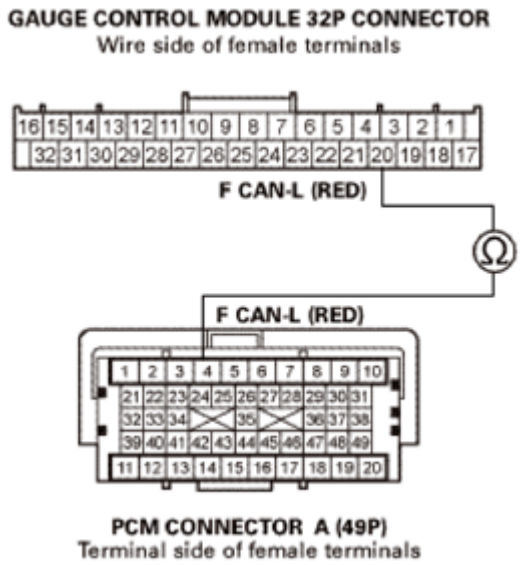

Fig. 40: Checking Continuity Between PCM Connector A (49P) No. 4 And Gauge Control Module 32P Connector No. 20 Terminals
Courtesy of AMERICAN HONDA MOTOR CO., INC.

Is there continuity?

YES : The F CAN-L wire is OK. **Substitute a known-good gauge control module** See **Rewriting the ODO Data and Transferring the Maintenance Minder™ Data to a New Gauge Control Module** or **GAUGE CONTROL MODULE REMOVAL AND INSTALLATION** , then **do the repair verification** . If DTC U0155 is not indicated after substitution, **replace the original gauge control module** See **Rewriting the ODO Data and Transferring the Maintenance Minder™ Data to a New Gauge Control Module** or **GAUGE CONTROL MODULE REMOVAL AND INSTALLATION** , then **do the repair verification** .

NO : Repair an open in the F CAN-L wire between the PCM (A4) and the gauge control module, then **do the repair verification** .

REPAIR VERIFICATION

- Turn the ignition switch to LOCK (0).
- Reconnect all connectors.
- Turn the ignition switch to ON (II).
- **Reset the PCM with the HDS** See **HOW TO TROUBLESHOOT THE A/T SYSTEM** or **HOW TO TROUBLESHOOT THE FUEL AND EMISSIONS SYSTEMS** .

GETtheMANUALS.org

- **DO THE PCM IDLE LEARN PROCEDURE** .
- Check for Pending or Confirmed DTCs with the HDS.

DTC Description	Confirmed DTC	Pending DTC	Freeze Frame
U0155 F-CAN MALFUNCTION (PCM-GAUGE CONTROL MODULE)			

Is DTC U0155 indicated?

YES : Check for poor connections or loose terminals at the gauge control module and the PCM, then go to step 1.

NO : Troubleshooting is complete. If any other Pending or Confirmed DTCs are indicated, go to the indicated DTC's troubleshooting.

DTC U1280 OR DTC INDICATOR 80: COMMUNICATION BUS LINE ERROR (BUS-OFF)

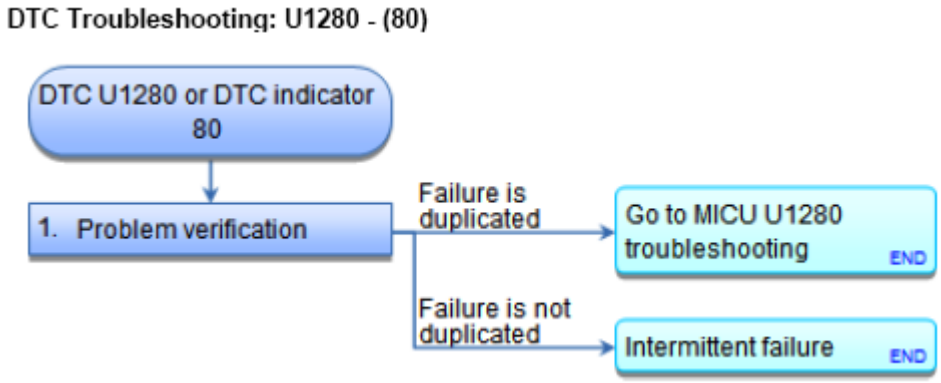

Fig. 41: DTC Troubleshooting Chart (U1280 Or DTC Indicator 80)
Courtesy of AMERICAN HONDA MOTOR CO., INC.

DTC Description	DTC
U1280 Communication bus line error (BUS-OFF)	

1. Problem verification:
   - 1. Clear the DTCs with the HDS.
   - 2. Turn the ignition switch to LOCK (0), and then back to ON (II).
   - 3. **Do the Self-Diagnostic Function with the HDS or the climate control unit** See **HOW TO TROUBLESHOOT THE BODY ELECTRICAL** or **HOW TO TROUBLESHOOT THE CLIMATE CONTROL SYSTEM** .
   - 4. Wait for at least 6 seconds.
   - 5. Check for DTCs.

GETtheMANUALS.org

DTC Description	DTC
U1280 Communication bus line error (BUS-OFF)	

Is DTC U1280 or 80 indicated?

YES : **GO TO THE MICU U1280 TROUBLESHOOTING**.

NO : Intermittent failure, the system is OK at this time.

DTC U1280: AUTOMATIC LIGHTING/SUNLIGHT SENSOR COMMUNICATION BUS LINE ERROR (BUS-OFF)

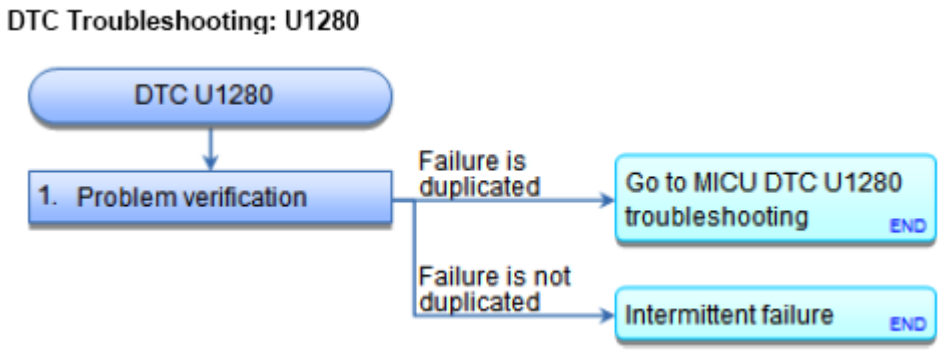

Fig. 42: DTC Troubleshooting Chart (U1280)
Courtesy of AMERICAN HONDA MOTOR CO., INC.

DTC Description	DTC
U1280 Automatic Lighting/Sunlight Sensor Communication Bus Line Error (BUS-OFF)	

1. Problem verification:
   - 1. Clear the DTCs with the HDS.
   - 2. Turn the ignition switch to LOCK (0) and then back to ON (II).
   - 3. Wait for at least 6 seconds.
   - 4. Check for DTCs with the HDS.

DTC Description	DTC
U1280 Automatic Lighting/Sunlight Sensor Communication Bus Line Error (BUS-OFF)	

Is DTC U1280 indicated?

YES : **GO TO MICU DTC U1280 TROUBLESHOOTING**.

NO : Intermittent failure, the system is OK at this time. Check for loose or poor connections.

GETtheMANUALS.org

DTC U1280: GAUGE CONTROL MODULE COMMUNICATION BUS LINE ERROR (BUS-OFF)

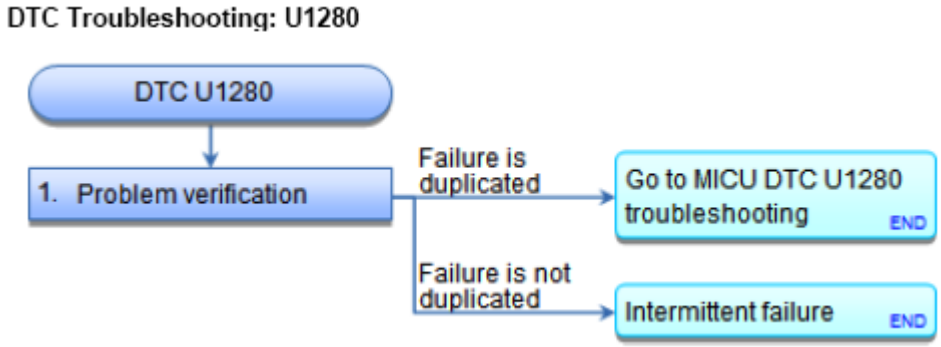

Fig. 43: DTC Troubleshooting Chart (U1280)
Courtesy of AMERICAN HONDA MOTOR CO., INC.

DTC Description	DTC
U1280 Gauge Control Module Communication Bus Line Error (BUS-OFF)	

NOTE:

- **If you have any loss of communication DTCs for the PCM, troubleshoot those DTCs first.**
- **If you are troubleshooting multiple DTCs, be sure to follow the instructions in B-CAN System Diagnosis Test Mode A.**

1. Problem verification:
   - 1. Clear the DTCs with the HDS.
   - 2. Turn the ignition switch to LOCK (0) and then back to ON (II).
   - 3. Wait for at least 6 seconds.
   - 4. Check for DTCs with the HDS.

DTC Description	DTC
U1280 Gauge Control Module Communication Bus Line Error (BUS-OFF)	

Is DTC U1280 indicated?

YES : **GO TO MICU DTC U1280 TROUBLESHOOTING**.

NO : Intermittent failure, the system is OK at this time.

DTC U1280: IMMOBILIZER-KEYLESS CONTROL UNIT COMMUNICATION BUS LINE ERROR (BUS-OFF)

GETtheMANUALS.org

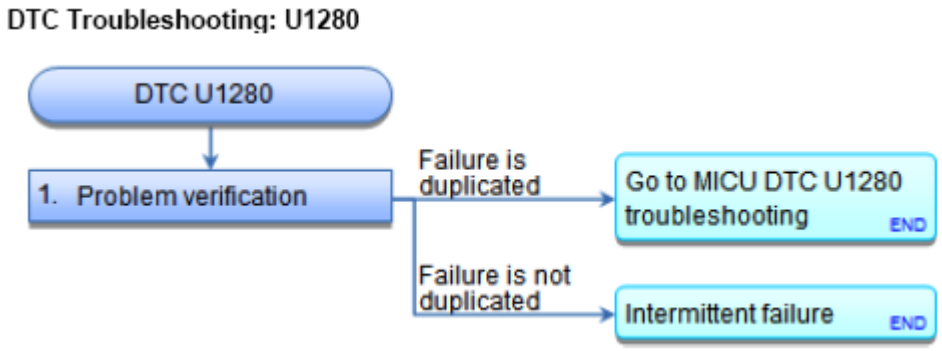

Fig. 44: DTC Troubleshooting Chart (U1280)
Courtesy of AMERICAN HONDA MOTOR CO., INC.

DTC Description	DTC
U1280 Immobilizer-Keyless Control Unit Communication Bus Line Error (BUS-OFF)	

NOTE: **If you are troubleshooting multiple DTCs, be sure to follow the instructions in B-CAN System Diagnosis Test Mode A.**

1. Problem verification:
   - 1. Clear the DTCs with the HDS.
   - 2. Turn the ignition switch to LOCK (0) and then back to ON (II).
   - 3. Wait for at least 6 seconds.
   - 4. Check for DTCs with the HDS.

DTC Description	DTC
U1280 Immobilizer-Keyless Control Unit Communication Bus Line Error (BUS-OFF)	

Is DTC U1280 indicated?

YES : **GO TO MICU DTC U1280 TROUBLESHOOTING**.

NO : Intermittent failure, the system is OK at this time. Check for loose or poor connections.

DTC U1280: COMMUNICATION BUS LINE ERROR (BUS-OFF)

GETtheMANUALS.org

DTC Troubleshooting: U1280

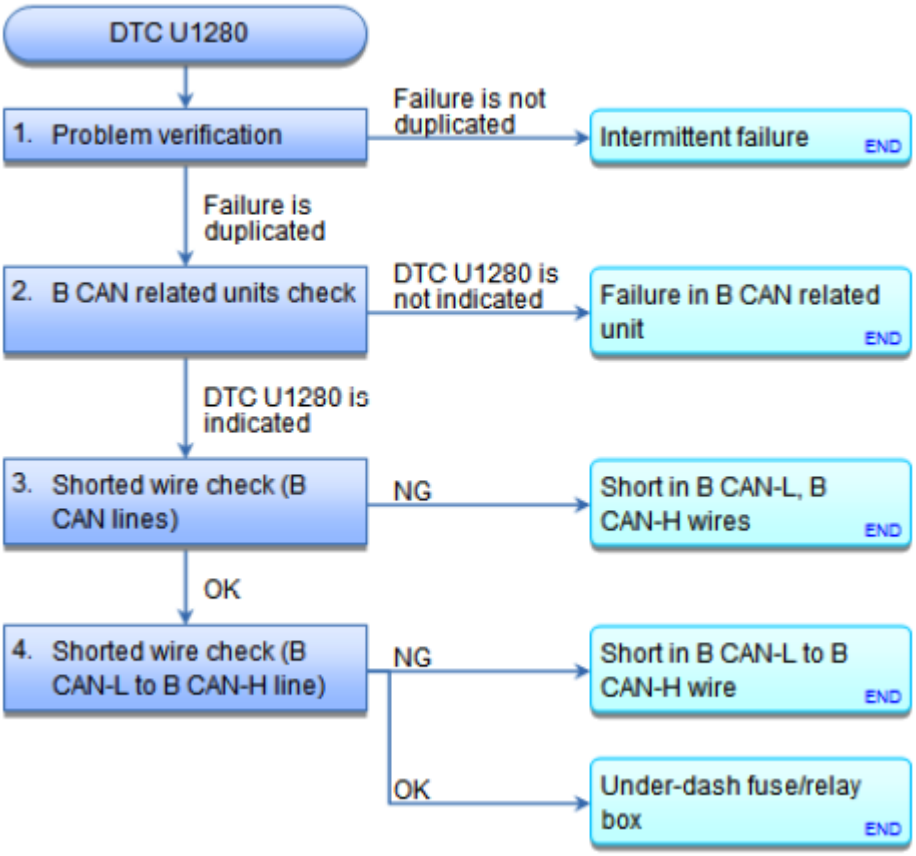

Fig. 45: DTC Troubleshooting Chart (U1280)
Courtesy of AMERICAN HONDA MOTOR CO., INC.

DTC Description	DTC
U1280 Communication Bus Line Error (BUS-OFF)	

NOTE:

- **Refer to the Electrical Wiring Diagrams for the location of the under-dash fuse/relay box connectors.**
- **If you are troubleshooting multiple DTCs, be sure to follow the instructions in B-CAN System Diagnosis Test Mode A.**

1. Problem verification:
   - 1. Clear the DTCs with the HDS.
   - 2. Turn the ignition switch to LOCK (0) and then back to ON (II).
   - 3. Wait for at least 6 seconds.
   - 4. Check for DTCs with the HDS.

DTC Description	DTC

GETtheMANUALS.org

U1280 Communication Bus Line Error (BUS-OFF)	

Is DTC U1280 indicated?

YES : Go to step 2.

NO : Intermittent failure, the system is OK at this time. Check for loose or poor connections.

2. B CAN related units check:
   - 1. Turn the ignition switch to LOCK (0).
   - 2. Disconnect the appropriate connector at each control unit in the table one at a time. Clear the DTC, then recheck for DTCs after each unit is disconnected.

Control Unit	Connector
Gauge control module	32P connector
Immobilizer-keyless control unit	7P connector
Automatic lighting/sunlight sensor	7P connector
Climate control unit	32P connector

DTC Description	DTC
U1280 Communication Bus Line Error (BUS-OFF)	

Is DTC U1280 indicated with each individual unit disconnected?

YES : Leave the connectors disconnected, and go to step 3.

NO : Replace the control unit that was disconnected when DTC U1280 did not reset.

3. Shorted wire check (B CAN lines):
   - 1. Turn the ignition switch to LOCK (0).
   - 2. Disconnect the following connector.

     Under-dash fuse/relay box connector K (12P)

   - 3. Check for continuity between test points 1 and 2 individually.

     Test condition IG LOCK (0)

     Under-dash fuse/relay box connector K (12P): disconnected

     Test circuit B CAN-L

     Test point 1 Under-dash fuse/relay box connector K (12P) No. 1 (BLU)

GETtheMANUALS.org

Test point 2 Body ground

Test circuit B CAN-H

Test point 1 Under-dash fuse/relay box connector K (12P) No. 2 (PNK)

Test point 2 Body ground

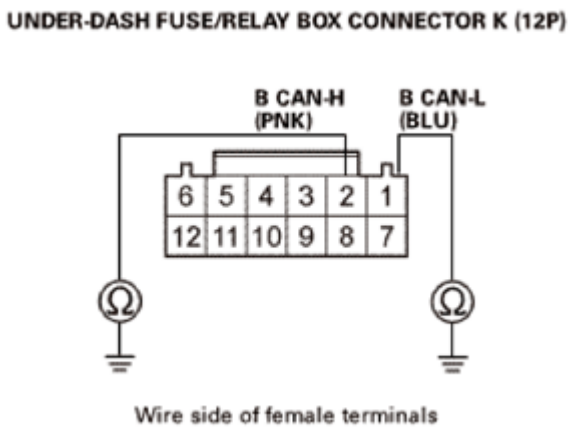

Fig. 46: Checking Continuity Between Under-Dash Fuse/Relay Box Connector K (12P) No. 1, 2 And Body Ground
Courtesy of AMERICAN HONDA MOTOR CO., INC.

Is there continuity?

YES : Repair a short to ground in the B CAN wires.

NO : The B CAN wires are OK. Go to step 4.

4. Shorted wire check (B CAN-L to B CAN-H line):
   - 1. Check for continuity between test points 1 and 2.

     Test condition IG LOCK (0)

     Under-dash fuse/relay box connector K (12P): disconnected

     Test circuit B CAN-L, B CAN-H

     Test point 1 Under-dash fuse/relay box connector K (12P) No. 1 (BLU)

     Test point 2 Under-dash fuse/relay box connector K (12P) No. 2 (PNK)

GETtheMANUALS.org

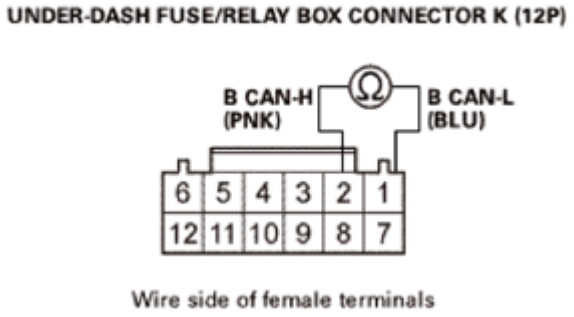

Fig. 47: Checking Continuity Between Under-Dash Fuse/Relay Box Connector K (12P) No. 1 And 2
Courtesy of AMERICAN HONDA MOTOR CO., INC.

Is there continuity?

YES : Repair a short in the B CAN-L to B CAN-H wire.

NO : The B CAN-L to B CAN-H wire is OK. Faulty MICU; **REPLACE THE UNDER-DASH FUSE/RELAY BOX** .

DTC U1281: AUTOMATIC LIGHTING/SUNLIGHT SENSOR LOST COMMUNICATION WITH MICU

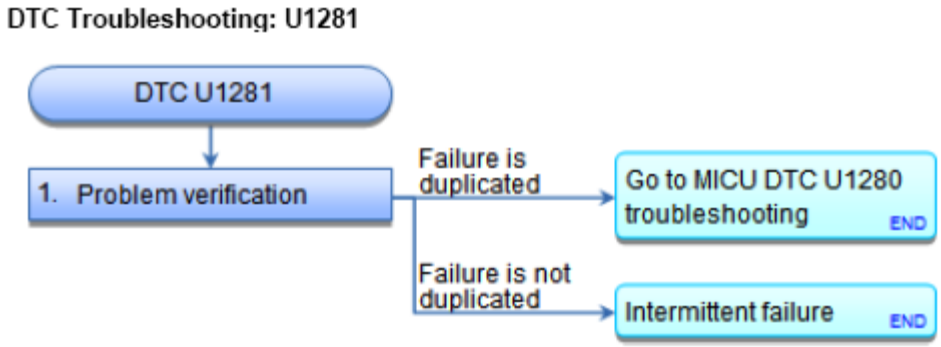

Fig. 48: DTC Troubleshooting Chart (U1281)
Courtesy of AMERICAN HONDA MOTOR CO., INC.

DTC Description	DTC
U1281 Automatic Lighting/Sunlight Sensor Lost Communication With MICU	

1. Problem verification:
   - 1. Clear the DTCs with the HDS.
   - 2. Turn the ignition switch to LOCK (0) and then back to ON (II).
   - 3. Wait for at least 6 seconds.
   - 4. Check for DTCs with the HDS.

GETtheMANUALS.org

DTC Description	DTC
U1281 Automatic Lighting/Sunlight Sensor Lost Communication With MICU	

Is DTC U1281 indicated?

YES : **GO TO MICU DTC U1280 TROUBLESHOOTING**.

NO : Intermittent failure, the system is OK at this time. Check for loose or poor connections.

DTC U1281: GAUGE CONTROL MODULE LOST COMMUNICATION WITH MICU (MICU FRAME)

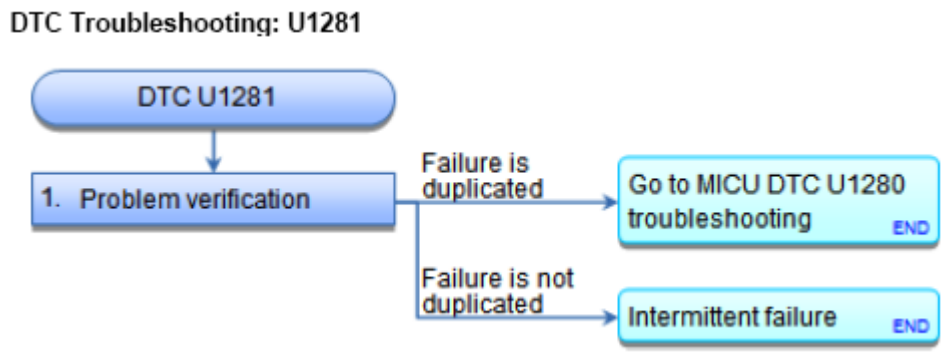

Fig. 49: DTC Troubleshooting Chart (U1281)
Courtesy of AMERICAN HONDA MOTOR CO., INC.

DTC Description	DTC
U1281 Gauge Control Module Lost Communication With MICU (MICU Frame)	

NOTE: **If you are troubleshooting multiple DTCs, be sure to follow the instructions in B-CAN System Diagnosis Test Mode A.**

1. Problem verification:
   - 1. Clear the DTCs with the HDS.
   - 2. Turn the ignition switch to LOCK (0) and then back to ON (II).
   - 3. Wait for at least 6 seconds.
   - 4. Check for DTCs with the HDS.

DTC Description	DTC
U1281 Gauge Control Module Lost Communication With MICU (MICU Frame)	

Is DTC U1281 indicated?

YES : **GO TO MICU DTC U1280 TROUBLESHOOTING**.

GETtheMANUALS.org

NO : Intermittent failure, the system is OK at this time.

DTC U1281: IMMOBILIZER-KEYLESS CONTROL UNIT LOST COMMUNICATION WITH MICU (MICU FRAME)

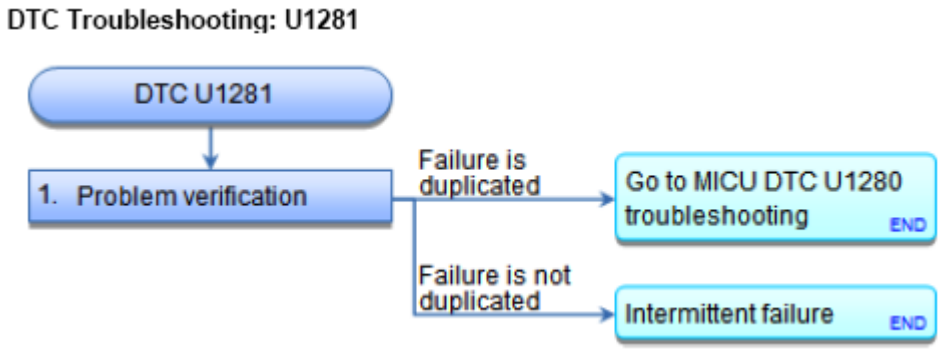

Fig. 50: DTC Troubleshooting Chart (U1281)
Courtesy of AMERICAN HONDA MOTOR CO., INC.

DTC Description	DTC
U1281 Immobilizer-Keyless Control Unit Lost Communication With MICU (MICU Frame)	

NOTE: **If you are troubleshooting multiple DTCs, be sure to follow the instructions in B-CAN System Diagnosis Test Mode A.**

1. Problem verification:
   - 1. Clear the DTCs with the HDS.
   - 2. Turn the ignition switch to LOCK (0) and then back to ON (II).
   - 3. Wait for at least 6 seconds.
   - 4. Check for DTCs with the HDS.

DTC Description	DTC
U1281 Immobilizer-Keyless Control Unit Lost Communication With MICU (MICU Frame)	

Is DTC U1281 indicated?

YES : **GO TO MICU DTC U1280 TROUBLESHOOTING**.

NO : Intermittent failure, the system is OK at this time. Check for loose or poor connections.

DTC U128D: LOST COMMUNICATION WITH GAUGE CONTROL MODULE (CLIMATE CONTROL UNIT); DTC INDICATOR 81: CLIMATE CONTROL UNIT LOST COMMUNICATION WITH GAUGE CONTROL MODULE (ECT MESSAGE); DTC INDICATOR 83: CLIMATE CONTROL UNIT LOST

GETtheMANUALS.org

COMMUNICATION WITH GAUGE CONTROL MODULE (VSP MESSAGE)

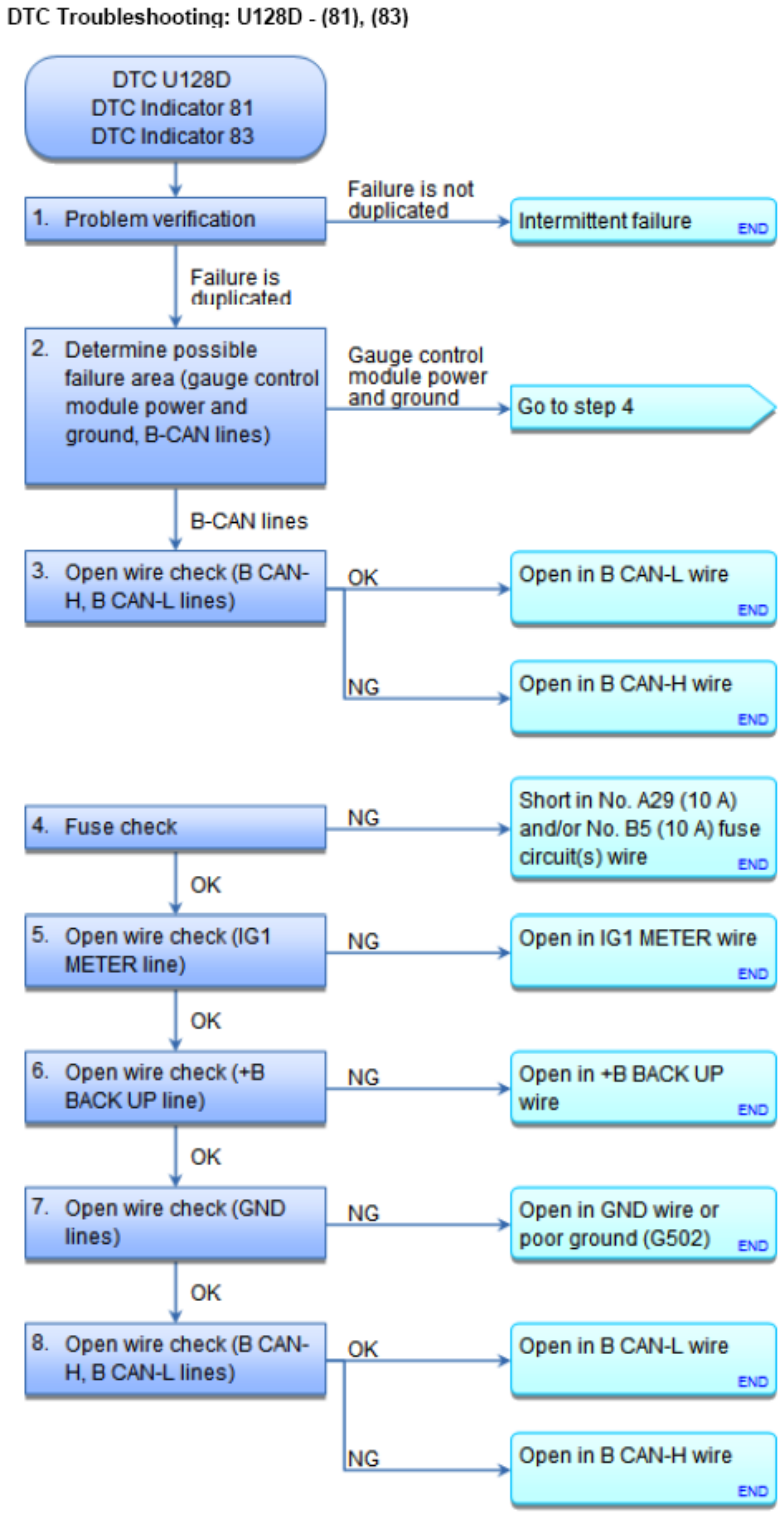

Fig. 51: DTC Troubleshooting Chart (U128D Or DTC Indicator 81, 83)
Courtesy of AMERICAN HONDA MOTOR CO., INC.

GETtheMANUALS.org

DTC Description	DTC
U128D Lost communication with gauge control module (climate control unit)	

1. Problem verification:
   - 1. Clear the DTCs with the HDS.
   - 2. Turn the ignition switch to LOCK (0) and then back to ON (II).
   - 3. **Do the Self-Diagnostic Function with the HDS or the climate control unit** See **HOW TO TROUBLESHOOT THE BODY ELECTRICAL** or **HOW TO TROUBLESHOOT THE CLIMATE CONTROL SYSTEM** .
   - 4. Check for DTCs.

DTC Description	DTC
U128D Lost communication with gauge control module (climate control unit)	

Is DTC U128D and 81 and 83 indicated?

YES : Go to step 2.

NO : Intermittent failure, the system is OK at this time. Check for loose or poor connections.

2. Determine possible failure area (gauge control module power and ground, B-CAN lines):
   - 1. Select B-CAN Control Units Information from the Body Electrical System Select menu, and then select Check Connected Control Units.
   - 2. Check the DETECT/NOT AVAILABLE information of the GAUGE CONTROL MODULE.

Is DETECT indicated?

YES : Go to step 3.

NO : Go to step 4.

3. Open wire check (B CAN-H, B CAN-L lines):
   - 1. Turn the ignition switch to LOCK (0).
   - 2. Disconnect the following connectors.

     Gauge control module 32P connector

     Climate control unit 32P connector

   - 3. Check for continuity between test points 1 and 2.

     Test condition IG LOCK (0)

     Gauge control module 32P connector: disconnected

GETtheMANUALS.org

Climate control unit 32P connector: disconnected

Test circuit B CAN-H

Test point 1 Gauge control module 32P connector No. 30 (PNK)

Test point 2 Climate control unit 32P connector No. 16 (PNK)

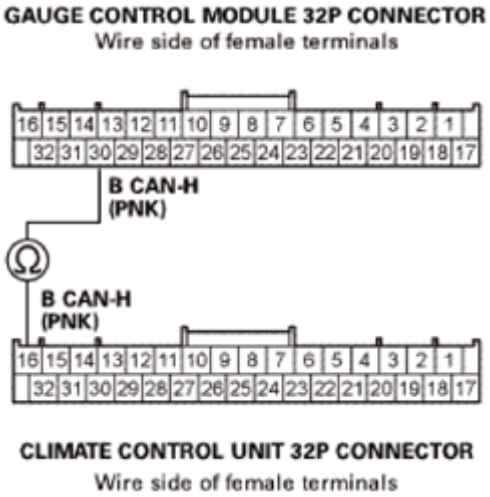

Fig. 52: Checking Continuity Between Gauge Control Module 32P Connector No. 30 And Climate Control Unit 32P Connector No. 16
Courtesy of AMERICAN HONDA MOTOR CO., INC.

Is there continuity?

YES : Repair an open or poor connection in the B CAN-L wire between the climate control unit and the gauge control module.

NO : Repair an open or poor connection in the B CAN-H wire between the climate control unit and the gauge control module.

4. Fuse check:
   - 1. Turn the ignition switch to LOCK (0).
   - 2. Check the following fuses.

   Fuse No. A29 (10 A)

   Location Under-hood fuse/relay box

   Fuse No. B5 (10 A)

   Location Under-dash fuse/relay box

GETtheMANUALS.org

Are the fuses OK?

YES : Go to step 5.

NO : Replace the fuse(s), and recheck. If the fuse(s) blow again, repair a short to ground in the No. A29 (10 A) fuse and/or the No. B5 (10 A) fuse circuit(s).

5. Open wire check (IG1 METER line):
   - 1. Disconnect the following connector.

     Gauge control module 32P connector

   - 2. Turn the ignition switch to ON (II).
   - 3. Measure the voltage between test points 1 and 2.

     Test condition IG ON (II)

     Gauge control module 32P connector: disconnected

     Test circuit IG1 METER

     Test point 1 Gauge control module 32P connector No. 17 (LT GRN)

     Test point 2 Body ground

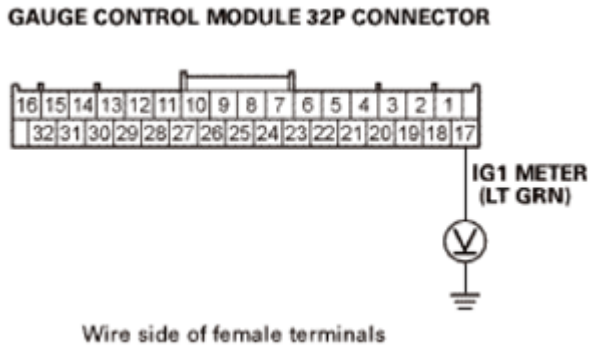

Fig. 53: Measuring Voltage Between Gauge Control Module 32P Connector No. 17 And Body Ground
Courtesy of AMERICAN HONDA MOTOR CO., INC.

Is there battery voltage?

YES : The IG1 METER wire is OK. Go to step 6.

NO : Repair an open in the IG1 METER wire.

6. Open wire check (+B BACK UP line):

GETtheMANUALS.org

- 1. Turn the ignition switch to LOCK (0).
- 2. Measure the voltage between test points 1 and 2.

  Test condition IG LOCK (0)

  Gauge control module 32P connector: disconnected

  Test circuit +B BACK UP

  Test point 1 Gauge control module 32P connector No. 1 (RED)

  Test point 2 Body ground

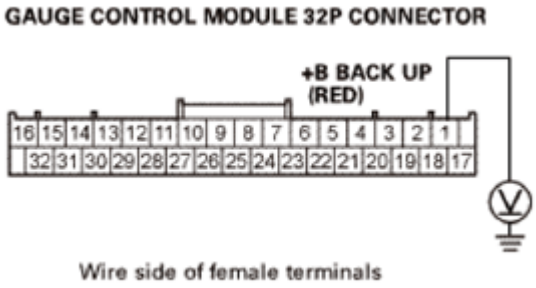

Fig. 54: Measuring Voltage Between Gauge Control Module 32P Connector No. 1 And Body Ground
Courtesy of AMERICAN HONDA MOTOR CO., INC.

Is there battery voltage?

YES : The +B BACK UP wire is OK. Go to step 7.

NO : Repair an open in the wire between the No. A29 (10 A) fuse in the under-hood fuse/relay box and gauge control module.

7. Open wire check (GND lines):
   - 1. Check for continuity between test points 1 and 2 individually.

     Test condition IG LOCK (0)

     Gauge control module 32P connector: disconnected

     Test circuit GND

     Test point 1 Gauge control module 32P connector No. 4 (BRN)

     Test point 2 Body ground

     Test circuit GND

GETtheMANUALS.org

Test point 1 Gauge control module 32P connector No. 32 (BRN)

Test point 2 Body ground

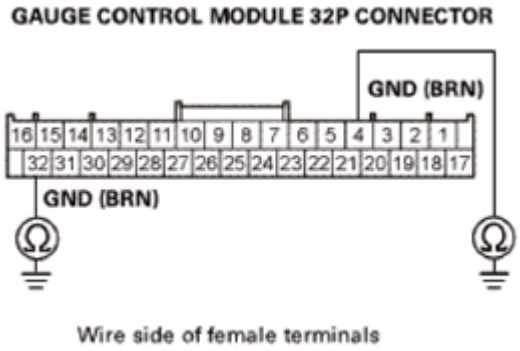

Fig. 55: Checking Continuity Between Gauge Control Module 32P Connector No. 4, 32 And Body Ground
Courtesy of AMERICAN HONDA MOTOR CO., INC.

Is there continuity?

YES : The GND wires are OK. Go to step 8.

NO : Check for an open in the wire(s) between the gauge control module and body ground. If the wires are OK, check poor ground at G502.

8. Open wire check (B CAN-H, B CAN-L lines):
   - 1. Disconnect the following connector.

     Climate control unit 32P connector

   - 2. Check for continuity between test points 1 and 2.

     Test condition IG LOCK (0)

     Gauge control module 32P connector: disconnected

     Climate control unit 32P connector: disconnected

     Test circuit B CAN-H

     Test point 1 Gauge control module 32P connector No. 30 (PNK)

     Test point 2 Climate control unit 32P connector No. 16 (PNK)

GETtheMANUALS.org

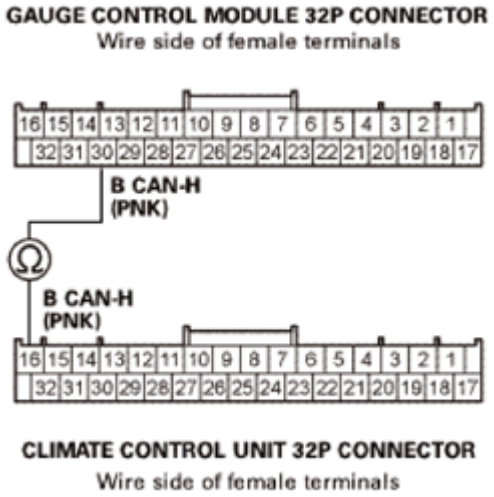

Fig. 56: Checking Continuity Between Gauge Control Module 32P Connector No. 30 And Climate Control Unit 32P Connector No. 16
Courtesy of AMERICAN HONDA MOTOR CO., INC.

Is there continuity?

YES : Repair an open or poor connection in the B CAN-L wire between the climate control unit and the gauge control module.

NO : Repair an open or poor connection in the B CAN-H wire between the climate control unit and the gauge control module.

DTC U128D: AUTOMATIC LIGHTING/SUNLIGHT SENSOR LOST COMMUNICATION WITH GAUGE CONTROL MODULE

GETtheMANUALS.org

DTC Troubleshooting: U128D

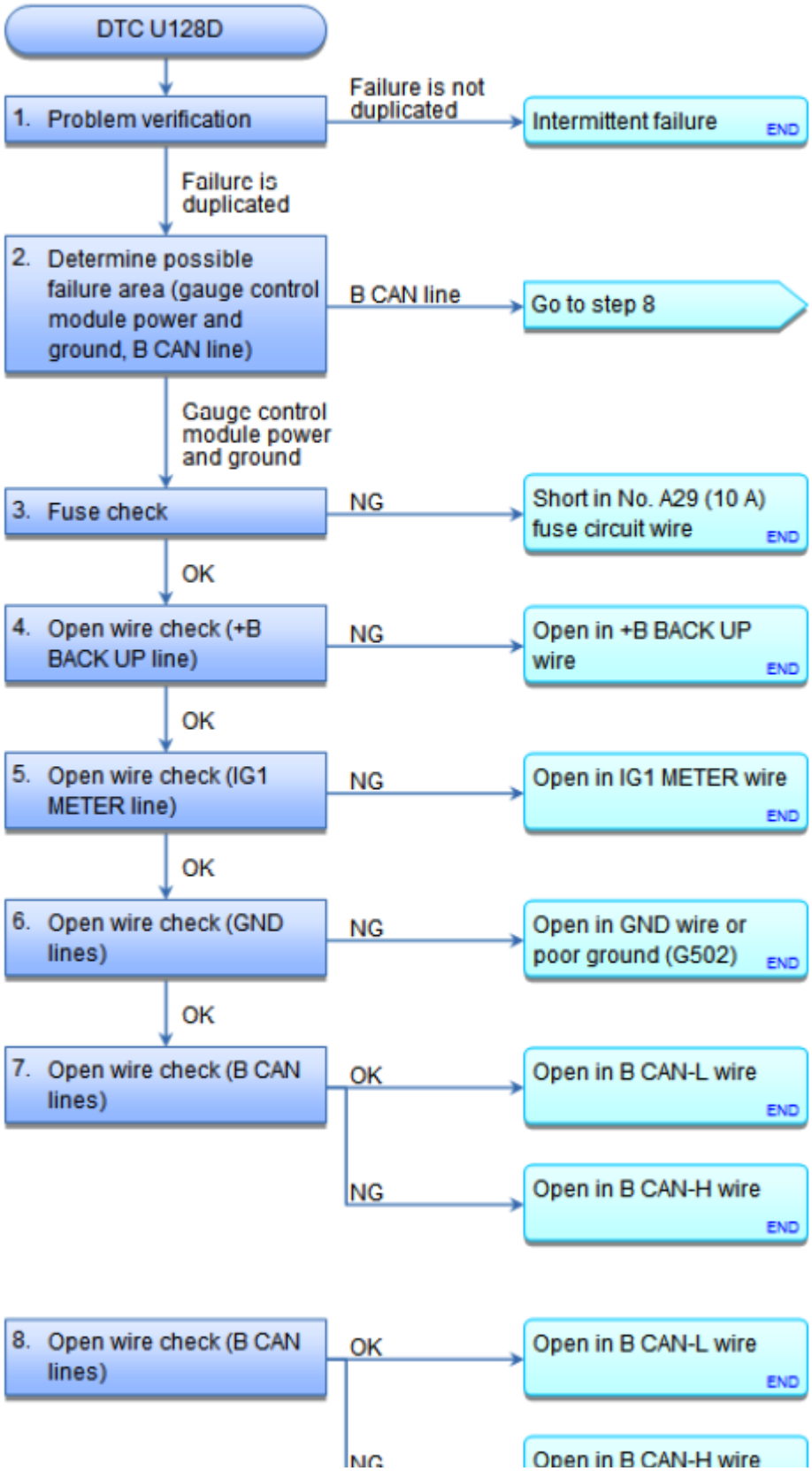

GETtheMANUALS.org

Fig. 57: DTC Troubleshooting Chart (U128D)
Courtesy of AMERICAN HONDA MOTOR CO., INC.

DTC Description	DTC
U128D Automatic Lighting/Sunlight Sensor Lost Communication With Gauge Control Module	

1. Problem verification:
   - 1. Clear the DTCs with the HDS.
   - 2. Turn the ignition switch to LOCK (0) and then back to ON (II).
   - 3. Wait for at least 6 seconds.
   - 4. Check for DTCs with the HDS.

DTC Description	DTC
U128D Automatic Lighting/Sunlight Sensor Lost Communication With Gauge Control Module	

Is DTC U128D indicated?

YES : Go to step 2.

NO : Intermittent failure, the system is OK at this time. Check for loose or poor connections.

2. Determine possible failure area (gauge control module power and ground, B CAN line):
   - 1. Select B-CAN CONTROL UNITS INFORMATION from the BODY ELECTRICAL SYSTEM SELECT menu, and then select CHECK CONNECTED CONTROL UNITS.
   - 2. Check the DETECT/NOT AVAILABLE information of the GAUGE CONTROL MODULE.

Is DETECT indicated?

YES : Go to step 8.

NO : Go to step 3.

3. Fuse check:
   - 1. Check the following fuse.

     Fuse No. A29 (10 A)

     Location Under-hood fuse/relay box

Is the fuse OK?

YES : Go to step 4.

GETtheMANUALS.org

NO : Replace the fuse. If the fuse blows again, repair a short to ground in the No. A29 (10A) fuse circuit.

4. Open wire check (+B BACK UP line):
    - 1. Turn the ignition switch to LOCK (0).
    - 2. Disconnect the following connector.

      Gauge control module 32P connector

    - 3. Measure the voltage between test points 1 and 2.

      Test condition IG LOCK (0)

      Gauge control module 32P connector: disconnected

      Test circuit +B BACK UP

      Test point 1 Gauge control module 32P connector No. 1 (RED)

      Test point 2 Body ground

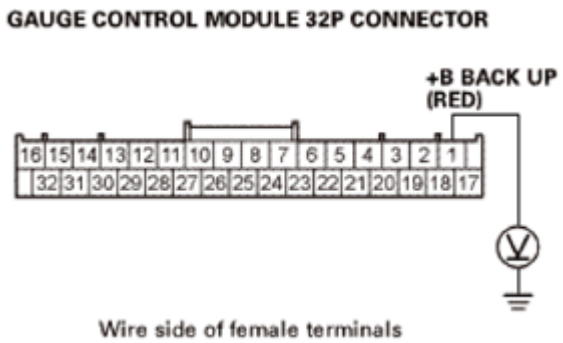

Fig. 58: Measuring Voltage Between Gauge Control Module 32P Connector No. 1 And Body Ground
Courtesy of AMERICAN HONDA MOTOR CO., INC.

Is there battery voltage?

YES : The +B BACK UP wire is OK. Go to step 5.

NO : Repair an open or high resistance in the wire.

5. Open wire check (IG1 METER line):
    - 1. Turn the ignition switch to ON (II).
    - 2. Measure the voltage between test points 1 and 2.

      Test condition IG ON (II)

GETtheMANUALS.org

Gauge control module 32P connector: disconnected

Test circuit IG1 METER

Test point 1 Gauge control module 32P connector No. 17 (LT GRN)

Test point 2 Body ground

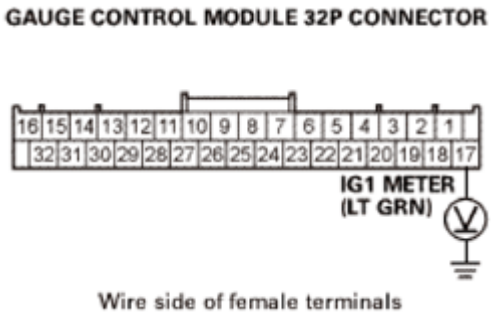

Fig. 59: Measuring Voltage Between Gauge Control Module 32P Connector No. 17 And Body Ground
Courtesy of AMERICAN HONDA MOTOR CO., INC.

Is there battery voltage?

YES : The IG1 METER wire is OK. Go to step 6.

NO : Repair an open or high resistance in the wire.

6. Open wire check (GND lines):
   - 1. Turn the ignition switch to LOCK (0).
   - 2. Check for continuity between test points 1 and 2 individually.

   Test condition IG LOCK (0)

   Gauge control module 32P connector: disconnected

   Test circuit GND

   Test point 1 Gauge control module 32P connector No. 4 (BRN)

   Test point 2 Body ground

   Test circuit GND

   Test point 1 Gauge control module 32P connector No. 32 (BRN)

   Test point 2 Body ground

GETtheMANUALS.org

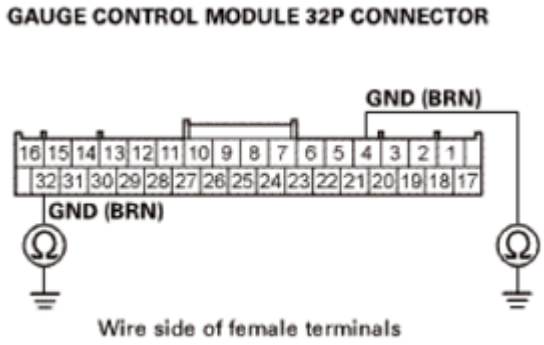

Fig. 60: Checking Continuity Between Gauge Control Module 32P Connector No. 4, 32 And Body Ground
Courtesy of AMERICAN HONDA MOTOR CO., INC.

Is there continuity?

YES : The GND wires are OK. Go to step 7.

NO : Repair an open or high resistance in the ground wire or poor ground (G502).

7. Open wire check (B CAN lines):
   - 1. Disconnect the following connector.

     Automatic lighting/sunlight sensor 7P connector

   - 2. Check for continuity between test points 1 and 2.

     Test condition IG LOCK (0)

     Gauge control module 32P connector: disconnected

     Automatic lighting/sunlight sensor 7P connector: disconnected

     Test circuit B CAN-H

     Test point 1 Automatic lighting/sunlight sensor 7P connector No. 6 (PNK)

     Test point 2 Gauge control module 32P connector No. 30 (PNK)

GETtheMANUALS.org

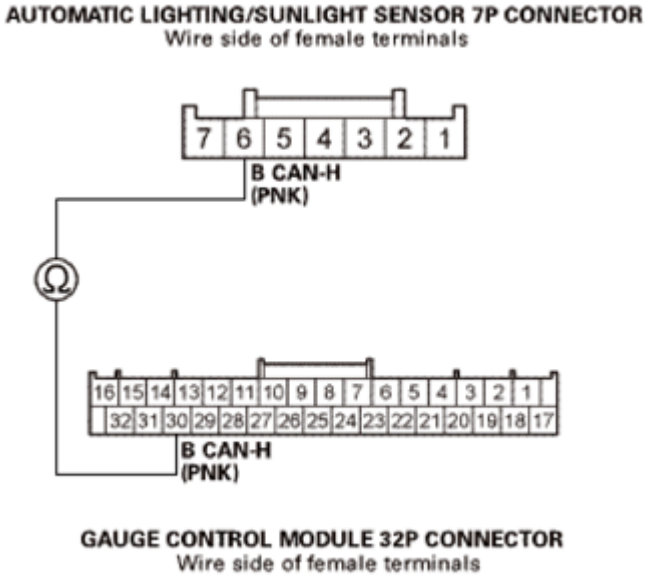

Fig. 61: Checking Continuity Between Automatic Lighting/Sunlight Sensor 7P Connector No. 6 And Gauge Control Module 32P Connector No. 30
Courtesy of AMERICAN HONDA MOTOR CO., INC.

Is there continuity?

YES : An open or poor connection in the B CAN-L wire between the automatic lighting/sunlight sensor and the gauge control module.

NO : An open or poor connection in the B CAN-H wire between the automatic lighting/sunlight sensor and the gauge control module.

8. Open wire check (B CAN lines):
   - 1. Turn the ignition switch to LOCK (0).
   - 2. Disconnect the following connectors.

     Gauge control module 32P connector

     Automatic lighting/sunlight sensor 7P connector

   - 3. Check for continuity between test points 1 and 2.

     Test condition IG LOCK (0)

     Gauge control module 32P connector: disconnected

     Automatic lighting/sunlight sensor 7P connector: disconnected

     Test circuit B CAN-H

GETtheMANUALS.org

Test point 1 Automatic lighting/sunlight sensor 7P connector No. 6 (PNK)

Test point 2 Gauge control module 32P connector No. 30 (PNK)

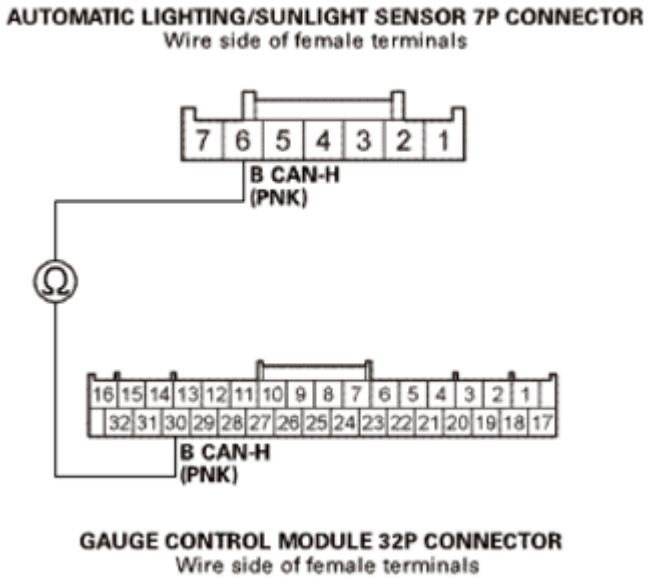

Fig. 62: Checking Continuity Between Automatic Lighting/Sunlight Sensor 7P Connector No. 6 And Gauge Control Module 32P Connector No. 30
Courtesy of AMERICAN HONDA MOTOR CO., INC.

Is there continuity?

YES : An open or poor connection in the B CAN-L wire between the automatic lighting/sunlight sensor and the gauge control module.

NO : An open or poor connection in the B CAN-H wire between the automatic lighting/sunlight sensor and the gauge control module.

DTC U128D: IMMOBILIZER-KEYLESS CONTROL UNIT LOST COMMUNICATION WITH GAUGE CONTROL MODULE

GETtheMANUALS.org

DTC Troubleshooting: U128D

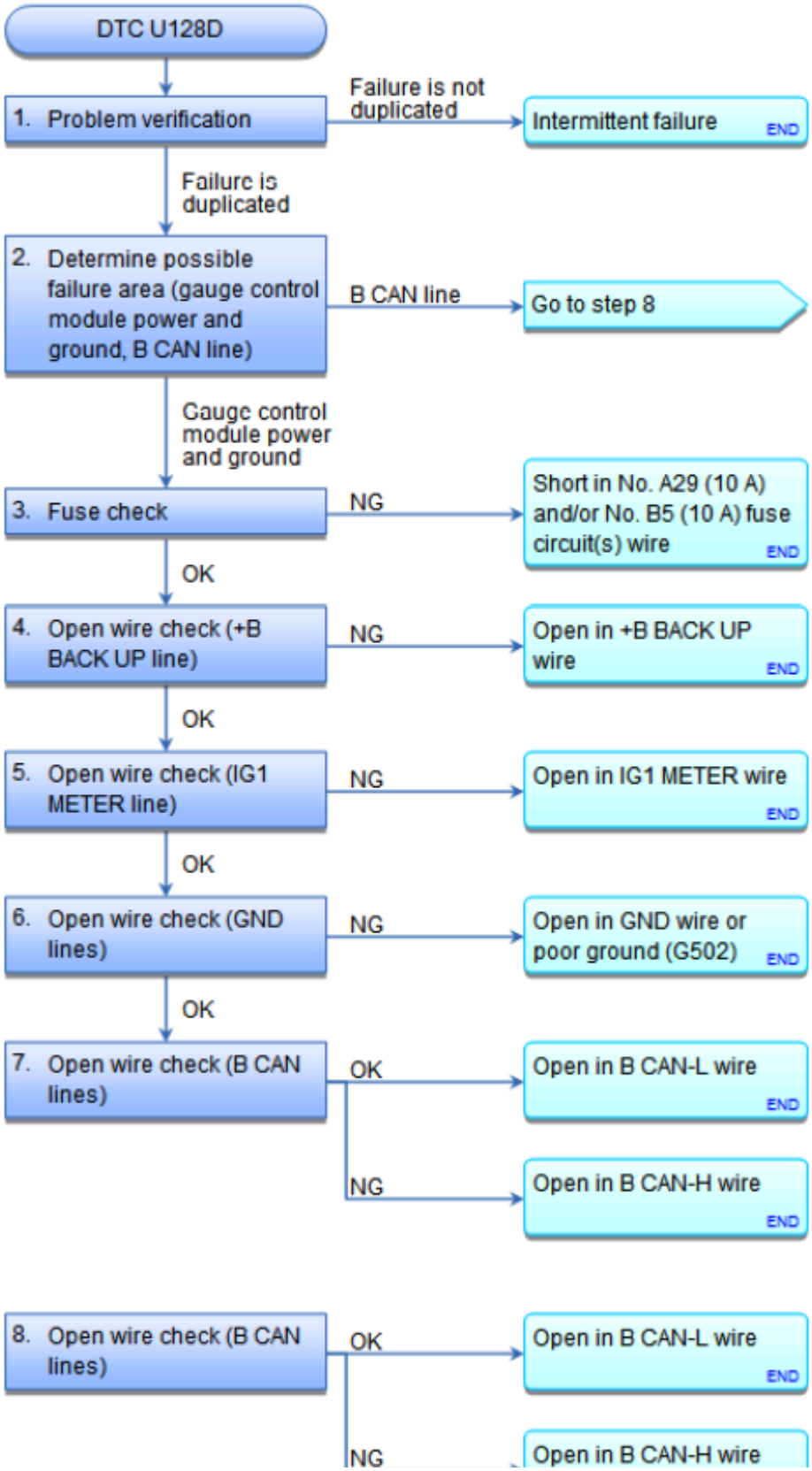

GETtheMANUALS.org

Fig. 63: DTC Troubleshooting Chart (U128D)
Courtesy of AMERICAN HONDA MOTOR CO., INC.

DTC Description	DTC
U128D Immobilizer-Keyless Control Unit Lost Communication With Gauge Control Module	

NOTE: **If you are troubleshooting multiple DTCs, be sure to follow the instructions in B-CAN System Diagnosis Test Mode A.**

1. Problem verification:
   - 1. Clear the DTCs with the HDS.
   - 2. Turn the ignition switch to LOCK (0) and then back to ON (II).
   - 3. Wait for at least 6 seconds.
   - 4. Check for DTCs with the HDS.

DTC Description	DTC
U128D Immobilizer-Keyless Control Unit Lost Communication With Gauge Control Module	

Is DTC U128D indicated?

YES : Go to step 2.

NO : Intermittent failure, the system is OK at this time. Check for loose or poor connections.

2. Determine possible failure area (gauge control module power and ground, B CAN line):
   - 1. Select B-CAN CONTROL UNITS INFORMATION from the BODY ELECTRICAL SYSTEM SELECT menu, and then select CHECK CONNECTED CONTROL UNITS.
   - 2. Check the DETECT/NOT AVAILABLE information of the GAUGE CONTROL MODULE.

Is DETECT indicated?

YES : Go to step 8.

NO : Go to step 3.

3. Fuse check:
   - 1. Check the following fuses.

     Fuse No. A29 (10 A)

     Location Under-hood fuse/relay box

     Fuse No. B5 (10 A)

GETtheMANUALS.org

Location Under-dash fuse/relay box

Is each fuse OK?

YES : Go to step 4.

NO : Replace the fuse. If the fuse blows again, repair a short to ground in the No. A29 (10 A) and/or No. B5 (10 A) fuse circuit(s).

4. Open wire check (+B BACK UP line):
   - 1. Turn the ignition switch to LOCK (0).
   - 2. Disconnect the following connector.

     Gauge control module 32P connector

   - 3. Measure the voltage between test points 1 and 2.

     Test condition IG LOCK (0)

     Gauge control module 32P connector: disconnected

     Test circuit +B BACK UP

     Test point 1 Gauge control module 32P connector No. 1 (RED)

     Test point 2 Body ground

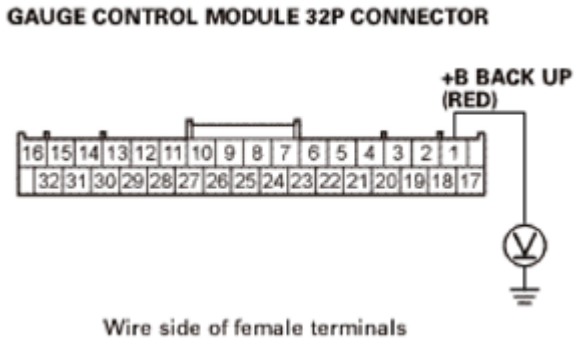

Fig. 64: Measuring Voltage Between Gauge Control Module 32P Connector No. 1 And Body Ground
Courtesy of AMERICAN HONDA MOTOR CO., INC.

Is there battery voltage?

YES : The +B BACK UP wire is OK. Go to step 5.

NO : Repair an open or high resistance in the wire.

GETtheMANUALS.org

5. Open wire check (IG1 METER line):
    - 1. Turn the ignition switch to ON (II).
    - 2. Measure the voltage between test points 1 and 2.

    Test condition IG ON (II)

    Gauge control module 32P connector: disconnected

    Test circuit IG1 METER

    Test point 1 Gauge control module 32P connector No. 17 (LT GRN)

    Test point 2 Body ground

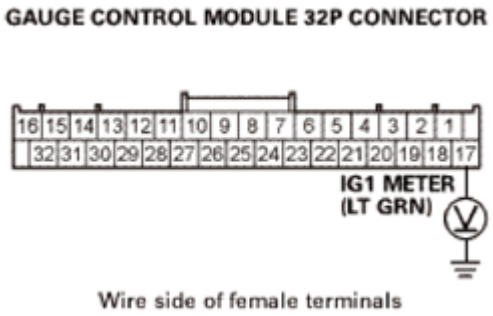

Fig. 65: Measuring Voltage Between Gauge Control Module 32P Connector No. 17 And Body Ground
Courtesy of AMERICAN HONDA MOTOR CO., INC.

Is there battery voltage?

YES : The IG1 METER wire is OK. Go to step 6.

NO : Repair an open or high resistance in the wire.

6. Open wire check (GND lines):
    - 1. Turn the ignition switch to LOCK (0).
    - 2. Check for continuity between test points 1 and 2 individually.

    Test condition IG LOCK (0)

    Gauge control module 32P connector: disconnected

    Test circuit GND

    Test point 1 Gauge control module 32P connector No. 4 (BRN)

GETtheMANUALS.org

Test point 2 Body ground

Test circuit GND

Test point 1 Gauge control module 32P connector No. 32 (BRN)

Test point 2 Body ground

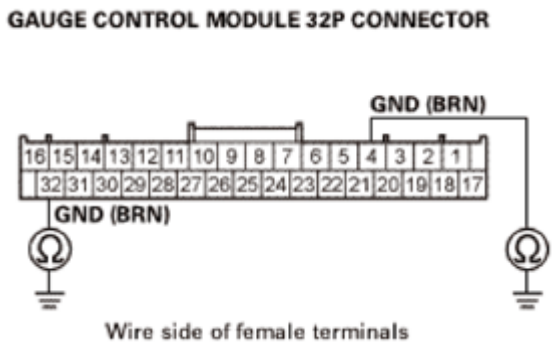

Fig. 66: Checking Continuity Between Gauge Control Module 32P Connector No. 4, 32 And Body Ground
Courtesy of AMERICAN HONDA MOTOR CO., INC.

Is there continuity?

YES : The GND wires are OK. Go to step 7.

NO : Repair an open or high resistance in the ground wire or poor ground (G502).

7. Open wire check (B CAN lines):
   - 1. Disconnect the following connector.

     Immobilizer-keyless control unit 7P connector

   - 2. Check for continuity between test points 1 and 2.

     Test condition IG LOCK (0)

     Gauge control module 32P connector: disconnected

     Immobilizer-keyless control unit 7P connector: disconnected

     Test circuit B CAN-H

     Test point 1 Immobilizer-keyless control unit 7P connector No. 4 (PNK)

     Test point 2 Gauge control module 32P connector No. 30 (PNK)

GETtheMANUALS.org

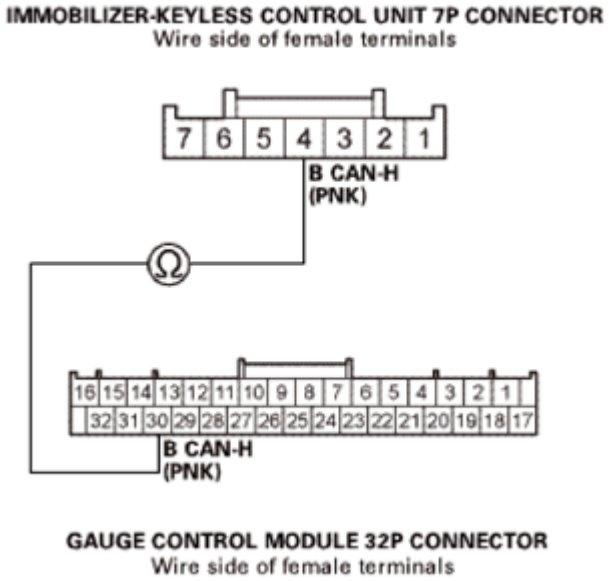

Fig. 67: Checking Continuity Between Immobilizer-Keyless Control Unit 7P Connector No. 4 And Gauge Control Module 32P Connector No. 30
Courtesy of AMERICAN HONDA MOTOR CO., INC.

Is there continuity?

YES : An open or poor connection in the B CAN-L wire between the immobilizer-keyless control unit and the gauge control module.

NO : An open or poor connection in the B CAN-H wire between the immobilizer-keyless control unit and the gauge control module.

8. Open wire check (B CAN lines):
   - 1. Disconnect the following connectors.

     Gauge control module 32P connector

     Immobilizer-keyless control unit 7P connector

   - 2. Check for continuity between test points 1 and 2.

     Test condition IG LOCK (0)

     Gauge control module 32P connector: disconnected

     Immobilizer-keyless control unit 7P connector: disconnected

     Test circuit B CAN-H

     Test point 1 Immobilizer-keyless control unit 7P connector No. 4 (PNK)

GETtheMANUALS.org

Test point 2 Gauge control module 32P connector No. 30 (PNK)

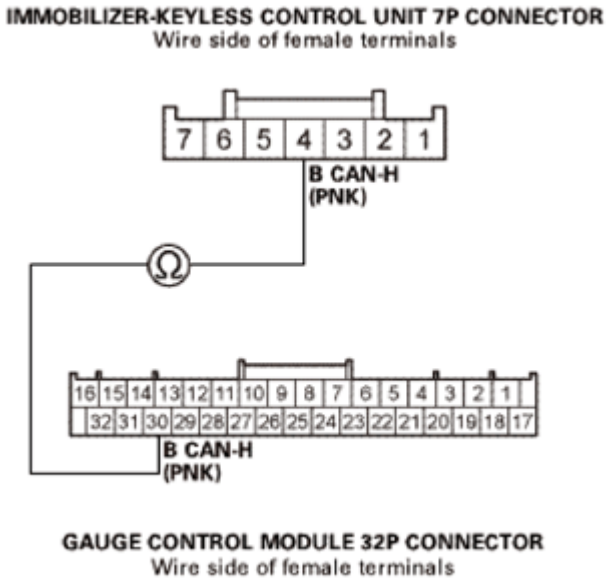

Fig. 68: Checking Continuity Between Immobilizer-Keyless Control Unit 7P Connector No. 4 And Gauge Control Module 32P Connector No. 30
Courtesy of AMERICAN HONDA MOTOR CO., INC.

Is there continuity?

YES : An open or poor connection in the B CAN-L wire between the immobilizer-keyless control unit and the gauge control module.

NO : An open or poor connection in the B CAN-H wire between the immobilizer-keyless control unit and the gauge control module.

DTC U128D: MICU LOST COMMUNICATION WITH GAUGE CONTROL MODULE

GETtheMANUALS.org

DTC Troubleshooting: U128D

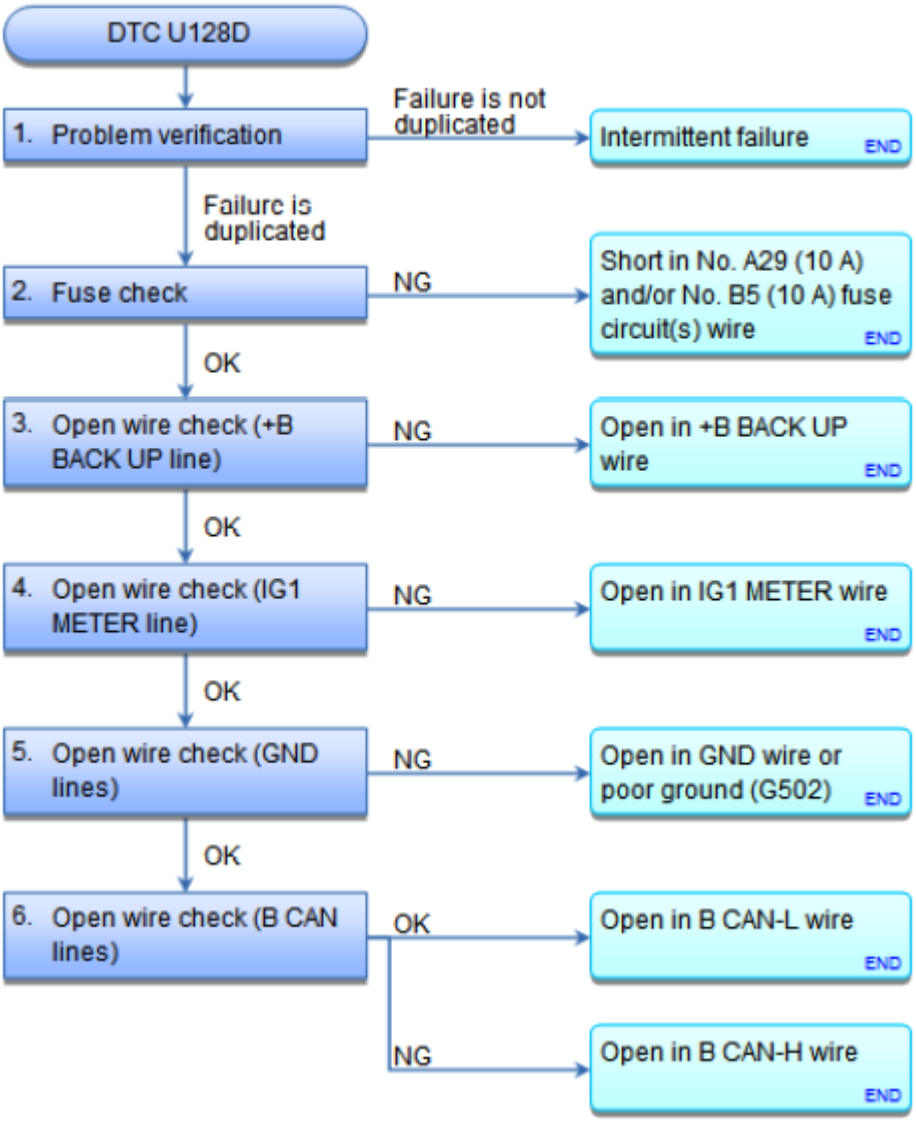

Fig. 69: DTC Troubleshooting Chart (U128D)
Courtesy of AMERICAN HONDA MOTOR CO., INC.

DTC Description	DTC
U128D MICU Lost Communication With Gauge Control Module	

NOTE:

- **Refer to the Electrical Wiring Diagrams for the location of the under-dash fuse/relay box connectors.**
- **If you are troubleshooting multiple DTCs, be sure to follow the instructions in B-CAN System Diagnosis Test Mode A.**

1. Problem verification:

GETtheMANUALS.org

- 1. Clear the DTCs with the HDS.
- 2. Turn the ignition switch to LOCK (0) and then back to ON (II).
- 3. Wait for at least 6 seconds.
- 4. Check for DTCs with the HDS.

DTC Description	DTC
U128D MICU Lost Communication With Gauge Control Module	

Is DTC U128D indicated?

YES : Go to step 2.

NO : Intermittent failure, the system is OK at this time. Check for loose or poor connections.

2. Fuse check:
   - 1. Check the following fuses.

     Fuse No. A29 (10 A)

     Location Under-hood fuse/relay box

     Fuse No. B5 (10 A)

     Location Under-dash fuse/relay box

Is each fuse OK?

YES : Go to step 3.

NO : Replace the fuse. If the fuse blows again, repair a short to ground in the No. A29 (10 A) and/or No. B5 (10 A) fuse circuit(s).

3. Open wire check (+B BACK UP line):
   - 1. Turn the ignition switch to LOCK (0).
   - 2. Disconnect the following connector.

     Gauge control module 32P connector

   - 3. Measure the voltage between test points 1 and 2.

     Test condition IG LOCK (0)

     Gauge control module 32P connector: disconnected

     Test circuit +B BACK UP

GETtheMANUALS.org

Test point 1 Gauge control module 32P connector No. 1 (RED)

Test point 2 Body ground

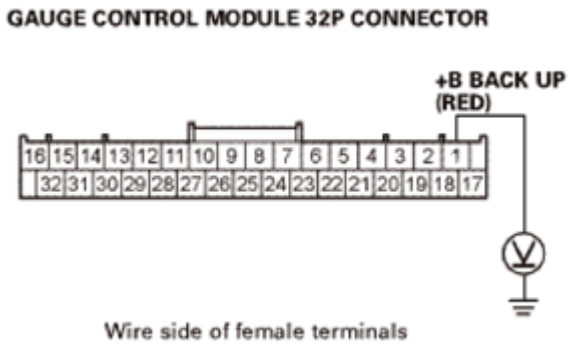

Fig. 70: Measuring Voltage Between Gauge Control Module 32P Connector No. 1 And Body Ground
Courtesy of AMERICAN HONDA MOTOR CO., INC.

Is there battery voltage?

YES : The +B BACK UP wire is OK. Go to step 4.

NO : Repair an open or high resistance in the wire.

4. Open wire check (IG1 METER line):
   - 1. Turn the ignition switch to ON (II).
   - 2. Measure the voltage between test points 1 and 2.

     Test condition IG ON (II)

     Gauge control module 32P connector: disconnected

     Test circuit IG1 METER

     Test point 1 Gauge control module 32P connector No. 17 (LT GRN)

     Test point 2 Body ground

GETtheMANUALS.org

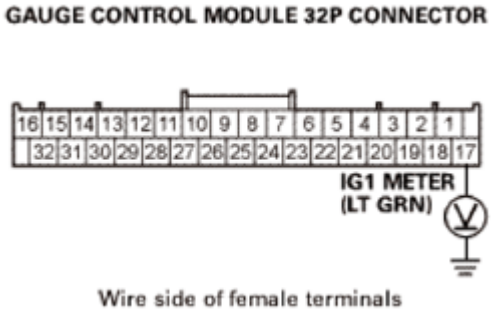

Fig. 71: Measuring Voltage Between Gauge Control Module 32P Connector No. 17 And Body Ground
Courtesy of AMERICAN HONDA MOTOR CO., INC.

Is there battery voltage?

YES : The IG1 METER wire is OK. Go to step 5.

NO : Repair an open or high resistance in the wire.

5. Open wire check (GND lines):
   - 1. Turn the ignition switch to LOCK (0).
   - 2. Check for continuity between test points 1 and 2 individually.

     Test condition IG LOCK (0)

     Gauge control module 32P connector: disconnected

     Test circuit GND

     Test point 1 Gauge control module 32P connector No. 4 (BRN)

     Test point 2 Body ground

     Test circuit GND

     Test point 1 Gauge control module 32P connector No. 32 (BRN)

     Test point 2 Body ground

GETtheMANUALS.org

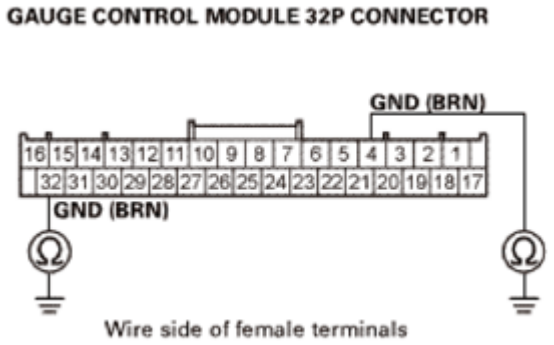

Fig. 72: Checking Continuity Between Gauge Control Module 32P Connector No. 4, 32 And Body Ground
Courtesy of AMERICAN HONDA MOTOR CO., INC.

Is there continuity?

YES : The GND wires are OK. Go to step 6.

NO : Repair an open or high resistance in the ground wire or poor ground (G502).

6. Open wire check (B CAN lines):
   - 1. Disconnect the following connector.

     Under-dash fuse/relay box connector K (12P)

   - 2. Check for continuity between test points 1 and 2.

     Test condition IG LOCK (0)

     Gauge control module 32P connector: disconnected

     Under-dash fuse/relay box connector K (12P): disconnected

     Test circuit B CAN-H

     Test point 1 Under-dash fuse/relay box connector K (12P) No. 2 (PNK)

     Test point 2 Gauge control module 32P connector No. 30 (PNK)

GETtheMANUALS.org

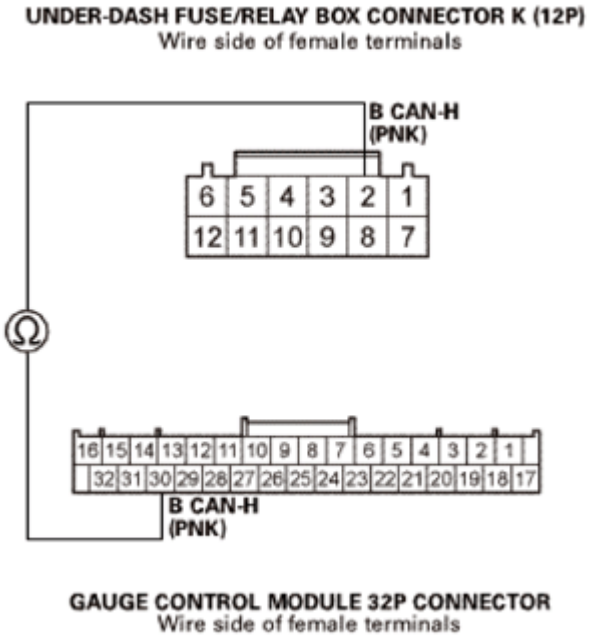

Fig. 73: Checking Continuity Between Under-Dash Fuse/Relay Box Connector K (12P) No. 2 And Gauge Control Module 32P Connector No. 30
Courtesy of AMERICAN HONDA MOTOR CO., INC.

Is there continuity?

YES : An open or poor connection in the B CAN-L wire between the MICU and the gauge control module.

NO : An open or poor connection in the B CAN-H wire between the MICU and the gauge control module.

DTC U3000-49: GAUGE CONTROL MODULE INTERNAL CIRCUIT ERROR

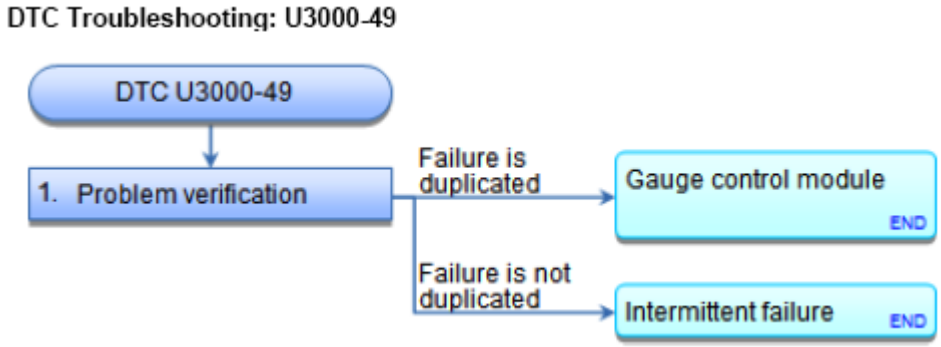

Fig. 74: DTC Troubleshooting Chart (U3000-49)
Courtesy of AMERICAN HONDA MOTOR CO., INC.

DTC Description	DTC

GETtheMANUALS.org

U3000-49 Gauge Control Module Internal Circuit Error	

1. Problem verification:
   - 1. Clear the DTCs with the HDS.
   - 2. Turn the ignition switch to LOCK (0) and then back to ON (II).
   - 3. Check for DTCs with the HDS.

DTC Description	DTC
U3000-49 Gauge Control Module Internal Circuit Error	

Is DTC U3000-49 indicated?

YES : **Replace the gauge control module** See **Rewriting the ODO Data and Transferring the Maintenance Minder™ Data to a New Gauge Control Module** or **GAUGE CONTROL MODULE REMOVAL AND INSTALLATION** .

NO : Intermittent failure, the system is OK at this time.

DTC U3000-49: CONTROL MODULE INTERNAL CONTROL MODULE MALFUNCTION

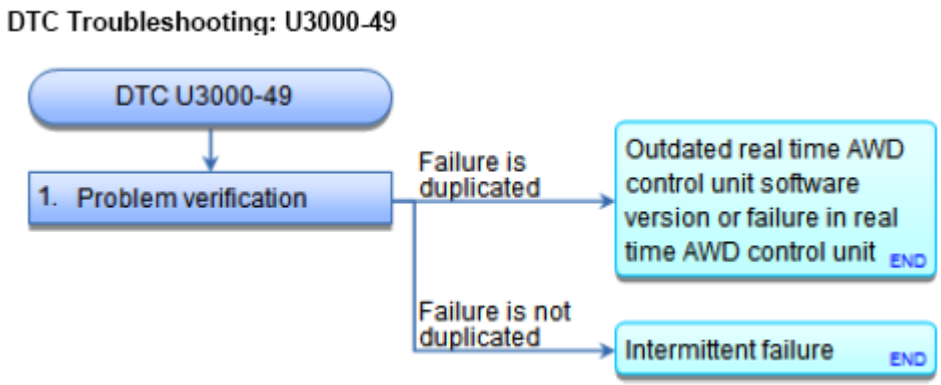

Fig. 75: DTC Troubleshooting Chart (U3000-49)
Courtesy of AMERICAN HONDA MOTOR CO., INC.

NOTE: **Before you troubleshoot, REVIEW THE HOW TO TROUBLESHOOT THE REAL TIME AWD SYSTEM .**

DTC Description	DTC	Freeze Frame
U3000-49 Control Module Internal Control Module Malfunction		

1. Problem verification:
   - 1. Turn the ignition switch to ON (II).

GETtheMANUALS.org

- 2. Clear the DTC with the HDS.
- 3. Start the engine.
- 4. Check for DTCs with the HDS.

DTC Description	DTC	Freeze Frame
U3000-49 Control Module Internal Control Module Malfunction		

Is DTC U3000-49 indicated?

YES : **Update the real time AWD control unit if it does not have the latest software** See **REAL TIME AWD CONTROL UNIT REMOVAL AND INSTALLATION** or **REAL TIME AWD CONTROL UNIT UPDATE** , or **substitute a known-good real time AWD control unit** See **REAL TIME AWD CONTROL UNIT REMOVAL AND INSTALLATION** or **REAL TIME AWD CONTROL UNIT UPDATE** , and recheck. If the symptom/indication goes away with the updated real time AWD control unit, troubleshooting is complete. If the symptom/indication goes away with a known-good real time AWD control unit, **replace the original real time AWD control unit** See **REAL TIME AWD CONTROL UNIT REMOVAL AND INSTALLATION** or **REAL TIME AWD CONTROL UNIT UPDATE** .

NO : Intermittent failure, the system is OK at this time.

DTC U3000-51: CONTROL MODULE PROGRAMMING ERROR

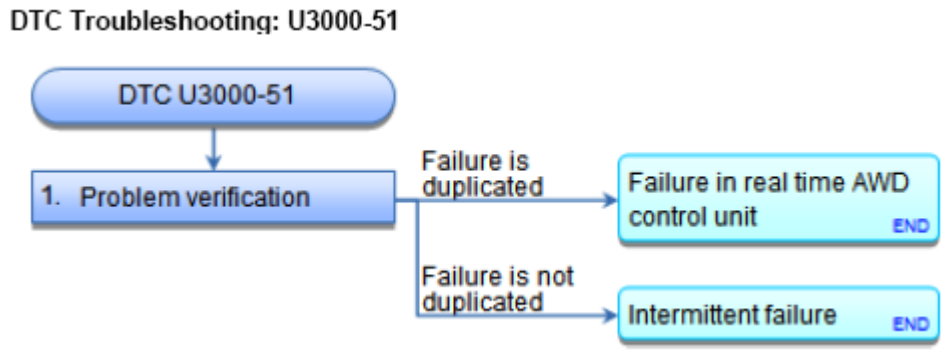

Fig. 76: DTC Troubleshooting Chart (U3000-51)
Courtesy of AMERICAN HONDA MOTOR CO., INC.

NOTE: **Before you troubleshoot, REVIEW THE HOW TO TROUBLESHOOT THE REAL TIME AWD SYSTEM .**

DTC Description	DTC	Freeze Frame
U3000-51 Control Module Programming Error		

1. Problem verification:
   - 1. **Do the re-programming of the real time AWD control unit** See **REAL TIME AWD**

GETtheMANUALS.org

CONTROL UNIT REMOVAL AND INSTALLATION or **REAL TIME AWD CONTROL UNIT UPDATE** .

- 2. Check for DTCs with the HDS.

DTC Description	DTC	Freeze Frame
U3000-51 Control Module Programming Error		

Is DTC U3000-51 indicated?

YES : **Substitute a known-good real time AWD control unit** See **REAL TIME AWD CONTROL UNIT REMOVAL AND INSTALLATION** or **REAL TIME AWD CONTROL UNIT UPDATE** , and recheck. If the symptom/indication goes away with a known-good real time AWD control unit, **replace the original real time AWD control unit** See **REAL TIME AWD CONTROL UNIT REMOVAL AND INSTALLATION** or **REAL TIME AWD CONTROL UNIT UPDATE** .

NO : Intermittent failure, the system is OK at this time.

GETtheMANUALS.org

BODY ELECTRICAL TROUBLESHOOTING - B-CAN SYSTEM DIAGNOSIS TEST MODE 1 AND TEST MODE 2 (WITHOUT THE HDS)

Shift to Test Mode 1

Check the PCM for DTCs and troubleshoot PCM or F-CAN loss of communication errors first, then do this diagnosis if the HDS is not available.

1. Check the No. A29 (10 A) fuse in the under-hood fuse/relay box, and the No. B5 (10 A) fuse in the under-dash fuse/relay box. If a fuse is blown, find and correct the cause, then replace the fuse.
2. Move the interior light switch to the DOOR position.

NOTE: Do steps 3-7 within 10 seconds.

3. Turn the ignition switch to ON (II).
4. Pull and hold the combination light switch in its Passing position.

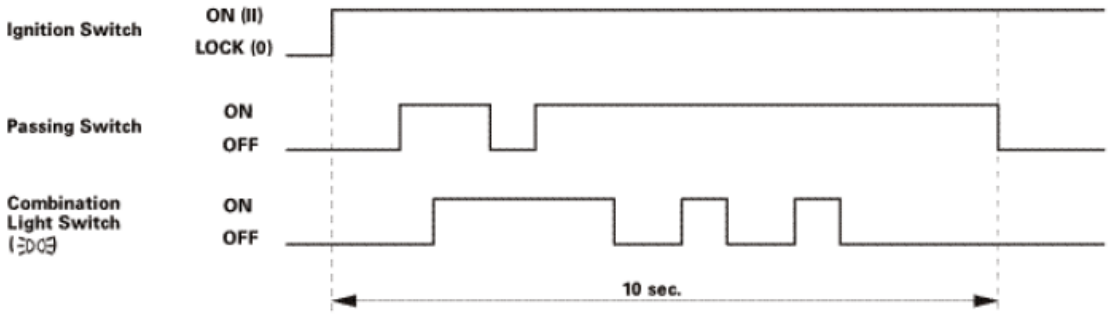

Fig. 1: Ignition Switch, Passing Switch And Combination Light Switch Blinking Pattern
Courtesy of AMERICAN HONDA MOTOR CO., INC.

5. While holding the switch, turn the headlight switch to the Parking position, then release, pull, and hold the combination switch in its Passing position.
6. Turn off the headlights, then turn the headlight switch to the Parking position, and turn the lights ON and OFF two more times.
7. Release the combination light switch.
8. Wait 5 seconds, and watch the individual map lights, ceiling light (if equipped), and ignition key light (if equipped). When the lights flash quickly once, the system enters Test Mode 1.
9. If individual map light keeps blinking after entering Test Mode 1. Check for B-CAN Unit communication error.

Error	Display code (blinking

GETtheMANUALS.org

	pattern)
Error in the bus (bus off status)	1
Gauge control module communication error (AT frames cannot be received)	5

10. Check for B-CAN DTCs indicated by the LCD display while still in Test Mode 1. Press the SEL/RESET button to display the next code. After you get to the last code, the display shows END. If no DTCs are stored, the display reads NO.

NOTE: **If the test times out, turn the ignition switch to LOCK (0), and repeat steps 3-7.**

Fig. 2: Display - B-CAN DTC On LCD Screen (DTC Detected)
Courtesy of AMERICAN HONDA MOTOR CO., INC.

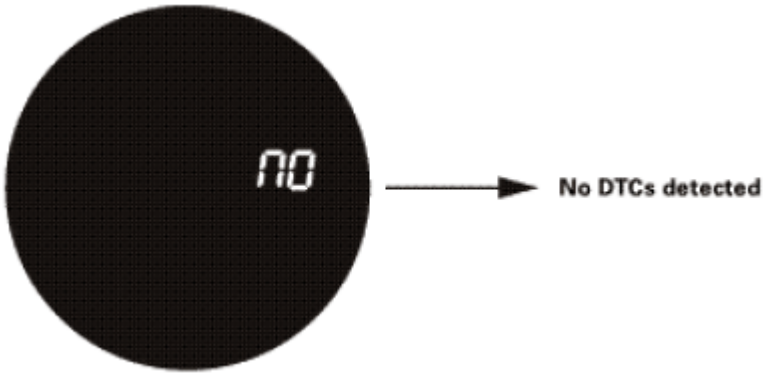

Fig. 3: Display - B-CAN DTC On LCD Screen (No DTC Detected)
Courtesy of AMERICAN HONDA MOTOR CO., INC.

GETtheMANUALS.org

Fig. 4: Display - B-CAN DTC On LCD Screen (All DTC Have Been Displayed)
Courtesy of AMERICAN HONDA MOTOR CO., INC.

The control unit that has stored the code can be identified by the number shown on the LCD display.

Control Unit	Control Unit I.D. Number
MICU	10
Gauge control module	50
Climate control unit	51
Automatic lighting/sunlight sensor	72
Immobilizer-keyless control unit	96

NOTE: **You can also check B-CAN communication status by the following methods:**

- **The MICU self-diagnostic function Test Mode 1 and Test Mode 2 can check some communication statuses and some switch circuits.**
- **THE GAUGE CONTROL MODULE SELF-DIAGNOSTIC FUNCTION CAN CHECK COMMUNICATION STATUS .**

11. Record all DTCs and troubleshoot them in this order:
    - Battery voltage DTCs
    - Internal error DTCs
    - Loss of communication DTCs
    - Signal error DTCs
12. Clear the DTCs by pressing and holding the SEL/RESET button for about 10 seconds.
13. You will hear a beep to confirm the codes have been cleared. Operate the devices that failed, and recheck for codes.

Shift to Test Mode 2

NOTE: **Do steps 13-17 within 10 seconds.**

GETtheMANUALS.org

14. Pull and hold the combination light switch in its Passing position.

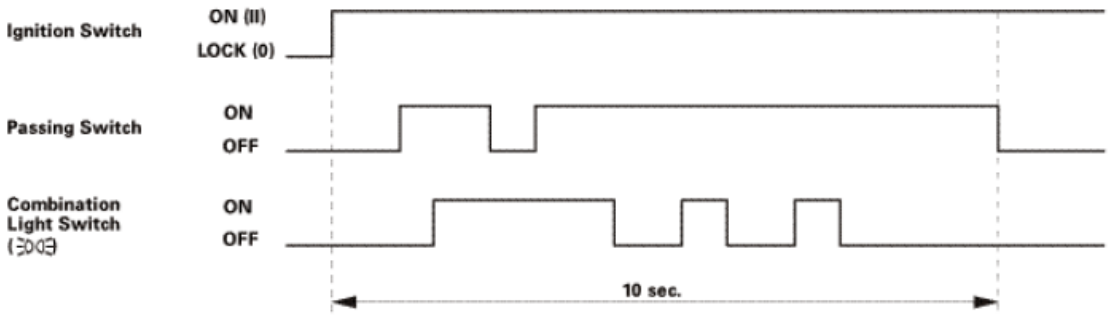

Fig. 5: Ignition Switch, Passing Switch And Combination Light Switch Blinking Pattern
Courtesy of AMERICAN HONDA MOTOR CO., INC.

15. While holding the switch, turn the headlight switch to the Parking position, then release, pull, and hold the combination switch in its Passing position.
16. Turn off the headlights, then turn the headlight switch to the Parking position, and turn the lights ON and OFF two more times.
17. Release the combination light switch.
18. Wait 5 seconds, and watch the individual map lights and ignition key light. When the lights flash two times quickly and then go off, the system is in Test Mode 2.

NOTE: **If you repeat this procedure, the system automatically returns to Test Mode 1.**

19. The following tables list the circuits that can be checked in Test Mode 2. Operate the switch that is most closely related to the problem. If the circuit is OK, the individual map lights, ceiling light, and ignition key light blink once. If the circuit is faulty, there is no such indication.
    - If the front individual map lights, ceiling light, and ignition key light do not blink even when a switch is operated, check two or three other circuits listed in the table. If the front individual map lights, ceiling light, and ignition key light blink for each circuit, the additional circuits are OK; repair the short or open circuit that failed the test in step 18.
    - If the front individual map lights, ceiling light, and ignition key light do not blink again, this means that the control unit has failed without triggering a DTC. Test a few more circuits. If they also fail, check the related control units using their input tests.

Driver's door lock switch (UNLOCK)	Windshield washer switch
Driver's door lock switch (LOCK)	Windshield wiper motor park position (Auto stop)
Front Passenger's door lock switch (UNLOCK)	Rear window wiper ON switch
Front Passenger's door lock switch (LOCK)	Rear window wiper INT switch
Driver's door lock knob switch (UNLOCK)	Rear window washer switch
Driver's door lock knob switch (LOCK)	Rear window wiper motor park position (Auto stop)
Driver's door key cylinder switch (UNLOCK)(1)	Turn signal switch (LEFT)
Driver's door key cylinder switch (LOCK)(1)	Turn signal switch (RIGHT)

GETtheMANUALS.org

Front passenger's door lock knob switch (UNLOCK)	Hazard warning switch
Left rear door lock knob switch (UNLOCK)	Headlight switch (ON)
Right rear door lock knob switch (UNLOCK)	Headlight switch (OFF)
Driver's door switch	Lighting switch
Front passenger's door switch	Dimmer switch
Left rear door switch	Passing switch
Right rear door switch	Fog light switch
Tailgate latch switch	Ignition key switch
Audio switch	Security hood switch
Windshield wiper HI/LO switch	Brake pedal position switch
Windshield wiper INT/LO switch	Transmission range switch (P)
Windshield wiper MIST switch	A/C pressure switch
Windshield wiper intermittent dwell time controller	
(1) A second key is necessary to check the key cylinder inputs. Be sure to rotate the key cylinder switch two times to each position (lock and lock, unlock and unlock) to ensure the door lock knob switch is in the appropriate position.	

BODY ELECTRICAL TROUBLESHOOTING - B-CAN SYSTEM DIAGNOSIS TEST MODE A - INITIAL COMMUNICATION AND DTC CHECKS

Check the PCM for DTCs and troubleshoot PCM or F-CAN loss of communication errors first, then do this diagnosis if the symptom is related to the B-CAN system.

1. Compare the symptom with this list of B-CAN related systems:
    - Gauge control module
    - Exterior lights
    - Turn signals
    - Entry light control
    - Interior lights
    - Safety indicators
    - Horns (security and panic)
    - Chimes (key-in, seat belt, lights-on, and parking brake)
    - Power window/moonroof timer
    - Wiper/washer
    - Security
    - Keyless entry
    - Power door locks
    - Key interlock
    - Dashlights brightness
    - Immobilizer

GETtheMANUALS.org

- Daytime running lights
- Climate control
  - If the symptom is related to the B-CAN, go to step 2.
  - If the symptom is not related to the B-CAN, go to the system symptom troubleshooting.

2. Connect the HDS to the data link connector (DLC) (A), then turn the ignition switch to ON (II).

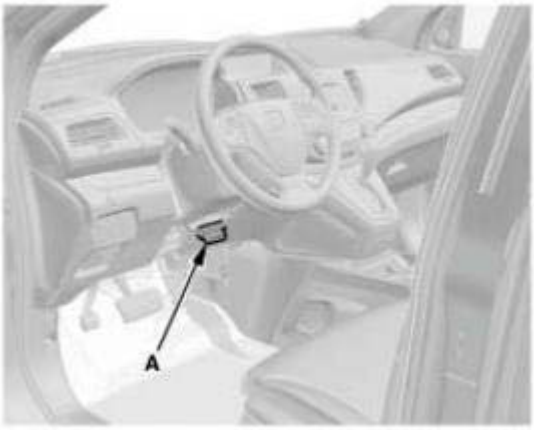

Fig. 6: Identifying Data Link Connector
Courtesy of AMERICAN HONDA MOTOR CO., INC.

3. From the BODY ELECTRICAL SYSTEM SELECT menu, select B-CAN CONTROL UNITS INFORMATION, and then select CHECK CONNECTED CONTROL UNITS listed to see if the following control units are communicating with the HDS.
   - MICU
   - Gauge control module
   - Immobilizer-keyless control unit
   - Climate control unit (if applicable)
   - Automatic lighting control unit

NOTE:
- **If a unit is communicating with the HDS, DETECT is displayed.**
- **If a unit is not communicating or the vehicle is not equipped, "NOT AVAILABLE" is displayed.**
- **The HDS only checks the status one time when BODY ELECTRICAL is selected. To recheck the status after repair, reboot the HDS.**

   - If all control units are communicating with the HDS, go to step **4** .
   - If any of the control units are not communicating, go to **B-CAN SYSTEM DIAGNOSIS TEST MODE B**.
   - If all units are not communicating or only the MICU is communicating, **go to MICU DTC U1280 troubleshooting** .

4. Select the system that has the problem from the BODY ELECTRICAL SYSTEM SELECT menu, then

GETtheMANUALS.org

select DTCs.

- If any DTCs are indicated, go to step **5** .
- If the problem is related to one of the following items and the system that is malfunctioning does not stop or turn off, go to **B-CAN SYSTEM DIAGNOSIS TEST MODE C**.
- If the problem is related to one of the following items and the system that is malfunctioning does not run or turn on, go to **B-CAN SYSTEM DIAGNOSIS TEST MODE D**.
  - Exterior lights
  - Turn signals
  - Entry light control
  - Interior lights
  - Horns (security and panic)
  - Wiper/washer
  - Power window
  - Power door locks
- If the problem is related to one of the following items, go to the troubleshooting for that individual system.
  - Gauge control module
  - Safety indicators
  - Chimes (key-in, seat belt, lights-on, and parking brake)
  - Security
  - Keyless entry
  - Key interlock
  - Dashlights brightness
  - Audio system
  - Immobilizer
  - Rear window defogger (climate control)
  - Climate control

5. Record all DTCs, and sort them by DTC type.
6. Troubleshoot the DTC(s) in this order:
   - Battery voltage DTCs.
   - Internal error DTCs.
   - Loss of communication DTCs.
   - Signal error DTCs.

BODY ELECTRICAL TROUBLESHOOTING - B-CAN SYSTEM DIAGNOSIS TEST MODE B - CONTROL UNIT NOT COMMUNICATING

Do this diagnosis if any of the control units are not communicating (NOT AVAILABLE is displayed in the HDS) as found by the **Body Electrical Troubleshooting - B-CAN System Diagnosis Test Mode A - Initial**

GETtheMANUALS.org

Communication and DTC Checks.

1. Using the HDS, select the system that has the symptom from the BODY ELECTRICAL SYSTEM SELECT menu.
2. Select DTCs, and then check for loss of communication DTCs.
   - If any loss of communication DTCs are indicated, go to step **3** .
   - If any loss of communication DTCs are not indicated, faulty MICU; **REPLACE THE UNDER-DASH FUSE/RELAY BOX** .
3. Do the power, ground, and communication part of the input test for the unit(s) not communicating with the HDS.

Unit not communicating
MICU
GAUGE CONTROL MODULE
IMMOBILIZER-KEYLESS CONTROL UNIT
CLIMATE CONTROL UNIT
AUTOMATIC LIGHTING CONTROL UNIT

BODY ELECTRICAL TROUBLESHOOTING - B-CAN SYSTEM DIAGNOSIS TEST MODE C - NO DTCS AND OUTPUT WON'T SHUT OFF

Do this diagnosis if a component that is controlled by the B-CAN system does not stop or turn off.

NOTE:

- **If the component does not turn on, go to B-CAN SYSTEM DIAGNOSIS TEST MODE D.**
- **See the B-CAN system unit input/output index for a list of input and output devices and the control units that monitor the input and control the output devices.**

1. Check for DTCs by selecting the system MODE MENU from the HDS.
   - If any DTCs are indicated, go to **B-CAN SYSTEM DIAGNOSIS TEST MODE A**.
   - If any DTCs are not indicated, go to step **2** .
2. Turn off the switch that controls the malfunctioning component.
3. Select the applicable system from the system MODE MENU, then select DATA LIST, and check the input of the switch that controls the related component.
   - If HDS indicates the switch is OFF, go to step **4** .
   - If HDS indicates the switch is not OFF, go to step 6.
4. In the DATA LIST, check the output signal of the malfunctioning component.
   - If the output signal is OFF, go to step **5** .
   - If the output signal is not OFF, replace the control unit that controls the device that will not turn OFF.

GETtheMANUALS.org

5. Check the relay that does not stop or turn off, if applicable, then check for a short in the wire between the relay and the component, the relay and control unit, or the component and control unit.
    - If the relay and the wire harness are OK, replace the control unit that controls the component that will not stop or turn OFF.
    - If the relay and the wire harness are not OK, replace the relay or repair/replace the wire harness.
6. Check the switch, then check for a short in the wire between the switch and the control unit that monitors the switch.
    - If the switch and the wire harness are OK, replace the control unit that monitors the switch.
    - If the switch and the wire harness are not OK, replace the switch or repair/replace the appropriate wire harness.

BODY ELECTRICAL TROUBLESHOOTING - B-CAN SYSTEM DIAGNOSIS TEST MODE D - NO DTCS AND OUTPUT WON'T TURN ON

Do this diagnosis if a component that is controlled by the B-CAN system does not run or come on.

NOTE:

- **If the component does not turn off or stop, go to B-CAN SYSTEM DIAGNOSIS TEST MODE C.**
- **See the B-CAN system unit input/output index for a list of input and output devices and the control units that monitor the input and control the output devices.**

1. Check the fuse of the malfunctioning output device.
    - If the fuse is OK, go to step **2** .
    - If the fuse is not OK, replace the fuse. If the fuse blows again, repair the short to ground on the fuse circuit of the malfunctioning device.
2. Check for DTCs by selecting the system MODE MENU from the HDS.
    - If any DTCs are indicated, go to **B-CAN SYSTEM DIAGNOSIS TEST MODE A**.
    - If any DTCs are not indicated, go to step **3** .
3. Turn ON the switch that controls the malfunctioning component.
4. Select the applicable system from the system MODE MENU, then select DATA LIST, and check the input of the switch that controls the related component.
    - If there is an output signal, go to step **5** .
    - If there is not an output signal, go to step 9.
5. Check the relay (if applicable) and ground, then check for an open or a short in the circuit for the malfunctioning component.
    - If the relay and the wire harness are OK, go to step **6** .
    - If the relay and the wire harness are not OK, replace the relay or repair the wire circuit.
6. Do the function test for the malfunctioning component.
    - If the output device pass the function test, go to step **7** .
    - If the output device does not pass the function test, replace the component.

GETtheMANUALS.org

7. With the malfunctioning output device connected, connect a voltmeter between the malfunctioning output device and body ground on the wire that the control unit uses to control the output device circuit.
8. Select FUNCTIONAL TEST from the system MODE MENU, and do the forced operation test of the malfunctioning component.
    - If the voltage changes (12 V to 0 V or 0 V to 12 V), inspect the ground for the component. If OK, replace the component.
    - If the voltage does not change, replace the control unit that controls the malfunctioning component.
9. Select DATA LIST from the system MODE MENU, and make sure the switch signal input for the malfunctioning system indicates a change when operated.
    - If the switch input indicates ON when the switch is ON, replace the control unit that controls the malfunctioning component.
    - If the switch input does not indicate ON when the switch is ON, go to step **10** .
10. Check the switch and its ground (if applicable), then check for an open or a short in the wire between the switch and the control unit that monitors it.
    - If the switch and the wire harness are OK, replace the control unit that monitors the switch.
    - If the switch and the wire harness are not OK, replace the switch, or repair/replace the wire harness.

GETtheMANUALS.org

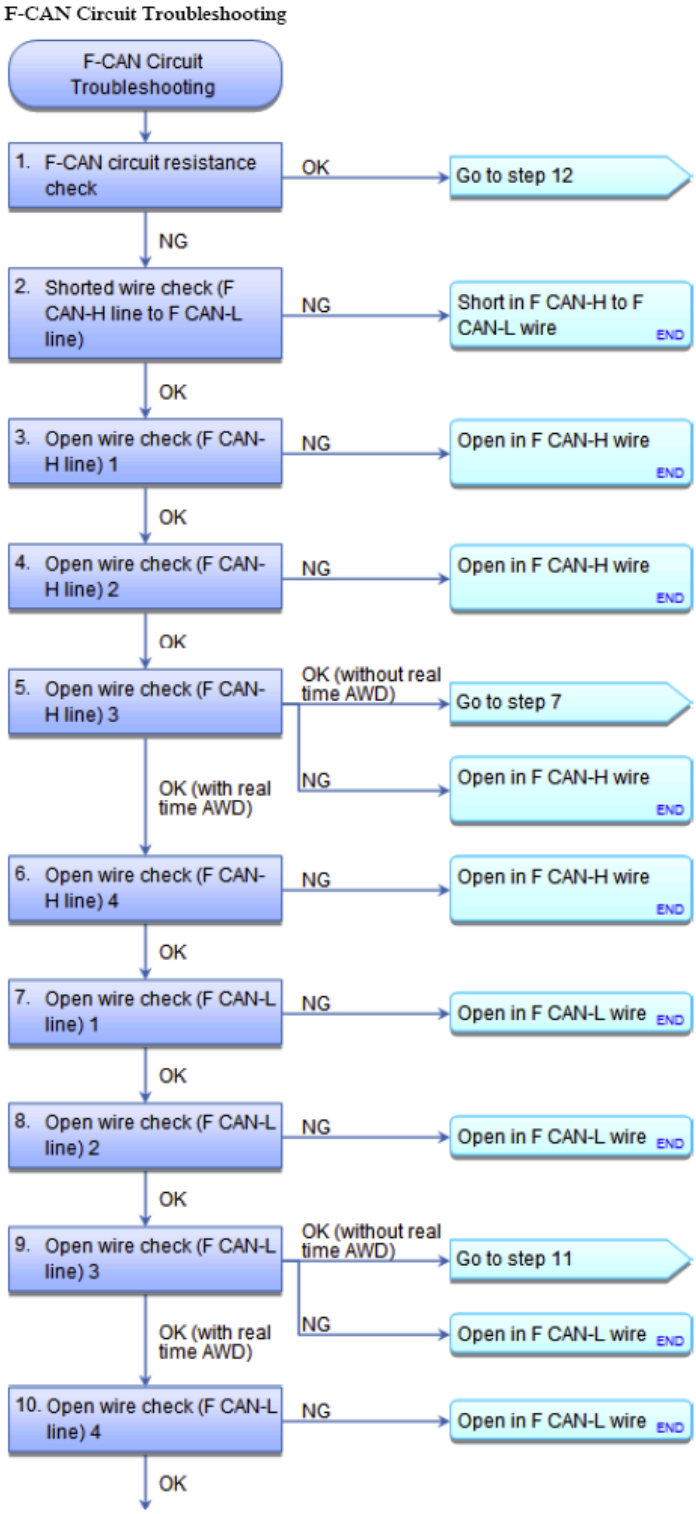

Fig. 7: F-CAN Circuit Troubleshooting Chart (1 Of 2)
Courtesy of AMERICAN HONDA MOTOR CO., INC.

F-CAN CIRCUIT TROUBLESHOOTING

GETtheMANUALS.org

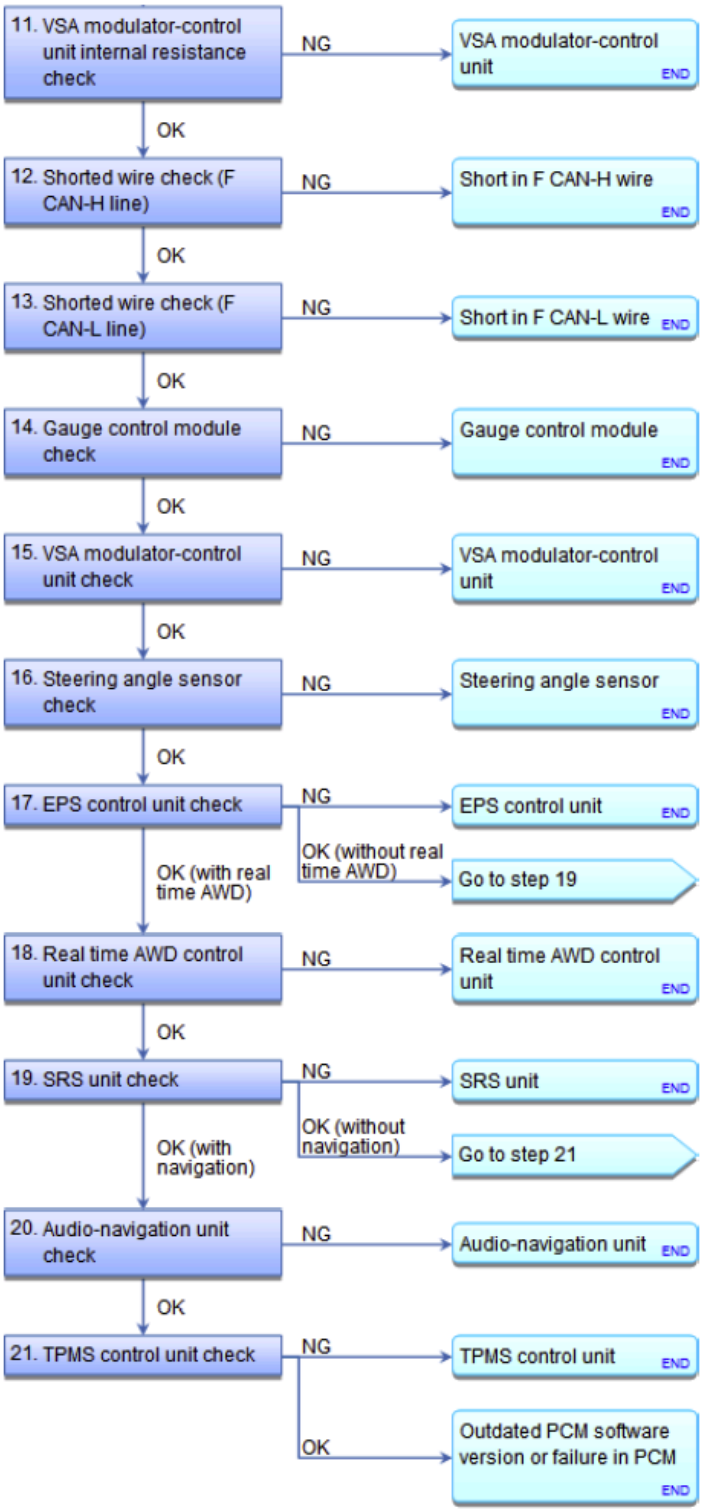

Fig. 8: F-CAN Circuit Troubleshooting Chart (2 Of 2)
Courtesy of AMERICAN HONDA MOTOR CO., INC.

1. F-CAN circuit resistance check:
    - 1. Turn the ignition switch to LOCK (0).

GETtheMANUALS.org

- 2. Jump the SCS line with the HDS.
- 3. Disconnect the following connector.

  PCM connector A (49P)

- 4. Disconnect the HDS.
- 5. Measure the resistance between test points 1 and 2.

  Test condition IG LOCK (0)

  PCM connector A (49P): disconnected

  Test circuit F CAN-H, F CAN-L

  Test point 1 PCM connector A (49P) No. 3 (WHT)

  Test point 2 PCM connector A (49P) No. 4 (RED)

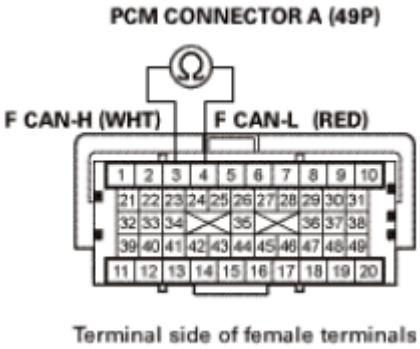

Fig. 9: Measuring Resistance Between PCM Connector A (49P) No. 3 And 4
Courtesy of AMERICAN HONDA MOTOR CO., INC.

Is there about 46-58 ohms?

YES : Go to step 12.

NO : Go to step 2.

2. Shorted wire check (F CAN-H line to F CAN-L line):
   - 1. Disconnect the following connectors.
     - Gauge control module 32P connector
     - VSA modulator-control unit 38P connector
     - Steering angle sensor 4P connector
     - EPS control unit connector A (11P)
     - Real time AWD control unit 24P connector (with real time AWD)

GETtheMANUALS.org

- SRS unit connector A (39P)
- TPMS control unit 20P connector
- Audio-navigation unit connector B (20P) (with navigation)

- Check for continuity between test points 1 and 2.

Test condition IG LOCK (0)

PCM connector A (49P): disconnected

Gauge control module 32P connector: disconnected

VSA modulator-control unit 38P connector: disconnected

Steering angle sensor 4P connector: disconnected

EPS control unit connector A (11P): disconnected

Real time AWD control unit 24P connector (with real time AWD): disconnected

SRS unit connector A (39P): disconnected

TPMS control unit 20P connector: disconnected

Audio-navigation unit connector B (20P) (with navigation): disconnected

Test circuit F CAN-H, F CAN-L

Test point 1 PCM connector A (49P) No. 3 (WHT)

Test point 2 PCM connector A (49P) No. 4 (RED)

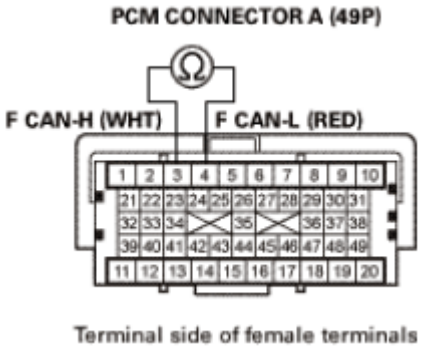

Fig. 10: Checking Continuity Between PCM Connector A (49P) No. 3 And 4
Courtesy of AMERICAN HONDA MOTOR CO., INC.

Is there continuity?

GETtheMANUALS.org

YES : Repair a short in the F CAN-H wire to F CAN-L wire between PCM terminals A3 and A4.

NO : The F CAN-H wire and F CAN-L wires are not shorted. Go to step 3.

3. Open wire check (F CAN-H line) 1:
    - 1. Check for continuity between test points 1 and 2.

      Test condition IG LOCK (0)

      PCM connector A (49P): disconnected

      Gauge control module 32P connector: disconnected

      VSA modulator-control unit 38P connector: disconnected

      Steering angle sensor 4P connector: disconnected

      EPS control unit connector A (11P): disconnected

      Real time AWD control unit 24P connector (with real time AWD): disconnected

      SRS unit connector A (39P): disconnected

      TPMS control unit 20P connector: disconnected

      Audio-navigation unit connector B (20P) (with navigation): disconnected

      Test circuit F CAN-H

      Test point 1 PCM connector A (49P) No. 3 (WHT)

      Test point 2 Gauge control module 32P connector No. 19 (WHT)

GETtheMANUALS.org

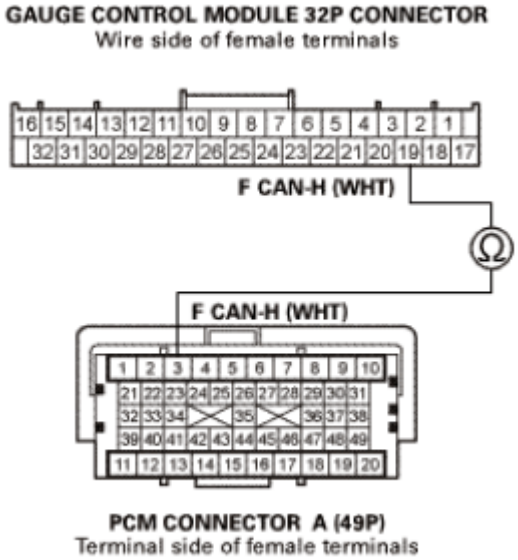

Fig. 11: Checking Continuity Between PCM Connector A (49P) No. 3 And Gauge Control Module 32P Connector No. 19
Courtesy of AMERICAN HONDA MOTOR CO., INC.

Is there continuity?

YES : The F CAN-H wire is not open. Go to step 4.

NO : Repair an open in the F CAN-H wire between the PCM (A3) and the gauge control module.

4. Open wire check (F CAN-H line) 2:
   - 1. Check for continuity between test points 1 and 2.

     Test condition IG LOCK (0)

     PCM connector A (49P): disconnected

     Gauge control module 32P connector: disconnected

     VSA modulator-control unit 38P connector: disconnected

     Steering angle sensor 4P connector: disconnected

     Real time AWD control unit 24P connector (with real time AWD): disconnected

     EPS control unit connector A (11P): disconnected

     SRS unit connector A (39P): disconnected

     TPMS control unit 20P connector: disconnected

GETtheMANUALS.org

Audio-navigation unit connector B (20P) (with navigation): disconnected

Test circuit F CAN-H

Test point 1 PCM connector A (49P) No. 3 (WHT)

Test point 2 VSA modulator-control unit 38P connector No. 38 (WHT)

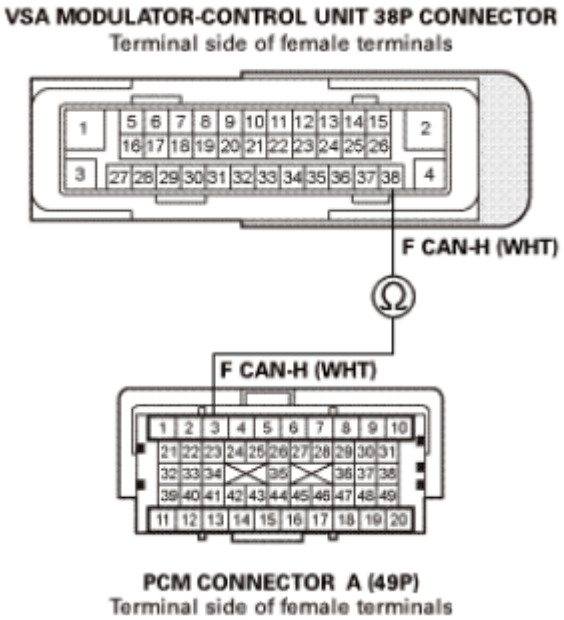

Fig. 12: Checking Continuity Between PCM Connector A (49P) No. 3 And VSA Modulator-Control Unit 38P Connector No. 38
Courtesy of AMERICAN HONDA MOTOR CO., INC.

Is there continuity?

YES : The F CAN-H wire is not open. Go to step 5.

NO : Repair an open in the F CAN-H wire between the PCM (A3) and the VSA modulator-control unit.

5. Open wire check (F CAN-H line) 3:
   - 1. Check for continuity between test points 1 and 2.

     Test condition IG LOCK (0)

     PCM connector A (49P): disconnected

     Gauge control module 32P connector: disconnected

     VSA modulator-control unit 38P connector: disconnected

GETtheMANUALS.org

Steering angle sensor 4P connector: disconnected

EPS control unit connector A (11P): disconnected

Real time AWD control unit 24P connector (with real time AWD): disconnected

SRS unit connector A (39P): disconnected

TPMS control unit 20P connector: disconnected

Audio-navigation unit connector B (20P) (with navigation): disconnected

Test circuit F CAN-H

Test point 1 PCM connector A (49P) No. 3 (WHT)

Test point 2 EPS control unit connector A (11P) No. 7 (WHT)

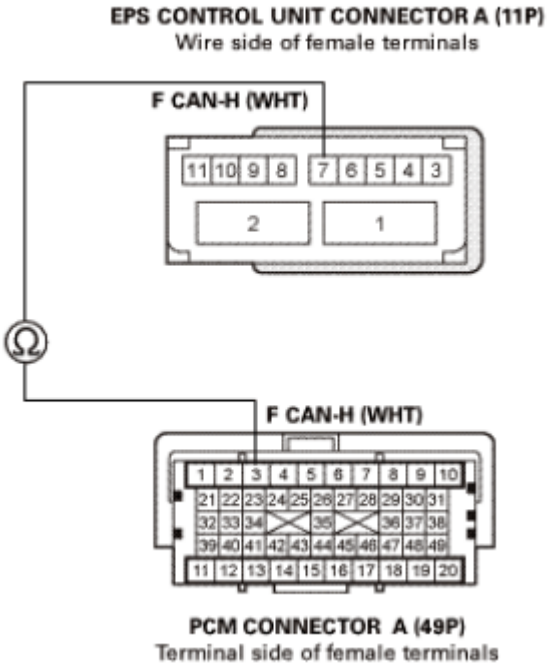

Fig. 13: Checking Continuity Between PCM Connector A (49P) No. 3 And EPS Control Unit Connector A (11P) No. 7
Courtesy of AMERICAN HONDA MOTOR CO., INC.

Is there continuity?

YES (with real time AWD) : The F CAN-H wire is not open. Go to step 6.

YES (without real time AWD) : The F CAN-H wire is not open. Go to step 7.

GETtheMANUALS.org

NO : Repair an open in the F CAN-H wire between the PCM (A3) and the EPS control unit.

6. Open wire check (F CAN-H line) 4:
    - 1. Check for continuity between test points 1 and 2.

      Test condition IG LOCK (0)

      PCM connector A (49P): disconnected

      Gauge control module 32P connector: disconnected

      VSA modulator-control unit 38P connector: disconnected

      Steering angle sensor 4P connector: disconnected

      EPS control unit connector A (11P): disconnected

      Real time AWD control unit 24P connector (with real time AWD): disconnected

      SRS unit connector A (39P): disconnected

      TPMS control unit 20P connector: disconnected

      Audio-navigation unit connector B (20P) (with navigation): disconnected

      Test circuit F CAN-H

      Test point 1 PCM connector A (49P) No. 3 (WHT)

      Test point 2 Real time AWD control unit 24P No. 14 (WHT)

GETtheMANUALS.org

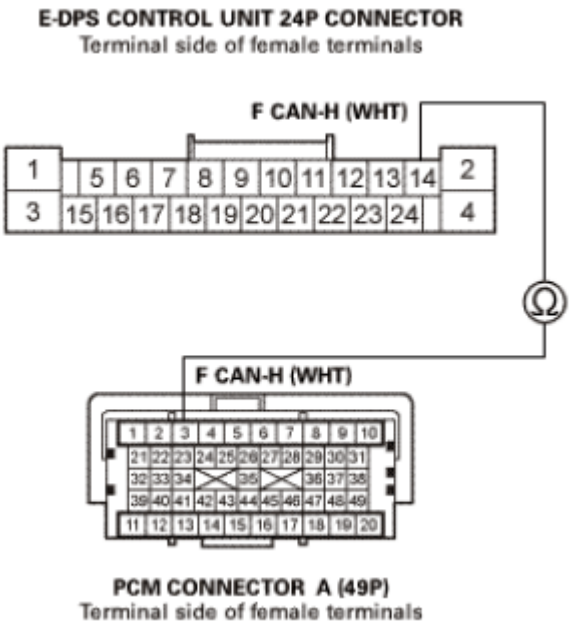

Fig. 14: Checking Continuity Between PCM Connector A (49P) No. 3 And Real Time AWD Control Unit 24P No. 14
Courtesy of AMERICAN HONDA MOTOR CO., INC.

Is there continuity?

YES : The F CAN-H wire is not open. Go to step 7.

NO : Repair an open in the F CAN-H wire between the PCM (A3) and the real time AWD control unit.

7. Open wire check (F CAN-L line) 1:
   - 1. Check for continuity between test points 1 and 2.

     Test condition IG LOCK (0)

     PCM connector A (49P): disconnected

     Gauge control module 32P connector: disconnected

     VSA modulator-control unit 38P connector: disconnected

     Steering angle sensor 4P connector: disconnected

     EPS control unit connector A (11P): disconnected

     Real time AWD control unit 24P connector (with real time AWD): disconnected

     SRS unit connector A (39P): disconnected

GETtheMANUALS.org

TPMS control unit 20P connector: disconnected

Audio-navigation unit connector B (20P) (with navigation): disconnected

Test circuit F CAN-L

Test point 1 PCM connector A (49P) No. 4 (RED)

Test point 2 Gauge control module 32P connector No. 20 (RED)

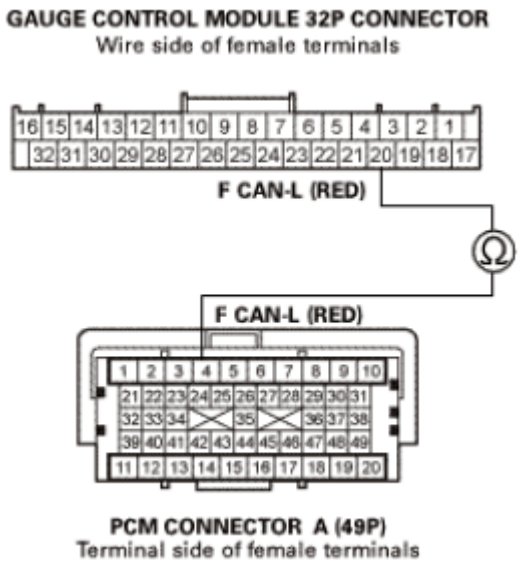

Fig. 15: Checking Continuity Between PCM Connector A (49P) No. 4 And Gauge Control Module 32P Connector No. 20
Courtesy of AMERICAN HONDA MOTOR CO., INC.

Is there continuity?

YES : The F CAN-L wire is not open. Go to step 8.

NO : Repair an open in the F CAN-L wire between the PCM (A4) and the gauge control module.

8. Open wire check (F CAN-L line) 2:
   - 1. Check for continuity between test points 1 and 2.

     Test condition IG LOCK (0)

     PCM connector A (49P): disconnected

     Gauge control module 32P connector: disconnected

     VSA modulator-control unit 38P connector: disconnected

GETtheMANUALS.org

Steering angle sensor 4P connector: disconnected

EPS control unit connector A (11P): disconnected

Real time AWD control unit 24P connector (with real time AWD): disconnected

SRS unit connector A (39P): disconnected

TPMS control unit 20P connector: disconnected

Audio-navigation unit connector B (20P) (with navigation): disconnected

Test circuit F CAN-L

Test point 1 PCM connector A (49P) No. 4 (RED)

Test point 2 VSA modulator-control unit 38P connector No. 26 (RED)

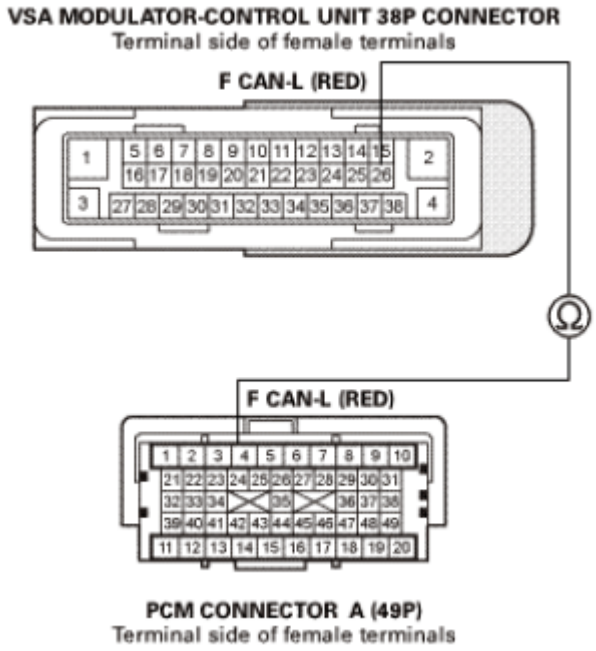

Fig. 16: Checking Continuity Between PCM Connector A (49P) No. 4 And VSA Modulator-Control Unit 38P Connector No. 26
Courtesy of AMERICAN HONDA MOTOR CO., INC.

Is there continuity?

YES : The F CAN-L wire is not open. Go to step 9.

NO : Repair an open in the F CAN-L wire between the PCM (A4) and the VSA modulator-control unit.

GETtheMANUALS.org

9. Open wire check (F CAN-L line) 3:
    - 1. Check for continuity between test points 1 and 2.

      Test condition IG LOCK (0)

      PCM connector A (49P): disconnected

      Gauge control module 32P connector: disconnected

      VSA modulator-control unit 38P connector: disconnected

      Steering angle sensor 4P connector: disconnected

      EPS control unit connector A (11P): disconnected

      Real time AWD control unit 24P connector (with real time AWD): disconnected

      SRS unit connector A (39P): disconnected

      TPMS control unit 20P connector: disconnected

      Audio-navigation unit connector B (20P) (with navigation): disconnected

      Test circuit F CAN-L

      Test point 1 PCM connector A (49P) No. 4 (RED)

      Test point 2 EPS control unit connector A (11P) No. 9 (RED)

GETtheMANUALS.org

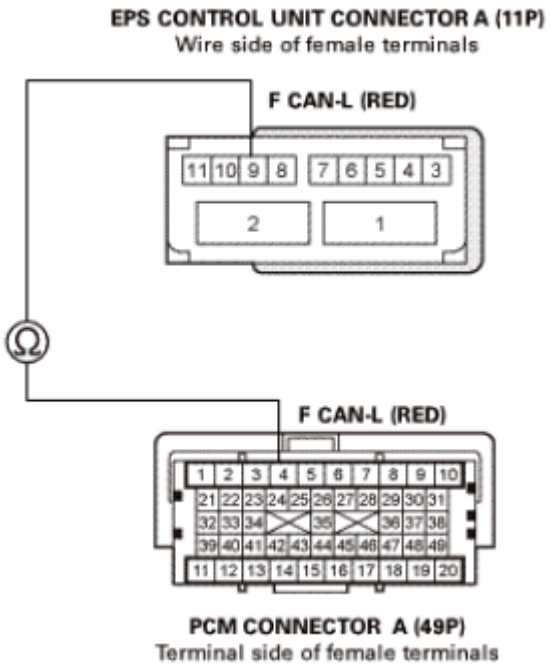

Fig. 17: Checking Continuity Between PCM Connector A (49P) No. 4 And EPS Control Unit Connector A (11P) No. 9
Courtesy of AMERICAN HONDA MOTOR CO., INC.

Is there continuity?

YES (with real time AWD) : The F CAN-L wire is not open. Go to step 10.

YES (without real time AWD) : The F CAN-L wire is not open. Go to step 11.

NO : Repair an open in the F CAN-L wire between the PCM (A4) and the EPS control unit.

10. Open wire check (F CAN-L line) 4:
    - 1. Check for continuity between test points 1 and 2.

      Test condition IG LOCK (0)

      PCM connector A (49P): disconnected

      Gauge control module 32P connector: disconnected

      VSA modulator-control unit 38P connector: disconnected

      Steering angle sensor 4P connector: disconnected

      EPS control unit connector A (11P): disconnected

      Real time AWD control unit 24P connector (with real time AWD): disconnected

GETtheMANUALS.org

SRS unit connector A (39P): disconnected

TPMS control unit 20P connector: disconnected

Audio-navigation unit connector B (20P) (with navigation): disconnected

Test circuit F CAN-L

Test point 1 PCM connector A (49P) No. 4 (RED)

Test point 2 Real time AWD control unit 24P No. 24 (RED)

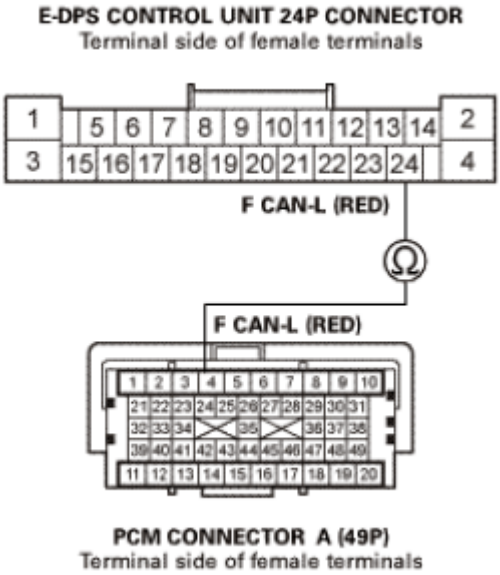

Fig. 18: Checking Continuity Between PCM Connector A (49P) No. 4 And Real Time AWD Control Unit 24P No. 24
Courtesy of AMERICAN HONDA MOTOR CO., INC.

Is there continuity?

YES : The F CAN-L wire is not open. Go to step 11.

NO : Repair an open in the F CAN-L wire between the PCM (A4) and the real time AWD control unit.

11. VSA modulator-control unit internal resistance check:
    - 1. Reconnect VSA modulator-control unit 38P connector.
    - 2. Measure the resistance between test points 1 and 2.

    Test condition IG LOCK (0)

    PCM connector A (49P): disconnected

GETtheMANUALS.org

Gauge control module 32P connector: disconnected

Steering angle sensor 4P connector: disconnected

EPS control unit connector A (11P): disconnected

Real time AWD control unit 24P connector (with real time AWD): disconnected

SRS unit connector A (39P): disconnected

TPMS control unit 20P connector: disconnected

Audio-navigation unit connector B (20P) (with navigation): disconnected

Test circuit F CAN-H, F CAN-L

Test point 1 PCM connector A (49P) No. 3 (WHT)

Test point 2 PCM connector A (49P) No. 4 (RED)

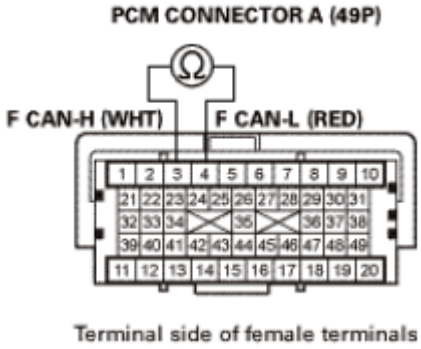

Fig. 19: Measuring Resistance Between PCM Connector A (49P) No. 3 And 4
Courtesy of AMERICAN HONDA MOTOR CO., INC.

Is there about 108-132 ohms?

YES : The VSA modulator-control unit is OK. Go to step 12.

NO : **Replace the original VSA modulator-control unit** See **VSA MODULATOR-CONTROL UNIT REMOVAL AND INSTALLATION** , **VSA MODULATOR-CONTROL UNIT UPDATE** or **VSA SENSOR NEUTRAL POSITION MEMORIZATION** .

12. Shorted wire check (F CAN-H line):
    - 1. Disconnect the following connectors:
        - Gauge control module 32P connector
        - VSA modulator-control unit 38P connector
        - Steering angle sensor 4P connector

GETtheMANUALS.org

- EPS control unit connector A (11P)
- Real time AWD control unit 24P connector (with real time AWD): disconnected
- SRS unit connector A (39P)
- TPMS control unit 20P connector
- Audio-navigation unit connector B (20P) (with navigation)

- Check for continuity between test points 1 and 2.

Test condition IG LOCK (0)

PCM connector A (49P): disconnected

Gauge control module 32P connector: disconnected

VSA modulator-control unit 38P connector: disconnected

Steering angle sensor 4P connector: disconnected

EPS control unit connector A (11P): disconnected

Real time AWD control unit 24P connector (with real time AWD): disconnected

SRS unit connector A (39P): disconnected

TPMS control unit 20P connector: disconnected

Audio-navigation unit connector B (20P) (with navigation): disconnected

Test circuit F CAN-H

Test point 1 PCM connector A (49P) No. 3 (WHT)

Test point 2 Body ground

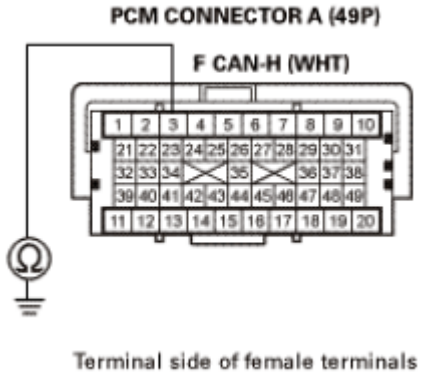

Fig. 20: Checking Continuity Between PCM Connector A (49P) No. 3 And Body Ground

GETtheMANUALS.org

Courtesy of AMERICAN HONDA MOTOR CO., INC.

Is there continuity?

YES : Repair a short in the F CAN-H wire between PCM (A3) and the gauge control module, the VSA modulator-control unit, the steering angle sensor, the EPS control unit, the real time AWD control unit, the SRS unit, the TPMS control unit, the navigation unit, or the DLC.

NO : The F CAN-H wire is OK. Go to step 13.

13. Shorted wire check (F CAN-L line):
    - 1. Check for continuity between test points 1 and 2.

      Test condition IG LOCK (0)

      Test circuit F CAN-L

      Test point 1 PCM connector A (49P) No. 4 (RED)

      Test point 2 Body ground

      Test condition IG LOCK (0)

      PCM connector A (49P): disconnected

      Gauge control module 32P connector: disconnected

      VSA modulator-control unit 38P connector: disconnected

      Steering angle sensor 4P connector: disconnected

      EPS control unit connector A (11P): disconnected

      Real time AWD control unit 24P connector (with real time AWD): disconnected

      SRS unit connector A (39P): disconnected

      TPMS control unit 20P connector: disconnected

      Audio-navigation unit connector B (20P) (with navigation): disconnected

      Test circuit F CAN-L

      Test point 1 PCM connector A (49P) No. 4 (RED)

      Test point 2 Body ground

GETtheMANUALS.org

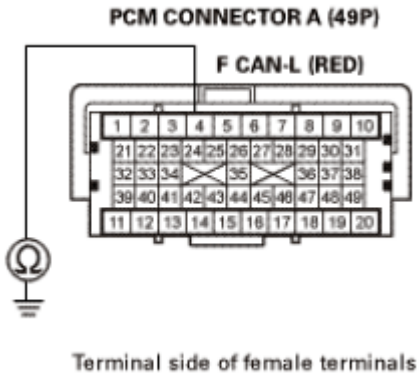

Fig. 21: Checking Continuity Between PCM Connector A (49P) No. 4 And Body Ground
Courtesy of AMERICAN HONDA MOTOR CO., INC.

Is there continuity?

YES : Repair a short in the F CAN-L wire between PCM (A4) and the gauge control module, the VSA modulator-control unit, the steering angle sensor, the EPS control unit, the real time AWD control unit, the SRS unit, the TPMS control unit, the navigation unit, or the DLC.

NO : The F CAN-L wire is OK. Go to step 14.

14. Gauge control module check:
    - 1. Reconnect all connectors.
    - 2. Connect the HDS to the DLC.
    - 3. Disconnect the following connector.

      Gauge control module 32P connector

    - 4. Turn the ignition switch to ON (II), and read the HDS.

Does the HDS identify the vehicle?

YES : **Replace the gauge control module** See **GAUGE CONTROL MODULE REMOVAL AND INSTALLATION** or **Rewriting the ODO Data and Transferring the Maintenance Minder™ Data to a New Gauge Control Module** .

NO : Go to step 15.

15. VSA modulator-control unit check:
    - 1. Turn the ignition switch to LOCK (0).
    - 2. Reconnect the gauge control module 32P connector.
    - 3. Disconnect the following connector.

      VSA modulator-control unit 38P connector

GETtheMANUALS.org

- 4. Turn the ignition switch to ON (II).

Does the HDS identify the vehicle?

YES : **Replace the VSA modulator-control unit** See **VSA MODULATOR-CONTROL UNIT REMOVAL AND INSTALLATION** , **VSA MODULATOR-CONTROL UNIT UPDATE** or **VSA SENSOR NEUTRAL POSITION MEMORIZATION** .

NO : Go to step 16.

16. Steering angle sensor check:
    - 1. Turn the ignition switch to LOCK (0).
    - 2. Reconnect the VSA modulator-control unit 38P connector.
    - 3. Disconnect the following connector.

      Steering angle sensor 4P connector

    - 4. Turn the ignition switch to ON (II), and read the HDS.

Does the HDS identify the vehicle?

YES : **REPLACE THE STEERING ANGLE SENSOR** .

NO : Go to step 17.

17. EPS control unit check:
    - 1. Turn the ignition switch to LOCK (0).
    - 2. Reconnect the steering angle sensor 4P connector.
    - 3. Disconnect the following connector.

      EPS control unit connector A (11P)

    - 4. Turn the ignition switch to ON (II), and read the HDS.

Does the HDS identify the vehicle?

YES : **Replace the EPS control unit** See **EPS CONTROL UNIT REMOVAL AND INSTALLATION** or **EPS CONTROL UNIT UPDATE** .

NO (with real time AWD) : Go to step 18.

NO (without real time AWD) : Go to step 19.

18. Real time AWD control unit check:
    - 1. Turn the ignition switch to LOCK (0).

GETtheMANUALS.org

- 2. Reconnect EPS control unit connector A (11P).
- 3. Disconnect the following connector.

  Real time AWD control unit 24P connector

- 4. Turn the ignition switch to ON (II), and read the HDS.

Does the HDS identify the vehicle?

YES : **Replace the real time AWD control unit** See **REAL TIME AWD CONTROL UNIT REMOVAL AND INSTALLATION** or **REAL TIME AWD CONTROL UNIT UPDATE** .

NO : Go to step 19.

19. SRS unit check:
    - 1. Turn the ignition switch to LOCK (0).
    - 2. Reconnect EPS control unit connector A (11P) or real time AWD control unit 24P connector.
    - 3. Disconnect the following connector.

      SRS unit connector A (39P)

    - 4. Turn the ignition switch to ON (II), and read the HDS.

    Does the HDS identify the vehicle?

    YES : **Replace the SRS unit** See **SRS UNIT REMOVAL AND INSTALLATION** or **SRS UNIT UPDATE** .

    NO (with navigation) : Go to step 20.

    NO (without navigation) : Go to step 21.

20. Audio-navigation unit check:
    - 1. Turn the ignition switch to LOCK (0).
    - 2. Reconnect SRS unit connector A (39P).
    - 3. Disconnect the following connector.

      Audio-navigation unit connector B (20P)

    - 4. Turn the ignition switch to ON (II), and read the HDS.

    Does the HDS identify the vehicle?

    YES : REPLACE THE AUDIO-NAVIGATION UNIT .

GETtheMANUALS.org

NO : Go to step 21.

21. TPMS control unit check:
    - 1. Turn the ignition switch to LOCK (0).
    - 2. Reconnect the audio-navigation unit connector B (20P).
    - 3. Disconnect the following connector.

      TPMS control unit 20P connector

    - 4. Turn the ignition switch to ON (II) and read the HDS.

    Does the HDS identify the vehicle?

    YES : **REPLACE THE TPMS CONTROL UNIT** .

    NO : **Update the PCM** See **PCM REMOVAL AND INSTALLATION** or **PCM UPDATE** if it does not have the latest software, or **substitute a known-good PCM** See **PCM REMOVAL AND INSTALLATION** or **PCM UPDATE** , then recheck. If the HDS identifies the vehicle and the PCM was updated, troubleshooting is complete. If the HDS identifies the vehicle and the PCM was substituted, **replace the original PCM** See **PCM REMOVAL AND INSTALLATION** or **PCM UPDATE** .

MULTIPLEX INTEGRATED CONTROL SYSTEM COMPONENT LOCATION INDEX

GETtheMANUALS.org

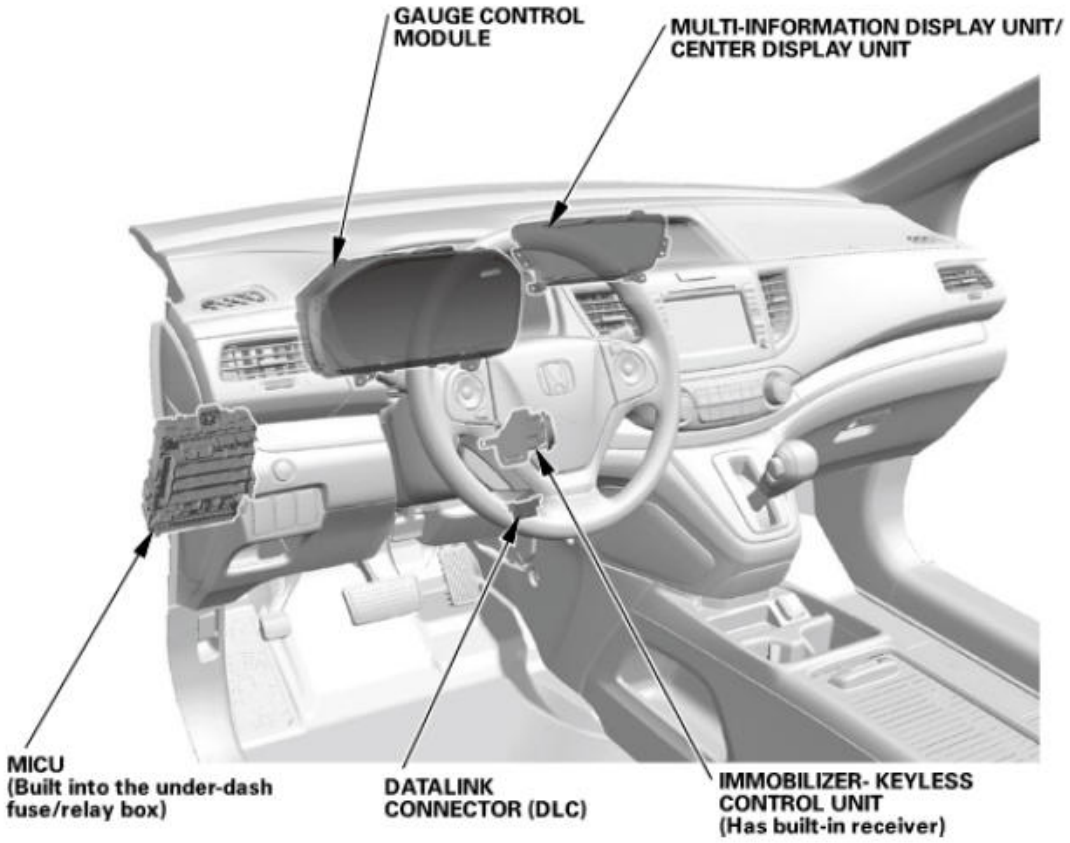

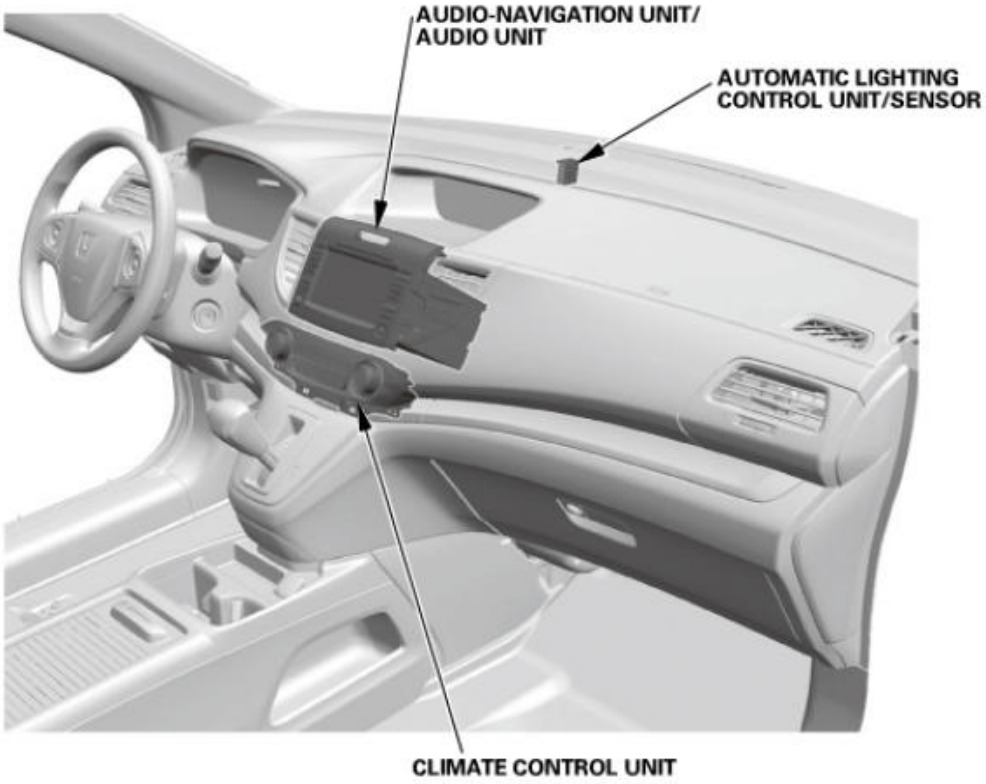

GETtheMANUALS.org

Fig. 22: Multiplex Integrated Control System Components Location
Courtesy of AMERICAN HONDA MOTOR CO., INC.

AUDIO-NAVIGATION UNIT	REMOVAL AND INSTALLATION
AUDIO UNIT	REMOVAL AND INSTALLATION
AUTOMATIC LIGHTING CONTROL UNIT/SENSOR	**INPUT TEST**
	REMOVAL AND INSTALLATION
CENTER DISPLAY	**REMOVAL AND INSTALLATION**
CLIMATE CONTROL UNIT	**REMOVAL AND INSTALLATION**
GAUGE CONTROL MODULE	**INPUT TEST**
	Removal and Installation See **GAUGE CONTROL MODULE REMOVAL AND INSTALLATION** or **Rewriting the ODO Data and Transferring the Maintenance Minder™ Data to a New Gauge Control Module** .
IMMOBILIZER-KEYLESS CONTROL UNIT	**INPUT TEST**
	Registration See **IMMOBILIZER-KEYLESS CONTROL UNIT REGISTRATION** or **IMMOBILIZER-KEYLESS CONTROL UNIT REMOVAL AND INSTALLATION**
	Removal and Installation See **IMMOBILIZER-KEYLESS CONTROL UNIT REGISTRATION** or **IMMOBILIZER-KEYLESS CONTROL UNIT REMOVAL AND INSTALLATION**
MICU (Built into the under-dash fuse/relay box)	**INPUT TEST**
	REMOVAL AND INSTALLATION
	Gauges Self-Diagnostic Function
	SLEEP AND WAKE-UP MODE TEST
MULTI-INFORMATION DISPLAY	**REMOVAL AND INSTALLATION**

NETWORK COMMUNICATION DTC TROUBLESHOOTING INDEX

NOTE: **Record all DTCs, and sort them by DTC type using the DTC troubleshooting index, then troubleshoot the DTC(s) in this order:**

- **Battery voltage DTCs**
- **Internal error DTCs**
- **Loss of communication DTCs**
- **Signal error DTCs**

MICU

DTC	Description	DTC type

GETtheMANUALS.org

B1002	MICU internal (EEPROM) error	Internal error
B1003	MICU program update error	Internal error
B1026	Passenger's door lock switch malfunction	Signal error
B1028	Rear wiper auto stop switch malfunction	Signal error
B1036	IG1 power supply circuit malfunction	Signal error
B1077	Wiper switch (As) malfunction	Signal error
B1079	Daytime running light malfunction	Signal error
B1127	Driver's door key cylinder switch input circuit malfunction (Simultaneous input of lock and unlock signal)	Signal error
B1128	Driver's door remote switch input circuit malfunction (Simultaneous input of lock and unlock signal)	Signal error
B1129	Driver's door lock knob switch input circuit malfunction (Simultaneous input of lock and unlock signal)	Signal error
B1275	Headlight switch OFF position circuit malfunction	Signal error
B1276	Headlight switch PARKING position circuit malfunction	Signal error
B1277	Headlight switch AUTO position circuit malfunction	Signal error
B1278	Headlight switch ON position circuit malfunction	Signal error
B1279	Dimmer switch circuit malfunction	Signal error
B1280	Turn signal switch circuit malfunction	Signal error
B1281	Front wiper MIST position circuit malfunction	Signal error
B1282	Front wiper INT (AUTO) position circuit malfunction	Signal error
B1283	Front wiper LOW position circuit malfunction	Signal error
B1284	Front wiper HIGH position circuit malfunction	Signal error
U1280	Communication bus line error (BUS-OFF)	Loss of communication
U128D	MICU lost communication with gauge control module	Loss of communication

GAUGE CONTROL MODULE

DTC	Description	DTC type
B1175	Fuel level sensor (Fuel gauge sending unit) circuit malfunction	Signal error
B1176	Fuel level sensor (Fuel gauge sending unit) circuit short	Signal error
U0029	F-CAN communication line error	Loss of communication
U0100	Gauge control module lost communication with PCM	Loss of communication
U0114	Gauge Control Module Lost Communication With Real Time AWD Control Unit	Loss of communication
U0122	Gauge control module lost communication with VSA modulator-control unit (VSA message)	Loss of communication
U0127	Gauge control module lost communication with TPMS control unit (TPMS message)	Loss of communication
		Loss of

GETtheMANUALS.org

U0131	Gauge control module lost communication with EPS control unit	communication
U0151	Gauge control module lost communication with SRS unit (SRS message)	Loss of communication
U1280	Gauge control module communication bus line error (BUS-OFF)	Loss of communication
U1281	Gauge control module lost communication with MICU (MICU frame)	Loss of communication
U3000-49	Gauge control module internal circuit error	Loss of communication

CLIMATE CONTROL

DTC	Description	DTC type
B121A	An open in the mode control motor circuit	Signal error
B121B	A short in the mode control motor circuit	Signal error
B121D	Humidity/in-car temperature sensor communication error	Signal error
B1220	A short in the recirculation control motor circuit	Signal error
B1227	An open in the outside air temperature sensor circuit	Signal error
B1228	A short in the outside air temperature sensor circuit	Signal error
B1229	An open in the sunlight sensor circuit	Signal error
B1230	A short in the sunlight sensor circuit	Signal error
B1231	An open in the evaporator temperature sensor circuit	Signal error
B1232	A short in the evaporator temperature sensor circuit	Signal error
B1233	An open in the air mix control motor circuit (driver's)	Signal error
B1234	A short in the air mix control motor circuit (driver's)	Signal error
B1235	A problem in the air mix control motor circuit, linkage, door, or motor (driver's)	Signal error
B1236	An open in the passenger's air mix control motor circuit	Signal error
B1237	A short in the passenger's air mix control motor circuit	Signal error
B1238	A problem in the passenger's air mix control motor circuit, linkage, door, or motor	Signal error
B1240	A problem in the mode control motor circuit, linkage, door, or motor	Signal error
B1241	A problem in the blower motor circuit	Signal error
B2969	Climate control unit lost communication with MICU (WIPSW message)	Loss of communication
B2983	A problem in the recirculation control motor circuit, linkage, door, or motor	Signal error
B2986	An open in the recirculation control motor circuit	Signal error
U1280	Communication bus line error (BUS-OFF)	Loss of communication
U128D	Lost communication with gauge control module (climate control unit)	Loss of communication

AUTOMATIC LIGHTING/SUNLIGHT SENSOR

GETtheMANUALS.org

DTC	Description	DTC type
B1575	Auto light sensor malfunction	Signal error
U1280	Automatic lighting/sunlight sensor communication bus line error (BUS-OFF)	Loss of communication
U1281	Automatic lighting/sunlight sensor lost communication with MICU	Loss of communication
U128D	Automatic lighting/sunlight sensor lost communication with gauge control module	Loss of communication

IMMOBILIZER-KEYLESS CONTROL UNIT

DTC	Description	DTC type
U1280	Immobilizer-keyless control unit communication bus line error (BUS-OFF)	Loss of communication
U1281	Immobilizer-keyless control unit lost communication with MICU (MICU frame)	Loss of communication
U128D	Immobilizer-keyless control unit lost communication with gauge control module	Loss of communication

ENTRY LIGHTS CONTROL SYSTEM (MICU) INPUT TEST

NOTE:

- **Refer to the Electrical Wiring Diagrams for the location of the under-dash fuse/relay box connectors.**
- **Before testing, make sure the No. A28 (7.5 A) and No. A29 (10 A) fuses in the under-hood fuse/relay box are OK.**
- **Before testing, make sure the No. B5 (10 A) fuse in the under-dash fuse/relay box is OK.**

1. Turn the ignition switch to LOCK (0).
2. **DISCONNECT UNDER-DASH FUSE/RELAY BOX CONNECTORS B, D, N, P, W, AND X** .

NOTE: **All connector views are shown from the wire side of the female terminals.**

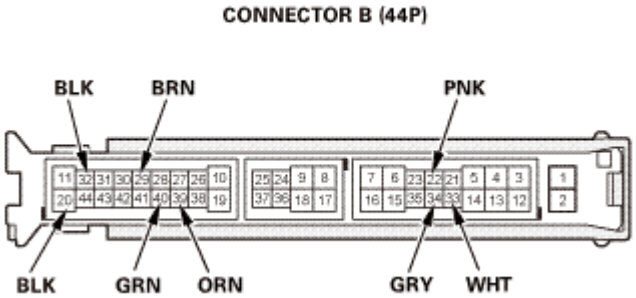

Fig. 23: Identifying Entry Lights Control System Connector B Terminals (44P)
Courtesy of AMERICAN HONDA MOTOR CO., INC.

GETtheMANUALS.org

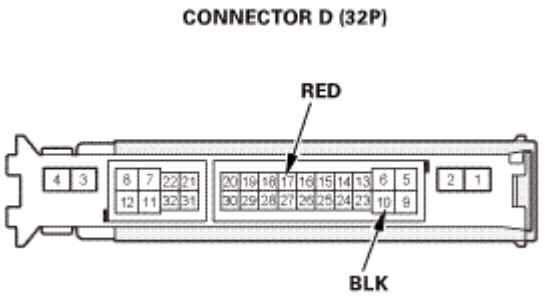

Fig. 24: Identifying Entry Lights Control System Connector D Terminals (32P)
Courtesy of AMERICAN HONDA MOTOR CO., INC.

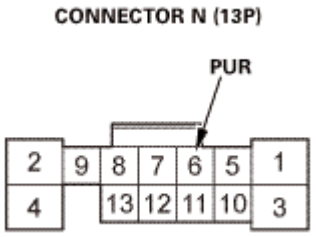

Fig. 25: Identifying Entry Lights Control System Connector N Terminals (13P)
Courtesy of AMERICAN HONDA MOTOR CO., INC.

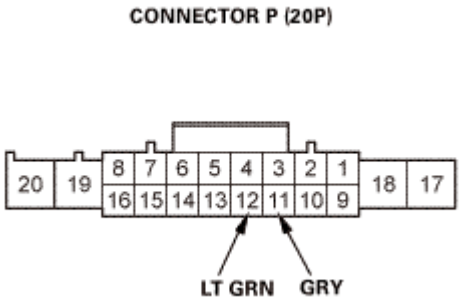

Fig. 26: Identifying Entry Lights Control System Connector P Terminals (20P)
Courtesy of AMERICAN HONDA MOTOR CO., INC.

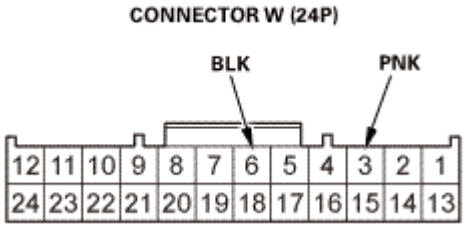

Fig. 27: Identifying Entry Lights Control System Connector W Terminals (24P)
Courtesy of AMERICAN HONDA MOTOR CO., INC.

GETtheMANUALS.org

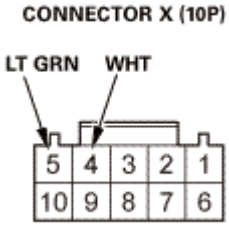

Fig. 28: Identifying Entry Lights Control System Connector X Terminals (10P)
Courtesy of AMERICAN HONDA MOTOR CO., INC.

3. Inspect the connector and socket terminals to be sure they are all making good contact:
   - If the terminals are bent, loose, or corroded, repair them as necessary, and recheck the system.
   - If the terminals are OK, go to step **4** .
4. With the connectors still disconnected, do the following input tests:
   - If any test indicates a problem, find and correct the cause, then recheck the system.
   - If all the input tests prove OK, go to step **5** .

Cavity	Wire	Test condition	Test: Desired result	Possible cause if desired result is not obtained
P12	LT GRN	Under all conditions	Connect terminal P12 and body ground with a jumper wire: The ignition key light should come on.	• Blown No. A28 (7.5 A) fuse in the under-hood fuse/relay box • Faulty ignition key switch • An open or high resistance in the wire
W3 N6	PNK PUR	Ceiling light switch in middle position and front individual map light switch in OFF position and interior light switch in DOOR position	Connect terminal W3 to ground, and terminal N6 to ground with jumper wires: The ceiling light and front individual map lights should come on.	• Blown No. A28 (7.5 A) fuse in the under-hood fuse/relay box • Blown bulb • Faulty ceiling light • Faulty front individual map lights • Faulty interior light switch • Faulty interior lights cut relay • An open or high resistance in the wire

5. Reconnect the connectors to the under-dash fuse/relay box; do the following input tests:
   - If any test indicates a problem, find and correct the cause, then recheck the system.

GETtheMANUALS.org

- If all the input tests prove OK, the MICU must be faulty; **REPLACE THE UNDER-DASH FUSE/RELAY BOX** .

Cavity	Wire	Test condition	Test: Desired result	Possible cause if desired result is not obtained
W3 B39	PNK ORN	Under all conditions	Connect terminal W3 to ground, and terminal B39 to ground with jumper wires: The cargo area light should come on.	• Blown No. A28 (7.5 A) fuse in the under-hood fuse/relay box • Blown bulb • Faulty cargo area light • Faulty interior lights cut relay • Faulty under-dash fuse/relay box • An open or high resistance in the wire
D17	RED	Under all conditions	Measure the voltage to ground: There should be battery voltage.	• Blown No. A29 (10 A) fuse in the under-hood fuse/relay box • An open or high resistance in the wire
W6	BLK	Under all conditions	Measure the voltage to ground: There should be less than 0.2 V.	• Poor ground (G501) • An open or high resistance in the ground wire
B32	BLK	Under all conditions	Measure the voltage to ground: There should be less than 0.2 V.	• Poor ground (G604) • An open or high resistance in the ground wire
B20	BLK	Under all conditions	Measure the voltage to ground: There should be less than 0.2 V.	• Poor ground (G604) • An open or high resistance in the ground wire
D10	BLK	Under all conditions	Measure the voltage to ground: There should be less than 0.2 V.	• Poor ground (G402) • An open or high resistance in the ground wire
		Driver's door open	Measure the voltage to ground: There should be less than 0.2 V.	• Faulty driver's door switch • Faulty driver's door switch ground

GETtheMANUALS.org

B40	GRN			• An open or high resistance in the wire
		Driver's door closed	Measure the voltage to ground: There should be about 5 V.	• Faulty driver's door switch • A short to ground in the wire
B29	BRN	Front passenger's door open	Measure the voltage to ground: There should be less than 0.2 V.	• Faulty front passenger's door switch • Faulty front passenger's door switch ground • An open or high resistance in the wire
		Front passenger's door closed	Measure the voltage to ground: There should be about 5 V.	• Faulty front passenger's door switch • A short to ground in the wire
B33	WHT	Left rear door open	Measure the voltage to ground: There should be less than 0.2 V.	• Faulty left rear door switch • Faulty left rear door switch ground • An open or high resistance in the wire
		Left rear door closed	Measure the voltage to ground: There should be about 5 V.	• Faulty left rear door switch • A short to ground in the wire
B34	GRY	Right rear door open	Measure the voltage to ground: There should be less than 0.2 V.	• Faulty right rear door switch • Faulty right rear door switch ground • An open or high resistance in the wire
		Right rear door closed	Measure the voltage to ground: There should be about 5 V.	• Faulty right rear door switch • An open or high resistance in the wire
		Driver's door lock knob switch in LOCK	Measure the voltage to ground: There should be less than 0.2 V.	• Faulty driver's door lock knob switch • Poor ground (G501) or an open in the ground wire

GETtheMANUALS.org

X5	LT GRN			• An open or high resistance in the wire
		Driver's door lock knob switch in UNLOCK	Measure the voltage to ground: There should be about 5 V.	• Faulty driver's door lock knob switch • A short to ground in the wire
X4	WHT	Driver's door lock knob switch in UNLOCK	Measure the voltage to ground: There should be less than 0.2 V.	• Faulty driver's door lock knob switch • Poor ground (G501) or an open in the ground wire • An open or high resistance in the wire
		Driver's door lock knob switch in LOCK	Measure the voltage to ground: There should be about 5 V.	• Faulty driver's door lock knob switch • A short to ground in the wire
B22	PNK	Tailgate open	Measure the voltage to ground: There should be less than 0.2 V.	• Faulty tailgate latch switch • Poor ground (G603) or an open in the ground wire • An open or high resistance in the wire
		Tailgate closed	Measure the voltage to ground: There should be about 5 V.	• Faulty tailgate latch switch • A short to ground in the wire
P11	GRY	Ignition key inserted into the ignition key cylinder	Measure the voltage to ground: There should be less than 0.2 V.	• Faulty ignition key switch • Poor ground (G502) or an open in the ground wire • An open or high resistance in the wire
		Ignition switch LOCK (0) position, and the ignition key removed from the ignition key cylinder	Measure the voltage to ground: There should be about 5 V.	• Faulty ignition key switch • A short to ground in the wire

EXTERIOR LIGHTS (MICU) INPUT TEST

GETtheMANUALS.org

NOTE:

- **Refer to the Electrical Wiring Diagrams for the location of the under-dash fuse/relay box connectors.**
- **Before testing, make sure the No. A16 (10 A), No. A24 (10 A), No. A25 (10 A), No. A26 (20 A), and No. A29 (10 A) fuses in the under-hood fuse/relay box are OK.**
- **Before testing, make sure the No. B5 (10 A), No. B34 (7.5 A), No. B38 (10 A), and No. B39 (10 A) fuses in the under-dash fuse/relay box are OK.**

1. Turn the ignition switch to LOCK (0).
2. **DISCONNECT UNDER-DASH FUSE/RELAY BOX CONNECTORS B, C, D, P, T, AND W** .

NOTE: **All connector views are shown from the wire side of the female terminals.**

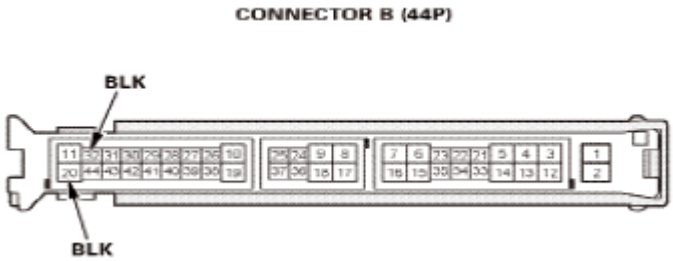

Fig. 29: Identifying Exterior Lights Connector B Terminals (44P)
Courtesy of AMERICAN HONDA MOTOR CO., INC.

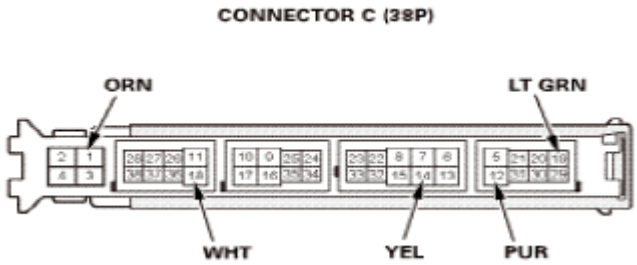

Fig. 30: Identifying Exterior Lights Connector C Terminals (38P)
Courtesy of AMERICAN HONDA MOTOR CO., INC.

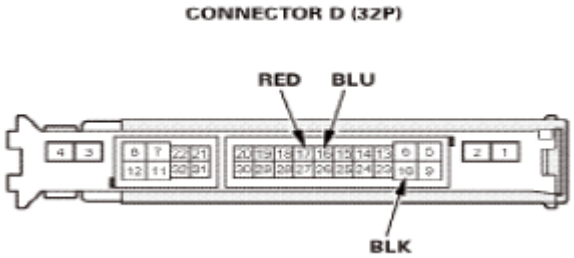

Fig. 31: Identifying Exterior Lights Connector D Terminals (32P)
Courtesy of AMERICAN HONDA MOTOR CO., INC.

GETtheMANUALS.org

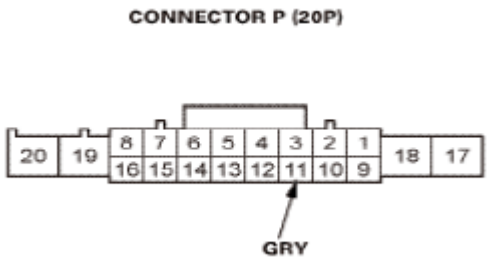

Fig. 32: Identifying Exterior Lights Connector P Terminals (20P)
Courtesy of AMERICAN HONDA MOTOR CO., INC.

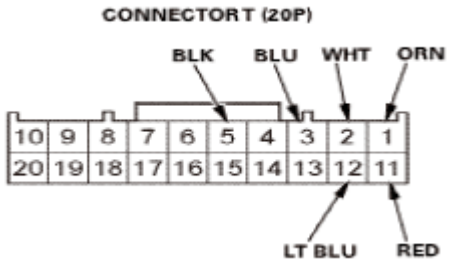

Fig. 33: Identifying Exterior Lights Connector T Terminals (20P)
Courtesy of AMERICAN HONDA MOTOR CO., INC.

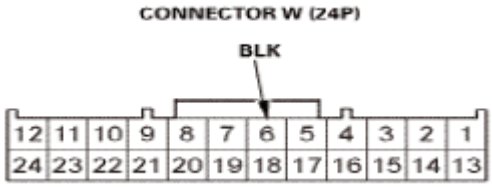

Fig. 34: Identifying Exterior Lights Connector W Terminals (24P)
Courtesy of AMERICAN HONDA MOTOR CO., INC.

3. Inspect the connector and socket terminals to be sure they are all making good contact:
   - If the terminals are bent, loose, or corroded, repair them as necessary, and recheck the system.
   - If the terminals are OK, go to step **4** .
4. With the connectors still disconnected, do the following input tests:
   - If any test indicates a problem, find and correct the cause, then recheck the system.
   - If all the input tests prove OK, go to step **5** .

Cavity	Wire	Test condition	Test: Desired result	Possible cause if desired result is not obtained
C19 C12	LT GRN PUR	Connect terminal C19 and ground with a jumper wire	Measure the voltage between terminal C12 and ground: There should be battery voltage.	• Faulty relay circuit board • An open or high resistance in the wire

GETtheMANUALS.org

D16	BLU	Under all conditions	Connect terminal to ground with a jumper wire: The headlights (low beam) should come on.	• Faulty relay circuit board • Blown bulb • Poor ground (G301) or an open in the ground wire • An open or high resistance in the wire
C18 C1	WHT ORN	Under all conditions	Connect terminals C18 and C1 with a jumper wire: The left headlight (high beam) should come on.	• Blown bulb • Poor ground (G301) or an open in the ground wire • An open or high resistance in the wire
C14 C1	YEL ORN	Under all conditions	Connect terminals C14 and C1 with a jumper wire: The right headlight (high beam) should come on.	• Blown bulb • Poor ground (G301) or an open in the ground wire • An open or high resistance in the wire

5. Reconnect the connectors to the under-dash fuse/relay box, do the following input tests:
   - If any test indicates a problem, find and correct the cause, then recheck the system.
   - If all the input tests prove OK, the MICU must be faulty; **REPLACE THE UNDER-DASH FUSE/RELAY BOX** .

Cavity	Wire	Test condition	Test: Desired result	Possible cause if desired result is not obtained
D17	RED	Under all conditions	Measure the voltage to ground: There should be battery voltage.	• Blown No. A29 (10 A) fuse in the under-hood fuse/relay box • An open or high resistance in the wire
C1	ORN	Under all conditions	Measure the voltage to ground: There should be battery voltage.	• Blown No. A2-4 (30 A) fuse in the under-hood fuse/relay box • An open or high resistance in the wire
W6	BLK	In all ignition switch positions	Measure the voltage to ground: There should be less than 0.2 V.	• Poor ground (G501) • An open or high resistance in the ground wire

GETtheMANUALS.org

B32	BLK	In all ignition switch positions	Measure the voltage to ground: There should be less than 0.2 V.	• Poor ground (G604) • An open or high resistance in the ground wire
B20	BLK	In all ignition switch positions	Measure the voltage to ground: There should be less than 0.2 V.	• Poor ground (G604) • An open or high resistance in the ground wire
D10	BLK	In all ignition switch positions	Measure the voltage to ground: There should be less than 0.2 V.	• Poor ground (G402) • An open or high resistance in the ground wire
P11	GRY	Ignition key inserted into the ignition key cylinder	Measure the voltage to ground: There should be less than 0.2 V.	• Faulty ignition key switch • Poor ground (G502) or an open in the ground wire • An open or high resistance in the wire
		Ignition switch LOCK (0) position, and the ignition key removed from the ignition key cylinder	Measure the voltage to ground: There should be about 5 V.	• Faulty ignition key switch • A short to ground in the wire
T1 T5	ORN BLK	Combination light switch OFF	Measure the voltage between terminals T1 and T5: There should be less than 0.2 V.	• Faulty combination light switch • An open or high resistance in the wire
		Combination light switch in any position other than OFF	Measure the voltage between terminals T1 and T5: There should be about 5 V.	• Faulty combination light switch • A short to ground in the wire
T3 T5	BLU BLK	Combination light switch (PARKING position) ON	Measure the voltage between terminals T3 and T5: There should be less than 0.2 V.	• Faulty combination light switch • An open or high resistance in the wire
		Combination light switch OFF	Measure the voltage between terminals T3 and T5: There should be about 5 V.	• Faulty combination light switch • A short to ground in the wire
		Combination light switch	Measure the voltage between terminals T2 and	• Faulty combination light switch

GETtheMANUALS.org

T2 T5	WHT BLK	(headlight) ON	T5: There should be less than 0.2 V.	• An open or high resistance in the wire
		Combination light switch OFF	Measure the voltage between terminals T2 and T5: There should be about 5 V.	• Faulty combination light switch • A short to ground in the wire
T11 T5	RED BLK	Combination light switch lever pulled (Passing)	Measure the voltage between terminals T11 and T5: There should be less than 0.2 V.	• Faulty combination light switch • An open or high resistance in the wire
		Combination light switch lever released (OFF)	Measure the voltage between terminals T11 and T5: There should be about 5 V.	• Faulty combination light switch • A short to ground in the wire
T12 T5	LT BLU BLK	Combination light switch (Dimmer) in high beam position	Measure the voltage between terminals T12 and T5: There should be less than 0.2 V.	• Faulty combination light switch • An open or high resistance in the wire
		Combination light switch (Dimmer) in low beam position	Measure the voltage between terminals T12 and T5: There should be about 5 V.	• Faulty combination light switch • A short to ground in the wire

FOG LIGHTS (MICU) INPUT TEST

NOTE:

- **Refer to the Electrical Wiring Diagrams for the location of the under-dash fuse/relay box connectors.**
- **Before testing, make sure that there is no DTC and the combination light switch circuit is OK.**
- **Before testing, make sure the No. A12 (20 A) and No. A29 (10 A) fuses in the under-hood fuse/relay box are OK.**
- **Before testing, make sure the No. B5 (10 A) fuse in the under-dash fuse/relay box is OK.**

1. Turn the ignition switch to LOCK (0).
2. **DISCONNECT UNDER-DASH FUSE/RELAY BOX CONNECTORS B, D, T, AND W** .

NOTE: **All connector views are shown from the wire side of the female terminals.**

GETtheMANUALS.org

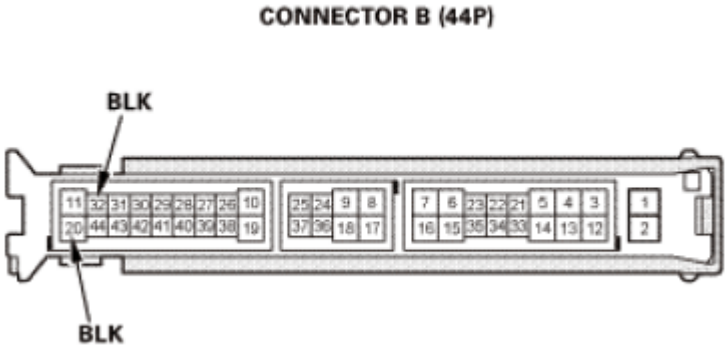

Fig. 35: Identifying Fog Lights Connector B Terminals (44P)
Courtesy of AMERICAN HONDA MOTOR CO., INC.

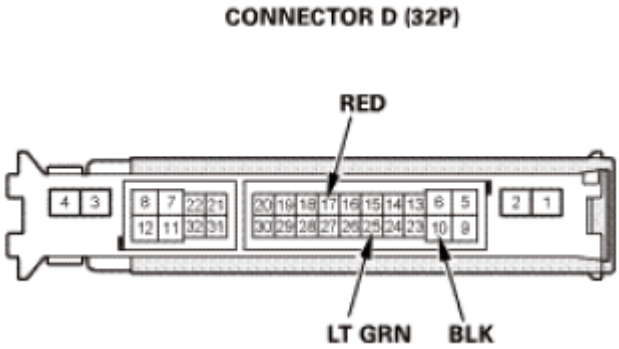

Fig. 36: Identifying Fog Lights Connector D Terminals (32P)
Courtesy of AMERICAN HONDA MOTOR CO., INC.

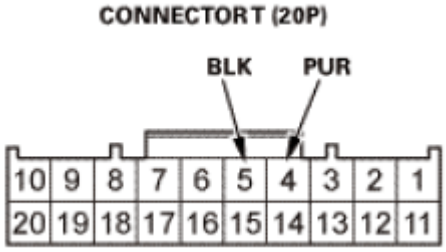

Fig. 37: Identifying Fog Lights Connector T Terminals (20P)
Courtesy of AMERICAN HONDA MOTOR CO., INC.

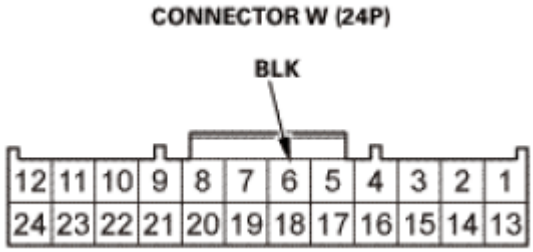

Fig. 38: Identifying Fog Lights Connector W Terminals (24P)

GETtheMANUALS.org

Courtesy of AMERICAN HONDA MOTOR CO., INC.

3. Inspect the connector and socket terminals to be sure they are all making good contact:
   - If the terminals are bent, loose, or corroded, repair them as necessary, and recheck the system.
   - If the terminals are OK, go to step **4** .
4. With the connector still disconnected, do the following input tests:
   - If any test indicates a problem, find and correct the cause, then recheck the system.
   - If all the input tests prove OK, go to step **5** .

Cavity	Wire	Test condition	Test: Desired result	Possible cause if desired result is not obtained
D25	LT GRN	Under all conditions	Connect terminal to ground with a jumper wire: The fog lights should come on.	• Blown No. A12 (20 A) fuse in the under-hood fuse/relay box • Blown bulb(s) • Faulty under-hood fuse/relay box • Faulty fog light relay • An open or high resistance in the wire

5. Reconnect the connectors to the under-dash fuse/relay box; do the following input tests:
   - If any test indicates a problem, find and correct the cause, then recheck the system.
   - If all the input tests prove OK, the MICU must be faulty; **REPLACE THE UNDER-DASH FUSE/RELAY BOX** .

Cavity	Wire	Test condition	Test: Desired result	Possible cause if desired result is not obtained
D17	RED	Under all conditions	Measure the voltage to ground: There should be battery voltage.	• Blown No. A29 (10 A) fuse in the under-hood fuse/relay box • An open or high resistance in the wire
W6	BLK	In all ignition switch positions	Measure the voltage to ground: There should be less than 0.2 V.	• Poor ground (G501) • An open or high resistance in the ground wire
B32	BLK	In all ignition switch positions	Measure the voltage to ground: There should be less than 0.2 V.	• Poor ground (G604) • An open or high resistance in the ground wire
B20	BLK	In all ignition switch positions	Measure the voltage to ground: There should be less than 0.2 V.	• Poor ground (G604) • An open or high resistance in the ground wire

GETtheMANUALS.org

D10	BLK	In all ignition switch positions	Measure the voltage to ground: There should be less than 0.2 V.	• Poor ground (G402) • An open or high resistance in the ground wire
T4 T5	PUR BLK	Fog light switch ON	Measure the voltage between terminals T4 and T5: There should be less than 0.2 V.	• Faulty combination light switch • An open or high resistance in the wire
		Fog light switch OFF	Measure the voltage between terminals T4 and T5: There should be about 5 V.	• Faulty combination light switch • A short to ground in the wire

KEYLESS/POWER DOOR LOCKS/SECURITY SYSTEM (MICU) INPUT TEST

NOTE:

- **Refer to the Electrical Wiring Diagrams for the location of the under-dash fuse/relay box connectors.**
- **Before testing, make sure the No. A29 (10 A) fuse in the under-hood fuse/relay box is OK.**
- **Before testing, make sure the No. B5 (10 A), No. B8 (15 A), No. B9 (10 A), No. B15 (10 A), No. B30 (10 A), No. B32 (15 A), No. B33 (15 A), and No. B41 (20 A) fuses in the under-dash fuse/relay box are OK.**
- **Before testing, make sure the headlights, parking lights, side marker lights, taillights, and horn(s) all work properly.**
- **There are two pairs of fuses in the same circuit (No. B8 and No. B32 fuses, No. B9 and No. B33 fuses, and No. B15 and No. B30 fuses). If one fuse is blown, make sure to check the other fuse in the same circuit. If necessary, replace the blown fuse(s).**

1. Turn the ignition switch to LOCK (0).
2. **DISCONNECT UNDER-DASH FUSE/RELAY BOX CONNECTORS B, C, D, N, P, R, S, W, AND X** .

NOTE: **All connector views are shown from the wire side of the female terminals.**

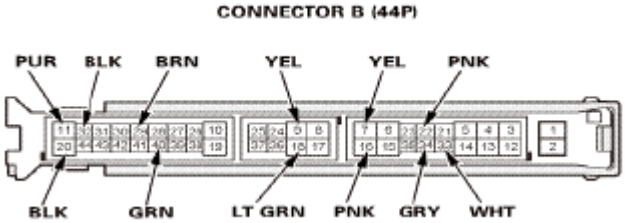

Fig. 39: Identifying Keyless/Power Door Locks/Security System Connector B Terminals (44P)
Courtesy of AMERICAN HONDA MOTOR CO., INC.

GETtheMANUALS.org

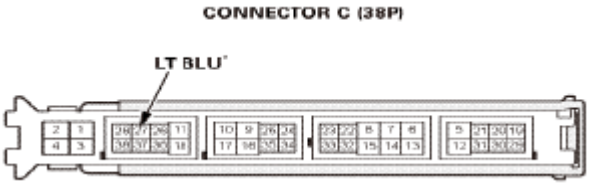

Fig. 40: Identifying Keyless/Power Door Locks/Security System Connector C Terminals (38P)
Courtesy of AMERICAN HONDA MOTOR CO., INC.

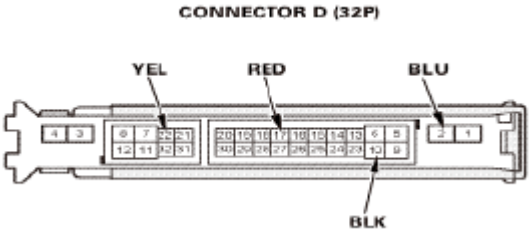

Fig. 41: Identifying Keyless/Power Door Locks/Security System Connector D Terminals (32P)
Courtesy of AMERICAN HONDA MOTOR CO., INC.

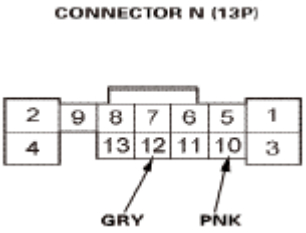

Fig. 42: Identifying Keyless/Power Door Locks/Security System Connector N Terminals (13P)
Courtesy of AMERICAN HONDA MOTOR CO., INC.

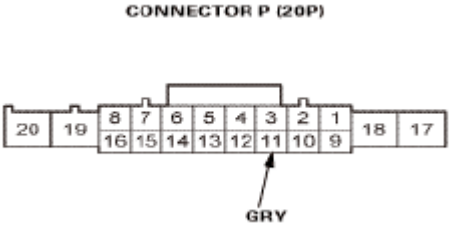

Fig. 43: Identifying Keyless/Power Door Locks/Security System Connector P Terminals (20P)
Courtesy of AMERICAN HONDA MOTOR CO., INC.

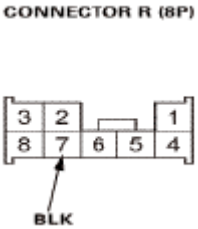

GETtheMANUALS.org

Fig. 44: Identifying Keyless/Power Door Locks/Security System Connector R Terminals (8P)
Courtesy of AMERICAN HONDA MOTOR CO., INC.

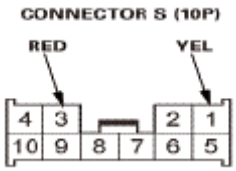

Fig. 45: Identifying Keyless/Power Door Locks/Security System Connector S Terminals (10P)
Courtesy of AMERICAN HONDA MOTOR CO., INC.

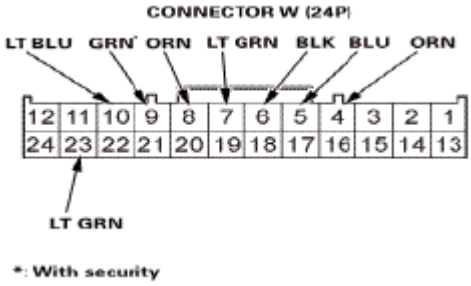

Fig. 46: Identifying Keyless/Power Door Locks/Security System Connector W Terminals (24P)
Courtesy of AMERICAN HONDA MOTOR CO., INC.

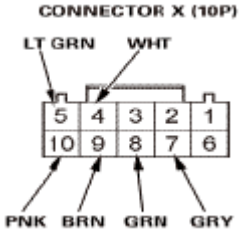

Fig. 47: Identifying Keyless/Power Door Locks/Security System Connector X Terminals (10P)
Courtesy of AMERICAN HONDA MOTOR CO., INC.

3. Inspect the connector and socket terminals to be sure they are all making good contact:
   - If the terminals are bent, loose, or corroded, repair them as necessary, and recheck the system.
   - If the terminals are OK, go to step **4** .
4. With the connectors still disconnected, do the following input tests:
   - If any test indicates a problem, find and correct the cause, then recheck the system.
   - If all the input tests prove OK, go to step **5** .

NOTE: These are door lock actuator operation tests for keyless entry.

Cavity	Wire	Test condition	Test: Desired result	Possible cause if desired result is not obtained

GETtheMANUALS.org

N10	PNK	Connect terminals D2[1] and N10 (or N12), and terminal N12 (or N10) and ground with jumper wires.	Check actuator operation: The driver's door lock actuator should LOCK (or UNLOCK).	• Faulty driver's door lock actuator • An open or high resistance in the wire
N12	GRY			
S3	RED	Connect terminals D2[1] and S3 (or S1), and terminal S1 (or S3) and ground with jumper wires.	Check actuator operation: The front passenger's door lock actuator should LOCK (or UNLOCK).	• Faulty front passenger's door lock actuator • An open or high resistance in the wire
S1	YEL			
B16	PNK	Connect terminals D2[1] and B16 (or B11), and terminal B11 (or B16) and ground with jumper wires.	Check actuator operation: The left rear door lock actuator should LOCK (or UNLOCK).	• Faulty left rear door lock actuator • An open or high resistance in the wire
B11	PUR			
B18	LT GRN	Connect terminals D2[1] and B18 (or B9), and terminal B9 (or B18) and ground with jumper wires.	Check actuator operation: The right rear door lock actuator should LOCK (or UNLOCK).	• Faulty right rear door lock actuator • An open or high resistance in the wire
B9	YEL			
B7	YEL	Connect terminals D2[1] and B7 with a jumper wire momentarily.	Check actuator operation: The tailgate release actuator should work.	• Faulty tailgate release actuator • Poor ground (G603) or an open in the ground wire • An open or high resistance in the wire
[1] Use a fused jumper wire with an appropriate amperage fuse.				

5. Reconnect the connectors to the under-dash fuse/relay box; do the following input tests:
   - If any test indicates a problem, find and correct the cause, then recheck the system.
   - If all the input tests prove OK, the MICU must be faulty; **REPLACE THE UNDER-DASH FUSE/RELAY BOX** .

Cavity	Wire	Test condition	Test: Desired result	Possible cause if desired result is not obtained
D17	RED	Under all conditions	Measure the voltage to ground: There should be battery voltage.	• Blown No. A29 (10 A) fuse in the under-hood fuse/relay box • An open or high

GETtheMANUALS.org

				resistance in the wire
D2	BLU	Under all conditions	Measure the voltage to ground: There should be battery voltage.	• Blown No. A2-2 (60 A) fuse in the under-hood fuse/relay box • An open or high resistance in the wire
W6	BLK	In all ignition switch positions	Measure the voltage to ground: There should be less than 0.2 V.	• Poor ground (G501) • An open or high resistance in the ground wire
B32	BLK	In all ignition switch positions	Measure the voltage to ground: There should be less than 0.2 V.	• Poor ground (G604) • An open or high resistance in the ground wire
B20	BLK	In all ignition switch positions	Measure the voltage to ground: There should be less than 0.2 V.	• Poor ground (G604) • An open or high resistance in the ground wire
D10	BLK	In all ignition switch positions	Measure the voltage to ground: There should be less than 0.2 V.	• Poor ground (G402) • An open or high resistance in the ground wire
R7	BLK	In all ignition switch positions	Measure the voltage to ground: There should be less than 0.2 V.	• Poor ground (G501) • An open or high resistance in the ground wire
C27(1)	LT BLU	Hood closed	Measure the voltage to ground: There should be less than 0.2 V.	• Faulty security hood switch • Poor ground (G402) or an open in the ground wire • An open or high resistance in the wire
		Hood open	Measure the voltage to ground: There should be about 5 V.	• Faulty security hood switch • A short to ground in the wire
		Driver's door open	Measure the voltage to ground: There should be less than 0.2 V.	• Faulty driver's door switch • Faulty driver's door switch ground

GETtheMANUALS.org

				• An open or high resistance in the wire
B40	GRN	Driver's door closed	Measure the voltage to ground: There should be about 5 V.	• Faulty driver's door switch • A short to ground in the wire
B29	BRN	Front passenger's door open	Measure the voltage to ground: There should be less than 0.2 V.	• Faulty front passenger's door switch • Faulty front passenger's door switch ground • An open or high resistance in the wire
		Front passenger's door closed	Measure the voltage to ground: There should be about 5 V.	• Faulty front passenger's door switch • A short to ground in the wire
B33	WHT	Left rear door open	Measure the voltage to ground: There should be less than 0.2 V.	• Faulty left rear door switch • Faulty left rear door switch ground • An open or high resistance in the wire
		Left rear door closed	Measure the voltage to ground: There should be about 5 V.	• Faulty left rear door switch • A short to ground in the wire
B34	GRY	Right rear door open	Measure the voltage to ground: There should be less than 0.2 V.	• Faulty right rear door switch • Faulty right rear door switch ground • An open or high resistance in the wire
		Right rear door closed	Measure the voltage to ground: There should be about 5 V.	• Faulty right rear door switch • A short to ground in the wire
		Driver's door lock switch in LOCK	Measure the voltage to ground: There should be less than 0.2 V.	• Faulty driver's door lock switch • Poor ground (G501) or an open in the ground wire

GETtheMANUALS.org

X8	GRN			• An open or high resistance in the wire
		Driver's door lock switch in neutral or UNLOCK	Measure the voltage to ground: There should be about 5 V.	• Faulty driver's door lock switch • A short to ground in the wire
X7	GRY	Driver's door lock switch in UNLOCK	Measure the voltage to ground: There should be less than 0.2 V.	• Faulty driver's door lock switch • Poor ground (G501) or an open in the ground wire • An open or high resistance in the wire
		Driver's door lock switch in neutral or LOCK	Measure the voltage to ground: There should be about 5 V.	• Faulty driver's door lock switch • A short to ground in the wire
X10	PNK	Driver's door key cylinder switch in LOCK	Measure the voltage to ground: There should be less than 0.2 V.	• Faulty driver's door key cylinder switch • Poor ground (G501) or an open in the ground wire • An open or high resistance in the wire
		Driver's door key cylinder switch in neutral or UNLOCK	Measure the voltage to ground: There should be about 5 V.	• Faulty driver's door key cylinder switch • A short to ground in the wire
X9	BRN	Driver's door key cylinder switch in UNLOCK	Measure the voltage to ground: There should be less than 0.2 V.	• Faulty driver's door key cylinder switch • Poor ground (G501) or an open in the ground wire • An open or high resistance in the wire
		Driver's door key cylinder switch in neutral or LOCK	Measure the voltage to ground: There should be about 5 V.	• Faulty driver's door key cylinder switch • A short to ground in the wire
				• Faulty front passenger's door lock switch

GETtheMANUALS.org

W7	LT GRN	Front passenger's door lock switch in LOCK	Measure the voltage to ground: There should be less than 0.2 V.	• Poor ground (G503) or an open in the ground wire • An open or high resistance in the wire
		Front passenger's door lock switch in neutral or UNLOCK	Measure the voltage to ground: There should be about 5 V.	• Faulty front passenger's door lock switch • A short to ground in the wire
W8	ORN	Front passenger's door lock switch in UNLOCK	Measure the voltage to ground: There should be less than 0.2 V.	• Faulty front passenger's door lock switch • Poor ground (G503) or an open in the ground wire • An open or high resistance in the wire
		Front passenger's door lock switch in neutral or LOCK	Measure the voltage to ground: There should be about 5 V.	• Faulty front passenger's door lock switch • A short to ground in the wire
X5	LT GRN	Driver's door lock knob switch in LOCK	Measure the voltage to ground: There should be less than 0.2 V.	• Faulty driver's door lock knob switch • Poor ground (G501) or an open in the ground wire • An open or high resistance in the wire
		Driver's door lock knob switch in UNLOCK	Measure the voltage to ground: There should be about 5 V.	• Faulty driver's door lock knob switch • A short to ground in the wire
X4	WHT	Driver's door lock knob switch in UNLOCK	Measure the voltage to ground: There should be less than 0.2 V.	• Faulty driver's door lock knob switch • Poor ground (G501) or an open in the ground wire • An open or high resistance in the wire
		Driver's door lock knob switch in LOCK	Measure the voltage to ground: There should be about 5 V.	• Faulty driver's door lock knob switch • A short to ground in the

GETtheMANUALS.org

				wire
W10	LT BLU	Front passenger's door lock knob switch in UNLOCK	Measure the voltage to ground: There should be less than 0.2 V.	• Faulty front passenger's door lock knob switch • Poor ground (G503) or an open in the ground wire • An open or high resistance in the wire
		Front passenger's door lock knob switch in LOCK	Measure the voltage to ground: There should be about 5 V.	• Faulty front passenger's door lock knob switch • A short to ground in the wire
W5	BLU	Left rear door lock knob switch in UNLOCK	Measure the voltage to ground: There should be less than 0.2 V.	• Faulty left rear door lock knob switch • Poor ground (G601) or an open in the ground wire • An open or high resistance in the wire
		Left rear door lock knob switch in LOCK	Measure the voltage to ground: There should be about 5 V.	• Faulty left rear door lock knob switch • A short to ground in the wire
W4	ORN	Right rear door lock knob switch in UNLOCK	Measure the voltage to ground: There should be less than 0.2 V.	• Faulty right rear door lock knob switch • Poor ground (G604) or an open in the ground wire • An open or high resistance in the wire
		Right rear door lock knob switch in LOCK	Measure the voltage to ground: There should be about 5 V.	• Faulty right rear door lock knob switch • A short to ground in the wire
W23	LT GRN	Tailgate outer handle switch pressed	Measure the voltage to ground: There should be less than 0.2 V.	• Faulty tailgate outer handle switch • Poor ground (G603) or an open in the ground wire • An open or high resistance in the wire

GETtheMANUALS.org

		Tailgate outer handle switch released	Measure the voltage to ground: There should be about 5 V.	• Faulty tailgate outer handle switch • A short to ground in the wire
B22	PNK	Tailgate open	Measure the voltage to ground: There should be less than 0.2 V.	• Faulty tailgate latch switch • Poor ground (G603) or an open in the ground wire • An open or high resistance in the wire
		Tailgate closed	Measure the voltage to ground: There should be battery voltage.	• Faulty tailgate latch switch • A short to ground in the wire
D22	YEL	Transmission range switch in P	Measure the voltage to ground: There should be less than 0.2 V.	• Faulty or improperly adjusted transmission range switch • Poor ground (G101) or an open in the ground wire • An open or high resistance in the wire
		Transmission range switch in any other position than P	Measure the voltage to ground: There should be about 5 V.	• A short to ground in the wire • Faulty or improperly adjusted transmission range switch
P11	GRY	Ignition key inserted into the ignition key cylinder	Measure the voltage to ground: There should be less than 0.2 V.	• Faulty ignition key switch • Poor ground (G502) or an open in the ground wire • An open or high resistance in the wire
		Ignition switch LOCK (0), and the ignition key removed from the ignition key cylinder	Measure the voltage to ground: There should be about 5 V.	• Faulty ignition key switch • A short to ground in the wire
			Measure the voltage to	• Faulty audio unit or audio-navigation unit

GETtheMANUALS.org

W9[1]	GRN	Under all conditions	ground: There should be less than 0.2 V.[2]	• Poor ground (G503) or an open in the ground wire • An open or high resistance in the wire
[1] With security [2] If the factory-installed audio unit is removed from the vehicle, this voltage will be between 10-12 V.				

MICU INPUT TEST

NOTE:

- **Refer to the Electrical Wiring Diagrams for the location of the under-dash fuse/relay box connectors.**
- **Before testing, check for DTCs. If any DTCs are indicated, troubleshoot those DTCs first.**

1. Turn the ignition switch to LOCK (0).
2. **DISCONNECT UNDER-DASH FUSE/RELAY BOX CONNECTORS B, D, K, M, P, Q, AND W** .

NOTE: **All connector views are shown from the wire side of the female terminals.**

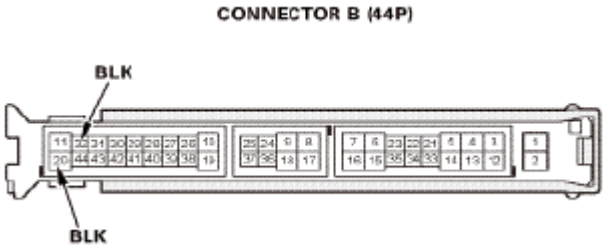

Fig. 48: Identifying Under-Dash Fuse/Relay Box System Connector B Terminals (44P)
Courtesy of AMERICAN HONDA MOTOR CO., INC.

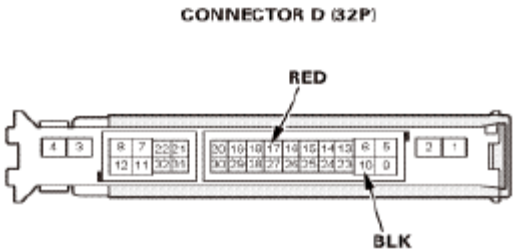

Fig. 49: Identifying Under-Dash Fuse/Relay Box System Connector D Terminals (32P)
Courtesy of AMERICAN HONDA MOTOR CO., INC.

GETtheMANUALS.org

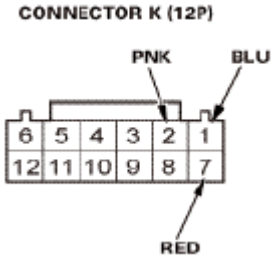

Fig. 50: Identifying Under-Dash Fuse/Relay Box System Connector K Terminals (12P)
Courtesy of AMERICAN HONDA MOTOR CO., INC.

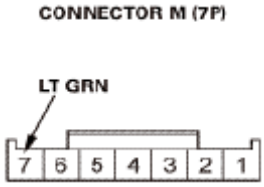

Fig. 51: Identifying Under-Dash Fuse/Relay Box System Connector M Terminals (7P)
Courtesy of AMERICAN HONDA MOTOR CO., INC.

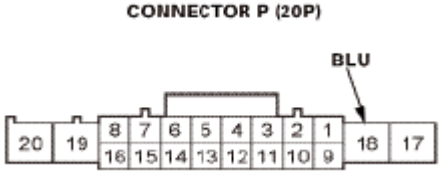

Fig. 52: Identifying Under-Dash Fuse/Relay Box System Connector P Terminals (20P)
Courtesy of AMERICAN HONDA MOTOR CO., INC.

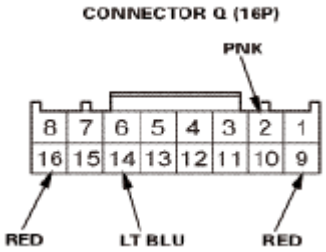

Fig. 53: Identifying Under-Dash Fuse/Relay Box System Connector Q Terminals (16P)
Courtesy of AMERICAN HONDA MOTOR CO., INC.

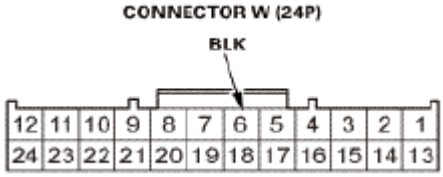

Fig. 54: Identifying Under-Dash Fuse/Relay Box System Connector W Terminals (24P)
Courtesy of AMERICAN HONDA MOTOR CO., INC.

GETtheMANUALS.org

3. Inspect the connector and socket terminals to be sure they are all making good contact:
   - If the terminals are bent, loose, or corroded, repair them as necessary, and recheck the system.
   - If the terminals are OK, go to step **4** .
4. With the connectors still disconnected, do the following input tests:
   - If any test indicates a problem, find and correct the cause, then recheck the system.
   - If all the input tests prove OK, go to step **5** .

Cavity	Wire	Test condition	Test: Desired result	Possible cause if desired result is not obtained
K1	BLU	Disconnect the immobilizer-keyless control unit 7P connector	Check for continuity between terminal K1 and immobilizer-keyless control unit 7P connector terminal No. 5: There should be continuity.	An open in the B-CAN wire
K2	PNK		Check for continuity between terminal K2 and immobilizer-keyless control unit 7P connector terminal No. 4: There should be continuity.	
K1	BLU	Disconnect the gauge control module 32P connector	Check for continuity between terminal K1 and gauge control module 32P connector terminal No. 31: There should be continuity.	An open in the B-CAN wire
K2	PNK		Check for continuity between terminal K2 and gauge control module 32P connector terminal No. 30: There should be continuity.	
K1(1)	BLU	Disconnect the climate control unit 32P connector	Check for continuity between terminal K1 and climate control unit 32P connector terminal No. 15: There should be continuity.	An open in the B-CAN wire
K2(1)	PNK		Check for continuity between terminal K2 and climate control unit 32P connector terminal No. 16: There should be continuity.	
K1(2)	BLU	Disconnect the automatic lighting/sunlight sensor 7P connector	Check for continuity between terminal K1 and automatic lighting/sunlight sensor 7P connector terminal No. 7: There should be continuity.	An open in the B-CAN wire
K2(2)	PNK		Check for continuity between terminal K2 and automatic lighting/sunlight sensor 7P connector terminal No. 6: There should be continuity.	
K1(3)	BLU	Disconnect audio-navigation unit connector E (16P)	Check for continuity between terminal K1 and audio-navigation unit connector E (16P) terminal No. 9: There should be continuity.	An open in the B-CAN wire
K2(3)	PNK		Check for continuity between terminal K2 and audio-navigation unit connector E (16P) terminal No. 1: There should be continuity.	

GETtheMANUALS.org

K1(4)	BLU	Disconnect audio unit connector B (20P)	Check for continuity between terminal K1 and audio unit connector B (20P) terminal No. 3: There should be continuity.	An open in the B-CAN wire
K2(4)	PNK		Check for continuity between terminal K2 and audio unit connector B (20P) terminal No. 13: There should be continuity.	
K1(5)	BLU	Disconnect the multi-information display unit connector A (32P)	Check for continuity between terminal K1 and multi-information display unit connector A (32P) terminal No. 15: There should be continuity.	An open in the B-CAN wire
K1(5)	PNK		Check for continuity between terminal K2 and multi-information display unit connector A (32P) terminal No. 31: There should be continuity.	
Q14	LT BLU	Under all conditions	Check for continuity between terminal Q14 and data link connector (DLC) terminal No. 7: There should be continuity.	An open in the K-LINE wire

(1) With climate control

(2) With automatic lighting

(3) With navigation

(4) Without navigation

(5) With multi-information display unit

5. Reconnect the connectors to the under-dash fuse/relay box; do the following input tests:
   - If any test indicates a problem, find and correct the cause, then recheck the system.
   - If all the input tests prove OK, the MICU must be faulty; **REPLACE THE UNDER-DASH FUSE/RELAY BOX** .

NOTE: These are power and ground tests for the MICU.

Cavity	Wire	Test condition	Test: Desired result	Possible cause if desired result is not obtained
D17	RED	Under all conditions	Measure the voltage to ground: There should be battery voltage.	• Blown No. A29 (10 A) fuse in the under-hood fuse/relay box • An open or high resistance in the wire
K7	RED	Under all conditions	Measure the voltage to ground: There should be battery voltage.	• Blown No. A29 (10 A) fuse in the under-hood fuse/relay box • Faulty under-dash fuse relay box • An open or high resistance in

GETtheMANUALS.org

				the wire
M7	LT GRN	Ignition switch ON (II)	Measure the voltage to ground: There should be battery voltage.	• Blown No. B5 (10 A) fuse in the under-dash fuse/relay box • An open or high resistance in the wire
P18	BLU	Ignition switch ON (II)	Measure the voltage to ground: There should be battery voltage.	• Blown No. B4 (15 A) fuse in the under-dash fuse/relay box • An open or high resistance in the wire
Q2	PNK	Ignition switch ON (II)	Measure the voltage to ground: There should be battery voltage.	• Blown No. B22 (7.5 A) fuse in the under-dash fuse/relay box • An open or high resistance in the wire
Q9	RED	Under all conditions	Measure the voltage to ground: There should be battery voltage.	• Blown No. B25 (10 A) fuse in the under-dash fuse/relay box • An open or high resistance in the wire
Q16	RED	Under all conditions	Measure the voltage to ground: There should be battery voltage.	• Blown No. A29 (10 A) fuse in the under-hood fuse/relay box • Faulty under-dash fuse relay box • An open or high resistance in the wire
B20	BLK	In all ignition switch positions	Measure the voltage to ground: There should be less than 0.2 V.	• Poor ground (G604) • An open or high resistance in the ground wire
B32	BLK	In all ignition switch positions	Measure the voltage to ground: There should be less than 0.2 V.	• Poor ground (G604) • An open or high resistance in the ground wire
D10	BLK	In all ignition switch positions	Measure the voltage to ground: There should be less than 0.2 V.	• Poor ground (G402) • An open or high resistance in the ground wire
W6	BLK	In all ignition switch positions	Measure the voltage to ground: There should be less than 0.2 V.	• Poor ground (G501) • An open or high resistance in the ground wire

MULTIPLEX INTEGRATED CONTROL SYSTEM SLEEP AND WAKE-UP MODE TEST

1. Shift to the sleep mode:

GETtheMANUALS.org

Close all doors. Turn the ignition switch to LOCK (0), remove the key, then open and close the driver's door. If the MICU receives no signals from the inputs listed below, it will go into sleep mode in less than 40 seconds.

- IG1 power supply
- IG2 power supply
- B-CAN data
- Hazard warning switch (OFF)

2. Confirm sleep mode:

NOTE: Check the official Honda service website for more service information about parasitic draw at the battery.

Check the parasitic draw at the battery while entering sleep mode; amperage should change from about 200 mA to less than 35 mA in less than 40 seconds.

3. Shift to wake-up mode:

When the ignition switch is turned to ON (II), the MICU, the gauge control module, the immobilizer-keyless control unit, and the PCM will wake-up at the same time without "talking" to each other through the communication lines. When any switch in the multiplex integrated control system is turned on, it wakes up its related control unit which, in turn, wakes up the other units. After confirming the system is in sleep mode, look in the following list for the switch most related to the problem. Operate that switch and see if its control unit wakes up.

NOTE: If any control unit is faulty and does not wake up, several circuits in the system malfunction at the same time. Below is a list of the switches and input signals that wake them up.

- IG1 power supply
- IG2 power supply
- ACC power supply
- B-CAN data
- Driver's door switch (Open)
- Left rear door switch (Open)
- Tailgate latch switch (Open)
- Tailgate outer handle switch (Open)
- Left rear door lock knob switch (UNLOCK)
- Security hood switch (Open)
- Hazard warning switch (ON)
- Combination light switch (Parking, Headlight, Dimmer, Passing, Fog ON)
- Ignition key switch (Key inserted)

GETtheMANUALS.org

- Driver's door key cylinder switch (LOCK/UNLOCK)
- Driver's door lock knob switch (LOCK/UNLOCK)
- Right rear door lock knob switch (UNLOCK)
- Front passenger's door lock knob switch (UNLOCK)
- Driver's door lock switch (LOCK/UNLOCK)
- Front passenger's door lock switch (LOCK/UNLOCK)
- Front passenger's door switch (Open)
- Right rear door switch (Open)
- Audio security switch (ON)

TURN SIGNAL/HAZARD WARNING LIGHTS (MICU) INPUT TEST

NOTE:

- **Refer to the Electrical Wiring Diagrams for the location of the under-dash fuse/relay box connectors.**
- **Before testing, make sure the No. A15 (10 A) and No. A29 (10 A) fuses in the under-hood fuse/relay box are OK.**
- **Before testing, make sure the No. B5 (10 A) fuse in the under-dash fuse/relay box is OK.**

1. Turn the ignition switch to LOCK (0).
2. **DISCONNECT UNDER-DASH FUSE/RELAY BOX CONNECTORS B, C, D, M, R, T, AND W** .

NOTE: **All connector views are shown from the wire side of the female terminals.**

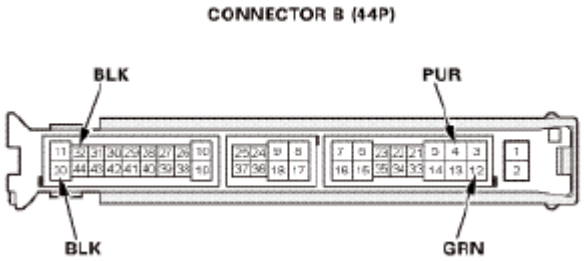

Fig. 55: Identifying Turn Signal/Hazard Warning Lights Connector B Terminals (44P)
Courtesy of AMERICAN HONDA MOTOR CO., INC.

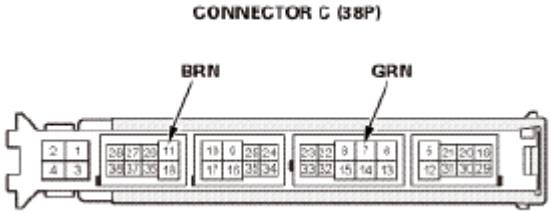

Fig. 56: Identifying Turn Signal/Hazard Warning Lights Connector C Terminals (38P)

GETtheMANUALS.org

Courtesy of AMERICAN HONDA MOTOR CO., INC.

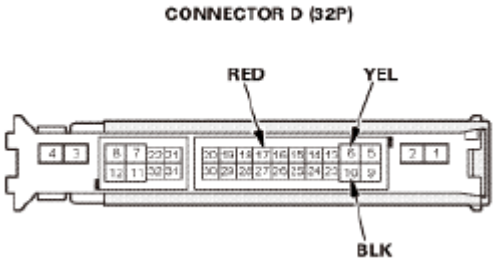

Fig. 57: Identifying Turn Signal/Hazard Warning Lights Connector D Terminals (32P)
Courtesy of AMERICAN HONDA MOTOR CO., INC.

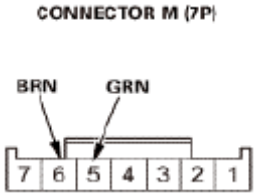

Fig. 58: Identifying Turn Signal/Hazard Warning Lights Connector M Terminals (7P)
Courtesy of AMERICAN HONDA MOTOR CO., INC.

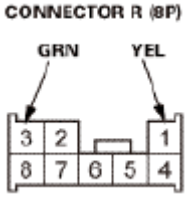

Fig. 59: Identifying Turn Signal/Hazard Warning Lights Connector R Terminals (8P)
Courtesy of AMERICAN HONDA MOTOR CO., INC.

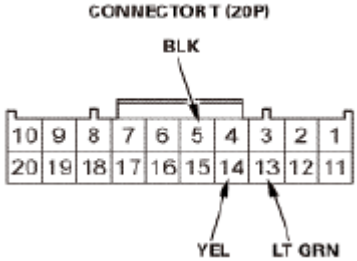

Fig. 60: Identifying Turn Signal/Hazard Warning Lights Connector T Terminals (20P)
Courtesy of AMERICAN HONDA MOTOR CO., INC.

GETtheMANUALS.org

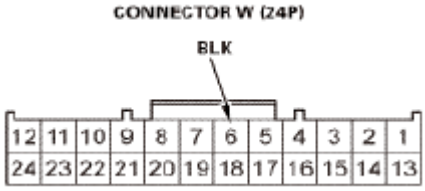

Fig. 61: Identifying Turn Signal/Hazard Warning Lights Connector W Terminals (24P)
Courtesy of AMERICAN HONDA MOTOR CO., INC.

3. Inspect the connector and socket terminals to be sure they are all making good contact:
   - If the terminals are bent, loose, or corroded, repair them as necessary, and recheck the system.
   - If the terminals are OK, go to step **4** .
4. With the connectors still disconnected, do the following input tests:
   - If any test indicates a problem, find and correct the cause, then recheck the system.
   - If all the input tests prove OK, go to step **5** .

Cavity	Wire	Test condition	Test: Desired result	Possible cause if desired result is not obtained
M6	BRN	Connect terminals M6 and D6 with a jumper wire	Check the turn signal lights operation: The left turn signal indicator should come on.	• Faulty gauge control module • An open or high resistance in the wire
M5	GRN	Connect terminals M5 and D6 with a jumper wire	Check the turn signal lights operation: The right turn signal indicator should come on.	• Faulty gauge control module • An open or high resistance in the wire
C11	BRN	Connect terminals C11 and D6 with a jumper wire	Check the turn signal lights operation: The left front turn signal light should come on.	• Blown bulb • Poor ground (G301) or an open in the ground wire • An open or high resistance in the wire
C7	GRN	Connect terminals C7 and D6 with a jumper wire	Check the turn signal lights operation: The right front turn signal light should come on.	• Blown bulb • Poor ground (G301) or an open in the ground wire • An open or high resistance in the wire
B4	PUR	Connect terminals B4 and D6 with a jumper	Check the turn signal lights operation: The left rear turn signal	• Blown bulb • Poor ground (G603) or an open in the ground wire

GETtheMANUALS.org

		wire	light should come on.	• An open or high resistance in the wire
B12	GRN	Connect terminals B12 and D6 with a jumper wire	Check the turn signal lights operation: The right rear turn signal light should come on.	• Blown bulb • Poor ground (G604) or an open in the ground wire • An open or high resistance in the wire

5. Reconnect the connectors to the under-dash fuse/relay box, do the following input tests:
   - If any test indicates a problem, find and correct the cause, then recheck the system.
   - If all the input tests prove OK, the MICU must be faulty; **REPLACE THE UNDER-DASH FUSE/RELAY BOX** .

Cavity	Wire	Test condition	Test: Desired result	Possible cause if desired result is not obtained
D17	RED	Under all conditions	Measure the voltage to ground: There should be battery voltage.	• Blown No. A29 (10 A) fuse in the under-hood fuse/relay box • An open or high resistance in the wire
D6	YEL	Under all conditions	Measure the voltage to ground: There should be battery voltage.	• Blown No. A15 (10 A) fuse in the under-hood fuse/relay box • An open or high resistance in the wire
W6	BLK	In all ignition switch positions	Measure the voltage to ground: There should be less than 0.2 V.	• Poor ground (G501) • An open or high resistance in the ground wire
B32	BLK	In all ignition switch positions	Measure the voltage to ground: There should be less than 0.2 V.	• Poor ground (G604) • An open or high resistance in the ground wire
B20	BLK	In all ignition switch positions	Measure the voltage to ground: There should be less than 0.2 V.	• Poor ground (G604) • An open or high resistance in the ground wire
D10	BLK	In all ignition switch positions	Measure the voltage to ground: There should be less than 0.2 V.	• Poor ground (G402) • An open or high resistance in the ground wire
				• Blown No. A15 (10 A) fuse in the under-hood fuse box

GETtheMANUALS.org

R1	YEL	Under all conditions	Measure the voltage to ground: There should be battery voltage.	• Faulty under-dash fuse/relay box • An open or high resistance in the ground wire
R3	GRN	Hazard warning switch pressed	Measure the voltage to ground: There should be battery voltage.	• Faulty hazard warning switch • An open or high resistance in the ground wire
T14	YEL	Turn signal switch in left position	Measure the voltage between terminals T14 and T5: There should be less than 0.2 V.	• Faulty turn signal switch • An open or high resistance in the wire
T5	BLK	Turn signal switch in right or neutral position	Measure the voltage between terminals T14 and T5: There should be about 5 V.	• Faulty turn signal switch • A short to ground in the wire
T13	LT GRN	Turn signal switch in right position	Measure the voltage between terminals T13 and T5: There should be less than 0.2 V.	• Faulty turn signal switch • An open or high resistance in the ground wire
T5	BLK	Turn signal switch in left or neutral position	Measure the voltage between terminals T13 and T5: There should be about 5 V.	• Faulty turn signal switch • A short to ground in the wire

WIPERS/WASHERS (MICU) INPUT TEST

NOTE:

- **Refer to the Electrical Wiring Diagrams for the location of the under-dash fuse/relay box connectors.**
- **Before testing, make sure the No. A2-9 (30 A) fuse in the under-hood fuse/relay box is OK.**
- **Before testing, make sure the No. B5 (10 A), No. B23 (10 A), and No. B28 (15 A) fuses in the under-dash fuse/relay box are OK.**

1. Turn the ignition switch to LOCK (0).
2. **DISCONNECT UNDER-DASH FUSE/RELAY BOX CONNECTORS B, C, D, P, R, T, AND W** .

NOTE: **All connector views are shown from the wire side of the female terminals.**

GETtheMANUALS.org

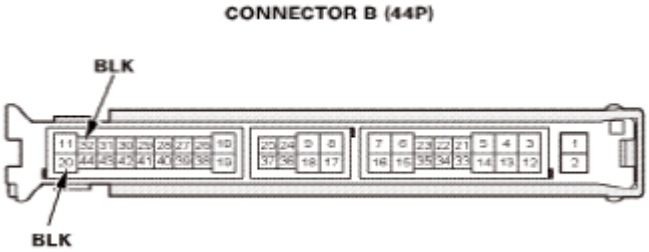

Fig. 62: Identifying Wipers/Washers System Connector B Terminals (44P)
Courtesy of AMERICAN HONDA MOTOR CO., INC.

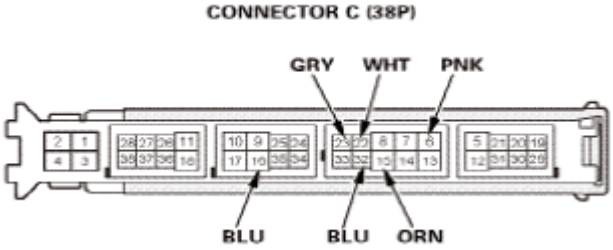

Fig. 63: Identifying Wipers/Washers System Connector C Terminals (38P)
Courtesy of AMERICAN HONDA MOTOR CO., INC.

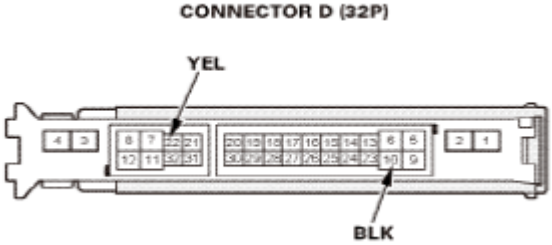

Fig. 64: Identifying Wipers/Washers System Connector D Terminals (32P)
Courtesy of AMERICAN HONDA MOTOR CO., INC.

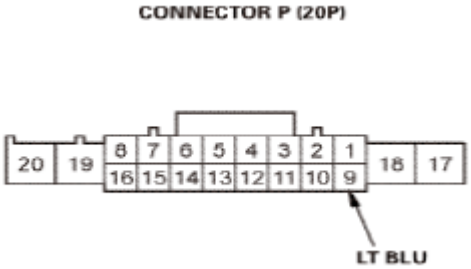

Fig. 65: Identifying Wipers/Washers System Connector P Terminals (20P)
Courtesy of AMERICAN HONDA MOTOR CO., INC.

GETtheMANUALS.org

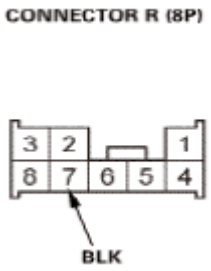

Fig. 66: Identifying Wipers/Washers System Connector R Terminals (8P)
Courtesy of AMERICAN HONDA MOTOR CO., INC.

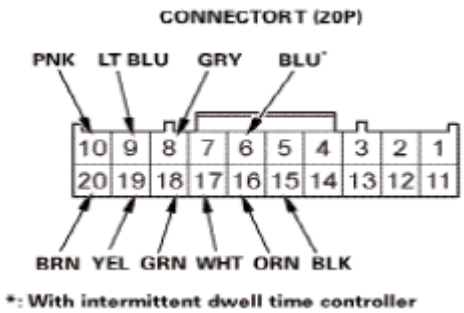

Fig. 67: Identifying Wipers/Washers System Connector T Terminals (20P)
Courtesy of AMERICAN HONDA MOTOR CO., INC.

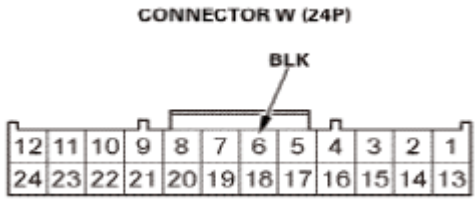

Fig. 68: Identifying Wipers/Washers System Connector W Terminals (24P)
Courtesy of AMERICAN HONDA MOTOR CO., INC.

3. Inspect the connector and socket terminals to be sure they are all making good contact:
   - If the terminals are bent, loose, or corroded, repair them as necessary, and recheck the system.
   - If the terminals are OK, go to step **4** .
4. With the connectors still disconnected, do the following input tests:
   - If any test indicates a problem, find and correct the cause, then recheck the system.
   - If all the input tests prove OK, go to step **5** .

Cavity	Wire	Test condition	Test: Desired result	Possible cause if desired result is not obtained
				• Blown No. A2-9 (30 A) fuse in the under-hood fuse/relay box

GETtheMANUALS.org

P9 C22	LT BLU WHT	Under all conditions	Connect terminals D4 and P9, and terminal C22 to body ground with jumper wires: The windshield wiper motor should run at high speed.	• Faulty relay circuit board • Faulty windshield wiper motor • Poor ground (G302) or an open in the ground wire • An open or high resistance in the wire
T6(1) T15	BLU BLK	Windshield wiper/washer switch (Intermittent dwell time controller) turned ON.	Measure the resistance between terminals T6 and T15: The resistance should vary between 0 to 1 kohms.	• Faulty windshield wiper/washer switch • An open or high resistance in the ground wire • A short to ground in the wire
C32	BLU	Run the windshield wiper motor by connecting terminals D4 and P9, and terminal C22 and body ground with jumper wires.	Connect terminal C32 to body ground with a jumper wire: The windshield wiper motor speed should change from high speed to low speed.	• Faulty windshield wiper motor • Faulty relay circuit board • An open or high resistance in the wire
C15 C6	ORN PNK	Under all conditions	Connect terminals C15 and D4, and terminal C6 to body ground with jumper wires: The windshield/rear window washer motor should run.	• Faulty windshield/rear window washer motor • An open or high resistance in the wire
C23	GRY	Run the windshield wiper motor by connecting terminals D4 and P9, and terminal C22 and body ground with jumper wires.	Use a DVOM to check for continuity to ground. **NOTE:** **There is no needle on a DVOM.**	• Faulty windshield wiper motor • An open or high resistance in the wire
P9 T20	LT BLU BRN	Under all conditions	Connect terminals D4 and P9, and terminal T20 to body ground with jumper wires: The rear window wiper motor should run.	• Faulty rear window wiper motor • An open or high resistance in the wire
(1) With intermittent dwell time controller				

5. Reconnect the connectors to the under-dash fuse/relay box, and do the following input tests:

GETtheMANUALS.org

- If any test indicates a problem, find and correct the cause, then recheck the system.
- If all the input tests prove OK, the MICU must be faulty; **REPLACE THE UNDER-DASH FUSE/RELAY BOX** .

Cavity	Wire	Test condition	Test: Desired result	Possible cause if desired result is not obtained
W6	BLK	In all ignition switch positions	Measure the voltage to ground: There should be less than 0.2 V.	• Poor ground (G501) • An open or high resistance in the ground wire
D10	BLK	In all ignition switch positions	Measure the voltage to ground: There should be less than 0.2 V.	• Poor ground (G402) • An open or high resistance in the ground wire
B32	BLK	In all ignition switch positions	Measure the voltage to ground: There should be less than 0.2 V.	• Poor ground (G604) • An open or high resistance in the ground wire
B20	BLK	In all ignition switch positions	Measure the voltage to ground: There should be less than 0.2 V.	• Poor ground (G604) • An open or high resistance in the ground wire
R7	BLK	In all ignition switch positions	Measure the voltage to ground: There should be less than 0.2 V.	• Poor ground (G501) • An open or high resistance in the ground wire
C16	BLU	Brake pedal pressed	Measure the voltage to ground: There should be battery voltage.	• Blown No. A16 (10 A) fuse in the under-hood fuse/relay box • Faulty brake pedal position switch • An open or high resistance in the wire
		Brake pedal released	Measure the voltage to ground: There should be no voltage.	• Faulty brake pedal position switch • A short to power in the wire
T16	ORN	Windshield wiper/washer switch (INT or LO) ON	Measure the voltage to ground: There should be less than 0.2 V.	• Faulty windshield wiper/washer switch • An open or high resistance in the wire
T15	BLK	Windshield wiper/washer switch OFF	Measure the voltage to ground: There should be about 5 V.	• Faulty windshield wiper/washer switch • A short to ground in the wire
		Windshield wiper/washer	Measure the voltage to	• Faulty windshield wiper/washer switch

GETtheMANUALS.org

T18 T15	GRN BLK	switch (MIST) ON	ground: There should be less than 0.2 V.	• An open or high resistance in the wire
		Windshield wiper/washer switch OFF	Measure the voltage to ground: There should be about 5 V.	• Faulty windshield wiper/washer switch • A short to ground in the wire
T17 T15	WHT BLK	Windshield wiper/washer switch (LO or HI) ON	Measure the voltage to ground: There should be less than 0.2 V.	• Faulty windshield wiper/washer switch • An open or high resistance in the wire
		Windshield wiper/washer switch OFF	Measure the voltage to ground: There should be about 5 V.	• Faulty windshield wiper/washer switch • A short to ground in the wire
T19 T15	YEL BLK	Windshield washer switch ON	Measure the voltage to ground: There should be less than 0.2 V.	• Faulty windshield wiper/washer switch • An open or high resistance in the wire
		Windshield washer switch OFF	Measure the voltage to ground: There should be about 5 V.	• Faulty windshield wiper/washer switch • A short to ground in the wire
T10 T15	PNK BLK	Rear window wiper switch ON	Measure the voltage to ground: There should be less than 0.2 V.	• Faulty rear window wiper/washer switch • An open or high resistance in the wire
		Rear window wiper switch OFF	Measure the voltage to ground: There should be about 5 V.	• Faulty rear window wiper/washer switch • A short to ground in the wire
T9 T15	LT BLU BLK	Rear window wiper switch INT	Measure the voltage to ground: There should be less than 0.2 V.	• Faulty rear window wiper/washer switch • An open or high resistance in the wire
		Rear window wiper switch OFF	Measure the voltage to ground: There should be about 5 V.	• Faulty rear window wiper/washer switch • A short to ground in the wire
T8 T15	GRY BLK	Rear window washer switch ON	Measure the voltage to ground: There should be less than 0.2 V.	• Faulty rear window wiper/washer switch • An open or high resistance in the wire
		Rear window washer switch OFF	Measure the voltage to ground: There should be about 5 V.	• Faulty rear window wiper/washer switch • A short to ground in the wire

GETtheMANUALS.org

D22	YEL	Transmission range switch in P	Measure the voltage to ground: There should be less than 0.2 V.	• Faulty or improperly adjusted transmission range switch • Poor ground (G101) or an open in the ground wire • An open or high resistance in the wire
		Transmission range switch in any other position than P	Measure the voltage to ground: There should be about 5 V.	• Faulty or improperly adjusted transmission range switch • A short to ground in the wire

GETtheMANUALS.org

HOW TO TROUBLESHOOT THE NAVIGATION SYSTEM

HOW TO TROUBLESHOOT THE NAVIGATION SYSTEM

General Operation

Refer to the Navigation Manual for the navigation system operating procedures.

Anti-Theft Feature

The navigation system has an auto anti-theft protection circuit. When any of these actions occur, the unit enters its anti-theft mode:

- Disconnecting the battery.
- Disconnecting audio-navigation unit connector A (24P) or connector B (20P).
- Removing the No. A1-6 (100 A) fuse or the No. A29 (10 A) fuse from the under-hood fuse/relay box.

After service, reconnect power to the audio-navigation unit, and turn the ignition switch to ON (II). There are two ways to exit the anti-theft mode:

- Press and hold the VOLUME/POWER ( ) knob for at least 2 seconds. The audio-navigation unit automatically exits the anti-theft mode. If the audio-navigation unit does not exit anti-theft mode, like in cases where a known-good unit (including the SD module) was substituted for testing, enter the anti-theft code.
- Enter the 5-digit anti-theft code.

If the code is lost or unavailable, you can get the code from the Interactive Network (iN) using the audio-navigation unit serial number. The serial number can easily be obtained without removing the audio-navigation unit. To get the serial number and the code, do the following:

- Press and hold the MAP/GUIDE, the DEST, and the CANCEL buttons at the same time.
- At the select diagnosis items screen, select the Detail Information & Setting, select the Unit Check, then the Navi ECU. The system runs a brief diagnosis, then the audio-navigation unit serial number is displayed.
- Use the anti-theft code inquiry option on the iN to look up the 5-digit anti-theft code. The iN may display more than one code for a given serial number. This is because serial numbers are not unique. You may have to try more than one 5-digit code. If no code is shown, or if the code(s) given do not work in the audio-navigation unit, contact the Automobile Warranty department.

When replacing the audio-navigation unit, be sure to give the customer the new anti-theft security code.

Symptom Diagnosis

GETtheMANUALS.org

Certain circumstances and system limitations may result in occasional vehicle positioning errors. Some customers may think this indicates a problem with the navigation system when, in fact, the system is normal. Keep the following items in mind when interviewing customers about symptoms of the navigation system.

Self-Inertial Navigation Limitations

The limitations of the self-inertial portion of the navigation system (the gyro and the vehicle speed signal) can cause discrepancies between the vehicle's actual position and the indicated vehicle's position (GPS vehicle position).

The following circumstances may cause vehicle positioning errors:

- Moving the vehicle with the engine stopped and the vehicle stopped, such as by ferry or tow truck, or if the vehicle is spun on a turn table.
- Tire slippage, changes in tire rolling diameters, and some driving situations may cause discrepancies in travel distances. Examples of this include;
    - Continuous tire slippage on a slippery surface
    - Driving with snow chains mounted
    - Abnormal tire pressure
    - Incorrect tire size
    - Frequent lane changes across a wide highway
    - Very bumpy roads
- Tolerances in the system and map inaccuracies sometimes limit how precisely the vehicle's position is indicated. Examples of this include;
    - Driving on roads not shown on the map (map matching is not possible)
    - Driving on a road that winds in one direction, such as a loop bridge, an interchange, or a spiral parking garage
    - Driving on a road with a series of sharp hair-pin turns
    - Driving near a gradual highway exit or transition
    - Driving on one of two close parallel roads
    - Making many 90 degree turns

Global Positioning System (GPS) Limitations

The GPS cannot detect the vehicle's position or elevation during the following instances:

- For the first 5 to 10 minutes after reconnecting the battery (this process can take as long as 45 minutes).
- When the satellite signals are blocked by tall buildings, mountains, tunnels, large trees, inside parking structures or large trucks.
- When the GPS antenna is blocked by metallic window tinting or by an object placed above it in the vehicle. The GPS antenna requires a clear unobstructed view of the sky.
- When there is no satellite signal output (signal output is sometimes stopped for satellite servicing).
- When the satellite signals are blocked by the operation of some electronic aftermarket accessories

GETtheMANUALS.org

including, but not limited to non- OEM in-dash entertainment units (amp, CD players/changers, radar detectors, theft recovery systems, etc.) and cell phones placed near the navigation system.

The accuracy of the GPS is reduced during these instances:

- Metallic window tinting above the GPS antenna.
- When only three or fewer satellite signals are received (Four satellite signals are required for accurate positioning).
- When driving near high tension power lines.
- When the satellite signals are blocked by the operation of some electronic aftermarket accessories including, but not limited to non-OEM in-dash entertainment units (amp, CD players/changers, radar detectors, theft recovery systems, etc.) and cell phones placed near the navigation system.
- When the satellite control centers are experiencing problems.

Muting Logic

Whenever the navigation system is giving guidance, outputs of all the speakers except the front speakers are decreased. When the voice control system is being used, all of the speakers are muted. If the HandsFreeLink is in use, the voice control system is unavailable.

LCD Unit Limitations

The screen is touch sensitive. Touch the display directly to select items on the screen.

- In cold temperatures, the display may stay dark for the first minute until it warms up.
- When the display is too hot because of direct summer sunlight, it remains dark until the temperature drops (you may see an error message displayed stating this fact).
- When the humidity is high and the interior temperature is low, the display may appear cloudy. The display will clear up after some use.
- Fingerprints on the screen may be noticeable. Clean the screen with a soft, damp cloth. You may use a mild cleaner intended for eye glasses or computer screens. To avoid scratching the panel, do not rub too hard or use abrasive cleaners or shop towels.

Symptom Duplication

When the symptom can be duplicated, verify that it is not a characteristic of the system. Review the Navigation Manual and compare it to a known-good vehicle (with the same software and database), under the same conditions. If the symptom is not the same as the known-good vehicle, follow the self-diagnostic procedures and the appropriate troubleshooting procedures.

When the symptom does not reappear or only reappears intermittently, ask the customer about the conditions when the symptom occurred.

- Always ask the customer to demonstrate the problem.
- Try to establish possible user error or misunderstanding of the system.
- Try to establish if outside interference may have been the cause.

GETtheMANUALS.org

- Vibration, temperature extremes, and moisture (dew, humidity) are factors that are difficult to duplicate.
- Inspect the vehicle for after-market electronic devices (vehicle locators, amps, radar detectors, etc.) that may be hidden.

NOTE: **When troubleshooting navigation system problems, ensure that the known-good vehicle is the same software version year and model as the vehicle being serviced. Mixing incompatible navigation systems or other system components can delay the troubleshooting process by creating symptoms or issues unrelated to the original problem.**

Audio-Navigation Unit and SD Module Service Precautions

Contrary to previous generations of DVD navigation systems, the audio-navigation unit and the SD module cannot be substituted separately for testing purposes. You can substitute a combined audio-navigation unit and SD module with a known-good combined audio-navigation unit and SD module. When the audio-navigation unit and the SD module are connected to a vehicle, and powered up for the first time, the audio-navigation unit and the SD module go through a mating process where the SD module writes the audio-navigation unit's serial number to its memory. The audio-navigation unit and the SD module are available separately.

When you get a replacement audio-navigation unit, it does not come with an SD module, but the unit is able to mate one time to an SD module. When you connect the audio-navigation unit to the SD module and power it up for the first time, the two components are mated. Once the audio-navigation unit is mated, it does not accept an SD module that is already mated to another audio-navigation unit. It does accept a new SD module.

The SD module is removable from the audio-navigation unit. If the audio-navigation unit is replaced, install the original SD module into the new audio-navigation unit. When you transfer the SD module, all the customer's settings, music, and photographs are transferred.

The SD module is able to mate more than once, allowing you to transfer the SD module with the customer's information to a new audio-navigation unit. The SD module must mate to a new audio-navigation unit. It cannot mate to an audio-navigation unit that has been mated to another SD module.

A new audio-navigation unit is defined as a unit that has not been mated to an SD module. A new unit may be new or remanufactured.

Audio-Navigation Unit	SD Module	Result
New	New	OK
Original	New	OK
New	Original	OK
Original	An audio-navigation unit mated to a different SD module	NG
An audio-navigation unit mated to a different SD module	Original	NG

If you need to replace the SD module, there is no way to transfer customer data to a new SD module. Explain to your customer that their personal information is not transferable. The navigation system has the Save Users

GETtheMANUALS.org

Memory function available, but Honda does not recommend using it. If the SD module is OK, install it in the new audio-navigation unit, and it will automatically transfer all the customer's information and settings.

If you need to replace the SD module, you can try to back-up the navigation data (if possible) and transfer it to the new SD module. See **SAVE USERS MEMORY**. The Save Users Memory function only copies customer settings and phone information.

- When the battery is disconnected, the internal GPS clock resets to 0:00. The clock resets to the correct time after the system finishes GPS initialization.
- Before disconnecting the battery, obtain any PGM-FI or A/T DTCs and freeze frame data (which are lost when the PCM loses power).
- After reconnecting the battery, you have to wait to get the initial signal from the satellite. It will take from 10 to 45 minutes.
- Adjust the setup clock settings (time zone and daylight savings) in the navigation system.

System Initialization

If the navigation system loses power (like the battery was disconnected), the navigation system requires initialization. Once completed, your system is ready to use.

This initialization requires the following:

- Press and hold the VOLUME/POWER knob for at least 2 seconds. The audio-navigation unit exits the anti-theft mode. Or you can enter the 5-digit anti-theft code.
- GPS initialization (may not be needed depending of the length of time the system was without power).
- Map matching aligns the GPS to a location on the map.

GPS Initialization

NOTE: You must park the vehicle outside with a clear view of the sky.

Depending on the length of time the battery was disconnected, your system may require GPS initialization. If it does, the CSF screen appears:

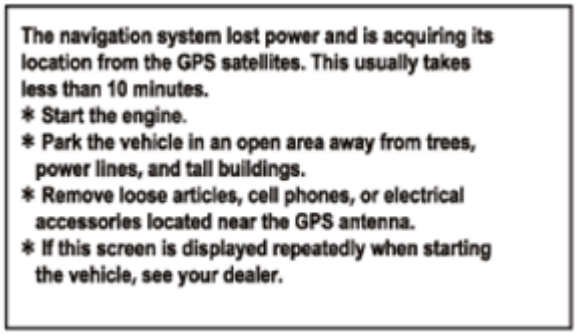

Fig. 1: Identifying GPS Initialization CSF Screen
Courtesy of AMERICAN HONDA MOTOR CO., INC.

GETtheMANUALS.org

If this procedure is not necessary, the system proceeds directly to the Disclaimer screen. During initialization, the system searches for all available GPS satellites, and obtains their orbital information. Park the vehicle out in the open with a clear view of the sky for this procedure.

If the navigation system finds the satellites properly, the CSF screen changes to the Disclaimer screen. If within 10 minutes the system fails to locate a sufficient number of satellites to locate your position, the confirmation screen appears.

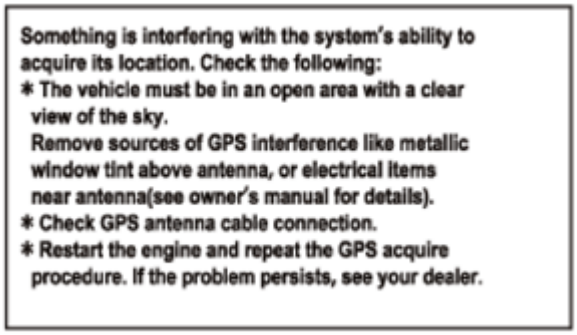

Fig. 2: Identifying GPS Initialization Confirmation Screen
Courtesy of AMERICAN HONDA MOTOR CO., INC.

If this screen appears, turn off the engine, then restart the vehicle and move it to a different location. If the Disclaimer screen appears, the GPS initialization is complete.

NOTE:

- **The average acquiring time is less than 10 minutes, but it can take as long as 45 minutes.**
- **If the system is still unable to acquire a signal, follow the instructions on the screen. If this screen appears again, go to GPS icon is white or not shown troubleshooting.**
- **Skip a CSF screen by pressing the DEST and the ZOOM OUT buttons at the same time and you can move to a System Links screen.**

Map Matching

This part of the initialization matches the GPS coordinates with a road on the map screen. To do this part of the procedure, make sure that the navigation system displays a map, and drive the vehicle on a mapped road shown on the map screen. Do not enter a destination at this time. When the name of the current road you are driving on appears at the bottom of the screen, the entire procedure is complete. Your system is now ready to use.

Ordering Updates Navigation Software

If the customer wants a yearly navigation software update, there are two ways to purchase one. They can either call 888-291-4675, or order on-line at www.hondanavi.com.

When customers order an update navigation software, they need:

GETtheMANUALS.org

- VIN
- Device number (found on the System/Device Information screen)
- Credit card

Update navigation software is available for purchase usually in the fall of each year. They may contain the following:

- Enhanced maps and points of interest (POI) coverage
- Fixes for minor software bugs
- Additional features

The update is loaded on a USB device which is mailed to the customer along with the password.

When the customer receives the USB device with the update, insert the USB device into the USB update port located in the passenger's dashboard area behind the glove box. The customer is prompted to enter the password that is shipped with the update USB device. The navigation system automatically updates the navigation software.

NOTE: The update on the USB device is designed to update the vehicle with the submitted VIN. If a customer has more than one vehicle that needs updating, they need to order a separate update USB device for that vehicle.

Never promise your customer future free updates. There are no free programs for updating the navigation software. Updates are generally available for purchase each fall. The online navigation software order site provides information when an update is available.

How to Answer Customer Questions about Navigation Coverage

Some customers may ask questions regarding a city, address, or POI (point of interest) covered by the navigation system. It is better to verify a coverage question on an actual vehicle than to disappoint your customer by promising coverage that may be incomplete or missing in their area. The following suggestions can be used to answer coverage inquiries from your customer.

Is my address covered by the navigation system?

Using a current production vehicle (of the same model), and enter the customer's address (street first) to see if their area is covered. Always enter the street first, because sometimes their city may be included in a neighboring township, or under some larger metropolitan city name. If the address is shown in a later year vehicle, but not your customer's vehicle, you might recommend that your customer purchase an update.

Is my city covered by the navigation system?

For general questions about whether a city is covered, view the map coverage link on the navigation software order site. On the site, select a year, and select a model, then click on the Coverage link. You then select a state or province, and the cities are listed. This does not guarantee that the customer's road or address is in the system. Verifying on an actual production vehicle is always the best guarantee that your information is accurate.

GETtheMANUALS.org

The gas station on my corner is now a restaurant. Why is it still incorrect in the navigation system?

For POI-related customer questions, explain that businesses are constantly moving, and there can be a considerable lag in updating the millions of POIs in the system. The database is updated annually, and the best way to the verify whether the POI is accurate is verify the inquiry on a current production vehicle.

Answers to these and other questions regarding coverage can be found in these locations:

- In the Frequently Asked Questions section of the Navigation Manual.
- At the online navigation software order site, by clicking on the FAQs link.

How do I find the local address of a business that is part of a national chain (for example, Starbucks)?

There are three ways to find the local address to businesses:

- If you know the phone number of the business, select Phone Number and enter the 10 digit phone number (area code plus seven digit number).
- Select Category, then Restaurant. Enter the keyword Star. The resulting list includes all restaurants that have the letters Star anywhere in the name.
- Select Name and enter Starbucks. For more common business names, like McDonalds, you may have to search through a list that includes other businesses like McDonalds Welding, McDonalds Automotive, etc.

LEVER-LOCKED CONNECTOR

Disconnecting

To disconnect the connector, pull the lever (A) while pushing the lock tab (B) down, then pull the connector (C).

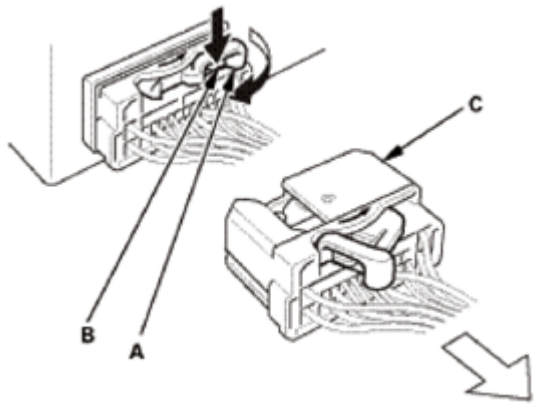

Fig. 3: Disconnecting Lever-Locked Connector
Courtesy of AMERICAN HONDA MOTOR CO., INC.

Connecting

GETtheMANUALS.org

To connect the connector, push the connector into the connector sleeve (A). As the connector is pressed in, the lever (B) moves to the locked position.

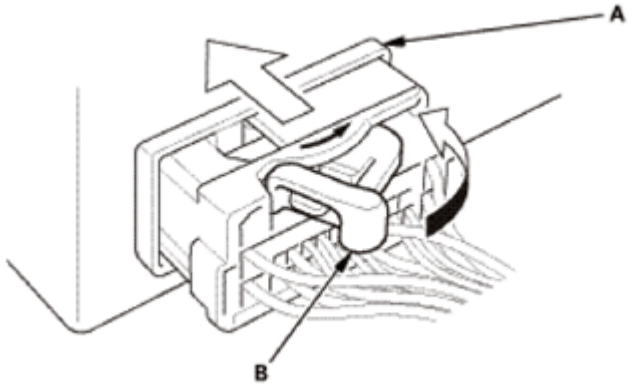

Fig. 4: Connecting Lever-Locked Connector
Courtesy of AMERICAN HONDA MOTOR CO., INC.

HOW TO CHECK ERROR HISTORY (NAVIGATION DTCS)

NOTE: The navigation DTCs cannot be retrieved with the HDS.

The Error History feature is to record intermittent navigation issues that occur while the customer is using the system. Sometimes the customer complaint cannot be duplicated. The error history may record the information needed to diagnose the problem. To check the error history:

1. Start the engine.
2. Press and hold the MAP/GUIDE, the DEST, and the CANCEL buttons for 3 seconds.
3. When the Select Diagnosis Items menu appears, select the Self-Diagnosis Mode.

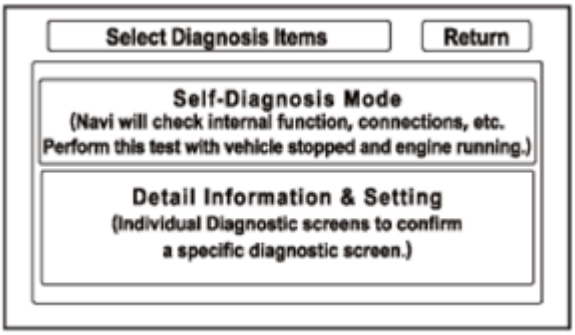

Fig. 5: Display - Select Diagnosis Items Menu
Courtesy of AMERICAN HONDA MOTOR CO., INC.

4. When the audio-navigation unit has hard error codes, the Error History icon appears yellow when the Self-Diagnosis Mode (System Links) screen is displayed. When no hard error codes are stored, the icon appears gray. To view the errors with their navigation DTC, select the Error History icon.

GETtheMANUALS.org

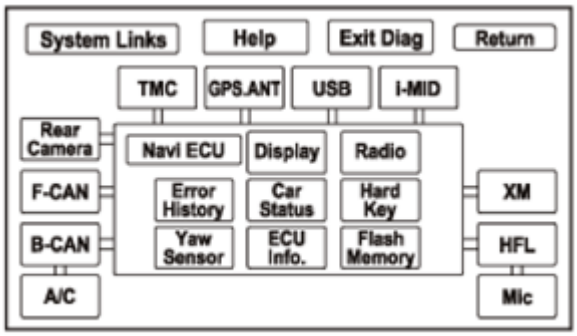

Fig. 6: Display - Error History Icon
Courtesy of AMERICAN HONDA MOTOR CO., INC.

5. Select Hard Error in the Error History menu.

NOTE: Soft Error is for factory use only.

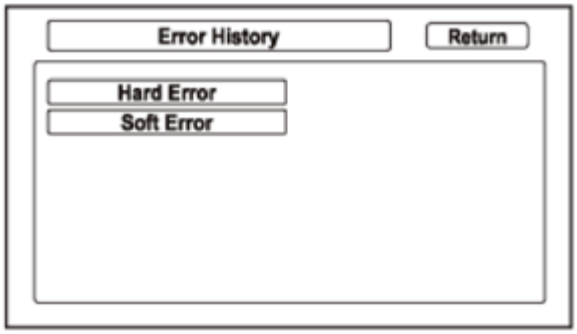

Fig. 7: Display - Error History Menu
Courtesy of AMERICAN HONDA MOTOR CO., INC.

6. The Hard Error screen displays the following information for each error:
   - The navigation DTC for the error.
   - A brief description of the navigation DTC.
   - The date and time when the error occurred.

NOTE: The Save feature is for factory use only.

GETtheMANUALS.org

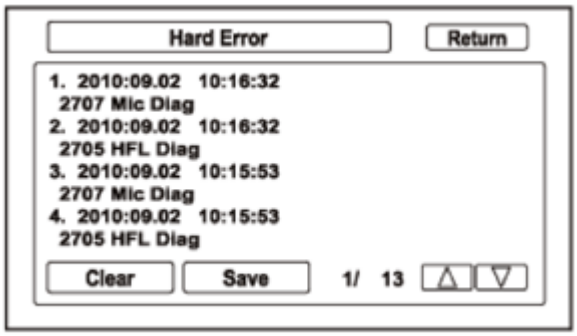

Fig. 8: Display - Hard Error Screen
Courtesy of AMERICAN HONDA MOTOR CO., INC.

7. Use the navigation DTC Troubleshooting table to troubleshoot the error. Select Return to exit the Error History main menu.

HOW TO CLEAR ERROR HISTORY

1. Turn the ignition switch to ON (II).
2. Press and hold the MAP/GUIDE, the DEST, and the CANCEL buttons for 3 seconds.
3. When the Select Diagnosis Items menu appears, select the Detail Information & Setting.

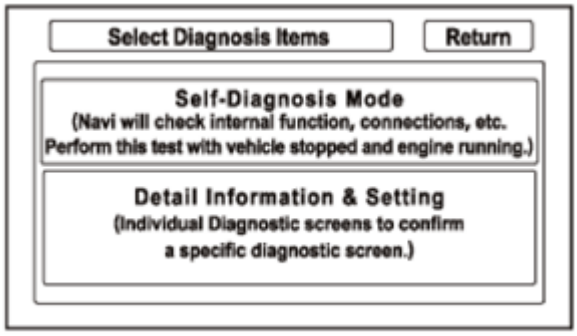

Fig. 9: Display - Select Diagnosis Items Menu
Courtesy of AMERICAN HONDA MOTOR CO., INC.

4. Select the Error History under the Detail Information & Setting menu.

GETtheMANUALS.org

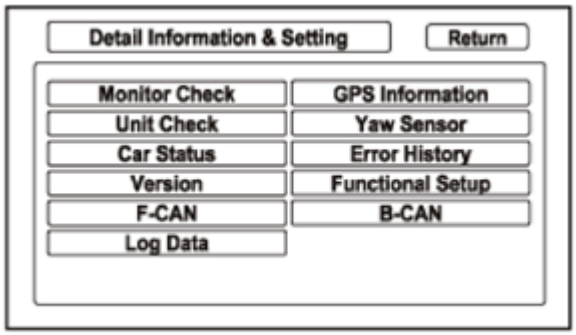

Fig. 10: Display - Detail Information & Setting Menu
Courtesy of AMERICAN HONDA MOTOR CO., INC.

5. Select Hard Error in the Error History menu.

NOTE: **Soft Error is for factory use only.**

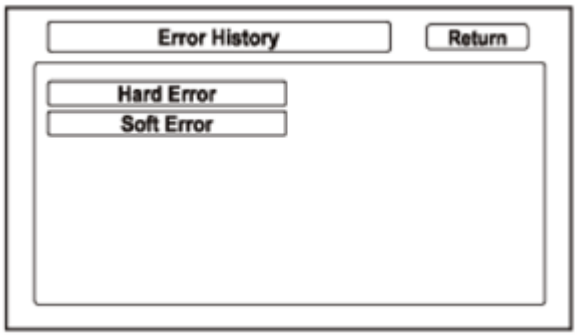

Fig. 11: Display - Error History Menu
Courtesy of AMERICAN HONDA MOTOR CO., INC.

6. Select Clear in the Hard Error.

NOTE:

- **By selecting Clear, all hardware errors stored in history are erased at the same time.**
- **The Save feature is for factory use only.**
- **Write down the navigation DTCs before deleting.**

GETtheMANUALS.org

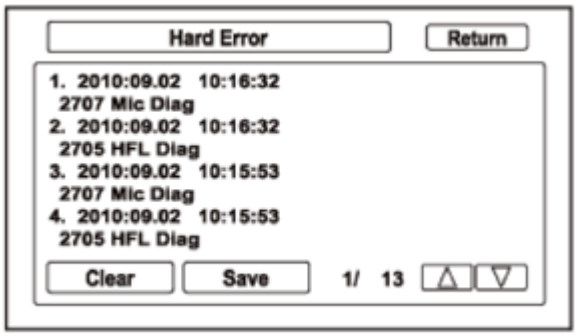

Fig. 12: Display - Hard Error Screen
Courtesy of AMERICAN HONDA MOTOR CO., INC.

7. The confirmation screen appears, then selects Yes. All Hard Error history are cleared. The system returns to the Error History menu automatically.

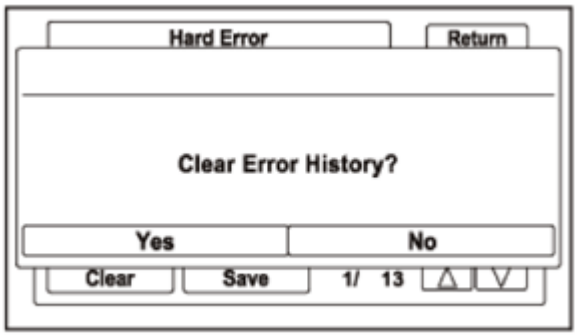

Fig. 13: Display - Hard Error Confirmation Screen
Courtesy of AMERICAN HONDA MOTOR CO., INC.

NAVIGATION SYSTEM ERROR MESSAGES

ERROR MESSAGES

Screen Error Message	Solution
The navigation system is unable to start due to excessive heat. The system will start after the system cools.	This message appears briefly when the navigation ECU temperature is too high, and then turn the ignition switch to LOCK (0) until the temperature cools down. The system turns back on when the audio-navigation unit cools down. Also make sure there is nothing blocking the cooling fan opening.
The display temperature is too high! For protection. The display will shut down.	This message appears briefly when the display temperature is too high, and then the display turns off until the temperature cools down. The system turns back on when the display cools down.
The navigation system cannot access the memory module. Please turn the ignition off, then turn it back on. If the problem continues, visit your dealer when convenient.	This message appears when the system detects the SD module is not connected or there is an SD module connecting error. Check any official Honda service website for more service information about the navigation system. If you recently replaced the audio-navigation unit, make sure the SD module was transferred to the new unit.

GETtheMANUALS.org

The navigation system cannot access the memory module because it is not authorized to work with this system. Please insert the correct memory module or visit your dealer when convenient.	This message appears when the system detects a SD module that is not approved. Make sure the SD module is a genuine part. If the audio-navigation unit was replaced, make sure the SD module was transferred to the new unit. The SD module may be damaged or was not properly mated to the audio-navigation unit. Check any official Honda service website for more service information about the navigation system.

TMC (TRAFFIC MESSAGE CHANNEL) INFORMATION

For more information about TMC, refer to www.hondacars.com/traffic.

GPS ANTENNA REMOVAL AND INSTALLATION

REMOVAL

1. Inner Vent - Both Sides
    1. Carefully pry out the inner vents (A) with the appropriate trim tool to detach the clips (B), then remove the inner vents.

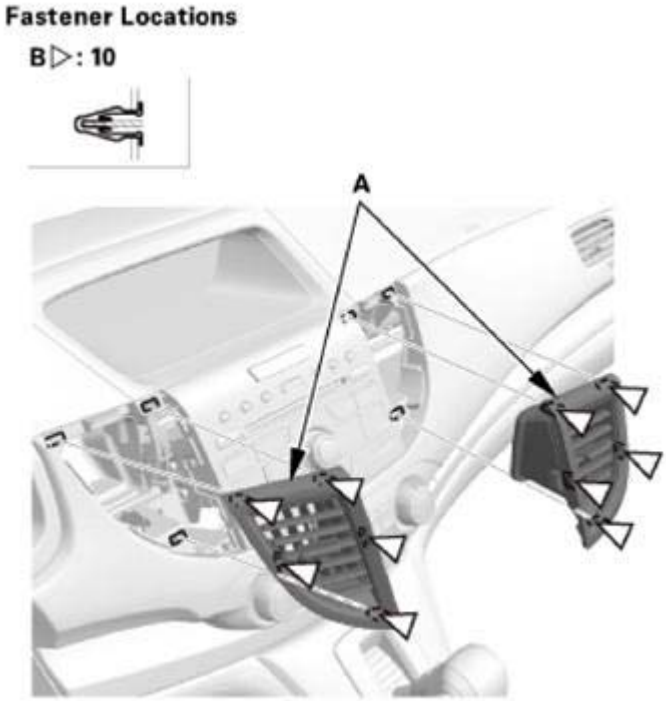

Fig. 14: Identifying Inner Vents And Clips
Courtesy of AMERICAN HONDA MOTOR CO., INC.

2. Audio-Navigation Unit Assembly

NOTE:

- **Eject the discs before removing the audio-navigation unit to prevent**

GETtheMANUALS.org

damaging the CD/DVD player's load mechanism.

- **If you are replacing the audio-navigation unit, write down the audio presets (if possible), then enter them into the new audio-navigation unit.**
- **If the audio-navigation unit is replaced or disconnected, Map Matching must be done.**
- **Lay a shop towel under the parts when working on them to protect the face panel from scratches or other damage.**
- **Do not work in a dusty or dirty place.**
- **Discharge static electricity from your body before and during the work.**
- **Do not touch the circuit board(s) with your bare hands.**
- **Do not work with dirty hands.**
- **Do not touch the terminal connector of the flat plate cable with your bare hands (If you have touched it, wipe it off thoroughly.).**

1. Remove the bolts.
2. Disconnect the connectors, then pull out the audio-navigation unit (A).

Except KX

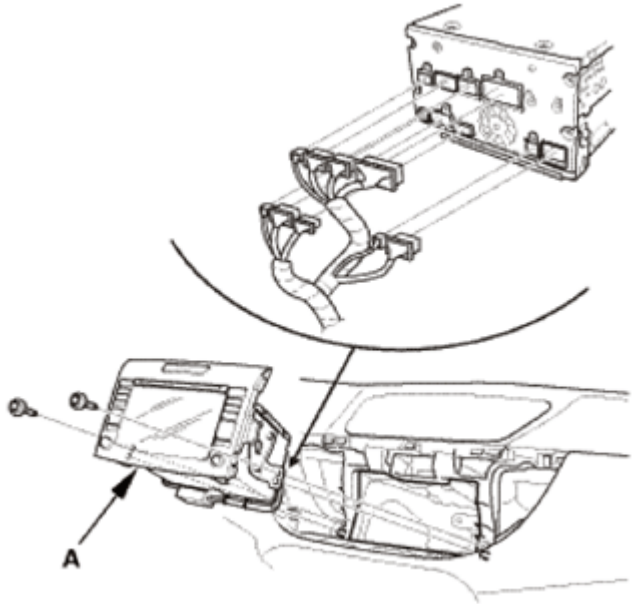

Fig. 15: Identifying Audio-Navigation Unit (Except KX)
Courtesy of AMERICAN HONDA MOTOR CO., INC.

KX

GETtheMANUALS.org

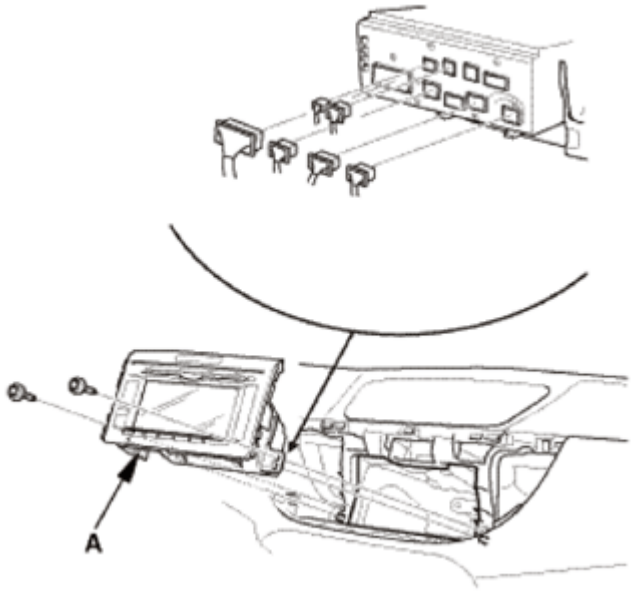

Fig. 16: Identifying Audio-Navigation Unit (KX)
Courtesy of AMERICAN HONDA MOTOR CO., INC.

3. Dashboard Center Display Visor Assembly
    1. Remove the dashboard center display visor (A).

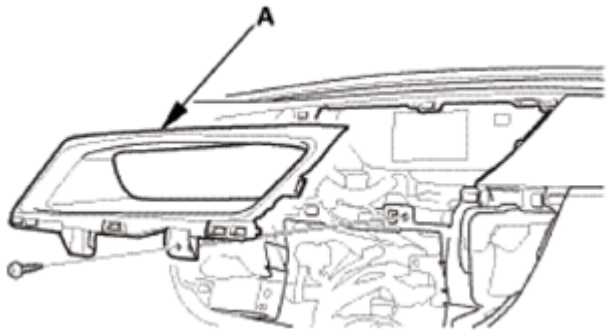

Fig. 17: Identifying Dashboard Center Display Visor
Courtesy of AMERICAN HONDA MOTOR CO., INC.

4. GPS Antenna
    1. Disconnect the connector.
    2. Remove the GPS antenna (A).

GETtheMANUALS.org

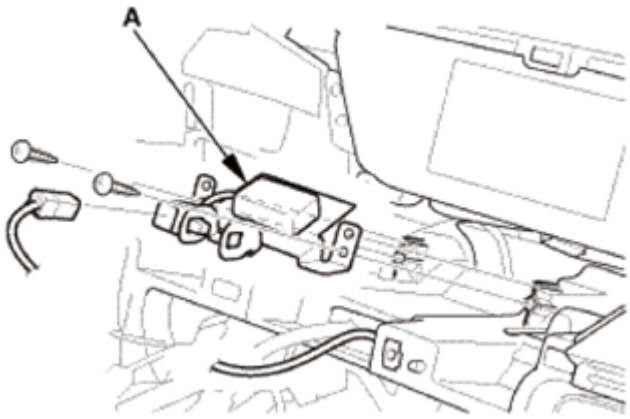

Fig. 18: Identifying GPS Antenna
Courtesy of AMERICAN HONDA MOTOR CO., INC.

INSTALLATION

1. GPS Antenna
    1. Install the GPS antenna (A).
    2. Connect the connector.

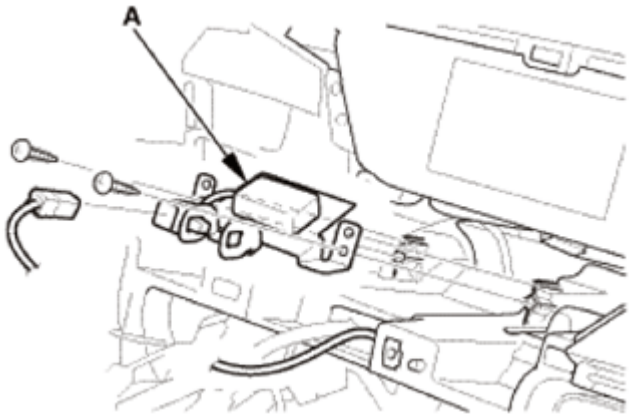

Fig. 19: Identifying GPS Antenna
Courtesy of AMERICAN HONDA MOTOR CO., INC.

2. Dashboard Center Display Visor Assembly
    1. Install the dashboard center display visor (A).

GETtheMANUALS.org

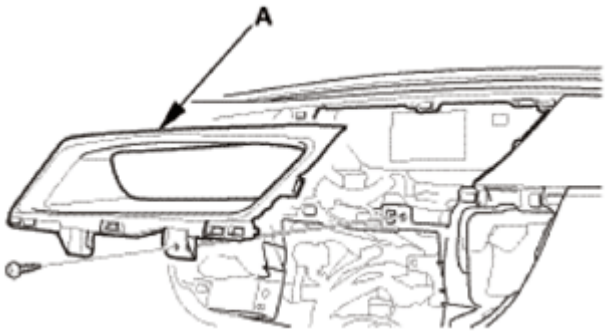

Fig. 20: Identifying Dashboard Center Display Visor
Courtesy of AMERICAN HONDA MOTOR CO., INC.

3. Audio-Navigation Unit Assembly
    1. Connect the connectors, then install the audio-navigation unit (A).

    NOTE: Make sure all the connectors and the antenna lead are secure.

    2. Install the bolts (B).

    Except KX

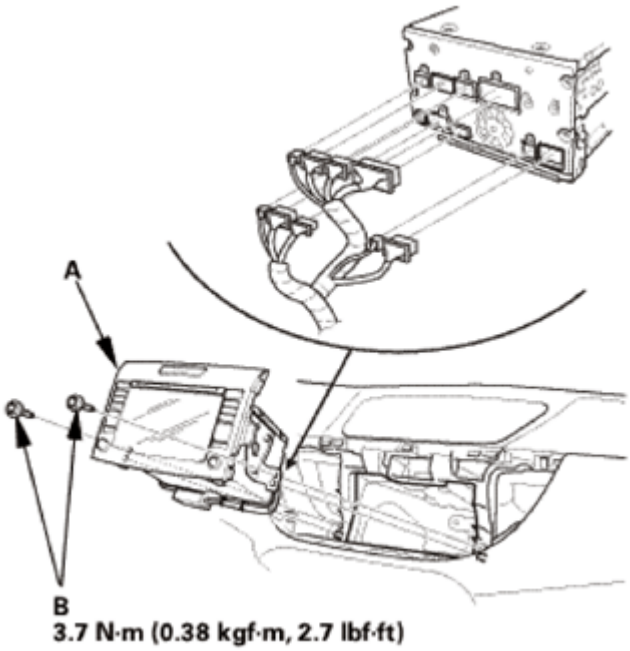

Fig. 21: Identifying Audio-Navigation Unit And Mounting Bolts With Torque Specification (Except KX)
Courtesy of AMERICAN HONDA MOTOR CO., INC.

KX

GETtheMANUALS.org

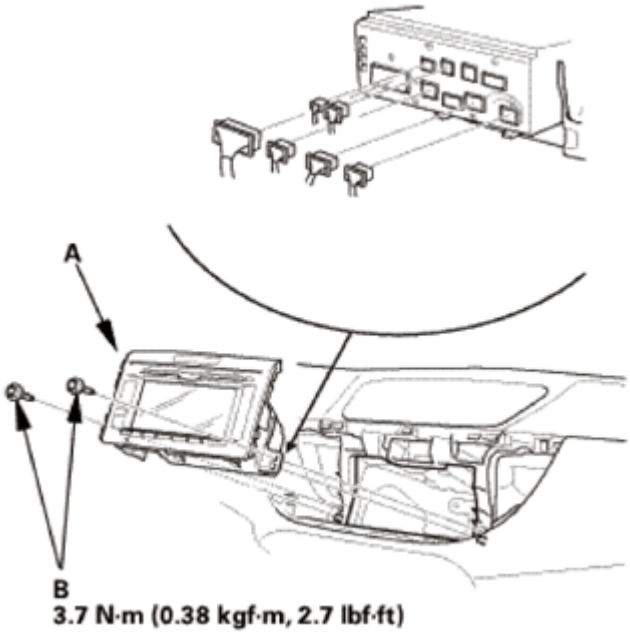

Fig. 22: Identifying Audio-Navigation Unit And Mounting Bolts With Torque Specification (KX)
Courtesy of AMERICAN HONDA MOTOR CO., INC.

4. Inner Vent - Both Sides
    1. Install the inner vents (A). Make sure the clips (B) snap into place securely.

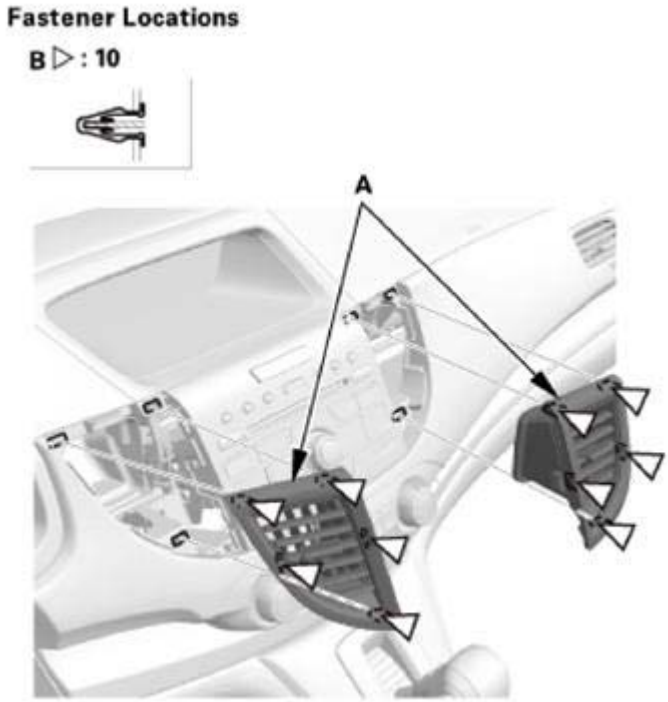

Fig. 23: Identifying Inner Vents And Clips

GETtheMANUALS.org

Courtesy of AMERICAN HONDA MOTOR CO., INC.

NAVIGATION SYSTEM COMPONENT LOCATION INDEX

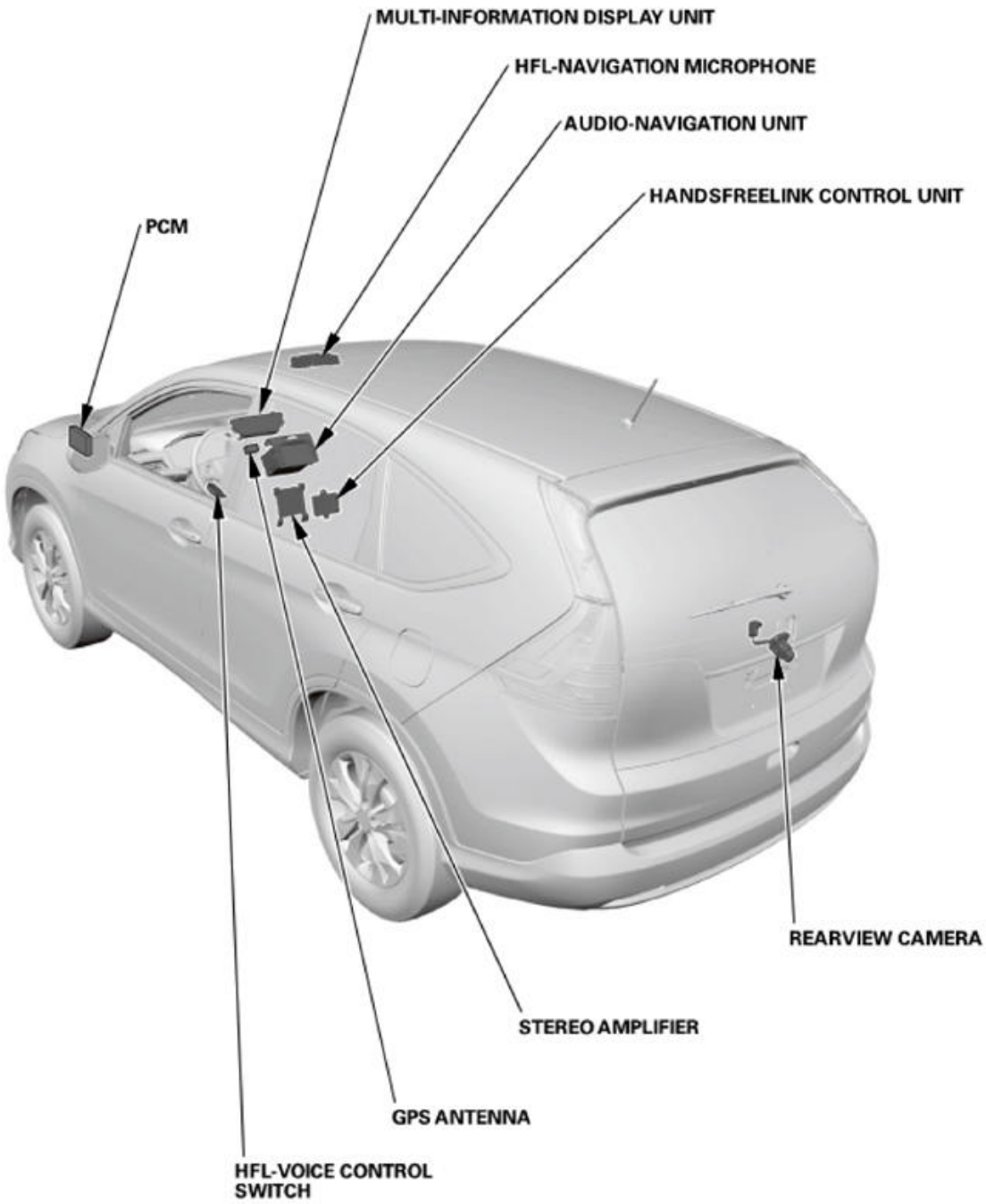

Fig. 24: Navigation System Component Location
Courtesy of AMERICAN HONDA MOTOR CO., INC.

AUDIO-NAVIGATION UNIT	REMOVAL AND INSTALLATION
	SYSTEM DIAGNOSTIC MODE

GETtheMANUALS.org

HFL-VOICE CONTROL SWITCH	**REMOVAL, INSTALLATION, AND TEST**
GPS ANTENNA	**REMOVAL AND INSTALLATION**
HFL-NAVIGATION MICROPHONE	**REMOVAL AND INSTALLATION**
MULTI-INFORMATION DISPLAY UNIT	**REMOVAL AND INSTALLATION**
STEREO AMPLIFIER	REMOVAL AND INSTALLATION
REARVIEW CAMERA	**REMOVAL AND INSTALLATION**

NAVIGATION SYSTEM DIAGNOSTIC MODE

START-UP PROCEDURE AND DIAGNOSTIC MENU

NOTE: **CHECK THE VEHICLE BATTERY CONDITION FIRST .**

1. Start the engine.
2. At the disclaimer screen use the audio-navigation unit hard buttons:

   Press and hold the MAP/GUIDE, the DEST, and the CANCEL buttons for 3 seconds. The display screen goes directly to the Select Diagnosis Items menu shown.

   - Self-Diagnosis Mode (runs the automatic diagnosis of the navigation system)
   - Detail Information & Setting (allows you to manually diagnose the navigation system)

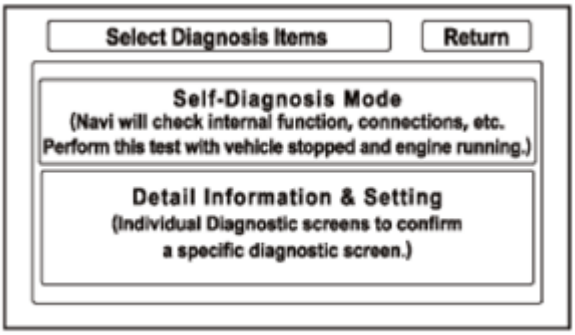

Fig. 25: Display - Select Diagnosis Items Menu
Courtesy of AMERICAN HONDA MOTOR CO., INC.

SYSTEM LINKS

1. Select the Self-Diagnosis Mode from the Select Diagnosis Items menu. The message at the bottom of the screen flashes indicating the diagnosis is running.

GETtheMANUALS.org

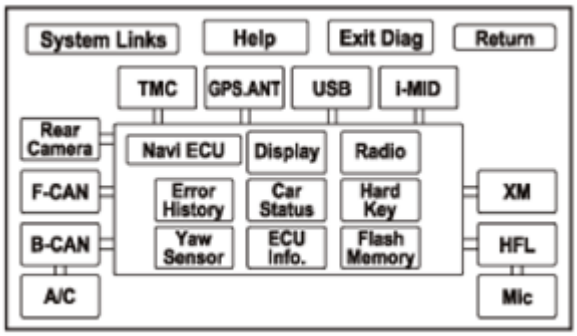

Fig. 26: Display - Self-Diagnosis Mode In Process
Courtesy of AMERICAN HONDA MOTOR CO., INC.

2. Select the icon you want to diagnose to see the details of that diagnostic function.

   The System Links function runs automatically and displays a flashing message at the bottom of the screen reminding you to have the engine running for the test. The diagnosis tests the following:

   - Most of the wires connecting the external navigation components shown in the block diagram.
   - The results from the various components shown in the block diagram.
   - The microphone is tested by listening to the bong sound produced by the audio-navigation unit from the speakers when the diagnosis is started. This requires that the audio system be operating normally.
3. When the diagnosis finishes, the icons turn different colors based on their test status. Each icon color is explained in the table.

Icon Colors	Description
Green	The system ran a diagnosis and the results are OK.
Red	Errors that require replacement of hardware or harness. Examples are connection error or memory diagnosis errors. Troubleshoot for navigation DTCs.
Yellow	Errors that do not require hardware replacement, such as leaving the vehicle in ACCESSORY (I), or because of a missing accessory.
White	The diagnosis is running. The screen functions are locked out while the diagnosis runs.
Gray	The system cannot automatically check this function. You have to select the diagnosis item and manually do additional testing, like checking the navigation buttons in the Hard Key test. When you complete the Hard Key test and return to the System Links screen, the gray icon turns green.

NOTE: By selecting the HELP icon, you can see a description for each color.

4. The indication on the screen may not change until you exit and reenter the Self-Diagnosis Mode. In some cases, you may have to restart the engine for the indication to change. After you repair the affected component or harness, repeat this diagnosis.

GETtheMANUALS.org

USB

This diagnosis displays directly from the System Links screen by selecting the USB icon.

This diagnosis checks the connection about navigation update harness.

If Connection shows NG, check for open in the wire between audio-navigation unit connector H (7P) terminals No. 6 (USB ADPT) and No. 7 (USB ON).

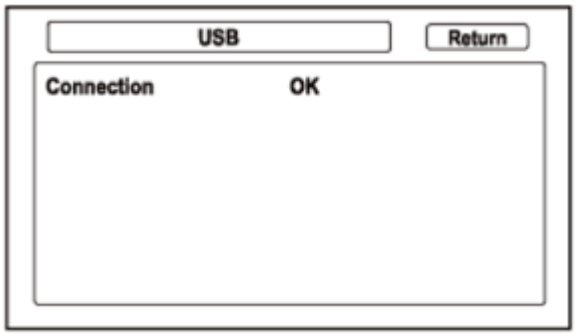

Fig. 27: Display - USB Connection Status Screen
Courtesy of AMERICAN HONDA MOTOR CO., INC.

FLASH MEMORY

This diagnosis displays directly from the System Links screen by selecting the Flash Memory icon.

This diagnosis checks the SD module status.

- Insert: Displays the result of the insert status about the SD module (OK; Inserted, NG; Not Inserted).
- Access: Displays the result of the access to the SD module (OK/NG). If NG, REPLACE THE SD MODULE , and recheck.

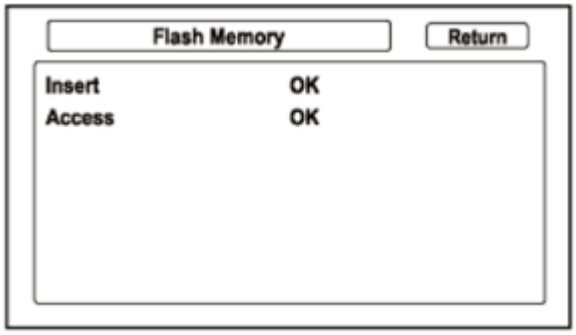

Fig. 28: Display - Flash Memory Status Screen
Courtesy of AMERICAN HONDA MOTOR CO., INC.

FACTORY DIAGNOSTIC SCREEN IN LINE DIAG

GETtheMANUALS.org

NOTE: **If the vehicle left the factory in the factory diagnostic mode, you will see this screen every time you turn on the ignition. Sometimes this screen also appears after you replace the audio-navigation unit with a new or remanufactured unit.**

When an audio-navigation unit is powered up for the first time at the factory, the factory diagnosis screen (In Line Diag) appears. Normally the factory does the steps necessary to verify proper operation and terminate the factory diagnosis.

Until the proper confirmation sequence is done, the screen appears every time you turn on the ignition.

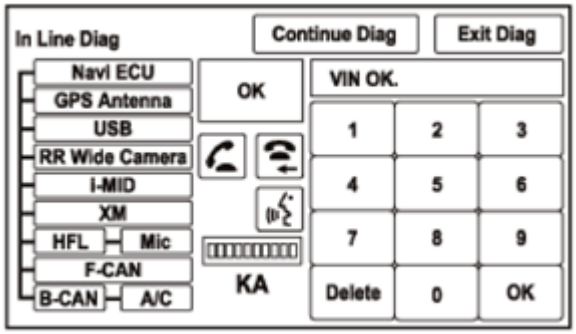

Fig. 29: Display - In Line Diag Diagnostic Screen
Courtesy of AMERICAN HONDA MOTOR CO., INC.

Follow the steps to prevent the screen from showing up in the future:

1. Press and hold the MAP/GUIDE, the DEST, and the CANCEL buttons for about 3 seconds. The Select Diagnosis Items screen appears.
2. Press and hold the MAP/GUIDE button until the In Line Diag CSF Setting screen appears.

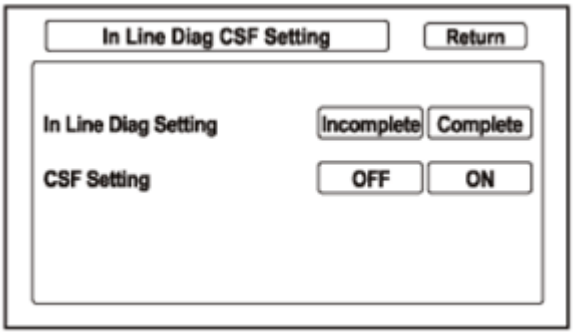

Fig. 30: Display - In Line Diag CSF Setting Screen
Courtesy of AMERICAN HONDA MOTOR CO., INC.

3. Set the In Line Diag Setting to Complete, and make sure the CSF setting is ON, then select Return twice to exit the diagnostic mode. The In Line Diag should not appear again.

DETAIL INFORMATION & SETTING

GETtheMANUALS.org

This section allows you to run a specific diagnosis and allows additional setting choices for some screens that are not shown when selecting an icon from the System Links screen.

Select the item you want to check, and the test begins. To return to the previous screen, select Return.

- Monitor Check
- Unit Check
- Car Status
- Version
- F-CAN
- Log Data
- GPS Information
- Yaw Sensor
- Error History
- Functional Setup
- B-CAN

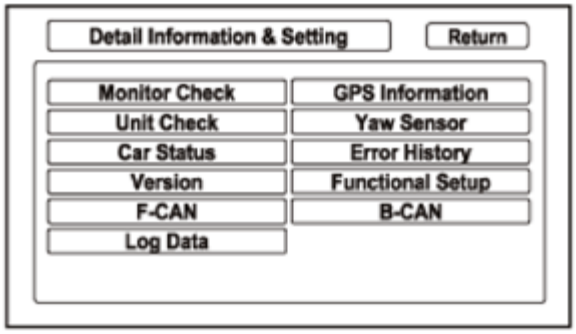

Fig. 31: Display - Detail Information & Setting Menu
Courtesy of AMERICAN HONDA MOTOR CO., INC.

MONITOR CHECK

Overview of the navigation display.

These screens allow you to troubleshoot the navigation display. Select the item you want to troubleshoot, and follow the diagnostic instructions.

- RGB Color
- Gray Tone
- White Raster
- Black Raster
- Color Pattern
- Monitor Adjustment

GETtheMANUALS.org

- Touch Panel Check
- Touch Panel Calibration

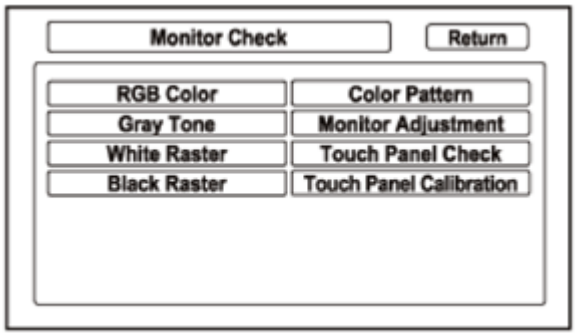

Fig. 32: Display - Monitor Check Screen
Courtesy of AMERICAN HONDA MOTOR CO., INC.

RGB Color

This screen verifies that the navigation display is receiving the video (R, G, B, and Composite sync) signals properly. The three primary colors should all appear without distortion. The combination of all three should produce a central white section. If the picture has lines in it, or scrolls horizontally or vertically, and any of the colors are missing, or scrolls horizontally troubleshoot for the color signal and composite sync problem.

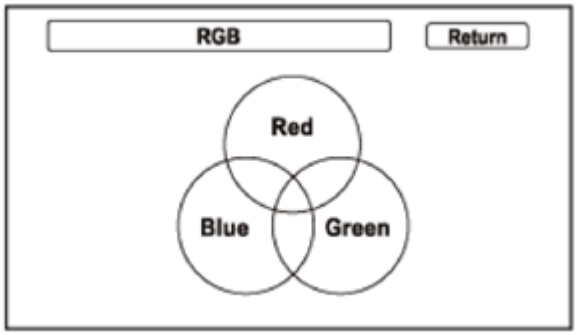

Fig. 33: Display - Radio Signal RGB Color Screen
Courtesy of AMERICAN HONDA MOTOR CO., INC.

Gray Tone

This screen checks problems with contrast. You should be able to see the changes from bar to bar across the scale. It is normal for the two bars on either side to appear the same. If you cannot see changes from bar to bar, REPLACE THE AUDIO-NAVIGATION UNIT .

GETtheMANUALS.org

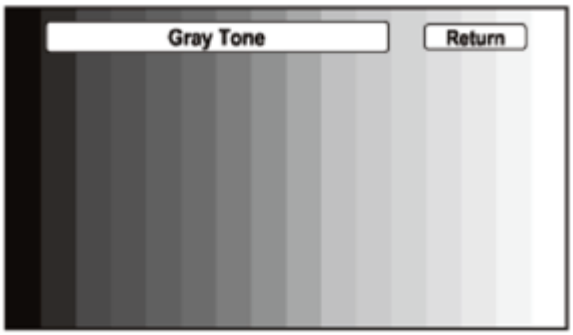

Fig. 34: Display - Gray Tone Screen
Courtesy of AMERICAN HONDA MOTOR CO., INC.

White Raster

This screen checks for pixels that may be dead (off). The entire display must be white. If there are dead pixels, REPLACE THE AUDIO-NAVIGATION UNIT .

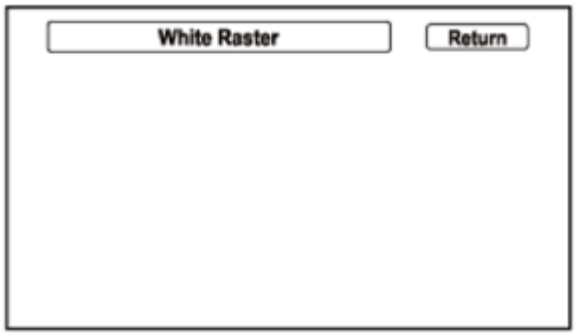

Fig. 35: Display - White Raster Screen
Courtesy of AMERICAN HONDA MOTOR CO., INC.

Black Raster

This screen checks for pixels that may be stuck on. The entire display must be black. If pixels are stuck on, REPLACE THE AUDIO-NAVIGATION UNIT .

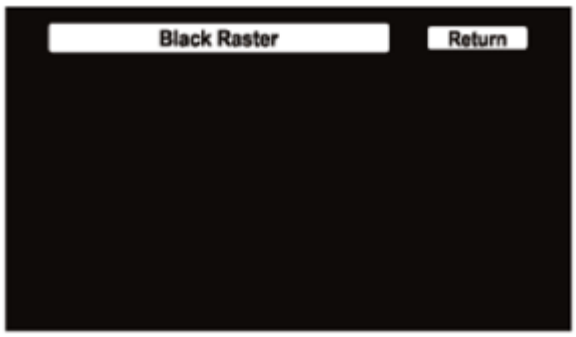

Fig. 36: Display - Black Raster Screen

GETtheMANUALS.org

Courtesy of AMERICAN HONDA MOTOR CO., INC.

Color Pattern

The screen shows the colors being used for the map and menu screens. This is for factory use only. To check the color signal, use the RGB Color diagnosis.

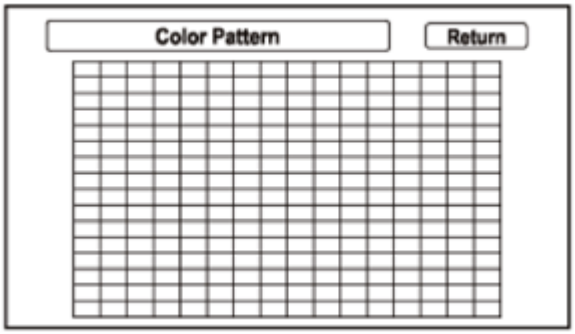

Fig. 37: Display - Color Pattern For Map And Menu Screens
Courtesy of AMERICAN HONDA MOTOR CO., INC.

Monitor Adjustment

This screen allows you to adjust the navigation display. Select the item you want to adjust.

- Navi: This allows you to center the navigation display.
- Rear Camera: This allows you to adjust the rearview camera guide lines.

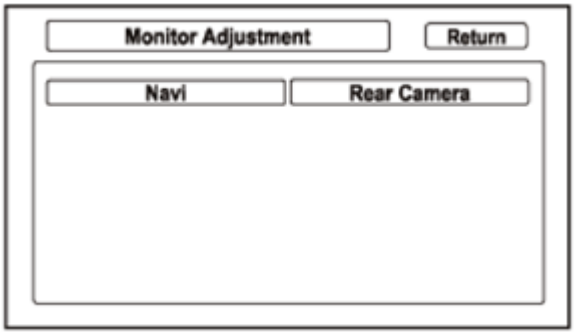

Fig. 38: Display - Monitor Adjustment Screen
Courtesy of AMERICAN HONDA MOTOR CO., INC.

Navi

If you selected the Navi, select Tuning, and use the joystick to move the picture up/down or left/right. Then select Set to save the selection. Do not adjust the monitor position unless directed by a service bulletin. Default resets the display position to factory specifications.

GETtheMANUALS.org

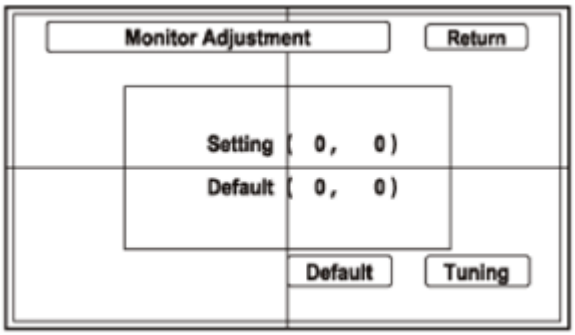

Fig. 39: Display - Monitor Adjustment Screen (Navi)
Courtesy of AMERICAN HONDA MOTOR CO., INC.

Rear Camera

If you selected the Rear Camera, select Tuning, then select the wide view, the normal view, or the top down view, and use the joystick to move the picture up/down or left/right. then press the CANCEL button to return the previous screen, and save the selection. Do not adjust the monitor position unless directed by a service bulletin. Default resets the display position to factory specifications.

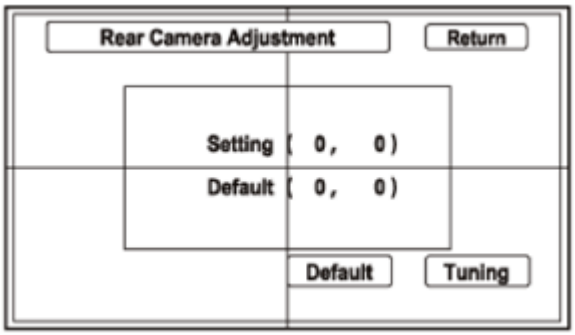

Fig. 40: Display - Monitor Adjustment Screen (Rear Camera)
Courtesy of AMERICAN HONDA MOTOR CO., INC.

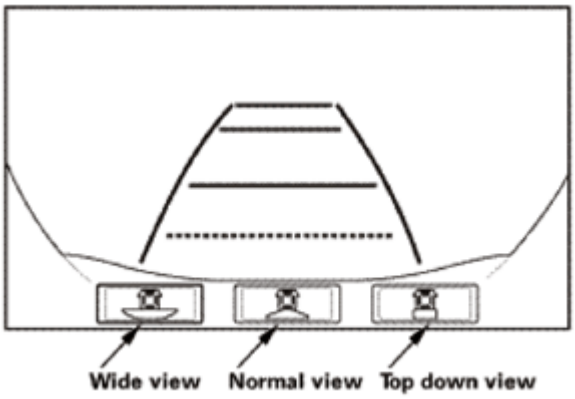

Fig. 41: Display - Rear Camera View Screen (Wide, Top Down And Normal Views)
Courtesy of AMERICAN HONDA MOTOR CO., INC.

GETtheMANUALS.org

Touch Panel Check

The panel touch sensing system consists of a touch sensitive resistive membrane covering the display. The screen has to be physically touched to make it work. The display has the capability of 479 touch locations (left to right), and 233 touch locations (top to bottom). The upper left hand corner is position (0, 0) and the lower right hand corner is (479, 233) as displayed. Touching anywhere on the screen displays the coordinate of the location, and cause the place you touch to display a + icon. If any area of the screen either does not respond, or responds at some other location when touched, then REPLACE THE AUDIO-NAVIGATION UNIT .

NOTE:

- **Unlike earlier screens that used infrared sensors, direct sunlight does not affect this test.**
- **A box appears after you touch the screen.**

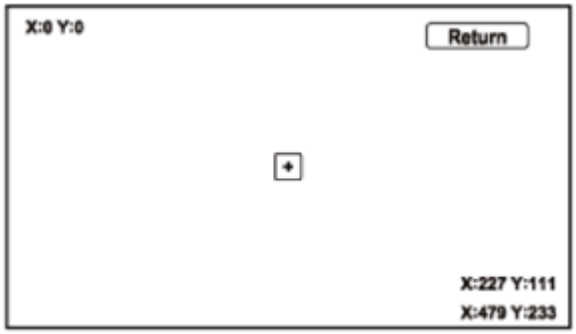

Fig. 42: Display - Touch Panel Check Screen
Courtesy of AMERICAN HONDA MOTOR CO., INC.

Touch Panel Calibration

The display screen uses a touch sensitive membrane. This means that every location of the entire surface of the display is touch sensitive. This diagnosis allows alignment of these touch locations with the location of the buttons images on the screen.

This should never need adjustment, and is used only by the factory to adjust the touch locations for parallax (the touch locations appear different when viewed at an angle). If you are directed to make an adjustment by the factory or other service information, follow this procedure:

- The screen consists of the + icons. Touch the center of the five + icons on order 1-5.

  NOTE: **Touch the center of the + icon correctly.**

- To store any changes you make, touch the Set button.
- Select Return to exit the diagnosis.

GETtheMANUALS.org

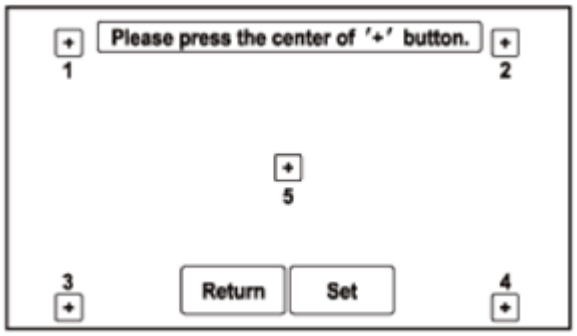

Fig. 43: Display - Touch Panel Calibration Screen
Courtesy of AMERICAN HONDA MOTOR CO., INC.

UNIT CHECK (QUICK CHECK)

Some of the tests and screens that are displayed under the Unit Check are different from the more detailed checks listed under other menu options.

To start the test, select the item you want to check.

- Display
- Hard Key
- XM
- Air-con
- Rear Camera
- TMC (Traffic) Status
- USB Memory Info*
- Navi ECU
- HFL
- GPS Antenna
- Radio
- i-MID

*: Grayed out without USB device connected to the USB update port.

GETtheMANUALS.org

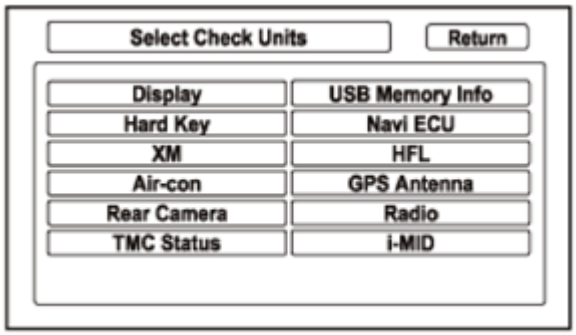

Fig. 44: Display - Check Unit Selection Screen
Courtesy of AMERICAN HONDA MOTOR CO., INC.

Display

This diagnosis does additional checks on the communication bus between the navigation ECU and the navigation display. In addition, this test checks the internal electronic functions.

- If Connection shows NG, REPLACE THE AUDIO-NAVIGATION UNIT .
- Version represents the software version for the display.

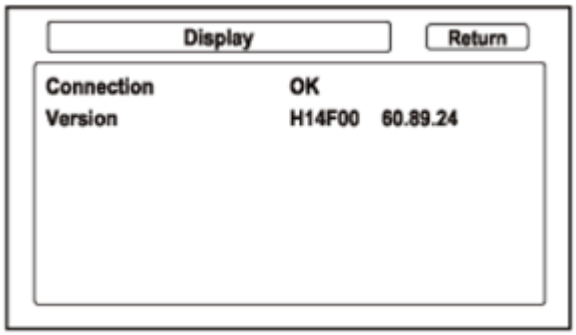

Fig. 45: Display - Audio-Navigation Unit Connection And Software Version
Courtesy of AMERICAN HONDA MOTOR CO., INC.

Hard Key

This diagnosis tests the navigation hard buttons surrounding the navigation display, the HFL-navigation voice control switch, and the audio remote switch.

- To complete the test, press each buttons, and move the joystick to each indicated position. As each function is tested, the corresponding button on the display should highlight.
- To exit, press and hold the ENTER button.

GETtheMANUALS.org

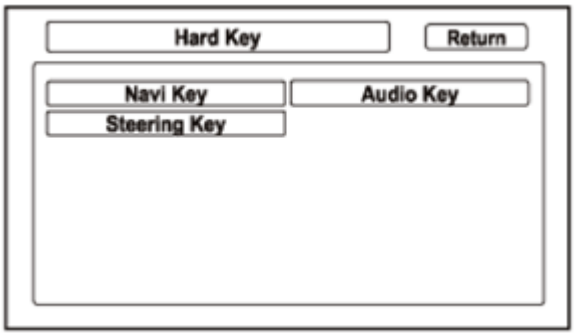

Fig. 46: Display - Hard Key Screen
Courtesy of AMERICAN HONDA MOTOR CO., INC.

Select Navi Key

Select Navi Key

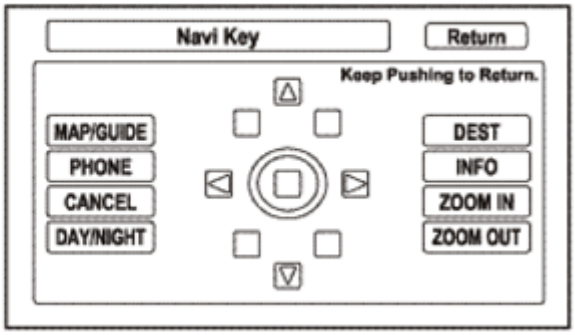

Fig. 47: Display - Select Navi Key Screen
Courtesy of AMERICAN HONDA MOTOR CO., INC.

Select Steering Key

Select Steering Key

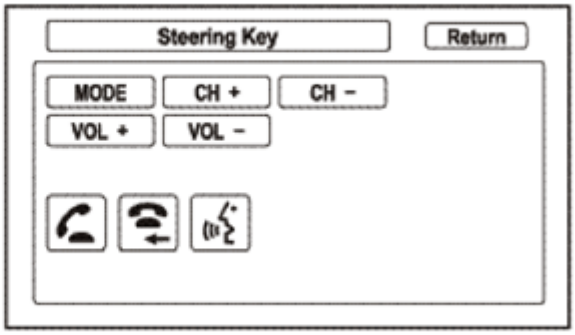

Fig. 48: Display - Select Steering Key Screen
Courtesy of AMERICAN HONDA MOTOR CO., INC.

Select Audio Key

GETtheMANUALS.org

Select Audio Key

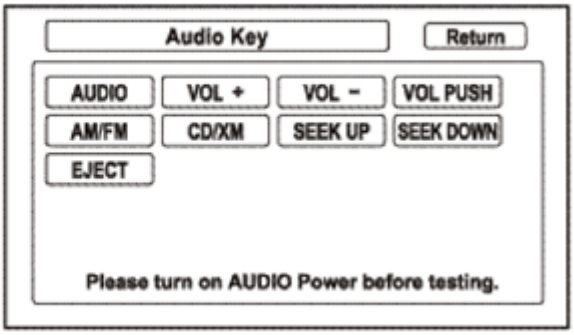

Fig. 49: Display - Select Audio Key Screen
Courtesy of AMERICAN HONDA MOTOR CO., INC.

XM

This diagnosis checks the GA-Net bus between the audio-navigation unit and the XM receiver.

If Connection shows NG, the connection may be open or short between the XM receiver and the audio-navigation unit. **CHECK FOR HARD ERROR CODES**.

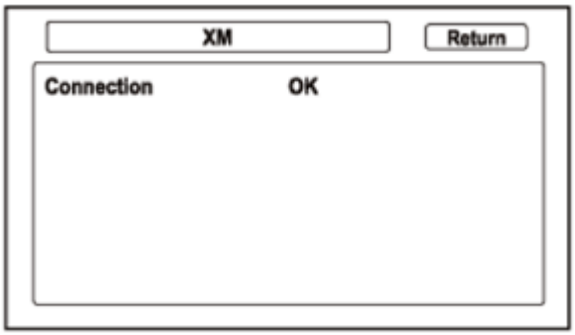

Fig. 50: Display - XM Receiver And Audio-Navigation Unit Connection Status Screen
Courtesy of AMERICAN HONDA MOTOR CO., INC.

Aircon

This diagnosis detects if the ignition switch is ON (II) using information provided over the F-CAN bus. Then tests the climate signal via B-CAN bus between the audio-navigation unit and the climate control unit. Make sure the engine is running for this test.

- If Connection shows NG, **CHECK FOR HARD ERROR CODES**.
- If Ignition shows OFF, check for F-CAN bus lines.

GETtheMANUALS.org

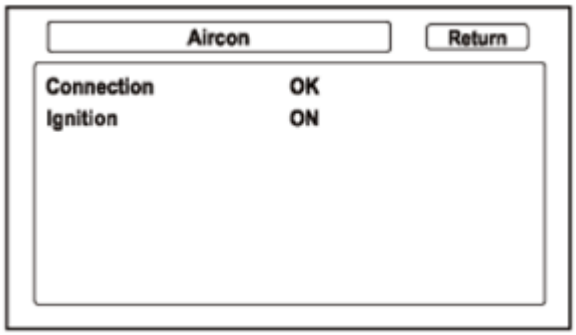

Fig. 51: Display - Aircon Screen
Courtesy of AMERICAN HONDA MOTOR CO., INC.

Rear Camera

This diagnosis checks the rearview camera connection.

If Connection shows NG, **CHECK FOR HARD ERROR CODES**.

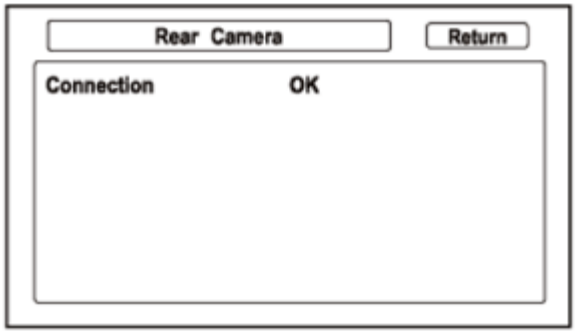

Fig. 52: Display - Rearview Camera Connection Status Screen
Courtesy of AMERICAN HONDA MOTOR CO., INC.

TMC (Traffic) Status

This diagnosis checks the current state of the RDS-TMC reception.

- Provider Count: The number of providers that can be received.
- Frequency: Frequency receiving at this time.

To start the TMC status check, select the Provider Count and Frequency you want to check, then select Start.

There are two modes to check the TMC status. The modes cannot select manually:

- Synchronous mode
- Asynchronous mode

GETtheMANUALS.org

This diagnosis checks the following status. Block Search Time, Uncorrected Blocks/min, and Message Counter are indicated at the Synchronous mode only.

- Field Strength: Displays reception sensitivity.
- Block Search Time: Displays the time until changing to the Synchronous mode.
- Uncorrected Blocks/min: Displays the number of block errors per one minute.
- Message Counter: Displays the number of message that is received.
- Error Status: Displays RDS error status;
  - 0: No error
  - 1: Cannot receive TMC
  - 2: Bus error
  - 3: Decoder error
  - 4: Undefined error

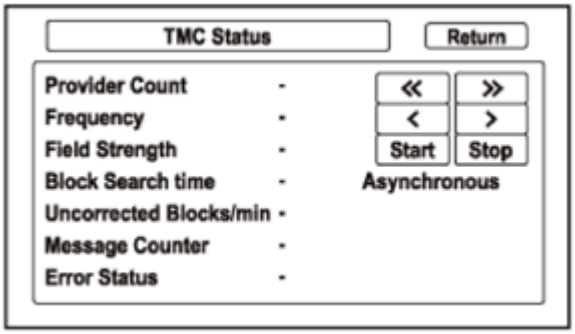

Fig. 53: Display - TMC Status Screen
Courtesy of AMERICAN HONDA MOTOR CO., INC.

USB Memory Info

This diagnosis displays the USB device status that is connected to the audio-navigation unit.

If the USB memory device is connected to the USB update port located in the passenger's dashboard area behind the glove box, the screen displays the USB memory size, the Product ID, Vender ID, and connection status (Inserted/Not Inserted).

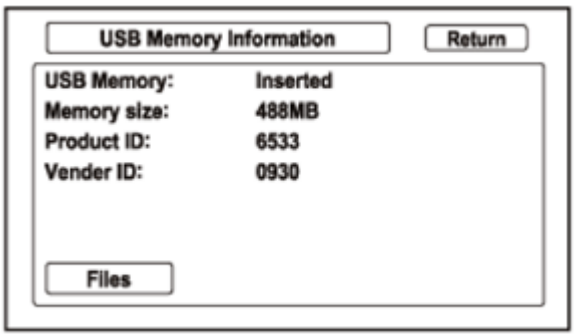

GETtheMANUALS.org

Fig. 54: Display - USB Memory Information Screen
Courtesy of AMERICAN HONDA MOTOR CO., INC.

When you select Files, the USB device file information is displayed.

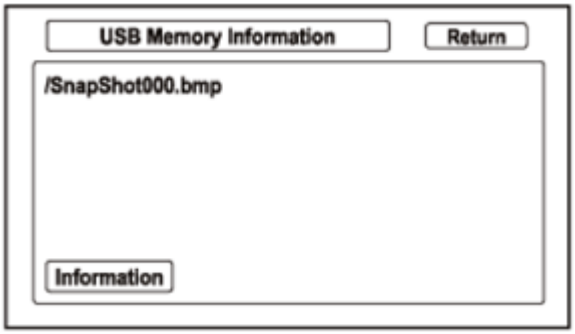

Fig. 55: Display - USB Memory Selected File Information Screen
Courtesy of AMERICAN HONDA MOTOR CO., INC.

Navi ECU

This diagnosis looks for problems in the navigation ECU. When you start this diagnosis, the audio-navigation unit may freeze or delay up to a minute while the diagnosis runs.

- D-RAM: Displays the result of the access to the DRAM (OK/NG). If NG, REPLACE THE AUDIO-NAVIGATION UNIT .
- Program Version: Displays the version of the navigation software.
- Model: Displays the audio-navigation unit model name.
- Serial No.: Displays the audio-navigation unit serial number. That should be the same as the serial number found on the upper side of the audio-navigation unit.
- Flash: Displays the result of the access to the flash memory (OK/NG). If NG, REPLACE THE AUDIO-NAVIGATION UNIT .

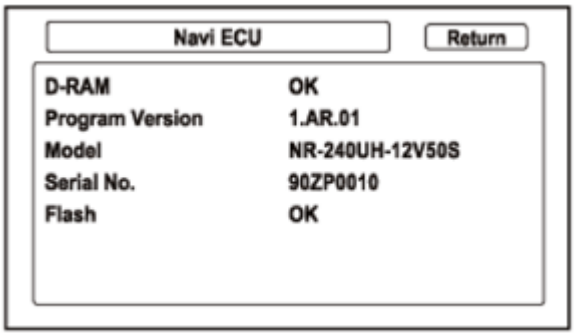

Fig. 56: Display - Navigation ECU Status Screen
Courtesy of AMERICAN HONDA MOTOR CO., INC.

HFL

GETtheMANUALS.org

This diagnosis checks first whether the HandsFreeLink control unit is connecting to the audio-navigation unit via the GA-Net. If HFL shows B1792 and GA-NET shows NG, go to **HFL does not respond (Navigation)** troubleshooting. Then checking the HandsFreeLink control unit status. If HFL shows B1792 and GA-NET shows OK, **GO TO HFL DTC B1792 TROUBLESHOOTING** .

If the HandsFreeLink control unit need to update the software, **do the HandsFreeLink control unit update** See **HANDSFREELINK CONTROL UNIT REMOVAL AND INSTALLATION** or **HANDSFREELINK CONTROL UNIT UPDATE** .

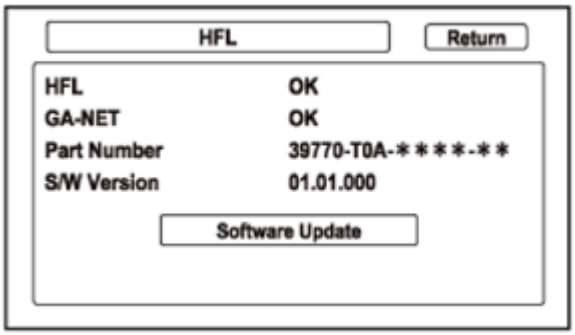

Fig. 57: Display - HFL Status Screen
Courtesy of AMERICAN HONDA MOTOR CO., INC.

GPS Antenna

This diagnosis tests the GPS antenna connection.

If Antenna shows NG, the GPS antenna may be failure. **CHECK FOR HARD ERROR CODES**.

Select Information to see the GPS satellite details.

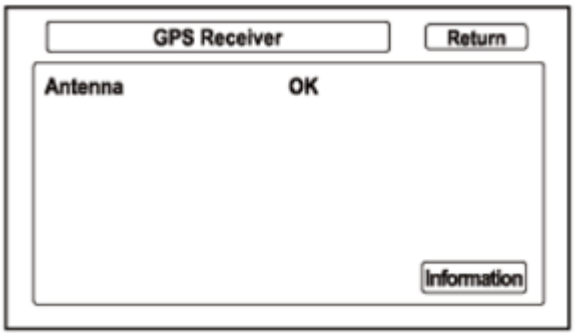

Fig. 58: Display - GPS Antenna Connection Information Screen
Courtesy of AMERICAN HONDA MOTOR CO., INC.

Radio

This diagnosis displays the internal radio tuner and the internal CD player status.

GETtheMANUALS.org

If Connection shows NG, REPLACE THE AUDIO-NAVIGATION UNIT .

- Electric Field Intensity: Displays radio reception sensitivity (dBuV).
- CD Mech. Version: Displays the version of the internal CD player.

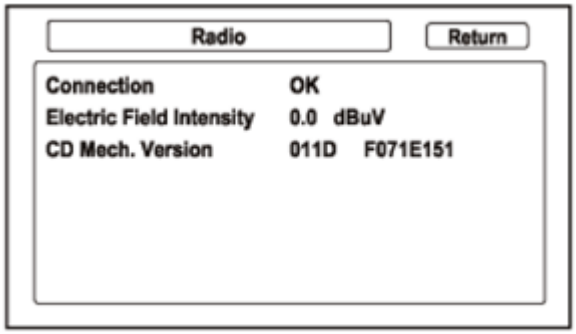

Fig. 59: Display - Internal Radio Tuner And CD Player Status Screen
Courtesy of AMERICAN HONDA MOTOR CO., INC.

i-MID

This diagnosis checks on the GA-Net bus between the audio-navigation unit and the multi-information display unit.

If Connection shows NG, check the connection between the multi-information display unit and the audio-navigation unit.

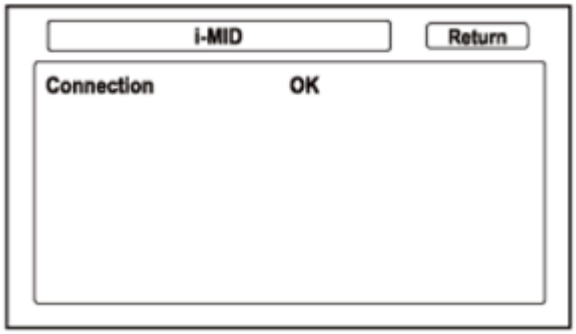

Fig. 60: Display - I-MID Connection Status Screen
Courtesy of AMERICAN HONDA MOTOR CO., INC.

CAR STATUS

Use this screen to confirm that the audio-navigation unit is properly receiving input signals. Signals equal to (0) are OFF, and signals equal to (1) are ON. If the value on the display does not match the actual vehicle status, then check the wire carrying the signal.

- VSP-Vehicle Speed Pulse from the PCM (audio-navigation unit connector A (24P) terminal No. 23)

GETtheMANUALS.org

The VSP comes from the PCM as a dedicated signal. Internally, the audio-navigation unit compares the actual VP on the map against street data to adjust the pulse to speed scaling factor.

a. OFF (0) when vehicle is not moving
b. ON (1) when vehicle is moving

- BACK-Reverse indication from reverse relay (audio-navigation unit connector B (20P) terminal No. 9)

  The BACK signal is used by the audio-navigation unit to allow the map screen to show the VP moving backwards when the vehicle is in R. This signal is needed because the VSP has no direction indication.

  a. OFF (0) when the shift lever is in any position other than R
  b. ON (1) when the shift lever is in R

- IGNITION-Ignition switch position indication

  Detects if the ignition switch is ON (II) using information provided over the F-CAN bus.

  a. OFF (0) when the ignition switch is in ACCESSORY (I)
  b. ON (1) when the ignition switch is in ON (II)

- ILL-Illumination Indication

  The illumination indication comes from the gauge control module to the audio-navigation unit via the B-CAN bus.

  The navigation uses the signal to determine whether to put the navigation screen into the Day or Night brightness mode. If there are stored B-CAN DTCs, this function may not work. Make sure the check for DTCs before diagnosing this input.

  a. OFF (0) when parking lights, or headlights are off
  b. ON (1) when parking lights, or headlights are on

- ILL CANCEL

  The illumination cancel indication comes from the gauge control module to the audio-navigation unit via the B-CAN bus.

  This item detects whether the illumination cancel function is in use. If there are stored B-CAN DTCs, this function may not work. Make sure the check for DTCs before diagnosing this input.

  a. OFF (0) when the dashlights brightness control knob is less than 90 % brightness with the headlights turned on
  b. ON (1) when the dashlights brightness control knob is more than 90 % brightness with the headlights turned on

GETtheMANUALS.org

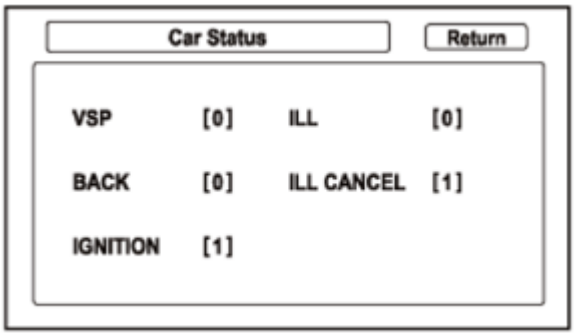

Fig. 61: Display - Car Status Screen
Courtesy of AMERICAN HONDA MOTOR CO., INC.

VERSION

This screen displays the current version information for the navigation system. DBOOT (NOR-FLROM) and System u-Com are all for factory use.

- Navi Application (DRAM): Displays the version of the navigation software.
- Map Data: Displays the version of the map data.

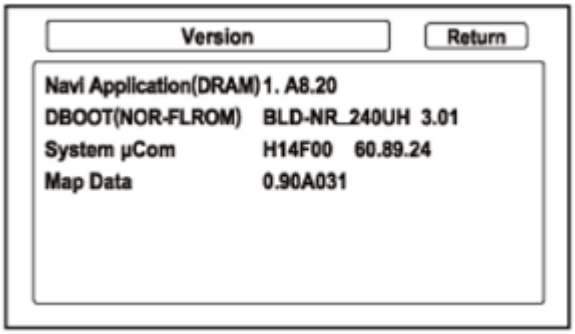

Fig. 62: Display - Navigation System Current Version Information Screen
Courtesy of AMERICAN HONDA MOTOR CO., INC.

F-CAN

F-CAN (Fast Controller Area Network) passes information between processors on the network. For example, the F-CAN network passes trip computer information between the gauge control module and the audio-navigation unit for the trip computer function. The F-CAN network uses a communication protocol that transmits data at 500 Kbps.

- This diagnosis must have the engine running.
- If F-CAN shows ERROR ACTIVE, an error is not detected between F-CAN bus and the audio-navigation unit. If any error is detected, check for DTCs for the F-CAN with the HDS. The data displayed in the ID boxes is for factory use only.

GETtheMANUALS.org

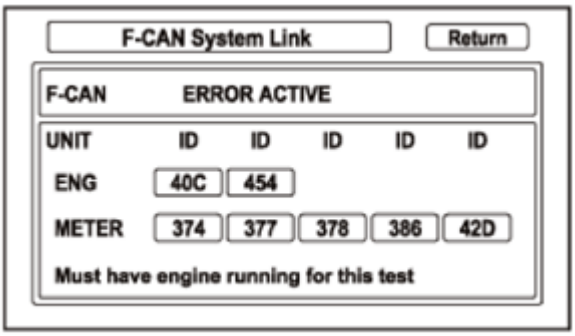

Fig. 63: Display - F-CAN System Link Information Screen
Courtesy of AMERICAN HONDA MOTOR CO., INC.

LOG DATA

This screen allows the factory to collect log data to troubleshoot navigation system issues.

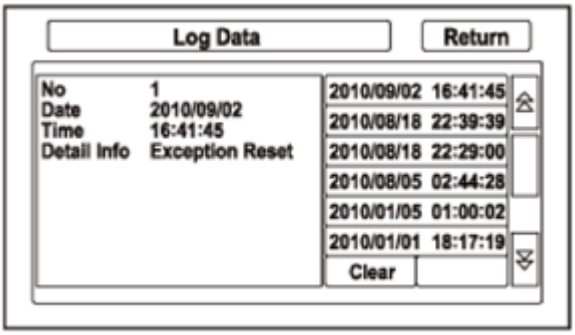

Fig. 64: Display - Navigation System Issues Troubleshooting Log Data
Courtesy of AMERICAN HONDA MOTOR CO., INC.

GPS INFORMATION

This screen shows the current status of GPS reception. The circular diagram shows the current location of the GPS satellites (yellow numbers) as they would appear in the sky. The outer circle represents the horizon (0 degrees elevation). The middle and inner circles represents 30 and 60 degrees respectively. The very center of the diagram (90 degrees elevation) is directly overhead. Nearby obstructions, like tall buildings will block satellites in that direction. That is why it is necessary to be in an open area to effectively troubleshoot GPS reception issues. The satellite numbers shown on the diagram correspond to the PRN number in the GPS Details screen. There are always at least 24 active GPS satellites in orbit. Because satellites fail, and have to be removed from service, spares are always parked in orbit, ready to be activated. This is why the PRN (satellite ID number) can be greater than 24.

NOTE: **When you use this screen for troubleshooting, park the vehicle outside, away from buildings, tall trees, and high-tension wires for at least 10 minutes with the engine running.**

- The Number of Satellites box shows the number of acquired satellites (maximum of 12). It should contain

GETtheMANUALS.org

three or more icons.

- The Current Position shows Latitude, Longitude, and Elevation (in feet). If there are less than four satellites, the elevation can be grossly inaccurate.
- The date/time field (A) shows the current date, and also a time that includes daylight savings and other offsets entered by the customer in Setup screen 2 Adjust Time Zone/Clock.

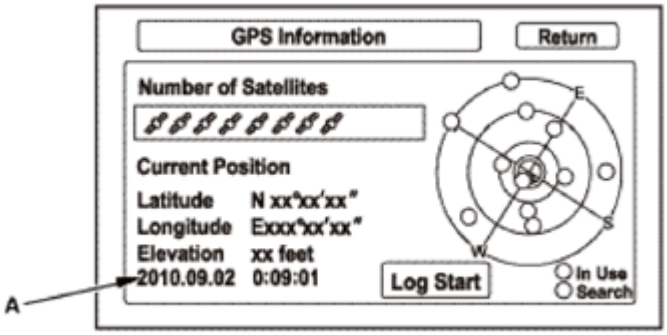

Fig. 65: Display - GPS Information Screen
Courtesy of AMERICAN HONDA MOTOR CO., INC.

GPS Detail

By pressing and holding the DEST button for 2 seconds, a GPS Detail screen appears. This screen displays real time incoming satellite positional data when the vehicle is outside in the open. The information shown on this screen is for factory use.

NOTE: The data shown is an example only.

- The box TS/AS and HDop (horizontal dilution of precision)/VDop (vertical dilution of precision) is for factory use.
- The Speed and Direction information is updated in real time when driving.
- The Date/Time Information is the same as in Setup screen 2 Adjust Time Zone/Clock.
- If the 3D icon is shown above the yellow dots, this implies that at least four satellites are available for map positioning, and the GPS indicator on the map screen will be green.
- If the row of data in the table below begins with a yellow dot, the AZI and EL fields can be used to locate each satellite on the circular GPS diagram (see prior screen).

Column	Description	Problem Indication
3D	Active satellites (Yellow Dot)	If 3D or 2D is missing when the vehicle is parked outside, go to GPS icon is white or not shown troubleshooting
PRN	The satellite ID number	
ST	The status: 0 = Cannot view or searching 1 = Searching 2 = Tracking 4 = Acquiring (It is not being	If all 0, go to GPS icon is white or not shown troubleshooting

GETtheMANUALS.org

	used for positioning) 8 = Acquiring (It is being used for positioning)	
AZI	Azimuth, the angle (0-360) clockwise from north	
EL	Elevation from the horizon (90 deg is overhead)	
C/N	Receiver sensitivity	Normal signal: 49-52 No signal: 27-33
ACC	Satellite accuracy	
1/2 or 2/2	Shows view of all satellites in two screen views 1/2 or 2/2	

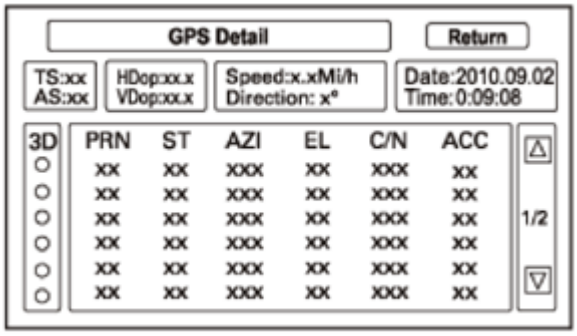

Fig. 66: Display - GPS Detail Screen
Courtesy of AMERICAN HONDA MOTOR CO., INC.

YAW SENSOR

This diagnosis checks the gyro in the audio-navigation unit. This device detects when the vehicle turns, and repositions the vehicle position icon on the map screen.

- Sensor: Indicates the voltage output from the gyro relative to the offset voltage. It should indicate about 2.300 V-2.700 V when the vehicle is stopped.
- Offset: Indicates the reference voltage or standard within the gyro. It also should indicate about 2.300 V - 2.700 V when the vehicle is stopped.
- A sensor output voltage HIGHER than the Offset voltage indicates that the vehicle is turning to the right.
- A sensor output voltage LOWER than the Offset voltage indicates that the vehicle is turning to the left.
- Offset and Sensor should both indicate about 2.300 V-2.700 V when the vehicle is stopped. If either reads below 2.300 V, or above 2.700 V, replace the audio-navigation unit.
- Offset and Sensor should be within +/-0.01 V of each other when the vehicle is stopped. The Sensor value should change relative to the Offset as the vehicle turns while driving. If not, replace the audio-navigation unit.
- Auto Tuning: For factory use only. This setting should be ON.

GETtheMANUALS.org

- Learning Level: Displays the status of the internal tuning function. At initialization, this value starts at 0 and increases to 10 as the internal correction values become more accurate.
- CCW Factor, CW Factor: For factory use only.
- GyroAD: Displays the result of the AD value (OK/NG). If NG, **CHECK FOR HARD ERROR CODES**.
- GyroZero: Displays the result of the zero point output voltage (OK/NG). If NG, **CHECK FOR HARD ERROR CODES**.

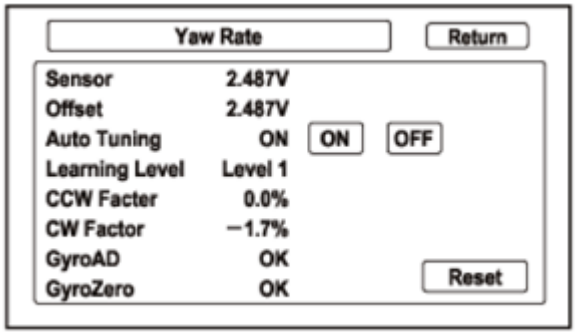

Fig. 67: Display - Yaw Sensor Information Screen
Courtesy of AMERICAN HONDA MOTOR CO., INC.

ERROR HISTORY

Refer to **HOW TO CHECK FOR ERROR HISTORY** to use this diagnosis.

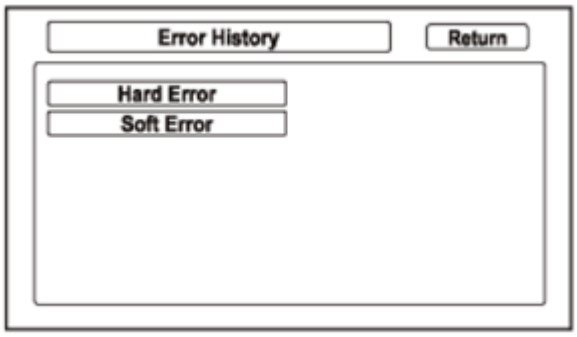

Fig. 68: Display - Error History Screen
Courtesy of AMERICAN HONDA MOTOR CO., INC.

FUNCTIONAL SETUP

Select the item you want to check.

- Mic Level
- Demo Mode
- Save Users Memory

GETtheMANUALS.org

- All Clear

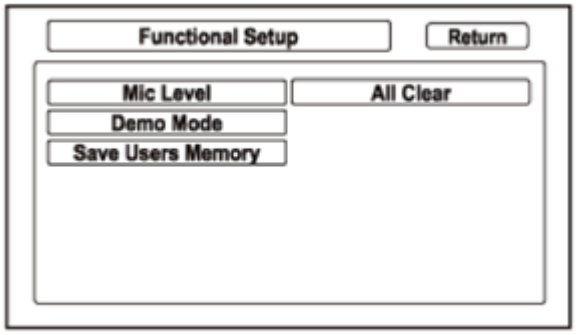

Fig. 69: Display - Functional Setup Screen
Courtesy of AMERICAN HONDA MOTOR CO., INC.

Mic Level

This diagnosis allows you to independently test the HFL-navigation microphone and the HFL-navigation voice control switch. The TALK button is used to activate the voice control system. The microphone is located near the map light in the roof console. The microphones can now isolate the driver's voice even when there is noise or other conversations in the vehicle. To properly check the microphone, make sure you are sitting in the driver's seat.

This diagnosis checks whether the HFL-navigation microphone and the HFL-navigation voice control switch are connecting to the HandsFreeLink control unit. Do the HFL diagnosis to check the GA-Net status before checking this diagnosis. If Mic and/or STRG SW shows HFL DTCs (B1775, B1776, B1779, and/or B1780), go to indicated HFL DTC troubleshooting.

If you check the Mic Level, in a normal voice say "testing". The Mic Level indicator on the screen should momentarily turn green. If there is no Mic Level movement when you speak, the microphone circuit must be faulty, **CHECK FOR HARD ERROR CODES**.

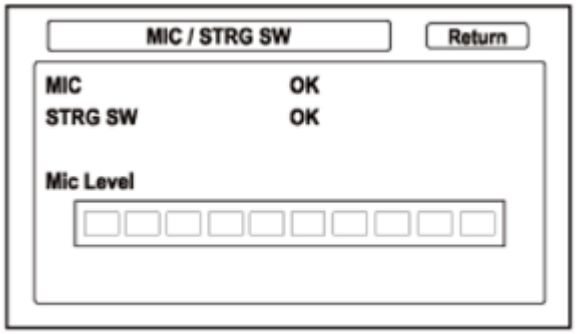

Fig. 70: Display - MIC Level Screen
Courtesy of AMERICAN HONDA MOTOR CO., INC.

Demo Mode

GETtheMANUALS.org

This screen is for factory use only, and should always be set to OFF. Occasionally DEMO setting is turned ON when vehicles are being used at auto shows or similar events. Turning this feature on, allows the navigation system to automatically follow a route to a destination when the vehicle is stationary. Speed changes the speed of the demo mode.

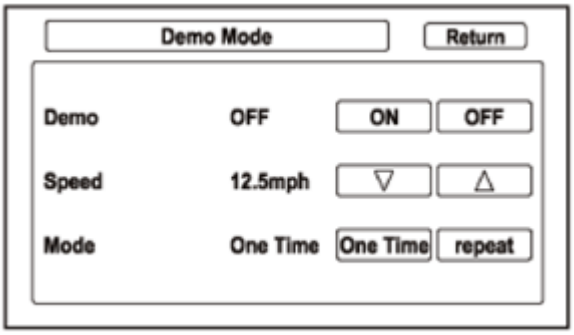

Fig. 71: Display - Demo Mode Screen
Courtesy of AMERICAN HONDA MOTOR CO., INC.

Save Users Memory

NOTE: **If the audio-navigation unit SD module is OK, transfer the SD module to the new audio-navigation unit. Do this procedure only when replacing the SD module (if possible). If the SD module is NG, it is unlikely you will be able to recover any information.**

When replacing the audio-navigation unit, this function allows the technician to transfer the customer's personal data to the new audio-navigation unit. The transferred information includes their setup settings and personal addresses. The Save Users memory cannot copy music or photographs that are saved on the old SD module. The dealer inserts a USB device into the USB update port located in the passenger's dashboard area above the glove box (not in the port that is located in the center console), and then selects the Save Users Memory function. Refer to the O/M for the USB specifications. The two functions in this diagnostic screen are Export and Import. Export saves the customer's data to the USB device, and Import moves the USB device files to the new audio-navigation unit.

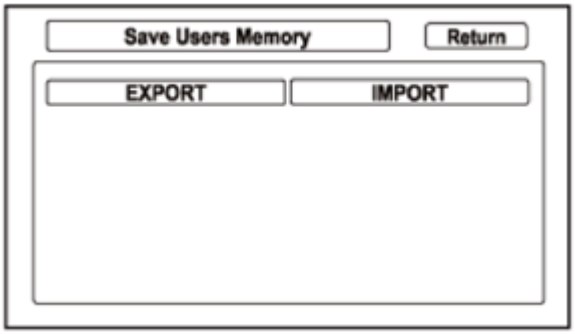

Fig. 72: Display - Save Users Memory Screen
Courtesy of AMERICAN HONDA MOTOR CO., INC.

GETtheMANUALS.org

This function does not start (the Export and Import buttons are grayed out) until you connect a USB device to the USB update port located in the passenger's dashboard area above the glove box (not the port in the center console).

Select Export button to move the customer's data from the original audio-navigation unit to the USB device. Select Yes on the Export User Data Confirmation screen. The process takes only a couple of seconds. The system stores.DAT files on the USB device.

NOTE: If the Export button is grayed out, check the USB update port.

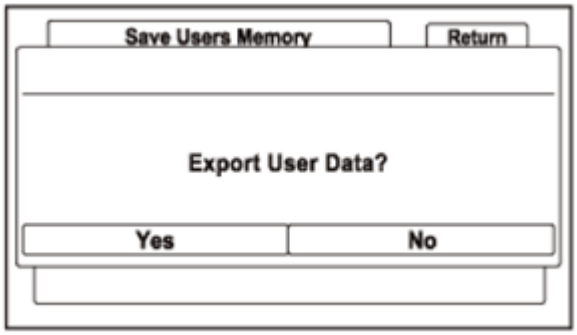

Fig. 73: Display - Save Users Memory Screen (Exporting User Data)
Courtesy of AMERICAN HONDA MOTOR CO., INC.

After replacing the new audio-navigation unit, allow the system to boot up. Insert the USB device into the USB update port and enter the Save Users Memory in the navigation system diagnostic mode.

Select the Import button to move the two files stored by the Export process from the USB device to the new audio-navigation unit. Select Yes on the Import User Data Confirmation screen. When the transfer is finished (a few seconds) the system automatically reboots. After the system reboots, remove the USB device from the USB update port.

NOTE: If the Import button is grayed out, check if the Model and the Program Version shown on the Navi ECU screen are the same.

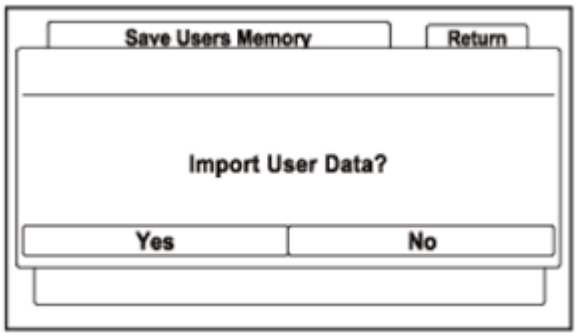

Fig. 74: Display - Save Users Memory Screen (Importing User Data)
Courtesy of AMERICAN HONDA MOTOR CO., INC.

GETtheMANUALS.org

All Clear

The all clear function deletes the all the ripped music, the images, and the previous destinations from the audio-navigation unit SD module.

If you select All Clear, a confirmation screen appears. When Yes is selected, a second confirmation screen appears.

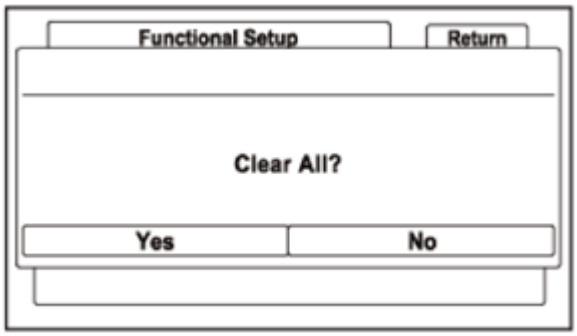

Fig. 75: Display - Functional Setup All Clear Confirmation Screen
Courtesy of AMERICAN HONDA MOTOR CO., INC.

When Yes is selected, the system restarts after performing the All Clear process. After the restart, a normal start-up process occurs and **NEEDS GPS INITIALIZATION**.

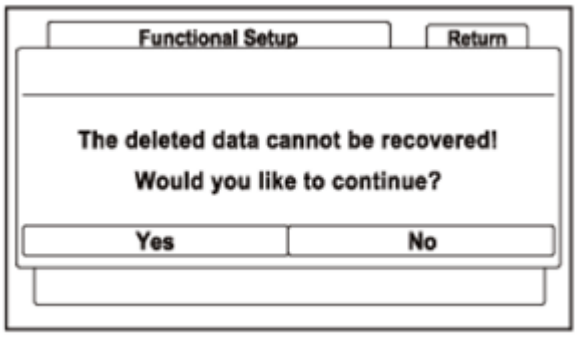

Fig. 76: Display - Functional Setup Delete Data Confirmation Message
Courtesy of AMERICAN HONDA MOTOR CO., INC.

B-CAN

This diagnosis checks whether the audio-navigation unit is properly connected to the B-CAN data BUS.

B-CAN (Body Controller Area Network) passes information between processors on the network. The B-CAN network uses a communication protocol that transmits data at 125 Kbps.

- This diagnosis must have the engine running.
- If any icon colors red, check for DTCs for the B-CAN with the HDS.

GETtheMANUALS.org

- Troubleshoot and resolve any B-CAN DTCs before troubleshooting the navigation system.

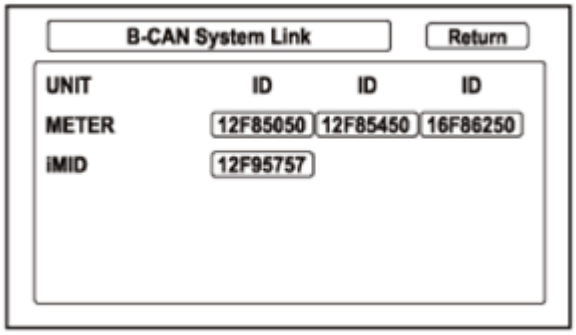

Fig. 77: Display - B-CAN System Link ID Screen
Courtesy of AMERICAN HONDA MOTOR CO., INC.

NAVIGATION SYSTEM DTC TROUBLESHOOTING INDEX

NOTE: **These DTCs cannot be read with the HDS. To view them, refer to HOW TO CHECK FOR ERROR HISTORY.**

AUDIO-NAVIGATION UNIT

DTC	Description	Failure Circuit
1002	SD Read Error	SD module
1101	Media Bus Send Error	Internal Bus
1102	USB Diag	USB
1301	GPS Antenna Error	GPS antenna
1302	GPS Receiver Error 1	GPS receiver
1303	GPS Receiver Error 2	GPS receiver
1304	Gyro Error 1	Internal gyro
1305	Gyro Error 2: ECU Temp XX °C	Internal gyro
1306	Vehicle Speed Pulse	Vehicle speed pulse
1701	Rear Camera Error	Rearview camera
1702	XM Antenna Error	XM
2607	XM Diag	XM
2608	Rear Camera Diag	Rearview camera
2610	DRAM Diag	Navigation ECU DRAM
2701	GPS Diag: Antenna	GPS
2702	GPS Diag: Receiver in Navi ECU	GPS
2703	Aircon Diag	Climate control unit
2705	HFL Diag	HFL
2706	Gyro Diag: ECU Temp XX °C	Internal gyro
2707	Mic Diag	Microphone

GETtheMANUALS.org

NAVIGATION SYSTEM DTC TROUBLESHOOTING INDEX

NOTE: **These DTCs cannot be read with the HDS. To view them, refer to HOW TO CHECK FOR ERROR HISTORY.**

AUDIO-NAVIGATION UNIT

DTC	Description	Failure Circuit
1002	SD Read Error	SD module
1101	Media Bus Send Error	Internal Bus
1102	USB Diag	USB
1301	GPS Antenna Error	GPS antenna
1302	GPS Receiver Error 1	GPS receiver
1303	GPS Receiver Error 2	GPS receiver
1304	Gyro Error 1	Internal gyro
1305	Gyro Error 2: ECU Temp XX °C	Internal gyro
1306	Vehicle Speed Pulse	Vehicle speed pulse
1701	Rear Camera Error	Rearview camera
1702	XM Antenna Error	XM
2607	XM Diag	XM
2608	Rear Camera Diag	Rearview camera
2610	DRAM Diag	Navigation ECU DRAM
2701	GPS Diag: Antenna	GPS
2702	GPS Diag: Receiver in Navi ECU	GPS
2703	Aircon Diag	Climate control unit
2705	HFL Diag	HFL
2706	Gyro Diag: ECU Temp XX °C	Internal gyro
2707	Mic Diag	Microphone

DIAGNOSTIC TROUBLE CODE (DTC) TESTS

DTC 1002: SD READ ERROR

GETtheMANUALS.org

Navigation System DTC Troubleshooting: 1002

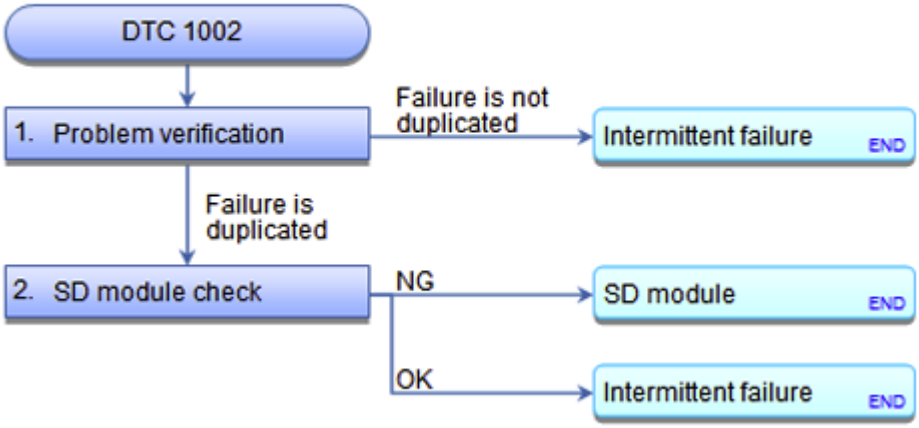

Fig. 78: Navigation System DTC Troubleshooting Flow Chart (1002)
Courtesy of AMERICAN HONDA MOTOR CO., INC.

NOTE:

- **CHECK THE VEHICLE BATTERY CONDITION FIRST .**
- **This navigation DTC sets when there is a problem with the SD module after updating the map data.**
- **BEFORE YOU TROUBLESHOOT, MAKE SURE TO FOLLOW THE HOW TO TROUBLESHOOT THE NAVIGATION SYSTEM.**
- **Check any official Honda service website for more service information about the navigation system.**

1. Problem verification:
   - 1. **CLEAR THE HARD ERROR CODES**.
   - 2. Turn the ignition switch to LOCK (0) and then back to ON (II).
   - 3. **CHECK FOR HARD ERROR CODES**.

   Is DTC 1002 indicated?

   YES : The failure is duplicated, go to step 2.

   NO : Intermittent failure, the system is OK at this time.

2. SD module check:
   - 1. Turn the ignition switch to LOCK (0).
   - 2. Do the map data update procedure. Refer to the instructions that came with the map update.
   - 3. **CLEAR THE HARD ERROR CODES**.
   - 4. Turn the ignition switch to LOCK (0) and then back to ON (II).
   - 5. **CHECK FOR HARD ERROR CODES**.

   Is DTC 1002 indicated?

GETtheMANUALS.org

YES : REPLACE THE SD MODULE .

NO : Intermittent failure, the system is OK at this time.

DTC 1101: MEDIA BUS SEND ERROR

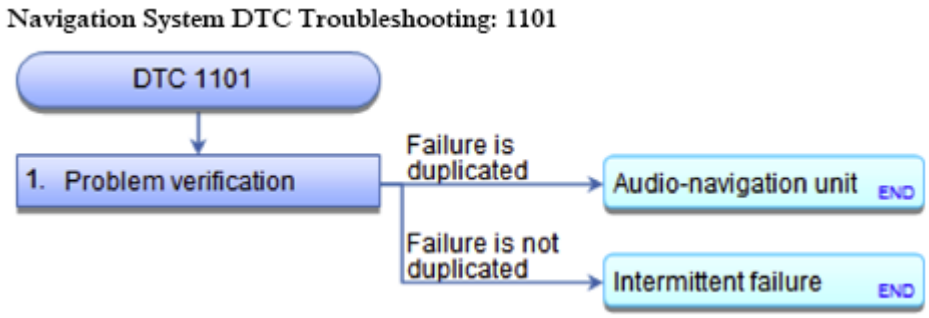

Fig. 79: Navigation System DTC Troubleshooting Flow Chart (1101)
Courtesy of AMERICAN HONDA MOTOR CO., INC.

NOTE:

- **CHECK THE VEHICLE BATTERY CONDITION FIRST .**
- **This navigation DTC sets when there is an internal error in BUS sending.**
- **BEFORE YOU TROUBLESHOOT, MAKE SURE TO FOLLOW THE HOW TO TROUBLESHOOT THE NAVIGATION SYSTEM.**
- **Check any official Honda service website for more service information about the navigation system.**

1. Problem verification:
   - 1. **CLEAR THE HARD ERROR CODES**.
   - 2. Turn the ignition switch to LOCK (0) and then back to ON (II), and wait at least 1 minute.
   - 3. **CHECK FOR HARD ERROR CODES**.

Is DTC 1101 indicated?

YES : REPLACE THE AUDIO-NAVIGATION UNIT .

NO : Intermittent failure, the system is OK at this time.

DTC 1102: USB DIAG

GETtheMANUALS.org

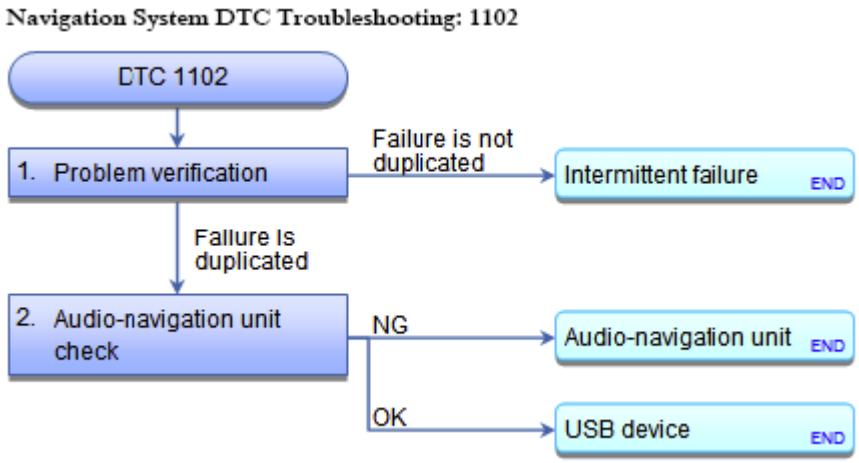

Fig. 80: Navigation System DTC Troubleshooting Flow Chart (1102)
Courtesy of AMERICAN HONDA MOTOR CO., INC.

NOTE:

- **CHECK THE VEHICLE BATTERY CONDITION FIRST .**
- **This navigation DTC sets when a problem is detected with the USB device that is connected to the USB update port located in the passenger's dashboard area behind the glovebox. This USB update port is for diagnosis and map updates only. Music will not play from this USB port.**
- **BEFORE YOU TROUBLESHOOT, MAKE SURE TO FOLLOW THE HOW TO TROUBLESHOOT THE NAVIGATION SYSTEM.**
- **Check any official Honda service website for more service information about the navigation system.**
- **Check the connectors for poor connections or loose terminals.**

1. Problem verification:
   - 1. **CLEAR THE HARD ERROR CODES**.
   - 2. Turn the ignition switch to LOCK (0).
   - 3. Connect the USB device to the USB update port located in the passenger's dashboard area behind the glovebox.
   - 4. **CHECK FOR HARD ERROR CODES**.

   Is DTC 1102 indicated?

   YES : The failure is duplicated, go to step 2.

   NO : Intermittent failure, the system is OK at this time. If the vehicle repeatedly comes back with the navigation DTC, try a known-good USB device, and recheck.

2. Audio-navigation unit check:
   - 1. **CLEAR THE HARD ERROR CODES**.

GETtheMANUALS.org

- 2. Turn the ignition switch to LOCK (0).
- 3. Disconnect the USB device, then connect a known-good USB device to the USB update port.
- 4. **CHECK FOR HARD ERROR CODES**.

Is DTC 1102 indicated?

YES : REPLACE THE AUDIO-NAVIGATION UNIT .

NO : Original USB device is faulty.

DTC 1301: GPS ANTENNA ERROR

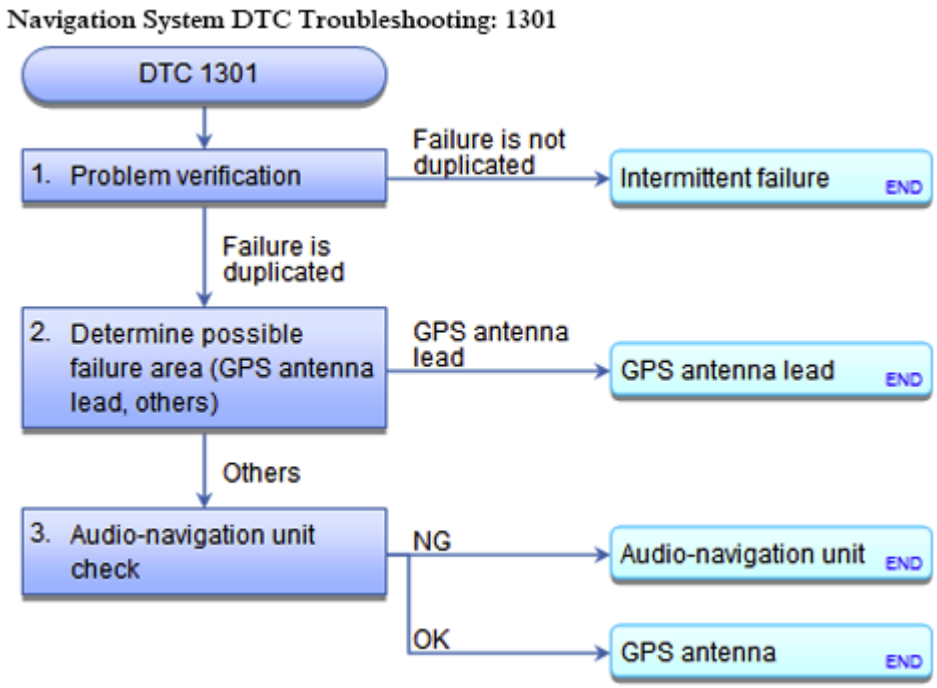

Fig. 81: Navigation System DTC Troubleshooting Flow Chart (1301)
Courtesy of AMERICAN HONDA MOTOR CO., INC.

NOTE:

- **CHECK THE VEHICLE BATTERY CONDITION FIRST .**
- **This navigation DTC sets when there is poor connectors or loose terminals at the GPS antenna connector or an open in GPS antenna lead.**
- **BEFORE YOU TROUBLESHOOT, MAKE SURE TO FOLLOW THE HOW TO TROUBLESHOOT THE NAVIGATION SYSTEM.**
- **Check any official Honda service website for more service information about the navigation system.**

1. Problem verification:
   - 1. **CLEAR THE HARD ERROR CODES**.

GETtheMANUALS.org

- 2. Turn the ignition switch to LOCK (0) and then back to ON (II).
- 3. **CHECK FOR HARD ERROR CODES**.

Is DTC 1301 indicated?

YES : The failure is duplicated, go to step 2.

NO : Intermittent failure, the system is OK at this time.

2. Determine possible failure area (GPS antenna lead, others):
   - 1. Turn the ignition switch to LOCK (0).
   - 2. **SUBSTITUTE A KNOWN-GOOD GPS ANTENNA LEAD**.
   - 3. **CLEAR THE HARD ERROR CODES**.
   - 4. Turn the ignition switch to LOCK (0) and then back to ON (II).
   - 5. **CHECK FOR HARD ERROR CODES**.

Is DTC 1301 indicated?

YES : Go to step 3.

NO : Replace the original GPS antenna lead.

3. Audio-navigation unit check:
   - 1. Turn the ignition switch to LOCK (0).
   - 2. **SUBSTITUTE A KNOWN-GOOD GPS ANTENNA**.
   - 3. **CLEAR THE HARD ERROR CODES**.
   - 4. Turn the ignition switch to LOCK (0) and then back to ON (II).
   - 5. **CHECK FOR HARD ERROR CODES**.

Is DTC 1301 indicated?

YES : **REPLACE THE AUDIO-NAVIGATION UNIT**.

NO : Replace the original GPS antenna.

DTC 1302: GPS RECEIVER ERROR 1

GETtheMANUALS.org

Navigation System DTC Troubleshooting: 1302

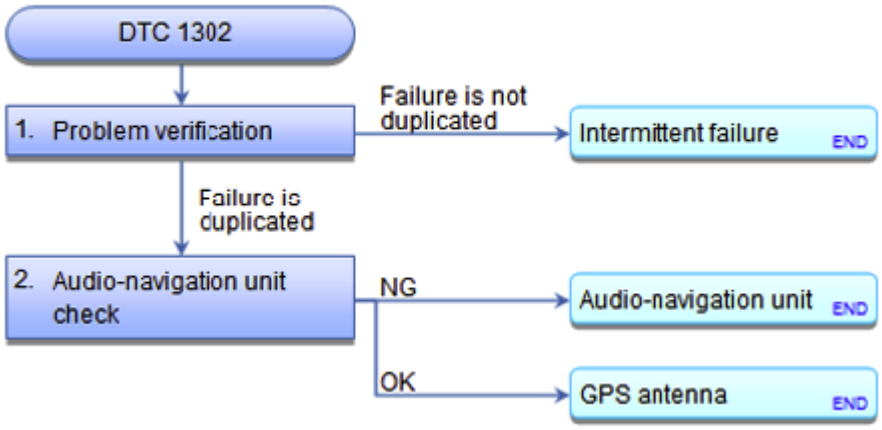

Fig. 82: Navigation System DTC Troubleshooting Flow Chart (1302)
Courtesy of AMERICAN HONDA MOTOR CO., INC.

NOTE:

- **CHECK THE VEHICLE BATTERY CONDITION FIRST.**
- **This navigation DTC sets when there is an internal GPS receiver problem.**
- **Aftermarket metallic window tint or electronic devices located near the audio-navigation unit or GPS antenna can potentially interfere with the operation of the navigation system.**
- **BEFORE YOU TROUBLESHOOT, MAKE SURE TO FOLLOW THE HOW TO TROUBLESHOOT THE NAVIGATION SYSTEM.**
- **Check any official Honda service website for more service information about the navigation system.**
- **Check the connectors for poor connections or loose terminals.**

1. Problem verification:
   - 1. **CLEAR THE HARD ERROR CODES**.
   - 2. Turn the ignition switch to LOCK (0) and then back to ON (II).
   - 3. **CHECK FOR HARD ERROR CODES**.

   Is DTC 1302 indicated?

   YES : The failure is duplicated, go to step 2.

   NO : Intermittent failure, the system is OK at this time.

2. Audio-navigation unit check:
   - 1. Turn the ignition switch to LOCK (0).
   - 2. **SUBSTITUTE A KNOWN-GOOD GPS ANTENNA**.
   - 3. **CLEAR THE HARD ERROR CODES**.

GETtheMANUALS.org

- 4. Turn the ignition switch to LOCK (0) and then back to ON (II).
- 5. **CHECK FOR HARD ERROR CODES**.

Is DTC 1302 indicated?

YES : **REPLACE THE AUDIO-NAVIGATION UNIT**.

NO : Replace the original GPS antenna.

DTC 1303: GPS RECEIVER ERROR 2

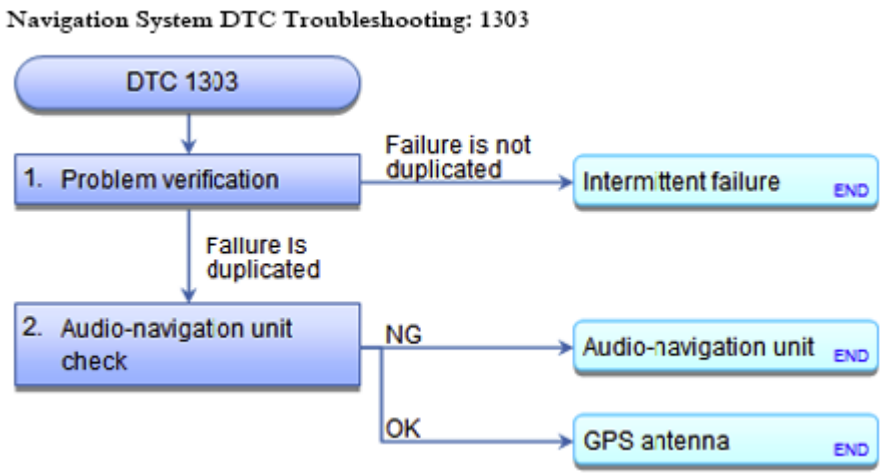

Fig. 83: Navigation System DTC Troubleshooting Flow Chart (1303)
Courtesy of AMERICAN HONDA MOTOR CO., INC.

NOTE:

- **CHECK THE VEHICLE BATTERY CONDITION FIRST.**
- **This navigation DTC sets when there is an internal GPS receiver problem, or an open in GPS antenna lead.**
- **Aftermarket metallic window tint or electronic devices located near the audio-navigation unit or GPS antenna can potentially interfere with the operation of the navigation system.**
- **BEFORE YOU TROUBLESHOOT, MAKE SURE TO FOLLOW THE HOW TO TROUBLESHOOT THE NAVIGATION SYSTEM.**
- **Check any official Honda service website for more service information about the navigation system.**
- **Check the connectors for poor connections or loose terminals.**

1. Problem verification:
   - 1. **CLEAR THE HARD ERROR CODES**.
   - 2. Turn the ignition switch to LOCK (0) and then back to ON (II).
   - 3. **CHECK FOR HARD ERROR CODES**.

GETtheMANUALS.org

Is DTC 1303 indicated?

YES : The failure is duplicated, go to step 2.

NO : Intermittent failure, the system is OK at this time.

2. Audio-navigation unit check:
   - 1. Turn the ignition switch to LOCK (0).
   - 2. **SUBSTITUTE A KNOWN-GOOD GPS ANTENNA**.
   - 3. **CLEAR THE HARD ERROR CODES**.
   - 4. Turn the ignition switch to LOCK (0) and then back to ON (II).
   - 5. **CHECK FOR HARD ERROR CODES**.

Is DTC 1303 indicated?

YES : **REPLACE THE AUDIO-NAVIGATION UNIT** .

NO : Replace the original GPS antenna.

DTC 1304: GYRO ERROR 1

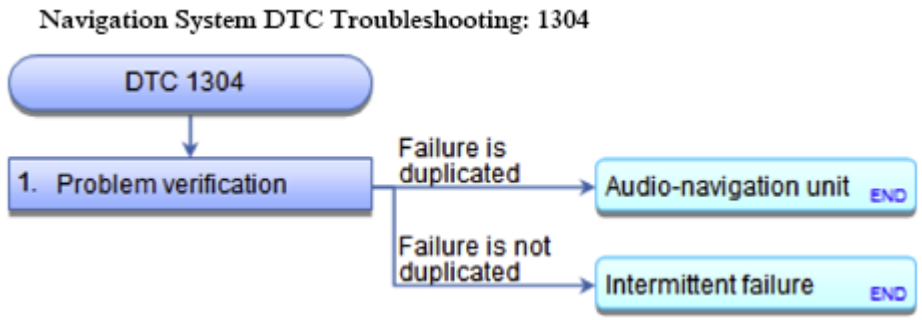

Fig. 84: Navigation System DTC Troubleshooting Flow Chart (1304)
Courtesy of AMERICAN HONDA MOTOR CO., INC.

NOTE:

- **CHECK THE VEHICLE BATTERY CONDITION FIRST .**
- **This navigation DTC sets when there is a problem with the internal gyro.**
- **BEFORE YOU TROUBLESHOOT, MAKE SURE TO FOLLOW THE HOW TO TROUBLESHOOT THE NAVIGATION SYSTEM.**
- **Check any official Honda service website for more service information about the navigation system.**

1. Problem verification:
   - 1. **CLEAR THE HARD ERROR CODES**.
   - 2. Turn the ignition switch to LOCK (0) and then back to ON (II), and wait at least 1 minute.

GETtheMANUALS.org

- 3. **CHECK FOR HARD ERROR CODES**.

Is DTC 1304 indicated?

YES : REPLACE THE AUDIO-NAVIGATION UNIT .

NO : Intermittent failure, the system is OK at this time.

DTC 1305: GYRO ERROR 2: ECU TEMP XX °C

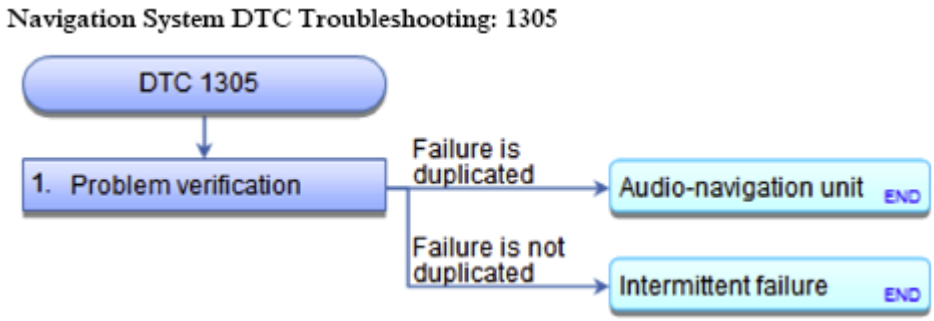

Fig. 85: Navigation System DTC Troubleshooting Flow Chart (1305)
Courtesy of AMERICAN HONDA MOTOR CO., INC.

NOTE:

- **CHECK THE VEHICLE BATTERY CONDITION FIRST .**
- **This navigation DTC sets when there is a problem with the internal gyro, and indicates the navigation ECU temperature when the DTC is detected.**
- **BEFORE YOU TROUBLESHOOT, MAKE SURE TO FOLLOW THE HOW TO TROUBLESHOOT THE NAVIGATION SYSTEM.**
- **Check any official Honda service website for more service information about the navigation system.**

1. Problem verification:
   - 1. **CLEAR THE HARD ERROR CODES**.
   - 2. Turn the ignition switch to LOCK (0) and then back to ON (II), and wait at least 3 minutes.
   - 3. **CHECK FOR HARD ERROR CODES**.

Is DTC 1305 indicated?

YES : REPLACE THE AUDIO-NAVIGATION UNIT .

NO : Intermittent failure, the system is OK at this time.

DTC 1306: VEHICLE SPEED PULSE

GETtheMANUALS.org

Navigation System DTC Troubleshooting: 1306

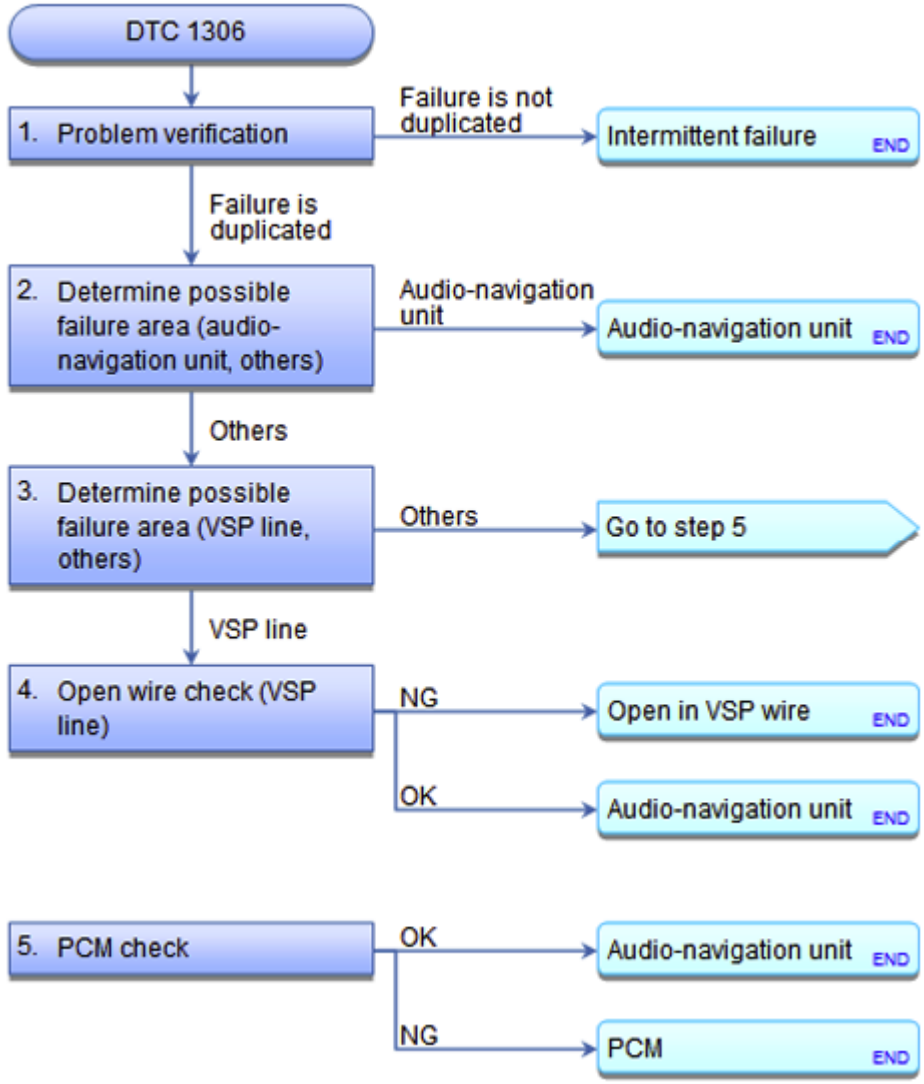

Fig. 86: Navigation System DTC Troubleshooting Flow Chart (1306)
Courtesy of AMERICAN HONDA MOTOR CO., INC.

NOTE:

- **CHECK THE VEHICLE BATTERY CONDITION FIRST .**
- **This navigation DTC sets when there is a problem with the VSP circuit.**
- **Check for aftermarket accessories that may interfere with the navigation system.**
- **Check the GPS reception in an open area.**
- **Aftermarket metallic window tint or electronic devices located near the audio-navigation unit or GPS antenna can potentially interfere with the operation of the navigation system.**
- **BEFORE YOU TROUBLESHOOT, MAKE SURE TO FOLLOW THE HOW TO TROUBLESHOOT THE NAVIGATION SYSTEM.**

GETtheMANUALS.org

- **Check any official Honda service website for more service information about the navigation system.**
- **Check the connectors for poor connections or loose terminals.**

1. Problem verification:
   - 1. **CLEAR THE HARD ERROR CODES**.
   - 2. Test-drive the vehicle at steady speed more than 12 mph (20 km/h) for about 1 minute.
   - 3. **CHECK FOR HARD ERROR CODES**.

   Is DTC 1306 indicated?

   YES : The failure is duplicated, go to step 2.

   NO : Intermittent failure, the system is OK at this time.

2. Determine possible failure area (audio-navigation unit, others):
   - 1. **GO INTO THE SYSTEM DIAGNOSTIC MODE, AND SELECT THE CAR STATUS IN THE SYSTEM LINKS TO CHECK THE VEHICLE SPEED PULSE**.
   - 2. With the help of an assistant test-drive the vehicle, and watch the VSP signal.

   Does the VSP signal change from [0] (stopped) to [1] (driving) as you drive?

   YES : REPLACE THE AUDIO-NAVIGATION UNIT .

   NO : Go to step 3.

3. Determine possible failure area (VSP line, others):
   - 1. Turn the ignition switch to LOCK (0).
   - 2. Jump the SCS line with the HDS.
   - 3. Disconnect the following connector.

     PCM connector A (49P)

   - 4. Turn the ignition switch to ON (II).
   - 5. Measure the voltage between test points 1 and 2.

     Test condition IG ON (II)

     PCM connector A (49P): disconnected

     Test circuit VSP

     Test point 1 PCM connector A (49P) No. 26 (GRN)

GETtheMANUALS.org

Test point 2 Body ground

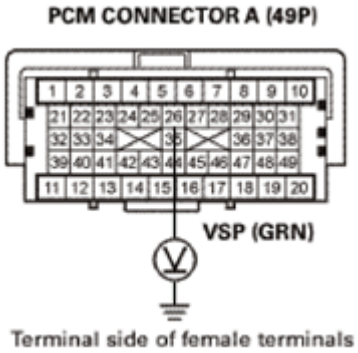

Fig. 87: Measuring Voltage Between PCM Connector A (49P) No. 26 And Body Ground
Courtesy of AMERICAN HONDA MOTOR CO., INC.

Is there about 5 V?

YES : The VSP wire is OK. Go to step 5.

NO : Go to step 4.

4. Open wire check (VSP line):
   - 1. Measure the voltage between test points 1 and 2.

     Test condition IG ON (II)

     PCM connector A (49P): disconnected

     Test circuit VSP

     Test point 1 Audio-navigation unit connector A (24P) No. 23 (GRN)

     Test point 2 Body ground

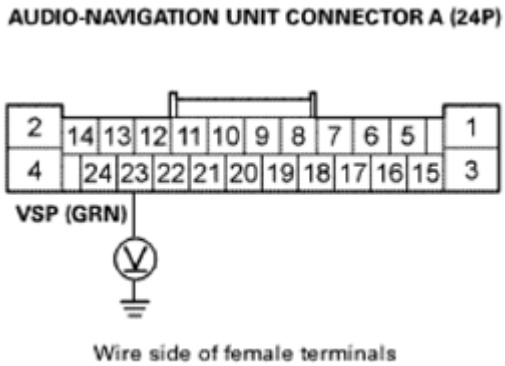

Fig. 88: Measuring Voltage Between Audio-Navigation Unit Connector A (24P) No. 23 And

GETtheMANUALS.org

Body Ground
Courtesy of AMERICAN HONDA MOTOR CO., INC.

Is there about 5 V?

YES : Repair an open in the wire between the audio-navigation unit and the PCM.

NO : REPLACE THE AUDIO-NAVIGATION UNIT .

5. PCM check:
   - 1. Turn the ignition switch to LOCK (0).
   - 2. Reconnect PCM connector A (49P).
   - 3. Raise the vehicle on a lift.
   - 4. Turn the ignition switch to ON (II).
   - 5. Measure the voltage between test points 1 and 2.

   Test condition IG ON (II), with the tires slowly rotating

   Test circuit VSP

   Test point 1 Audio-navigation unit connector A (24P) No. 23 (GRN)

   Test point 2 Body ground

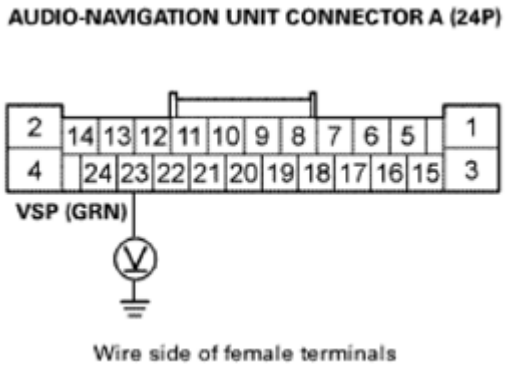

Fig. 89: Measuring Voltage Between Audio-Navigation Unit Connector A (24P) No. 23 And Body Ground
Courtesy of AMERICAN HONDA MOTOR CO., INC.

Does the voltage pulse between 0 V and 5 V as you rotate the tires?

YES : REPLACE THE AUDIO-NAVIGATION UNIT .

NO : **Update the PCM** See **PCM REMOVAL AND INSTALLATION** or **PCM UPDATE** if it does not have the latest software, or **substitute a known-good PCM** See **PCM REMOVAL AND INSTALLATION** or **PCM UPDATE** , and recheck.

GETtheMANUALS.org

DTC 1701: REAR CAMERA ERROR

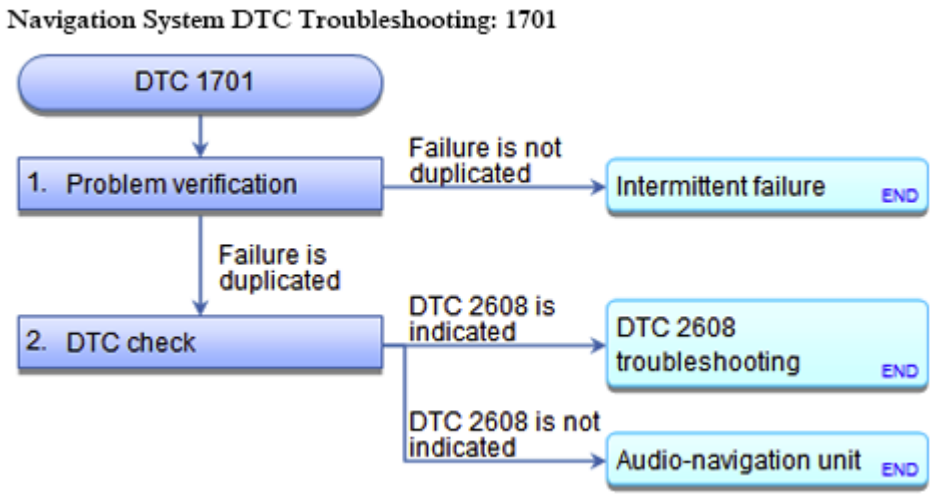

Fig. 90: Navigation System DTC Troubleshooting Flow Chart (1701)
Courtesy of AMERICAN HONDA MOTOR CO., INC.

NOTE:

- **CHECK THE VEHICLE BATTERY CONDITION FIRST .**
- **This navigation DTC sets when a problem is detected in the rearview camera circuit.**
- **BEFORE YOU TROUBLESHOOT, MAKE SURE TO FOLLOW THE HOW TO TROUBLESHOOT THE NAVIGATION SYSTEM.**
- **Check the connectors for poor connections or loose terminals.**

1. Problem verification:
   - 1. **CLEAR THE HARD ERROR CODES**.
   - 2. Turn the ignition switch to LOCK (0) and then back to ON (II).
   - 3. Move the shift lever to P or N.
   - 4. **CHECK FOR HARD ERROR CODES**.

   Is DTC 1701 indicated?

   YES : Go to step 2.

   NO : Intermittent failure, the system is OK at this time.

2. DTC check:
   - 1. **CHECK FOR HARD ERROR CODES**.

   Is DTC 2608 indicated?

   YES : **GO TO DTC 2608 TROUBLESHOOTING**.

GETtheMANUALS.org

NO : REPLACE THE AUDIO-NAVIGATION UNIT .

DTC 1702: XM ANTENNA ERROR

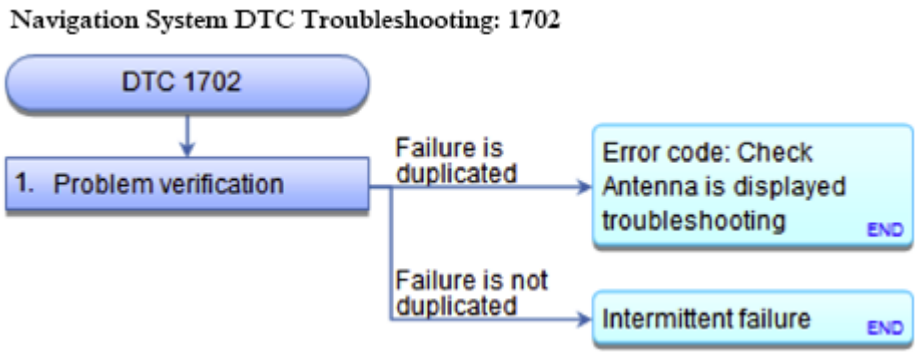

Fig. 91: Navigation System DTC Troubleshooting Flow Chart (1702)
Courtesy of AMERICAN HONDA MOTOR CO., INC.

NOTE:

- **CHECK THE VEHICLE BATTERY CONDITION FIRST .**
- **This navigation DTC sets when there is poor connectors or loose terminals at the XM antenna connector or an open in the XM antenna lead.**
- **BEFORE YOU TROUBLESHOOT, MAKE SURE TO FOLLOW THE HOW TO TROUBLESHOOT THE NAVIGATION SYSTEM.**
- **Check any official Honda service website for more service information about the navigation system.**
- **Check the connectors for poor connections or loose terminals.**

1. Problem verification:
   - 1. **CLEAR THE HARD ERROR CODES**.
   - 2. Turn the ignition switch to LOCK (0) and then back to ON (II).
   - 3. Turn on the audio system, and press the CD/XM button to select the XM radio.
   - 4. **CHECK FOR HARD ERROR CODES**.

Is DTC 1702 indicated?

YES : The failure is duplicated, go to **Error code: Check Antenna is displayed (Without Navigation)** or **Error code: Check Antenna is displayed (Navigation)** troubleshooting.

NO : Intermittent failure, the system is OK at this time.

DTC 2607: XM DIAG

GETtheMANUALS.org

Navigation System DTC Troubleshooting: 2607

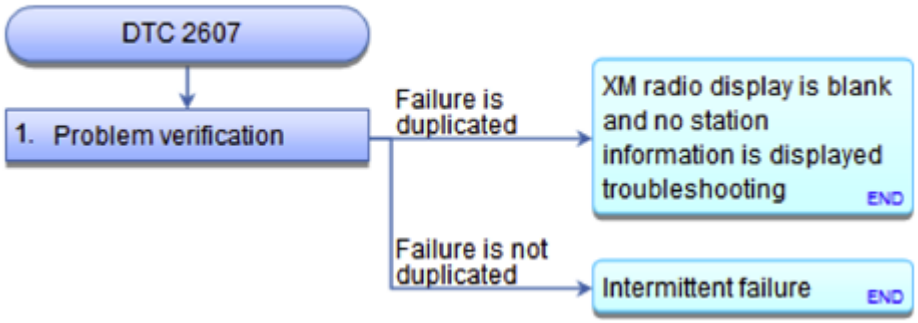

Fig. 92: Navigation System DTC Troubleshooting Flow Chart (2607)
Courtesy of AMERICAN HONDA MOTOR CO., INC.

NOTE:

- **CHECK THE VEHICLE BATTERY CONDITION FIRST .**
- **This navigation DTC sets when a problem (open or short) is detected in the GA-Net BUS (the XM icon is red in the System Links).**
- **BEFORE YOU TROUBLESHOOT, MAKE SURE TO FOLLOW THE HOW TO TROUBLESHOOT THE NAVIGATION SYSTEM.**
- **Check any official Honda service website for more service information about the navigation system.**
- **Check the connectors for poor connections or loose terminals.**

1. Problem verification:
   - 1. **CLEAR THE HARD ERROR CODE**.
   - 2. Turn the ignition switch to LOCK (0) and then back to ON (II).
   - 3. **CHECK FOR THE HARD ERROR CODE**.

   Is DTC 2607 indicated?

   YES : The failure is duplicated, go to **XM radio display is blank and no station information is displayed (Navigation)** or **XM radio display is blank and no station information is displayed (Without Navigation)** troubleshooting.

   NO : Intermittent failure, the system is OK at this time.

DTC 2608: REAR CAMERA DIAG

GETtheMANUALS.org

Navigation System DTC Troubleshooting: 2608

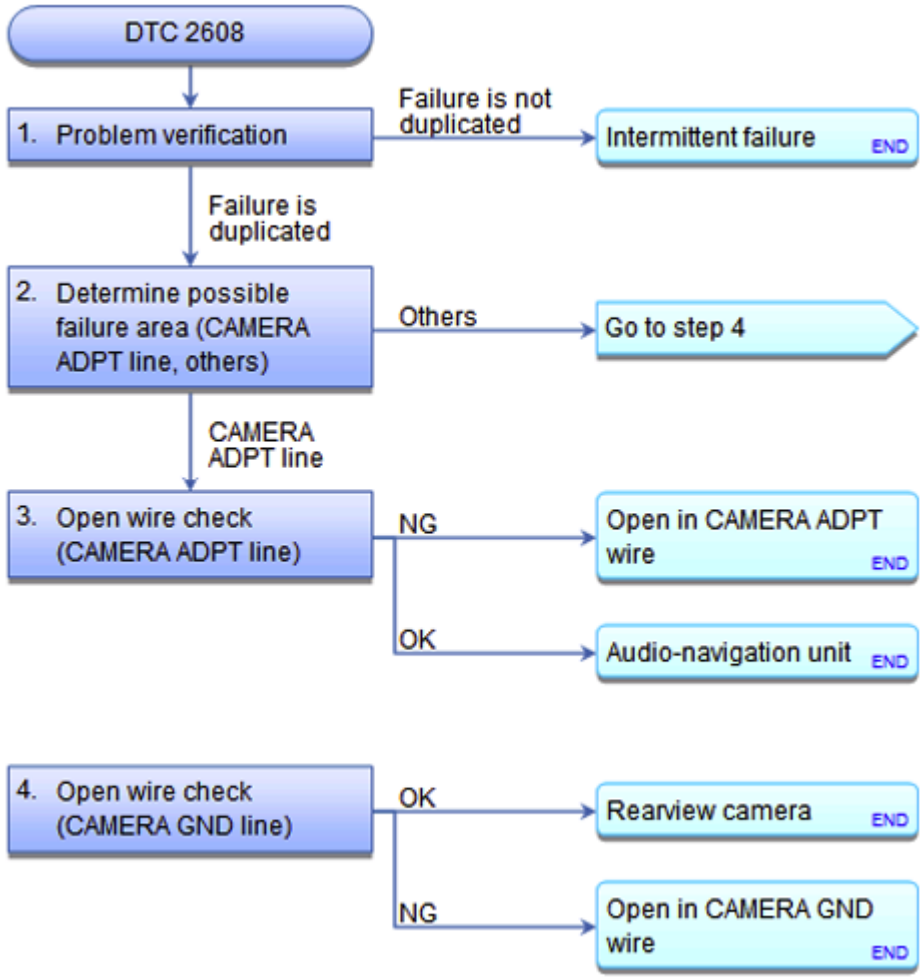

Fig. 93: Navigation System DTC Troubleshooting Flow Chart (2608)
Courtesy of AMERICAN HONDA MOTOR CO., INC.

NOTE:

- **CHECK THE VEHICLE BATTERY CONDITION FIRST .**
- **This navigation DTC sets when NG is indicated in the Rear Camera diagnosis (the Rear Camera icon is red in the System Links).**
- **BEFORE YOU TROUBLESHOOT, MAKE SURE TO FOLLOW THE HOW TO TROUBLESHOOT THE NAVIGATION SYSTEM.**
- **Check the connectors for poor connections or loose terminals.**

1. Problem verification:
   - 1. **CLEAR THE HARD ERROR CODES**.
   - 2. Turn the ignition switch to LOCK (0) and then back to ON (II).
   - 3. **CHECK FOR HARD ERROR CODES**.

   Is DTC 2608 indicated?

GETtheMANUALS.org

YES : The failure is duplicated, go to step 2.

NO : Intermittent failure, the system is OK at this time.

2. Determine possible failure area (CAMERA ADPT line, others):
   - 1. Turn the ignition switch to LOCK (0).
   - 2. Disconnect the following connector.

     Rearview camera 12P connector

   - 3. Turn the ignition switch to ON (II).
   - 4. Measure the voltage between test points 1 and 2.

     Test condition IG ON (II)

     Rearview camera 12P connector: disconnected

     Test circuit CAMERA ADPT

     Test point 1 Rearview camera 12P connector No. 11 (YEL)

     Test point 2 Body ground

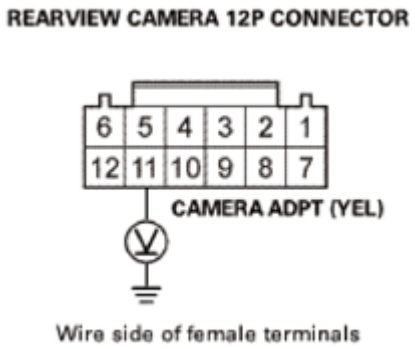

Fig. 94: Measuring Voltage Between Rearview Camera 12P Connector No. 11 And Body Ground
Courtesy of AMERICAN HONDA MOTOR CO., INC.

Is there about 3.0 V?

YES : Go to step 4.

NO : Go to step 3.

3. Open wire check (CAMERA ADPT line):
   - 1. Measure the voltage between test points 1 and 2.

GETtheMANUALS.org

Test condition IG ON (II)

Rearview camera 12P connector: disconnected

Test circuit CAMERA ADPT

Test point 1 Audio-navigation unit connector F (7P) No. 1 (BLK)

Test point 2 Body ground

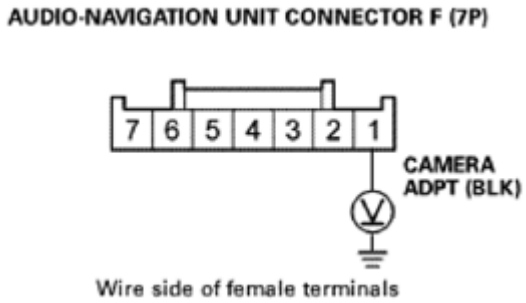

Fig. 95: Measuring Voltage Between Audio-Navigation Unit Connector F (7P) No. 1 And Body Ground
Courtesy of AMERICAN HONDA MOTOR CO., INC.

Is there about 3.0 V?

YES : Repair an open in the wire between the audio-navigation unit and the rearview camera.

NO : REPLACE THE AUDIO-NAVIGATION UNIT .

4. Open wire check (CAMERA GND line):
   - 1. Turn the ignition switch to LOCK (0).
   - 2. Disconnect the following connector.

     Audio-navigation unit connector F (7P)

   - 3. Connect terminals A and B with a jumper wire.

     Terminal A Rearview camera 12P connector No. 7 (BLK)

     Terminal B Body ground

GETtheMANUALS.org

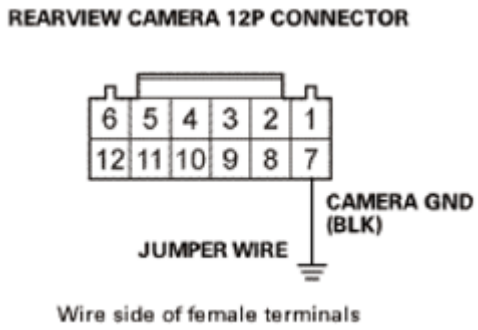

Fig. 96: Connecting Rearview Camera 12P Connector No. 7 And Body Ground Using Jumper Wire
Courtesy of AMERICAN HONDA MOTOR CO., INC.

- 4. Check for continuity between test points 1 and 2.

  Test condition IG LOCK (0)

  Rearview camera 12P connector: disconnected

  Audio-navigation unit connector F (7P): disconnected

  Rearview camera 12P connector No. 7: jumped to body ground

  Test circuit CAMERA GND

  Test point 1 Audio-navigation unit connector F (7P) No. 6 (GRN)

  Test point 2 Body ground

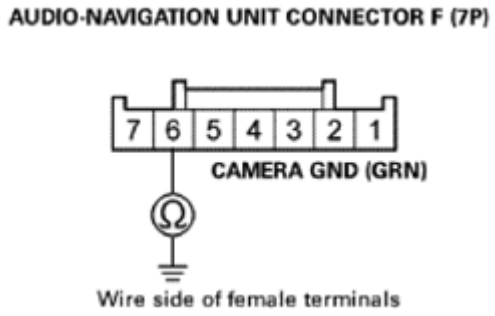

Fig. 97: Checking Continuity Between Audio-Navigation Unit Connector F (7P) No. 6 And Body Ground
Courtesy of AMERICAN HONDA MOTOR CO., INC.

Is there continuity?

YES : **REPLACE THE REARVIEW CAMERA** .

GETtheMANUALS.org

NO : Repair an open in the wire between the audio-navigation unit and the rearview camera.

DTC 2610: DRAM DIAG

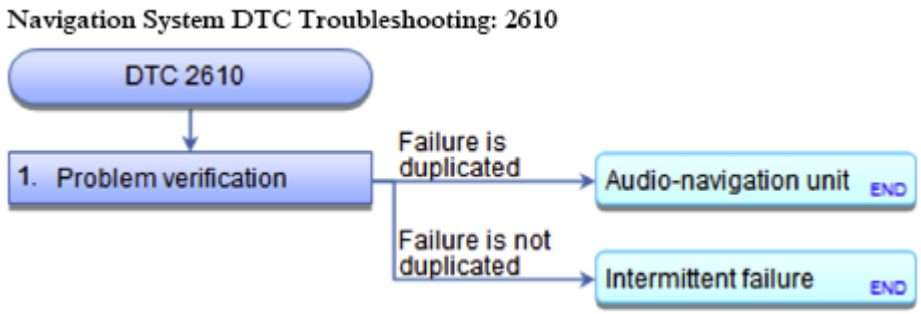

Fig. 98: Navigation System DTC Troubleshooting Flow Chart (2610)
Courtesy of AMERICAN HONDA MOTOR CO., INC.

NOTE:

- **CHECK THE VEHICLE BATTERY CONDITION FIRST .**
- **This navigation DTC sets when a problem with the internal DRAM is detected (the ECU info icon is red in the System Links).**
- **BEFORE YOU TROUBLESHOOT, MAKE SURE TO FOLLOW THE HOW TO TROUBLESHOOT THE NAVIGATION SYSTEM.**
- **Check any official Honda service website for more service information about the navigation system.**

1. Problem verification:
   - 1. **CLEAR THE HARD ERROR CODES**.
   - 2. Turn the ignition switch to LOCK (0) and then back to ON (II).
   - 3. **CHECK FOR HARD ERROR CODES**.

   Is DTC 2610 indicated?

   YES : REPLACE THE AUDIO-NAVIGATION UNIT .

   NO : Intermittent failure, the system is OK at this time.

DTC 2701: GPS DIAG: ANTENNA

GETtheMANUALS.org

Navigation System DTC Troubleshooting: 2701

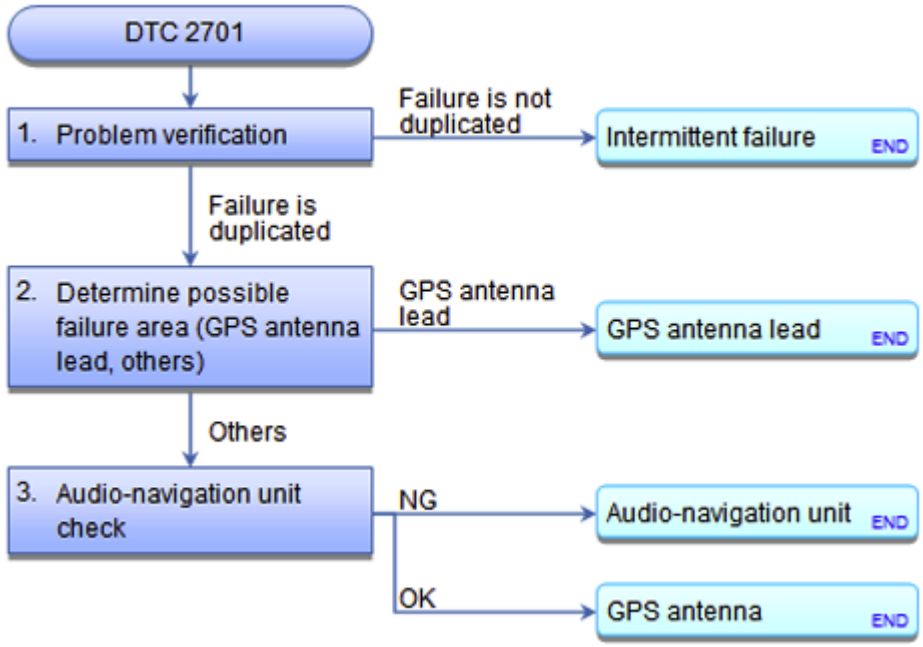

Fig. 99: Navigation System DTC Troubleshooting Flow Chart (2701)
Courtesy of AMERICAN HONDA MOTOR CO., INC.

NOTE:

- **CHECK THE VEHICLE BATTERY CONDITION FIRST .**
- **This navigation DTC sets when a problem is detected in the GPS antenna (the GPS Ant icon is red in the System Links).**
- **BEFORE YOU TROUBLESHOOT, MAKE SURE TO FOLLOW THE HOW TO TROUBLESHOOT THE NAVIGATION SYSTEM.**
- **Check any official Honda service website for more service information about the navigation system.**
- **Check the connectors for poor connections or loose terminals.**

1. Problem verification:
   - 1. **CLEAR THE HARD ERROR CODES**.
   - 2. Turn the ignition switch to LOCK (0) and then back to ON (II).
   - 3. **CHECK FOR HARD ERROR CODES**.

   Is DTC 2701 indicated?

   YES : The failure is duplicated, go to step 2.

   NO : Intermittent failure, the system is OK at this time.

2. Determine possible failure area (GPS antenna lead, others):
   - 1. Turn the ignition switch to LOCK (0).

GETtheMANUALS.org

- 2. **SUBSTITUTE A KNOWN-GOOD GPS ANTENNA LEAD**.
- 3. **CLEAR THE HARD ERROR CODES**.
- 4. Turn the ignition switch to LOCK (0) and then back to ON (II).
- 5. **CHECK FOR HARD ERROR CODES**.

Is DTC 2701 indicated?

YES : Go to step 3.

NO : Replace the original GPS antenna lead.

3. Audio-navigation unit check:
   - 1. Turn the ignition switch to LOCK (0).
   - 2. **SUBSTITUTE A KNOWN-GOOD GPS ANTENNA**.
   - 3. **CLEAR THE HARD ERROR CODES**.
   - 4. Turn the ignition switch to LOCK (0) and then back to ON (II).
   - 5. **CHECK FOR HARD ERROR CODES**.

Is DTC 2701 indicated?

YES : **REPLACE THE AUDIO-NAVIGATION UNIT**.

NO : Replace the original GPS antenna.

DTC 2702: GPS DIAG: RECEIVER IN NAVI ECU

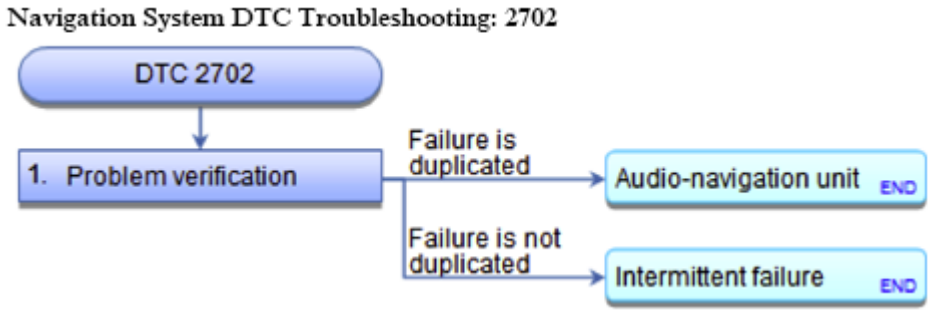

Fig. 100: Navigation System DTC Troubleshooting Flow Chart (2702)
Courtesy of AMERICAN HONDA MOTOR CO., INC.

NOTE:

- **CHECK THE VEHICLE BATTERY CONDITION FIRST .**
- **This navigation DTC sets when a problem is detected in the internal GPS receiver.**
- **BEFORE YOU TROUBLESHOOT, MAKE SURE TO FOLLOW THE HOW TO TROUBLESHOOT THE NAVIGATION SYSTEM.**

GETtheMANUALS.org

- **Check any official Honda service website for more service information about the navigation system.**

1. Problem verification:
   - 1. **CLEAR THE HARD ERROR CODES**.
   - 2. Turn the ignition switch to LOCK (0) and then back to ON (II).
   - 3. **CHECK FOR HARD ERROR CODES**.

   Is DTC 2702 indicated?

   YES : REPLACE THE AUDIO-NAVIGATION UNIT .

   NO : Intermittent failure, the system is OK at this time.

DTC 2703: AIRCON DIAG

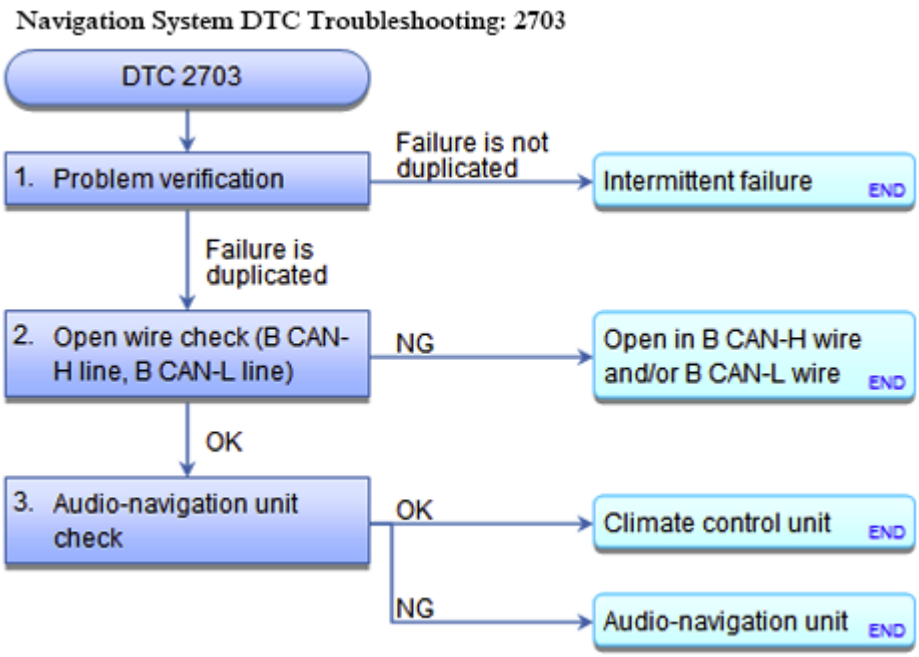

Fig. 101: Navigation System DTC Troubleshooting Flow Chart (2703)
Courtesy of AMERICAN HONDA MOTOR CO., INC.

NOTE:

- **CHECK THE VEHICLE BATTERY CONDITION FIRST .**
- **This navigation DTC sets when NG is indicated in the Aircon diagnosis (the A/C icon is red in the System Links).**
- **Check for B-CAN DTCs and resolve them before troubleshooting.**
- **BEFORE YOU TROUBLESHOOT, MAKE SURE TO FOLLOW THE HOW TO TROUBLESHOOT THE NAVIGATION SYSTEM.**

GETtheMANUALS.org

1. Problem verification:
    - 1. **CLEAR THE HARD ERROR CODES**.
    - 2. Turn the ignition switch to LOCK (0) and then back to ON (II).
    - 3. **CHECK FOR HARD ERROR CODES**.

    Is DTC 2703 indicated?

    YES : The failure is duplicated, go to step 2.

    NO : Intermittent failure, the system is OK at this time.

2. Open wire check (B CAN-H line, B CAN-L line):
    - 1. Turn the ignition switch to LOCK (0).
    - 2. Disconnect the following connectors.

      Audio-navigation unit connector B (24P)

      Climate control unit 32P connector

    - 3. Check for continuity between test points 1 and 2.

      Test condition IG LOCK (0)

      Audio-navigation unit connector B (24P): disconnected

      Climate control unit 32P connector: disconnected

      Test circuit B CAN-H

      Test point 1 Audio-navigation unit connector E (16P) No. 1 (PNK)

      Test point 2 Climate control unit 32P connector No. 16 (PNK)

      Test circuit B CAN-L

      Test point 1 Audio-navigation unit connector E (16P) No. 9 (BLU)

      Test point 2 Climate control unit 32P connector No. 15 (BLU)

GETtheMANUALS.org

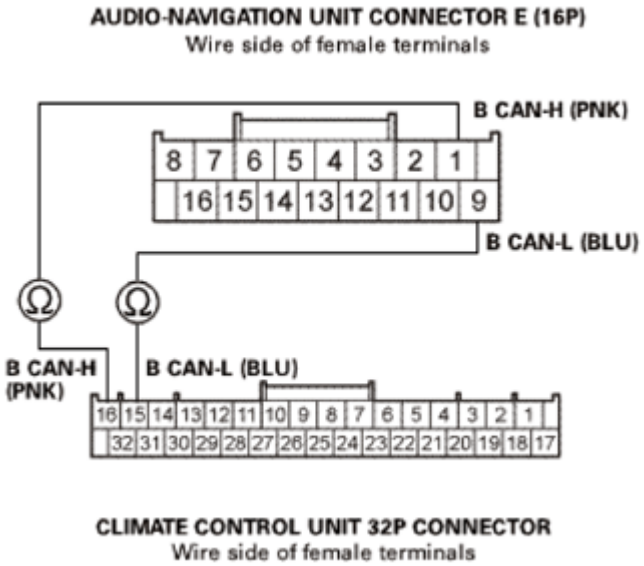

Fig. 102: Checking Continuity Between Audio-Navigation Unit Connector E (16P) And Climate Control Unit 32P Connector Terminals
Courtesy of AMERICAN HONDA MOTOR CO., INC.

Is there continuity?

YES : Go to step 3.

NO : Repair an open in the wire(s) between the audio-navigation unit and the climate control unit.

3. Audio-navigation unit check:
   - 1. **SUBSTITUTE A KNOWN-GOOD CLIMATE CONTROL UNIT** , and recheck.

Does the symptom/indication go away?

YES : Replace the original climate control unit.

NO : REPLACE THE AUDIO-NAVIGATION UNIT .

DTC 2705: HFL DIAG

GETtheMANUALS.org

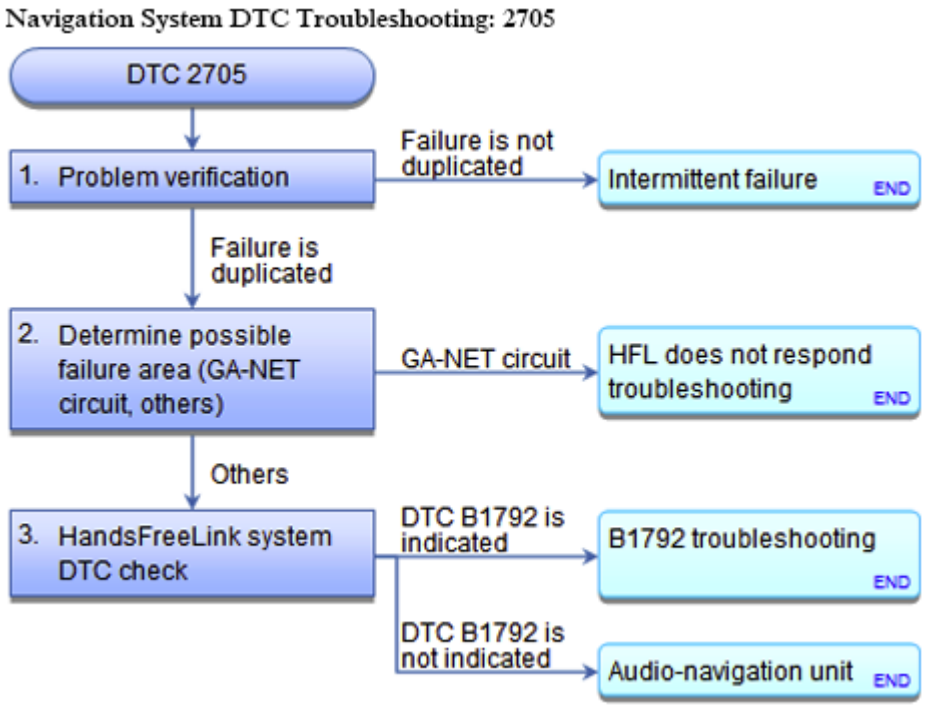

Fig. 103: Navigation System DTC Troubleshooting Flow Chart (2705)
Courtesy of AMERICAN HONDA MOTOR CO., INC.

NOTE:

- **CHECK THE VEHICLE BATTERY CONDITION FIRST .**
- **This navigation DTC sets when NG is indicated in the HFL diagnosis (the HFL icon is red in the System Links).**
- **BEFORE YOU TROUBLESHOOT, MAKE SURE TO FOLLOW THE HOW TO TROUBLESHOOT THE NAVIGATION SYSTEM.**
- **Check any official Honda service website for more service information about the navigation system.**
- **Check the connectors for poor connections or loose terminals.**

1. Problem verification:
   - 1. **CLEAR THE HARD ERROR CODES**.
   - 2. Turn the ignition switch to LOCK (0) and then back to ON (II).
   - 3. **CHECK FOR HARD ERROR CODES**.

   Is DTC 2705 indicated?

   YES : The failure is duplicated, go to step 2.

   NO : Intermittent failure, the system is OK at this time.

2. Determine possible failure area (GA-NET circuit, others):

GETtheMANUALS.org

- 1. **SELECT THE HFL IN THE SYSTEM LINKS, AND CHECK FOR GA-NET STATUS**.

Is GA-NET NG indicated?

YES : Go to **HFL does not respond (Navigation)** or **HFL does not respond (Without Navigation)** .

NO : Go to step 3.

3. HandsFreeLink system DTC check:
   - 1.

     SELECT THE HFL IN THE SYSTEM LINKS, AND CHECK FOR HFL DTC.

Is DTC B1792 indicated?

YES : **GO TO B1792 TROUBLESHOOTING** .

NO : REPLACE THE AUDIO-NAVIGATION UNIT .

DTC 2706: GYRO DIAG: ECU TEMP XX °C

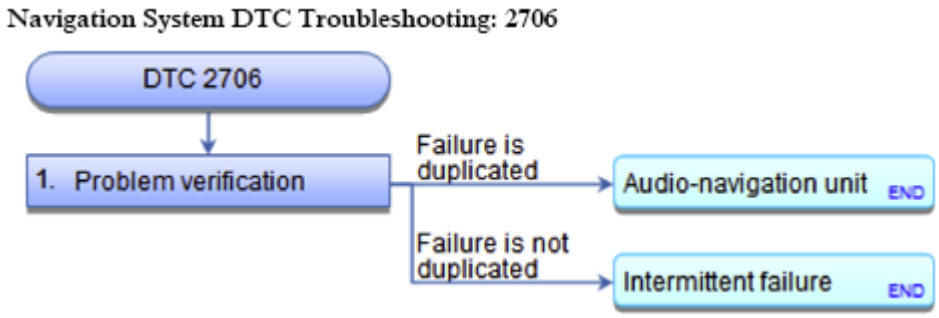

Fig. 104: Navigation System DTC Troubleshooting Flow Chart (2706)
Courtesy of AMERICAN HONDA MOTOR CO., INC.

NOTE:

- **CHECK THE VEHICLE BATTERY CONDITION FIRST .**
- **This navigation DTC sets when there is a problem with the internal gyro (the Yaw Sensor icon is red in the System Links), and indicates the navigation ECU temperature when the DTC is detected.**
- **BEFORE YOU TROUBLESHOOT, MAKE SURE TO FOLLOW THE HOW TO TROUBLESHOOT THE NAVIGATION SYSTEM.**
- **Check any official Honda service website for more service information about the navigation system.**

1. Problem verification:
   - 1. **CLEAR THE HARD ERROR CODES**.

GETtheMANUALS.org

- 2. Turn the ignition switch to LOCK (0) and then back to ON (II).
- 3. **CHECK FOR HARD ERROR CODES**.

Is DTC 2706 indicated?

YES : REPLACE THE AUDIO-NAVIGATION UNIT .

NO : Intermittent failure, the system is OK at this time.

DTC 2707: MIC DIAG

GETtheMANUALS.org

Navigation System DTC Troubleshooting: 2707

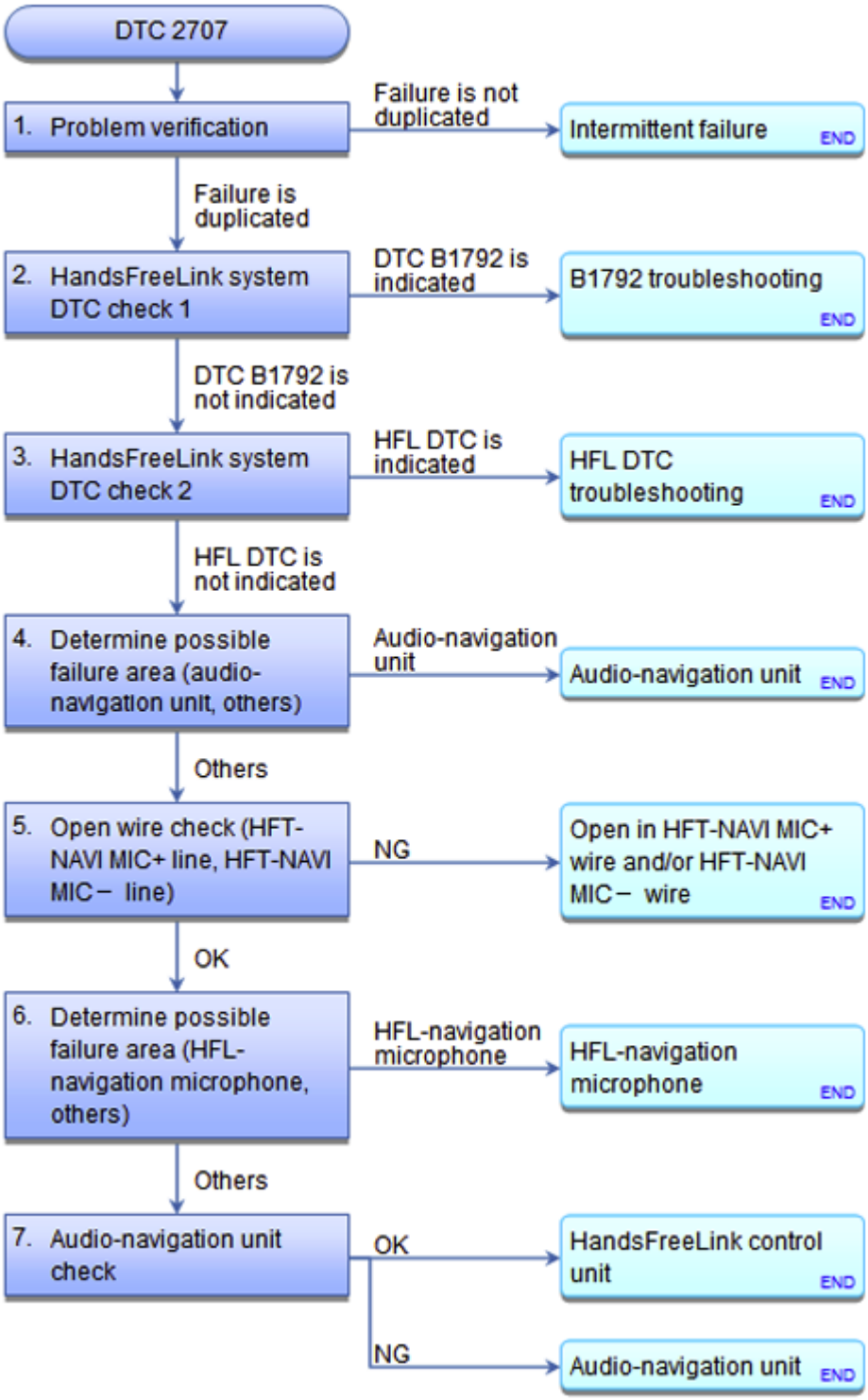

Fig. 105: Navigation System DTC Troubleshooting Flow Chart (2707)
Courtesy of AMERICAN HONDA MOTOR CO., INC.

NOTE:

- **CHECK THE VEHICLE BATTERY CONDITION FIRST .**

GETtheMANUALS.org

- **This navigation DTC sets when a problem is detected in the microphone circuit (the Mic icon is red in the System Links).**
- **BEFORE YOU TROUBLESHOOT, MAKE SURE TO FOLLOW THE HOW TO TROUBLESHOOT THE NAVIGATION SYSTEM.**
- **Check any official Honda service website for more service information about the navigation system.**
- **Check the connectors for poor connections or loose terminals.**

1. Problem verification:
   - 1. **CLEAR THE HARD ERROR CODES**.
   - 2.

     Turn the ignition switch to LOCK (0) and then back to ON (II).

   - 3. **CHECK FOR HARD ERROR CODES**.

   Is DTC 2707 indicated?

   YES : The failure is duplicated, go to step 2.

   NO : Intermittent failure, the system is OK at this time.

2. HandsFreeLink system DTC check 1:
   - 1. **SELECT THE HFL IN THE SYSTEM LINKS, AND CHECK FOR HFL DTC**.

   Is DTC B1792 indicated?

   YES : **GO TO B1792 TROUBLESHOOTING** .

   NO : Go to step 3.

3. HandsFreeLink system DTC check 2:
   - 1. **SELECT THE MIC/STRG SW IN THE FUNCTIONAL SETUP MENU, AND CHECK FOR HFL DTCS**.

   Are any HFL DTCs indicated?

   YES : Go to indicated HFL DTC troubleshooting.

   NO : Go to step 4.

4. Determine possible failure area (audio-navigation unit, others):
   - 1. **SELECT THE MIC/STRG SW IN THE FUNCTIONAL SETUP MENU, AND USE THE MIC LEVEL TEST**.

GETtheMANUALS.org

Is the microphone level OK?

YES : REPLACE THE AUDIO-NAVIGATION UNIT .

NO : Go to step 5.

5. Open wire check (HFT-NAVI MIC+ line, HFT-NAVI MIC- line):
    - 1. Turn the ignition switch to LOCK (0).
    - 2. Disconnect the following connector.

      Audio-navigation unit connector B (20P)

      HandsFreeLink control unit 32P connector

    - 3. Check for continuity between test points 1 and 2.

      Test condition IG LOCK (0)

      Audio-navigation unit connector E (16P): disconnected

      HandsFreeLink control unit 32P connector: disconnected

      Test circuit HFT-NAVI MIC+

      Test point 1 Audio-navigation unit connector B (20P) No. 11 (BRN)

      Test point 2 HandsFreeLink control unit 32P connector No. 18 (BRN)

      Test circuit HFT-NAVI MIC-

      Test point 1 Audio-navigation unit connector B (20P) No. 12 (YEL)

      Test point 2 HandsFreeLink control unit 32P connector No. 17 (YEL)

GETtheMANUALS.org

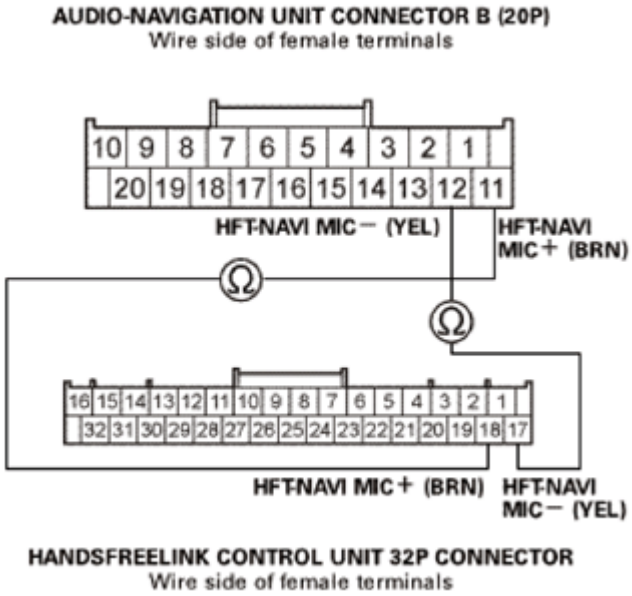

Fig. 106: Checking Continuity Between Audio-Navigation Unit Connector B (20P) And Handsfreelink Control Unit 32P Connector Terminals
Courtesy of AMERICAN HONDA MOTOR CO., INC.

Is there continuity?

YES : The HFT-NAVI MIC+ and the HFT-NAVI MIC- wires are OK. Go to step 6.

NO : There is an open in the wire(s) between the HandsFreeLink control unit and the audio-navigation unit. Replace the affected shielded harness.

6. Determine possible failure area (HFL-navigation microphone, others):
   - 1. Reconnect the HandsFreeLink control unit 32P connector and audio-navigation unit connector B (20P).
   - 2. **SUBSTITUTE A KNOWN-GOOD HFL-NAVIGATION MICROPHONE** , and recheck.

Does the symptom/indication go away?

YES : Replace the original HFL-navigation microphone.

NO : Go to step 7.

7. Audio-navigation unit check:
   - 1. Turn the ignition switch to LOCK (0).
   - 2. **Substitute a known-good HandsFreeLink control unit** See **HANDSFREELINK CONTROL UNIT REMOVAL AND INSTALLATION** or **HANDSFREELINK CONTROL UNIT UPDATE** , and recheck.

Does the symptom/indication go away?

GETtheMANUALS.org

YES : Replace the original HandsFreeLink control unit.

NO : REPLACE THE AUDIO-NAVIGATION UNIT .

SYMPTOM TESTS

DISPLAY DAY/NIGHT MODE DOES NOT WORK OR DOES NOT WORK PROPERLY

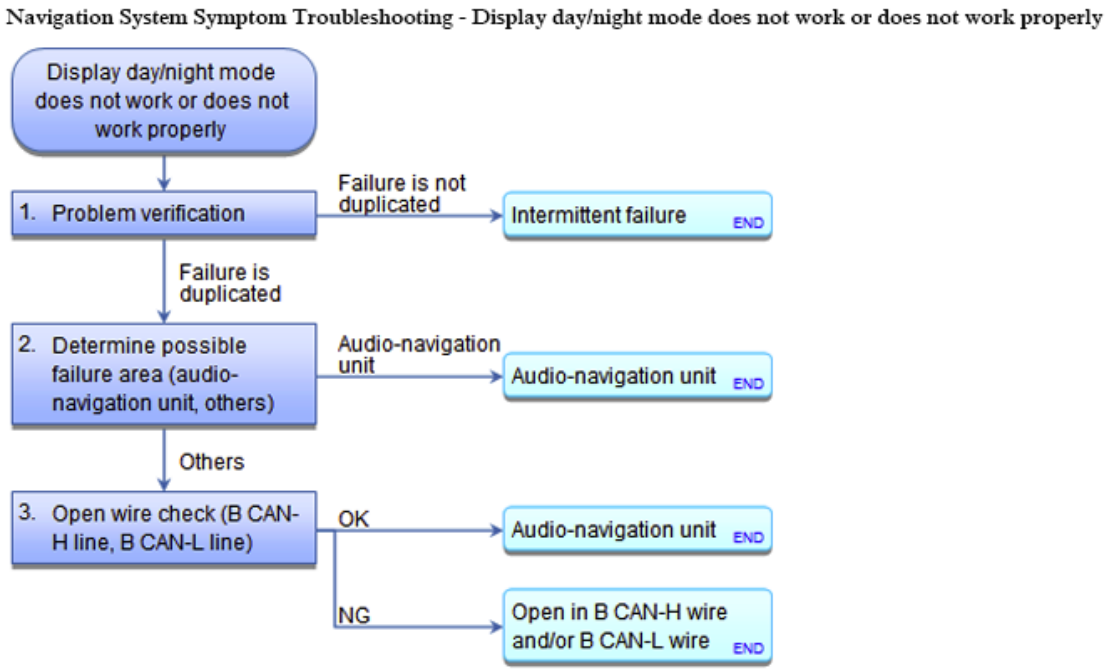

Fig. 107: Navigation System DTC Troubleshooting Flow Chart (Display Day/Night Mode Does Not Work/Does Not Work Properly)
Courtesy of AMERICAN HONDA MOTOR CO., INC.

NOTE:

- **CHECK THE VEHICLE BATTERY CONDITION FIRST .**
- **Full brightness on the dashlights brightness control with the head lights turned on causes the system to stay in the day mode, even when the lights are on.**
- **Check for B-CAN DTCs and resolve them before troubleshooting.**
- **The navigation system receives the dash brightness/dimming signal from the B-CAN network from the gauge control module. Check for B-CAN DTCs and resolve them before troubleshooting.**
- **Check any official Honda service website for more service information about the navigation system.**
- **Check the connectors for poor connections or loose terminals.**

1. Problem verification:
    - 1. Turn the ignition switch to ON (II).

GETtheMANUALS.org

- 2. Turn the combination lighting switch to the parking light position.
- 3. Turn the dash brightness knob to the mid brightness level (the display does not change if the brightness level is set to max).

Does the display change to day and night modes when turning the headlights on and off?

YES : Intermittent failure, the system is OK at this time. Explain to the customer that if the display brightness is set to max, the display does not change.

NO : The failure is duplicated, go to step 2.

2. Determine possible failure area (audio-navigation unit, others):
   - 1. Turn the combination lighting switch off.
   - 2. **GO INTO THE SYSTEM DIAGNOSTIC MODE, AND USE THE CAR STATUS DIAGNOSIS TO CHECK THE ILL SIGNAL**.
   - 3. Turn the combination lighting switch to the parking light position.

Does the ILL signal change from [0] to [1] when the combination lighting switch is changed to the parking light position?

YES : REPLACE THE AUDIO-NAVIGATION UNIT .

NO : Go to step 3.

3. Open wire check (B CAN-H line, B CAN-L line):
   - 1. Turn the combination lighting switch off.
   - 2. Turn the ignition switch to LOCK (0).
   - 3. Disconnect the following connectors.

     Audio-navigation unit connector E (16P)

     Gauge control module 32P connector

   - 4. Check for continuity between test points 1 and 2.

     Test condition IG LOCK (0)

     Audio-navigation unit connector E (16P): disconnected

     Gauge control module 32P connector: disconnected

     Test circuit B CAN-H

     Test point 1 Audio-navigation unit connector E (16P) No. 1 (PNK)

GETtheMANUALS.org

Test point 2 Gauge control module 32P connector No. 30 (PNK)

Test circuit B CAN-L

Test point 1 Audio-navigation unit connector E (16P) No. 9 (BLU)

Test point 2 Gauge control module 32P connector No. 31 (BLU)

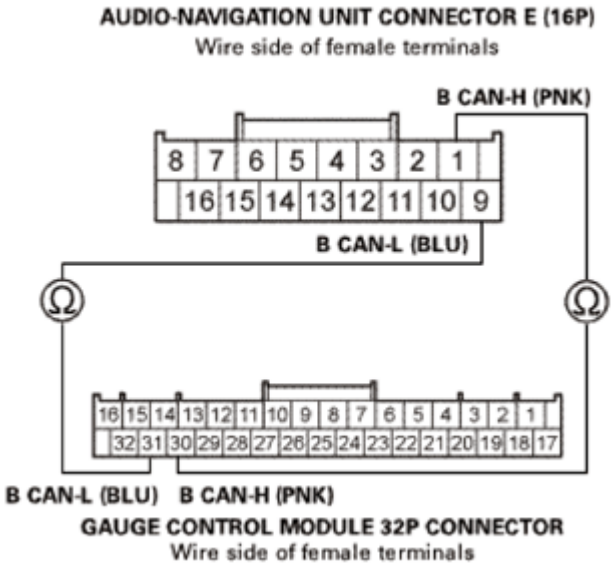

Fig. 108: Checking Continuity Between Audio-Navigation Unit Connector E (16P) And Gauge Control Module 32P Connector Terminals
Courtesy of AMERICAN HONDA MOTOR CO., INC.

Is there continuity?

YES : REPLACE THE AUDIO-NAVIGATION UNIT .

NO : Repair an open in the wire(s) between the audio-navigation unit and the gauge control module.

GPS ICON IS WHITE OR NOT SHOWN

GETtheMANUALS.org

Navigation System Symptom Troubleshooting - GPS icon is white or not shown

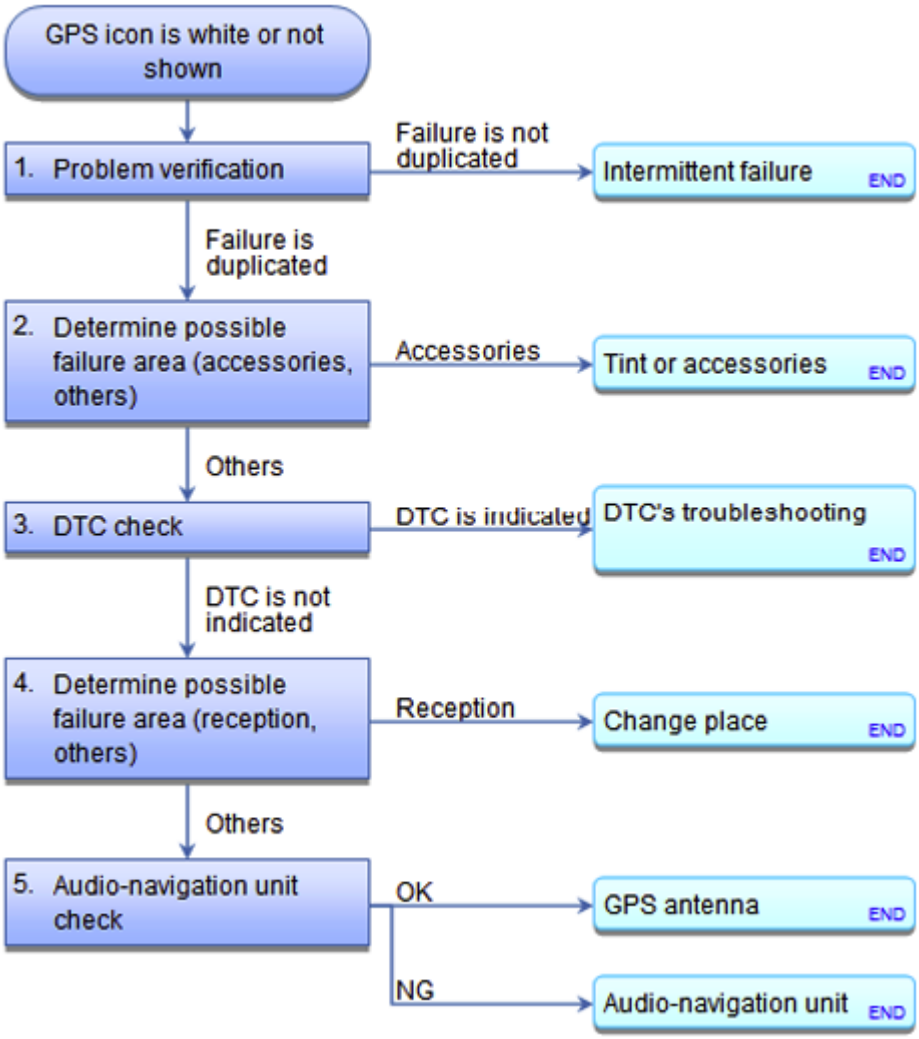

Fig. 109: Navigation System DTC Troubleshooting Flow Chart (GPS Icon Is White Or Not Shown)
Courtesy of AMERICAN HONDA MOTOR CO., INC.

NOTE:

- **CHECK THE VEHICLE BATTERY CONDITION FIRST .**
- **Refer to GPS INFORMATION for real-time satellite reception display.**
- **Check the GPS signal reception in an open area. With good reception, the icon is normally green.**
- **Check any official Honda service website for more service information about the navigation system.**
- **Check the connectors for poor connections or loose terminals.**

1. Problem verification:
    - 1. Park the vehicle in an open area.
    - 2. Turn the ignition switch to ON (II).

GETtheMANUALS.org

- 3. Check the GPS icon on the map screen.

Is the GPS icon missing?

YES : The failure is duplicated, go to step 2.

NO : Intermittent failure, the system is OK at this time.

2. Determine possible failure area (accessories, others):
   - 1.

     Turn the ignition switch to LOCK (0).

   - 2. Check for aftermarket metallic window tint on the front window and electronic aftermarket accessories (possibly hidden) mounted near the GPS antenna or the audio-navigation unit.

Is there aftermarket metallic window tint or electronic accessories?

YES : Remove tint or the accessories, and recheck.

NO : Go to step 3.

3. DTC check:
   - 1. **CHECK FOR HARD ERROR CODES**.

Are there any navigation DTCs indicated?

YES : Go to indicated DTC's troubleshooting.

NO : Go to step 4.

4. Determine possible failure area (reception, others):
   - 1. **GO INTO THE SYSTEM DIAGNOSTIC MODE, AND USE THE GPS INFORMATION DIAGNOSIS TO CHECK THE GPS RECEPTION**.

Are there 4 or more GPS satellite icon displayed?

YES : Go to step 5.

NO : Move the vehicle (make sure you're in an open area away from buildings, power lines, other vehicles, and any other sources of strong magnetic fields), and recheck. Make sure that other vehicles with navigation receive a signal in the same location under the same conditions.

5. Audio-navigation unit check:
   - 1. Turn the ignition switch to LOCK (0).
   - 2. **SUBSTITUTE A KNOWN-GOOD GPS ANTENNA**, and recheck.

GETtheMANUALS.org

Does the symptom go away?

YES : Replace the original GPS antenna.

NO : REPLACE THE AUDIO-NAVIGATION UNIT .

NAVIGATION CANNOT CONTROL HVAC BY VOICE COMMAND

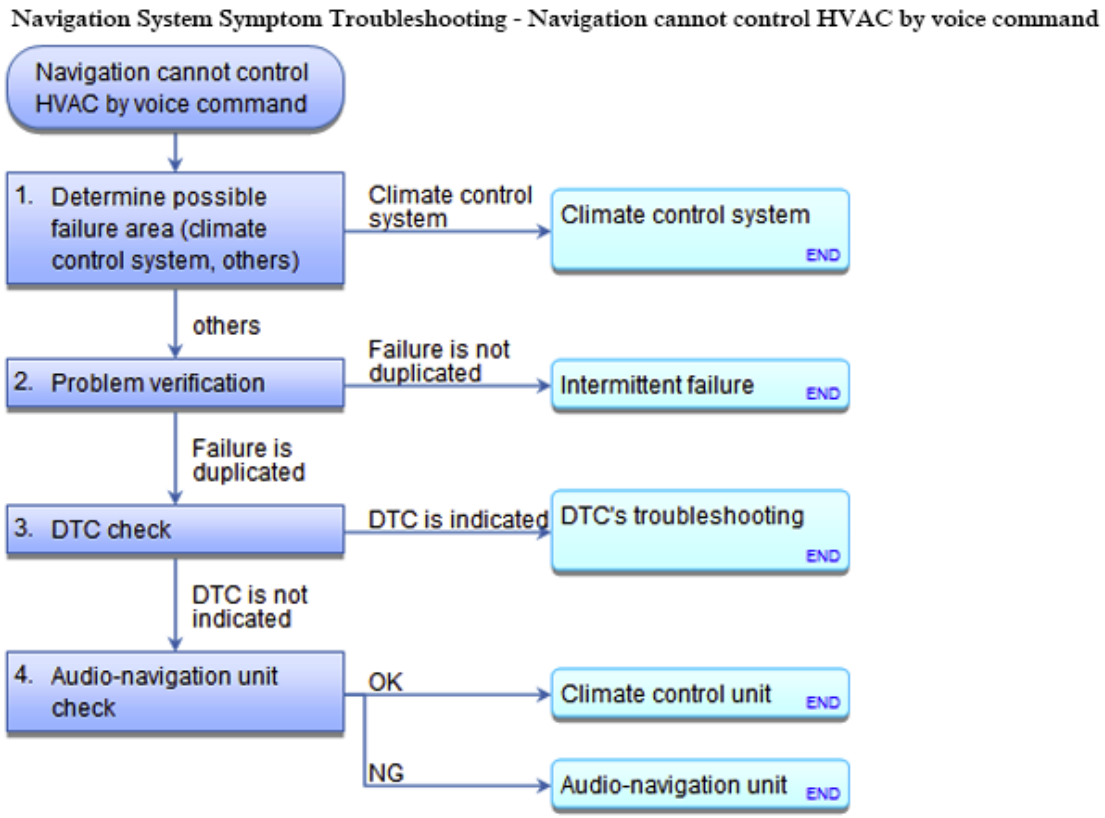

Fig. 110: Navigation System DTC Troubleshooting Flow Chart (Navigation Cannot Control HVAC By Voice Command)
Courtesy of AMERICAN HONDA MOTOR CO., INC.

NOTE:

- **CHECK THE VEHICLE BATTERY CONDITION FIRST .**
- **VERIFY THAT THE CORRECT AUDIO-NAVIGATION UNIT IS INSTALLED FOR THIS MODEL. GO INTO THE SYSTEM DIAGNOSTIC MODE, AND USE THE NAVI ECU.**
- **Check for B-CAN DTCs and resolve them before troubleshooting.**
- **Check any official Honda service website for more service information about the navigation system.**
- **Check the connectors for poor connections or loose terminals.**

1. Determine possible failure area (climate control system, others):

GETtheMANUALS.org

- 1. Start the engine.
- 2. Check the climate control system operation.

Does the system operate properly?

YES : Go to step 2.

NO : Refer to the climate control system symptom troubleshooting.

2. Problem verification:
   - 1. Pressing the TALK button, then give a voice command "Climate control" clearly in a natural speaking voice.

Does the climate control system turn on by the voice command?

YES : Intermittent failure, the system is OK at this time. Direct customers to review the available voice commands in the navigation manual.

NO : The failure is duplicated, go to step 3.

3. DTC check:
   - 1. **CHECK FOR HARD ERROR CODES**.

Are there any navigation DTCs indicated?

YES : Go to indicated DTC's troubleshooting.

NO : Go to step 4.

4. Audio-navigation unit check:
   - 1. Turn the ignition switch to LOCK (0).
   - 2. **SUBSTITUTE A KNOWN-GOOD CLIMATE CONTROL UNIT** , and recheck.

Does the symptom go away?

YES : Replace the original climate control unit.

NO : REPLACE THE AUDIO-NAVIGATION UNIT .

NAVIGATION DISPLAY BUTTONS DO NOT WORK OR RESPOND PROPERLY

GETtheMANUALS.org

Navigation System Symptom Troubleshooting - Navigation display buttons do not work or respond properly

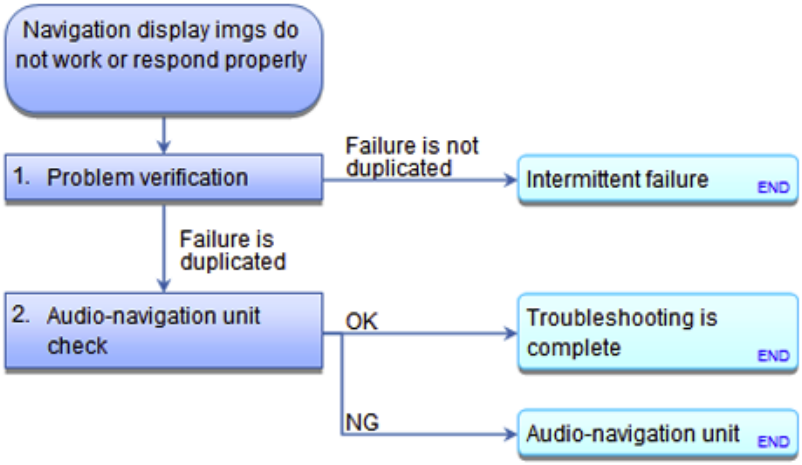

Fig. 111: Navigation System DTC Troubleshooting Flow Chart (Navigation Display Buttons Do Not Work Or Respond Properly)
Courtesy of AMERICAN HONDA MOTOR CO., INC.

NOTE:

- **CHECK THE VEHICLE BATTERY CONDITION FIRST .**
- **VERIFY THAT THE CORRECT AUDIO-NAVIGATION UNIT IS INSTALLED FOR THIS MODEL. GO INTO THE SYSTEM DIAGNOSTIC MODE, AND USE THE NAVI ECU.**
- **Check any official Honda service website for more service information about the navigation system.**

1. Problem verification:
   - 1. Turn the ignition switch to ON (II).
   - 2. Check if the navigation system operate properly by touching the display.

   Does the system operate properly?

   YES : Intermittent failure, the system is OK at this time.

   NO : The failure is duplicated, go to step 2.

2. Audio-navigation unit check:
   - 1. **GO INTO THE SYSTEM DIAGNOSTIC MODE, AND USE THE TOUCH PANEL CALIBRATION UNDER THE MONITOR CHECK MENU**.

   Does the symptom go away?

   YES : Troubleshooting is complete.

   NO : REPLACE THE AUDIO-NAVIGATION UNIT .

GETtheMANUALS.org

NAVIGATION DISPLAY STAYS ON WITH IGNITION SWITCH IN LOCK (0)

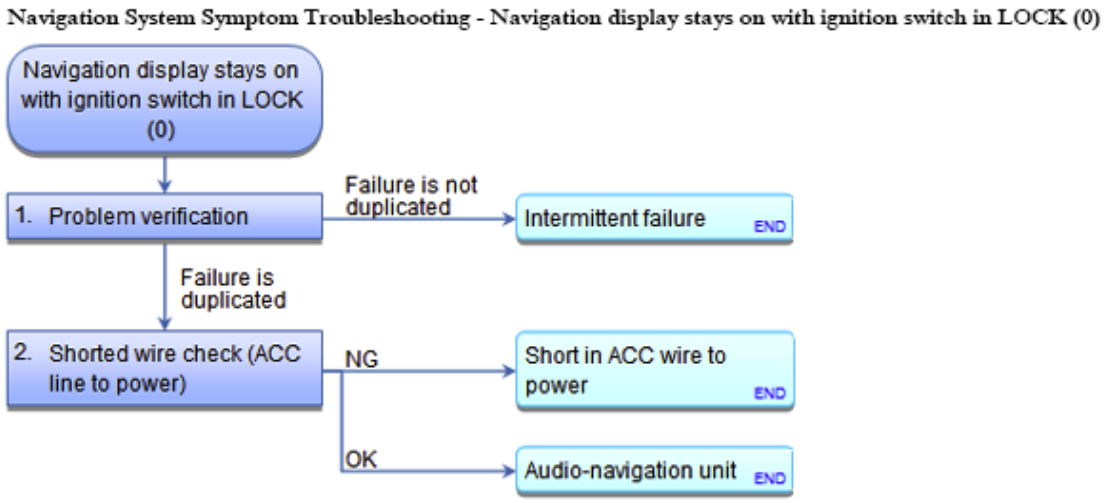

Fig. 112: Navigation System DTC Troubleshooting Flow Chart (Navigation Display Stays On With Ignition Switch In Lock)
Courtesy of AMERICAN HONDA MOTOR CO., INC.

NOTE:

- **Check for aftermarket accessories that may interfere with the navigation system.**
- **The vehicle may have been used for a show event. Check for a short jumper harness in-line with audio-navigation unit connector A (24P). If a jumper harness is present, remove it, and return it to Tech Line.**
- **Check any official Honda service website for more service information about the navigation system.**
- **Check the connectors for poor connections or loose terminals.**

1. Problem verification:
   - 1. Remove the key from the ignition.

   Does the navigation screen stay on?

   YES : The failure is duplicated, go to step 2.

   NO : Intermittent failure, the system is OK at this time.

2. Shorted wire check (ACC line to power):
   - 1. Measure the voltage between test points 1 and 2.

     Test condition IG LOCK (0)

     Test circuit ACC

GETtheMANUALS.org

Test point 1 Audio-navigation unit connector A (24P) No. 24 (PUR)

Test point 2 Body ground

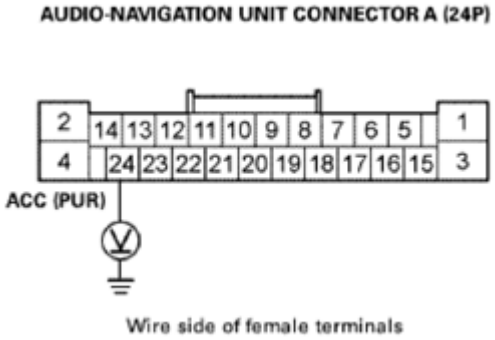

Fig. 113: Measuring Voltage Between Audio-Navigation Unit Connector A (24P) No. 24 And Body Ground
Courtesy of AMERICAN HONDA MOTOR CO., INC.

Is there battery voltage?

YES : Repair a short to power in the wire between the No. B19 (7.5 A) fuse in the under-dash fuse/relay box and the audio-navigation unit.

NO : REPLACE THE AUDIO-NAVIGATION UNIT .

NAVIGATION FREQUENTLY ASKS FOR ANTI-THEFT CODE AND/OR NEEDS GPS INITIALIZATION

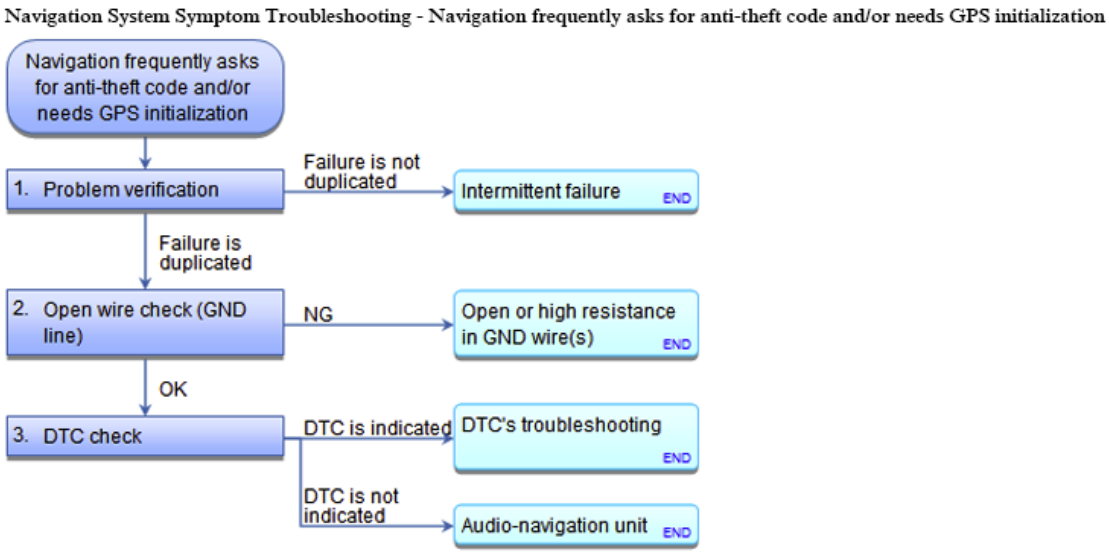

Fig. 114: Navigation System DTC Troubleshooting Flow Chart (Navigation Frequently Asks For Anti-Theft Code And/Or Needs GPS Initialization)
Courtesy of AMERICAN HONDA MOTOR CO., INC.

GETtheMANUALS.org

NOTE:

- **<u>CHECK THE VEHICLE BATTERY CONDITION FIRST</u> .**
- **Check any official Honda service website for more service information about the navigation system.**
- **Check the connectors for poor connections or loose terminals.**

1. Problem verification:
   - 1. Check if the Anti-Theft System screen or the CSF (GPS Initialization) screen is displayed every time the ignition switch is turned to ON (II).

   Is Anti-Theft System screen or CSF screen displayed every time?

   YES : The failure is duplicated, go to step 2.

   NO : Intermittent failure, the system is OK at this time.

2. Open wire check (GND line):
   - 1. Measure the voltage between test points 1 and 2.

     Test condition IG ON (II)

     Test circuit GND

     Test point 1 Audio-navigation unit connector A (24P) No. 1 (BLK)

     Test point 2 Body ground

     Test circuit GND

     Test point 1 Audio-navigation unit connector B (20P) No. 20 (BLK)

     Test point 2 Body ground

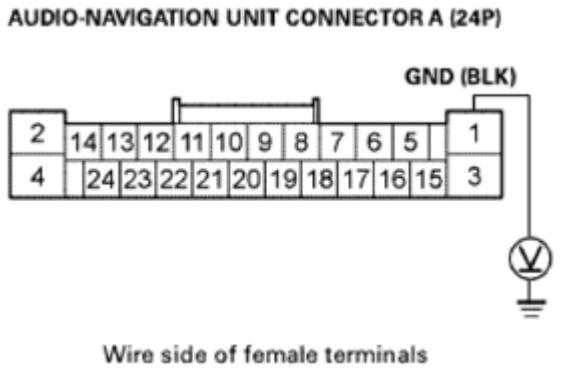

<u>Fig. 115: Measuring Voltage Between Audio-Navigation Unit Connector A (24P) No. 1 And Body Ground</u>
Courtesy of AMERICAN HONDA MOTOR CO., INC.

GETtheMANUALS.org

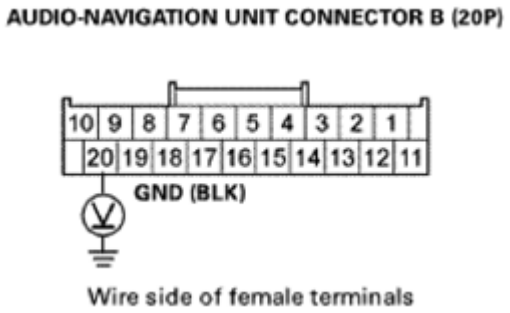

Fig. 116: Measuring Voltage Between Audio-Navigation Unit Connector A (20P) No. 20 And Body Ground
Courtesy of AMERICAN HONDA MOTOR CO., INC.

Is there less than 0.2 V?

YES : The GND wires are OK. Go to step 3.

NO : Repair an open or high resistance in the wire(s) between the audio-navigation unit and body ground (G502) and/or body ground (G503).

3. DTC check:
   - 1. **CHECK FOR HARD ERROR CODES**.

Are there any navigation DTCs indicated?

YES : Go to indicated DTC's troubleshooting.

NO : REPLACE THE AUDIO-NAVIGATION UNIT .

NO PICTURE IS DISPLAYED

GETtheMANUALS.org

Navigation System Symptom Troubleshooting - No picture is displayed

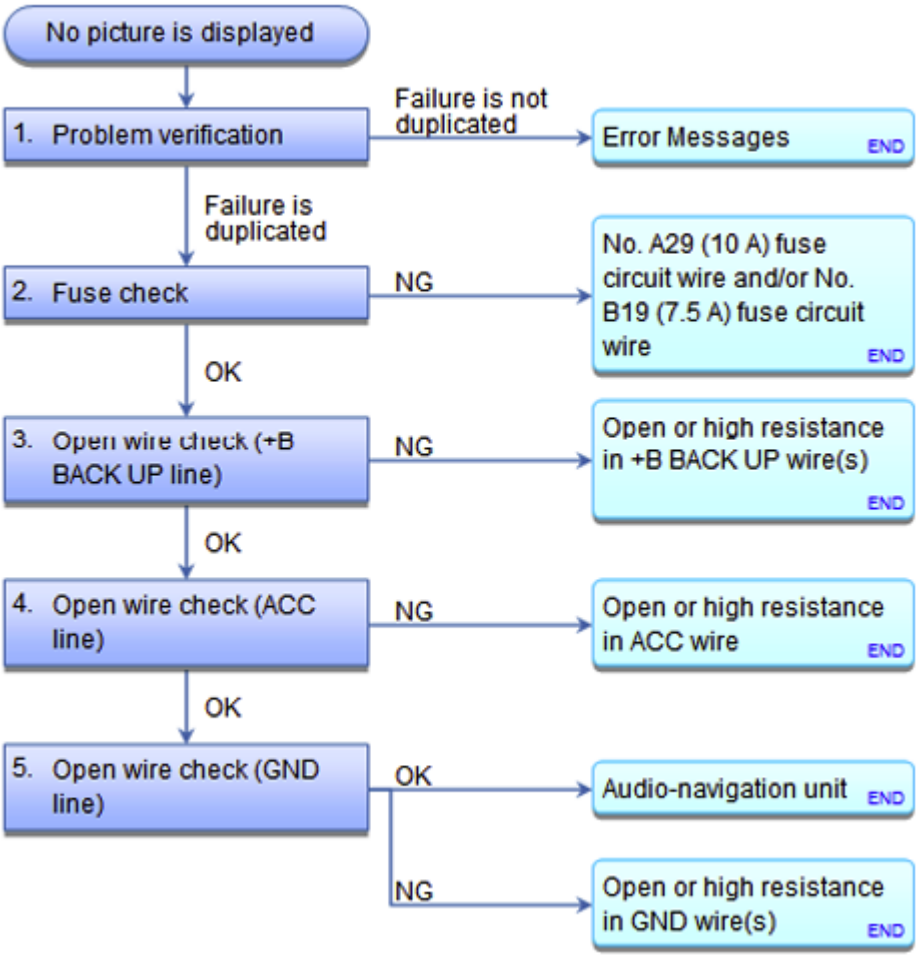

Fig. 117: Navigation System DTC Troubleshooting Flow Chart (No Picture Is Displayed)
Courtesy of AMERICAN HONDA MOTOR CO., INC.

NOTE:

- **CHECK THE VEHICLE BATTERY CONDITION FIRST .**
- **Check if the Day/Night ( ) button has been pressed, and turned off the display (see the Navigation Manual for more information).**
- **Check any official Honda service website for more service information about the navigation system.**
- **Check the connectors for poor connections or loose terminals.**

1. Problem verification:
   - 1. Turn the ignition switch to ON (II).
   - 2. Check if the navigation display indicates any error message.

Is an error message displayed?

YES : **REFER TO THE Error Messages**.

GETtheMANUALS.org

NO : The failure is duplicated, go to step 2.

2. Fuse check:
   - 1. Turn the ignition switch to LOCK (0).
   - 2. Check the following fuses.

     Fuse No. A29 (10 A)

     Location Under-hood fuse/relay box

     Fuse No. B19 (7.5 A)

     Location Under-dash fuse/relay box

Are the fuses OK?

YES : Go to step 3.

NO : Replace the fuse(s), and recheck. If the fuse(s) blows again, check for a short in the No. A29 (10 A) fuse and/or the No. B19 (7.5 A) fuse circuit(s).

3. Open wire check (+B BACK UP line):
   - 1. Measure the voltage between test points 1 and 2.

     Test condition IG LOCK (0)

     Test circuit +B BACK UP

     Test point 1 Audio-navigation unit connector A (24P) No. 3 (RED)

     Test point 2 Body ground

     Test circuit +B BACK UP

     Test point 1 Audio-navigation unit connector B (20P) No. 10 (RED)

     Test point 2 Body ground

GETtheMANUALS.org

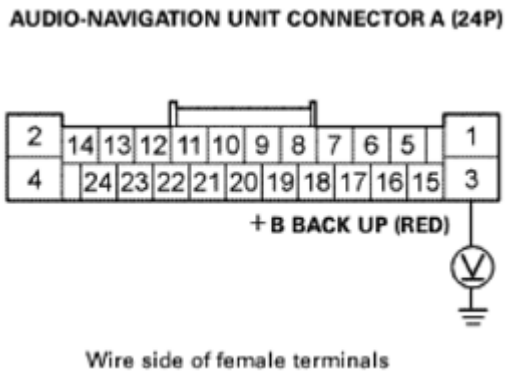

Fig. 118: Measuring Voltage Between Audio-Navigation Unit Connector A (24P) No. 3 And Body Ground
Courtesy of AMERICAN HONDA MOTOR CO., INC.

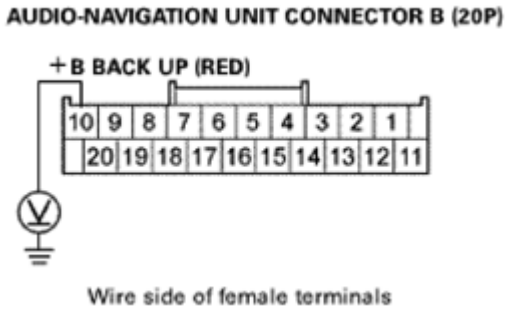

Fig. 119: Measuring Voltage Between Audio-Navigation Unit Connector B (20P) No. 10 And Body Ground
Courtesy of AMERICAN HONDA MOTOR CO., INC.

Is there battery voltage?

YES : The +B BACK UP wires are OK. Go to step 4.

NO : Repair an open or high resistance in the wire(s) between the No. A29 (10 A) fuse in the under-hood fuse/relay box and the audio-navigation unit.

4. Open wire check (ACC line):
   - 1. Turn the ignition switch to ON (II).
   - 2. Measure the voltage between test points 1 and 2.

     Test condition IG ON (II)

     Test circuit ACC

     Test point 1 Audio-navigation unit connector A (24P) No. 24 (PUR)

     Test point 2 Body ground

GETtheMANUALS.org

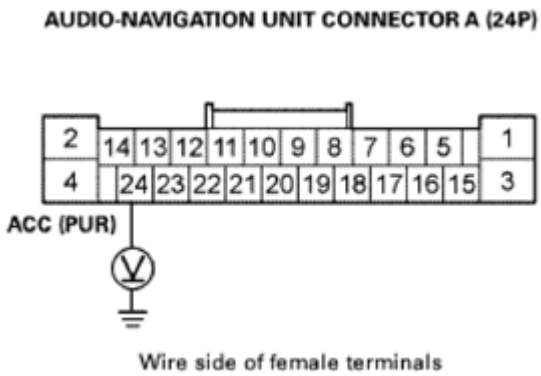

Fig. 120: Measuring Voltage Between Audio-Navigation Unit Connector A (24P) No. 24 And Body Ground
Courtesy of AMERICAN HONDA MOTOR CO., INC.

Is there battery voltage?

YES : The ACC wire is OK. Go to step 5.

NO : Repair an open or high resistance in the wire between the No. B19 (7.5 A) fuse in the under-dash fuse/relay box and the audio-navigation unit.

5. Open wire check (GND line):
   - 1. Measure the voltage between test points 1 and 2.

     Test condition IG ON (II)

     Test circuit GND

     Test point 1 Audio-navigation unit connector A (24P) No. 1 (BLK)

     Test point 2 Body ground

     Test circuit GND

     Test point 1 Audio-navigation unit connector B (20P) No. 20 (BLK)

     Test point 2 Body ground

GETtheMANUALS.org

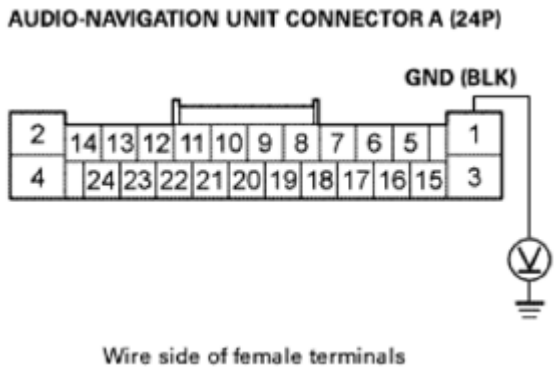

Fig. 121: Measuring Voltage Between Audio-Navigation Unit Connector A (24P) No. 1 And Body Ground
Courtesy of AMERICAN HONDA MOTOR CO., INC.

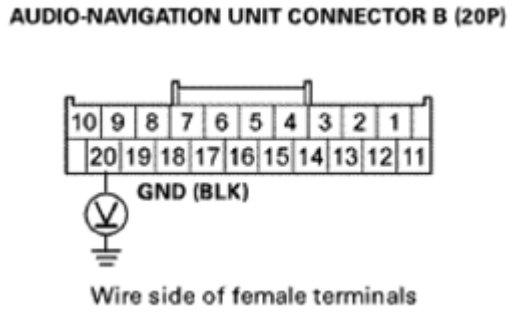

Fig. 122: Measuring Voltage Between Audio-Navigation Unit Connector B (20P) No. 20 And Body Ground
Courtesy of AMERICAN HONDA MOTOR CO., INC.

Is there less than 0.2 V?

YES : REPLACE THE AUDIO-NAVIGATION UNIT .

NO : Repair an open or high resistance in the wire(s) between the audio-navigation unit and body ground (G502) and/or body ground (G503).

PICTURE HAS LINES/ROLLS/OTHER ISSUES OR IS AN ODD COLOR

GETtheMANUALS.org

Navigation System Symptom Troubleshooting - Picture has lines/rolls/other issues or is an odd color

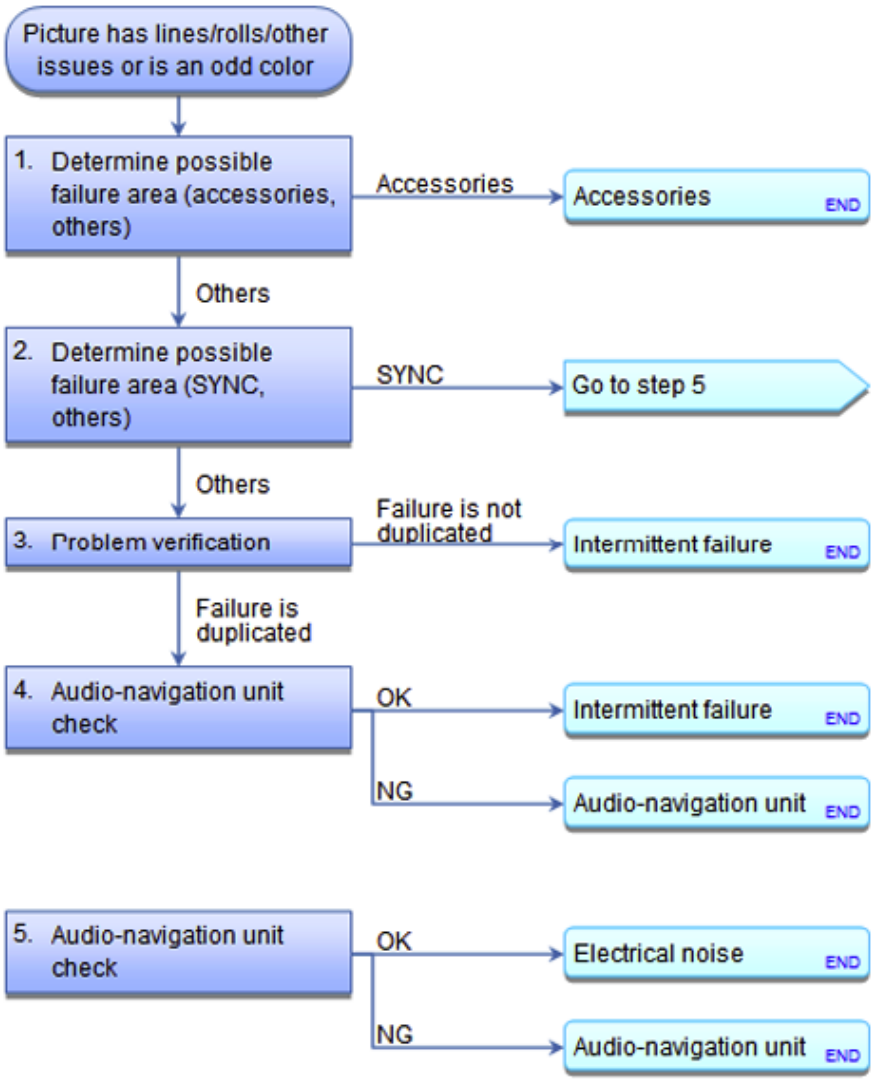

Fig. 123: Navigation System DTC Troubleshooting Flow Chart (Picture Has Lines/Rolls/Other Issues Or Odd Color)
Courtesy of AMERICAN HONDA MOTOR CO., INC.

NOTE:

- **CHECK THE VEHICLE BATTERY CONDITION FIRST .**
- **Always compare the screen image to a known-good vehicle. If the screen looks the same, inform the customer that it is a characteristic of the system.**
- **Check the navigation screen settings for brightness, contrast, black level, and check the color screen for map color and menu color.**
- **Check any official Honda service website for more service information about the navigation system.**

1. Determine possible failure area (accessories, others):

GETtheMANUALS.org

- 1. Check for any electronic aftermarket accessories (possibly hidden) mounted near the audio-navigation unit.

Are there any electronic accessories?

YES : Remove the accessories, and recheck.

NO : Go to step 2.

2. Determine possible failure area (SYNC, others):
   - 1. Start the engine.
   - 2. Start up the navigation screen, and check it.

Is the picture scrolling horizontally (left to right or right to left), have lines across the screen, or is blurry?

YES : Go to step 5.

NO : Go to step 3.

3. Problem verification:
   - 1. Check the navigation screen.

Is the picture an odd color?

YES : The failure is duplicated, go to step 4.

NO : Intermittent failure, the system is OK at this time.

4. Audio-navigation unit check:
   - 1. **GO INTO THE SYSTEM DIAGNOSTIC MODE, AND USE THE RGB COLOR DIAGNOSIS UNDER THE MONITOR CHECK MENU**.

Are the red, green, and blue colored circle shown?

YES : Intermittent failure, the system is OK at this time.

NO : REPLACE THE AUDIO-NAVIGATION UNIT .

5. Audio-navigation unit check:
   - 1. Turn the ignition switch to LOCK (0) and then back to ON (II), and observe the navigation picture.

Did the image improve?

YES : Check for sources of electrical noise, such as charging system or ignition system.

GETtheMANUALS.org

NO : REPLACE THE AUDIO-NAVIGATION UNIT .

POOR RDS-TMC RECEPTION OR INTERFERENCE

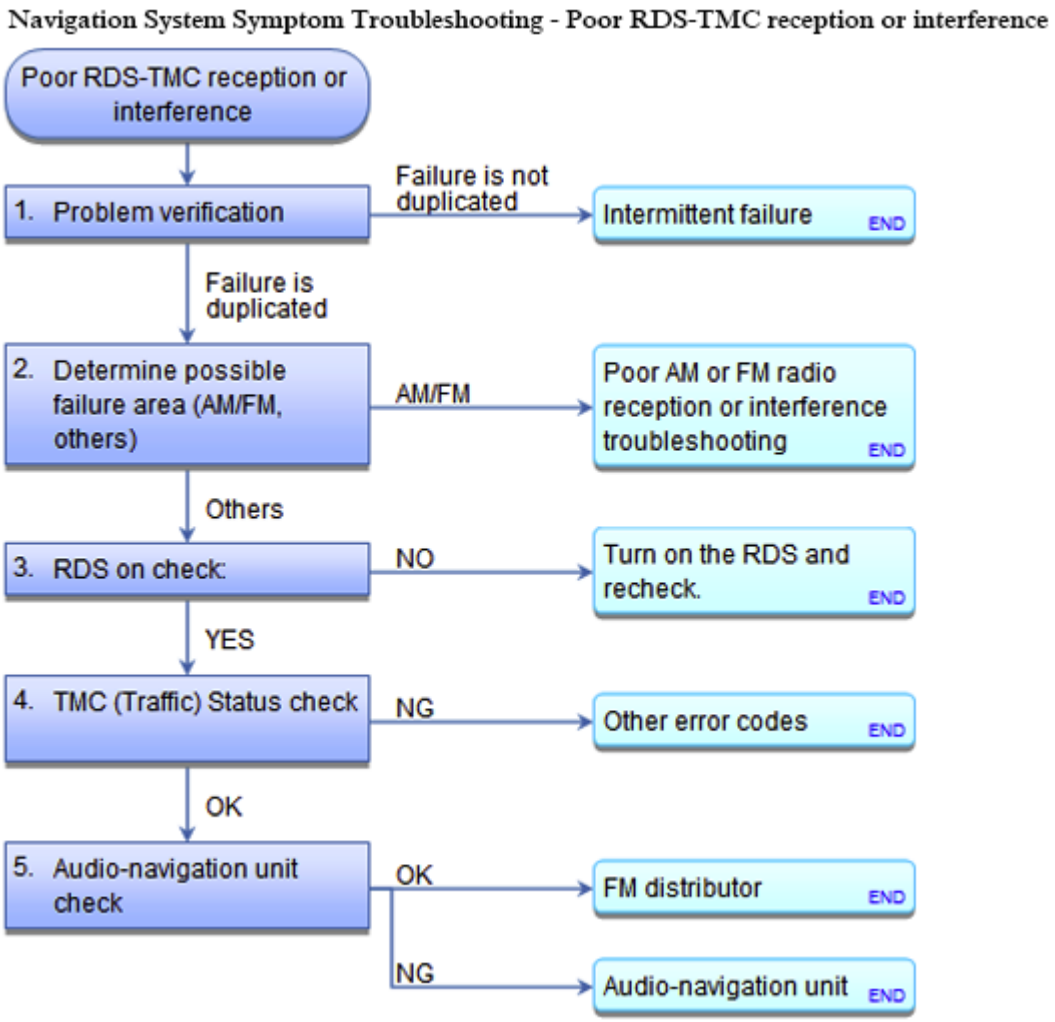

Fig. 124: Navigation System DTC Troubleshooting Flow Chart (Poor RDS-TMC Reception Or Interference)
Courtesy of AMERICAN HONDA MOTOR CO., INC.

NOTE:

- **CHECK THE VEHICLE BATTERY CONDITION FIRST .**
- **Check for aftermarket accessories including cell phones and chargers plugged into the vehicle accessory power sockets.**
- **For more information about TMC (traffic) including a list of frequently asked questions, go to hondacars.com/traffic.**
- **Check the RDS-TMC reception in an open area. Poor reception/interference can be caused by the following;**
  - **The RDS-TMC station is too far away**

GETtheMANUALS.org

    - **Atmospheric condition are unfavorable**
    - **Tall buildings, mountains, or high-voltage power lines are nearby**
  - **Make sure you compare the traffic function to a known-good vehicle under the same conditions because the problem may be the traffic signal, not the vehicle.**
  - **Check any official Honda service website for more service information about the navigation system.**
  - **Check the connectors for poor connections or loose terminals.**

1. Problem verification:
    - 1. Turn the ignition switch to ON (II).
    - 2. Check if the TMC information is displayed on the navigation map screen.

   Is the TMC information displayed?

   YES : Intermittent failure, the system is OK at this time.

   NO : The failure is duplicated, go to step 2.

2. Determine possible failure area (AM/FM, others):
    - 1. Turn on the audio system, and set the proper AM or FM radio station.

   Does the AM or the FM radio play?

   YES : Go to step 3.

   NO : Go to **Poor AM or FM radio reception or interference (Navigation)** troubleshooting.

3. RDS on check:
    - 1. Check that the RDS-TMC (traffic is turned on (refer to the O/M).

   Is the RDS-TMC turned on?

   YES : Go to step 4.

   NO : Turn on the RDS and recheck.

4. TMC (Traffic) Status check
    - 1. **ENTER THE SYSTEM DIAGNOSTIC MODE** and check the TMC (Traffic) status.

GETtheMANUALS.org

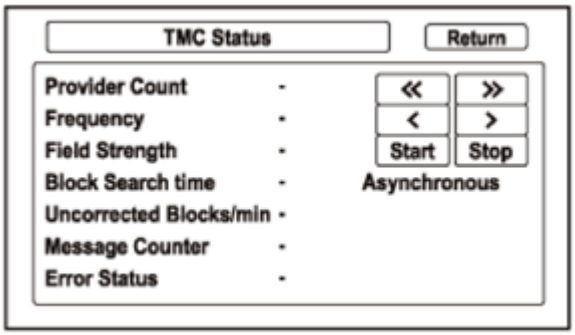

Fig. 125: Display - TMC Status Screen
Courtesy of AMERICAN HONDA MOTOR CO., INC.

Does the TMC error status indicate 0?

YES : Go to step 5.

NO : Repair the indicated error.

5. Audio-navigation unit check:
   - 1. Turn the ignition switch to LOCK (0).
   - 2. SUBSTITUTE A KNOWN-GOOD FM DISTRIBUTOR , and recheck.

Does the symptom go away?

YES : Replace the original FM distributor.

NO : REPLACE THE AUDIO-NAVIGATION UNIT .

REARVIEW CAMERA IMAGE DOES NOT CHANGE

GETtheMANUALS.org

Navigation System Symptom Troubleshooting - Rearview camera image does not change

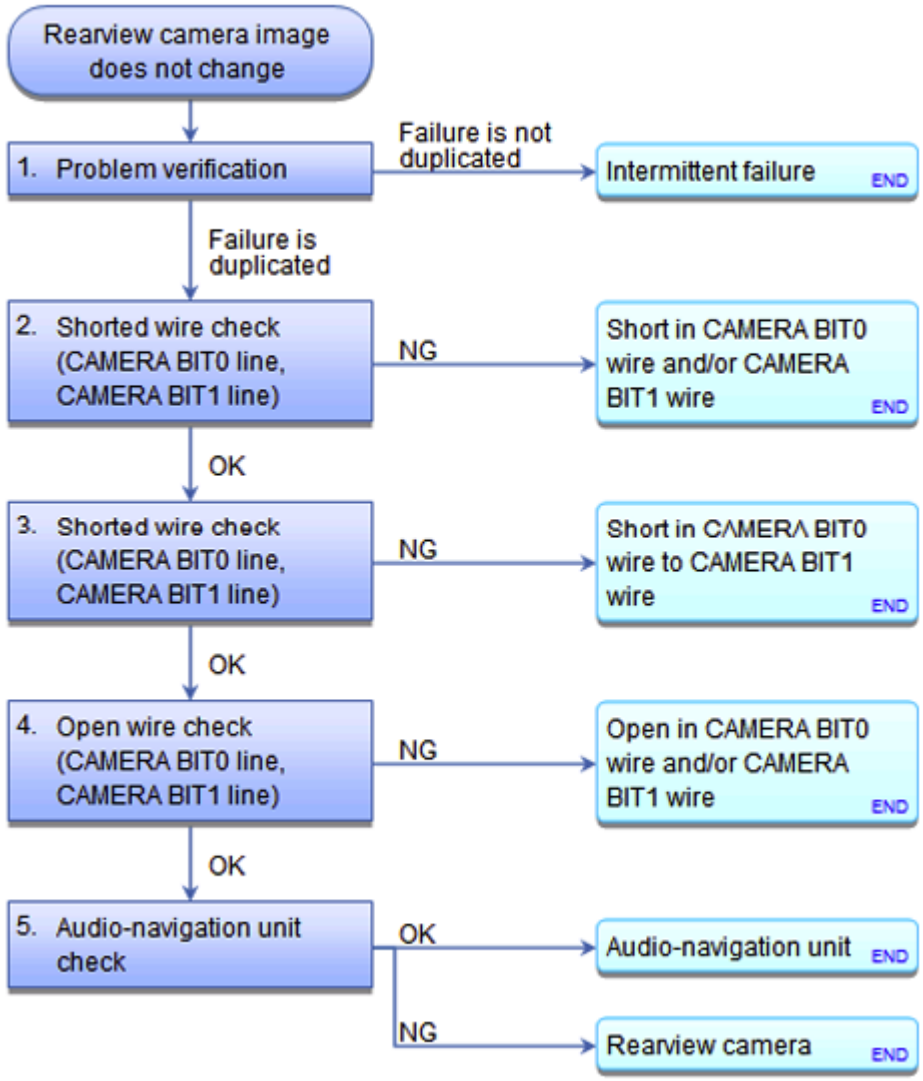

Fig. 126: Navigation System DTC Troubleshooting Flow Chart (Rearview Camera Image Does Not Change)
Courtesy of AMERICAN HONDA MOTOR CO., INC.

NOTE:

- **You can select three different rearview camera angles for backing up. If there is no camera image on the display, go to Rearview camera image does not come on or work properly troubleshooting.**
- **Check the connectors for poor connections or loose terminals.**

1. Problem verification:
   - 1. Turn the ignition switch to ON (II).
   - 2. Move the shift lever to R.
   - 3. Press the ENTER button to see if the rearview image changes between the wide view, the normal view, and the top down view in this order.

GETtheMANUALS.org

Does the rearview camera image change properly?

YES : Intermittent failure, the system is OK at this time.

NO : The failure is duplicated, go to step 2.

2. Shorted wire check (CAMERA BIT0 line, CAMERA BIT1 line):
    - 1. Move the shift lever to P or N.
    - 2. Turn the ignition switch to LOCK (0).
    - 3. Disconnect the following connector.

      Audio-navigation unit connector B (20P)

      Rearview camera 12P connector

    - 4. Check for continuity between test points 1 and 2.

      Test condition IG LOCK (0)

      Audio-navigation unit connector B (20P): disconnected

      Rearview camera 12P connector: disconnected

      Test circuit CAMERA BIT0

      Test point 1 Rearview camera 12P connector No. 2 (GRN)

      Test point 2 Body ground

      Test circuit CAMERA BIT1

      Test point 1 Rearview camera 12P connector No. 1 (BLU)

      Test point 2 Body ground

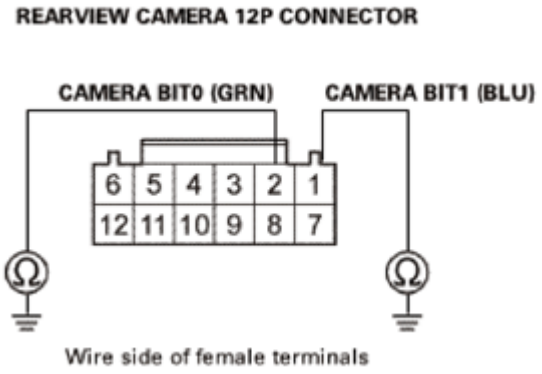

GETtheMANUALS.org

Fig. 127: Checking Continuity Between Rearview Camera 12P Connector No. 1, 2 And Body Ground
Courtesy of AMERICAN HONDA MOTOR CO., INC.

Is there continuity?

YES : Repair a short to body ground in the wire(s) between the rearview camera and the audio-navigation unit.

NO : The CAMERA BIT0 and the CAMERA BIT1 wires are not shorted to ground. Go to step 3.

3. Shorted wire check (CAMERA BIT0 line, CAMERA BIT1 line):
   - 1. Check for continuity between test points 1 and 2.

     Test condition IG LOCK (0)

     Audio-navigation unit connector B (20P): disconnected

     Rearview camera 12P connector: disconnected

     Test circuit CAMERA BIT0, CAMERA BIT1

     Test point 1 Rearview camera 12P connector No. 2 (GRN)

     Test point 2 Rearview camera 12P connector No. 1 (BLU)

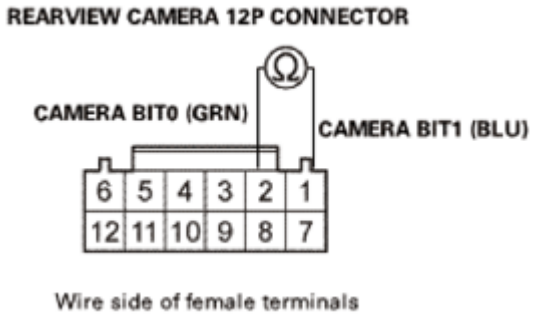

Fig. 128: Checking Continuity Between Rearview Camera 12P Connector No. 1 And 2
Courtesy of AMERICAN HONDA MOTOR CO., INC.

Is there continuity?

YES : Repair a short in the wires between the rearview camera and the audio-navigation unit.

NO : The CAMERA BIT0 and the CAMERA BIT1 wires are not shorted. Go to step 4.

4. Open wire check (CAMERA BIT0 line, CAMERA BIT1 line):
   - 1. Check for continuity between test points 1 and 2.

GETtheMANUALS.org

Test condition IG LOCK (0)

Audio-navigation unit connector B (20P): disconnected

Rearview camera 12P connector: disconnected

Test circuit CAMERA BIT0

Test point 1 Audio-navigation unit connector B (20P) No. 4 (GRN)

Test point 2 Rearview camera 12P connector No. 2 (GRN)

Test circuit CAMERA BIT1

Test point 1 Audio-navigation unit connector B (20P) No. 15 (BLU)

Test point 2 Rearview camera 12P connector No. 1 (BLU)

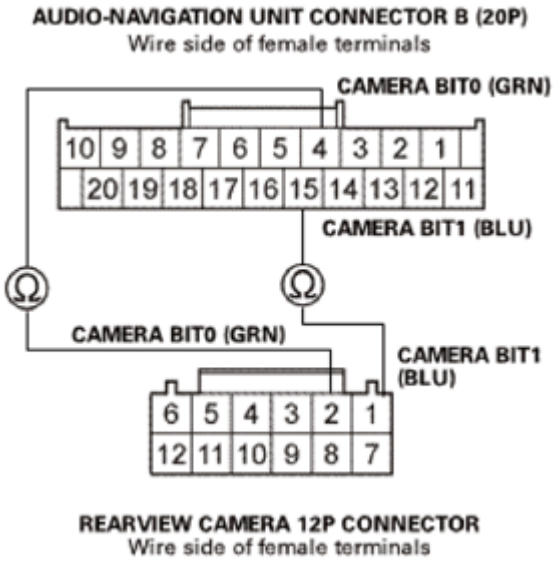

Fig. 129: Checking Continuity Between Audio-Navigation Unit Connector B (20P) And Rearview Camera 12P Connector Terminals
Courtesy of AMERICAN HONDA MOTOR CO., INC.

Is there continuity?

YES : The CAMERA BIT0 and the CAMERA BIT1 wires are OK. Go to step 5.

NO : Repair an open in the wire(s) between the rearview camera and the audio-navigation unit.

5. Audio-navigation unit check:
    - 1. Turn the ignition switch to LOCK (0).

GETtheMANUALS.org

- 2. SUBSTITUTE A KNOWN-GOOD AUDIO-NAVIGATION UNIT , and recheck.

Does the symptom go away?

YES : Replace the original audio-navigation unit.

NO : **REPLACE THE REARVIEW CAMERA** .

REARVIEW CAMERA IMAGE DOES NOT COME ON OR WORK PROPERLY

GETtheMANUALS.org

Navigation System Symptom Troubleshooting - Rearview camera image does not come on or work properly

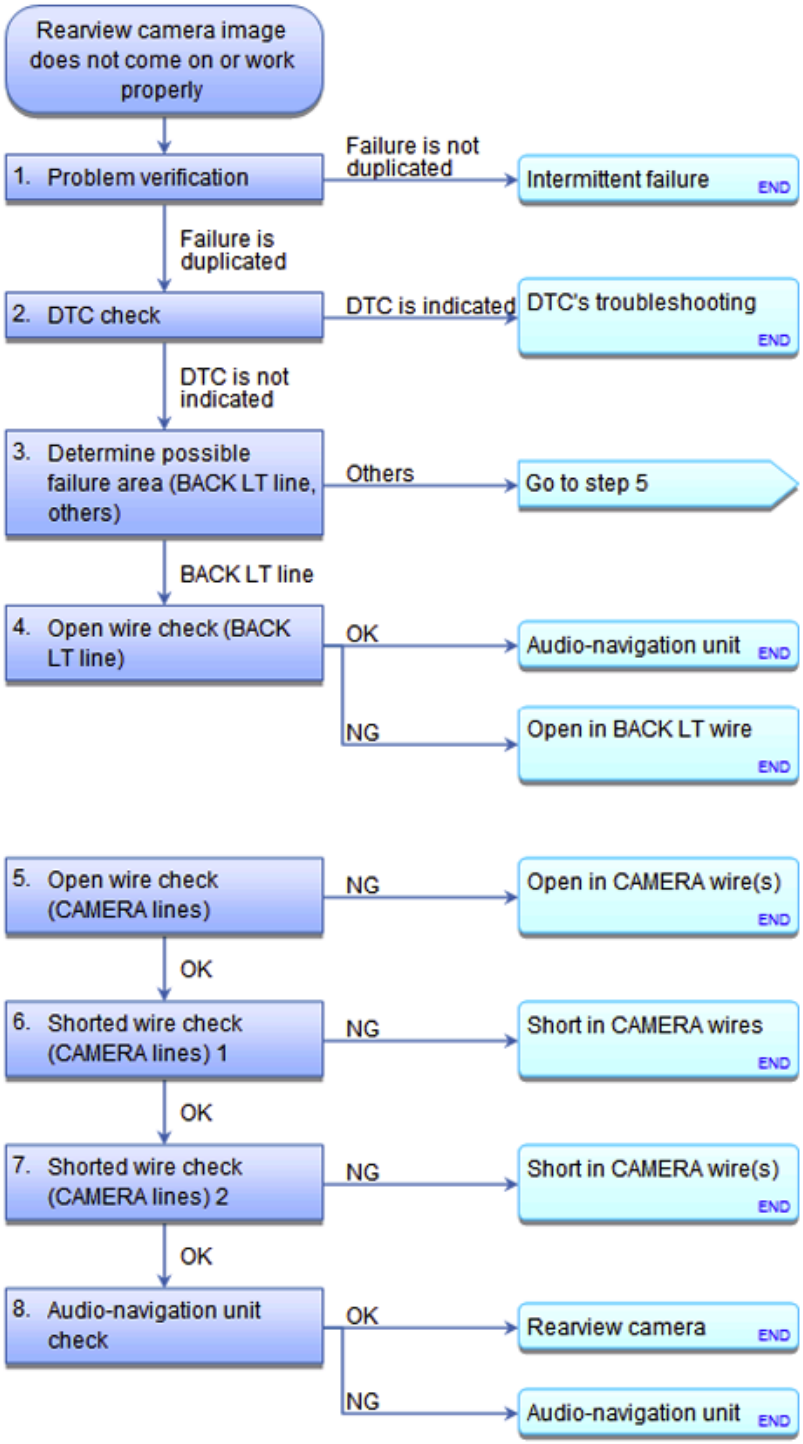

Fig. 130: Navigation System DTC Troubleshooting Flow Chart (Rearview Camera Image Does Not Come On Or Work Properly)
Courtesy of AMERICAN HONDA MOTOR CO., INC.

NOTE:

- **CHECK THE VEHICLE BATTERY CONDITION FIRST .**

GETtheMANUALS.org

- **Check the connectors for poor connections or loose terminals.**

1. Problem verification:
   - 1. Turn the ignition switch to ON (II).
   - 2. Move the shift lever to R.

   Does the navigation display image change when the shift lever is in R?

   YES : Intermittent failure, the system is OK at this time.

   NO : The failure is duplicated, go to step 2.

2. DTC check:
   - 1. Move the shift lever to P or N.
   - 2. **CHECK FOR HARD ERROR CODES**.

   Are there any navigation DTCs indicated?

   YES : Go to indicated DTC's troubleshooting.

   NO : Go to step 3.

3. Determine possible failure area (BACK LT line, others):
   - 1. **GO INTO THE SYSTEM DIAGNOSTIC MODE, AND USE THE CAR STATUS DIAGNOSIS TO CHECK THE BACK SIGNAL**.
   - 2. Move the shift lever to R.

   Does the BACK signal change from [0] to [1] when the shift lever position is changed from P or N to R?

   YES : Go to step 5.

   NO : Go to step 4.

4. Open wire check (BACK LT line):
   - 1. Move the shift lever to P or N.
   - 2. Turn the ignition switch to LOCK (0).
   - 3. Disconnect the following connector.

     Audio-navigation unit connector B (20P)

   - 4. Turn the ignition switch to ON (II).
   - 5. Move the shift lever to R.
   - 6. Measure the voltage between test points 1 and 2.

GETtheMANUALS.org

Test condition IG ON (II)

Audio-navigation unit connector B (20P): disconnected

Test circuit BACK LT

Test point 1 Audio-navigation unit connector B (20P) No. 9 (BRN)

Test point 2 Body ground

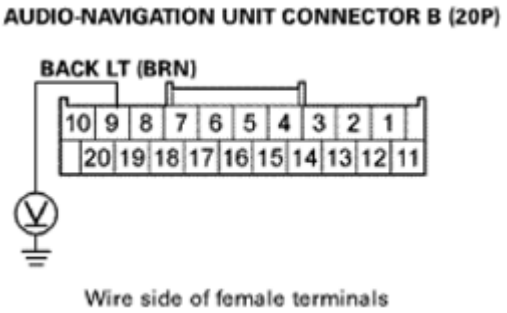

Fig. 131: Measuring Voltage Between Audio-Navigation Unit Connector B (20P) No. 9 And Body Ground
Courtesy of AMERICAN HONDA MOTOR CO., INC.

Is there battery voltage?

YES : REPLACE THE AUDIO-NAVIGATION UNIT .

NO : Repair an open in the wire between the audio-navigation unit and the under-dash fuse/relay box.

5. Open wire check (CAMERA lines):
   - 1. Move the shift lever to P or N.
   - 2. Turn the ignition switch to LOCK (0).
   - 3. Disconnect the following connectors.

     Audio-navigation unit connector F (7P)

     Rearview camera 12P connector

   - 4. Check for continuity between test points 1 and 2.

     Test condition IG LOCK (0)

     Audio-navigation unit connector F (7P): disconnected

     Rearview camera 12P connector: disconnected

GETtheMANUALS.org

Test circuit	Test point 1: Audio-navigation unit connector F (7P)	Test point 2: Rearview camera 12P connector
SH CAMERA	No. 2 (GRY)	No. 12 (GRY)
CAMERA V	No. 3 (RED)	No. 9 (RED)
CAMERA V GND	No. 4 (WHT)	No. 6 (WHT)
CAMERA GND	No. 6 (GRN)	No. 7 (BLK)
CAMERA VCC	No. 7 (YEL)	No. 4 (GRN)

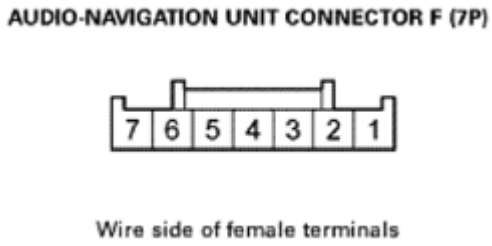

Fig. 132: Identifying Audio-Navigation Unit Connector F (7P) Terminals
Courtesy of AMERICAN HONDA MOTOR CO., INC.

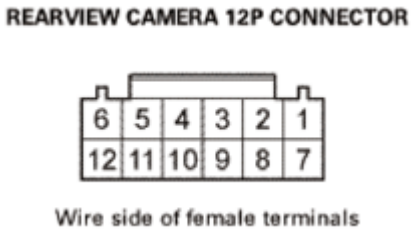

Fig. 133: Identifying Rearview Camera 12P Connector Terminals
Courtesy of AMERICAN HONDA MOTOR CO., INC.

Is there continuity?

YES : The CAMERA wires are not open. Go to step 6.

NO : There is an open in the wire(s) between the audio-navigation unit and the rearview camera. Replace the affected shielded harness.

6. Shorted wire check (CAMERA lines) 1:
   - 1. Check for continuity between test points 1 and 2.

     Test condition IG LOCK (0)

     Audio-navigation unit connector F (7P): disconnected

     Rearview camera 12P connector: disconnected

GETtheMANUALS.org

Test circuits	Connector: Audio-navigation unit connector F (7P)	
	Test point 1	Test points 2
SH CAMERA to CAMERA V, CAMERA V GND, CAMERA GND, CAMERA VCC	No. 2 (GRY)	No. 3 (RED), No. 4 (WHT), No. 6 (GRN), No. 7 (YEL)
CAMERA V to CAMERA V GND, CAMERA GND, CAMERA VCC	No. 3 (RED)	No. 4 (WHT), No. 6 (GRN), No. 7 (YEL)
CAMERA V GND to CAMERA GND, CAMERA VCC	No. 4 (WHT)	No. 6 (GRN), No. 7 (YEL)
CAMERA GND to CAMERA VCC	No. 6 (GRN)	No. 7 (YEL)

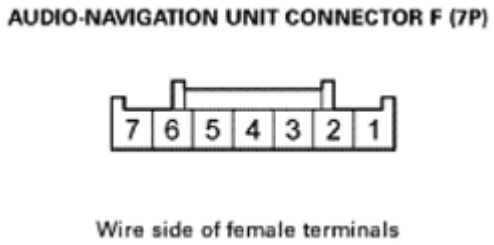

Fig. 134: Identifying Audio-Navigation Unit Connector F (7P) Terminals
Courtesy of AMERICAN HONDA MOTOR CO., INC.

Is there continuity between any of the terminals?

YES : There is a short in the wires between the audio-navigation unit and the rearview camera. Replace the affected shielded harness.

NO : The CAMERA wires are not shorted in the wires. Go to step 7.

7. Shorted wire check (CAMERA lines) 2:
   - 1. Check for continuity between these test points and body ground individually.

     Test condition IG LOCK (0)

     Audio-navigation unit connector F (7P): disconnected

     Rearview camera 12P connector: disconnected

Connector	Test circuit	Terminal
Audio-navigation unit connector F (7P)	CAMERA V	No. 3 (RED)
	CAMERA V GND	No. 4 (WHT)
	CAMERA GND	No. 6 (GRN)
	CAMERA VCC	No. 7 (YEL)

GETtheMANUALS.org

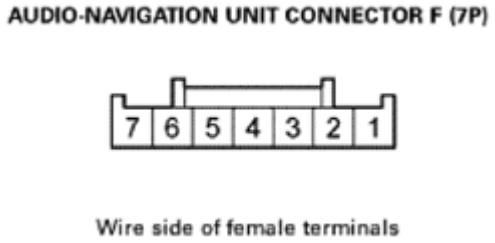

Fig. 135: Identifying Audio-Navigation Unit Connector F (7P) Terminals
Courtesy of AMERICAN HONDA MOTOR CO., INC.

Is there continuity?

YES : There is a short to body ground in the wire(s) between the audio-navigation unit and the rearview camera. Replace the affected shielded harness.

NO : The CAMERA wires are OK. Go to step 8.

8. Audio-navigation unit check:
   - 1. **SUBSTITUTE A KNOWN-GOOD REARVIEW CAMERA** , and recheck.

Does the symptom go away?

YES : Replace the original rearview camera.

NO : REPLACE THE AUDIO-NAVIGATION UNIT .

SYSTEM LOCKS UP OR FREEZES CONSTANTLY

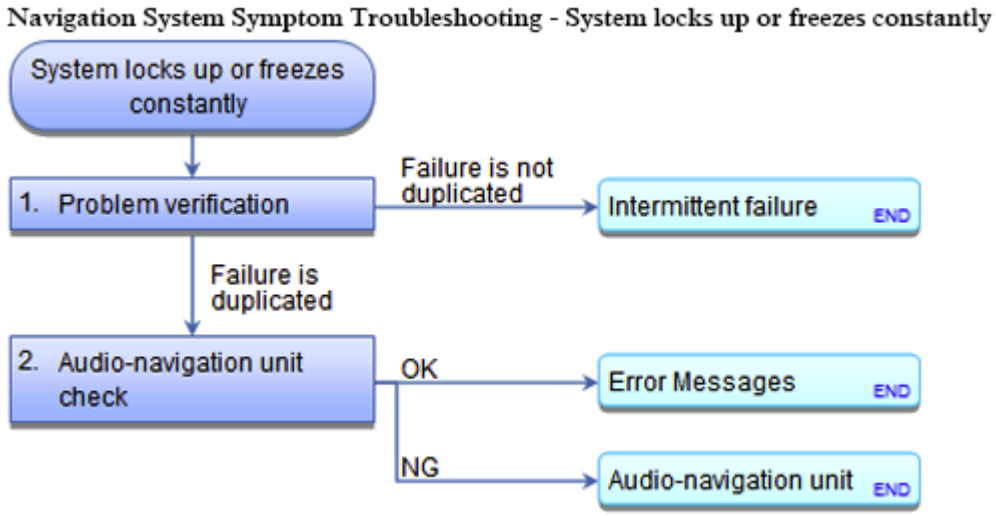

Fig. 136: Navigation System DTC Troubleshooting Flow Chart (System Locks Up Or Freezes Constantly)
Courtesy of AMERICAN HONDA MOTOR CO., INC.

GETtheMANUALS.org

NOTE:

- **CHECK THE VEHICLE BATTERY CONDITION FIRST .**
- **VERIFY THAT THE CORRECT AUDIO-NAVIGATION UNIT IS INSTALLED FOR THIS MODEL. GO INTO THE SYSTEM DIAGNOSTIC MODE, AND USE THE NAVI ECU.**
- **Check any official Honda service website for more service information about the navigation system.**

1. Problem verification:
   - 1. Turn the ignition switch to LOCK (0) and then back to ON (II).

   Does the system reboot, lock up, or freeze?

   YES : The failure is duplicated, go to step 2.

   NO : Intermittent failure, the system is OK at this time.

2. Audio-navigation unit check:
   - 1. Check if the navigation display indicates any error message.

   Is an error message displayed?

   YES : **REFER TO THE ERROR MESSAGES**.

   NO : REPLACE THE AUDIO-NAVIGATION UNIT .

VEHICLE POSITION ICON CONSTANTLY LEAVES ROAD, MOVES ERRATICALLY, OR IS DISPLAYED VERY FAR FROM ACTUAL VEHICLE POSITION

GETtheMANUALS.org

Navigation System Symptom Troubleshooting - Vehicle position icon constantly leaves road, moves erratically, or is displayed very far from actual vehicle position

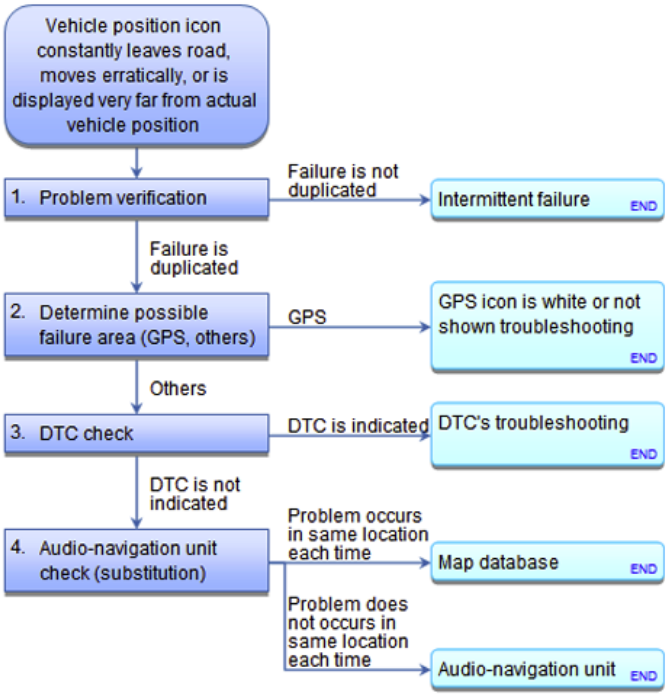

Fig. 137: Navigation System DTC Troubleshooting Flow Chart (Vehicle Position Icon Constantly Leaves Road Or Moves Erratically)
Courtesy of AMERICAN HONDA MOTOR CO., INC.

NOTE:

- **CHECK THE VEHICLE BATTERY CONDITION FIRST .**
- **Check the GPS signal reception in an open area.**
- **This is not the same condition as when driving off-road (or on a fire or logging road). This condition is caused by a loss of map matching from a bad sensor input. Check for aftermarket metallic window tinting or other objects that can block the GPS signal. ALWAYS DO THE MAP MATCHING BEFORE PROCEEDING WITH THE TROUBLESHOOTING.**
- **Make sure that the latest navigation software is installed.**
- **Check any official Honda service website for more service information about the navigation system.**

1. Problem verification:
    - 1. Park the vehicle in an open area.
    - 2. Turn the ignition switch to ON (II).
    - 3. Check if the vehicle position icon displays the actual vehicle position.

Does the vehicle position icon display the actual vehicle position?

YES : Intermittent failure, the system is OK at this time.

GETtheMANUALS.org

NO : The failure is duplicated, go to step 2.

2. Determine possible failure area (GPS, others):
   - 1. Check the GPS icon on the navigation screen.

   Is the GPS icon white or missing?

   YES : Go to **GPS icon is white or not shown** troubleshooting.

   NO : Go to step 3.

3. DTC check:
   - 1. **CHECK FOR HARD ERROR CODES**.

   Are there any navigation DTCs indicated?

   YES : Go to indicated DTC's troubleshooting.

   NO : Go to step 4.

4. Audio-navigation unit check (substitution):
   - 1. Turn the ignition switch to LOCK (0).
   - 2. SUBSTITUTE A KNOWN-GOOD AUDIO-NAVIGATION UNIT , and check to see if the problem occurs in the same place.

   Does the problem occur in the same location each time?

   YES : Try to replicate the problem in a known-good vehicle. If the problem can be duplicated, the problem is in the map database. Report the problem according to the Navigation Manual under Reporting Errors.

   NO : Replace the original audio-navigation unit.

VEHICLE POSITION ICON WANDERS ACROSS THE MAP WHEN DRIVING (DOES NOT FOLLOW A DISPLAYED ROAD) OR MAP VEHICLE ICON SPINS

GETtheMANUALS.org

Navigation System Symptom Troubleshooting - Vehicle position icon wanders across the map when driving (does not follow a displayed road) or map vehicle ICON spins

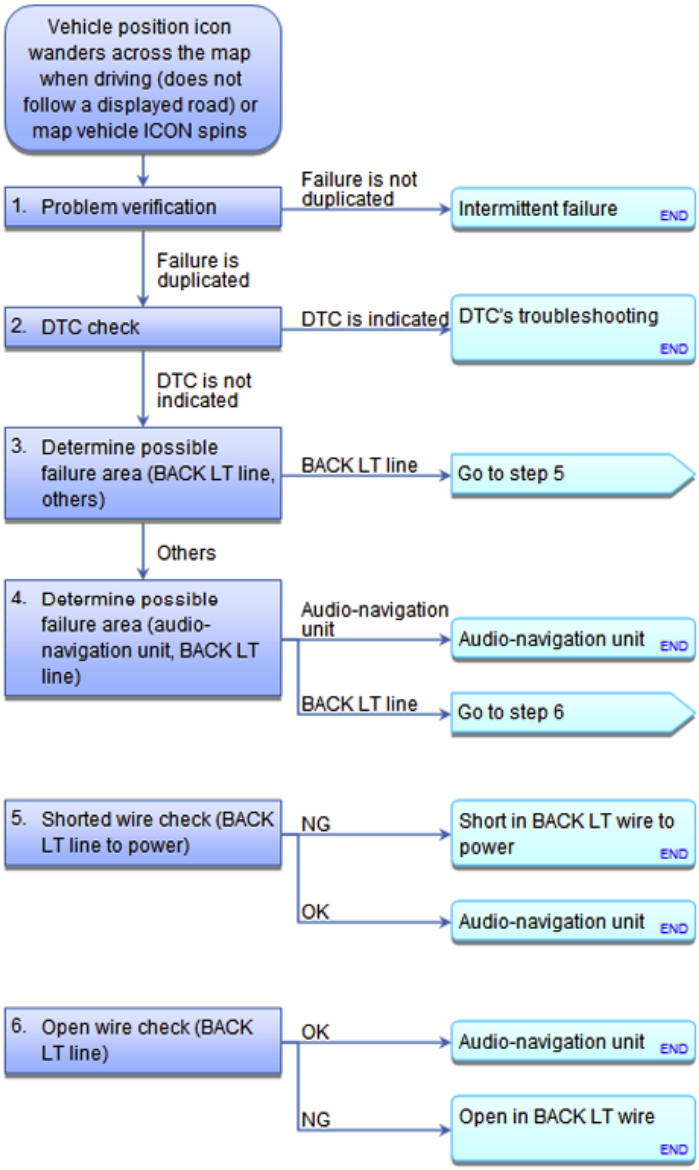

Fig. 138: Navigation System DTC Troubleshooting Flow Chart (Map Vehicle Icon Spins)
Courtesy of AMERICAN HONDA MOTOR CO., INC.

NOTE:

- **CHECK THE VEHICLE BATTERY CONDITION FIRST .**
- **This is not the same condition as when driving off-road (or on a fire or logging road).**
- **This condition is caused by a loss of map matching from a bad sensor input. Check for aftermarket or other objects that can block the GPS signal. ALWAYS DO THE MAP MATCHING BEFORE PROCEEDING WITH THE TROUBLESHOOTING.**
- **Aftermarket metallic window tint or electronic devices located near the**

GETtheMANUALS.org

audio-navigation unit or GPS antenna can potentially interfere with the operation of the navigation system.

- **Check any official Honda service website for more service information about the navigation system.**
- **Check the connectors for poor connections or loose terminals.**

1. Problem verification:
   - 1. Test-drive the vehicle in an open area, and check if the vehicle position icon displays the actual vehicle position.

Does the vehicle position icon wanders across the map?

YES : The failure is duplicated, go to step 2.

NO : Intermittent failure, the system is OK at this time.

2. DTC check:
   - 1. **CHECK FOR HARD ERROR CODES**.

Are there any navigation DTCs indicated?

YES : Go to indicated DTC's troubleshooting.

NO : Go to step 3.

3. Determine possible failure area (BACK LT line, others):
   - 1. **GO INTO THE SYSTEM DIAGNOSTIC MODE, AND USE THE CAR STATUS DIAGNOSIS TO CHECK THE BACK SIGNAL**.

Does the BACK signal [1] when the shift lever position is P or N?

YES : Go to step 5.

NO : Go to step 4.

4. Determine possible failure area (audio-navigation unit, BACK LT line):
   - 1. **GO INTO THE SYSTEM DIAGNOSTIC MODE, AND USE THE CAR STATUS DIAGNOSIS TO CHECK THE BACK SIGNAL**.
   - 2. Move the shift lever to R.

Does the BACK signal change from [0] to [1] when the shift lever position is changed from P or N to R?

YES : REPLACE THE AUDIO-NAVIGATION UNIT .

NO : Go to step 6.

GETtheMANUALS.org

5. Shorted wire check (BACK LT line to power):
    - 1. Turn the ignition switch to LOCK (0).
    - 2. Disconnect the following connector.

      Audio-navigation unit connector B (20P)

    - 3. Turn the ignition switch to ON (II).
    - 4. Measure the voltage between test points 1 and 2.

      Test condition IG ON (II)

      Audio-navigation unit connector B (20P): disconnected

      Test circuit BACK LT

      Test point 1 Audio-navigation unit connector B (20P) No. 9 (BRN)

      Test point 2 Body ground

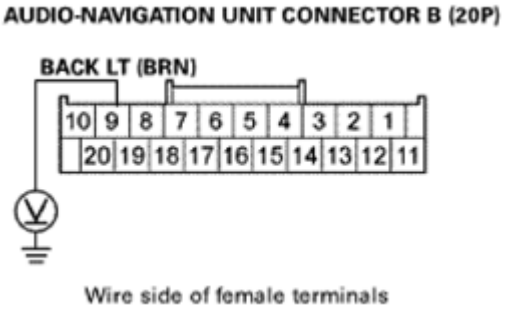

Fig. 139: Measuring Voltage Between Audio-Navigation Unit Connector B (20P) No. 9 And Body Ground
Courtesy of AMERICAN HONDA MOTOR CO., INC.

Is there battery voltage?

YES : Repair a short to power in the wire between the under-dash fuse/relay box and the audio-navigation unit.

NO : REPLACE THE AUDIO-NAVIGATION UNIT .

6. Open wire check (BACK LT line):
    - 1. Move the shift lever to P or N.
    - 2. Turn the ignition switch to LOCK (0).
    - 3. Disconnect the following connector.

      Audio-navigation unit connector B (20P)

GETtheMANUALS.org

- 4. Turn the ignition switch to ON (II).
- 5. Move the shift lever to R.
- 6. Measure the voltage between test points 1 and 2.

Test condition IG ON (II)

Audio-navigation unit connector B (20P): disconnected

Test circuit BACK LT

Test point 1 Audio-navigation unit connector B (20P) No. 9 (BRN)

Test point 2 Body ground

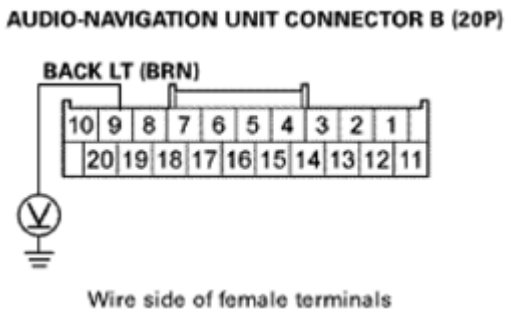

Fig. 140: Measuring Voltage Between Audio-Navigation Unit Connector B (20P) No. 9 And Body Ground
Courtesy of AMERICAN HONDA MOTOR CO., INC.

Is there battery voltage?

YES : REPLACE THE AUDIO-NAVIGATION UNIT .

NO : Repair an open in the wire between the audio-navigation unit and the under-dash fuse/relay box.

VOICE CONTROL DOES NOT WORK/RESPOND

GETtheMANUALS.org

Navigation System Symptom Troubleshooting - Voice control does not work/respond

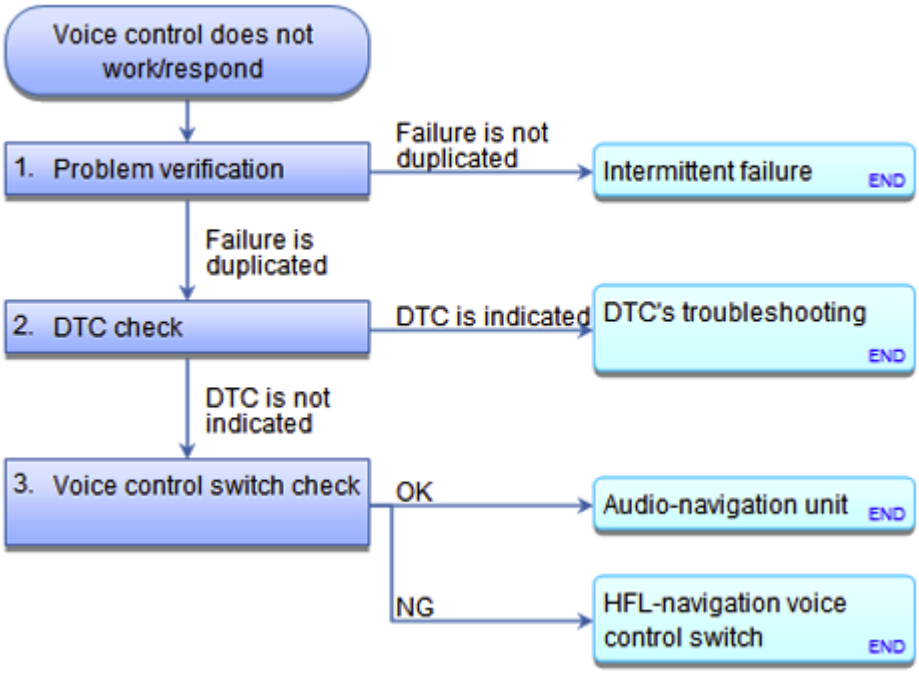

Fig. 141: Navigation System DTC Troubleshooting Flow Chart (Voice Control Does Not Work/Respond)
Courtesy of AMERICAN HONDA MOTOR CO., INC.

NOTE:

- **CHECK THE VEHICLE BATTERY CONDITION FIRST .**
- **Make sure that the latest navigation software is installed.**
- **Before assuming that a voice complaint is hardware related, ensure that the voice control system is being operated correctly.**
  - **Make sure you are on the correct screen when trying to issue a voice command. For instance, the command "Find the nearest Italian Restaurant" only works on Map screen (see the Navigation Manual for a complete list of allowed voice commands for the information being displayed)**
  - **Close the windows and moonroof**
  - **Set the fan speed to low (1 or 2)**
  - **Adjust the air flow from the air conditioning vents so that they do not blow against the microphone on the ceiling**
  - **Pause after pressing the TALK button then give a voice command clearly in a natural speaking voice. If the system cannot recognize your command, speak louder**
  - **If you speak a command with something in your mouth, or your voice is too husky, or high pitched, the system may misunderstand your command**
- **Determine if the problem only happens to one person, or everyone who uses the system.**

GETtheMANUALS.org

- **If the system only has a problem with one person's voice, this should be considered a system limitation.**
- **Check any official Honda service website for more service information about the navigation system.**
- **Check the connectors for poor connections or loose terminals.**

1. Problem verification:
   - 1. Turn the ignition switch to ON (II).
   - 2. Pressing the TALK button, then give a voice command "Audio" clearly in a natural speaking voice.

   Does the audio system turn on by the voice command?

   YES : Intermittent failure, the system is OK at this time.

   NO : The failure is duplicated, go to step 2.

2. DTC check:
   - 1. **CHECK FOR HARD ERROR CODES**.

   Are there any navigation DTCs indicated?

   YES : Go to indicated DTC's troubleshooting.

   NO : Go to step 3.

3. Voice control switch check:
   - 1. Turn the ignition switch to LOCK (0).
   - 2. **DO THE VOICE CONTROL SWITCH TEST**.

   Is the switch OK?

   YES : REPLACE THE AUDIO-NAVIGATION UNIT .

   NO : **REPLACE THE HFL-NAVIGATION VOICE CONTROL SWITCH**.

VOICE GUIDANCE CANNOT BE HEARD, IS BROKEN UP, OR THERE IS STATIC

GETtheMANUALS.org

Navigation System Symptom Troubleshooting - Voice guidance cannot be heard, is broken up, or there is static

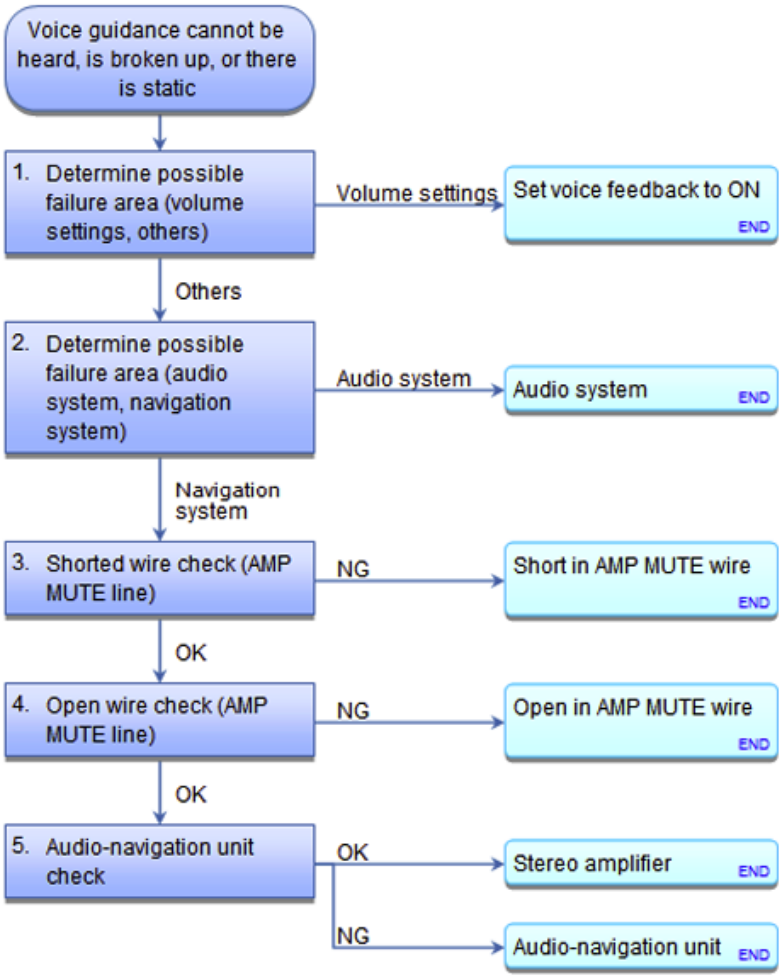

Fig. 142: Navigation System DTC Troubleshooting Flow Chart (Voice Guidance Cannot Be Heard, Broken Up Or Static)
Courtesy of AMERICAN HONDA MOTOR CO., INC.

NOTE:

- **CHECK THE VEHICLE BATTERY CONDITION FIRST .**
- **Check any official Honda service website for more service information about the navigation system.**
- **Check the connectors for poor connections or loose terminals.**

1. Determine possible failure area (volume settings, others):
   - 1. Turn the ignition switch to ON (II).
   - 2. Check the volume and voice feedback setting for the navigation system in set-up.

Is either set to OFF?

YES : Set the voice feedback to ON, and select an audible level for the volume.

GETtheMANUALS.org

NO : Go to step 2.

2. Determine possible failure area (audio system, navigation system):
    - 1. Check that the audio system is operating normally, from different audio sources (AM/FM and CD) and the speaker sound levels are normal.

Does the audio system work normally, and is the audio output from the speaker normal when playing various audio sources?

YES : Go to step 3.

NO : Refer to the audio system Symptom Troubleshooting.

3. Shorted wire check (AMP MUTE line):
    - 1. Turn the ignition switch to LOCK (0).
    - 2. Disconnect the following connectors.

      Audio-navigation unit connector E (16P)

      Stereo amplifier connector B (24P)

    - 3. Check for continuity between test points 1 and 2.

      Test condition IG LOCK (0)

      Audio-navigation unit connector E (16P): disconnected

      Stereo amplifier connector B (24P): disconnected

      Test circuit AMP MUTE

      Test point 1 Stereo amplifier connector B (24P) No. 24 (RED)

      Test point 2 Body ground

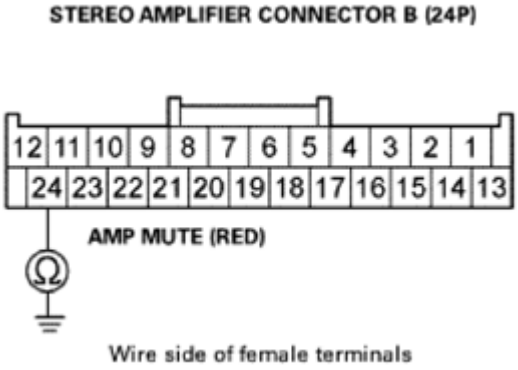

GETtheMANUALS.org

Fig. 143: Checking Continuity Between Stereo Amplifier Connector B (24P) No. 24 And Body Ground
Courtesy of AMERICAN HONDA MOTOR CO., INC.

Is there continuity?

YES : Repair a short to body ground in the wire between the stereo amplifier and the audio-navigation unit.

NO : The AMP MUTE wire is not shorted to ground. Go to step 4.

4. Open wire check (AMP MUTE line):
   - 1. Check for continuity between test points 1 and 2.

     Test condition IG LOCK (0)

     Audio-navigation unit connector E (16P): disconnected

     Stereo amplifier connector B (24P): disconnected

     Test circuit AMP MUTE

     Test point 1 Audio-navigation unit connector E (16P) No. 12 (RED)

     Test point 2 Stereo amplifier connector B (24P) No. 24 (RED)

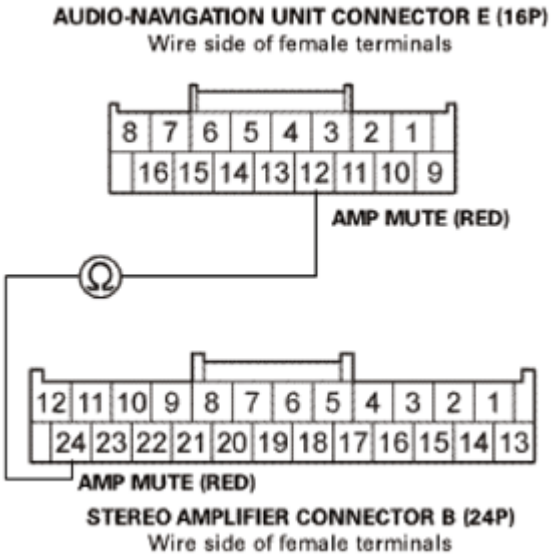

Fig. 144: Checking Continuity Between Audio-Navigation Unit Connector E (16P) No. 12 And Stereo Amplifier Connector B (24P) No. 24
Courtesy of AMERICAN HONDA MOTOR CO., INC.

Is there continuity?

GETtheMANUALS.org

YES : The AMP MUTE wire is OK. Go to step 5.

NO : Repair an open in the wire between the audio-navigation unit and the stereo amplifier.

5. Audio-navigation unit check:
   - 1. SUBSTITUTE A KNOWN-GOOD STEREO AMPLIFIER , and recheck.

Does the symptom go away?

YES : Replace the original stereo amplifier.

NO : REPLACE THE AUDIO-NAVIGATION UNIT .

VOICE CONTROL SWITCH REMOVAL, INSTALLATION, AND TEST

Removal

SRS components are located in this area. Review the **SRS COMPONENT LOCATIONS** and the **PRECAUTIONS AND PROCEDURES** before doing repairs or service.

1. Battery Terminal (SRS) - Disconnection
   1. Make sure the ignition switch is in LOCK (0).
   2. Disconnect and isolate the negative cable (A) from the battery.

      NOTE: Always disconnect the negative side first.

   3. Disconnect the positive cable (B) from the battery.
   4. Wait at least 3 minutes before starting work.

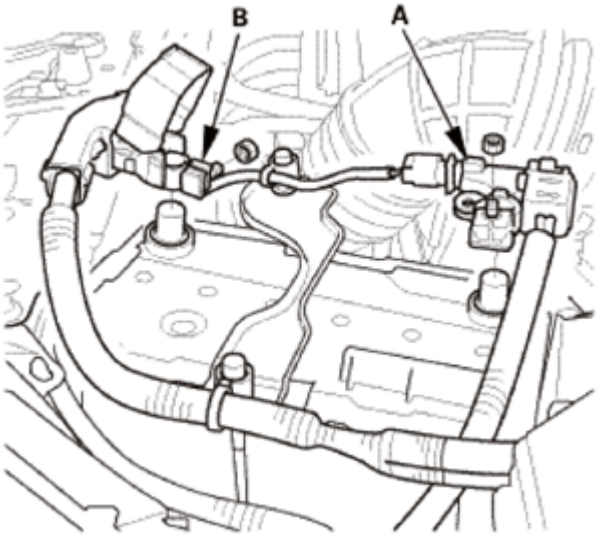

Fig. 145: Identifying Battery Positive And Negative Terminals

GETtheMANUALS.org

Courtesy of AMERICAN HONDA MOTOR CO., INC.

2. Driver's Airbag
    1. Remove the access panel (A).
    2. Disconnect the driver's airbag inflator connector (B) on the cable reel harness.
    3. Disconnect the horn switch connector (C).

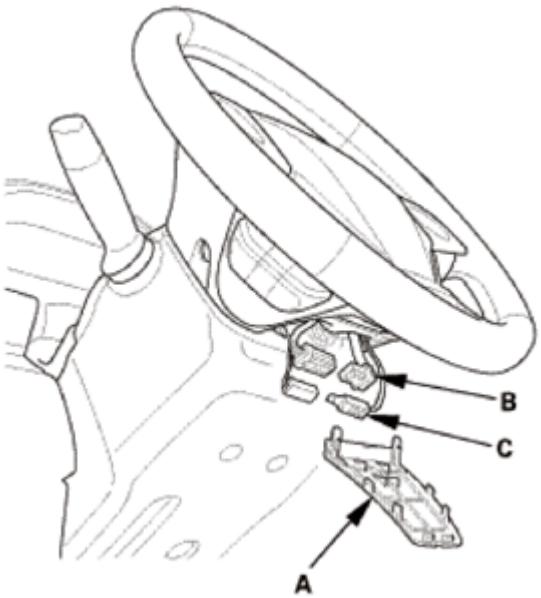

Fig. 146: Identifying Access Panel, Driver's Airbag Inflator Connector And Horn Switch Connector
Courtesy of AMERICAN HONDA MOTOR CO., INC.

    4. Remove the TORX bolts using a TORX T30 bit.
    5. Remove the driver's airbag (A).

GETtheMANUALS.org

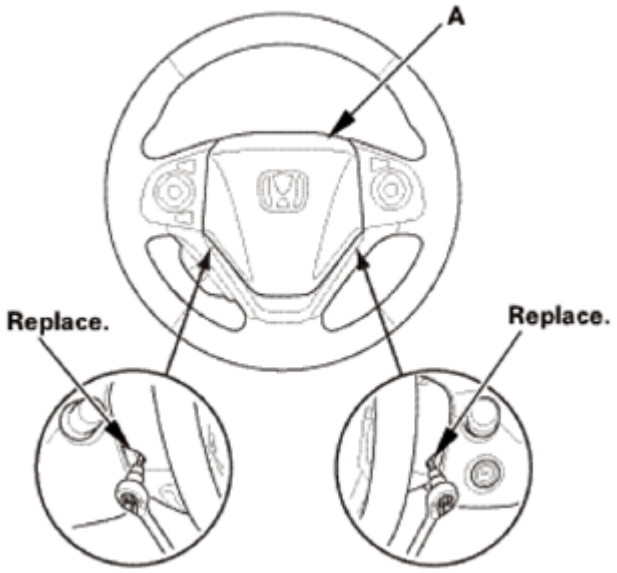

Fig. 147: Identifying Driver's Airbag
Courtesy of AMERICAN HONDA MOTOR CO., INC.

3. Steering Wheel Assembly
    1. Set the front wheels in the straight ahead position.
    2. Disconnect the connector (A).
    3. Loosen the steering wheel bolt (B) three turns.

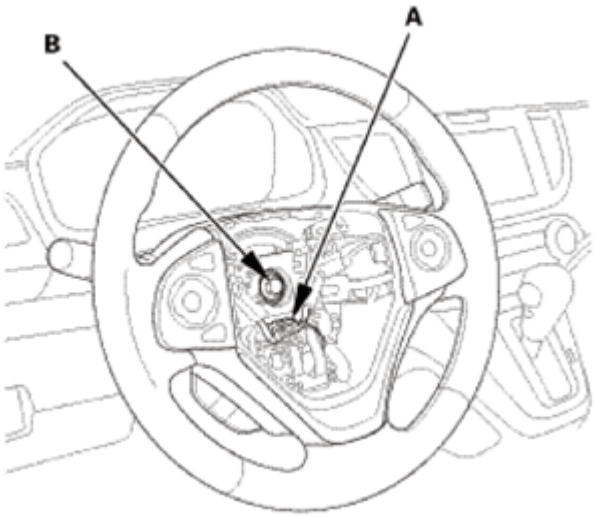

Fig. 148: Identifying Steering Wheel Connector And Bolt
Courtesy of AMERICAN HONDA MOTOR CO., INC.

    4. Install a commercially available steering wheel puller (A) on the steering wheel (B).
    5. Free the steering wheel from the steering column shaft by turning the pressure bolt (C) of the puller.

GETtheMANUALS.org

Note these items when removing the steering wheel:

- Do not tap on the steering wheel or the steering column shaft when removing the steering wheel.
- If you thread the puller bolts (D) into the wheel hub more than five threads, the bolts will hit the cable reel and damage it. To prevent this, install a pair of jam nuts five threads up on each puller bolt.

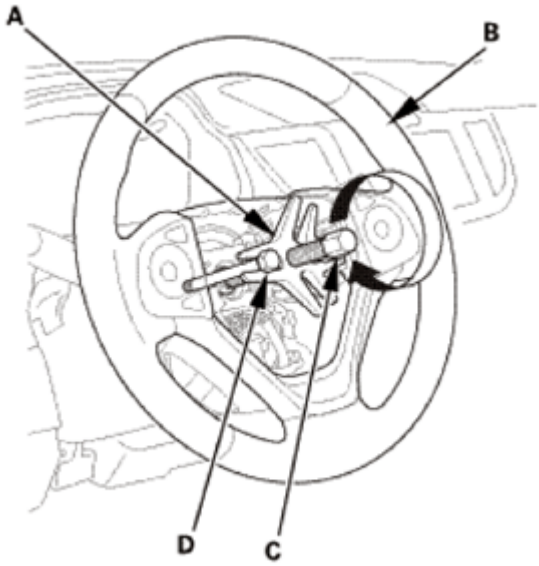

Fig. 149: Turning Steering Wheel Pressure Bolt Using Puller
Courtesy of AMERICAN HONDA MOTOR CO., INC.

6. Remove the steering wheel puller.
7. Remove the steering wheel (A) from the steering column.

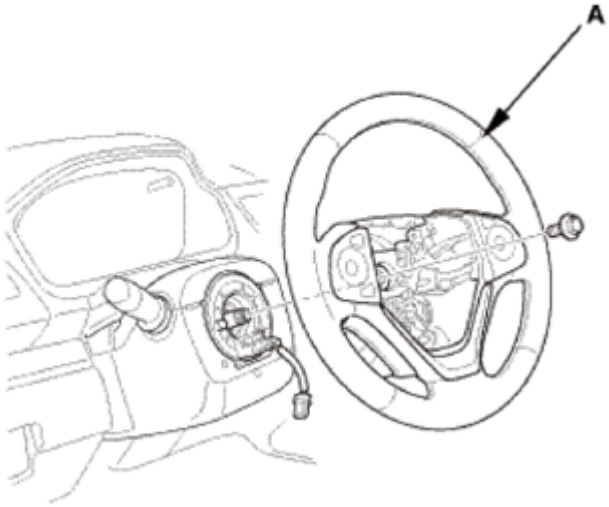

Fig. 150: Identifying Steering Wheel

GETtheMANUALS.org

Courtesy of AMERICAN HONDA MOTOR CO., INC.

4. HFL-Voice Control Switch
    1. Remove the cover (A).
    2. Remove the HFL-voice control switch (B).

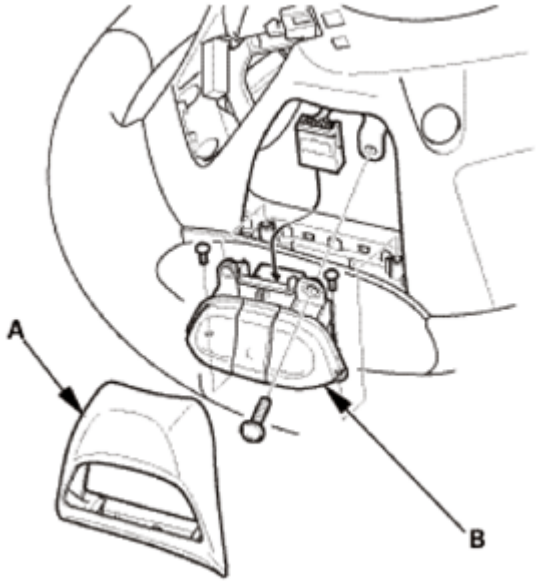

Fig. 151: Identifying HFL-Voice Control Switch And Cover
Courtesy of AMERICAN HONDA MOTOR CO., INC.

Test

1. Voice Control Switch - Test
    1. Measure the resistance between terminals No. 3 and No. 5 in each switch position according to the table.

HFL-VOICE CONTROL SWITCH

Position	Resistance
No button pressed	About 10 kohms
HANG-UP button pressed	About 47 kohms
PICK-UP button pressed	About 222 ohms
TALK button pressed	About 2.25 kohms

    2. If the resistance is not as specified, replace the HFL-voice control switch (A).

GETtheMANUALS.org

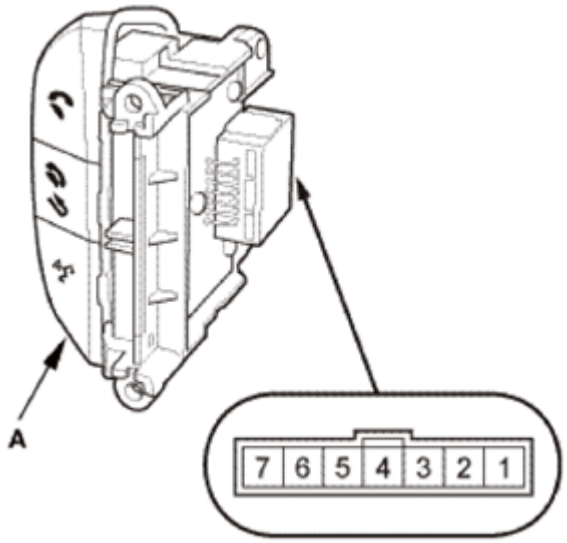

Fig. 152: Identifying HFL-Voice Control Switch Connector Terminals
Courtesy of AMERICAN HONDA MOTOR CO., INC.

Installation

SRS components are located in this area. Review the **SRS COMPONENT LOCATIONS** and the **PRECAUTIONS AND PROCEDURES** before doing repairs or service.

1. HFL-Voice Control Switch
    1. Install the HFL-voice control switch (A).
    2. Install the cover (B).

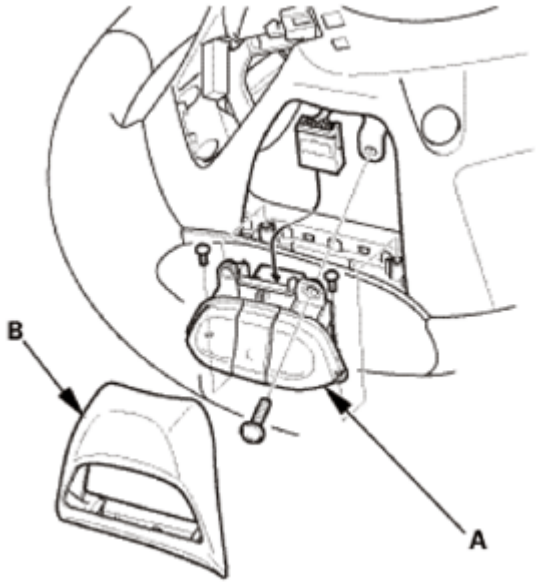

Fig. 153: Identifying HFL-Voice Control Switch And Cover
Courtesy of AMERICAN HONDA MOTOR CO., INC.

GETtheMANUALS.org

2. Steering Wheel Assembly
    1. Make sure the front wheels are pointing straight ahead.
    2. Center the cable reel (A). Do this by first rotating the cable reel clockwise until it stops.
    3. Rotate the cable reel counterclockwise about three full turns. The arrow mark (B) on the cable reel label should point straight up.

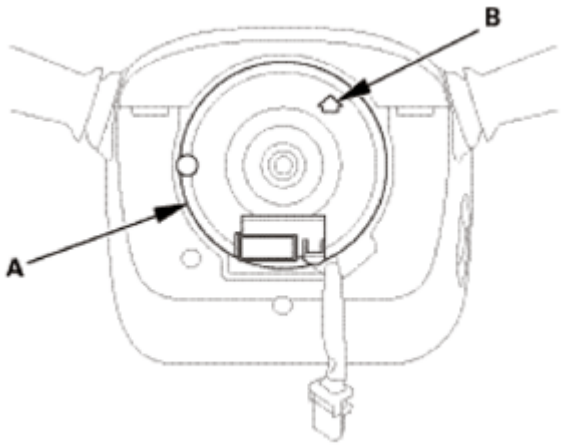

Fig. 154: Identifying Cable Reel Label With Arrow Mark
Courtesy of AMERICAN HONDA MOTOR CO., INC.

    4. Position the steering wheel hub (A) so that it engages the pin (B) of the cable reel.
    5. Install the steering wheel (C) on to the steering column shaft.

NOTE: **Do not tap on the steering wheel or the steering column shaft when installing the steering wheel.**

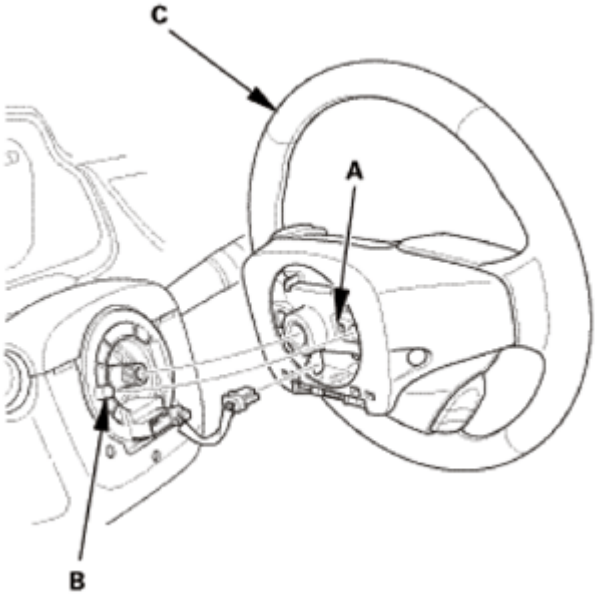

GETtheMANUALS.org

Fig. 155: Identifying Steering Wheel, Hub And Pin
Courtesy of AMERICAN HONDA MOTOR CO., INC.

6. Install the steering wheel bolt (A), and tighten it to the specified torque.
7. Connect the connector (B).
8. Make sure the wire harness is routed and fastened properly.

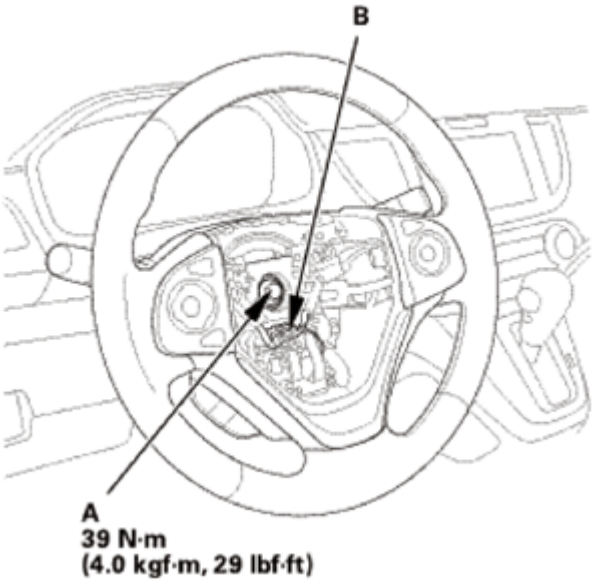

Fig. 156: Identifying Steering Wheel Connector And Bolt With Torque Specification
Courtesy of AMERICAN HONDA MOTOR CO., INC.

3. Driver's Airbag

NOTE: If you are replacing a deployed driver's airbag, inspect the cable reel for heat damage. If there is any damage, replace the cable reel.

1. Place the driver's airbag (A) in the steering wheel.
2. Tighten the new TORX bolts using a TORX T30 bit.

NOTE: Make sure the clearance (B) between the steering wheel and the horn pad is the specified value.

GETtheMANUALS.org

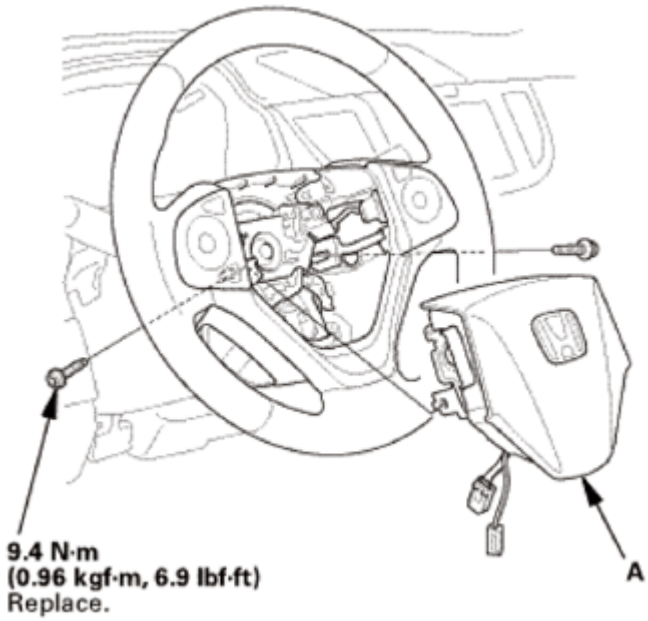

Fig. 157: Identifying Steering Wheel Driver's Airbag With Torque Specification
Courtesy of AMERICAN HONDA MOTOR CO., INC.

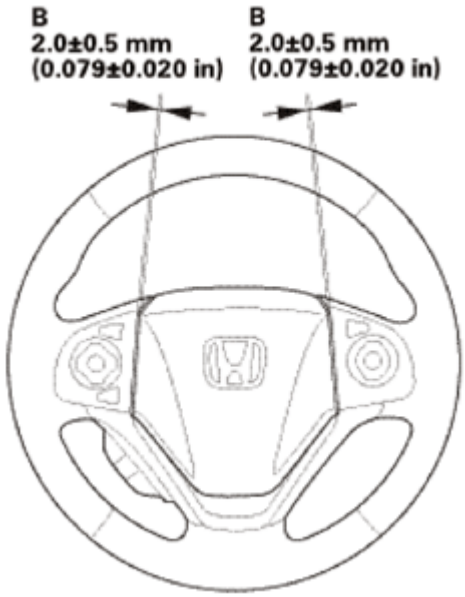

Fig. 158: Identifying Torx Bolts With Torque Specifications
Courtesy of AMERICAN HONDA MOTOR CO., INC.

3. Connect the driver's airbag inflator connector (A) on the cable reel harness.
4. Connect the horn switch connector (B).

NOTE: **After reconnecting the negative cable to the battery, make sure the horn works properly.**

GETtheMANUALS.org

5. Install the access panel (C).

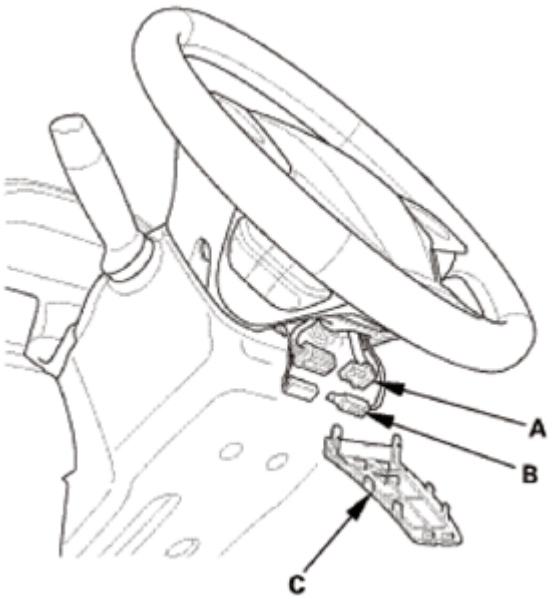

Fig. 159: Identifying Driver's Airbag Inflator Connector, Horn Switch Connector And Access Panel
Courtesy of AMERICAN HONDA MOTOR CO., INC.

4. Battery Terminal (SRS) - Reconnection

NOTE: If the battery performance is abnormal, test the battery.

1. Clean the battery terminals.
2. Connect the positive cable (A) to the battery.

NOTE: Always connect the positive side first.

3. Connect the negative cable (B) to the battery.
4. Apply multipurpose grease to the terminals to prevent corrosion.

GETtheMANUALS.org

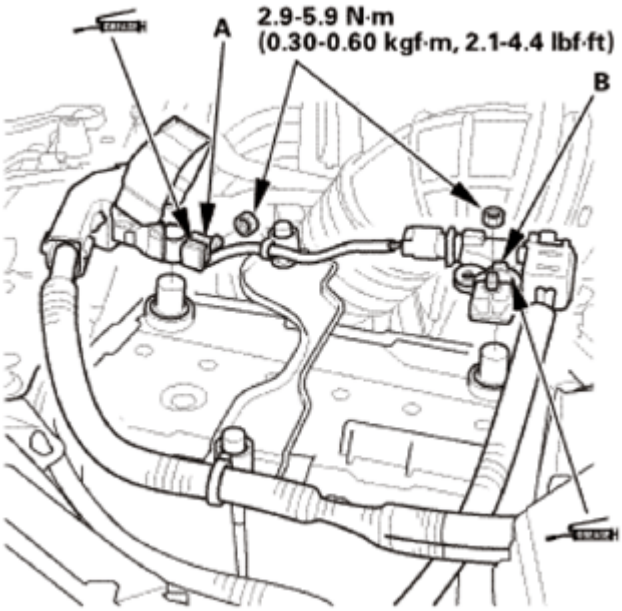

Fig. 160: Identifying Battery Positive And Negative Terminals With Torque Specification
Courtesy of AMERICAN HONDA MOTOR CO., INC.

5. Steering Wheel Spoke Angle - Check
    1. Check the steering wheel spoke angle.
    2. If steering spoke angles to the right and left are not equal (steering wheel is not centered), correct the engagement of the wheel/column shaft splines.
6. HDS DLC - Connection
    1. Connect the HDS to the data link connector (DLC) (A) located under the driver's side of the dashboard.
    2. Turn the ignition switch to ON (II).
    3. Make sure the HDS communicates with the vehicle. If it does not communicate, go to the DLC circuit troubleshooting.

GETtheMANUALS.org

Fig. 161: Identifying Data Link Connector
Courtesy of AMERICAN HONDA MOTOR CO., INC.

7. VSA Sensor Neutral Position - Memorization
    1. Park the vehicle on a flat and level surface, with the steering wheel in the straight ahead position.
    2. Select VSA ADJUSTMENT, then select ALL SENSORS with the HDS, and follow the screen prompts.

    NOTE: See the HDS Help menu for specific instructions.

8. Steering Angle Sensor Neutral Position - Clear
    1. Select EPS ADJUSTMENT, then select EPS STEERING ANGLE SENSOR VALUE CLEAR and follow the screen prompts on the HDS.

    NOTE: See the HDS Help menu for specific instructions.

GETtheMANUALS.org

DTC P0010: VTC OIL CONTROL SOLENOID VALVE MALFUNCTION

DTC Troubleshooting: P0010

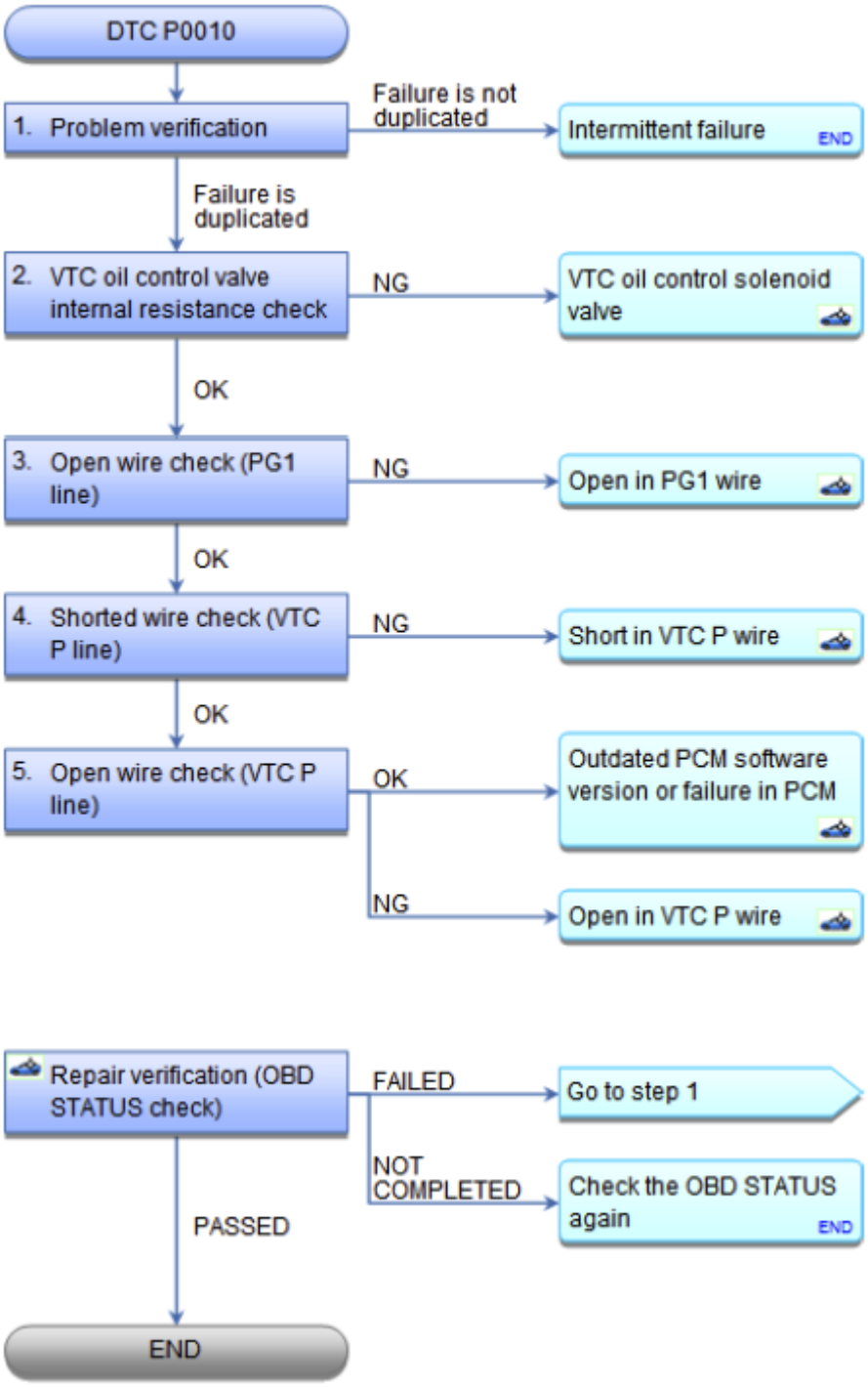

GETtheMANUALS.org

Fig. 1: DTC Troubleshooting Flow Chart (P0010)
Courtesy of AMERICAN HONDA MOTOR CO., INC.

NOTE: **Before you troubleshoot, record all freeze data and any on-board snapshot, and review the general troubleshooting information See HOW TO TROUBLESHOOT THE A/T SYSTEM or HOW TO TROUBLESHOOT THE FUEL AND EMISSIONS SYSTEMS .**

DTC Description	Confirmed DTC	Pending DTC	Freeze Frame
P0010 VTC OIL CONTROL SOLENOID VALVE MALFUNCTION			

1. Problem verification:
   - 1. Turn the ignition switch to ON (II).
   - 2. **Clear the DTC with the HDS** See **HOW TO TROUBLESHOOT THE A/T SYSTEM** or **HOW TO TROUBLESHOOT THE FUEL AND EMISSIONS SYSTEMS** .
   - 3. Start the engine. Hold the engine speed at 3, 000 rpm without load (in P or N) until the radiator fan comes on, then let it idle.
   - 4. Do the VTC TEST in the INSPECTION MENU with the HDS.
   - 5. Check for Pending or Confirmed DTCs with the HDS.

DTC Description	Confirmed DTC	Pending DTC	Freeze Frame
P0010 VTC OIL CONTROL SOLENOID VALVE MALFUNCTION			

Is DTC P0010 indicated?

YES : The failure is duplicated. Go to step 2.

NO : Intermittent failure, the system is OK at this time. Check for poor connections or loose terminals at the VTC oil control solenoid valve and the PCM.

2. VTC oil control valve internal resistance check:
   - 1. Turn the ignition switch to LOCK (0).
   - 2. Disconnect the following connector.

     VTC oil control solenoid valve 2P connector

   - 3. At the solenoid valve side, measure the resistance between test points 1 and 2.

     Test condition IG LOCK (0)

GETtheMANUALS.org

VTC oil control solenoid valve 2P connector: disconnected

Test circuit VTC P, PG1

Test point 1 VTC oil control solenoid valve 2P connector No. 1 (VTC oil control solenoid valve side)

Test point 2 VTC oil control solenoid valve 2P connector No. 2 (VTC oil control solenoid valve side)

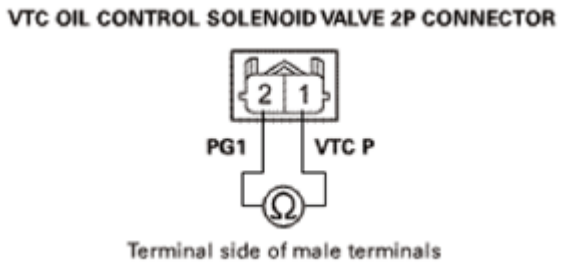

Fig. 2: Measuring Resistance Between VTC Oil Control Solenoid Valve 2P Connector No. 1 And No. 2
Courtesy of AMERICAN HONDA MOTOR CO., INC.

Is there 6.75-8.25 ohms at room temperature?

YES : Go to step 3.

NO : REPLACE THE VTC OIL CONTROL SOLENOID VALVE , then **do the repair verification** .

3. Open wire check (PG1 line):
   - 1. Check for continuity between test points 1 and 2.

     Test condition IG LOCK (0)

     VTC oil control solenoid valve 2P connector: disconnected

     Test circuit PG1

     Test point 1 VTC oil control solenoid valve 2P connector No. 2 (BLK)

     Test point 2 Body ground

GETtheMANUALS.org

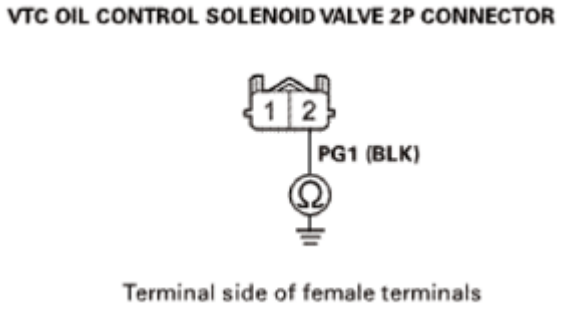

Fig. 3: Checking Continuity Between VTC Oil Control Solenoid Valve 2P Connector No. 2 (BLK) And Body Ground
Courtesy of AMERICAN HONDA MOTOR CO., INC.

Is there continuity?

YES : The PG1 wire is OK. Go to step 4.

NO : Repair an open in the PG1 wire between the VTC oil control solenoid valve and body ground (G101), then **do the repair verification** .

4. Shorted wire check (VTC P line):
   - 1. Jump the SCS line with the HDS.
   - 2. Disconnect the following connector.

     PCM connector C (49P)

   - 3. Check for continuity between test points 1 and 2.

     Test condition IG LOCK (0)

     VTC oil control solenoid valve 2P connector: disconnected

     PCM connector C (49P): disconnected

     Test circuit VTC P

     Test point 1 PCM connector C (49P) No. 33 (BLU)

     Test point 2 Body ground

GETtheMANUALS.org

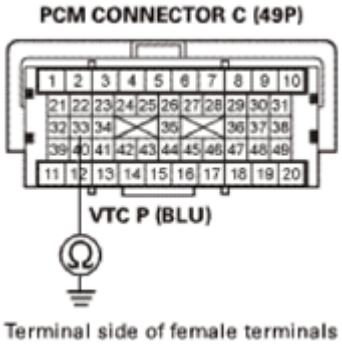

Fig. 4: Checking Continuity Between PCM Connector C (49P) No. 33 (BLU) And Body Ground
Courtesy of AMERICAN HONDA MOTOR CO., INC.

Is there continuity?

YES : Repair a short in the VTC P wire between the VTC oil control solenoid valve and the PCM (C33), then **do the repair verification** .

NO : The VTC P wire is not shorted. Go to step 5.

5. Open wire check (VTC P line):
   - 1. Check for continuity between test points 1 and 2.

     Test condition IG LOCK (0)

     VTC oil control solenoid valve 2P connector: disconnected

     PCM connector C (49P): disconnected

     Test circuit VTC P

     Test point 1 VTC oil control solenoid valve 2P connector No. 1 (BLU)

     Test point 2 PCM connector C (49P) No. 33 (BLU)

GETtheMANUALS.org

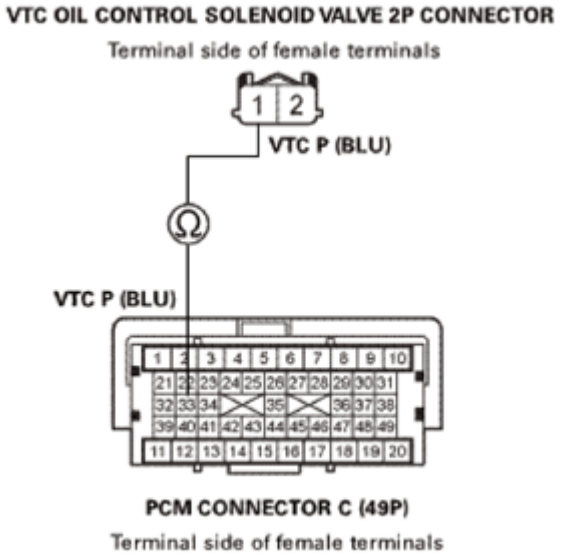

Fig. 5: Checking Continuity Between VTC Oil Control Solenoid Valve 2P Connector No. 1 (BLU) And PCM Connector C (49P) No. 33 (BLU)
Courtesy of AMERICAN HONDA MOTOR CO., INC.

Is there continuity?

YES : The VTC P wire is OK. **Update the PCM** See **PCM REMOVAL AND INSTALLATION** or **PCM UPDATE** if it does not have the latest software, or **substitute a known-good PCM** See **PCM REMOVAL AND INSTALLATION** or **PCM UPDATE** , then **do the repair verification** .

NO : Repair an open in the VTC P wire between the VTC oil control solenoid valve and the PCM (C33), then **do the repair verification** .

REPAIR VERIFICATION (OBD STATUS CHECK)

- 1. Turn the ignition switch to LOCK (0).
- 2. Reconnect all connectors.
- 3. Turn the ignition switch to ON (II).
- 4. **Reset the PCM with the HDS** See **HOW TO TROUBLESHOOT THE A/T SYSTEM** or **HOW TO TROUBLESHOOT THE FUEL AND EMISSIONS SYSTEMS** .
- 5. **DO THE PCM IDLE LEARN PROCEDURE** .
- 6. Do the VTC TEST in the INSPECTION MENU with the HDS.
- 7. Monitor the OBD STATUS for DTC P0010 in the DTCs MENU with the HDS.

DTC Description	OBD STATUS
P0010 VTC OIL CONTROL SOLENOID VALVE MALFUNCTION	

Does the HDS indicate PASSED, FAILED, or NOT COMPLETED?

GETtheMANUALS.org

PASSED : Troubleshooting is complete. If the PCM was substituted, **replace the original PCM** See **PCM REMOVAL AND INSTALLATION** or **PCM UPDATE** . If any other Pending or Confirmed DTCs were indicated, go to the indicated DTC's troubleshooting.

FAILED : Go to step 1 and recheck. If the PCM was updated, **substitute a known-good PCM** See **PCM REMOVAL AND INSTALLATION** or **PCM UPDATE** , then check the OBD STATUS again.

NOT COMPLETED : Check the OBD STATUS again.

DTC P0011: VTC SYSTEM MALFUNCTION

GETtheMANUALS.org

DTC Troubleshooting: P0011

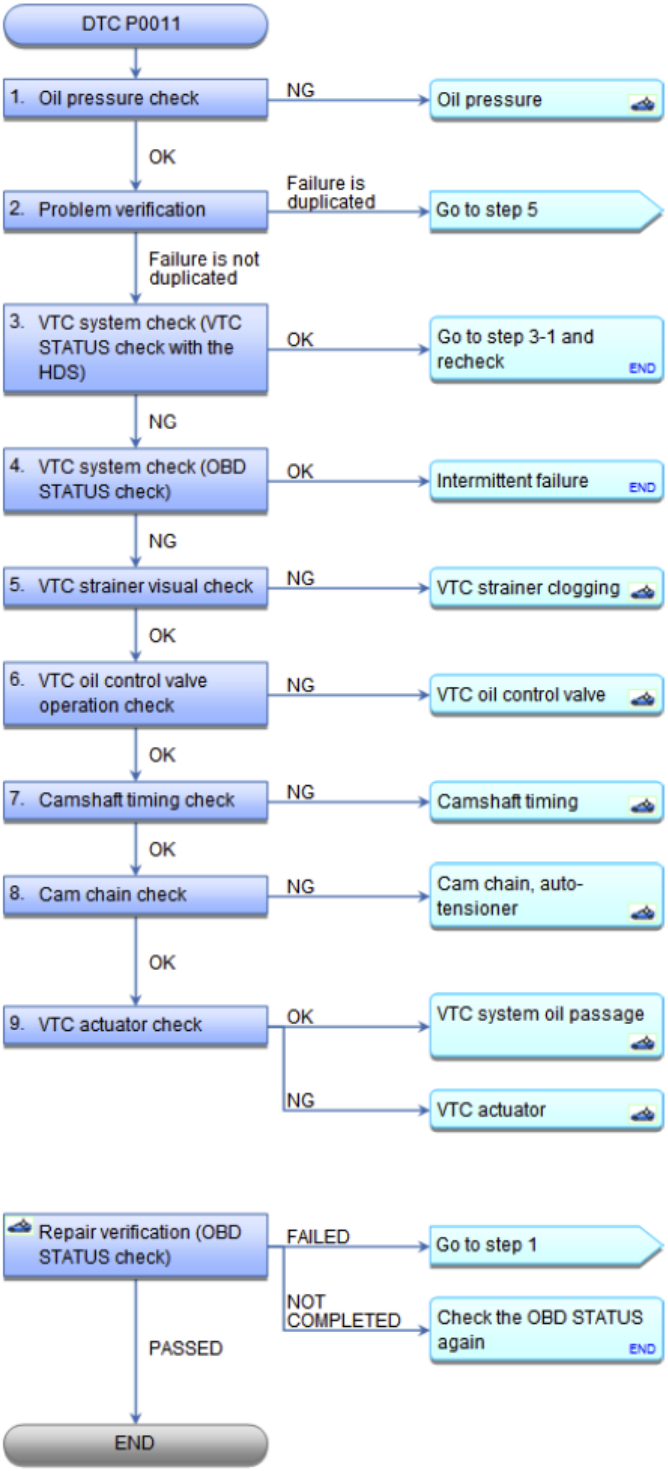

Fig. 6: DTC Troubleshooting Flow Chart (P0011)
Courtesy of AMERICAN HONDA MOTOR CO., INC.

NOTE: **Before you troubleshoot, record all freeze data and any on-board snapshot, and**

GETtheMANUALS.org

review the general troubleshooting information See HOW TO TROUBLESHOOT THE A/T SYSTEM or HOW TO TROUBLESHOOT THE FUEL AND EMISSIONS SYSTEMS .

DTC Description	Confirmed DTC	Pending DTC	Freeze Frame
P0011 VTC SYSTEM MALFUNCTION			

1. Oil pressure check:
   - 1. Turn the ignition switch to ON (II).
   - 2. **Clear the DTC with the HDS** See **HOW TO TROUBLESHOOT THE A/T SYSTEM** or **HOW TO TROUBLESHOOT THE FUEL AND EMISSIONS SYSTEMS** .
   - 3. Start the engine.
   - 4. Watch the low oil pressure indicator with the engine running.

   Is the low oil pressure indicator on?

   YES : CHECK THE OIL PRESSURE , then **do the repair verification** .

   NO : Go to step 2.

2. Problem verification:
   - 1. Do the VTC TEST in the INSPECTION MENU with the HDS.

   Is the result OK?

   YES : Go to step 3.

   NO : The failure is duplicated. Go to step 5.

3. VTC system check (VTC STATUS check with the HDS):
   - 1. Test-drive at a steady speed between 19-38 mph (30-60 km/h) for 10 minutes.
   - 2. Check the parameter(s) below with the HDS.

Signal	Threshold		Current conditions	
	Values	Unit	Values	Unit
VTC STATUS	ON			

   Do the current condition(s) match the threshold?

   YES : Go to step 4.

   NO : Go to step 1 and recheck.

4. VTC system check (OBD STATUS check):

GETtheMANUALS.org

- 1. Monitor the OBD STATUS for DTC P0011 in the DTCs MENU with the HDS.

DTC Description	OBD STATUS
P0011 VTC SYSTEM MALFUNCTION	

Does the HDS indicate FAILED?

YES : Go to step 5.

NO : If the HDS indicates PASSED, intermittent failure, the system is OK at this time.

If the screen indicates NOT COMPLETED, go to step 1 and recheck.

5. VTC strainer visual check:
   - 1. Turn the ignition switch to LOCK (0).
   - 2. **REMOVE THE AUTO-TENSIONER** .
   - 3. Remove the VTC strainer (A), and check it for clogging.

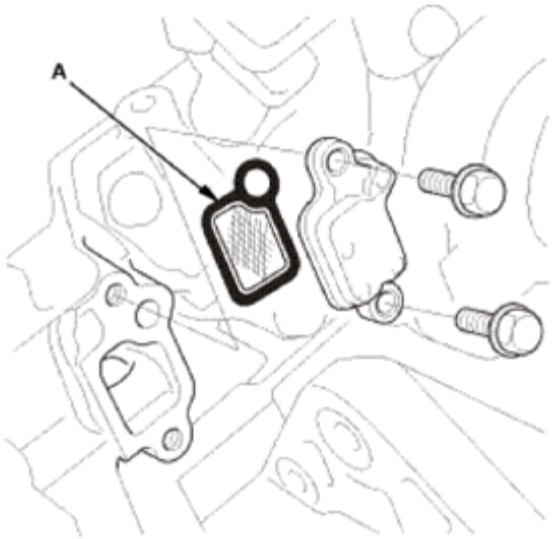

Fig. 7: Identifying VTC Strainer
Courtesy of AMERICAN HONDA MOTOR CO., INC.

Is the strainer OK?

YES : Go to step 6.

NO : Clean the VTC strainer, REPLACE THE ENGINE OIL FILTER and THE ENGINE OIL , then **do the repair verification** .

6. VTC oil control valve operation check:

GETtheMANUALS.org

- 1. TEST THE VTC OIL CONTROL SOLENOID VALVE .

Is the VTC oil control solenoid valve OK?

YES : Go to step 7.

NO : REPLACE THE VTC OIL CONTROL SOLENOID VALVE , then **do the repair verification** .

7. Camshaft timing check:
   - 1. **Check the camshaft timing** See VALVE CLEARANCE ADJUSTMENT or VALVE, SPRING, AND VALVE SEAL REMOVAL AND INSTALLATION .

Is the camshaft timing OK?

YES : Go to step 8.

NO : **Reset the camshaft timing** See VALVE CLEARANCE ADJUSTMENT or VALVE, SPRING, AND VALVE SEAL REMOVAL AND INSTALLATION , then **do the repair verification** .

8. Cam chain check:
   - 1. CHECK FOR DAMAGE OR STRETCH AT THE CAM CHAIN .

Is the cam chain damaged or stretched?

YES : REPLACE THE CAM CHAIN AND THE AUTO-TENSIONER , then **do the repair verification** .

NO : Go to step 9.

9. VTC actuator check:
   - 1. INSPECT THE VTC ACTUATOR .

Is the VTC actuator OK?

YES : Check the VTC system oil passages between VTC strainer and the VTC actuator in the cylinder block and the cylinder head, and clean them if needed, then **do the repair verification** .

NO : REPLACE THE VTC ACTUATOR , then **do the repair verification** .

REPAIR VERIFICATION (OBD STATUS CHECK)

- 1. Turn the ignition switch to ON (II).
- 2. **Reset the PCM with the HDS** See **HOW TO TROUBLESHOOT THE A/T SYSTEM** or **HOW TO TROUBLESHOOT THE FUEL AND EMISSIONS SYSTEMS** .
- 3. **DO THE PCM IDLE LEARN PROCEDURE** .

GETtheMANUALS.org

- 4. **Do the CKP pattern clear/CKP pattern learn procedure** See **HOW TO TROUBLESHOOT THE A/T SYSTEM** or **HOW TO TROUBLESHOOT THE FUEL AND EMISSIONS SYSTEMS** .
- 5. Do the VTC TEST in the INSPECTION MENU with the HDS.
- 6. Monitor the OBD STATUS for DTC P0011 in the DTCs MENU with the HDS.

DTC Description	OBD STATUS
P0011 VTC SYSTEM MALFUNCTION	

Does the HDS indicate PASSED, FAILED, or NOT COMPLETED?

PASSED : Troubleshooting is complete. If any other Pending or Confirmed DTCs were indicated, go to the indicated DTC's troubleshooting.

FAILED : Go to step 1 and recheck.

NOT COMPLETED : Check the OBD STATUS again.

DTC P0101: MAF SENSOR CIRCUIT RANGE/PERFORMANCE PROBLEM

GETtheMANUALS.org

DTC Troubleshooting: P0101

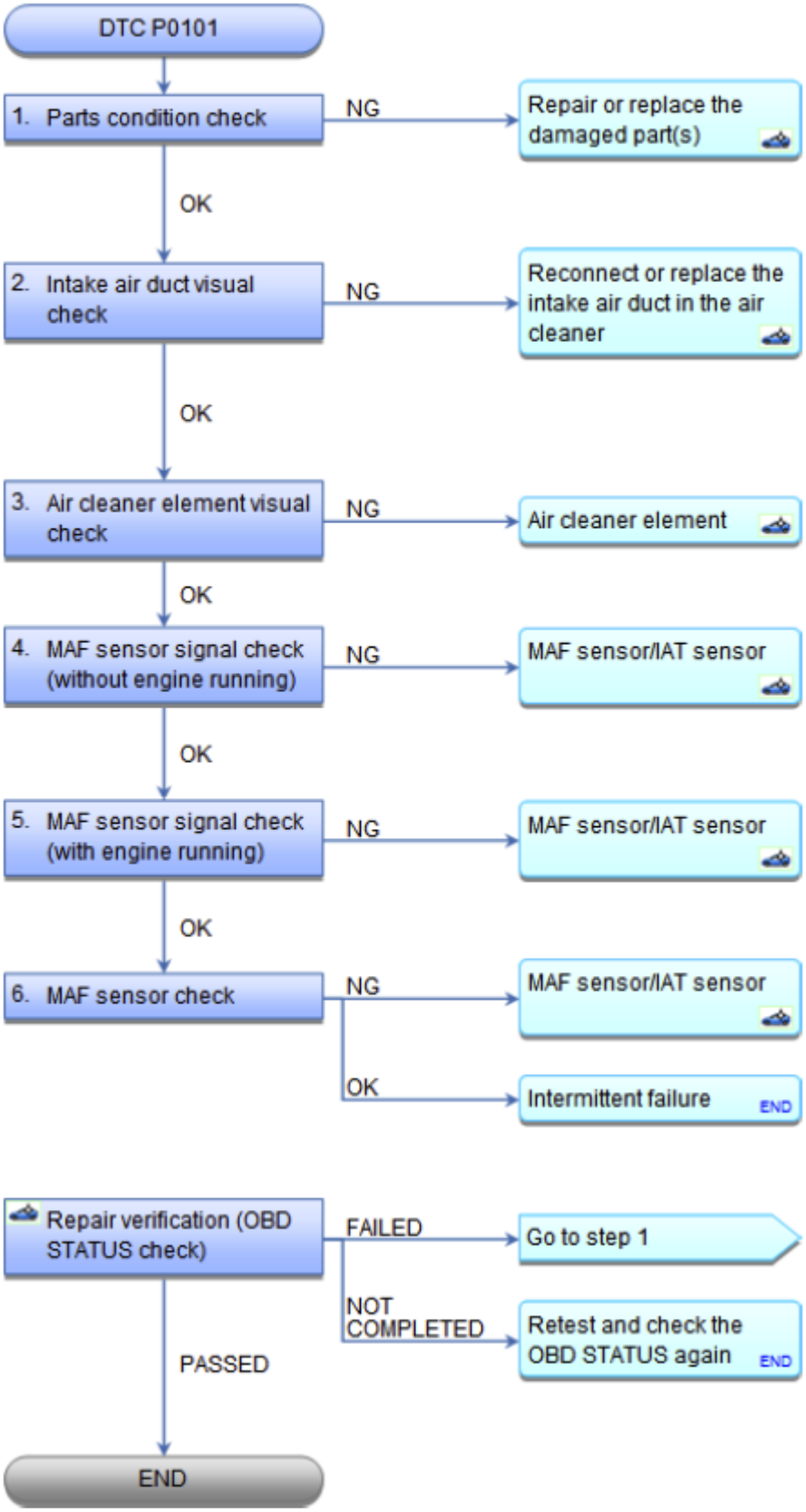

GETtheMANUALS.org

Fig. 8: DTC Troubleshooting Flow Chart (P0101)
Courtesy of AMERICAN HONDA MOTOR CO., INC.

NOTE:

- **Before you troubleshoot, record all freeze data and any on-board snapshot, and review the general troubleshooting information See HOW TO TROUBLESHOOT THE A/T SYSTEM or HOW TO TROUBLESHOOT THE FUEL AND EMISSIONS SYSTEMS .**
- **If DTC P0106, P2228, and/or P2229 are stored at the same time as DTC P0101, troubleshoot those DTCs first, then recheck for DTC P0101.**

DTC Description	Confirmed DTC	Pending DTC	Freeze Frame
P0101 MAF SENSOR CIRCUIT RANGE/PERFORMANCE PROBLEM			

1. Parts condition check:
   - 1. Check for poor connections or damage to these parts:
     - PCV hose
     - Intake air duct
     - Air cleaner
     - Purge (PCS) line

   Are the parts OK?

   YES : Go to step 2.

   NO : Repair or replace the damaged part(s), then **do the repair verification** .

2. Intake air duct visual check:
   - 1. Check for damage or looseness of the air duct in the air cleaner.

   Is it OK?

   YES : Go to step 3.

   NO : Reconnect or replace the intake air duct in the air cleaner, then **do the repair verification** .

3. Air cleaner element visual check:
   - 1. Check for a dirty air cleaner element.

   Is it dirty?

   YES : **REPLACE THE AIR CLEANER ELEMENT** , then **do the repair verification** .

GETtheMANUALS.org

NO : Go to step 4.

4. MAF sensor signal check (without engine running):
   - 1. Turn the ignition switch to LOCK (0).
   - 2. Turn the ignition switch to ON (II).
   - 3. Check the parameter(s) below with the HDS.

Signal	Threshold		Current conditions	
	Values	Unit	Values	Unit
MAF SENSOR	About 0.2	g/s		

Do the current condition(s) match the threshold?

YES : Go to step 5.

NO : **REPLACE THE MAF SENSOR/IAT SENSOR** , then **do the repair verification** .

5. MAF sensor signal check (with engine running):
   - 1. Start the engine.
   - 2. Vary the engine speed between 2, 000 rpm and 3, 000 rpm.
   - 3. Check the MAF SENSOR in the DATA LIST with the HDS.

Signal	Current conditions	
	Values	Unit
MAF SENSOR		

Does the reading change?

YES : Go to step 6.

NO : **REPLACE THE MAF SENSOR/IAT SENSOR** , then **do the repair verification** .

6. MAF sensor check:
   - 1. Hold the engine speed at 3, 000 rpm without load (in P or N) until the radiator fan comes on, then let it idle.
   - 2. Test-drive the vehicle for several minutes in the range of these recorded freeze data parameters:
     - ENGINE SPEED
     - VEHICLE SPEED
     - MAP SENSOR
     - TP SENSOR

Signal	Current conditions	

GETtheMANUALS.org

	Values	Unit
ENGINE SPEED		
VEHICLE SPEED		
MAP SENSOR		
TP SENSOR		

- 3. Monitor the OBD STATUS for DTC P0101 with the HDS.

DTC Description	OBD STATUS
P0101 MAF SENSOR CIRCUIT RANGE/PERFORMANCE PROBLEM	

Does the HDS indicate FAILED?

YES : **REPLACE THE MAF SENSOR/IAT SENSOR** , then **do the repair verification** .

NO : If the HDS indicates PASSED, intermittent failure, the system is OK at this time. Check for poor connections or loose terminals at the MAF sensor/IAT sensor and the PCM. If the HDS indicates NOT COMPLETED, go to step 2 and recheck.

REPAIR VERIFICATION (OBD STATUS CHECK)

- 1. Turn the ignition switch to ON (II).
- 2. **Reset the PCM with the HDS** See **HOW TO TROUBLESHOOT THE A/T SYSTEM** or **HOW TO TROUBLESHOOT THE FUEL AND EMISSIONS SYSTEMS** .
- 3. **DO THE PCM IDLE LEARN PROCEDURE** .
- 4. Test-drive the vehicle for several minutes in the range of these recorded freeze data parameters:
  - ENGINE SPEED
  - VEHICLE SPEED
  - MAP SENSOR
  - TP SENSOR

Signal	Current conditions	
	Values	Unit
ENGINE SPEED		
VEHICLE SPEED		
MAP SENSOR		
TP SENSOR		

- 5. Monitor the OBD STATUS for DTC P0101 in the DTCs MENU with the HDS.

DTC Description	OBD STATUS
P0101 MAF SENSOR CIRCUIT RANGE/PERFORMANCE PROBLEM	

GETtheMANUALS.org

Does the HDS indicate PASSED, FAILED, or NOT COMPLETED?

PASSED : Troubleshooting is complete. If any other Pending or Confirmed DTCs were indicated, go to the indicated DTC's troubleshooting.

FAILED : Go to step 1 and recheck.

NOT COMPLETED : Meet the test condition, and check the OBD STATUS again.

DTC P0102: MAF SENSOR CIRCUIT LOW VOLTAGE

GETtheMANUALS.org

DTC Troubleshooting: P0102

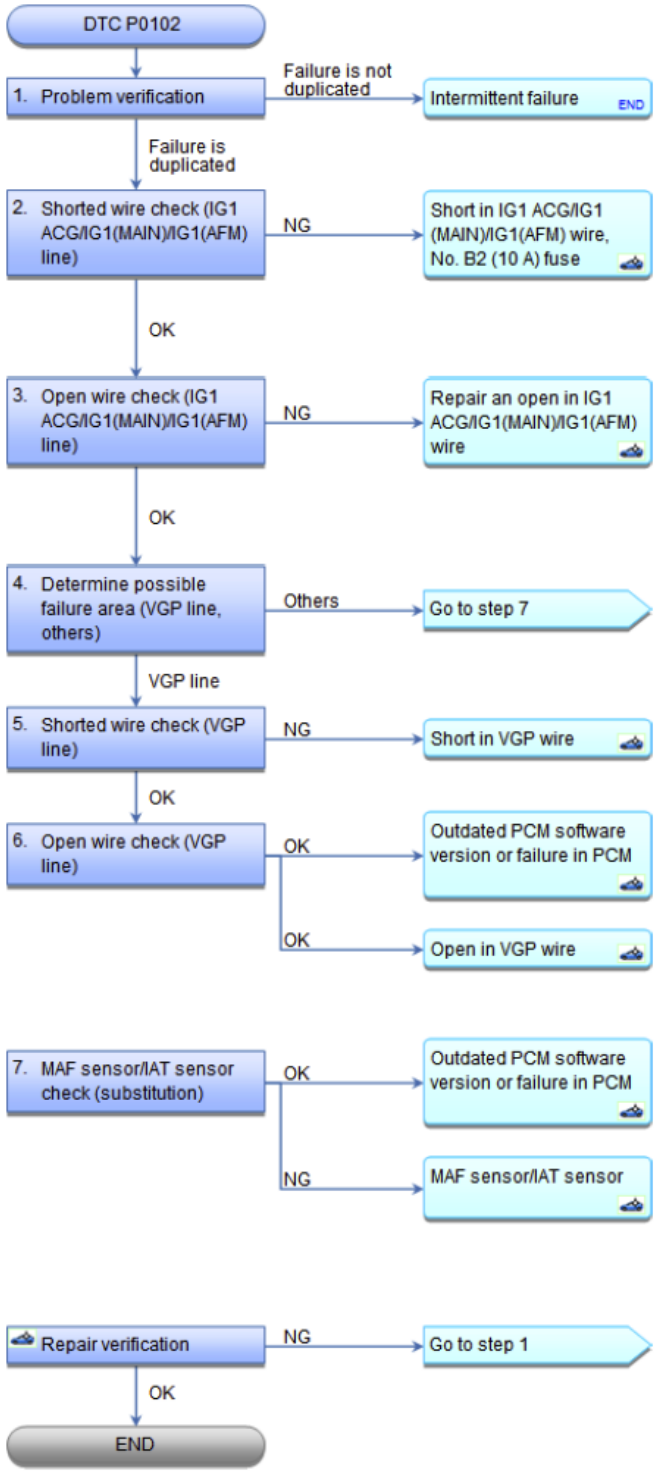

Fig. 9: DTC Troubleshooting Flow Chart (P0102)
Courtesy of AMERICAN HONDA MOTOR CO., INC.

NOTE: **Before you troubleshoot, record all freeze data and any on-board snapshot, and**

GETtheMANUALS.org

review the general troubleshooting information See HOW TO TROUBLESHOOT THE A/T SYSTEM or HOW TO TROUBLESHOOT THE FUEL AND EMISSIONS SYSTEMS .

DTC Description	Confirmed DTC	Pending DTC	Freeze Frame
P0102 MAF SENSOR LOW CIRCUIT VOLTAGE			

1. Problem verification:
   - 1. Turn the ignition switch to ON (II), and wait 2 seconds.
   - 2. Check the parameter(s) below with the HDS.

Signal	Threshold		Current conditions	
	Values	Unit	Values	Unit
MAF SENSOR	Less than 0.1	V		

Do the current condition(s) match the threshold?

YES : The failure is duplicated. Go to step 2.

NO : Intermittent failure, the system is OK at this time. Check for poor connections or loose terminals at the MAF sensor/IAT sensor and the PCM.

2. Shorted wire check (IG1 ACG/IG1(MAIN)/IG1(AFM) line):
   - 1. Turn the ignition switch to LOCK (0).
   - 2. Check the following fuse.

     Fuse No. B2 (10 A)

     Location Under-dash fuse/relay box

Is the fuse OK?

YES : The IG1 ACG/IG1(MAIN)/IG1(AFM) wire is not shorted. Go to step 3.

NO : Repair a short in the IG1 ACG/IG1(MAIN)/IG1(AFM) wire between the MAF sensor/IAT sensor and the No. B2 (10 A) fuse. Also replace the No. B2 (10 A) fuse, then **do the repair verification** .

3. Open wire check (IG1 ACG/IG1(MAIN)/IG1(AFM) line):
   - 1. Turn the ignition switch to LOCK (0).
   - 2. Disconnect the following connector.

     MAF sensor/IAT sensor 5P connector

   - 3. Turn the ignition switch to ON (II).

GETtheMANUALS.org

- 4. Measure the voltage between test points 1 and 2.

  Test condition IG ON (II)

  MAF sensor/IAT sensor 5P connector: disconnected

  Test circuit IG1(AFM)

  Test point 1 MAF sensor/IAT sensor 5P connector No. 3 (WHT)

  Test point 2 Body ground

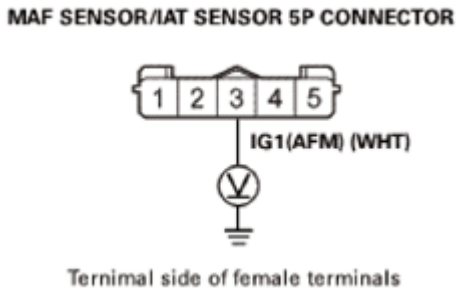

Fig. 10: Measuring Voltage Between MAF Sensor/IAT Sensor 5P Connector No. 3 (WHT) And Body Ground
Courtesy of AMERICAN HONDA MOTOR CO., INC.

Is there battery voltage?

YES : The IG1 ACG/IG1(MAIN)/IG1(AFM) wire is OK. Go to step 4.

NO : Repair an open in the IG1 ACG/IG1(MAIN)/IG1(AFM) wire between the No. B2 (10 A) fuse and the MAF sensor/IAT sensor, then **do the repair verification** .

4. Determine possible failure area (VGP line, others):
   - 1. Turn the ignition switch to LOCK (0).
   - 2. Measure the resistance between test points 1 and 2.

     Test condition IG LOCK (0)

     MAF sensor/IAT sensor 5P connector: disconnected

     Test circuit VGP

     Test point 1 MAF sensor/IAT sensor 5P connector No. 5 (LT BLU)

     Test point 2 Body ground

GETtheMANUALS.org

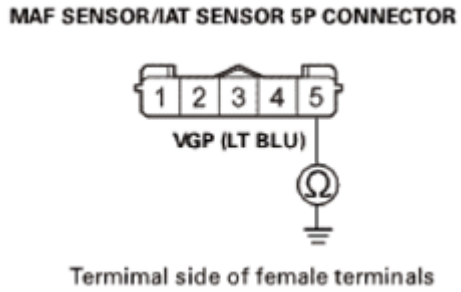

Fig. 11: Measuring Resistance Between MAF Sensor/IAT Sensor 5P Connector No. 5 (LT BLU) And Body Ground
Courtesy of AMERICAN HONDA MOTOR CO., INC.

Is there 190-210 kohms?

YES : Go to step 7.

NO : Go to step 5.

5. Shorted wire check (VGP line):
   - 1. Jump the SCS line with the HDS.
   - 2. Disconnect the following connector.

     PCM connector B (49P)

   - 3. Check for continuity between test points 1 and 2.

     Test condition IG LOCK (0)

     MAF sensor/IAT sensor 5P connector: disconnected

     PCM connector B (49P): disconnected

     Test circuit VGP

     Test point 1 PCM connector B (49P) No. 22 (LT BLU)

     Test point 2 Body ground

GETtheMANUALS.org

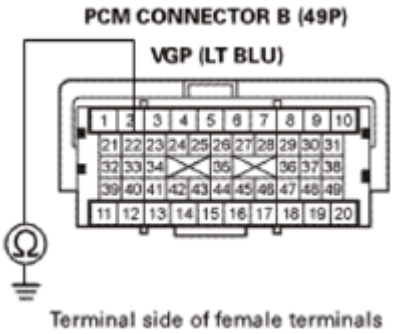

Fig. 12: Checking Continuity Between PCM Connector B (49P) No. 22 (LT BLU) And Body Ground
Courtesy of AMERICAN HONDA MOTOR CO., INC.

Is there continuity?

YES : Repair a short in the VGP wire between the PCM (B22) and the MAF sensor/IAT sensor, then **do the repair verification** .

NO : The VGP wire is not shorted. Go to step 6.

6. Open wire check (VGP line):
   - 1. Check for continuity between test points 1 and 2.

     Test condition IG LOCK (0)

     MAF sensor/IAT sensor 5P connector: disconnected

     PCM connector B (49P): disconnected

     Test circuit VGP

     Test point 1 PCM connector B (49P) No. 22 (LT BLU)

     Test point 2 MAF sensor/IAT sensor 5P connector No. 5 (LT BLU)

GETtheMANUALS.org

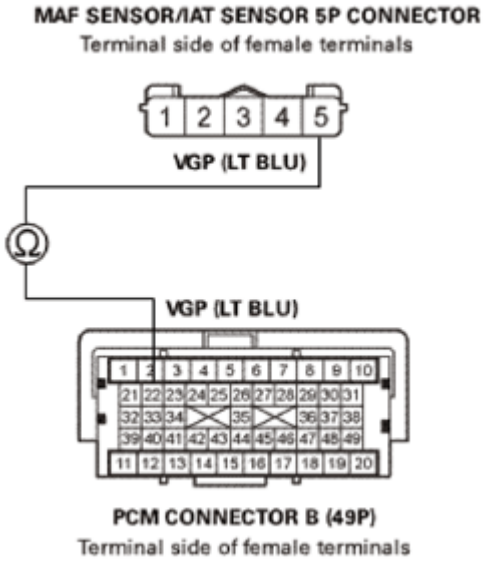

Fig. 13: Checking Continuity Between PCM Connector B (49P) No. 22 (LT BLU) And MAF Sensor/IAT Sensor 5P Connector No. 5 (LT BLU)
Courtesy of AMERICAN HONDA MOTOR CO., INC.

Is there continuity?

YES : The VGP wire is OK. **Update the PCM** See **PCM REMOVAL AND INSTALLATION** or **PCM UPDATE** if it does not have the latest software, or **substitute a known-good PCM** See **PCM REMOVAL AND INSTALLATION** or **PCM UPDATE** , then **do the repair verification** .

NO : Repair an open in the VGP wire between the PCM (B22) and the MAF sensor/IAT sensor, then **do the repair verification** .

7. MAF sensor/IAT sensor check (substitution):
   - 1. **SUBSTITUTE A KNOWN-GOOD MAF SENSOR/IAT SENSOR** .
   - 2. Reconnect all connectors.
   - 3. Turn the ignition switch to ON (II).
   - 4. Clear the DTC with the HDS.
   - 5. Start the engine. Hold the engine speed at 2, 000 rpm without load (in P or N).
   - 6. Check for Pending or Confirmed DTCs with the HDS.

DTC Description	Confirmed DTC	Pending DTC	Freeze Frame
P0102 MAF SENSOR LOW VOLTAGE			

Is DTC P0102 indicated?

YES : The MAF sensor/IAT sensor is OK. **Update the PCM** See **PCM REMOVAL AND INSTALLATION** or **PCM UPDATE** if it does not have the latest software, or **substitute a known-good PCM** See **PCM REMOVAL AND INSTALLATION** or **PCM UPDATE** , then **do the repair**

GETtheMANUALS.org

verification .

NO : **REPLACE THE ORIGINAL MAF SENSOR/IAT SENSOR** , then **do the repair verification** .

REPAIR VERIFICATION

- 1. Turn the ignition switch to LOCK (0).
- 2. Reconnect all connectors.
- 3. Turn the ignition switch to ON (II).
- 4. **Reset the PCM with the HDS** See **HOW TO TROUBLESHOOT THE A/T SYSTEM** or **HOW TO TROUBLESHOOT THE FUEL AND EMISSIONS SYSTEMS** .
- 5. **DO THE PCM IDLE LEARN PROCEDURE** .
- 6. Check for Pending or Confirmed DTCs with the HDS.

DTC Description	Confirmed DTC	Pending DTC	Freeze Frame
P0102 MAF SENSOR LOW VOLTAGE			

Is DTC P0102 indicated?

YES : Check for poor connections or loose terminals at the MAF sensor/IAT sensor and the PCM. If the PCM was updated, **substitute a known-good PCM** See **PCM REMOVAL AND INSTALLATION** or **PCM UPDATE** , then recheck. If the PCM was substituted, go to step 1.

NO : Troubleshooting is complete. If the PCM was substituted, **replace the original PCM** See **PCM REMOVAL AND INSTALLATION** or **PCM UPDATE** . If any other Pending or Confirmed DTCs are indicated, go to the indicated DTC's troubleshooting.

DTC P0103: MAF SENSOR CIRCUIT HIGH VOLTAGE

GETtheMANUALS.org

DTC Troubleshooting: P0103

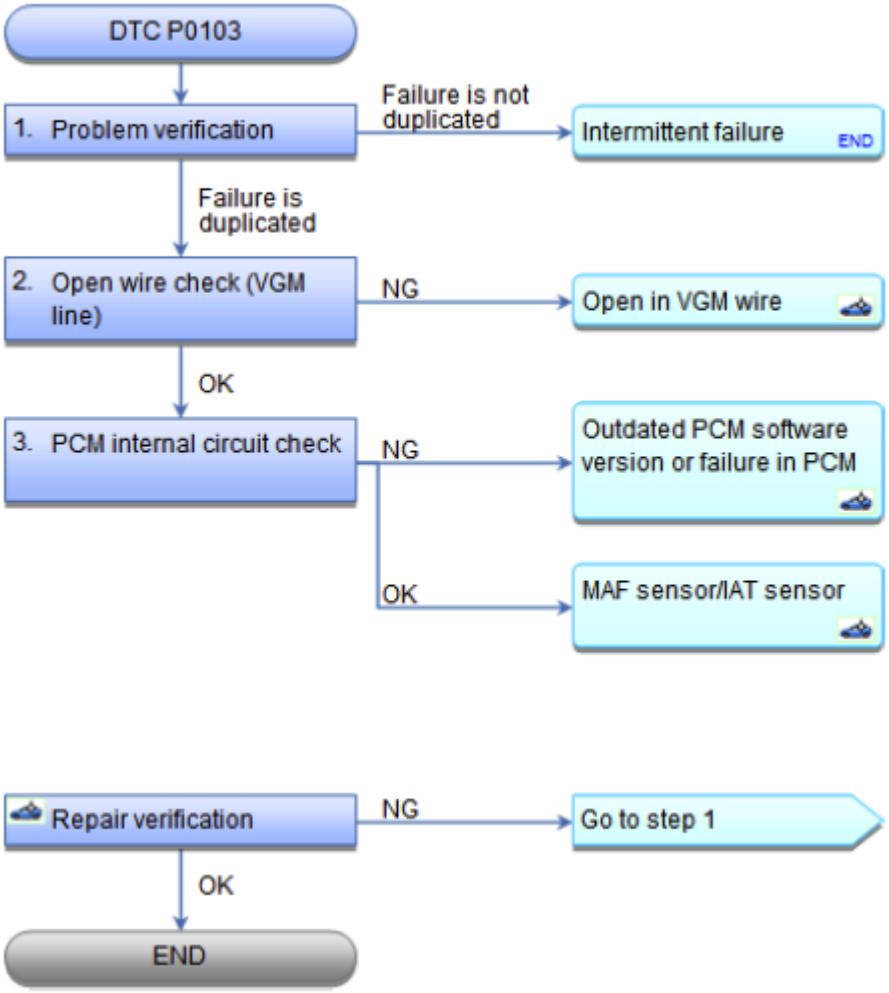

Fig. 14: DTC Troubleshooting Flow Chart (P0103)
Courtesy of AMERICAN HONDA MOTOR CO., INC.

NOTE: **Before you troubleshoot, record all freeze data and any on-board snapshot, and review the general troubleshooting information See HOW TO TROUBLESHOOT THE A/T SYSTEM or HOW TO TROUBLESHOOT THE FUEL AND EMISSIONS SYSTEMS .**

DTC Description	Confirmed DTC	Pending DTC	Freeze Frame
P0103 MAF SENSOR CIRCUIT HIGH VOLTAGE			

1. Problem verification:
   - 1. Turn the ignition switch to ON (II), and wait 2 seconds.
   - 2. Check the parameter(s) below with the HDS.

	Threshold	Current conditions

GETtheMANUALS.org

Signal	Values	Unit	Values	Unit
MAF SENSOR	More than 4.89	V		

Do the current condition(s) match the threshold?

YES : The failure is duplicated. Go to step 2.

NO : Intermittent failure, the system is OK at this time. Check for poor connections or loose terminals at the MAF sensor/IAT sensor and the PCM.

2. Open wire check (VGM line):
   - 1. Turn the ignition switch to LOCK (0).
   - 2. Jump the SCS line with the HDS.
   - 3. Disconnect the following connectors.

     MAF sensor/IAT sensor 5P connector

     PCM connector B (49P)

   - 4. Check for continuity between test points 1 and 2.

     Test condition IG LOCK (0)

     MAF sensor/IAT sensor 5P connector: disconnected

     PCM connector B (49P): disconnected

     Test circuit VGM

     Test point 1 PCM connector B (49P) No. 43 (LT GRN)

     Test point 2 MAF sensor/IAT sensor 5P connector No. 4 (LT GRN)

GETtheMANUALS.org

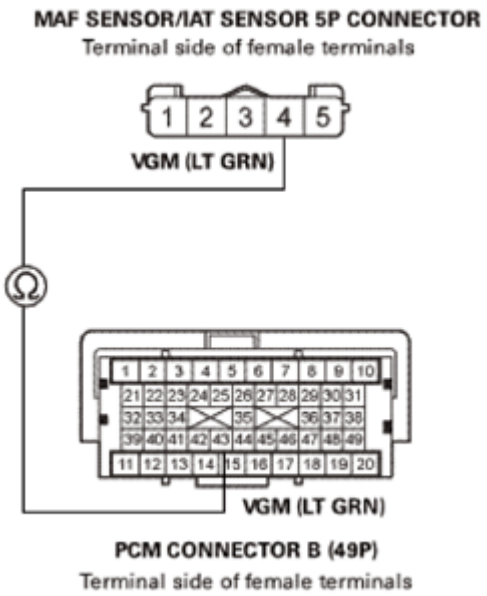

Fig. 15: Checking Continuity Between PCM Connector B (49P) No. 43 (LT GRN) And MAF Sensor/IAT Sensor 5P Connector No. 4 (LT GRN)
Courtesy of AMERICAN HONDA MOTOR CO., INC.

Is there continuity?

YES : The VGM wire is OK. Go to step 3.

NO : Repair an open in the VGM wire between the PCM (B43) and the MAF sensor/IAT sensor, then **do the repair verification** .

3. PCM internal circuit check:
   - 1. Reconnect the following connector.

     PCM connector B (49P)

   - 2. Connect terminals A and B with a jumper wire.

     Terminal A MAF sensor/IAT sensor 5P connector No. 4 (LT GRN)

     Terminal B MAF sensor/IAT sensor 5P connector No. 5 (LT BLU)

GETtheMANUALS.org

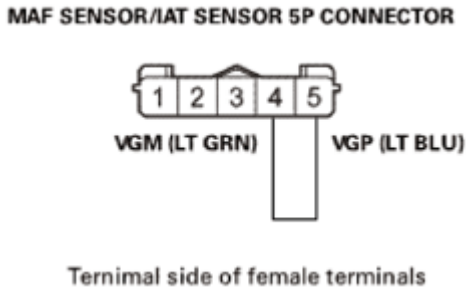

Fig. 16: Identifying MAF Sensor/IAT Sensor 5P Connector Terminals
Courtesy of AMERICAN HONDA MOTOR CO., INC.

- 3. Turn the ignition switch to ON (II).
- 4. **Clear the DTC with the HDS** See **HOW TO TROUBLESHOOT THE A/T SYSTEM** or **HOW TO TROUBLESHOOT THE FUEL AND EMISSIONS SYSTEMS** .
- 5. Check for Pending or Confirmed DTCs with the HDS.

DTC Description	Confirmed DTC	Pending DTC	Freeze Frame
P0103 MAF SENSOR CIRCUIT HIGH VOLTAGE			

Is DTC P0103 indicated?

YES : **Update the PCM** See **PCM REMOVAL AND INSTALLATION** or **PCM UPDATE** if it does not have the latest software, or **substitute a known-good PCM** See **PCM REMOVAL AND INSTALLATION** or **PCM UPDATE** , then **do the repair verification** .

NO : The PCM internal circuit is OK. **REPLACE THE MAF SENSOR/IAT SENSOR** , then **do the repair verification** .

REPAIR VERIFICATION

- 1. Turn the ignition switch to LOCK (0).
- 2. Reconnect all connectors.
- 3. Turn the ignition switch to ON (II).
- 4. **Reset the PCM with the HDS** See **HOW TO TROUBLESHOOT THE A/T SYSTEM** or **HOW TO TROUBLESHOOT THE FUEL AND EMISSIONS SYSTEMS** .
- 5. **DO THE PCM IDLE LEARN PROCEDURE** .
- 6. Check for Pending or Confirmed DTCs with the HDS.

DTC Description	Confirmed DTC	Pending DTC	Freeze Frame
P0103 MAF SENSOR CIRCUIT HIGH VOLTAGE			

Is DTC P0103 indicated?

GETtheMANUALS.org

YES : Check for poor connections or loose terminals at the MAF sensor/IAT sensor and the PCM. If the PCM was updated, **substitute a known-good PCM** See **PCM REMOVAL AND INSTALLATION** or **PCM UPDATE** , then recheck. If the PCM was substituted, go to step 1.

NO : Troubleshooting is complete. If the PCM was substituted, **replace the original PCM** See **PCM REMOVAL AND INSTALLATION** or **PCM UPDATE** . If any other Pending or Confirmed DTCs are indicated, go to the indicated DTC's troubleshooting.

DTC P0107: MAP SENSOR CIRCUIT LOW VOLTAGE

GETtheMANUALS.org

DTC Troubleshooting: P0107

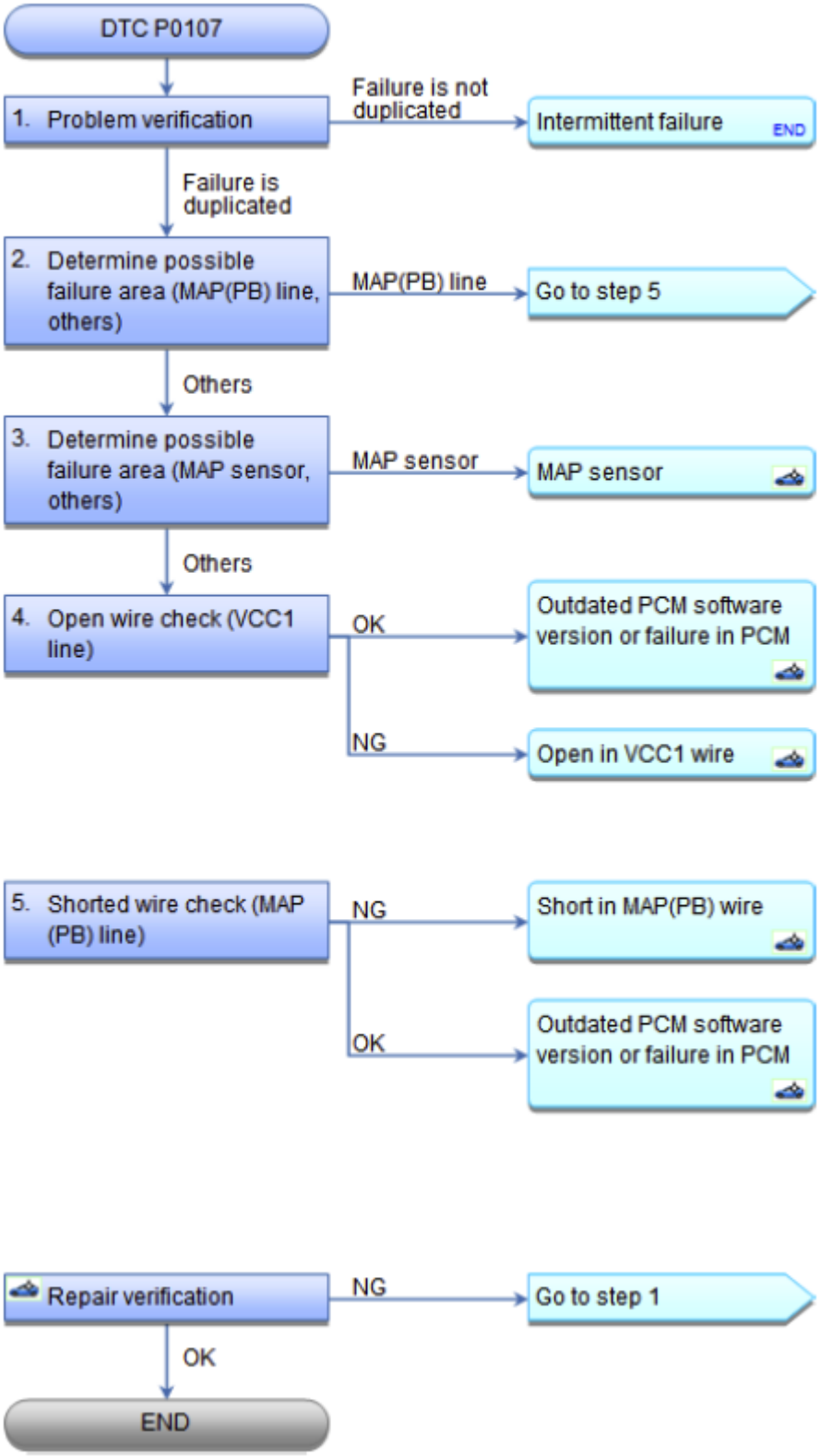

Fig. 17: DTC Troubleshooting Flow Chart (P0107)

GETtheMANUALS.org

Courtesy of AMERICAN HONDA MOTOR CO., INC.

NOTE: **Before you troubleshoot, record all freeze data and any on-board snapshot, and review the general troubleshooting information See HOW TO TROUBLESHOOT THE A/T SYSTEM or HOW TO TROUBLESHOOT THE FUEL AND EMISSIONS SYSTEMS .**

DTC Description	Confirmed DTC	Pending DTC	Freeze Frame
P0107 MAP SENSOR CIRCUIT LOW VOLTAGE			

1. Problem verification:
   - 1. Turn the ignition switch to ON (II).
   - 2. Check the parameter(s) below with the HDS.

Signal	Threshold		Current conditions	
	Values	Unit	Values	Unit
MAP SENSOR	Less than 0.23	V		

Do the current condition(s) match the threshold?

YES : The failure is duplicated. Go to step 2.

NO : Intermittent failure, the system is OK at this time. Check for poor connections or loose terminals at the MAP sensor and the PCM.

2. Determine possible failure area (MAP(PB) line, others):
   - 1. Turn the ignition switch to LOCK (0).
   - 2. Disconnect the following connector.

     MAP sensor 3P connector

   - 3. Turn the ignition switch to ON (II).
   - 4. Check the parameter(s) below with the HDS.

Signal	Threshold		Current conditions	
	Values	Unit	Values	Unit
MAP SENSOR	Less than 0.23	V		

Do the current condition(s) match the threshold?

YES : Go to step 5.

NO : Go to step 3.

GETtheMANUALS.org

3. Determine possible failure area (MAP sensor, others):
    - 1. Measure the voltage between test points 1 and 2.

      Test condition IG ON (II)

      MAP sensor 3P connector: disconnected

      Test circuit VCC1, SG1

      Test point 1 MAP sensor 3P connector No. 1 (GRY)

      Test point 2 MAP sensor 3P connector No. 3 (PNK)

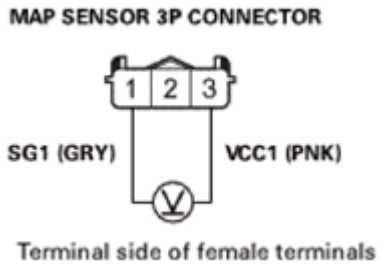

      Fig. 18: Measuring Voltage Between MAP Sensor 3P Connector No. 1 (GRY) And No. 3 (PNK)
      Courtesy of AMERICAN HONDA MOTOR CO., INC.

Is there about 5.0 V?

YES : **REPLACE THE MAP SENSOR** , then **do the repair verification** .

NO : Go to step 4.

4. Open wire check (VCC1 line):
    - 1. Turn the ignition switch to LOCK (0).
    - 2. Jump the SCS line with the HDS.
    - 3. Disconnect the following connector.

      PCM connector C (49P)

    - 4. Check for continuity between test points 1 and 2.

      Test condition IG LOCK (0)

      MAP sensor 3P connector: disconnected

      PCM connector C (49P): disconnected

GETtheMANUALS.org

Test circuit VCC1

Test point 1 PCM connector C (49P) No. 23 (PNK)

Test point 2 MAP sensor 3P connector No. 3 (PNK)

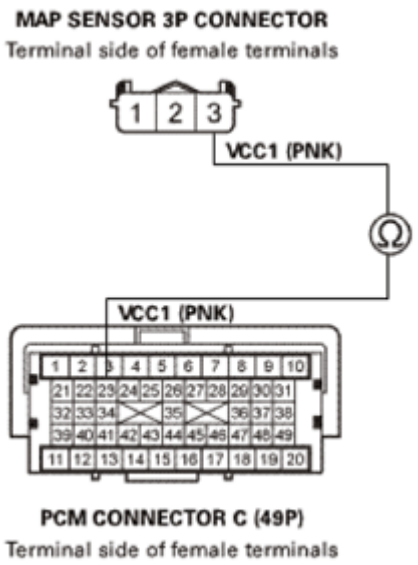

Fig. 19: Checking Continuity Between PCM Connector C (49P) No. 23 (PNK) And MAP Sensor 3P Connector No. 3 (PNK)
Courtesy of AMERICAN HONDA MOTOR CO., INC.

Is there continuity?

YES : The VCC1 wire is OK. **Update the PCM** See **PCM REMOVAL AND INSTALLATION** or **PCM UPDATE** if it does not have the latest software, or **substitute a known-good PCM** See **PCM REMOVAL AND INSTALLATION** or **PCM UPDATE** , then **do the repair verification** .

NO : Repair an open in the VCC1 wire between the PCM (C23) and the MAP sensor, then **do the repair verification** .

5. Shorted wire check (MAP(PB) line):
   - 1. Turn the ignition switch to LOCK (0).
   - 2. Jump the SCS line with the HDS.
   - 3. Disconnect the following connector.

     PCM connector B (49P)

   - 4. Check for continuity between test points 1 and 2.

     Test condition IG LOCK (0)

GETtheMANUALS.org

MAP sensor 3P connector: disconnected

PCM connector B (49P): disconnected

Test circuit MAP(PB)

Test point 1 MAP sensor 3P connector No. 2 (GRN)

Test point 2 Body ground

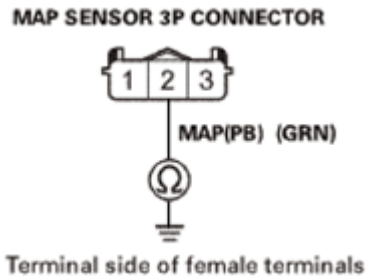

Fig. 20: Checking Continuity Between MAP Sensor 3P Connector No. 2 (GRN) And Body Ground
Courtesy of AMERICAN HONDA MOTOR CO., INC.

Is there continuity?

YES : Repair a short in the MAP(PB) wire between the PCM (B31) and the MAP sensor, then **do the repair verification** .

NO : The MAP(PB) wire is OK. **Update the PCM** See **PCM REMOVAL AND INSTALLATION** or **PCM UPDATE** if it does not have the latest software, or **substitute a known-good PCM** See **PCM REMOVAL AND INSTALLATION** or **PCM UPDATE** , then **do the repair verification** .

REPAIR VERIFICATION

- 1. Turn the ignition switch to LOCK (0).
- 2. Reconnect all connectors.
- 3. Turn the ignition switch to ON (II).
- 4. **Reset the PCM with the HDS** See **HOW TO TROUBLESHOOT THE A/T SYSTEM** or **HOW TO TROUBLESHOOT THE FUEL AND EMISSIONS SYSTEMS** .
- 5. **DO THE PCM IDLE LEARN PROCEDURE** .
- 6. Check for Pending or Confirmed DTCs with the HDS.

DTC Description	Confirmed DTC	Pending DTC	Freeze Frame
P0107 MAP SENSOR CIRCUIT LOW VOLTAGE			

Is DTC P0107 indicated?

GETtheMANUALS.org

YES : Check for poor connections or loose terminals at the MAP sensor and the PCM. If the PCM was updated, **substitute a known-good PCM** See **PCM REMOVAL AND INSTALLATION** or **PCM UPDATE** , then recheck. If the PCM was substituted, go to step 1.

NO : Troubleshooting is complete. If the PCM was substituted, **replace the original PCM** See **PCM REMOVAL AND INSTALLATION** or **PCM UPDATE** . If any other Pending or Confirmed DTCs are indicated, go to the indicated DTC's troubleshooting.

DTC P0108: MAP SENSOR CIRCUIT HIGH VOLTAGE

GETtheMANUALS.org

DTC Troubleshooting: P0108

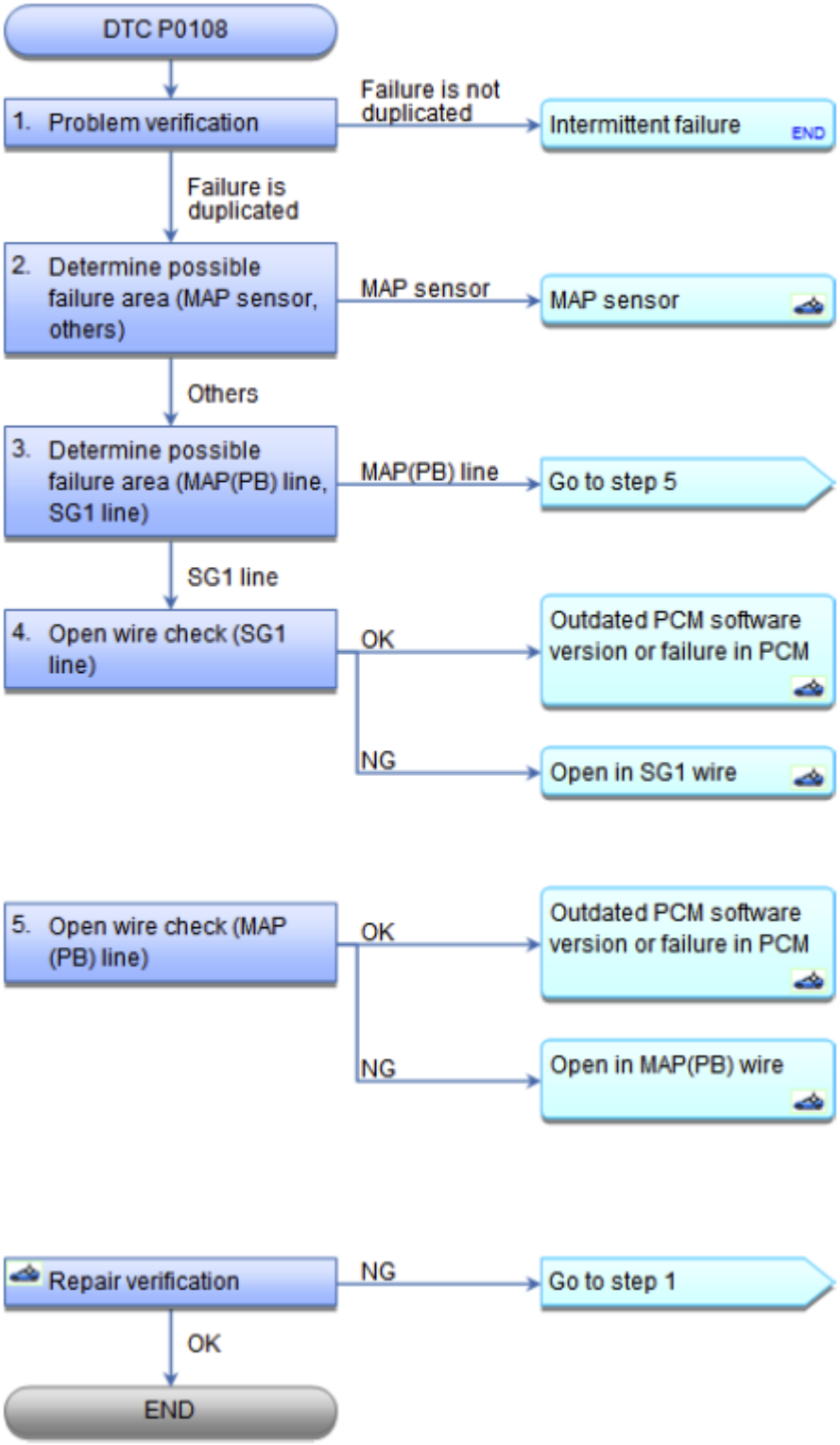

Fig. 21: DTC Troubleshooting Flow Chart (P0108)
Courtesy of AMERICAN HONDA MOTOR CO., INC.

GETtheMANUALS.org

NOTE: **Before you troubleshoot, record all freeze data and any on-board snapshot, and review the general troubleshooting information See HOW TO TROUBLESHOOT THE FUEL AND EMISSIONS SYSTEMS or HOW TO TROUBLESHOOT THE A/T SYSTEM .**

DTC Description	Confirmed DTC	Pending DTC	Freeze Frame
P0108 MANIFOLD ABSOLUTE PRESSURE (MAP) SENSOR CIRCUIT HIGH VOLTAGE			

1. Problem verification:
   - 1. Turn the ignition switch to ON (II).
   - 2. Check the MAP SENSOR in the DATA LIST with the HDS.

Signal	Threshold		Current conditions	
	Values	Unit	Values	Unit
MAP SENSOR	More than 4.49	V		

Do the current condition(s) match the threshold?

YES : The failure is duplicated. Go to step 2.

NO : Intermittent failure, the system is OK at this time. Check for poor connections or loose terminals at the MAP sensor and the PCM.

2. Determine possible failure area (MAP sensor, others):
   - 1. Turn the ignition switch to LOCK (0).
   - 2. Disconnect the following connector.

     MAP sensor 3P connector

   - 3. Connect terminals A and B with a jumper wire.

     Terminal A MAP sensor 3P connector No. 1 (GRY)

     Terminal B MAP sensor 3P connector No. 2 (GRN)

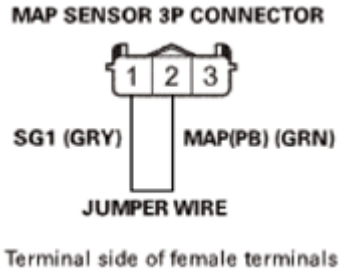

GETtheMANUALS.org

Fig. 22: Identifying MAP Sensor 3P Connector Terminals
Courtesy of AMERICAN HONDA MOTOR CO., INC.

- 4. Turn the ignition switch to ON (II).
- 5. Check the parameter(s) below with the HDS.

Signal	Threshold		Current conditions	
	Values	Unit	Values	Unit
MAP SENSOR	More than 4.49	V		

Do the current condition(s) match the threshold?

YES : Go to step 3.

NO : **REPLACE THE MAP SENSOR** , then **do the repair verification** .

3. Determine possible failure area (MAP(PB) line, SG1 line):
   - 1. Turn the ignition switch to LOCK (0).
   - 2. Remove the jumper wire.
   - 3. Turn the ignition switch to ON (II).
   - 4. Measure the voltage between test points 1 and 2.

   Test condition IG ON (II)

   MAP sensor 3P connector: disconnected

   Test circuit VCC1, SG1

   Test point 1 MAP sensor 3P connector No. 1 (GRY)

   Test point 2 MAP sensor 3P connector No. 3 (PNK)

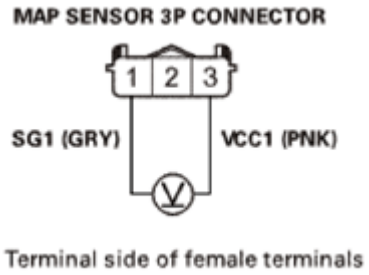

Fig. 23: Measuring Voltage Between MAP Sensor 3P Connector No. 1 (GRY) And No. 3 (PNK)
Courtesy of AMERICAN HONDA MOTOR CO., INC.

Is there about 5.0 V?

GETtheMANUALS.org

YES : Go to step 5.

NO : Go to step 4.

4. Open wire check (SG1 line):
    - 1. Turn the ignition switch to LOCK (0).
    - 2. Jump the SCS line with the HDS.
    - 3. Disconnect the following connector.

      PCM connector C (49P)

    - 4. Check for continuity between test points 1 and 2.

      Test condition IG LOCK (0)

      MAP sensor 3P connector: disconnected

      PCM connector C (49P): disconnected

      Test circuit SG1

      Test point 1 PCM connector C (49P) No. 24 (GRY)

      Test point 2 MAP sensor 3P connector No. 1 (GRY)

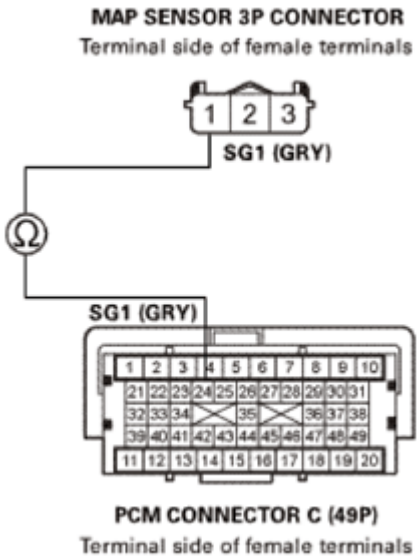

Fig. 24: Checking Continuity Between PCM Connector C (49P) No. 24 (GRY) And MAP Sensor 3P Connector No. 1 (GRY)
Courtesy of AMERICAN HONDA MOTOR CO., INC.

Is there continuity?

GETtheMANUALS.org

YES : The SG1 wire is OK. **Update the PCM** See **PCM REMOVAL AND INSTALLATION** or **PCM UPDATE** if it does not have the latest software, or **substitute a known-good PCM** See **PCM REMOVAL AND INSTALLATION** or **PCM UPDATE** , then **do the repair verification** .

NO : Repair an open in the SG1 wire between the PCM (C24) and the MAP sensor, then **do the repair verification** .

5. Open wire check (MAP(PB) line):
   - 1. Turn the ignition switch to LOCK (0).
   - 2. Jump the SCS line with the HDS.
   - 3. Disconnect the following connector.

     PCM connector B (49P)

   - 4. Check for continuity between test points 1 and 2.

     Test condition IG LOCK (0)

     MAP sensor 3P connector: disconnected

     PCM connector B (49P): disconnected

     Test circuit MAP(PB)

     Test point 1 PCM connector B (49P) No. 31 (GRN)

     Test point 2 MAP sensor 3P connector No. 2 (GRN)

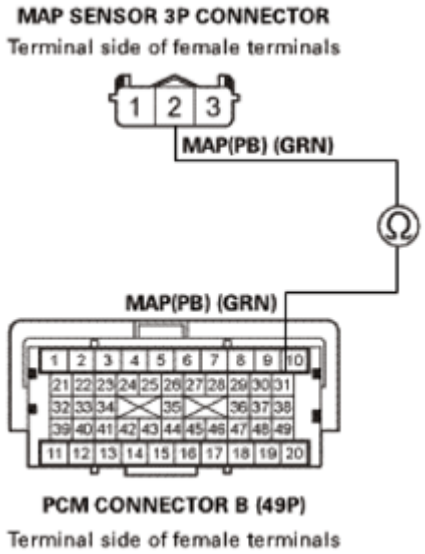

Fig. 25: Checking Continuity Between PCM Connector B (49P) No. 31 (GRN) And MAP Sensor 3P Connector No. 2 (GRN)

GETtheMANUALS.org

Courtesy of AMERICAN HONDA MOTOR CO., INC.

Is there continuity?

YES : The MAP(PB) wire is OK. **Update the PCM** See **PCM REMOVAL AND INSTALLATION** or **PCM UPDATE** if it does not have the latest software, or **substitute a known-good PCM** See **PCM REMOVAL AND INSTALLATION** or **PCM UPDATE** , then **do the repair verification** .

NO : Repair an open in the MAP(PB) wire between the PCM (B31) and the MAP sensor, then **do the repair verification** .

REPAIR VERIFICATION

- 1. Turn the ignition switch to LOCK (0).
- 2. Reconnect all connectors.
- 3. Turn the ignition switch to ON (II).
- 4. **Reset the PCM with the HDS** See **HOW TO TROUBLESHOOT THE A/T SYSTEM** or **HOW TO TROUBLESHOOT THE FUEL AND EMISSIONS SYSTEMS** .
- 5. **DO THE PCM IDLE LEARN PROCEDURE** .
- 6. Check for Pending or Confirmed DTCs with the HDS.

DTC Description	Confirmed DTC	Pending DTC	Freeze Frame
P0108 MANIFOLD ABSOLUTE PRESSURE (MAP) SENSOR CIRCUIT HIGH VOLTAGE			

Is DTC P0108 indicated?

YES : Check for poor connections or loose terminals at the MAP sensor and the PCM. If the PCM was updated, **substitute a known-good PCM** See **PCM UPDATE** or **PCM REMOVAL AND INSTALLATION** , then recheck. If the PCM was substituted, go to step 1.

NO : Troubleshooting is complete. If the PCM was substituted, **replace the original PCM** See **PCM REMOVAL AND INSTALLATION** or **PCM UPDATE** . If any other Pending or Confirmed DTCs are indicated, go to the indicated DTC's troubleshooting.

DTC P0111: IAT SENSOR CIRCUIT RANGE/PERFORMANCE PROBLEM

GETtheMANUALS.org

DTC Troubleshooting: P0111

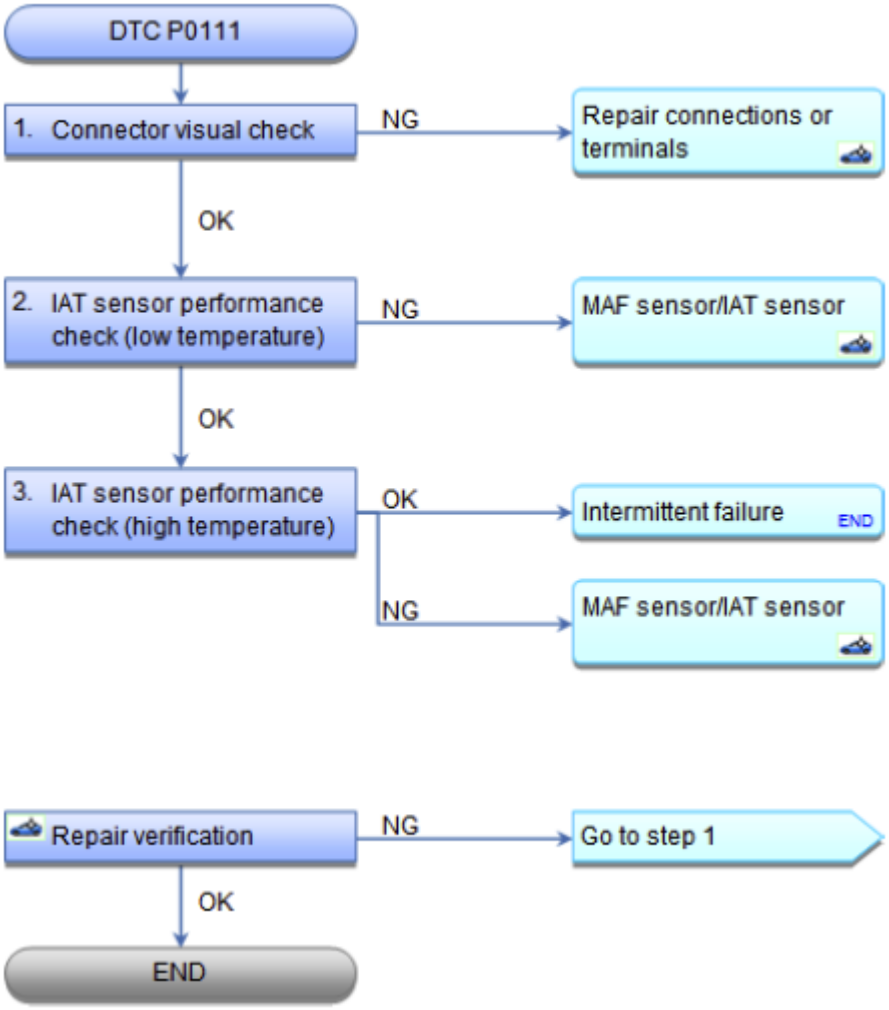

Fig. 26: DTC Troubleshooting Flow Chart (P0111)
Courtesy of AMERICAN HONDA MOTOR CO., INC.

NOTE: **Before you troubleshoot, record all freeze data and any on-board snapshot, and review the general troubleshooting information See HOW TO TROUBLESHOOT THE A/T SYSTEM or HOW TO TROUBLESHOOT THE FUEL AND EMISSIONS SYSTEMS .**

DTC Description	Confirmed DTC	Pending DTC	Freeze Frame
P0111 IAT SENSOR CIRCUIT RANGE/PERFORMANCE PROBLEM			

1. Connector visual check:
   - 1. Check for poor connections or loose terminals at these locations:
     - MAF sensor/IAT sensor

GETtheMANUALS.org

- ECT sensor 1
- ECT sensor 2

Are the connections and terminals OK?

YES : Go to step 2.

NO : Repair the connections or terminals, then **do the repair verification** .

2. IAT sensor performance check (low temperature):
   - 1. **REMOVE THE MAF SENSOR/IAT SENSOR** .
   - 2. Allow the MAF sensor/IAT sensor to cool to the ambient temperature.
   - 3. Note the ambient temperature.
   - 4. Connect the MAF sensor/IAT sensor to its 5P connector, but do not install it.
   - 5. Turn the ignition switch to ON (II).
   - 6. Quickly note the value of the IAT SENSOR in the DATA LIST with the HDS.

Signal	Current conditions	
	Values	Unit
IAT SENSOR (2)		

   - 7. Compare the value of IAT SENSOR to the ambient temperature.

Does the value of IAT SENSOR differ 5.4 °F (3 °C) or more from the ambient temperature?

YES : **REPLACE THE MAF SENSOR/IAT SENSOR** , then **do the repair verification** .

NO : The IAT sensor is OK in the ambient temperature. Go to step 3.

3. IAT sensor performance check (high temperature):
   - 1. Disconnect the following connector.

     MAF sensor/IAT sensor 5P connector

   - 2. Using a heat gun, blow hot air on the MAF sensor/IAT sensor for a few seconds. Do not apply the heat longer than a few seconds or you will damage the sensor.
   - 3. Connect the MAF sensor/IAT sensor to its 5P connector, but do not install it.
   - 4. Check the IAT SENSOR in the DATA LIST with the HDS.

Signal	Current conditions	
	Values	Unit
IAT SENSOR (2)		

GETtheMANUALS.org

Does the IAT SENSOR change 76 °F (42 °C) or more?

YES : Intermittent failure, the system is OK at this time. Check for poor connections or loose terminals at the MAF sensor/IAT sensor and the PCM.

NO : **REPLACE THE MAF SENSOR/IAT SENSOR** , then **do the repair verification** .

REPAIR VERIFICATION

- 1. Turn the ignition switch to ON (II).
- 2. **Reset the PCM with the HDS** See **HOW TO TROUBLESHOOT THE A/T SYSTEM** or **HOW TO TROUBLESHOOT THE FUEL AND EMISSIONS SYSTEMS** .
- 3. **DO THE PCM IDLE LEARN PROCEDURE** .
- 4. Check for Pending or Confirmed DTCs with the HDS.

DTC Description	Confirmed DTC	Pending DTC	Freeze Frame
P0111 IAT SENSOR CIRCUIT RANGE/PERFORMANCE PROBLEM			

Is DTC P0111 indicated?

YES : Check for poor connections or loose terminals at the MAF sensor/IAT sensor and the PCM, then go to step 1.

NO : Troubleshooting is complete. If any other Pending or Confirmed DTCs are indicated, go to the indicated DTC's troubleshooting.

DTC P0112: IAT SENSOR CIRCUIT LOW VOLTAGE

GETtheMANUALS.org

DTC Troubleshooting: P0112

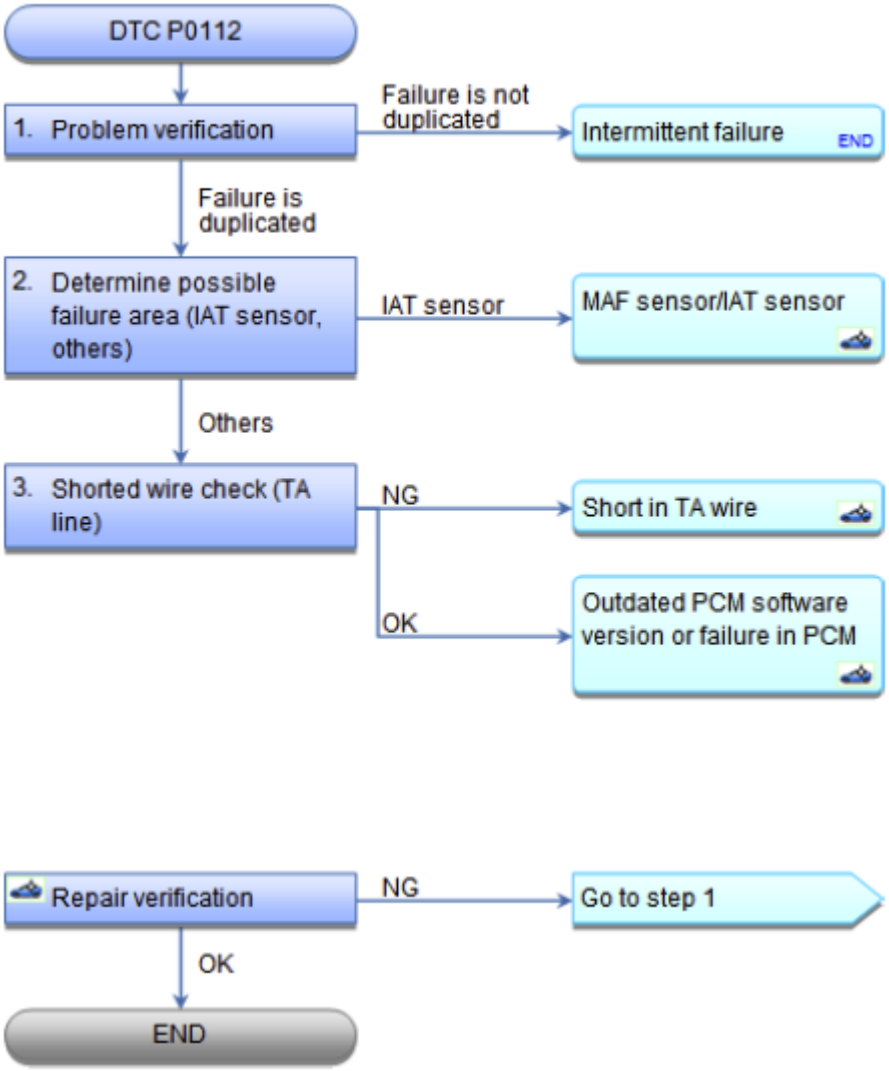

Fig. 27: DTC Troubleshooting Flow Chart (P0112)
Courtesy of AMERICAN HONDA MOTOR CO., INC.

NOTE: **Before you troubleshoot, record all freeze data and any on-board snapshot, and review the general troubleshooting information See HOW TO TROUBLESHOOT THE FUEL AND EMISSIONS SYSTEMS or HOW TO TROUBLESHOOT THE A/T SYSTEM .**

DTC Description	Confirmed DTC	Pending DTC	Freeze Frame
P0112 IAT SENSOR CIRCUIT LOW VOLTAGE			

1. Problem verification:
   - 1. Turn the ignition switch to ON (II).
   - 2. Check the parameter(s) below with the HDS.

GETtheMANUALS.org

Signal	Threshold		Current conditions	
	Values	Unit	Values	Unit
IAT SENSOR (2)	Less than 0.08	V		

Do the current condition(s) match the threshold?

YES : The failure is duplicated. Go to step 2.

NO : Intermittent failure, the system is OK at this time. Check for poor connections or loose terminals at the MAF sensor/IAT sensor and the PCM.

2. Determine possible failure area (IAT sensor, others):
   - 1. Turn the ignition switch to LOCK (0).
   - 2. Disconnect the following connector.

     MAF sensor/IAT sensor 5P connector

   - 3. Turn the ignition switch to ON (II).
   - 4. Check the parameter(s) below with the HDS.

Signal	Threshold		Current conditions	
	Values	Unit	Values	Unit
IAT SENSOR (2)	Less than 0.08	V		

Do the current condition(s) match the threshold?

YES : Go to step 3.

NO : **REPLACE THE MAF SENSOR/IAT SENSOR** , then **do the repair verification** .

3. Shorted wire check (TA line):
   - 1. Turn the ignition switch to LOCK (0).
   - 2. Jump the SCS line with the HDS.
   - 3. Disconnect the following connector.

     PCM connector B (49P)

   - 4. Check for continuity between test points 1 and 2.

     Test condition IG LOCK (0)

     MAF sensor/IAT sensor 5P connector: disconnected

     PCM connector B (49P): disconnected

GETtheMANUALS.org

Test circuit TA

Test point 1 MAF sensor/IAT sensor 5P connector No. 1 (RED)

Test point 2 Body ground

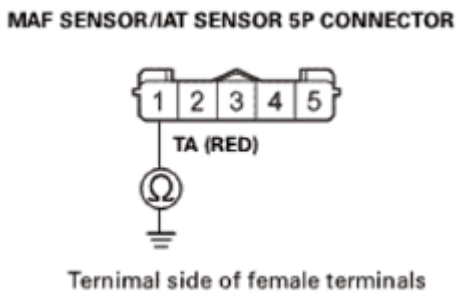

Fig. 28: Checking Continuity Between MAF Sensor/IAT Sensor 5P Connector No. 1 (RED) And Body Ground
Courtesy of AMERICAN HONDA MOTOR CO., INC.

Is there continuity?

YES : Repair a short in the TA wire between the PCM (B42) and the MAF sensor/IAT sensor, then **do the repair verification** .

NO : The TA wire is OK. **Update the PCM** See **PCM REMOVAL AND INSTALLATION** or **PCM UPDATE** if it does not have the latest software, or **substitute a known-good PCM** See **PCM UPDATE** or **PCM REMOVAL AND INSTALLATION** , then **do the repair verification** .

REPAIR VERIFICATION

- 1. Turn the ignition switch to LOCK (0).
- 2. Reconnect all connectors.
- 3. Turn the ignition switch to ON (II).
- 4. **Reset the PCM with the HDS** See **HOW TO TROUBLESHOOT THE A/T SYSTEM** or **HOW TO TROUBLESHOOT THE FUEL AND EMISSIONS SYSTEMS** .
- 5. **DO THE PCM IDLE LEARN PROCEDURE** .
- 6. Check for Pending or Confirmed DTCs with the HDS.

DTC Description	Confirmed DTC	Pending DTC	Freeze Frame
P0112 IAT SENSOR CIRCUIT LOW VOLTAGE			

Is DTC P0112 indicated?

YES : Check for poor connections or loose terminals at the MAF sensor/IAT sensor and the PCM. If the PCM was updated, **substitute a known-good PCM** See **PCM REMOVAL AND INSTALLATION** or **PCM UPDATE** , then recheck. If the PCM was substituted, go to step 1.

GETtheMANUALS.org

NO : Troubleshooting is complete. If the PCM was substituted, **replace the original PCM** See **PCM REMOVAL AND INSTALLATION** or **PCM UPDATE** . If any other Pending or Confirmed DTCs are indicated, go to the indicated DTC's troubleshooting.

DTC P0113: IAT SENSOR CIRCUIT HIGH VOLTAGE

GETtheMANUALS.org

DTC Troubleshooting: P0113

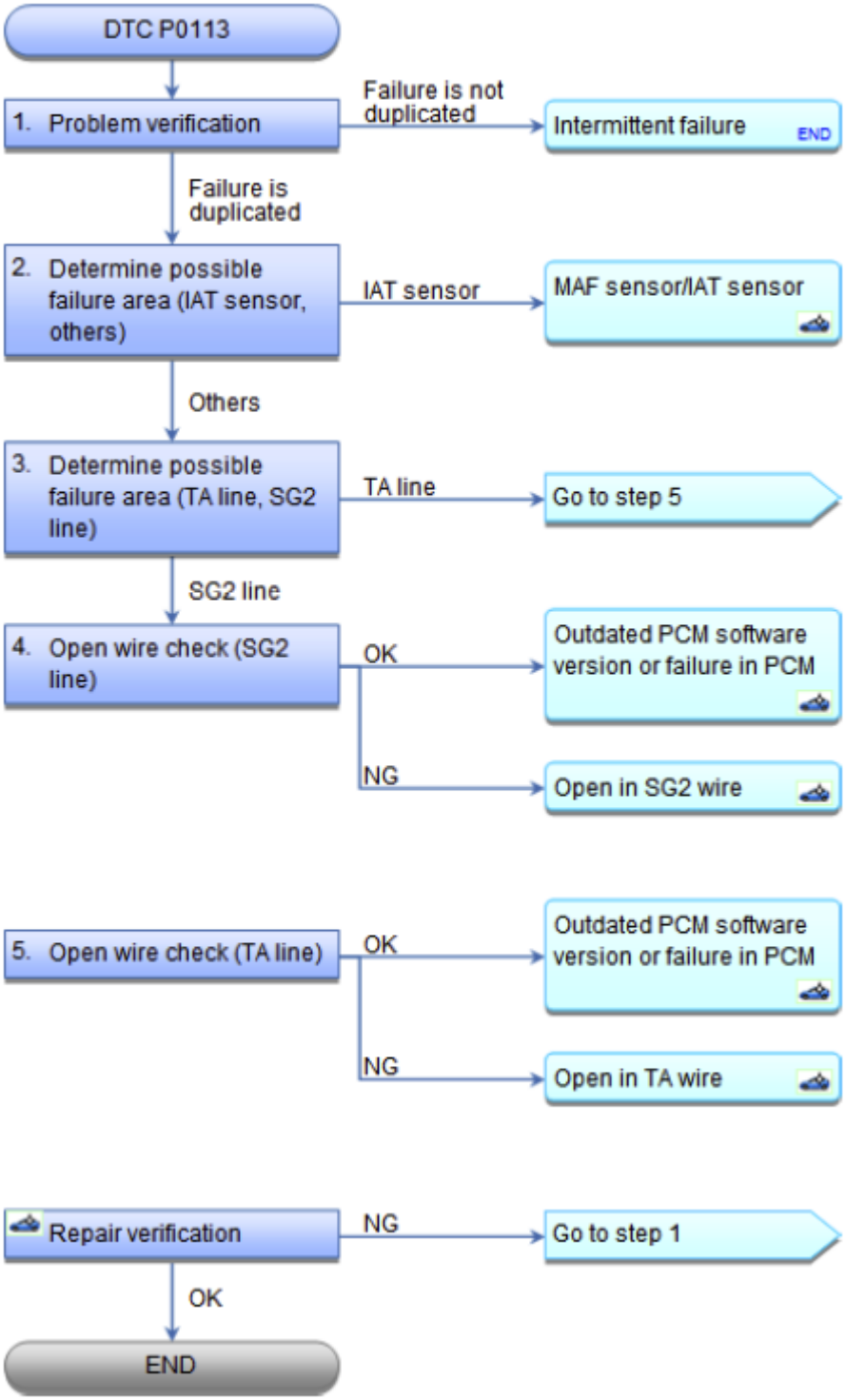

Fig. 29: DTC Troubleshooting Flow Chart (P0113)
Courtesy of AMERICAN HONDA MOTOR CO., INC.

NOTE: **Before you troubleshoot, record all freeze data and any on-board snapshot, and**

GETtheMANUALS.org

review the general troubleshooting information See HOW TO TROUBLESHOOT THE FUEL AND EMISSIONS SYSTEMS or HOW TO TROUBLESHOOT THE A/T SYSTEM .

DTC Description	Confirmed DTC	Pending DTC	Freeze Frame
P0113 IAT SENSOR CIRCUIT HIGH VOLTAGE			

1. Problem verification:
   - 1. Turn the ignition switch to ON (II).
   - 2. Check the parameter(s) below with the HDS.

Signal	Threshold		Current conditions	
	Values	Unit	Values	Unit
IAT SENSOR (2)	More than 4.92	V		

Do the current condition(s) match the threshold?

YES : The failure is duplicated. Go to step 2.

NO : Intermittent failure, the system is OK at this time. Check for poor connections or loose terminals at the MAF sensor/IAT sensor and the PCM.

2. Determine possible failure area (IAT sensor, others):
   - 1. Turn the ignition switch to LOCK (0).
   - 2. Disconnect the following connector.

     MAF sensor/IAT sensor 5P connector

   - 3. Connect terminals A and B with a jumper wire.

     Terminal A MAF sensor/IAT sensor 5P connector No. 1 (RED)

     Terminal B MAF sensor/IAT sensor 5P connector No. 2 (GRY)

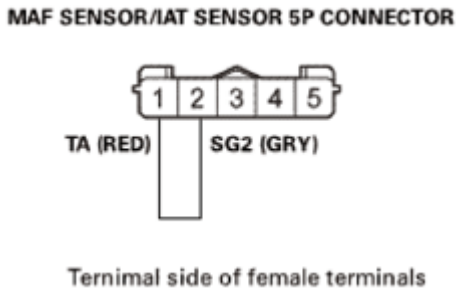

Fig. 30: Identifying MAF Sensor/IAT Sensor 5P Connector Terminals
Courtesy of AMERICAN HONDA MOTOR CO., INC.

GETtheMANUALS.org

- 4. Turn the ignition switch to ON (II).
- 5. Check the parameter(s) below with the HDS.

Signal	Threshold		Current conditions	
	Values	Unit	Values	Unit
IAT SENSOR (2)	More than 4.92	V		

Do the current condition(s) match the threshold?

YES : Go to step 3.

NO : **REPLACE THE MAF SENSOR/IAT SENSOR** , then **do the repair verification** .

3. Determine possible failure area (TA line, SG2 line):
   - 1. Turn the ignition switch to LOCK (0).
   - 2. Remove the jumper wire.
   - 3. Turn the ignition switch to ON (II).
   - 4. Measure the voltage between test points 1 and 2.

     Test condition IG ON (II)

     MAF sensor/IAT sensor 5P connector: disconnected

     Test circuit TA

     Test point 1 MAF sensor/IAT sensor 5P connector No. 1 (RED)

     Test point 2 Body ground

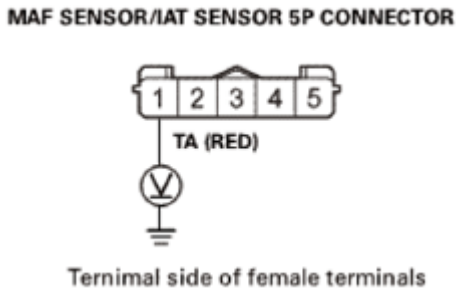

Fig. 31: Measuring Voltage Between MAF Sensor/IAT Sensor 5P Connector No. 1 (RED) And Body Ground
Courtesy of AMERICAN HONDA MOTOR CO., INC.

Is there about 5.0 V?

YES : Go to step 4.

GETtheMANUALS.org

NO : Go to step 5.

4. Open wire check (SG2 line):
   - 1. Turn the ignition switch to LOCK (0).
   - 2. Jump the SCS line with the HDS.
   - 3. Disconnect the following connector.

     PCM connector B (49P)

   - 4. Check for continuity between test points 1 and 2.

     Test condition IG LOCK (0)

     MAF sensor/IAT sensor 5P connector: disconnected

     PCM connector B (49P): disconnected

     Test circuit SG2

     Test point 1 PCM connector B (49P) No. 44 (GRY)

     Test point 2 MAF sensor/IAT sensor 5P connector No. 2 (GRY)

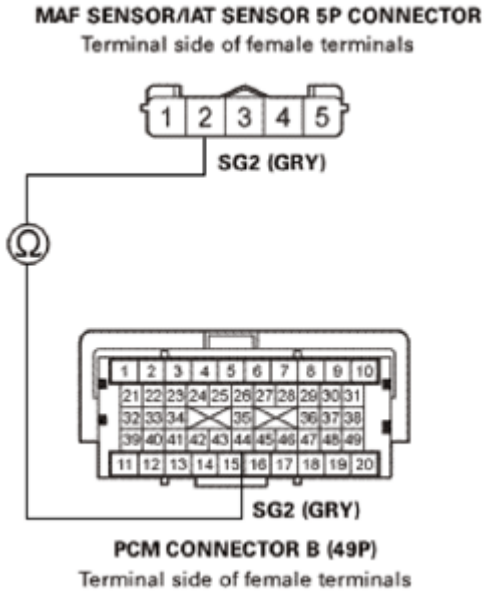

Fig. 32: Checking Continuity Between PCM Connector B (49P) No. 44 (GRY) And MAF Sensor/IAT Sensor 5P Connector No. 2 (GRY)
Courtesy of AMERICAN HONDA MOTOR CO., INC.

Is there continuity?

GETtheMANUALS.org

YES : The SG2 wire is OK. **Update the PCM** See **PCM REMOVAL AND INSTALLATION** or **PCM UPDATE** if it does not have the latest software, or **substitute a known-good PCM** See **PCM UPDATE** or **PCM REMOVAL AND INSTALLATION** , then **do the repair verification** .

NO : Repair an open in the SG2 wire between the PCM (B44) and the MAF sensor/IAT sensor, then **do the repair verification** .

5. Open wire check (TA line):
   - 1. Turn the ignition switch to LOCK (0).
   - 2. Jump the SCS line with the HDS.
   - 3. Disconnect the following connector.

     PCM connector B (49P)

   - 4. Check for continuity between test points 1 and 2.

     Test condition IG LOCK (0)

     MAF sensor/IAT sensor 5P connector: disconnected

     PCM connector B (49P): disconnected

     Test circuit TA

     Test point 1 PCM connector B (49P) No. 42 (RED)

     Test point 2 MAF sensor/IAT sensor 5P connector No. 1 (RED)

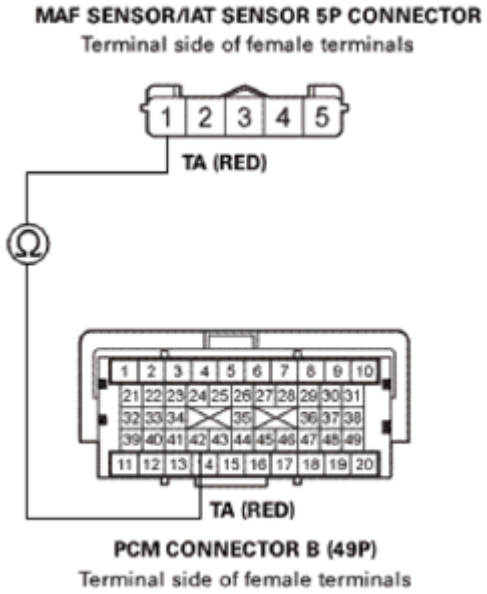

Fig. 33: Checking Continuity Between PCM Connector B (49P) No. 42 (RED) And MAF

GETtheMANUALS.org

Sensor/IAT Sensor 5P Connector No. 1 (RED)
Courtesy of AMERICAN HONDA MOTOR CO., INC.

Is there continuity?

YES : The TA wire is OK. **Update the PCM** See **PCM REMOVAL AND INSTALLATION** or **PCM UPDATE** if it does not have the latest software, or **substitute a known-good PCM** See **PCM REMOVAL AND INSTALLATION** or **PCM UPDATE** , then **do the repair verification** .

NO : Repair an open in the TA wire between the PCM (B42) and the MAF sensor/IAT sensor, then **do the repair verification** .

REPAIR VERIFICATION

- 1. Turn the ignition switch to LOCK (0).
- 2. Reconnect all connectors.
- 3. Turn the ignition switch to ON (II).
- 4. **Reset the PCM with the HDS** See **HOW TO TROUBLESHOOT THE A/T SYSTEM** or **HOW TO TROUBLESHOOT THE FUEL AND EMISSIONS SYSTEMS** .
- 5. **DO THE PCM IDLE LEARN PROCEDURE** .
- 6. Check for Pending or Confirmed DTCs with the HDS.

DTC Description	Confirmed DTC	Pending DTC	Freeze Frame
P0113 IAT SENSOR CIRCUIT HIGH VOLTAGE			

Is DTC P0113 indicated?

YES : Check for poor connections or loose terminals at the MAF sensor/IAT sensor and the PCM. If the PCM was updated, **substitute a known-good PCM** See **PCM UPDATE** or **PCM REMOVAL AND INSTALLATION** , then recheck. If the PCM was substituted, go to step 1.

NO : Troubleshooting is complete. If the PCM was substituted, **replace the original PCM** See **PCM UPDATE** or **PCM REMOVAL AND INSTALLATION** . If any other Pending or Confirmed DTCs are indicated, go to the indicated DTC's troubleshooting.

DTC P0116: ECT SENSOR 1 CIRCUIT RANGE/PERFORMANCE PROBLEM

GETtheMANUALS.org

DTC Troubleshooting: P0116

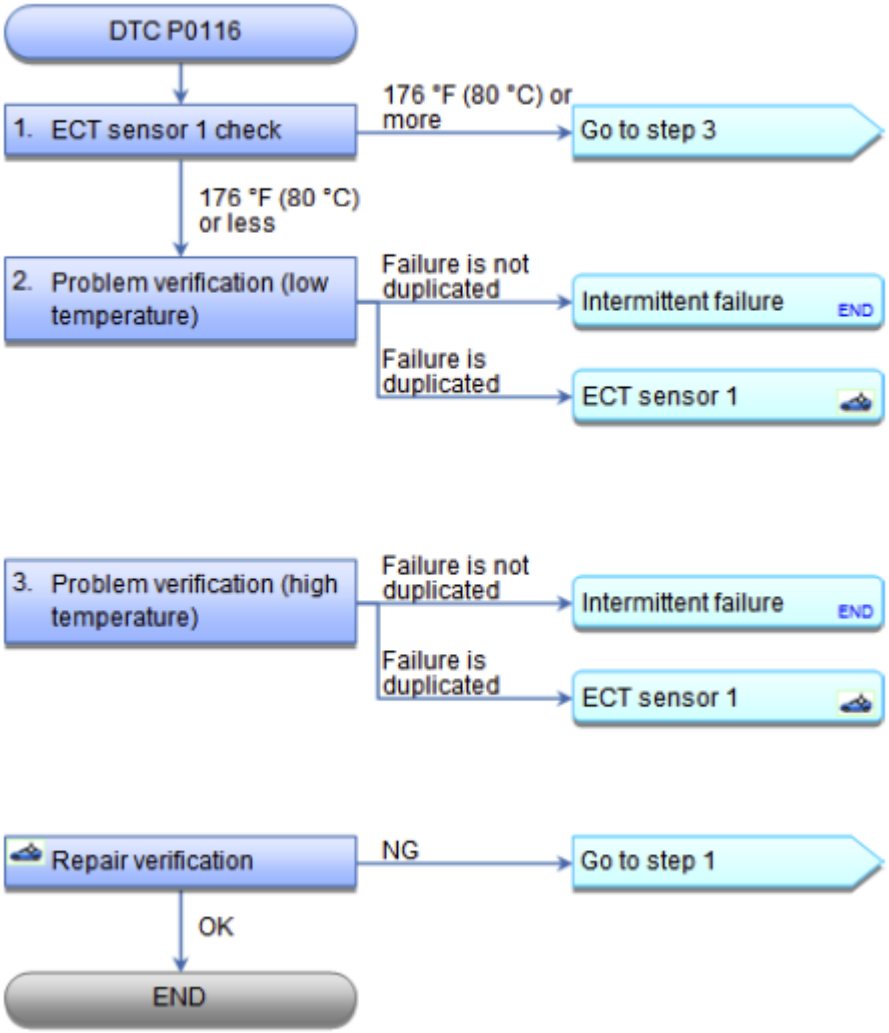

Fig. 34: DTC Troubleshooting Flow Chart (P0116)
Courtesy of AMERICAN HONDA MOTOR CO., INC.

NOTE: **Before you troubleshoot, record all freeze data and any on-board snapshot, and review the general troubleshooting information See HOW TO TROUBLESHOOT THE A/T SYSTEM or HOW TO TROUBLESHOOT THE FUEL AND EMISSIONS SYSTEMS .**

DTC Description	Confirmed DTC	Pending DTC	Freeze Frame
P0116 ECT SENSOR 1 CIRCUIT RANGE/PERFORMANCE PROBLEM			

1. ECT sensor 1 check:
   - 1. Turn the ignition switch to ON (II).

GETtheMANUALS.org

- 2. Check the parameter(s) below with the HDS.

Signal	Threshold		Current conditions	
	Values	Unit	Values	Unit
ECT SENSOR 1	More than 176	°F		
	More than 80	°C		

Do the current condition(s) match the threshold?

YES : Note the value of ECT SENSOR 1, then go to step 3.

NO : Note the value of ECT SENSOR 1, then go to step 2.

2. Problem verification (low temperature):
   - 1. Note the value of ECT SENSOR 1 in the DATA LIST with the HDS.

Signal	Current conditions	
	Values	Unit
ECT SENSOR 1		

   - 2. Start the engine. Hold the engine speed at 3, 000 rpm without load (in P or N) until the radiator fan comes on, then let it idle.
   - 3. Check ECT SENSOR 1 in the DATA LIST with the HDS.

Signal	Current conditions	
	Values	Unit
ECT SENSOR 1		

Does ECT SENSOR 1 change 18 °F (10 °C) or more?

YES : Intermittent failure, the system is OK at this time. Check for poor connections or loose terminals at ECT sensor 1 and the PCM.

NO : The failure is duplicated. **REPLACE ECT SENSOR 1** , then **do the repair verification** .

3. Problem verification (high temperature):
   - 1. Turn the ignition switch to LOCK (0).
   - 2. Open the hood, and let the engine cool for 3 hours.
   - 3. Turn the ignition switch to ON (II).
   - 4. Check ECT SENSOR 1 in the DATA LIST with the HDS.

Signal	Current conditions	
	Values	Unit

GETtheMANUALS.org

ECT SENSOR 1		

Does ECT SENSOR 1 change 18 °F (10 °C) or more?

YES : Intermittent failure, the system is OK at this time. Check for poor connections or loose terminals at ECT sensor 1 and the PCM.

NO : The failure is duplicated. **REPLACE ECT SENSOR 1** , then **do the repair verification** .

REPAIR VERIFICATION

- 1. Turn the ignition switch to ON (II).
- 2. **Reset the PCM with the HDS** See **HOW TO TROUBLESHOOT THE FUEL AND EMISSIONS SYSTEMS** or **HOW TO TROUBLESHOOT THE A/T SYSTEM** .
- 3. **DO THE PCM IDLE LEARN PROCEDURE** .
- 4. Check for Pending or Confirmed DTCs with the HDS.

DTC Description	Confirmed DTC	Pending DTC	Freeze Frame
P0116 ECT SENSOR 1 CIRCUIT RANGE/PERFORMANCE PROBLEM			

Is DTC P0116 indicated?

YES : Check for poor connections or loose terminals at ECT sensor 1 and the PCM, then go to step 1.

NO : Troubleshooting is complete. If any other Pending or Confirmed DTCs are indicated, go to the indicated DTC's troubleshooting.

DTC P0117: ECT SENSOR 1 CIRCUIT LOW VOLTAGE

GETtheMANUALS.org

DTC Troubleshooting: P0117

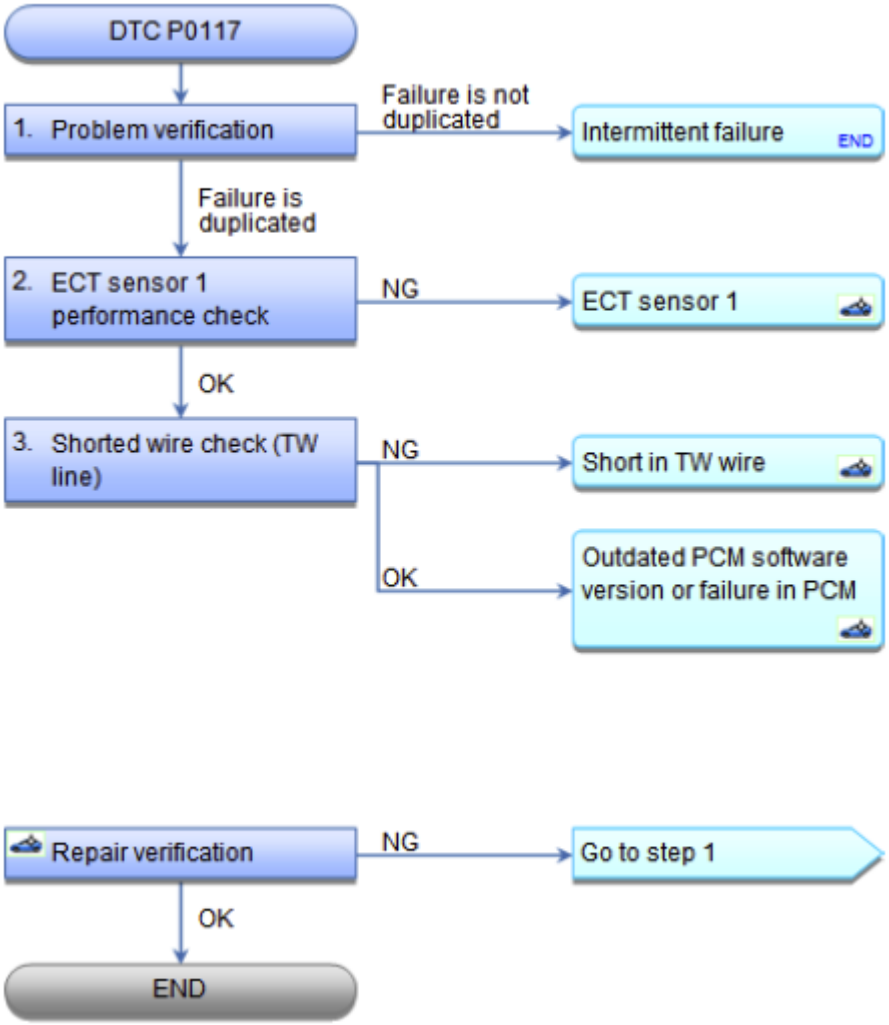

Fig. 35: DTC Troubleshooting Flow Chart (P0117)
Courtesy of AMERICAN HONDA MOTOR CO., INC.

NOTE: **Before you troubleshoot, record all freeze data and any on-board snapshot, and review the general troubleshooting information See HOW TO TROUBLESHOOT THE A/T SYSTEM or HOW TO TROUBLESHOOT THE FUEL AND EMISSIONS SYSTEMS .**

DTC Description	Confirmed DTC	Pending DTC	Freeze Frame
P0117 ECT SENSOR 1 CIRCUIT LOW VOLTAGE			

1. Problem verification:
   - 1. Turn the ignition switch to ON (II).
   - 2. Check the parameter(s) below with the HDS.

GETtheMANUALS.org

Signal	Threshold		Current conditions	
	Values	Unit	Values	Unit
ECT SENSOR 1	Less than 0.08	V		

Do the current condition(s) match the threshold?

YES : The failure is duplicated. Go to step 2.

NO : Intermittent failure, the system is OK at this time. Check for poor connections or loose terminals at ECT sensor 1 and the PCM.

2. ECT sensor 1 performance check:
   - 1. Turn the ignition switch to LOCK (0).
   - 2. Disconnect the following connector.

     ECT sensor 1 2P connector

   - 3. Turn the ignition switch to ON (II).
   - 4. Check the parameter(s) below with the HDS.

Signal	Threshold		Current conditions	
	Values	Unit	Values	Unit
ECT SENSOR 1	Less than 0.08	V		

Do the current condition(s) match the threshold?

YES : Go to step 3.

NO : **REPLACE ECT SENSOR 1** , then **do the repair verification** .

3. Shorted wire check (TW line):
   - 1. Turn the ignition switch to LOCK (0).
   - 2. Jump the SCS line with the HDS.
   - 3. Disconnect the following connector.

     PCM connector B (49P)

   - 4. Check for continuity between test points 1 and 2.

     Test condition IG LOCK (0)

     ECT sensor 1 2P connector: disconnected

     PCM connector B (49P): disconnected

GETtheMANUALS.org

Test circuit TW

Test point 1 ECT sensor 1 2P connector No. 2 (PNK)

Test point 2 Body ground

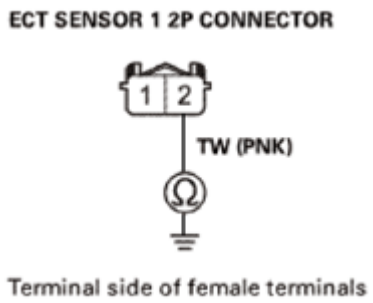

Fig. 36: Checking Continuity Between ECT Sensor 1 2P Connector No. 2 (PNK) And Body Ground
Courtesy of AMERICAN HONDA MOTOR CO., INC.

Is there continuity?

YES : Repair a short in the TW wire between the PCM (B34) and ECT sensor 1, then **do the repair verification** .

NO : The TW wire is OK. **Update the PCM** See **PCM REMOVAL AND INSTALLATION** or **PCM UPDATE** if it does not have the latest software, or **substitute a known-good PCM** See **PCM REMOVAL AND INSTALLATION** or **PCM UPDATE** , then **do the repair verification** .

REPAIR VERIFICATION

- 1. Turn the ignition switch to LOCK (0).
- 2. Reconnect all connectors.
- 3. Turn the ignition switch to ON (II).
- 4. **Reset the PCM with the HDS** See **HOW TO TROUBLESHOOT THE A/T SYSTEM** or **HOW TO TROUBLESHOOT THE FUEL AND EMISSIONS SYSTEMS** .
- 5. **DO THE PCM IDLE LEARN PROCEDURE** .
- 6. Check for Pending or Confirmed DTCs with the HDS.

DTC Description	Confirmed DTC	Pending DTC	Freeze Frame
P0117 ECT SENSOR 1 CIRCUIT LOW VOLTAGE			

Is DTC P0117 indicated?

YES : Check for poor connections or loose terminals at ECT sensor 1 and the PCM. If the PCM was updated, **substitute a known-good PCM** See **PCM UPDATE** or **PCM REMOVAL AND INSTALLATION** , then

GETtheMANUALS.org

recheck. If the PCM was substituted, go to step 1.

NO : Troubleshooting is complete. If the PCM was substituted, **replace the original PCM** See **PCM REMOVAL AND INSTALLATION** or **PCM UPDATE** . If any other Pending or Confirmed DTCs are indicated, go to the indicated DTC's troubleshooting.

DTC P0118: ECT SENSOR 1 CIRCUIT HIGH VOLTAGE

GETtheMANUALS.org

DTC Troubleshooting: P0118

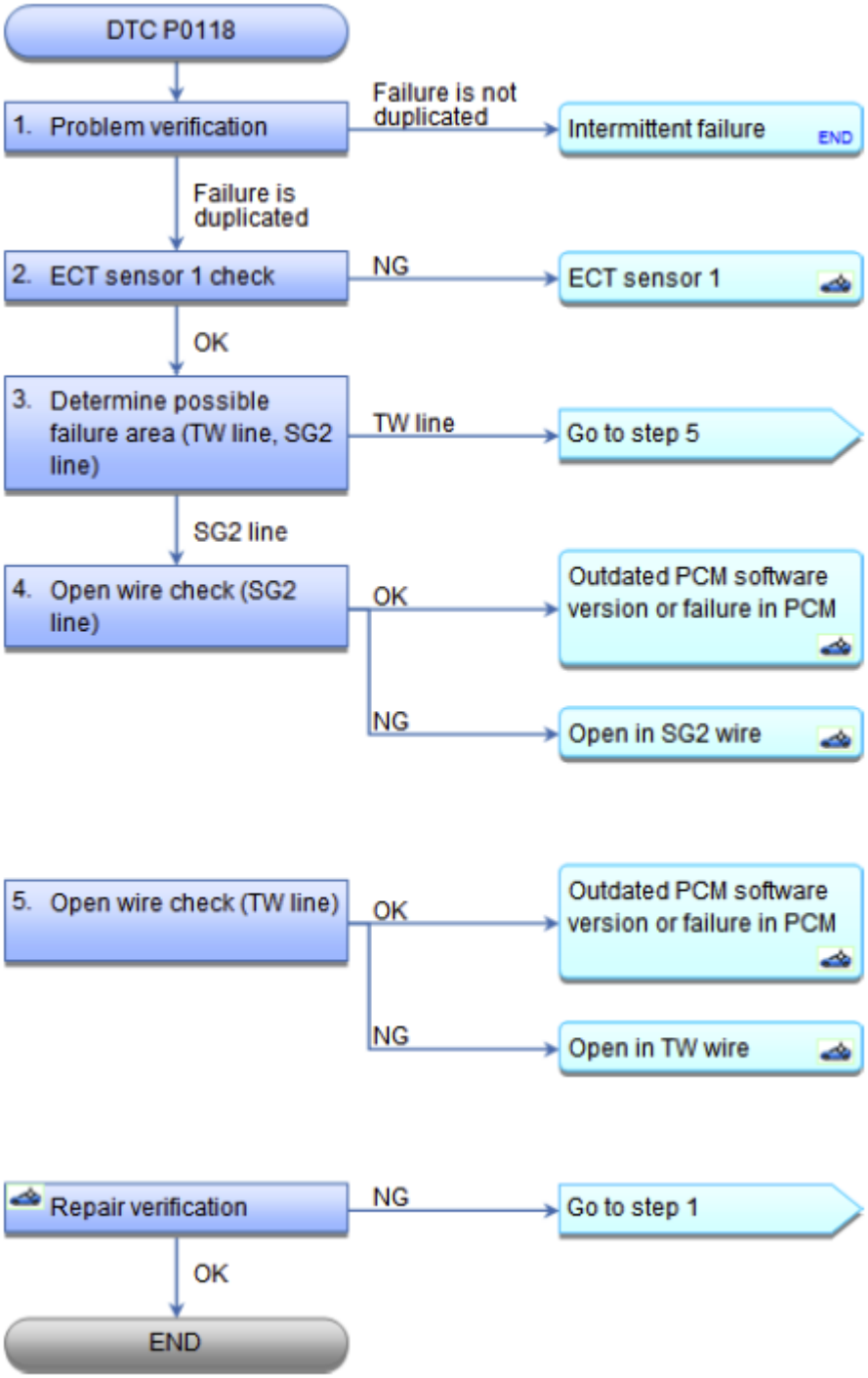

Fig. 37: DTC Troubleshooting Flow Chart (P0118)
Courtesy of AMERICAN HONDA MOTOR CO., INC.

NOTE: **Before you troubleshoot, record all freeze data and any on-board snapshot, and review the general troubleshooting information See HOW TO TROUBLESHOOT THE A/T SYSTEM or HOW TO TROUBLESHOOT THE FUEL AND EMISSIONS**

GETtheMANUALS.org

SYSTEMS .

DTC Description	Confirmed DTC	Pending DTC	Freeze Frame
P0118 ECT SENSOR 1 CIRCUIT HIGH VOLTAGE			

1. Problem verification:
   - 1. Turn the ignition switch to ON (II).
   - 2. Check the parameter(s) below with the HDS.

Signal	Threshold		Current conditions	
	Values	Unit	Values	Unit
ECT SENSOR 1	More than 4.92	V		

Do the current condition(s) match the threshold?

YES : The failure is duplicated. Go to step 2.

NO : Intermittent failure, the system is OK at this time. Check for poor connections or loose terminals at ECT sensor 1 and the PCM.

2. ECT sensor 1 check:
   - 1. Turn the ignition switch to LOCK (0).
   - 2. Disconnect the following connector.

     ECT sensor 1 2P connector

   - 3. Connect terminals A and B with a jumper wire.

     Terminal A ECT sensor 1 2P connector No. 1 (GRY)

     Terminal B ECT sensor 1 2P connector No. 2 (PNK)

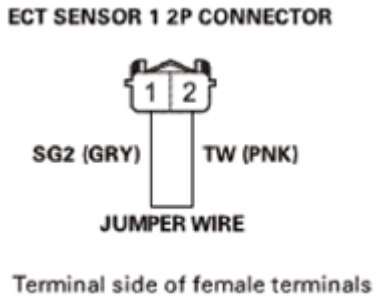

Fig. 38: Identifying ECT Sensor 1 2P Connector Terminals
Courtesy of AMERICAN HONDA MOTOR CO., INC.

   - 4. Turn the ignition switch to ON (II).

GETtheMANUALS.org

- 5. Check the parameter(s) below with the HDS.

Signal	Threshold		Current conditions	
	Values	Unit	Values	Unit
ECT SENSOR 1	More than 4.92	V		

Do the current condition(s) match the threshold?

YES : Go to step 3.

NO : **REPLACE ECT SENSOR 1** , then **do the repair verification** .

3. Determine possible failure area (TW line, SG2 line):
   - 1. Turn the ignition switch to LOCK (0).
   - 2. Remove the jumper wire.
   - 3. Turn the ignition switch to ON (II).
   - 4. Measure the voltage between test points 1 and 2.

     Test condition IG ON (II)

     ECT sensor 1 2P connector: disconnected

     Test circuit TW

     Test point 1 ECT sensor 1 2P connector No. 2 (PNK)

     Test point 2 Body ground

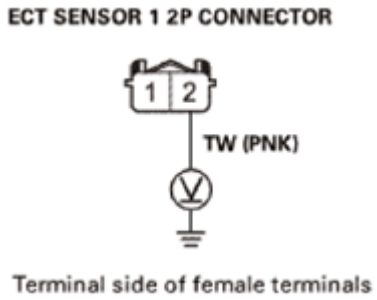

Fig. 39: Measuring Voltage Between ECT Sensor 1 2P Connector No. 2 (PNK) And Body Ground
Courtesy of AMERICAN HONDA MOTOR CO., INC.

Is there about 5.0 V?

YES : Go to step 4.

GETtheMANUALS.org

NO : Go to step 5.

4. Open wire check (SG2 line):
   - 1. Turn the ignition switch to LOCK (0).
   - 2. Jump the SCS line with the HDS.
   - 3. Disconnect the following connector.

     PCM connector B (49P)

   - 4. Check for continuity between test points 1 and 2.

     Test condition IG LOCK (0)

     ECT sensor 1 2P connector: disconnected

     PCM connector B (49P): disconnected

     Test circuit SG2

     Test point 1 PCM connector B (49P) No. 44 (GRY)

     Test point 2 ECT sensor 1 2P connector No. 1 (GRY)

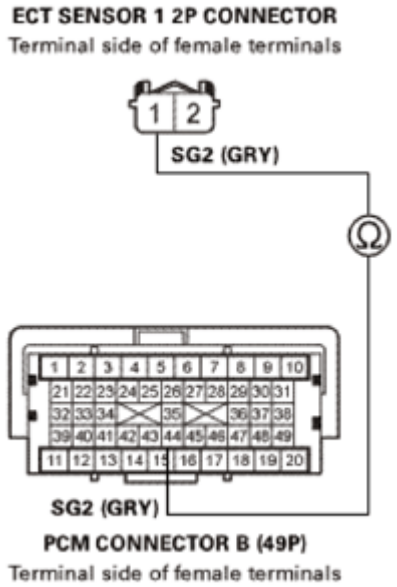

Fig. 40: Checking Continuity Between PCM Connector B (49P) No. 44 (GRY) And ECT Sensor 1 2P Connector No. 1 (GRY)
Courtesy of AMERICAN HONDA MOTOR CO., INC.

Is there continuity?

GETtheMANUALS.org

YES : The SG2 wire is OK. **Update the PCM** See **PCM REMOVAL AND INSTALLATION** or **PCM UPDATE** if it does not have the latest software, or **substitute a known-good PCM** See **PCM REMOVAL AND INSTALLATION** or **PCM UPDATE** , then **do the repair verification** .

NO : Repair an open in the SG2 wire between the PCM (B44) and ECT sensor 1, then **do the repair verification** .

5. Open wire check (TW line):
   - 1. Turn the ignition switch to LOCK (0).
   - 2. Jump the SCS line with the HDS.
   - 3. Disconnect the following connector.

     PCM connector B (49P)

   - 4. Check for continuity between test points 1 and 2.

     Test condition IG LOCK (0)

     ECT sensor 1 2P connector: disconnected

     PCM connector B (49P): disconnected

     Test circuit TW

     Test point 1 PCM connector B (49P) No. 34 (PNK)

     Test point 2 ECT sensor 1 2P connector No. 2 (PNK)

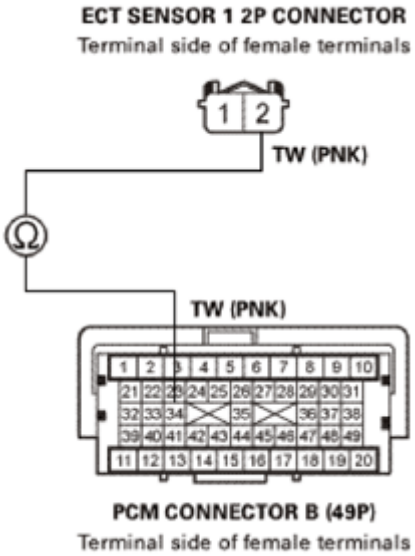

Fig. 41: Checking Continuity Between PCM Connector B (49P) No. 34 (PNK) And ECT Sensor 1 2P Connector No. 2 (PNK)

GETtheMANUALS.org

Courtesy of AMERICAN HONDA MOTOR CO., INC.

Is there continuity?

YES : The TW wire is OK. **Update the PCM** See **PCM REMOVAL AND INSTALLATION** or **PCM UPDATE** if it does not have the latest software, or **substitute a known-good PCM** See **PCM REMOVAL AND INSTALLATION** or **PCM UPDATE** , then **do the repair verification** .

NO : Repair an open in the TW wire between the PCM (B34) and ECT sensor 1, then **do the repair verification** .

REPAIR VERIFICATION

- 1. Turn the ignition switch to LOCK (0).
- 2. Reconnect all connectors.
- 3. Turn the ignition switch to ON (II).
- 4. **Reset the PCM with the HDS** See **HOW TO TROUBLESHOOT THE A/T SYSTEM** or **HOW TO TROUBLESHOOT THE FUEL AND EMISSIONS SYSTEMS** .
- 5. **DO THE PCM IDLE LEARN PROCEDURE** .
- 6. Check for Pending or Confirmed DTCs with the HDS.

DTC Description	Confirmed DTC	Pending DTC	Freeze Frame
P0118 ECT SENSOR 1 CIRCUIT HIGH VOLTAGE			

Is DTC P0118 indicated?

YES : Check for poor connections or loose terminals at ECT sensor 1 and the PCM. If the PCM was updated, **substitute a known-good PCM** See **PCM REMOVAL AND INSTALLATION** or **PCM UPDATE** , then recheck. If the PCM was substituted, go to step 1.

NO : Troubleshooting is complete. If the PCM was substituted, **replace the original PCM** See **PCM REMOVAL AND INSTALLATION** or **PCM UPDATE** . If any other Pending or Confirmed DTCs are indicated, go to the indicated DTC's troubleshooting.

DTC P0122: TP SENSOR A CIRCUIT LOW VOLTAGE

GETtheMANUALS.org

DTC Troubleshooting: P0122

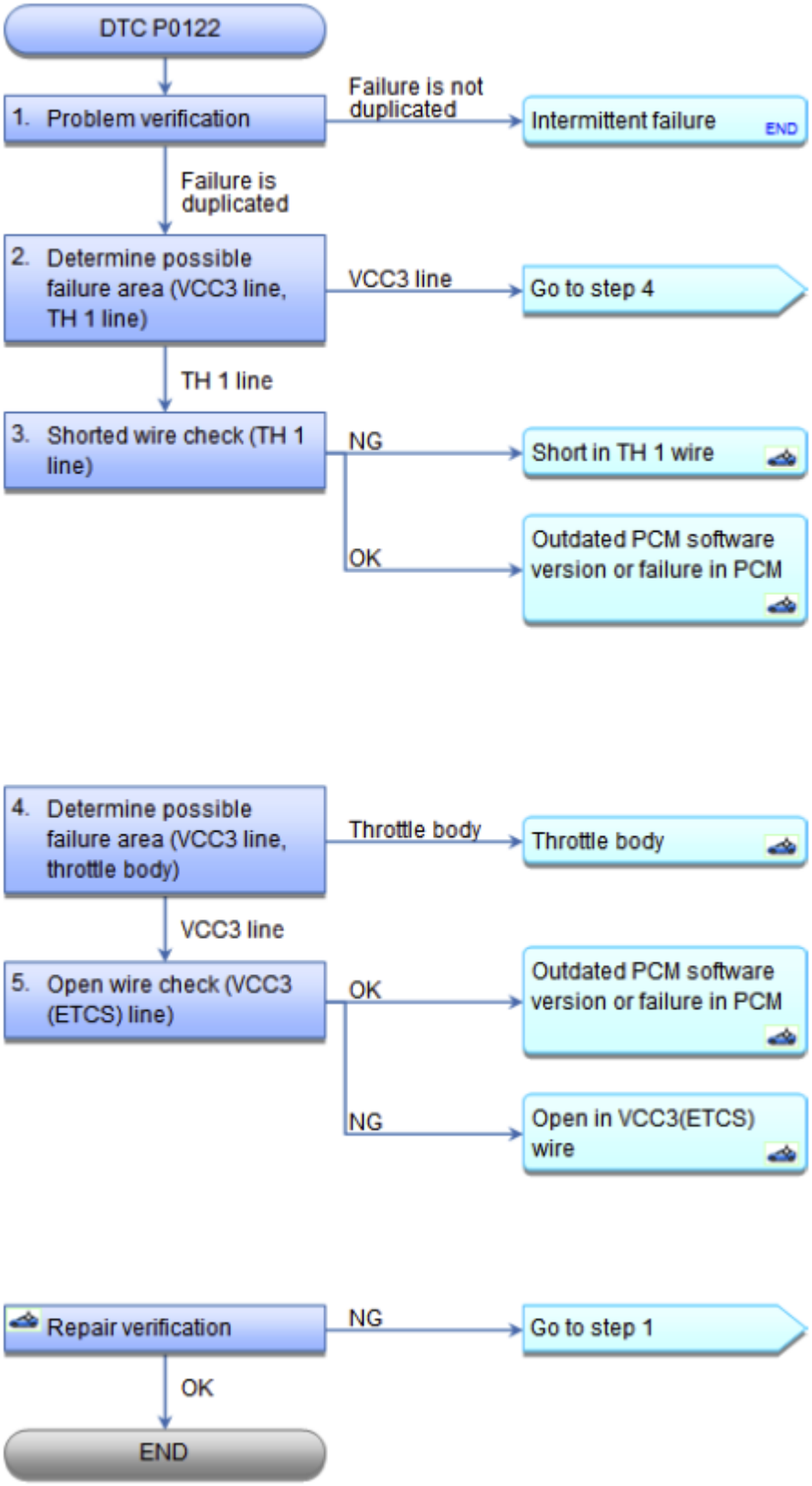

GETtheMANUALS.org

Fig. 42: DTC Troubleshooting Flow Chart (P0122)
Courtesy of AMERICAN HONDA MOTOR CO., INC.

NOTE: **Before you troubleshoot, record all freeze data and any on-board snapshot, and review the general troubleshooting information See HOW TO TROUBLESHOOT THE A/T SYSTEM or HOW TO TROUBLESHOOT THE FUEL AND EMISSIONS SYSTEMS .**

DTC Description	Confirmed DTC	Pending DTC	Freeze Frame
P0122 TP SENSOR A CIRCUIT LOW VOLTAGE			

1. Problem verification:
   - 1. Turn the ignition switch to ON (II).
   - 2. **Clear the DTC with the HDS** See **HOW TO TROUBLESHOOT THE A/T SYSTEM** or **HOW TO TROUBLESHOOT THE FUEL AND EMISSIONS SYSTEMS** .
   - 3. Check the parameter(s) below with the HDS.

Signal	Threshold		Current conditions	
	Values	Unit	Values	Unit
TP SENSOR A	Less than 0.3	V		

Do the current condition(s) match the threshold?

YES : The failure is duplicated. Go to step 2.

NO : Intermittent failure, the system is OK at this time. Check for poor connections or loose terminals at the throttle body and the PCM.

2. Determine possible failure area (VCC3 line, TH 1 line):
   - 1. Check for Pending or Confirmed DTCs with the HDS.

DTC Description	Confirmed DTC	Pending DTC	Freeze Frame
P0122 TP SENSOR A CIRCUIT LOW VOLTAGE			
P0222 TP SENSOR B CIRCUIT LOW VOLTAGE			

Are DTC P0122 and P0222 indicated at the same time?

YES : Go to step 4.

NO : Go to step 3.

GETtheMANUALS.org

3. Shorted wire check (TH 1 line):
    - 1. Turn the ignition switch to LOCK (0).
    - 2. Jump the SCS line with the HDS.
    - 3. Disconnect the following connectors.

      PCM connector C (49P)

      Throttle body 6P connector

    - 4. Check for continuity between test points 1 and 2.

      Test condition IG LOCK (0)

      PCM connector C (49P): disconnected

      Throttle body 6P connector: disconnected

      Test circuit TH 1

      Test point 1 Throttle body 6P connector No. 6 (LT GRN)

      Test point 2 Body ground

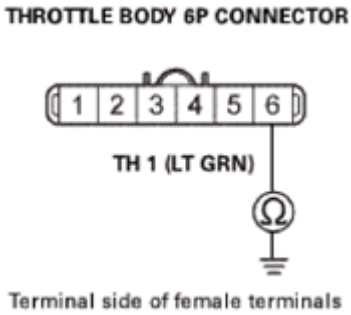

Fig. 43: Checking Continuity Between Throttle Body 6P Connector No. 6 (LT GRN) And Body Ground
Courtesy of AMERICAN HONDA MOTOR CO., INC.

Is there continuity?

YES : Repair a short in the TH 1 wire between the PCM (C30) and the throttle body, then **do the repair verification** .

NO : The TH 1 wire is OK. **Update the PCM** See **PCM UPDATE** or **PCM REMOVAL AND INSTALLATION** if it does not have the latest software, or **substitute a known-good PCM** See **PCM REMOVAL AND INSTALLATION** or **PCM UPDATE** , then **do the repair verification** .

4. Determine possible failure area (VCC3 line, throttle body):

GETtheMANUALS.org

- 1. Turn the ignition switch to LOCK (0).
- 2. Disconnect the following connector.

  Throttle body 6P connector

- 3. Turn the ignition switch to ON (II).
- 4. Measure the voltage between test points 1 and 2.

  Test condition IG ON (II)

  Throttle body 6P connector: disconnected

  Test circuit VCC3(ETCS)

  Test point 1 Throttle body 6P connector No. 5 (TAN)

  Test point 2 Body ground

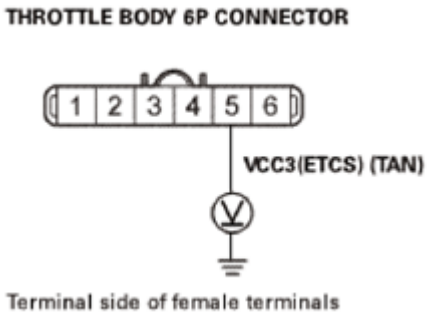

Fig. 44: Measuring Voltage Between Throttle Body 6P Connector No. 5 (TAN) And Body Ground
Courtesy of AMERICAN HONDA MOTOR CO., INC.

Is there about 5.0 V?

YES : **Replace the throttle body** See **THROTTLE BODY REMOVAL AND INSTALLATION** , **THROTTLE BODY DISASSEMBLY AND REASSEMBLY** or **THROTTLE BODY CLEANING** , then **do the repair verification** .

NO : Go to step 5.

5. Open wire check (VCC3(ETCS) line):
   - 1. Turn the ignition switch to LOCK (0).
   - 2. Jump the SCS line with the HDS.
   - 3. Disconnect the following connector.

     PCM connector C (49P)

GETtheMANUALS.org

- 4. Check for continuity between test points 1 and 2.

  Test condition IG LOCK (0)

  Throttle body 6P connector: disconnected

  PCM connector C (49P): disconnected

  Test circuit VCC3(ETCS)

  Test point 1 PCM connector C (49P) No. 22 (TAN)

  Test point 2 Throttle body 6P connector No. 5 (TAN)

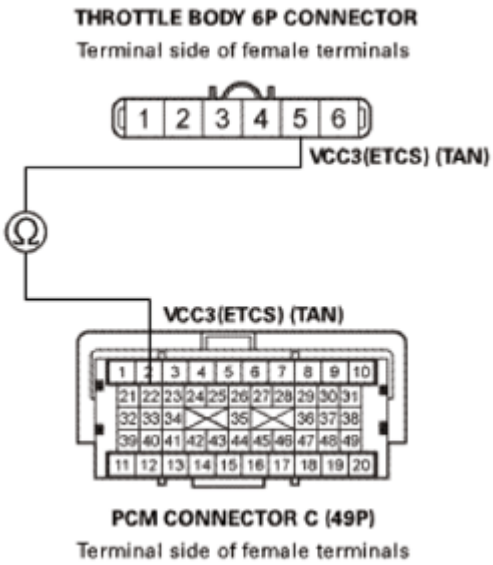

Fig. 45: Checking Continuity Between PCM Connector C (49P) No. 22 (TAN) And Throttle Body 6P Connector No. 5 (TAN)
Courtesy of AMERICAN HONDA MOTOR CO., INC.

Is there continuity?

YES : The VCC3(ETCS) wire is OK. **Update the PCM** See **PCM REMOVAL AND INSTALLATION** or **PCM UPDATE** if it does not have the latest software, or **substitute a known-good PCM** See **PCM REMOVAL AND INSTALLATION** or **PCM UPDATE** , then **do the repair verification** .

NO : Repair an open in the VCC3(ETCS) wire between the PCM (C22) and the throttle body, then **do the repair verification** .

REPAIR VERIFICATION

- 1. Turn the ignition switch to LOCK (0).

GETtheMANUALS.org

- 2. Reconnect all connectors.
- 3. Turn the ignition switch to ON (II).
- 4. **Reset the PCM with the HDS** See **HOW TO TROUBLESHOOT THE A/T SYSTEM** or **HOW TO TROUBLESHOOT THE FUEL AND EMISSIONS SYSTEMS** .
- 5. **DO THE PCM IDLE LEARN PROCEDURE** .
- 6. Check for Pending or Confirmed DTCs with the HDS.

DTC Description	Confirmed DTC	Pending DTC	Freeze Frame
P0122 TP SENSOR A CIRCUIT LOW VOLTAGE			

Is DTC P0122 indicated?

YES : Check for poor connections or loose terminals at the throttle body and the PCM. If the PCM was updated, **substitute a known-good PCM** See **PCM REMOVAL AND INSTALLATION** or **PCM UPDATE** , then recheck. If the PCM was substituted, go to step 1.

NO : Troubleshooting is complete. If the PCM was substituted, **replace the original PCM** See **PCM UPDATE** or **PCM REMOVAL AND INSTALLATION** . If any other Pending or Confirmed DTCs are indicated, go to the indicated DTC's troubleshooting.

DTC P0123: TP SENSOR A CIRCUIT HIGH VOLTAGE

GETtheMANUALS.org

DTC Troubleshooting: P0123

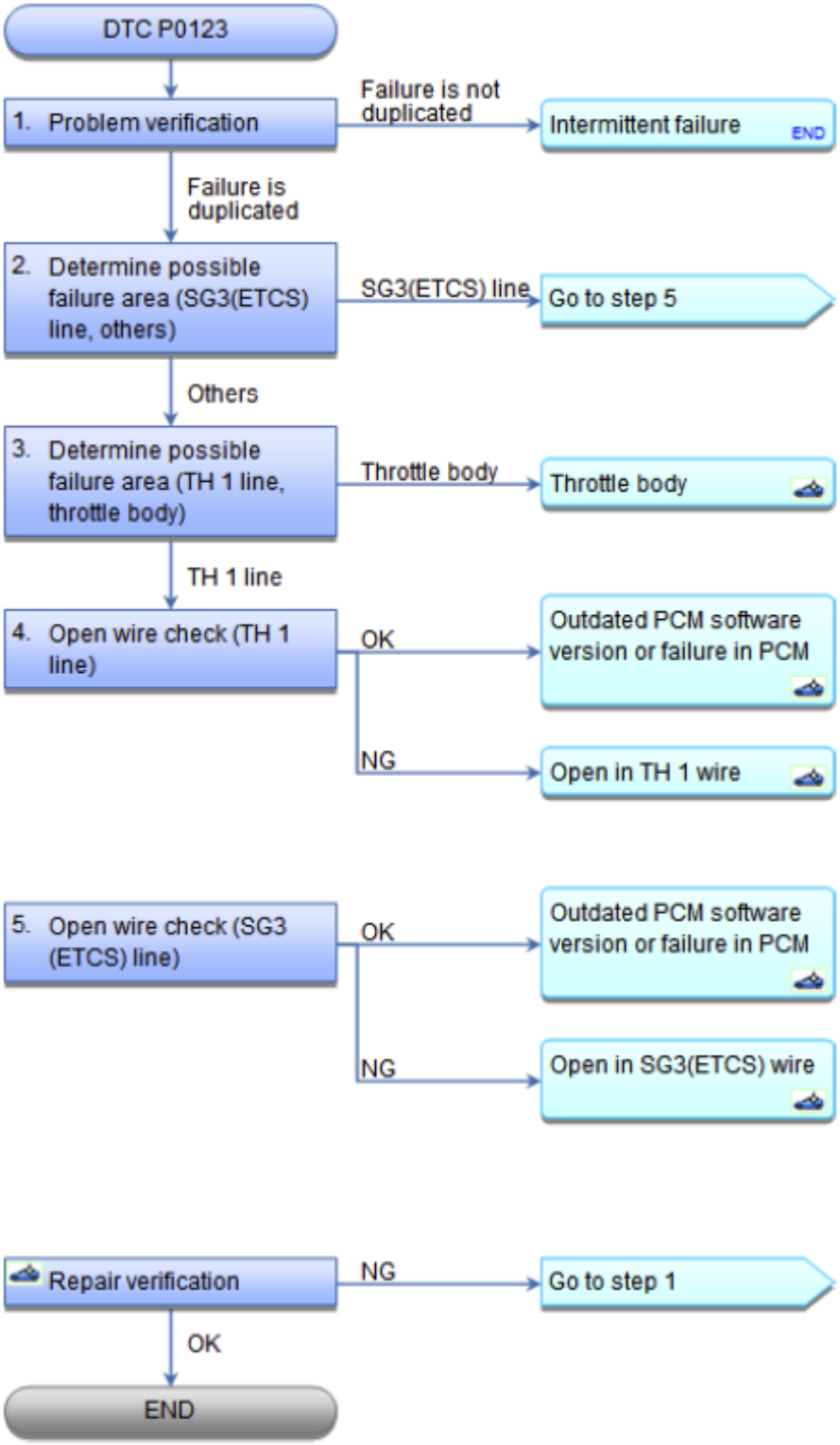

Fig. 46: DTC Troubleshooting Flow Chart (P0123)
Courtesy of AMERICAN HONDA MOTOR CO., INC.

GETtheMANUALS.org

NOTE: **Before you troubleshoot, record all freeze data and any on-board snapshot, and review the general troubleshooting information See HOW TO TROUBLESHOOT THE A/T SYSTEM or HOW TO TROUBLESHOOT THE FUEL AND EMISSIONS SYSTEMS .**

DTC Description	Confirmed DTC	Pending DTC	Freeze Frame
P0123 TP SENSOR A CIRCUIT HIGH VOLTAGE			

1. Problem verification:
   - 1. Turn the ignition switch to ON (II).
   - 2. **Clear the DTC with the HDS** See **HOW TO TROUBLESHOOT THE A/T SYSTEM** or **HOW TO TROUBLESHOOT THE FUEL AND EMISSIONS SYSTEMS** .
   - 3. Check the parameter(s) below with the HDS.

Signal	Threshold		Current conditions	
	Values	Unit	Values	Unit
TP SENSOR A	More than 4.8	V		

Do the current condition(s) match the threshold?

YES : The failure is duplicated. Go to step 2.

NO : Intermittent failure, the system is OK at this time. Check for poor connections or loose terminals at the throttle body and the PCM.

2. Determine possible failure area (SG3(ETCS) line, others):
   - 1. Check for Pending or Confirmed DTCs with the HDS.

DTC Description	Confirmed DTC	Pending DTC	Freeze Frame
P0123 TP SENSOR A CIRCUIT HIGH VOLTAGE			
P0223 TP SENSOR B CIRCUIT HIGH VOLTAGE			

Are DTC P0123 and P0223 indicated at the same time?

YES : Go to step 5.

NO : Go to step 3.

3. Determine possible failure area (TH 1 line, throttle body):
   - 1. Turn the ignition switch to LOCK (0).
   - 2. Disconnect the following connector.

GETtheMANUALS.org

Throttle body 6P connector

- 3. Turn the ignition switch to ON (II).
- 4. Measure the voltage between test points 1 and 2.

Test condition IG ON (II)

Throttle body 6P connector: disconnected

Test circuit TH 1

Test point 1 Throttle body 6P connector No. 6 (LT GRN)

Test point 2 Body ground

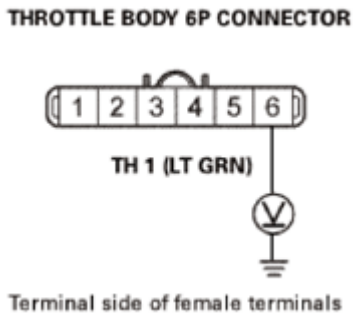

Fig. 47: Measuring Voltage Between Throttle Body 6P Connector No. 6 (LT GRN) And Body Ground
Courtesy of AMERICAN HONDA MOTOR CO., INC.

Is there about 5.0 V?

YES : **Replace the throttle body** See **THROTTLE BODY REMOVAL AND INSTALLATION** , **THROTTLE BODY DISASSEMBLY AND REASSEMBLY** or **THROTTLE BODY CLEANING** , then **do the repair verification** .

NO : Go to step 4.

4. Open wire check (TH 1 line):
   - 1. Turn the ignition switch to LOCK (0).
   - 2. Jump the SCS line with the HDS.
   - 3. Disconnect the following connector.

     PCM connector C (49P)

   - 4. Check for continuity between test points 1 and 2.

     Test condition IG LOCK (0)

GETtheMANUALS.org

Throttle body 6P connector: disconnected

PCM connector C (49P): disconnected

Test circuit TH 1

Test point 1 PCM connector C (49P) No. 30 (LT GRN)

Test point 2 Throttle body 6P connector No. 6 (LT GRN)

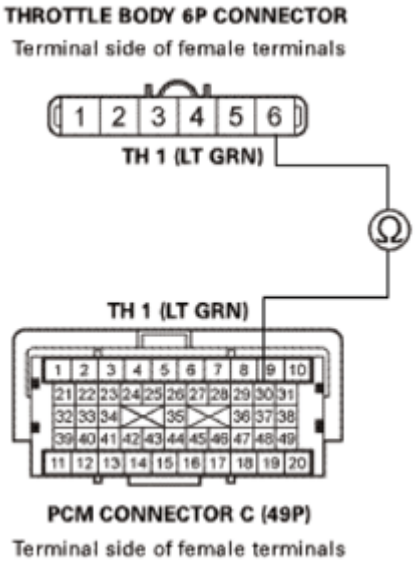

Fig. 48: Checking Continuity Between PCM Connector C (49P) No. 30 (LT GRN) And Throttle Body 6P Connector No. 6 (LT GRN)
Courtesy of AMERICAN HONDA MOTOR CO., INC.

Is there continuity?

YES : The TH 1 wire is OK. **Update the PCM** See **PCM REMOVAL AND INSTALLATION** or **PCM UPDATE** if it does not have the latest software, or **substitute a known-good PCM** See **PCM REMOVAL AND INSTALLATION** or **PCM UPDATE** , then **do the repair verification** .

NO : Repair an open in the TH 1 wire between the PCM (C30) and the throttle body, then **do the repair verification** .

5. Open wire check (SG3(ETCS) line):
   - 1. Turn the ignition switch to LOCK (0).
   - 2. Jump the SCS line with the HDS.
   - 3. Disconnect the following connectors.

     PCM connector C (49P)

GETtheMANUALS.org

Throttle body 6P connector

- 4. Check for continuity between test points 1 and 2.

  Test condition IG LOCK (0)

  PCM connector C (49P): disconnected

  Throttle body 6P connector: disconnected

  Test circuit SG3(ETCS)

  Test point 1 PCM connector C (49P) No. 14 (GRY)

  Test point 2 Throttle body 6P connector No. 3 (GRY)

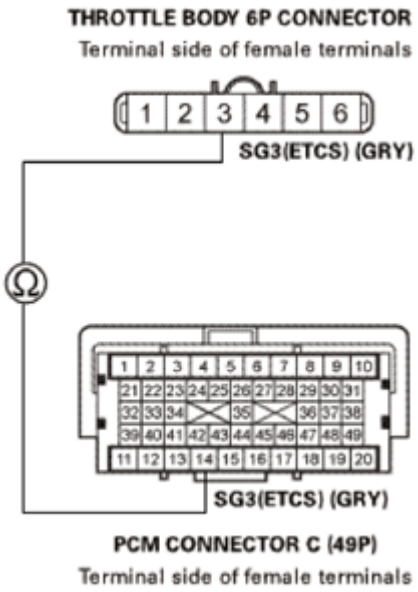

Fig. 49: Checking Continuity Between PCM Connector C (49P) No. 14 (GRY) And Throttle Body 6P Connector No. 3 (GRY)
Courtesy of AMERICAN HONDA MOTOR CO., INC.

Is there continuity?

YES : The SG3(ETCS) wire is OK. **Update the PCM** See **PCM REMOVAL AND INSTALLATION** or **PCM UPDATE** if it does not have the latest software, or **substitute a known-good PCM** See **PCM REMOVAL AND INSTALLATION** or **PCM UPDATE** , then **do the repair verification** .

NO : Repair an open in the SG3(ETCS) wire between the PCM (C14) and the throttle body, then **do the repair verification** .

REPAIR VERIFICATION

GETtheMANUALS.org

- 1. Turn the ignition switch to LOCK (0).
- 2. Reconnect all connectors.
- 3. Turn the ignition switch to ON (II).
- 4. **Reset the PCM with the HDS** See **HOW TO TROUBLESHOOT THE A/T SYSTEM** or **HOW TO TROUBLESHOOT THE FUEL AND EMISSIONS SYSTEMS** .
- 5. **DO THE PCM IDLE LEARN PROCEDURE** .
- 6. Check for Pending or Confirmed DTCs with the HDS.

DTC Description	Confirmed DTC	Pending DTC	Freeze Frame
P0123 TP SENSOR A CIRCUIT HIGH VOLTAGE			

Is DTC P0123 indicated?

YES : Check for poor connections or loose terminals at the throttle body and the PCM. If the PCM was updated, **substitute a known-good PCM** See **PCM REMOVAL AND INSTALLATION** or **PCM UPDATE** , then recheck. If the PCM was substituted, go to step 1.

NO : Troubleshooting is complete. If the PCM was substituted, **replace the original PCM** See **PCM REMOVAL AND INSTALLATION** or **PCM UPDATE** . If any other Pending or Confirmed DTCs are indicated, go to the indicated DTC's troubleshooting.

DTC P0125: ECT SENSOR 1 MALFUNCTION/SLOW RESPONSE

GETtheMANUALS.org

DTC Troubleshooting: P0125

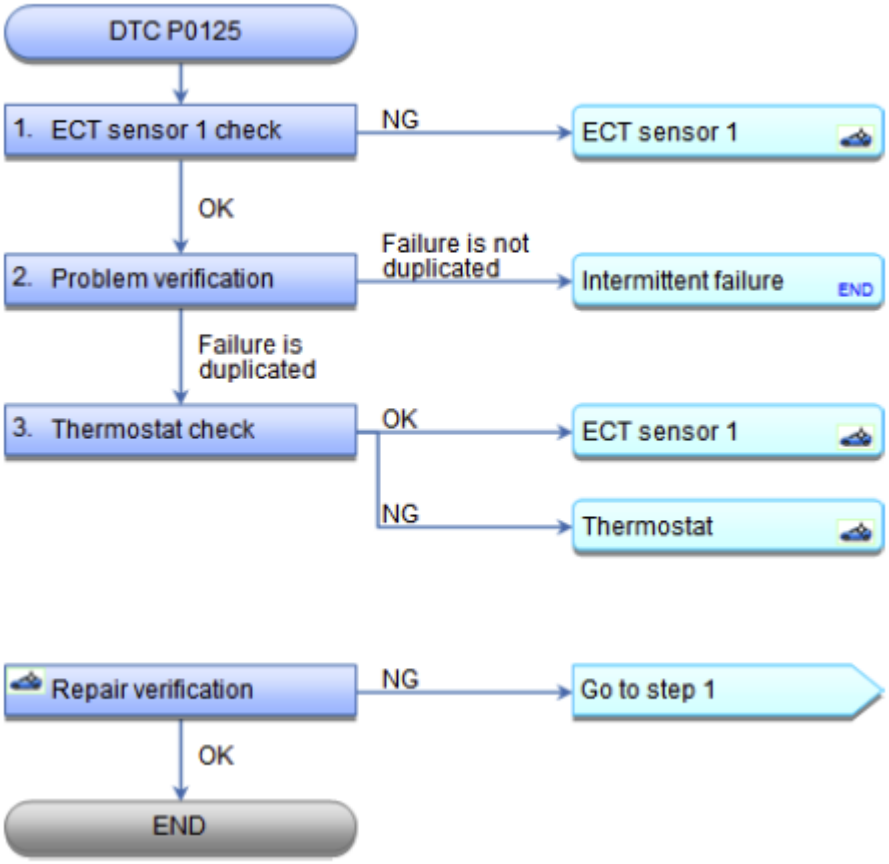

Fig. 50: DTC Troubleshooting Flow Chart (P0125)
Courtesy of AMERICAN HONDA MOTOR CO., INC.

NOTE: **Before you troubleshoot, record all freeze data and any on-board snapshot, and review the general troubleshooting information See HOW TO TROUBLESHOOT THE A/T SYSTEM or HOW TO TROUBLESHOOT THE FUEL AND EMISSIONS SYSTEMS .**

DTC Description	Confirmed DTC	Pending DTC	Freeze Frame
P0125 ECT SENSOR 1 MALFUNCTION/SLOW RESPONSE			

1. ECT sensor 1 check:
   - 1. Start the engine, and let it idle for 5 minutes or more.
   - 2. Check the parameter(s) below with the HDS.

Signal	Threshold		Current conditions	
	Values	Unit	Values	Unit

GETtheMANUALS.org

ECT SENSOR 1	Less than 0	°F		
	Less than - 18	°C		

Do the current condition(s) match the threshold?

YES : Check for poor connections or loose terminals at ECT sensor 1, ECT sensor 2, and the PCM. If they are OK, **REPLACE ECT SENSOR 1** , then **do the repair verification** .

NO : Go to step 2.

2. Problem verification:
   - 1. Turn the ignition switch to LOCK (0).
   - 2. Allow the engine to cool to 104 °F (40 °C) or less.
   - 3. Start the engine, and let it idle until ECT SENSOR 1 goes up to about 158 °F (70 °C).

Signal	Current conditions	
	Values	Unit
ECT SENSOR 1		

   - 4. Check the parameter(s) below with the HDS.

Signal	Threshold		Current conditions	
	Values	Unit	Values	Unit
ECT SENSOR 2	About 158	°F		
	About 70	°C		

Do the current condition(s) match the threshold?

YES : The failure is duplicated. Go to step 3.

NO : Intermittent failure, the system is OK at this time. Check for poor connections or loose terminals at ECT sensor 1, ECT sensor 2, and the PCM.

3. Thermostat check:
   - 1. CHECK THE THERMOSTAT .

Is the thermostat OK?

YES : Check for poor connections or loose terminals at ECT sensor 1, ECT sensor 2, and the PCM. If the connections and terminals are OK, **REPLACE ECT SENSOR 1** , then **do the repair verification** .

NO : REPLACE THE THERMOSTAT , then **do the repair verification** .

REPAIR VERIFICATION

GETtheMANUALS.org

- 1. Turn the ignition switch to ON (II).
- 2. **Reset the PCM with the HDS** See **HOW TO TROUBLESHOOT THE A/T SYSTEM** or **HOW TO TROUBLESHOOT THE FUEL AND EMISSIONS SYSTEMS** .
- 3. Turn the ignition switch to LOCK (0).
- 4. Allow the engine to cool to 104 °F (40 °C) or less.
- 5. Start the engine, and let it idle until ECT SENSOR 1 goes up to about 158 °F (70 °C).

Signal	Current conditions	
	Values	Unit
ECT SENSOR 1		

- 6. Check the parameter(s) below with the HDS.

Signal	Threshold		Current conditions	
	Values	Unit	Values	Unit
ECT SENSOR 2	About 158	°F		
	About 70	°C		

Do the current condition(s) match the threshold?

YES : Check for poor connections or loose terminals at ECT sensor 1, ECT sensor 2, and the PCM, go to step 1.

NO : Troubleshooting is complete. If the PCM was substituted, **replace the original PCM** See **PCM UPDATE** or **PCM REMOVAL AND INSTALLATION** . If any other Pending or Confirmed DTCs are indicated, go to the indicated DTC's troubleshooting.

DTC P0128: COOLING SYSTEM MALFUNCTION

GETtheMANUALS.org

DTC Troubleshooting: P0128

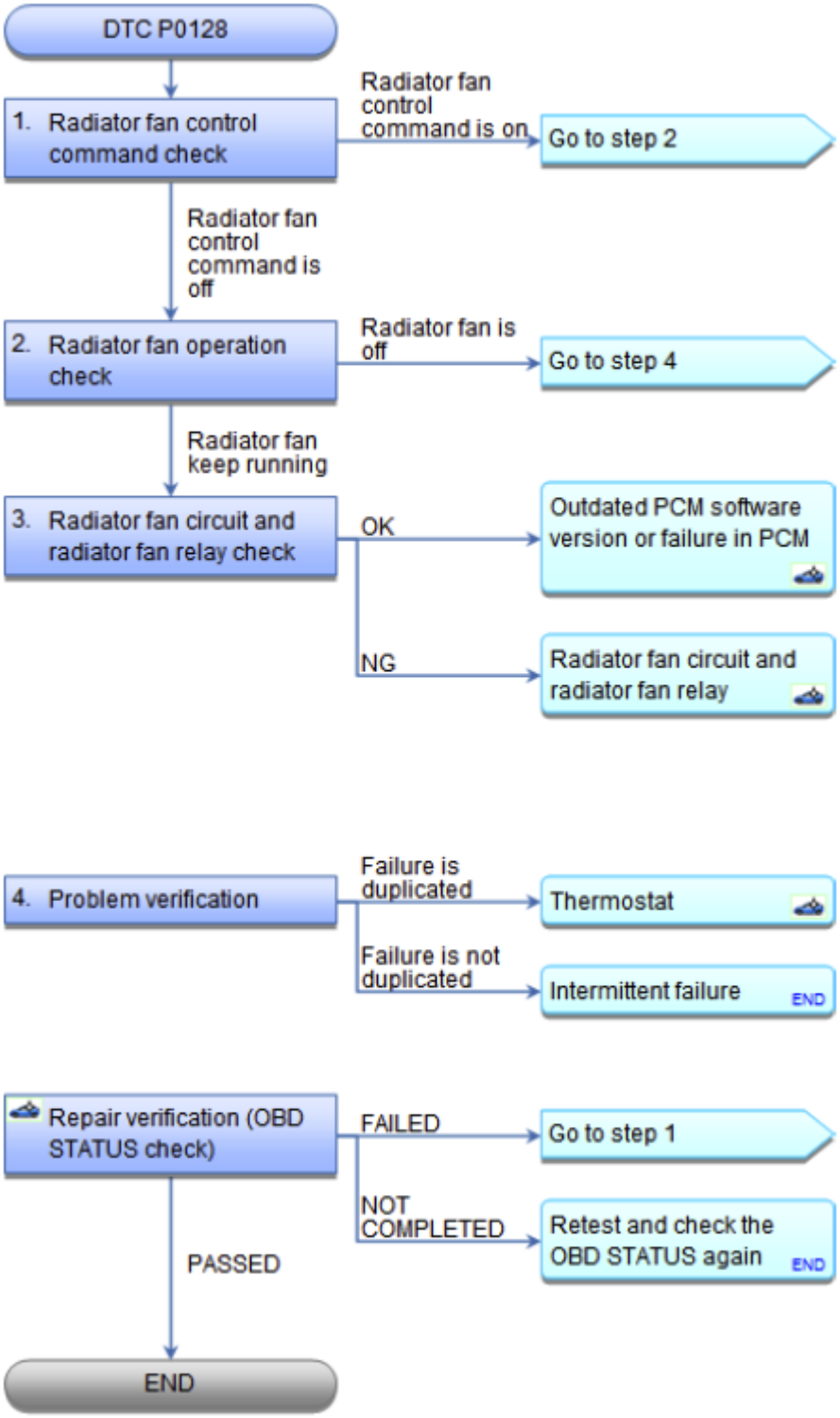

Fig. 51: DTC Troubleshooting Flow Chart (P0128)
Courtesy of AMERICAN HONDA MOTOR CO., INC.

GETtheMANUALS.org

NOTE: **Before you troubleshoot, record all freeze data and any on-board snapshot, and review the general troubleshooting information See HOW TO TROUBLESHOOT THE A/T SYSTEM or HOW TO TROUBLESHOOT THE FUEL AND EMISSIONS SYSTEMS .**

DTC Description	Confirmed DTC	Pending DTC	Freeze Frame
P0128 COOLING SYSTEM MALFUNCTION			

1. Radiator fan control command check:
   - 1. Turn the ignition switch to ON (II).
   - 2. **Clear the DTC with the HDS** See **HOW TO TROUBLESHOOT THE A/T SYSTEM** or **HOW TO TROUBLESHOOT THE FUEL AND EMISSIONS SYSTEMS** .
   - 3. Turn the blower switch off.
   - 4. Check the parameter(s) below with the HDS.

Signal	Threshold		Current conditions	
	Values	Unit	Values	Unit
FAN HIGH CTRL	OFF			
FAN LOW CTRL	OFF			

Are they OFF?

YES : Go to step 2.

NO : Wait until the FAN HIGH CTRL and the FAN LOW CTRL are off, then go to step 2.

2. Radiator fan operation check:
   - 1. Check the radiator fan operation.

Does the radiator fan keep running?

YES : Go to step 3.

NO : Wait until the FAN HIGH CTRL and FAN LOW CTRL are off, then go to step 4.

3. Radiator fan circuit and radiator fan relay check:
   - 1. Check the radiator fan circuit, and the radiator fan relay.

Is it OK?

YES : **Update the PCM** See **PCM REMOVAL AND INSTALLATION** or **PCM UPDATE** if it does not have the latest software, or **substitute a known-good PCM** See **PCM REMOVAL AND INSTALLATION** or **PCM UPDATE** , then **do the repair verification** .

GETtheMANUALS.org

NO : Repair the radiator fan circuit, and the radiator fan relay, then **do the repair verification** .

4. Problem verification:
   - 1. Let the engine cool until the coolant temperature is 104 °F (40 °C) or less.
   - 2. Note the value of ECT SENSOR 1 and ECT SENSOR 2 in the DATA LIST with the HDS.

Signal	Current conditions	
	Values	Unit
ECT SENSOR 1		
ECT SENSOR 2		

   - 3. Start the engine, and let it idle.
   - 4. Let the engine idle until ECT SENSOR 1 goes up 40 °F (22 °C) or more from the recorded temperature.

Signal	Current conditions	
	Values	Unit
ECT SENSOR 1		

   - 5. Check ECT SENSOR 2 in the DATA LIST with the HDS.

Signal	Current conditions	
	Values	Unit
ECT SENSOR 2		

   - 6. Compare the recorded value of ECT SENSOR 2 and the present value of ECT SENSOR 2.

Did temperature rise 13 °F (7 °C) or more?

YES : TEST THE THERMOSTAT and replace it if needed, then **do the repair verification** .

NO : Intermittent failure, the system is OK at this time. Check for poor connections or loose terminals at ECT sensor 1, ECT sensor 2, and the PCM.

REPAIR VERIFICATION (OBD STATUS CHECK)

- 1. Turn the ignition switch to ON (II).
- 2. **Reset the PCM with the HDS** See **HOW TO TROUBLESHOOT THE A/T SYSTEM** or **HOW TO TROUBLESHOOT THE FUEL AND EMISSIONS SYSTEMS** .
- 3. Let the engine cool until the coolant temperature is between 21 °F (-6 °C) and 104 °F (40 °C).
- 4. **DO THE PCM IDLE LEARN PROCEDURE** .
- 5. Test-drive at a steady speed between 15-75 mph (25-120 km/h) for 10 minutes.
- 6. Monitor the OBD STATUS for DTC P0128 in the DTCs MENU with the HDS.

GETtheMANUALS.org

DTC Description	OBD STATUS
P0128 COOLING SYSTEM MALFUNCTION	

Does the HDS indicate PASSED, FAILED, or NOT COMPLETED?

PASSED : Troubleshooting is complete. If the PCM was substituted, **replace the original PCM** See **PCM REMOVAL AND INSTALLATION** or **PCM UPDATE** . If any other Pending or Confirmed DTCs are indicated, go to the indicated DTC's troubleshooting.

FAILED : Go to step 1 and recheck. If the PCM was updated, **replace the original PCM** See **PCM REMOVAL AND INSTALLATION** or **PCM UPDATE** , then check the OBD STATUS again.

NOT COMPLETED : Meet the test condition, and check the OBD STATUS again.

DTC P0133: A/F SENSOR (SENSOR 1) MALFUNCTION/SLOW RESPONSE

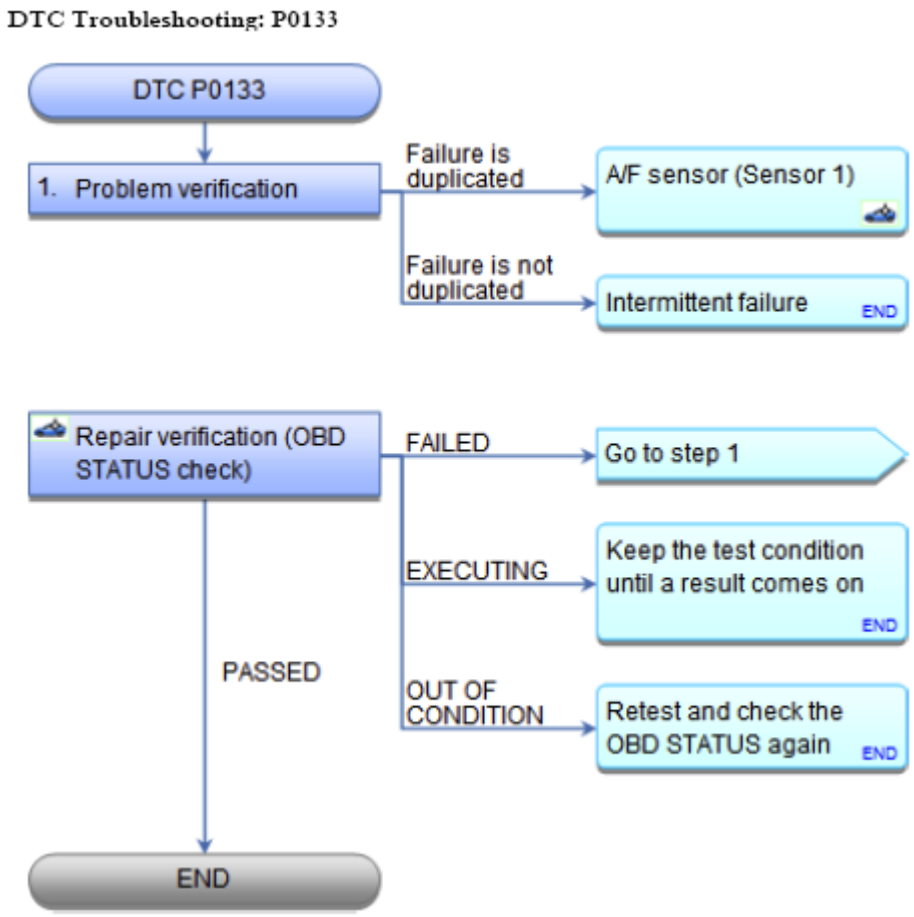

Fig. 52: DTC Troubleshooting Flow Chart (P0133)
Courtesy of AMERICAN HONDA MOTOR CO., INC.

NOTE:

- **Before you troubleshoot, record all freeze data and any on-board**

GETtheMANUALS.org

snapshot, and review the general troubleshooting information See HOW TO TROUBLESHOOT THE A/T SYSTEM or HOW TO TROUBLESHOOT THE FUEL AND EMISSIONS SYSTEMS .

- **If DTC P0139 is stored at the same time as DTC P0133, troubleshoot DTC P0139 first, then recheck for DTC P0133.**

DTC Description	Confirmed DTC	Pending DTC	Freeze Frame
P0133 A/F SENSOR (SENSOR 1) MALFUNCTION/SLOW RESPONSE			

1. Problem verification:
   - 1. Turn the ignition switch to ON (II).
   - 2. **Clear the DTC with the HDS** See **HOW TO TROUBLESHOOT THE A/T SYSTEM** or **HOW TO TROUBLESHOOT THE FUEL AND EMISSIONS SYSTEMS** .
   - 3. Start the engine. Hold the engine speed at 3, 000 rpm without load (in P or N) until the radiator fan comes on, then let it idle.
   - 4. Test-drive under these conditions:
     - Engine coolant temperature (ECT SENSOR 1) above 158 °F (70 °C)
     - Transmission in D
     - Engine speed between 1, 500-3, 000 rpm
     - Drive the vehicle at 25 mph (40 km/h) or less for 5 minutes, then drive at a steady speed of 32 mph (52 km/h) or more

Signal	Current conditions	
	Values	Unit
ECT SENSOR 1		
ENGINE SPEED		
VEHICLE SPEED		

   - 5. Monitor the OBD STATUS for DTC P0133 with the HDS.

DTC Description	OBD STATUS
P0133 A/F SENSOR (SENSOR 1) MALFUNCTION/SLOW RESPONSE	

Does the HDS indicate FAILED?

YES : **REPLACE THE A/F SENSOR (SENSOR 1)** , then **do the repair verification** .

NO : If the HDS indicates PASSED, intermittent failure, the system is OK at this time. Check for poor connections or loose terminals at the A/F sensor (Sensor 1) and the PCM. If the HDS indicates EXECUTING, keep driving until a result comes on. If the HDS indicates OUT OF CONDITION, go to step 3 on this step and recheck.

GETtheMANUALS.org

REPAIR VERIFICATION (OBD STATUS CHECK)

- 1. Turn the ignition switch to ON (II).
- 2. **Reset the PCM with the HDS** See **HOW TO TROUBLESHOOT THE A/T SYSTEM** or **HOW TO TROUBLESHOOT THE FUEL AND EMISSIONS SYSTEMS** .
- 3. **DO THE PCM IDLE LEARN PROCEDURE** .
- 4. Start the engine. Hold the engine speed at 3, 000 rpm without load (in P or N) until the radiator fan comes on, then let it idle.
- 5. Test-drive under these conditions:
  - Engine coolant temperature (ECT SENSOR 1) above 158 °F (70 °C)
  - Transmission in D
  - Engine speed between 1, 500-3, 000 rpm
  - Drive the vehicle at 25 mph (40 km/h) or less for 5 minutes, then drive at a steady speed of 32 mph (52 km/h) or more

Signal	Current conditions	
	Values	Unit
ECT SENSOR 1		
ENGINE SPEED		
VEHICLE SPEED		

- 6. Monitor the OBD STATUS for DTC P0133 in the DTCs MENU with the HDS.

DTC Description	OBD STATUS
P0133 A/F SENSOR (SENSOR 1) MALFUNCTION/SLOW RESPONSE	

Does the HDS indicate PASSED, FAILED, EXECUTING, or OUT OF CONDITION?

PASSED : Troubleshooting is complete. If any other Pending or Confirmed DTCs were indicated, go to the indicated DTC's troubleshooting.

FAILED : Go to step 1 and recheck.

EXECUTING : Keep the test condition until a result comes on.

OUT OF CONDITION : Meet the test condition, and check the OBD STATUS again.

DTC P0134: A/F SENSOR (SENSOR 1) HEATER SYSTEM MALFUNCTION

GETtheMANUALS.org

DTC Troubleshooting: P0134

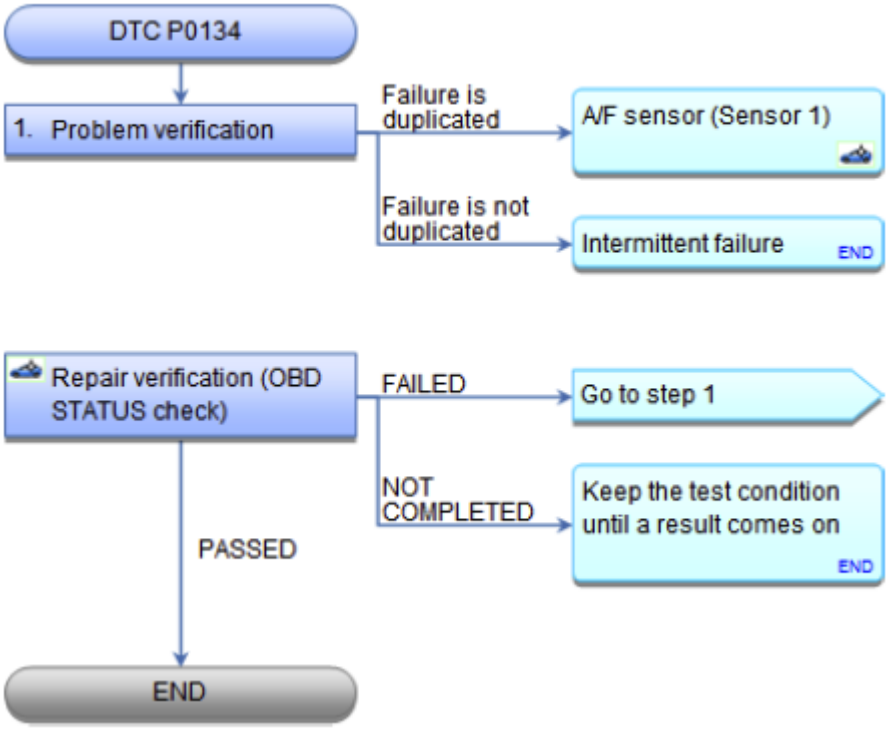

Fig. 53: DTC Troubleshooting Flow Chart (P0134)
Courtesy of AMERICAN HONDA MOTOR CO., INC.

NOTE:

- **Before you troubleshoot, record all freeze data and any on-board snapshot, and review the general troubleshooting information See HOW TO TROUBLESHOOT THE A/T SYSTEM or HOW TO TROUBLESHOOT THE FUEL AND EMISSIONS SYSTEMS .**
- **If the vehicle was out of fuel and the engine stalled before this DTC was stored, refuel and clear the DTC with the HDS.**
- **If DTC P0135 is stored at the same time as DTC P0134, troubleshoot DTC P0135 first, then recheck for DTC P0134.**

DTC Description	Confirmed DTC	Pending DTC	Freeze Frame
P0134 A/F SENSOR (SENSOR 1) HEATER SYSTEM MALFUNCTION			

1. Problem verification:
   - 1. Turn the ignition switch to ON (II).
   - 2. **Clear the DTC with the HDS** See **HOW TO TROUBLESHOOT THE A/T SYSTEM** or **HOW TO TROUBLESHOOT THE FUEL AND EMISSIONS SYSTEMS** .
   - 3. Start the engine, and let it idle without load (in P or N) until the radiator fan comes on.

GETtheMANUALS.org

- 4. Check for Pending or Confirmed DTCs with the HDS.

DTC Description	Confirmed DTC	Pending DTC	Freeze Frame
P0134 A/F SENSOR (SENSOR 1) HEATER SYSTEM MALFUNCTION			

Is DTC P0134 indicated?

YES : The failure is duplicated. **REPLACE THE A/F SENSOR (SENSOR 1)** , then **do the repair verification** .

NO : Intermittent failure, the system is OK at this time. Check for poor connections or loose terminals at the A/F sensor (Sensor 1), the PGM-FI subrelay, and the PCM.

REPAIR VERIFICATION (OBD STATUS CHECK)

- 1. Turn the ignition switch to ON (II).
- 2. **Reset the PCM with the HDS** See **HOW TO TROUBLESHOOT THE A/T SYSTEM** or **HOW TO TROUBLESHOOT THE FUEL AND EMISSIONS SYSTEMS** .
- 3. **DO THE PCM IDLE LEARN PROCEDURE** .
- 4. Monitor the OBD STATUS for DTC P0134 in the DTCs MENU with the HDS.

DTC Description	OBD STATUS
P0134 A/F SENSOR (SENSOR 1) HEATER SYSTEM MALFUNCTION	

Does the HDS indicate PASSED, FAILED, or NOT COMPLETED?

PASSED : Troubleshooting is complete. If any other Pending or Confirmed DTCs are indicated, go to the indicated DTC's troubleshooting.

FAILED : Go to step 1 and recheck.

NOT COMPLETED : Keep the test condition until a result comes on.

DTC P0135: A/F SENSOR (SENSOR 1) HEATER CIRCUIT MALFUNCTION

GETtheMANUALS.org

DTC Troubleshooting: P0135

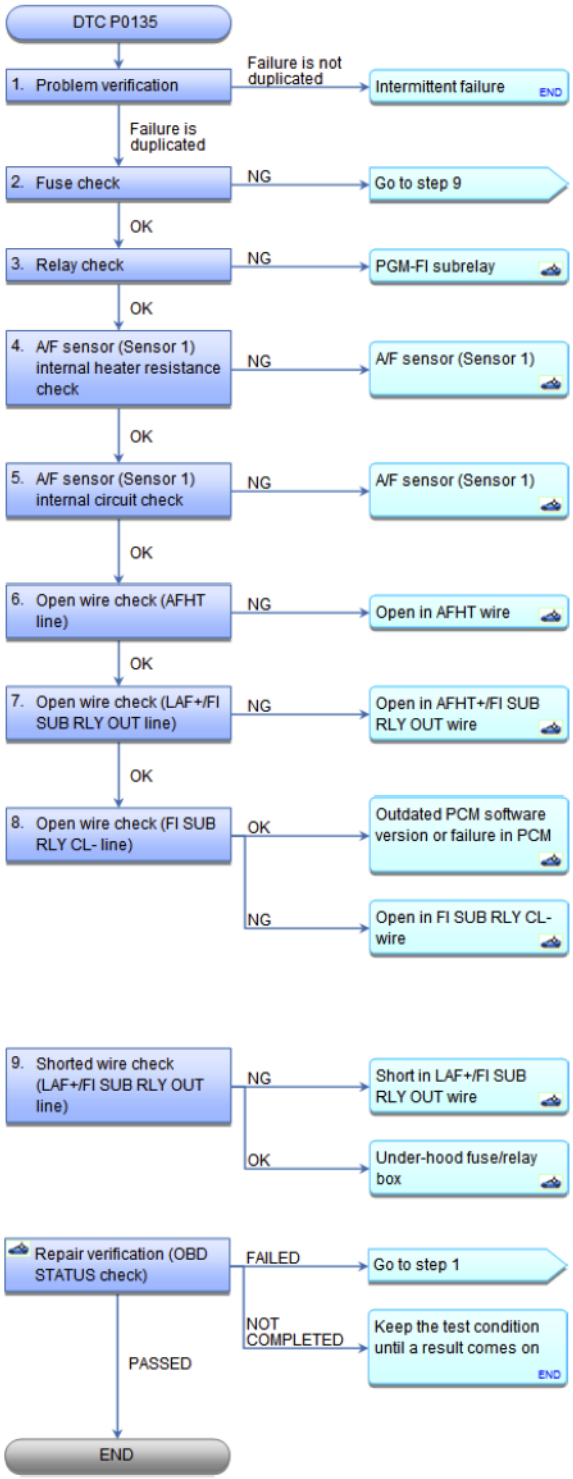

Fig. 54: DTC Troubleshooting Flow Chart (P0135)
Courtesy of AMERICAN HONDA MOTOR CO., INC.

NOTE: **Before you troubleshoot, record all freeze data and any on-board snapshot, and review the general troubleshooting information See HOW TO TROUBLESHOOT**

GETtheMANUALS.org

THE FUEL AND EMISSIONS SYSTEMS or HOW TO TROUBLESHOOT THE A/T SYSTEM .

DTC Description	Confirmed DTC	Pending DTC	Freeze Frame
P0135 A/F SENSOR (SENSOR 1) HEATER CIRCUIT MALFUNCTION			

1. Problem verification:
   - 1. Turn the ignition switch to ON (II).
   - 2. **Clear the DTC with the HDS** See **HOW TO TROUBLESHOOT THE FUEL AND EMISSIONS SYSTEMS** or **HOW TO TROUBLESHOOT THE A/T SYSTEM** .
   - 3. Start the engine. Hold the engine speed at 3, 000 rpm without load (in P or N) until the radiator fan comes on, then let it idle.
   - 4. Check for Pending or Confirmed DTCs with the HDS.

DTC Description	Confirmed DTC	Pending DTC	Freeze Frame
P0135 A/F SENSOR (SENSOR 1) HEATER CIRCUIT MALFUNCTION			

Is DTC P0135 indicated?

YES : The failure is duplicated. Go to step 2.

NO : Intermittent failure, the system is OK at this time. Check for poor connections or loose terminals at the A/F sensor (Sensor 1), the PGM-FI subrelay, and the PCM.

2. Fuse check:
   - 1. Turn the ignition switch to LOCK (0).
   - 2. Check the following fuse.

     Fuse No. A18 (15 A)

     Location Under-hood fuse/relay box

Is the fuse OK?

YES : Go to step 3.

NO : Go to step 9.

3. Relay check:
   - 1. Remove the PGM-FI subrelay (A) from the under-hood fuse/relay box.

GETtheMANUALS.org

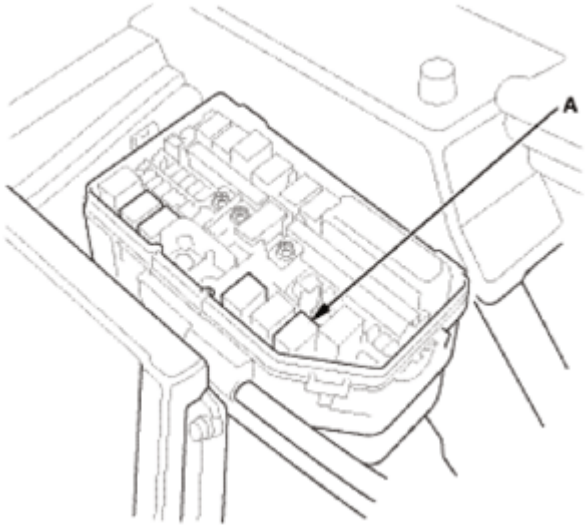

Fig. 55: Identifying PGM-FI Relay Box Subrelay
Courtesy of AMERICAN HONDA MOTOR CO., INC.

- 2. **TEST THE PGM-FI SUBRELAY** .

Is the PGM-FI subrelay OK?

YES : Go to step 4.

NO : Replace the PGM-FI subrelay, then **do the repair verification** .

4. A/F sensor (Sensor 1) internal heater resistance check:
   - 1. Disconnect the following connector.

     A/F sensor (Sensor 1) 4P connector

   - 2. At the sensor side, measure the resistance between test points 1 and 2.

     Test condition IG LOCK (0)

     PGM-FI subrelay: disconnected

     A/F sensor (Sensor 1) 4P connector: disconnected

     Test circuit AFHT, LAF+,

     Test point 1 A/F sensor (Sensor 1) 4P connector No. 3 (A/F sensor (Sensor 1) side)

     Test point 2 A/F sensor (Sensor 1) 4P connector No. 4 (A/F sensor (Sensor 1) side)

GETtheMANUALS.org

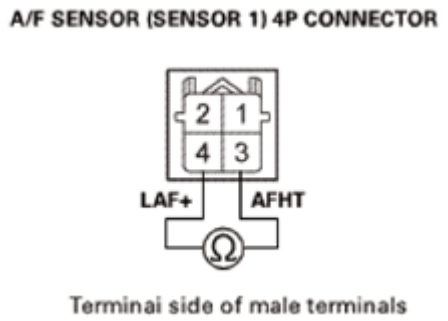

Fig. 56: Measuring Resistance Between A/F Sensor (Sensor 1) 4P Connector No. 3 And No. 4
Courtesy of AMERICAN HONDA MOTOR CO., INC.

Is there 2.2-2.7 ohms at room temperature?

YES : Go to step 5.

NO : **REPLACE THE A/F SENSOR (SENSOR 1)** , then **do the repair verification** .

5. A/F sensor (Sensor 1) internal circuit check:
   - 1. At the sensor side, check for continuity between test points 1 and 2.

     Test condition IG LOCK (0)

     PGM-FI subrelay: disconnected

     A/F sensor (Sensor 1) 4P connector: disconnected

     Test circuit AFS-, LAF+

     Test point 1 A/F sensor (Sensor 1) 4P connector No. 1 (A/F sensor (Sensor 1) side)

     Test point 2 A/F sensor (Sensor 1) 4P connector No. 4 (A/F sensor (Sensor 1) side)

     Test circuit AFS-, AFHT

     Test point 1 A/F sensor (Sensor 1) 4P connector No. 1 (A/F sensor (Sensor 1) side)

     Test point 2 A/F sensor (Sensor 1) 4P connector No. 3 (A/F sensor (Sensor 1) side)

GETtheMANUALS.org

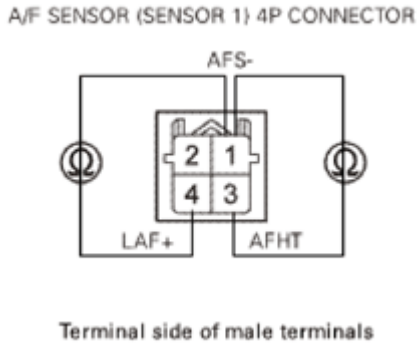

Fig. 57: Checking Continuity Between A/F Sensor (Sensor 1) 4P Connector No. 1 And No. 3
Courtesy of AMERICAN HONDA MOTOR CO., INC.

Is there continuity?

YES : **REPLACE THE A/F SENSOR (SENSOR 1)** , then **do the repair verification** .

NO : Go to step 6.

6. Open wire check (AFHT line):
   - 1. Jump the SCS line with the HDS.
   - 2. Disconnect the following connector.

     PCM connector C (49P)

   - 3. Check for continuity between test points 1 and 2.

     Test condition IG LOCK (0)

     PGM-FI subrelay: disconnected

     A/F sensor (Sensor 1) 4P connector: disconnected

     PCM connector C (49P): disconnected

     Test circuit AFHT

     Test point 1 PCM connector C (49P) No. 9 (GRN)

     Test point 2 A/F sensor (Sensor 1) 4P connector No. 3 (GRN)

GETtheMANUALS.org

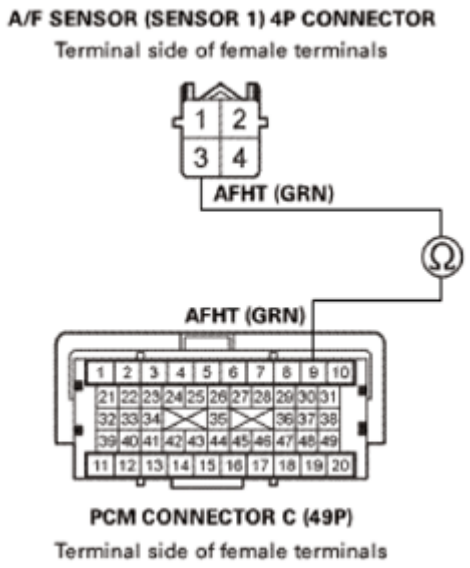

Fig. 58: Checking Continuity Between PCM Connector C (49P) No. 9 (GRN) And A/F Sensor (Sensor 1) 4P Connector No. 3 (GRN)
Courtesy of AMERICAN HONDA MOTOR CO., INC.

Is there continuity?

YES : The AFHT wire is OK. Go to step 7.

NO : Repair an open in the AFHT wire between the PCM (C9) and the A/F sensor (Sensor 1), then **do the repair verification** .

7. Open wire check (LAF+/FI SUB RLY OUT line):
   - 1. Check for continuity between test points 1 and 2.

     Test condition IG LOCK (0)

     PGM-FI subrelay: disconnected

     A/F sensor (Sensor 1) 4P connector: disconnected

     PCM connector C (49P): disconnected

     Test circuit LAF+/FI SUB RLY OUT

     Test point 1 PGM-FI subrelay 4P socket No. 2 (Under-hood fuse/relay box)

     Test point 2 A/F sensor (Sensor 1) 4P connector No. 4 (LT BLU)

GETtheMANUALS.org

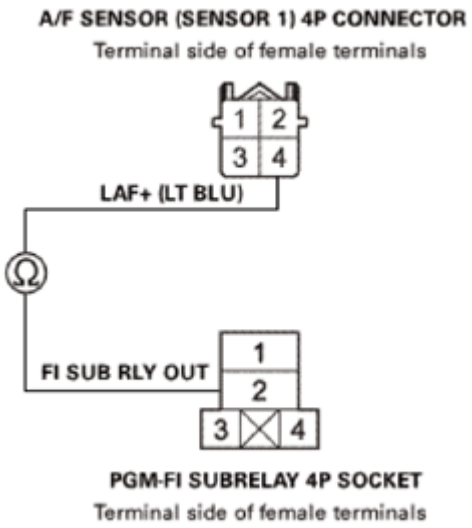

Fig. 59: Checking Continuity Between PGM-FI Subrelay 4P Socket No. 2 (Under-Hood Fuse/Relay Box) And A/F Sensor (Sensor 1) 4P Connector No. 4 (Lt Blu)
Courtesy of AMERICAN HONDA MOTOR CO., INC.

Is there continuity?

YES : The LAF+/FI SUB RLY OUT wire is OK. Go to step 8.

NO : Repair an open in the AFHT+/FI SUB RLY OUT wire between the A/F sensor (Sensor 1) and the PGM-FI subrelay, then **do the repair verification** .

8. Open wire check (FI SUB RLY CL- line):
   - 1. Disconnect the following connector.

     PCM connector A (49P)

   - 2. Check for continuity between test points 1 and 2.

     Test condition IG LOCK (0)

     PGM-FI subrelay: disconnected

     A/F sensor (Sensor 1) 4P connector: disconnected

     PCM connector C (49P): disconnected

     PCM connector A (49P): disconnected

     Test circuit FI SUB RLY CL-

     Test point 1 PCM connector A (49P) No. 20 (WHT)

GETtheMANUALS.org

Test point 2 PGM-FI subrelay 4P socket No. 4 (Under-hood fuse/relay box)

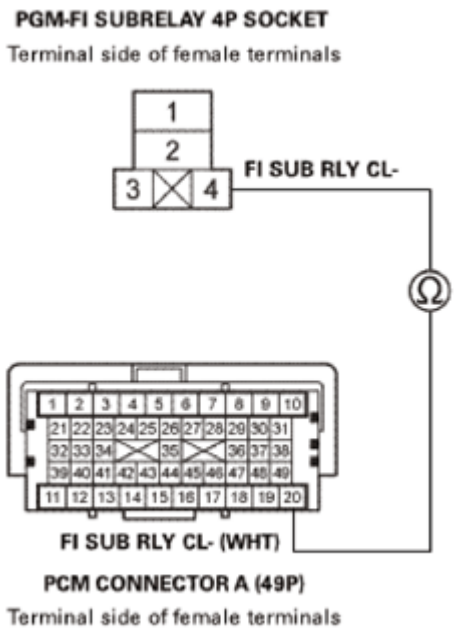

Fig. 60: Checking Continuity Between PCM Connector A (49P) No. 20 (WHT) And PGM-FI Subrelay 4P Socket No. 4 (Under-Hood Fuse/Relay Box)
Courtesy of AMERICAN HONDA MOTOR CO., INC.

Is there continuity?

YES : The FI SUB RLY CL- wire is OK. **Update the PCM** See **PCM REMOVAL AND INSTALLATION** or **PCM UPDATE** if it does not have the latest software, or **substitute a known-good PCM** See **PCM REMOVAL AND INSTALLATION** or **PCM UPDATE** , then **do the repair verification** .

NO : Repair an open in the FI SUB RLY CL- wire between the PCM (A20) and the PGM-FI subrelay, then **do the repair verification** .

9. Shorted wire check (LAF+/FI SUB RLY OUT line):
    - 1. Remove the PGM-FI subrelay (A) and the A/C condenser fan relay (B) from the under-hood fuse/relay box.

GETtheMANUALS.org

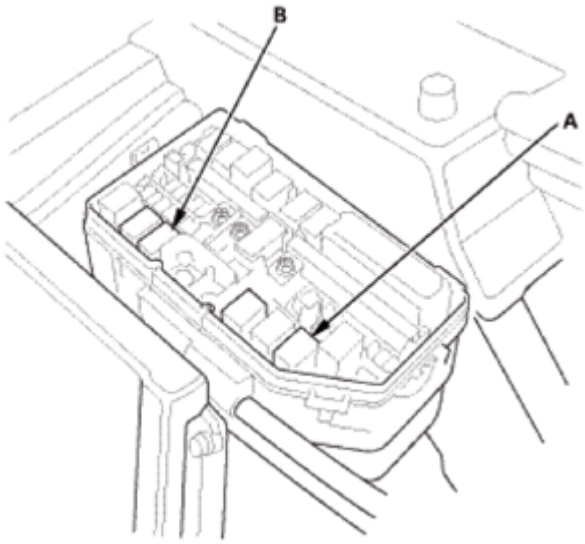

Fig. 61: Identifying PGM-FI Subrelay And A/C Condenser Fan Relay
Courtesy of AMERICAN HONDA MOTOR CO., INC.

- 2. Jump the SCS line with the HDS.
- 3. Disconnect the following connector.

  PCM connector A (49P)

  A/F sensor (Sensor 1) 4P connector

  EVAP canister vent shut valve 2P connector

- 4. Check for continuity between test points 1 and 2.

  Test condition IG LOCK (0)

  PGM-FI subrelay: disconnected

  A/C condenser fan relay: disconnected

  PCM connector A (49P): disconnected

  A/F sensor (Sensor 1) 4P connector: disconnected

  EVAP canister vent shut valve 2P connector: disconnected

  Test circuit LAF+

  Test point 1 A/F sensor (Sensor 1) 4P connector No. 4 (LT BLU)

  Test point 2 Body ground

GETtheMANUALS.org

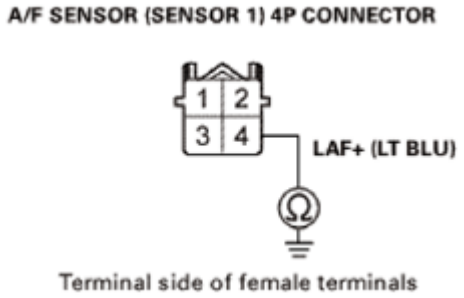

Fig. 62: Checking Continuity Between A/F Sensor (Sensor 1) 4P Connector No. 4 (LT BLU) And Body Ground
Courtesy of AMERICAN HONDA MOTOR CO., INC.

Is there continuity?

YES : Repair a short in the LAF+/FI SUB RLY OUT wire between the PGM-FI subrelay, the A/F sensor (Sensor 1), the A/C condenser fan relay, EVAP canister vent shut valve, and the EVAP canister vent shut valve. Also replace the No. A18 (15 A) fuse, then **do the repair verification** .

NO : The LAF+/FI SUB RLY OUT wire is OK. Replace the under-hood fuse/relay box, then **do the repair verification** .

REPAIR VERIFICATION (OBD STATUS CHECK)

- 1. Turn the ignition switch to LOCK (0).
- 2. Reconnect all connectors.
- 3. Turn the ignition switch to ON (II).
- 4. **Reset the PCM with the HDS** See **HOW TO TROUBLESHOOT THE FUEL AND EMISSIONS SYSTEMS** or **HOW TO TROUBLESHOOT THE A/T SYSTEM** .
- 5. **DO THE PCM IDLE LEARN PROCEDURE** .
- 6. Monitor the OBD STATUS for DTC P0135 in the DTCs MENU with the HDS.

DTC Description	OBD STATUS
P0135 A/F SENSOR (SENSOR 1) HEATER CIRCUIT MALFUNCTION	

Does the HDS indicate PASSED, FAILED, or NOT COMPLETED?

PASSED : Troubleshooting is complete. If the PCM was substituted, **replace the original PCM** See **PCM REMOVAL AND INSTALLATION** or **PCM UPDATE** . If any other Pending or Confirmed DTCs are indicated, go to the indicated DTC's troubleshooting.

FAILED : Go to step 1 and recheck. If the PCM was updated, **substitute a known-good PCM** See **PCM REMOVAL AND INSTALLATION** or **PCM UPDATE** , then check the OBD STATUS again.

NOT COMPLETED : Keep the test condition until a result comes on.

GETtheMANUALS.org

DTC P0137: SECONDARY HO2S (SENSOR 2) CIRCUIT LOW VOLTAGE

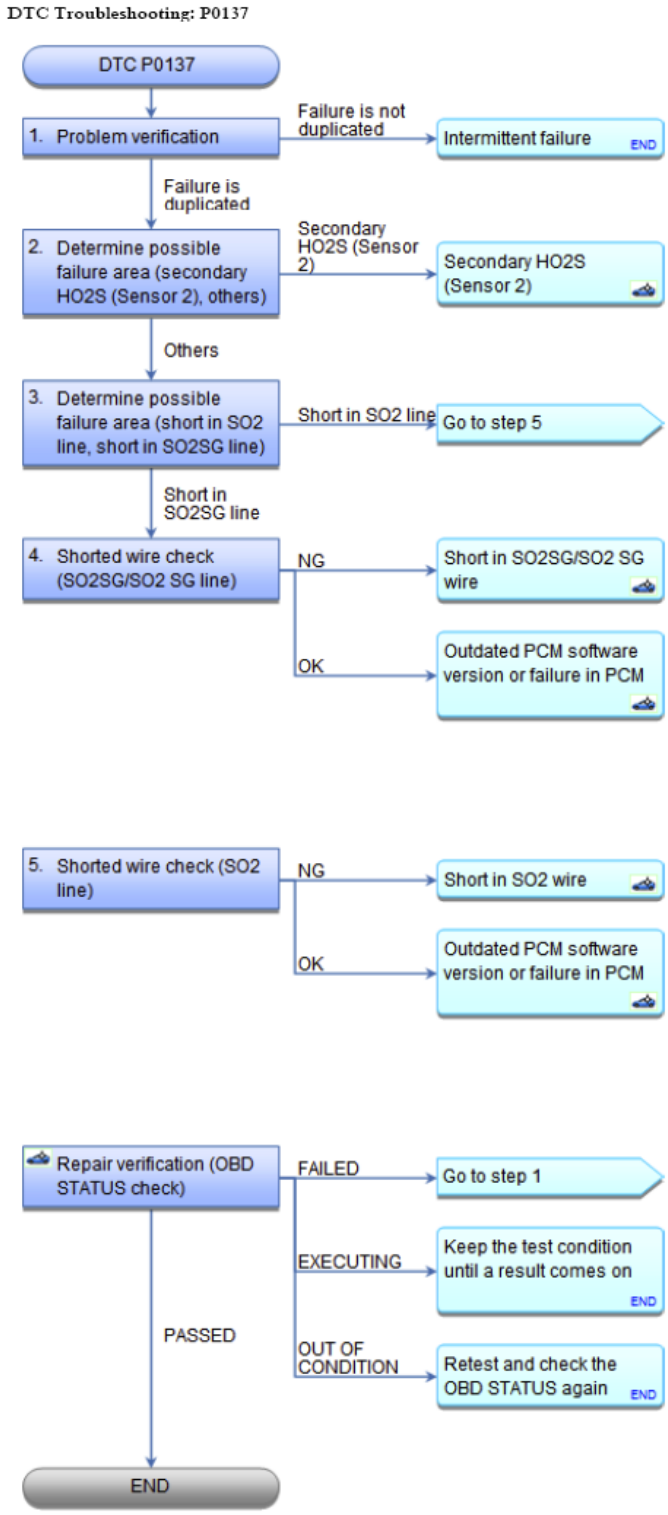

Fig. 63: DTC Troubleshooting Flow Chart (P0137)
Courtesy of AMERICAN HONDA MOTOR CO., INC.

GETtheMANUALS.org

NOTE: **Before you troubleshoot, record all freeze data and any on-board snapshot, and review the general troubleshooting information See HOW TO TROUBLESHOOT THE FUEL AND EMISSIONS SYSTEMS or HOW TO TROUBLESHOOT THE A/T SYSTEM .**

DTC Description	Confirmed DTC	Pending DTC	Freeze Frame
P0137 SECONDARY HO2S (SENSOR 2) CIRCUIT LOW VOLTAGE			

1. Problem verification:
   - 1. Turn the ignition switch to ON (II).
   - 2. **Clear the DTC with the HDS** See **HOW TO TROUBLESHOOT THE A/T SYSTEM** or **HOW TO TROUBLESHOOT THE FUEL AND EMISSIONS SYSTEMS** .
   - 3. Start the engine. Hold the engine speed at 3, 000 rpm without load (in P or N) until the radiator fan comes on.
   - 4. Monitor the OBD STATUS for DTC P0137 in the DTCs MENU with the HDS.

DTC Description	OBD STATUS
P0137 SECONDARY HO2S (SENSOR 2) CIRCUIT LOW VOLTAGE	

Does the HDS indicate FAILED?

YES : The failure is duplicated. Go to step 2.

NO : If the HDS indicates PASSED, intermittent failure, the system is OK at this time. Check for poor connections or loose terminals at secondary HO2S (Sensor 2) and the PCM. If the HDS indicates EXECUTING, keep idling until a result comes on. If the HDS indicates OUT OF CONDITION, go to step 3 and recheck.

2. Determine possible failure area (secondary HO2S (Sensor 2), others):
   - 1. Turn the ignition switch to LOCK (0).
   - 2. Disconnect the following connector.

     Secondary HO2S (Sensor 2) 4P connector

   - 3. Connect terminals A and B with a jumper wire.

     Terminal A Secondary HO2S (Sensor 2) 4P connector No. 1 (YEL)

     Terminal B Secondary HO2S (Sensor 2) 4P connector No. 2 (BRN)

GETtheMANUALS.org

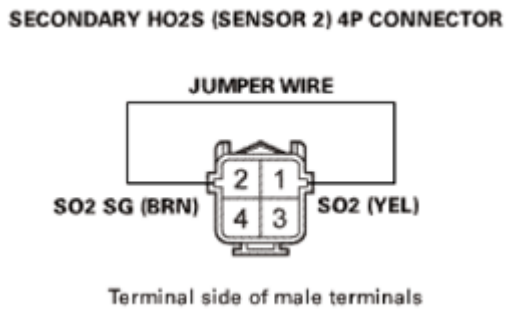

Fig. 64: Identifying Secondary HO2S (Sensor 2) 4P Connector Terminals
Courtesy of AMERICAN HONDA MOTOR CO., INC.

- 4. Turn the ignition switch to ON (II).
- 5. Check the parameter(s) below with the HDS.

Signal	Threshold		Current conditions	
	Values	Unit	Values	Unit
HO2S S2	Less than 0.12	V		

Do the current condition(s) match the threshold?

YES : Go to step 3.

NO : **REPLACE SECONDARY HO2S (SENSOR 2)** , then **do the repair verification** .

3. Determine possible failure area (short in SO2 line, short in SO2SG line):
   - 1. Turn the ignition switch to LOCK (0).
   - 2. Remove the jumper wire from the secondary HO2S (Sensor 2) 4P connector.
   - 3. Turn the ignition switch to ON (II).
   - 4. Check the parameter(s) below with the HDS.

Signal	Threshold		Current conditions	
	Values	Unit	Values	Unit
HO2S S2	about 5.0	V		

Do the current condition(s) match the threshold?

YES : Go to step 4.

NO : Go to step 5.

4. Shorted wire check (SO2SG/SO2 SG line):
   - 1. Turn the ignition switch to LOCK (0).
   - 2. Jump the SCS line with the HDS.

GETtheMANUALS.org

- 3. Disconnect the following connector.

  PCM connector C (49P)

- 4. Check for continuity between test points 1 and 2.

  Test condition IG LOCK (0)

  PCM connector C (49P): disconnected

  Secondary HO2S (Sensor 2) 4P connector: disconnected

  Test circuit SO2SG

  Test point 1 PCM connector C (49P) No. 47 (GRY)

  Test point 2 Body ground

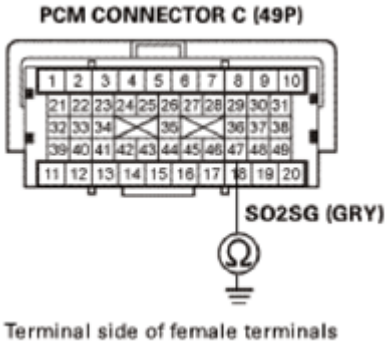

Fig. 65: Checking Continuity Between PCM Connector C (49P) No. 47 (GRY) And Body Ground
Courtesy of AMERICAN HONDA MOTOR CO., INC.

Is there continuity?

YES : Repair a short in the SO2SG/SO2 SG wire between the PCM (C47) and secondary HO2S (Sensor 2), then **do the repair verification** .

NO : The SO2SG/SO2 SG wire is OK. **Update the PCM** See **PCM REMOVAL AND INSTALLATION** or **PCM UPDATE** if it does not have the latest software, or **substitute a known-good PCM** See **PCM REMOVAL AND INSTALLATION** or **PCM UPDATE** , then **do the repair verification** .

5. Shorted wire check (SO2 line):
   - 1. Turn the ignition switch to LOCK (0).
   - 2. Jump the SCS line with the HDS.
   - 3. Disconnect the following connector.

GETtheMANUALS.org

PCM connector B (49P)

- 4. Check for continuity between test points 1 and 2.

  Test condition IG LOCK (0)

  Secondary HO2S (Sensor 2) 4P connector: disconnected

  PCM connector B (49P): disconnected

  Test circuit SO2

  Test point 1 PCM connector B (49P) No. 46 (WHT)

  Test point 2 Body ground

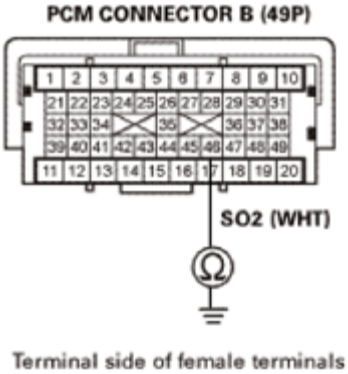

Fig. 66: Checking Continuity Between PCM Connector B (49P) No. 46 (WHT) And Body Ground
Courtesy of AMERICAN HONDA MOTOR CO., INC.

Is there continuity?

YES : Repair a short in the SO2 wire between the PCM (B46) and secondary HO2S (Sensor 2), then **do the repair verification** .

NO : The SO2 wire is OK. **Update the PCM** See **PCM REMOVAL AND INSTALLATION** or **PCM UPDATE** if it does not have the latest software, or **substitute a known-good PCM** See **PCM REMOVAL AND INSTALLATION** or **PCM UPDATE** , then **do the repair verification** .

REPAIR VERIFICATION (OBD STATUS CHECK)

- 1. Reconnect all connectors.
- 2. Turn the ignition switch to ON (II).
- 3. **Reset the PCM with the HDS** See **HOW TO TROUBLESHOOT THE FUEL AND EMISSIONS SYSTEMS** or **HOW TO TROUBLESHOOT THE A/T SYSTEM** .

GETtheMANUALS.org

- 4. **DO THE PCM IDLE LEARN PROCEDURE** .
- 5. Start the engine. Hold the engine speed at 3, 000 rpm without load (in P or N) until the radiator fan comes on, then let it idle.
- 6. Monitor the OBD STATUS for DTC P0137 in the DTCs MENU with the HDS.

DTC Description	OBD STATUS
P0137 SECONDARY HO2S (SENSOR 2) CIRCUIT LOW VOLTAGE	

Does the HDS indicate PASSED, FAILED, EXECUTING, or OUT OF CONDITION?

PASSED : Troubleshooting is complete. If the PCM was substituted, **replace the original PCM** See **PCM REMOVAL AND INSTALLATION** or **PCM UPDATE** . If any other Pending or Confirmed DTCs are indicated, go to the indicated DTC's troubleshooting.

FAILED : Go to step 1 and recheck. If the PCM was updated, **substitute a known-good PCM** See **PCM UPDATE** or **PCM REMOVAL AND INSTALLATION** , then check the OBD STATUS again.

EXECUTING : Keep the test condition until a result comes on.

OUT OF CONDITION : Meet the test condition, and check the OBD STATUS again.

DTC P0138: SECONDARY HO2S (SENSOR 2) CIRCUIT HIGH VOLTAGE

GETtheMANUALS.org

DTC Troubleshooting: P0138

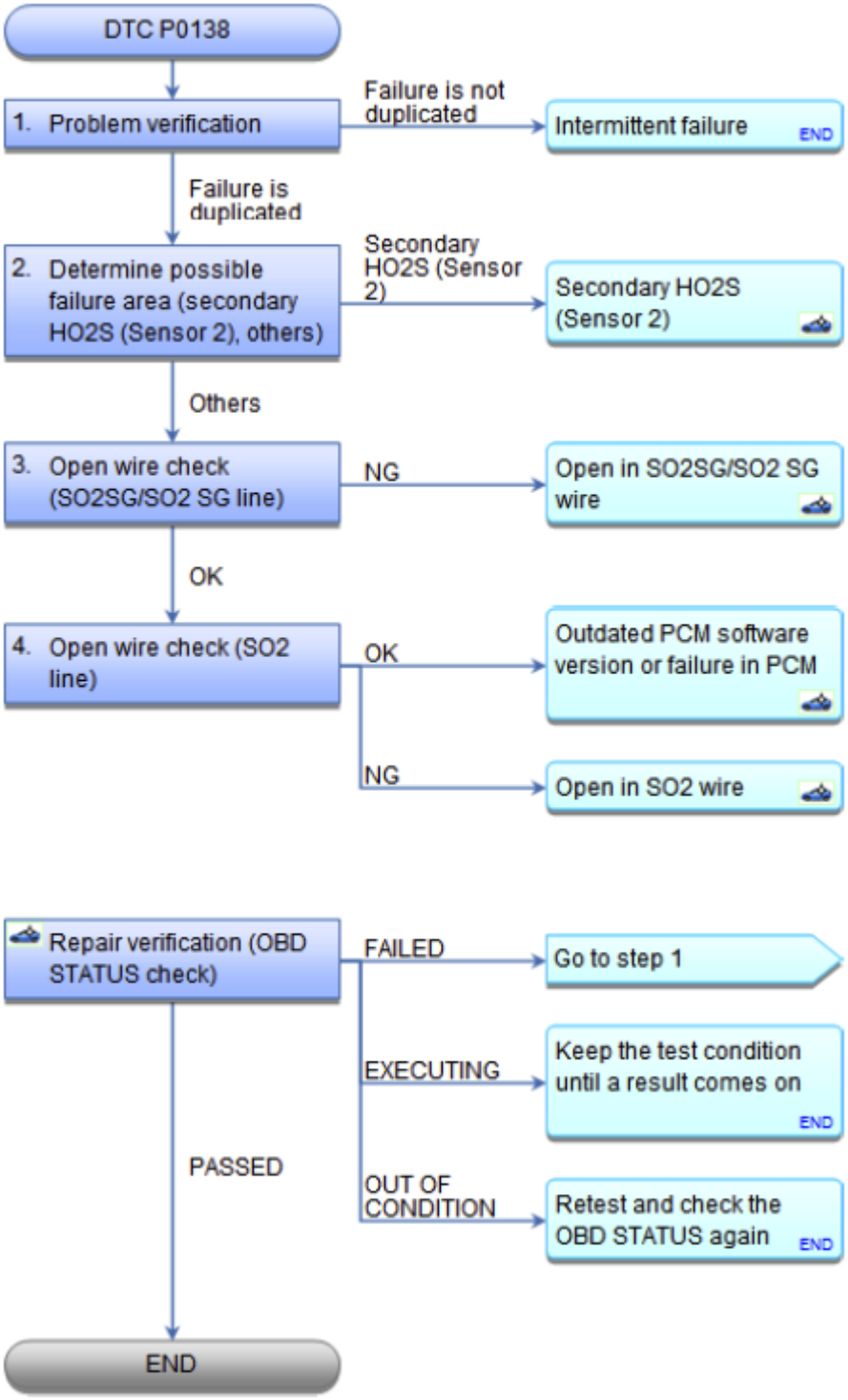

Fig. 67: DTC Troubleshooting Flow Chart (P0138)
Courtesy of AMERICAN HONDA MOTOR CO., INC.

NOTE: **Before you troubleshoot, record all freeze data and any on-board snapshot, and**

GETtheMANUALS.org

review the general troubleshooting information See HOW TO TROUBLESHOOT THE FUEL AND EMISSIONS SYSTEMS or HOW TO TROUBLESHOOT THE A/T SYSTEM .

DTC Description	Confirmed DTC	Pending DTC	Freeze Frame
P0138 SECONDARY HO2S (SENSOR 2) CIRCUIT HIGH VOLTAGE			

1. Problem verification:
   - 1. Turn the ignition switch to ON (II).
   - 2. **Clear the DTC with the HDS** See **HOW TO TROUBLESHOOT THE A/T SYSTEM** or **HOW TO TROUBLESHOOT THE FUEL AND EMISSIONS SYSTEMS** .
   - 3. Start the engine. Hold the engine speed at 3, 000 rpm without load (in P or N) until the radiator fan comes on, then let it idle.
   - 4. Check the parameter(s) below with the HDS.

Signal	Threshold		Current conditions	
	Values	Unit	Values	Unit
HO2S S2	More than 1.27	V		

Do the current condition(s) match the threshold?

YES : The failure is duplicated. Go to step 2.

NO : Intermittent failure, the system is OK at this time. Check for poor connections or loose terminals at secondary HO2S (Sensor 2) and the PCM.

2. Determine possible failure area (secondary HO2S (Sensor 2), others):
   - 1. Turn the ignition switch to LOCK (0).
   - 2. Disconnect the following connector.

     Secondary HO2S (Sensor 2) 4P connector

   - 3. Connect terminals A and B with a jumper wire.

     Terminal A Secondary HO2S (Sensor 2) 4P connector No. 1 (YEL)

     Terminal B Secondary HO2S (Sensor 2) 4P connector No. 2 (BRN)

GETtheMANUALS.org

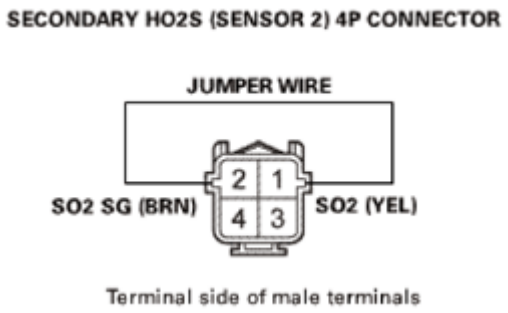

Fig. 68: Checking Continuity Between Secondary HO2S (Sensor 2) 4P Connector Terminals
Courtesy of AMERICAN HONDA MOTOR CO., INC.

- 4. Turn the ignition switch to ON (II).
- 5. Check the parameter(s) below with the HDS.

Signal	Threshold		Current conditions	
	Values	Unit	Values	Unit
HO2S S2	More than 1.27	V		

Do the current condition(s) match the threshold?

YES : Go to step 3.

NO : **REPLACE SECONDARY HO2S (SENSOR 2)** , then **do the repair verification** .

3. Open wire check (SO2SG/SO2 SG line):
   - 1. Turn the ignition switch to LOCK (0).
   - 2. Remove the jumper wire from the secondary HO2S (Sensor 2) 4P connector.
   - 3. Connect terminals A and B with a jumper wire.

   Terminal A Secondary HO2S (Sensor 2) 4P connector No. 1 (YEL)

   Terminal B Body ground

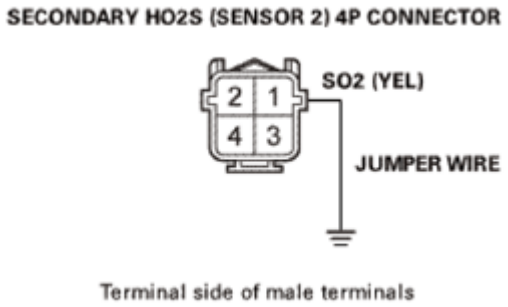

Fig. 69: Identifying Secondary HO2S (Sensor 2) 4P Connector Terminals
Courtesy of AMERICAN HONDA MOTOR CO., INC.

GETtheMANUALS.org

- 4. Turn the ignition switch to ON (II).
- 5. Check the parameter(s) below with the HDS.

Signal	Threshold		Current conditions	
	Values	Unit	Values	Unit
HO2S S2	More than 1.27	V		

Do the current condition(s) match the threshold?

YES : The SO2SG/SO2 SG wire is OK. Go to step 4.

NO : Repair an open in the SO2SG/SO2 SG wire between the PCM (C47) and secondary HO2S (Sensor 2), then **do the repair verification** .

4. Open wire check (SO2 line):
   - 1. Turn the ignition switch to LOCK (0).
   - 2. Jump the SCS line with the HDS.
   - 3. Disconnect the following connector.

     PCM connector B (49P)

   - 4. Check for continuity between test points 1 and 2.

     Test condition IG LOCK (0)

     Secondary HO2S (Sensor 2) 4P connector terminal No. 1: jumped to body ground

     PCM connector B (49P): disconnected

     Test circuit SO2

     Test point 1 PCM connector B (49P) No. 46 (WHT)

     Test point 2 Body ground

GETtheMANUALS.org

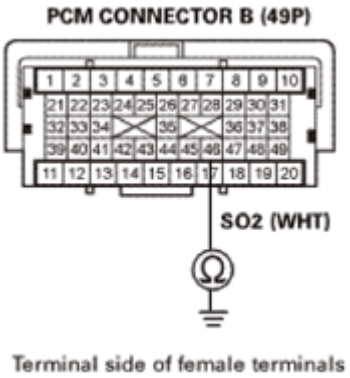

Fig. 70: Checking Continuity Between PCM Connector B (49P) No. 46 (WHT) And Body Ground
Courtesy of AMERICAN HONDA MOTOR CO., INC.

Is there continuity?

YES : The SO2 wire is OK. **Update the PCM** See **PCM REMOVAL AND INSTALLATION** or **PCM UPDATE** if it does not have the latest software, or **substitute a known-good PCM** See **PCM REMOVAL AND INSTALLATION** or **PCM UPDATE** , then **do the repair verification** .

NO : Repair an open in the SO2 wire between the PCM (B46) and secondary HO2S (Sensor 2), then **do the repair verification** .

REPAIR VERIFICATION (OBD STATUS CHECK)

- 1. Reconnect all connectors.
- 2. Turn the ignition switch to ON (II).
- 3. **Reset the PCM with the HDS** See **HOW TO TROUBLESHOOT THE A/T SYSTEM** or **HOW TO TROUBLESHOOT THE FUEL AND EMISSIONS SYSTEMS** .
- 4. **DO THE PCM IDLE LEARN PROCEDURE** .
- 5. Start the engine, and let it idle without load (in P or N) until the radiator fan comes on.
- 6. Test-drive under these conditions:
  - Engine coolant temperature (ECT SENSOR 1) above 158 °F (70 °C)
  - Transmission in D
  - Engine speed between 1, 500-3, 000 rpm
  - Drive 1 minute or more

Signal	Current conditions	
	Values	Unit
ECT SENSOR 1		
ENGINE SPEED		

- 7. Monitor the OBD STATUS for DTC P0138 in the DTCs MENU with the HDS.

GETtheMANUALS.org

DTC Description	OBD STATUS
P0138 SECONDARY HO2S (SENSOR 2) CIRCUIT HIGH VOLTAGE	

Does the HDS indicate PASSED, FAILED, EXECUTING, or OUT OF CONDITION?

PASSED : Troubleshooting is complete. If the PCM was substituted, **replace the original PCM** See **PCM REMOVAL AND INSTALLATION** or **PCM UPDATE** . If any other Pending or Confirmed DTCs are indicated, go to the indicated DTC's troubleshooting.

FAILED : Go to step 1 and recheck. If the PCM was updated, **substitute a known-good PCM** See **PCM REMOVAL AND INSTALLATION** or **PCM UPDATE** , then check the OBD STATUS again.

EXECUTING : Keep the test condition until a result comes on.

OUT OF CONDITION : Meet the test condition, and check the OBD STATUS again.

DTC P0139: SECONDARY HO2S (SENSOR 2) SLOW RESPONSE

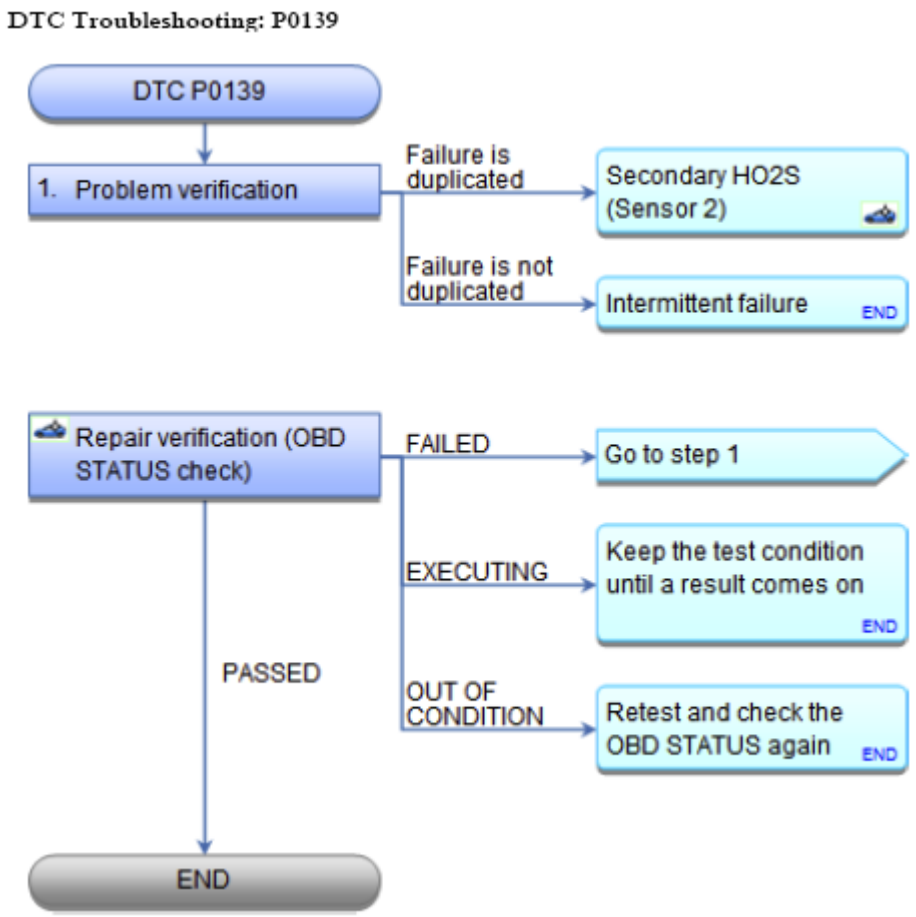

Fig. 71: DTC Troubleshooting Flow Chart (P0139)
Courtesy of AMERICAN HONDA MOTOR CO., INC.

GETtheMANUALS.org

NOTE:

- **Before you troubleshoot, record all freeze data and any on-board snapshot, and review the general troubleshooting information See HOW TO TROUBLESHOOT THE A/T SYSTEM or HOW TO TROUBLESHOOT THE FUEL AND EMISSIONS SYSTEMS .**
- **If the exhaust leaks from the exhaust system, this DTC will be set. Check for damage in the exhaust pipe, and repair it if needed.**

DTC Description	Confirmed DTC	Pending DTC	Freeze Frame
P0139 SECONDARY HO2S (SENSOR 2) SLOW RESPONSE			

1. Problem verification:
   - 1. Turn the ignition switch to ON (II).
   - 2. **Clear the DTC with the HDS** See **HOW TO TROUBLESHOOT THE A/T SYSTEM** or **HOW TO TROUBLESHOOT THE FUEL AND EMISSIONS SYSTEMS** .
   - 3. Start the engine. Hold the engine speed at 3, 000 rpm without load (in P or N) until the radiator fan comes on, then let it idle.
   - 4. Test-drive under these conditions:
     - Engine coolant temperature (ECT SENSOR 1) above 158 °F (70 °C)
     - Transmission in D
     - Drive at a steady speed between 55-75 mph (90-120 km/h) for 1 minute, then decelerate (with the throttle fully closed) for 10 seconds

Signal	Current conditions	
	Values	Unit
ECT SENSOR 1		
VEHICLE SPEED		

   - 5. Monitor the OBD STATUS for DTC P0139 with the HDS.

DTC Description	OBD STATUS
P0139 SECONDARY HO2S (SENSOR 2) SLOW RESPONSE	

Does the HDS indicate FAILED?

YES : The failure is duplicated. **REPLACE SECONDARY HO2S (SENSOR 2)** , then **do the repair verification** .

NO : If the HDS indicates PASSED, intermittent failure, the system is OK at this time. Check for poor connections or loose terminals at secondary HO2S (Sensor 2) and the PCM. If the HDS indicates EXECUTING, keep driving until a result comes on. If the HDS indicates OUT OF CONDITION, go to step 3 on this step and recheck.

GETtheMANUALS.org

REPAIR VERIFICATION (OBD STATUS CHECK)

- 1. Turn the ignition switch to LOCK (0).
- 2. Reconnect all connectors.
- 3. Turn the ignition switch to ON (II).
- 4. **Reset the PCM with the HDS** See **HOW TO TROUBLESHOOT THE FUEL AND EMISSIONS SYSTEMS** or **HOW TO TROUBLESHOOT THE A/T SYSTEM** .
- 5. **DO THE PCM IDLE LEARN PROCEDURE** .
- 6. Start the engine. Hold the engine speed at 3, 000 rpm without load (in P or N) until the radiator fan comes on, then let it idle.
- 7. Test-drive under these conditions:
  - Engine coolant temperature (ECT SENSOR 1) above 158 °F (70 °C)
  - Transmission in D
  - Drive at a steady speed between 55-75 mph (90-120 km/h) for 1 minute, then decelerate (with the throttle fully closed) for 10 seconds

Signal	Current conditions	
	Values	Unit
ECT SENSOR 1		
VEHICLE SPEED		

- 8. Monitor the OBD STATUS for DTC P0139 with the HDS.

DTC Description	OBD STATUS
P0139 SECONDARY HO2S (SENSOR 2) SLOW RESPONSE	

Does the HDS indicate PASSED, FAILED, EXECUTING, or OUT OF CONDITION?

PASSED : Troubleshooting is complete. If any other Pending or Confirmed DTCs were indicated, go to the indicated DTC's troubleshooting.

FAILED : Go to step 1 and recheck.

EXECUTING : Keep the test condition until a result comes on.

OUT OF CONDITION : Meet the test condition, and check the OBD STATUS again.

DTC P0141: SECONDARY HO2S (SENSOR 2) HEATER CIRCUIT MALFUNCTION

GETtheMANUALS.org

DTC Troubleshooting: P0141

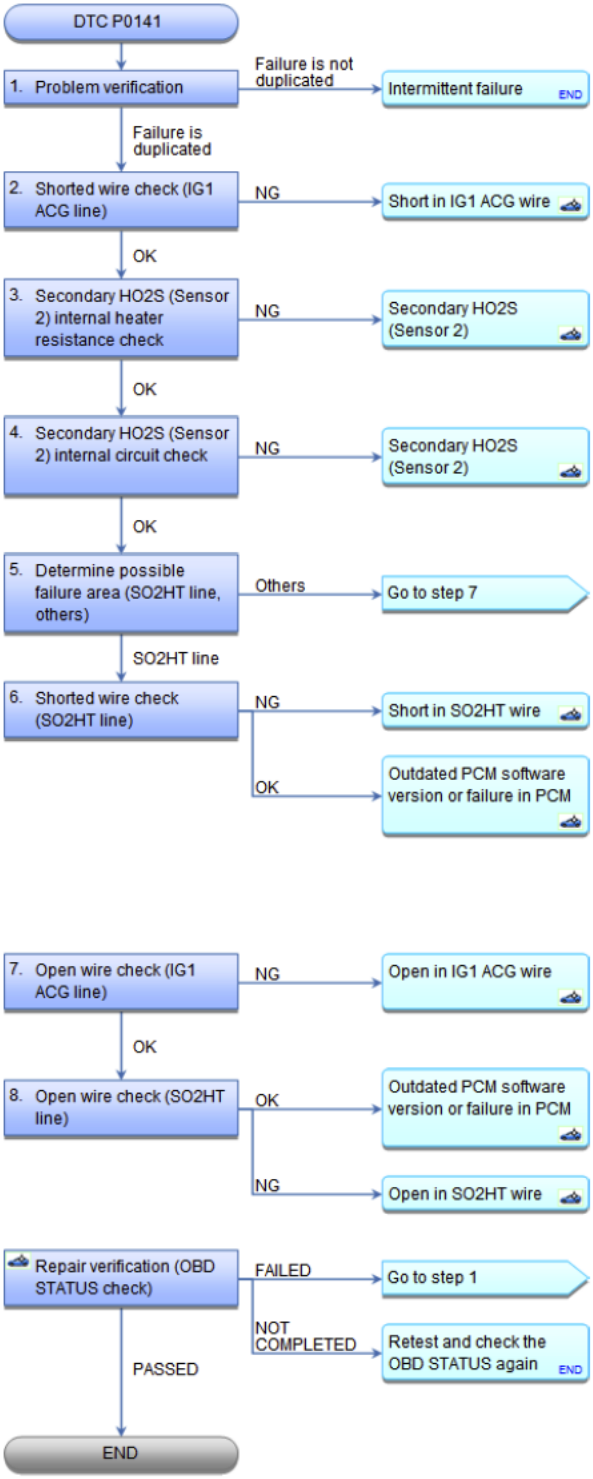

Fig. 72: DTC Troubleshooting Flow Chart (P0141)
Courtesy of AMERICAN HONDA MOTOR CO., INC.

NOTE: **Before you troubleshoot, record all freeze data and any on-board snapshot, and**

GETtheMANUALS.org

review the general troubleshooting information See HOW TO TROUBLESHOOT THE A/T SYSTEM or HOW TO TROUBLESHOOT THE FUEL AND EMISSIONS SYSTEMS .

DTC Description	Confirmed DTC	Pending DTC	Freeze Frame
P0141 SECONDARY HO2S (SENSOR 2) HEATER CIRCUIT MALFUNCTION			

1. Problem verification:
   - 1. Turn the ignition switch to ON (II).
   - 2. **Clear the DTC with the HDS** See **HOW TO TROUBLESHOOT THE A/T SYSTEM** or **HOW TO TROUBLESHOOT THE FUEL AND EMISSIONS SYSTEMS** .
   - 3. Start the engine, and let it idle.
   - 4. Check for Pending or Confirmed DTCs with the HDS.

DTC Description	Confirmed DTC	Pending DTC	Freeze Frame
P0141 SECONDARY HO2S (SENSOR 2) HEATER CIRCUIT MALFUNCTION			

Is DTC P0141 indicated?

YES : The failure is duplicated. Go to step 2.

NO : Intermittent failure, the system is OK at this time. Check for poor connections or loose terminals at secondary HO2S (Sensor 2), and the PCM.

2. Shorted wire check (IG1 ACG line):
   - 1. Turn the ignition switch to LOCK (0).
   - 2. Check the following fuse.

     Fuse No. B2 (10 A)

     Location Under-dash fuse/relay box

Is the fuse OK?

YES : The IG1 ACG wire is not shorted. Go to step 3.

NO : Repair a short in the IG1 ACG wire between secondary HO2S (Sensor 2) and the No. B2 (10 A) fuse. Also replace the No. B2 (10 A) fuse, then **do the repair verification** .

3. Secondary HO2S (Sensor 2) internal heater resistance check:

GETtheMANUALS.org

- 1. Disconnect the following connector.

  Secondary HO2S (Sensor 2) 4P connector

- 2. At the sensor side, measure the resistance between test points 1 and 2.

  Test condition IG LOCK (0)

  Secondary HO2S (Sensor 2) 4P connector: disconnected

  Test circuit IG1 ACG, SO2HT

  Test point 1 Secondary HO2S (Sensor 2) 4P connector No. 3 (secondary HO2S (Sensor 2) side)

  Test point 2 Secondary HO2S (Sensor 2) 4P connector No. 4 (secondary HO2S (Sensor 2) side)

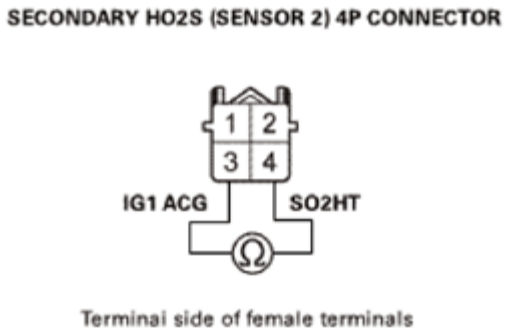

Fig. 73: Measuring Resistance Between Secondary HO2S Sensor 2 4P Connector No. 3 And No. 4
Courtesy of AMERICAN HONDA MOTOR CO., INC.

Is there 5.4-7.3 ohms at room temperature?

YES : Go to step 4.

NO : **REPLACE SECONDARY HO2S (SENSOR 2)** , then **do the repair verification** .

4. Secondary HO2S (Sensor 2) internal circuit check:
   - 1. At the sensor side, check for continuity under the following conditions.

     Test condition IG LOCK (0)

     Secondary HO2S (Sensor 2) 4P connector: disconnected

     Test circuit IG1 ACG

     Test point 1 Secondary HO2S (Sensor 2) 4P connector No. 3 (secondary HO2S (Sensor 2) side)

GETtheMANUALS.org

Test point 2 Body ground

Test circuit SO2HT

Test point 1 Secondary HO2S (Sensor 2) 4P connector No. 4 (secondary HO2S (Sensor 2) side)

Test point 2 Body ground

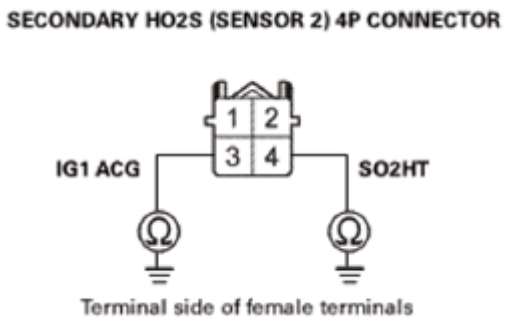

Fig. 74: Checking Continuity Between Secondary HO2S (Sensor 2) 4P Connector No. 4 And Body Ground
Courtesy of AMERICAN HONDA MOTOR CO., INC.

Is there continuity?

YES : **REPLACE SECONDARY HO2S (SENSOR 2)** , then **do the repair verification** .

NO : Go to step 5.

5. Determine possible failure area (SO2HT line, others):
   - 1. Turn the ignition switch to ON (II).
   - 2. Measure the voltage between test points 1 and 2.

   Test condition IG ON (II)

   Secondary HO2S (Sensor 2) 4P connector: disconnected

   Test circuit IG1 ACG, SO2HT

   Test point 1 Secondary HO2S (Sensor 2) 4P connector No. 3 (RED)

   Test point 2 Secondary HO2S (Sensor 2) 4P connector No. 4 (LT BLU)

GETtheMANUALS.org

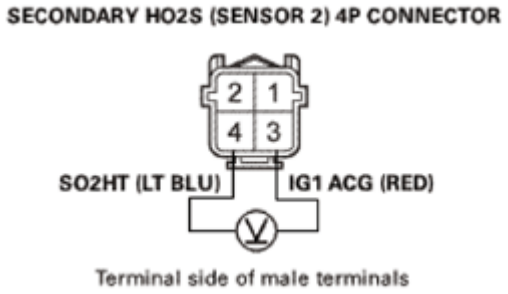

Fig. 75: Measuring Voltage Between Secondary HO2S (Sensor 2) 4P Connector No. 3 (RED) And No. 4 (LT BLU)
Courtesy of AMERICAN HONDA MOTOR CO., INC.

Is there battery voltage?

YES : Go to step 6.

NO : Go to step 7.

6. Shorted wire check (SO2HT line):
   - 1. Turn the ignition switch to LOCK (0).
   - 2. Jump the SCS line with the HDS.
   - 3. Disconnect the following connector.

     PCM connector B (49P)

   - 4. Check for continuity between test points 1 and 2.

     Test condition IG LOCK (0)

     Secondary HO2S (Sensor 2) 4P connector: disconnected

     PCM connector B (49P): disconnected

     Test circuit SO2HT

     Test point 1 PCM connector B (49P) No. 4 (LT GRN)

     Test point 2 Body ground

GETtheMANUALS.org

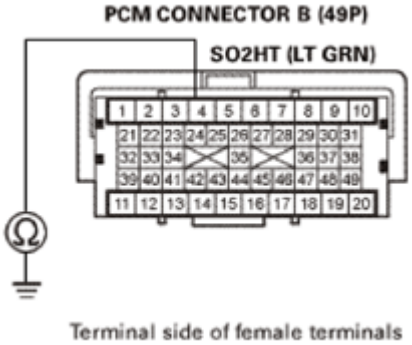

Fig. 76: Checking Continuity Between PCM Connector B (49P) No. 4 (LT GRN) And Body Ground
Courtesy of AMERICAN HONDA MOTOR CO., INC.

Is there continuity?

YES : Repair a short in the SO2HT wire between the PCM (B4) and secondary HO2S (Sensor 2), then **do the repair verification** .

NO : The SO2HT wire is OK. **Update the PCM** See **PCM REMOVAL AND INSTALLATION** or **PCM UPDATE** if it does not have the latest software, or **substitute a known-good PCM** See **PCM REMOVAL AND INSTALLATION** or **PCM UPDATE** , then **do the repair verification** .

7. Open wire check (IG1 ACG line):
   - 1. Measure the voltage between test points 1 and 2.

     Test condition IG ON (II)

     Secondary HO2S (Sensor 2) 4P connector: disconnected

     Test circuit IG1 ACG

     Test point 1 Secondary HO2S (Sensor 2) 4P connector No. 3 (RED)

     Test point 2 Body ground

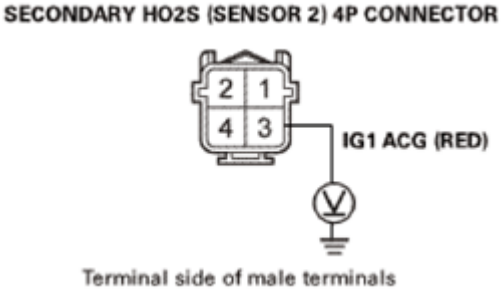

Fig. 77: Measuring Voltage Between Secondary HO2S (Sensor 2) 4P Connector No. 3 (RED)

GETtheMANUALS.org

<u>And Body Ground</u>
Courtesy of AMERICAN HONDA MOTOR CO., INC.

Is there battery voltage?

YES : The IG1 ACG wire is OK. Go to step 8.

NO : Repair an open in the IG1 ACG wire between the No. B2 (10 A) fuse and secondary HO2S (Sensor 2), then **do the repair verification** .

8. Open wire check (SO2HT line):
   - 1. Turn the ignition switch to LOCK (0).
   - 2. Jump the SCS line with the HDS.
   - 3. Disconnect the following connector.

     PCM connector B (49P)

   - 4. Check for continuity between test points 1 and 2.

     Test condition IG LOCK (0)

     Secondary HO2S (Sensor 2) 4P connector: disconnected

     PCM connector B (49P): disconnected

     Test circuit SO2HT

     Test point 1 PCM connector B (49P) No. 4 (LT GRN)

     Test point 2 Secondary HO2S (Sensor 2) 4P connector No. 4 (LT BLU)

GETtheMANUALS.org

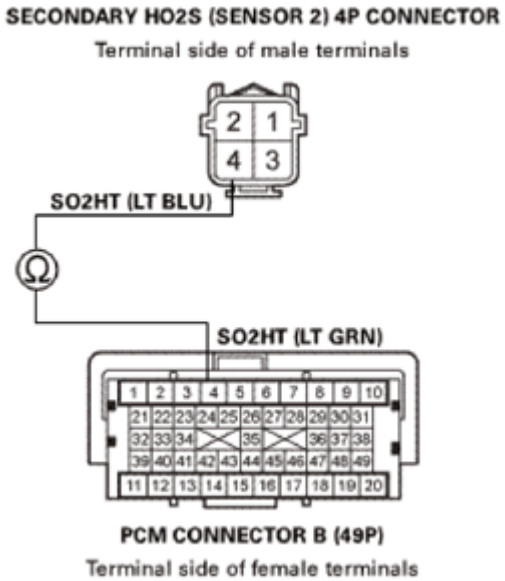

Fig. 78: Checking Continuity Between PCM Connector B (49P) No. 4 (LT GRN) And Secondary HO2S (Sensor 2) 4P Connector No. 4 (LT BLU)
Courtesy of AMERICAN HONDA MOTOR CO., INC.

Is there continuity?

YES : The SO2HT wire is OK. **UPDATE THE PCM** if it does not have the latest software, or **SUBSTITUTE A KNOWN-GOOD PCM** , then **do the repair verification** .

NO : Repair an open in the SO2HT wire between the PCM (B4) and secondary HO2S (Sensor 2), then **do the repair verification** .

REPAIR VERIFICATION (OBD STATUS CHECK)

- 1. Turn the ignition switch to LOCK (0).
- 2. Reconnect all connectors.
- 3. Turn the ignition switch to ON (II).
- 4. **Reset the PCM with the HDS** See **HOW TO TROUBLESHOOT THE FUEL AND EMISSIONS SYSTEMS** or **HOW TO TROUBLESHOOT THE A/T SYSTEM** .
- 5. **DO THE PCM IDLE LEARN PROCEDURE** .
- 6. Monitor the OBD STATUS for DTC P0141 in the DTCs MENU with the HDS.

DTC Description	OBD STATUS
P0141 SECONDARY HO2S (SENSOR 2) HEATER CIRCUIT MALFUNCTION	

Does the HDS indicate PASSED, FAILED, or NOT COMPLETED?

PASSED : Troubleshooting is complete. If the PCM was substituted, **replace the original PCM** See **PCM REMOVAL AND INSTALLATION** or **PCM UPDATE** . If any other Pending or Confirmed DTCs are

GETtheMANUALS.org

indicated, go to the indicated DTC's troubleshooting.

FAILED : Go to step 1 and recheck. If the PCM was updated, **substitute a known-good PCM** See **PCM UPDATE** or **PCM REMOVAL AND INSTALLATION** , then check the OBD STATUS again.

NOT COMPLETED : Meet the test condition, and check the OBD STATUS again.

DTC P0171: FUEL SYSTEM TOO LEAN

GETtheMANUALS.org

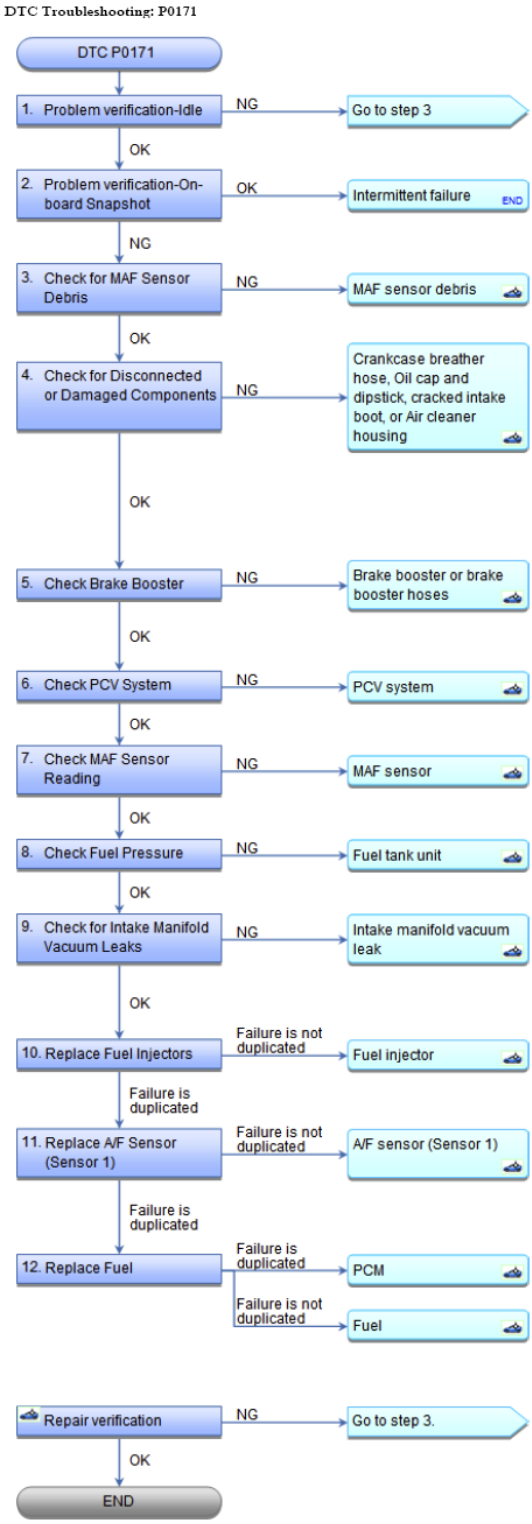

Fig. 79: DTC Troubleshooting Flow Chart (P0171)
Courtesy of AMERICAN HONDA MOTOR CO., INC.

NOTE:

- **Before you troubleshoot, record all freeze data and any on-board**

GETtheMANUALS.org

snapshot, and review the general troubleshooting information See HOW TO TROUBLESHOOT THE A/T SYSTEM or HOW TO TROUBLESHOOT THE FUEL AND EMISSIONS SYSTEMS .

- **Do not clear the DTC or reset the PCM before beginning this troubleshooting procedure until instructed to clear it. Clearing the DTC or resetting the PCM can delete valuable diagnostic information, even if the on-board snapshot and the freeze data is saved.**
- **Inspect for aftermarket fuel system and engine components before beginning troubleshooting.**
- **If any of the DTCs listed below are stored at the same time as DTC P0171, troubleshoot those DTCs first, then recheck for P0171.**

P0101, P0102, P0103: MAF sensor

P0106, P0107, P0108: MAP sensor

P0133, P1172, P1157, P2238, P2252, P2A00: A/F sensor (Sensor 1)

P0134, P0135: A/F sensor (Sensor 1) heater

P0137, P0138, P0139, P2270: Secondary HO2S (Sensor 2)

P0201, P0202, P0203, P0204: Fuel injector

P0141: Secondary HO2S (Sensor 2) heater

P0443, P0496: EVAP canister purge valve

P2646, P2647, P2648, P2649: VTEC system

DTC Description	Confirmed DTC	Pending DTC	Freeze Frame
P0171 FUEL SYSTEM TOO LEAN			

1. Problem verification-Idle:
   - 1. Start the engine, and let it idle without load (in P or N).
   - 2. Check the parameter(s) below with the HDS.

Signal	Threshold		Current conditions	
	Values	Unit	Values	Unit
AF FB (ST FUEL TRIM)	More than 1.33			

Do the current condition(s) match the threshold?

YES : The AF FB (ST FUEL TRIM) is too high at idle. Go to step 3.

GETtheMANUALS.org

NO : The AF FB (ST FUEL TRIM) is OK at idle. Go to step 2.

2. Problem verification-On-board Snapshot:
   - 1. Review the on-board snapshot and record the value of the parameters below when AF FB (ST FUEL TRIM) was at its highest point.

ENGINE SPEED	
VEHICLE SPEED	
REL TP SENSOR	
APP SENSOR	

   - 2. Drive the vehicle according to the conditions determined above.

Signal	Current conditions	
	Values	Unit
ENGINE SPEED		
VEHICLE SPEED		
REL TP SENSOR		
APP SENSOR		

   - 3. Check the parameter(s) below with the HDS while driving.

Signal	Threshold		Current conditions	
	Values	Unit	Values	Unit
AF FB (ST FUEL TRIM)	More than 1.33			

Do the current condition(s) match the threshold under the on-board snapshot conditions?

YES : AF FB (ST FUEL TRIM) is too high under the conditions above. Go to step 3.

NO : AF FB (ST FUEL TRIM) is OK under the same conditions as the on-board snapshot. The system is normal at this time.

3. Check for MAF Sensor Debris:
   - 1. **REMOVE THE MAF SENSOR/IAT SENSOR** .
   - 2. Check for lint, bugs, and other foreign objects in the sensor.

Is there debris in the MAF sensor?

YES : Remove the debris from the MAF sensor and then use a vacuum cleaner to remove any debris from the air cleaner housing, then **do the repair verification** .

NO : Reinstall the MAF sensor/IAT sensor. Go to step 4.

GETtheMANUALS.org

4. Check for Disconnected or Damaged Components:
    - 1. Visually inspect each of the components below for disconnected hoses, cracks, or damage:
        - Crankcase breather hose (A)
        - Air cleaner housing (B)
        - Oil cap (C) and dipstick (D)

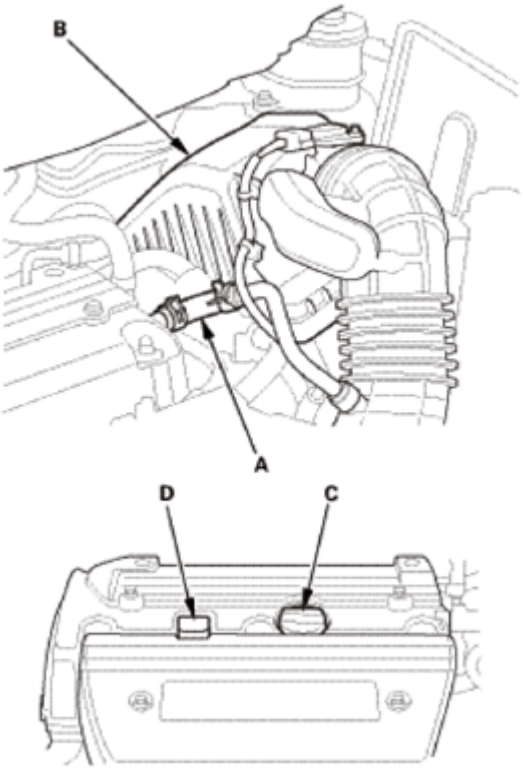

Fig. 80: Identifying Breather Hose, Air Cleaner Housing, Oil Cap And Dipstick
Courtesy of AMERICAN HONDA MOTOR CO., INC.

Are any components disconnected or damaged?

YES : Repair as necessary, then **do the repair verification** .

NO : Go to step 5.

5. Check Brake Booster:
    - 1. Continue to let the engine idle.
    - 2. Pinch the brake booster vacuum hose (A) connecting to the intake manifold.

GETtheMANUALS.org

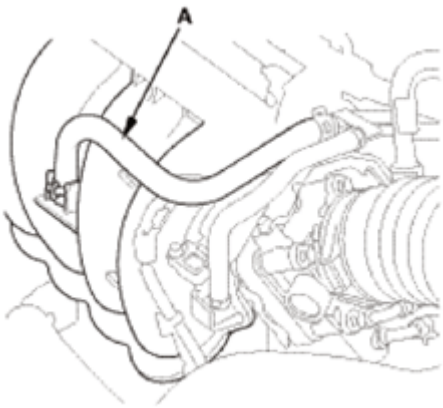

Fig. 81: Identifying Brake Booster Vacuum Hose
Courtesy of AMERICAN HONDA MOTOR CO., INC.

- 3. Check the parameter(s) below with the HDS with the vacuum hose pinched.

Signal	Threshold		Current conditions	
	Values	Unit	Values	Unit
AF FB (ST FUEL TRIM)	More than 1.33			

Do the current condition(s) match the threshold?

YES : The brake booster is not leaking. Go to step 6.

NO : There is a leak in the brake booster or hoses. Check the brake booster vacuum hoses for leaks. If no leaks are found, replace the brake booster, then **do the repair verification** .

6. Check PCV System:
   - 1. Continue to let the engine idle.
   - 2. Pinch the PCV vacuum hose (A).

GETtheMANUALS.org

Fig. 82: Identifying PCV Vacuum Hose
Courtesy of AMERICAN HONDA MOTOR CO., INC.

- 3. Check the parameter(s) below with the HDS with the vacuum hose pinched.

Signal	Threshold		Current conditions	
	Values	Unit	Values	Unit
AF FB (ST FUEL TRIM)	More than 1.33			

Do the current condition(s) match the threshold?

YES : The PCV system is not leaking. Go to step 7.

NO : There is a leak in the PCV system. Check the vacuum hoses for leaks and repair as needed, then **do the repair verification** .

7. Check MAF Sensor Reading:
   - 1. Start the engine and hold the engine speed at 3, 000 rpm until the radiator fan comes on.
   - 2. Make sure the following conditions are met:
     - ECT Sensor 1 above 158 °F (70 °C)
     - Transmission in P or N
     - All engine and electrical loads turned off

Signal	Current conditions	

GETtheMANUALS.org

	Values	Unit
ECT SENSOR 1		

- 3. Monitor the ENGINE SPEED in the DATA LIST with the HDS, then hold the engine speed at 2, 500 rpm with the accelerator pedal held steady.

Signal	Current conditions	
	Values	Unit
ENGINE SPEED		

- 4. Check the parameter(s) below with the HDS at 2, 500 rpm.

Signal	Threshold		Current conditions	
	Values	Unit	Values	Unit
MAF SENSOR	7.0-8.6	g/s		

Do the current condition(s) match the threshold?

YES : The MAF sensor is OK. Go to step 8.

NO : The MAF sensor is reading incorrectly. Inspect for a cracked, damaged, or incorrectly installed air cleaner assembly. If OK, **REPLACE THE MAF SENSOR/IAT SENSOR** , then **do the repair verification** .

8. Check Fuel Pressure:
   - 1. Check the fuel pressure under the conditions when AF FB (ST FUEL TRIM) is 1.33 or more.

Signal	Current conditions	
	Values	Unit
AF FB (ST FUEL TRIM)		

Is the fuel pressure between 330-380 kPa (3.4-3.9 kgf/cm^2 , 48-55 psi)?

YES : The fuel pressure is OK. Go to step 9.

NO : **Replace the fuel tank unit** See FUEL TANK UNIT DISASSEMBLY AND REASSEMBLY or FUEL TANK UNIT REMOVAL AND INSTALLATION , then **do the repair verification** .

9. Check for Intake Manifold Vacuum Leaks:
   - 1. Disconnect the intake air duct from the air cleaner housing.
   - 2. Connect a large intake manifold adaptor cone into the intake air duct from the OTC LeakMaster evaporative emissions system tester kit.
   - 3. Use the OTC LeakMaster evaporative emissions system tester to direct smoke into the intake manifold.

GETtheMANUALS.org

- 4. Inspect each of the areas below for signs of leaks:
  - Intake manifold and gaskets
  - Throttle body and gasket
  - Air intake ducting
  - All vacuum and air hoses

Are there any leaks?

YES : Repair the vacuum leak, then **do the repair verification** .

NO : Reconnect any disconnected components, then go to step 10.

10. Replace Fuel Injectors:
    - 1. REPLACE THE FUEL INJECTORS WITH KNOWN-GOOD INJECTORS .
    - 2. Operate the vehicle under the same conditions where AF FB (ST FUEL TRIM) was 1.33 or more.

ENGINE SPEED	
VEHICLE SPEED	
REL TP SENSOR	
APP SENSOR	

Signal	Current conditions	
	Values	Unit
ENGINE SPEED		
VEHICLE SPEED		
REL TP SENSOR		
APP SENSOR		

- 3. Check the parameter(s) below with the HDS while driving.

Signal	Threshold		Current conditions	
	Values	Unit	Values	Unit
AF FB (ST FUEL TRIM)	More than 1.33			

Do the current condition(s) match the threshold under the on-board snapshot conditions?

YES : The fuel injectors are not the cause of the high AF FB (ST FUEL TRIM) value. Go to step 11.

NO : The fuel injectors were causing the high AF FB (ST FUEL TRIM) value. REPLACE THE ORIGINAL INJECTORS , then **do the repair verification** .

11. Replace A/F Sensor (Sensor 1)

GETtheMANUALS.org

- 1. **REPLACE THE A/F SENSOR (SENSOR 1) WITH A KNOWN-GOOD SENSOR** .
- 2. Operate the vehicle under the same conditions where AF FB (ST FUEL TRIM) was 1.33 or more.

ENGINE SPEED	
VEHICLE SPEED	
REL TP SENSOR	
APP SENSOR	

Signal	Current conditions	
	Values	Unit
ENGINE SPEED		
VEHICLE SPEED		
REL TP SENSOR		
APP SENSOR		

- 3. Check the parameter(s) below with the HDS while driving.

Signal	Threshold		Current conditions	
	Values	Unit	Values	Unit
AF FB (ST FUEL TRIM)	More than 1.33			

Do the current condition(s) match the threshold under the on-board snapshot conditions?

YES : The A/F sensor (Sensor 1) is not the cause of the high AF FB (ST FUEL TRIM) value. Go to step 12.

NO : The A/F sensor (Sensor 1) was causing the high AF FB (ST FUEL TRIM) value. **REPLACE THE ORIGINAL A/F SENSOR (SENSOR 1)** , then **do the repair verification** .

12. Replace Fuel:

NOTE: **There is an increased likelihood of a fuel related issue if the misfire appeared shortly after refueling. The MIL DIST (MIL Distance) value in the DATA LIST in combination with the fuel level may help you make this determination.**

- 1. Remove the fuel tank unit and then drain and refill the fuel tank with known-good fuel.
- 2. Operate the vehicle under the same conditions where AF FB (ST FUEL TRIM) was 1.33 or more.

ENGINE SPEED	
VEHICLE SPEED	

GETtheMANUALS.org

REL TP SENSOR	
APP SENSOR	

Signal	Current conditions	
	Values	Unit
ENGINE SPEED		
VEHICLE SPEED		
REL TP SENSOR		
APP SENSOR		

- 3. Check the parameter(s) below with the HDS while driving.

Signal	Threshold		Current conditions	
	Values	Unit	Values	Unit
AF FB (ST FUEL TRIM)	More than 1.33			

Do the current condition(s) match the threshold under the on-board snapshot conditions?

YES : The fuel is not the cause of the high AF FB (ST FUEL TRIM) value. **Substitute a known-good PCM** See **PCM REMOVAL AND INSTALLATION** or **PCM UPDATE** , then **do the repair verification** .

NO : The fuel was causing the high AF FB (ST FUEL TRIM) value. **do the repair verification** .

REPAIR VERIFICAITON

- 1. Turn the ignition switch to ON (II).
- 2. **Reset the PCM with the HDS** See **HOW TO TROUBLESHOOT THE A/T SYSTEM** or **HOW TO TROUBLESHOOT THE FUEL AND EMISSIONS SYSTEMS** .
- 3. **DO THE PCM IDLE LEARN PROCEDURE** .
- 4. Start the engine. Hold the engine speed at 3, 000 rpm without load (in P or N) until the radiator fan comes on, then let it idle.
- 5. Operate the vehicle under the same conditions where AF FB (ST FUEL TRIM) was 1.33 or more.

ENGINE SPEED	
VEHICLE SPEED	
REL TP SENSOR	
APP SENSOR	

Signal	Current conditions	
	Values	Unit
ENGINE SPEED		
VEHICLE SPEED		

GETtheMANUALS.org

REL TP SENSOR		
APP SENSOR		

- 6. Check the parameter(s) below with the HDS while driving.

Signal	Threshold		Current conditions	
	Values	Unit	Values	Unit
AF FB (ST FUEL TRIM)	More than 1.33			

Do the current condition(s) match the threshold under the on-board snapshot conditions?

YES : AF FB (ST FUEL TRIM) is too high. Go to step 3.

NO : AF FB (ST FUEL TRIM) is OK. Troubleshooting is complete.

DTC P0172: FUEL SYSTEM TOO RICH

GETtheMANUALS.org

DTC Troubleshooting: P0172

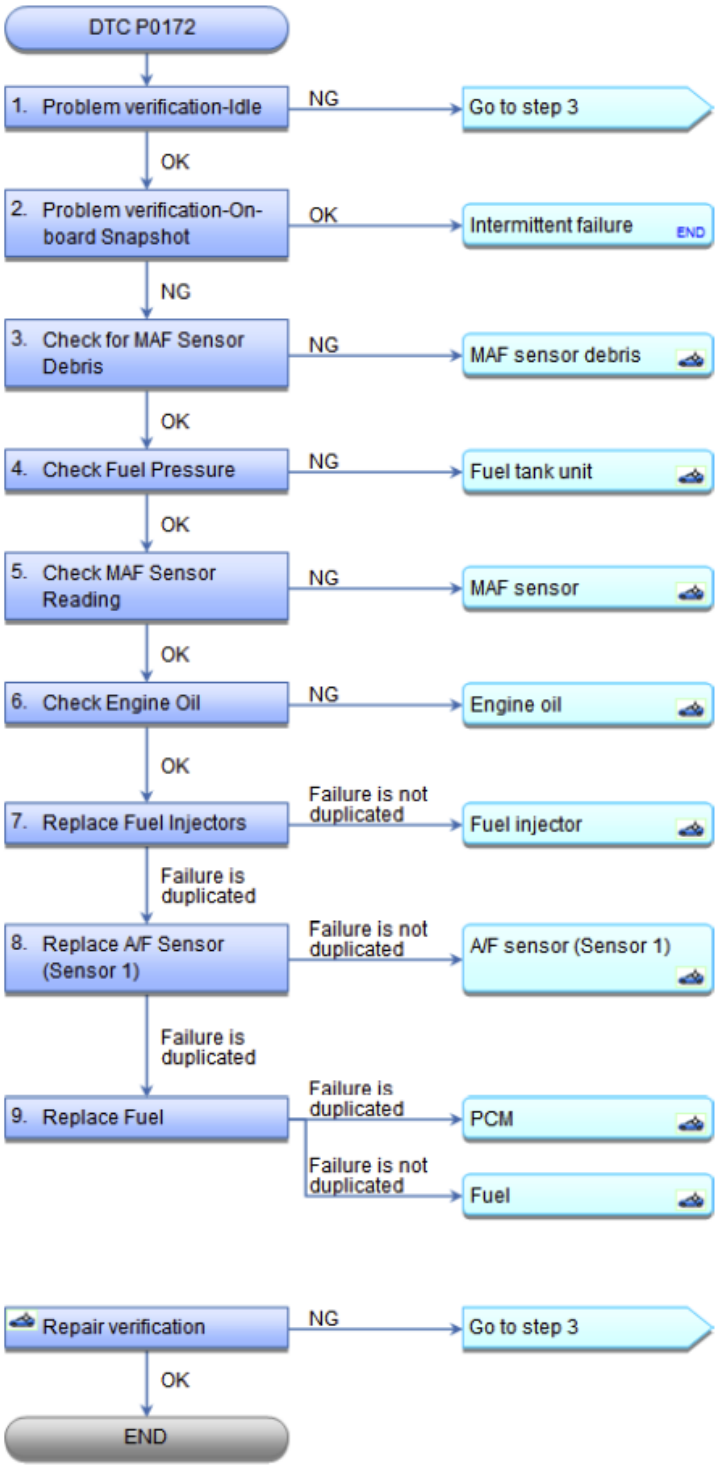

Fig. 83: DTC Troubleshooting Flow Chart (P0172)
Courtesy of AMERICAN HONDA MOTOR CO., INC.

NOTE:

- **Before you troubleshoot, record all freeze data and any on-board**

GETtheMANUALS.org

snapshot, and review the general troubleshooting information See HOW TO TROUBLESHOOT THE A/T SYSTEM or HOW TO TROUBLESHOOT THE FUEL AND EMISSIONS SYSTEMS .

- **Do not clear the DTC or reset the PCM before beginning this troubleshooting procedure until instructed to clear it. Clearing the DTC or resetting the PCM can delete valuable diagnostic information, even if the on-board snapshot and the freeze data is saved.**
- **Inspect for aftermarket fuel system and engine components before beginning troubleshooting.**
- **If any of the DTCs listed below are stored at the same time as P0172, troubleshoot those DTCs first, then recheck for P0172.**

P0101, P0102, P0103: MAF sensor

P0106, P0107, P0108: MAP sensor

P0133, P1172, P1157, P2238, P2252, P2A00: A/F sensor (Sensor 1)

P0134, P0135: A/F sensor (Sensor 1) heater

P0137, P0138, P0139, P2270: Secondary HO2S (Sensor 2)

P0141: Secondary HO2S (Sensor 2) heater

P0443, P0496: EVAP canister purge valve

P2646, P2647, P2648, P2649: VTEC system

DTC Description	Confirmed DTC	Pending DTC	Freeze Frame
P0172 FUEL SYSTEM TOO RICH B1			

1. Problem verification-Idle:
   - 1. Start the engine, and let it idle without load (in P or N).
   - 2. Check the parameter(s) below with the HDS.

Signal	Threshold		Current conditions	
	Values	Unit	Values	Unit
AF FB (ST FUEL TRIM)	Less than 0.79			

Do the current condition(s) match the threshold?

YES : The AF FB (ST FUEL TRIM) is too low at idle. Go to step 3.

NO : The AF FB (ST FUEL TRIM) is OK at idle. Go to step 2.

GETtheMANUALS.org

2. Problem verification-On-board Snapshot:
   - 1. Review the on-board snapshot and record the value of the parameters below when AF FB (ST FUEL TRIM) was at its lowest point.

ENGINE SPEED	
VEHICLE SPEED	
REL TP SENSOR	
APP SENSOR	

   - 2. Drive the vehicle according to the conditions determined above.

Signal	Current conditions	
	Values	Unit
ENGINE SPEED		
VEHICLE SPEED		
REL TP SENSOR		
APP SENSOR		

   - 3. Check the parameter(s) below with the HDS while driving.

Signal	Threshold		Current conditions	
	Values	Unit	Values	Unit
AF FB (ST FUEL TRIM)	Less than 0.79			

Do the current condition(s) match the threshold under the on-board snapshot conditions?

YES : AF FB (ST FUEL TRIM) is too low under the conditions above. Go to step 3.

NO : AF FB (ST FUEL TRIM) is OK under the same conditions as the on-board snapshot. The system is normal at this time.

3. Check for MAF Sensor Debris:
   - 1. **REMOVE THE MAF SENSOR/IAT SENSOR** .
   - 2. Check for lint, bugs, and other foreign objects in the sensor.

Is there debris in the MAF sensor?

YES : Remove the debris from the MAF sensor and then use a vacuum cleaner to remove any debris from the air cleaner housing, then **do the repair verification** .

NO : Reinstall the MAF sensor/IAT sensor. Go to step 4.

4. Check Fuel Pressure:

GETtheMANUALS.org

- 1. Check the fuel pressure under the conditions when AF FB (ST FUEL TRIM) is 0.79 or less.

Signal	Current conditions	
	Values	Unit
AF FB (ST FUEL TRIM)		

Is the fuel pressure between 330-380 kPa (3.4-3.9 kgf/cm^2 , 48-55 psi)?

YES : The fuel pressure is OK. Go to step 5.

NO : **Replace the fuel tank unit** See FUEL TANK UNIT REMOVAL AND INSTALLATION or FUEL TANK UNIT DISASSEMBLY AND REASSEMBLY , then **do the repair verification** .

5. Check MAF Sensor Reading:
   - 1. Start the engine and hold the engine speed at 3, 000 rpm until the radiator fan comes on.
   - 2. Make sure the following conditions are met:
     - ECT Sensor 1 above 158 °F (70 °C)
     - Transmission in P or N
     - All engine and electrical loads turned off

Signal	Current conditions	
	Values	Unit
ECT SENSOR 1		

   - 3. Monitor the ENGINE SPEED in the DATA LIST with the HDS, then hold the engine speed at 2, 500 rpm with the accelerator pedal held steady.

Signal	Current conditions	
	Values	Unit
ENGINE SPEED		

   - 4. Check the parameter(s) below with the HDS at 2, 500 rpm.

Signal	Threshold		Current conditions	
	Values	Unit	Values	Unit
MAF SENSOR	7.0-8.6	g/s		

Do the current condition(s) match the threshold?

YES : The MAF sensor is OK. Go to step 6.

NO : The MAF sensor is reading incorrectly. Inspect for a cracked, damaged, or incorrectly installed air cleaner assembly. If OK, **REPLACE THE MAF SENSOR/IAT SENSOR** , then **do the repair**

GETtheMANUALS.org

verification .

6. Check Engine Oil:
    - 1. Start the engine, and let it idle.
    - 2. Gently pinch the PCV vacuum hose (A).

Fig. 84: Identifying PCV Vacuum Hose
Courtesy of AMERICAN HONDA MOTOR CO., INC.

- 3. Check the parameter(s) below with the HDS with the vacuum hose pinched.

Signal	Threshold		Current conditions	
	Values	Unit	Values	Unit
AF FB (ST FUEL TRIM)	Less than 0.79			

Do the current condition(s) match the threshold?

YES : The engine oil is OK. Go to step 7.

NO : The engine oil is contaminated. REPLACE THE ENGINE OIL AND OIL FILTER , then **do the repair verification** .

7. Replace Fuel Injectors:
    - 1. REPLACE THE FUEL INJECTORS WITH KNOWN-GOOD INJECTORS .
    - 2. Operate the vehicle under the same conditions where AF FB (ST FUEL TRIM) was 0.79 or less.

GETtheMANUALS.org

ENGINE SPEED	
VEHICLE SPEED	
REL TP SENSOR	
APP SENSOR	

Signal	Current conditions	
	Values	Unit
ENGINE SPEED		
VEHICLE SPEED		
REL TP SENSOR		
APP SENSOR		

- 3. Check the parameter(s) below with the HDS while driving.

Signal	Threshold		Current conditions	
	Values	Unit	Values	Unit
AF FB (ST FUEL TRIM)	Less than 0.79			

Do the current condition(s) match the threshold under the on-board snapshot conditions?

YES : The fuel injectors are not the cause of the low AF FB (ST FUEL TRIM) value. Go to step 8.

NO : The fuel injectors were causing the low AF FB (ST FUEL TRIM) value. REPLACE THE ORIGINAL INJECTORS , then **do the repair verification** .

8. Replace A/F Sensor (Sensor 1)
   - 1. **REPLACE THE A/F SENSOR (SENSOR 1) WITH A KNOWN-GOOD SENSOR** .
   - 2. Operate the vehicle under the same conditions where AF FB (ST FUEL TRIM) was 0.79 or less.

ENGINE SPEED	
VEHICLE SPEED	
REL TP SENSOR	
APP SENSOR	

Signal	Current conditions	
	Values	Unit
ENGINE SPEED		
VEHICLE SPEED		
REL TP SENSOR		
APP SENSOR		

- 3. Check the parameter(s) below with the HDS while driving.

GETtheMANUALS.org

Signal	Threshold		Current conditions	
	Values	Unit	Values	Unit
AF FB (ST FUEL TRIM)	Less than 0.79			

Do the current condition(s) match the threshold under the on-board snapshot conditions?

YES : The A/F sensor (Sensor 1) is not the cause of the low AF FB (ST FUEL TRIM) value. Go to step 9.

NO : The A/F sensor (Sensor 1) was causing the low AF FB (ST FUEL TRIM) value. **REPLACE THE ORIGINAL A/F SENSOR (SENSOR 1)** , then **do the repair verification** .

9. Replace Fuel:

NOTE: **There is an increased likelihood of a fuel related issue if the misfire appeared shortly after refueling. The MIL DIST (MIL Distance) value in the DATA LIST in combination with the fuel level may help you make this determination.**

- 1. Remove the fuel tank unit and then drain and refill the fuel tank with known-good fuel.
- 2. Operate the vehicle under the same conditions where AF FB (ST FUEL TRIM) was 0.79 or less.

ENGINE SPEED	
VEHICLE SPEED	
REL TP SENSOR	
APP SENSOR	

Signal	Current conditions	
	Values	Unit
ENGINE SPEED		
VEHICLE SPEED		
REL TP SENSOR		
APP SENSOR		

- 3. Check the parameter(s) below with the HDS while driving.

Signal	Threshold		Current conditions	
	Values	Unit	Values	Unit
AF FB (ST FUEL TRIM)	Less than 0.79			

Do the current condition(s) match the threshold under the on-board snapshot conditions?

YES : The fuel is not the cause of the low AF FB (ST FUEL TRIM) value. **Substitute a known-good PCM** See **PCM REMOVAL AND INSTALLATION** or **PCM UPDATE** , then **do the repair**

GETtheMANUALS.org

verification .

NO : The fuel was causing the low AF FB (ST FUEL TRIM) value. **Do the repair confirm procedure** See **HOW TO TROUBLESHOOT THE A/T SYSTEM** or **HOW TO TROUBLESHOOT THE FUEL AND EMISSIONS SYSTEMS** .

REPAIR VERIFICATION

- 1. Turn the ignition switch to ON (II).
- 2. **RESET THE PCM WITH THE HDS** .
- 3. **DO THE PCM IDLE LEARN PROCEDURE** .
- 4. Start the engine. Hold the engine speed at 3, 000 rpm without load (in P or N) until the radiator fan comes on, then let it idle.
- 5. Operate the vehicle under the same conditions where AF FB (ST FUEL TRIM) was 0.79 or less.

ENGINE SPEED	
VEHICLE SPEED	
REL TP SENSOR	
APP SENSOR	

Signal	Current conditions	
	Values	Unit
ENGINE SPEED		
VEHICLE SPEED		
REL TP SENSOR		
APP SENSOR		

- 6. Check the parameter(s) below with the HDS while driving.

Signal	Threshold		Current conditions	
	Values	Unit	Values	Unit
AF FB (ST FUEL TRIM)	Less than 0.79			

Do the current condition(s) match the threshold under the on-board snapshot conditions?

YES : AF FB (ST FUEL TRIM) is too low. Go to step 3.

NO : AF FB (ST FUEL TRIM) is OK. Troubleshooting is complete.

DTC P0201: NO. 1 CYLINDER INJECTOR CIRCUIT MALFUNCTION; DTC P0202: NO. 2 CYLINDER INJECTOR CIRCUIT MALFUNCTION; DTC P0203: NO. 3 CYLINDER INJECTOR CIRCUIT MALFUNCTION; DTC P0204: NO. 4 CYLINDER INJECTOR CIRCUIT MALFUNCTION

GETtheMANUALS.org

DTC Troubleshooting: P0201, P0202, P0203, P0204

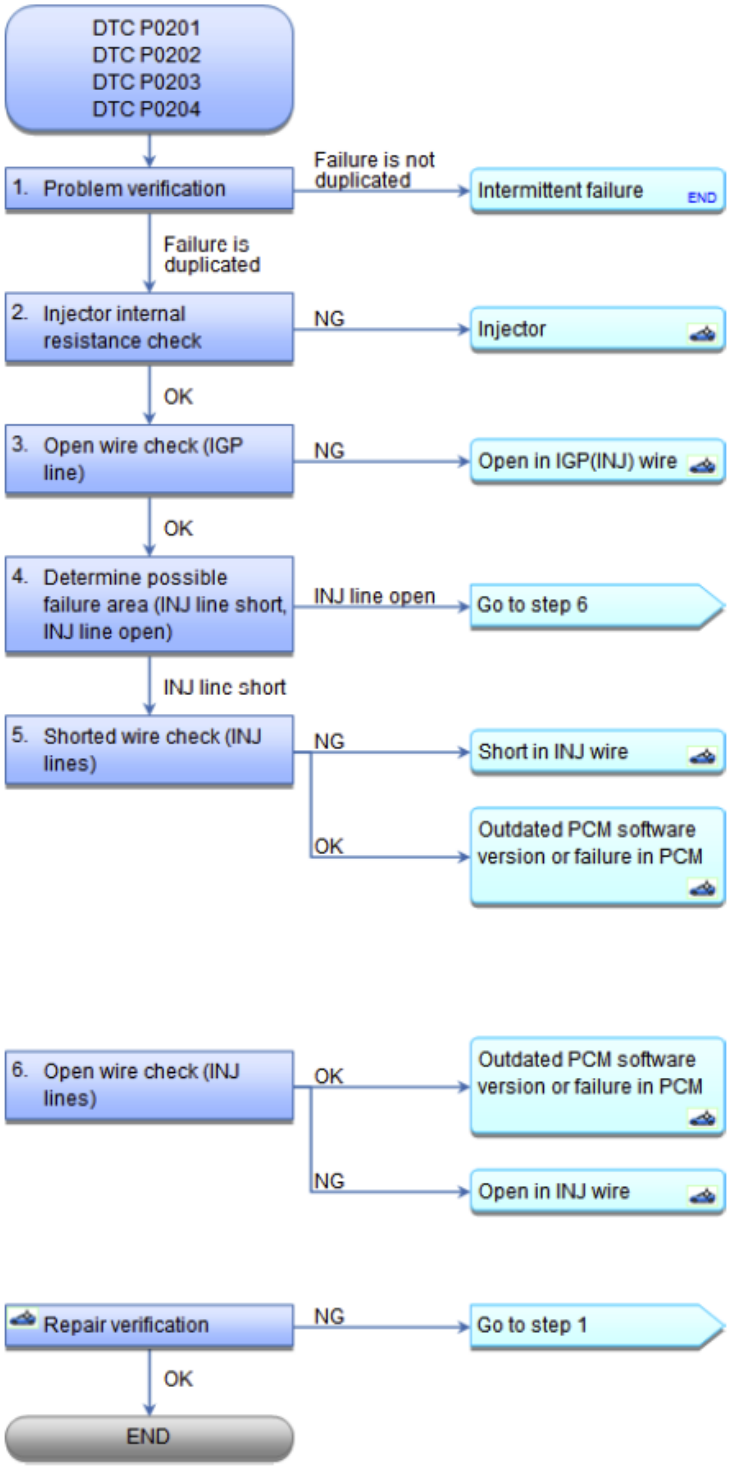

Fig. 85: DTC Troubleshooting Flow Chart (P0201, P0202, P0203, P0204)
Courtesy of AMERICAN HONDA MOTOR CO., INC.

NOTE: **Before you troubleshoot, record all freeze data and any on-board snapshot, and**

GETtheMANUALS.org

review the general troubleshooting information See HOW TO TROUBLESHOOT THE FUEL AND EMISSIONS SYSTEMS or HOW TO TROUBLESHOOT THE A/T SYSTEM .

DTC Description	Confirmed DTC	Pending DTC	Freeze Frame
P0201 No. 1 CYLINDER INJECTOR CIRCUIT MALFUNCTION			
P0202 No. 2 CYLINDER INJECTOR CIRCUIT MALFUNCTION			
P0203 No. 3 CYLINDER INJECTOR CIRCUIT MALFUNCTION			
P0204 No. 4 CYLINDER INJECTOR CIRCUIT MALFUNCTION			

1. Problem verification:
   - 1. Turn the ignition switch to ON (II).
   - 2. **Clear the DTC with the HDS** See **HOW TO TROUBLESHOOT THE FUEL AND EMISSIONS SYSTEMS** or **HOW TO TROUBLESHOOT THE A/T SYSTEM** .
   - 3. Start the engine, and let it idle for 20 seconds.
   - 4. Check for Pending or Confirmed DTCs with the HDS.

DTC Description	Confirmed DTC	Pending DTC	Freeze Frame
P0201 No. 1 CYLINDER INJECTOR CIRCUIT MALFUNCTION			
P0202 No. 2 CYLINDER INJECTOR CIRCUIT MALFUNCTION			
P0203 No. 3 CYLINDER INJECTOR CIRCUIT MALFUNCTION			
P0204 No. 4 CYLINDER INJECTOR CIRCUIT MALFUNCTION			

Is DTC P0201, P0202, P0203, or P0204 indicated?

YES : The failure is duplicated. Go to step 2.

NO : Intermittent failure, the system is OK at this time. Check for poor connections or loose terminals at the injectors and the PCM.

2. Injector internal resistance check:
   - 1. Turn the ignition switch to LOCK (0).
   - 2. Disconnect the following connector(s).

GETtheMANUALS.org

Injector 2P connector (problem cylinder)

- 3. At the injector side, measure the resistance between test points 1 and 2.

  Test condition IG LOCK (0)

  Injector 2P connector (problem cylinder): disconnected

  Test circuit IGP(INJ), INJ

  Test point 1 Injector 2P connector No. 1 (injector side)

  Test point 2 Injector 2P connector No. 2 (injector side)

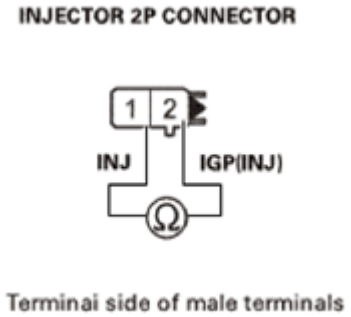

Fig. 86: Measuring Resistance Between Injector 2P Connector No. 1 And No. 2 (Injector Side)
Courtesy of AMERICAN HONDA MOTOR CO., INC.

Is there 10-13 ohms?

YES : The injector is OK. Go to step 3.

NO : REPLACE THE PROBLEM INJECTOR , then **do the repair verification** .

3. Open wire check (IGP line):
   - 1. Turn the ignition switch to ON (II).
   - 2. Measure the voltage between test points 1 and 2.

     Test condition IG ON (II)

     Injector 2P connector (problem cylinder): disconnected

     Test circuit IGP(INJ)

     Test point 1 Injector 2P connector No. 1 (YEL)

     Test point 2 Body ground

GETtheMANUALS.org

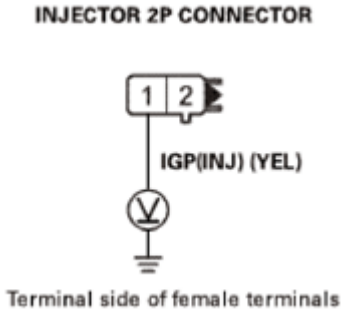

Fig. 87: Measuring Voltage Between Injector 2P Connector No. 1 (YEL) And Body Ground
Courtesy of AMERICAN HONDA MOTOR CO., INC.

Is there battery voltage?

YES : The IGP(INJ) wire is OK. Go to step 4.

NO : Repair an open in the IGP(INJ) wire between the injector and PGM-FI main relay 1, then **do the repair verification** .

4. Determine possible failure area (INJ line short, INJ line open):
   - 1. Turn the ignition switch to LOCK (0).
   - 2. Check for continuity between body ground and the appropriate injector connector terminal of the problem cylinder (see table).

     Test condition IG LOCK (0)

     Injector 2P connector (problem cylinder): disconnected

     Test circuit INJ

PROBLEM CYLINDER	DTC	WIRE COLOR
No. 1	P0201	PUR
No. 2	P0202	RED
No. 3	P0203	BLU
No. 4	P0204	TAN

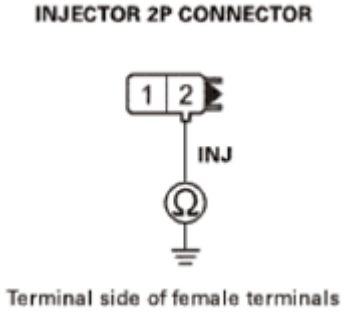

GETtheMANUALS.org

Fig. 88: Checking Continuity Between Body Ground And Injector 2P Connector Terminal
Courtesy of AMERICAN HONDA MOTOR CO., INC.

Is there continuity?

YES : Go to step 5.

NO : Go to step 6.

5. Shorted wire check (INJ lines):
   - 1. Jump the SCS line with the HDS.
   - 2. Disconnect the following connector.

     PCM connector C (49P)

   - 3. Check for continuity between body ground and the appropriate injector connector terminal of the problem cylinder (see table).

     Test condition IG LOCK (0)

     Injector 2P connector (problem cylinder): disconnected

     PCM connector C (49P): disconnected

     Test circuit INJ

PROBLEM CYLINDER	DTC	WIRE COLOR
No. 1	P0201	PUR
No. 2	P0202	RED
No. 3	P0203	BLU
No. 4	P0204	TAN

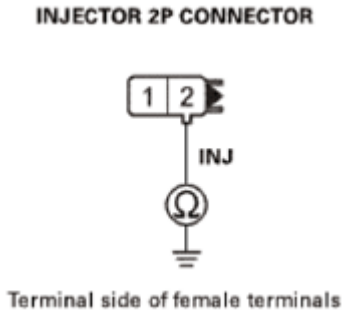

Fig. 89: Checking Continuity Between Body Ground And Injector 2P Connector Terminal
Courtesy of AMERICAN HONDA MOTOR CO., INC.

Is there continuity?

GETtheMANUALS.org

YES : Repair a short in the INJ wire between the PCM and the injector, then **do the repair verification** .

NO : The INJ wire is OK. **Update the PCM** See **PCM UPDATE** or **PCM REMOVAL AND INSTALLATION** if it does not have the latest software, or **substitute a known-good PCM** See **PCM UPDATE** or **PCM REMOVAL AND INSTALLATION** , then **do the repair verification** .

6. Open wire check (INJ lines):
   - 1. Jump the SCS line with the HDS.
   - 2. Disconnect the following connector.

     PCM connector C (49P)

   - 3. Check for continuity between the appropriate injector 2P connector terminal No. 1 and the PCM connector of problem cylinder (see table).

     Test condition IG LOCK (0)

     Injector 2P connector (problem cylinder): disconnected

     PCM connector C (49P): disconnected

     Test circuit INJ

PROBLEM CYLINDER	DTC	PCM TERMINAL	WIRE COLOR
No. 1	P0201	C5	PUR
No. 2	P0202	C6	RED
No. 3	P0203	C7	BLU
No. 4	P0204	C8	TAN

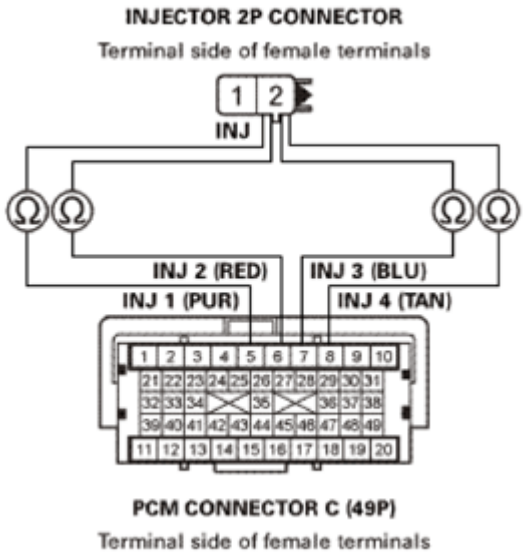

Fig. 90: Checking Continuity Between Body Ground And Injector 2P Connector Terminal

GETtheMANUALS.org

Courtesy of AMERICAN HONDA MOTOR CO., INC.

Is there continuity?

YES : The INJ wire is OK. **Update the PCM** See **PCM REMOVAL AND INSTALLATION** or **PCM UPDATE** if it does not have the latest software, or **substitute a known-good PCM** See **PCM REMOVAL AND INSTALLATION** or **PCM UPDATE** , then **do the repair verification** .

NO : Repair an open in the INJ wire between the PCM and the injector, then **do the repair verification** .

REPAIR VERIFICATION

- 1. Turn the ignition switch to LOCK (0).
- 2. Reconnect all connectors.
- 3. Turn the ignition switch to ON (II).
- 4. **Reset the PCM with the HDS** See **HOW TO TROUBLESHOOT THE A/T SYSTEM** or **HOW TO TROUBLESHOOT THE FUEL AND EMISSIONS SYSTEMS** .
- 5. **DO THE PCM IDLE LEARN PROCEDURE** .
- 6. Check for Pending or Confirmed DTCs with the HDS.

DTC Description	Confirmed DTC	Pending DTC	Freeze Frame
P0201 No. 1 CYLINDER INJECTOR CIRCUIT MALFUNCTION			
P0202 No. 2 CYLINDER INJECTOR CIRCUIT MALFUNCTION			
P0203 No. 3 CYLINDER INJECTOR CIRCUIT MALFUNCTION			
P0204 No. 4 CYLINDER INJECTOR CIRCUIT MALFUNCTION			

Is DTC P0201, P0202, P0203, or P0204 indicated?

YES : Check for poor connections or loose terminals at the injector and the PCM. If the PCM was updated, **substitute a known-good PCM** See **PCM UPDATE** or **PCM REMOVAL AND INSTALLATION** , then recheck. If the PCM was substituted, go to step 1.

NO : Troubleshooting is complete. If the PCM was substituted, **replace the original PCM** See **PCM UPDATE** or **PCM REMOVAL AND INSTALLATION** . If any other Pending or Confirmed DTCs are indicated, go to the indicated DTC's troubleshooting.

DTC P0222: TP SENSOR B CIRCUIT LOW VOLTAGE

GETtheMANUALS.org

DTC Troubleshooting: P0222

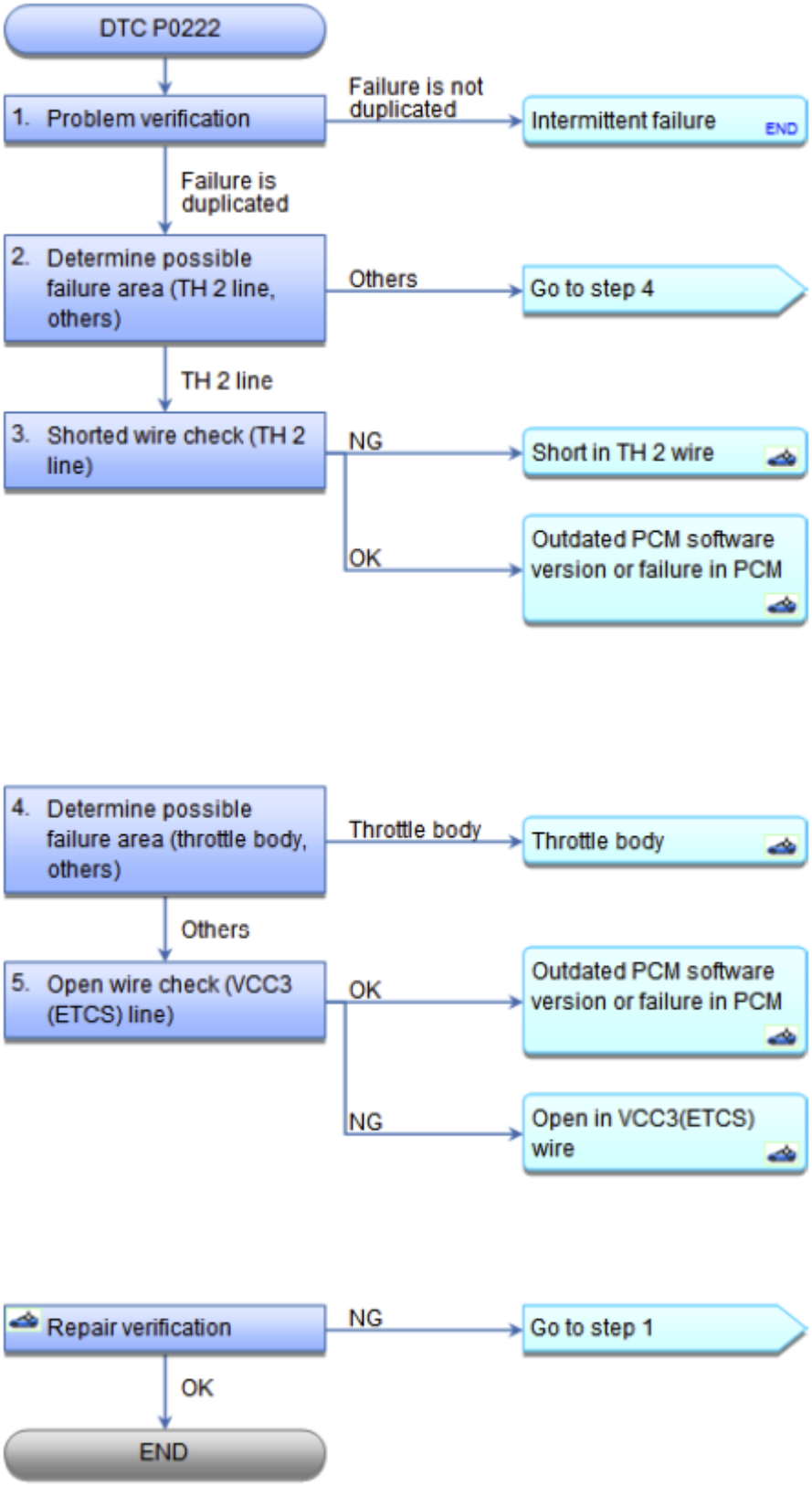

GETtheMANUALS.org

Fig. 91: DTC Troubleshooting Flow Chart (P0222)
Courtesy of AMERICAN HONDA MOTOR CO., INC.

NOTE: **Before you troubleshoot, record all freeze data and any on-board snapshot, and review the general troubleshooting information See HOW TO TROUBLESHOOT THE A/T SYSTEM or HOW TO TROUBLESHOOT THE FUEL AND EMISSIONS SYSTEMS .**

DTC Description	Confirmed DTC	Pending DTC	Freeze Frame
P0222 TP SENSOR B CIRCUIT LOW VOLTAGE			

1. Problem verification:
   - 1. Turn the ignition switch to ON (II).
   - 2. **Clear the DTC with the HDS** See **HOW TO TROUBLESHOOT THE A/T SYSTEM** or **HOW TO TROUBLESHOOT THE FUEL AND EMISSIONS SYSTEMS** .
   - 3. Check the parameter(s) below with the HDS.

Signal	Threshold		Current conditions	
	Values	Unit	Values	Unit
TP SENSOR B	Less than 0.3 V			

Do the current condition(s) match the threshold?

YES : The failure is duplicated. Go to step 2.

NO : Intermittent failure, the system is OK at this time. Check for poor connections or loose terminals at the throttle body and the PCM.

2. Determine possible failure area (TH 2 line, others):
   - 1. Check for Pending or Confirmed DTCs with the HDS.

DTC Description	Confirmed DTC	Pending DTC	Freeze Frame
P0122 TP SENSOR A CIRCUIT LOW VOLTAGE			
P0222 TP SENSOR B CIRCUIT LOW VOLTAGE			

Are DTC P0122 and P0222 indicated at the same time?

YES : Go to step 4.

NO : Go to step 3.

GETtheMANUALS.org

3. Shorted wire check (TH 2 line):
    - 1. Turn the ignition switch to LOCK (0).
    - 2. Jump the SCS line with the HDS.
    - 3. Disconnect the following connectors.

      PCM connector C (49P)

      Throttle body 6P connector

    - 4. Check for continuity between test points 1 and 2.

      Test condition IG LOCK (0)

      PCM connector C (49P): disconnected

      Throttle body 6P connector: disconnected

      Test circuit TH 2

      Test point 1 Throttle body 6P connector No. 4 (RED)

      Test point 2 Body ground

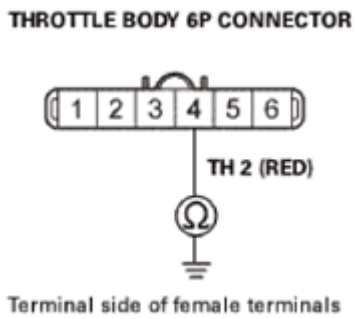

Fig. 92: Checking Continuity Between Throttle Body 6P Connector No. 4 (RED) And Body Ground
Courtesy of AMERICAN HONDA MOTOR CO., INC.

Is there continuity?

YES : Repair a short in the TH 2 wire between the PCM (C31) and the throttle body, then **do the repair verification** .

NO : The TH 2 wire is OK. **Update the PCM** See **PCM REMOVAL AND INSTALLATION** or **PCM UPDATE** if it does not have the latest software, or **substitute a known-good PCM** See **PCM REMOVAL AND INSTALLATION** or **PCM UPDATE** , then **do the repair verification** .

4. Determine possible failure area (throttle body, others):

GETtheMANUALS.org

- 1. Turn the ignition switch to LOCK (0).
- 2. Disconnect the following connector.

  Throttle body 6P connector

- 3. Turn the ignition switch to ON (II).
- 4. Measure the voltage between test points 1 and 2.

  Test condition IG ON (II)

  Throttle body 6P connector: disconnected

  Test circuit VCC3(ETCS)

  Test point 1 Throttle body 6P connector No. 5 (TAN)

  Test point 2 Body ground

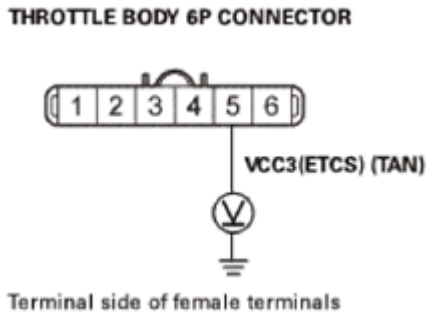

Fig. 93: Measuring Voltage Between Throttle Body 6P Connector No. 5 (TAN) And Body Ground
Courtesy of AMERICAN HONDA MOTOR CO., INC.

Is there about 5.0 V?

YES : **Replace the throttle body** See **THROTTLE BODY DISASSEMBLY AND REASSEMBLY** or **THROTTLE BODY REMOVAL AND INSTALLATION** or **THROTTLE BODY CLEANING** , then **do the repair verification** .

NO : Go to step 5.

5. Open wire check (VCC3(ETCS) line):
   - 1. Turn the ignition switch to LOCK (0).
   - 2. Jump the SCS line with the HDS.
   - 3. Disconnect the following connector.

     PCM connector C (49P)

GETtheMANUALS.org

- 4. Check for continuity between test points 1 and 2.

  Test condition IG LOCK (0)

  Throttle body 6P connector: disconnected

  PCM connector C (49P): disconnected

  Test circuit VCC3(ETCS)

  Test point 1 PCM connector C (49P) No. 22 (TAN)

  Test point 2 Throttle body 6P connector No. 5 (TAN)

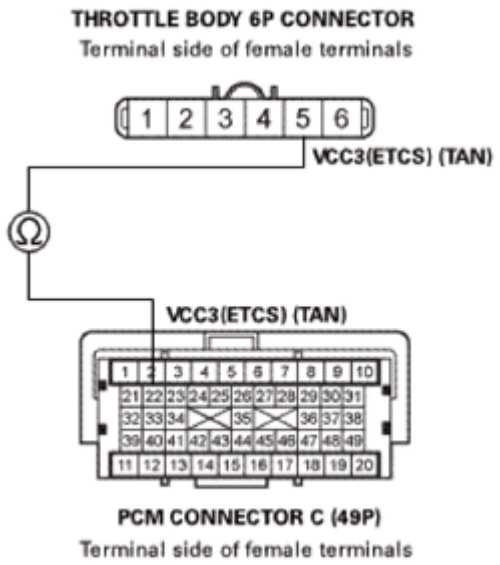

Fig. 94: Checking Continuity Between PCM Connector C (49P) No. 22 (TAN) And Throttle Body 6P Connector No. 5 (TAN)
Courtesy of AMERICAN HONDA MOTOR CO., INC.

Is there continuity?

YES : The VCC3 wire is OK. **Update the PCM** See **PCM REMOVAL AND INSTALLATION** or **PCM UPDATE** if it does not have the latest software, or **substitute a known-good PCM** See **PCM REMOVAL AND INSTALLATION** or **PCM UPDATE** , then **do the repair verification** .

NO : Repair an open in the VCC3(ETCS) wire between the PCM (C22) and the throttle body, then **do the repair verification** .

REPAIR VERIFICATION

- 1. Turn the ignition switch to LOCK (0).

GETtheMANUALS.org

- 2. Reconnect all connectors.
- 3. Turn the ignition switch to ON (II).
- 4. **Reset the PCM with the HDS** See **HOW TO TROUBLESHOOT THE FUEL AND EMISSIONS SYSTEMS** or **HOW TO TROUBLESHOOT THE A/T SYSTEM** .
- 5. **DO THE PCM IDLE LEARN PROCEDURE** .
- 6. Check for Pending or Confirmed DTCs with the HDS.

DTC Description	Confirmed DTC	Pending DTC	Freeze Frame
P0222 TP SENSOR B CIRCUIT LOW VOLTAGE			

Is DTC P0222 indicated?

YES : Check for poor connections or loose terminals at the throttle body and the PCM. If the PCM was updated, **substitute a known-good PCM** See **PCM REMOVAL AND INSTALLATION** or **PCM UPDATE** , then recheck. If the PCM was substituted, go to step 1.

NO : Troubleshooting is complete. If the PCM was substituted, **replace the original PCM** See **PCM REMOVAL AND INSTALLATION** or **PCM UPDATE** . If any other Pending or Confirmed DTCs are indicated, go to the indicated DTC's troubleshooting.

DTC P0223: TP SENSOR B CIRCUIT HIGH VOLTAGE

GETtheMANUALS.org

DTC Troubleshooting: P0223

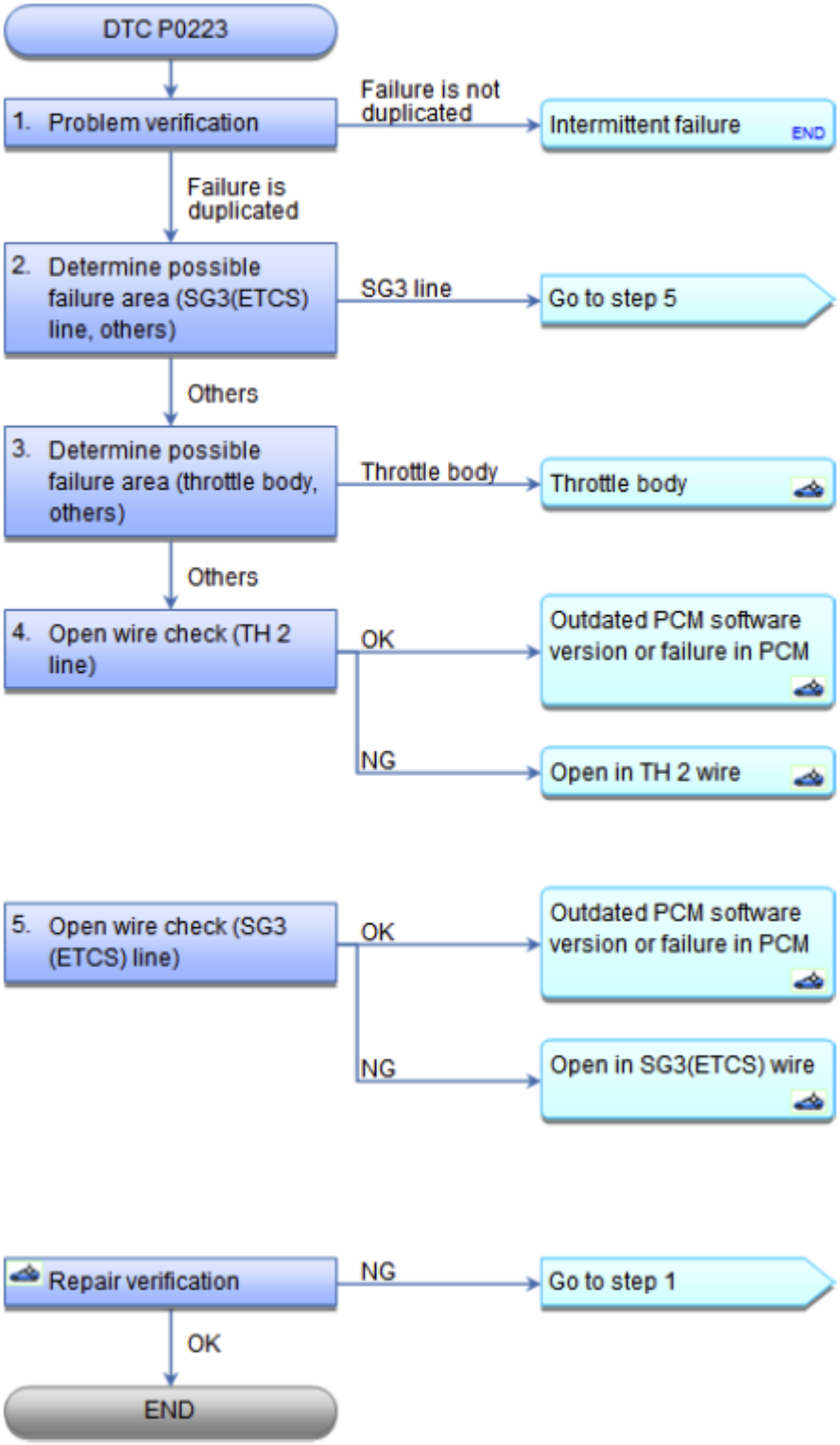

Fig. 95: DTC Troubleshooting Flow Chart (P0223)
Courtesy of AMERICAN HONDA MOTOR CO., INC.

GETtheMANUALS.org

NOTE: **Before you troubleshoot, record all freeze data and any on-board snapshot, and review the general troubleshooting information See HOW TO TROUBLESHOOT THE A/T SYSTEM or HOW TO TROUBLESHOOT THE FUEL AND EMISSIONS SYSTEMS .**

DTC Description	Confirmed DTC	Pending DTC	Freeze Frame
P0223 TP SENSOR B CIRCUIT HIGH VOLTAGE			

1. Problem verification:
   - 1. Turn the ignition switch to ON (II).
   - 2. **Clear the DTC with the HDS** See **HOW TO TROUBLESHOOT THE A/T SYSTEM** or **HOW TO TROUBLESHOOT THE FUEL AND EMISSIONS SYSTEMS** .
   - 3. Check the parameter(s) below with the HDS.

Signal	Threshold		Current conditions	
	Values	Unit	Values	Unit
TP SENSOR B	More than 4.8	V		

Do the current condition(s) match the threshold?

YES : The failure is duplicated. Go to step 2.

NO : Intermittent failure, the system is OK at this time. Check for poor connections or loose terminals at the throttle body and the PCM.

2. Determine possible failure area (SG3(ETCS) line, others):
   - 1. Check for Pending or Confirmed DTCs with the HDS.

DTC Description	Confirmed DTC	Pending DTC	Freeze Frame
P0123 TP SENSOR A CIRCUIT HIGH VOLTAGE			
P0223 TP SENSOR B CIRCUIT HIGH VOLTAGE			

Are DTC P0123 and P0223 indicated at the same time?

YES : Go to step 5.

NO : Go to step 3.

3. Determine possible failure area (throttle body, others):
   - 1. Turn the ignition switch to LOCK (0).
   - 2. Disconnect the following connector.

GETtheMANUALS.org

Throttle body 6P connector

- 3. Turn the ignition switch to ON (II).
- 4. Measure the voltage between test points 1 and 2.

Test condition IG ON (II)

Throttle body 6P connector: disconnected

Test circuit TH 2

Test point 1 Throttle body 6P connector No. 4 (RED)

Test point 2 Body ground

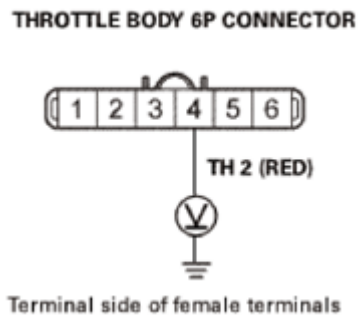

Fig. 96: Measuring Voltage Between Throttle Body 6P Connector No. 4 (RED) And Body Ground
Courtesy of AMERICAN HONDA MOTOR CO., INC.

Is there about 5.0 V?

YES : **Replace the throttle body** See **THROTTLE BODY REMOVAL AND INSTALLATION** , **THROTTLE BODY DISASSEMBLY AND REASSEMBLY** or **THROTTLE BODY CLEANING** , then **do the repair verification** .

NO : Go to step 4.

4. Open wire check (TH 2 line):
   - 1. Turn the ignition switch to LOCK (0).
   - 2. Jump the SCS line with the HDS.
   - 3. Disconnect the following connector.

     PCM connector C (49P)

   - 4. Check for continuity between test points 1 and 2.

     Test condition IG LOCK (0)

GETtheMANUALS.org

Throttle body 6P connector: disconnected

PCM connector C (49P): disconnected

Test circuit TH 2

Test point 1 PCM connector C (49P) No. 31 (RED)

Test point 2 Throttle body 6P connector No. 4 (RED)

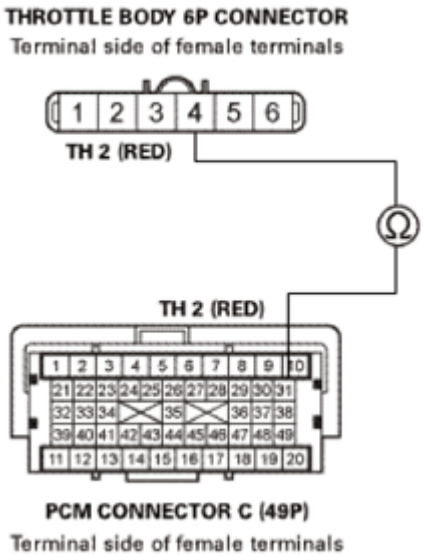

Fig. 97: Checking Continuity Between PCM Connector C (49P) No. 31 (RED) And Throttle Body 6P Connector No. 4 (RED)
Courtesy of AMERICAN HONDA MOTOR CO., INC.

Is there continuity?

YES : The TH 2 wire is OK. **Update the PCM** See **PCM REMOVAL AND INSTALLATION** or **PCM UPDATE** if it does not have the latest software, or **substitute a known-good PCM** See **PCM REMOVAL AND INSTALLATION** or **PCM UPDATE** , then **do the repair verification** .

NO : Repair an open in the TH 2 wire between the PCM (C31) and the throttle body, then **do the repair verification** .

5. Open wire check (SG3(ETCS) line):
   - 1. Turn the ignition switch to LOCK (0).
   - 2. Jump the SCS line with the HDS.
   - 3. Disconnect the following connectors.

     PCM connector C (49P)

GETtheMANUALS.org

Throttle body 6P connector

- 4. Check for continuity between test points 1 and 2.

  Test condition IG LOCK (0)

  PCM connector C (49P): disconnected

  Throttle body 6P connector: disconnected

  Test circuit SG3(ETCS)

  Test point 1 PCM connector C (49P) No. 14 (GRY)

  Test point 2 Throttle body 6P connector No. 3 (GRY)

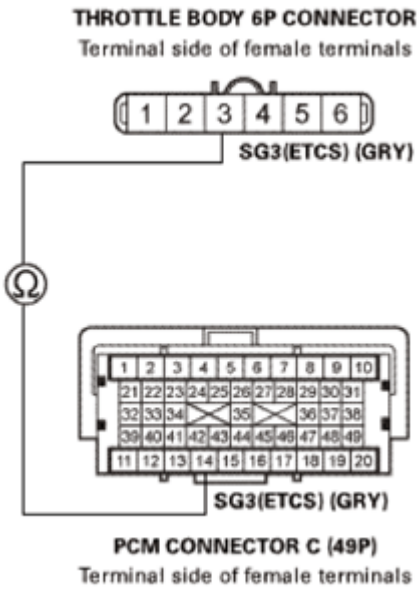

Fig. 98: Checking Continuity Between PCM Connector C (49P) No. 14 (GRY) And Throttle Body 6P Connector No. 3 (GRY)
Courtesy of AMERICAN HONDA MOTOR CO., INC.

Is there continuity?

YES : The SG3(ETCS) wire is OK. **Update the PCM** See **PCM UPDATE** or **PCM REMOVAL AND INSTALLATION** if it does not have the latest software, or **substitute a known-good PCM** See **PCM REMOVAL AND INSTALLATION** or **PCM UPDATE** , then **do the repair verification** .

NO : Repair an open in the SG3(ETCS) wire between the PCM (C14) and the throttle body, then **do the repair verification** .

REPAIR VERIFICATION

GETtheMANUALS.org

- 1. Turn the ignition switch to LOCK (0).
- 2. Reconnect all connectors.
- 3. Turn the ignition switch to ON (II).
- 4. **Reset the PCM with the HDS** See **HOW TO TROUBLESHOOT THE A/T SYSTEM** or **HOW TO TROUBLESHOOT THE FUEL AND EMISSIONS SYSTEMS** .
- 5. **DO THE PCM IDLE LEARN PROCEDURE** .
- 6. Check for Pending or Confirmed DTCs with the HDS.

DTC Description	Confirmed DTC	Pending DTC	Freeze Frame
P0223 TP SENSOR B CIRCUIT HIGH VOLTAGE			

Is DTC P0223 indicated?

YES : Check for poor connections or loose terminals at the throttle body and the PCM. If the PCM was updated, **substitute a known-good PCM** See **PCM UPDATE** or **PCM REMOVAL AND INSTALLATION** , then recheck. If the PCM was substituted, go to step 1.

NO : Troubleshooting is complete. If the PCM was substituted, **replace the original PCM** See **PCM REMOVAL AND INSTALLATION** or **PCM UPDATE** . If any other Pending or Confirmed DTCs are indicated, go to the indicated DTC's troubleshooting.

DTC P0300: RANDOM MISFIRE DETECTED; DTC P0301: NO. 1 CYLINDER MISFIRE DETECTED; DTC P0302: NO. 2 CYLINDER MISFIRE DETECTED; DTC P0303: NO. 3 CYLINDER MISFIRE DETECTED; DTC P0304: NO. 4 CYLINDER MISFIRE DETECTED

GETtheMANUALS.org

DTC Troubleshooting: P0300, P0301, P0302, P0303, P0304

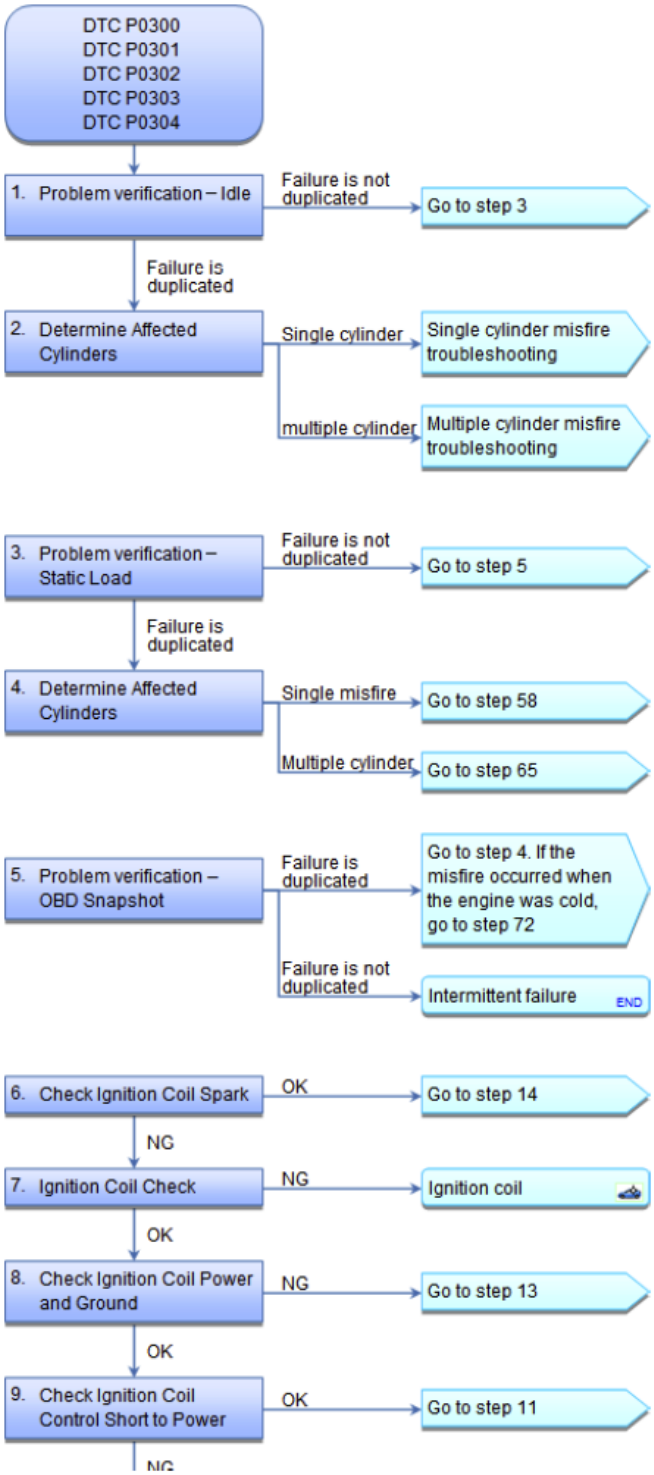

Fig. 99: DTC Troubleshooting Flow Chart - P0300, P0301, P0302, P0303, P0304 (1 Of 9)
Courtesy of AMERICAN HONDA MOTOR CO., INC.

GETtheMANUALS.org

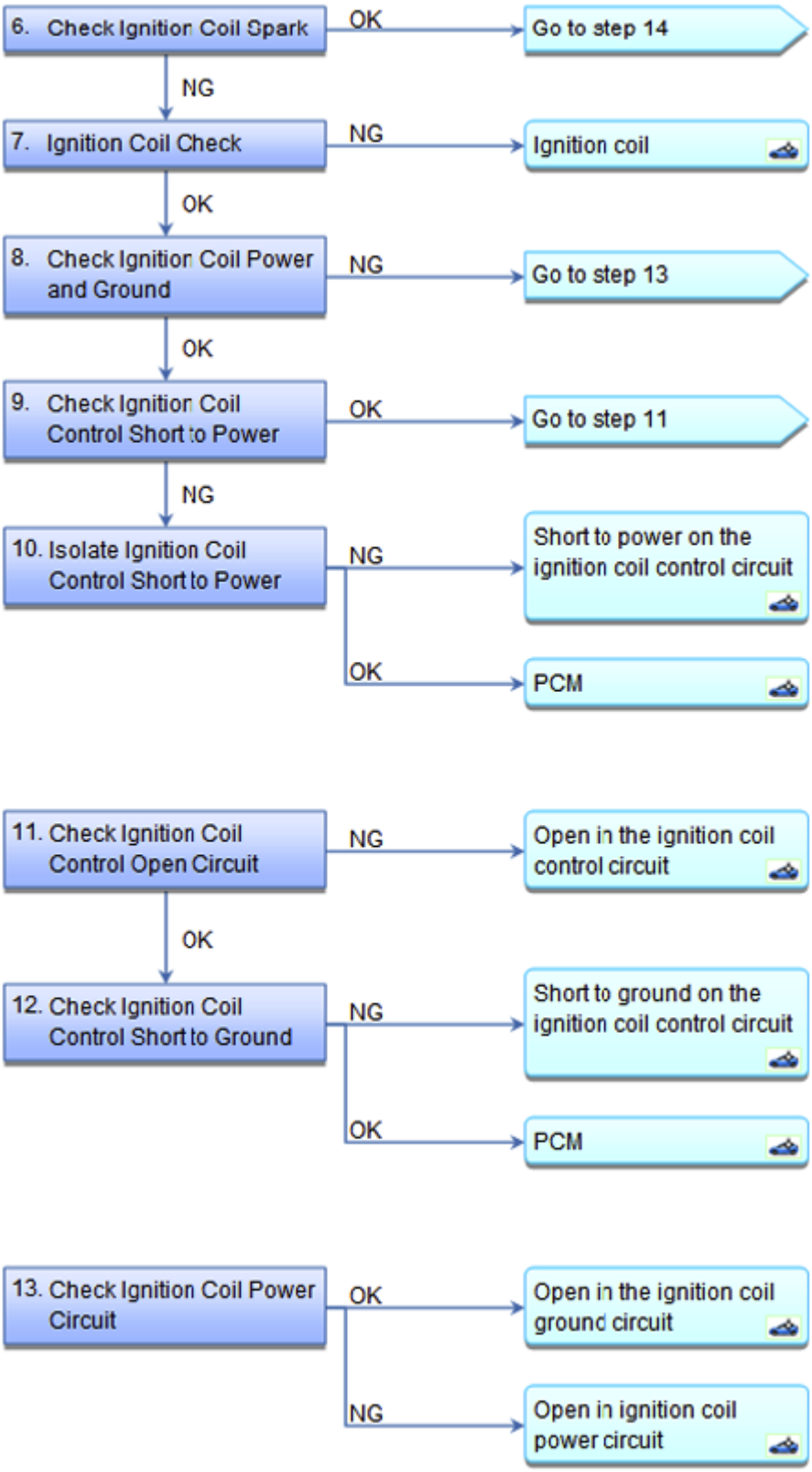

Fig. 100: DTC Troubleshooting Flow Chart - P0300, P0301, P0302, P0303, P0304 (2 Of 9)
Courtesy of AMERICAN HONDA MOTOR CO., INC.

GETtheMANUALS.org

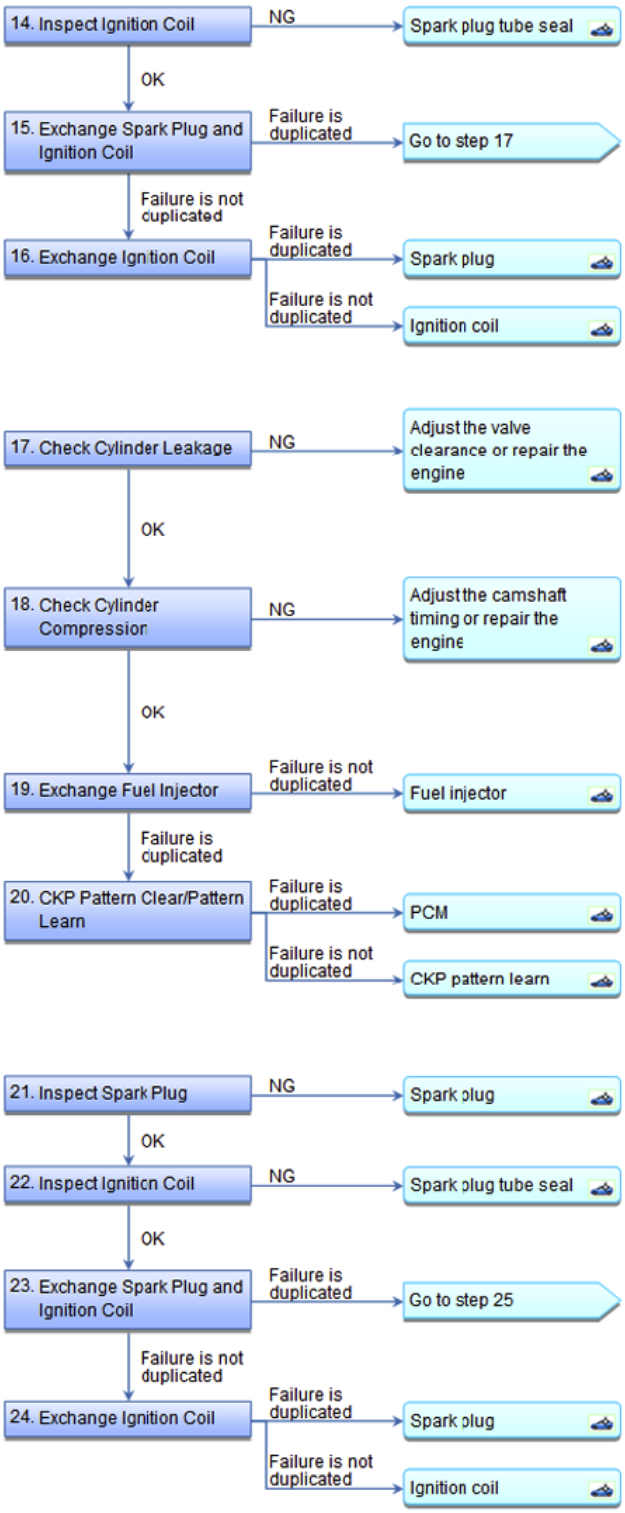

Fig. 101: DTC Troubleshooting Flow Chart - P0300, P0301, P0302, P0303, P0304 (3 Of 9)
Courtesy of AMERICAN HONDA MOTOR CO., INC.

GETtheMANUALS.org

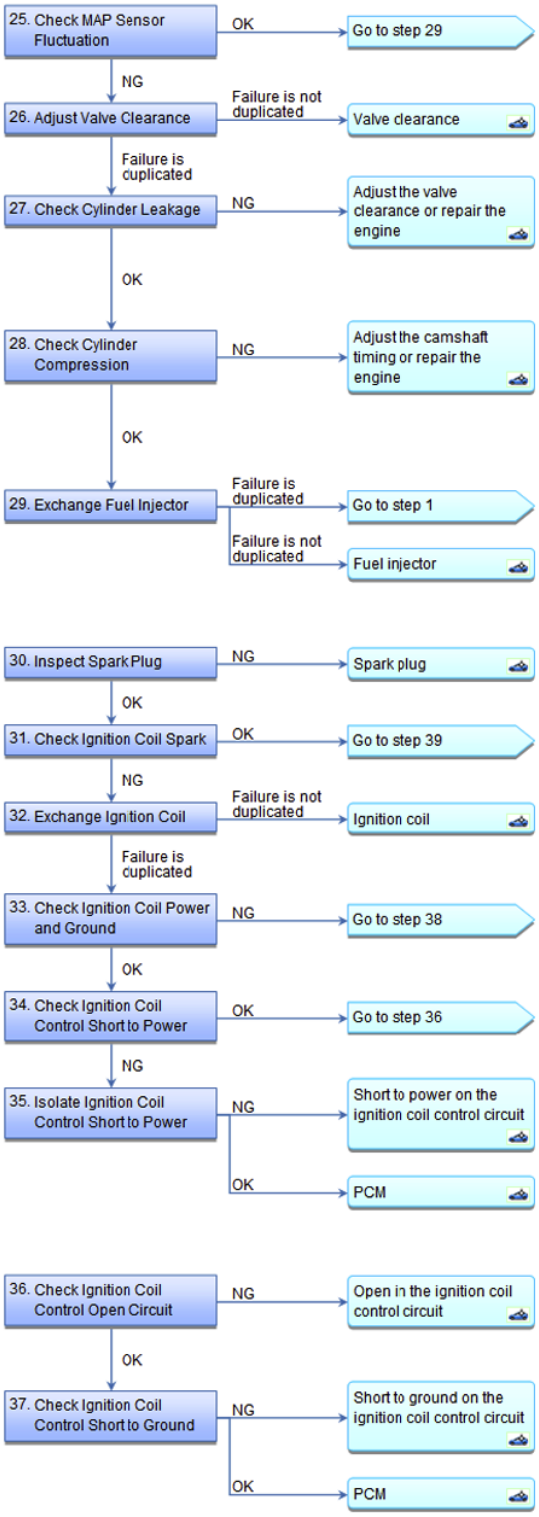

Fig. 102: DTC Troubleshooting Flow Chart - P0300, P0301, P0302, P0303, P0304 (4 Of 9)
Courtesy of AMERICAN HONDA MOTOR CO., INC.

GETtheMANUALS.org

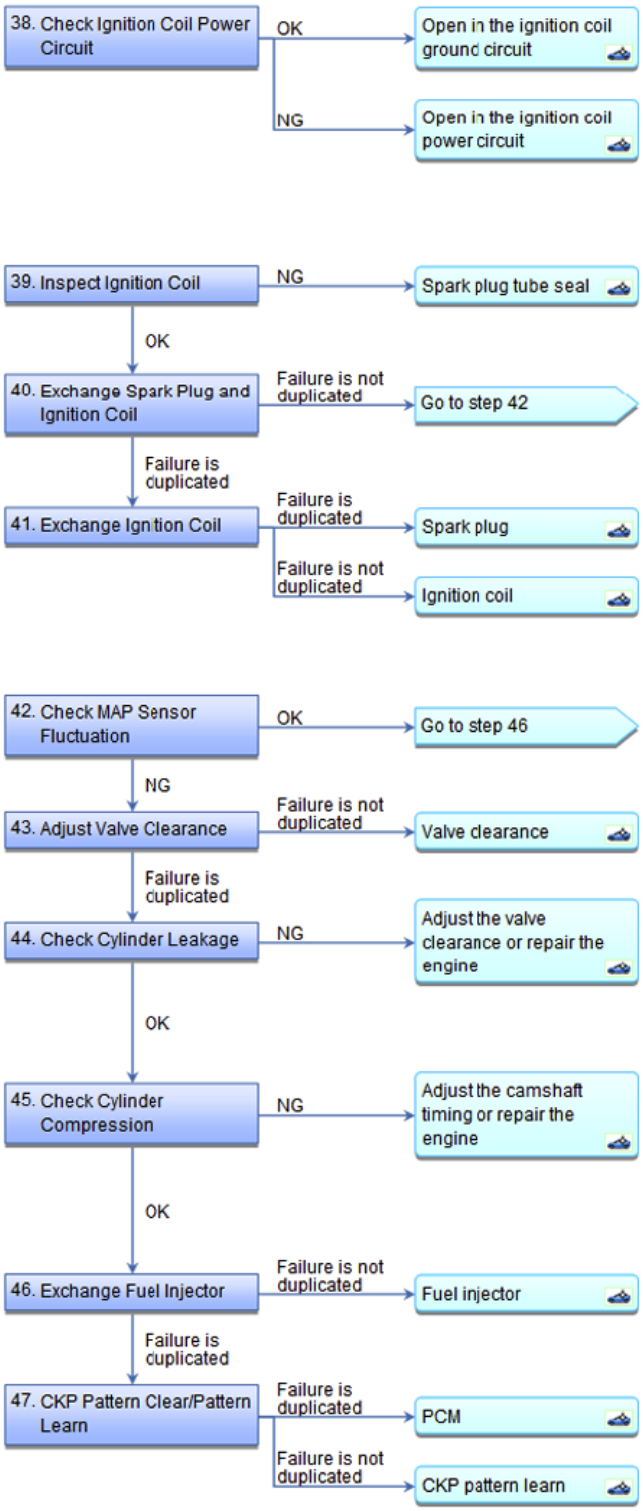

Fig. 103: DTC Troubleshooting Flow Chart - P0300, P0301, P0302, P0303, P0304 (5 Of 9)
Courtesy of AMERICAN HONDA MOTOR CO., INC.

GETtheMANUALS.org

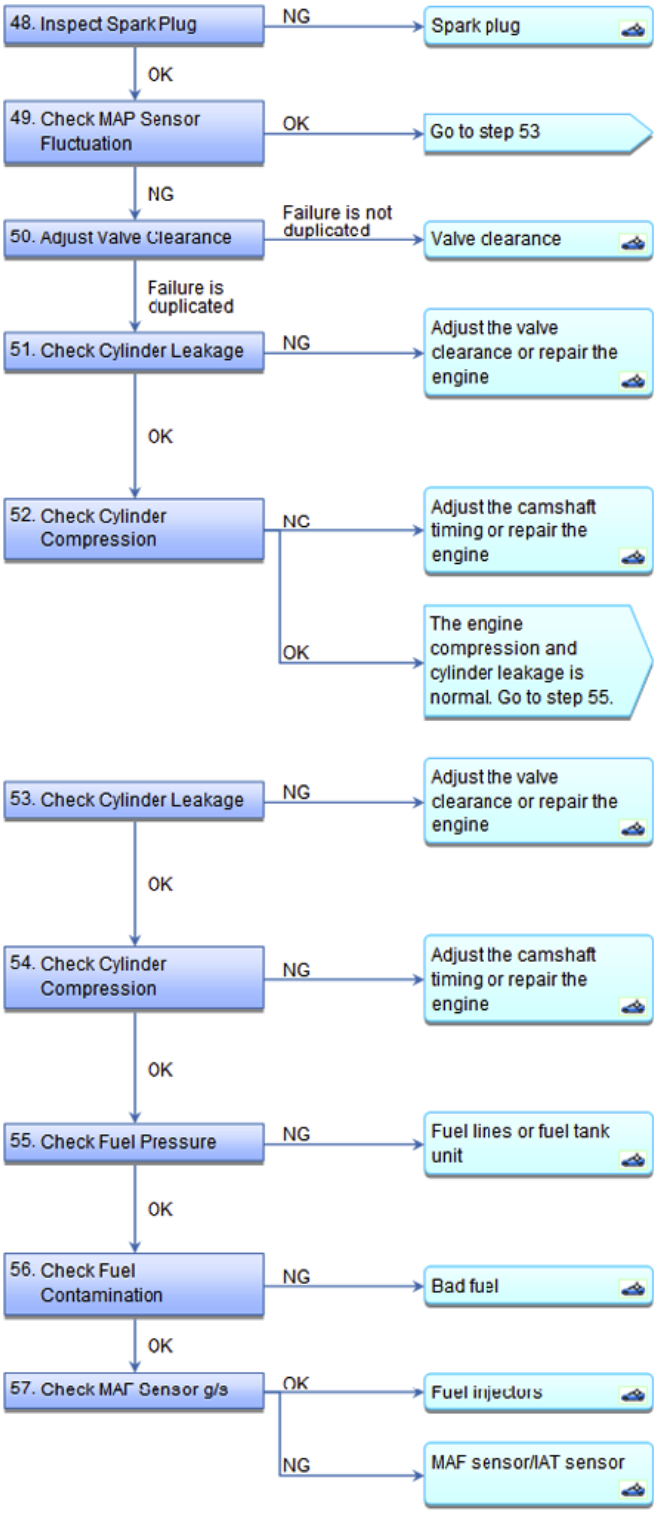

Fig. 104: DTC Troubleshooting Flow Chart - P0300, P0301, P0302, P0303, P0304 (6 Of 9)
Courtesy of AMERICAN HONDA MOTOR CO., INC.

GETtheMANUALS.org

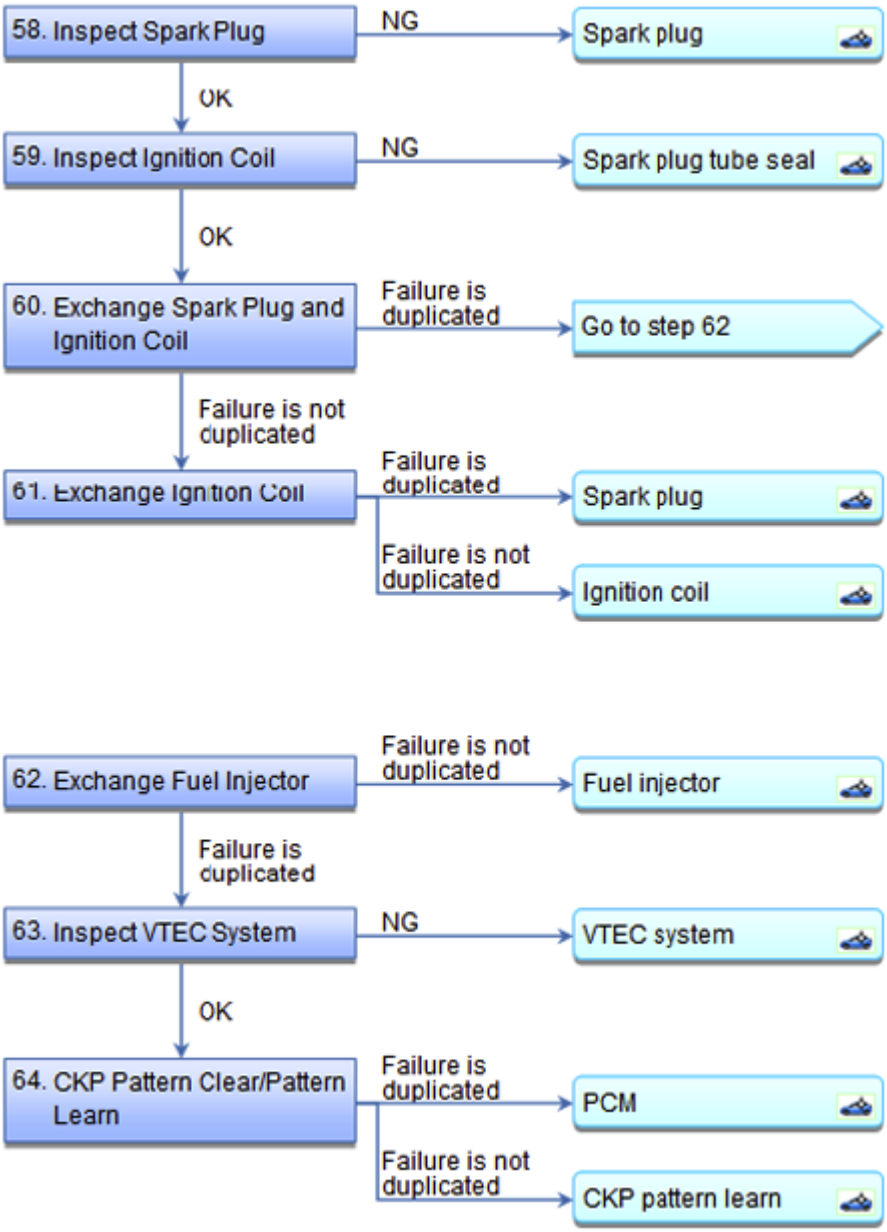

Fig. 105: DTC Troubleshooting Flow Chart - P0300, P0301, P0302, P0303, P0304 (7 Of 9)
Courtesy of AMERICAN HONDA MOTOR CO., INC.

GETtheMANUALS.org

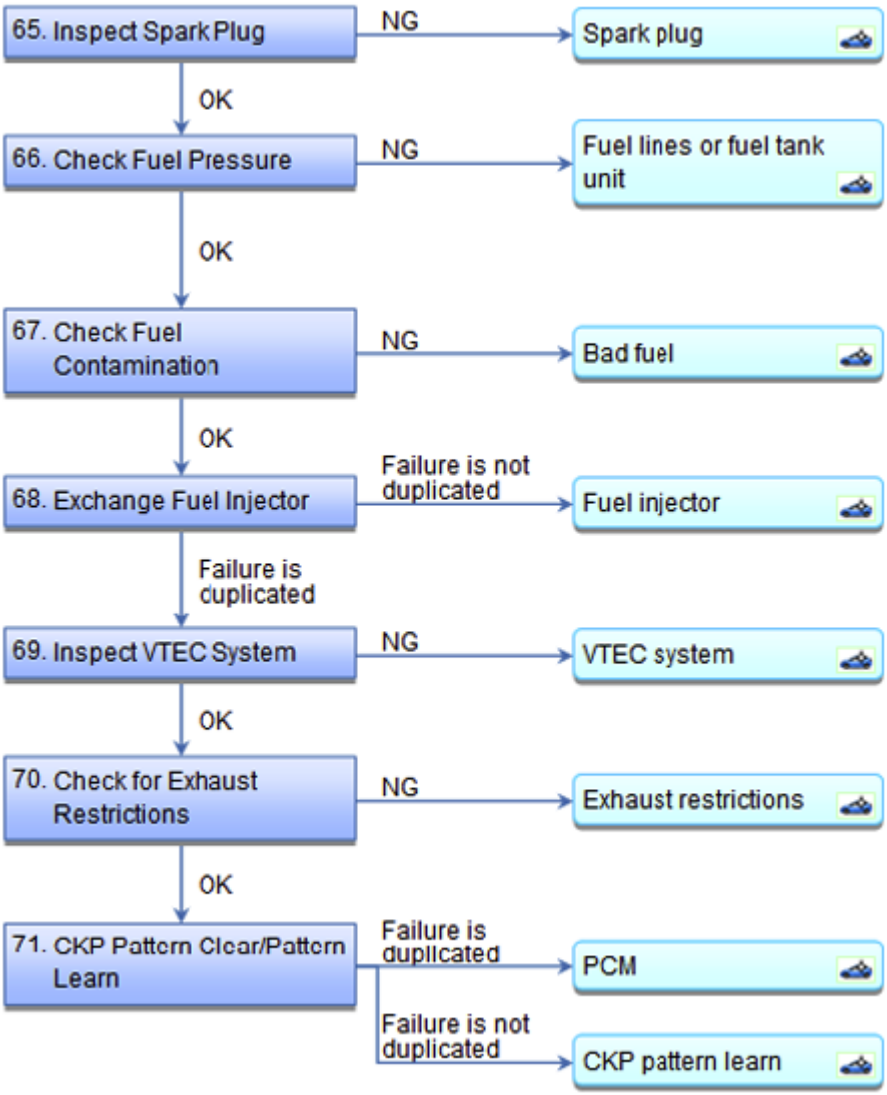

Fig. 106: DTC Troubleshooting Flow Chart - P0300, P0301, P0302, P0303, P0304 (8 Of 9)
Courtesy of AMERICAN HONDA MOTOR CO., INC.

GETtheMANUALS.org

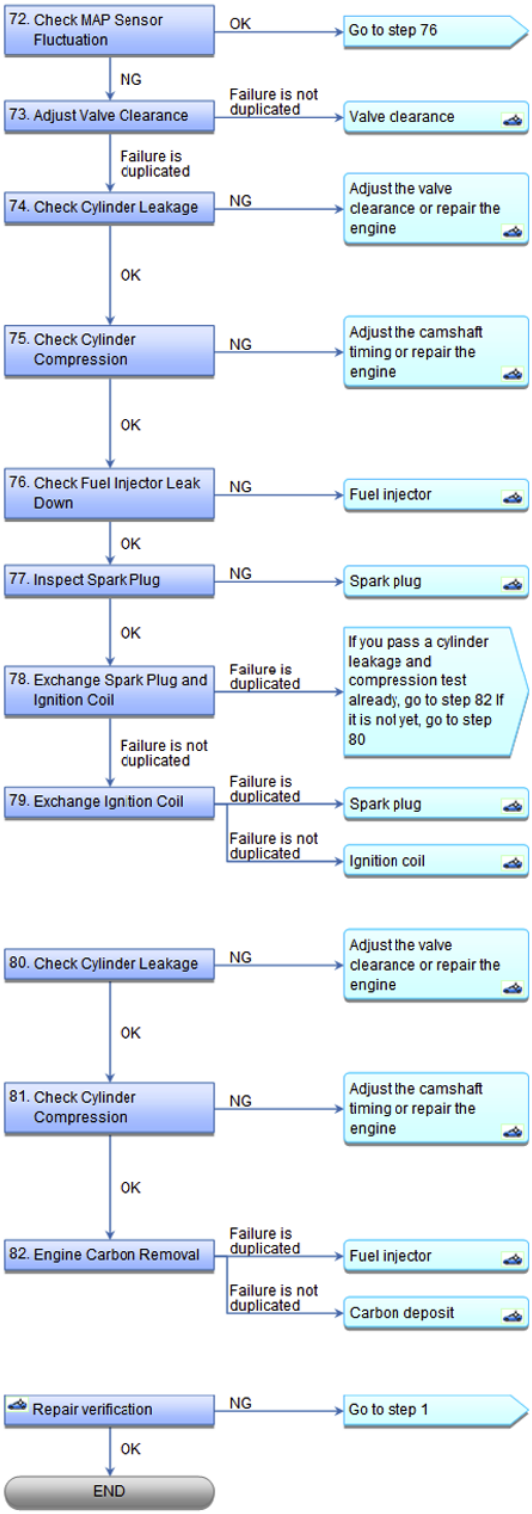

Fig. 107: DTC Troubleshooting Flow Chart - P0300, P0301, P0302, P0303, P0304 (9 Of 9)
Courtesy of AMERICAN HONDA MOTOR CO., INC.

NOTE:

- **Before you troubleshoot, record all freeze data and any on-board**

GETtheMANUALS.org

snapshot, and review the general troubleshooting information See HOW TO TROUBLESHOOT THE A/T SYSTEM or HOW TO TROUBLESHOOT THE FUEL AND EMISSIONS SYSTEMS .

- **Do not clear the DTC until the cause of the misfire is fixed. Valuable data required for troubleshooting will be lost if the DTC is cleared. The data will also be lost even if freeze data and the on-board snapshot is saved.**
- **If the misfire is frequent enough to trigger detection of increased emissions during two consecutive driving cycles, the MIL will come on, and DTC P0300 (and some combination of P0301 through P0304) will be stored.**
- **If the misfire is frequent enough to damage the catalyst, the MIL will flash whenever the misfire occurs, and DTC P0300 (and some combination of P0301 through P0304) will be stored. When the misfire stops, the MIL will remain on.**
- **Troubleshoot the following DTCs first, if any of them were stored along with the random misfire DTC(s) (Because parts can sometimes fail without setting DTC's you should also do a physical inspection of the systems listed below):**

  P0102, P0103: MAF sensor

  P0107, P0108: MAP sensor

  P0171, P0172: Fuel system

  P0201, P0202, P0203, P0204: No. 1-No. 4 cylinder injector

  P0335, P0339: CKP sensor

  P0365, P0369: CMP sensor B

  P0351, P0352, P0353, P0354: No. 1 -No. 4 cylinder ignition coil(s)

  P2646, P2647, P2648, P2649: VTEC system

DTC Description	Confirmed DTC	Pending DTC	Freeze Frame
P0300 RANDOM MISFIRE			
P0301 No. 1 CYLINDER MISFIRE DETECTED			
P0302 No. 2 CYLINDER MISFIRE DETECTED			
P0303 No. 3 CYLINDER MISFIRE DETECTED			
P0304 No. 4 CYLINDER MISFIRE DETECTED			

1. Problem verification-Idle
   - 1. Record the FREEZE DATA and the ONBOARD SNAPSHOT with the HDS.

GETtheMANUALS.org

- 2. Start the engine, and let it idle.
- 3. Monitor these parameters in the DATA LIST:
  - CYL1 MISFIRE
  - CYL2 MISFIRE
  - CYL3 MISFIRE
  - CYL4 MISFIRE

Signal	Current conditions	
	Values	Unit
CYL1 MISFIRE		
CYL2 MISFIRE		
CYL3 MISFIRE		
CYL4 MISFIRE		

Are the misfire counts increasing on any cylinder at idle?

YES : The engine is misfiring at idle, go to step 2.

NO : The engine does not misfire at idle, go to step 3.

2. Determine Affected Cylinders
   - 1. Continue to monitor the misfire parameters in the DATA LIST.

Signal	Current conditions	
	Values	Unit
CYL1 MISFIRE		
CYL2 MISFIRE		
CYL3 MISFIRE		
CYL4 MISFIRE		

Are misfire counts generally isolated to a single cylinder?

YES : The misfire is isolated to a single cylinder.

- If the misfire counts are increasing every engine revolution (completely inactive cylinder), start the Single Cylinder Continuous Misfire at Idle troubleshooting on step 6.
- If the misfire counts are increasing every few engine revolutions (partially inactive cylinder), start the Single Cylinder Non-Continuous Misfire at Idle troubleshooting on step 21.

NO : The misfire affects multiple cylinders.

- If the misfire counts are increasing every engine revolution (completely inactive cylinder), start the Multiple Cylinder Continuous Misfire at Idle troubleshooting on step 30.

GETtheMANUALS.org

- If the misfire counts are increasing every few engine revolutions (partially inactive cylinder), start the Multiple Cylinder Non-Continuous Misfire at Idle troubleshooting on step 48.

3. Problem verification-Static Load
   - 1. Increase the engine speed to 3, 500 RPM.
   - 2. Hold the engine speed steady, and monitor the misfire parameters in the DATA LIST.

Signal	Current conditions	
	Values	Unit
CYL1 MISFIRE		
CYL2 MISFIRE		
CYL3 MISFIRE		
CYL4 MISFIRE		

Are the misfire counts increasing on any cylinder?

YES : The engine is misfiring under load. Go to step 4.

NO : The engine does not misfire under a static load. Go to step 5.

4. Determine Affected Cylinders
   - 1. Continue to monitor the misfire parameters in the DATA LIST.

Signal	Current conditions	
	Values	Unit
CYL1 MISFIRE		
CYL2 MISFIRE		
CYL3 MISFIRE		
CYL4 MISFIRE		

Are misfire counts generally isolated to a single cylinder?

YES : The misfire is isolated to a single cylinder, start the Single Cylinder Misfire. Under Load troubleshooting on step 58.

NO : The misfire affects multiple cylinders, start the Multiple Cylinder Misfire. Under Load troubleshooting on step 65.

5. Problem verification -- OBD Snapshot
   - 1. Open the ONBOARD SNAPSHOT with the HDS.
   - 2. Scroll through the snapshot, and find when the MISFIRE value begins to increase.
   - 3. Record the value of these parameters as the MISFIRE value increases:

Signal	Value	Units

GETtheMANUALS.org

ECT SENSOR 1		°F
ENGINE SPEED		RPM
VEHICLE SPEED		MPH
MAP SENSOR		V
TP SENSOR		V

- 4. Drive the vehicle according to the conditions you identified above while monitoring the misfire counts.

Signal	Current conditions	
	Values	Unit
CYL1 MISFIRE		
CYL2 MISFIRE		
CYL3 MISFIRE		
CYL4 MISFIRE		

Are the misfire counts increasing on any cylinder?

YES : The engine is misfiring under the specific operating conditions above.

- If the misfire occurred when the engine was cold, start the Misfire When Cold troubleshooting on step 72.
- If the misfire occurred when the engine was loaded, go to step 4.

NO : Intermittent failure; the engine is not misfiring at this time.

NOTE: **If the misfire can not be reproduced, there is a possibility that the problem may have been caused by poor quality fuel. The problem may have disappeared after refueling with fresh fuel. The MIL DIST (MIL Distance) value in the Data List in combination with the fuel level may help you make this determination.**

6. Check Ignition Coil Spark
   - 1. Turn the ignition switch to LOCK (0).
   - 2. Remove the ignition coil from the problem cylinder.
   - 3. Connect a commercially available spark tester between the ignition coil and engine ground.
   - 4. Start the engine with the ignition coil connected.

Does the ignition coil produce a spark?

YES : The ignition coil wiring is OK. Go to step 14.

NO : There is a problem with the ignition coil, or the Ignition coil circuit. Go to step 7.

GETtheMANUALS.org

7. Ignition Coil Check
    - 1. Exchange the ignition coil on the problem cylinder with a normally operating cylinder.
    - 2. Connect a commercially available spark tester between the ignition coil and engine ground.
    - 3. Start the engine with the ignition coil connected.

    Does the ignition coil produce a spark?

    YES : The ignition coil has a failure. REPLACE THE IGNITION COIL , and then **do the repair verification** .

    NO : There is a problem with the ignition coil circuit. Go to step 8.

8. Check Ignition Coil Power and Ground
    - 1. Disconnect the ignition coil 3P connector from the problem cylinder.
    - 2. Turn the ignition switch to ON (II).
    - 3. Measure the voltage between ignition coil 3P connector terminals No. 1 (power) and No. 2 (ground).

    NOTE: **After the ignition switch is turned to LOCK (0), this circuit may still show battery voltage for a period of time. This is normal.**

GETtheMANUALS.org

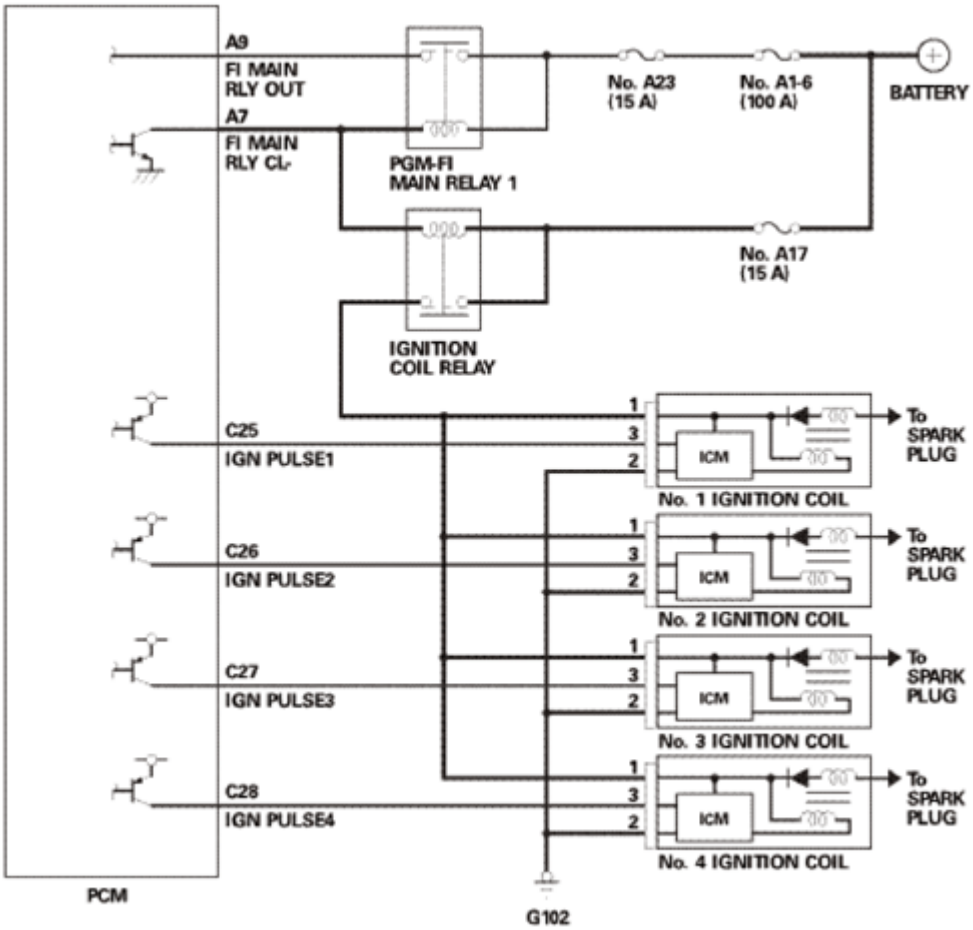

Fig. 108: Measuring Voltage Between Ignition Coil 3P Connector Terminals No. 2
Courtesy of AMERICAN HONDA MOTOR CO., INC.

Is there battery voltage?

YES : The ignition coil power and ground circuits are OK. Go to step 9.

NO : There is a problem with the ignition coil power or ground circuit. Go to step 13.

9. Check Ignition Coil Control Short to Power
   - 1. Turn the ignition switch to ON (II).
   - 2. Measure the voltage between ignition coil 3P connector terminals No. 3 (Ignition Control) and body ground.

GETtheMANUALS.org

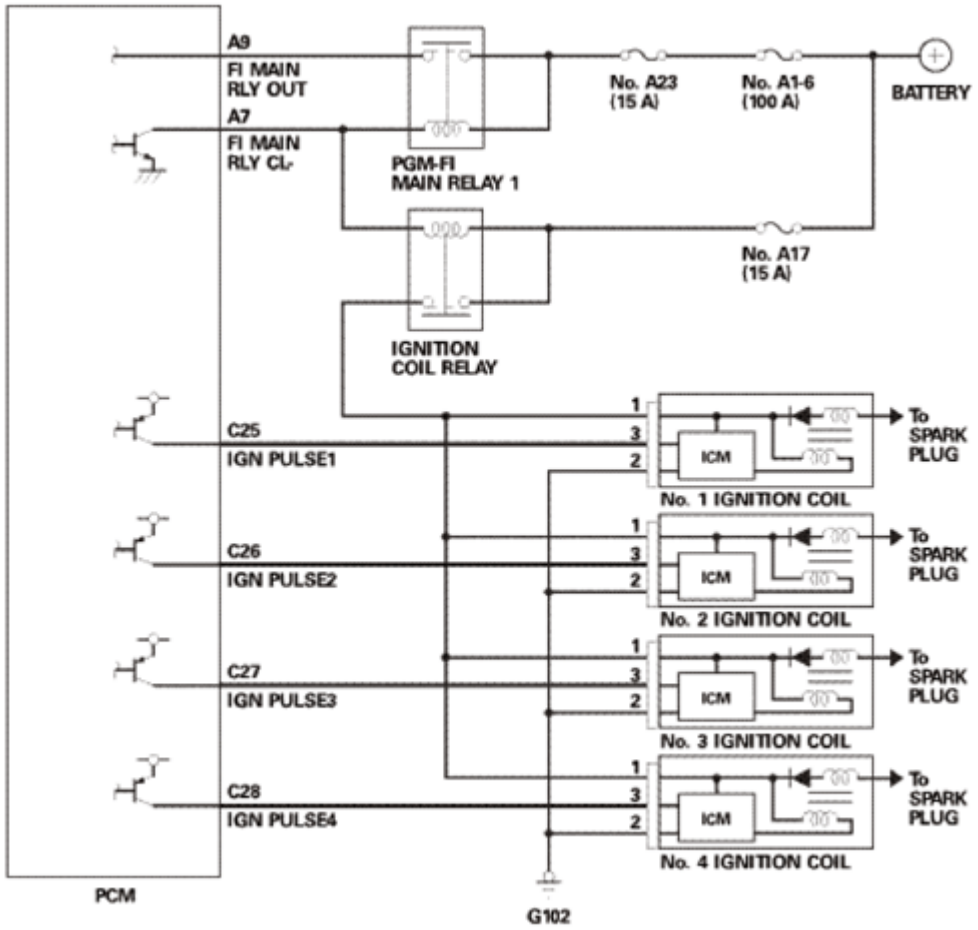

Fig. 109: Measuring Voltage Between Ignition Coil 3P Connector Terminals No. 3 (Ignition Control) And Body Ground
Courtesy of AMERICAN HONDA MOTOR CO., INC.

Is there about 4 V or more?

YES : The ignition coil control circuit is shorted to power. Go to step 10.

NO : The ignition coil control circuit is not shorted to power. Go to step 11.

10. Isolate Ignition Coil Control Short to Power
    - 1. Jump the SCS line with the HDS.
    - 2. Turn the ignition switch to LOCK (0).
    - 3. Disconnect the PCM connectors.
    - 4. Turn the ignition switch to ON (II).
    - 5. Measure the voltage between ignition coil 3P connector terminals No. 3 (Ignition Control) and body ground.

GETtheMANUALS.org

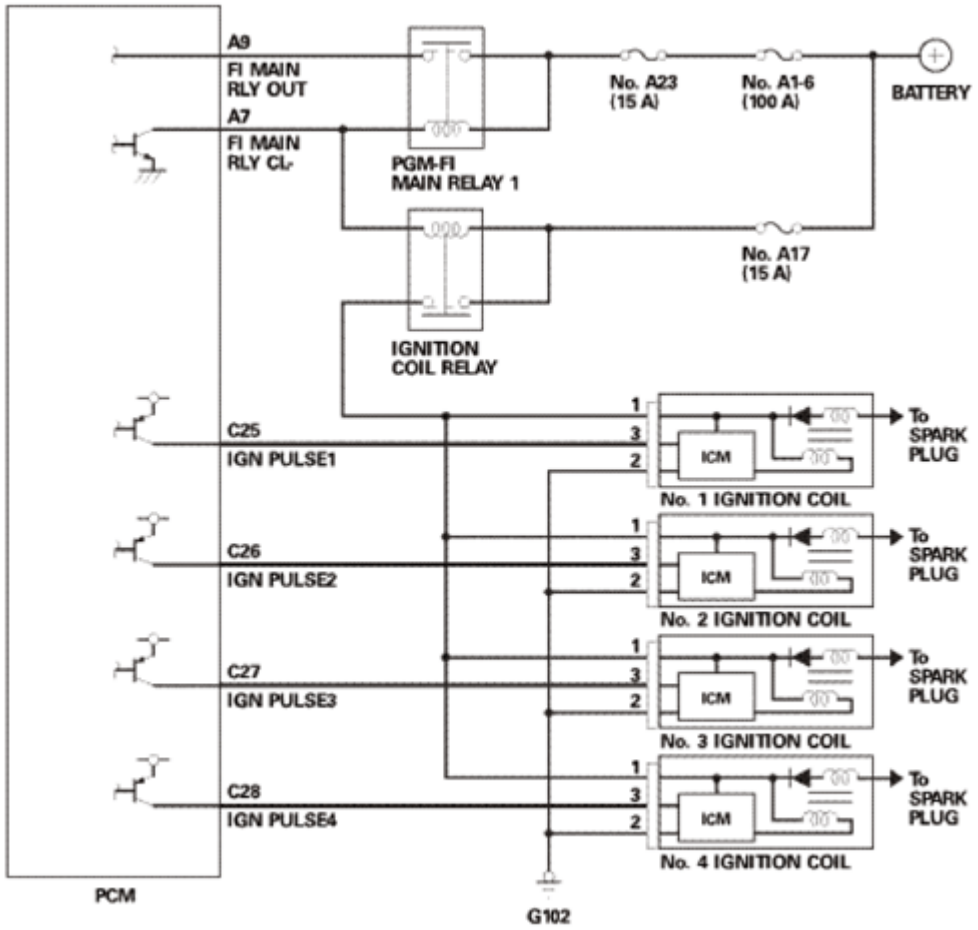

Fig. 110: Measuring Voltage Between Ignition Coil 3P Connector Terminals No. 3 (Ignition Control) And Body Ground
Courtesy of AMERICAN HONDA MOTOR CO., INC.

Is there about 4 V or more?

YES : There is a short to power on the ignition coil control circuit. Find and repair the failure, and then **do the repair verification** .

NO : The PCM is malfunctioning. **Replace the PCM** See **PCM UPDATE** or **PCM REMOVAL AND INSTALLATION** , and then **do the repair verification** .

11. Check Ignition Coil Control Open Circuit
    - 1. Jump the SCS line with the HDS.
    - 2. Turn the ignition switch to LOCK (0).
    - 3. Disconnect the PCM connectors.
    - 4. Check for continuity between the ignition coil control terminal at the PCM connector and at the ignition coil 3P connector terminal No. 3.

GETtheMANUALS.org

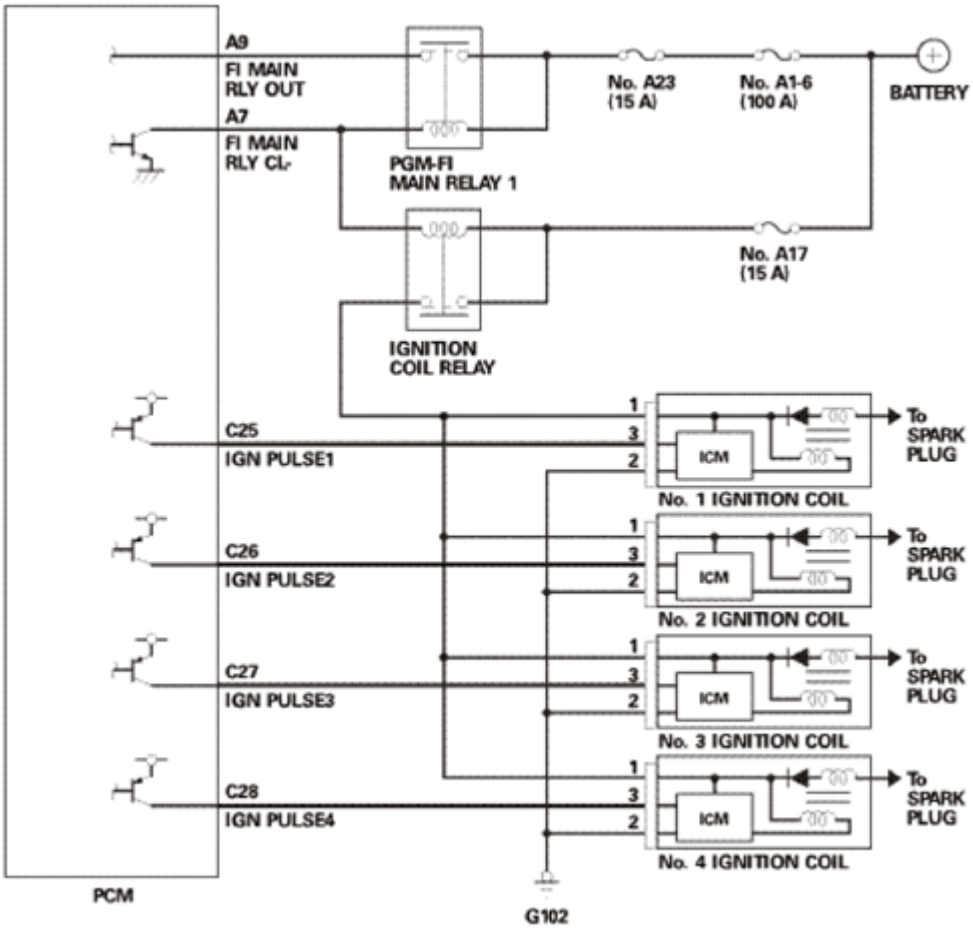

Fig. 111: Checking Continuity Between Ignition Coil Control Terminal PCM Connector And Ignition Coil 3P Connector Terminal No. 3
Courtesy of AMERICAN HONDA MOTOR CO., INC.

Is there continuity?

YES : The ignition coil control circuit is not open. Go to step 12.

NO : Repair the open circuit between the ignition coil and the PCM, and then **do the repair verification** .

12. Check Ignition Coil Control Short to Ground
    - 1. Check for continuity between the ignition coil control terminal at the ignition coil 3P connector terminal No. 3 and body ground.

GETtheMANUALS.org

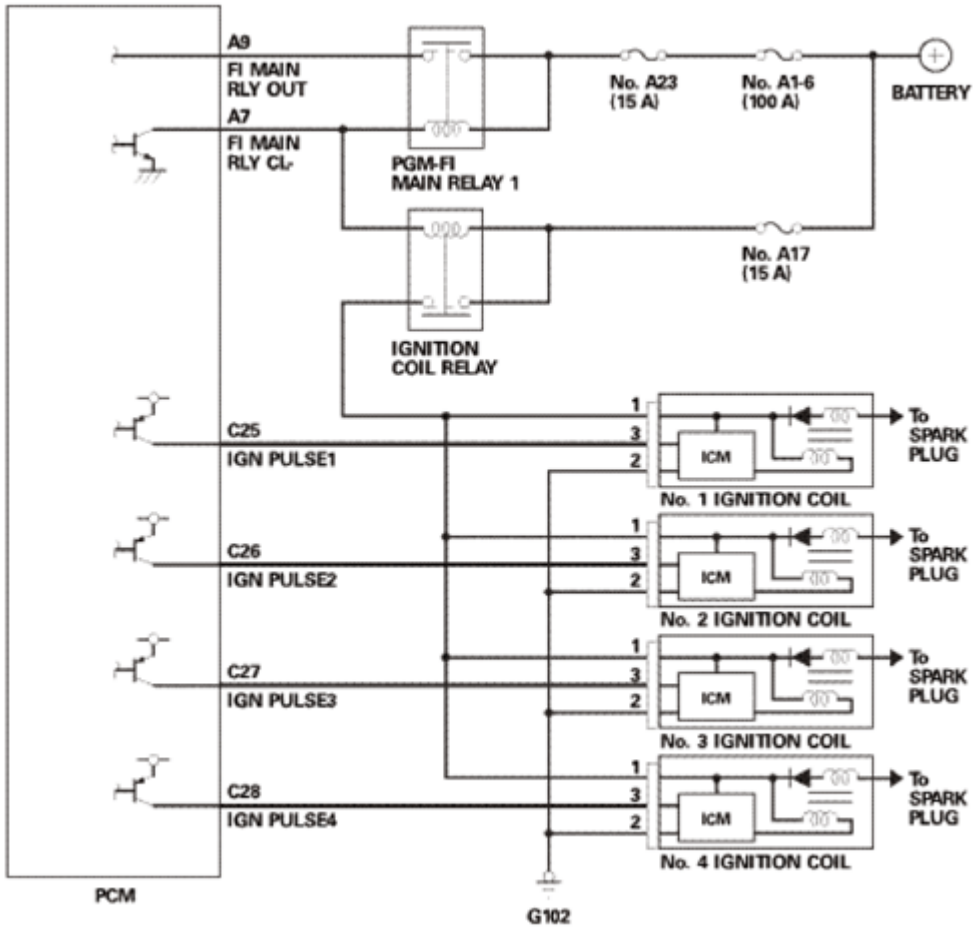

Fig. 112: Checking Continuity Between Ignition Coil Control Terminal At Ignition Coil 3P Connector Terminal No. 3 And Body Ground
Courtesy of AMERICAN HONDA MOTOR CO., INC.

Is there continuity?

YES : Repair the short to ground on the ignition coil control wire, and then **do the repair verification** .

NO : The ignition coil control wiring is OK. **Substitute a known good PCM** See **PCM REMOVAL AND INSTALLATION** or **PCM UPDATE** , and then **do the repair verification** .

13. Check Ignition Coil Power Circuit
    - 1. Measure the voltage between ignition coil 3P connector terminal No. 1 (power) and a known-good engine ground.

GETtheMANUALS.org

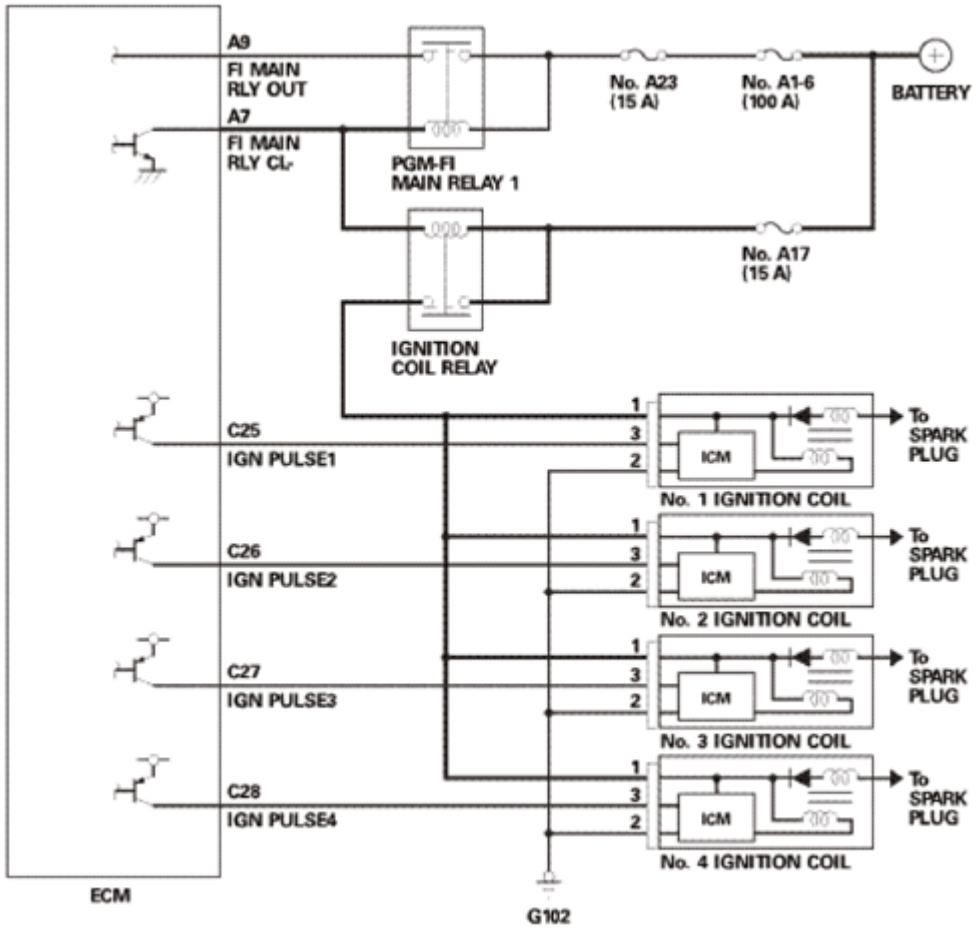

Fig. 113: Measuring Voltage Between Ignition Coil 3P Connector Terminal No. 1 (Power) And Ground
Courtesy of AMERICAN HONDA MOTOR CO., INC.

Is there battery voltage between the ignition coil power terminal and engine ground?

YES : The power circuit is OK. Repair the open circuit between the ignition coil (3P connector terminal No. 2) and G102, and then **do the repair verification** .

NO : Repair the open circuit between the ignition coil and the ignition coil relay, and then **do the repair verification** .

14. Inspect Ignition Coil
    - 1. Inspect the ignition coil and spark plug tube for engine oil contamination.

Is the ignition coil covered in engine oil?

YES : Clean the oil from the ignition coil and spark plug tube. REPLACE THE SPARK PLUG TUBE SEALS IN THE CYLINDER HEAD COVER , and then **do the repair verification** .

GETtheMANUALS.org

NO : Go to step 15.

15. Exchange Spark Plug and Ignition Coil
    - 1. Exchange the spark plug and the ignition coil with one from a normally operating cylinder.
    - 2. Drive the vehicle under the conditions when the misfire was duplicated.
    - 3. Monitor these parameters in the DATA LIST:
        - CYL1 MISFIRE
        - CYL2 MISFIRE
        - CYL3 MISFIRE
        - CYL4 MISFIRE

Signal	Current conditions	
	Values	Unit
CYL1 MISFIRE		
CYL2 MISFIRE		
CYL3 MISFIRE		
CYL4 MISFIRE		

Did the misfire counts stay at the problem cylinder?

YES : The ignition coil and spark plug are OK. Go to step 17.

NO : There is a failure in the ignition coil or the spark plug. Go to step 16.

16. Exchange Ignition Coil
    - 1. Exchange the ignition coil on the problem cylinder with a normally operating cylinder.
    - 2. Drive the vehicle under the conditions when the misfire was duplicated.
    - 3. Monitor these parameters in the DATA LIST:
        - CYL1 MISFIRE
        - CYL2 MISFIRE
        - CYL3 MISFIRE
        - CYL4 MISFIRE

Signal	Current conditions	
	Values	Unit
CYL1 MISFIRE		
CYL2 MISFIRE		
CYL3 MISFIRE		
CYL4 MISFIRE		

Did the misfire counts stay at the problem cylinder?

GETtheMANUALS.org

YES : The spark plug has a failure. REPLACE THE SPARK PLUG , and then **do the repair verification** .

NO : The ignition coil has a failure. REPLACE THE IGNITION COIL , and then **do the repair verification** .

17. Check Cylinder Leakage
    - 1. PERFORM A CYLINDER LEAKAGE TEST .
    - 2. Record your test results in the chart shown below.

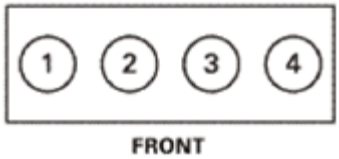

Fig. 114: Identifying Cylinder
Courtesy of AMERICAN HONDA MOTOR CO., INC.

	Leakage %	Leakage Area
No. 1	%	
No. 2	%	
No. 3	%	
No. 4	%	

Does any cylinder have leakage greater than 10%?

YES : If the majority of the air is escaping from exhaust pipe or throttle body, check for tight valve clearance and adjust each cylinder as needed, then retest. Determine the cause of the cylinder leakage and repair the engine as needed, and then **do the repair verification** .

NO : The cylinders are sealing properly. Go to step 18.

18. Check Cylinder Compression
    - 1. PERFORM A CYLINDER COMPRESSION TEST .
    - 2. Record your test results in a chart similar to the one shown below.

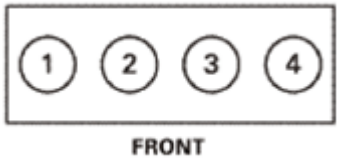

Fig. 115: Identifying Cylinder
Courtesy of AMERICAN HONDA MOTOR CO., INC.

GETtheMANUALS.org

	Compression
No. 1	PSI
No. 2	PSI
No. 3	PSI
No. 4	PSI

Highest Reading	Lowest Reading	Variation
PSI	PSI	%

Does the compression vary more than 10% between cylinders, or does any cylinder read below 150 PSI?

YES : The cylinder leakage is normal, but the engine compression is low. Check for each of the conditions below and repair as needed, and then **do the repair verification** .

- Incorrect camshaft timing.
- A bent (short) connecting rod.
- Worn or damaged camshaft lobes.

NO : The engine compression and cylinder leakage is normal. Go to step 19.

19. Exchange Fuel Injector
    - 1. Exchange the fuel injector from the problem cylinder with one from another cylinder.
    - 2. Drive the vehicle under the conditions when the misfire was duplicated.
    - 3. Monitor these parameters in the DATA LIST:
        - CYL1 MISFIRE
        - CYL2 MISFIRE
        - CYL3 MISFIRE
        - CYL4 MISFIRE

Signal	Current conditions	
	Values	Unit
CYL1 MISFIRE		
CYL2 MISFIRE		
CYL3 MISFIRE		
CYL4 MISFIRE		

Do the misfire counts stay at the problem cylinder when the fuel injector is swapped?

YES : The fuel injector is OK. Go to step 20.

NO : The fuel injector is faulty. REPLACE THE FAULTY FUEL INJECTOR , and then **do the repair verification** .

GETtheMANUALS.org

20. CKP Pattern Clear/Pattern Learn
    - 1. Select CRANK PATTERN in the ADJUSTMENT MENU with the HDS.
    - 2. Select CRANK PATTERN CLEAR, and clear the CKP pattern.
    - 3. Select CRANK PATTERN LEARNING with the HDS, and follow the screen prompts.
    - 4. Drive the vehicle under the conditions when the misfire was duplicated.
    - 5. Monitor these parameters in the DATA LIST:
        - CYL1 MISFIRE
        - CYL2 MISFIRE
        - CYL3 MISFIRE
        - CYL4 MISFIRE

Signal	Current conditions	
	Values	Unit
CYL1 MISFIRE		
CYL2 MISFIRE		
CYL3 MISFIRE		
CYL4 MISFIRE		

Did the misfire counts stay at the problem cylinder?

YES : **Update the PCM with the latest software** See **PCM REMOVAL AND INSTALLATION** or **PCM UPDATE** or **substitute a known-good PCM** See **PCM REMOVAL AND INSTALLATION** or **PCM UPDATE** , and then **do the repair verification** .

NO : **Perform the repair confirmation** .

21. Inspect Spark Plug
    - 1. Remove the spark plug from the problem cylinder.
    - 2. Inspect the spark plug for signs of failure. Also make sure the spark plugs are the correct part number for the vehicle.

Does the spark plug show any signs of failure or is it not the correct part number?

YES : REPLACE THE SPARK PLUG , and then **do the repair verification** .

NO : Go to step 22.

22. Inspect Ignition Coil
    - 1. Inspect the ignition coil and spark plug tube for engine oil contamination.

Is the ignition coil covered in engine oil?

YES : Clean the oil from the ignition coil and spark plug tube. REPLACE THE SPARK PLUG TUBE

GETtheMANUALS.org

SEALS IN THE CYLINDER HEAD cover, and then **do the repair verification** .

NO : Go to step 23.

23. Exchange Spark Plug and Ignition Coil
    - 1. Exchange the spark plug and the ignition coil with normally operating cylinder.
    - 2. Drive the vehicle under the conditions when the misfire was duplicated.
    - 3. Monitor these parameters in the DATA LIST:
        - CYL1 MISFIRE
        - CYL2 MISFIRE
        - CYL3 MISFIRE
        - CYL4 MISFIRE

Signal	Current conditions	
	Values	Unit
CYL1 MISFIRE		
CYL2 MISFIRE		
CYL3 MISFIRE		
CYL4 MISFIRE		

Did the misfire counts stay at the problem cylinder?

YES : The ignition coil and spark plug are OK. Go to step 25.

NO : There is a failure in the ignition coil or the spark plug. Go to step 24.

24. Exchange Ignition Coil
    - 1. Exchange the ignition coil on the problem cylinder with a normally operating cylinder.
    - 2. Drive the vehicle under the conditions when the misfire was duplicated.
    - 3. Monitor these parameters in the DATA LIST:
        - CYL1 MISFIRE
        - CYL2 MISFIRE
        - CYL3 MISFIRE
        - CYL4 MISFIRE

Signal	Current conditions	
	Values	Unit
CYL1 MISFIRE		
CYL2 MISFIRE		
CYL3 MISFIRE		
CYL4 MISFIRE		

GETtheMANUALS.org

Did the misfire counts stay at the problem cylinder?

YES : The spark plug has a failure. REPLACE THE SPARK PLUG , and then **do the repair verification** .

NO : The ignition coil has a failure. REPLACE THE IGNITION COIL , and then **do the repair verification** .

25. Check MAP Sensor Fluctuation
    - 1. Start the engine, and let it idle until the cooling fans cycle twice.
    - 2. Turn off all engine and electrical loads (AC, radio, lights, etc.).
    - 3. Configure a HIGH-SPEED SNAPSHOT, and select only the MAP SENSOR.
    - 4. Begin displaying live vehicle data on a line graph.
    - 5. Configure the MAP SENSOR line graph range for 1.2 V MAX and 0.8 V MIN.
    - 6. Watch the MAP SENSOR fluctuation. See examples below.

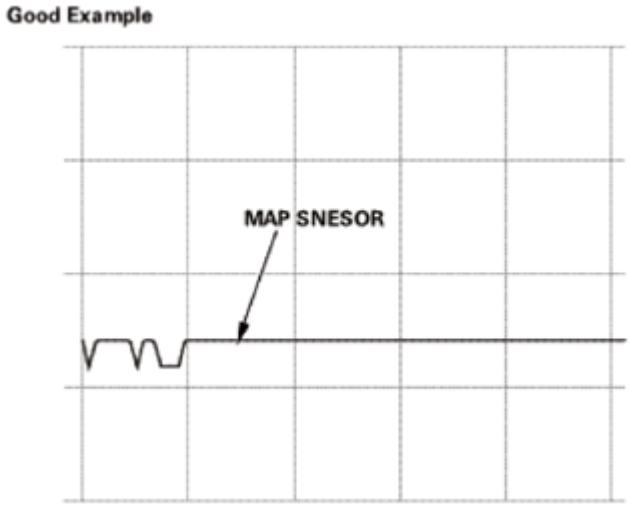

Fig. 116: MAP Sensor Proper Signal Waveform
Courtesy of AMERICAN HONDA MOTOR CO., INC.

GETtheMANUALS.org

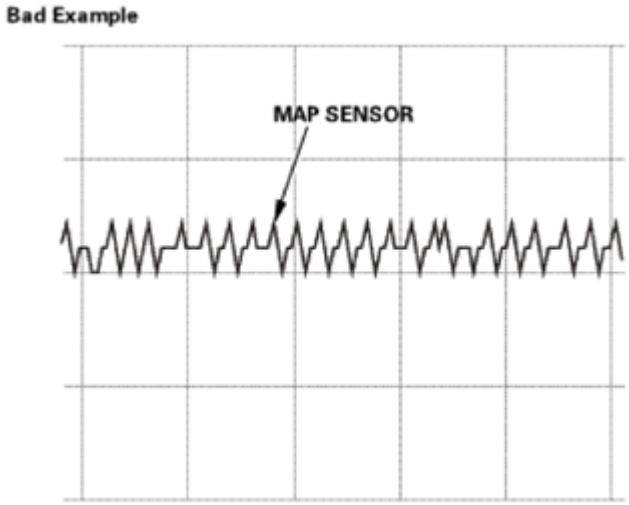

Fig. 117: MAP Sensor Improper Signal Waveform
Courtesy of AMERICAN HONDA MOTOR CO., INC.

Does the MAP SENSOR continuously fluctuate 0.04 V or more at idle, no loads, engine hot?

YES : The intake manifold pressure fluctuation indicates a mechanical engine failure. Go to step 26.

NO : The intake manifold vacuum fluctuation is OK. Go to step 29.

26. Adjust Valve Clearance
    - 1. **Adjust the valve clearances** See VALVE CLEARANCE ADJUSTMENT or VALVE, SPRING, AND VALVE SEAL REMOVAL AND INSTALLATION , and inspect the camshaft for excessive wear or grooves.

      NOTE: ECT Sensor 1 must read less than 100 ° F (38 ° C) before adjusting the valve clearance. Short cutting this step may cause incorrect valve clearance and engine misfire.

    - 2. Recheck the MAP Sensor fluctuation at idle.

Does the MAP SENSOR continuously fluctuate 0.04 V or more at idle, no loads, engine hot?

YES : Adjusting the valve clearance did not correct the excessive MAP sensor fluctuation. Go to step 27.

NO : The excessive MAP sensor fluctuation was caused by incorrect valve clearance. **Perform the Repair Confirmation** .

27. Check Cylinder Leakage
    - 1. PERFORM A CYLINDER LEAKAGE TEST .
    - 2. Record your test results in the chart shown below.

GETtheMANUALS.org

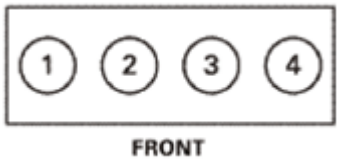

Fig. 118: Identifying Cylinder
Courtesy of AMERICAN HONDA MOTOR CO., INC.

	Leakage	Leakage Area
No. 1	%	
No. 2	%	
No. 3	%	
No. 4	%	

Does any cylinder have leakage greater than 10 %?

YES : If the majority of the air is escaping from exhaust pipe or throttle body, check for tight valve clearance and adjust each cylinder as needed, then retest. Determine the cause of the cylinder leakage and repair the engine as needed, and then **do the repair verification** .

NO : The cylinders are sealing properly. Go to step 28.

28. Check Cylinder Compression
    - 1. PERFORM A CYLINDER COMPRESSION TEST .
    - 2. Record your test results in a chart similar to the one shown below.

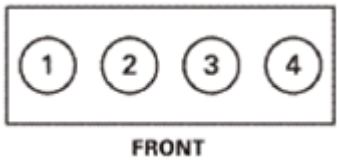

Fig. 119: Identifying Cylinder
Courtesy of AMERICAN HONDA MOTOR CO., INC.

	Compression
No. 1	PSI
No. 2	PSI
No. 3	PSI
No. 4	PSI

Highest Reading	Lowest Reading	Variation
PSI	PSI	%

Does the compression vary more than 10 % between cylinders, or does any cylinder read below 150 PSI?

GETtheMANUALS.org

YES : The cylinder leakage is normal, but the engine compression is low. Check for each of the conditions below and repair as needed, and then **do the repair verification** .

- Incorrect camshaft timing.
- A bent (short) connecting rod.
- Worn or damaged camshaft lobes.

NO : The engine compression and cylinder leakage is normal. Go to step 29.

29. Exchange Fuel Injector
    - 1. Exchange the fuel injector from the problem cylinder with one from another cylinder.
    - 2. Drive the vehicle under the conditions when the misfire was duplicated.
    - 3. Monitor these parameters in the DATA LIST:
        - CYL1 MISFIRE
        - CYL2 MISFIRE
        - CYL3 MISFIRE
        - CYL4 MISFIRE

Signal	Current conditions	
	Values	Unit
CYL1 MISFIRE		
CYL2 MISFIRE		
CYL3 MISFIRE		
CYL4 MISFIRE		

Do the misfire counts stay at the problem cylinder when the fuel injector is swapped?

YES : The fuel injector is OK. All of the failures have been checked for this type of misfire. Go to step 1 in the Problem verification procedure and ensure you selected the correct troubleshooting procedure.

NO : The fuel injector is faulty. REPLACE THE FAULTY FUEL INJECTOR , and then **do the repair verification** .

30. Inspect Spark Plug
    - 1. Remove the spark plug from the problem cylinder.
    - 2. Inspect the spark plug for signs of failure. Also make sure the spark plugs are the correct part number for the vehicle.

Does the spark plug show any signs of failure or is it not the correct part number?

YES : REPLACE THE SPARK PLUG , and then **do the repair verification** .

NO : Go to step 31.

GETtheMANUALS.org

31. Check Ignition Coil Spark
    - 1. Turn the ignition switch to LOCK (0).
    - 2. Remove the ignition coil from the problem cylinder.
    - 3. Connect a commercially available spark tester between the ignition coil and engine ground.
    - 4. Start the engine with the ignition coil connected.

    Does the ignition coil produce a spark?

    YES : The ignition coil wiring is OK. Go to step 39.

    NO : There is a problem with the ignition coil wiring. Go to step 32.

32. Exchange Ignition Coil
    - 1. Exchange the ignition coil on the problem cylinder with a normally operating cylinder.
    - 2. Connect a commercially available spark tester between the ignition coil and engine ground.
    - 3. Start the engine with the ignition coil connected.

    Does the ignition coil produce a spark?

    YES : The ignition coil has a failure. REPLACE THE IGNITION COIL , and then **do the repair verification** .

    NO : There is a problem with the ignition coil circuit. Go to step 33.

33. Check Ignition Coil Power and Ground
    - 1. Disconnect the ignition coil 3P connector from the problem cylinder.
    - 2. Turn the ignition switch to ON (II).
    - 3. Measure the voltage between ignition coil 3P connector terminals No. 1 (power) and No. 3 (ground).

GETtheMANUALS.org

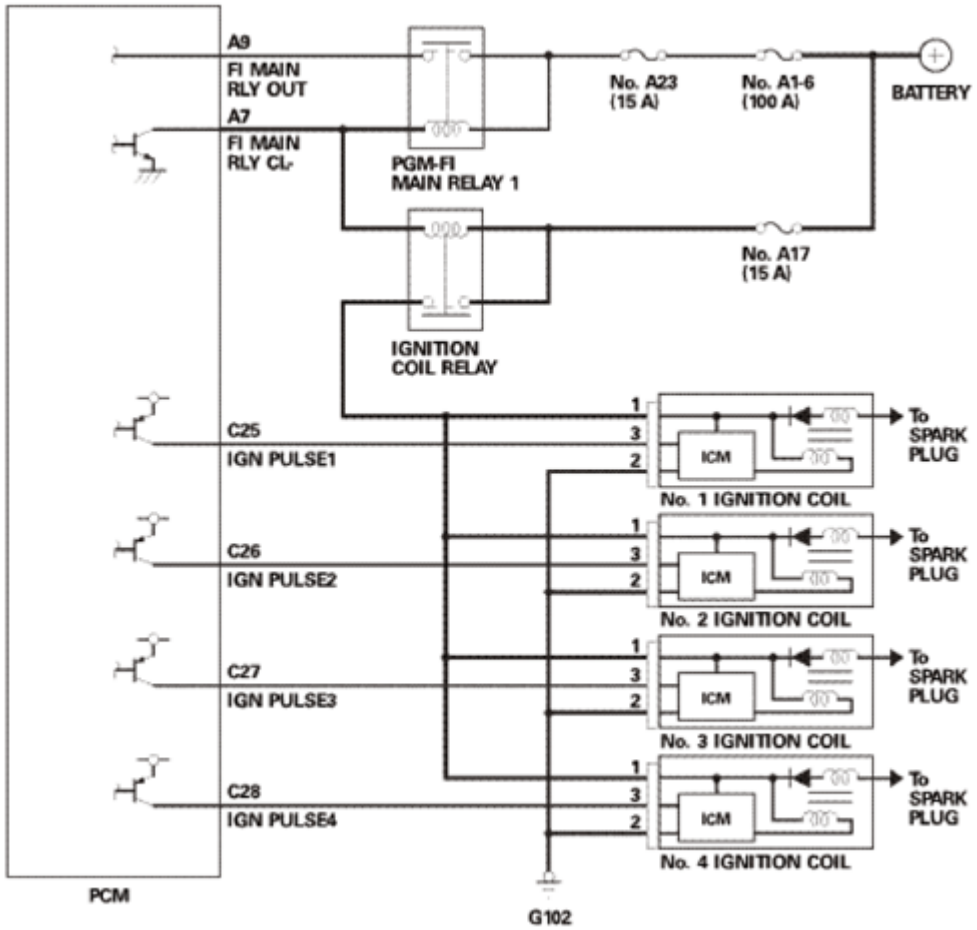

Fig. 120: Measuring Voltage Between Ignition Coil 3P Connector Terminals No. 1 (Power) And No. 3 (Ground)
Courtesy of AMERICAN HONDA MOTOR CO., INC.

Is there battery voltage?

YES : The ignition coil power and ground circuits are OK. Go to step 34.

NO : There is a problem with the ignition coil power or ground circuit. Go to step 38.

34. Check Ignition Coil Control Short to Power
    - 1. Turn the ignition switch to ON (II).
    - 2. Measure the voltage between ignition coil 3P connector terminals No. 3 (Ignition Control) and body ground.

GETtheMANUALS.org

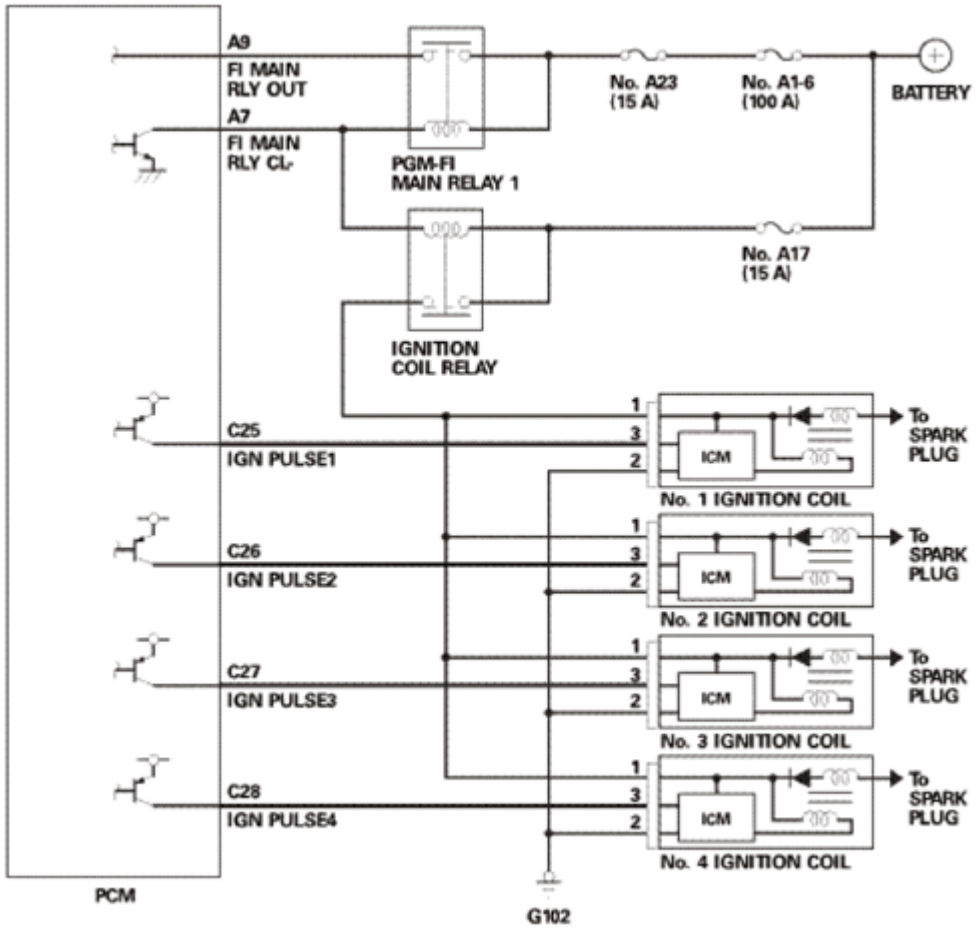

Fig. 121: Measuring Voltage Between Ignition Coil 3P Connector Terminals No. 3 (Ignition Control) And Body Ground
Courtesy of AMERICAN HONDA MOTOR CO., INC.

Is there about 4 V or more?

YES : The ignition coil control circuit is shorted to power. Go to step 35.

NO : The ignition coil control circuit is not shorted to power. Go to step 36.

35. Isolate Ignition Coil Control Short to Power
    - 1. Jump the SCS line with the HDS.
    - 2. Turn the ignition switch to LOCK (0).
    - 3. Disconnect the PCM connectors.
    - 4. Turn the ignition switch to ON (II).
    - 5. Measure the voltage between ignition coil 3P connector terminals No. 3 (Ignition Control) and body ground.

GETtheMANUALS.org

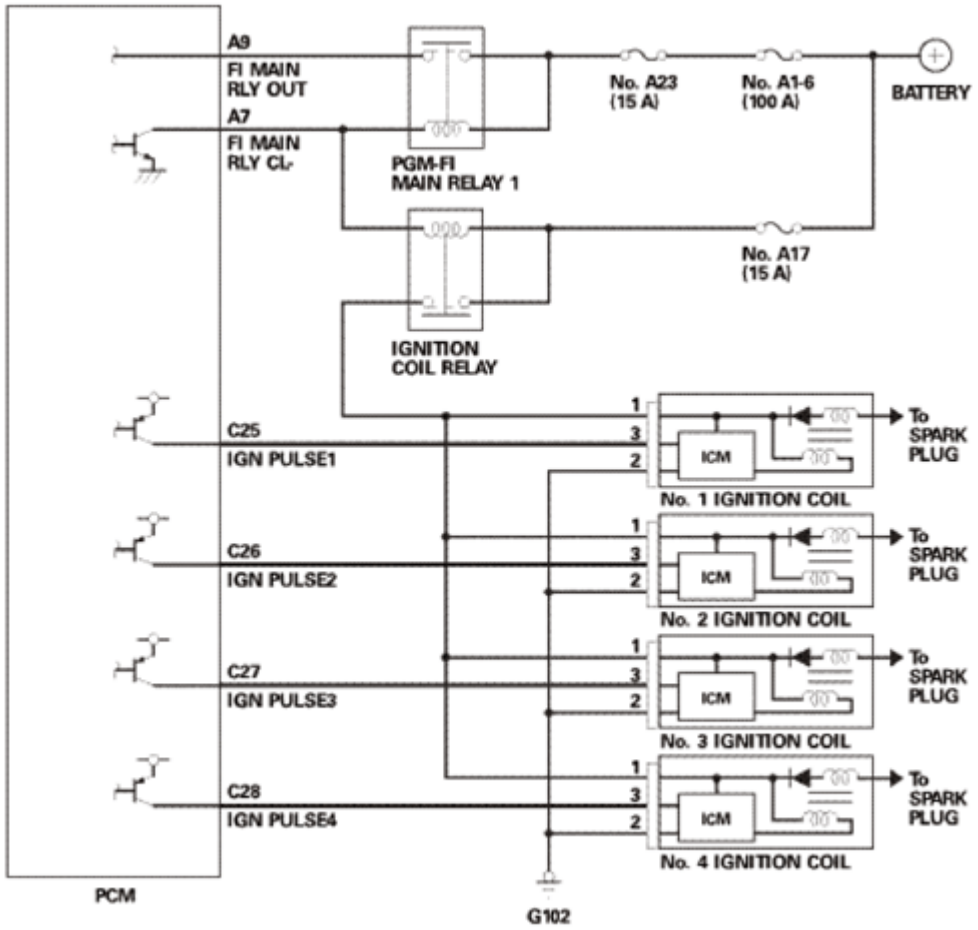

Fig. 122: Measuring Voltage Between Ignition Coil 3P Connector Terminals No. 3 (Ignition Control) And Body Ground
Courtesy of AMERICAN HONDA MOTOR CO., INC.

Is there about 4 V or more?

YES : There is a short to power on the ignition coil control circuit. Find and repair the failure, and then **do the repair verification** .

NO : The PCM is malfunctioning. **Replace the PCM** See **PCM UPDATE** or **PCM REMOVAL AND INSTALLATION** , and then **do the repair verification** .

36. Check Ignition Coil Control Open Circuit
    - 1. Jump the SCS line with the HDS.
    - 2. Turn the ignition switch to LOCK (0).
    - 3. Disconnect the PCM connectors.
    - 4. Check for continuity between the ignition coil control terminal at the PCM connector and at the ignition coil 3P connector terminal No. 3.

GETtheMANUALS.org

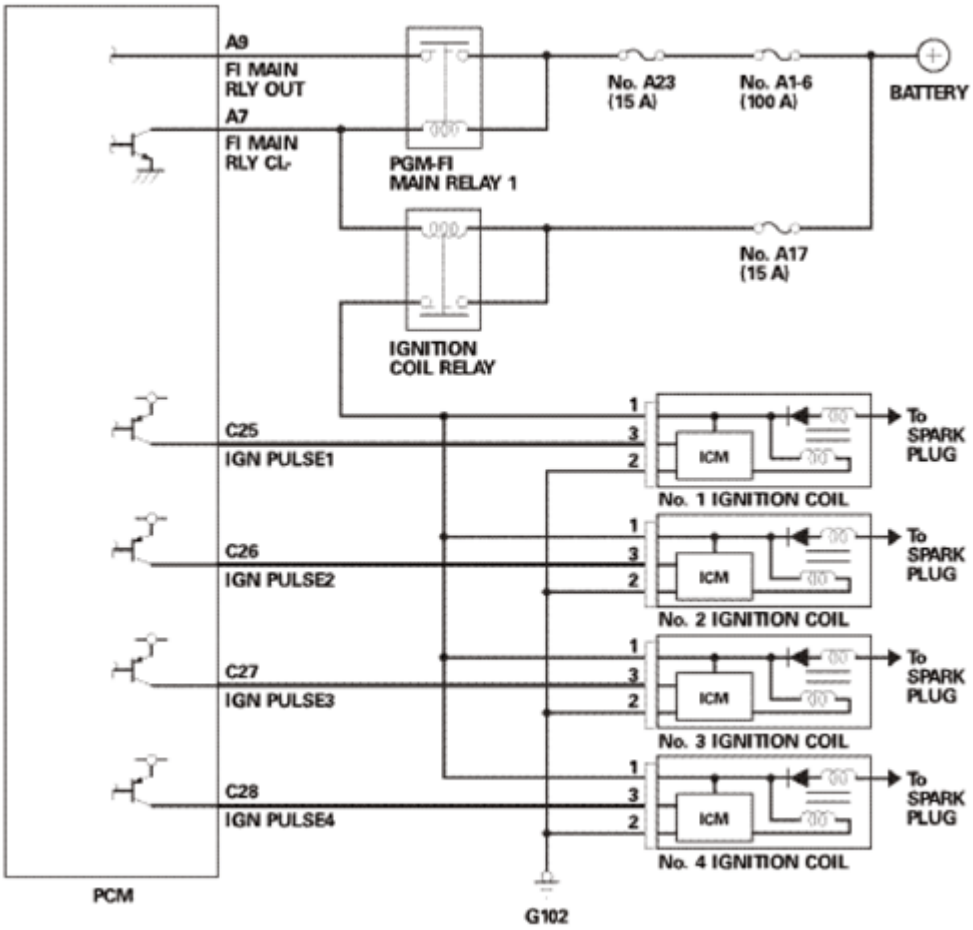

Fig. 123: Checking Continuity Between Ignition Coil Control Terminal PCM Connector And Ignition Coil 3P Connector Terminal No. 3
Courtesy of AMERICAN HONDA MOTOR CO., INC.

Is there continuity?

YES : The ignition coil control circuit is not open. Go to step 37.

NO : Repair the open circuit between the ignition coil and the PCM, and then **do the repair verification** .

37. Check Ignition Coil Control Short to Ground
    - 1. Check for continuity between the ignition coil control terminal at the ignition coil 3P connector terminal No. 3 and body ground.

GETtheMANUALS.org

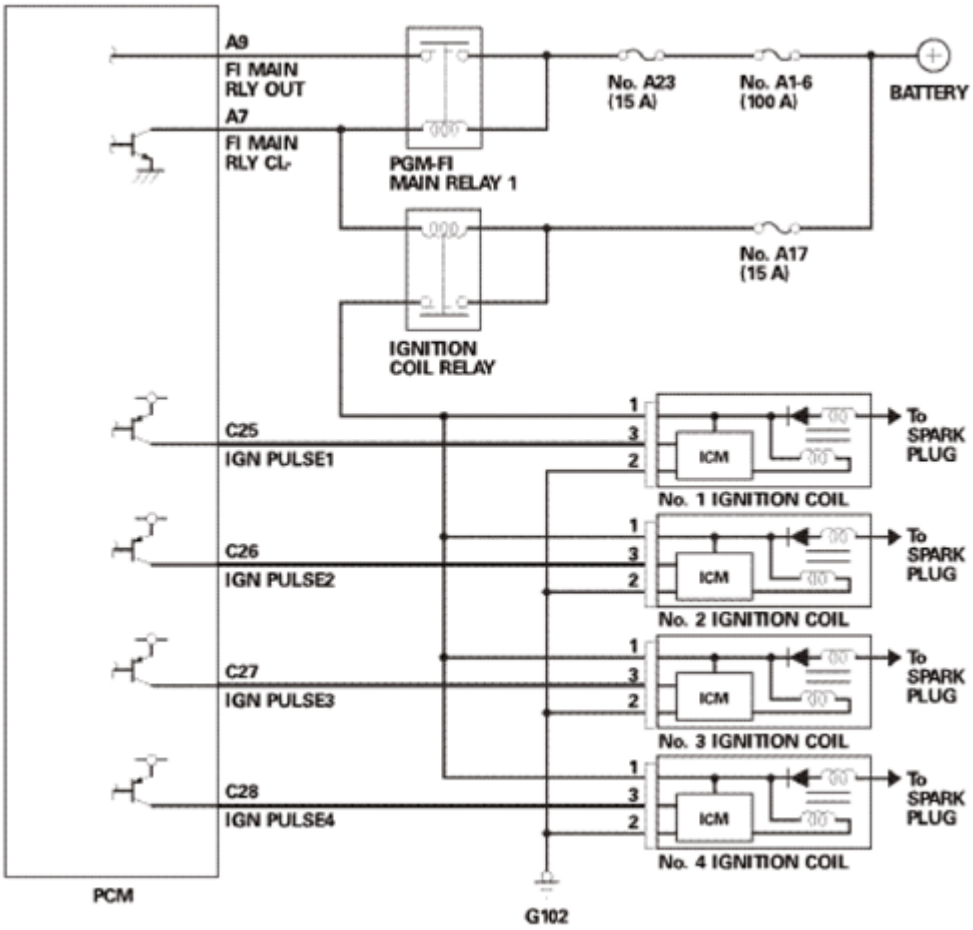

Fig. 124: Checking Continuity Between Ignition Coil Control Terminal Ignition Coil 3P Connector Terminal No. 3 And Body Ground
Courtesy of AMERICAN HONDA MOTOR CO., INC.

Is there continuity?

YES : Repair the short to ground on the ignition coil control wire, and then **do the repair verification** .

NO : The ignition coil control wiring is OK. **Substitute a known-good PCM** See **PCM REMOVAL AND INSTALLATION** or **PCM UPDATE** , and then **do the repair verification** .

38. Check Ignition Coil Power Circuit
    - 1. Measure the voltage between ignition coil 3P connector terminal No. 1 (power) and a known-good engine ground.

GETtheMANUALS.org

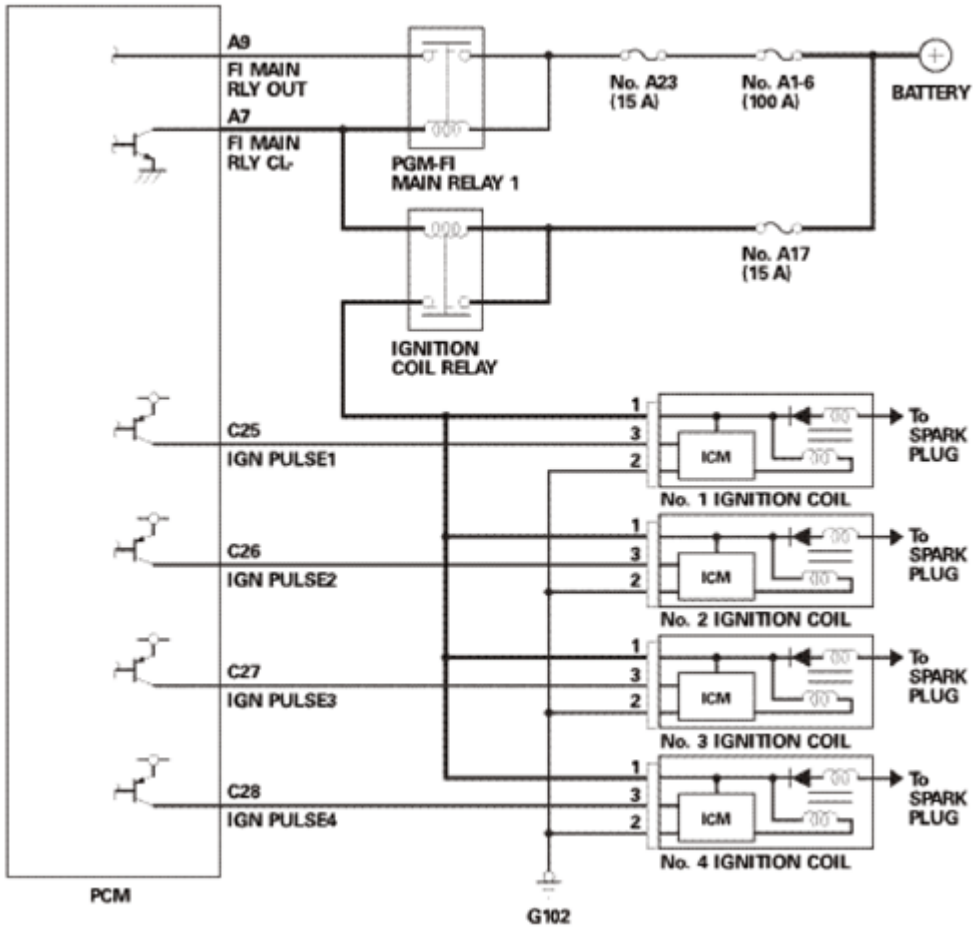

Fig. 125: Measuring Voltage Between Ignition Coil 3P Connector Terminal No. 1 (Power) And Ground
Courtesy of AMERICAN HONDA MOTOR CO., INC.

Is there battery voltage between the ignition coil power terminal and engine ground?

YES : The power circuit is OK. Repair the open circuit between the ignition coil (3P connector terminal No. 2) and G102, and then **do the repair verification** .

NO : Repair the open circuit between the ignition coil and the ignition coil relay, and then **do the repair verification** .

39. Inspect Ignition Coil
    - 1. Inspect the ignition coil and spark plug tube for engine oil contamination.

Is the ignition coil covered in engine oil?

YES : Clean the oil from the ignition coil and spark plug tube. REPLACE THE SPARK PLUG TUBE SEALS IN THE CYLINDER HEAD COVER , and then **do the repair verification** .

GETtheMANUALS.org

NO : Go to step 40.

40. Exchange Spark Plug and Ignition Coil
    - 1. Exchange the spark plug and the ignition coil with normally operating cylinder.
    - 2. Drive the vehicle under the conditions when the misfire was duplicated.
    - 3. Monitor these parameters in the DATA LIST:
        - CYL1 MISFIRE
        - CYL2 MISFIRE
        - CYL3 MISFIRE
        - CYL4 MISFIRE

Signal	Current conditions	
	Values	Unit
CYL1 MISFIRE		
CYL2 MISFIRE		
CYL3 MISFIRE		
CYL4 MISFIRE		

Did the misfire counts stay at the problem cylinder?

YES : The ignition coil and spark plug are OK. Go to step 42.

NO : There is a failure in the ignition coil or the spark plug. Go to step 41.

41. Exchange Ignition Coil
    - 1. Exchange the ignition coil on the problem cylinder with a normally operating cylinder.
    - 2. Drive the vehicle under the conditions when the misfire was duplicated.
    - 3. Monitor these parameters in the DATA LIST:
        - CYL1 MISFIRE
        - CYL2 MISFIRE
        - CYL3 MISFIRE
        - CYL4 MISFIRE

Signal	Current conditions	
	Values	Unit
CYL1 MISFIRE		
CYL2 MISFIRE		
CYL3 MISFIRE		
CYL4 MISFIRE		

Did the misfire counts stay at the problem cylinder?

GETtheMANUALS.org

YES : The spark plug has a failure. REPLACE THE SPARK PLUG , and then **do the repair verification** .

NO : The ignition coil has a failure. REPLACE THE IGNITION COIL , and then **do the repair verification** .

42. Check MAP Sensor Fluctuation
    - 1. Start the engine, and let it idle until the cooling fans cycle twice.
    - 2. Turn off all engine and electrical loads (AC, radio, lights, etc.).
    - 3. Configure a HIGH-SPEED SNAPSHOT, and select only the MAP SENSOR.
    - 4. Begin displaying live vehicle data on a line graph.
    - 5. Configure the MAP SENSOR line graph range for 1.2 V MAX and 0.8 V MIN.
    - 6. Watch the MAP SENSOR fluctuation. See examples below.

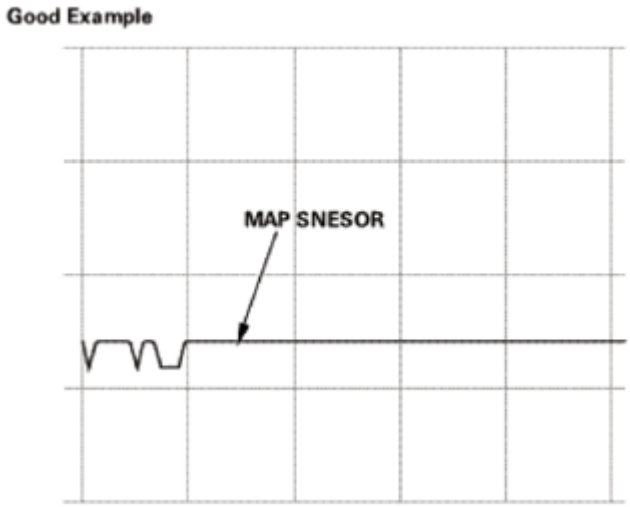

Fig. 126: MAP Sensor Proper Signal Waveform
Courtesy of AMERICAN HONDA MOTOR CO., INC.

GETtheMANUALS.org

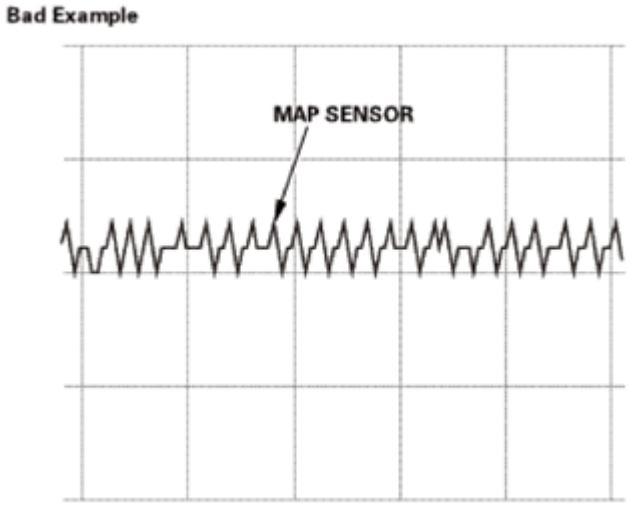

Fig. 127: MAP Sensor Improper Signal Waveform
Courtesy of AMERICAN HONDA MOTOR CO., INC.

Does the MAP SENSOR continuously fluctuate 0.04 V or more at idle, no loads, engine hot?

YES : The intake manifold pressure fluctuation indicates a mechanical engine failure. Go to step 43.

NO : The intake manifold vacuum fluctuation is OK. Go to step 46.

43. Adjust Valve Clearance
    - 1. **Adjust the valve clearances** See VALVE CLEARANCE ADJUSTMENT or VALVE, SPRING, AND VALVE SEAL REMOVAL AND INSTALLATION , and inspect the camshaft for excessive wear or grooves.

      NOTE: ECT Sensor 1 must read less than 100 °F (38 ° C) before adjusting the valve clearance. Short cutting this step may cause incorrect valve clearance and engine misfire.

    - 2. Recheck the MAP Sensor fluctuation at idle.

Does the MAP SENSOR continuously fluctuate 0.04 V or more at idle, no loads, engine hot?

YES : Adjusting the valve clearance did not correct the excessive MAP sensor fluctuation. Go to step 44.

NO : The excessive MAP sensor fluctuation was caused by incorrect valve clearance. **Perform the Repair Confirmation** .

44. Check Cylinder Leakage
    - 1. PERFORM A CYLINDER LEAKAGE TEST .
    - 2. Record your test results in the chart shown below.

GETtheMANUALS.org

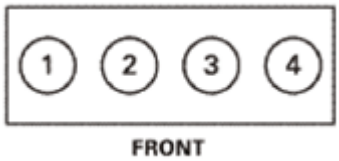

Fig. 128: Identifying Cylinder
Courtesy of AMERICAN HONDA MOTOR CO., INC.

	Leakage %	Leakage Area
No. 1	%	
No. 2	%	
No. 3	%	
No. 4	%	

Does any cylinder have leakage greater than 10 %?

YES : If the majority of the air is escaping from exhaust pipe or throttle body, check for tight valve clearance and adjust each cylinder as needed, then retest. Determine the cause of the cylinder leakage and repair the engine as needed, and then **do the repair verification** .

NO : The cylinders are sealing properly. Go to step 45.

45. Check Cylinder Compression
    - 1. PERFORM A CYLINDER COMPRESSION TEST .
    - 2. Record your test results in a chart similar to the one shown below.

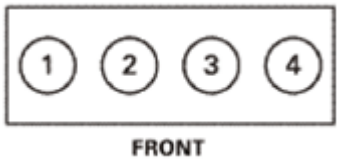

Fig. 129: Identifying Cylinder
Courtesy of AMERICAN HONDA MOTOR CO., INC.

	Compression
No. 1	PSI
No. 2	PSI
No. 3	PSI
No. 4	PSI

Highest Reading	Lowest Reading	Variation
PSI	PSI	%

Does the compression vary more than 10 % between cylinders, or does any cylinder read below 150 PSI?

GETtheMANUALS.org

YES : The cylinder leakage is normal, but the engine compression is low. Check for each of the conditions below and repair as needed, and then **do the repair verification** .

- Incorrect camshaft timing.
- A bent (short) connecting rod.
- Worn or damaged camshaft lobes.

NO : The engine compression and cylinder leakage is normal. Go to step 46.

46. Exchange Fuel Injector
    - 1. Exchange the fuel injector from the problem cylinder with one from another cylinder.
    - 2. Drive the vehicle under the conditions when the misfire was duplicated.
    - 3. Monitor these parameters in the DATA LIST:
        - CYL1 MISFIRE
        - CYL2 MISFIRE
        - CYL3 MISFIRE
        - CYL4 MISFIRE

Signal	Current conditions	
	Values	Unit
CYL1 MISFIRE		
CYL2 MISFIRE		
CYL3 MISFIRE		
CYL4 MISFIRE		

Do the misfire counts stay at the problem cylinder when the fuel injector is swapped?

YES : The fuel injector is OK. Go to step 47.

NO : The fuel injector is faulty. REPLACE THE FAULTY FUEL INJECTOR , and then **do the repair verification** .

47. CKP Pattern Clear/Pattern Learn
    - 1. Select CRANK PATTERN in the ADJUSTMENT MENU with the HDS.
    - 2. Select CRANK PATTERN CLEAR, and clear the CKP pattern.
    - 3. Select CRANK PATTERN LEARNING with the HDS, and follow the screen prompts.
    - 4. Drive the vehicle under the conditions when the misfire was duplicated.
    - 5. Monitor these parameters in the DATA LIST:
        - CYL1 MISFIRE
        - CYL2 MISFIRE
        - CYL3 MISFIRE
        - CYL4 MISFIRE

GETtheMANUALS.org

Signal	Current conditions	
	Values	Unit
CYL1 MISFIRE		
CYL2 MISFIRE		
CYL3 MISFIRE		
CYL4 MISFIRE		

Did the misfire counts stay at the problem cylinder?

YES : **Update the PCM with the latest software** See **PCM REMOVAL AND INSTALLATION** or **PCM UPDATE** or **substitute a known-good PCM** See **PCM REMOVAL AND INSTALLATION** or **PCM UPDATE** , and then **do the repair verification** .

NO : **Perform the Repair Confirmation** .

48. Inspect Spark Plug
    - 1. Remove the spark plug from the problem cylinder.
    - 2. Inspect the spark plug for signs of failure. Also make sure the spark plugs are the correct part number for the vehicle.

Does the spark plug show any signs of failure or is it not the correct part number?

YES : REPLACE THE SPARK PLUG , and then **do the repair verification** .

NO : Go to step 49.

49. Check MAP Sensor Fluctuation
    - 1. Start the engine, and let it idle until the cooling fans cycle twice.
    - 2. Turn off all engine and electrical loads (AC, radio, lights, etc.).
    - 3. Configure a HIGH-SPEED SNAPSHOT, and select only the MAP SENSOR.
    - 4. Begin displaying live vehicle data on a line graph.
    - 5. Configure the MAP SENSOR line graph range for 1.2 V MAX and 0.8 V MIN.
    - 6. Watch the MAP SENSOR fluctuation. See examples below.

GETtheMANUALS.org

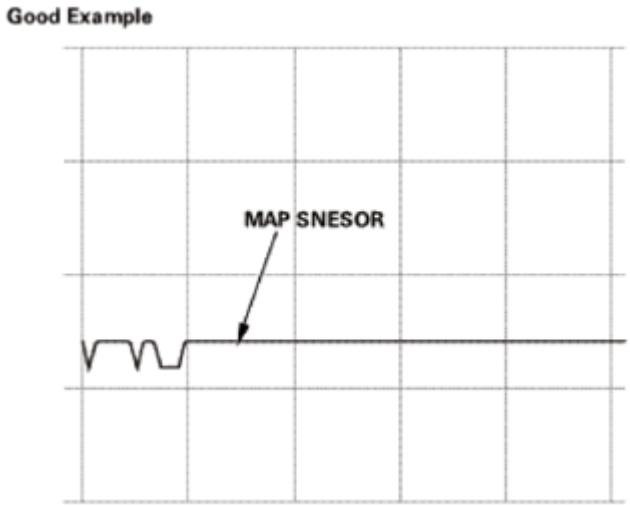

Fig. 130: MAP Sensor Proper Signal Waveform
Courtesy of AMERICAN HONDA MOTOR CO., INC.

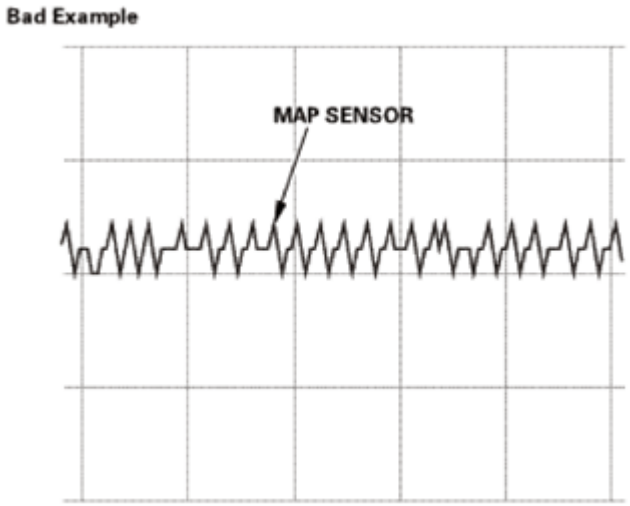

Fig. 131: MAP Sensor Improper Signal Waveform
Courtesy of AMERICAN HONDA MOTOR CO., INC.

Does the MAP SENSOR continuously fluctuate 0.04 V or more at idle, no loads, engine hot?

YES : The intake manifold pressure fluctuation indicates a mechanical engine failure. Go to step 50.

NO : The intake manifold vacuum fluctuation is OK. Go to step 53.

50. Adjust Valve Clearance
    - 1. **Adjust the valve clearances** See VALVE CLEARANCE ADJUSTMENT or VALVE, SPRING, AND VALVE SEAL REMOVAL AND INSTALLATION , and inspect the camshaft for excessive wear or grooves.

GETtheMANUALS.org

NOTE: **ECT Sensor 1 must read less than 100 ° F (38 ° C) before adjusting the valve clearance. Short cutting this step may cause incorrect valve clearance and engine misfire.**

- 2. Recheck the MAP Sensor fluctuation at idle.

Does the MAP SENSOR continuously fluctuate 0.04 V or more at idle, no loads, engine hot?

YES : Adjusting the valve clearance did not correct the excessive MAP sensor fluctuation. Go to step 51.

NO : The excessive MAP sensor fluctuation was caused by incorrect valve clearance. **Perform the Repair Confirmation** .

51. Check Cylinder Leakage
    - 1. PERFORM A CYLINDER LEAKAGE TEST .
    - 2. Record your test results in the chart shown below.

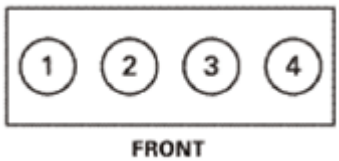

Fig. 132: Identifying Cylinder
Courtesy of AMERICAN HONDA MOTOR CO., INC.

	Leakage %	Leakage Area
No. 1	%	
No. 2	%	
No. 3	%	
No. 4	%	

Does any cylinder have leakage greater than 10 %?

YES : If the majority of the air is escaping from exhaust pipe or throttle body, check for tight valve clearance and adjust each cylinder as needed, then retest. Determine the cause of the cylinder leakage and repair the engine as needed, and then **do the repair verification** .

NO : The cylinders are sealing properly. Go to step 52.

52. Check Cylinder Compression
    - 1. PERFORM A CYLINDER COMPRESSION TEST .
    - 2. Record your test results in a chart similar to the one shown below.

GETtheMANUALS.org

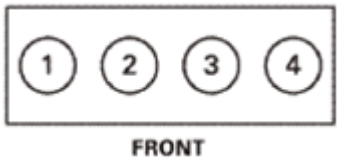

Fig. 133: Identifying Cylinder
Courtesy of AMERICAN HONDA MOTOR CO., INC.

	Compression
No. 1	PSI
No. 2	PSI
No. 3	PSI
No. 4	PSI

Highest Reading	Lowest Reading	Variation
PSI	PSI	%

Does the compression vary more than 10 % between cylinders, or does any cylinder read below 150 PSI?

YES : The cylinder leakage is normal, but the engine compression is low. Check for each of the conditions below and repair as needed, and then **do the repair verification** .

- Incorrect camshaft timing.
- A bent (short) connecting rod.
- Worn or damaged camshaft lobes.

NO : The engine compression and cylinder leakage is normal. Go to step 55.

53. Check Cylinder Leakage
    - 1. PERFORM A CYLINDER LEAKAGE TEST .
    - 2. Record your test results in the chart shown below.

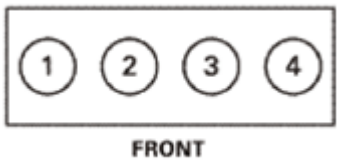

Fig. 134: Identifying Cylinder
Courtesy of AMERICAN HONDA MOTOR CO., INC.

	Leakage %	Leakage Area
No. 1	%	
No. 2	%	

GETtheMANUALS.org

No. 3	%	
No. 4	%	

Does any cylinder have leakage greater than 10%?

YES : If the majority of the air is escaping from exhaust pipe or throttle body, check for tight valve clearance and adjust each cylinder as needed, then retest. Determine the cause of the cylinder leakage and repair the engine as needed, and then **do the repair verification** .

NO : The cylinders are sealing properly. Go to step 54.

54. Check Cylinder Compression
    - 1. PERFORM A CYLINDER COMPRESSION TEST .
    - 2. Record your test results in a chart similar to the one shown below.

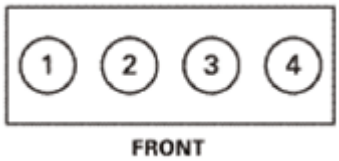

Fig. 135: Identifying Cylinder
Courtesy of AMERICAN HONDA MOTOR CO., INC.

	Compression
No. 1	PSI
No. 2	PSI
No. 3	PSI
No. 4	PSI

Highest Reading	Lowest Reading	Variation
PSI	PSI	%

Does the compression vary more than 10 % between cylinders, or does any cylinder read below 150 PSI?

YES : The cylinder leakage is normal, but the engine compression is low. Check for each of the conditions below and repair as needed, and then **do the repair verification** .

- Incorrect camshaft timing.
- A bent (short) connecting rod.
- Worn or damaged camshaft lobes.

NO : The engine compression and cylinder leakage is normal. Go to step 55.

55. Check Fuel Pressure

GETtheMANUALS.org

- 1. RELIEVE THE FUEL PRESSURE .
- 2. ATTACH THE FUEL PRESSURE GAUGE SET AND THE FUEL PRESSURE GAUGE .
- 3. Locate and record the fuel pressure specification for your vehicle.

Minimum Pressure	Maximum Pressure
kPa	kPa

- 4. Start the engine and record the fuel pressure under the conditions the misfire was duplicated.

Fuel Pressure
kPa

Is the fuel pressure within specifications?

YES : The fuel pressure is OK. Go to step 56.

NO : Check for pinched or damaged fuel lines. If OK, **replace the fuel tank unit** See FUEL TANK UNIT REMOVAL AND INSTALLATION , and then **do the repair verification** .

56. Check Fuel Contamination
    - 1. **Remove the fuel tank unit** See FUEL TANK UNIT DISASSEMBLY AND REASSEMBLY or FUEL TANK UNIT REMOVAL AND INSTALLATION .
    - 2. Inspect for evidence of fuel contamination such as diesel fuel, water, rust, or debris.

NOTE: **If the misfire occurred shortly after refueling, the likely cause is poor fuel quality. The MIL DIST (MIL distance) value in the DATA LIST, along with the fuel level, can help you make this determination.**

Incorrect or contaminated fuel typically affects multiple cylinders. But a problem such as water in the fuel can cause a single cylinder misfire that occurs randomly.

Is there evidence of fuel contamination?

YES : Replace the fuel filter and then drain/refill the fuel tank with a known-good fuel. **Perform the Repair Confirmation** .

NO : The fuel system has no signs of fuel contamination. Go to step 57.

57. Check MAF Sensor g/s
    - 1. Locate and record the MAF SENSOR g/s specification for your vehicle. This can be found in troubleshooting procedure for DTC P0171.

Minimum g/s	Maximum g/s	Specified RPM
g/s	g/s	g/s

GETtheMANUALS.org

- 2. Ensure the vehicle meets these conditions:
  - Engine coolant temperature (ECT SENSOR 1) above 176 °F (80 °C)
  - Transmission in P or N
  - All electrical loads off

Signal	Current conditions	
	Values	Unit
ECT SENSOR 1		

- 3. Monitor the ENGINE SPEED in the DATA LIST with the HDS. Raise and hold the engine speed steady at the specified rpm.

Signal	Current conditions	
	Values	Unit
ENGINE SPEED		

- 4. While holding the rpm steady, check the MAF SENSOR in the DATA LIST.

Signal	Current conditions	
	Values	Unit
MAF SENSOR		

Is the MAF Sensor g/s value within specifications?

YES : The MAF sensor is reading correctly. REPLACE THE FUEL INJECTORS , and then **do the repair verification** .

NO : The MAF sensor is not reading correctly. **REPLACE THE MAF SENSOR/IAT SENSOR** , and then **do the repair verification** .

58. Inspect Spark Plug
    - 1. Remove the spark plug from the problem cylinder.
    - 2. Inspect the spark plug for signs of failure. Also make sure the spark plugs are the correct part number for the vehicle.

Does the spark plug show any signs of failure or is it not the correct part number?

YES : REPLACE THE SPARK PLUG , and then **do the repair verification** .

NO : Go to step 59.

59. Inspect Ignition Coil
    - 1. Inspect the ignition coil and spark plug tube for engine oil contamination.

GETtheMANUALS.org

Is the ignition coil covered in engine oil?

YES : Clean the oil from the ignition coil and spark plug tube. REPLACE THE SPARK PLUG TUBE SEALS IN THE CYLINDER HEAD COVER , and then **do the repair verification** .

NO : Go to step 60.

60. Exchange Spark Plug and Ignition Coil
    - 1. Exchange the spark plug and the ignition coil with normally operating cylinder.
    - 2. Drive the vehicle under the conditions when the misfire was duplicated.
    - 3. Monitor these parameters in the DATA LIST:
        - CYL1 MISFIRE
        - CYL2 MISFIRE
        - CYL3 MISFIRE
        - CYL4 MISFIRE

Signal	Current conditions	
	Values	Unit
CYL1 MISFIRE		
CYL2 MISFIRE		
CYL3 MISFIRE		
CYL4 MISFIRE		

Did the misfire counts stay at the problem cylinder?

YES : The ignition coil and spark plug are OK. Go to step 62.

NO : There is a failure in the ignition coil or the spark plug. Go to step 61.

61. Exchange Ignition Coil
    - 1. Exchange the ignition coil on the problem cylinder with a normally operating cylinder.
    - 2. Drive the vehicle under the conditions when the misfire was duplicated.
    - 3. Monitor these parameters in the DATA LIST:
        - CYL1 MISFIRE
        - CYL2 MISFIRE
        - CYL3 MISFIRE
        - CYL4 MISFIRE

Signal	Current conditions	
	Values	Unit
CYL1 MISFIRE		
CYL2 MISFIRE		

GETtheMANUALS.org

CYL3 MISFIRE		
CYL4 MISFIRE		

Did the misfire counts stay at the problem cylinder?

YES : The spark plug has a failure. REPLACE THE SPARK PLUG , and then **do the repair verification** .

NO : The ignition coil has a failure. REPLACE THE IGNITION COIL , and then **do the repair verification** .

62. Exchange Fuel Injector
    - 1. Exchange the fuel injector from the problem cylinder with one from another cylinder.
    - 2. Drive the vehicle under the conditions when the misfire was duplicated.
    - 3. Monitor these parameters in the DATA LIST:
        - CYL1 MISFIRE
        - CYL2 MISFIRE
        - CYL3 MISFIRE
        - CYL4 MISFIRE

Signal	Current conditions	
	Values	Unit
CYL1 MISFIRE		
CYL2 MISFIRE		
CYL3 MISFIRE		
CYL4 MISFIRE		

Do the misfire counts stay at the problem cylinder when the fuel injector is swapped?

YES : The fuel injector is OK. Go to step 63.

NO : The fuel injector is faulty. REPLACE THE FAULTY FUEL INJECTOR , and then **do the repair verification** .

63. Inspect VTEC System
    - 1. PERFORM THE VTEC ROCKER ARM TEST .

Does the engine pass the VTEC rocker arm test?

YES : Go to step 64.

NO : Repair the VTEC system, and then **do the repair verification** .

64. CKP Pattern Clear/Pattern Learn

GETtheMANUALS.org

- 1. Select CRANK PATTERN in the ADJUSTMENT MENU with the HDS.
- 2. Select CRANK PATTERN CLEAR, and clear the CKP pattern.
- 3. Select CRANK PATTERN LEARNING with the HDS, and follow the screen prompts.
- 4. Drive the vehicle under the conditions when the misfire was duplicated.
- 5. Monitor these parameters in the DATA LIST:
  - CYL1 MISFIRE
  - CYL2 MISFIRE
  - CYL3 MISFIRE
  - CYL4 MISFIRE

Signal	Current conditions	
	Values	Unit
CYL1 MISFIRE		
CYL2 MISFIRE		
CYL3 MISFIRE		
CYL4 MISFIRE		

Did the misfire counts stay at the problem cylinder?

YES : **Update the PCM with the latest software** See **PCM REMOVAL AND INSTALLATION** or **PCM UPDATE** or **substitute a known-good PCM** See **PCM REMOVAL AND INSTALLATION** or **PCM UPDATE** , and then **do the repair verification** .

NO : **Perform the Repair Confirmation** .

65. Inspect Spark Plug
    - 1. Remove the spark plug from the problem cylinder.
    - 2. Inspect the spark plug for signs of failure. Also make sure the spark plugs are the correct part number for the vehicle.

Does the spark plug show any signs of failure or is it not the correct part number?

YES : REPLACE THE SPARK PLUG , and then **do the repair verification** .

NO : Go to step 66.

66. Check Fuel Pressure
    - 1. RELIEVE THE FUEL PRESSURE .
    - 2. ATTACH THE FUEL PRESSURE GAUGE SET AND THE FUEL PRESSURE GAUGE .
    - 3. Locate and record the fuel pressure specification for your vehicle.

Minimum Pressure	Maximum Pressure

GETtheMANUALS.org

kPa	kPa

- 4. Start the engine and record the fuel pressure under the conditions the misfire was duplicated.

Fuel Pressure
kPa

Is the fuel pressure within specifications?

YES : The fuel pressure is OK. Go to step 67.

NO : Check for pinched or damaged fuel lines. If OK, **replace the fuel tank unit** See FUEL TANK UNIT REMOVAL AND INSTALLATION or FUEL TANK UNIT DISASSEMBLY AND REASSEMBLY , and then **do the repair verification** .

67. Check Fuel Contamination
    - 1. **Remove the fuel tank unit** See FUEL TANK UNIT DISASSEMBLY AND REASSEMBLY or FUEL TANK UNIT REMOVAL AND INSTALLATION .
    - 2. Inspect for evidence of fuel contamination such as diesel fuel, water, rust, or debris.

NOTE: **If the misfire occurred shortly after refueling, the likely cause is poor fuel quality. The MIL DIST (MIL distance) value in the DATA LIST, along with the fuel level, can help you make this determination.**

Incorrect or contaminated fuel typically affects multiple cylinders. But a problem such as water in the fuel can cause a single cylinder misfire that occurs randomly.

Is there evidence of fuel contamination?

YES : **Replace the fuel filter** See FUEL TANK UNIT REMOVAL AND INSTALLATION or FUEL TANK UNIT DISASSEMBLY AND REASSEMBLY and then drain/refill the fuel tank with a known-good fuel. **Perform the Repair Confirmation** .

NO : The fuel system has no signs of fuel contamination. Go to step 68.

68. Exchange Fuel Injector
    - 1. Exchange the fuel injector from the problem cylinder with one from another cylinder.
    - 2. Drive the vehicle under the conditions when the misfire was duplicated.
    - 3. Monitor these parameters in the DATA LIST:
        - CYL1 MISFIRE
        - CYL2 MISFIRE
        - CYL3 MISFIRE
        - CYL4 MISFIRE

GETtheMANUALS.org

Signal	Current conditions	
	Values	Unit
CYL1 MISFIRE		
CYL2 MISFIRE		
CYL3 MISFIRE		
CYL4 MISFIRE		

Do the misfire counts stay at the problem cylinder when the fuel injector is swapped?

YES : The fuel injector is OK. Go to step 69.

NO : The fuel injector is faulty. REPLACE THE FAULTY FUEL INJECTOR , and then **do the repair verification** .

69. Inspect VTEC System
    - 1. PERFORM THE VTEC ROCKER ARM TEST .

Does the engine pass the VTEC rocker arm test?

YES : Go to step 70.

NO : Repair the VTEC system, and then **do the repair verification** .

70. Check for Exhaust Restrictions
    - 1. Reinstall all removed parts, and reconnect all connectors.
    - 2. Record the MAP SENSOR value while the engine is off.

Signal	Current conditions	
	Values	Unit
MAP SENSOR		

    - 3. Start the engine and monitor the ENGINE SPEED and MAP SENSOR in the DATA LIST with the HDS.

Signal	Current conditions	
	Values	Unit
MAP SENSOR		
ENGINE SPEED		

    - 4. Raise the engine speed to 3500 rpm and hold the throttle steady.

Does the MAP SENSOR read near atmospheric pressure (engine off value)?

YES : There is a restriction in the exhaust system. Check for catalyst damage and repair as necessary.

GETtheMANUALS.org

Perform the Repair Confirmation .

NO : Go to step 71.

71. CKP Pattern Clear/Pattern Learn
    - 1. Select CRANK PATTERN in the ADJUSTMENT MENU with the HDS.
    - 2. Select CRANK PATTERN CLEAR, and clear the CKP pattern.
    - 3. Select CRANK PATTERN LEARNING with the HDS, and follow the screen prompts.
    - 4. Drive the vehicle under the conditions when the misfire was duplicated.
    - 5. Monitor these parameters in the DATA LIST:
        - CYL1 MISFIRE
        - CYL2 MISFIRE
        - CYL3 MISFIRE
        - CYL4 MISFIRE

Signal	Current conditions	
	Values	Unit
CYL1 MISFIRE		
CYL2 MISFIRE		
CYL3 MISFIRE		
CYL4 MISFIRE		

Did the misfire counts stay at the problem cylinder?

YES : **Update the PCM with the latest software** See **PCM REMOVAL AND INSTALLATION** or **PCM UPDATE** or **SUBSTITUTE A KNOWN-GOOD PCM** , and then **do the repair verification** .

NO : **Perform the Repair Confirmation** .

72. Check MAP Sensor Fluctuation
    - 1. Start the engine, and let it idle until the cooling fans cycle twice.
    - 2. Turn off all engine and electrical loads (AC, radio, lights, etc.).
    - 3. Configure a HIGH-SPEED SNAPSHOT, and select only the MAP SENSOR.
    - 4. Begin displaying live vehicle data on a line graph.
    - 5. Configure the MAP SENSOR line graph range for 1.2 V MAX and 0.8 V MIN.
    - 6. Watch the MAP SENSOR fluctuation. See examples below.

GETtheMANUALS.org

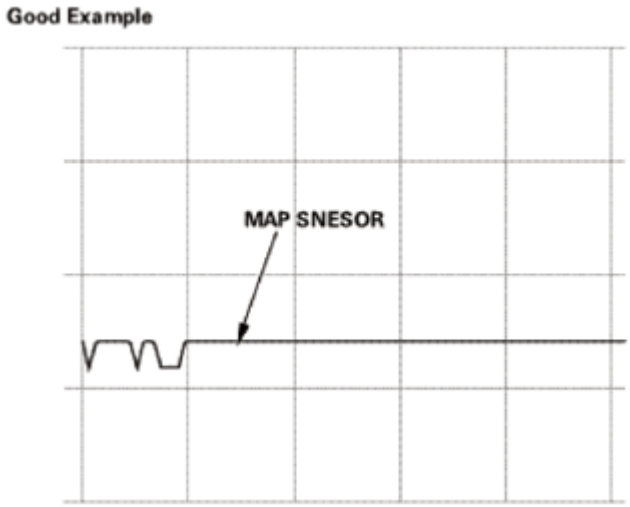

Fig. 136: MAP Sensor Proper Signal Waveform
Courtesy of AMERICAN HONDA MOTOR CO., INC.

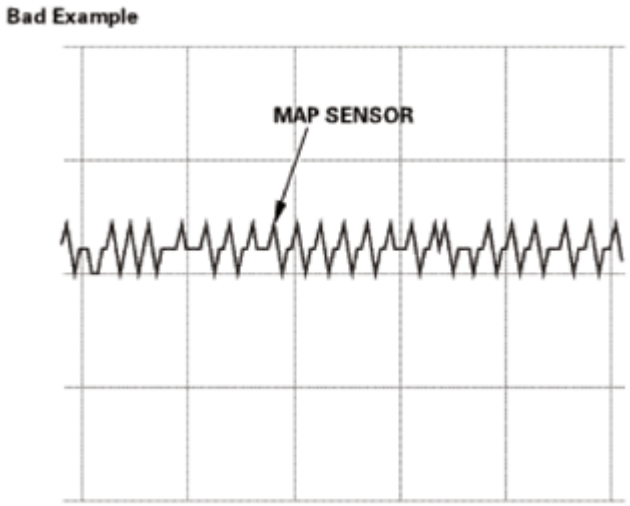

Fig. 137: MAP Sensor Improper Signal Waveform
Courtesy of AMERICAN HONDA MOTOR CO., INC.

Does the MAP SENSOR continuously fluctuate 0.04 V or more at idle, no loads, engine cold?

YES : The intake manifold pressure fluctuation indicates a mechanical engine failure. Go to step 73.

NO : The intake manifold vacuum fluctuation is OK. Go to step 76.

73. Adjust Valve Clearance
    - 1. **Adjust the valve clearances** See VALVE CLEARANCE ADJUSTMENT or VALVE, SPRING, AND VALVE SEAL REMOVAL AND INSTALLATION , and inspect the camshaft for excessive wear or grooves.

GETtheMANUALS.org

NOTE: **ECT Sensor 1 must read less than 100 °F (38 °C) before adjusting the valve clearance. Short cutting this step may cause incorrect valve clearance and engine misfire.**

- 2. Recheck the MAP Sensor fluctuation at idle.

Does the MAP SENSOR continuously fluctuate 0.04 V or more at idle, no loads, engine cold?

YES : Adjusting the valve clearance did not correct the excessive MAP sensor fluctuation. Go to step 74.

NO : The excessive MAP sensor fluctuation was caused by incorrect valve clearance. **Perform the Repair Confirmation** .

74. Check Cylinder Leakage
    - 1. PERFORM A CYLINDER LEAKAGE TEST .

Does any cylinder have leakage greater than 10 %?

YES : If the majority of the air is escaping from exhaust pipe or throttle body, check for tight valve clearance and adjust each cylinder as needed, then retest. Determine the cause of the cylinder leakage and repair the engine as needed, and then **do the repair verification** .

NO : The cylinders are sealing properly. Go to step 75.

75. Check Cylinder Compression
    - 1. PERFORM A CYLINDER COMPRESSION TEST .
    - 2. Record your test results in a chart similar to the one shown below.

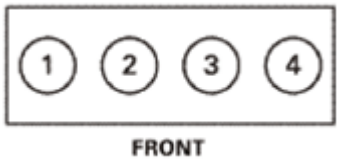

Fig. 138: Identifying Cylinder
Courtesy of AMERICAN HONDA MOTOR CO., INC.

	Compression
No. 1	PSI
No. 2	PSI
No. 3	PSI
No. 4	PSI

Highest Reading	Lowest Reading	Variation
PSI	PSI	%

GETtheMANUALS.org

Does the compression vary more than 10 % between cylinders, or does any cylinder read below 150 PSI?

YES : The cylinder leakage is normal, but the engine compression is low. Check for each of the conditions below and repair as needed, and then **do the repair verification** .

- Incorrect camshaft timing.
- A bent (short) connecting rod.
- Worn or damaged camshaft lobes.

NO : The engine compression and cylinder leakage is normal. Go to step 76.

76. Check Fuel Injector Leak Down
    - 1. CONNECT THE FUEL PRESSURE GAUGE SET .
    - 2. Ensure that the fuel shut off valve is on the fuel pump side of the pressure gauge.

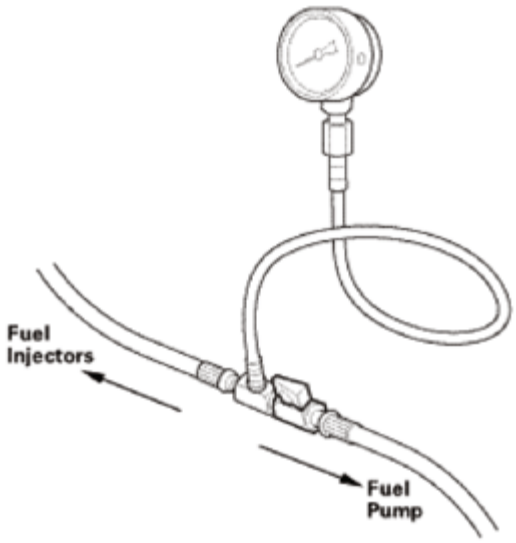

Fig. 139: Checking Fuel Injector Leakage Using Pressure Gauge
Courtesy of AMERICAN HONDA MOTOR CO., INC.

    - 3. Start the engine and then shut it off.
    - 4. Turn the shut off valve 90° to isolate the pressure between the fuel injectors and the fuel pressure gauge.
    - 5. Record the initial fuel pressure reading.
    - 6. Let the vehicle sit for 10 minutes.
    - 7. Check the fuel pressure.

Does the pressure drop more than 10 PSI within 10 minutes?

YES : The fuel injectors are leaking. REPLACE THE FUEL INJECTORS , and then **do the repair verification** .

GETtheMANUALS.org

NO : The fuel injectors are not leaking. Go to step 77.

77. Inspect Spark Plug
    - 1. Remove the spark plug from the problem cylinder.
    - 2. Inspect the spark plug for signs of failure. Also make sure the spark plugs are the correct part number for the vehicle.

Does the spark plug show any signs of failure or is it not the correct part number?

YES : REPLACE THE SPARK PLUG , and then **do the repair verification** .

NO : Go to step 78.

78. Exchange Spark Plug and Ignition Coil
    - 1. Exchange the spark plug and the ignition coil with normally operating cylinder.
    - 2. Drive the vehicle under the conditions when the misfire was duplicated.
    - 3. Monitor these parameters in the DATA LIST:
        - CYL1 MISFIRE
        - CYL2 MISFIRE
        - CYL3 MISFIRE
        - CYL4 MISFIRE

Signal	Current conditions	
	Values	Unit
CYL1 MISFIRE		
CYL2 MISFIRE		
CYL3 MISFIRE		
CYL4 MISFIRE		

Did the misfire counts stay at the problem cylinder?

YES : The ignition coil and spark plug are OK.

- If you have already performed a cylinder leakage and compression test, go to step 82.
- If you have not performed a cylinder leakage and compression test, go to step 80.

NO : There is a failure in the ignition coil or the spark plug. Go to step 79.

79. Exchange Ignition Coil
    - 1. Exchange the ignition coil on the problem cylinder with a normally operating cylinder.
    - 2. Drive the vehicle under the conditions when the misfire was duplicated.
    - 3. Monitor these parameters in the DATA LIST:
        - CYL1 MISFIRE

GETtheMANUALS.org

- CYL2 MISFIRE
- CYL3 MISFIRE
- CYL4 MISFIRE

Signal	Current conditions	
	Values	Unit
CYL1 MISFIRE		
CYL2 MISFIRE		
CYL3 MISFIRE		
CYL4 MISFIRE		

Did the misfire counts stay at the problem cylinder?

YES : The spark plug has a failure. REPLACE THE SPARK PLUG , and then **do the repair verification** .

NO : The ignition coil has a failure. REPLACE THE IGNITION COIL , and then **do the repair verification** .

80. Check Cylinder Leakage
    - 1. PERFORM A CYLINDER LEAKAGE TEST .
    - 2. Record your test results in the chart shown below.

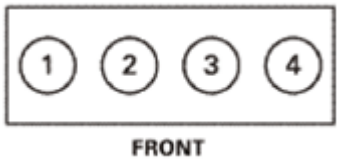

Fig. 140: Identifying Cylinder
Courtesy of AMERICAN HONDA MOTOR CO., INC.

	Leakage %	Leakage Area
No. 1	%	
No. 2	%	
No. 3	%	
No. 4	%	

Does any cylinder have leakage greater than 10 %?

YES : If the majority of the air is escaping from exhaust pipe or throttle body, check for tight valve clearance and adjust each cylinder as needed, then retest. Determine the cause of the cylinder leakage and repair the engine as needed, and then **do the repair verification** .

NO : The cylinders are sealing properly. Go to step 81.

GETtheMANUALS.org

81. Check Cylinder Compression
    - 1. PERFORM A CYLINDER COMPRESSION TEST .
    - 2. Record your test results in a chart similar to the one shown below.

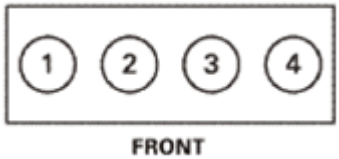

Fig. 141: Identifying Cylinder
Courtesy of AMERICAN HONDA MOTOR CO., INC.

	Compression
No. 1	PSI
No. 2	PSI
No. 3	PSI
No. 4	PSI

Highest Reading	Lowest Reading	Variation
PSI	PSI	%

Does the compression vary more than 10 % between cylinders, or does any cylinder read below 150 PSI?

YES : The cylinder leakage is normal, but the engine compression is low. Check for each of the conditions below and repair as needed, and then **do the repair verification** .

- Incorrect camshaft timing.
- A bent (short) connecting rod.
- Worn or damaged camshaft lobes.

NO : The engine compression and cylinder leakage is normal. Go to step 82.

82. Engine Carbon Removal
    - 1. Perform a top engine cleaning following the product manufacturer's instructions.
    - 2. Drive the vehicle under the conditions when the misfire was duplicated.
    - 3. Monitor these parameters in the DATA LIST:
        - CYL1 MISFIRE
        - CYL2 MISFIRE
        - CYL3 MISFIRE
        - CYL4 MISFIRE

	Current conditions

GETtheMANUALS.org

Signal	Values	Unit
CYL1 MISFIRE		
CYL2 MISFIRE		
CYL3 MISFIRE		
CYL4 MISFIRE		

Did the misfire counts stay?

YES : The carbon removal procedure did not correct the misfire. REPLACE THE FUEL INJECTORS , and then **do the repair verification** .

NO : The carbon removal procedure corrected the misfire. **Perform the Repair Confirmation** .

REPAIR VERIFICATION

- 1. Reinstall all removed parts, and reconnect all connectors.
- 2. Turn the ignition switch to ON (II).
- 3. **Reset the PCM with the HDS** See **HOW TO TROUBLESHOOT THE A/T SYSTEM** or **HOW TO TROUBLESHOOT THE FUEL AND EMISSIONS SYSTEMS** .
- 4. **Clear the CKP pattern with the HDS** See **HOW TO TROUBLESHOOT THE A/T SYSTEM** or **HOW TO TROUBLESHOOT THE FUEL AND EMISSIONS SYSTEMS** .
- 5. **DO THE PCM IDLE LEARN PROCEDURE** .
- 6. **Do the CKP pattern learn procedure** See **HOW TO TROUBLESHOOT THE FUEL AND EMISSIONS SYSTEMS** or **HOW TO TROUBLESHOOT THE A/T SYSTEM** .
- 7. Drive the vehicle under the conditions that you noticed the misfire while monitoring these parameters in the DATA LIST:
  - CYL1 MISFIRE
  - CYL2 MISFIRE
  - CYL3 MISFIRE
  - CYL4 MISFIRE

Signal	Current conditions	
	Values	Unit
CYL1 MISFIRE		
CYL2 MISFIRE		
CYL3 MISFIRE		
CYL4 MISFIRE		

Do any of the cylinders display misfire counts?

YES : The engine is still misfiring. Go to step 1 in the Problem verification procedure and ensure that you selected the correct troubleshooting procedure.

GETtheMANUALS.org

NO : The misfire problem has been fixed. Clear the DTC.

DTC P0326: KNOCK SENSOR MALFUNCTION

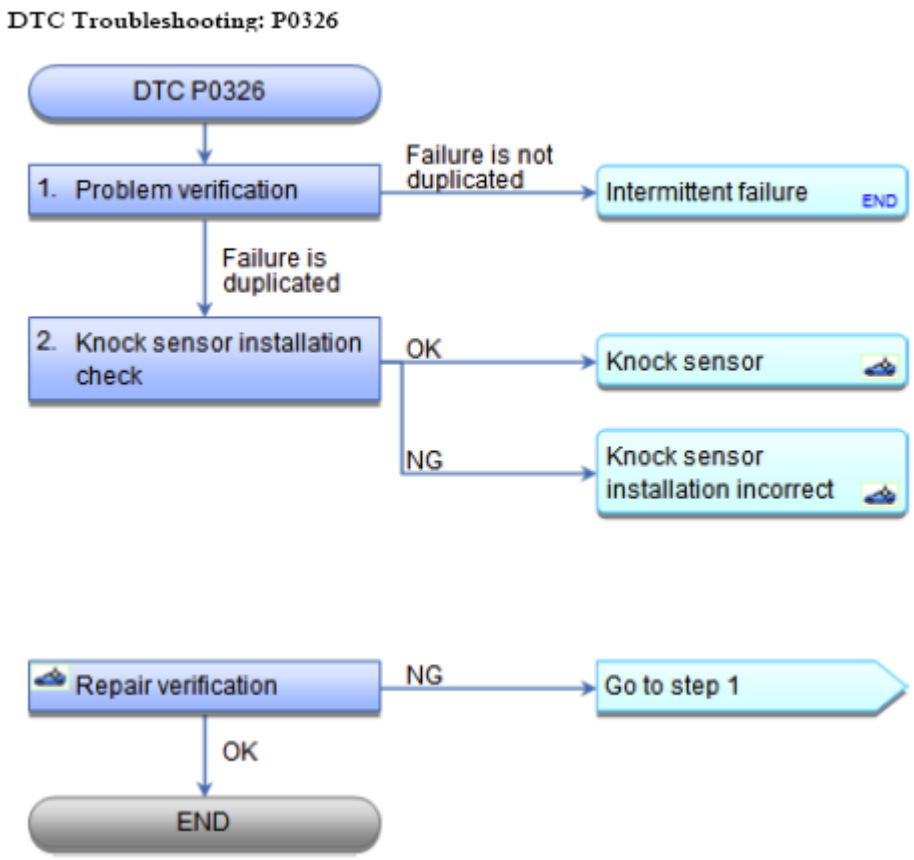

Fig. 142: DTC Troubleshooting Flow Chart (P0326)
Courtesy of AMERICAN HONDA MOTOR CO., INC.

NOTE: **Before you troubleshoot, record all freeze data and any on-board snapshot, and review the general troubleshooting information See HOW TO TROUBLESHOOT THE A/T SYSTEM or HOW TO TROUBLESHOOT THE FUEL AND EMISSIONS SYSTEMS .**

DTC Description	Confirmed DTC	Pending DTC	Freeze Frame
P0326 KNOCK SENSOR MALFUNCTION			

1. Problem verification:
   - 1. Turn the ignition switch to ON (II).
   - 2. **Clear the DTC with the HDS** See **HOW TO TROUBLESHOOT THE A/T SYSTEM** or **HOW TO TROUBLESHOOT THE FUEL AND EMISSIONS SYSTEMS** .
   - 3. Turn the ignition switch to LOCK (0).
   - 4. Start the engine. Hold the engine speed at 2, 000 rpm or more without load (in P or N) for at least

GETtheMANUALS.org

5 seconds.

- 5. Check for Pending or Confirmed DTCs with the HDS.

DTC Description	Confirmed DTC	Pending DTC	Freeze Frame
P0326 KNOCK SENSOR MALFUNCTION			

Is DTC P0326 indicated?

YES : The failure is duplicated. Go to step 2.

NO : Intermittent failure, the system is OK at this time. Check for poor connections or loose terminals at the knock sensor and the PCM.

2. Knock sensor installation check:
   - 1. Check the knock sensor installation.

Is the knock sensor installed correctly?

YES : **REPLACE THE KNOCK SENSOR** , then **do the repair verification** .

NO : **INSTALL THE KNOCK SENSOR CORRECTLY** , then **do the repair verification** .

REPAIR VERIFICATION

- 1. Turn the ignition switch to ON (II).
- 2. **Reset the PCM with the HDS** See **HOW TO TROUBLESHOOT THE A/T SYSTEM** or **HOW TO TROUBLESHOOT THE FUEL AND EMISSIONS SYSTEMS** .
- 3. **DO THE PCM IDLE LEARN PROCEDURE** .
- 4. Test-drive under these conditions:
  - Engine coolant temperature (ECT SENSOR 1) above 158 °F (70 °C)
  - Transmission in D
  - Engine speed at 1, 500 rpm or more
  - Drive 5 seconds or more

Signal	Current conditions	
	Values	Unit
ECT SENSOR 1		
ENGINE SPEED		

- Check for Pending or Confirmed DTCs with the HDS.

Is DTC P0326 indicated?

YES : Check for poor connections or loose terminals at the knock sensor and the PCM, then go to step 1.

GETtheMANUALS.org

NO : Troubleshooting is complete. If any other Pending or Confirmed DTCs are indicated, go to the indicated DTC's troubleshooting.

DTC P0327: KNOCK SENSOR CIRCUIT LOW VOLTAGE

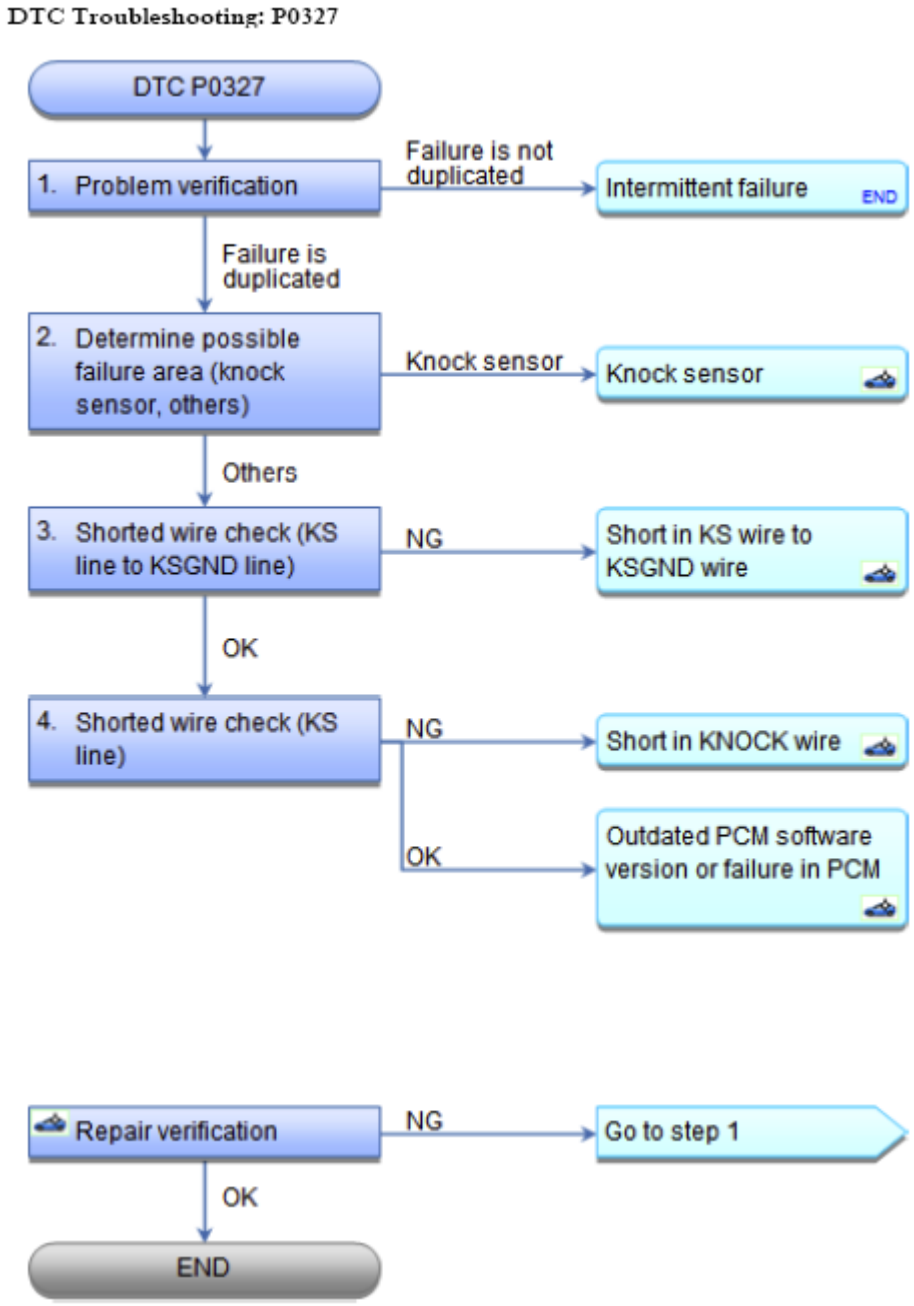

Fig. 143: DTC Troubleshooting Flow Chart (P0327)
Courtesy of AMERICAN HONDA MOTOR CO., INC.

NOTE: **Before you troubleshoot, record all freeze data and any on-board snapshot, and review the general troubleshooting information See HOW TO TROUBLESHOOT**

GETtheMANUALS.org

THE FUEL AND EMISSIONS SYSTEMS or HOW TO TROUBLESHOOT THE A/T SYSTEM .

DTC Description	Confirmed DTC	Pending DTC	Freeze Frame
P0327 KNOCK SENSOR CIRCUIT LOW VOLTAGE			

1. Problem verification:
   - 1. Turn the ignition switch to ON (II).
   - 2. **Clear the DTC with the HDS** See **HOW TO TROUBLESHOOT THE A/T SYSTEM** or **HOW TO TROUBLESHOOT THE FUEL AND EMISSIONS SYSTEMS** .
   - 3. Turn the ignition switch to LOCK (0).
   - 4. Turn the ignition switch to ON (II).
   - 5. Check for Pending or Confirmed DTCs with the HDS.

DTC Description	Confirmed DTC	Pending DTC	Freeze Frame
P0327 KNOCK SENSOR CIRCUIT LOW VOLTAGE			

Is DTC P0327 indicated?

YES : The failure is duplicated. Go to step 2.

NO : Intermittent failure, the system is OK at this time. Check for poor connections or loose terminals at the knock sensor and the PCM.

2. Determine possible failure area (knock sensor, others):
   - 1. Turn the ignition switch to LOCK (0).
   - 2. Disconnect the following connector.

     Knock sensor 2P connector

   - 3. Turn the ignition switch to ON (II).
   - 4. Check for Pending or Confirmed DTCs with the HDS.

DTC Description	Confirmed DTC	Pending DTC	Freeze Frame
P0327 KNOCK SENSOR CIRCUIT LOW VOLTAGE			

Is DTC P0328 indicated?

YES : **REPLACE THE KNOCK SENSOR** , then **do the repair verification** .

GETtheMANUALS.org

NO : Go to step 3.

3. Shorted wire check (KS line to KSGND line):
   - 1. Turn the ignition switch to LOCK (0).
   - 2. Jump the SCS line with the HDS.
   - 3. Disconnect the following connector.

     PCM connector C (49P)

   - 4. Check for continuity between test points 1 and 2.

     Test condition IG LOCK (0)

     Knock sensor 2P connector: disconnected

     PCM connector C (49P): disconnected

     Test circuit KS, KSGND

     Test point 1 Knock sensor 2P connector No. 1 (BLK)

     Test point 2 Knock sensor 2P connector No. 2 (WHT)

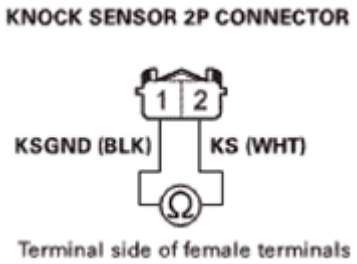

Fig. 144: Checking Continuity Between Knock Sensor 2P Connector No. 1 (BLK) And No. 2 (WHT)
Courtesy of AMERICAN HONDA MOTOR CO., INC.

Is there continuity?

YES : Repair a short in the KS wire to KSGND wire between the PCM (C17) and the PCM (C48), then **do the repair verification** .

NO : Go to step 4.

4. Shorted wire check (KS line):
   - 1. Check for continuity between test points 1 and 2.

     Test condition IG LOCK (0)

GETtheMANUALS.org

Knock sensor 2P connector: disconnected

PCM connector C (49P): disconnected

Test circuit KS

Test point 1 Knock sensor 2P connector No. 2 (WHT)

Test point 2 Body ground

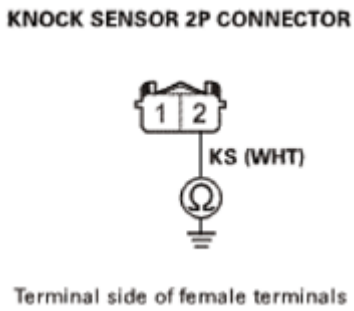

Fig. 145: Checking Continuity Between Knock Sensor 2P Connector No. 2 (WHT) And Body Ground
Courtesy of AMERICAN HONDA MOTOR CO., INC.

Is there continuity?

YES : Repair a short in the KS wire between the PCM (C17) and the knock sensor, then **do the repair verification** .

NO : The KS wire is OK. **Update the PCM** See **PCM REMOVAL AND INSTALLATION** or **PCM UPDATE** if it does not have the latest software, or **substitute a known-good PCM** See **PCM REMOVAL AND INSTALLATION** or **PCM UPDATE** , then **do the repair verification** .

REPAIR VERIFICATION

- 1. Turn the ignition switch to LOCK (0).
- 2. Reconnect all connectors.
- 3. Turn the ignition switch to ON (II).
- 4. **Reset the PCM with the HDS** See **HOW TO TROUBLESHOOT THE FUEL AND EMISSIONS SYSTEMS** or **HOW TO TROUBLESHOOT THE A/T SYSTEM** .
- 5. **DO THE PCM IDLE LEARN PROCEDURE** .
- 6. Check for Pending or Confirmed DTCs with the HDS.

DTC Description	Confirmed DTC	Pending DTC	Freeze Frame
P0327 KNOCK SENSOR CIRCUIT LOW VOLTAGE			

GETtheMANUALS.org

Is DTC P0327 indicated?

YES : Check for poor connections or loose terminals at the knock sensor and the PCM. If the PCM was updated, **substitute a known-good PCM** See **PCM UPDATE** or **PCM REMOVAL AND INSTALLATION** , then recheck. If the PCM was substituted, go to step 1.

NO : Troubleshooting is complete. If the PCM was substituted, **replace the original PCM** See **PCM REMOVAL AND INSTALLATION** or **PCM UPDATE** . If any other Pending or Confirmed DTCs are indicated, go to the indicated DTC's troubleshooting.

DTC P0328: KNOCK SENSOR CIRCUIT HIGH VOLTAGE

GETtheMANUALS.org

DTC Troubleshooting: P0328

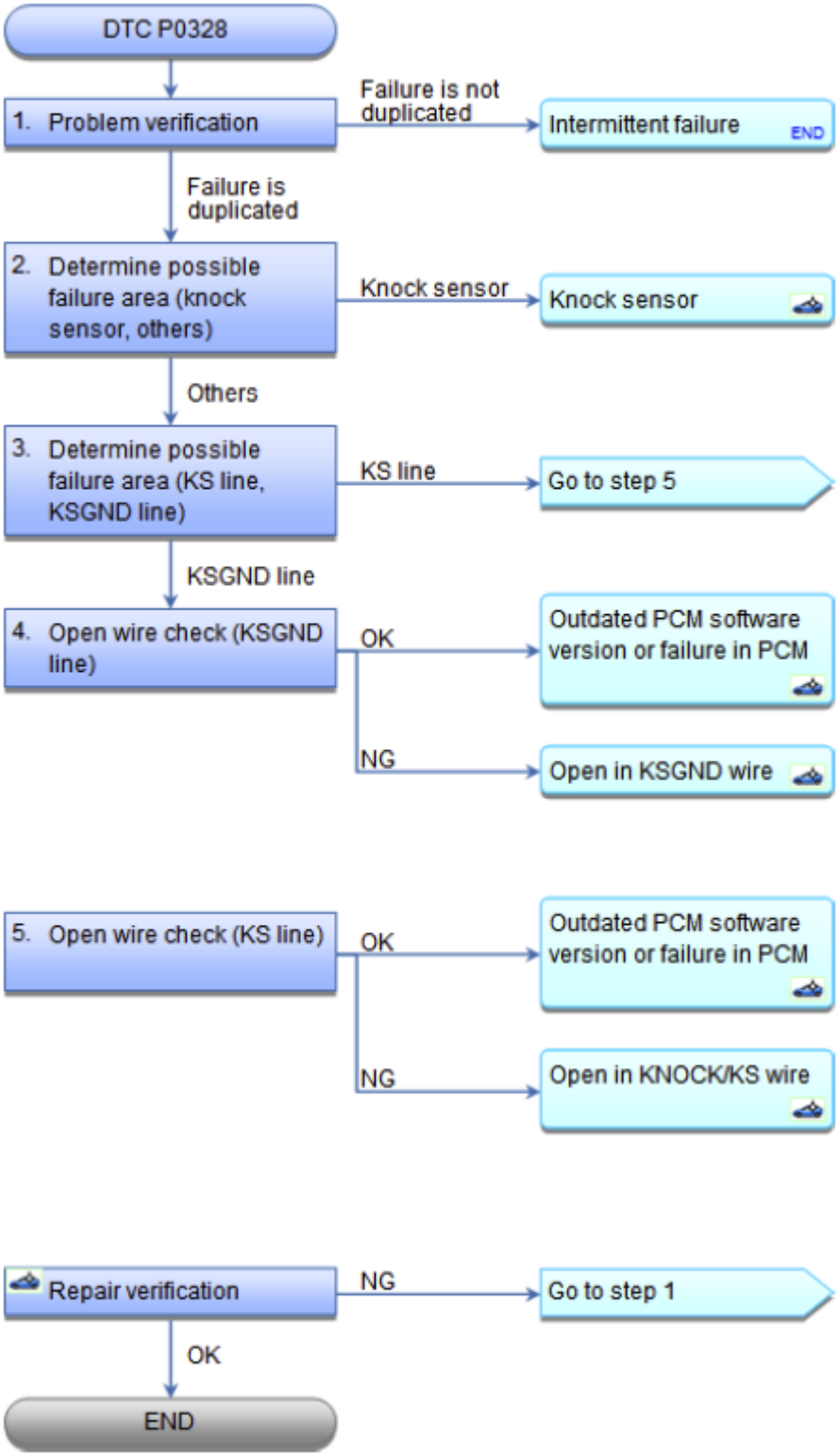

Fig. 146: DTC Troubleshooting Flow Chart (P0328)
Courtesy of AMERICAN HONDA MOTOR CO., INC.

GETtheMANUALS.org

NOTE: **Before you troubleshoot, record all freeze data and any on-board snapshot, and review the general troubleshooting information See HOW TO TROUBLESHOOT THE A/T SYSTEM or HOW TO TROUBLESHOOT THE FUEL AND EMISSIONS SYSTEMS .**

DTC Description	Confirmed DTC	Pending DTC	Freeze Frame
P0328 KNOCK SENSOR CIRCUIT HIGH VOLTAGE			

1. Problem verification:
   - 1. Turn the ignition switch to ON (II).
   - 2. **Clear the DTC with the HDS** See **HOW TO TROUBLESHOOT THE FUEL AND EMISSIONS SYSTEMS** or **HOW TO TROUBLESHOOT THE A/T SYSTEM** .
   - 3. Turn the ignition switch to LOCK (0).
   - 4. Turn the ignition switch to ON (II).
   - 5. Check for Pending or Confirmed DTCs with the HDS.

DTC Description	Confirmed DTC	Pending DTC	Freeze Frame
P0328 KNOCK SENSOR CIRCUIT HIGH VOLTAGE			

Is DTC P0328 indicated?

YES : The failure is duplicated. Go to step 2.

NO : Intermittent failure, the system is OK at this time. Check for poor connections or loose terminals at the knock sensor and the PCM.

2. Determine possible failure area (knock sensor, others):
   - 1. Turn the ignition switch to LOCK (0).
   - 2. Disconnect the following connector.

     Knock sensor 2P connector

   - 3. Turn the ignition switch to ON (II).
   - 4. Measure the voltage between test points 1 and 2.

     Test condition IG ON (II)

     Knock sensor 2P connector: disconnected

     Test circuit KS, KSGND

     Test point 1 Knock sensor 2P connector No. 1 (BLK)

GETtheMANUALS.org

Test point 2 Knock sensor 2P connector No. 2 (WHT)

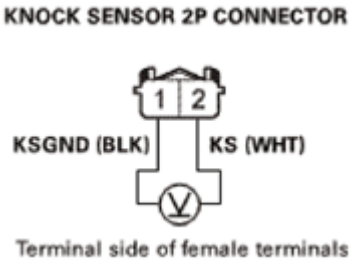

Fig. 147: Measuring Voltage Between And Knock Sensor 2P Connector No. 1 (BLK) And No. 2 (WHT)
Courtesy of AMERICAN HONDA MOTOR CO., INC.

Is there about 5.0 V?

YES : **REPLACE THE KNOCK SENSOR** , then **do the repair verification** .

NO : Go to step 3.

3. Determine possible failure area (KS line, KSGND line):
   - 1. Measure the voltage between test points 1 and 2.

     Test condition IG ON (II)

     Knock sensor 2P connector: disconnected

     Test circuit KS

     Test point 1 Knock sensor 2P connector No. 2 (WHT)

     Test point 2 Body ground

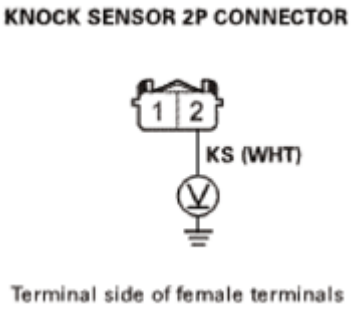

Fig. 148: Measuring Voltage Between Knock Sensor 2P Connector No. 2 (WHT) And Body Ground
Courtesy of AMERICAN HONDA MOTOR CO., INC.

GETtheMANUALS.org

Is there about 5.0 V?

YES : Go to step 4.

NO : Go to step 5.

4. Open wire check (KSGND line):
    - 1. Turn the ignition switch to LOCK (0).
    - 2. Jump the SCS line with the HDS.
    - 3. Disconnect the following connector.

      PCM connector C (49P)

    - 4. Connect terminals A and B with a jumper wire.

      Terminal A Knock sensor 2P connector No. 1 (BLK)

      Terminal B Body ground

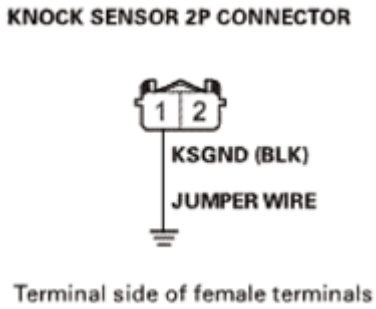

Fig. 149: Connecting Wire Between Knock Sensor 2P Connector No. 1 (BLK) And Body Ground
Courtesy of AMERICAN HONDA MOTOR CO., INC.

    - 5. Check for continuity between test points 1 and 2.

      Test condition IG LOCK (0)

      Knock sensor 2P connector: disconnected

      Knock sensor 2P connector No. 1: jumped to body ground

      PCM connector C (49P): disconnected

      Test circuit KSGND

      Test point 1 PCM connector C (49P) No. 48 (GRN)

GETtheMANUALS.org

Test point 2 Body ground

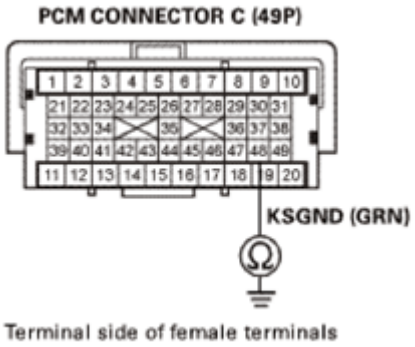

Fig. 150: Checking Continuity Between PCM Connector C (49P) No. 48 (GRN) And Body Ground
Courtesy of AMERICAN HONDA MOTOR CO., INC.

Is there continuity?

YES : The KSGND wire is OK. **Update the PCM** See **PCM UPDATE** or **PCM REMOVAL AND INSTALLATION** if it does not have the latest software, or **substitute a known-good PCM** See **PCM REMOVAL AND INSTALLATION** or **PCM UPDATE** , then **do the repair verification** .

NO : Repair an open in the KSGND wire between the PCM (C48) and the knock sensor, then **do the repair verification** .

5. Open wire check (KS line):
   - 1. Turn the ignition switch to LOCK (0).
   - 2. Jump the SCS line with the HDS.
   - 3. Disconnect the following connector.

     PCM connector C (49P)

   - 4. Connect terminals A and B with a jumper wire.

     Terminal A Knock sensor 2P connector No. 2 (WHT)

     Terminal B Body ground

GETtheMANUALS.org

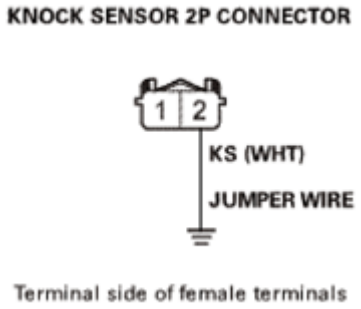

Fig. 151: Identifying Knock Sensor 2P Connector Terminals
Courtesy of AMERICAN HONDA MOTOR CO., INC.

- 5. Check for continuity between test points 1 and 2.

  Test condition IG LOCK (0)

  Knock sensor 2P connector: disconnected

  Knock sensor 2P connector No. 2: jumped to body ground

  PCM connector C (49P): disconnected

  Test circuit KS

  Test point 1 PCM connector C (49P) No. 17 (RED)

  Test point 2 Body ground

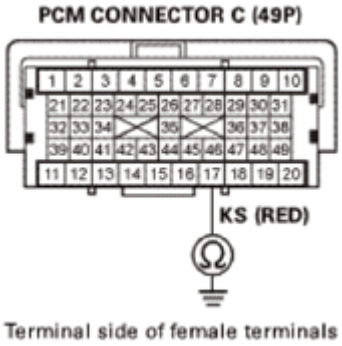

Fig. 152: Checking Continuity Between PCM Connector C (49P) No. 17 (RED) And Body Ground
Courtesy of AMERICAN HONDA MOTOR CO., INC.

Is there continuity?

YES : The KS wires are OK. **Update the PCM** See **PCM UPDATE** or **PCM REMOVAL AND INSTALLATION** if it does not have the latest software, or **substitute a known-good PCM** See **PCM**

GETtheMANUALS.org

REMOVAL AND INSTALLATION or **PCM UPDATE** , then **do the repair verification** .

NO : Repair an open in the KS wire between the PCM (C17) and the knock sensor, then **do the repair verification** .

REPAIR VERIFICATION

- 1. Turn the ignition switch to LOCK (0).
- 2. Reconnect all connectors.
- 3. Turn the ignition switch to ON (II).
- 4. **Reset the PCM with the HDS** See **HOW TO TROUBLESHOOT THE FUEL AND EMISSIONS SYSTEMS** or **HOW TO TROUBLESHOOT THE A/T SYSTEM** .
- 5. **DO THE PCM IDLE LEARN PROCEDURE** .
- 6. Check for Pending or Confirmed DTCs with the HDS.

DTC Description	Confirmed DTC	Pending DTC	Freeze Frame
P0328 KNOCK SENSOR CIRCUIT HIGH VOLTAGE			

Is DTC P0328 indicated?

YES : Check for poor connections or loose terminals at the knock sensor and the PCM. If the PCM was updated, **substitute a known-good PCM** See **PCM REMOVAL AND INSTALLATION** or **PCM UPDATE** , then recheck. If the PCM was substituted, go to step 1.

NO : Troubleshooting is complete. If the PCM was substituted, **replace the original PCM** See **PCM REMOVAL AND INSTALLATION** or **PCM UPDATE** . If any other Pending or Confirmed DTCs are indicated, go to the indicated DTC's troubleshooting.

DTC P0335: CKP SENSOR NO SIGNAL

GETtheMANUALS.org

DTC Troubleshooting: P0335

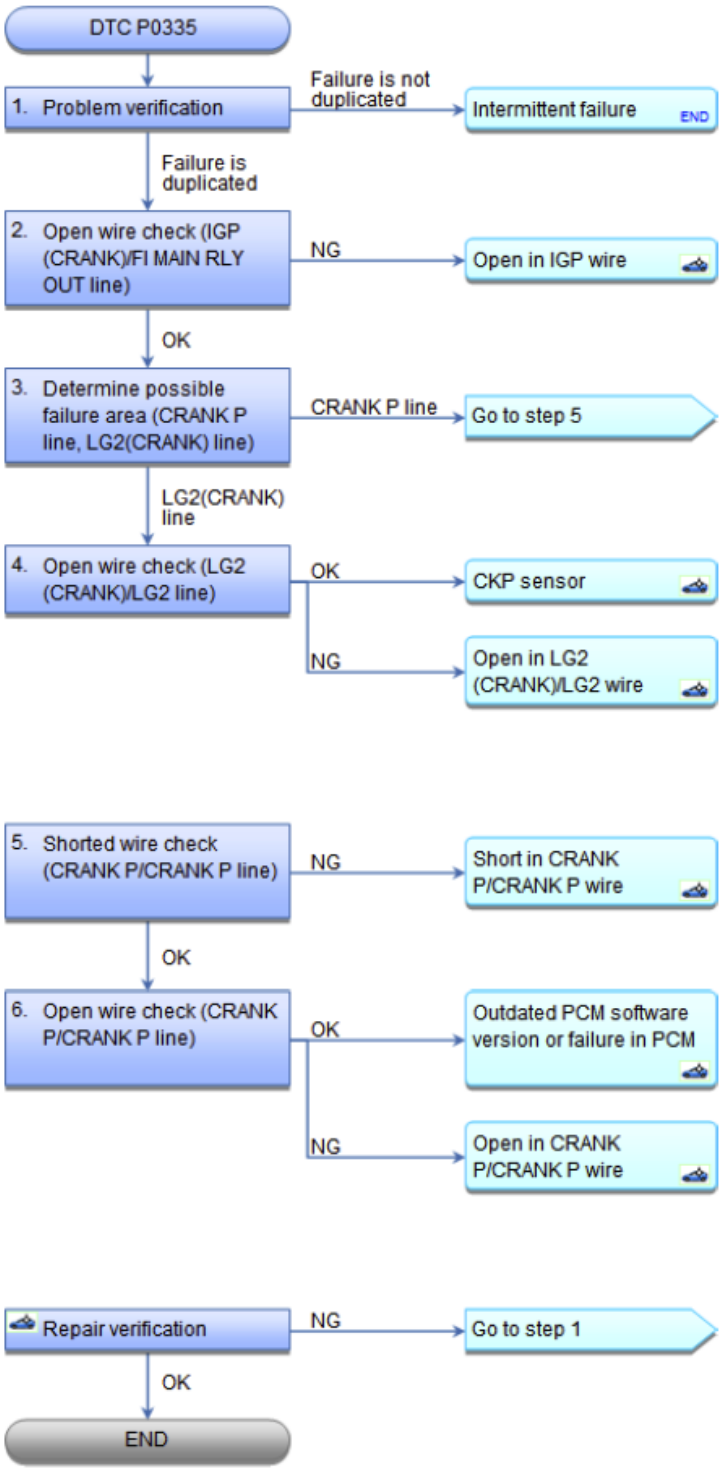

Fig. 153: DTC Troubleshooting Flow Chart (P0335)
Courtesy of AMERICAN HONDA MOTOR CO., INC.

NOTE: **Before you troubleshoot, record all freeze data and any on-board snapshot, and**

GETtheMANUALS.org

review the general troubleshooting information See HOW TO TROUBLESHOOT THE A/T SYSTEM or HOW TO TROUBLESHOOT THE FUEL AND EMISSIONS SYSTEMS .

DTC Description	Confirmed DTC	Pending DTC	Freeze Frame
P0335 CKP SENSOR NO SIGNAL			

1. Problem verification:
   - 1. Turn the ignition switch to ON (II).
   - 2. **Clear the DTC with the HDS** See **HOW TO TROUBLESHOOT THE A/T SYSTEM** or **HOW TO TROUBLESHOOT THE FUEL AND EMISSIONS SYSTEMS** .
   - 3. Start the engine.
   - 4. Check for Pending or Confirmed DTCs with the HDS.

DTC Description	Confirmed DTC	Pending DTC	Freeze Frame
P0335 CKP SENSOR NO SIGNAL			

Is DTC P0335 indicated?

YES : The failure is duplicated. Go to step 2.

NO : Intermittent failure, the system is OK at this time. Check for poor connections or loose terminals at the CKP sensor and the PCM.

2. Open wire check (IGP(CRANK)/FI MAIN RLY OUT line):
   - 1. Turn the ignition switch to LOCK (0).
   - 2. Disconnect the following connector.

     CKP sensor 3P connector

   - 3. Turn the ignition switch to ON (II).
   - 4. Measure the voltage between test points 1 and 2.

     Test condition IG ON (II)

     CKP sensor 3P connector: disconnected

     Test circuit IGP(CRANK)

     Test point 1 CKP sensor 3P connector No. 1 (YEL/BLK)

     Test point 2 Body ground

GETtheMANUALS.org

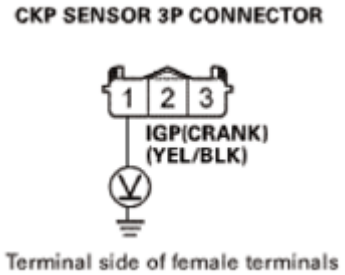

Fig. 154: Measuring Voltage Between CKP Sensor 3P Connector No. 1 (YEL/BLK) And Body Ground
Courtesy of AMERICAN HONDA MOTOR CO., INC.

Is there battery voltage?

YES : The IGP(CRANK)/FI MAIN RLY OUT wire is OK. Go to step 3.

NO : Repair an open in the IGP(CRANK)/FI MAIN RLY OUT wire between the CKP sensor and PGM-FI main relay 1, then **do the repair verification** .

3. Determine possible failure area (CRANK P line, LG2(CRANK) line):
   - 1. Measure the voltage between test points 1 and 2.

     Test condition IG ON (II)

     CKP sensor 3P connector: disconnected

     Test circuit CRANK P

     Test point 1 CKP sensor 3P connector No. 3 (BLU)

     Test point 2 Body ground

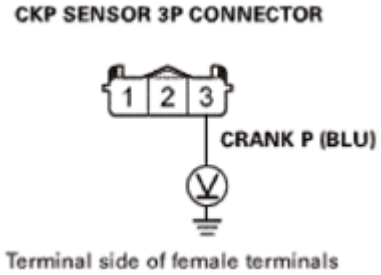

Fig. 155: Measuring Voltage Between CKP Sensor 3P Connector No. 3 (BLU) And Body Ground
Courtesy of AMERICAN HONDA MOTOR CO., INC.

Is there about 5.0 V?

GETtheMANUALS.org

YES : Go to step 4.

NO : Go to step 5.

4. Open wire check (LG2(CRANK)/LG2 line):
   - 1. Measure the voltage between test points 1 and 2.

     Test condition IG ON (II)

     CKP sensor 3P connector: disconnected

     Test circuit IGP(CRANK), LG2(CRANK),

     Test point 1 CKP sensor 3P connector No. 1 (YEL/BLK)

     Test point 2 CKP sensor 3P connector No. 2 (BRN/YEL)

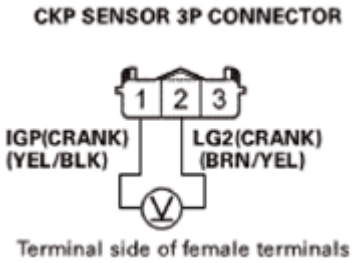

Fig. 156: Measuring Voltage Between CKP Sensor 3P Connector No. 1 (YEL/BLK) And CKP Sensor 3P Connector No. 2 (BRN/YEL)
Courtesy of AMERICAN HONDA MOTOR CO., INC.

Is there battery voltage?

YES : The LG2(CRANK)/LG2 wire is OK. **REPLACE THE CKP SENSOR** , then **do the repair verification** .

NO : Repair an open in the LG2(CRANK)/LG2 wire between the CKP sensor and G101, then **do the repair verification** .

5. Shorted wire check (CRANK P/CRANK P line):
   - 1. Turn the ignition switch to LOCK (0).
   - 2. Jump the SCS line with the HDS.
   - 3. Disconnect the following connector.

     PCM connector C (49P)

   - 4. Check for continuity between test points 1 and 2.

GETtheMANUALS.org

Test condition IG LOCK (0)

CKP sensor 3P connector: disconnected

PCM connector C (49P): disconnected

Test circuit CRANK P

Test point 1 PCM connector C (49P) No. 42 (BLU)

Test point 2 Body ground

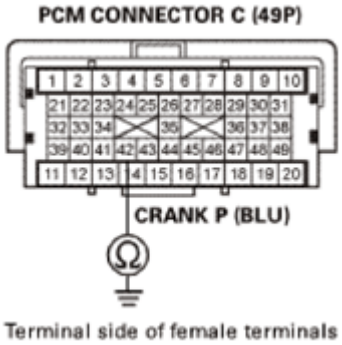

Fig. 157: Checking Continuity Between PCM Connector C (49P) No. 42 (BLU) And Body Ground
Courtesy of AMERICAN HONDA MOTOR CO., INC.

Is there continuity?

YES : Repair a short in the CRANK P/CRANK P wire between the PCM (C42) and the CKP sensor, then **do the repair verification** .

NO : The CRANK P/CRANK P wire is not shorted. Go to step 6.

6. Open wire check (CRANK P/CRANK P line):
   - 1. Connect terminals A and B with a jumper wire.

     Terminal A CKP sensor 3P connector No. 3 (BLU)

     Terminal B Body ground

GETtheMANUALS.org

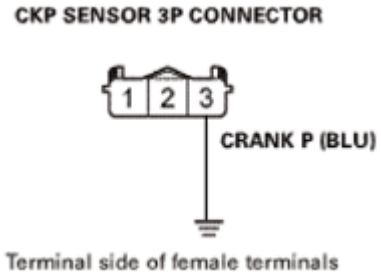

Fig. 158: Connecting Wire Between CKP Sensor 3P Connector No. 3 (BLU) And Body Ground
Courtesy of AMERICAN HONDA MOTOR CO., INC.

- 2. Check for continuity between test points 1 and 2.

  Test condition IG LOCK (0)

  CKP sensor 3P connector: disconnected

  CKP sensor 3P connector No. 3: jumped to body ground

  PCM connector C (49P): disconnected

  Test circuit CRANK P

  Test point 1 PCM connector C (49P) No. 42 (BLU)

  Test point 2 Body ground

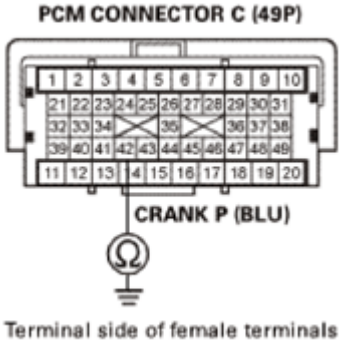

Fig. 159: Checking Continuity Between PCM Connector C (49P) No. 42 (BLU) And Body Ground
Courtesy of AMERICAN HONDA MOTOR CO., INC.

Is there continuity?

YES : The CRANK P/CRANK P wire is OK. **Update the PCM** See **PCM REMOVAL AND INSTALLATION** or **PCM UPDATE** if it does not have the latest software, or **substitute a known-**

GETtheMANUALS.org

good PCM See **PCM REMOVAL AND INSTALLATION** or **PCM UPDATE** , then **do the repair verification** .

NO : Repair an open in the CRANK P/CRANK P wire between the PCM (C42) and the CKP sensor, then **do the repair verification** .

REPAIR VERIFICATION

- 1. Turn the ignition switch to LOCK (0).
- 2. Reconnect all connectors.
- 3. Turn the ignition switch to ON (II).
- 4. **Reset the PCM with the HDS** See **HOW TO TROUBLESHOOT THE A/T SYSTEM** or **HOW TO TROUBLESHOOT THE FUEL AND EMISSIONS SYSTEMS** .
- 5. **DO THE PCM IDLE LEARN PROCEDURE** .
- 6. **Do the CKP pattern clear/CKP pattern learn procedure** See **HOW TO TROUBLESHOOT THE A/T SYSTEM** or **HOW TO TROUBLESHOOT THE FUEL AND EMISSIONS SYSTEMS** .
- 7. Check for Pending or Confirmed DTCs with the HDS.

DTC Description	Confirmed DTC	Pending DTC	Freeze Frame
P0335 CKP SENSOR NO SIGNAL			

Is DTC P0335 indicated?

YES : Check for poor connections or loose terminals at the CKP sensor and the PCM. If the PCM was updated, **substitute a known-good PCM** See **PCM REMOVAL AND INSTALLATION** or **PCM UPDATE** , then recheck. If the PCM was substituted, go to step 1.

NO : Troubleshooting is complete. If the PCM was substituted, **replace the original PCM** See **PCM REMOVAL AND INSTALLATION** or **PCM UPDATE** . If any other Pending or Confirmed DTCs are indicated, go to the indicated DTC's troubleshooting.

DTC P0339: CKP SENSOR CIRCUIT INTERMITTENT INTERRUPTION

GETtheMANUALS.org

DTC Troubleshooting: P0339

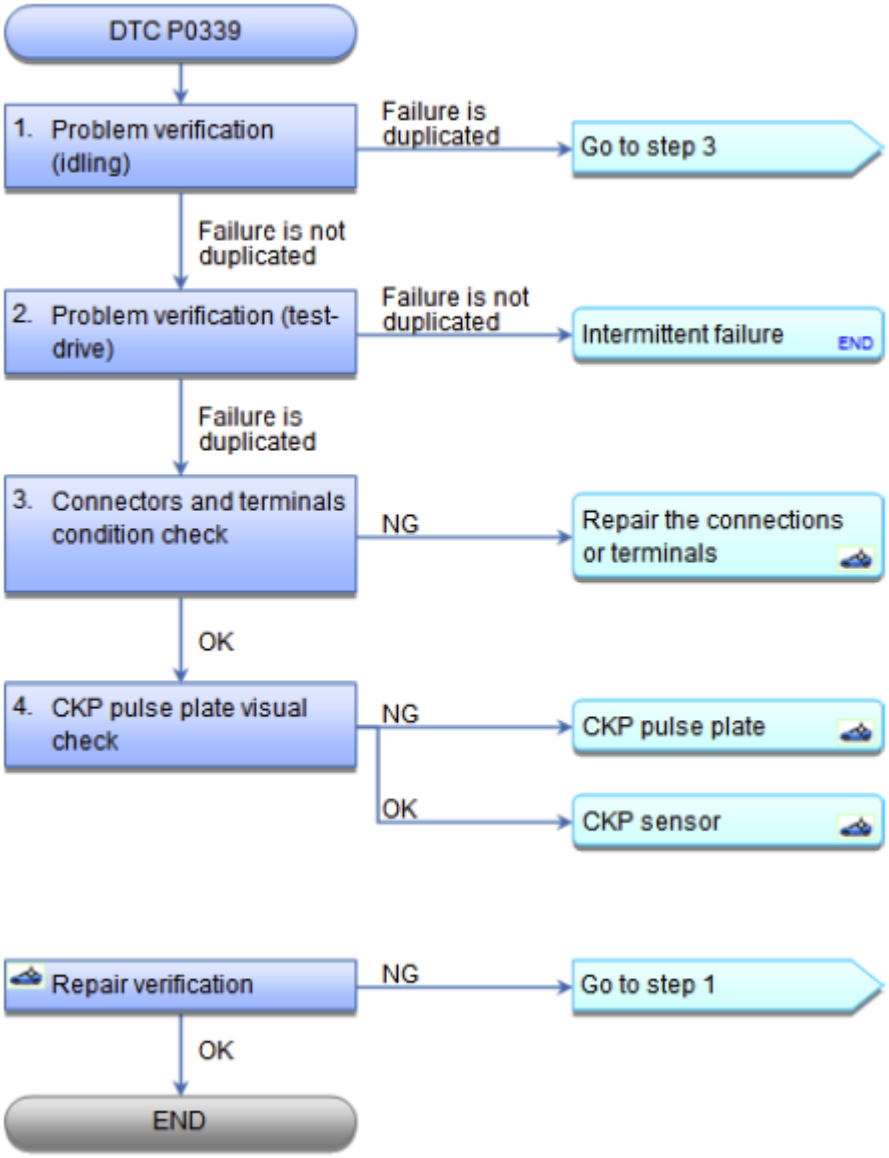

Fig. 160: DTC Troubleshooting Flow Chart (P0339)
Courtesy of AMERICAN HONDA MOTOR CO., INC.

NOTE: **Before you troubleshoot, record all freeze data and any on-board snapshot, and review the general troubleshooting information See HOW TO TROUBLESHOOT THE A/T SYSTEM or HOW TO TROUBLESHOOT THE FUEL AND EMISSIONS SYSTEMS .**

DTC Description	Confirmed DTC	Pending DTC	Freeze Frame
P0339 CKP SENSOR CIRCUIT INTERMITTENT INTERRUPTION			

GETtheMANUALS.org

1. Problem verification (idling):
   - 1. Turn the ignition switch to ON (II).
   - 2. **Clear the DTC with the HDS** See **HOW TO TROUBLESHOOT THE A/T SYSTEM** or **HOW TO TROUBLESHOOT THE FUEL AND EMISSIONS SYSTEMS** .
   - 3. Start the engine, and let it idle for 10 seconds.
   - 4. Monitor the OBD STATUS for DTC P0339 in the DTCs MENU with the HDS.

DTC Description	OBD STATUS
P0339 CKP SENSOR CIRCUIT INTERMITTENT INTERRUPTION	

Does the HDS indicate FAILED?

YES : The failure is duplicated. Go to step 3.

NO : If the HDS indicates PASSED, go to step 2. If the HDS indicates NOT COMPLETED, keep idling until a result comes on.

2. Problem verification (test-drive):
   - 1. Test-drive the vehicle for several minutes in the range of these recorded freeze data parameters:
     - ENGINE SPEED
     - VEHICLE SPEED
   - 2. Monitor the OBD STATUS for DTC P0339 in the DTCs MENU with the HDS.

DTC Description	OBD STATUS
P0339 CKP SENSOR CIRCUIT INTERMITTENT INTERRUPTION	

Does the HDS indicate FAILED?

YES : The failure is duplicated. Go to step 3.

NO : If the HDS indicates PASSED, intermittent failure, the system is OK at this time. Check for poor connections or loose terminals at the CKP sensor and the PCM. If the HDS indicates NOT COMPLETED, retest and check the OBD STATUS again.

3. Connectors and terminals condition check:
   - 1. Check for poor connections or loose terminals at these locations:
     - CKP sensor
     - PCM
     - Engine ground
     - Body ground

Are the connections and terminals OK?

GETtheMANUALS.org

YES : Go to step 4.

NO : Repair the connections or terminals, then **do the repair verification** .

4. CKP pulse plate visual check:
   - 1. **REMOVE THE CKP SENSOR** , and check for damage to the CKP pulse plate.

Is the pulse plate damaged?

YES : **REPLACE THE CKP PULSE PLATE** , then **do the repair verification** .

NO : **REPLACE THE CKP SENSOR** , then **do the repair verification** .

REPAIR VERIFICATION

- 1. Turn the ignition switch to LOCK (0).
- 2. Reconnect all connectors.
- 3. Turn the ignition switch to ON (II).
- 4. **Reset the PCM with the HDS** See **HOW TO TROUBLESHOOT THE A/T SYSTEM** or **HOW TO TROUBLESHOOT THE FUEL AND EMISSIONS SYSTEMS** .
- 5. **DO THE PCM IDLE LEARN PROCEDURE** .
- 6. **Do the CKP pattern clear/CKP pattern learn procedure** See **HOW TO TROUBLESHOOT THE A/T SYSTEM** or **HOW TO TROUBLESHOOT THE FUEL AND EMISSIONS SYSTEMS** .
- 7. Start the engine, and let it idle for 10 seconds, or test-drive the vehicle for several minutes under the freeze data conditions (same as step **2-1**).
- 8. Check for Pending or Confirmed DTCs with the HDS.

DTC Description	Confirmed DTC	Pending DTC	Freeze Frame
P0339 CKP SENSOR CIRCUIT INTERMITTENT INTERRUPTION			

Is DTC P0339 indicated?

YES : Check for poor connections or loose terminals at the CKP sensor and the PCM, then go to step 1.

NO : Troubleshooting is complete. If any other Pending or Confirmed DTCs are indicated, go to the indicated DTC's troubleshooting.

DTC P0340: CMP SENSOR A NO SIGNAL

GETtheMANUALS.org

DTC Troubleshooting: P0340

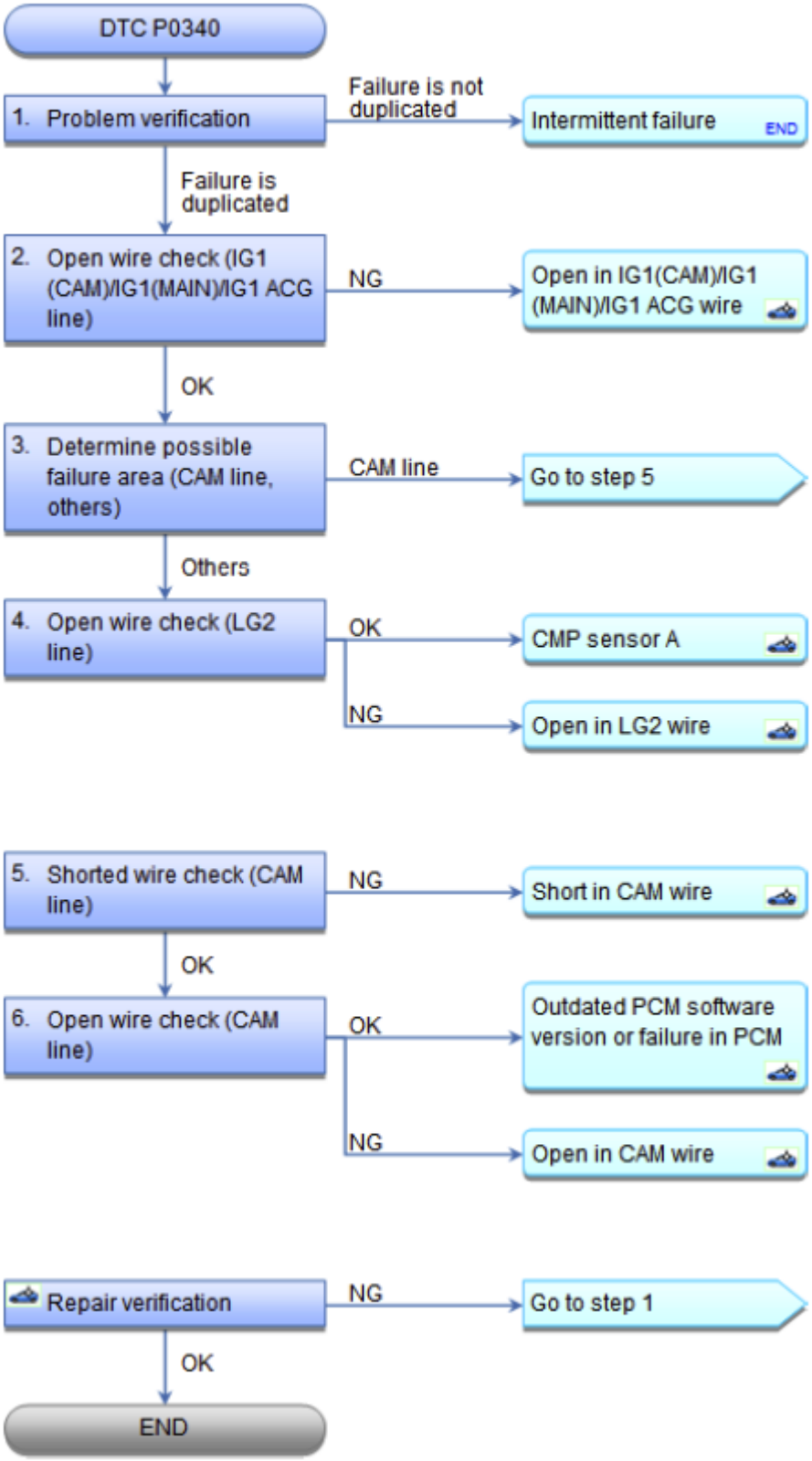

Fig. 161: DTC Troubleshooting Flow Chart (P0340)

GETtheMANUALS.org

Courtesy of AMERICAN HONDA MOTOR CO., INC.

NOTE: **Before you troubleshoot, record all freeze data and any on-board snapshot, and review the general troubleshooting information See HOW TO TROUBLESHOOT THE A/T SYSTEM or HOW TO TROUBLESHOOT THE FUEL AND EMISSIONS SYSTEMS .**

DTC Description	Confirmed DTC	Pending DTC	Freeze Frame
P0340 CMP SENSOR A NO PULSE			

1. Problem verification:
   - 1. Turn the ignition switch to ON (II).
   - 2. **Clear the DTC with the HDS** See **HOW TO TROUBLESHOOT THE A/T SYSTEM** or **HOW TO TROUBLESHOOT THE FUEL AND EMISSIONS SYSTEMS** .
   - 3. Start the engine.
   - 4. Check for Pending or Confirmed DTCs with the HDS.

DTC Description	Confirmed DTC	Pending DTC	Freeze Frame
P0340 CMP SENSOR A NO PULSE			

Is DTC P0340 indicated?

YES : The failure is duplicated. Go to step 2.

NO : Intermittent failure, the system is OK at this time. Check for poor connections or loose terminals at CMP sensor A and the PCM.

2. Open wire check (IG1(CAM)/IG1(MAIN)/IG1 ACG line):
   - 1. Turn the ignition switch to LOCK (0).
   - 2. Disconnect the following connector.

     CMP sensor A 3P connector

   - 3. Turn the ignition switch to ON (II).
   - 4. Measure the voltage between test points 1 and 2.

     Test condition IG ON (II)

     CMP sensor A 3P connector: disconnected

     Test circuit IG1(CAM)

     Test point 1 CMP sensor A 3P connector No. 1 (WHT)

GETtheMANUALS.org

Test point 2 Body ground

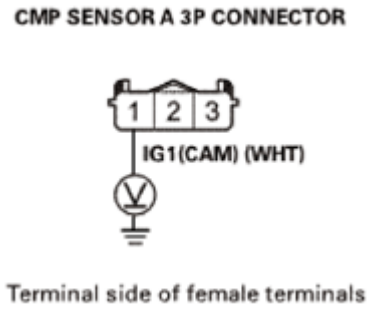

Fig. 162: Measuring Voltage Between CMP Sensor A 3P Connector No. 1 (WHT) And Body Ground
Courtesy of AMERICAN HONDA MOTOR CO., INC.

Is there battery voltage?

YES : The IG1(CAM)/IG1(MAIN)/IG1 ACG wire is OK. Go to step 3.

NO : Repair an open in the IG1(CAM)/IG1(MAIN)/IG1 ACG wire between No. B2 (10 A) fuse in the under-dash fuse/relay box and CMP sensor A, then **do the repair verification** .

3. Determine possible failure area (CAM line, others):
   - 1. Measure the voltage between test points 1 and 2.

     Test condition IG ON (II)

     CMP sensor A 3P connector: disconnected

     Test circuit CAM

     Test point 1 CMP sensor A 3P connector No. 3 (BLU)

     Test point 2 Body ground

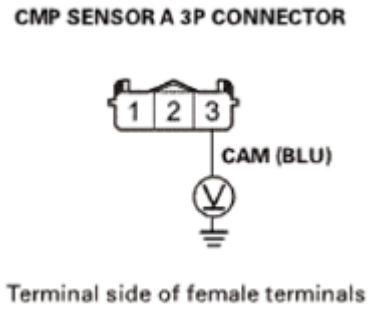

Fig. 163: Measuring Voltage Between CMP Sensor A 3P Connector No. 3 (BLU) And Body Ground

GETtheMANUALS.org

Courtesy of AMERICAN HONDA MOTOR CO., INC.

Is there about 5.0 V?

YES : The CAM wire is OK. Go to step 4.

NO : There is a problem in the CAM wire. Go to step 5.

4. Open wire check (LG2 line):
   - 1. Measure the voltage between test points 1 and 2.

     Test condition IG ON (II)

     CMP sensor A 3P connector: disconnected

     Test circuit IG1(CAM), LG2

     Test point 1 CMP sensor A 3P connector No. 1 (WHT)

     Test point 2 CMP sensor A 3P connector No. 2 (BRN)

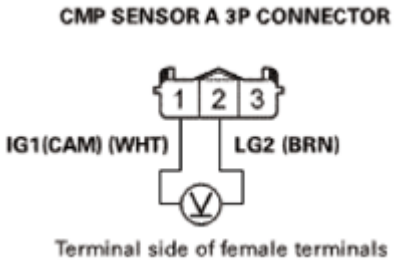

Fig. 164: Measuring Voltage Between CMP Sensor B 3P Connector No. 1 (WHT) And No. 2 (BRN)
Courtesy of AMERICAN HONDA MOTOR CO., INC.

Is there battery voltage?

YES : The LG2 wire is OK. **REPLACE CMP SENSOR A** , then **do the repair verification** .

NO : Repair an open in the LG2 wire between CMP sensor A and G101, then **do the repair verification** .

5. Shorted wire check (CAM line):
   - 1. Turn the ignition switch to LOCK (0).
   - 2. Jump the SCS line with the HDS.
   - 3. Disconnect the following connector.

     PCM connector C (49P)

GETtheMANUALS.org

- 4. Check for continuity between test points 1 and 2.

  Test condition IG LOCK (0)

  CMP sensor A 3P connector: disconnected

  PCM connector C (49P): disconnected

  Test circuit CAM

  Test point 1 PCM connector C (49P) No. 16 (BLU)

  Test point 2 Body ground

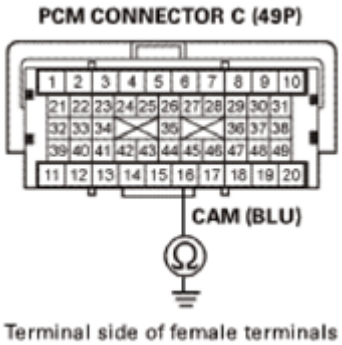

Fig. 165: Checking Continuity Between PCM Connector C (49P) No. 16 (BLU) And Body Ground
Courtesy of AMERICAN HONDA MOTOR CO., INC.

Is there continuity?

YES : Repair a short in the CAM wire between the PCM (C16) and CMP sensor A, then **do the repair verification** .

NO : The CAM wire is not shorted. Go to step 6.

6. Open wire check (CAM line):
   - 1. Check for continuity between test points 1 and 2.

     Test condition IG LOCK (0)

     CMP sensor A 3P connector: disconnected

     PCM connector C (49P): disconnected

     Test circuit CAM

GETtheMANUALS.org

Test point 1 PCM connector C (49P) No. 16 (BLU)

Test point 2 CMP sensor A 3P connector No. 3 (BLU)

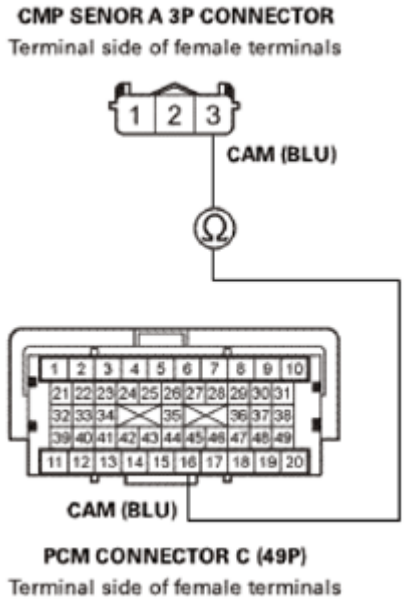

Fig. 166: Checking Continuity Between PCM Connector C (49P) No. 16 (BLU) And CMP Sensor A 3P Connector No. 3 (BLU)
Courtesy of AMERICAN HONDA MOTOR CO., INC.

Is there continuity?

YES : The CAM wire is OK. **Update the PCM** See **PCM REMOVAL AND INSTALLATION** or **PCM UPDATE** if it does not have the latest software, or **substitute a known-good PCM** See **PCM UPDATE** or **PCM REMOVAL AND INSTALLATION** , then **do the repair verification** .

NO : Repair an open in the CAM wire between the PCM (C16) and CMP sensor A, then **do the repair verification** .

REPAIR VERIFICATION

- 1. Turn the ignition switch to LOCK (0).
- 2. Reconnect all connectors.
- 3. Turn the ignition switch to ON (II).
- 4. **Reset the PCM with the HDS** See **HOW TO TROUBLESHOOT THE A/T SYSTEM** or **HOW TO TROUBLESHOOT THE FUEL AND EMISSIONS SYSTEMS** .
- 5. **DO THE PCM IDLE LEARN PROCEDURE** .
- 6. Check for Pending or Confirmed DTCs with the HDS.

DTC Description	Confirmed DTC	Pending DTC	Freeze Frame

GETtheMANUALS.org

P0340 CMP SENSOR A NO PULSE			

Is DTC P0340 indicated?

YES : Check for poor connections or loose terminals at CMP sensor A and the PCM. If the PCM was updated, **substitute a known-good PCM** See **PCM REMOVAL AND INSTALLATION** or **PCM UPDATE** , then recheck. If the PCM was substituted, go to step 1.

NO : Troubleshooting is complete. If the PCM was substituted, **replace the original PCM** See **PCM UPDATE** or **PCM REMOVAL AND INSTALLATION** . If any other Pending or Confirmed DTCs are indicated, go to the indicated DTC's troubleshooting.

DTC P0341: CMP SENSOR A AND CKP SENSOR INCORRECT PHASE DETECTED

GETtheMANUALS.org

DTC Troubleshooting: P0341

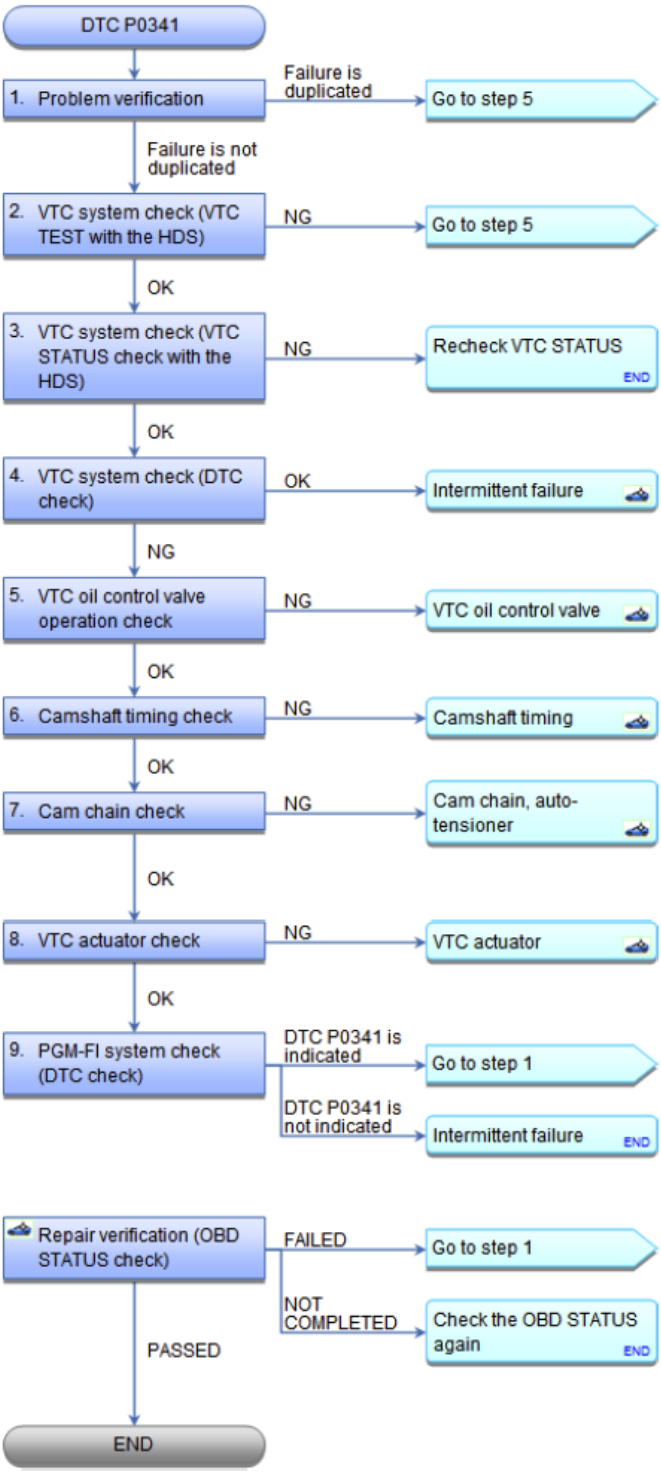

Fig. 167: DTC Troubleshooting Flow Chart (P0341)
Courtesy of AMERICAN HONDA MOTOR CO., INC.

NOTE: **Before you troubleshoot, record all freeze data and any on-board snapshot, and**

GETtheMANUALS.org

review the general troubleshooting information See HOW TO TROUBLESHOOT THE FUEL AND EMISSIONS SYSTEMS or HOW TO TROUBLESHOOT THE A/T SYSTEM .

DTC Description	Confirmed DTC	Pending DTC	Freeze Frame
P0341 CMP SENSOR A AND CKP SENSOR INCORRECT PHASE DETECTED			

1. Problem verification:
   - 1. Turn the ignition switch to ON (II).
   - 2. **Clear the DTC with the HDS** See **HOW TO TROUBLESHOOT THE A/T SYSTEM** or **HOW TO TROUBLESHOOT THE FUEL AND EMISSIONS SYSTEMS** .
   - 3. Test-drive at a steady speed between 19-38 mph (30-60 km/h) for 10 minutes.
   - 4. Check for Pending or Confirmed DTCs with the HDS.

DTC Description	Confirmed DTC	Pending DTC	Freeze Frame
P0341 CMP SENSOR A AND CKP SENSOR INCORRECT PHASE DETECTED			

Is DTC P0341 indicated?

YES : Go to step 5.

NO : Go to step 2.

2. VTC system check (VTC TEST with the HDS):
   - 1. Do the VTC TEST in the INSPECTION MENU with the HDS.

Is the result OK?

YES : Go to step 3.

NO : Go to step 5.

3. VTC system check (VTC STATUS check with the HDS):
   - 1. Test-drive at a steady speed between 19-38 mph (30-60 km/h) for 10 minutes.
   - 2. Check the parameter(s) below with the HDS.

Signal	Threshold		Current conditions	
	Values	Unit	Values	Unit
VTC STATUS	ON			

GETtheMANUALS.org

Do the current condition(s) match the threshold?

YES : Go to step 4.

NO : Redo the test-drive, then recheck the VTC STATUS.

4. VTC system check (DTC check):
   - 1. Monitor the OBD STATUS for DTC P0341 in the DTCs MENU with the HDS.

DTC Description	OBD STATUS
P0341 CMP SENSOR A AND CKP SENSOR INCORRECT PHASE DETECTED	

Does the HDS indicate FAILED?

YES : Go to step 5.

NO : If the HDS indicates PASSED, intermittent failure, the system is OK at this time.

If the HDS indicates NOT COMPLETED, go to step 3 and recheck.

5. VTC oil control valve operation check:
   - 1. TEST THE VTC OIL CONTROL SOLENOID VALVE .

Is the VTC oil control solenoid valve OK?

YES : Go to step 6.

NO : REPLACE THE VTC OIL CONTROL SOLENOID VALVE , then **do the repair verification** .

6. Camshaft timing check:
   - 1. **Check the camshaft timing** See VALVE, SPRING, AND VALVE SEAL REMOVAL AND INSTALLATION or VALVE CLEARANCE ADJUSTMENT .

Is the camshaft timing OK?

YES : Go to step 7.

NO : **Reset the camshaft timing** See VALVE CLEARANCE ADJUSTMENT or VALVE, SPRING, AND VALVE SEAL REMOVAL AND INSTALLATION , then **do the repair verification** .

7. Cam chain check:
   - 1. CHECK FOR DAMAGE OR STRETCH AT THE CAM CHAIN .

Is the cam chain damaged or stretched?

GETtheMANUALS.org

YES : REPLACE THE CAM CHAIN AND THE AUTO-TENSIONER , then **do the repair verification** .

NO : Go to step 8.

8. VTC actuator check:
   - 1. INSPECT THE VTC ACTUATOR .

Is the actuator OK?

YES : Go to step 9.

NO : REPLACE THE VTC ACTUATOR , then **do the repair verification** .

9. PGM-FI system check (DTC check):
   - 1. Turn the ignition switch to ON (II).
   - 2. **Reset the PCM with the HDS** See **HOW TO TROUBLESHOOT THE A/T SYSTEM** or **HOW TO TROUBLESHOOT THE FUEL AND EMISSIONS SYSTEMS** .
   - 3. **DO THE PCM IDLE LEARN PROCEDURE** .
   - 4. **Do the CKP pattern clear/CKP pattern learn procedure** See **HOW TO TROUBLESHOOT THE A/T SYSTEM** or **HOW TO TROUBLESHOOT THE FUEL AND EMISSIONS SYSTEMS** .
   - 5. Test-drive at a steady speed between 19-38 mph (30-60 km/h) for 10 minutes.
   - 6. Check for Pending or Confirmed DTCs with the HDS.

DTC Description	Confirmed DTC	Pending DTC	Freeze Frame
P0341 CMP SENSOR A AND CKP SENSOR INCORRECT PHASE DETECTED			

Is DTC P0341 indicated?

YES : Check for poor connections or loose terminals at the VTC oil control solenoid valve and the PCM, then go to step 1.

NO : Intermittent failure, the system is OK at this time.

REPAIR VERIFICATION (OBD STATUS CHECK)

- 1. Turn the ignition switch to ON (II).
- 2. **Reset the PCM with the HDS** See **HOW TO TROUBLESHOOT THE FUEL AND EMISSIONS SYSTEMS** or **HOW TO TROUBLESHOOT THE A/T SYSTEM** .
- 3. **DO THE PCM IDLE LEARN PROCEDURE** .
- 4. **Do the CKP pattern clear/CKP pattern learn procedure** See **HOW TO TROUBLESHOOT THE**

GETtheMANUALS.org

A/T SYSTEM or **HOW TO TROUBLESHOOT THE FUEL AND EMISSIONS SYSTEMS** .

- 5. Test-drive at a steady speed between 19-38 mph (30-60 km/h) for 10 minutes.
- 6. Monitor the OBD STATUS for DTC P0341 in the DTCs MENU with the HDS.

DTC Description	OBD STATUS
P0341 CMP SENSOR A AND CKP SENSOR INCORRECT PHASE DETECTED	

Does the HDS indicate PASSED, FAILED, or NOT COMPLETED?

PASSED : Troubleshooting is complete. If any other Pending or Confirmed DTCs were indicated, go to the indicated DTC's troubleshooting.

FAILED : Go to step 1 and recheck.

NOT COMPLETED : Meet the test condition, and check the OBD STATUS again.

DTC P0344: CMP SENSOR A CIRCUIT INTERMITTENT INTERRUPTION

GETtheMANUALS.org

DTC Troubleshooting: P0344

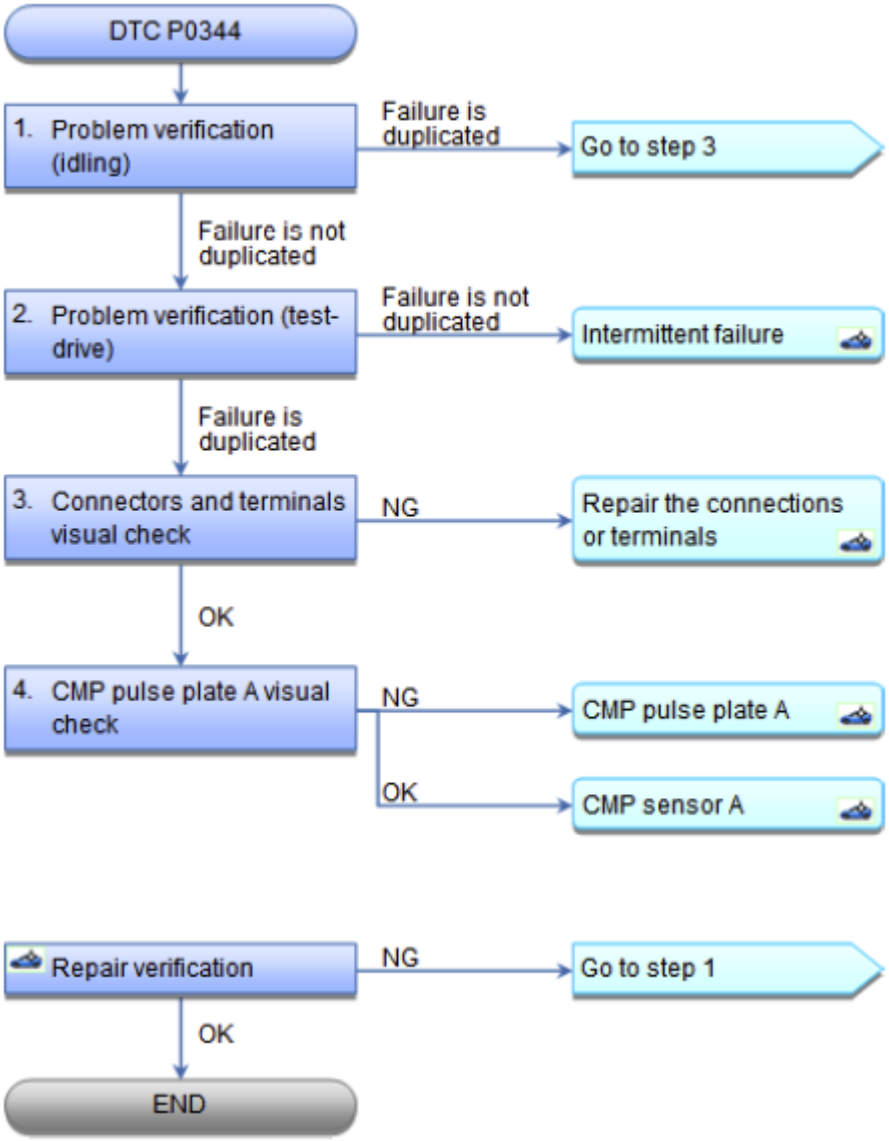

Fig. 168: DTC Troubleshooting Flow Chart (P0344)
Courtesy of AMERICAN HONDA MOTOR CO., INC.

NOTE: **Before you troubleshoot, record all freeze data and any on-board snapshot, and review the general troubleshooting information See HOW TO TROUBLESHOOT THE A/T SYSTEM or HOW TO TROUBLESHOOT THE FUEL AND EMISSIONS SYSTEMS .**

DTC Description	Confirmed DTC	Pending DTC	Freeze Frame
P0344 CMP SENSOR A CIRCUIT INTERMITTENT INTERRUPTION			

GETtheMANUALS.org

1. Problem verification (idling):
   - 1. Turn the ignition switch to ON (II).
   - 2. **Clear the DTC with the HDS** See **HOW TO TROUBLESHOOT THE A/T SYSTEM** or **HOW TO TROUBLESHOOT THE FUEL AND EMISSIONS SYSTEMS** .
   - 3. Start the engine, and let it idle for 10 seconds.
   - 4. Monitor the OBD STATUS for DTC P0344 in the DTCs MENU with the HDS.

DTC Description	OBD STATUS
P0344 CMP SENSOR A CIRCUIT INTERMITTENT INTERRUPTION	

Does the HDS indicate FAILED?

YES : The failure is duplicated. Go to step 3.

NO : If the HDS indicates PASSED, go to step 2. If the HDS indicates NOT COMPLETED, keep idling until a result comes on.

2. Problem verification (test-drive):
   - 1. Test-drive the vehicle for several minutes in the range of these recorded freeze data parameters:
     - ENGINE SPEED
     - VEHICLE SPEED
   - 2. Monitor the OBD STATUS for DTC P0344 in the DTCs MENU with the HDS.

DTC Description	OBD STATUS
P0344 CMP SENSOR A CIRCUIT INTERMITTENT INTERRUPTION	

Does the HDS indicate FAILED?

YES : The failure is duplicated. Go to step 3.

NO : If the HDS indicates PASSED, intermittent failure, the system is OK at this time. Check for poor connections or loose terminals at CMP sensor A and the PCM. If the HDS indicates NOT COMPLETED, retest and check the OBD STATUS again.

3. Connectors and terminals visual check:
   - 1. Check for poor connections or loose terminals at these locations:
     - CMP sensor A
     - PCM
     - Engine ground
     - Body ground

Are the connections and terminals OK?

GETtheMANUALS.org

YES : Go to step 4.

NO : Repair the connections or terminals, then **do the repair verification** .

4. CMP pulse plate A visual check:
   - 1. Remove the cylinder head cover, then check for damage to CMP pulse plate A.

Is the pulse plate damaged?

YES : **Replace CMP pulse plate A** See **CMP PULSE PLATE A REMOVAL AND INSTALLATION** or **CMP PULSE PLATE B REMOVAL AND INSTALLATION** , then **do the repair verification** .

NO : **REPLACE CMP SENSOR A** , then **do the repair verification** .

REPAIR VERIFICATION

- 1. Turn the ignition switch to LOCK (0).
- 2. Reconnect all connectors.
- 3. Turn the ignition switch to ON (II).
- 4. **Reset the PCM with the HDS** See **HOW TO TROUBLESHOOT THE A/T SYSTEM** or **HOW TO TROUBLESHOOT THE FUEL AND EMISSIONS SYSTEMS** .
- 5. **DO THE PCM IDLE LEARN PROCEDURE** .
- 6. Start the engine, and let it idle for 10 seconds, or test-drive the vehicle for several minutes under the freeze data conditions (same as step **2-1**).
- 7. Check for Pending or Confirmed DTCs with the HDS.

DTC Description	Confirmed DTC	Pending DTC	Freeze Frame
P0344 CMP SENSOR A CIRCUIT INTERMITTENT INTERRUPTION			

Is DTC P0344 indicated?

YES : Check for poor connections or loose terminals at CMP sensor A and the PCM, then go to step 1.

NO : Troubleshooting is complete. If any other Pending or Confirmed DTCs are indicated, go to the indicated DTC's troubleshooting.

DTC P0351: NO. 1 CYLINDER IGNITION COIL CIRCUIT MALFUNCTION; DTC P0352: NO. 2 CYLINDER IGNITION COIL CIRCUIT MALFUNCTION; DTC P0353: NO. 3 CYLINDER IGNITION COIL CIRCUIT MALFUNCTION; DTC P0354: NO. 4 CYLINDER IGNITION COIL CIRCUIT MALFUNCTION

GETtheMANUALS.org

DTC Troubleshooting: P0351, P0352, P0353, P0354

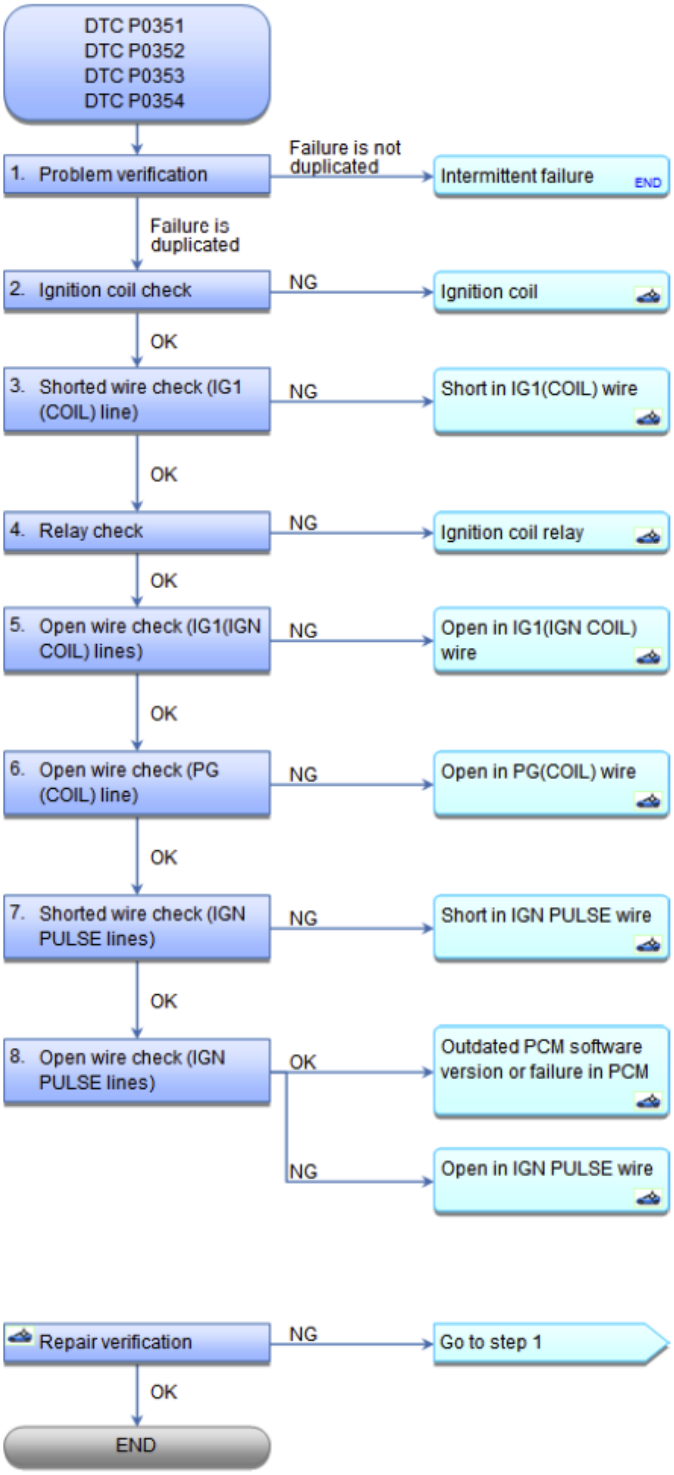

Fig. 169: DTC Troubleshooting Flow Chart (P0351, P0352, P0353, P0354)
Courtesy of AMERICAN HONDA MOTOR CO., INC.

NOTE: **Before you troubleshoot, record all freeze data and any on-board snapshot, and**

GETtheMANUALS.org

review the general troubleshooting information See HOW TO TROUBLESHOOT THE A/T SYSTEM or HOW TO TROUBLESHOOT THE FUEL AND EMISSIONS SYSTEMS .

DTC Description	Confirmed DTC	Pending DTC	Freeze Frame
P0351 NO. 1 CYLINDER IGNITION COIL CIRCUIT MALFUNCTION			
P0352 NO. 2 CYLINDER IGNITION COIL CIRCUIT MALFUNCTION			
P0353 NO. 3 CYLINDER IGNITION COIL CIRCUIT MALFUNCTION			
P0354 NO. 4 CYLINDER IGNITION COIL CIRCUIT MALFUNCTION			

1. Problem verification:
   - 1. Turn the ignition switch to ON (II).
   - 2. **Clear the DTC with the HDS** See **HOW TO TROUBLESHOOT THE A/T SYSTEM** or **HOW TO TROUBLESHOOT THE FUEL AND EMISSIONS SYSTEMS** .
   - 3. Start the engine.
   - 4. Check for Pending or Confirmed DTCs with the HDS.

DTC Description	Confirmed DTC	Pending DTC	Freeze Frame
P0351 NO. 1 CYLINDER IGNITION COIL CIRCUIT MALFUNCTION			
P0352 NO. 2 CYLINDER IGNITION COIL CIRCUIT MALFUNCTION			
P0353 NO. 3 CYLINDER IGNITION COIL CIRCUIT MALFUNCTION			
P0354 NO. 4 CYLINDER IGNITION COIL CIRCUIT MALFUNCTION			

Is DTC P0351, P0352, P0353, and/or P0354 indicated?

YES : The failure is duplicated. Go to step 2.

NO : Intermittent failure, the system is OK at this time. Check for poor connections or loose terminals at the ignition coil and the PCM.

2. Ignition coil check:
   - 1. Turn the ignition switch to LOCK (0).
   - 2. Exchange the ignition coil from the problem cylinder with one from another cylinder.
   - 3. Start the engine.

GETtheMANUALS.org

- 4. Check for Pending or Confirmed DTCs with the HDS.

DTC Description	Confirmed DTC	Pending DTC	Freeze Frame
P0351 NO. 1 CYLINDER IGNITION COIL CIRCUIT MALFUNCTION			
P0352 NO. 2 CYLINDER IGNITION COIL CIRCUIT MALFUNCTION			
P0353 NO. 3 CYLINDER IGNITION COIL CIRCUIT MALFUNCTION			
P0354 NO. 4 CYLINDER IGNITION COIL CIRCUIT MALFUNCTION			

Is DTC indicated at the exchanged position?

YES : REPLACE THE FAULTY IGNITION COIL , then **do the repair verification** .

NO : Go to step 3.

3. Shorted wire check (IG1(COIL) line):
   - 1. Turn the ignition switch to LOCK (0).
   - 2. Check the following fuse.

     Fuse No. A17 (15 A)

     Location Under-hood fuse/relay box

Is the fuses OK?

YES : Go to step 4.

NO : Repair a short in the IG1(COIL) wire between the ignition coil and the No. A17 (15 A) fuse. Also replace the No. A17 (15 A) fuse, then **do the repair verification** .

4. Relay check:
   - 1. Remove the ignition coil relay (A) from the under-hood fuse/relay box.

GETtheMANUALS.org

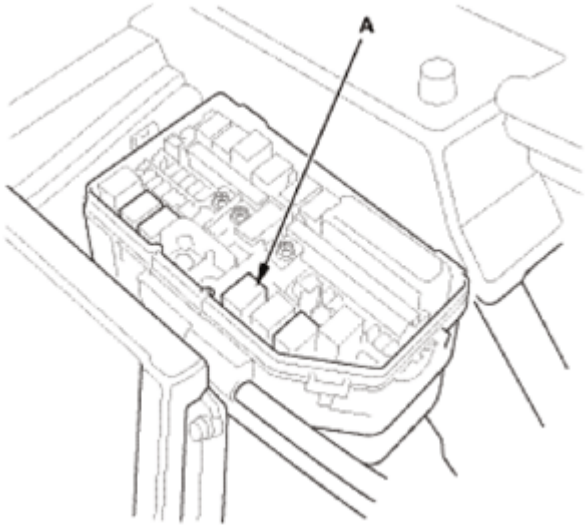

Fig. 170: Identifying Ignition Coil Relay
Courtesy of AMERICAN HONDA MOTOR CO., INC.

- 2. **TEST THE IGNITION COIL RELAY** .

Is the relay OK?

YES : Go to step 5.

NO : Replace the ignition coil relay, then **do the repair verification** .

5. Open wire check (IG1(IGN COIL) lines):
   - 1. Reinstall the ignition coil relay.
   - 2. Disconnect the following connector(s).

     Ignition coil 3P connector (problem cylinder)

   - 3. Turn the ignition switch to ON (II).
   - 4. Measure the voltage between test points 1 and 2.

     Test condition IG ON (II)

     Ignition coil 3P connector (problem cylinder): disconnected

     Test circuit IG1(IGN COIL)

     Test point 1 Ignition coil 3P connector No. 1 (RED)

     Test point 2 Body ground

GETtheMANUALS.org

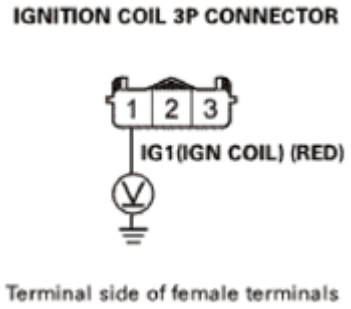

Fig. 171: Measuring Voltage Between Ignition Coil 3P Connector No. 1 (RED) And Body Ground
Courtesy of AMERICAN HONDA MOTOR CO., INC.

Is there battery voltage?

YES : The IG1(IGN COIL) wire is OK. Go to step 6.

NO : Repair an open in the IG1(IGN COIL) wire between the ignition coil and the ignition coil relay, then **do the repair verification** .

6. Open wire check (PG(COIL) lines):
   - 1. Turn the ignition switch to LOCK (0).
   - 2. Check for continuity between test points 1 and 2.

     Test condition IG ON (II)

     Ignition coil 3P connector (problem cylinder): disconnected

     Test circuit PG(COIL)

     Test point 1 Ignition coil 3P connector No. 2 (BLK)

     Test point 2 Body ground

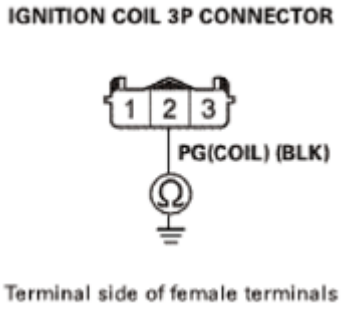

Fig. 172: Checking Continuity Between Ignition Coil 3P Connector No. 2 (BLK) And Body Ground
Courtesy of AMERICAN HONDA MOTOR CO., INC.

GETtheMANUALS.org

Is there continuity?

YES : The PG(COIL) wire is OK. Go to step 7.

NO

Repair an open in the PG(COIL) wire between the ignition coil and G102, then **do the repair verification** .

7. Shorted wire check (IGN PULSE lines):
   - 1. Jump the SCS line with the HDS.
   - 2. Disconnect the following connector.

     PCM connector C (49P)

   - 3. Check for continuity between body ground and the appropriate PCM connector terminal of the problem ignition coil (see table).

     Test condition IG LOCK (0)

     Ignition coil 3P connector (problem cylinder): disconnected

     PCM connector C (49P): disconnected

PROBLEM CYLINDER	DTC	PCM TERMINAL	WIRE COLOR
No. 1	P0351	C25	YEL
No. 2	P0353	C26	BLU
No. 3	P0355	C27	WHT
No. 4	P0357	C28	PUR

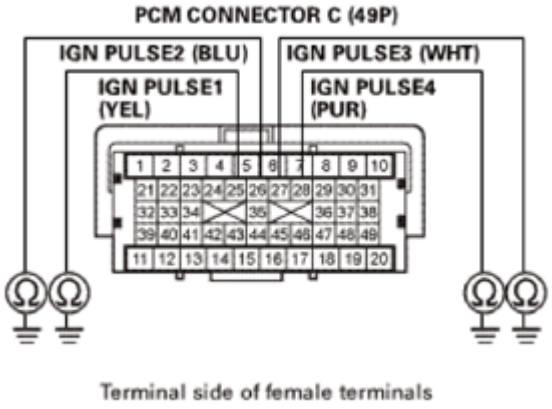

Fig. 173: Checking Continuity Between Body Ground And PCM Connector Terminal Of Ignition Coil
Courtesy of AMERICAN HONDA MOTOR CO., INC.

GETtheMANUALS.org

Is there continuity?

YES : Repair a short in the IGN PULSE wire between the PCM and the ignition coil, then **do the repair verification** .

NO : The IGN PULSE wires are not shorted. Go to step 8.

8. Open wire check (IGN PULSE lines):
   - 1. Check for continuity between appropriate ignition coil 3P connector terminal No. 1 and the appropriate PCM connector terminal of the problem ignition coil (see table).

     Test condition IG LOCK (0)

     Ignition coil 3P connector (problem cylinder): disconnected

     PCM connector C (49P): disconnected

PROBLEM CYLINDER	DTC	PCM TERMINAL	WIRE COLOR
No. 1	P0351	C25	YEL
No. 2	P0353	C26	BLU
No. 3	P0355	C27	WHT
No. 4	P0357	C28	PUR

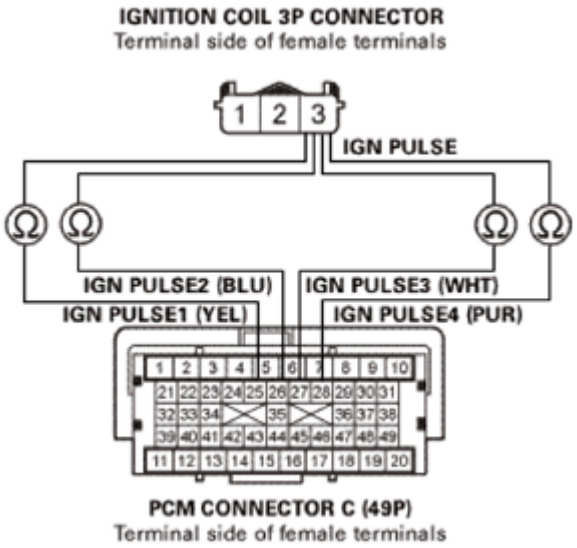

Fig. 174: Checking Continuity Between Ignition Coil 3P Connector Terminal No. 1 And PCM Connector Terminal Of Ignition Coil
Courtesy of AMERICAN HONDA MOTOR CO., INC.

Is there continuity?

YES : The IGN PULSE wires are OK. **Update the PCM** See **PCM REMOVAL AND**

GETtheMANUALS.org

INSTALLATION or **PCM UPDATE** if it does not have the latest software, or **substitute a known-good PCM** See **PCM REMOVAL AND INSTALLATION** or **PCM UPDATE** , then **do the repair verification** .

NO : Repair an open in the IGN PULSE wire between the PCM and the ignition coil, then **do the repair verification** .

REPAIR VERIFICATION

- 1. Turn the ignition switch to LOCK (0).
- 2. Reconnect all connectors.
- 3. Turn the ignition switch to ON (II).
- 4. **Reset the PCM with the HDS** See **HOW TO TROUBLESHOOT THE A/T SYSTEM** or **HOW TO TROUBLESHOOT THE FUEL AND EMISSIONS SYSTEMS** .
- 5. **DO THE PCM IDLE LEARN PROCEDURE** .
- 6. Check for Pending or Confirmed DTCs with the HDS.

DTC Description	Confirmed DTC	Pending DTC	Freeze Frame
P0351 NO. 1 CYLINDER IGNITION COIL CIRCUIT MALFUNCTION			
P0352 NO. 2 CYLINDER IGNITION COIL CIRCUIT MALFUNCTION			
P0353 NO. 3 CYLINDER IGNITION COIL CIRCUIT MALFUNCTION			
P0354 NO. 4 CYLINDER IGNITION COIL CIRCUIT MALFUNCTION			

Is DTC P0351, P0352, P0353 and/or P0354 indicated?

YES : Check for poor connections or loose terminals at the ignition coil and the PCM. If the PCM was updated, **substitute a known-good PCM** See **PCM REMOVAL AND INSTALLATION** or **PCM UPDATE** , then recheck. If the PCM was substituted, go to step 1.

NO : Troubleshooting is complete. If the PCM was substituted, **replace the original PCM** See **PCM REMOVAL AND INSTALLATION** or **PCM UPDATE** . If any other Pending or Confirmed DTCs are indicated, go to the indicated DTC's troubleshooting.

DTC P0365: CMP SENSOR B CIRCUIT NO SIGNAL

GETtheMANUALS.org

DTC Troubleshooting: P0365

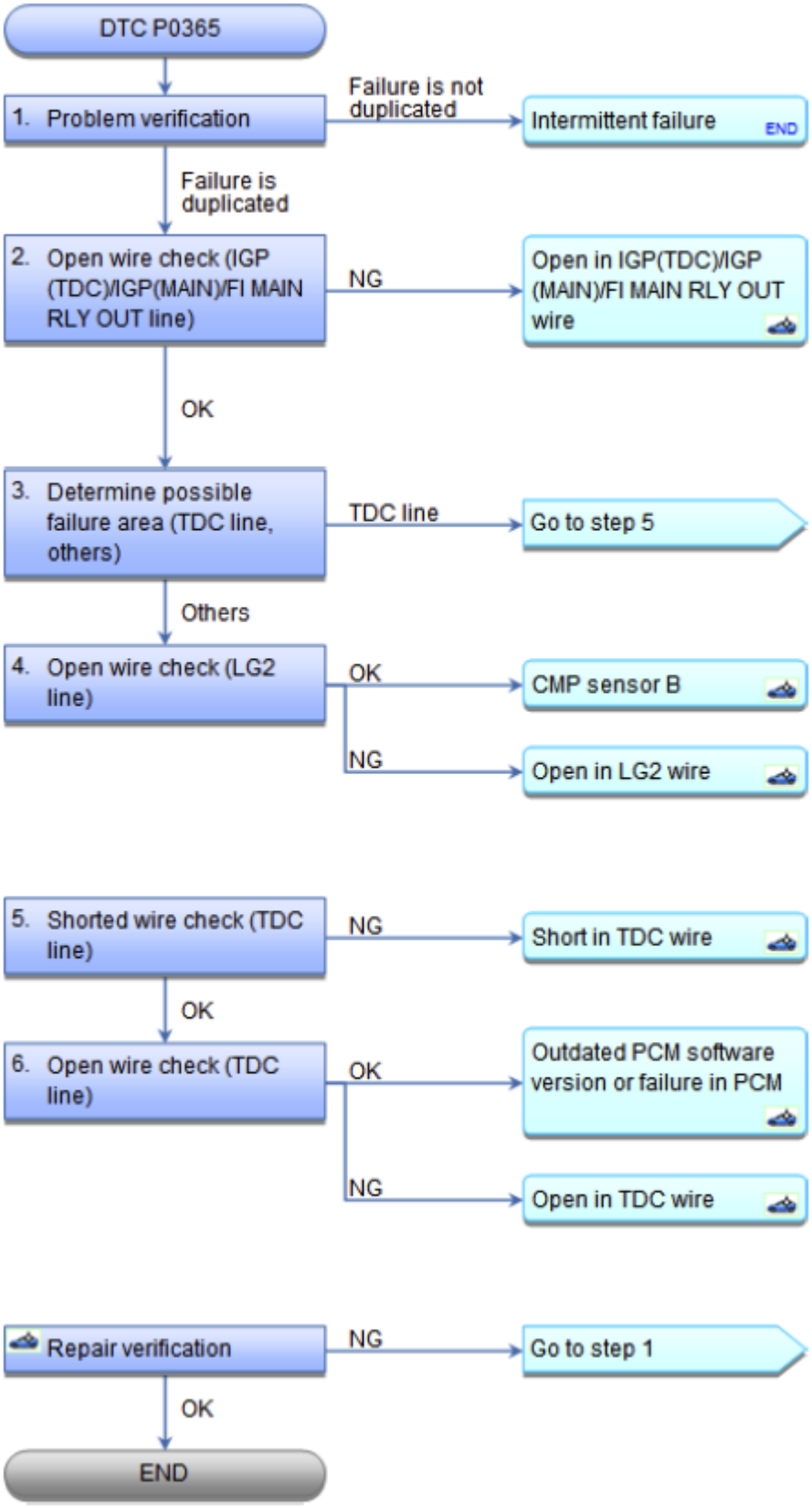

GETtheMANUALS.org

Fig. 175: DTC Troubleshooting Flow Chart (P0365)
Courtesy of AMERICAN HONDA MOTOR CO., INC.

NOTE: **Before you troubleshoot, record all freeze data and any on-board snapshot, and review the general troubleshooting information See HOW TO TROUBLESHOOT THE A/T SYSTEM or HOW TO TROUBLESHOOT THE FUEL AND EMISSIONS SYSTEMS .**

DTC Description	Confirmed DTC	Pending DTC	Freeze Frame
P0365 CMP SENSOR B CIRCUIT NO SIGNAL			

1. Problem verification:
   - 1. Turn the ignition switch to ON (II).
   - 2. **Clear the DTC with the HDS** See **HOW TO TROUBLESHOOT THE A/T SYSTEM** or **HOW TO TROUBLESHOOT THE FUEL AND EMISSIONS SYSTEMS** .
   - 3. Start the engine.
   - 4. Check for Pending or Confirmed DTCs with the HDS.

DTC Description	Confirmed DTC	Pending DTC	Freeze Frame
P0365 CMP SENSOR B CIRCUIT NO SIGNAL			

Is DTC P0365 indicated?

YES : The failure is duplicated. Go to step 2.

NO : Intermittent failure, the system is OK at this time. Check for poor connections or loose terminals at CMP sensor B and the PCM.

2. Open wire check (IGP(TDC)/IGP(MAIN)/FI MAIN RLY OUT line):
   - 1. Turn the ignition switch to LOCK (0).
   - 2. Disconnect the following connector.

     CMP sensor B 3P connector

   - 3. Turn the ignition switch to ON (II).
   - 4. Measure the voltage between test points 1 and 2.

     Test condition IG ON (II)

     CMP sensor B 3P connector: disconnected

     Test circuit IGP(TDC)

     Test point 1 CMP sensor B 3P connector No. 1 (YEL)

GETtheMANUALS.org

Test point 2 Body ground

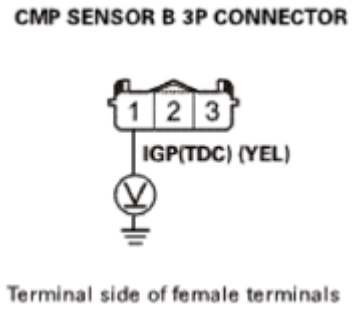

Fig. 176: Measuring Voltage Between CMP Sensor A 3P Connector No. 1 (YEL) And Body Ground
Courtesy of AMERICAN HONDA MOTOR CO., INC.

Is there battery voltage?

YES : The IGP(TDC)/IGP(MAIN)/FI MAIN RLY OUT wire is OK. Go to step 3.

NO : Repair an open in the IGP(TDC)/IGP(MAIN)/FI MAIN RLY OUT wire between CMP sensor B and PGM-FI main relay 1, then **do the repair verification** .

3. Determine possible failure area (TDC line, others):
   - 1. Measure the voltage between test points 1 and 2.

     Test condition IG ON (II)

     CMP sensor B 3P connector: disconnected

     Test circuit TDC

     Test point 1 CMP sensor B 3P connector No. 3 (GRN)

     Test point 2 Body ground

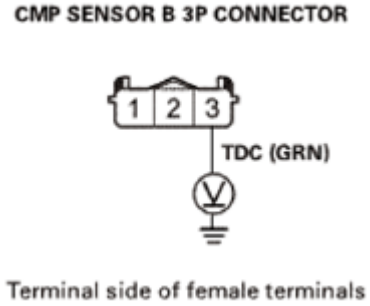

Fig. 177: Measuring Voltage Between CMP Sensor B 3P Connector No. 3 (GRN) And Body Ground

GETtheMANUALS.org

Courtesy of AMERICAN HONDA MOTOR CO., INC.

Is there about 5.0 V?

YES : Go to step 4.

NO : Go to step 5.

4. Open wire check (LG2 line):
   - 1. Measure the voltage between test points 1 and 2.

     Test condition IG ON (II)

     CMP sensor B 3P connector: disconnected

     Test circuit IGP(TDC), LG2

     Test point 1 CMP sensor B 3P connector No. 1 (YEL)

     Test point 2 CMP sensor B 3P connector No. 2 (BRN)

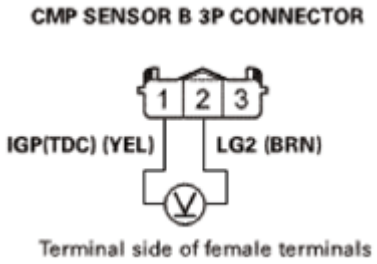

Fig. 178: Measuring Voltage Between CMP Sensor B 3P Connector No. 1 (YEL) And No. 2 (BRN)
Courtesy of AMERICAN HONDA MOTOR CO., INC.

Is there battery voltage?

YES : The LG2 wire is OK. **REPLACE CMP SENSOR B** , then **do the repair verification** .

NO : Repair an open in the LG2 wire between CMP sensor B and G101, then **do the repair verification** .

5. Shorted wire check (TDC line):
   - 1. Turn the ignition switch to LOCK (0).
   - 2. Jump the SCS line with the HDS.
   - 3. Disconnect the following connector.

     PCM connector C (49P)

GETtheMANUALS.org

- 4. Check for continuity between test points 1 and 2.

  Test condition IG LOCK (0)

  CMP sensor B 3P connector: disconnected

  PCM connector C (49P): disconnected

  Test circuit TDC

  Test point 1 PCM connector C (49P) No. 41 (GRN)

  Test point 2 Body ground

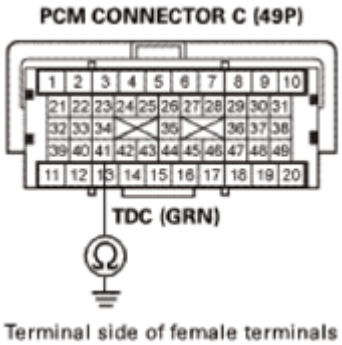

Fig. 179: Checking Continuity Between PCM Connector C (49P) No. 41 (GRN) And Body Ground
Courtesy of AMERICAN HONDA MOTOR CO., INC.

Is there continuity?

YES : Repair a short in the TDC wire between the PCM (C41) and CMP sensor B, then **do the repair verification** .

NO : The TDC wire is not shorted. Go to step 6.

6. Open wire check (TDC line):
   - 1. Check for continuity between test points 1 and 2.

     Test condition IG LOCK (0)

     CMP sensor B 3P connector: disconnected

     PCM connector C (49P): disconnected

     Test circuit TDC

GETtheMANUALS.org

Test point 1 PCM connector C (49P) No. 41 (GRN)

Test point 2 CMP sensor B 3P connector No. 3 (GRN)

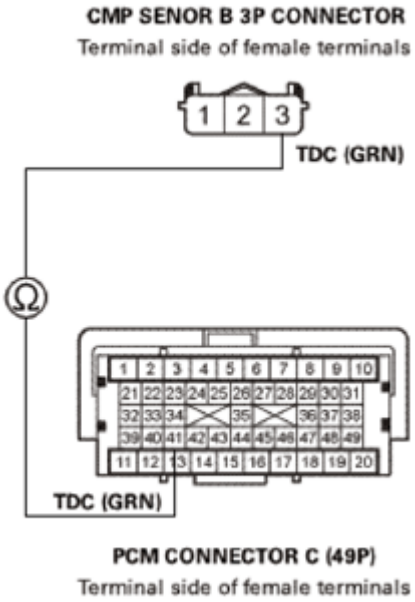

Fig. 180: Checking Continuity Between PCM Connector C (49P) No. 41 (GRN) And CMP Sensor B 3P Connector No. 3 (GRN)
Courtesy of AMERICAN HONDA MOTOR CO., INC.

Is there continuity?

YES : The TDC wire is OK. **Update the PCM** See **PCM REMOVAL AND INSTALLATION** or **PCM UPDATE** if it does not have the latest software, or **substitute a known-good PCM** See **PCM REMOVAL AND INSTALLATION** or **PCM UPDATE** , then **do the repair verification** .

NO : Repair an open in the TDC wire between the PCM (C41) and CMP sensor B, then **do the repair verification** .

REPAIR VERIFICATION

- 1. Turn the ignition switch to LOCK (0).
- 2. Reconnect all connectors.
- 3. Turn the ignition switch to ON (II).
- 4. **Reset the PCM with the HDS** See **HOW TO TROUBLESHOOT THE A/T SYSTEM** or **HOW TO TROUBLESHOOT THE FUEL AND EMISSIONS SYSTEMS** .
- 5. **DO THE PCM IDLE LEARN PROCEDURE** .
- 6. Check for Pending or Confirmed DTCs with the HDS.

DTC Description	Confirmed DTC	Pending DTC	Freeze Frame

GETtheMANUALS.org

P0365 CMP SENSOR B CIRCUIT NO SIGNAL			

Is DTC P0365 indicated?

YES : Check for poor connections or loose terminals at CMP sensor B and the PCM. If the PCM was updated, **substitute a known-good PCM** See **PCM REMOVAL AND INSTALLATION** or **PCM UPDATE** , then recheck. If the PCM was substituted, go to step 1.

NO : Troubleshooting is complete. If the PCM was substituted, **replace the original PCM** See **PCM REMOVAL AND INSTALLATION** or **PCM UPDATE** . If any other Pending or Confirmed DTCs are indicated, go to the indicated DTC's troubleshooting.

DTC P0369: CMP SENSOR B CIRCUIT INTERMITTENT INTERRUPTION

GETtheMANUALS.org

DTC Troubleshooting: P0369

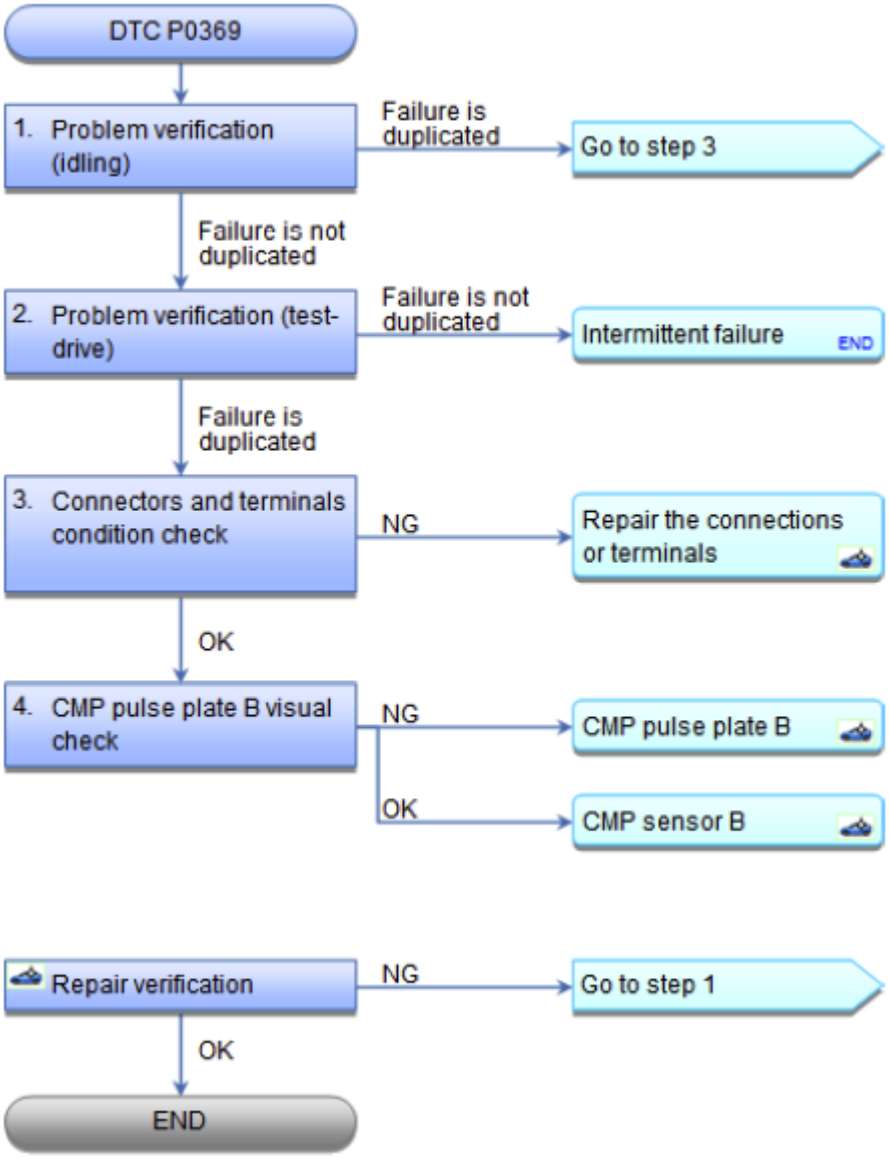

Fig. 181: DTC Troubleshooting Flow Chart (P0369)
Courtesy of AMERICAN HONDA MOTOR CO., INC.

NOTE: **Before you troubleshoot, record all freeze data and any on-board snapshot, and review the general troubleshooting information See HOW TO TROUBLESHOOT THE A/T SYSTEM or HOW TO TROUBLESHOOT THE FUEL AND EMISSIONS SYSTEMS .**

DTC Description	Confirmed DTC	Pending DTC	Freeze Frame
P0369 CMP SENSOR B CIRCUIT INTERMITTENT INTERRUPTION			

GETtheMANUALS.org

1. Problem verification (idling):
   - 1. Turn the ignition switch to ON (II).
   - 2. **Clear the DTC with the HDS** See **HOW TO TROUBLESHOOT THE A/T SYSTEM** or **HOW TO TROUBLESHOOT THE FUEL AND EMISSIONS SYSTEMS** .
   - 3. Start the engine, and let it idle for 10 seconds.
   - 4. Monitor the OBD STATUS for DTC P0369 in the DTCs MENU with the HDS.

DTC Description	OBD STATUS
P0369 CMP SENSOR B CIRCUIT INTERMITTENT INTERRUPTION	

Does the HDS indicate FAILED?

YES : The failure is duplicated. Go to step 3.

NO : If the HDS indicates PASSED, go to step 2. If the HDS indicates NOT COMPLETED, keep idling until a result comes on.

2. Problem verification (test-drive):
   - 1. Test-drive the vehicle for several minutes in the range of these recorded freeze data parameters:
     - ENGINE SPEED
     - VEHICLE SPEED
   - 2. Monitor the OBD STATUS for DTC P0369 in the DTCs MENU with the HDS.

DTC Description	OBD STATUS
P0369 CMP SENSOR B CIRCUIT INTERMITTENT INTERRUPTION	

Does the HDS indicate FAILED?

YES : The failure is duplicated. Go to step 3.

NO : If the HDS indicates PASSED, intermittent failure, the system is OK at this time. Check for poor connections or loose terminals at CMP sensor B and the PCM. If the HDS indicates NOT COMPLETED, retest and check the OBD STATUS again.

3. Connectors and terminals condition check:
   - 1. Check for poor connections or loose terminals at these locations:
     - CMP sensor B
     - PCM
     - Engine ground
     - Body ground

Are the connections and terminals OK?

GETtheMANUALS.org

YES : Go to step 4.

NO : Repair the connections or terminals, then **do the repair verification** .

4. CMP pulse plate B visual check:
   - 1. Remove the cylinder head cover, then check for damage to CMP pulse plate B.

Is the pulse plate damaged?

YES : **Replace CMP pulse plate B** See **CMP PULSE PLATE A REMOVAL AND INSTALLATION** or **CMP PULSE PLATE B REMOVAL AND INSTALLATION** , then **do the repair verification** .

NO : **REPLACE CMP SENSOR B** , then **do the repair verification** .

REPAIR VERIFICATION

- 1. Turn the ignition switch to LOCK (0).
- 2. Reconnect all connectors.
- 3. Turn the ignition switch to ON (II).
- 4. **Reset the PCM with the HDS** See **HOW TO TROUBLESHOOT THE A/T SYSTEM** or **HOW TO TROUBLESHOOT THE FUEL AND EMISSIONS SYSTEMS** .
- 5. **DO THE PCM IDLE LEARN PROCEDURE** .
- 6. Start the engine, and let it idle for 10 seconds, or test-drive the vehicle for several minutes under the freeze data conditions (same as step **2-1**).
- 7. Check for Pending or Confirmed DTCs with the HDS.

DTC Description	Confirmed DTC	Pending DTC	Freeze Frame
P0369 CMP SENSOR B CIRCUIT INTERMITTENT INTERRUPTION			

Is DTC P0369 indicated?

YES : Check for poor connections or loose terminals at CMP sensor B and the PCM, then go to step 1.

NO : Troubleshooting is complete. If any other Pending or Confirmed DTCs are indicated, go to the indicated DTC's troubleshooting.

DTC P0420: CATALYST SYSTEM EFFICIENCY BELOW THRESHOLD

GETtheMANUALS.org

DTC Troubleshooting: P0420

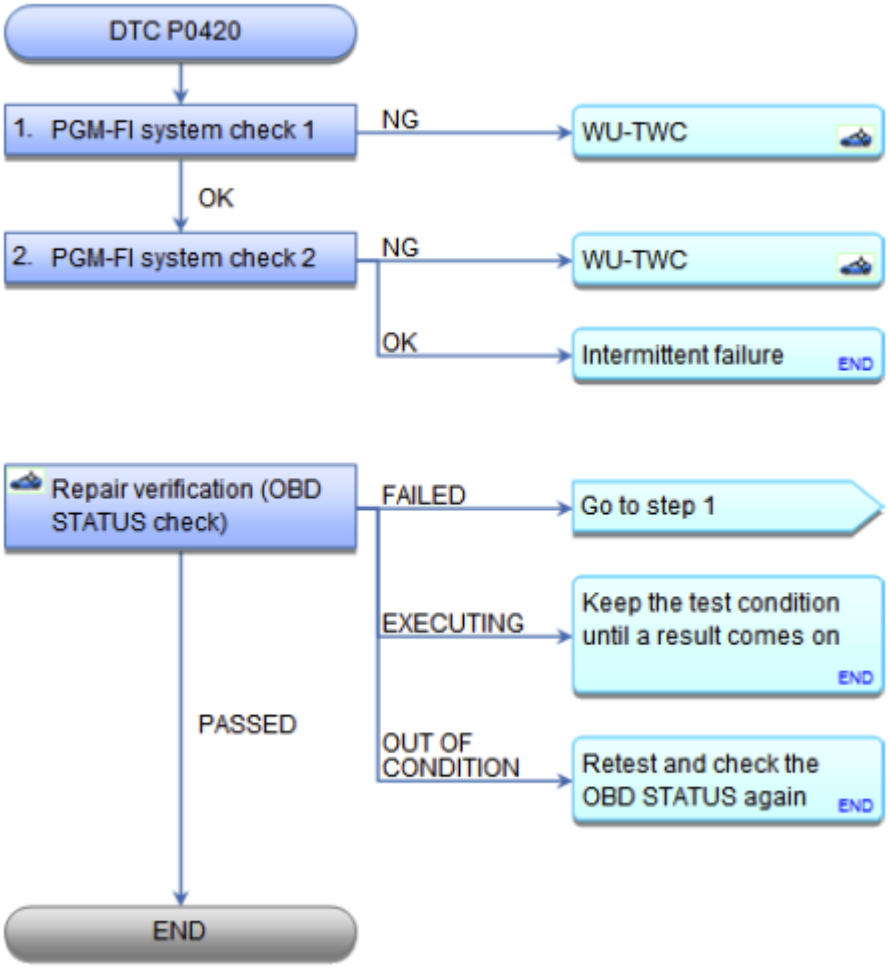

Fig. 182: DTC Troubleshooting Flow Chart (P0420)
Courtesy of AMERICAN HONDA MOTOR CO., INC.

NOTE:

- **Before you troubleshoot, record all freeze data and any on-board snapshot, and review the general troubleshooting information See HOW TO TROUBLESHOOT THE A/T SYSTEM or HOW TO TROUBLESHOOT THE FUEL AND EMISSIONS SYSTEMS .**
- **If some of the DTCs listed below are stored at the same time as DTC P0420, troubleshoot them first, then recheck for DTC P0420.**
  - **P0137, P0138: Secondary HO2S (Sensor 2)**
  - **P0141: Secondary HO2S (Sensor 2) heater**
  - **P0300: Random misfire**
  - **P0301, P0302, P0303, P0304: No. 1, No. 2, No. 3, No. 4 cylinder misfire detected**
- **Poor quality fuel may cause this DTC.**

GETtheMANUALS.org

DTC Description	Confirmed DTC	Pending DTC	Freeze Frame
P0420 CATALYST SYSTEM EFFICIENCY BELOW THRESHOLD			

1. PGM-FI system check 1:
   - 1. Turn the ignition switch to ON (II).
   - 2. **Clear the DTC with the HDS** See **HOW TO TROUBLESHOOT THE A/T SYSTEM** or **HOW TO TROUBLESHOOT THE FUEL AND EMISSIONS SYSTEMS** .
   - 3. Start the engine. Hold the engine speed at 3, 000 rpm without load (in P or N) until the radiator fan comes on, then let it idle.
   - 4. Test-drive under these conditions:
     - Engine coolant temperature (ECT SENSOR 1) above 158 °F (70 °C)
     - Transmission in D
     - Vehicle speed between 45-75 mph (70-120 km/h) for 5 minutes or more with cruise control set
     - Vehicle speed between 55-75 mph (90-120 km/h) for 10 seconds, then decelerate (with the throttle fully closed). Repeat this three or more times
     - Maintain the vehicle speed at 55 mph (88 km/h) for 5 minutes or more with cruise control set

Signal	Current conditions	
	Values	Unit
ECT SENSOR 1		
VEHICLE SPEED		

   - 5. Monitor the OBD STATUS for DTC P0420 with the HDS.

DTC Description	OBD STATUS
P0420 CATALYST SYSTEM EFFICIENCY BELOW THRESHOLD	

Does the HDS indicate FAILED?

YES : **Replace the WU-TWC** See **UNDER-FLOOR TWC REMOVAL AND INSTALLATION** or **WARM UP TWC REMOVAL AND INSTALLATION** , then **do the repair verification** .

NO : If the HDS indicates EXECUTING, go to step 2. If the HDS indicates OUT OF CONDITION, meet the test condition and recheck. If the HDS indicates PASSED, intermittent failure the system is OK at this time.

2. PGM-FI system check 2:
   - 1. Continue test-drive until a result comes on.
   - 2. Monitor the OBD STATUS for DTC P0420 with the HDS.

GETtheMANUALS.org

DTC Description	OBD STATUS
P0420 CATALYST SYSTEM EFFICIENCY BELOW THRESHOLD	

Does the HDS indicate FAILED?

YES : **Replace the WU-TWC** See **UNDER-FLOOR TWC REMOVAL AND INSTALLATION** or **WARM UP TWC REMOVAL AND INSTALLATION** , then **do the repair verification** .

NO : If the HDS indicates PASSED, intermittent failure, the system is OK at this time. If the HDS indicates EXECUTING, keep driving until a result comes on. If the HDS indicates OUT OF CONDITION, meet the test condition and recheck.

REPAIR VERIFICATION (OBD STATUS CHECK)

- 1. Turn the ignition switch to ON (II).
- 2. **Reset the PCM with the HDS** See **HOW TO TROUBLESHOOT THE A/T SYSTEM** or **HOW TO TROUBLESHOOT THE FUEL AND EMISSIONS SYSTEMS** .
- 3. **DO THE PCM IDLE LEARN PROCEDURE** .
- 4. Drive the vehicle until the result of CATA MONITOR CONDITION in the DATA LIST on HDS indicates OK.

NOTE: Test-drive may to 10 minutes or more.

Signal	Current conditions	
	Values	Unit
CATA MONITOR CONDITION		

- 5. Test-drive under these conditions:
  - Engine coolant temperature (ECT SENSOR 1) above 158 °F (70 °C)
  - Transmission in D
  - Vehicle speed between 45-75 mph (72-120 km/h) for 5 minutes or more with cruise control set
  - Vehicle speed between 55-75 mph (72-120 km/h) for 10 seconds, then decelerate (with the throttle fully closed). Repeat this three or more times
  - Maintain the vehicle speed at 55 mph (88 km/h) for 5 minutes or more with cruise control set

Signal	Current conditions	
	Values	Unit
ECT SENSOR 1		
VEHICLE SPEED		

- 6. Monitor the OBD STATUS for DTC P0420 with the HDS.

DTC Description	OBD STATUS

GETtheMANUALS.org

P0420 CATALYST SYSTEM EFFICIENCY BELOW THRESHOLD

Does the HDS indicate PASSED, FAILED, EXECUTING, or OUT OF CONDITION?

PASSED : Troubleshooting is complete. If any other Pending or Confirmed DTCs were indicated, go to the indicated DTC's troubleshooting.

FAILED : Go to step 1 and recheck.

EXECUTING : Keep the test condition until a result comes on.

OUT OF CONDITION : Meet the test condition, and check the OBD STATUS again.

DTC P0443: EVAP CANISTER PURGE VALVE CIRCUIT MALFUNCTION

GETtheMANUALS.org

DTC Troubleshooting: P0443

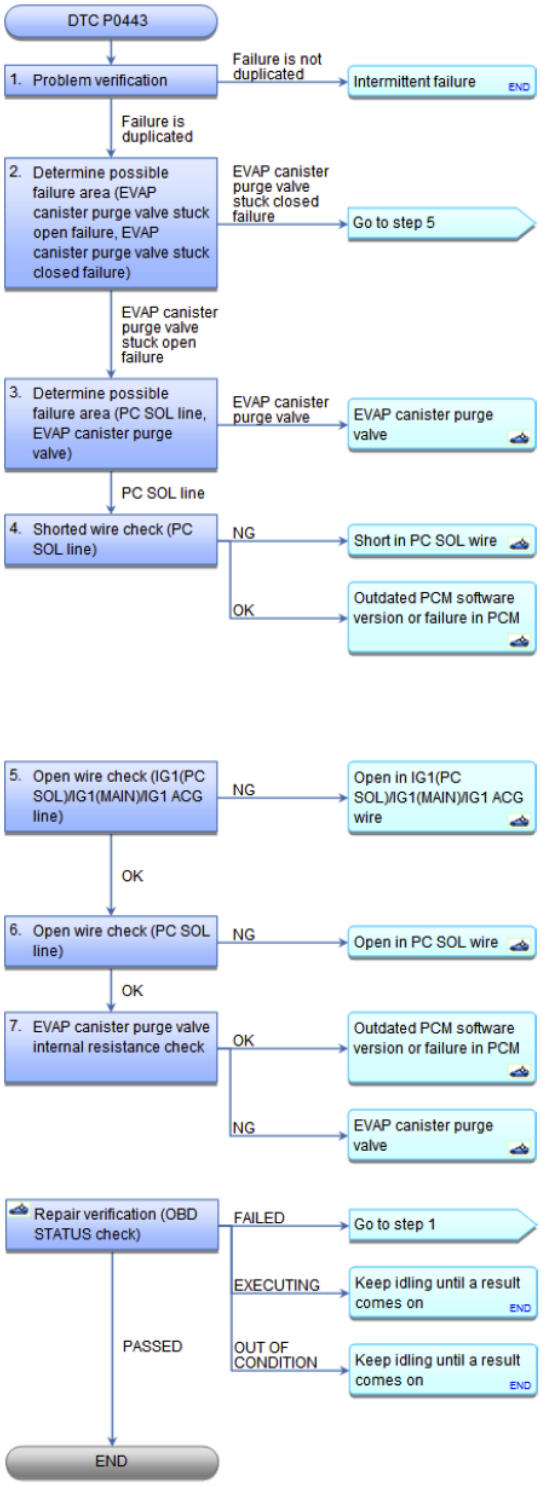

Fig. 183: DTC Troubleshooting Flow Chart (P0443)
Courtesy of AMERICAN HONDA MOTOR CO., INC.

Special Tools Required

GETtheMANUALS.org

Vacuum Pump/Gauge, 0-30 inHg Snap-on YA4000A or equivalent, commercially available

NOTE: **Before you troubleshoot, record all freeze data and any on-board snapshot, and review the general troubleshooting information See HOW TO TROUBLESHOOT THE A/T SYSTEM or HOW TO TROUBLESHOOT THE FUEL AND EMISSIONS SYSTEMS .**

DTC Description	Confirmed DTC	Pending DTC	Freeze Frame
P0443 EVAP CANISTER PURGE VALVE CIRCUIT MALFUNCTION			

1. Problem verification:
   - 1. Turn the ignition switch to ON (II).
   - 2. **Clear the DTC with the HDS** See **HOW TO TROUBLESHOOT THE A/T SYSTEM** or **HOW TO TROUBLESHOOT THE FUEL AND EMISSIONS SYSTEMS** .
   - 3. Start the engine. Hold the engine speed at 3, 000 rpm without load (in P or N) until the radiator fan comes on, then let it idle.
   - 4. Check for Pending or Confirmed DTCs with the HDS.

DTC Description	Confirmed DTC	Pending DTC	Freeze Frame
P0443 EVAP CANISTER PURGE VALVE CIRCUIT MALFUNCTION			

Is DTC P0443 indicated?

YES : The failure is duplicated. Go to step 2.

NO : Intermittent failure, the system is OK at this time. Check for poor connections or loose terminals at the EVAP canister purge valve and the PCM.

2. Determine possible failure area (EVAP canister purge valve stuck open failure, EVAP canister purge valve stuck closed failure):
   - 1. Turn the ignition switch to LOCK (0), and allow the engine to cool below 140 °F (60 °C).
   - 2. Disconnect the vacuum hose (A) from the EVAP canister purge valve (B) in the engine compartment, then connect a vacuum pump/gauge, 0-30 inHg, to the EVAP canister purge valve.

GETtheMANUALS.org

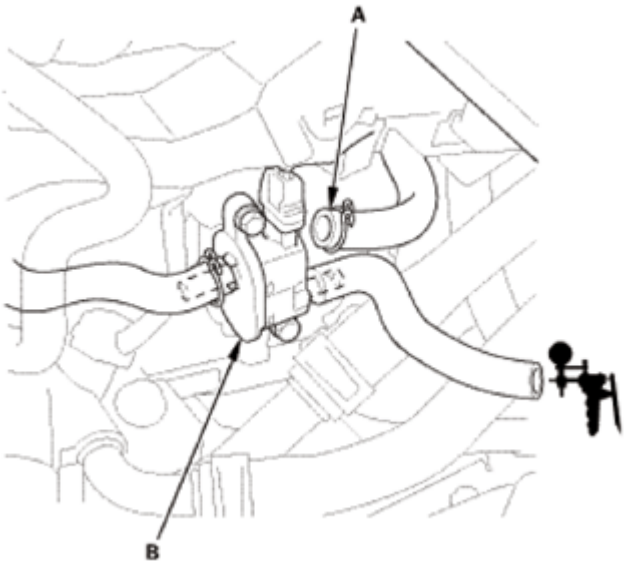

Fig. 184: Identifying Vacuum Hose And EVAP Canister Purge ValveIdentifying
Courtesy of AMERICAN HONDA MOTOR CO., INC.

- 3. Start the engine, and let it idle.

Is there vacuum?

YES : The EVAP canister purge valve is stuck open. Go to step 3.

NO : The EVAP canister purge valve is stuck closed. Go to step 5.

3. Determine possible failure area (PC SOL line, EVAP canister purge valve):
   - 1. Turn the ignition switch to LOCK (0).
   - 2. Disconnect the following connector.

     EVAP canister purge valve 2P connector

   - 3. Check for continuity between test points 1 and 2.

     Test condition IG LOCK (0)

     EVAP canister purge valve 2P connector: disconnected

     Test circuit PC SOL

     Test point 1 EVAP canister purge valve 2P connector No. 1 (YEL)

     Test point 2 Body ground

GETtheMANUALS.org

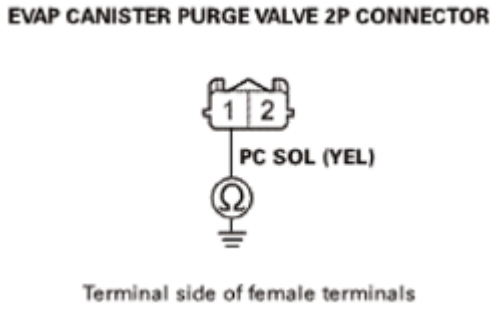

Fig. 185: Checking Continuity Between EVAP Canister Purge Valve 2P Connector No. 1 (YEL) And Body Ground
Courtesy of AMERICAN HONDA MOTOR CO., INC.

Is there continuity?

YES : There is a problem in the PC SOL line. Go to step 4.

NO : **REPLACE THE EVAP CANISTER PURGE VALVE** , then **do the repair verification** .

4. Shorted wire check (PC SOL line):
   - 1. Jump the SCS line with the HDS.
   - 2. Disconnect the following connector.

     PCM connector B (49P)

   - 3. Check for continuity between test points 1 and 2.

     Test condition IG LOCK (0)

     EVAP canister purge valve 2P connector: disconnected

     PCM connector B (49P): disconnected

     Test circuit PC SOL

     Test point 1 EVAP canister purge valve 2P connector No. 1 (YEL)

     Test point 2 Body ground

GETtheMANUALS.org

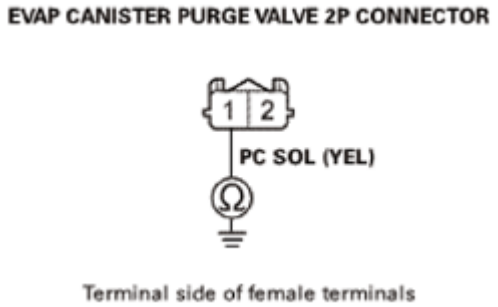

Fig. 186: Checking Continuity Between EVAP Canister Purge Valve 2P Connector No. 1 (YEL) And Body Ground
Courtesy of AMERICAN HONDA MOTOR CO., INC.

Is there continuity?

YES : Repair a short in the PC SOL wire between the PCM (B3) and the EVAP canister purge valve, then **do the repair verification** .

NO : The PC SOL wire is OK. **Update the PCM** See **PCM REMOVAL AND INSTALLATION** or **PCM UPDATE** if it does not have the latest software, or **substitute a known-good PCM** See **PCM REMOVAL AND INSTALLATION** or **PCM UPDATE** , then **do the repair verification** .

5. Open wire check (IG1(PC SOL)/IG1(MAIN)/IG1 ACG line):
   - 1. Turn the ignition switch to LOCK (0).
   - 2. Disconnect the following connector.

     EVAP canister purge valve 2P connector

   - 3. Turn the ignition switch to ON (II).
   - 4. Measure the voltage between test points 1 and 2.

     Test condition IG ON (II)

     EVAP canister purge valve 2P connector: disconnected

     Test circuit IG1(PC SOL)

     Test point 1 EVAP canister purge valve 2P connector No. 2 (WHT)

     Test point 2 Body ground

GETtheMANUALS.org

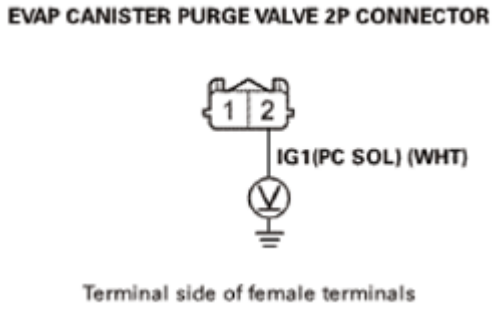

Fig. 187: Measuring Voltage Between EVAP Canister Purge Valve 2P Connector No. 2 (WHT) And Body Ground
Courtesy of AMERICAN HONDA MOTOR CO., INC.

Is there battery voltage?

YES : The IG1(PC SOL)/IG1(MAIN)/IG1 ACG wire is OK. Go to step 6.

NO : Repair an open in the IG1(PC SOL)/IG1(MAIN)/IG1 ACG wire between the EVAP canister purge valve and the No. B2 (15 A) fuse in the under-dash fuse/relay box, then **do the repair verification** .

6. Open wire check (PC SOL line):
   - 1. Turn the ignition switch to LOCK (0).
   - 2. Jump the SCS line with the HDS.
   - 3. Disconnect the following connector.

     PCM connector B (49P)

   - 4. Check for continuity between test points 1 and 2.

     Test condition IG LOCK (0)

     EVAP canister purge valve 2P connector: disconnected

     PCM connector B (49P): disconnected

     Test circuit PC SOL

     Test point 1 PCM connector B (49P) No. 3 (YEL)

     Test point 2 EVAP canister purge valve 2P connector No. 1 (YEL)

GETtheMANUALS.org

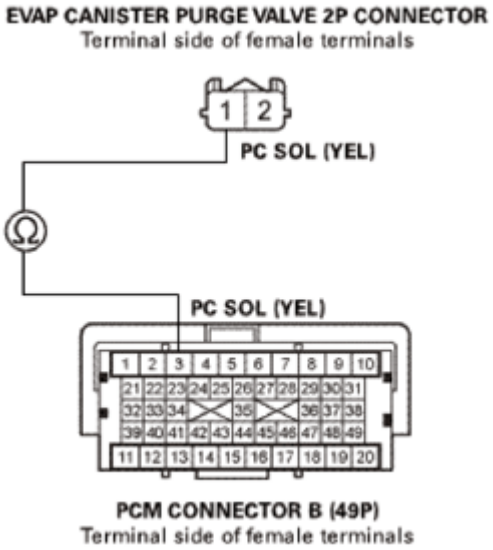

Fig. 188: Checking Continuity Between PCM Connector B (49P) No. 3 (YEL) And EVAP Canister Purge Valve 2P Connector No. 1 (YEL)
Courtesy of AMERICAN HONDA MOTOR CO., INC.

Is there continuity?

YES : The PC SOL wire is OK. Go to step 7.

NO : Repair an open in the PC SOL wire between the PCM (B3) and the EVAP canister purge valve, then **do the repair verification** .

7. EVAP canister purge valve internal resistance check:
   - 1. At the purge valve side, measure the resistance between test points 1 and 2.

     Test condition IG LOCK (0)

     EVAP canister purge valve 2P connector: disconnected

     PCM connector B (49P): disconnected

     Test circuit IG1, PC SOL

     Test point 1 EVAP canister purge valve 2P connector No. 1 (EVAP canister purge valve side)

     Test point 2 EVAP canister purge valve 2P connector No. 2 (EVAP canister purge valve side)

GETtheMANUALS.org

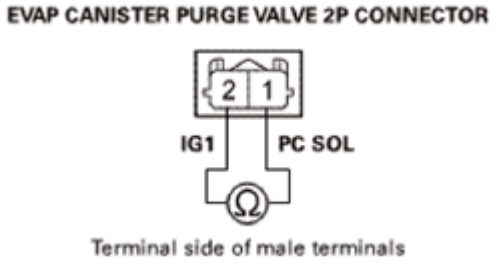

Fig. 189: Measuring Resistance Between EVAP Canister Purge Valve 2P Connector No. 1 And No. 2
Courtesy of AMERICAN HONDA MOTOR CO., INC.

Is there about 23-26 ohms at room temperature?

YES : The EVAP canister purge valve is OK. **Update the PCM** See **PCM REMOVAL AND INSTALLATION** or **PCM UPDATE** if it does not have the latest software, or **substitute a known-good PCM** See **PCM REMOVAL AND INSTALLATION** or **PCM UPDATE** , then **do the repair verification** .

NO : **REPLACE THE EVAP CANISTER PURGE VALVE** , then **do the repair verification** .

REPAIR VERIFICATION (OBD STATUS CHECK)

- 1. Turn the ignition switch to LOCK (0).
- 2. Reconnect all connectors.
- 3. Turn the ignition switch to ON (II).
- 4. **Reset the PCM with the HDS** See **HOW TO TROUBLESHOOT THE A/T SYSTEM** or **HOW TO TROUBLESHOOT THE FUEL AND EMISSIONS SYSTEMS** .
- 5. **DO THE PCM IDLE LEARN PROCEDURE** .
- 6. Monitor the OBD STATUS for DTC P0443 with the HDS.

DTC Description	OBD STATUS
P0443 EVAP CANISTER PURGE VALVE CIRCUIT MALFUNCTION	

Does the HDS indicate PASSED, FAILED, EXECUTING, or OUT OF CONDITION?

PASSED : Troubleshooting is complete. If the PCM was substituted, **REPLACE THE ORIGINAL PCM** . If any other Pending or Confirmed DTCs are indicated, go to the indicated DTC's troubleshooting.

FAILED : Go to step 1 and recheck. If the PCM was updated, **substitute a known-good PCM** See **PCM REMOVAL AND INSTALLATION** or **PCM UPDATE** , then check the OBD STATUS again.

EXECUTING : Keep idling until a result comes on.

OUT OF CONDITION : Keep idling until a result comes on.

GETtheMANUALS.org

DTC P0451: FTP SENSOR CIRCUIT RANGE/PERFORMANCE PROBLEM

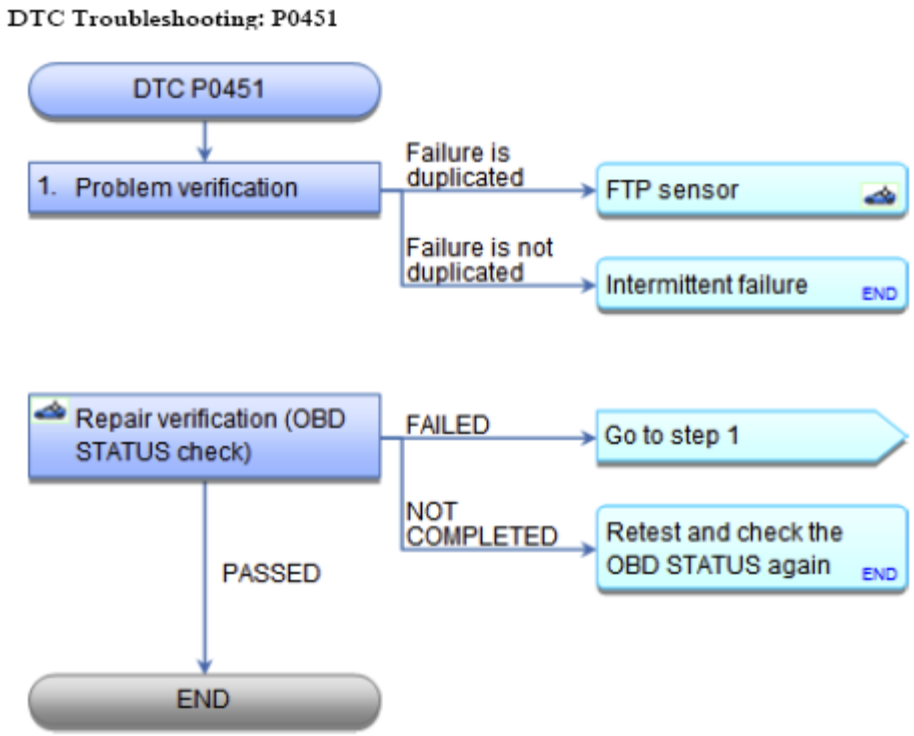

Fig. 190: DTC Troubleshooting Flow Chart (P0451)
Courtesy of AMERICAN HONDA MOTOR CO., INC.

NOTE:

- **Before you troubleshoot, record all freeze data and any on-board snapshot, and review the general troubleshooting information See HOW TO TROUBLESHOOT THE A/T SYSTEM or HOW TO TROUBLESHOOT THE FUEL AND EMISSIONS SYSTEMS .**
- **If DTC P2422 is stored at the same time as DTC P0451, troubleshoot DTC P2422 first, then recheck for DTC P0451.**

DTC Description	Confirmed DTC	Pending DTC	Freeze Frame
P0451 FTP SENSOR CIRCUIT RANGE/PERFORMANCE PROBLEM			

1. Problem verification:
   - 1. Turn the ignition switch to ON (II).
   - 2. **Clear the DTC with the HDS** See HOW TO TROUBLESHOOT THE A/T SYSTEM or HOW TO TROUBLESHOOT THE FUEL AND EMISSIONS SYSTEMS .
   - 3. Start the engine, and let it idle for 1 minute.
   - 4. Monitor the OBD STATUS for DTC P0451 with the HDS.

GETtheMANUALS.org

DTC Description	OBD STATUS
P0451 FTP SENSOR CIRCUIT RANGE/PERFORMANCE PROBLEM	

Does the HDS indicate FAILED?

YES : REPLACE THE FTP SENSOR , then **do the repair verification** .

NO : If the HDS indicates PASSED, intermittent failure, the system is OK at this time. Check for poor connections or loose terminals at the FTP sensor and the PCM. If the HDS indicates NOT COMPLETED, keep idling until a result comes on.

REPAIR VERIFICATION (OBD STATUS CHECK)

- 1. Turn the ignition switch to ON (II).
- 2. **Reset the PCM with the HDS** See **HOW TO TROUBLESHOOT THE A/T SYSTEM** or **HOW TO TROUBLESHOOT THE FUEL AND EMISSIONS SYSTEMS** .
- 3. **DO THE PCM IDLE LEARN PROCEDURE** .
- 4. Start the engine, and let it idle for 1 minute.
- 5. Monitor the OBD STATUS for DTC P0451 in the DTCs MENU with the HDS.

DTC Description	OBD STATUS
P0451 FTP SENSOR CIRCUIT RANGE/PERFORMANCE PROBLEM	

Does the HDS indicate PASSED, FAILED, or NOT COMPLETED?

PASSED : Troubleshooting is complete. If any other Pending or Confirmed DTCs were indicated, go to the indicated DTC's troubleshooting.

FAILED : Go to step 1 and recheck.

NOT COMPLETED : Meet the test condition, and check the OBD STATUS again.

DTC P0452: FTP SENSOR CIRCUIT LOW VOLTAGE

GETtheMANUALS.org

DTC Troubleshooting: P0452

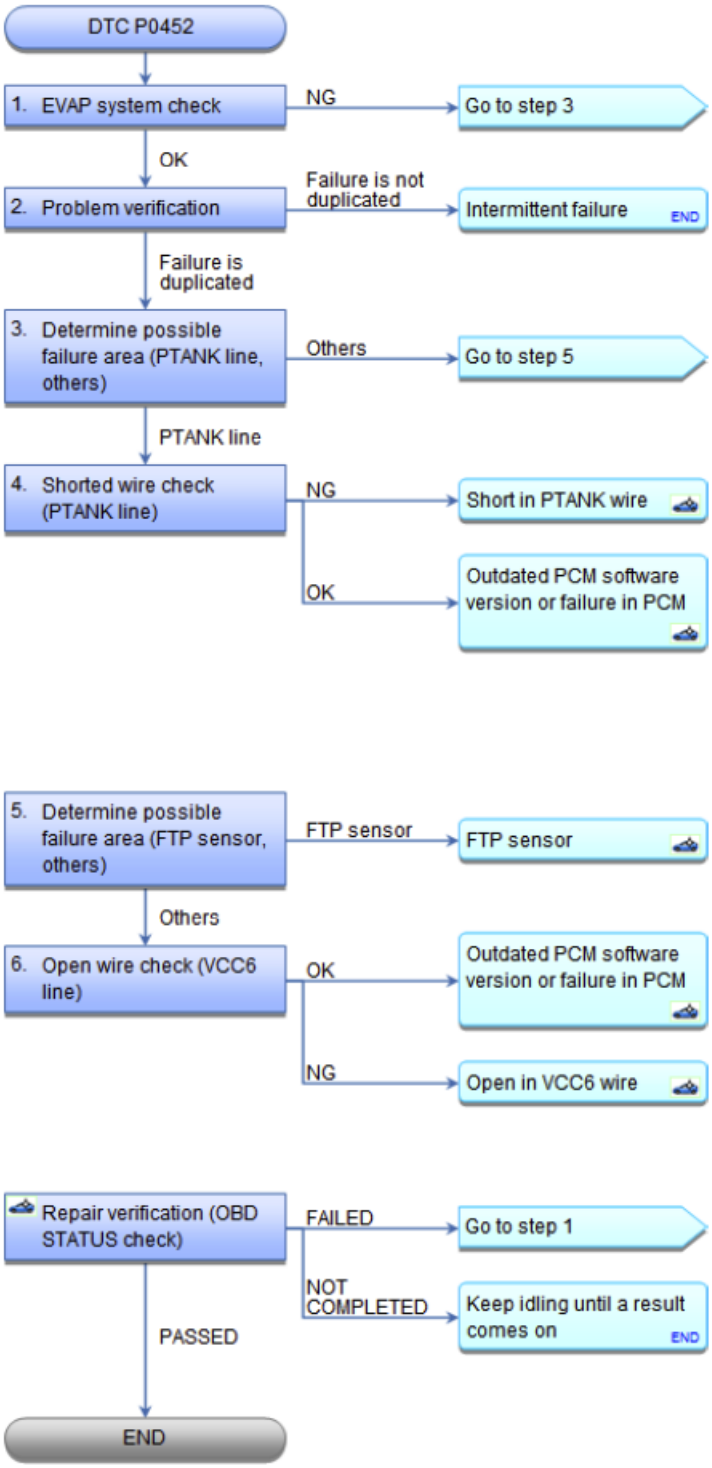

Fig. 191: DTC Troubleshooting Flow Chart (P0452)
Courtesy of AMERICAN HONDA MOTOR CO., INC.

NOTE: **Before you troubleshoot, record all freeze data and any on-board snapshot, and**

GETtheMANUALS.org

review the general troubleshooting information See HOW TO TROUBLESHOOT THE A/T SYSTEM or HOW TO TROUBLESHOOT THE FUEL AND EMISSIONS SYSTEMS .

DTC Description	Confirmed DTC	Pending DTC	Freeze Frame
P0452 FTP SENSOR CIRCUIT LOW VOLTAGE			

1. EVAP system check:
   - 1. Turn the ignition switch to ON (II).
   - 2. **Clear the DTC with the HDS** See **HOW TO TROUBLESHOOT THE A/T SYSTEM** or **HOW TO TROUBLESHOOT THE FUEL AND EMISSIONS SYSTEMS** .
   - 3. Turn the ignition switch to LOCK (0).
   - 4. Remove the fuel fill cap.
   - 5. Turn the ignition switch to ON (II).
   - 6. Check the parameter(s) below with the HDS.

Signal	Threshold		Current DTC	
	Values	Unit	Values	Unit
FTP SENSOR	Less than 0.3	V		

Do the current condition(s) match the threshold?

YES : Go to step 3.

NO : Go to step 2.

2. Problem verification:
   - 1. Install the fuel fill cap.
   - 2. Start the engine, and let it idle.
   - 3. Monitor the OBD STATUS for DTC P0452 with the HDS.

DTC Description	OBD STATUS
P0452 FTP SENSOR CIRCUIT LOW VOLTAGE	

Does the HDS indicate FAILED?

YES : The failure is duplicated. Go to step 3.

NO : If the HDS indicates PASSED, intermittent failure, the system is OK at this time. Check for poor connections or loose terminals at the FTP sensor and the PCM. If the HDS indicates NOT COMPLETED, keep idling until a result comes on.

3. Determine possible failure area (PTANK line, others):

GETtheMANUALS.org

- 1. Turn the ignition switch to LOCK (0).
- 2. Disconnect the following connector.

  FTP sensor 3P connector

- 3. Turn the ignition switch to ON (II).
- 4. Check the parameter(s) below with the HDS.

Signal	Threshold		Current DTC	
	Values	Unit	Values	Unit
FTP SENSOR	Less than 0.3	V		

Do the current condition(s) match the threshold?

YES : Go to step 4.

NO : Go to step 5.

4. Shorted wire check (PTANK line):
   - 1. Turn the ignition switch to LOCK (0).
   - 2. Jump the SCS line with the HDS.
   - 3. Disconnect the following connector.

     PCM connector A (49P)

   - 4. Check for continuity between test points 1 and 2.

     Test condition IG LOCK (0)

     FTP sensor 3P connector: disconnected

     PCM connector A (49P): disconnected

     Test circuit PTANK

     Test point 1 FTP sensor 3P connector No. 2 (WHT)

     Test point 2 Body ground

GETtheMANUALS.org

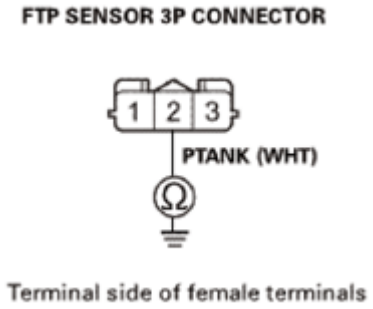

Fig. 192: Checking Continuity Between FTP Sensor 3P Connector No. 2 (WHT) And Body Ground
Courtesy of AMERICAN HONDA MOTOR CO., INC.

Is there continuity?

YES : Repair a short in the PTANK wire between the PCM (A37) and the FTP sensor, then **do the repair verification** .

NO : The PTANK wire is OK. **Update the PCM** See **PCM REMOVAL AND INSTALLATION** or **PCM UPDATE** if it does not have the latest software, or **substitute a known-good PCM** See **PCM REMOVAL AND INSTALLATION** or **PCM UPDATE** , then **do the repair verification** .

5. Determine possible failure area (FTP sensor, others):
   - 1. Measure the voltage between test points 1 and 2.

     Test condition IG ON (II)

     FTP sensor 3P connector: disconnected

     Test circuit VCC6

     Test point 1 FTP sensor 3P connector No. 3 (RED)

     Test point 2 Body ground

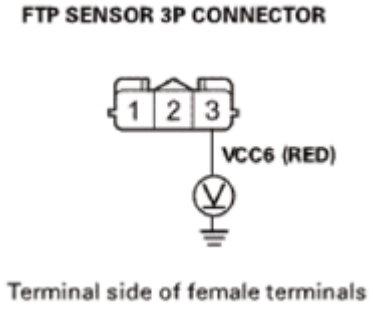

Fig. 193: Measuring Voltage Between FTP Sensor 3P Connector No. 3 (RED) And Body Ground

GETtheMANUALS.org

Courtesy of AMERICAN HONDA MOTOR CO., INC.

Is there about 5.0 V?

YES : REPLACE THE FTP SENSOR , then **do the repair verification** .

NO : There is a problem in the VCC6 line. Go to step 6.

6. Open wire check (VCC6 line):
   - 1. Turn the ignition switch to LOCK (0).
   - 2. Jump the SCS line with the HDS.
   - 3. Disconnect the following connector.

     PCM connector A (49P)

   - 4. Connect terminals A and B with a jumper wire.

     Terminal A FTP sensor 3P connector No. 3 (RED)

     Terminal B Body ground

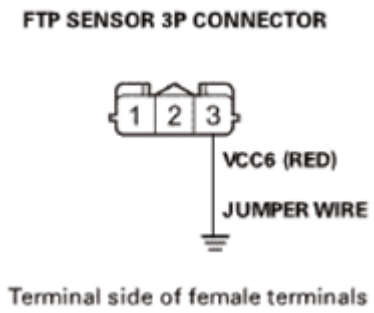

Fig. 194: Connecting Wire Between FTP Sensor 3P Connector No. 3 (RED) And Body Ground
Courtesy of AMERICAN HONDA MOTOR CO., INC.

   - 5. Check for continuity between test points 1 and 2.

     Test condition IG LOCK (0)

     FTP sensor 3P connector: disconnected

     FTP sensor 3P connector No. 3: jumped to body ground

     PCM connector A (49P): disconnected

     Test circuit VCC6

GETtheMANUALS.org

Test point 1 PCM connector A (49P) No. 30 (RED)

Test point 2 Body ground

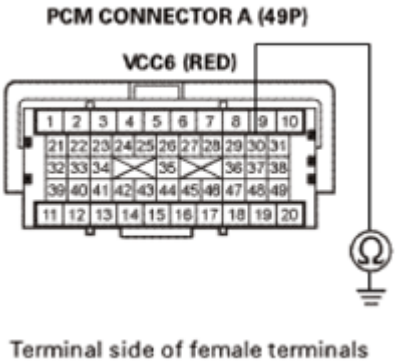

Fig. 195: Checking Continuity Between PCM Connector A (49P) No. 30 (RED) And Body Ground
Courtesy of AMERICAN HONDA MOTOR CO., INC.

Is there continuity?

YES : The VCC6 wire is OK. **Update the PCM** See **PCM REMOVAL AND INSTALLATION** or **PCM UPDATE** if it does not have the latest software, or **substitute a known-good PCM** See **PCM REMOVAL AND INSTALLATION** or **PCM UPDATE** , then **do the repair verification** .

NO : Repair an open in the VCC6 wire between the PCM (A30) and the FTP sensor, then **do the repair verification** .

REPAIR VERIFICATION (OBD STATUS CHECK)

- 1. Turn the ignition switch to LOCK (0).
- 2. Reconnect all connectors.
- 3. Turn the ignition switch to ON (II).
- 4. **Reset the PCM with the HDS** See **HOW TO TROUBLESHOOT THE A/T SYSTEM** or **HOW TO TROUBLESHOOT THE FUEL AND EMISSIONS SYSTEMS** .
- 5. **DO THE PCM IDLE LEARN PROCEDURE** .
- 6. Start the engine, and let it idle.
- 7. Monitor the OBD STATUS for DTC P0452 in the DTCs MENU with the HDS.

DTC Description	OBD STATUS
P0452 FTP SENSOR CIRCUIT LOW VOLTAGE	

Does the HDS indicate PASSED, FAILED, or NOT COMPLETED?

PASSED : Troubleshooting is complete. If the PCM was substituted, **replace the original PCM** See **PCM**

GETtheMANUALS.org

REMOVAL AND INSTALLATION or **PCM UPDATE** . If any other Pending or Confirmed DTCs were indicated, go to the indicated DTC's troubleshooting.

FAILED : Go to step 1 and recheck. If the PCM was updated, **substitute a known-good PCM** See **PCM REMOVAL AND INSTALLATION** or **PCM UPDATE** , then check the OBD STATUS again.

NOT COMPLETED : Keep idling until a result comes on.

DTC P0453: FTP SENSOR CIRCUIT HIGH VOLTAGE

GETtheMANUALS.org

DTC Troubleshooting: P0453

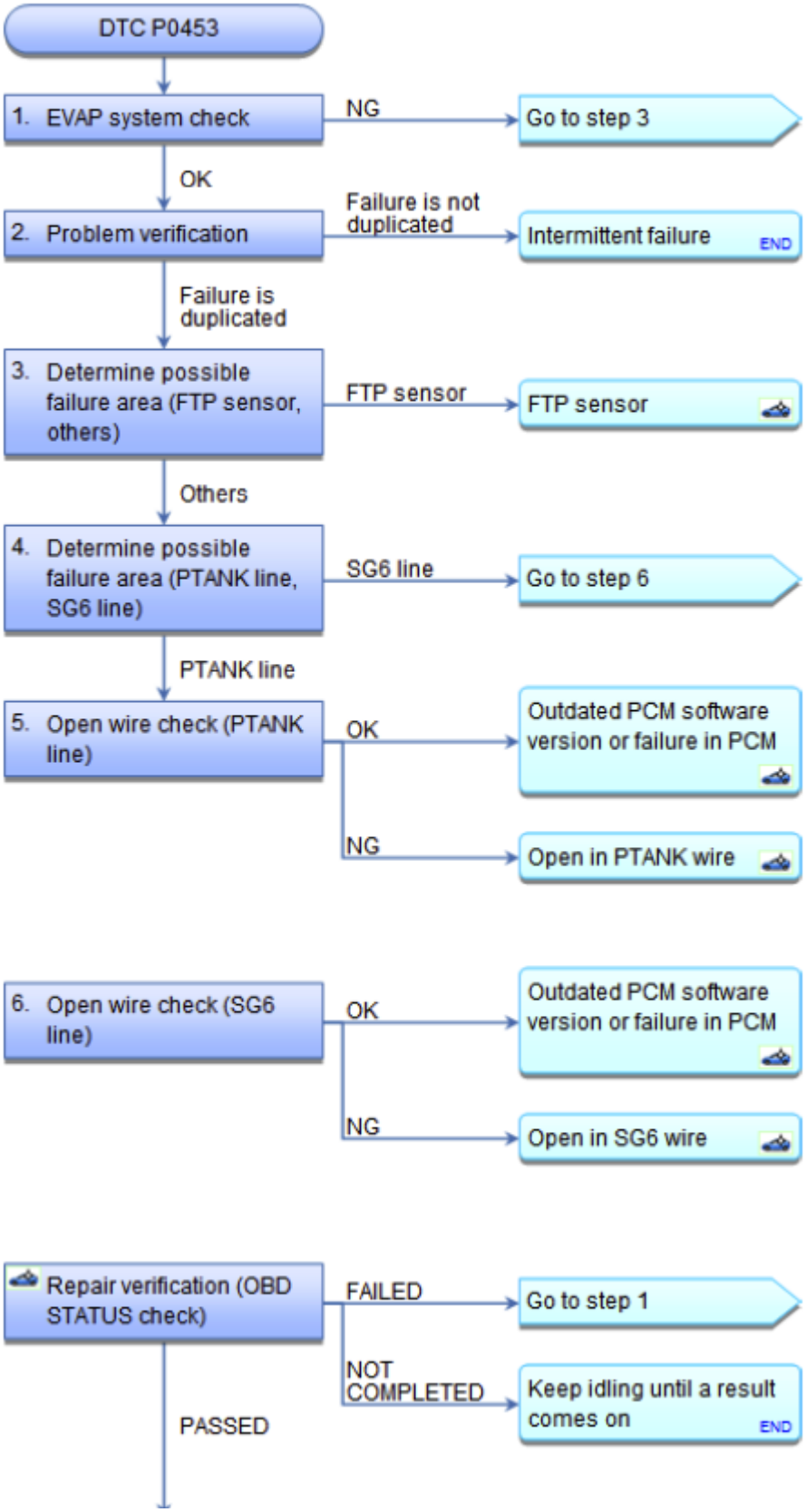

GETtheMANUALS.org

Fig. 196: DTC Troubleshooting Flow Chart (P0453)
Courtesy of AMERICAN HONDA MOTOR CO., INC.

NOTE: **Before you troubleshoot, record all freeze data and any on-board snapshot, and review the general troubleshooting information See HOW TO TROUBLESHOOT THE A/T SYSTEM or HOW TO TROUBLESHOOT THE FUEL AND EMISSIONS SYSTEMS .**

DTC Description	Confirmed DTC	Pending DTC	Freeze Frame
P0453 FTP SENSOR CIRCUIT HIGH			
VOLTAGE			

1. EVAP system check:
   - 1. Turn the ignition switch to ON (II).
   - 2. **Clear the DTC with the HDS** See **HOW TO TROUBLESHOOT THE A/T SYSTEM** or **HOW TO TROUBLESHOOT THE FUEL AND EMISSIONS SYSTEMS** .
   - 3. Turn the ignition switch to LOCK (0).
   - 4. Remove the fuel fill cap.
   - 5. Turn the ignition switch to ON (II).
   - 6. Check the parameter(s) below with the HDS.

Signal	Threshold		Current DTC	
	Values	Unit	Values	Unit
FTP SENSOR	More than 4.7	V		

Do the current condition(s) match the threshold?

YES : Go to step 3.

NO : Go to step 2.

2. Problem verification:
   - 1. Install the fuel fill cap.
   - 2. Start the engine. Hold the engine speed at 3, 000 rpm without load (in P or N) until the radiator fan comes on, then let it idle.
   - 3. Monitor the OBD STATUS for DTC P0453 with the HDS.

DTC Description	OBD STATUS
P0453 FTP SENSOR CIRCUIT HIGH VOLTAGE	

Does the HDS indicate FAILED?

YES : Failure is duplicated. Go to step 3.

GETtheMANUALS.org

NO : If the HDS indicates PASSED, intermittent failure, the system is OK at this time. Check for poor connections or loose terminals at the FTP sensor and the PCM. If the HDS indicates NOT COMPLETED, keep idling until a result comes on.

3. Determine possible failure area (FTP sensor, others):
   - 1. Turn the ignition switch to LOCK (0).
   - 2. Disconnect the following connector.

     FTP sensor 3P connector

   - 3. Connect terminals A and B with a jumper wire.

     Terminal A FTP sensor 3P connector No. 1 (GRY)

     Terminal B FTP sensor 3P connector No. 2 (WHT)

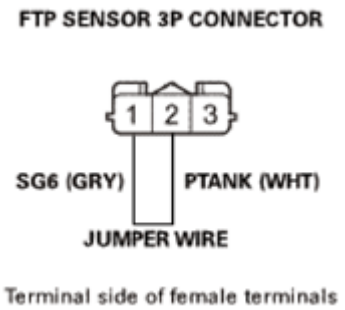

Fig. 197: Connecting Wire Between FTP Sensor 3P Connector No. 1 (GRY) And No. 2 (WHT)
Courtesy of AMERICAN HONDA MOTOR CO., INC.

   - 4. Turn the ignition switch to ON (II).
   - 5. Check the parameter(s) below with the HDS.

Signal	Threshold		Current DTC	
	Values	Unit	Values	Unit
FTP SENSOR	More than 4.7	V		

Do the current condition(s) match the threshold?

YES : Go to step 4.

NO : REPLACE THE FTP SENSOR , then **do the repair verification** .

4. Determine possible failure area (PTANK line, SG6 line):
   - 1. Measure the voltage between test points 1 and 2.

GETtheMANUALS.org

Test condition IG ON (II)

FTP sensor 3P connector: disconnected

Test circuit VCC6, SG6

Test point 1 FTP sensor 3P connector No. 1 (GRY)

Test point 2 FTP sensor 3P connector No. 3 (RED)

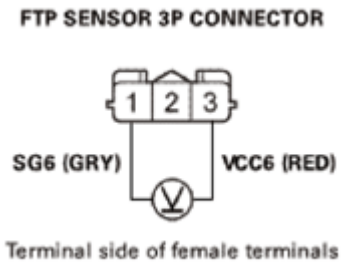

Fig. 198: Measuring Voltage Between FTP Sensor 3P Connector No. 1 (GRY) And No. 3 (RED)
Courtesy of AMERICAN HONDA MOTOR CO., INC.

Is there about 5.0 V?

YES : Go to step 5.

NO : Go to step 6.

5. Open wire check (PTANK line):
   - 1. Turn the ignition switch to LOCK (0).
   - 2. Jump the SCS line with the HDS.
   - 3. Disconnect the following connector.

     PCM connector A (49P)

   - 4. Connect terminals A and B with a jumper wire.

     Terminal A FTP sensor 3P connector No. 2 (WHT)

     Terminal B Body ground

GETtheMANUALS.org

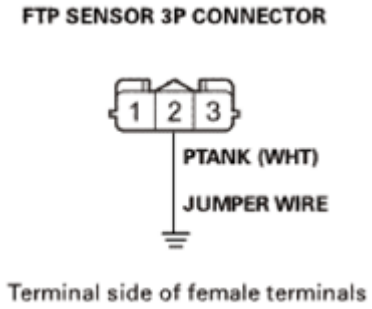

Fig. 199: Identifying FTP Sensor 3P Connector Terminals
Courtesy of AMERICAN HONDA MOTOR CO., INC.

- 5. Check for continuity between test points 1 and 2.

  Test condition IG LOCK (0)

  FTP sensor 3P connector: disconnected

  FTP sensor 3P connector No. 2: jumped to body ground

  PCM connector A (49P): disconnected

  Test circuit PTANK

  Test point 1 PCM connector A (49P) No. 37 (WHT)

  Test point 2 Body ground

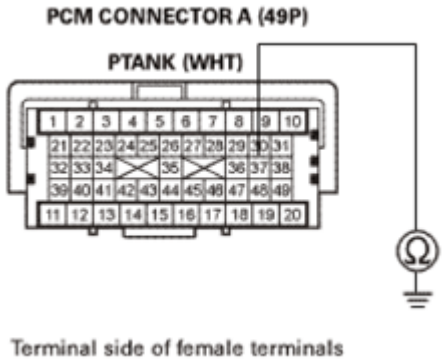

Fig. 200: Checking Continuity Between PCM Connector A (49P) No. 37 (WHT) And Body Ground
Courtesy of AMERICAN HONDA MOTOR CO., INC.

Is there continuity?

YES : The PTANK wire is OK. **Update the PCM** See **PCM REMOVAL AND INSTALLATION** or **PCM UPDATE** if it does not have the latest software, or **substitute a known-good PCM** See **PCM**

GETtheMANUALS.org

REMOVAL AND INSTALLATION or **PCM UPDATE** , then **do the repair verification** .

NO : Repair an open in the PTANK wire between the PCM (A37) and the FTP sensor, then **do the repair verification** .

6. Open wire check (SG6 line):
   - 1. Turn the ignition switch to LOCK (0).
   - 2. Jump the SCS line with the HDS.
   - 3. Disconnect the following connector.

     PCM connector A (49P)

   - 4. Connect terminals A and B with a jumper wire.

     Terminal A FTP sensor 3P connector No. 1 (GRY)

     Terminal B Body ground

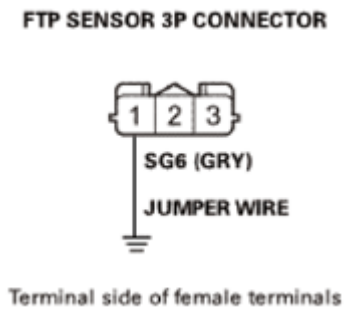

Fig. 201: Identifying FTP Sensor 3P Connector Terminals
Courtesy of AMERICAN HONDA MOTOR CO., INC.

   - 5. Check for continuity between test points 1 and 2.

     Test condition IG LOCK (0)

     FTP sensor 3P connector: disconnected

     FTP sensor 3P connector No. 1: jumped to body ground

     PCM connector A (49P): disconnected

     Test circuit SG6

     Test point 1 PCM connector A (49P) No. 10 (GRY)

     Test point 2 Body ground

GETtheMANUALS.org

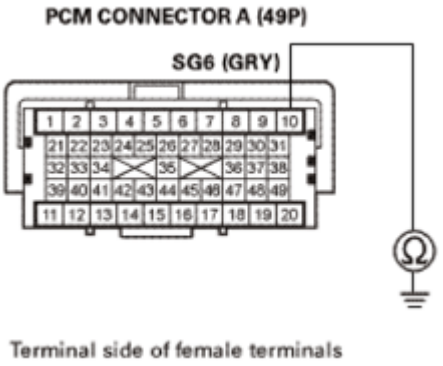

Fig. 202: Checking Continuity Between PCM Connector A (49P) No. 10 (GRY) And Body Ground
Courtesy of AMERICAN HONDA MOTOR CO., INC.

Is there continuity?

YES : The SG6 wire is OK. **Update the PCM** See **PCM REMOVAL AND INSTALLATION** or **PCM UPDATE** if it does not have the latest software, or **substitute a known-good PCM** See **PCM REMOVAL AND INSTALLATION** or **PCM UPDATE** , then **do the repair verification** .

NO : Repair an open in the SG6 wire between the PCM (A10) and the FTP sensor, then **do the repair verification** .

REPAIR VERIFICATION (OBD STATUS CHECK)

- 1. Turn the ignition switch to LOCK (0).
- 2. Reconnect all connectors.
- 3. Turn the ignition switch to ON (II).
- 4. **Reset the PCM with the HDS** See **HOW TO TROUBLESHOOT THE A/T SYSTEM** or **HOW TO TROUBLESHOOT THE FUEL AND EMISSIONS SYSTEMS** .
- 5. **DO THE PCM IDLE LEARN PROCEDURE** .
- 6. Start the engine, and let it idle.
- 7. Monitor the OBD STATUS for DTC P0453 in the DTCs MENU with the HDS.

DTC Description	OBD STATUS
P0453 FTP SENSOR CIRCUIT HIGH VOLTAGE	

Does the HDS indicate PASSED?

PASSED : Troubleshooting is complete. If the PCM was substituted, **replace the original PCM** See **PCM REMOVAL AND INSTALLATION** or **PCM UPDATE** . If any other Pending or Confirmed DTCs were indicated, go to the indicated DTC's troubleshooting.

FAILED : Go to step 1 and recheck. If the PCM was updated, **substitute a known-good PCM** See **PCM**

GETtheMANUALS.org

REMOVAL AND INSTALLATION or **PCM UPDATE** , then check the OBD STATUS again.

NOT COMPLETED : Keep idling until a result comes on.

DTC P0455: EVAP SYSTEM LARGE LEAK DETECTED

GETtheMANUALS.org

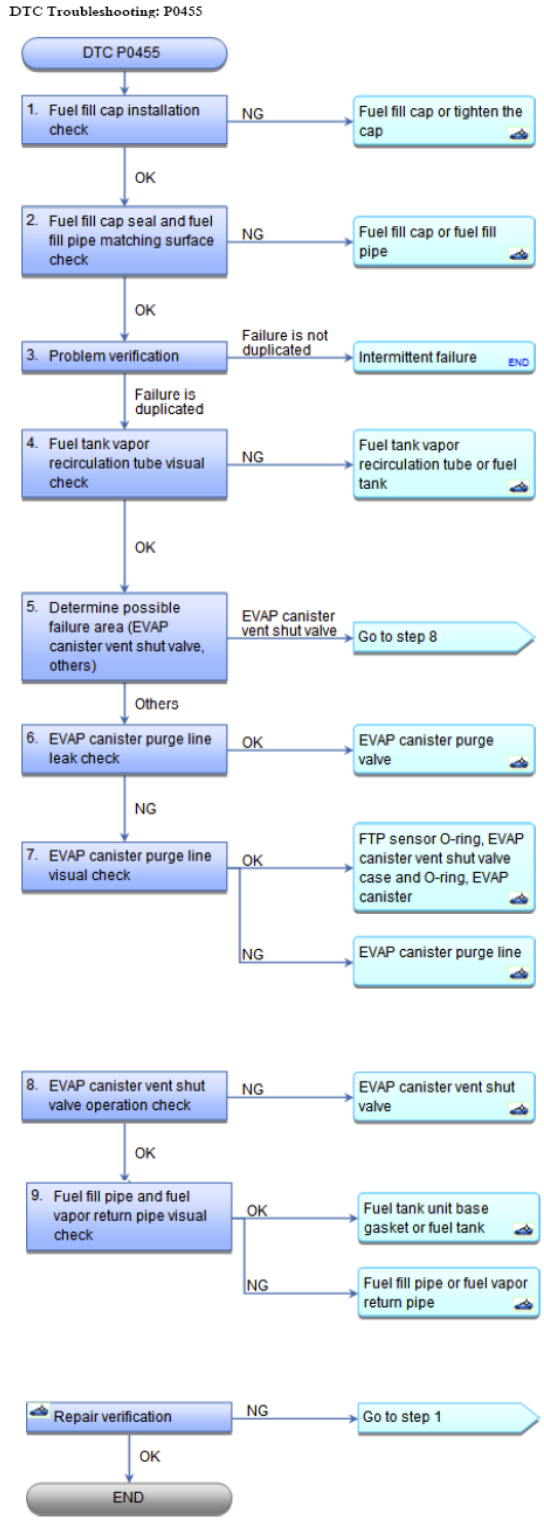

Fig. 203: DTC Troubleshooting Flow Chart (P0455)
Courtesy of AMERICAN HONDA MOTOR CO., INC.

Special Tools Required

GETtheMANUALS.org

Vacuum Pump/Gauge, 0-30 inHg Snap-on YA4000A or equivalent, commercially available

NOTE: **The fuel system is designed to allow specified maximum vacuum and pressure conditions. Do not deviate from the vacuum and pressure tests as indicated in these procedures. Excessive pressure/vacuum would damage the EVAP components or cause eventual fuel tank failure.**

NOTE:

- **Before you troubleshoot, record all freeze data and any on-board snapshot, and review the general troubleshooting information See HOW TO TROUBLESHOOT THE A/T SYSTEM or HOW TO TROUBLESHOOT THE FUEL AND EMISSIONS SYSTEMS .**
- **Fresh fuel has a higher volatility that will create greater pressure/vacuum. The best condition for testing is less than a full tank of fresh fuel. If possible, to assist in leak detection, add 1 gallon of fresh fuel to the tank (as long as it will not fill the tank), just before starting these procedures.**

DTC Description	Confirmed DTC	Pending DTC	Freeze Frame
P0455 EVAP SYSTEM LARGE LEAK DETECTED			

1. Fuel fill cap installation check:
   - 1. Check the fuel fill cap (the cap must say TIGHTEN TO CLICK). It should turn 1/4 turn after it's tight, then it clicks.

   Is the correct fuel fill cap installed and properly tightened?

   YES : Go to step 2.

   NO : Replace the fuel fill cap or tighten the cap, then **do the repair verification** .

2. Fuel fill cap seal and fuel fill pipe matching surface check:
   - 1. Check the fuel fill cap seal (A) and the fuel fill pipe matching surface (B). Verify that the fuel fill cap tether cord (C) is not caught under the cap.

GETtheMANUALS.org

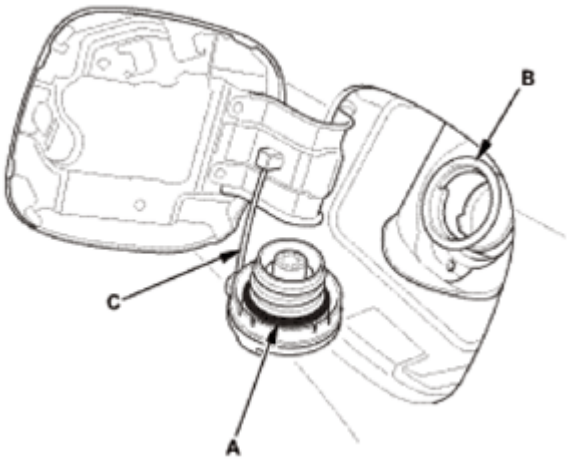

Fig. 204: Identifying Fuel Fill Cap Seal, Cap Tether Cord, Pipe Matching Surface
Courtesy of AMERICAN HONDA MOTOR CO., INC.

Is the fuel fill cap seal missing or damaged, is the fuel fill pipe damaged, or is the tether cord caught under the cap?

YES : Replace the fuel fill cap or the fuel fill pipe, then **do the repair verification** .

NO : The fuel fill cap and the fuel fill pipe are OK. Go to step 3.

3. Problem verification:
   - 1. Turn the ignition switch to ON (II).
   - 2. **Clear the DTC with the HDS** See **HOW TO TROUBLESHOOT THE A/T SYSTEM** or **HOW TO TROUBLESHOOT THE FUEL AND EMISSIONS SYSTEMS** .
   - 3. Select the EVAP TEST in the INSPECTION MENU, and do the FUNCTION TEST with the HDS.

Is the result OK?

YES : Intermittent failure, the system is OK at this time. Check for poor connections or loose terminals at the FTP sensor, the EVAP canister purge valve, the EVAP canister vent shut valve, and the PCM.

NO : The failure is duplicated. Go to step 4.

4. Fuel tank vapor recirculation tube visual check:
   - 1. Turn the ignition switch to LOCK (0).
   - 2. Check for a poor connection or damage at the fuel tank vapor recirculation tube.

Is the tube OK?

YES : The tube is OK. Go to step 5.

GETtheMANUALS.org

NO : Replace the fuel tank vapor recirculation tube, or REPLACE THE FUEL TANK if needed, then **do the repair verification** .

5. Determine possible failure area (EVAP canister vent shut valve, others):
   - 1. Disconnect the fuel tank vapor control valve hose (A) and the fresh air hose (B) from the EVAP canister (C), and plug the EVAP canister ports (D).

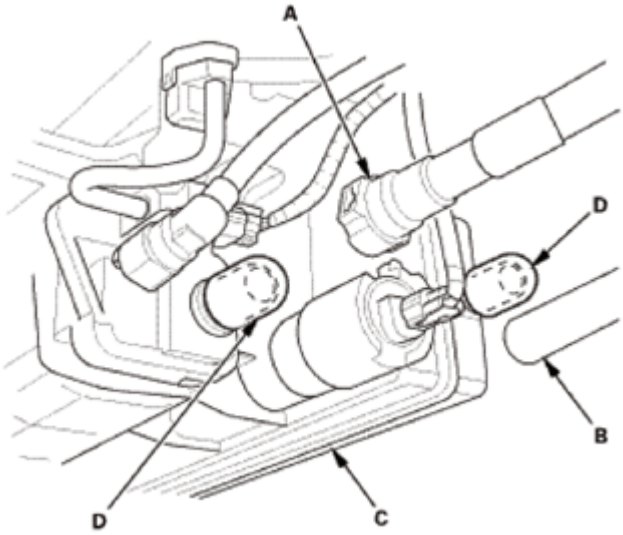

Fig. 205: Identifying Fuel Tank Vapor Control Valve Hose, Fresh Air Hose, EVAP Canister And Ports
Courtesy of AMERICAN HONDA MOTOR CO., INC.

   - 2. Disconnect the vacuum hose (engine side) (A) from the EVAP canister purge valve (B) in the engine compartment, then connect a vacuum pump/gauge, 0-30 inHg, to the purge control solenoid valve as shown.

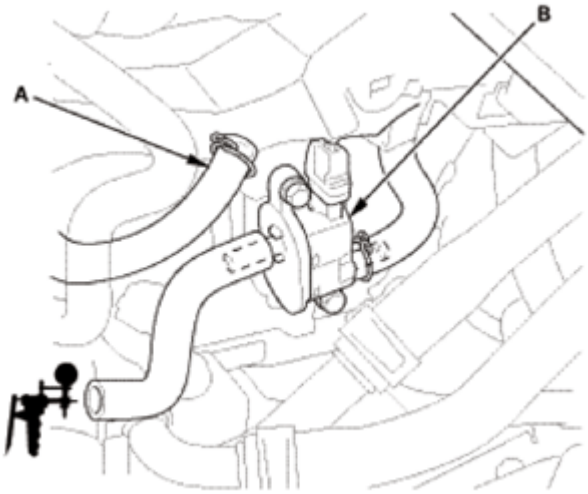

Fig. 206: Identifying EVAP Canister Purge Valve And Vacuum Hose (Engine Side)
Courtesy of AMERICAN HONDA MOTOR CO., INC.

GETtheMANUALS.org

- 3. Turn the ignition switch to ON (II).
- 4. Select EVAP TEST in the INSPECTION MENU, and do the EVAP PCS ON and EVAP CVS ON in the MULTI SOLENOIDS with the HDS.
- 5. Apply vacuum to the hose until the FTP reads 1.90 V (-0.59 inHg, -15.1 mmHg).

NOTE: **Be careful not to exceed the vacuum. If you do, the FTP sensor can be damaged.**

Signal	Current conditions	
	Values	Unit
FTP SENSOR		

- 6. Do the EVAP PCS OFF and EVAP CVS ON in the MULTI SOLENOIDS with the HDS, then remove the vacuum pump/gauge from the purge control solenoid valve.
- 7. Check the parameter(s) below with the HDS for 1 minute.

Signal	Current conditions	
	Values	Unit
FTP SENSOR		

Does the voltage increase more than 0.2 V (0.1 inHg, 2.5 mmHg)?

YES : Go to step 6.

NO : Go to step 8.

6. EVAP canister purge line leak check:
   - 1. Turn the ignition switch to LOCK (0).
   - 2. Reconnect the vacuum hose (A) (engine side) to the EVAP canister purge valve.

GETtheMANUALS.org

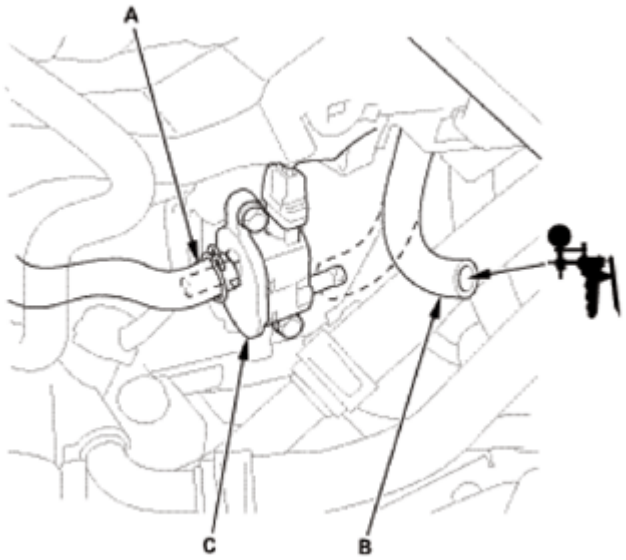

Fig. 207: Identifying EVAP Canister Purge Valve And Vacuum Hose (Engine Side)
Courtesy of AMERICAN HONDA MOTOR CO., INC.

- 3. Disconnect the vacuum hose (EVAP canister side) (B) from the EVAP canister purge valve (C) in the engine compartment, then connect the vacuum pump/gauge to the purge control solenoid valve as shown.
- 4. Turn the ignition switch to ON (II).
- 5. Select EVAP TEST in the INSPECTION MENU, and do the EVAP CVS ON in the SINGLE SOLENOID with the HDS.
- 6. Apply vacuum to the hose until the FTP reads 1.90 V (-0.59 inHg, -15.1 mmHg).

NOTE: **Be careful not to exceed the vacuum. If you do, the FTP sensor can be damaged.**

Signal	Current conditions	
	Values	Unit
FTP SENSOR		

- 7. Check the parameter(s) below with the HDS for 1 minute.

Signal	Current conditions	
	Values	Unit
FTP SENSOR		

Does the voltage increase more than 0.2 V (0.1 inHg, 2.5 mmHg)?

YES : Go to step 7.

NO : The EVAP canister purge line is OK. **REPLACE THE EVAP CANISTER PURGE VALVE** ,

GETtheMANUALS.org

then **do the repair verification** .

7. EVAP canister purge line visual check:
   - 1. Check for a loose or damaged EVAP canister purge line between the EVAP canister and the EVAP canister purge valve. Also check for a leaking EVAP canister.

Are the line and the canister OK?

YES : Replace these parts, then **do the repair verification** .

- FTP sensor O-ring
- EVAP canister vent shut valve case and O-ring
- EVAP canister

NO : Reconnect or repair the EVAP canister purge line, then **do the repair verification** .

8. EVAP canister vent shut valve operation check:
   - 1. Turn the ignition switch to LOCK (0).
   - 2. Reconnect the fresh air hose (A) from the EVAP canister (B).

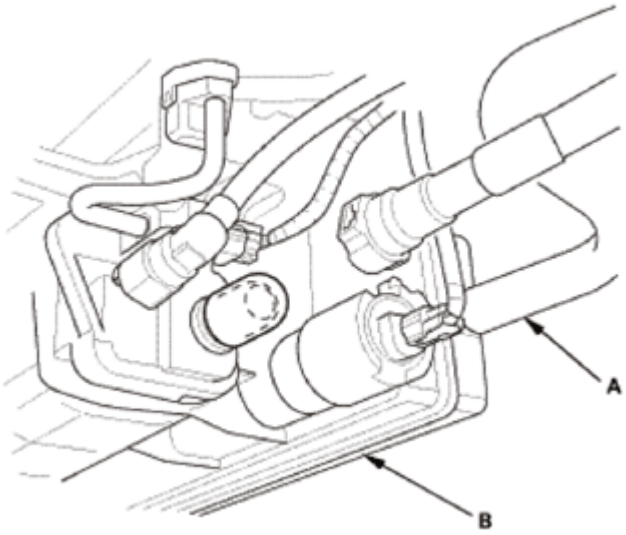

Fig. 208: Identifying Air Hose And EVAP Canister
Courtesy of AMERICAN HONDA MOTOR CO., INC.

   - 3. Reconnect the vacuum hose (engine side) to the EVAP canister purge valve.
   - 4. Disconnect the vacuum hose (EVAP canister side) (A) from the EVAP canister purge valve (B) in the engine compartment, then connect the vacuum pump/gauge to the purge control solenoid valve as shown.

GETtheMANUALS.org

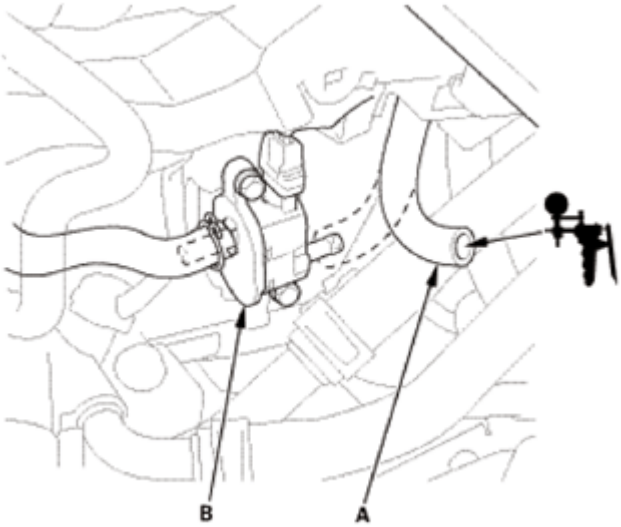

Fig. 209: Identifying EVAP Canister Purge Valve And Vacuum Hose (EVAP Canister Side)
Courtesy of AMERICAN HONDA MOTOR CO., INC.

- 5. Turn the ignition switch to ON (II).
- 6. Select EVAP TEST in the INSPECTION MENU, and do the EVAP CVS ON in the SINGLE SOLENOID with the HDS.
- 7. Apply vacuum to the hose until the FTP reads 1.90 V (-0.59 inHg, -15.1 mmHg).

NOTE: **Be careful not to exceed the vacuum. If you do, the FTP sensor can be damaged.**

Signal	Current conditions	
	Values	Unit
FTP SENSOR		

- 8. Check the parameter(s) below with the HDS for 1 minute.

Signal	Current conditions	
	Values	Unit
FTP SENSOR		

Does the voltage increase more than 0.2 V (0.1 inHg, 2.5 mmHg)?

YES : **REPLACE THE EVAP CANISTER VENT SHUT VALVE** , then **do the repair verification** .

NO : The EVAP canister vent shut valve is OK. Go to step 9.

9. Fuel fill pipe and fuel vapor return pipe visual check:
   - 1. Do the EVAP CVS OFF in the SINGLE SOLENOID with the HDS.

GETtheMANUALS.org

- 2. Check for looseness or damage at the fuel fill pipe and the fuel vapor return pipe.

Are the parts OK?

YES : The fuel fill pipe and fuel vapor return pipe are OK. Check the fuel tank unit base gasket and the fuel tank, then **do the repair verification** .

NO : Repair or replace the damaged parts, then **do the repair verification** .

REPAIR VERIFICATION

- 1. Turn the ignition switch to LOCK (0).
- 2. Install the parts in the reverse order of removal.
- 3. Turn the ignition switch to ON (II).
- 4. **Reset the PCM with the HDS** See **HOW TO TROUBLESHOOT THE A/T SYSTEM** or **HOW TO TROUBLESHOOT THE FUEL AND EMISSIONS SYSTEMS** .
- 5. **DO THE PCM IDLE LEARN PROCEDURE** .
- 6. Do the EVAP FUNCTION TEST with the HDS.

Is the result OK?

YES : Troubleshooting is complete.

NO : Check for poor connections or loose terminals at the FTP sensor, the EVAP canister purge valve, the EVAP canister vent shut valve, and the PCM, then go to step 1.

DTC P0456: EVAP SYSTEM VERY SMALL LEAK DETECTED

GETtheMANUALS.org

DTC Troubleshooting: P0456

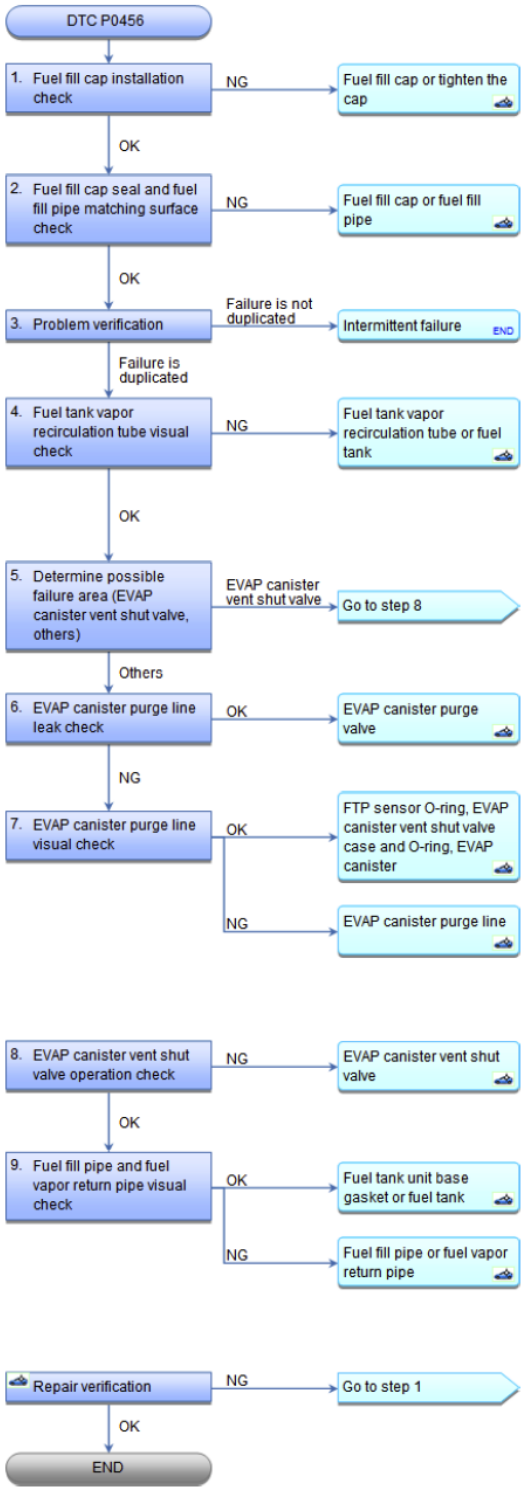

Fig. 210: DTC Troubleshooting Flow Chart (P0456)
Courtesy of AMERICAN HONDA MOTOR CO., INC.

Special Tools Required

GETtheMANUALS.org

Vacuum Pump/Gauge, 0-30 inHg Snap-on YA4000A or equivalent, commercially available

NOTE: **The fuel system is designed to allow specified maximum vacuum and pressure conditions. Do not deviate from the vacuum and pressure tests as indicated in these procedures. Excessive pressure/vacuum would damage the EVAP components or cause eventual fuel tank failure.**

NOTE:

- **Before you troubleshoot, record all freeze data and any on-board snapshot, and review the general troubleshooting information See HOW TO TROUBLESHOOT THE A/T SYSTEM or HOW TO TROUBLESHOOT THE FUEL AND EMISSIONS SYSTEMS .**
- **Fresh fuel has a higher volatility that will create greater pressure/vacuum. The best condition for testing is less than a full tank of fresh fuel. If possible, to assist in leak detection, add 1 gallon of fresh fuel to the tank (as long as it will not fill the tank), just before starting these procedures.**

DTC Description	Confirmed DTC	Pending DTC	Freeze Frame
P0456 EVAP SYSTEM VERY SMALL LEAK DETECTED			

1. Fuel fill cap installation check:
   - 1. Check the fuel fill cap (the cap must say TIGHTEN TO CLICK). It should turn 1/4 turn after it is tight, then it clicks.

   Is the correct fuel fill cap installed and properly tightened?

   YES : Go to step 2.

   NO : Replace the fuel fill cap or tighten the cap, then **do the repair verification** .

2. Fuel fill cap seal and fuel fill pipe matching surface check:
   - 1. Check the fuel fill cap seal (A) and the fuel fill pipe matching surface (B). Verify that the fuel fill cap tether cord (C) is not caught under the cap.

GETtheMANUALS.org

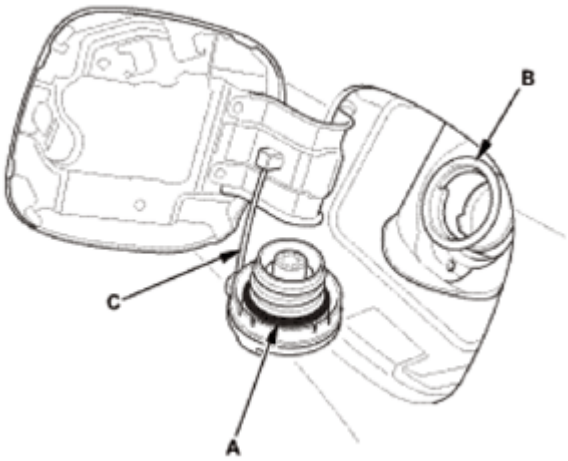

Fig. 211: Identifying Fuel Fill Cap Seal, Cap Tether Cord, Pipe Matching Surface
Courtesy of AMERICAN HONDA MOTOR CO., INC.

Is the fuel fill cap seal missing or damaged, is the fuel fill pipe damaged, or is the tether cord caught under the cap?

YES : Replace the fuel fill cap or the fuel fill pipe, then **do the repair verification** .

NO : The fuel fill cap and the fuel fill pipe are OK. Go to step 3.

3. Problem verification:
   - 1. Turn the ignition switch to ON (II).
   - 2. **Clear the DTC with the HDS** See **HOW TO TROUBLESHOOT THE A/T SYSTEM** or **HOW TO TROUBLESHOOT THE FUEL AND EMISSIONS SYSTEMS** .
   - 3. Select the EVAP TEST in the INSPECTION MENU, and do the FUNCTION TEST with the HDS.

Is the result OK?

YES : Intermittent failure, the system is OK at this time. Check for poor connections or loose terminals at the FTP sensor, the EVAP canister purge valve, the EVAP canister vent shut valve, and the PCM.

NO : The failure is duplicated. Go to step 4.

4. Fuel tank vapor recirculation tube visual check:
   - 1. Turn the ignition switch to LOCK (0).
   - 2. Check for a poor connection or damage at the fuel tank vapor recirculation tube.

Is the tube OK?

YES : The tube is OK. Go to step 5.

GETtheMANUALS.org

NO : Replace the fuel tank vapor recirculation tube, or REPLACE THE FUEL TANK if needed, then **do the repair verification** .

5. Determine possible failure area (EVAP canister vent shut valve, others):
   - 1. Disconnect the fuel tank vapor control valve hose (A) and the fresh air hose (B) from the EVAP canister (C), and plug the EVAP canister ports (D).

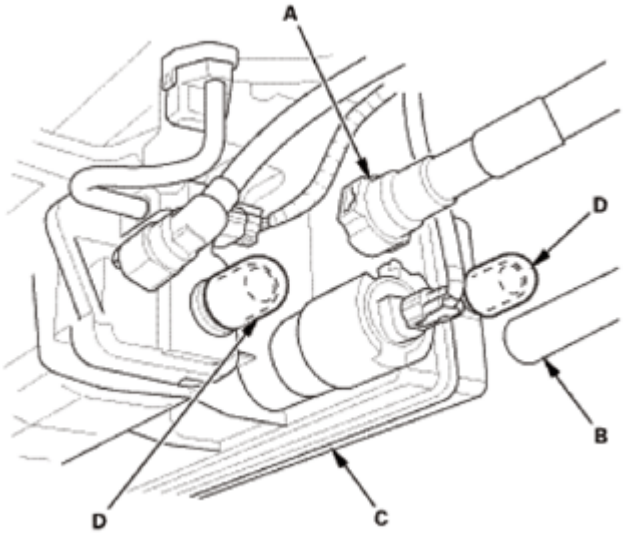

Fig. 212: Identifying Fuel Tank Vapor Control Valve Hose, Fresh Air Hose, EVAP Canister And Ports
Courtesy of AMERICAN HONDA MOTOR CO., INC.

   - 2. Disconnect the vacuum hose (engine side) (A) from the EVAP canister purge valve (B) in the engine compartment, then connect a vacuum pump/gauge, 0-30 inHg, to the purge control solenoid valve as shown.

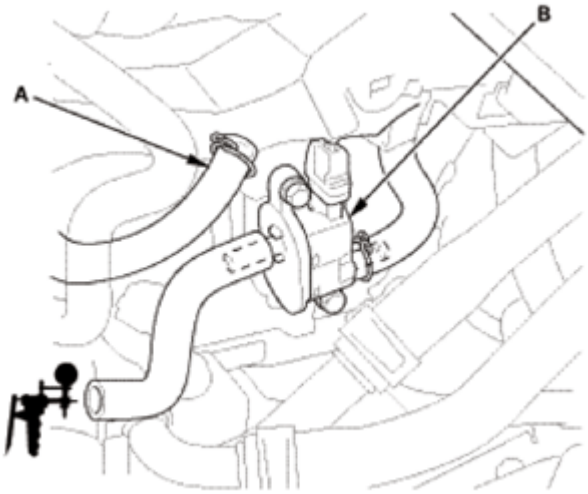

Fig. 213: Identifying EVAP Canister Purge Valve And Vacuum Hose (Engine Side)
Courtesy of AMERICAN HONDA MOTOR CO., INC.

GETtheMANUALS.org

- 3. Turn the ignition switch to ON (II).
- 4. Select EVAP TEST in the INSPECTION MENU, and do the EVAP PCS ON and EVAP CVS ON in the MULTI SOLENOIDS with the HDS.
- 5. Apply vacuum to the hose until the FTP reads 1.90 V (-0.59 inHg, -15.1 mmHg).

NOTE: **Be careful not to exceed the vacuum. If you do, the FTP sensor can be damaged.**

Signal	Current conditions	
	Values	Unit
FTP SENSOR		

- 6. Do the EVAP PCS OFF and EVAP CVS ON in the MULTI SOLENOIDS with the HDS, then remove the vacuum pump/gauge from the purge control solenoid valve.
- 7. Check the parameter(s) below with the HDS for 1 minute.

Signal	Current conditions	
	Values	Unit
FTP SENSOR		

Does the voltage increase more than 0.2 V (0.1 inHg, 2.5 mmHg)?

YES : Go to step 6.

NO : Go to step 8.

6. EVAP canister purge line leak check:
   - 1. Turn the ignition switch to LOCK (0).
   - 2. Reconnect the vacuum hose (A) (engine side) to the EVAP canister purge valve.

GETtheMANUALS.org

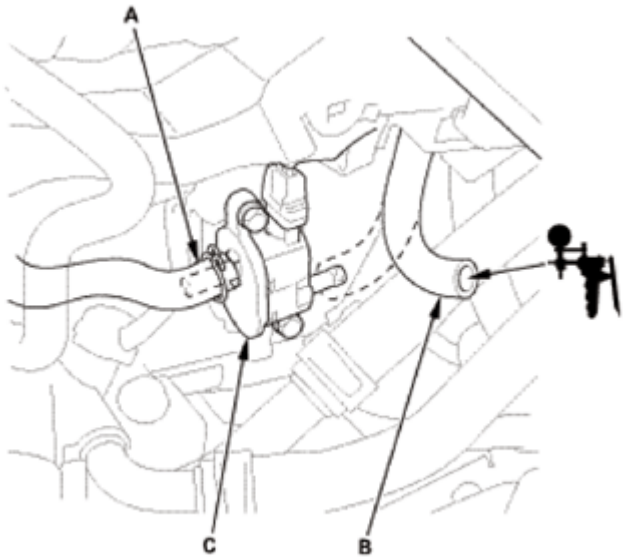

Fig. 214: Identifying EVAP Canister Purge Valve And Vacuum Hose (Engine Side)
Courtesy of AMERICAN HONDA MOTOR CO., INC.

- 3. Disconnect the vacuum hose (EVAP canister side) (B) from the EVAP canister purge valve (C) in the engine compartment, then connect the vacuum pump/gauge to the purge control solenoid valve as shown.
- 4. Turn the ignition switch to ON (II).
- 5. Select EVAP TEST in the INSPECTION MENU, and do the EVAP CVS ON in the SINGLE SOLENOID with the HDS.
- 6. Apply vacuum to the hose until the FTP reads 1.90 V (-0.59 inHg, -15.1 mmHg).

NOTE: **Be careful not to exceed the vacuum. If you do, the FTP sensor can be damaged.**

Signal	Current conditions	
	Values	Unit
FTP SENSOR		

- 7. Check the parameter(s) below with the HDS for 1 minute.

Signal	Current conditions	
	Values	Unit
FTP SENSOR		

Does the voltage increase more than 0.2 V (0.1 inHg, 2.5 mmHg)?

YES : Go to step 7.

NO : The EVAP canister purge line is OK. **REPLACE THE EVAP CANISTER PURGE VALVE** ,

GETtheMANUALS.org

then **do the repair verification** .

7. EVAP canister purge line visual check:
    - 1. Check for a loose or damaged EVAP canister purge line between the EVAP canister and the EVAP canister purge valve. Also check for a leaking EVAP canister.

Are the line and the canister OK?

YES : Replace these parts, then **do the repair verification** .

- FTP sensor O-ring
- EVAP canister vent shut valve case and O-ring
- EVAP canister

NO : Reconnect or repair the EVAP canister purge line, then **do the repair verification** .

8. EVAP canister vent shut valve operation check:
    - 1. Turn the ignition switch to LOCK (0).
    - 2. Reconnect the fresh air hose (A) from the EVAP canister (B).

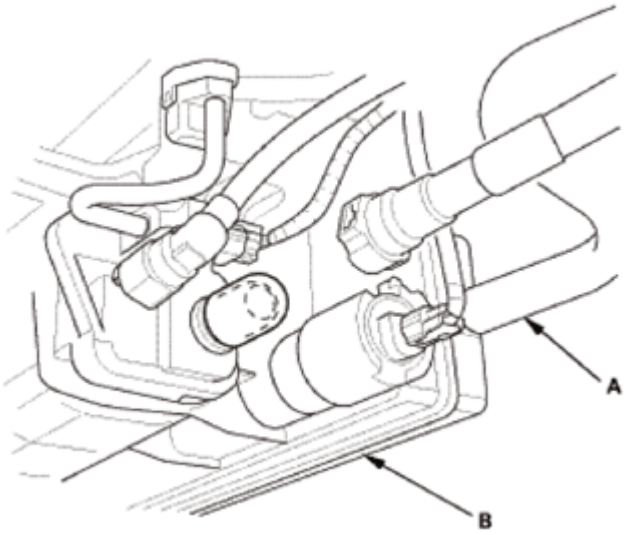

Fig. 215: Identifying Air Hose And EVAP Canister
Courtesy of AMERICAN HONDA MOTOR CO., INC.

    - 3. Reconnect the vacuum hose (engine side) to the EVAP canister purge valve.
    - 4. Disconnect the vacuum hose (EVAP canister side) (A) from the EVAP canister purge valve (B) in the engine compartment, then connect the vacuum pump/gauge to the purge control solenoid valve as shown.

GETtheMANUALS.org

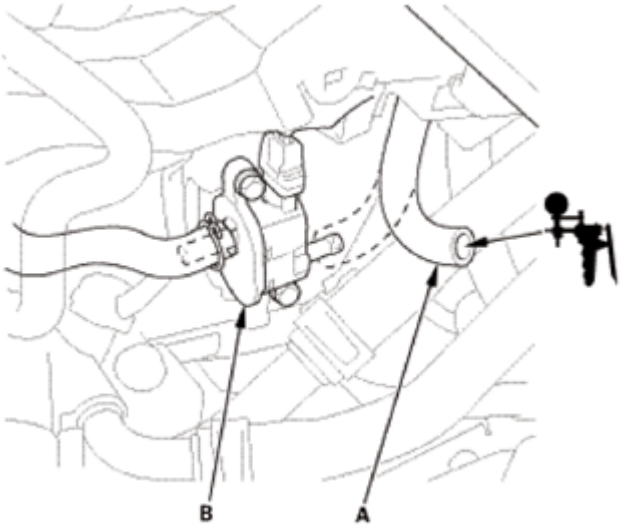

Fig. 216: Identifying Vacuum Hose (EVAP Canister Side) And EVAP Canister Purge Valve
Courtesy of AMERICAN HONDA MOTOR CO., INC.

- 5. Turn the ignition switch to ON (II).
- 6. Select EVAP TEST in the INSPECTION MENU, and do the EVAP CVS ON in the SINGLE SOLENOID with the HDS.
- 7. Apply vacuum to the hose until the FTP reads 1.90 V (-0.59 inHg, -15.1 mmHg).

NOTE: **Be careful not to exceed the vacuum. If you do, the FTP sensor can be damaged.**

Signal	Current conditions	
	Values	Unit
FTP SENSOR		

- 8. Check the parameter(s) below with the HDS for 1 minute.

Signal	Current conditions	
	Values	Unit
FTP SENSOR		

Does the voltage increase more than 0.2 V (0.1 inHg, 2.5 mmHg)?

YES : **REPLACE THE EVAP CANISTER VENT SHUT VALVE** , then **do the repair verification** .

NO : The EVAP canister vent shut valve is OK. Go to step 9.

9. Fuel fill pipe and fuel vapor return pipe visual check:
   - 1. Do the EVAP CVS OFF in the SINGLE SOLENOID with the HDS.

GETtheMANUALS.org

- 2. Check for looseness or damage at the fuel fill pipe and the fuel vapor return pipe.

Are the parts OK?

YES : The fuel fill pipe and fuel vapor return pipe are OK. Check the fuel tank unit base gasket and the fuel tank, then **do the repair verification** .

NO : Repair or replace the damaged parts, then **do the repair verification** .

REPAIR VERIFICATION

- 1. Turn the ignition switch to LOCK (0).
- 2. Install the parts in the reverse order of removal.
- 3. Turn the ignition switch to ON (II).
- 4. **Reset the PCM with the HDS** See **HOW TO TROUBLESHOOT THE A/T SYSTEM** or **HOW TO TROUBLESHOOT THE FUEL AND EMISSIONS SYSTEMS** .
- 5. **DO THE PCM IDLE LEARN PROCEDURE** .
- 6. Do the EVAP FUNCTION TEST with the HDS.

Is the result OK?

YES : Troubleshooting is complete.

NO : Check for poor connections or loose terminals at the FTP sensor, the EVAP canister purge valve, the EVAP canister vent shut valve, and the PCM, then go to step 1.

DTC P0457: EVAP SYSTEM LEAK DETECTED/FUEL FILL CAP LOOSE OR MISSING

GETtheMANUALS.org

DTC Troubleshooting: P0457

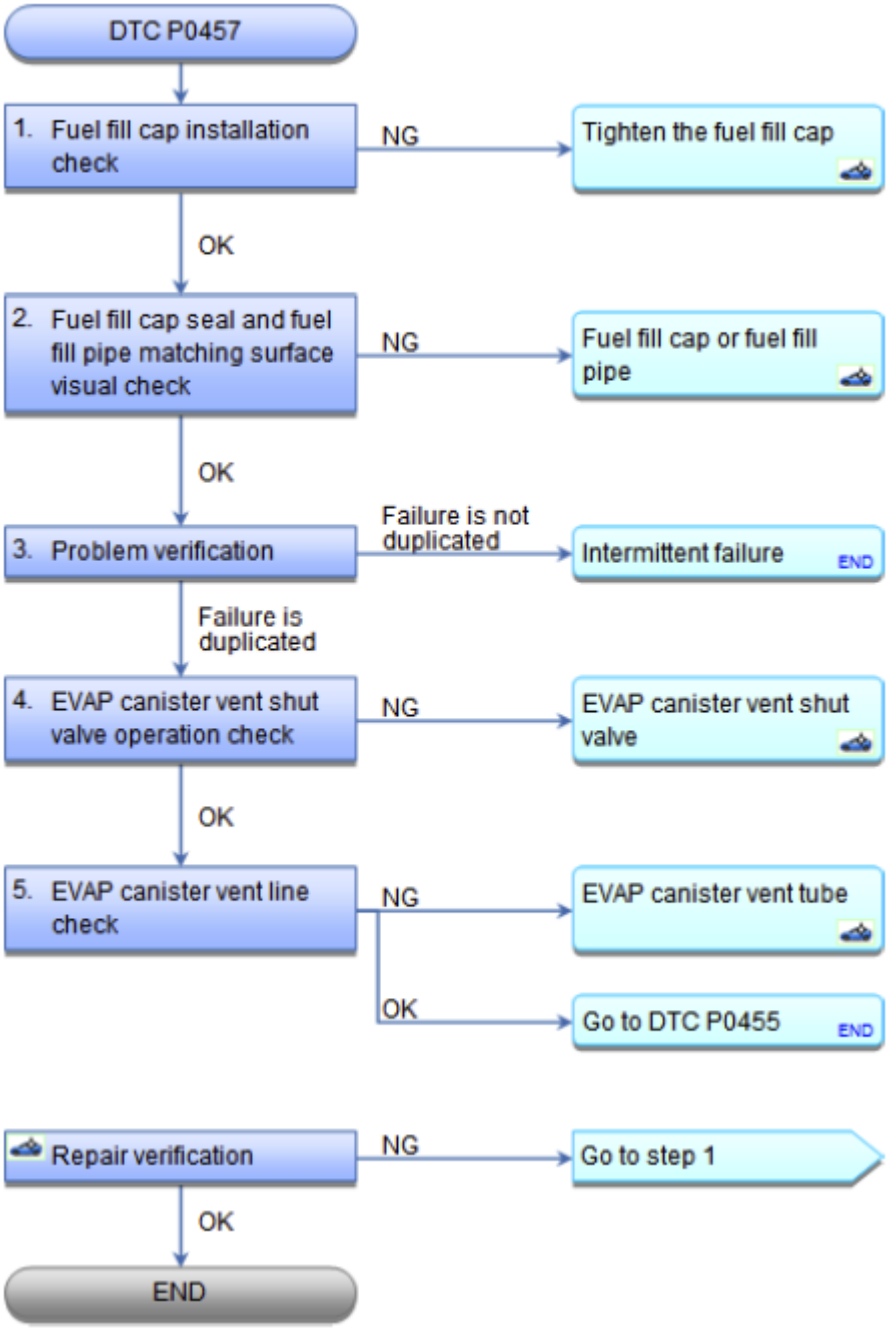

Fig. 217: DTC Troubleshooting Flow Chart (P0457)
Courtesy of AMERICAN HONDA MOTOR CO., INC.

NOTE: **Before you troubleshoot, record all freeze data and any on-board snapshot, and review the general troubleshooting information See HOW TO TROUBLESHOOT THE A/T SYSTEM or HOW TO TROUBLESHOOT THE FUEL AND EMISSIONS SYSTEMS .**

GETtheMANUALS.org

DTC Description	Confirmed DTC	Pending DTC	Freeze Frame
P0457 EVAP SYSTEM LEAK DETECTED/FUEL FILL CAP LOOSE OR MISSING			

1. Fuel fill cap installation check:
   - 1. Check the fuel fill cap (the cap must say TIGHTEN TO CLICK). It should turn 1/4 turn after it is tight, then it clicks.

   Is the correct fuel fill cap installed and properly tightened?

   YES : Go to step 2.

   NO : Replace the fuel fill cap or tighten the cap, then **do the repair verification** .

2. Fuel fill cap seal and fuel fill pipe matching surface visual check:
   - 1. Check the fuel fill cap seal (A) and the fuel fill pipe matching surface (B). Verify that the fuel fill cap tether cord (C) is not caught under the cap.

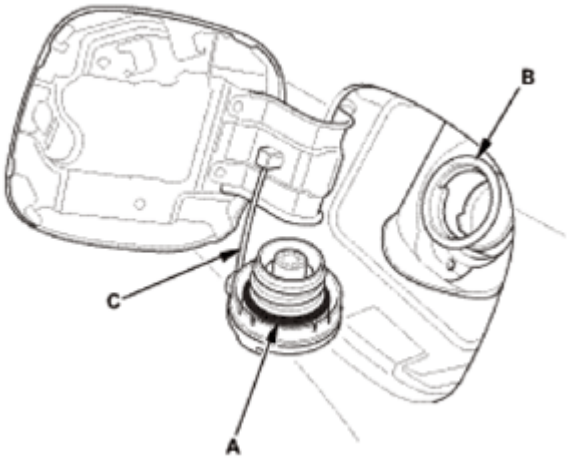

Fig. 218: Identifying Fuel Fill Cap Seal, Cap Tether Cord, Pipe Matching Surface
Courtesy of AMERICAN HONDA MOTOR CO., INC.

Is the fuel fill cap seal missing or damaged, is the fuel fill pipe damaged, or is the tether cord caught under the cap?

YES : Replace the fuel fill cap or the fuel fill pipe, then **do the repair verification** .

NO : The fuel fill cap and the fuel fill pipe are OK. Go to step 3.

3. Problem verification:
   - 1. Turn the ignition switch to ON (II).
   - 2. **Clear the DTC with the HDS** See **HOW TO TROUBLESHOOT THE A/T SYSTEM** or

GETtheMANUALS.org

HOW TO TROUBLESHOOT THE FUEL AND EMISSIONS SYSTEMS .

- 3. Select the EVAP TEST in the INSPECTION MENU, and do the FUNCTION TEST with the HDS.

Is the result OK?

YES : Intermittent failure, the system is OK at this time. Check for poor connections or loose terminals at the FTP sensor, the EVAP canister vent shut valve, and the PCM.

NO : The failure is duplicated. Go to step 4.

4. EVAP canister vent shut valve operation check:
   - 1. **Clear the DTC with the HDS** See **HOW TO TROUBLESHOOT THE A/T SYSTEM** or **HOW TO TROUBLESHOOT THE FUEL AND EMISSIONS SYSTEMS** .
   - 2. Turn the ignition switch to LOCK (0).
   - 3. **REMOVE THE EVAP CANISTER VENT SHUT VALVE FROM THE EVAP CANISTER** .
   - 4. Connect the 2P connector to the EVAP canister vent shut valve.
   - 5. Turn the ignition switch to ON (II).
   - 6. Select EVAP TEST in the INSPECTION MENU, and do the EVAP CVS ON in the SINGLE SOLENOID with the HDS.
   - 7. Check the EVAP canister vent shut valve (A) operation.

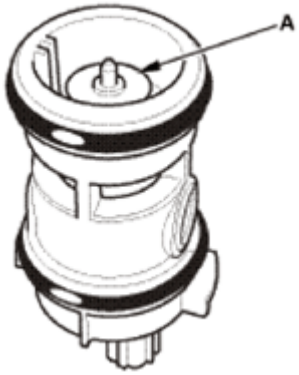

Fig. 219: Identifying EVAP Canister Vent Shut Valve
Courtesy of AMERICAN HONDA MOTOR CO., INC.

Does the valve operate?

YES : The EVAP canister vent shut valve is OK. Go to step 5.

NO : **REPLACE THE EVAP CANISTER VENT SHUT VALVE** , then **do the repair verification** .

5. EVAP canister vent line check:
   - 1. Check the routing of the EVAP canister vent tube.

GETtheMANUALS.org

Is there any damage or blockage?

YES : Remove the blockage and replace the EVAP canister vent tube if needed, then **do the repair verification** .

NO : **DO THE DTC P0455 TROUBLESHOOTING**.

REPAIR VERIFICATION

- 1. Turn the ignition switch to LOCK (0).
- 2. Install the parts in the reverse order of removal.
- 3. Turn the ignition switch to ON (II).
- 4. **Reset the PCM with the HDS** See **HOW TO TROUBLESHOOT THE A/T SYSTEM** or **HOW TO TROUBLESHOOT THE FUEL AND EMISSIONS SYSTEMS** .
- 5. **DO THE PCM IDLE LEARN PROCEDURE** .
- 6. Select the EVAP TEST in the INSPECTION MENU, and do the FUNCTION TEST with the HDS.

Is the result OK?

YES : Troubleshooting is complete.

NO : Check for poor connections or loose terminals at the FTP sensor, the EVAP canister vent shut valve, and the PCM, then go to step 1.

DTC P0461: FUEL LEVEL SENSOR (FUEL GAUGE SENDING UNIT) CIRCUIT RANGE/PERFORMANCE PROBLEM

GETtheMANUALS.org

DTC Troubleshooting: P0461

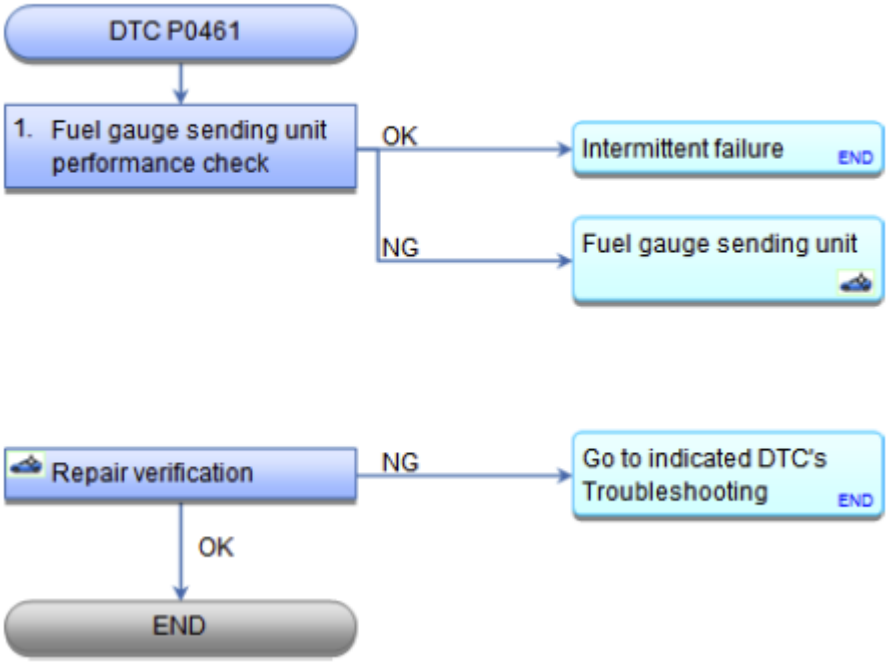

Fig. 220: DTC Troubleshooting Flow Chart (P0461)
Courtesy of AMERICAN HONDA MOTOR CO., INC.

NOTE:

- **Before you troubleshoot, record all freeze data and any on-board snapshot, and review the general troubleshooting information See HOW TO TROUBLESHOOT THE A/T SYSTEM or HOW TO TROUBLESHOOT THE FUEL AND EMISSIONS SYSTEMS .**
- **Because it requires 124 miles (200 km) of driving without refueling to complete this diagnosis, DTC P0461 cannot be duplicated during this troubleshooting.**

DTC Description	Confirmed DTC	Pending DTC	Freeze Frame
P0461 FUEL LEVEL SENSOR (FUEL GAUGE SENDING UNIT) CIRCUIT RANGE/PERFORMANCE PROBLEM			

1. Fuel gauge sending unit performance check:
   - 1. **TEST THE FUEL GAUGE SENDING UNIT** .

   Is the fuel gauge sending unit OK?

   YES : Check for poor connections or loose terminals at the fuel gauge sending unit and the gauge control module.

   NO : **Replace the fuel gauge sending unit** See FUEL TANK UNIT DISASSEMBLY AND

GETtheMANUALS.org

REASSEMBLY or FUEL TANK UNIT REMOVAL AND INSTALLATION , then **do the repair verification** .

REPAIR VERIFICATION

- 1. Turn the ignition switch to ON (II).
- 2. **Reset the PCM with the HDS** See **HOW TO TROUBLESHOOT THE A/T SYSTEM** or **HOW TO TROUBLESHOOT THE FUEL AND EMISSIONS SYSTEMS** .
- 3. **DO THE PCM IDLE LEARN PROCEDURE** .
- 4. Check for Pending or Confirmed DTCs with the HDS.

DTC Description	Confirmed DTC	Pending DTC	Freeze Frame
P0461 FUEL LEVEL SENSOR (FUEL GAUGE SENDING UNIT) CIRCUIT RANGE/PERFORMANCE PROBLEM			

Are any Pending or Confirmed DTCs indicated?

YES : Go to the indicated DTC's Troubleshooting.

NO : Troubleshooting is complete.

DTC P0462: FUEL LEVEL SENSOR (FUEL GAUGE SENDING UNIT) CIRCUIT LOW VOLTAGE

GETtheMANUALS.org

DTC Troubleshooting: P0462

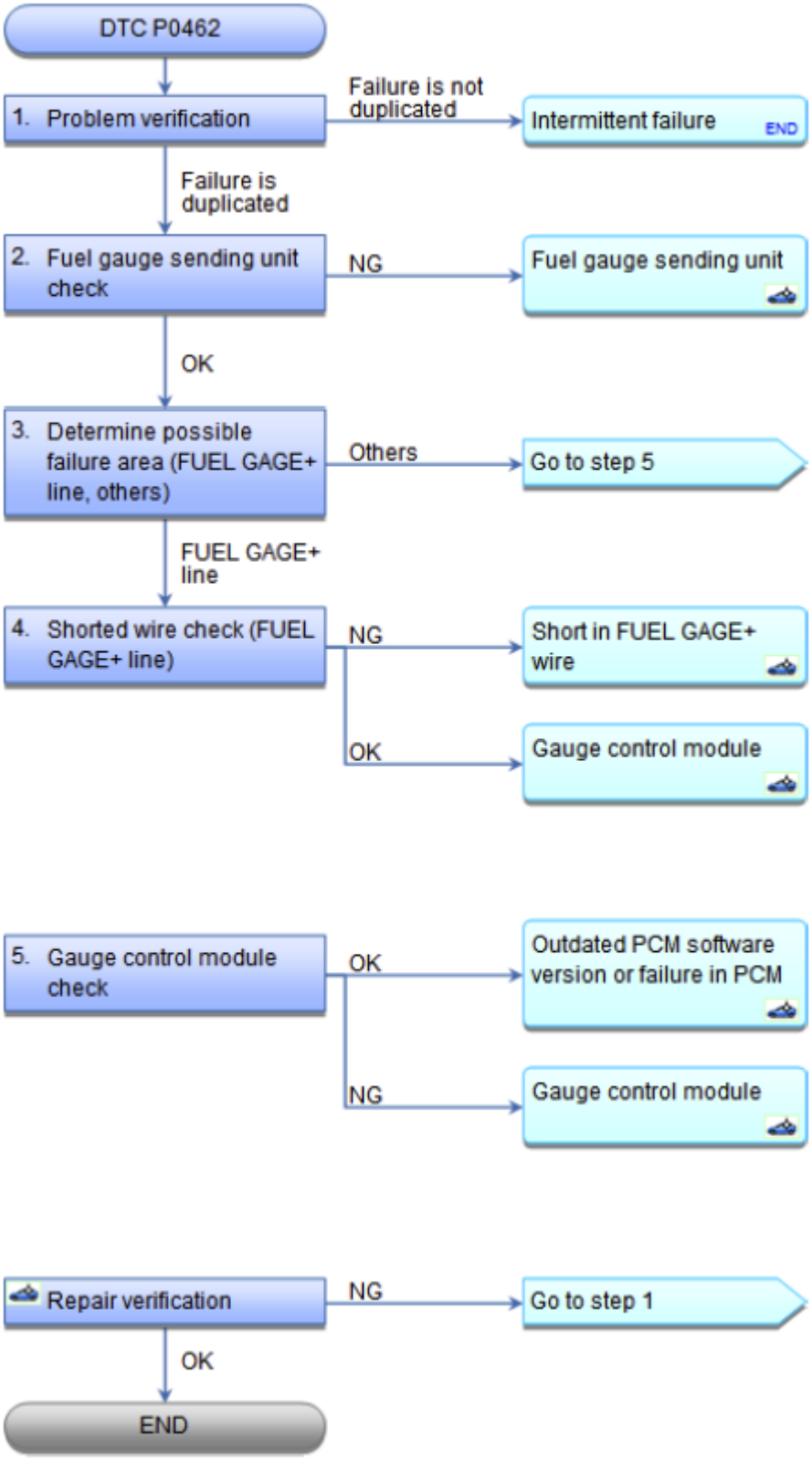

Fig. 221: DTC Troubleshooting Flow Chart (P0462)

GETtheMANUALS.org

Courtesy of AMERICAN HONDA MOTOR CO., INC.

NOTE: **Before you troubleshoot, record all freeze data and any on-board snapshot, and review the general troubleshooting information See HOW TO TROUBLESHOOT THE A/T SYSTEM or HOW TO TROUBLESHOOT THE FUEL AND EMISSIONS SYSTEMS .**

DTC Description	Confirmed DTC	Pending DTC	Freeze Frame
P0462 FUEL LEVEL SENSOR (FUEL GAUGE SENDING UNIT) CIRCUIT LOW VOLTAGE			

1. Problem verification:
   - 1. Turn the ignition switch to ON (II).
   - 2. **Clear the DTC with the HDS** See **HOW TO TROUBLESHOOT THE A/T SYSTEM** or **HOW TO TROUBLESHOOT THE FUEL AND EMISSIONS SYSTEMS** .
   - 3. Wait 5 seconds.
   - 4. Check for Pending or Confirmed DTCs with the HDS.

DTC Description	Confirmed DTC	Pending DTC	Freeze Frame
P0462 FUEL LEVEL SENSOR (FUEL GAUGE SENDING UNIT) CIRCUIT LOW VOLTAGE			

Is DTC P0462 indicated?

YES : The failure is duplicated. Go to step 2.

NO : Intermittent failure, the system is OK at this time. Check for poor connections or loose terminals at the gauge control module and the fuel gauge sending unit.

2. Fuel gauge sending unit check:
   - 1. Turn the ignition switch to LOCK (0).
   - 2. Remove the access panel from the floor.
   - 3. Disconnect the following connector. Fuel tank unit 4P connector
   - 4. Turn the ignition switch to ON (II).
   - 5. Wait 5 seconds.
   - 6. Check for Pending or Confirmed DTCs with the HDS.

DTC Description	Confirmed DTC	Pending DTC	Freeze Frame
P0463 FUEL LEVEL SENSOR CIRCUIT HIGH VOLTAGE			

GETtheMANUALS.org

Is DTC P0463 indicated?

YES : **Replace the fuel gauge sending unit** See FUEL TANK UNIT DISASSEMBLY AND REASSEMBLY or FUEL TANK UNIT REMOVAL AND INSTALLATION , then **do the repair verification** .

NO : The fuel gauge sending unit is OK. Go to step 3.

3. Determine possible failure area (FUEL GAGE+ line, others):
   - 1. Measure the voltage between test points 1 and 2.

     Test condition IG ON (II)

     Fuel tank unit 4P connector: disconnected

     Test circuit FUEL GAGE+

     Test point 1 Fuel tank unit 4P connector No. 2 (YEL)

     Test point 2 Body ground

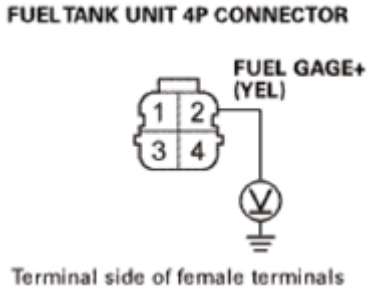

Fig. 222: Measuring Voltage Between Fuel Tank Unit 4P Connector No. 2 (YEL) And Body Ground
Courtesy of AMERICAN HONDA MOTOR CO., INC.

Is there battery voltage?

YES : Go to step 5.

NO : Go to step 4.

4. Shorted wire check (FUEL GAGE+ line):
   - 1. Turn the ignition switch to LOCK (0).
   - 2. **Remove the gauge control module** See **GAUGE CONTROL MODULE REMOVAL AND INSTALLATION** or Rewriting the ODO Data and Transferring the Maintenance Minder™ Data to a New Gauge Control Module.
   - 3. Disconnect the following connector.

GETtheMANUALS.org

Gauge control module 32P connector

- 4. Check for continuity between test points 1 and 2.

  Test condition IG LOCK (0)

  Fuel tank unit 4P connector: disconnected

  Gauge control module 32P connector: disconnected

  Test circuit FUEL GAGE+

  Test point 1 Fuel tank unit 4P connector No. 2 (YEL)

  Test point 2 Body ground

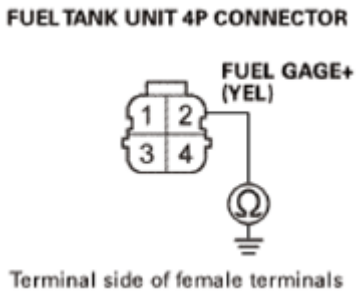

Fig. 223: Checking Continuity Between Fuel Tank Unit 4P Connector No. 2 (YEL) And Body Ground
Courtesy of AMERICAN HONDA MOTOR CO., INC.

Is there continuity?

YES : Repair a short in the FUEL GAGE+ wire between the gauge control module and the fuel tank unit, then **do the repair verification** .

NO : The FUEL GAGE+ wire is OK. **Replace the gauge control module** See **GAUGE CONTROL MODULE REMOVAL AND INSTALLATION** or Rewriting the ODO Data and Transferring the Maintenance Minder™ Data to a New Gauge Control Module, then **do the repair verification** .

5. Gauge control module check:
   - 1. Reconnect the following connector.

     Gauge control module 32P connector

   - 2. **Remove the fuel tank unit** See FUEL TANK UNIT DISASSEMBLY AND REASSEMBLY or FUEL TANK UNIT REMOVAL AND INSTALLATION .
   - 3. Connect the following connector.

GETtheMANUALS.org

Fuel tank unit 4P connector

- 4. Turn the ignition switch to ON (II).
- 5. **Clear the DTC with the HDS** See **HOW TO TROUBLESHOOT THE A/T SYSTEM** or **HOW TO TROUBLESHOOT THE FUEL AND EMISSIONS SYSTEMS** .
- 6. Set the float (A) to the E position.

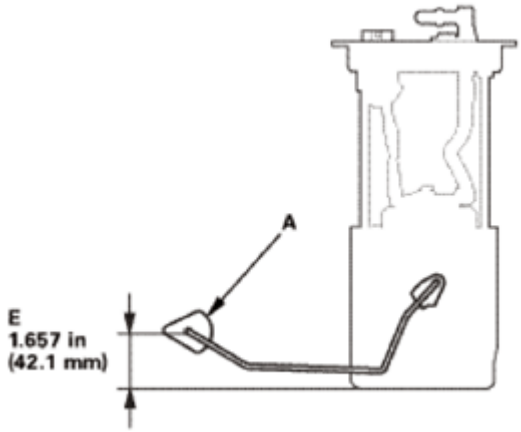

Fig. 224: Identifying Distance Between Float At E Position To Ground
Courtesy of AMERICAN HONDA MOTOR CO., INC.

- 7. Check the fuel gauge.

Does the gauge move to the empty position?

YES : The gauge control module is OK. **Update the PCM** See **PCM REMOVAL AND INSTALLATION** or **PCM UPDATE** if it does not have the latest software, or **substitute a known-good PCM** See **PCM REMOVAL AND INSTALLATION** or **PCM UPDATE** , then **do the repair verification** .

NO : **Replace the gauge control module** See **GAUGE CONTROL MODULE REMOVAL AND INSTALLATION** or Rewriting the ODO Data and Transferring the Maintenance Minder™ Data to a New Gauge Control Module, then **do the repair verification** .

REPAIR VERIFICATION

- 1. Turn the ignition switch to LOCK (0).
- 2. Reinstall all removed parts in the reverse order of removal.
- 3. Turn the ignition switch to ON (II).
- 4. **Reset the PCM with the HDS** See **HOW TO TROUBLESHOOT THE A/T SYSTEM** or **HOW TO TROUBLESHOOT THE FUEL AND EMISSIONS SYSTEMS** .
- 5. **DO THE PCM IDLE LEARN PROCEDURE** .
- 6. Check for Pending or Confirmed DTCs with the HDS.

GETtheMANUALS.org

DTC Description	Confirmed DTC	Pending DTC	Freeze Frame
P0462 FUEL LEVEL SENSOR (FUEL GAUGE SENDING UNIT) CIRCUIT LOW VOLTAGE			

Is DTC P0462 indicated?

YES : Check for poor connections or loose terminals at the gauge control module and the fuel gauge sending unit. If the PCM was updated, **substitute a known-good PCM** See **PCM REMOVAL AND INSTALLATION** or **PCM UPDATE** , then recheck. If the PCM was substituted, go to step 1.

NO : Troubleshooting is complete. If the PCM was substituted, **replace the original PCM** See **PCM REMOVAL AND INSTALLATION** or **PCM UPDATE** . If any other Pending or Confirmed DTCs are indicated, go to the indicated DTC's troubleshooting.

DTC P0463: FUEL LEVEL SENSOR (FUEL GAUGE SENDING UNIT) CIRCUIT HIGH VOLTAGE

NOTE: **Before you troubleshoot, record all freeze data and any on-board snapshot, and review the general troubleshooting information See HOW TO TROUBLESHOOT THE A/T SYSTEM or HOW TO TROUBLESHOOT THE FUEL AND EMISSIONS SYSTEMS .**

DTC Description	Confirmed DTC	Pending DTC	Freeze Frame
P0463 FUEL LEVEL SENSOR (FUEL GAUGE SENDING UNIT) CIRCUIT HIGH VOLTAGE			

1. Problem verification:
   - 1. Turn the ignition switch to ON (II).
   - 2. **Clear the DTC with the HDS** See **HOW TO TROUBLESHOOT THE A/T SYSTEM** or **HOW TO TROUBLESHOOT THE FUEL AND EMISSIONS SYSTEMS** .
   - 3. Wait 5 seconds.
   - 4. Check for Pending or Confirmed DTCs with the HDS.

DTC Description	Confirmed DTC	Pending DTC	Freeze Frame
P0463 FUEL LEVEL SENSOR (FUEL GAUGE SENDING UNIT) CIRCUIT HIGH VOLTAGE			

Is DTC P0463 indicated?

YES : The failure is duplicated. Go to step 2.

GETtheMANUALS.org

NO : Intermittent failure, the system is OK at this time. Check for poor connections or loose terminals at the gauge control module and the fuel gauge sending unit.

2. Determine possible failure area (FUEL GAGE+ line or FUEL GAGE- line, others):
    - 1. Turn the ignition switch to LOCK (0).
    - 2. Remove the access panel from the floor.
    - 3. Disconnect the following connector.

      Fuel tank unit 4P connector

    - 4. Turn the ignition switch to ON (II).
    - 5. Measure the voltage between test points 1 and 2.

      Test condition IG ON (II)

      Fuel tank unit 4P connector: disconnected

      Test circuit FUEL GAGE+, FUEL GAGE-

      Test point 1 Fuel tank unit 4P connector No. 2 (YEL)

      Test point 2 Fuel tank unit 4P connector No. 4 (PUR)

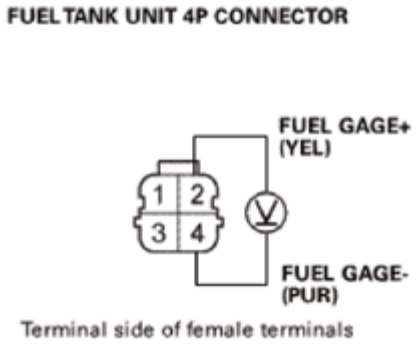

Fig. 225: Measuring Voltage Between Fuel Tank Unit 4P Connector No. 2 (YEL) And No. 4 (PUR)
Courtesy of AMERICAN HONDA MOTOR CO., INC.

Is there battery voltage?

YES : Go to step 5.

NO : Go to step 3.

3. Open wire check (FUEL GAGE- line):
    - 1. Turn the ignition switch to LOCK (0).

GETtheMANUALS.org

- 2. Connect terminals A and B with a jumper wire.

  Terminal A Fuel tank unit 4P connector No. 4 (PUR)

  Terminal B Body ground

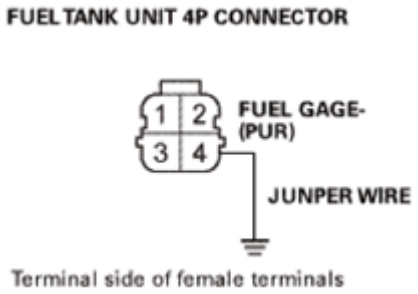

Fig. 226: Identifying Fuel Tank Unit 4P Connector Terminals
Courtesy of AMERICAN HONDA MOTOR CO., INC.

- 3. **Remove the gauge control module** See Rewriting the ODO Data and Transferring the Maintenance Minder™ Data to a New Gauge Control Module or **GAUGE CONTROL MODULE REMOVAL AND INSTALLATION** .
- 4. Disconnect the following connector.

  Gauge control module 32P connector

- 5. Check for continuity between test points 1 and 2.

  Test condition IG LOCK (0)

  Fuel tank unit 4P connector: disconnected

  Fuel tank unit 4P connector No. 4: jumped to body ground

  Gauge control module 32P connector: disconnected

  Test circuit FUEL GAGE-

  Test point 1 Gauge control module 32P connector No. 21 (BLK)

  Test point 2 Body ground

GETtheMANUALS.org

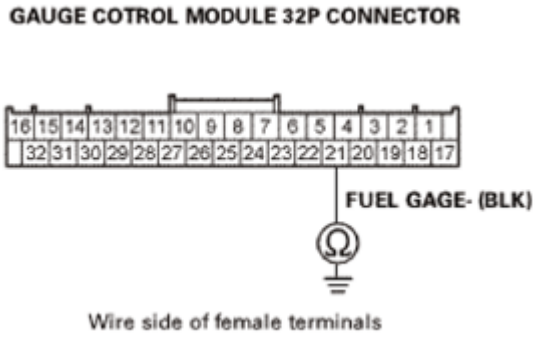

Fig. 227: Checking Continuity Between Gauge Control Module 32P Connector No. 21 (BLK) And Body Ground
Courtesy of AMERICAN HONDA MOTOR CO., INC.

Is there continuity?

YES : The FUEL GAGE- wire is OK. Go to step 4.

NO : Repair an open in the FUEL GAGE- wire between the gauge control module and the fuel tank unit, then **do the repair verification** .

4. Open wire check (FUEL GAGE+ line):
   - 1. Connect terminals A and B with a jumper wire.

     Terminal A Fuel tank unit 4P connector No. 2 (YEL)

     Terminal B Body ground

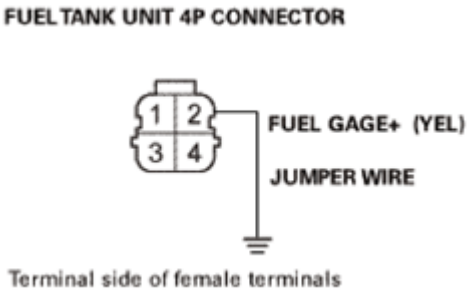

Fig. 228: Connecting Wire Between Fuel Tank Unit 4P Connector No. 2 (YEL) And Body Ground
Courtesy of AMERICAN HONDA MOTOR CO., INC.

   - 2. Check for continuity between test points 1 and 2.

     Test condition IG LOCK (0)

     Fuel tank unit 4P connector: disconnected

GETtheMANUALS.org

Fuel tank unit 4P connector No. 2: jumped to body ground

Gauge control module 32P connector: disconnected

Test circuit FUEL GAGE+

Test point 1 Gauge control module 32P connector No. 22 (BLU)

Test point 2 Body ground

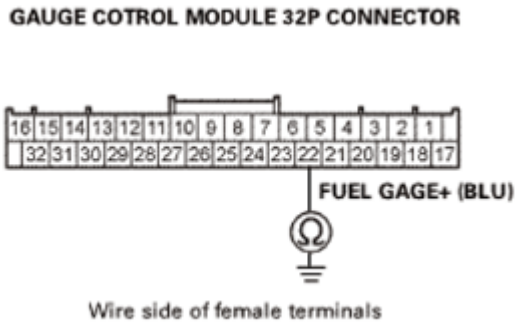

Fig. 229: Checking Continuity Between Gauge Control Module 32P Connector No. 22 (BLU) And Body Ground
Courtesy of AMERICAN HONDA MOTOR CO., INC.

Is there continuity?

YES : The FUEL GAGE+ wire is OK. Go to step 5.

NO : Repair an open in the FUEL GAGE+ wire between the gauge control module and the fuel tank unit, then **do the repair verification** .

5. Fuel gauge sending unit performance check:
   - 1. Turn the ignition switch to LOCK (0).
   - 2. Remove the jumper wire from the fuel tank unit 4P connector.
   - 3. **Remove the fuel tank unit** See FUEL TANK UNIT REMOVAL AND INSTALLATION or FUEL TANK UNIT DISASSEMBLY AND REASSEMBLY .
   - 4. **TEST THE FUEL GAUGE SENDING UNIT** .

Is the fuel gauge sending unit OK?

YES : The fuel gauge sending unit is OK. Go to step 6.

NO : Replace the fuel gauge sending unit, then **do the repair verification** .

6. Gauge control module check:
   - 1. Connect the following connectors.

GETtheMANUALS.org

Fuel tank unit 4P connector

Gauge control module 32P connector

- 2. Turn the ignition switch to ON (II).
- 3. **Clear the DTC with the HDS** See **HOW TO TROUBLESHOOT THE A/T SYSTEM** or **HOW TO TROUBLESHOOT THE FUEL AND EMISSIONS SYSTEMS** .
- 4. Set the float (A) to the F position.

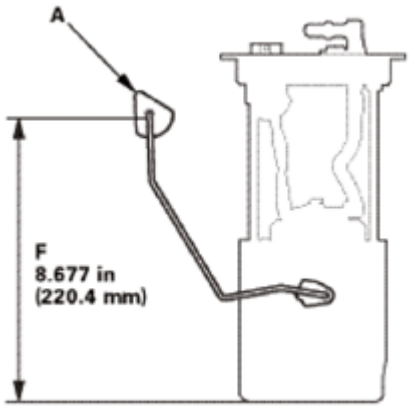

Fig. 230: Identifying Distance Between Float At F Position To Ground
Courtesy of AMERICAN HONDA MOTOR CO., INC.

- 5. Check the fuel gauge.

Does the gauge move to the full position?

YES : The gauge control module is OK. **Update the PCM** See **PCM REMOVAL AND INSTALLATION** or **PCM UPDATE** if it does not have the latest software, or **substitute a known-good PCM** See **PCM REMOVAL AND INSTALLATION** or **PCM UPDATE** , then **do the repair verification** .

NO : **Replace the gauge control module** See **GAUGE CONTROL MODULE REMOVAL AND INSTALLATION** or Rewriting the ODO Data and Transferring the Maintenance Minder™ Data to a New Gauge Control Module, then **do the repair verification** .

REPAIR VERIFICATION

- 1. Turn the ignition switch to LOCK (0).
- 2. Reinstall all removed parts in the reverse order of removal.
- 3. Turn the ignition switch to ON (II).
- 4. **Reset the PCM with the HDS** See **HOW TO TROUBLESHOOT THE A/T SYSTEM** or **HOW TO TROUBLESHOOT THE FUEL AND EMISSIONS SYSTEMS** .
- 5. **DO THE PCM IDLE LEARN PROCEDURE** .

GETtheMANUALS.org

- 6. Check for Pending or Confirmed DTCs with the HDS.

DTC Description	Confirmed DTC	Pending DTC	Freeze Frame
P0463 FUEL LEVEL SENSOR (FUEL GAUGE SENDING UNIT) CIRCUIT HIGH VOLTAGE			

Is DTC P0463 indicated?

YES : Check for poor connections or loose terminals at the gauge control module and the fuel gauge sending unit. If the PCM was updated, **substitute a known-good PCM** See **PCM REMOVAL AND INSTALLATION** or **PCM UPDATE** , then recheck. If the PCM was substituted, go to step 1.

NO : Troubleshooting is complete. If the PCM was substituted, **REPLACE THE ORIGINAL PCM** . If any other Pending or Confirmed DTCs are indicated, go to the indicated DTC's troubleshooting.

DTC P0496: EVAP SYSTEM HIGH PURGE FLOW DETECTED

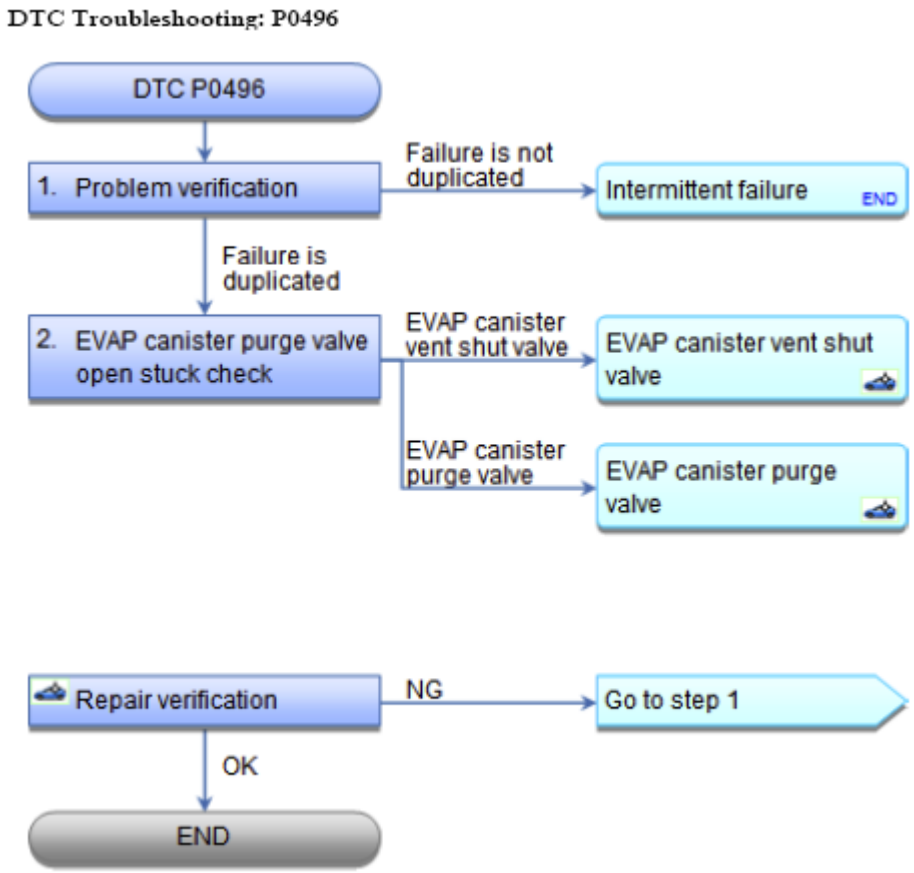

Fig. 231: DTC Troubleshooting Flow Chart (P0496)
Courtesy of AMERICAN HONDA MOTOR CO., INC.

GETtheMANUALS.org

Special Tools Required

- **Vacuum Pump/Gauge, 0-30 inHg Snap-on YA4000A or equivalent, commercially available**
- **Vacuum/Pressure Gauge, 0-4 inHg 07JAZ-001000B**

NOTE: **Before you troubleshoot, record all freeze data and any on-board snapshot, and review the general troubleshooting information See HOW TO TROUBLESHOOT THE A/T SYSTEM or HOW TO TROUBLESHOOT THE FUEL AND EMISSIONS SYSTEMS .**

DTC Description	Confirmed DTC	Pending DTC	Freeze Frame
P0496 EVAP SYSTEM HIGH PURGE FLOW DETECTED			

1. Problem verification:
   - 1. Turn the ignition switch to ON (II).
   - 2. **Clear the DTC with the HDS** See **HOW TO TROUBLESHOOT THE A/T SYSTEM** or **HOW TO TROUBLESHOOT THE FUEL AND EMISSIONS SYSTEMS** .
   - 3. Select the EVAP TEST in the INSPECTION MENU, and do the FUNCTION TEST with the HDS.

   NOTE: **If the test could not be completed because of another DTC, do the troubleshooting for that DTC.**

   Is the result OK?

   YES : Intermittent failure, the system is OK at this time. Check for poor connections or loose terminals at the FTP sensor, the EVAP canister purge valve, the EVAP canister vent shut valve, and the PCM.

   NO : Go to step 2.

2. EVAP canister purge valve open stuck check:
   - 1. Select EVAP TEST in the INSPECTION MENU, and do the EVAP PCS OFF in the SINGLE SOLENOID with the HDS.
   - 2. Disconnect the vacuum hose (A) from the EVAP canister purge valve (B). Connect a T-fitting (C), a vacuum gauge, and a vacuum pump/gauge, 0-30 inHg, to the EVAP canister purge valve as shown.

GETtheMANUALS.org

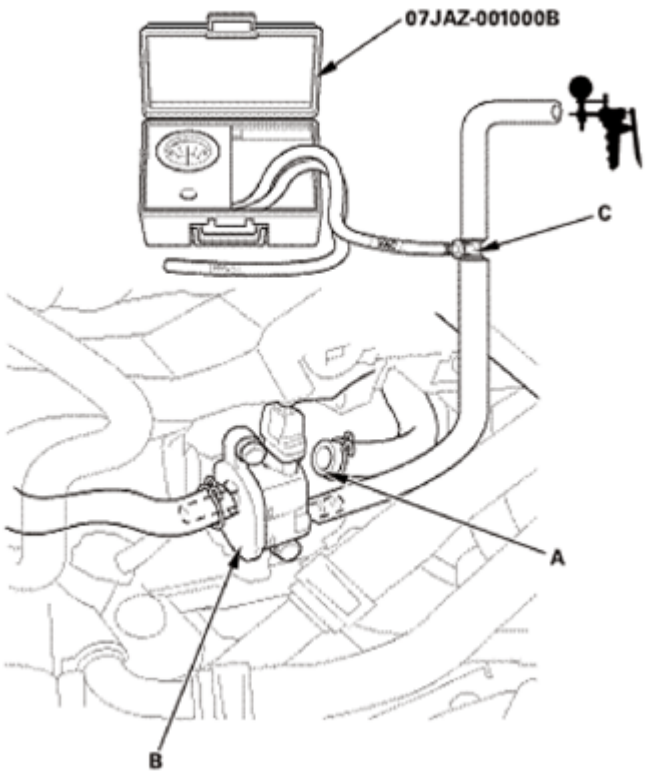

Fig. 232: Connecting T-Fitting, Vacuum Gauge And Vacuum Pump/Gauge To EVAP Canister Purge Valve
Courtesy of AMERICAN HONDA MOTOR CO., INC.

- 3. Apply about 2 kPa (0.6 inHg, 15 mmHg) of vacuum to the purge control solenoid valve.
- 4. Do the EVAP PCS ON in the SINGLE SOLENOID with the HDS.

Does the vacuum release immediately?

YES : **REPLACE THE EVAP CANISTER VENT SHUT VALVE** , then **do the repair verification** .

NO : **REPLACE THE EVAP CANISTER PURGE VALVE** , then **do the repair verification** .

REPAIR VERIFICATION

- 1. Turn the ignition switch to ON (II).
- 2. **Reset the PCM with the HDS** See **HOW TO TROUBLESHOOT THE A/T SYSTEM** or **HOW TO TROUBLESHOOT THE FUEL AND EMISSIONS SYSTEMS** .
- 3. **DO THE PCM IDLE LEARN PROCEDURE** .
- 4. Select the EVAP TEST in the INSPECTION MENU, and do the FUNCTION TEST with the HDS.

Is the result OK?

YES : Troubleshooting is complete.

GETtheMANUALS.org

NO : Check for poor connections or loose terminals at the FTP sensor, the EVAP canister purge valve, the EVAP canister vent shut valve, and the PCM. then go to step 1.

DTC P0497: EVAP SYSTEM LOW PURGE FLOW DETECTED

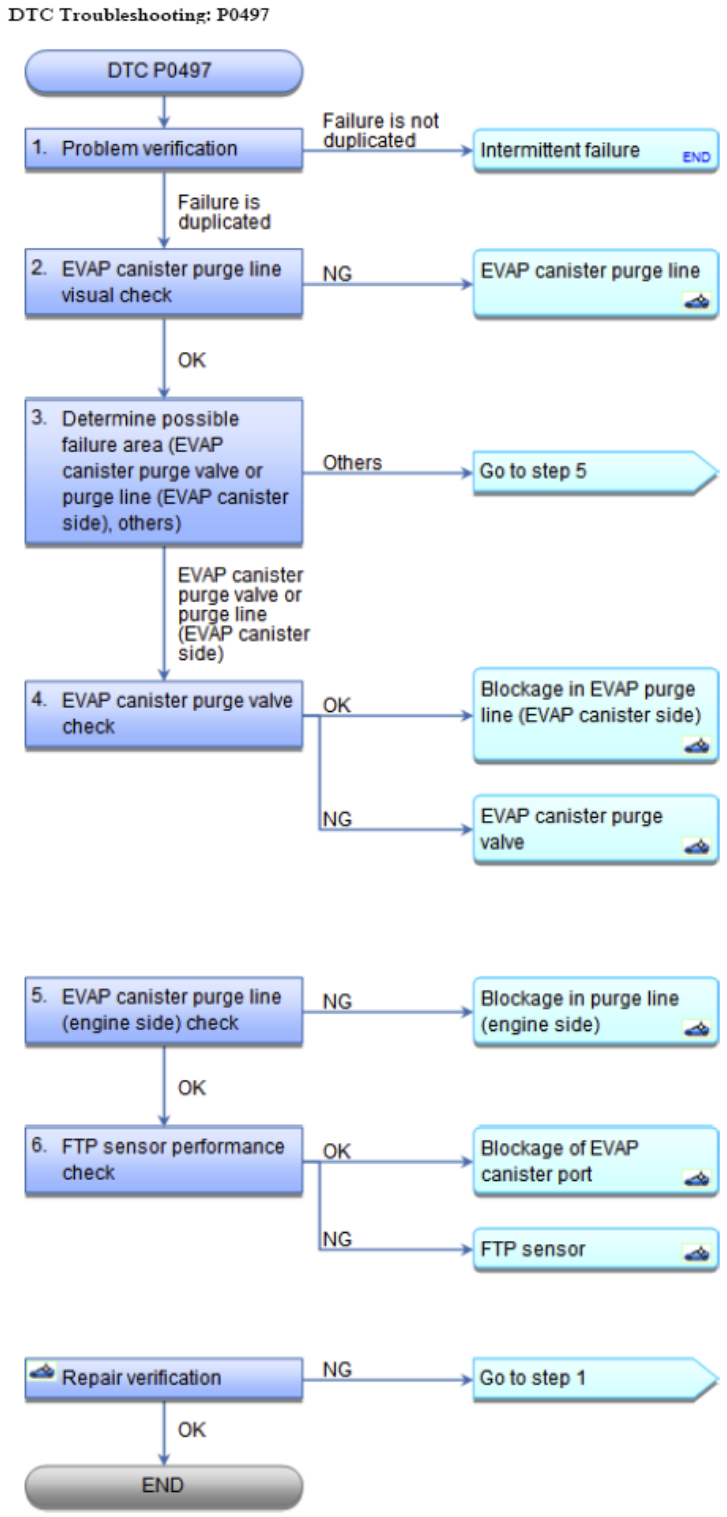

GETtheMANUALS.org

Fig. 233: DTC Troubleshooting Flow Chart (P0497)
Courtesy of AMERICAN HONDA MOTOR CO., INC.

Special Tools Required

- **Vacuum Pump/Gauge, 0-30 inHg Snap-on YA4000A or equivalent, commercially available**
- **Vacuum/Pressure Gauge, 0-4 inHg 07JAZ-001000B**

NOTE: **Before you troubleshoot, record all freeze data and any on-board snapshot, and review the general troubleshooting information See HOW TO TROUBLESHOOT THE A/T SYSTEM or HOW TO TROUBLESHOOT THE FUEL AND EMISSIONS SYSTEMS .**

DTC Description	Confirmed DTC	Pending DTC	Freeze Frame
P0497 EVAP SYSTEM LOW PURGE FLOW DETECTED			

1. Problem verification:
   - 1. Turn the ignition switch to ON (II).
   - 2. **Clear the DTC with the HDS** See **HOW TO TROUBLESHOOT THE A/T SYSTEM** or **HOW TO TROUBLESHOOT THE FUEL AND EMISSIONS SYSTEMS** .
   - 3. Select the EVAP TEST in the INSPECTION MENU, and do the FUNCTION TEST with the HDS.

   Is the result OK?

   YES : Intermittent failure, the system is OK at this time. Check for poor connections or loose terminals at the FTP sensor, the EVAP canister purge valve, the EVAP canister vent shut valve, and the PCM.

   NO : The failure is duplicated. Go to step 2.

2. EVAP canister purge line visual check:
   - 1. Turn the ignition switch to LOCK (0).
   - 2. Check for a poor connection, a blockage, or damage at the EVAP canister purge line between throttle body and the EVAP canister.

   Is the line OK?

   YES : Go to step 3.

   NO : Reconnect or repair the EVAP canister purge line, then **do the repair verification** .

3. Determine possible failure area (EVAP canister purge valve or purge line (EVAP canister side), others):
   - 1. Disconnect the vacuum hose (A) from the EVAP canister purge valve (B).

GETtheMANUALS.org

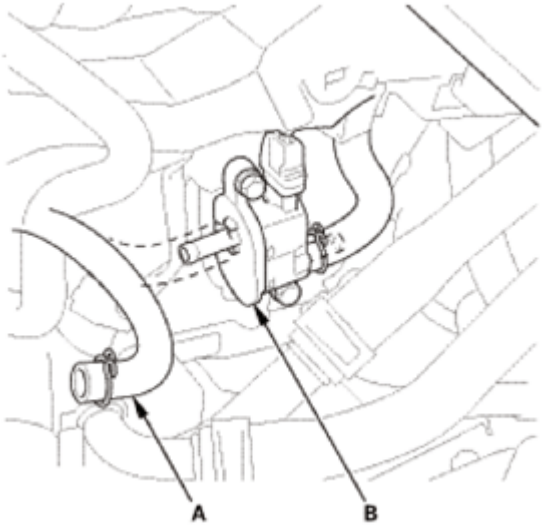

Fig. 234: Identifying Vacuum Hose And EVAP Canister Purge Valve
Courtesy of AMERICAN HONDA MOTOR CO., INC.

- 2. Disconnect the vacuum hose (A) from the purge line (at the EVAP canister side), then connect a T-fitting (B), a vacuum gauge, and a vacuum pump/gauge, 0-30 inHg, to the hose as shown.

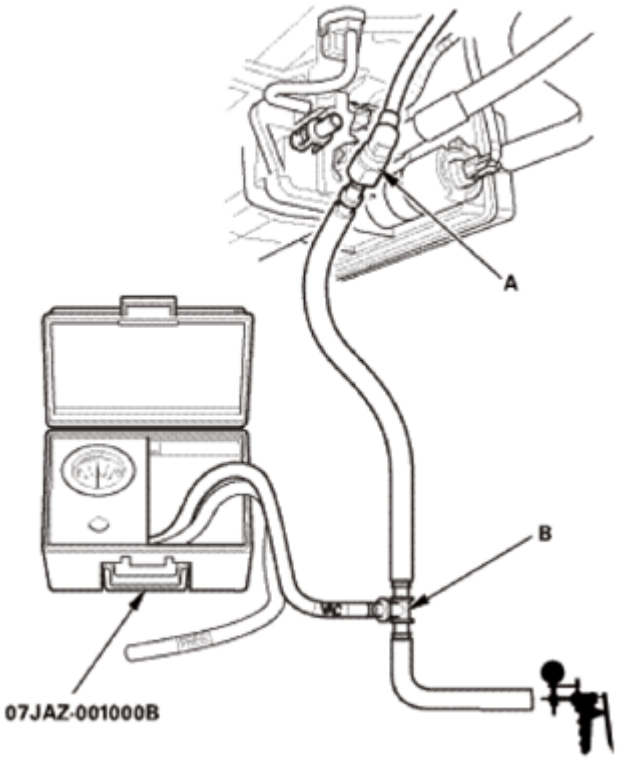

Fig. 235: Connecting T-Fitting, Vacuum Gauge And Vacuum Pump/Gauge To Hose
Courtesy of AMERICAN HONDA MOTOR CO., INC.

- 3. Turn the ignition switch to ON (II).

GETtheMANUALS.org

- 4. Apply about 2 kPa (0.6 inHg, 15 mmHg) of vacuum to the hose.
- 5. Select EVAP TEST in the INSPECTION MENU, and do the EVAP PCS ON in the SINGLE SOLENOID with the HDS.

Does the vacuum release immediately?

YES : Go to step 5.

NO : Go to step 4.

4. EVAP canister purge valve check:
   - 1. Do the EVAP PCS OFF in the SINGLE SOLENOID with the HDS.
   - 2. Disconnect the vacuum hose (A) from the EVAP canister purge valve (B). Connect the T-fitting (C), the vacuum gauge, and the vacuum pump/gauge to the EVAP canister purge valve as shown.

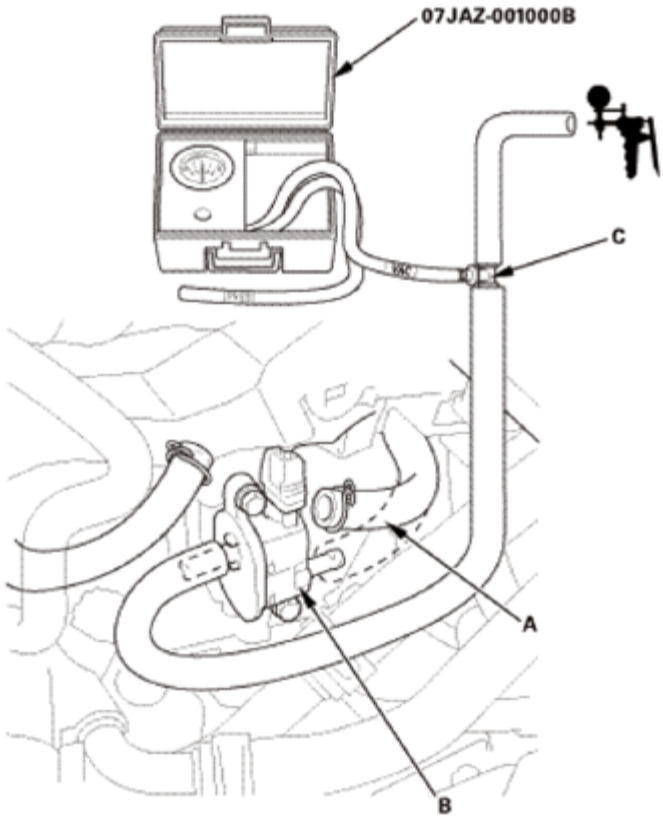

Fig. 236: Connecting T-Fitting, Vacuum Gauge And Vacuum Pump/Gauge To EVAP Canister Purge Valve
Courtesy of AMERICAN HONDA MOTOR CO., INC.

- 3. Apply about 2 kPa (0.6 inHg, 15 mmHg) of vacuum to the purge control solenoid valve.
- 4. Do the EVAP PCS ON in the SINGLE SOLENOID with the HDS.

GETtheMANUALS.org

Does the vacuum release immediately?

YES : The EVAP canister purge valve is OK. Check for a blockage in the purge line between the EVAP canister purge valve and the EVAP canister, then **do the repair verification** .

NO : **REPLACE THE EVAP CANISTER PURGE VALVE** , then **do the repair verification** .

5. EVAP canister purge line (engine side) check:
    - 1. Connect the vacuum pump/gauge to the vacuum hose (A) as shown.

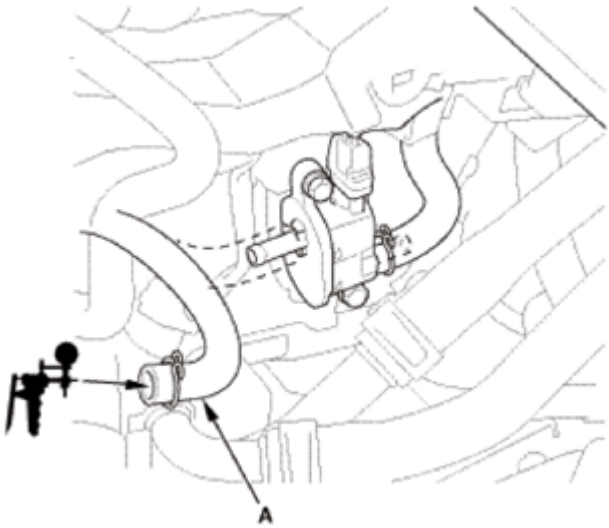

Fig. 237: Identifying Vacuum Hose
Courtesy of AMERICAN HONDA MOTOR CO., INC.

    - 2. Start the engine, and let it idle.

Is there vacuum?

YES : The purge line (engine side) is OK. Go to step 6.

NO : Check for a blockage in the purge line between the EVAP canister purge valve and the intake manifold, then **do the repair verification** .

6. FTP sensor performance check:
    - 1. Turn the ignition switch to LOCK (0).
    - 2. Remove the FTP sensor with its connector connected.
    - 3. Connect the T-fitting (A), the vacuum pump/gauge, and the vacuum pump to the FTP sensor (B) as shown.

GETtheMANUALS.org

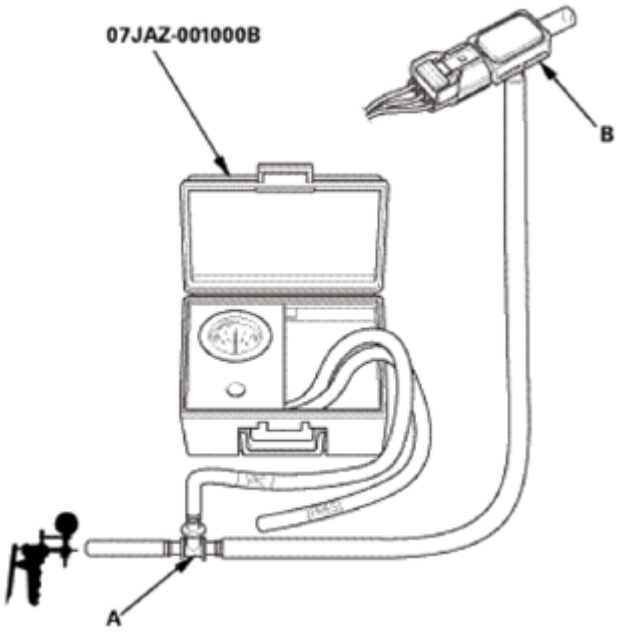

Fig. 238: Connecting T-Fitting, Vacuum Gauge And Vacuum Pump/Gauge To FTP Sensor
Courtesy of AMERICAN HONDA MOTOR CO., INC.

- 4. Turn the ignition switch to ON (II).
- 5. Check and record the FTP SENSOR reading in the DATA LIST with the HDS.

Signal	Current conditions	
	Values	Unit
FTP SENSOR		

- 6. Slowly apply about 1.3 kPa (0.4 inHg, 10 mmHg) of vacuum to the hose.

NOTE: **Be careful not to exceed the vacuum. If you do, the FTP sensor can be damaged.**

- 7. Check the FTP SENSOR in the DATA LIST with the HDS.

Signal	Current conditions	
	Values	Unit
FTP SENSOR		

Does the value change?

YES : The FTP sensor is OK. Check for a blockage at the EVAP canister port, then **do the repair verification** .

NO : REPLACE THE FTP SENSOR , then **do the repair verification** .

GETtheMANUALS.org

REPAIR VERIFICATION

- 1. Turn the ignition switch to LOCK (0).
- 2. Install the parts in the reverse order of removal.
- 3. Turn the ignition switch to ON (II).
- 4. **Reset the PCM with the HDS** See **HOW TO TROUBLESHOOT THE A/T SYSTEM** or **HOW TO TROUBLESHOOT THE FUEL AND EMISSIONS SYSTEMS** .
- 5. **DO THE PCM IDLE LEARN PROCEDURE** .
- 6. Select the EVAP TEST in the INSPECTION MENU, and do the FUNCTION TEST with the HDS.

Is the result OK?

YES : Troubleshooting is complete.

NO : Check for poor connections or loose terminals at the FTP sensor, the EVAP canister purge valve, the EVAP canister vent shut valve, and the PCM, then go to step 1.

DTC P0498: EVAP CANISTER VENT SHUT VALVE CIRCUIT LOW VOLTAGE

GETtheMANUALS.org

DTC Troubleshooting: P0498

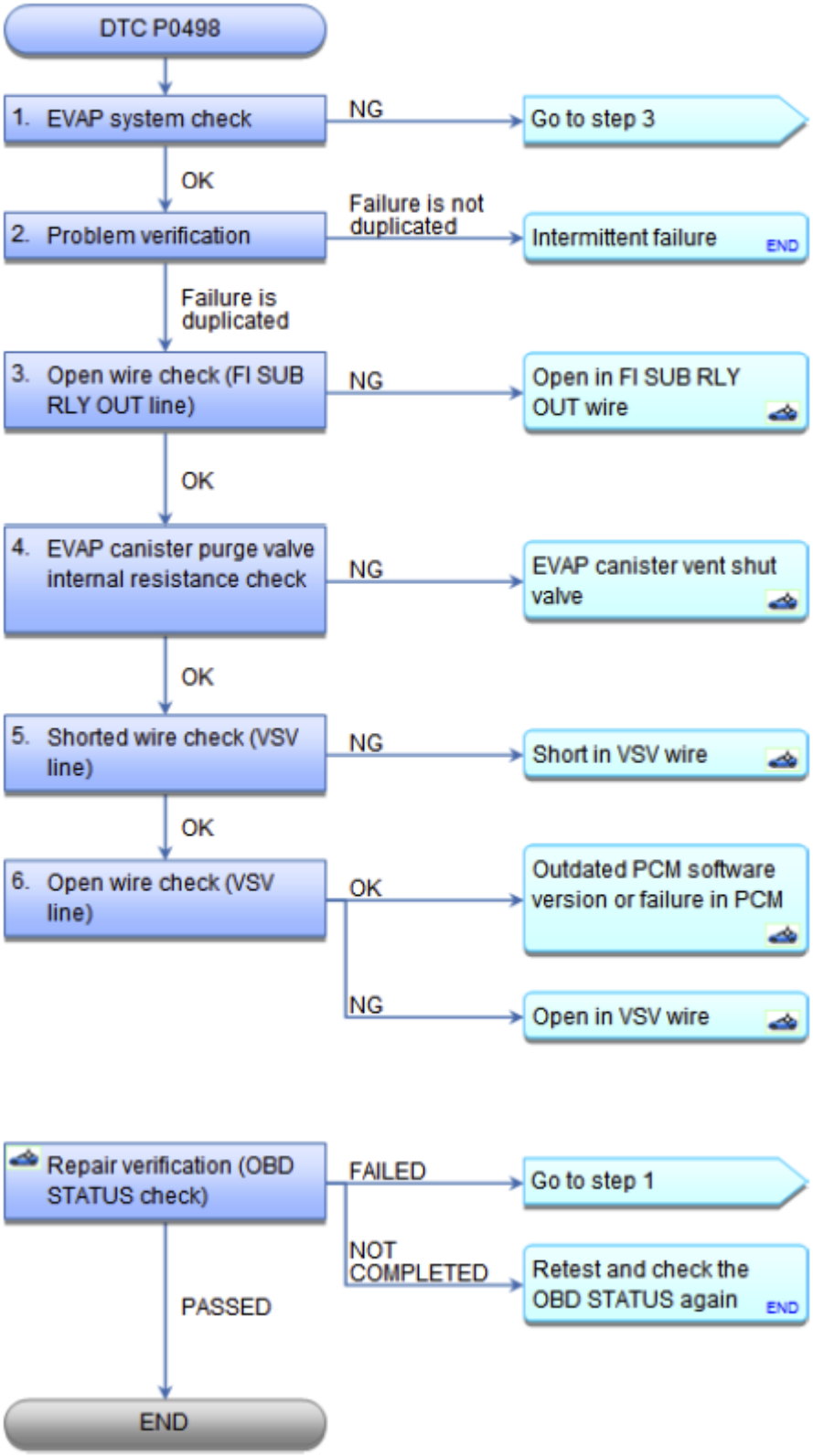

Fig. 239: DTC Troubleshooting Flow Chart (P0498)

GETtheMANUALS.org

Courtesy of AMERICAN HONDA MOTOR CO., INC.

NOTE: **Before you troubleshoot, record all freeze data and any on-board snapshot, and review the general troubleshooting information See HOW TO TROUBLESHOOT THE A/T SYSTEM or HOW TO TROUBLESHOOT THE FUEL AND EMISSIONS SYSTEMS .**

DTC Description	Confirmed DTC	Pending DTC	Freeze Frame
P0498 EVAP CANISTER VENT SHUT VALVE CIRCUIT LOW VOLTAGE			

1. EVAP system check:
   - 1. Turn the ignition switch to ON (II).
   - 2. **Clear the DTC with the HDS** See **HOW TO TROUBLESHOOT THE A/T SYSTEM** or **HOW TO TROUBLESHOOT THE FUEL AND EMISSIONS SYSTEMS** .
   - 3. Check for Pending or Confirmed DTCs with the HDS.

DTC Description	Confirmed DTC	Pending DTC	Freeze Frame
P0498 EVAP CANISTER VENT SHUT VALVE CIRCUIT LOW VOLTAGE			

Is DTC P0498 indicated?

YES : Go to step 3.

NO : Go to step 2.

2. Problem verification:
   - 1. Select EVAP TEST in the INSPECTION MENU, and do the EVAP CVS ON in the SINGLE SOLENOID with the HDS.
   - 2. Check for Pending or Confirmed DTCs with the HDS.

DTC Description	Confirmed DTC	Pending DTC	Freeze Frame
P0498 EVAP CANISTER VENT SHUT VALVE CIRCUIT LOW VOLTAGE			

Is DTC P0498 indicated?

YES : The failure is duplicated. Go to step 3.

NO : The EVAP system is OK. Intermittent failure, the system is OK at this time. Check for poor

GETtheMANUALS.org

connections or loose terminals at the EVAP canister vent shut valve and the PCM.

3. Open wire check (FI SUB RLY OUT line):
    - 1. Turn the ignition switch to LOCK (0).
    - 2. Disconnect the following connector.

      EVAP canister vent shut valve 2P connector

    - 3. Turn the ignition switch to ON (II).
    - 4. Measure the voltage between test points 1 and 2.

      Test condition IG ON (II)

      EVAP canister vent shut valve 2P connector: disconnected

      Test circuit FI SUB RLY OUT

      Test point 1 EVAP canister vent shut valve 2P connector No. 1 (GRN)

      Test point 2 Body ground

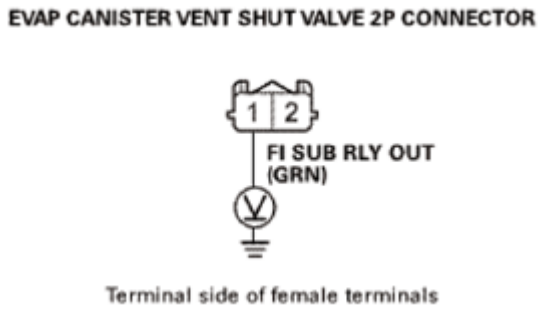

Fig. 240: Measuring Voltage Between EVAP Canister Vent Shut Valve 2P Connector No. 1 (GRN) And Body Ground
Courtesy of AMERICAN HONDA MOTOR CO., INC.

Is there battery voltage?

YES : The FI SUB RLY OUT wire is OK. Go to step 4.

NO : Repair an open in the FI SUB RLY OUT wire between the EVAP canister vent shut valve and the PGM-FI subrelay, then **do the repair verification** .

4. EVAP canister purge valve internal resistance check:
    - 1. Turn the ignition switch to LOCK (0).
    - 2. At the vent shut valve side, measure the resistance between test points 1 and 2.

      Test condition IG LOCK (0)

GETtheMANUALS.org

EVAP canister vent shut valve 2P connector: disconnected

Test circuit VSV, FI SUB RLY OUT

Test point 1 EVAP canister vent shut valve 2P connector No. 1 (EVAP canister vent shut valve side)

Test point 2 EVAP canister vent shut valve 2P connector No. 2 (EVAP canister vent shut valve side)

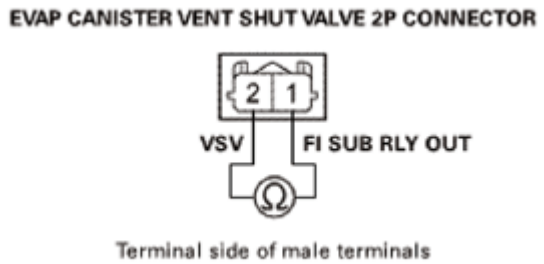

Fig. 241: Measuring Resistance Between EVAP Canister Vent Shut Valve 2P Connector No. 1 And No. 2 (EVAP Canister Vent Shut Valve Side)
Courtesy of AMERICAN HONDA MOTOR CO., INC.

Is there about 25 -30 ohms at room temperature?

YES : The EVAP canister vent shut valve is OK. Go to step 5.

NO : **REPLACE THE EVAP CANISTER VENT SHUT VALVE** , then **do the repair verification** .

5. Shorted wire check (VSV line):
   - 1. Turn the ignition switch to LOCK (0).
   - 2. Jump the SCS line with the HDS.
   - 3. Disconnect the following connector.

     PCM connector A (49P)

   - 4. Check for continuity between test points 1 and 2.

     Test condition IG LOCK (0)

     EVAP canister vent shut valve 2P connector: disconnected

     PCM connector A (49P): disconnected

     Test circuit VSV

     Test point 1 PCM connector A (49P) No. 32 (GRY)

GETtheMANUALS.org

Test point 2 Body ground

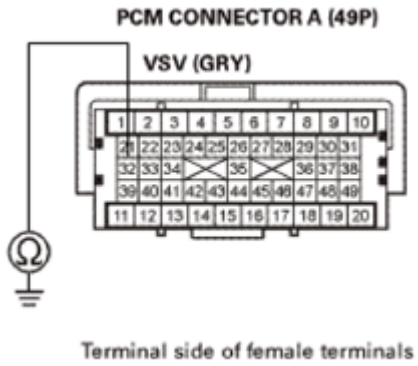

Fig. 242: Checking Continuity Between PCM Connector A (49P) No. 32 (GRY) And Body Ground
Courtesy of AMERICAN HONDA MOTOR CO., INC.

Is there continuity?

YES : Repair a short in the VSV wire between the EVAP canister vent shut valve and the PCM (A32), then **do the repair verification** .

NO : The VSV wire is not shorted. Go to step 6.

6. Open wire check (VSV line):
   - 1. Connect terminals A and B with a jumper wire.

     Terminal A EVAP canister vent shut valve 2P connector No. 2 (GRY)

     Terminal B Body ground

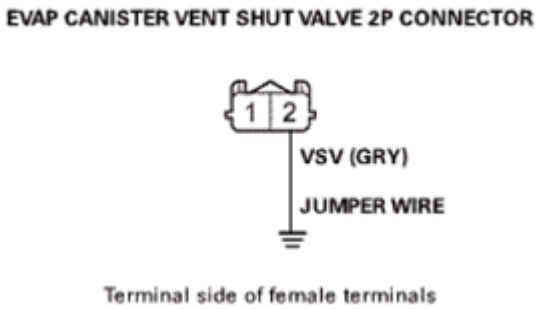

Fig. 243: Identifying EVAP Canister Vent Shut Valve 2P Connector Terminals
Courtesy of AMERICAN HONDA MOTOR CO., INC.

   - 2. Check for continuity between test points 1 and 2.

     Test condition IG LOCK (0)

GETtheMANUALS.org

EVAP canister vent shut valve 2P connector: disconnected

EVAP canister vent shut valve 2P connector No. 2: jumped to body ground

PCM connector A (49P): disconnected

Test circuit VSV

Test point 1 PCM connector A (49P) No. 32 (GRY)

Test point 2 Body ground

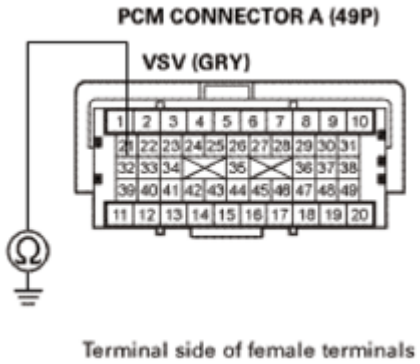

Fig. 244: Checking Continuity Between PCM Connector A (49P) No. 32 (GRY) And Body Ground
Courtesy of AMERICAN HONDA MOTOR CO., INC.

Is there continuity?

YES : The VSV wire is OK. **Update the PCM** See **PCM REMOVAL AND INSTALLATION** or **PCM UPDATE** if it does not have the latest software, or **substitute a known-good PCM** See **PCM UPDATE** or **PCM REMOVAL AND INSTALLATION** , then **do the repair verification** .

NO : Repair an open in the VSV wire between the EVAP canister vent shut valve and the PCM (A32), then **do the repair verification** .

REPAIR VERIFICATION (OBD STATUS CHECK)

- 1. Turn the ignition switch to LOCK (0).
- 2. Reconnect all connectors.
- 3. Turn the ignition switch to ON (II).
- 4. **Reset the PCM with the HDS** See **HOW TO TROUBLESHOOT THE A/T SYSTEM** or **HOW TO TROUBLESHOOT THE FUEL AND EMISSIONS SYSTEMS** .
- 5. **DO THE PCM IDLE LEARN PROCEDURE** .
- 6. Select EVAP TEST in the INSPECTION MENU, and do the EVAP CVS ON in the SINGLE SOLENOID with the HDS.

GETtheMANUALS.org

- 7. Monitor the OBD STATUS for DTC P0498 in the DTCs MENU with the HDS.

DTC Description	OBD STATUS
P0498 EVAP CANISTER VENT SHUT VALVE CIRCUIT LOW VOLTAGE	

Does the HDS indicate PASSED, FAILED, or NOT COMPLETED?

PASSED : Troubleshooting is complete. If the PCM was substituted, **replace the original PCM** See **PCM REMOVAL AND INSTALLATION** or **PCM UPDATE** . If any other Pending or Confirmed DTCs are indicated, go to the indicated DTC's troubleshooting.

FAILED : Go to step 1 and recheck. If the PCM was updated, **substitute a known-good PCM** See **PCM REMOVAL AND INSTALLATION** or **PCM UPDATE** , then check the OBD STATUS again.

NOT COMPLETED : Meet the test condition, and check the OBD STATUS again.

DTC P0499: EVAP CANISTER VENT SHUT VALVE CIRCUIT HIGH VOLTAGE

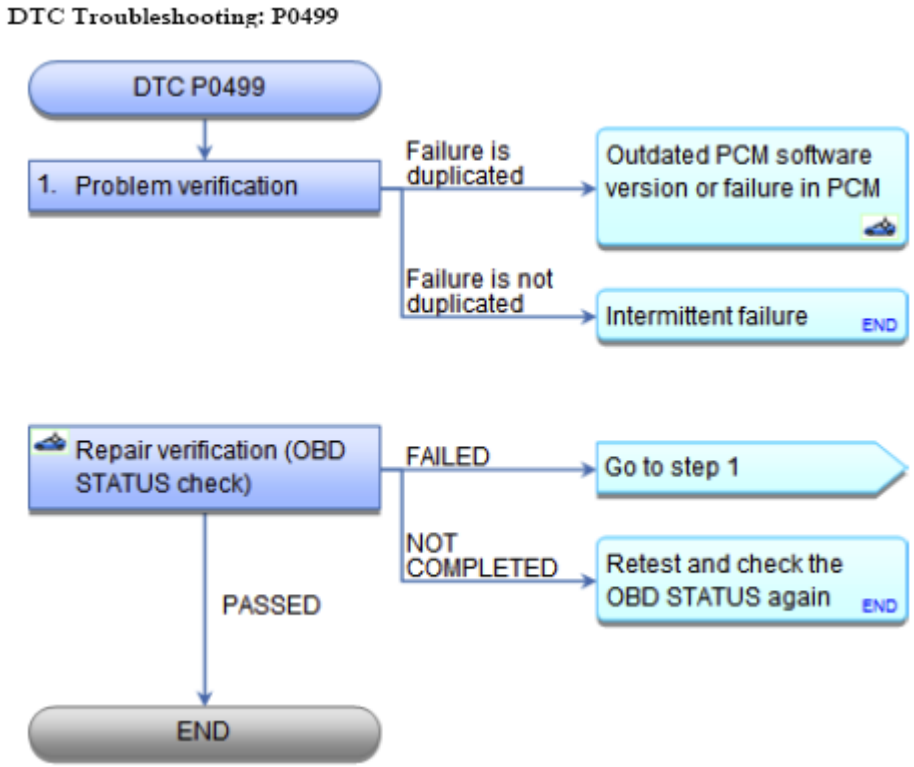

Fig. 245: DTC Troubleshooting Flow Chart (P0499)
Courtesy of AMERICAN HONDA MOTOR CO., INC.

NOTE: **Before you troubleshoot, record all freeze data and any on-board snapshot, and review the general troubleshooting information See HOW TO TROUBLESHOOT THE A/T SYSTEM or HOW TO TROUBLESHOOT THE FUEL AND EMISSIONS**

GETtheMANUALS.org

SYSTEMS .

DTC Description	Confirmed DTC	Pending DTC	Freeze Frame
P0499 EVAP CANISTER VENT SHUT VALVE CIRCUIT HIGH VOLTAGE			

1. Problem verification:
   - 1. Turn the ignition switch to ON (II).
   - 2. **Clear the DTC with the HDS** See **HOW TO TROUBLESHOOT THE A/T SYSTEM** or **HOW TO TROUBLESHOOT THE FUEL AND EMISSIONS SYSTEMS** .
   - 3. Select EVAP TEST in the INSPECTION MENU, and do the EVAP CVS ON in the SINGLE SOLENOID with the HDS.
   - 4. Check for Pending or Confirmed DTCs with the HDS.

DTC Description	Confirmed DTC	Pending DTC	Freeze Frame
P0499 EVAP CANISTER VENT SHUT VALVE CIRCUIT HIGH VOLTAGE			

Is DTC P0499 indicated?

YES : Failure is duplicated. **Update the PCM** See **PCM REMOVAL AND INSTALLATION** or **PCM UPDATE** if it does not have the latest software, or **substitute a known-good PCM** See **PCM REMOVAL AND INSTALLATION** or **PCM UPDATE** , then **do the repair verification** .

NO : Intermittent failure, the system is OK at this time. Check for poor connections or loose terminals at the EVAP canister vent shut valve and the PCM.

REPAIR VERIFICATION (OBD STATUS CHECK)

- 1. Turn the ignition switch to ON (II).
- 2. **Reset the PCM with the HDS** See **HOW TO TROUBLESHOOT THE A/T SYSTEM** or **HOW TO TROUBLESHOOT THE FUEL AND EMISSIONS SYSTEMS** .
- 3. **DO THE PCM IDLE LEARN PROCEDURE** .
- 4. Select EVAP TEST in the INSPECTION MENU, and do the EVAP CVS ON in the SINGLE SOLENOID with the HDS.
- 5. Monitor the OBD STATUS for DTC P0499 in the DTCs MENU with the HDS.

DTC Description	OBD STATUS
P0499 EVAP CANISTER VENT SHUT VALVE CIRCUIT HIGH VOLTAGE	

Does the HDS indicate PASSED, FAILED, or NOT COMPLETED?

GETtheMANUALS.org

PASSED : Troubleshooting is complete. If the PCM was substituted, **replace the original PCM** See **PCM UPDATE** or **PCM REMOVAL AND INSTALLATION** . If any other Pending or Confirmed DTCs are indicated, go to the indicated DTC's troubleshooting.

FAILED : Go to step 1 and recheck. If the PCM was updated, **substitute a known-good PCM** See **PCM REMOVAL AND INSTALLATION** or **PCM UPDATE** , then check the OBD STATUS again.

NOT COMPLETED : Meet the test condition, and check the OBD STATUS again.

DTC P0506: IDLE CONTROL SYSTEM RPM LOWER THAN EXPECTED

GETtheMANUALS.org

DTC Troubleshooting: P0506

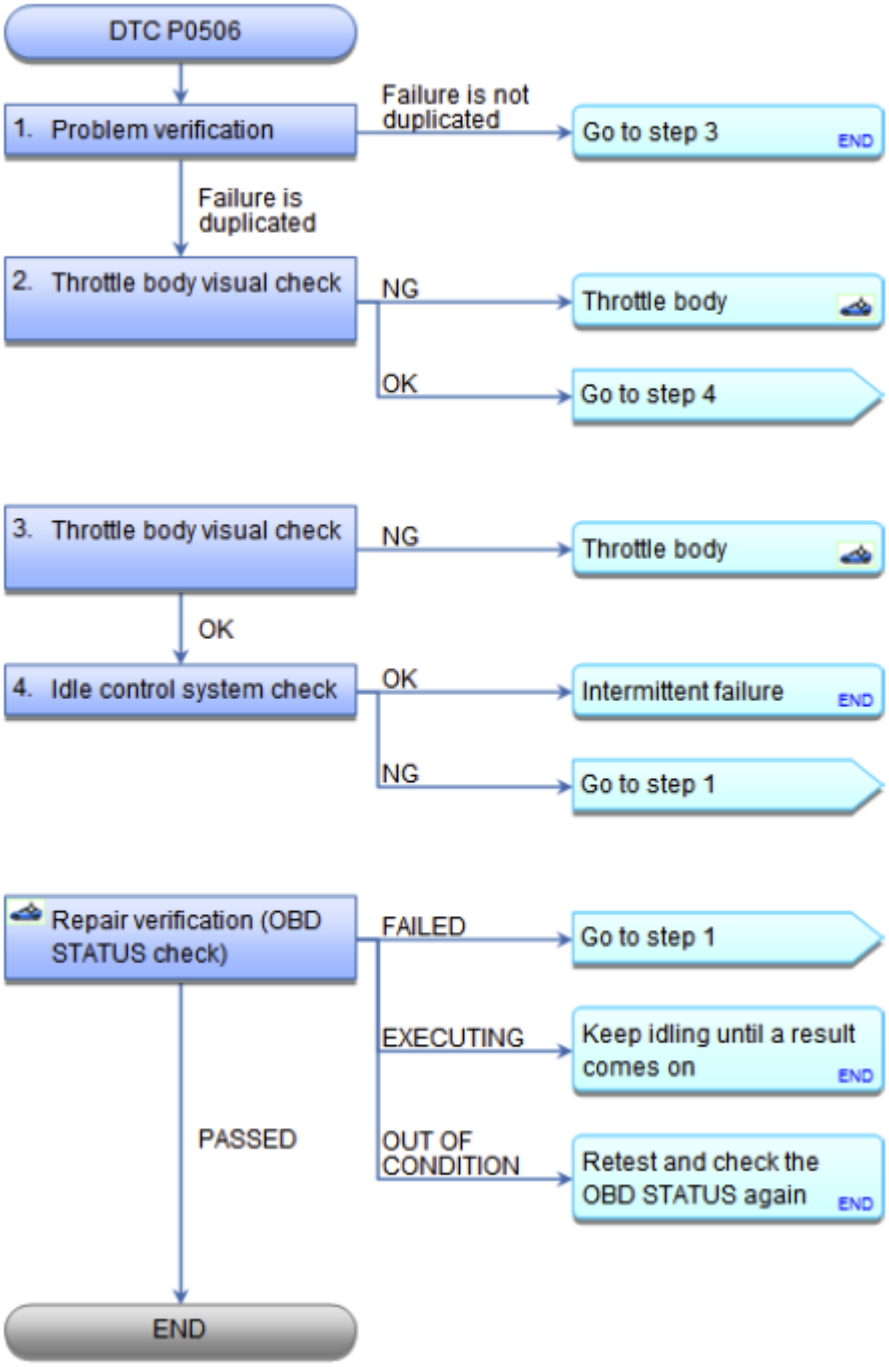

Fig. 246: DTC Troubleshooting Flow Chart (P0506)
Courtesy of AMERICAN HONDA MOTOR CO., INC.

NOTE: **Before you troubleshoot, record all freeze data and any on-board snapshot, and review the general troubleshooting information See HOW TO TROUBLESHOOT THE A/T SYSTEM or HOW TO TROUBLESHOOT THE FUEL AND EMISSIONS SYSTEMS .**

GETtheMANUALS.org

DTC Description	Confirmed DTC	Pending DTC	Freeze Frame
P0506 IDLE CONTROL SYSTEM RPM LOWER THAN EXPECTED			

1. Problem verification:
   - 3. Turn the ignition switch to ON (II).
   - 2. **Clear the DTC with the HDS** See **HOW TO TROUBLESHOOT THE A/T SYSTEM** or **HOW TO TROUBLESHOOT THE FUEL AND EMISSIONS SYSTEMS** .
   - 3. Start the engine. Hold the engine speed at 3, 000 rpm without load (in P or N) until the radiator fan comes on, then let it idle at least 20 seconds.
   - 4. Check for these conditions in the DATA LIST with the HDS:
     - ECT SENSOR 1 above 158 °F (70 °C)
     - IAT SENSOR above 32 °F (0 °C)
     - VEHICLE SPEED is 0 mph (0 km/h)
     - ST FUEL TRIM between 0.69 and 1.47
     - FSS is CLOSED

Signal	Current conditions	
	Values	Unit
ECT SENSOR 1		
IAT SENSOR (2)		
VEHICLE SPEED		
AF FB (ST FUEL TRIM)		
FSS		

   - 5. Monitor the OBD STATUS for DTC P0506 in the DTCs MENU with the HDS.

DTC Description	OBD STATUS
P0506 IDLE CONTROL SYSTEM RPM LOWER THAN EXPECTED	

Does the HDS indicate FAILED?

YES : The failure is duplicated. Go to step 2.

NO : If the HDS indicates PASSED, go to step 1. If the HDS indicates EXECUTING, keep idling until a result comes on. If the HDS indicates OUT OF CONDITION, meet the test condition and recheck.

2. Throttle body visual check:
   - 1. **Remove the intake air duct from the throttle body** See **THROTTLE BODY DISASSEMBLY AND REASSEMBLY** , **THROTTLE BODY REMOVAL AND INSTALLATION** or **THROTTLE BODY CLEANING** .

GETtheMANUALS.org

- 2. Check for dirt, carbon, or damage in the throttle bore.

Is there dirt, carbon, or damage in the throttle bore?

YES : If there is dirt or carbon, **clean the throttle body** See **THROTTLE BODY DISASSEMBLY AND REASSEMBLY** , **THROTTLE BODY REMOVAL AND INSTALLATION** or **THROTTLE BODY CLEANING** . Also check for damage to the air cleaner element, then **do the repair verification** . If there is damage in the throttle bore, **replace the throttle body** See **THROTTLE BODY DISASSEMBLY AND REASSEMBLY** , **THROTTLE BODY REMOVAL AND INSTALLATION** or **THROTTLE BODY CLEANING** , then **do the repair verification** .

NO : The throttle body is OK. Check the A/C system, then go to step 4.

3. Throttle body visual check:
   - 1. **Remove the intake air duct from the throttle body** See **THROTTLE BODY DISASSEMBLY AND REASSEMBLY** , **THROTTLE BODY REMOVAL AND INSTALLATION** or **THROTTLE BODY CLEANING** .
   - 2. Check for dirt, carbon, or damage in the throttle bore.

Is there dirt, carbon, or damage in the throttle bore?

YES : If there is dirt or carbon, **clean the throttle body** See **THROTTLE BODY DISASSEMBLY AND REASSEMBLY** or **THROTTLE BODY REMOVAL AND INSTALLATION** or **THROTTLE BODY CLEANING** . Also check for damage to the air cleaner element, then **do the repair verification** . If there is damage in the throttle bore, **replace the throttle body** See **THROTTLE BODY DISASSEMBLY AND REASSEMBLY** , **THROTTLE BODY REMOVAL AND INSTALLATION** or **THROTTLE BODY CLEANING** , then **do the repair verification** .

NO : The throttle body is OK. Go to step 4.

4. Idle control system check:
   - 1. Turn the ignition switch to ON (II).
   - 2. **Clear the DTC with the HDS** See **HOW TO TROUBLESHOOT THE A/T SYSTEM** or **HOW TO TROUBLESHOOT THE FUEL AND EMISSIONS SYSTEMS** .
   - 3. Start the engine. Hold the engine speed at 3, 000 rpm without load (in P or N) until the radiator fan comes on, then let it idle at least 20 seconds.
   - 4. Check for these conditions in the DATA LIST with the HDS:
     - ECT SENSOR 1 above 158 °F (70 °C)
     - IAT SENSOR above 32 °F (0 °C)
     - VEHICLE SPEED is 0 mph (0 km/h)
     - ST FUEL TRIM between 0.69 and 1.47
     - FSS is CLOSED

	Current conditions	

GETtheMANUALS.org

Signal	Values	Unit
ECT SENSOR 1		
IAT SENSOR (2)		
VEHICLE SPEED		
AF FB (ST FUEL TRIM)		
FSS		

NOTE: **Recheck with different load conditions (turn on the headlights, the blower motor, the rear window defogger, and/or the A/C, change the gear position, etc.).**

- 5. Monitor the OBD STATUS for DTC P0506 in the DTCs MENU with the HDS.

DTC Description	OBD STATUS
P0506 IDLE CONTROL SYSTEM RPM LOWER THAN EXPECTED	

Does the HDS indicate PASSED?

YES : Intermittent failure, the system is OK at this time.

NO : If the HDS indicates FAILED, check the A/C system, then go to step 1 and recheck. If the HDS indicates EXECUTING, keep idling until a result comes on. If the HDS indicates OUT OF CONDITION, meet the test condition and recheck.

REPAIR VERIFICATION (OBD STATUS CHECK)

- 1. Turn the ignition switch to LOCK (0).
- 2. Reconnect all connectors.
- 3. Turn the ignition switch to ON (II).
- 4. **Reset the PCM with the HDS** See **HOW TO TROUBLESHOOT THE A/T SYSTEM** or **HOW TO TROUBLESHOOT THE FUEL AND EMISSIONS SYSTEMS** .
- 5. **DO THE PCM IDLE LEARN PROCEDURE** .
- 6. Start the engine. Hold the engine speed at 3, 000 rpm without load (in P or N) until the radiator fan comes on, then let it idle at least 20 seconds.
- 7. Check for these conditions in the DATA LIST with the HDS:
  - ECT SENSOR 1 above 158 °F (70 °C)
  - IAT SENSOR above 32 °F (0 °C)
  - VEHICLE SPEED is 0 mph (0 km/h)
  - ST FUEL TRIM between 0.69 and 1.47
  - FSS is CLOSED

Signal	Current conditions	

GETtheMANUALS.org

	Values	Unit
ECT SENSOR 1		
IAT SENSOR (2)		
VEHICLE SPEED		
AF FB (ST FUEL TRIM)		
FSS		

- 8. Monitor the OBD STATUS for DTC P0506 in the DTCs MENU with the HDS.

DTC Description	OBD STATUS
P0506 IDLE CONTROL SYSTEM RPM LOWER THAN EXPECTED	

Does the HDS indicate PASSED, FAILED, EXECUTING, or OUT OF CONDITION?

PASSED : Troubleshooting is complete. If any other Pending or Confirmed DTCs were indicated, go to the indicated DTC's troubleshooting.

FAILED : Go to step 1 and recheck.

EXECUTING : Keep idling until a result comes on.

OUT OF CONDITION : Meet the test condition, and check the OBD STATUS again.

DTC P0507: IDLE CONTROL SYSTEM RPM HIGHER THAN EXPECTED

GETtheMANUALS.org

DTC Troubleshooting: P0507

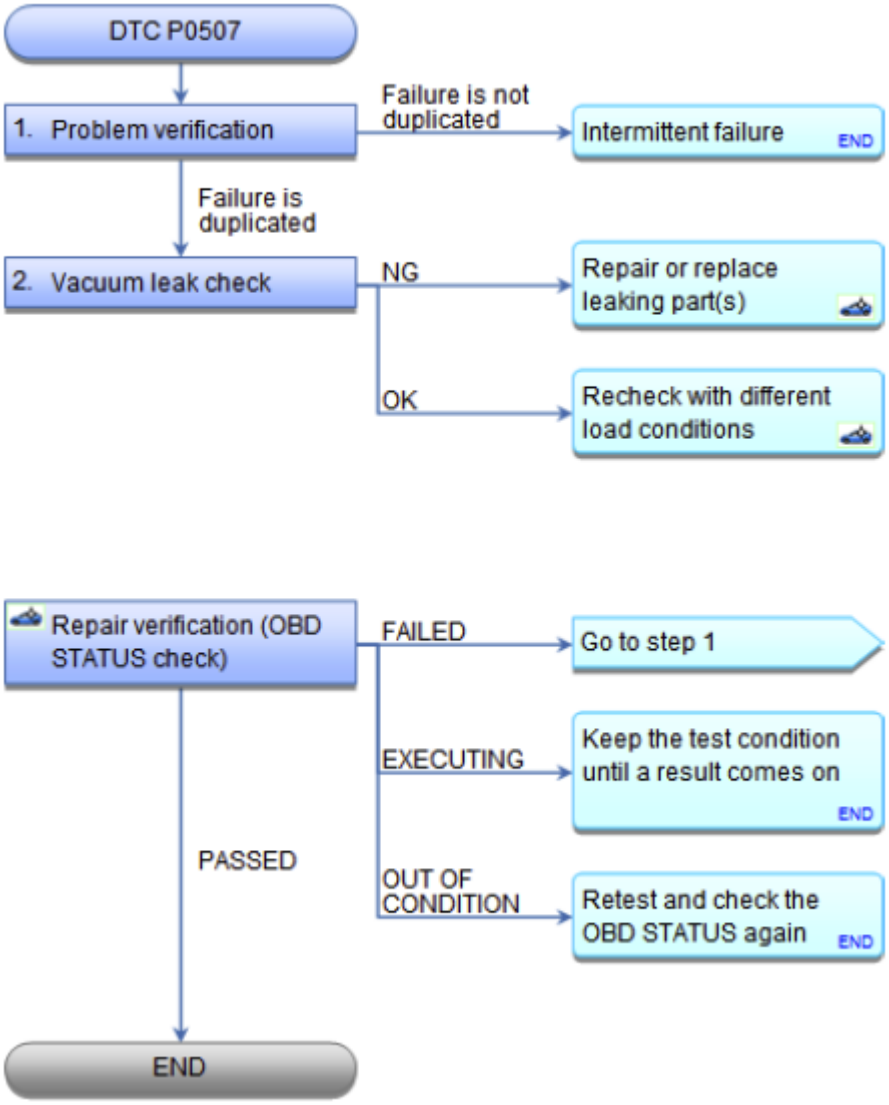

Fig. 247: DTC Troubleshooting Flow Chart (P0507)
Courtesy of AMERICAN HONDA MOTOR CO., INC.

NOTE: **Before you troubleshoot, record all freeze data and any on-board snapshot, and review the general troubleshooting information See HOW TO TROUBLESHOOT THE A/T SYSTEM or HOW TO TROUBLESHOOT THE FUEL AND EMISSIONS SYSTEMS .**

DTC Description	Confirmed DTC	Pending DTC	Freeze Frame
P0507 IDLE CONTROL SYSTEM RPM HIGHER THAN EXPECTED			

1. Problem verification:

GETtheMANUALS.org

- 1. Turn the ignition switch to ON (II).
- 2. **Clear the DTC with the HDS** See **HOW TO TROUBLESHOOT THE A/T SYSTEM** or **HOW TO TROUBLESHOOT THE FUEL AND EMISSIONS SYSTEMS** .
- 3. Start the engine. Hold the engine speed at 3, 000 rpm without load (in P or N) until the radiator fan comes on, then let it idle at least 20 seconds.
- 4. Monitor the OBD STATUS for DTC P0507 with the HDS.

DTC Description	OBD STATUS
P0507 IDLE CONTROL SYSTEM RPM HIGHER THAN EXPECTED	

Does the HDS indicate FAILED?

YES : The failure is duplicated. Go to step 2.

NO : If the HDS indicates PASSED, intermittent failure, the system is OK at this time. If the HDS indicates EXECUTING, keep idling until a result comes on. If the HDS indicates OUT OF CONDITION, recheck with different load conditions (electrical, A/C, gear position, etc.).

2. Vacuum leak check:
   - 1. Turn the ignition switch to LOCK (0).
   - 2. Check for vacuum leaks at these parts:
     - PCV valve
     - PCV hose
     - EVAP canister purge valve
     - Throttle body
     - Intake manifold
     - Brake booster and hose

Are there any leaks?

YES : Repair or replace the leaking part(s), then **do the repair verification** .

NO : Recheck with different load conditions (turn on the headlights, blower motor, or A/C; change the gear position, etc.), then **do the repair verification** .

REPAIR VERIFICATION (OBD STATUS CHECK)

- 1. Turn the ignition switch to ON (II).
- 2. **Reset the PCM with the HDS** See **HOW TO TROUBLESHOOT THE A/T SYSTEM** or **HOW TO TROUBLESHOOT THE FUEL AND EMISSIONS SYSTEMS** .
- 3. **DO THE PCM IDLE LEARN PROCEDURE** .
- 4. Start the engine. Hold the engine speed at 3, 000 rpm without load (in P or N) until the radiator fan comes on, then let it idle at least 20 seconds.

GETtheMANUALS.org

DTC Description	OBD STATUS
P0507 IDLE CONTROL SYSTEM RPM HIGHER THAN EXPECTED	

Does the HDS indicate PASSED, FAILED, EXECUTING, or OUT OF CONDITION?

PASSED : Troubleshooting is complete. If any other Pending or Confirmed DTCs are indicated, go to the indicated DTC's troubleshooting.

FAILED : Go to step 1 and recheck.

EXECUTING : Keep the test condition until a result comes on.

OUT OF CONDITION : Meet the test condition, and check the OBD STATUS again.

DTC P050A: COLD START IDLE AIR CONTROL SYSTEM PERFORMANCE PROBLEM

GETtheMANUALS.org

DTC Troubleshooting: P050A

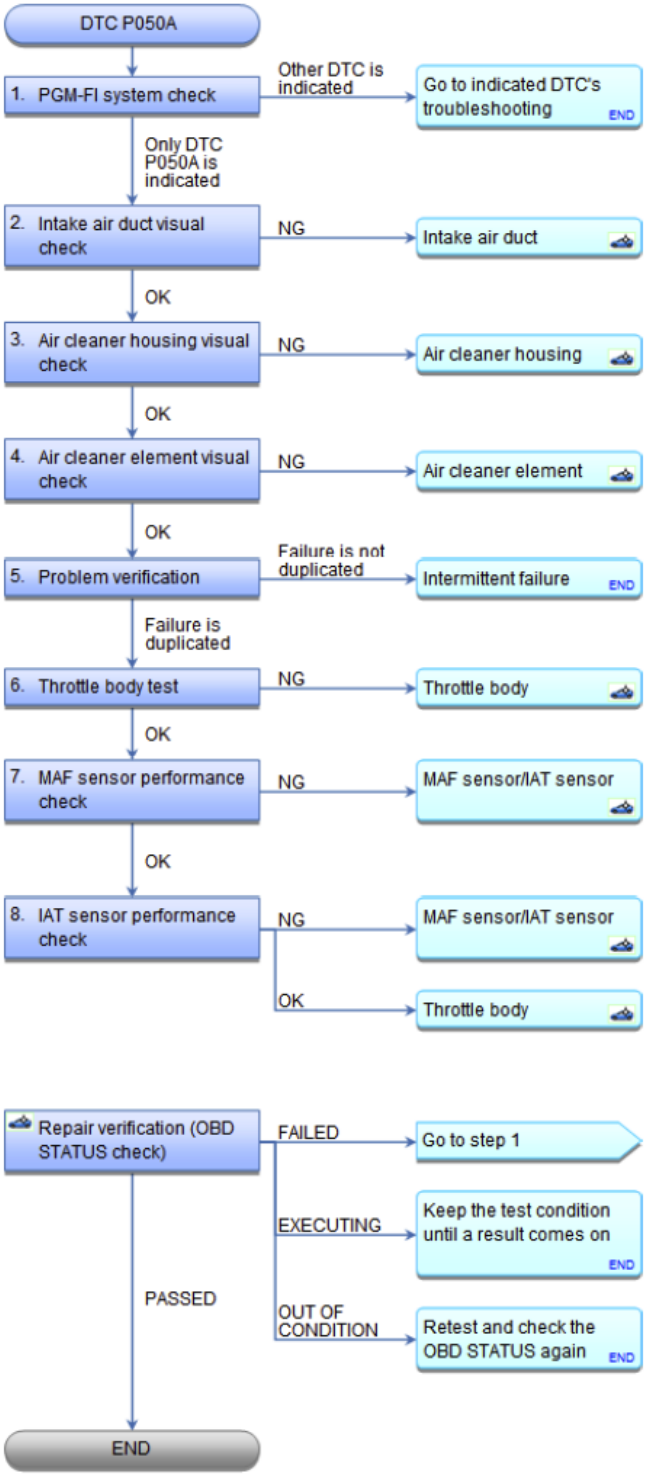

Fig. 248: DTC Troubleshooting Flow Chart (P050A)
Courtesy of AMERICAN HONDA MOTOR CO., INC.

NOTE: **Before you troubleshoot, record all freeze data and any on-board snapshot, and**

GETtheMANUALS.org

review the general troubleshooting information See HOW TO TROUBLESHOOT THE A/T SYSTEM or HOW TO TROUBLESHOOT THE FUEL AND EMISSIONS SYSTEMS .

DTC Description	Confirmed DTC	Pending DTC	Freeze Frame
P050A COLD START IDLE AIR CONTROL SYSTEM PERFORMANCE PROBLEM			

1. PGM-FI system check:
   - 1. Turn the ignition switch to ON (II).
   - 2. Check for Pending or Confirmed DTCs with the HDS.

DTC Description	Confirmed DTC	Pending DTC	Freeze Frame

Are any Pending or Confirmed DTCs other than P050A indicated?

YES : Go to the indicated DTC's troubleshooting.

NO : Go to step 2.

2. Intake air duct visual check:
   - 1. Check for a poor connection or blockage at the intake air duct.

Is it OK?

YES : Go to step 3.

NO : Reconnect or repair the intake air duct, then **do the repair verification** .

3. Air cleaner housing visual check:
   - 1. Check for a poor connection or blockage at the air cleaner housing.

Is it OK?

YES : Go to step 4.

NO : **REPLACE THE AIR CLEANER HOUSING** , then **do the repair verification** .

4. Air cleaner element visual check:
   - 1. Check for dirt or debris on the air cleaner element.

Is it dirty?

GETtheMANUALS.org

YES : **REPLACE THE AIR CLEANER ELEMENT** , then **do the repair verification** .

NO : Go to step 5.

5. Problem verification:
   - 1. Let the engine cool until the value of ECT SENSOR 1 is 122 °F (50 °C) or less.

Signal	Current conditions	
	Values	Unit
ECT SENSOR 1		

   - 2. **Clear the DTC with the HDS** See **HOW TO TROUBLESHOOT THE A/T SYSTEM** or **HOW TO TROUBLESHOOT THE FUEL AND EMISSIONS SYSTEMS** .
   - 3. Start the engine, and let it idle for 10 seconds or more.
   - 4. Monitor the OBD STATUS for DTC P050A with the HDS.

DTC Description	OBD STATUS
P050A COLD START IDLE AIR CONTROL SYSTEM PERFORMANCE PROBLEM	

Does the HDS indicate FAILED?

YES : The failure is duplicated. Go to step 6.

NO : If the HDS indicates PASSED, intermittent failure, the system is OK at this time. Check for poor connections or loose terminals at the throttle body, the MAF sensor/IAT sensor, and the PCM. If the HDS indicates EXECUTING, keep idling until a result comes on. If the HDS indicates OUT OF CONDITION, go to step 1. and recheck.

6. Throttle body test:
   - 1. Do the ETCS TEST with the HDS.

Is the THROTTLE ACTUATOR CONTROL VALVE normal?

YES : Go to step 7.

NO : **Replace the throttle body** See **THROTTLE BODY DISASSEMBLY AND REASSEMBLY** , **THROTTLE BODY REMOVAL AND INSTALLATION** or **THROTTLE BODY CLEANING** , then **do the repair verification** .

7. MAF sensor performance check:
   - 1. Start the engine. Hold the engine speed at 3, 000 rpm without load (in P or N) until the radiator fan comes on, then let it idle.
   - 2. While holding the engine speed at 2, 500 rpm for 30 seconds, check the parameter(s) below with

GETtheMANUALS.org

the HDS.

Signal	Threshold		Current conditions	
	Values	Unit	Values	Unit
MAF SENSOR	7.0-8.6	g/s		

Do the current condition(s) match the threshold?

YES : The MAF sensor is OK. Go to step 8.

NO : **REPLACE THE MAF SENSOR/IAT SENSOR** , then **do the repair verification** .

8. IAT sensor performance check:
   - 1. Turn the ignition switch to LOCK (0).
   - 2. Allow the engine to cool to ambient temperature.
   - 3. Note the ambient temperature.
   - 4. Turn the ignition switch to ON (II).
   - 5. Quickly note the value of the IAT SENSOR in the DATA LIST with the HDS.

Signal	Current conditions	
	Values	Unit
IAT SENSOR		

   - 6. Compare the value of the IAT SENSOR with the ambient temperature.

Does the value of the IAT SENSOR differ 5.4 °F (3 °C) or more from the ambient temperature?

YES : **REPLACE THE MAF SENSOR/IAT SENSOR** , then **do the repair verification** .

NO : The IAT sensor is OK. Check for dirt, carbon, or damage in the throttle bore. If there is dirt or carbon, **clean the throttle body** See **THROTTLE BODY DISASSEMBLY AND REASSEMBLY** or **THROTTLE BODY REMOVAL AND INSTALLATION** or **THROTTLE BODY CLEANING** , then **do the repair verification** . If there is damage in the throttle bore, **replace the throttle body** See **THROTTLE BODY DISASSEMBLY AND REASSEMBLY** , **THROTTLE BODY REMOVAL AND INSTALLATION** or **THROTTLE BODY CLEANING** , then **do the repair verification** .

REPAIR VERIFICATION (OBD STATUS CHECK)

- 1. Turn the ignition switch to LOCK (0).
- 2. Reconnect all connectors.
- 3. Turn the ignition switch to ON (II).
- 4. **Reset the PCM with the HDS** See **HOW TO TROUBLESHOOT THE A/T SYSTEM** or **HOW TO TROUBLESHOOT THE FUEL AND EMISSIONS SYSTEMS** .
- 5. **DO THE PCM IDLE LEARN PROCEDURE** .

GETtheMANUALS.org

- 6. Let the engine cool until the value of ECT SENSOR 1 is 122 °F (50 °C) or less.

Signal	Current conditions	
	Values	Unit
ECT SENSOR 1		

- 7. Start the engine, and let it idle for 10 seconds or more.
- 8. Monitor the OBD STATUS for DTC P050A in the DTCs MENU with the HDS.

DTC Description	OBD STATUS
P050A COLD START IDLE AIR CONTROL SYSTEM PERFORMANCE PROBLEM	

Does the HDS indicate PASSED, FAILED, EXECUTING, or OUT OF CONDITION?

PASSED : Troubleshooting is complete. If any other Pending or Confirmed DTCs were indicated, go to the indicated DTC's troubleshooting.

FAILED : Go to step 1 and recheck.

EXECUTING : Keep the test condition until a result comes on.

OUT OF CONDITION : Meet the test condition, and check the OBD STATUS again.

DTC P050B: COLD START IGNITION TIMING CONTROL SYSTEM PERFORMANCE PROBLEM

GETtheMANUALS.org

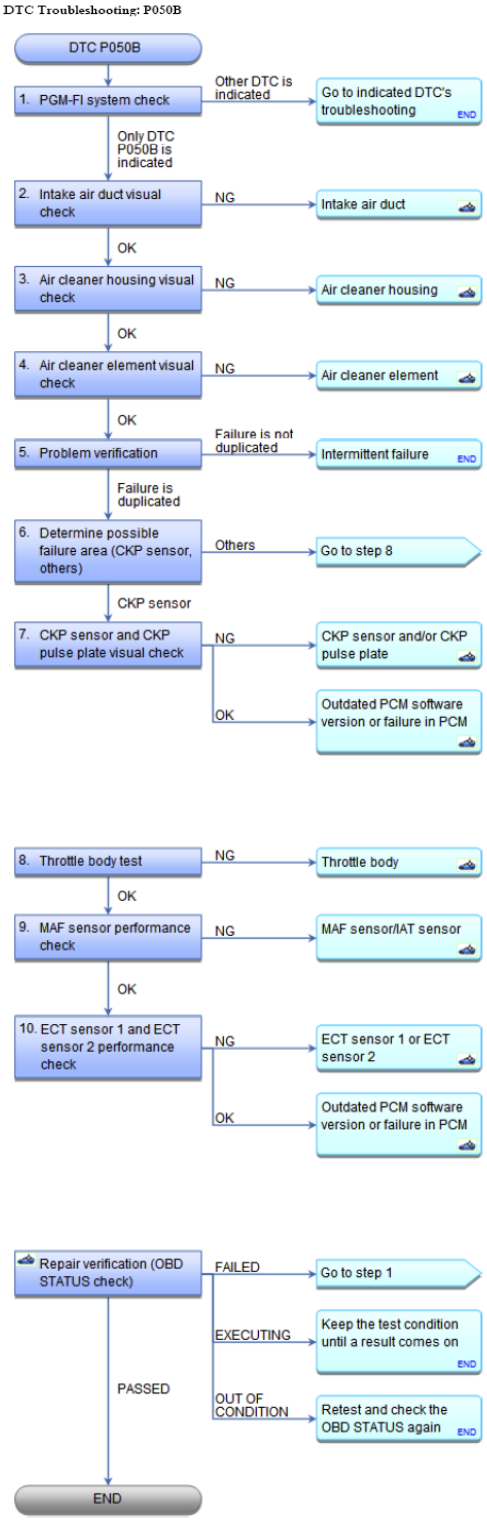

Fig. 249: DTC Troubleshooting Flow Chart (P050B)
Courtesy of AMERICAN HONDA MOTOR CO., INC.

NOTE: **Before you troubleshoot, record all freeze data and any on-board snapshot, and**

GETtheMANUALS.org

review the general troubleshooting information See HOW TO TROUBLESHOOT THE A/T SYSTEM or HOW TO TROUBLESHOOT THE FUEL AND EMISSIONS SYSTEMS .

DTC Description	Confirmed DTC	Pending DTC	Freeze Frame
P050B COLD START IGNITION TIMING CONTROL SYSTEM PERFORMANCE PROBLEM			

1. PGM-FI system check:
   - 1. Turn the ignition switch to ON (II).
   - 2. Check for Pending or Confirmed DTCs with the HDS.

DTC Description	Confirmed DTC	Pending DTC	Freeze Frame

Are any Pending or Confirmed DTCs other than P050B indicated?

YES : Go to the indicated DTC's troubleshooting.

NO : Go to step 2.

2. Intake air duct visual check:
   - 1. Check for a poor connection or blockage at the intake air duct.

Is it OK?

YES : Go to step 3.

NO : Reconnect or repair the intake air duct, then **do the repair verification** .

3. Air cleaner housing visual check:
   - 1. Check for a poor connection or blockage at the air cleaner housing.

Is it OK?

YES : Go to step 4.

NO : **REPLACE THE AIR CLEANER HOUSING** , then **do the repair verification** .

4. Air cleaner element visual check:
   - 1. Check for dirt or debris on the air cleaner element.

Is it dirty?

GETtheMANUALS.org

YES : **REPLACE THE AIR CLEANER ELEMENT** , then **do the repair verification** .

NO : Go to step 5.

5. Problem verification:
   - 1. Let the engine cool until the value of ECT SENSOR 1 is 122 °F (50 °C) or less.

Signal	Current conditions	
	Values	Unit
ECT SENSOR 1		

   - 2. **Clear the DTC with the HDS** See **HOW TO TROUBLESHOOT THE A/T SYSTEM** or **HOW TO TROUBLESHOOT THE FUEL AND EMISSIONS SYSTEMS** .
   - 3. Start the engine, and let it idle for 10 seconds or more.
   - 4. Monitor the OBD STATUS for DTC P050B with the HDS.

DTC Description	OBD STATUS
P050B COLD START IGNITION TIMING CONTROL SYSTEM PERFORMANCE PROBLEM	

Does the HDS indicate FAILED?

YES : The failure is duplicated. Go to step 6.

NO : If the HDS indicates PASSED, intermittent failure, the system is OK at this time. Check for poor connections or loose terminals at the CKP sensor, the throttle body, the MAF sensor/IAT sensor, ECT sensor 1, ECT sensor 2, and the PCM. If the HDS indicates EXECUTING, keep idling until a result comes on. If the HDS indicates OUT OF CONDITION, go to step 1. and recheck.

6. Determine possible failure area (CKP sensor, others):
   - 1. CHECK THE IGNITION TIMING .

Is the ignition timing OK?

YES : Go to step 8.

NO : Go to step 7.

7. CKP sensor and CKP pulse plate visual check:
   - 1. Check for damage at the CKP sensor and the CKP pulse plate.

Is the CKP sensor and/or the CKP pulse plate damaged?

YES : **REPLACE THE CKP SENSOR** and/or the **CKP PULSE PLATE** , then **do the repair**

GETtheMANUALS.org

verification .

NO : The CKP sensor and the CKP pulse plate is OK. **Update the PCM** See **PCM REMOVAL AND INSTALLATION** or **PCM UPDATE** if it does not have the latest software, or **substitute a known-good PCM** See **PCM REMOVAL AND INSTALLATION** or **PCM UPDATE** , then **do the repair verification** .

8. Throttle body test:
   - 1. Do the ETCS TEST with the HDS.

Is the THROTTLE ACTUATOR CONTROL VALVE normal?

YES : The throttle body is OK. Go to step 9.

NO : **Replace the throttle body** See **THROTTLE BODY DISASSEMBLY AND REASSEMBLY** , **THROTTLE BODY REMOVAL AND INSTALLATION** or **THROTTLE BODY CLEANING** , then **do the repair verification** .

9. MAF sensor performance check:
   - 1. Start the engine. Hold the engine speed at 3, 000 rpm without load (in P or N) until the radiator fan comes on, then let it idle.
   - 2. While holding the engine speed at 2, 500 rpm for 30 seconds, check the parameter(s) below with the HDS.

Signal	Threshold		Current conditions	
	Values	Unit	Values	Unit
MAF SENSOR	7.0-8.6	g/s		

Do the current condition(s) match the threshold?

YES : The MAF sensor is OK. Go to step 10.

NO : **REPLACE THE MAF SENSOR/IAT SENSOR** , then **do the repair verification** .

10. ECT sensor 1 and ECT sensor 2 performance check:
    - 1. Turn the ignition switch to LOCK (0).
    - 2. Allow the engine to cool to the ambient temperature.
    - 3. Note the ambient temperature.
    - 4. Turn the ignition switch to ON (II).
    - 5. Quickly note the value of ECT SENSOR 1 and ECT SENSOR 2 in the DATA LIST with the HDS.

Signal	Current conditions	
	Values	Unit

GETtheMANUALS.org

ECT SENSOR 1		
ECT SENSOR 2		

- 6. Compare the value of ECT SENSOR 1 and the value of ECT SENSOR 2 to the ambient temperature individually.

Does either sensor differ more than 5.4 °F (3 °C) from the ambient temperature?

YES : Replace the sensor that differed more than 5.4 °F (3 °C) from the ambient temperature, then **do the repair verification** .

NO : The ECT sensors are OK. Check and repair any problems with the following items. Repair or replace them if needed, then **do the repair verification** . If every item is OK, **update the PCM** See **PCM REMOVAL AND INSTALLATION** or **PCM UPDATE** if it does not have the latest software, or **substitute a known-good PCM** See **PCM REMOVAL AND INSTALLATION** or **PCM UPDATE** , then **do the repair verification** .

- Engine compression and cylinder leakdown
- Valve pause system
- Engine oil
- A/C system

REPAIR VERIFICATION (OBD STATUS CHECK)

- 1. Turn the ignition switch to LOCK (0).
- 2. Reconnect all connectors.
- 3. Turn the ignition switch to ON (II).
- 4. **Reset the PCM with the HDS** See **HOW TO TROUBLESHOOT THE A/T SYSTEM** or **HOW TO TROUBLESHOOT THE FUEL AND EMISSIONS SYSTEMS** .
- 5. **DO THE PCM IDLE LEARN PROCEDURE** .
- 6. Let the engine cool until the value of ECT SENSOR 1 is 122 °F (50 °C) or less.

Signal	Current conditions	
	Values	Unit
ECT SENSOR 1		

- 7. Start the engine, and let it idle for 10 seconds or more.
- 8. Monitor the OBD STATUS for DTC P050B in the DTCs MENU with the HDS.

DTC Description	OBD STATUS
P050B COLD START IGNITION TIMING CONTROL SYSTEM PERFORMANCE PROBLEM	

GETtheMANUALS.org

Does the HDS indicate PASSED, FAILED, EXECUTING, or OUT OF CONDITION?

PASSED : Troubleshooting is complete. If the PCM was substituted, **replace the original PCM** See **PCM REMOVAL AND INSTALLATION** or **PCM UPDATE** . If any other Pending or Confirmed DTCs are indicated, go to the indicated DTC's troubleshooting.

FAILED : Go to step 1 and recheck. If the PCM was updated, **substitute a known-good PCM** See **PCM REMOVAL AND INSTALLATION** or **PCM UPDATE** , then check the OBD STATUS again.

EXECUTING : Keep the test condition until a result comes on.

OUT OF CONDITION : Meet the test condition, and check the OBD STATUS again.

DTC P0532: A/C PRESSURE SENSOR CIRCUIT LOW VOLTAGE

GETtheMANUALS.org

DTC Troubleshooting: P0532

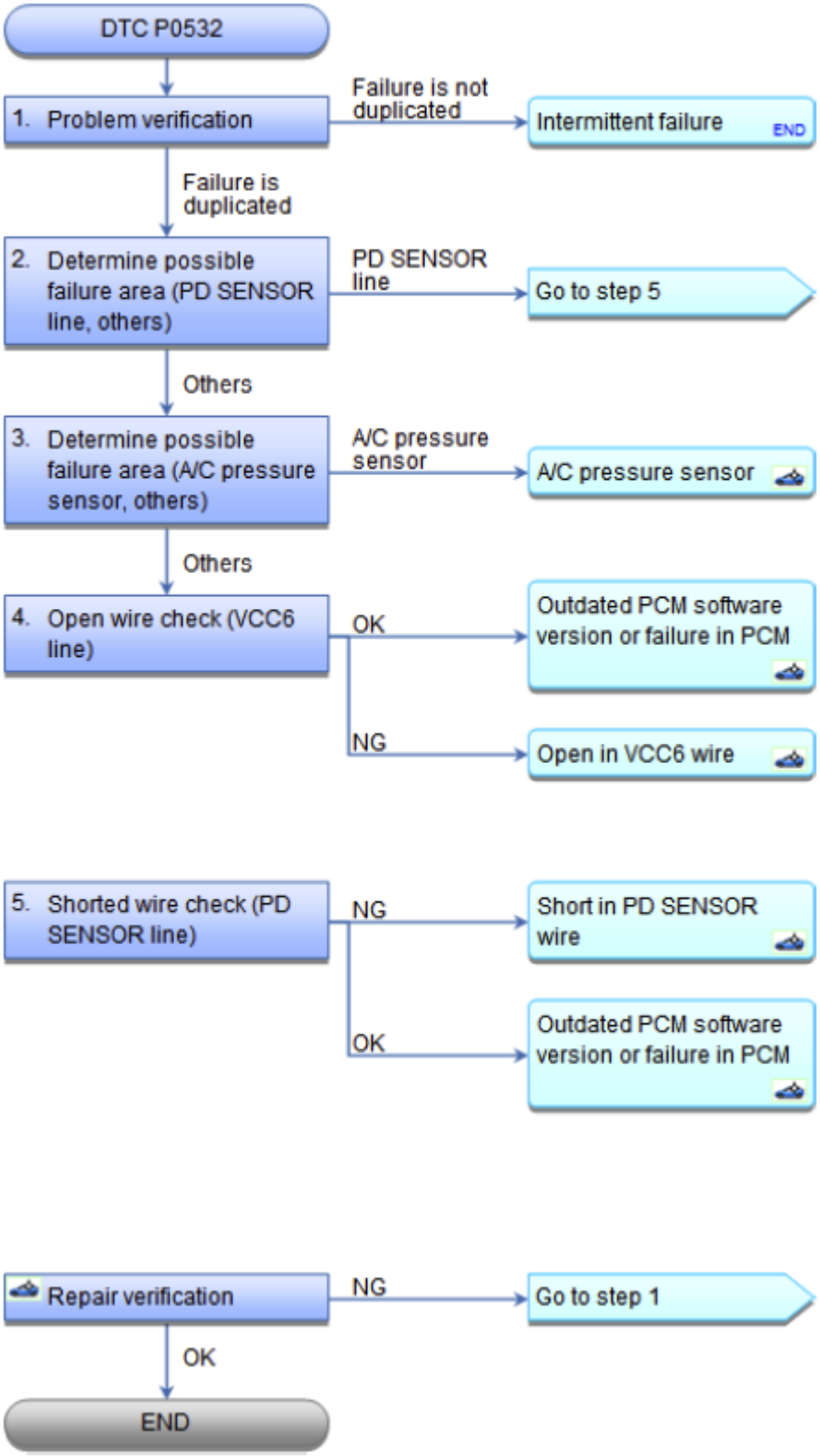

Fig. 250: DTC Troubleshooting Flow Chart (P0532)

GETtheMANUALS.org

Courtesy of AMERICAN HONDA MOTOR CO., INC.

NOTE: **Before you troubleshoot, record all freeze data and any on-board snapshot, and review the general troubleshooting information See HOW TO TROUBLESHOOT THE A/T SYSTEM or HOW TO TROUBLESHOOT THE FUEL AND EMISSIONS SYSTEMS .**

DTC Description	Confirmed DTC	Pending DTC	Freeze Frame
P0532 A/C PRESSURE SENSOR CIRCUIT LOW VOLTAGE			

1. Problem verification:
   - 1. Start the engine, and let it idle.
   - 2. Turn the blower switch on.
   - 3. Turn the A/C switch on.
   - 4. Check the parameter(s) below with the HDS.

Signal	Threshold		Current conditions	
	Values	Unit	Values	Unit
A/C PRESSURE SENSOR	Less than 0.24	V		

Do the current condition(s) match the threshold?

YES : The failure is duplicated. Go to step 2.

NO : Intermittent failure, the system is OK at this time. Check for poor connections or loose terminals at the A/C pressure sensor and the PCM.

2. Determine possible failure area (PD SENSOR line, others):
   - 1. Turn the ignition switch to LOCK (0).
   - 2. Disconnect the following connector.

     A/C pressure sensor 3P connector

   - 3. Turn the ignition switch to ON (II).
   - 4. Check the parameter(s) below with the HDS.

Signal	Threshold		Current conditions	
	Values	Unit	Values	Unit
A/C PRESSURE SENSOR	Less than 0.24	V		

Do the current condition(s) match the threshold?

GETtheMANUALS.org

YES : Go to step 5.

NO : Go to step 3.

3. Determine possible failure area (A/C pressure sensor, others):
    - 1. Measure the voltage between test points 1 and 2.

      Test condition IG ON (II)

      A/C pressure sensor 3P connector: disconnected

      Test circuit VCC6, SG6

      Test point 1 A/C pressure sensor 3P connector No. 1 (GRY)

      Test point 2 A/C pressure sensor 3P connector No. 3 (RED)

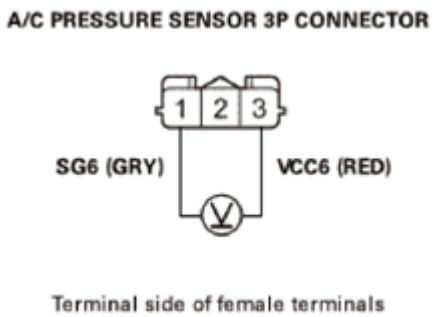

Fig. 251: Measuring Voltage Between A/C Pressure Sensor 3P Connector No. 1 (GRY) And No. 3 (RED)
Courtesy of AMERICAN HONDA MOTOR CO., INC.

Is there about 5.0 V?

YES : **REPLACE THE A/C PRESSURE SENSOR** , then **do the repair verification** .

NO : Go to step 4.

4. Open wire check (VCC6 line):
    - 1. Turn the ignition switch to LOCK (0).
    - 2. Jump the SCS line with the HDS.
    - 3. Disconnect the following connector. PCM connector A (49P)
    - 4. Check for continuity between test points 1 and 2.

      Test condition IG LOCK (0)

      A/C pressure sensor 3P connector: disconnected

GETtheMANUALS.org

PCM connector A (49P): disconnected

Test circuit VCC6

Test point 1 PCM connector A (49P) No. 30 (RED)

Test point 2 A/C pressure sensor 3P connector No. 3 (RED)

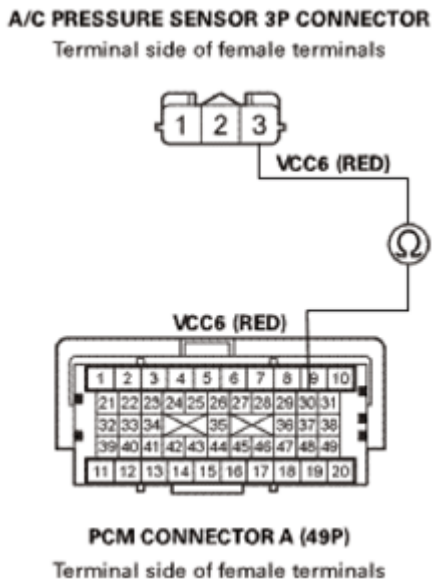

Fig. 252: Checking Continuity Between PCM Connector A (49P) No. 30 (RED) And A/C Pressure Sensor 3P Connector No. 3 (RED)
Courtesy of AMERICAN HONDA MOTOR CO., INC.

Is there continuity?

YES : The VCC6 wire is OK. **Update the PCM** See **PCM REMOVAL AND INSTALLATION** or **PCM UPDATE** if it does not have the latest software, or **substitute a known-good PCM** See **PCM REMOVAL AND INSTALLATION** or **PCM UPDATE** , then **do the repair verification** .

NO : Repair an open in the VCC6 wire between the PCM (A30) and the A/C pressure sensor, then **do the repair verification** .

5. Shorted wire check (PD SENSOR line):
   - 1. Turn the ignition switch to LOCK (0).
   - 2. Jump the SCS line with the HDS.
   - 3. Disconnect the following connector.

     PCM connector A (49P)

   - 4. Check for continuity between test points 1 and 2.

GETtheMANUALS.org

Test condition IG LOCK (0)

A/C pressure sensor 3P connector: disconnected

PCM connector A (49P): disconnected

Test circuit PD SENSOR

Test point 1 A/C pressure sensor 3P connector No. 2 (BLU)

Test point 2 Body ground

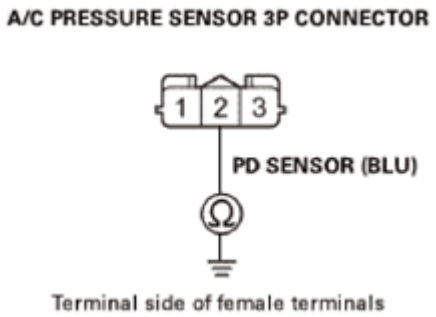

Fig. 253: Checking Continuity Between A/C Pressure Sensor 3P Connector No. 2 (BLU) And Body Ground
Courtesy of AMERICAN HONDA MOTOR CO., INC.

Is there continuity?

YES : Repair a short in the PD SENSOR wire between the PCM (A27) and the A/C pressure sensor, then **do the repair verification** .

NO : The PD SENSOR wire is OK. **Update the PCM** See **PCM UPDATE** or **PCM REMOVAL AND INSTALLATION** if it does not have the latest software, or **substitute a known-good PCM** See **PCM REMOVAL AND INSTALLATION** or **PCM UPDATE** , then **do the repair verification** .

REPAIR VERIFICATION

- 1. Turn the ignition switch to LOCK (0).
- 2. Reconnect all connectors.
- 3. Turn the ignition switch to ON (II).
- 4. **Reset the PCM with the HDS** See **HOW TO TROUBLESHOOT THE A/T SYSTEM** or **HOW TO TROUBLESHOOT THE FUEL AND EMISSIONS SYSTEMS** .
- 5. **DO THE PCM IDLE LEARN PROCEDURE** .
- 6. Start the engine, and let it idle.
- 7. Turn the blower switch on.
- 8. Turn the A/C switch on.

GETtheMANUALS.org

- 9. Check for Pending or Confirmed DTCs with the HDS.

DTC Description	Confirmed DTC	Pending DTC	Freeze Frame
P0532 A/C PRESSURE SENSOR CIRCUIT LOW VOLTAGE			

Is DTC P0532 indicated?

YES : Check for poor connections or loose terminals at the A/C pressure sensor and the PCM. If the PCM was updated, **substitute a known-good PCM** See **PCM UPDATE** or **PCM REMOVAL AND INSTALLATION** , then recheck. If the PCM was substituted, go to step 1.

NO : Troubleshooting is complete. If the PCM was substituted, **replace the original PCM** See **PCM REMOVAL AND INSTALLATION** or **PCM UPDATE** . If any other Pending or Confirmed DTCs are indicated, go to the indicated DTC's troubleshooting.

DTC P0533: A/C PRESSURE SENSOR CIRCUIT HIGH VOLTAGE

GETtheMANUALS.org

DTC Troubleshooting: P0533

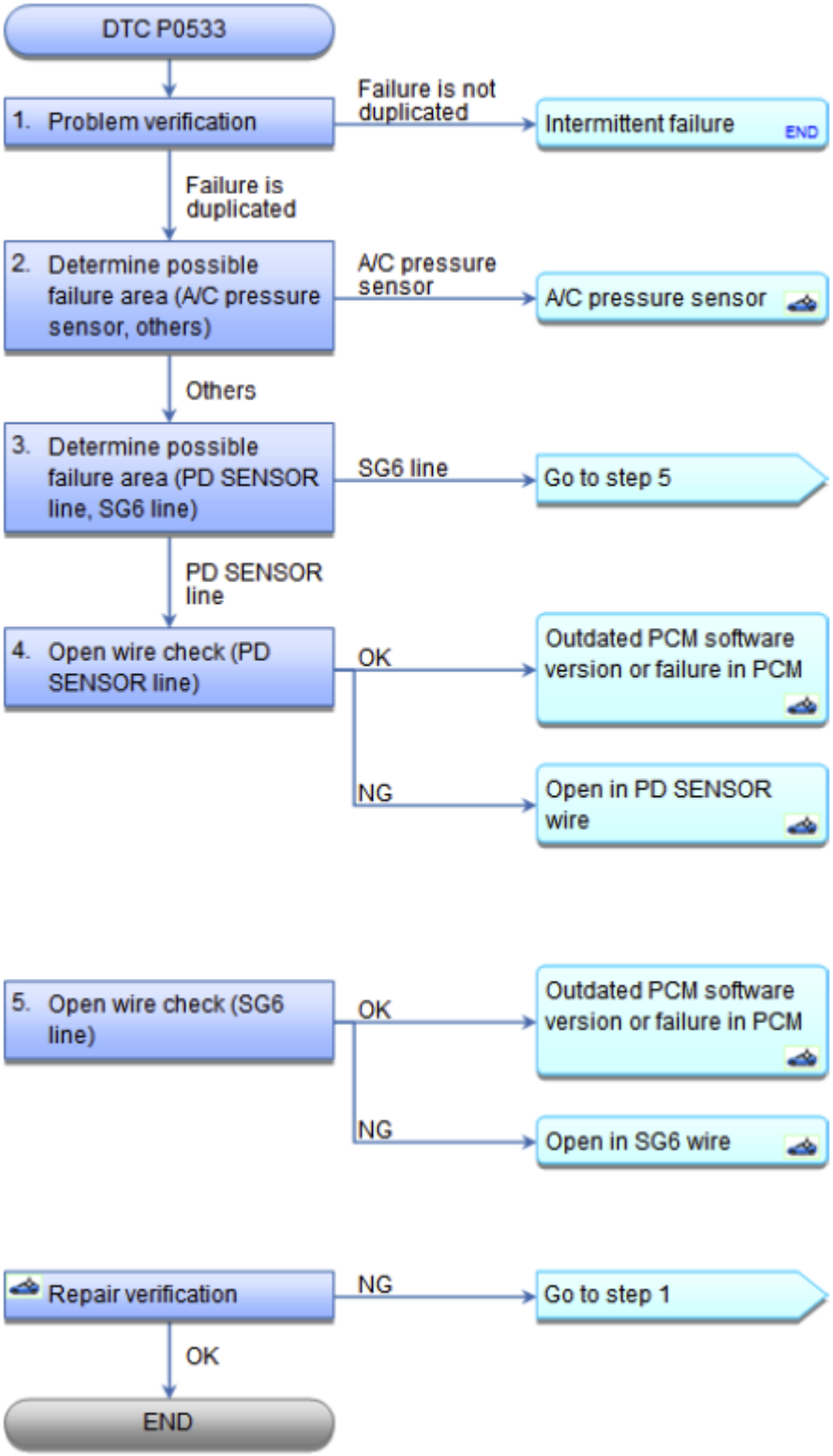

Fig. 254: DTC Troubleshooting Flow Chart (P0533)
Courtesy of AMERICAN HONDA MOTOR CO., INC.

GETtheMANUALS.org

NOTE: **Before you troubleshoot, record all freeze data and any on-board snapshot, and review the general troubleshooting information See HOW TO TROUBLESHOOT THE A/T SYSTEM or HOW TO TROUBLESHOOT THE FUEL AND EMISSIONS SYSTEMS .**

DTC Description	Confirmed DTC	Pending DTC	Freeze Frame
P0533 A/C PRESSURE SENSOR CIRCUIT HIGH VOLTAGE			

1. Problem verification:
   - 1. Start the engine, and let it idle.
   - 2. Turn the blower switch on.
   - 3. Turn the A/C switch on.
   - 4. Check the parameter(s) below with the HDS.

Signal	Threshold		Current conditions	
	Values	Unit	Values	Unit
A/C PRESSURE SENSOR	More than 4.75	V		

Do the current condition(s) match the threshold?

YES : The failure is duplicated. Go to step 2.

NO : Intermittent failure, the system is OK at this time. Check for poor connections or loose terminals at the A/C pressure sensor and the PCM.

2. Determine possible failure area (A/C pressure sensor, others):
   - 1. Turn the ignition switch to LOCK (0).
   - 2. Disconnect the following connector.

     A/C pressure sensor 3P connector

   - 3. Connect terminals A and B with a jumper wire.

     Terminal A A/C pressure sensor 3P connector No. 1 (GRY)

     Terminal B A/C pressure sensor 3P connector No. 2 (BLU)

GETtheMANUALS.org

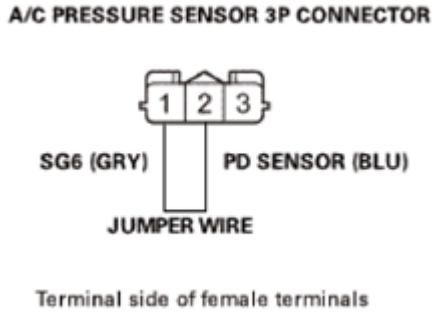

Fig. 255: Connecting Wire Between A/C Pressure Sensor 3P Connector No. 1 (GRY) And No. 2 (BLU)
Courtesy of AMERICAN HONDA MOTOR CO., INC.

- 4. Turn the ignition switch to ON (II).
- 5. Check the parameter(s) below with the HDS.

Signal	Threshold		Current conditions	
	Values	Unit	Values	Unit
A/C PRESSURE SENSOR	More than 4.75	V		

Do the current condition(s) match the threshold?

YES : Go to step 3.

NO : **REPLACE THE A/C PRESSURE SENSOR** , then **do the repair verification** .

3. Determine possible failure area (PD SENSOR line, SG6 line):
   - 1. Turn the ignition switch to LOCK (0).
   - 2. Remove the jumper wire.
   - 3. Turn the ignition switch to ON (II).
   - 4. Measure the voltage between test points 1 and 2.

   Test condition IG ON (II)

   A/C pressure sensor 3P connector: disconnected

   Test circuit SG6, VCC6

   Test point 1 A/C pressure sensor 3P connector No. 1 (GRY)

   Test point 2 A/C pressure sensor 3P connector No. 3 (RED)

GETtheMANUALS.org

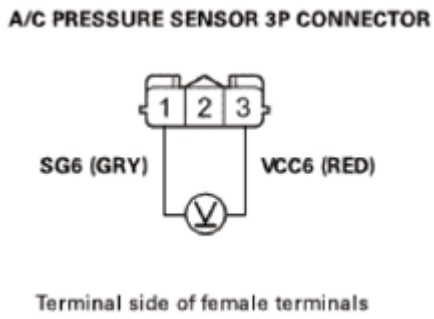

Fig. 256: Measuring Voltage Between A/C Pressure Sensor 3P Connector No. 1 (GRY) And No. 3 (RED)
Courtesy of AMERICAN HONDA MOTOR CO., INC.

Is there about 5.0 V?

YES : Go to step 4.

NO : Go to step 5.

4. Open wire check (PD SENSOR line):
   - 1. Turn the ignition switch to LOCK (0).
   - 2. Jump the SCS line with the HDS.
   - 3. Disconnect the following connector.

     PCM connector A (49P)

   - 4. Check for continuity between test points 1 and 2.

     Test condition IG LOCK (0)

     A/C pressure sensor 3P connector: disconnected

     PCM connector A (49P): disconnected

     Test circuit PD SENSOR

     Test point 1 PCM connector A (49P) No. 27 (BLU)

     Test point 2 A/C pressure sensor 3P connector No. 2 (BLU)

GETtheMANUALS.org

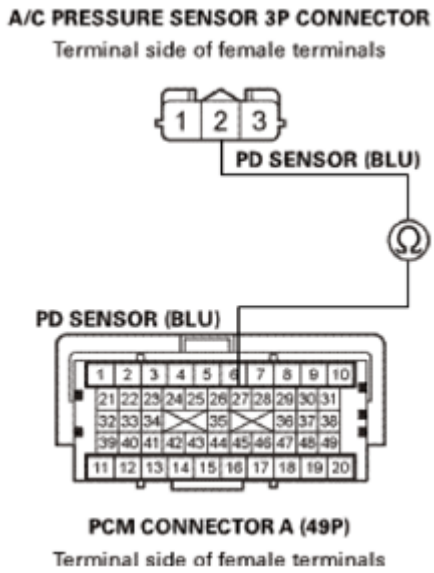

Fig. 257: Checking Continuity Between PCM Connector A (49P) No. 27 (BLU) And A/C Pressure Sensor 3P Connector No. 2 (BLU)
Courtesy of AMERICAN HONDA MOTOR CO., INC.

Is there continuity?

YES : The PD SENSOR wire is OK. **Update the PCM** See **PCM REMOVAL AND INSTALLATION** or **PCM UPDATE** if it does not have the latest software, or **substitute a known-good PCM** See **PCM REMOVAL AND INSTALLATION** or **PCM UPDATE** , then **do the repair verification** .

NO : Repair an open in the PD SENSOR wire between the PCM (A27) and the A/C pressure sensor, then **do the repair verification** .

5. Open wire check (SG6 line):
   - 1. Turn the ignition switch to LOCK (0).
   - 2. Jump the SCS line with the HDS.
   - 3. Disconnect the following connector.

     PCM connector A (49P)

   - 4. Check for continuity between test points 1 and 2.

     Test condition IG LOCK (0)

     A/C pressure sensor 3P connector: disconnected

     PCM connector A (49P): disconnected

     Test circuit SG6

GETtheMANUALS.org

Test point 1 PCM connector A (49P) No. 10 (GRY)

Test point 2 A/C pressure sensor 3P connector No. 1 (GRY)

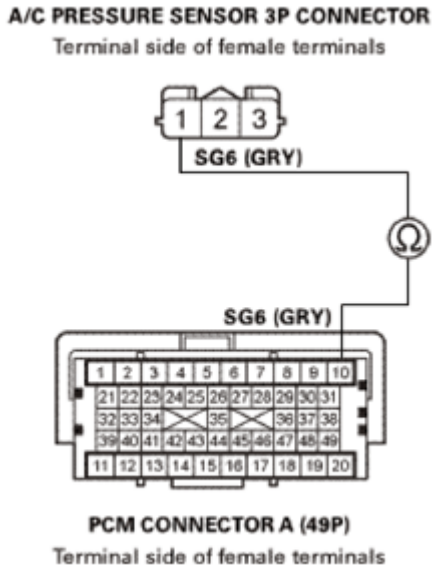

Fig. 258: Checking Continuity Between PCM Connector A (49P) No. 10 (GRY) And A/C Pressure Sensor 3P Connector No. 1 (GRY)
Courtesy of AMERICAN HONDA MOTOR CO., INC.

Is there continuity?

YES : The SG6 wire is OK. **Update the PCM** See **PCM REMOVAL AND INSTALLATION** or **PCM UPDATE** if it does not have the latest software, or **substitute a known-good PCM** See **PCM UPDATE** or **PCM REMOVAL AND INSTALLATION** , then **do the repair verification** .

NO : Repair an open in the SG6 wire between the PCM (A10) and the A/C pressure sensor, then **do the repair verification** .

REPAIR VERIFICATION

- 1. Turn the ignition switch to LOCK (0).
- 2. Reconnect all connectors.
- 3. Turn the ignition switch to ON (II).
- 4. **Reset the PCM with the HDS** See **HOW TO TROUBLESHOOT THE A/T SYSTEM** or **HOW TO TROUBLESHOOT THE FUEL AND EMISSIONS SYSTEMS** .
- 5. **DO THE PCM IDLE LEARN PROCEDURE** .
- 6. Start the engine, and let it idle.
- 7. Turn the blower switch on.
- 8. Turn the A/C switch on.
- 9. Check for Pending or Confirmed DTCs with the HDS.

GETtheMANUALS.org

DTC Description	Confirmed DTC	Pending DTC	Freeze Frame
P0533 A/C PRESSURE SENSOR CIRCUIT HIGH VOLTAGE			

Is DTC P0533 indicated?

YES : Check for poor connections or loose terminals at the A/C pressure sensor and the PCM. If the PCM was updated, **substitute a known-good PCM** See **PCM REMOVAL AND INSTALLATION** or **PCM UPDATE** , then recheck. If the PCM was substituted, go to step 1.

NO : Troubleshooting is complete. If the PCM was substituted, **replace the original PCM** See **PCM REMOVAL AND INSTALLATION** or **PCM UPDATE** . If any other Pending or Confirmed DTCs are indicated, go to the indicated DTC's troubleshooting.

DTC P0562: CHARGING SYSTEM LOW VOLTAGE

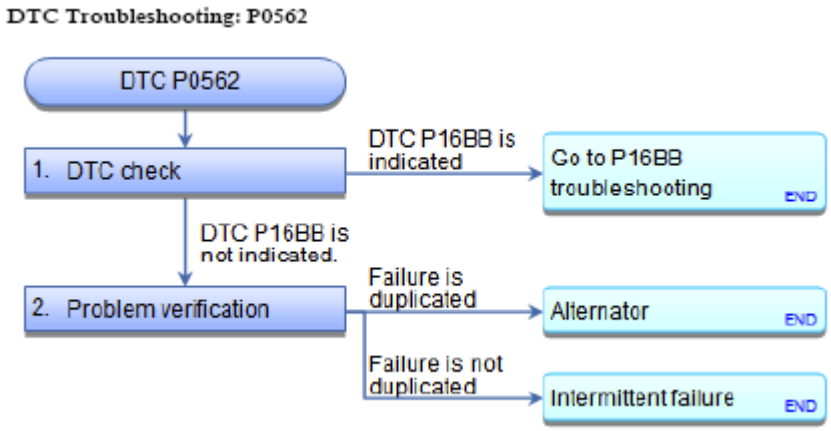

Fig. 259: DTC Troubleshooting Flow Chart (P0562)
Courtesy of AMERICAN HONDA MOTOR CO., INC.

NOTE:

- **Before you troubleshoot, record all freeze data and any on-board snapshot, and review the general troubleshooting information See HOW TO TROUBLESHOOT THE A/T SYSTEM or HOW TO TROUBLESHOOT THE FUEL AND EMISSIONS SYSTEMS .**
- **Check for loose terminal on the alternator (+B terminal). If the alternator +B terminal was loose, the DTC P0562 will be stored.**

DTC Description	Confirmed DTC	Pending DTC	Freeze Frame
P0562 CHARGING SYSTEM LOW VOLTAGE			

1. DTC check:
    - 1. Turn the ignition switch to ON (II).

GETtheMANUALS.org

- 2. **Clear the DTC with the HDS** See **HOW TO TROUBLESHOOT THE A/T SYSTEM** or **HOW TO TROUBLESHOOT THE FUEL AND EMISSIONS SYSTEMS** .
- 3. Start the engine, and let it idle without load for 1 minute.
- 4. Check for Pending or Confirmed DTCs with the HDS.

DTC Description	Confirmed DTC	Pending DTC	Freeze Frame
P16BB ALTERNATOR B TERMINAL CIRCUIT LOW VOLTAGE			

Is DTC P16BB indicated?

YES : **DO THE TROUBLESHOOTING FOR DTC P16BB**.

NO : Go to step 2.

2. Problem verification:
   - 1. Check for Pending or Confirmed DTCs with the HDS.

DTC Description	Confirmed DTC	Pending DTC	Freeze Frame
P0562 CHARGING SYSTEM LOW VOLTAGE			

Is DTC P0562 is indicated?

YES : **Repair or replace the alternator** See **ALTERNATOR OVERHAUL** or **ALTERNATOR REMOVAL AND INSTALLATION** .

NO : Intermittent failure, the system is OK at this time. Check for poor connections or loose terminals at the +B terminal on the alternator and the under-hood fuse/relay box.

DTC P0563: PCM POWER SOURCE CIRCUIT UNEXPECTED VOLTAGE

GETtheMANUALS.org

DTC Troubleshooting: P0563

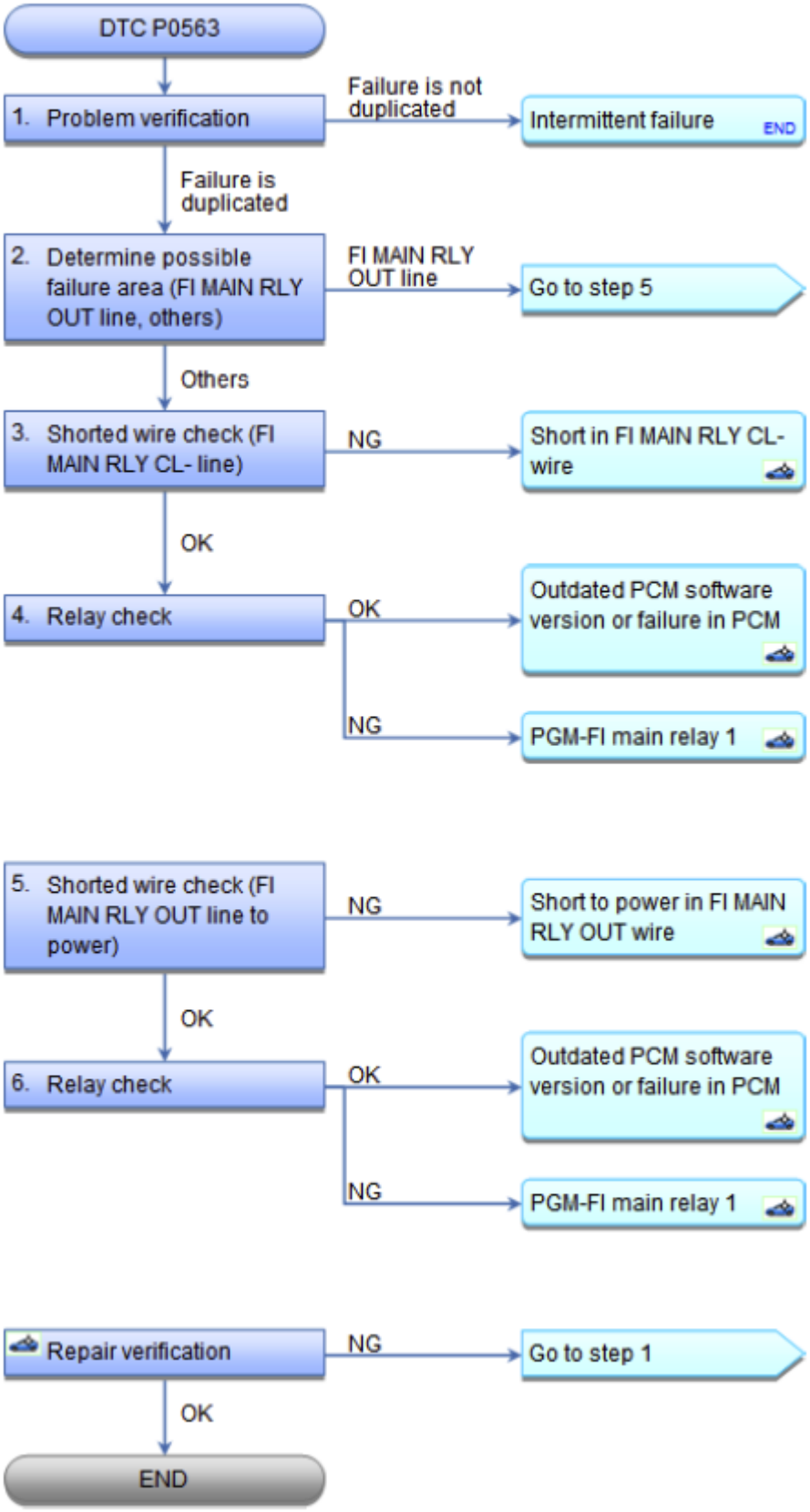

GETtheMANUALS.org

Fig. 260: DTC Troubleshooting Flow Chart (P0563)
Courtesy of AMERICAN HONDA MOTOR CO., INC.

NOTE: **Before you troubleshoot, record all freeze data and any on-board snapshot, and review the general troubleshooting information See HOW TO TROUBLESHOOT THE A/T SYSTEM or HOW TO TROUBLESHOOT THE FUEL AND EMISSIONS SYSTEMS .**

DTC Description	Confirmed DTC	Pending DTC	Freeze Frame
P0563 PCM POWER SOURCE CIRCUIT UNEXPECTED VOLTAGE			

1. Problem verification:
   - 1. Turn the ignition switch to ON (II).
   - 2. **Clear the DTC with the HDS** See **HOW TO TROUBLESHOOT THE A/T SYSTEM** or **HOW TO TROUBLESHOOT THE FUEL AND EMISSIONS SYSTEMS** .
   - 3. Turn the ignition switch to LOCK (0).
   - 4. Wait 10 seconds.
   - 5. Turn the ignition switch to ON (II).
   - 6. Check for Pending or Confirmed DTCs with the HDS.

DTC Description	Confirmed DTC	Pending DTC	Freeze Frame
P0563 PCM POWER SOURCE CIRCUIT UNEXPECTED VOLTAGE			

Is DTC P0563 indicated?

YES : The failure is duplicated. Go to step 2.

NO : Intermittent failure, the system is OK at this time. Check for poor connections or loose terminals at PGM-FI main relay 1 and the PCM.

2. Determine possible failure area (FI MAIN RLY OUT line, others):
   - 1. Turn the ignition switch to LOCK (0).
   - 2. Jump the SCS line with the HDS.
   - 3. Disconnect the following connector.

     PCM connector A (49P)

   - 4. Measure the voltage between test points 1 and 2.

     Test condition IG LOCK (0)

GETtheMANUALS.org

PCM connector A (49P): disconnected

Test circuit FI MAIN RLY CL-

Test point 1 PCM connector A (49P) No. 7 (GRY)

Test point 2 Body ground

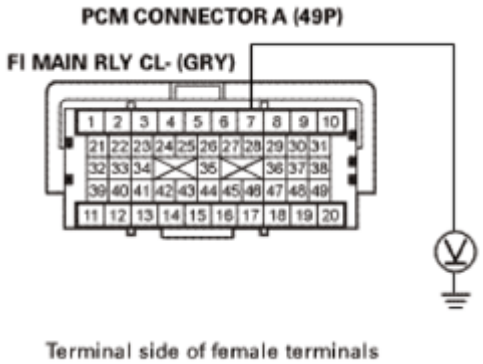

Fig. 261: Measuring Voltage Between PCM Connector A (49P) No. 7 (GRY) And Body Ground
Courtesy of AMERICAN HONDA MOTOR CO., INC.

Is there battery voltage?

YES : Go to step 5.

NO : Go to step 3.

3. Shorted wire check (FI MAIN RLY CL- line):
   - 1. Remove PGM-FI main relay 1 (A) from the under-dash fuse/relay box.

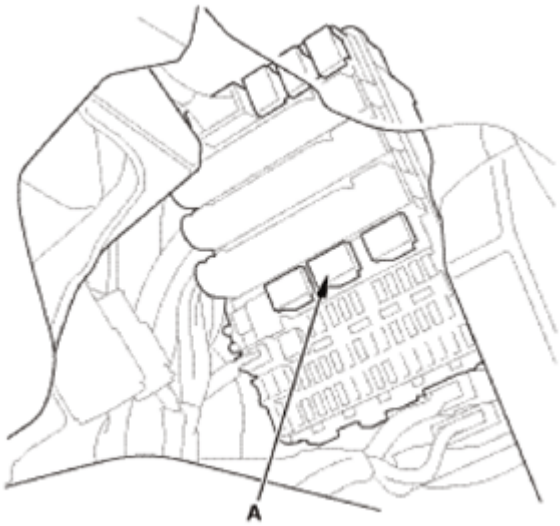

GETtheMANUALS.org

Fig. 262: Identifying PGM-FI Main Relay
Courtesy of AMERICAN HONDA MOTOR CO., INC.

- 2. Check for continuity between test points 1 and 2.

  Test condition IG LOCK (0)

  PCM connector A (49P): disconnected

  PGM-FI main relay 1: disconnected

  Test circuit FI MAIN RLY CL-

  Test point 1 PCM connector A (49P) No. 7 (GRY)

  Test point 2 Body ground

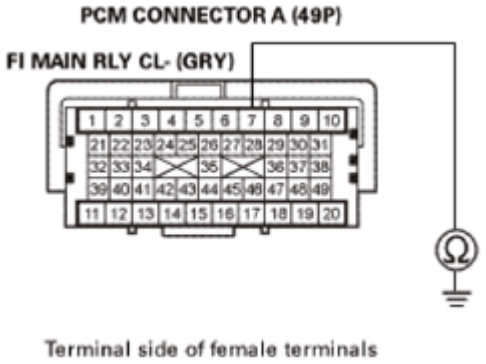

Fig. 263: Checking Continuity Between PCM Connector A (49P) No. 7 (GRY) And Body Ground
Courtesy of AMERICAN HONDA MOTOR CO., INC.

Is there continuity?

YES : Repair a short in the FI MAIN RLY CL- wire between the PCM (A7) and PGM-FI main relay 1, then **do the repair verification** .

NO : The FI MAIN RLY CL- wire is OK. Go to step 4.

4. Relay check:
   - 1. **TEST PGM-FI MAIN RELAY 1** .

Is PGM-FI main relay 1 OK?

YES : **Update the PCM** See **PCM REMOVAL AND INSTALLATION** or **PCM UPDATE** if it does not have the latest software, or **substitute a known-good PCM** See **PCM REMOVAL AND INSTALLATION** or **PCM UPDATE** , then **do the repair verification** .

GETtheMANUALS.org

NO : Replace PGM-FI main relay 1, then **do the repair verification** .

5. Shorted wire check (FI MAIN RLY OUT line to power):
   - 1. Remove PGM-FI main relay 1 (A) from the under-dash fuse/relay box.

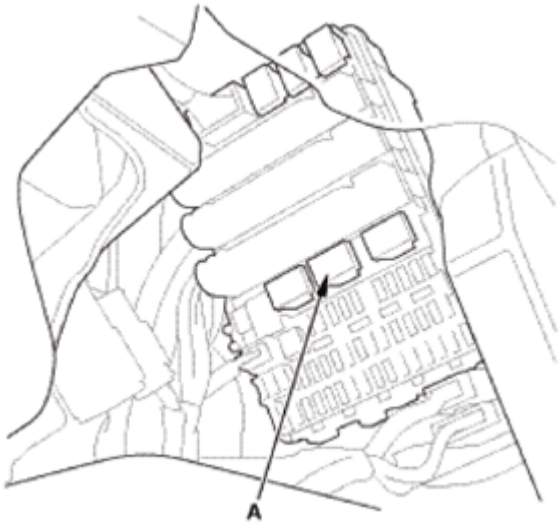

Fig. 264: Identifying PGM-FI Main Relay
Courtesy of AMERICAN HONDA MOTOR CO., INC.

   - 2. Measure the voltage between test points 1 and 2.

     Test condition IG LOCK (0)

     PCM connector A (49P): disconnected

     PGM-FI main relay 1: disconnected

     Test circuit FI MAIN RLY OUT

     Test point 1 PCM connector A (49P) No. 9 (BRN)

     Test point 2 Body ground

GETtheMANUALS.org

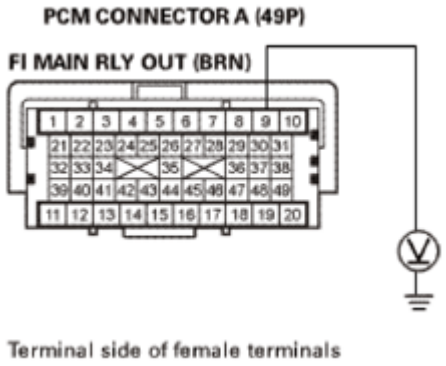

Fig. 265: Measuring Voltage Between PCM Connector A (49P) No. 9 (BRN) And Body Ground
Courtesy of AMERICAN HONDA MOTOR CO., INC.

Is there battery voltage?

YES : Repair a short to power in the FI MAIN RLY OUT wire between the PCM (A9) and PGM-FI main relay 1, then **do the repair verification** .

NO : The FI MAIN RLY OUT wire is OK. Go to step 6.

6. Relay check:
   - 1. **TEST PGM-FI MAIN RELAY 1** .

Is PGM-FI main relay 1 OK?

YES : PGM-FI main relay 1 is OK. **Update the PCM** See **PCM REMOVAL AND INSTALLATION** or **PCM UPDATE** if it does not have the latest software, or **substitute a known-good PCM** See **PCM REMOVAL AND INSTALLATION** or **PCM UPDATE** , then **do the repair verification** .

NO : Replace PGM-FI main relay 1, then **do the repair verification** .

REPAIR VERIFICATION

- 1. Turn the ignition switch to LOCK (0).
- 2. Reconnect all connectors.
- 3. Turn the ignition switch to ON (II).
- 4. **Reset the PCM with the HDS** See **HOW TO TROUBLESHOOT THE A/T SYSTEM** or **HOW TO TROUBLESHOOT THE FUEL AND EMISSIONS SYSTEMS** .
- 5. **DO THE PCM IDLE LEARN PROCEDURE** .
- 6. Turn the ignition switch to LOCK (0).
- 7. Wait 10 seconds.
- 8. Turn the ignition switch to ON (II).
- 9. Check for Pending or Confirmed DTCs with the HDS.

GETtheMANUALS.org

DTC Description	Confirmed DTC	Pending DTC	Freeze Frame
P0563 PCM POWER SOURCE CIRCUIT UNEXPECTED VOLTAGE			

Is DTC P0563 indicated?

YES : Check for poor connections or loose terminals at PGM-FI main relay 1 and the PCM. If the PCM was updated, **substitute a known-good PCM** See **PCM REMOVAL AND INSTALLATION** or **PCM UPDATE** , then recheck. If the PCM was substituted, go to step 1.

NO : Troubleshooting is complete. If the PCM was substituted, **replace the original PCM** See **PCM UPDATE** or **PCM REMOVAL AND INSTALLATION** . If any other Pending or Confirmed DTCs are indicated, go to the indicated DTC's troubleshooting.

DTC P0602: PCM PROGRAMMING ERROR

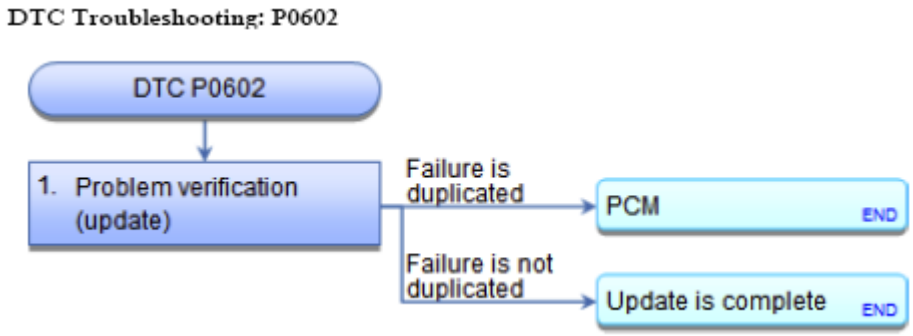

Fig. 266: DTC Troubleshooting Flow Chart (P0602)
Courtesy of AMERICAN HONDA MOTOR CO., INC.

NOTE:

- **Before you troubleshoot, record all freeze data and any on-board snapshot, and review the general troubleshooting information See HOW TO TROUBLESHOOT THE A/T SYSTEM or HOW TO TROUBLESHOOT THE FUEL AND EMISSIONS SYSTEMS .**
- **This DTC is indicated when a PCM update is not completed.**
- **Do not turn the ignition switch to ACC (I) or LOCK (0) while updating the PCM. If you do, the PCM can be damaged.**

DTC Description	Confirmed DTC	Pending DTC	Freeze Frame
P0602 PCM PROGRAMMING ERROR			

1. Problem verification (update):
   - 1. **Do the PCM update procedure** See **PCM REMOVAL AND INSTALLATION** or **PCM UPDATE** .

GETtheMANUALS.org

- 2. Check for Pending or Confirmed DTCs with the HDS.

DTC Description	Confirmed DTC	Pending DTC	Freeze Frame
P0602 PCM PROGRAMMING ERROR			

Is DTC P0602 indicated?

YES : **Replace the PCM** See **PCM REMOVAL AND INSTALLATION** or **PCM UPDATE** .

NO : Update is complete. If any other Pending or Confirmed DTCs are indicated, go to the indicated DTC's troubleshooting.

DTC P060A: PCM INTERNAL CONTROL MODULE MALFUNCTION

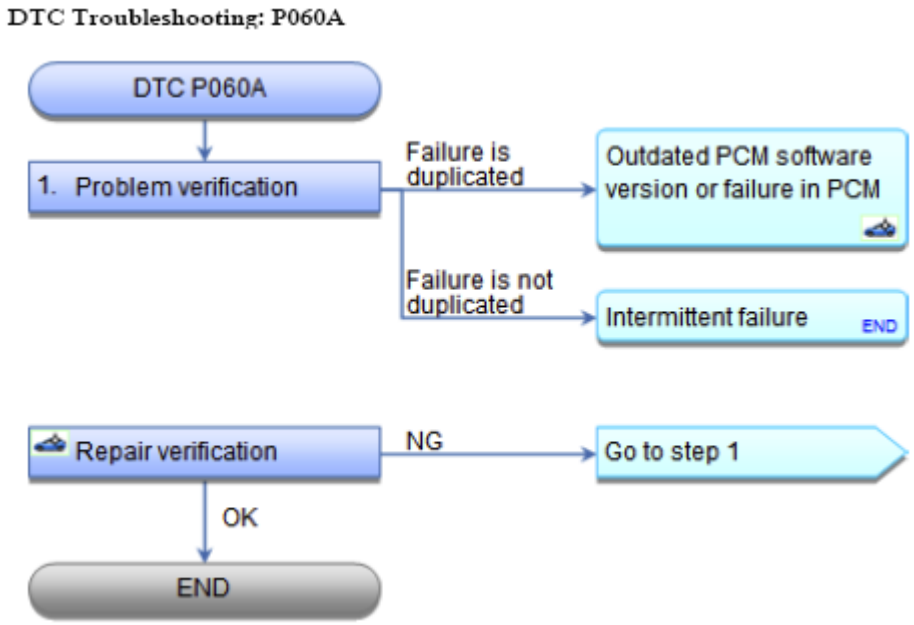

Fig. 267: DTC Troubleshooting Flow Chart (P060A)
Courtesy of AMERICAN HONDA MOTOR CO., INC.

NOTE: **Before you troubleshoot, record all freeze data and any on-board snapshot, and review the general troubleshooting information See HOW TO TROUBLESHOOT THE A/T SYSTEM or HOW TO TROUBLESHOOT THE FUEL AND EMISSIONS SYSTEMS .**

DTC Description	Confirmed DTC	Pending DTC	Freeze Frame
P060A PCM INTERNAL CONTROL MODULE MALFUNCTION			

GETtheMANUALS.org

1. Problem verification:
   - 1. Turn the ignition switch to ON (II).
   - 2. **Clear the DTC with the HDS** See **HOW TO TROUBLESHOOT THE A/T SYSTEM** or **HOW TO TROUBLESHOOT THE FUEL AND EMISSIONS SYSTEMS** .
   - 3. Check for Pending or Confirmed DTCs with the HDS.

DTC Description	Confirmed DTC	Pending DTC	Freeze Frame
P060A PCM INTERNAL CONTROL MODULE MALFUNCTION			

Is DTC P060A indicated?

YES : **Update the PCM** See **PCM REMOVAL AND INSTALLATION** or **PCM UPDATE** if it does not have the latest software, or **substitute a known-good PCM** See **PCM REMOVAL AND INSTALLATION** or **PCM UPDATE** , then **do the repair verification** .

NO : Intermittent failure, the system is OK at this time.

REPAIR VERIFICATION

- 1. Check for Pending or Confirmed DTCs with the HDS.

DTC Description	Confirmed DTC	Pending DTC	Freeze Frame
P060A PCM INTERNAL CONTROL MODULE MALFUNCTION			

Is DTC P060A indicated?

YES : If the PCM was updated, **substitute a known-good PCM** See **PCM REMOVAL AND INSTALLATION** or **PCM UPDATE** , then recheck. If the PCM was substituted, go to step 1.

NO : Troubleshooting is complete. If the PCM was substituted, **replace the original PCM** See **PCM REMOVAL AND INSTALLATION** or **PCM UPDATE** . If any other Pending or Confirmed DTCs are indicated, go to the indicated DTC's troubleshooting.

DTC P062F: PCM INTERNAL CONTROL MODULE KEEP ALIVE MEMORY (KAM) ERROR

GETtheMANUALS.org

DTC Troubleshooting: P062F

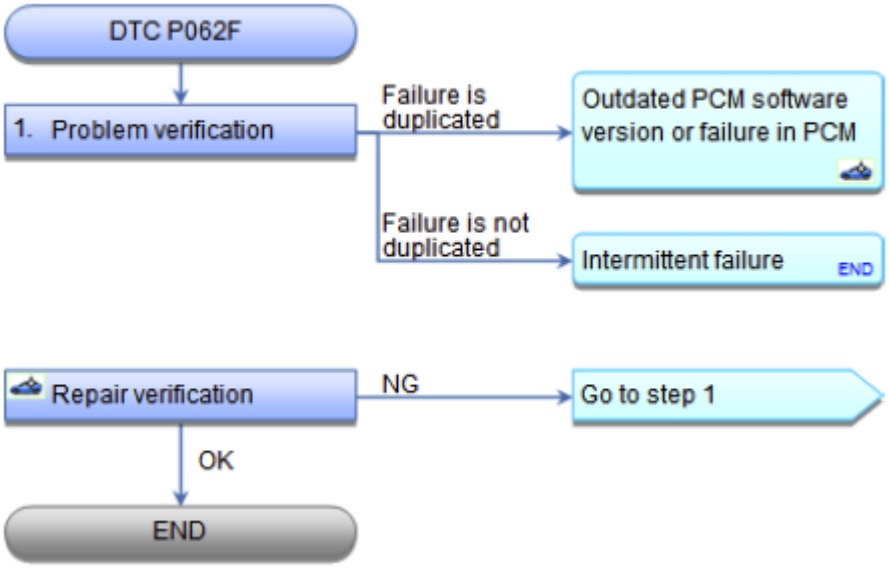

Fig. 268: DTC Troubleshooting Flow Chart (P062F)
Courtesy of AMERICAN HONDA MOTOR CO., INC.

NOTE: **Before you troubleshoot, record all freeze data and any on-board snapshot, and review the general troubleshooting information See HOW TO TROUBLESHOOT THE A/T SYSTEM or HOW TO TROUBLESHOOT THE FUEL AND EMISSIONS SYSTEMS .**

DTC Description	Confirmed DTC	Pending DTC	Freeze Frame
P062F PCM INTERNAL CONTROL MODULE KEEP ALIVE MEMORY (KAM) ERROR			

1. Problem verification:
   - 1. Turn the ignition switch to ON (II).
   - 2. **Clear the DTC with the HDS** See **HOW TO TROUBLESHOOT THE A/T SYSTEM** or **HOW TO TROUBLESHOOT THE FUEL AND EMISSIONS SYSTEMS** .
   - 3. Check for Pending or Confirmed DTCs with the HDS.

DTC Description	Confirmed DTC	Pending DTC	Freeze Frame
P062F PCM INTERNAL CONTROL MODULE KEEP ALIVE MEMORY (KAM) ERROR			

Is DTC P062F indicated?

YES : The failure is duplicated. **Update the PCM** See **PCM REMOVAL AND INSTALLATION** or

GETtheMANUALS.org

PCM UPDATE if it does not have the latest software, or **substitute a known-good PCM** See **PCM REMOVAL AND INSTALLATION** or **PCM UPDATE** , then **do the repair verification** .

NO : Intermittent failure, the system is OK at this time.

REPAIR VERIFICATION

- 1. Check for Pending or Confirmed DTCs with the HDS.

DTC Description	Confirmed DTC	Pending DTC	Freeze Frame
P062F PCM INTERNAL CONTROL MODULE KEEP ALIVE MEMORY (KAM) ERROR			

Is DTC P062F indicated?

YES : If the PCM was updated, **substitute a known-good PCM** See **PCM REMOVAL AND INSTALLATION** or **PCM UPDATE** , then recheck. If the PCM was substituted, go to step 1.

NO : Troubleshooting is complete. If the PCM was substituted, **replace the original PCM** See **PCM REMOVAL AND INSTALLATION** or **PCM UPDATE** . If any other Pending or Confirmed DTCs are indicated, go to the indicated DTC's troubleshooting.

DTC P0630: VIN NOT PROGRAMMED OR MISMATCH

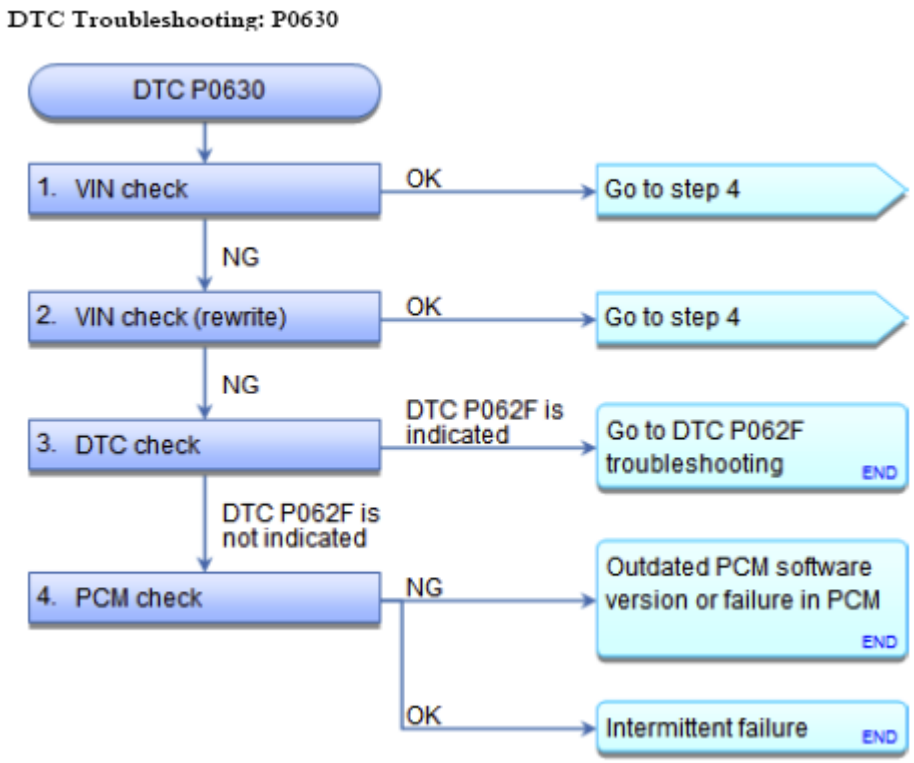

GETtheMANUALS.org

Fig. 269: DTC Troubleshooting Flow Chart (P0630)
Courtesy of AMERICAN HONDA MOTOR CO., INC.

NOTE:

- **Before you troubleshoot, record all freeze data and any on-board snapshot, and review the general troubleshooting information See HOW TO TROUBLESHOOT THE A/T SYSTEM or HOW TO TROUBLESHOOT THE FUEL AND EMISSIONS SYSTEMS .**
- **This DTC is stored only when the PCM does not have the VIN information of the vehicle. Use the HDS to input the missing VIN information.**

DTC Description	Confirmed DTC	Pending DTC	Freeze Frame
P0630 VIN NOT PROGRAMMED OR MISMATCH			

1. VIN check:
   - 1. Turn the ignition switch to ON (II).
   - 2. Check the VIN with the HDS.

   Does the HDS show the vehicle's VIN?

   YES : Go to step 4.

   NO : Go to step 2.

2. VIN check (rewrite):
   - 1. Input the VIN to the PCM with the HDS.

   Does the HDS show COMPLETE?

   YES : Go to step 4.

   NO : Go to step 3.

3. DTC check:
   - 1. Check for Pending or Confirmed DTCs with the HDS.

DTC Description	Confirmed DTC	Pending DTC	Freeze Frame
P062F PCM INTERNAL CONTROL MODULE KEEP ALIVE MEMORY (KAM) ERROR			

   Is DTC P062F indicated?

   YES : **DO THE DTC P062F TROUBLESHOOTING**.

GETtheMANUALS.org

NO : Go to step 4.

4. PCM check:
   - 1. **Clear the DTC with the HDS** See **HOW TO TROUBLESHOOT THE A/T SYSTEM** or **HOW TO TROUBLESHOOT THE FUEL AND EMISSIONS SYSTEMS** .
   - 2. Turn the ignition switch to LOCK (0).
   - 3. Turn the ignition switch to ON (II), and wait 5 seconds.
   - 4. Check for Pending or Confirmed DTCs with the HDS.

DTC Description	Confirmed DTC	Pending DTC	Freeze Frame
P0630 VIN NOT PROGRAMMED OR MISMATCH			

Is DTC P0630 indicated?

YES : **Update the PCM** See **PCM REMOVAL AND INSTALLATION** or **PCM UPDATE** if it does not have the latest software, or **substitute a known-good PCM** See **PCM REMOVAL AND INSTALLATION** or **PCM UPDATE** , then recheck.

NO : Intermittent failure, the system is OK at this time. If any other Pending or Confirmed DTCs are indicated, go to the indicated DTC's troubleshooting.

DTC P0641: SENSOR REFERENCE VOLTAGE A MALFUNCTION

GETtheMANUALS.org

DTC Troubleshooting: P0641

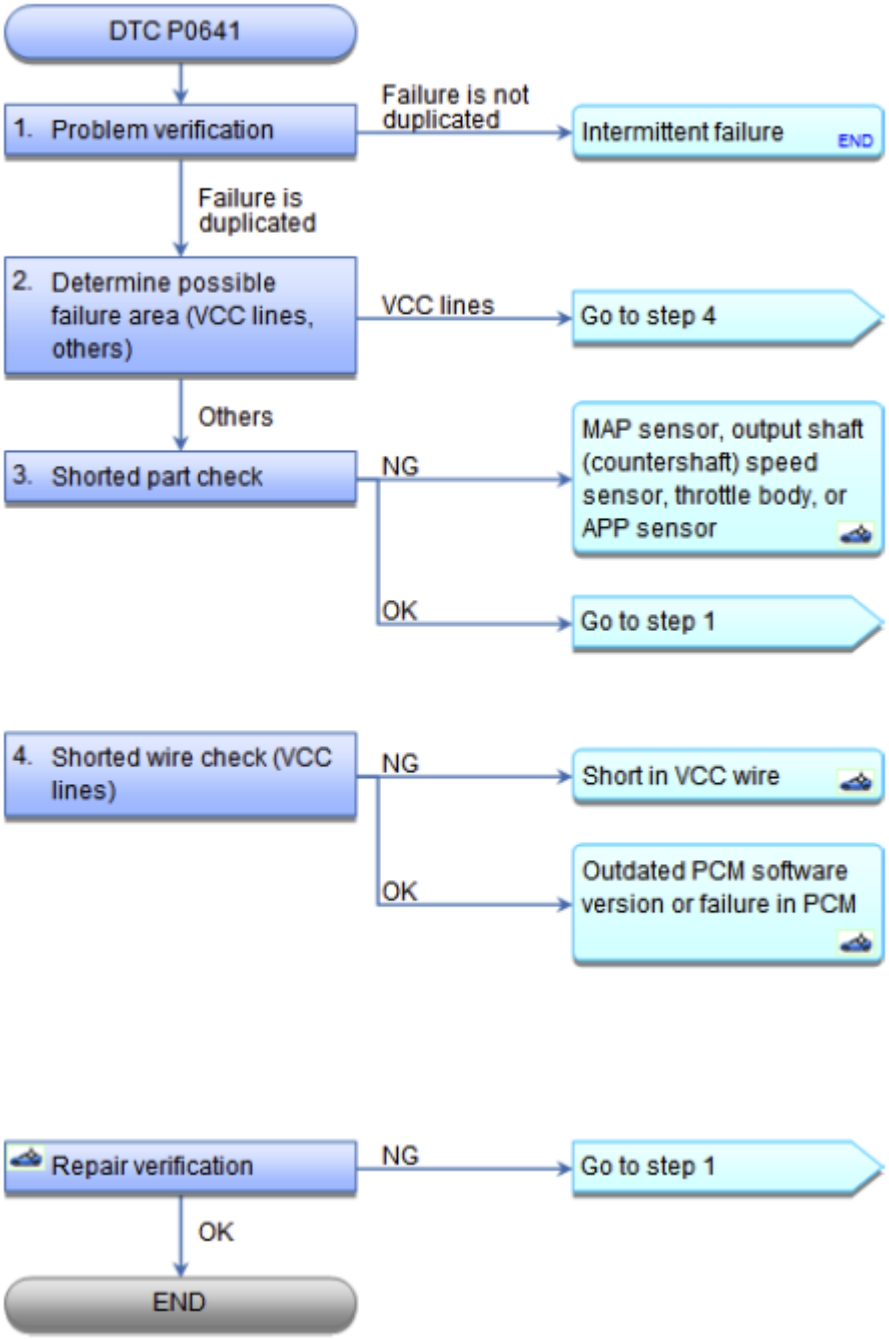

Fig. 270: DTC Troubleshooting Flow Chart (P0641)
Courtesy of AMERICAN HONDA MOTOR CO., INC.

NOTE: **Before you troubleshoot, record all freeze data and any on-board snapshot, and review the general troubleshooting information See HOW TO TROUBLESHOOT THE A/T SYSTEM or HOW TO TROUBLESHOOT THE FUEL AND EMISSIONS SYSTEMS .**

GETtheMANUALS.org

DTC Description	Confirmed DTC	Pending DTC	Freeze Frame
P0641 SENSOR REFERENCE VOLTAGE A MALFUNCTION			

1. Problem verification:
   - 1. Turn the ignition switch to ON (II).
   - 2. **Clear the DTC with the HDS** See **HOW TO TROUBLESHOOT THE A/T SYSTEM** or **HOW TO TROUBLESHOOT THE FUEL AND EMISSIONS SYSTEMS** .
   - 3. Check for Pending or Confirmed DTCs with the HDS.

DTC Description	Confirmed DTC	Pending DTC	Freeze Frame
P0641 SENSOR REFERENCE VOLTAGE A MALFUNCTION			

Is DTC P0641 indicated?

YES : The failure is duplicated. Go to step 2.

NO : Intermittent failure, the system is OK at this time. Check for poor connections or loose terminals at the PCM and these parts:

- MAP sensor
- Output shaft (countershaft) speed sensor
- Throttle body
- APP sensor

2. Determine possible failure area (VCC lines, others):
   - 1. Turn the ignition switch to LOCK (0).
   - 2. Disconnect the connectors from these parts:
     - MAP sensor
     - Output shaft (countershaft) speed sensor
     - Throttle body
     - APP sensor
   - Turn the ignition switch to ON (II).
   - **Clear the DTC with the HDS** See **HOW TO TROUBLESHOOT THE A/T SYSTEM** or **HOW TO TROUBLESHOOT THE FUEL AND EMISSIONS SYSTEMS** .
   - Check for Pending or Confirmed DTCs with the HDS.

DTC Description	Confirmed DTC	Pending DTC	Freeze Frame
P0641 SENSOR REFERENCE VOLTAGE A			

GETtheMANUALS.org

MALFUNCTION			

Is DTC P0641 indicated?

YES : Go to step 4.

NO : Go to step 3.

3. Shorted part check:
   - 1. Check for Pending or Confirmed DTCs with the HDS while reconnecting these parts, one at a time:
     - MAP sensor
     - Output shaft (countershaft) speed sensor
     - Throttle body
     - APP sensor

Is DTC P0641 indicated?

YES : Replace the part that caused the DTC when it was reconnected, then **do the repair verification** .

NO : Check for poor connections or loose terminals at the PCM and the following parts, then go to step 1.

- MAP sensor
- Output shaft (countershaft) speed sensor
- Throttle body
- APP sensor

4. Shorted wire check (VCC lines):
   - 1. Turn the ignition switch to LOCK (0).
   - 2. Jump the SCS line with the HDS.
   - 3. Disconnect the following connectors.

     PCM connector A (49P)

     PCM connector C (49P)

   - 4. Check for continuity between these test points and body ground individually.

     Test condition IG LOCK (0)

     MAP sensor 3P connector: disconnected

     Output shaft (countershaft) speed sensor 3P connector: disconnected

     Throttle body 6P connector: disconnected

GETtheMANUALS.org

APP sensor 6P connector: disconnected

PCM connector A (49P): disconnected

PCM connector C (49P): disconnected

Connector	Test circuit	Terminal
PCM connector A (49P)	VCC4	No. 36 (BRN)
PCM connector C (49P)	VCC1	No. 23 (PNK)
	VCC3(ETCS)	No. 22 (TAN)

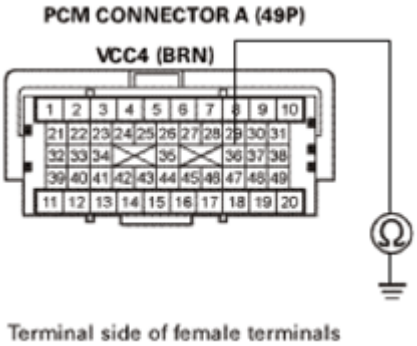

Fig. 271: Checking Continuity Between VCC4 No. 36 (BRN) And Body Ground
Courtesy of AMERICAN HONDA MOTOR CO., INC.

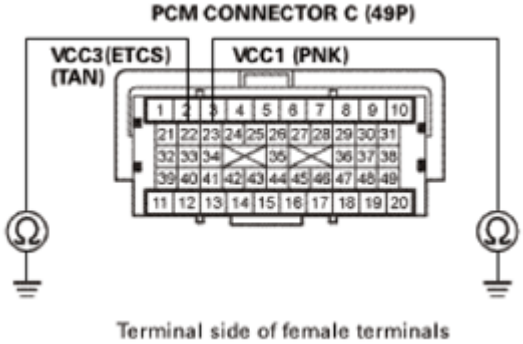

Fig. 272: Checking Continuity Between VCC1 No. 23 (PNK) And Body Ground
Courtesy of AMERICAN HONDA MOTOR CO., INC.

Is there continuity?

YES : Repair a short in the VCC wire between the PCM (A36, C22, or C23) and each part that was disconnected in step **2-2** , then **do the repair verification** .

NO : The VCC wires are OK. **Update the PCM** See **PCM REMOVAL AND INSTALLATION** or **PCM UPDATE** if it does not have the latest software, or **substitute a known-good PCM** See **PCM REMOVAL AND INSTALLATION** or **PCM UPDATE** , then **do the repair verification** .

GETtheMANUALS.org

REPAIR VERIFICATION

- 1. Turn the ignition switch to LOCK (0).
- 2. Reconnect all connectors.
- 3. Turn the ignition switch to ON (II).
- 4. **Reset the PCM with the HDS** See **HOW TO TROUBLESHOOT THE A/T SYSTEM** or **HOW TO TROUBLESHOOT THE FUEL AND EMISSIONS SYSTEMS** .
- 5. **DO THE PCM IDLE LEARN PROCEDURE** .
- 6. Check for Pending or Confirmed DTCs with the HDS.

DTC Description	Confirmed DTC	Pending DTC	Freeze Frame
P0641 SENSOR REFERENCE VOLTAGE A MALFUNCTION			

Is DTC P0641 indicated?

YES : Check for poor connections or loose terminals at the PCM and the following parts, then go to step 1.

- MAP sensor
- Output shaft (countershaft) speed sensor
- Throttle body
- APP sensor

NO : Troubleshooting is complete. If any other Pending or Confirmed DTCs are indicated, go to the indicated DTC's troubleshooting.

DTC P0651: SENSOR REFERENCE VOLTAGE B MALFUNCTION

GETtheMANUALS.org

DTC Troubleshooting: P0651

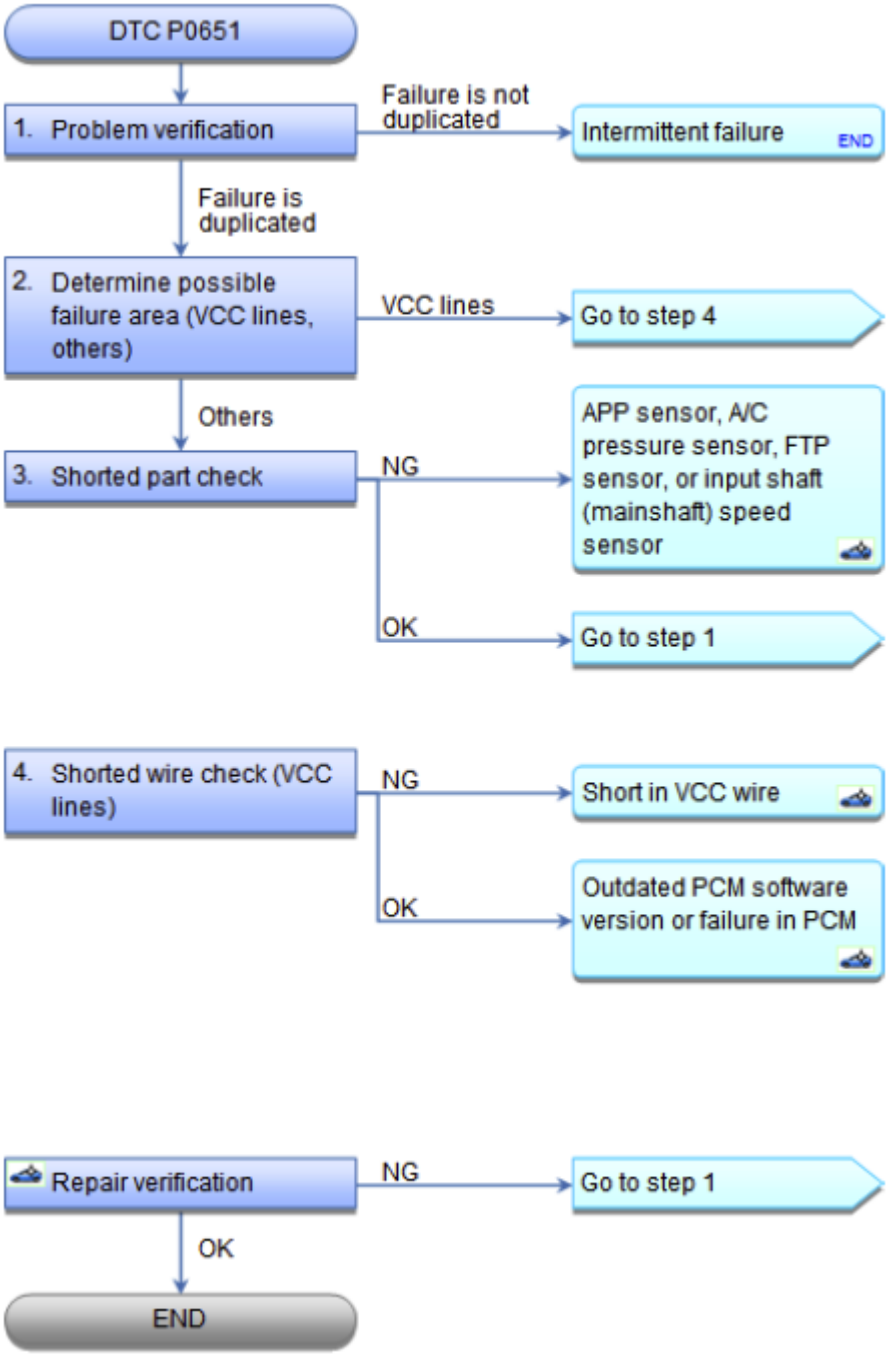

Fig. 273: DTC Troubleshooting Flow Chart (P0651)
Courtesy of AMERICAN HONDA MOTOR CO., INC.

NOTE: **Before you troubleshoot, record all freeze data and any on-board snapshot, and review the general troubleshooting information See HOW TO TROUBLESHOOT THE A/T SYSTEM or HOW TO TROUBLESHOOT THE FUEL AND EMISSIONS SYSTEMS .**

GETtheMANUALS.org

DTC Description	Confirmed DTC	Pending DTC	Freeze Frame
P0651 SENSOR REFERENCE VOLTAGE B MALFUNCTION			

1. Problem verification:
   - 1. Turn the ignition switch to ON (II).
   - 2. **Clear the DTC with the HDS** See **HOW TO TROUBLESHOOT THE FUEL AND EMISSIONS SYSTEMS** or **HOW TO TROUBLESHOOT THE A/T SYSTEM** .
   - 3. Check for Pending or Confirmed DTCs with the HDS.

DTC Description	Confirmed DTC	Pending DTC	Freeze Frame
P0651 SENSOR REFERENCE VOLTAGE B MALFUNCTION			

Is DTC P0651 indicated?

YES : The failure is duplicated. Go to step 2.

NO : Intermittent failure, the system is OK at this time. Check for poor connections or loose terminals at the PCM and these parts:

- APP sensor
- A/C pressure sensor
- FTP sensor
- Input shaft (mainshaft) speed sensor

2. Determine possible failure area (VCC lines, others):
   - 1. Turn the ignition switch to LOCK (0).
   - 2. Disconnect the connectors from these parts:
     - APP sensor
     - A/C pressure sensor
     - FTP sensor
     - Input shaft (mainshaft) speed sensor
   - Turn the ignition switch to ON (II).
   - **Clear the DTC with the HDS** See **HOW TO TROUBLESHOOT THE A/T SYSTEM** or **HOW TO TROUBLESHOOT THE FUEL AND EMISSIONS SYSTEMS** .
   - Check for Pending or Confirmed DTCs with the HDS.

DTC Description	Confirmed DTC	Pending DTC	Freeze Frame
P0651 SENSOR REFERENCE VOLTAGE B			

GETtheMANUALS.org

MALFUNCTION			

Is DTC P0651 indicated?

YES : Go to step 4.

NO : Go to step 3.

3. Shorted part check:
   - 1. Check for Pending or Confirmed DTCs with the HDS while reconnecting these parts, one at a time:
     - APP sensor
     - A/C pressure sensor
     - FTP sensor
     - Input shaft (mainshaft) speed sensor

DTC Description	Confirmed DTC	Pending DTC	Freeze Frame
P0651 SENSOR REFERENCE VOLTAGE B MALFUNCTION			

Is DTC P0651 indicated?

YES : Replace the part that caused the DTC when it was reconnected, then **do the repair verification** .

NO : Check for poor connections or loose terminals at the PCM and the following parts, then go to step 1.

- APP sensor
- A/C pressure sensor
- FTP sensor
- Input shaft (mainshaft) speed sensor

4. Shorted wire check (VCC lines):
   - 1. Turn the ignition switch to LOCK (0).
   - 2. Jump the SCS line with the HDS.
   - 3. Disconnect the following connector.

     PCM connectors A (49P)

     PCM connectors B (49P)

   - 4. Check for continuity between these test points and body ground individually.

     Test condition IG LOCK (0)

GETtheMANUALS.org

APP sensor 6P connector: disconnected

A/C pressure sensor 3P connector: disconnected

FTP sensor 3P connector: disconnected

Input shaft (mainshaft) speed sensor 3P connector: disconnected

PCM connector A (49P): disconnected

PCM connector B (49P): disconnected

Connector	Test circuit	Terminal
PCM connector A (49P)	VCC6	No. 30 (RED)
	VCC5	No. 35 (LT GRN)
PCM connector B (49P)	VCC2	No. 29 (PNK)

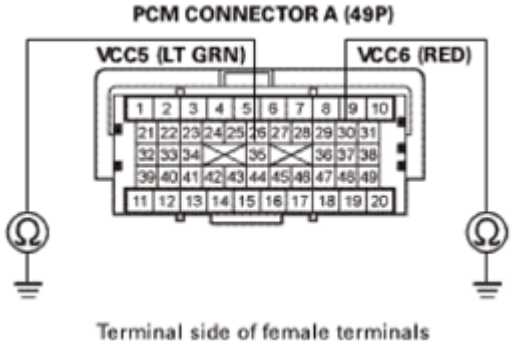

Fig. 274: Checking Continuity Between VCC6 No. 30 (RED) And Body Ground
Courtesy of AMERICAN HONDA MOTOR CO., INC.

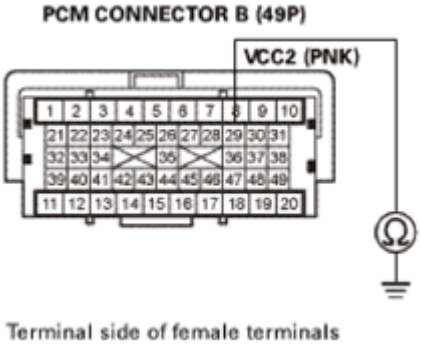

Fig. 275: Checking Continuity Between VCC2 No. 29 (PNK) And Body Ground
Courtesy of AMERICAN HONDA MOTOR CO., INC.

Is there continuity?

GETtheMANUALS.org

YES : Repair a short in the VCC wire between the PCM (A30, A35, B29) and each part that was disconnected in step 2, then **do the repair verification** .

NO : **Update the PCM** See **PCM REMOVAL AND INSTALLATION** or **PCM UPDATE** if it does not have the latest software, or **substitute a known-good PCM** See **PCM UPDATE** or **PCM REMOVAL AND INSTALLATION** , then **do the repair verification** .

REPAIR VERIFICATION

- 1. Turn the ignition switch to LOCK (0).
- 2. Reconnect all connectors.
- 3. Turn the ignition switch to ON (II).
- 4. **Reset the PCM with the HDS** See **HOW TO TROUBLESHOOT THE A/T SYSTEM** or **HOW TO TROUBLESHOOT THE FUEL AND EMISSIONS SYSTEMS** .
- 5. **DO THE PCM IDLE LEARN PROCEDURE** .
- 6. Check for Pending or Confirmed DTCs with the HDS.

DTC Description	Confirmed DTC	Pending DTC	Freeze Frame
P0651 SENSOR REFERENCE VOLTAGE B MALFUNCTION			

Is DTC P0651 indicated?

YES : Check for poor connections or loose terminals at the PCM and the following parts, then go to step 1.

- APP sensor
- A/C pressure sensor
- FTP sensor
- Input shaft (mainshaft) speed sensor

NO : Troubleshooting is complete. If any other Pending or Confirmed DTCs are indicated, go to the indicated DTC's troubleshooting.

DTC P065A: ACG NO CHARGING MALFUNCTION

GETtheMANUALS.org

DTC Troubleshooting: P065A

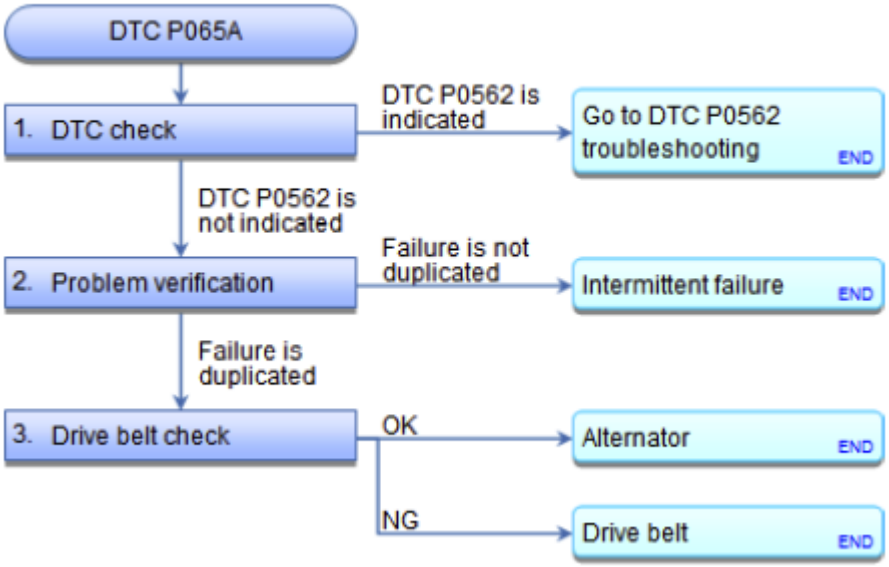

Fig. 276: DTC Troubleshooting Flow Chart (P065A)
Courtesy of AMERICAN HONDA MOTOR CO., INC.

NOTE: **Before you troubleshoot, record all freeze data and any on-board snapshot, and review the general troubleshooting information See HOW TO TROUBLESHOOT THE A/T SYSTEM or HOW TO TROUBLESHOOT THE FUEL AND EMISSIONS SYSTEMS .**

DTC Description	Confirmed DTC	Pending DTC	Freeze Frame
P065A ACG NO CHARGING MALFUNCTION			

1. DTC check:
   - 1. **Clear the DTC with the HDS** See **HOW TO TROUBLESHOOT THE A/T SYSTEM** or **HOW TO TROUBLESHOOT THE FUEL AND EMISSIONS SYSTEMS** .
   - 2. Start the engine, and let it idle 1 minute.
   - 3. Check for Pending or Confirmed DTCs with the HDS.

DTC Description	Confirmed DTC	Pending DTC	Freeze Frame
P0562 CHARGING SYSTEM LOW VOLTAGE			

Is DTC P0562 indicated?

YES : **DO THE DTC P0562 TROUBLESHOOTING**.

NO : Go to step 2.

2. Problem verification:

GETtheMANUALS.org

- 1. Check for Pending or Confirmed DTCs with the HDS.

DTC Description	Confirmed DTC	Pending DTC	Freeze Frame
P065A ACG NO CHARGING MALFUNCTION			

Is DTC P065A indicated?

YES : Go to step 3.

NO : Intermittent failure, the system is OK at this time. Check the alternator and the drive belt.

3. Drive belt check:
   - 1. **INSPECT THE DRIVE BELT** .

Is the drive belt OK?

YES : **Repair or replace the alternator** See **ALTERNATOR OVERHAUL** or **ALTERNATOR REMOVAL AND INSTALLATION** .

NO : **REPLACE THE DRIVE BELT** .

DTC P0685: PCM POWER CONTROL CIRCUIT/INTERNAL CIRCUIT MALFUNCTION

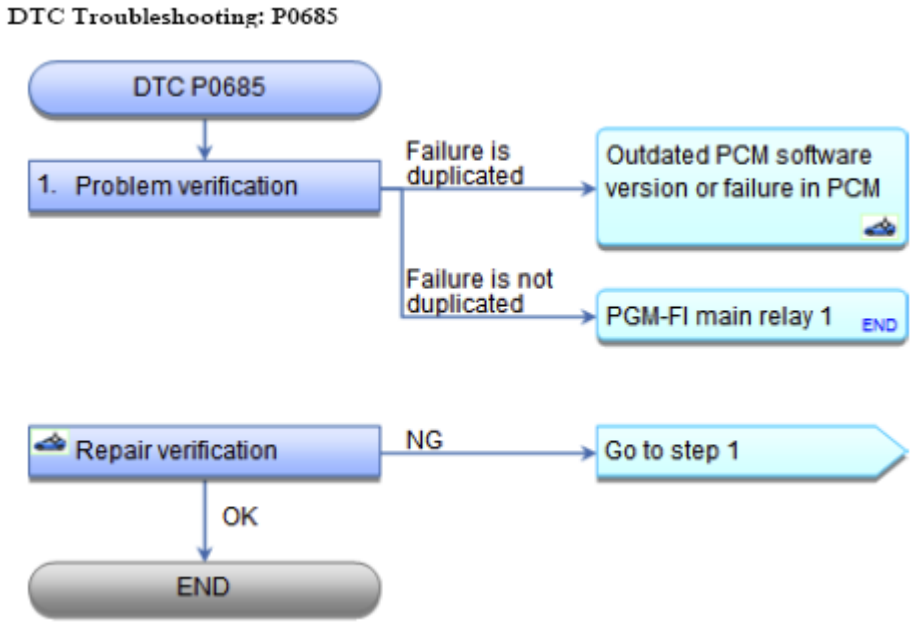

Fig. 277: DTC Troubleshooting Flow Chart (P0685)
Courtesy of AMERICAN HONDA MOTOR CO., INC.

GETtheMANUALS.org

NOTE:

- **Before you troubleshoot, record all freeze data and any on-board snapshot, and review the general troubleshooting information See HOW TO TROUBLESHOOT THE A/T SYSTEM or HOW TO TROUBLESHOOT THE FUEL AND EMISSIONS SYSTEMS .**
- **If the problem doesn't return after you clear the DTC, or if this DTC is stored intermittently, check for loose terminals at the IGP line connectors before replacing the PCM.**

DTC Description	Confirmed DTC	Pending DTC	Freeze Frame
P0685 PCM POWER CONTROL CIRCUIT/INTERNAL CIRCUIT MALFUNCTION			

1. Problem verification:
   - 1. Turn the ignition switch to ON (II).
   - 2. **Clear the DTC with the HDS** See **HOW TO TROUBLESHOOT THE A/T SYSTEM** or **HOW TO TROUBLESHOOT THE FUEL AND EMISSIONS SYSTEMS** .
   - 3. Start the engine, and let it idle for 30 seconds.
   - 4. Turn the ignition switch to LOCK (0).
   - 5. Turn the ignition switch to ON (II).
   - 6. Check for Pending or Confirmed DTCs with the HDS.

DTC Description	Confirmed DTC	Pending DTC	Freeze Frame
P0685 PCM POWER CONTROL CIRCUIT/INTERNAL CIRCUIT MALFUNCTION			

Is DTC P0685 indicated?

YES : The failure is duplicated. **Update the PCM** See **PCM UPDATE** or **PCM REMOVAL AND INSTALLATION** if it does not have the latest software, or **substitute a known-good PCM** See **PCM REMOVAL AND INSTALLATION** or **PCM UPDATE** , then **do the repair verification** .

NO : Intermittent failure. Check the following items:

- PGM-FI main relay 1
- PGM-FI main fuse
- Poor connections or loose terminals between the PCM and the under-hood fuse/relay box
- Poor or loose PCM ground terminals and connections
- Poor or loose battery cables and connections
- Check the battery

REPAIR VERIFICATION

GETtheMANUALS.org

- 1. Start the engine, and let it idle for 30 seconds.
- 2. Turn the ignition switch to LOCK (0).
- 3. Turn the ignition switch to ON (II).
- 4. Check for Pending or Confirmed DTCs with the HDS.

DTC Description	Confirmed DTC	Pending DTC	Freeze Frame
P0685 PCM POWER CONTROL CIRCUIT/INTERNAL CIRCUIT MALFUNCTION			

Is DTC P0685 indicated?

YES : If the PCM was updated, **substitute a known-good PCM** See **PCM REMOVAL AND INSTALLATION** or **PCM UPDATE** , then recheck. If the PCM was substituted, go to step 1.

NO : Troubleshooting is complete. If the PCM was substituted, **replace the original PCM** See **PCM REMOVAL AND INSTALLATION** or **PCM UPDATE** . If any other Pending or Confirmed DTCs are indicated, go to the indicated DTC's troubleshooting.

DTC P06A8: INTERNAL VCC POWER MALFUNCTION

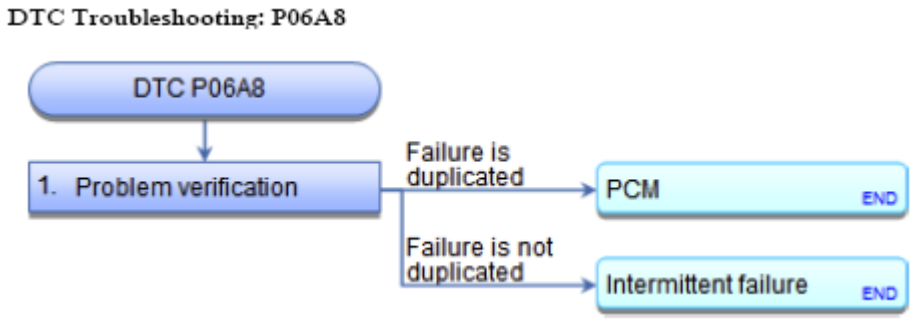

Fig. 278: DTC Troubleshooting Flow Chart (P06A8)
Courtesy of AMERICAN HONDA MOTOR CO., INC.

NOTE: **Before you troubleshoot, record all freeze data and any on-board snapshot, and review the general troubleshooting information See HOW TO TROUBLESHOOT THE A/T SYSTEM or HOW TO TROUBLESHOOT THE FUEL AND EMISSIONS SYSTEMS .**

DTC Description	Confirmed DTC	Pending DTC	Freeze Frame
P06A8 INTERNAL VCC POWER MALFUNCTION			

1. Problem verification:
   - 1. Turn the ignition switch to ON (II).
   - 2. **Clear the DTC with the HDS** See **HOW TO TROUBLESHOOT THE A/T SYSTEM** or

GETtheMANUALS.org

HOW TO TROUBLESHOOT THE FUEL AND EMISSIONS SYSTEMS .

- 3. Check for Pending or Confirmed DTCs with the HDS.

DTC Description	Confirmed DTC	Pending DTC	Freeze Frame
P06A8 INTERNAL VCC POWER MALFUNCTION			

Is DTC P06A8 indicated?

YES : **Replace the PCM** See **PCM REMOVAL AND INSTALLATION** or **PCM UPDATE** .

NO : Intermittent failure, the system is OK at this time. Check for poor connections or loose terminals at the PCM.

DTC P1009: VTC ADVANCE MALFUNCTION

GETtheMANUALS.org

DTC Troubleshooting: P1009

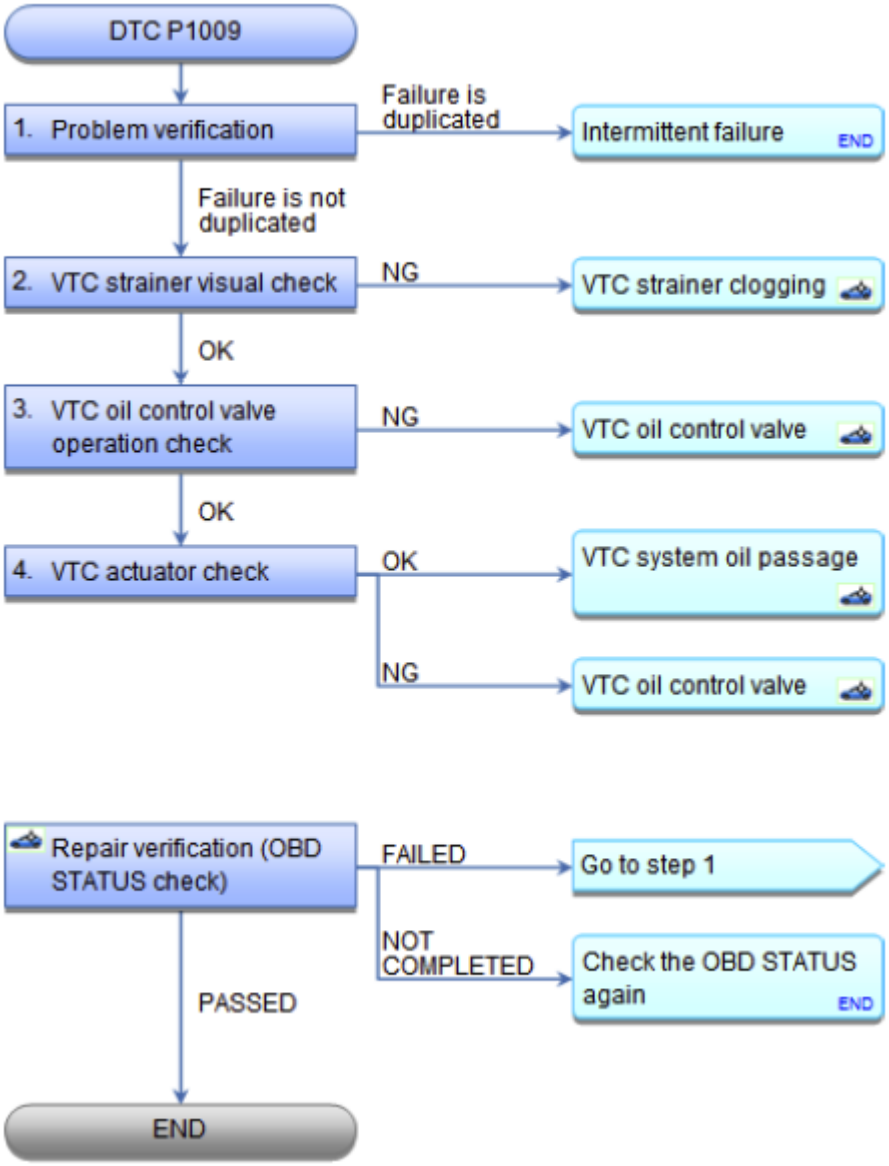

Fig. 279: DTC Troubleshooting Flow Chart (P1009)
Courtesy of AMERICAN HONDA MOTOR CO., INC.

NOTE:

- **Before you troubleshoot, record all freeze data and any on-board snapshot, and review the general troubleshooting information See HOW TO TROUBLESHOOT THE A/T SYSTEM or HOW TO TROUBLESHOOT THE FUEL AND EMISSIONS SYSTEMS .**
- **If DTC P0341 is stored at the same time as DTC P1009, troubleshoot DTC P1009 first, then recheck for DTC P0341.**

DTC Description	Confirmed DTC	Pending DTC	Freeze Frame

GETtheMANUALS.org

P1009 VTC ADVANCE MALFUNCTION			

1. Problem verification:
   - 1. Turn the ignition switch to ON (II).
   - 2. **Clear the DTC with the HDS** See **HOW TO TROUBLESHOOT THE A/T SYSTEM** or **HOW TO TROUBLESHOOT THE FUEL AND EMISSIONS SYSTEMS** .
   - 3. Start the engine.
   - 4. Check for Pending or Confirmed DTCs with the HDS.

DTC Description	Confirmed DTC	Pending DTC	Freeze Frame
P1009 VTC ADVANCE MALFUNCTION			

Is DTC P1009 indicated?

YES : Go to step 2.

NO : Intermittent failure, the system is OK at this time.

2. VTC strainer visual check:
   - 1. Turn the ignition switch to LOCK (0).
   - 2. **REMOVE THE AUTO-TENSIONER** .
   - 3. Remove the VTC strainer (A), and check it for clogging.

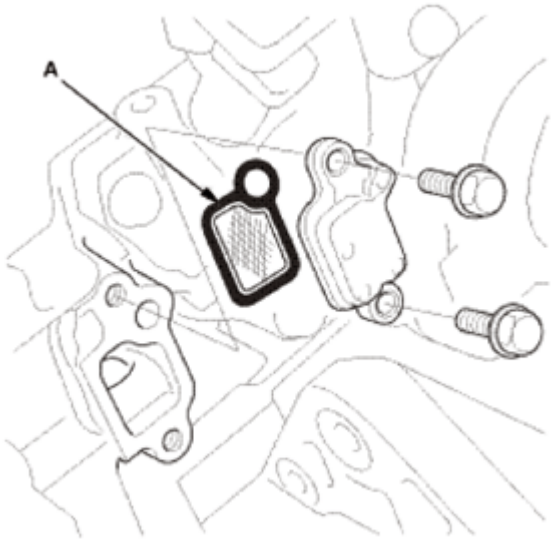

Fig. 280: Identifying VTC Strainer
Courtesy of AMERICAN HONDA MOTOR CO., INC.

Is the strainer OK?

YES : Go to step 3.

GETtheMANUALS.org

NO : Clean the VTC strainer, REPLACE THE ENGINE OIL FILTER and the ENGINE OIL , then **do the repair verification** .

3. VTC oil control valve operation check:
   - 1. TEST THE VTC OIL CONTROL SOLENOID VALVE .

   Is the VTC oil control solenoid valve OK?

   YES : Go to step 4.

   NO : REPLACE THE VTC OIL CONTROL SOLENOID VALVE , then **do the repair verification** .

4. VTC actuator check:
   - 1. INSPECT THE VTC ACTUATOR .

   Is the actuator OK?

   YES : Check the VTC system oil passages and clean them if needed, then **do the repair verification** .

   NO : REPLACE THE VTC ACTUATOR , then **do the repair verification** .

REPAIR VERIFICATION (OBD STATUS CHECK)

- 1. Turn the ignition switch to ON (II).
- 2. **Reset the PCM with the HDS** See **HOW TO TROUBLESHOOT THE A/T SYSTEM** or **HOW TO TROUBLESHOOT THE FUEL AND EMISSIONS SYSTEMS** .
- 3. **DO THE PCM IDLE LEARN PROCEDURE** .
- 4. **Do the CKP pattern clear/CKP pattern learn procedure** See **HOW TO TROUBLESHOOT THE A/T SYSTEM** or **HOW TO TROUBLESHOOT THE FUEL AND EMISSIONS SYSTEMS** .
- 5. Do the VTC TEST in the INSPECTION MENU with the HDS.
- 6. Monitor the OBD STATUS for DTC P0011 in the DTCs MENU with the HDS.

DTC Description	OBD Status
P1009 VTC ADVANCE MALFUNCTION	

Does the HDS indicate PASSED, FAILED, or NOT COMPLETED?

PASSED : Troubleshooting is complete. If any other Pending or Confirmed DTCs were indicated, go to the indicated DTC's troubleshooting.

FAILED : Go to step 1 and recheck.

NOT COMPLETED : Check the OBD STATUS again.

DTC P1109: BARO SENSOR CIRCUIT OUT OF RANGE HIGH

GETtheMANUALS.org

DTC Troubleshooting: P1109

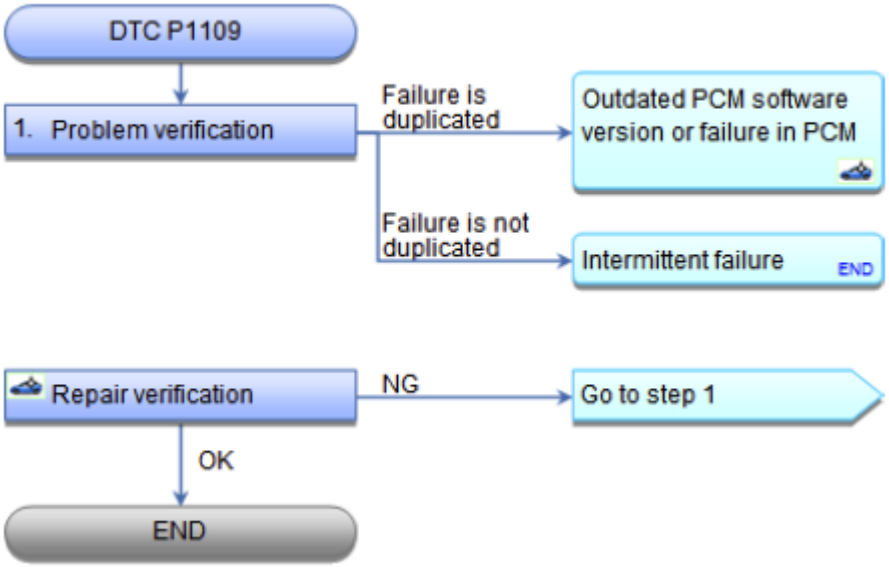

Fig. 281: DTC Troubleshooting Flow Chart (P1109)
Courtesy of AMERICAN HONDA MOTOR CO., INC.

NOTE: **Before you troubleshoot, record all freeze data and any on-board snapshot, and review the general troubleshooting information See HOW TO TROUBLESHOOT THE A/T SYSTEM or HOW TO TROUBLESHOOT THE FUEL AND EMISSIONS SYSTEMS .**

DTC Description	Confirmed DTC	Pending DTC	Freeze Frame
P1109 BARO SENSOR CIRCUIT OUT OF RANGE HIGH			

1. Problem verification:
   - 1. Turn the ignition switch to ON (II).
   - 2. **Clear the DTC with the HDS** See **HOW TO TROUBLESHOOT THE A/T SYSTEM** or **HOW TO TROUBLESHOOT THE FUEL AND EMISSIONS SYSTEMS** .
   - 3. Check for Pending or Confirmed DTCs with the HDS.

DTC Description	Confirmed DTC	Pending DTC	Freeze Frame
P1109 BARO SENSOR CIRCUIT OUT OF RANGE HIGH			

Is DTC P1109 indicated?

YES : The failure is duplicated. **Update the PCM** See **PCM REMOVAL AND INSTALLATION** or

GETtheMANUALS.org

PCM UPDATE if it does not have the latest software, or **substitute a known-good PCM** See **PCM REMOVAL AND INSTALLATION** or **PCM UPDATE** , then **do the repair verification** .

NO : Intermittent failure, the system is OK at this time.

REPAIR VERIFICATION

- 1. Check for Pending or Confirmed DTCs with the HDS.

DTC Description	Confirmed DTC	Pending DTC	Freeze Frame
P1109 BARO SENSOR CIRCUIT OUT OF RANGE HIGH			

Is DTC P1109 indicated?

YES : If the PCM was updated, **substitute a known-good PCM** See **PCM UPDATE** or **PCM REMOVAL AND INSTALLATION** , then recheck. If the PCM was substituted, go to step 1.

NO : If the PCM was updated, troubleshooting is complete. If the PCM was substituted, **replace the original PCM** See **PCM REMOVAL AND INSTALLATION** or **PCM UPDATE** . If any other Pending or Confirmed DTCs are indicated, go to the indicated DTC's troubleshooting.

DTC P1116: ECT SENSOR 1 RANGE/PERFORMANCE PROBLEM

GETtheMANUALS.org

DTC Troubleshooting: P1116

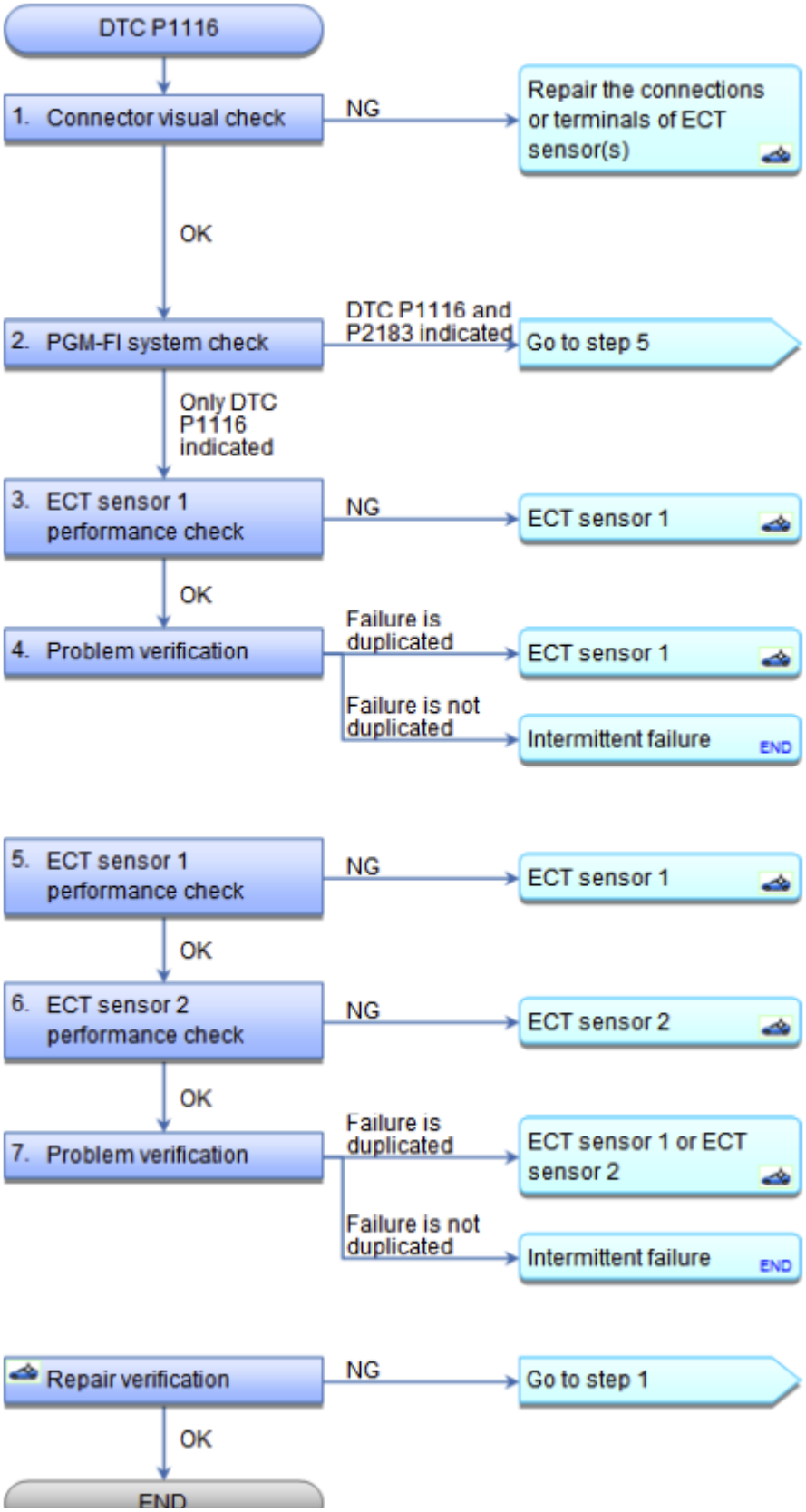

GETtheMANUALS.org

Fig. 282: DTC Troubleshooting Flow Chart (P1116)
Courtesy of AMERICAN HONDA MOTOR CO., INC.

NOTE:

- **Before you troubleshoot, record all freeze data and any on-board snapshot, and review the general troubleshooting information See HOW TO TROUBLESHOOT THE A/T SYSTEM or HOW TO TROUBLESHOOT THE FUEL AND EMISSIONS SYSTEMS .**
- **If DTC P0111 is stored at the same time as DTC P1116, troubleshoot DTC P0111 first, then recheck for DTC P1116.**

DTC Description	Confirmed DTC	Pending DTC	Freeze Frame
P1116 ECT SENSOR 1 CIRCUIT RANGE/PERFORMANCE PROBLEM			

1. Connector visual check:
   - 1. Check for poor connections or loose terminals at these locations:
     - ECT sensor 1
     - ECT sensor 2

   Are the connections and terminals OK?

   YES : The connections and terminals are OK. Go to step 2.

   NO : Repair the connections or terminals, then **do the repair verification** .

2. PGM-FI system check:
   - 1. Turn the ignition switch to ON (II).
   - 2. Check for Pending or Confirmed DTCs with the HDS.

DTC Description	Confirmed DTC	Pending DTC	Freeze Frame
P1116 ECT SENSOR 1 CIRCUIT RANGE/PERFORMANCE PROBLEM			
P2183 ECT SENSOR 2 CIRCUIT RANGE/PERFORMANCE PROBLEM			

   Are DTC P1116 and P2183 indicated at the same time?

   YES : Go to step 5.

   NO : Only DTC P1116 is indicated. Go to step 3.

3. ECT sensor 1 performance check:

GETtheMANUALS.org

- 1. Start the engine, and let it idle for 10 minutes.
- 2. Check the parameter(s) below with the HDS.

Signal	Threshold		Current conditions	
	Values	Unit	Values	Unit
ECT SENSOR 1	Less than 108	°F		
	Less than 42	°C		

Do the current condition(s) match the threshold?

YES : **REPLACE ECT SENSOR 1** , then **do the repair verification** .

NO : ECT sensor 1 is OK at this time. Go to step 4.

4. Problem verification:
   - 1. Turn the ignition switch to LOCK (0).
   - 2. Allow ECT sensor 1 to cool to the ambient temperature.
   - 3. Note the ambient temperature.
   - 4. Turn the ignition switch to ON (II).
   - 5. Quickly note the value of ECT SENSOR 1 in the DATA LIST with the HDS.

Signal	Current conditions	
	Values	Unit
ECT SENSOR 1		

   - 6. Compare the value of ECT SENSOR 1 and the ambient temperature.

Does the value of ECT SENSOR 1 differ 5.4 °F (3 °C) or more from the ambient temperature?

YES : **REPLACE ECT SENSOR 1** , then **do the repair verification** .

NO : Intermittent failure, the system is OK at this time. Check for poor connections or loose terminals at ECT sensor 1, ECT sensor 2, and the PCM.

5. ECT sensor 1 performance check:
   - 1. Start the engine, and let it idle for 10 minutes.
   - 2. Check the parameter(s) below with the HDS.

Signal	Threshold		Current conditions	
	Values	Unit	Values	Unit
ECT SENSOR 1	Less than 108	°F		
	Less than 42	°C		

GETtheMANUALS.org

Do the current condition(s) match the threshold?

YES : **<u>REPLACE ECT SENSOR 1</u>** , then **do the repair verification** .

NO : Go to step 6.

6. ECT sensor 2 performance check:
   - 1. Let the engine idle for 10 minutes.
   - 2. Check the parameter(s) below with the HDS.

Signal	Threshold		Current conditions	
	Values	Unit	Values	Unit
ECT SENSOR 2	Less than 108	°F		
	Less than 42	°C		

Do the current condition(s) match the threshold?

YES : **<u>REPLACE ECT SENSOR 2</u>** , then **do the repair verification** .

NO : Go to step 7.

7. Problem verification:
   - 1. Turn the ignition switch to LOCK (0).
   - 2. Allow the sensors to cool to the ambient temperature.
   - 3. Note the ambient temperature.
   - 4. Turn the ignition switch to ON (II).
   - 5. Quickly note the value of ECT SENSOR 1 and ECT SENSOR 2 in the DATA LIST with the HDS.

Signal	Current conditions	
	Values	Unit
ECT SENSOR 1		
ECT SENSOR 2		

   - 6. Compare the value of ECT SENSOR 1 and the value of ECT SENSOR 2 to the ambient temperature individually.

Does either sensor differ more than 5.4 °F (3 °C) from the ambient temperature?

YES : Replace the sensor that differed more than 5.4 °F (3 °C) from the ambient temperature, then **do the repair verification** .

NO : Intermittent failure, the system is OK at this time. Check for poor connections or loose terminals at ECT sensor 1, ECT sensor 2, and the PCM.

GETtheMANUALS.org

REPAIR VERIFICATION

- 1. Turn the ignition switch to ON (II).
- 2. **Reset the PCM with the HDS** See **HOW TO TROUBLESHOOT THE A/T SYSTEM** or **HOW TO TROUBLESHOOT THE FUEL AND EMISSIONS SYSTEMS** .
- 3. **DO THE PCM IDLE LEARN PROCEDURE** .
- 4. Check for Pending or Confirmed DTCs with the HDS.

DTC Description	Confirmed DTC	Pending DTC	Freeze Frame
P1116 ECT SENSOR 1 CIRCUIT RANGE/PERFORMANCE PROBLEM			

Is DTC P1116 indicated?

YES : Check for poor connections or loose terminals at ECT sensor 1, ECT sensor 2, and the PCM, then go to step 1.

NO : Troubleshooting is complete. If any other Pending or Confirmed DTCs are indicated, go to the indicated DTC's troubleshooting.

DTC P1128: MAP SENSOR SIGNAL LOWER THAN EXPECTED

GETtheMANUALS.org

DTC Troubleshooting: P1128

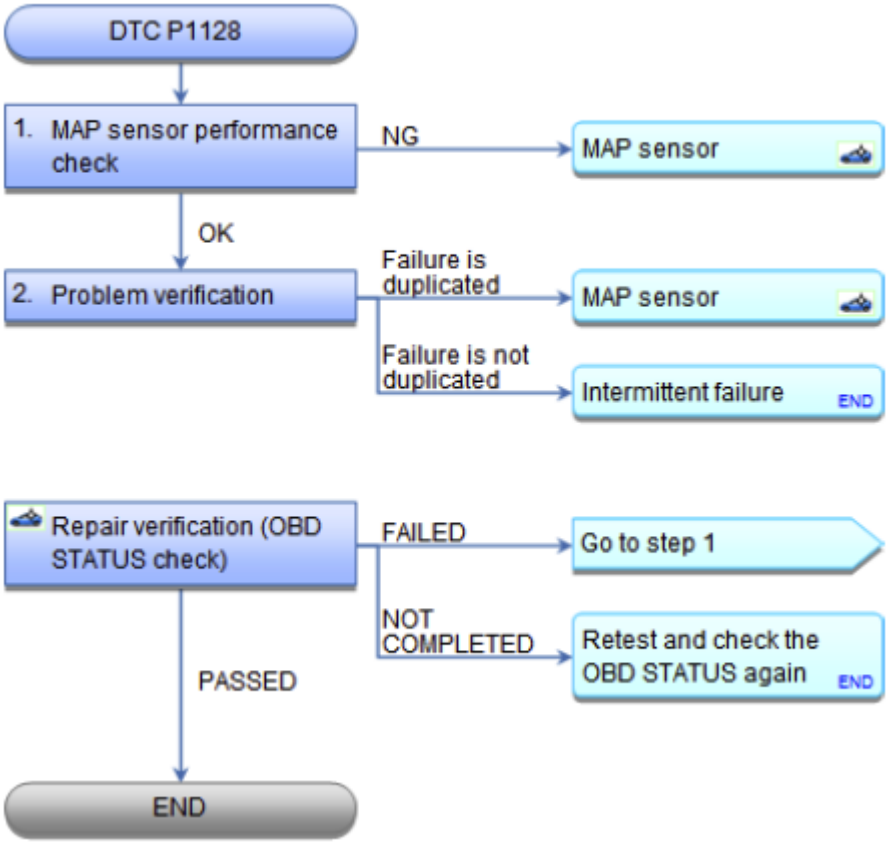

Fig. 283: DTC Troubleshooting Flow Chart (P1128)
Courtesy of AMERICAN HONDA MOTOR CO., INC.

NOTE:

- **Before you troubleshoot, record all freeze data and any on-board snapshot, and review the general troubleshooting information See HOW TO TROUBLESHOOT THE A/T SYSTEM or HOW TO TROUBLESHOOT THE FUEL AND EMISSIONS SYSTEMS .**
- **Before you begin, check for poor connections or a blockage at the intake air duct.**

DTC Description	Confirmed DTC	Pending DTC	Freeze Frame
P1128 MAP SENSOR SIGNAL LOWER THAN EXPECTED			

1. MAP sensor performance check:
   - 1. Turn the ignition switch to ON (II).
   - 2. Check the parameter(s) below with the HDS for 5 seconds.

GETtheMANUALS.org

Signal	Threshold		Current conditions	
	Values	Unit	Values	Unit
MAP SENSOR	Less than 54.1	kPa		
	1.61	V		

Did the value maintain the threshold for 5 seconds or more?

YES : **REPLACE THE MAP SENSOR** , then **do the repair verification** .

NO : Go to step 2.

2. Problem verification:
   - 1. **Clear the DTC with the HDS** See **HOW TO TROUBLESHOOT THE A/T SYSTEM** or **HOW TO TROUBLESHOOT THE FUEL AND EMISSIONS SYSTEMS** .
   - 2. Start the engine. Hold the engine speed at 3, 000 rpm without load (in P or N) until the radiator fan comes on, then let it idle.
   - 3. Test-drive under these conditions:
     - Engine coolant temperature (ECT SENSOR 1) above 158 °F (70 °C)
     - Engine speed at 1, 400 rpm or more
     - Transmission in D
     - Vehicle speed accelerated to 15 mph (24 km/h) or more under half throttle

Signal	Current conditions	
	Values	Unit
ECT SENSOR 1		
ENGINE SPEED		
VEHICLE SPEED		

   - 4. Monitor the OBD STATUS for DTC P1128 in the DTCs MENU with the HDS.

DTC Description	OBD Status
P1128 MAP SENSOR SIGNAL LOWER THAN EXPECTED	

Does the HDS indicate FAILED?

YES : The failure is duplicated. **REPLACE THE MAP SENSOR** , then **do the repair verification** .

NO : If the HDS indicates PASSED, intermittent failure, the system is OK at this time. Check for poor connections or loose terminals at the MAP sensor and the PCM. If the HDS indicates NOT COMPLETED, go to step **2-2** and recheck.

REPAIR VERIFICATION (OBD STATUS CHECK)

GETtheMANUALS.org

- 1. Turn the ignition switch to ON (II).
- 2. **Reset the PCM with the HDS** See **HOW TO TROUBLESHOOT THE A/T SYSTEM** or **HOW TO TROUBLESHOOT THE FUEL AND EMISSIONS SYSTEMS** .
- 3. **DO THE PCM IDLE LEARN PROCEDURE** .
- 4. Start the engine. Hold the engine speed at 3, 000 rpm without load (in P or N) until the radiator fan comes on, then let it idle.
- 5. Test-drive under these conditions:
  - Engine coolant temperature (ECT SENSOR 1) above 158 °F (70 °C)
  - Engine speed at 1, 400 rpm or more
  - Transmission in D
  - Vehicle speed accelerated to 15 mph (24 km/h) or more under half throttle

Signal	Current conditions	
	Values	Unit
ECT SENSOR 1		
ENGINE SPEED		
VEHICLE SPEED		

- 6. Monitor the OBD STATUS for DTC P1128 in the DTCs MENU with the HDS.

DTC Description	OBD Status
P1128 MAP SENSOR SIGNAL LOWER THAN EXPECTED	

Does the HDS indicate PASSED, FAILED, or NOT COMPLETED?

PASSED : Troubleshooting is complete. If any other Pending or Confirmed DTCs were indicated, go to the indicated DTC's troubleshooting.

FAILED : Go to step 1 and recheck.

NOT COMPLETED : Meet the test condition, and check the OBD STATUS again.

DTC P1129: MAP SENSOR SIGNAL HIGHER THAN EXPECTED

GETtheMANUALS.org

DTC Troubleshooting: P1129

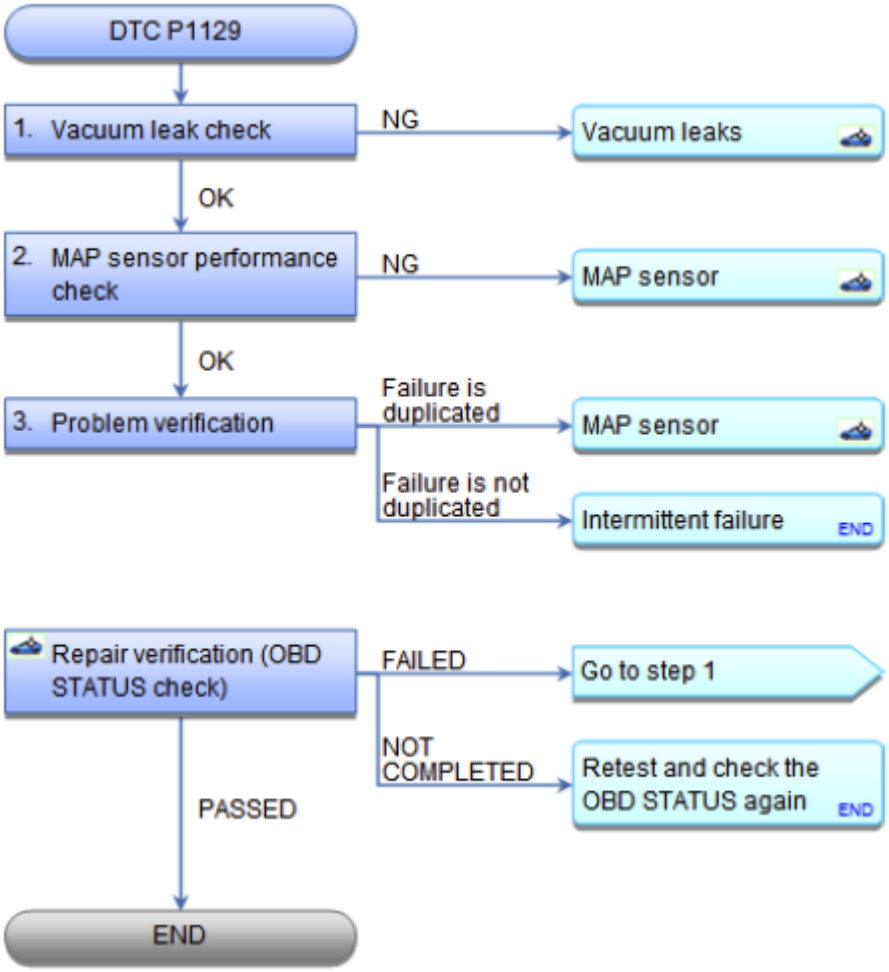

Fig. 284: DTC Troubleshooting Flow Chart (P1129)
Courtesy of AMERICAN HONDA MOTOR CO., INC.

NOTE: **Before you troubleshoot, record all freeze data and any on-board snapshot, and review the general troubleshooting information See HOW TO TROUBLESHOOT THE A/T SYSTEM or HOW TO TROUBLESHOOT THE FUEL AND EMISSIONS SYSTEMS .**

DTC Description	Confirmed DTC	Pending DTC	Freeze Frame
P1129 MAP SENSOR SIGNAL HIGHER THAN EXPECTED			

1. Vacuum leak check:
    - 1. Check for vacuum leaks in these parts:
        - PCV valve

GETtheMANUALS.org

- PCV hose
- EVAP canister purge valve
- Throttle body
- Intake manifold
- Brake booster
- Brake booster hose

Are there any vacuum leaks?

YES : Repair or replace the parts with vacuum leaks, then **do the repair verification** .

NO : Go to step 2.

2. MAP sensor performance check:
   - 1. Start the engine. Hold the engine speed at 3, 000 rpm without load (in P or N) until the radiator fan comes on, then let it idle.
   - 2. Check the parameter(s) below with the HDS for 5 seconds.

Signal	Threshold		Current conditions	
	Values	Unit	Values	Unit
MAP SENSOR	More than 36.9	kPa		
	More than 1.1	V		

Did the value maintain the threshold for 5 seconds or more?

YES : **REPLACE THE MAP SENSOR** , then **do the repair verification** .

NO : Go to step 3.

3. Problem verification:
   - 1. **Clear the DTC with the HDS** See **HOW TO TROUBLESHOOT THE A/T SYSTEM** or **HOW TO TROUBLESHOOT THE FUEL AND EMISSIONS SYSTEMS** .
   - 2. Test-drive under these conditions:
     - Engine coolant temperature (ECT SENSOR 1) above 158 °F (70 °C)
     - Engine speed between 1, 400-6, 800 rpm
     - Transmission in D
     - Drive at a steady speed between 55-75 mph (88-120 km/h) for 10 seconds, then decelerate (with the throttle fully closed) for at least 2 seconds

Signal	Current conditions	
	Values	Unit
ECT SENSOR 1		

GETtheMANUALS.org

ENGINE SPEED		
VEHICLE SPEED		

- 3. Monitor the OBD STATUS for DTC P1129 in the DTCs MENU with the HDS.

DTC Description	OBD Status
P1129 MAP SENSOR SIGNAL HIGHER THAN EXPECTED	

Does the HDS indicate FAILED?

YES : The failure is duplicated. **REPLACE THE MAP SENSOR** , then **do the repair verification** .

NO : If the HDS indicates PASSED, intermittent failure, the system is OK at this time. Check for poor connections or loose terminals at the MAP sensor and the PCM. If the HDS indicates NOT COMPLETED, go to step **3-2** and recheck.

REPAIR VERIFICATION (OBD STATUS CHECK)

- 1. Turn the ignition switch to ON (II).
- 2. **Reset the PCM with the HDS** See **HOW TO TROUBLESHOOT THE A/T SYSTEM** or **HOW TO TROUBLESHOOT THE FUEL AND EMISSIONS SYSTEMS** .
- 3. **DO THE PCM IDLE LEARN PROCEDURE** .
- 4. Start the engine. Hold the engine speed at 3, 000 rpm without load (in P or N) until the radiator fan comes on, then let it idle.
- 5. Test-drive under these conditions:
  - Engine coolant temperature (ECT SENSOR 1) above 158 °F (70 °C)
  - Engine speed between 1, 400-6, 800 rpm
  - Transmission in D
  - Drive at a steady speed between 55-75 mph (88-120 km/h) for 10 seconds, then decelerate (with the throttle fully closed) for at least 2 seconds

Signal	Current conditions	
	Values	Unit
ECT SENSOR 1		
ENGINE SPEED		
VEHICLE SPEED		

- 6. Monitor the OBD STATUS for DTC P1129 in the DTCs MENU with the HDS.

DTC Description	OBD Status
P1129 MAP SENSOR SIGNAL HIGHER THAN EXPECTED	

Does the HDS indicate PASSED, FAILED, or NOT COMPLETED?

GETtheMANUALS.org

PASSED : Troubleshooting is complete. If any other Pending or Confirmed DTCs were indicated, go to the indicated DTC's troubleshooting.

FAILED : Go to step 1 and recheck.

NOT COMPLETED : Meet the test condition, and check the OBD STATUS again.

DTC P1157: A/F SENSOR (SENSOR 1) AFS CIRCUIT HIGH VOLTAGE

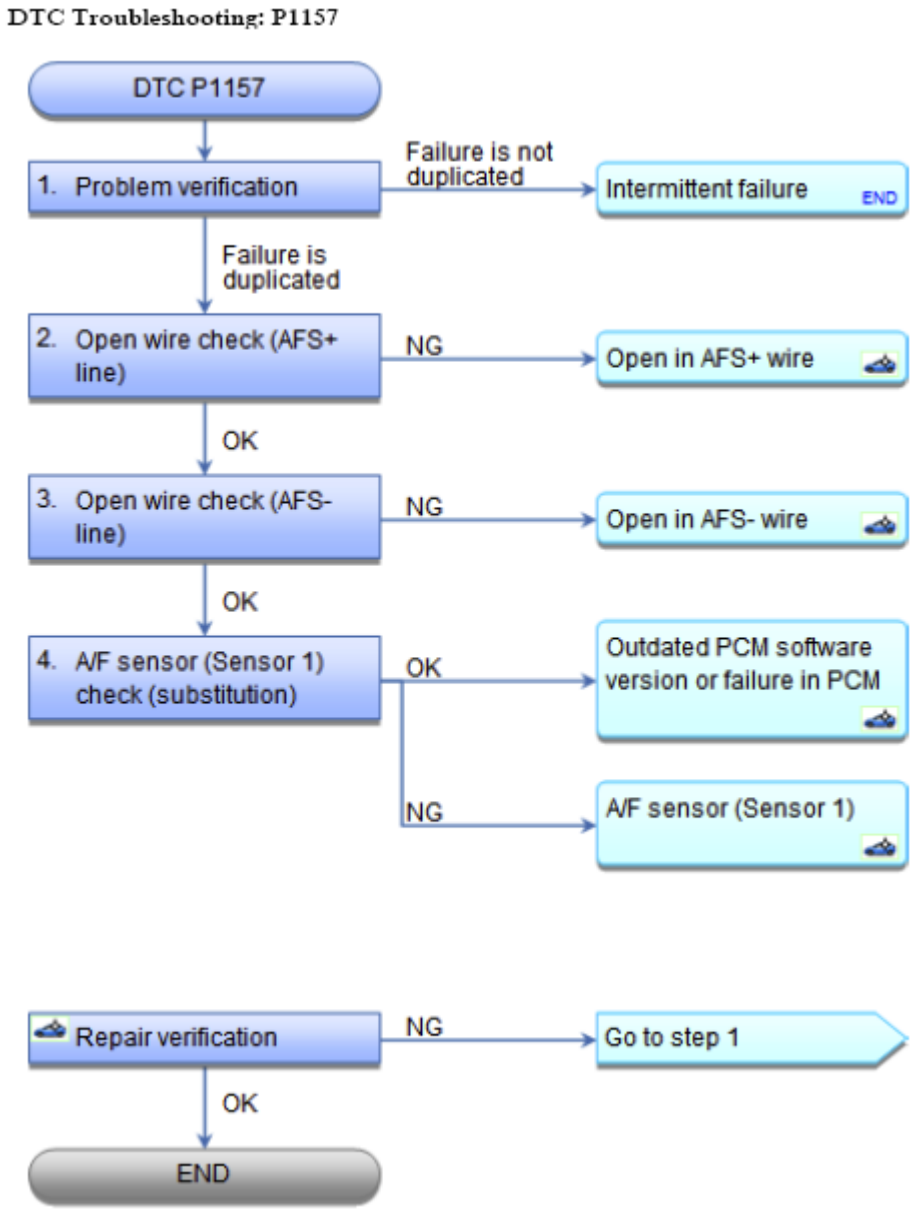

Fig. 285: DTC Troubleshooting Flow Chart (P1157)
Courtesy of AMERICAN HONDA MOTOR CO., INC.

GETtheMANUALS.org

NOTE: **Before you troubleshoot, record all freeze data and any on-board snapshot, and review the general troubleshooting information See HOW TO TROUBLESHOOT THE A/T SYSTEM or HOW TO TROUBLESHOOT THE FUEL AND EMISSIONS SYSTEMS .**

DTC Description	Confirmed DTC	Pending DTC	Freeze Frame
P1157 A/F SENSOR (SENSOR 1) AFS CIRCUIT HIGH VOLTAGE			

1. Problem verification:
   - 1. Turn the ignition switch to ON (II).
   - 2. **Clear the DTC with the HDS** See **HOW TO TROUBLESHOOT THE A/T SYSTEM** or **HOW TO TROUBLESHOOT THE FUEL AND EMISSIONS SYSTEMS** .
   - 3. Start the engine, and wait 1 minute.
   - 4. Check for Pending or Confirmed DTCs with the HDS.

DTC Description	Confirmed DTC	Pending DTC	Freeze Frame
P1157 A/F SENSOR (SENSOR 1) AFS CIRCUIT HIGH VOLTAGE			

Is DTC P1157 indicated?

YES : The failure is duplicated. Go to step 2.

NO : Intermittent failure, the system is OK at this time. Check for poor connections or loose terminals at the A/F sensor (Sensor 1), the PGM-FI subrelay, and the PCM.

2. Open wire check (AFS+ line):
   - 1. Turn the ignition switch to LOCK (0).
   - 2. Jump the SCS line with the HDS.
   - 3. Disconnect the following connectors.

     A/F sensor (Sensor 1) 4P connector

     PCM connector C (49P)

   - 4. Check for continuity between test points 1 and 2.

     Test condition IG LOCK (0)

     A/F sensor (Sensor 1) 4P connector: disconnected

GETtheMANUALS.org

PCM connector C (49P): disconnected

Test circuit AFS+

Test point 1 PCM connector C (49P) No. 39 (RED)

Test point 2 A/F sensor (Sensor 1) 4P connector No. 2 (RED)

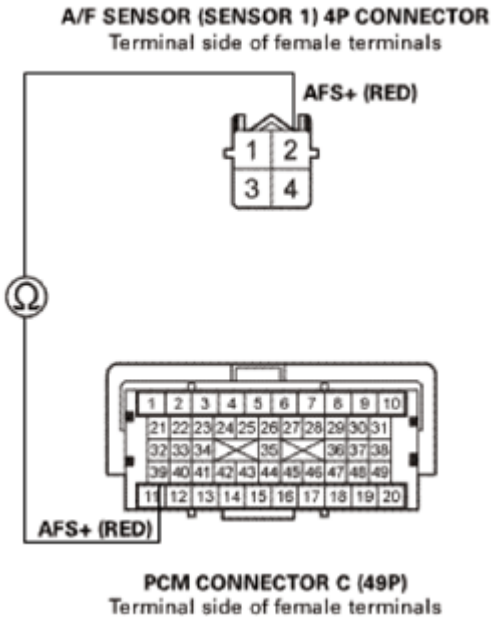

Fig. 286: Checking Continuity Between PCM Connector C (49P) No. 39 (RED) And A/F Sensor (Sensor 1) 4P Connector No. 2 (RED)
Courtesy of AMERICAN HONDA MOTOR CO., INC.

Is there continuity?

YES : The AFS+ wire is OK. Go to step 3.

NO : Repair an open in the AFS+ wire between the PCM (C39) and the A/F sensor (Sensor 1), then **do the repair verification** .

3. Open wire check (AFS- line):
   - 1. Check for continuity between test points 1 and 2.

     Test condition IG LOCK (0)

     A/F sensor (Sensor 1) 4P connector: disconnected

     PCM connector C (49P): disconnected

     Test circuit AFS-

GETtheMANUALS.org

Test point 1 PCM connector C (49P) No. 40 (YEL)

Test point 2 A/F sensor (Sensor 1) 4P connector No. 2 (YEL)

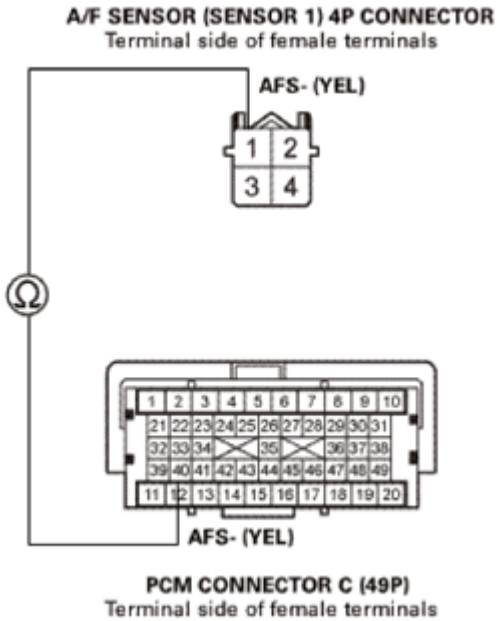

Fig. 287: Checking Continuity Between PCM Connector C (49P) No. 40 (YEL) And A/F Sensor (Sensor 1) 4P Connector No. 2 (YEL)
Courtesy of AMERICAN HONDA MOTOR CO., INC.

Is there continuity?

YES : The AFS- wire is OK. Go to step 4.

NO : Repair an open in the AFS- wire between the PCM (C40) and the A/F sensor (Sensor 1), then **do the repair verification** .

4. A/F sensor (Sensor 1) check (substitution):
   - 1. Substitute a known-good A/F sensor (Sensor 1).
   - 2. Reconnect all connectors.
   - 3. Turn the ignition switch to ON (II).
   - 4. **Reset the PCM with the HDS** See **HOW TO TROUBLESHOOT THE A/T SYSTEM** or **HOW TO TROUBLESHOOT THE FUEL AND EMISSIONS SYSTEMS** .
   - 5. **DO THE PCM IDLE LEARN PROCEDURE** .
   - 6. Check for Pending or Confirmed DTCs with the HDS.

DTC Description	Confirmed DTC	Pending DTC	Freeze Frame
P1157 A/F SENSOR (SENSOR 1) AFS CIRCUIT			

GETtheMANUALS.org

HIGH VOLTAGE			

Is DTC P1157 indicated?

YES : The A/F sensor (Sensor 1) is OK. **Update the PCM** See **PCM REMOVAL AND INSTALLATION** or **PCM UPDATE** if it does not have the latest software, or **substitute a known-good PCM** See **PCM REMOVAL AND INSTALLATION** or **PCM UPDATE** , then **do the repair verification** .

NO : **REPLACE THE ORIGINAL A/F SENSOR (SENSOR 1)** , then **do the repair verification** .

REPAIR VERIFICATION

- 1. Turn the ignition switch to LOCK (0).
- 2. Reconnect all connectors.
- 3. Turn the ignition switch to ON (II).
- 4. **Reset the PCM with the HDS** See **HOW TO TROUBLESHOOT THE A/T SYSTEM** or **HOW TO TROUBLESHOOT THE FUEL AND EMISSIONS SYSTEMS** .
- 5. **DO THE PCM IDLE LEARN PROCEDURE** .
- 6. Check for Pending or Confirmed DTCs with the HDS.

DTC Description	Confirmed DTC	Pending DTC	Freeze Frame
P1157 A/F SENSOR (SENSOR 1) AFS CIRCUIT HIGH VOLTAGE			

Is DTC P1157 indicated?

YES : Check for poor connections or loose terminals at the A/F sensor (Sensor 1) and the PCM. If the PCM was updated, **substitute a known-good PCM** See **PCM REMOVAL AND INSTALLATION** or **PCM UPDATE** , then recheck. If the PCM was substituted, go to step 1.

NO : Troubleshooting is complete. If the PCM was substituted, **replace the original PCM** See **PCM REMOVAL AND INSTALLATION** or **PCM UPDATE** . If any other Pending or Confirmed DTCs are indicated, go to the indicated DTC's troubleshooting.

DTC P1172: A/F SENSOR (SENSOR 1) CIRCUIT OUT OF RANGE HIGH

GETtheMANUALS.org

DTC Troubleshooting: P1172

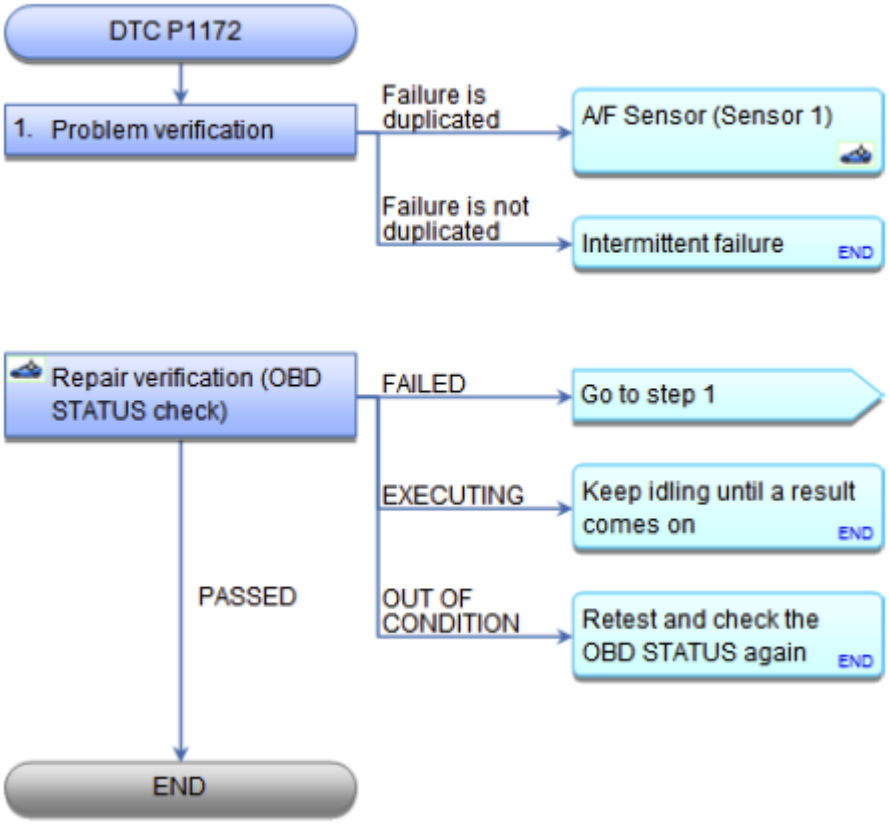

Fig. 288: DTC Troubleshooting Flow Chart (P1172)
Courtesy of AMERICAN HONDA MOTOR CO., INC.

NOTE: **Before you troubleshoot, record all freeze data and any on-board snapshot, and review the general troubleshooting information See HOW TO TROUBLESHOOT THE A/T SYSTEM or HOW TO TROUBLESHOOT THE FUEL AND EMISSIONS SYSTEMS .**

DTC Description	Confirmed DTC	Pending DTC	Freeze Frame
P1172 A/F SENSOR (SENSOR 1) CIRCUIT OUT OF RANGE HIGH			

1. Problem verification:
   - 1. Turn the ignition switch to ON (II).
   - 2. **Clear the DTC with the HDS** See **HOW TO TROUBLESHOOT THE A/T SYSTEM** or **HOW TO TROUBLESHOOT THE FUEL AND EMISSIONS SYSTEMS** .
   - 3. Start the engine. Hold the engine speed at 3, 000 rpm without load (in P or N) until the radiator fan comes on, then let it idle.
   - 4. Monitor the OBD STATUS for DTC P1172 with the HDS.

GETtheMANUALS.org

DTC Description	OBD Status
P1172 A/F SENSOR (SENSOR 1) CIRCUIT OUT OF RANGE HIGH	

Does the HDS indicate FAILED?

YES : **REPLACE THE A/F SENSOR (SENSOR 1)** , then **do the repair verification** .

NO : If the HDS indicates PASSED, intermittent failure, the system is OK at this time. Check for poor connections or loose terminals at the A/F Sensor (Sensor 1) and the PCM. If the HDS indicates EXECUTING, keep driving until a result comes on. If the HDS indicates OUT OF CONDITION, go to step **1-3** and recheck.

REPAIR VERIFICATION (OBD STATUS CHECK)

- 1. Turn the ignition switch to LOCK (0).
- 2. Reconnect all connectors.
- 3. Turn the ignition switch to ON (II).
- 4. **Reset the PCM with the HDS** See **HOW TO TROUBLESHOOT THE A/T SYSTEM** or **HOW TO TROUBLESHOOT THE FUEL AND EMISSIONS SYSTEMS** .
- 5. **DO THE PCM IDLE LEARN PROCEDURE** .
- 6. Start the engine. Hold the engine speed at 3, 000 rpm without load (in P or N) until the radiator fan comes on, then let it idle.
- 7. Monitor the OBD STATUS for DTC P1172 in the DTCs MENU with the HDS.

DTC Description	OBD Status
P1172 A/F SENSOR (SENSOR 1) CIRCUIT OUT OF RANGE HIGH	

Does the HDS indicate PASSED, FAILED, EXECUTING, or OUT OF CONDITION?

PASSED : Troubleshooting is complete. If any other Pending or Confirmed DTCs were indicated, go to the indicated DTC's troubleshooting.

FAILED : Go to step 1 and recheck.

EXECUTING : Keep idling until a result comes on.

OUT OF CONDITION : Meet the test condition, and check the OBD STATUS again.

DTC P1297: ELD CIRCUIT LOW VOLTAGE

GETtheMANUALS.org

DTC Troubleshooting: P1297

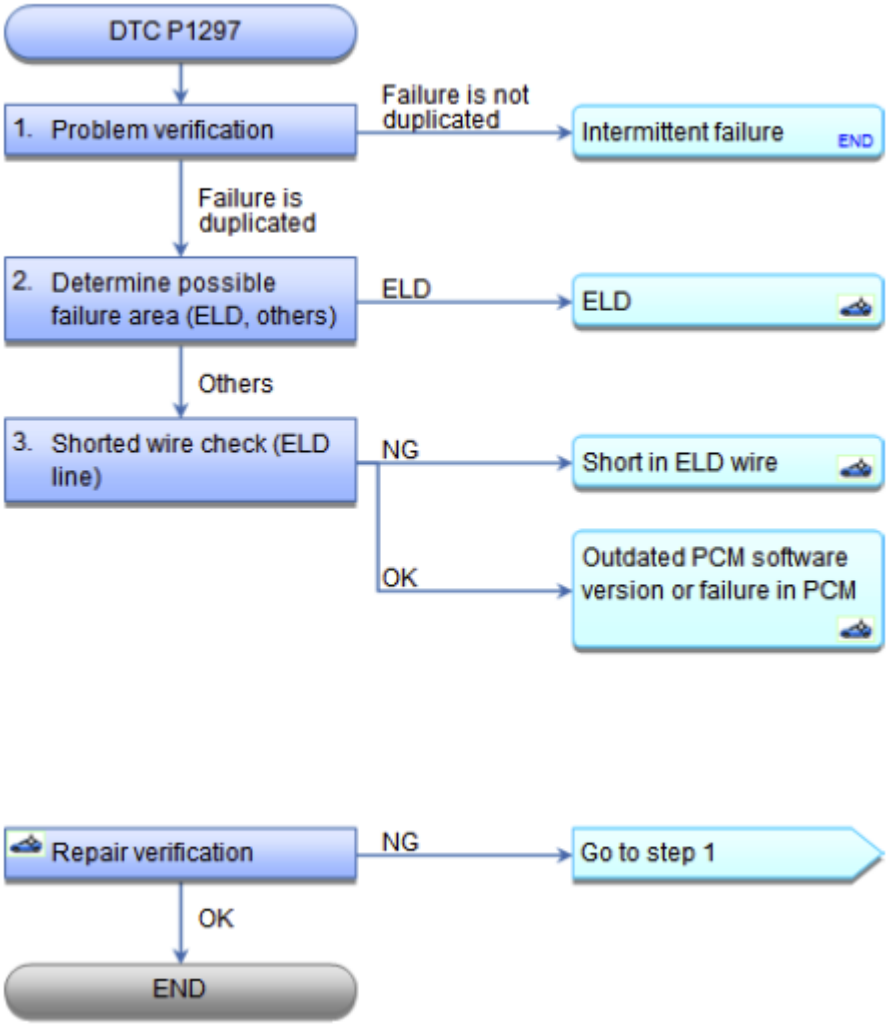

Fig. 289: DTC Troubleshooting Flow Chart (P1297)
Courtesy of AMERICAN HONDA MOTOR CO., INC.

NOTE: **Before you troubleshoot, record all freeze data and any on-board snapshot, and review the general troubleshooting information See HOW TO TROUBLESHOOT THE A/T SYSTEM or HOW TO TROUBLESHOOT THE FUEL AND EMISSIONS SYSTEMS .**

DTC Description	Confirmed DTC	Pending DTC	Freeze Frame
P1297 ELD CIRCUIT LOW VOLTAGE			

1. Problem verification:
   - 1. Turn the ignition switch to ON (II).
   - 2. Check the parameter(s) below with the HDS.

GETtheMANUALS.org

Signal	Threshold		Current conditions	
	Values	Unit	Values	Unit
ELECTRIC LOAD VALUE	More than 72	A		

Do the current condition(s) match the threshold?

YES : The failure is duplicated. Go to step 2.

NO : Intermittent failure, the system is OK at this time. Check for poor connections or loose terminals at the under-hood fuse/relay box and the PCM.

2. Determine possible failure area (ELD, others):
   - 1. Turn the ignition switch to LOCK (0).
   - 2. Disconnect the following connector.

     Under-hood fuse/relay box 3P connector

   - 3. Turn the ignition switch to ON (II).
   - 4. Check the parameter(s) below with the HDS.

Signal	Threshold		Current conditions	
	Values	Unit	Values	Unit
ELECTRIC LOAD VALUE	More than 72	A		

Do the current condition(s) match the threshold?

YES : Go to step 3.

NO : **REPLACE THE ELD** , then **do the repair verification** .

3. Shorted wire check (ELD line):
   - 1. Turn the ignition switch to LOCK (0).
   - 2. Jump the SCS line with the HDS.
   - 3. Disconnect the following connector.

     PCM connector A (49P)

   - 4. Check for continuity between test points 1 and 2.

     Test condition IG LOCK (0)

     Under-hood fuse/relay box 3P connector: disconnected

     PCM connector A (49P): disconnected

GETtheMANUALS.org

Test circuit ELD

Test point 1 PCM connector A (49P) No. 34 (WHT)

Test point 2 Body ground

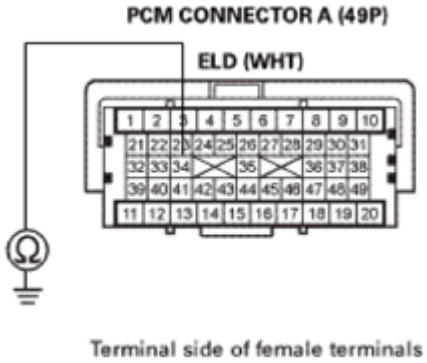

Fig. 290: Checking Continuity Between PCM Connector A (49P) No. 34 (WHT) And Body Ground
Courtesy of AMERICAN HONDA MOTOR CO., INC.

Is there continuity?

YES : Repair a short in the ELD wire between the PCM (A34) and the under-hood fuse/relay box, then **do the repair verification** .

NO : The ELD wire is OK. **Update the PCM** See **PCM UPDATE** or **PCM REMOVAL AND INSTALLATION** if it does not have the latest software, or **substitute a known-good PCM** See **PCM REMOVAL AND INSTALLATION** or **PCM UPDATE** , then **do the repair verification** .

Repair verification:

- 1. Turn the ignition switch to LOCK (0).
- 2. Reconnect all connectors.
- 3. Turn the ignition switch to ON (II).
- 4. **Reset the PCM with the HDS** See **HOW TO TROUBLESHOOT THE A/T SYSTEM** or **HOW TO TROUBLESHOOT THE FUEL AND EMISSIONS SYSTEMS** .
- 5. **DO THE PCM IDLE LEARN PROCEDURE** .
- 6. Start the engine.
- 7. Turn on the headlights.
- 8. Check for Pending or Confirmed DTCs with the HDS.

DTC Description	Confirmed DTC	Pending DTC	Freeze Frame
P1297 ELD CIRCUIT LOW VOLTAGE			

GETtheMANUALS.org

Is DTC P1297 indicated?

YES : Check for poor connections or loose terminals at the under-hood fuse/relay box and the PCM. If the PCM was updated, **substitute a known-good PCM** See **PCM REMOVAL AND INSTALLATION** or **PCM UPDATE** , then recheck. If the PCM was substituted, go to step 1.

NO : Troubleshooting is complete. If the PCM was substituted, **replace the original PCM** See **PCM REMOVAL AND INSTALLATION** or **PCM UPDATE** . If any other Pending or Confirmed DTCs are indicated, go to the indicated DTC's troubleshooting.

DTC P1298: ELD CIRCUIT HIGH VOLTAGE

GETtheMANUALS.org

DTC Troubleshooting: P1298

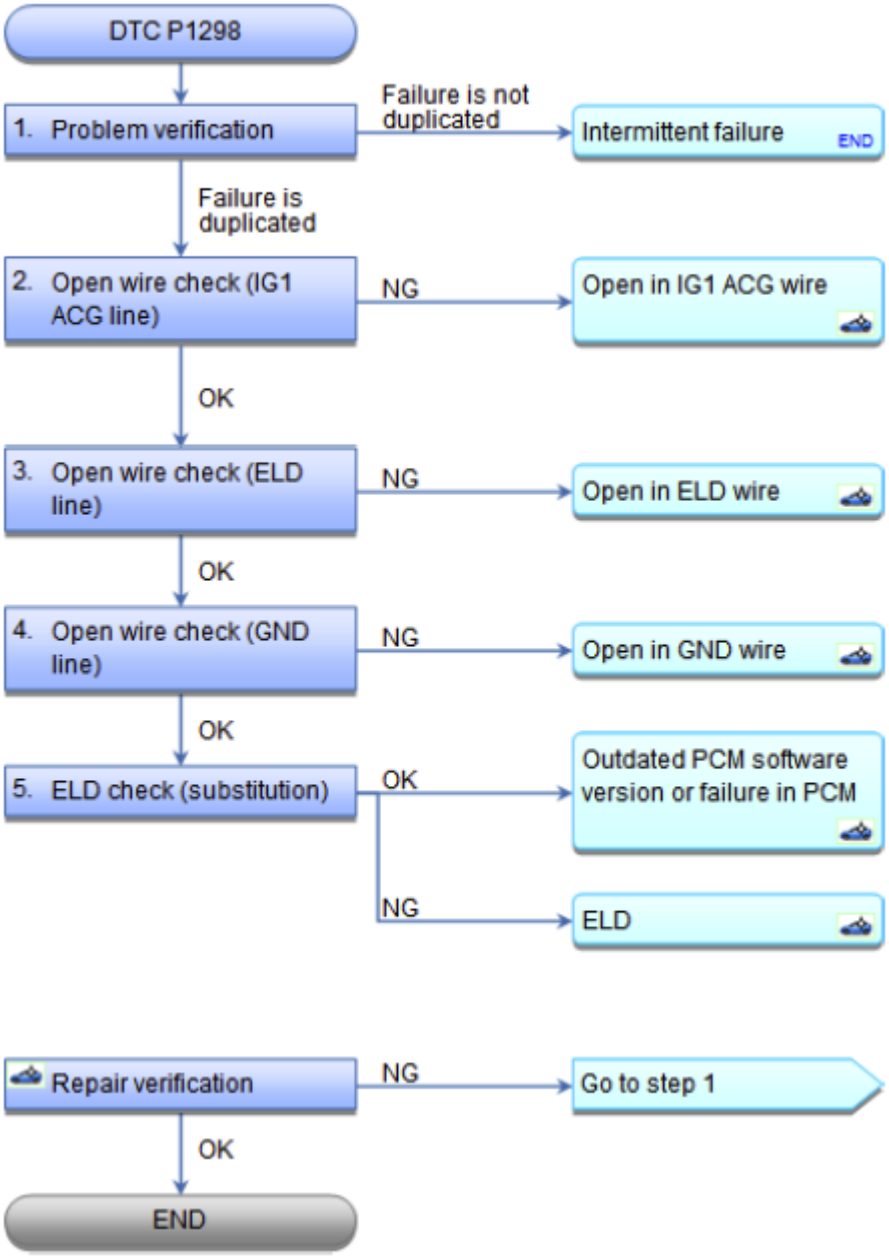

Fig. 291: DTC Troubleshooting Flow Chart (P1298)
Courtesy of AMERICAN HONDA MOTOR CO., INC.

NOTE: **Before you troubleshoot, record all freeze data and any on-board snapshot, and review the general troubleshooting information See HOW TO TROUBLESHOOT THE A/T SYSTEM or HOW TO TROUBLESHOOT THE FUEL AND EMISSIONS SYSTEMS .**

DTC Description	Confirmed DTC	Pending DTC	Freeze Frame

GETtheMANUALS.org

P1298 ELD CIRCUIT HIGH VOLTAGE			

1. Problem verification:
   - 1. Turn the ignition switch to ON (II).
   - 2. Check the parameter(s) below with the HDS.

Signal	Threshold		Current conditions	
	Values	Unit	Values	Unit
ELECTRIC LOAD VALUE	Less than 0.2	A		

Do the current condition(s) match the threshold?

YES : The failure is duplicated. Go to step 2.

NO : Intermittent failure, the system is OK at this time. Check for poor connections or loose terminals at the under-hood fuse/relay box and the PCM.

2. Open wire check (IG1 ACG line):
   - 1. Turn the ignition switch to LOCK (0).
   - 2. Disconnect the following connector.

     Under-hood fuse/relay box 3P connector

   - 3. Turn the ignition switch to ON (II).
   - 4. Measure the voltage between test points 1 and 2.

     Test condition IG ON (II)

     Under-hood fuse/relay box 3P connector: disconnected

     Test circuit IG1 ACG

     Test point 1 Under-hood fuse/relay box 3P connector No. 3 (RED)

     Test point 2 Body ground

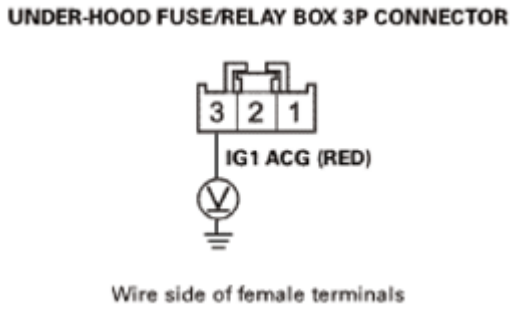

GETtheMANUALS.org

Fig. 292: Measuring Voltage Between Under-Hood Fuse/Relay Box 3P Connector No. 3 (RED) And Body Ground
Courtesy of AMERICAN HONDA MOTOR CO., INC.

Is there battery voltage?

YES : The IG1 ACG wire is OK. Go to step 3.

NO : Check the No. B2 (15 A) fuse in the under-dash fuse/relay box. If the fuse is OK, repair open in the IG1 ACG wire between the No. B2 (15 A) fuse and the under-hood fuse/relay box, then **do the repair verification** .

3. Open wire check (ELD line):
   - 1. Turn the ignition switch to LOCK (0).
   - 2. Jump the SCS line with the HDS.
   - 3. Disconnect the following connector.

     PCM connector A (49P)

   - 4. Check for continuity between test points 1 and 2.

     Test condition IG LOCK (0)

     Under-hood fuse/relay box 3P connector: disconnected

     PCM connector A (49P): disconnected

     Test circuit ELD

     Test point 1 PCM connector A (49P) No. 34 (WHT)

     Test point 2 Under-hood fuse/relay box 3P connector No. 1 (WHT)

GETtheMANUALS.org

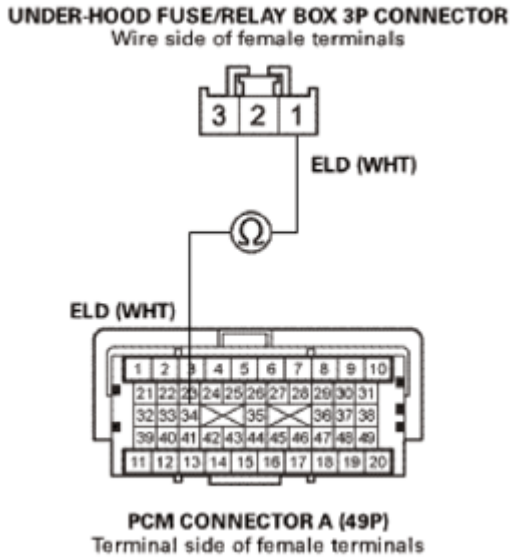

Fig. 293: Checking Continuity Between PCM Connector A (49P) No. 34 (WHT) And Under-hood Fuse/Relay Box 3P Connector No. 1 (WHT)
Courtesy of AMERICAN HONDA MOTOR CO., INC.

Is there continuity?

YES : The ELD wire is OK. Go to step 4.

NO : Repair an open in the ELD wire between the PCM (A34) and the under-hood fuse/relay box, then **do the repair verification** .

4. Open wire check (GND line):
   - 1. Check for continuity between test points 1 and 2.

     Test condition IG LOCK (0)

     Under-hood fuse/relay box 3P connector: disconnected

     PCM connector A (49P): disconnected

     Test circuit GND

     Test point 1 Under-hood fuse/relay box 3P connector No. 2 (GRY)

     Test point 2 Body ground

GETtheMANUALS.org

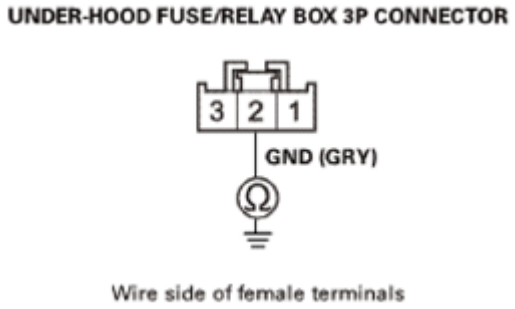

Fig. 294: Checking Continuity Between Under-Hood Fuse/Relay Box 3P Connector No. 2 (GRY) And Body Ground
Courtesy of AMERICAN HONDA MOTOR CO., INC.

Is there continuity?

YES : The GND wire is OK. Go to step 5.

NO : Repair an open in the GND wire between the under-hood fuse/relay box and G302, then **do the repair verification** .

5. ELD check (substitution):
   - 1. **SUBSTITUTE A KNOWN-GOOD ELD** .
   - 2. Turn the ignition switch to ON (II).
   - 3. **Reset the PCM with the HDS** See **HOW TO TROUBLESHOOT THE A/T SYSTEM** or **HOW TO TROUBLESHOOT THE FUEL AND EMISSIONS SYSTEMS** .
   - 4. **DO THE PCM IDLE LEARN PROCEDURE** .
   - 5. Check for Pending or Confirmed DTCs with the HDS.

DTC Description	Confirmed DTC	Pending DTC	Freeze Frame
P1298 ELD CIRCUIT HIGH VOLTAGE			

Is DTC P1298 indicated?

YES : **Update the PCM** See **PCM REMOVAL AND INSTALLATION** or **PCM UPDATE** if it does not have the latest software, or **substitute a known-good PCM** See **PCM REMOVAL AND INSTALLATION** or **PCM UPDATE** , then **do the repair verification** .

NO : **REPLACE THE ORIGINAL ELD** , then **do the repair verification** .

REPAIR VERIFICATION

- 1. Turn the ignition switch to LOCK (0).
- 2. Reconnect all connectors.
- 3. Turn the ignition switch to ON (II).

GETtheMANUALS.org

- 4. **Reset the PCM with the HDS** See **HOW TO TROUBLESHOOT THE A/T SYSTEM** or **HOW TO TROUBLESHOOT THE FUEL AND EMISSIONS SYSTEMS** .
- 5. **DO THE PCM IDLE LEARN PROCEDURE** .
- 6. Check for Pending or Confirmed DTCs with the HDS.

DTC Description	Confirmed DTC	Pending DTC	Freeze Frame
P1298 ELD CIRCUIT HIGH VOLTAGE			

Is DTC P1298 indicated?

YES : Check for poor connections or loose terminals at the under-hood fuse/relay box and the PCM. If the PCM was updated, **substitute a known-good PCM** See **PCM REMOVAL AND INSTALLATION** or **PCM UPDATE** , then recheck. If the PCM was substituted, go to step 1.

NO : Troubleshooting is complete. If the PCM was substituted, **replace the original PCM** See **PCM REMOVAL AND INSTALLATION** or **PCM UPDATE** . If any other Pending or Confirmed DTCs are indicated, go to the indicated DTC's troubleshooting.

DTC P1454: FTP SENSOR CIRCUIT RANGE/PERFORMANCE PROBLEM

GETtheMANUALS.org

DTC Troubleshooting: P1454

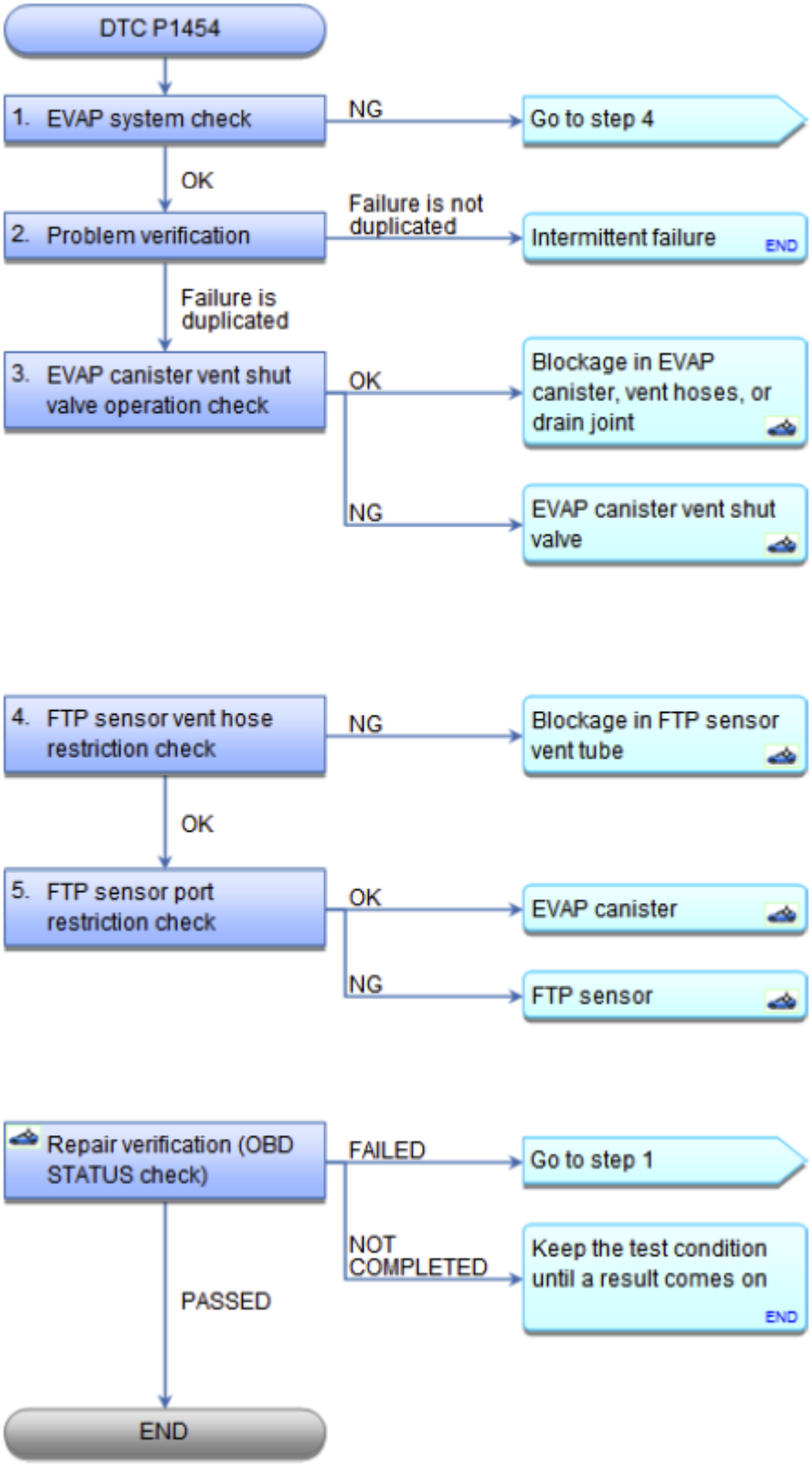

Fig. 295: DTC Troubleshooting Flow Chart (P1454)

GETtheMANUALS.org

Courtesy of AMERICAN HONDA MOTOR CO., INC.

NOTE: **Before you troubleshoot, record all freeze data and any on-board snapshot, and review the general troubleshooting information See HOW TO TROUBLESHOOT THE A/T SYSTEM or HOW TO TROUBLESHOOT THE FUEL AND EMISSIONS SYSTEMS .**

DTC Description	Confirmed DTC	Pending DTC	Freeze Frame
P1454 FTP SENSOR CIRCUIT RANGE/PERFORMANCE PROBLEM			

1. EVAP system check:
   - 1. Turn the ignition switch to ON (II).
   - 2. **Clear the DTC with the HDS** See **HOW TO TROUBLESHOOT THE A/T SYSTEM** or **HOW TO TROUBLESHOOT THE FUEL AND EMISSIONS SYSTEMS** .
   - 3. Turn the ignition switch to LOCK (0).
   - 4. Remove the fuel fill cap, and wait 1 minute.
   - 5. Turn the ignition switch to ON (II).
   - 6. Check the parameter(s) below with the HDS.

Signal	Threshold		Current conditions	
	Values	Unit	Values	Unit
FTP SENSOR	-0.67-0.67	kPa		
	2.4-2.6	V		

Do the current condition(s) match the threshold?

YES : Go to step 2.

NO : Go to step 4.

2. Problem verification:
   - 1. Install the fuel fill cap.
   - 2. **Clear the DTC with the HDS** See **HOW TO TROUBLESHOOT THE A/T SYSTEM** .
   - 3. Start the engine, and let it idle without load (in P or N) until the radiator fan comes on.
   - 4. Monitor the EVAP PC DUTY (purge control duty) in the DATA LIST with the HDS, while holding the engine speed at 3, 000 rpm with the EVAP PC DUTY at 20 % or more for at least 4 minutes, then let the engine idle.

Signal	Current conditions	
	Values	Unit
EVAP PC DUTY		

GETtheMANUALS.org

- 5. Monitor the OBD STATUS for DTC P1454 in the DTCs MENU with the HDS.

DTC Description	OBD Status
P1454 FTP SENSOR CIRCUIT RANGE/PERFORMANCE PROBLEM	

Does the HDS indicate FAILED?

YES : The failure is duplicated. Go to step 3.

NO : If the HDS indicates PASSED, there might be an intermittent failure, and the system is OK at this time. Check the on-board snapshot, and repeat the driving conditions when the DTC set (fuel level, engine speed, vehicle speed, and outside temperature). If no problem is found, check for poor connections or loose terminals between the FTP sensor and the PCM. Also check for a blockage in the FTP sensor vent port and vent hose, and the EVAP canister vent hose and drain joint. If the HDS indicates NOT COMPLETED, let the engine idle until a result comes on.

3. EVAP canister vent shut valve operation check:
   - 1. Turn the ignition switch to LOCK (0).
   - 2. **Remove the EVAP canister vent shut valve from the EVAP canister** See **HOW TO TROUBLESHOOT THE FUEL AND EMISSIONS SYSTEMS** .
   - 3. Connect the 2P connector to the EVAP canister vent shut valve.
   - 4. Turn the ignition switch to ON (II).
   - 5. Select EVAP TEST in the INSPECTION MENU, and do the EVAP CVS ON in the SINGLE SOLENOID with the HDS.
   - 6. Check the EVAP canister vent shut valve (A) operation.

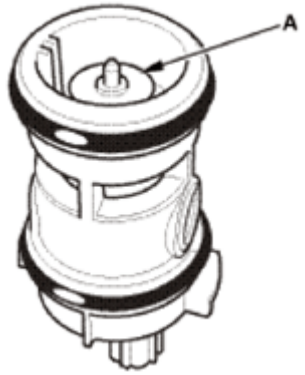

Fig. 296: Identifying EVAP Canister Vent Shut Valve
Courtesy of AMERICAN HONDA MOTOR CO., INC.

Is the valve free of corrosion, and does it operate properly?

YES : Check for a blockage in the EVAP canister, the vent hoses, and the drain joint, and repair it if needed. Install the EVAP canister vent shut valve, then **do the repair verification** .

GETtheMANUALS.org

NO : **REPLACE THE EVAP CANISTER VENT SHUT VALVE** , then **do the repair verification** .

4. FTP sensor vent hose restriction check:
   - 1. Disconnect the vent hose (A) from the FTP sensor (B).

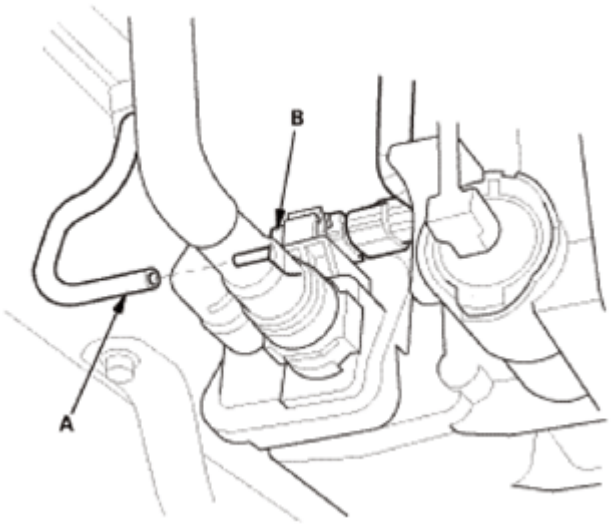

Fig. 297: Identifying Vent Hose And FTP Sensor
Courtesy of AMERICAN HONDA MOTOR CO., INC.

   - 2. Check the parameter(s) below with the HDS.

Signal	Threshold		Current conditions	
	Values	Unit	Values	Unit
FTP SENSOR	-0.67-0.67	kPa		
	2.4-2.6	V		

Do the current condition(s) match the threshold?

YES : Check for a blockage in the FTP sensor vent hose, then **do the repair verification** .

NO : The FTP sensor vent hose is OK. Go to step 5.

5. FTP sensor port restriction check:
   - 1. Turn the ignition switch to LOCK (0).
   - 2. Remove the FTP sensor (A) from the EVAP canister with its connector connected.

GETtheMANUALS.org

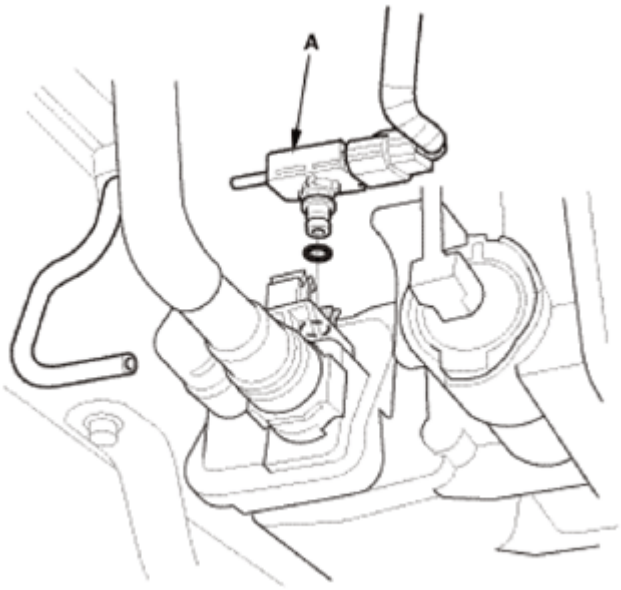

Fig. 298: Identifying FTP Sensor
Courtesy of AMERICAN HONDA MOTOR CO., INC.

- 3. Turn the ignition switch to ON (II).
- 4. Check the parameter(s) below with the HDS.

Signal	Threshold		Current conditions	
	Values	Unit	Values	Unit
FTP SENSOR	-0.67-0.67	kPa		
	2.4-2.6	V		

Do the current condition(s) match the threshold?

YES : The FTP sensor port is OK. The EVAP canister has an internal blockage; **REPLACE THE EVAP CANISTER** , then **do the repair verification** .

NO : REPLACE THE FTP SENSOR , then **do the repair verification** .

REPAIR VERIFICATION (OBD STATUS CHECK)

- 1. Turn the ignition switch to LOCK (0).
- 2. Install the parts in the reverse order of removal.
- 3. Turn the ignition switch to ON (II).
- 4. **Reset the PCM with the HDS** See **HOW TO TROUBLESHOOT THE A/T SYSTEM** or **HOW TO TROUBLESHOOT THE FUEL AND EMISSIONS SYSTEMS** .
- 5. **DO THE PCM IDLE LEARN PROCEDURE** .
- 6. Monitor the EVAP PC DUTY (purge control duty) in the DATA LIST with the HDS, while holding the engine speed at 3, 000 rpm with the EVAP PC DUTY at 20 % or more for at least 4 minutes, then let

GETtheMANUALS.org

the engine idle.

Signal	Current conditions	
	Values	Unit
EVAP PC DUTY		

- 7. Monitor the OBD STATUS for DTC P1454 in the DTCs MENU with the HDS.

DTC Description	OBD Status
P1454 FTP SENSOR CIRCUIT RANGE/PERFORMANCE PROBLEM	

Does the HDS indicate PASSED, FAILED, or NOT COMPLETED?

PASSED : Troubleshooting is complete. If any other Pending or Confirmed DTCs were indicated, go to the indicated DTC's troubleshooting.

FAILED : Go to step 1 and recheck.

NOT COMPLETED : Hold the engine speed at 3, 000 rpm with the EVAP PC DUTY at 20% or more until a result comes on.

DTC P1458: FTP SENSOR CIRCUIT RANGE/PERFORMANCE PROBLEM

GETtheMANUALS.org

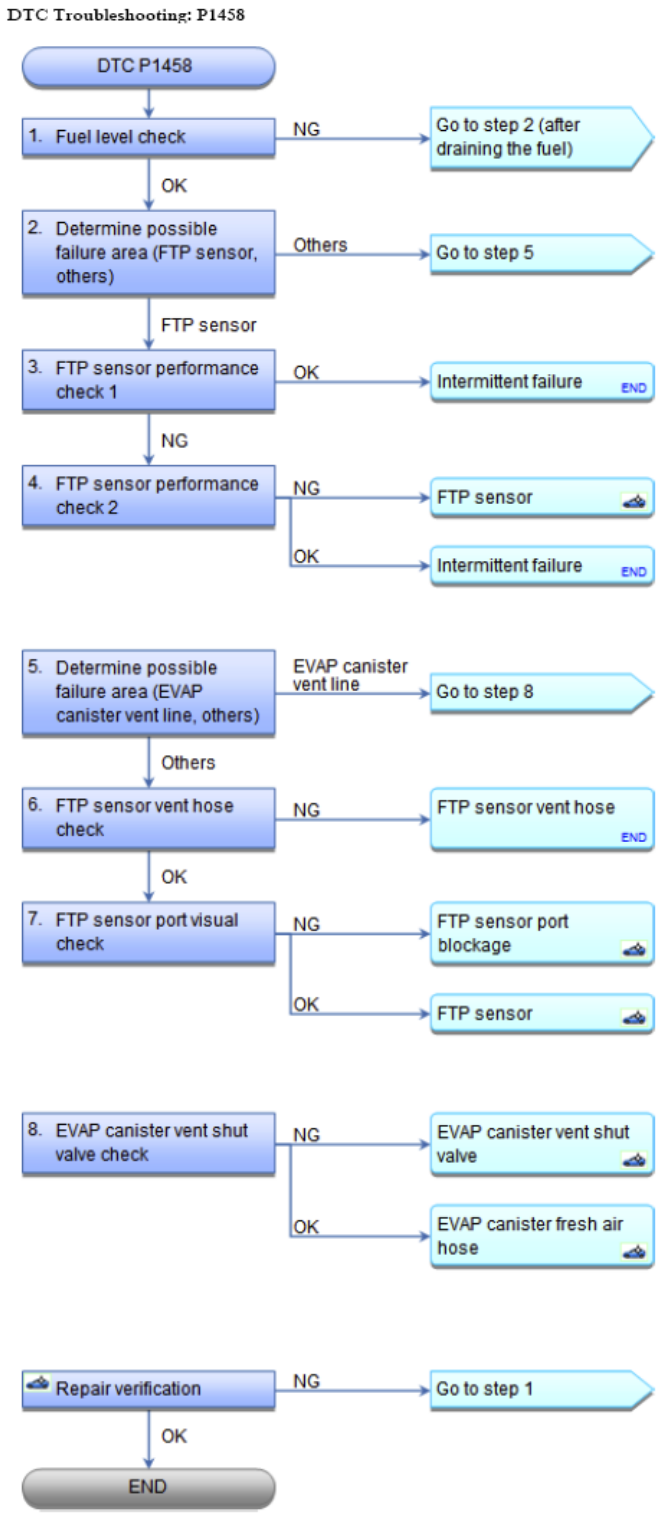

Fig. 299: DTC Troubleshooting Flow Chart (P1458)
Courtesy of AMERICAN HONDA MOTOR CO., INC.

Special Tools Required

GETtheMANUALS.org

Vacuum Pump/Gauge, 0-30 inHg Snap-on YA4000A or equivalent, commercially available

NOTE:

- **Before you troubleshoot, record all freeze data and any on-board snapshot, and review the general troubleshooting information See HOW TO TROUBLESHOOT THE A/T SYSTEM or HOW TO TROUBLESHOOT THE FUEL AND EMISSIONS SYSTEMS .**
- **If any of DTCs listed below are indicated at the same time as DTC P1458, troubleshoot those DTCs first, then recheck for P1458.**
  - **P0451, P0452, P0453, P1454: FTP sensor**
  - **P2422: EVAP canister vent shut valve**
- **Do not start the engine during this troubleshooting.**

DTC Description	Confirmed DTC	Pending DTC	Freeze Frame
P1458 FTP SENSOR CIRCUIT RANGE/PERFORMANCE PROBLEM			

1. Fuel level check:
   - 1. Turn the ignition switch to ON (II).
   - 2. Note these recorded on-board snapshot parameters with the HDS:
     - MAX Value of FTP SENSOR
     - MIN Value of FTP SENSOR
     - FUEL LEVEL

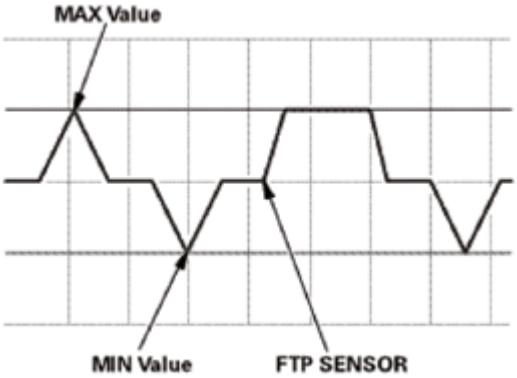

Fig. 300: FTP Sensor Signal Waveform
Courtesy of AMERICAN HONDA MOTOR CO., INC.

   - Check the FUEL LEVEL in the DATA LIST with the HDS.

Signal	Current conditions	
	Values	Unit
FUEL LEVEL		

GETtheMANUALS.org

Is the FUEL LEVEL less than it is on the on-board snapshot?

YES : Go to step 2.

NO : Drain the fuel until the FUEL LEVEL is less than it is on the on-board snapshot, then go to step 2.

2. Determine possible failure area (FTP sensor, others):
   - 1. Take a snapshot with the HDS for 3 minutes without starting the engine.
   - 2. Check the recorded snapshot parameter with the HDS:
     - MAX Value of FTP SENSOR (FINE)
     - MIN Value of FTP SENSOR (FINE)

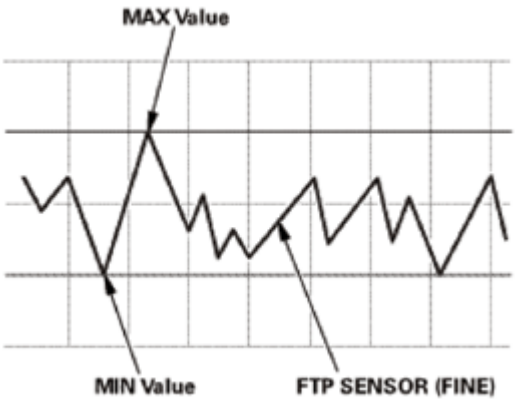

Fig. 301: FTP Sensor Signal Waveform (Fine)
Courtesy of AMERICAN HONDA MOTOR CO., INC.

Is the difference between the MAX and MIN values of the FTP SENSOR (FINE) about 0.67 kPa (0.2 inHg, 5 mmHg) or less?

YES : Go to step 3.

NO : Go to step 5.

3. FTP sensor performance check 1:
   - 1. Check the FTP SENSOR (FINE) in the recorded snapshot with the HDS.

Does it vary 0.067 kPa (0.2 inHg, 5 mmHg) or more for 3 seconds?

YES : Go to step 4.

NO : Intermittent failure, the system is OK at this time. Check for poor connections or loose terminals at the FTP sensor, the EVAP canister vent shut valve, and the PCM. Also check for a blockage in the EVAP vent hose.

4. FTP sensor performance check 2:

GETtheMANUALS.org

- 1. Turn the ignition switch to LOCK (0).
- 2. REMOVE THE FTP SENSOR .
- 3. Reconnect the FTP sensor 3P connector.
- 4. Turn the ignition switch to ON (II).
- 5. Check the parameter(s) below with the HDS.

Signal	Current conditions	
	Values	Unit
FTP SENSOR (FINE)		

Does it vary 0.067 kPa (0.2 inHg, 5 mmHg) or more for 3 seconds?

YES : REPLACE THE FTP SENSOR , then **do the repair verification** .

NO : Intermittent failure, the system is OK at this time. Check for poor connections or loose terminals at the FTP sensor, the EVAP canister vent shut valve, and the PCM. Also check for a blockage in the EVAP vent hose.

5. Determine possible failure area (EVAP canister vent line, others):
   - 1. Remove the fuel fill cap.
   - 2. Check the parameter(s) below with the HDS.

Signal	Threshold		Current conditions	
	Values	Unit	Values	Unit
FTP SENSOR (FINE)	More than 0.67	kPa		
	Less than -0.67	kPa		

Do the current condition(s) match the threshold?

YES : Reinstall the fuel fill cap, then go to step 8.

NO : Go to step 6.

6. FTP sensor vent hose check:
   - 1. Turn the ignition switch to LOCK (0).
   - 2. REMOVE THE FTP SENSOR .
   - 3. Reconnect the FTP sensor 3P connector.
   - 4. Turn the ignition switch to ON (II).
   - 5. Check the parameter(s) below with the HDS.

Signal	Threshold		Current conditions	
	Values	Unit	Values	Unit

GETtheMANUALS.org

FTP SENSOR (FINE)	More than 0.67	kPa		
	less than - 0.67	kPa		

Do the current condition(s) match the threshold?

YES : Remove the blockage in the FTP sensor vent hose. Replace the hose if needed.

NO : Go to step 7.

7. FTP sensor port visual check:
   - 1. Turn the ignition switch to LOCK (0).
   - 2. Disconnect the following connector.

     FTP sensor 3P connector

   - 3. Check for a blockage or damage at the FTP sensor ports (EVAP canister side and vent side).

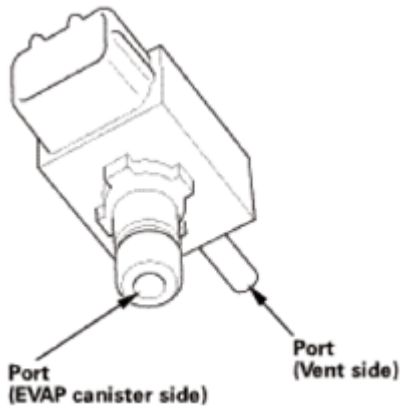

Fig. 302: Identifying FTP Sensor Ports
Courtesy of AMERICAN HONDA MOTOR CO., INC.

Is there any blockage or damage?

YES : Remove the blockage, and REPLACE THE FTP SENSOR if needed, then **do the repair verification** .

NO : REPLACE THE FTP SENSOR , then **do the repair verification** .

8. EVAP canister vent shut valve check:
   - 1. Turn the ignition switch to LOCK (0).
   - 2. Disconnect the fresh air hose (A) from the EVAP canister (B), then connect a vacuum pump/gauge, 0-30 inHg, to the EVAP vent shut valve as shown.

GETtheMANUALS.org

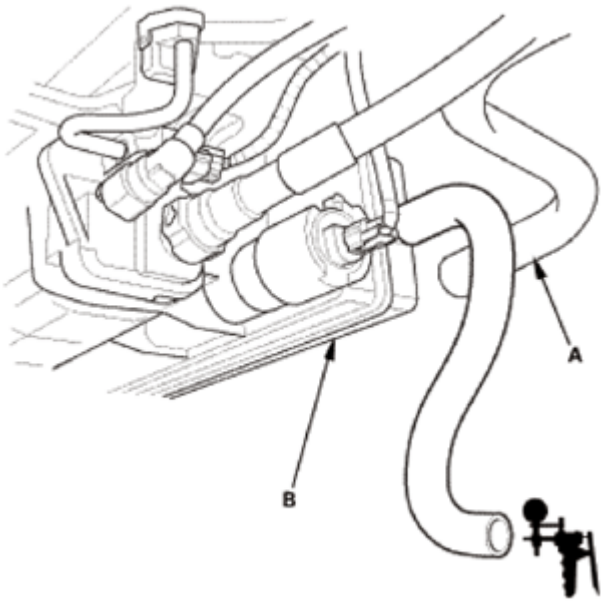

Fig. 303: Identifying EVAP Canister And Air Hose
Courtesy of AMERICAN HONDA MOTOR CO., INC.

- 3. Turn the ignition switch to ON (II).
- 4. Try to apply vacuum to the valve (not more than 5.3 kPa (1.6 inHg, 40 mmHg)) while checking the FTP SENSOR (FINE) in the DATA LIST with the HDS.

NOTE: **To avoid damaging the FTP sensor, do not apply more than 5.3 kPa (1.6 inHg, 40 mmHg) of vacuum.**

Signal	Current conditions	
	Values	Unit
FTP SENSOR (FINE)		

Does the valve hold more than 1.3 kPa (0.4 inHg, 10 mmHg) of vacuum?

YES : **REPLACE THE EVAP CANISTER VENT SHUT VALVE** , then **do the repair verification** .

NO : The EVAP canister vent shut valve is OK. Remove the blockage in the fresh air hose. Replace the hose if needed, then **do the repair verification** .

REPAIR VERIFICATION

- 1. Turn the ignition switch to LOCK (0).
- 2. Reconnect all connectors and the fresh air hose.
- 3. Turn the ignition switch to ON (II).
- 4. **Reset the PCM with the HDS** See **HOW TO TROUBLESHOOT THE A/T SYSTEM** or **HOW TO TROUBLESHOOT THE FUEL AND EMISSIONS SYSTEMS** .

GETtheMANUALS.org

- 5. **DO THE PCM IDLE LEARN PROCEDURE** .
- 6. Take a snapshot with the HDS for 3 minutes without starting the engine.
- 7. Check the recorded snapshot parameter with the HDS:
  - MAX Value of FTP SENSOR (FINE)
  - MIN Value of FTP SENSOR (FINE)

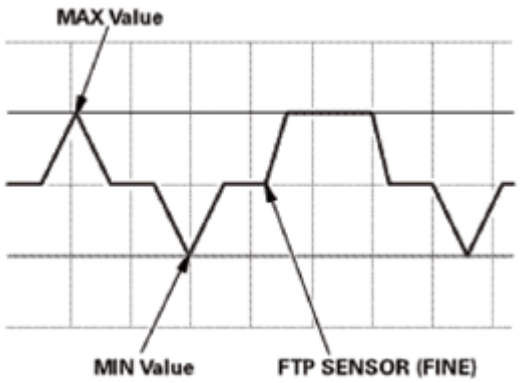

Fig. 304: FTP Sensor Signal Waveform (Fine)
Courtesy of AMERICAN HONDA MOTOR CO., INC.

Is the difference between the MAX and MIN values of the FTP SENSOR (FINE) about 0.67 kPa (0.2 inHg, 5 mmHg) or less?

YES : Troubleshooting is complete.

NO : Check for poor connections or loose terminals at the FTP sensor, the EVAP canister vent shut valve, and the PCM, then go to step 1.

DTC P145C: EVAP SYSTEM PURGE FLOW MALFUNCTION

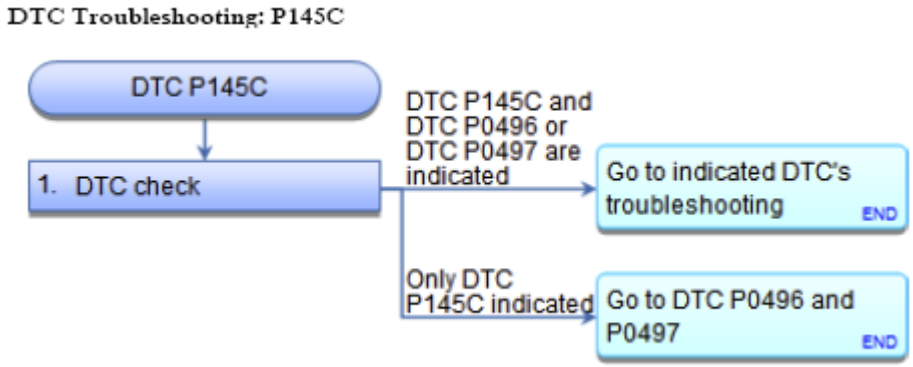

Fig. 305: DTC Troubleshooting Flow Chart (P145C)
Courtesy of AMERICAN HONDA MOTOR CO., INC.

NOTE:

- **Before you troubleshoot, record all freeze data and any on-board**

GETtheMANUALS.org

snapshot, and review the general troubleshooting information See HOW TO TROUBLESHOOT THE A/T SYSTEM or HOW TO TROUBLESHOOT THE FUEL AND EMISSIONS SYSTEMS .

- **If DTC P145C is indicated alone, do the troubleshooting for DTC P0496 and P0497 using the freeze data for P145C.**
- **If DTC P0497 and P145C are stored at the same time, check for a poor connection, a blockage, or damage at the EVAP canister purge line between the EVAP canister purge valve and the EVAP canister. Also check for a stuck closed EVAP canister purge valve.**
- **If any of the DTCs listed below are indicated at the same time as DTC P145C, troubleshoot those DTCs first, then recheck for P145C.**
  - **P0496, P0497: EVAP system purge flow**

DTC Description	Confirmed DTC	Pending DTC	Freeze Frame
P145C EVAP SYSTEM PURGE FLOW MALFUNCTION			

1. DTC check:
   - 1. Turn the ignition switch to ON (II).
   - 2. Check for Pending or Confirmed DTCs with the HDS.

DTC Description	Confirmed DTC	Pending DTC	Freeze Frame
P0496 EVAP SYSTEM HIGH PURGE FLOW DETECTED			
P0497 EVAP SYSTEM LOW PURGE FLOW DETECTED			
P145C EVAP SYSTEM PURGE FLOW MALFUNCTION			

Are DTC P0496 or P0497 and P145C indicated at the same time?

YES : Go to the indicated DTC's troubleshooting.

NO : Go to the **DTC P0496 TROUBLESHOOTING** and the **DTC P0497 TROUBLESHOOTING**.

DTC P1549: CHARGING SYSTEM HIGH VOLTAGE

GETtheMANUALS.org

DTC Troubleshooting: P1549

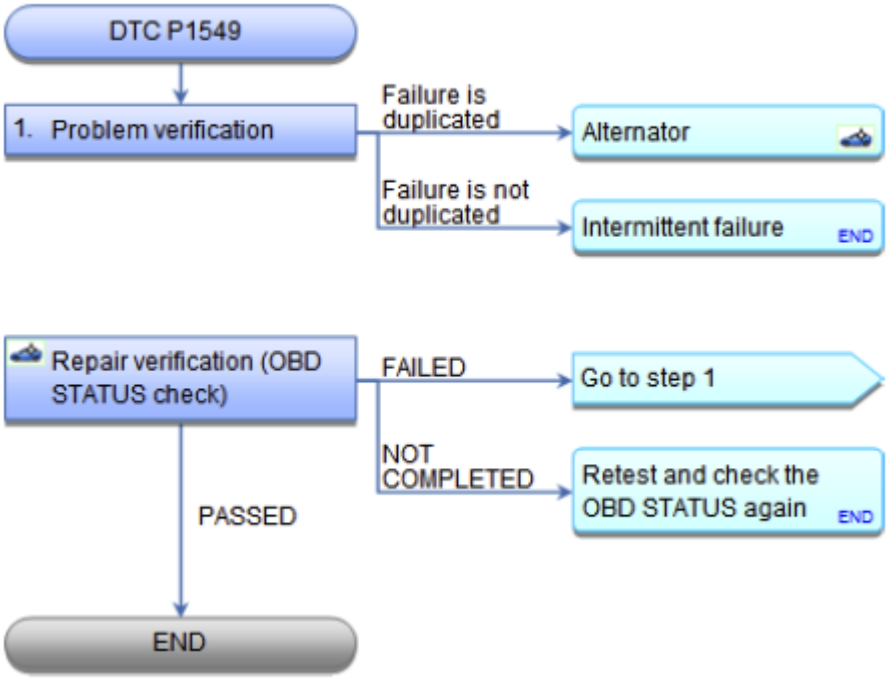

Fig. 306: DTC Troubleshooting Flow Chart (P1549)
Courtesy of AMERICAN HONDA MOTOR CO., INC.

NOTE:

- **Before you troubleshoot, record all freeze data and any on-board snapshot, and review the general troubleshooting information See HOW TO TROUBLESHOOT THE A/T SYSTEM or HOW TO TROUBLESHOOT THE FUEL AND EMISSIONS SYSTEMS .**
- **If a high voltage battery (24 V, etc.) is connected to the vehicle, this DTC can be stored.**

DTC Description	Confirmed DTC	Pending DTC	Freeze Frame
P1549 CHARGING SYSTEM HIGH VOLTAGE			

1. Problem verification:
   - 1. Turn the ignition switch to ON (II).
   - 2. **Clear the DTC with the HDS** See **HOW TO TROUBLESHOOT THE A/T SYSTEM** or **HOW TO TROUBLESHOOT THE FUEL AND EMISSIONS SYSTEMS** .
   - 3. Start the engine.
   - 4. Check under these conditions:
     - A/C off
     - Headlights off
     - Rear window defogger off
   - 5. Hold the engine speed at 3, 000 rpm (in P or N) for 1 minute.

GETtheMANUALS.org

- 6. Check for Pending or Confirmed DTCs with the HDS.

DTC Description	Confirmed DTC	Pending DTC	Freeze Frame
P1549 CHARGING SYSTEM HIGH VOLTAGE			

Is DTC P1549 indicated?

YES : **Replace the alternator** See **ALTERNATOR OVERHAUL** or **ALTERNATOR REMOVAL AND INSTALLATION** , then **do the repair verification** .

NO : Intermittent failure, the system is OK at this time. Check for poor connections or loose terminals at the alternator and the under-hood fuse/relay box.

REPAIR VERIFICATION (OBD STATUS CHECK)

- 1. Turn the ignition switch to ON (II).
- 2. **Reset the PCM with the HDS** See **HOW TO TROUBLESHOOT THE A/T SYSTEM** or **HOW TO TROUBLESHOOT THE FUEL AND EMISSIONS SYSTEMS** .
- 3. **DO THE PCM IDLE LEARN PROCEDURE** .
- 4. Start the engine.
- 5. Check under these conditions:
  - A/C off
  - Headlights off
  - Rear window defogger off
- 6. Monitor the OBD STATUS for DTC P1549 in the DTCs MENU with the HDS.

DTC Description	OBD Status
P1549 CHARGING SYSTEM HIGH VOLTAGE	

Does the HDS indicate PASSED, FAILED, or NOT COMPLETED?

PASSED : Troubleshooting is complete. If any other Pending or Confirmed DTCs were indicated, go to the indicated DTC's troubleshooting.

FAILED : Go to step 1 and recheck.

NOT COMPLETED : Meet the test condition, and check the OBD STATUS again.

DTC P154A: BATTERY SENSOR INTERNAL FAILURE

GETtheMANUALS.org

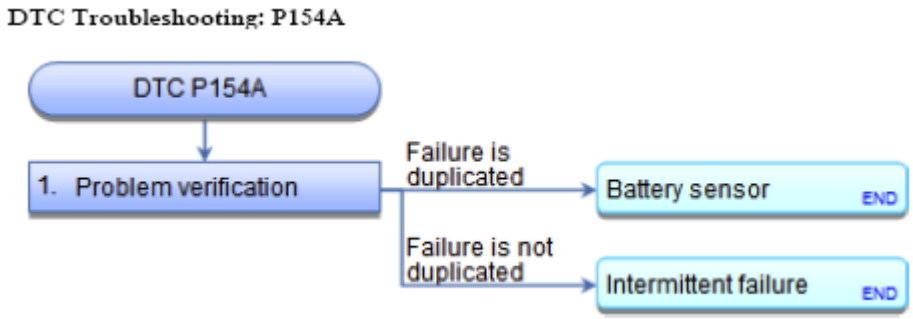

Fig. 307: DTC Troubleshooting Flow Chart (P154A)
Courtesy of AMERICAN HONDA MOTOR CO., INC.

NOTE: **Before you troubleshoot, record all freeze data and any on-board snapshot, and review the general troubleshooting information See HOW TO TROUBLESHOOT THE A/T SYSTEM or HOW TO TROUBLESHOOT THE FUEL AND EMISSIONS SYSTEMS .**

DTC Description	Confirmed DTC	Pending DTC	Freeze Frame
P154A BATTERY SENSOR INTERNAL FAILURE			

1. Problem verification:
   - 1. Turn the ignition switch to ON (II).
   - 2. **Clear the DTC with the HDS** See **HOW TO TROUBLESHOOT THE A/T SYSTEM** or **HOW TO TROUBLESHOOT THE FUEL AND EMISSIONS SYSTEMS** , and wait 5 seconds.
   - 3. Check for Pending or Confirmed DTCs with the HDS.

DTC Description	Confirmed DTC	Pending DTC	Freeze Frame
P154A BATTERY SENSOR INTERNAL FAILURE			

Is DTC P154A indicated?

YES : **REPLACE THE BATTERY SENSOR** .

NO : Intermittent failure, the system is OK at this time. Check for poor connections or loose terminals at the battery sensor and the PCM.

DTC P1658: ETCS CONTROL RELAY ON MALFUNCTION

GETtheMANUALS.org

DTC Troubleshooting: P1658

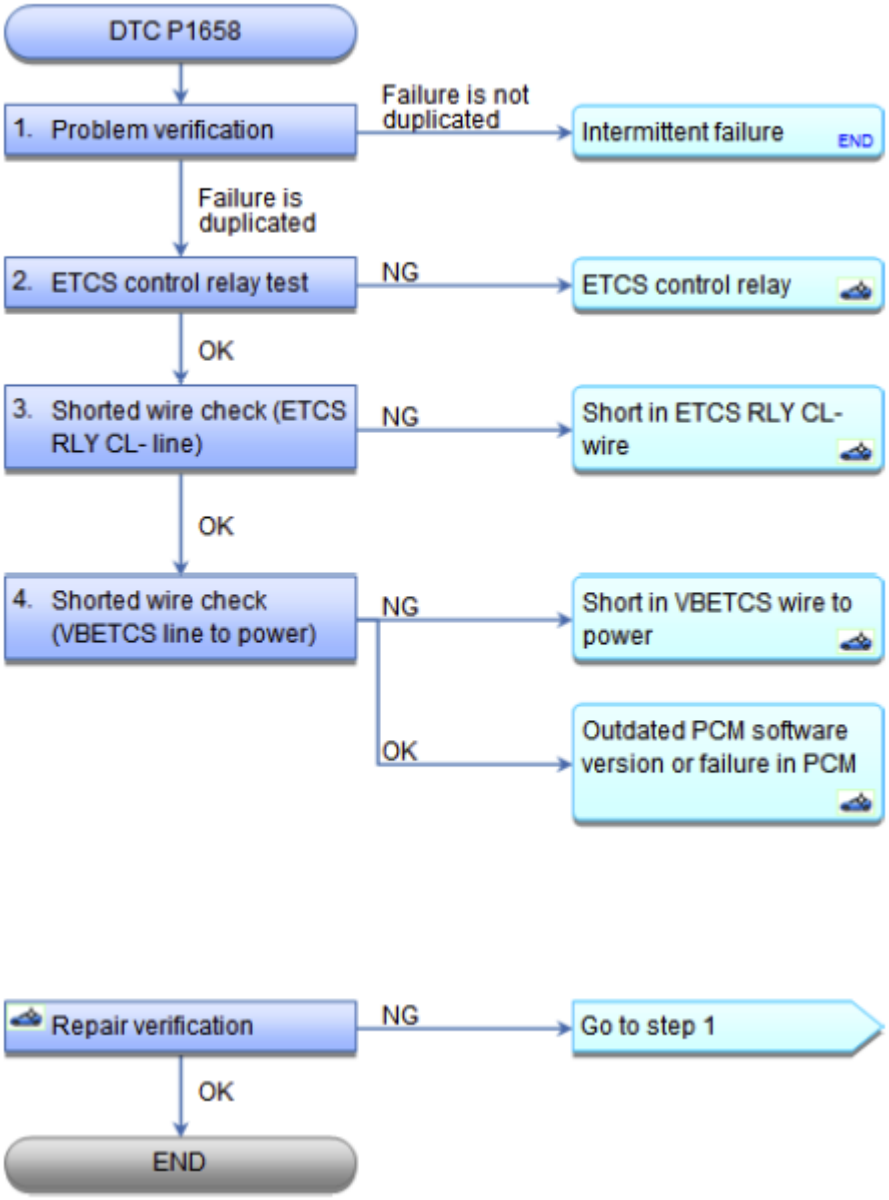

Fig. 308: DTC Troubleshooting Flow Chart (P1658)
Courtesy of AMERICAN HONDA MOTOR CO., INC.

NOTE: **Before you troubleshoot, record all freeze data and any on-board snapshot, and review the general troubleshooting information See HOW TO TROUBLESHOOT THE A/T SYSTEM or HOW TO TROUBLESHOOT THE FUEL AND EMISSIONS SYSTEMS .**

DTC Description	Confirmed DTC	Pending DTC	Freeze Frame
P1658 ETCS CONTROL RELAY ON MALFUNCTION			

GETtheMANUALS.org

1. Problem verification:
    - 1. Turn the ignition switch to ON (II).
    - 2. Do the ETCS TEST with the HDS.

    Is the RELAY circuit OK?

    YES : Intermittent failure, the system is OK at this time. Check for poor connections or loose terminals at the ETCS control relay and the PCM.

    NO : The failure is duplicated. Go to step 2.

2. ETCS control relay test:
    - 1. Turn the ignition switch to LOCK (0).
    - 2. Remove the ETCS control relay (A) from the under-dash fuse/relay box.

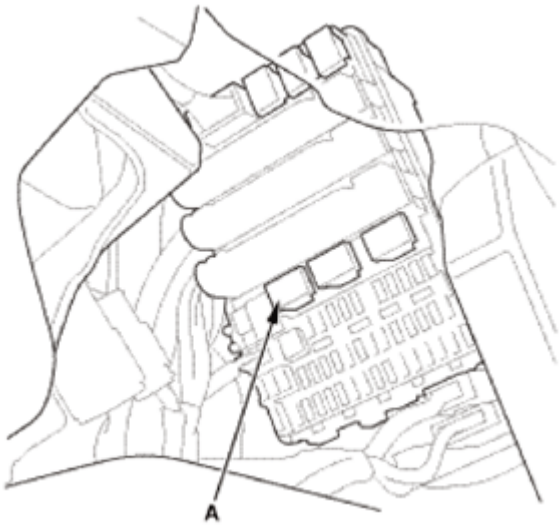

Fig. 309: Identifying ETCS Control Relay
Courtesy of AMERICAN HONDA MOTOR CO., INC.

    - 3. **TEST THE ETCS CONTROL RELAY** .

    Is the ETCS control relay OK?

    YES : The ETCS control relay is OK. Go to step 3.

    NO : Replace the ETCS control relay, then **do the repair verification** .

3. Shorted wire check (ETCS RLY CL- line):
    - 1. Turn the ignition switch to LOCK (0).
    - 2. Jump the SCS line with the HDS.
    - 3. Disconnect the following connector.

GETtheMANUALS.org

PCM connector A (49P)

- 4. Check for continuity between test points 1 and 2.

  Test condition IG LOCK (0)

  ETCS control relay: disconnected

  PCM connector A (49P): disconnected

  Test circuit ETCS RLY CL-

  Test point 1 PCM connector A (49P) No. 48 (PUR)

  Test point 2 Body ground

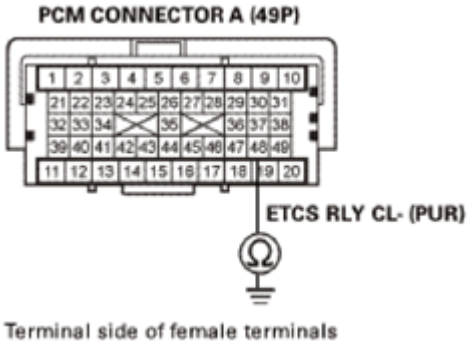

Fig. 310: Checking Continuity Between PCM Connector A (49P) No. 48 (PUR) And Body Ground
Courtesy of AMERICAN HONDA MOTOR CO., INC.

Is there continuity?

YES : Repair a short in the ETCS RLY CL- wire between the PCM (A48) and the throttle body, then **do the repair verification** .

NO : The ETCS RLY CL- wire is OK. Go to step 4.

4. Shorted wire check (VBETCS line to power):
   - 1. Disconnect the following connector.

     PCM connector C (49P)

   - 2. Turn the ignition switch to ON (II).
   - 3. Measure the voltage between test points 1 and 2.

     Test condition IG ON (II)

GETtheMANUALS.org

ETCS control relay: disconnected

PCM connector A (49P): disconnected

PCM connector C (49P): disconnected

Test circuit VBETCS

Test point 1 PCM connector C (49P) No. 1 (YEL)

Test point 2 Body ground

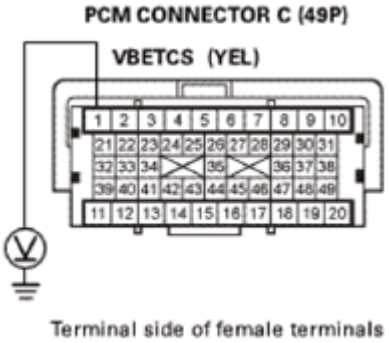

Fig. 311: Measuring Voltage Between PCM Connector C (49P) No. 1 (YEL) And Body Ground
Courtesy of AMERICAN HONDA MOTOR CO., INC.

Is there battery voltage?

YES : Repair a short to power in the VBETCS wire between the PCM (C1) and the ETCS control relay, then **do the repair verification** .

NO : The VBETCS wire is OK. **Update the PCM** See **PCM REMOVAL AND INSTALLATION** or **PCM UPDATE** if it does not have the latest software, or **substitute a known-good PCM** See **PCM REMOVAL AND INSTALLATION** or **PCM UPDATE** , then **do the repair verification** .

REPAIR VERIFICATION

- 1. Turn the ignition switch to LOCK (0).
- 2. Reconnect all connectors.
- 3. Turn the ignition switch to ON (II).
- 4. **Reset the PCM with the HDS** See **HOW TO TROUBLESHOOT THE A/T SYSTEM** or **HOW TO TROUBLESHOOT THE FUEL AND EMISSIONS SYSTEMS** .
- 5. **DO THE PCM IDLE LEARN PROCEDURE** .
- 6. Check for Pending or Confirmed DTCs with the HDS.

GETtheMANUALS.org

DTC Description	Confirmed DTC	Pending DTC	Freeze Frame
P1658 ETCS CONTROL RELAY ON MALFUNCTION			

Is DTC P1658 indicated?

YES : Check for poor connections or loose terminals at the ETCS control relay and the PCM. If the PCM was updated, **substitute a known-good PCM** See **PCM REMOVAL AND INSTALLATION** or **PCM UPDATE** , then recheck. If the PCM was substituted, go to step 1.

NO : Troubleshooting is complete. If the PCM was substituted, **replace the original PCM** See **PCM REMOVAL AND INSTALLATION** or **PCM UPDATE** . If any other Pending or Confirmed DTCs are indicated, go to the indicated DTC's troubleshooting.

DTC P1659: ETCS CONTROL RELAY OFF MALFUNCTION

GETtheMANUALS.org

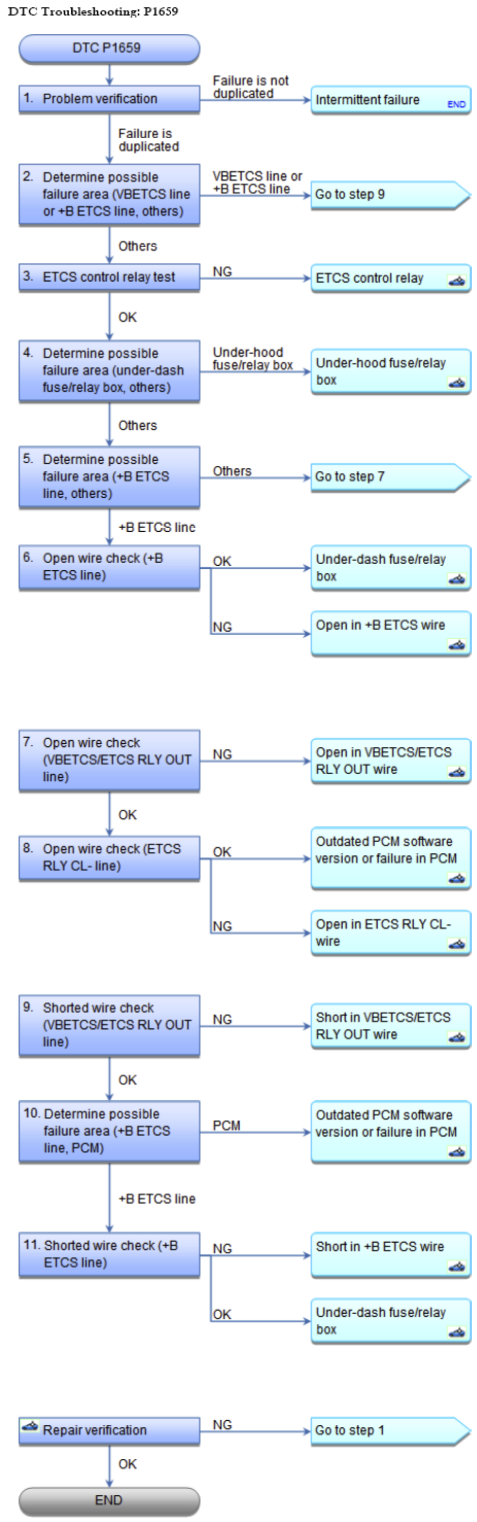

Fig. 312: DTC Troubleshooting Flow Chart (P1659)
Courtesy of AMERICAN HONDA MOTOR CO., INC.

NOTE: **Before you troubleshoot, record all freeze data and any on-board snapshot, and review the general troubleshooting information See HOW TO TROUBLESHOOT**

GETtheMANUALS.org

THE FUEL AND EMISSIONS SYSTEMS or HOW TO TROUBLESHOOT THE A/T SYSTEM .

DTC Description	Confirmed DTC	Pending DTC	Freeze Frame
P1659 ETCS CONTROL RELAY OFF MALFUNCTION			

1. Problem verification:
   - 1. Turn the ignition switch to ON (II).
   - 2. **Clear the DTC with the HDS** See **HOW TO TROUBLESHOOT THE A/T SYSTEM** or **HOW TO TROUBLESHOOT THE FUEL AND EMISSIONS SYSTEMS** .
   - 3. Check for Pending or Confirmed DTCs with the HDS.

DTC Description	Confirmed DTC	Pending DTC	Freeze Frame
P1659 ETCS CONTROL RELAY OFF MALFUNCTION			

Is DTC P1659 indicated?

YES : The failure is duplicated. Go to step 2.

NO : Intermittent failure, the system is OK at this time. Check for poor connections or loose terminals at the ETCS control relay and the PCM.

2. Determine possible failure area (VBETCS line or +B ETCS line, others):
   - 1. Turn the ignition switch to LOCK (0).
   - 2. Check the following fuse.

     Fuse No. A22 (15 A)

     Location Under-hood fuse/relay box

Is the fuse OK?

YES : Go to step 3.

NO : Go to step 9.

3. ETCS control relay test:
   - 1. Remove the ETCS control relay (A) from the under-dash fuse/relay box.

GETtheMANUALS.org

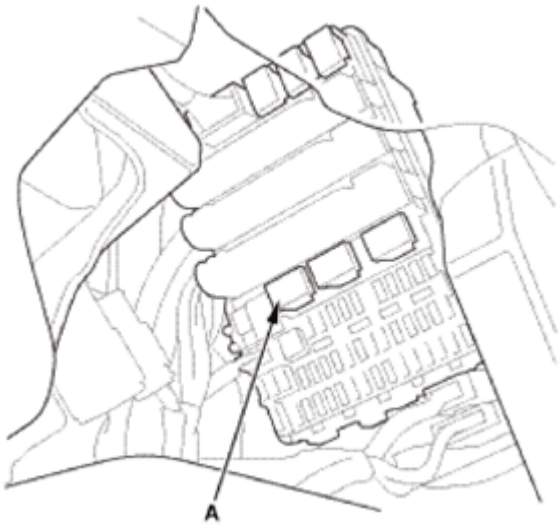

Fig. 313: Identifying ETCS Control Relay
Courtesy of AMERICAN HONDA MOTOR CO., INC.

- 2. **TEST THE ETCS CONTROL RELAY** .

Is the ETCS control relay OK?

YES : The ETCS control relay is OK. Go to step 4.

NO : Replace the ETCS control relay, then **do the repair verification** .

4. Determine possible failure area (under-dash fuse/relay box, others):
   - 1. Turn the ignition switch to ON (II).
   - 2. Measure the voltage between test points 1 and 2.

     Test condition IG ON (II)

     ETCS control relay: disconnected

     Test circuit FI MAIN RLY OUT

     Test point 1 ETCS control relay 4P socket No. 3 (Under-dash fuse/relay box)

     Test point 2 Body ground

GETtheMANUALS.org

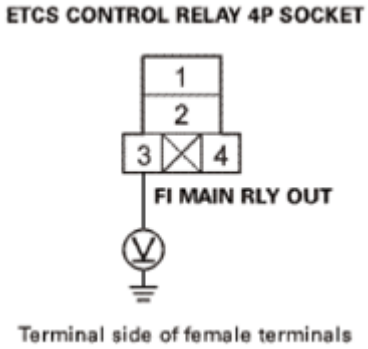

Fig. 314: Measuring Voltage Between ETCS Control Relay 4P Socket No. 3 (Under-Dash Fuse/Relay Box) And Body Ground
Courtesy of AMERICAN HONDA MOTOR CO., INC.

Is there battery voltage?

YES : Go to step 5.

NO : **REPLACE THE UNDER-DASH FUSE/RELAY BOX** , then **do the repair verification** .

5. Determine possible failure area (+B ETCS line, others):
   - 1. Measure the voltage between test points 1 and 2.

     Test condition IG ON (II)

     ETCS control relay: disconnected

     Test circuit +B ETCS

     Test point 1 ETCS control relay 4P socket No. 1 (Under-dash fuse/relay box)

     Test point 2 Body ground

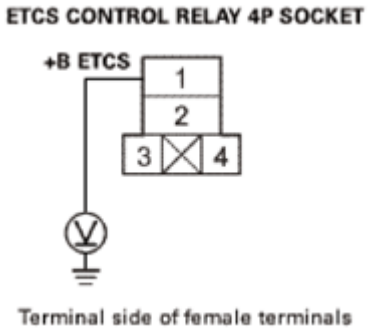

Fig. 315: Measuring Voltage Between ETCS Control Relay 4P Socket No. 1 (Under-Dash Fuse/Relay Box) And Body Ground
Courtesy of AMERICAN HONDA MOTOR CO., INC.

GETtheMANUALS.org

Is there battery voltage?

YES : Go to step 7.

NO : Go to step 6.

6. Open wire check (+B ETCS line):
   - 1. Turn the ignition switch to LOCK (0).
   - 2. Disconnect the following connector.

     Under-dash fuse/relay box connector D (32P)

   - 3. Measure the voltage between test points 1 and 2.

     Test condition IG LOCK (0)

     ETCS control relay: disconnected

     Under-dash fuse/relay box connector D (32P): disconnected

     Test circuit +B ETCS

     Test point 1 Under-dash fuse/relay box connector D (32P) No. 5 (LT GRN)

     Test point 2 Body ground

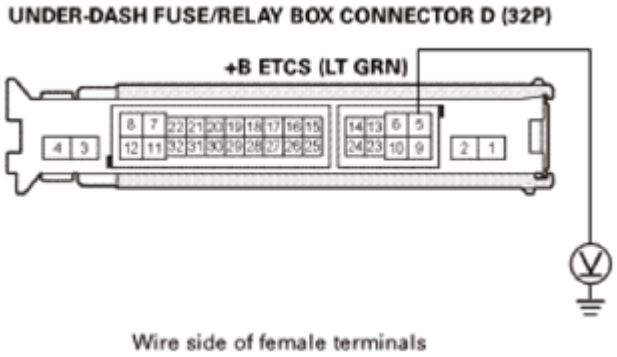

<u>Fig. 316: Measuring Voltage Between Under-Dash Fuse/Relay Box Connector D (32P) No. 5 (LT GRN) And Body Ground</u>
Courtesy of AMERICAN HONDA MOTOR CO., INC.

Is there battery voltage?

YES : The +B ETCS wire is OK. **<u>REPLACE THE UNDER-DASH FUSE/RELAY BOX</u>** , then **do the repair verification** .

NO : Repair an open in the +B ETCS wire between the No. A22 (15 A) fuse and the under-dash

GETtheMANUALS.org

fuse/relay box, then **do the repair verification** .

7. Open wire check (VBETCS/ETCS RLY OUT line):
    - 1. Turn the ignition switch to LOCK (0).
    - 2. Jump the SCS line with the HDS.
    - 3. Disconnect the following connector.

      PCM connector C (49P)

    - 4. Check for continuity between test points 1 and 2.

      Test condition IG LOCK (0)

      ETCS control relay: disconnected

      PCM connector C (49P): disconnected

      Test circuit VBETCS/ETCS RLY OUT

      Test point 1 PCM connector C (49P) No. 1 (YEL)

      Test point 2 ETCS control relay 4P socket No. 2 (Under-dash fuse/relay box)

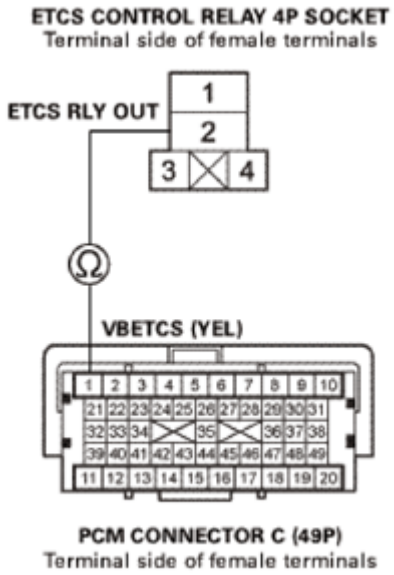

Fig. 317: Checking Continuity Between PCM Connector C (49P) No. 1 (YEL) And ETCS Control Relay 4P Socket No. 2 (Under-Dash Fuse/Relay Box)
Courtesy of AMERICAN HONDA MOTOR CO., INC.

Is there continuity?

YES : The VBETCS/ETCS RLY OUT wire is OK. Go to step 8.

GETtheMANUALS.org

NO : Repair an open in the VBETCS/ETCS RLY OUT wire between the PCM (C1) and the ETCS control relay, then **do the repair verification** .

8. Open wire check (ETCS RLY CL- line):
   - 1. Disconnect the following connector.

     PCM connector A (49P)

   - 2. Check for continuity between test points 1 and 2.

     Test condition IG LOCK (0)

     ETCS control relay: disconnected

     PCM connector C (49P): disconnected

     PCM connector A (49P): disconnected

     Test circuit ETCS RLY CL-

     Test point 1 PCM connector A (49P) No. 48 (PUR)

     Test point 2 ETCS control relay 4P socket No. 4 (Under-dash fuse/relay box)

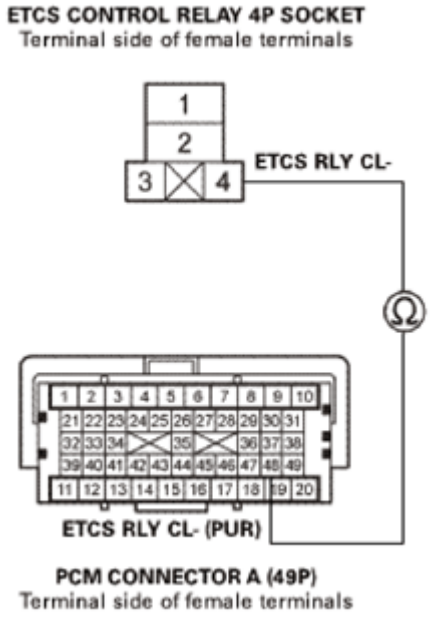

Fig. 318: Checking Continuity Between PCM Connector A (49P) No. 48 (PUR) And ETCS Control Relay 4P Socket No. 4 (Under-Dash Fuse/Relay Box)
Courtesy of AMERICAN HONDA MOTOR CO., INC.

Is there continuity?

GETtheMANUALS.org

YES : The ETCS RLY CL- wire is OK. **Update the PCM** See **PCM UPDATE** or **PCM REMOVAL AND INSTALLATION** if it does not have the latest software, or **substitute a known-good PCM** See **PCM REMOVAL AND INSTALLATION** or **PCM UPDATE** , then **do the repair verification** .

NO : Repair an open in the ETCS RLY CL- wire between the PCM (A48) and the ETCS control relay, then **do the repair verification** .

9. Shorted wire check (VBETCS/ETCS RLY OUT line):
   - 1. Remove the ETCS control relay (A) from the under-hood fuse/relay box.

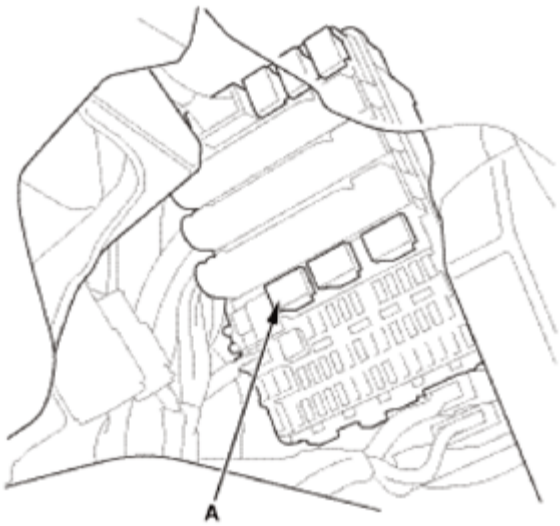

Fig. 319: Identifying ETCS Control Relay
Courtesy of AMERICAN HONDA MOTOR CO., INC.

   - 2. Jump the SCS line with the HDS.
   - 3. Disconnect the following connector.

     PCM connector C (49P)

   - 4. Check for continuity between test points 1 and 2.

     Test condition IG LOCK (0)

     ETCS control relay: disconnected

     PCM connector C (49P): disconnected

     Test circuit VBETCS

     Test point 1 PCM connector C (49P) No. 1 (YEL)

     Test point 2 Body ground

GETtheMANUALS.org

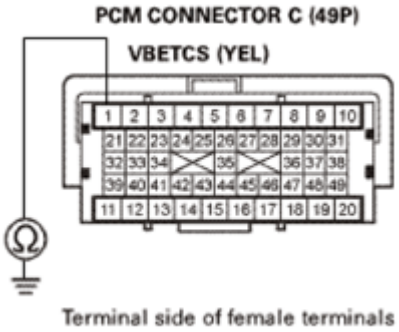

Fig. 320: Checking Continuity Between PCM Connector C (49P) No. 1 (YEL) And Body Ground
Courtesy of AMERICAN HONDA MOTOR CO., INC.

Is there continuity?

YES : Repair a short in the VBETCS/ETCS RLY OUT wire between the PCM (C1) and the ETCS control relay, then **do the repair verification** .

NO : The VBETCS/ETCS RLY OUT wire is OK. Go to step 10.

10. Determine possible failure area (+B ETCS line, PCM):
    - 1. Check for continuity between test points 1 and 2.

      Test condition IG LOCK (0)

      ETCS control relay: disconnected

      PCM connector C (49P): disconnected

      Test circuit +B ETCS

      Test point 1 ETCS control relay 4P socket No. 1 (Under-dash fuse/relay box)

      Test point 2 Body ground

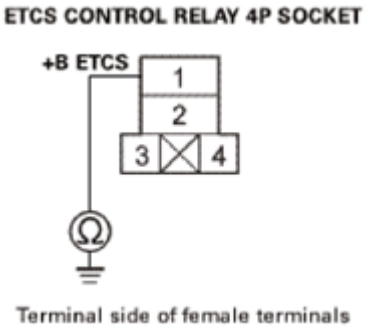

Fig. 321: Checking Continuity Between ETCS Control Relay 4P Socket No. 1 (Under-Dash

GETtheMANUALS.org

Fuse/Relay Box) And Body Ground
Courtesy of AMERICAN HONDA MOTOR CO., INC.

Is there continuity?

YES : Go to step 11.

NO : **Update the PCM** See **PCM REMOVAL AND INSTALLATION** or **PCM UPDATE** if it does not have the latest software, or **substitute a known-good PCM** See **PCM REMOVAL AND INSTALLATION** or **PCM UPDATE** , then **do the repair verification** .

11. Shorted wire check (+B ETCS line):
    - 1. Disconnect the following connector.

      Under-dash fuse/relay box connector D (32P)

    - 2. Check for continuity between test points 1 and 2.

      Test condition IG LOCK (0)

      ETCS control relay: disconnected

      PCM connector C (49P): disconnected

      Under-dash fuse/relay box connector D (32P): disconnected

      Test circuit +B ETCS

      Test point 1 Under-dash fuse/relay box connector D (32P) No. 5 (LT GRN)

      Test point 2 Body ground

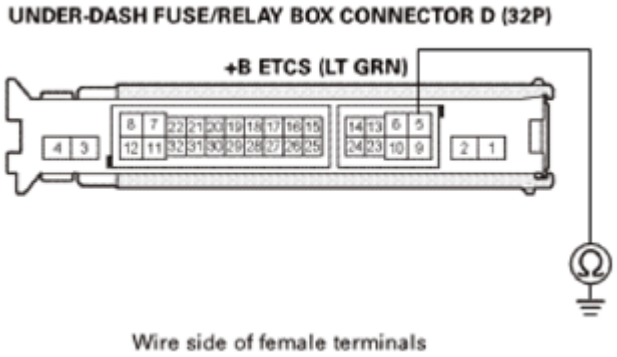

Fig. 322: Checking Continuity Between Under-Dash Fuse/Relay Box Connector D (32P) No. 5 (LT GRN) And Body Ground
Courtesy of AMERICAN HONDA MOTOR CO., INC.

GETtheMANUALS.org

Is there continuity?

YES : Repair a short in the +B ETCS wire between the No. A22 (15 A) fuse and the under-dash fuse/relay box, then **do the repair verification** .

NO : The +B ETCS wire is OK. Check the under-dash fuse relay box, and **REPLACE IT** if needed, then **do the repair verification** .

REPAIR VERIFICATION

- 1. Turn the ignition switch to LOCK (0).
- 2. Reconnect all connectors.
- 3. Turn the ignition switch to ON (II).
- 4. **Reset the PCM with the HDS** See **HOW TO TROUBLESHOOT THE A/T SYSTEM** or **HOW TO TROUBLESHOOT THE FUEL AND EMISSIONS SYSTEMS** .
- 5. **DO THE PCM IDLE LEARN PROCEDURE** .
- 6. Check for Pending or Confirmed DTCs with the HDS.

DTC Description	Confirmed DTC	Pending DTC	Freeze Frame
P1659 ETCS CONTROL RELAY OFF MALFUNCTION			

Is DTC P1659 indicated?

YES : Check for poor connections or loose terminals at the ETCS control relay and the PCM. If the PCM was updated, **substitute a known-good PCM** See **PCM REMOVAL AND INSTALLATION** or **PCM UPDATE** , then recheck. If the PCM was substituted, go to step 1.

NO : Troubleshooting is complete. If the PCM was substituted, **replace the original PCM** See **PCM REMOVAL AND INSTALLATION** or **PCM UPDATE** . If any other Pending or Confirmed DTCs are indicated, go to the indicated DTC's troubleshooting.

DTC P1683: THROTTLE VALVE DEFAULT POSITION SPRING PERFORMANCE PROBLEM

GETtheMANUALS.org

DTC Troubleshooting: P1683

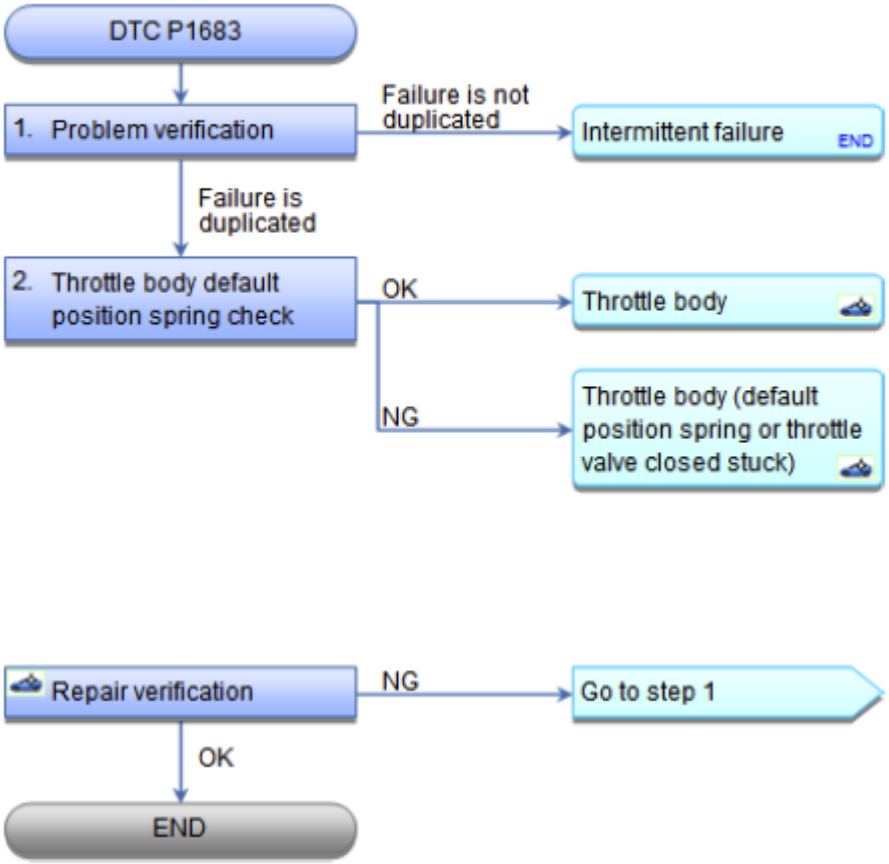

Fig. 323: DTC Troubleshooting Flow Chart (P1683)
Courtesy of AMERICAN HONDA MOTOR CO., INC.

CAUTION: Do not insert your fingers into the installed throttle body when you turn the ignition switch to ON (II), or while the ignition switch is in ON (II). If you do, you will seriously injure your fingers if the throttle valve is activated.

NOTE: Before you troubleshoot, record all freeze data and any on-board snapshot, and review the general troubleshooting information See HOW TO TROUBLESHOOT THE A/T SYSTEM or HOW TO TROUBLESHOOT THE FUEL AND EMISSIONS SYSTEMS .

DTC Description	Confirmed DTC	Pending DTC	Freeze Frame
P1683 THROTTLE VALVE DEFAULT POSITION SPRING PERFORMANCE PROBLEM			

1. Problem verification:
   - 1. Turn the ignition switch to ON (II).

GETtheMANUALS.org

- 2. **Clear the DTC with the HDS** See **HOW TO TROUBLESHOOT THE A/T SYSTEM** or **HOW TO TROUBLESHOOT THE FUEL AND EMISSIONS SYSTEMS** .
- 3. Start the engine. Hold the engine speed at 3, 000 rpm without load (in P or N) until the radiator fan comes on, then let it idle.
- 4. Turn the ignition switch to LOCK (0), and wait 10 seconds.
- 5. Turn the ignition switch to ON (II).
- 6. Check for Pending or Confirmed DTCs with the HDS.

DTC Description	Confirmed DTC	Pending DTC	Freeze Frame
P1683 THROTTLE VALVE DEFAULT POSITION SPRING PERFORMANCE PROBLEM			

Is DTC P1683 indicated?

YES : The failure is duplicated. Go to step 2.

NO : Intermittent failure, the system is OK at this time. Check for poor connections or loose terminals at the throttle body and the PCM.

2. Throttle body default position spring check:
   - 1. Turn the ignition switch to LOCK (0).
   - 2. Disconnect the intake air duct from the throttle body.
   - 3. Push the throttle valve closed as shown.

Fig. 324: Pushing Throttle Valve
Courtesy of AMERICAN HONDA MOTOR CO., INC.

- 4. Release the throttle valve.

Does the throttle valve return?

YES : **Clean the throttle body** See **THROTTLE BODY REMOVAL AND INSTALLATION** ,

GETtheMANUALS.org

THROTTLE BODY DISASSEMBLY AND REASSEMBLY or **THROTTLE BODY CLEANING** , then **do the repair verification** . If DTC P1683 is indicated, **replace the throttle body** See **THROTTLE BODY REMOVAL AND INSTALLATION** , **THROTTLE BODY CLEANING** or **THROTTLE BODY DISASSEMBLY AND REASSEMBLY** , then **do the repair verification** .

NO : **Replace the throttle body** See **THROTTLE BODY DISASSEMBLY AND REASSEMBLY** , **THROTTLE BODY REMOVAL AND INSTALLATION** or **THROTTLE BODY CLEANING** , then **do the repair verification** .

REPAIR VERIFICATION

- 1. Turn the ignition switch to ON (II).
- 2. **Reset the PCM with the HDS** See **HOW TO TROUBLESHOOT THE A/T SYSTEM** or **HOW TO TROUBLESHOOT THE FUEL AND EMISSIONS SYSTEMS** .
- 3. **DO THE PCM IDLE LEARN PROCEDURE** .
- 4. Turn the ignition switch to LOCK (0), and wait 10 seconds.
- 5. Turn the ignition switch to ON (II).
- 6. Check for Pending or Confirmed DTCs with the HDS.

DTC Description	Confirmed DTC	Pending DTC	Freeze Frame
P1683 THROTTLE VALVE DEFAULT POSITION SPRING PERFORMANCE PROBLEM			

Is DTC P1683 indicated?

YES : Check for poor connections or loose terminals at the throttle body and the PCM, then go to step 1.

NO : Troubleshooting is complete. If any other Pending or Confirmed DTCs are indicated, go to the indicated DTC's troubleshooting.

DTC P1684: THROTTLE VALVE RETURN SPRING PERFORMANCE PROBLEM

GETtheMANUALS.org

DTC Troubleshooting: P1684

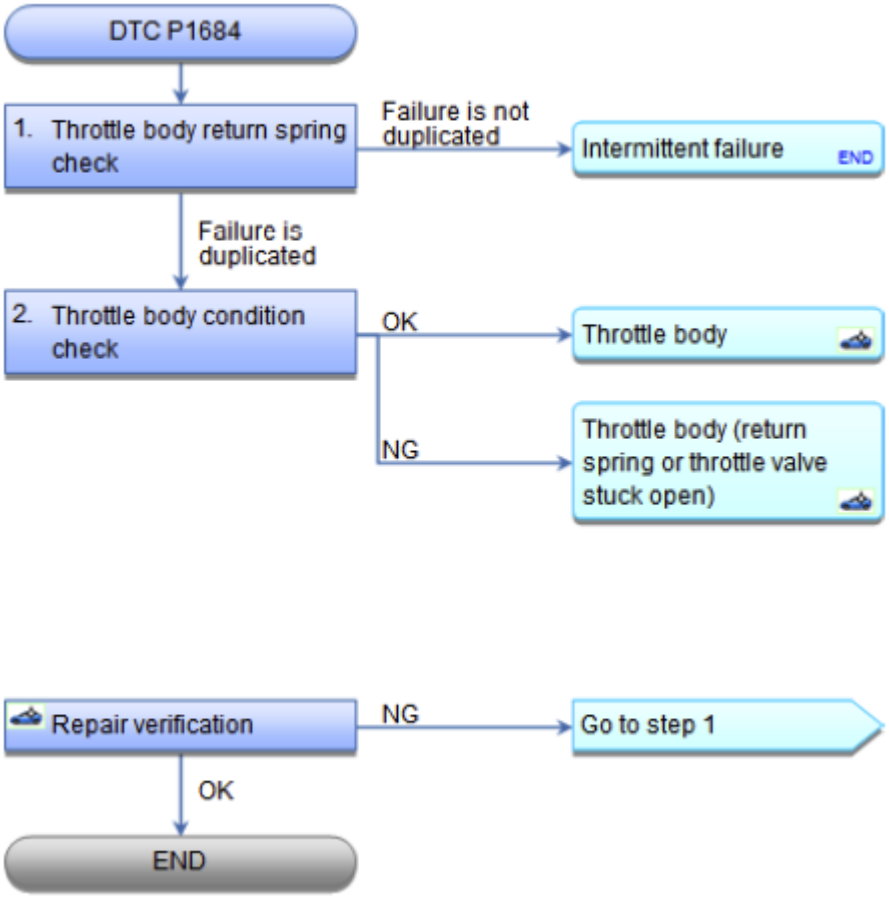

Fig. 325: DTC Troubleshooting Flow Chart (P1684)
Courtesy of AMERICAN HONDA MOTOR CO., INC.

CAUTION: Do not insert your fingers into the installed throttle body when you turn the ignition switch to ON (II), or while the ignition switch is in ON (II). If you do, you will seriously injure your fingers if the throttle valve is activated.

NOTE: Before you troubleshoot, record all freeze data and any on-board snapshot, and review the general troubleshooting information See HOW TO TROUBLESHOOT THE A/T SYSTEM or HOW TO TROUBLESHOOT THE FUEL AND EMISSIONS SYSTEMS .

DTC Description	Confirmed DTC	Pending DTC	Freeze Frame
P1684 THROTTLE VALVE RETURN SPRING PERFORMANCE PROBLEM			

1. Throttle body return spring check:
   - 1. Turn the ignition switch to ON (II).

GETtheMANUALS.org

- 2. **Clear the DTC with the HDS** See **HOW TO TROUBLESHOOT THE A/T SYSTEM** or **HOW TO TROUBLESHOOT THE FUEL AND EMISSIONS SYSTEMS** .
- 3. Start the engine. Hold the engine speed at 3, 000 rpm without load (in P or N) until the radiator fan comes on, then let it idle.
- 4. Turn the ignition switch to LOCK (0), and wait 10 seconds.
- 5. Turn the ignition switch to ON (II).
- 6. Check for Pending or Confirmed DTCs with the HDS.

DTC Description	Confirmed DTC	Pending DTC	Freeze Frame
P1684 THROTTLE VALVE RETURN SPRING PERFORMANCE PROBLEM			

Is DTC P1684 indicated?

YES : The failure is duplicated. Go to step 2.

NO : Intermittent failure, the system is OK at this time. Check for poor connections or loose terminals at the throttle body and the PCM.

2. Throttle body condition check:
   - 1. Turn the ignition switch to LOCK (0).
   - 2. Disconnect the intake air duct from the throttle body.
   - 3. Push the throttle valve open as shown.

Fig. 326: Pushing Throttle Valve
Courtesy of AMERICAN HONDA MOTOR CO., INC.

   - 4. Release the throttle valve.

Does the throttle valve return?

YES : **Clean the throttle body** See **THROTTLE BODY DISASSEMBLY AND REASSEMBLY** ,

GETtheMANUALS.org

THROTTLE BODY REMOVAL AND INSTALLATION or **THROTTLE BODY CLEANING** , then **do the repair verification** . If DTC P1684 is indicated, **replace the throttle body** See **THROTTLE BODY DISASSEMBLY AND REASSEMBLY** , **THROTTLE BODY REMOVAL AND INSTALLATION** or **THROTTLE BODY CLEANING** , then **do the repair verification** .

NO : **Replace the throttle body** See **THROTTLE BODY DISASSEMBLY AND REASSEMBLY** , **THROTTLE BODY REMOVAL AND INSTALLATION** or **THROTTLE BODY CLEANING** , then **do the repair verification** .

REPAIR VERIFICATION

- 1. Turn the ignition switch to ON (II).
- 2. **Reset the PCM with the HDS** See **HOW TO TROUBLESHOOT THE A/T SYSTEM** or **HOW TO TROUBLESHOOT THE FUEL AND EMISSIONS SYSTEMS** .
- 3. **DO THE PCM IDLE LEARN PROCEDURE** .
- 4. Turn the ignition switch to LOCK (0), and wait 10 seconds.
- 5. Turn the ignition switch to ON (II).
- 6. Check for Pending or Confirmed DTCs with the HDS.

DTC Description	Confirmed DTC	Pending DTC	Freeze Frame
P1684 THROTTLE VALVE RETURN SPRING PERFORMANCE PROBLEM			

Is DTC P1684 indicated?

YES : Check for poor connections or loose terminals at the throttle body and the PCM, then go to step 1.

NO : Troubleshooting is complete. If any other Pending or Confirmed DTCs are indicated, go to the indicated DTC's troubleshooting.

DTC P16BB: ALTERNATOR B TERMINAL CIRCUIT LOW VOLTAGE

GETtheMANUALS.org

DTC Troubleshooting: P16BB

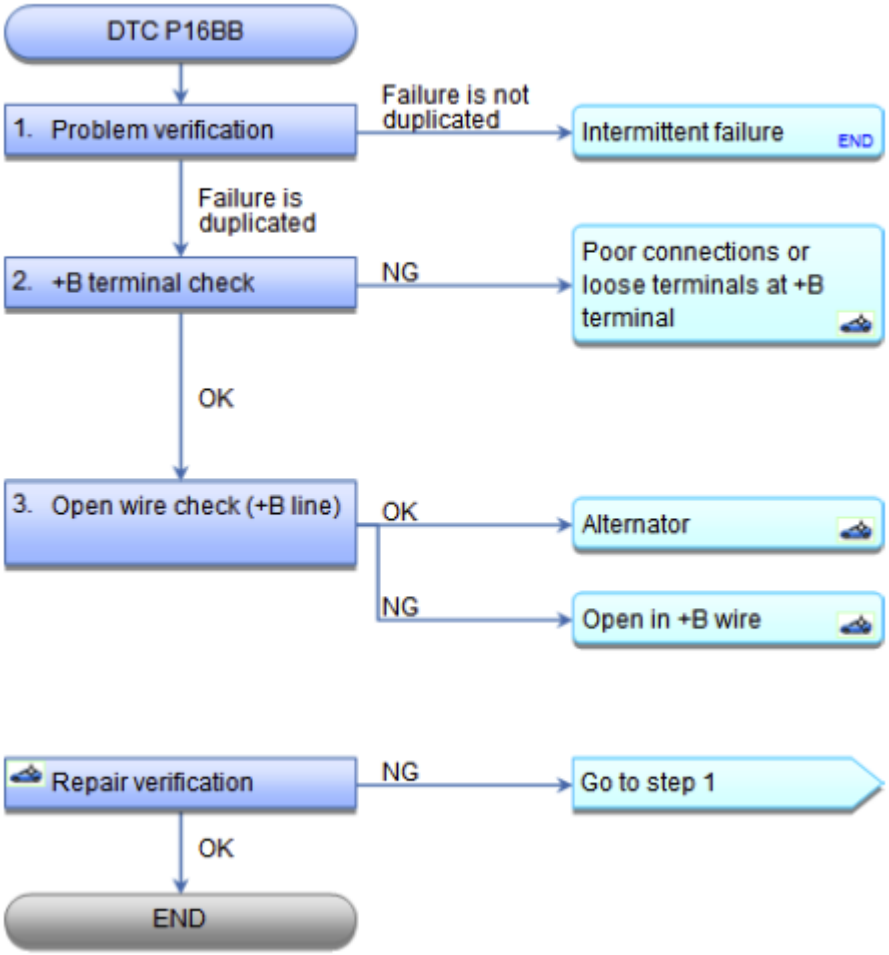

Fig. 327: DTC Troubleshooting Flow Chart (P16BB)
Courtesy of AMERICAN HONDA MOTOR CO., INC.

NOTE: **Before you troubleshoot, record all freeze data and any on-board snapshot, and review the general troubleshooting information See HOW TO TROUBLESHOOT THE A/T SYSTEM or HOW TO TROUBLESHOOT THE FUEL AND EMISSIONS SYSTEMS .**

DTC Description	Confirmed DTC	Pending DTC	Freeze Frame
P16BB ALTERNATOR B TERMINAL CIRCUIT LOW VOLTAGE			

1. Problem verification:
   - 1. Turn the ignition switch to ON (II).
   - 2. **Clear the DTC with the HDS** See **HOW TO TROUBLESHOOT THE A/T SYSTEM** or **HOW TO TROUBLESHOOT THE FUEL AND EMISSIONS SYSTEMS** .

GETtheMANUALS.org

- 3. Start the engine.
- 4. Check under these conditions:
  - A/C on
  - Temperature control at maximum cool
  - Blower fan at maximum speed
  - Headlights on high beam
  - Rear window defogger on
- Hold the engine speed at 2, 000 rpm (in P or N) for 1 minute.
- Check for Pending or Confirmed DTCs with the HDS.

DTC Description	Confirmed DTC	Pending DTC	Freeze Frame
P16BB ALTERNATOR B TERMINAL CIRCUIT LOW VOLTAGE			

Is DTC P16BB indicated?

YES : The failure is duplicated. Go to step 2.

NO : Intermittent failure, the system is OK at this time. Check for poor connections or loose terminals at the alternator and the under-hood fuse/relay box. Also check the battery performance.

2. +B terminal check:
   - 1. Check for poor connections or loose terminals at the alternator and the under-hood fuse/relay box (+B line).

Are the connections and terminals OK?

YES : Go to step 3.

NO : Repair the connections or the terminals, then **do the repair verification** .

3. Open wire check (+B line):
   - 1. Check for an open in the wire between the alternator and the under-hood fuse/relay box at the engine harness.

Is the harness OK?

YES : **Replace the alternator** See **ALTERNATOR OVERHAUL** or **ALTERNATOR REMOVAL AND INSTALLATION** , then **do the repair verification** .

NO : Repair an open in the +B wire between the alternator and the under-hood fuse/relay box, then **do the repair verification** .

GETtheMANUALS.org

REPAIR VERIFICATION

- 1. Turn the ignition switch to ON (II).
- 2. **Reset the PCM with the HDS** See **HOW TO TROUBLESHOOT THE A/T SYSTEM** or **HOW TO TROUBLESHOOT THE FUEL AND EMISSIONS SYSTEMS** .
- 3. **DO THE PCM IDLE LEARN PROCEDURE** .
- 4. Start the engine.
- 5. Check under these conditions:
  - A/C on
  - Temperature control at maximum cool
  - Blower fan at maximum speed
  - Headlights on high beam
  - Rear window defogger on
- Hold the engine speed at 2, 000 rpm (in P or N) for 1 minute.
- Check for Pending or Confirmed DTCs with the HDS.

DTC Description	Confirmed DTC	Pending DTC	Freeze Frame
P16BB ALTERNATOR B TERMINAL CIRCUIT LOW VOLTAGE			

Is DTC P16BB indicated?

YES : Check for poor connections or loose terminals at the alternator and the under-hood fuse/relay box, then go to step 1.

NO : Troubleshooting is complete. If any other Pending or Confirmed DTCs are indicated, go to the indicated DTC's troubleshooting.

DTC P16E2: PGM-FI-ACG LIN COMMUNICATION ERROR

GETtheMANUALS.org

DTC Troubleshooting: P16E2

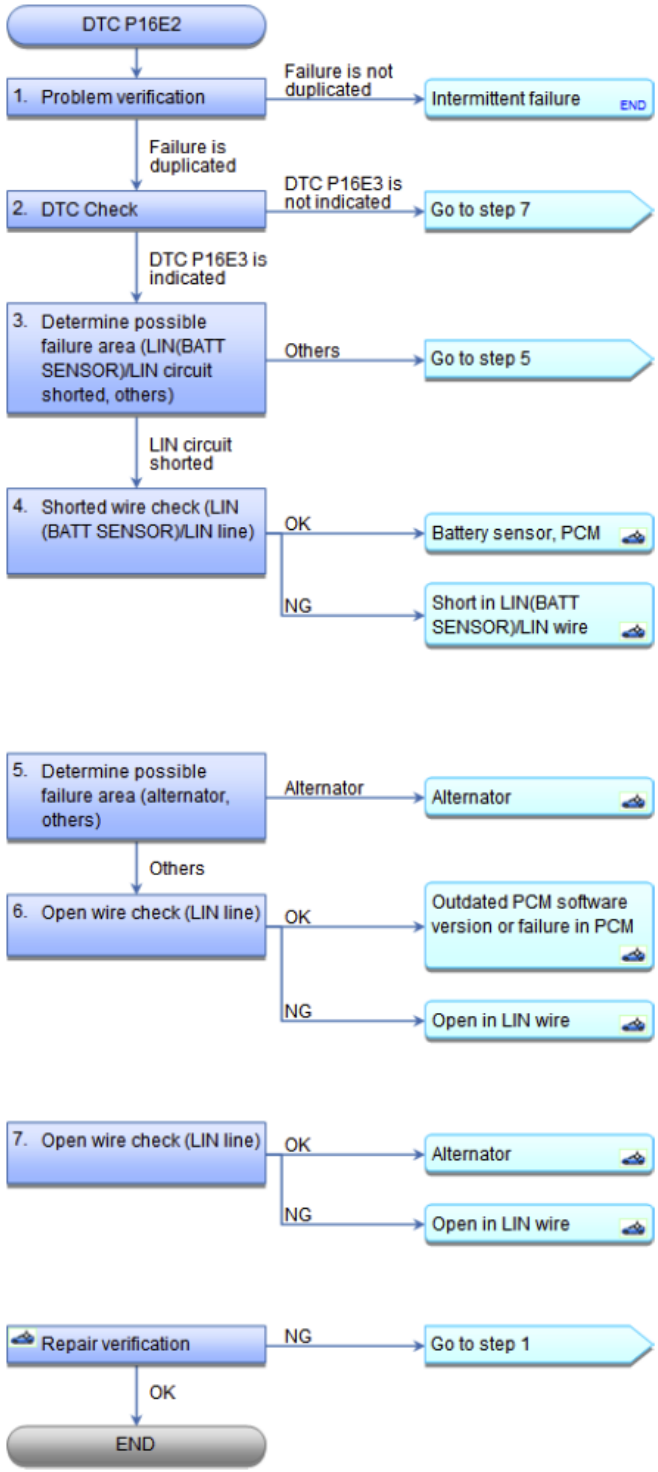

Fig. 328: DTC Troubleshooting Flow Chart (P16E2)
Courtesy of AMERICAN HONDA MOTOR CO., INC.

NOTE: **Before you troubleshoot, record all freeze data and any on-board snapshot, and**

GETtheMANUALS.org

review the general troubleshooting information See HOW TO TROUBLESHOOT THE A/T SYSTEM or HOW TO TROUBLESHOOT THE FUEL AND EMISSIONS SYSTEMS .

DTC Description	Confirmed DTC	Pending DTC	Freeze Frame
P16E2 PGM-FI-ACG LIN COMMUNICATION ERROR			

1. Problem verification:
   - 1. Turn the ignition switch to ON (II).
   - 2. **Clear the DTC with the HDS** See **HOW TO TROUBLESHOOT THE A/T SYSTEM** or **HOW TO TROUBLESHOOT THE FUEL AND EMISSIONS SYSTEMS** , and wait for 10 seconds.
   - 3. Check for Pending or Confirmed DTCs with the HDS.

DTC Description	Confirmed DTC	Pending DTC	Freeze Frame
P16E2 PGM-FI-ACG LIN COMMUNICATION ERROR			

Is DTC P16E2 indicated?

YES : The failure is duplicated. Go to step 2.

NO : Intermittent failure, the system is OK at this time. Check for poor connections or loose terminals at the alternator, the battery sensor, and the PCM.

2. DTC Check:
   - 1. Check for Pending or Confirmed DTCs with the HDS.

DTC Description	Confirmed DTC	Pending DTC	Freeze Frame
P16E3 PGM-FI-BATTERY SENSOR LIN COMMUNICATION ERROR			

Is DTC P16E3 indicated?

YES : Go to step 3.

NO : Go to step 7.

3. Determine possible failure area (LIN(BATT SENSOR)/LIN circuit shorted, others):
   - 1. Turn the ignition switch to LOCK (0).

GETtheMANUALS.org

- 2. Disconnect the following connector.

  Alternator 1P connector

- 3. Check for continuity between test points 1 and 2.

  Test condition IG LOCK (0)

  Alternator 1P connector: disconnected

  Test circuit LIN

  Test point 1 Alternator 1P connector No. 1 (TAN)

  Test point 2 Body ground

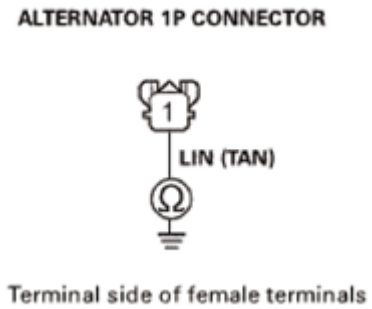

Fig. 329: Checking Continuity Between Alternator 1P Connector No. 1 (TAN) And Body Ground
Courtesy of AMERICAN HONDA MOTOR CO., INC.

Is there continuity?

YES : Go to step 4.

NO : Go to step 5.

4. Shorted wire check (LIN(BATT SENSOR)/LIN line):
   - 1. Jump the SCS line with the HDS.
   - 2. Continue to check for continuity between the alternator 1P connector terminal and body ground, while disconnecting these connectors, one at a time:
     - Battery sensor 2P connector
     - PCM connector B (49P)

Does continuity go away when one of the above connectors is disconnected?

YES : The LIN(BATT SENSOR)/LIN wire is OK. Replace the part that caused an open when it was disconnected, then **do the repair verification** .

GETtheMANUALS.org

NO : Repair a short in the LIN(BATT SENSOR)/LIN wire between the battery sensor, the alternator, and the PCM (B16), then **do the repair verification** .

5. Determine possible failure area (alternator, others):
   - 1. Turn the ignition switch to LOCK (0).
   - 2. Reconnect the alternator 1P connector
   - 3. Disconnect the following connector.

     Battery sensor 2P connector

   - 4. Check for continuity between test points 1 and 2.

     Test condition IG LOCK (0)

     Battery sensor 2P connector: disconnected

     Test circuit LIN(BATT SENSOR)

     Test point 1 Battery sensor 2P connector No. 2 (BLU)

     Test point 2 Body ground

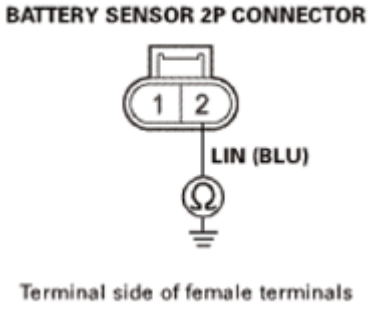

Fig. 330: Checking Continuity Between Battery Sensor 2P Connector No. 2 (BLU) And Body Ground
Courtesy of AMERICAN HONDA MOTOR CO., INC.

Is there continuity?

YES : **Replace the alternator** See **ALTERNATOR OVERHAUL** or **ALTERNATOR REMOVAL AND INSTALLATION** , then **do the repair verification** .

NO : Go to step 6.

6. Open wire check (LIN line):
   - 1. Jump the SCS line with the HDS.
   - 2. Disconnect the following connector.

GETtheMANUALS.org

Alternator 1P connector

PCM connector B (49P)

- 3. Check for continuity between test points 1 and 2.

  Test condition IG LOCK (0)

  Battery sensor 2P connector: disconnected

  Alternator 1P connector: disconnected

  PCM connector B (49P): disconnected

  Test circuit LIN

  Test point 1 PCM connector B (49P) No. 16 (TAN)

  Test point 2 Alternator 1P connector No. 1 (TAN)

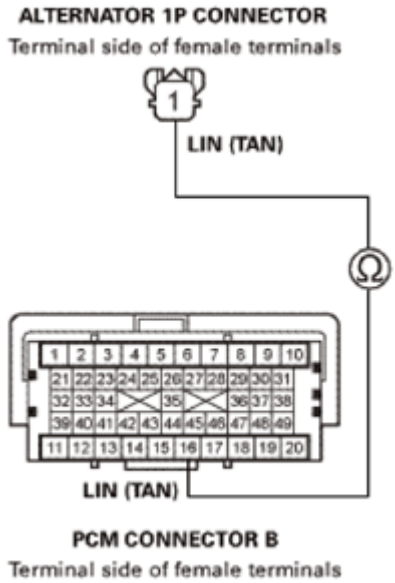

Fig. 331: Checking Continuity Between PCM Connector B (49P) No. 16 (TAN) And Alternator 1P Connector No. 1 (TAN)
Courtesy of AMERICAN HONDA MOTOR CO., INC.

Is there continuity?

YES : The LIN wire is OK. **Update the PCM** See **PCM UPDATE** or **PCM REMOVAL AND INSTALLATION** if it does not have the latest software, or **substitute a known-good PCM** See **PCM REMOVAL AND INSTALLATION** or **PCM UPDATE** , then **do the repair verification** .

GETtheMANUALS.org

NO : Repair an open in the LIN wire between the alternator and the PCM (B16), then **do the repair verification** .

7. Open wire check (LIN line):
    - 1. Jump the SCS line with the HDS.
    - 2. Disconnect the following connectors.

      Alternator 1P connector

      PCM connector B (49P)

    - 3. Check for continuity between test points 1 and 2.

      Test condition IG LOCK (0)

      Alternator 1P connector: disconnected

      PCM connector B (49P): disconnected

      Test circuit LIN

      Test point 1 PCM connector B (49P) No. 16 (TAN)

      Test point 2 Alternator 1P connector No. 1 (TAN)

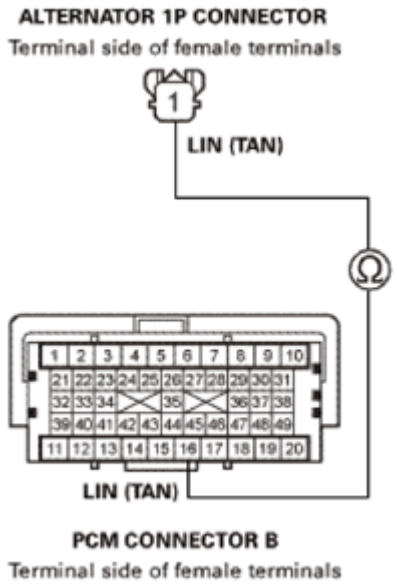

Fig. 332: Checking Continuity Between PCM Connector B (49P) No. 16 (TAN) And Alternator 1P Connector No. 1 (TAN)
Courtesy of AMERICAN HONDA MOTOR CO., INC.

Is there continuity?

GETtheMANUALS.org

YES : The LIN wire is OK. **Replace the alternator** See **ALTERNATOR OVERHAUL** or **ALTERNATOR REMOVAL AND INSTALLATION** , then **do the repair verification** .

NO : Repair an open in the LIN wire between the alternator and the PCM (B16), then **do the repair verification** .

REPAIR VERIFICATION

- 1. Turn the ignition switch to LOCK (0).
- 2. Reconnect all connectors.
- 3. Turn the ignition switch to ON (II)
- 4. **Reset the PCM with the HDS** See **HOW TO TROUBLESHOOT THE FUEL AND EMISSIONS SYSTEMS** or **HOW TO TROUBLESHOOT THE A/T SYSTEM** .
- 5. **DO THE PCM IDLE LEARN PROCEDURE** .
- 6. Check for Pending or Confirmed DTCs with the HDS.

DTC Description	Confirmed DTC	Pending DTC	Freeze Frame
P16E2 PGM-FI-ACG LIN COMMUNICATION ERROR			

Is DTC P16E2 indicated?

YES : Check for poor connections or loose terminals at the alternator, the battery sensor, and the PCM. If the PCM was updated, **substitute a known-good PCM** See **PCM UPDATE** or **PCM REMOVAL AND INSTALLATION** , then recheck. If the PCM was substituted, go to step 1.

NO : Troubleshooting is complete. If the PCM was substituted, **replace the original PCM** See **PCM UPDATE** or **PCM REMOVAL AND INSTALLATION** . If any other Pending or Confirmed DTCs are indicated, go to the indicated DTC's troubleshooting.

DTC P16E3: PGM-FI-BATTERY SENSOR LIN COMMUNICATION ERROR

GETtheMANUALS.org

DTC Troubleshooting: P16E3

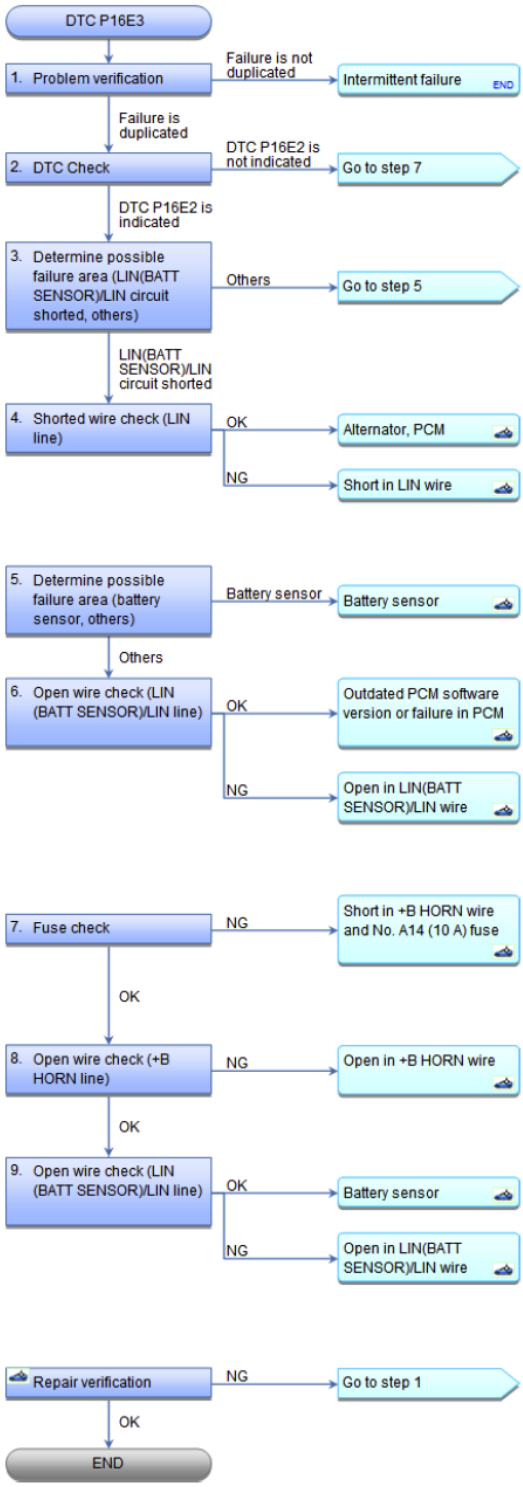

Fig. 333: DTC Troubleshooting Flow Chart (P16E3)
Courtesy of AMERICAN HONDA MOTOR CO., INC.

NOTE:

- **Before you troubleshoot, record all freeze data and any on-board**

GETtheMANUALS.org

snapshot, and review the general troubleshooting information See HOW TO TROUBLESHOOT THE A/T SYSTEM or HOW TO TROUBLESHOOT THE FUEL AND EMISSIONS SYSTEMS .

- **Check for loose terminals on the battery sensor (battery negative (-) terminal).**

DTC Description	Confirmed DTC	Pending DTC	Freeze Frame
P16E3 PGM-FI-BATTERY SENSOR LIN COMMUNICATION ERROR			

1. Problem verification:
   - 1. Turn the ignition switch to ON (II).
   - 2. **Clear the DTC with the HDS** See **HOW TO TROUBLESHOOT THE A/T SYSTEM** or **HOW TO TROUBLESHOOT THE FUEL AND EMISSIONS SYSTEMS** , and wait for 10 seconds.
   - 3. Check for Pending or Confirmed DTCs with the HDS.

DTC Description	Confirmed DTC	Pending DTC	Freeze Frame
P16E3 PGM-FI-BATTERY SENSOR LIN COMMUNICATION ERROR			

Is DTC P16E3 indicated?

YES : The failure is duplicated. Go to step 2.

NO : Intermittent failure, the system is OK at this time. Check for poor connections or loose terminals at the alternator, the battery sensor, and the PCM.

2. DTC Check:
   - 1. Check for Pending or Confirmed DTCs with the HDS.

DTC Description	Confirmed DTC	Pending DTC	Freeze Frame
P16E2 PGM-FI-ACG LIN COMMUNICATION ERROR			

Is DTC P16E2 indicated?

YES : Go to step 3.

NO : Go to step 7.

GETtheMANUALS.org

3. Determine possible failure area (LIN(BATT SENSOR)/LIN circuit shorted, others):
    - 1. Turn the ignition switch to LOCK (0).
    - 2. Disconnect the following connector.

      Battery sensor 2P connector

    - 3. Check for continuity between test points 1 and 2.

      Test condition IG LOCK (0)

      Battery sensor 2P connector: disconnected

      Test circuit LIN(BATT SENSOR)

      Test point 1 Battery sensor 2P connector No. 2 (BLU)

      Test point 2 Body ground

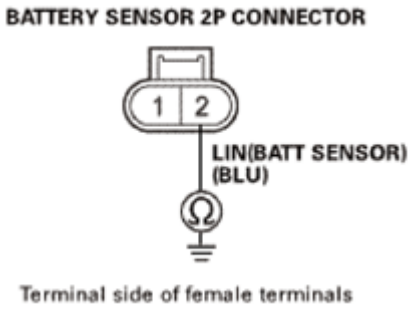

Fig. 334: Checking Continuity Between Battery Sensor 2P Connector No. 2 (BLU) And Body Ground
Courtesy of AMERICAN HONDA MOTOR CO., INC.

Is there continuity?

YES : Go to step 4.

NO : Go to step 5.

4. Shorted wire check (LIN line):
    - 1. Jump the SCS line with the HDS.
    - 2. Continue to check for continuity between battery sensor 2P connector terminal No. 2 and body ground, while disconnecting these connectors, one at a time:
        - Alternator 1P connector
        - PCM connector B (49P)

Does continuity go away when one of the above connectors is disconnected?

GETtheMANUALS.org

YES : The LIN wire is OK. Replace the part that caused an open when it was disconnected, then **do the repair verification** .

NO : Repair a short in the LIN wire between the battery sensor, the alternator, and the PCM (B16), then **do the repair verification** .

5. Determine possible failure area (battery sensor, others):
   - 1. Turn the ignition switch to LOCK (0).
   - 2. Reconnect the battery sensor 2P connector.
   - 3. Disconnect the following connector.

     Alternator 1P connector

   - 4. Check for continuity between test points 1 and 2.

     Test condition IG LOCK (0)

     Alternator 1P connector: disconnected

     Test circuit LIN

     Test point 1 Alternator 1P connector No. 1 (TAN)

     Test point 2 Body ground

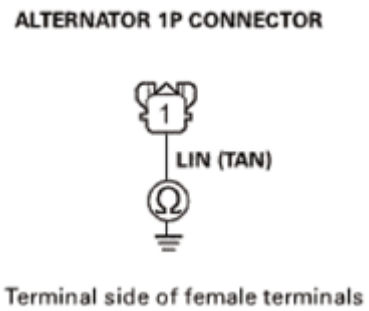

Fig. 335: Checking Continuity Between Alternator 1P Connector No. 1 (TAN) And Body Ground
Courtesy of AMERICAN HONDA MOTOR CO., INC.

Is there continuity?

YES : **REPLACE THE BATTERY SENSOR** , then **do the repair verification** .

NO : Go to step 6.

6. Open wire check (LIN(BATT SENSOR)/LIN line):
   - 1. Jump the SCS line with the HDS.

GETtheMANUALS.org

- 2. Disconnect the following connector.

  Battery sensor 2P connector

  PCM connector B (49P)

- 3. Check for continuity between test points 1 and 2.

  Test condition IG LOCK (0)

  Alternator 1P connector: disconnected

  Battery sensor 2P connector: disconnected

  PCM connector B (49P): disconnected

  Test circuit LIN(BATT SENSOR)/LIN

  Test point 1 PCM connector B (49P) No. 16 (TAN)

  Test point 2 Battery sensor 2P connector No. 2 (BLU)

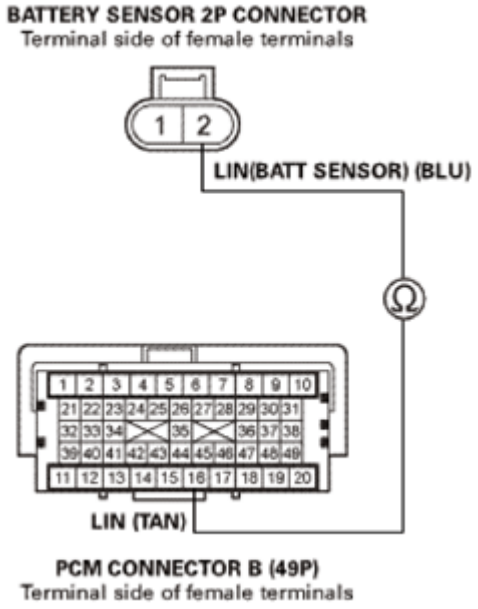

Fig. 336: Checking Continuity Between PCM Connector B (49P) No. 16 (TAN) And Battery Sensor 2P Connector No. 2 (BLU)
Courtesy of AMERICAN HONDA MOTOR CO., INC.

Is there continuity?

YES : The LIN(BATT SENSOR)/LIN wire is OK. **Update the PCM** See **PCM REMOVAL AND**

GETtheMANUALS.org

INSTALLATION or **PCM UPDATE** if it does not have the latest software, or **substitute a known-good PCM** See **PCM REMOVAL AND INSTALLATION** or **PCM UPDATE** , then **do the repair verification** .

NO : Repair an open in the LIN(BATT SENSOR)/LIN wire between the battery sensor and the PCM (B16), then **do the repair verification** .

7. Fuse check:
   - 1. Turn the ignition switch to LOCK (0).
   - 2. Check the following fuse.

     Fuse No. A14 (10 A)

     Location Under-hood fuse/relay box

Is the fuse OK?

YES : The fuse is OK. Go to step 8.

NO : Repair a short in the +B HORN wire between the battery sensor and the under-hood fuse/relay box, and replace the No. A14 (10 A) fuse, then **do the repair verification** .

8. Open wire check (+B HORN line):
   - 1. Disconnect the following connector.

     Battery sensor 2P connector

   - 2. Measure the voltage between test points 1 and 2.

     Test condition IG LOCK (0)

     Battery sensor 2P connector: disconnected

     Test circuit +B HORN

     Test point 1 Battery sensor 2P connector No. 1 (WHT)

     Test point 2 Body ground

GETtheMANUALS.org

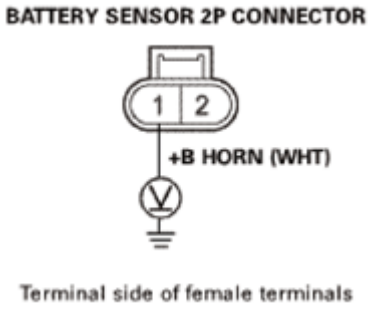

Fig. 337: Measuring Voltage Between Battery Sensor 2P Connector No. 1 (WHT) And Body Ground
Courtesy of AMERICAN HONDA MOTOR CO., INC.

Is there battery voltage?

YES : The +B HORN wire is OK. Go to step 9.

NO : Repair an open in the +B HORN wire between the battery sensor and No. A14 (7.5 A) fuse in the under-hood fuse/relay box, then **do the repair verification** .

9. Open wire check (LIN(BATT SENSOR)/LIN line):
   - 1. Jump the SCS line with the HDS.
   - 2. Disconnect the following connector.

     PCM connector B (49P)

   - 3. Check for continuity between test points 1 and 2.

     Test condition IG LOCK (0)

     Test circuit LIN(BATT SENSOR)/LIN

     Battery sensor 2P connector: disconnected

     PCM connector B (49P): disconnected

     Test point 1 PCM connector B (49P) No. 16 (TAN)

     Test point 2 Battery sensor 2P connector No. 2 (BLU)

GETtheMANUALS.org

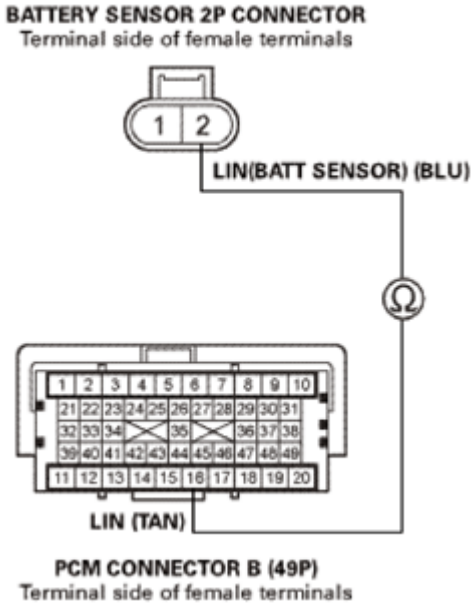

Fig. 338: Checking Continuity Between PCM Connector B (49P) No. 16 (TAN) And Battery Sensor 2P Connector No. 2 (BLU)
Courtesy of AMERICAN HONDA MOTOR CO., INC.

Is there continuity?

YES : The LIN(BATT SENSOR) wire is OK. **REPLACE THE BATTERY SENSOR** , then **do the repair verification** .

NO : Repair an open in the LIN(BATT SENSOR)/LIN wire between the battery sensor and the PCM (B16), then **do the repair verification** .

REPAIR VERIFICATION

- 1. Turn the ignition switch to LOCK (0).
- 2. Reconnect all connectors.
- 3. Turn the ignition switch to ON (II)
- 4. **Reset the PCM with the HDS** See **HOW TO TROUBLESHOOT THE A/T SYSTEM** or **HOW TO TROUBLESHOOT THE FUEL AND EMISSIONS SYSTEMS** .
- 5. **DO THE PCM IDLE LEARN PROCEDURE** .
- 6. Check for Pending or Confirmed DTCs with the HDS.

DTC Description	Confirmed DTC	Pending DTC	Freeze Frame
P16E3 PGM-FI-BATTERY SENSOR LIN COMMUNICATION ERROR			

Is DTC P16E3 indicated?

GETtheMANUALS.org

YES : Check for poor connections or loose terminals at the alternator, the battery sensor, and the PCM. If the PCM was updated, **substitute a known-good PCM** See **PCM REMOVAL AND INSTALLATION** or **PCM UPDATE** , then recheck. If the PCM was substituted, go to step 1.

NO : Troubleshooting is complete. If the PCM was substituted, **replace the original PCM** See **PCM UPDATE** or **PCM REMOVAL AND INSTALLATION** . If any other Pending or Confirmed DTCs are indicated, go to the indicated DTC's troubleshooting.

DTC P16E4: ACG HIGH-TEMPERATURE

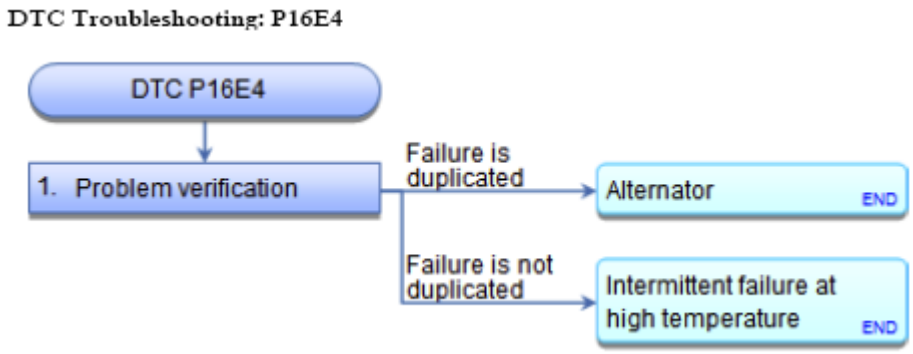

Fig. 339: DTC Troubleshooting Flow Chart (P16E4)
Courtesy of AMERICAN HONDA MOTOR CO., INC.

NOTE:

- **Before you troubleshoot, record all freeze data and any on-board snapshot, and review the general troubleshooting information See HOW TO TROUBLESHOOT THE A/T SYSTEM or HOW TO TROUBLESHOOT THE FUEL AND EMISSIONS SYSTEMS .**
- **This DTC is stored when the alternator temperature is high (about 320 °F (160 °C) or more).**

DTC Description	Confirmed DTC	Pending DTC	Freeze Frame
P16E4 ACG HIGH-TEMPERATURE			

1. Problem verification:
   - 1. If the temperature of the engine and the alternator is high, open the hood to cool the engine compartment.
   - 2. Turn the ignition switch to ON (II).
   - 3. **Clear the DTC with the HDS** See **HOW TO TROUBLESHOOT THE A/T SYSTEM** or **HOW TO TROUBLESHOOT THE FUEL AND EMISSIONS SYSTEMS** .
   - 4. Check for Pending or Confirmed DTCs with the HDS.

DTC Description	Confirmed DTC	Pending DTC	Freeze Frame
P16E4 ACG HIGH-TEMPERATURE			

GETtheMANUALS.org

Is DTC P16E4 indicated?

YES : **Replace the alternator** See **ALTERNATOR OVERHAUL** or **ALTERNATOR REMOVAL AND INSTALLATION** .

NO : Check the cause of the high temperature, and repair it.

DTC P2101: ETCS MALFUNCTION

GETtheMANUALS.org

DTC Troubleshooting: P2101

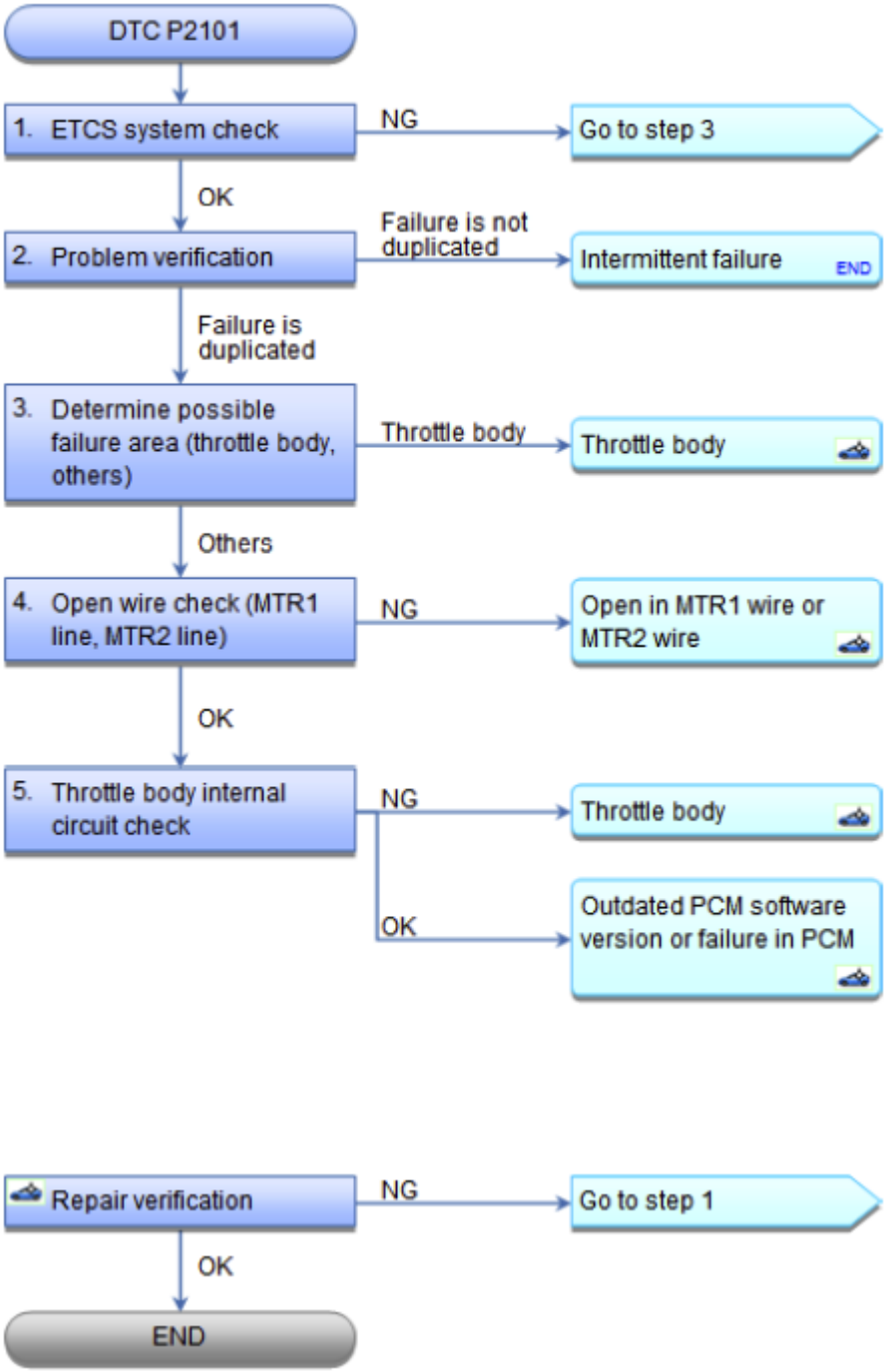

Fig. 340: DTC Troubleshooting Flow Chart (P2101)
Courtesy of AMERICAN HONDA MOTOR CO., INC.

CAUTION: Do not insert your fingers into the installed throttle body when you turn the ignition switch to ON (II), or while the ignition switch is in ON (II). If you do, you will seriously injure your fingers if the throttle valve is activated.

GETtheMANUALS.org

NOTE: **Before you troubleshoot, record all freeze data and any on-board snapshot, and review the general troubleshooting information See HOW TO TROUBLESHOOT THE A/T SYSTEM or HOW TO TROUBLESHOOT THE FUEL AND EMISSIONS SYSTEMS .**

DTC Description	Confirmed DTC	Pending DTC	Freeze Frame
P2101 ETCS MALFUNCTION			

1. ETCS system check:
   - 1. Turn the ignition switch to ON (II).
   - 2. **Clear the DTC with the HDS** See **HOW TO TROUBLESHOOT THE A/T SYSTEM** or **HOW TO TROUBLESHOOT THE FUEL AND EMISSIONS SYSTEMS** .
   - 3. Do the ETCS TEST with the HDS.
   - 4. Check for Pending or Confirmed DTCs with the HDS.

DTC Description	Confirmed DTC	Pending DTC	Freeze Frame
P2101 ETCS MALFUNCTION			

Is DTC P2101 indicated?

YES : The failure is duplicated. Go to step 3.

NO : The failure is not duplicated. Go to step 2.

2. Problem verification:
   - 1. Test-drive the vehicle for several minutes in the range of these recorded freeze data parameters:
     - ENGINE SPEED
     - VEHICLE SPEED
     - APP SENSOR

Signal	Current conditions	
	Values	Unit
ENGINE SPEED		
VEHICLE SPEED		
APP SENSOR		

   - Check for Pending or Confirmed DTCs with the HDS.

Is DTC P2101 indicated?

YES : The failure is duplicated. Go to step 3.

NO : Intermittent failure, the system is OK at this time. Check for poor connections or loose terminals at

GETtheMANUALS.org

the throttle body and the PCM.

3. Determine possible failure area (throttle body, others):
   - 1. Turn the ignition switch to LOCK (0).
   - 2. Disconnect the intake air duct from the throttle body.
   - 3. Turn the ignition switch to ON (II).
   - 4. **Clear the DTC with the HDS** See **HOW TO TROUBLESHOOT THE A/T SYSTEM** or **HOW TO TROUBLESHOOT THE FUEL AND EMISSIONS SYSTEMS** .
   - 5. Visually check the throttle valve operation while doing the ETCS TEST in the INSPECTION MENU with the HDS.

   Does the throttle valve operate smoothly?

   YES : **Clean the throttle body** See **THROTTLE BODY DISASSEMBLY AND REASSEMBLY** , **THROTTLE BODY CLEANING** or **THROTTLE BODY REMOVAL AND INSTALLATION** , then **do the repair verification** . If DTC P2101 is indicated, **replace the throttle body** See **THROTTLE BODY DISASSEMBLY AND REASSEMBLY** , **THROTTLE BODY REMOVAL AND INSTALLATION** or **THROTTLE BODY CLEANING** , then **do the repair verification** .

   NO : Go to step 4.

4. Open wire check (MTR1 line, MTR2 line):
   - 1. Turn the ignition switch to LOCK (0).
   - 2. Jump the SCS line with the HDS.
   - 3. Disconnect the following connectors.

     PCM connector C (49P)

     Throttle body 6P connector

   - 4. Connect terminals A and B with a jumper wire.

     Terminal A Throttle body 6P connector No. 1 (PNK)

     Terminal B Throttle body 6P connector No. 2 (GRN)

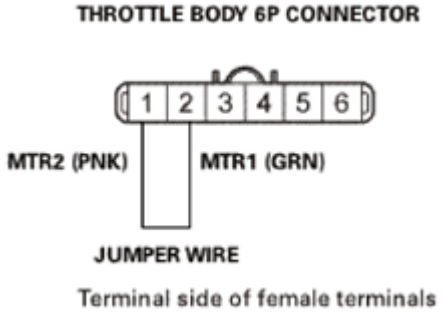

GETtheMANUALS.org

Fig. 341: Connecting Wire Between Throttle Body 6P Connector No. 1 (PNK) And No. 2 (GRN)
Courtesy of AMERICAN HONDA MOTOR CO., INC.

- 5. Check for continuity between test points 1 and 2.

  Test condition IG LOCK (0)

  PCM connector C (49P): disconnected

  Throttle body 6P connector: disconnected

  Throttle body 6P connector No. 1 and No. 2: jumped

  Test circuit MTR1, MTR2

  Test point 1 PCM connector C (49P) No. 3 (GRN)

  Test point 2 PCM connector C (49P) No. 4 (PNK)

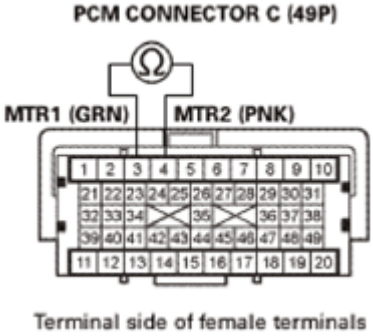

Fig. 342: Checking Continuity Between PCM Connector C (49P) No. 3 (GRN) And No. 4 (PNK)
Courtesy of AMERICAN HONDA MOTOR CO., INC.

Is there continuity?

YES : The MTR1 and MTR2 wires are OK. Go to step 5.

NO : Repair an open in the MTR1 wire or MTR2 wire between the PCM (C3, C4) and the throttle body, then **do the repair verification** .

5. Throttle body internal circuit check:
   - 1. At the throttle body side, measure the resistance between test points 1 and 2.

     Test condition IG LOCK (0)

     PCM connector C (49P): disconnected

GETtheMANUALS.org

Throttle body 6P connector: disconnected

Test circuit MTR1, MTR2

Test point 1 Throttle body 6P connector No. 1 (throttle body side)

Test point 2 Throttle body 6P connector No. 2 (throttle body side)

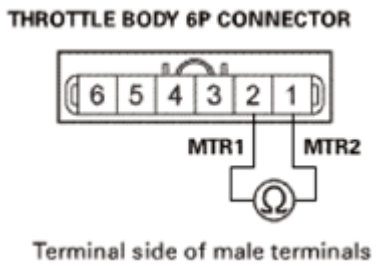

Fig. 343: Measuring Resistance Between Throttle Body 6P Connector No. 1 And No. 2 (Throttle Body Side)
Courtesy of AMERICAN HONDA MOTOR CO., INC.

Is there about 1.0 kohms or more?

YES : **Replace the throttle body** See **THROTTLE BODY DISASSEMBLY AND REASSEMBLY** , **THROTTLE BODY REMOVAL AND INSTALLATION** or **THROTTLE BODY CLEANING** , then **do the repair verification** .

NO : The throttle body internal circuit is OK. **Update the PCM** See **PCM REMOVAL AND INSTALLATION** or **PCM UPDATE** if it does not have the latest software, or **substitute a known-good PCM** See **PCM UPDATE** or **PCM REMOVAL AND INSTALLATION** , then **do the repair verification** .

REPAIR VERIFICATION

- 1. Turn the ignition switch to LOCK (0).
- 2. Reconnect all connectors.
- 3. Turn the ignition switch to ON (II).
- 4. **Reset the PCM with the HDS** See **HOW TO TROUBLESHOOT THE A/T SYSTEM** or **HOW TO TROUBLESHOOT THE FUEL AND EMISSIONS SYSTEMS** .
- 5. **DO THE PCM IDLE LEARN PROCEDURE** .
- 6. Test-drive the vehicle for several minutes in the range of these recorded freeze data parameters:
  - ENGINE SPEED
  - VEHICLE SPEED
  - APP SENSOR

	Current conditions

GETtheMANUALS.org

Signal	Values	Unit
ENGINE SPEED		
VEHICLE SPEED		
APP SENSOR		

- Check for Pending or Confirmed DTCs with the HDS.

Is DTC P2101 indicated?

YES : Check for poor connections or loose terminals at the throttle body and the PCM, and **clean the throttle body** See **THROTTLE BODY DISASSEMBLY AND REASSEMBLY** , **THROTTLE BODY REMOVAL AND INSTALLATION** or **THROTTLE BODY CLEANING** , then go to step 1. If the PCM was updated, **substitute a known-good PCM** See **PCM REMOVAL AND INSTALLATION** or **PCM UPDATE** , then recheck. If the PCM was substituted, go to step 1.

NO : Troubleshooting is complete. If the PCM was substituted, **replace the original PCM** See **PCM REMOVAL AND INSTALLATION** or **PCM UPDATE** . If any other Pending or Confirmed DTCs are indicated, go to the indicated DTC's troubleshooting.

DTC P2118: THROTTLE ACTUATOR CURRENT RANGE/PERFORMANCE PROBLEM

GETtheMANUALS.org

DTC Troubleshooting: P2118

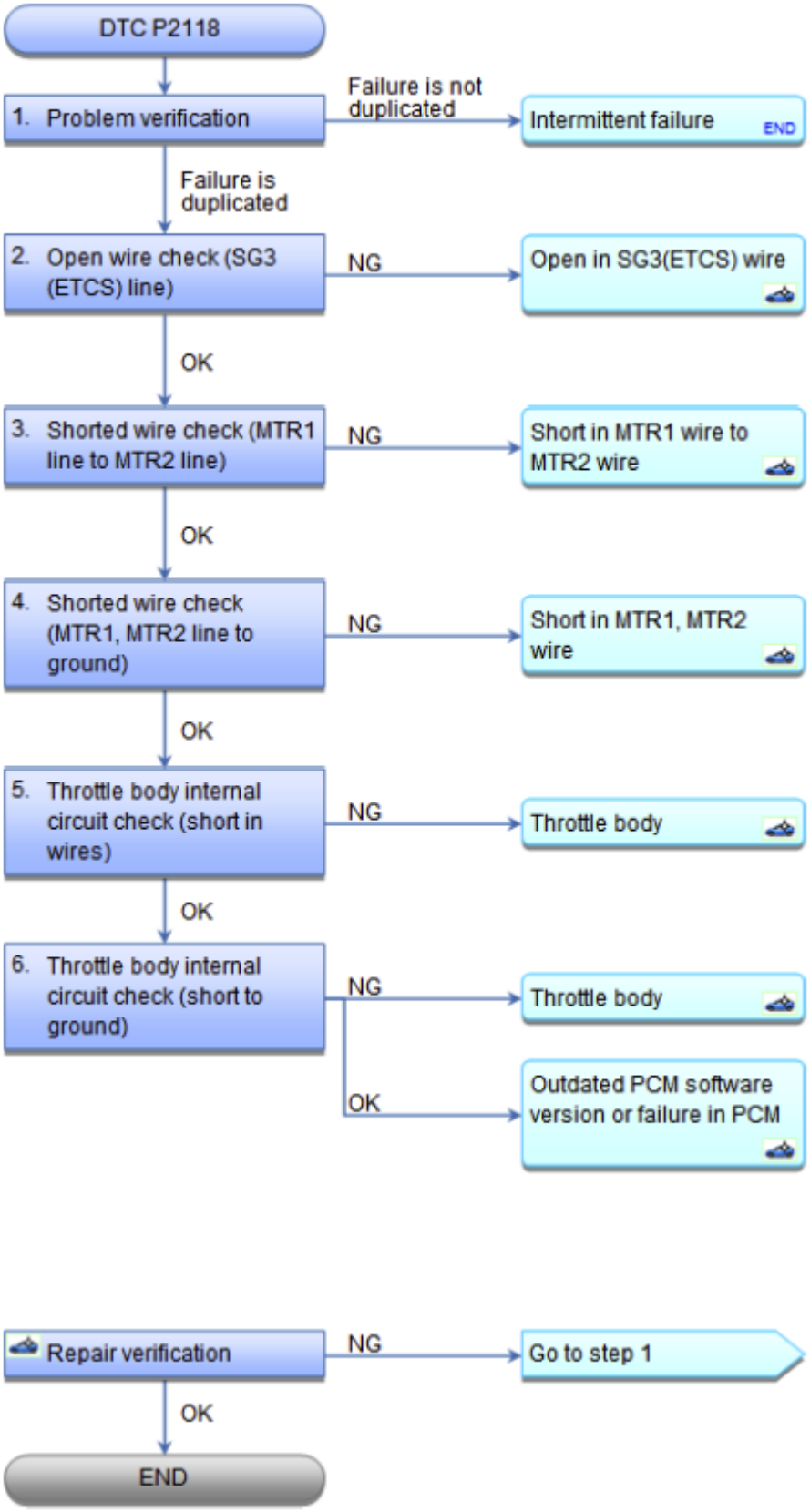

GETtheMANUALS.org

Fig. 344: DTC Troubleshooting Flow Chart (P2118)
Courtesy of AMERICAN HONDA MOTOR CO., INC.

NOTE: **Before you troubleshoot, record all freeze data and any on-board snapshot, and review the general troubleshooting information See HOW TO TROUBLESHOOT THE A/T SYSTEM or HOW TO TROUBLESHOOT THE FUEL AND EMISSIONS SYSTEMS .**

DTC Description	Confirmed DTC	Pending DTC	Freeze Frame
P2118 THROTTLE ACTUATOR CURRENT RANGE/PERFORMANCE PROBLEM			

1. Problem verification:
   - 1. Turn the ignition switch to ON (II).
   - 2. **Clear the DTC with the HDS** See **HOW TO TROUBLESHOOT THE A/T SYSTEM** or **HOW TO TROUBLESHOOT THE FUEL AND EMISSIONS SYSTEMS** .
   - 3. Slowly press the accelerator pedal to the floor.
   - 4. Check for Pending or Confirmed DTCs with the HDS.

DTC Description	Confirmed DTC	Pending DTC	Freeze Frame
P2118 THROTTLE ACTUATOR CURRENT RANGE/PERFORMANCE PROBLEM			

Is DTC P2118 indicated?

YES : The failure is duplicated. Go to step 2.

NO : Intermittent failure, the system is OK at this time. Check for poor connections or loose terminals at the throttle body and the PCM, then **clean the throttle body** See **THROTTLE BODY DISASSEMBLY AND REASSEMBLY** , **THROTTLE BODY CLEANING** or **THROTTLE BODY REMOVAL AND INSTALLATION** .

2. Open wire check (SG3(ETCS) line):
   - 1. Turn the ignition switch to LOCK (0).
   - 2. Jump the SCS line with the HDS.
   - 3. Disconnect the following connectors.

     PCM connector C (49P)

     Throttle body 6P connector

   - 4. Check for continuity between test points 1 and 2.

GETtheMANUALS.org

Test condition IG LOCK (0)

PCM connector C (49P): disconnected

Throttle body 6P connector: disconnected

Test circuit SG3(ETCS)

Test point 1 PCM connector C (49P) No. 14 (GRY)

Test point 2 Throttle body 6P connector No. 3 (GRY)

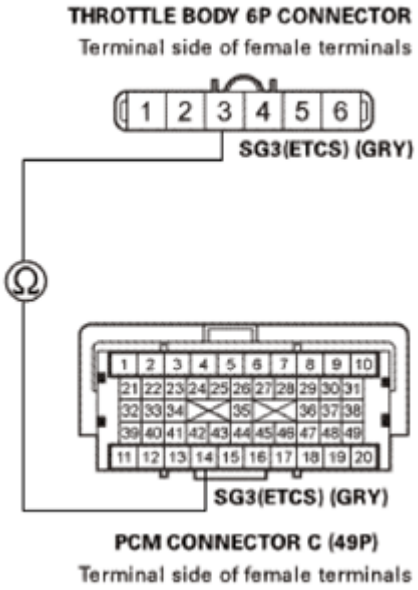

Fig. 345: Checking Continuity Between PCM Connector C (49P) No. 14 (GRY) And Throttle Body 6P Connector No. 3 (GRY)
Courtesy of AMERICAN HONDA MOTOR CO., INC.

Is there continuity?

YES : The SG3(ETCS) wire is OK. Go to step 3.

NO : Repair an open in the SG3(ETCS) wire between the PCM (C14) and the throttle body, then **do the repair verification** .

3. Shorted wire check (MTR1 line to MTR2 line):
   - 1. Check for continuity between test points 1 and 2.

     Test condition IG LOCK (0)

     PCM connector C (49P): disconnected

GETtheMANUALS.org

Throttle body 6P connector: disconnected

Test circuit MTR1, MTR2

Test point 1 Throttle body 6P connector No. 1 (PNK)

Test point 2 Throttle body 6P connector No. 2 (GRN)

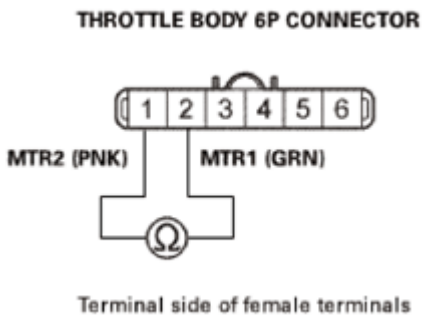

Fig. 346: Checking Continuity Between Throttle Body 6P Connector No. 1 (PNK) And No. 2 (GRN)
Courtesy of AMERICAN HONDA MOTOR CO., INC.

Is there continuity?

YES : Repair a short in the MTR1 and MTR2 wires between the throttle body and the PCM (C3, C4), then **do the repair verification** .

NO : Go to step 4.

4. Shorted wire check (MTR1, MTR2 line to ground):
   - 1. Check for continuity between test points 1 and 2.

     Test condition IG LOCK (0)

     PCM connector C (49P): disconnected

     Throttle body 6P connector: disconnected

     Test circuit MTR1

     Test point 1 Throttle body 6P connector No. 2 (GRN)

     Test point 2 Body ground

     Test circuit MTR2

     Test point 1 Throttle body 6P connector No. 1 (PNK)

GETtheMANUALS.org

Test point 2 Body ground

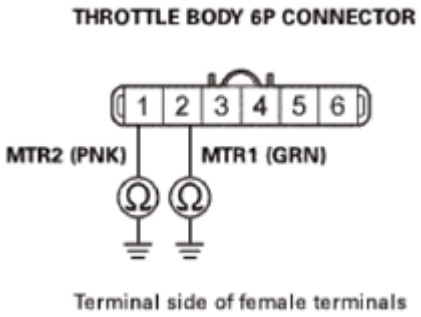

Fig. 347: Checking Continuity Between Throttle Body 6P Connector No. 1 (PNK) And Body Ground
Courtesy of AMERICAN HONDA MOTOR CO., INC.

Is there continuity?

YES : Repair a short to ground in the MTR1, MTR2 wire between the throttle body and the PCM (C3, C4), then **do the repair verification** .

NO : The MTR1, MIR2 wires are OK. Go to step 5.

5. Throttle body internal circuit check (short in wires):
   - 1. At the throttle body side, measure the resistance between test points 1 and 2.

     Test condition IG LOCK (0)

     PCM connector C (49P): disconnected

     Throttle body 6P connector: disconnected

     Test circuit MTR1, MTR2

     Test point 1 Throttle body 6P connector No. 1 (throttle body side)

     Test point 2 Throttle body 6P connector No. 2 (throttle body side)

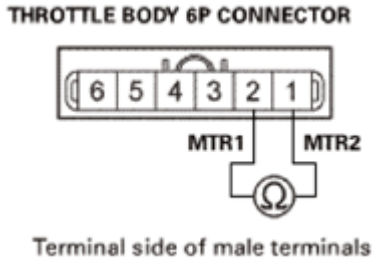

Fig. 348: Measuring Resistance Between Throttle Body 6P Connector No. 1 And No. 2

GETtheMANUALS.org

(Throttle Body Side)
Courtesy of AMERICAN HONDA MOTOR CO., INC.

Is there about 1.2 ohms -1.0 k ohms?

YES : Go to step 6.

NO : **Replace the throttle body** See **THROTTLE BODY DISASSEMBLY AND REASSEMBLY** , **THROTTLE BODY REMOVAL AND INSTALLATION** or **THROTTLE BODY CLEANING** , then **do the repair verification** .

6. Throttle body internal circuit check (short to ground):
   - 1. At the throttle body side, measure the resistance between test points 1 and 2.

     Test condition IG LOCK (0)

     PCM connector C (49P): disconnected

     Throttle body 6P connector: disconnected

     Test circuit MTR1

     Test point 1 Throttle body 6P connector No. 2 (throttle body side)

     Test point 2 Body ground

     Test circuit MTR2

     Test point 1 Throttle body 6P connector No. 1 (throttle body side)

     Test point 2 Body ground

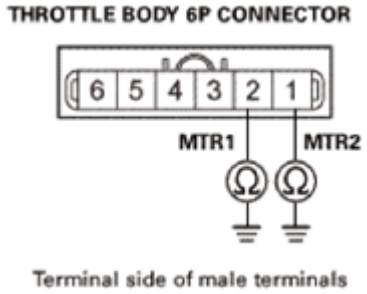

Fig. 349: Measuring Resistance Between Throttle Body 6P Connector No. 1 And No. 2 (Throttle Body Side)
Courtesy of AMERICAN HONDA MOTOR CO., INC.

Is there continuity?

GETtheMANUALS.org

YES : **Replace the throttle body** See **THROTTLE BODY DISASSEMBLY AND REASSEMBLY** , **THROTTLE BODY REMOVAL AND INSTALLATION** or **THROTTLE BODY CLEANING** , then **do the repair verification** .

NO : The throttle body internal circuit is OK. **Update the PCM** See **PCM REMOVAL AND INSTALLATION** or **PCM UPDATE** if it does not have the latest software, or **substitute a known-good PCM** See **PCM REMOVAL AND INSTALLATION** or **PCM UPDATE** , then **do the repair verification** .

REPAIR VERIFICATION

- 1. Turn the ignition switch to LOCK (0).
- 2. Reconnect all connectors.
- 3. Turn the ignition switch to ON (II).
- 4. **Reset the PCM with the HDS** See **HOW TO TROUBLESHOOT THE A/T SYSTEM** or **HOW TO TROUBLESHOOT THE FUEL AND EMISSIONS SYSTEMS** .
- 5. **DO THE PCM IDLE LEARN PROCEDURE** .
- 6. Slowly press the accelerator pedal to the floor.
- 7. Check for Pending or Confirmed DTCs with the HDS.

DTC Description	Confirmed DTC	Pending DTC	Freeze Frame
P2118 THROTTLE ACTUATOR CURRENT RANGE/PERFORMANCE PROBLEM			

Is DTC P2118 indicated?

YES : Check for poor connections or loose terminals at the throttle body and the PCM. If the PCM was updated, **substitute a known-good PCM** See **PCM REMOVAL AND INSTALLATION** or **PCM UPDATE** , then recheck. If the PCM was substituted, go to step 1.

NO : Troubleshooting is complete. If the PCM was substituted, **replace the original PCM** See **PCM REMOVAL AND INSTALLATION** or **PCM UPDATE** . If any other Pending or Confirmed DTCs are indicated, go to the indicated DTC's troubleshooting.

DTC P2122: APP SENSOR A (TP SENSOR D) CIRCUIT LOW VOLTAGE

GETtheMANUALS.org

DTC Troubleshooting: P2122

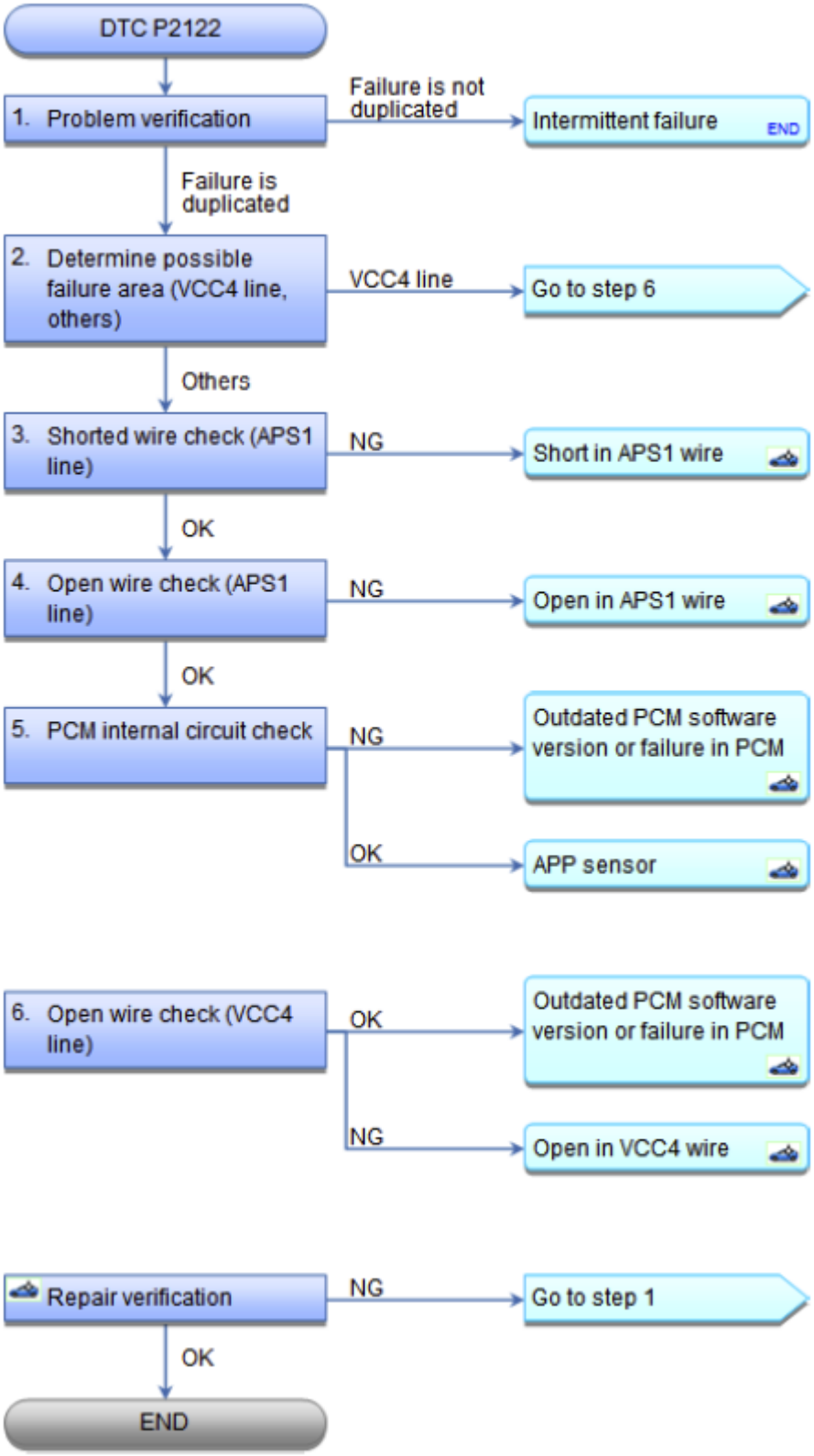

Fig. 350: DTC Troubleshooting Flow Chart (P2122)

GETtheMANUALS.org

Courtesy of AMERICAN HONDA MOTOR CO., INC.

NOTE: **Before you troubleshoot, record all freeze data and any on-board snapshot, and review the general troubleshooting information See HOW TO TROUBLESHOOT THE A/T SYSTEM or HOW TO TROUBLESHOOT THE FUEL AND EMISSIONS SYSTEMS .**

DTC Description	Confirmed DTC	Pending DTC	Freeze Frame
P2122 APP SENSOR A CIRCUIT LOW VOLTAGE			

1. Problem verification:
   - 1. Turn the ignition switch to ON (II).
   - 2. Check the parameter(s) below with the HDS.

Signal	Threshold		Current conditions	
	Values	Unit	Values	Unit
APP SENSOR A	Less than 0.2	V		

Do the current condition(s) match the threshold?

YES : The failure is duplicated. Go to step 2.

NO : Intermittent failure, the system is OK at this time. Check for poor connections or loose terminals at the APP sensor and the PCM.

2. Determine possible failure area (VCC4 line, others):
   - 1. Turn the ignition switch to LOCK (0).
   - 2. Disconnect the following connector.

     APP sensor 6P connector

   - 3. Turn the ignition switch to ON (II).
   - 4. Measure the voltage between test points 1 and 2.

     Test condition IG ON (II)

     APP sensor 6P connector: disconnected

     Test circuit VCC4, SG4

     Test point 1 APP sensor 6P connector No. 4 (BRN)

     Test point 2 APP sensor 6P connector No. 5 (LT BLU)

GETtheMANUALS.org

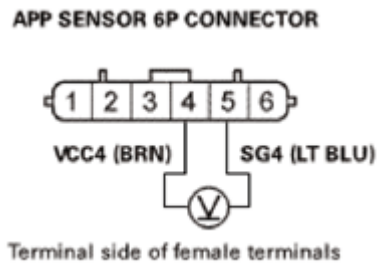

Fig. 351: Measuring Voltage Between APP Sensor 6P Connector No. 4 (BRN) And No. 5 (LT BLU)
Courtesy of AMERICAN HONDA MOTOR CO., INC.

Is there about 5.0 V?

YES : Go to step 3.

NO : Go to step 6.

3. Shorted wire check (APS1 line):
   - 1. Turn the ignition switch to LOCK (0).
   - 2. Jump the SCS line with the HDS.
   - 3. Disconnect the following connector.

     PCM connector A (49P)

   - 4. Check for continuity between test points 1 and 2.

     Test condition IG LOCK (0)

     APP sensor 6P connector: disconnected

     PCM connector A (49P): disconnected

     Test circuit APS1

     Test point 1 APP sensor 6P connector No. 6 (ORN)

     Test point 2 Body ground

GETtheMANUALS.org

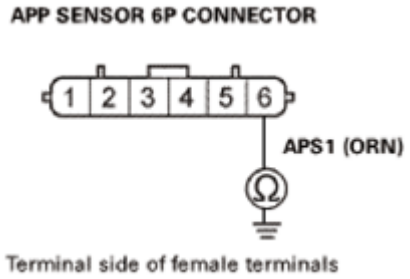

Fig. 352: Checking Continuity Between APP Sensor 6P Connector No. 6 (ORN) And Body Ground
Courtesy of AMERICAN HONDA MOTOR CO., INC.

Is there continuity?

YES : Repair a short in the APS1 wire between the PCM (A28) and the APP sensor, then **do the repair verification** .

NO : The APS1 wire is not shorted. Go to step 4.

4. Open wire check (APS1 line):
   - 1. Connect terminals A and B with a jumper wire.

     Terminal A APP sensor 6P connector No. 6 (ORN)

     Terminal B Body ground

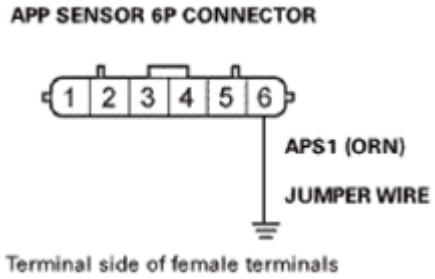

Fig. 353: Connecting Wire Between APP Sensor 6P Connector No. 6 (ORN) And Body Ground
Courtesy of AMERICAN HONDA MOTOR CO., INC.

   - 2. Check for continuity between test points 1 and 2.

     Test condition IG LOCK (0)

     APP sensor 6P connector: disconnected

     APP sensor 6P connector No. 6: jumped to body ground

GETtheMANUALS.org

PCM connector A (49P): disconnected

Test circuit APS1

Test point 1 PCM connector A (49P) No. 28 (ORN)

Test point 2 Body ground

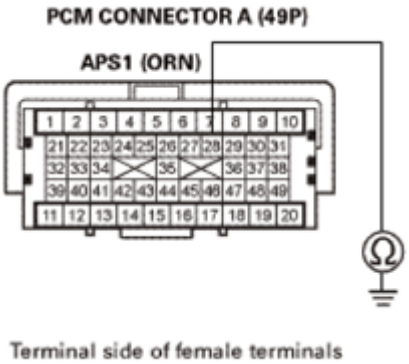

Fig. 354: Checking Continuity Between PCM Connector A (49P) No. 28 (ORN) And Body Ground
Courtesy of AMERICAN HONDA MOTOR CO., INC.

Is there continuity?

YES : The APS1 wire is OK. Go to step 5.

NO : Repair an open in the APS1 wire between the PCM (A28) and the APP sensor, then **do the repair verification** .

5. PCM internal circuit check:
   - 1. Reconnect the following connector.

     PCM connector A (49P)

   - 2. Connect terminals A and B with a jumper wire.

     Terminal A APP sensor 6P connector No. 4 (BRN)

     Terminal B APP sensor 6P connector No. 6 (ORN)

GETtheMANUALS.org

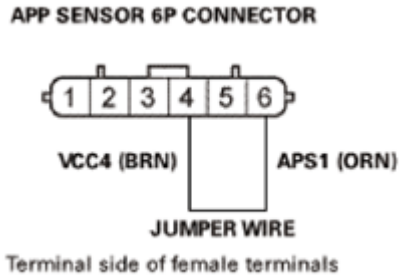

Fig. 355: Connecting Wire Between APP Sensor 6P Connector No. 4 (BRN) And No. 6 (ORN) Courtesy of AMERICAN HONDA MOTOR CO., INC.

- 3. Turn the ignition switch to ON (II).
- 4. Check the parameter(s) below with the HDS.

Signal	Threshold		Current conditions	
	Values	Unit	Values	Unit
APP SENSOR A	Less than 0.2	V		

Do the current condition(s) match the threshold?

YES : **Update the PCM** See **PCM REMOVAL AND INSTALLATION** or **PCM UPDATE** if it does not have the latest software, or **substitute a known-good PCM** See **PCM REMOVAL AND INSTALLATION** or **PCM UPDATE** , then **do the repair verification** .

NO : **REPLACE THE APP SENSOR** , then **do the repair verification** .

6. Open wire check (VCC4 line):
   - 1. Turn the ignition switch to LOCK (0).
   - 2. Jump the SCS line with the HDS.
   - 3. Disconnect the following connector.

     PCM connector A (49P)

   - 4. Connect terminals A and B with a jumper wire.

     Terminal A APP sensor 6P connector No. 4 (BRN)

     Terminal B Body ground

GETtheMANUALS.org

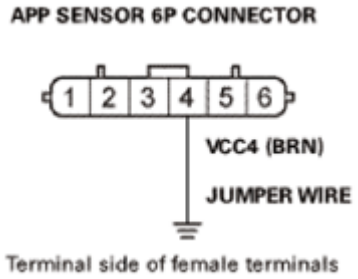

Fig. 356: Connecting Wire Between APP Sensor 6P Connector No. 4 (BRN) And Body Ground
Courtesy of AMERICAN HONDA MOTOR CO., INC.

- 5. Check for continuity between test points 1 and 2.

  Test condition IG LOCK (0)

  APP sensor 6P connector: disconnected

  APP sensor 6P connector No. 4: jumped to body ground

  PCM connector A (49P): disconnected

  Test circuit VCC4

  Test point 1 PCM connector A (49P) No. 36 (BRN)

  Test point 2 Body ground

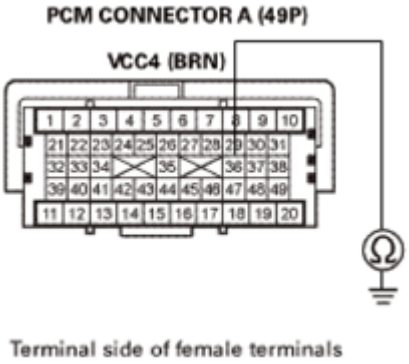

Fig. 357: Checking Continuity Between PCM Connector A (49P) No. 36 (BRN) And Body Ground
Courtesy of AMERICAN HONDA MOTOR CO., INC.

Is there continuity?

YES : The VCC4 wire is OK. **Update the PCM** See **PCM REMOVAL AND INSTALLATION** or **PCM UPDATE** if it does not have the latest software, or **substitute a known-good PCM** See **PCM**

GETtheMANUALS.org

REMOVAL AND INSTALLATION or **PCM UPDATE** , then **do the repair verification** .

NO : Repair an open in the VCC4 wire between the PCM (A36) and the APP sensor, then **do the repair verification** .

REPAIR VERIFICATION

- 1. Turn the ignition switch to LOCK (0).
- 2. Reconnect all connectors.
- 3. Turn the ignition switch to ON (II).
- 4. **Reset the PCM with the HDS** See **HOW TO TROUBLESHOOT THE A/T SYSTEM** or **HOW TO TROUBLESHOOT THE FUEL AND EMISSIONS SYSTEMS** .
- 5. **DO THE PCM IDLE LEARN PROCEDURE** .
- 6. Check for Pending or Confirmed DTCs with the HDS.

DTC Description	Confirmed DTC	Pending DTC	Freeze Frame
P2122 APP SENSOR A CIRCUIT LOW VOLTAGE			

Is DTC P2122 indicated?

YES : Check for poor connections or loose terminals at the APP sensor and the PCM. If the PCM was updated, **substitute a known-good PCM** See **PCM UPDATE** or **PCM REMOVAL AND INSTALLATION** , then recheck. If the PCM was substituted, go to step 1.

NO : Troubleshooting is complete. If the PCM was substituted, **replace the original PCM** See **PCM REMOVAL AND INSTALLATION** or **PCM UPDATE** . If any other Pending or Confirmed DTCs are indicated, go to the indicated DTC's troubleshooting.

DTC P2123: APP SENSOR A (TP SENSOR D) CIRCUIT HIGH VOLTAGE

GETtheMANUALS.org

DTC Troubleshooting: P2123

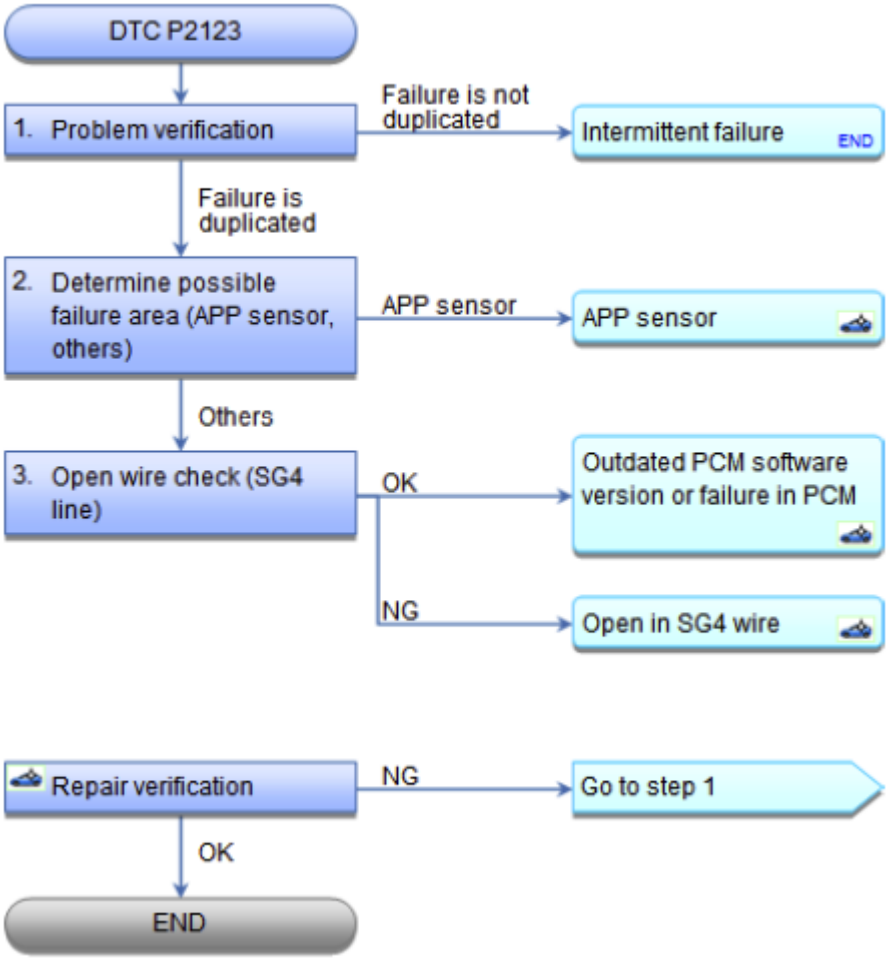

Fig. 358: DTC Troubleshooting Flow Chart (P2123)
Courtesy of AMERICAN HONDA MOTOR CO., INC.

NOTE: **Before you troubleshoot, record all freeze data and any on-board snapshot, and review the general troubleshooting information See HOW TO TROUBLESHOOT THE A/T SYSTEM or HOW TO TROUBLESHOOT THE FUEL AND EMISSIONS SYSTEMS .**

DTC Description	Confirmed DTC	Pending DTC	Freeze Frame
P2123 APP SENSOR A CIRCUIT HIGH VOLTAGE			

1. Problem verification:
   - 1. Turn the ignition switch to ON (II).
   - 2. Check the parameter(s) below with the HDS.

Signal	Threshold		Current conditions	
	Values	Unit	Values	Unit

GETtheMANUALS.org

APP SENSOR A	More than 4.9	V		

Do the current condition(s) match the threshold?

YES : The failure is duplicated. Go to step 2.

NO : Intermittent failure, the system is OK at this time. Check for poor connections or loose terminals at the APP sensor and the PCM.

2. Determine possible failure area (APP sensor, others):
   - 1. Turn the ignition switch to LOCK (0).
   - 2. Disconnect the following connector.

     APP sensor 6P connector

   - 3. Turn the ignition switch to ON (II).
   - 4. Measure the voltage between test points 1 and 2.

     Test condition IG ON (II)

     APP sensor 6P connector: disconnected

     Test circuit VCC4, SG4

     Test point 1 APP sensor 6P connector No. 4 (BRN)

     Test point 2 APP sensor 6P connector No. 5 (LT BLU)

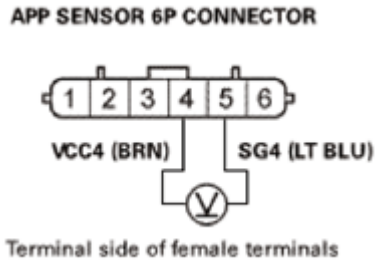

Fig. 359: Measuring Voltage Between APP Sensor 6P Connector No. 4 (BRN) And No. 5 (LT BLU)
Courtesy of AMERICAN HONDA MOTOR CO., INC.

Is there about 5.0 V?

YES : **REPLACE THE APP SENSOR** , then **do the repair verification** .

NO : Go to step 3.

GETtheMANUALS.org

3. Open wire check (SG4 line):
    - 1. Turn the ignition switch to LOCK (0).
    - 2. Jump the SCS line with the HDS.
    - 3. Disconnect the following connector.

      PCM connector A (49P)

    - 4. Connect terminals A and B with a jumper wire.

      Terminal A APP sensor 6P connector No. 5 (LT BLU)

      Terminal B Body ground

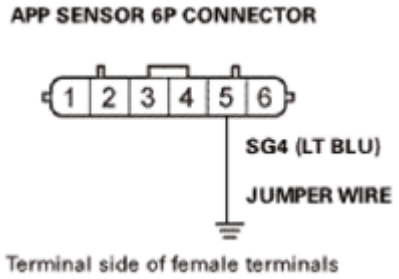

Fig. 360: Connecting Wire Between APP Sensor 6P Connector No. 5 (LT BLU) And Body Ground
Courtesy of AMERICAN HONDA MOTOR CO., INC.

    - 5. Check for continuity between test points 1 and 2.

      Test condition IG LOCK (0)

      APP sensor 6P connector: disconnected

      APP sensor 6P connector No. 5: jumped to body ground

      PCM connector A (49P): disconnected

      Test circuit SG4

      Test point 1 PCM connector A (49P) No. 46 (LT BLU)

      Test point 2 Body ground

GETtheMANUALS.org

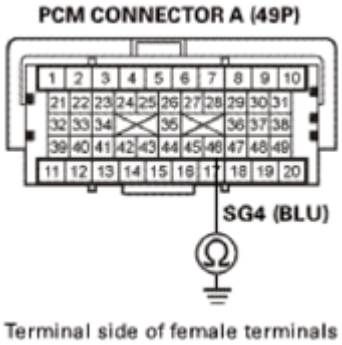

Fig. 361: Checking Continuity Between PCM Connector A (49P) No. 46 (LT BLU) And Body Ground
Courtesy of AMERICAN HONDA MOTOR CO., INC.

Is there continuity?

YES : The SG4 wire is OK. **Update the PCM** See **PCM REMOVAL AND INSTALLATION** or **PCM UPDATE** if it does not have the latest software, or **substitute a known-good PCM** See **PCM UPDATE** or **PCM REMOVAL AND INSTALLATION** , then **do the repair verification** .

NO : Repair an open in the SG4 wire between the PCM (A46) and the APP sensor, then **do the repair verification** .

REPAIR VERIFICATION

- 1. Turn the ignition switch to LOCK (0).
- 2. Reconnect all connectors.
- 3. Turn the ignition switch to ON (II).
- 4. **Reset the PCM with the HDS** See **HOW TO TROUBLESHOOT THE FUEL AND EMISSIONS SYSTEMS** or **HOW TO TROUBLESHOOT THE A/T SYSTEM** .
- 5. **DO THE PCM IDLE LEARN PROCEDURE** .
- 6. Check for Pending or Confirmed DTCs with the HDS.

DTC Description	Confirmed DTC	Pending DTC	Freeze Frame
P2123 APP SENSOR A CIRCUIT HIGH VOLTAGE			

Is DTC P2123 indicated?

YES : Check for poor connections or loose terminals at the APP sensor and the PCM. If the PCM was updated, **substitute a known-good PCM** See **PCM REMOVAL AND INSTALLATION** or **PCM UPDATE** , then recheck. If the PCM was substituted, go to step 1.

NO : Troubleshooting is complete. If the PCM was substituted, **replace the original PCM** See **PCM REMOVAL AND INSTALLATION** or **PCM UPDATE** . If any other Pending or Confirmed DTCs are indicated, go to the indicated DTC's troubleshooting.

GETtheMANUALS.org

DTC P2127: APP SENSOR B (TP SENSOR E) CIRCUIT LOW VOLTAGE

GETtheMANUALS.org

DTC Troubleshooting: P2127

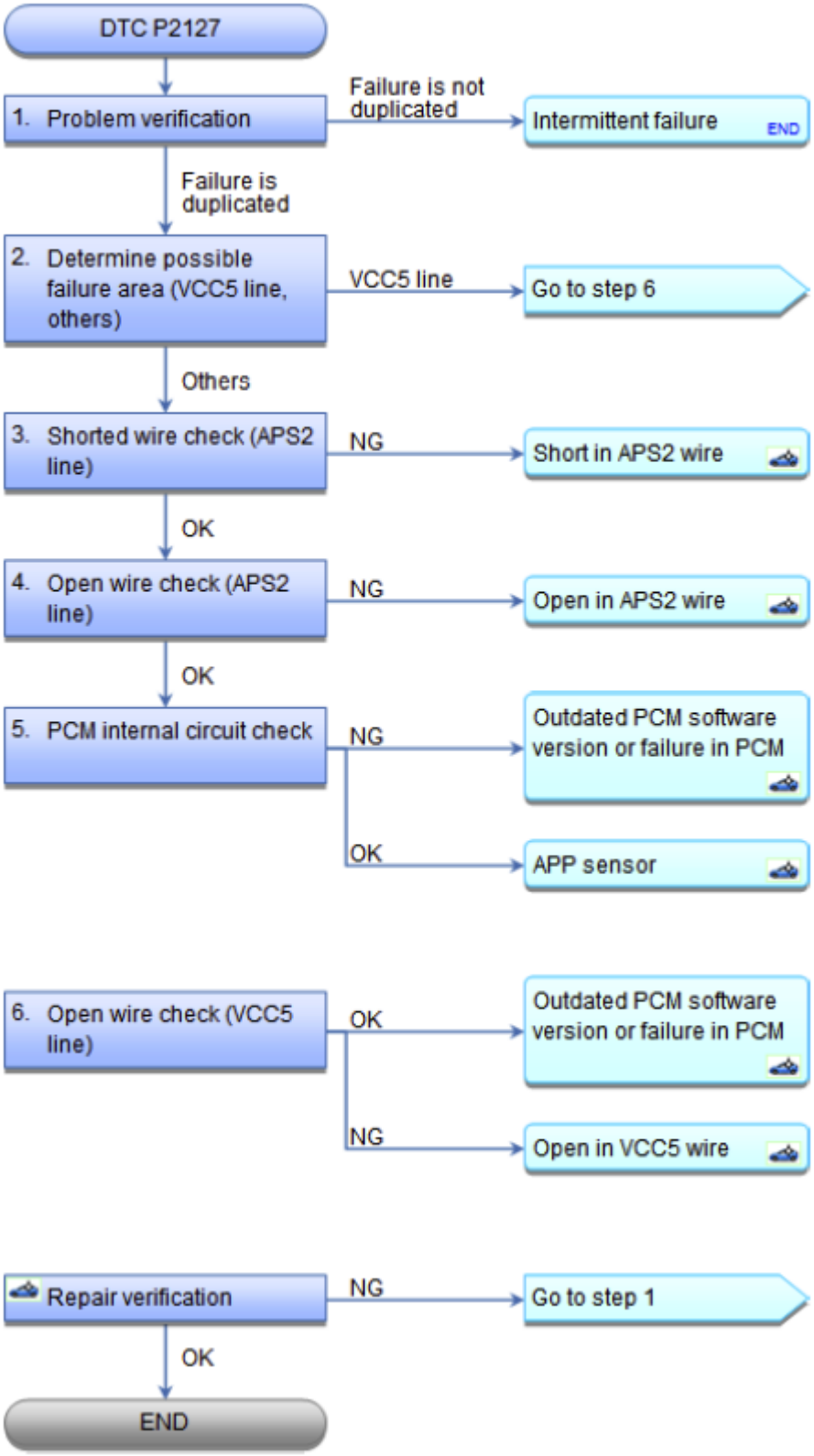

Fig. 362: DTC Troubleshooting Flow Chart (P2127)

GETtheMANUALS.org

Courtesy of AMERICAN HONDA MOTOR CO., INC.

NOTE: **Before you troubleshoot, record all freeze data and any on-board snapshot, and review the general troubleshooting information See HOW TO TROUBLESHOOT THE FUEL AND EMISSIONS SYSTEMS or HOW TO TROUBLESHOOT THE A/T SYSTEM .**

DTC Description	Confirmed DTC	Pending DTC	Freeze Frame
P2127 APP SENSOR B CIRCUIT LOW VOLTAGE			

1. Problem verification:
   - 1. Turn the ignition switch to ON (II).
   - 2. Check the parameter(s) below with the HDS.

Signal	Threshold		Current conditions	
	Values	Unit	Values	Unit
APP SENSOR B	Less than 0.2	V		

Do the current condition(s) match the threshold?

YES : The failure is duplicated. Go to step 2.

NO : Intermittent failure, the system is OK at this time. Check for poor connections or loose terminals at the APP sensor and the PCM.

2. Determine possible failure area (VCC5 line, others):
   - 1. Turn the ignition switch to LOCK (0).
   - 2. Disconnect the following connector.

     APP sensor 6P connector

   - 3. Turn the ignition switch to ON (II).
   - 4. Measure the voltage between test points 1 and 2.

     Test condition IG ON(II)

     APP sensor 6P connector: disconnected

     Test circuit VCC5, SG5

     Test point 1 APP sensor 6P connector No. 1 (LT GRN)

     Test point 2 APP sensor 6P connector No. 2 (YEL)

GETtheMANUALS.org

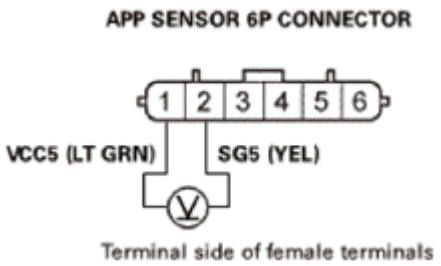

Fig. 363: Measuring Voltage Between APP Sensor 6P Connector No. 1 (LT GRN) And No. 2 (YEL)
Courtesy of AMERICAN HONDA MOTOR CO., INC.

Is there about 5.0 V?

YES : Go to step 3.

NO : Go to step 6.

3. Shorted wire check (APS2 line):
   - 1. Turn the ignition switch to LOCK (0).
   - 2. Jump the SCS line with the HDS.
   - 3. Disconnect the following connector.

     PCM connector A (49P)

   - 4. Check for continuity between test points 1 and 2.

     Test condition IG LOCK (0)

     APP sensor 6P connector: disconnected

     PCM connector A (49P): disconnected

     Test circuit APS2

     Test point 1 APP sensor 6P connector No. 3 (PUR)

     Test point 2 Body ground

GETtheMANUALS.org

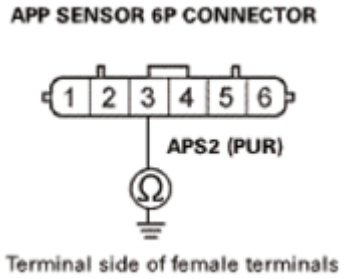

Fig. 364: Checking Continuity Between APP Sensor 6P Connector No. 3 (PUR) And Body Ground
Courtesy of AMERICAN HONDA MOTOR CO., INC.

Is there continuity?

YES : Repair a short in the APS2 wire between the PCM (A29) and the APP sensor, then **do the repair verification** .

NO : The APS2 wire is not shorted. Go to step 4.

4. Open wire check (APS2 line):
   - 1. Connect terminals A and B with a jumper wire.

     Terminal A APP sensor 6P connector No. 3 (PUR)

     Terminal B Body ground

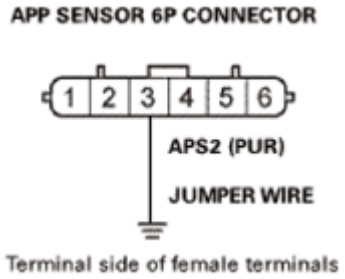

Fig. 365: Connecting Wire Between APP Sensor 6P Connector No. 3 (PUR) And Body Ground
Courtesy of AMERICAN HONDA MOTOR CO., INC.

   - 2. Check for continuity between test points 1 and 2.

     Test condition IG LOCK (0)

     APP sensor 6P connector: disconnected

     APP sensor 6P connector No. 3: jumped to body ground

GETtheMANUALS.org

PCM connector A (49P): disconnected

Test circuit APS2

Test point 1 PCM connector A (49P) No. 29 (PUR)

Test point 2 Body ground

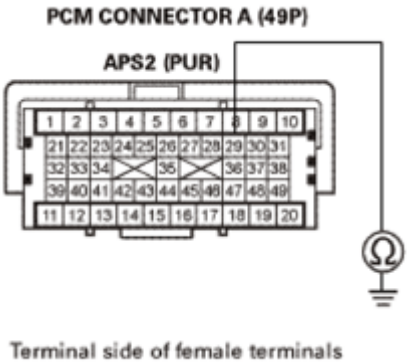

Fig. 366: Checking Continuity Between PCM Connector A (49P) No. 29 (PUR) And Body Ground
Courtesy of AMERICAN HONDA MOTOR CO., INC.

Is there continuity?

YES : The APS2 wire is OK. Go to step 5.

NO : Repair an open in the APS2 wire between the PCM (A29) and the APP sensor, then **do the repair verification** .

5. PCM internal circuit check:
   - 1. Reconnect the following connector.

     PCM connector A (49P)

   - 2. Connect terminals A and B with a jumper wire.

     Terminal A APP sensor 6P connector No. 1 (LT GRN)

     Terminal B APP sensor 6P connector No. 3 (PUR)

GETtheMANUALS.org

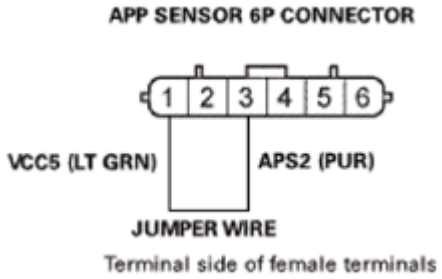

Fig. 367: Connecting Wire Between APP Sensor 6P Connector No. 1 (LT GRN) And No. 3 (PUR)
Courtesy of AMERICAN HONDA MOTOR CO., INC.

- 3. Turn the ignition switch to ON (II).
- 4. Check the parameter(s) below with the HDS.

Signal	Threshold		Current conditions	
	Values	Unit	Values	Unit
APP SENSOR B	Less than 0.2	V		

Do the current condition(s) match the threshold?

YES : **Update the PCM** See **PCM REMOVAL AND INSTALLATION** or **PCM UPDATE** if it does not have the latest software, or **substitute a known-good PCM** See **PCM REMOVAL AND INSTALLATION** or **PCM UPDATE** , then **do the repair verification** .

NO : **REPLACE THE APP SENSOR** , then **do the repair verification** .

6. Open wire check (VCC5 line):
   - 1. Turn the ignition switch to LOCK (0).
   - 2. Jump the SCS line with the HDS.
   - 3. Disconnect the following connector.

     PCM connector A (49P)

   - 4. Connect terminals A and B with a jumper wire.

     Terminal A APP sensor 6P connector No. 1 (LT GRN)

     Terminal B Body ground

GETtheMANUALS.org

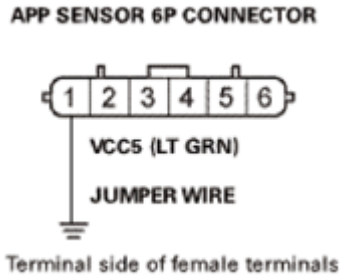

Fig. 368: Connecting Wire Between APP Sensor 6P Connector No. 1 (LT GRN) And Body Ground
Courtesy of AMERICAN HONDA MOTOR CO., INC.

- 5. Check for continuity between test points 1 and 2.

  Test condition IG LOCK (0)

  APP sensor 6P connector: disconnected

  APP sensor 6P connector No. 1: jumped to body ground

  PCM connector A (49P): disconnected

  Test circuit VCC5

  Test point 1 PCM connector A (49P) No. 35 (LT GRN)

  Test point 2 Body ground

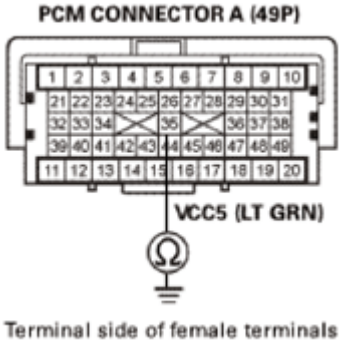

Fig. 369: Checking Continuity Between PCM Connector A (49P) No. 35 (LT GRN) And Body Ground
Courtesy of AMERICAN HONDA MOTOR CO., INC.

Is there continuity?

YES : The VCC5 wire is OK. **Update the PCM** See **PCM UPDATE** or **PCM REMOVAL AND INSTALLATION** if it does not have the latest software, or **substitute a known-good PCM** See **PCM**

GETtheMANUALS.org

UPDATE or **PCM REMOVAL AND INSTALLATION** , then **do the repair verification** .

NO : Repair an open in the VCC5 wire between the PCM (A35) and the APP sensor, then **do the repair verification** .

REPAIR VERIFICATION

- 1. Turn the ignition switch to LOCK (0).
- 2. Reconnect all connectors.
- 3. Turn the ignition switch to ON (II).
- 4. **Reset the PCM with the HDS** See **HOW TO TROUBLESHOOT THE FUEL AND EMISSIONS SYSTEMS** or **HOW TO TROUBLESHOOT THE A/T SYSTEM** .
- 5. **DO THE PCM IDLE LEARN PROCEDURE** .
- 6. Check for Pending or Confirmed DTCs with the HDS.

DTC Description	Confirmed DTC	Pending DTC	Freeze Frame
P2127 APP SENSOR B CIRCUIT LOW VOLTAGE			

Is DTC P2127 indicated?

YES : Check for poor connections or loose terminals at the APP Sensor and the PCM. If the PCM was updated, **substitute a known-good PCM** See **PCM REMOVAL AND INSTALLATION** or **PCM UPDATE** , then recheck. If the PCM was substituted, go to step 1.

NO : Troubleshooting is complete. If the PCM was substituted, **replace the original PCM** See **PCM UPDATE** or **PCM REMOVAL AND INSTALLATION** . If any other Pending or Confirmed DTCs are indicated, go to the indicated DTC's troubleshooting.

DTC P2128: APP SENSOR B (TP SENSOR E) CIRCUIT HIGH VOLTAGE

GETtheMANUALS.org

DTC Troubleshooting: P2128

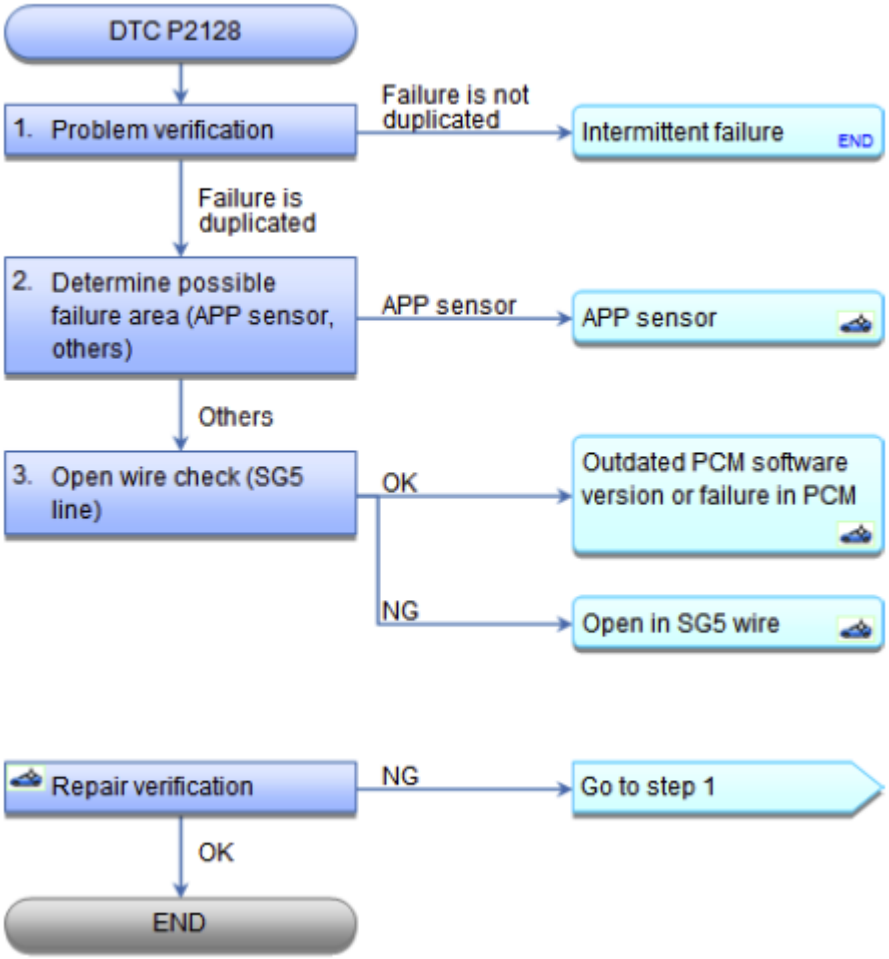

Fig. 370: DTC Troubleshooting Flow Chart (P2128)
Courtesy of AMERICAN HONDA MOTOR CO., INC.

NOTE: **Before you troubleshoot, record all freeze data and any on-board snapshot, and review the general troubleshooting information See HOW TO TROUBLESHOOT THE A/T SYSTEM or HOW TO TROUBLESHOOT THE FUEL AND EMISSIONS SYSTEMS .**

DTC Description	Confirmed DTC	Pending DTC	Freeze Frame
P2128 APP SENSOR B CIRCUIT HIGH VOLTAGE			

1. Problem verification:
   - 1. Turn the ignition switch to ON (II).
   - 2. Check the parameter(s) below with the HDS.

Signal	Threshold		Current conditions	
	Values	Unit	Values	Unit

GETtheMANUALS.org

APP SENSOR B	More than 4.0	V		

Do the current condition(s) match the threshold?

YES : The failure is duplicated. Go to step 2.

NO : Intermittent failure, the system is OK at this time. Check for poor connections or loose terminals at the APP sensor and the PCM.

2. Determine possible failure area (APP sensor, others):
   - 1. Turn the ignition switch to LOCK (0).
   - 2. Disconnect the following connector.

     APP sensor 6P connector

   - 3. Turn the ignition switch to ON (II).
   - 4. Measure the voltage between test points 1 and 2.

     Test condition IG ON (II)

     APP sensor 6P connector: disconnected

     Test circuit VCC5, SG5

     Test point 1 APP sensor 6P connector No. 1 (LT GRN)

     Test point 2 APP sensor 6P connector No. 2 (YEL)

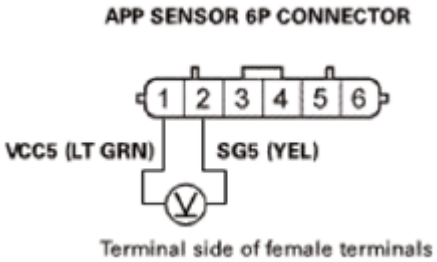

Fig. 371: Measuring Voltage Between APP Sensor 6P Connector No. 1 (LT GRN) And No. 2 (YEL)
Courtesy of AMERICAN HONDA MOTOR CO., INC.

Is there about 5.0 V?

YES : **REPLACE THE APP SENSOR** , then **do the repair verification** .

NO : There is a problem in the SG5 line. Go to step 3.

GETtheMANUALS.org

3. Open wire check (SG5 line):
    - 1. Turn the ignition switch to LOCK (0).
    - 2. Jump the SCS line with the HDS.
    - 3. Disconnect the following connector.

      PCM connector A (49P)

    - 4. Connect terminals A and B with a jumper wire.

      Terminal A APP sensor 6P connector No. 2 (YEL)

      Terminal B Body ground

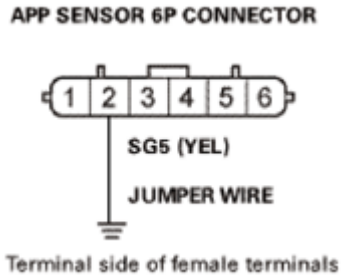

Fig. 372: Connecting Wire Between APP Sensor 6P Connector No. 2 (YEL) And Body Ground
Courtesy of AMERICAN HONDA MOTOR CO., INC.

    - 5. Check for continuity between test points 1 and 2.

      Test condition IG LOCK (0)

      APP sensor 6P connector: disconnected

      APP sensor 6P connector No. 2: jumped to body ground

      PCM connector A (49P): disconnected

      Test circuit SG5

      Test point 1 PCM connector A (49P) No. 45 (YEL)

      Test point 2 Body ground

GETtheMANUALS.org

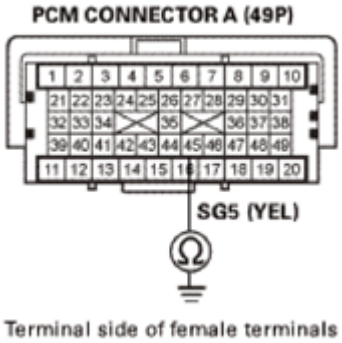

Fig. 373: Checking Continuity Between PCM Connector A (49P) No. 45 (YEL) And Body Ground
Courtesy of AMERICAN HONDA MOTOR CO., INC.

Is there continuity?

YES : The SG5 wire is OK. **Update the PCM** See **PCM UPDATE** or **PCM REMOVAL AND INSTALLATION** if it does not have the latest software, or **substitute a known-good PCM** See **PCM UPDATE** or **PCM REMOVAL AND INSTALLATION** , then **do the repair verification** .

NO : Repair an open in the SG5 wire between the PCM (A45) and the APP sensor, then **do the repair verification** .

REPAIR VERIFICATION

- 1. Turn the ignition switch to LOCK (0).
- 2. Reconnect all connectors.
- 3. Turn the ignition switch to ON (II).
- 4. **Reset the PCM with the HDS** See **HOW TO TROUBLESHOOT THE FUEL AND EMISSIONS SYSTEMS** or **HOW TO TROUBLESHOOT THE A/T SYSTEM** .
- 5. **DO THE PCM IDLE LEARN PROCEDURE** .
- 6. Check for Pending or Confirmed DTCs with the HDS.

DTC Description	Confirmed DTC	Pending DTC	Freeze Frame
P2128 APP SENSOR B CIRCUIT HIGH VOLTAGE			

Is DTC P2128 indicated?

YES : Check for poor connections or loose terminals at the APP sensor and the PCM. If the PCM was updated, **substitute a known-good PCM** See **PCM REMOVAL AND INSTALLATION** or **PCM UPDATE** , then recheck. If the PCM was substituted, go to step 1.

NO : Troubleshooting is complete. If the PCM was substituted, **replace the original PCM** See **PCM REMOVAL AND INSTALLATION** or **PCM UPDATE** . If any other Pending or Confirmed DTCs are indicated, go to the indicated DTC's troubleshooting.

GETtheMANUALS.org

DTC P2135: TP SENSOR A/B INCORRECT VOLTAGE CORRELATION

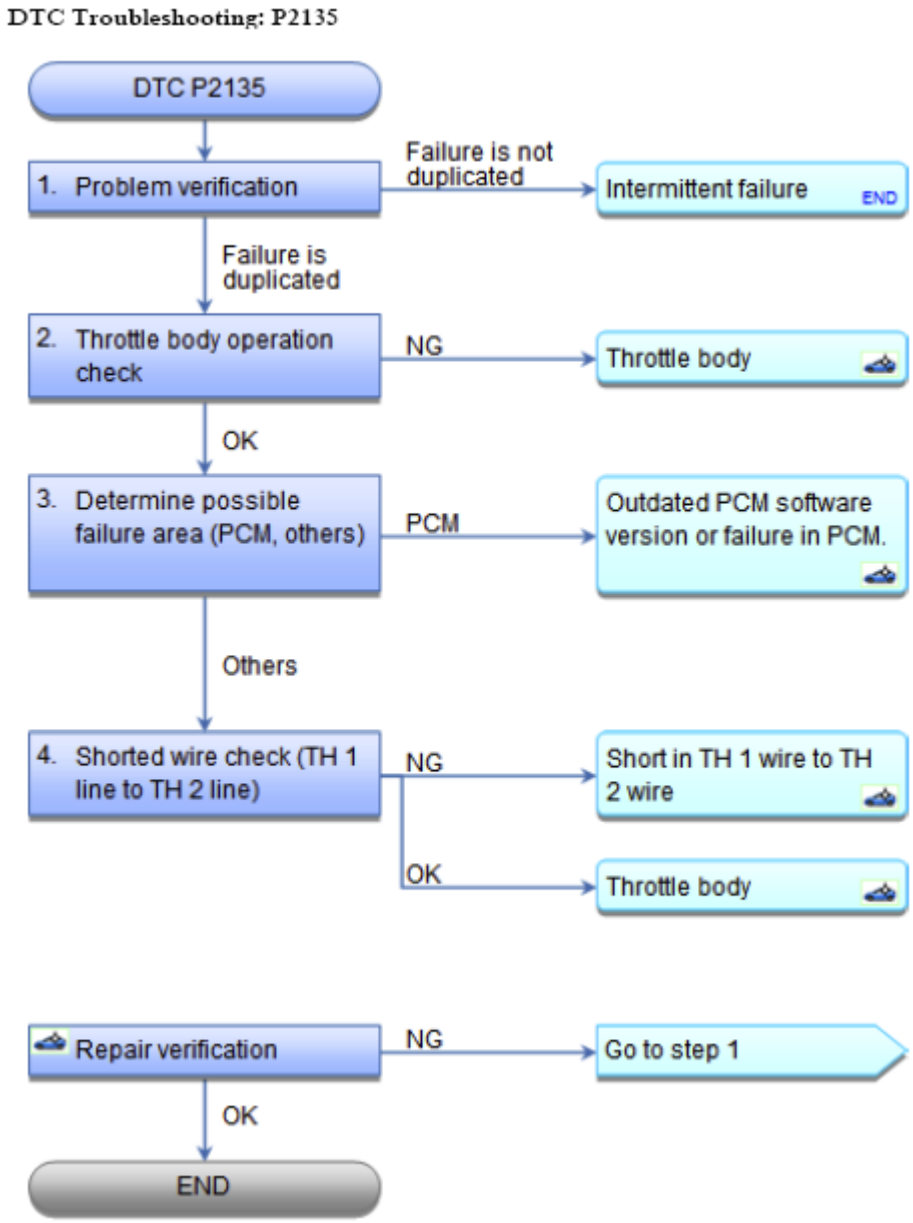

Fig. 374: DTC Troubleshooting Flow Chart (P2135)
Courtesy of AMERICAN HONDA MOTOR CO., INC.

CAUTION: Do not insert your fingers into the installed throttle body when you turn the ignition switch to ON (II), or while the ignition switch is in ON (II). If you do, you will seriously injure your fingers if the throttle valve is activated.

NOTE: Before you troubleshoot, record all freeze data and any on-board snapshot, and review the general troubleshooting information See HOW TO TROUBLESHOOT THE FUEL AND EMISSIONS SYSTEMS or HOW TO TROUBLESHOOT THE A/T

GETtheMANUALS.org

SYSTEM .

DTC Description	Confirmed DTC	Pending DTC	Freeze Frame
P2135 TP SENSOR A/B INCORRECT VOLTAGE CORRELATION			

1. Problem verification:
   - 1. Turn the ignition switch to ON (II).
   - 2. **Clear the DTC with the HDS** See **HOW TO TROUBLESHOOT THE A/T SYSTEM** or **HOW TO TROUBLESHOOT THE FUEL AND EMISSIONS SYSTEMS** .
   - 3. Do the ETCS TEST with the HDS.
   - 4. Check for Pending or Confirmed DTCs with the HDS.

DTC Description	Confirmed DTC	Pending DTC	Freeze Frame
P2135 TP SENSOR A/B INCORRECT VOLTAGE CORRELATION			

Is DTC P2135 indicated?

YES : The failure is duplicated. Go to step 2.

NO : Intermittent failure, the system is OK at this time. Check for poor connections or loose terminals at the throttle body and the PCM.

2. Throttle body operation check:
   - 1. Turn the ignition switch to LOCK (0).
   - 2. Disconnect the intake air duct from the throttle body.
   - 3. Turn the ignition switch to ON (II).
   - 4. **Clear the DTC with the HDS** See **HOW TO TROUBLESHOOT THE A/T SYSTEM** or **HOW TO TROUBLESHOOT THE FUEL AND EMISSIONS SYSTEMS** .
   - 5. Visually check the throttle valve operation.

Does the valve temporarily move to its fully closed position?

YES : **Replace the throttle body** See **THROTTLE BODY REMOVAL AND INSTALLATION** , **THROTTLE BODY DISASSEMBLY AND REASSEMBLY** or **THROTTLE BODY CLEANING** , then **do the repair verification** .

NO : Go to step 3.

3. Determine possible failure area (PCM, others):

GETtheMANUALS.org

- 1. Turn the ignition switch to LOCK (0).
- 2. Jump the SCS line with the HDS.
- 3. Disconnect the following connector.

  PCM connector C (49P)

- 4. Check for continuity between test points 1 and 2.

  Test condition IG LOCK (0)

  PCM connector C (49P): disconnected

  Test circuit TH 1, TH 2

  Test point 1 PCM connector C (49P) No. 30 (LT GRN)

  Test point 2 PCM connector C (49P) No. 31 (RED)

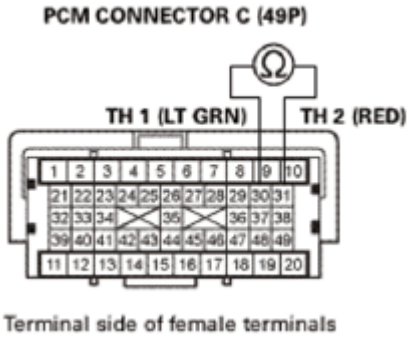

Fig. 375: Checking Continuity Between PCM Connector C (49P) No. 30 (LT GRN) And No. 31 (RED)
Courtesy of AMERICAN HONDA MOTOR CO., INC.

Is there continuity?

YES : Go to step 4.

NO : **Update the PCM** See **PCM REMOVAL AND INSTALLATION** or **PCM UPDATE** if it does not have the latest software, or **substitute a known-good PCM** See **PCM REMOVAL AND INSTALLATION** or **PCM UPDATE** , then **do the repair verification** .

4. Shorted wire check (TH 1 line to TH 2 line):
   - 1. Disconnect the following connector.

     Throttle body 6P connector

   - 2. Check for continuity between test points 1 and 2.

GETtheMANUALS.org

Test condition IG LOCK (0)

PCM connector C (49P): disconnected

Throttle body 6P connector: disconnected

Test circuit TH 1, TH 2

Test point 1 PCM connector C (49P) No. 30 (LT GRN)

Test point 2 PCM connector C (49P) No. 31 (RED)

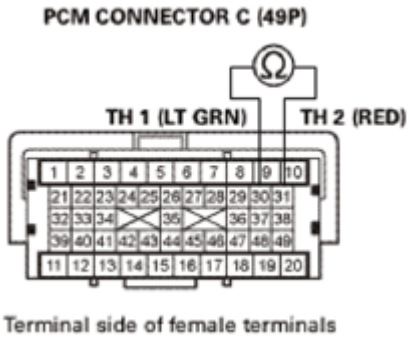

Fig. 376: Checking Continuity Between PCM Connector C (49P) No. 30 (LT GRN) And No. 31 (RED)
Courtesy of AMERICAN HONDA MOTOR CO., INC.

Is there continuity?

YES : Repair a short in the TH 1 wire to TH 2 wire between PCM connector terminals C30 (TH 1 line) and C31 (TH 2 line), then **do the repair verification** .

NO : The TH 1 and TH 2 wires are OK. **Replace the throttle body** See **THROTTLE BODY REMOVAL AND INSTALLATION** or **THROTTLE BODY CLEANING** or **THROTTLE BODY DISASSEMBLY AND REASSEMBLY** , then **do the repair verification** .

REPAIR VERIFICATION

- 1. Turn the ignition switch to LOCK (0).
- 2. Reconnect all connectors.
- 3. Turn the ignition switch to ON (II).
- 4. **Reset the PCM with the HDS** See **HOW TO TROUBLESHOOT THE A/T SYSTEM** or **HOW TO TROUBLESHOOT THE FUEL AND EMISSIONS SYSTEMS** .
- 5. **DO THE PCM IDLE LEARN PROCEDURE** .
- 6. Check for Pending or Confirmed DTCs with the HDS.

GETtheMANUALS.org

DTC Description	Confirmed DTC	Pending DTC	Freeze Frame
P2135 TP SENSOR A/B INCORRECT VOLTAGE CORRELATION			

Is DTC P2135 indicated?

YES : Check for poor connections or loose terminals at the throttle body and the PCM. If the PCM was updated, **substitute a known-good PCM** See **PCM REMOVAL AND INSTALLATION** or **PCM UPDATE** , then recheck. If the PCM was substituted, go to step 1.

NO : Troubleshooting is complete. If the PCM was substituted, **replace the original PCM** See **PCM REMOVAL AND INSTALLATION** or **PCM UPDATE** . If any other Pending or Confirmed DTCs are indicated, go to the indicated DTC's troubleshooting.

DTC P2138: APP SENSOR A/B (TP SENSOR D/E) INCORRECT VOLTAGE CORRELATION

GETtheMANUALS.org

DTC Troubleshooting: P2138

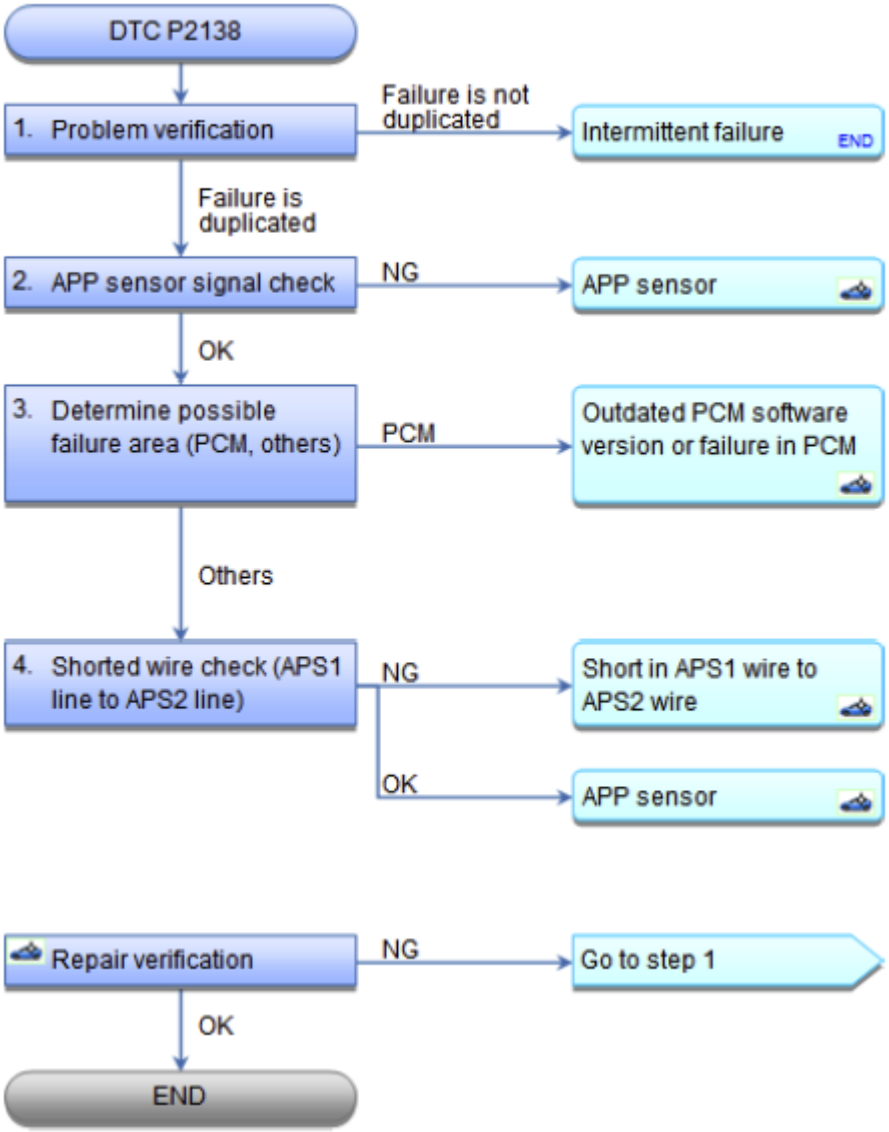

Fig. 377: DTC Troubleshooting Flow Chart (P2138)
Courtesy of AMERICAN HONDA MOTOR CO., INC.

NOTE: **Before you troubleshoot, record all freeze data and any on-board snapshot, and review the general troubleshooting information See HOW TO TROUBLESHOOT THE FUEL AND EMISSIONS SYSTEMS or HOW TO TROUBLESHOOT THE A/T SYSTEM .**

DTC Description	Confirmed DTC	Pending DTC	Freeze Frame
P2138 APP SENSOR A/B (TP SENSOR D/E) INCORRECT VOLTAGE CORRELATION			

GETtheMANUALS.org

1. Problem verification:
   - 1. Turn the ignition switch to ON (II).
   - 2. **Clear the DTC with the HDS** See **HOW TO TROUBLESHOOT THE A/T SYSTEM** or **HOW TO TROUBLESHOOT THE FUEL AND EMISSIONS SYSTEMS** .
   - 3. Press the accelerator pedal to the floor.
   - 4. Check for Pending or Confirmed DTCs with the HDS.

DTC Description	Confirmed DTC	Pending DTC	Freeze Frame
P2138 APP SENSOR A/B (TP SENSOR D/E) INCORRECT VOLTAGE CORRELATION			

Is DTC P2138 indicated?

YES : The failure is duplicated. Go to step 2.

NO : Intermittent failure, the system is OK at this time. Check for poor connections or loose terminals at the APP sensor and the PCM.

2. APP sensor signal check:
   - 1. Check the parameter(s) below with the HDS.

Signal	Current conditions	
	Values	Unit
APP SENSOR A		
APP SENSOR B		

Are they the same voltage?

YES : Go to step 3.

NO : **REPLACE THE APP SENSOR** , then **do the repair verification** .

3. Determine possible failure area (PCM, others):
   - 1. Turn the ignition switch to LOCK (0)
   - 2. Jump the SCS line with the HDS.
   - 3. Disconnect the following connector.

     PCM connector A (49P)

   - 4. Check for continuity between test points 1 and 2.

     Test condition IG LOCK (0)

GETtheMANUALS.org

PCM connector A (49P): disconnected

Test circuit APS1, APS2

Test point 1 PCM connector A (49P) No. 28 (ORN)

Test point 2 PCM connector A (49P) No. 29 (PUR)

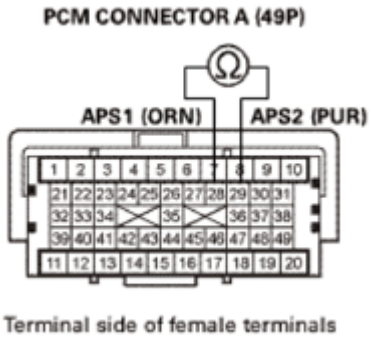

Fig. 378: Checking Continuity Between PCM Connector A (49P) No. 28 (ORN) And No. 29 (PUR)
Courtesy of AMERICAN HONDA MOTOR CO., INC.

Is there continuity?

YES : Go to step 4.

NO : **Update the PCM** See **PCM UPDATE** or **PCM REMOVAL AND INSTALLATION** if it does not have the latest software, or **substitute a known-good PCM** See **PCM UPDATE** or **PCM REMOVAL AND INSTALLATION** , then **do the repair verification** .

4. Shorted wire check (APS1 line to APS2 line):
   - 1. Disconnect the following connector.

     APP sensor 6P connector

   - 2. Check for continuity between test points 1 and 2.

     Test condition IG LOCK (0)

     PCM connector A (49P): disconnected

     APP sensor 6P connector: disconnected

     Test circuit APS1, APS2

     Test point 1 PCM connector A (49P) No. 28 (ORN)

GETtheMANUALS.org

Test point 2 PCM connector A (49P) No. 29 (PUR)

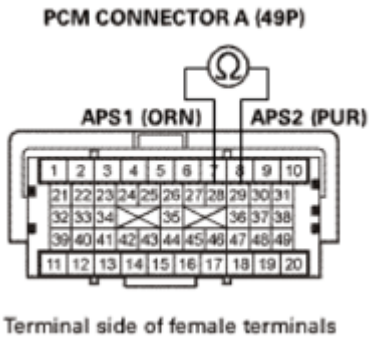

Fig. 379: Checking Continuity Between PCM Connector A (49P) No. 28 (ORN) And No. 29 (PUR)
Courtesy of AMERICAN HONDA MOTOR CO., INC.

Is there continuity?

YES : Repair a short in the APS1, APS2 wires between PCM connector terminals A28 (APS1 line) and A29 (APS2 line), then **do the repair verification** .

NO : The APS1 and APS2 wires are OK. **REPLACE THE APP SENSOR** , then **do the repair verification** .

REPAIR VERIFICATION

- 1. Turn the ignition switch to LOCK (0).
- 2. Reconnect all connectors.
- 3. Turn the ignition switch to ON (II).
- 4. **Reset the PCM with the HDS** See **HOW TO TROUBLESHOOT THE FUEL AND EMISSIONS SYSTEMS** or **HOW TO TROUBLESHOOT THE A/T SYSTEM** .
- 5. **DO THE PCM IDLE LEARN PROCEDURE** .
- 6. Turn the ignition switch to LOCK (0).
- 7. Turn the ignition switch to ON (II).
- 8. Press the accelerator pedal to the floor.
- 9. Check for Pending or Confirmed DTCs with the HDS.

DTC Description	Confirmed DTC	Pending DTC	Freeze Frame
P2138 APP SENSOR A/B (TP SENSOR D/E) INCORRECT VOLTAGE CORRELATION			

Is DTC P2138 indicated?

YES : Check for poor connections or loose terminals at the APP sensor and the PCM. If the PCM was updated,

GETtheMANUALS.org

substitute a known-good PCM See **PCM REMOVAL AND INSTALLATION** or **PCM UPDATE** . then recheck. If the PCM was substituted, go to step 1.

NO : Troubleshooting is complete. If the PCM was substituted, **replace the original PCM** See **PCM REMOVAL AND INSTALLATION** or **PCM UPDATE** . If any other Pending or Confirmed DTCs are indicated, go to the indicated DTC's troubleshooting.

DTC P2176: THROTTLE ACTUATOR CONTROL SYSTEM IDLE POSITION NOT LEARNED

GETtheMANUALS.org

DTC Troubleshooting: P2176

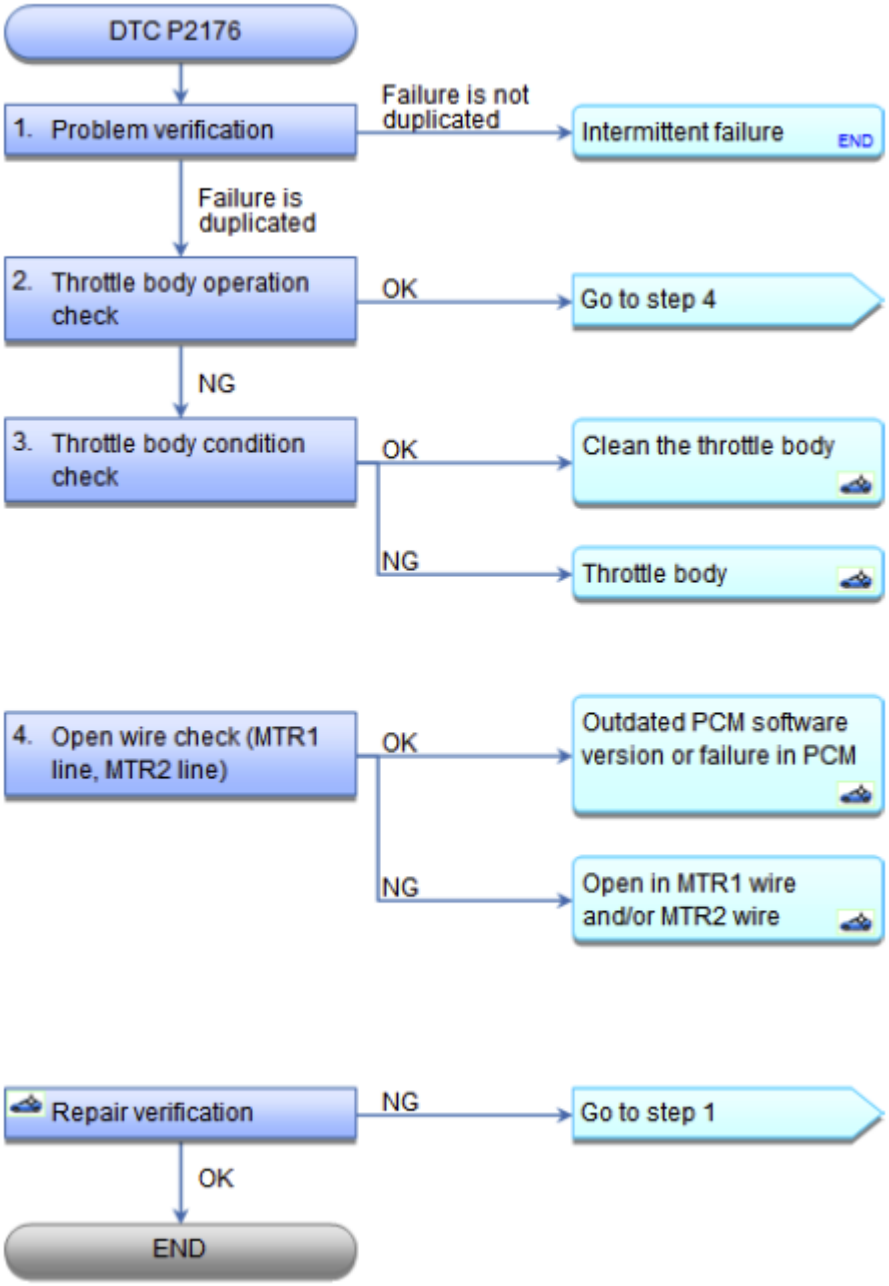

Fig. 380: DTC Troubleshooting Flow Chart (P2176)
Courtesy of AMERICAN HONDA MOTOR CO., INC.

CAUTION: Do not insert your fingers into the installed throttle body when you turn the ignition switch to ON (II), or while the ignition switch is in ON (II). If you do, you will seriously injure your fingers if the throttle valve is activated.

NOTE:

- **Before you troubleshoot, record all freeze data and any on-board**

GETtheMANUALS.org

snapshot, and review the general troubleshooting information See HOW TO TROUBLESHOOT THE A/T SYSTEM or HOW TO TROUBLESHOOT THE FUEL AND EMISSIONS SYSTEMS .

- **If DTC P2135 is stored at the same time as DTC P2176, troubleshoot DTC P2135 first, then recheck for DTC P2176.**

DTC Description	Confirmed DTC	Pending DTC	Freeze Frame
P2176 THROTTLE ACTUATOR CONTROL SYSTEM IDLE POSITION NOT LEARNED			

1. Problem verification:
   - 1. Turn the ignition switch to ON (II).
   - 2. **Clear the DTC with the HDS** See **HOW TO TROUBLESHOOT THE A/T SYSTEM** or **HOW TO TROUBLESHOOT THE FUEL AND EMISSIONS SYSTEMS** .
   - 3. Turn the ignition switch to LOCK (0).
   - 4. Turn the ignition switch to ON (II), and wait 10 seconds.
   - 5. Check for Pending or Confirmed DTCs with the HDS.

DTC Description	Confirmed DTC	Pending DTC	Freeze Frame
P2176 THROTTLE ACTUATOR CONTROL SYSTEM IDLE POSITION NOT LEARNED			

Is DTC P2176 indicated?

YES : The failure is duplicated. Go to step 2.

NO : Intermittent failure, the system is OK at this time. Check for poor connections or loose terminals at the throttle body and the PCM, then clean the throttle body.

2. Throttle body operation check:
   - 1. Turn the ignition switch to LOCK (0).
   - 2. Disconnect the intake air duct from the throttle body.
   - 3. Turn the ignition switch to ON (II).
   - 4. **Clear the DTC with the HDS** See **HOW TO TROUBLESHOOT THE FUEL AND EMISSIONS SYSTEMS** or **HOW TO TROUBLESHOOT THE A/T SYSTEM** .
   - 5. Visually check the throttle valve operation while doing the ETCS TEST in the INSPECTION MENU with the HDS.

Does the throttle valve move to its fully closed position?

YES : Go to step 3.

GETtheMANUALS.org

NO : Go to step 4.

3. Throttle body condition check:
   - 1. Turn the ignition switch to LOCK (0).
   - 2. **Remove the throttle body** See **THROTTLE BODY DISASSEMBLY AND REASSEMBLY** , **THROTTLE BODY REMOVAL AND INSTALLATION** or **THROTTLE BODY CLEANING** .
   - 3. Check for carbon build up on the throttle valve.

   Is there carbon build up on the throttle valve?

   YES : **Clean the throttle body** See **THROTTLE BODY DISASSEMBLY AND REASSEMBLY** , **THROTTLE BODY REMOVAL AND INSTALLATION** or **THROTTLE BODY CLEANING** , then **do the repair verification** .

   NO : **Replace the throttle body** See **THROTTLE BODY DISASSEMBLY AND REASSEMBLY** , **THROTTLE BODY REMOVAL AND INSTALLATION** or **THROTTLE BODY CLEANING** , then **do the repair verification** .

4. Open wire check (MTR1 line, MTR2 line):
   - 1. Turn the ignition switch to LOCK (0).
   - 2. Jump the SCS line with the HDS.
   - 3. Disconnect the following connectors.

     PCM connector C (49P)

     Throttle body 6P connector

   - 4. Connect terminals A and B with a jumper wire.

     Terminal A Throttle body 6P connector No. 1 (PNK)

     Terminal B Throttle body 6P connector No. 2 (GRN)

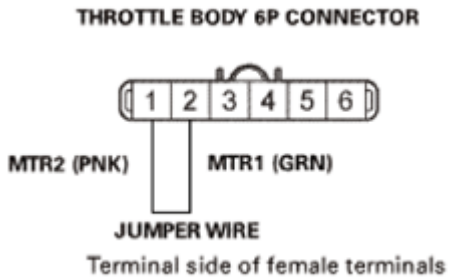

Fig. 381: Connecting Wire Between Throttle Body 6P Connector No. 1 (PNK) And No. 2 (GRN)
Courtesy of AMERICAN HONDA MOTOR CO., INC.

GETtheMANUALS.org

- 5. Check for continuity between test points 1 and 2.

  Test condition IG LOCK (0)

  PCM connector C (49P): disconnected

  Throttle body 6P connector: disconnected

  Throttle body 6P connector No. 1 and No. 2: jumped

  Test circuit MTR1, MTR2

  Test point 1 PCM connector C (49P) No. 3 (GRN)

  Test point 2 PCM connector C (49P) No. 4 (PNK)

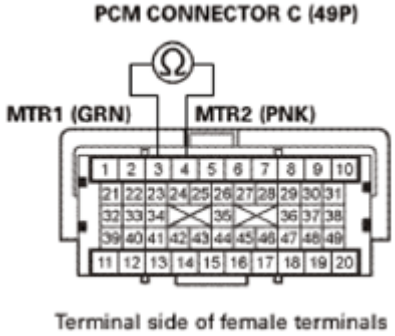

Fig. 382: Checking Continuity Between PCM Connector C (49P) No. 3 (GRN) And No. 4 (PNK)
Courtesy of AMERICAN HONDA MOTOR CO., INC.

Is there continuity?

YES : The MTR1 and MTR2 wires are OK. **Update the PCM** See **PCM REMOVAL AND INSTALLATION** or **PCM UPDATE** if it does not have the latest software, or **substitute a known-good PCM** See **PCM REMOVAL AND INSTALLATION** or **PCM UPDATE** , then **do the repair verification** .

NO : Repair an open in the MTR1 wire and/or the MTR2 wire between the PCM (C3, C4) and the throttle body, then **do the repair verification** .

REPAIR VERIFICATION

- 1. Turn the ignition switch to LOCK (0).
- 2. Reconnect all connectors.
- 3. Turn the ignition switch to ON (II).
- 4. **Reset the PCM with the HDS** See **HOW TO TROUBLESHOOT THE A/T SYSTEM** or **HOW**

GETtheMANUALS.org

TO TROUBLESHOOT THE FUEL AND EMISSIONS SYSTEMS .

- 5. **DO THE PCM IDLE LEARN PROCEDURE** .
- 6. Turn the ignition switch to LOCK (0).
- 7. Turn the ignition switch to ON (II), and wait 10 seconds.
- 8. Check for Pending or Confirmed DTCs with the HDS.

DTC Description	Confirmed DTC	Pending DTC	Freeze Frame
P2176 THROTTLE ACTUATOR CONTROL SYSTEM IDLE POSITION NOT LEARNED			

Is DTC P2176 indicated?

YES : Check for poor connections or loose terminals at the throttle body and the PCM, then **clean the throttle body** See **THROTTLE BODY REMOVAL AND INSTALLATION** , **THROTTLE BODY DISASSEMBLY AND REASSEMBLY** or **THROTTLE BODY CLEANING** , and go to step 1. If the PCM was updated, **substitute a known-good PCM** See **PCM UPDATE** or **PCM REMOVAL AND INSTALLATION** , then recheck. If the PCM was substituted, go to step 1.

NO : Troubleshooting is complete. If the PCM was substituted, **replace the original PCM** See **PCM REMOVAL AND INSTALLATION** or **PCM UPDATE** . If any other Pending or Confirmed DTCs are indicated, go to the indicated DTC's troubleshooting.

DTC P2183: ECT SENSOR 2 CIRCUIT RANGE/PERFORMANCE PROBLEM

GETtheMANUALS.org

DTC Troubleshooting: P2183

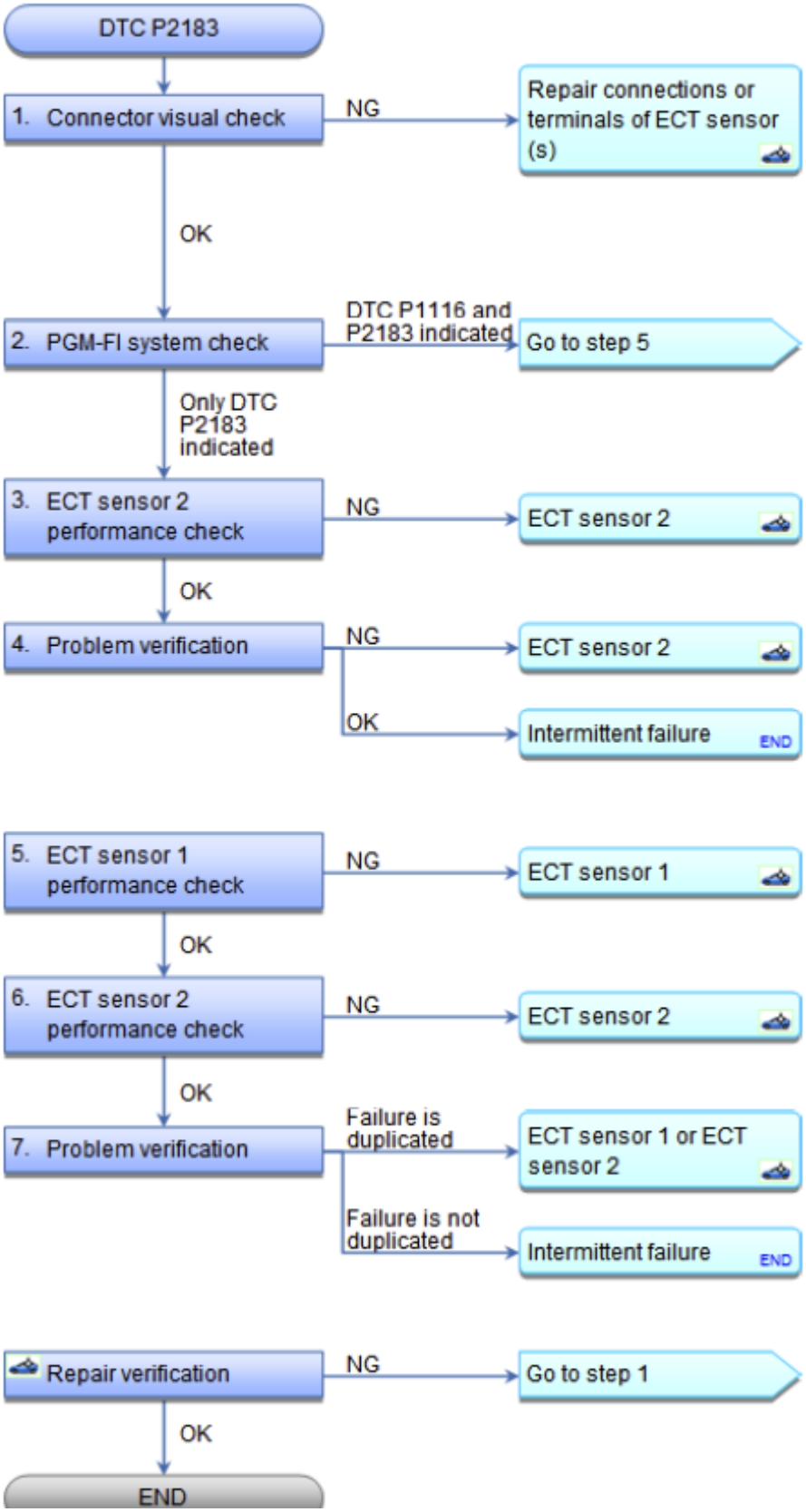

GETtheMANUALS.org

Fig. 383: DTC Troubleshooting Flow Chart (P2183)
Courtesy of AMERICAN HONDA MOTOR CO., INC.

NOTE:

- **Before you troubleshoot, record all freeze data and any on-board snapshot, and review the general troubleshooting information See HOW TO TROUBLESHOOT THE FUEL AND EMISSIONS SYSTEMS or HOW TO TROUBLESHOOT THE A/T SYSTEM .**
- **If DTC P0111 is stored at the same time as DTC P2183, troubleshoot DTC P0111 first, then recheck for DTC P2183.**

DTC Description	Confirmed DTC	Pending DTC	Freeze Frame
P2183 ECT SENSOR 2 CIRCUIT RANGE/PERFORMANCE PROBLEM			

1. Connector visual check:
   - 1. Check for poor connections or loose terminals and terminals at these sensors:
     - ECT sensor 1
     - ECT sensor 2

   Are the connections and terminals OK?

   YES : Go to step 2.

   NO : Repair the connections or terminals, then **do the repair verification** .

2. PGM-FI system check:
   - 1. Turn the ignition switch to ON (II).
   - 2. Check for Pending or Confirmed DTCs with the HDS.

DTC Description	Confirmed DTC	Pending DTC	Freeze Frame
P1116 ECT SENSOR 1 CIRCUIT RANGE/PERFORMANCE PROBLEM			
P2183 ECT SENSOR 2 CIRCUIT RANGE/PERFORMANCE PROBLEM			

   Are DTC P1116 and P2183 indicated at the same time?

   YES : Go to step 5.

   NO : Only DTC P2183 is indicated. Go to step 3.

3. ECT sensor 2 performance check:

GETtheMANUALS.org

- 1. Start the engine, and let it idle for 10 minutes.
- 2. Check the parameter(s) below with the HDS.

Signal	Threshold		Current conditions	
	Values	Unit	Values	Unit
ECT SENSOR 2	Less than 120	°F		
	Less than 49	°C		

Do the current condition(s) match the threshold?

YES : **REPLACE ECT SENSOR 2** , then **do the repair verification** .

NO : Go to step 4.

4. Problem verification:
   - 1. Turn the ignition switch to LOCK (0).
   - 2. Allow ECT sensor 2 to cool to the ambient temperature.
   - 3. Note the ambient temperature.
   - 4. Turn the ignition switch to ON (II).
   - 5. Quickly note the value of ECT SENSOR 2 in the DATA LIST with the HDS.

Signal	Current conditions	
	Values	Unit
ECT SENSOR 2		

   - 6. Compare the value of ECT SENSOR 2 and the ambient temperature.

Does the value of ECT SENSOR 2 differ 5.4 °F (3 °C) or more from the ambient temperature?

YES : **REPLACE ECT SENSOR 2** , then **do the repair verification** .

NO : Intermittent failure, the system is OK at this time. Check for poor connections or loose terminals at ECT sensor 1, ECT sensor 2, and the PCM.

5. ECT sensor 1 performance check:
   - 1. Start the engine, and let it idle for 10 minutes.
   - 2. Check the parameter(s) below with the HDS.

Signal	Threshold		Current conditions	
	Values	Unit	Values	Unit
ECT SENSOR 1	Less than 120	°F		
	Less than 49	°C		

GETtheMANUALS.org

Do the current condition(s) match the threshold?

YES : **REPLACE ECT SENSOR 1** , then **do the repair verification** .

NO : ECT sensor 1 is OK at this time. Go to step 6.

6. ECT sensor 2 performance check:
   - 1. Let the engine idle for 10 minutes.
   - 2. Check the parameter(s) below with the HDS.

Signal	Threshold		Current conditions	
	Values	Unit	Values	Unit
ECT SENSOR 2	Less than 120	°F		
	Less than 49	°C		

Do the current condition(s) match the threshold?

YES : **REPLACE ECT SENSOR 2** , then **do the repair verification** .

NO : Go to step 7.

7. Problem verification:
   - 1. Turn the ignition switch to LOCK (0).
   - 2. Allow the sensors to cool to the ambient temperature.
   - 3. Note the ambient temperature.
   - 4. Turn the ignition switch to ON (II).
   - 5. Quickly note the value of ECT SENSOR 1 and ECT SENSOR 2 in the DATA LIST with the HDS.

Signal	Current conditions	
	Values	Unit
ECT SENSOR 1		
ECT SENSOR 2		

   - 6. Compare the value of ECT SENSOR 1 to the ambient temperature, and the value of ECT SENSOR 2 to the ambient temperature individually.

Does either sensor differ more than 5.4 °F (3 °C) from the ambient temperature?

YES : Replace the sensor that differed more than 5.4 °F (3 °C) from the ambient temperature, then **do the repair verification** .

NO : Intermittent failure, the system is OK at this time. Check for poor connections or loose terminals at ECT sensor 1, ECT sensor 2, and the PCM.

GETtheMANUALS.org

REPAIR VERIFICATION

- 1. Turn the ignition switch to ON (II).
- 2. **Reset the PCM with the HDS** See **HOW TO TROUBLESHOOT THE A/T SYSTEM** or **HOW TO TROUBLESHOOT THE FUEL AND EMISSIONS SYSTEMS** .
- 3. **DO THE PCM IDLE LEARN PROCEDURE** .
- 4. Check for Pending or Confirmed DTCs with the HDS.

DTC Description	Confirmed DTC	Pending DTC	Freeze Frame
P2183 ECT SENSOR 2 CIRCUIT RANGE/PERFORMANCE PROBLEM			

Is DTC P2183 indicated?

YES : Check for poor connections or loose terminals at ECT sensor 1, ECT sensor 2, and the PCM, then go to step 1.

NO : Troubleshooting is complete. If any other Pending or Confirmed DTCs are indicated, go to the indicated DTC's troubleshooting.

DTC P2184: ECT SENSOR 2 CIRCUIT LOW VOLTAGE

GETtheMANUALS.org

DTC Troubleshooting: P2184

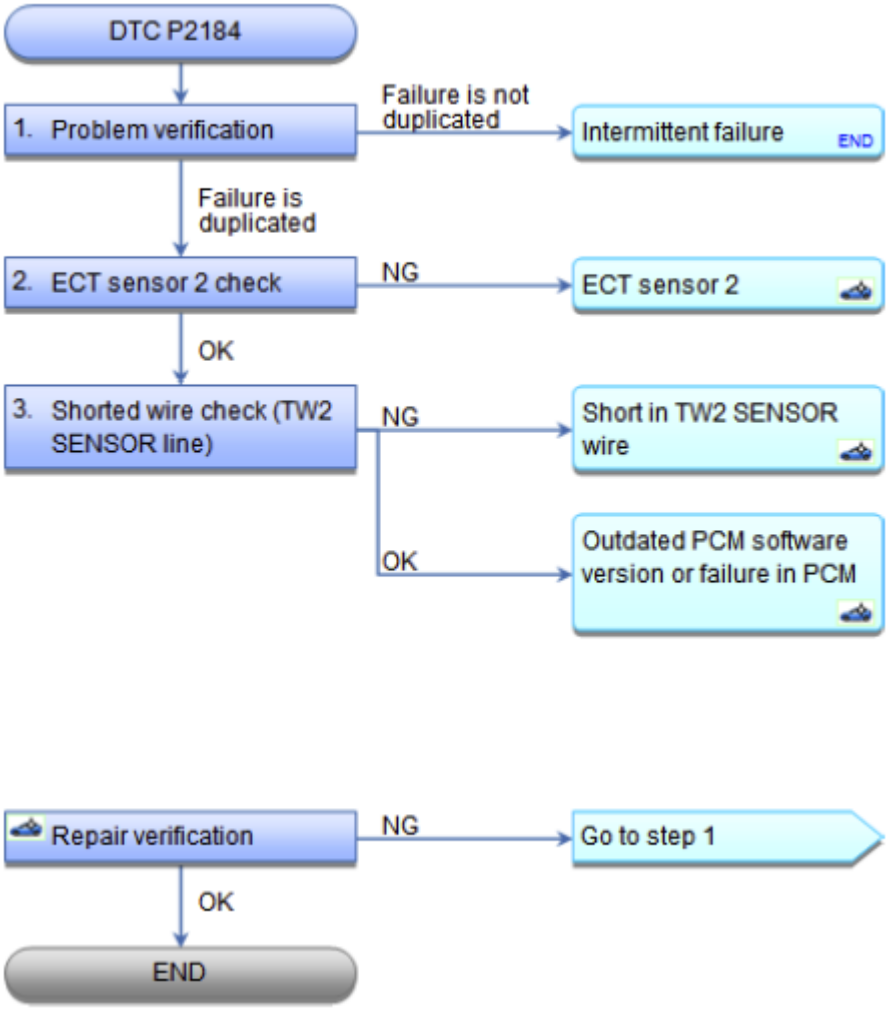

Fig. 384: DTC Troubleshooting Flow Chart (P2184)
Courtesy of AMERICAN HONDA MOTOR CO., INC.

NOTE: **Before you troubleshoot, record all freeze data and any on-board snapshot, and review the general troubleshooting information See HOW TO TROUBLESHOOT THE A/T SYSTEM or HOW TO TROUBLESHOOT THE FUEL AND EMISSIONS SYSTEMS .**

DTC Description	Confirmed DTC	Pending DTC	Freeze Frame
P2184 ECT SENSOR 2 CIRCUIT LOW VOLTAGE			

1. Problem verification:
   - 1. Turn the ignition switch to ON (II).
   - 2. Check the parameter(s) below with the HDS.

GETtheMANUALS.org

Signal	Threshold		Current conditions	
	Values	Unit	Values	Unit
ECT SENSOR 2	Less than 0.08	V		

Do the current condition(s) match the threshold?

YES : The failure is duplicated. Go to step 2.

NO : Intermittent failure, the system is OK at this time. Check for poor connections or loose terminals at ECT sensor 2 and the PCM.

2. ECT sensor 2 check:
   - 1. Turn the ignition switch to LOCK (0).
   - 2. Disconnect the following connector.

     ECT Sensor 2 2P connector

   - 3. Turn the ignition switch to ON (II).
   - 4. Check the parameter(s) below with the HDS.

Signal	Threshold		Current conditions	
	Values	Unit	Values	Unit
ECT SENSOR 2	Less than 0.08	V		

Do the current condition(s) match the threshold?

YES : Go to step 3.

NO : **REPLACE ECT SENSOR 2** , then **do the repair verification** .

3. Shorted wire check (TW2 SENSOR line):
   - 1. Turn the ignition switch to LOCK (0).
   - 2. Jump the SCS line with the HDS.
   - 3. Disconnect the following connector.

     PCM connector A (49P)

   - 4. Check for continuity between test points 1 and 2.

     Test condition IG LOCK (0)

     ECT Sensor 2 2P connector: disconnected

     PCM connector A (49P): disconnected

GETtheMANUALS.org

Test circuit TW2 SENSOR

Test point 1 ECT sensor 2 2P connector No. 2 (PNK)

Test point 2 Body ground

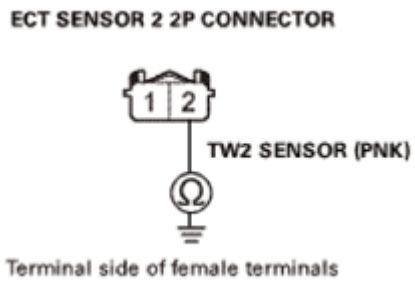

Fig. 385: Checking Continuity Between ECT Sensor 2 2P Connector No. 2 (PNK) And Body Ground
Courtesy of AMERICAN HONDA MOTOR CO., INC.

Is there continuity?

YES : Repair a short in the TW2 SENSOR wire between the PCM (A44) and ECT sensor 2, then **do the repair verification** .

NO : The TW2 SENSOR wire is OK. **Update the PCM** See **PCM REMOVAL AND INSTALLATION** or **PCM UPDATE** if it does not have the latest software, or **substitute a known-good PCM** See **PCM UPDATE** or **PCM REMOVAL AND INSTALLATION** , then **do the repair verification** .

REPAIR VERIFICATION

- 1. Turn the ignition switch to LOCK (0).
- 2. Reconnect all connectors.
- 3. Turn the ignition switch to ON (II).
- 4. **Reset the PCM with the HDS** See **HOW TO TROUBLESHOOT THE A/T SYSTEM** or **HOW TO TROUBLESHOOT THE FUEL AND EMISSIONS SYSTEMS** .
- 5. **DO THE PCM IDLE LEARN PROCEDURE** .
- 6. Check for Pending or Confirmed DTCs with the HDS.

DTC Description	Confirmed DTC	Pending DTC	Freeze Frame
P2184 ECT SENSOR 2 CIRCUIT LOW VOLTAGE			

Is DTC P2184 indicated?

YES : Check for poor connections or loose terminals at ECT sensor 2 and the PCM. If the PCM was updated, **substitute a known-good PCM** See **PCM REMOVAL AND INSTALLATION** or **PCM UPDATE** , then

GETtheMANUALS.org

recheck. If the PCM was substituted, go to step 1.

NO : Troubleshooting is complete. If the PCM was substituted, **replace the original PCM** See **PCM REMOVAL AND INSTALLATION** or **PCM UPDATE** . If any other Pending or Confirmed DTCs are indicated, go to the indicated DTC's troubleshooting.

DTC P2185: ECT SENSOR 2 CIRCUIT HIGH VOLTAGE

GETtheMANUALS.org

DTC Troubleshooting: P2185

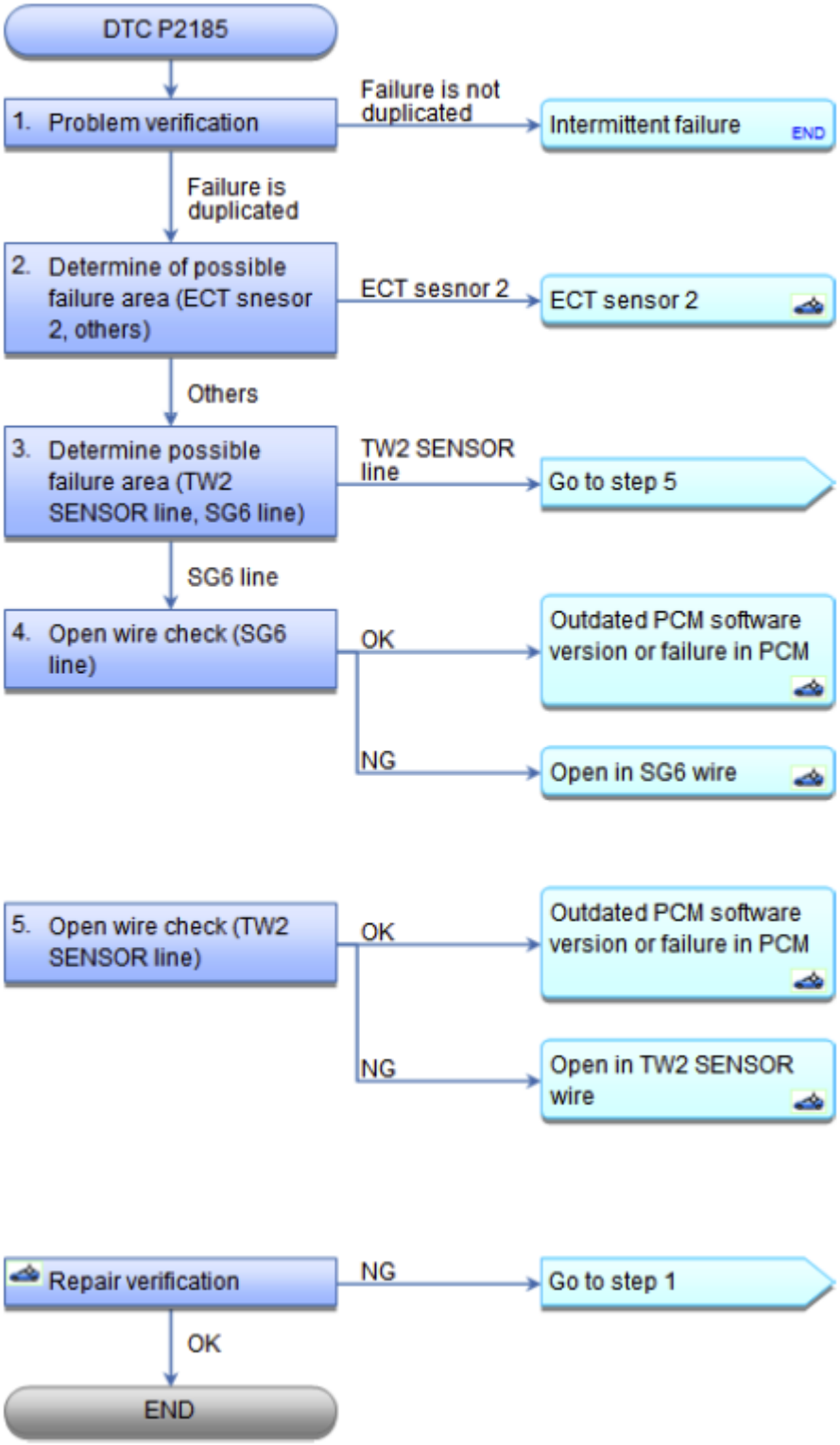

Fig. 386: DTC Troubleshooting Flow Chart (P2185)
Courtesy of AMERICAN HONDA MOTOR CO., INC.

GETtheMANUALS.org

NOTE: **Before you troubleshoot, record all freeze data and any on-board snapshot, and review the general troubleshooting information See HOW TO TROUBLESHOOT THE A/T SYSTEM or HOW TO TROUBLESHOOT THE FUEL AND EMISSIONS SYSTEMS .**

DTC Description	Confirmed DTC	Pending DTC	Freeze Frame
P2185 ECT SENSOR 2 CIRCUIT HIGH VOLTAGE			

1. Problem verification:
   - 1. Turn the ignition switch to ON (II).
   - 2. Check the parameter(s) below with the HDS.

Signal	Threshold		Current conditions	
	Values	Unit	Values	Unit
ECT SENSOR 2	More than 4.92	V		

Do the current condition(s) match the threshold?

YES : The failure is duplicated. Go to step 2.

NO : Intermittent failure, the system is OK at this time. Check for poor connections or loose terminals at ECT sensor 2 and the PCM.

2. Determine of possible failure area (ECT snesor 2, others):
   - 1. Turn the ignition switch to LOCK (0).
   - 2. Disconnect the following connector.

     ECT sensor 2 2P connector

   - 3. Connect terminals A and B with a jumper wire.

     Terminal A ECT sensor 2 2P connector No. 1 (GRY)

     Terminal B ECT sensor 2 2P connector No. 2 (PNK)

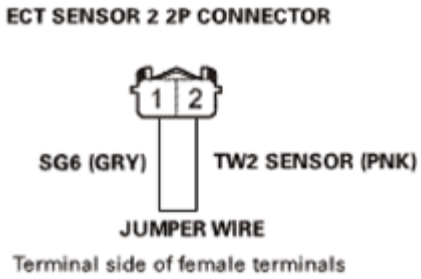

Fig. 387: Connecting Wire Between ECT Sensor 2 2P Connector No. 1 (GRY) And No. 2

GETtheMANUALS.org

(PNK)
Courtesy of AMERICAN HONDA MOTOR CO., INC.

- 4. Turn the ignition switch to ON (II).
- 5. Check the parameter(s) below with the HDS.

Signal	Threshold		Current conditions	
	Values	Unit	Values	Unit
ECT SENSOR 2	More than 4.92	V		

Do the current condition(s) match the threshold?

YES : Go to step 3.

NO : **REPLACE ECT SENSOR 2** , then **do the repair verification** .

3. Determine possible failure area (TW2 SENSOR line, SG6 line):
   - 1. Turn the ignition switch to LOCK (0).
   - 2. Remove the jumper wire.
   - 3. Turn the ignition switch to ON (II).
   - 4. Measure the voltage between test points 1 and 2.

   Test condition IG ON (II)

   ECT sensor 2 2P connector: disconnected

   Test circuit TW2 SENSOR

   Test point 1 ECT sensor 2 2P connector No. 2 (PNK)

   Test point 2 Body ground

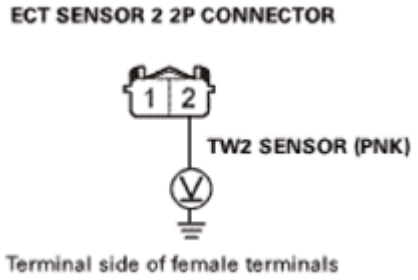

Fig. 388: Measuring Voltage Between ECT Sensor 2 2P Connector No. 2 (PNK) And Body Ground
Courtesy of AMERICAN HONDA MOTOR CO., INC.

Is there about 5.0 V?

GETtheMANUALS.org

YES : The TW2 SENSOR wire is OK. Go to step 4.

NO : Go to step 5.

4. Open wire check (SG6 line):
   - 1. Turn the ignition switch to LOCK (0).
   - 2. Jump the SCS line with the HDS.
   - 3. Disconnect the following connector.

     PCM connector A (49P)

   - 4. Check for continuity between test points 1 and 2.

     Test condition IG LOCK (0)

     ECT sensor 2 2P connector: disconnected

     PCM connector A (49P): disconnected

     Test circuit SG6

     Test point 1 PCM connector A (49P) No. 10 (GRY)

     Test point 2 ECT sensor 2 2P connector No. 1 (GRY)

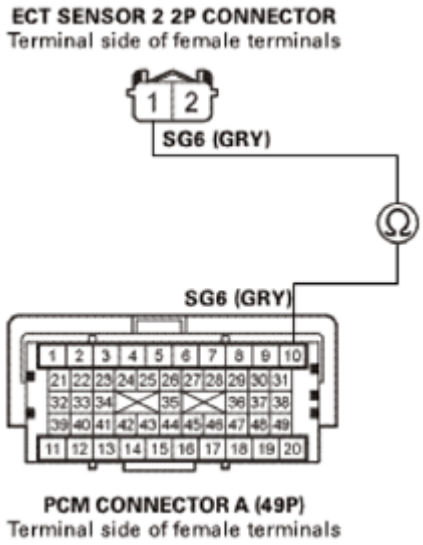

Fig. 389: Checking Continuity Between PCM Connector A (49P) No. 10 (GRY) And ECT Sensor 2 2P Connector No. 1 (GRY)
Courtesy of AMERICAN HONDA MOTOR CO., INC.

Is there continuity?

GETtheMANUALS.org

YES : The SG6 wire is OK. **Update the PCM** See **PCM UPDATE** or **PCM REMOVAL AND INSTALLATION** if it does not have the latest software, or **substitute a known-good PCM** See **PCM REMOVAL AND INSTALLATION** or **PCM UPDATE** , then **do the repair verification** .

NO : Repair an open in the SG6 wire between the PCM (A10) and ECT sensor 2, then **do the repair verification** .

5. Open wire check (TW2 SENSOR line):
   - 1. Turn the ignition switch to LOCK (0).
   - 2. Jump the SCS line with the HDS.
   - 3. Disconnect the following connector.

     PCM connector A (49P)

   - 4. Check for continuity between test points 1 and 2.

     Test condition IG LOCK (0)

     ECT sensor 2 2P connector: disconnected

     PCM connector A (49P): disconnected

     Test circuit TW2 SENSOR

     Test point 1 PCM connector A (49P) No. 44 (PNK)

     Test point 2 ECT sensor 2 2P connector No. 2 (PNK)

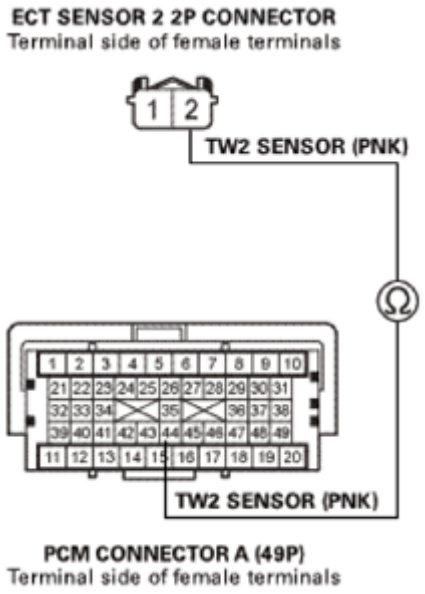

Fig. 390: Checking Continuity Between PCM Connector A (49P) No. 44 (PNK) And ECT

GETtheMANUALS.org

Sensor 2 2P Connector No. 2 (PNK)
Courtesy of AMERICAN HONDA MOTOR CO., INC.

Is there continuity?

YES : The TW2 SENSOR wire is OK. **Update the PCM** See **PCM REMOVAL AND INSTALLATION** or **PCM UPDATE** if it does not have the latest software, or **substitute a known-good PCM** See **PCM REMOVAL AND INSTALLATION** or **PCM UPDATE** , then **do the repair verification** .

NO : Repair an open in the TW2 SENSOR wire between the PCM (A44) and ECT sensor 2, then **do the repair verification** .

REPAIR VERIFICATION

- 1. Turn the ignition switch to LOCK (0).
- 2. Reconnect all connectors.
- 3. Turn the ignition switch to ON (II).
- 4. **Reset the PCM with the HDS** See **HOW TO TROUBLESHOOT THE A/T SYSTEM** or **HOW TO TROUBLESHOOT THE FUEL AND EMISSIONS SYSTEMS** .
- 5. **DO THE PCM IDLE LEARN PROCEDURE** .
- 6. Check for Pending or Confirmed DTCs with the HDS.

DTC Description	Confirmed DTC	Pending DTC	Freeze Frame
P2185 ECT SENSOR 2 CIRCUIT HIGH VOLTAGE			

Is DTC P2185 indicated?

YES : Check for poor connections or loose terminals at ECT sensor 2 and the PCM. If the PCM was updated, **substitute a known-good PCM** See **PCM REMOVAL AND INSTALLATION** or **PCM UPDATE** , then recheck. If the PCM was substituted, go to step 1.

NO : Troubleshooting is complete. If the PCM was substituted, **replace the original PCM** See **PCM REMOVAL AND INSTALLATION** or **PCM UPDATE** . If any other Pending or Confirmed DTCs are indicated, go to the indicated DTC's troubleshooting.

DTC P2195: A/F SENSOR (SENSOR 1) SIGNAL STUCK LEAN

GETtheMANUALS.org

DTC Troubleshooting: P2195

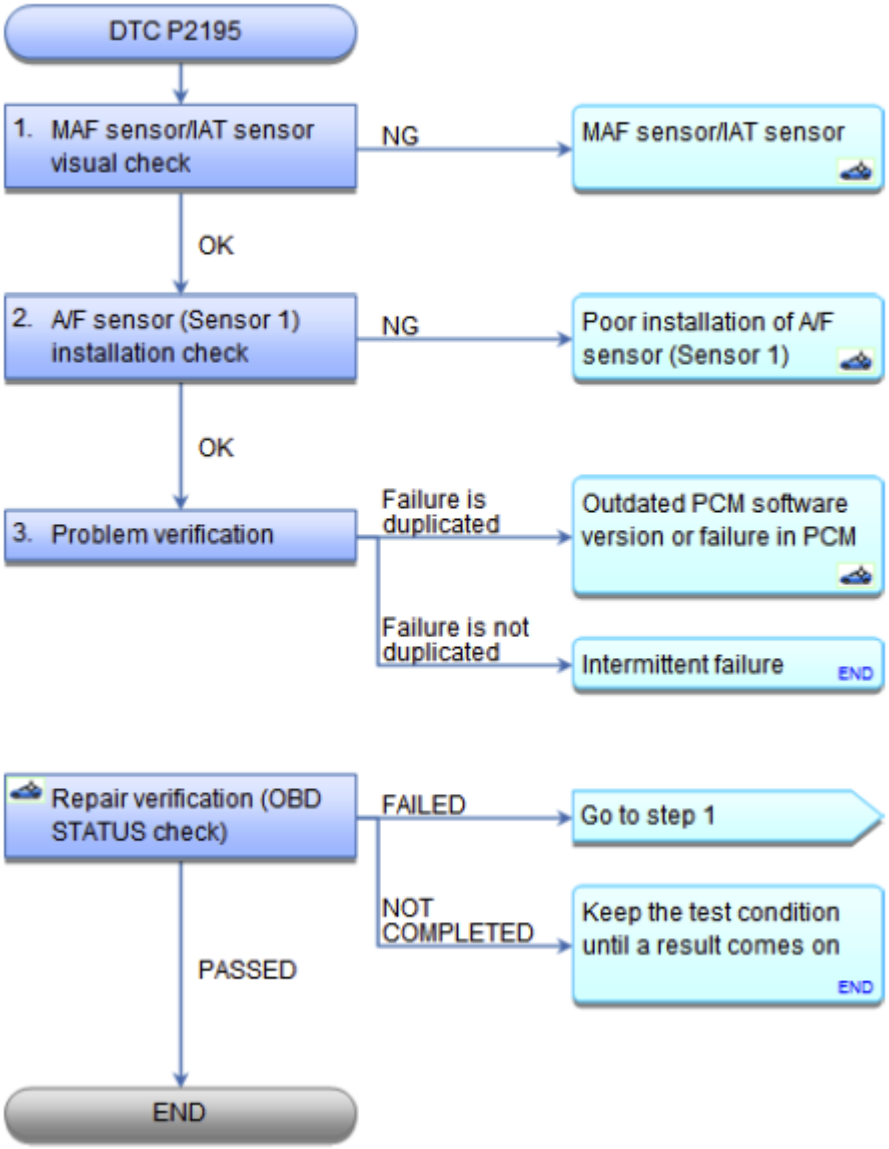

Fig. 391: DTC Troubleshooting Flow Chart (P2195)
Courtesy of AMERICAN HONDA MOTOR CO., INC.

NOTE:

- **Before you troubleshoot, record all freeze data and any on-board snapshot, and review the general troubleshooting information See HOW TO TROUBLESHOOT THE FUEL AND EMISSIONS SYSTEMS or HOW TO TROUBLESHOOT THE A/T SYSTEM .**
- **If the vehicle was out of fuel and the engine stalled before this DTC was stored, refuel and clear the DTC with the HDS.**
- **If DTC P2101, P2118, P2135, P2138, P2176, or a combination of P2122 and P2127, P2122, and P2138, or P2127 and P2138 is stored at the same time, troubleshoot them first, then recheck for DTC P2195.**

GETtheMANUALS.org

DTC Description	Confirmed DTC	Pending DTC	Freeze Frame
P2195 AIR FUEL RATIO (A/F) SENSOR (SENSOR 1) SIGNAL STUCK LEAN			

1. MAF sensor/IAT sensor visual check:
   - 1. **REMOVE THE MAF SENSOR/IAT SENSOR** .
   - 2. Check for dirt or debris in the MAF sensor/IAT sensor.

   Is it dirty?

   YES : Remove the debris. If needed, **REPLACE THE MAF SENSOR/IAT SENSOR** , then **do the repair verification** .

   NO : Go to step 2.

2. A/F sensor (Sensor 1) installation check:
   - 1. Check the installation of the A/F sensor (Sensor 1).

   Is the A/F sensor loose or installed incorrectly in the exhaust pipe?

   YES : Reinstall the A/F sensor (Sensor 1), then **do the repair verification** .

   NO : Go to step 3.

3. Problem verification:
   - 1. Turn the ignition switch to ON (II).
   - 2. **Clear the DTC with the HDS** See **HOW TO TROUBLESHOOT THE A/T SYSTEM** or **HOW TO TROUBLESHOOT THE FUEL AND EMISSIONS SYSTEMS** .
   - 3. Start the engine, and let it idle without load (in P or N) until the radiator fan comes on.
   - 4. Check for Pending or Confirmed DTCs with the HDS.

DTC Description	Confirmed DTC	Pending DTC	Freeze Frame
P2195 AIR FUEL RATIO (A/F) SENSOR (SENSOR 1) SIGNAL STUCK LEAN			

   Is DTC P2195 indicated?

   YES : Check for poor connections or loose terminals at the A/F sensor (Sensor 1) and the PCM. **Update the PCM** See **PCM REMOVAL AND INSTALLATION** or **PCM UPDATE** if it does not have the latest software, or **substitute a known-good PCM** See **PCM REMOVAL AND INSTALLATION** or **PCM UPDATE** , then **do the repair verification** .

   NO : Intermittent failure, the system is OK at this time. Check for poor connections or loose terminals at

GETtheMANUALS.org

the A/F sensor (Sensor 1) and the PCM.

REPAIR VERIFICATION (OBD STATUS CHECK)

- 1. Turn the ignition switch to ON (II).
- 2. **Reset the PCM with the HDS** See **HOW TO TROUBLESHOOT THE FUEL AND EMISSIONS SYSTEMS** or **HOW TO TROUBLESHOOT THE A/T SYSTEM** .
- 3. **DO THE PCM IDLE LEARN PROCEDURE** .
- 4. Start the engine, and let it idle without load (in P or N) until the radiator fan comes on.
- 5. Monitor the OBD STATUS for DTC P2195 in the DTCs MENU with the HDS.

DTC Description	OBD Status
P2195 AIR FUEL RATIO (A/F) SENSOR (SENSOR 1) SIGNAL STUCK LEAN	

Does the HDS indicate PASSED, FAILED, or NOT COMPLETED?

PASSED : Troubleshooting is complete. If the PCM was substituted, **replace the original PCM** See **PCM REMOVAL AND INSTALLATION** or **PCM UPDATE** . If any other Pending or Confirmed DTCs are indicated, go to the indicated DTC's troubleshooting.

FAILED : Go to step 1 and recheck. If the PCM was updated, **substitute a known-good PCM** See **PCM REMOVAL AND INSTALLATION** or **PCM UPDATE** , then check the OBD STATUS again.

NOT COMPLETED : Keep the test condition until a result comes on.

DTC P219A: AIR-FUEL RATIO VARIATION OF CYLINDERS

GETtheMANUALS.org

DTC Troubleshooting: P219A

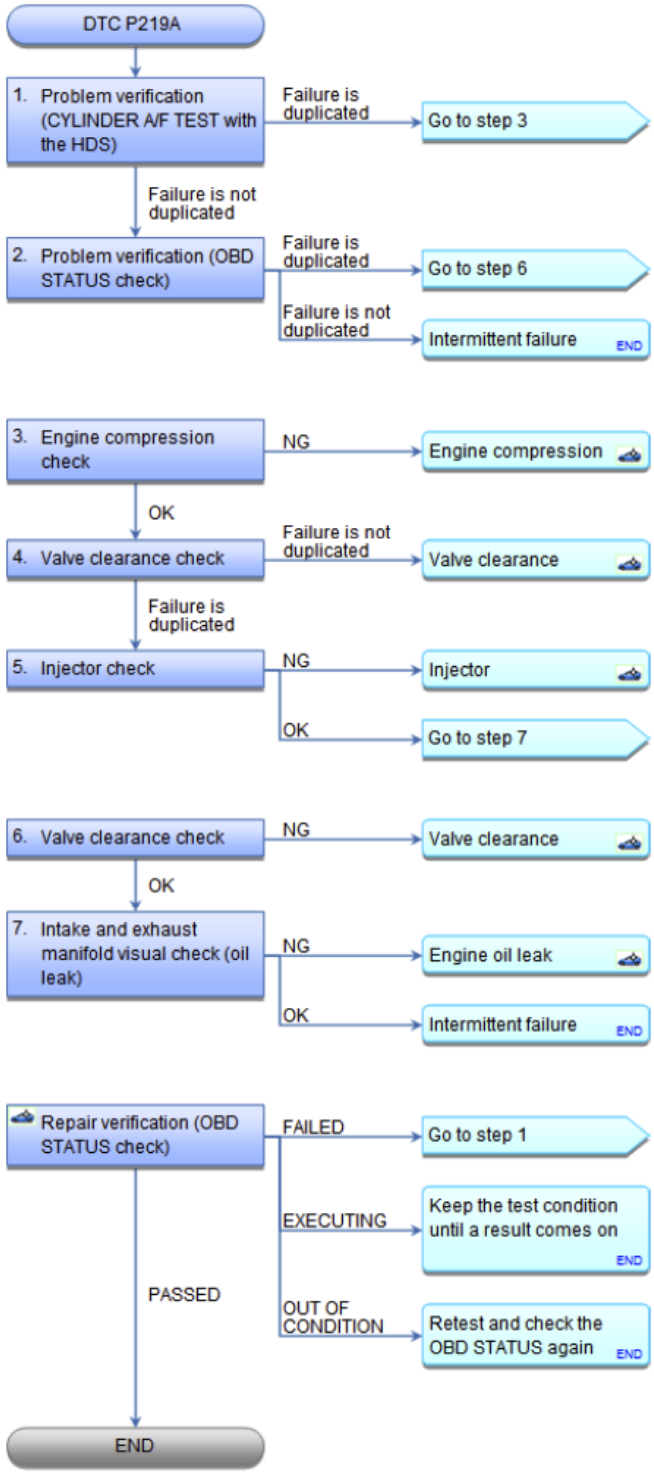

Fig. 392: DTC Troubleshooting Flow Chart (P219A)
Courtesy of AMERICAN HONDA MOTOR CO., INC.

NOTE:

- **Before you troubleshoot, record all freeze data and any on-board**

GETtheMANUALS.org

snapshot, and review the general troubleshooting information See HOW TO TROUBLESHOOT THE A/T SYSTEM or HOW TO TROUBLESHOOT THE FUEL AND EMISSIONS SYSTEMS .

- **If any of the DTCs listed below are indicated at the same time as DTC P219A, troubleshoot those DTCs first, then recheck for P219A.**
  - **P0133, P1157, P1172, P2195, P2238, P2252, P2A00: A/F sensor (Sensor 1)**
  - **P0134, P0135: A/F sensor (Sensor 1) heater**
  - **P0201, P0202, P0203, P0204: No. 1 - No. 4 cylinder injector(s)**
  - **P0300: Random misfire**
  - **P0301, P0302, P0303, P0304: No. 1, No. 2, No. 3, or No. 4 cylinder misfire detected**
  - **P0351, P0352, P0353, P0354: Ignition coil power circuit**

DTC Description	Confirmed DTC	Pending DTC	Freeze Frame
P219A AIR-FUEL RATIO VARIATION OF CYLINDER			

1. Problem verification (CYLINDER A/F TEST with the HDS):
   - 1. Turn the ignition switch to ON (II).
   - 2. Record following HDS on-board snapshot parameters:
     - VEHICLE SPEED
     - ENGINE SPEED
     - MAP SENSOR
     - ECT SENSOR 1
     - APP SENSOR
     - AF FB (ST FUEL TRIM)
   - 3. Hold the engine speed at 3, 000 rpm without load (in P or N) until the radiator fan comes on, then let it idle.
   - 4. Check under these conditions:
     - A/C off
     - All electrical loads off
   - 5. Do the CYLINDER A/F TEST three times in the INSPECTION MENU with the HDS.

Is the result OK?

YES : Go to step 2.

NO : Go to step 3.

GETtheMANUALS.org

2. Problem verification (OBD STATUS check):
   - 6. Test-drive the vehicle in the range of these recorded on-board snapshot parameters:
     - VEHICLE SPEED
     - ENGINE SPEED
     - MAP SENSOR
     - ECT SENSOR 1
     - APP SENSOR
     - AF FB (ST FUEL TRIM)

Signal	Current conditions	
	Values	Unit
VEHICLE SPEED		
ENGINE SPEED		
MAP SENSOR		
ECT SENSOR 1		
APP SENSOR		
AF FB (ST FUEL TRIM)		

   - 2. Monitor the OBD STATUS for DTC P219A in the DTCs MENU with the HDS.

DTC Description	OBD Status
P219A AIR-FUEL RATIO VARIATION OF CYLINDER	

Does the HDS indicate FAILED?

YES : The failure is duplicated. Go to step 1.

NO : If the HDS indicates PASSED, intermittent failure, the system is OK at this time. If the HDS indicates EXECUTING, keep driving until a result comes on. If the HDS indicates OUT OF CONDITION, go to step **2-1** and recheck.

3. Engine compression check:
   - 1. DO A CYLINDER COMPRESSION TEST .

Is the compression of the problem cylinder lower than the other cylinders?

YES : Repair the engine compression problem, then **do the repair verification** .

NO : Go to step 4.

4. Valve clearance check:
   - 1. **Adjust the valve clearance** See VALVE CLEARANCE ADJUSTMENT or VALVE, SPRING, AND VALVE SEAL REMOVAL AND INSTALLATION .

GETtheMANUALS.org

- 2. Hold the engine speed at 3, 000 rpm without load (in P or N) until the radiator fan comes on, then let it idle.
- 3. Check under these conditions:
  - A/C off
  - All electrical loads off
- Do the CYLINDER A/F TEST three times in the INSPECTION MENU with the HDS.

Is the result OK?

YES : Failure is not duplicated. **do the repair verification** .

NO : Go to step 5.

5. Injector check:
   - 1. Turn the ignition switch to LOCK (0).
   - 2. Exchange the injector from the problem cylinder with one from another cylinder.
   - 3. Hold the engine speed at 3, 000 rpm without load (in P or N) until the radiator fan comes on, then let it idle.
   - 4. Check under these conditions:
     - A/C off
     - All electrical loads off
   - Do the CYLINDER A/F TEST three times in the INSPECTION MENU with the HDS.

Is an injector failure indicated at the cylinder where the injector was exchanged?

YES : REPLACE THE FAULTY INJECTOR , then **do the repair verification** .

NO : Go to step 7.

6. Valve clearance check:
   - 1. **Inspect the valve clearance** See VALVE CLEARANCE ADJUSTMENT or VALVE, SPRING, AND VALVE SEAL REMOVAL AND INSTALLATION .

Is the valve clearance OK?

YES : Go to step 7.

NO : Adjust the valve clearance, then **do the repair verification** .

7. Intake and exhaust manifold visual check (oil leak):
   - 1. Check for carbon build-up in the intake manifold and the exhaust manifold.

Is there carbon build-up in the intake manifold and/or the cylinder head?

GETtheMANUALS.org

YES : Check the engine for oil leaks. If needed, repair the engine. Remove the carbon, then **do the repair verification** .

NO : Intermittent failure, the system is OK at this time. Check the engine for oil leaks.

REPAIR VERIFICATION (OBD STATUS CHECK)

- 1. Turn the ignition switch to LOCK (0).
- 2. **Reset the PCM with the HDS** See **HOW TO TROUBLESHOOT THE FUEL AND EMISSIONS SYSTEMS** or **HOW TO TROUBLESHOOT THE A/T SYSTEM** .
- 3. **DO THE PCM IDLE LEARN PROCEDURE** .
- 4. Test-drive the vehicle in the range of these recorded on-board snapshot parameters:
  - VEHICLE SPEED
  - ENGINE SPEED
  - MAP SENSOR
  - ECT SENSOR 1
  - APP SENSOR
  - AF FB (ST FUEL TRIM)

Signal	Current conditions	
	Values	Unit
VEHICLE SPEED		
ENGINE SPEED		
MAP SENSOR		
ECT SENSOR 1		
APP SENSOR		
AF FB (ST FUEL TRIM)		

- 5. Monitor the OBD STATUS for DTC P219A in the DTCs MENU with the HDS.

DTC Description	OBD Status
P219A AIR-FUEL RATIO VARIATION OF CYLINDER	

Does the HDS indicate PASSED, FAILED, EXECUTING, or OUT OF CONDITION?

PASSED : Troubleshooting is complete. If any other Pending or Confirmed DTCs were indicated, go to the indicated DTC's troubleshooting.

FAILED : Go to step 1 and recheck.

EXECUTING : Keep the test condition until a result comes on.

OUT OF CONDITION : Meet the test condition, and check the OBD STATUS again.

GETtheMANUALS.org

DTC P2227: BARO SENSOR CIRCUIT RANGE/PERFORMANCE PROBLEM

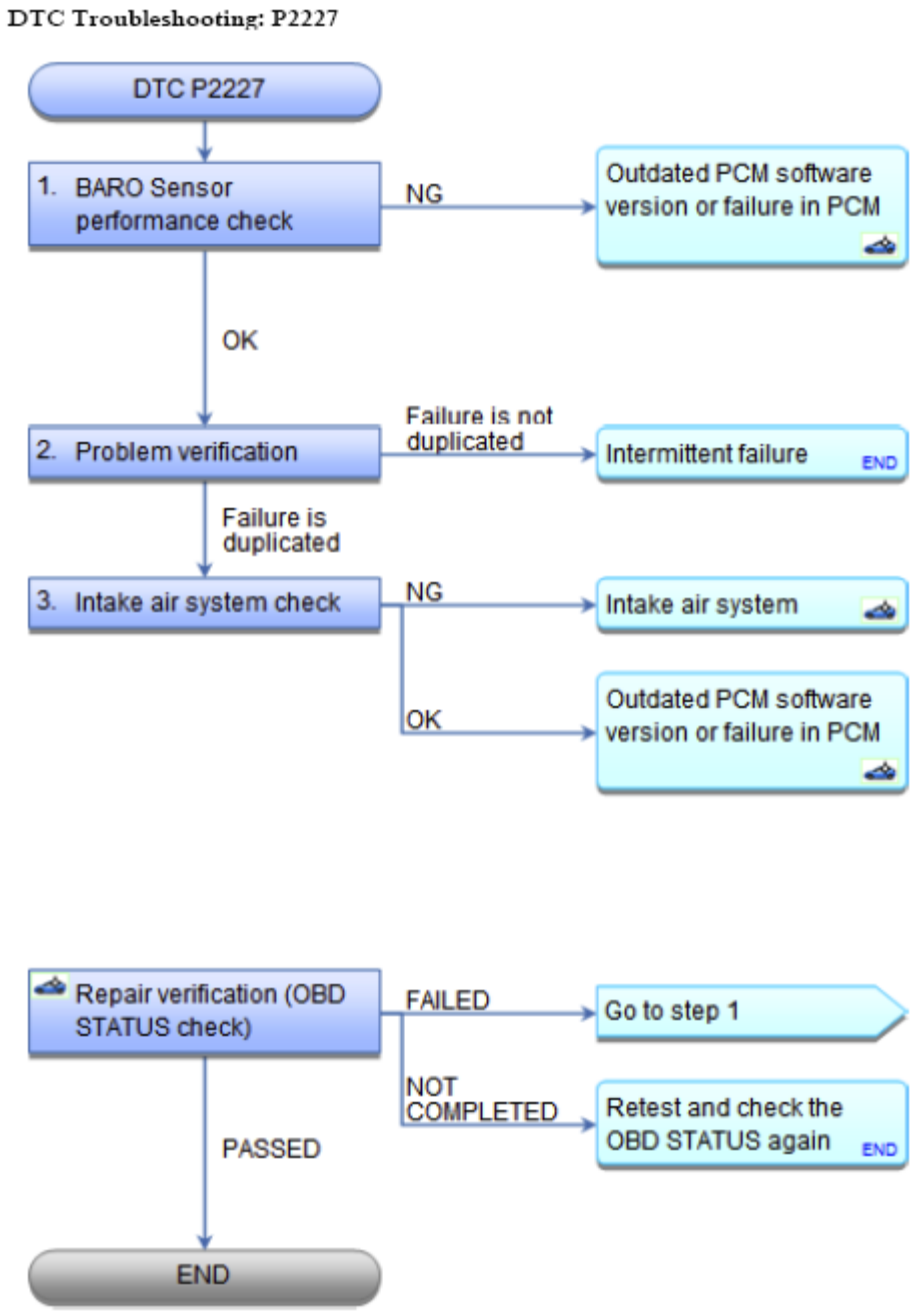

Fig. 393: DTC Troubleshooting Flow Chart (P2227)
Courtesy of AMERICAN HONDA MOTOR CO., INC.

NOTE:

- **Before you troubleshoot, record all freeze data and any on-board snapshot, and review the general troubleshooting information See HOW TO TROUBLESHOOT THE A/T SYSTEM or HOW TO TROUBLESHOOT THE FUEL AND EMISSIONS SYSTEMS .**

GETtheMANUALS.org

- **If DTC P0107, P0108, P1128, and/or P1129 are stored at the same time as DTC P2227, troubleshoot those DTCs first, then recheck for DTC P2227.**

DTC Description	Confirmed DTC	Pending DTC	Freeze Frame
P2227 BARO SENSOR CIRCUIT RANGE/PERFORMANCE PROBLEM			

1. BARO Sensor performance check:
   - 1. Turn the ignition switch to ON (II), and wait 2 seconds.
   - 2. Check the parameter(s) below with the HDS.

Signal	Threshold		Current conditions	
	Values	Unit	Values	Unit
BARO SENSOR	About 101	kPa		

Is about 101 kPa (29.9 inHg, 760 mmHg), or about 2.9 V at sea level indicated?

YES : Go to step 2.

NO : **Update the PCM** See **PCM REMOVAL AND INSTALLATION** or **PCM UPDATE** if it does not have the latest software, or **substitute a known-good PCM** See **PCM REMOVAL AND INSTALLATION** or **PCM UPDATE** , then **do the repair verification** .

2. Problem verification:
   - 1. **Clear the DTC with the HDS** See **HOW TO TROUBLESHOOT THE FUEL AND EMISSIONS SYSTEMS** or **HOW TO TROUBLESHOOT THE A/T SYSTEM** .
   - 2. Start the engine. Hold the engine speed at 3, 000 rpm without load (in P or N) until the radiator fan comes on, then let it idle.
   - 3. Test-drive under these conditions:
     - Engine coolant temperature (ECT SENSOR 1) above 158 °F (70 °C)
     - Transmission in D
     - REL TP SENSOR between 16 and 28 degrees for 3 seconds

Signal	Current conditions	
	Values	Unit
ECT SENSOR 1		
REL TP SENSOR		

   - 4. Monitor the OBD STATUS for DTC P2227 with the HDS.

DTC Description	OBD Status

GETtheMANUALS.org

P2227 BARO SENSOR CIRCUIT RANGE/PERFORMANCE PROBLEM	

Does the HDS indicate FAILED?

YES : The failure is duplicated. Go to step 3.

NO : If the HDS indicates PASSED, intermittent failure, the system is OK at this time. If the HDS indicates NOT COMPLETED, go to step **2-2** and recheck.

3. Intake air system check:
   - 1. Check the intake air system for clogging or restrictions (foreign material, dirty air cleaner element, etc.).

Is the intake air system clogged or restricted?

YES : Remove the clog or restriction, then **do the repair verification** .

NO : **Update the PCM** See **PCM REMOVAL AND INSTALLATION** or **PCM UPDATE** if it does not have the latest software, or **substitute a known-good PCM** See **PCM REMOVAL AND INSTALLATION** or **PCM UPDATE** , then **do the repair verification** .

REPAIR VERIFICATION (OBD STATUS CHECK)

- 1. Turn the ignition switch to ON (II).
- 2. **Reset the PCM with the HDS** See **HOW TO TROUBLESHOOT THE FUEL AND EMISSIONS SYSTEMS** or **HOW TO TROUBLESHOOT THE A/T SYSTEM** .
- 3. **DO THE PCM IDLE LEARN PROCEDURE** .
- 4. Start the engine. Hold the engine speed at 3, 000 rpm without load (in P or N) until the radiator fan comes on, then let it idle.
- 5. Test-drive under these conditions:
  - Engine coolant temperature (ECT SENSOR 1) above 158 °F (70 °C)
  - Transmission in D
  - REL TP SENSOR between 16 and 28 degrees for 3 seconds

Signal	Current conditions	
	Values	Unit
ECT SENSOR 1		
REL TP SENSOR		

- 6. Monitor the OBD STATUS for DTC P2227 in the DTCs MENU with the HDS.

DTC Description	OBD Status
P2227 BARO SENSOR CIRCUIT RANGE/PERFORMANCE PROBLEM	

GETtheMANUALS.org

Does the HDS indicate PASSED, FAILED, or NOT COMPLETED?

PASSED : Troubleshooting is complete. If the PCM was substituted, **replace the original PCM** See **PCM UPDATE** or **PCM REMOVAL AND INSTALLATION** . If any other Pending or Confirmed DTCs are indicated, go to the indicated DTC's troubleshooting.

FAILED : Go to step 1 and recheck. If the PCM was updated, **substitute a known-good PCM** See **PCM REMOVAL AND INSTALLATION** or **PCM UPDATE** , then check the OBD STATUS again.

NOT COMPLETED : Meet the test condition, and check the OBD STATUS again.

DTC P2228: BARO SENSOR CIRCUIT LOW VOLTAGE

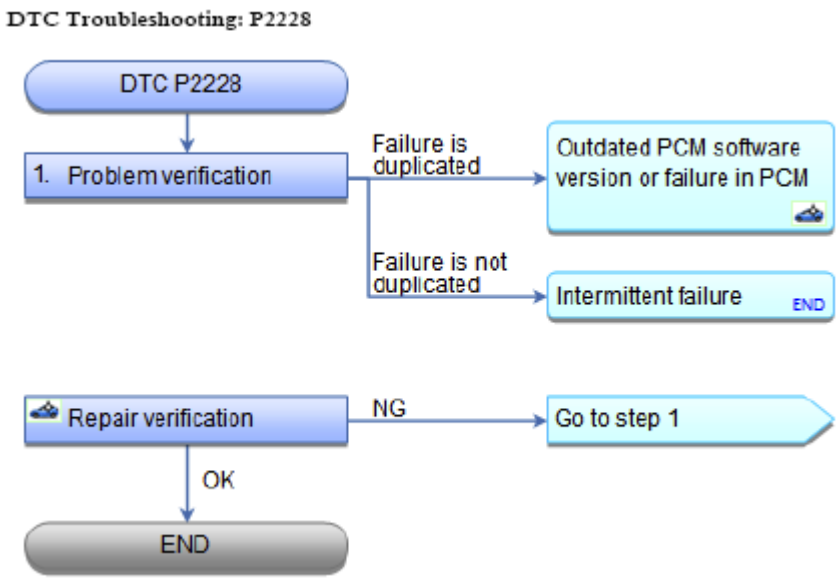

Fig. 394: DTC Troubleshooting Flow Chart (P2228)
Courtesy of AMERICAN HONDA MOTOR CO., INC.

NOTE: **Before you troubleshoot, record all freeze data and any on-board snapshot, and review the general troubleshooting information See HOW TO TROUBLESHOOT THE A/T SYSTEM or HOW TO TROUBLESHOOT THE FUEL AND EMISSIONS SYSTEMS .**

DTC Description	Confirmed DTC	Pending DTC	Freeze Frame
P2228 BARO SENSOR CIRCUIT LOW VOLTAGE			

1. Problem verification:
   - 1. Turn the ignition switch to ON (II).
   - 2. Check the parameter(s) below with the HDS.

	Threshold	Current conditions

GETtheMANUALS.org

Signal	Values	Unit	Values	Unit
BARO SENSOR	Less than 1.31	V		

Do the current condition(s) match the threshold?

YES : The failure is duplicated. **Update the PCM** See **PCM UPDATE** or **PCM REMOVAL AND INSTALLATION** if it does not have the latest software, or **substitute a known-good PCM** See **PCM REMOVAL AND INSTALLATION** or **PCM UPDATE** , then **do the repair verification** .

NO : Intermittent failure, the system is OK at this time.

REPAIR VERIFICATION

- 1. Check for Pending or Confirmed DTCs with the HDS.

DTC Description	Confirmed DTC	Pending DTC	Freeze Frame
P2228 BARO SENSOR CIRCUIT LOW VOLTAGE			

Is DTC P2228 indicated?

YES : Check for poor connections or loose terminals at the PCM. If the PCM was updated, **substitute a known-good PCM** See **PCM REMOVAL AND INSTALLATION** or **PCM UPDATE** , then recheck. If the PCM was substituted, go to step 1.

NO : Troubleshooting is complete. If the PCM was substituted, **replace the original PCM** See **PCM UPDATE** or **PCM REMOVAL AND INSTALLATION** . If any other Pending or Confirmed DTCs are indicated, go to the indicated DTC's troubleshooting.

DTC P2229: BARO SENSOR CIRCUIT HIGH VOLTAGE

GETtheMANUALS.org

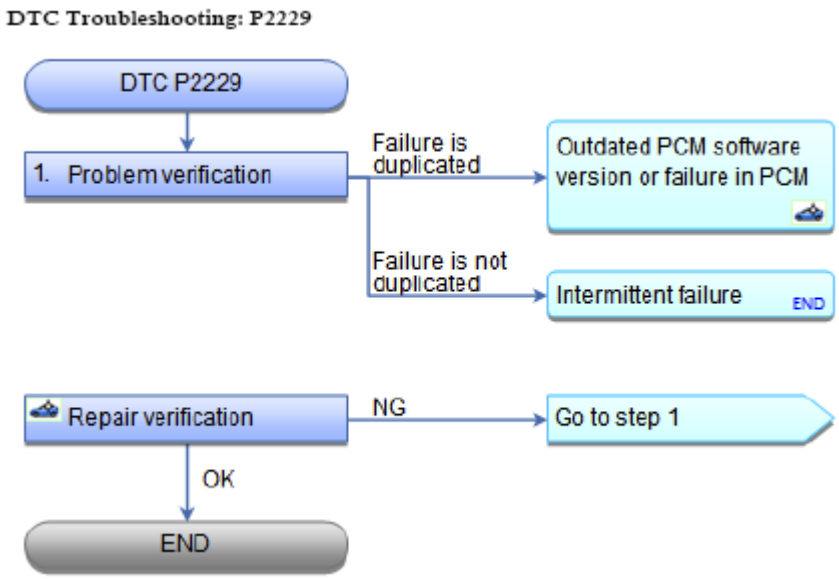

Fig. 395: DTC Troubleshooting Flow Chart (P2229)
Courtesy of AMERICAN HONDA MOTOR CO., INC.

NOTE: **Before you troubleshoot, record all freeze data and any on-board snapshot, and review the general troubleshooting information See HOW TO TROUBLESHOOT THE A/T SYSTEM or HOW TO TROUBLESHOOT THE FUEL AND EMISSIONS SYSTEMS .**

DTC Description	Confirmed DTC	Pending DTC	Freeze Frame
P2229 BARO SENSOR CIRCUIT HIGH VOLTAGE			

1. Problem verification:
   - 1. Turn the ignition switch to ON (II).
   - 2. Check the parameter(s) below with the HDS.

Signal	Threshold		Current conditions	
	Values	Unit	Values	Unit
BARO SENSOR	More than 4.49	V		

Do the current condition(s) match the threshold?

YES : The failure is duplicated. **Update the PCM** See **PCM REMOVAL AND INSTALLATION** or **PCM UPDATE** if it does not have the latest software, or **substitute a known-good PCM** See **PCM UPDATE** or **PCM REMOVAL AND INSTALLATION** , then **do the repair verification** .

NO : Intermittent failure, the system is OK at this time.

REPAIR VERIFICATION

GETtheMANUALS.org

- 1. Check for Pending or Confirmed DTCs with the HDS.

DTC Description	Confirmed DTC	Pending DTC	Freeze Frame
P2229 BARO SENSOR CIRCUIT HIGH VOLTAGE			

Is DTC P2229 indicated?

YES : Check for poor connections or loose terminals at the PCM. If the PCM was updated, **substitute a known-good PCM** See **PCM REMOVAL AND INSTALLATION** or **PCM UPDATE** , then recheck. If the PCM was substituted, go to step 1.

NO : Troubleshooting is complete. If the PCM was substituted, **replace the original PCM** See **PCM REMOVAL AND INSTALLATION** or **PCM UPDATE** . If any other Pending or Confirmed DTCs are indicated, go to the indicated DTC's troubleshooting.

DTC P2238: A/F SENSOR (SENSOR 1) AFS+ CIRCUIT LOW VOLTAGE

GETtheMANUALS.org

DTC Troubleshooting: P2238

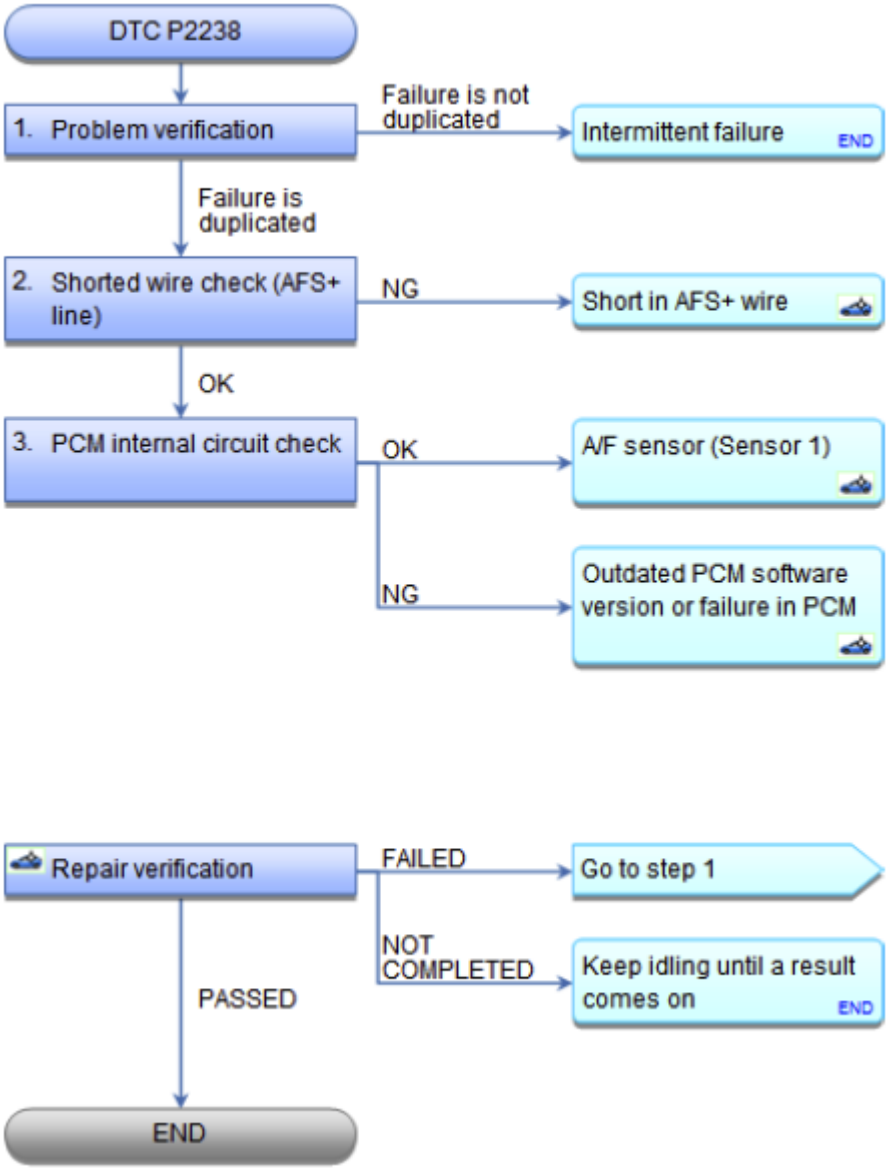

Fig. 396: DTC Troubleshooting Flow Chart (P2238)
Courtesy of AMERICAN HONDA MOTOR CO., INC.

NOTE: **Before you troubleshoot, record all freeze data and any on-board snapshot, and review the general troubleshooting information See HOW TO TROUBLESHOOT THE A/T SYSTEM or HOW TO TROUBLESHOOT THE FUEL AND EMISSIONS SYSTEMS .**

DTC Description	Confirmed DTC	Pending DTC	Freeze Frame
P2238 AIR FUEL RATIO (A/F) SENSOR (SENSOR 1) AFS+ CIRCUIT LOW VOLTAGE			

GETtheMANUALS.org

1. Problem verification:
   - 1. Turn the ignition switch to ON (II).
   - 2. **Clear the DTC with the HDS** See **HOW TO TROUBLESHOOT THE A/T SYSTEM** or **HOW TO TROUBLESHOOT THE FUEL AND EMISSIONS SYSTEMS** .
   - 3. Check for Pending or Confirmed DTCs with the HDS.

DTC Description	Confirmed DTC	Pending DTC	Freeze Frame
P2238 AIR FUEL RATIO (A/F) SENSOR (SENSOR 1) AFS+ CIRCUIT LOW VOLTAGE			

Is DTC P2238 indicated?

YES : The failure is duplicated. Go to step 2.

NO : Intermittent failure, the system is OK at this time. Check for poor connections or loose terminals at the A/F sensor (Sensor 1), the PGM-FI subrelay, and the PCM.

2. Shorted wire check (AFS+ line):
   - 1. Turn the ignition switch to LOCK (0).
   - 2. Jump the SCS line with the HDS.
   - 3. Disconnect the following connectors

     A/F sensor (Sensor 1) 4P connector

     PCM connector C (49P)

   - 4. Check for continuity between test points 1 and 2.

     Test condition IG LOCK (0)

     A/F sensor (Sensor 1) 4P connector: disconnected

     PCM connector C (49P): disconnected

     Test circuit AFS+

     Test point 1 PCM connector C (49P) No. 39 (RED)

     Test point 2 Body ground

GETtheMANUALS.org

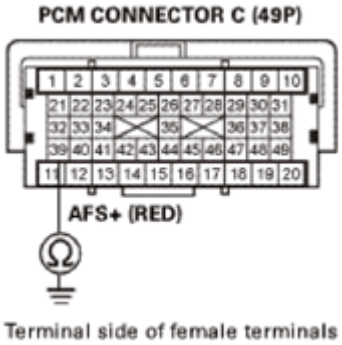

Fig. 397: Checking Continuity Between PCM Connector C (49P) No. 39 (RED) And Body Ground
Courtesy of AMERICAN HONDA MOTOR CO., INC.

Is there continuity?

YES : Repair a short in the AFS+ wire between the PCM (C39) and the A/F sensor (Sensor 1), then **do the repair verification** .

NO : The AFS+ wire is OK. Go to step 3.

3. PCM internal circuit check:
   - 1. Reconnect PCM connector C (49P).
   - 2. Turn the ignition switch to ON (II).
   - 3. Measure the voltage between test points 1 and 2.

     Test condition IG ON (II)

     A/F sensor (Sensor 1) 4P connector: disconnected

     Test circuit AFS+

     Test point 1 A/F sensor (Sensor 1) 4P connector No. 2 (RED)

     Test point 2 Body ground

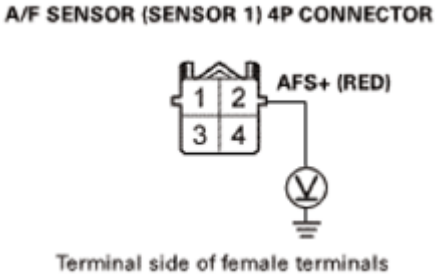

Fig. 398: Measuring Voltage Between A/F Sensor (Sensor 1) 4P Connector No. 2 (RED) And

GETtheMANUALS.org

Body Ground
Courtesy of AMERICAN HONDA MOTOR CO., INC.

Is the voltage about 2.2 V?

YES : The PCM internal circuit is OK. **REPLACE THE A/F SENSOR (SENSOR 1)** , then **do the repair verification** .

NO : **Update the PCM** See **PCM REMOVAL AND INSTALLATION** or **PCM UPDATE** if it does not have the latest software, or **substitute a known-good PCM** See **PCM UPDATE** or **PCM REMOVAL AND INSTALLATION** , then **do the repair verification** .

REPAIR VERIFICATION

- 1. Turn the ignition switch to LOCK (0).
- 2. Reconnect all connectors.
- 3. Turn the ignition switch to ON (II).
- 4. **Reset the PCM with the HDS** See **HOW TO TROUBLESHOOT THE A/T SYSTEM** or **HOW TO TROUBLESHOOT THE FUEL AND EMISSIONS SYSTEMS** .
- 5. **DO THE PCM IDLE LEARN PROCEDURE** .
- 6. Monitor the OBD STATUS for DTC P2238 in the DTCs MENU with the HDS.

DTC Description	OBD Status
P2238 AIR FUEL RATIO (A/F) SENSOR (SENSOR 1) AFS+ CIRCUIT LOW VOLTAGE	

Does the HDS indicate PASSED, FAILED, or NOT COMPLETED?

PASSED : Troubleshooting is complete. If the PCM was substituted, **replace the original PCM** See **PCM UPDATE** or **PCM REMOVAL AND INSTALLATION** . If any other Pending or Confirmed DTCs were indicated, go to the indicated DTC's troubleshooting.

FAILED : Go to step 1 and recheck. If the PCM was updated, **substitute a known-good PCM** See **PCM REMOVAL AND INSTALLATION** or **PCM UPDATE** , then check the OBD STATUS again.

NOT COMPLETED : Keep idling until a result comes on.

DTC P2252: A/F SENSOR (SENSOR 1) AFS- CIRCUIT LOW VOLTAGE

GETtheMANUALS.org

DTC Troubleshooting: P2252

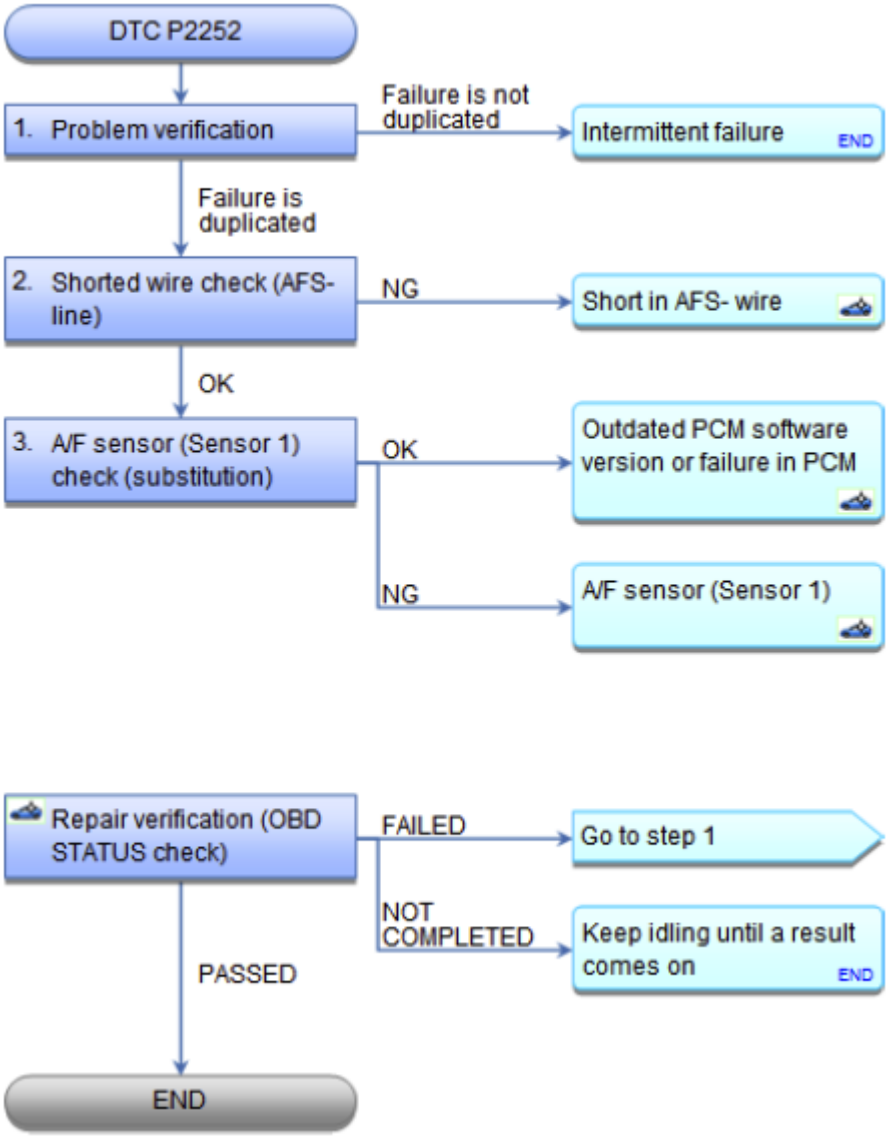

Fig. 399: DTC Troubleshooting Flow Chart (P2252)
Courtesy of AMERICAN HONDA MOTOR CO., INC.

NOTE: **Before you troubleshoot, record all freeze data and any on-board snapshot, and review the general troubleshooting information See HOW TO TROUBLESHOOT THE A/T SYSTEM or HOW TO TROUBLESHOOT THE FUEL AND EMISSIONS SYSTEMS .**

DTC Description	Confirmed DTC	Pending DTC	Freeze Frame
P2252 A/F SENSOR (SENSOR 1) AFS-CIRCUIT LOW VOLTAGE			

GETtheMANUALS.org

1. Problem verification:
    - 1. Turn the ignition switch to ON (II).
    - 2. **Clear the DTC with the HDS** See **HOW TO TROUBLESHOOT THE A/T SYSTEM** or **HOW TO TROUBLESHOOT THE FUEL AND EMISSIONS SYSTEMS** .
    - 3. Start the engine. Hold the engine speed at 3, 000 rpm without load (in P or N) until the radiator fan comes on, then let it idle.
    - 4. Check for Pending or Confirmed DTCs with the HDS.

DTC Description	Confirmed DTC	Pending DTC	Freeze Frame
P2252 A/F SENSOR (SENSOR 1) AFS-CIRCUIT LOW VOLTAGE			

Is DTC P2252 indicated?

YES : The failure is duplicated. Go to step 2.

NO : Intermittent failure, the system is OK at this time. Check for poor connections or loose terminals at the A/F sensor (Sensor 1), the PGM-FI subrelay, and the PCM.

2. Shorted wire check (AFS- line):
    - 1. Turn the ignition switch to LOCK (0).
    - 2. Jump the SCS line with the HDS.
    - 3. Disconnect the following connectors.

      A/F sensor (Sensor 1) 4P connector

      PCM connector C (49P)

    - 4. Check for continuity between test points 1 and 2.

      Test condition IG LOCK (0)

      A/F sensor (Sensor 1) 4P connector: disconnected

      PCM connector C (49P): disconnected

      Test circuit AFS-

      Test point 1 PCM connector C (49P) No. 40 (YEL)

      Test point 2 Body ground

GETtheMANUALS.org

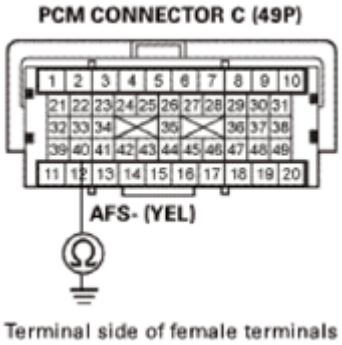

Fig. 400: Checking Continuity Between PCM Connector C (49P) No. 40 (YEL) And Body Ground
Courtesy of AMERICAN HONDA MOTOR CO., INC.

Is there continuity?

YES : Repair a short in the AFS- wire between the PCM (C40) and the A/F sensor (Sensor 1), then **do the repair verification** .

NO : The AFS- wire is OK. Go to step 3.

3. A/F sensor (Sensor 1) check (substitution):
   - 1. **SUBSTITUTE A KNOWN-GOOD A/F SENSOR (SENSOR 1)** .
   - 2. Reconnect all connectors.
   - 3. Turn the ignition switch to ON (II).
   - 4. **Reset the PCM with the HDS** See **HOW TO TROUBLESHOOT THE A/T SYSTEM** or **HOW TO TROUBLESHOOT THE FUEL AND EMISSIONS SYSTEMS** .
   - 5. **DO THE PCM IDLE LEARN PROCEDURE** .
   - 6. Check for Pending or Confirmed DTCs with the HDS.

DTC Description	Confirmed DTC	Pending DTC	Freeze Frame
P2252 A/F SENSOR (SENSOR 1) AFS-CIRCUIT LOW VOLTAGE			

Is DTC P2252 indicated?

YES : The A/F sensor (Sensor 1) is OK. **Update the PCM** See **PCM REMOVAL AND INSTALLATION** or **PCM UPDATE** if it does not have the latest software, or **substitute a known-good PCM** See **PCM UPDATE** or **PCM REMOVAL AND INSTALLATION** , then **do the repair verification** .

NO : **REPLACE THE ORIGINAL A/F SENSOR (SENSOR 1)** , then **do the repair verification** .

REPAIR VERIFICATION (OBD STATUS CHECK)

GETtheMANUALS.org

- 1. Turn the ignition switch to LOCK (0).
- 2. Reconnect all connectors.
- 3. Turn the ignition switch to ON (II).
- 4. **Reset the PCM with the HDS** See **HOW TO TROUBLESHOOT THE FUEL AND EMISSIONS SYSTEMS** or **HOW TO TROUBLESHOOT THE A/T SYSTEM** .
- 5. **DO THE PCM IDLE LEARN PROCEDURE** .
- 6. Monitor the OBD STATUS for DTC P2252 in the DTCs MENU with the HDS.

DTC Description	OBD Status
P2252 A/F SENSOR (SENSOR 1) AFS-CIRCUIT LOW VOLTAGE	

Does the HDS indicate PASSED, FAILED, or NOT COMPLETED?

PASSED : Troubleshooting is complete. If the PCM was substituted, **replace the original PCM** See **PCM REMOVAL AND INSTALLATION** or **PCM UPDATE** . If any other Pending or Confirmed DTCs are indicated, go to the indicated DTC's troubleshooting.

FAILED : Go to step 1 and recheck. If the PCM was updated, **substitute a known-good PCM** See **PCM REMOVAL AND INSTALLATION** or **PCM UPDATE** , then check the OBD STATUS again.

NOT COMPLETED : Keep idling until a result comes on.

DTC P2270: SECONDARY HO2S (SENSOR 2) CIRCUIT SIGNAL STUCK LEAN

NOTE: **Before you troubleshoot, record all freeze data and any on-board snapshot, and review the general troubleshooting information See HOW TO TROUBLESHOOT THE A/T SYSTEM or HOW TO TROUBLESHOOT THE FUEL AND EMISSIONS SYSTEMS .**

DTC Description	Confirmed DTC	Pending DTC	Freeze Frame
P2270 SECONDARY HO2S (SENSOR 2) CIRCUIT SIGNAL STUCK LEAN			

1. Problem verification:
   - 1. Turn the ignition switch to ON (II).
   - 2. **Clear the DTC with the HDS** See **HOW TO TROUBLESHOOT THE A/T SYSTEM** or **HOW TO TROUBLESHOOT THE FUEL AND EMISSIONS SYSTEMS** .
   - 3. Start the engine. Hold the engine speed at 3, 000 rpm without load (in P or N) until the radiator fan comes on, then let it idle.
   - 4. Test-drive under these conditions:
     - Engine coolant temperature (ECT SENSOR 1) above 158 °F (70 °C)

GETtheMANUALS.org

- Transmission in D
- Engine speed between 1, 500-3, 000 rpm
- Drive 30 seconds or more

Signal	Current conditions	
	Values	Unit
ECT SENSOR 1		
ENGINE SPEED		

- 5. Monitor the OBD STATUS for DTC P2270 with the HDS.

DTC Description	OBD Status
P2270 SECONDARY HO2S (SENSOR 2) CIRCUIT SIGNAL STUCK LEAN	

Does the HDS indicate FAILED?

YES : **REPLACE THE SECONDARY HO2S (SENSOR 2)** , then **do the repair verification** .

NO : If the HDS indicates PASSED, intermittent failure, the system is OK at this time. Check for poor connections or loose terminals at secondary HO2S (Sensor 2) and the PCM. If the HDS indicates NOT COMPLETED, go to step **1-3** and recheck.

REPAIR VERIFICATION (OBD STATUS CHECK)

- 1. Turn the ignition switch to ON (II).
- 2. **Reset the PCM with the HDS** See **HOW TO TROUBLESHOOT THE FUEL AND EMISSIONS SYSTEMS** or **HOW TO TROUBLESHOOT THE A/T SYSTEM** .
- 3. **DO THE PCM IDLE LEARN PROCEDURE** .
- 4. Start the engine. Hold the engine speed at 3, 000 rpm without load (in P or N) until the radiator fan comes on, then let it idle.
- 5. Test-drive under these conditions:
  - Engine coolant temperature (ECT SENSOR 1) above 158 °F (70 °C)
  - Transmission in D
  - Engine speed between 1, 500-3, 000 rpm
  - Drive 30 seconds or more

Signal	Current conditions	
	Values	Unit
ECT SENSOR 1		
ENGINE SPEED		

- 6. Monitor the OBD STATUS for DTC P2270 in the DTCs MENU with the HDS.

GETtheMANUALS.org

DTC Description	OBD Status
P2270 SECONDARY HO2S (SENSOR 2) CIRCUIT SIGNAL STUCK LEAN	

Does the HDS indicate PASSED, FAILED, or NOT COMPLETED?

PASSED : Troubleshooting is complete. If any other Pending or Confirmed DTCs were indicated, go to the indicated DTC's troubleshooting.

FAILED : Go to step 1 and recheck.

NOT COMPLETED : Meet the test condition, and check the OBD STATUS again.

DTC P2279: INTAKE AIR SYSTEM LEAK

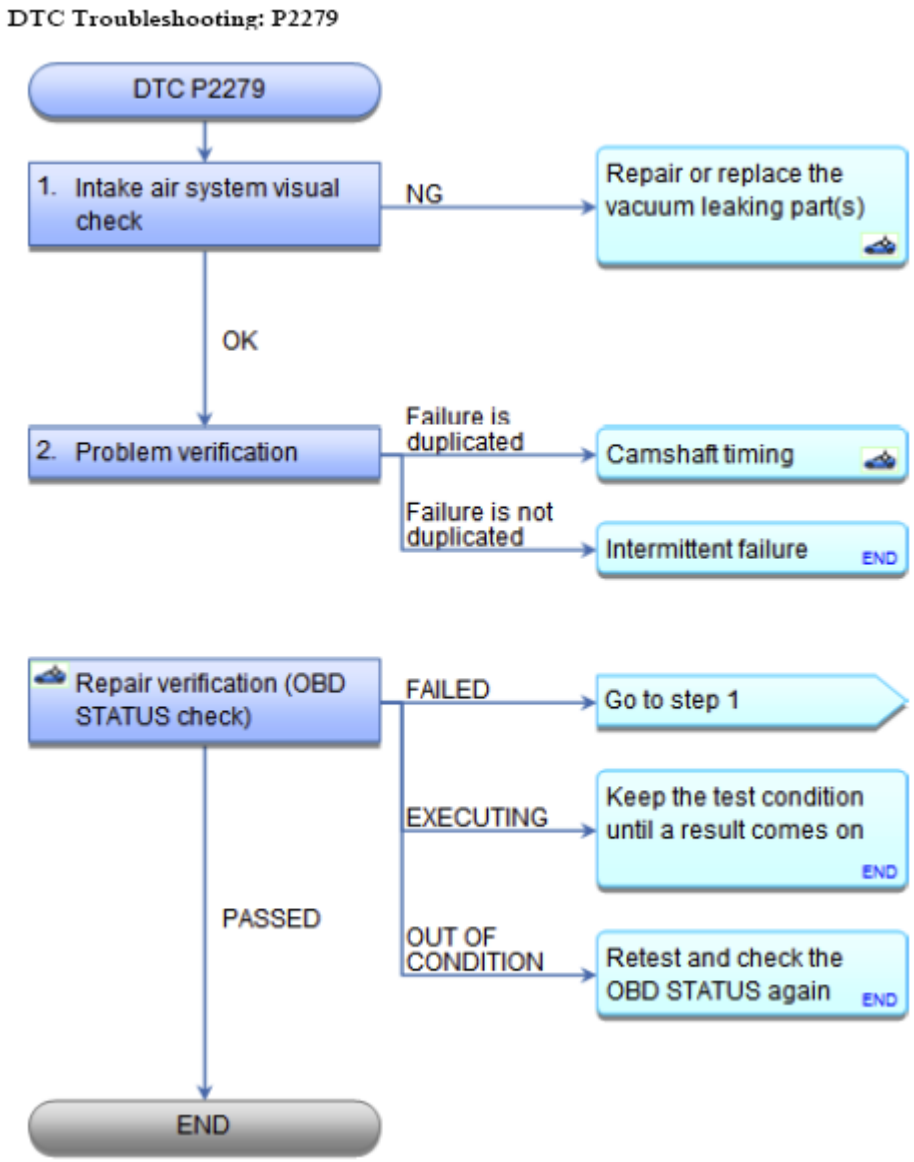

GETtheMANUALS.org

Fig. 401: DTC Troubleshooting Flow Chart (P2279)
Courtesy of AMERICAN HONDA MOTOR CO., INC.

NOTE:

- **Before you troubleshoot, record all freeze data and any on-board snapshot, and review the general troubleshooting information See HOW TO TROUBLESHOOT THE A/T SYSTEM or HOW TO TROUBLESHOOT THE FUEL AND EMISSIONS SYSTEMS .**
- **If DTC P0443 is stored at the same time as DTC P2279, troubleshoot DTC P0443 first, then recheck for DTC P2279.**

DTC Description	Confirmed DTC	Pending DTC	Freeze Frame
P2279 INTAKE AIR SYSTEM LEAK			

1. Intake air system visual check:
   - 1. Check for vacuum leaks at these parts:
     - PCV valve
     - PCV hose
     - Purge (PCS) line
     - Throttle body
     - Intake manifold
     - Brake booster
     - Brake booster hose

   Are the parts OK?

   YES : Go to step 2.

   NO : Repair or replace any leaking part(s), then **do the repair verification** .

2. Problem verification:
   - 1. Let the engine cool until the value of ECT SENSOR 1 is 140 °F (60 °C) or less.

Signal	Current conditions	
	Values	Unit
ECT SENSOR 1		

   - 2. **Clear the DTC with the HDS** See **HOW TO TROUBLESHOOT THE A/T SYSTEM** or **HOW TO TROUBLESHOOT THE FUEL AND EMISSIONS SYSTEMS** .
   - 3. Start the engine, and let it idle for 10 seconds or more.
   - 4. Monitor the OBD STATUS for DTC P2279 with the HDS.

DTC Description	OBD Status

GETtheMANUALS.org

P2279 INTAKE AIR SYSTEM LEAK	

Does the HDS indicate FAILED?

YES : The failure is duplicated. Check the camshaft timing and adjust it if needed, then **do the repair verification** .

NO : If the HDS indicates PASSED, intermittent failure, the system is OK at this time. Check for vacuum leaks at the PCV valve, the PCV hose, the purge (PCS) line, the throttle body, the intake manifold, the brake booster, and the brake booster hose. If the HDS indicates EXECUTING, keep idling until a result comes on. If the HDS indicates OUT OF CONDITION, go to step **2-1** . and recheck.

REPAIR VERIFICATION (OBD STATUS CHECK)

- 1. Turn the ignition switch to LOCK (0).
- 2. Reconnect all connectors.
- 3. Turn the ignition switch to ON (II).
- 4. **Reset the PCM with the HDS** See **HOW TO TROUBLESHOOT THE A/T SYSTEM** or **HOW TO TROUBLESHOOT THE FUEL AND EMISSIONS SYSTEMS** .
- 5. **DO THE PCM IDLE LEARN PROCEDURE** .
- 6. Let the engine cool until the value of ECT SENSOR 1 is 140 °F (60 °C) or less.

Signal	Current conditions	
	Values	Unit
ECT SENSOR 1		

- 7. Start the engine, and let it idle for 10 seconds or more.
- 8. Monitor the OBD STATUS for DTC P2279 in the DTCs MENU with the HDS.

DTC Description	OBD Status
P2279 INTAKE AIR SYSTEM LEAK	

Does the HDS indicate PASSED, FAILED, EXECUTING, or OUT OF CONDITION?

PASSED : Troubleshooting is complete. If any other Pending or Confirmed DTCs were indicated, go to the indicated DTC's troubleshooting.

FAILED : Go to step 1 and recheck.

EXECUTING : Keep the test condition until a result comes on.

OUT OF CONDITION Meet the test condition, and check the OBD STATUS again.

DTC P2422: EVAP CANISTER VENT SHUT VALVE STUCK CLOSED

GETtheMANUALS.org

MALFUNCTION

GETtheMANUALS.org

DTC Troubleshooting: P2422

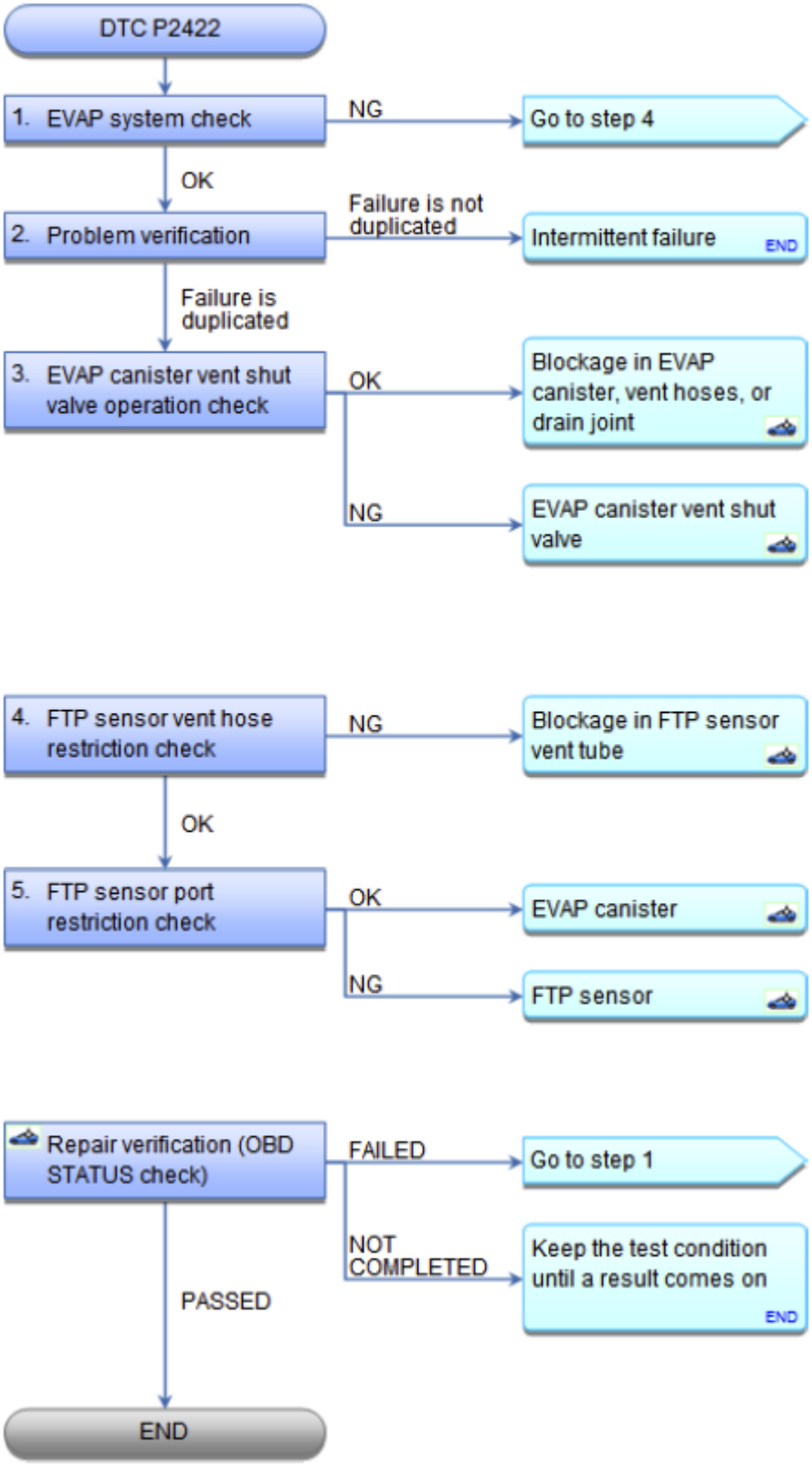

Fig. 402: DTC Troubleshooting Flow Chart (P2422)

GETtheMANUALS.org

Courtesy of AMERICAN HONDA MOTOR CO., INC.

NOTE: **Before you troubleshoot, record all freeze data and any on-board snapshot, and review the general troubleshooting information See HOW TO TROUBLESHOOT THE FUEL AND EMISSIONS SYSTEMS or HOW TO TROUBLESHOOT THE A/T SYSTEM .**

DTC Description	Confirmed DTC	Pending DTC	Freeze Frame
P2422 EVAP CVS STUCK CLOSED MALFUNCTION			

1. EVAP system check:
   - 1. Turn the ignition switch to ON (II).
   - 2. **Clear the DTC with the HDS** See **HOW TO TROUBLESHOOT THE A/T SYSTEM** or **HOW TO TROUBLESHOOT THE FUEL AND EMISSIONS SYSTEMS** .
   - 3. Turn the ignition switch to LOCK (0).
   - 4. Remove the fuel fill cap, and wait 1 minute.
   - 5. Turn the ignition switch to ON (II).
   - 6. Check the parameter(s) below with the HDS.

Signal	Threshold		Current conditions	
	Values	Unit	Values	Unit
FTP SENSOR	-0.67-0.67	kPa		
	2.4-2.6	V		

Do the current condition(s) match the threshold?

YES : Go to step 2.

NO : Go to step 4.

2. Problem verification:
   - 1. Install the fuel fill cap.
   - 2. **Clear the DTC with the HDS** See **HOW TO TROUBLESHOOT THE A/T SYSTEM** or **HOW TO TROUBLESHOOT THE FUEL AND EMISSIONS SYSTEMS** .
   - 3. Start the engine, and let it idle without load (in P or N) until the radiator fan comes on.
   - 4. Monitor the EVAP PC DUTY (purge control duty) in the DATA LIST with the HDS, while holding the engine speed at 3, 000 rpm with the EVAP PC DUTY at 20 % or more for at least 4 minutes, then let the engine idle.

Signal	Current conditions	
	Values	Unit
EVAP PC DUTY		

GETtheMANUALS.org

- 5. Monitor the OBD STATUS for DTC P2422 in the DTCs MENU with the HDS.

DTC Description	OBD Status
P2422 EVAP CVS STUCK CLOSED MALFUNCTION	

Does the HDS indicate FAILED?

YES : The failure is duplicated. Go to step 3.

NO : If the HDS indicates PASSED, there might be an intermittent failure, and the system is OK at this time. Check the on-board snapshot, and repeat the driving conditions when the DTC set (fuel level, engine speed, vehicle speed, and outside temperature). If no problem is found, check for poor connections or loose terminals between the FTP sensor and the PCM. Also check for a blockage in the FTP sensor vent port and vent hose, and the EVAP canister vent hose and drain joint. If the HDS indicates NOT COMPLETED, let the engine idle until a result comes on.

3. EVAP canister vent shut valve operation check:
   - 1. Turn the ignition switch to LOCK (0).
   - 2. **REMOVE THE EVAP CANISTER VENT SHUT VALVE FROM THE EVAP CANISTER** .
   - 3. Connect the 2P connector to the EVAP canister vent shut valve.
   - 4. Turn the ignition switch to ON (II).
   - 5. Select EVAP TEST in the INSPECTION MENU, and do the EVAP CVS ON in the SINGLE SOLENOID with the HDS.
   - 6. Check the EVAP canister vent shut valve (A) operation.

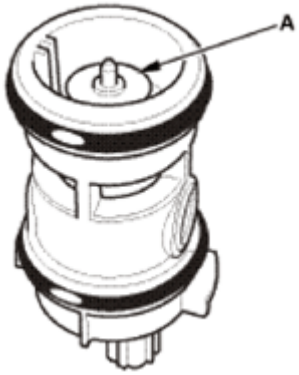

Fig. 403: Identifying EVAP Canister Vent Shut Valve
Courtesy of AMERICAN HONDA MOTOR CO., INC.

Is the valve free of corrosion, and does it operate properly?

YES : Check for a blockage in the EVAP canister, the vent hoses, and the drain joint, and repair it if needed. Install the EVAP canister vent shut valve, then **do the repair verification** .

GETtheMANUALS.org

NO : **REPLACE THE EVAP CANISTER VENT SHUT VALVE** , then **do the repair verification** .

4. FTP sensor vent hose restriction check:
   - 1. Disconnect the vent hose (A) from the FTP sensor (B).

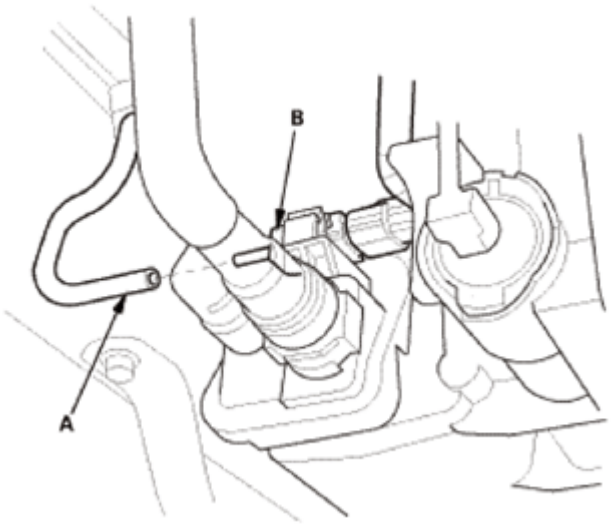

Fig. 404: Identifying Vent Hose And FTP Sensor
Courtesy of AMERICAN HONDA MOTOR CO., INC.

   - 2. Check the parameter(s) below with the HDS.

Signal	Threshold		Current conditions	
	Values	Unit	Values	Unit
FTP SENSOR	-0.67-0.67	kPa		
	2.4-2.6	V		

Do the current condition(s) match the threshold?

YES : Check for a blockage in the FTP sensor vent hose, then **do the repair verification** .

NO : The FTP sensor vent hose is OK. Go to step 5.

5. FTP sensor port restriction check:
   - 1. Turn the ignition switch to LOCK (0).
   - 2. Remove the FTP sensor (A) from the EVAP canister with its connector connected.

GETtheMANUALS.org

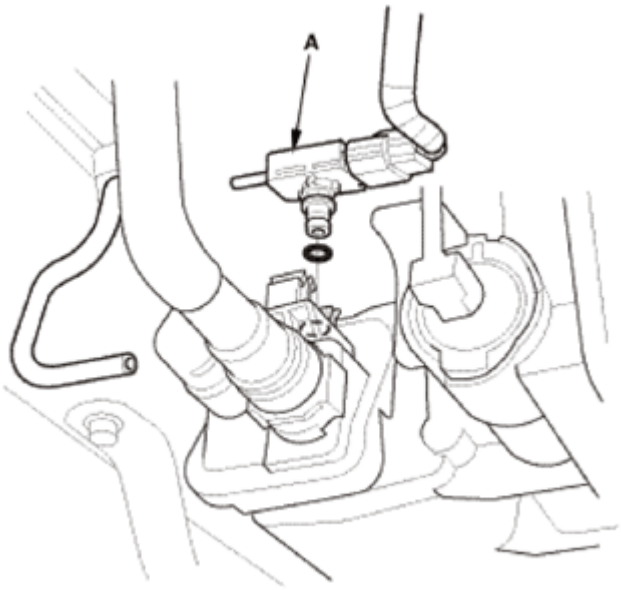

Fig. 405: Identifying FTP Sensor
Courtesy of AMERICAN HONDA MOTOR CO., INC.

- 3. Turn the ignition switch to ON (II).
- 4. Check the parameter(s) below with the HDS.

Signal	Threshold		Current conditions	
	Values	Unit	Values	Unit
FTP SENSOR	-0.67-0.67	kPa		
	2.4-2.6	V		

Do the current condition(s) match the threshold?

YES : The FTP sensor port is OK. The EVAP canister has an internal blockage; **REPLACE THE EVAP CANISTER** , then **do the repair verification** .

NO : REPLACE THE FTP SENSOR , then **do the repair verification** .

REPAIR VERIFICATION (OBD STATUS CHECK)

- 1. Turn the ignition switch to LOCK (0).
- 2. Install the parts in the reverse order of removal.
- 3. Turn the ignition switch to ON (II).
- 4. **Reset the PCM with the HDS** See **HOW TO TROUBLESHOOT THE A/T SYSTEM** or **HOW TO TROUBLESHOOT THE FUEL AND EMISSIONS SYSTEMS** .
- 5. **DO THE PCM IDLE LEARN PROCEDURE** .
- 6. Monitor the EVAP PC DUTY (purge control duty) in the DATA LIST with the HDS, while holding the engine speed at 3, 000 rpm with the EVAP PC DUTY at 20 % or more for at least 4 minutes, then let

GETtheMANUALS.org

the engine idle.

Signal	Current conditions	
	Values	Unit
EVAP PC DUTY		

- 7. Monitor the OBD STATUS for DTC P2422 in the DTCs MENU with the HDS.

DTC Description	OBD Status
P2422 EVAP CVS STUCK CLOSED MALFUNCTION	

Does the HDS indicate PASSED, FAILED, or NOT COMPLETED?

PASSED : Troubleshooting is complete. If any other Pending or Confirmed DTCs were indicated, go to the indicated DTC's troubleshooting.

FAILED : Go to step 1 and recheck.

NOT COMPLETED : Hold the engine speed at 3, 000 rpm with the EVAP PC DUTY at 20% or more until a result comes on.

DTC P2610: PCM IGNITION OFF INTERNAL TIMER MALFUNCTION

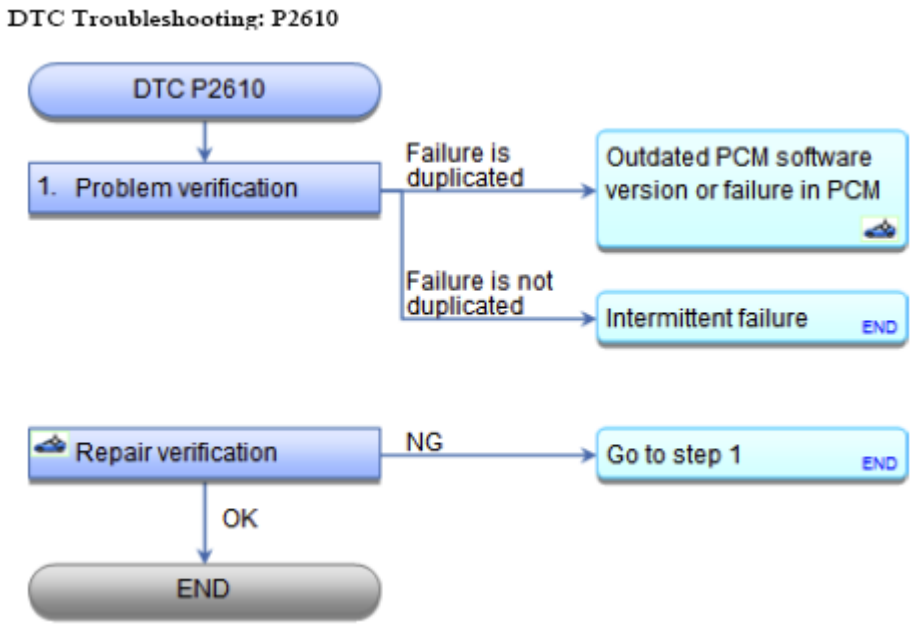

Fig. 406: DTC Troubleshooting Flow Chart (P2610)
Courtesy of AMERICAN HONDA MOTOR CO., INC.

NOTE: Before you troubleshoot, record all freeze data and any on-board snapshot, and

GETtheMANUALS.org

review the general troubleshooting information See HOW TO TROUBLESHOOT THE A/T SYSTEM or HOW TO TROUBLESHOOT THE FUEL AND EMISSIONS SYSTEMS .

DTC Description	Confirmed DTC	Pending DTC	Freeze Frame
P2610 PCM IGNITION OFF INTERNAL TIMER MALFUNCTION			

1. Problem verification:
   - 1. Turn the ignition switch to ON (II).
   - 2. **Clear the DTC with the HDS** See **HOW TO TROUBLESHOOT THE A/T SYSTEM** or **HOW TO TROUBLESHOOT THE FUEL AND EMISSIONS SYSTEMS** .
   - 3. Check for Pending or Confirmed DTCs with the HDS.

DTC Description	Confirmed DTC	Pending DTC	Freeze Frame
P2610 PCM IGNITION OFF INTERNAL TIMER MALFUNCTION			

Is DTC P2610 indicated?

YES : The failure is duplicated. **Update the PCM** See **PCM REMOVAL AND INSTALLATION** or **PCM UPDATE** if it does not have the latest software, or **substitute a known-good PCM** See **PCM REMOVAL AND INSTALLATION** or **PCM UPDATE** , then **do the repair verification** .

NO : Intermittent failure, the system is OK at this time. If any other Pending or Confirmed DTCs are indicated, go to the indicated DTC's troubleshooting.

REPAIR VERIFICATION

- 1. Check for Pending or Confirmed DTCs with the HDS.

DTC Description	Confirmed DTC	Pending DTC	Freeze Frame
P2610 PCM IGNITION OFF INTERNAL TIMER MALFUNCTION			

Is DTC P2610 indicated?

YES : If the PCM was updated, **substitute a known-good PCM** See **PCM UPDATE** or **PCM REMOVAL AND INSTALLATION** , then recheck. If the PCM was substituted, go to step 1.

NO : Troubleshooting is complete. If the PCM was substituted, **replace the original PCM** See **PCM REMOVAL AND INSTALLATION** or **PCM UPDATE** . If any other Pending or Confirmed DTCs are

GETtheMANUALS.org

indicated, go to the indicated DTC's troubleshooting.

DTC P2646: ROCKER ARM OIL PRESSURE SWITCH CIRCUIT LOW VOLTAGE

GETtheMANUALS.org

DTC Troubleshooting: P2646

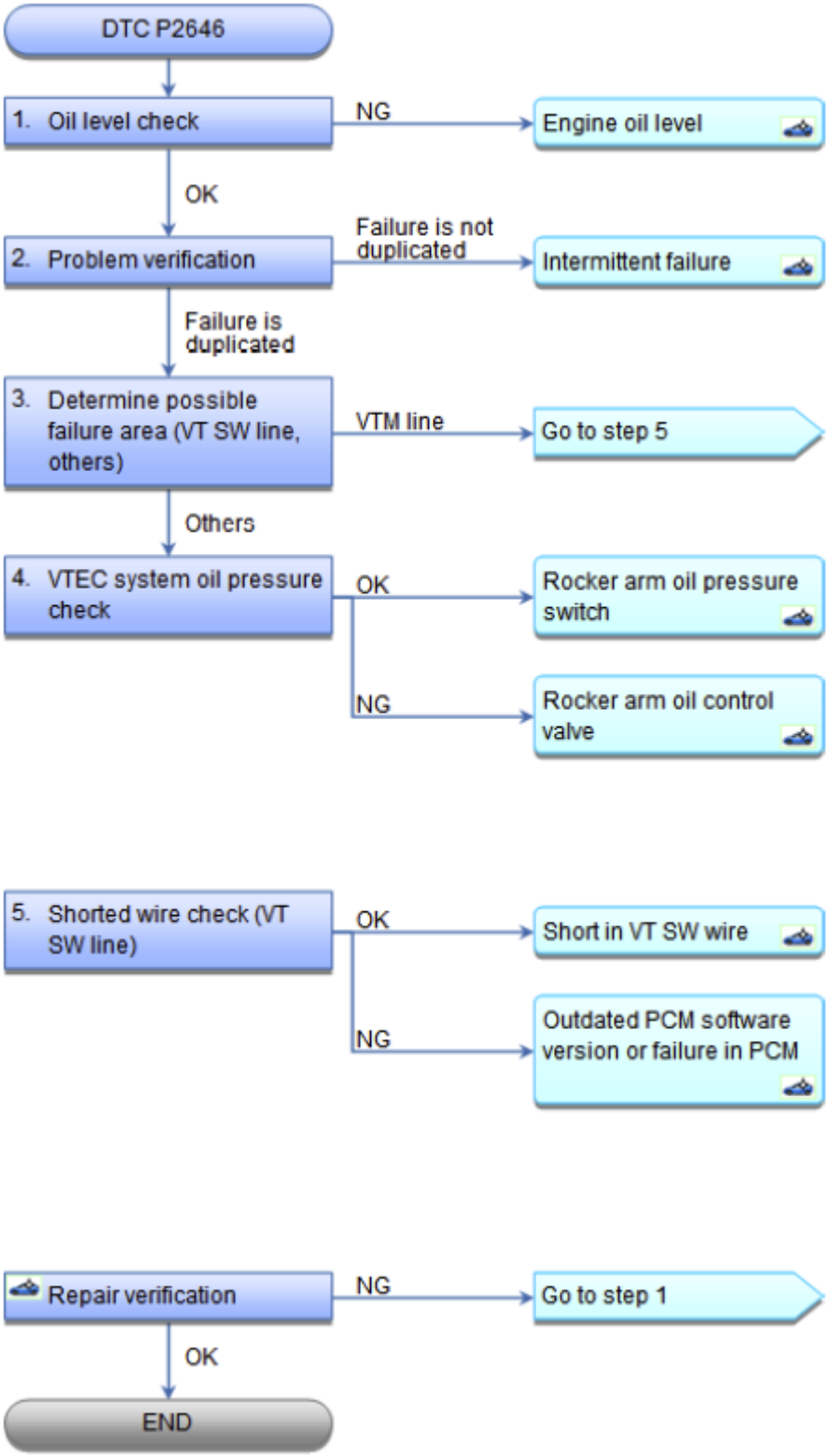

Fig. 407: DTC Troubleshooting Flow Chart (P2646)
Courtesy of AMERICAN HONDA MOTOR CO., INC.

GETtheMANUALS.org

Special Tools Required

- **Pressure Gauge Adapter 07NAJ-P07010A**
- **A/T Low Pressure Gauge w/Panel 07406-0070301**
- **A/T Pressure Test Hose 07AAJ-PY4A100**
- **A/T Pressure Adapter 07MAJ-PY40120**
- **Oil Pressure Hose 07ZAJ-S5AA200**

NOTE:

- **Before you troubleshoot, record all freeze data and any on-board snapshot, and review the general troubleshooting information See HOW TO TROUBLESHOOT THE A/T SYSTEM or HOW TO TROUBLESHOOT THE FUEL AND EMISSIONS SYSTEMS .**
- **If DTC P2648 and/or P2649 are stored at the same time as DTC P2646, troubleshoot those DTCs first, then recheck for DTC P2646.**

DTC Description	Confirmed DTC	Pending DTC	Freeze Frame
P2646 ROCKER ARM OIL PRESSURE SWITCH CIRCUIT LOW VOLTAGE			

1. Oil level check:
   - 1. CHECK THE ENGINE OIL LEVEL .

   Is the level OK?

   YES : Go to step 2.

   NO : ADJUST THE ENGINE OIL TO THE PROPER LEVEL , then **do the repair verification** .

2. Problem verification:
   - 1. Do the VTEC TEST in the INSPECTION MENU with the HDS.

   Is the result OK?

   YES : Intermittent failure, the system is OK at this time. Check for poor connections or loose terminals at the rocker arm oil pressure switch, the rocker arm oil control solenoid, and the PCM.

   NO : The failure is duplicated. Go to step 3.

3. Determine possible failure area (VT SW line, others):
   - 1. Turn the ignition switch to LOCK (0).
   - 2. Disconnect the following connector.

     Rocker arm oil pressure switch 2P connector

GETtheMANUALS.org

- 3. Turn the ignition switch to ON (II).
- 4. Check the parameter(s) below with the HDS.

Signal	Malfunction threshold		Current conditions	
	Values	Unit	Values	Unit
VTEC PRES SW	ON			

Do the current condition(s) match the threshold?

YES : Go to step 5.

NO : Go to step 4.

4. VTEC system oil pressure check:
   - 1. Turn the ignition switch to LOCK (0).
   - 2. Remove the rocker arm oil pressure switch (A) from the rocker arm oil control valve, and attach the special tools as shown, then attach the rocker arm oil pressure switch to the oil pressure gauge adapter (B).

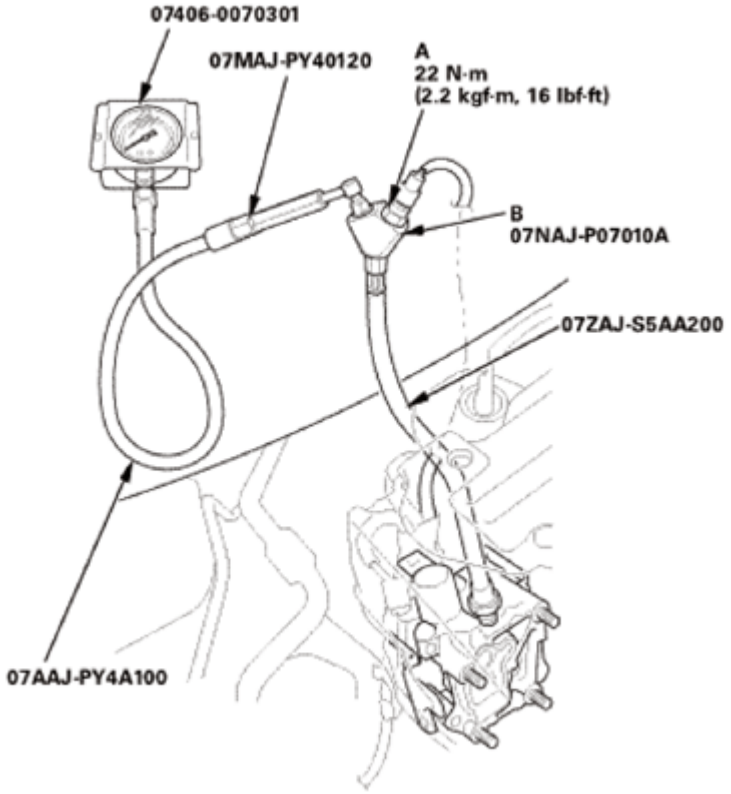

Fig. 408: Checking VTEC System Oil Pressure Using Tools
Courtesy of AMERICAN HONDA MOTOR CO., INC.

- 3. Reconnect the rocker arm oil pressure switch 2P connector.

GETtheMANUALS.org

- 4. Start the engine.
- 5. Do the VTEC TEST in the INSPECTION MENU with the HDS.
- 6. Check the oil pressure.

Does the oil pressure increase to at least 392 kPa (4.0 kgf/cm^2 , 56.9 psi)?

YES : The VTEC system oil pressure is OK. REPLACE THE ROCKER ARM OIL PRESSURE SWITCH , then **do the repair verification** .

NO : Inspect the VTEC system. If it is OK, REPLACE THE ROCKER ARM OIL CONTROL VALVE , then **do the repair verification** .

5. Shorted wire check (VT SW line):
   - 1. Turn the ignition switch to LOCK (0).
   - 2. Jump the SCS line with the HDS.
   - 3. Disconnect the following connector.

     PCM connector C (49P)

   - 4. Check for continuity between test points 1 and 2.

     Test condition IG LOCK (0)

     PCM connector C (49P): disconnected

     Test circuit VT SW

     Test point 1 PCM connector C (49P) No. 13 (LT BLU)

     Test point 2 Body ground

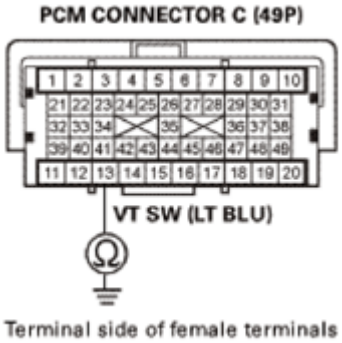

Fig. 409: Checking Continuity Between PCM Connector C (49P) No. 13 (LT BLU) And Body Ground
Courtesy of AMERICAN HONDA MOTOR CO., INC.

GETtheMANUALS.org

Is there continuity?

YES : Repair a short in the VT SW wire between the PCM (C13) and the rocker arm oil pressure switch, then **do the repair verification** .

NO : The VT SW wire is OK. **Update the PCM** See **PCM UPDATE** or **PCM REMOVAL AND INSTALLATION** if it does not have the latest software, or **substitute a known-good PCM** See **PCM REMOVAL AND INSTALLATION** or **PCM UPDATE** , then **do the repair verification** .

REPAIR VERIFICATION

- 1. Reconnect all connectors.
- 2. Turn the ignition switch to ON (II).
- 3. **Reset the PCM with the HDS** See **HOW TO TROUBLESHOOT THE A/T SYSTEM** or **HOW TO TROUBLESHOOT THE FUEL AND EMISSIONS SYSTEMS** .
- 4. **DO THE PCM IDLE LEARN PROCEDURE** .
- 5. Do the VTEC TEST in the INSPECTION MENU with the HDS.
- 6. Check for Pending or Confirmed DTCs with the HDS.

DTC Description	Confirmed DTC	Pending DTC	Freeze Frame
P2646 ROCKER ARM OIL PRESSURE SWITCH CIRCUIT LOW VOLTAGE			

Is DTC P2646 indicated?

YES : Check for poor connections or loose terminals at the rocker arm oil pressure switch, the rocker arm oil control solenoid, and the PCM. If the PCM was updated, **substitute a known-good PCM** See **PCM REMOVAL AND INSTALLATION** or **PCM UPDATE** , then recheck. If the PCM was substituted, go to step 1.

NO : Troubleshooting is complete. If the PCM was substituted, **replace the original PCM** See **PCM REMOVAL AND INSTALLATION** or **PCM UPDATE** . If any other Pending or Confirmed DTCs are indicated, go to the indicated DTC's troubleshooting.

DTC P2647: ROCKER ARM OIL PRESSURE SWITCH CIRCUIT HIGH VOLTAGE

GETtheMANUALS.org

DTC Troubleshooting: P2647

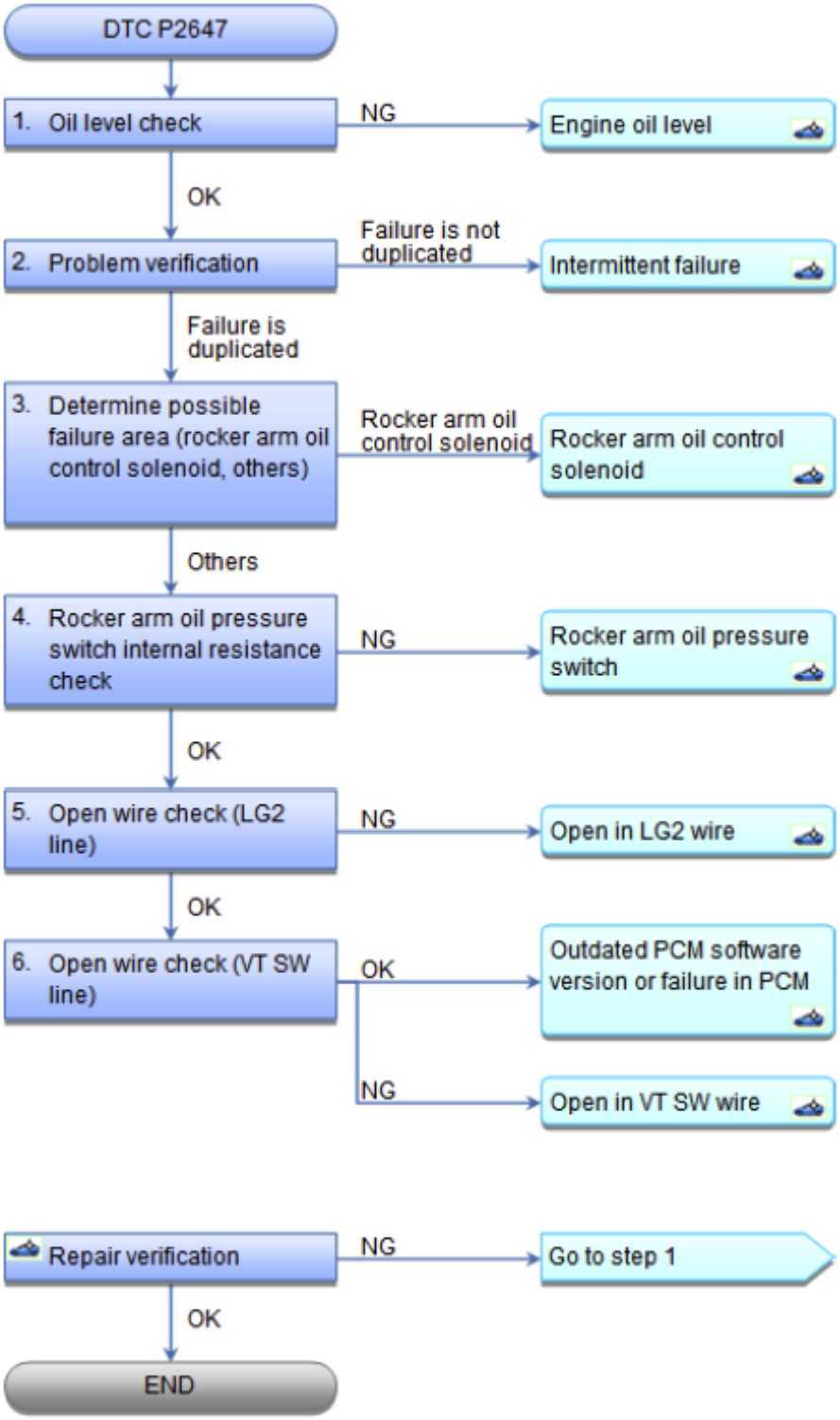

Fig. 410: DTC Troubleshooting Flow Chart (P2647)
Courtesy of AMERICAN HONDA MOTOR CO., INC.

GETtheMANUALS.org

NOTE:

- **Before you troubleshoot, record all freeze data and any on-board snapshot, and review the general troubleshooting information See HOW TO TROUBLESHOOT THE A/T SYSTEM or HOW TO TROUBLESHOOT THE FUEL AND EMISSIONS SYSTEMS .**
- **If DTC P2648 and/or P2649 are stored at the same time as DTC P2647, troubleshoot those DTCs first, then recheck for DTC P2647.**

DTC Description	Confirmed DTC	Pending DTC	Freeze Frame
P2647 ROCKER ARM OIL PRESSURE SWITCH CIRCUIT HIGH VOLTAGE			

1. Oil level check:
   - 1. CHECK THE ENGINE OIL LEVEL .

   Is the level OK?

   YES : Go to step 2.

   NO : ADJUST THE ENGINE OIL TO THE PROPER LEVEL , then **do the repair verification** .

2. Problem verification:
   - 1. Do the VTEC TEST in the INSPECTION MENU with the HDS.

   NOTE: **If DTC P2647 is indicated, go to step 6. If any other Pending or Confirmed DTCs are indicated, go to the indicated DTC's troubleshooting.**

   Is the result OK?

   YES : Intermittent failure, the system is OK at this time. Check for poor connections or loose terminals at the rocker arm oil pressure switch, the rocker arm oil control solenoid, and the PCM.

   NO : The failure is duplicated. Go to step 3.

3. Determine possible failure area (rocker arm oil control solenoid, others):
   - 1. Check the result of VTEC TEST.

   Is VTEC Switch Failure, VTEC Switch Open, VTEC Switch SIG Line Open, or VTEC Switch GND Line Open indicated?

   YES : Go to step 4.

   NO : Check for poor connections or loose terminals at the rocker arm oil pressure switch. If it is OK, REPLACE THE ROCKER ARM OIL CONTROL VALVE , then **do the repair verification** .

GETtheMANUALS.org

4. Rocker arm oil pressure switch internal resistance check:
    - 1. Turn the ignition switch to LOCK (0).
    - 2. Disconnect the following connector.

      Rocker arm oil pressure switch 2P connector

    - 3. At the rocker arm oil pressure switch side, measure the resistance between test points 1 and 2.

      Test condition IG LOCK (0)

      Rocker arm oil pressure switch 2P connector: disconnected

      Test circuit VT SW, LG

      Test point 1 Rocker arm oil pressure switch 2P connector No. 1 (rocker arm oil pressure switch side)

      Test point 2 Rocker arm oil pressure switch 2P connector No. 2 (rocker arm oil pressure switch side)

   Is there continuity?

   YES : Go to step 5.

   NO : REPLACE THE ROCKER ARM OIL PRESSURE SWITCH , then **do the repair verification** .

5. Open wire check (LG2 line):
    - 1. Turn the ignition switch to ON (II).
    - 2. Measure the voltage between test points 1 and 2.

      Test condition IG ON (II)

      Rocker arm oil pressure switch 2P connector: disconnected

      Test circuit VT SW

      Test point 1 Rocker arm oil pressure switch 2P connector No. 1 (LT BLU)

      Test point 2 Body ground

   Is there about 5.0 V?

   YES : The VT SW wire is OK. Repair an open in the LG2 wire between the rocker arm oil pressure switch and G101, then **do the repair verification** .

   NO : Go to step 6.

GETtheMANUALS.org

6. Open wire check (VT SW line):
    - 1. Turn the ignition switch to LOCK (0).
    - 2. Jump the SCS line with the HDS.
    - 3. Disconnect the following connector.

      PCM connector C (49P)

    - 4. Check for continuity between test points 1 and 2.

      Test condition IG LOCK (0)

      Rocker arm oil pressure switch 2P connector: disconnected

      PCM connector C (49P): disconnected

      Test circuit VT SW

      Test point 1 PCM connector C (49P) No. 13 (LT BLU)

      Test point 2 Rocker arm oil pressure switch 2P connector No. 1 (LT BLU)

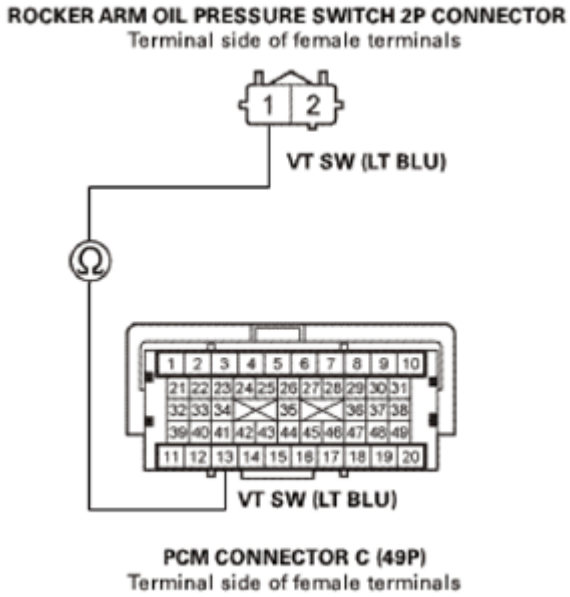

Fig. 411: Checking Continuity Between PCM Connector C (49P) No. 13 (LT BLU) And Rocker Arm Oil Control Solenoid 2P Connector No. 1 (LT BLU)
Courtesy of AMERICAN HONDA MOTOR CO., INC.

Is there continuity?

YES : The VT SW wire is OK. **Update the PCM** See **PCM REMOVAL AND INSTALLATION** or **PCM UPDATE** if it does not have the latest software, or **substitute a known-good PCM** See **PCM**

GETtheMANUALS.org

REMOVAL AND INSTALLATION or **PCM UPDATE** , then **do the repair verification** .

NO : Repair an open in the VT SW wire between the rocker arm oil pressure switch and the PCM (C13), then **do the repair verification** .

REPAIR VERIFICATION

- 1. Reconnect all connectors.
- 2. Turn the ignition switch to ON (II).
- 3. **Reset the PCM with the HDS** See **HOW TO TROUBLESHOOT THE FUEL AND EMISSIONS SYSTEMS** or **HOW TO TROUBLESHOOT THE A/T SYSTEM** .
- 4. **DO THE PCM IDLE LEARN PROCEDURE** .
- 5. Start the engine, and let it idle.
- 6. Check for Pending or Confirmed DTCs with the HDS.

DTC Description	Confirmed DTC	Pending DTC	Freeze Frame
P2647 ROCKER ARM OIL PRESSURE SWITCH CIRCUIT HIGH VOLTAGE			

Is DTC P2647 indicated?

YES : Check for poor connections or loose terminals at the rocker arm oil pressure switch, the rocker arm oil control solenoid, and the PCM. If the PCM was updated, **substitute a known-good PCM** See **PCM UPDATE** or **PCM REMOVAL AND INSTALLATION** , then recheck. If the PCM was substituted, go to step 1.

NO : Troubleshooting is complete. If the PCM was substituted, **replace the original PCM** See **PCM REMOVAL AND INSTALLATION** or **PCM UPDATE** . If any other Pending or Confirmed DTCs are indicated, go to the indicated DTC's troubleshooting.

DTC P2648: ROCKER ARM OIL CONTROL SOLENOID CIRCUIT LOW VOLTAGE

GETtheMANUALS.org

DTC Troubleshooting: P2648

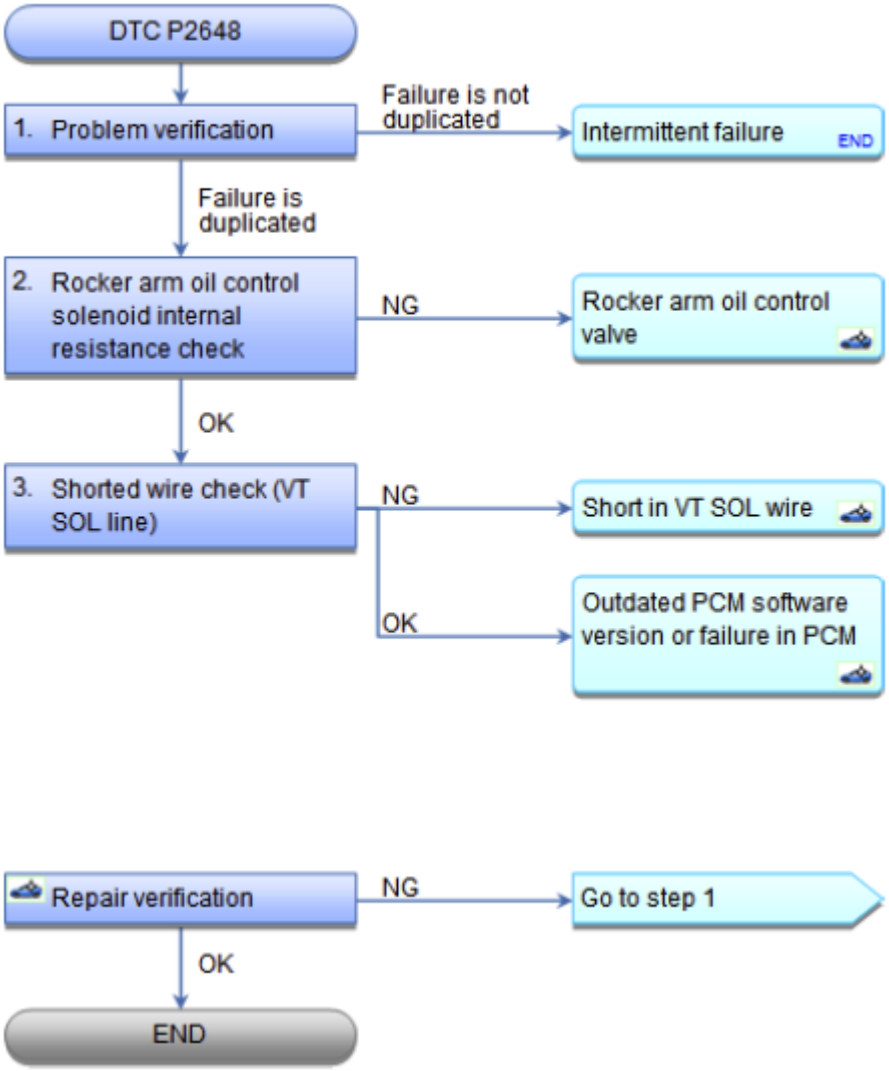

Fig. 412: DTC Troubleshooting Flow Chart (P2648)
Courtesy of AMERICAN HONDA MOTOR CO., INC.

NOTE: **Before you troubleshoot, record all freeze data and any on-board snapshot, and review the general troubleshooting information See HOW TO TROUBLESHOOT THE FUEL AND EMISSIONS SYSTEMS or HOW TO TROUBLESHOOT THE A/T SYSTEM .**

DTC Description	Confirmed DTC	Pending DTC	Freeze Frame
P2648 ROCKER ARM OIL CONTROL SOLENOID CIRCUIT LOW VOLTAGE			

1. Problem verification:

GETtheMANUALS.org

- 1. Turn the ignition switch to ON (II).
- 2. **Clear the DTC with the HDS** See **HOW TO TROUBLESHOOT THE FUEL AND EMISSIONS SYSTEMS** or **HOW TO TROUBLESHOOT THE A/T SYSTEM** .
- 3. Do the VTEC TEST in the INSPECTION MENU with the HDS.

Is the result OK?

YES : Intermittent failure, the system is OK at this time. Check for poor connections or loose terminals at the rocker arm oil pressure switch, the rocker arm oil control solenoid, and the PCM.

NO : The failure is duplicated. Go to step 2.

2. Rocker arm oil control solenoid internal resistance check:
   - 1. Turn the ignition switch to LOCK (0).
   - 2. Disconnect the following connector.

     Rocker arm oil control solenoid 2P connector

   - 3. At the rocker arm oil control solenoid side, measure the resistance between test points 1 and 2.

     Test condition IG LOCK (0)

     Rocker arm oil control solenoid 2P connector: disconnected

     Test circuit VT SOL, PG1

     Test point 1 Rocker arm oil control solenoid 2P connector No. 1 (rocker arm oil control solenoid side)

     Test point 2 Rocker arm oil control solenoid 2P connector No. 2 (rocker arm oil control solenoid side)

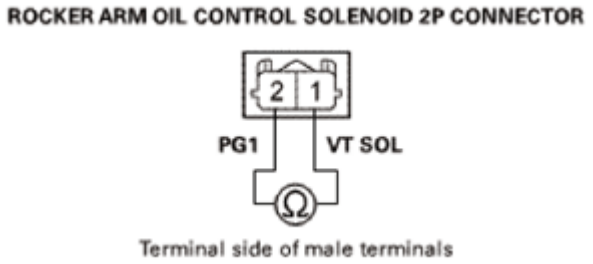

Fig. 413: Measuring Resistance Between Rocker Arm Oil Control Solenoid 2P Connector No. 1 And No. 2
Courtesy of AMERICAN HONDA MOTOR CO., INC.

Is there 14-30 ohms at room temperature?

GETtheMANUALS.org

YES : Go to step 3.

NO : REPLACE THE ROCKER ARM OIL CONTROL VALVE , then **do the repair verification** .

3. Shorted wire check (VT SOL line):
   - 1. Jump the SCS line with the HDS.
   - 2. Disconnect the following connector.

     PCM connector B (49P)

   - 3. Check for continuity between test points 1 and 2.

     Test condition IG LOCK (0)

     Rocker arm oil control solenoid 2P connector: disconnected

     PCM connector B (49P): disconnected

     Test circuit VT SOL

     Test point 1 PCM connector B (49P) No. 33 (GRN)

     Test point 2 Body ground

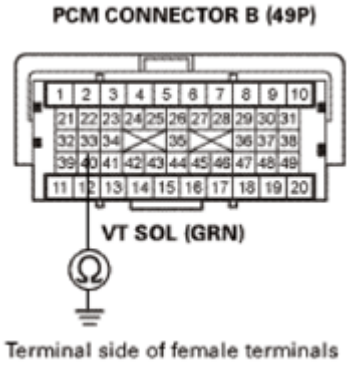

Fig. 414: Checking Continuity Between PCM Connector B (49P) No. 33 (GRN) And Body Ground
Courtesy of AMERICAN HONDA MOTOR CO., INC.

Is there continuity?

YES : Repair a short in the VT SOL wire between the rocker arm oil control solenoid and the PCM (B33), then **do the repair verification** .

NO : The VT SOL wire is OK. **Update the PCM** See **PCM UPDATE** or **PCM REMOVAL AND INSTALLATION** if it does not have the latest software, or **substitute a known-good PCM** See **PCM UPDATE** or **PCM REMOVAL AND INSTALLATION** , then **do the repair verification** .

GETtheMANUALS.org

REPAIR VERIFICATION

- 1. Reconnect all connectors.
- 2. Turn the ignition switch to ON (II).
- 3. **Reset the PCM with the HDS** See **HOW TO TROUBLESHOOT THE FUEL AND EMISSIONS SYSTEMS** or **HOW TO TROUBLESHOOT THE A/T SYSTEM** .
- 4. **DO THE PCM IDLE LEARN PROCEDURE** .
- 5. Do the VTEC TEST in the INSPECTION MENU with the HDS.
- 6. Check for Pending or Confirmed DTCs with the HDS.

DTC Description	Confirmed DTC	Pending DTC	Freeze Frame
P2648 ROCKER ARM OIL CONTROL SOLENOID CIRCUIT LOW VOLTAGE			

Is DTC P2648 indicated?

YES : Check for poor connections or loose terminals at the rocker arm oil pressure switch, the rocker arm oil control solenoid, and the PCM. If the PCM was updated, **substitute a known-good PCM** See **PCM REMOVAL AND INSTALLATION** or **PCM UPDATE** , then recheck. If the PCM was substituted, go to step 1.

NO : Troubleshooting is complete. If the PCM was substituted, **replace the original PCM** See **PCM UPDATE** or **PCM REMOVAL AND INSTALLATION** . If any other Pending or Confirmed DTCs are indicated, go to the indicated DTC's troubleshooting.

DTC P2649: ROCKER ARM OIL CONTROL SOLENOID CIRCUIT HIGH VOLTAGE

GETtheMANUALS.org

DTC Troubleshooting: P2649

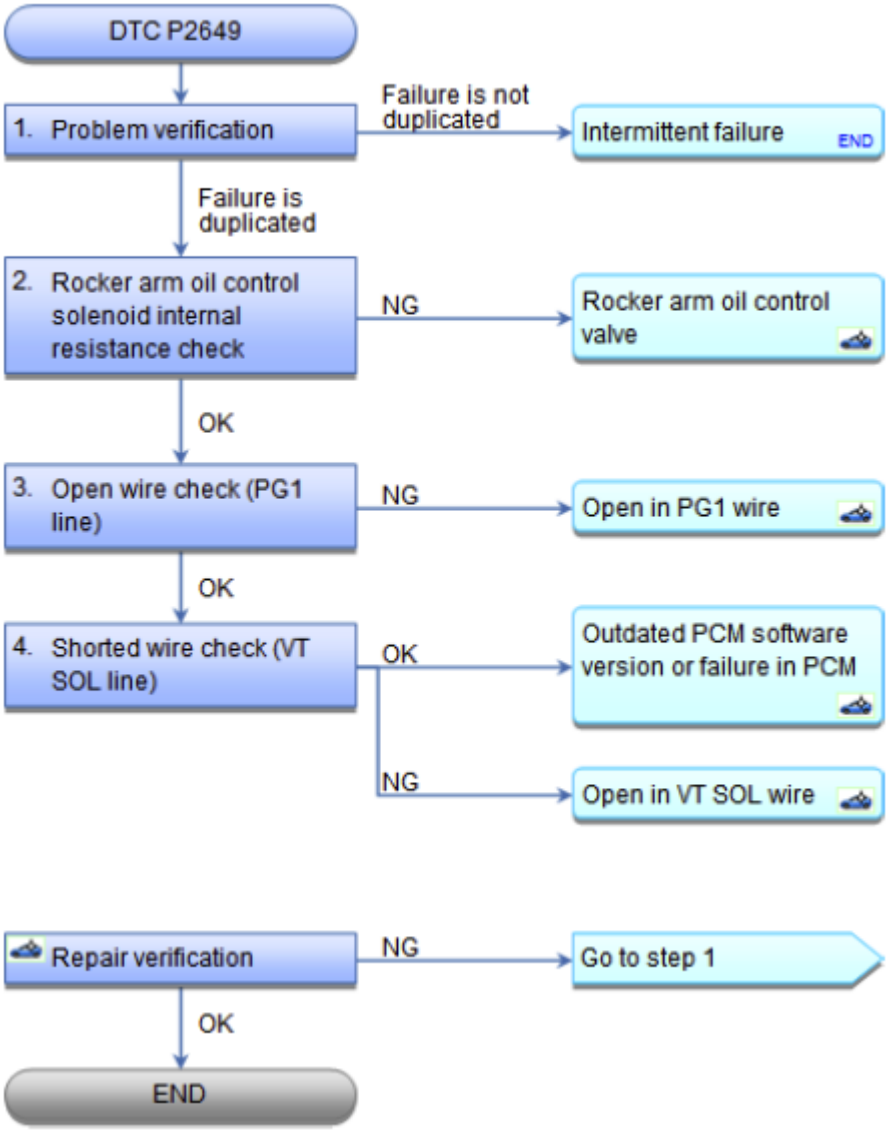

Fig. 415: DTC Troubleshooting Flow Chart (P2649)
Courtesy of AMERICAN HONDA MOTOR CO., INC.

NOTE: **Before you troubleshoot, record all freeze data and any on-board snapshot, and review the general troubleshooting information See HOW TO TROUBLESHOOT THE A/T SYSTEM or HOW TO TROUBLESHOOT THE FUEL AND EMISSIONS SYSTEMS .**

DTC Description	Confirmed DTC	Pending DTC	Freeze Frame
P2649 ROCKER ARM OIL CONTROL SOLENOID CIRCUIT HIGH VOLTAGE			

GETtheMANUALS.org

1. Problem verification:
    - 1. Turn the ignition switch to ON (II).
    - 2. **Clear the DTC with the HDS** See **HOW TO TROUBLESHOOT THE A/T SYSTEM** or **HOW TO TROUBLESHOOT THE FUEL AND EMISSIONS SYSTEMS** .
    - 3. Start the engine. Hold the engine speed at 3, 000 rpm without load (in P or N) until the radiator fan comes on, then let it idle.
    - 4. Check for Pending or Confirmed DTCs with the HDS.

DTC Description	Confirmed DTC	Pending DTC	Freeze Frame
P2649 ROCKER ARM OIL CONTROL SOLENOID CIRCUIT HIGH VOLTAGE			

Is DTC P2649 indicated?

YES : The failure is duplicated. Go to step 2.

NO : Intermittent failure, the system is OK at this time. Check for poor connections or loose terminals at the rocker arm oil pressure switch, the rocker arm oil control solenoid, and the PCM.

2. Rocker arm oil control solenoid internal resistance check:
    - 1. Turn the ignition switch to LOCK (0).
    - 2. Disconnect the following connector.

      Rocker arm oil control solenoid 2P connector

    - 3. At the rocker arm oil control solenoid side, measure the resistance between test points 1 and 2.

      Test condition IG LOCK (0)

      Rocker arm oil control solenoid 2P connector: disconnected

      Test circuit VT SOL, PG1

      Test point 1 Rocker arm oil control solenoid 2P connector No. 1 (rocker arm oil control solenoid side)

      Test point 2 Rocker arm oil control solenoid 2P connector No. 2 (rocker arm oil control solenoid side)

GETtheMANUALS.org

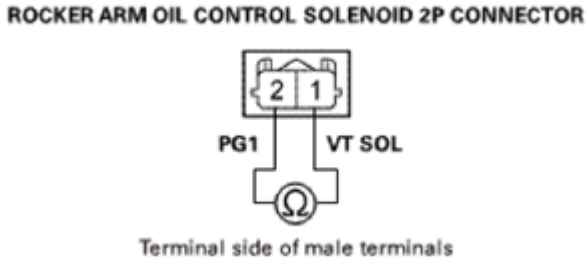

Fig. 416: Measuring Resistance Between Rocker Arm Oil Control Solenoid 2P Connector No. 1 And No. 2
Courtesy of AMERICAN HONDA MOTOR CO., INC.

Is there 14-30 ohms at room temperature?

YES : Go to step 3.

NO : REPLACE THE ROCKER ARM OIL CONTROL VALVE , then **do the repair verification** .

3. Open wire check (PG1 line):
   - 1. Check for continuity between test points 1 and 2.

     Test condition IG LOCK (0)

     Rocker arm oil control solenoid 2P connector: disconnected

     Test circuit PG1

     Test point 1 Rocker arm oil control solenoid 2P connector No. 2 (BLK)

     Test point 2 Body ground

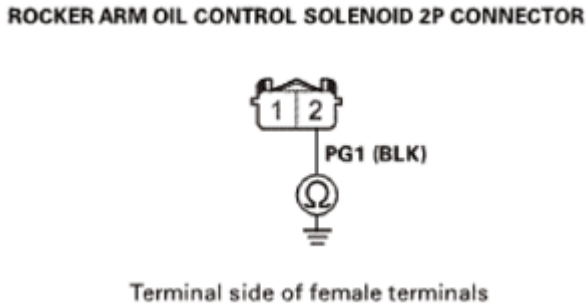

Fig. 417: Checking Continuity Between Rocker Arm Oil Control Solenoid 2P Connector No. 2 (BLK) And Body Ground
Courtesy of AMERICAN HONDA MOTOR CO., INC.

Is there continuity?

GETtheMANUALS.org

YES : Go to step 4.

NO : Repair an open in the PG1 wire between the rocker arm oil control solenoid and the G101, then **do the repair verification** .

4. Shorted wire check (VT SOL line):
   - 1. Jump the SCS line with the HDS.
   - 2. Disconnect the following connector.

     PCM connector B (49P)

   - 3. Check for continuity between test points 1 and 2.

     Test condition IG LOCK (0)

     Rocker arm oil control solenoid 2P connector: disconnected

     PCM connector B (49P): disconnected

     Test circuit VT SOL

     Test point 1 PCM connector B (49P) No. 33 (GRN)

     Test point 2 Rocker arm oil control solenoid 2P connector No. 1 (GRN)

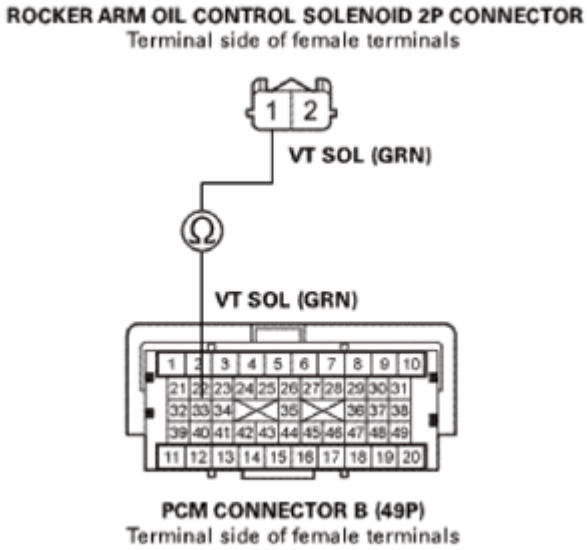

Fig. 418: Checking Continuity Between PCM Connector B (49P) No. 33 (GRN) And Rocker Arm Oil Control Solenoid 2P Connector No. 1 (GRN)
Courtesy of AMERICAN HONDA MOTOR CO., INC.

Is there continuity?

GETtheMANUALS.org

YES : The VT SOL wire is OK. **Update the PCM** See **PCM REMOVAL AND INSTALLATION** or **PCM UPDATE** if it does not have the latest software, or **substitute a known-good PCM** See **PCM UPDATE** or **PCM REMOVAL AND INSTALLATION** , then **do the repair verification** .

NO : Repair an open in the VT SOL wire between the rocker arm oil control solenoid and the PCM (B33), then **do the repair verification** .

REPAIR VERIFICATION

- 1. Reconnect all connectors.
- 2. Turn the ignition switch to ON (II).
- 3. **Reset the PCM with the HDS** See **HOW TO TROUBLESHOOT THE A/T SYSTEM** or **HOW TO TROUBLESHOOT THE FUEL AND EMISSIONS SYSTEMS** .
- 4. **DO THE PCM IDLE LEARN PROCEDURE** .
- 5. Start the engine. Hold the engine speed at 3, 000 rpm without load (in P or N) until the radiator fan comes on, then let it idle
- 6. Check for Pending or Confirmed DTCs with the HDS.

DTC Description	Confirmed DTC	Pending DTC	Freeze Frame
P2649 ROCKER ARM OIL CONTROL SOLENOID CIRCUIT HIGH VOLTAGE			

Is DTC P2649 indicated?

YES : Check for poor connections or loose terminals at the rocker arm oil pressure switch, the rocker arm oil control solenoid, and the PCM. If the PCM was updated, **substitute a known-good PCM** See **PCM REMOVAL AND INSTALLATION** or **PCM UPDATE** , then recheck. If the PCM was substituted, go to step 1.

NO : Troubleshooting is complete. If the PCM was substituted, **replace the original PCM** See **PCM UPDATE** or **PCM REMOVAL AND INSTALLATION** . If any other Pending or Confirmed DTCs are indicated, go to the indicated DTC's troubleshooting.

DTC P2A00: A/F SENSOR (SENSOR 1) CIRCUIT RANGE/PERFORMANCE PROBLEM

GETtheMANUALS.org

DTC Troubleshooting: P2A00

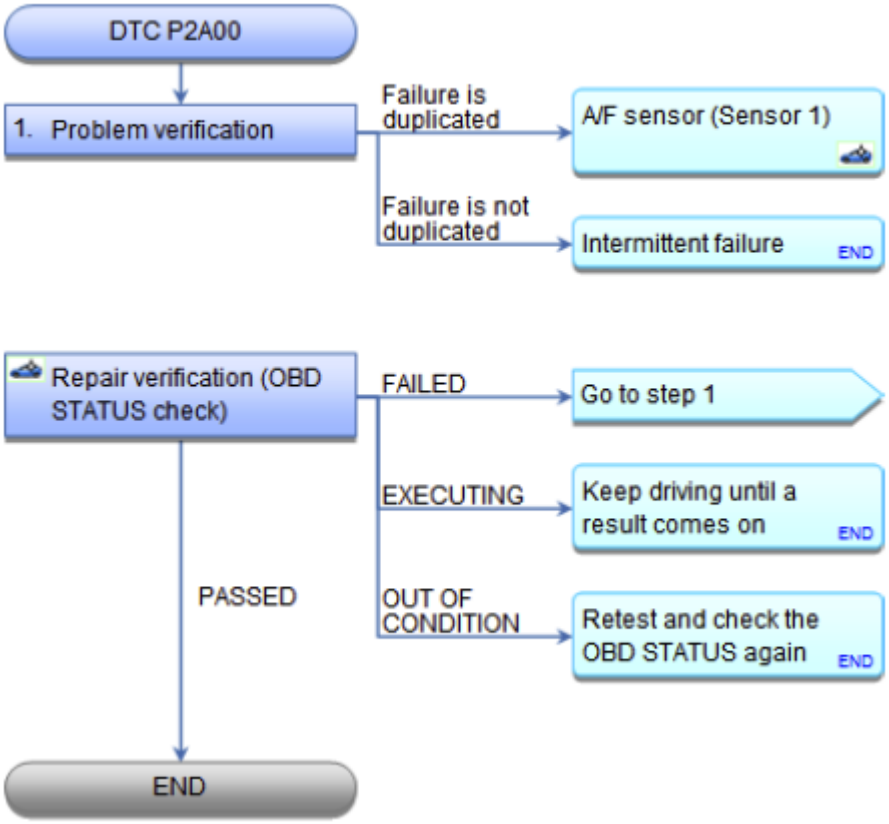

Fig. 419: DTC Troubleshooting Flow Chart (P2A00)
Courtesy of AMERICAN HONDA MOTOR CO., INC.

NOTE: **Before you troubleshoot, record all freeze data and any on-board snapshot, and review the general troubleshooting information See HOW TO TROUBLESHOOT THE A/T SYSTEM or HOW TO TROUBLESHOOT THE FUEL AND EMISSIONS SYSTEMS .**

DTC Description	Confirmed DTC	Pending DTC	Freeze Frame
P2A00 A/F SENSOR (SENSOR 1) CIRCUIT RANGE/PERFORMANCE PROBLEM			

1. Problem verification:
   - 1. Turn the ignition switch to ON (II).
   - 2. **Clear the DTC with the HDS** See **HOW TO TROUBLESHOOT THE A/T SYSTEM** or **HOW TO TROUBLESHOOT THE FUEL AND EMISSIONS SYSTEMS** .
   - 3. Start the engine. Hold the engine speed at 3, 000 rpm without load (in P or N) until the radiator fan comes on, then let it idle.
   - 4. Test-drive under these conditions:

GETtheMANUALS.org

- Engine coolant temperature (ECT SENSOR 1) above 158 °F (70 °C)
- Transmission in D
- Vehicle speed between 25-55 mph (40-90 km/h) for 5 minutes
- Drive at a steady speed between 55-75 mph (88- 120 km/h) for 10 seconds, then decelerate (with throttle fully closed) for at least 4 seconds

Signal	Current conditions	
	Values	Unit
ECT SENSOR 1		
ENGINE SPEED		

- 5. Monitor the OBD STATUS for DTC P2A00 with the HDS.

DTC Description	OBD Status
P2A00 A/F SENSOR (SENSOR 1) CIRCUIT RANGE/PERFORMANCE PROBLEM	

Does the HDS indicate FAILED?

YES : **REPLACE THE A/F SENSOR (SENSOR 1)** , then **do the repair verification** .

NO : If the HDS indicates PASSED, intermittent failure, the system is OK at this time. Check for poor connections or loose terminals at the A/F sensor (Sensor 1) and the PCM. If the HDS indicates EXECUTING, keep driving until a result comes on. If the HDS indicates OUT OF CONDITION, go to step **1-3** and recheck.

REPAIR VERIFICATION (OBD STATUS CHECK)

- 1. Turn the ignition switch to ON (II).
- 2. **Reset the PCM with the HDS** See **HOW TO TROUBLESHOOT THE A/T SYSTEM** or **HOW TO TROUBLESHOOT THE FUEL AND EMISSIONS SYSTEMS** .
- 3. **DO THE PCM IDLE LEARN PROCEDURE** .
- 4. Test-drive under these conditions:
  - Engine coolant temperature (ECT SENSOR 1) above 158 °F (70 °C)
  - Transmission in D
  - Vehicle speed between 25-55 mph (40-90 km/h) for 5 minutes
  - Drive at a steady speed between 55-75 mph (88- 120 km/h) for 10 seconds, then decelerate (with throttle fully closed) for at least 4 seconds

Signal	Current conditions	
	Values	Unit
ECT SENSOR 1		

GETtheMANUALS.org

ENGINE SPEED		

- 5. Monitor the OBD STATUS for DTC P2A00 in the DTCs MENU with the HDS.

DTC Description	OBD Status
P2A00 A/F SENSOR (SENSOR 1) CIRCUIT RANGE/PERFORMANCE PROBLEM	

Does the HDS indicate PASSED, FAILED, EXECUTING, or OUT OF CONDITION?

PASSED : Troubleshooting is complete. If any other Pending or Confirmed DTCs were indicated, go to the indicated DTC's troubleshooting.

FAILED : Go to step 1 and recheck.

EXECUTING : Keep driving until a result comes on.

OUT OF CONDITION : Meet the test condition, and check the OBD STATUS again.

GETtheMANUALS.org

MOONROOF SYMPTOM TROUBLESHOOTING INDEX

MOONROOF ELECTRICAL SYMPTOM TROUBLESHOOTING INDEX

Symptom	Diagnostic procedure
Water leaks from moonroof	1. Check for a defective or an improperly installed glass weatherstrip or drain channel. 2. Check for a gap between the drain channel seal and the roof panel. 3. **Check the glass position adjustment** See **MOONROOF GLASS POSITION ADJUSTMENT** or **MOONROOF GLASS REMOVAL AND INSTALLATION**. 4. Check for a clogged or detached drain tube.
Wind noise from moonroof	1. Check for excessive clearance between the glass weatherstrip and the roof panel. 2. **Check the glass position adjustment** See **MOONROOF GLASS POSITION ADJUSTMENT** or **MOONROOF GLASS REMOVAL AND INSTALLATION**.
Motor noise from moonroof	1. Check for a loose motor. 2. Check for a worn gear or bearing. 3. Check for a deformed cable assembly. 4. Check for dirt or debris.
Moonroof glass does not move smoothly	1. **CHECK FOR A DEFECTIVE MOTOR CONTROL UNIT**. 2. **CHECK THE MOONROOF MOTOR**. 3. **Check the glass position adjustment** See **MOONROOF GLASS POSITION ADJUSTMENT** or **MOONROOF GLASS REMOVAL AND INSTALLATION**. 4. Check the sliding parts.
Moonroof glass does not move, but motor turns	1. Check for foreign matter stuck between the guide rail and the slider. 2. Make sure the cable assembly is attached properly. 3. Check for a loose inner cable. 4. Check for a defective gear or inner cable.
Moonroof glass does not move and motor does not turn	1. **CHECK FOR A RUN DOWN BATTERY** . 2. Check for a blown fuse. 3. **CHECK FOR A FAULTY MOONROOF SWITCH**. 4. **CHECK FOR A DEFECTIVE MOTOR CONTROL UNIT**.
	1. **RESET THE MOONROOF CONTROL UNIT**.

GETtheMANUALS.org

Moonroof glass does not stop at proper flush closed position	2. **Check the glass position adjustment** See **MOONROOF GLASS POSITION ADJUSTMENT** or **MOONROOF GLASS REMOVAL AND INSTALLATION**.
During auto close operation, moonroof glass reverses when no object is trapped	1. Check for dirt and debris in the track. 2. **RESET THE MOONROOF CONTROL UNIT**.
Moonroof glass moves, but there is no AUTO function	**RESET THE MOONROOF CONTROL UNIT**.

MOONROOF DRAIN CHANNEL REMOVAL AND INSTALLATION

REMOVAL

1. Moonroof Link Cover - Both Sides

NOTE: Repeat on the opposite side.

1. Carefully pry out the cover (A), then remove the screw (B).
2. Remove the moonroof link cover (C).

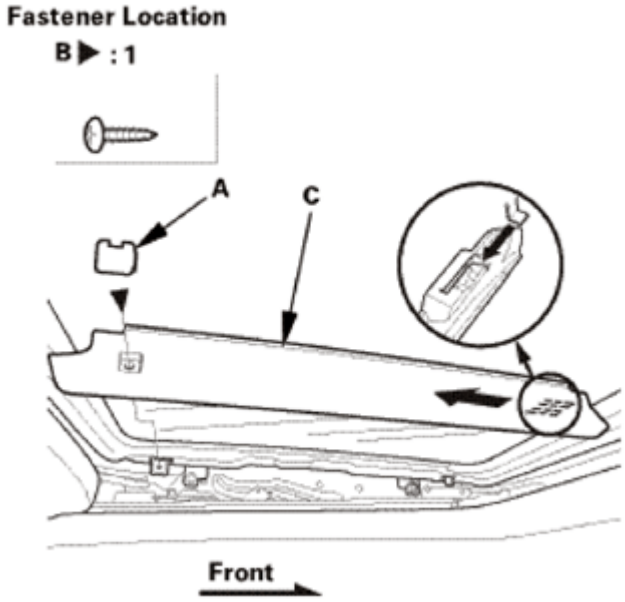

Fig. 1: Removing Moonroof Link Cover
Courtesy of AMERICAN HONDA MOTOR CO., INC.

2. Moonroof Glass
   1. Remove the TORX screws (A) with a TORX T25 bit from the glass brackets (B) on both sides.

GETtheMANUALS.org

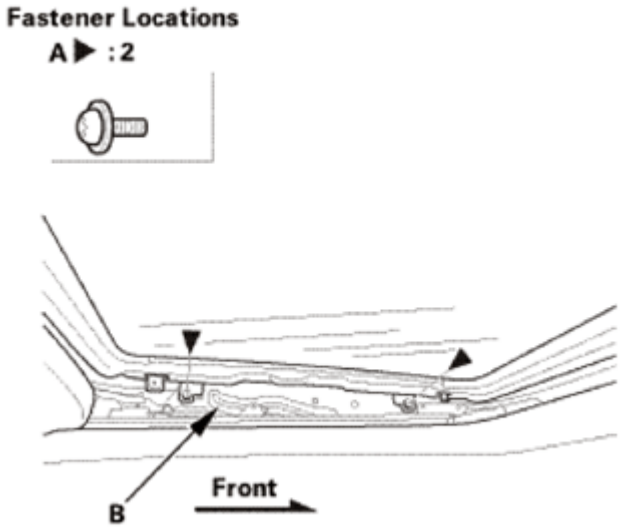

Fig. 2: Identifying Moonroof Glass Bracket And Screws
Courtesy of AMERICAN HONDA MOTOR CO., INC.

2. Remove the moonroof glass (A) by lifting it up. Do not damage the roof panel.

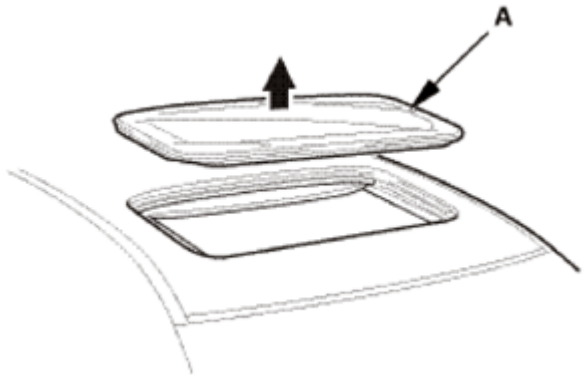

Fig. 3: Removing Moonroof Glass
Courtesy of AMERICAN HONDA MOTOR CO., INC.

3. Drain Channel
    1. On both sides, slide the glass brackets (A) with the moonroof switch to the position where the moonroof normally tilts up.
    2. Disconnect the drain channel rods (B).

GETtheMANUALS.org

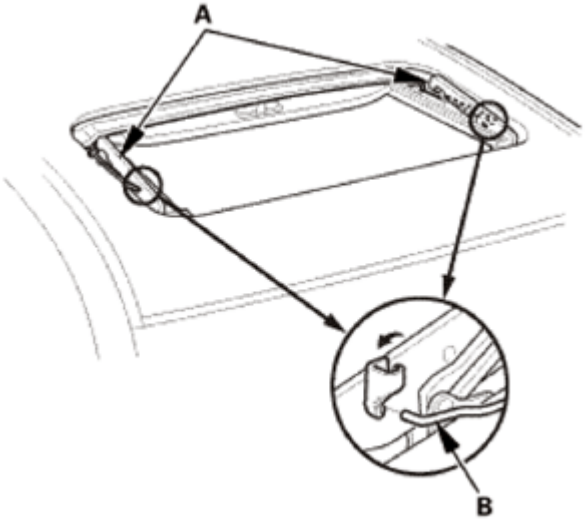

Fig. 4: Disconnecting Drain Channel Rods And Glass Bracket
Courtesy of AMERICAN HONDA MOTOR CO., INC.

3. Slide the drain channel (A) forward.

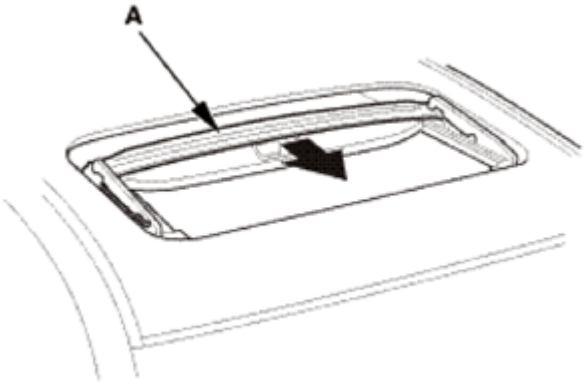

Fig. 5: Sliding Drain Channel
Courtesy of AMERICAN HONDA MOTOR CO., INC.

4. Pull up the rear edge of the drain channel (A) while pushing both clips (B), and release the channel from both hooks (C) of the drain channel slider by pulling it rearward.
5. Remove the drain channel.

GETtheMANUALS.org

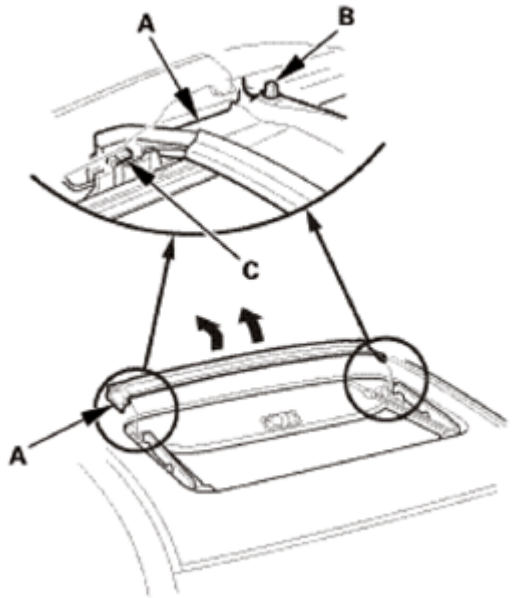

Fig. 6: Removing Drain Channel
Courtesy of AMERICAN HONDA MOTOR CO., INC.

INSTALLATION

1. Drain Channel
    1. Install the drain channel (A).

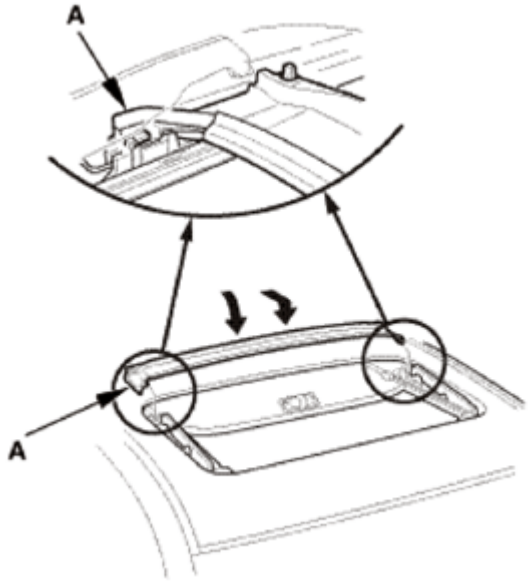

Fig. 7: Installing Drain Channel
Courtesy of AMERICAN HONDA MOTOR CO., INC.

2. Slide the drain channel (A) rearward.

GETtheMANUALS.org

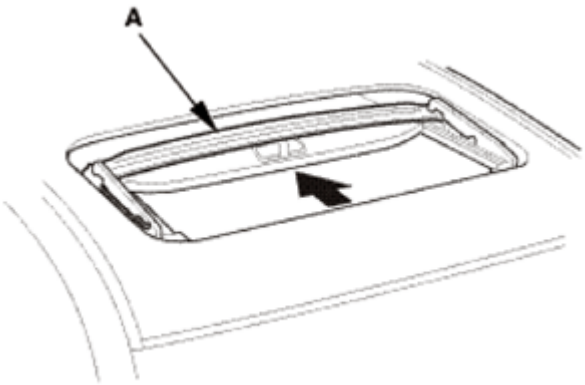

Fig. 8: Sliding Drain Channel
Courtesy of AMERICAN HONDA MOTOR CO., INC.

3. Connect the drain channel rods (A).
4. Tilt down the glass bracket (B).

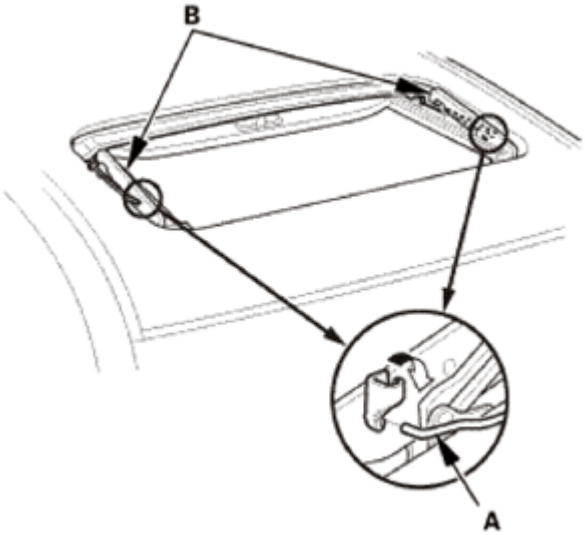

Fig. 9: Connecting Drain Channel Rods
Courtesy of AMERICAN HONDA MOTOR CO., INC.

2. Moonroof Glass
    1. Install the moonroof glass (A).

GETtheMANUALS.org

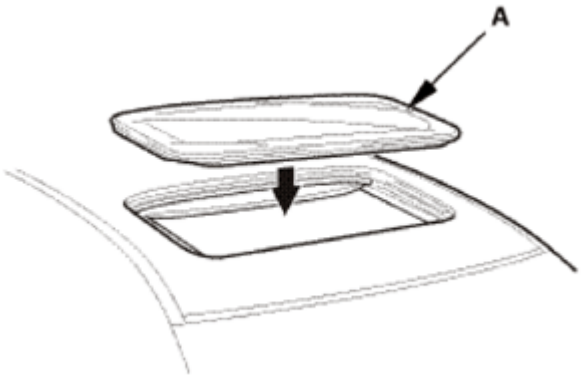

Fig. 10: Installing Moonroof Glass
Courtesy of AMERICAN HONDA MOTOR CO., INC.

2. Install the TORX screws (A).
3. Repeat on the opposite side.

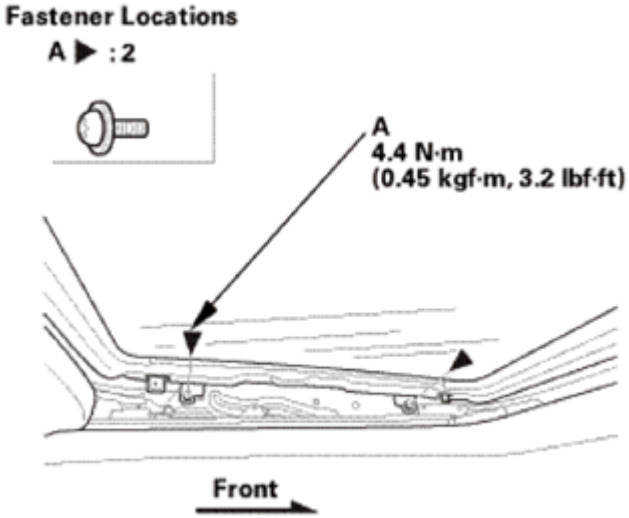

Fig. 11: Identifying Torx Screws With Torque Specifications
Courtesy of AMERICAN HONDA MOTOR CO., INC.

3. Moonroof Glass - Position Check

   The roof panel (A) should be even with the glass weatherstrip (B), to within 0+1/-1 mm (0-0.04/+0.04 in) all the way around.

GETtheMANUALS.org

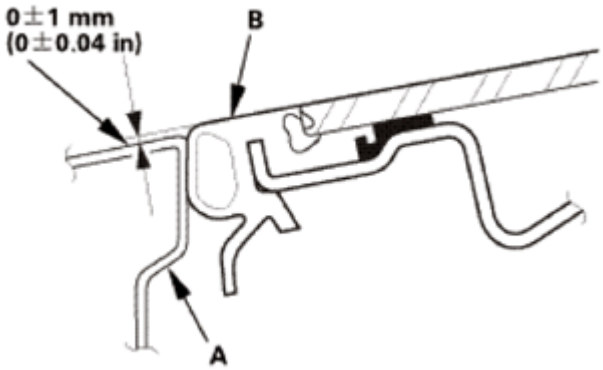

Fig. 12: Identifying Roof Panel And Glass Weatherstrip
Courtesy of AMERICAN HONDA MOTOR CO., INC.

4. Moonroof Glass - Position Adjustment
    1. Slightly loosen the TORX screws with a TORX T25 bit.
    2. Move the glass (A) up or down and forward or rearward.
    3. Tighten all screws securely.
    4. If necessary, repeat on the opposite side.

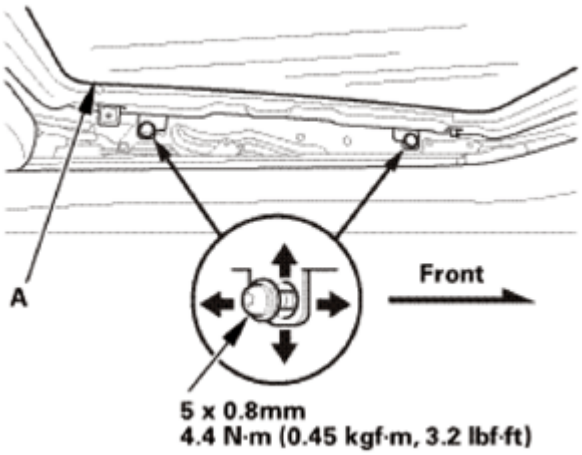

Fig. 13: Moving Moonroof Glass And Mounting Bolts With Torque Specifications
Courtesy of AMERICAN HONDA MOTOR CO., INC.

5. Moonroof Link Cover - Both Sides

NOTE: Repeat on the opposite side

1. Install the moonroof link cover (A), then install the screw (B).
2. Install the cover (C).

GETtheMANUALS.org

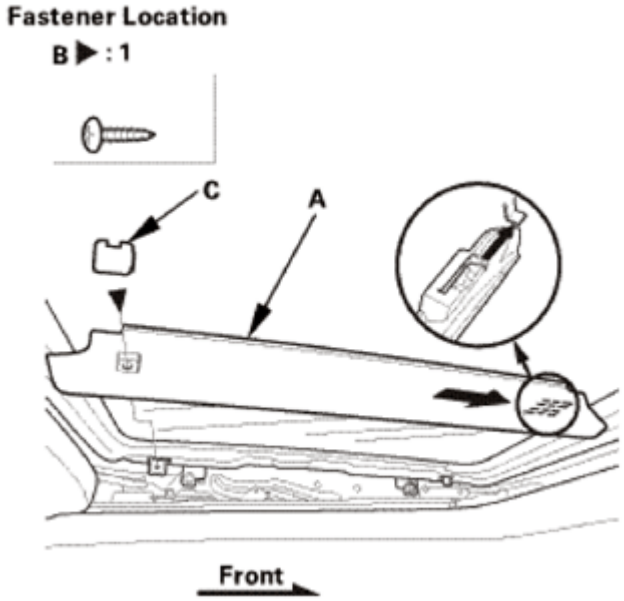

Fig. 14: Installing Moonroof Link Cover
Courtesy of AMERICAN HONDA MOTOR CO., INC.

6. Moon Roof Control Unit - Reset
    1. **DO THE MOON ROOF CONTROL UNIT RESETTING PROCEDURE**.

MOONROOF DRAIN TUBE REMOVAL AND INSTALLATION

SPECIAL TOOL DESCRIPTION

Image	Description/Tool Number
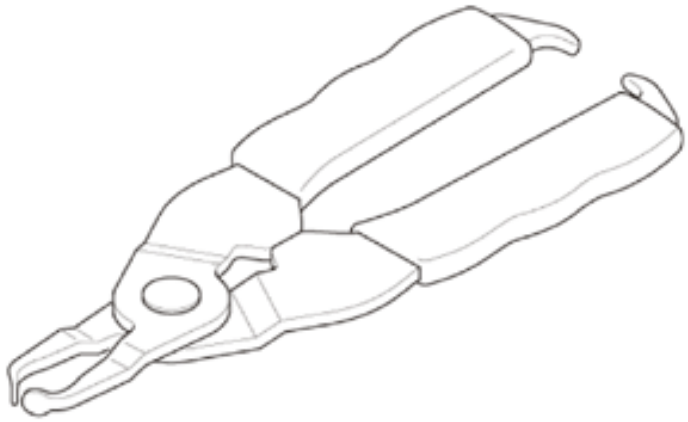	Push Pin/Grab Rail Cap Pliers 07AAC-001A100

REMOVAL

SRS components are located in this area. Review the **SRS COMPONENT LOCATIONS** and the **PRECAUTIONS AND PROCEDURES** before doing repairs or service.

GETtheMANUALS.org

1. Battery Terminal (SRS) - Disconnection
    1. Make sure the ignition switch is in LOCK (0).
    2. Disconnect and isolate the negative cable (A) from the battery.

    NOTE: Always disconnect the negative side first.

    3. Disconnect the positive cable (B) from the battery.
    4. Wait at least 3 minutes before starting work.

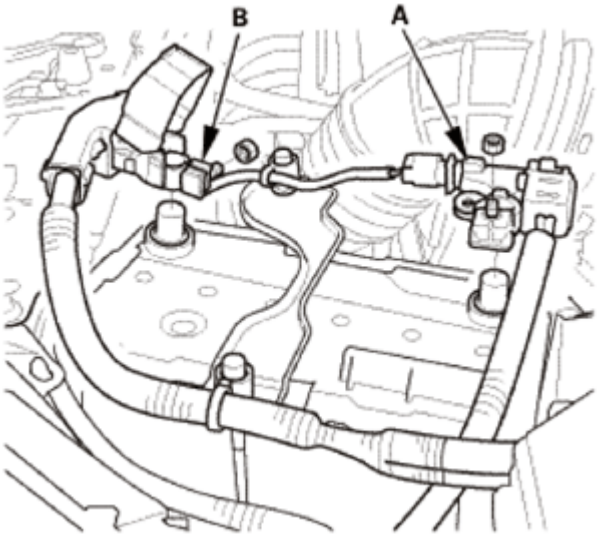

Fig. 15: Identifying Battery (SRS) Negative And Positive Terminal
Courtesy of AMERICAN HONDA MOTOR CO., INC.

2. Front Door Sill Trim - Both Sides

NOTE: Repeat on the opposite side.

    1. Detach the hooks (A) and the tabs (B) from the kick panel (C) and the B-pillar lower trim (D), and pull up the front door inner sill trim (E) by hand to detach the clips (F), then remove the trim.

GETtheMANUALS.org

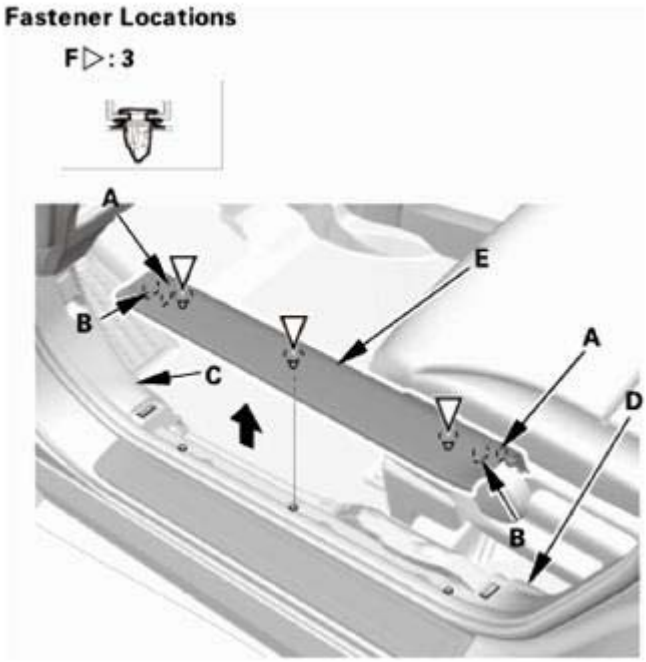

Fig. 16: Removing Front Door Sill Trim
Courtesy of AMERICAN HONDA MOTOR CO., INC.

3. Front Door Opening Seal As Needed - Both Sides

NOTE: Repeat on the opposite side.

1. Pull out the front door opening seal (A) from the trim hooks (B) around the front door opening flange, then detach the seal as needed.

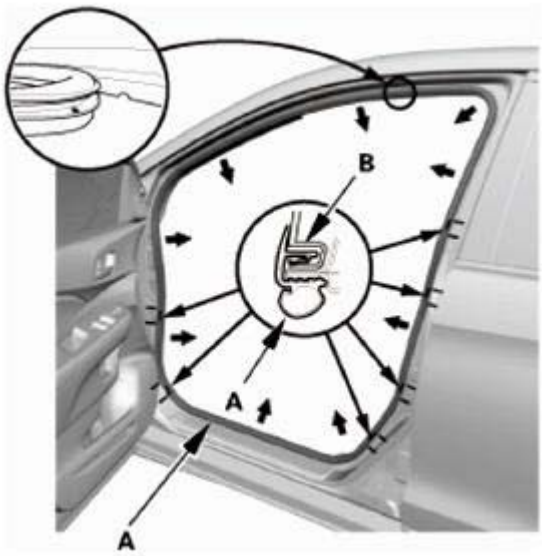

Fig. 17: Removing Front Door Opening Seal From Trim Hooks

GETtheMANUALS.org

Courtesy of AMERICAN HONDA MOTOR CO., INC.

4. A-Pillar Trim - Both Sides

NOTE: Repeat this procedure on the opposite side.

1. Pull out the A-pillar trim (A) by hand to release the clips (B, C).

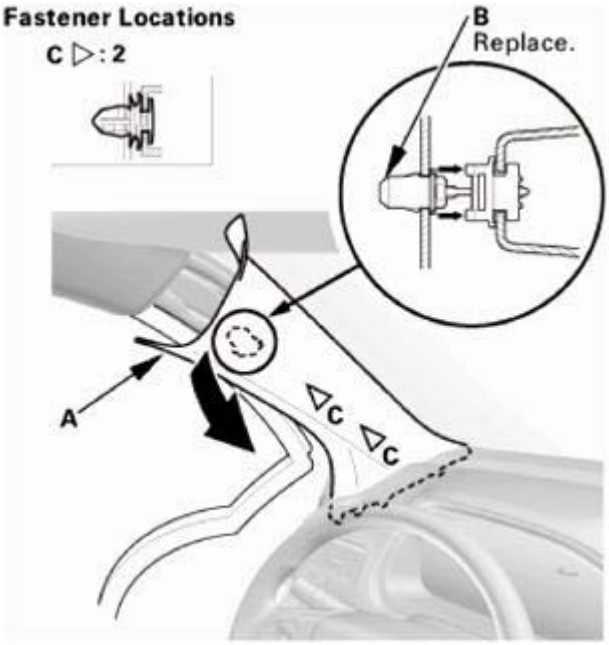

Fig. 18: Removing A-Pillar Trim
Courtesy of AMERICAN HONDA MOTOR CO., INC.

2. Put a shop towel (A) in the opening between the A-pillar trim (B) and the dashboard to prevent dropping the A-pillar clips.

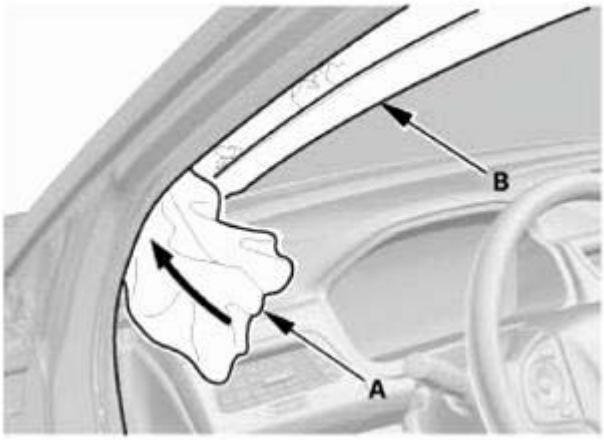

Fig. 19: Placing Shop Towel In Opening Between A-Pillar Trim And Dashboard

GETtheMANUALS.org

Courtesy of AMERICAN HONDA MOTOR CO., INC.

3. Pull out and up on the A-pillar trim (A) to release it from the dashboard.

NOTE: The upper clip will stay in the body.

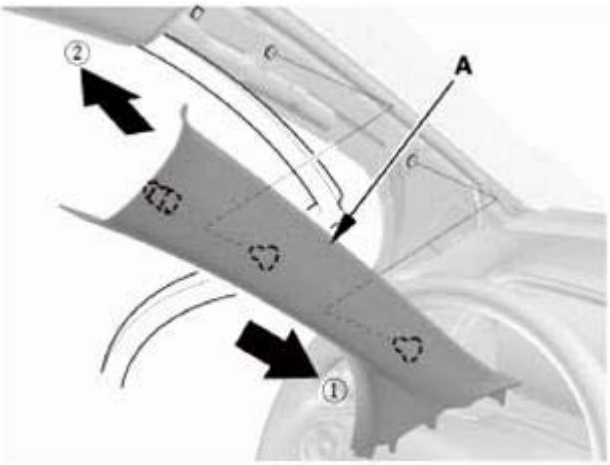

Fig. 20: Releasing A-Pillar Trim From Dashboard
Courtesy of AMERICAN HONDA MOTOR CO., INC.

4. Remove the upper clip (A) from the body.

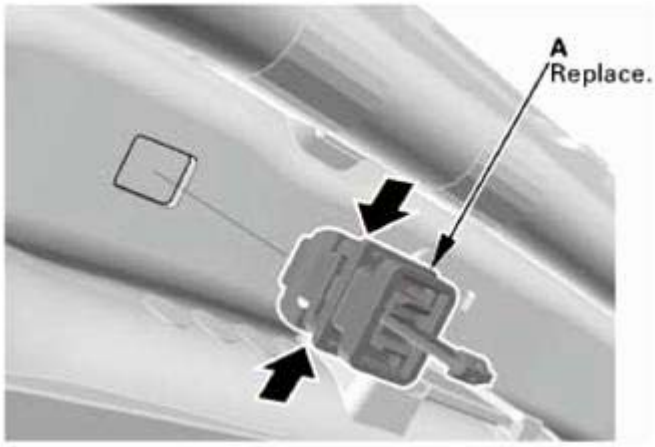

Fig. 21: Removing A-Pillar Trim Upper Clip
Courtesy of AMERICAN HONDA MOTOR CO., INC.

5. Rear Door Sill Trim - Both Sides

NOTE: Repeat this procedure on the opposite side.

1. Pull the release strap to fold down the rear seat, then lift-up and latch the rear seat-back in the

GETtheMANUALS.org

upright position.

2. Detach the hooks (A) and the tab (B) from the B-pillar lower trim (C) and the rear side trim panel (D), and pull up the rear door inner sill trim (E) by hand to detach the clips (F, G), then remove the trim.

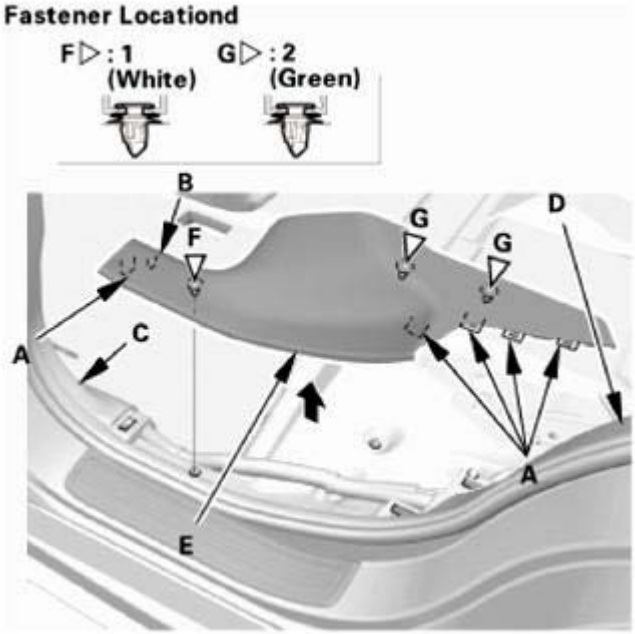

Fig. 22: Removing Rear Door Sill Trim
Courtesy of AMERICAN HONDA MOTOR CO., INC.

6. Rear Door Opening Seal As Needed - Both Sides

NOTE: Repeat this procedure on the opposite side.

1. Pull out the rear door opening seal (A) from the trim hooks (B) around the rear door opening flange, then detach the seal as needed.

GETtheMANUALS.org

Fig. 23: Removing Rear Door Opening Seal From Trim Hooks
Courtesy of AMERICAN HONDA MOTOR CO., INC.

7. B-Pillar Lower Trim - Both Sides

NOTE: Repeat this procedure on the opposite side.

1. Slide the front seat forward fully.
2. Pull back the bottom portion of the B-pillar lower trim (A) by hand to detach the clips (B).
3. Pull back the upper portion of the B-pillar lower trim to detach the upper hooks (C), then remove the B-pillar lower trim.

GETtheMANUALS.org

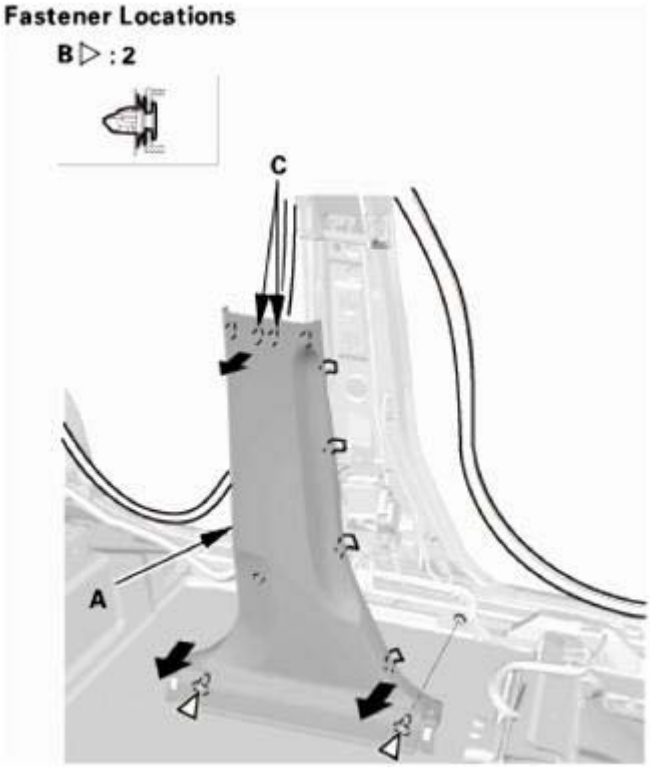

Fig. 24: Removing B-Pillar Lower Trim
Courtesy of AMERICAN HONDA MOTOR CO., INC.

8. Front Seat Belt Upper Anchor Bolt - Both Sides

NOTE: Repeat this procedure on the opposite side.

1. Remove the front seat belt shoulder anchor adjuster cap (A), then remove the front seat belt upper anchor bolt.

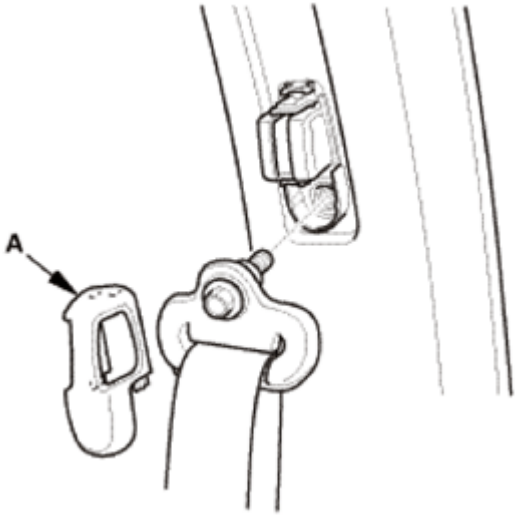

GETtheMANUALS.org

Fig. 25: Identifying Front Seat Belt Shoulder Anchor Adjuster Cap
Courtesy of AMERICAN HONDA MOTOR CO., INC.

9. B-Pillar Upper Trim - Both Sides

NOTE: Repeat this procedure on the opposite side.

1. Pull back the bottom portion of the B-pillar upper trim (A) by hand to detach the hooks (B). Pull down the trim to release the upper hook (C) from the hole (D) in the body, then remove the B-pillar upper trim.

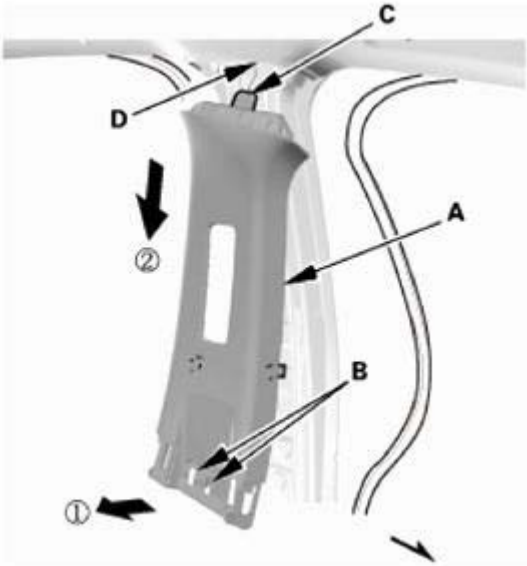

Fig. 26: Removing B-Pillar Upper Trim
Courtesy of AMERICAN HONDA MOTOR CO., INC.

10. Tonneau Cover (For Some Models)
    1. Remove the tonneau cover (A).

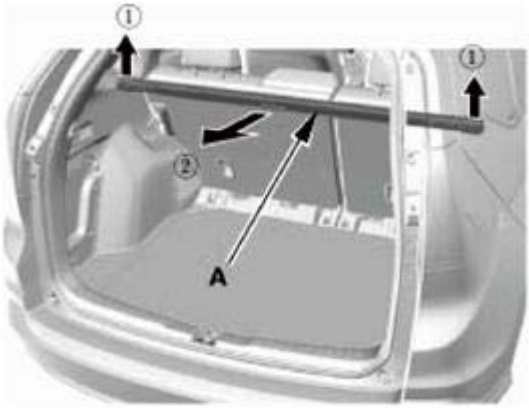

Fig. 27: Removing Tonneau Cover

GETtheMANUALS.org

Courtesy of AMERICAN HONDA MOTOR CO., INC.

11. Cargo Floor Cover
    1. Remove the cargo floor cover (A).

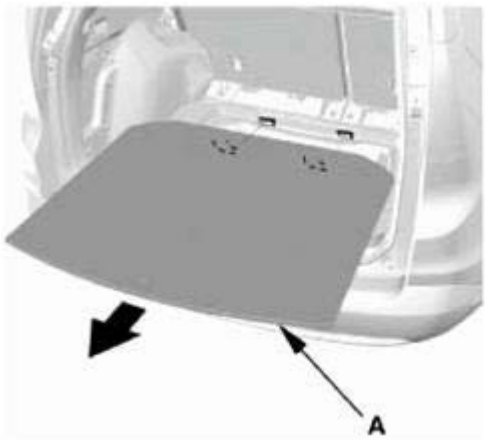

Fig. 28: Removing Cargo Floor Cover
Courtesy of AMERICAN HONDA MOTOR CO., INC.

12. Tailgate Weatherstrip As Needed
    1. Detach the tailgate weatherstrip (A) as needed.

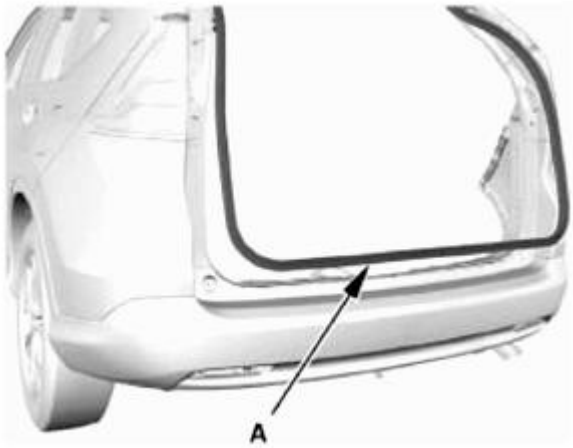

Fig. 29: Identifying Tailgate Weatherstrip
Courtesy of AMERICAN HONDA MOTOR CO., INC.

13. Rear Trim Panel
    1. Remove the clips (A).
    2. Detach the hooks (B) and the tabs (C) from the rear side trim panels (D), and pull up the rear trim panel (E) by hand to detach the clips (F, G), then remove the rear trim panel.

GETtheMANUALS.org

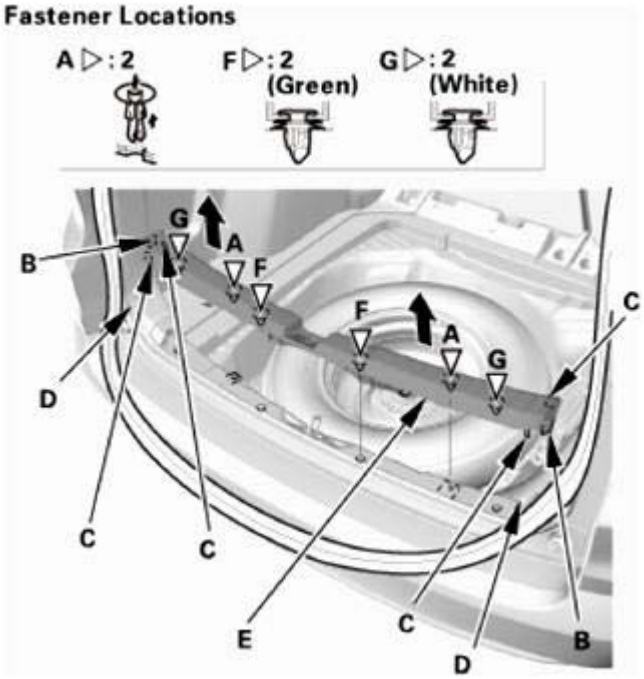

Fig. 30: Removing Rear Trim Panel
Courtesy of AMERICAN HONDA MOTOR CO., INC.

14. Rear Damper Maintenance Cover - Both Sides

NOTE: Repeat this procedure on the opposite side.

1. Fold down the rear seat-back.
2. Pull up the rear damper maintenance cover (A) by hand to detach the hooks (B), then remove the rear damper maintenance cover.

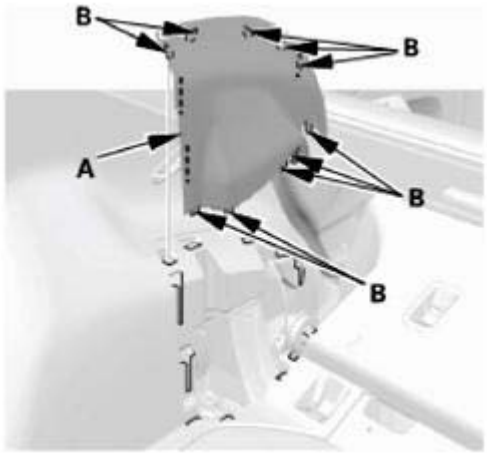

Fig. 31: Identifying Rear Damper Maintenance Cover And Hooks
Courtesy of AMERICAN HONDA MOTOR CO., INC.

GETtheMANUALS.org

15. Rear Carpet Trim - Both Sides
    1. Detach the clips (A), then tuck up the rear seat-back cover (B).

       Left side

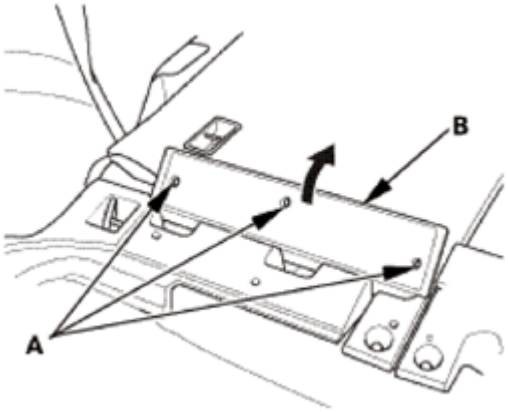

Fig. 32: Installing Rear Seat-Back Cover (Left Side)
Courtesy of AMERICAN HONDA MOTOR CO., INC.

Right side

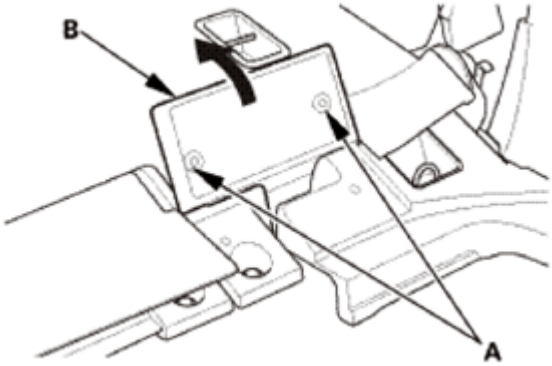

Fig. 33: Installing Rear Seat-Back Cover (Right Side)
Courtesy of AMERICAN HONDA MOTOR CO., INC.

    2. Detach the hooks (A) from the rear side trim panel (B), and pull up the rear carpet trims (C) by hand to detach the clips (D), then remove the rear carpet trims.

       Left side

GETtheMANUALS.org

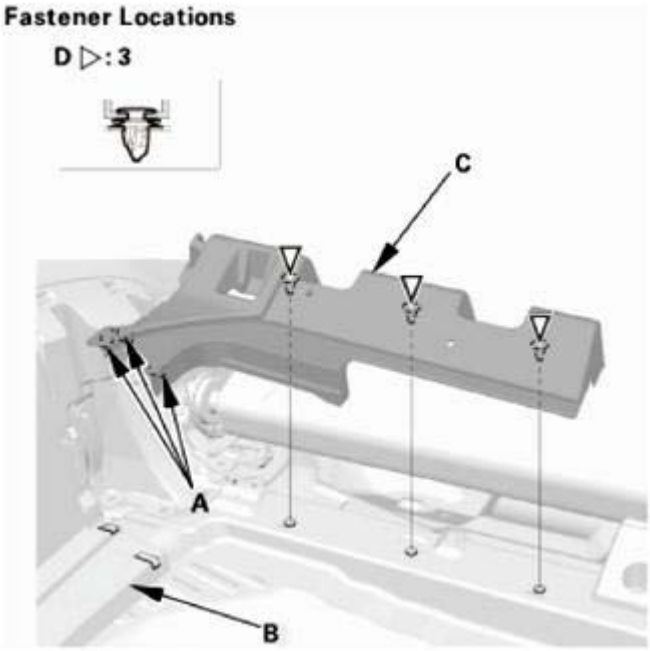

Fig. 34: Identifying Rear Carpet Trims, Panel, Hooks And Clips (Left Side)
Courtesy of AMERICAN HONDA MOTOR CO., INC.

Right side

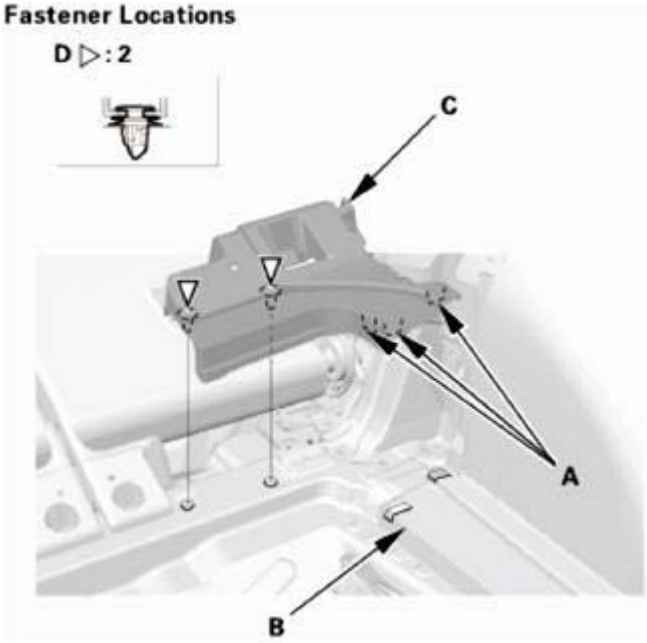

Fig. 35: Identifying Rear Carpet Trims, Panel, Hooks And Clips (Right Side)
Courtesy of AMERICAN HONDA MOTOR CO., INC.

16. Rear Seat Cushion Foot Cover - Both Sides (Remove The Outer Left Side Only)

GETtheMANUALS.org

1. Pull up the rear seat cushion foot cover (A) by hand to detach the clips (B).
2. Detach the hooks (C), then remove the rear seat cushion foot cover.

Left side

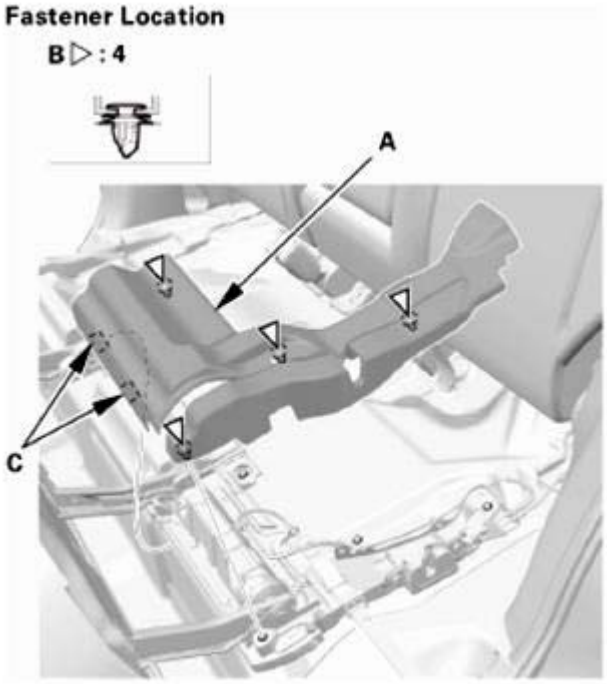

Fig. 36: Identifying Rear Seat Cushion Foot Cover, Hooks And Clips (Left Side)
Courtesy of AMERICAN HONDA MOTOR CO., INC.

Right side

GETtheMANUALS.org

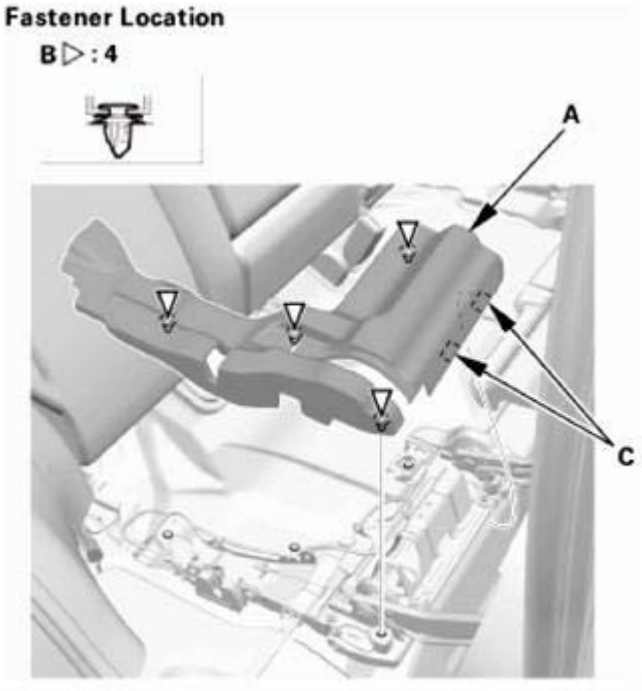

Fig. 37: Identifying Rear Seat Cushion Foot Cover, Hooks And Clips (Right Side)
Courtesy of AMERICAN HONDA MOTOR CO., INC.

17. Rear Seat Belt Lower Anchor Bolt - Both Sides

NOTE: Repeat this procedure on the opposite side.

1. Remove the rear seat belt lower anchor bolt (A).

GETtheMANUALS.org

Fig. 38: Identifying Rear Seat Belt Lower Anchor Bolt
Courtesy of AMERICAN HONDA MOTOR CO., INC.

18. Rear Side Trim Panel - Both Sides

NOTE: Repeat this procedure on the opposite side.

1. Carefully pry out on the upper hook (A) in the rear seat release lever cap (B) with the appropriate trim tool, then pull back the rear seat release lever cap to remove it.
2. Remove the screws (C).

GETtheMANUALS.org

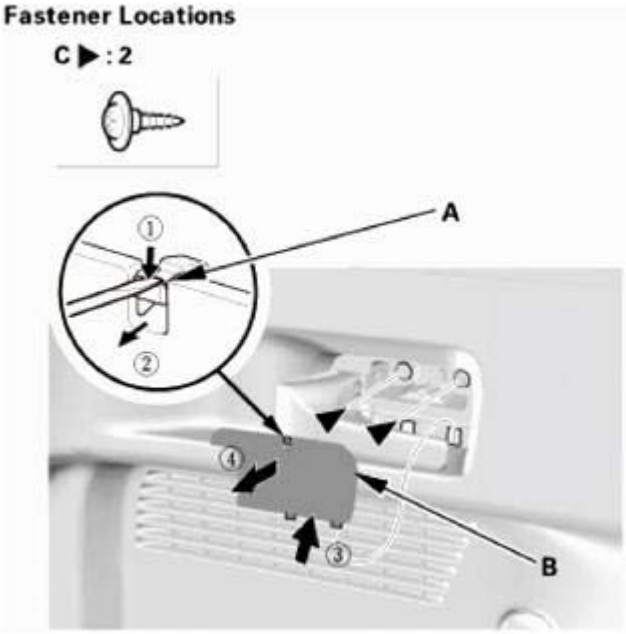

Fig. 39: Removing Rear Side Trim Panel
Courtesy of AMERICAN HONDA MOTOR CO., INC.

3. Push in the center pin (A), then remove the trunk hook (B).

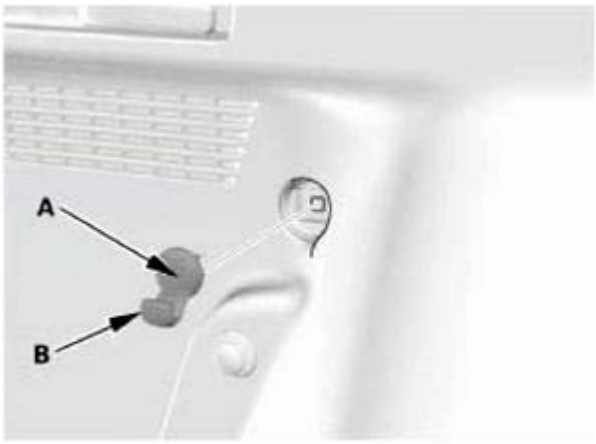

Fig. 40: Identifying Trunk Hook And Center Pin
Courtesy of AMERICAN HONDA MOTOR CO., INC.

4. Remove the bolt (A), then remove the tie-down hook (B).

GETtheMANUALS.org

Fig. 41: Identifying Tie-Down Hook And Bolt
Courtesy of AMERICAN HONDA MOTOR CO., INC.

5. Detach the clips (A, B).
6. Detach the hooks (C) and the tabs (D) from the quarter pillar trim (E), and pull out the rear side trim panel (F) by hand to detach the clips (G, H).

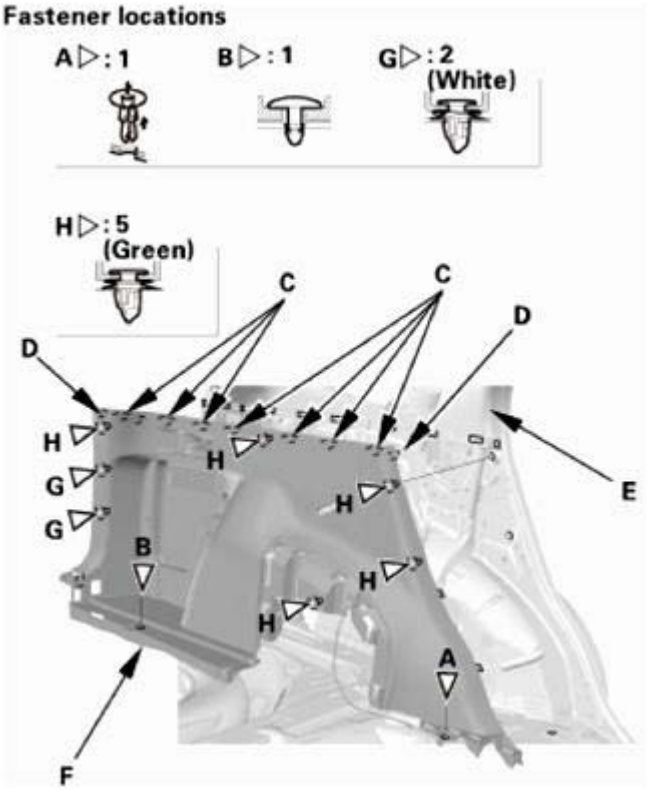

GETtheMANUALS.org

Fig. 42: Identifying Quarter Pillar Trim, Rear Side Trim Panel, Hooks And Clips
Courtesy of AMERICAN HONDA MOTOR CO., INC.

7. Remove the rear seat release lever (A) from the rear side trim panel (B).

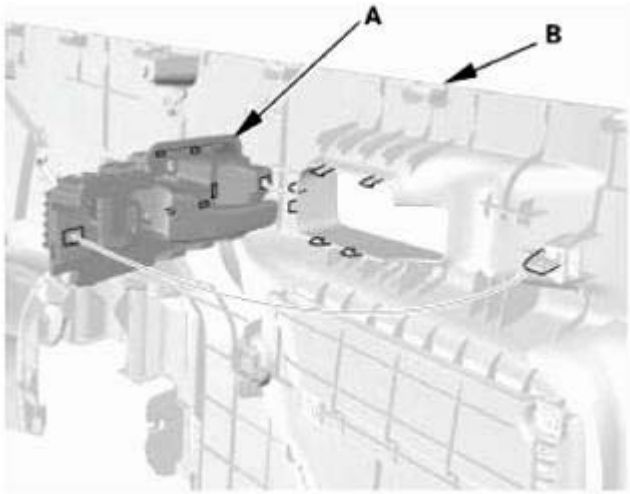

Fig. 43: Identifying Rear Seat Release Lever And Rear Side Trim Panel
Courtesy of AMERICAN HONDA MOTOR CO., INC.

8. Detach the rear seat release cable (A) from the clips of the rear side trim panel (B), then remove the rear side trim panel.

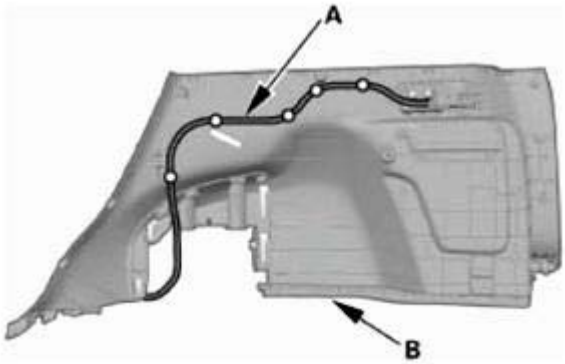

Fig. 44: Identifying Rear Seat Release Cable And Rear Side Trim Panel
Courtesy of AMERICAN HONDA MOTOR CO., INC.

19. Quarter Pillar Trim - Both Sides

NOTE: Repeat this procedure on the opposite side.

1. Pull out the quarter pillar trim (A) by hand to detach the clips (B, C, and D).
2. Pass the rear seat belt lower anchor (E) out through the hole in the quarter pillar trim, then remove the quarter pillar trim.

GETtheMANUALS.org

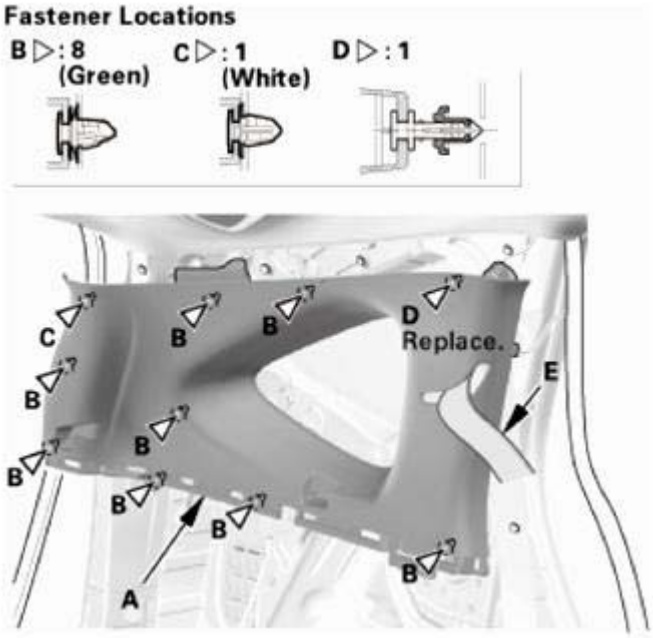

Fig. 45: Identifying Quarter Pillar Trim, Rear Seat Belt Lower Anchor And Clips
Courtesy of AMERICAN HONDA MOTOR CO., INC.

20. Roof Console Assembly
    1. Remove the lenses (A), then remove the screws (B).
    2. Open the console, then remove the screws (C).
    3. Disconnect the connectors (D), then remove the roof console assembly (E).

GETtheMANUALS.org

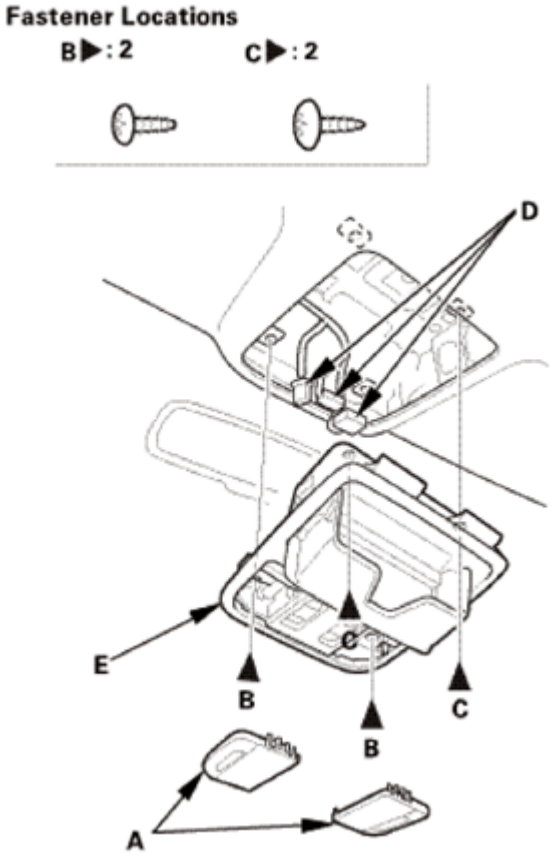

Fig. 46: Identifying Roof Console Assembly, Connectors, Lenses And Screws
Courtesy of AMERICAN HONDA MOTOR CO., INC.

21. Ceiling Light (without RES)
    1. Turn the ceiling light switch OFF.
    2. Carefully pry off the lens (A).
    3. Remove the bulb.
    4. Remove the ceiling light (B).
    5. Disconnect the connector.

GETtheMANUALS.org

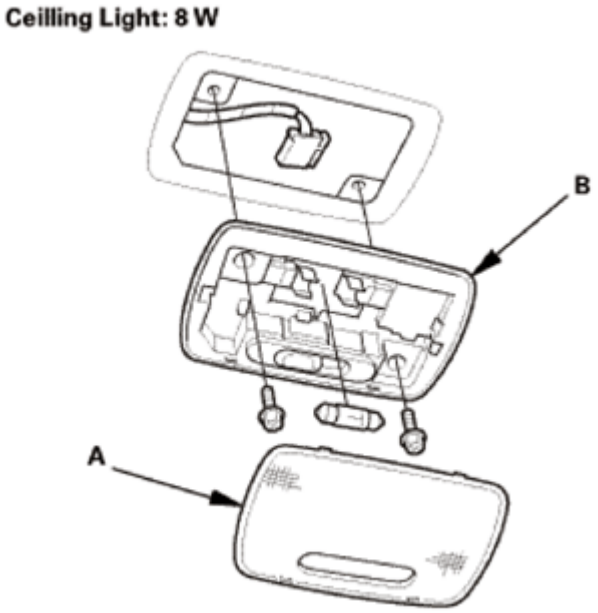

Fig. 47: Identifying Ceiling Light And Lens
Courtesy of AMERICAN HONDA MOTOR CO., INC.

22. Rear Display Cover (With RES)
    1. Turn the ceiling light switch OFF.
    2. Carefully pry off the lenses (A) with a flat-tip screwdriver.
    3. Remove the ceiling light (B).
    4. Disconnect the connector.

GETtheMANUALS.org

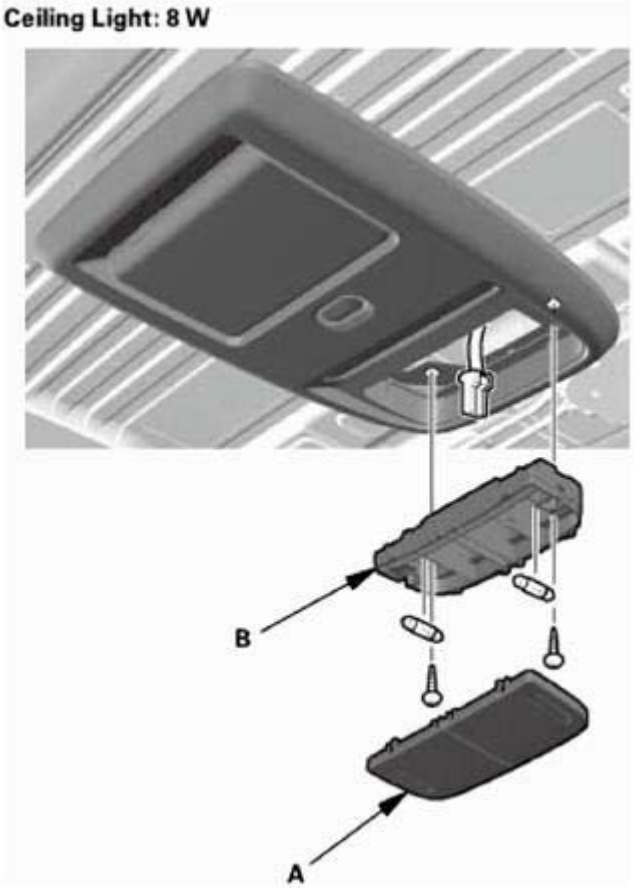

Fig. 48: Identifying Ceiling Light And Lens (With RES)
Courtesy of AMERICAN HONDA MOTOR CO., INC.

5. Remove the rear display cover (A).

GETtheMANUALS.org

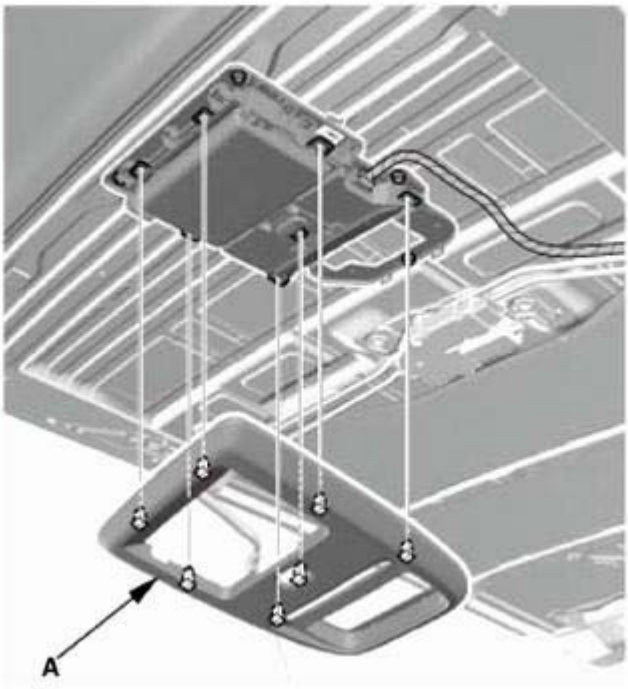

Fig. 49: Identifying Rear Display Cover
Courtesy of AMERICAN HONDA MOTOR CO., INC.

23. Rear Controller and Screen (With RES)
    1. Disconnect the connector.
    2. Remove the rear controller and screen (A).

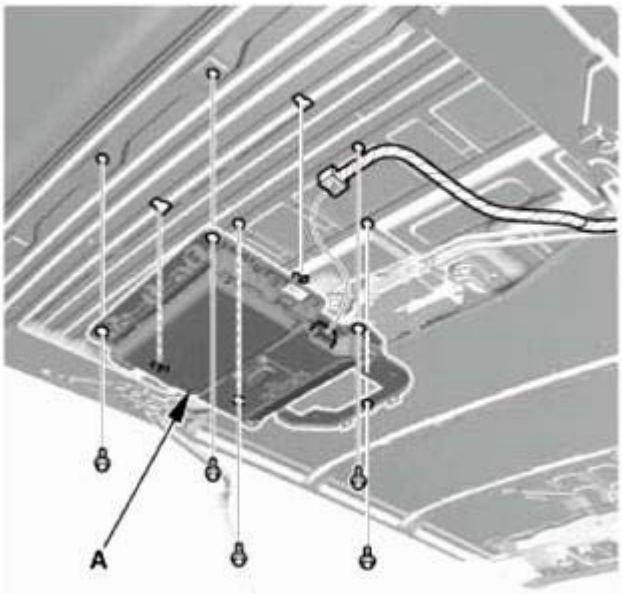

Fig. 50: Identifying Rear Controller And Screen
Courtesy of AMERICAN HONDA MOTOR CO., INC.

GETtheMANUALS.org

24. Cargo Area Light
    1. Turn the cargo area light switch OFF.
    2. Carefully pry off the lens (A).
    3. Remove the bulb.
    4. Remove the cargo area light (B).
    5. Disconnect the connector.

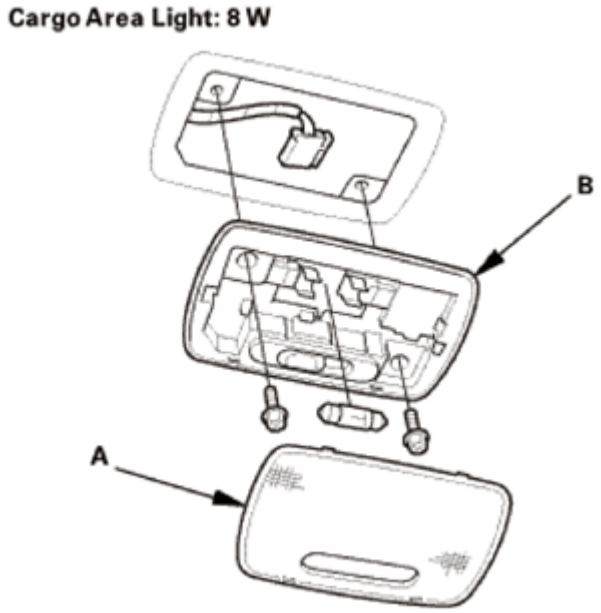

Fig. 51: Identifying Cargo Area Light And Lens
Courtesy of AMERICAN HONDA MOTOR CO., INC.

25. Grab Handles for One Vehicle
    1. Lower the grab handle (A).
    2. Insert the tips of the push pin/grab rail cap pliers (B) into the notch.

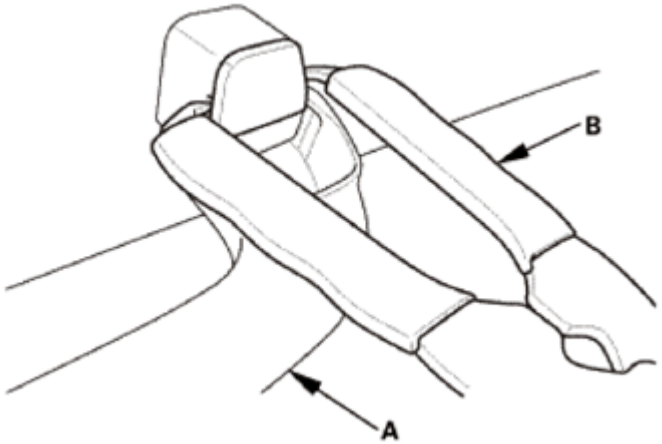

GETtheMANUALS.org

Fig. 52: Inserting Tips Of Push Pin/Grab Rail Cap Pliers Into Notch
Courtesy of AMERICAN HONDA MOTOR CO., INC.

3. Gently squeeze the handles of the push pin/grab rail cap pliers (A), and pull the cap (B) straight out.

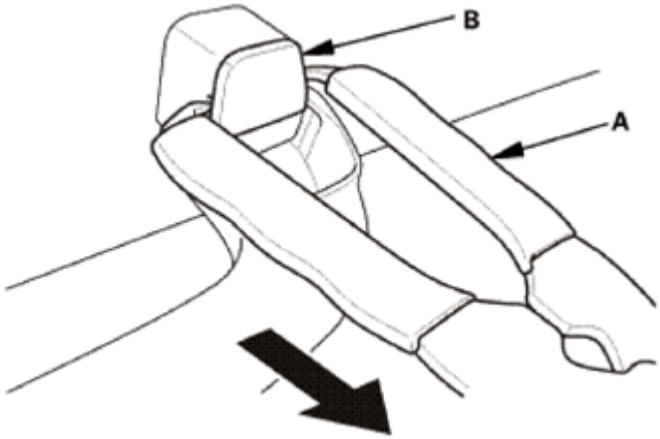

Fig. 53: Removing Tips Of Push Pin/Grab Rail Cap Pliers From Notch
Courtesy of AMERICAN HONDA MOTOR CO., INC.

4. Remove the grab handle (A).

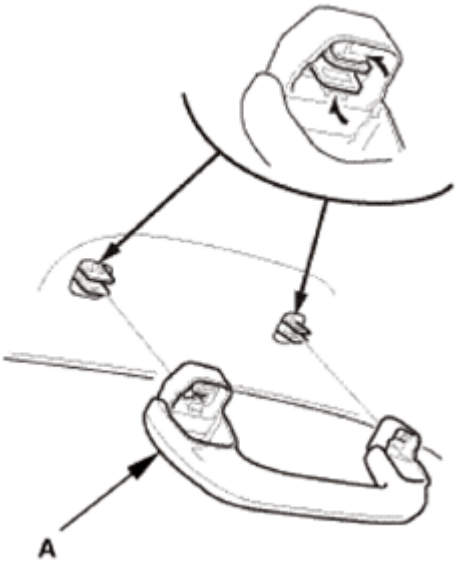

Fig. 54: Identifying Grab Handle
Courtesy of AMERICAN HONDA MOTOR CO., INC.

5. Remove the clips (A).

GETtheMANUALS.org

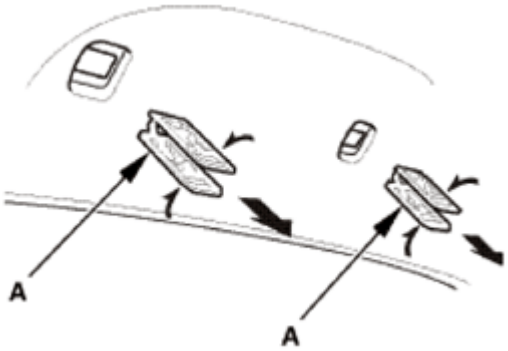

Fig. 55: Removing Grab Handles Clips
Courtesy of AMERICAN HONDA MOTOR CO., INC.

26. Sunvisor - Both Sides

NOTE: Repeat this procedure on the opposite side.

1. Push the tab (A) with a flat-tip screwdriver through the hole in the front side of the bracket cover (B).

NOTE: Make sure the tab is unlocked.

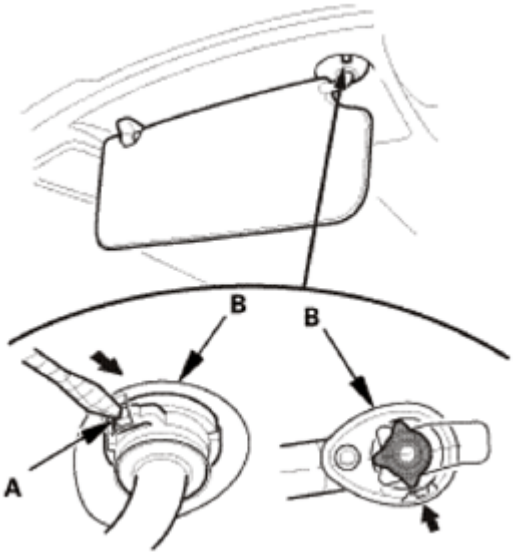

Fig. 56: Pushing Tab Of Sunvisor Using Flat-Tip Screwdriver
Courtesy of AMERICAN HONDA MOTOR CO., INC.

2. While pushing in the tab (A) with a flat-tip screwdriver, release the sunvisor (B) from the holder (C), and rotate the sunvisor backward 45 °.

NOTE: Make sure the tab slides into the bracket cover as you rotate the

GETtheMANUALS.org

sunvisor.

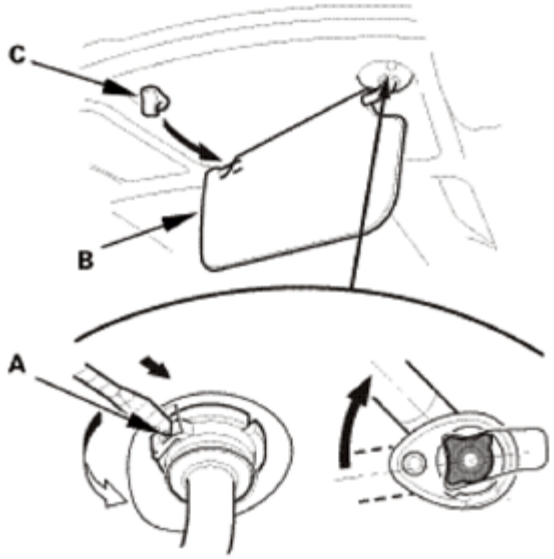

Fig. 57: Removing Sunvisor Using Tool
Courtesy of AMERICAN HONDA MOTOR CO., INC.

3. Disconnect the connector (A), then remove the sunvisor (B).

NOTE: **If the sunvisor cannot be removed, the tab has not rotated into the bracket cover. Repeat step 2 to rotate the tab.**

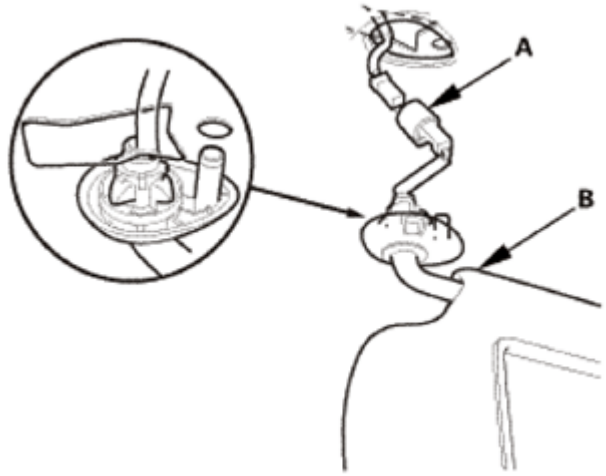

Fig. 58: Identifying Sunvisor And Connector
Courtesy of AMERICAN HONDA MOTOR CO., INC.

27. Sunvisor Holder - Both Sides

NOTE: **Repeat this procedure on the opposite side.**

GETtheMANUALS.org

1. Turn the sunvisor holder (A) 45 ° counterclockwise, then remove it from the holder grommet (B).

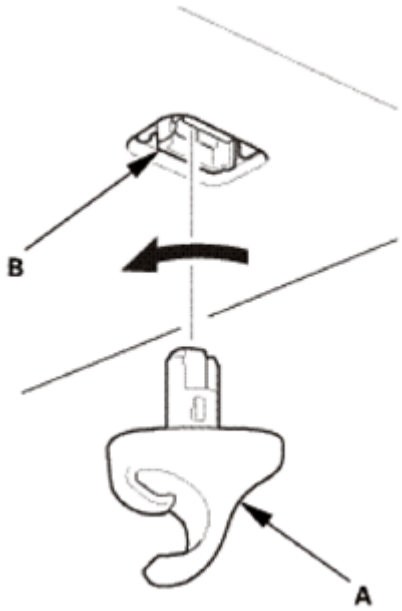

Fig. 59: Turning Sunvisor Holder
Courtesy of AMERICAN HONDA MOTOR CO., INC.

2. Remove the holder grommet (A).

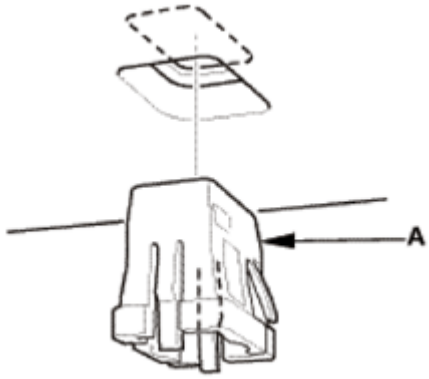

Fig. 60: Identifying Sunvisor Holder Grommet
Courtesy of AMERICAN HONDA MOTOR CO., INC.

28. Headliner
    1. Without moonroof: Disconnect the connector (A), and detach the harness clips (B) from the driver's side A-pillar.

GETtheMANUALS.org

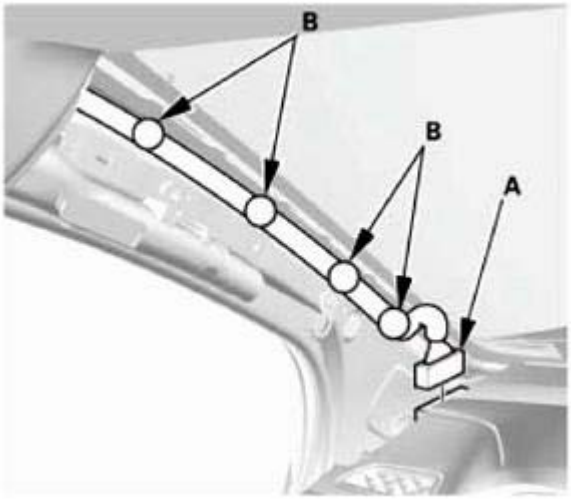

Fig. 61: Identifying Headliner Connector And Harness Clips (Driver Side A-Pillar Trim)
Courtesy of AMERICAN HONDA MOTOR CO., INC.

2. Disconnect the connectors (A), and detach the harness clips (B) from the passenger's side A-pillar.

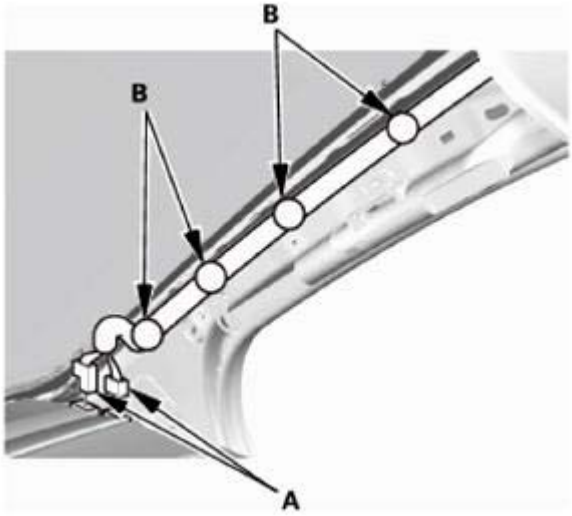

Fig. 62: Identifying Headliner Connector And Harness Clips (Passenger Side A-Pillar Trim)
Courtesy of AMERICAN HONDA MOTOR CO., INC.

3. Disconnect the connectors (A), and detach the connector clips (B) and the harness clip (C) from the right quarter pillar.

GETtheMANUALS.org

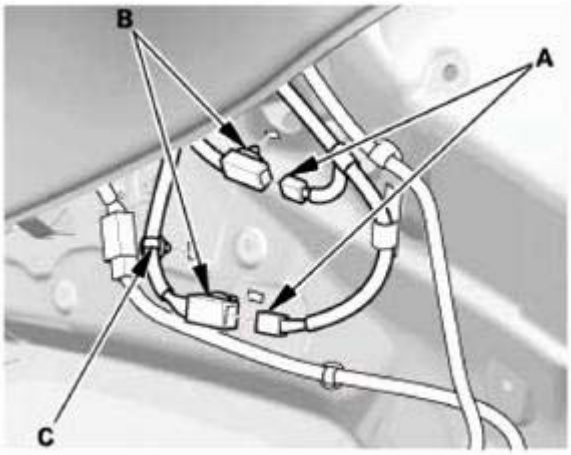

Fig. 63: Identifying Headliner Connector And Harness Clips (Right Quarter Pillar)
Courtesy of AMERICAN HONDA MOTOR CO., INC.

4. Slide the front seats all the way back, and recline the seat-back fully.
5. Fold down the rear seats.
6. Detach the clips (A) and release the fasteners (B) from the headliner (C) by pulling it down.
7. With the help of an assistant, lower the headliner.

Without moonroof

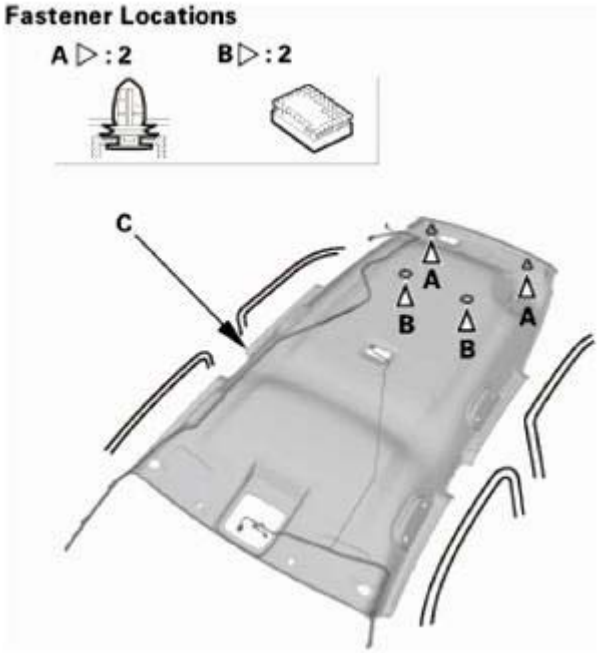

Fig. 64: Identifying Headliner, Fasteners And Clips (Without Moonroof)
Courtesy of AMERICAN HONDA MOTOR CO., INC.

With moonroof

GETtheMANUALS.org

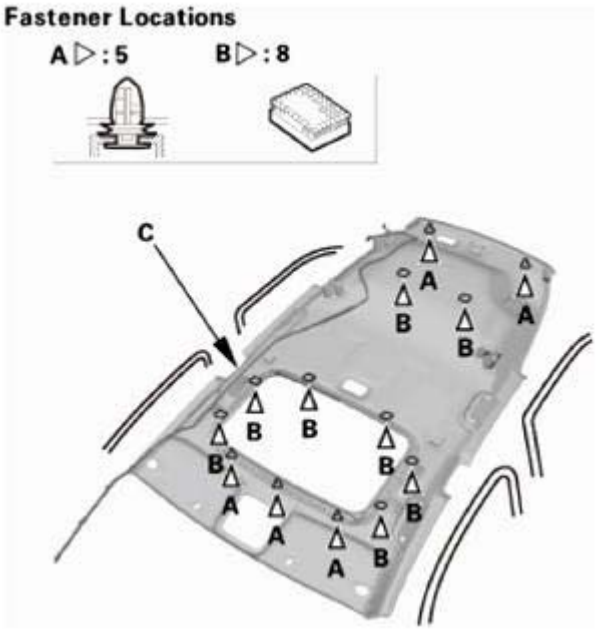

Fig. 65: Identifying Headliner, Fasteners And Clips (With Moonroof)
Courtesy of AMERICAN HONDA MOTOR CO., INC.

8. With the help of an assistant, remove the headliner (A) through the tailgate opening.

NOTE: **Do not bend the headliner. Bending the headliner will crease and damage it.**

Fig. 66: Identifying Headliner On Tailgate Opening
Courtesy of AMERICAN HONDA MOTOR CO., INC.

29. Moonroof Front Drain Tube - Both Sides

GETtheMANUALS.org

NOTE: Repeat this procedure on the opposite side.

1. Disconnect the moonroof front drain tube (A).
2. Pull out the moonroof front drain valve (B) from the body hole.
3. Detach the clips (C).
4. Tie a string to the top end of the moonroof front drain tube, then pull down the drain tube out of the A-pillar.

NOTE: Leave the string in the pillar to use when reinstalling the drain tube.

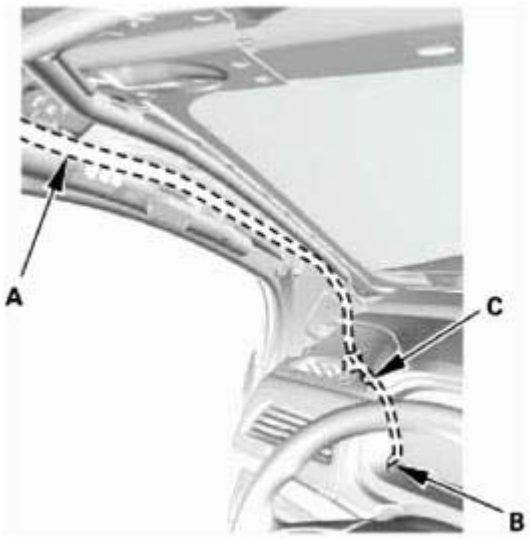

Fig. 67: Identifying Moonroof Front Drain Tube, Valve And Clips
Courtesy of AMERICAN HONDA MOTOR CO., INC.

30. Moonroof Rear Drain Tube - Both Sides

NOTE: Repeat this procedure on the opposite side.

1. Disconnect the moonroof rear drain tube (A).
2. Pull out the rear drain valve (B) from the body hole.
3. Tie a string to the top end of the moonroof rear drain tube, then pull down the drain tube out of the pillar.

NOTE: Leave the string in the pillar to use when reinstalling the drain tube.

GETtheMANUALS.org

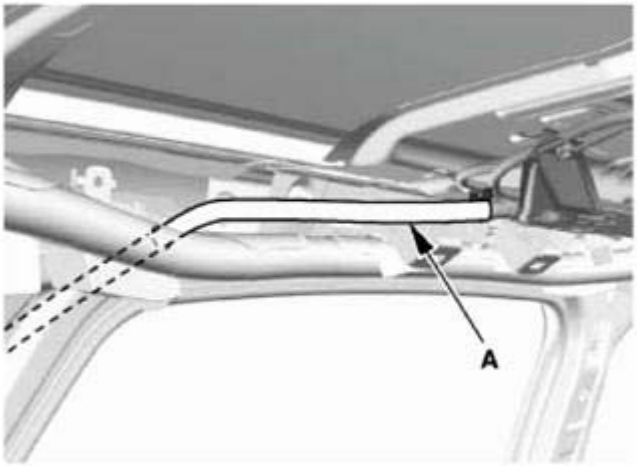

Fig. 68: Identifying Moonroof Rear Drain Tube
Courtesy of AMERICAN HONDA MOTOR CO., INC.

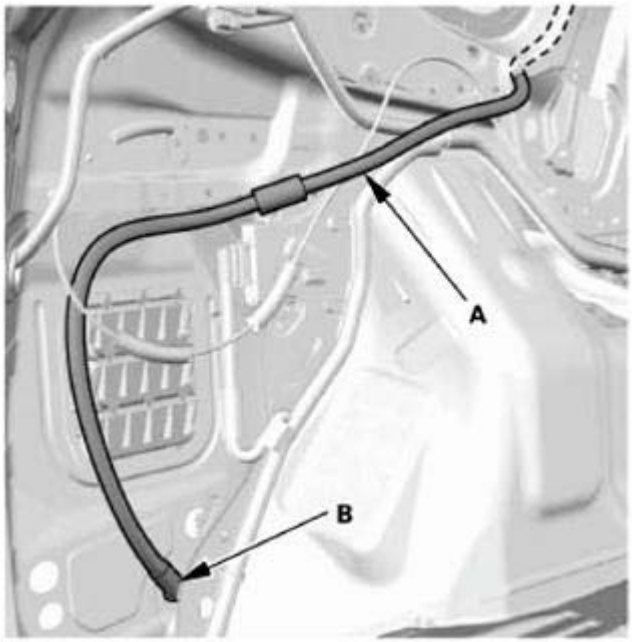

Fig. 69: Identifying Moonroof Rear Drain Tube And Valve
Courtesy of AMERICAN HONDA MOTOR CO., INC.

INSTALLATION

SRS components are located in this area. Review the **SRS COMPONENT LOCATIONS** and the **PRECAUTIONS AND PROCEDURES** before doing repairs or service.

1. Moonroof Rear Drain Tube - Both Sides

NOTE: **Repeat this procedure on the opposite side.**

GETtheMANUALS.org

1. Tie the string that was left in the pillar to the top end of a new moonroof rear drain tube (A) and pull it up into the roof.
2. Connect the moonroof rear drain tube.
3. Install the moonroof rear drain valve (B).

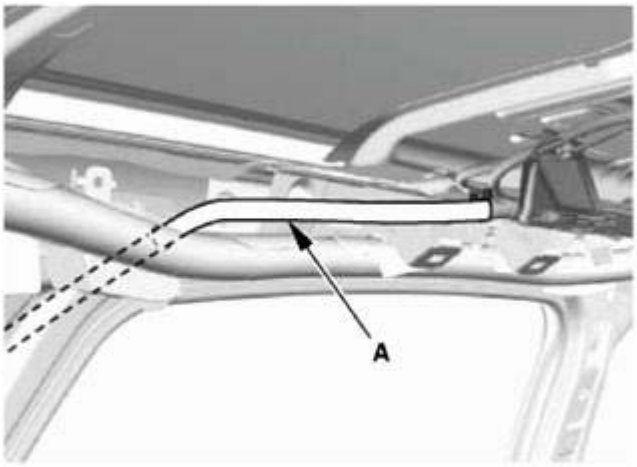

Fig. 70: Identifying Moonroof Rear Drain Tube
Courtesy of AMERICAN HONDA MOTOR CO., INC.

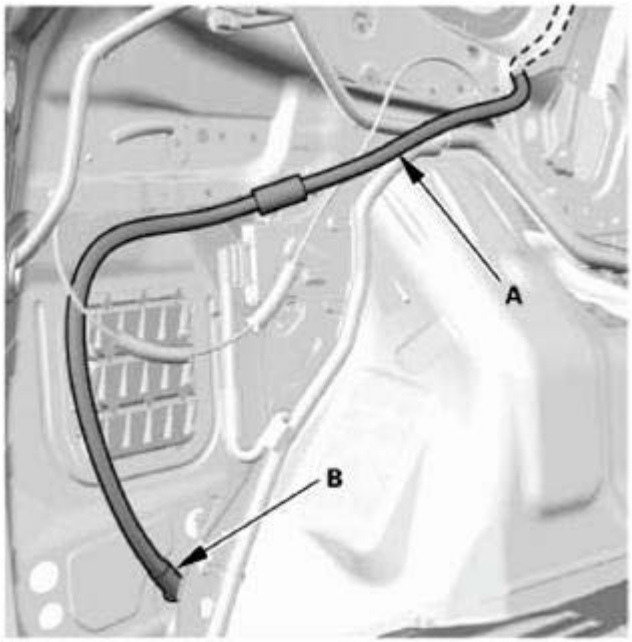

Fig. 71: Identifying Moonroof Rear Drain Tube And Valve
Courtesy of AMERICAN HONDA MOTOR CO., INC.

2. Moonroof Front Drain Tube - Both Sides

GETtheMANUALS.org

NOTE: **Repeat this procedure on the opposite side.**

1. Tie the string that was left in the A-pillar to the top end of a new moonroof front drain tube (A) and pull it up into the roof.
2. Connect the moonroof front drain tube.
3. Install the moonroof front drain valve (B) securing the clip (C).

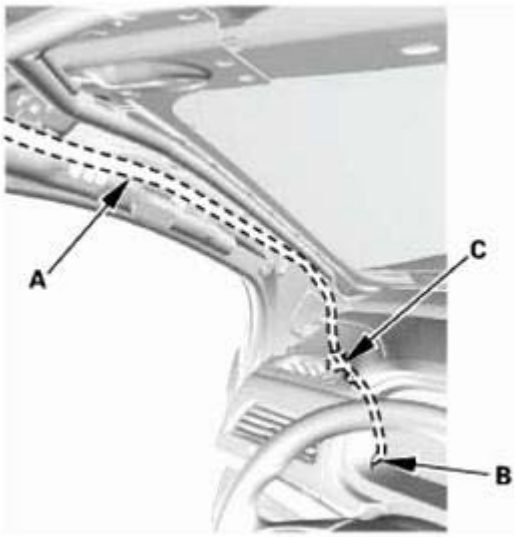

Fig. 72: Identifying Moonroof Front Drain Tube, Valve And Clips
Courtesy of AMERICAN HONDA MOTOR CO., INC.

3. Headliner - Check
   1. If the side curtain airbag has deployed, replace the headliner and removed trim pieces, along with the other parts listed for side curtain airbag deployment.
   2. To prevent the side curtain airbags from deploying improperly and possibly causing injury, inspect the headliner and all removed trim. Replace any pieces with the following damage:
      - Any creases or tears in the headliner (A)
      - Any damages around the grab handle holes (B) or the sunvisor holes (C) in the headliner
      - Any clip bases (D) which have come off the headliner
      - Any fasteners (E) or clip bases (F) which have come off the headliner

GETtheMANUALS.org

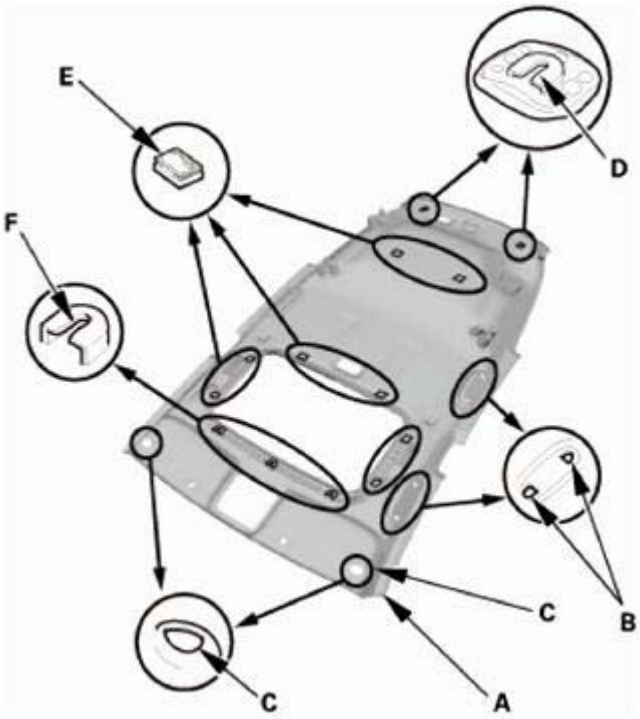

Fig. 73: Identifying Headliner, Grab Handle Holes, Sunvisor Holes, Clip Bases, Fasteners And Clip Bases
Courtesy of AMERICAN HONDA MOTOR CO., INC.

4. Headliner
    1. With the help of an assistant, slide the headliner (A) through the tailgate opening.

NOTE: **Do not bend the headliner. Bending the headliner will crease and damage it.**

Fig. 74: Identifying Headliner On Tailgate Opening

GETtheMANUALS.org

Courtesy of AMERICAN HONDA MOTOR CO., INC.

2. With the help of an assistant, install the headliner (A), then push on the clips (B) and the fasteners (C) which will snap into place securely.

Without moonroof

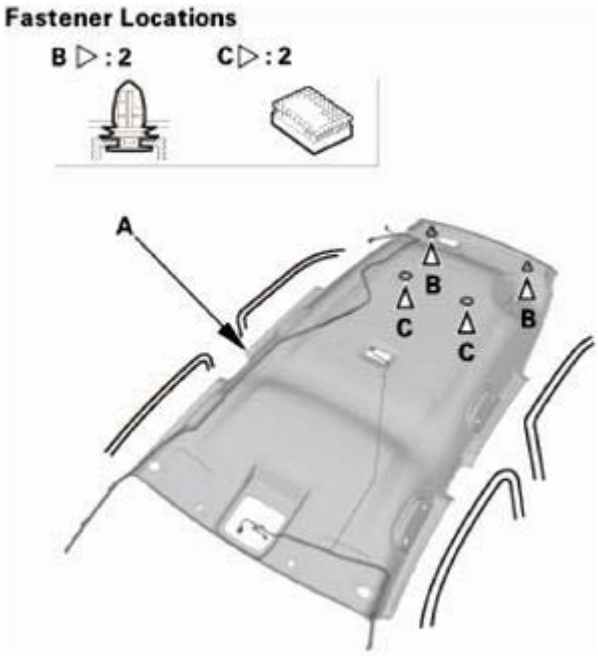

Fig. 75: Identifying Headliner, Fasteners And Clips (Without Moonroof)
Courtesy of AMERICAN HONDA MOTOR CO., INC.

With moonroof

GETtheMANUALS.org

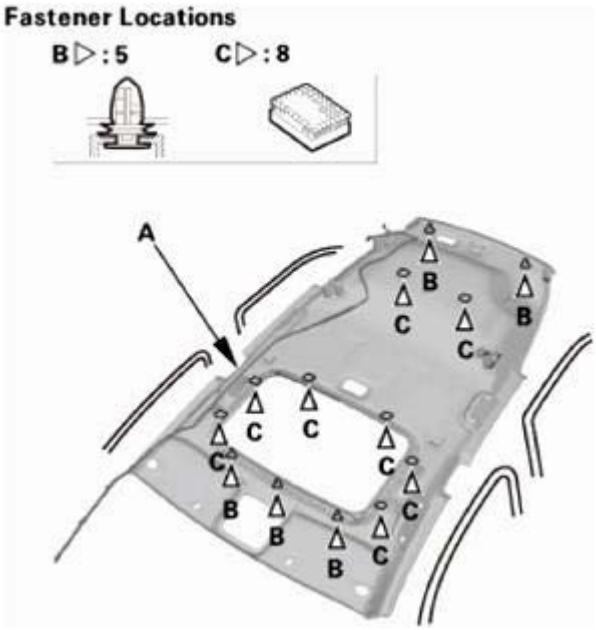

Fig. 76: Identifying Headliner, Fasteners And Clips (With Moonroof)
Courtesy of AMERICAN HONDA MOTOR CO., INC.

3. At the right quarter pillar, connect the connectors (A), and install the connector clips (B) and the harness clip (C).

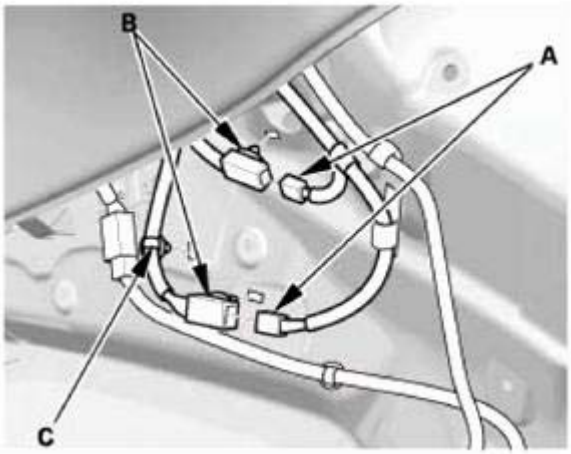

Fig. 77: Identifying Right Quarter Pillar Connector And Clips
Courtesy of AMERICAN HONDA MOTOR CO., INC.

4. At the passenger's A-pillar, connect the connectors (A), and install the harness clips (B).

GETtheMANUALS.org

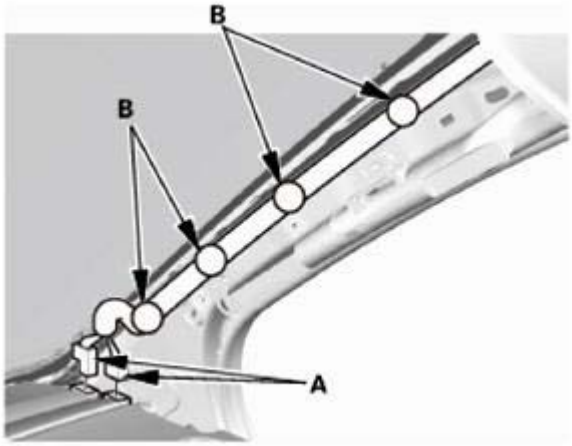

Fig. 78: Identifying Passenger A-Pillar Connector And Clips
Courtesy of AMERICAN HONDA MOTOR CO., INC.

5. Without moonroof: At the driver's A-pillar, connect the connector (A), and install the harness clips (B).

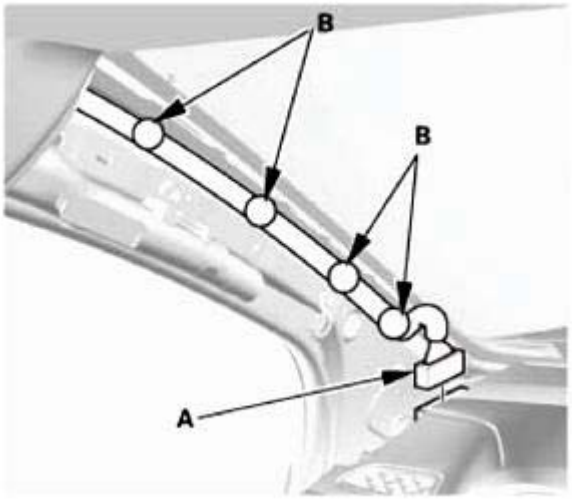

Fig. 79: Identifying Driver A-Pillar Connector And Clips
Courtesy of AMERICAN HONDA MOTOR CO., INC.

5. Sunvisor Holder
    1. Install the holder (A) into the holder grommet (B) by turning it 45 ° clockwise.
    2. Install the holder and the holder grommet as an assembly into the body by pushing it until the hooks snap into place securely.

GETtheMANUALS.org

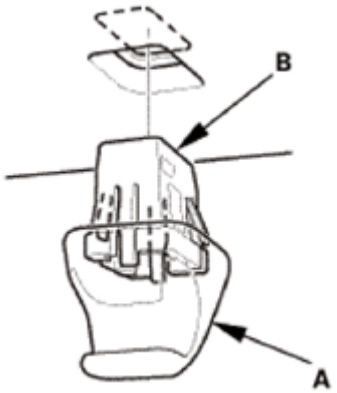

Fig. 80: Identifying Sunvisor Holder And Grommet
Courtesy of AMERICAN HONDA MOTOR CO., INC.

6. Sunvisor - Check
    1. If the side curtain airbag has deployed, replace the sunvisor, along with the other parts listed for side curtain airbag deployment.
    2. If the side curtain airbag has not deployed, inspect the sunvisor for damage. A damaged sunvisor may cause the side curtain airbags to deploy improperly, possibly causing injury. Replace the sunvisor if it has any of the following damage:

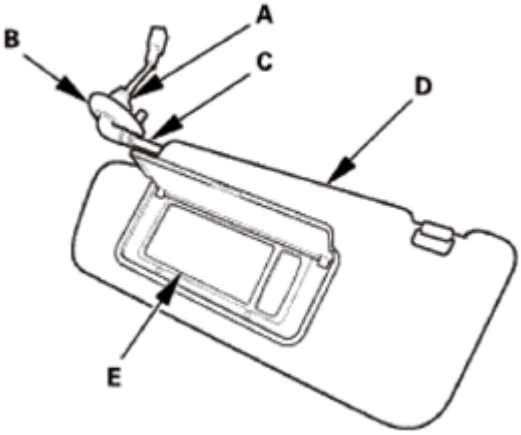

Fig. 81: Identifying Sunvisor Bracket, Cover, Shaft, Base And Mirror Base
Courtesy of AMERICAN HONDA MOTOR CO., INC.

- Any cracks in the sunvisor bracket (A)
- Any cracks in the sunvisor bracket cover (B)
- Any bends or cracks in the sunvisor shaft (C)
- Any cracks in the sunvisor base (D)
- Any cracks in the vanity mirror base (E)

    3. If the holder grommet is damaged or stress-whitened, replace the holder grommet and the holder as an assembly.

GETtheMANUALS.org

7. Sunvisor - Both Sides

NOTE: Repeat this procedure on the opposite side.

1. Connect the connector (A), and install the sunvisor (B).

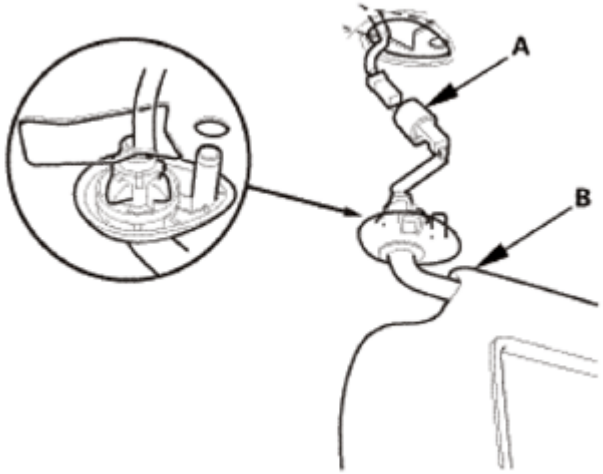

Fig. 82: Identifying Sunvisor And Connector
Courtesy of AMERICAN HONDA MOTOR CO., INC.

2. While holding the bracket cover (A), rotate the sunvisor (B) forward until the tab (C) snaps into place.
3. Gently pull down on the sunvisor to make sure it is properly secured in the body.
4. Rotate the sunvisor into the holder (D).

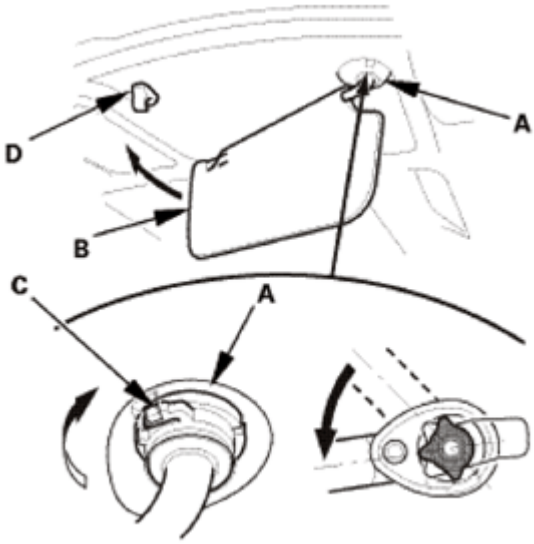

Fig. 83: Rotating Sunvisor Into Holder
Courtesy of AMERICAN HONDA MOTOR CO., INC.

GETtheMANUALS.org

8. Grab Handle - Check
    1. If the side curtain airbag has not deployed, inspect the grab handle (A) for damage. A damaged grab handle may cause the side curtain airbag to deploy improperly, possibly causing injury. Replace the grab handle if it has any of the following damage:
        - Any cracks or breakage in the grab handle
        - Any cracks or stress-whitening in the caps (B)

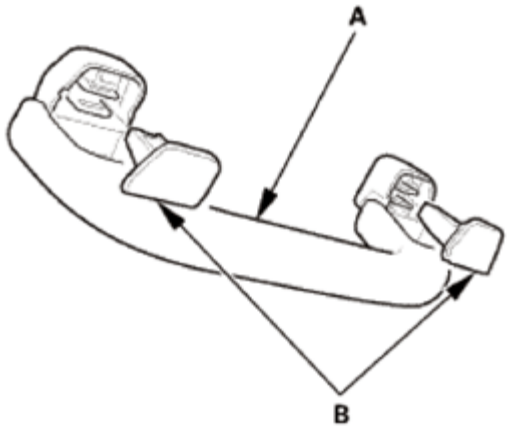

Fig. 84: Identifying Grab Handle And Caps
Courtesy of AMERICAN HONDA MOTOR CO., INC.

9. Grab Handles for One Vehicle
    1. Install the clips (A) on the grab handle (B).
    2. Install the caps (C) fully into the clips.

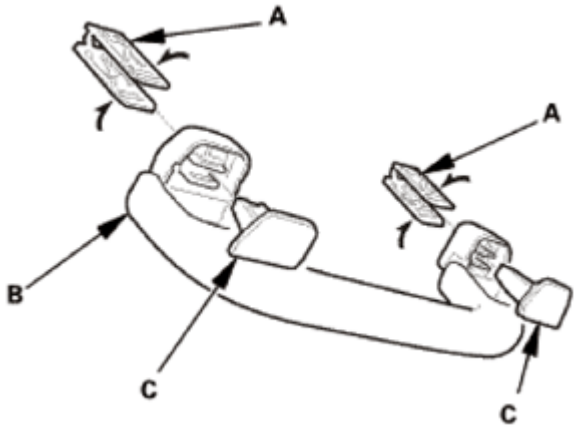

Fig. 85: Installing Clips On Grab Handle
Courtesy of AMERICAN HONDA MOTOR CO., INC.

    3. Position the grab handle (A) on the grab handle bracket (B).
    4. Push on the grab handle until the clips (C) snap into place securely.

GETtheMANUALS.org

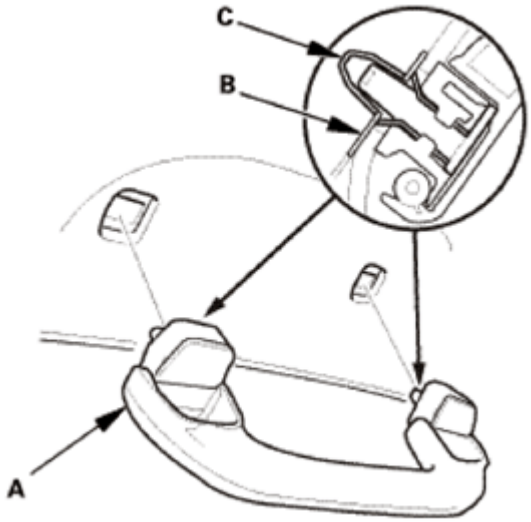

Fig. 86: Identifying Grab Handle, Bracket And Clips
Courtesy of AMERICAN HONDA MOTOR CO., INC.

10. Cargo Area Light
    1. Connect the connector.
    2. Install the cargo area light (A).
    3. Install the bulb.
    4. Carefully install the lens (B).

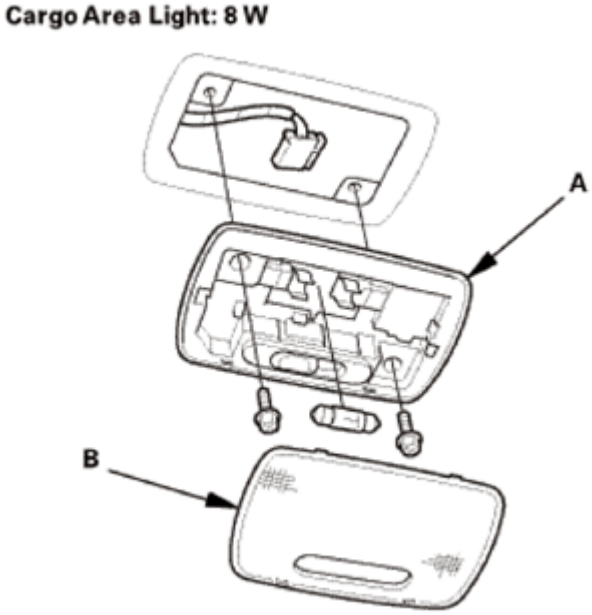

Fig. 87: Identifying Cargo Area Light And Lens
Courtesy of AMERICAN HONDA MOTOR CO., INC.

11. Rear Controller and Screen (With RES)

GETtheMANUALS.org

1. Install the rear controller and screen (A).
2. Connect the connector.

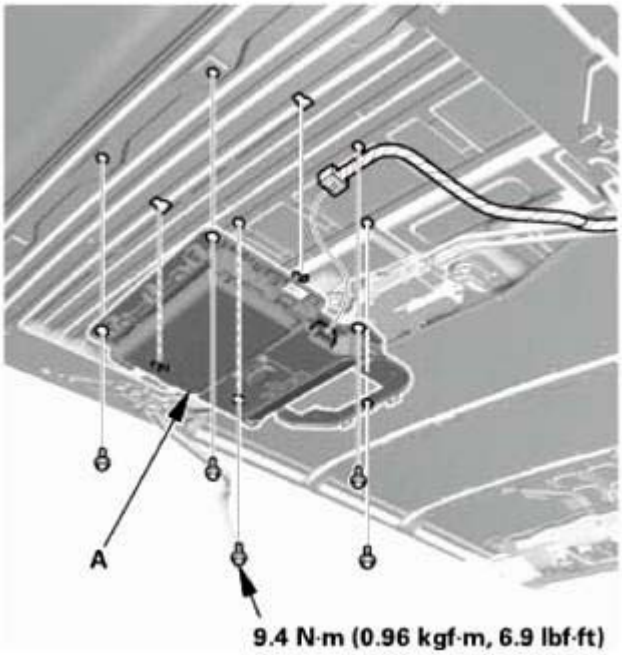

Fig. 88: Identifying Rear Controller And Screen With Torque Specifications
Courtesy of AMERICAN HONDA MOTOR CO., INC.

12. Rear Display Cover (With RES)
    1. Install the rear display cover (A).

GETtheMANUALS.org

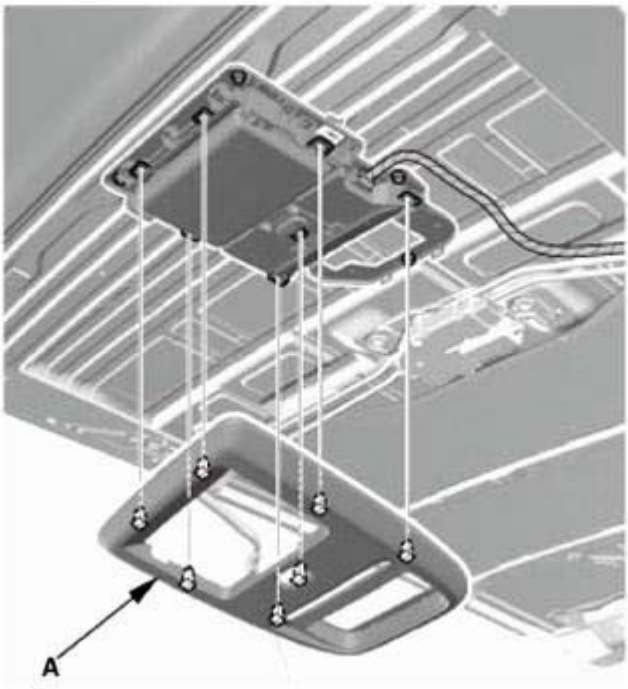

Fig. 89: Identifying Rear Display Cover (With RES)
Courtesy of AMERICAN HONDA MOTOR CO., INC.

2. Connect the connector.
3. Install the ceiling light (B).
4. Carefully install the lenses (C).

GETtheMANUALS.org

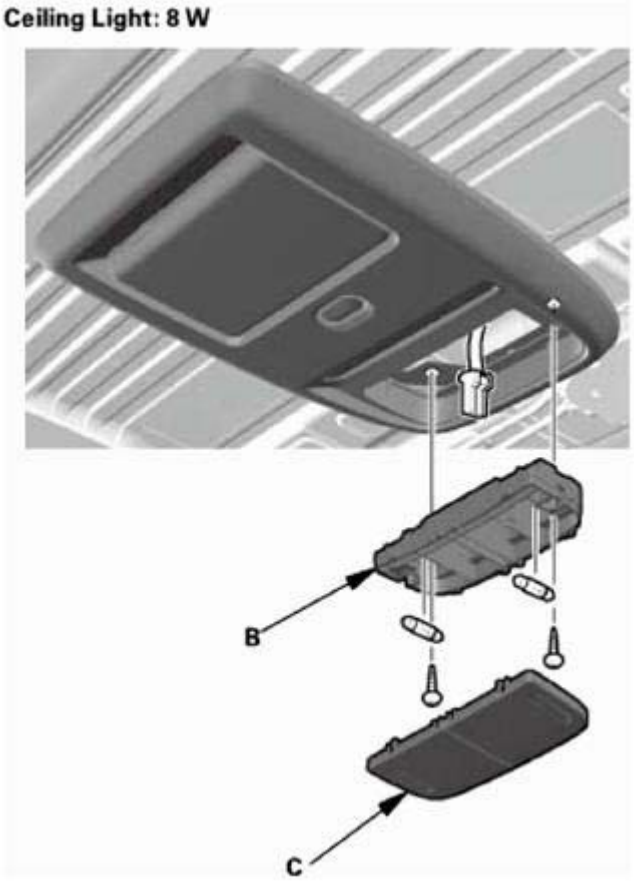

Fig. 90: Identifying Ceiling Light And Lenses
Courtesy of AMERICAN HONDA MOTOR CO., INC.

13. Ceiling Light (without RES)
    1. Connect the connector.
    2. Install the ceiling light (A).
    3. Install the bulb.
    4. Carefully install the lens (B).

GETtheMANUALS.org

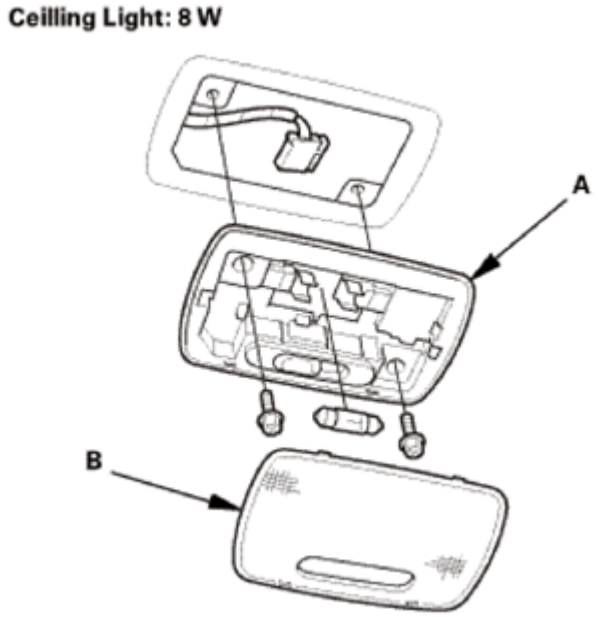

Fig. 91: Identifying Ceiling Light And Lens (Without RES)
Courtesy of AMERICAN HONDA MOTOR CO., INC.

14. Roof Console Assembly
    1. Connect the connectors (A), then install the roof console assembly (B).
    2. Install the screws (C, D), then install the lenses (E).

GETtheMANUALS.org

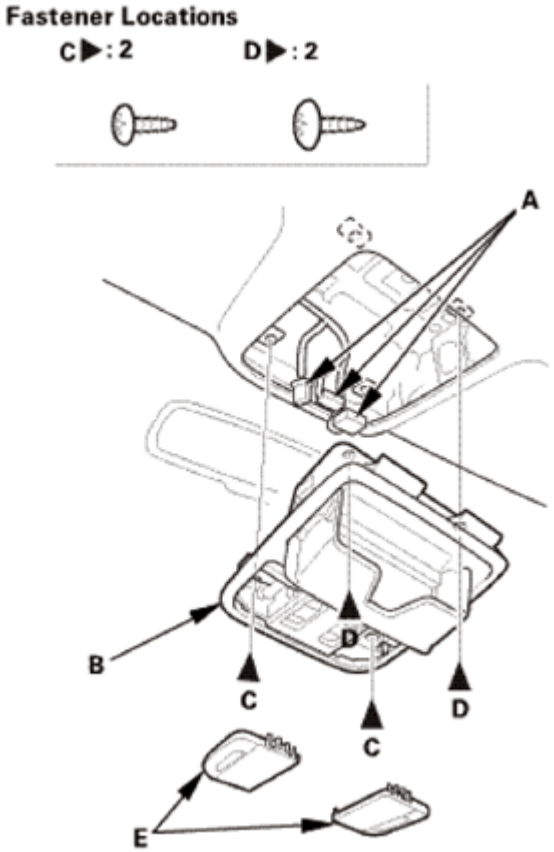

Fig. 92: Identifying Roof Console Assembly, Connector, Lenses And Screws
Courtesy of AMERICAN HONDA MOTOR CO., INC.

15. Quarter Pillar Trim - Check
    1. If the side curtain airbag has deployed, replace the quarter pillar trim (A), along with the other parts listed for side curtain airbag deployment.
    2. If the side curtain airbag has not deployed, check the quarter pillar trim and note the following items:
        - To prevent the side curtain airbags from deploying improperly and possibly causing injury, inspect the quarter pillar trim and replace it with a new one if it has any of the following damage:
            - Any cracks, deformations, or stress-whitening in the quarter pillar trim
            - Any cracks or stress-whitened areas in the clip seating surfaces (B)
        - After checking and adjusting the overlap between the headliner and the quarter pillar trim, replace the upper clip (C) with a new one.
        - If the clips (D) are damaged or stress-whitened, replace them with new ones.

GETtheMANUALS.org

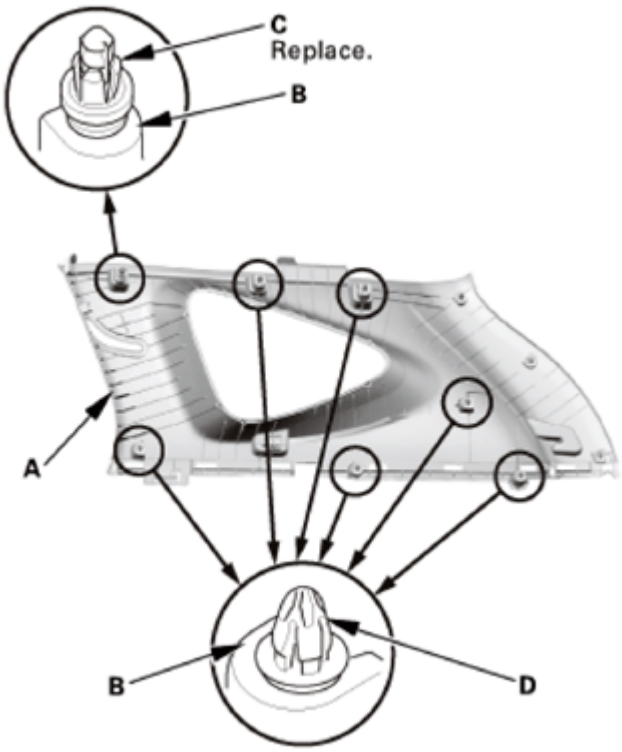

Fig. 93: Identifying Quarter Pillar Trim Upper Clip And Clip Seating Surfaces
Courtesy of AMERICAN HONDA MOTOR CO., INC.

16. Headliner/Pillar Trim Overlap - Check

Checking and Adjusting the Headliner/Pillar Trim Overlap

To prevent the side curtain airbag from deploying and damaging the pillar trim (A-pillar trim, B-pillar trim, quarter pillar trim), the overlap between the headliner and pillar trim must be 8.0+0/-2.0 mm (0.31+0/-0.08 in). To check the overlap, do this:

1. Install the headliner (A) and the pillar trim (B).

GETtheMANUALS.org

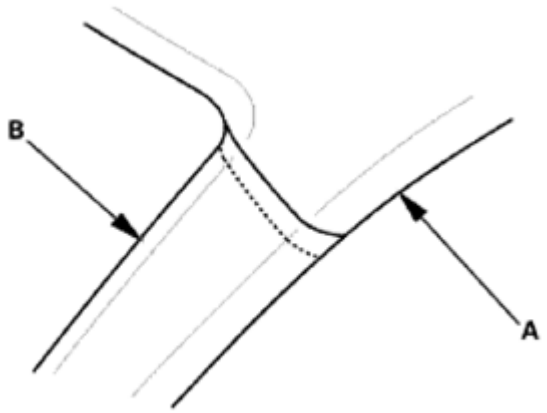

This illustration shows the A-pillar.

Fig. 94: Identifying Headliner And Pillar Trim
Courtesy of AMERICAN HONDA MOTOR CO., INC.

2. Apply masking tape (A) to the headliner (B) to mark the upper edge of the pillar trim (C).

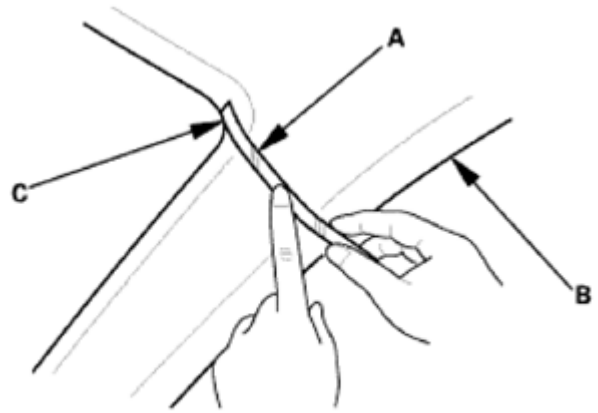

This illustration shows the A-pillar.

Fig. 95: Applying Mask Tape To Headliner
Courtesy of AMERICAN HONDA MOTOR CO., INC.

3. Remove the pillar trim, and measure the headliner overlap.
   - If the overlap is 8.0+0/-2.0 mm (0.31+0/-0.08 in), remove the tape, and install the pillar trim.
   - If the overlap is more than 8.0 mm (0.31 in), go to step 4.

GETtheMANUALS.org

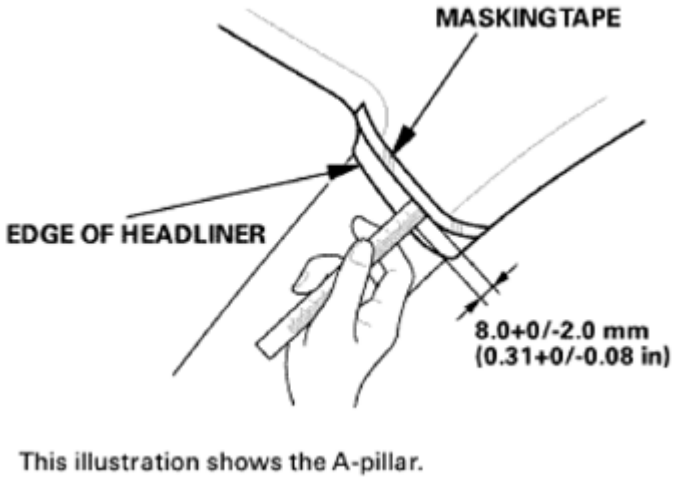

Fig. 96: Measuring Headliner Overlap
Courtesy of AMERICAN HONDA MOTOR CO., INC.

4. Carefully trim the headliner with a utility knife, reducing the overlap to 8.0+0/-2.0 mm (0.31+0/-0.08 in).
5. Remove the tape, and install the pillar trim.

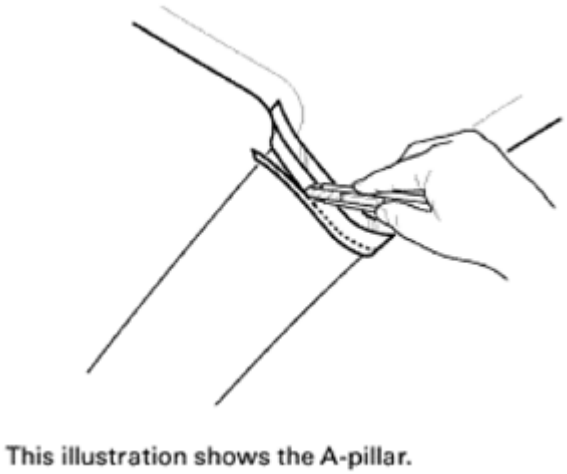

Fig. 97: Triming Headliner Using Utility Knife
Courtesy of AMERICAN HONDA MOTOR CO., INC.

17. Quarter Pillar Trim - Both Sides
    1. Install a new clip (A) to the quarter pillar trim (B).

GETtheMANUALS.org

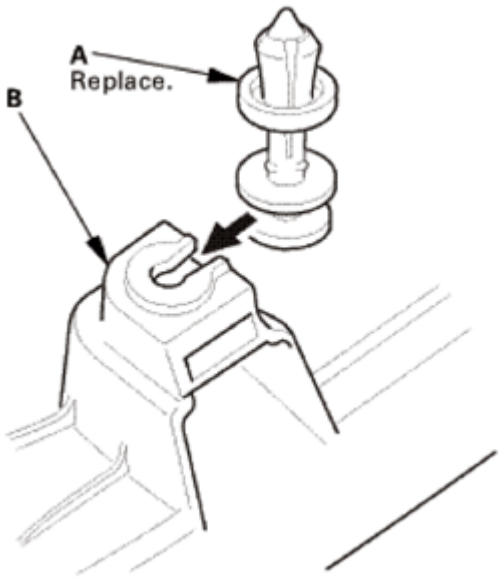

Fig. 98: Installing Quarter Pillar Trim Into Clip
Courtesy of AMERICAN HONDA MOTOR CO., INC.

2. Pass the rear seat belt lower anchor (A) through the hole in the quarter pillar trim (B).
3. Fit the clips into the holes in the quarter pillar.
4. Lightly push the quarter pillar trim into place, then install the trim.

NOTE:

- **Make sure the side curtain airbag is not tucked under the clips or the ribs.**
- **Do not push too hard on the quarter pillar trim. If you push too hard, the clip will be damaged, and it will not hold the trim properly.**
- **Gently tug on the quarter pillar trim to verify that all clips are securely fastened.**
- **Make sure the clips (C, D, and E) snap into place securely.**

GETtheMANUALS.org

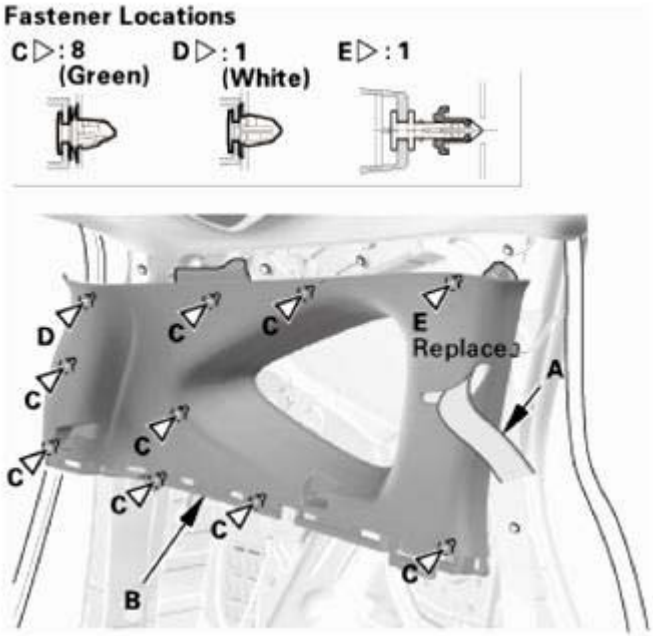

Fig. 99: Identifying Rear Seat Belt Lower Anchor, Quarter Pillar Trim And Clips
Courtesy of AMERICAN HONDA MOTOR CO., INC.

18. Rear Side Trim Panel - Both Sides

NOTE: Repeat this procedure on the opposite side.

1. Install the rear seat release cable (A) to the clips (B) of the rear side trim panel (C).

NOTE: Align the marks (D) with the clips as shown.

GETtheMANUALS.org

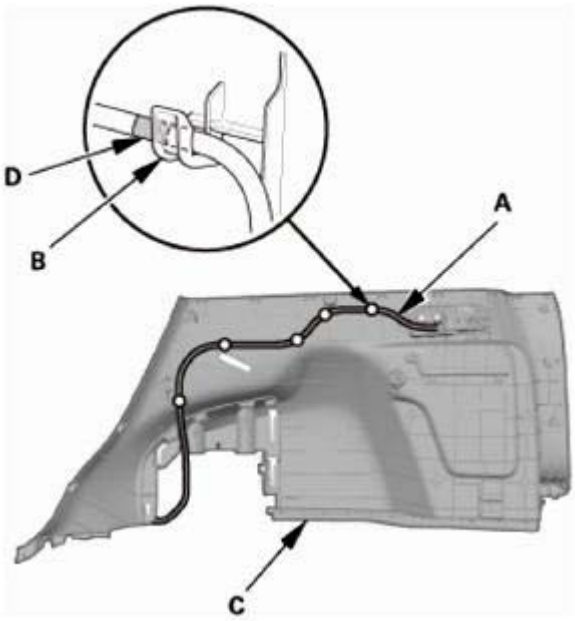

Fig. 100: Identifying Rear Seat Release Cable, Rear Side Trim Panel And Clips
Courtesy of AMERICAN HONDA MOTOR CO., INC.

2. Install the rear seat release lever (A) to the rear side trim panel (B).

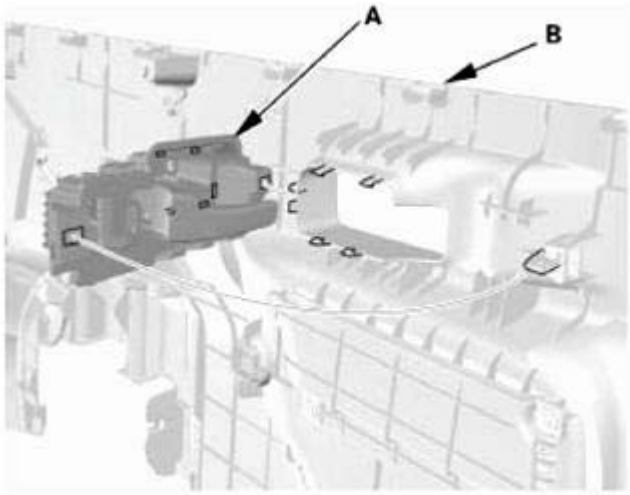

Fig. 101: Identifying Rear Seat Release Lever And Rear Side Panel
Courtesy of AMERICAN HONDA MOTOR CO., INC.

3. Install the rear side trim panel (A). Make sure the hooks (B), the tabs (C), and the clips (D, E) snap into place securely.
4. Install the clips (F, G).

GETtheMANUALS.org

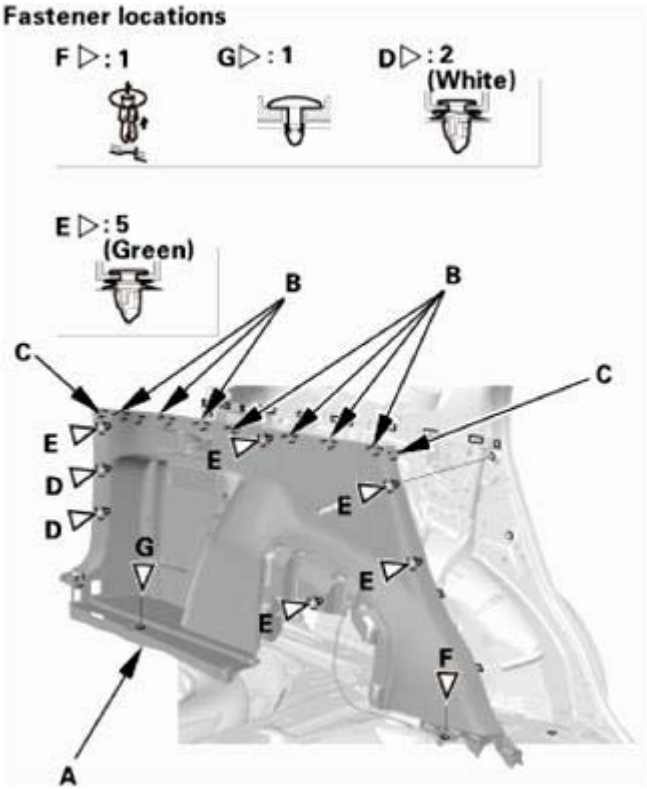

Fig. 102: Identifying Rear Side Trim Panel, Hooks And Clips
Courtesy of AMERICAN HONDA MOTOR CO., INC.

5. Install the tie-down hook (A), then install the bolt (B).

Fig. 103: Identifying Tie-Down Hook And Bolt With Torque Specifications

GETtheMANUALS.org

Courtesy of AMERICAN HONDA MOTOR CO., INC.

6. Install the trunk hook (A).

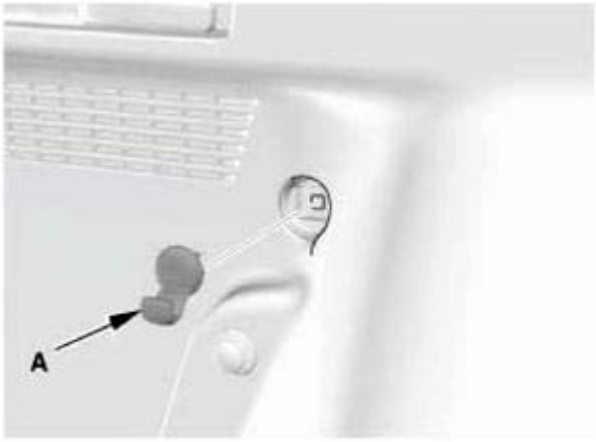

Fig. 104: Identifying Trunk Hook
Courtesy of AMERICAN HONDA MOTOR CO., INC.

7. Install the screws (A), then install the rear seat release lever cap (B). Make sure the upper hook (C) and the lower hooks (D) snap into place securely.

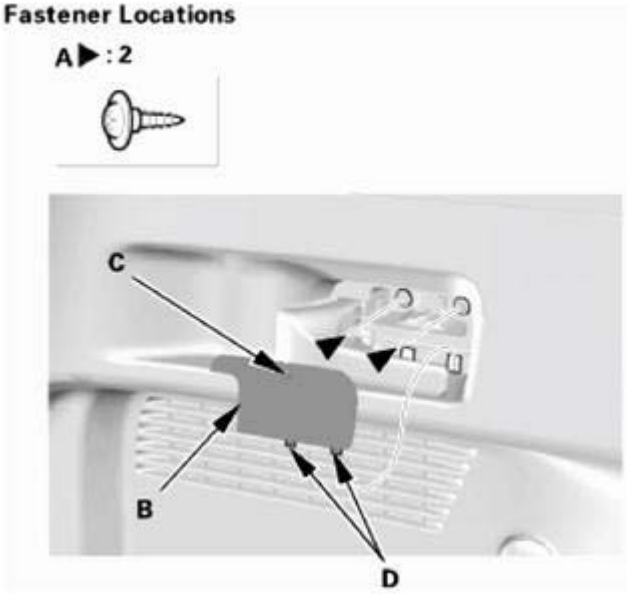

Fig. 105: Identifying Rear Seat Release Lever Cap, Upper, Lower Hook And Screws
Courtesy of AMERICAN HONDA MOTOR CO., INC.

19. Rear Seat Belt Lower Anchor Bolt - Both Sides

NOTE: Repeat this procedure on the opposite side.

GETtheMANUALS.org

1. Install the rear seat belt lower anchor bolt (A).

NOTE: **Before installing the anchor bolt, make sure there are no twists or kinks in the seat belt.**

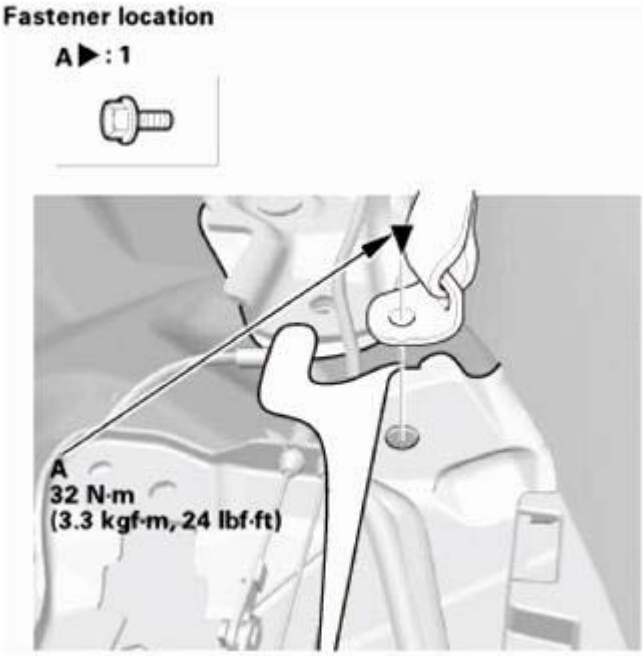

Fig. 106: Identifying Rear Seat Belt Lower Anchor Bolt With Torque Specifications
Courtesy of AMERICAN HONDA MOTOR CO., INC.

20. Rear Seat Cushion Foot Cover - Both Sides (Remove The Outer Left Side Only)
    1. Install the rear seat cushion foot cover (A). Make sure the clips (B) and the hooks (C) snap into place securely.

    Left side

GETtheMANUALS.org

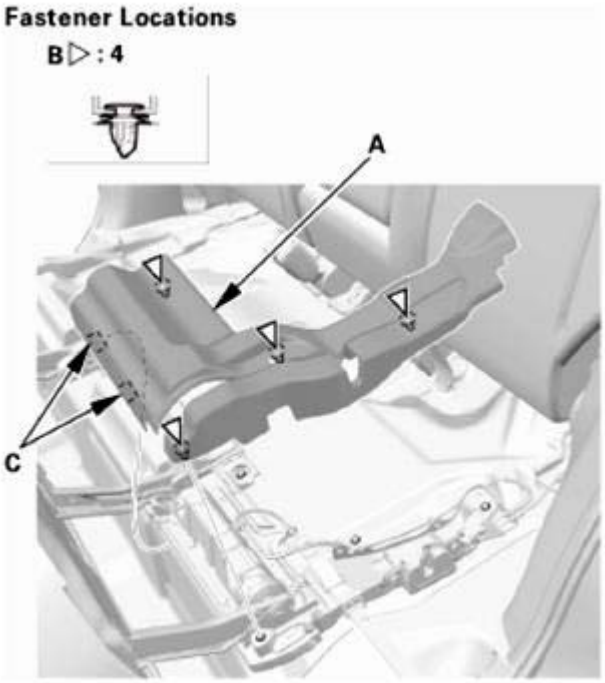

Fig. 107: Identifying Rear Seat Cushion Foot Cover, Hooks And Clips (Left Side)
Courtesy of AMERICAN HONDA MOTOR CO., INC.

Right side

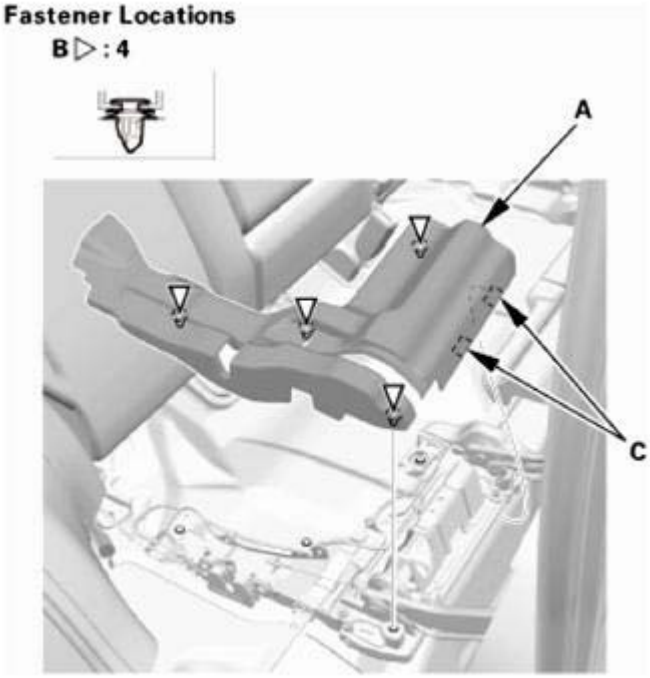

Fig. 108: Identifying Rear Seat Cushion Foot Cover, Hooks And Clips (Right Side)
Courtesy of AMERICAN HONDA MOTOR CO., INC.

GETtheMANUALS.org

21. Rear Carpet Trim - Both Sides
    1. Install the rear carpet trims (A). Make sure the clips (B) and the hooks (C) snap into place securely.

Left side

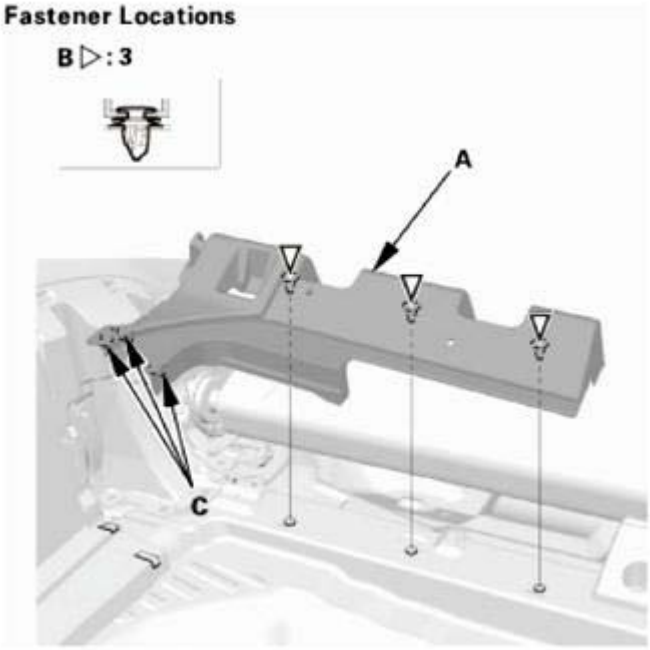

Fig. 109: Identifying Rear Carpet Trims, Hooks And Clips (Left Side)
Courtesy of AMERICAN HONDA MOTOR CO., INC.

Right side

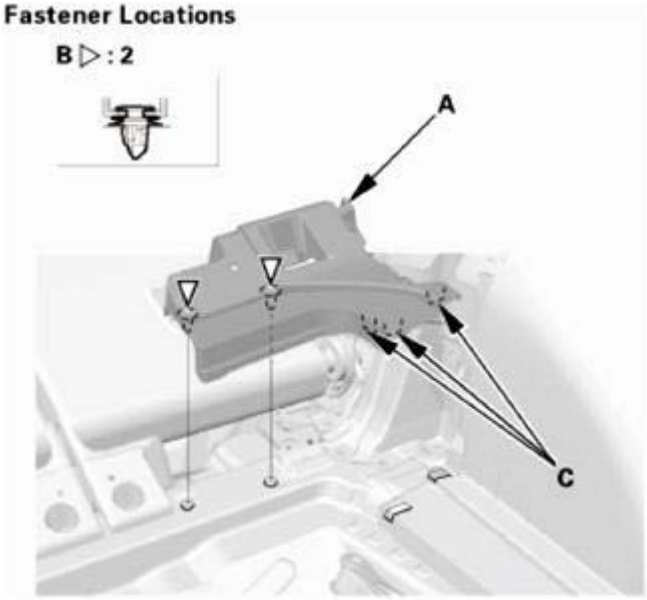

GETtheMANUALS.org

Fig. 110: Identifying Rear Carpet Trims, Hooks And Clips (Right Side)
Courtesy of AMERICAN HONDA MOTOR CO., INC.

2. Install the rear seat-back cover (A). Make sure the clips (B) snap into place securely.

Left side

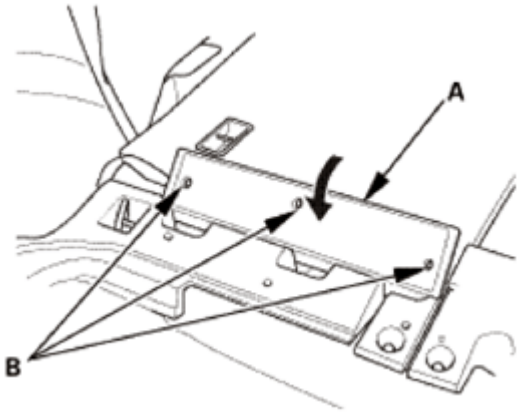

Fig. 111: Installing Rear Seat-Back Cover (Left Side)
Courtesy of AMERICAN HONDA MOTOR CO., INC.

Right side

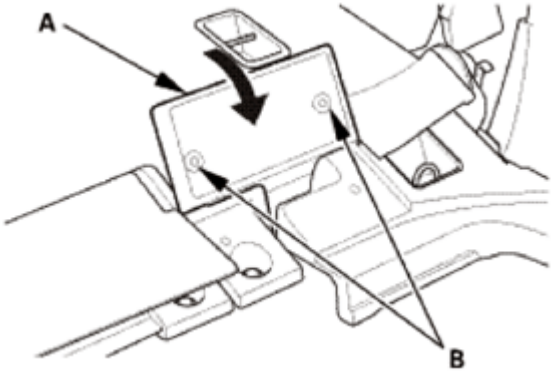

Fig. 112: Installing Rear Seat-Back Cover (Right Side)
Courtesy of AMERICAN HONDA MOTOR CO., INC.

22. Rear Damper Maintenance Cover - Both Sides

NOTE: Repeat this procedure on the opposite side.

1. Fold down the rear seat-back.
2. Install the rear damper maintenance cover (A). Make sure the hooks (B) snap into place securely.

GETtheMANUALS.org

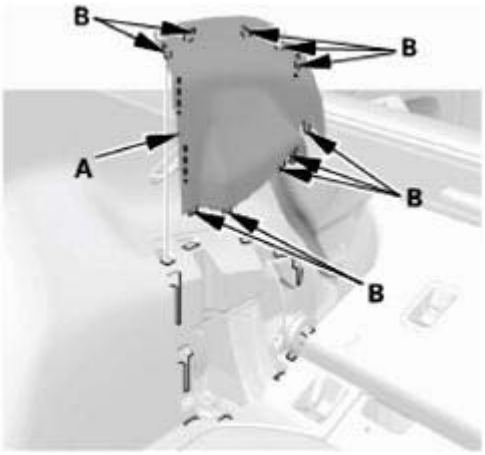

Fig. 113: Identifying Rear Damper Maintenance Cover And Hooks
Courtesy of AMERICAN HONDA MOTOR CO., INC.

23. Rear Trim Panel
    1. Install the rear trim panel (A). Make sure the clips (B, C), the hooks (D), and the tabs (E) snap into place securely.
    2. Install the clips (F).

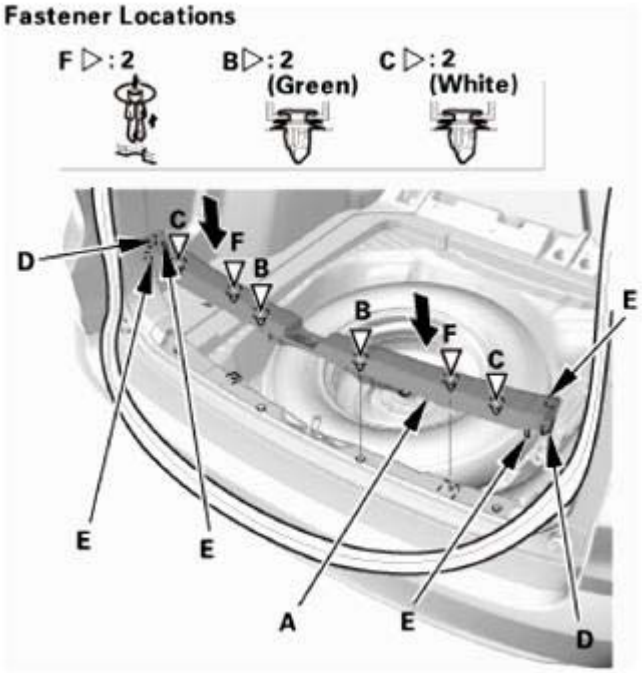

Fig. 114: Installing Rear Trim Panel
Courtesy of AMERICAN HONDA MOTOR CO., INC.

24. Tailgate Weatherstrip As Needed
    1. Locate the alignment mark (A) of the tailgate weatherstrip (B). Align the alignment mark (C) with

GETtheMANUALS.org

the center of the lower area on the tailgate opening, then install the tailgate weatherstrip all the way around.

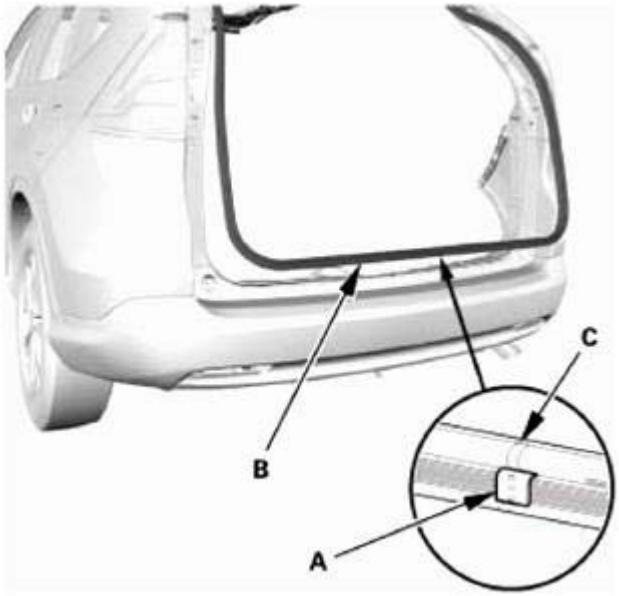

Fig. 115: Identifying Tailgate Weatherstrip And Alignment Marks
Courtesy of AMERICAN HONDA MOTOR CO., INC.

25. Cargo Floor Cover
    1. Install the cargo floor cover (A).

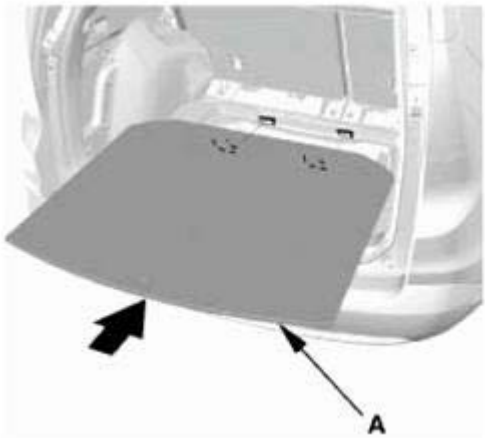

Fig. 116: Installing Cargo Floor Cover
Courtesy of AMERICAN HONDA MOTOR CO., INC.

26. Tonneau Cover (For Some Models)
    1. Install the tonneau cover (A).

GETtheMANUALS.org

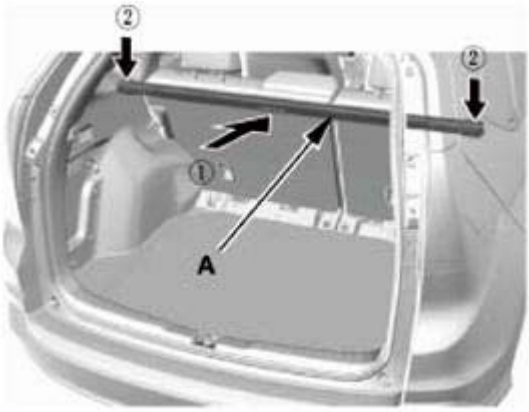

Fig. 117: Installing Tonneau Cover
Courtesy of AMERICAN HONDA MOTOR CO., INC.

27. B-Pillar Upper/Lower Trim - Check
    1. If the side curtain airbag has deployed, replace the B-pillar upper trim (A) and the B-pillar lower trim (B), along with the other parts listed for side curtain airbag deployment.
    2. If the side curtain airbag has not deployed, check the B-pillar upper/lower trim and note the following items:
        - To prevent the side curtain airbags from deploying improperly and possibly causing injury, inspect the trim and replace it with a new one if it has any of the following damage:
            - Any cracks or deformations in the B-pillar upper trim or the upper hooks (C), or any stress-whitened areas in the upper part of the trim
            - Any cracks or deformations in the B-pillar lower trim, or any breakages in the part (D) fitted with the B-pillar upper trim
            - Any cracks or stress-whitening areas in the clip seating surfaces (E)
        - If the clips (F) are damaged or stress-whitened, replace them with new ones.

Trim inspection

GETtheMANUALS.org

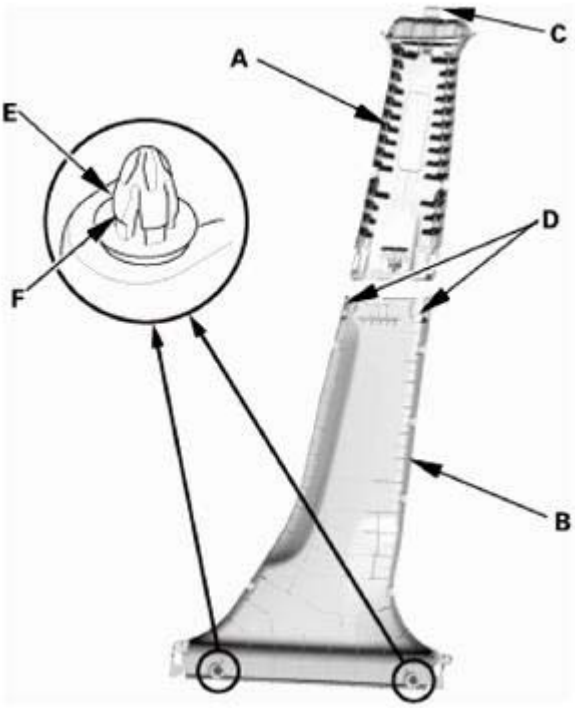

Fig. 118: Identifying B-Pillar Upper/Lower Trim And Related Components
Courtesy of AMERICAN HONDA MOTOR CO., INC.

28. Headliner/Pillar Trim Overlap - Check

Checking and Adjusting the Headliner/Pillar Trim Overlap

To prevent the side curtain airbag from deploying and damaging the pillar trim (A-pillar trim, B-pillar trim, quarter pillar trim), the overlap between the headliner and pillar trim must be 8.0+0/-2.0 mm (0.31+0/-0.08 in). To check the overlap, do this:

1. Install the headliner (A) and the pillar trim (B).

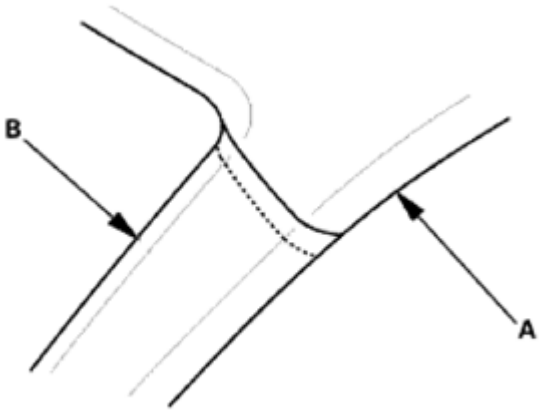

This illustration shows the A-pillar.

GETtheMANUALS.org

Fig. 119: Identifying Headliner And Pillar Trim
Courtesy of AMERICAN HONDA MOTOR CO., INC.

2. Apply masking tape (A) to the headliner (B) to mark the upper edge of the pillar trim (C).

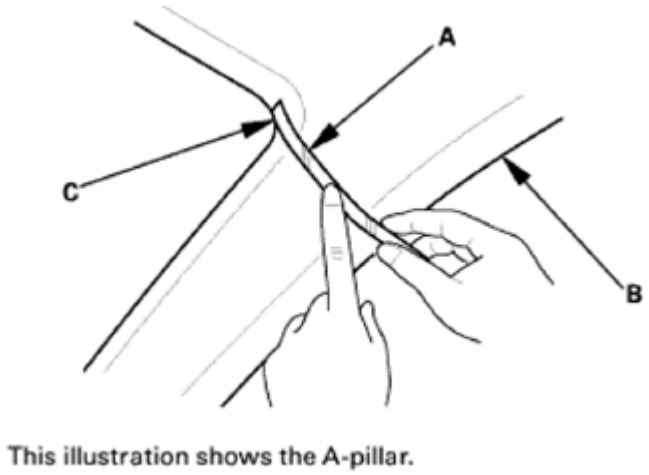

Fig. 120: Applying Mask Tape To Headliner
Courtesy of AMERICAN HONDA MOTOR CO., INC.

3. Remove the pillar trim, and measure the headliner overlap.
   - If the overlap is 8.0+0/-2.0 mm (0.31+0/-0.08 in), remove the tape, and install the pillar trim.
   - If the overlap is more than 8.0 mm (0.31 in), go to step 4.

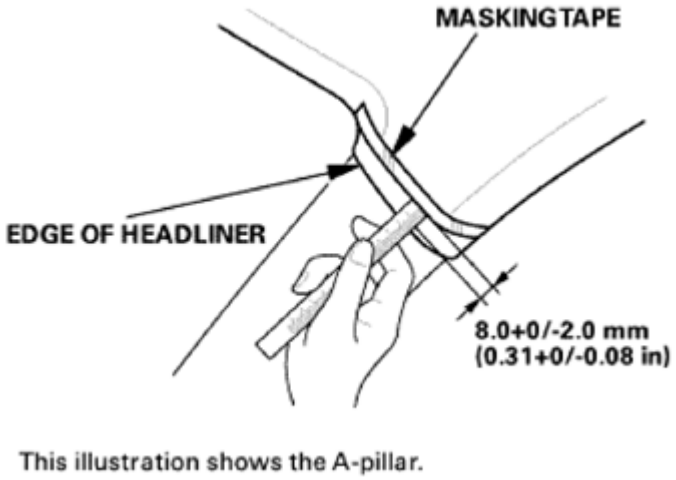

Fig. 121: Measuring Headliner Overlap
Courtesy of AMERICAN HONDA MOTOR CO., INC.

4. Carefully trim the headliner with a utility knife, reducing the overlap to 8.0+0/-2.0 mm (0.31+0/-0.08 in).
5. Remove the tape, and install the pillar trim.

GETtheMANUALS.org

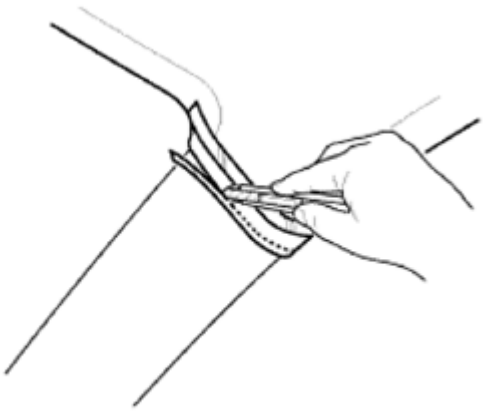

This illustration shows the A-pillar.

Fig. 122: Triming Headliner Using Utility Knife
Courtesy of AMERICAN HONDA MOTOR CO., INC.

29. B-Pillar Upper Trim - Both Sides

NOTE: Repeat this procedure on the opposite side.

1. Install the upper hook (A) of the B-pillar upper trim (B) to the hole in the body. Push the bottom portion of the B-pillar upper trim to install the lower hooks (C). Make sure the hooks snap into place securely.

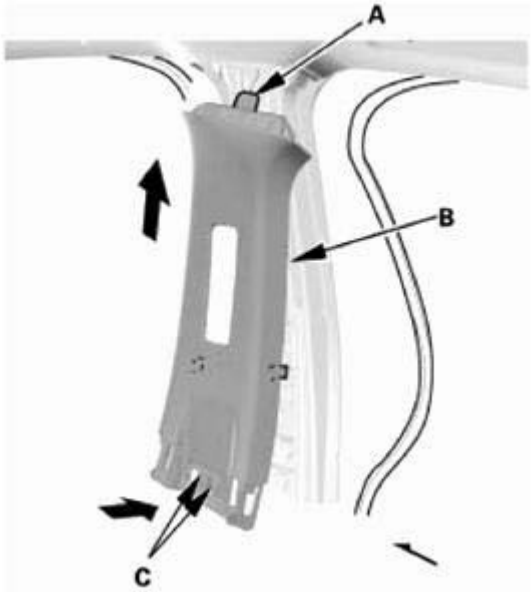

Fig. 123: Installing Upper Hook Of B-Pillar Upper Trim
Courtesy of AMERICAN HONDA MOTOR CO., INC.

30. Front Seat Belt Upper Anchor Bolt - Both Sides

GETtheMANUALS.org

NOTE: **Repeat this procedure on the opposite side.**

1. Install the front seat belt upper anchor bolt, then install the front seat belt shoulder anchor adjuster cap (A).

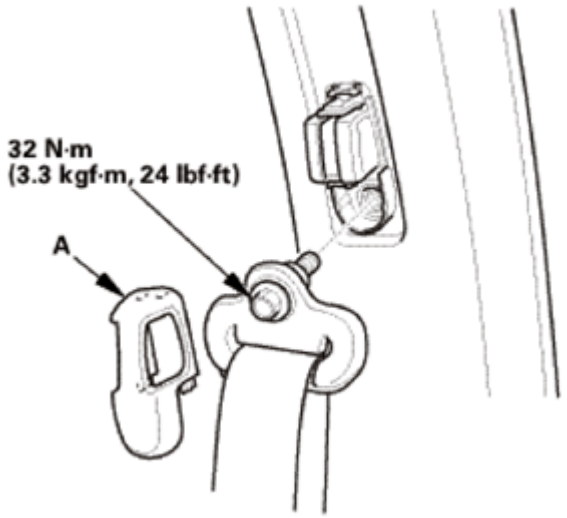

Fig. 124: Identifying Front Seat Belt Shoulder Anchor Adjuster Cap With Torque Specifications
Courtesy of AMERICAN HONDA MOTOR CO., INC.

31. B-Pillar Lower Trim - Both Sides

NOTE: **Repeat this procedure on the opposite side.**

1. Install the B-pillar lower trim (A). Make sure the clips (B) and the hooks (C) snap into place securely.

GETtheMANUALS.org

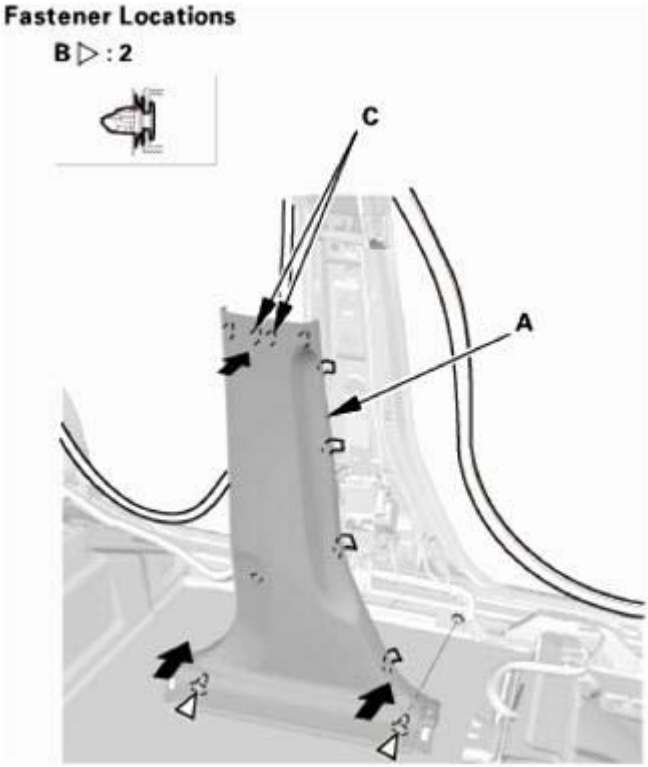

Fig. 125: Installing B-Pillar Lower Trim
Courtesy of AMERICAN HONDA MOTOR CO., INC.

32. Rear Door Opening Seal As Needed - Both Sides

NOTE: Repeat this procedure on the opposite side.

1. Install the rear door opening seal (A). Make sure the seal is installed securely into the hooks (B).

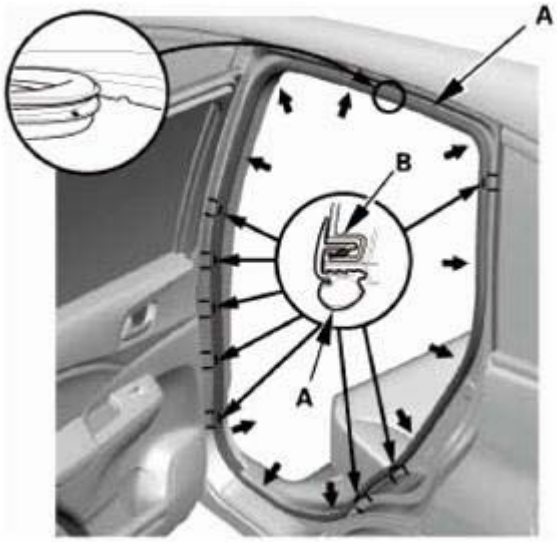

GETtheMANUALS.org

Fig. 126: Installing Rear Door Opening Seal
Courtesy of AMERICAN HONDA MOTOR CO., INC.

33. Rear Door Sill Trim - Both Sides

NOTE: Repeat this procedure on the opposite side.

1. Pull the release strap to fold down the rear seat, then lift-up and latch the rear seat-back in the upright position.
2. Install the rear door inner sill trim (A). Make sure the clips (B, C), the hooks (D), and the tab (E) snap into place securely.

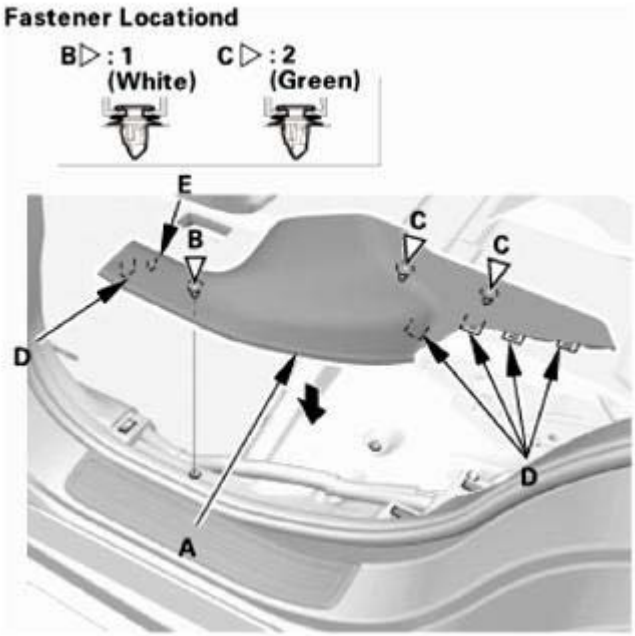

Fig. 127: Installing Rear Door Inner Sill Trim
Courtesy of AMERICAN HONDA MOTOR CO., INC.

34. A-Pillar Trim - Check
    1. If the side curtain airbag has deployed, replace the A-pillar trim (A), along with the other parts listed for side curtain airbag deployment.
    2. If the side curtain airbag has not deployed, check the A-pillar trim and note the following items:
        - To prevent the side curtain airbags from deploying improperly and possibly causing injury, inspect the A-pillar trim and replace it with a new one if it has any of the following damage:
            - Any cracks, deformations, or stress-whitened areas in the A-pillar trim
            - Any cracks or stress-whitening in the clip seating surfaces (B)
        - After checking and adjusting the overlap between the headliner and the A-pillar trim, replace the upper clip (C) with a new one.
        - If the clips (D) are damaged or stress-whitened, replace them with new ones.

GETtheMANUALS.org

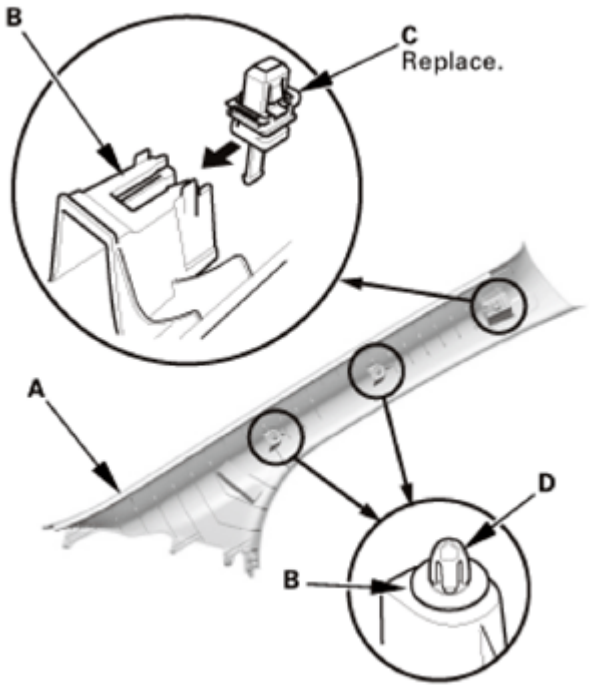

Fig. 128: Identifying Headliner And Pillar Trim
Courtesy of AMERICAN HONDA MOTOR CO., INC.

35. Headliner/Pillar Trim Overlap - Check

Checking and Adjusting the Headliner/Pillar Trim Overlap

To prevent the side curtain airbag from deploying and damaging the pillar trim (A-pillar trim, B-pillar trim, quarter pillar trim), the overlap between the headliner and pillar trim must be 8.0+0/-2.0 mm (0.31+0/-0.08 in). To check the overlap, do this:

1. Install the headliner (A) and the pillar trim (B).

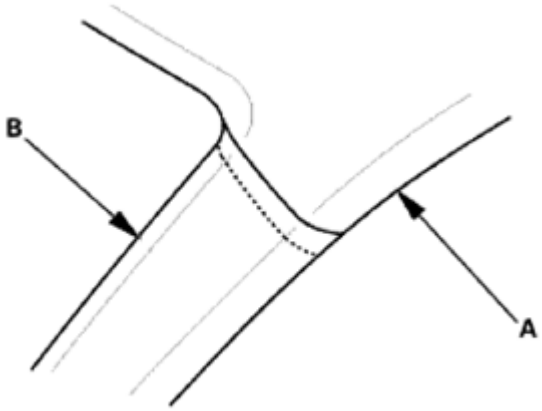

This illustration shows the A-pillar.

GETtheMANUALS.org

Fig. 129: Identifying Headliner And Pillar Trim
Courtesy of AMERICAN HONDA MOTOR CO., INC.

2. Apply masking tape (A) to the headliner (B) to mark the upper edge of the pillar trim (C).

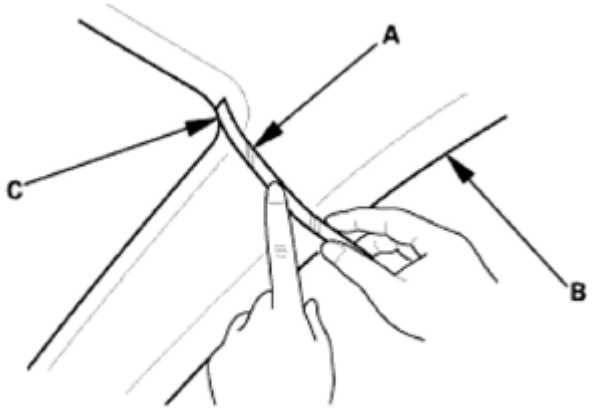

This illustration shows the A-pillar.

Fig. 130: Applying Mask Tape To Headliner
Courtesy of AMERICAN HONDA MOTOR CO., INC.

3. Remove the pillar trim, and measure the headliner overlap.
   - If the overlap is 8.0+0/-2.0 mm (0.31+0/-0.08 in), remove the tape, and install the pillar trim.
   - If the overlap is more than 8.0 mm (0.31 in), go to step 4.

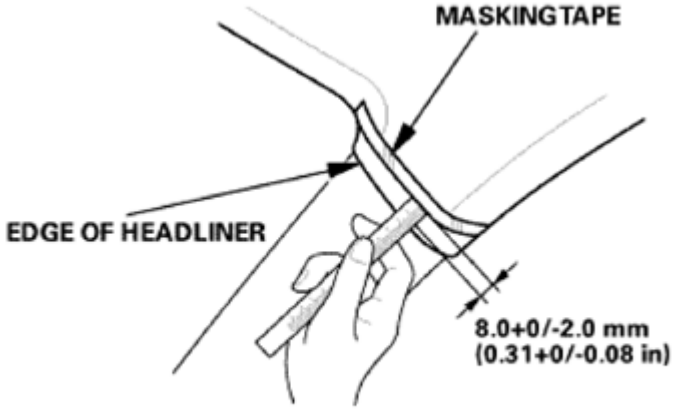

This illustration shows the A-pillar.

Fig. 131: Measuring Headliner Overlap
Courtesy of AMERICAN HONDA MOTOR CO., INC.

4. Carefully trim the headliner with a utility knife, reducing the overlap to 8.0+0/-2.0 mm (0.31+0/-0.08 in).
5. Remove the tape, and install the pillar trim.

GETtheMANUALS.org

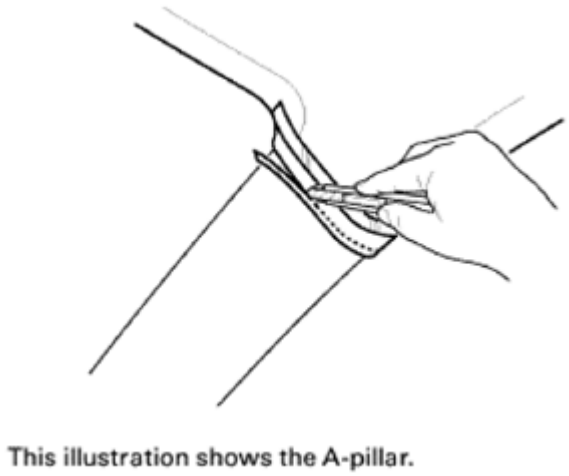

Fig. 132: Triming Headliner Using Utility Knife
Courtesy of AMERICAN HONDA MOTOR CO., INC.

36. A-Pillar Trim - Both Sides

NOTE: Repeat this procedure on the opposite side.

1. Carefully install a new upper clip (A) to the A-pillar trim (B).

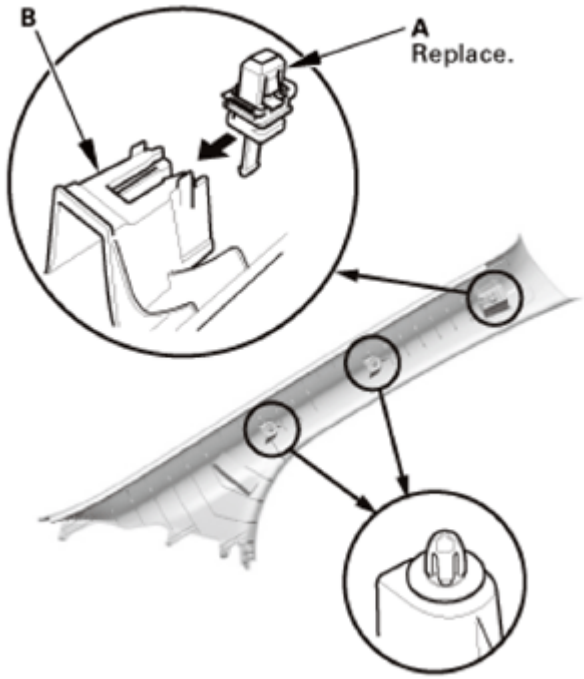

Fig. 133: Installing Upper Clip To A-Pillar Trim
Courtesy of AMERICAN HONDA MOTOR CO., INC.

2. Insert the bottom portion of the A-pillar trim (A) into the dashboard (B). Place the trim over the A-

GETtheMANUALS.org

pillar (C), and fit its upper clip (D) and the other clips (E) into the holes (F) in the A-pillar, then lightly push the trim into place.

NOTE:

- **Make sure the side curtain airbag is not tucked under the clips or the trim ribs.**
- **Do not push too hard on the A-pillar trim. If you push too hard, the clip will be damaged, and it will not hold the trim properly.**
- **Gently tug on the A-pillar trim to verify that all clips are securely fastened.**

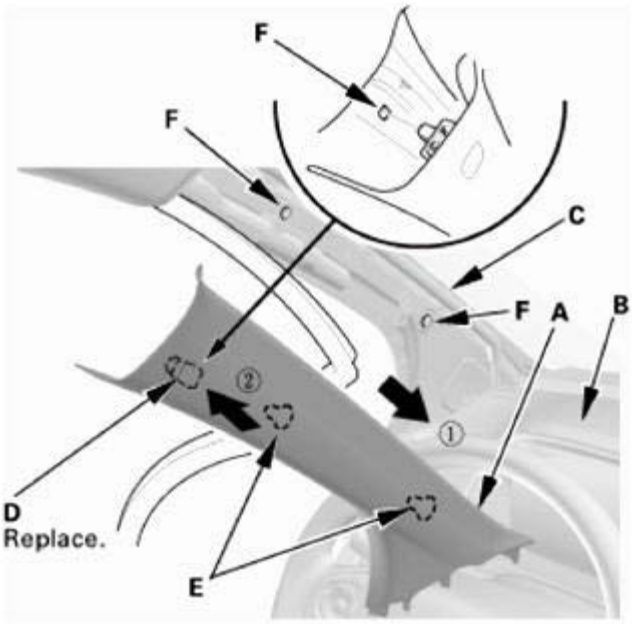

Fig. 134: Inserting Bottom Portion Of A-Pillar Trim Into Dashboard
Courtesy of AMERICAN HONDA MOTOR CO., INC.

37. Front Door Opening Seal As Needed - Both Sides

NOTE: **Repeat this procedure on the opposite side.**

1. Install the front door opening seal (A). Make sure the seal is installed securely into the hooks (B).

GETtheMANUALS.org

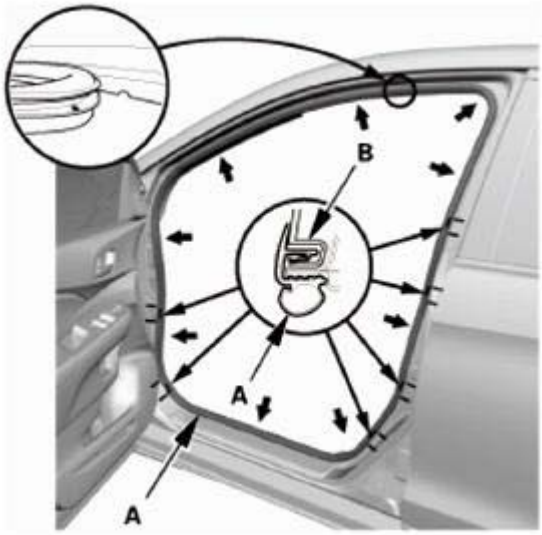

Fig. 135: Installing Front Door Opening Seal
Courtesy of AMERICAN HONDA MOTOR CO., INC.

38. Front Door Sill Trim - Both Sides

NOTE: Repeat this procedure on the opposite side.

1. Install the front door inner sill trim (A). Make sure the clips (B), the hooks (C), and the tabs (D) snap into place securely.

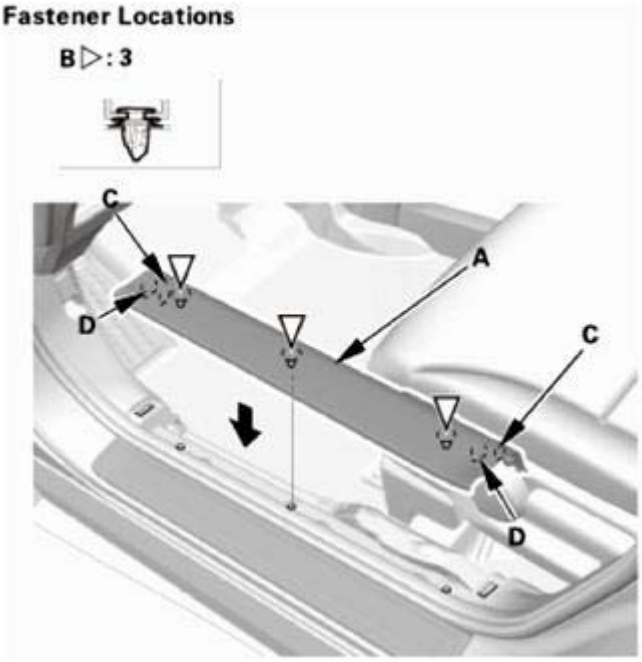

Fig. 136: Identifying Front Door Sill Trim, Hooks, Tabs And Clips
Courtesy of AMERICAN HONDA MOTOR CO., INC.

GETtheMANUALS.org

39. Battery Terminal (SRS) - Reconnection

NOTE: If the battery performance is abnormal, test the battery.

1. Clean the battery terminals.
2. Connect the positive cable (A) to the battery.

NOTE: Always connect the positive side first.

3. Connect the negative cable (B) to the battery.
4. Apply multipurpose grease to the terminals to prevent corrosion.

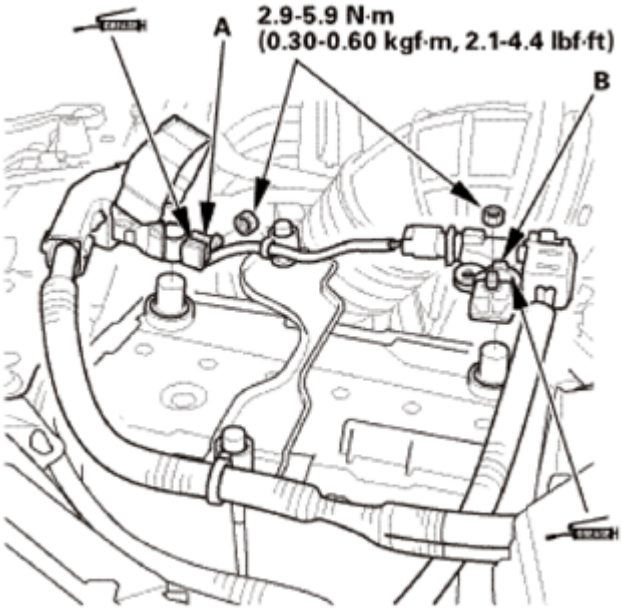

Fig. 137: Identifying Battery Positive And Negative Cable With Torque Specifications
Courtesy of AMERICAN HONDA MOTOR CO., INC.

MOONROOF ELECTRICAL COMPONENT LOCATION INDEX

GETtheMANUALS.org

Fig. 138: Moonroof Electrical Components Location
Courtesy of AMERICAN HONDA MOTOR CO., INC.

MOONROOF CONTROL UNIT/MOTOR	**REMOVAL AND INSTALLATION**
	RESETTING THE MOONROOF CONTROL UNIT
	SYMPTOM TROUBLESHOOTING
	INPUT TEST
MOONROOF SWITCH	**REMOVAL, INSTALLATION, AND TEST**
POWER WINDOW MASTER SWITCH	**INPUT TEST**
	REMOVAL AND INSTALLATION

MOONROOF FRAME/DRAIN CHANNEL SLIDER AND CABLE ASSEMBLY REMOVAL AND INSTALLATION

SPECIAL TOOL DESCRIPTION

Image	Description/Tool Number

GETtheMANUALS.org

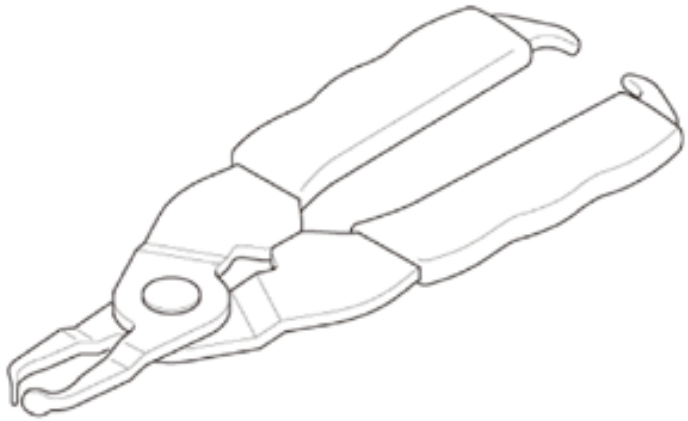	Push Pin/Grab Rail Cap Pliers 07AAC-001A100

REMOVAL

SRS components are located in this area. Review the **SRS COMPONENT LOCATIONS** and the **PRECAUTIONS AND PROCEDURES** before doing repairs or service.

1. Battery Terminal (SRS) - Disconnection
    1. Make sure the ignition switch is in LOCK (0).
    2. Disconnect and isolate the negative cable (A) from the battery.

    NOTE: Always disconnect the negative side first.

    3. Disconnect the positive cable (B) from the battery.
    4. Wait at least 3 minutes before starting work.

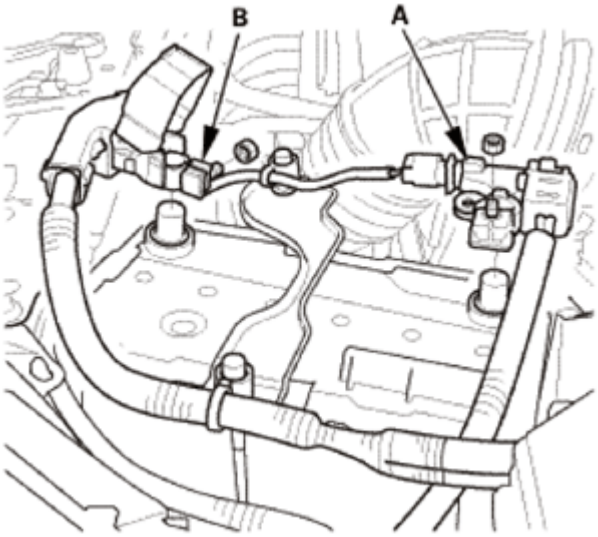

Fig. 139: Identifying Battery Positive And Negative Cable
Courtesy of AMERICAN HONDA MOTOR CO., INC.

GETtheMANUALS.org

2. Front Door Sill Trim - Both Sides

NOTE: Repeat on the opposite side.

1. Detach the hooks (A) and the tabs (B) from the kick panel (C) and the B-pillar lower trim (D), and pull up the front door inner sill trim (E) by hand to detach the clips (F), then remove the trim.

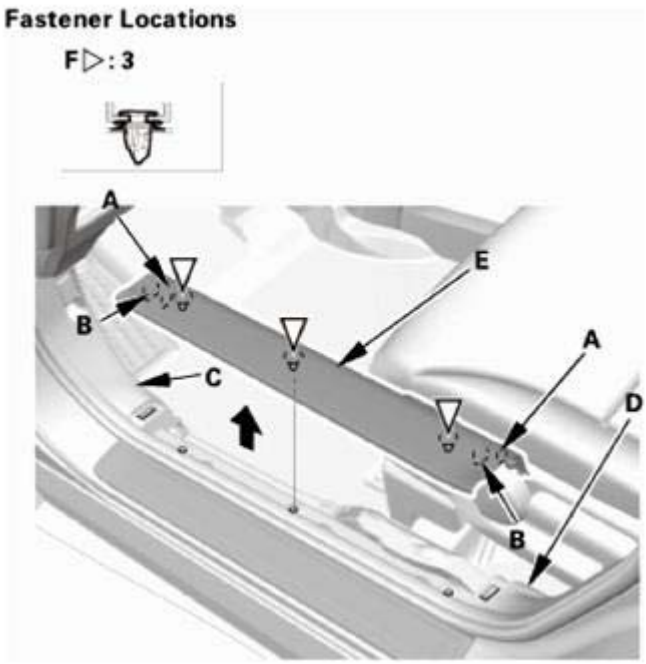

Fig. 140: Identifying B-Pillar Lower Trim, Front Door Inner Sill Trim, Kick Panel, Tabs, Hooks And Clips
Courtesy of AMERICAN HONDA MOTOR CO., INC.

3. Front Door Opening Seal As Needed - Both Sides

NOTE: Repeat on the opposite side.

1. Pull out the front door opening seal (A) from the trim hooks (B) around the front door opening flange, then detach the seal as needed.

GETtheMANUALS.org

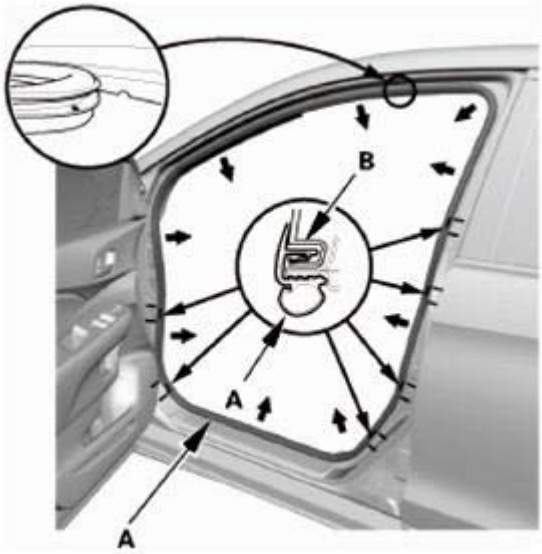

Fig. 141: Pulling Front Door Opening Seal From Trim Hooks
Courtesy of AMERICAN HONDA MOTOR CO., INC.

4. A-Pillar Trim - Both Sides

NOTE: Repeat this procedure on the opposite side.

1. Pull out the A-pillar trim (A) by hand to release the clips (B, C).

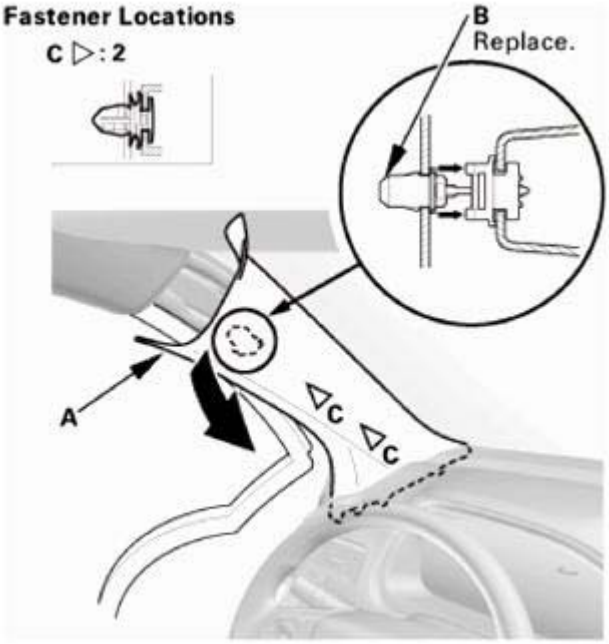

Fig. 142: Pulling A-Pillar Trim
Courtesy of AMERICAN HONDA MOTOR CO., INC.

GETtheMANUALS.org

2. Put a shop towel (A) in the opening between the A-pillar trim (B) and the dashboard to prevent dropping the A-pillar clips.

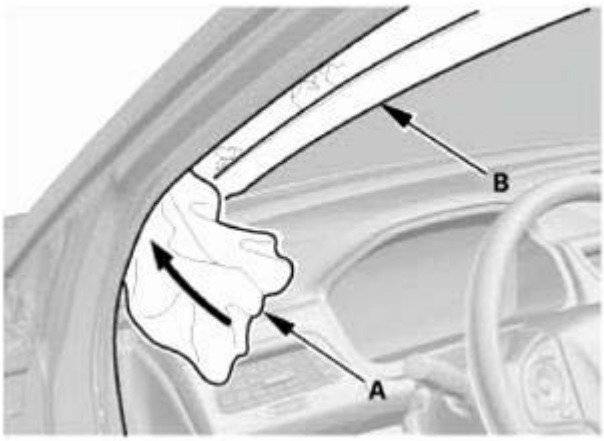

Fig. 143: Placing Shop Towel In Opening Between A-Pillar Trim And Dashboard
Courtesy of AMERICAN HONDA MOTOR CO., INC.

3. Pull out and up on the A-pillar trim (A) to release it from the dashboard.

NOTE: The upper clip will stay in the body.

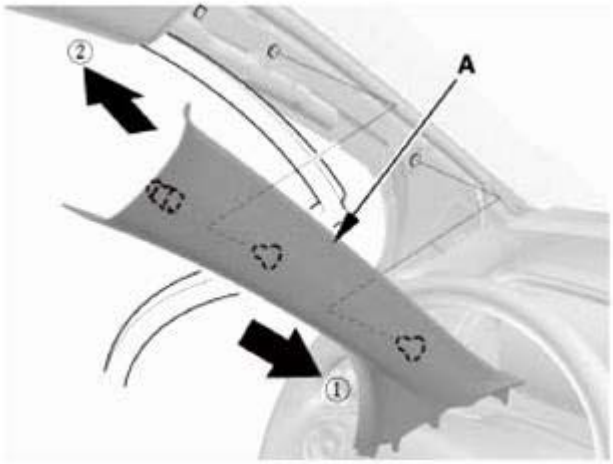

Fig. 144: Releasing A-Pillar Trim From Dashboard
Courtesy of AMERICAN HONDA MOTOR CO., INC.

4. Remove the upper clip (A) from the body.

GETtheMANUALS.org

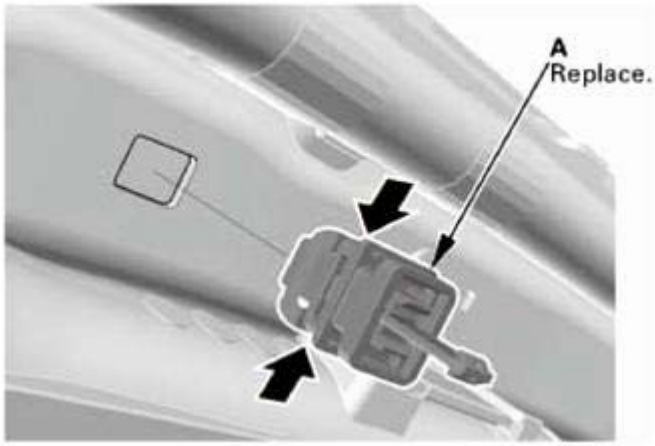

Fig. 145: Removing A-Pillar Trim Upper Clip
Courtesy of AMERICAN HONDA MOTOR CO., INC.

5. Rear Door Sill Trim - Both Sides

NOTE: Repeat this procedure on the opposite side.

1. Pull the release strap to fold down the rear seat, then lift-up and latch the rear seat-back in the upright position.
2. Detach the hooks (A) and the tab (B) from the B-pillar lower trim (C) and the rear side trim panel (D), and pull up the rear door inner sill trim (E) by hand to detach the clips (F, G), then remove the trim.

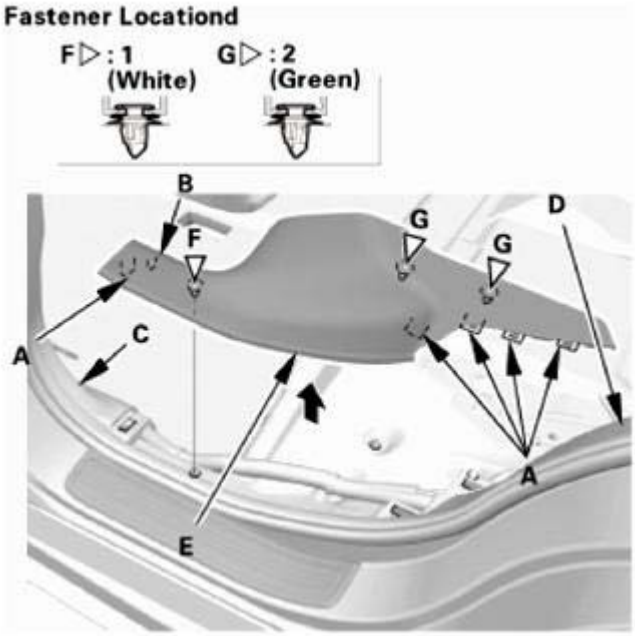

Fig. 146: Removing Rear Door Inner Sill Trim
Courtesy of AMERICAN HONDA MOTOR CO., INC.

GETtheMANUALS.org

6. Rear Door Opening Seal As Needed - Both Sides

NOTE: Repeat this procedure on the opposite side.

1. Pull out the rear door opening seal (A) from the trim hooks (B) around the rear door opening flange, then detach the seal as needed.

Fig. 147: Pulling Rear Door Opening Seal From Trim Hooks
Courtesy of AMERICAN HONDA MOTOR CO., INC.

7. B-Pillar Lower Trim - Both Sides

NOTE: Repeat this procedure on the opposite side.

1. Slide the front seat forward fully.
2. Pull back the bottom portion of the B-pillar lower trim (A) by hand to detach the clips (B).
3. Pull back the upper portion of the B-pillar lower trim to detach the upper hooks (C), then remove the B-pillar lower trim.

GETtheMANUALS.org

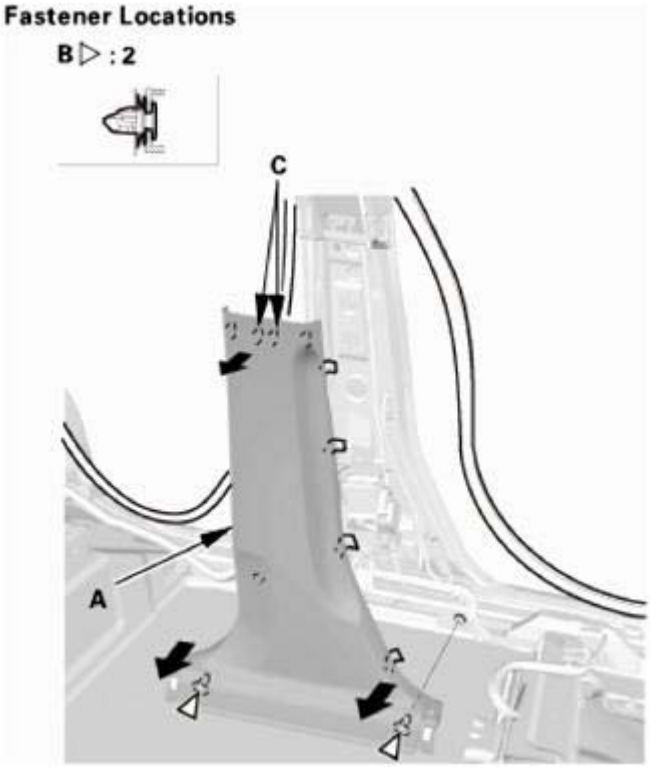

Fig. 148: Removing B-Pillar Lower Trim
Courtesy of AMERICAN HONDA MOTOR CO., INC.

8. Front Seat Belt Upper Anchor Bolt - Both Sides

NOTE: Repeat this procedure on the opposite side.

1. Remove the front seat belt shoulder anchor adjuster cap (A), then remove the front seat belt upper anchor bolt.

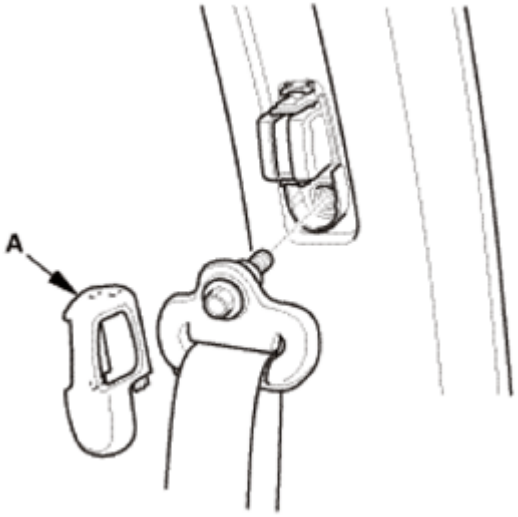

GETtheMANUALS.org

Fig. 149: Identifying Front Seat Belt Shoulder Anchor Adjuster Cap
Courtesy of AMERICAN HONDA MOTOR CO., INC.

9. B-Pillar Upper Trim - Both Sides

NOTE: Repeat this procedure on the opposite side.

1. Pull back the bottom portion of the B-pillar upper trim (A) by hand to detach the hooks (B). Pull down the trim to release the upper hook (C) from the hole (D) in the body, then remove the B-pillar upper trim.

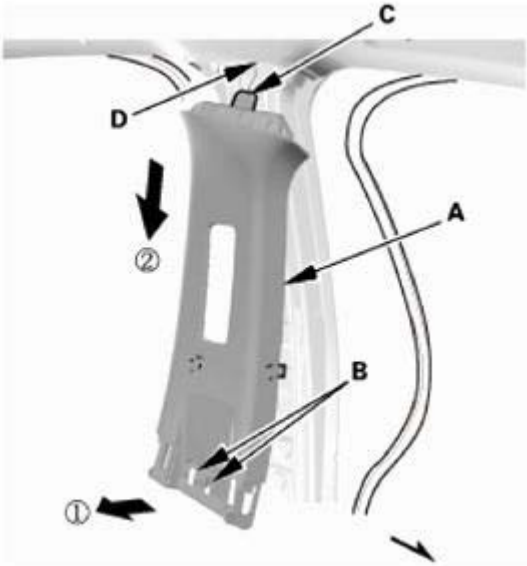

Fig. 150: Removing B-Pillar Upper Trim
Courtesy of AMERICAN HONDA MOTOR CO., INC.

10. Tonneau Cover (For Some Models)
    1. Remove the tonneau cover (A).

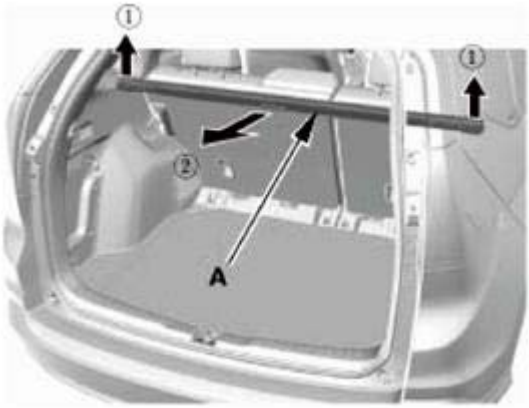

Fig. 151: Removing Tonneau Cover

GETtheMANUALS.org

Courtesy of AMERICAN HONDA MOTOR CO., INC.

11. Cargo Floor Cover
    1. Remove the cargo floor cover (A).

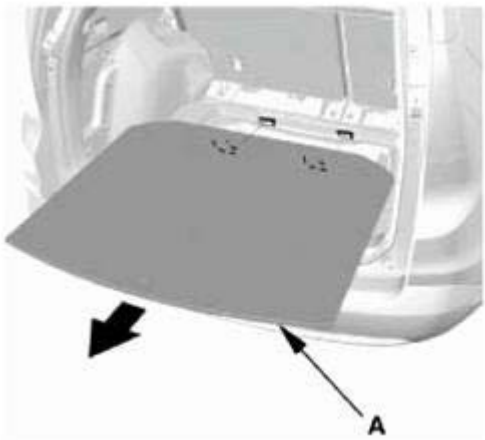

Fig. 152: Removing Cargo Floor Cover
Courtesy of AMERICAN HONDA MOTOR CO., INC.

12. Tailgate Weatherstrip As Needed
    1. Detach the tailgate weatherstrip (A) as needed.

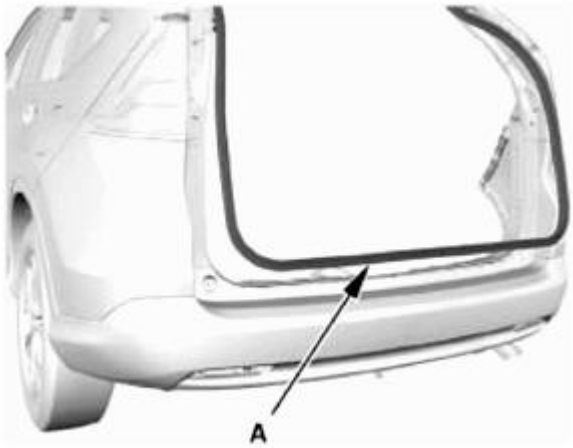

Fig. 153: Identifying Tailgate Weatherstrip
Courtesy of AMERICAN HONDA MOTOR CO., INC.

13. Rear Trim Panel
    1. Remove the clips (A).
    2. Detach the hooks (B) and the tabs (C) from the rear side trim panels (D), and pull up the rear trim panel (E) by hand to detach the clips (F, G), then remove the rear trim panel.

GETtheMANUALS.org

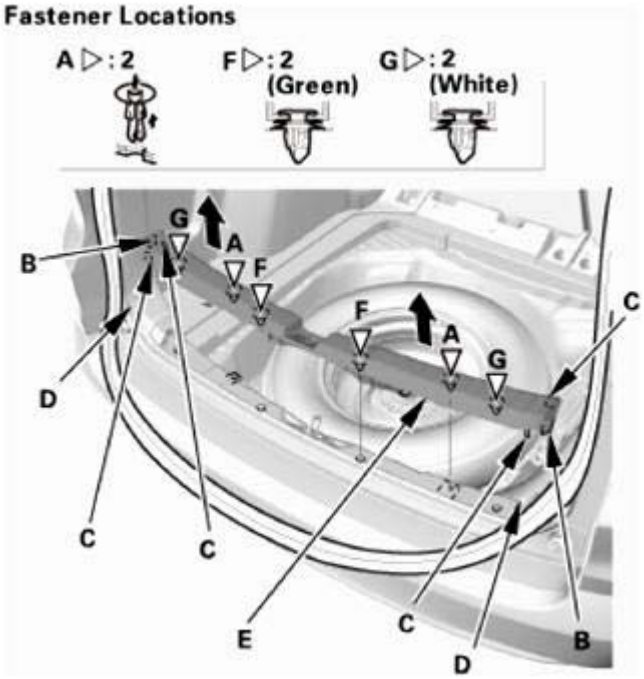

Fig. 154: Removing Rear Trim Panel
Courtesy of AMERICAN HONDA MOTOR CO., INC.

14. Rear Damper Maintenance Cover - Both Sides

NOTE: Repeat this procedure on the opposite side.

1. Fold down the rear seat-back.
2. Pull up the rear damper maintenance cover (A) by hand to detach the hooks (B), then remove the rear damper maintenance cover.

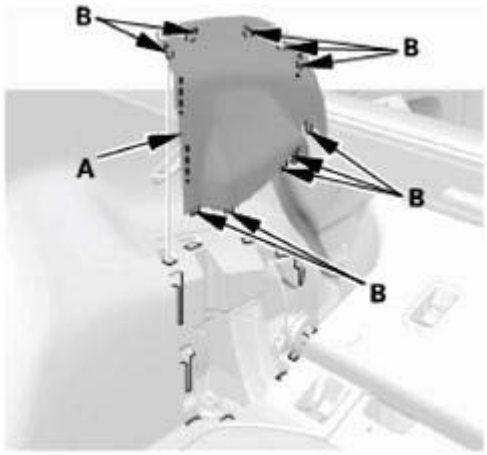

Fig. 155: Identifying Rear Damper Maintenance Cover And Hooks
Courtesy of AMERICAN HONDA MOTOR CO., INC.

GETtheMANUALS.org

15. Rear Carpet Trim - Both Sides
    1. Detach the clips (A), then tuck up the rear seat-back cover (B).

       Left side

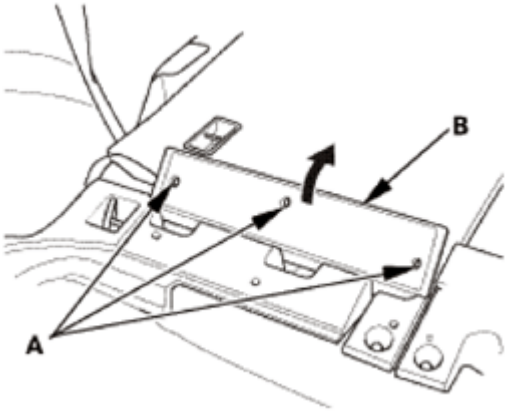

Fig. 156: Removing Rear Seat-Back Cover (Left Side)
Courtesy of AMERICAN HONDA MOTOR CO., INC.

       Right side

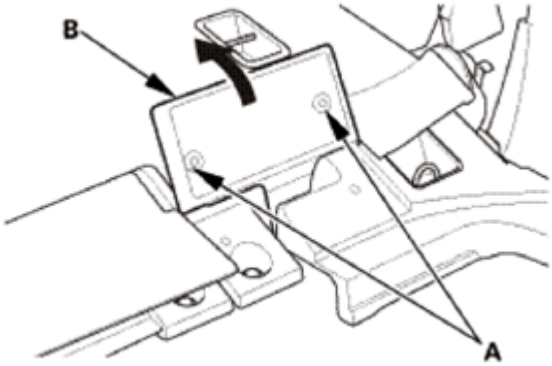

Fig. 157: Removing Rear Seat-Back Cover (Right Side)
Courtesy of AMERICAN HONDA MOTOR CO., INC.

    2. Detach the hooks (A) from the rear side trim panel (B), and pull up the rear carpet trims (C) by hand to detach the clips (D), then remove the rear carpet trims.

       Left side

GETtheMANUALS.org

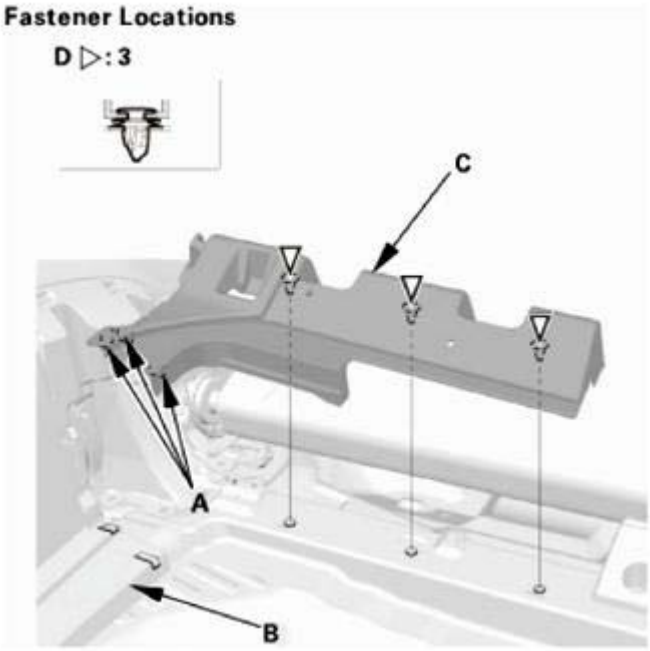

Fig. 158: Identifying Rear Side Trim Panel, Rear Carpet Trims, Hooks And Clips (Left Side)
Courtesy of AMERICAN HONDA MOTOR CO., INC.

Right side

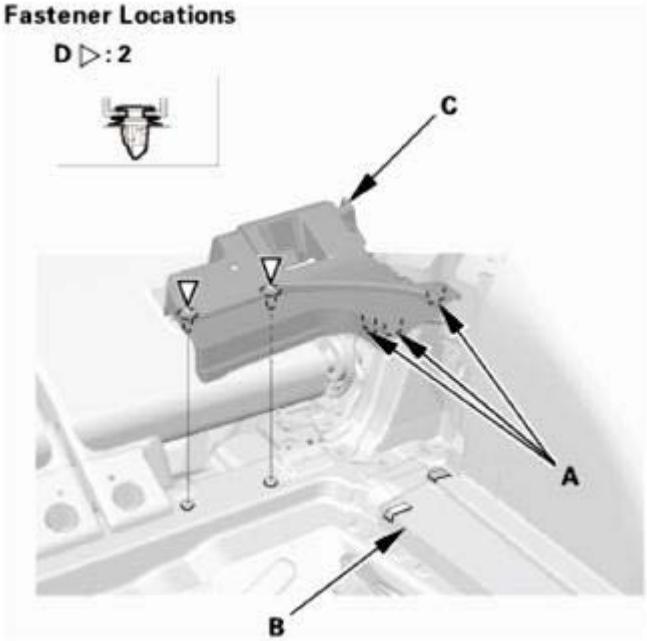

Fig. 159: Identifying Rear Side Trim Panel, Rear Carpet Trims, Hooks And Clips (Right Side)
Courtesy of AMERICAN HONDA MOTOR CO., INC.

16. Rear Seat Cushion Foot Cover - Both Sides (Remove The Outer Left Side Only)

GETtheMANUALS.org

1. Pull up the rear seat cushion foot cover (A) by hand to detach the clips (B).
2. Detach the hooks (C), then remove the rear seat cushion foot cover.

Left side

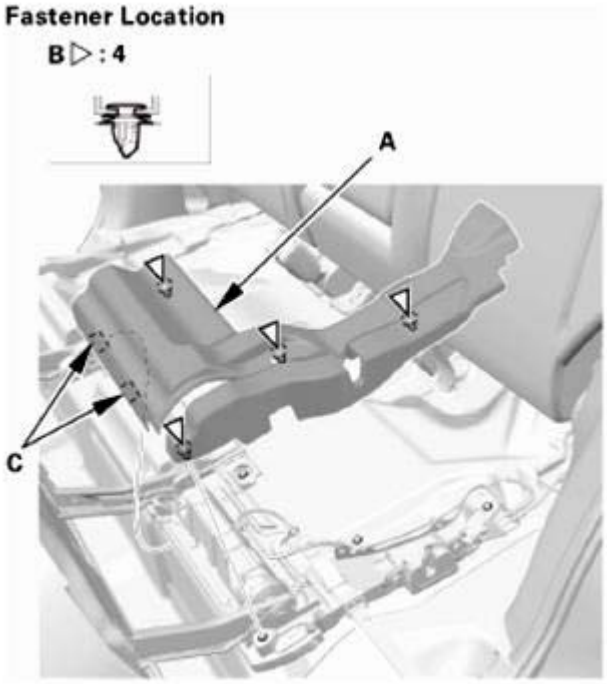

Fig. 160: Identifying Rear Seat Cushion Foot Cover And Clips (Left Side)
Courtesy of AMERICAN HONDA MOTOR CO., INC.

Right side

GETtheMANUALS.org

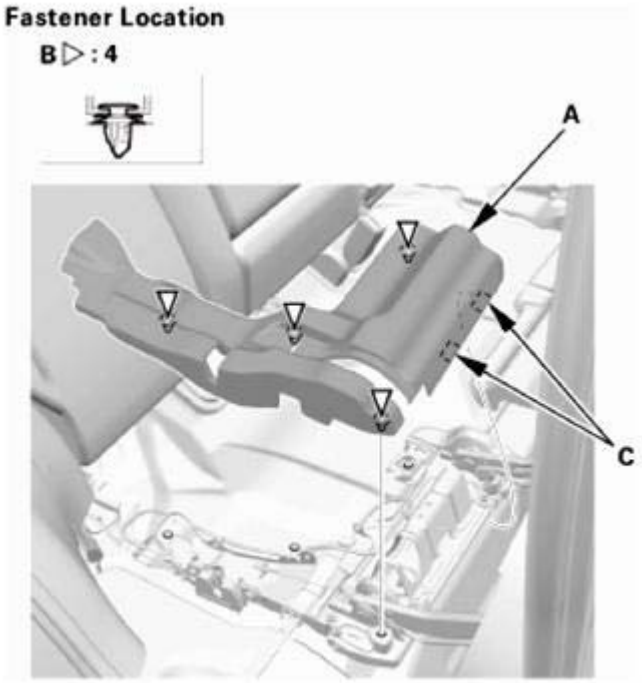

Fig. 161: Identifying Rear Seat Cushion Foot Cover And Clips (Right Side)
Courtesy of AMERICAN HONDA MOTOR CO., INC.

17. Rear Seat Belt Lower Anchor Bolt - Both Sides

NOTE: Repeat this procedure on the opposite side.

1. Remove the rear seat belt lower anchor bolt (A).

GETtheMANUALS.org

Fig. 162: Identifying Rear Seat Belt Lower Anchor Bolt
Courtesy of AMERICAN HONDA MOTOR CO., INC.

18. Rear Side Trim Panel - Both Sides

NOTE: Repeat this procedure on the opposite side.

1. Carefully pry out on the upper hook (A) in the rear seat release lever cap (B) with the appropriate trim tool, then pull back the rear seat release lever cap to remove it.
2. Remove the screws (C).

GETtheMANUALS.org

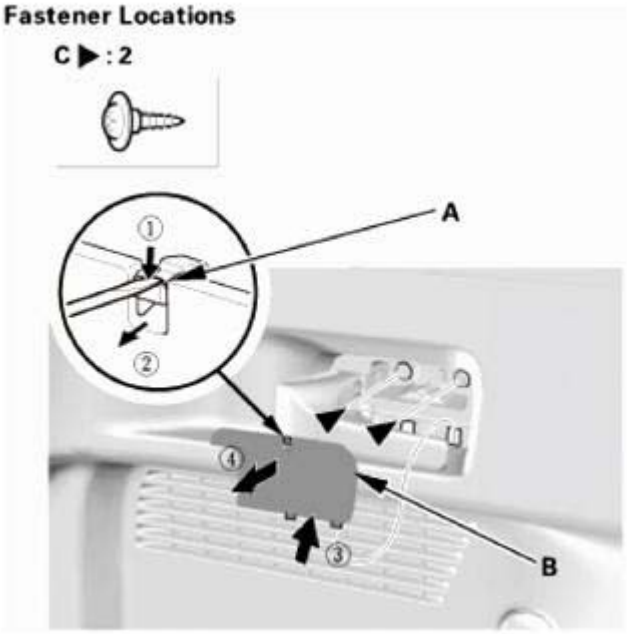

Fig. 163: Removing Rear Side Trim Panel
Courtesy of AMERICAN HONDA MOTOR CO., INC.

3. Push in the center pin (A), then remove the trunk hook (B).

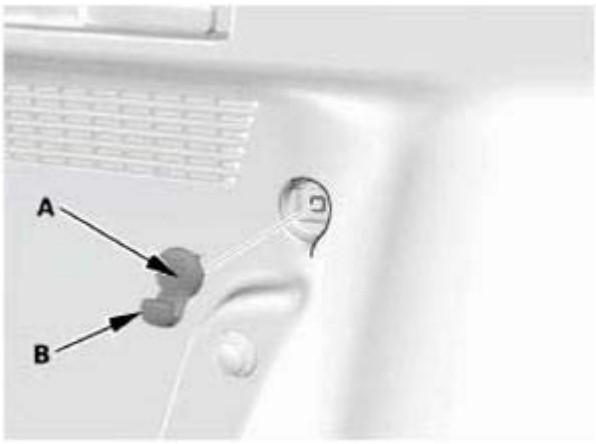

Fig. 164: Identifying Trunk Hook And Center Pin On Rear Side Trim Panel
Courtesy of AMERICAN HONDA MOTOR CO., INC.

4. Remove the bolt (A), then remove the tie-down hook (B).

GETtheMANUALS.org

Fig. 165: Identifying Tie-Down Hook And Bolt
Courtesy of AMERICAN HONDA MOTOR CO., INC.

5. Detach the clips (A, B).
6. Detach the hooks (C) and the tabs (D) from the quarter pillar trim (E), and pull out the rear side trim panel (F) by hand to detach the clips (G, H).

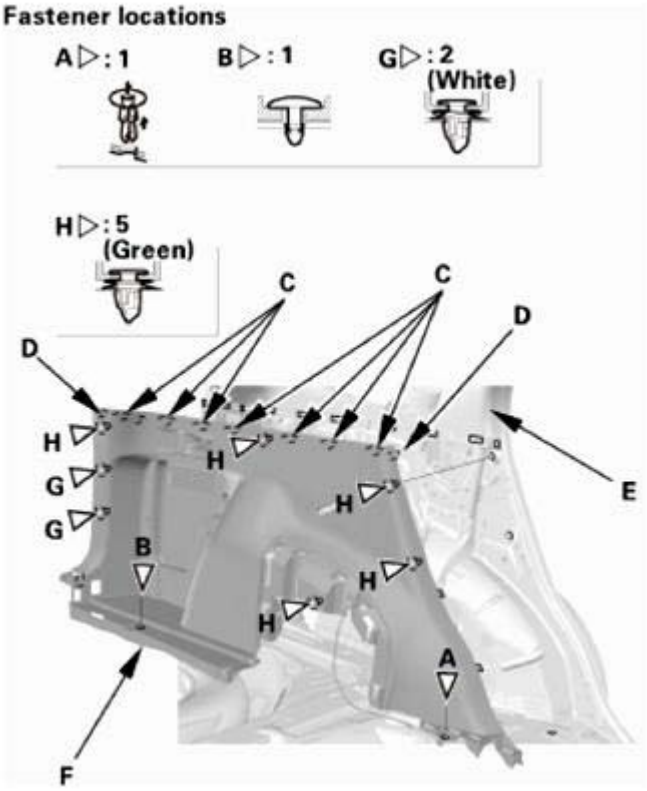

GETtheMANUALS.org

Fig. 166: Identifying Quarter Pillar Trim, Rear Side Trim Panel, Hooks, Tabs And Clips
Courtesy of AMERICAN HONDA MOTOR CO., INC.

7. Remove the rear seat release lever (A) from the rear side trim panel (B).

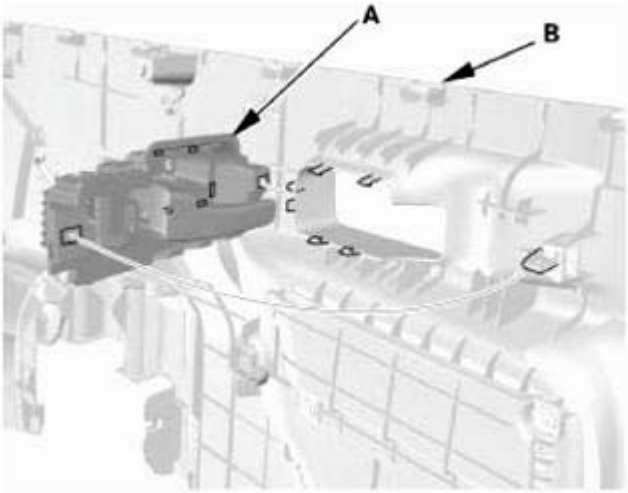

Fig. 167: Identifying Rear Seat Release Lever And Rear Side Trim Panel
Courtesy of AMERICAN HONDA MOTOR CO., INC.

8. Detach the rear seat release cable (A) from the clips of the rear side trim panel (B), then remove the rear side trim panel.

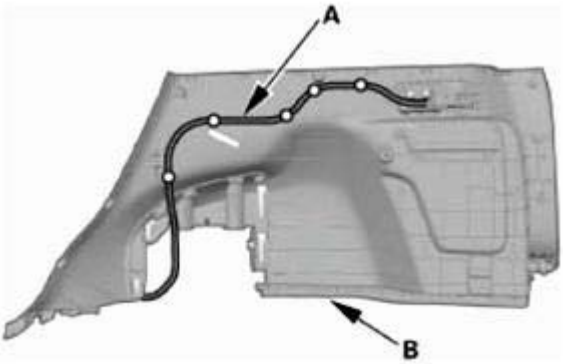

Fig. 168: Identifying Rear Seat Release Cable And Side Trim Panel
Courtesy of AMERICAN HONDA MOTOR CO., INC.

19. Quarter Pillar Trim - Both Sides

NOTE: Repeat this procedure on the opposite side.

1. Pull out the quarter pillar trim (A) by hand to detach the clips (B, C, and D).
2. Pass the rear seat belt lower anchor (E) out through the hole in the quarter pillar trim, then remove the quarter pillar trim.

GETtheMANUALS.org

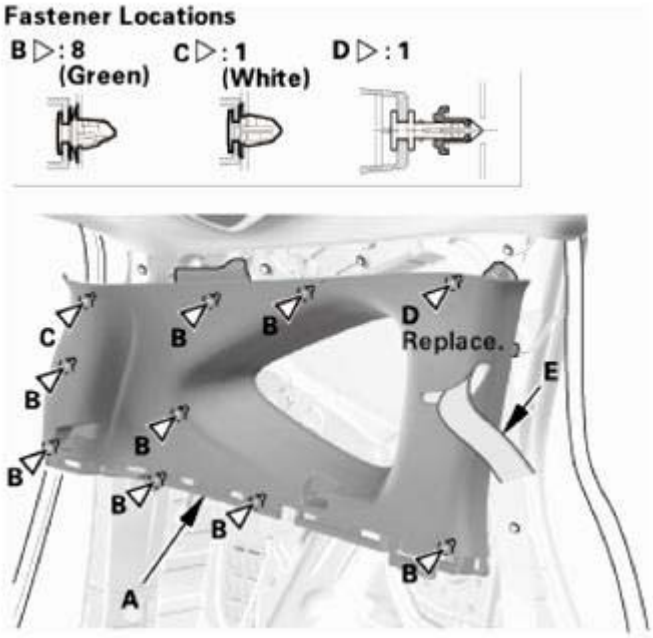

Fig. 169: Identifying Quarter Pillar Trim, Rear Seat Belt Lower Anchor And Clips
Courtesy of AMERICAN HONDA MOTOR CO., INC.

20. Roof Console Assembly
    1. Remove the lenses (A), then remove the screws (B).
    2. Open the console, then remove the screws (C).
    3. Disconnect the connectors (D), then remove the roof console assembly (E).

GETtheMANUALS.org

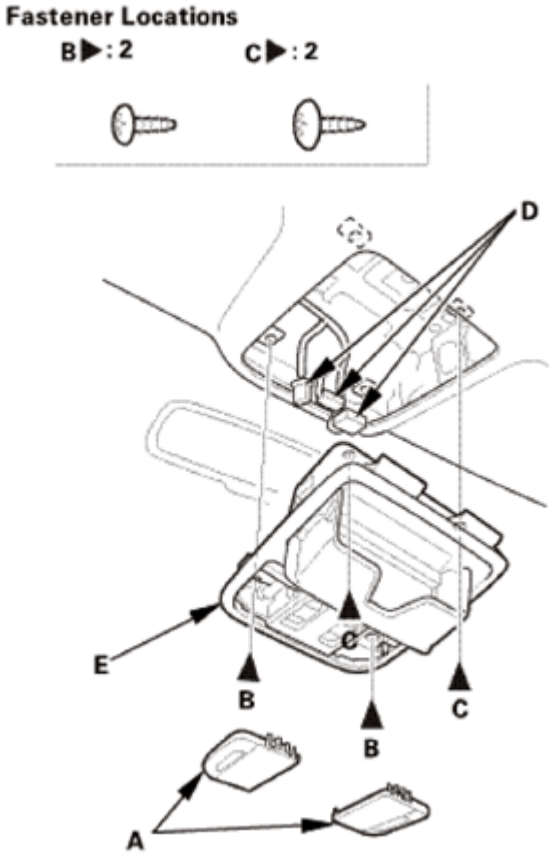

Fig. 170: Identifying Roof Console Assembly, Connectors, Lenses And Screws
Courtesy of AMERICAN HONDA MOTOR CO., INC.

21. Ceiling Light (without RES)
    1. Turn the ceiling light switch OFF.
    2. Carefully pry off the lens (A).
    3. Remove the bulb.
    4. Remove the ceiling light (B).
    5. Disconnect the connector.

GETtheMANUALS.org

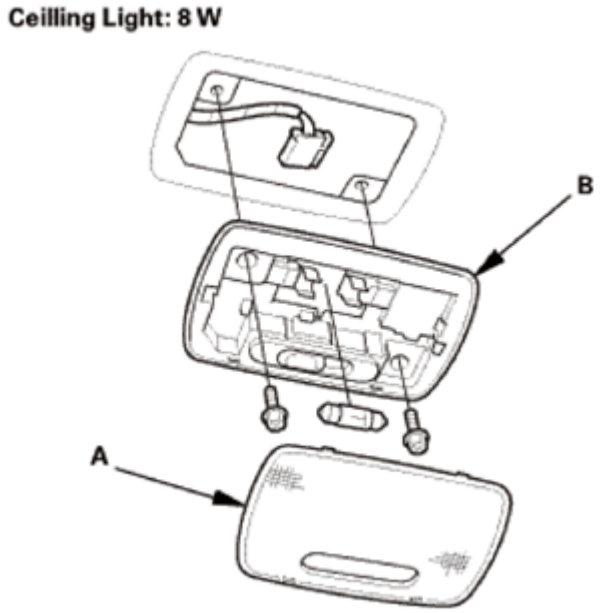

Fig. 171: Identifying Ceiling Light And Lens (Without RES)
Courtesy of AMERICAN HONDA MOTOR CO., INC.

22. Rear Display Cover (With RES)
    1. Turn the ceiling light switch OFF.
    2. Carefully pry off the lenses (A) with a flat-tip screwdriver.
    3. Remove the ceiling light (B).
    4. Disconnect the connector.

GETtheMANUALS.org

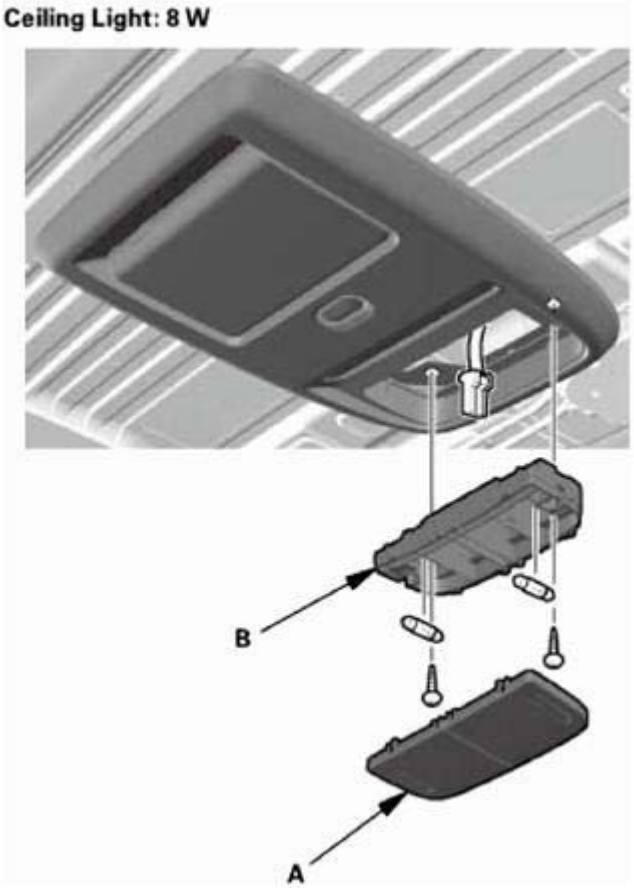

Fig. 172: Identifying Ceiling Light And Lens (With RES)
Courtesy of AMERICAN HONDA MOTOR CO., INC.

5. Remove the rear display cover (A).

GETtheMANUALS.org

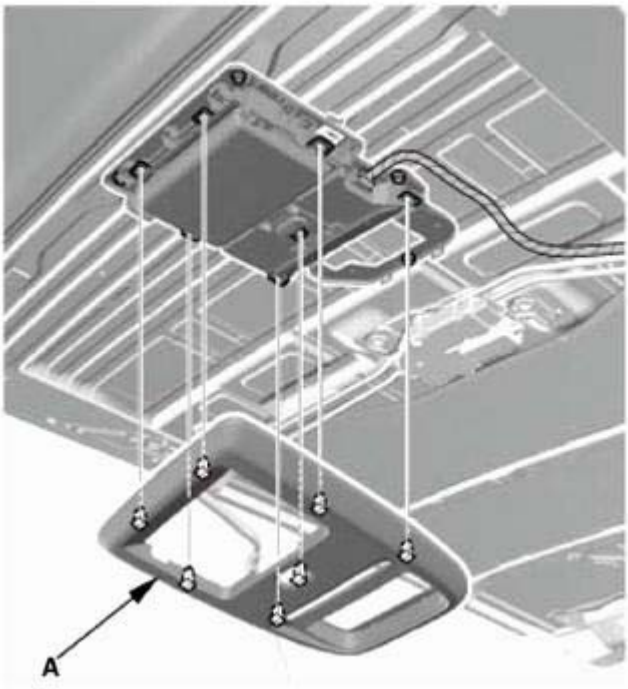

Fig. 173: Identifying Rear Display Cover
Courtesy of AMERICAN HONDA MOTOR CO., INC.

23. Rear Controller and Screen (With RES)
    1. Disconnect the connector.
    2. Remove the rear controller and screen (A).

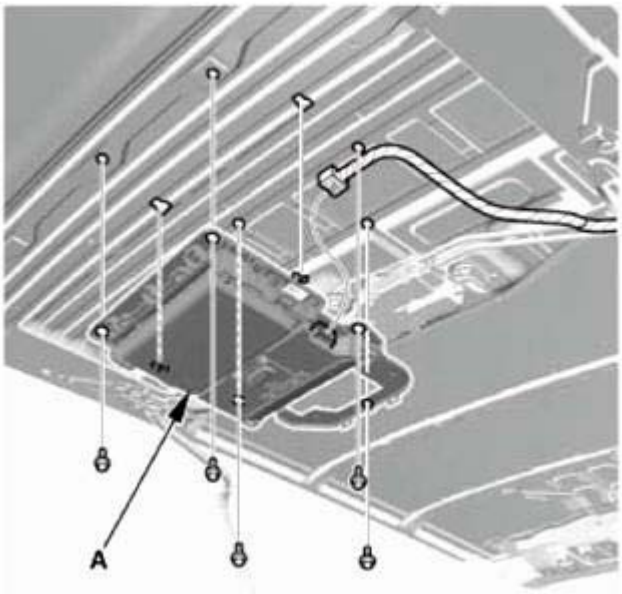

Fig. 174: Identifying Rear Controller And Screen
Courtesy of AMERICAN HONDA MOTOR CO., INC.

GETtheMANUALS.org

24. Cargo Area Light
    1. Turn the cargo area light switch OFF.
    2. Carefully pry off the lens (A).
    3. Remove the bulb.
    4. Remove the cargo area light (B).
    5. Disconnect the connector.

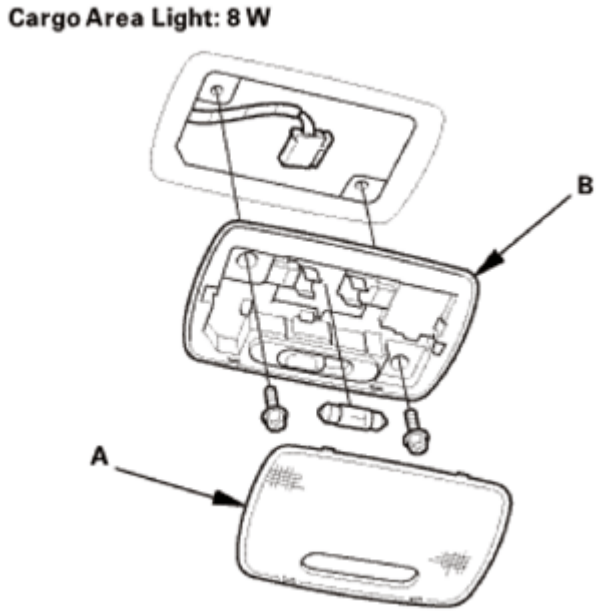

Fig. 175: Identifying Cargo Area Light And Lens
Courtesy of AMERICAN HONDA MOTOR CO., INC.

25. Grab Handles for One Vehicle
    1. Lower the grab handle (A).
    2. Insert the tips of the push pin/grab rail cap pliers (B) into the notch.

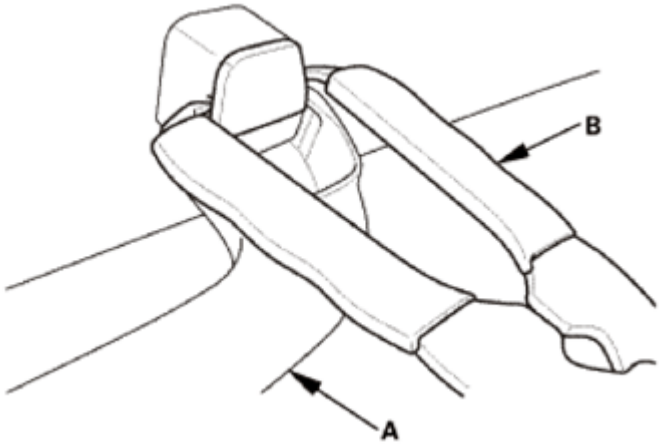

GETtheMANUALS.org

Fig. 176: Inserting Tips Of Push Pin/Grab Rail Cap Pliers Into Notch
Courtesy of AMERICAN HONDA MOTOR CO., INC.

3. Gently squeeze the handles of the push pin/grab rail cap pliers (A), and pull the cap (B) straight out.

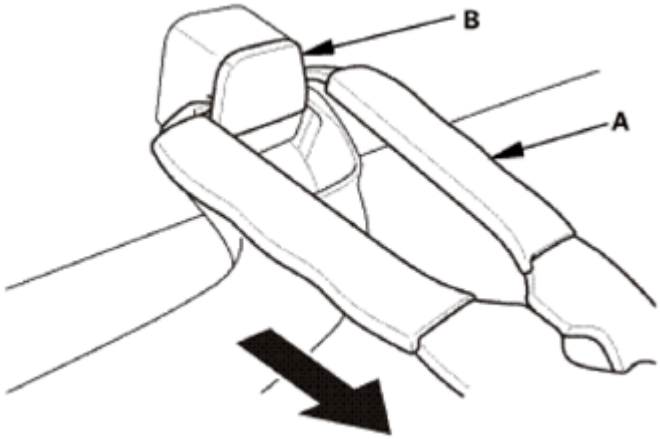

Fig. 177: Removing Tips Of Push Pin/Grab Rail Cap Pliers From Notch
Courtesy of AMERICAN HONDA MOTOR CO., INC.

4. Remove the grab handle (A).

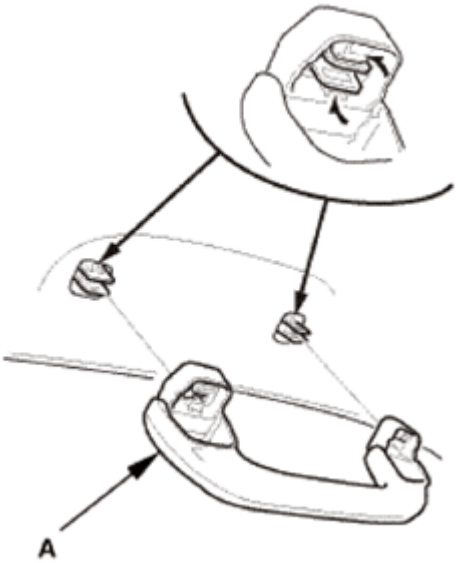

Fig. 178: Removing Grab Handle
Courtesy of AMERICAN HONDA MOTOR CO., INC.

5. Remove the clips (A).

GETtheMANUALS.org

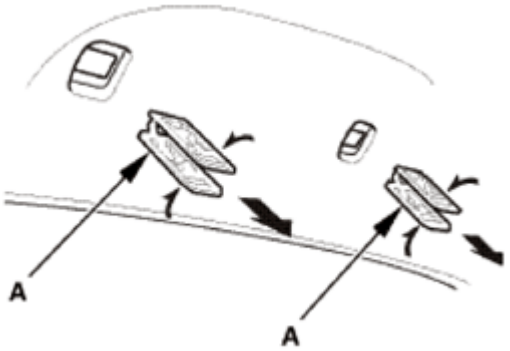

Fig. 179: Removing Grab Handle Clips
Courtesy of AMERICAN HONDA MOTOR CO., INC.

26. Sunvisor - Both Sides

NOTE: Repeat this procedure on the opposite side.

1. Push the tab (A) with a flat-tip screwdriver through the hole in the front side of the bracket cover (B).

NOTE: Make sure the tab is unlocked.

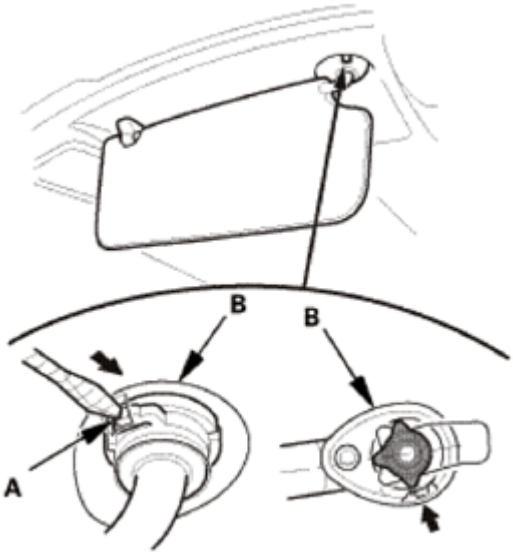

Fig. 180: Pushing Tab Of Sunvisor Using Flat-Tip Screwdriver
Courtesy of AMERICAN HONDA MOTOR CO., INC.

2. While pushing in the tab (A) with a flat-tip screwdriver, release the sunvisor (B) from the holder (C), and rotate the sunvisor backward 45 °.

NOTE: Make sure the tab slides into the bracket cover as you rotate the

GETtheMANUALS.org

sunvisor.

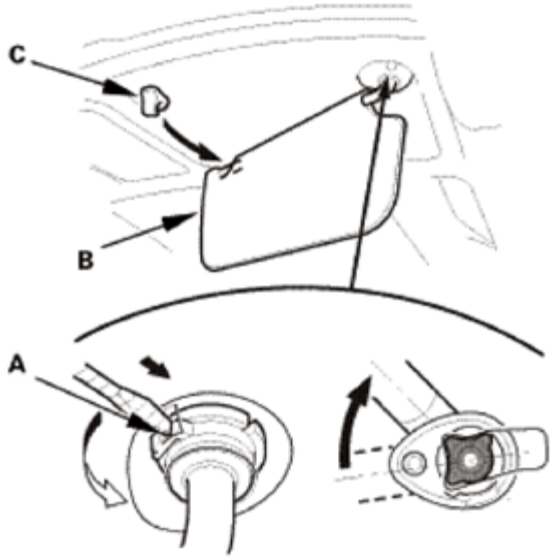

Fig. 181: Removing Sunvisor Using Tool
Courtesy of AMERICAN HONDA MOTOR CO., INC.

3. Disconnect the connector (A), then remove the sunvisor (B).

NOTE: **If the sunvisor cannot be removed, the tab has not rotated into the bracket cover. Repeat step 2 to rotate the tab.**

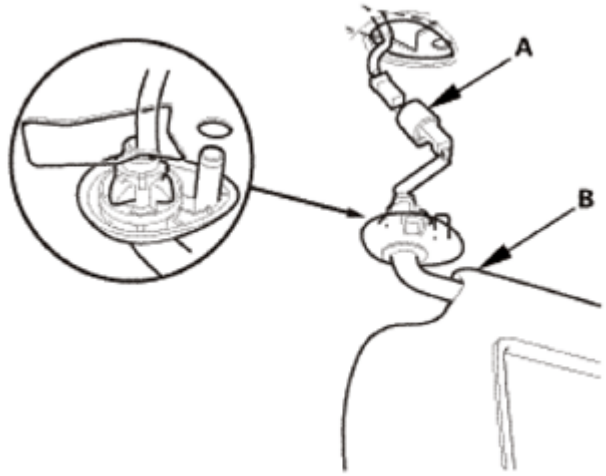

Fig. 182: Identifying Sunvisor And Connector
Courtesy of AMERICAN HONDA MOTOR CO., INC.

27. Sunvisor Holder - Both Sides

NOTE: **Repeat this procedure on the opposite side.**

GETtheMANUALS.org

1. Turn the sunvisor holder (A) 45 ° counterclockwise, then remove it from the holder grommet (B).

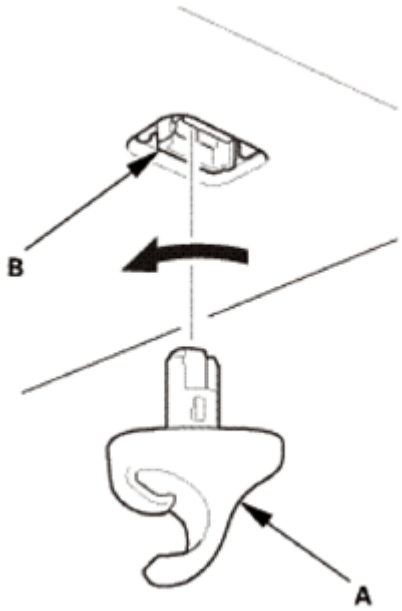

Fig. 183: Turning Sunvisor Holder
Courtesy of AMERICAN HONDA MOTOR CO., INC.

2. Remove the holder grommet (A).

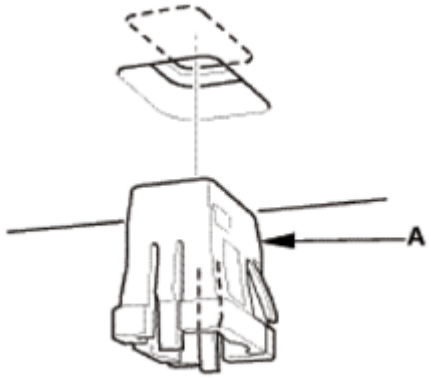

Fig. 184: Identifying Sunvisor Holder Grommet
Courtesy of AMERICAN HONDA MOTOR CO., INC.

28. Headliner
    1. Without moonroof: Disconnect the connector (A), and detach the harness clips (B) from the driver's side A-pillar.

GETtheMANUALS.org

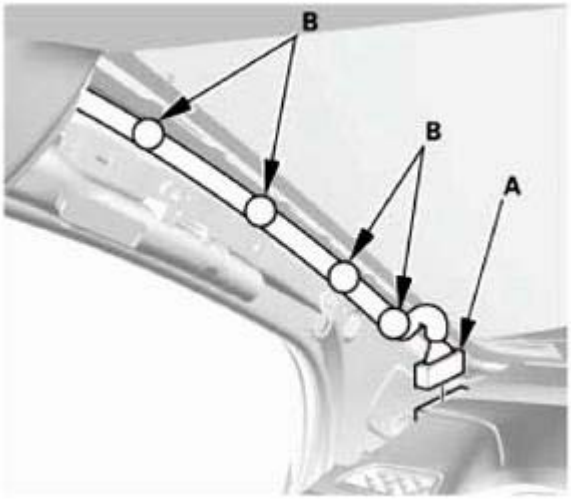

Fig. 185: Identifying Headliner Connector And Harness Clips (Driver Side A-Pillar Trim)
Courtesy of AMERICAN HONDA MOTOR CO., INC.

2. Disconnect the connectors (A), and detach the harness clips (B) from the passenger's side A-pillar.

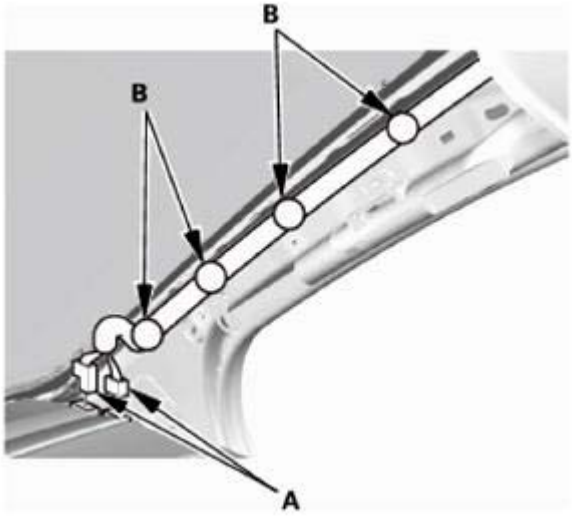

Fig. 186: Identifying Headliner Connector And Harness Clips (Passenger Side A-Pillar Trim)
Courtesy of AMERICAN HONDA MOTOR CO., INC.

3. Disconnect the connectors (A), and detach the connector clips (B) and the harness clip (C) from the right quarter pillar.

GETtheMANUALS.org

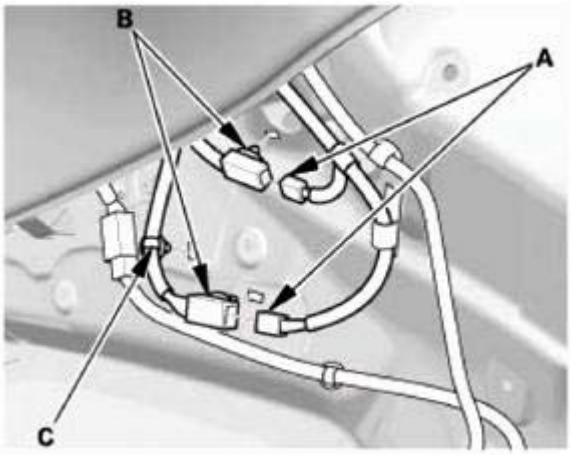

Fig. 187: Identifying Headliner Connector And Harness Clips (Right Quarter Pillar)
Courtesy of AMERICAN HONDA MOTOR CO., INC.

4. Slide the front seats all the way back, and recline the seat-back fully.
5. Fold down the rear seats.
6. Detach the clips (A) and release the fasteners (B) from the headliner (C) by pulling it down.
7. With the help of an assistant, lower the headliner.

Without moonroof

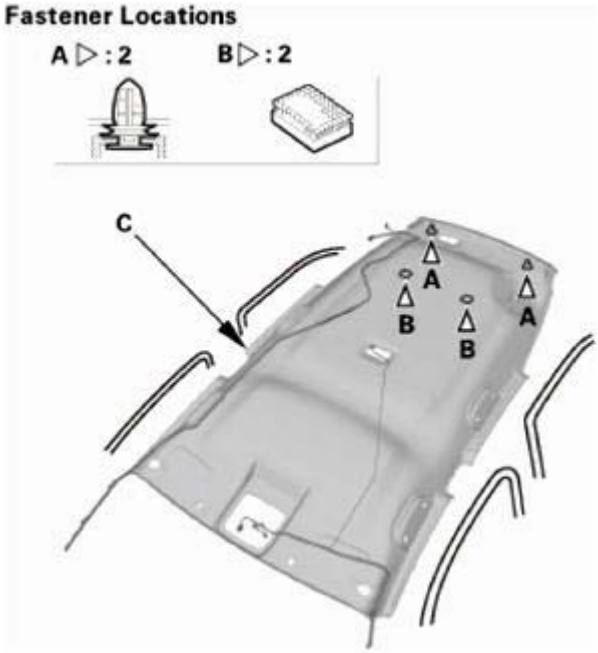

Fig. 188: Identifying Headliner, Fasteners And Clips (Without Moonroof)
Courtesy of AMERICAN HONDA MOTOR CO., INC.

With moonroof

GETtheMANUALS.org

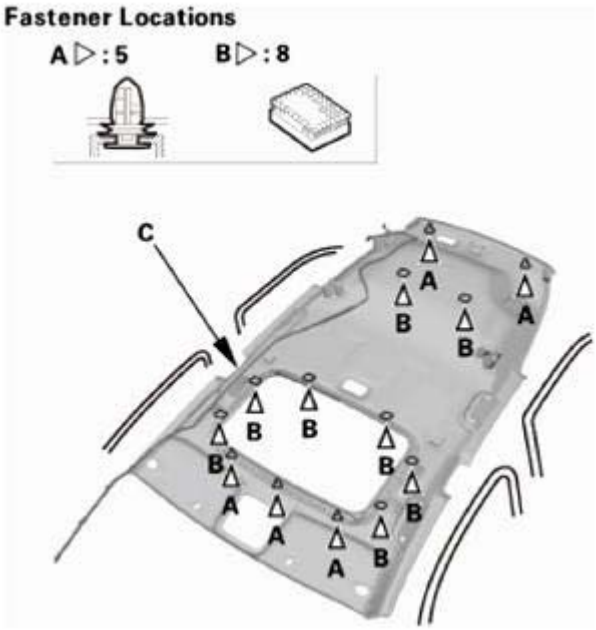

Fig. 189: Identifying Headliner, Fasteners And Clips (With Moonroof)
Courtesy of AMERICAN HONDA MOTOR CO., INC.

8. With the help of an assistant, remove the headliner (A) through the tailgate opening.

NOTE: **Do not bend the headliner. Bending the headliner will crease and damage it.**

Fig. 190: Identifying Headliner On Tailgate Opening
Courtesy of AMERICAN HONDA MOTOR CO., INC.

29. Moonroof Link Cover - Both Sides

GETtheMANUALS.org

NOTE: **Repeat on the opposite side.**

1. Carefully pry out the cover (A), then remove the screw (B).
2. Remove the moonroof link cover (C).

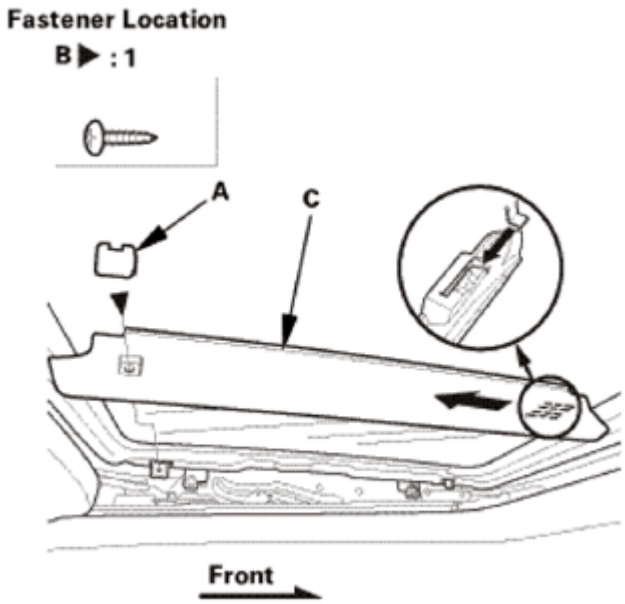

Fig. 191: Removing Moonroof Link Cover
Courtesy of AMERICAN HONDA MOTOR CO., INC.

30. Moonroof Glass
    1. Remove the TORX screws (A) with a TORX T25 bit from the glass brackets (B) on both sides.

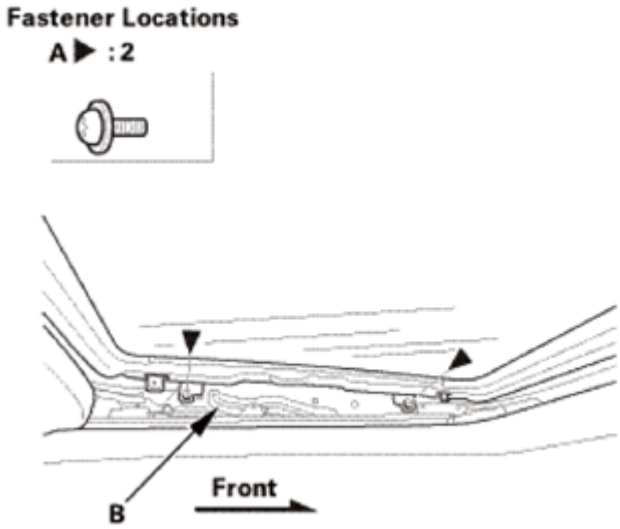

Fig. 192: Identifying Moonroof Glass Bracket And Screws
Courtesy of AMERICAN HONDA MOTOR CO., INC.

GETtheMANUALS.org

2. Remove the moonroof glass (A) by lifting it up. Do not damage the roof panel.

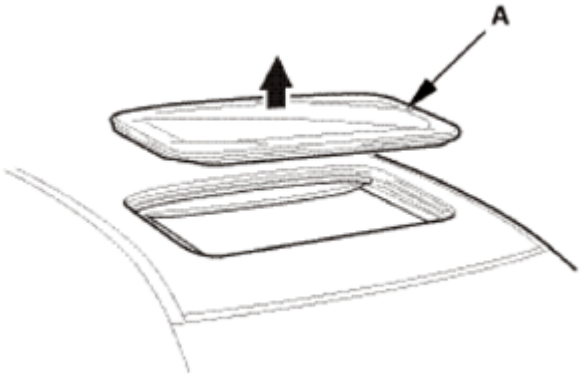

Fig. 193: Removing Moonroof Glass
Courtesy of AMERICAN HONDA MOTOR CO., INC.

31. Moonroof Deflector
    1. Open the glass fully.
    2. Remove both moonroof wind deflector links (A).

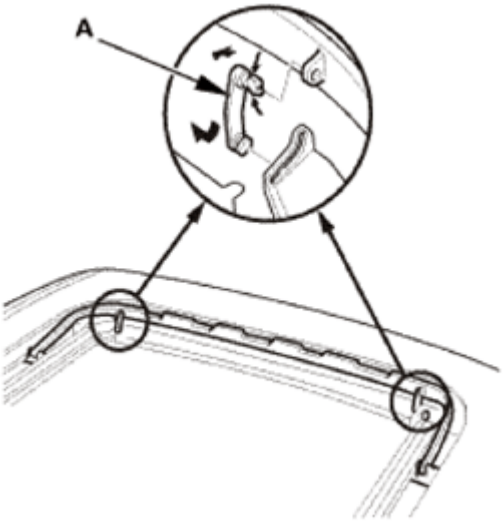

Fig. 194: Removing Moonroof Wind Deflector Links
Courtesy of AMERICAN HONDA MOTOR CO., INC.

3. Remove the moonroof wind deflector (A).

GETtheMANUALS.org

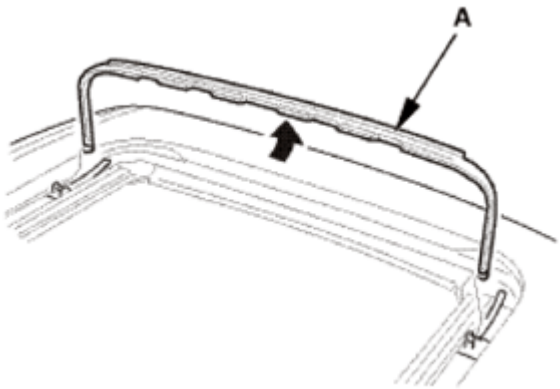

Fig. 195: Removing Moonroof Wind Deflector
Courtesy of AMERICAN HONDA MOTOR CO., INC.

4. Carefully pry up on the moonroof deflector arm bases (A) with a flat-tip screwdriver and release the hooks (B), then remove the bases with the deflector arm springs (C) from both sides.

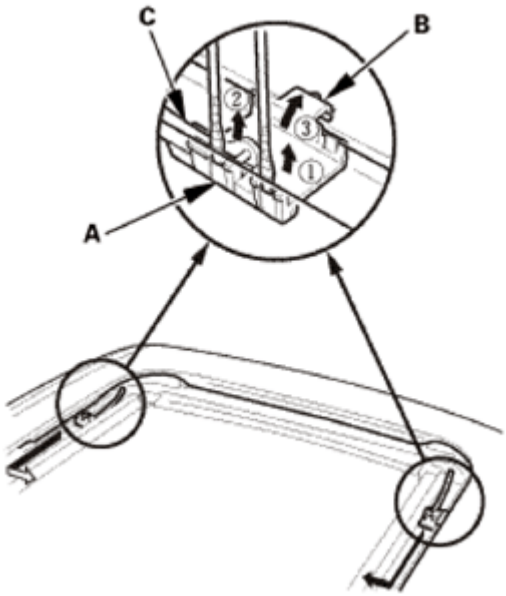

Fig. 196: Removing Bases With Deflector Arm Springs
Courtesy of AMERICAN HONDA MOTOR CO., INC.

32. Drain Channel
    1. On both sides, slide the glass brackets (A) with the moonroof switch to the position where the moonroof normally tilts up.
    2. Disconnect the drain channel rods (B).

GETtheMANUALS.org

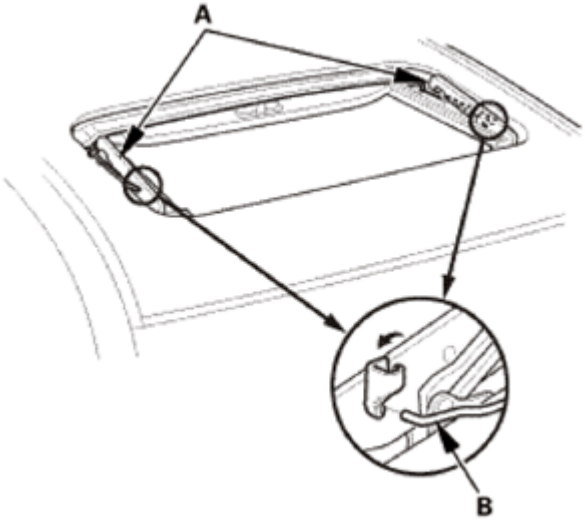

Fig. 197: Disconnecting Drain Channel Rods And Glass Bracket
Courtesy of AMERICAN HONDA MOTOR CO., INC.

3. Slide the drain channel (A) forward.

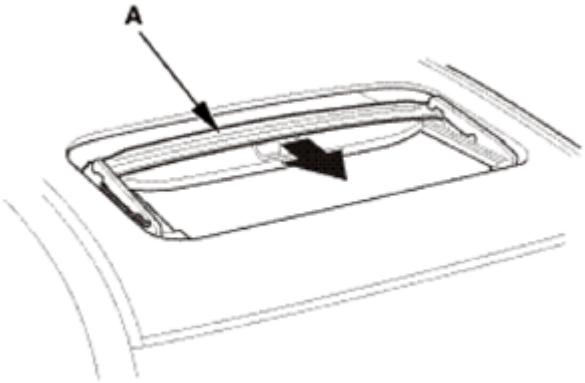

Fig. 198: Sliding Drain Channel
Courtesy of AMERICAN HONDA MOTOR CO., INC.

4. Pull up the rear edge of the drain channel (A) while pushing both clips (B), and release the channel from both hooks (C) of the drain channel slider by pulling it rearward.
5. Remove the drain channel.

GETtheMANUALS.org

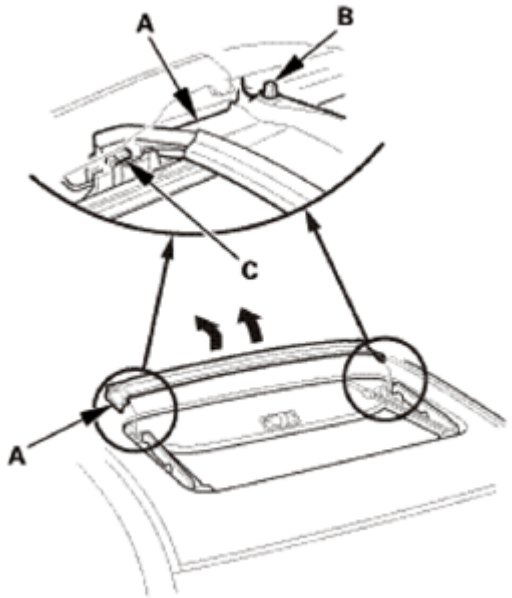

Fig. 199: Removing Drain Channel
Courtesy of AMERICAN HONDA MOTOR CO., INC.

33. Moonroof Sunshade
    1. Slide the sunshade (A) until you can see both sunshade slider spacers (B).
    2. Remove the screws (C), then remove both sunshade slider spacers.

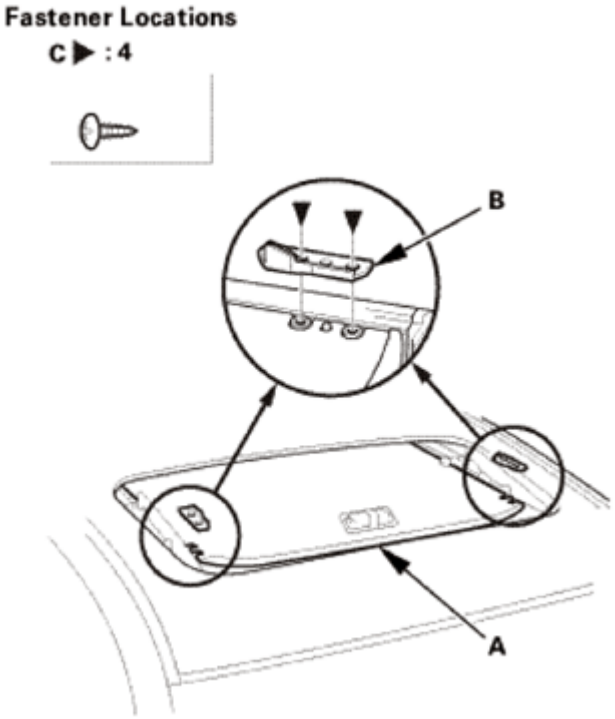

Fig. 200: Identifying Moonroof Sunshade, Slider Spacers And Screws

GETtheMANUALS.org

Courtesy of AMERICAN HONDA MOTOR CO., INC.

3. While lifting the front portion of the sunshade (A), move the sunshade forward until you can see both sunshade rear hooks (B). Do not damage the sunshade or the hooks.
4. Remove the screws (C), then remove both hooks.

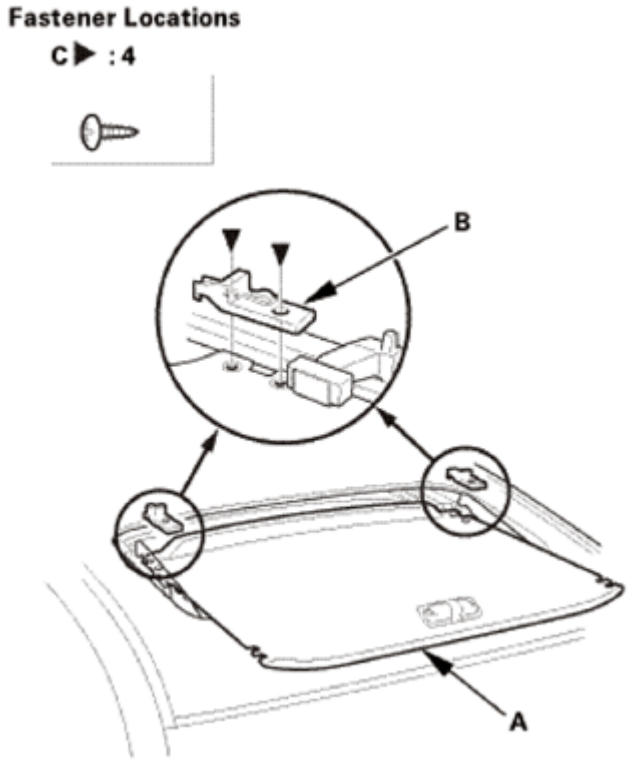

Fig. 201: Identifying Moonroof Sunshade, Rear Hooks And Screws
Courtesy of AMERICAN HONDA MOTOR CO., INC.

5. Remove the sunshade (A).

Fig. 202: Removing Moonroof Sunshade
Courtesy of AMERICAN HONDA MOTOR CO., INC.

6. Remove both front sunshade base sliders (A) and both rear sunshade base sliders (B).

GETtheMANUALS.org

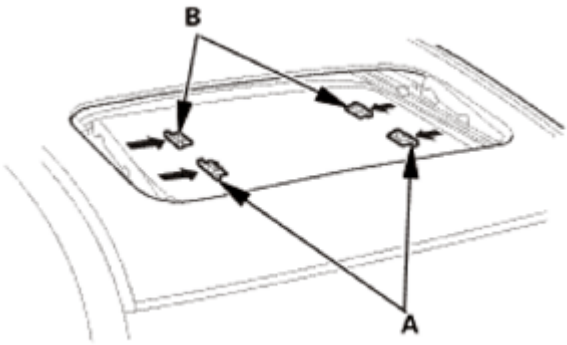

Fig. 203: Removing Front And Rear Sunshade Base Sliders
Courtesy of AMERICAN HONDA MOTOR CO., INC.

34. Moonroof Motor
    1. Disconnect the connector (A), and remove the screws (B), then remove the motor (C).

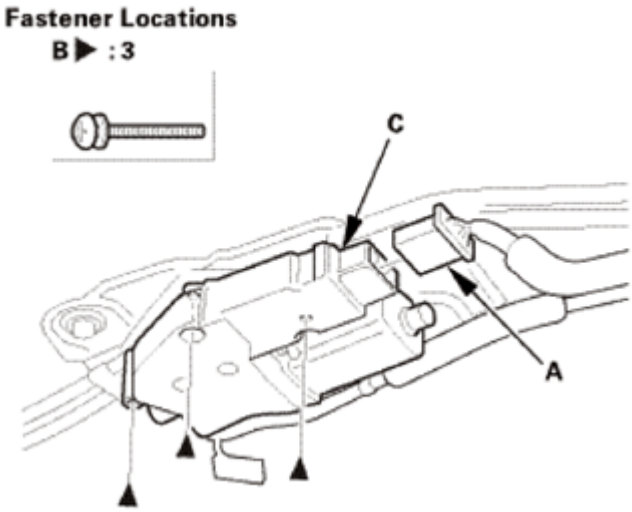

Fig. 204: Identifying Moonroof Motor, Connector And Screws
Courtesy of AMERICAN HONDA MOTOR CO., INC.

35. Moonroof Frame
    1. Disconnect the moonroof front drain tubes (A) and the moonroof rear drain tubes (B).

GETtheMANUALS.org

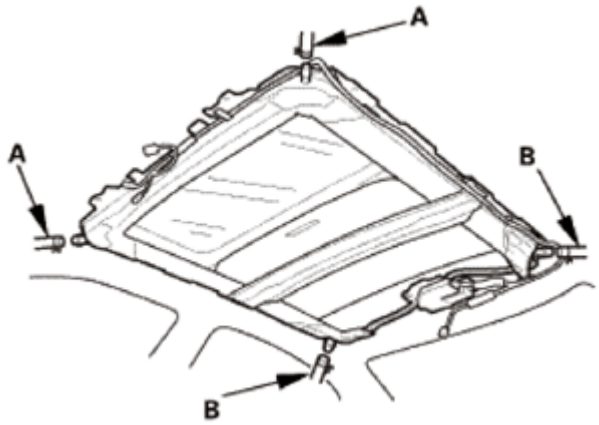

Fig. 205: Identifying Moonroof Front And Rear Drain Tubes
Courtesy of AMERICAN HONDA MOTOR CO., INC.

2. Detach the harness clips (A).
3. Remove the moonroof wire harness (B)

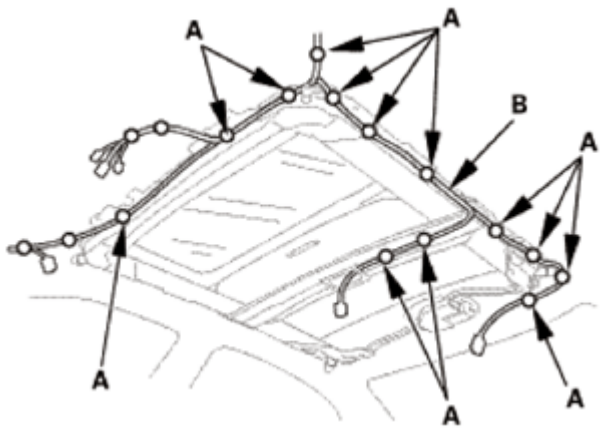

Fig. 206: Identifying Moonroof Wire Harness And Clips
Courtesy of AMERICAN HONDA MOTOR CO., INC.

4. With an assistant holding the frame (A), remove the bolts (B), starting at the rear, and release the rear hook (C) by moving the frame forward.
5. With the help of an assistant, carefully remove the frame through the tailgate opening.

GETtheMANUALS.org

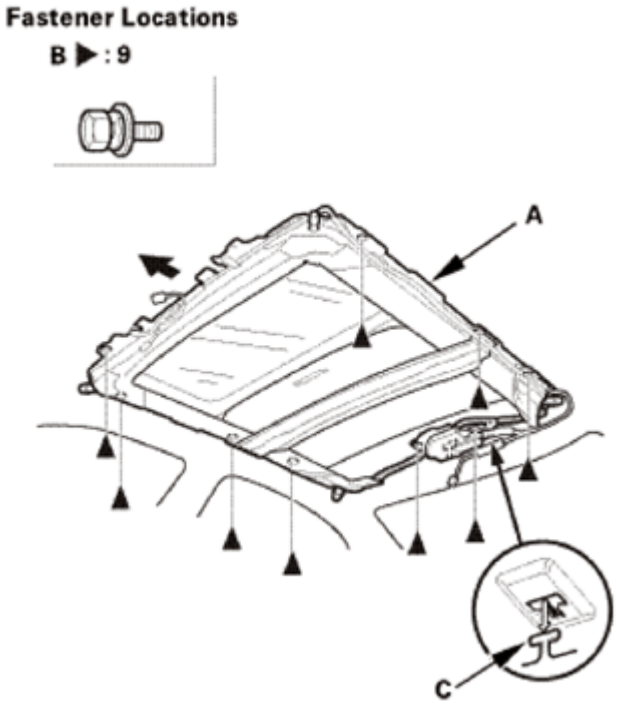

Fig. 207: Moving Frame Forward
Courtesy of AMERICAN HONDA MOTOR CO., INC.

36. Moonroof Drain Channel Slider
    1. Remove the screws (A, B).
    2. Remove the cable tube side bracket mounting bolts (C) and the cable tube mounting screws (D).
    3. Repeat on the opposite side.

GETtheMANUALS.org

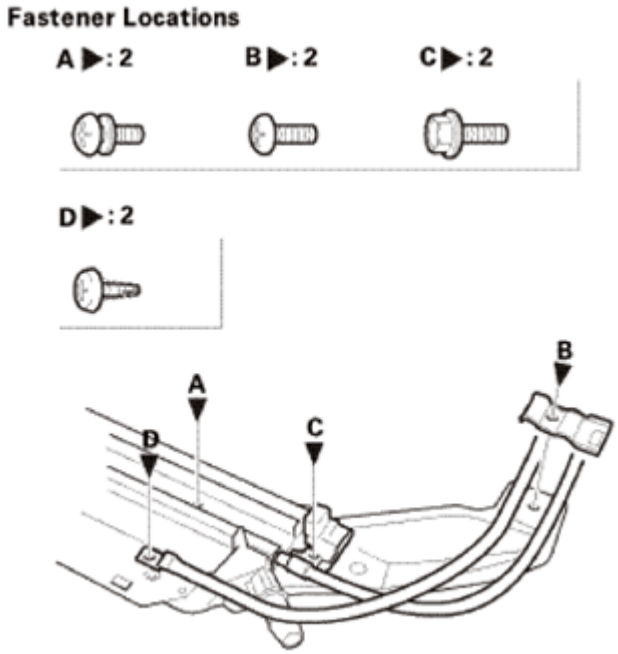

Fig. 208: Identifying Moonroof Drain Channel Slider Cable Tube Side Bracket Mounting Bolts And Screws
Courtesy of AMERICAN HONDA MOTOR CO., INC.

4. Turn both cable tube side brackets (A) up to release the hooks (B) from the holes in both sides of the frame.
5. Pivot the glass brackets (C) down by sliding the link lifters (D) back, then slide both glass brackets back with the link lifters.
6. Slide the moonroof cable assembly (E) half-way.

GETtheMANUALS.org

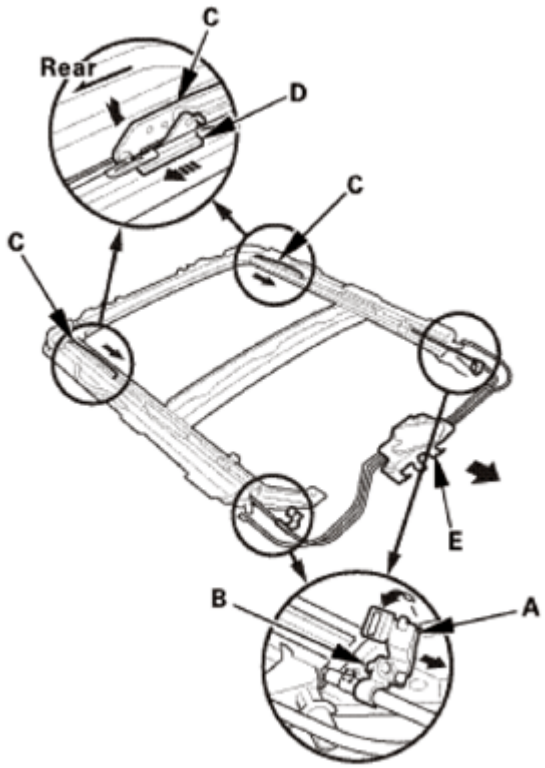

Fig. 209: Pivoting Glass Brackets
Courtesy of AMERICAN HONDA MOTOR CO., INC.

7. Remove both moonroof drain channel sliders (A).

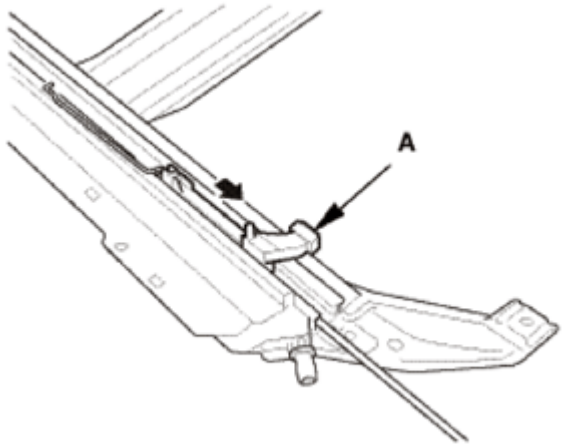

Fig. 210: Removing Moonroof Drain Channel Sliders
Courtesy of AMERICAN HONDA MOTOR CO., INC.

37. Moonroof Cable
    1. Slide the cable assembly (A) and both glass brackets (B) back, remove the deflector sliders (C) from both glass brackets, then remove them from the frame (D).

GETtheMANUALS.org

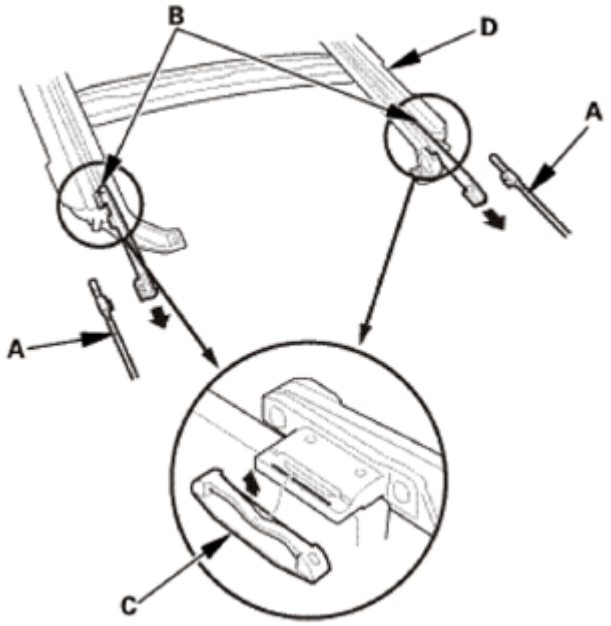

Fig. 211: Sliding Cable Assembly And Glass Brackets
Courtesy of AMERICAN HONDA MOTOR CO., INC.

INSTALLATION

SRS components are located in this area. Review the **SRS COMPONENT LOCATIONS** and the **PRECAUTIONS AND PROCEDURES** before doing repairs or service.

1. Moonroof Cable
    1. Install the moonroof cable assembly (A).

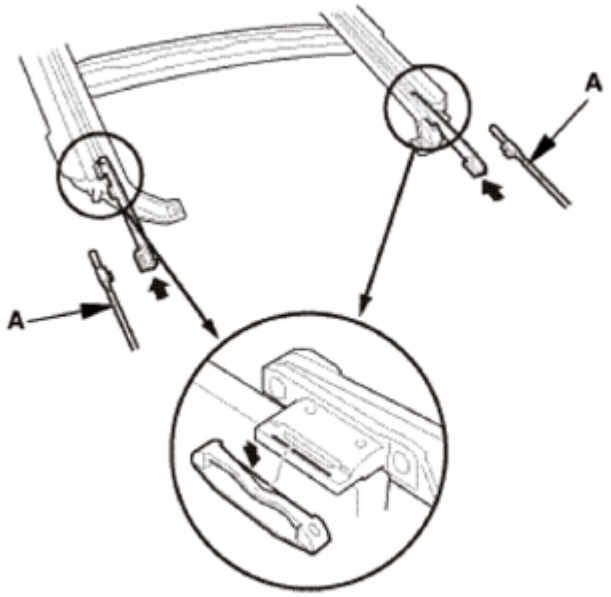

GETtheMANUALS.org

Fig. 212: Installing Moonroof Cable Assembly
Courtesy of AMERICAN HONDA MOTOR CO., INC.

2. Moonroof Drain Channel Slider
    1. Apply multipurpose grease to the glass bracket (A) and the guide rail area of the frame (B) indicated by the arrows.

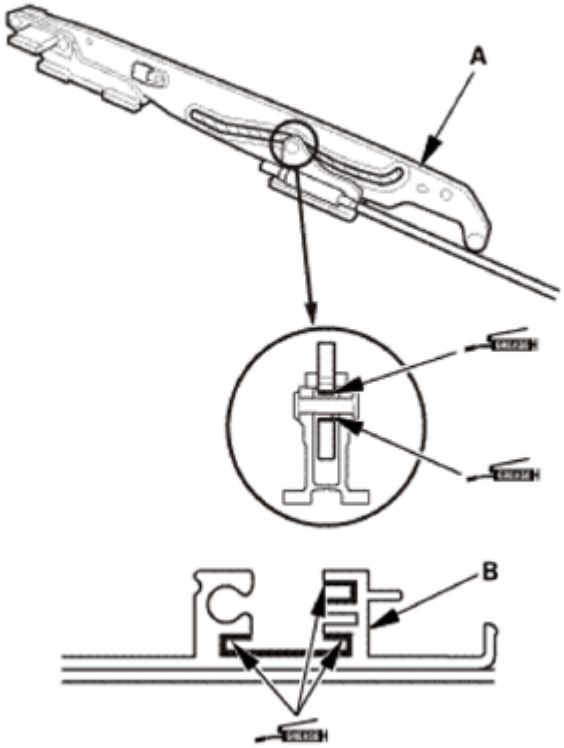

Fig. 213: Identifying Moonroof Drain Channel Slider Grease Applying Area
Courtesy of AMERICAN HONDA MOTOR CO., INC.

    2. Install both moonroof drain channel sliders (A).

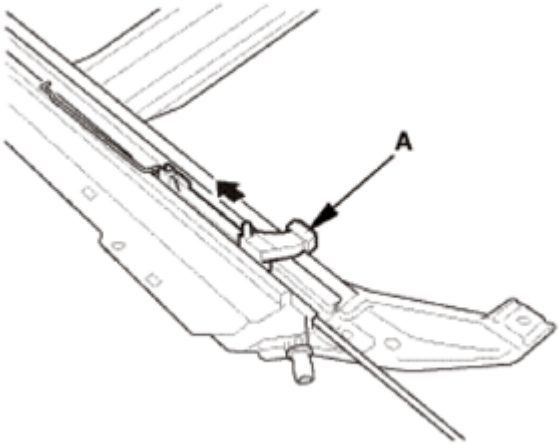

GETtheMANUALS.org

Fig. 214: Installing Moonroof Drain Channel Sliders
Courtesy of AMERICAN HONDA MOTOR CO., INC.

3. Install the moonroof cable assembly (A).
4. Install both glass brackets (B).
5. Install both cable tube side brackets (C).

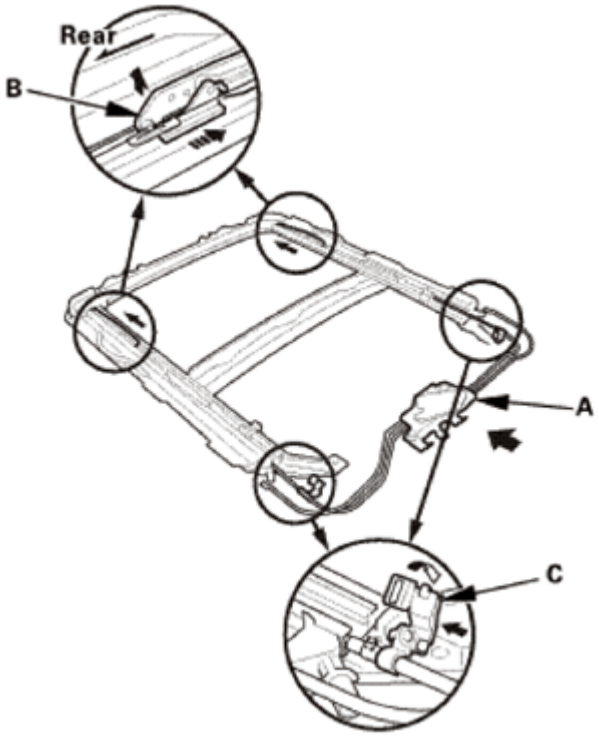

Fig. 215: Installing Moonroof Cable Assembly
Courtesy of AMERICAN HONDA MOTOR CO., INC.

6. Install the cable tube side bracket mounting bolts (A) and the cable tube mounting screws (B).
7. Install the screws (C, D).
8. Repeat on the opposite side.

GETtheMANUALS.org

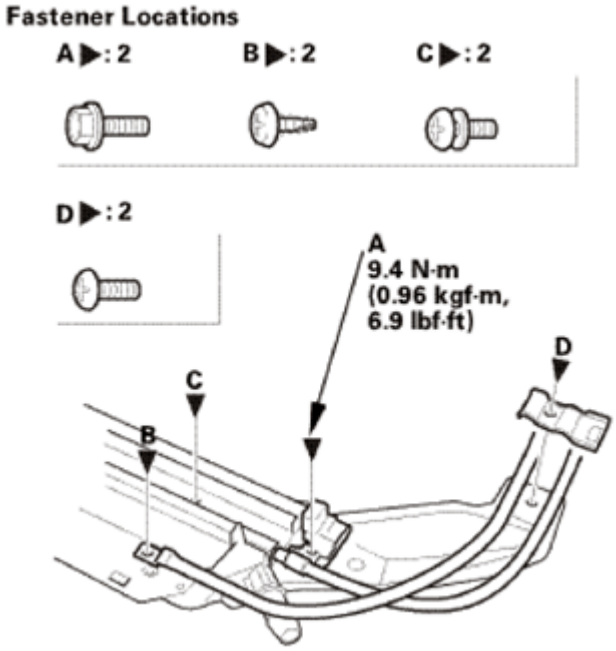

Fig. 216: Identifying Moonroof Drain Channel Slider Cable Tube Side Bracket Mounting Bolts And Screws
Courtesy of AMERICAN HONDA MOTOR CO., INC.

3. Moonroof Frame
    1. With an assistant holding the frame (A), install the frame, then install the rear hook (B) and the bolts (C).

GETtheMANUALS.org

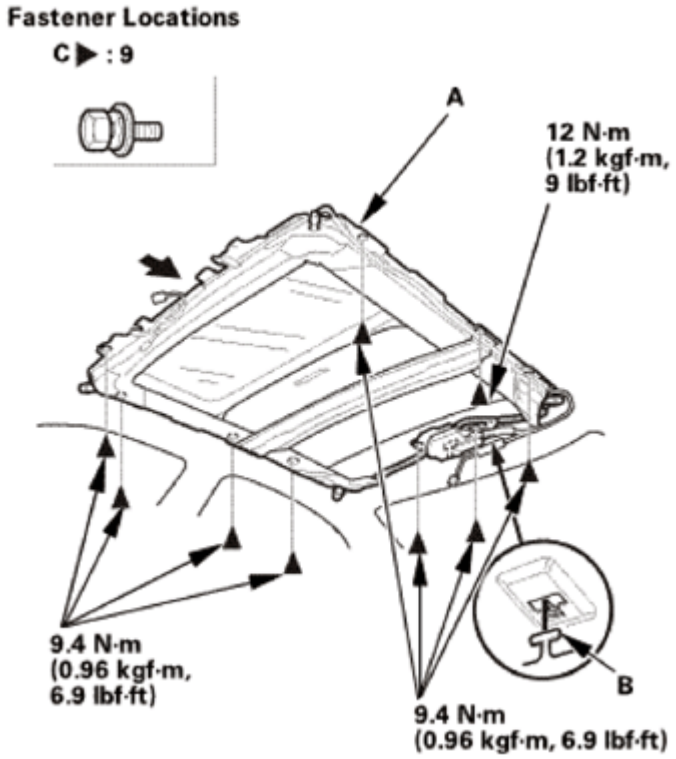

Fig. 217: Identifying Moonroof Frame, Rear Hooks And Bolt With Torque Specifications
Courtesy of AMERICAN HONDA MOTOR CO., INC.

2. Install the harness clips (A).
3. Install the moonroof wire harness (B).

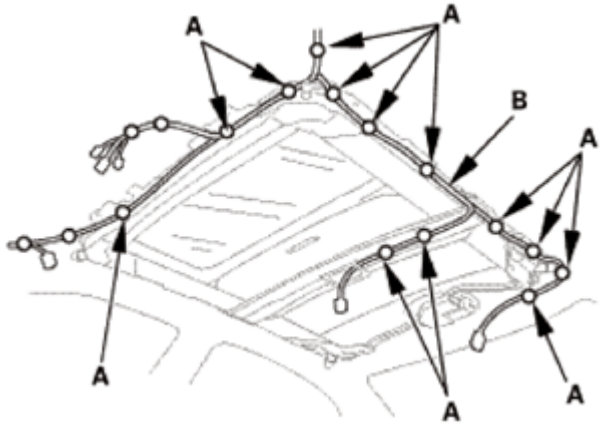

Fig. 218: Identifying Moonroof Frame, Harness And Clips
Courtesy of AMERICAN HONDA MOTOR CO., INC.

4. Connect the moonroof front drain tubes (A) and the moonroof rear drain tubes (B).

GETtheMANUALS.org

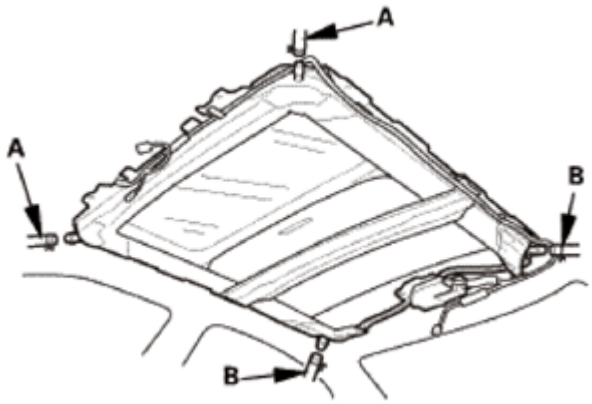

Fig. 219: Identifying Moonroof Rear And Front Drain Tubes
Courtesy of AMERICAN HONDA MOTOR CO., INC.

4. Moonroof Motor
    1. With the glass lift arms in the full tilt position, install the motor (A), then install the screws (B).
    2. Connect the connector (C).

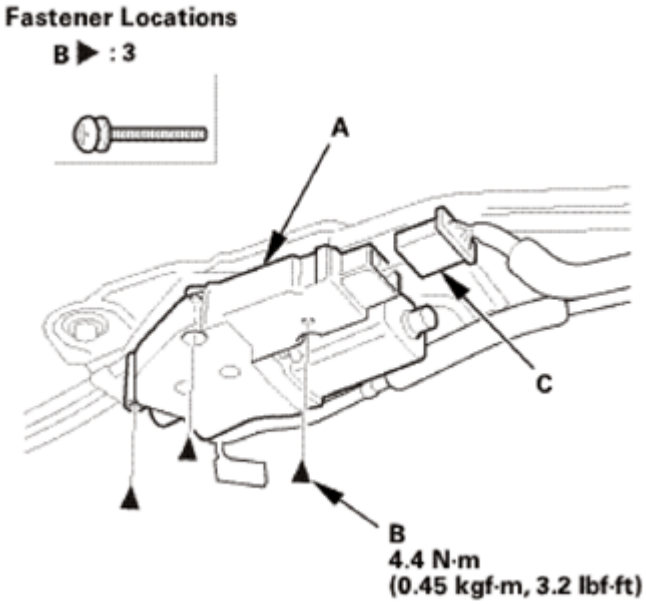

Fig. 220: Identifying Moonroof Motor, Connector And Screws With Torque Specifications
Courtesy of AMERICAN HONDA MOTOR CO., INC.

5. Moonroof Sunshade
    1. Install both front moonroof sunshade base sliders (A) and both rear moonroof sunshade base sliders (B).

GETtheMANUALS.org

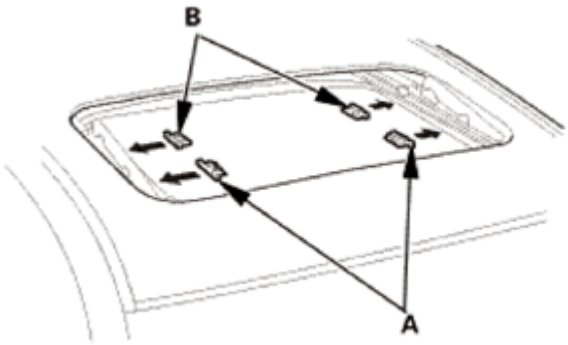

Fig. 221: Installing Front And Rear Sunshade Base Sliders
Courtesy of AMERICAN HONDA MOTOR CO., INC.

2. Install the moonroof sunshade (A).

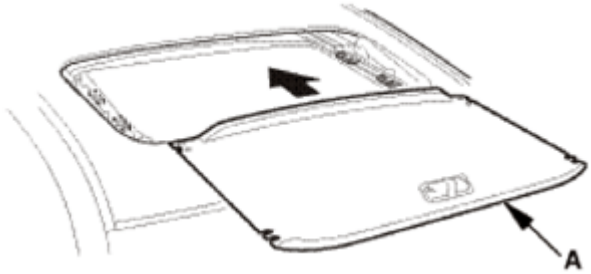

Fig. 222: Installing Moonroof Sunshade
Courtesy of AMERICAN HONDA MOTOR CO., INC.

3. Install both moonroof sunshade rear hooks (A), then install the screws (B).

GETtheMANUALS.org

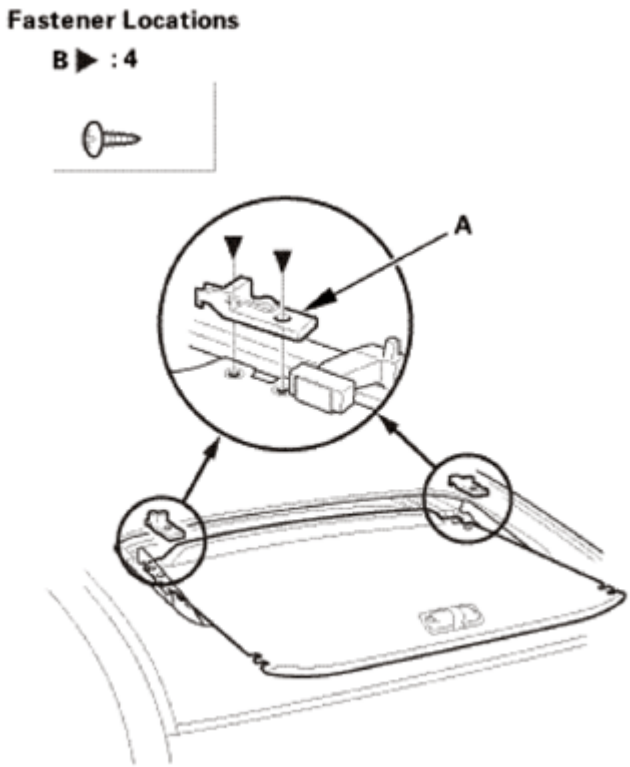

Fig. 223: Identifying Moonroof Sunshade Rear Hooks And Screws
Courtesy of AMERICAN HONDA MOTOR CO., INC.

4. Install both moonroof sunshade slider spacers (A), then install the screws (B).

GETtheMANUALS.org

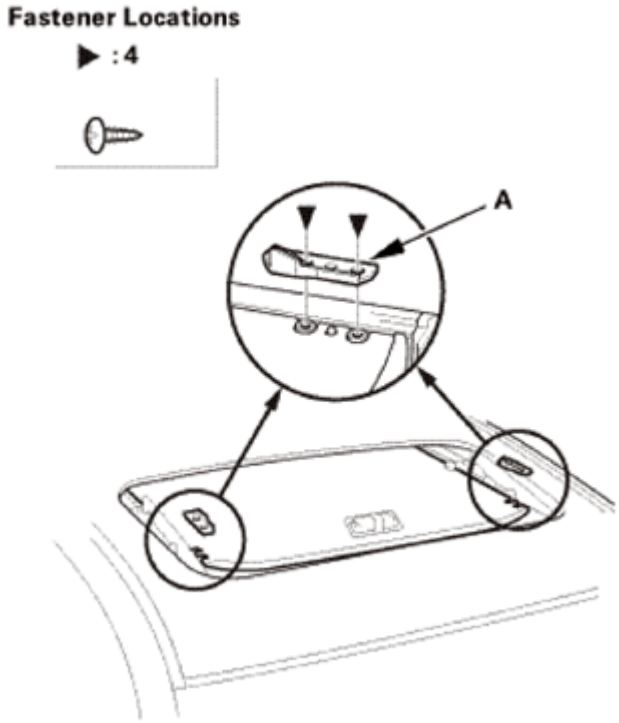

Fig. 224: Identifying Moonroof Sunshade Slider Spacers And Screws
Courtesy of AMERICAN HONDA MOTOR CO., INC.

6. Drain Channel
    1. Install the drain channel (A).

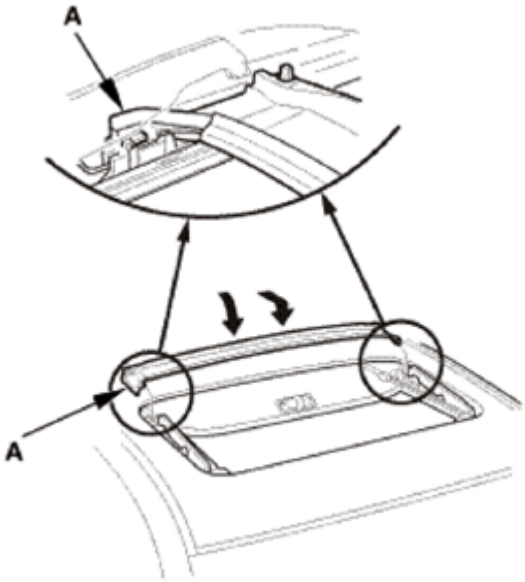

Fig. 225: Installing Drain Channel
Courtesy of AMERICAN HONDA MOTOR CO., INC.

GETtheMANUALS.org

2. Slide the drain channel (A) rearward.

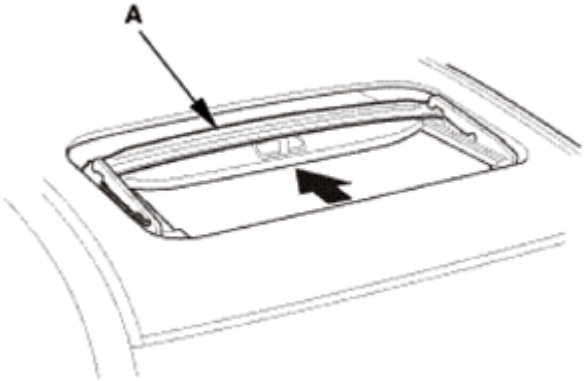

Fig. 226: Sliding Drain Channel Rearward
Courtesy of AMERICAN HONDA MOTOR CO., INC.

3. Connect the drain channel rods (A).
4. Tilt down the glass bracket (B).

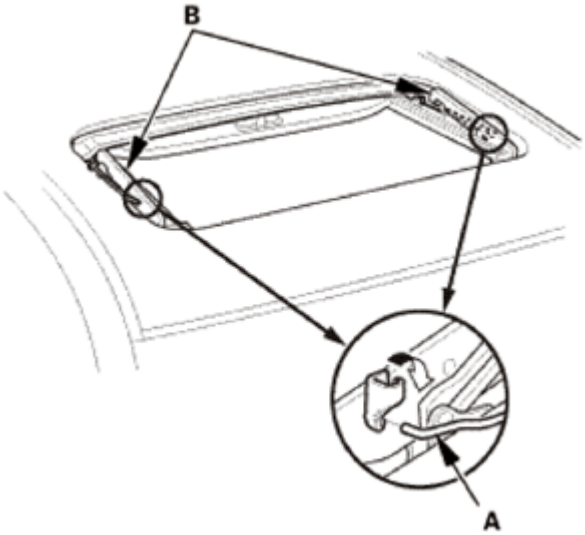

Fig. 227: Connecting Drain Channel Rods
Courtesy of AMERICAN HONDA MOTOR CO., INC.

7. Moonroof Deflector
    1. Install both moonroof wind deflector arm bases (A) until they click into the notch in the rail.

GETtheMANUALS.org

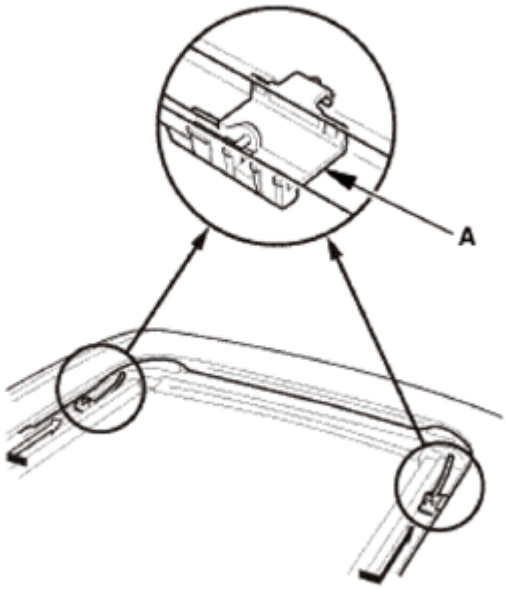

Fig. 228: Identifying Moonroof Wind Deflector Arm Bases
Courtesy of AMERICAN HONDA MOTOR CO., INC.

2. Install the moonroof wind deflector (A).

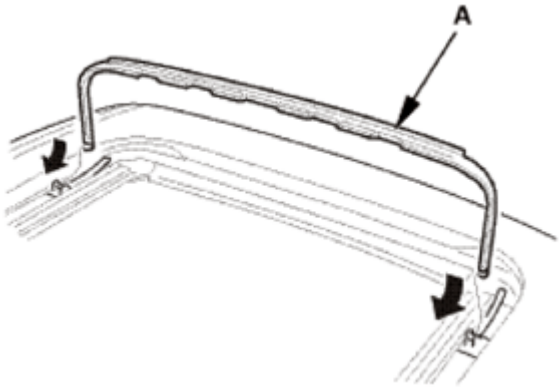

Fig. 229: Installing Moonroof Wind Deflector
Courtesy of AMERICAN HONDA MOTOR CO., INC.

3. Install both moonroof wind deflector links (A).

GETtheMANUALS.org

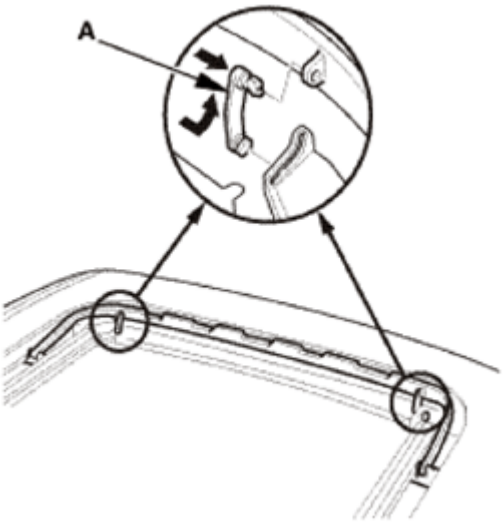

Fig. 230: Installing Moonroof Wind Deflector Links
Courtesy of AMERICAN HONDA MOTOR CO., INC.

8. Moonroof Glass
    1. Install the moonroof glass (A).

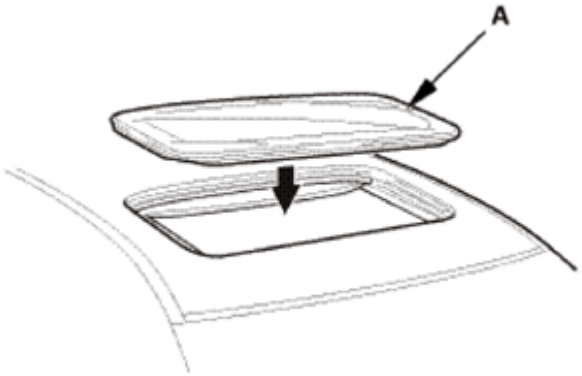

Fig. 231: Installing Moonroof Glass
Courtesy of AMERICAN HONDA MOTOR CO., INC.

    2. Install the TORX screws (A).
    3. Repeat on the opposite side.

GETtheMANUALS.org

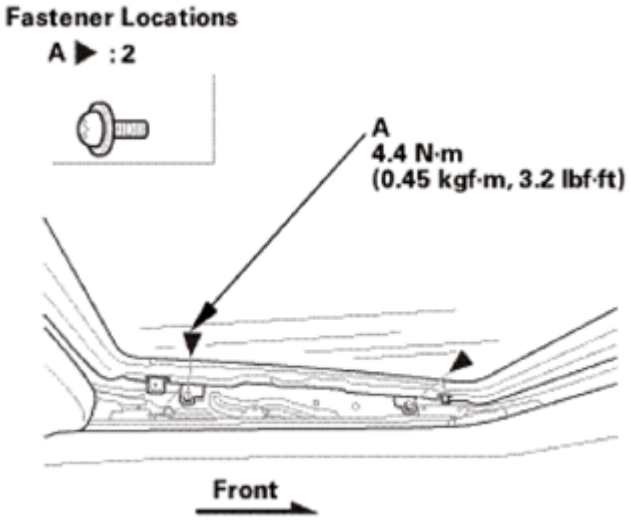

Fig. 232: Identifying TORX Screws With Torque Specifications
Courtesy of AMERICAN HONDA MOTOR CO., INC.

9. Moonroof Link Cover - Both Sides

NOTE: Repeat on the opposite side

1. Install the moonroof link cover (A), then install the screw (B).
2. Install the cover (C).

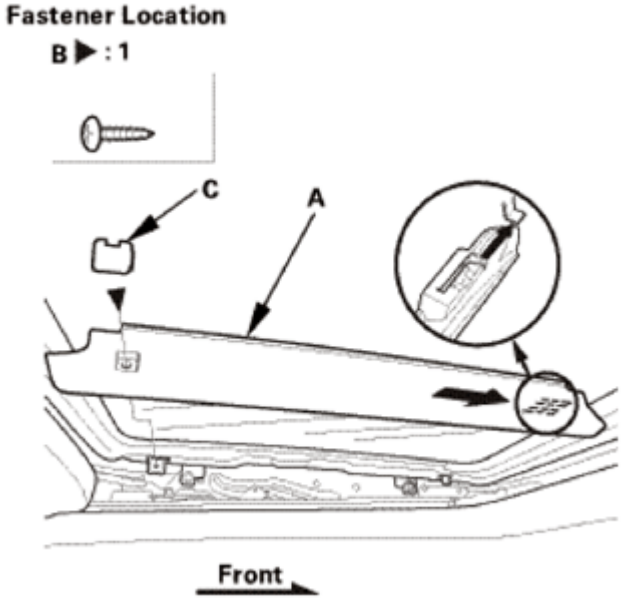

Fig. 233: Installing Moonroof Link Cover
Courtesy of AMERICAN HONDA MOTOR CO., INC.

10. Headliner - Check

GETtheMANUALS.org

1. If the side curtain airbag has deployed, replace the headliner and removed trim pieces, along with the other parts listed for side curtain airbag deployment.
2. To prevent the side curtain airbags from deploying improperly and possibly causing injury, inspect the headliner and all removed trim. Replace any pieces with the following damage:
    - Any creases or tears in the headliner (A)
    - Any damages around the grab handle holes (B) or the sunvisor holes (C) in the headliner
    - Any clip bases (D) which have come off the headliner
    - Any fasteners (E) or clip bases (F) which have come off the headliner

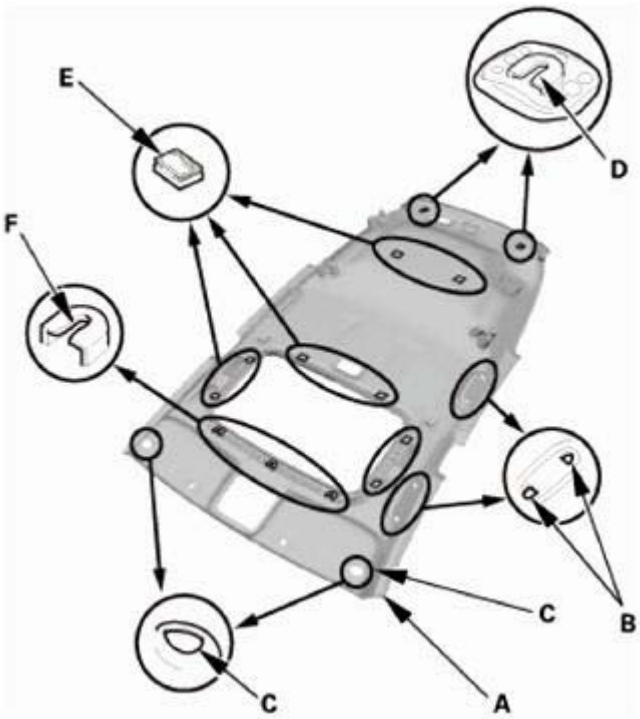

Fig. 234: Identifying Headliner, Grab Handle Holes, Sunvisor Holes, Clip Bases, Fasteners And Clip Bases
Courtesy of AMERICAN HONDA MOTOR CO., INC.

11. Headliner
    1. With the help of an assistant, slide the headliner (A) through the tailgate opening.

NOTE: **Do not bend the headliner. Bending the headliner will crease and damage it.**

GETtheMANUALS.org

Fig. 235: Identifying Headliner
Courtesy of AMERICAN HONDA MOTOR CO., INC.

2. With the help of an assistant, install the headliner (A), then push on the clips (B) and the fasteners (C) which will snap into place securely.

Without moonroof

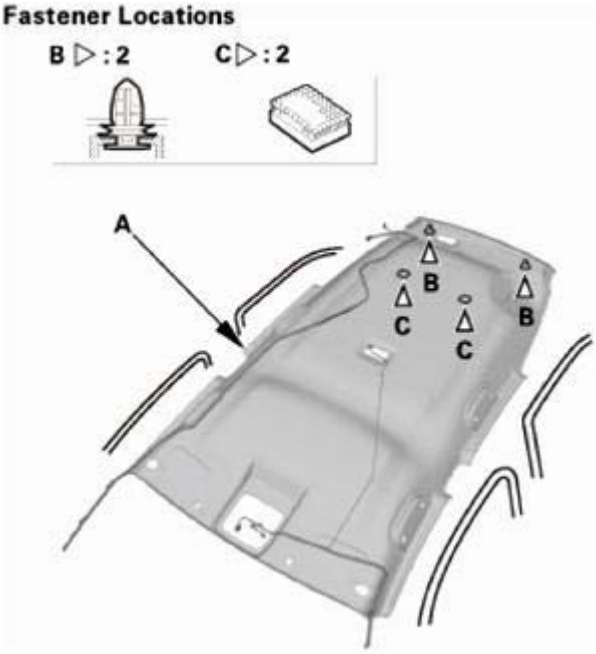

Fig. 236: Identifying Headliner, Fasteners And Clips (Without Moonroof)
Courtesy of AMERICAN HONDA MOTOR CO., INC.

With moonroof

GETtheMANUALS.org

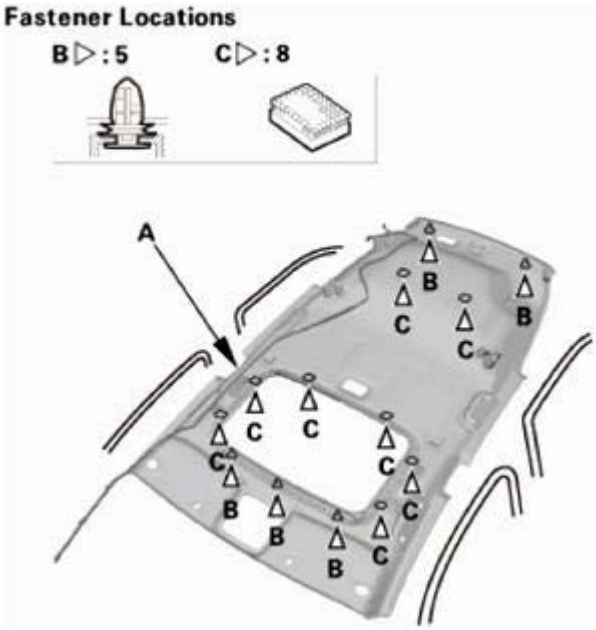

Fig. 237: Identifying Headliner, Fasteners And Clips (With Moonroof)
Courtesy of AMERICAN HONDA MOTOR CO., INC.

3. At the right quarter pillar, connect the connectors (A), and install the connector clips (B) and the harness clip (C).

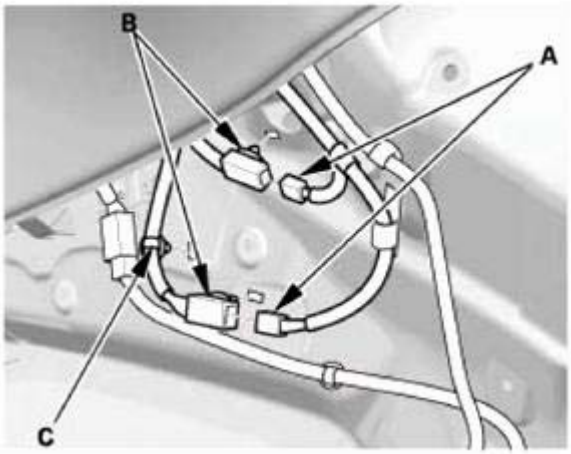

Fig. 238: Identifying Right Quarter Pillar Connector And Clips
Courtesy of AMERICAN HONDA MOTOR CO., INC.

4. At the passenger's A-pillar, connect the connectors (A), and install the harness clips (B).

GETtheMANUALS.org

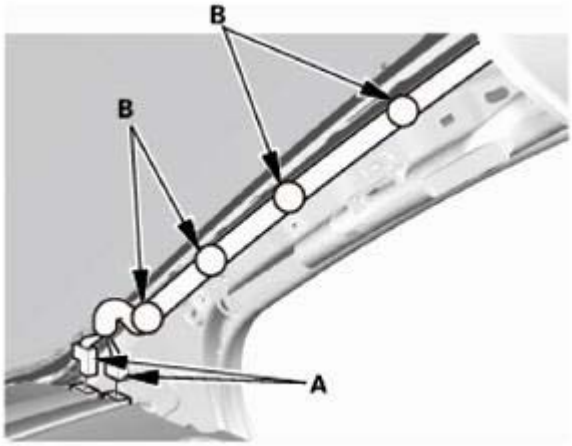

Fig. 239: Identifying Passenger A-Pillar Connector And Clips
Courtesy of AMERICAN HONDA MOTOR CO., INC.

5. Without moonroof: At the driver's A-pillar, connect the connector (A), and install the harness clips (B).

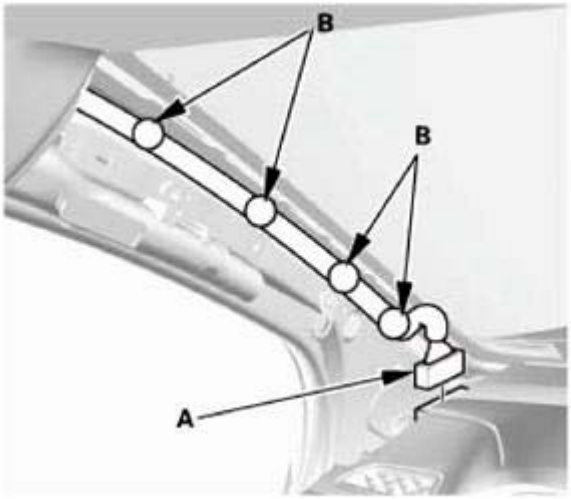

Fig. 240: Identifying Driver A-Pillar Connector And Clips (Without Moonroof)
Courtesy of AMERICAN HONDA MOTOR CO., INC.

12. Sunvisor Holder
    1. Install the holder (A) into the holder grommet (B) by turning it 45 ° clockwise.
    2. Install the holder and the holder grommet as an assembly into the body by pushing it until the hooks snap into place securely.

GETtheMANUALS.org

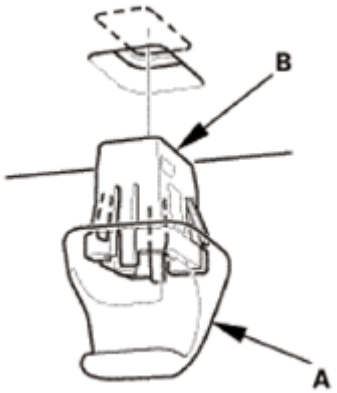

Fig. 241: Identifying Sunvisor Holder And Grommet
Courtesy of AMERICAN HONDA MOTOR CO., INC.

13. Sunvisor - Check
    1. If the side curtain airbag has deployed, replace the sunvisor, along with the other parts listed for side curtain airbag deployment.
    2. If the side curtain airbag has not deployed, inspect the sunvisor for damage. A damaged sunvisor may cause the side curtain airbags to deploy improperly, possibly causing injury. Replace the sunvisor if it has any of the following damage:
        - Any cracks in the sunvisor bracket (A)
        - Any cracks in the sunvisor bracket cover (B)
        - Any bends or cracks in the sunvisor shaft (C)
        - Any cracks in the sunvisor base (D)
        - Any cracks in the vanity mirror base (E)

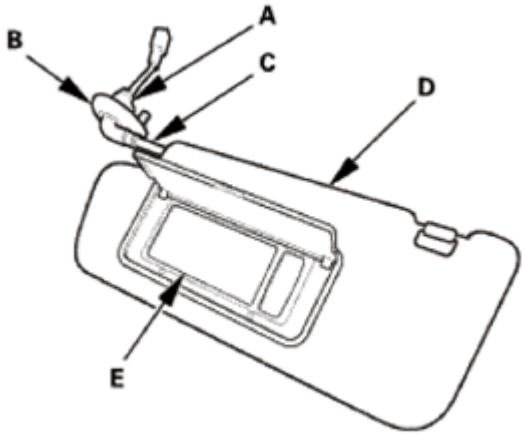

Fig. 242: Identifying Sunvisor Bracket, Cover, Shaft, Base And Mirror Base
Courtesy of AMERICAN HONDA MOTOR CO., INC.

    3. If the holder grommet is damaged or stress-whitened, replace the holder grommet and the holder as an assembly.

GETtheMANUALS.org

14. Sunvisor - Both Sides

NOTE: Repeat this procedure on the opposite side.

1. Connect the connector (A), and install the sunvisor (B).

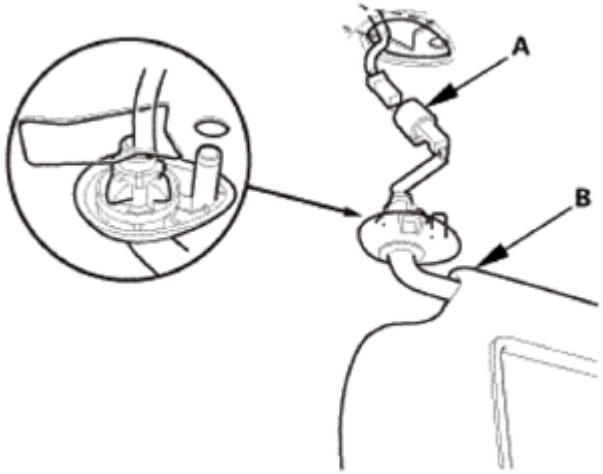

Fig. 243: Identifying Sunvisor And Connector
Courtesy of AMERICAN HONDA MOTOR CO., INC.

2. While holding the bracket cover (A), rotate the sunvisor (B) forward until the tab (C) snaps into place.
3. Gently pull down on the sunvisor to make sure it is properly secured in the body.
4. Rotate the sunvisor into the holder (D).

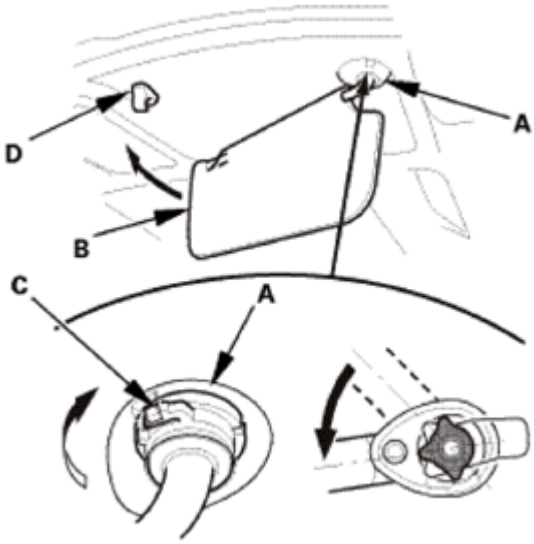

Fig. 244: Rotating Sunvisor Into Holder
Courtesy of AMERICAN HONDA MOTOR CO., INC.

GETtheMANUALS.org

15. Grab Handle - Check
    1. If the side curtain airbag has not deployed, inspect the grab handle (A) for damage. A damaged grab handle may cause the side curtain airbag to deploy improperly, possibly causing injury. Replace the grab handle if it has any of the following damage:
        - Any cracks or breakage in the grab handle
        - Any cracks or stress-whitening in the caps (B)

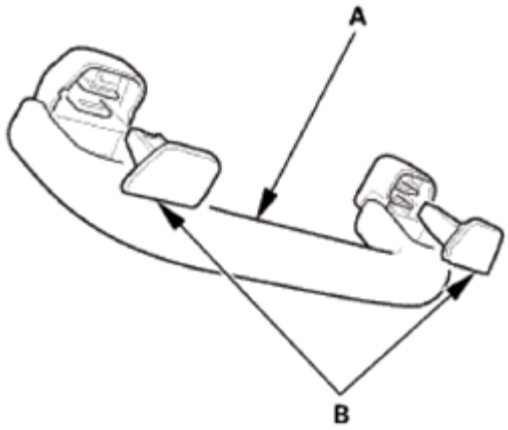

Fig. 245: Identifying Grab Handle And Caps
Courtesy of AMERICAN HONDA MOTOR CO., INC.

16. Grab Handles for One Vehicle
    1. Install the clips (A) on the grab handle (B).
    2. Install the caps (C) fully into the clips.

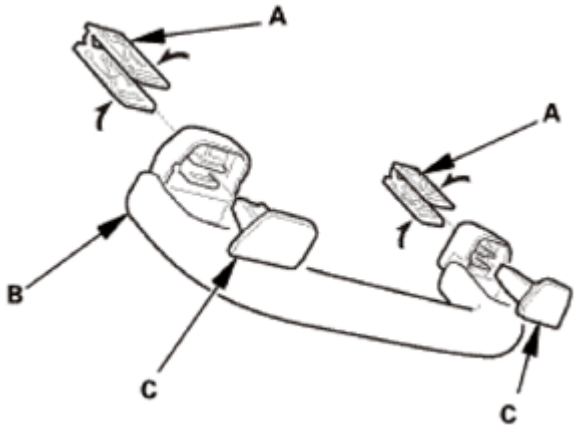

Fig. 246: Installing Clips On Grab Handle
Courtesy of AMERICAN HONDA MOTOR CO., INC.

    3. Position the grab handle (A) on the grab handle bracket (B).
    4. Push on the grab handle until the clips (C) snap into place securely.

GETtheMANUALS.org

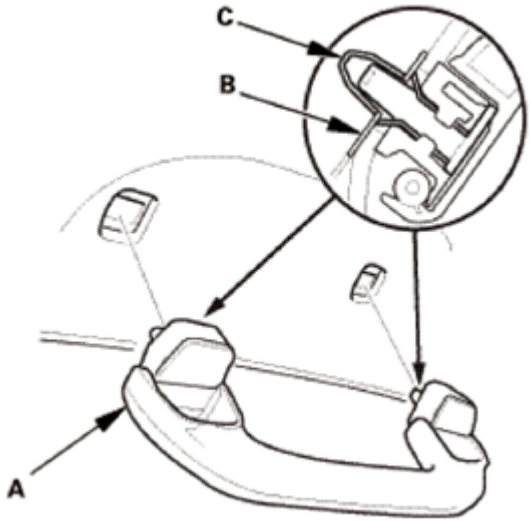

Fig. 247: Identifying Grab Handle, Bracket And Clips
Courtesy of AMERICAN HONDA MOTOR CO., INC.

17. Cargo Area Light
    1. Connect the connector.
    2. Install the cargo area light (A).
    3. Install the bulb.
    4. Carefully install the lens (B).

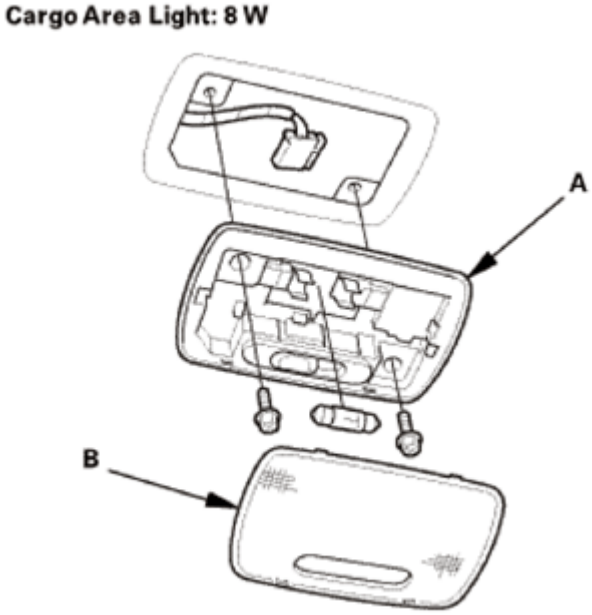

Fig. 248: Identifying Cargo Area Light And Lens
Courtesy of AMERICAN HONDA MOTOR CO., INC.

18. Rear Controller and Screen (With RES)

GETtheMANUALS.org

1. Install the rear controller and screen (A).
2. Connect the connector.

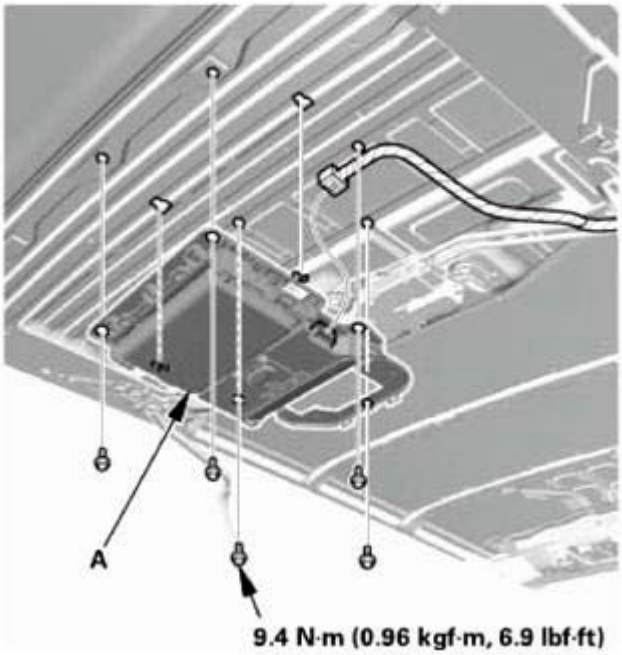

Fig. 249: Identifying Rear Controller And Screen With Torque Specifications (With RES)
Courtesy of AMERICAN HONDA MOTOR CO., INC.

19. Rear Display Cover (With RES)
    1. Install the rear display cover (A).

GETtheMANUALS.org

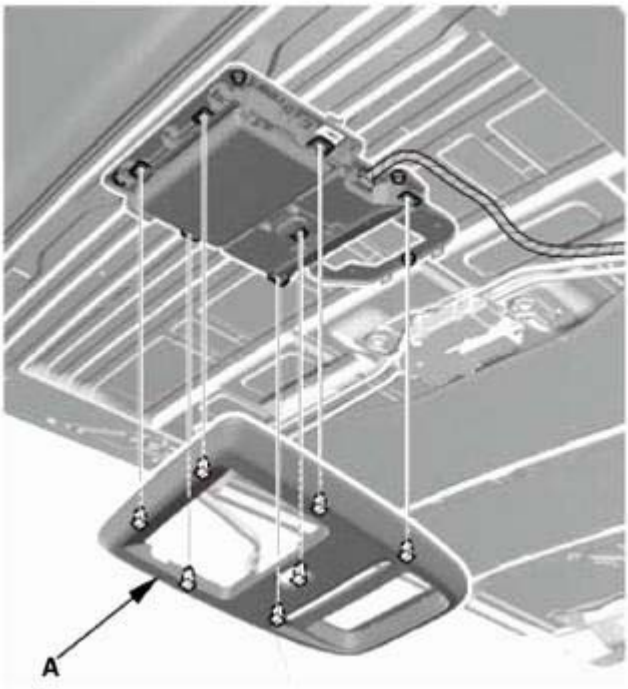

Fig. 250: Identifying Rear Display Cover (With RES)
Courtesy of AMERICAN HONDA MOTOR CO., INC.

2. Connect the connector.
3. Install the ceiling light (B).
4. Carefully install the lenses (C).

GETtheMANUALS.org

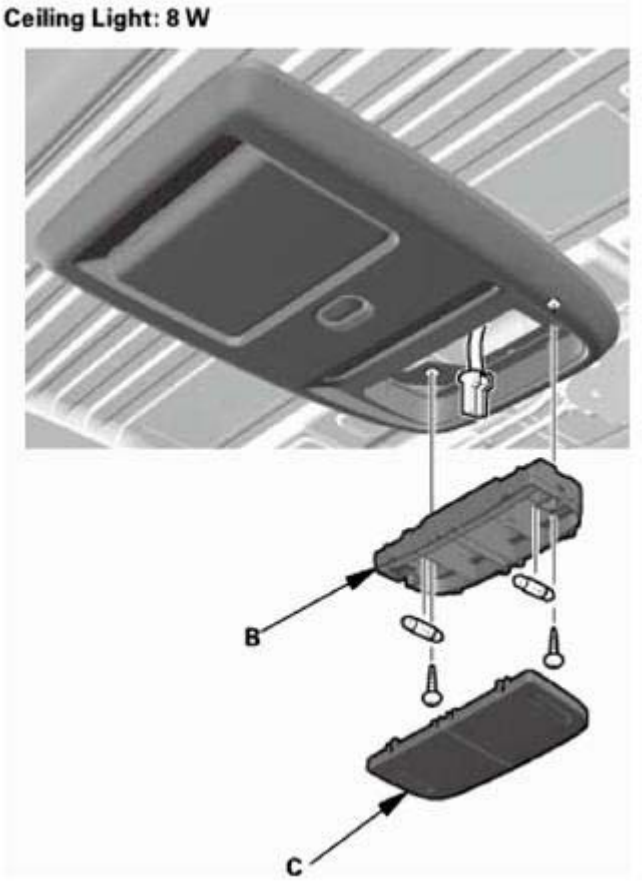

Fig. 251: Identifying Ceiling Light And Lens (With RES)
Courtesy of AMERICAN HONDA MOTOR CO., INC.

20. Ceiling Light (without RES)
    1. Connect the connector.
    2. Install the ceiling light (A).
    3. Install the bulb.
    4. Carefully install the lens (B).

GETtheMANUALS.org

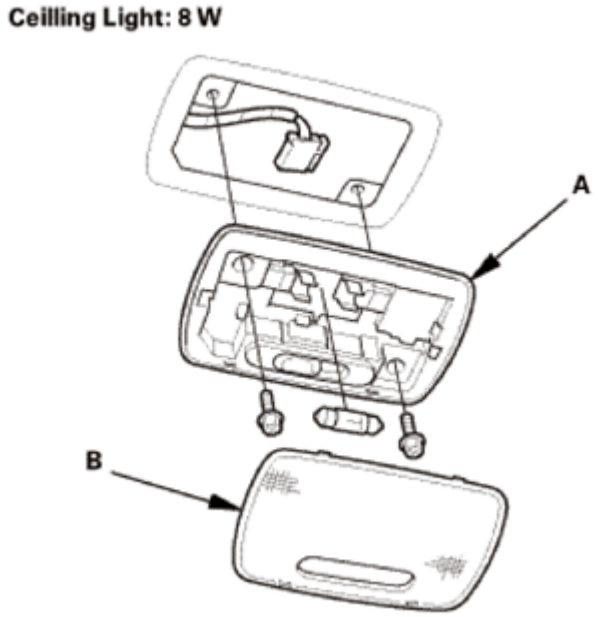

Fig. 252: Identifying Ceiling Light And Lens (Without RES)
Courtesy of AMERICAN HONDA MOTOR CO., INC.

21. Roof Console Assembly
    1. Connect the connectors (A), then install the roof console assembly (B).
    2. Install the screws (C, D), then install the lenses (E).

GETtheMANUALS.org

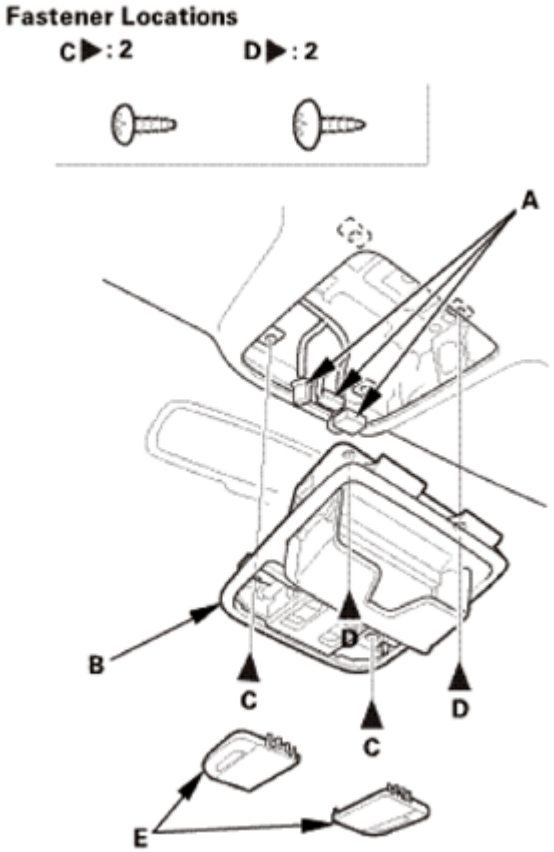

Fig. 253: Identifying Roof Console Assembly, Connector, Lens And Screws
Courtesy of AMERICAN HONDA MOTOR CO., INC.

22. Quarter Pillar Trim - Check
    1. If the side curtain airbag has deployed, replace the quarter pillar trim (A), along with the other parts listed for side curtain airbag deployment.
    2. If the side curtain airbag has not deployed, check the quarter pillar trim and note the following items:
        - To prevent the side curtain airbags from deploying improperly and possibly causing injury, inspect the quarter pillar trim and replace it with a new one if it has any of the following damage:
            - Any cracks, deformations, or stress-whitening in the quarter pillar trim
            - Any cracks or stress-whitened areas in the clip seating surfaces (B)
        - After checking and adjusting the overlap between the headliner and the quarter pillar trim, replace the upper clip (C) with a new one.
        - If the clips (D) are damaged or stress-whitened, replace them with new ones.

GETtheMANUALS.org

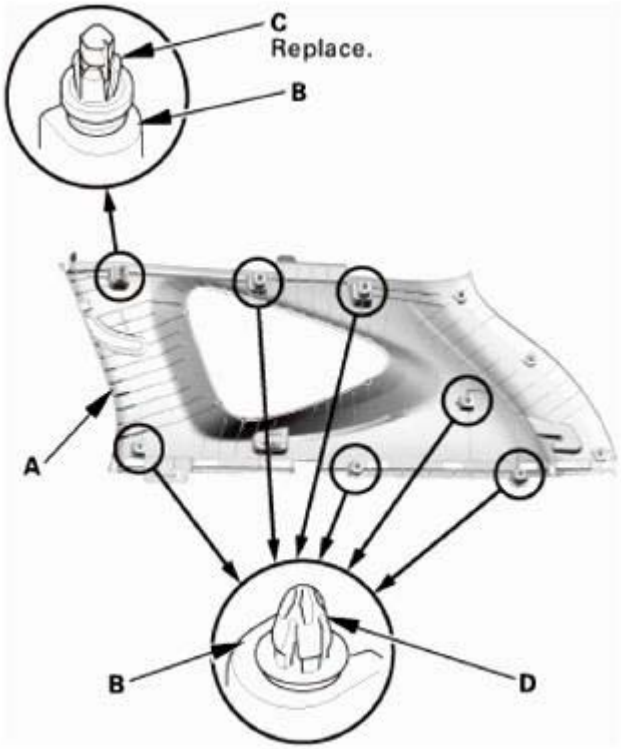

Fig. 254: Identifying Quarter Pillar Trim Upper Clip And Clip Seating Surfaces
Courtesy of AMERICAN HONDA MOTOR CO., INC.

23. Headliner/Pillar Trim Overlap - Check

Checking and Adjusting the Headliner/Pillar Trim Overlap

To prevent the side curtain airbag from deploying and damaging the pillar trim (A-pillar trim, B-pillar trim, quarter pillar trim), the overlap between the headliner and pillar trim must be 8.0+0/-2.0 mm (0.31+0/-0.08 in). To check the overlap, do this:

1. Install the headliner (A) and the pillar trim (B).

GETtheMANUALS.org

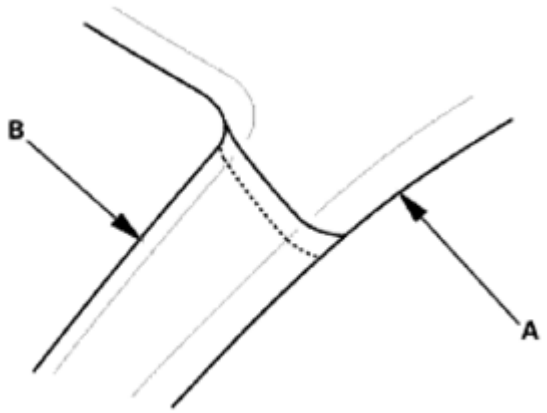

This illustration shows the A-pillar.

Fig. 255: Identifying Headliner And Pillar Trim
Courtesy of AMERICAN HONDA MOTOR CO., INC.

2. Apply masking tape (A) to the headliner (B) to mark the upper edge of the pillar trim (C).

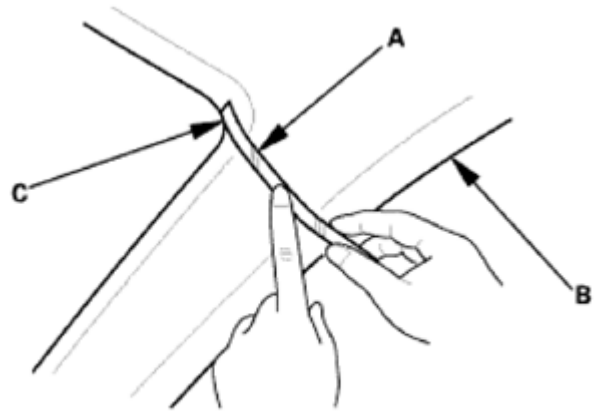

This illustration shows the A-pillar.

Fig. 256: Applying Mask Tape To Headliner
Courtesy of AMERICAN HONDA MOTOR CO., INC.

3. Remove the pillar trim, and measure the headliner overlap.
   - If the overlap is 8.0+0/-2.0 mm (0.31+0/-0.08 in), remove the tape, and install the pillar trim.
   - If the overlap is more than 8.0 mm (0.31 in), go to step 4.

GETtheMANUALS.org

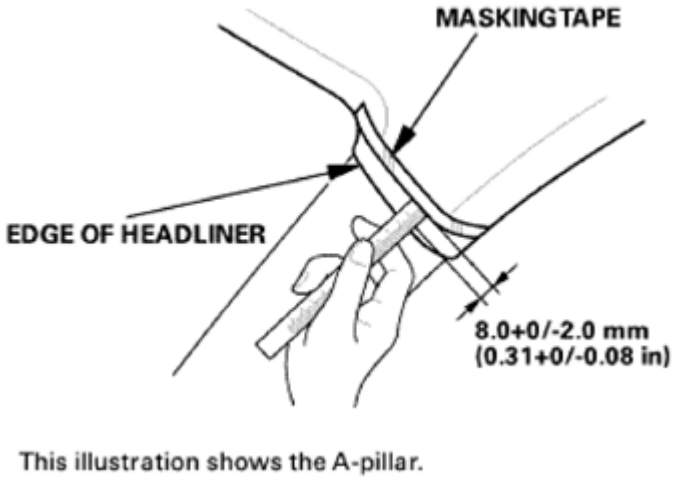

Fig. 257: Measuring Headliner Overlap
Courtesy of AMERICAN HONDA MOTOR CO., INC.

4. Carefully trim the headliner with a utility knife, reducing the overlap to 8.0+0/-2.0 mm (0.31+0/-0.08 in).
5. Remove the tape, and install the pillar trim.

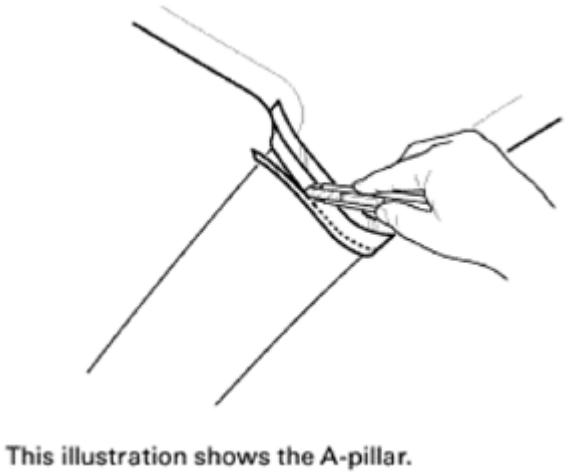

Fig. 258: Triming Headliner Using Utility Knife
Courtesy of AMERICAN HONDA MOTOR CO., INC.

24. Quarter Pillar Trim - Both Sides
    1. Install a new clip (A) to the quarter pillar trim (B).

GETtheMANUALS.org

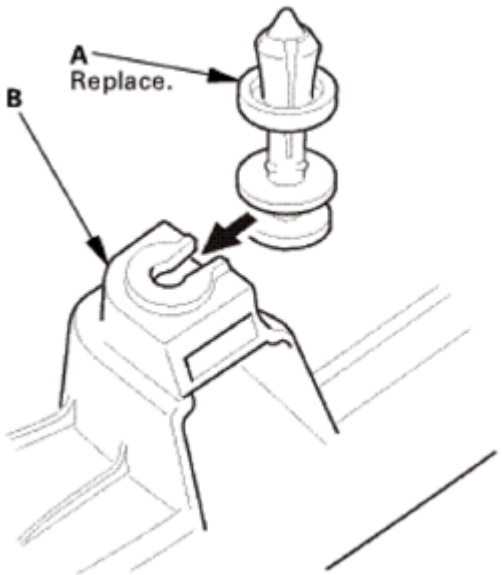

Fig. 259: Installing Quarter Pillar Trim Into Clip
Courtesy of AMERICAN HONDA MOTOR CO., INC.

2. Pass the rear seat belt lower anchor (A) through the hole in the quarter pillar trim (B).
3. Fit the clips into the holes in the quarter pillar.
4. Lightly push the quarter pillar trim into place, then install the trim.

NOTE:

- **Make sure the side curtain airbag is not tucked under the clips or the ribs.**
- **Do not push too hard on the quarter pillar trim. If you push too hard, the clip will be damaged, and it will not hold the trim properly.**
- **Gently tug on the quarter pillar trim to verify that all clips are securely fastened.**
- **Make sure the clips (C, D, and E) snap into place securely.**

GETtheMANUALS.org

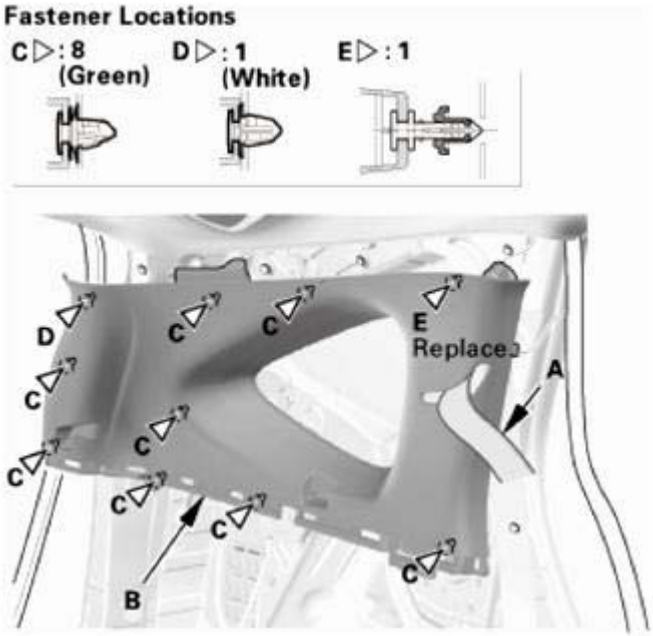

Fig. 260: Identifying Rear Seat Belt Lower Anchor, Quarter Pillar Trim And Clips
Courtesy of AMERICAN HONDA MOTOR CO., INC.

25. Rear Side Trim Panel - Both Sides

NOTE: Repeat this procedure on the opposite side.

1. Install the rear seat release cable (A) to the clips (B) of the rear side trim panel (C).

NOTE: Align the marks (D) with the clips as shown.

GETtheMANUALS.org

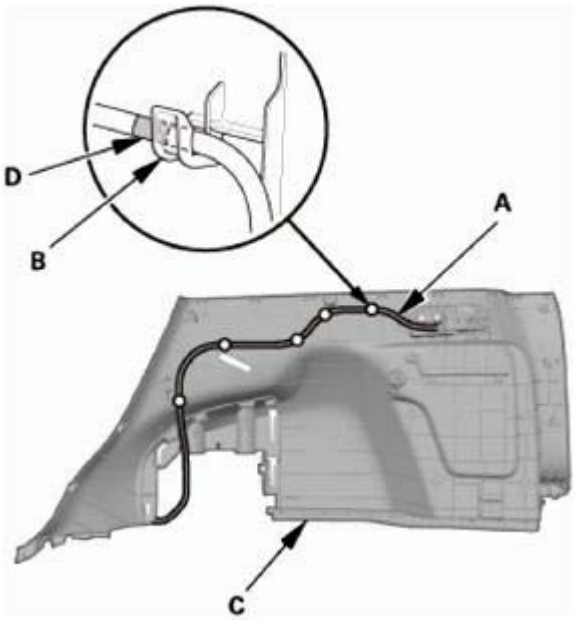

Fig. 261: Identifying Rear Seat Release Cable, Rear Side Trim Panel And Clips
Courtesy of AMERICAN HONDA MOTOR CO., INC.

2. Install the rear seat release lever (A) to the rear side trim panel (B).

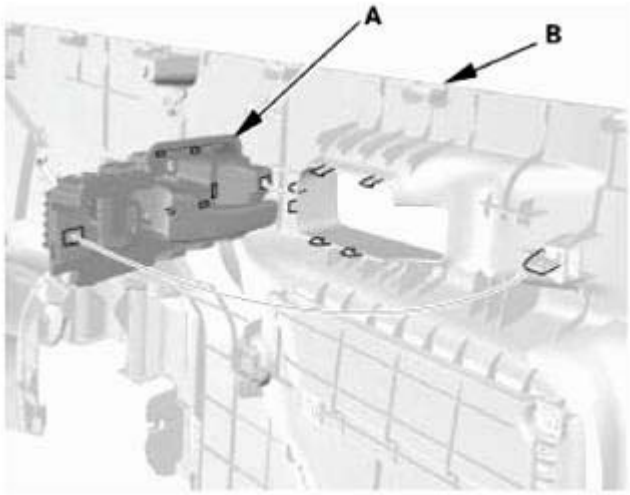

Fig. 262: Identifying Rear Seat Release Lever And Rear Side Panel
Courtesy of AMERICAN HONDA MOTOR CO., INC.

3. Install the rear side trim panel (A). Make sure the hooks (B), the tabs (C), and the clips (D, E) snap into place securely.
4. Install the clips (F, G).

GETtheMANUALS.org

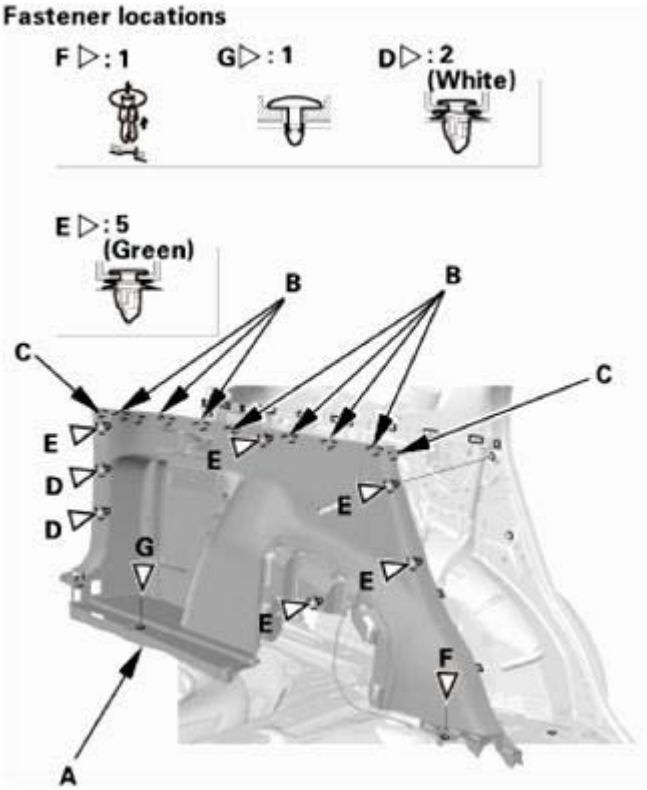

Fig. 263: Identifying Rear Side Trim Panel, Hooks And Clips
Courtesy of AMERICAN HONDA MOTOR CO., INC.

5. Install the tie-down hook (A), then install the bolt (B).

Fig. 264: Identifying Tie-Down Hook And Bolt With Torque Specifications

GETtheMANUALS.org

Courtesy of AMERICAN HONDA MOTOR CO., INC.

6. Install the trunk hook (A).

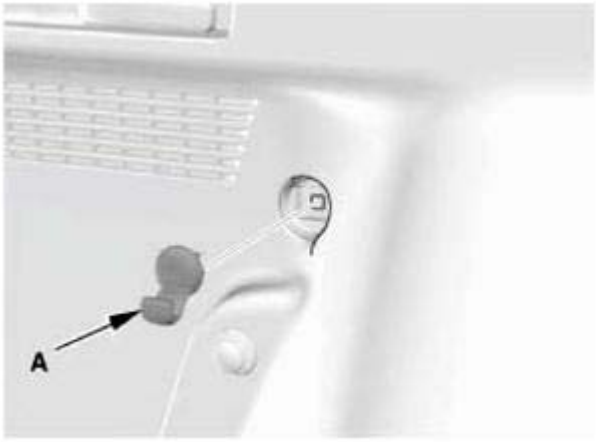

Fig. 265: Identifying Trunk Hook
Courtesy of AMERICAN HONDA MOTOR CO., INC.

7. Install the screws (A), then install the rear seat release lever cap (B). Make sure the upper hook (C) and the lower hooks (D) snap into place securely.

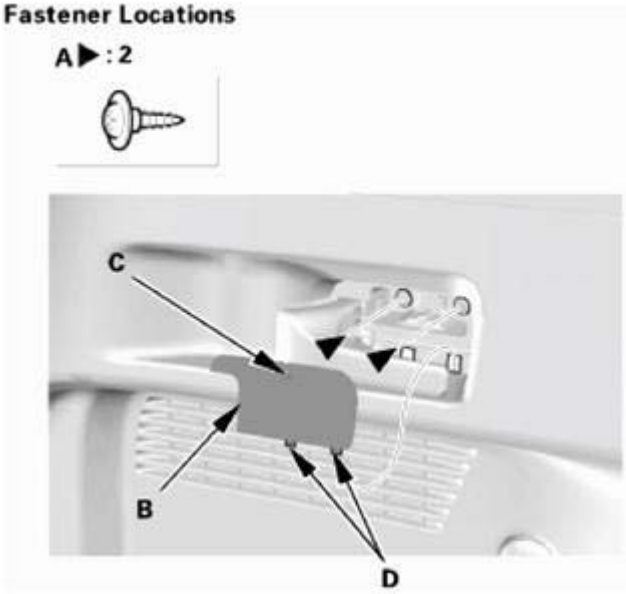

Fig. 266: Identifying Rear Seat Release Lever Cap, Upper, Lower Hook And Screws
Courtesy of AMERICAN HONDA MOTOR CO., INC.

26. Rear Seat Belt Lower Anchor Bolt - Both Sides

NOTE: Repeat this procedure on the opposite side.

GETtheMANUALS.org

1. Install the rear seat belt lower anchor bolt (A).

NOTE: **Before installing the anchor bolt, make sure there are no twists or kinks in the seat belt.**

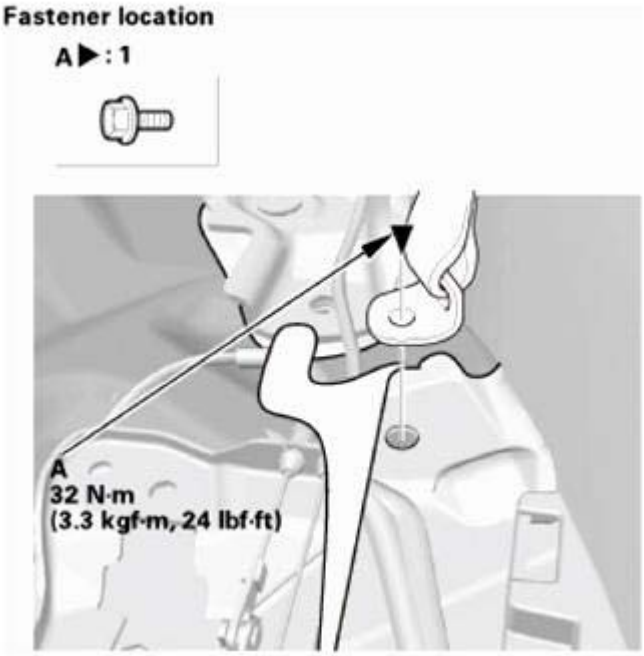

Fig. 267: Identifying Rear Seat Belt Lower Anchor Bolt With Torque Specifications
Courtesy of AMERICAN HONDA MOTOR CO., INC.

27. Rear Seat Cushion Foot Cover - Both Sides (Remove The Outer Left Side Only)
    1. Install the rear seat cushion foot cover (A). Make sure the clips (B) and the hooks (C) snap into place securely.

    Left side

GETtheMANUALS.org

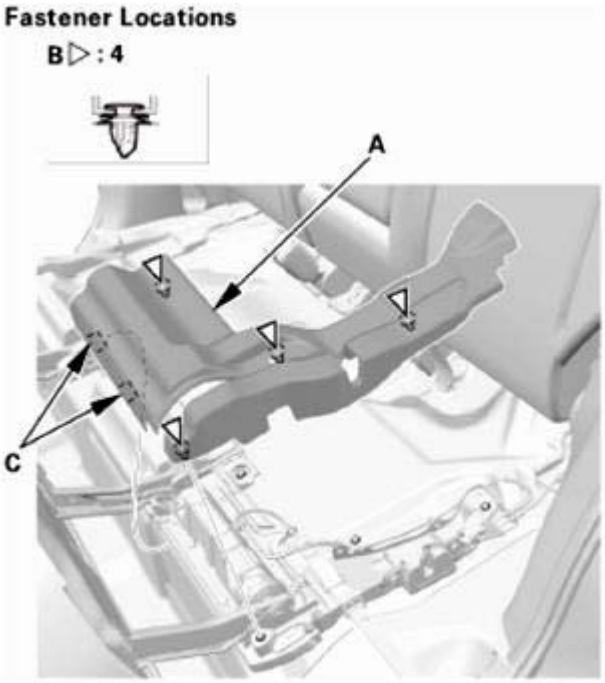

Fig. 268: Identifying Rear Seat Cushion Foot Cover, Hooks And Clips (Left Side)
Courtesy of AMERICAN HONDA MOTOR CO., INC.

Right side

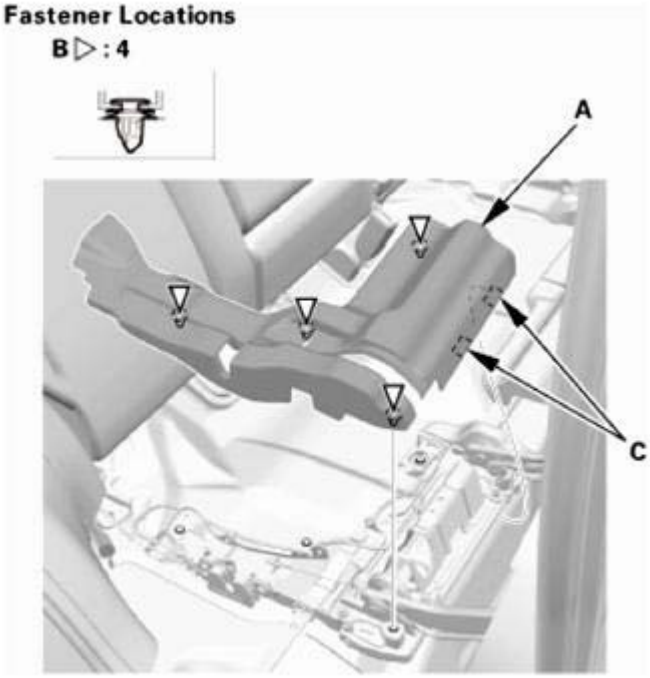

Fig. 269: Identifying Rear Seat Cushion Foot Cover, Hooks And Clips (Right Side)
Courtesy of AMERICAN HONDA MOTOR CO., INC.

GETtheMANUALS.org

28. Rear Carpet Trim - Both Sides
    1. Install the rear carpet trims (A). Make sure the clips (B) and the hooks (C) snap into place securely.

Left side

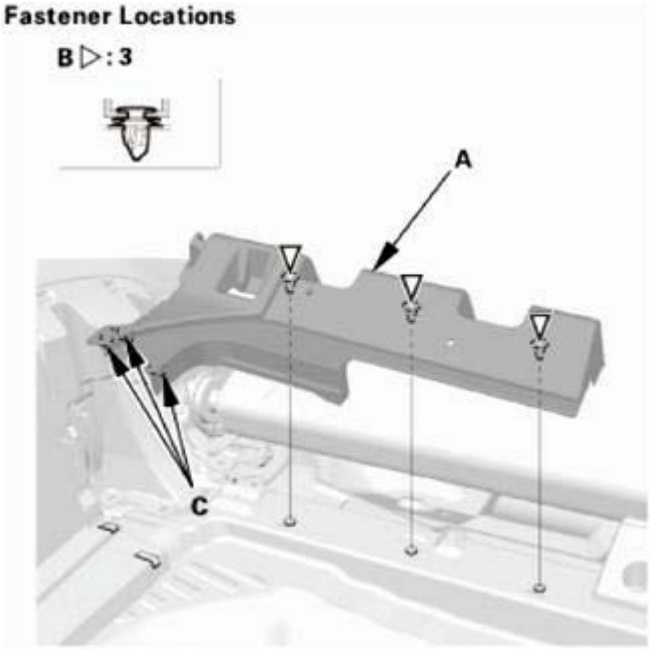

Fig. 270: Identifying Rear Carpet Trims, Hooks And Clips (Left Side)
Courtesy of AMERICAN HONDA MOTOR CO., INC.

Right side

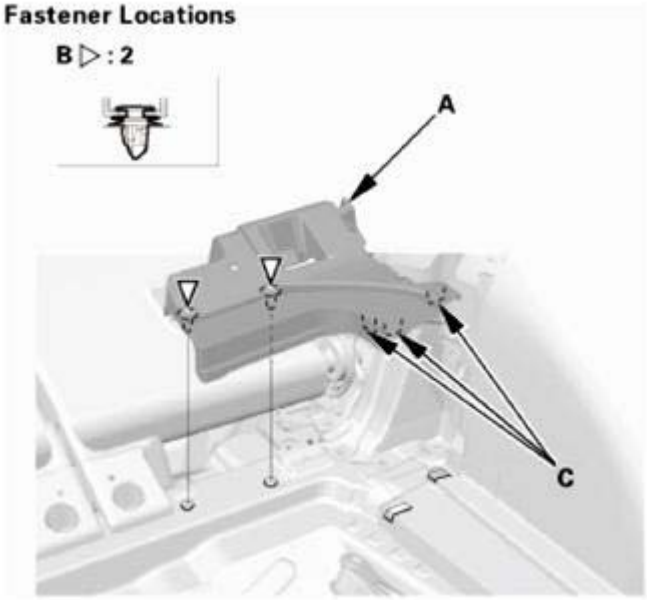

GETtheMANUALS.org

Fig. 271: Identifying Rear Carpet Trims, Hooks And Clips (Right Side)
Courtesy of AMERICAN HONDA MOTOR CO., INC.

2. Install the rear seat-back cover (A). Make sure the clips (B) snap into place securely.

Left side

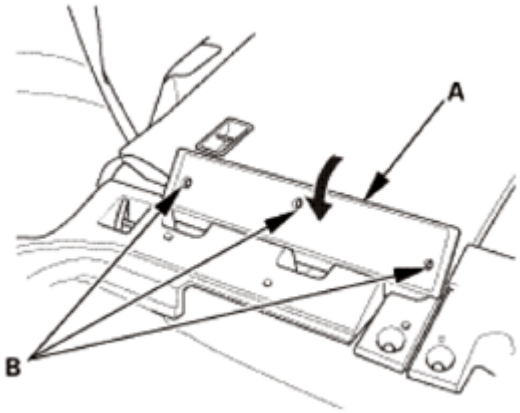

Fig. 272: Installing Rear Seat-Back Cover (Left Side)
Courtesy of AMERICAN HONDA MOTOR CO., INC.

Right side

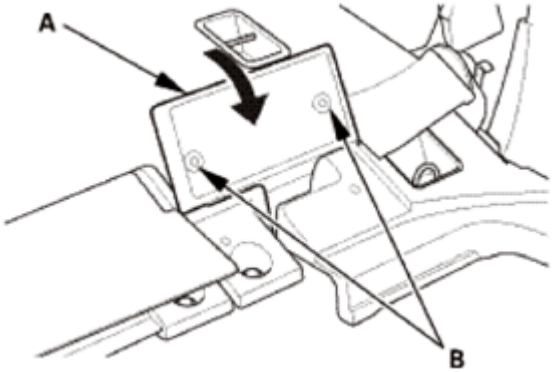

Fig. 273: Installing Rear Seat-Back Cover (Right Side)
Courtesy of AMERICAN HONDA MOTOR CO., INC.

29. Rear Damper Maintenance Cover - Both Sides

NOTE: Repeat this procedure on the opposite side.

1. Fold down the rear seat-back.
2. Install the rear damper maintenance cover (A). Make sure the hooks (B) snap into place securely.

GETtheMANUALS.org

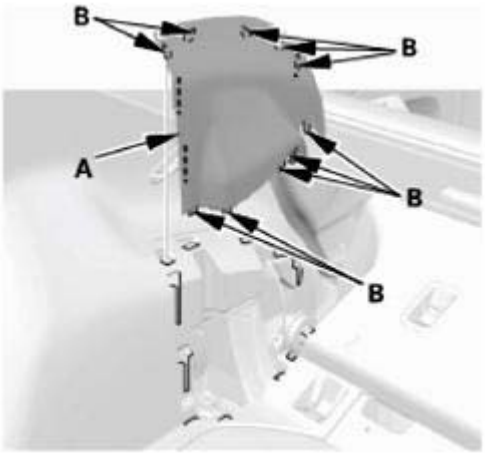

Fig. 274: Identifying Rear Damper Maintenance Cover And Hooks
Courtesy of AMERICAN HONDA MOTOR CO., INC.

30. Rear Trim Panel
    1. Install the rear trim panel (A). Make sure the clips (B, C), the hooks (D), and the tabs (E) snap into place securely.
    2. Install the clips (F).

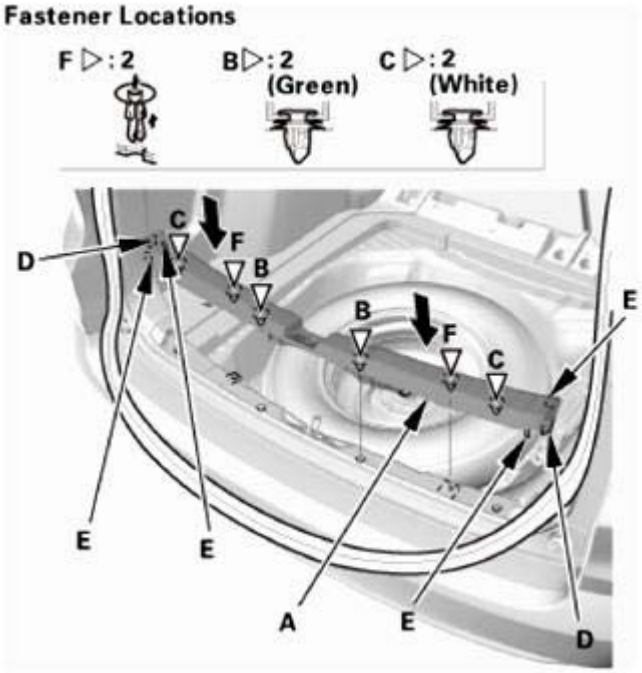

Fig. 275: Installing Rear Trim Panel
Courtesy of AMERICAN HONDA MOTOR CO., INC.

31. Tailgate Weatherstrip As Needed
    1. Locate the alignment mark (A) of the tailgate weatherstrip (B). Align the alignment mark (C) with

GETtheMANUALS.org

the center of the lower area on the tailgate opening, then install the tailgate weatherstrip all the way around.

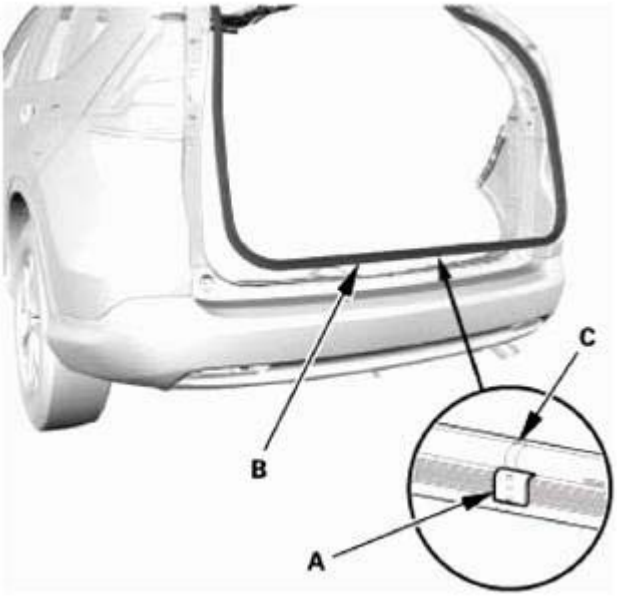

Fig. 276: Identifying Tailgate Weatherstrip And Alignment Marks
Courtesy of AMERICAN HONDA MOTOR CO., INC.

32. Cargo Floor Cover
    1. Install the cargo floor cover (A).

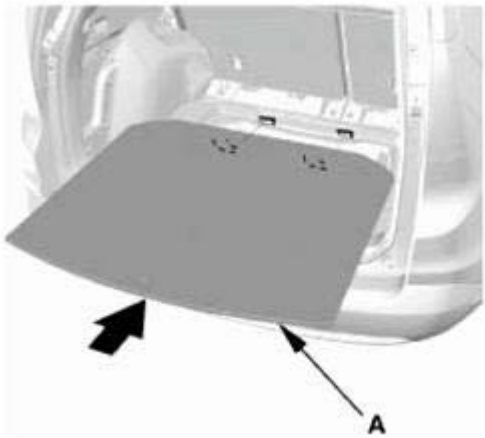

Fig. 277: Installing Cargo Floor Cover
Courtesy of AMERICAN HONDA MOTOR CO., INC.

33. Tonneau Cover (For Some Models)
    1. Install the tonneau cover (A).

GETtheMANUALS.org

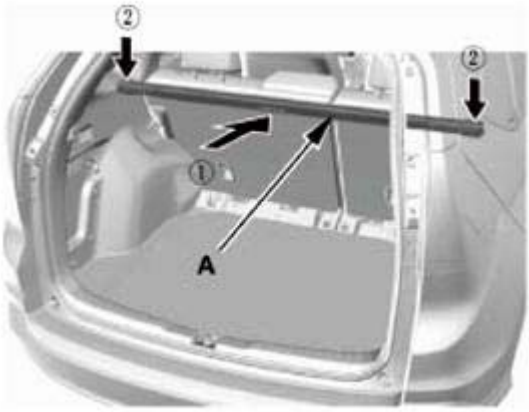

Fig. 278: Installing Tonneau Cover
Courtesy of AMERICAN HONDA MOTOR CO., INC.

34. B-Pillar Upper/Lower Trim - Check
    1. If the side curtain airbag has deployed, replace the B-pillar upper trim (A) and the B-pillar lower trim (B), along with the other parts listed for side curtain airbag deployment.
    2. If the side curtain airbag has not deployed, check the B-pillar upper/lower trim and note the following items:
        - To prevent the side curtain airbags from deploying improperly and possibly causing injury, inspect the trim and replace it with a new one if it has any of the following damage:
            - Any cracks or deformations in the B-pillar upper trim or the upper hooks (C), or any stress-whitened areas in the upper part of the trim
            - Any cracks or deformations in the B-pillar lower trim, or any breakages in the part (D) fitted with the B-pillar upper trim
            - Any cracks or stress-whitening areas in the clip seating surfaces (E)
        - If the clips (F) are damaged or stress-whitened, replace them with new ones.

Trim inspection

GETtheMANUALS.org

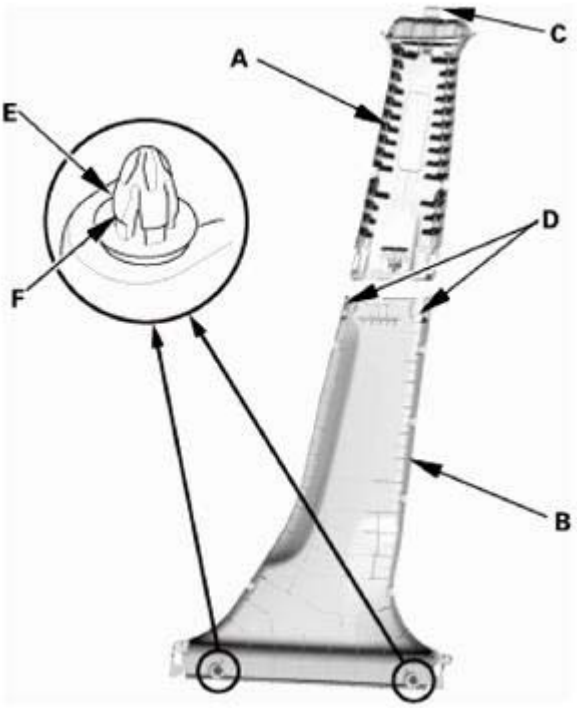

Fig. 279: Identifying B-Pillar Upper/Lower Trim And Related Components
Courtesy of AMERICAN HONDA MOTOR CO., INC.

35. Headliner/Pillar Trim Overlap - Check

Checking and Adjusting the Headliner/Pillar Trim Overlap

To prevent the side curtain airbag from deploying and damaging the pillar trim (A-pillar trim, B-pillar trim, quarter pillar trim), the overlap between the headliner and pillar trim must be 8.0+0/-2.0 mm (0.31+0/-0.08 in). To check the overlap, do this:

1. Install the headliner (A) and the pillar trim (B).

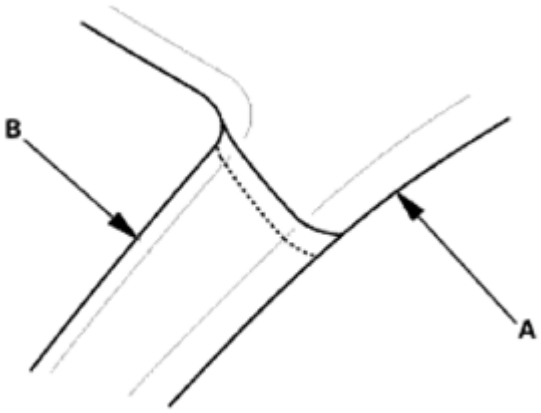

This illustration shows the A-pillar.

GETtheMANUALS.org

Fig. 280: Identifying Headliner And Pillar Trim
Courtesy of AMERICAN HONDA MOTOR CO., INC.

2. Apply masking tape (A) to the headliner (B) to mark the upper edge of the pillar trim (C).

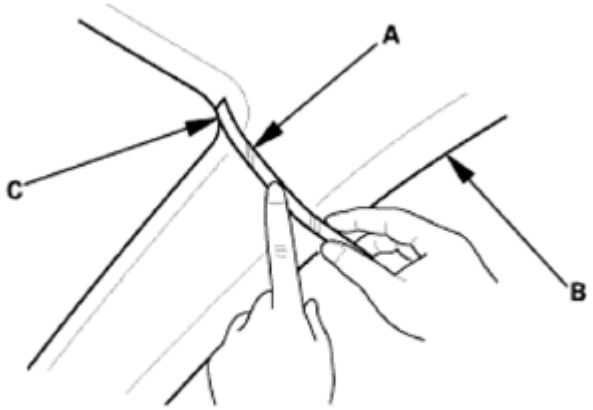

This illustration shows the A-pillar.

Fig. 281: Applying Mask Tape To Headliner
Courtesy of AMERICAN HONDA MOTOR CO., INC.

3. Remove the pillar trim, and measure the headliner overlap.
   - If the overlap is 8.0+0/-2.0 mm (0.31+0/-0.08 in), remove the tape, and install the pillar trim.
   - If the overlap is more than 8.0 mm (0.31 in), go to step 4.

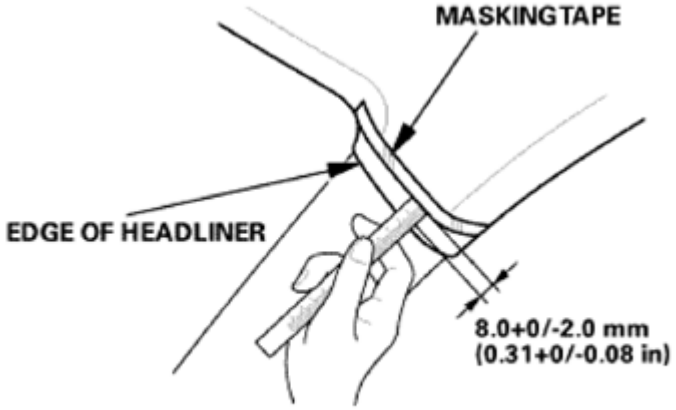

This illustration shows the A-pillar.

Fig. 282: Measuring Headliner Overlap
Courtesy of AMERICAN HONDA MOTOR CO., INC.

4. Carefully trim the headliner with a utility knife, reducing the overlap to 8.0+0/-2.0 mm (0.31+0/-0.08 in).
5. Remove the tape, and install the pillar trim.

GETtheMANUALS.org

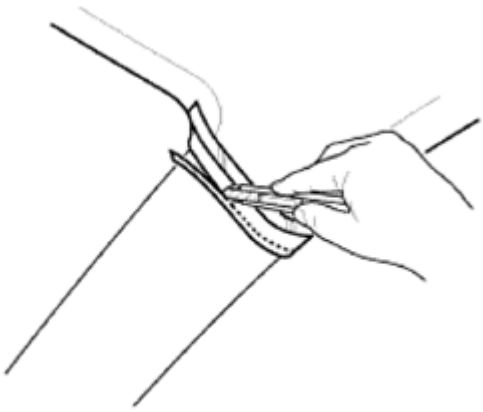

This illustration shows the A-pillar.

Fig. 283: Triming Headliner Using Utility Knife
Courtesy of AMERICAN HONDA MOTOR CO., INC.

36. B-Pillar Upper Trim - Both Sides

NOTE: Repeat this procedure on the opposite side.

1. Install the upper hook (A) of the B-pillar upper trim (B) to the hole in the body. Push the bottom portion of the B-pillar upper trim to install the lower hooks (C). Make sure the hooks snap into place securely.

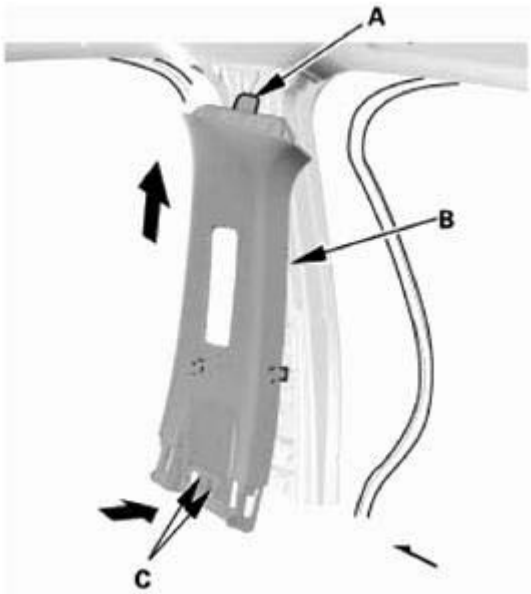

Fig. 284: Installing Upper Hook Of B-Pillar Upper Trim
Courtesy of AMERICAN HONDA MOTOR CO., INC.

37. Front Seat Belt Upper Anchor Bolt - Both Sides

GETtheMANUALS.org

NOTE: **Repeat this procedure on the opposite side.**

1. Install the front seat belt upper anchor bolt, then install the front seat belt shoulder anchor adjuster cap (A).

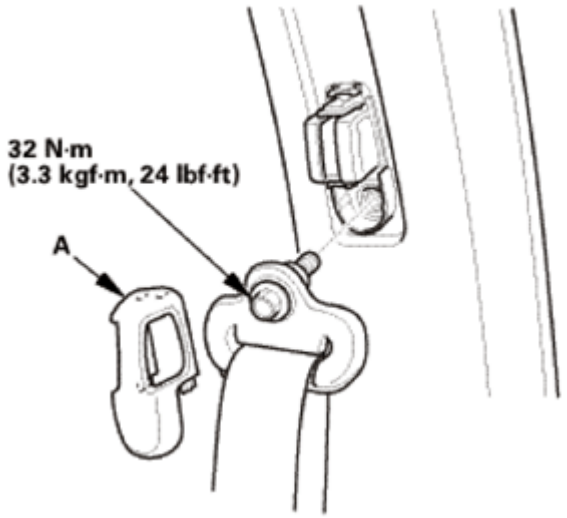

Fig. 285: Identifying Front Seat Belt Shoulder Anchor Adjuster Cap With Torque Specifications
Courtesy of AMERICAN HONDA MOTOR CO., INC.

38. B-Pillar Lower Trim - Both Sides

NOTE: **Repeat this procedure on the opposite side.**

1. Install the B-pillar lower trim (A). Make sure the clips (B) and the hooks (C) snap into place securely.

GETtheMANUALS.org

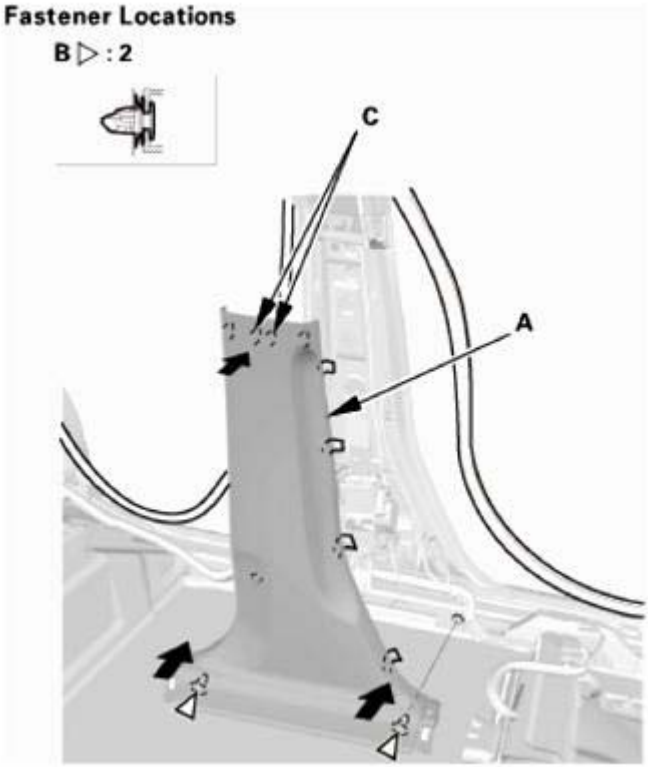

Fig. 286: Installing B-Pillar Lower Trim
Courtesy of AMERICAN HONDA MOTOR CO., INC.

39. Rear Door Opening Seal As Needed - Both Sides

NOTE: Repeat this procedure on the opposite side.

1. Install the rear door opening seal (A). Make sure the seal is installed securely into the hooks (B).

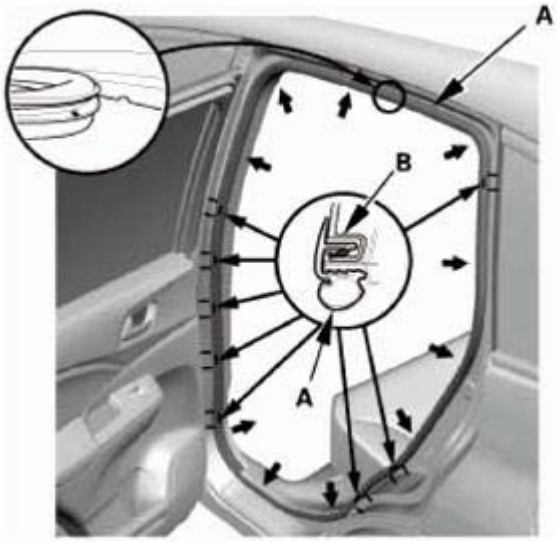

GETtheMANUALS.org

Fig. 287: Installing Rear Door Opening Seal
Courtesy of AMERICAN HONDA MOTOR CO., INC.

40. Rear Door Sill Trim - Both Sides

NOTE: Repeat this procedure on the opposite side.

1. Pull the release strap to fold down the rear seat, then lift-up and latch the rear seat-back in the upright position.
2. Install the rear door inner sill trim (A). Make sure the clips (B, C), the hooks (D), and the tab (E) snap into place securely.

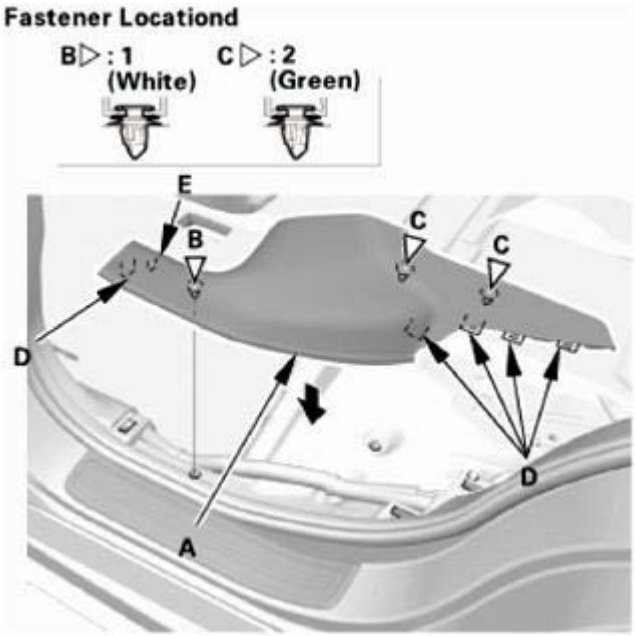

Fig. 288: Removing Rear Door Inner Sill Trim
Courtesy of AMERICAN HONDA MOTOR CO., INC.

41. A-Pillar Trim - Check
    1. If the side curtain airbag has deployed, replace the A-pillar trim (A), along with the other parts listed for side curtain airbag deployment.
    2. If the side curtain airbag has not deployed, check the A-pillar trim and note the following items:
        - To prevent the side curtain airbags from deploying improperly and possibly causing injury, inspect the A-pillar trim and replace it with a new one if it has any of the following damage:
            - Any cracks, deformations, or stress-whitened areas in the A-pillar trim
            - Any cracks or stress-whitening in the clip seating surfaces (B)
        - After checking and adjusting the overlap between the headliner and the A-pillar trim, replace the upper clip (C) with a new one.
        - If the clips (D) are damaged or stress-whitened, replace them with new ones.

GETtheMANUALS.org

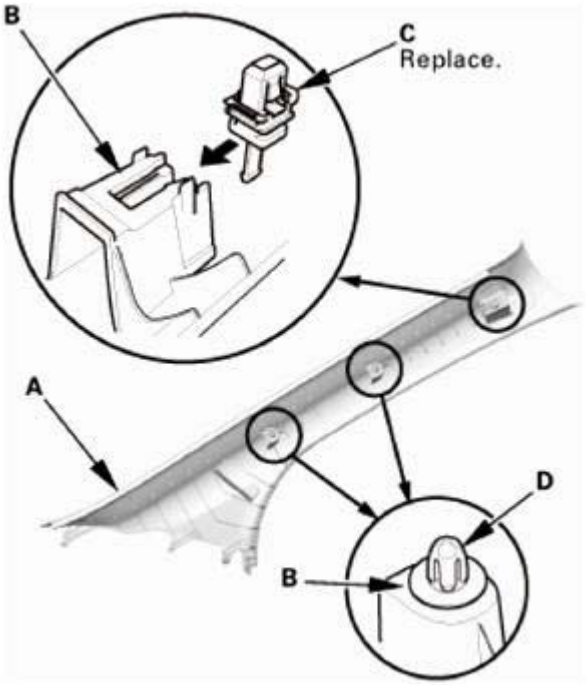

Fig. 289: Identifying Headliner And Pillar Trim
Courtesy of AMERICAN HONDA MOTOR CO., INC.

42. Headliner/Pillar Trim Overlap - Check

Checking and Adjusting the Headliner/Pillar Trim Overlap

To prevent the side curtain airbag from deploying and damaging the pillar trim (A-pillar trim, B-pillar trim, quarter pillar trim), the overlap between the headliner and pillar trim must be 8.0+0/-2.0 mm (0.31+0/-0.08 in). To check the overlap, do this:

1. Install the headliner (A) and the pillar trim (B).

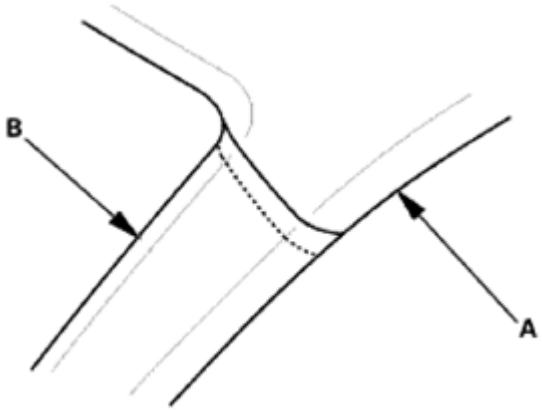

This illustration shows the A-pillar.

GETtheMANUALS.org

Fig. 290: Identifying Headliner And Pillar Trim
Courtesy of AMERICAN HONDA MOTOR CO., INC.

2. Apply masking tape (A) to the headliner (B) to mark the upper edge of the pillar trim (C).

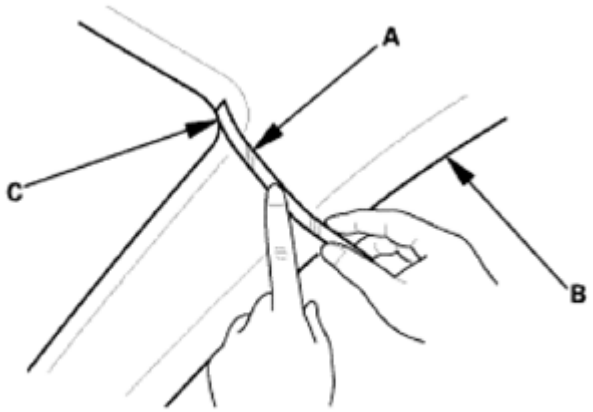

This illustration shows the A-pillar.

Fig. 291: Applying Mask Tape To Headliner
Courtesy of AMERICAN HONDA MOTOR CO., INC.

3. Remove the pillar trim, and measure the headliner overlap.
   - If the overlap is 8.0+0/-2.0 mm (0.31+0/-0.08 in), remove the tape, and install the pillar trim.
   - If the overlap is more than 8.0 mm (0.31 in), go to step 4.

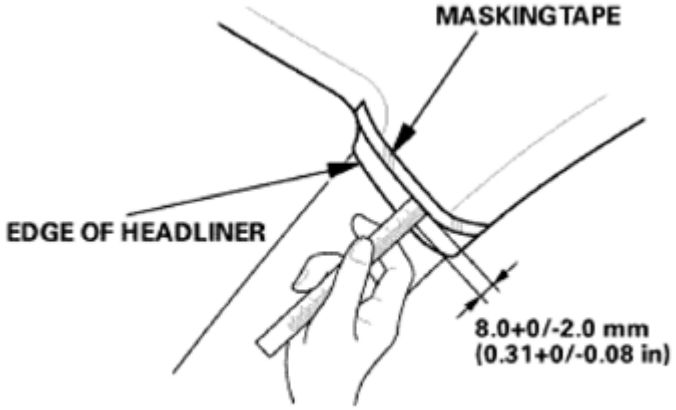

This illustration shows the A-pillar.

Fig. 292: Measuring Headliner Overlap
Courtesy of AMERICAN HONDA MOTOR CO., INC.

4. Carefully trim the headliner with a utility knife, reducing the overlap to 8.0+0/-2.0 mm (0.31+0/-0.08 in).
5. Remove the tape, and install the pillar trim.

GETtheMANUALS.org

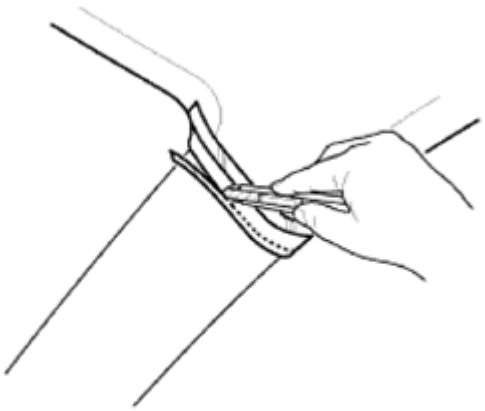

This illustration shows the A-pillar.

Fig. 293: Triming Headliner Using Utility Knife
Courtesy of AMERICAN HONDA MOTOR CO., INC.

43. A-Pillar Trim - Both Sides

NOTE: Repeat this procedure on the opposite side.

1. Carefully install a new upper clip (A) to the A-pillar trim (B).

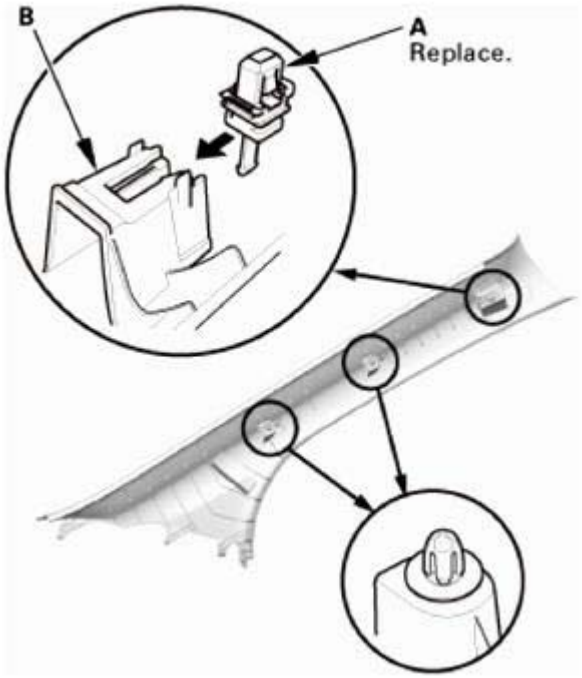

Fig. 294: Installing Upper Clip To A-Pillar Trim
Courtesy of AMERICAN HONDA MOTOR CO., INC.

2. Insert the bottom portion of the A-pillar trim (A) into the dashboard (B). Place the trim over the A-

GETtheMANUALS.org

pillar (C), and fit its upper clip (D) and the other clips (E) into the holes (F) in the A-pillar, then lightly push the trim into place.

NOTE:

- **Make sure the side curtain airbag is not tucked under the clips or the trim ribs.**
- **Do not push too hard on the A-pillar trim. If you push too hard, the clip will be damaged, and it will not hold the trim properly.**
- **Gently tug on the A-pillar trim to verify that all clips are securely fastened.**

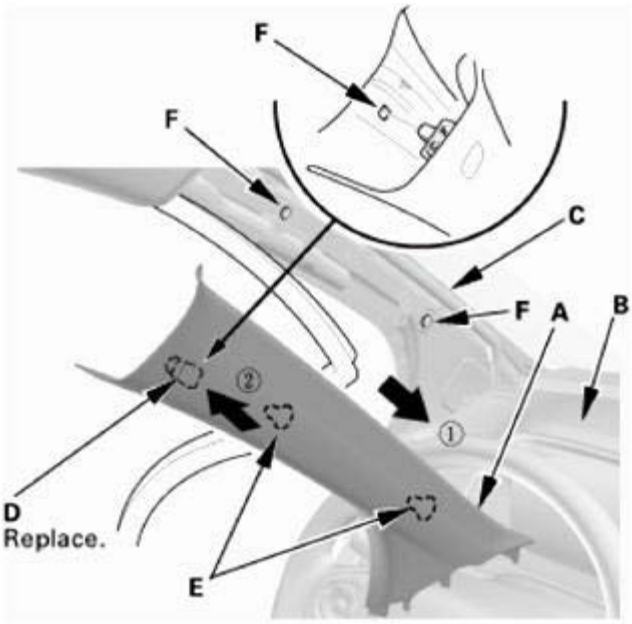

Fig. 295: Inserting Bottom Portion Of A-Pillar Trim Into Dashboard
Courtesy of AMERICAN HONDA MOTOR CO., INC.

44. Front Door Opening Seal As Needed - Both Sides

NOTE: **Repeat this procedure on the opposite side.**

1. Install the front door opening seal (A). Make sure the seal is installed securely into the hooks (B).

GETtheMANUALS.org

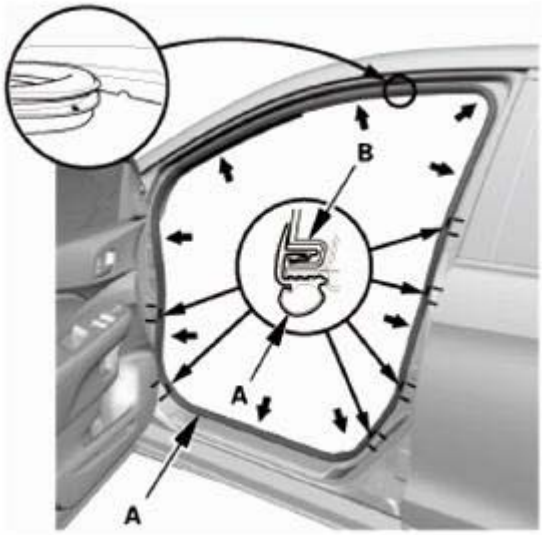

Fig. 296: Inserting Bottom Portion Of A-Pillar Trim Into Dashboard
Courtesy of AMERICAN HONDA MOTOR CO., INC.

45. Front Door Sill Trim - Both Sides

NOTE: Repeat this procedure on the opposite side.

1. Install the front door inner sill trim (A). Make sure the clips (B), the hooks (C), and the tabs (D) snap into place securely.

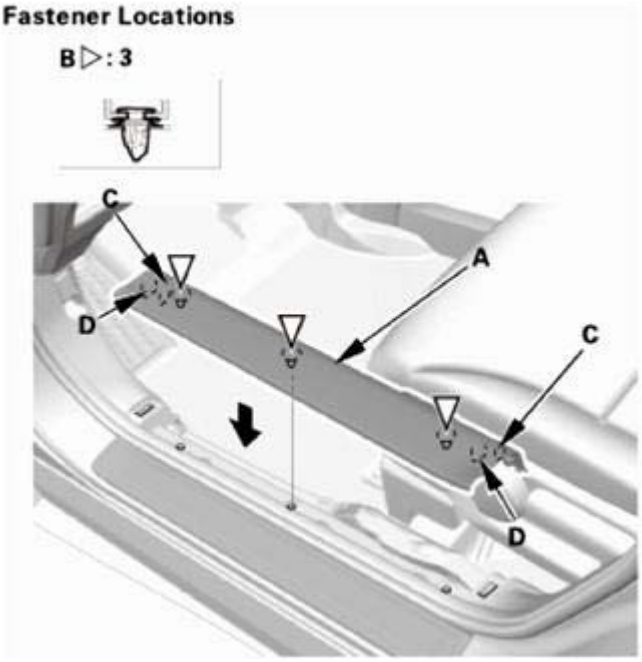

Fig. 297: Identifying Front Door Sill Trim, Hooks, Tabs And Clips
Courtesy of AMERICAN HONDA MOTOR CO., INC.

GETtheMANUALS.org

46. Battery Terminal (SRS) - Reconnection

NOTE: If the battery performance is abnormal, test the battery.

1. Clean the battery terminals.
2. Connect the positive cable (A) to the battery.

NOTE: Always connect the positive side first.

3. Connect the negative cable (B) to the battery.
4. Apply multipurpose grease to the terminals to prevent corrosion.

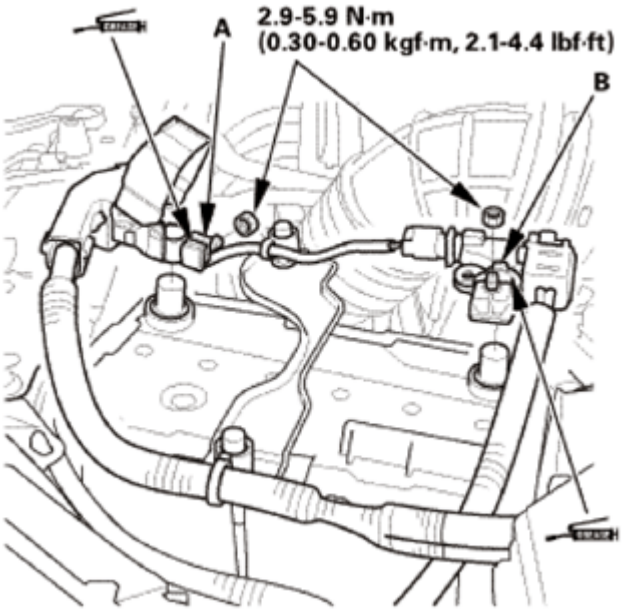

Fig. 298: Identifying Battery Positive And Negative Cable With Torque Specifications
Courtesy of AMERICAN HONDA MOTOR CO., INC.

47. Moon Roof Control Unit - Reset
    1. **DO THE MOON ROOF CONTROL UNIT RESETTING PROCEDURE**.

MOONROOF GLASS POSITION ADJUSTMENT

REMOVAL

1. Moonroof Glass - Position Check

The roof panel (A) should be even with the glass weatherstrip (B), to within 0+1/-1 mm (0+0.04/-0.04 in) all the way around. If not, make the following adjustment:

GETtheMANUALS.org

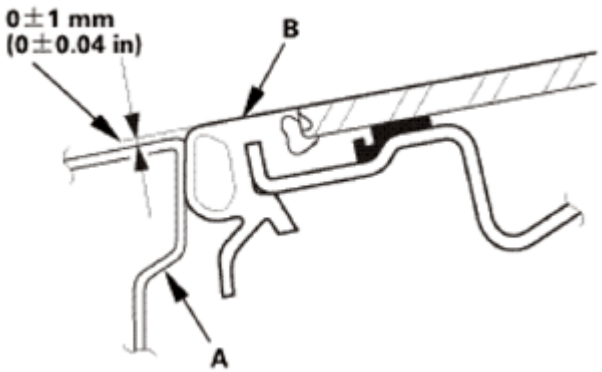

Fig. 299: Identifying Roof Panel And Glass Weatherstrip
Courtesy of AMERICAN HONDA MOTOR CO., INC.

2. Moonroof Link Cover - Both Sides

NOTE: Repeat on the opposite side.

1. Carefully pry out the cover (A), then remove the screw (B).
2. Remove the moonroof link cover (C).

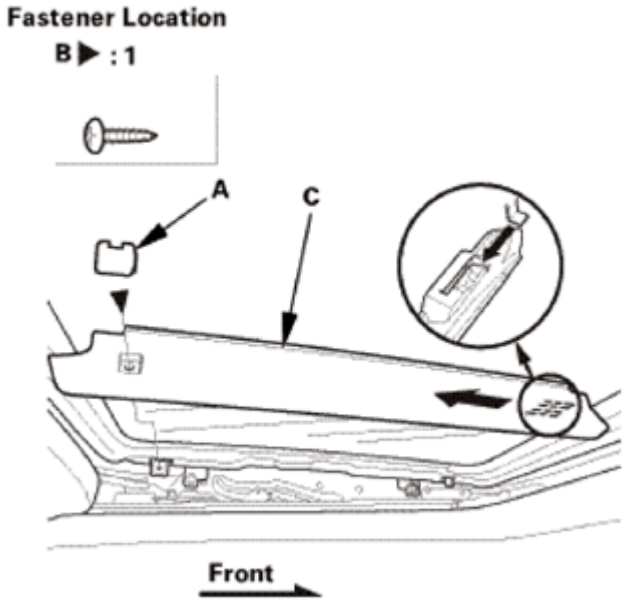

Fig. 300: Removing Moonroof Link Cover
Courtesy of AMERICAN HONDA MOTOR CO., INC.

ADJUSTMENT

1. Moonroof Glass - Position Adjustment
    1. Slightly loosen the TORX screws with a TORX T25 bit.

GETtheMANUALS.org

2. Move the glass (A) up or down and forward or rearward.
3. Tighten all screws securely.
4. If necessary, repeat on the opposite side.

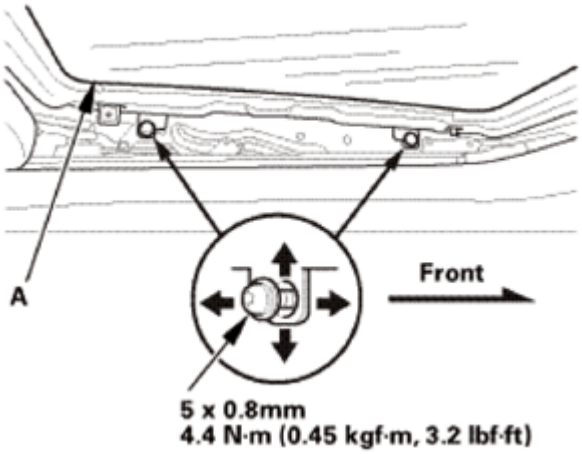

Fig. 301: Moving Moonroof Glass And Mounting Bolts With Torque Specifications
Courtesy of AMERICAN HONDA MOTOR CO., INC.

INSTALLATION

1. Moonroof Link Cover - Both Sides

NOTE: Repeat on the opposite side

1. Install the moonroof link cover (A), then install the screw (B).
2. Install the cover (C).

GETtheMANUALS.org

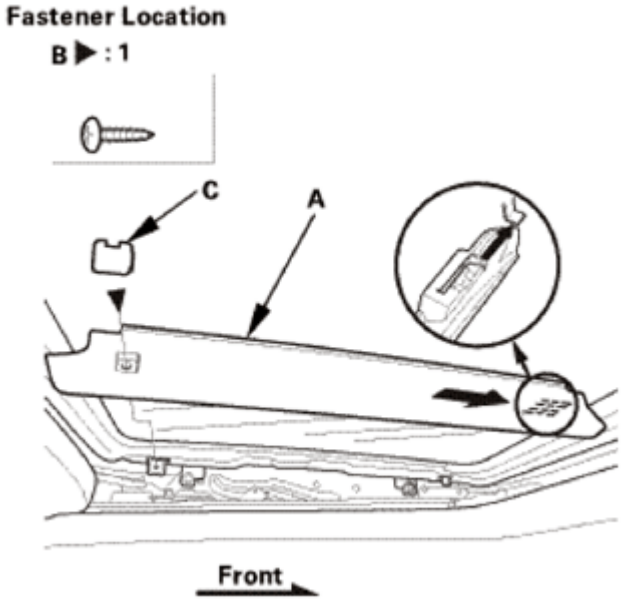

Fig. 302: Installing Moonroof Link Cover
Courtesy of AMERICAN HONDA MOTOR CO., INC.

2. Moon Roof Control Unit - Reset
    1. **DO THE MOON ROOF CONTROL UNIT RESETTING PROCEDURE**.

MOONROOF GLASS REMOVAL AND INSTALLATION

REMOVAL

1. Moonroof Link Cover - Both Sides

    NOTE: Repeat on the opposite side.

    1. Carefully pry out the cover (A), then remove the screw (B).
    2. Remove the moonroof link cover (C).

GETtheMANUALS.org

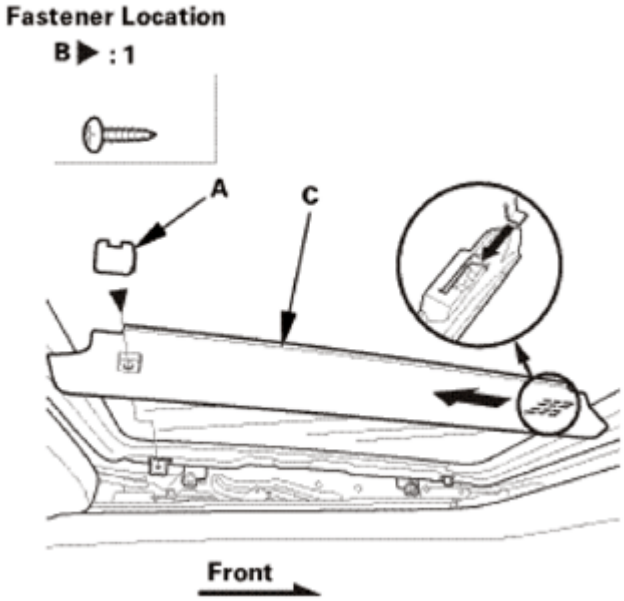

Fig. 303: Removing Moonroof Link Cover
Courtesy of AMERICAN HONDA MOTOR CO., INC.

2. Moonroof Glass
    1. Remove the TORX screws (A) with a TORX T25 bit from the glass brackets (B) on both sides.

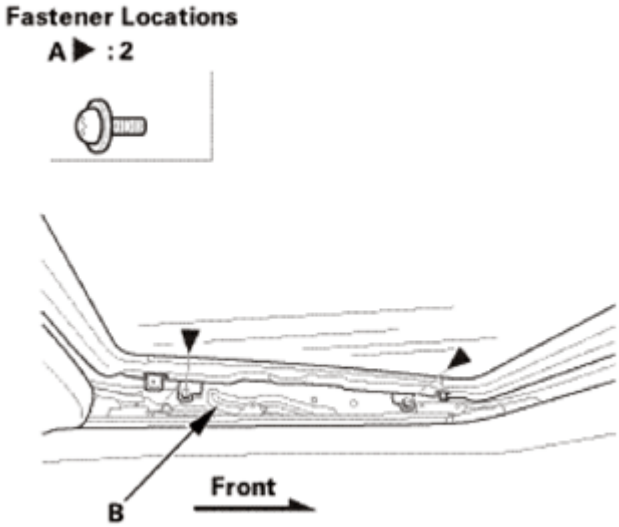

Fig. 304: Identifying Moonroof Glass Bracket And Screws
Courtesy of AMERICAN HONDA MOTOR CO., INC.

    2. Remove the moonroof glass (A) by lifting it up. Do not damage the roof panel.

GETtheMANUALS.org

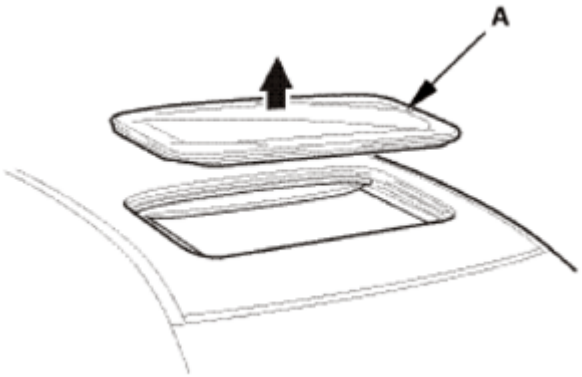

Fig. 305: Removing Moonroof Glass
Courtesy of AMERICAN HONDA MOTOR CO., INC.

INSTALLATION

1. Moonroof Glass
    1. Install the moonroof glass (A).

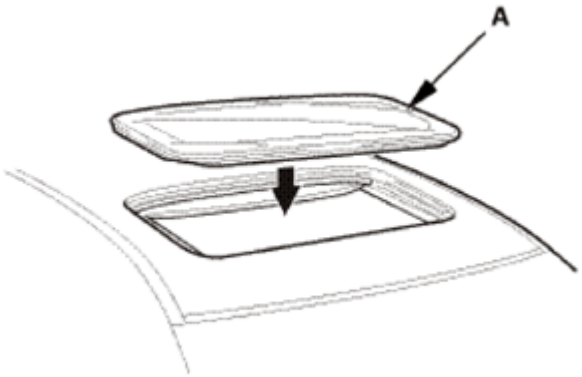

Fig. 306: Installing Moonroof Glass
Courtesy of AMERICAN HONDA MOTOR CO., INC.

2. Install the TORX screws (A).
3. Repeat on the opposite side.

GETtheMANUALS.org

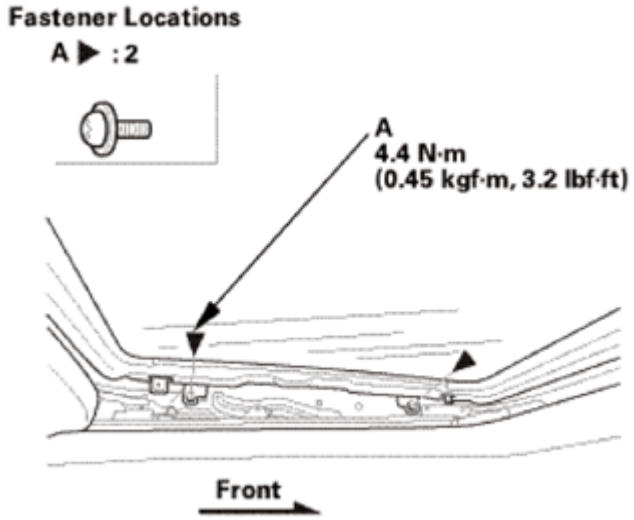

Fig. 307: Identifying TORX Screws With Torque Specifications
Courtesy of AMERICAN HONDA MOTOR CO., INC.

2. Moonroof Glass - Position Check

   The roof panel (A) should be even with the glass weatherstrip (B), to within 0+1/-1 mm (0+0.04/-0.04 in) all the way around.

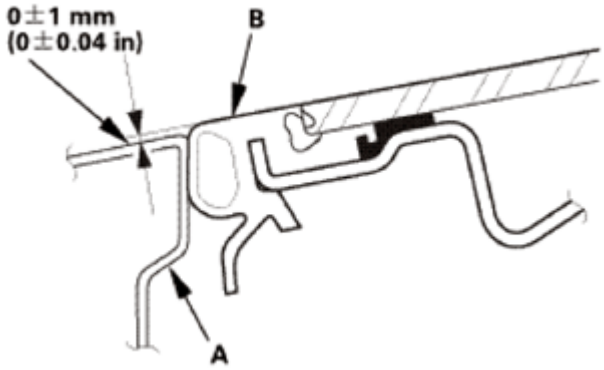

Fig. 308: Identifying Roof Panel And Glass Weatherstrip
Courtesy of AMERICAN HONDA MOTOR CO., INC.

3. Moonroof Glass - Position Adjustment
   1. Slightly loosen the TORX screws with a TORX T25 bit.
   2. Move the glass (A) up or down and forward or rearward.
   3. Tighten all screws securely.
   4. If necessary, repeat on the opposite side.

GETtheMANUALS.org

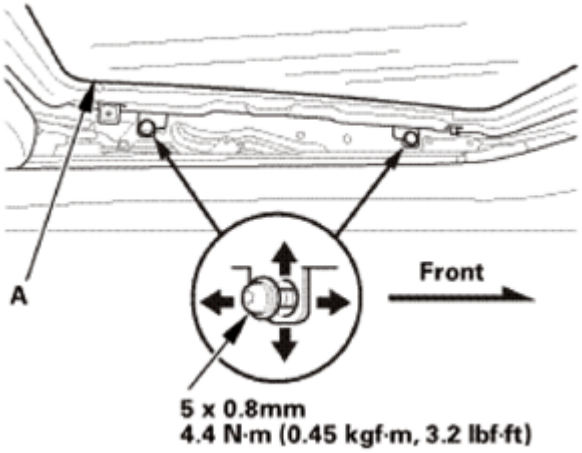

Fig. 309: Moving Moonroof Glass And Mounting Bolts With Torque Specifications
Courtesy of AMERICAN HONDA MOTOR CO., INC.

4. Moonroof Link Cover - Both Sides

NOTE: Repeat on the opposite side

1. Install the moonroof link cover (A), then install the screw (B).
2. Install the cover (C).

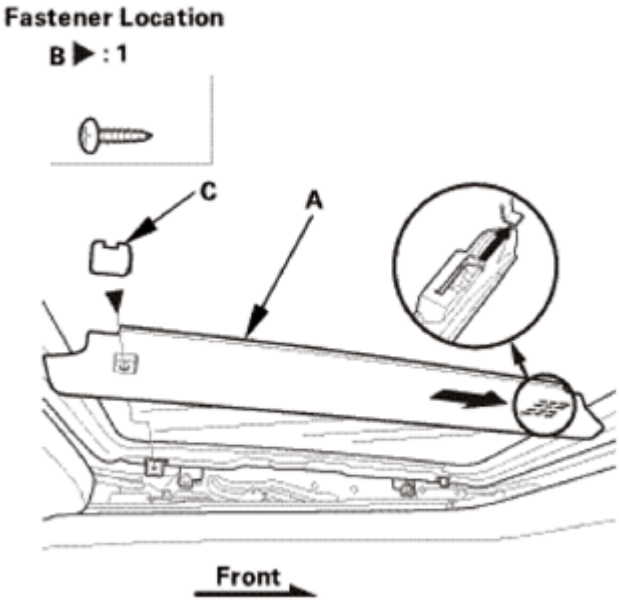

Fig. 310: Installing Moonroof Link Cover
Courtesy of AMERICAN HONDA MOTOR CO., INC.

5. Moon Roof Control Unit - Reset
   1. **DO THE MOON ROOF CONTROL UNIT RESETTING PROCEDURE**.

GETtheMANUALS.org

MOONROOF MECHANICAL COMPONENT LOCATION INDEX

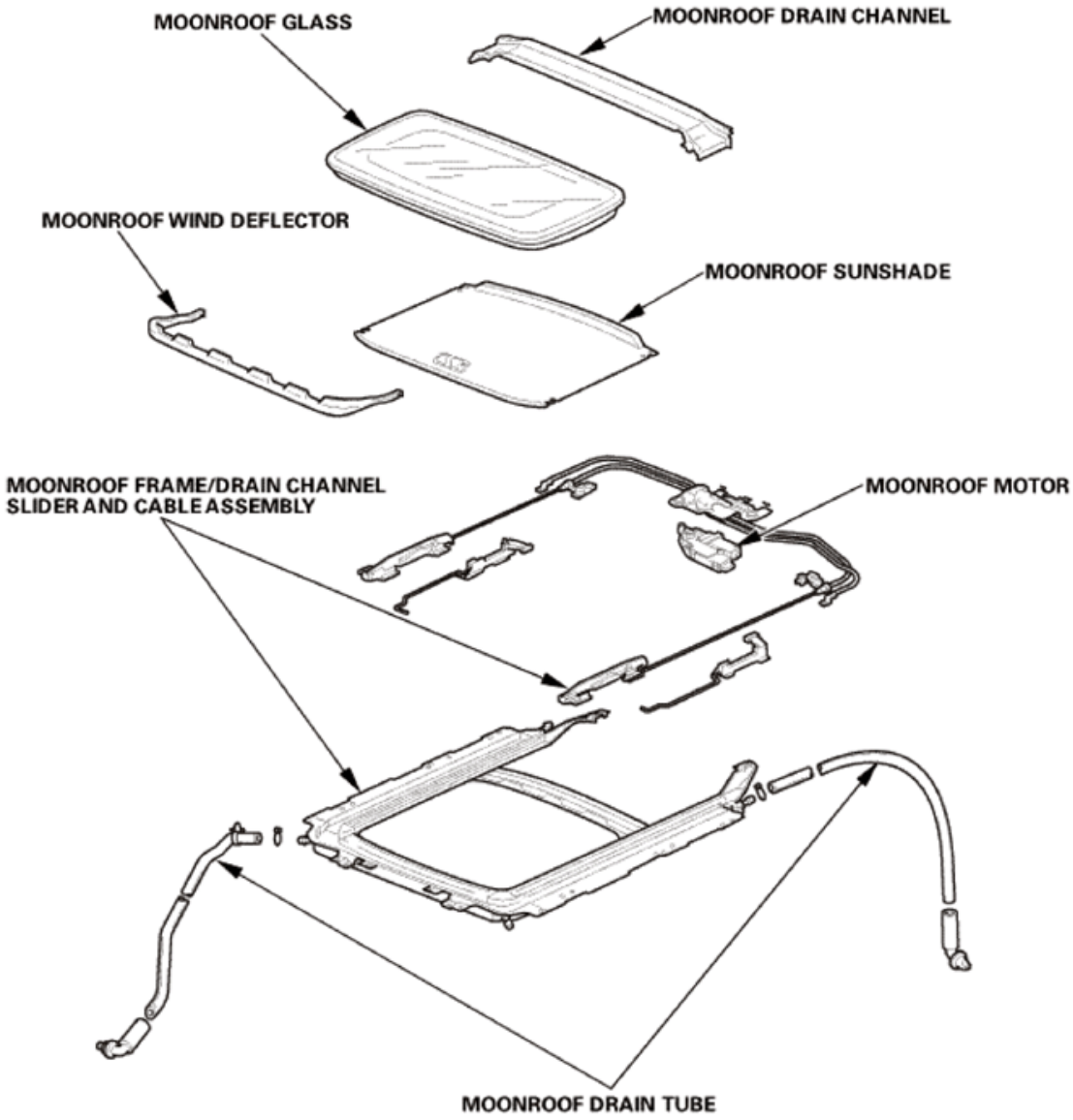

Fig. 311: Moonroof Mechanical Components Location
Courtesy of AMERICAN HONDA MOTOR CO., INC.

MOONROOF DRAIN CHANNEL	**REMOVAL AND INSTALLATION**
MOONROOF DRAIN TUBE	**REMOVAL AND INSTALLATION**
MOONROOF FRAME ASSEMBLY/DRAIN CHANNEL SLIDER AND CABLE ASSEMBLY	**REMOVAL AND INSTALLATION**
MOONROOF GLASS	**Removal and Installation** See **MOONROOF GLASS POSITION ADJUSTMENT** or **MOONROOF GLASS REMOVAL AND INSTALLATION**
	Adjustment See **MOONROOF GLASS POSITION**

GETtheMANUALS.org

MOONROOF GLASS POSITION	**ADJUSTMENT** or **MOONROOF GLASS REMOVAL AND INSTALLATION**
MOONROOF MOTOR	**REMOVAL AND INSTALLATION**
MOONROOF SUNSHADE	**REMOVAL AND INSTALLATION**
MOONROOF WIND DEFLECTOR	**REMOVAL AND INSTALLATION**

MOONROOF MOTOR REMOVAL AND INSTALLATION

SPECIAL TOOL DESCRIPTION

Image	Description/Tool Number
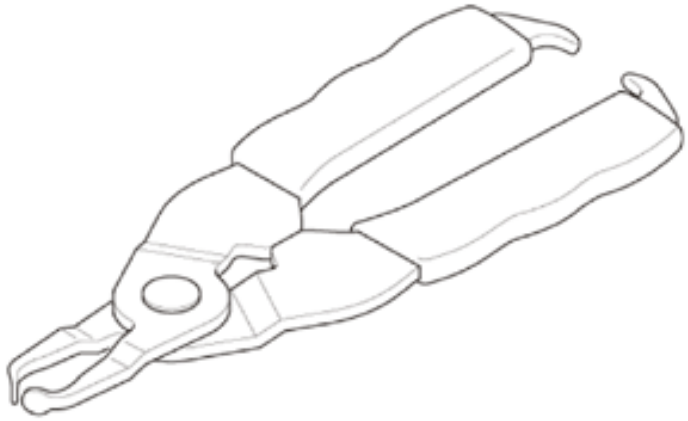	Push Pin/Grab Rail Cap Pliers 07AAC-001A100

REMOVAL

SRS components are located in this area. Review the **SRS COMPONENT LOCATIONS** and the **PRECAUTIONS AND PROCEDURES** before doing repairs or service.

1. Battery Terminal (SRS) - Disconnection
    1. Make sure the ignition switch is in LOCK (0).
    2. Disconnect and isolate the negative cable (A) from the battery.

        NOTE: Always disconnect the negative side first.

    3. Disconnect the positive cable (B) from the battery.
    4. Wait at least 3 minutes before starting work.

GETtheMANUALS.org

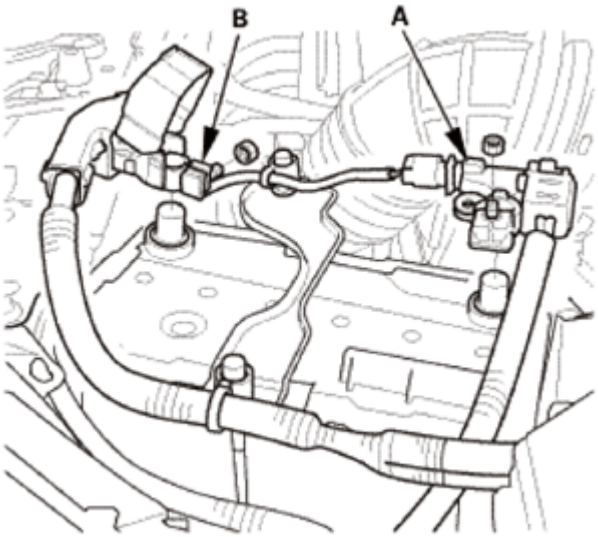

Fig. 312: Identifying Battery Positive And Negative Cable
Courtesy of AMERICAN HONDA MOTOR CO., INC.

2. Front Door Sill Trim - Both Sides

NOTE: Repeat on the opposite side.

1. Detach the hooks (A) and the tabs (B) from the kick panel (C) and the B-pillar lower trim (D), and pull up the front door inner sill trim (E) by hand to detach the clips (F), then remove the trim.

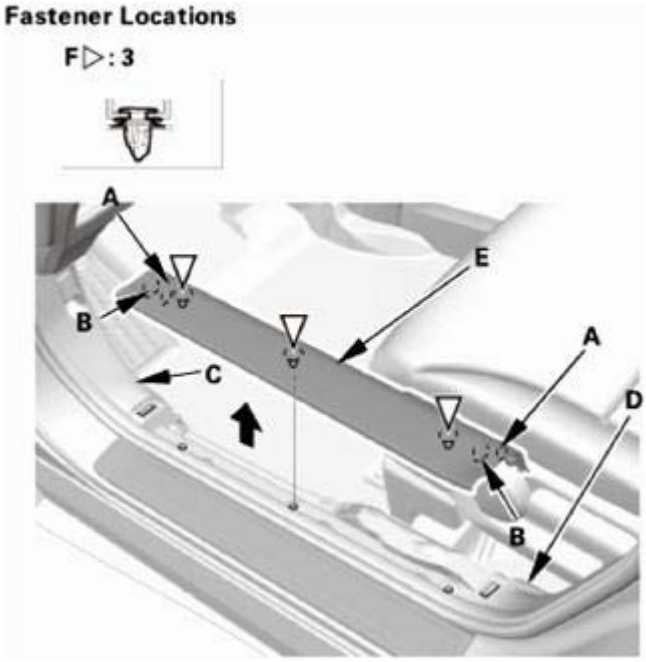

Fig. 313: Pulling Front Door Inner Sill Trim Upside
Courtesy of AMERICAN HONDA MOTOR CO., INC.

GETtheMANUALS.org

3. Front Door Opening Seal As Needed - Both Sides

NOTE: Repeat on the opposite side.

1. Pull out the front door opening seal (A) from the trim hooks (B) around the front door opening flange, then detach the seal as needed.

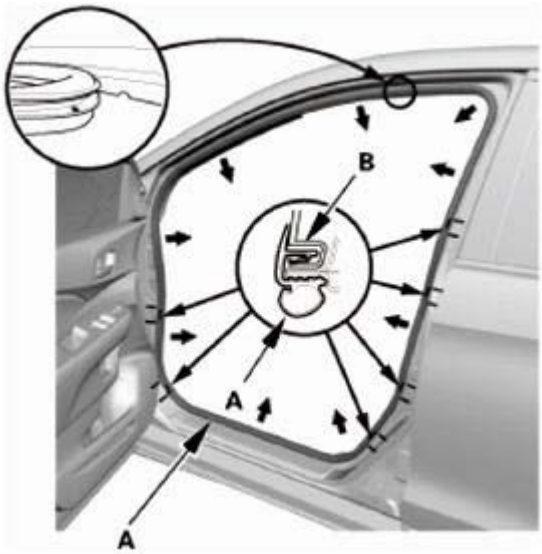

Fig. 314: Pulling Front Door Opening Seal From Trim Hooks
Courtesy of AMERICAN HONDA MOTOR CO., INC.

4. A-Pillar Trim - Both Sides

NOTE: Repeat this procedure on the opposite side.

1. Pull out the A-pillar trim (A) by hand to release the clips (B, C).

GETtheMANUALS.org

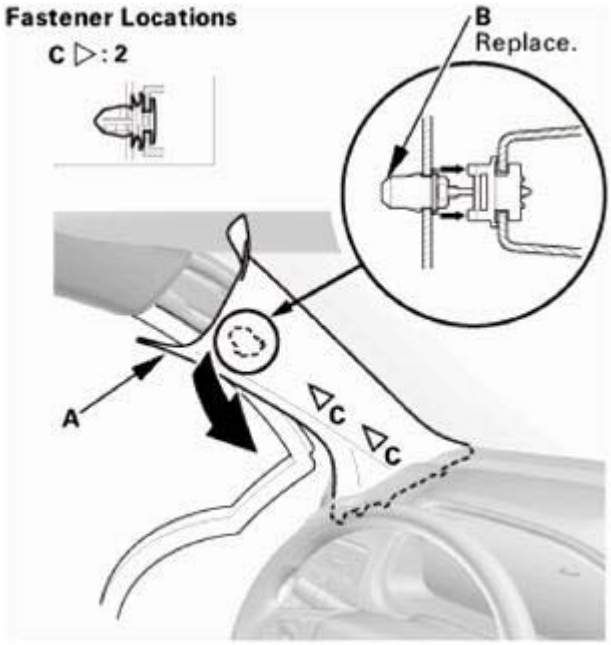

Fig. 315: Pulling A-Pillar Trim
Courtesy of AMERICAN HONDA MOTOR CO., INC.

2. Put a shop towel (A) in the opening between the A-pillar trim (B) and the dashboard to prevent dropping the A-pillar clips.

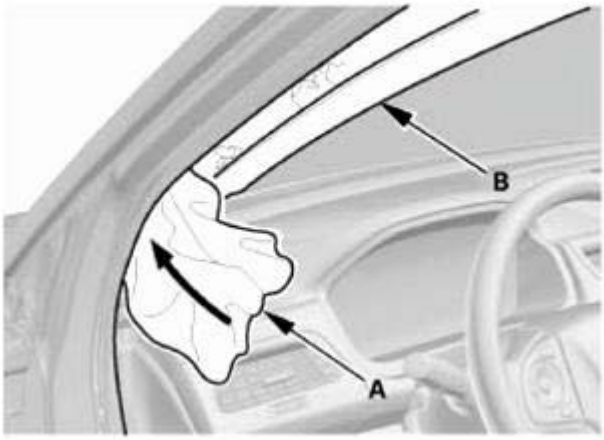

Fig. 316: Placing Shop Towel In Opening Between A-Pillar Trim And Dashboard
Courtesy of AMERICAN HONDA MOTOR CO., INC.

3. Pull out and up on the A-pillar trim (A) to release it from the dashboard.

NOTE: The upper clip will stay in the body.

GETtheMANUALS.org

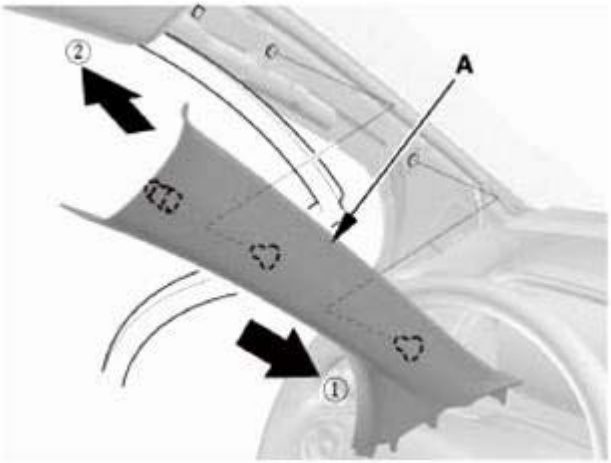

Fig. 317: Releasing A-Pillar Trim From Dashboard
Courtesy of AMERICAN HONDA MOTOR CO., INC.

4. Remove the upper clip (A) from the body.

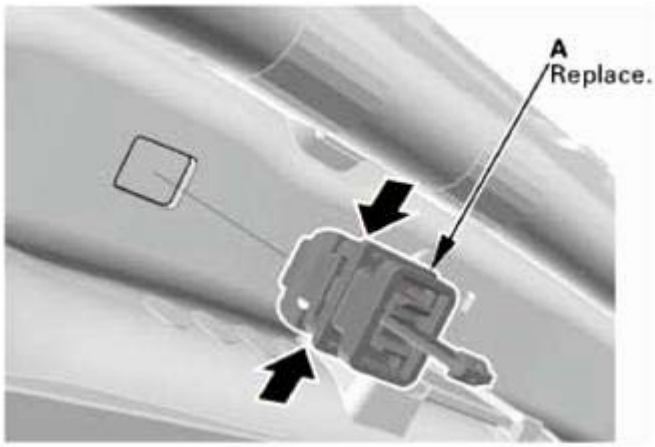

Fig. 318: Removing A-Pillar Trim Upper Clip
Courtesy of AMERICAN HONDA MOTOR CO., INC.

5. Rear Door Sill Trim - Both Sides

NOTE: Repeat this procedure on the opposite side.

1. Pull the release strap to fold down the rear seat, then lift-up and latch the rear seat-back in the upright position.
2. Detach the hooks (A) and the tab (B) from the B-pillar lower trim (C) and the rear side trim panel (D), and pull up the rear door inner sill trim (E) by hand to detach the clips (F, G), then remove the trim.

GETtheMANUALS.org

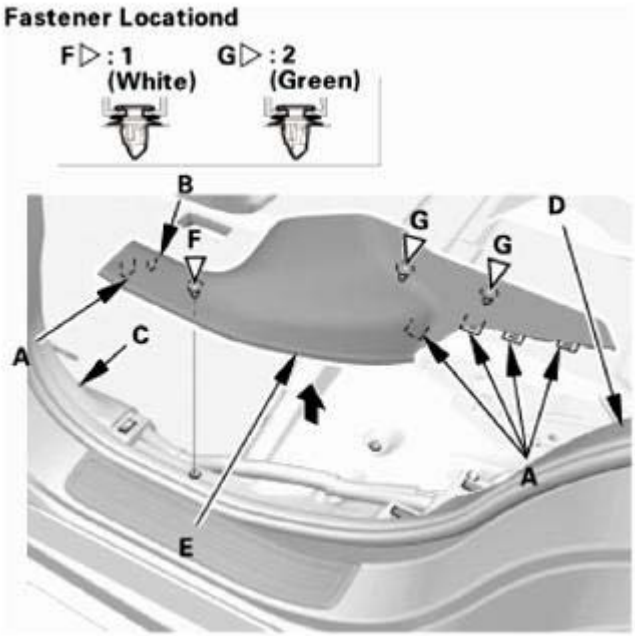

Fig. 319: Removing Rear Door Inner Sill Trim
Courtesy of AMERICAN HONDA MOTOR CO., INC.

6. Rear Door Opening Seal As Needed - Both Sides

NOTE: Repeat this procedure on the opposite side.

1. Pull out the rear door opening seal (A) from the trim hooks (B) around the rear door opening flange, then detach the seal as needed.

Fig. 320: Pulling Rear Door Opening Seal From Trim Hooks
Courtesy of AMERICAN HONDA MOTOR CO., INC.

GETtheMANUALS.org

7. B-Pillar Lower Trim - Both Sides

NOTE: Repeat this procedure on the opposite side.

1. Slide the front seat forward fully.
2. Pull back the bottom portion of the B-pillar lower trim (A) by hand to detach the clips (B).
3. Pull back the upper portion of the B-pillar lower trim to detach the upper hooks (C), then remove the B-pillar lower trim.

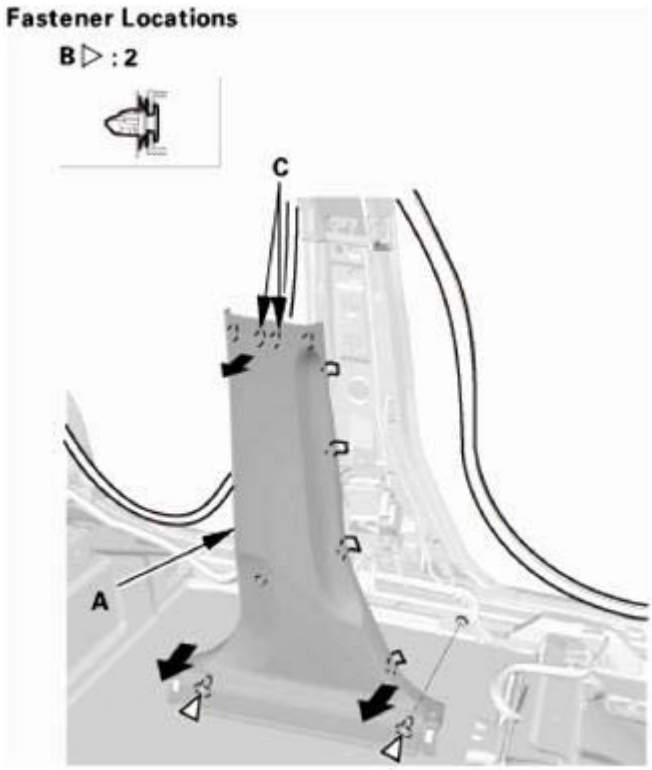

Fig. 321: Removing B-Pillar Lower Trim
Courtesy of AMERICAN HONDA MOTOR CO., INC.

8. Front Seat Belt Upper Anchor Bolt - Both Sides

NOTE: Repeat this procedure on the opposite side.

1. Remove the front seat belt shoulder anchor adjuster cap (A), then remove the front seat belt upper anchor bolt.

GETtheMANUALS.org

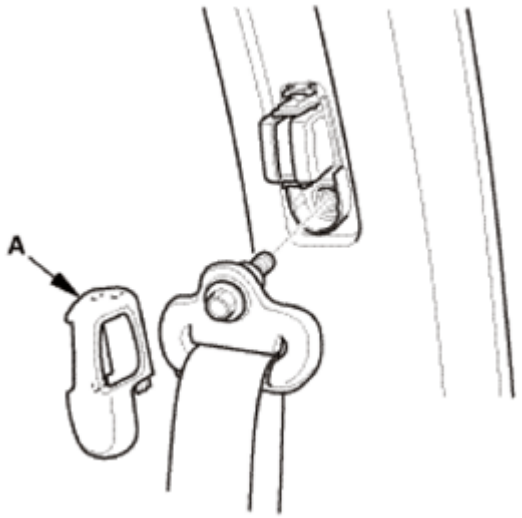

Fig. 322: Identifying Front Seat Belt Shoulder Anchor Adjuster Cap
Courtesy of AMERICAN HONDA MOTOR CO., INC.

9. B-Pillar Upper Trim - Both Sides

NOTE: Repeat this procedure on the opposite side.

1. Pull back the bottom portion of the B-pillar upper trim (A) by hand to detach the hooks (B). Pull down the trim to release the upper hook (C) from the hole (D) in the body, then remove the B-pillar upper trim.

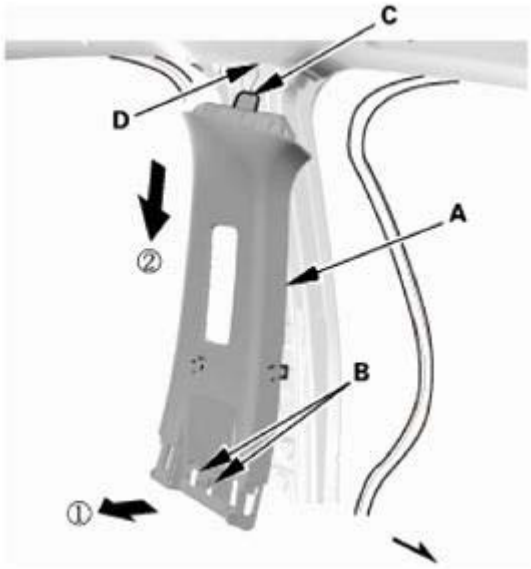

Fig. 323: Removing B-Pillar Upper Trim
Courtesy of AMERICAN HONDA MOTOR CO., INC.

10. Tonneau Cover (For Some Models)

GETtheMANUALS.org

1. Remove the tonneau cover (A).

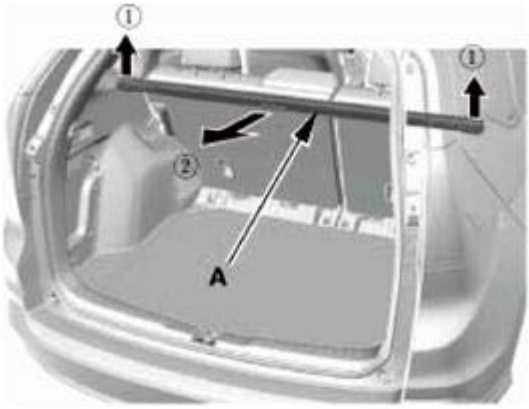

Fig. 324: Removing Tonneau Cover
Courtesy of AMERICAN HONDA MOTOR CO., INC.

11. Cargo Floor Cover
    1. Remove the cargo floor cover (A).

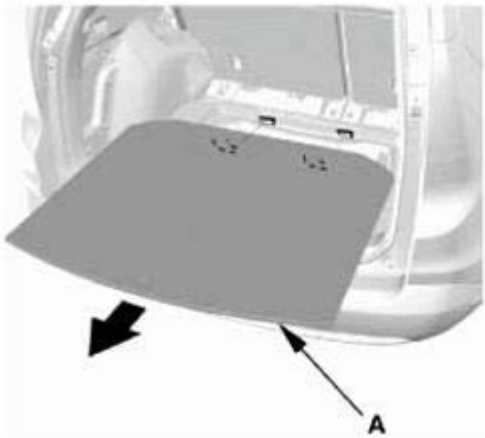

Fig. 325: Removing Cargo Floor Cover
Courtesy of AMERICAN HONDA MOTOR CO., INC.

12. Tailgate Weatherstrip As Needed
    1. Detach the tailgate weatherstrip (A) as needed.

GETtheMANUALS.org

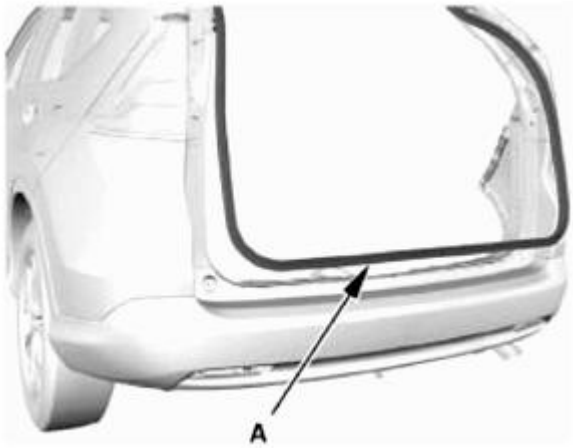

Fig. 326: Identifying Tailgate Weatherstrip
Courtesy of AMERICAN HONDA MOTOR CO., INC.

13. Rear Trim Panel
    1. Remove the clips (A).
    2. Detach the hooks (B) and the tabs (C) from the rear side trim panels (D), and pull up the rear trim panel (E) by hand to detach the clips (F, G), then remove the rear trim panel.

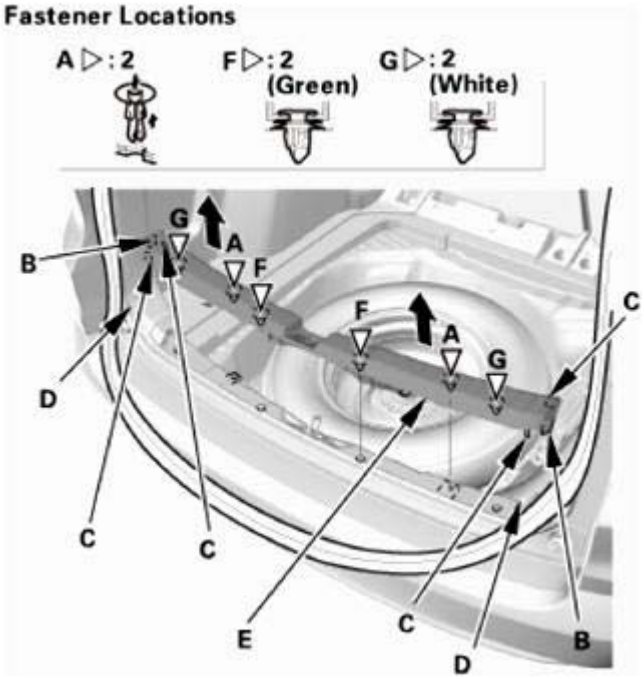

Fig. 327: Removing Rear Trim Panel
Courtesy of AMERICAN HONDA MOTOR CO., INC.

14. Rear Damper Maintenance Cover - Both Sides

GETtheMANUALS.org

NOTE: **Repeat this procedure on the opposite side.**

1. Fold down the rear seat-back.
2. Pull up the rear damper maintenance cover (A) by hand to detach the hooks (B), then remove the rear damper maintenance cover.

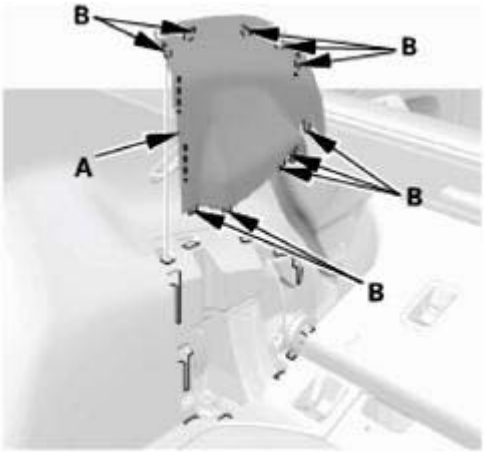

Fig. 328: Identifying Rear Damper Maintenance Cover And Hooks
Courtesy of AMERICAN HONDA MOTOR CO., INC.

15. Rear Carpet Trim - Both Sides
    1. Detach the clips (A), then tuck up the rear seat-back cover (B).

Left side

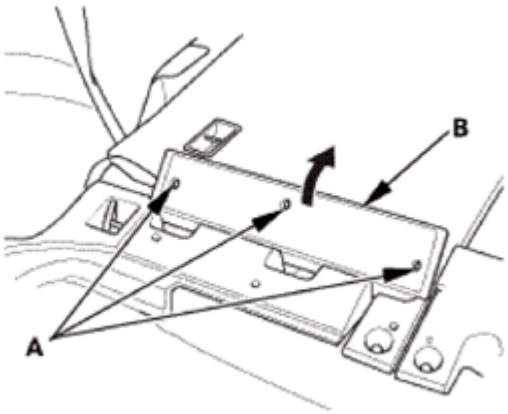

Fig. 329: Removing Rear Seat-Back Cover (Left Side)
Courtesy of AMERICAN HONDA MOTOR CO., INC.

Right side

GETtheMANUALS.org

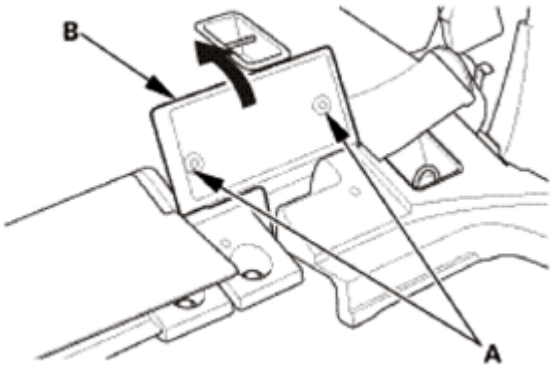

Fig. 330: Removing Rear Seat-Back Cover (Right Side)
Courtesy of AMERICAN HONDA MOTOR CO., INC.

2. Detach the hooks (A) from the rear side trim panel (B), and pull up the rear carpet trims (C) by hand to detach the clips (D), then remove the rear carpet trims.

Left side

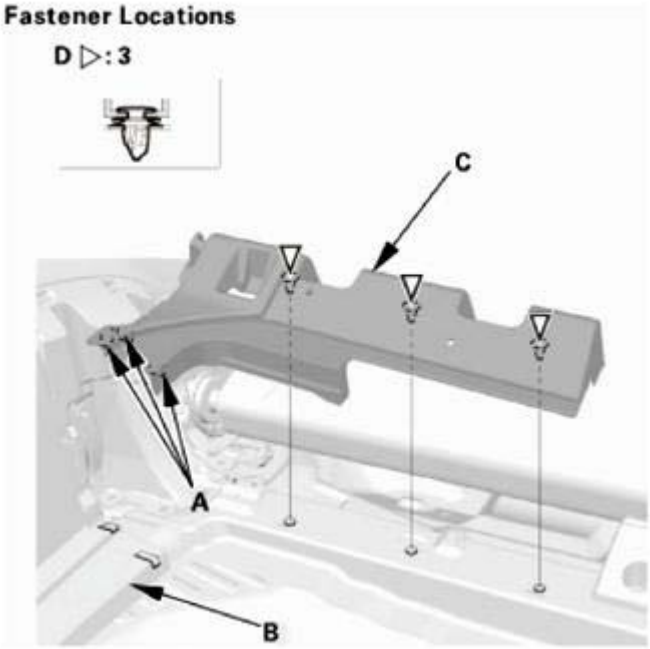

Fig. 331: Identifying Rear Side Trim Panel, Rear Carpet Trims, Hooks And Clips (Left Side)
Courtesy of AMERICAN HONDA MOTOR CO., INC.

Right side

GETtheMANUALS.org

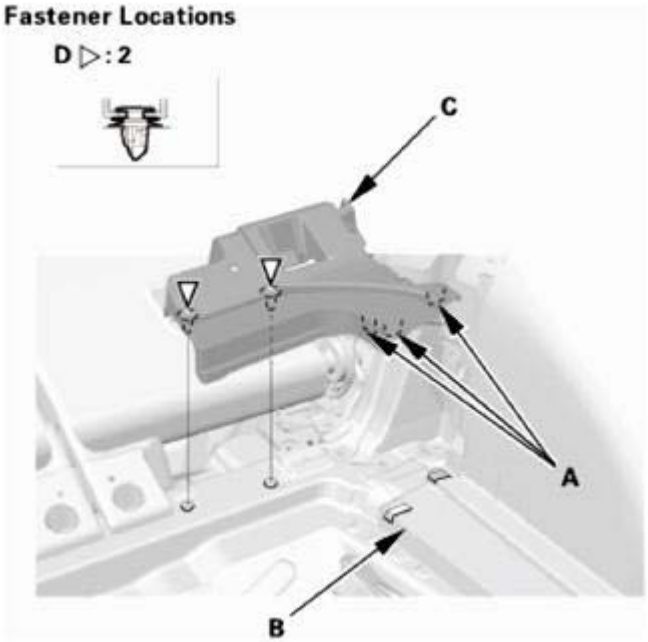

Fig. 332: Identifying Rear Side Trim Panel, Rear Carpet Trims, Hooks And Clips (Right Side)
Courtesy of AMERICAN HONDA MOTOR CO., INC.

16. Rear Seat Cushion Foot Cover - Both Sides (Remove The Outer Left Side Only)
    1. Pull up the rear seat cushion foot cover (A) by hand to detach the clips (B).
    2. Detach the hooks (C), then remove the rear seat cushion foot cover.

    Left side

GETtheMANUALS.org

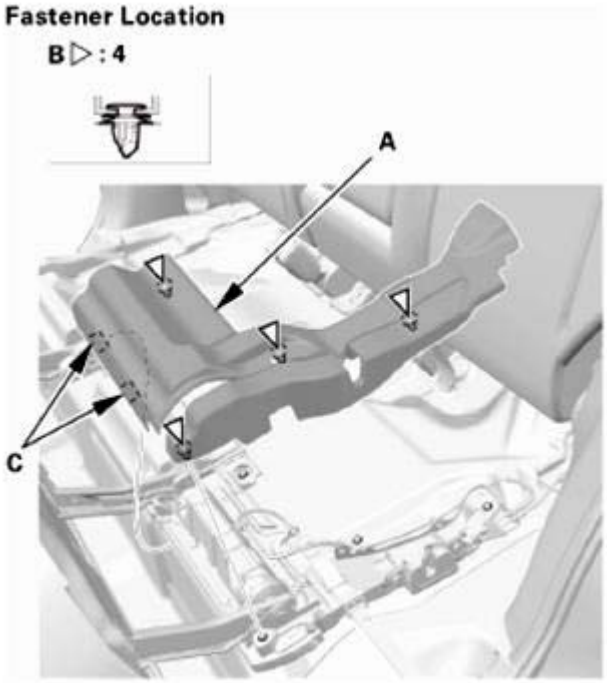

Fig. 333: Identifying Rear Seat Cushion Foot Cover And Clips (Left Side)
Courtesy of AMERICAN HONDA MOTOR CO., INC.

Right side

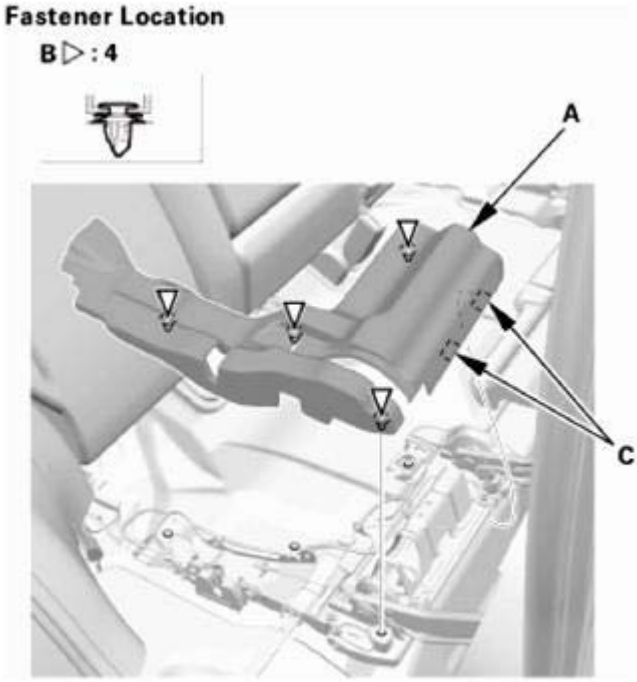

Fig. 334: Identifying Rear Seat Cushion Foot Cover And Clips (Right Side)
Courtesy of AMERICAN HONDA MOTOR CO., INC.

GETtheMANUALS.org

17. Rear Seat Belt Lower Anchor Bolt - Both Sides

NOTE: Repeat this procedure on the opposite side.

1. Remove the rear seat belt lower anchor bolt (A).

Fig. 335: Identifying Rear Seat Belt Lower Anchor Bolt
Courtesy of AMERICAN HONDA MOTOR CO., INC.

18. Rear Side Trim Panel - Both Sides

NOTE: Repeat this procedure on the opposite side.

1. Carefully pry out on the upper hook (A) in the rear seat release lever cap (B) with the appropriate trim tool, then pull back the rear seat release lever cap to remove it.
2. Remove the screws (C).

GETtheMANUALS.org

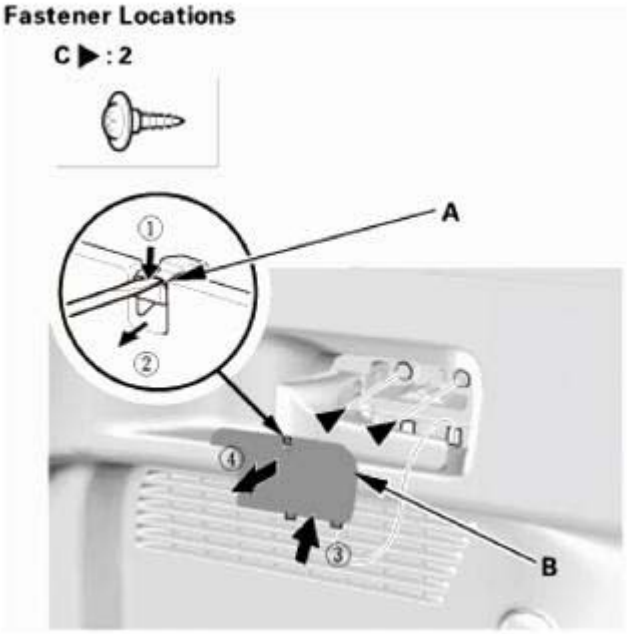

Fig. 336: Removing Rear Side Trim Panel
Courtesy of AMERICAN HONDA MOTOR CO., INC.

3. Push in the center pin (A), then remove the trunk hook (B).

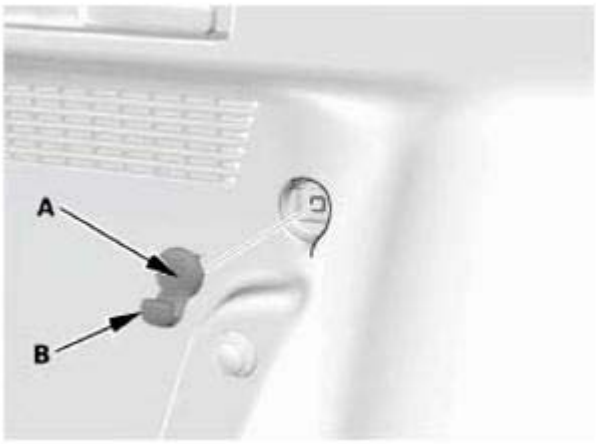

Fig. 337: Identifying Trunk Hook And Center Pin On Rear Side Trim Panel
Courtesy of AMERICAN HONDA MOTOR CO., INC.

4. Remove the bolt (A), then remove the tie-down hook (B).

GETtheMANUALS.org

Fig. 338: Identifying Tie-Down Hook And Bolt
Courtesy of AMERICAN HONDA MOTOR CO., INC.

5. Detach the clips (A, B).
6. Detach the hooks (C) and the tabs (D) from the quarter pillar trim (E), and pull out the rear side trim panel (F) by hand to detach the clips (G, H).

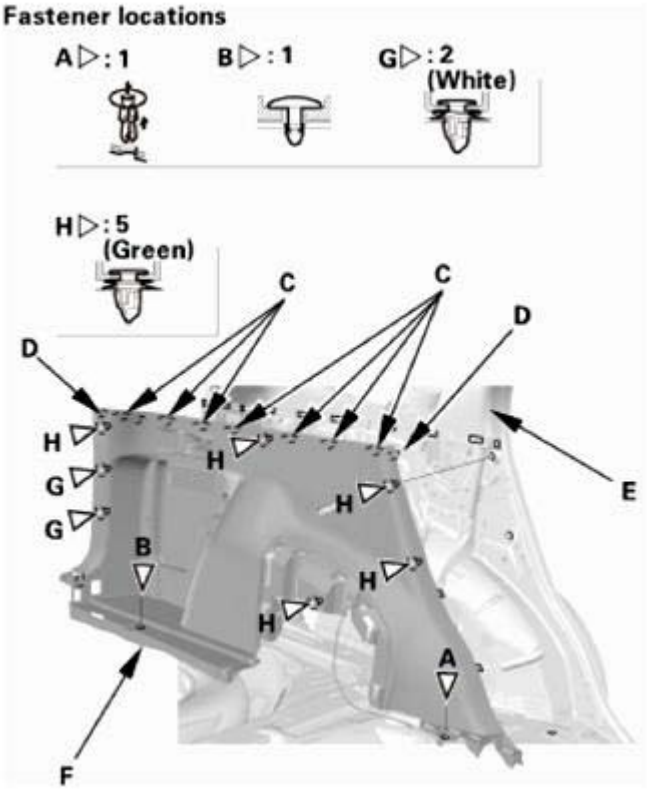

GETtheMANUALS.org

Fig. 339: Identifying Quarter Pillar Trim, Rear Side Trim Panel, Hooks, Tabs And Clips
Courtesy of AMERICAN HONDA MOTOR CO., INC.

7. Remove the rear seat release lever (A) from the rear side trim panel (B).

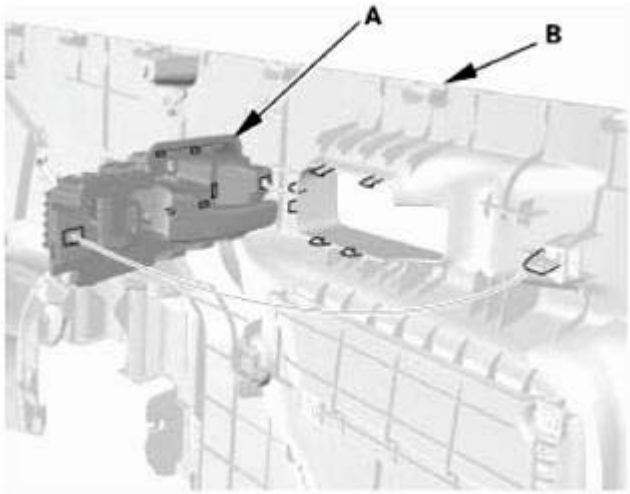

Fig. 340: Identifying Rear Seat Release Lever And Rear Side Trim Panel
Courtesy of AMERICAN HONDA MOTOR CO., INC.

8. Detach the rear seat release cable (A) from the clips of the rear side trim panel (B), then remove the rear side trim panel.

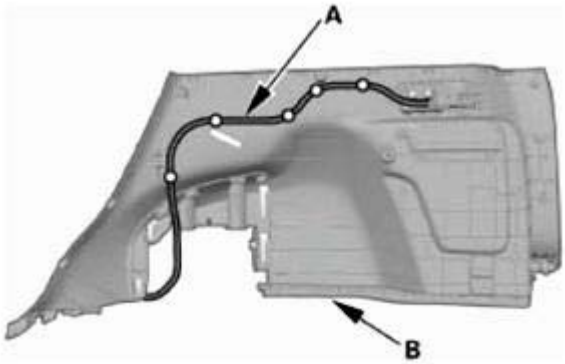

Fig. 341: Identifying Rear Seat Release Cable And Side Trim Panel
Courtesy of AMERICAN HONDA MOTOR CO., INC.

19. Quarter Pillar Trim - Both Sides

NOTE: Repeat this procedure on the opposite side.

1. Pull out the quarter pillar trim (A) by hand to detach the clips (B, C, and D).
2. Pass the rear seat belt lower anchor (E) out through the hole in the quarter pillar trim, then remove the quarter pillar trim.

GETtheMANUALS.org

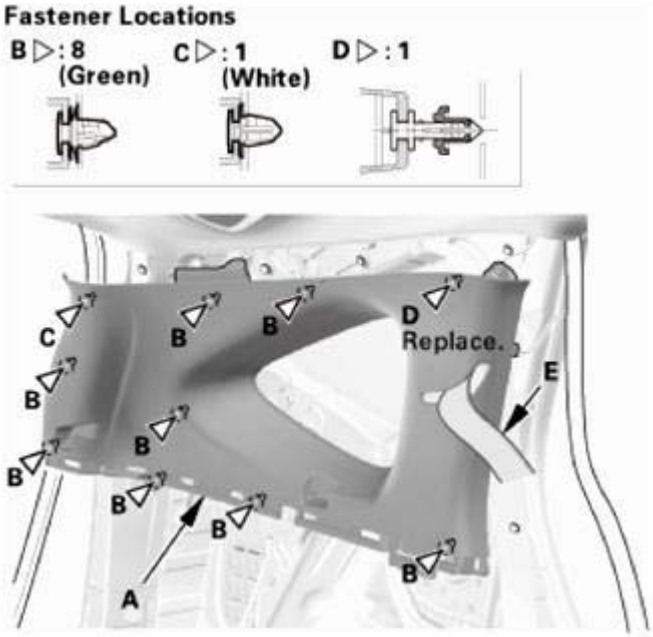

Fig. 342: Identifying Quarter Pillar Trim, Rear Seat Belt Lower Anchor And Clips
Courtesy of AMERICAN HONDA MOTOR CO., INC.

20. Roof Console Assembly
    1. Remove the lenses (A), then remove the screws (B).
    2. Open the console, then remove the screws (C).
    3. Disconnect the connectors (D), then remove the roof console assembly (E).

GETtheMANUALS.org

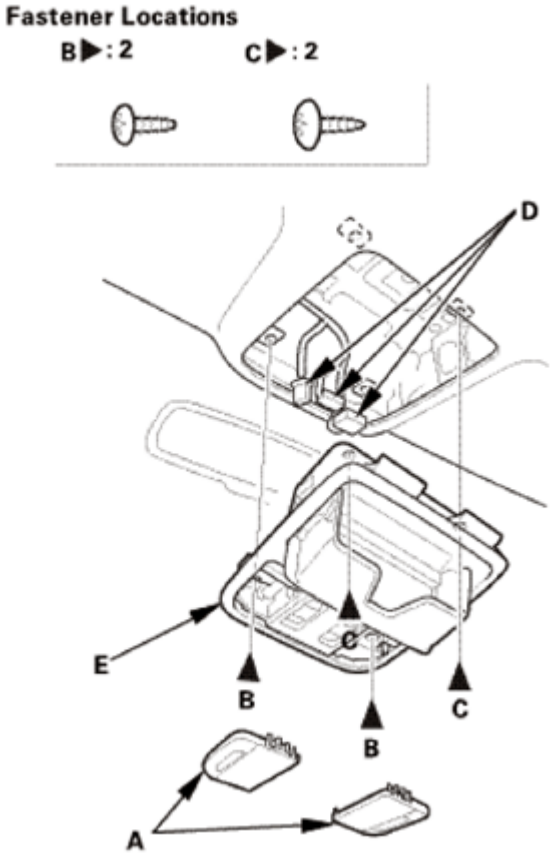

Fig. 343: Identifying Roof Console Assembly, Connectors, Lenses And Screws
Courtesy of AMERICAN HONDA MOTOR CO., INC.

21. Ceiling Light (without RES)
    1. Turn the ceiling light switch OFF.
    2. Carefully pry off the lens (A).
    3. Remove the bulb.
    4. Remove the ceiling light (B).
    5. Disconnect the connector.

GETtheMANUALS.org

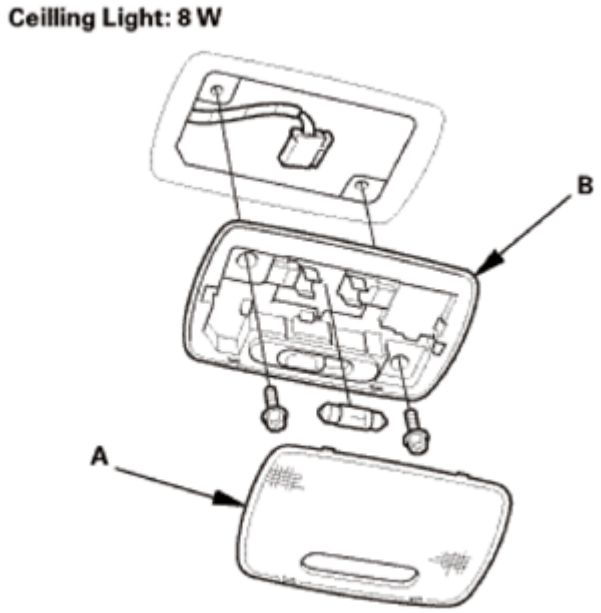

Fig. 344: Identifying Ceiling Light And Lens (Without RES)
Courtesy of AMERICAN HONDA MOTOR CO., INC.

22. Rear Display Cover (With RES)
    1. Turn the ceiling light switch OFF.
    2. Carefully pry off the lenses (A) with a flat-tip screwdriver.
    3. Remove the ceiling light (B).
    4. Disconnect the connector.

GETtheMANUALS.org

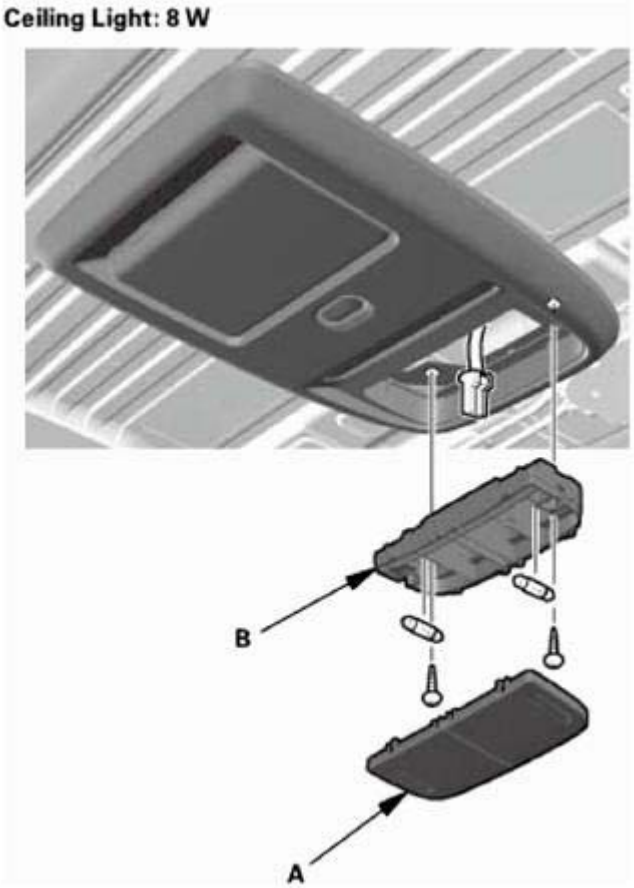

Fig. 345: Identifying Ceiling Light And Lens (With RES)
Courtesy of AMERICAN HONDA MOTOR CO., INC.

5. Remove the rear display cover (A).

GETtheMANUALS.org

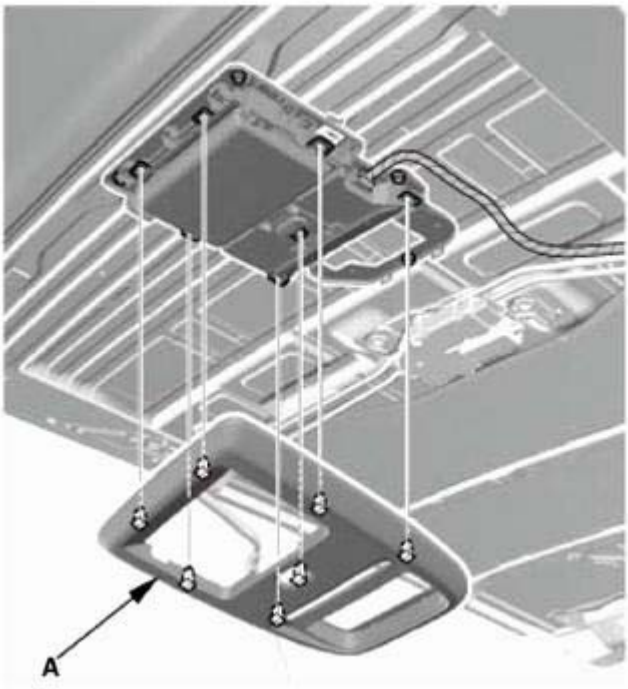

Fig. 346: Identifying Rear Display Cover
Courtesy of AMERICAN HONDA MOTOR CO., INC.

23. Rear Controller and Screen (With RES)
    1. Disconnect the connector.
    2. Remove the rear controller and screen (A).

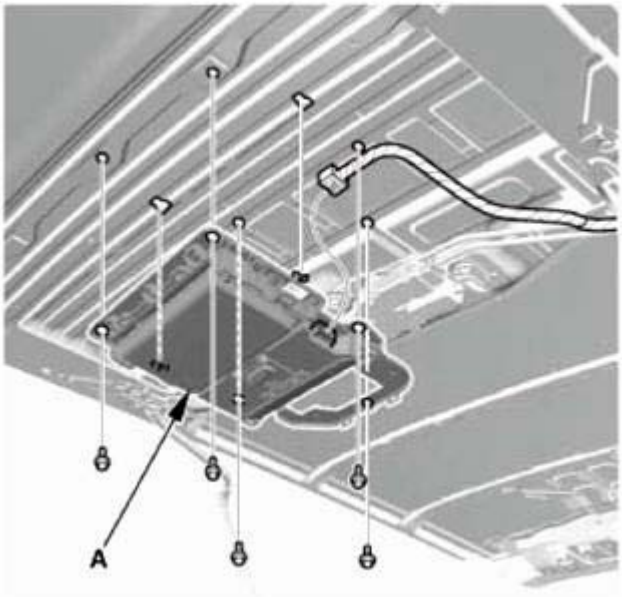

Fig. 347: Identifying Rear Controller And Screen
Courtesy of AMERICAN HONDA MOTOR CO., INC.

GETtheMANUALS.org

24. Cargo Area Light
    1. Turn the cargo area light switch OFF.
    2. Carefully pry off the lens (A).
    3. Remove the bulb.
    4. Remove the cargo area light (B).
    5. Disconnect the connector.

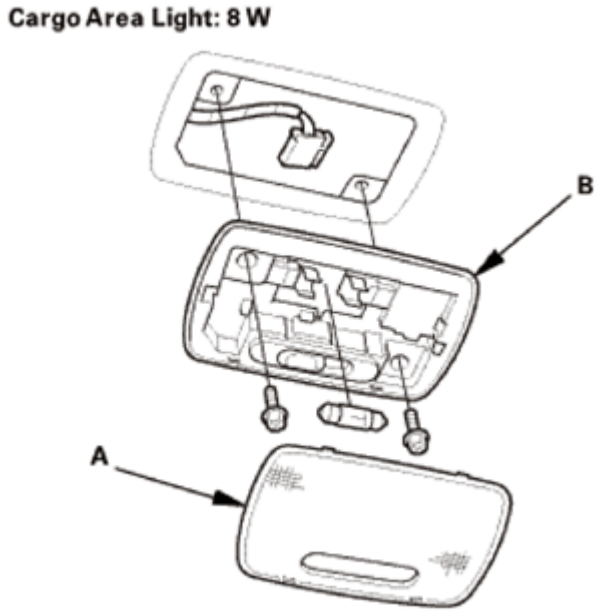

Fig. 348: Identifying Cargo Area Light And Lens
Courtesy of AMERICAN HONDA MOTOR CO., INC.

25. Grab Handles for One Vehicle
    1. Lower the grab handle (A).
    2. Insert the tips of the push pin/grab rail cap pliers (B) into the notch.

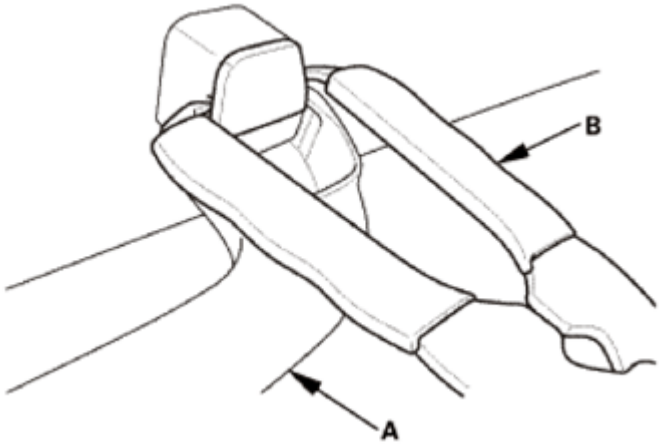

GETtheMANUALS.org

Fig. 349: Inserting Tips Of Push Pin/Grab Rail Cap Pliers Into Notch
Courtesy of AMERICAN HONDA MOTOR CO., INC.

3. Gently squeeze the handles of the push pin/grab rail cap pliers (A), and pull the cap (B) straight out.

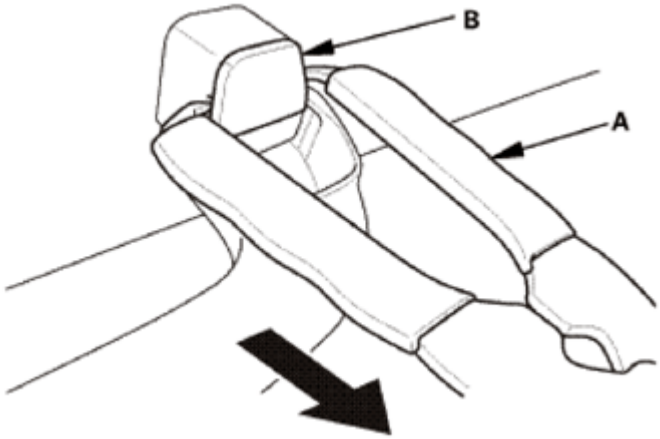

Fig. 350: Removing Tips Of Push Pin/Grab Rail Cap Pliers From Notch
Courtesy of AMERICAN HONDA MOTOR CO., INC.

4. Remove the grab handle (A).

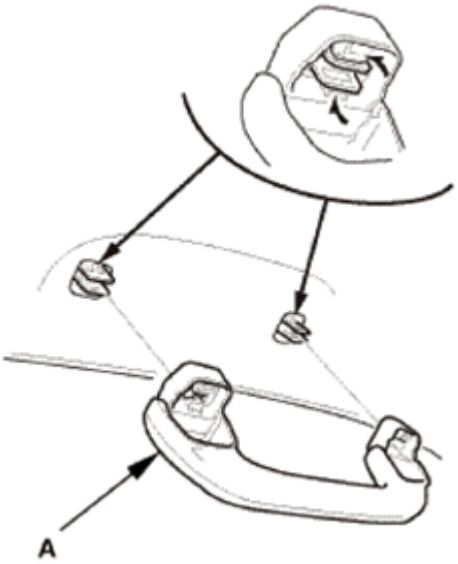

Fig. 351: Removing Grab Handle
Courtesy of AMERICAN HONDA MOTOR CO., INC.

5. Remove the clips (A).

GETtheMANUALS.org

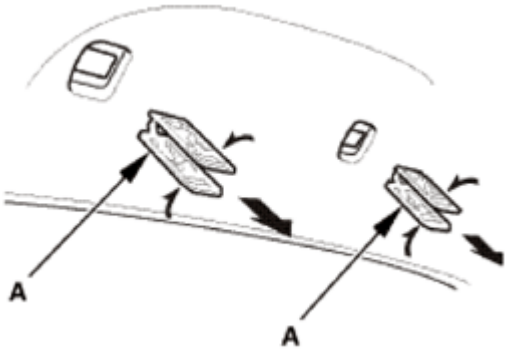

Fig. 352: Removing Grab Handle Clips
Courtesy of AMERICAN HONDA MOTOR CO., INC.

26. Sunvisor - Both Sides

NOTE: Repeat this procedure on the opposite side.

1. Push the tab (A) with a flat-tip screwdriver through the hole in the front side of the bracket cover (B).

NOTE: Make sure the tab is unlocked.

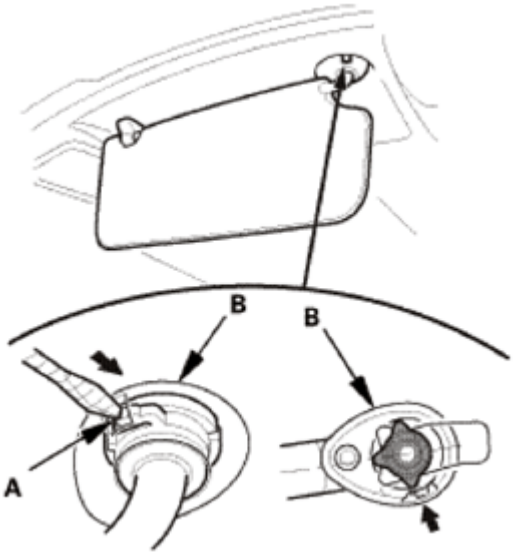

Fig. 353: Pushing Tab Of Sunvisor Using Flat-Tip Screwdriver
Courtesy of AMERICAN HONDA MOTOR CO., INC.

2. While pushing in the tab (A) with a flat-tip screwdriver, release the sunvisor (B) from the holder (C), and rotate the sunvisor backward 45 °.

NOTE: Make sure the tab slides into the bracket cover as you rotate the

GETtheMANUALS.org

sunvisor.

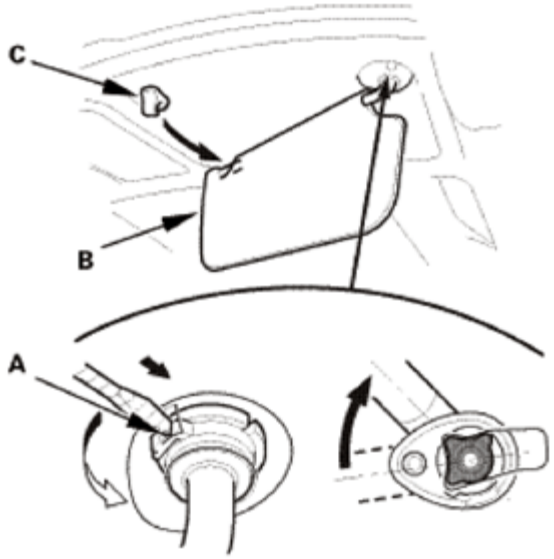

Fig. 354: Removing Sunvisor Using Tool
Courtesy of AMERICAN HONDA MOTOR CO., INC.

3. Disconnect the connector (A), then remove the sunvisor (B).

NOTE: **If the sunvisor cannot be removed, the tab has not rotated into the bracket cover. Repeat step 2 to rotate the tab.**

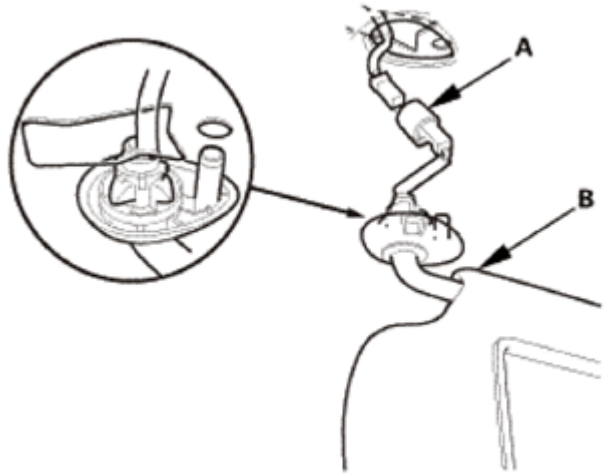

Fig. 355: Identifying Sunvisor And Connector
Courtesy of AMERICAN HONDA MOTOR CO., INC.

27. Sunvisor Holder - Both Sides

NOTE: **Repeat this procedure on the opposite side.**

GETtheMANUALS.org

1. Turn the sunvisor holder (A) 45 ° counterclockwise, then remove it from the holder grommet (B).

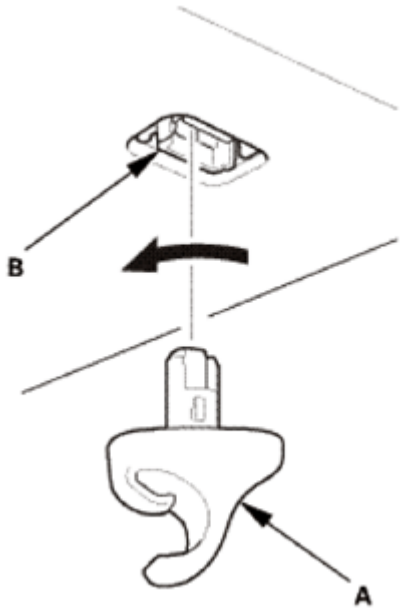

Fig. 356: Turning Sunvisor Holder
Courtesy of AMERICAN HONDA MOTOR CO., INC.

2. Remove the holder grommet (A).

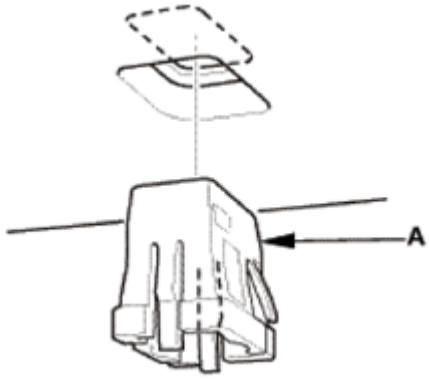

Fig. 357: Identifying Sunvisor Holder Grommet
Courtesy of AMERICAN HONDA MOTOR CO., INC.

28. Headliner
    1. Without moonroof: Disconnect the connector (A), and detach the harness clips (B) from the driver's side A-pillar.

GETtheMANUALS.org

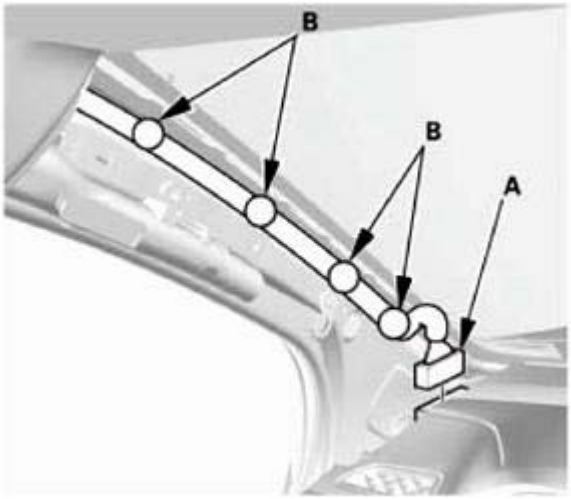

Fig. 358: Identifying Headliner Connector And Harness Clips (Driver Side A-Pillar Trim)
Courtesy of AMERICAN HONDA MOTOR CO., INC.

2. Disconnect the connectors (A), and detach the harness clips (B) from the passenger's side A-pillar.

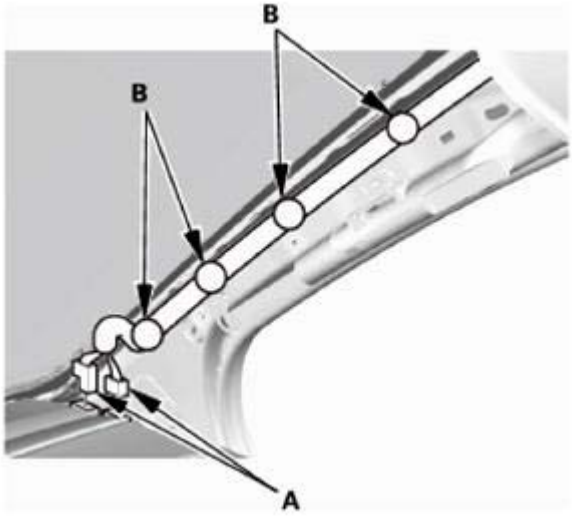

Fig. 359: Identifying Headliner Connector And Harness Clips (Passenger Side A-Pillar Trim)
Courtesy of AMERICAN HONDA MOTOR CO., INC.

3. Disconnect the connectors (A), and detach the connector clips (B) and the harness clip (C) from the right quarter pillar.

GETtheMANUALS.org

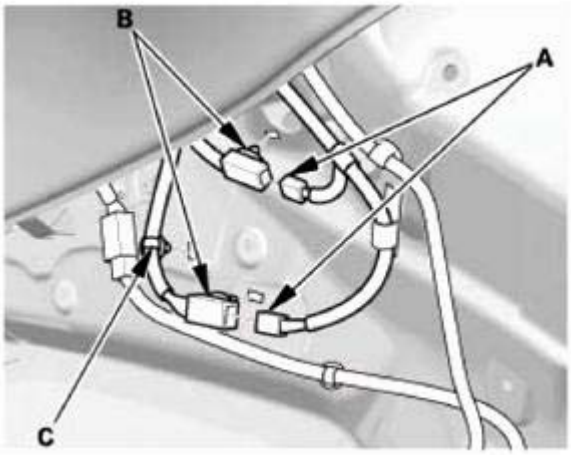

Fig. 360: Identifying Headliner Connector And Harness Clips (Right Quarter Pillar)
Courtesy of AMERICAN HONDA MOTOR CO., INC.

4. Slide the front seats all the way back, and recline the seat-back fully.
5. Fold down the rear seats.
6. Detach the clips (A) and release the fasteners (B) from the headliner (C) by pulling it down.
7. With the help of an assistant, lower the headliner.

Without moonroof

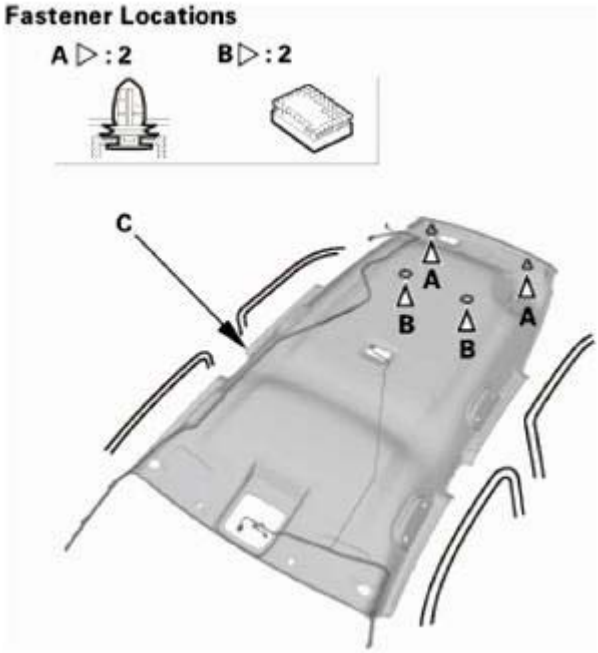

Fig. 361: Identifying Headliner, Fasteners And Clips (Without Moonroof)
Courtesy of AMERICAN HONDA MOTOR CO., INC.

With moonroof

GETtheMANUALS.org

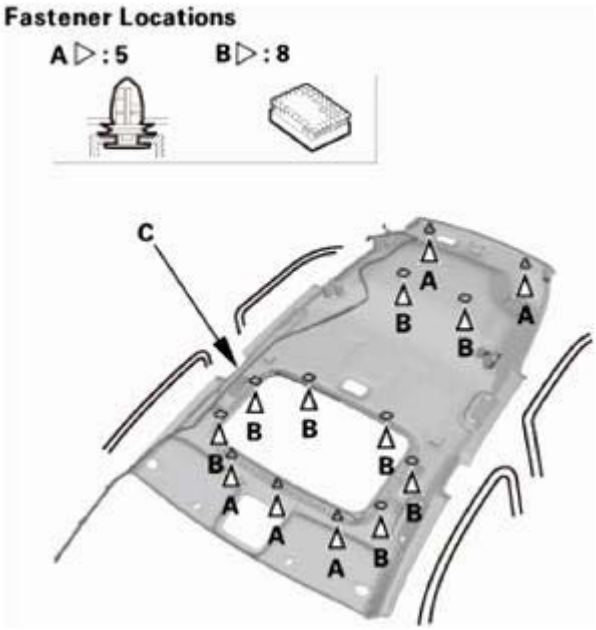

Fig. 362: Identifying Headliner, Fasteners And Clips (With Moonroof)
Courtesy of AMERICAN HONDA MOTOR CO., INC.

8. With the help of an assistant, remove the headliner (A) through the tailgate opening.

NOTE: **Do not bend the headliner. Bending the headliner will crease and damage it.**

Fig. 363: Identifying Headliner On Tailgate Opening
Courtesy of AMERICAN HONDA MOTOR CO., INC.

29. Moonroof Motor
    1. Disconnect the connector (A), and remove the screws (B), then remove the motor (C).

GETtheMANUALS.org

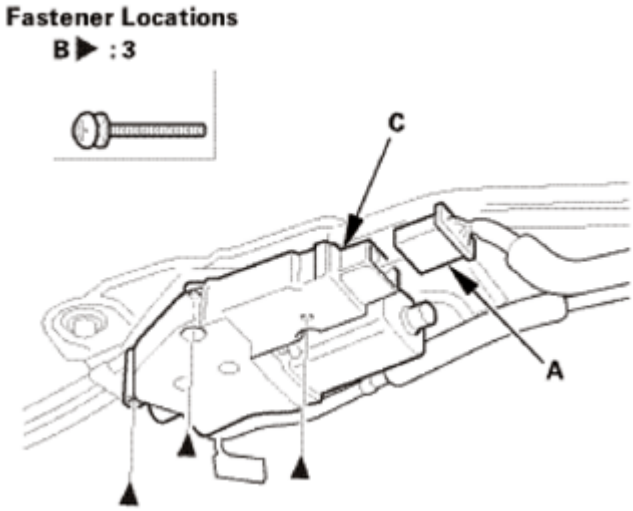

Fig. 364: Identifying Moonroof Motor, Connector And Screws
Courtesy of AMERICAN HONDA MOTOR CO., INC.

INSTALLATION

SRS components are located in this area. Review the **SRS COMPONENT LOCATIONS** and the **PRECAUTIONS AND PROCEDURES** before doing repairs or service.

1. Moonroof Motor
    1. With the glass lift arms in the full tilt position, install the motor (A), then install the screws (B).
    2. Connect the connector (C).

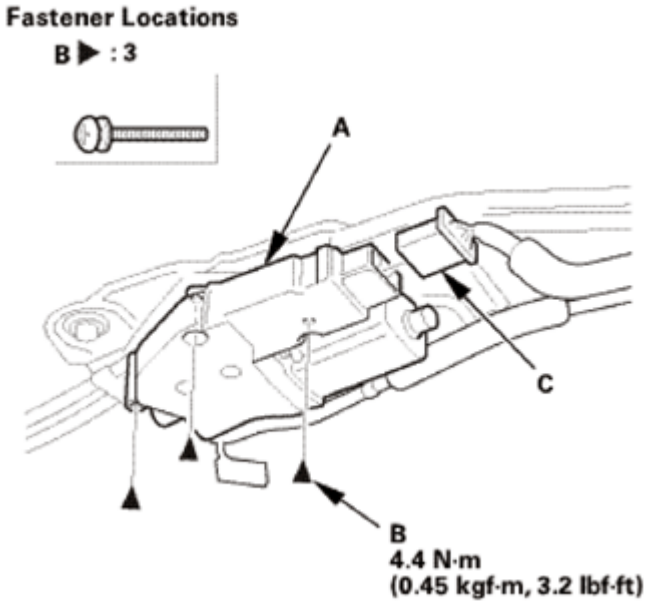

Fig. 365: Identifying Moonroof Motor, Connector And Screws With Torque Specifications
Courtesy of AMERICAN HONDA MOTOR CO., INC.

GETtheMANUALS.org

2. Headliner - Check
    1. If the side curtain airbag has deployed, replace the headliner and removed trim pieces, along with the other parts listed for side curtain airbag deployment.
    2. To prevent the side curtain airbags from deploying improperly and possibly causing injury, inspect the headliner and all removed trim. Replace any pieces with the following damage:
        - Any creases or tears in the headliner (A)
        - Any damages around the grab handle holes (B) or the sunvisor holes (C) in the headliner
        - Any clip bases (D) which have come off the headliner
        - Any fasteners (E) or clip bases (F) which have come off the headliner

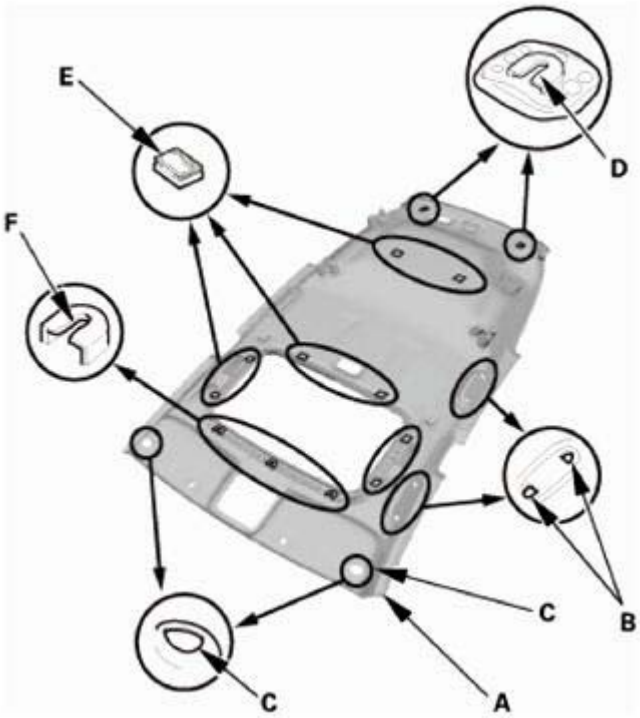

Fig. 366: Identifying Headliner, Grab Handle Holes, Sunvisor Holes, Clip Bases, Fasteners And Clip Bases
Courtesy of AMERICAN HONDA MOTOR CO., INC.

3. Headliner
    1. With the help of an assistant, slide the headliner (A) through the tailgate opening.

NOTE: **Do not bend the headliner. Bending the headliner will crease and damage it.**

GETtheMANUALS.org

Fig. 367: Identifying Headliner
Courtesy of AMERICAN HONDA MOTOR CO., INC.

2. With the help of an assistant, install the headliner (A), then push on the clips (B) and the fasteners (C) which will snap into place securely.

Without moonroof

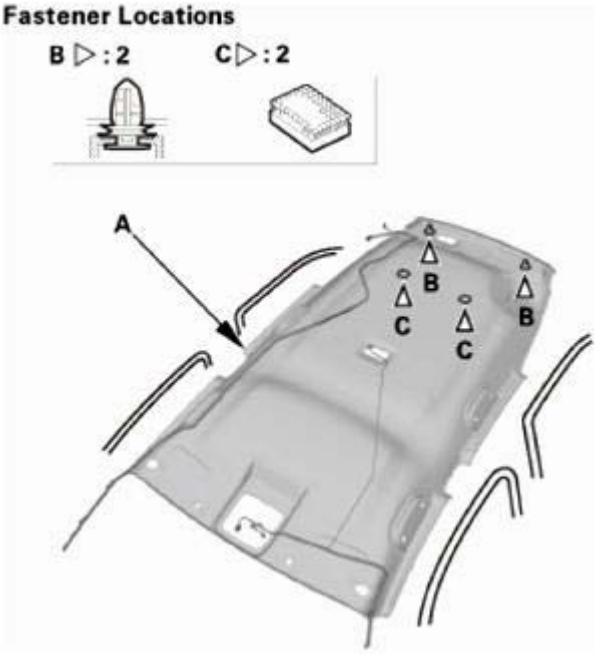

Fig. 368: Identifying Headliner, Fasteners And Clips (Without Moonroof)
Courtesy of AMERICAN HONDA MOTOR CO., INC.

With moonroof

GETtheMANUALS.org

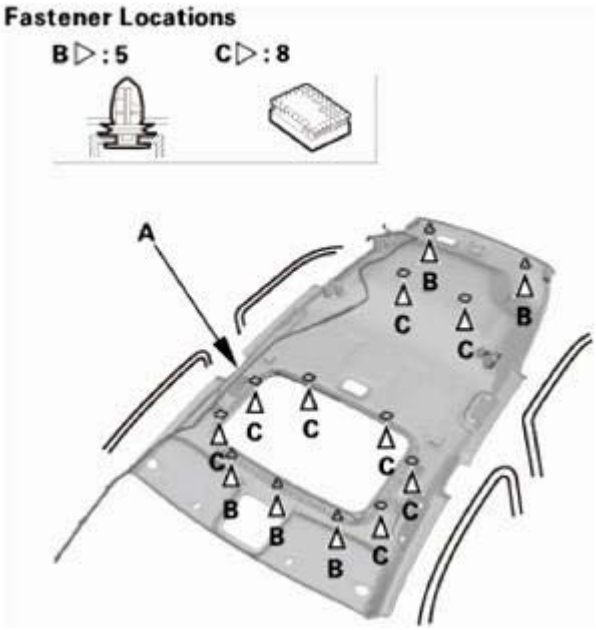

Fig. 369: Identifying Headliner, Fasteners And Clips (With Moonroof)
Courtesy of AMERICAN HONDA MOTOR CO., INC.

3. At the right quarter pillar, connect the connectors (A), and install the connector clips (B) and the harness clip (C).

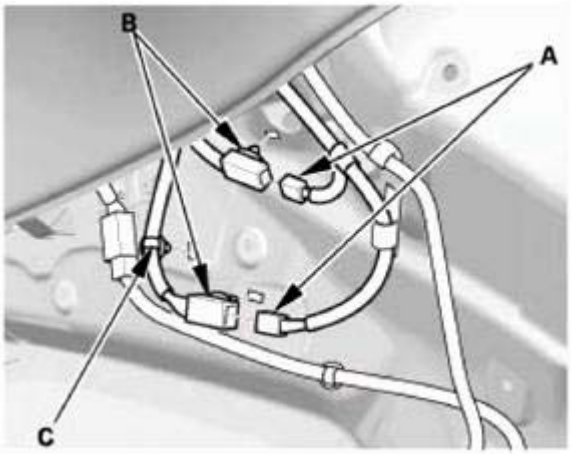

Fig. 370: Identifying Right Quarter Pillar Connector And Clips
Courtesy of AMERICAN HONDA MOTOR CO., INC.

4. At the passenger's A-pillar, connect the connectors (A), and install the harness clips (B).

GETtheMANUALS.org

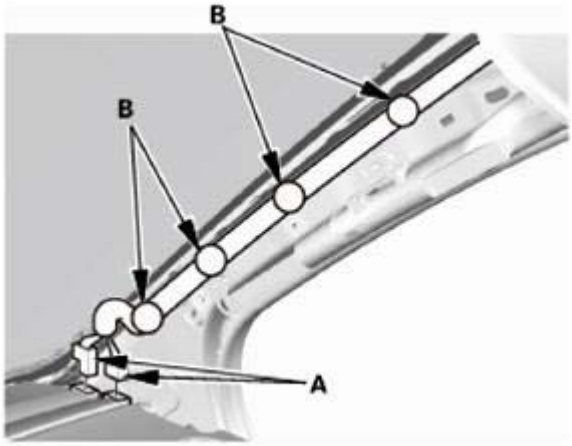

Fig. 371: Identifying Passenger A-Pillar Connector And Clips
Courtesy of AMERICAN HONDA MOTOR CO., INC.

5. Without moonroof: At the driver's A-pillar, connect the connector (A), and install the harness clips (B).

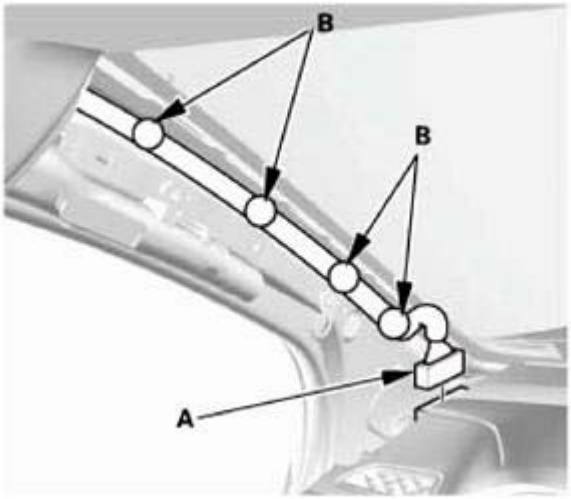

Fig. 372: Identifying Driver A-Pillar Connector And Clips (Without Moonroof)
Courtesy of AMERICAN HONDA MOTOR CO., INC.

4. Sunvisor Holder
    1. Install the holder (A) into the holder grommet (B) by turning it 45 ° clockwise.
    2. Install the holder and the holder grommet as an assembly into the body by pushing it until the hooks snap into place securely.

GETtheMANUALS.org

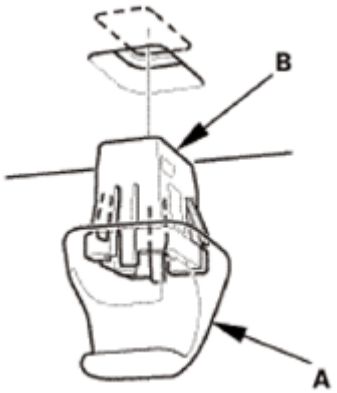

Fig. 373: Identifying Sunvisor Holder And Grommet
Courtesy of AMERICAN HONDA MOTOR CO., INC.

5. Sunvisor - Check
    1. If the side curtain airbag has deployed, replace the sunvisor, along with the other parts listed for side curtain airbag deployment.
    2. If the side curtain airbag has not deployed, inspect the sunvisor for damage. A damaged sunvisor may cause the side curtain airbags to deploy improperly, possibly causing injury. Replace the sunvisor if it has any of the following damage:
        - Any cracks in the sunvisor bracket (A)
        - Any cracks in the sunvisor bracket cover (B)
        - Any bends or cracks in the sunvisor shaft (C)
        - Any cracks in the sunvisor base (D)
        - Any cracks in the vanity mirror base (E)
    3. If the holder grommet is damaged or stress-whitened, replace the holder grommet and the holder as an assembly.

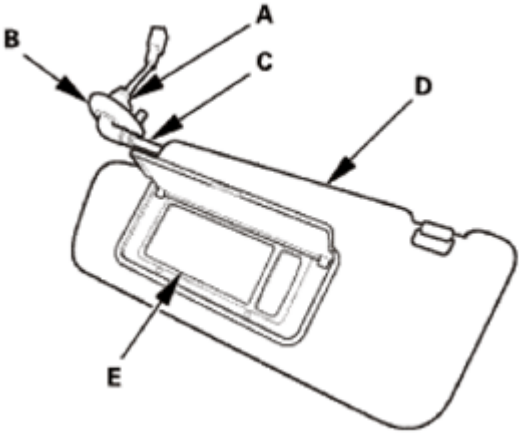

Fig. 374: Identifying Sunvisor Bracket, Cover, Shaft, Base And Mirror Base
Courtesy of AMERICAN HONDA MOTOR CO., INC.

GETtheMANUALS.org

6. Sunvisor - Both Sides

NOTE: Repeat this procedure on the opposite side.

1. Connect the connector (A), and install the sunvisor (B).

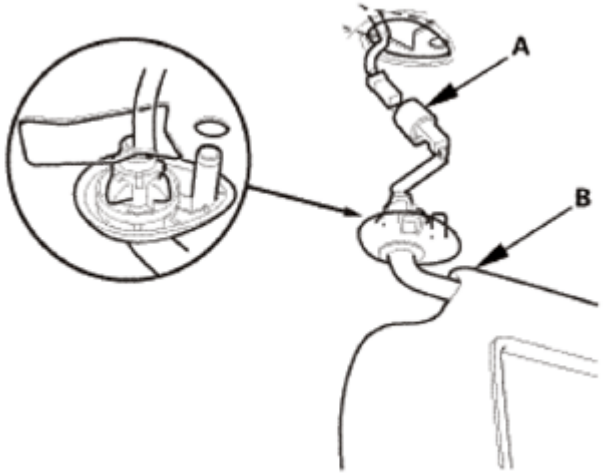

Fig. 375: Identifying Sunvisor And Connector
Courtesy of AMERICAN HONDA MOTOR CO., INC.

2. While holding the bracket cover (A), rotate the sunvisor (B) forward until the tab (C) snaps into place.
3. Gently pull down on the sunvisor to make sure it is properly secured in the body.
4. Rotate the sunvisor into the holder (D).

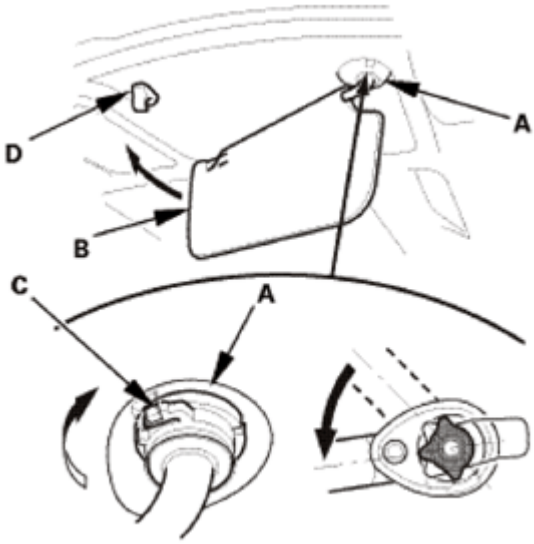

Fig. 376: Rotating Sunvisor Into Holder
Courtesy of AMERICAN HONDA MOTOR CO., INC.

GETtheMANUALS.org

7. Grab Handle - Check
    1. If the side curtain airbag has not deployed, inspect the grab handle (A) for damage. A damaged grab handle may cause the side curtain airbag to deploy improperly, possibly causing injury. Replace the grab handle if it has any of the following damage:
        - Any cracks or breakage in the grab handle
        - Any cracks or stress-whitening in the caps (B)

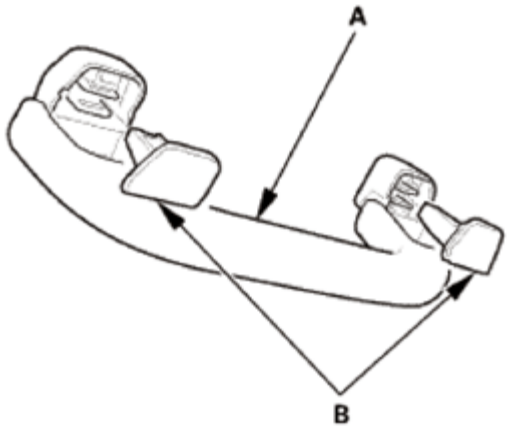

Fig. 377: Identifying Grab Handle And Caps
Courtesy of AMERICAN HONDA MOTOR CO., INC.

8. Grab Handles for One Vehicle
    1. Install the clips (A) on the grab handle (B).
    2. Install the caps (C) fully into the clips.

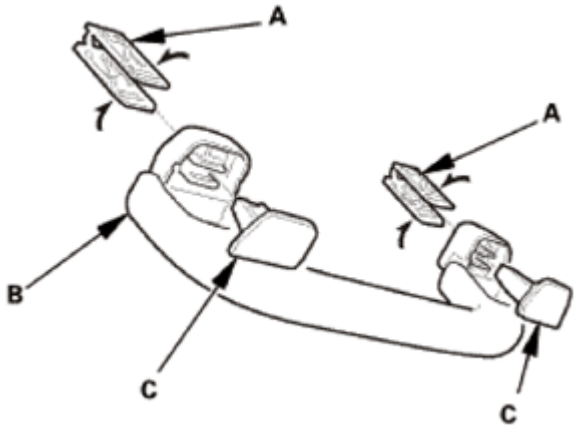

Fig. 378: Installing Clips On Grab Handle
Courtesy of AMERICAN HONDA MOTOR CO., INC.

    3. Position the grab handle (A) on the grab handle bracket (B).
    4. Push on the grab handle until the clips (C) snap into place securely.

GETtheMANUALS.org

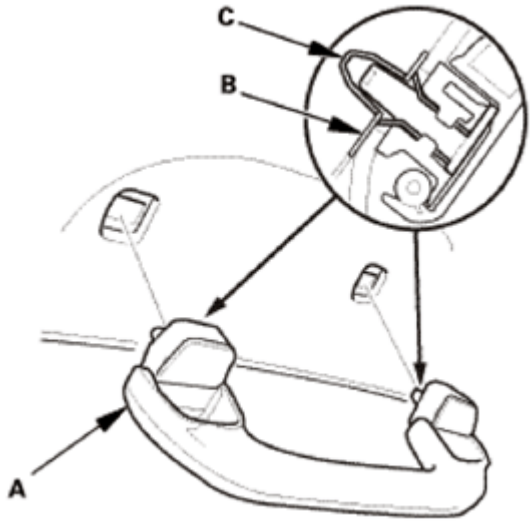

Fig. 379: Identifying Grab Handle, Bracket And Clips
Courtesy of AMERICAN HONDA MOTOR CO., INC.

9. Cargo Area Light
    1. Connect the connector.
    2. Install the cargo area light (A).
    3. Install the bulb.
    4. Carefully install the lens (B).

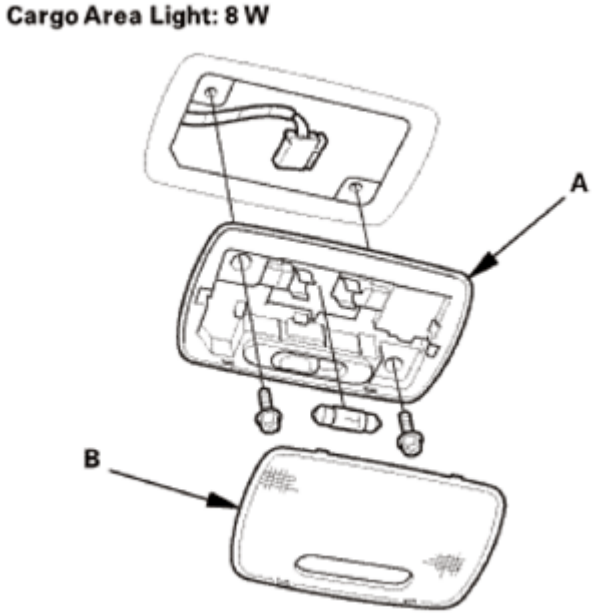

Fig. 380: Identifying Cargo Area Light And Lens
Courtesy of AMERICAN HONDA MOTOR CO., INC.

10. Rear Controller and Screen (With RES)

GETtheMANUALS.org

1. Install the rear controller and screen (A).
2. Connect the connector.

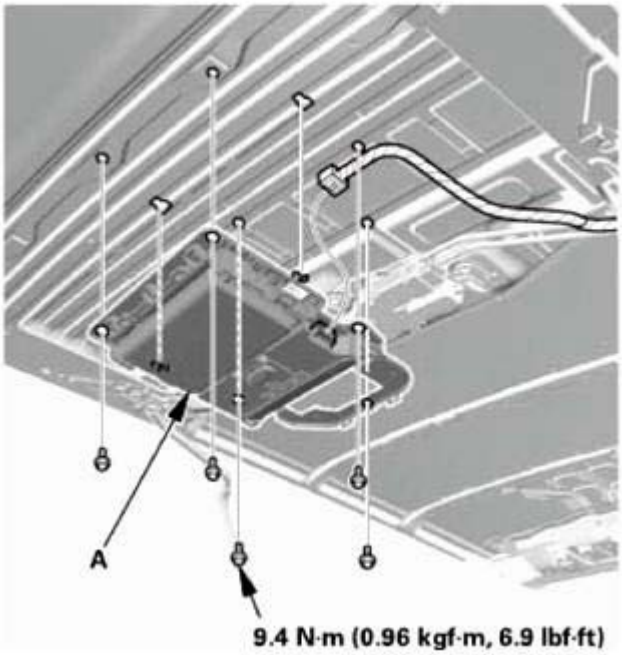

Fig. 381: Identifying Rear Controller And Screen With Torque Specifications (With RES)
Courtesy of AMERICAN HONDA MOTOR CO., INC.

11. Rear Display Cover (With RES)
    1. Install the rear display cover (A).

GETtheMANUALS.org

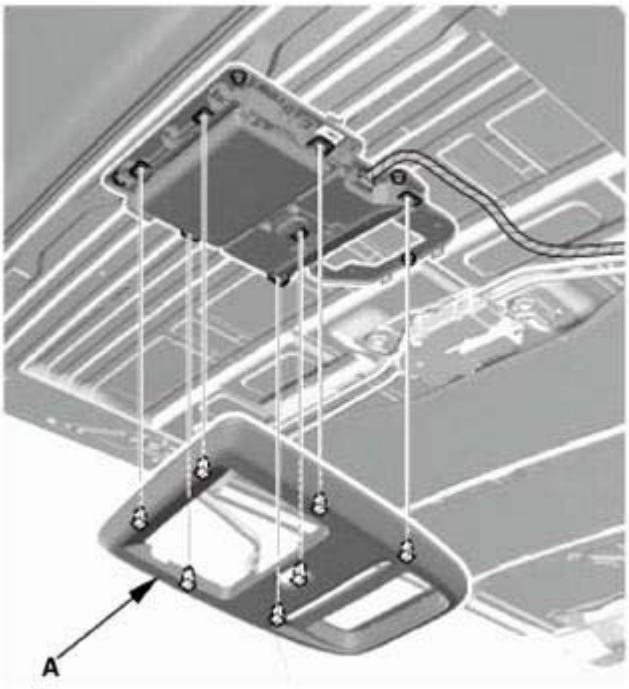

Fig. 382: Identifying Rear Display Cover (With RES)
Courtesy of AMERICAN HONDA MOTOR CO., INC.

2. Connect the connector.
3. Install the ceiling light (B).
4. Carefully install the lenses (C).

GETtheMANUALS.org

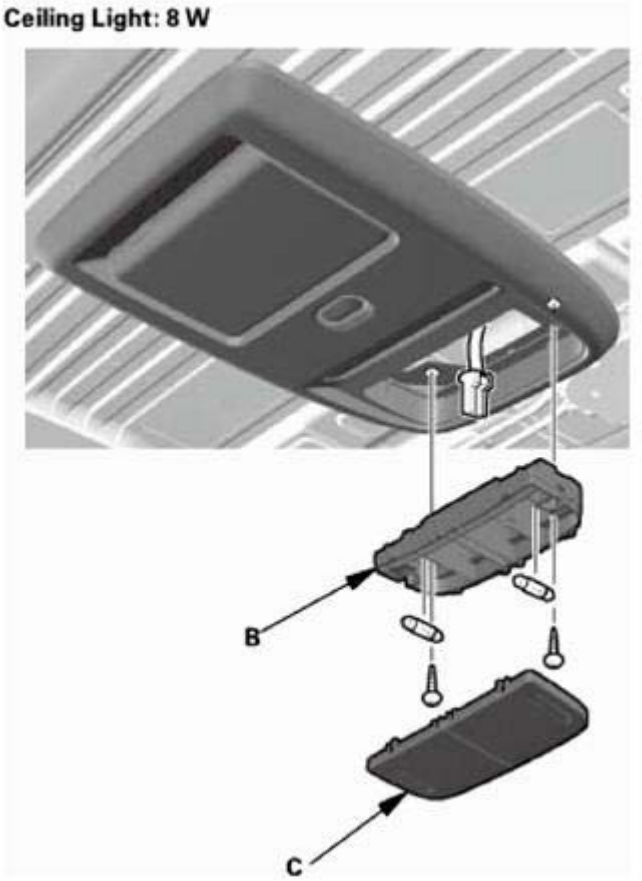

Fig. 383: Identifying Ceiling Light And Lens (With RES)
Courtesy of AMERICAN HONDA MOTOR CO., INC.

12. Ceiling Light (without RES)
    1. Connect the connector.
    2. Install the ceiling light (A).
    3. Install the bulb.
    4. Carefully install the lens (B).

GETtheMANUALS.org

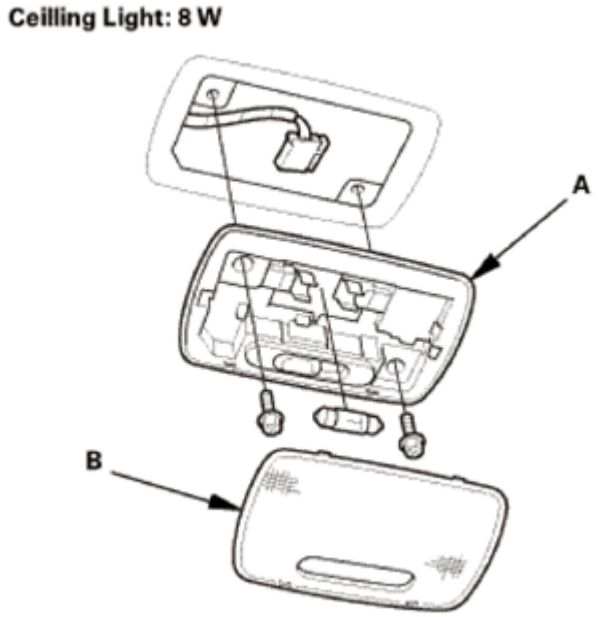

Fig. 384: Identifying Ceiling Light And Lens (Without RES)
Courtesy of AMERICAN HONDA MOTOR CO., INC.

13. Roof Console Assembly
    1. Connect the connectors (A), then install the roof console assembly (B).
    2. Install the screws (C, D), then install the lenses (E).

GETtheMANUALS.org

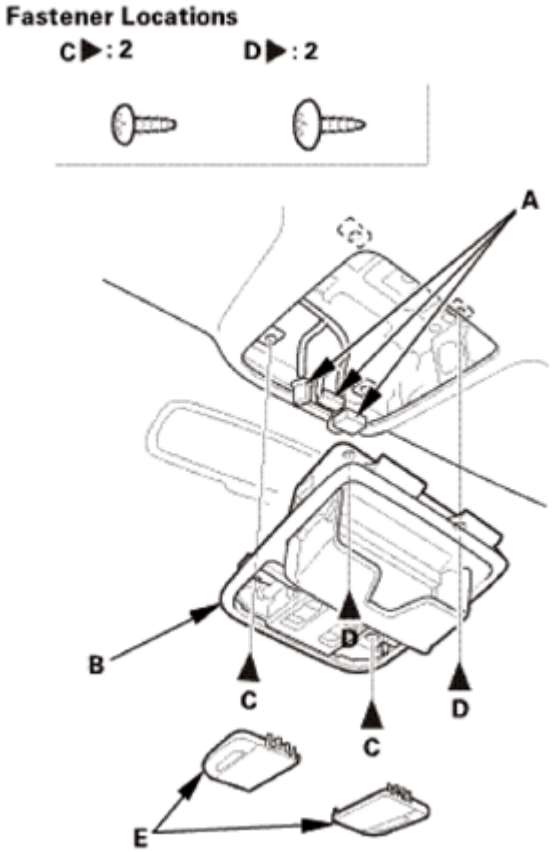

Fig. 385: Identifying Roof Console Assembly, Connector, Lens And Screws
Courtesy of AMERICAN HONDA MOTOR CO., INC.

14. Quarter Pillar Trim - Check
    1. If the side curtain airbag has deployed, replace the quarter pillar trim (A), along with the other parts listed for side curtain airbag deployment.
    2. If the side curtain airbag has not deployed, check the quarter pillar trim and note the following items:
        - To prevent the side curtain airbags from deploying improperly and possibly causing injury, inspect the quarter pillar trim and replace it with a new one if it has any of the following damage:
            - Any cracks, deformations, or stress-whitening in the quarter pillar trim
            - Any cracks or stress-whitened areas in the clip seating surfaces (B)
        - After checking and adjusting the overlap between the headliner and the quarter pillar trim, replace the upper clip (C) with a new one.
        - If the clips (D) are damaged or stress-whitened, replace them with new ones.

GETtheMANUALS.org

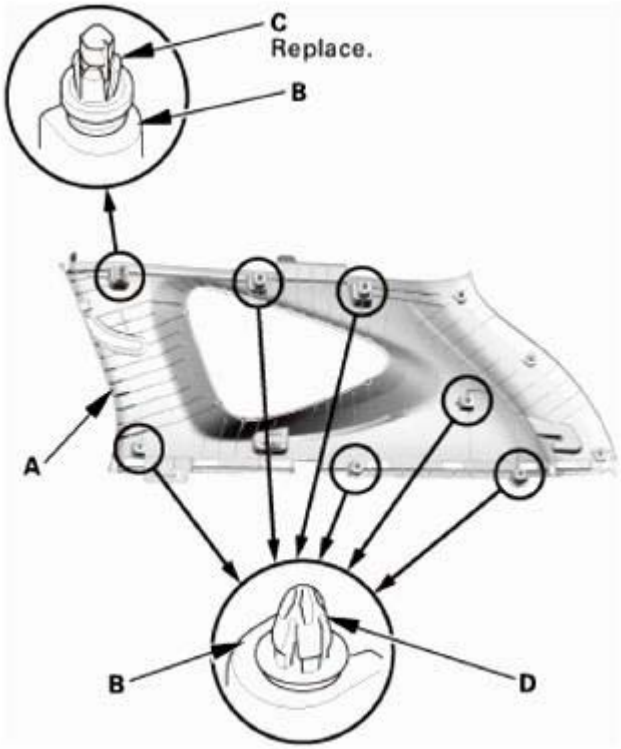

Fig. 386: Identifying Quarter Pillar Trim Upper Clip And Clip Seating Surfaces
Courtesy of AMERICAN HONDA MOTOR CO., INC.

15. Headliner/Pillar Trim Overlap - Check

Checking and Adjusting the Headliner/Pillar Trim Overlap

To prevent the side curtain airbag from deploying and damaging the pillar trim (A-pillar trim, B-pillar trim, quarter pillar trim), the overlap between the headliner and pillar trim must be 8.0+0/-2.0 mm (0.31+0/-0.08 in). To check the overlap, do this:

1. Install the headliner (A) and the pillar trim (B).

GETtheMANUALS.org

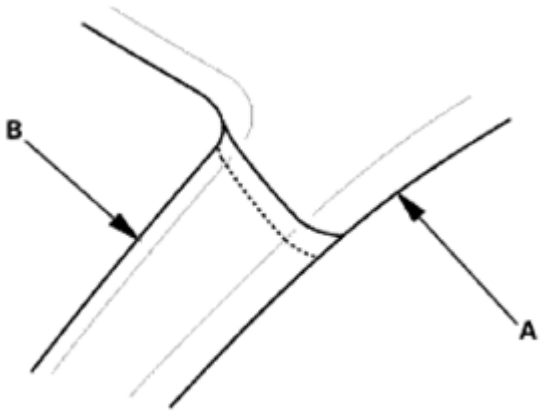

This illustration shows the A-pillar.

Fig. 387: Identifying Headliner And Pillar Trim
Courtesy of AMERICAN HONDA MOTOR CO., INC.

2. Apply masking tape (A) to the headliner (B) to mark the upper edge of the pillar trim (C).

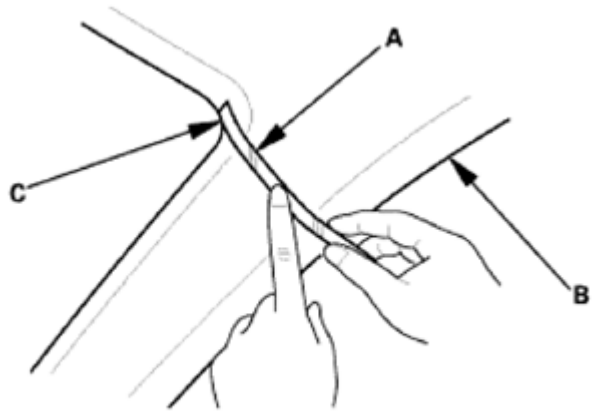

This illustration shows the A-pillar.

Fig. 388: Applying Mask Tape To Headliner
Courtesy of AMERICAN HONDA MOTOR CO., INC.

3. Remove the pillar trim, and measure the headliner overlap.
   - If the overlap is 8.0+0/-2.0 mm (0.31+0/-0.08 in), remove the tape, and install the pillar trim.
   - If the overlap is more than 8.0 mm (0.31 in), go to step 4.

GETtheMANUALS.org

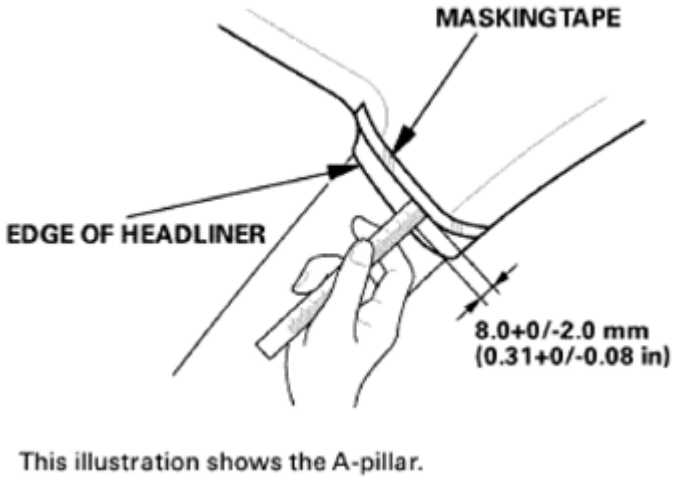

Fig. 389: Measuring Headliner Overlap
Courtesy of AMERICAN HONDA MOTOR CO., INC.

4. Carefully trim the headliner with a utility knife, reducing the overlap to 8.0+0/-2.0 mm (0.31+0/-0.08 in).
5. Remove the tape, and install the pillar trim.

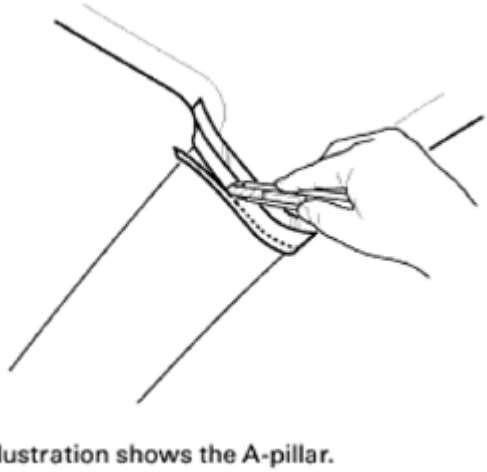

Fig. 390: Triming Headliner Using Utility Knife
Courtesy of AMERICAN HONDA MOTOR CO., INC.

16. Quarter Pillar Trim - Both Sides
    1. Install a new clip (A) to the quarter pillar trim (B).

GETtheMANUALS.org

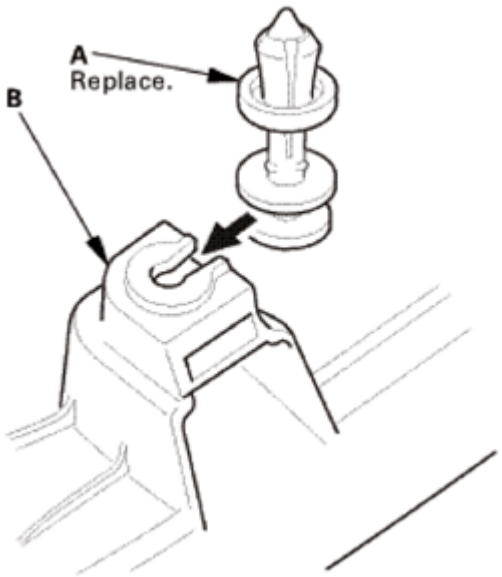

Fig. 391: Installing Quarter Pillar Trim Into Clip
Courtesy of AMERICAN HONDA MOTOR CO., INC.

2. Pass the rear seat belt lower anchor (A) through the hole in the quarter pillar trim (B).
3. Fit the clips into the holes in the quarter pillar.
4. Lightly push the quarter pillar trim into place, then install the trim.

NOTE:

- **Make sure the side curtain airbag is not tucked under the clips or the ribs.**
- **Do not push too hard on the quarter pillar trim. If you push too hard, the clip will be damaged, and it will not hold the trim properly.**
- **Gently tug on the quarter pillar trim to verify that all clips are securely fastened.**
- **Make sure the clips (C, D, and E) snap into place securely.**

GETtheMANUALS.org

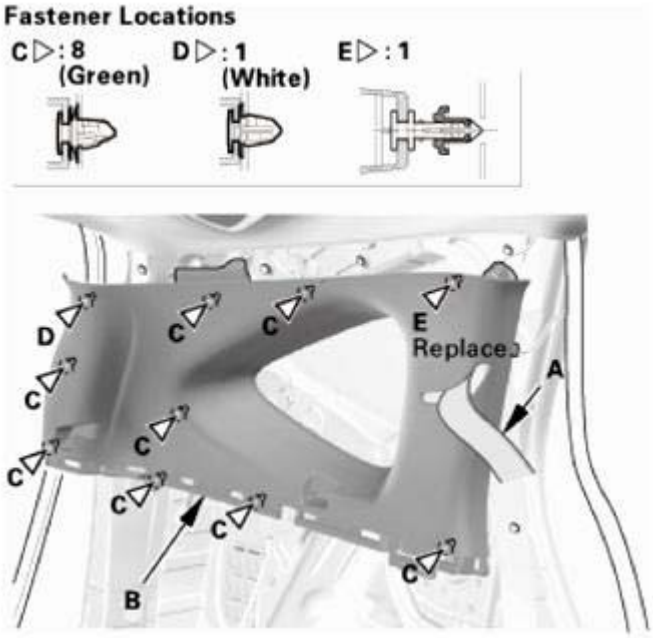

Fig. 392: Identifying Rear Seat Belt Lower Anchor, Quarter Pillar Trim And Clips
Courtesy of AMERICAN HONDA MOTOR CO., INC.

17. Rear Side Trim Panel - Both Sides

NOTE: Repeat this procedure on the opposite side.

1. Install the rear seat release cable (A) to the clips (B) of the rear side trim panel (C).

NOTE: Align the marks (D) with the clips as shown.

GETtheMANUALS.org

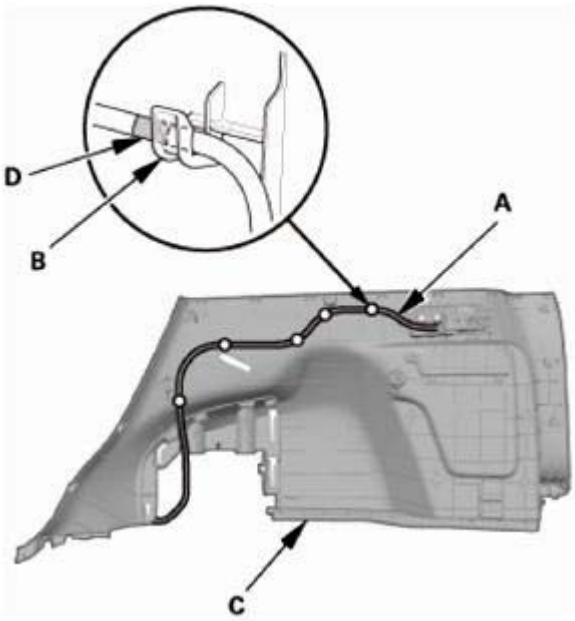

Fig. 393: Identifying Rear Seat Release Cable, Rear Side Trim Panel And Clips
Courtesy of AMERICAN HONDA MOTOR CO., INC.

2. Install the rear seat release lever (A) to the rear side trim panel (B).

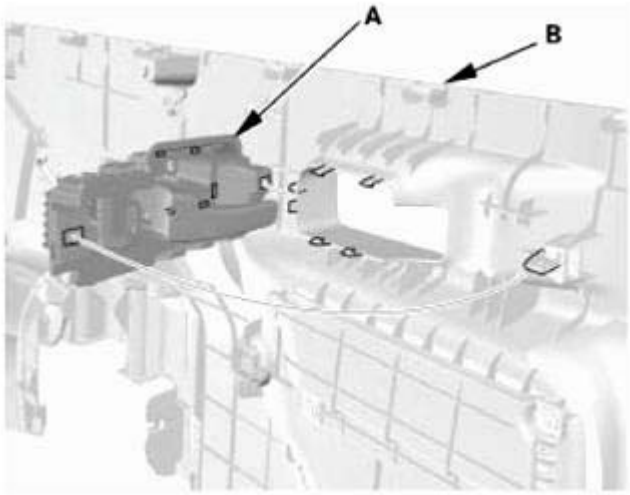

Fig. 394: Identifying Rear Seat Release Lever And Rear Side Panel
Courtesy of AMERICAN HONDA MOTOR CO., INC.

3. Install the rear side trim panel (A). Make sure the hooks (B), the tabs (C), and the clips (D, E) snap into place securely.
4. Install the clips (F, G).

GETtheMANUALS.org

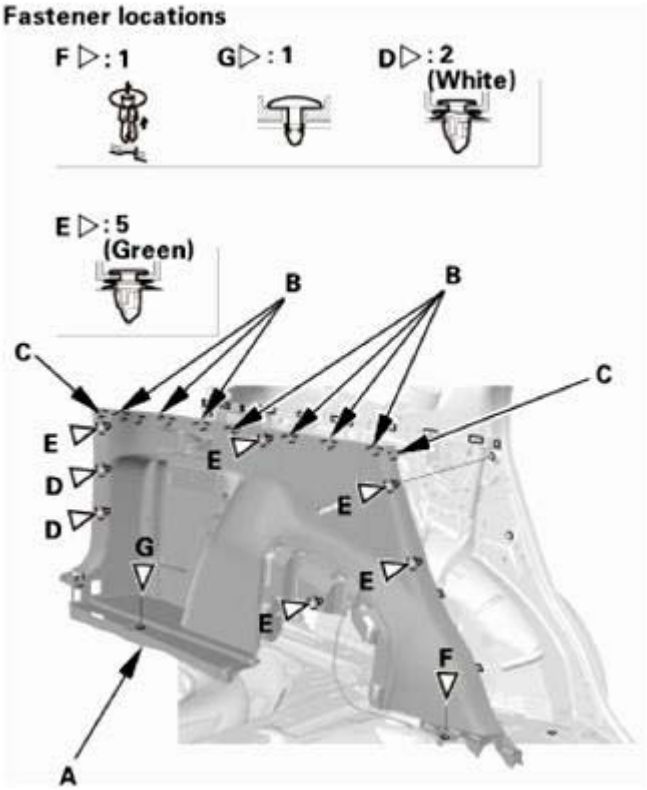

Fig. 395: Identifying Rear Side Trim Panel, Hooks And Clips
Courtesy of AMERICAN HONDA MOTOR CO., INC.

5. Install the tie-down hook (A), then install the bolt (B).

Fig. 396: Identifying Tie-Down Hook And Bolt With Torque Specifications

GETtheMANUALS.org

Courtesy of AMERICAN HONDA MOTOR CO., INC.

6. Install the trunk hook (A).

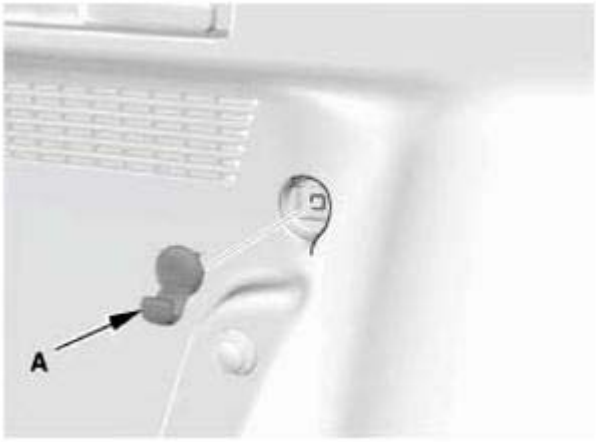

Fig. 397: Identifying Trunk Hook
Courtesy of AMERICAN HONDA MOTOR CO., INC.

7. Install the screws (A), then install the rear seat release lever cap (B). Make sure the upper hook (C) and the lower hooks (D) snap into place securely.

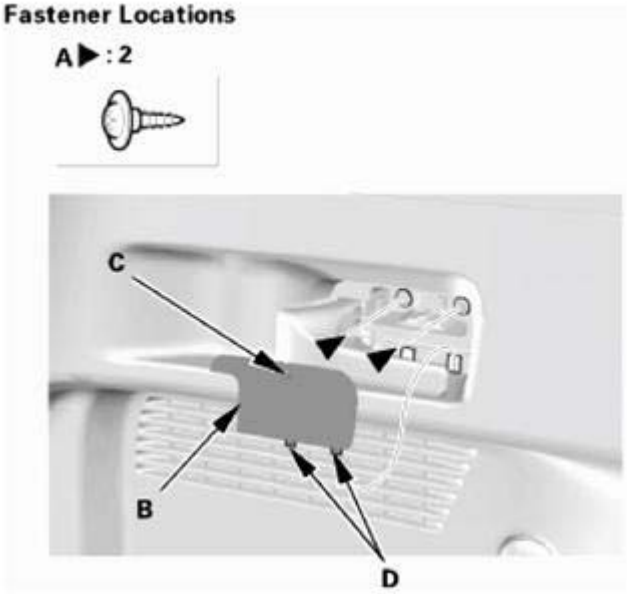

Fig. 398: Identifying Rear Seat Release Lever Cap, Upper, Lower Hook And Screws
Courtesy of AMERICAN HONDA MOTOR CO., INC.

18. Rear Seat Belt Lower Anchor Bolt - Both Sides

NOTE: Repeat this procedure on the opposite side.

GETtheMANUALS.org

1. Install the rear seat belt lower anchor bolt (A).

NOTE: **Before installing the anchor bolt, make sure there are no twists or kinks in the seat belt.**

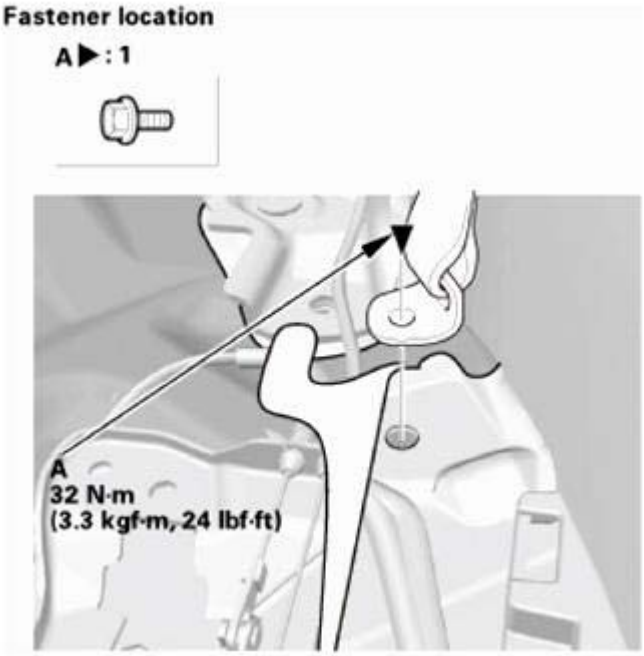

Fig. 399: Identifying Rear Seat Belt Lower Anchor Bolt With Torque Specifications
Courtesy of AMERICAN HONDA MOTOR CO., INC.

19. Rear Seat Cushion Foot Cover - Both Sides (Remove The Outer Left Side Only)
    1. Install the rear seat cushion foot cover (A). Make sure the clips (B) and the hooks (C) snap into place securely.

Left side

GETtheMANUALS.org

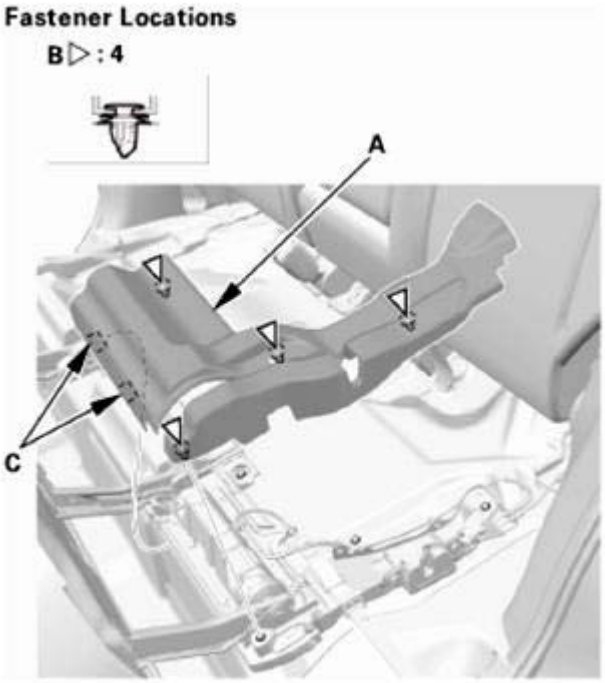

Fig. 400: Identifying Rear Seat Cushion Foot Cover, Hooks And Clips (Left Side)
Courtesy of AMERICAN HONDA MOTOR CO., INC.

Right side

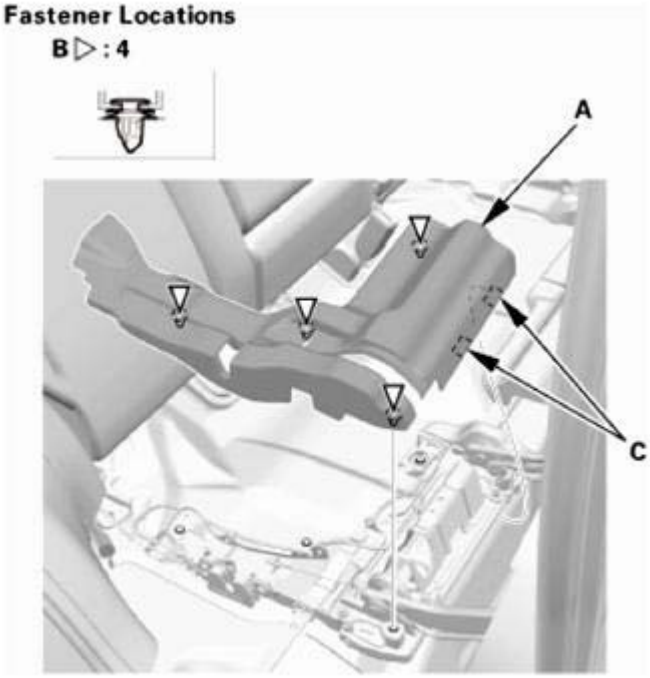

Fig. 401: Identifying Rear Seat Cushion Foot Cover, Hooks And Clips (Right Side)
Courtesy of AMERICAN HONDA MOTOR CO., INC.

GETtheMANUALS.org

20. Rear Carpet Trim - Both Sides
    1. Install the rear carpet trims (A). Make sure the clips (B) and the hooks (C) snap into place securely.

Left side

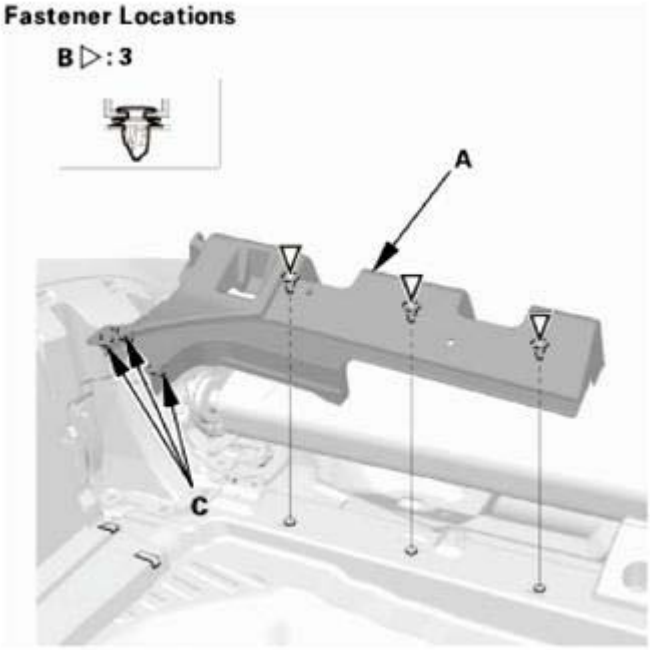

Fig. 402: Identifying Rear Carpet Trims, Hooks And Clips (Left Side)
Courtesy of AMERICAN HONDA MOTOR CO., INC.

Right side

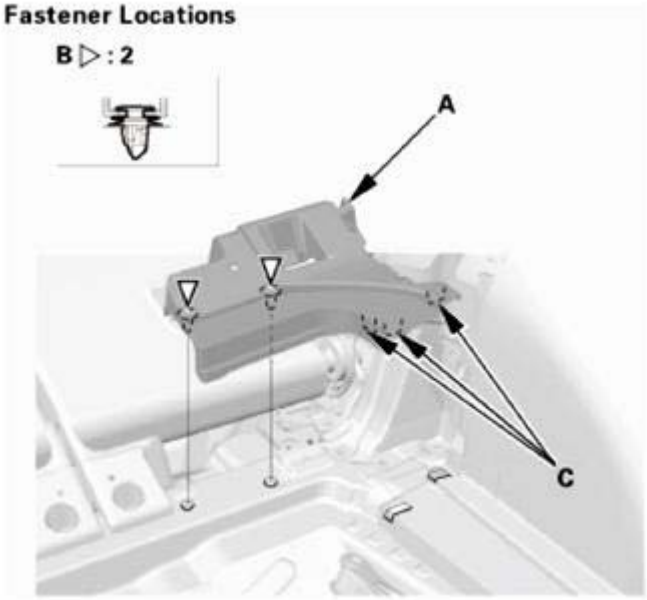

GETtheMANUALS.org

Fig. 403: Identifying Rear Carpet Trims, Hooks And Clips (Right Side)
Courtesy of AMERICAN HONDA MOTOR CO., INC.

2. Install the rear seat-back cover (A). Make sure the clips (B) snap into place securely.

Left side

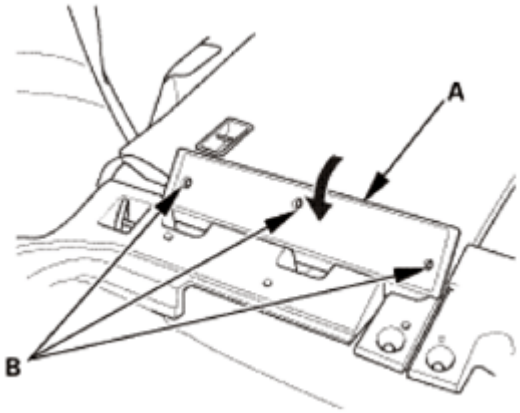

Fig. 404: Installing Rear Seat-Back Cover (Left Side)
Courtesy of AMERICAN HONDA MOTOR CO., INC.

Right side

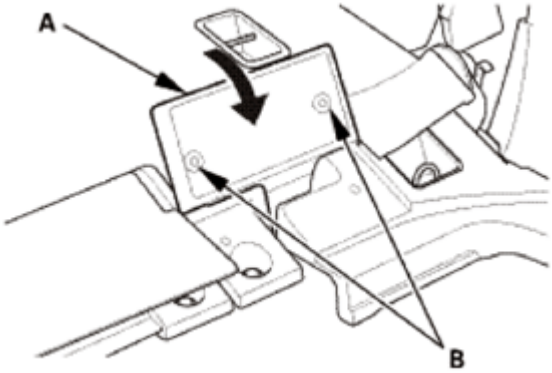

Fig. 405: Installing Rear Seat-Back Cover (Right Side)
Courtesy of AMERICAN HONDA MOTOR CO., INC.

21. Rear Damper Maintenance Cover - Both Sides

NOTE: Repeat this procedure on the opposite side.

1. Fold down the rear seat-back.
2. Install the rear damper maintenance cover (A). Make sure the hooks (B) snap into place securely.

GETtheMANUALS.org

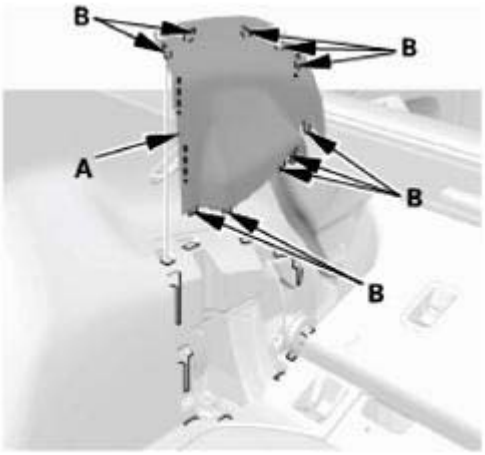

Fig. 406: Identifying Rear Damper Maintenance Cover And Hooks
Courtesy of AMERICAN HONDA MOTOR CO., INC.

22. Rear Trim Panel
    1. Install the rear trim panel (A). Make sure the clips (B, C), the hooks (D), and the tabs (E) snap into place securely.
    2. Install the clips (F).

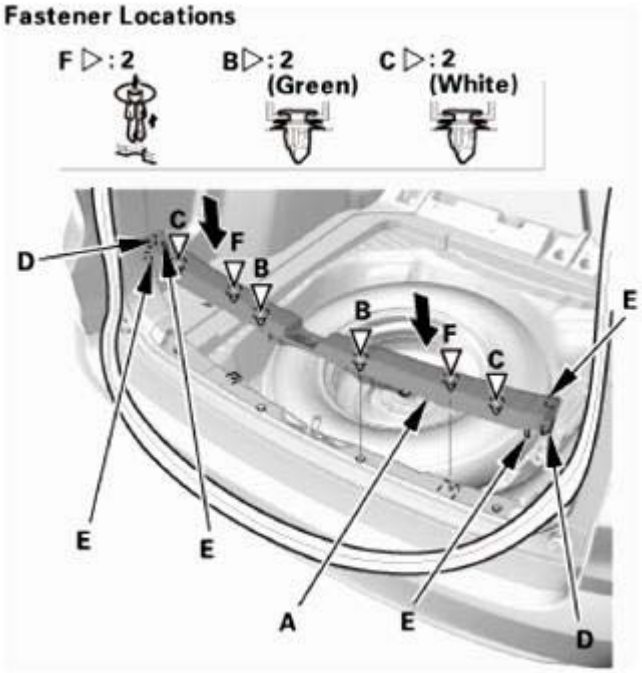

Fig. 407: Installing Rear Trim Panel
Courtesy of AMERICAN HONDA MOTOR CO., INC.

23. Tailgate Weatherstrip As Needed
    1. Locate the alignment mark (A) of the tailgate weatherstrip (B). Align the alignment mark (C) with

GETtheMANUALS.org

the center of the lower area on the tailgate opening, then install the tailgate weatherstrip all the way around.

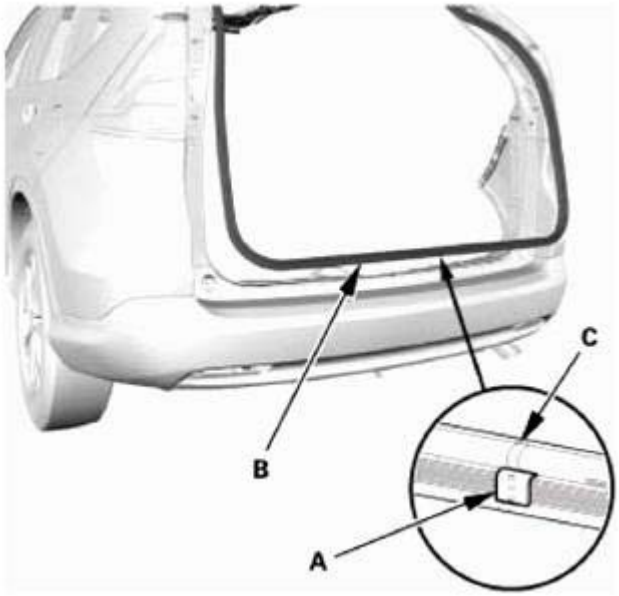

Fig. 408: Identifying Tailgate Weatherstrip And Alignment Marks
Courtesy of AMERICAN HONDA MOTOR CO., INC.

24. Cargo Floor Cover
    1. Install the cargo floor cover (A).

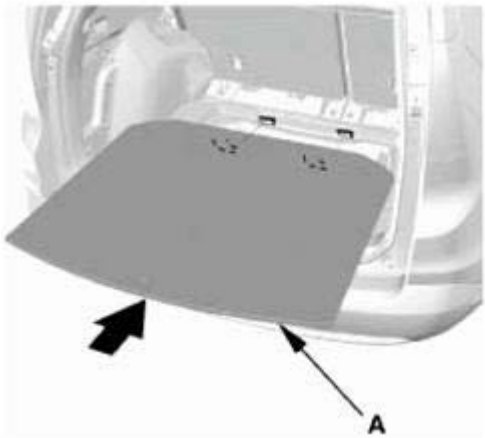

Fig. 409: Installing Cargo Floor Cover
Courtesy of AMERICAN HONDA MOTOR CO., INC.

25. Tonneau Cover (For Some Models)
    1. Install the tonneau cover (A).

GETtheMANUALS.org

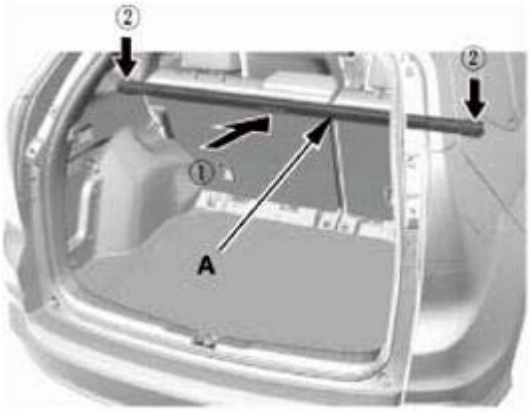

Fig. 410: Installing Tonneau Cover
Courtesy of AMERICAN HONDA MOTOR CO., INC.

26. B-Pillar Upper/Lower Trim - Check
    1. If the side curtain airbag has deployed, replace the B-pillar upper trim (A) and the B-pillar lower trim (B), along with the other parts listed for side curtain airbag deployment.
    2. If the side curtain airbag has not deployed, check the B-pillar upper/lower trim and note the following items:
        - To prevent the side curtain airbags from deploying improperly and possibly causing injury, inspect the trim and replace it with a new one if it has any of the following damage:
            - Any cracks or deformations in the B-pillar upper trim or the upper hooks (C), or any stress-whitened areas in the upper part of the trim
            - Any cracks or deformations in the B-pillar lower trim, or any breakages in the part (D) fitted with the B-pillar upper trim
            - Any cracks or stress-whitening areas in the clip seating surfaces (E)
        - If the clips (F) are damaged or stress-whitened, replace them with new ones.

Trim inspection

GETtheMANUALS.org

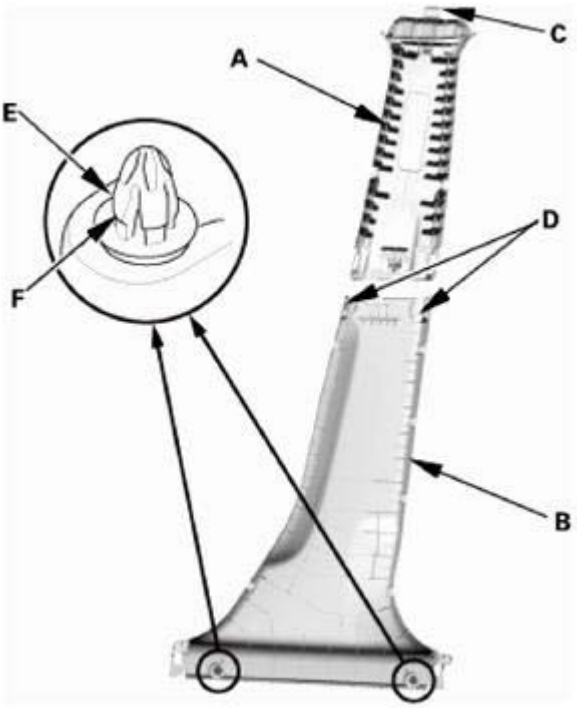

Fig. 411: Identifying B-Pillar Upper/Lower Trim And Related Components
Courtesy of AMERICAN HONDA MOTOR CO., INC.

27. Headliner/Pillar Trim Overlap - Check

Checking and Adjusting the Headliner/Pillar Trim Overlap

To prevent the side curtain airbag from deploying and damaging the pillar trim (A-pillar trim, B-pillar trim, quarter pillar trim), the overlap between the headliner and pillar trim must be 8.0+0/-2.0 mm (0.31+0/-0.08 in). To check the overlap, do this:

1. Install the headliner (A) and the pillar trim (B).

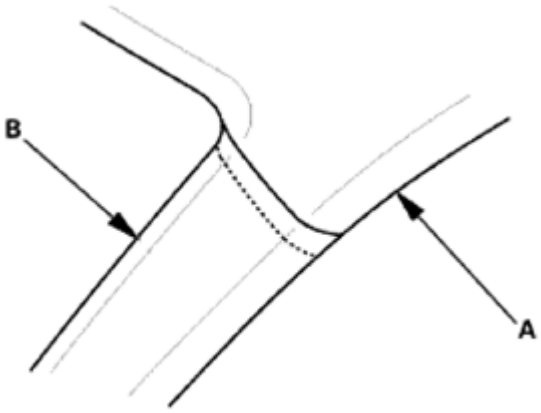

This illustration shows the A-pillar.

GETtheMANUALS.org

Fig. 412: Identifying Headliner And Pillar Trim
Courtesy of AMERICAN HONDA MOTOR CO., INC.

2. Apply masking tape (A) to the headliner (B) to mark the upper edge of the pillar trim (C).

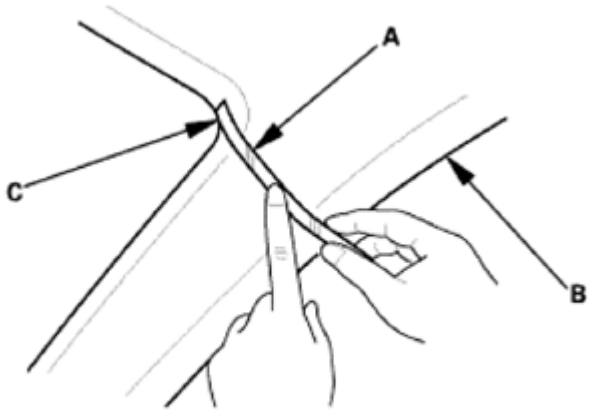

This illustration shows the A-pillar.

Fig. 413: Applying Mask Tape To Headliner
Courtesy of AMERICAN HONDA MOTOR CO., INC.

3. Remove the pillar trim, and measure the headliner overlap.
   - If the overlap is 8.0+0/-2.0 mm (0.31+0/-0.08 in), remove the tape, and install the pillar trim.
   - If the overlap is more than 8.0 mm (0.31 in), go to step 4.

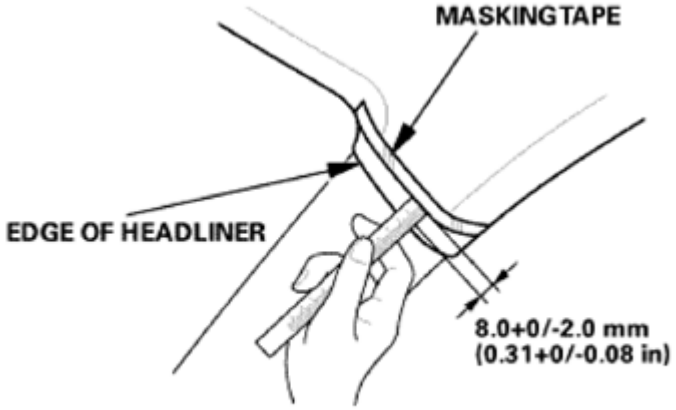

This illustration shows the A-pillar.

Fig. 414: Measuring Headliner Overlap
Courtesy of AMERICAN HONDA MOTOR CO., INC.

4. Carefully trim the headliner with a utility knife, reducing the overlap to 8.0+0/-2.0 mm (0.31+0/-0.08 in).
5. Remove the tape, and install the pillar trim.

GETtheMANUALS.org

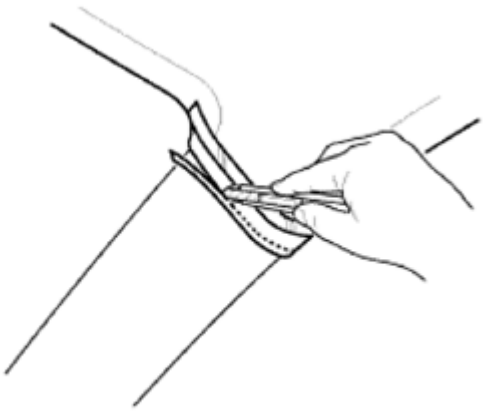

This illustration shows the A-pillar.

Fig. 415: Triming Headliner Using Utility Knife
Courtesy of AMERICAN HONDA MOTOR CO., INC.

28. B-Pillar Upper Trim - Both Sides

NOTE: Repeat this procedure on the opposite side.

1. Install the upper hook (A) of the B-pillar upper trim (B) to the hole in the body. Push the bottom portion of the B-pillar upper trim to install the lower hooks (C). Make sure the hooks snap into place securely.

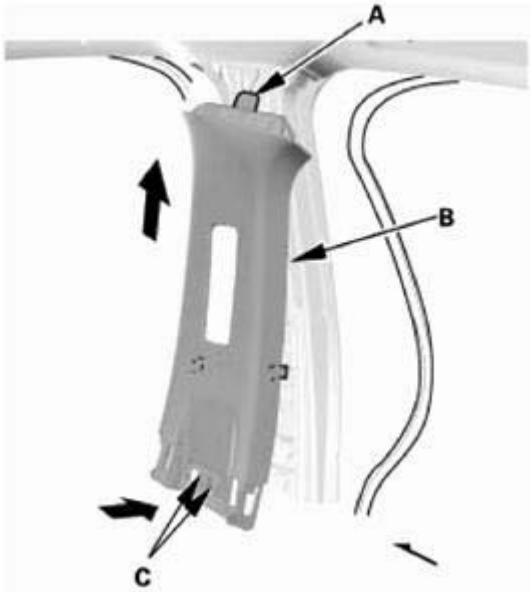

Fig. 416: Installing Upper Hook Of B-Pillar Upper Trim
Courtesy of AMERICAN HONDA MOTOR CO., INC.

29. Front Seat Belt Upper Anchor Bolt - Both Sides

GETtheMANUALS.org

NOTE: **Repeat this procedure on the opposite side.**

1. Install the front seat belt upper anchor bolt, then install the front seat belt shoulder anchor adjuster cap (A).

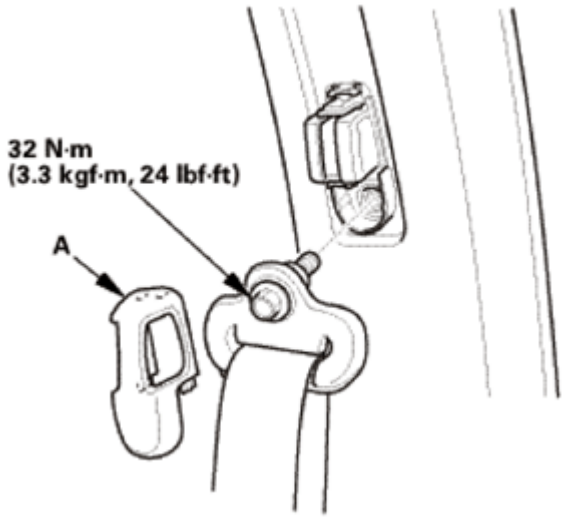

Fig. 417: Identifying Front Seat Belt Shoulder Anchor Adjuster Cap With Torque Specifications
Courtesy of AMERICAN HONDA MOTOR CO., INC.

30. B-Pillar Lower Trim - Both Sides

NOTE: **Repeat this procedure on the opposite side.**

1. Install the B-pillar lower trim (A). Make sure the clips (B) and the hooks (C) snap into place securely.

GETtheMANUALS.org

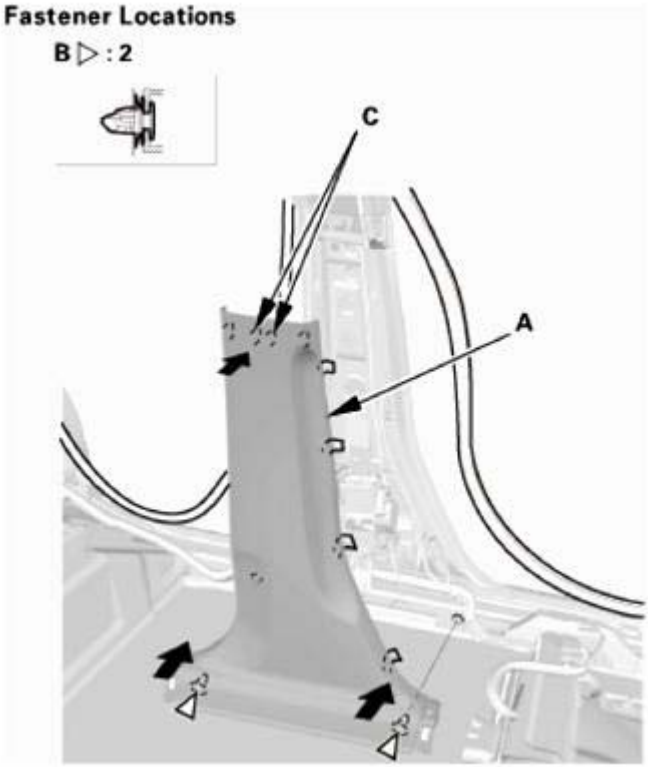

Fig. 418: Installing B-Pillar Lower Trim
Courtesy of AMERICAN HONDA MOTOR CO., INC.

31. Rear Door Opening Seal As Needed - Both Sides

NOTE: Repeat this procedure on the opposite side.

1. Install the rear door opening seal (A). Make sure the seal is installed securely into the hooks (B).

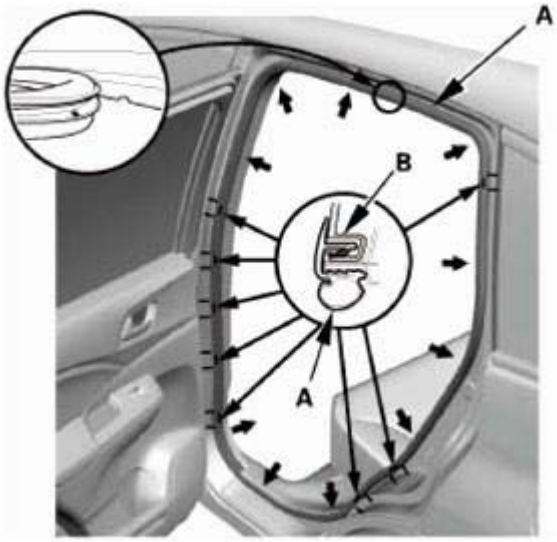

GETtheMANUALS.org

Fig. 419: Installing Rear Door Opening Seal
Courtesy of AMERICAN HONDA MOTOR CO., INC.

32. Rear Door Sill Trim - Both Sides

NOTE: Repeat this procedure on the opposite side.

1. Pull the release strap to fold down the rear seat, then lift-up and latch the rear seat-back in the upright position.
2. Install the rear door inner sill trim (A). Make sure the clips (B, C), the hooks (D), and the tab (E) snap into place securely.

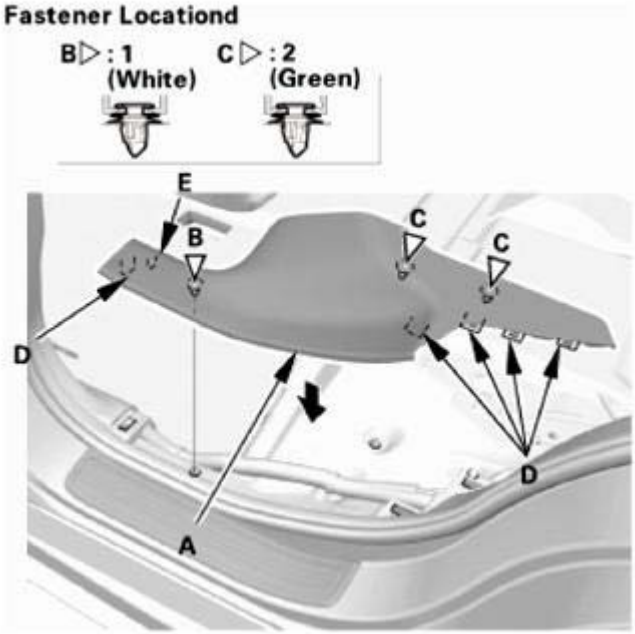

Fig. 420: Removing Rear Door Inner Sill Trim
Courtesy of AMERICAN HONDA MOTOR CO., INC.

33. A-Pillar Trim - Check
    1. If the side curtain airbag has deployed, replace the A-pillar trim (A), along with the other parts listed for side curtain airbag deployment.
    2. If the side curtain airbag has not deployed, check the A-pillar trim and note the following items:
        - To prevent the side curtain airbags from deploying improperly and possibly causing injury, inspect the A-pillar trim and replace it with a new one if it has any of the following damage:
            - Any cracks, deformations, or stress-whitened areas in the A-pillar trim
            - Any cracks or stress-whitening in the clip seating surfaces (B)
        - After checking and adjusting the overlap between the headliner and the A-pillar trim, replace the upper clip (C) with a new one.
        - If the clips (D) are damaged or stress-whitened, replace them with new ones.

GETtheMANUALS.org

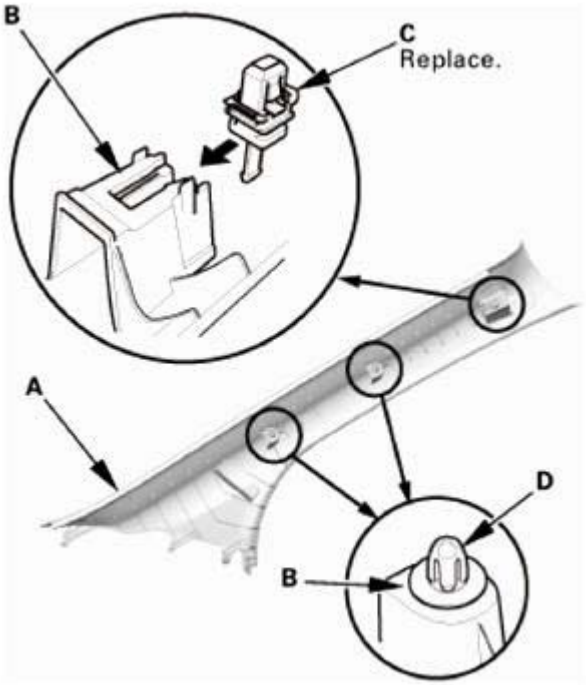

Fig. 421: Identifying Headliner And Pillar Trim
Courtesy of AMERICAN HONDA MOTOR CO., INC.

34. Headliner/Pillar Trim Overlap - Check

Checking and Adjusting the Headliner/Pillar Trim Overlap

To prevent the side curtain airbag from deploying and damaging the pillar trim (A-pillar trim, B-pillar trim, quarter pillar trim), the overlap between the headliner and pillar trim must be 8.0+0/-2.0 mm (0.31+0/-0.08 in). To check the overlap, do this:

1. Install the headliner (A) and the pillar trim (B).

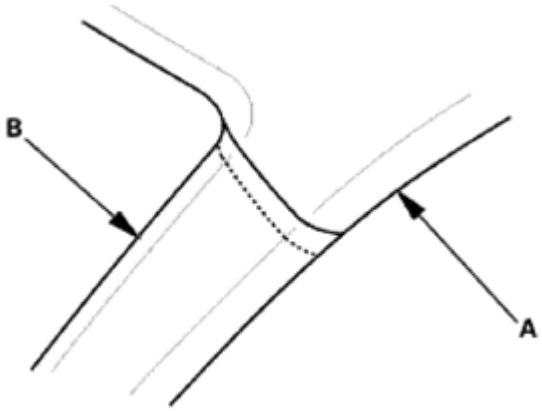

This illustration shows the A-pillar.

GETtheMANUALS.org

Fig. 422: Identifying Headliner And Pillar Trim
Courtesy of AMERICAN HONDA MOTOR CO., INC.

2. Apply masking tape (A) to the headliner (B) to mark the upper edge of the pillar trim (C).

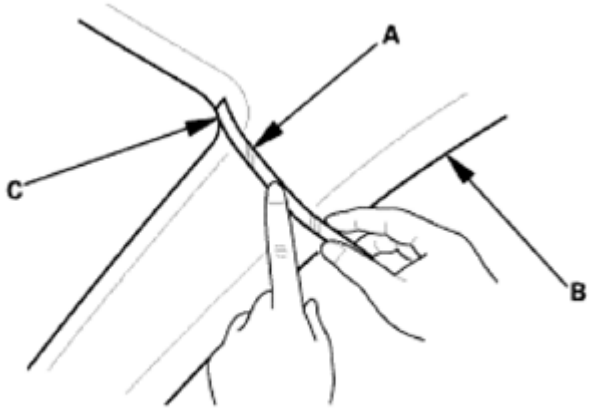

This illustration shows the A-pillar.

Fig. 423: Applying Mask Tape To Headliner
Courtesy of AMERICAN HONDA MOTOR CO., INC.

3. Remove the pillar trim, and measure the headliner overlap.
   - If the overlap is 8.0+0/-2.0 mm (0.31+0/-0.08 in), remove the tape, and install the pillar trim.
   - If the overlap is more than 8.0 mm (0.31 in), go to step 4.

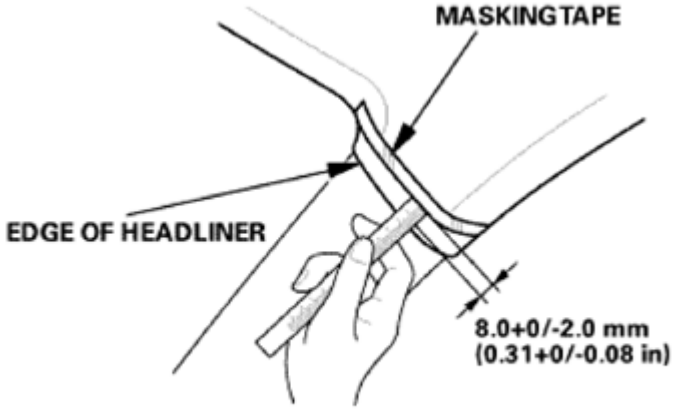

This illustration shows the A-pillar.

Fig. 424: Measuring Headliner Overlap
Courtesy of AMERICAN HONDA MOTOR CO., INC.

4. Carefully trim the headliner with a utility knife, reducing the overlap to 8.0+0/-2.0 mm (0.31+0/-0.08 in).
5. Remove the tape, and install the pillar trim.

GETtheMANUALS.org

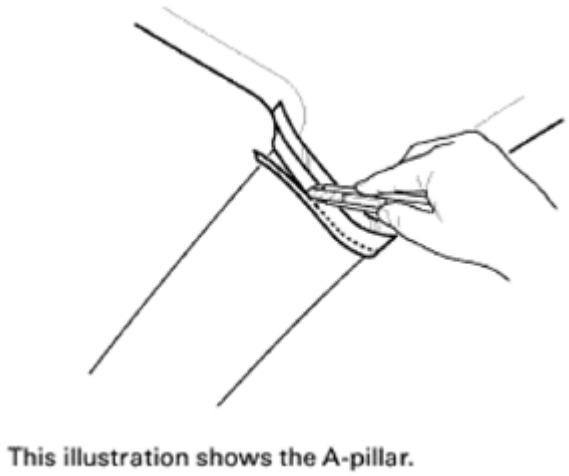

Fig. 425: Triming Headliner Using Utility Knife
Courtesy of AMERICAN HONDA MOTOR CO., INC.

35. A-Pillar Trim - Both Sides

NOTE: Repeat this procedure on the opposite side.

1. Carefully install a new upper clip (A) to the A-pillar trim (B).

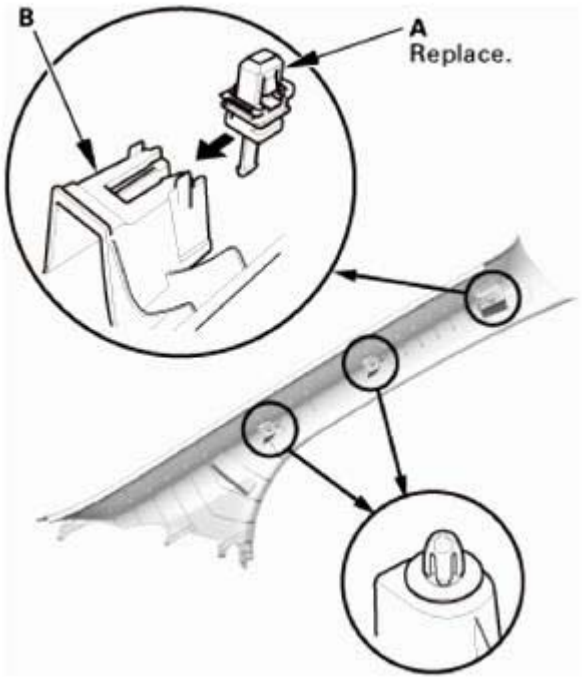

Fig. 426: Installing Upper Clip To A-Pillar Trim
Courtesy of AMERICAN HONDA MOTOR CO., INC.

2. Insert the bottom portion of the A-pillar trim (A) into the dashboard (B). Place the trim over the A-

GETtheMANUALS.org

pillar (C), and fit its upper clip (D) and the other clips (E) into the holes (F) in the A-pillar, then lightly push the trim into place.

NOTE:

- **Make sure the side curtain airbag is not tucked under the clips or the trim ribs.**
- **Do not push too hard on the A-pillar trim. If you push too hard, the clip will be damaged, and it will not hold the trim properly.**
- **Gently tug on the A-pillar trim to verify that all clips are securely fastened.**

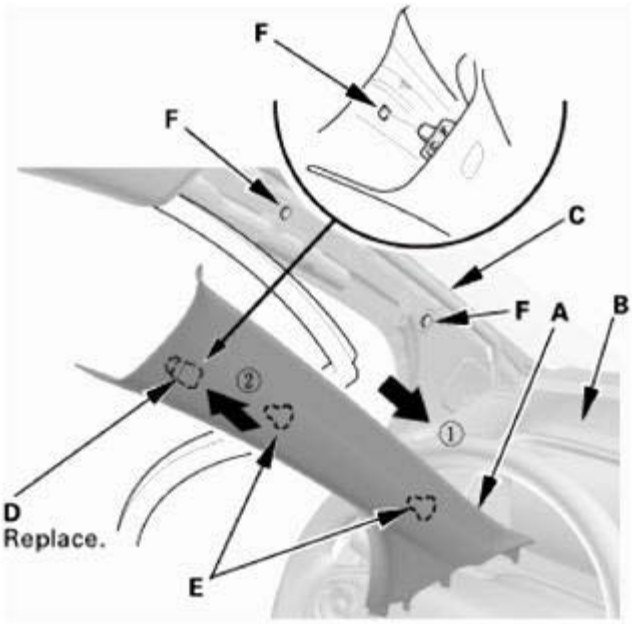

Fig. 427: Inserting Bottom Portion Of A-Pillar Trim Into Dashboard
Courtesy of AMERICAN HONDA MOTOR CO., INC.

36. Front Door Opening Seal As Needed - Both Sides

NOTE: **Repeat this procedure on the opposite side.**

1. Install the front door opening seal (A). Make sure the seal is installed securely into the hooks (B).

GETtheMANUALS.org

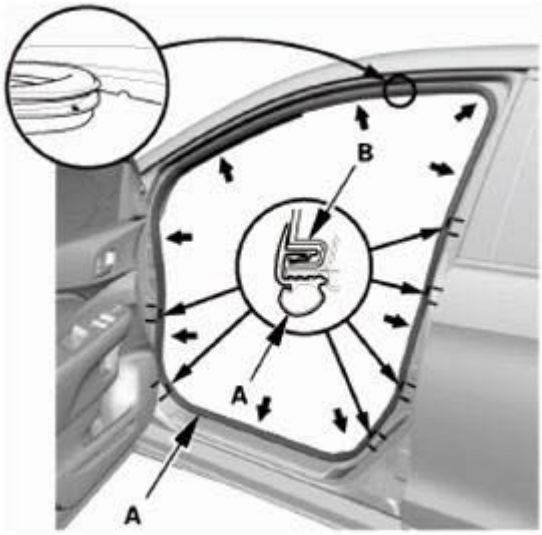

Fig. 428: Inserting Bottom Portion Of A-Pillar Trim Into Dashboard
Courtesy of AMERICAN HONDA MOTOR CO., INC.

37. Front Door Sill Trim - Both Sides

NOTE: Repeat this procedure on the opposite side.

1. Install the front door inner sill trim (A). Make sure the clips (B), the hooks (C), and the tabs (D) snap into place securely.

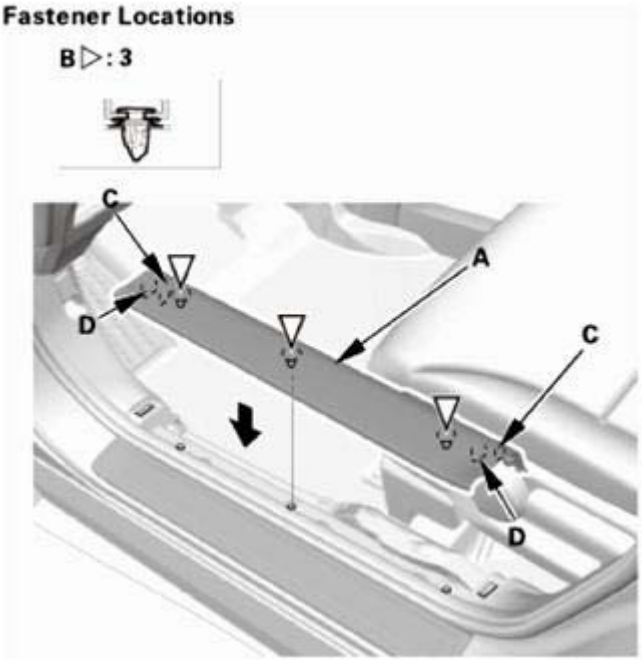

Fig. 429: Identifying Front Door Sill Trim, Hooks, Tabs And Clips
Courtesy of AMERICAN HONDA MOTOR CO., INC.

GETtheMANUALS.org

38. Battery Terminal (SRS) - Reconnection

NOTE: If the battery performance is abnormal, test the battery.

1. Clean the battery terminals.
2. Connect the positive cable (A) to the battery.

NOTE: Always connect the positive side first.

3. Connect the negative cable (B) to the battery.
4. Apply multipurpose grease to the terminals to prevent corrosion.

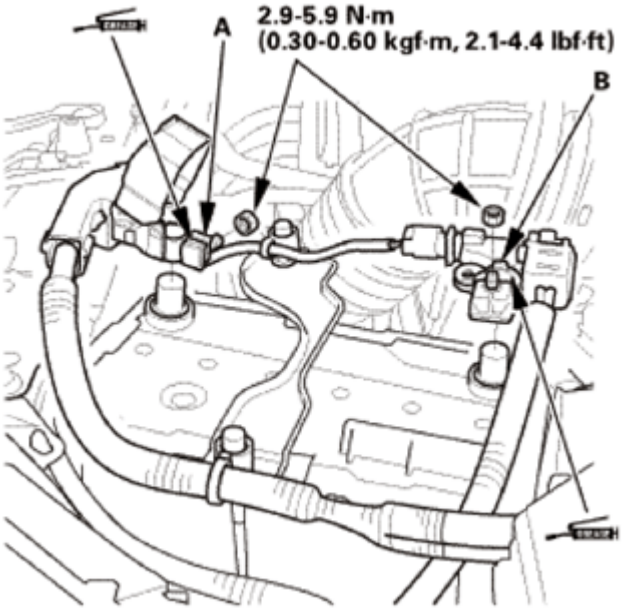

Fig. 430: Identifying Battery Positive And Negative Cable With Torque Specifications
Courtesy of AMERICAN HONDA MOTOR CO., INC.

39. Moon Roof Control Unit - Reset
    1. **DO THE MOON ROOF CONTROL UNIT RESETTING PROCEDURE**.

MOONROOF SUNSHADE REMOVAL AND INSTALLATION

REMOVAL

1. Moonroof Link Cover - Both Sides

NOTE: Repeat on the opposite side.

1. Carefully pry out the cover (A), then remove the screw (B).

GETtheMANUALS.org

2. Remove the moonroof link cover (C).

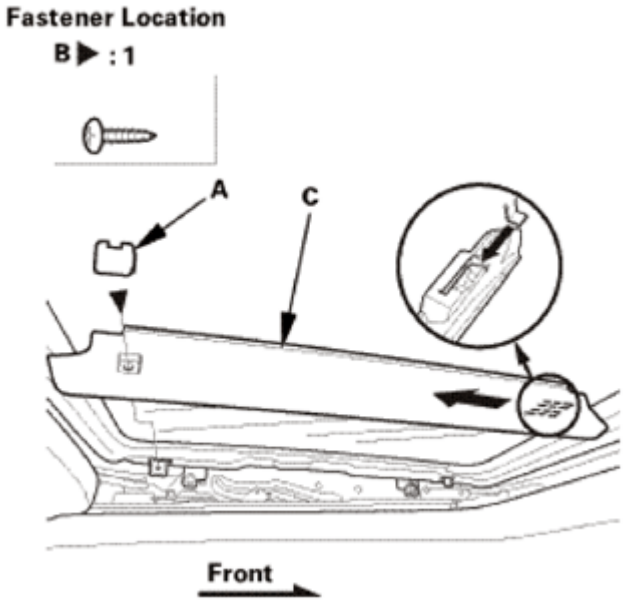

Fig. 431: Removing Moonroof Link Cover
Courtesy of AMERICAN HONDA MOTOR CO., INC.

2. Moonroof Glass
    1. Remove the TORX screws (A) with a TORX T25 bit from the glass brackets (B) on both sides.

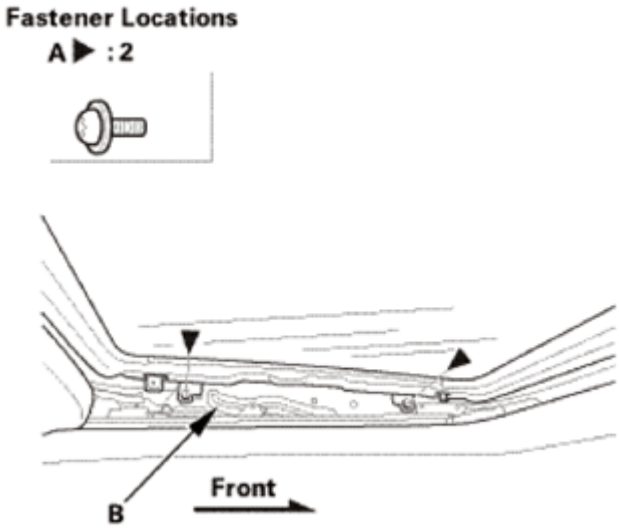

Fig. 432: Identifying Moonroof Glass Bracket And Screws
Courtesy of AMERICAN HONDA MOTOR CO., INC.

2. Remove the moonroof glass (A) by lifting it up. Do not damage the roof panel.

GETtheMANUALS.org

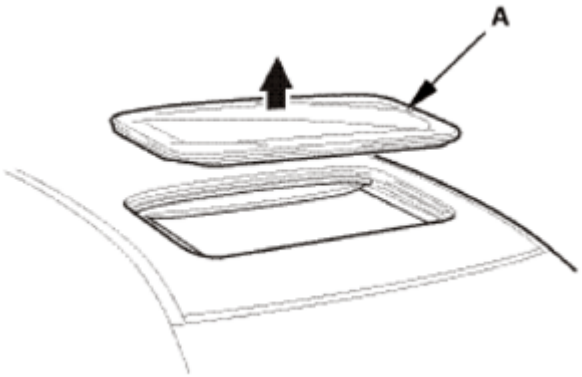

Fig. 433: Removing Moonroof Glass
Courtesy of AMERICAN HONDA MOTOR CO., INC.

3. Drain Channel
    1. On both sides, slide the glass brackets (A) with the moonroof switch to the position where the moonroof normally tilts up.
    2. Disconnect the drain channel rods (B).

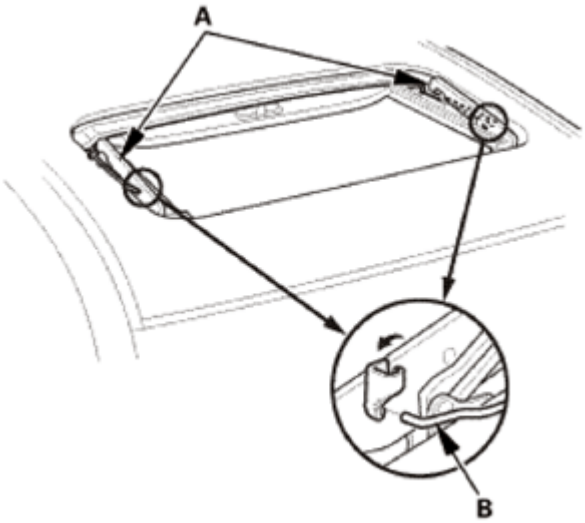

Fig. 434: Disconnecting Drain Channel Rods And Glass Bracket
Courtesy of AMERICAN HONDA MOTOR CO., INC.

    3. Slide the drain channel (A) forward.

GETtheMANUALS.org

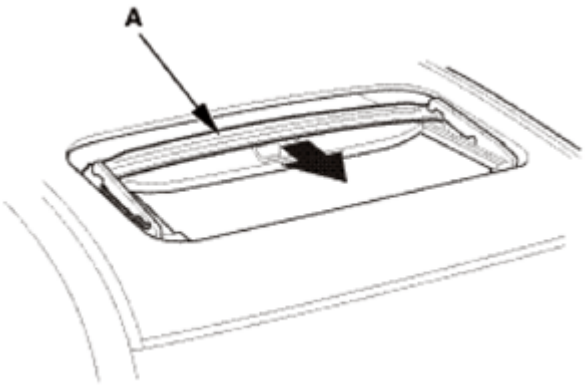

Fig. 435: Sliding Drain Channel
Courtesy of AMERICAN HONDA MOTOR CO., INC.

4. Pull up the rear edge of the drain channel (A) while pushing both clips (B), and release the channel from both hooks (C) of the drain channel slider by pulling it rearward.
5. Remove the drain channel.

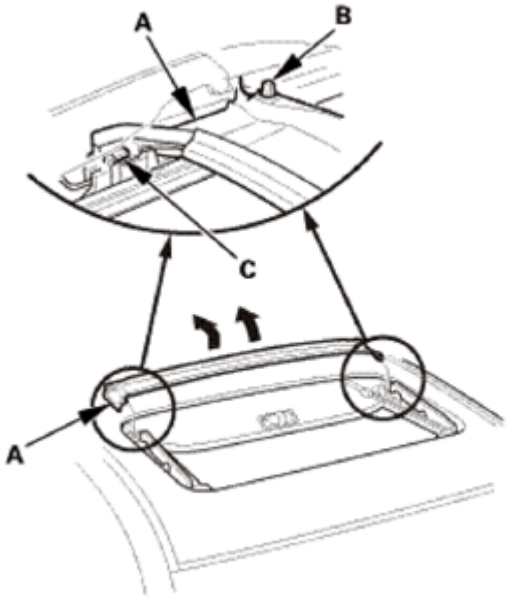

Fig. 436: Removing Drain Channel
Courtesy of AMERICAN HONDA MOTOR CO., INC.

4. Moonroof Sunshade
    1. Slide the sunshade (A) until you can see both sunshade slider spacers (B).
    2. Remove the screws (C), then remove both sunshade slider spacers.

GETtheMANUALS.org

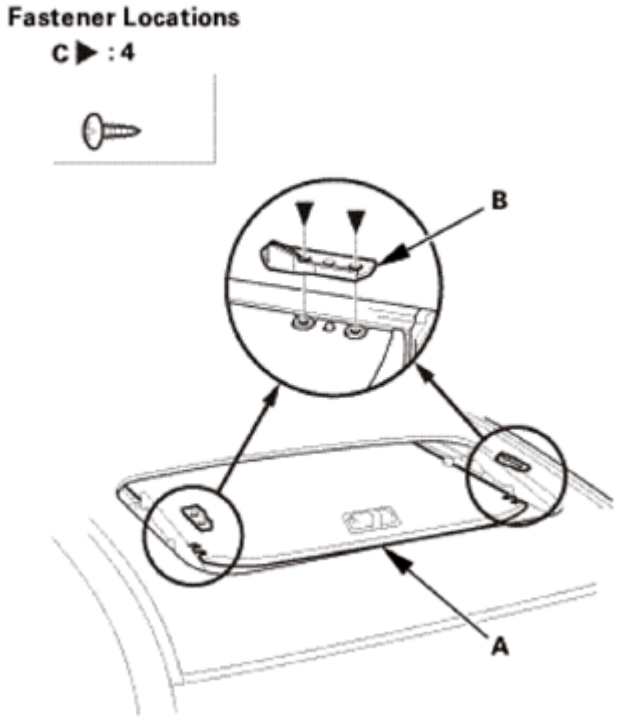

Fig. 437: Identifying Moonroof Sunshade, Slider Spacers And Screws
Courtesy of AMERICAN HONDA MOTOR CO., INC.

3. While lifting the front portion of the sunshade (A), move the sunshade forward until you can see both sunshade rear hooks (B). Do not damage the sunshade or the hooks.
4. Remove the screws (C), then remove both hooks.

GETtheMANUALS.org

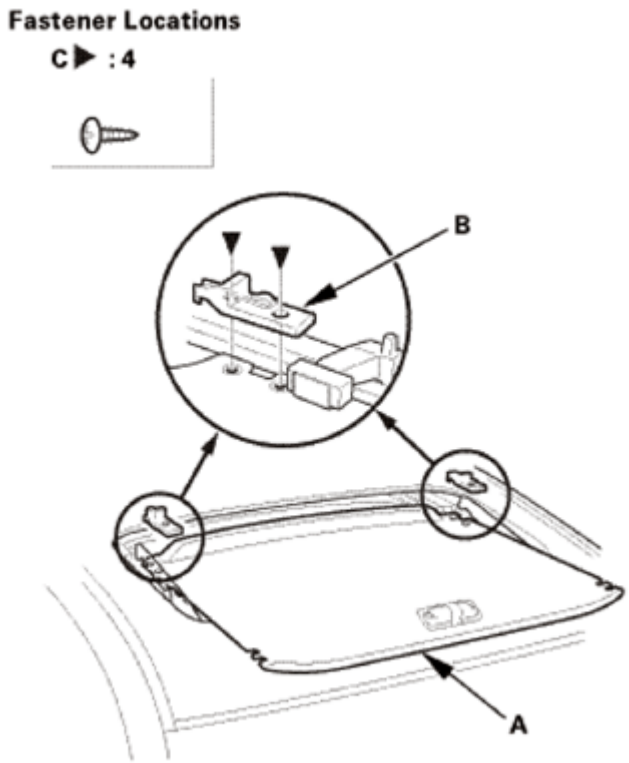

Fig. 438: Identifying Moonroof Sunshade, Rear Hooks And Screws
Courtesy of AMERICAN HONDA MOTOR CO., INC.

5. Remove the sunshade (A).

Fig. 439: Removing Moonroof Sunshade
Courtesy of AMERICAN HONDA MOTOR CO., INC.

6. Remove both front sunshade base sliders (A) and both rear sunshade base sliders (B).

GETtheMANUALS.org

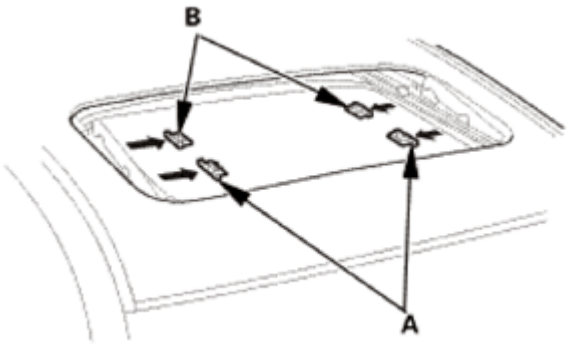

Fig. 440: Removing Front And Rear Sunshade Base Sliders
Courtesy of AMERICAN HONDA MOTOR CO., INC.

5. Sunshade Handle
    1. If necessary, remove the screws (A), then remove the sunshade handle (B).

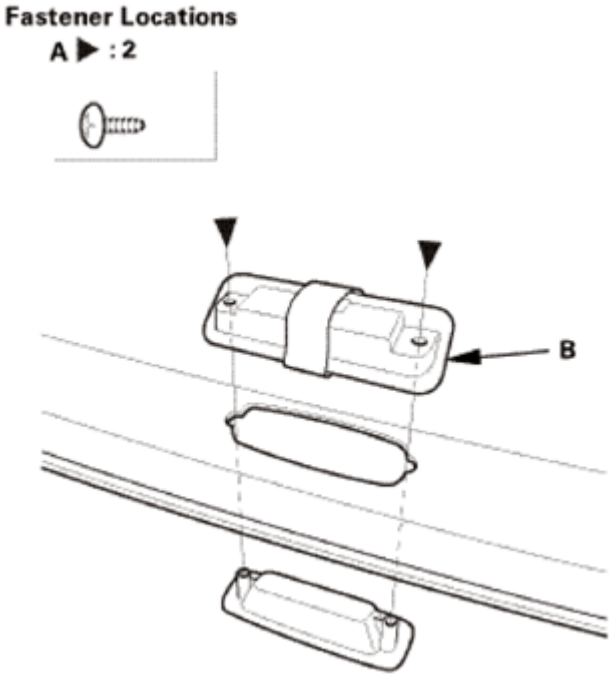

Fig. 441: Identifying Sunshade Handle And Screws
Courtesy of AMERICAN HONDA MOTOR CO., INC.

INSTALLATION

1. Sunshade Handle
    1. Install the sunshade handle (A), then install the screws (B).

GETtheMANUALS.org

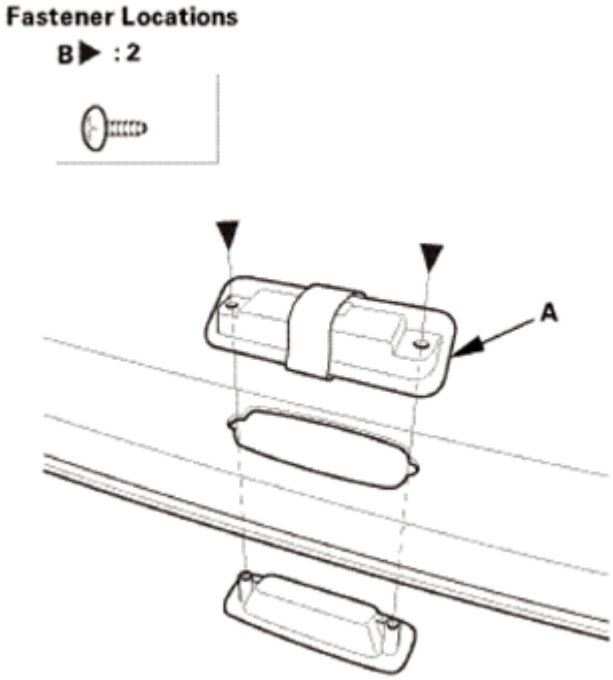

Fig. 442: Identifying Sunshade Handle And Screws
Courtesy of AMERICAN HONDA MOTOR CO., INC.

2. Moonroof Sunshade
    1. Install both front moonroof sunshade base sliders (A) and both rear moonroof sunshade base sliders (B).

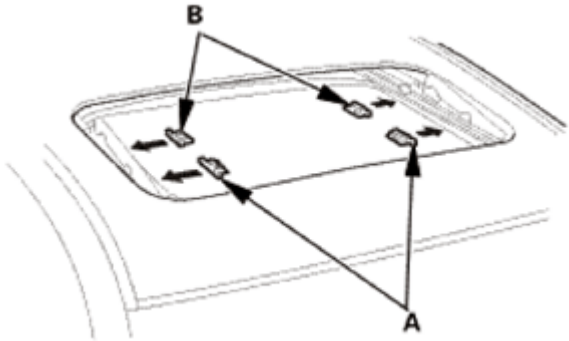

Fig. 443: Installing Front And Rear Moonroof Sunshade Base Sliders
Courtesy of AMERICAN HONDA MOTOR CO., INC.

    2. Install the moonroof sunshade (A).

GETtheMANUALS.org

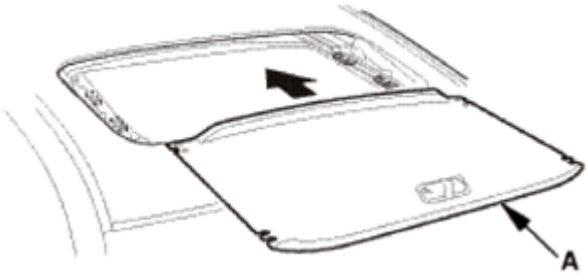

Fig. 444: Installing Moonroof Sunshade
Courtesy of AMERICAN HONDA MOTOR CO., INC.

3. Install both moonroof sunshade rear hooks (A), then install the screws (B).

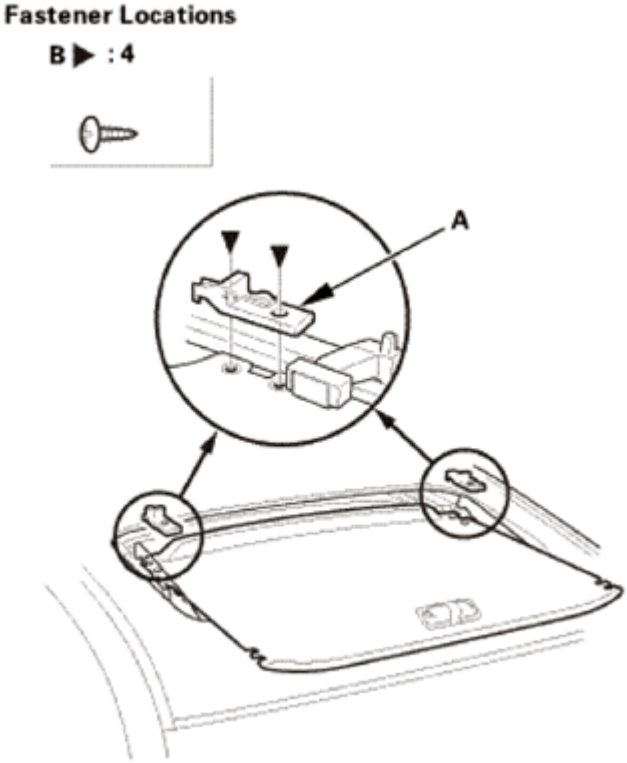

Fig. 445: Identifying Moonroof Sunshade Rear Hooks And Screws
Courtesy of AMERICAN HONDA MOTOR CO., INC.

4. Install both moonroof sunshade slider spacers (A), then install the screws (B).

GETtheMANUALS.org

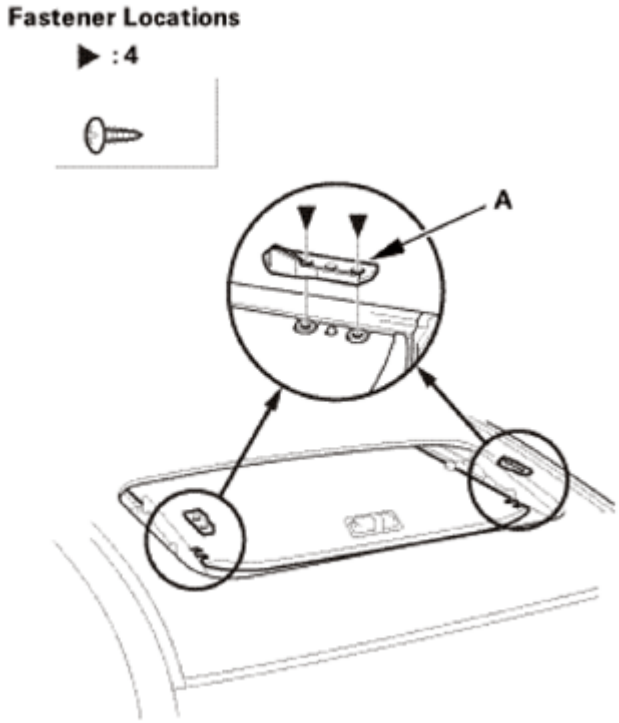

Fig. 446: Identifying Moonroof Sunshade Slider Spacers And Screws
Courtesy of AMERICAN HONDA MOTOR CO., INC.

3. Drain Channel
    1. Install the drain channel (A).

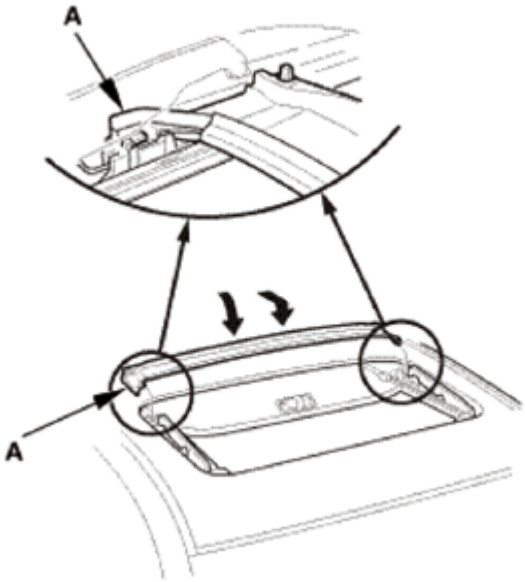

Fig. 447: Installing Drain Channel
Courtesy of AMERICAN HONDA MOTOR CO., INC.

GETtheMANUALS.org

2. Slide the drain channel (A) rearward.

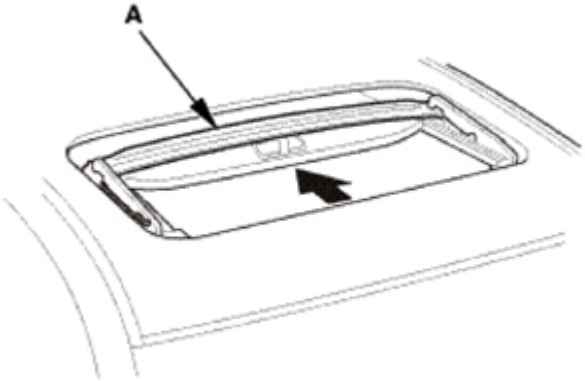

Fig. 448: Sliding Drain Channel
Courtesy of AMERICAN HONDA MOTOR CO., INC.

3. Connect the drain channel rods (A).
4. Tilt down the glass bracket (B).

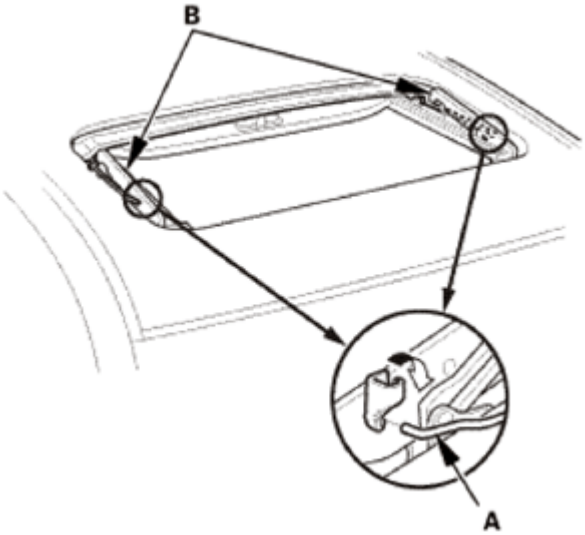

Fig. 449: Tilting Down Glass Bracket
Courtesy of AMERICAN HONDA MOTOR CO., INC.

4. Moonroof Glass
    1. Install the moonroof glass (A).

GETtheMANUALS.org

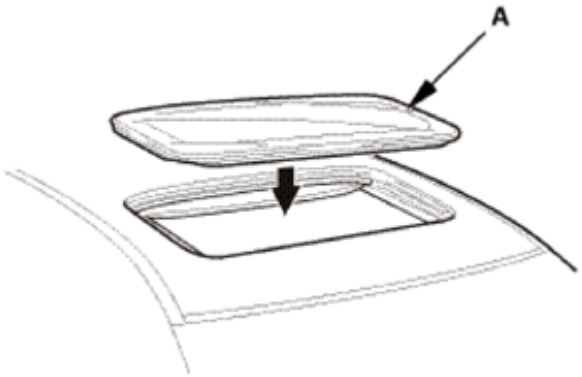

Fig. 450: Installing Moonroof Glass
Courtesy of AMERICAN HONDA MOTOR CO., INC.

2. Install the TORX screws (A).
3. Repeat on the opposite side.

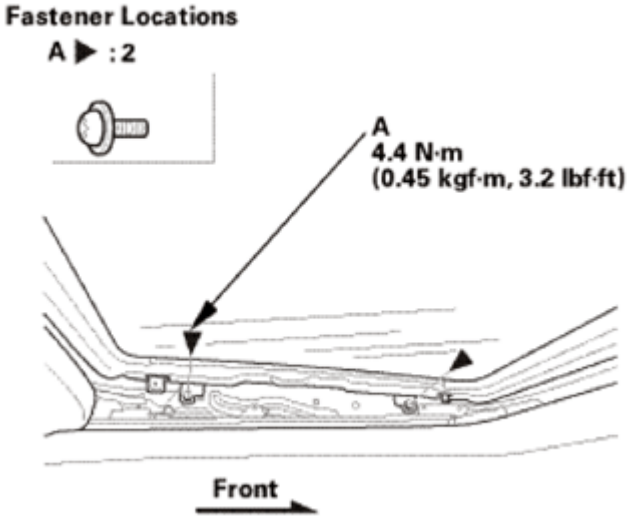

Fig. 451: Identifying Moonroof Glass And Torx Screws With Torque Specification
Courtesy of AMERICAN HONDA MOTOR CO., INC.

5. Moonroof Glass - Position Check

   The roof panel (A) should be even with the glass weatherstrip (B), to within 0+1/-1 mm (0+0.04/-0.04 in) all the way around.

GETtheMANUALS.org

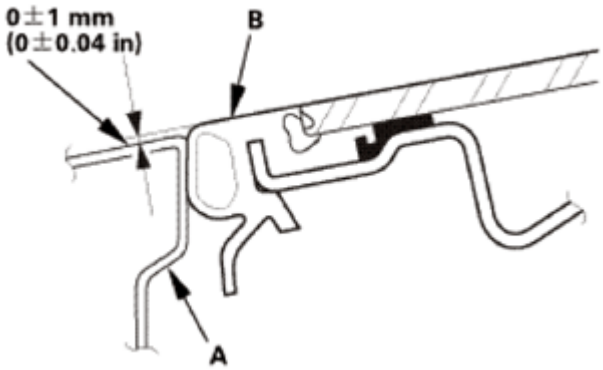

Fig. 452: Identifying Roof Panel And Glass Weatherstrip
Courtesy of AMERICAN HONDA MOTOR CO., INC.

6. Moonroof Glass - Position Adjustment
    1. Slightly loosen the TORX screws with a TORX T25 bit.
    2. Move the glass (A) up or down and forward or rearward.
    3. Tighten all screws securely.
    4. If necessary, repeat on the opposite side.

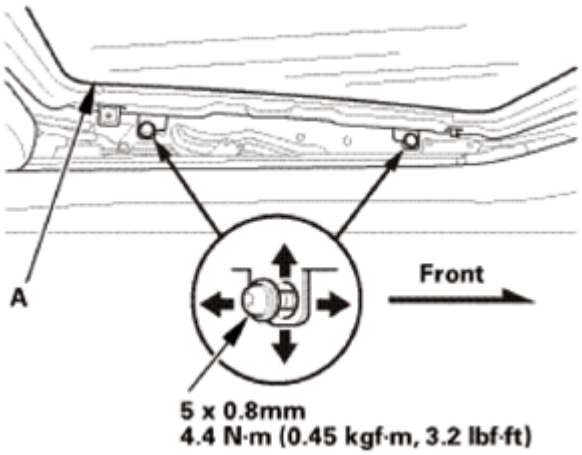

Fig. 453: Moving Moonroof Glass And Mounting Bolts With Torque Specifications
Courtesy of AMERICAN HONDA MOTOR CO., INC.

7. Moonroof Link Cover - Both Sides

NOTE: Repeat on the opposite side

1. Install the moonroof link cover (A), then install the screw (B).
2. Install the cover (C).

GETtheMANUALS.org

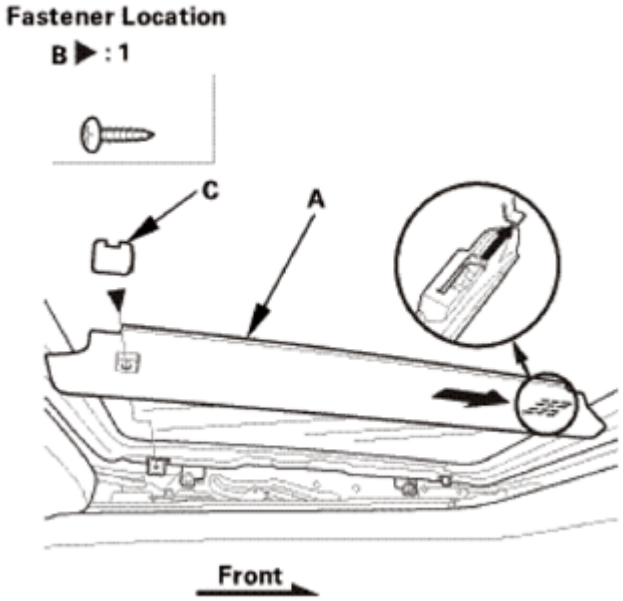

Fig. 454: Installing Moonroof Link Cover
Courtesy of AMERICAN HONDA MOTOR CO., INC.

8. Moon Roof Control Unit - Reset
    1. **DO THE MOON ROOF CONTROL UNIT RESETTING PROCEDURE**.

MOONROOF SWITCH REMOVAL, INSTALLATION, AND TEST

REMOVAL

1. Front Individual Map Light (with moonroof)
    1. Turn the front individual map light switch OFF.
    2. Carefully pry off the lenses (A) with a flat-tip screwdriver.
    3. Remove the bulbs.
    4. Remove the front individual map light (B).
    5. Disconnect the connectors.

GETtheMANUALS.org

Front Individual Map Light: 8 W

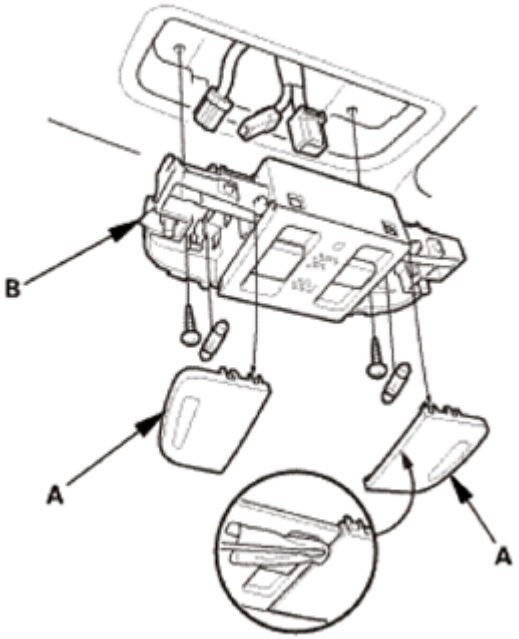

Fig. 455: Prying Off Lenses Using Flat-Tip Screwdriver
Courtesy of AMERICAN HONDA MOTOR CO., INC.

2. Moonroof Switch
    1. Remove the moonroof switch (A).

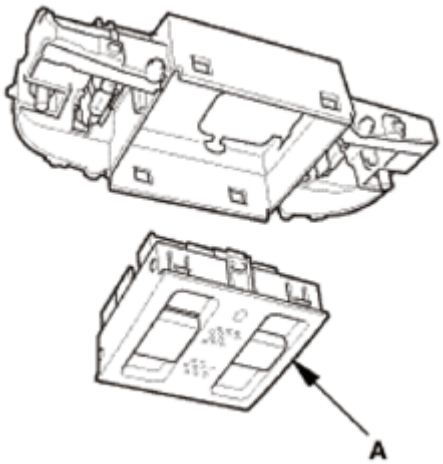

Fig. 456: Identifying Moonroof Switch
Courtesy of AMERICAN HONDA MOTOR CO., INC.

3. Moonroof Switch Bulb
    1. Remove the cover (A), then remove the bulb (B).

GETtheMANUALS.org

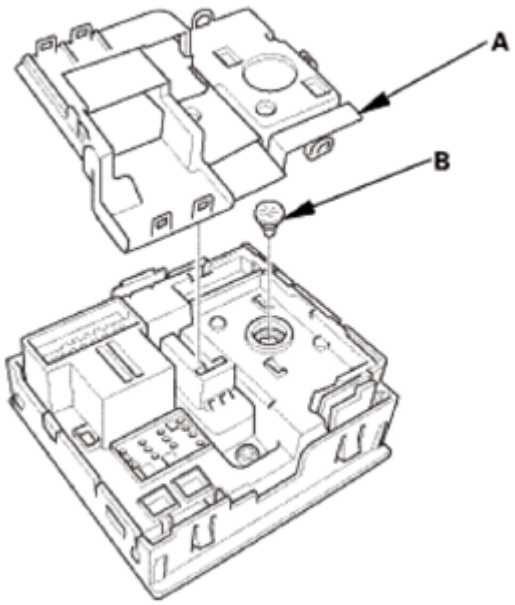

Fig. 457: Identifying Moonroof Switch Bulb And Cover
Courtesy of AMERICAN HONDA MOTOR CO., INC.

TEST

1. Moonroof Switch - Test

NOTE: When doing the moonroof switch test, install the bulb correctly.

1. Check for continuity between the terminals in each switch position according to the table.
2. If the continuity check is not as specified, replace the switch.

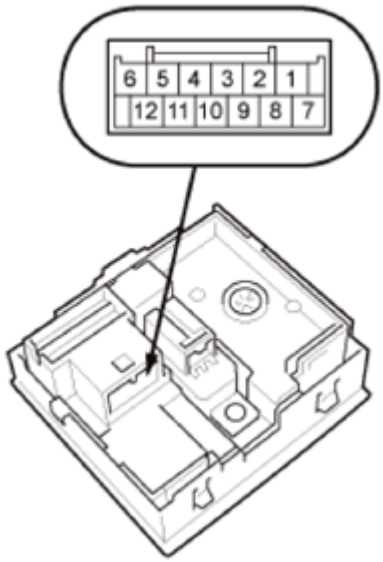

GETtheMANUALS.org

Fig. 458: Identifying Moonroof Switch Connector
Courtesy of AMERICAN HONDA MOTOR CO., INC.

Terminal / Position	1	2	3	9	11	4		5
OPEN	○	○						
CLOSE		○			○			
TILT		○	○			○	⊕	○
CLOSE+AUTO		○		○	○			
OPEN+AUTO	○	○		○				

Fig. 459: Moonroof Switch Continuity Reference Chart
Courtesy of AMERICAN HONDA MOTOR CO., INC.

INSTALLATION

1. Moonroof Switch Bulb
    1. Install the bulb (A) and cover (B).

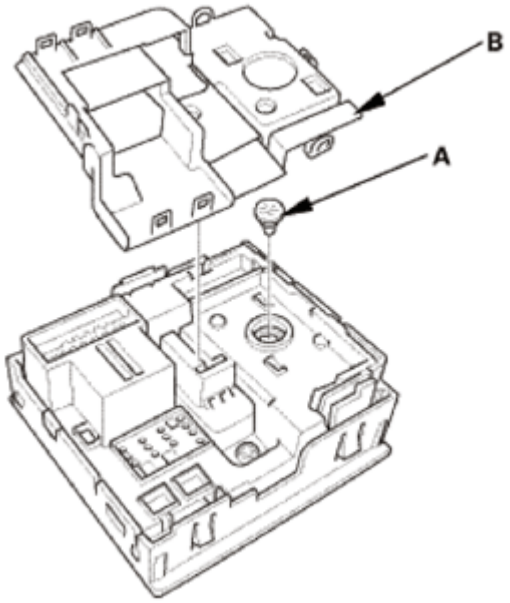

Fig. 460: Identifying Moonroof Switch Bulb And Cover
Courtesy of AMERICAN HONDA MOTOR CO., INC.

2. Moonroof Switch
    1. Install the moonroof switch (A).

GETtheMANUALS.org

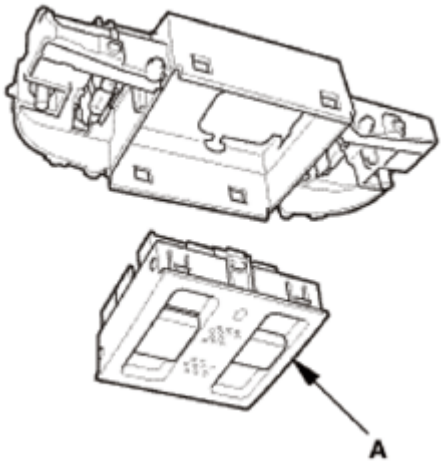

Fig. 461: Identifying Moonroof Switch
Courtesy of AMERICAN HONDA MOTOR CO., INC.

3. Front Individual Map Light (with moonroof)
    1. Connect the connectors.
    2. Install the front individual map lights (A).
    3. Install the bulbs.
    4. Carefully install the lenses (B).

Front Individual Map Light: 8 W

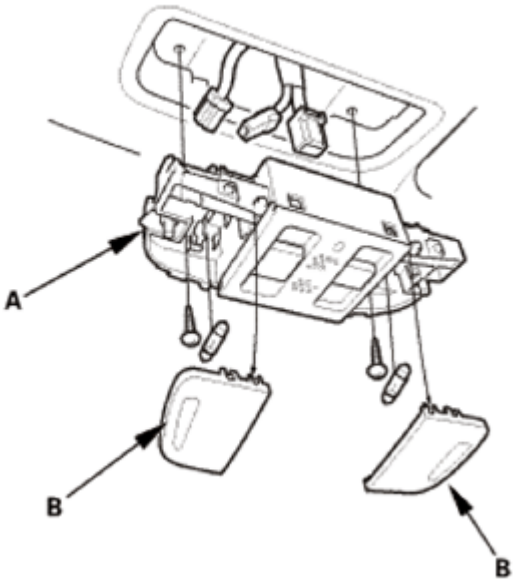

Fig. 462: Identifying Front Individual Map Light And Lenses (With Moonroof)
Courtesy of AMERICAN HONDA MOTOR CO., INC.

MOONROOF WIND DEFLECTOR REMOVAL AND INSTALLATION

GETtheMANUALS.org

REMOVAL

1. Moonroof Deflector
    1. Open the glass fully.
    2. Remove both moonroof wind deflector links (A).

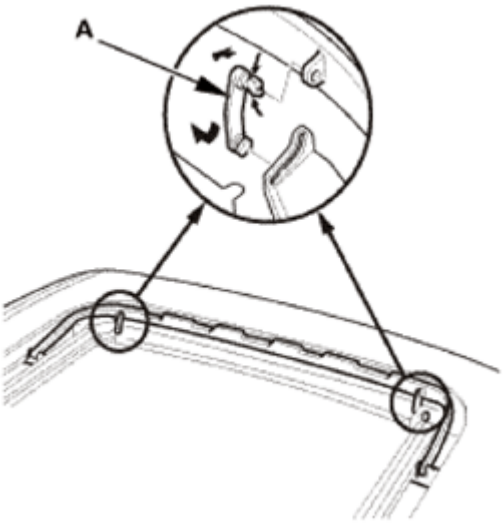

Fig. 463: Removing Moonroof Wind Deflector Links
Courtesy of AMERICAN HONDA MOTOR CO., INC.

3. Remove the moonroof wind deflector (A).

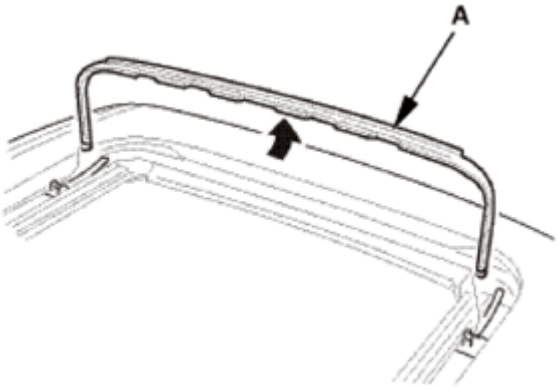

Fig. 464: Removing Moonroof Wind Deflector
Courtesy of AMERICAN HONDA MOTOR CO., INC.

4. Carefully pry up on the moonroof deflector arm bases (A) with a flat-tip screwdriver and release the hooks (B), then remove the bases with the deflector arm springs (C) from both sides.

GETtheMANUALS.org

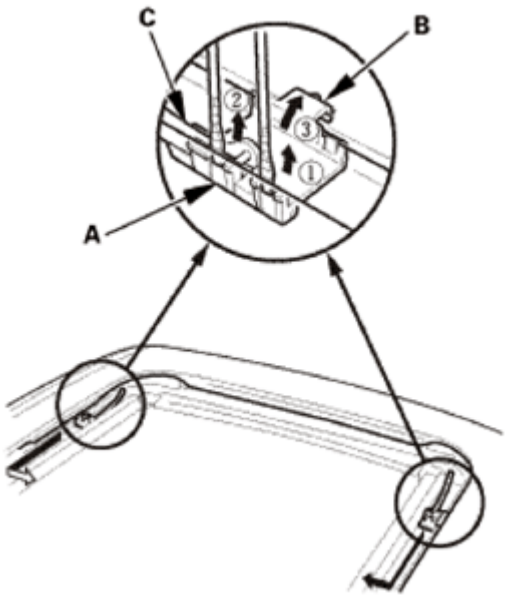

Fig. 465: Removing Bases With Deflector Arm Springs
Courtesy of AMERICAN HONDA MOTOR CO., INC.

INSTALLATION

1. Moonroof Deflector
    1. Install both moonroof wind deflector arm bases (A) until they click into the notch in the rail.

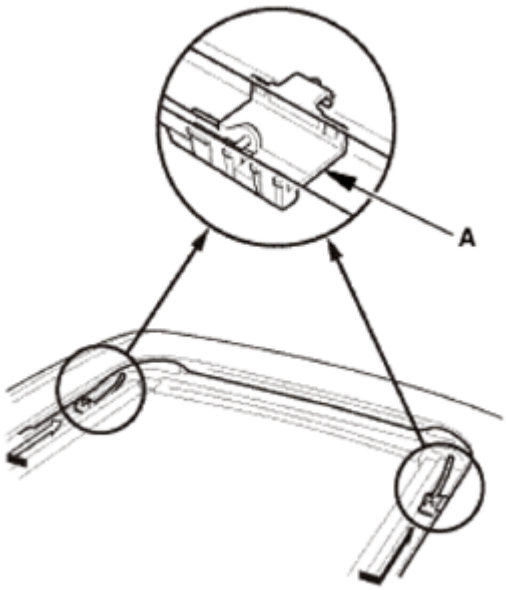

Fig. 466: Identifying Moonroof Wind Deflector Arm Bases
Courtesy of AMERICAN HONDA MOTOR CO., INC.

    2. Install the moonroof wind deflector (A).

GETtheMANUALS.org

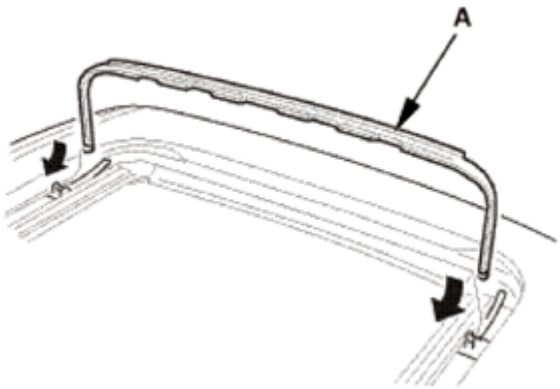

Fig. 467: Installing Moonroof Wind Deflector
Courtesy of AMERICAN HONDA MOTOR CO., INC.

3. Install both moonroof wind deflector links (A).

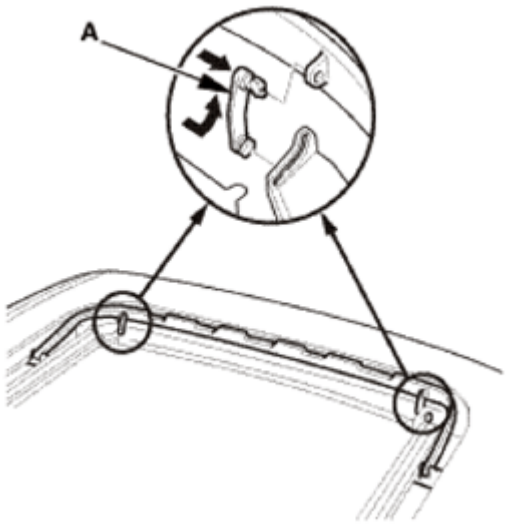

Fig. 468: Installing Moonroof Wind Deflector Links
Courtesy of AMERICAN HONDA MOTOR CO., INC.

RESETTING THE MOONROOF CONTROL UNIT

PROCEDURE

1. Moonroof Control Unit - Reset

   Resetting the moonroof is required when any of the following have occurred:

   - The moonroof stops on the track during AUTO/MANUAL operation.
   - The moonroof does not work by auto operation.
   - The moonroof was moved manually while the battery was dead or disconnected.

GETtheMANUALS.org

- The moonroof motor was removed or replaced with a new one.
- Any of components related to the moonroof were replaced or removed and installed.
  - Wind deflector
  - Moonroof glass
  - Moonroof glass bracket
  - Moonroof frame/Drain channel slider and cable assembly
  - Moonroof cables, etc.

To reset the moonroof control unit, do these steps:

1. Close the driver's door, and leave it closed until the procedure is complete.
2. Turn the ignition switch to LOCK (0).

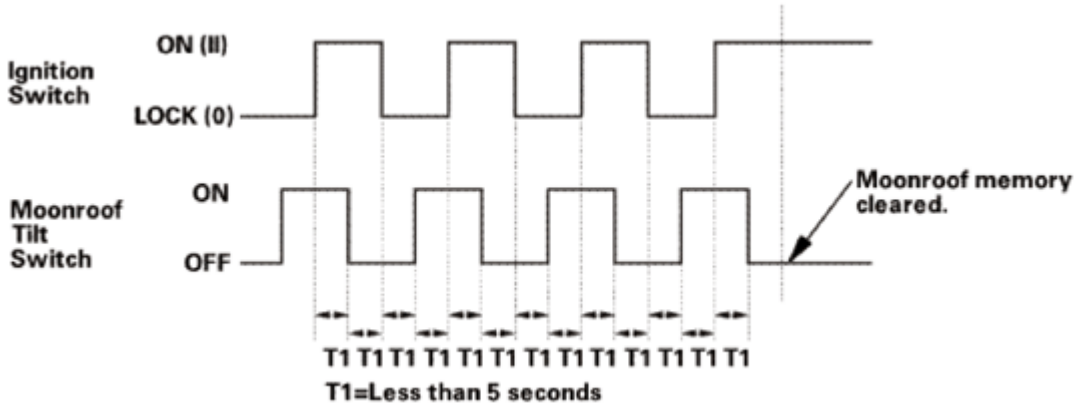

Fig. 469: Ignition Switch And Moonroof Tilt Switch Blinking Pattern
Courtesy of AMERICAN HONDA MOTOR CO., INC.

3. Press and hold the tilt switch, and turn the ignition switch to ON (II).
4. Release the tilt switch, and turn the ignition switch to LOCK (0).
5. Repeat steps 3 and 4 four more times.
6. Check if the AUTO OPEN and AUTO CLOSE function still work. If they still work, the AUTO functions have not been cleared, go back to step 1. If the AUTO functions have been cleared, go to step 7.
7. Press and hold the moonroof close switch until moonroof is fully tilt opened.
8. Confirm that the moonroof control unit is reset by using the moonroof AUTO OPEN and AUTO CLOSE function.

MOONROOF CONTROL UNIT INPUT TEST

NOTE:

- **Before testing, make sure the No. B5 (10 A) fuse in the under-dash fuse/relay box is OK.**
- **If the moonroof works OK manually, but will not work in AUTO, or reverses**

GETtheMANUALS.org

frequently (obstacle detection), RESET THE MOONROOF BEFORE PROCEEDING with the input test.

1. Turn the ignition switch to LOCK (0).
2. **DISCONNECT THE MOONROOF CONTROL UNIT/MOTOR 14P CONNECTOR**.

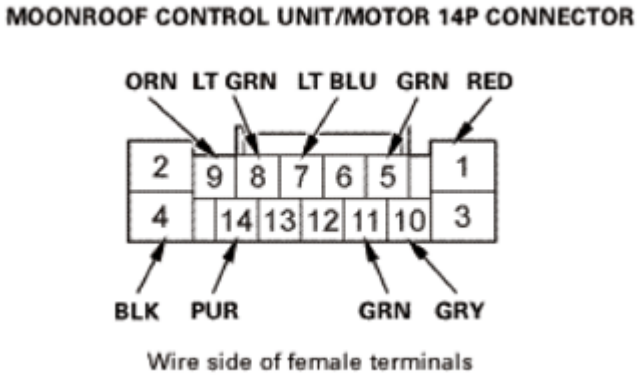

Fig. 470: Identifying Moonroof Control Unit/Motor 14P Connector Terminals
Courtesy of AMERICAN HONDA MOTOR CO., INC.

3. Inspect the connector and socket terminals to be sure they are all making good contact:
   - If the terminals are bent, loose, or corroded, repair them as necessary, and recheck the system.
   - If the terminals are OK, go to step 4.
4. With the connector still disconnected, do the following input tests:
   - If any test indicates a problem, find and correct the cause, then recheck the system.
   - If all the input tests prove OK, go to step 5.

Cavity	Wire	Test condition	Test: Desired result	Possible cause if desired result is not obtained
11	GRN	Disconnect under-dash fuse/relay box connector R (8P)	Check for continuity between terminal No. 11 and under-dash fuse/relay box connector R (8P) terminal No. 6: There should be continuity.	An open or high resistance in the wire
			Check for continuity to ground: There should be no continuity.	A short to ground in the wire
5	GRN	Jump the SCS line with the HDS, **disconnect PCM connector A (49P)** See **HOW TO TROUBLESHOOT THE A/T SYSTEM** or	Check for continuity between terminal No. 5 and PCM connector A (49P) No. 26: There should be continuity.	An open or high resistance in the wire

GETtheMANUALS.org

		HOW TO TROUBLESHOOT THE FUEL AND EMISSIONS SYSTEMS	Check for continuity to ground: There should be no continuity.	A short to ground in the wire

5. Reconnect the connector to the moonroof control unit/motor, and do the following input tests:
   - If any test indicates a problem, find and correct the cause, then recheck the system.
   - If all the input tests prove OK, **REPLACE THE MOONROOF CONTROL UNIT/MOTOR**.

NOTE: **After replacing the moonroof control unit/motor, DO THE MOONROOF CONTROL UNIT RESETTING PROCEDURE.**

Cavity	Wire	Test condition	Test: Desired result	Possible cause if desired result is not obtained
1	RED	Under all conditions	Measure the voltage to ground: There should be battery voltage.	• Blown No. B11 (20 A) fuse in the under-dash fuse/relay box • An open or high resistance in the wire
10	GRY	Ignition switch ON (II)	Measure the voltage to ground: There should be battery voltage.	• Blown No. B6 (7.5 A) fuse in the under-dash fuse/relay box • An open or high resistance in the wire
4	BLK	In all ignition switch positions	Measure the voltage to ground: There should be less than 0.2 V.	• Poor ground (G501) • An open or high resistance in the ground wire
9	ORN	Ignition switch ON (II), moonroof switch in CLOSE position	Measure the voltage to ground: There should be less than 0.2 V.	• Faulty moonroof switch • Poor ground (G501) or an open in the ground wire • An open or high resistance in the wire
		Ignition switch ON (II), moonroof switch released	Measure the voltage to ground: There should be battery voltage.	• Faulty moonroof switch • A short to ground in the wire
8	LT GRN	Ignition switch ON (II), moonroof switch in TILT position	Measure the voltage to ground: There should be less than 0.2 V.	• Faulty moonroof switch • Poor ground (G501) or an open in the ground wire • An open or high resistance in the wire

GETtheMANUALS.org

		Ignition switch ON (II), moonroof switch released	Measure the voltage to ground: There should be battery voltage.	• Faulty moonroof switch • A short to ground in the wire
7	LT BLU	Ignition switch ON (II), moonroof switch in OPEN position	Measure the voltage to ground: There should be less than 0.2 V.	• Faulty moonroof switch • Poor ground (G501) or an open in the ground wire • An open or high resistance in the wire
		Ignition switch ON (II), moonroof switch released	Measure the voltage to ground: There should be battery voltage.	• Faulty moonroof switch • A short to ground in the wire
14	PUR	Ignition switch ON (II), moonroof switch in AUTO (OPEN) or AUTO (CLOSE) position	Measure the voltage to ground: There should be less than 0.2 V.	• Faulty moonroof switch • Poor ground (G501) or an open in the ground wire • An open or high resistance in the wire
		Ignition switch ON (II), moonroof switch released	Measure the voltage to ground: There should be battery voltage.	• Faulty moonroof switch • A short to ground in the wire

GETtheMANUALS.org

EPS SYMPTOM TROUBLESHOOTING INDEX

When the vehicle has one of these symptoms, check for a diagnostic trouble code (DTC) with the HDS. If there is no DTC, do the diagnostic procedure for the symptom, in the sequence listed, until you find the cause.

Symptom	Diagnostic Procedure
HDS does not communicate with the EPS control unit or the vehicle	**TROUBLESHOOT THE DLC CIRCUIT** .
Steering pull	**Symptom Troubleshooting** .
EPS indicator does not come on	**Symptom Troubleshooting** .
EPS indicator does not go off, and no DTCs are stored	**Symptom Troubleshooting** .
EPS indicator is not on, no DTCs are stored, but there is no power assist or power assist is reduced	○ 1. Check the EPS motor power wires between the EPS control unit and the EPS motor for a short to body ground. Repair as needed. ○ 2. If the EPS motor power wires are OK, replace the EPS motor (short in the EPS motor). ○ 3. Check the power and body ground connections at the EPS control unit.

GETtheMANUALS.org

POWER STEERING ASSIST CHECK

CHECK

1. Power Steering Assist Check

NOTE: **This test should be done with original equipment tires and wheels at the correct tire pressure.**

1. Start the engine, and let it idle.
2. Attach a commercially available spring scale (A) to the steering wheel. With the engine idling and the vehicle on a clean, dry floor, pull the scale as shown, and read it as soon as the tires begin to turn.

   Initial turning load: 34 N (3.5 kgf, 7.6 lbf)

3. If the scale reads no more than the specification, the power assist is OK. If it reads more, check these items:
   - Steering linkage
   - Rack guide adjustment
   - EPS system

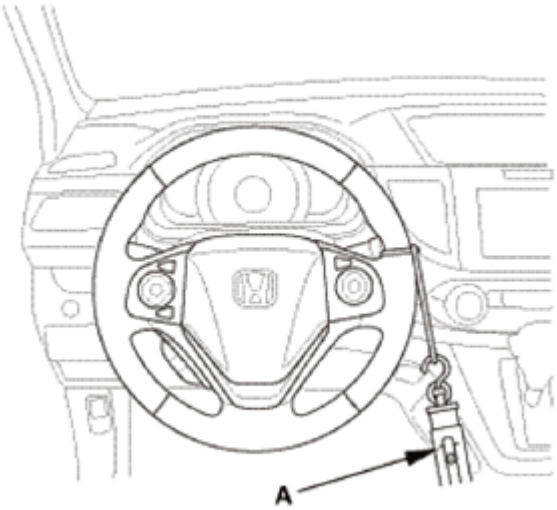

Fig. 1: Checking Power Steering Assist Using Spring Scale
Courtesy of AMERICAN HONDA MOTOR CO., INC.

STEERING ANGLE SENSOR NEUTRAL POSITION CLEAR

GETtheMANUALS.org

PROCEDURE

1. HDS DLC - Connection
    1. Connect the HDS to the data link connector (DLC) (A) located under the driver's side of the dashboard.
    2. Turn the ignition switch to ON (II).
    3. Make sure the HDS communicates with the vehicle. If it does not communicate, go to the DLC circuit troubleshooting.

Fig. 2: Identifying Data Link Connector
Courtesy of AMERICAN HONDA MOTOR CO., INC.

2. Steering Angle Sensor Neutral Position - Clear
    1. Select EPS ADJUSTMENT, then select EPS STEERING ANGLE SENSOR VALUE CLEAR and follow the screen prompts on the HDS.

NOTE: See the HDS Help menu for specific instructions.

STEERING ANGLE SENSOR REMOVAL AND INSTALLATION

REMOVAL

SRS components are located in this area. Review the **SRS COMPONENT LOCATIONS** , and the **PRECAUTIONS AND PROCEDURES** before doing repairs or service.

1. Battery Terminal (SRS) - Disconnection
    1. Make sure the ignition switch is in LOCK (0).
    2. Disconnect and isolate the negative cable (A) from the battery.

NOTE: Always disconnect the negative side first.

GETtheMANUALS.org

3. Disconnect the positive cable (B) from the battery.
4. Wait at least 3 minutes before starting work.

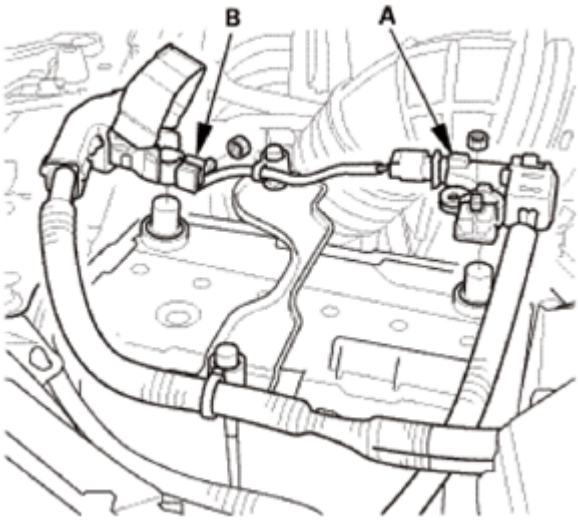

Fig. 3: Identifying Battery Positive And Negative Cable
Courtesy of AMERICAN HONDA MOTOR CO., INC.

2. Driver's Airbag
    1. Remove the access panel (A).
    2. Disconnect the driver's airbag inflator connector (B) on the cable reel harness.
    3. Disconnect the horn switch connector (C).

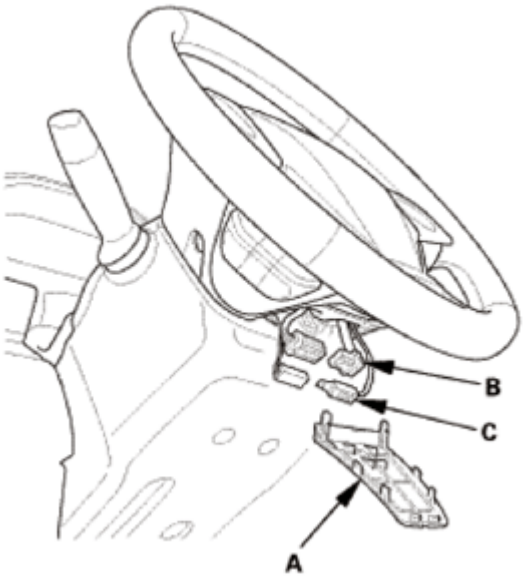

Fig. 4: Identifying Driver Airbag Inflator Connector, Horn Switch Connector And Access Panel
Courtesy of AMERICAN HONDA MOTOR CO., INC.

GETtheMANUALS.org

4. Remove the TORX bolts using a TORX T30 bit.
5. Remove the driver's airbag (A).

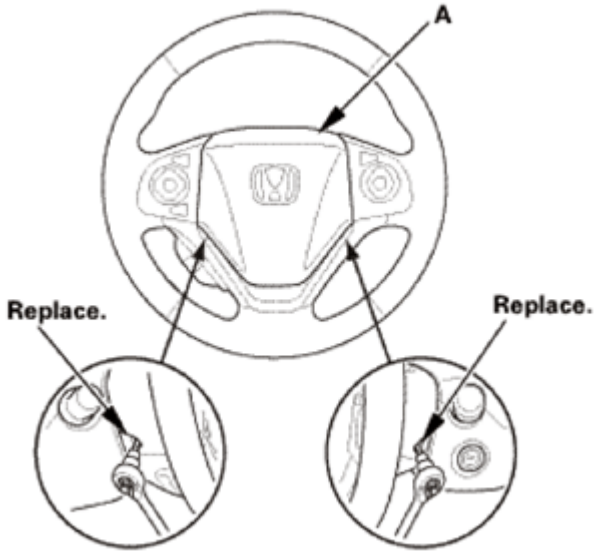

Fig. 5: Identifying Driver Airbag
Courtesy of AMERICAN HONDA MOTOR CO., INC.

3. Steering Wheel Assembly
    1. Set the front wheels in the straight ahead position.
    2. Disconnect the connector (A).
    3. Loosen the steering wheel bolt (B) three turns.

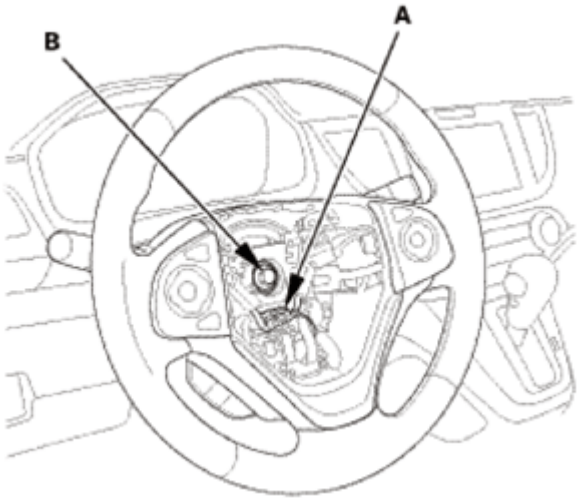

Fig. 6: Identifying Steering Wheel Bolt And Connector
Courtesy of AMERICAN HONDA MOTOR CO., INC.

4. Install a commercially available steering wheel puller (A) on the steering wheel (B).

GETtheMANUALS.org

5. Free the steering wheel from the steering column shaft by turning the pressure bolt (C) of the puller.

   Note these items when removing the steering wheel:

   - Do not tap on the steering wheel or the steering column shaft when removing the steering wheel.
   - If you thread the puller bolts (D) into the wheel hub more than five threads, the bolts will hit the cable reel and damage it. To prevent this, install a pair of jam nuts five threads up on each puller bolt.

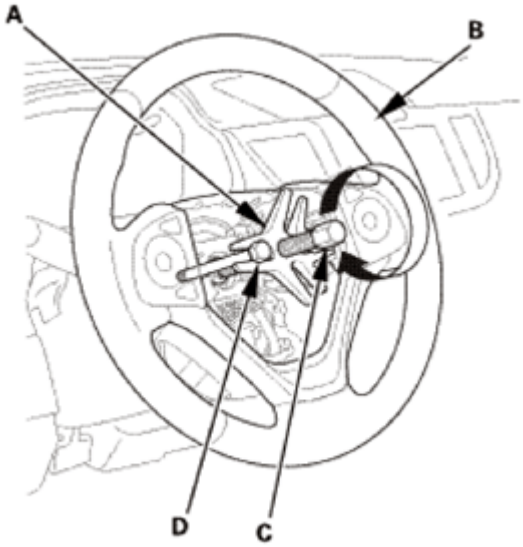

Fig. 7: Removing Steering Wheel From Steering Column Shaft
Courtesy of AMERICAN HONDA MOTOR CO., INC.

6. Remove the steering wheel puller.
7. Remove the steering wheel (A) from the steering column.

GETtheMANUALS.org

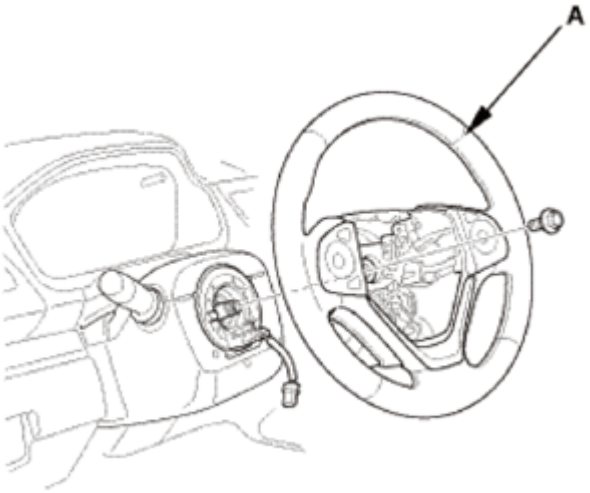

Fig. 8: Identifying Steering Wheel
Courtesy of AMERICAN HONDA MOTOR CO., INC.

4. Upper Column Cover
    1. Carefully pry out the dashboard meter visor blind cover (A) with the appropriate trim tool to detach the clips (B) and the hook (C), then tuck up the dashboard meter visor blind cover.

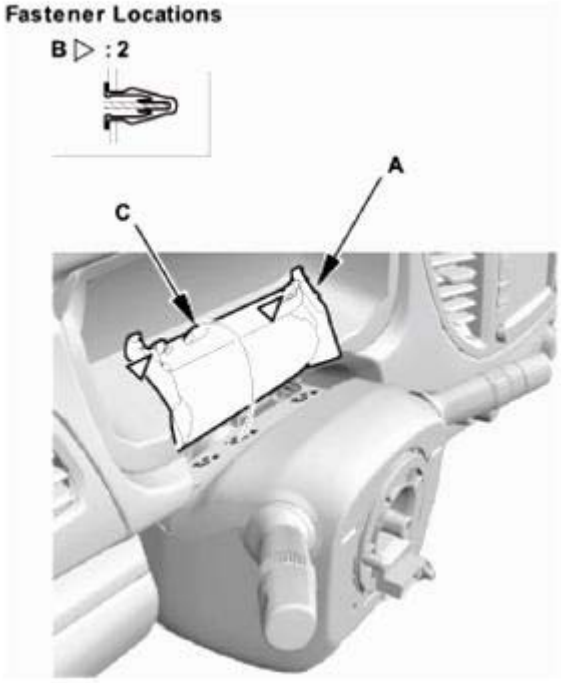

Fig. 9: Identifying Dashboard Meter Visor Blind Cover, Hooks And Clips
Courtesy of AMERICAN HONDA MOTOR CO., INC.

    2. Remove the upper column cover (A).

GETtheMANUALS.org

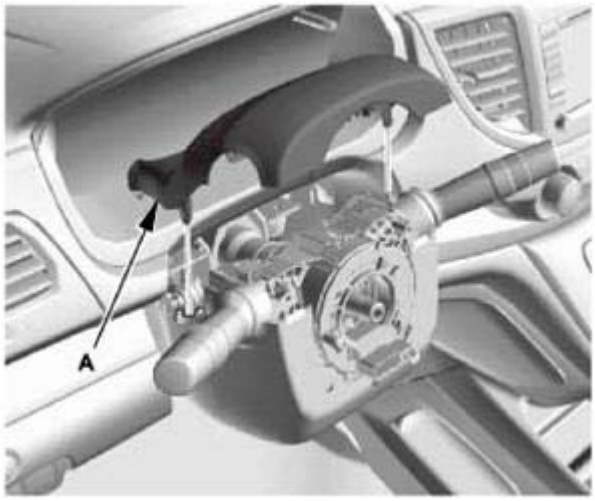

Fig. 10: Identifying Upper Column Cover
Courtesy of AMERICAN HONDA MOTOR CO., INC.

5. Lower Column Cover
    1. Remove the screws (A) securing the lower column cover (B) from the front side.

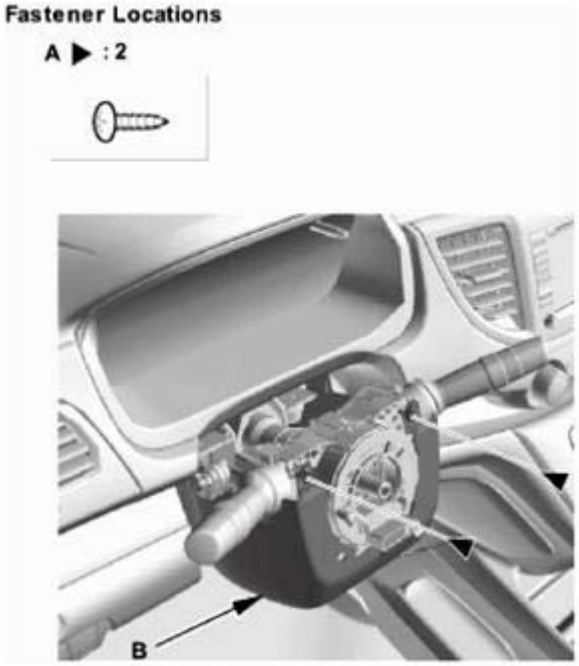

Fig. 11: Identifying Lower Column Cover And Screws (Front Side)
Courtesy of AMERICAN HONDA MOTOR CO., INC.

    2. Remove the screw (A), then remove the lower column cover (B).

GETtheMANUALS.org

Fig. 12: Identifying Lower Column Cover And Screws
Courtesy of AMERICAN HONDA MOTOR CO., INC.

6. Cable Reel/Steering Angle Sensor
    1. Disconnect cable reel connector A on the dashboard wire harness, cable reel connector B on the dashboard wire harness, and the steering angle sensor connector (C).

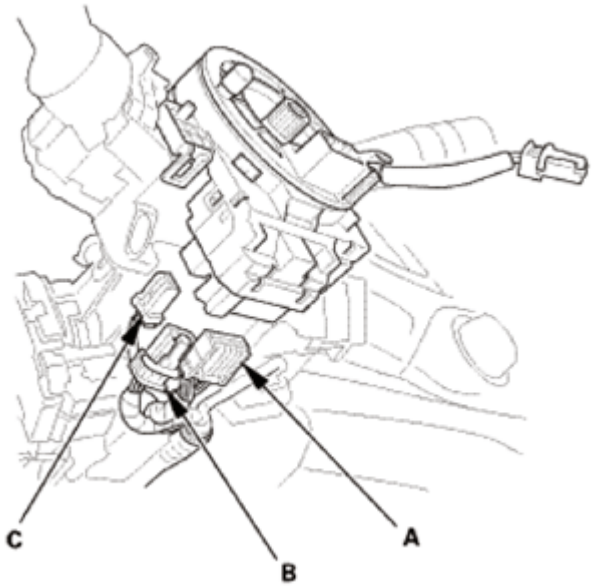

Fig. 13: Identifying Steering Angle Sensor And Cable Reel Connector
Courtesy of AMERICAN HONDA MOTOR CO., INC.

GETtheMANUALS.org

2. Remove the cable reel/steering angle sensor (A).

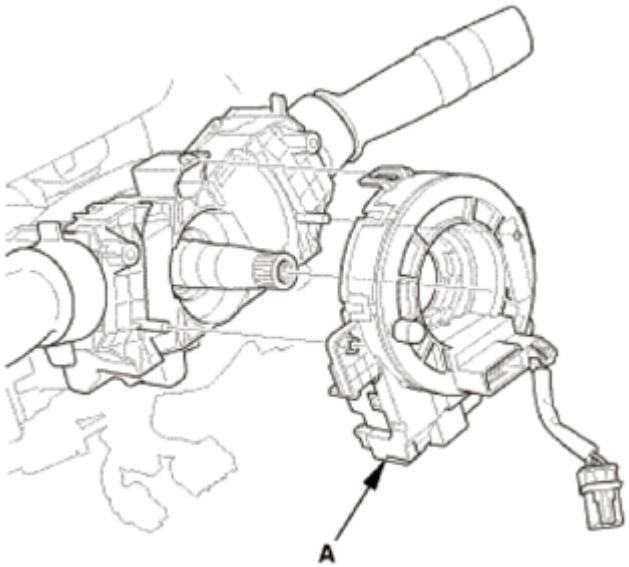

Fig. 14: Identifying Cable Reel/Steering Angle Sensor
Courtesy of AMERICAN HONDA MOTOR CO., INC.

7. Steering Angle Sensor
    1. Remove the steering angle sensor (A) from the cable reel (B).

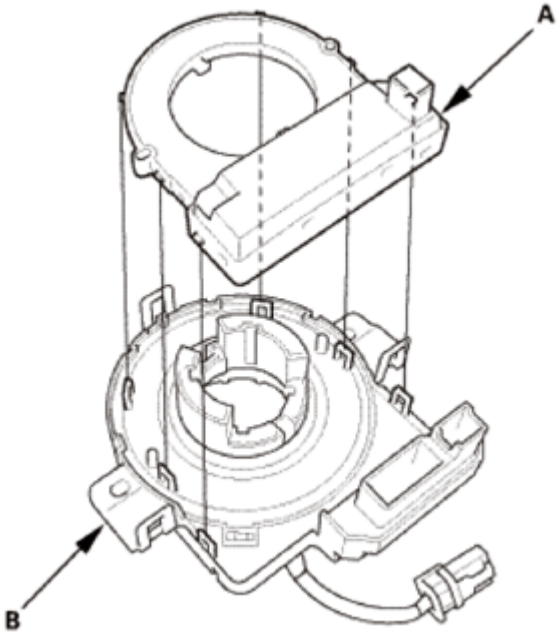

Fig. 15: Identifying Steering Angle Sensor And Cable Reel
Courtesy of AMERICAN HONDA MOTOR CO., INC.

GETtheMANUALS.org

INSTALLATION

SRS components are located in this area. Review the **SRS COMPONENT LOCATIONS** , and the **PRECAUTIONS AND PROCEDURES** before doing repairs or service.

1. Steering Angle Sensor
    1. Install the steering angle sensor (A) to the cable reel (B).

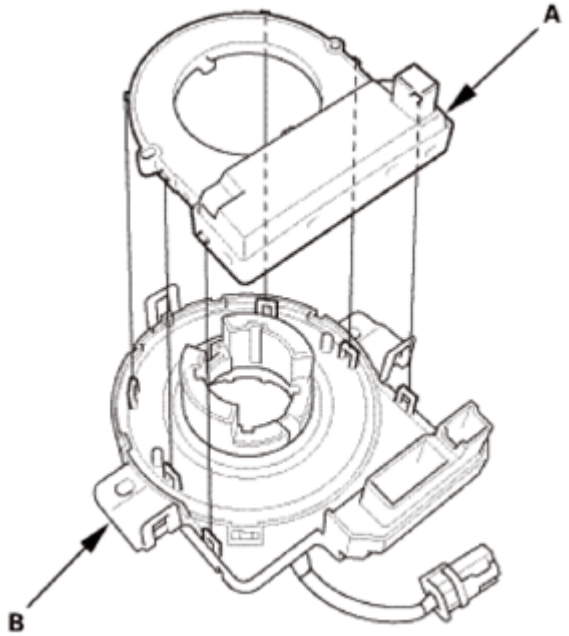

Fig. 16: Identifying Steering Angle Sensor And Cable Reel
Courtesy of AMERICAN HONDA MOTOR CO., INC.

2. Cable Reel/Steering Angle Sensor
    1. Install the cable reel/steering angle sensor (A).

GETtheMANUALS.org

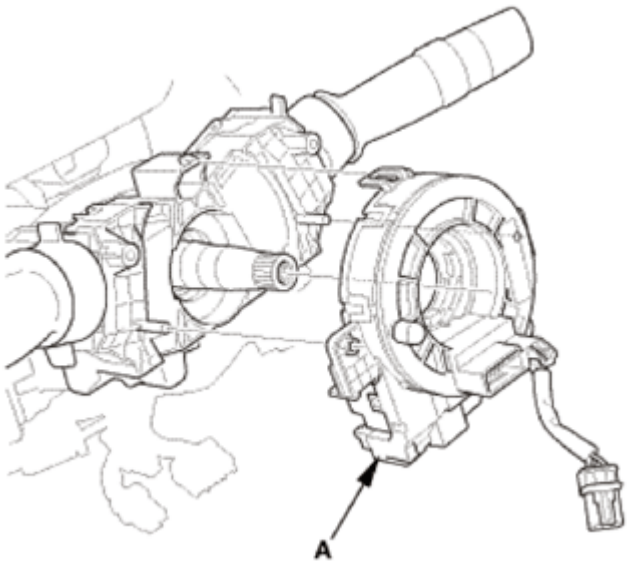

Fig. 17: Identifying Cable Reel/Steering Angle Sensor
Courtesy of AMERICAN HONDA MOTOR CO., INC.

2. Connect cable reel connector A on the dashboard wire harness, cable reel connector B on the dashboard wire harness, and the steering angle sensor connector (C).

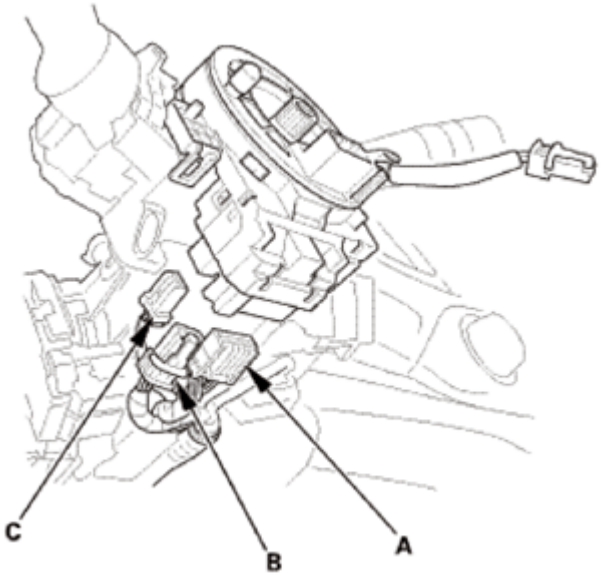

Fig. 18: Identifying Steering Angle Sensor And Cable Reel Connector
Courtesy of AMERICAN HONDA MOTOR CO., INC.

3. Lower Column Cover
    1. Push in on the lower column cover just above ignition switch opening (A) to engage the column cover with the locking tab (B).

GETtheMANUALS.org

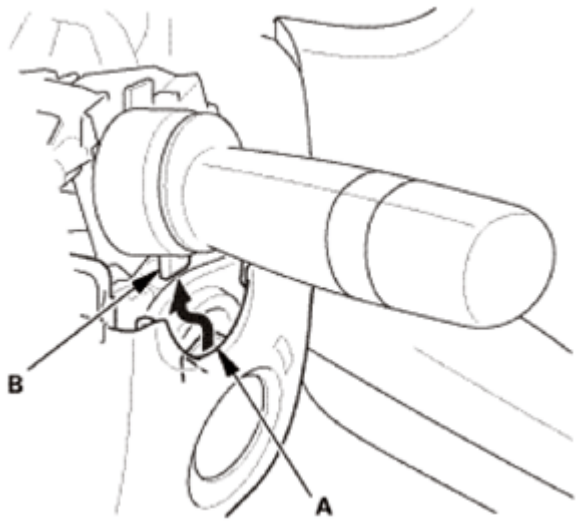

Fig. 19: Engaging Column Cover With Locking Tab
Courtesy of AMERICAN HONDA MOTOR CO., INC.

2. Install the lower column cover (A), then install the screw (B).

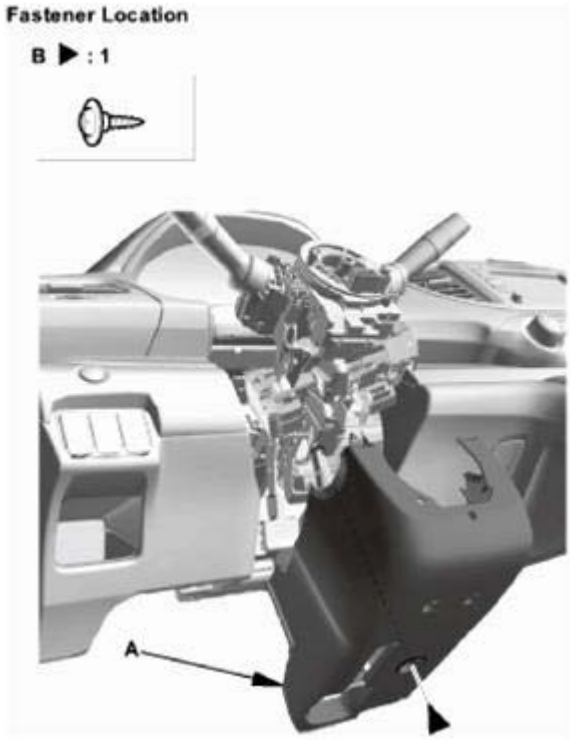

Fig. 20: Identifying Lower Column Cover And Screws
Courtesy of AMERICAN HONDA MOTOR CO., INC.

3. Install the screws (A) securing the lower column cover (B) from the front side.

GETtheMANUALS.org

Fig. 21: Identifying Lower Column Cover And Screws (Front Side)
Courtesy of AMERICAN HONDA MOTOR CO., INC.

4. Upper Column Cover
    1. Install the upper column cover (A).

Fig. 22: Identifying Upper Column Cover
Courtesy of AMERICAN HONDA MOTOR CO., INC.

    2. Install the dashboard meter visor blind cover (A). Make sure the clips (B) and the hook (C) snap into place securely.

GETtheMANUALS.org

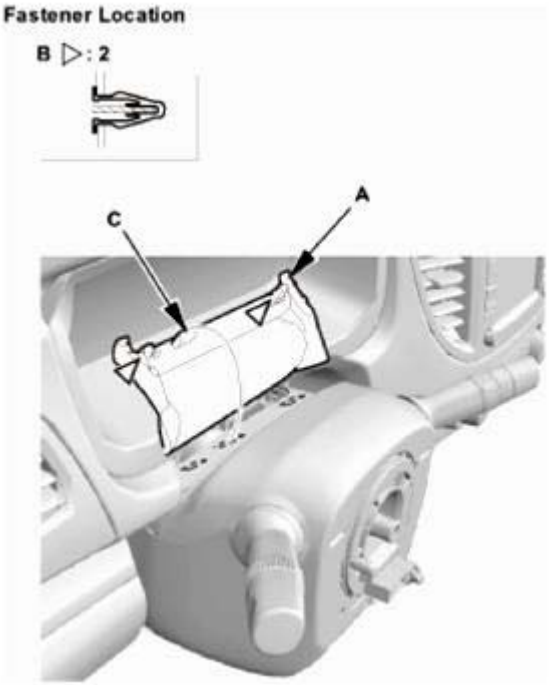

Fig. 23: Identifying Dashboard Meter Visor Blind Cover, Hooks And Clips
Courtesy of AMERICAN HONDA MOTOR CO., INC.

5. Steering Wheel Assembly
    1. Make sure the front wheels are pointing straight ahead.
    2. Center the cable reel (A). Do this by first rotating the cable reel clockwise until it stops.
    3. Rotate the cable reel counterclockwise about three full turns. The arrow mark (B) on the cable reel label should point straight up.

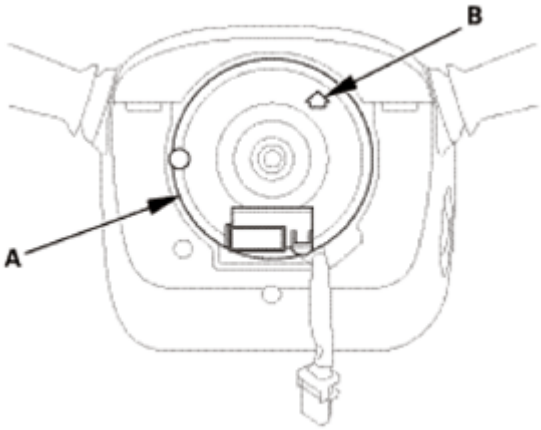

Fig. 24: Identifying Cable Reel And Label Mark
Courtesy of AMERICAN HONDA MOTOR CO., INC.

    4. Position the steering wheel hub (A) so that it engages the pin (B) of the cable reel.

GETtheMANUALS.org

5. Install the steering wheel (C) on to the steering column shaft.

NOTE: **Do not tap on the steering wheel or the steering column shaft when installing the steering wheel.**

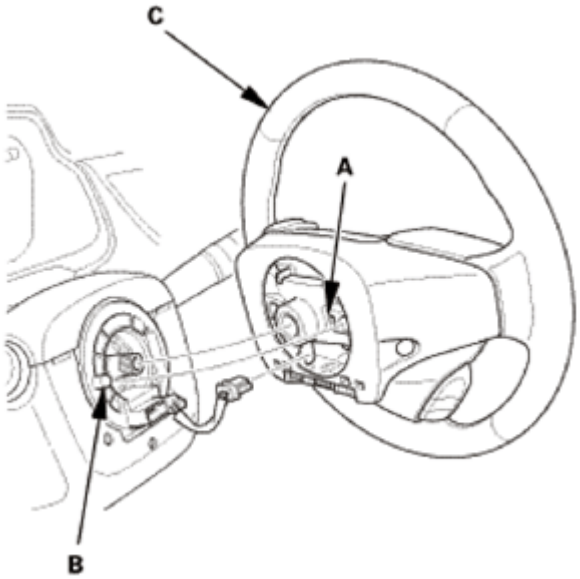

Fig. 25: Identifying Steering Wheel, Hub And Pin
Courtesy of AMERICAN HONDA MOTOR CO., INC.

6. Install the steering wheel bolt (A), and tighten it to the specified torque.
7. Connect the connector (B).
8. Make sure the wire harness is routed and fastened properly.

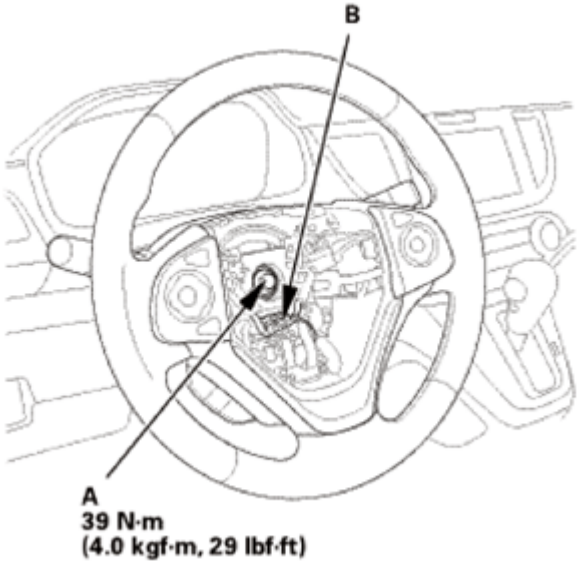

Fig. 26: Identifying Steering Wheel Bolt And Connector With Torque Specifications

GETtheMANUALS.org

Courtesy of AMERICAN HONDA MOTOR CO., INC.

6. Driver's Airbag

NOTE: **If you are replacing a deployed driver's airbag, inspect the cable reel for heat damage. If there is any damage, replace the cable reel.**

1. Place the driver's airbag (A) in the steering wheel.
2. Tighten the new TORX bolts using a TORX T30 bit.

NOTE: **Make sure the clearance (B) between the steering wheel and the horn pad is the specified value.**

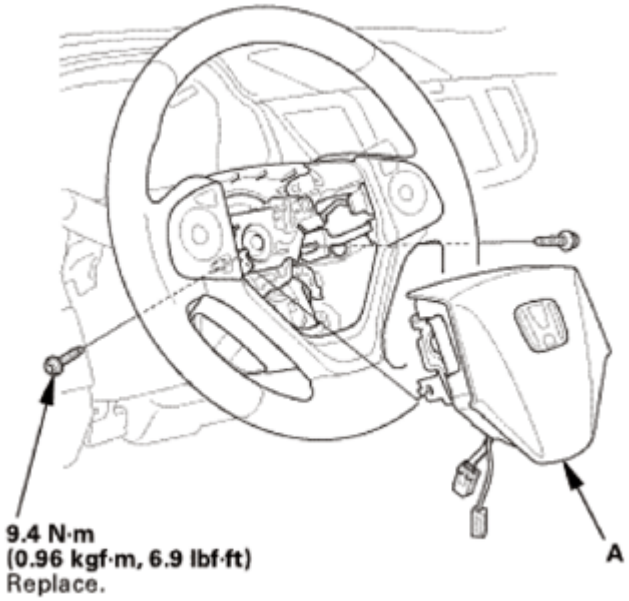

Fig. 27: Identifying Driver Airbag With Torque Specifications
Courtesy of AMERICAN HONDA MOTOR CO., INC.

GETtheMANUALS.org

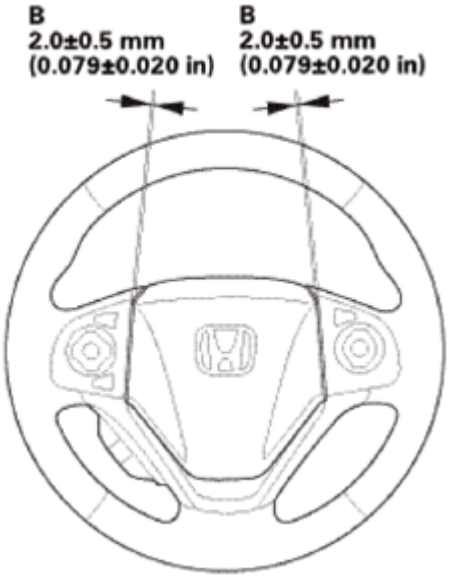

Fig. 28: Identifying Clearance Between Steering Wheel And Horn Pad
Courtesy of AMERICAN HONDA MOTOR CO., INC.

3. Connect the driver's airbag inflator connector (A) on the cable reel harness.
4. Connect the horn switch connector (B).

NOTE: **After reconnecting the negative cable to the battery, make sure the horn works properly.**

5. Install the access panel (C).

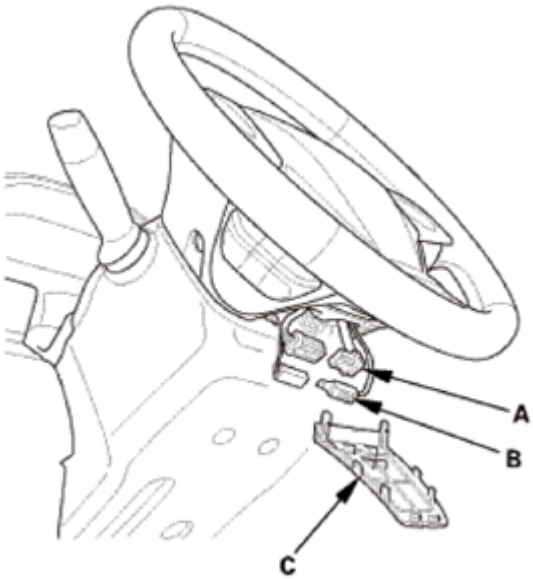

Fig. 29: Identifying Driver Airbag Inflator Connector, Horn Switch Connector And Access Panel

GETtheMANUALS.org

Courtesy of AMERICAN HONDA MOTOR CO., INC.

7. Battery Terminal (SRS) - Reconnection

NOTE: If the battery performance is abnormal, test the battery.

1. Clean the battery terminals.
2. Connect the positive cable (A) to the battery.

NOTE: Always connect the positive side first.

3. Connect the negative cable (B) to the battery.
4. Apply multipurpose grease to the terminals to prevent corrosion.

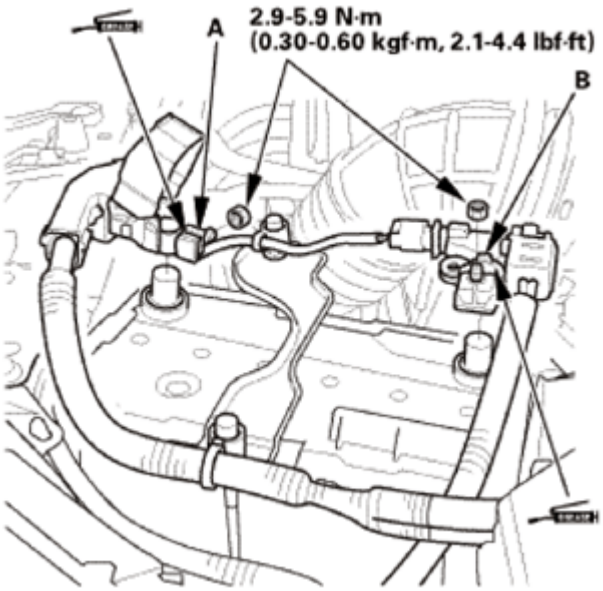

Fig. 30: Identifying Battery Positive And Negative Cable With Torque Specifications
Courtesy of AMERICAN HONDA MOTOR CO., INC.

8. Steering Wheel Spoke Angle - Check
   1. Check the steering wheel spoke angle.
   2. If steering spoke angles to the right and left are not equal (steering wheel is not centered), correct the engagement of the wheel/column shaft splines.
9. HDS DLC - Connection
   1. Connect the HDS to the data link connector (DLC) (A) located under the driver's side of the dashboard.
   2. Turn the ignition switch to ON (II).
   3. Make sure the HDS communicates with the vehicle. If it does not communicate, go to the DLC circuit troubleshooting.

GETtheMANUALS.org

Fig. 31: Identifying Data Link Connector
Courtesy of AMERICAN HONDA MOTOR CO., INC.

10. VSA Sensor Neutral Position - Memorization
    1. Park the vehicle on a flat and level surface, with the steering wheel in the straight ahead position.
    2. Select VSA ADJUSTMENT, then select ALL SENSORS with the HDS, and follow the screen prompts.

    NOTE: See the HDS Help menu for specific instructions.

11. Steering Angle Sensor Neutral Position - Clear
    1. Select EPS ADJUSTMENT, then select EPS STEERING ANGLE SENSOR VALUE CLEAR and follow the screen prompts on the HDS.

    NOTE: See the HDS Help menu for specific instructions.

STEERING COLUMN COVER REMOVAL AND INSTALLATION

REMOVAL

1. Upper Column Cover
    1. Carefully pry out the dashboard meter visor blind cover (A) with the appropriate trim tool to detach the clips (B) and the hook (C), then tuck up the dashboard meter visor blind cover.

GETtheMANUALS.org

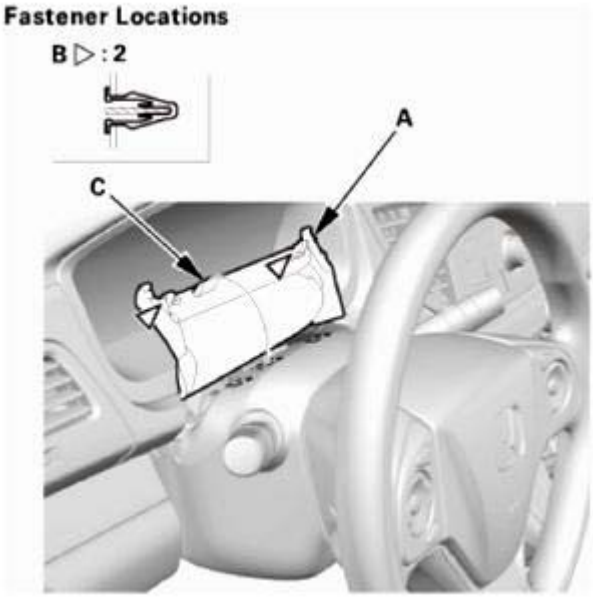

Fig. 32: Identifying Dashboard Meter Visor Blind Cover, Hooks And Clips
Courtesy of AMERICAN HONDA MOTOR CO., INC.

2. Detach the hooks (A), then remove the upper column cover (B).

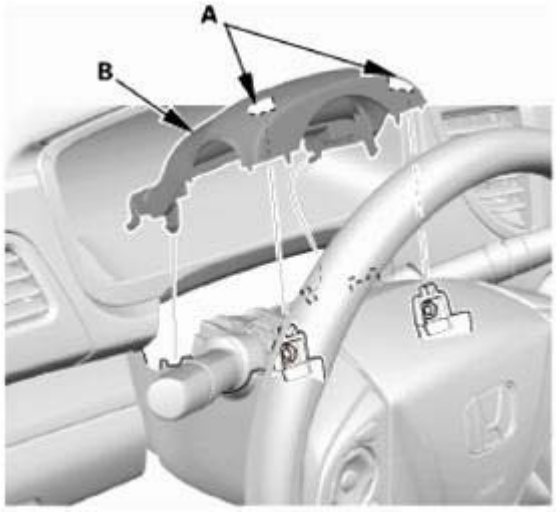

Fig. 33: Identifying Upper Column Cover And Screws
Courtesy of AMERICAN HONDA MOTOR CO., INC.

2. Lower Column Cover
    1. Turn the steering wheel to the left. Remove the screw (A) securing the lower column cover (B) from the front side.
    2. Turn the steering wheel to the right. Remove the screw securing the lower column cover from the front side.

GETtheMANUALS.org

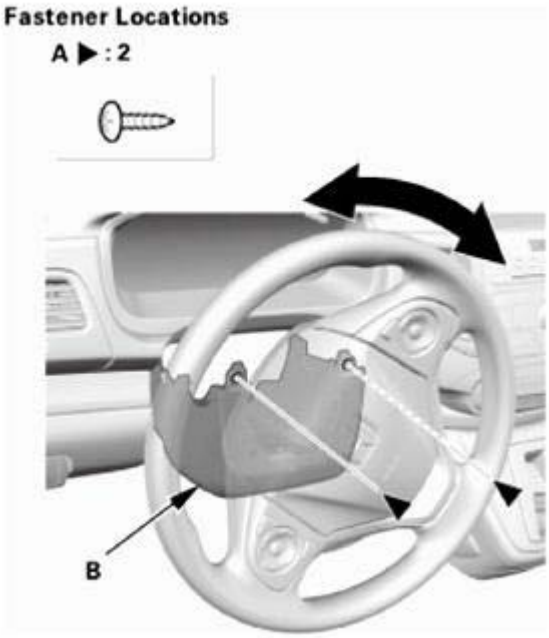

Fig. 34: Turning Steering Wheel
Courtesy of AMERICAN HONDA MOTOR CO., INC.

3. Remove the screw (A), then remove the lower column cover (B).

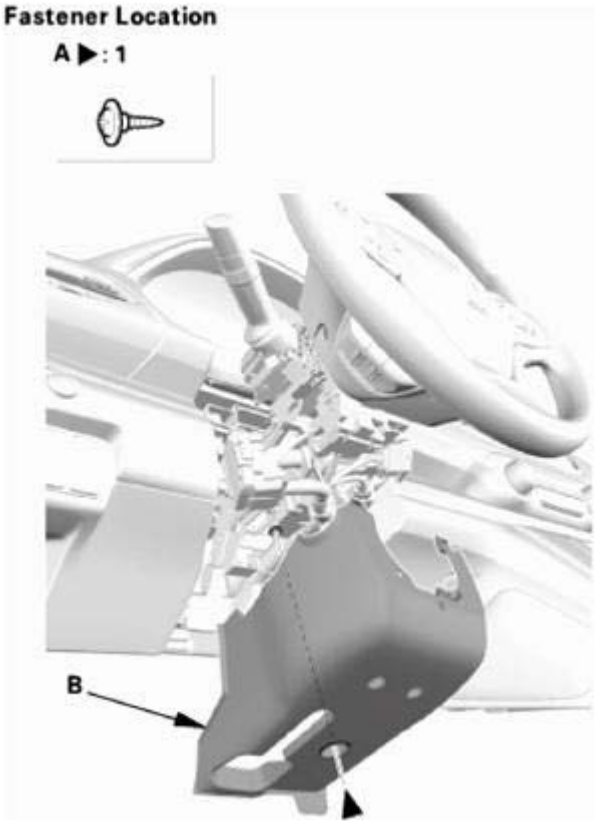

GETtheMANUALS.org

Fig. 35: Identifying Lower Column Cover And Screws
Courtesy of AMERICAN HONDA MOTOR CO., INC.

INSTALLATION

1. Lower Column Cover
    1. Push in on the lower column cover just above ignition switch opening (A) to engage the column cover with the locking tab (B).

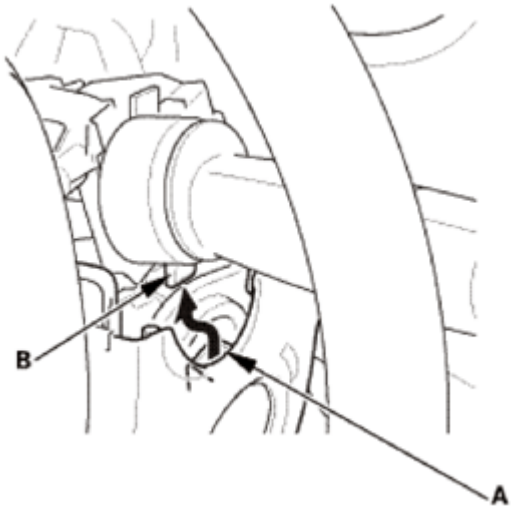

Fig. 36: Engaging Column Cover With Lock Tab
Courtesy of AMERICAN HONDA MOTOR CO., INC.

    2. Install the lower column cover (A), then install the screw (B).

GETtheMANUALS.org

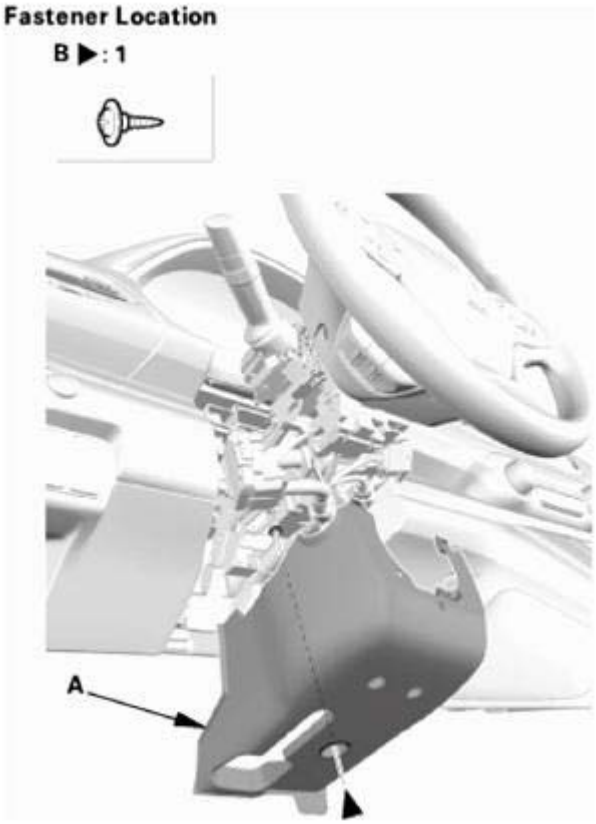

Fig. 37: Identifying Lower Column Cover And Screw
Courtesy of AMERICAN HONDA MOTOR CO., INC.

3. Turn the steering wheel to the left. Install the screw (A) securing the lower column cover (B) from the front side.
4. Turn the steering wheel to the right. Install the screw securing the lower column cover from the front side.

GETtheMANUALS.org

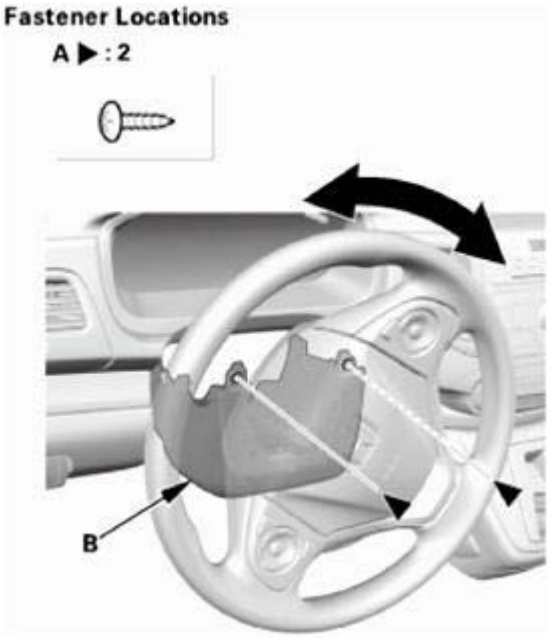

Fig. 38: Turning Steering Wheel
Courtesy of AMERICAN HONDA MOTOR CO., INC.

2. Upper Column Cover
    1. Install the upper column cover (A). Make sure the hooks (B) snap into place securely.

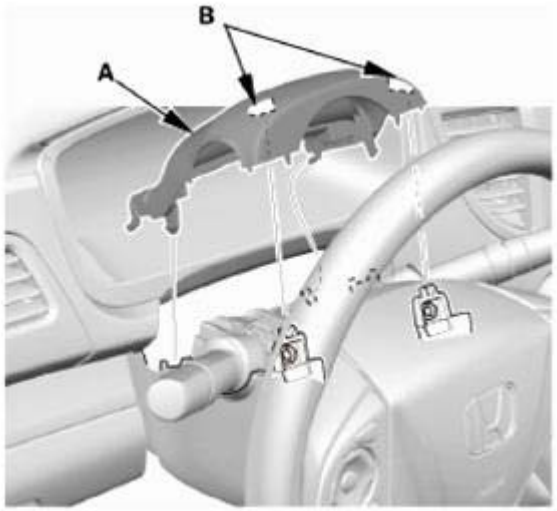

Fig. 39: Identifying Upper Column Cover And Hooks
Courtesy of AMERICAN HONDA MOTOR CO., INC.

    2. Install the dashboard meter visor blind cover (A). Make sure the clips (B) and the hook (C) snap into place securely

GETtheMANUALS.org

Fig. 40: Identifying Dashboard Meter Visor Blind Cover, Hooks And Clips
Courtesy of AMERICAN HONDA MOTOR CO., INC.

STEERING COLUMN INSPECTION

INSPECTION

1. Steering Column Inspection (In Car)

   Check of Tilting Force

   1. Set the steering wheel in the straight ahead driving position, and loosen the lock lever fully.
   2. Attach a commercially available spring scale (A) to the highest point of the steering wheel, and tilt the steering column to the lowest position.
   3. Pull the spring scale straight up, and read the force required to move the steering column.
   4. Attach the spring scale to the lowest point of the steering wheel.
   5. Pull the spring scale straight down, and read the force required to move the steering column.

      Tilting force (upward/downward):

      Standard: 69 N (7.0 kgf, 16 lbf) max .

   6. If the measurement is higher than the specified, replace the steering column as an assembly.

GETtheMANUALS.org

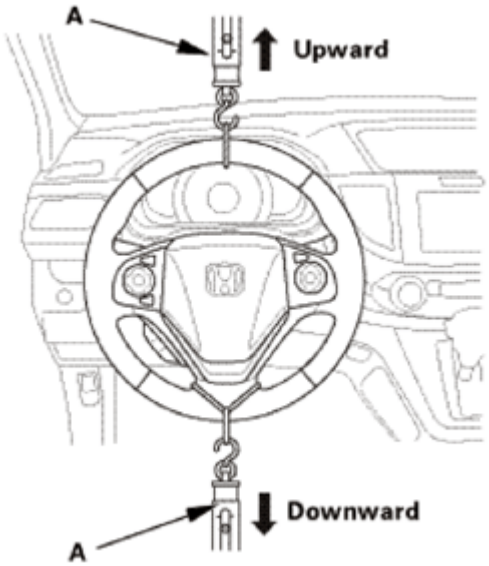

Fig. 41: Checking Steering Wheel Tilting Force Using Tool
Courtesy of AMERICAN HONDA MOTOR CO., INC.

Check of Telescoping Force

1. Set the steering wheel in the straight ahead driving position, and loosen the lock lever fully.
2. Attach a commercially available spring scale (A) to the center point of the steering wheel as shown.
3. Pull the spring scale, and read the force required to move the steering column during telescoping out.

   Telescoping force:

   Standard: 90 N (9.2 kgf, 20 lbf) max .

4. If the measurement is higher than specified, replace the steering column as an assembly.

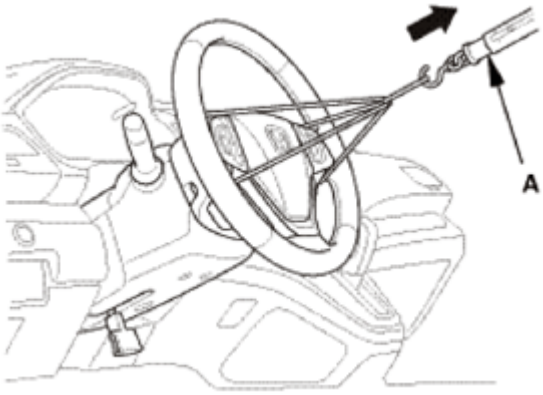

Fig. 42: Checking Telescoping Force Using Spring Scale
Courtesy of AMERICAN HONDA MOTOR CO., INC.

GETtheMANUALS.org

Check of Lock Lever Force

1. Move the lock lever (A) from the loosened position to the locked position three to five times, then release the lock lever. Adjust the steering column to the center tilt position and also to the full telescopic out position, and hold the steering wheel.
2. Using a commercially available push-pull gauge, push up the lock lever 10 mm (0.39 in) in from its end, and measure the force required to move the lock lever.

   Lock lever force:

   Standard: 82 N (8.4 kgf, 18 lbf) max .

3. If the measurement is higher than specified, replace the steering column as an assembly.

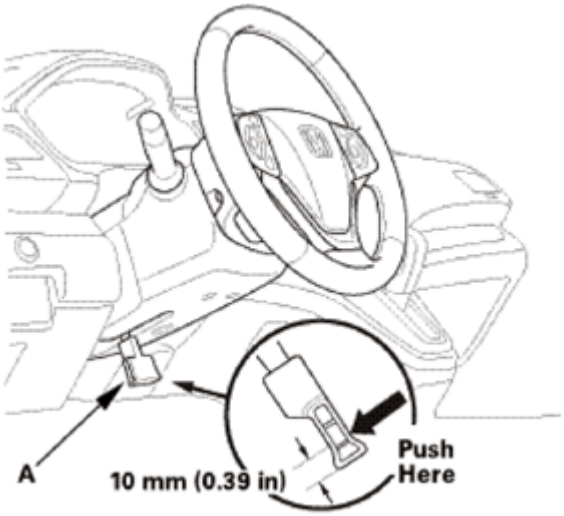

Fig. 43: Pushing Lock Lever
Courtesy of AMERICAN HONDA MOTOR CO., INC.

REMOVAL

SRS components are located in this area. Review the **SRS COMPONENT LOCATIONS** , and the **PRECAUTIONS AND PROCEDURES** before doing repairs or service.

1. Battery Terminal (SRS) - Disconnection
   1. Make sure the ignition switch is in LOCK (0).
   2. Disconnect and isolate the negative cable (A) from the battery.

      NOTE: Always disconnect the negative side first.

   3. Disconnect the positive cable (B) from the battery.
   4. Wait at least 3 minutes before starting work.

GETtheMANUALS.org

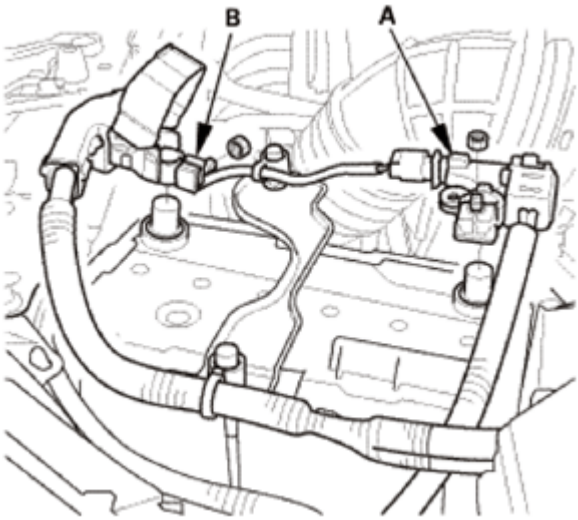

Fig. 44: Identifying Battery Positive And Negative Terminals
Courtesy of AMERICAN HONDA MOTOR CO., INC.

2. Driver's Airbag
    1. Remove the access panel (A).
    2. Disconnect the driver's airbag inflator connector (B) on the cable reel harness.
    3. Disconnect the horn switch connector (C).

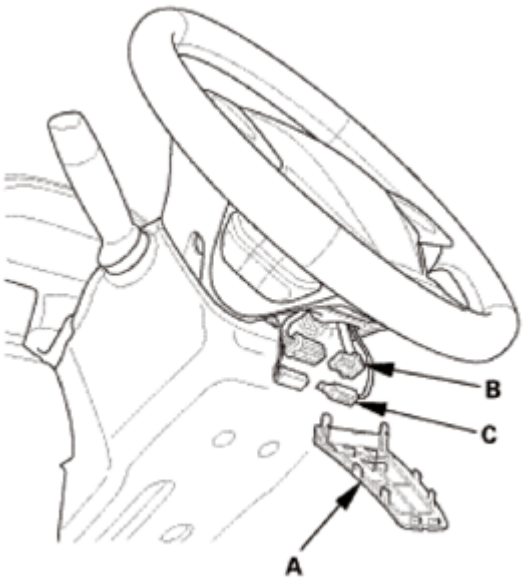

Fig. 45: Identifying Access Panel, Driver's Airbag Inflator Connector And Horn Switch Connector
Courtesy of AMERICAN HONDA MOTOR CO., INC.

    4. Remove the TORX bolts using a TORX T30 bit.
    5. Remove the driver's airbag (A).

GETtheMANUALS.org

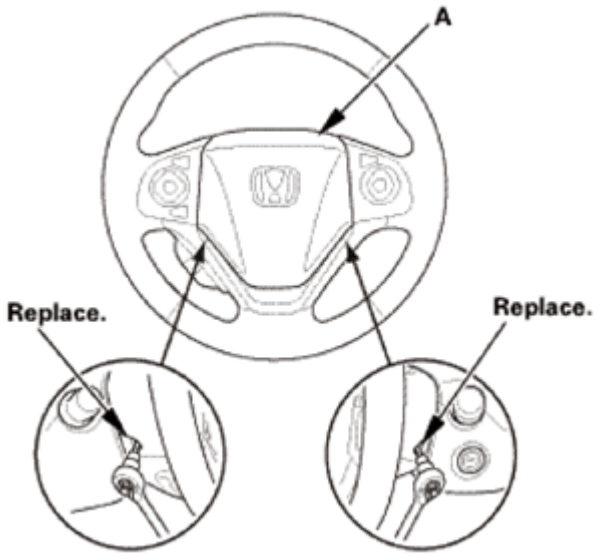

Fig. 46: Identifying Driver's Airbag And Torx Bolt
Courtesy of AMERICAN HONDA MOTOR CO., INC.

3. Steering Wheel Assembly
    1. Set the front wheels in the straight ahead position.
    2. Disconnect the connector (A).
    3. Loosen the steering wheel bolt (B) three turns.

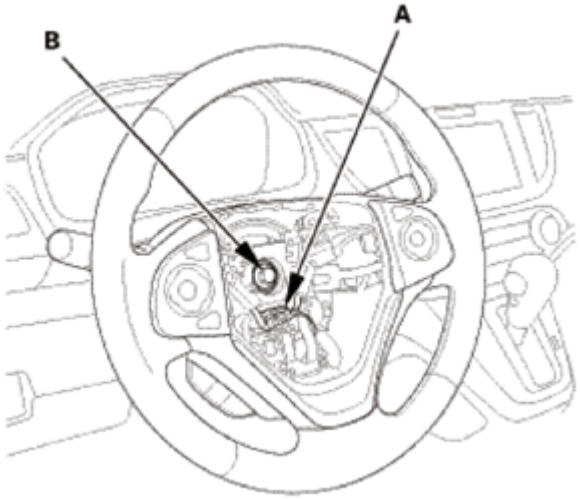

Fig. 47: Identifying Steering Wheel Connector And Bolt
Courtesy of AMERICAN HONDA MOTOR CO., INC.

    4. Install a commercially available steering wheel puller (A) on the steering wheel (B).
    5. Free the steering wheel from the steering column shaft by turning the pressure bolt (C) of the puller.

GETtheMANUALS.org

Note these items when removing the steering wheel:

- Do not tap on the steering wheel or the steering column shaft when removing the steering wheel.
- If you thread the puller bolts (D) into the wheel hub more than five threads, the bolts will hit the cable reel and damage it. To prevent this, install a pair of jam nuts five threads up on each puller bolt.

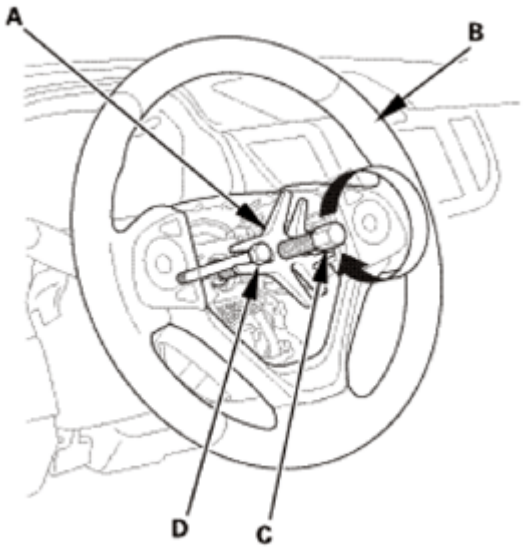

Fig. 48: Turning Steering Wheel Pressure Bolt Using Puller
Courtesy of AMERICAN HONDA MOTOR CO., INC.

6. Remove the steering wheel puller.
7. Remove the steering wheel (A) from the steering column.

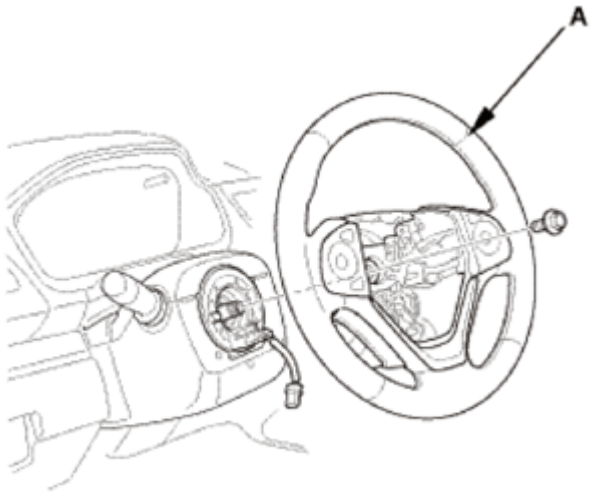

Fig. 49: Identifying Steering Wheel
Courtesy of AMERICAN HONDA MOTOR CO., INC.

GETtheMANUALS.org

4. Upper Column Cover
    1. Carefully pry out the dashboard meter visor blind cover (A) with the appropriate trim tool to detach the clips (B) and the hook (C), then tuck up the dashboard meter visor blind cover.

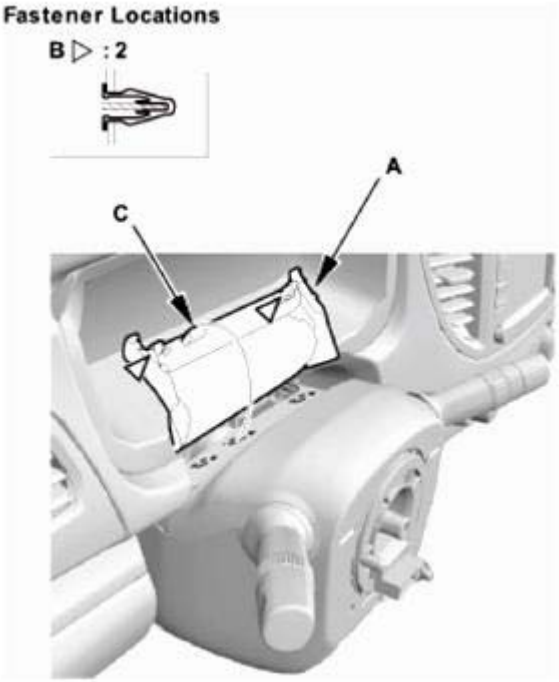

Fig. 50: Identifying Dashboard Meter Visor Blind Cover, Hooks And Clips
Courtesy of AMERICAN HONDA MOTOR CO., INC.

    2. Remove the upper column cover (A).

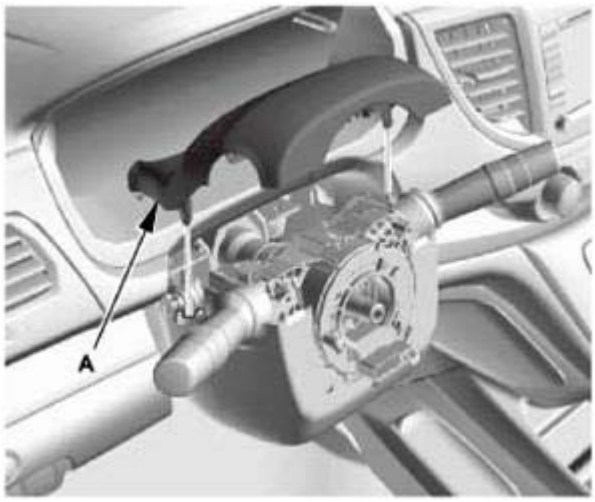

Fig. 51: Identifying Upper Column Cover
Courtesy of AMERICAN HONDA MOTOR CO., INC.

GETtheMANUALS.org

5. Lower Column Cover
    1. Remove the screws (A) securing the lower column cover (B) from the front side.

<u>Fig. 52: Identifying Lower Column Cover And Screw</u>
Courtesy of AMERICAN HONDA MOTOR CO., INC.

    2. Remove the screw (A), then remove the lower column cover (B).

GETtheMANUALS.org

Fig. 53: Identifying Lower Column Cover And Screw
Courtesy of AMERICAN HONDA MOTOR CO., INC.

6. Combination Switch Body Assembly
    1. Disconnect the connectors (A).
    2. Remove the clip (B).

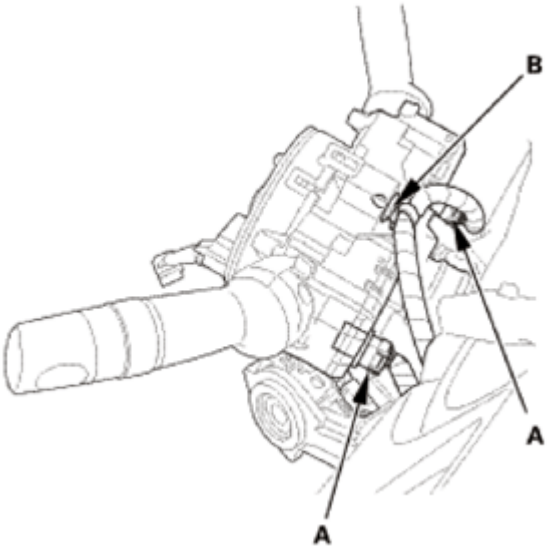

Fig. 54: Identifying Combination Switch Body Assembly Connectors And Clip
Courtesy of AMERICAN HONDA MOTOR CO., INC.

GETtheMANUALS.org

3. Disconnect the connectors (A).

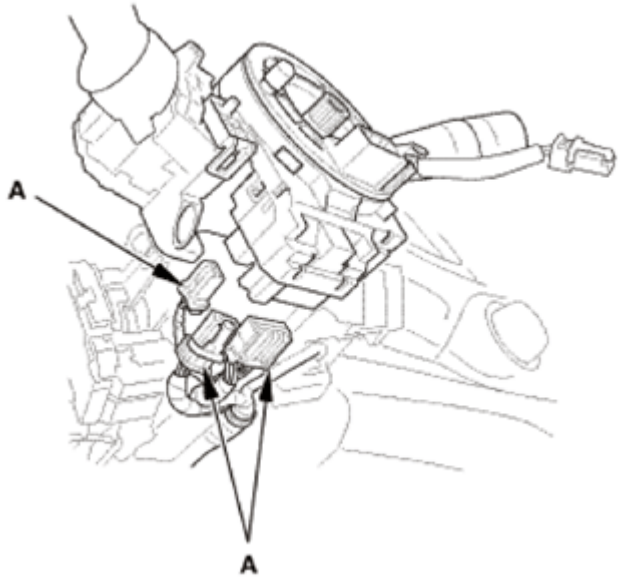

Fig. 55: Identifying Combination Switch Body Assembly Connectors
Courtesy of AMERICAN HONDA MOTOR CO., INC.

4. Remove the combination switch body assembly (A) from the steering column shaft.

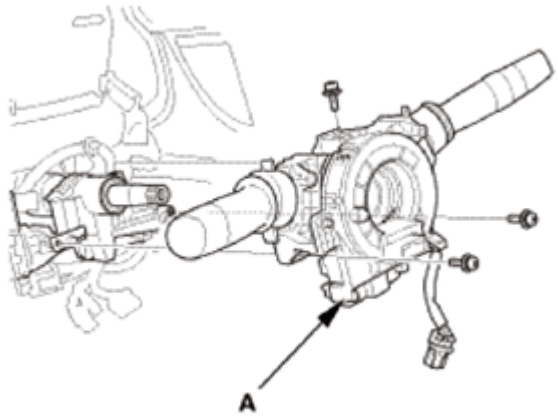

Fig. 56: Identifying Combination Switch Body Assembly
Courtesy of AMERICAN HONDA MOTOR CO., INC.

7. Driver's Dashboard Undercover
    1. Turn the lock knob (A) 90 °, then gently pull down the front edge of the driver's dashboard undercover (B) to detach the clip (C).
    2. Pull away the undercover to release the pin (D) from the holder (E), then remove the driver's dashboard undercover.

GETtheMANUALS.org

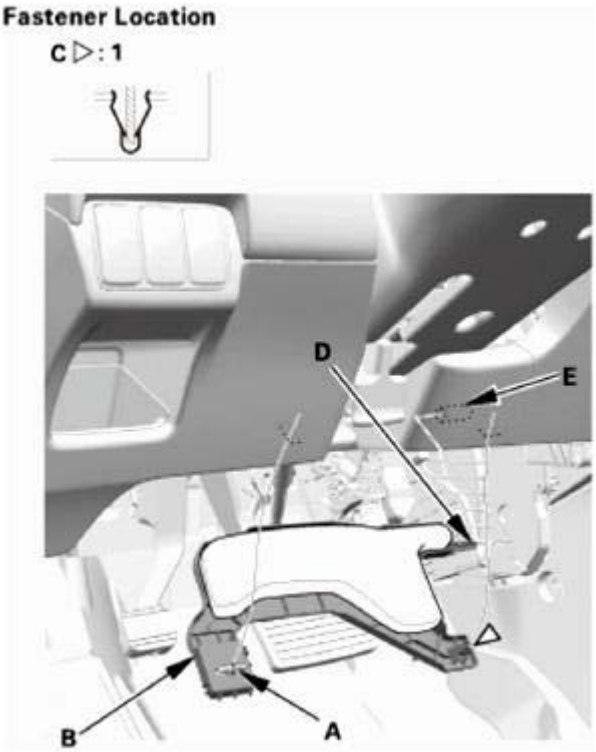

Fig. 57: Identifying Driver's Dashboard Undercover, Lock Knob, Holder, Clip And Pin
Courtesy of AMERICAN HONDA MOTOR CO., INC.

8. Steering Joint Cover
    1. Remove the steering joint cover (A).

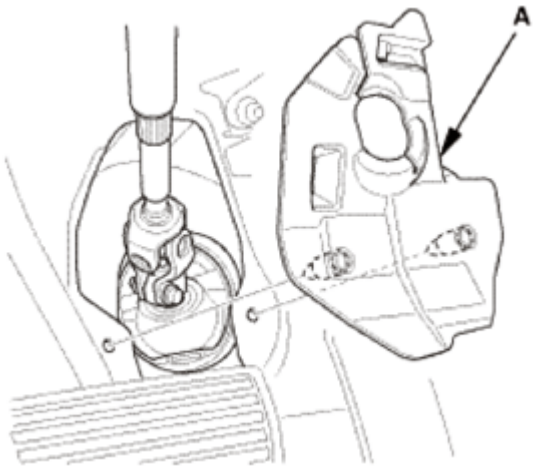

Fig. 58: Identifying Steering Joint Cover
Courtesy of AMERICAN HONDA MOTOR CO., INC.

9. Steering Column Lower Slide Shaft - Hold
    1. Set the steering column to the center tilt position, and to the center telescopic position.

GETtheMANUALS.org

2. Hold the lower slide shaft (A) on the column with a piece of wire (B) between the joint yoke (C) of the lower slide shaft and the joint yoke (D) of the upper shaft to prevent the lower slider shaft from pulling out.

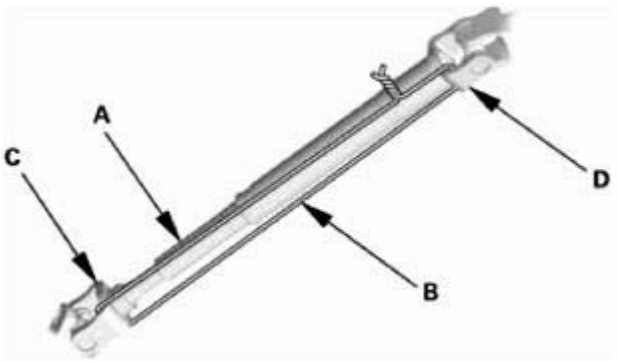

Fig. 59: Holding Lower Slide Shaft On Column Using Wire
Courtesy of AMERICAN HONDA MOTOR CO., INC.

10. Steering Joint - Disconnection
    1. Remove the steering joint bolt (A).
    2. Disconnect the steering joint (B) from the pinion shaft.

NOTE:

- **If the center guide (C) is in place and has not moved, leave it in place.**
- **If the center guide has come off, discard it.**

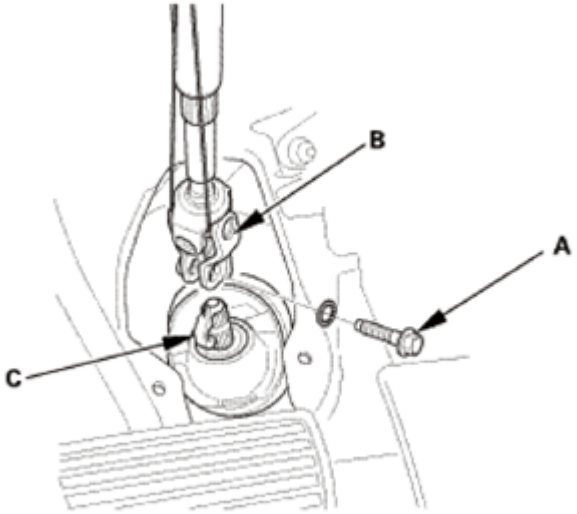

Fig. 60: Identifying Steering Joint, Center Guide And Bolt
Courtesy of AMERICAN HONDA MOTOR CO., INC.

11. Steering Column

GETtheMANUALS.org

1. Disconnect the connectors (A) from the ignition switch (B).

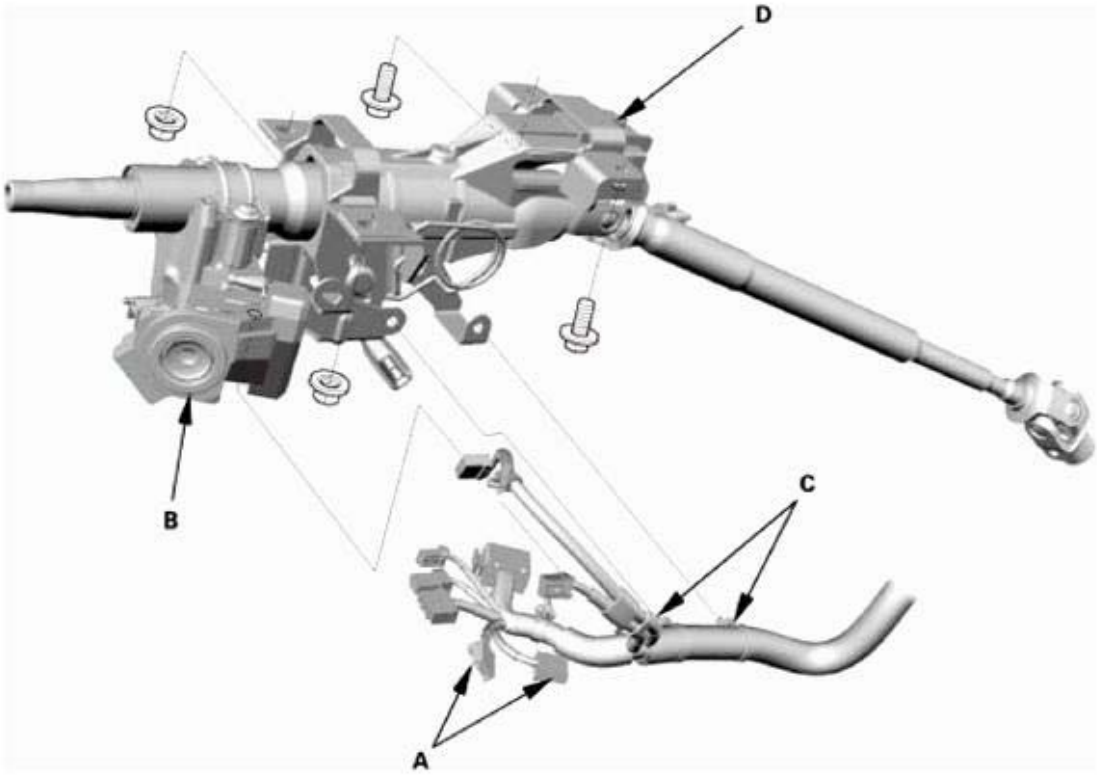

Fig. 61: Identifying Steering Column, Connectors, Ignition Switch And Wire Harness Clips
Courtesy of AMERICAN HONDA MOTOR CO., INC.

2. Detach the wire harness clips (C) from the steering column.
3. Remove the steering column (D).

NOTE: **Do not release the lock lever until the steering column is installed. If the lock lever is released before installation, adjust the steering column after installation.**

INSPECTION

1. Steering Column Inspection
   1. Check these items:
      - Check the upper ball bearing (A) and the lower ball bearing (B) for play and proper movement. If any bearing is noisy or has excessive play, replace the steering column as an assembly.
      - Check the spline shaft (C) for smooth movement in and out. If the spline shaft is removed, slip it into the spline tube by aligning the paint or stamped marks (D). If it sticks or binds, replace the steering column as an assembly.
      - Check the coat plates (E) for distortion or breakage. If there is distortion or breakage, replace

GETtheMANUALS.org

the steering column as an assembly.

- Check the tilt mechanism and telescopic mechanism for movement and damage.
- Check the absorbing plates (F) for distortion or breakage. If there is distortion or breakage, replace the steering column as an assembly.
- Apply multipurpose grease to the steering column.

NOTE: Do not use the silicone grease.

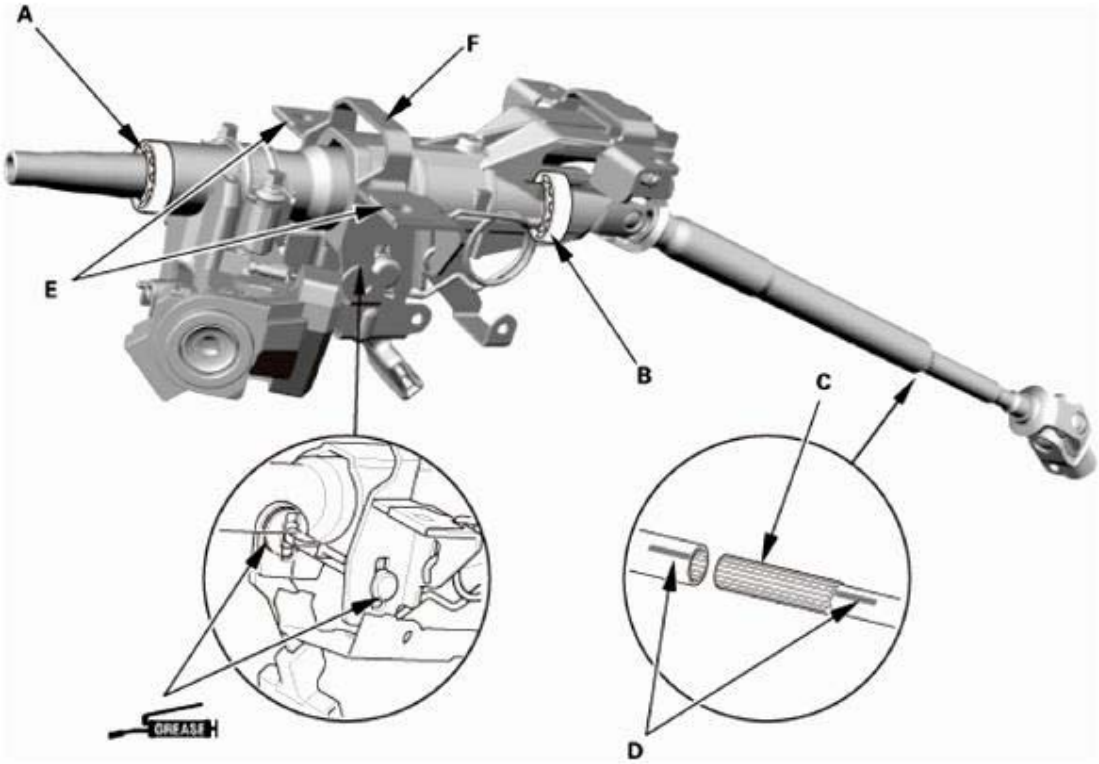

Fig. 62: Identifying Steering Column And Related Components
Courtesy of AMERICAN HONDA MOTOR CO., INC.

INSTALLATION

SRS components are located in this area. Review the **SRS COMPONENT LOCATIONS** , and the **PRECAUTIONS AND PROCEDURES** before doing repairs or service.

1. Steering Column
    1. Install the steering column (A).

NOTE: Do not release the lock lever until the steering column is installed. If the lock lever is released before installation, adjust the steering column after installation.

GETtheMANUALS.org

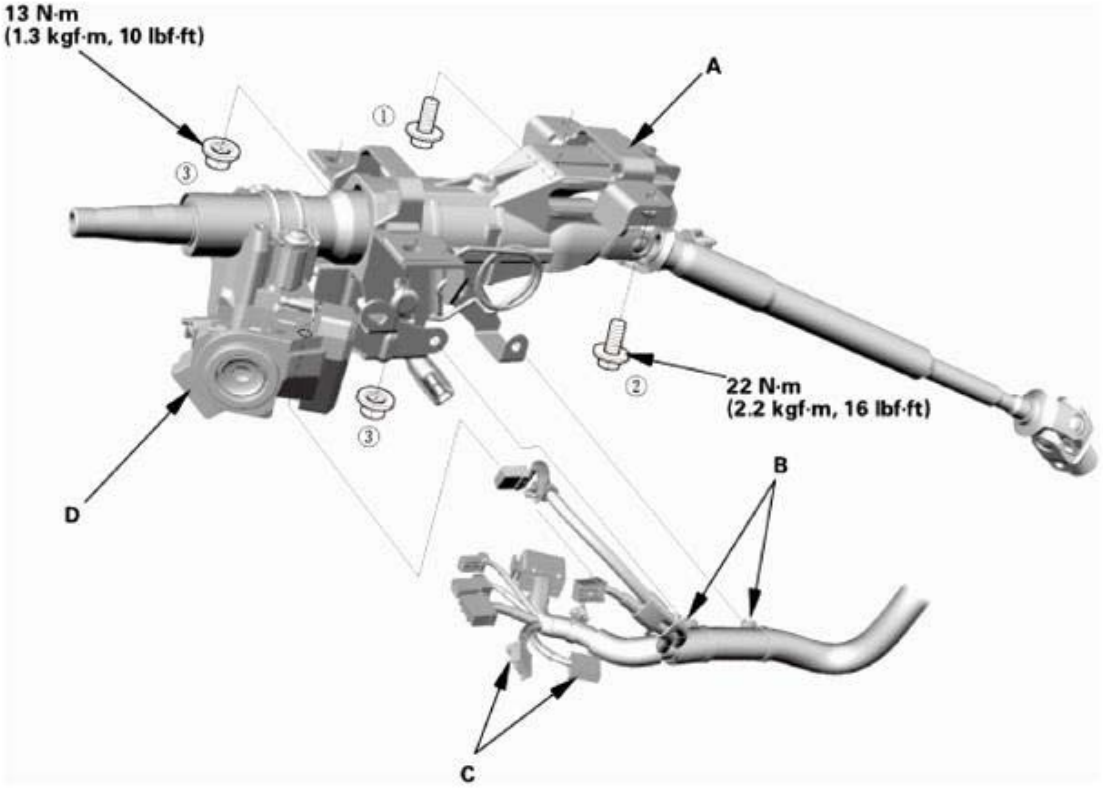

Fig. 63: Identifying Steering Column And Related Components With Torque Specifications
Courtesy of AMERICAN HONDA MOTOR CO., INC.

2. Loosely tighten the attaching nuts and bolts.
3. Tighten the attaching nuts and bolts to the specified torque in the sequence shown.
4. Install the wire harness clips (B) to the steering column.
5. Connect the connectors (C) to the ignition switch (D).

2. Steering Column Lower Slide Shaft - Release
   1. Cut the wire (A).

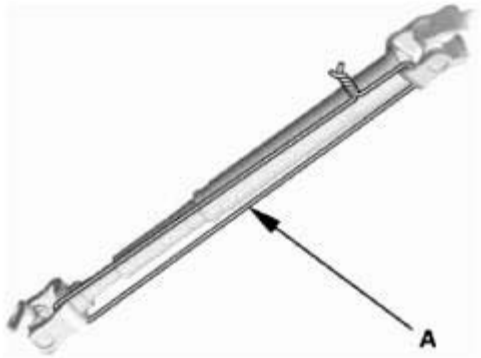

Fig. 64: Identifying Steering Column Lower Slide Shaft And Wire
Courtesy of AMERICAN HONDA MOTOR CO., INC.

GETtheMANUALS.org

3. Steering Joint - Reconnection
    1. Place the rack in the straight ahead driving position.
    2. Slip the lower end of the steering joint (A) onto the pinion shaft (B).

NOTE:

- **Pinion shaft with center guide: Install the steering joint by aligning the center guide (C).**
- **Pinion shaft without center guide: Position the steering column by aligning the gap (D) within the angle.**

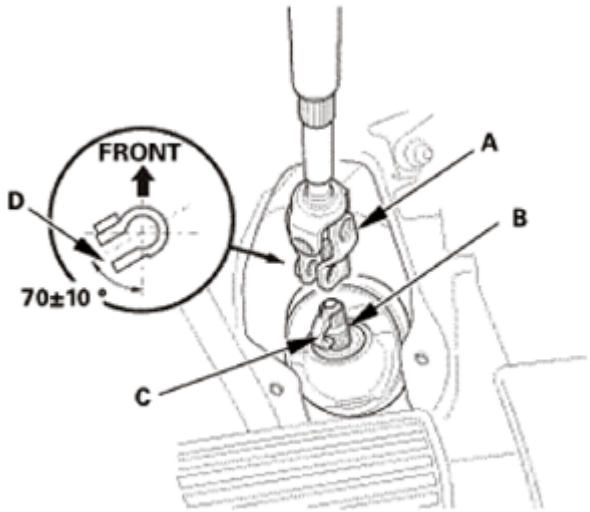

Fig. 65: Identifying Steering Joint, Pinion Shaft And Center Guide
Courtesy of AMERICAN HONDA MOTOR CO., INC.

    3. Align the bolt hole (A) on the steering joint with the groove (B) around the pinion shaft.
    4. Loosely install the steering joint bolt (C).
    5. Be sure that the joint bolt is securely in the groove in the pinion shaft.
    6. Pull on the steering joint to make sure that the steering joint is fully seated.
    7. Tighten the steering joint bolt to the specified torque.

GETtheMANUALS.org

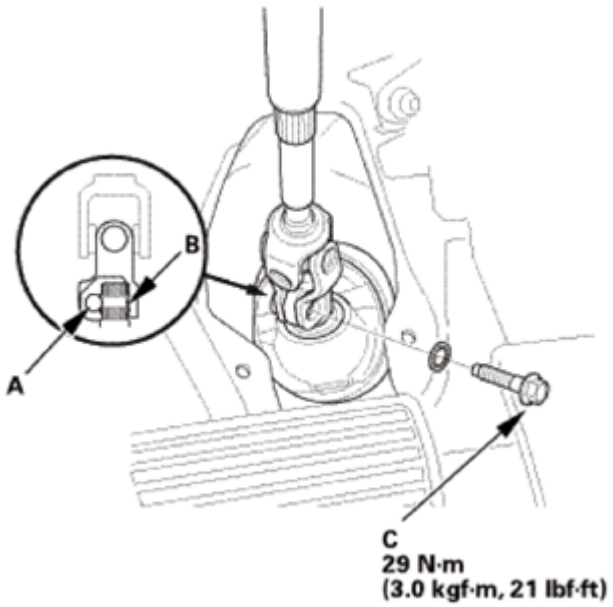

Fig. 66: Identifying Pinion Shaft Groove, Steering Joint Bolt And Bolt Hole With Torque Specification
Courtesy of AMERICAN HONDA MOTOR CO., INC.

4. Steering Joint Cover
    1. Install the steering joint cover (A).

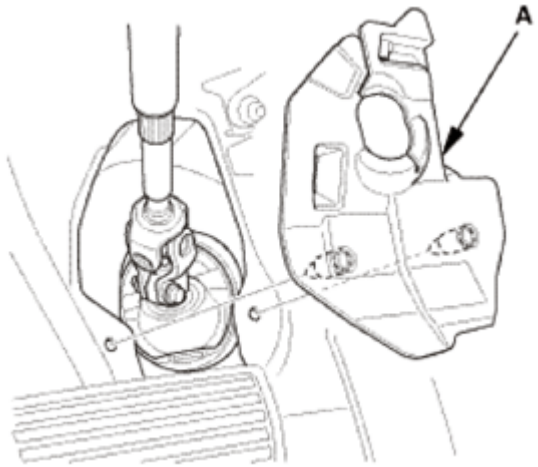

Fig. 67: Identifying Steering Joint Cover
Courtesy of AMERICAN HONDA MOTOR CO., INC.

5. Driver's Dashboard Undercover
    1. Install the driver's dashboard undercover (A). Make sure the clip (B) snap into place securely, and the pin (C) into the holder (D) securely.
    2. Turn the lock knob (E) 90 °.

GETtheMANUALS.org

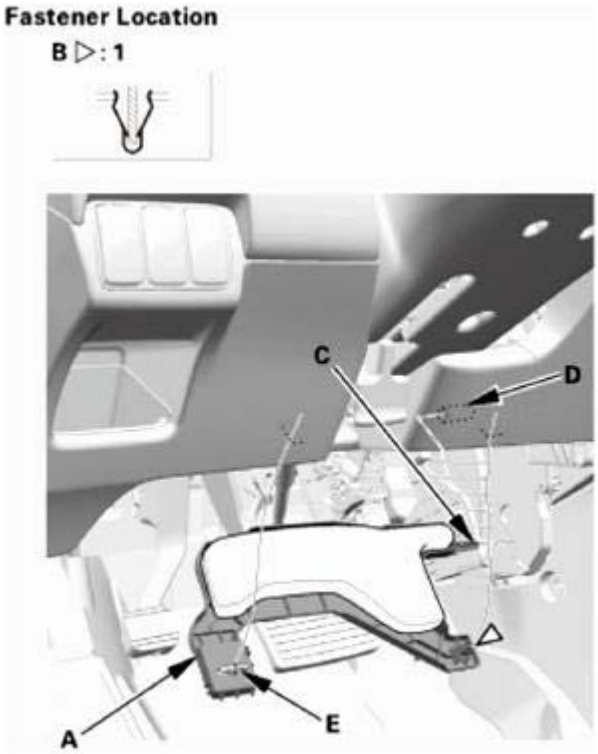

Fig. 68: Identifying Driver's Dashboard Undercover, Lock Knob, Holder, Pin And Clip
Courtesy of AMERICAN HONDA MOTOR CO., INC.

6. Combination Switch Body Assembly
    1. Install the combination switch body assembly (A).
    2. Tighten three screws (B) in the sequence shown.

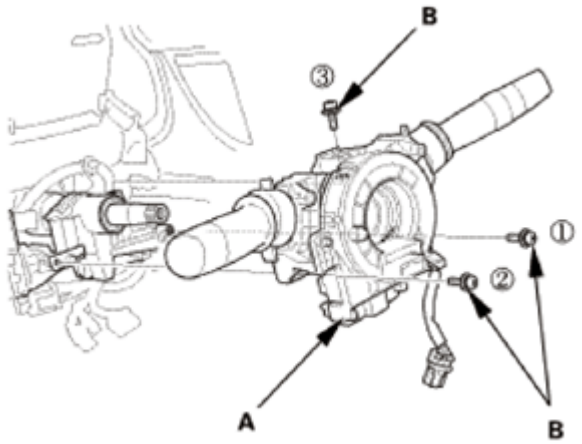

Fig. 69: Identifying Combination Switch Body Assembly Mounting Screws Tightening Sequence
Courtesy of AMERICAN HONDA MOTOR CO., INC.

    3. Connect the connectors (A).

GETtheMANUALS.org

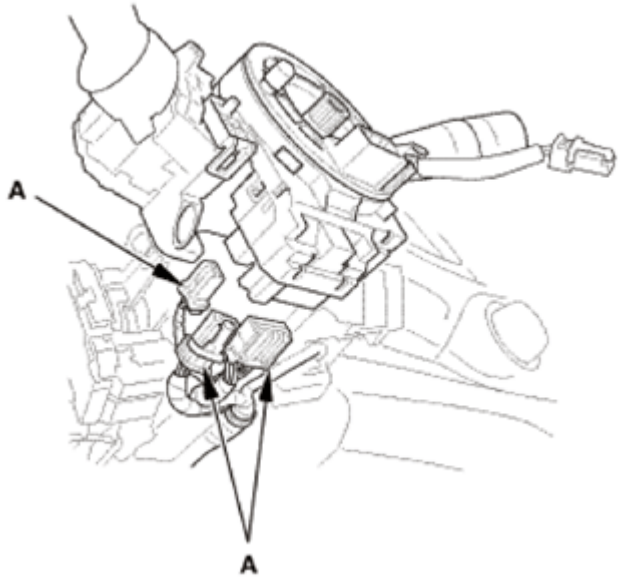

Fig. 70: Identifying Combination Switch Body Assembly Connectors
Courtesy of AMERICAN HONDA MOTOR CO., INC.

4. Connect the connectors (A).
5. Install the clip (B).

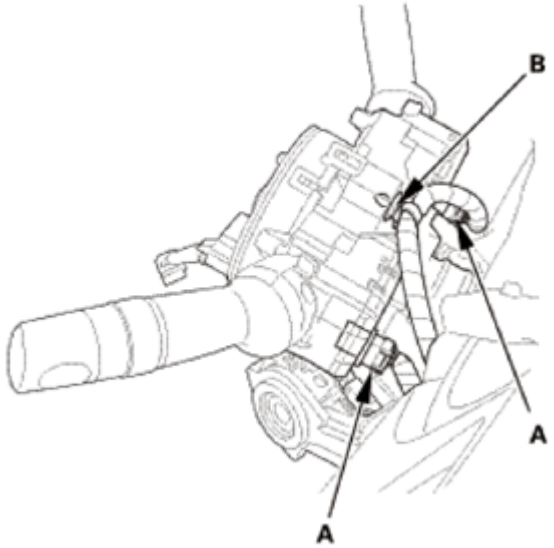

Fig. 71: Identifying Combination Switch Body Assembly Connectors And Clip
Courtesy of AMERICAN HONDA MOTOR CO., INC.

7. Lower Column Cover
    1. Push in on the lower column cover just above ignition switch opening (A) to engage the column cover with the locking tab (B).

GETtheMANUALS.org

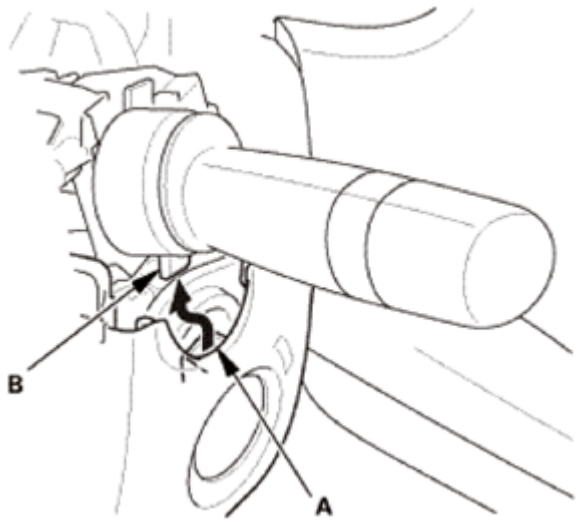

Fig. 72: Engaging Column Cover With Lock Tab
Courtesy of AMERICAN HONDA MOTOR CO., INC.

2. Install the lower column cover (A), then install the screw (B).

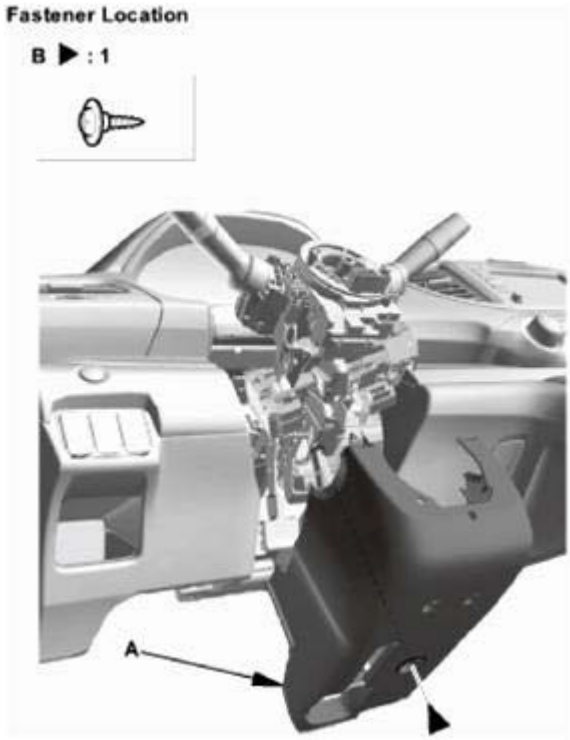

Fig. 73: Identifying Lower Column Cover And Screw
Courtesy of AMERICAN HONDA MOTOR CO., INC.

3. Install the screws (A) securing the lower column cover (B) from the front side.

GETtheMANUALS.org

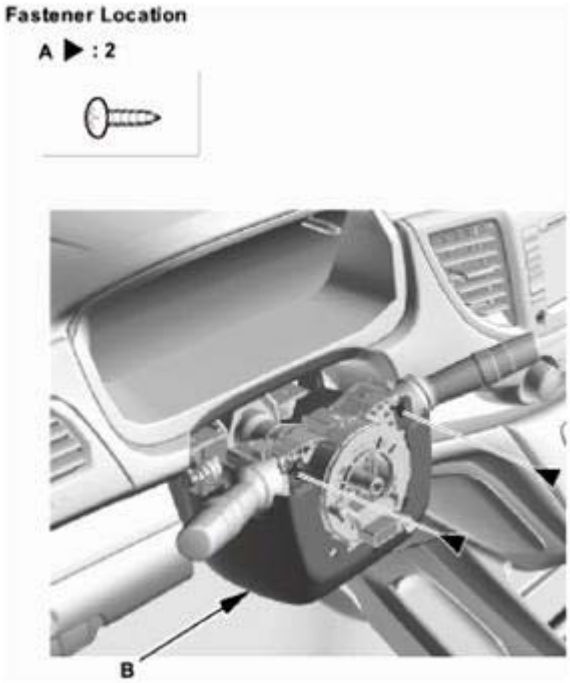

Fig. 74: Identifying Lower Column Cover And Screws
Courtesy of AMERICAN HONDA MOTOR CO., INC.

8. Upper Column Cover
    1. Install the upper column cover (A).

Fig. 75: Identifying Upper Column Cover
Courtesy of AMERICAN HONDA MOTOR CO., INC.

    2. Install the dashboard meter visor blind cover (A). Make sure the clips (B) and the hook (C) snap into place securely.

GETtheMANUALS.org

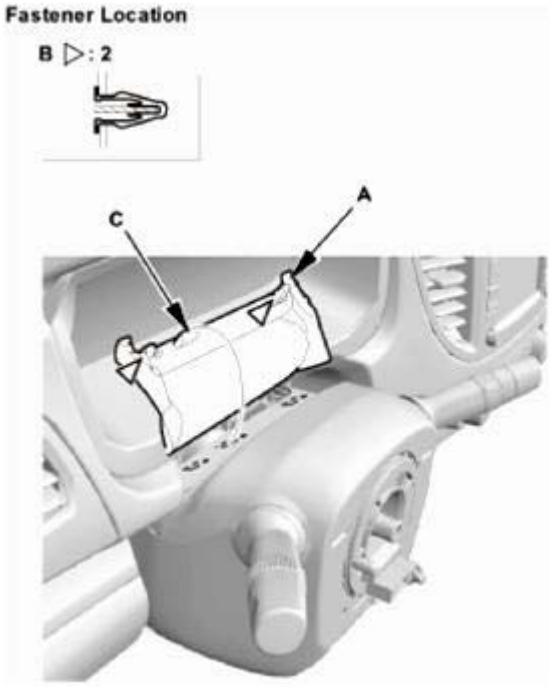

Fig. 76: Identifying Dashboard Meter Visor Blind Cover, Hooks And Clips
Courtesy of AMERICAN HONDA MOTOR CO., INC.

9. Steering Wheel Assembly
    1. Make sure the front wheels are pointing straight ahead.
    2. Center the cable reel (A). Do this by first rotating the cable reel clockwise until it stops.
    3. Rotate the cable reel counterclockwise about three full turns. The arrow mark (B) on the cable reel label should point straight up.

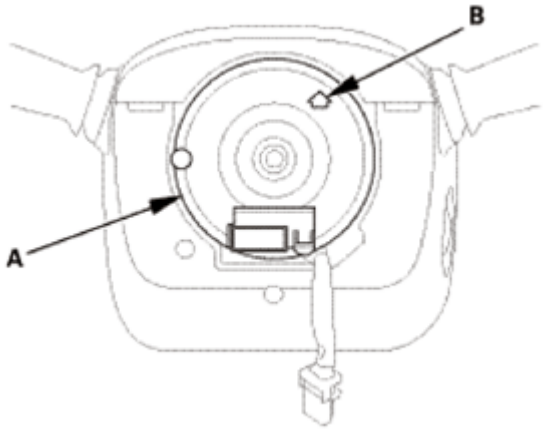

Fig. 77: Identifying Cable Reel With Arrow Mark
Courtesy of AMERICAN HONDA MOTOR CO., INC.

    4. Position the steering wheel hub (A) so that it engages the pin (B) of the cable reel.

GETtheMANUALS.org

5. Install the steering wheel (C) on to the steering column shaft.

NOTE: **Do not tap on the steering wheel or the steering column shaft when installing the steering wheel.**

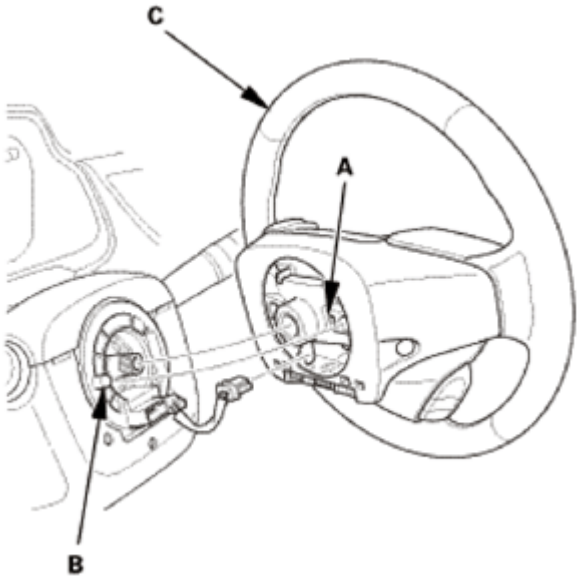

Fig. 78: Identifying Steering Wheel, Hub And Pin
Courtesy of AMERICAN HONDA MOTOR CO., INC.

6. Install the steering wheel bolt (A), and tighten it to the specified torque.
7. Connect the connector (B).
8. Make sure the wire harness is routed and fastened properly.

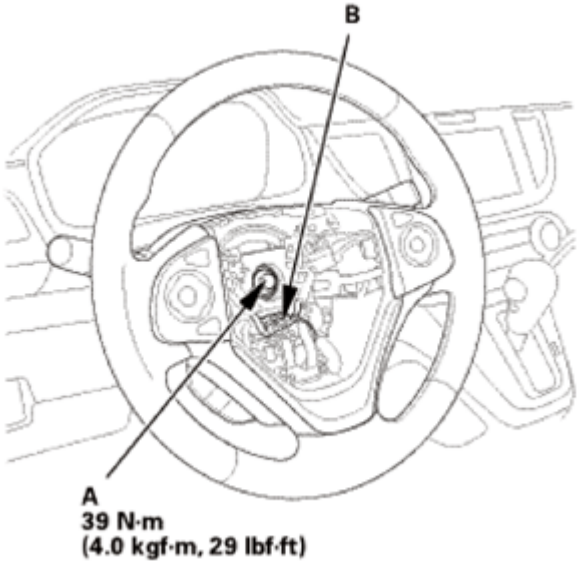

Fig. 79: Identifying Steering Wheel Bolt And Connector With Torque Specifications

GETtheMANUALS.org

Courtesy of AMERICAN HONDA MOTOR CO., INC.

10. Driver's Airbag

NOTE: If you are replacing a deployed driver's airbag, inspect the cable reel for heat damage. If there is any damage, replace the cable reel.

1. Place the driver's airbag (A) in the steering wheel.
2. Tighten the new TORX bolts using a TORX T30 bit.

NOTE: Make sure the clearance (B) between the steering wheel and the horn pad is the specified value.

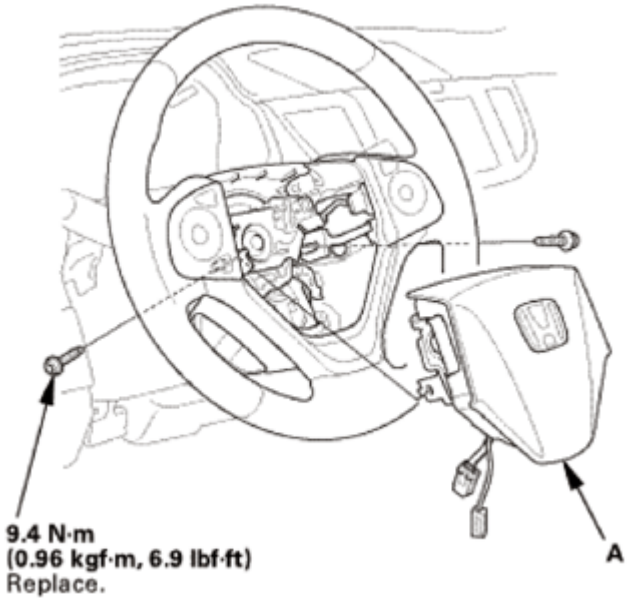

Fig. 80: Identifying Driver Airbag With Torque Specifications
Courtesy of AMERICAN HONDA MOTOR CO., INC.

GETtheMANUALS.org

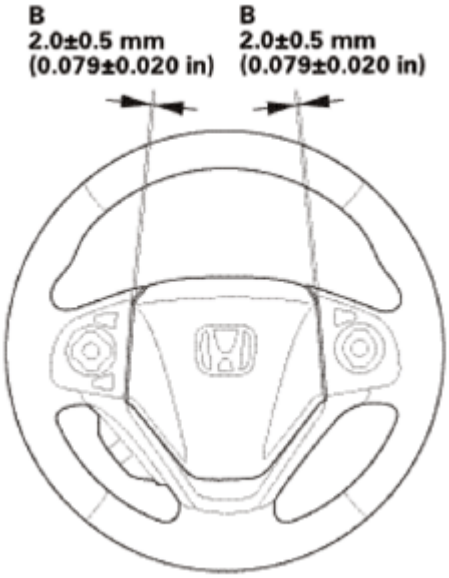

Fig. 81: Identifying Clearance Between Steering Wheel And Horn Pad
Courtesy of AMERICAN HONDA MOTOR CO., INC.

3. Connect the driver's airbag inflator connector (A) on the cable reel harness.
4. Connect the horn switch connector (B).

NOTE: **After reconnecting the negative cable to the battery, make sure the horn works properly.**

5. Install the access panel (C).

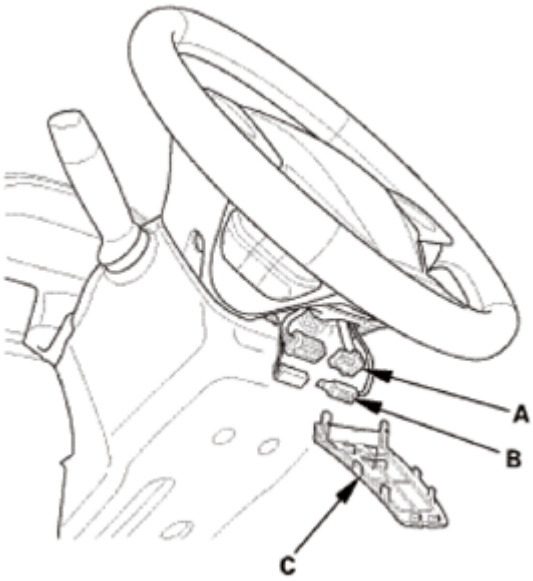

Fig. 82: Identifying Driver Airbag Inflator Connector, Horn Switch Connector And Access Panel

GETtheMANUALS.org

Courtesy of AMERICAN HONDA MOTOR CO., INC.

11. Battery Terminal (SRS) - Reconnection

NOTE: If the battery performance is abnormal, test the battery.

1. Clean the battery terminals.
2. Connect the positive cable (A) to the battery.

NOTE: Always connect the positive side first.

3. Connect the negative cable (B) to the battery.
4. Apply multipurpose grease to the terminals to prevent corrosion.

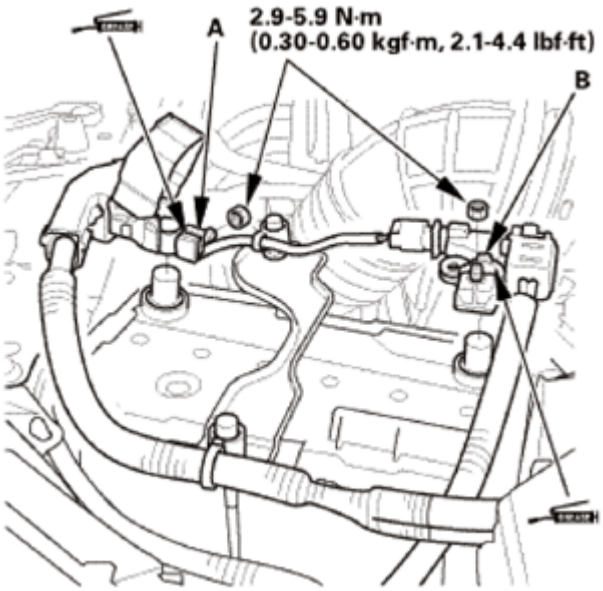

Fig. 83: Identifying Battery Positive And Negative Cable With Torque Specifications
Courtesy of AMERICAN HONDA MOTOR CO., INC.

12. Steering After Install - Check
    1. After installation, check these items:
        - Start the engine, allow it to idle, and turn the steering wheel from lock to lock several times.
        - Check that the EPS indicator does not come on.
        - Check the steering wheel spoke angle. If steering spoke angles to the right and left are not equal (steering wheel and rack are not centered), correct the engagement of the joint/pinion shaft splines.
13. Pre-Alignment Checks

For proper inspection and adjustment of the wheel alignment, do these checks:

GETtheMANUALS.org

1. Release the parking brake to avoid an incorrect measurement.
2. Make sure the suspension is not modified.
3. Make sure the fuel tank is full, and that the spare tire, the jack, and the tools are in place on the vehicle.
4. Check the tire size and tire pressure according to tire information.
5. Set the steering column to the middle tilt position and telescopic position.

14. Front Toe - Inspection

Use commercially available computerized four wheel alignment equipment to measure wheel alignment (caster, camber, toe, and turning angle). Follow the equipment manufacturer's instructions.

1. Set the steering column to the middle tilt position and telescopic positions.
2. Center the steering wheel spokes, and install a steering wheel holder tool.
3. Check the toe with the wheels pointed straight ahead.

Front toe-in: 0±2 mm (0±0.08 in)

- If adjustment is required, go to the front toe adjustment.
- If no adjustment is required, remove the alignment equipment.

15. HDS DLC - Connection

1. Connect the HDS to the data link connector (DLC) (A) located under the driver's side of the dashboard.
2. Turn the ignition switch to ON (II).
3. Make sure the HDS communicates with the vehicle. If it does not communicate, go to the DLC circuit troubleshooting.

Fig. 84: Identifying Data Link Connector
Courtesy of AMERICAN HONDA MOTOR CO., INC.

GETtheMANUALS.org

16. VSA Sensor Neutral Position - Memorization
    1. Park the vehicle on a flat and level surface, with the steering wheel in the straight ahead position.
    2. Select VSA ADJUSTMENT, then select ALL SENSORS with the HDS, and follow the screen prompts.

    NOTE: See the HDS Help menu for specific instructions.

17. Steering Angle Sensor Neutral Position - Clear
    1. Select EPS ADJUSTMENT, then select EPS STEERING ANGLE SENSOR VALUE CLEAR and follow the screen prompts on the HDS.

    NOTE: See the HDS Help menu for specific instructions.

STEERING COLUMN REMOVAL AND INSTALLATION

REMOVAL

SRS components are located in this area. Review the **SRS COMPONENT LOCATIONS** , and the **PRECAUTIONS AND PROCEDURES** before doing repairs or service.

1. Battery Terminal (SRS) - Disconnection
    1. Make sure the ignition switch is in LOCK (0).
    2. Disconnect and isolate the negative cable (A) from the battery.

    NOTE: Always disconnect the negative side first.

    3. Disconnect the positive cable (B) from the battery.
    4. Wait at least 3 minutes before starting work.

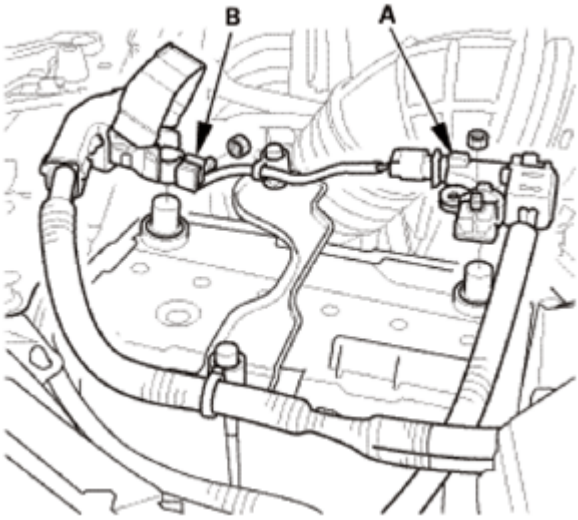

GETtheMANUALS.org

Fig. 85: Identifying Battery Positive And Negative Terminals
Courtesy of AMERICAN HONDA MOTOR CO., INC.

2. Driver's Airbag
    1. Remove the access panel (A).
    2. Disconnect the driver's airbag inflator connector (B) on the cable reel harness.
    3. Disconnect the horn switch connector (C).

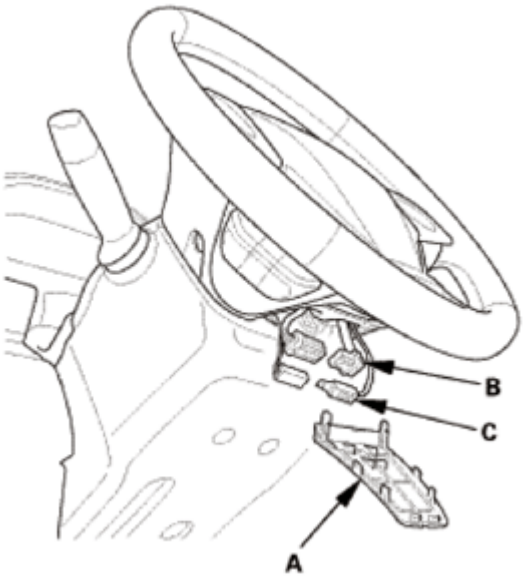

Fig. 86: Identifying Access Panel, Driver's Airbag Inflator Connector And Horn Switch Connector
Courtesy of AMERICAN HONDA MOTOR CO., INC.

    4. Remove the TORX bolts using a TORX T30 bit.
    5. Remove the driver's airbag (A).

GETtheMANUALS.org

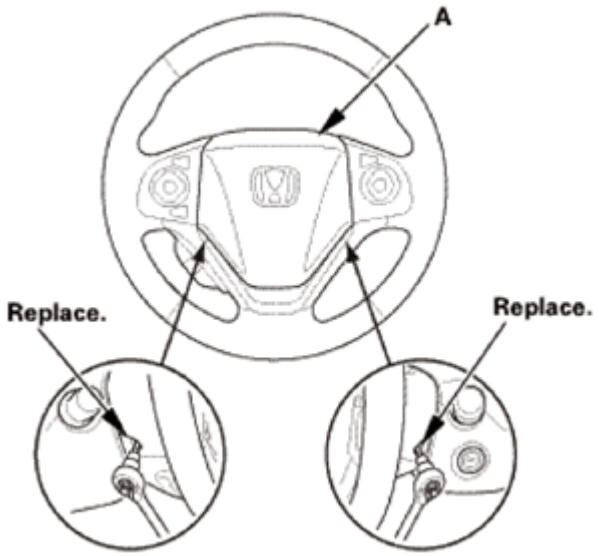

Fig. 87: Identifying Driver's Airbag And Torx Bolt
Courtesy of AMERICAN HONDA MOTOR CO., INC.

3. Steering Wheel Assembly
    1. Set the front wheels in the straight ahead position.
    2. Disconnect the connector (A).
    3. Loosen the steering wheel bolt (B) three turns.

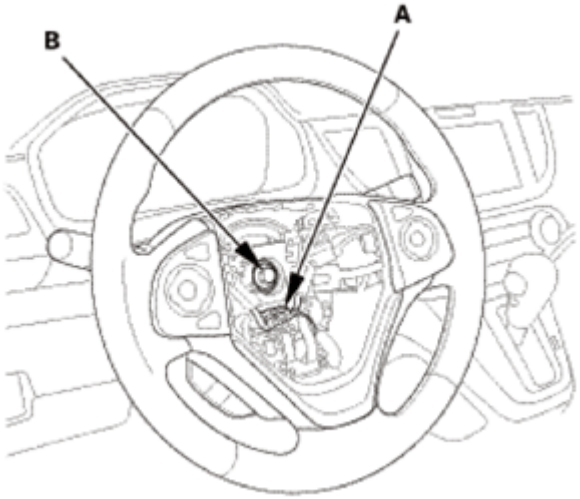

Fig. 88: Identifying Steering Wheel Connector And Bolt
Courtesy of AMERICAN HONDA MOTOR CO., INC.

    4. Install a commercially available steering wheel puller (A) on the steering wheel (B).
    5. Free the steering wheel from the steering column shaft by turning the pressure bolt (C) of the puller.

GETtheMANUALS.org

Note these items when removing the steering wheel:

- Do not tap on the steering wheel or the steering column shaft when removing the steering wheel.
- If you thread the puller bolts (D) into the wheel hub more than five threads, the bolts will hit the cable reel and damage it. To prevent this, install a pair of jam nuts five threads up on each puller bolt.

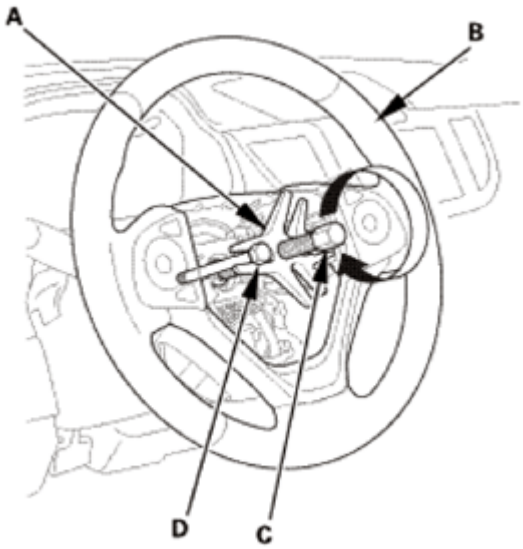

Fig. 89: Turning Steering Wheel Pressure Bolt Using Puller
Courtesy of AMERICAN HONDA MOTOR CO., INC.

6. Remove the steering wheel puller.
7. Remove the steering wheel (A) from the steering column.

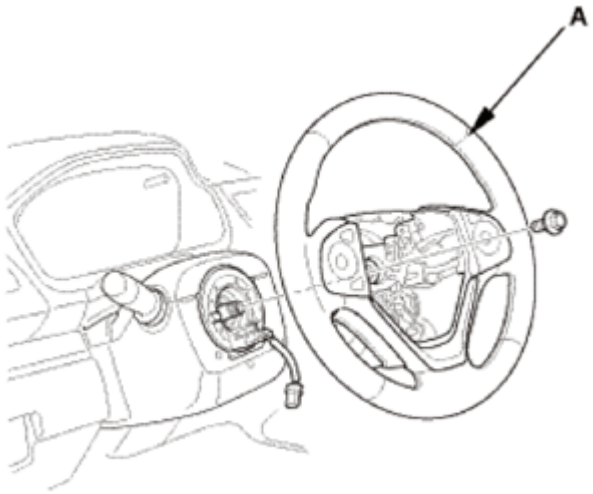

Fig. 90: Identifying Steering Wheel
Courtesy of AMERICAN HONDA MOTOR CO., INC.

GETtheMANUALS.org

4. Upper Column Cover
    1. Carefully pry out the dashboard meter visor blind cover (A) with the appropriate trim tool to detach the clips (B) and the hook (C), then tuck up the dashboard meter visor blind cover.

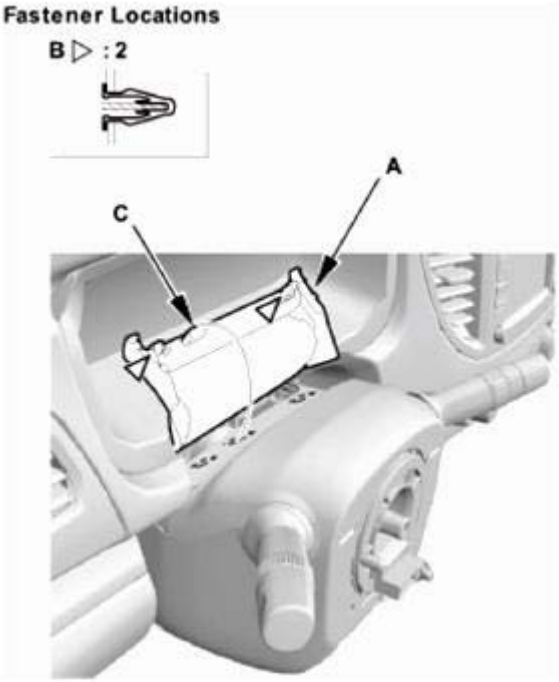

Fig. 91: Identifying Dashboard Meter Visor Blind Cover, Hooks And Clips
Courtesy of AMERICAN HONDA MOTOR CO., INC.

    2. Remove the upper column cover (A).

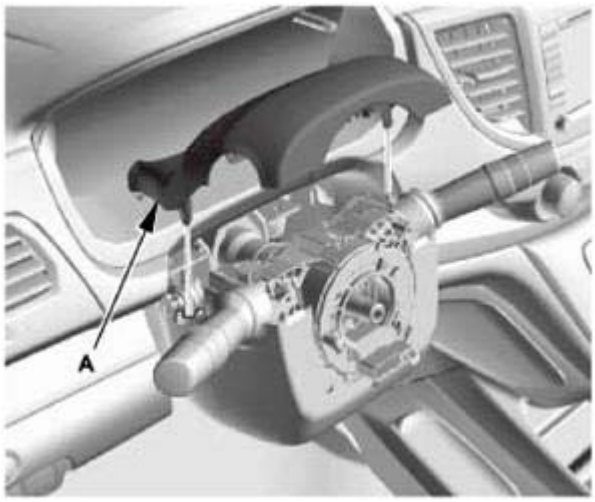

Fig. 92: Identifying Upper Column Cover
Courtesy of AMERICAN HONDA MOTOR CO., INC.

GETtheMANUALS.org

5. Lower Column Cover
    1. Remove the screws (A) securing the lower column cover (B) from the front side.

<u>Fig. 93: Identifying Lower Column Cover And Screw</u>
Courtesy of AMERICAN HONDA MOTOR CO., INC.

    2. Remove the screw (A), then remove the lower column cover (B).

GETtheMANUALS.org

Fig. 94: Identifying Lower Column Cover And Screw
Courtesy of AMERICAN HONDA MOTOR CO., INC.

6. Combination Switch Body Assembly
    1. Disconnect the connectors (A).
    2. Remove the clip (B).

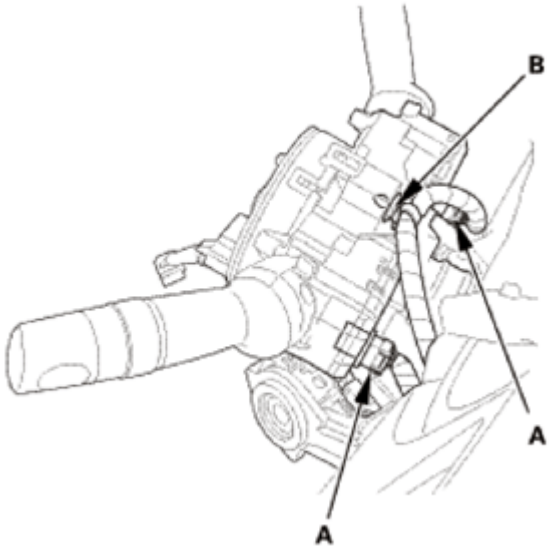

Fig. 95: Identifying Combination Switch Body Assembly Connectors And Clips
Courtesy of AMERICAN HONDA MOTOR CO., INC.

GETtheMANUALS.org

3. Disconnect the connectors (A).

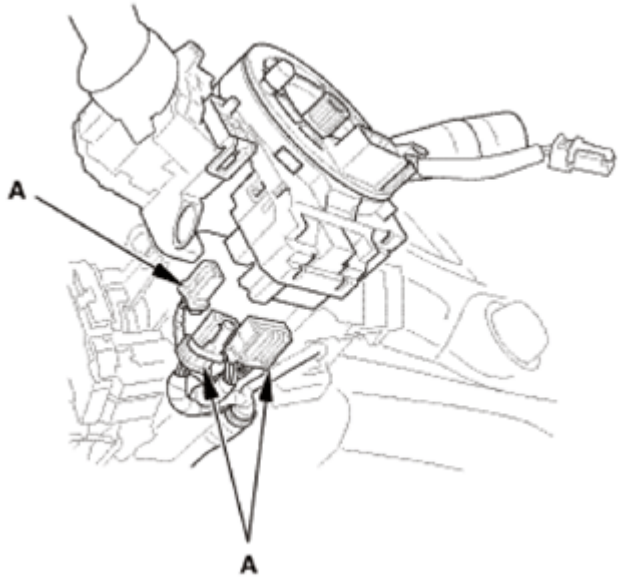

Fig. 96: Identifying Combination Switch Body Assembly Connectors
Courtesy of AMERICAN HONDA MOTOR CO., INC.

4. Remove the combination switch body assembly (A) from the steering column shaft.

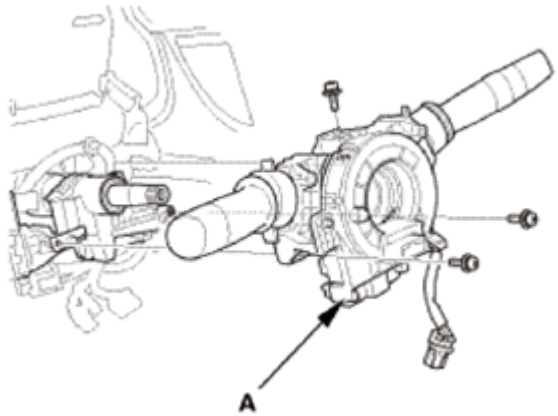

Fig. 97: Identifying Combination Switch Body Assembly
Courtesy of AMERICAN HONDA MOTOR CO., INC.

7. Driver's Dashboard Undercover
    1. Turn the lock knob (A) 90 °, then gently pull down the front edge of the driver's dashboard undercover (B) to detach the clip (C).
    2. Pull away the undercover to release the pin (D) from the holder (E), then remove the driver's dashboard undercover.

GETtheMANUALS.org

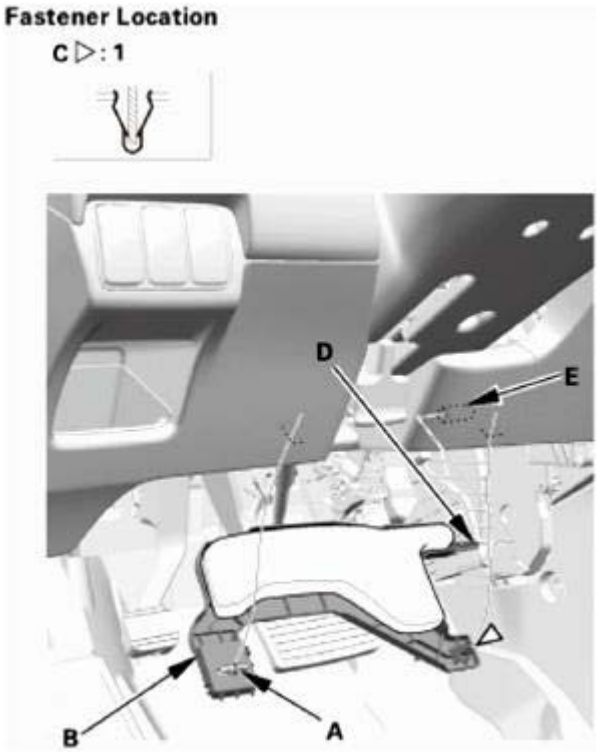

Fig. 98: Identifying Driver's Dashboard Undercover, Lock Knob, Holder, Clip And Pin
Courtesy of AMERICAN HONDA MOTOR CO., INC.

8. Steering Joint Cover
    1. Remove the steering joint cover (A).

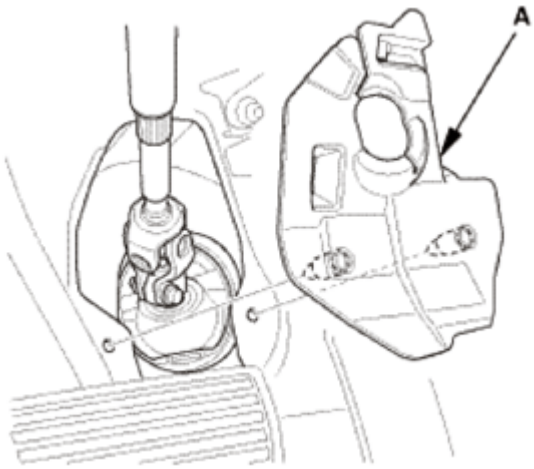

Fig. 99: Identifying Steering Joint Cover
Courtesy of AMERICAN HONDA MOTOR CO., INC.

9. Steering Column Lower Slide Shaft - Hold
    1. Set the steering column to the center tilt position, and to the center telescopic position.

GETtheMANUALS.org

2. Hold the lower slide shaft (A) on the column with a piece of wire (B) between the joint yoke (C) of the lower slide shaft and the joint yoke (D) of the upper shaft to prevent the lower slider shaft from pulling out.

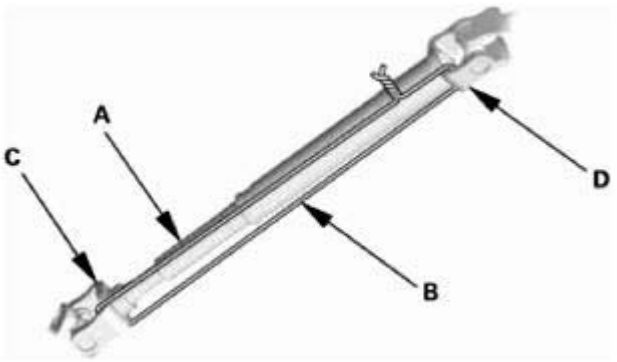

Fig. 100: Holding Lower Slide Shaft On Column Using Wire
Courtesy of AMERICAN HONDA MOTOR CO., INC.

10. Steering Joint - Disconnection
    1. Remove the steering joint bolt (A).
    2. Disconnect the steering joint (B) from the pinion shaft.

NOTE:

- **If the center guide (C) is in place and has not moved, leave it in place.**
- **If the center guide has come off, discard it.**

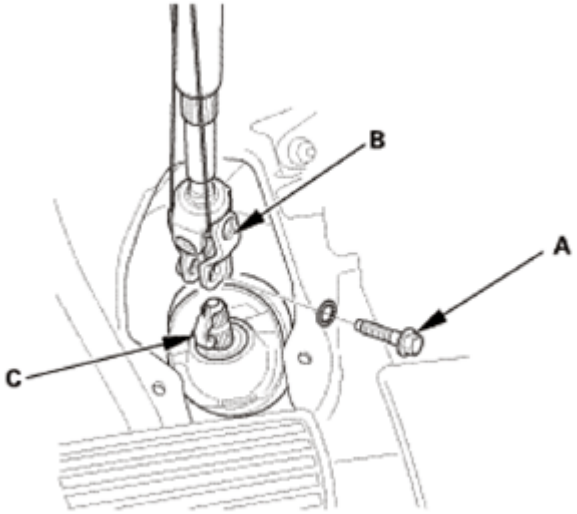

Fig. 101: Identifying Steering Joint, Center Guide And Bolt
Courtesy of AMERICAN HONDA MOTOR CO., INC.

11. Steering Column

GETtheMANUALS.org

1. Disconnect the connectors (A) from the ignition switch (B).

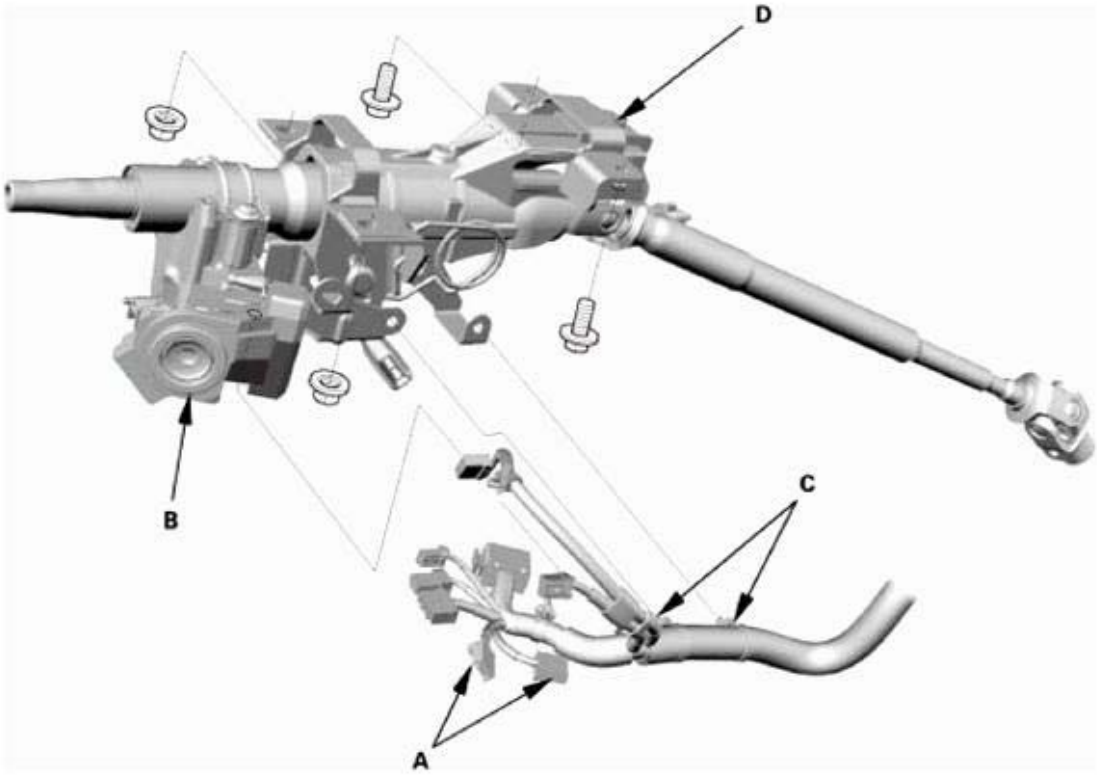

Fig. 102: Identifying Steering Column, Connectors, Ignition Switch And Wire Harness Clips
Courtesy of AMERICAN HONDA MOTOR CO., INC.

2. Detach the wire harness clips (C) from the steering column.
3. Remove the steering column (D).

NOTE: **Do not release the lock lever until the steering column is installed. If the lock lever is released before installation, adjust the steering column after installation.**

INSTALLATION

SRS components are located in this area. Review the **SRS COMPONENT LOCATIONS** , and the **PRECAUTIONS AND PROCEDURES** before doing repairs or service.

1. Steering Column
    1. Install the steering column (A).

NOTE: **Do not release the lock lever until the steering column is installed. If the lock lever is released before installation, adjust the steering column after installation.**

GETtheMANUALS.org

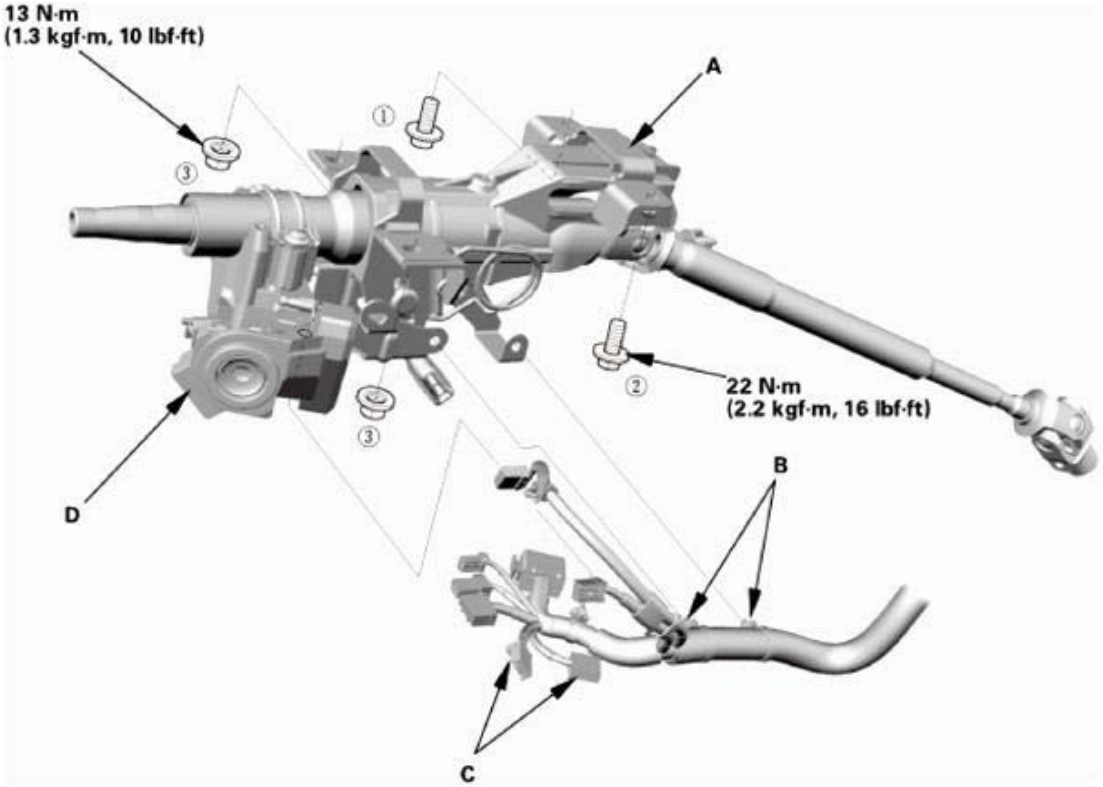

Fig. 103: Identifying Steering Column And Related Components With Torque Specifications
Courtesy of AMERICAN HONDA MOTOR CO., INC.

2. Loosely tighten the attaching nuts and bolts.
3. Tighten the attaching nuts and bolts to the specified torque in the sequence shown.
4. Install the wire harness clips (B) to the steering column.
5. Connect the connectors (C) to the ignition switch (D).

2. Steering Column Lower Slide Shaft - Release
   1. Cut the wire (A).

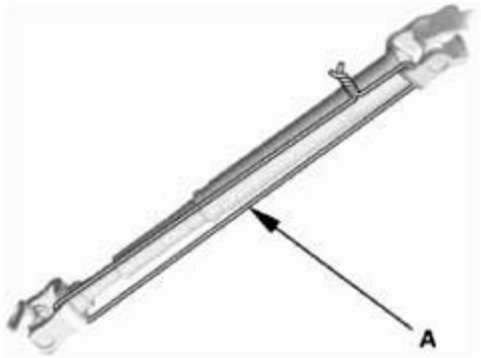

Fig. 104: Identifying Steering Column Lower Slide Shaft And Wire
Courtesy of AMERICAN HONDA MOTOR CO., INC.

GETtheMANUALS.org

3. Steering Joint - Reconnection
    1. Place the rack in the straight ahead driving position.
    2. Slip the lower end of the steering joint (A) onto the pinion shaft (B).

NOTE:

- **Pinion shaft with center guide: Install the steering joint by aligning the center guide (C).**
- **Pinion shaft without center guide: Position the steering column by aligning the gap (D) within the angle.**

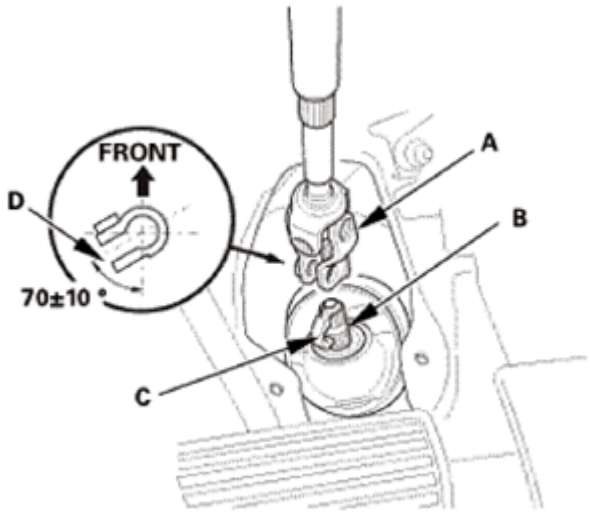

Fig. 105: Identifying Steering Joint, Pinion Shaft And Center Guide
Courtesy of AMERICAN HONDA MOTOR CO., INC.

    3. Align the bolt hole (A) on the steering joint with the groove (B) around the pinion shaft.
    4. Loosely install the steering joint bolt (C).
    5. Be sure that the joint bolt is securely in the groove in the pinion shaft.
    6. Pull on the steering joint to make sure that the steering joint is fully seated.
    7. Tighten the steering joint bolt to the specified torque.

GETtheMANUALS.org

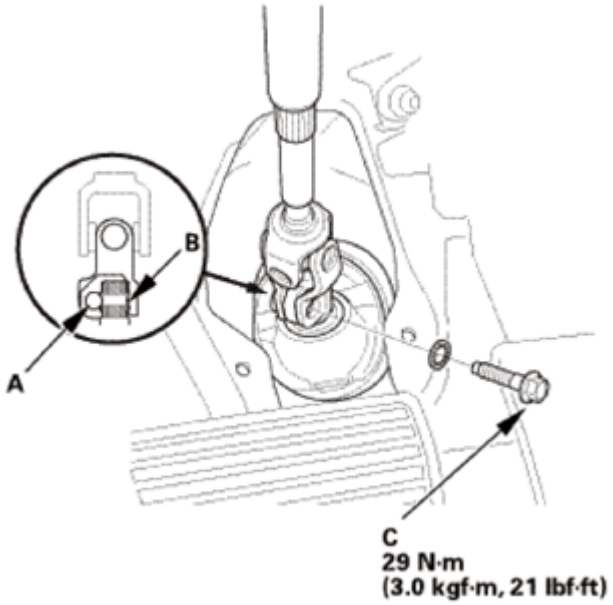

Fig. 106: Identifying Pinion Shaft Groove, Steering Joint Bolt And Bolt Hole With Torque Specification
Courtesy of AMERICAN HONDA MOTOR CO., INC.

4. Steering Joint Cover
    1. Install the steering joint cover (A).

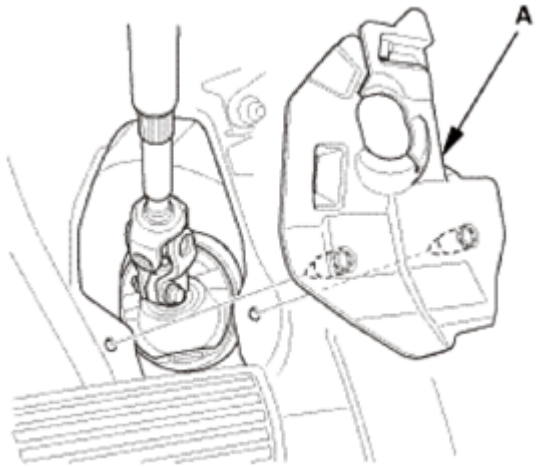

Fig. 107: Identifying Steering Joint Cover
Courtesy of AMERICAN HONDA MOTOR CO., INC.

5. Driver's Dashboard Undercover
    1. Install the driver's dashboard undercover (A). Make sure the clip (B) snap into place securely, and the pin (C) into the holder (D) securely.
    2. Turn the lock knob (E) 90 °.

GETtheMANUALS.org

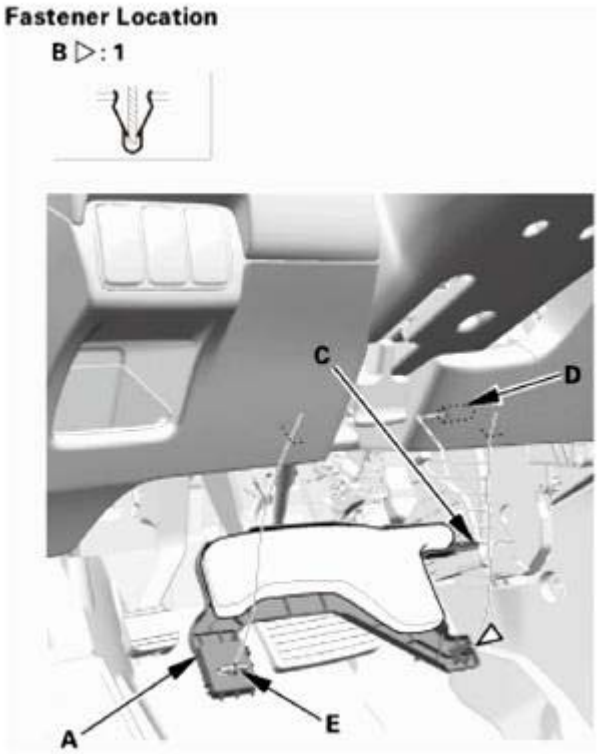

Fig. 108: Identifying Driver's Dashboard Undercover, Lock Knob, Holder, Pin And Clip
Courtesy of AMERICAN HONDA MOTOR CO., INC.

6. Combination Switch Body Assembly
    1. Install the combination switch body assembly (A).
    2. Tighten three screws (B) in the sequence shown.

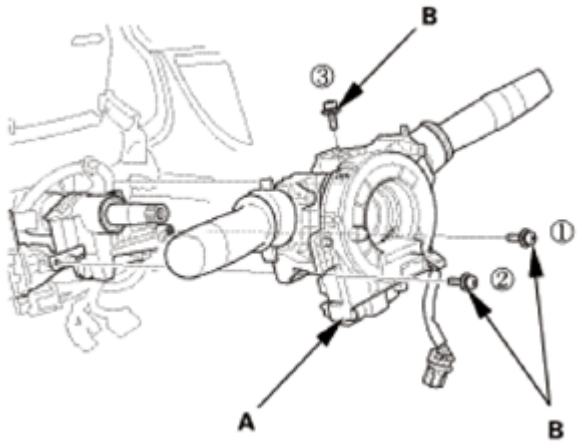

Fig. 109: Identifying Combination Switch Body Assembly Mounting Screws Tightening Sequence
Courtesy of AMERICAN HONDA MOTOR CO., INC.

3. Connect the connectors (A).

GETtheMANUALS.org

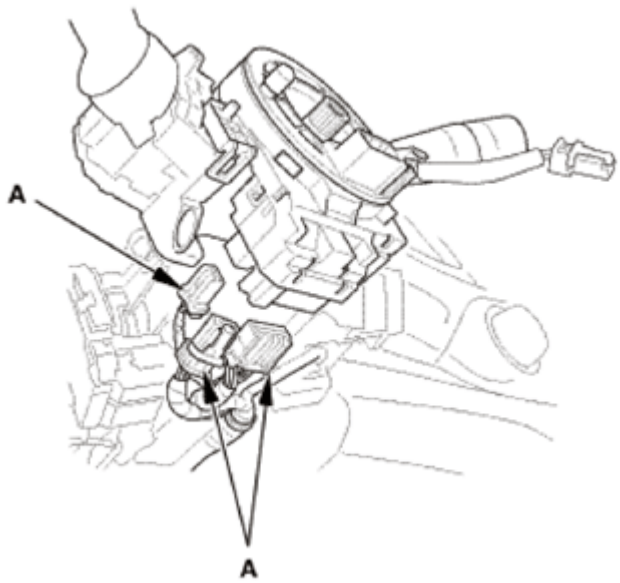

Fig. 110: Identifying Combination Switch Body Assembly Connectors
Courtesy of AMERICAN HONDA MOTOR CO., INC.

4. Connect the connectors (A).
5. Install the clip (B).

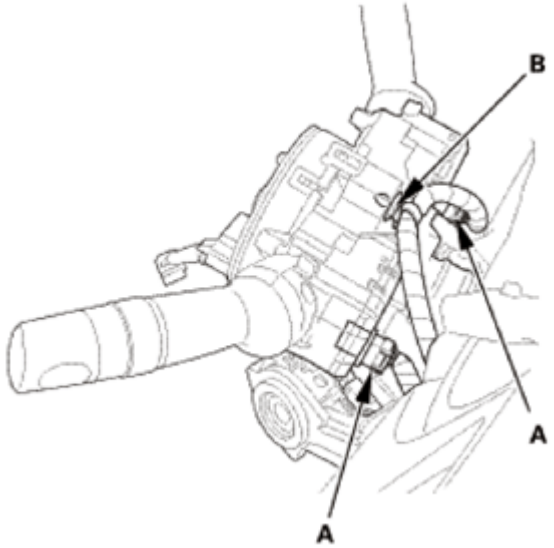

Fig. 111: Identifying Combination Switch Body Assembly Connectors And Clip
Courtesy of AMERICAN HONDA MOTOR CO., INC.

7. Lower Column Cover
    1. Push in on the lower column cover just above ignition switch opening (A) to engage the column cover with the locking tab (B).

GETtheMANUALS.org

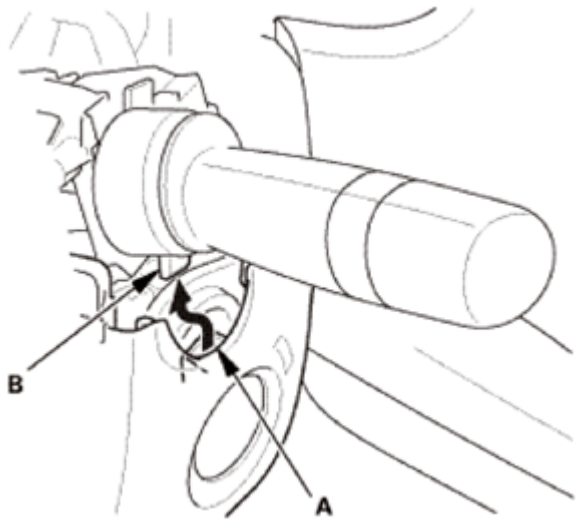

Fig. 112: Engaging Column Cover With Lock Tab
Courtesy of AMERICAN HONDA MOTOR CO., INC.

2. Install the lower column cover (A), then install the screw (B).

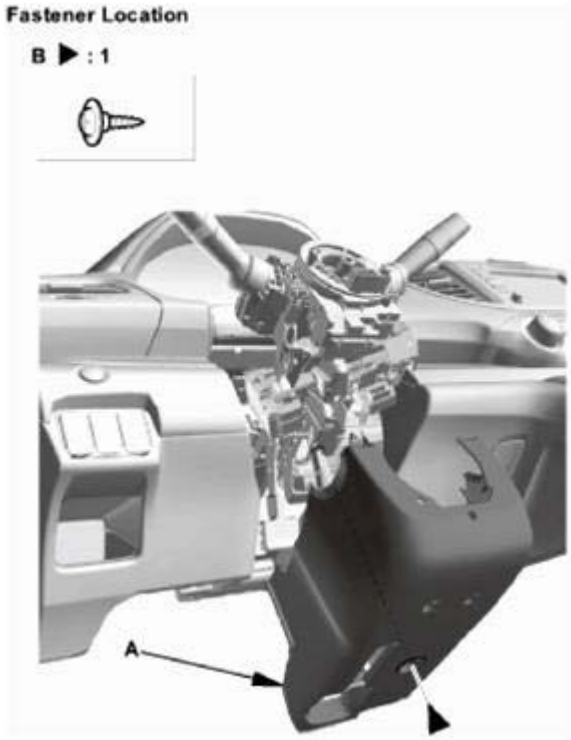

Fig. 113: Identifying Lower Column Cover And Screw
Courtesy of AMERICAN HONDA MOTOR CO., INC.

3. Install the screws (A) securing the lower column cover (B) from the front side.

GETtheMANUALS.org

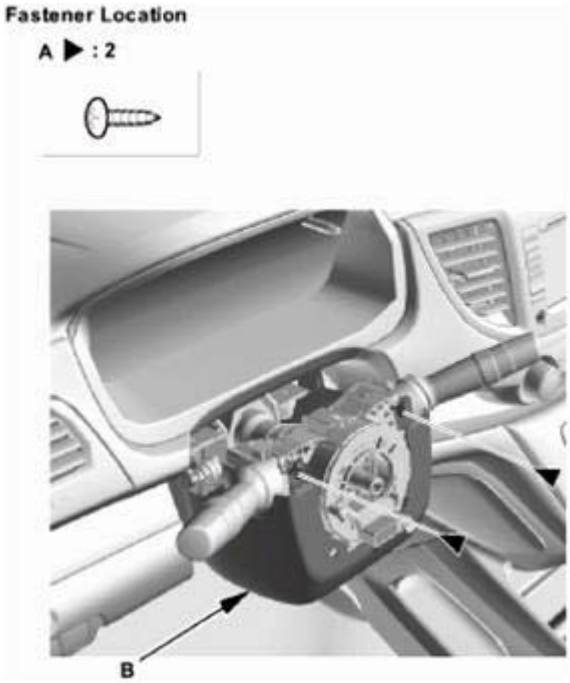

Fig. 114: Identifying Lower Column Cover And Screws
Courtesy of AMERICAN HONDA MOTOR CO., INC.

8. Upper Column Cover
    1. Install the upper column cover (A).

Fig. 115: Identifying Upper Column Cover
Courtesy of AMERICAN HONDA MOTOR CO., INC.

    2. Install the dashboard meter visor blind cover (A). Make sure the clips (B) and the hook (C) snap into place securely.

GETtheMANUALS.org

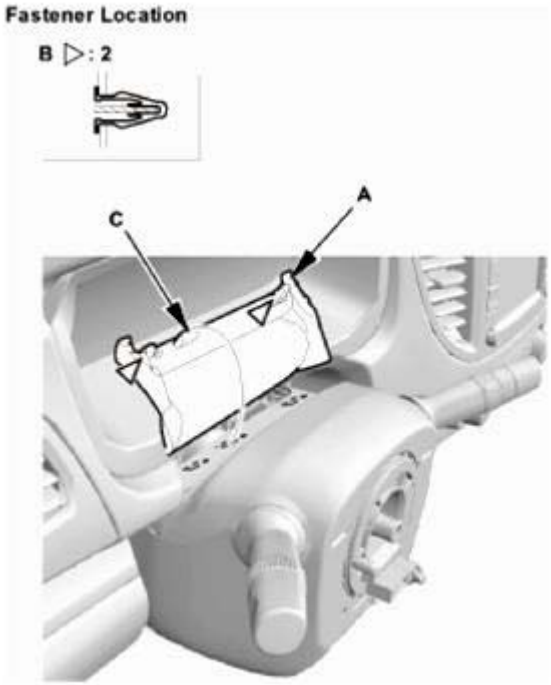

Fig. 116: Identifying Dashboard Meter Visor Blind Cover, Hooks And Clips
Courtesy of AMERICAN HONDA MOTOR CO., INC.

9. Steering Wheel Assembly
    1. Make sure the front wheels are pointing straight ahead.
    2. Center the cable reel (A). Do this by first rotating the cable reel clockwise until it stops.
    3. Rotate the cable reel counterclockwise about three full turns. The arrow mark (B) on the cable reel label should point straight up.

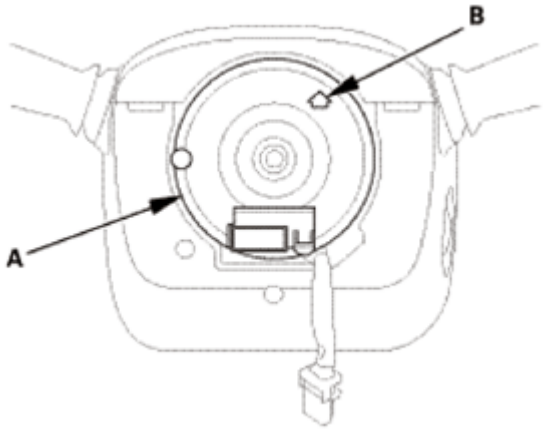

Fig. 117: Identifying Cable Reel With Arrow Mark
Courtesy of AMERICAN HONDA MOTOR CO., INC.

    4. Position the steering wheel hub (A) so that it engages the pin (B) of the cable reel.

GETtheMANUALS.org

5. Install the steering wheel (C) on to the steering column shaft.

NOTE: **Do not tap on the steering wheel or the steering column shaft when installing the steering wheel.**

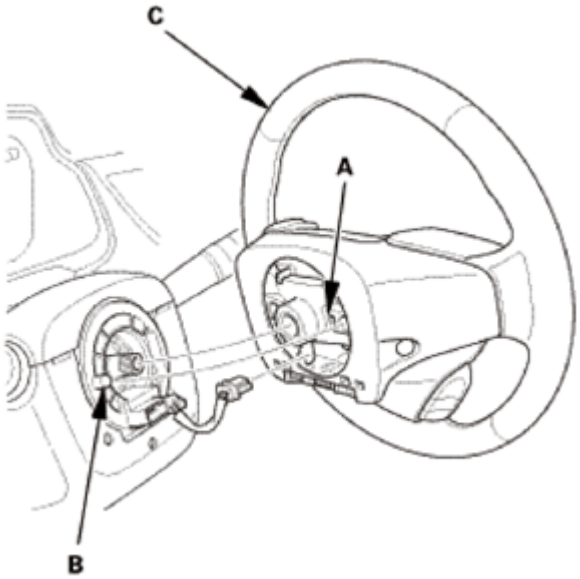

Fig. 118: Identifying Steering Wheel, Hub And Pin
Courtesy of AMERICAN HONDA MOTOR CO., INC.

6. Install the steering wheel bolt (A), and tighten it to the specified torque.
7. Connect the connector (B).
8. Make sure the wire harness is routed and fastened properly.

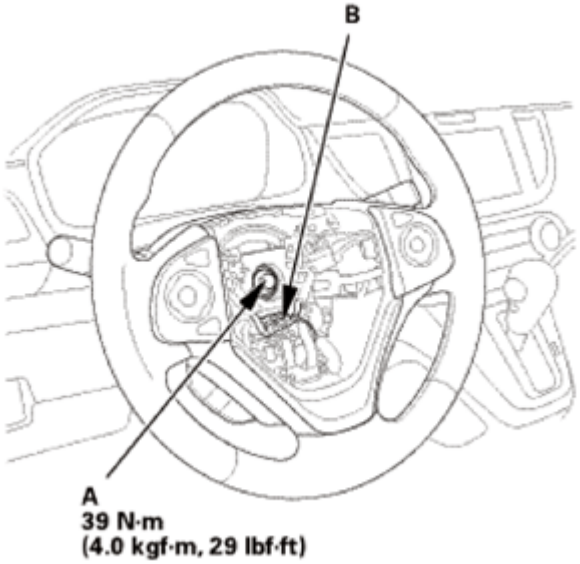

Fig. 119: Identifying Steering Wheel Bolt And Connector With Torque Specifications

GETtheMANUALS.org

Courtesy of AMERICAN HONDA MOTOR CO., INC.

10. Driver's Airbag

NOTE: **If you are replacing a deployed driver's airbag, inspect the cable reel for heat damage. If there is any damage, replace the cable reel.**

1. Place the driver's airbag (A) in the steering wheel.
2. Tighten the new TORX bolts using a TORX T30 bit.

NOTE: **Make sure the clearance (B) between the steering wheel and the horn pad is the specified value.**

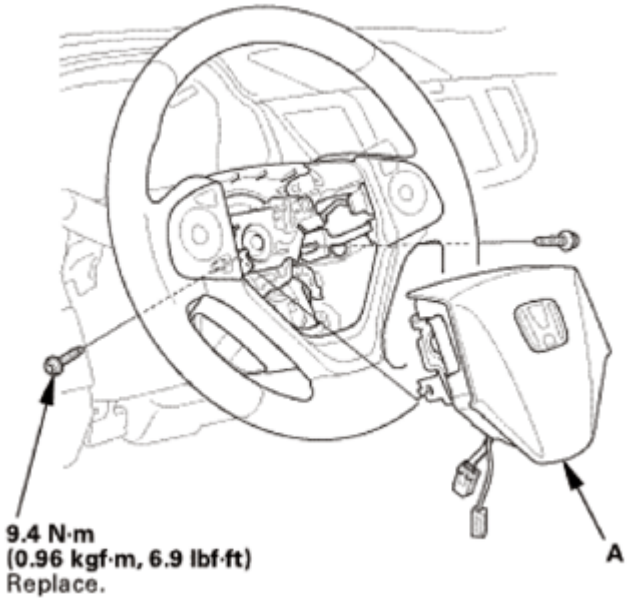

Fig. 120: Identifying Driver Airbag With Torque Specifications
Courtesy of AMERICAN HONDA MOTOR CO., INC.

GETtheMANUALS.org

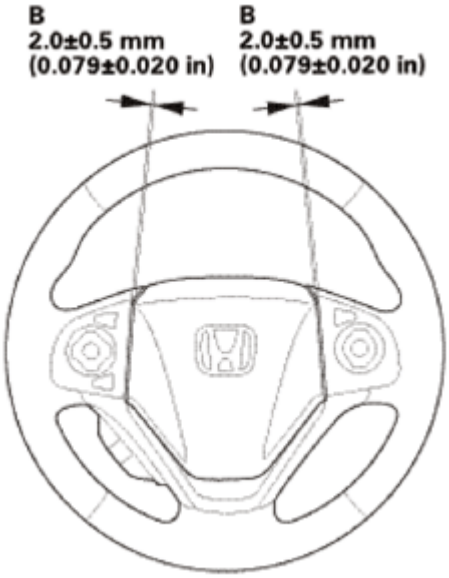

Fig. 121: Identifying Clearance Between Steering Wheel And Horn Pad
Courtesy of AMERICAN HONDA MOTOR CO., INC.

3. Connect the driver's airbag inflator connector (A) on the cable reel harness.
4. Connect the horn switch connector (B).

NOTE: **After reconnecting the negative cable to the battery, make sure the horn works properly.**

5. Install the access panel (C).

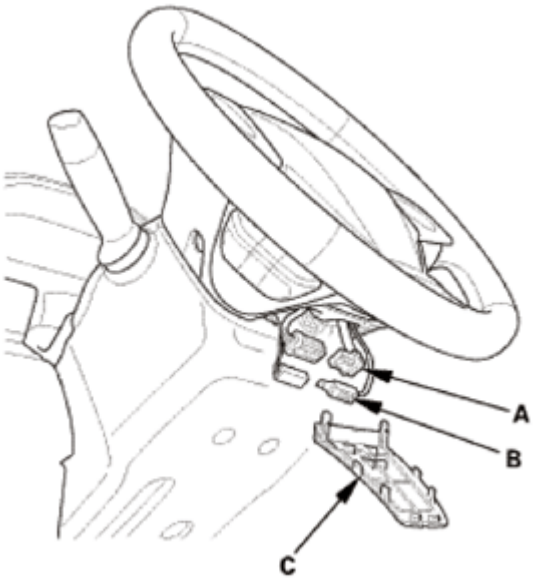

Fig. 122: Identifying Driver Airbag Inflator Connector, Horn Switch Connector And Access Panel

GETtheMANUALS.org

Courtesy of AMERICAN HONDA MOTOR CO., INC.

11. Battery Terminal (SRS) - Reconnection

NOTE: If the battery performance is abnormal, test the battery.

1. Clean the battery terminals.
2. Connect the positive cable (A) to the battery.

NOTE: Always connect the positive side first.

3. Connect the negative cable (B) to the battery.
4. Apply multipurpose grease to the terminals to prevent corrosion.

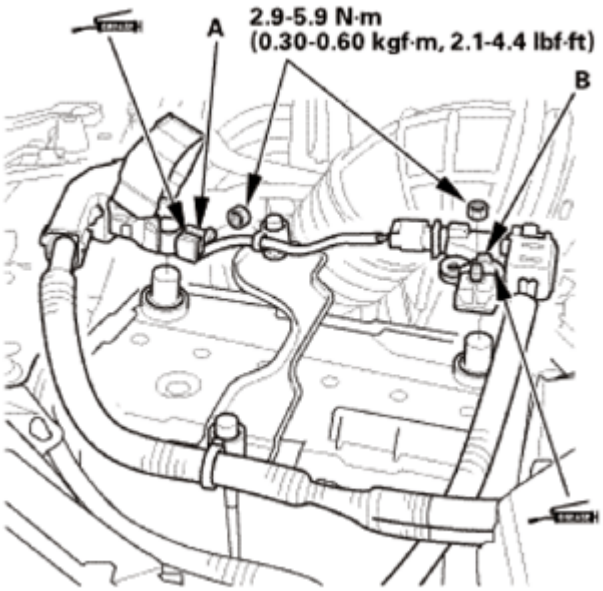

Fig. 123: Identifying Battery Positive And Negative Cable With Torque Specifications
Courtesy of AMERICAN HONDA MOTOR CO., INC.

12. Steering After Install - Check
    1. After installation, check these items:
        - Start the engine, allow it to idle, and turn the steering wheel from lock to lock several times.
        - Check that the EPS indicator does not come on.
        - Check the steering wheel spoke angle. If steering spoke angles to the right and left are not equal (steering wheel and rack are not centered), correct the engagement of the joint/pinion shaft splines.
13. Pre-Alignment Checks

For proper inspection and adjustment of the wheel alignment, do these checks:

GETtheMANUALS.org

1. Release the parking brake to avoid an incorrect measurement.
2. Make sure the suspension is not modified.
3. Make sure the fuel tank is full, and that the spare tire, the jack, and the tools are in place on the vehicle.
4. Check the tire size and tire pressure according to tire information.
5. Set the steering column to the middle tilt position and telescopic position.

14. Front Toe - Inspection

Use commercially available computerized four wheel alignment equipment to measure wheel alignment (caster, camber, toe, and turning angle). Follow the equipment manufacturer's instructions.

1. Set the steering column to the middle tilt position and telescopic positions.
2. Center the steering wheel spokes, and install a steering wheel holder tool.
3. Check the toe with the wheels pointed straight ahead.

Front toe-in: 0±2 mm (0±0.08 in)

- If adjustment is required, go to the front toe adjustment.
- If no adjustment is required, remove the alignment equipment.

15. HDS DLC - Connection

1. Connect the HDS to the data link connector (DLC) (A) located under the driver's side of the dashboard.
2. Turn the ignition switch to ON (II).
3. Make sure the HDS communicates with the vehicle. If it does not communicate, go to the DLC circuit troubleshooting.

Fig. 124: Identifying Data Link Connector
Courtesy of AMERICAN HONDA MOTOR CO., INC.

GETtheMANUALS.org

16. VSA Sensor Neutral Position - Memorization
    1. Park the vehicle on a flat and level surface, with the steering wheel in the straight ahead position.
    2. Select VSA ADJUSTMENT, then select ALL SENSORS with the HDS, and follow the screen prompts.

    NOTE: See the HDS Help menu for specific instructions.

17. Steering Angle Sensor Neutral Position - Clear
    1. Select EPS ADJUSTMENT, then select EPS STEERING ANGLE SENSOR VALUE CLEAR and follow the screen prompts on the HDS.

    NOTE: See the HDS Help menu for specific instructions.

STEERING COMPONENT LOCATION INDEX

GETtheMANUALS.org

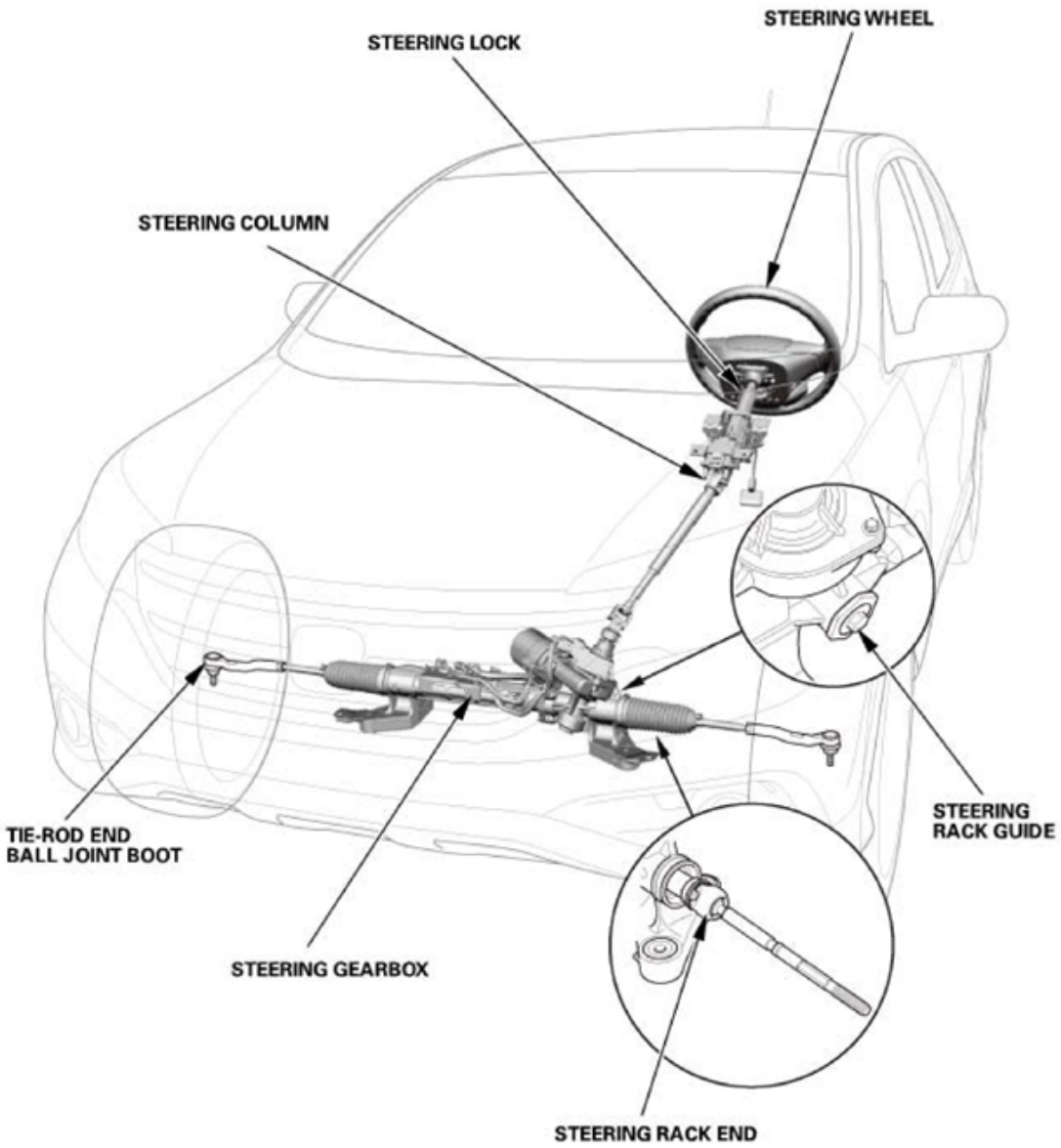

Fig. 125: Steering Components Location
Courtesy of AMERICAN HONDA MOTOR CO., INC.

STEERING COLUMN	**INSPECTION**
	REMOVAL AND INSTALLATION
STEERING GEARBOX	**LINKAGE AND GEARBOX INSPECTION**
	Removal and Installation See **STEERING GEARBOX DISASSEMBLY AND REASSEMBLY** or **STEERING GEARBOX REMOVAL AND INSTALLATION**
	Disassembly and Reassembly See **STEERING GEARBOX DISASSEMBLY AND REASSEMBLY** or **STEERING GEARBOX REMOVAL AND INSTALLATION**
	MOUNT CUSHION REPLACEMENT

GETtheMANUALS.org

STEERING LOCK	**REMOVAL AND INSTALLATION**
STEERING RACK END	**REMOVAL AND INSTALLATION**
STEERING RACK GUIDE	**ADJUSTMENT**
STEERING TIE-ROD END BALL JOINT BOOT	**REPLACEMENT**
STEERING WHEEL	**Disassembly and Reassembly** See **STEERING WHEEL DISASSEMBLY AND REASSEMBLY** or **STEERING WHEEL REMOVAL AND INSTALLATION**
	Power Steering Assist Check See **POWER STEERING ASSIST CHECK** or STEERING WHEEL ROTATIONAL PLAY CHECK
	Rotational Play Check See **POWER STEERING ASSIST CHECK** or STEERING WHEEL ROTATIONAL PLAY CHECK
	Removal and Installation See **STEERING WHEEL DISASSEMBLY AND REASSEMBLY** or **STEERING WHEEL REMOVAL AND INSTALLATION**

STEERING GEARBOX DISASSEMBLY AND REASSEMBLY

VIEW

1. STEERING GEARBOX EXPLODED VIEW

NOTE: For these operations, refer to the complete procedure as needed.

- EPS motor removal and installation.
- Rack end removal and installation
- If the rack guide is removed, rack guide adjustment is necessary.

GETtheMANUALS.org

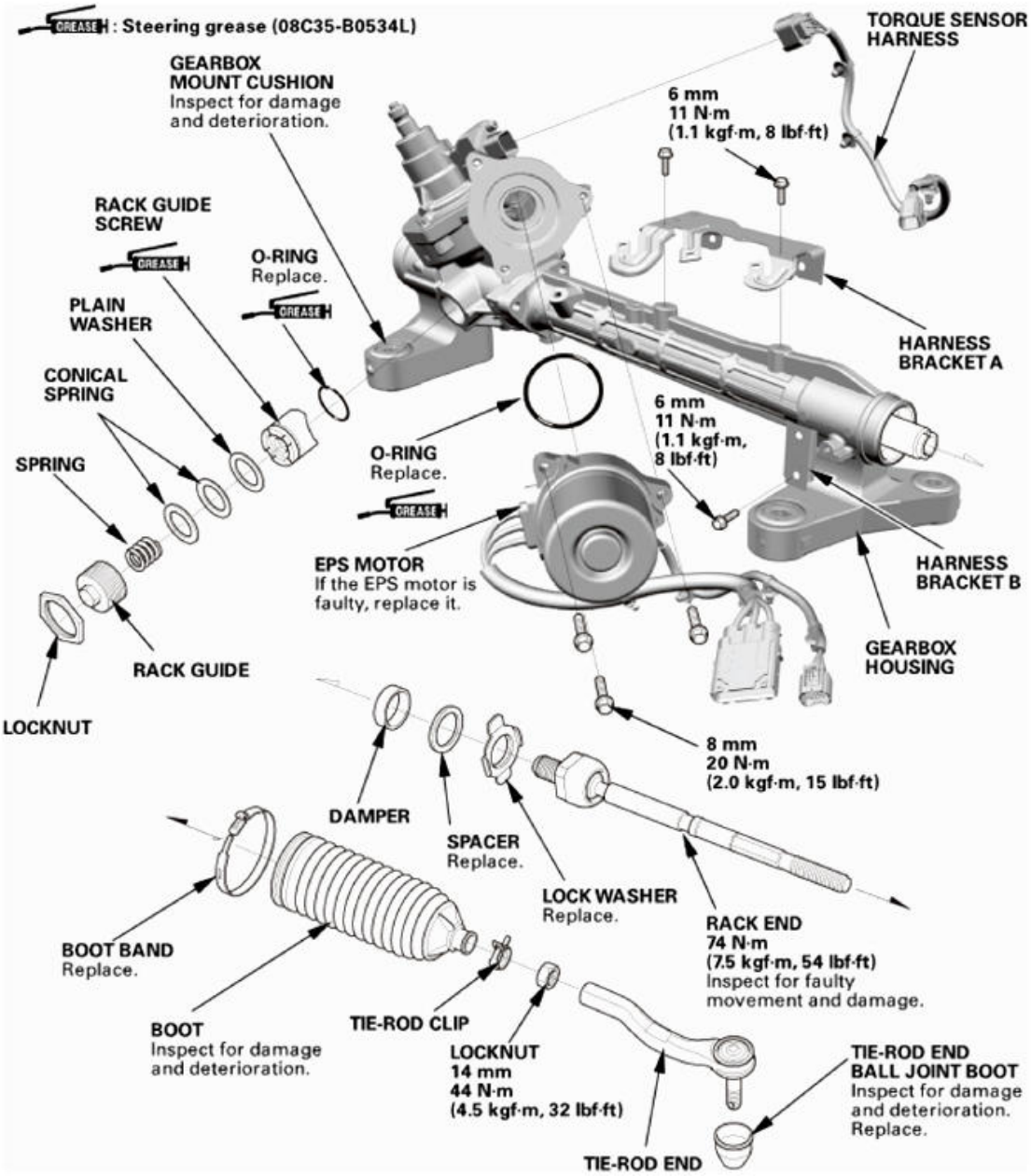

Fig. 126: Exploded View Of Steering Gearbox With Torque Specifications
Courtesy of AMERICAN HONDA MOTOR CO., INC.

STEERING GEARBOX MOUNT CUSHION REPLACEMENT

SPECIAL TOOL DESCRIPTION

Image	Description/Tool Number

GETtheMANUALS.org

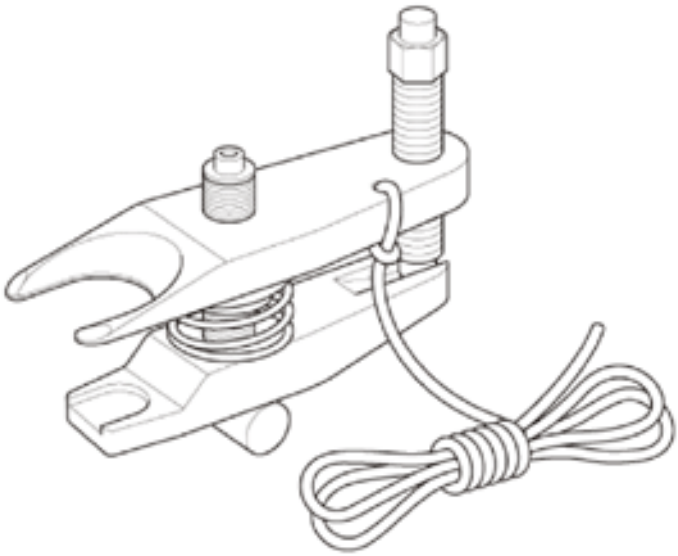	Ball Joint Remover, 28 mm 07MAC-SL00202
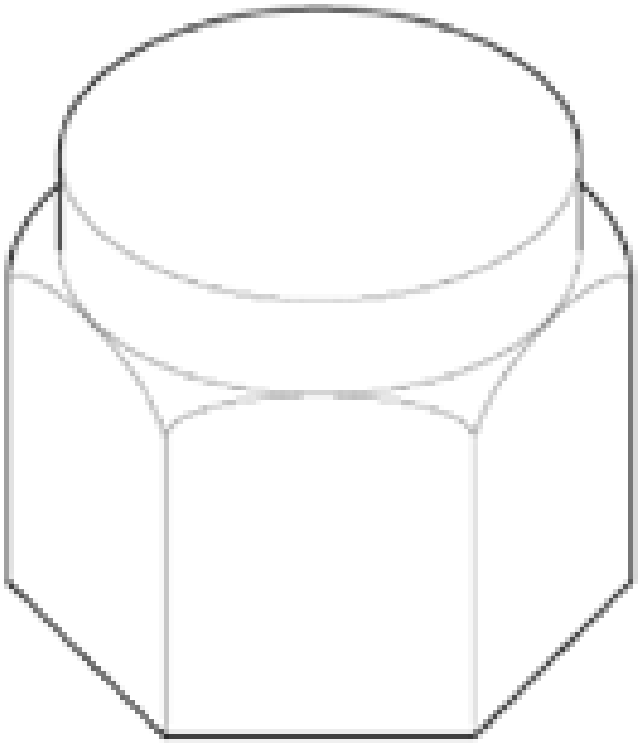	Ball Joint Thread Protector, 12 mm 07AAF-SDAA100
	Subframe Adapter VSB02C000016(1)

GETtheMANUALS.org

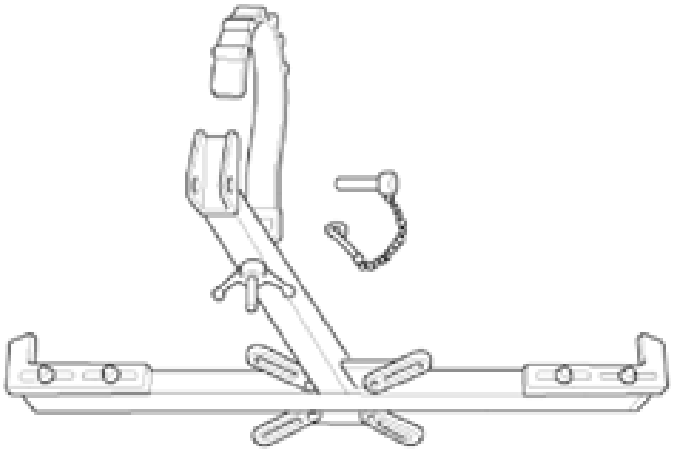	
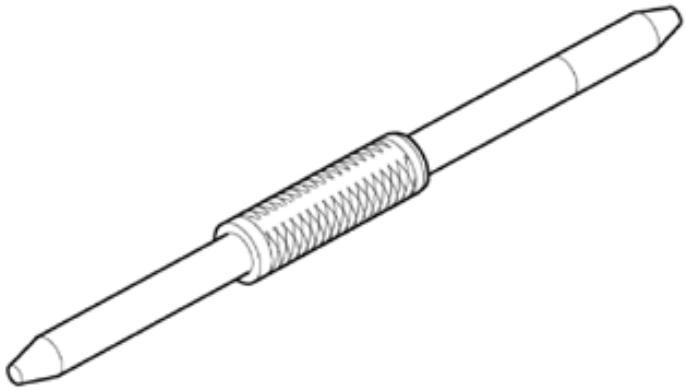	Subframe Alignment Pin 070AG-SJAA10S
(1) Available through the Honda Tool and Equipment Program 888-424-6857	

REMOVAL

1. Vehicle Lift
    1. Raise the vehicle on a lift, and make sure it is securely supported.
2. Front Wheel - Both Side
    1. Remove both front wheels.

GETtheMANUALS.org

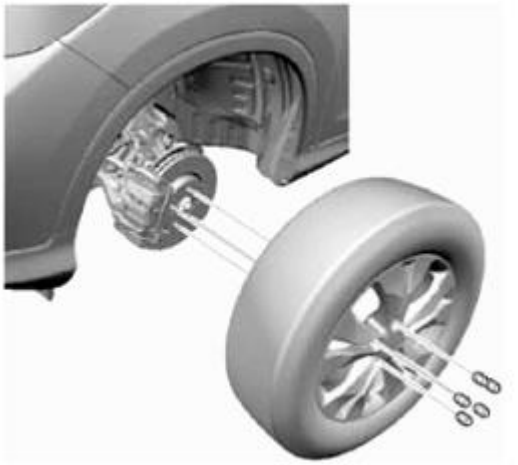

Fig. 127: Identifying Front Wheel
Courtesy of AMERICAN HONDA MOTOR CO., INC.

3. Steering Joint Cover
    1. Remove the steering joint cover (A).

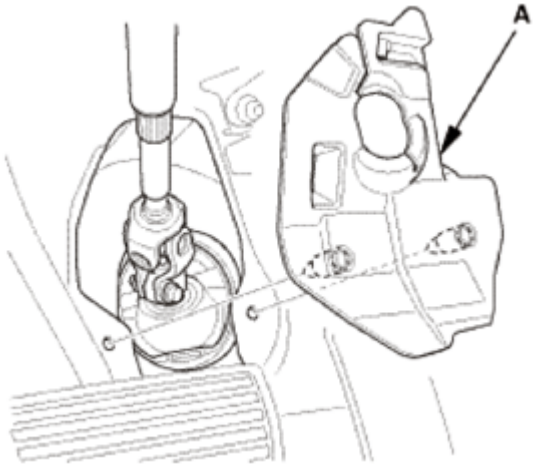

Fig. 128: Identifying Steering Joint Cover
Courtesy of AMERICAN HONDA MOTOR CO., INC.

4. Steering Column Lower Slide Shaft - Hold
    1. Set the steering column to the center tilt position, and to the center telescopic position.
    2. Hold the lower slide shaft (A) on the column with a piece of wire (B) between the joint yoke (C) of the lower slide shaft and the joint yoke (D) of the upper shaft to prevent the lower slider shaft from pulling out.

GETtheMANUALS.org

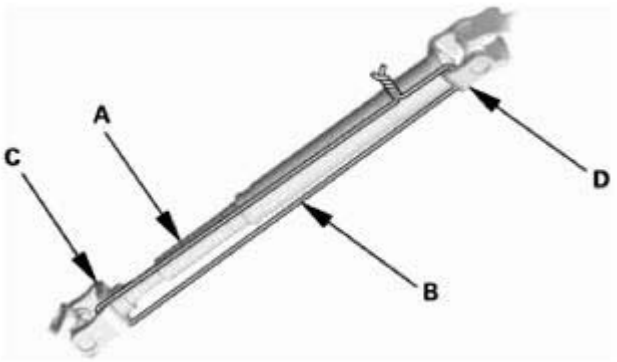

Fig. 129: Holding Lower Slide Shaft On Column Using Wire
Courtesy of AMERICAN HONDA MOTOR CO., INC.

5. Steering Wheel Hold
    1. Center the steering wheel spoke angle.
    2. Install a commercially available steering wheel holder tool (A).

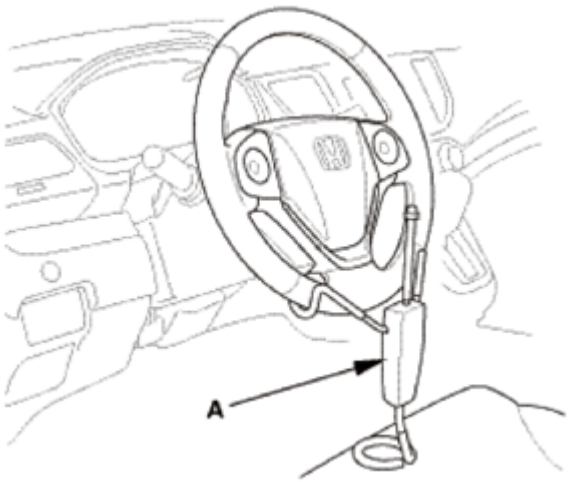

Fig. 130: Installing Steering Wheel Holder Tool On Steering Wheel
Courtesy of AMERICAN HONDA MOTOR CO., INC.

6. Steering Joint - Disconnection
    1. Remove the steering joint bolt (A).
    2. Disconnect the steering joint (B) from the pinion shaft.
    3. Remove the center guide (C) (if equipped), and discard it.

GETtheMANUALS.org

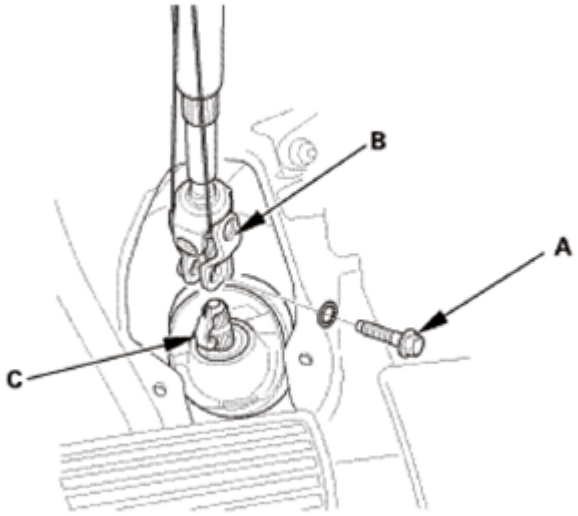

Fig. 131: Identifying Steering Joint, Center Guide And Bolt
Courtesy of AMERICAN HONDA MOTOR CO., INC.

7. Ball Joint - Removal

NOTE: **Always use a ball joint remover to disconnect a ball joint. Do not strike the housing or any other part of the ball joint connection to disconnect it.**

1. Install a hex nut (A) or the ball joint thread protector.

NOTE: **When using a hex nut, make sure the nut is flush with the ball joint pin end to prevent damage to the threaded end of the ball joint pin.**

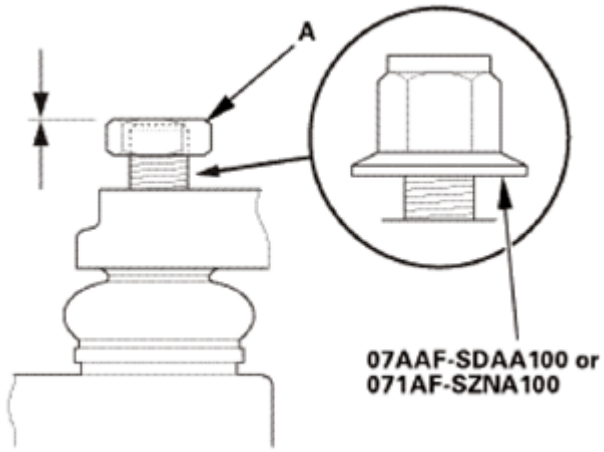

Fig. 132: Identifying Hex Nut Or Ball Joint Thread Protector
Courtesy of AMERICAN HONDA MOTOR CO., INC.

2. Apply grease to the ball joint remover on the areas shown (A).

GETtheMANUALS.org

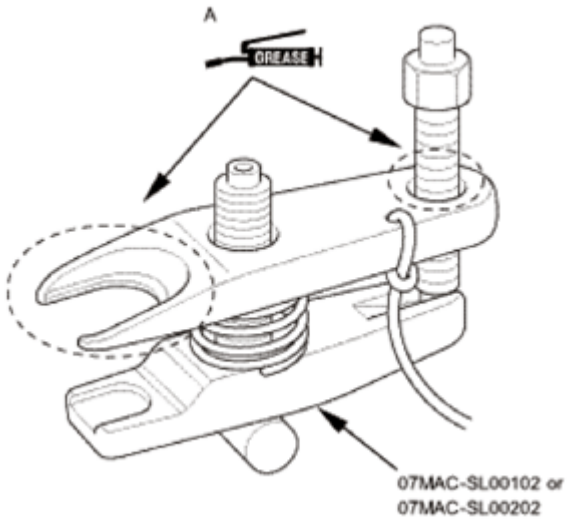

Fig. 133: Identifying Grease Applying Areas On Ball Joint Remover
Courtesy of AMERICAN HONDA MOTOR CO., INC.

3. Install the ball joint remover as shown.

NOTE:

- **Fasten the safety tie (A) securely to a suspension arm or the subframe (B).**
- **Making sure not to damage the ball joint boot.**

4. Tighten the pressure bolt until the ball joint pin pops loose from the ball joint connecting hole.

NOTE: **Do not use pneumatic or electric tools on the pressure bolt.**

5. Remove the ball joint remover.
6. Remove the hex nut or the ball joint thread protector.
7. Pull the ball joint out of the ball joint connecting hole.

GETtheMANUALS.org

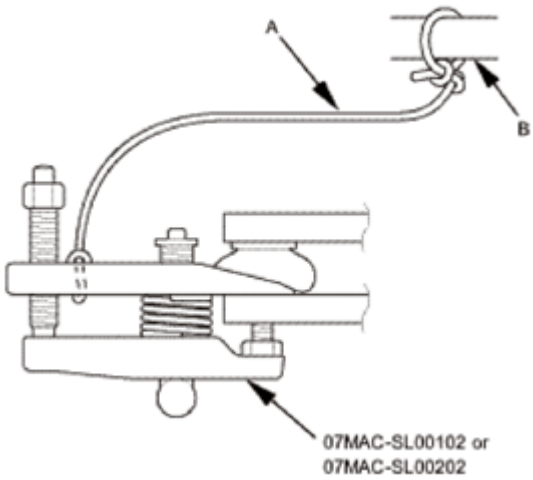

Fig. 134: Fastening Safety Tie On Suspension Arm Or Subframe
Courtesy of AMERICAN HONDA MOTOR CO., INC.

8. Tie-Rod End Ball Joint - Disconnection, Both Side
    1. Remove the cotter pin (A) from the tie-rod end ball joint.
    2. Remove the nut (B).
    3. Disconnect the tie-rod end ball joint.

NOTE: **Be careful not to damage the ball joint boot when installing the remover.**

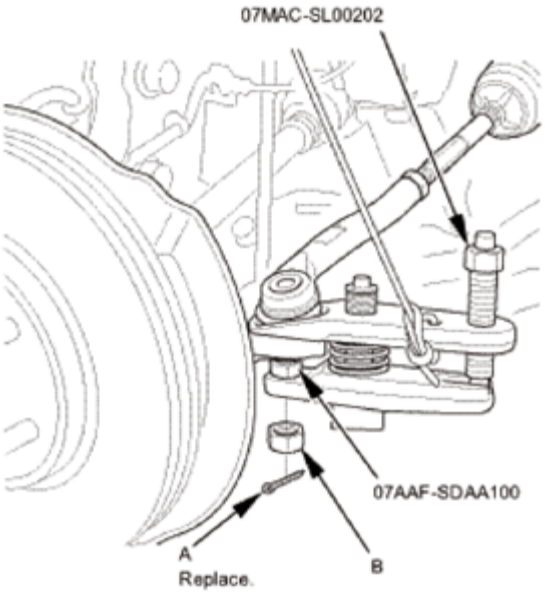

Fig. 135: Identifying Tie-Rod End Ball Joint Cotter Pin And Nut
Courtesy of AMERICAN HONDA MOTOR CO., INC.

9. Front Stabilizer Link Stabilizer Bar Side - Disconnection, Both Side

GETtheMANUALS.org

1. Remove the flange nuts (A) while holding the respective joint pin (B) with a hex wrench (C).
2. Disconnect both sides of the stabilizer link (D) from the front stabilizer bar (E).

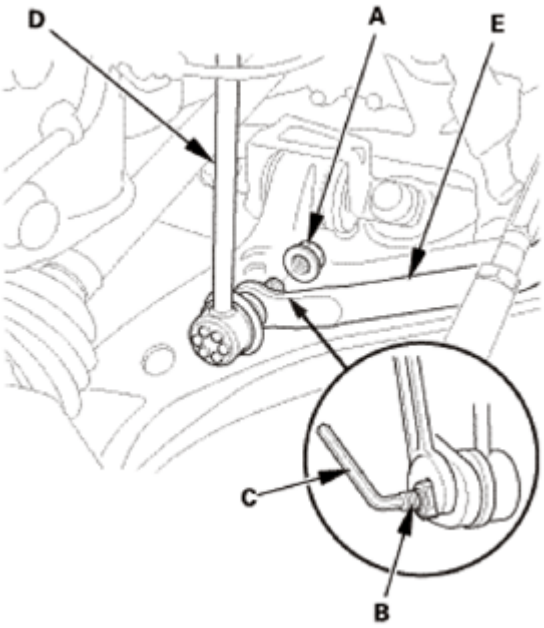

Fig. 136: Removing Flange Nuts Using Hex Wrench
Courtesy of AMERICAN HONDA MOTOR CO., INC.

10. Front Splash Shield
    1. Remove the bolts (A), then remove the clips (B) that secure the front inner fender and the front splash shield (C) to the body.
    2. From under the front bumper (D), remove the clips (E).
    3. From under the body, remove the clips (F), then pull out the front splash shield.

GETtheMANUALS.org

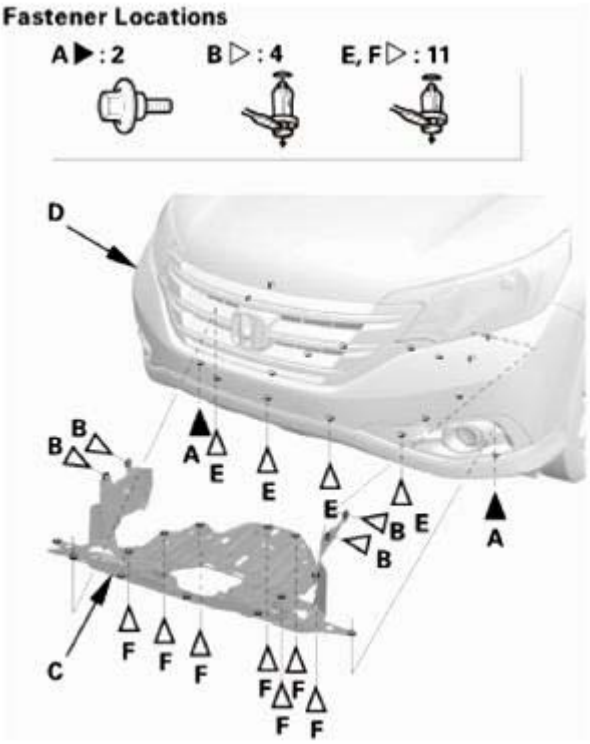

Fig. 137: Identifying Front Bumper, Front Splash Shield, Bolt And Clips
Courtesy of AMERICAN HONDA MOTOR CO., INC.

11. Front Floor Undercover
    1. Remove the bolts (A) and the clips (B, C) securing the front floor undercover (D), then remove the front floor undercover.

GETtheMANUALS.org

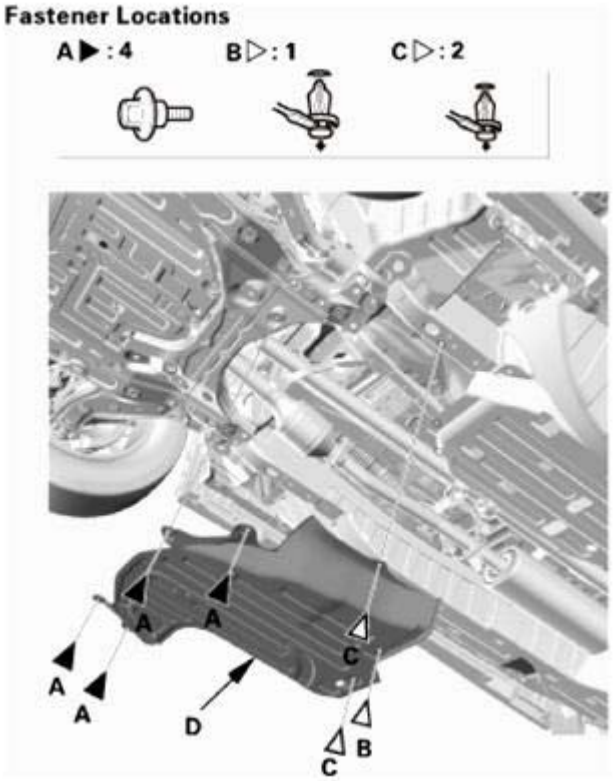

Fig. 138: Identifying Front Floor Undercover, Bolts And Clips
Courtesy of AMERICAN HONDA MOTOR CO., INC.

12. Under-Floor TWC Assembly
    1. Remove the under-floor TWC.

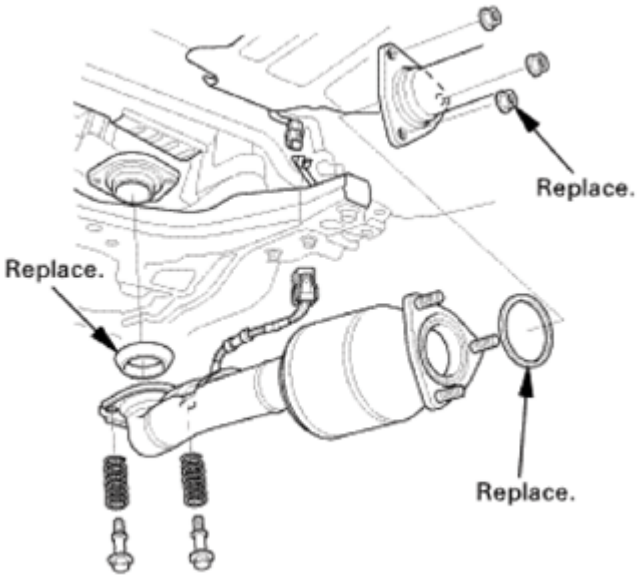

Fig. 139: Identifying Under-Floor TWC
Courtesy of AMERICAN HONDA MOTOR CO., INC.

GETtheMANUALS.org

13. Left Middle Floor Undercover (AWD/4WD)
    1. Remove the bolts (A) and clips (B, C), then remove the left middle floor undercover (D).

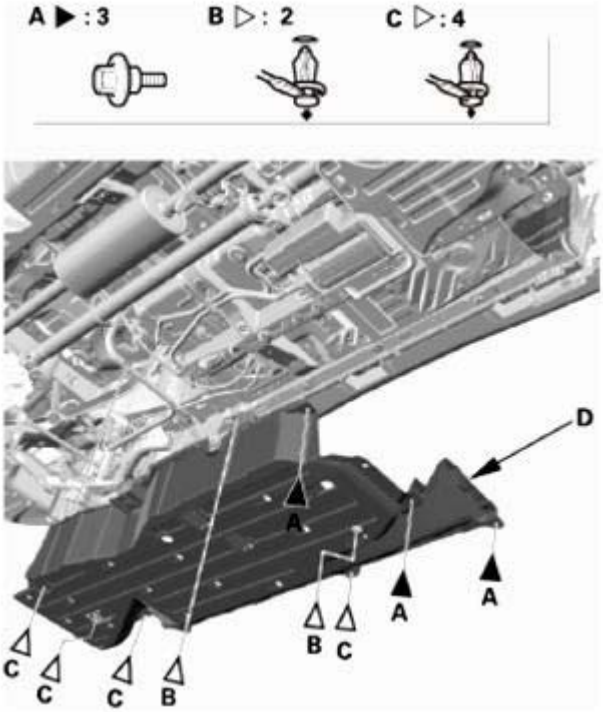

Fig. 140: Identifying Left Middle Floor Undercover, Clips And Bolts
Courtesy of AMERICAN HONDA MOTOR CO., INC.

14. Propeller Shaft Protector No. 1 (AWD/4WD)
    1. Remove the No. 1 propeller shaft protector (A).

GETtheMANUALS.org

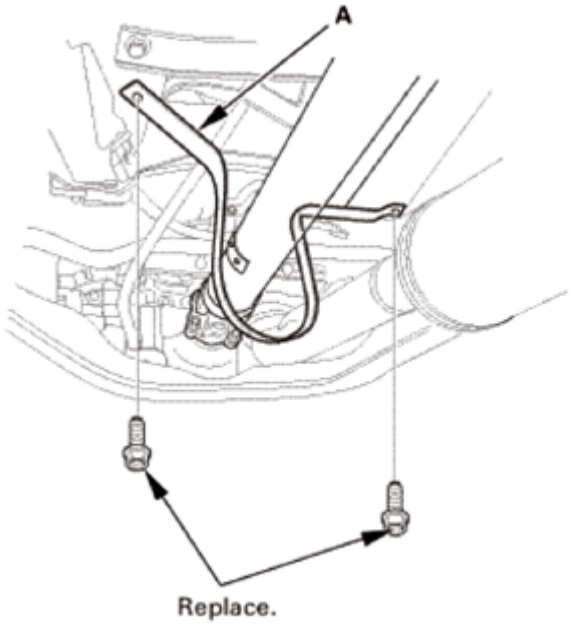

Fig. 141: Identifying Propeller Shaft Protector (No. 1)
Courtesy of AMERICAN HONDA MOTOR CO., INC.

15. Propeller Shaft Protector No. 2 (AWD/4WD)
    1. Remove the No. 2 propeller shaft protector (A).

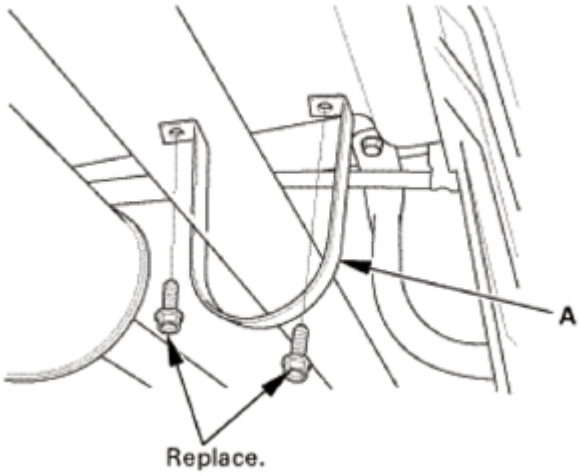

Fig. 142: Identifying Propeller Shaft Protector (No. 2)
Courtesy of AMERICAN HONDA MOTOR CO., INC.

16. Propeller Shaft Transmission Side - Disconnection (AWD/4WD)
    1. Make reference mark (A) across the No. 1 propeller shaft (B) and the transfer companion flange (C).
    2. Remove the No. 1 propeller shaft flange bolts (D).

GETtheMANUALS.org

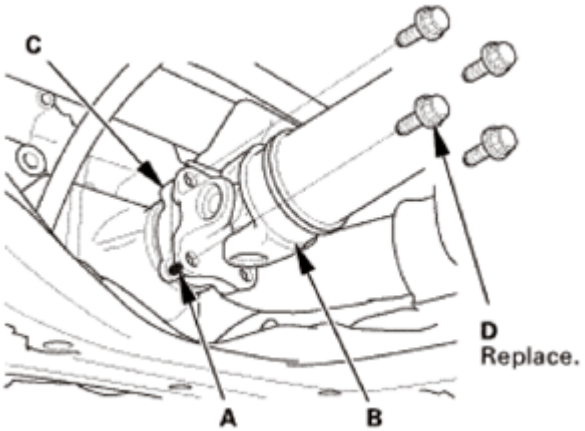

Fig. 143: Identifying Transfer Companion Flange, Propeller Shaft And Flange Bolts
Courtesy of AMERICAN HONDA MOTOR CO., INC.

17. Propeller Shaft Differential Side - Disconnection (AWD/4WD)
    1. Make reference mark (A) across the No. 2 propeller shaft (B) and the rear differential companion flange (C).
    2. Remove the No. 2 propeller shaft flange bolts (D).

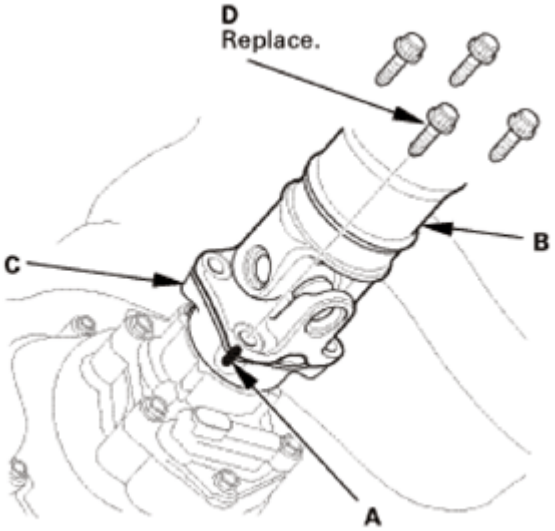

Fig. 144: Identifying Rear Companion Flange, Propeller Shaft And Flange Bolts
Courtesy of AMERICAN HONDA MOTOR CO., INC.

18. Propeller Shaft Assembly (AWD/4WD)
    1. Remove the center support bearing mounting bolts (A), then remove the propeller shaft assembly (B).

GETtheMANUALS.org

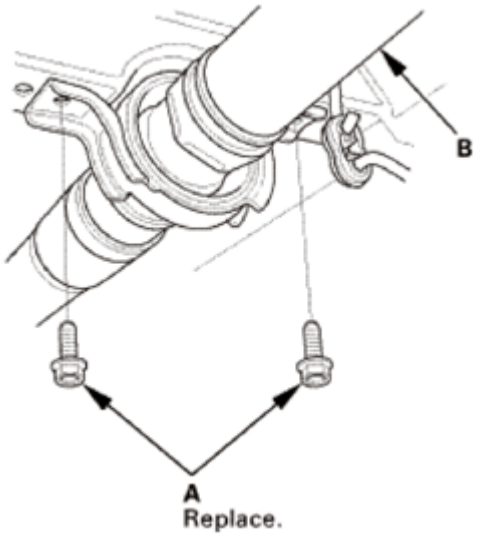

Fig. 145: Identifying Propeller Shaft Assembly And Mounting Bolts
Courtesy of AMERICAN HONDA MOTOR CO., INC.

19. Power Steering Gearbox Items

NOTE: Wrap the connectors with vinyl tape to avoid contamination from grease or water.

1. Disconnect the EPS motor 3P connector (A) by pushing the lock (B) and pulling up the lever (C).
2. Disconnect the connectors (D).
3. Remove the harness clip (E).

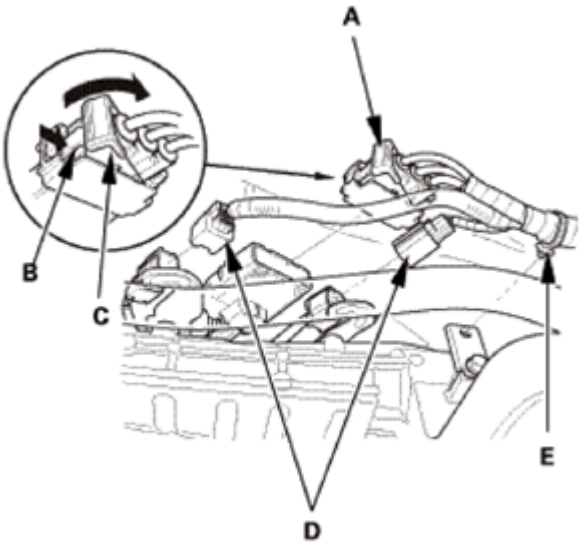

Fig. 146: Disconnecting EPS Motor 3P Connector
Courtesy of AMERICAN HONDA MOTOR CO., INC.

GETtheMANUALS.org

4. Remove the steering gearbox mounting bolts (A).
5. Remove the stiffener mounting bolts (B).
6. Remove the steering gearbox stiffeners (C).

Driver's side

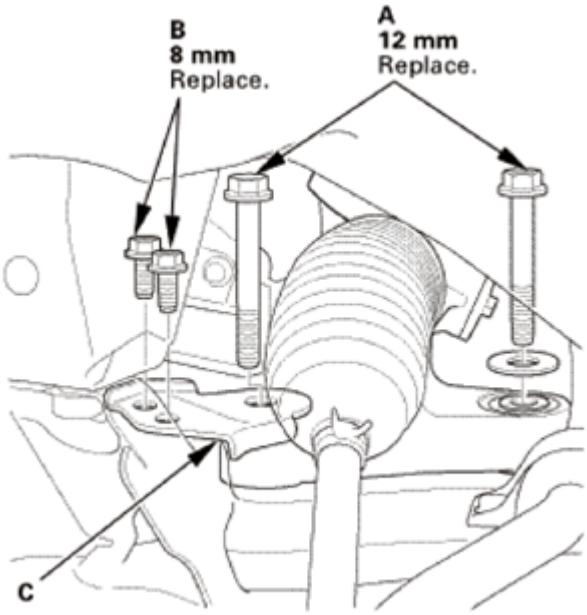

Fig. 147: Identifying Steering Gearbox Stiffeners And Mounting Bolts (Driver Side)
Courtesy of AMERICAN HONDA MOTOR CO., INC.

Passenger's side

GETtheMANUALS.org

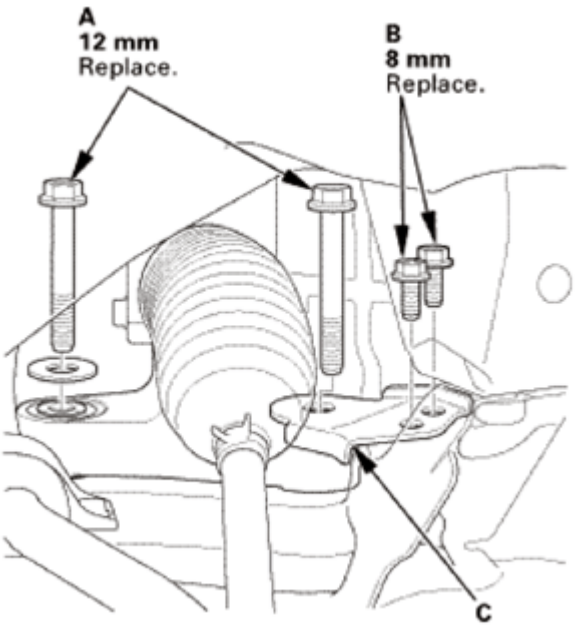

Fig. 148: Identifying Steering Gearbox Stiffeners And Mounting Bolts (Passenger Side)
Courtesy of AMERICAN HONDA MOTOR CO., INC.

20. Subframe Support
    1. Attach the subframe adapter (A) to the front subframe by looping the belt (B) over the front of the front subframe (C), then secure the belt with its stop (D).
    2. Raise the jack and line up the slots in the subframe adapter arms with the bolt holes on the jack base, then securely attach them with four bolts.

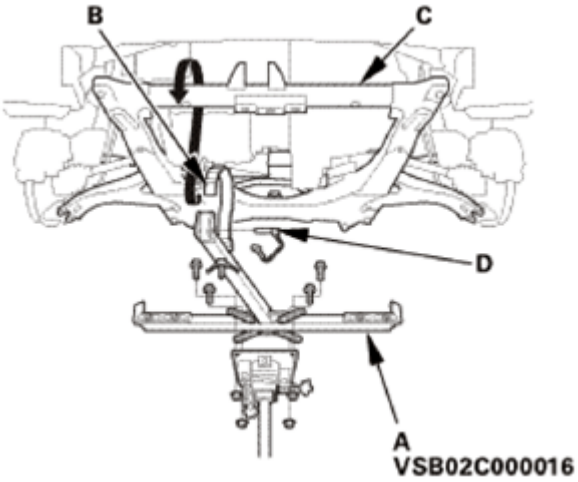

Fig. 149: Attaching Subframe Adapter To Front Subframe By Looping Belt
Courtesy of AMERICAN HONDA MOTOR CO., INC.

21. Lower Torque Rod - Disconnection
    1. Remove the lower torque rod mount mounting bolts (A).

GETtheMANUALS.org

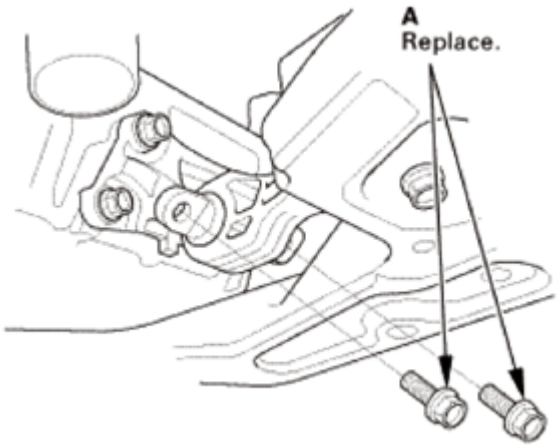

Fig. 150: Identifying Lower Torque Rod Mount Mounting Bolts
Courtesy of AMERICAN HONDA MOTOR CO., INC.

22. Front Subframe - Move
    1. Remove the mid mounting bolts (A) on both sides.

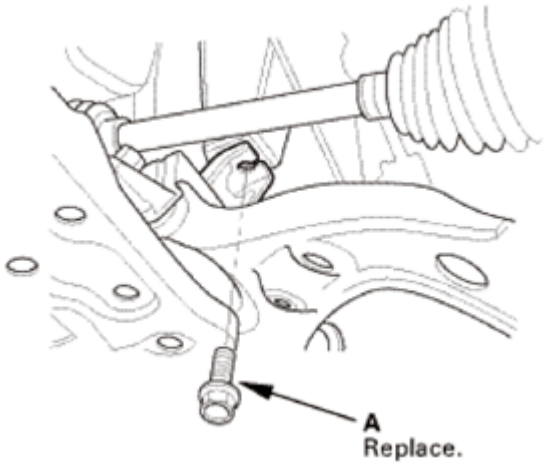

Fig. 151: Identifying Mid Mounting Bolts
Courtesy of AMERICAN HONDA MOTOR CO., INC.

    2. Loosen the front subframe mounting bolts (A) so they are about 30 mm (1.18 in) from the mounting surface on both sides.

NOTE: **Do not loosen the front subframe mounting bolts more than necessary.**

GETtheMANUALS.org

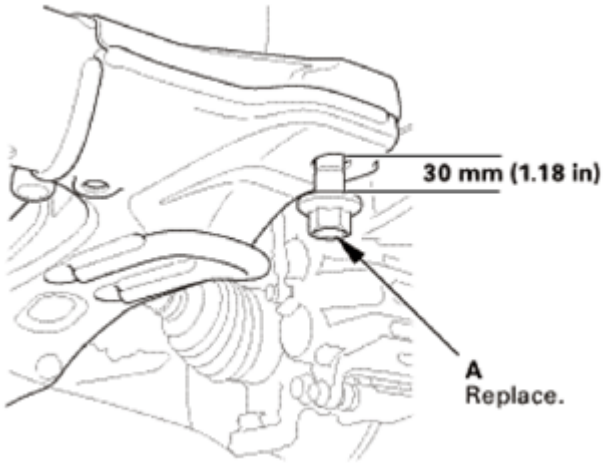

Fig. 152: Identifying Front Subframe Mounting Bolt
Courtesy of AMERICAN HONDA MOTOR CO., INC.

3. Remove the front subframe mounting bolts (A) on both side.
4. Lower the jack slowly until the front subframe has dropped about 130 mm (5.12 in).

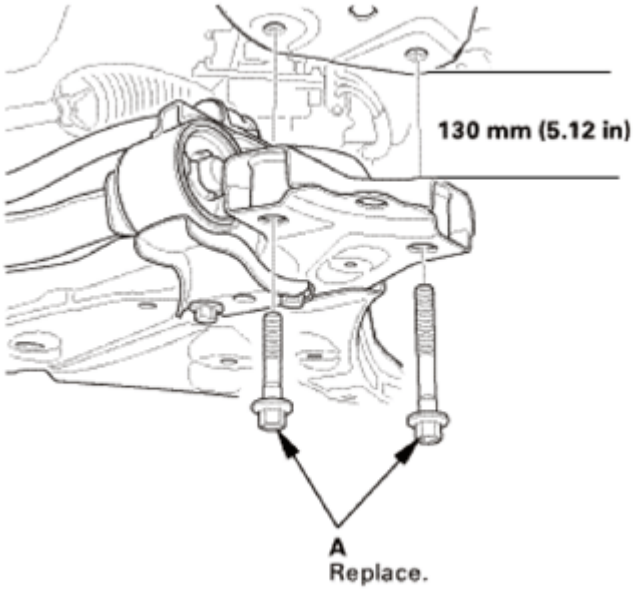

Fig. 153: Identifying Front Subframe Mounting Bolt
Courtesy of AMERICAN HONDA MOTOR CO., INC.

23. Pinion Shaft Grommet
    1. Remove the pinion shaft grommet (A).
    2. Wrap vinyl tape over the splines on the pinion shaft (B).

GETtheMANUALS.org

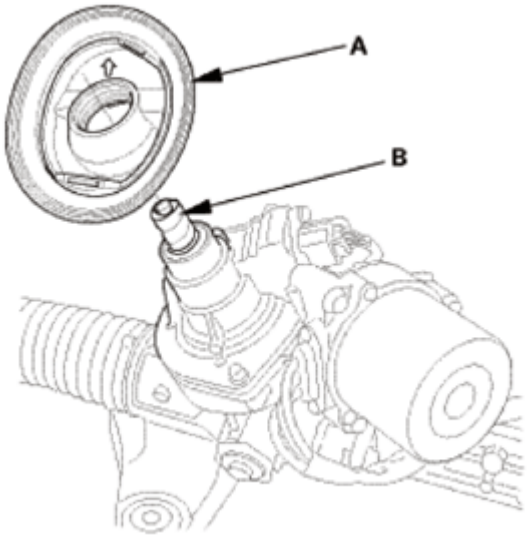

Fig. 154: Identifying Pinion Shaft And Grommet
Courtesy of AMERICAN HONDA MOTOR CO., INC.

24. Power Steering Gearbox Assembly
    1. Move the steering gearbox to the driver's side, and rotate it so the pinion shaft (A) points toward the rear of the vehicle.
    2. Carefully move the steering gearbox (B) as an assembly toward the driver's side of the vehicle until the pinion shaft clears the wheelwell opening.
    3. Remove the steering gearbox through the wheelwell opening on the driver's side.

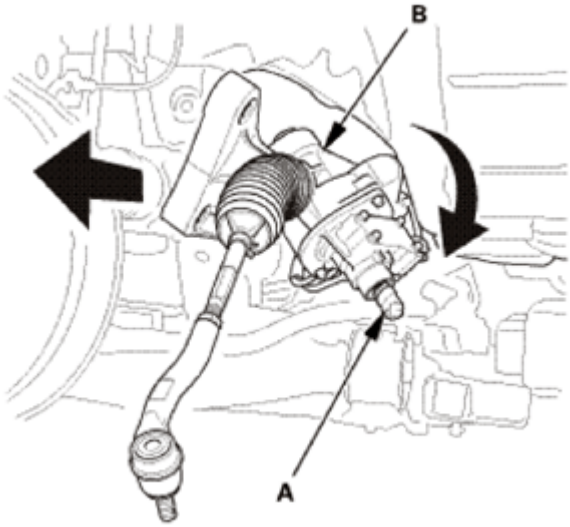

Fig. 155: Removing Steering Gearbox
Courtesy of AMERICAN HONDA MOTOR CO., INC.

25. Steering Gearbox Mount Cushion
    1. Position a 41 mm socket (A) on the flange part of the gearbox housing with a washer (B), a 10 x

GETtheMANUALS.org

105 mm flange bolt (C), and a 10 mm nut (D) as shown.

2. Hold the flange bolt with a wrench, and tighten the nut with a wrench. Remove the gearbox mount cushion (E).

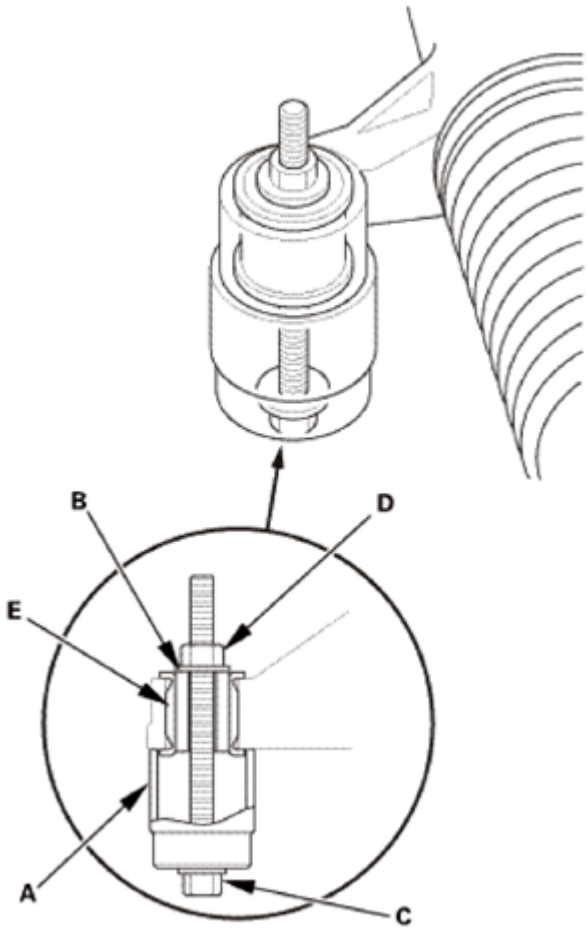

Fig. 156: Identifying Steering Gearbox Mount Cushion And Related Components
Courtesy of AMERICAN HONDA MOTOR CO., INC.

INSTALLATION

1. Steering Gearbox Mount Cushion
    1. Apply a mild soap and water solution to the new gearbox mount cushion surface (A), then place mount cushion on the gearbox mounting cushion hole.
    2. Position the 41 mm socket on the flange part of the gearbox housing with a washer, a flange bolt, and a nut as shown.
    3. Install the gearbox mount cushion by tightening the nut until the mount cushion edges (B) properly fit on the gearbox flange surface (C).

GETtheMANUALS.org

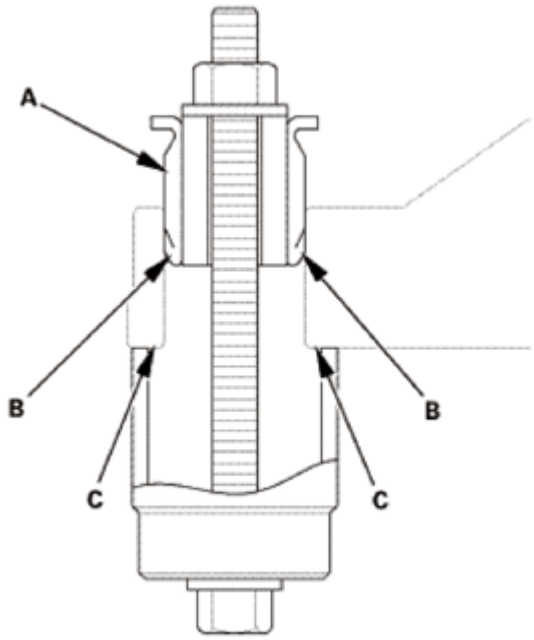

Fig. 157: Identifying Steering Gearbox Mount Cushion And Related Components
Courtesy of AMERICAN HONDA MOTOR CO., INC.

2. Power Steering Gearbox Assembly
    1. Apply vinyl tape to the splines on the pinion shaft (A).
    2. Slide the steering gearbox (B) between the front subframe and body from the driver's side.
    3. Carefully move the steering gearbox toward the passenger's side until the pinion shaft clears the wheelwell opening on the body.
    4. Rotate the steering gearbox so the pinion shaft points upward.
    5. Continue moving the steering gearbox toward the passenger's side until the steering gearbox is in position.

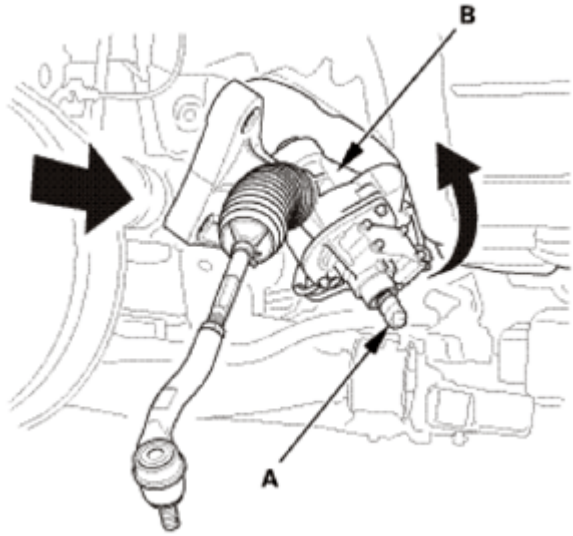

GETtheMANUALS.org

Fig. 158: Rotating Steering Gearbox
Courtesy of AMERICAN HONDA MOTOR CO., INC.

3. Pinion Shaft Grommet
    1. Remove the vinyl tape (A) from pinion shaft.
    2. Install the pinion shaft grommet (B).
    3. Align the lug portion (C) in the pinion shaft grommet with the cutout portion (D) on the steering gearbox.

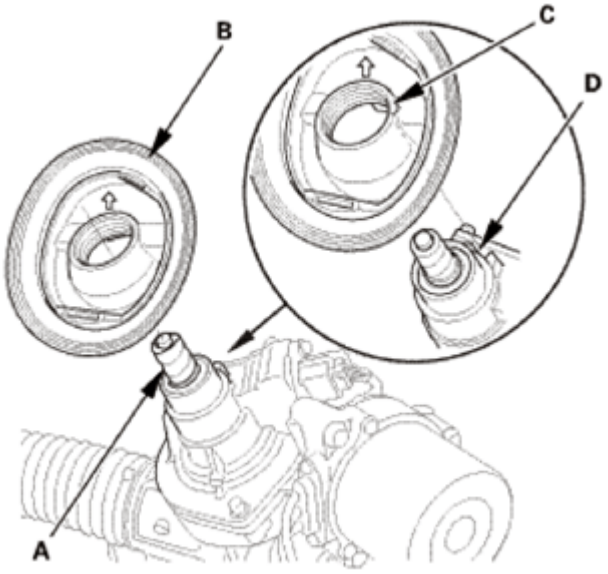

Fig. 159: Identifying Pinion Shaft Grommet, Lug Portion, Cutout Portion And Vinyl Tape
Courtesy of AMERICAN HONDA MOTOR CO., INC.

4. Front Subframe - Move
    1. Turn the lip (A) of the pinion shaft grommet.
    2. Lift the front subframe (B) up to the body, then restore the pinion shaft grommet back to proper position.

NOTE: **Be sure that the pinion shaft grommet is securely in place. Make sure the lip of the pinion shaft grommet is not turned up. Incorrect installation can cause leakage of water and mud, or noise.**

GETtheMANUALS.org

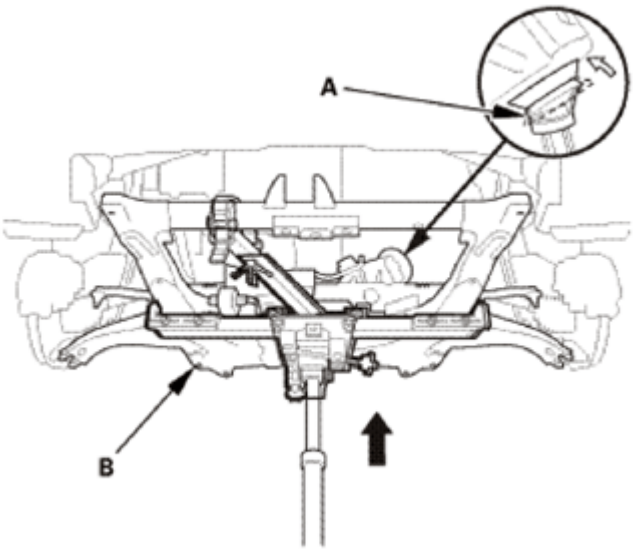

Fig. 160: Lifting Front Subframe Up To Body
Courtesy of AMERICAN HONDA MOTOR CO., INC.

3. Loosely install the new front subframe mounting bolts (A).

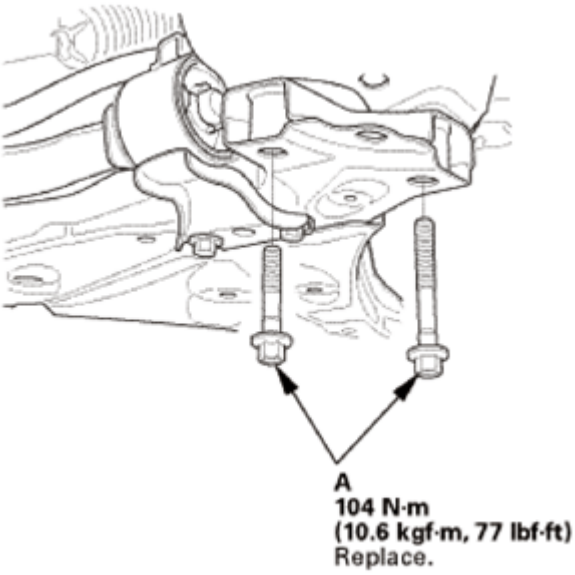

Fig. 161: Identifying Front Subframe Mounting Bolts With Torque Specifications (1 Of 2)
Courtesy of AMERICAN HONDA MOTOR CO., INC.

GETtheMANUALS.org

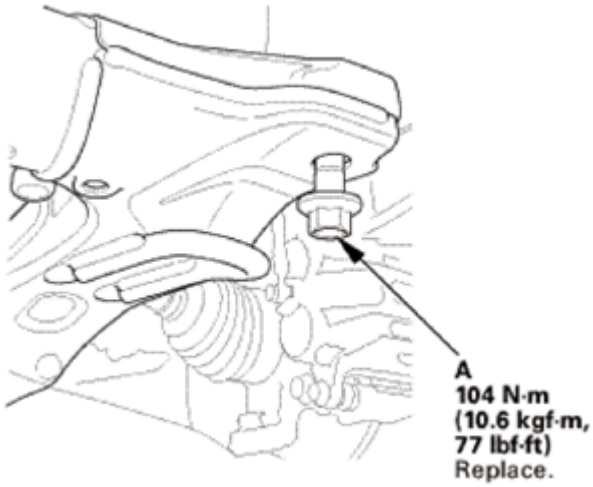

Fig. 162: Identifying Front Subframe Mounting Bolts With Torque Specifications (2 Of 2)
Courtesy of AMERICAN HONDA MOTOR CO., INC.

4. Loosely install the mid mounting bolts (A).

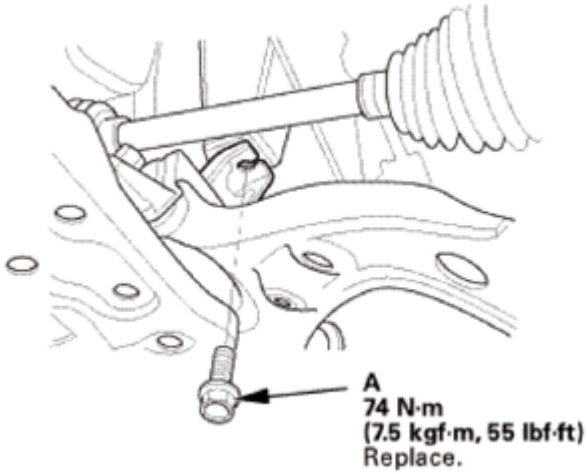

Fig. 163: Identifying Mid Mounting Bolts With Torque Specifications
Courtesy of AMERICAN HONDA MOTOR CO., INC.

5. Front Subframe - Alignment

NOTE:

- **Align the front subframe in the following sequence.**
- **When Installing, align both installation reference holes in the subframe with both reference holes in the body using the subframe alignment pin.**

1. Insert the subframe alignment pin (A) through the positioning hole (B) on the right rear subframe, and into the positioning hole (C) on the body, then loosely tighten the subframe right rear mounting bolts.

GETtheMANUALS.org

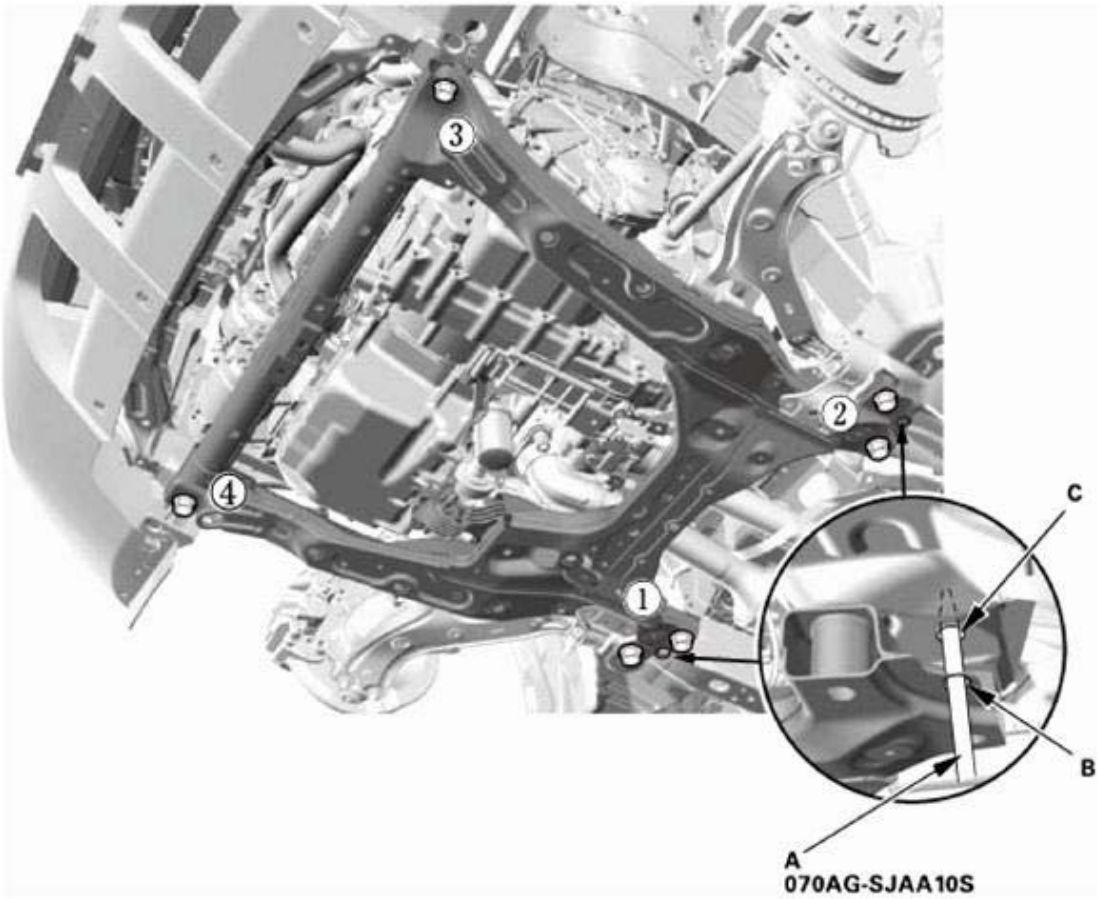

Fig. 164: Inserting Subframe Alignment Pin Into Right Rear Subframe
Courtesy of AMERICAN HONDA MOTOR CO., INC.

2. Insert the subframe alignment pin through the positioning hole on the left rear subframe, and into the positioning hole on the body, then loosely tighten the subframe left rear mounting bolts.
3. Tighten the subframe mounting bolts to the specified torque values starting with the right rear subframe mounting bolt. Use the subframe alignment pin when tightening the rear side subframe mounting bolts.
4. Check all of the subframe mounting bolts, and retighten if necessary.

NOTE: Tighten the bolts in the sequence shown.

5. Tighten the mid mounting bolts to the specified torque.
6. Lower the transmission jack supporting the subframe.

6. Lower Torque Rod - Reconnection
   1. Loosely install the new lower torque rod mounting bolts (A).

GETtheMANUALS.org

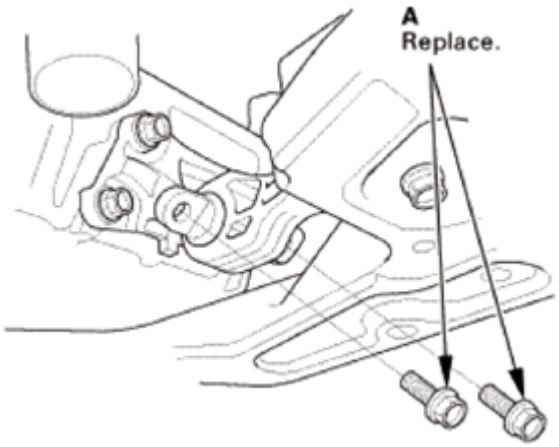

Fig. 165: Identifying Lower Torque Rod Mounting Bolts
Courtesy of AMERICAN HONDA MOTOR CO., INC.

7. Lower Torque Rod Mounting Bolt - Tighten
    1. Loosen the lower torque mount mounting bolt.
    2. Tighten the lower torque rod mount mounting bolts in the numbered sequence shown.

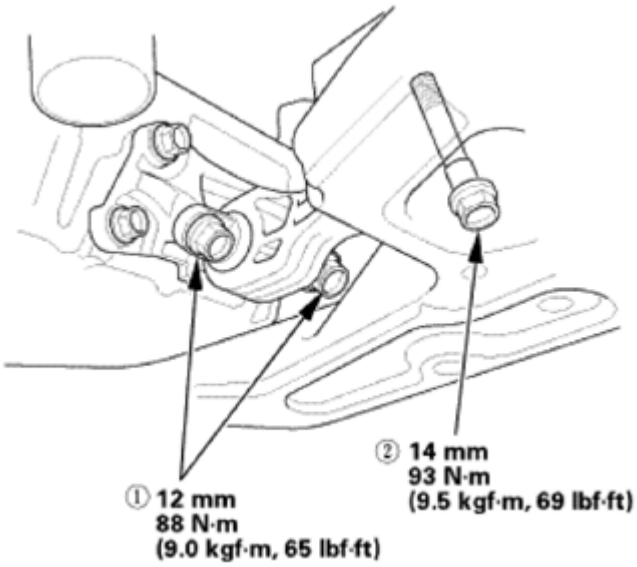

Fig. 166: Identifying Lower Torque Rod Mount Mounting Bolts Tightening Sequence With Torque Specifications
Courtesy of AMERICAN HONDA MOTOR CO., INC.

8. Power Steering Gearbox Items
    1. Install the steering gearbox stiffeners (A).
    2. Loosely tighten the steering gearbox mounting bolts (B).
    3. Loosely tighten the stiffener mounting bolts (C).
    4. Tighten the steering gearbox mounting bolts and the stiffener mounting bolts to the specified torque

GETtheMANUALS.org

in the sequence shown.

Driver's side

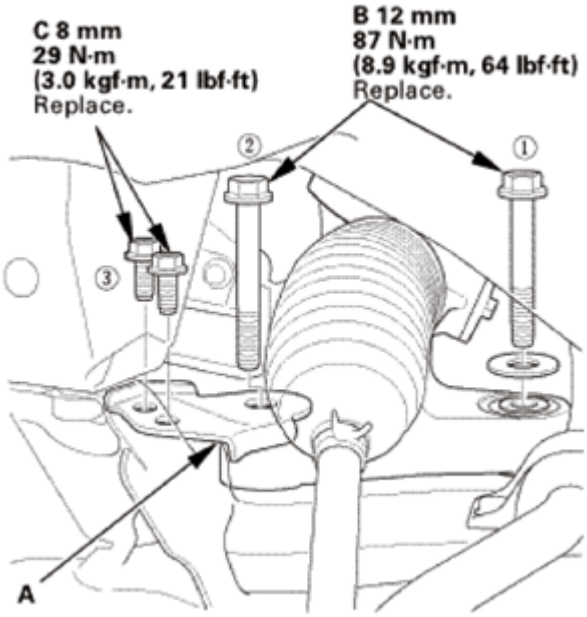

Fig. 167: Identifying Steering Gearbox Stiffeners With Torque Specifications (Driver Side)
Courtesy of AMERICAN HONDA MOTOR CO., INC.

Passenger's side

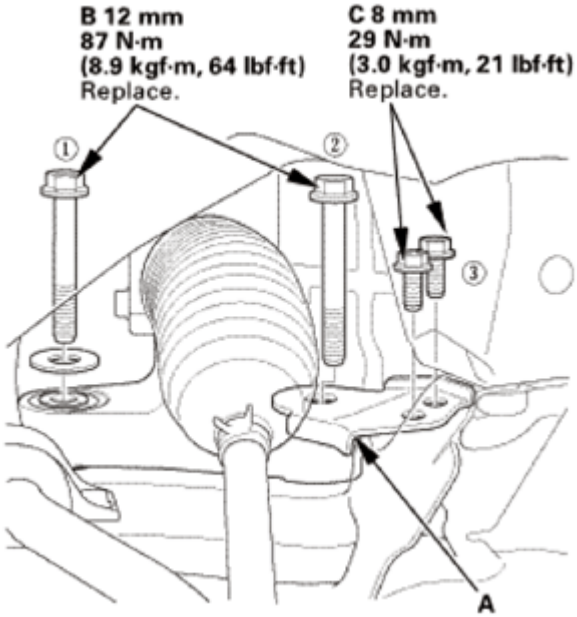

Fig. 168: Identifying Steering Gearbox Stiffeners With Torque Specifications (Passenger Side)

GETtheMANUALS.org

Courtesy of AMERICAN HONDA MOTOR CO., INC.

5. Install the harness clip (A).
6. Pull down the lever (B) of the EPS motor 3P connector (C), then confirm the connector is fully seated.
7. Connect the Connectors (D).

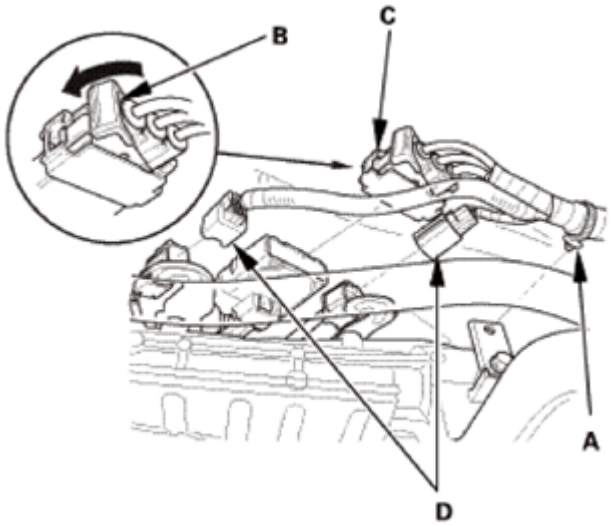

Fig. 169: Pulling Lever Of EPS Motor 3P Connector
Courtesy of AMERICAN HONDA MOTOR CO., INC.

9. Propeller Shaft Assembly (AWD/4WD)
    1. Install the propeller shaft assembly (A), then Install new center support bearing mounting bolts (B).

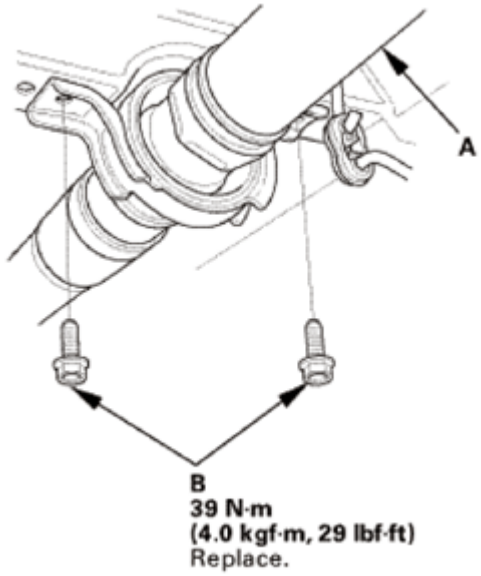

Fig. 170: Identifying Propeller Shaft Assembly

GETtheMANUALS.org

Courtesy of AMERICAN HONDA MOTOR CO., INC.

10. Propeller Shaft Differential Side - Reconnection (AWD/4WD)
    1. Set the No. 2 propeller shaft (A) to the rear differential companion flange (B) by aligning the reference mark (C) you made during the removal procedure.
    2. Install new No. 2 propeller shaft flange bolts (D) to the specified torque.

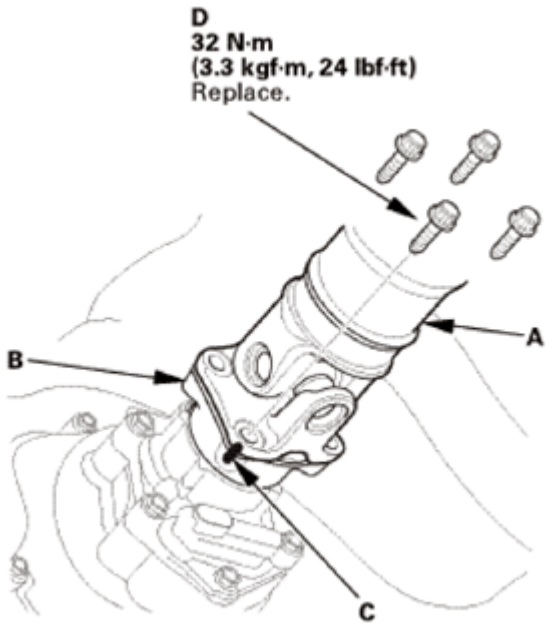

Fig. 171: Identifying Rear Differential Companion Flange, Propeller Shaft And Flange Bolts With Torque Specifications
Courtesy of AMERICAN HONDA MOTOR CO., INC.

11. Propeller Shaft Transmission Side - Reconnection (AWD/4WD)
    1. Set the No. 1 propeller shaft (A) to the transfer companion flange (B) by aligning the reference mark (C) you made during the removal procedure.
    2. Install new No. 1 propeller shaft flange bolts (D) to the specified torque.

GETtheMANUALS.org

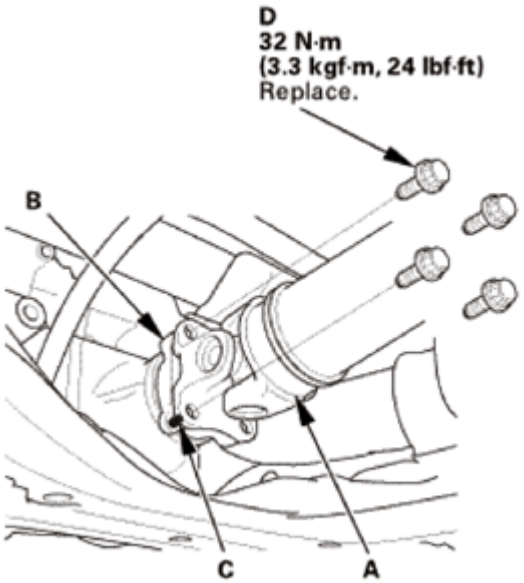

Fig. 172: Identifying Transfer Companion Flange, Propeller Shaft And Flange Bolts With Torque Specifications
Courtesy of AMERICAN HONDA MOTOR CO., INC.

12. Propeller Shaft Protector No. 2 (AWD/4WD)
    1. Install the No. 2 propeller shaft protector (A).

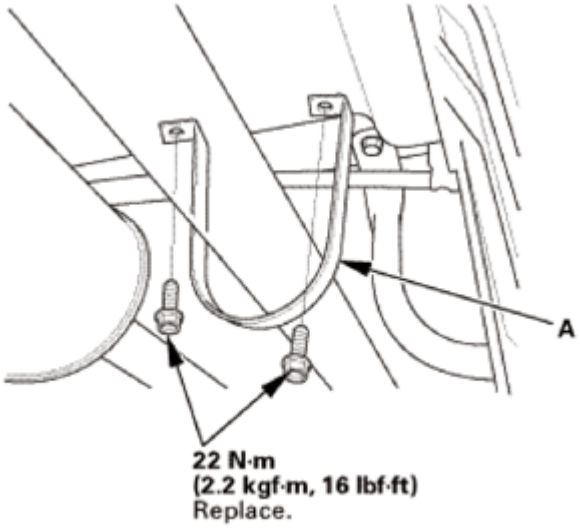

Fig. 173: Identifying Propeller Shaft Protector (No. 2)
Courtesy of AMERICAN HONDA MOTOR CO., INC.

13. Propeller Shaft Protector No. 1 (AWD/4WD)
    1. Install the No. 1 propeller shaft protector (A).

GETtheMANUALS.org

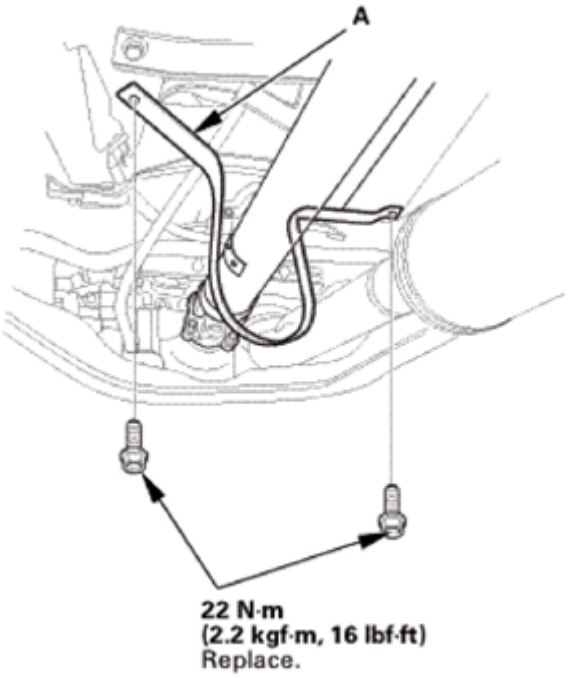

Fig. 174: Identifying Propeller Shaft Protector (No. 1)
Courtesy of AMERICAN HONDA MOTOR CO., INC.

14. Left Middle Floor Undercover (AWD/4WD)
    1. Install the left middle floor undercover (A), then install the bolts (B) and the clips (C, D). The clips snap into place securely.

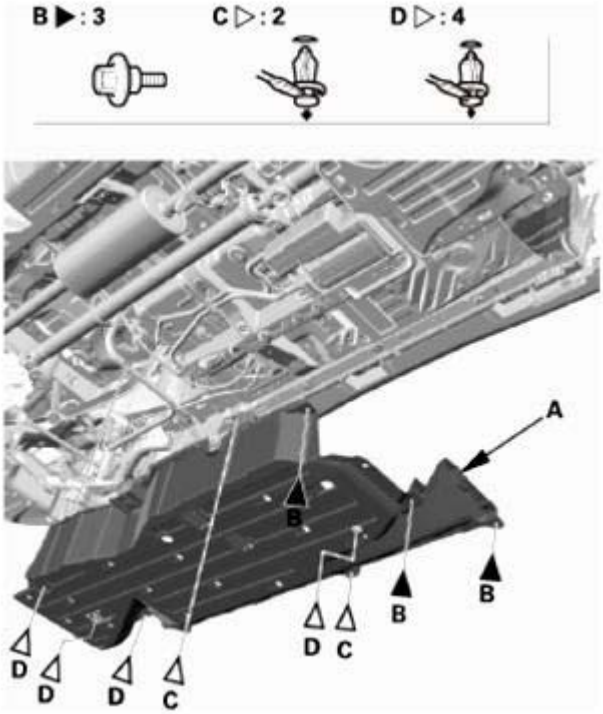

GETtheMANUALS.org

Fig. 175: Identifying Left Middle Floor Undercover, Bolts And Clips
Courtesy of AMERICAN HONDA MOTOR CO., INC.

15. Under Floor TWC Assembly
    1. Install the under-floor TWC.

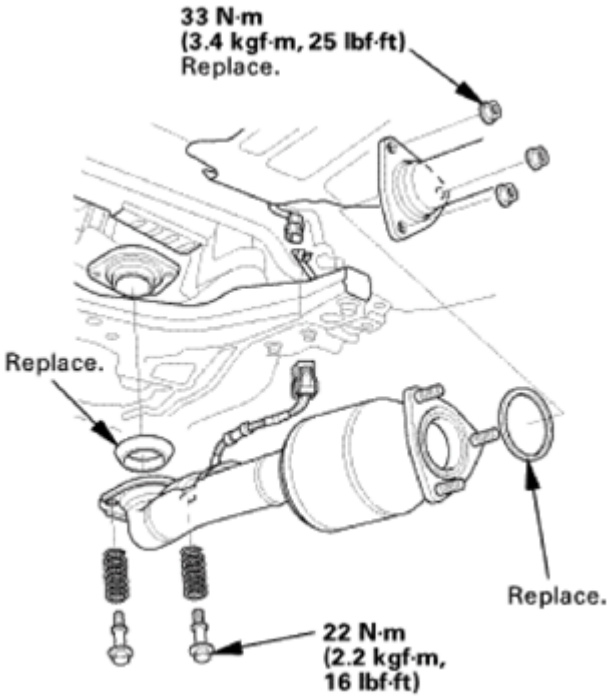

Fig. 176: Identifying Under-Floor TWC With Torque Specifications
Courtesy of AMERICAN HONDA MOTOR CO., INC.

16. Front Floor Undercover
    1. Install the front floor undercover (A), then install the bolts (B) and the clips (C, D). Make sure the clips snap into place securely.

GETtheMANUALS.org

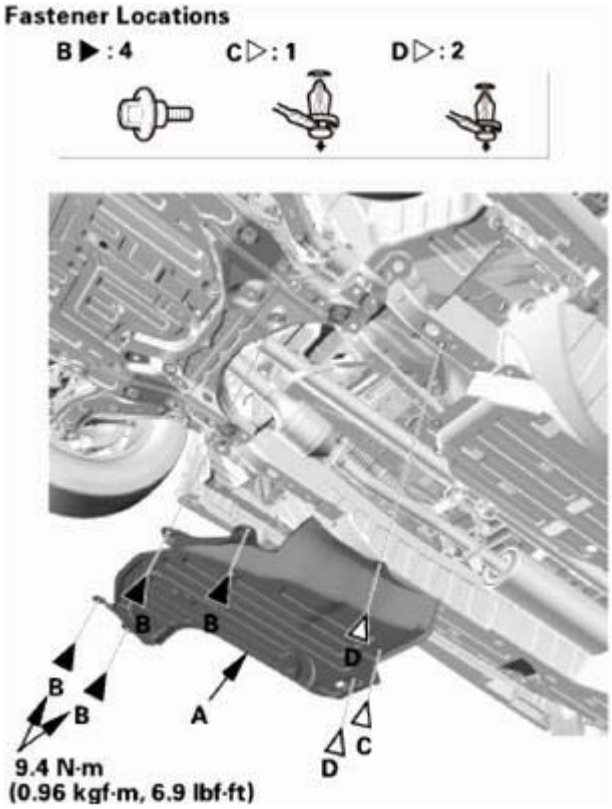

Fig. 177: Identifying Front Floor Undercover, Bolts And Clips With Torque Specifications
Courtesy of AMERICAN HONDA MOTOR CO., INC.

17. Front Splash Shield
    1. Install the front splash shield (A), then install the bolts (B) and the clips (C, D). Make sure the clips snap into place securely.

GETtheMANUALS.org

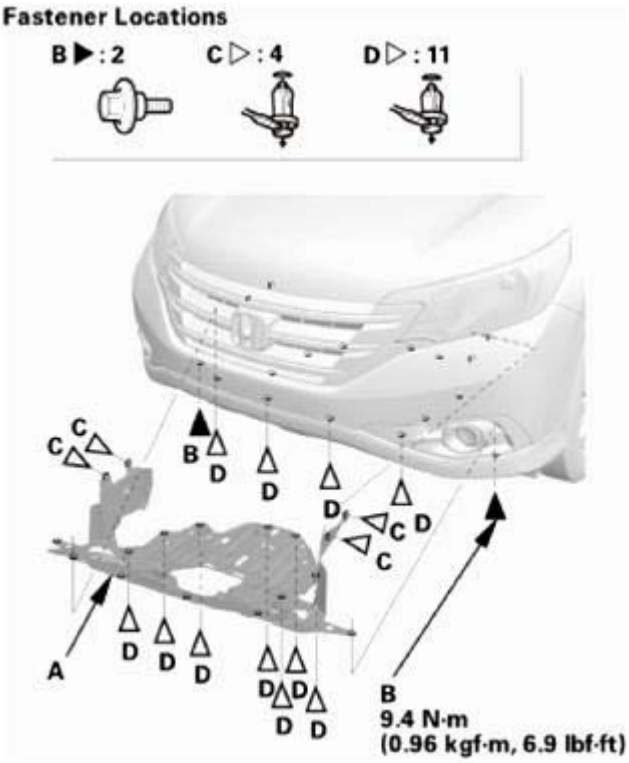

Fig. 178: Identifying Front Splash Shield, Bolts And Clips With Torque Specifications
Courtesy of AMERICAN HONDA MOTOR CO., INC.

18. Front Stabilizer Link Stabilizer Bar Side - Reconnection, Both Side
    1. Connect both sides of the stabilizer link (A) to the front stabilizer bar (B).
    2. Install the flange nuts (C), and tighten them to the specified torque while holding the respective joint pin (D) with a hex wrench (E).

GETtheMANUALS.org

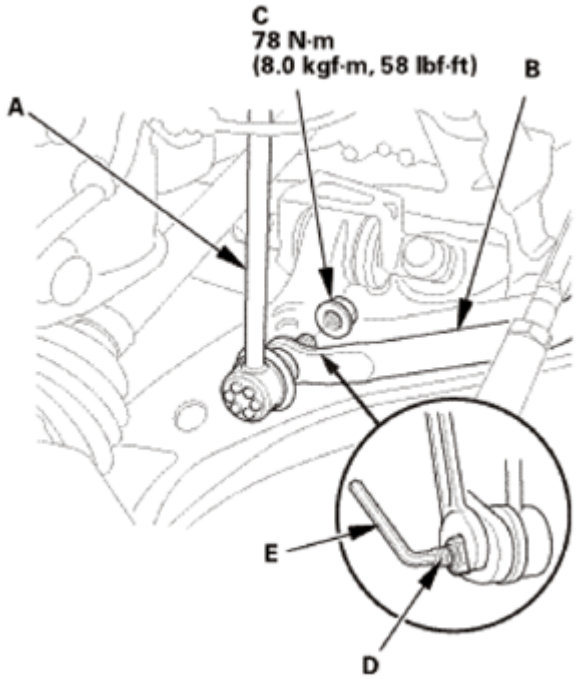

Fig. 179: Installing Front Stabilizer Link Stabilizer Bar Side
Courtesy of AMERICAN HONDA MOTOR CO., INC.

19. Tie-Rod End Ball Joint - Connection, Both Side
    1. Wipe off any grease contamination from the ball joint tapered section and threads.
    2. Connect the tie-rod ball joint (A) to the knuckle.
    3. Install the nut (B) and tighten to the specified torque.
    4. Install a new cotter pin (C).

NOTE: **Bend the cotter pin as shown.**

GETtheMANUALS.org

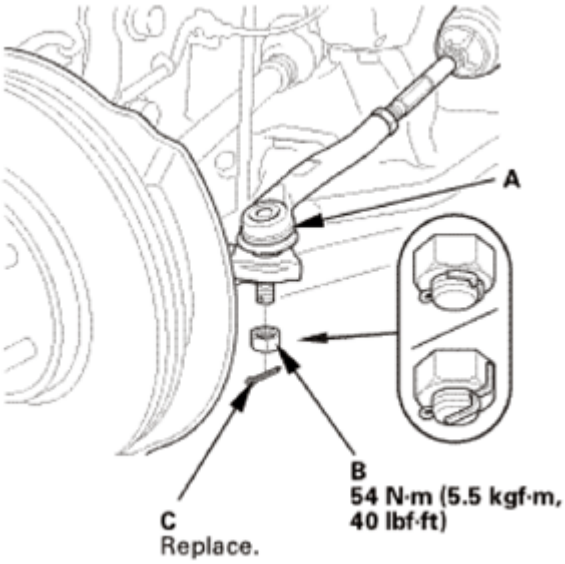

Fig. 180: Identifying Tie-Rod Ball Joint, Cotter Pin And Nut With Torque Specifications
Courtesy of AMERICAN HONDA MOTOR CO., INC.

20. Steering Column Lower Slide Shaft - Release
    1. Cut the wire (A).

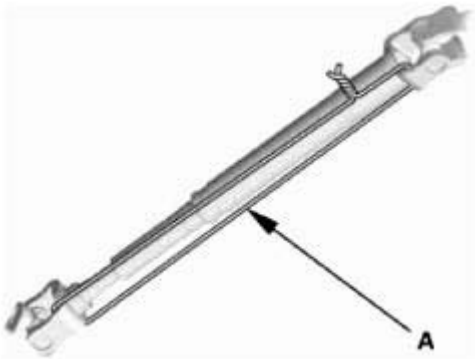

Fig. 181: Identifying Steering Column Lower Slide Shaft And Wire
Courtesy of AMERICAN HONDA MOTOR CO., INC.

21. Steering Wheel Release
    1. Remove the steering wheel holder tool (A).

GETtheMANUALS.org

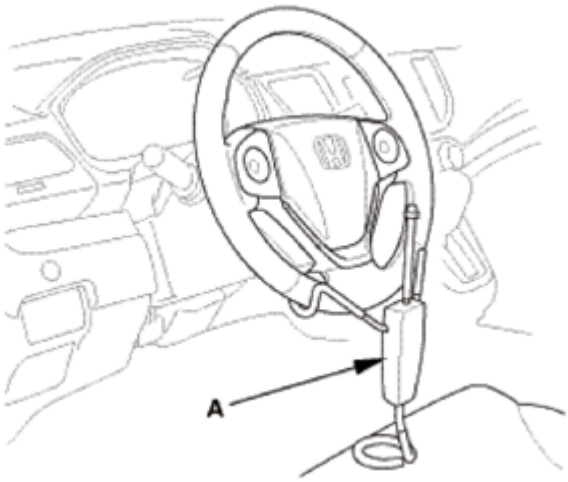

Fig. 182: Identifying Steering Wheel Holder Tool
Courtesy of AMERICAN HONDA MOTOR CO., INC.

22. Steering Joint - Reconnection
    1. Place the rack in the straight ahead driving position.
    2. Slip the lower end of the steering joint (A) onto the pinion shaft (B).

NOTE: Position the steering column by aligning the gap (C) within the angle.

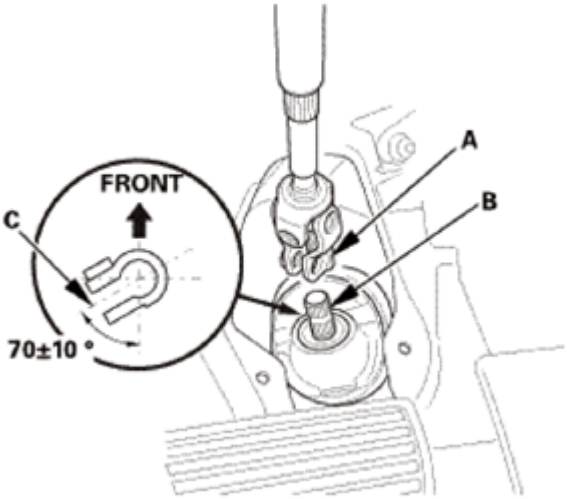

Fig. 183: Installing Lower End Of Steering Joint Onto Pinion Shaft
Courtesy of AMERICAN HONDA MOTOR CO., INC.

    3. Align the bolt hole (A) on the steering joint with the groove (B) around the pinion shaft.
    4. Loosely install the steering joint bolt (C).
    5. Be sure that the joint bolt is securely in the groove in the pinion shaft.
    6. Pull on the steering joint to make sure that the steering joint is fully seated.

GETtheMANUALS.org

7. Tighten the steering joint bolt to the specified torque.

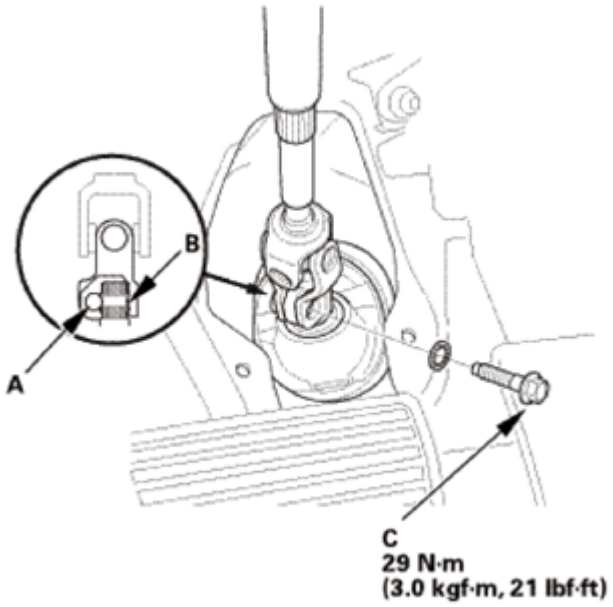

Fig. 184: Identifying Pinion Shaft Groove, Steering Joint Bolt And Bolt Hole With Torque Specification
Courtesy of AMERICAN HONDA MOTOR CO., INC.

23. Steering Joint Cover
    1. Install the steering joint cover (A).

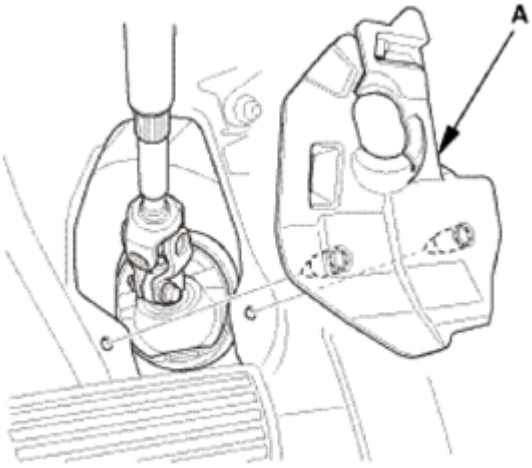

Fig. 185: Identifying Steering Joint Cover
Courtesy of AMERICAN HONDA MOTOR CO., INC.

24. Front Wheel - Both Side
    1. Install both front wheels.

GETtheMANUALS.org

NOTE: **Before installing the wheel, clean the mating surfaces between the brake disc and the inside of the wheel.**

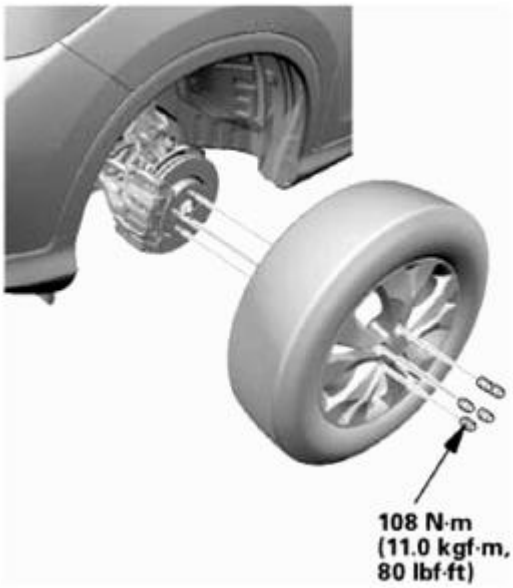

Fig. 186: Identifying Front Wheel With Torque Specifications
Courtesy of AMERICAN HONDA MOTOR CO., INC.

25. Battery Terminal (SRS) - Reconnection

NOTE: **If the battery performance is abnormal, test the battery.**

1. Clean the battery terminals.
2. Connect the positive cable (A) to the battery.

NOTE: **Always connect the positive side first.**

3. Connect the negative cable (B) to the battery.
4. Apply multipurpose grease to the terminals to prevent corrosion.

GETtheMANUALS.org

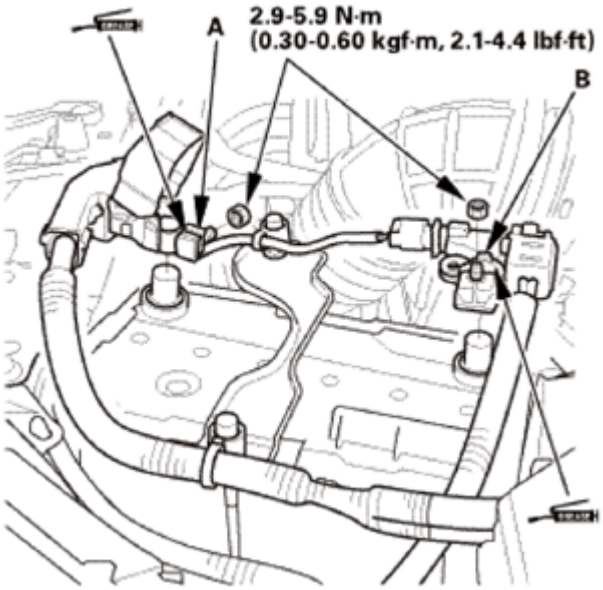

Fig. 187: Identifying Battery Positive And Negative Cable With Torque Specifications
Courtesy of AMERICAN HONDA MOTOR CO., INC.

26. Steering Gearbox - After Install Symptom Check
    1. With the tires raised off the ground, check for the following symptoms by turning the steering wheel fully to the right and left several times.

Symptom	Probable cause
Rubbing sound coming from the lower steering column area.	Steering column joint is contacting the cover.
Grating sound from the lower steering column area, or a rough feeling during steering.	Poor engagement of the pinion shaft serrations.
Noise from around the steering wheel during steering.	Poor engagement of the SRS cable reel with the steering wheel, or a damaged cable reel.

27. Steering After Install - Check
    1. After installation, check these items:
        - Start the engine, allow it to idle, and turn the steering wheel from lock to lock several times.
        - Check that the EPS indicator does not come on.
        - Check the steering wheel spoke angle. If steering spoke angles to the right and left are not equal (steering wheel and rack are not centered), correct the engagement of the joint/pinion shaft splines.
28. Pre-Alignment Checks

    For proper inspection and adjustment of the wheel alignment, do these checks:

    1. Release the parking brake to avoid an incorrect measurement.
    2. Make sure the suspension is not modified.

GETtheMANUALS.org

3. Make sure the fuel tank is full, and that the spare tire, the jack, and the tools are in place on the vehicle.
4. Check the tire size and tire pressure according to tire information.
5. Set the steering column to the middle tilt position and telescopic position.

29. Caster - Inspection

Use commercially available computerized four wheel alignment equipment to measure wheel alignment (caster, camber, toe, and turning angle). Follow the equipment manufacturer's instructions.

1. Check the caster angle.

   Caster angle:

   2WD:

   With 16 inch wheel: 2 ° 44 '±30 '

   Without 16 inch wheel: 2 ° 50 '±30 '

   AWD/4WD:

   With 16 inch wheel: 2 ° 38 '±30 '

   Without 16 inch wheel: 2 ° 44 '±30 '

   - If the measurement is within specifications, measure the front camber angle.
   - If the measurement is not within specifications, check for bent or damaged suspension components.

30. Camber - Inspection

Use commercially available computerized four wheel alignment equipment to measure wheel alignment (caster, camber, toe, and turning angle). Follow the equipment manufacturer's instructions.

1. Check the camber angle.

   Camber angle:

   2WD:

   Front:

   With 16 inch wheel: -0 ° 01 '±1 ° 00 '

   Without 16 inch wheel: -0 ° 10 '±1 ° 00 '

   (Maximum difference between the front right and left side: 1 °00 ')

GETtheMANUALS.org

Rear:

With 16 inch wheel: -1 ° 06 '±45 '

Without 16 inch wheel: -1 ° 12 '±45 '

(Maximum difference between the front right and left side: 0 °45 ')

AWD/4WD:

Front:

With 16 inch wheel: -0 ° 08 '±1 ° 00 '

Without 16 inch wheel: 0 ° 00 '±1 ° 00 '

(Maximum difference between the front right and left side: 1 °00 ')

Rear:

With 16 inch wheel: -0 ° 50 '±45 '

Without 16 inch wheel: -1 ° 00 '±45 '

(Maximum difference between the front right and left side: 0 °45 ')

- If the measurement is within specification, measure the toe-in.
- If the measurement for the front camber is not within the specification, go to front camber adjustment.
- If the measurement for the rear camber is not within the specification, check for bent or damaged suspension components.

31. Front Toe - Inspection

Use commercially available computerized four wheel alignment equipment to measure wheel alignment (caster, camber, toe, and turning angle). Follow the equipment manufacturer's instructions.

1. Set the steering column to the middle tilt position and telescopic positions.
2. Center the steering wheel spokes, and install a steering wheel holder tool.
3. Check the toe with the wheels pointed straight ahead.

Front toe-in: 0±2 mm (0±0.08 in)

- If adjustment is required, go to the front toe adjustment.
- If no adjustment is required, remove the alignment equipment.

32. Turning Angle - Inspection

GETtheMANUALS.org

Use commercially available computerized four wheel alignment equipment to measure wheel alignment (caster, camber, toe, and turning angle). Follow the equipment manufacturer's instructions.

1. Turn the wheel right and left while applying the brake, and measure the turning angle of both wheels.

   Turning angle:

   2WD:

   Inward:

   With 16 inch wheel: 36 ° 29 '±2 °

   Without 16 inch wheel: 36 ° 13 '±2 °

   Outward (reference):

   With 16 inch wheel: 31 ° 13 '

   Without 16 inch wheel: 31 ° 02 '

   AWD/4WD:

   Inward:

   With 16 inch wheel: 36 ° 48 '±2 °

   Without 16 inch wheel: 36 ° 30 '±2 °

   Outward (reference):

   With 16 inch wheel: 31 ° 18 '

   Without 16 inch wheel: 31 ° 12 '

GETtheMANUALS.org

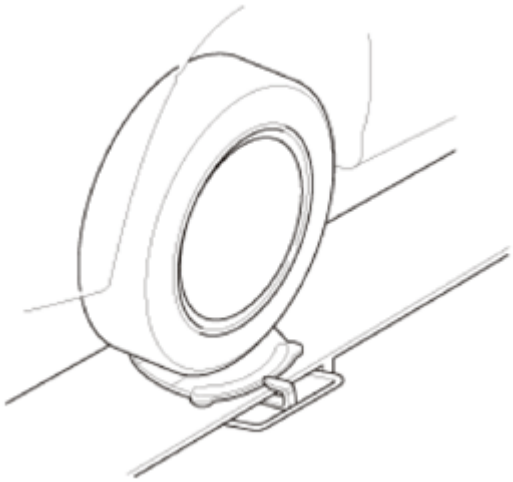

Fig. 188: Measuring Turning Angle Of Wheel
Courtesy of AMERICAN HONDA MOTOR CO., INC.

2. If the measurement is not within the specifications, even up both sides of the tie-rod threaded section length while adjusting the front toe.
3. If it is correct, but the turning angle is not within the specifications, check for bent or damaged suspension components.

33. HDS DLC - Connection
    1. Connect the HDS to the data link connector (DLC) (A) located under the driver's side of the dashboard.
    2. Turn the ignition switch to ON (II).
    3. Make sure the HDS communicates with the vehicle. If it does not communicate, go to the DLC circuit troubleshooting.

Fig. 189: Identifying Data Link Connector
Courtesy of AMERICAN HONDA MOTOR CO., INC.

GETtheMANUALS.org

34. VSA Sensor Neutral Position - Memorization
    1. Park the vehicle on a flat and level surface, with the steering wheel in the straight ahead position.
    2. Select VSA ADJUSTMENT, then select ALL SENSORS with the HDS, and follow the screen prompts.

    NOTE: See the HDS Help menu for specific instructions.

35. Steering Angle Sensor Neutral Position - Clear
    1. Select EPS ADJUSTMENT, then select EPS STEERING ANGLE SENSOR VALUE CLEAR and follow the screen prompts on the HDS.

    NOTE: See the HDS Help menu for specific instructions.

STEERING GEARBOX REMOVAL AND INSTALLATION

SPECIAL TOOL DESCRIPTION

Image	Description/Tool Number
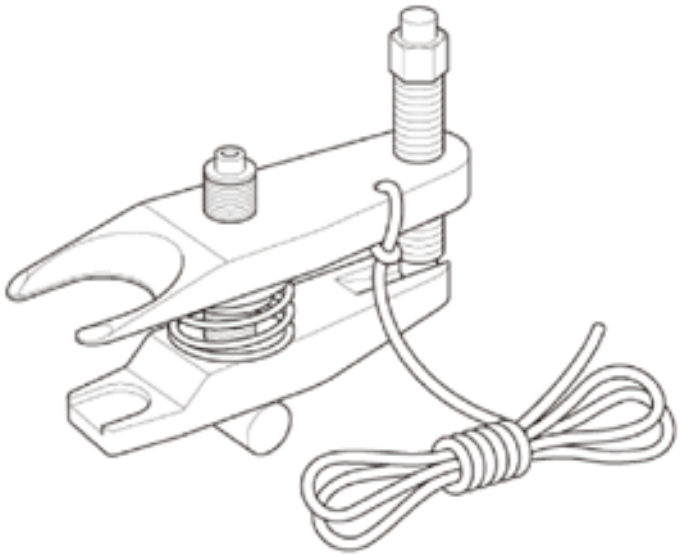	Ball Joint Remover, 28 mm 07MAC-SL00202
	Ball Joint Thread Protector, 12 mm 07AAF-

GETtheMANUALS.org

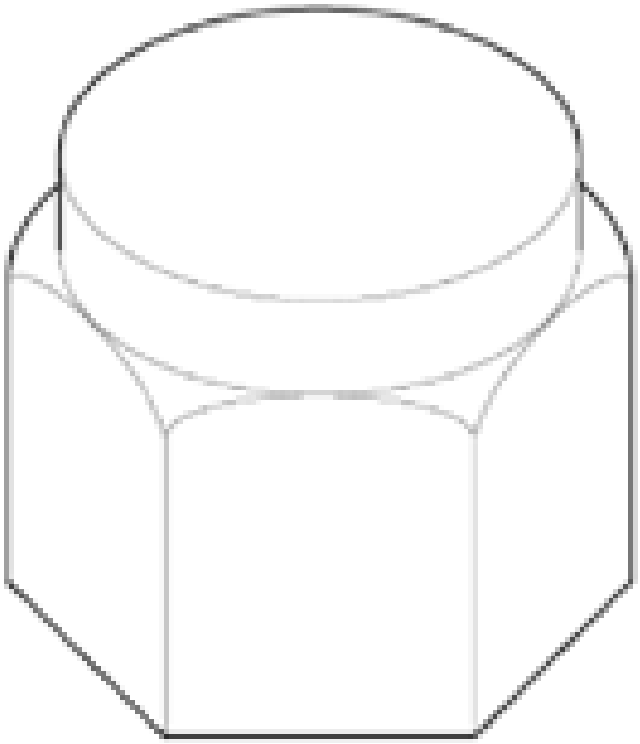	SDAA100
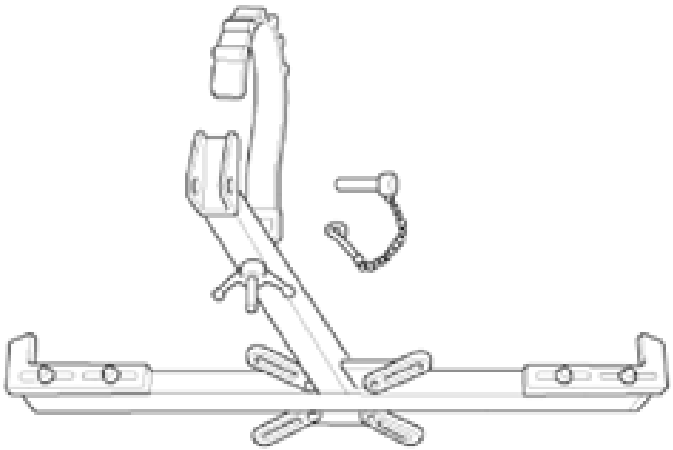	Subframe Adapter VSB02C000016(1)
	Subframe Alignment Pin 070AG-SJAA10S

GETtheMANUALS.org

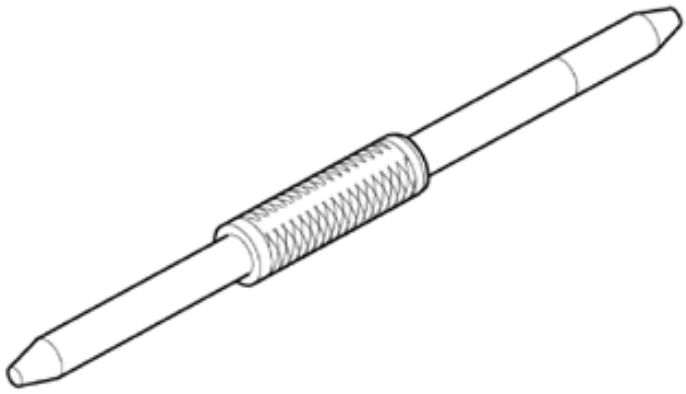	
(1) Available through the Honda Tool and Equipment Program 888-424-6857	

REMOVAL

1. Battery Terminal (SRS) - Disconnection
    1. Make sure the ignition switch is in LOCK (0).
    2. Disconnect and isolate the negative cable (A) from the battery.

    NOTE: Always disconnect the negative side first.

    3. Disconnect the positive cable (B) from the battery.
    4. Wait at least 3 minutes before starting work.

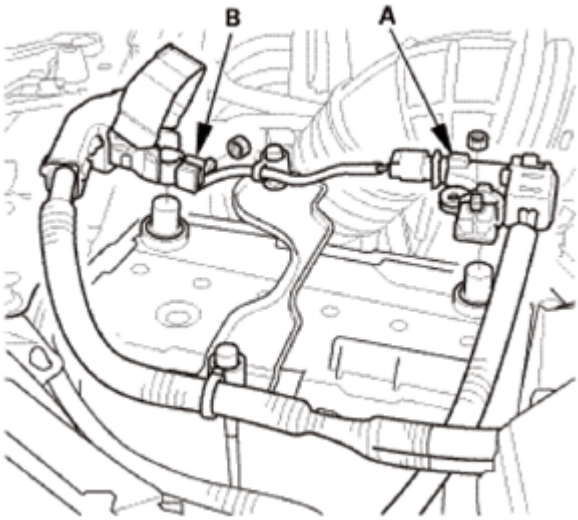

Fig. 190: Identifying Battery Positive And Negative Terminals
Courtesy of AMERICAN HONDA MOTOR CO., INC.

2. Vehicle Lift
    1. Raise the vehicle on a lift, and make sure it is securely supported.

GETtheMANUALS.org

3. Front Wheel - Both Side
    1. Remove both front wheels.

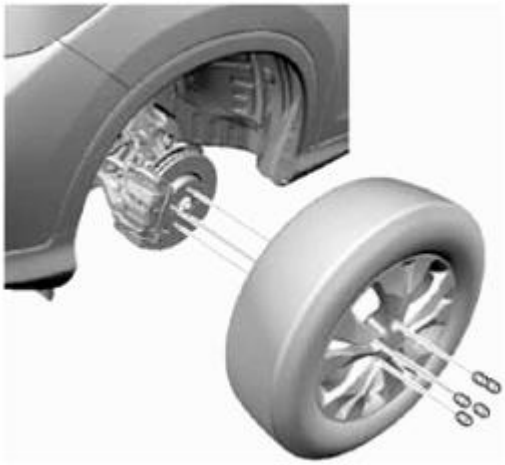

Fig. 191: Identifying Front Wheel
Courtesy of AMERICAN HONDA MOTOR CO., INC.

4. Steering Joint Cover
    1. Remove the steering joint cover (A).

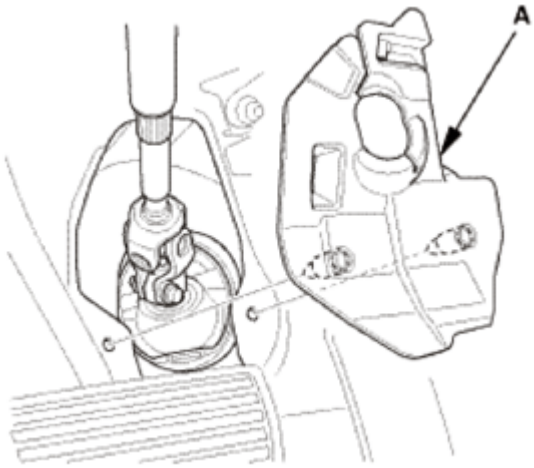

Fig. 192: Identifying Steering Joint Cover
Courtesy of AMERICAN HONDA MOTOR CO., INC.

5. Steering Column Lower Slide Shaft - Hold
    1. Set the steering column to the center tilt position, and to the center telescopic position.
    2. Hold the lower slide shaft (A) on the column with a piece of wire (B) between the joint yoke (C) of the lower slide shaft and the joint yoke (D) of the upper shaft to prevent the lower slider shaft from pulling out.

GETtheMANUALS.org

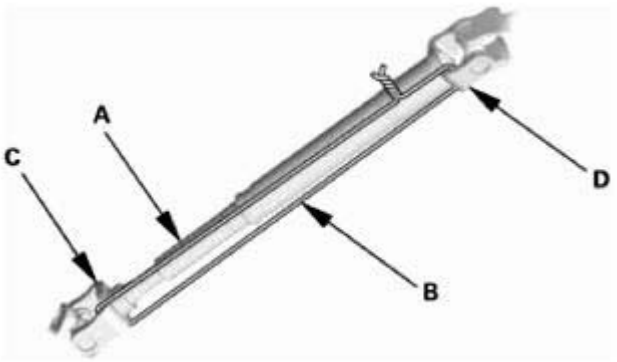

Fig. 193: Holding Lower Slide Shaft On Column Using Wire
Courtesy of AMERICAN HONDA MOTOR CO., INC.

6. Steering Wheel Hold
    1. Center the steering wheel spoke angle.
    2. Install a commercially available steering wheel holder tool (A).

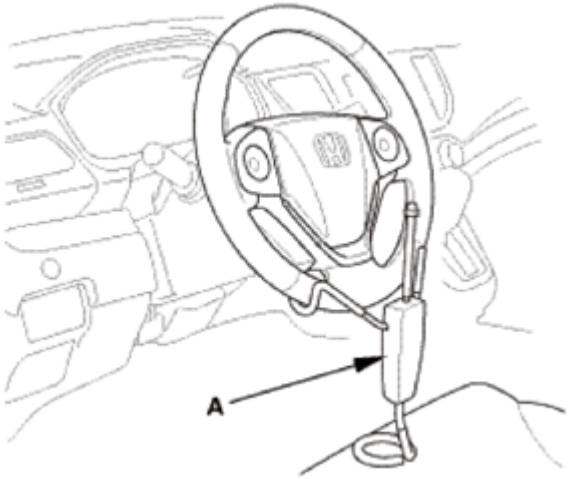

Fig. 194: Identifying Lower Slide Shaft, Wire And Yoke Joint
Courtesy of AMERICAN HONDA MOTOR CO., INC.

7. Steering Joint - Disconnection
    1. Remove the steering joint bolt (A).
    2. Disconnect the steering joint (B) from the pinion shaft.
    3. Remove the center guide (C) (if equipped), and discard it.

GETtheMANUALS.org

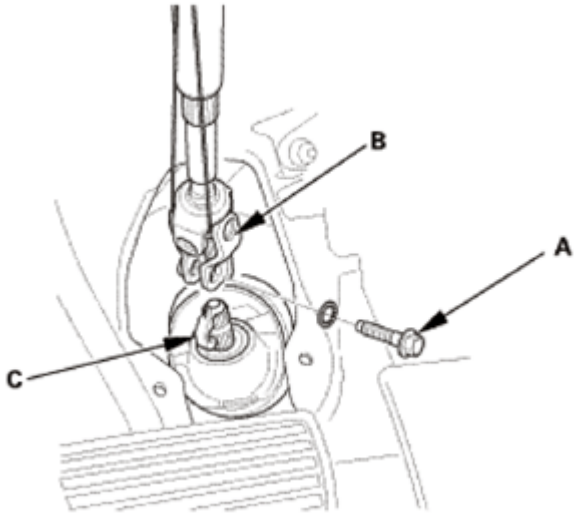

Fig. 195: Identifying Steering Joint, Center Guide And Bolt
Courtesy of AMERICAN HONDA MOTOR CO., INC.

8. Ball Joint - Removal

NOTE: **Always use a ball joint remover to disconnect a ball joint. Do not strike the housing or any other part of the ball joint connection to disconnect it.**

1. Install a hex nut (A) or the ball joint thread protector.

NOTE: **When using a hex nut, make sure the nut is flush with the ball joint pin end to prevent damage to the threaded end of the ball joint pin.**

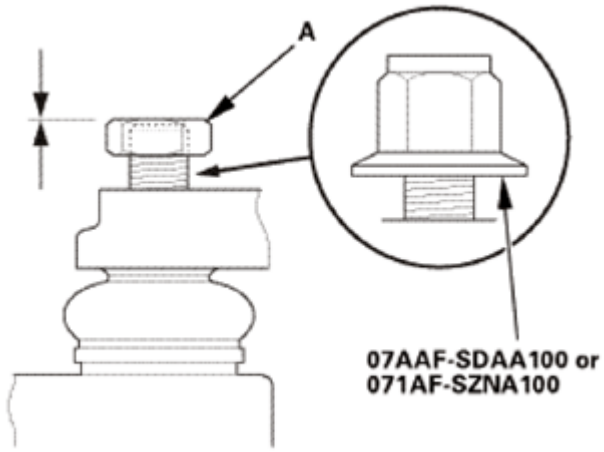

Fig. 196: Identifying Hex Nut Or Ball Joint Thread Protector
Courtesy of AMERICAN HONDA MOTOR CO., INC.

2. Apply grease to the ball joint remover on the areas shown (A).

GETtheMANUALS.org

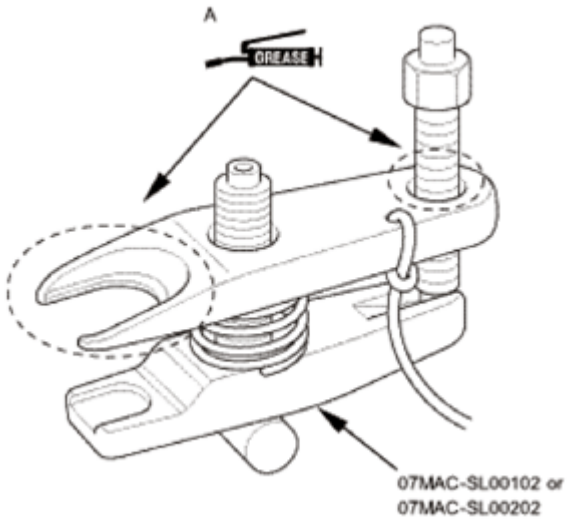

Fig. 197: Identifying Grease Applying Areas On Ball Joint Remover
Courtesy of AMERICAN HONDA MOTOR CO., INC.

3. Install the ball joint remover as shown.

NOTE:

- **Fasten the safety tie (A) securely to a suspension arm or the subframe (B).**
- **Making sure not to damage the ball joint boot.**

4. Tighten the pressure bolt until the ball joint pin pops loose from the ball joint connecting hole.

NOTE: **Do not use pneumatic or electric tools on the pressure bolt.**

5. Remove the ball joint remover.
6. Remove the hex nut or the ball joint thread protector.
7. Pull the ball joint out of the ball joint connecting hole.

GETtheMANUALS.org

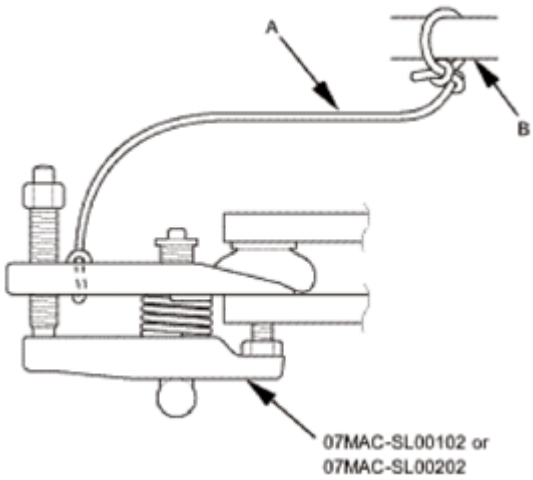

Fig. 198: Fastening Safety Tie On Suspension Arm Or Subframe
Courtesy of AMERICAN HONDA MOTOR CO., INC.

9. Tie-Rod End Ball Joint - Disconnection, Both Side
    1. Remove the cotter pin (A) from the tie-rod end ball joint.
    2. Remove the nut (B).
    3. Disconnect the tie-rod end ball joint.

NOTE: **Be careful not to damage the ball joint boot when installing the remover.**

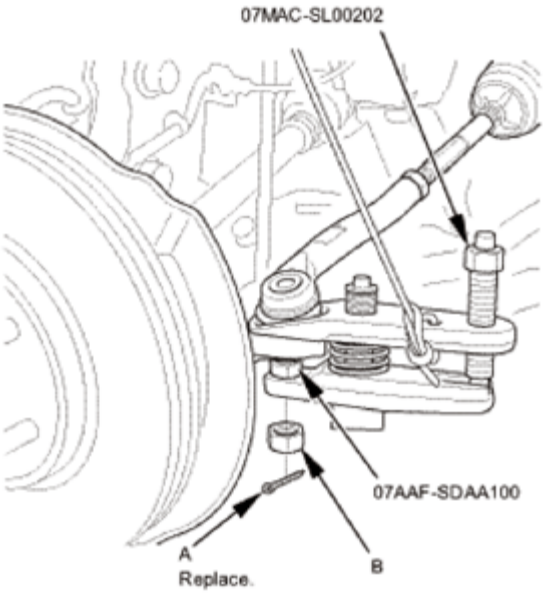

Fig. 199: Identifying Tie-Rod End Ball Joint Cotter Pin And Nut
Courtesy of AMERICAN HONDA MOTOR CO., INC.

10. Front Stabilizer Link Stabilizer Bar Side - Disconnection, Both Side

GETtheMANUALS.org

1. Remove the flange nuts (A) while holding the respective joint pin (B) with a hex wrench (C).
2. Disconnect both sides of the stabilizer link (D) from the front stabilizer bar (E).

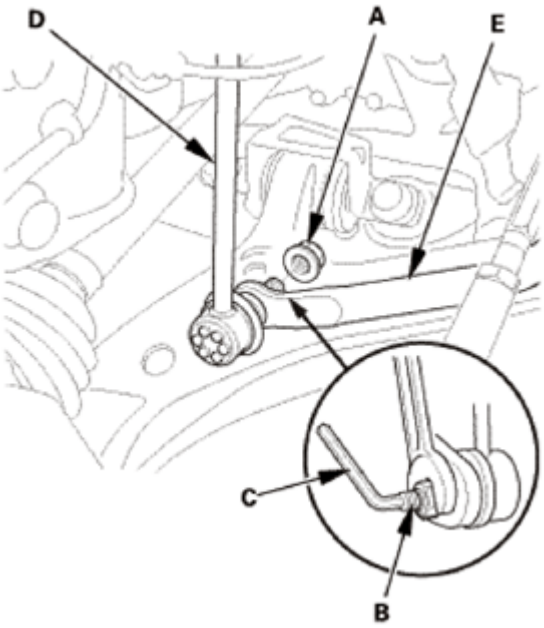

Fig. 200: Removing Flange Nuts Using Hex Wrench
Courtesy of AMERICAN HONDA MOTOR CO., INC.

11. Front Splash Shield
    1. Remove the bolts (A), then remove the clips (B) that secure the front inner fender and the front splash shield (C) to the body.
    2. From under the front bumper (D), remove the clips (E).
    3. From under the body, remove the clips (F), then pull out the front splash shield.

GETtheMANUALS.org

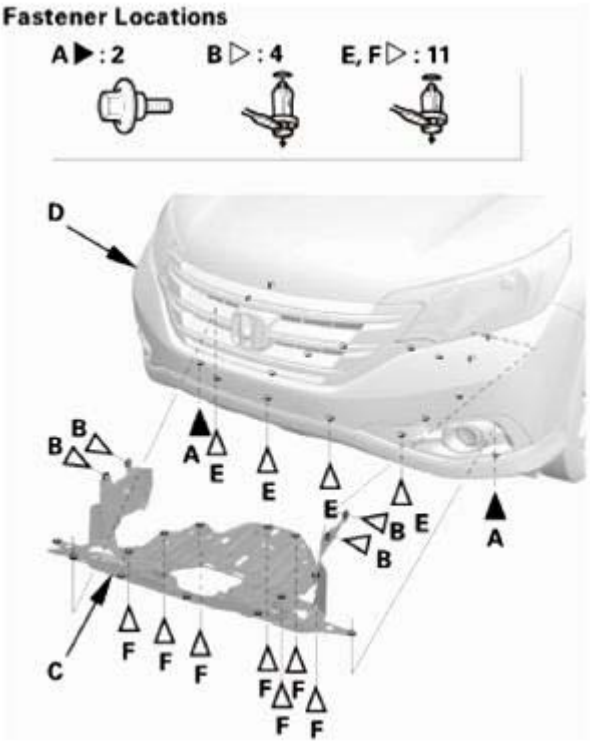

Fig. 201: Identifying Front Bumper, Front Splash Shield, Bolt And Clips
Courtesy of AMERICAN HONDA MOTOR CO., INC.

12. Front Floor Undercover
    1. Remove the bolts (A) and the clips (B, C) securing the front floor undercover (D), then remove the front floor undercover.

GETtheMANUALS.org

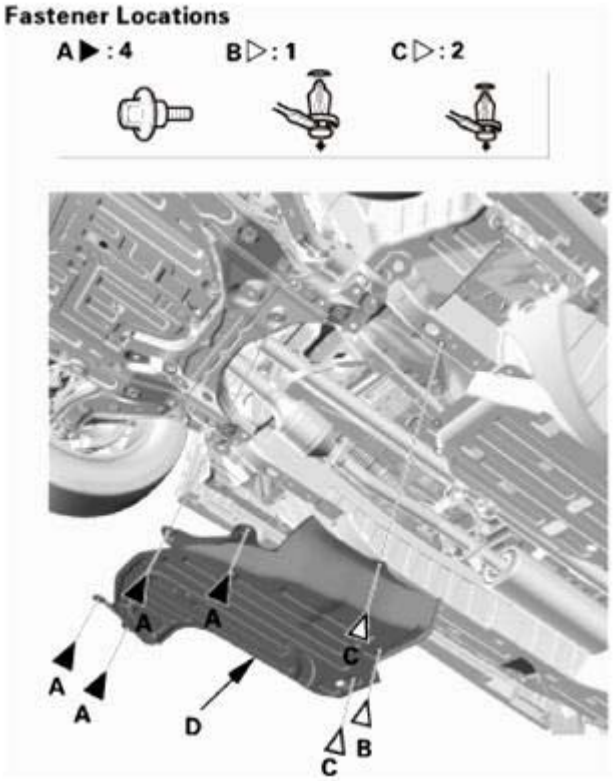

Fig. 202: Identifying Front Floor Undercover, Bolts And Clips
Courtesy of AMERICAN HONDA MOTOR CO., INC.

13. Under-Floor TWC Assembly
    1. Remove the under-floor TWC.

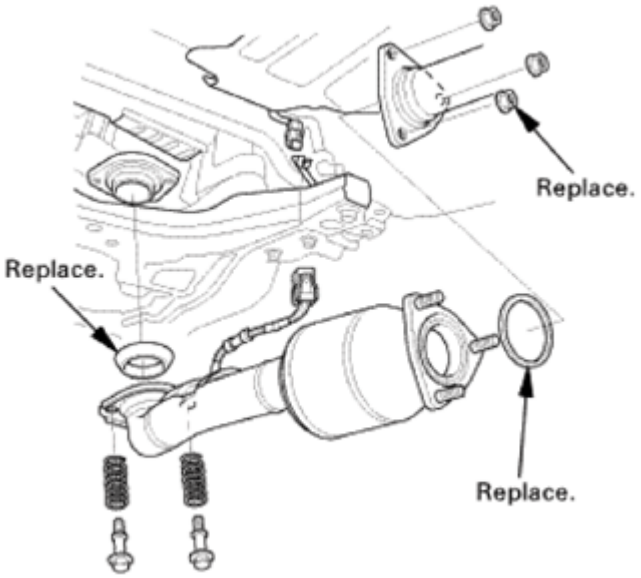

Fig. 203: Identifying Under-Floor TWC
Courtesy of AMERICAN HONDA MOTOR CO., INC.

GETtheMANUALS.org

14. Left Middle Floor Undercover (AWD/4WD)
    1. Remove the bolts (A) and clips (B, C), then remove the left middle floor undercover (D).

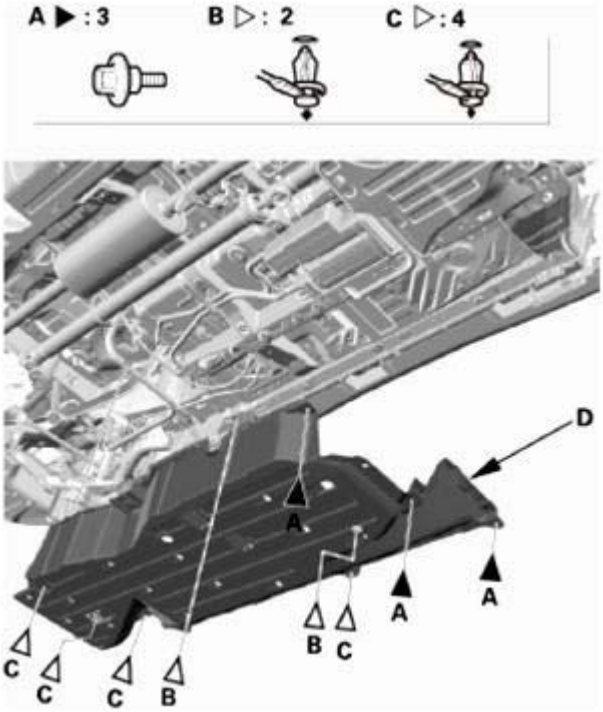

Fig. 204: Identifying Left Middle Floor Undercover, Clips And Bolts
Courtesy of AMERICAN HONDA MOTOR CO., INC.

15. Propeller Shaft Protector No. 1 (AWD/4WD)
    1. Remove the No. 1 propeller shaft protector (A).

GETtheMANUALS.org

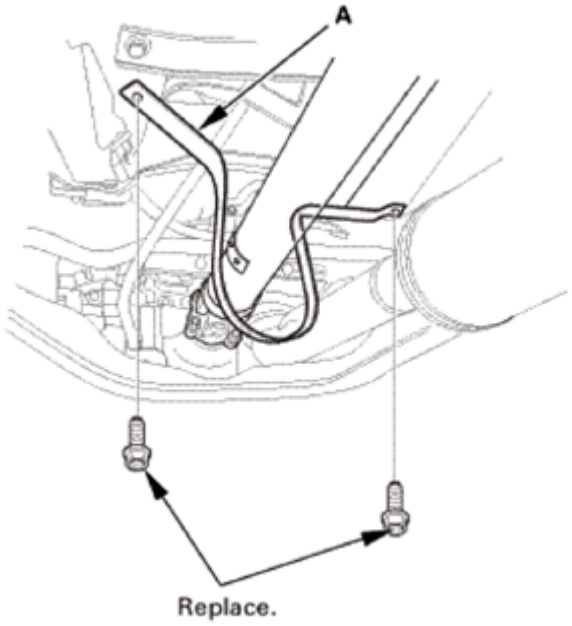

Fig. 205: Identifying Propeller Shaft Protector (No. 1)
Courtesy of AMERICAN HONDA MOTOR CO., INC.

16. Propeller Shaft Protector No. 2 (AWD/4WD)
    1. Remove the No. 2 propeller shaft protector (A).

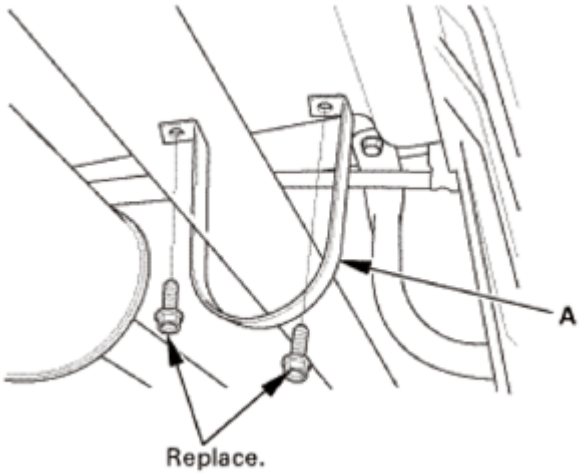

Fig. 206: Identifying Propeller Shaft Protector (No. 2)
Courtesy of AMERICAN HONDA MOTOR CO., INC.

17. Propeller Shaft Transmission Side - Disconnection (AWD/4WD)
    1. Make reference mark (A) across the No. 1 propeller shaft (B) and the transfer companion flange (C).
    2. Remove the No. 1 propeller shaft flange bolts (D).

GETtheMANUALS.org

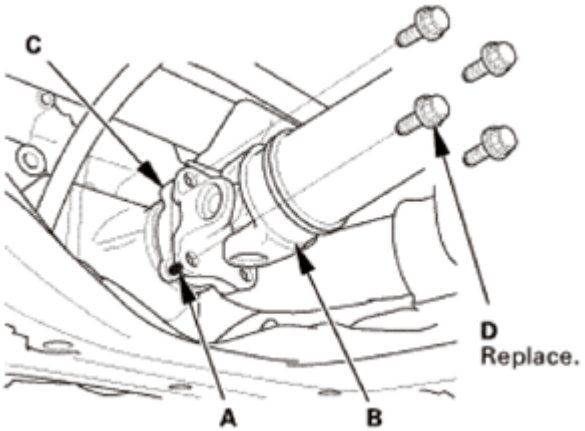

Fig. 207: Identifying Transfer Companion Flange, Propeller Shaft And Flange Bolt With Reference Mark
Courtesy of AMERICAN HONDA MOTOR CO., INC.

18. Propeller Shaft Differential Side - Disconnection (AWD/4WD)
    1. Make reference mark (A) across the No. 2 propeller shaft (B) and the rear differential companion flange (C).
    2. Remove the No. 2 propeller shaft flange bolts (D).

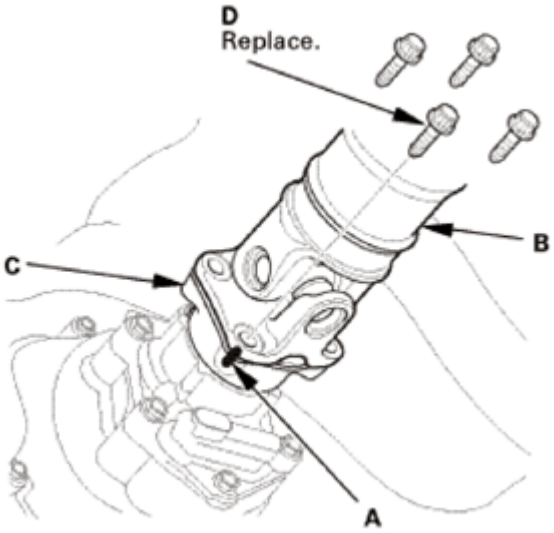

Fig. 208: Identifying Rear Differential Flange, Propeller Shaft And Flange Bolt With Reference Mark
Courtesy of AMERICAN HONDA MOTOR CO., INC.

19. Propeller Shaft Assembly (AWD/4WD)
    1. Remove the center support bearing mounting bolts (A), then remove the propeller shaft assembly (B).

GETtheMANUALS.org

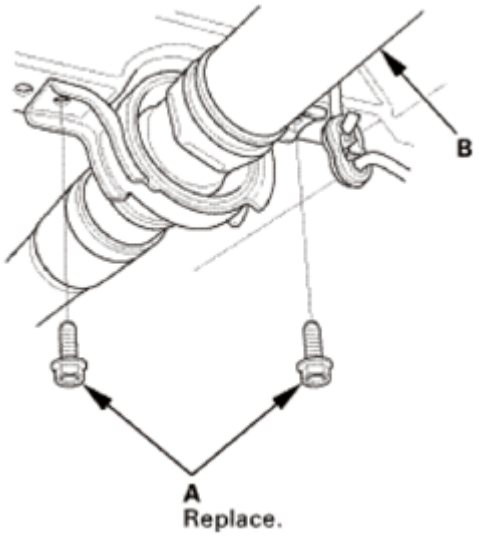

Fig. 209: Identifying Propeller Shaft Assembly And Center Support Bearing Mounting Bolts
Courtesy of AMERICAN HONDA MOTOR CO., INC.

20. Power Steering Gearbox Items

NOTE: Wrap the connectors with vinyl tape to avoid contamination from grease or water.

1. Disconnect the EPS motor 3P connector (A) by pushing the lock (B) and pulling up the lever (C).
2. Disconnect the connectors (D).
3. Remove the harness clip (E).

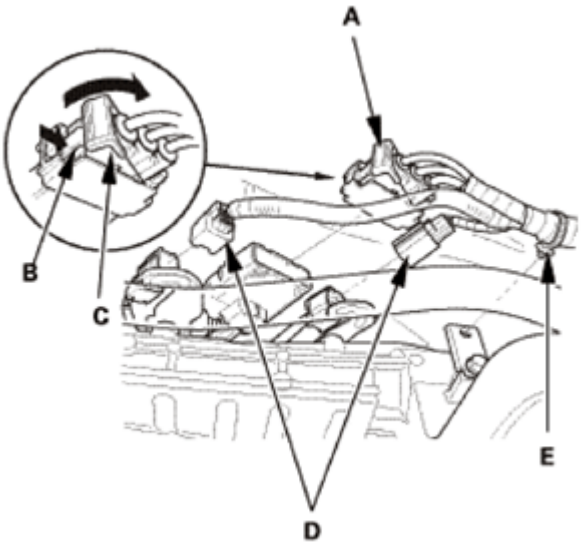

Fig. 210: Disconnecting EPS Motor 3P Connector
Courtesy of AMERICAN HONDA MOTOR CO., INC.

GETtheMANUALS.org

4. Remove the steering gearbox mounting bolts (A).
5. Remove the stiffener mounting bolts (B).
6. Remove the steering gearbox stiffeners (C).

Driver's side

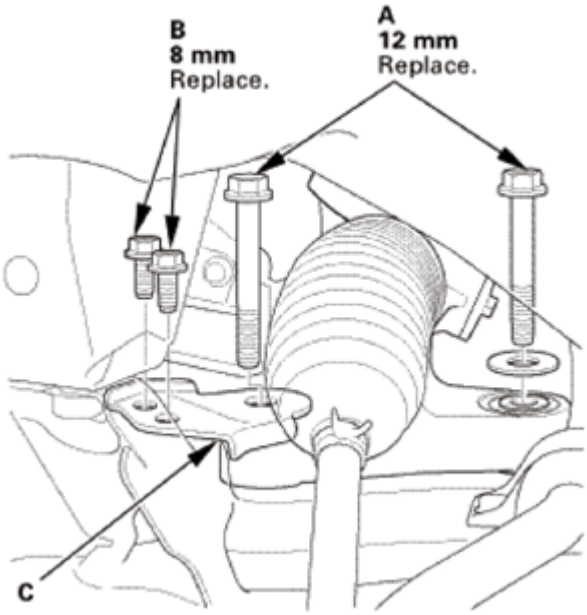

Fig. 211: Identifying Steering Gearbox Stiffeners And Mounting Bolts (Driver Side)
Courtesy of AMERICAN HONDA MOTOR CO., INC.

Passenger's side

GETtheMANUALS.org

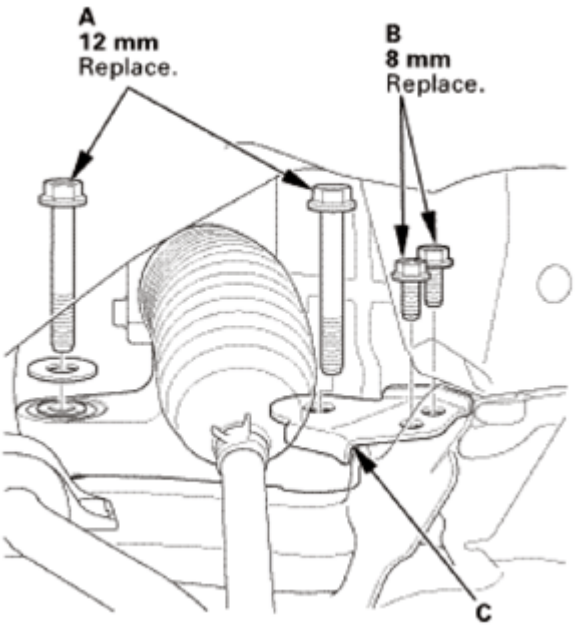

Fig. 212: Identifying Steering Gearbox Stiffeners And Mounting Bolts (Passenger Side)
Courtesy of AMERICAN HONDA MOTOR CO., INC.

21. Subframe Support
    1. Attach the subframe adapter (A) to the front subframe by looping the belt (B) over the front of the front subframe (C), then secure the belt with its stop (D).
    2. Raise the jack and line up the slots in the subframe adapter arms with the bolt holes on the jack base, then securely attach them with four bolts.

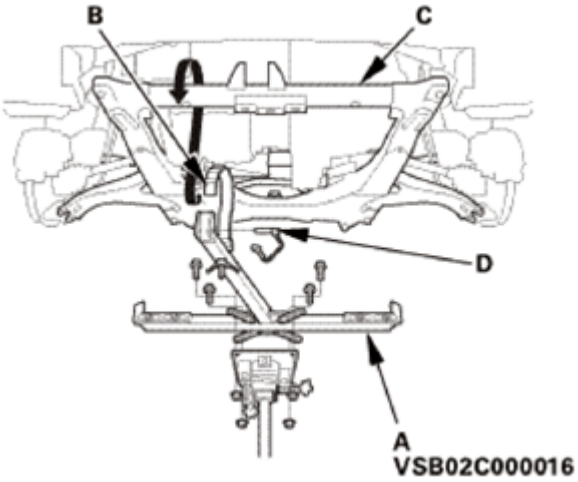

Fig. 213: Attaching Subframe Adapter To Front Subframe By Looping Belt
Courtesy of AMERICAN HONDA MOTOR CO., INC.

22. Lower Torque Rod - Disconnection
    1. Remove the lower torque rod mount mounting bolts (A).

GETtheMANUALS.org

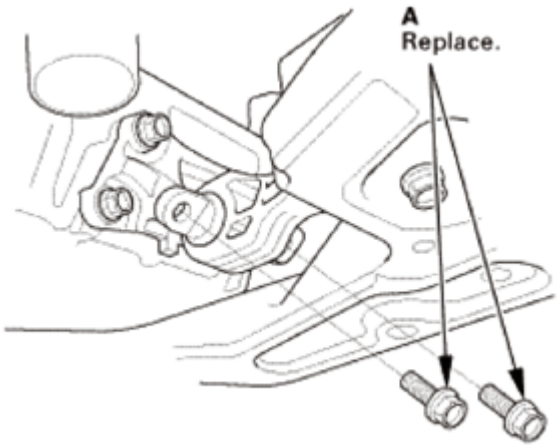

Fig. 214: Identifying Lower Torque Rod Mount Mounting Bolts
Courtesy of AMERICAN HONDA MOTOR CO., INC.

23. Front Subframe - Move
    1. Remove the mid mounting bolts (A) on both sides.

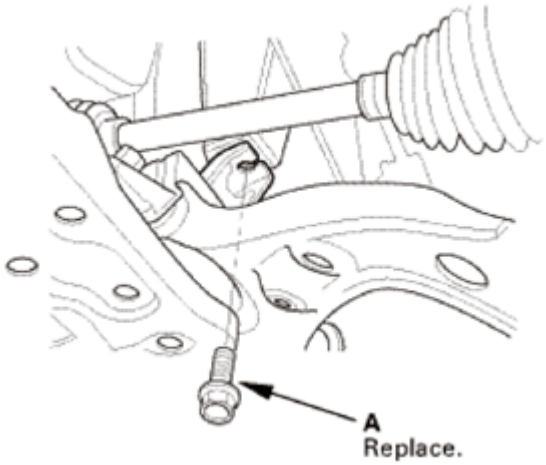

Fig. 215: Identifying Mid Mounting Bolts
Courtesy of AMERICAN HONDA MOTOR CO., INC.

    2. Loosen the front subframe mounting bolts (A) so they are about 30 mm (1.18 in) from the mounting surface on both sides.

NOTE: **Do not loosen the front subframe mounting bolts more than necessary.**

GETtheMANUALS.org

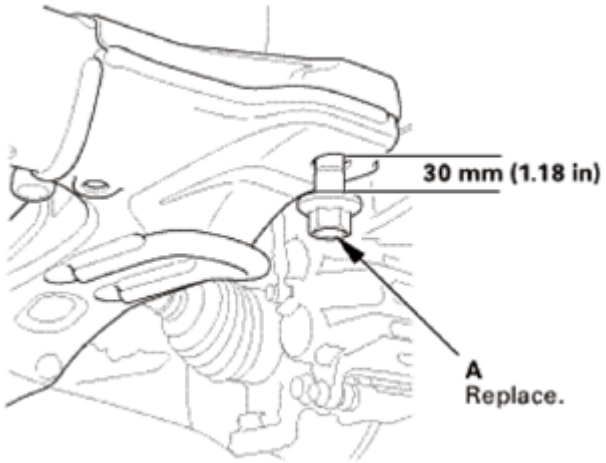

Fig. 216: Identifying Front Subframe Mounting Bolt
Courtesy of AMERICAN HONDA MOTOR CO., INC.

3. Remove the front subframe mounting bolts (A) on both side.
4. Lower the jack slowly until the front subframe has dropped about 130 mm (5.12 in).

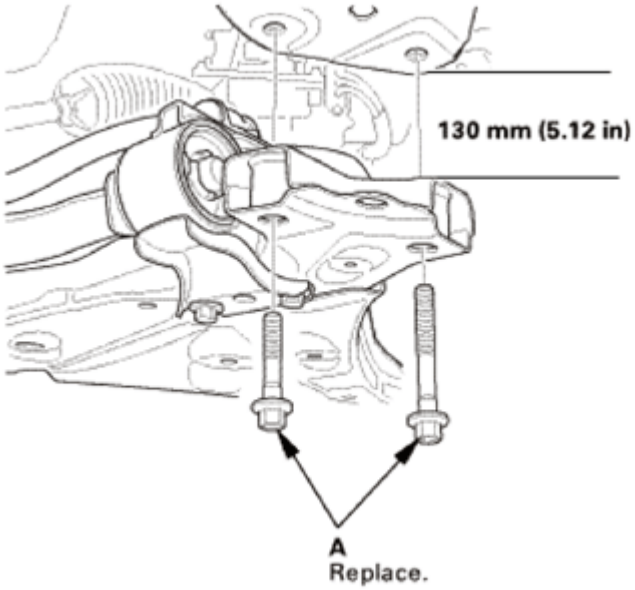

Fig. 217: Identifying Front Subframe Mounting Bolt
Courtesy of AMERICAN HONDA MOTOR CO., INC.

24. Pinion Shaft Grommet
    1. Remove the pinion shaft grommet (A).
    2. Wrap vinyl tape over the splines on the pinion shaft (B).

GETtheMANUALS.org

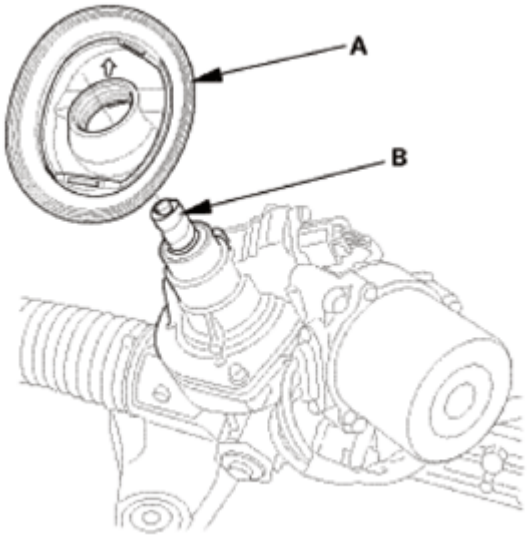

Fig. 218: Identifying Pinion Shaft And Grommet
Courtesy of AMERICAN HONDA MOTOR CO., INC.

25. Power Steering Gearbox Assembly
    1. Move the steering gearbox to the driver's side, and rotate it so the pinion shaft (A) points toward the rear of the vehicle.
    2. Carefully move the steering gearbox (B) as an assembly toward the driver's side of the vehicle until the pinion shaft clears the wheelwell opening.
    3. Remove the steering gearbox through the wheelwell opening on the driver's side.

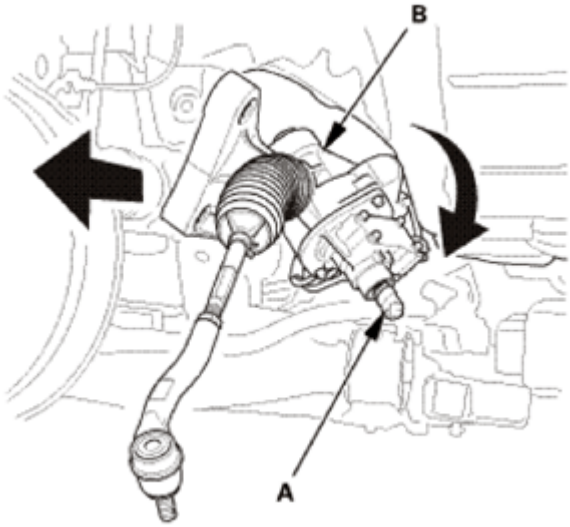

Fig. 219: Removing Steering Gearbox
Courtesy of AMERICAN HONDA MOTOR CO., INC.

26. Power Steering Heat Shield
    1. Remove the heat shield (A).

GETtheMANUALS.org

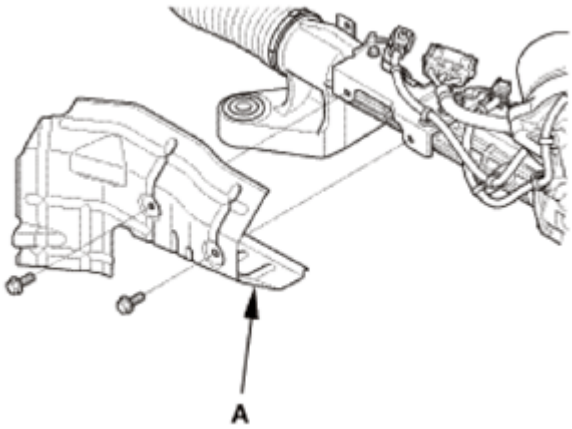

Fig. 220: Identifying Heat Shield
Courtesy of AMERICAN HONDA MOTOR CO., INC.

INSTALLATION

1. Power Steering Heat Shield
    1. Install the heat shield (A).

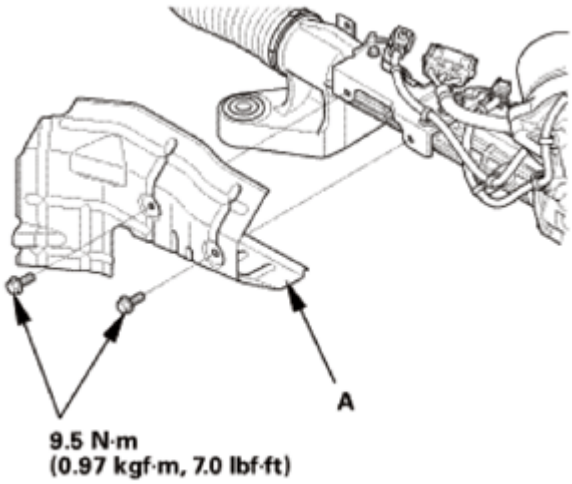

Fig. 221: Identifying Heat Shield With Torque Specifications
Courtesy of AMERICAN HONDA MOTOR CO., INC.

2. Power Steering Gearbox Assembly
    1. Apply vinyl tape to the splines on the pinion shaft (A).
    2. Slide the steering gearbox (B) between the front subframe and body from the driver's side.
    3. Carefully move the steering gearbox toward the passenger's side until the pinion shaft clears the wheelwell opening on the body.
    4. Rotate the steering gearbox so the pinion shaft points upward.
    5. Continue moving the steering gearbox toward the passenger's side until the steering gearbox is in position.

GETtheMANUALS.org

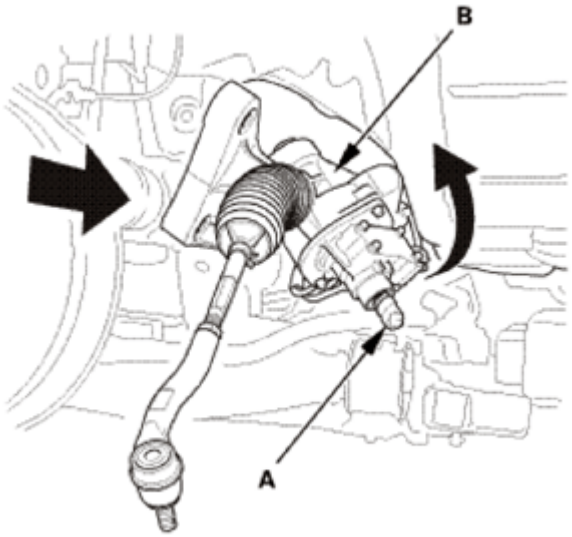

Fig. 222: Rotating Steering Gearbox
Courtesy of AMERICAN HONDA MOTOR CO., INC.

3. Pinion Shaft Grommet
    1. Remove the vinyl tape (A) from pinion shaft.
    2. Install the pinion shaft grommet (B).
    3. Align the lug portion (C) in the pinion shaft grommet with the cutout portion (D) on the steering gearbox.

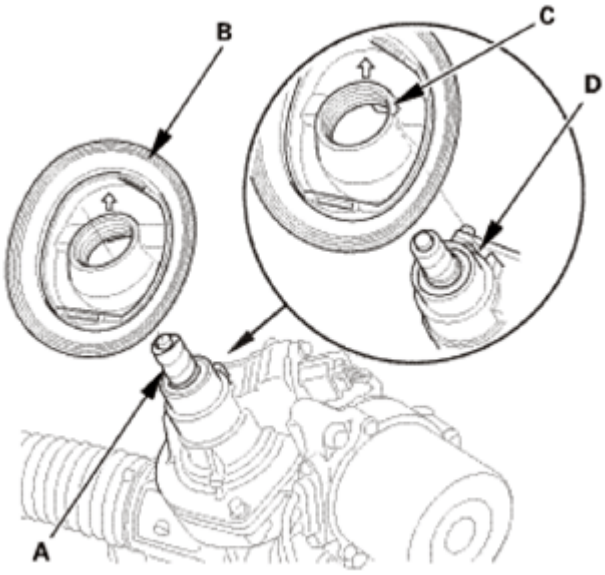

Fig. 223: Identifying Pinion Shaft Grommet, Lug Portion, Cutout Portion And Vinyl Tape
Courtesy of AMERICAN HONDA MOTOR CO., INC.

4. Front Subframe - Move
    1. Turn the lip (A) of the pinion shaft grommet.

GETtheMANUALS.org

2. Lift the front subframe (B) up to the body, then restore the pinion shaft grommet back to proper position.

NOTE: **Be sure that the pinion shaft grommet is securely in place. Make sure the lip of the pinion shaft grommet is not turned up. Incorrect installation can cause leakage of water and mud, or noise.**

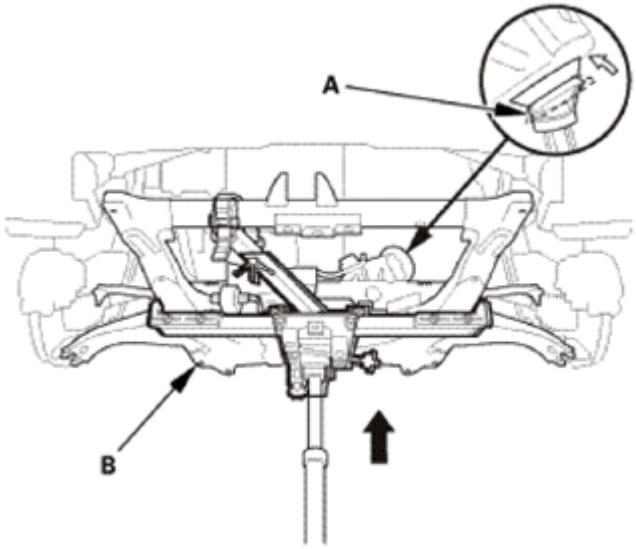

Fig. 224: Lifting Front Subframe Up To Body
Courtesy of AMERICAN HONDA MOTOR CO., INC.

3. Loosely install the new front subframe mounting bolts (A).

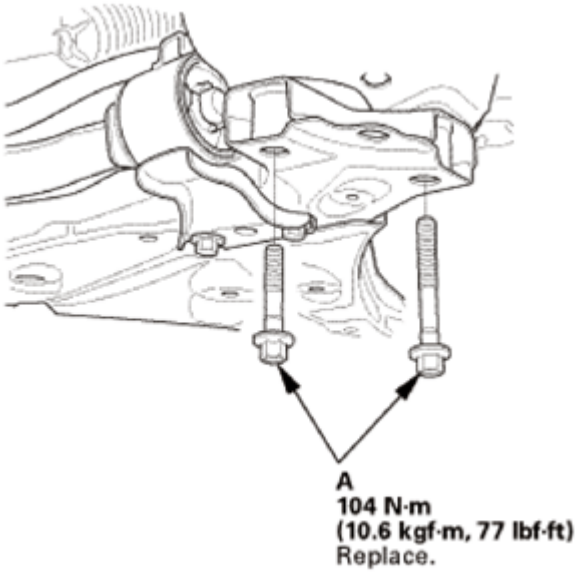

Fig. 225: Identifying Front Subframe Mounting Bolts With Torque Specifications (1 Of 2)
Courtesy of AMERICAN HONDA MOTOR CO., INC.

GETtheMANUALS.org

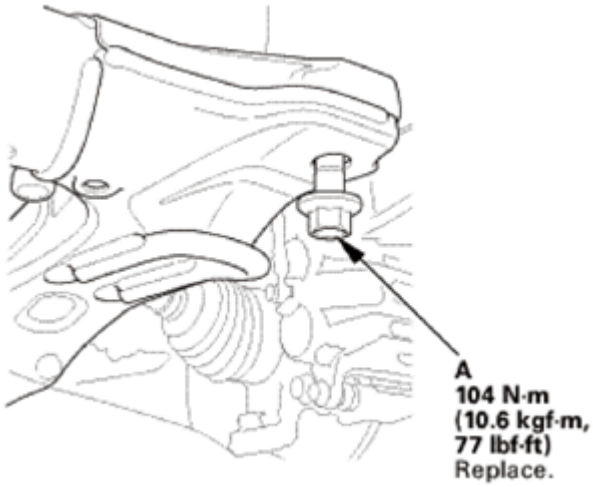

Fig. 226: Identifying Front Subframe Mounting Bolts With Torque Specifications (2 Of 2)
Courtesy of AMERICAN HONDA MOTOR CO., INC.

4. Loosely install the mid mounting bolts (A).

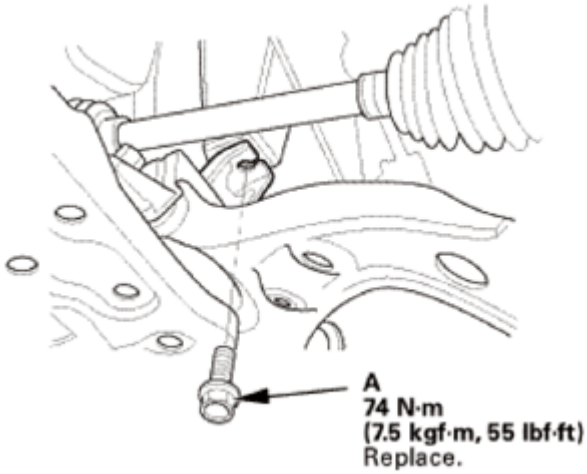

Fig. 227: Identifying Mid Mounting Bolts With Torque Specifications
Courtesy of AMERICAN HONDA MOTOR CO., INC.

5. Front Subframe - Alignment

NOTE:

- **Align the front subframe in the following sequence.**
- **When Installing, align both installation reference holes in the subframe with both reference holes in the body using the subframe alignment pin.**

1. Insert the subframe alignment pin (A) through the positioning hole (B) on the right rear subframe, and into the positioning hole (C) on the body, then loosely tighten the subframe right rear mounting bolts.

GETtheMANUALS.org

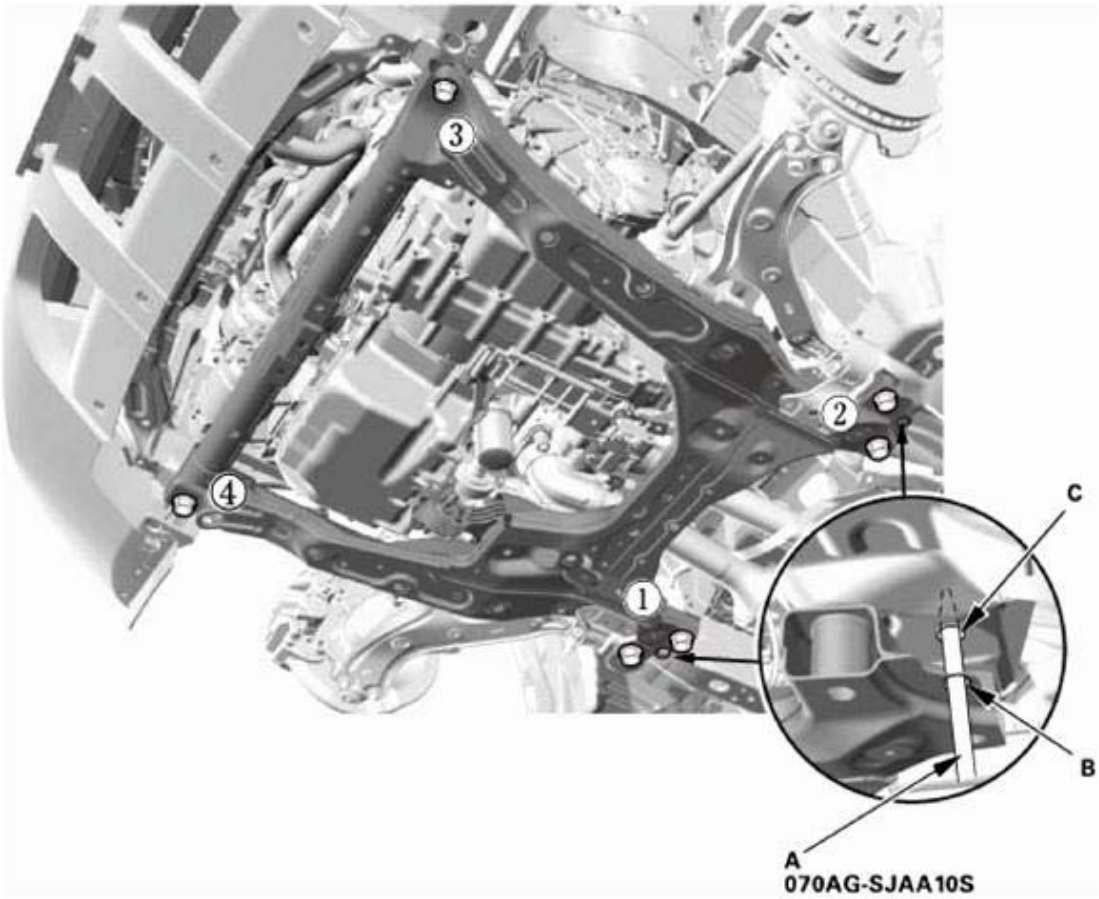

Fig. 228: Inserting Subframe Alignment Pin Into Right Rear Subframe
Courtesy of AMERICAN HONDA MOTOR CO., INC.

2. Insert the subframe alignment pin through the positioning hole on the left rear subframe, and into the positioning hole on the body, then loosely tighten the subframe left rear mounting bolts.
3. Tighten the subframe mounting bolts to the specified torque values starting with the right rear subframe mounting bolt. Use the subframe alignment pin when tightening the rear side subframe mounting bolts.
4. Check all of the subframe mounting bolts, and retighten if necessary.

NOTE: Tighten the bolts in the sequence shown.

5. Tighten the mid mounting bolts to the specified torque.
6. Lower the transmission jack supporting the subframe.

6. Lower Torque Rod - Reconnection
   1. Loosely install the new lower torque rod mounting bolts (A).

GETtheMANUALS.org

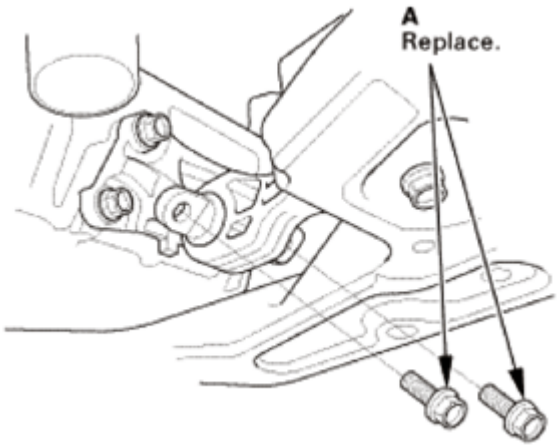

Fig. 229: Identifying Lower Torque Rod Mounting Bolts
Courtesy of AMERICAN HONDA MOTOR CO., INC.

7. Lower Torque Rod Mounting Bolt - Tighten
    1. Loosen the lower torque mount mounting bolt.
    2. Tighten the lower torque rod mount mounting bolts in the numbered sequence shown.

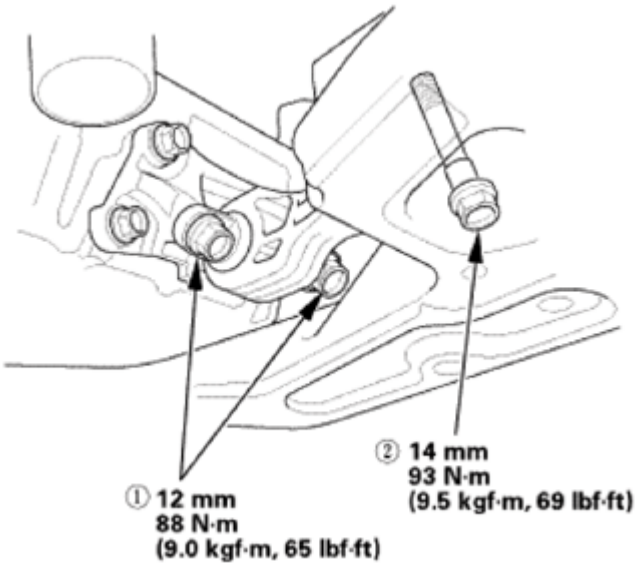

Fig. 230: Identifying Lower Torque Rod Mount Mounting Bolts Tightening Sequence With Torque Specifications
Courtesy of AMERICAN HONDA MOTOR CO., INC.

8. Power Steering Gearbox Items
    1. Install the steering gearbox stiffeners (A).
    2. Loosely tighten the steering gearbox mounting bolts (B).
    3. Loosely tighten the stiffener mounting bolts (C).
    4. Tighten the steering gearbox mounting bolts and the stiffener mounting bolts to the specified torque

GETtheMANUALS.org

in the sequence shown.

Driver's side

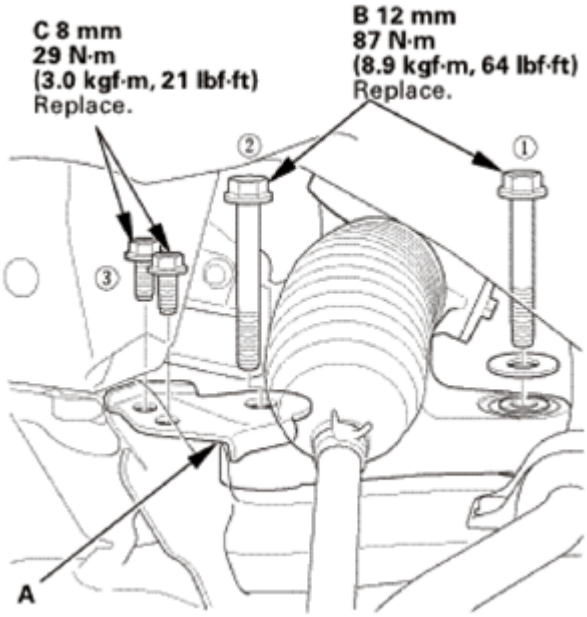

Fig. 231: Identifying Steering Gearbox Stiffeners With Torque Specifications (Driver Side)
Courtesy of AMERICAN HONDA MOTOR CO., INC.

Passenger's side

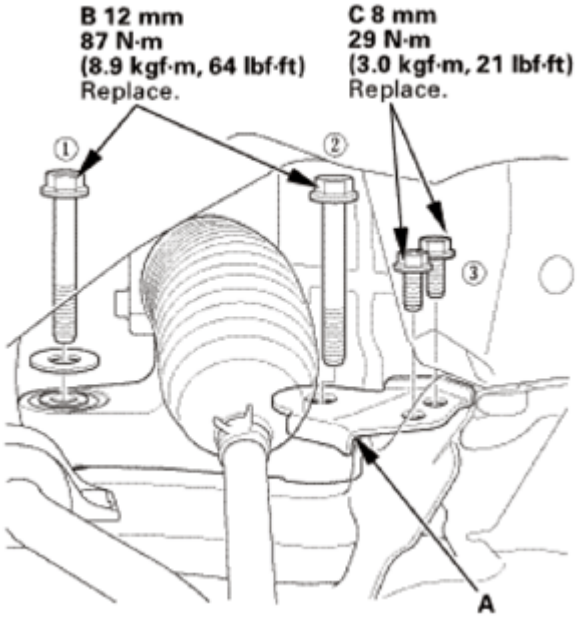

Fig. 232: Identifying Steering Gearbox Stiffeners With Torque Specifications (Passenger Side)

GETtheMANUALS.org

Courtesy of AMERICAN HONDA MOTOR CO., INC.

5. Install the harness clip (A).
6. Pull down the lever (B) of the EPS motor 3P connector (C), then confirm the connector is fully seated.
7. Connect the Connectors (D).

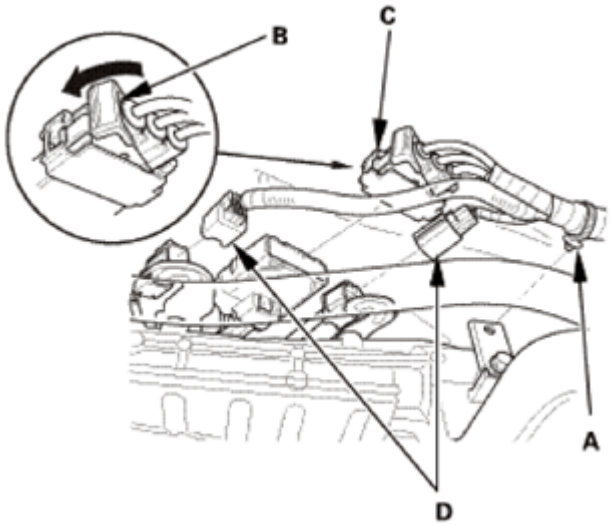

Fig. 233: Pulling Lever Of EPS Motor 3P Connector
Courtesy of AMERICAN HONDA MOTOR CO., INC.

9. Propeller Shaft Assembly (AWD/4WD)
    1. Install the propeller shaft assembly (A), then Install new center support bearing mounting bolts (B).

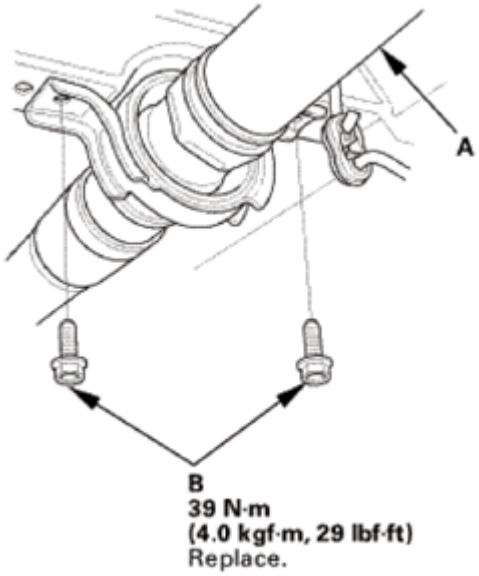

Fig. 234: Identifying Propeller Shaft Assembly

GETtheMANUALS.org

Courtesy of AMERICAN HONDA MOTOR CO., INC.

10. Propeller Shaft Differential Side - Reconnection (AWD/4WD)
    1. Set the No. 2 propeller shaft (A) to the rear differential companion flange (B) by aligning the reference mark (C) you made during the removal procedure.
    2. Install new No. 2 propeller shaft flange bolts (D) to the specified torque.

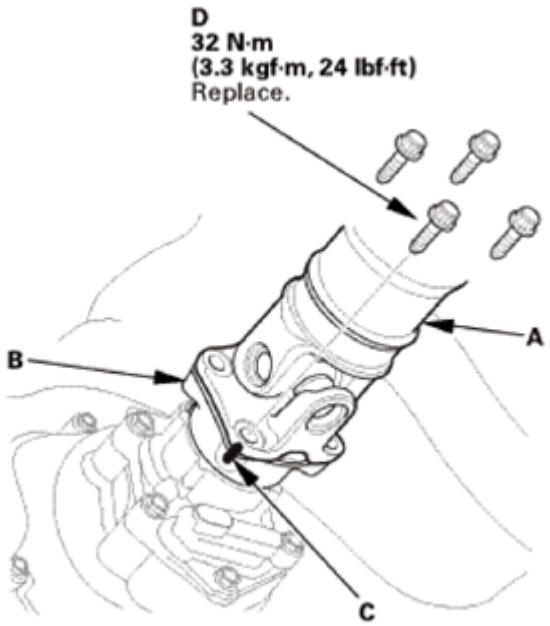

Fig. 235: Identifying Rear Differential Companion Flange, Propeller Shaft And Flange Bolts With Torque Specifications
Courtesy of AMERICAN HONDA MOTOR CO., INC.

11. Propeller Shaft Transmission Side - Reconnection (AWD/4WD)
    1. Set the No. 1 propeller shaft (A) to the transfer companion flange (B) by aligning the reference mark (C) you made during the removal procedure.
    2. Install new No. 1 propeller shaft flange bolts (D) to the specified torque.

GETtheMANUALS.org

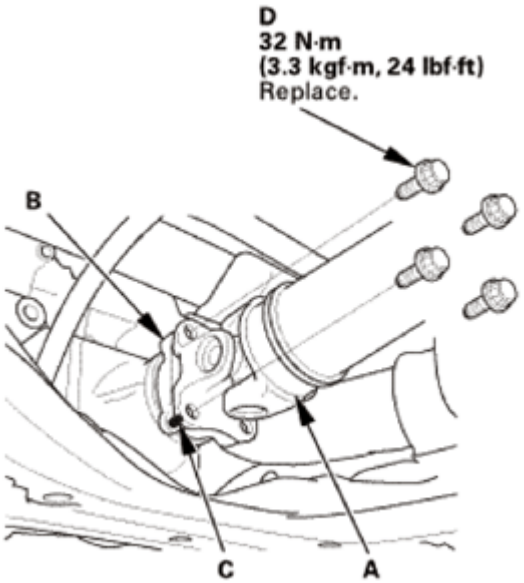

Fig. 236: Identifying Transfer Companion Flange, Propeller Shaft And Flange Bolts With Torque Specifications
Courtesy of AMERICAN HONDA MOTOR CO., INC.

12. Propeller Shaft Protector No. 2 (AWD/4WD)
    1. Install the No. 2 propeller shaft protector (A).

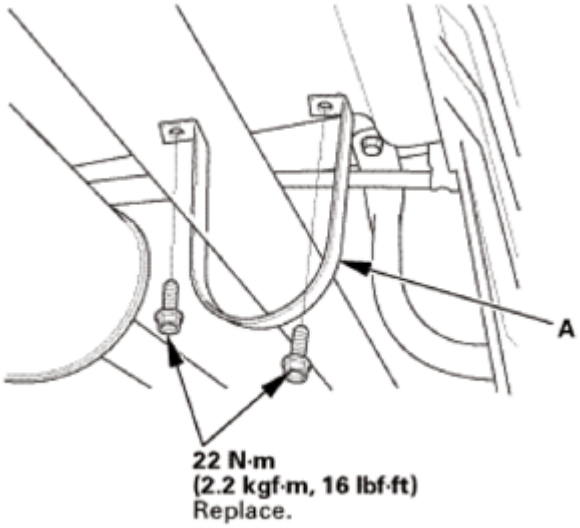

Fig. 237: Identifying Propeller Shaft Protector (No. 2)
Courtesy of AMERICAN HONDA MOTOR CO., INC.

13. Propeller Shaft Protector No. 1 (AWD/4WD)
    1. Install the No. 1 propeller shaft protector (A).

GETtheMANUALS.org

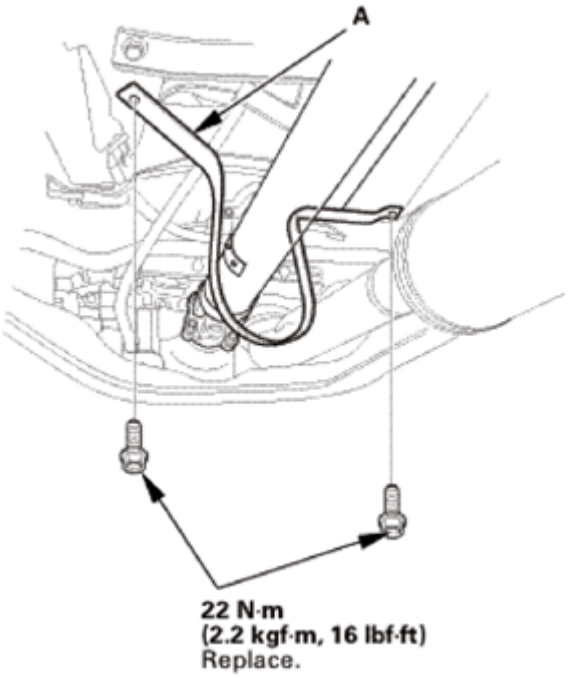

Fig. 238: Identifying Propeller Shaft Protector (No. 1)
Courtesy of AMERICAN HONDA MOTOR CO., INC.

14. Left Middle Floor Undercover (AWD/4WD)
    1. Install the left middle floor undercover (A), then install the bolts (B) and the clips (C, D). The clips snap into place securely.

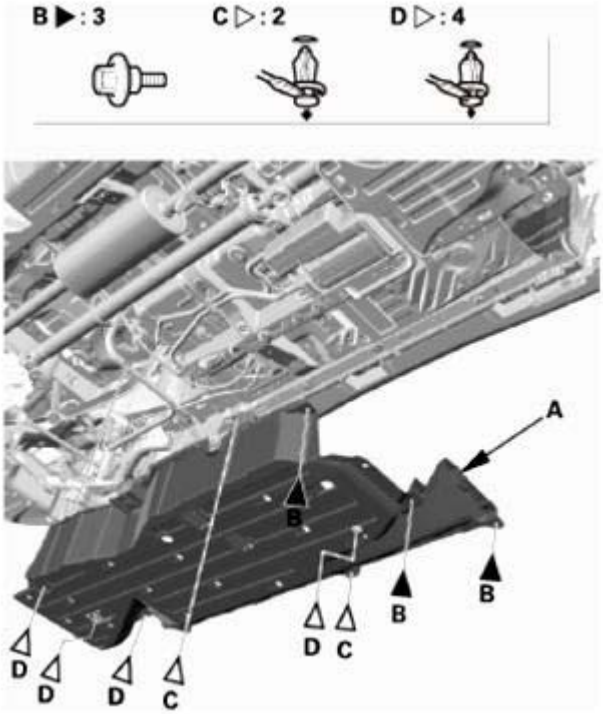

GETtheMANUALS.org

Fig. 239: Identifying Left Middle Floor Undercover, Bolts And Clips
Courtesy of AMERICAN HONDA MOTOR CO., INC.

15. Under Floor TWC Assembly
    1. Install the under-floor TWC.

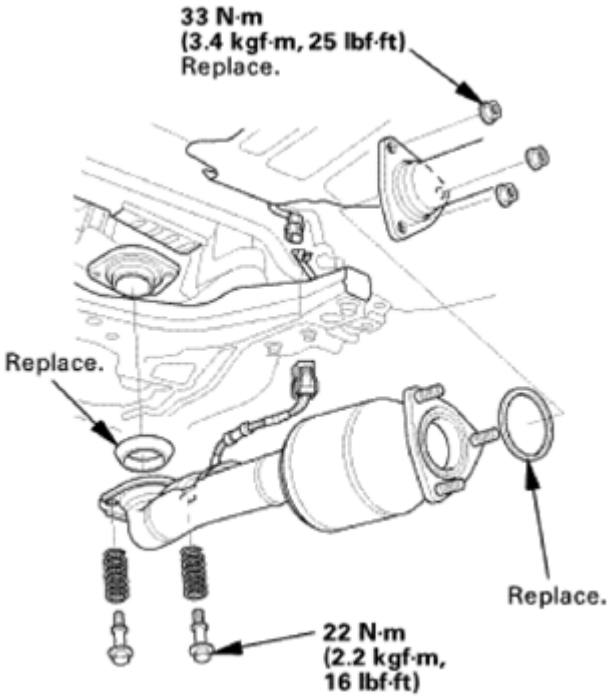

Fig. 240: Identifying Under-Floor TWC With Torque Specifications
Courtesy of AMERICAN HONDA MOTOR CO., INC.

16. Front Floor Undercover
    1. Install the front floor undercover (A), then install the bolts (B) and the clips (C, D). Make sure the clips snap into place securely.

GETtheMANUALS.org

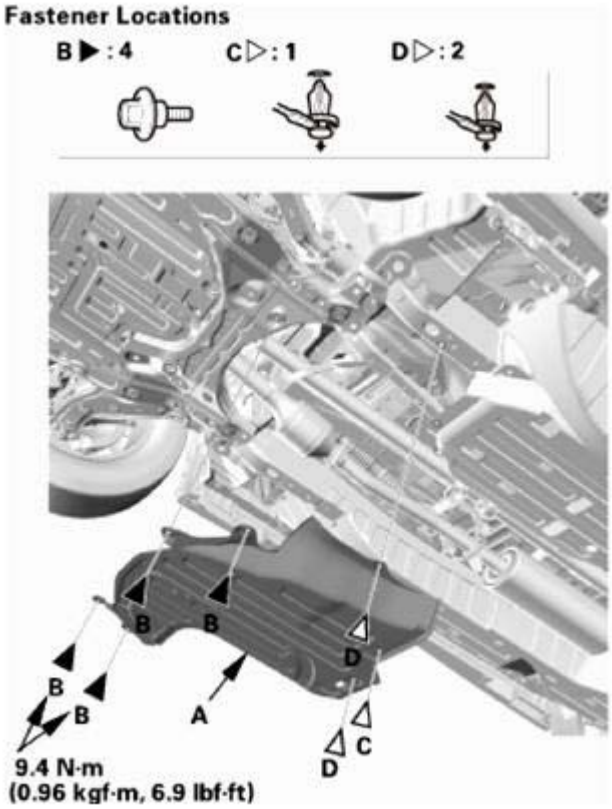

Fig. 241: Identifying Front Floor Undercover, Bolts And Clips With Torque Specifications
Courtesy of AMERICAN HONDA MOTOR CO., INC.

17. Front Splash Shield
    1. Install the front splash shield (A), then install the bolts (B) and the clips (C, D). Make sure the clips snap into place securely.

GETtheMANUALS.org

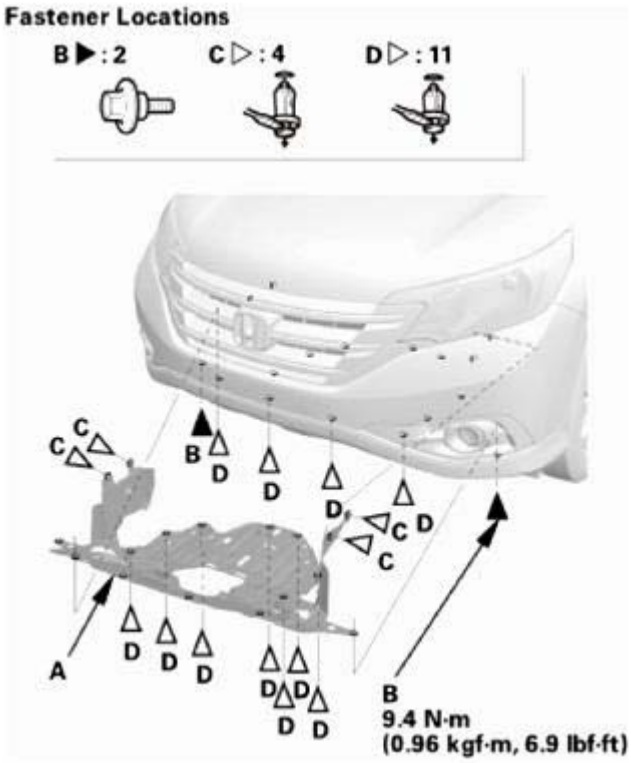

Fig. 242: Identifying Front Splash Shield, Bolts And Clips With Torque Specifications
Courtesy of AMERICAN HONDA MOTOR CO., INC.

18. Front Stabilizer Link Stabilizer Bar Side - Reconnection, Both Side
    1. Connect both sides of the stabilizer link (A) to the front stabilizer bar (B).
    2. Install the flange nuts (C), and tighten them to the specified torque while holding the respective joint pin (D) with a hex wrench (E).

GETtheMANUALS.org

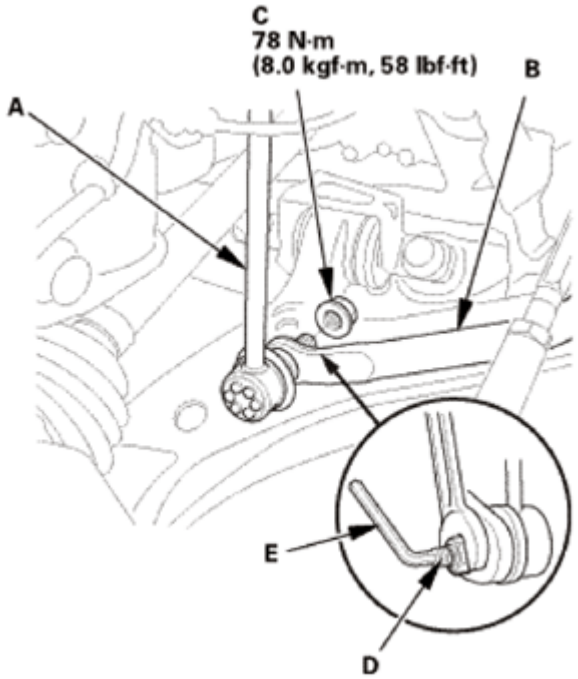

Fig. 243: Installing Front Stabilizer Link Stabilizer Bar Side
Courtesy of AMERICAN HONDA MOTOR CO., INC.

19. Tie-Rod End Ball Joint - Connection, Both Side
    1. Wipe off any grease contamination from the ball joint tapered section and threads.
    2. Connect the tie-rod ball joint (A) to the knuckle.
    3. Install the nut (B) and tighten to the specified torque.
    4. Install a new cotter pin (C).

NOTE: **Bend the cotter pin as shown.**

GETtheMANUALS.org

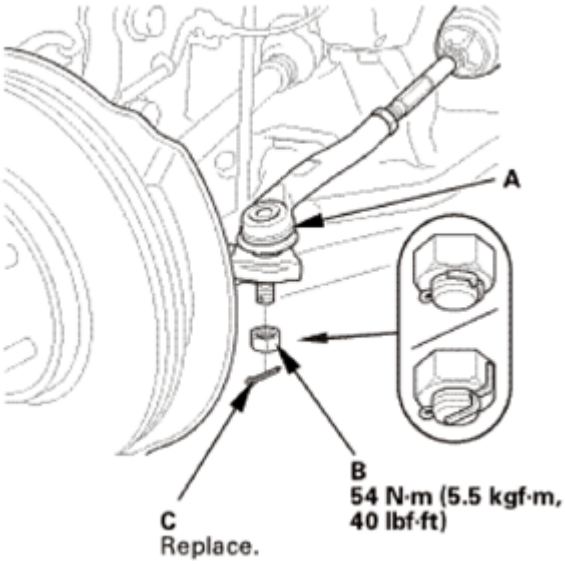

Fig. 244: Identifying Tie-Rod Ball Joint, Cotter Pin And Nut With Torque Specifications
Courtesy of AMERICAN HONDA MOTOR CO., INC.

20. Steering Column Lower Slide Shaft - Release
    1. Cut the wire (A).

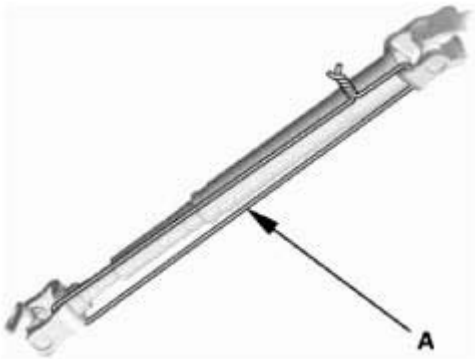

Fig. 245: Identifying Steering Column Lower Slide Shaft And Wire
Courtesy of AMERICAN HONDA MOTOR CO., INC.

21. Steering Wheel Release
    1. Remove the steering wheel holder tool (A).

GETtheMANUALS.org

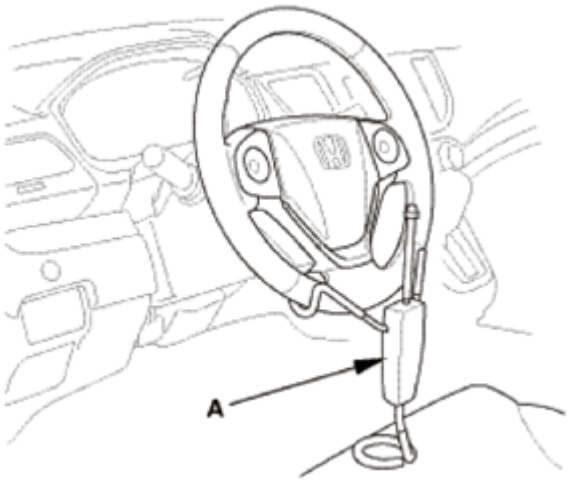

Fig. 246: Identifying Steering Wheel Holder Tool
Courtesy of AMERICAN HONDA MOTOR CO., INC.

22. Steering Joint - Reconnection
    1. Place the rack in the straight ahead driving position.
    2. Slip the lower end of the steering joint (A) onto the pinion shaft (B).

NOTE: Position the steering column by aligning the gap (C) within the angle.

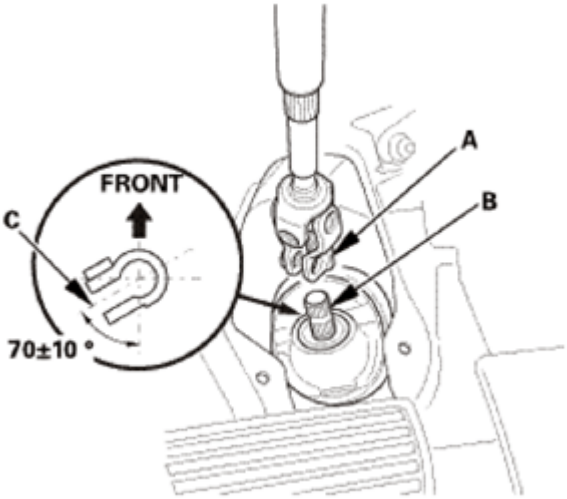

Fig. 247: Installing Lower End Of Steering Joint Onto Pinion Shaft
Courtesy of AMERICAN HONDA MOTOR CO., INC.

    3. Align the bolt hole (A) on the steering joint with the groove (B) around the pinion shaft.
    4. Loosely install the steering joint bolt (C).
    5. Be sure that the joint bolt is securely in the groove in the pinion shaft.
    6. Pull on the steering joint to make sure that the steering joint is fully seated.

GETtheMANUALS.org

7. Tighten the steering joint bolt to the specified torque.

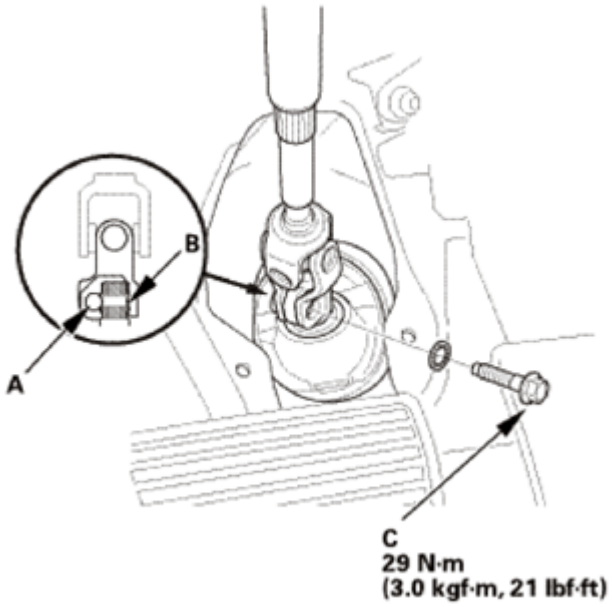

Fig. 248: Identifying Pinion Shaft Groove, Steering Joint Bolt And Bolt Hole With Torque Specification
Courtesy of AMERICAN HONDA MOTOR CO., INC.

23. Steering Joint Cover
    1. Install the steering joint cover (A).

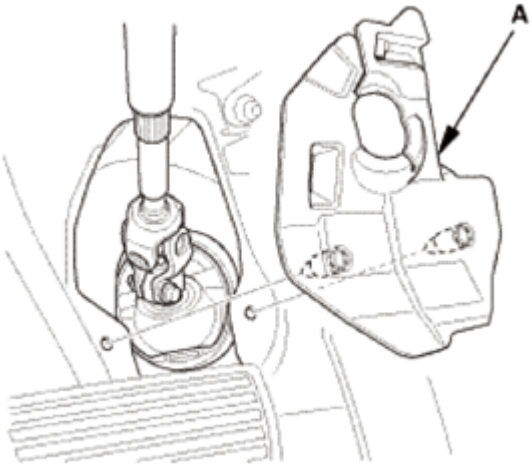

Fig. 249: Identifying Steering Joint Cover
Courtesy of AMERICAN HONDA MOTOR CO., INC.

24. Front Wheel - Both Side
    1. Install both front wheels.

GETtheMANUALS.org

NOTE: **Before installing the wheel, clean the mating surfaces between the brake disc and the inside of the wheel.**

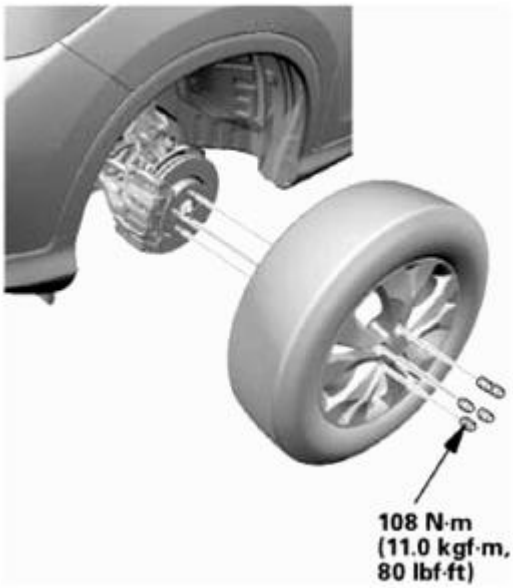

Fig. 250: Identifying Front Wheels With Torque Specifications
Courtesy of AMERICAN HONDA MOTOR CO., INC.

25. Battery Terminal (SRS) - Reconnection

NOTE: **If the battery performance is abnormal, test the battery.**

1. Clean the battery terminals.
2. Connect the positive cable (A) to the battery.

NOTE: **Always connect the positive side first.**

3. Connect the negative cable (B) to the battery.
4. Apply multipurpose grease to the terminals to prevent corrosion.

GETtheMANUALS.org

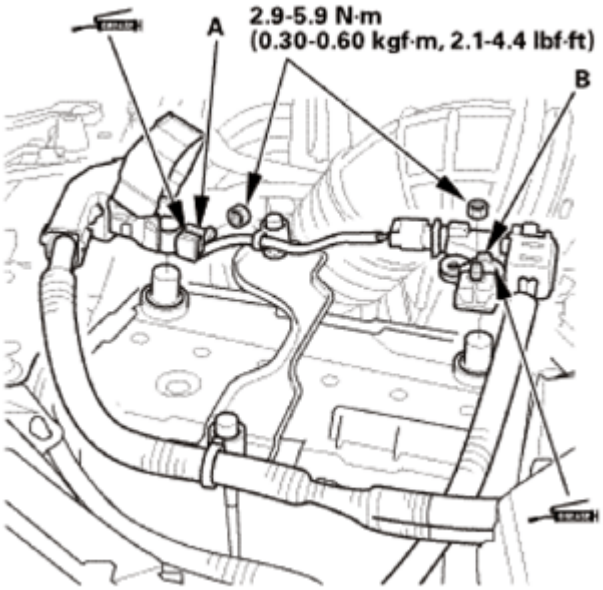

Fig. 251: Identifying Battery Positive And Negative Cable With Torque Specifications
Courtesy of AMERICAN HONDA MOTOR CO., INC.

26. Steering Gearbox - After Install Symptom Check
    1. With the tires raised off the ground, check for the following symptoms by turning the steering wheel fully to the right and left several times.

Symptom	Probable cause
Rubbing sound coming from the lower steering column area.	Steering column joint is contacting the cover.
Grating sound from the lower steering column area, or a rough feeling during steering.	Poor engagement of the pinion shaft serrations.
Noise from around the steering wheel during steering.	Poor engagement of the SRS cable reel with the steering wheel, or a damaged cable reel.

27. Steering After Install - Check
    1. After installation, check these items:
        - Start the engine, allow it to idle, and turn the steering wheel from lock to lock several times.
        - Check that the EPS indicator does not come on.
        - Check the steering wheel spoke angle. If steering spoke angles to the right and left are not equal (steering wheel and rack are not centered), correct the engagement of the joint/pinion shaft splines.
28. Pre-Alignment Checks

    For proper inspection and adjustment of the wheel alignment, do these checks:

    1. Release the parking brake to avoid an incorrect measurement.
    2. Make sure the suspension is not modified.

GETtheMANUALS.org

3. Make sure the fuel tank is full, and that the spare tire, the jack, and the tools are in place on the vehicle.
4. Check the tire size and tire pressure according to tire information.
5. Set the steering column to the middle tilt position and telescopic position.

29. Caster - Inspection

Use commercially available computerized four wheel alignment equipment to measure wheel alignment (caster, camber, toe, and turning angle). Follow the equipment manufacturer's instructions.

1. Check the caster angle.

   Caster angle:

   2WD:

   With 16 inch wheel: 2 ° 44 '±30 '

   Without 16 inch wheel: 2 ° 50 '±30 '

   AWD/4WD:

   With 16 inch wheel: 2 ° 38 '±30 '

   Without 16 inch wheel: 2 ° 44 '±30 '

   - If the measurement is within specifications, measure the front camber angle.
   - If the measurement is not within specifications, check for bent or damaged suspension components.

30. Camber - Inspection

Use commercially available computerized four wheel alignment equipment to measure wheel alignment (caster, camber, toe, and turning angle). Follow the equipment manufacturer's instructions.

1. Check the camber angle.

   Camber angle:

   2WD:

   Front:

   With 16 inch wheel: -0 ° 01 '±1 ° 00 '

   Without 16 inch wheel: -0 ° 10 '±1 ° 00 '

   (Maximum difference between the front right and left side: 1 °00 ')

GETtheMANUALS.org

Rear:

With 16 inch wheel: -1 ° 06 '±45 '

Without 16 inch wheel: -1 ° 12 '±45 '

(Maximum difference between the front right and left side: 0 °45 ')

AWD/4WD:

Front:

With 16 inch wheel: -0 ° 08 '±1 ° 00 '

Without 16 inch wheel: 0 ° 00 '±1 ° 00 '

(Maximum difference between the front right and left side: 1 °00 ')

Rear:

With 16 inch wheel: -0 ° 50 '±45 '

Without 16 inch wheel: -1 ° 00 '±45 '

(Maximum difference between the front right and left side: 0 °45 ')

- If the measurement is within specification, measure the toe-in.
- If the measurement for the front camber is not within the specification, go to front camber adjustment.
- If the measurement for the rear camber is not within the specification, check for bent or damaged suspension components.

31. Front Toe - Inspection

Use commercially available computerized four wheel alignment equipment to measure wheel alignment (caster, camber, toe, and turning angle). Follow the equipment manufacturer's instructions.

1. Set the steering column to the middle tilt position and telescopic positions.
2. Center the steering wheel spokes, and install a steering wheel holder tool.
3. Check the toe with the wheels pointed straight ahead.

Front toe-in: 0±2 mm (0±0.08 in)

- If adjustment is required, go to the front toe adjustment.
- If no adjustment is required, remove the alignment equipment.

32. Turning Angle - Inspection

GETtheMANUALS.org

Use commercially available computerized four wheel alignment equipment to measure wheel alignment (caster, camber, toe, and turning angle). Follow the equipment manufacturer's instructions.

1. Turn the wheel right and left while applying the brake, and measure the turning angle of both wheels.

   Turning angle:

   2WD:

   Inward:

   With 16 inch wheel: 36 ° 29 '±2 °

   Without 16 inch wheel: 36 ° 13 '±2 °

   Outward (reference):

   With 16 inch wheel: 31 ° 13 '

   Without 16 inch wheel: 31 ° 02 '

   AWD/4WD:

   Inward:

   With 16 inch wheel: 36 ° 48 '±2 °

   Without 16 inch wheel: 36 ° 30 '±2 °

   Outward (reference):

   With 16 inch wheel: 31 ° 18 '

   Without 16 inch wheel: 31 ° 12 '

2. If the measurement is not within the specifications, even up both sides of the tie-rod threaded section length while adjusting the front toe.
3. If it is correct, but the turning angle is not within the specifications, check for bent or damaged suspension components.

GETtheMANUALS.org

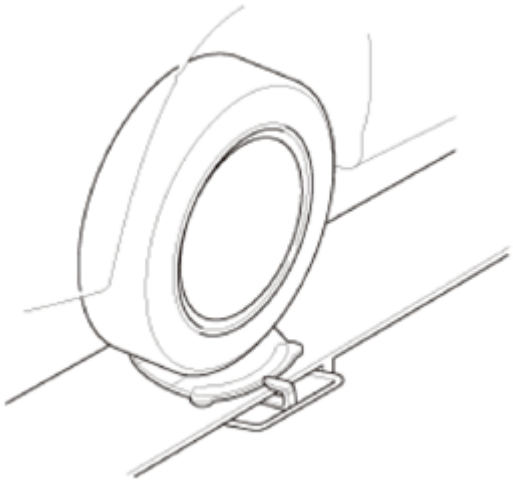

Fig. 252: Measuring Turning Angle Of Wheel
Courtesy of AMERICAN HONDA MOTOR CO., INC.

33. HDS DLC - Connection
    1. Connect the HDS to the data link connector (DLC) (A) located under the driver's side of the dashboard.
    2. Turn the ignition switch to ON (II).
    3. Make sure the HDS communicates with the vehicle. If it does not communicate, go to the DLC circuit troubleshooting.

Fig. 253: Identifying Data Link Connector
Courtesy of AMERICAN HONDA MOTOR CO., INC.

34. VSA Sensor Neutral Position - Memorization
    1. Park the vehicle on a flat and level surface, with the steering wheel in the straight ahead position.
    2. Select VSA ADJUSTMENT, then select ALL SENSORS with the HDS, and follow the screen prompts.

GETtheMANUALS.org

NOTE: **See the HDS Help menu for specific instructions.**

35. Steering Angle Sensor Neutral Position - Clear
    1. Select EPS ADJUSTMENT, then select EPS STEERING ANGLE SENSOR VALUE CLEAR and follow the screen prompts on the HDS.

NOTE: **See the HDS Help menu for specific instructions.**

STEERING LINKAGE AND GEARBOX INSPECTION

INSPECTION

1. Steering Linkage and Gearbox Inspection

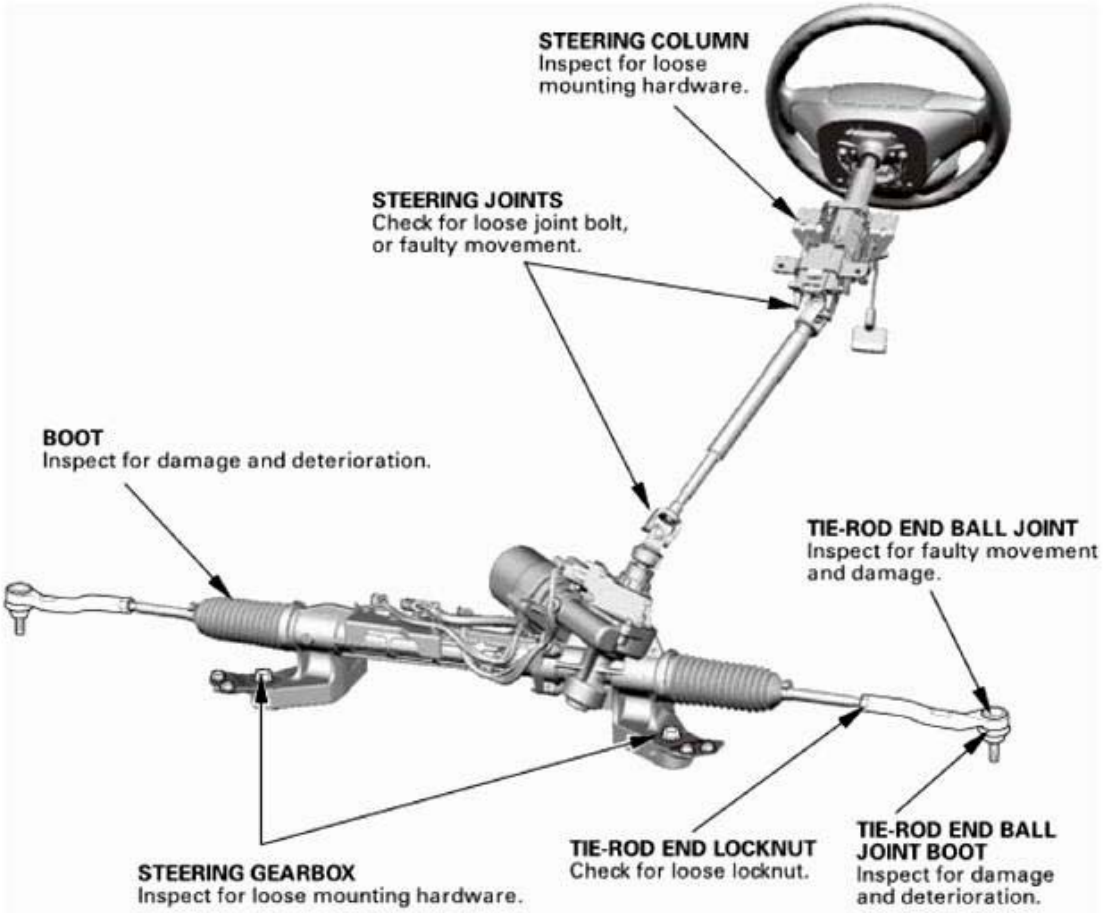

Fig. 254: Steering Linkage And Gearbox Components Location
Courtesy of AMERICAN HONDA MOTOR CO., INC.

STEERING LOCK REMOVAL AND INSTALLATION

GETtheMANUALS.org

REMOVAL

SRS components are located in this area. Review the **SRS COMPONENT LOCATIONS** , and the **PRECAUTIONS AND PROCEDURES** before doing repairs or service.

1. Battery Terminal (SRS) - Disconnection
    1. Make sure the ignition switch is in LOCK (0).
    2. Disconnect and isolate the negative cable (A) from the battery.

    NOTE: Always disconnect the negative side first.

    3. Disconnect the positive cable (B) from the battery.
    4. Wait at least 3 minutes before starting work.

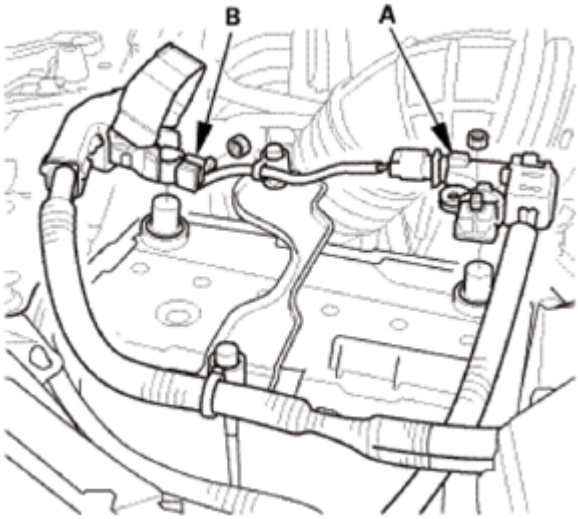

Fig. 255: Identifying Battery Positive And Negative Terminals
Courtesy of AMERICAN HONDA MOTOR CO., INC.

2. Driver's Airbag
    1. Remove the access panel (A).
    2. Disconnect the driver's airbag inflator connector (B) on the cable reel harness.
    3. Disconnect the horn switch connector (C).

GETtheMANUALS.org

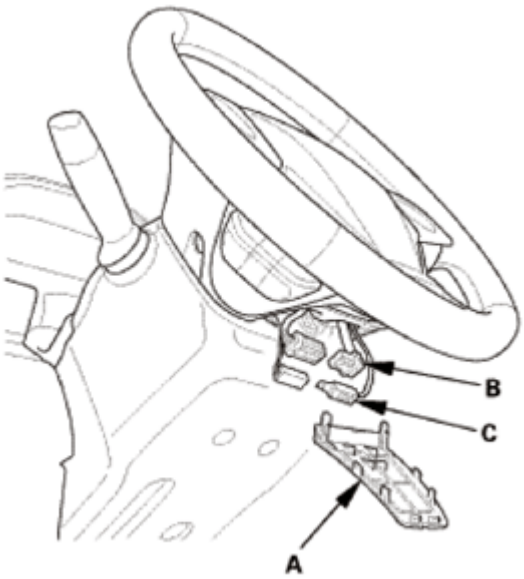

Fig. 256: Identifying Access Panel, Driver's Airbag Inflator Connector And Horn Switch Connector
Courtesy of AMERICAN HONDA MOTOR CO., INC.

4. Remove the TORX bolts using a TORX T30 bit.
5. Remove the driver's airbag (A).

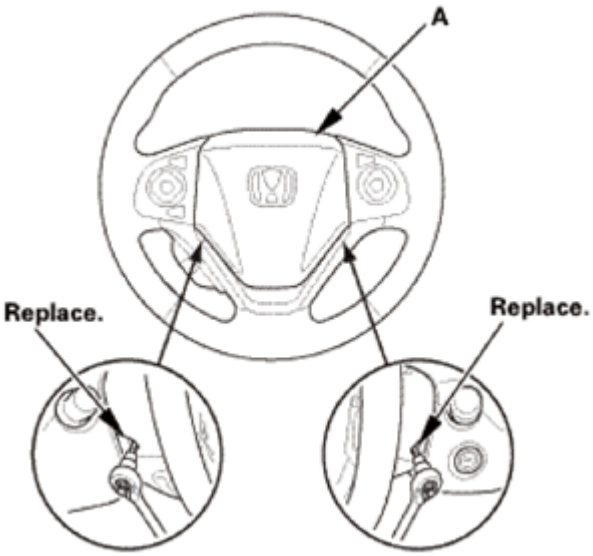

Fig. 257: Identifying Driver's Airbag And Torx Bolt
Courtesy of AMERICAN HONDA MOTOR CO., INC.

3. Steering Wheel Assembly
    1. Set the front wheels in the straight ahead position.
    2. Disconnect the connector (A).

GETtheMANUALS.org

3. Loosen the steering wheel bolt (B) three turns.

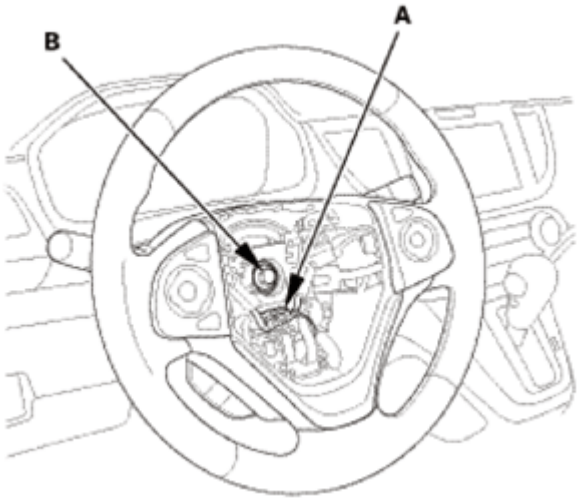

Fig. 258: Identifying Steering Wheel Connector And Bolt
Courtesy of AMERICAN HONDA MOTOR CO., INC.

4. Install a commercially available steering wheel puller (A) on the steering wheel (B).
5. Free the steering wheel from the steering column shaft by turning the pressure bolt (C) of the puller.

   Note these items when removing the steering wheel:

   - Do not tap on the steering wheel or the steering column shaft when removing the steering wheel.
   - If you thread the puller bolts (D) into the wheel hub more than five threads, the bolts will hit the cable reel and damage it. To prevent this, install a pair of jam nuts five threads up on each puller bolt.

GETtheMANUALS.org

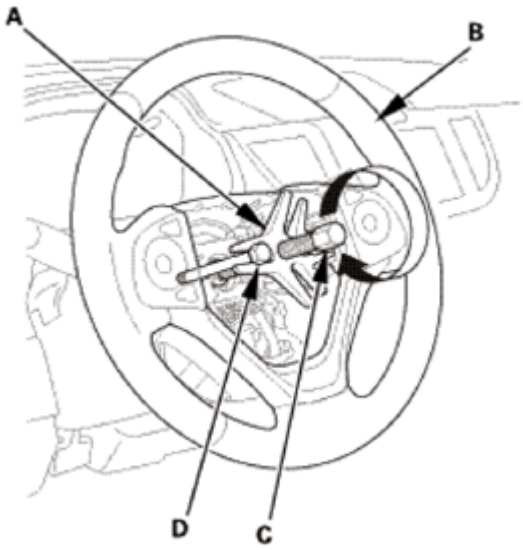

Fig. 259: Turning Steering Wheel Pressure Bolt Using Puller
Courtesy of AMERICAN HONDA MOTOR CO., INC.

6. Remove the steering wheel puller.
7. Remove the steering wheel (A) from the steering column.

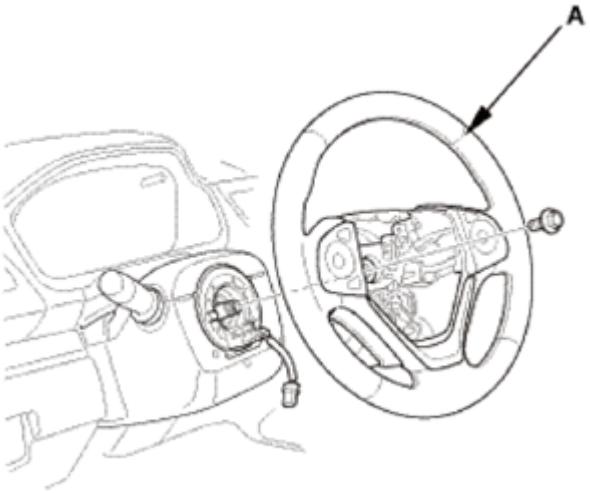

Fig. 260: Identifying Steering Wheel
Courtesy of AMERICAN HONDA MOTOR CO., INC.

4. Upper Column Cover
    1. Carefully pry out the dashboard meter visor blind cover (A) with the appropriate trim tool to detach the clips (B) and the hook (C), then tuck up the dashboard meter visor blind cover.

GETtheMANUALS.org

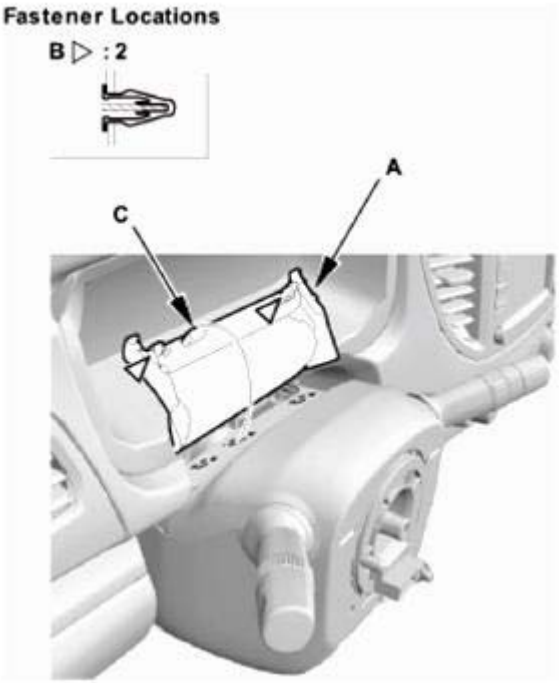

Fig. 261: Identifying Dashboard Meter Visor Blind Cover, Hooks And Clips
Courtesy of AMERICAN HONDA MOTOR CO., INC.

2. Remove the upper column cover (A).

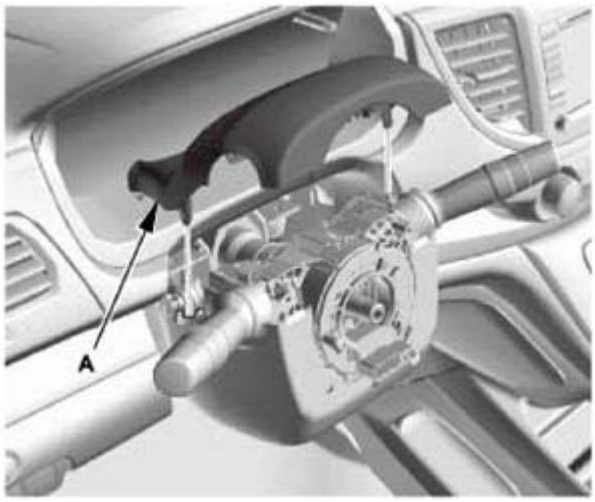

Fig. 262: Identifying Upper Column Cover
Courtesy of AMERICAN HONDA MOTOR CO., INC.

5. Lower Column Cover
    1. Remove the screws (A) securing the lower column cover (B) from the front side.

GETtheMANUALS.org

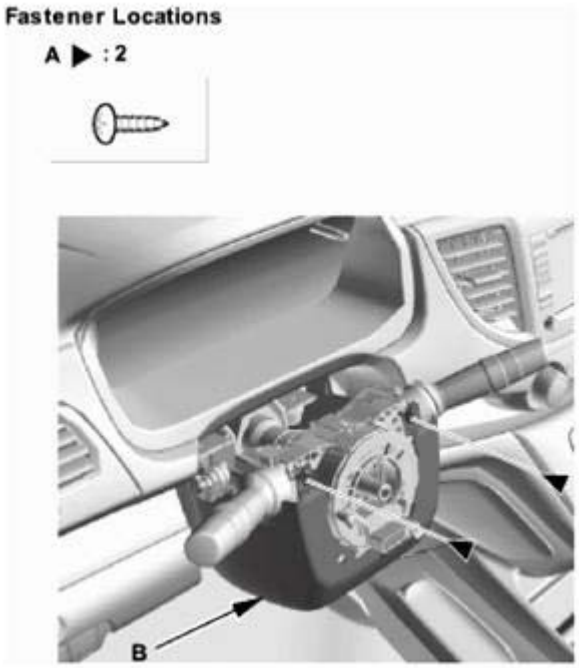

Fig. 263: Identifying Lower Column Cover And Screw
Courtesy of AMERICAN HONDA MOTOR CO., INC.

2. Remove the screw (A), then remove the lower column cover (B).

Fig. 264: Identifying Lower Column Cover And Screw
Courtesy of AMERICAN HONDA MOTOR CO., INC.

GETtheMANUALS.org

6. Combination Switch Body Assembly
    1. Disconnect the connectors (A).
    2. Remove the clip (B).

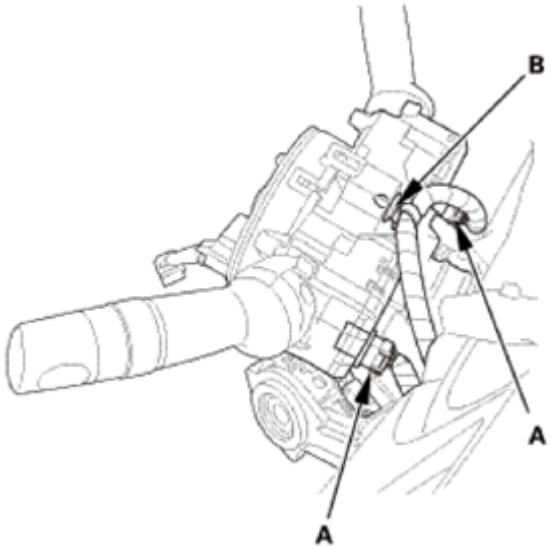

Fig. 265: Identifying Combination Switch Connector And Clip
Courtesy of AMERICAN HONDA MOTOR CO., INC.

3. Disconnect the connectors (A).

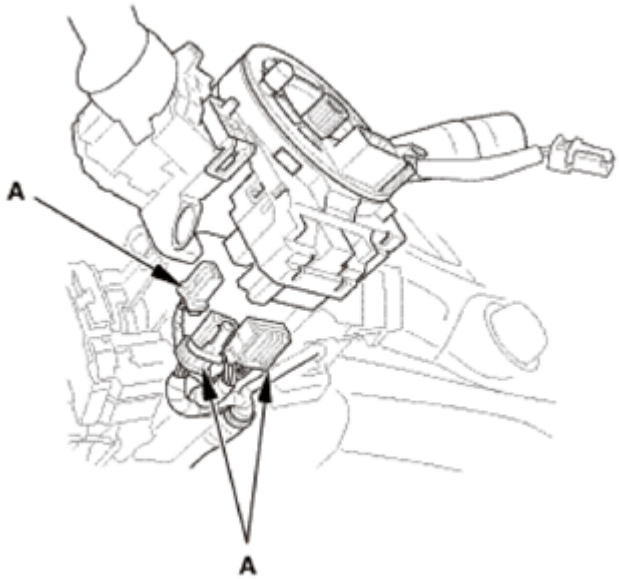

Fig. 266: Identifying Combination Switch Connector
Courtesy of AMERICAN HONDA MOTOR CO., INC.

4. Remove the combination switch body assembly (A) from the steering column shaft.

GETtheMANUALS.org

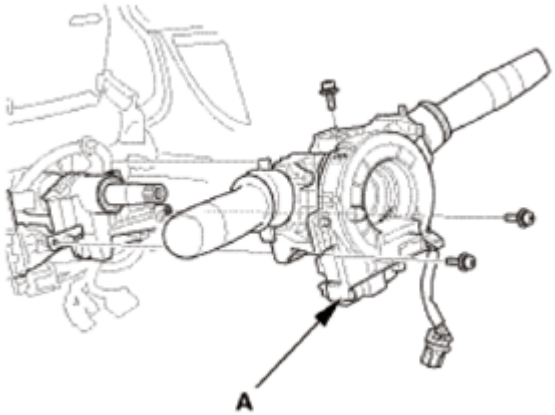

Fig. 267: Identifying Combination Switch Body Assembly
Courtesy of AMERICAN HONDA MOTOR CO., INC.

7. Immobilizer-Keyless Control Unit
    1. Disconnect the connector.
    2. Remove the immobilizer-keyless control unit (A).

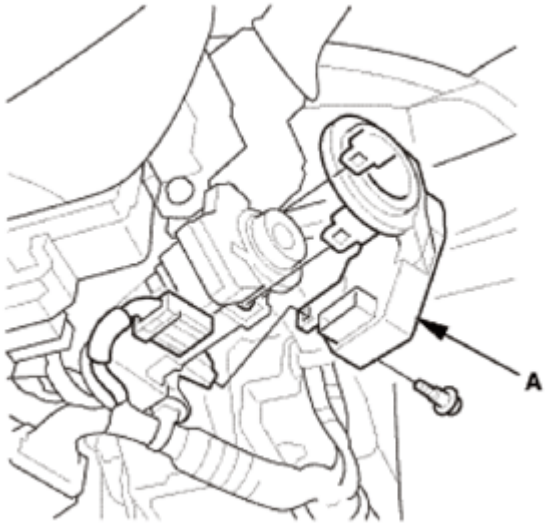

Fig. 268: Identifying Immobilizer-Keyless Control Unit
Courtesy of AMERICAN HONDA MOTOR CO., INC.

8. Steering Joint Cover
    1. Remove the steering joint cover (A).

GETtheMANUALS.org

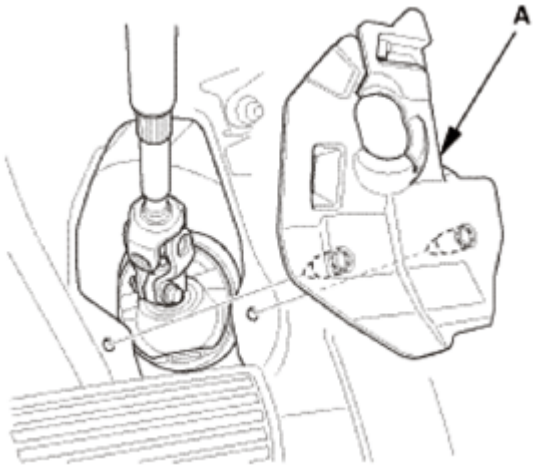

Fig. 269: Identifying Steering Joint Cover
Courtesy of AMERICAN HONDA MOTOR CO., INC.

9. Steering Column Lower Slide Shaft - Hold
    1. Set the steering column to the center tilt position, and to the center telescopic position.
    2. Hold the lower slide shaft (A) on the column with a piece of wire (B) between the joint yoke (C) of the lower slide shaft and the joint yoke (D) of the upper shaft to prevent the lower slider shaft from pulling out.

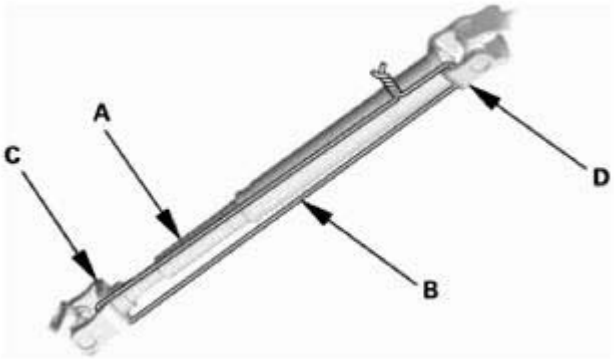

Fig. 270: Holding Lower Slide Shaft On Column Using Wire
Courtesy of AMERICAN HONDA MOTOR CO., INC.

10. Steering Joint - Disconnection
    1. Remove the steering joint bolt (A).
    2. Disconnect the steering joint (B) from the pinion shaft.

NOTE:

- **If the center guide (C) is in place and has not moved, leave it in place.**
- **If the center guide has come off, discard it.**

GETtheMANUALS.org

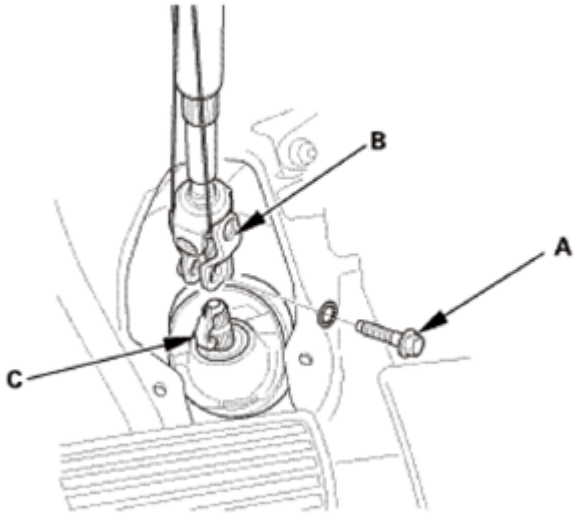

Fig. 271: Identifying Steering Joint, Center Guide And Bolt
Courtesy of AMERICAN HONDA MOTOR CO., INC.

11. Steering Column
    1. Disconnect the connectors (A) from the ignition switch (B).

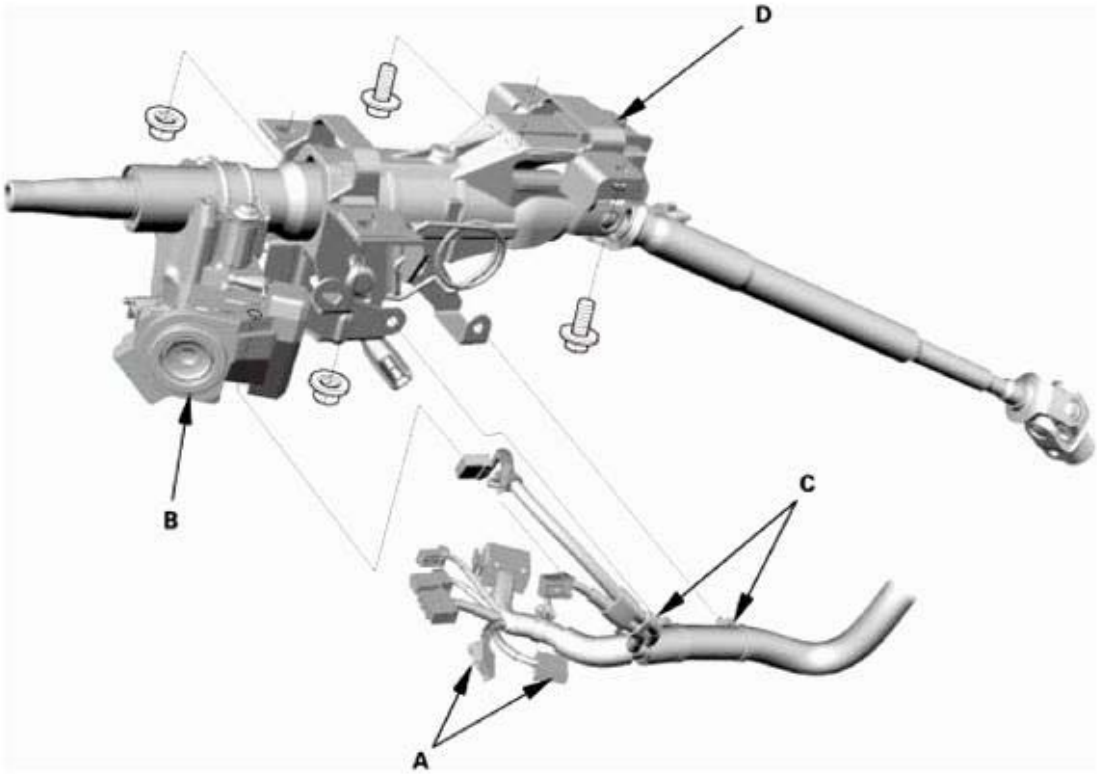

Fig. 272: Identifying Steering Column, Connectors, Ignition Switch And Wire Harness Clips
Courtesy of AMERICAN HONDA MOTOR CO., INC.

GETtheMANUALS.org

2. Detach the wire harness clips (C) from the steering column.
3. Remove the steering column (D).

NOTE: **Do not release the lock lever until the steering column is installed. If the lock lever is released before installation, adjust the steering column after installation.**

12. Steering Lock Assembly
    1. Center-punch both of the two shear bolts (A).
    2. Drill their heads off with a 5 mm (0.20 in) drill bit. Be careful not to damage the steering lock when removing the shear bolts.
    3. Remove the steering lock (B).

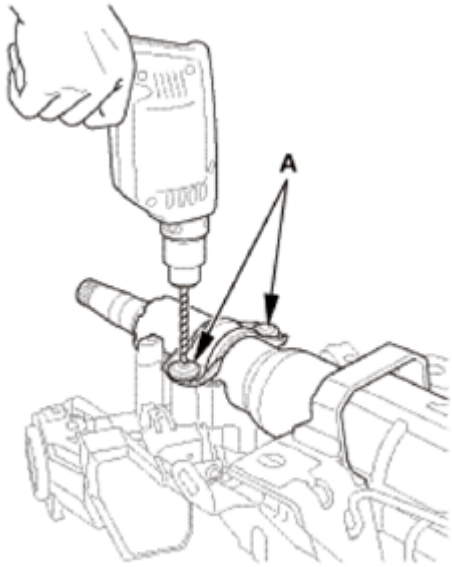

Fig. 273: Removing Steering Lock Using Tool
Courtesy of AMERICAN HONDA MOTOR CO., INC.

INSTALLATION

SRS components are located in this area. Review the **SRS COMPONENT LOCATIONS** , and the **PRECAUTIONS AND PROCEDURES** before doing repairs or service.

1. Steering Lock Assembly
    1. Install the steering lock (A) without the key inserted.
    2. Loosely tighten the new shear bolts (B).
    3. Insert the ignition key, and check for proper operation of the steering wheel lock and that the ignition key turns freely.

GETtheMANUALS.org

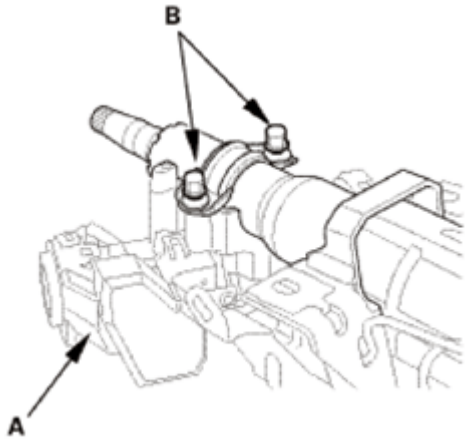

Fig. 274: Identifying Steering Lock And Shear Bolt
Courtesy of AMERICAN HONDA MOTOR CO., INC.

4. Tighten the shear bolts (A) until the hex heads (B) twist off.

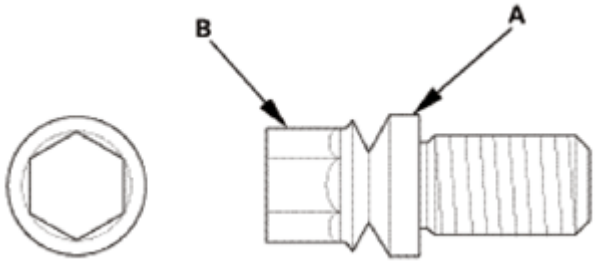

Fig. 275: Identifying Shear Bolt With Hex Head
Courtesy of AMERICAN HONDA MOTOR CO., INC.

2. Steering Column
    1. Install the steering column (A).

NOTE: **Do not release the lock lever until the steering column is installed. If the lock lever is released before installation, adjust the steering column after installation.**

GETtheMANUALS.org

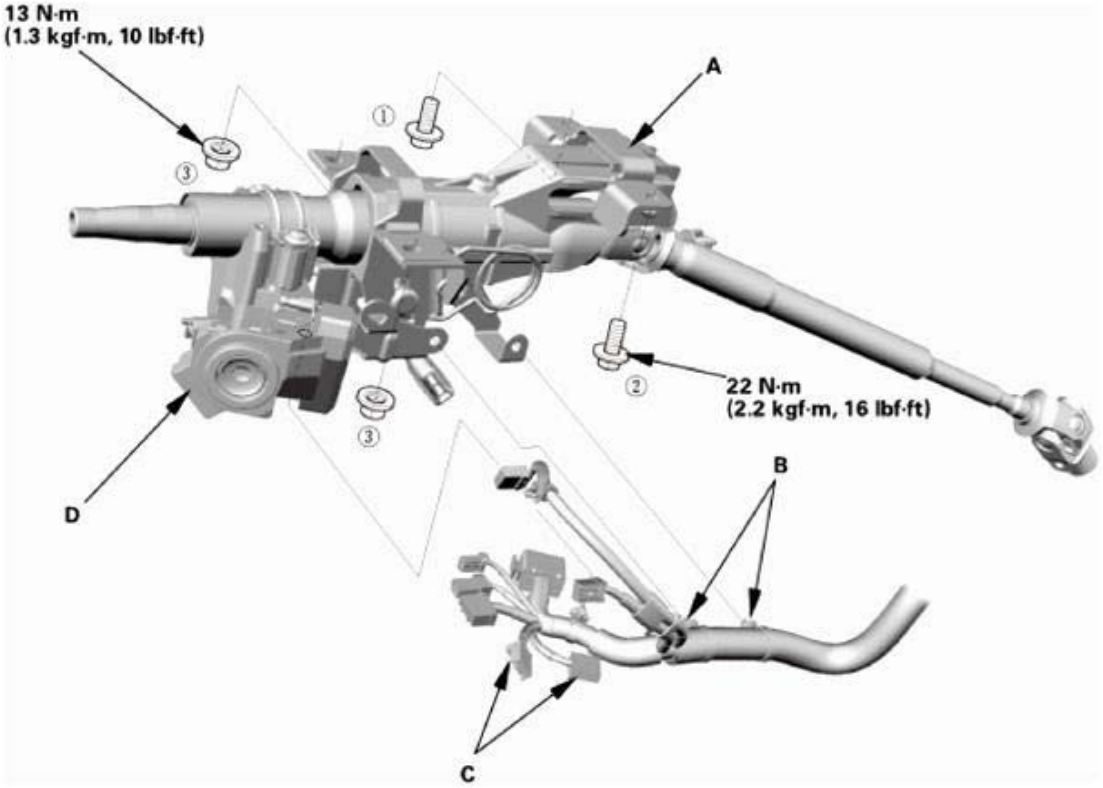

Fig. 276: Identifying Steering Column And Related Components With Torque Specifications
Courtesy of AMERICAN HONDA MOTOR CO., INC.

2. Loosely tighten the attaching nuts and bolts.
3. Tighten the attaching nuts and bolts to the specified torque in the sequence shown.
4. Install the wire harness clips (B) to the steering column.
5. Connect the connectors (C) to the ignition switch (D).

3. Steering Column Lower Slide Shaft - Release
   1. Cut the wire (A).

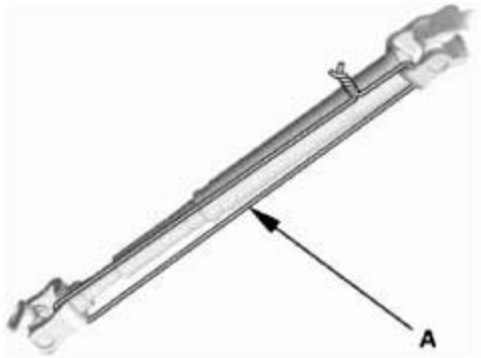

Fig. 277: Identifying Steering Column Lower Slide Shaft And Wire
Courtesy of AMERICAN HONDA MOTOR CO., INC.

GETtheMANUALS.org

4. Steering Joint - Reconnection
    1. Place the rack in the straight ahead driving position.
    2. Slip the lower end of the steering joint (A) onto the pinion shaft (B).

NOTE:

- **Pinion shaft with center guide: Install the steering joint by aligning the center guide (C).**
- **Pinion shaft without center guide: Position the steering column by aligning the gap (D) within the angle.**

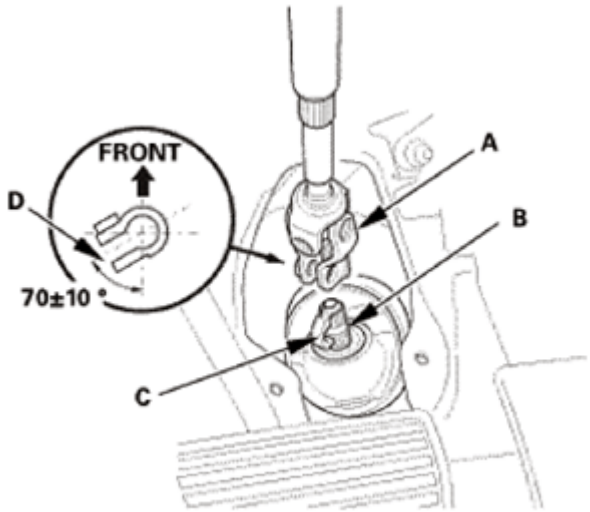

Fig. 278: Identifying Steering Joint, Pinion Shaft And Center Guide
Courtesy of AMERICAN HONDA MOTOR CO., INC.

3. Align the bolt hole (A) on the steering joint with the groove (B) around the pinion shaft.
4. Loosely install the steering joint bolt (C).
5. Be sure that the joint bolt is securely in the groove in the pinion shaft.
6. Pull on the steering joint to make sure that the steering joint is fully seated.
7. Tighten the steering joint bolt to the specified torque.

GETtheMANUALS.org

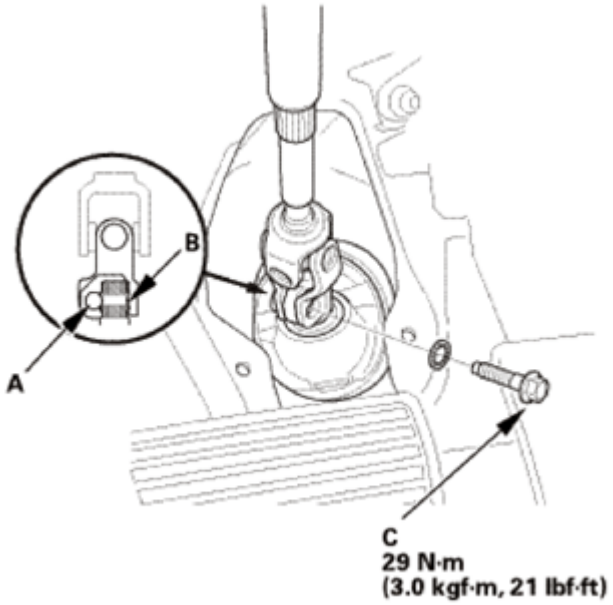

Fig. 279: Identifying Pinion Shaft Groove, Steering Joint Bolt And Bolt Hole With Torque Specification
Courtesy of AMERICAN HONDA MOTOR CO., INC.

5. Steering Joint Cover
    1. Install the steering joint cover (A).

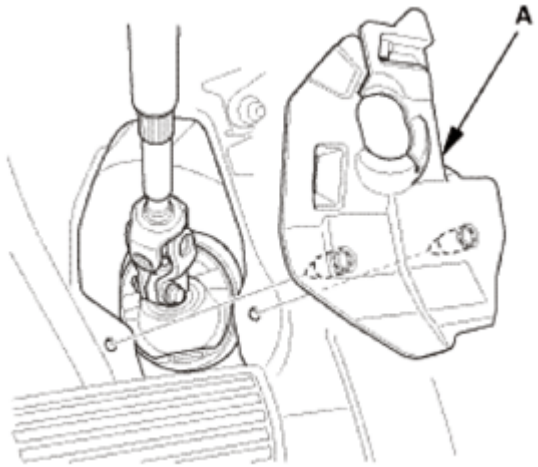

Fig. 280: Identifying Steering Joint Cover
Courtesy of AMERICAN HONDA MOTOR CO., INC.

6. Immobilizer-Keyless Control Unit
    1. Install the immobilizer-keyless control unit (A).
    2. Connect the connector.

GETtheMANUALS.org

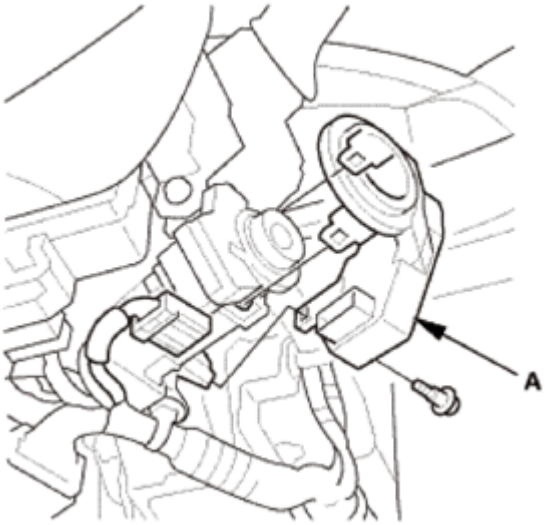

Fig. 281: Identifying Immobilizer-Keyless Control Unit
Courtesy of AMERICAN HONDA MOTOR CO., INC.

7. Combination Switch Body Assembly
    1. Install the combination switch body assembly (A).
    2. Tighten three screws (B) in the sequence shown.

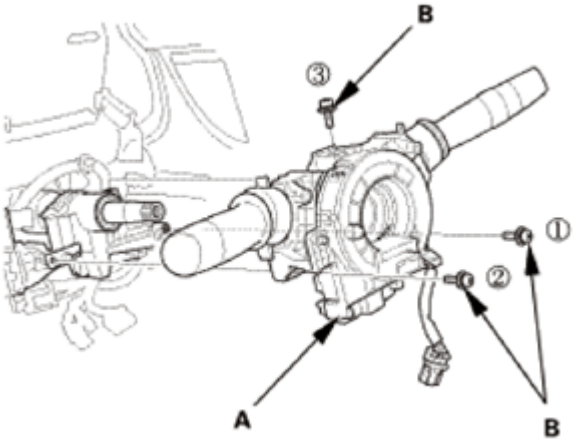

Fig. 282: Identifying Combination Switch Body Assembly Mounting Screws Tightening Sequence
Courtesy of AMERICAN HONDA MOTOR CO., INC.

    3. Connect the connectors (A).

GETtheMANUALS.org

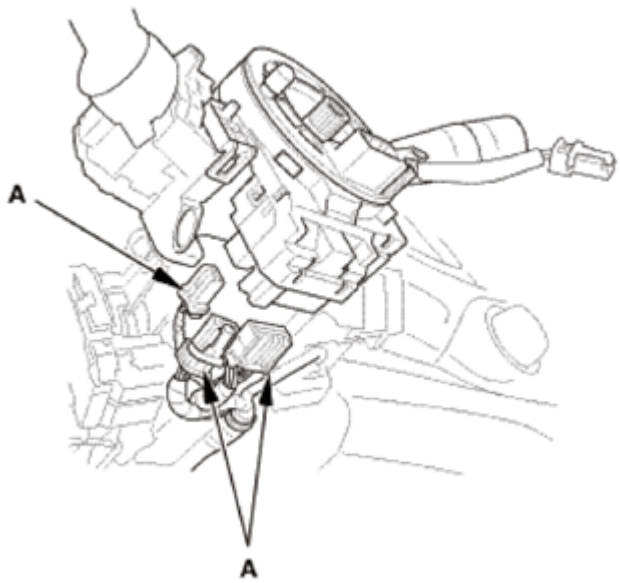

Fig. 283: Identifying Combination Switch Body Assembly Connectors
Courtesy of AMERICAN HONDA MOTOR CO., INC.

4. Connect the connectors (A).
5. Install the clip (B).

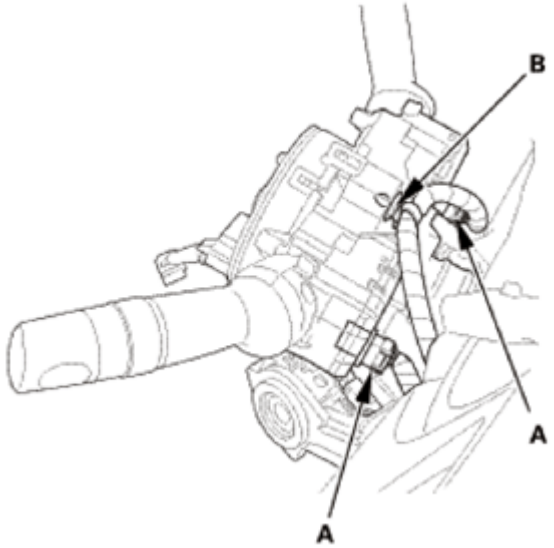

Fig. 284: Identifying Combination Switch Body Assembly Connectors And Clip
Courtesy of AMERICAN HONDA MOTOR CO., INC.

8. Lower Column Cover
    1. Push in on the lower column cover just above ignition switch opening (A) to engage the column cover with the locking tab (B).

GETtheMANUALS.org

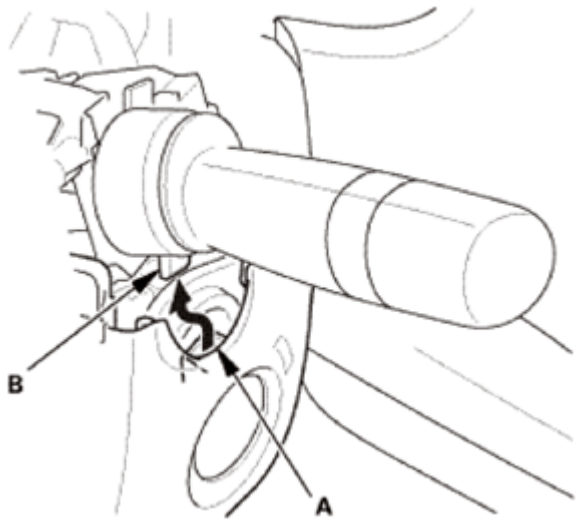

Fig. 285: Engaging Column Cover With Lock Tab
Courtesy of AMERICAN HONDA MOTOR CO., INC.

2. Install the lower column cover (A), then install the screw (B).

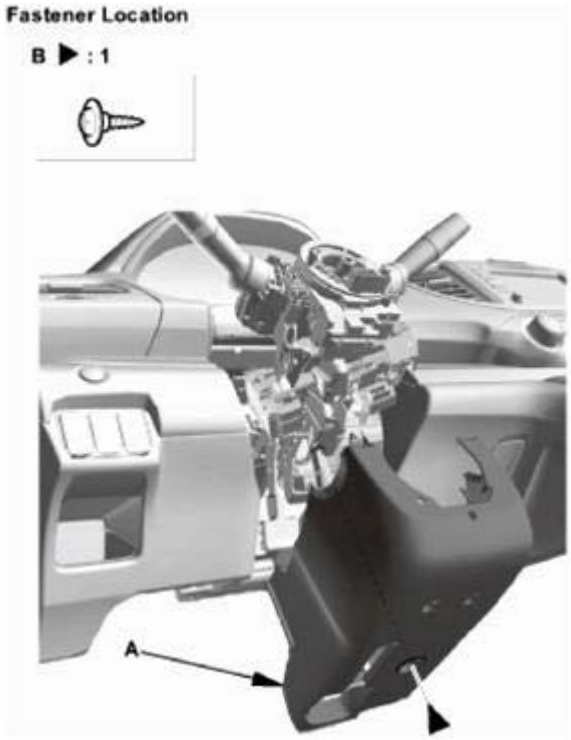

Fig. 286: Identifying Lower Column Cover And Screw
Courtesy of AMERICAN HONDA MOTOR CO., INC.

3. Install the screws (A) securing the lower column cover (B) from the front side.

GETtheMANUALS.org

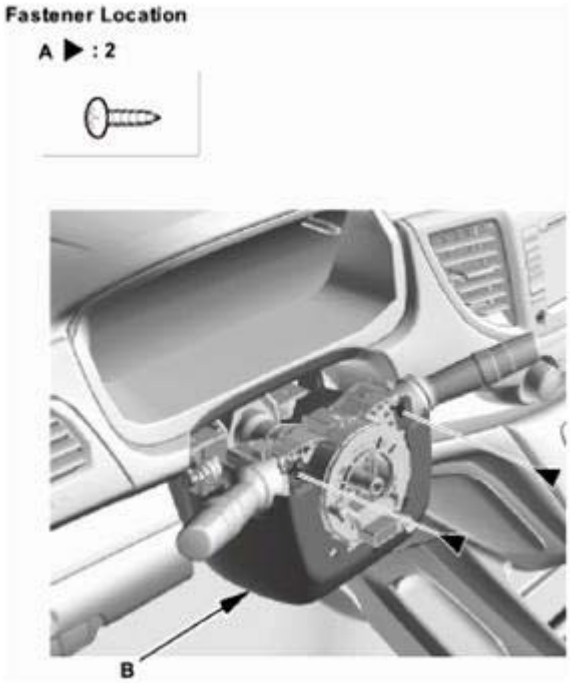

Fig. 287: Identifying Lower Column Cover And Screws
Courtesy of AMERICAN HONDA MOTOR CO., INC.

9. Upper Column Cover
    1. Install the upper column cover (A).

Fig. 288: Identifying Upper Column Cover
Courtesy of AMERICAN HONDA MOTOR CO., INC.

    2. Install the dashboard meter visor blind cover (A). Make sure the clips (B) and the hook (C) snap into place securely.

GETtheMANUALS.org

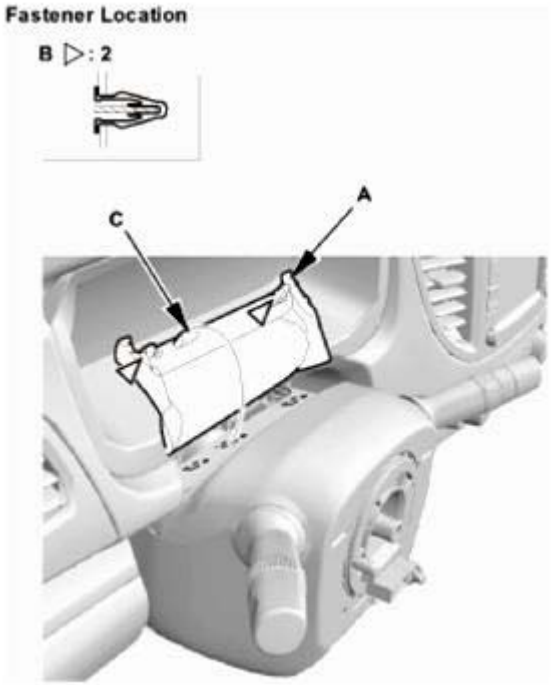

Fig. 289: Identifying Dashboard Meter Visor Blind Cover, Hooks And Clips
Courtesy of AMERICAN HONDA MOTOR CO., INC.

10. Steering Wheel Assembly
    1. Make sure the front wheels are pointing straight ahead.
    2. Center the cable reel (A). Do this by first rotating the cable reel clockwise until it stops.
    3. Rotate the cable reel counterclockwise about three full turns. The arrow mark (B) on the cable reel label should point straight up.

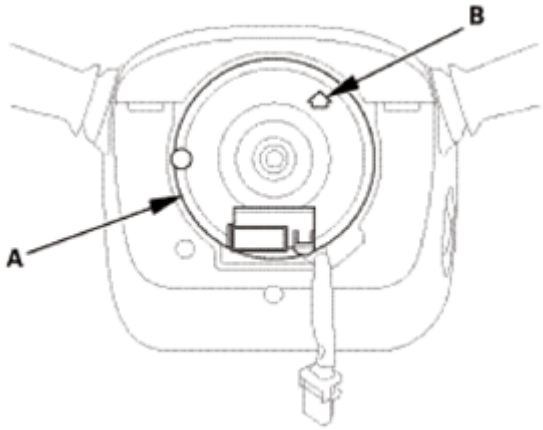

Fig. 290: Identifying Cable Reel With Arrow Mark
Courtesy of AMERICAN HONDA MOTOR CO., INC.

    4. Position the steering wheel hub (A) so that it engages the pin (B) of the cable reel.

GETtheMANUALS.org

5. Install the steering wheel (C) on to the steering column shaft.

NOTE: **Do not tap on the steering wheel or the steering column shaft when installing the steering wheel.**

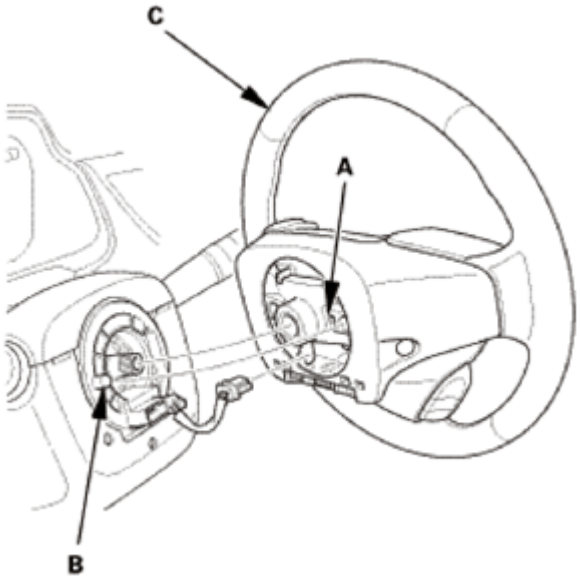

Fig. 291: Identifying Steering Wheel, Hub And Pin
Courtesy of AMERICAN HONDA MOTOR CO., INC.

6. Install the steering wheel bolt (A), and tighten it to the specified torque.
7. Connect the connector (B).
8. Make sure the wire harness is routed and fastened properly.

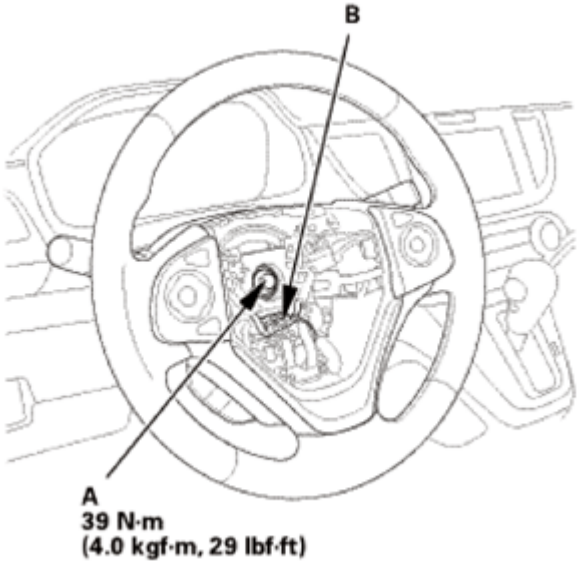

Fig. 292: Identifying Steering Wheel Bolt And Connector With Torque Specifications

GETtheMANUALS.org

Courtesy of AMERICAN HONDA MOTOR CO., INC.

11. Driver's Airbag

NOTE: **If you are replacing a deployed driver's airbag, inspect the cable reel for heat damage. If there is any damage, replace the cable reel.**

1. Place the driver's airbag (A) in the steering wheel.
2. Tighten the new TORX bolts using a TORX T30 bit.

NOTE: **Make sure the clearance (B) between the steering wheel and the horn pad is the specified value.**

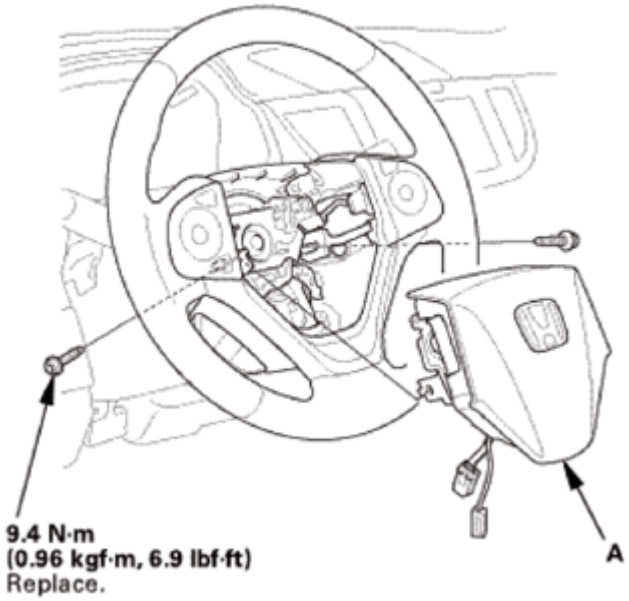

Fig. 293: Identifying Driver Airbag With Torque Specifications
Courtesy of AMERICAN HONDA MOTOR CO., INC.

GETtheMANUALS.org

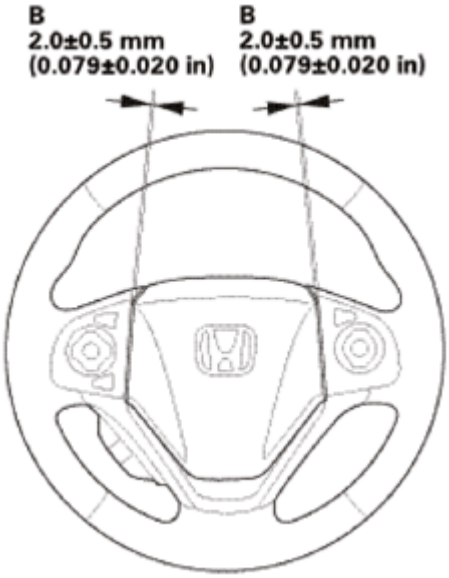

Fig. 294: Identifying Clearance Between Steering Wheel And Horn Pad
Courtesy of AMERICAN HONDA MOTOR CO., INC.

3. Connect the driver's airbag inflator connector (A) on the cable reel harness.
4. Connect the horn switch connector (B).

NOTE: **After reconnecting the negative cable to the battery, make sure the horn works properly.**

5. Install the access panel (C).

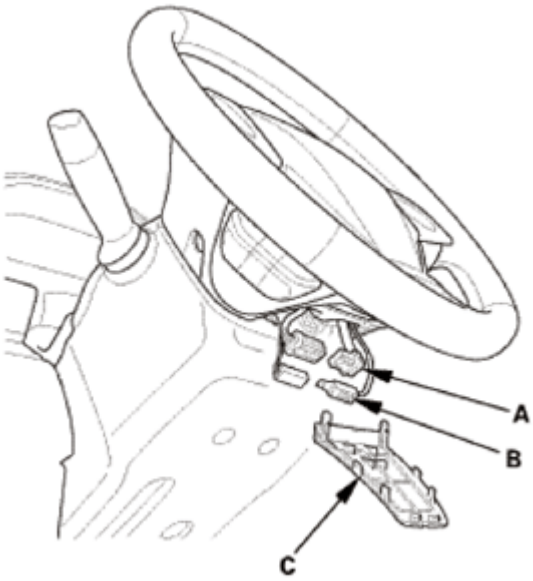

Fig. 295: Identifying Driver Airbag Inflator Connector, Horn Switch Connector And Access Panel

GETtheMANUALS.org

Courtesy of AMERICAN HONDA MOTOR CO., INC.

12. Battery Terminal (SRS) - Reconnection

NOTE: If the battery performance is abnormal, test the battery.

1. Clean the battery terminals.
2. Connect the positive cable (A) to the battery.

NOTE: Always connect the positive side first.

3. Connect the negative cable (B) to the battery.
4. Apply multipurpose grease to the terminals to prevent corrosion.

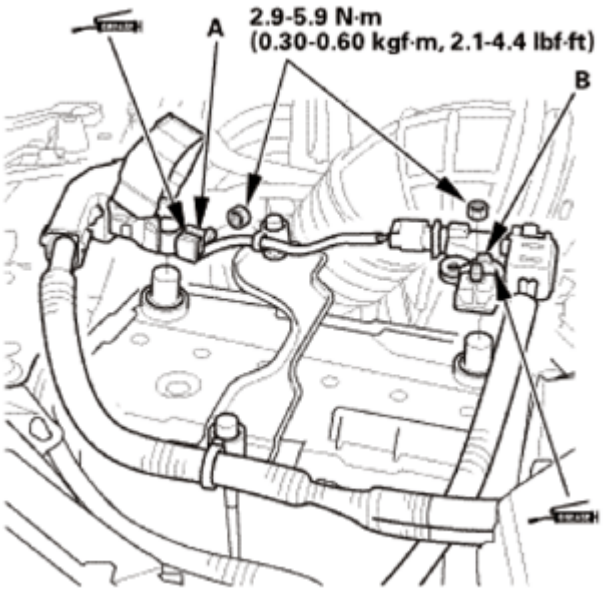

Fig. 296: Identifying Battery Positive And Negative Cable With Torque Specifications
Courtesy of AMERICAN HONDA MOTOR CO., INC.

13. Steering After Install - Check
    1. After installation, check these items:
        - Start the engine, allow it to idle, and turn the steering wheel from lock to lock several times.
        - Check that the EPS indicator does not come on.
        - Check the steering wheel spoke angle. If steering spoke angles to the right and left are not equal (steering wheel and rack are not centered), correct the engagement of the joint/pinion shaft splines.
14. Pre-Alignment Checks

For proper inspection and adjustment of the wheel alignment, do these checks:

GETtheMANUALS.org

1. Release the parking brake to avoid an incorrect measurement.
2. Make sure the suspension is not modified.
3. Make sure the fuel tank is full, and that the spare tire, the jack, and the tools are in place on the vehicle.
4. Check the tire size and tire pressure according to tire information.
5. Set the steering column to the middle tilt position and telescopic position.

15. Front Toe - Inspection

Use commercially available computerized four wheel alignment equipment to measure wheel alignment (caster, camber, toe, and turning angle). Follow the equipment manufacturer's instructions.

1. Set the steering column to the middle tilt position and telescopic positions.
2. Center the steering wheel spokes, and install a steering wheel holder tool.
3. Check the toe with the wheels pointed straight ahead.

Front toe-in: 0±2 mm (0±0.08 in)

- If adjustment is required, go to the front toe adjustment.
- If no adjustment is required, remove the alignment equipment.

16. HDS DLC - Connection

1. Connect the HDS to the data link connector (DLC) (A) located under the driver's side of the dashboard.
2. Turn the ignition switch to ON (II).
3. Make sure the HDS communicates with the vehicle. If it does not communicate, go to the DLC circuit troubleshooting.

Fig. 297: Identifying Data Link Connector
Courtesy of AMERICAN HONDA MOTOR CO., INC.

GETtheMANUALS.org

17. VSA Sensor Neutral Position - Memorization
    1. Park the vehicle on a flat and level surface, with the steering wheel in the straight ahead position.
    2. Select VSA ADJUSTMENT, then select ALL SENSORS with the HDS, and follow the screen prompts.

    NOTE: See the HDS Help menu for specific instructions.

18. Steering Angle Sensor Neutral Position - Clear
    1. Select EPS ADJUSTMENT, then select EPS STEERING ANGLE SENSOR VALUE CLEAR and follow the screen prompts on the HDS.

    NOTE: See the HDS Help menu for specific instructions.

19. Immobilizer Key - Registration

    NOTE:
    - **The HDS is required for registration of the immobilizer keys.**
    - **Programming the immobilizer also programs the keyless transmitter.**
    - **Check for aftermarket electrical equipment that can cause problems with transponder operation.**
    - **The immobilizer-keyless control unit can store up to six immobilizer keys.**

    1. Prepare all new keys and have the immobilizer PCM code.
    2. Select IMMOBI from the SYSTEM SELECTION MENU, then select IMMOBILIZER SETUP.
    3. Select ADD AND DELETE KEYS, then ALL KEYS LOST.
    4. Do the registration according to the instructions on the HDS screen.
    5. Check that the engine can be started with the newly registered keys.
    6. When prompted by the HDS, do the keyless transmitter programming.
    7. Make sure the keyless transmitter works properly.

STEERING RACK END REMOVAL AND INSTALLATION

SPECIAL TOOL DESCRIPTION

Image	Description/Tool Number

GETtheMANUALS.org

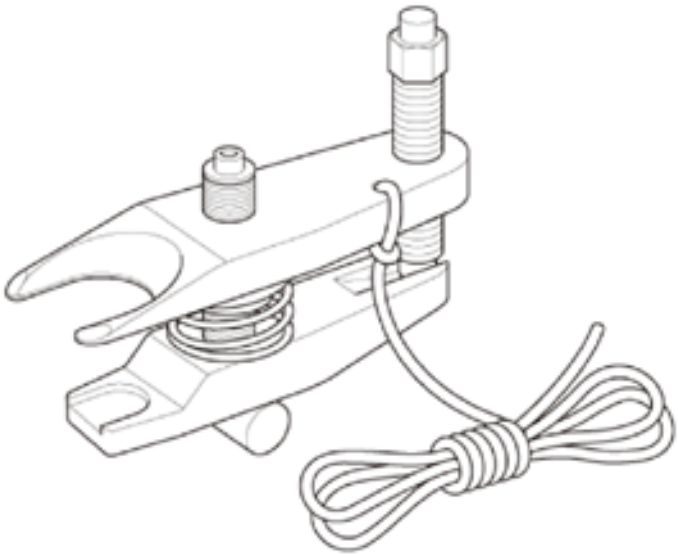	Ball Joint Remover, 28 mm 07MAC-SL00202
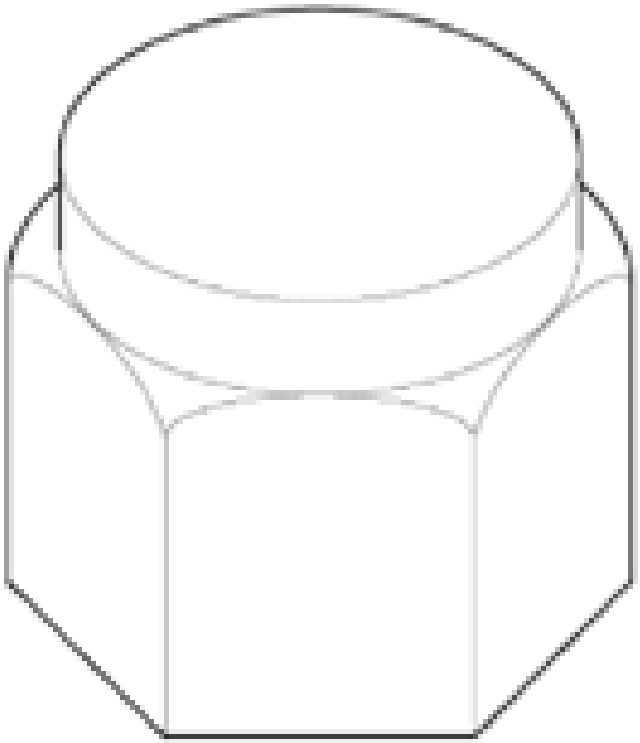	Ball Joint Thread Protector, 12 mm 07AAF-SDAA100
	Subframe Adapter VSB02C000016(1)

GETtheMANUALS.org

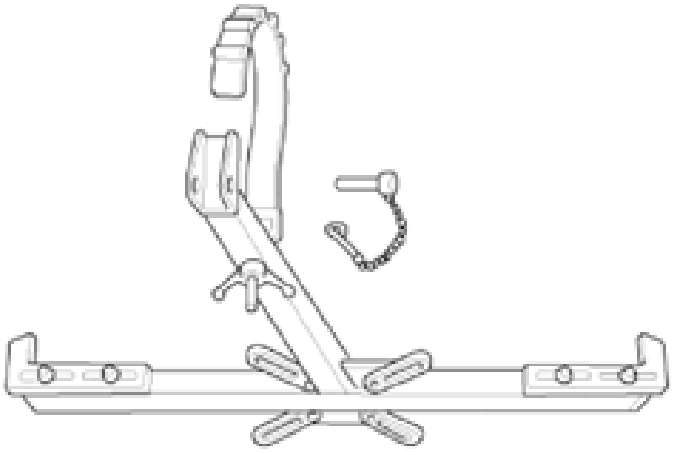	
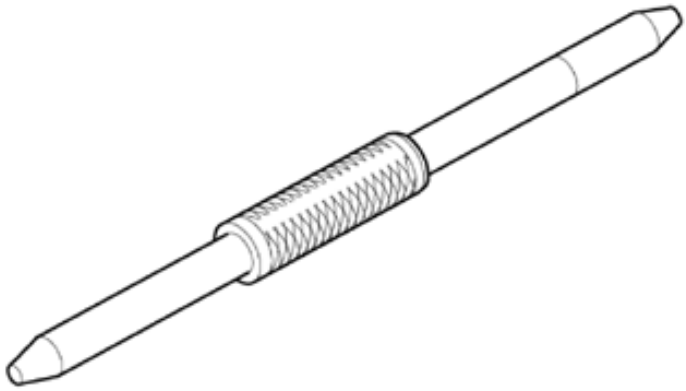	Subframe Alignment Pin 070AG-SJAA10S
(1) Available through the Honda Tool and Equipment Program 888-424-6857	

REMOVAL

NOTE: Do not allow dust, dirt, or other foreign materials to enter the steering gearbox.

1. Battery Terminal (SRS) - Disconnection
    1. Make sure the ignition switch is in LOCK (0).
    2. Disconnect and isolate the negative cable (A) from the battery.

    NOTE: Always disconnect the negative side first.

    3. Disconnect the positive cable (B) from the battery.
    4. Wait at least 3 minutes before starting work.

GETtheMANUALS.org

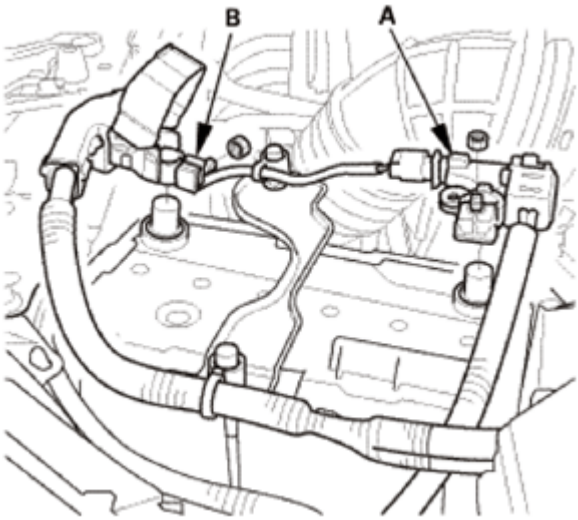

Fig. 298: Identifying Battery Positive And Negative Terminals
Courtesy of AMERICAN HONDA MOTOR CO., INC.

2. Vehicle Lift
    1. Raise the vehicle on a lift, and make sure it is securely supported.
3. Front Wheel - Both Side
    1. Remove both front wheels.

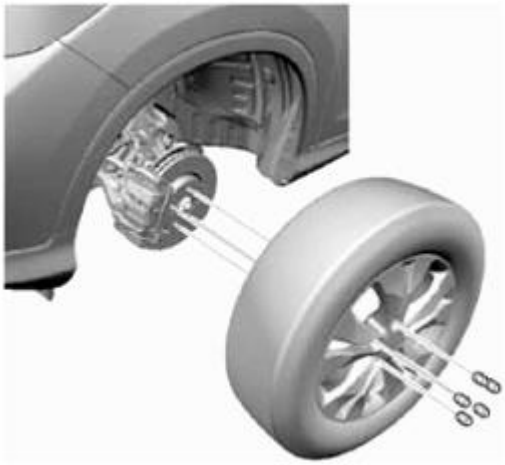

Fig. 299: Identifying Front Wheel
Courtesy of AMERICAN HONDA MOTOR CO., INC.

4. Steering Joint Cover
    1. Remove the steering joint cover (A).

GETtheMANUALS.org

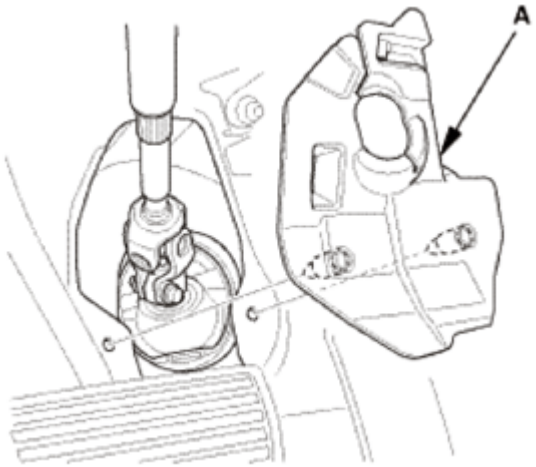

Fig. 300: Identifying Steering Joint Cover
Courtesy of AMERICAN HONDA MOTOR CO., INC.

5. Steering Column Lower Slide Shaft - Hold
    1. Set the steering column to the center tilt position, and to the center telescopic position.
    2. Hold the lower slide shaft (A) on the column with a piece of wire (B) between the joint yoke (C) of the lower slide shaft and the joint yoke (D) of the upper shaft to prevent the lower slider shaft from pulling out.

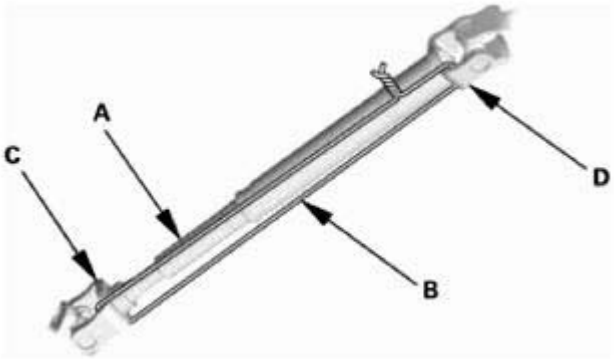

Fig. 301: Holding Lower Slide Shaft On Column Using Wire
Courtesy of AMERICAN HONDA MOTOR CO., INC.

6. Steering Wheel Hold
    1. Center the steering wheel spoke angle.
    2. Install a commercially available steering wheel holder tool (A).

GETtheMANUALS.org

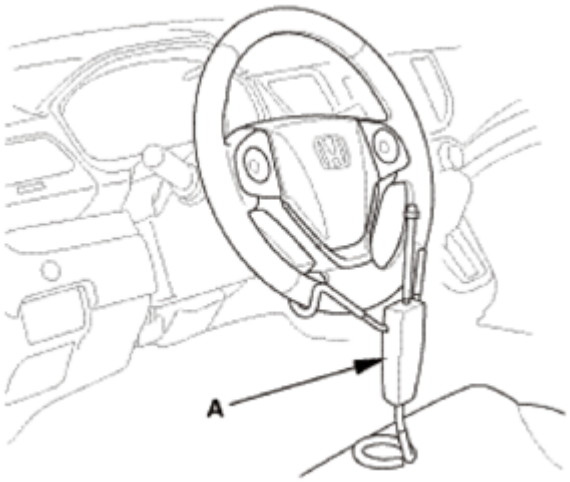

Fig. 302: Identifying Lower Slide Shaft, Wire And Yoke Joint
Courtesy of AMERICAN HONDA MOTOR CO., INC.

7. Steering Joint - Disconnection
    1. Remove the steering joint bolt (A).
    2. Disconnect the steering joint (B) from the pinion shaft.
    3. Remove the center guide (C) (if equipped), and discard it.

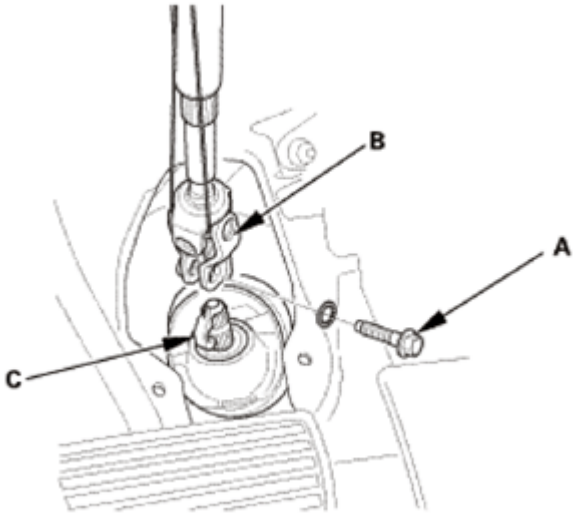

Fig. 303: Identifying Steering Joint, Center Guide And Bolt
Courtesy of AMERICAN HONDA MOTOR CO., INC.

8. Ball Joint - Removal

NOTE: **Always use a ball joint remover to disconnect a ball joint. Do not strike the housing or any other part of the ball joint connection to disconnect it.**

1. Install a hex nut (A) or the ball joint thread protector.

GETtheMANUALS.org

NOTE: **When using a hex nut, make sure the nut is flush with the ball joint pin end to prevent damage to the threaded end of the ball joint pin.**

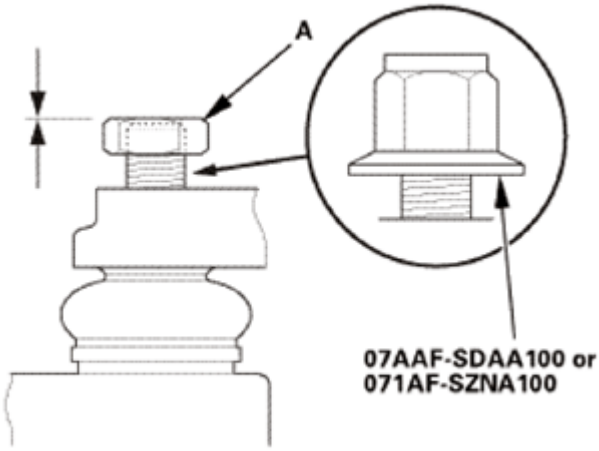

Fig. 304: Identifying Hex Nut Or Ball Joint Thread Protector
Courtesy of AMERICAN HONDA MOTOR CO., INC.

2. Apply grease to the ball joint remover on the areas shown (A).

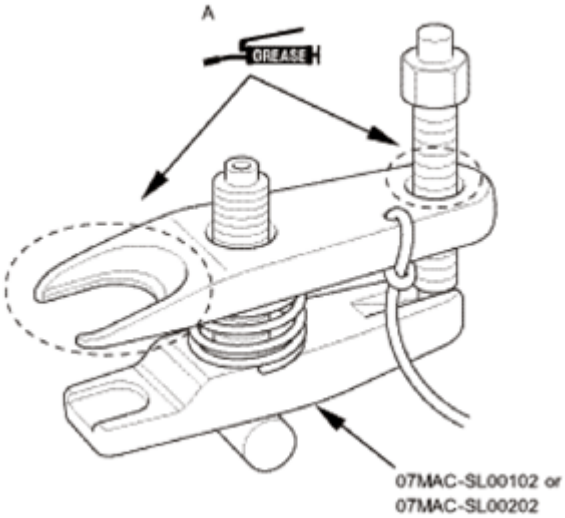

Fig. 305: Identifying Grease Applying Areas On Ball Joint Remover
Courtesy of AMERICAN HONDA MOTOR CO., INC.

3. Install the ball joint remover as shown.

NOTE:

- **Fasten the safety tie (A) securely to a suspension arm or the subframe (B).**
- **Making sure not to damage the ball joint boot.**

GETtheMANUALS.org

4. Tighten the pressure bolt until the ball joint pin pops loose from the ball joint connecting hole.

NOTE: Do not use pneumatic or electric tools on the pressure bolt.

5. Remove the ball joint remover.
6. Remove the hex nut or the ball joint thread protector.
7. Pull the ball joint out of the ball joint connecting hole.

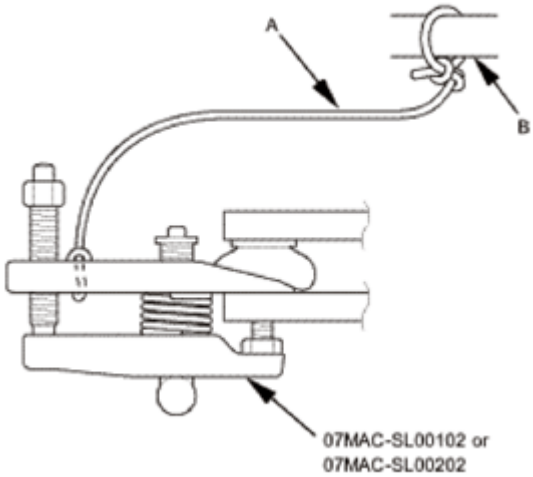

Fig. 306: Fastening Safety Tie On Suspension Arm Or Subframe
Courtesy of AMERICAN HONDA MOTOR CO., INC.

9. Tie-Rod End Ball Joint - Disconnection, Both Side
   1. Remove the cotter pin (A) from the tie-rod end ball joint.
   2. Remove the nut (B).
   3. Disconnect the tie-rod end ball joint.

NOTE: Be careful not to damage the ball joint boot when installing the remover.

GETtheMANUALS.org

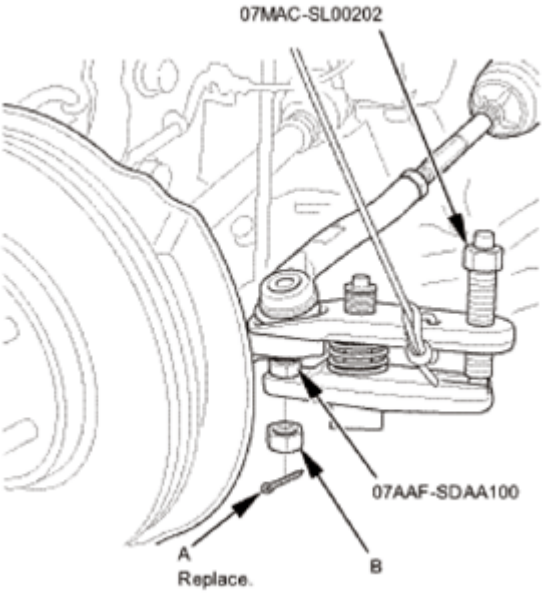

Fig. 307: Identifying Tie-Rod End Ball Joint Cotter Pin And Nut
Courtesy of AMERICAN HONDA MOTOR CO., INC.

10. Front Stabilizer Link Stabilizer Bar Side - Disconnection, Both Side
    1. Remove the flange nuts (A) while holding the respective joint pin (B) with a hex wrench (C).
    2. Disconnect both sides of the stabilizer link (D) from the front stabilizer bar (E).

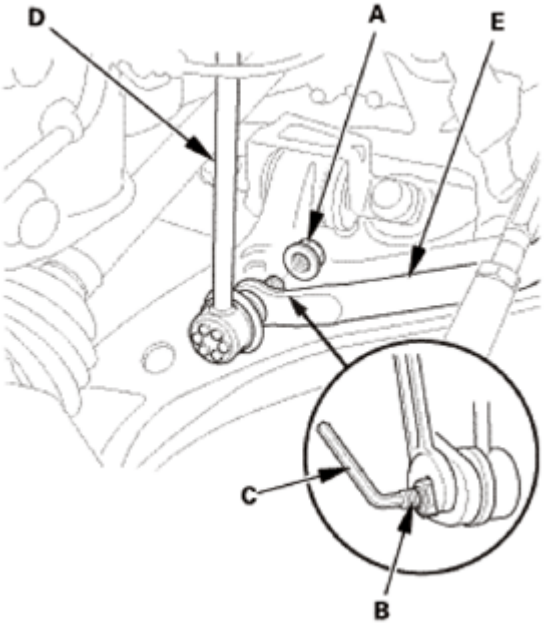

Fig. 308: Removing Flange Nuts Using Hex Wrench
Courtesy of AMERICAN HONDA MOTOR CO., INC.

11. Front Splash Shield

GETtheMANUALS.org

1. Remove the bolts (A), then remove the clips (B) that secure the front inner fender and the front splash shield (C) to the body.
2. From under the front bumper (D), remove the clips (E).
3. From under the body, remove the clips (F), then pull out the front splash shield.

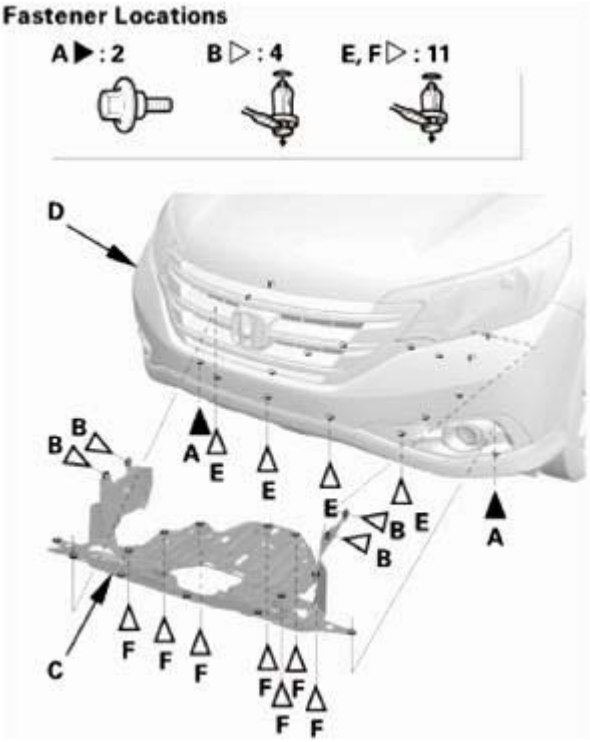

Fig. 309: Identifying Front Bumper, Front Splash Shield, Bolt And Clips
Courtesy of AMERICAN HONDA MOTOR CO., INC.

12. Front Floor Undercover
    1. Remove the bolts (A) and the clips (B, C) securing the front floor undercover (D), then remove the front floor undercover.

GETtheMANUALS.org

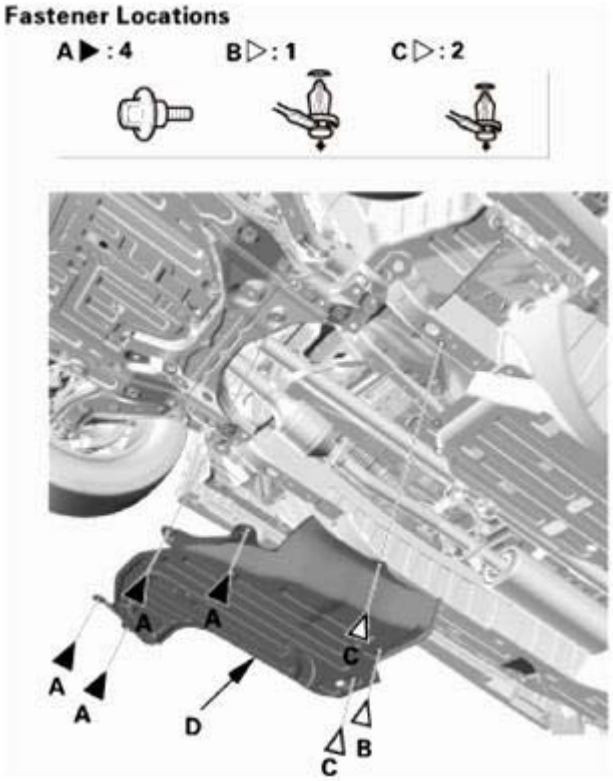

Fig. 310: Identifying Front Floor Undercover, Bolts And Clips
Courtesy of AMERICAN HONDA MOTOR CO., INC.

13. Under-Floor TWC Assembly
    1. Remove the under-floor TWC.

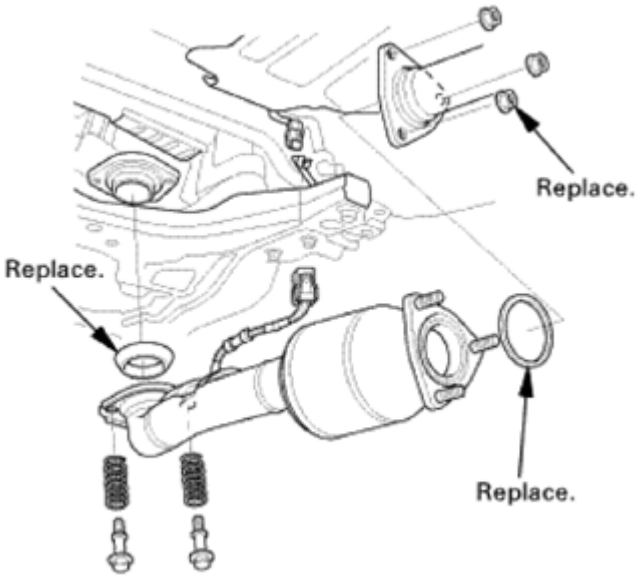

Fig. 311: Identifying Under-Floor TWC
Courtesy of AMERICAN HONDA MOTOR CO., INC.

GETtheMANUALS.org

14. Left Middle Floor Undercover (AWD/4WD)
    1. Remove the bolts (A) and clips (B, C), then remove the left middle floor undercover (D).

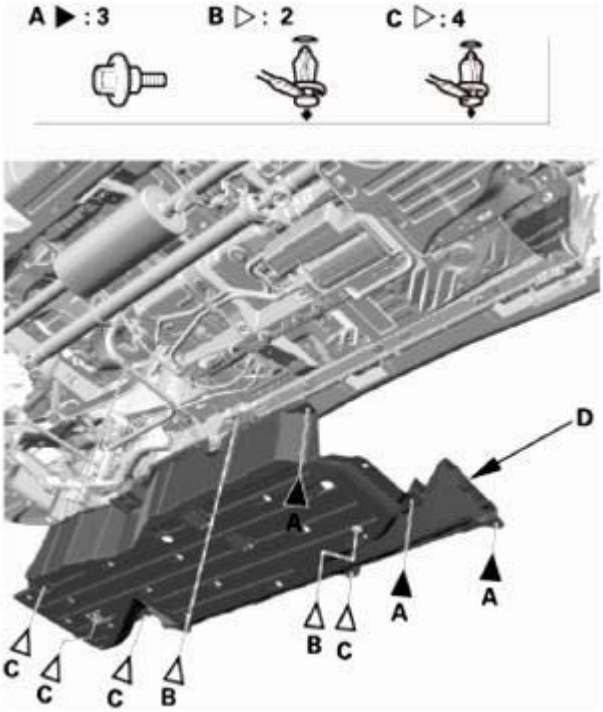

Fig. 312: Identifying Left Middle Floor Undercover, Clips And Bolts
Courtesy of AMERICAN HONDA MOTOR CO., INC.

15. Propeller Shaft Protector No. 1 (AWD/4WD)
    1. Remove the No. 1 propeller shaft protector (A).

GETtheMANUALS.org

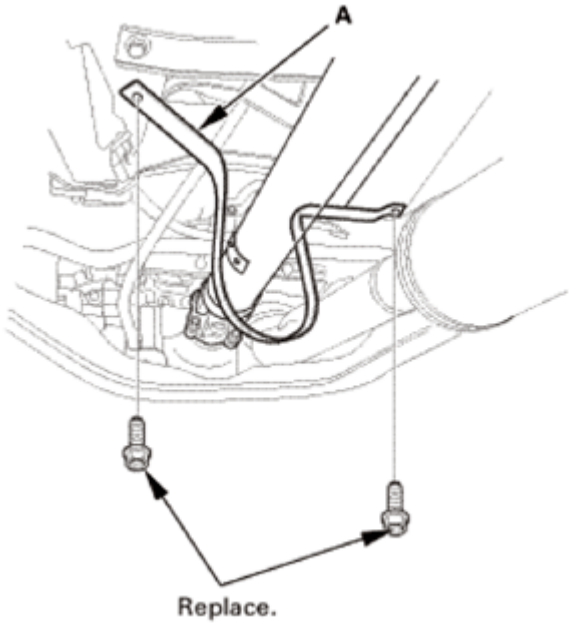

Fig. 313: Identifying Propeller Shaft Protector
Courtesy of AMERICAN HONDA MOTOR CO., INC.

16. Propeller Shaft Protector No. 2 (AWD/4WD)
    1. Remove the No. 2 propeller shaft protector (A).

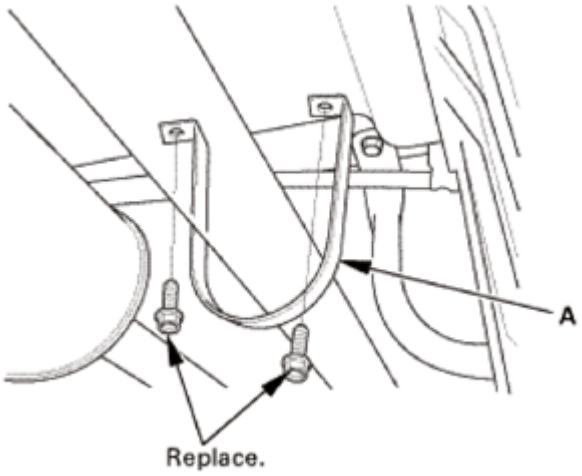

Fig. 314: Identifying Propeller Shaft Protector (No. 2)
Courtesy of AMERICAN HONDA MOTOR CO., INC.

17. Propeller Shaft Transmission Side - Disconnection (AWD/4WD)
    1. Make reference mark (A) across the No. 1 propeller shaft (B) and the transfer companion flange (C).
    2. Remove the No. 1 propeller shaft flange bolts (D).

GETtheMANUALS.org

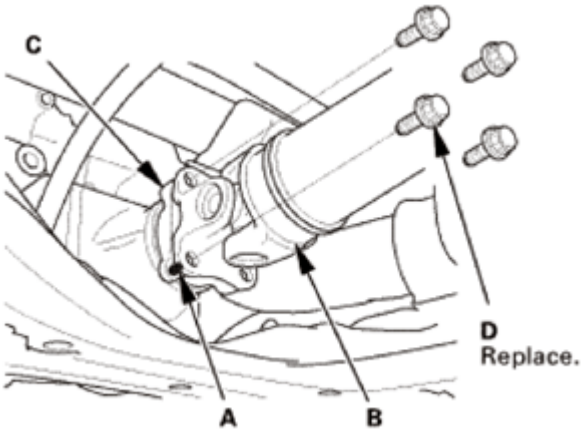

Fig. 315: Identifying Transfer Companion Flange, Propeller Shaft And Flange Bolt With Reference Mark
Courtesy of AMERICAN HONDA MOTOR CO., INC.

18. Propeller Shaft Differential Side - Disconnection (AWD/4WD)
    1. Make reference mark (A) across the No. 2 propeller shaft (B) and the rear differential companion flange (C).
    2. Remove the No. 2 propeller shaft flange bolts (D).

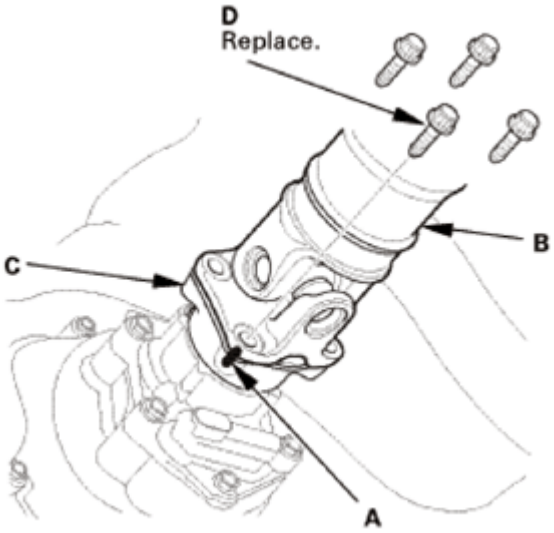

Fig. 316: Identifying Rear Differential Flange, Propeller Shaft And Flange Bolt With Reference Mark
Courtesy of AMERICAN HONDA MOTOR CO., INC.

19. Propeller Shaft Assembly (AWD/4WD)
    1. Remove the center support bearing mounting bolts (A), then remove the propeller shaft assembly (B).

GETtheMANUALS.org

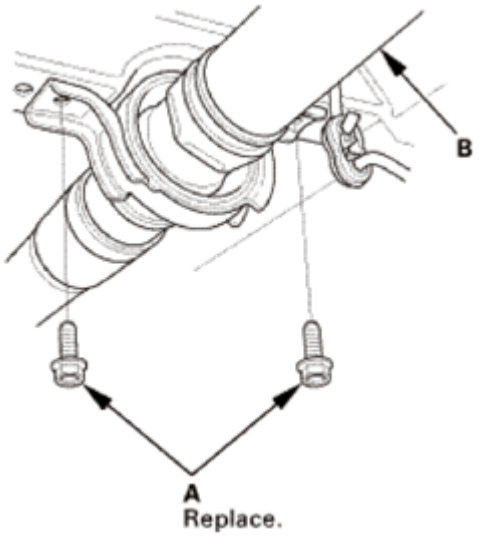

Fig. 317: Identifying Propeller Shaft Assembly And Center Support Bearing Mounting Bolts
Courtesy of AMERICAN HONDA MOTOR CO., INC.

20. Power Steering Gearbox Items

NOTE: Wrap the connectors with vinyl tape to avoid contamination from grease or water.

1. Disconnect the EPS motor 3P connector (A) by pushing the lock (B) and pulling up the lever (C).
2. Disconnect the connectors (D).
3. Remove the harness clip (E).

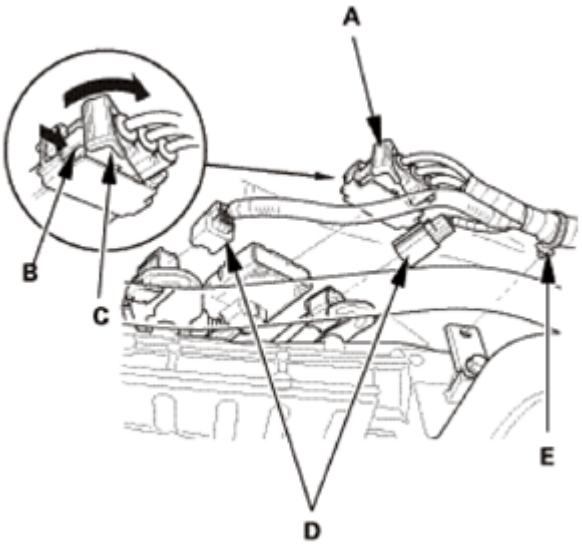

Fig. 318: Disconnecting EPS Motor 3P Connector
Courtesy of AMERICAN HONDA MOTOR CO., INC.

GETtheMANUALS.org

4. Remove the steering gearbox mounting bolts (A).
5. Remove the stiffener mounting bolts (B).
6. Remove the steering gearbox stiffeners (C).

Driver's side

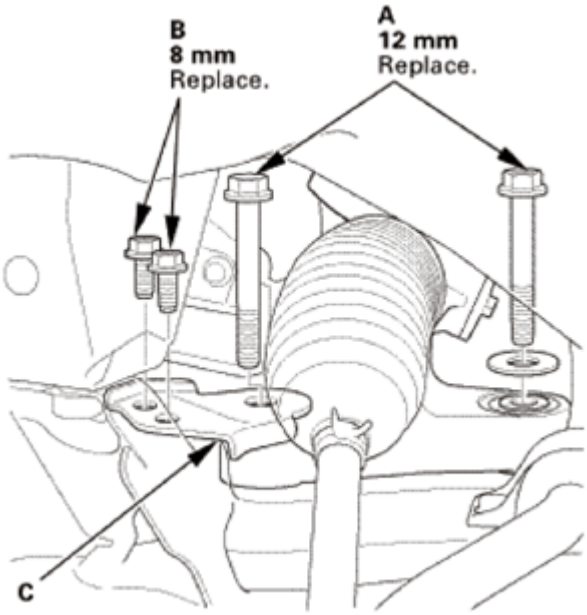

Fig. 319: Identifying Steering Gearbox Stiffeners And Mounting Bolts (Driver Side)
Courtesy of AMERICAN HONDA MOTOR CO., INC.

Passenger's side

GETtheMANUALS.org

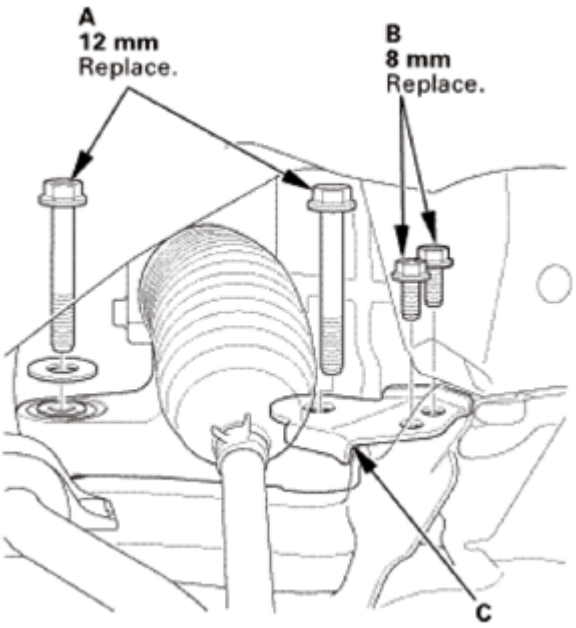

Fig. 320: Identifying Steering Gearbox Stiffeners And Mounting Bolts (Passenger Side)
Courtesy of AMERICAN HONDA MOTOR CO., INC.

21. Subframe Support
    1. Attach the subframe adapter (A) to the front subframe by looping the belt (B) over the front of the front subframe (C), then secure the belt with its stop (D).
    2. Raise the jack and line up the slots in the subframe adapter arms with the bolt holes on the jack base, then securely attach them with four bolts.

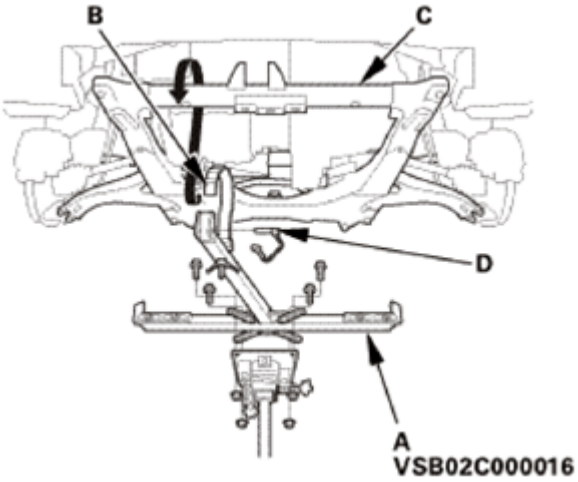

Fig. 321: Attaching Subframe Adapter To Front Subframe By Looping Belt
Courtesy of AMERICAN HONDA MOTOR CO., INC.

22. Lower Torque Rod - Disconnection
    1. Remove the lower torque rod mount mounting bolts (A).

GETtheMANUALS.org

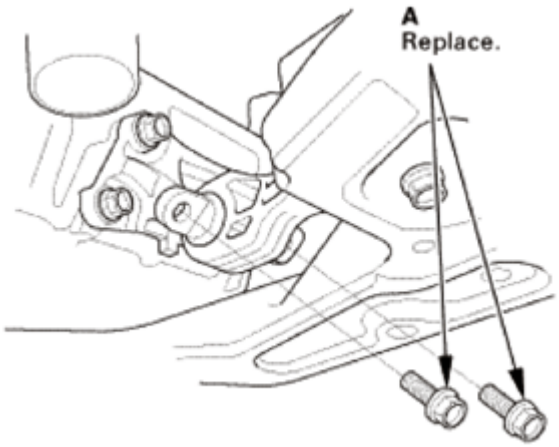

Fig. 322: Identifying Lower Torque Rod Mount Mounting Bolts
Courtesy of AMERICAN HONDA MOTOR CO., INC.

23. Front Subframe - Move
    1. Remove the mid mounting bolts (A) on both sides.

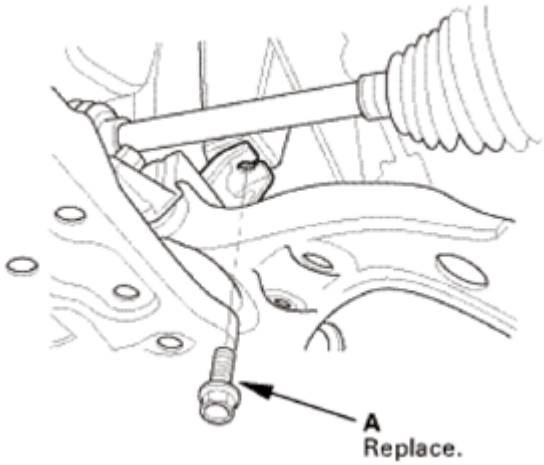

Fig. 323: Identifying Mid Mounting Bolts
Courtesy of AMERICAN HONDA MOTOR CO., INC.

    2. Loosen the front subframe mounting bolts (A) so they are about 30 mm (1.18 in) from the mounting surface on both sides.

NOTE: **Do not loosen the front subframe mounting bolts more than necessary.**

GETtheMANUALS.org

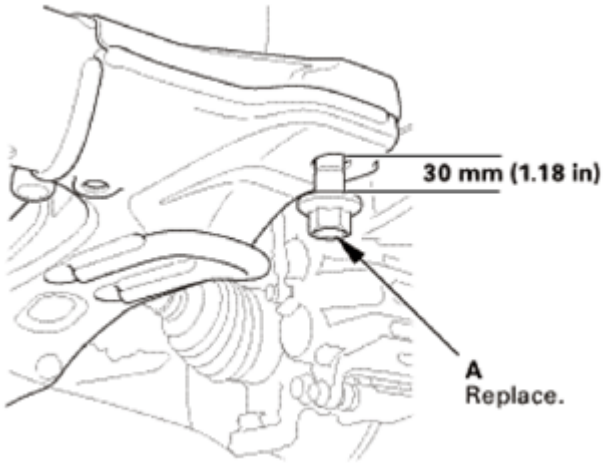

Fig. 324: Identifying Front Subframe Mounting Bolt
Courtesy of AMERICAN HONDA MOTOR CO., INC.

3. Remove the front subframe mounting bolts (A) on both side.
4. Lower the jack slowly until the front subframe has dropped about 130 mm (5.12 in).

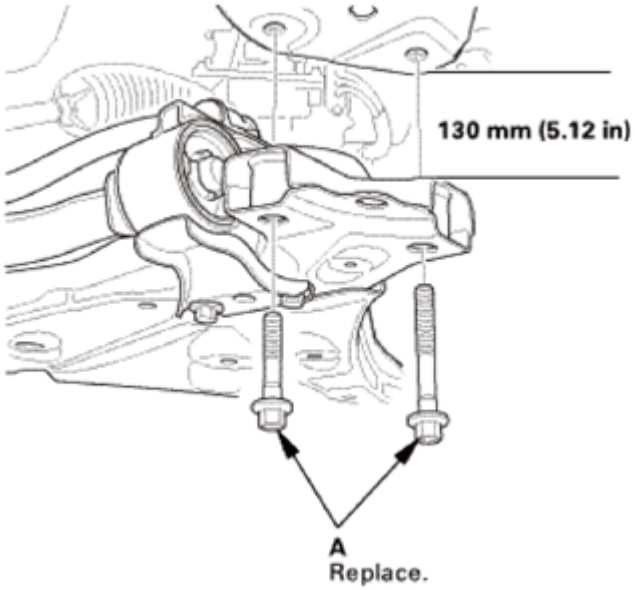

Fig. 325: Identifying Front Subframe Mounting Bolt
Courtesy of AMERICAN HONDA MOTOR CO., INC.

24. Pinion Shaft Grommet
    1. Remove the pinion shaft grommet (A).
    2. Wrap vinyl tape over the splines on the pinion shaft (B).

GETtheMANUALS.org

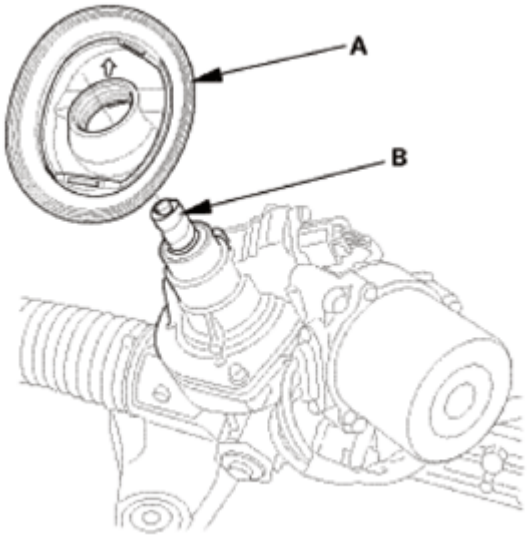

Fig. 326: Identifying Pinion Shaft And Grommet
Courtesy of AMERICAN HONDA MOTOR CO., INC.

25. Power Steering Gearbox Assembly
    1. Move the steering gearbox to the driver's side, and rotate it so the pinion shaft (A) points toward the rear of the vehicle.
    2. Carefully move the steering gearbox (B) as an assembly toward the driver's side of the vehicle until the pinion shaft clears the wheelwell opening.
    3. Remove the steering gearbox through the wheelwell opening on the driver's side.

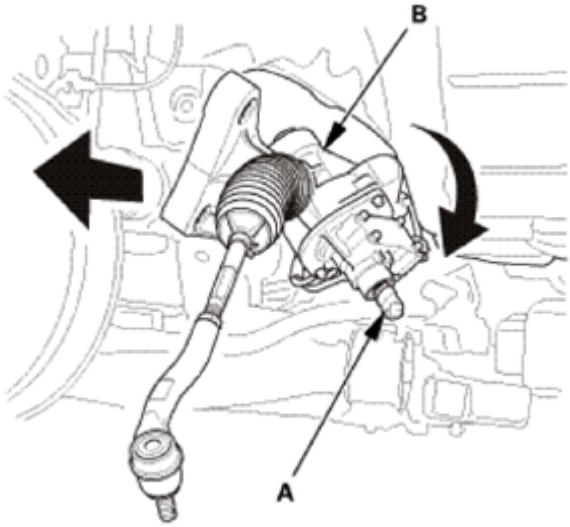

Fig. 327: Removing Steering Gearbox
Courtesy of AMERICAN HONDA MOTOR CO., INC.

26. Tie-Rod End
    1. Loosen the locknut (A).

GETtheMANUALS.org

2. Remove the tie-rod end (B), then remove the locknut.

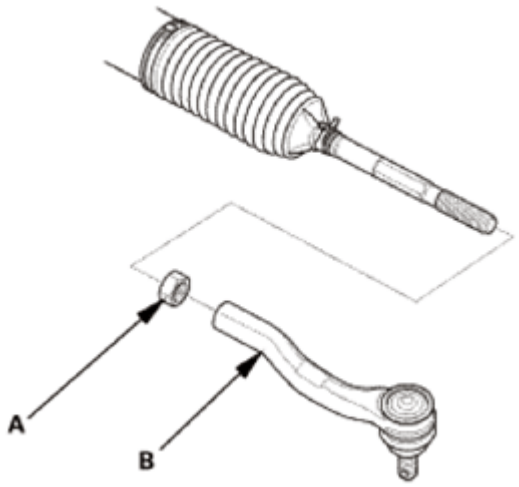

Fig. 328: Identifying Tie-Rod End And Lock Nut
Courtesy of AMERICAN HONDA MOTOR CO., INC.

27. Rack End Boot
    1. Remove the boot band (A).
    2. Remove the tie-rod clip (B).
    3. Pull the boot (C) away from the ends of the steering gearbox.

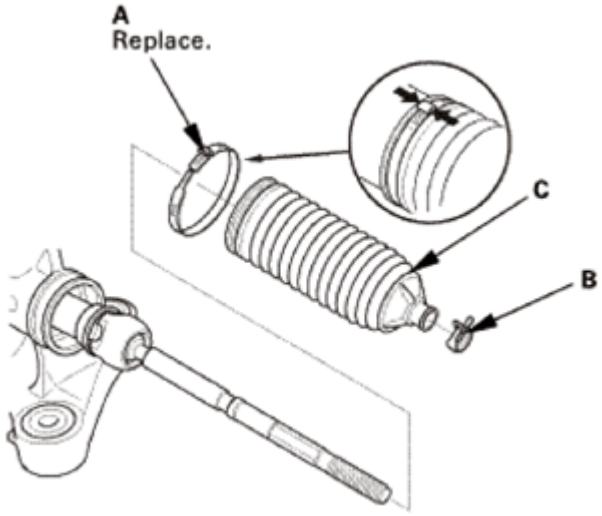

Fig. 329: Identifying Boot Band, Tie-Rod Clip And Boot
Courtesy of AMERICAN HONDA MOTOR CO., INC.

28. Rack End
    1. Hold the gearbox housing using a C-clamp (A) to a workbench as shown.

GETtheMANUALS.org

NOTE: **Do not clamp the cylinder part of the gearbox housing in a vise.**

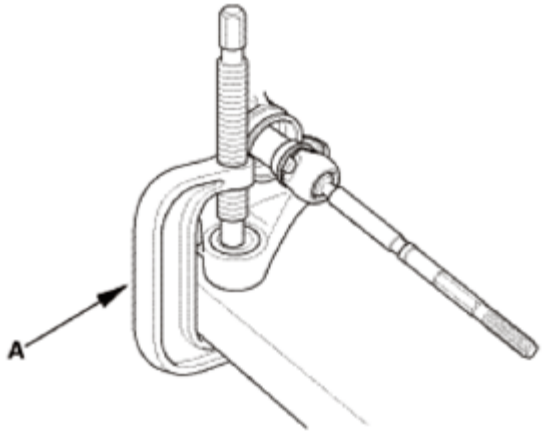

Fig. 330: Holding Gearbox Housing Using C-Clamp
Courtesy of AMERICAN HONDA MOTOR CO., INC.

2. Unbend the lock washer (A).

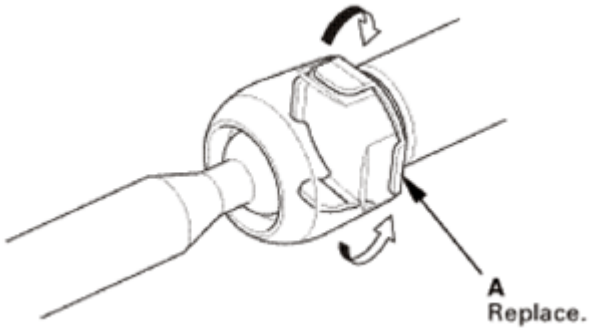

Fig. 331: Removing Lock Washer
Courtesy of AMERICAN HONDA MOTOR CO., INC.

3. Unscrew the rack end (A) with a wrench.

NOTE: **Be careful not to damage the rack surface with the wrench.**

4. Remove the lock washer (B).
5. Remove the spacer (C).
6. Remove the damper (D).

GETtheMANUALS.org

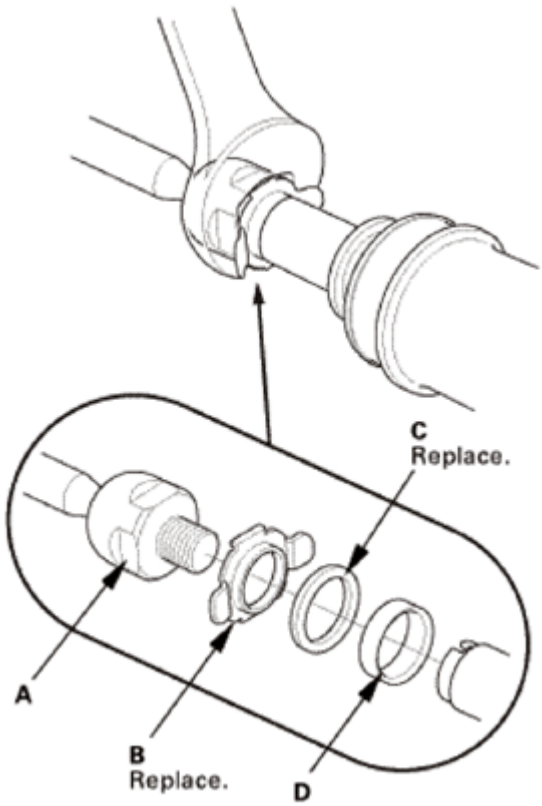

Fig. 332: Removing Rack End Using Wrench
Courtesy of AMERICAN HONDA MOTOR CO., INC.

INSTALLATION

NOTE: Do not allow dust, dirt, or other foreign materials to enter the steering gearbox.

1. Rack End
    1. Hold the gearbox housing using a C-clamp (A) to a workbench as shown.

NOTE: Do not clamp the cylinder part of the gearbox housing in a vise.

GETtheMANUALS.org

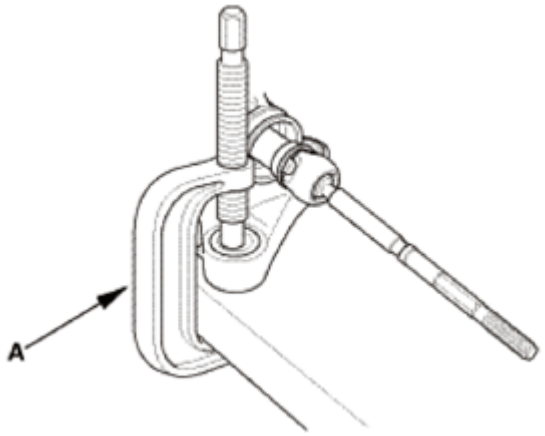

Fig. 333: Holding Gearbox Housing Using C-Clamp
Courtesy of AMERICAN HONDA MOTOR CO., INC.

2. Install the damper (A).

NOTE: **Make sure that the tapered side (B) of the damper is facing toward the gearbox.**

3. Install a new spacer (C).
4. Install a new lock washer (D).
5. Align the lock washer tabs (E) with the flat spots (F) on the rack end ball joint housing.
6. Install the rack end (G) while holding the lock washer in place.

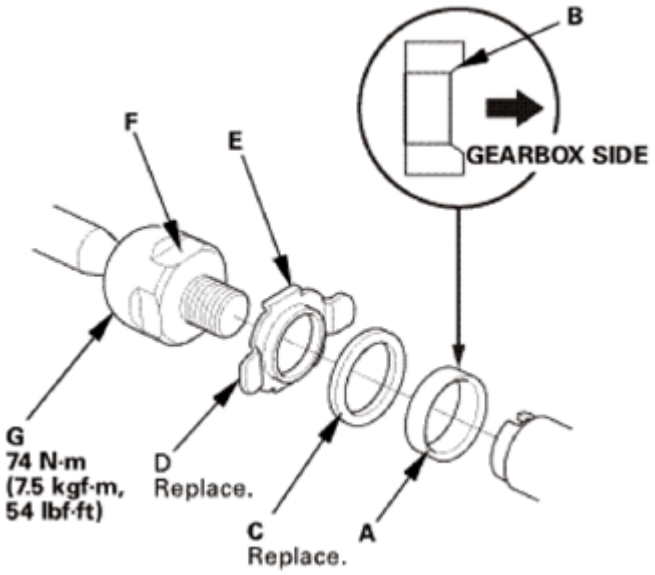

Fig. 334: Identifying Damper, Spacer, Lock Washer, Tabs And Rack End
Courtesy of AMERICAN HONDA MOTOR CO., INC.

GETtheMANUALS.org

7. Bend the lock washer tabs (A) back against the flat spots on the rack end joint housing.

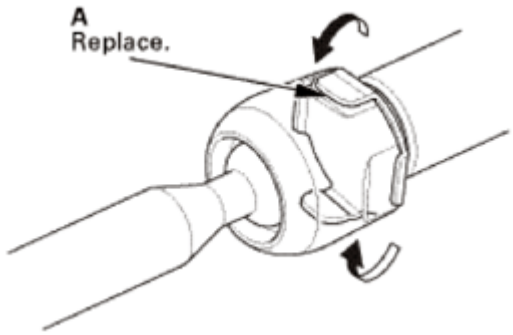

Fig. 335: Twisting Lock Washer Tabs
Courtesy of AMERICAN HONDA MOTOR CO., INC.

8. Stake the lock washer at the stake point (A) on the rack.

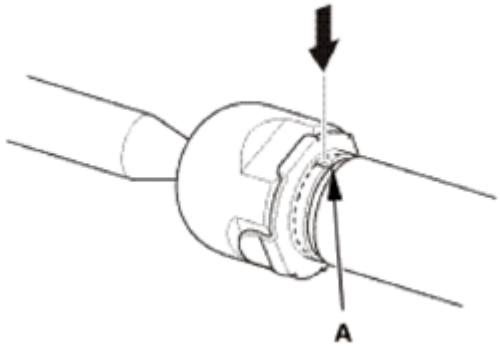

Fig. 336: Locating Stake Point On Lock Washer
Courtesy of AMERICAN HONDA MOTOR CO., INC.

9. Apply multipurpose grease to the circumference of the rack end joint housing (A) and boot grooves (B) on the rack end.

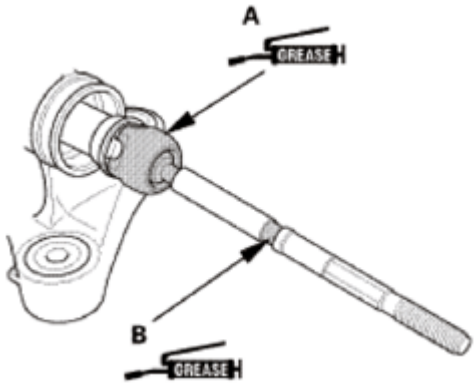

Fig. 337: Identifying Rack End Joint Housing And Boot Grooves Grease Applying Area
Courtesy of AMERICAN HONDA MOTOR CO., INC.

GETtheMANUALS.org

2. Rack End Boot
    1. Apply a light coat of multipurpose grease to the boot installation groove (A) around the gearbox housing.
    2. Install the boots (B) on the rack ends with the tie-rod clips (C).
    3. Fit the boot end in the installation grooves in the housing properly.
    4. After installing the boots, wipe the grease off the threaded section (D) of the rack end.

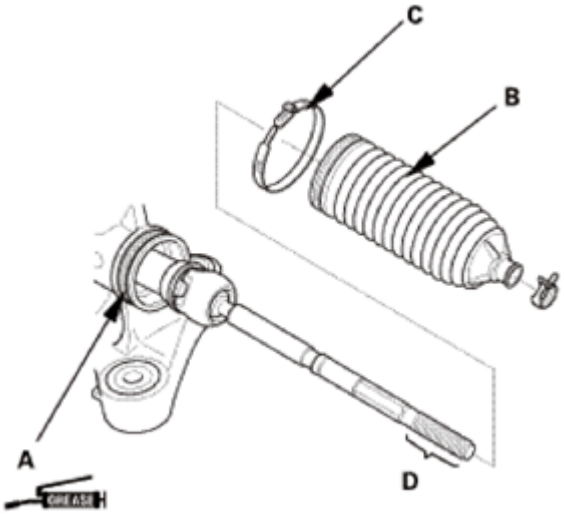

Fig. 338: Identifying Tie Rod Clip, Boots, Groove And Threaded Section On Rack End
Courtesy of AMERICAN HONDA MOTOR CO., INC.

5. Install the new boot bands (A) by aligning the tabs (B) with the holes (C) on the band.

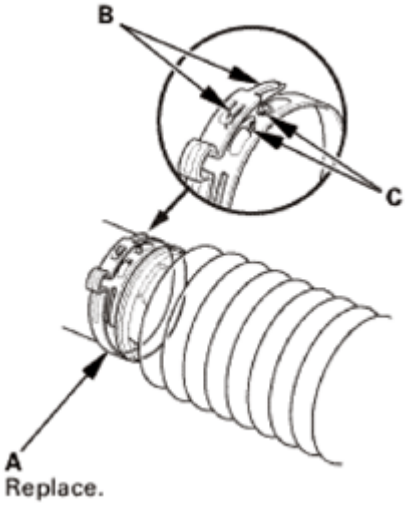

Fig. 339: Identifying Boot Band, Tabs And Holes
Courtesy of AMERICAN HONDA MOTOR CO., INC.

6. Close the ear portion (A) of the boot band (B) with pincers Oetiker 1098, commercially available or

GETtheMANUALS.org

equivalent (C).

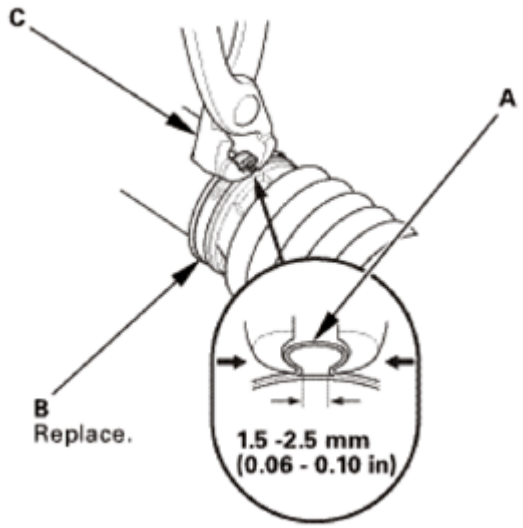

Fig. 340: Closing Ear Portion Of Boot Band Using Pincers
Courtesy of AMERICAN HONDA MOTOR CO., INC.

3. Tie-Rod End
    1. Install the locknut (A).
    2. Install the tie-rod end (B), then tighten the locknut.

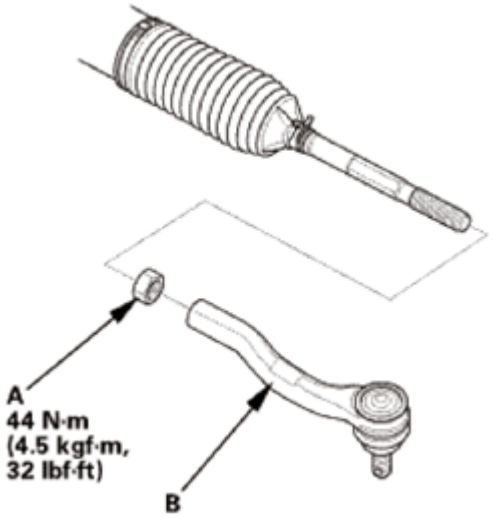

Fig. 341: Identifying Tie-Rod End And Lock Nut With Torque Specifications
Courtesy of AMERICAN HONDA MOTOR CO., INC.

4. Power Steering Gearbox Assembly
    1. Apply vinyl tape to the splines on the pinion shaft (A).
    2. Slide the steering gearbox (B) between the front subframe and body from the driver's side.

GETtheMANUALS.org

3. Carefully move the steering gearbox toward the passenger's side until the pinion shaft clears the wheelwell opening on the body.
4. Rotate the steering gearbox so the pinion shaft points upward.
5. Continue moving the steering gearbox toward the passenger's side until the steering gearbox is in position.

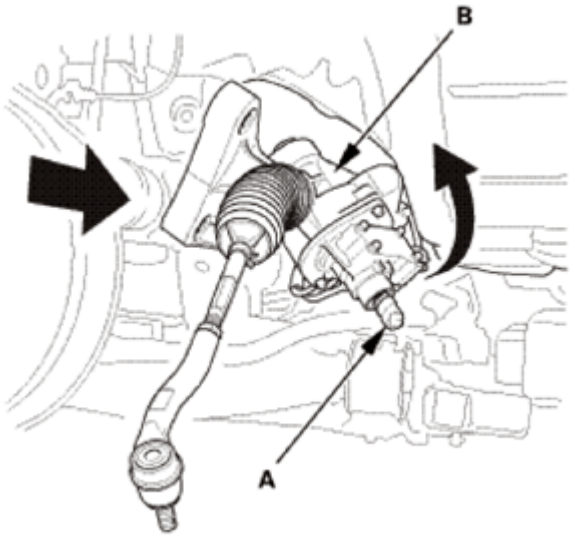

Fig. 342: Rotating Steering Gearbox
Courtesy of AMERICAN HONDA MOTOR CO., INC.

5. Pinion Shaft Grommet
    1. Remove the vinyl tape (A) from pinion shaft.
    2. Install the pinion shaft grommet (B).
    3. Align the lug portion (C) in the pinion shaft grommet with the cutout portion (D) on the steering gearbox.

GETtheMANUALS.org

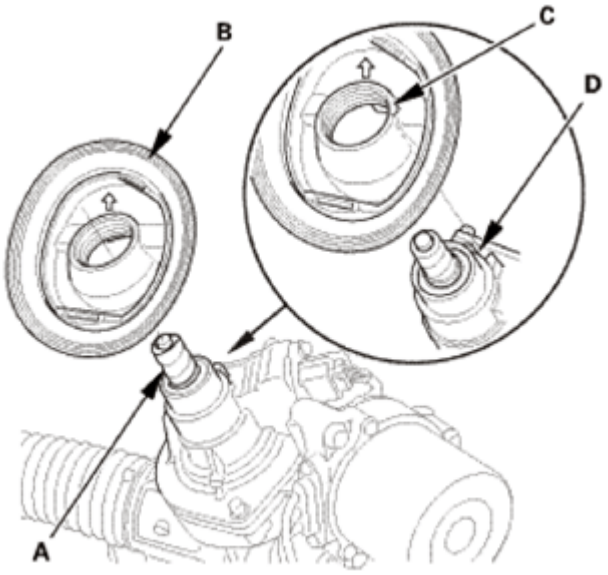

Fig. 343: Identifying Pinion Shaft Grommet, Lug Portion, Cutout Portion And Vinyl Tape
Courtesy of AMERICAN HONDA MOTOR CO., INC.

6. Front Subframe - Move
    1. Turn the lip (A) of the pinion shaft grommet.
    2. Lift the front subframe (B) up to the body, then restore the pinion shaft grommet back to proper position.

NOTE: **Be sure that the pinion shaft grommet is securely in place. Make sure the lip of the pinion shaft grommet is not turned up. Incorrect installation can cause leakage of water and mud, or noise.**

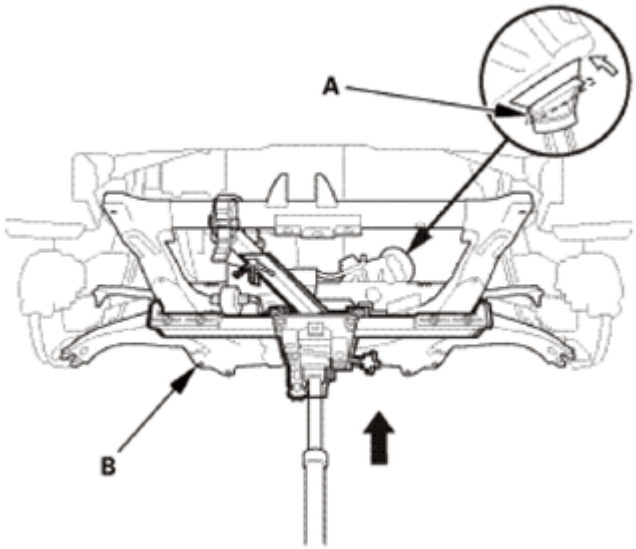

Fig. 344: Lifting Front Subframe Up To Body

GETtheMANUALS.org

Courtesy of AMERICAN HONDA MOTOR CO., INC.

3. Loosely install the new front subframe mounting bolts (A).

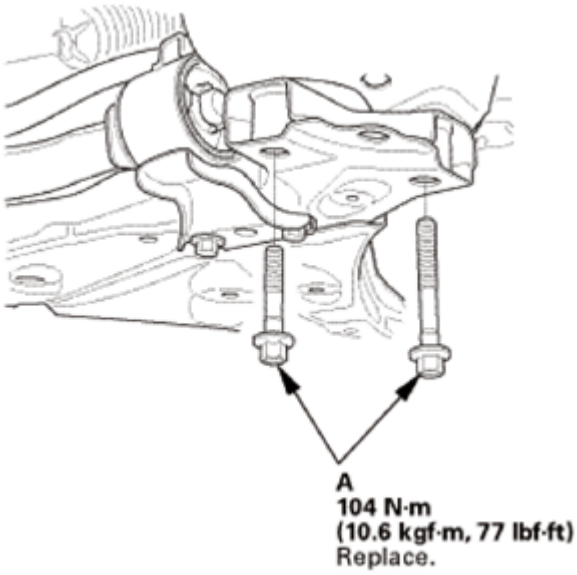

Fig. 345: Identifying Front Subframe Mounting Bolts With Torque Specifications (1 Of 2)
Courtesy of AMERICAN HONDA MOTOR CO., INC.

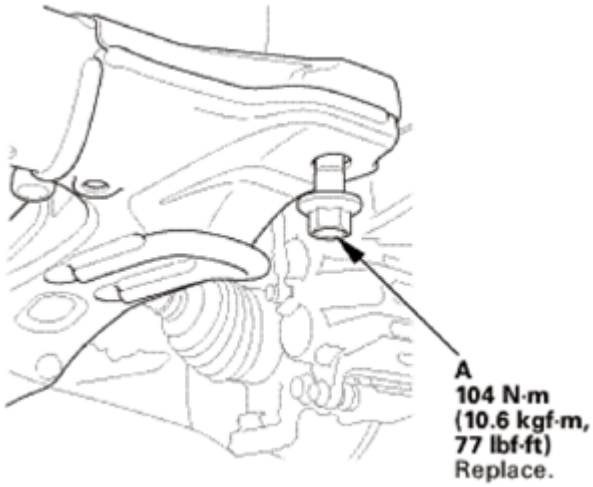

Fig. 346: Identifying Front Subframe Mounting Bolts With Torque Specifications (2 Of 2)
Courtesy of AMERICAN HONDA MOTOR CO., INC.

4. Loosely install the mid mounting bolts (A).

GETtheMANUALS.org

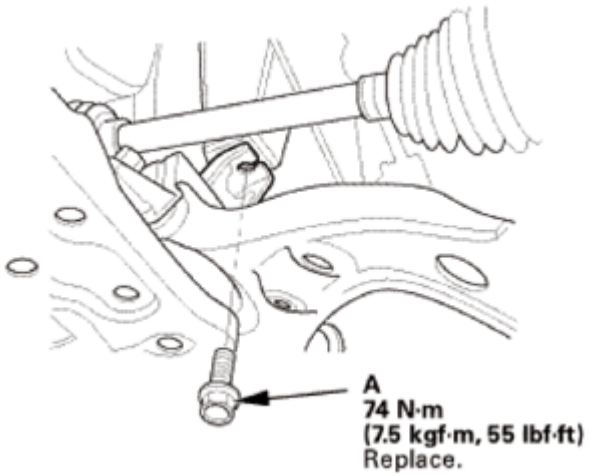

Fig. 347: Identifying Mid Mounting Bolts With Torque Specifications
Courtesy of AMERICAN HONDA MOTOR CO., INC.

7. Front Subframe - Alignment

NOTE:

- **Align the front subframe in the following sequence.**
- **When Installing, align both installation reference holes in the subframe with both reference holes in the body using the subframe alignment pin.**

1. Insert the subframe alignment pin (A) through the positioning hole (B) on the right rear subframe, and into the positioning hole (C) on the body, then loosely tighten the subframe right rear mounting bolts.

GETtheMANUALS.org

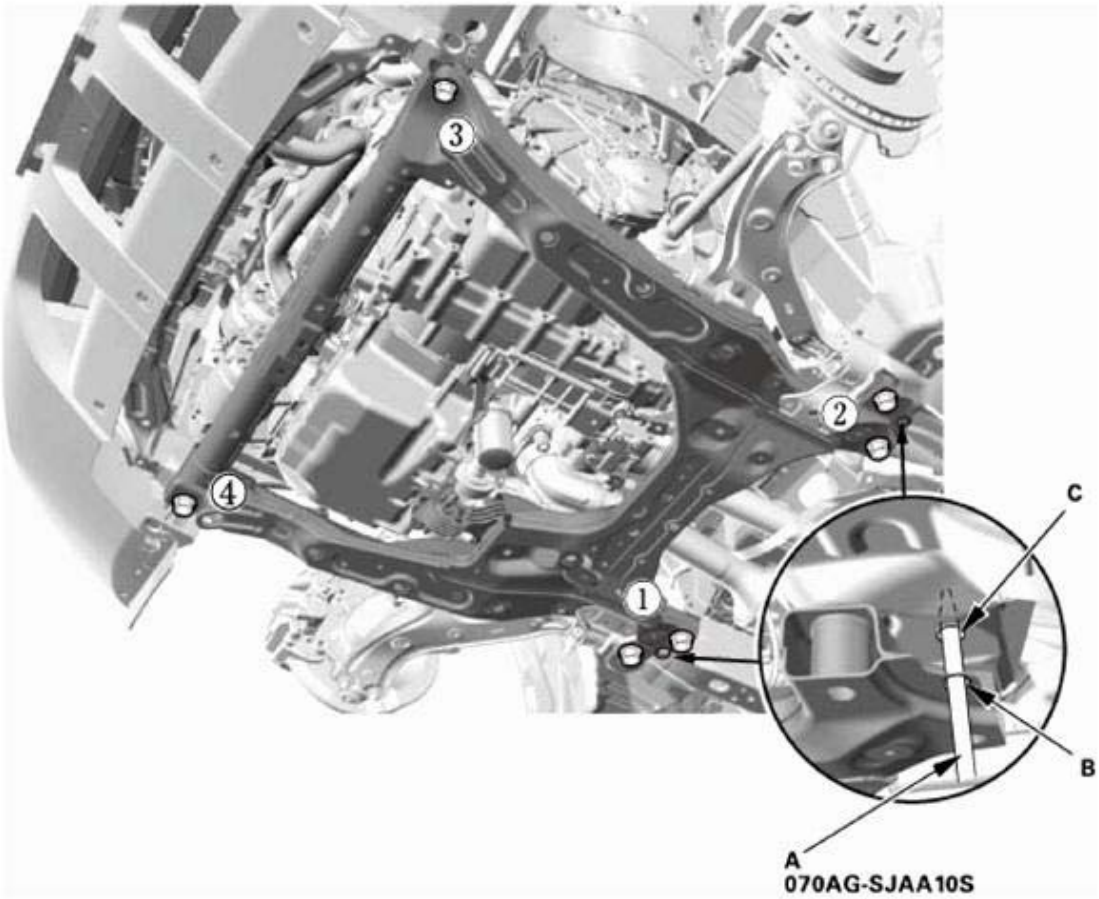

Fig. 348: Inserting Subframe Alignment Pin Into Right Rear Subframe
Courtesy of AMERICAN HONDA MOTOR CO., INC.

2. Insert the subframe alignment pin through the positioning hole on the left rear subframe, and into the positioning hole on the body, then loosely tighten the subframe left rear mounting bolts.
3. Tighten the subframe mounting bolts to the specified torque values starting with the right rear subframe mounting bolt. Use the subframe alignment pin when tightening the rear side subframe mounting bolts.
4. Check all of the subframe mounting bolts, and retighten if necessary.

NOTE: Tighten the bolts in the sequence shown.

5. Tighten the mid mounting bolts to the specified torque.
6. Lower the transmission jack supporting the subframe.

8. Lower Torque Rod - Reconnection
   1. Loosely install the new lower torque rod mounting bolts (A).

GETtheMANUALS.org

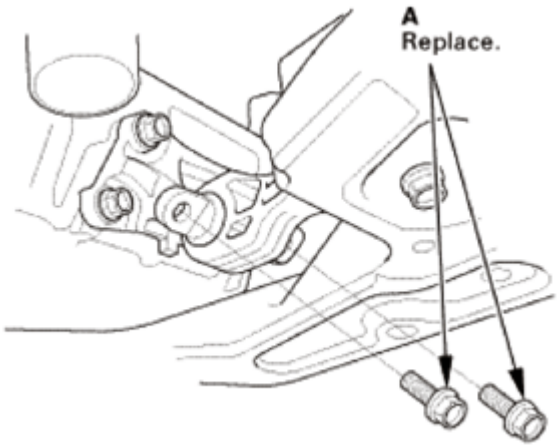

Fig. 349: Identifying Lower Torque Rod Mounting Bolts
Courtesy of AMERICAN HONDA MOTOR CO., INC.

9. Lower Torque Rod Mounting Bolt - Tighten
    1. Loosen the lower torque mount mounting bolt.
    2. Tighten the lower torque rod mount mounting bolts in the numbered sequence shown.

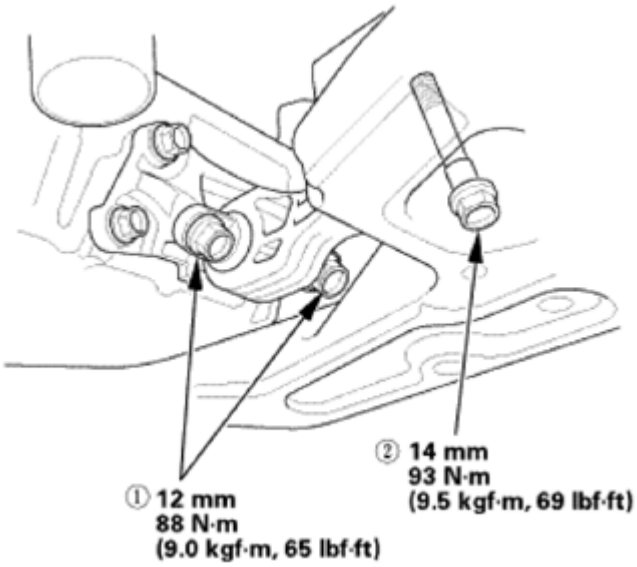

Fig. 350: Identifying Lower Torque Rod Mount Mounting Bolts Tightening Sequence With Torque Specifications
Courtesy of AMERICAN HONDA MOTOR CO., INC.

10. Power Steering Gearbox Items
    1. Install the steering gearbox stiffeners (A).
    2. Loosely tighten the steering gearbox mounting bolts (B).
    3. Loosely tighten the stiffener mounting bolts (C).
    4. Tighten the steering gearbox mounting bolts and the stiffener mounting bolts to the specified torque

GETtheMANUALS.org

in the sequence shown.

Driver's side

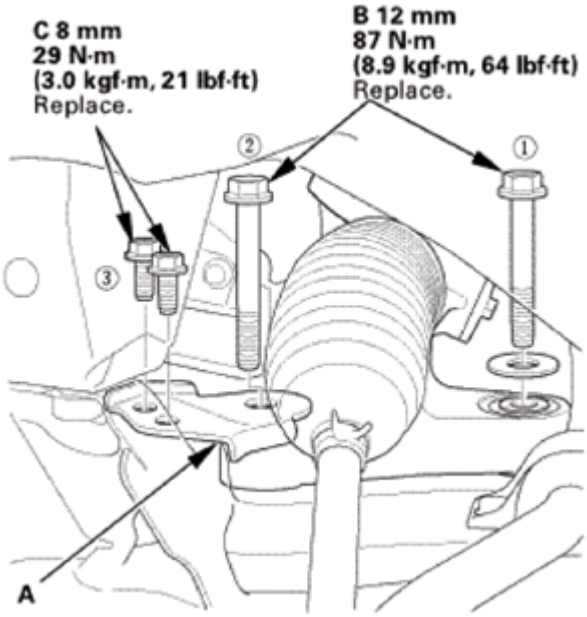

Fig. 351: Identifying Steering Gearbox Stiffeners With Torque Specifications (Driver Side)
Courtesy of AMERICAN HONDA MOTOR CO., INC.

Passenger's side

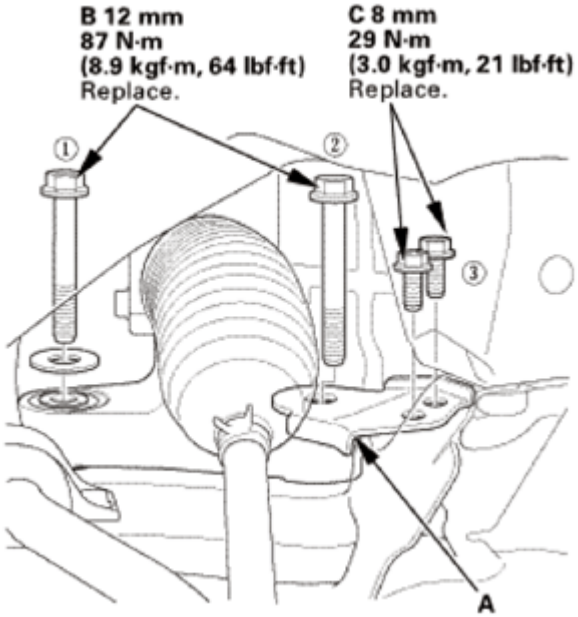

Fig. 352: Identifying Steering Gearbox Stiffeners With Torque Specifications (Passenger Side)

GETtheMANUALS.org

Courtesy of AMERICAN HONDA MOTOR CO., INC.

5. Install the harness clip (A).
6. Pull down the lever (B) of the EPS motor 3P connector (C), then confirm the connector is fully seated.
7. Connect the Connectors (D).

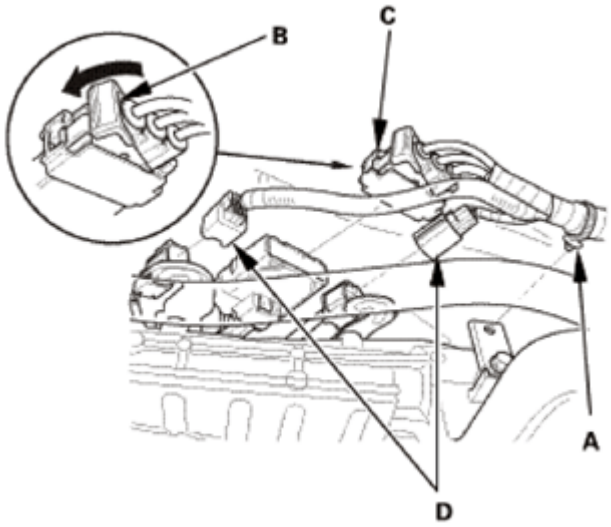

Fig. 353: Pulling Lever Of EPS Motor 3P Connector
Courtesy of AMERICAN HONDA MOTOR CO., INC.

11. Propeller Shaft Assembly (AWD/4WD)
    1. Install the propeller shaft assembly (A), then Install new center support bearing mounting bolts (B).

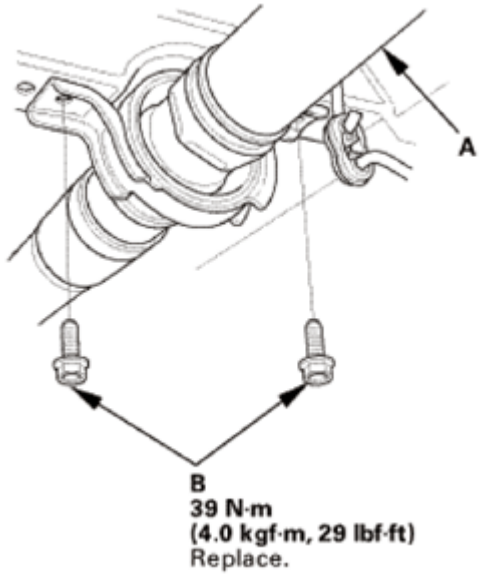

Fig. 354: Identifying Propeller Shaft Assembly And Center Support Bearing Mounting Bolts

GETtheMANUALS.org

Courtesy of AMERICAN HONDA MOTOR CO., INC.

12. Propeller Shaft Differential Side - Reconnection (AWD/4WD)
    1. Set the No. 2 propeller shaft (A) to the rear differential companion flange (B) by aligning the reference mark (C) you made during the removal procedure.
    2. Install new No. 2 propeller shaft flange bolts (D) to the specified torque.

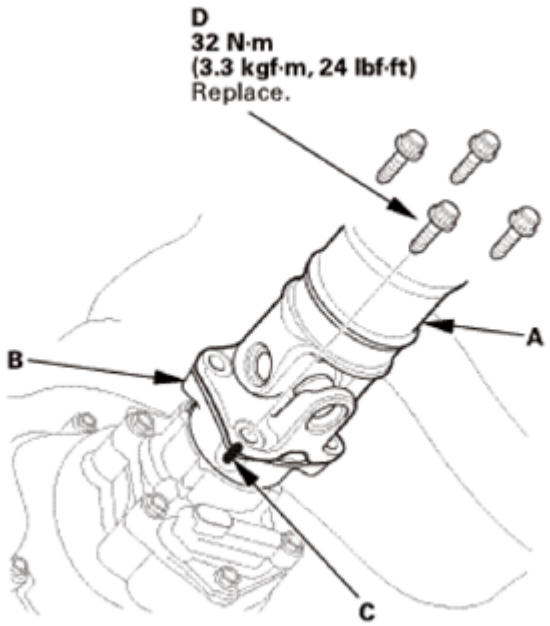

Fig. 355: Identifying Rear Differential Companion Flange, Propeller Shaft And Flange Bolts With Torque Specifications
Courtesy of AMERICAN HONDA MOTOR CO., INC.

13. Propeller Shaft Transmission Side - Reconnection (AWD/4WD)
    1. Set the No. 1 propeller shaft (A) to the transfer companion flange (B) by aligning the reference mark (C) you made during the removal procedure.
    2. Install new No. 1 propeller shaft flange bolts (D) to the specified torque.

GETtheMANUALS.org

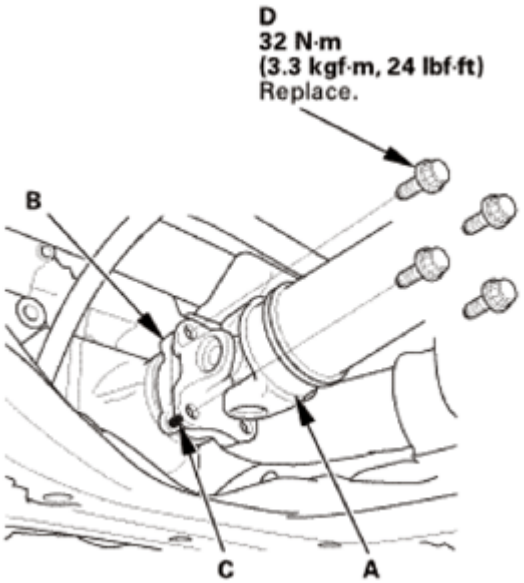

Fig. 356: Identifying Transfer Companion Flange, Propeller Shaft And Flange Bolts With Torque Specifications
Courtesy of AMERICAN HONDA MOTOR CO., INC.

14. Propeller Shaft Protector No. 2 (AWD/4WD)
    1. Install the No. 2 propeller shaft protector (A).

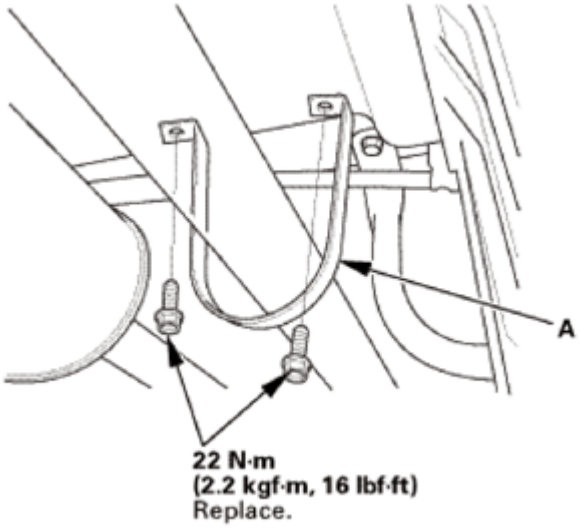

Fig. 357: Identifying Propeller Shaft Protector (No. 2)
Courtesy of AMERICAN HONDA MOTOR CO., INC.

15. Propeller Shaft Protector No. 1 (AWD/4WD)
    1. Install the No. 1 propeller shaft protector (A).

GETtheMANUALS.org

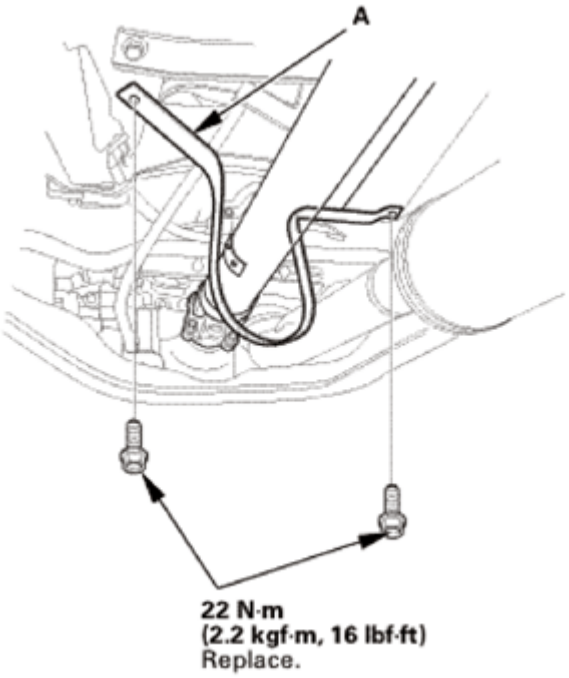

Fig. 358: Identifying Propeller Shaft Protector (No. 1)
Courtesy of AMERICAN HONDA MOTOR CO., INC.

16. Left Middle Floor Undercover (AWD/4WD)
    1. Install the left middle floor undercover (A), then install the bolts (B) and the clips (C, D). The clips snap into place securely.

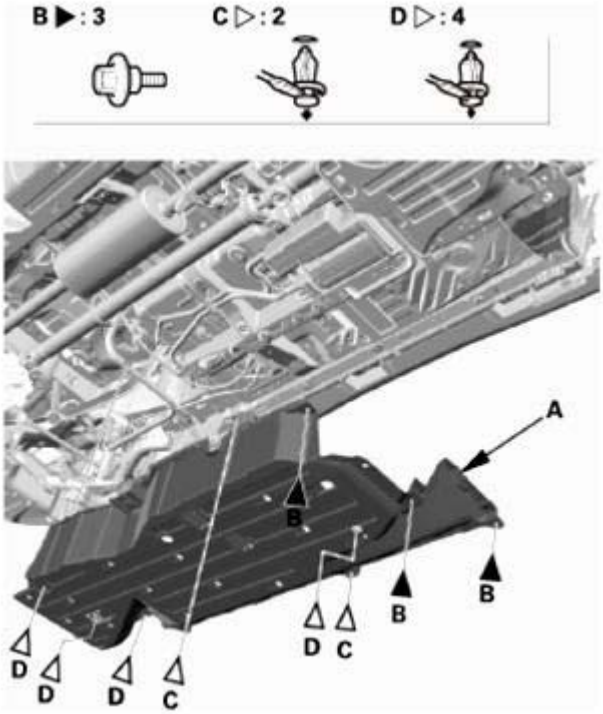

GETtheMANUALS.org

Fig. 359: Identifying Left Middle Floor Undercover, Bolts And Clips
Courtesy of AMERICAN HONDA MOTOR CO., INC.

17. Under Floor TWC Assembly
    1. Install the under-floor TWC.

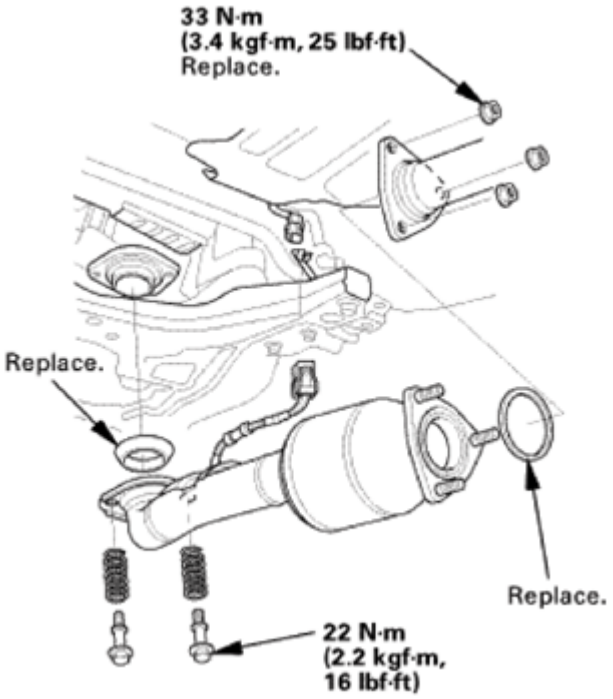

Fig. 360: Identifying Under-Floor TWC With Torque Specifications
Courtesy of AMERICAN HONDA MOTOR CO., INC.

18. Front Floor Undercover
    1. Install the front floor undercover (A), then install the bolts (B) and the clips (C, D). Make sure the clips snap into place securely.

GETtheMANUALS.org

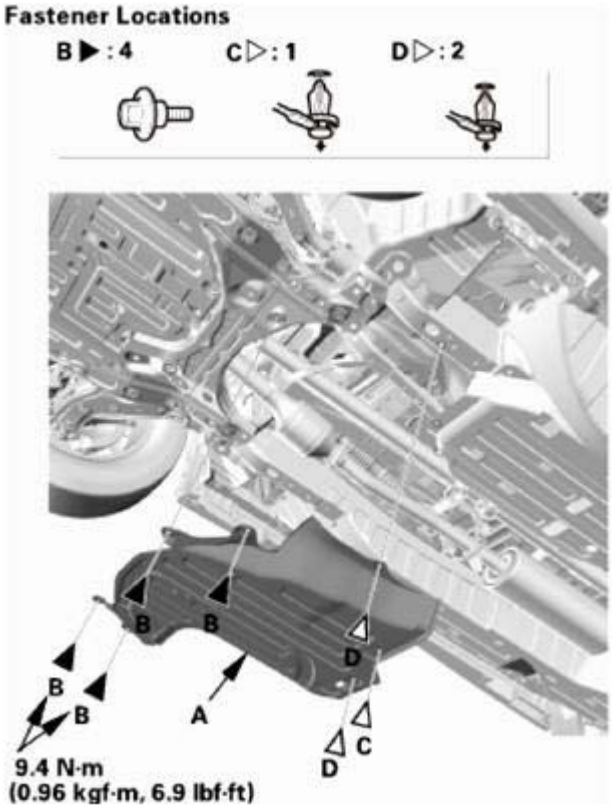

Fig. 361: Identifying Front Floor Undercover, Bolts And Clips With Torque Specifications
Courtesy of AMERICAN HONDA MOTOR CO., INC.

19. Front Splash Shield
    1. Install the front splash shield (A), then install the bolts (B) and the clips (C, D). Make sure the clips snap into place securely.

GETtheMANUALS.org

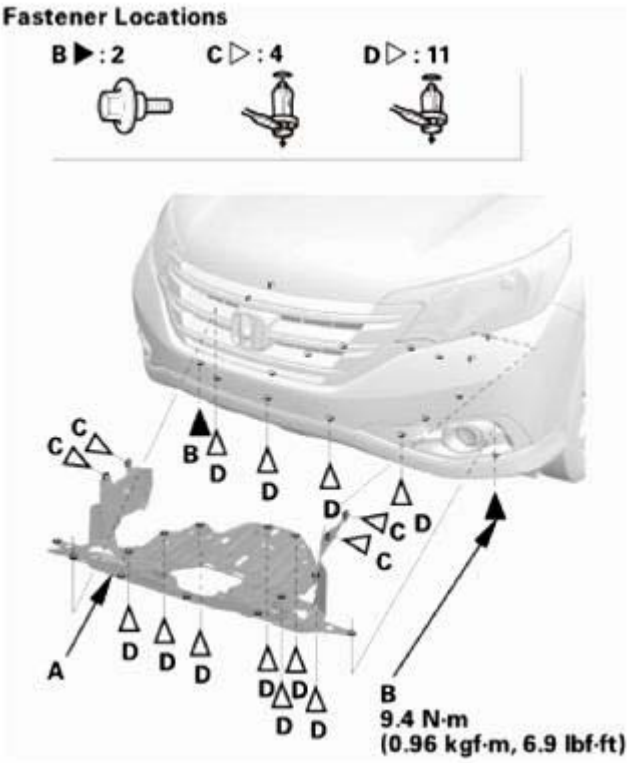

Fig. 362: Identifying Front Splash Shield, Bolts And Clips With Torque Specifications
Courtesy of AMERICAN HONDA MOTOR CO., INC.

20. Front Stabilizer Link Stabilizer Bar Side - Reconnection, Both Side
    1. Connect both sides of the stabilizer link (A) to the front stabilizer bar (B).
    2. Install the flange nuts (C), and tighten them to the specified torque while holding the respective joint pin (D) with a hex wrench (E).

GETtheMANUALS.org

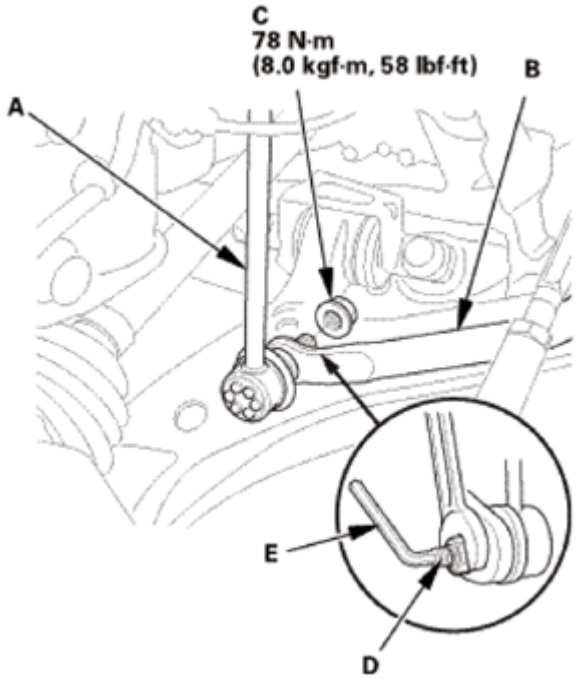

Fig. 363: Installing Front Stabilizer Link Stabilizer Bar Side
Courtesy of AMERICAN HONDA MOTOR CO., INC.

21. Tie-Rod End Ball Joint - Connection, Both Side
    1. Wipe off any grease contamination from the ball joint tapered section and threads.
    2. Connect the tie-rod ball joint (A) to the knuckle.
    3. Install the nut (B) and tighten to the specified torque.
    4. Install a new cotter pin (C).

NOTE: **Bend the cotter pin as shown.**

GETtheMANUALS.org

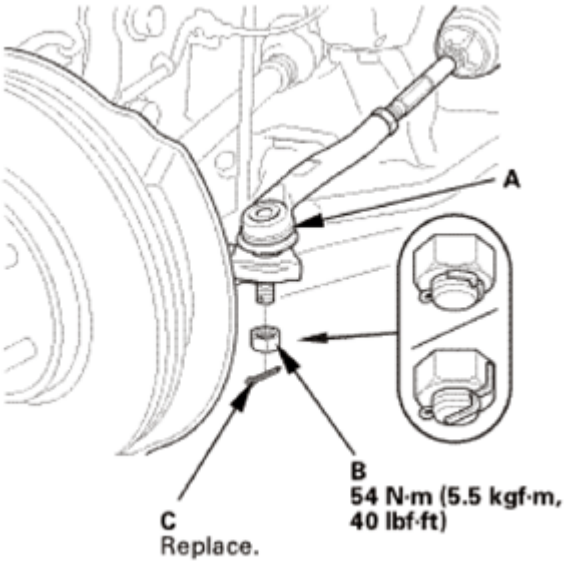

Fig. 364: Identifying Tie-Rod Ball Joint, Cotter Pin And Nut With Torque Specifications
Courtesy of AMERICAN HONDA MOTOR CO., INC.

22. Steering Column Lower Slide Shaft - Release
    1. Cut the wire (A).

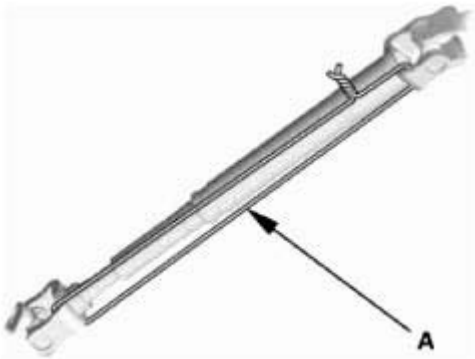

Fig. 365: Identifying Steering Column Lower Slide Shaft And Wire
Courtesy of AMERICAN HONDA MOTOR CO., INC.

23. Steering Wheel Release
    1. Remove the steering wheel holder tool (A).

GETtheMANUALS.org

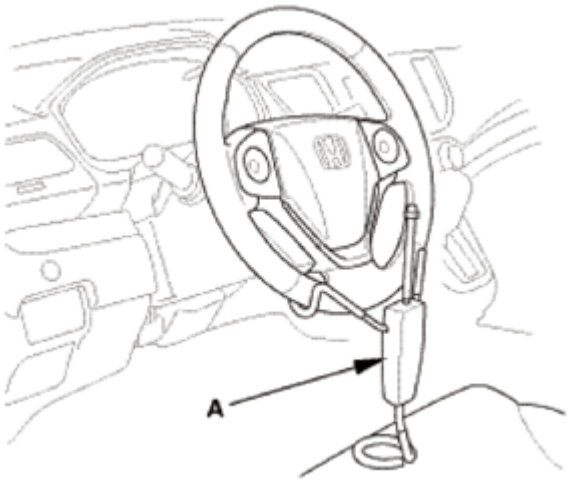

Fig. 366: Identifying Steering Wheel Holder Tool
Courtesy of AMERICAN HONDA MOTOR CO., INC.

24. Steering Joint - Reconnection
    1. Place the rack in the straight ahead driving position.
    2. Slip the lower end of the steering joint (A) onto the pinion shaft (B).

NOTE: Position the steering column by aligning the gap (C) within the angle.

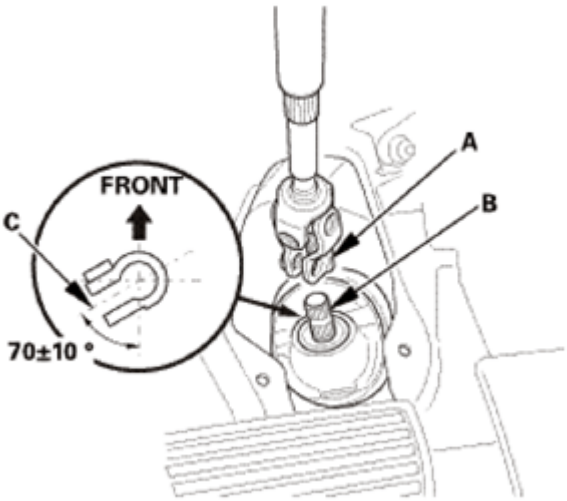

Fig. 367: Installing Lower End Of Steering Joint Onto Pinion Shaft
Courtesy of AMERICAN HONDA MOTOR CO., INC.

    3. Align the bolt hole (A) on the steering joint with the groove (B) around the pinion shaft.
    4. Loosely install the steering joint bolt (C).
    5. Be sure that the joint bolt is securely in the groove in the pinion shaft.
    6. Pull on the steering joint to make sure that the steering joint is fully seated.

GETtheMANUALS.org

7. Tighten the steering joint bolt to the specified torque.

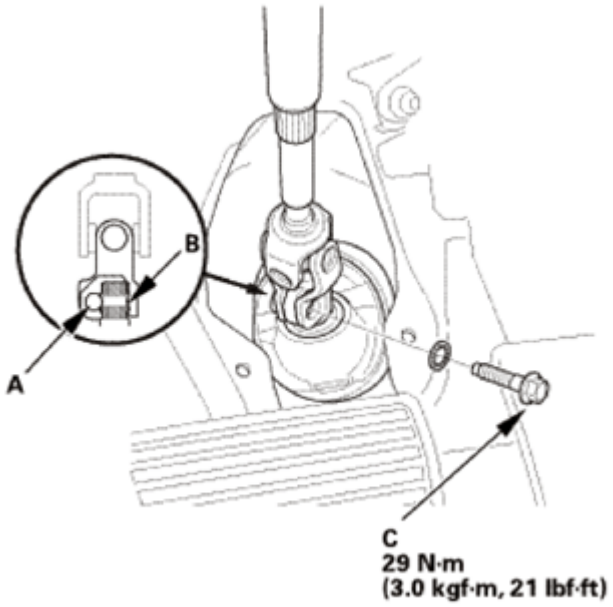

Fig. 368: Identifying Pinion Shaft Groove, Steering Joint Bolt And Bolt Hole With Torque Specification
Courtesy of AMERICAN HONDA MOTOR CO., INC.

25. Steering Joint Cover
    1. Install the steering joint cover (A).

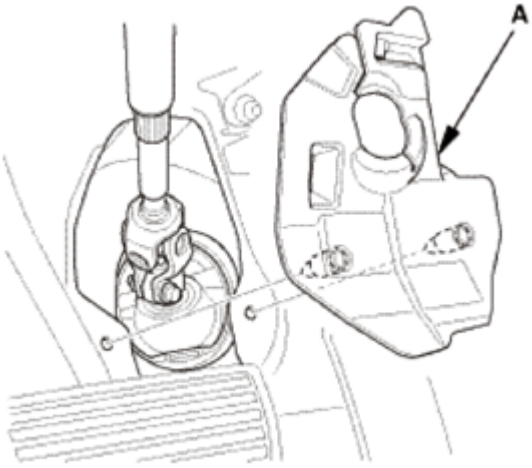

Fig. 369: Identifying Steering Joint Cover
Courtesy of AMERICAN HONDA MOTOR CO., INC.

26. Front Wheel - Both Side
    1. Install both front wheels.

GETtheMANUALS.org

NOTE: **Before installing the wheel, clean the mating surfaces between the brake disc and the inside of the wheel.**

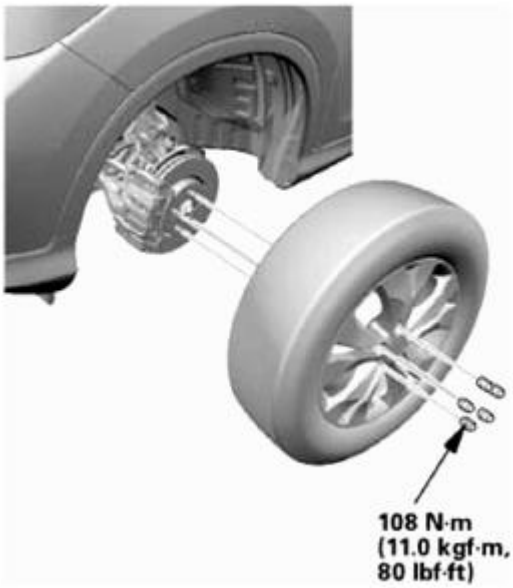

Fig. 370: Identifying Front Wheel With Torque Specifications
Courtesy of AMERICAN HONDA MOTOR CO., INC.

27. Battery Terminal (SRS) - Reconnection

NOTE: **If the battery performance is abnormal, test the battery.**

1. Clean the battery terminals.
2. Connect the positive cable (A) to the battery.

NOTE: **Always connect the positive side first.**

3. Connect the negative cable (B) to the battery.
4. Apply multipurpose grease to the terminals to prevent corrosion.

GETtheMANUALS.org

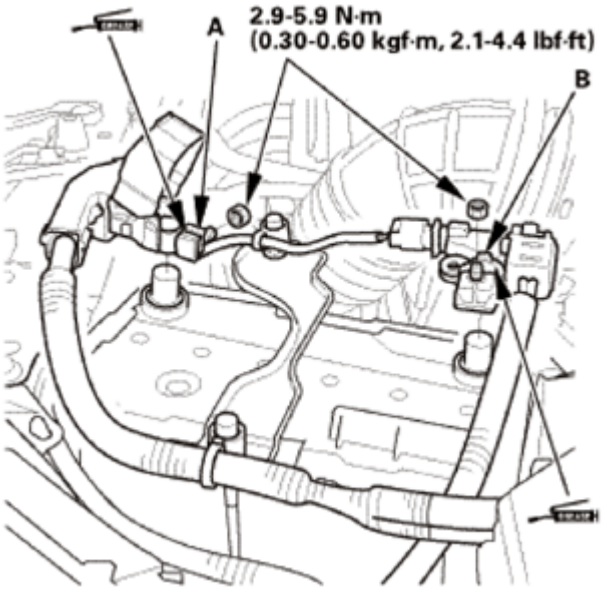

Fig. 371: Identifying Battery Positive And Negative Cable With Torque Specifications
Courtesy of AMERICAN HONDA MOTOR CO., INC.

28. Steering Gearbox - After Install Symptom Check
    1. With the tires raised off the ground, check for the following symptoms by turning the steering wheel fully to the right and left several times.

Symptom	Probable cause
Rubbing sound coming from the lower steering column area.	Steering column joint is contacting the cover.
Grating sound from the lower steering column area, or a rough feeling during steering.	Poor engagement of the pinion shaft serrations.
Noise from around the steering wheel during steering.	Poor engagement of the SRS cable reel with the steering wheel, or a damaged cable reel.

29. Steering After Install - Check
    1. After installation, check these items:
        - Start the engine, allow it to idle, and turn the steering wheel from lock to lock several times.
        - Check that the EPS indicator does not come on.
        - Check the steering wheel spoke angle. If steering spoke angles to the right and left are not equal (steering wheel and rack are not centered), correct the engagement of the joint/pinion shaft splines.
30. Pre-Alignment Checks

    For proper inspection and adjustment of the wheel alignment, do these checks:

    1. Release the parking brake to avoid an incorrect measurement.
    2. Make sure the suspension is not modified.

GETtheMANUALS.org

3. Make sure the fuel tank is full, and that the spare tire, the jack, and the tools are in place on the vehicle.
4. Check the tire size and tire pressure according to tire information.
5. Set the steering column to the middle tilt position and telescopic position.

31. Caster - Inspection

Use commercially available computerized four wheel alignment equipment to measure wheel alignment (caster, camber, toe, and turning angle). Follow the equipment manufacturer's instructions.

1. Check the caster angle.

   Caster angle:

   2WD:

   With 16 inch wheel: 2 ° 44 '±30 '

   Without 16 inch wheel: 2 ° 50 '±30 '

   AWD/4WD:

   With 16 inch wheel: 2 ° 38 '±30 '

   Without 16 inch wheel: 2 ° 44 '±30 '

   - If the measurement is within specifications, measure the front camber angle.
   - If the measurement is not within specifications, check for bent or damaged suspension components.

32. Camber - Inspection

Use commercially available computerized four wheel alignment equipment to measure wheel alignment (caster, camber, toe, and turning angle). Follow the equipment manufacturer's instructions.

1. Check the camber angle.

   Camber angle:

   2WD:

   Front:

   With 16 inch wheel: -0 ° 01 '±1 ° 00 '

   Without 16 inch wheel: -0 ° 10 '±1 ° 00 '

   (Maximum difference between the front right and left side: 1 °00 ')

GETtheMANUALS.org

Rear:

With 16 inch wheel: -1 ° 06 '±45 '

Without 16 inch wheel: -1 ° 12 '±45 '

(Maximum difference between the front right and left side: 0 °45 ')

AWD/4WD:

Front:

With 16 inch wheel: -0 ° 08 '±1 ° 00 '

Without 16 inch wheel: 0 ° 00 '±1 ° 00 '

(Maximum difference between the front right and left side: 1 °00 ')

Rear:

With 16 inch wheel: -0 ° 50 '±45 '

Without 16 inch wheel: -1 ° 00 '±45 '

(Maximum difference between the front right and left side: 0 °45 ')

- If the measurement is within specification, measure the toe-in.
- If the measurement for the front camber is not within the specification, go to front camber adjustment.
- If the measurement for the rear camber is not within the specification, check for bent or damaged suspension components.

33. Front Toe - Inspection

Use commercially available computerized four wheel alignment equipment to measure wheel alignment (caster, camber, toe, and turning angle). Follow the equipment manufacturer's instructions.

1. Set the steering column to the middle tilt position and telescopic positions.
2. Center the steering wheel spokes, and install a steering wheel holder tool.
3. Check the toe with the wheels pointed straight ahead.

Front toe-in: 0±2 mm (0±0.08 in)

- If adjustment is required, go to the front toe adjustment.
- If no adjustment is required, remove the alignment equipment.

34. Turning Angle - Inspection

GETtheMANUALS.org

Use commercially available computerized four wheel alignment equipment to measure wheel alignment (caster, camber, toe, and turning angle). Follow the equipment manufacturer's instructions.

1. Turn the wheel right and left while applying the brake, and measure the turning angle of both wheels.

   Turning angle:

   2WD:

   Inward:

   With 16 inch wheel: 36 ° 29 '±2 °

   Without 16 inch wheel: 36 ° 13 '±2 °

   Outward (reference):

   With 16 inch wheel: 31 ° 13 '

   Without 16 inch wheel: 31 ° 02 '

   AWD/4WD:

   Inward:

   With 16 inch wheel: 36 ° 48 '±2 °

   Without 16 inch wheel: 36 ° 30 '±2 °

   Outward (reference):

   With 16 inch wheel: 31 ° 18 '

   Without 16 inch wheel: 31 ° 12 '

2. If the measurement is not within the specifications, even up both sides of the tie-rod threaded section length while adjusting the front toe.
3. If it is correct, but the turning angle is not within the specifications, check for bent or damaged suspension components.

GETtheMANUALS.org

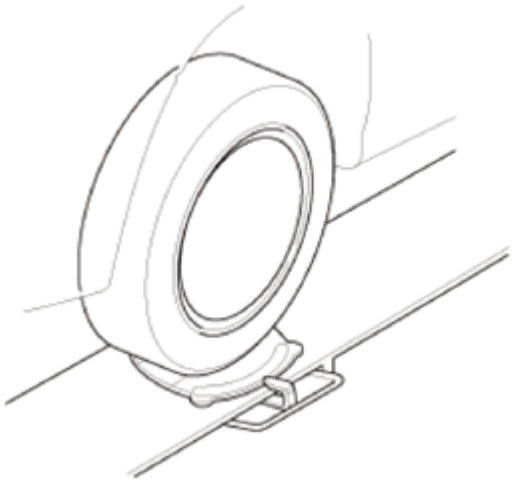

Fig. 372: Measuring Turning Angle Of Wheel
Courtesy of AMERICAN HONDA MOTOR CO., INC.

35. HDS DLC - Connection
    1. Connect the HDS to the data link connector (DLC) (A) located under the driver's side of the dashboard.
    2. Turn the ignition switch to ON (II).
    3. Make sure the HDS communicates with the vehicle. If it does not communicate, go to the DLC circuit troubleshooting.

Fig. 373: Identifying Data Link Connector
Courtesy of AMERICAN HONDA MOTOR CO., INC.

36. VSA Sensor Neutral Position - Memorization
    1. Park the vehicle on a flat and level surface, with the steering wheel in the straight ahead position.
    2. Select VSA ADJUSTMENT, then select ALL SENSORS with the HDS, and follow the screen prompts.

GETtheMANUALS.org

NOTE: **See the HDS Help menu for specific instructions.**

37. Steering Angle Sensor Neutral Position - Clear
    1. Select EPS ADJUSTMENT, then select EPS STEERING ANGLE SENSOR VALUE CLEAR and follow the screen prompts on the HDS.

NOTE: **See the HDS Help menu for specific instructions.**

STEERING RACK GUIDE ADJUSTMENT

SPECIAL TOOL DESCRIPTION

Image	Description/Tool Number
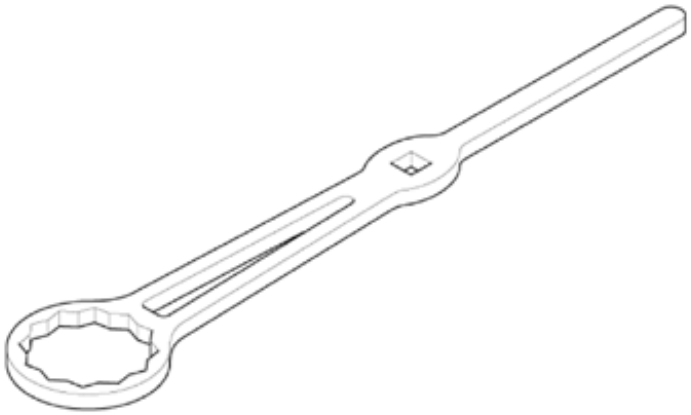	Locknut Wrench, 40 mm 07AAA-TL2A100

REMOVAL

1. Vehicle Lift
    1. Raise the vehicle on a lift, and make sure it is securely supported.
2. Front Floor Undercover
    1. Remove the bolts (A) and the clips (B, C) securing the front floor undercover (D), then remove the front floor undercover.

GETtheMANUALS.org

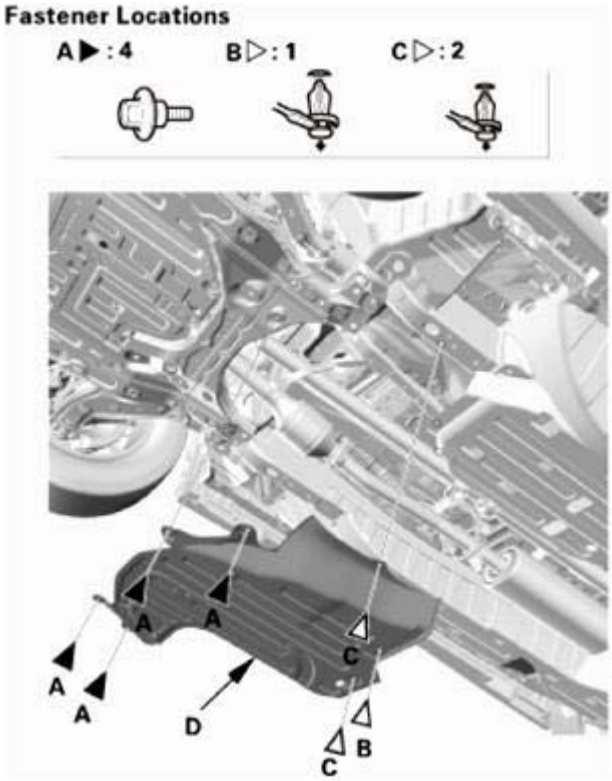

Fig. 374: Identifying Front Floor Undercover, Bolts And Clips
Courtesy of AMERICAN HONDA MOTOR CO., INC.

ADJUSTMENT

1. Steering Rack Guide Adjustment
    1. Set the front wheels in the straight ahead position.
    2. Loosen the locknut (A) with the locknut wrench.
    3. Remove the rack guide screw (B).

GETtheMANUALS.org

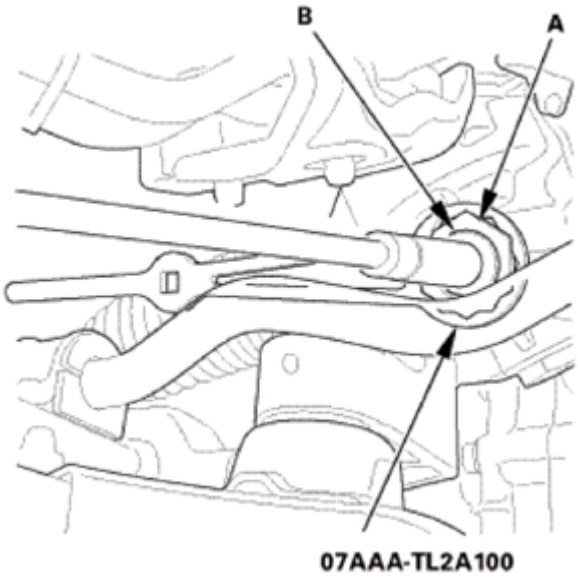

Fig. 375: Removing Rack Guide Screw And Locknut Using Tool
Courtesy of AMERICAN HONDA MOTOR CO., INC.

4. Remove the old sealant from the rack guide screw (A).
5. Apply new sealant (Three Bond 1215 or Loctite 5699) to the middle of the threads (B).

NOTE: **If the rack guide screw is not installed within five minutes after applying the sealant, remove the sealant and residue, and reapply new sealant.**

6. Loosely install the rack guide screw on the steering gearbox.

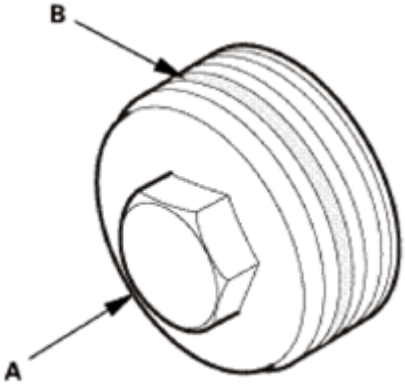

Fig. 376: Identifying Rack Guide Screw Sealant Applying Area
Courtesy of AMERICAN HONDA MOTOR CO., INC.

7. Tighten the rack guide screw (A) to 25 N.m (2.5 kgf.m, 18 lbf.ft), then loosen it.
8. Retighten the rack guide screw to 3.9 N.m (0.40 kgf.m, 2.9 lbf.ft), then back it off to the specified angle.

GETtheMANUALS.org

Specified return angle: 12 1 °

9. Hold the rack guide screw stationary with a wrench, and tighten the locknut (B) by hand until it's fully seated.
10. Install the locknut wrench on the locknut, and hold the rack guide screw stationary with a wrench. Tighten the locknut to the specified torque.
11. Check for unusual steering effort through the complete turning range.

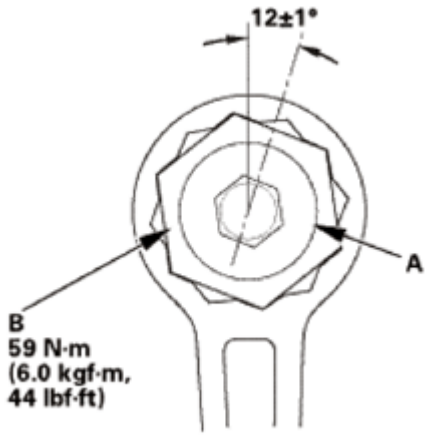

Fig. 377: Identifying Locknut Tightening Angle
Courtesy of AMERICAN HONDA MOTOR CO., INC.

INSTALLATION

1. Front Floor Undercover
    1. Install the front floor undercover (A), then install the bolts (B) and the clips (C, D). Make sure the clips snap into place securely.

GETtheMANUALS.org

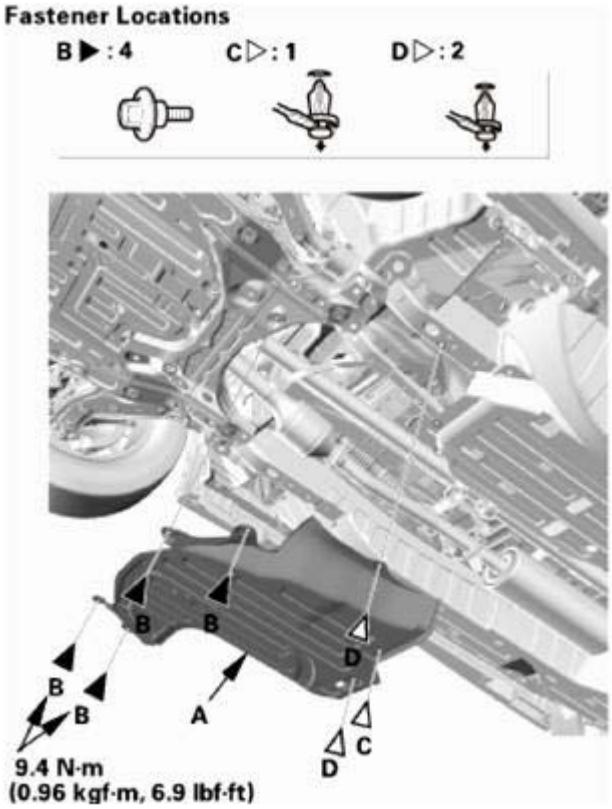

Fig. 378: Identifying Front Floor Undercover, Bolts And Clips With Torque Specifications
Courtesy of AMERICAN HONDA MOTOR CO., INC.

2. Steering Wheel Rotational Play Check
    1. Set the front wheels in the straight ahead position.
    2. Measure how far you can turn the steering wheel left and right without moving the front wheels.
        - If the play is within the limit, the steering gearbox and the steering linkage are OK.
        - If the play exceeds the limit, adjust the rack guide. If the play is still excessive after rack guide adjustment, inspect the steering linkage and the steering gearbox.

        Rotational play: 0-10 mm (0-0.39 in)

GETtheMANUALS.org

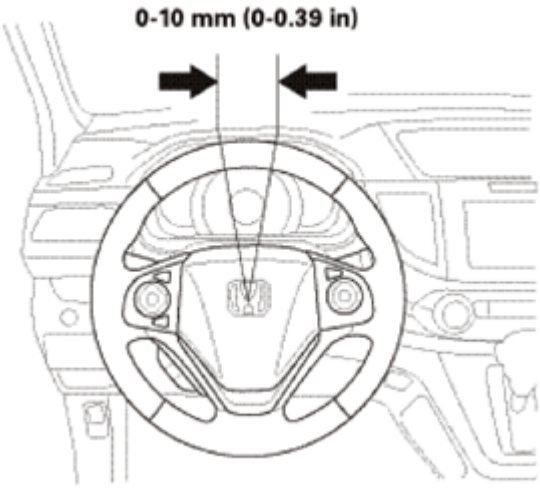

Fig. 379: Identifying Steering Wheel Rotational Play
Courtesy of AMERICAN HONDA MOTOR CO., INC.

3. Power Steering Assist Check

NOTE: **This test should be done with original equipment tires and wheels at the correct tire pressure.**

1. Start the engine, and let it idle.
2. Attach a commercially available spring scale (A) to the steering wheel. With the engine idling and the vehicle on a clean, dry floor, pull the scale as shown, and read it as soon as the tires begin to turn.

   Initial turning load: 34 N (3.5 kgf, 7.6 lbf)

3. If the scale reads no more than the specification, the power assist is OK. If it reads more, check these items:
   - Steering linkage
   - Rack guide adjustment
   - EPS system

GETtheMANUALS.org

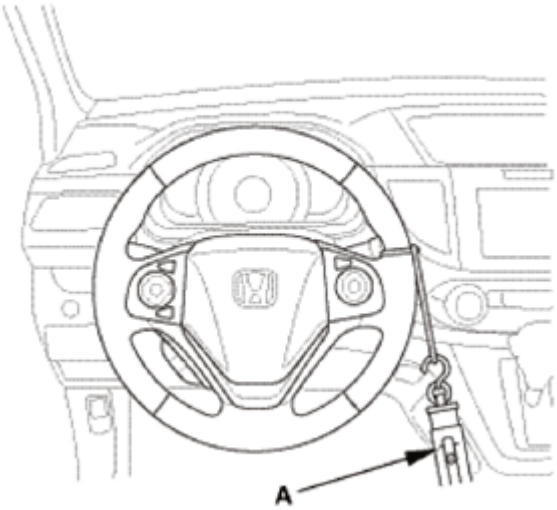

Fig. 380: Checking Power Steering Initial Turning Load Using Tool
Courtesy of AMERICAN HONDA MOTOR CO., INC.

STEERING TIE-ROD END BALL JOINT BOOT REPLACEMENT

SPECIAL TOOL DESCRIPTION

Image	Description/Tool Number
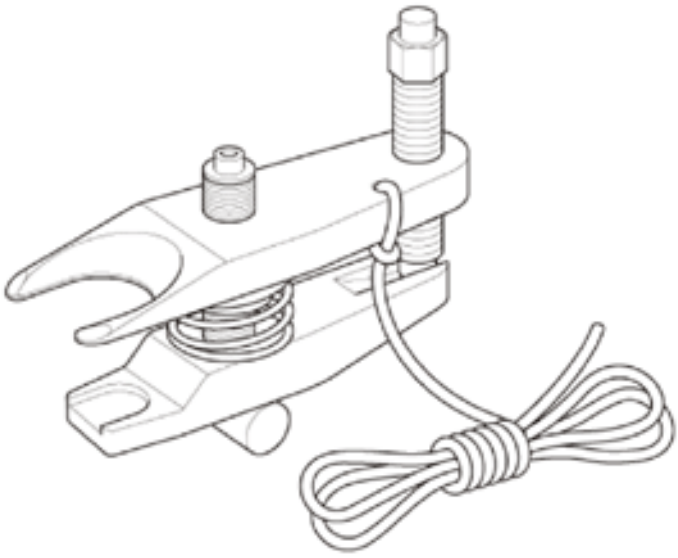	Ball Joint Remover, 28 mm 07MAC-SL00202

GETtheMANUALS.org

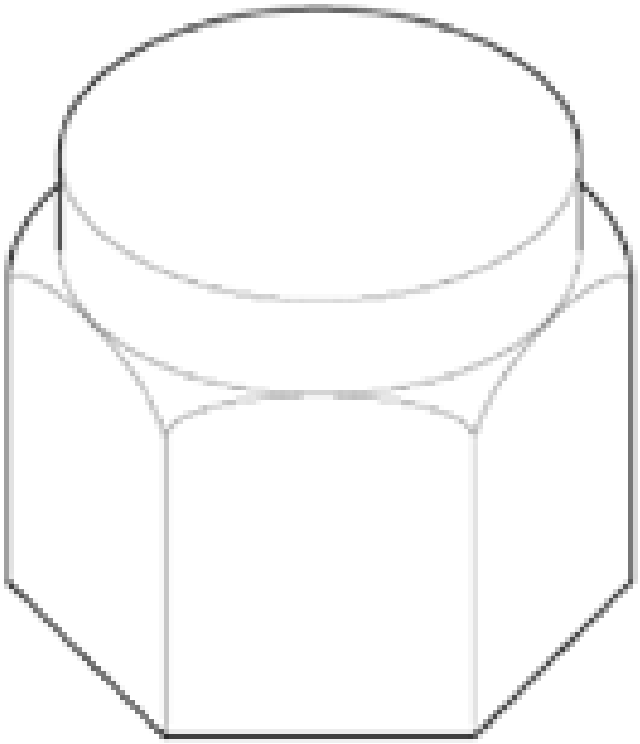	Ball Joint Thread Protector, 12 mm 07AAF-SDAA100
	Bearing Driver Attachment, 42 mm 07QAD-P0A0100

GETtheMANUALS.org

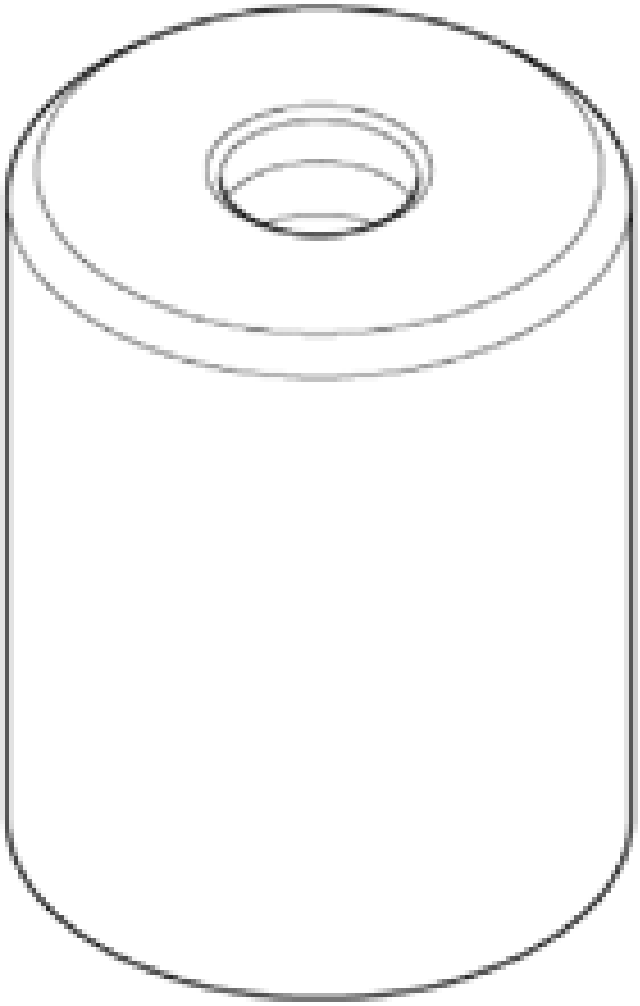

REMOVAL

1. Vehicle Lift
    1. Raise the vehicle on a lift, and make sure it is securely supported.
2. Front Wheel
    1. Remove the front wheel.

GETtheMANUALS.org

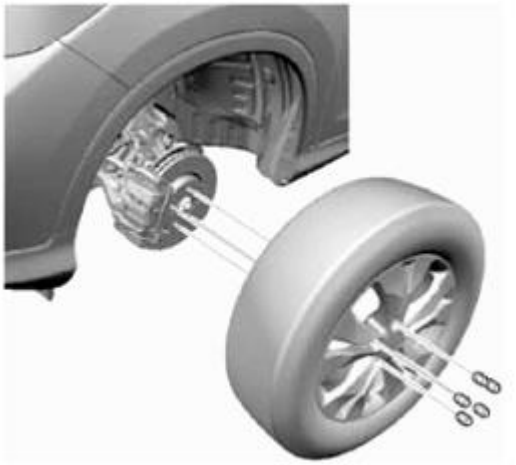

Fig. 381: Identifying Front Wheel
Courtesy of AMERICAN HONDA MOTOR CO., INC.

3. Ball Joint - Removal

NOTE: **Always use a ball joint remover to disconnect a ball joint. Do not strike the housing or any other part of the ball joint connection to disconnect it.**

1. Install a hex nut (A) or the ball joint thread protector.

NOTE: **When using a hex nut, make sure the nut is flush with the ball joint pin end to prevent damage to the threaded end of the ball joint pin.**

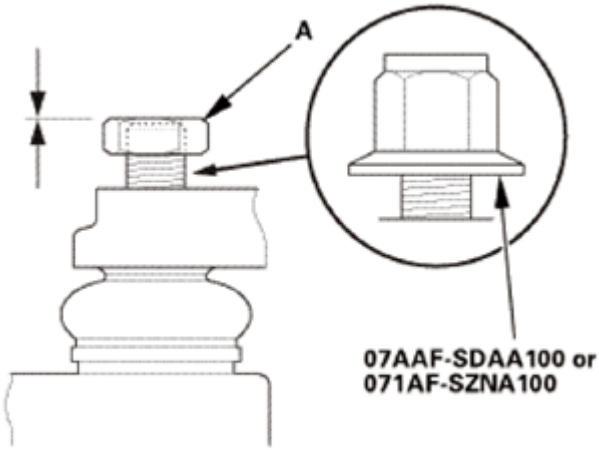

Fig. 382: Identifying Hex Nut Or Ball Joint Thread Protector
Courtesy of AMERICAN HONDA MOTOR CO., INC.

2. Apply grease to the ball joint remover on the areas shown (A).

GETtheMANUALS.org

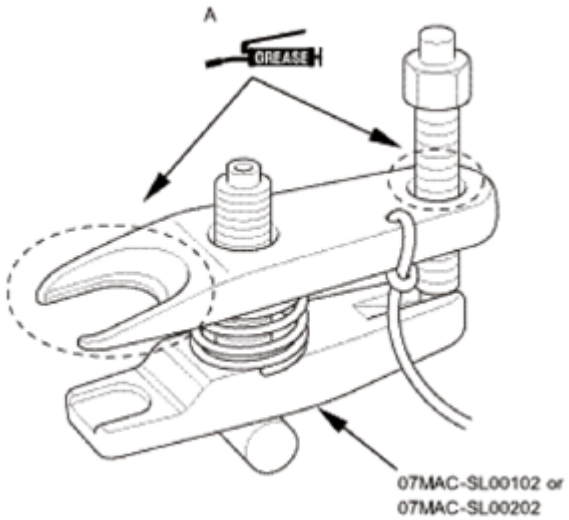

Fig. 383: Identifying Grease Applying Areas On Ball Joint Remover
Courtesy of AMERICAN HONDA MOTOR CO., INC.

3. Install the ball joint remover as shown.

NOTE:

- **Fasten the safety tie (A) securely to a suspension arm or the subframe (B).**
- **Making sure not to damage the ball joint boot.**

4. Tighten the pressure bolt until the ball joint pin pops loose from the ball joint connecting hole.

NOTE: **Do not use pneumatic or electric tools on the pressure bolt.**

5. Remove the ball joint remover.
6. Remove the hex nut or the ball joint thread protector.
7. Pull the ball joint out of the ball joint connecting hole.

GETtheMANUALS.org

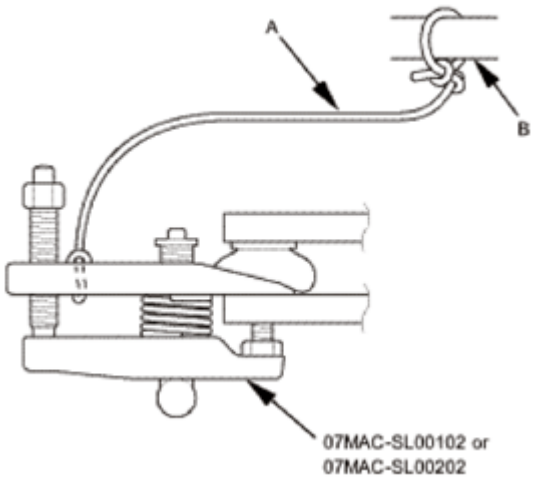

Fig. 384: Fastening Safety Tie On Suspension Arm Or Subframe
Courtesy of AMERICAN HONDA MOTOR CO., INC.

4. Tie-Rod End Ball Joint - Disconnection
    1. Remove the cotter pin (A).
    2. Remove the nut (B).
    3. Disconnect the tie-rod end ball joint.

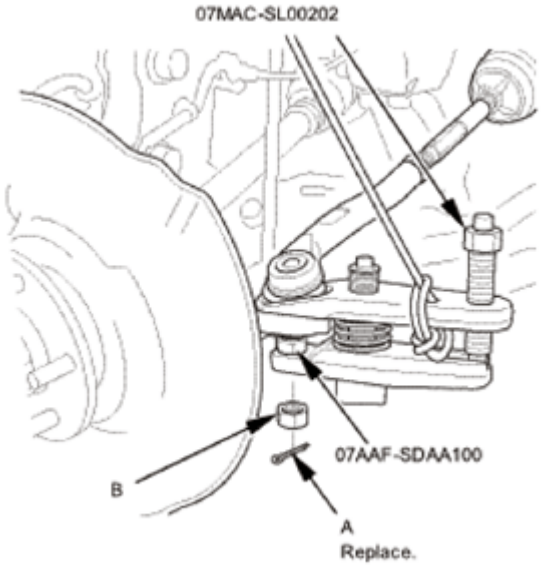

Fig. 385: Identifying Cotter Pin And Nut
Courtesy of AMERICAN HONDA MOTOR CO., INC.

5. Tie-Rod End
    1. Loosen the locknut (A).
    2. Remove the tie-rod end (B), then remove the locknut.

GETtheMANUALS.org

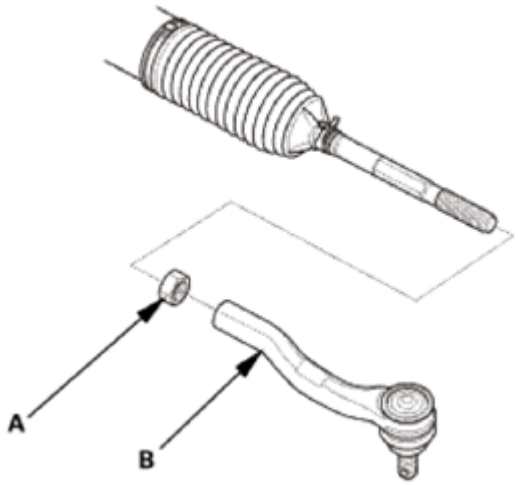

Fig. 386: Identifying Tie-Rod End And Locknut
Courtesy of AMERICAN HONDA MOTOR CO., INC.

6. Tie-Rod End Ball Joint Boot
    1. Remove the ball joint boot (A) from the tie-rod end, and wipe the old grease off the ball pin.

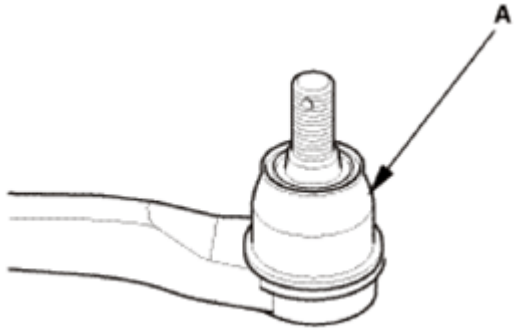

Fig. 387: Identifying Ball Joint Boot
Courtesy of AMERICAN HONDA MOTOR CO., INC.

INSTALLATION

1. Tie-Rod End Ball Joint Boot
    1. Pack the lower area of the ball pin (A) with fresh multipurpose grease.
    2. Pack the interior of the new ball joint boot (B) and the lip (C) with fresh multipurpose grease.

    Note these items when installing new grease:

    - Keep grease off the boot mounting area (D) and the tapered section (E) of the ball pin.
    - Do not allow dust, dirt, or other foreign materials to enter the boot.

GETtheMANUALS.org

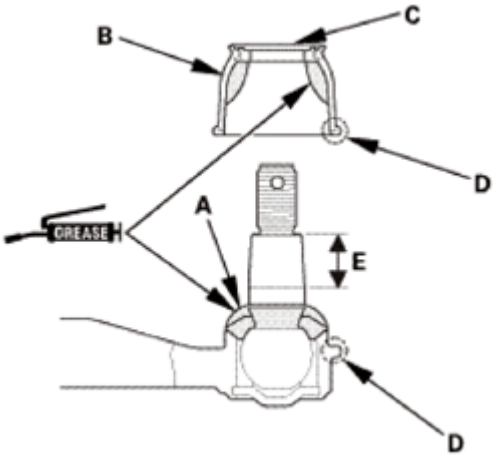

Fig. 388: Identifying Boot Mounting Grease Applying Area
Courtesy of AMERICAN HONDA MOTOR CO., INC.

3. Install the ball joint boot (A) using the bearing driver attachment.
4. The ball joint boot must not have a gap at the ball joint boot installation sections (B).
5. After installing the ball joint boot, check the ball pin tapered section for grease contamination.
6. Wipe the ball pin tapered section if necessary.

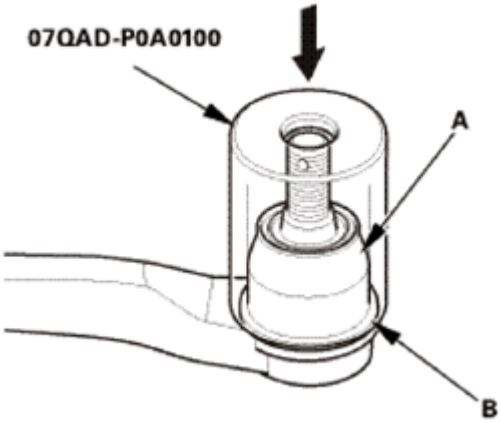

Fig. 389: Installing Ball Joint Boot
Courtesy of AMERICAN HONDA MOTOR CO., INC.

2. Tie-Rod End
    1. Install the locknut (A).
    2. Install the tie-rod end (B), then tighten the locknut.

GETtheMANUALS.org

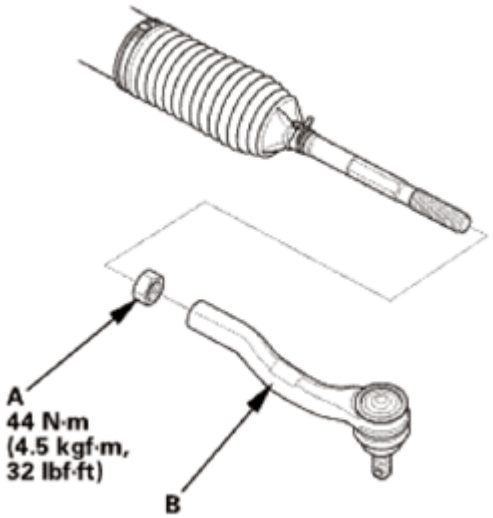

Fig. 390: Identifying Tie-Rod End And Locknut With Torque Specifications
Courtesy of AMERICAN HONDA MOTOR CO., INC.

3. Tie-Rod End Ball Joint - Reconnection
    1. Connect the tie-rod end ball joint.
    2. Install the nut (A).
    3. Install the cotter pin (B) as shown.

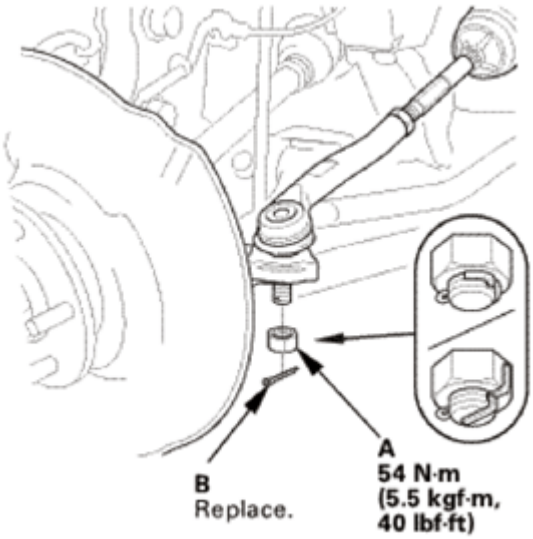

Fig. 391: Identifying Cotter Pin And Nut With Torque Specifications
Courtesy of AMERICAN HONDA MOTOR CO., INC.

4. Front Wheel
    1. Install the front wheel.

NOTE: Before installing the wheel, clean the mating surfaces between the

GETtheMANUALS.org

brake disc and the inside of the wheel.

Fig. 392: Identifying Front Wheel With Torque Specifications
Courtesy of AMERICAN HONDA MOTOR CO., INC.

5. Pre-Alignment Checks

   For proper inspection and adjustment of the wheel alignment, do these checks:

   1. Release the parking brake to avoid an incorrect measurement.
   2. Make sure the suspension is not modified.
   3. Make sure the fuel tank is full, and that the spare tire, the jack, and the tools are in place on the vehicle.
   4. Check the tire size and tire pressure according to tire information.
   5. Set the steering column to the middle tilt position and telescopic position.
6. Front Toe - Inspection

   Use commercially available computerized four wheel alignment equipment to measure wheel alignment (caster, camber, toe, and turning angle). Follow the equipment manufacturer's instructions.

   1. Set the steering column to the middle tilt position and telescopic positions.
   2. Center the steering wheel spokes, and install a steering wheel holder tool.
   3. Check the toe with the wheels pointed straight ahead.

      Front toe-in: 0±2 mm (0±0.08 in)

      - If adjustment is required, go to the front toe adjustment.
      - If no adjustment is required, remove the alignment equipment.

GETtheMANUALS.org

7. HDS DLC - Connection
    1. Connect the HDS to the data link connector (DLC) (A) located under the driver's side of the dashboard.
    2. Turn the ignition switch to ON (II).
    3. Make sure the HDS communicates with the vehicle. If it does not communicate, go to the DLC circuit troubleshooting.

Fig. 393: Identifying Data Link Connector
Courtesy of AMERICAN HONDA MOTOR CO., INC.

8. VSA Sensor Neutral Position - Memorization
    1. Park the vehicle on a flat and level surface, with the steering wheel in the straight ahead position.
    2. Select VSA ADJUSTMENT, then select ALL SENSORS with the HDS, and follow the screen prompts.

    NOTE: See the HDS Help menu for specific instructions.

9. Steering Angle Sensor Neutral Position - Clear
    1. Select EPS ADJUSTMENT, then select EPS STEERING ANGLE SENSOR VALUE CLEAR and follow the screen prompts on the HDS.

    NOTE: See the HDS Help menu for specific instructions.

STEERING WHEEL DISASSEMBLY AND REASSEMBLY

EXPLODED VIEW

1. STEERING WHEEL EXPLODED VIEW

    EXPLODED VIEW

GETtheMANUALS.org

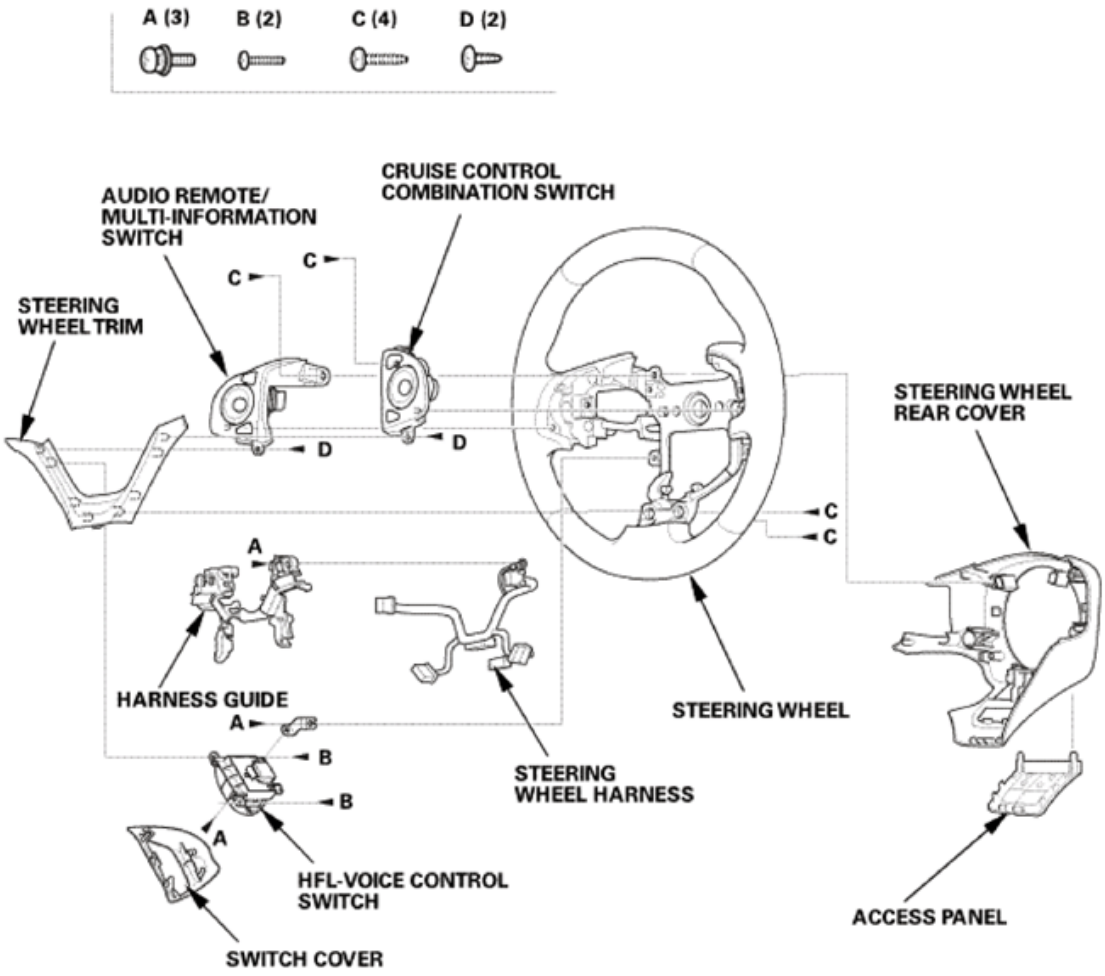

Fig. 394: Exploded View Of Steering Wheel
Courtesy of AMERICAN HONDA MOTOR CO., INC.

DISASSEMBLY

1. Steering Wheel Rear Cover
    1. Remove the steering wheel rear cover (A).

GETtheMANUALS.org

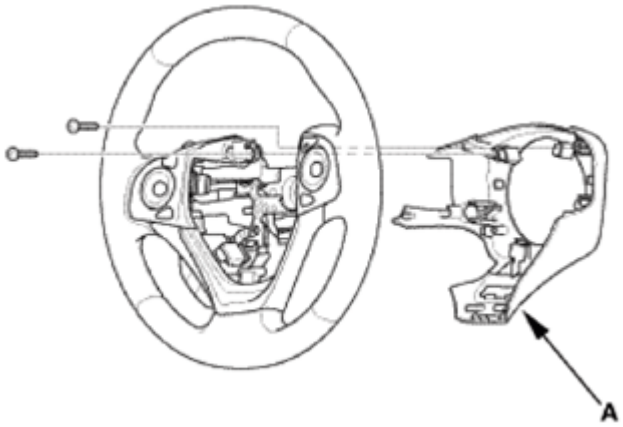

Fig. 395: Identifying Steering Wheel Rear Cover
Courtesy of AMERICAN HONDA MOTOR CO., INC.

2. HFL-Voice Control Switch
    1. Remove the switch cover (A).
    2. Remove the HFL-voice control switch (B).

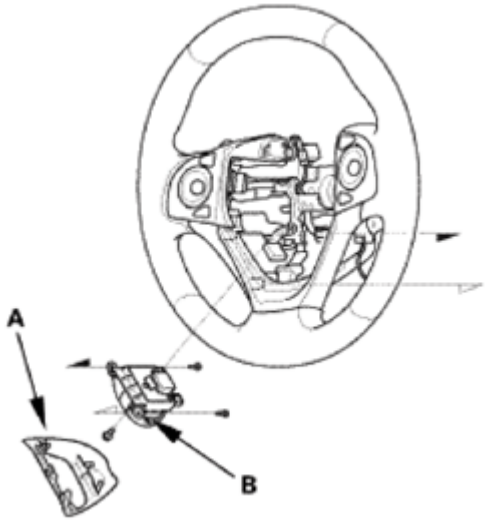

Fig. 396: Identifying Switch Cover And Voice Control Switch
Courtesy of AMERICAN HONDA MOTOR CO., INC.

3. Steering Wheel Harness
    1. Remove the cable reel subharness (A).

GETtheMANUALS.org

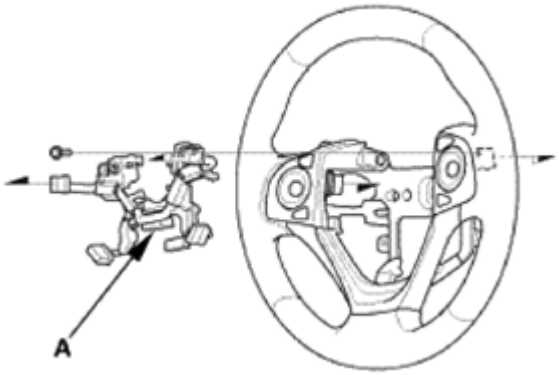

Fig. 397: Identifying Cable Reel Subharness
Courtesy of AMERICAN HONDA MOTOR CO., INC.

4. Steering Wheel Trim
    1. Remove the steering wheel trim (A).

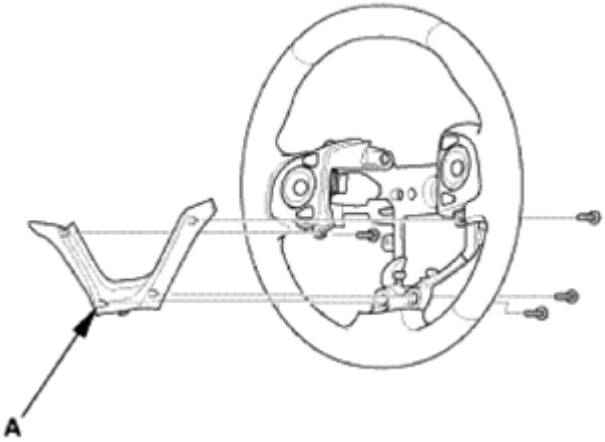

Fig. 398: Identifying Steering Wheel Trim
Courtesy of AMERICAN HONDA MOTOR CO., INC.

5. Audio Remote/Multi-Information Switch
    1. Remove the audio remote/multi-information switch (A).

GETtheMANUALS.org

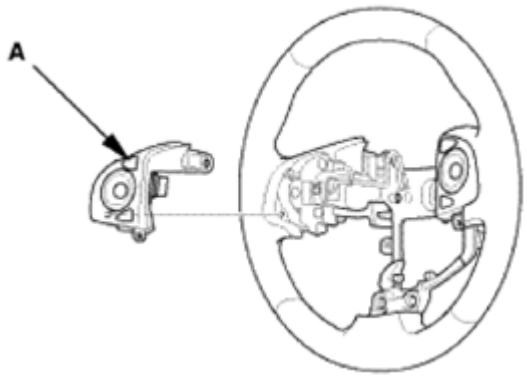

Fig. 399: Identifying Audio Remote/Multi-Information Switch
Courtesy of AMERICAN HONDA MOTOR CO., INC.

6. Cruise Control Combination Switch
    1. Remove the cruise control combination switch (A).

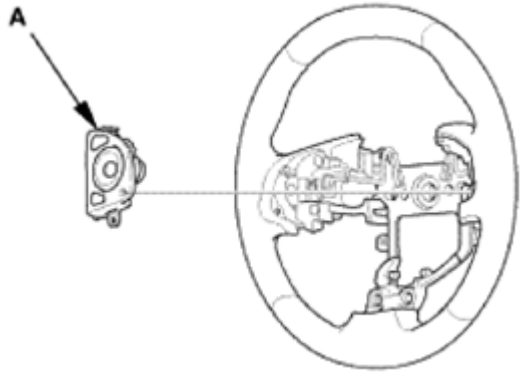

Fig. 400: Identifying Cruise Control Combination Switch
Courtesy of AMERICAN HONDA MOTOR CO., INC.

REASSEMBLY

1. Cruise Control Combination Switch
    1. Install the cruise control combination switch (A).

GETtheMANUALS.org

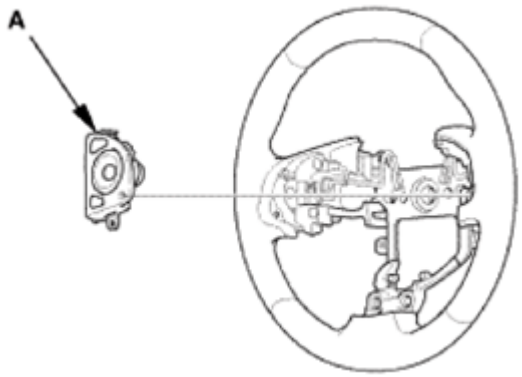

Fig. 401: Identifying Cruise Control Combination Switch
Courtesy of AMERICAN HONDA MOTOR CO., INC.

2. Audio Remote Switch
    1. Install the audio remote/multi-information switch (A).

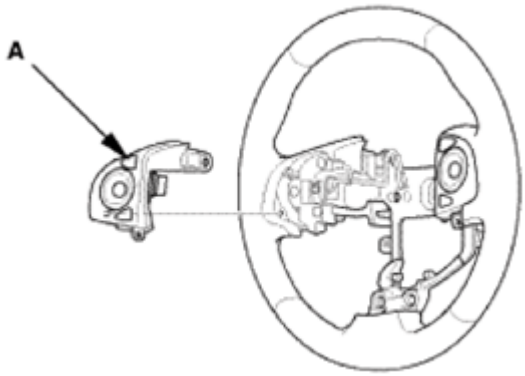

Fig. 402: Identifying Audio Remote/Multi-Information Switch
Courtesy of AMERICAN HONDA MOTOR CO., INC.

3. Steering Wheel Trim Assembly
    1. Install the steering wheel trim (A).

GETtheMANUALS.org

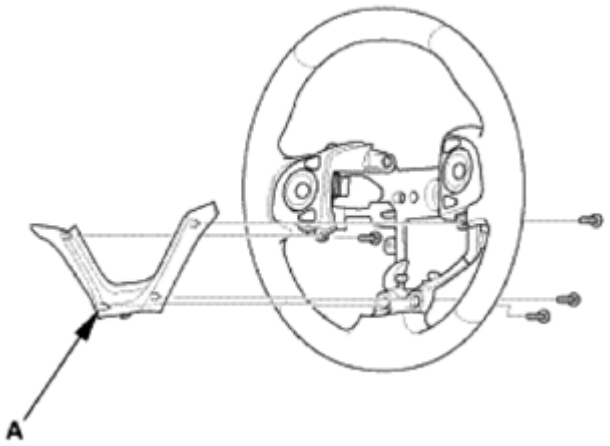

Fig. 403: Identifying Steering Wheel Trim
Courtesy of AMERICAN HONDA MOTOR CO., INC.

4. Steering Wheel Harness
    1. Install the cable reel subharness (A).

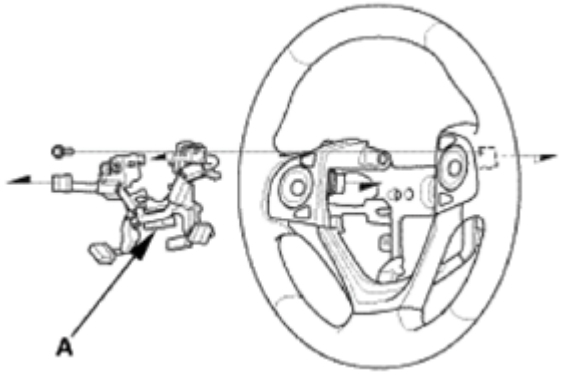

Fig. 404: Identifying Cable Reel Subharness
Courtesy of AMERICAN HONDA MOTOR CO., INC.

5. HFL-Voice Control Switch
    1. Install the HFL-voice control switch (A).
    2. Install the switch cover (B).

GETtheMANUALS.org

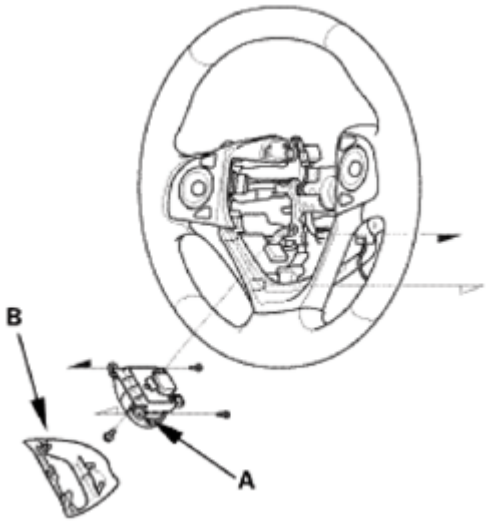

Fig. 405: Identifying Voice Control Switch And Switch Cover
Courtesy of AMERICAN HONDA MOTOR CO., INC.

6. Steering Wheel Rear Cover
    1. Install the steering wheel rear cover (A).

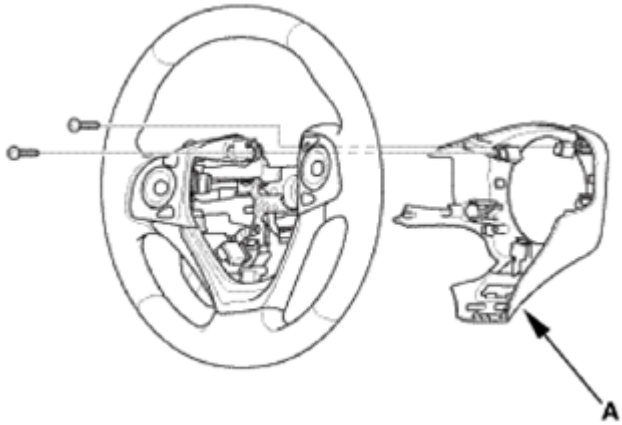

Fig. 406: Identifying Steering Wheel Rear Cover
Courtesy of AMERICAN HONDA MOTOR CO., INC.

STEERING WHEEL REMOVAL AND INSTALLATION

REMOVAL

SRS components are located in this area. Review the **SRS COMPONENT LOCATIONS** , and the **PRECAUTIONS AND PROCEDURES** before doing repairs or service.

1. Battery Terminal (SRS) - Disconnection
    1. Make sure the ignition switch is in LOCK (0).

GETtheMANUALS.org

2. Disconnect and isolate the negative cable (A) from the battery.

NOTE: Always disconnect the negative side first.

3. Disconnect the positive cable (B) from the battery.
4. Wait at least 3 minutes before starting work.

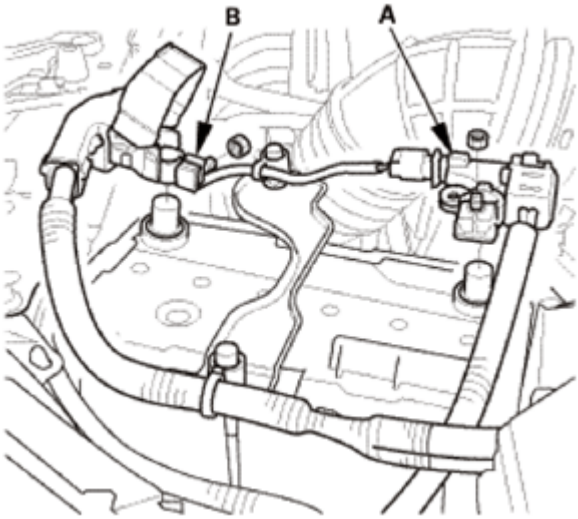

Fig. 407: Identifying Battery Positive And Negative Terminals
Courtesy of AMERICAN HONDA MOTOR CO., INC.

2. Driver's Airbag
    1. Remove the access panel (A).
    2. Disconnect the driver's airbag inflator connector (B) on the cable reel harness.
    3. Disconnect the horn switch connector (C).

GETtheMANUALS.org

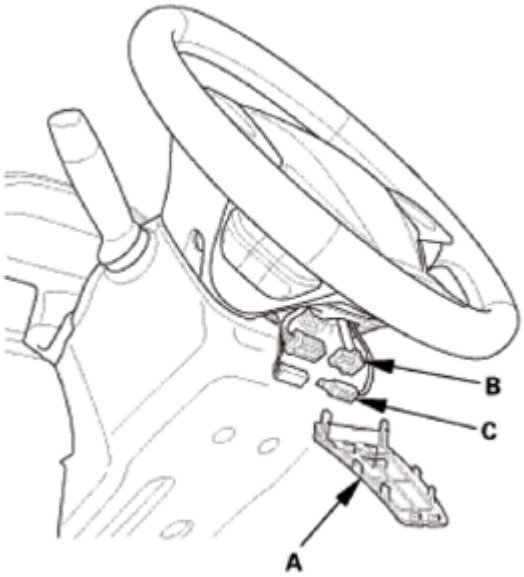

Fig. 408: Identifying Access Panel, Driver's Airbag Inflator Connector And Horn Switch Connector
Courtesy of AMERICAN HONDA MOTOR CO., INC.

4. Remove the TORX bolts using a TORX T30 bit.
5. Remove the driver's airbag (A).

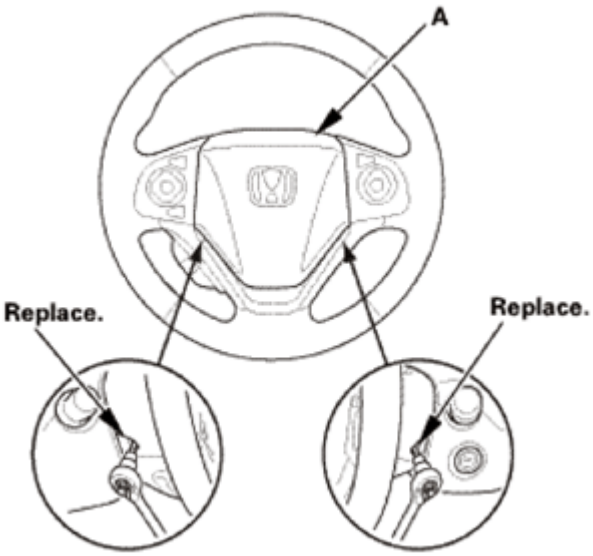

Fig. 409: Identifying Driver's Airbag And Torx Bolt
Courtesy of AMERICAN HONDA MOTOR CO., INC.

3. Steering Wheel Assembly
    1. Set the front wheels in the straight ahead position.
    2. Disconnect the connector (A).

GETtheMANUALS.org

3. Loosen the steering wheel bolt (B) three turns.

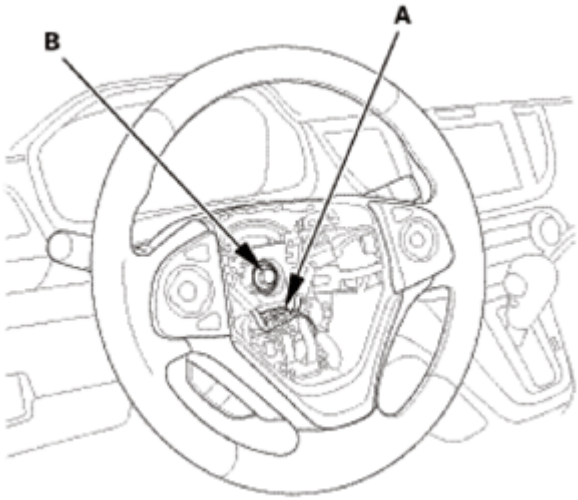

Fig. 410: Identifying Steering Wheel Connector And Bolt
Courtesy of AMERICAN HONDA MOTOR CO., INC.

4. Install a commercially available steering wheel puller (A) on the steering wheel (B).
5. Free the steering wheel from the steering column shaft by turning the pressure bolt (C) of the puller.

   Note these items when removing the steering wheel:

   - Do not tap on the steering wheel or the steering column shaft when removing the steering wheel.
   - If you thread the puller bolts (D) into the wheel hub more than five threads, the bolts will hit the cable reel and damage it. To prevent this, install a pair of jam nuts five threads up on each puller bolt.

GETtheMANUALS.org

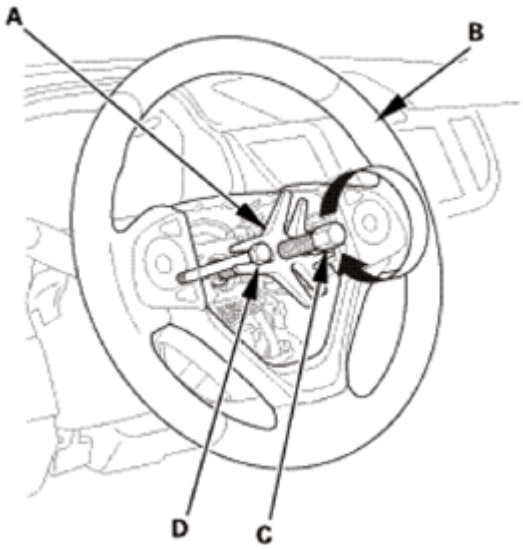

Fig. 411: Turning Steering Wheel Pressure Bolt Using Puller
Courtesy of AMERICAN HONDA MOTOR CO., INC.

6. Remove the steering wheel puller.
7. Remove the steering wheel (A) from the steering column.

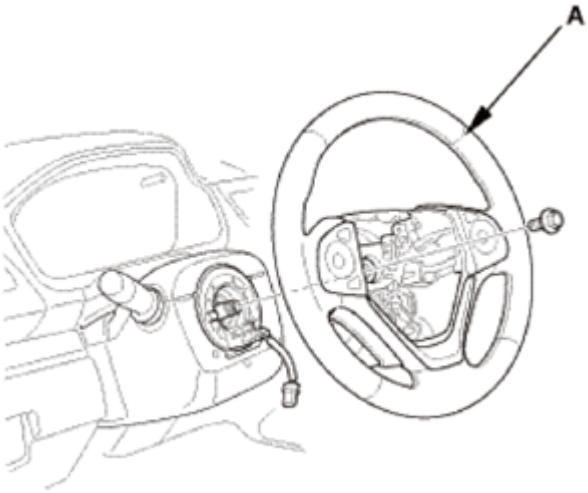

Fig. 412: Identifying Steering Wheel
Courtesy of AMERICAN HONDA MOTOR CO., INC.

INSTALLATION

SRS components are located in this area. Review the **SRS COMPONENT LOCATIONS** , and the **PRECAUTIONS AND PROCEDURES** before doing repairs or service.

1. Steering Wheel Assembly
    1. Make sure the front wheels are pointing straight ahead.

GETtheMANUALS.org

2. Center the cable reel (A). Do this by first rotating the cable reel clockwise until it stops.
3. Rotate the cable reel counterclockwise about three full turns. The arrow mark (B) on the cable reel label should point straight up.

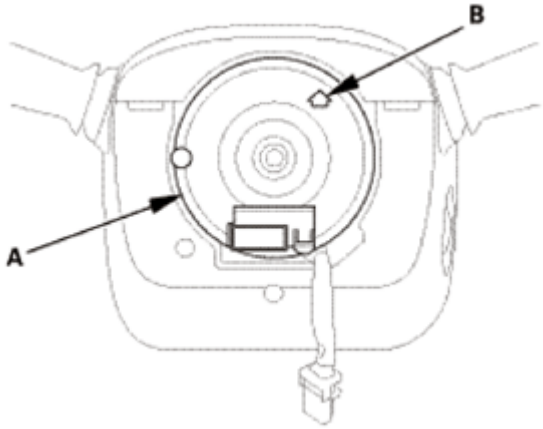

Fig. 413: Identifying Cable Reel With Arrow Mark
Courtesy of AMERICAN HONDA MOTOR CO., INC.

4. Position the steering wheel hub (A) so that it engages the pin (B) of the cable reel.
5. Install the steering wheel (C) on to the steering column shaft.

NOTE: **Do not tap on the steering wheel or the steering column shaft when installing the steering wheel.**

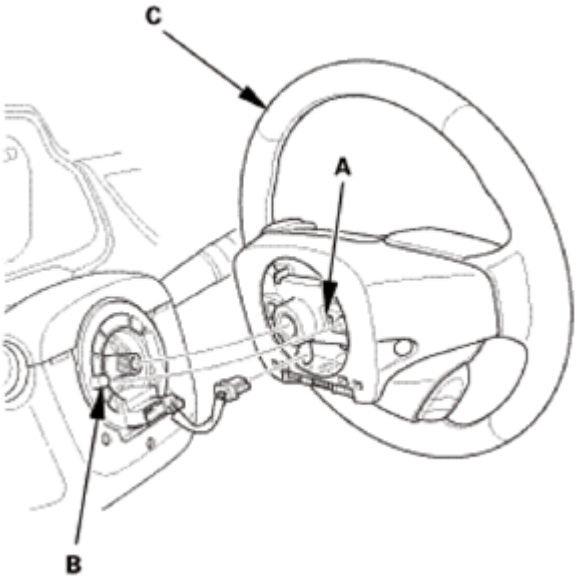

Fig. 414: Identifying Steering Wheel, Hub And Pin
Courtesy of AMERICAN HONDA MOTOR CO., INC.

GETtheMANUALS.org

6. Install the steering wheel bolt (A), and tighten it to the specified torque.
7. Connect the connector (B).
8. Make sure the wire harness is routed and fastened properly.

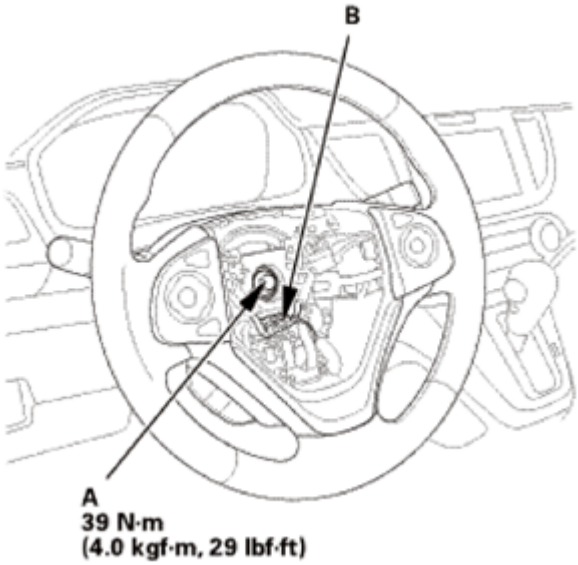

Fig. 415: Identifying Steering Wheel Bolt And Connector With Torque Specifications
Courtesy of AMERICAN HONDA MOTOR CO., INC.

2. Driver's Airbag

NOTE: If you are replacing a deployed driver's airbag, inspect the cable reel for heat damage. If there is any damage, replace the cable reel.

1. Place the driver's airbag (A) in the steering wheel.
2. Tighten the new TORX bolts using a TORX T30 bit.

NOTE: Make sure the clearance (B) between the steering wheel and the horn pad is the specified value.

GETtheMANUALS.org

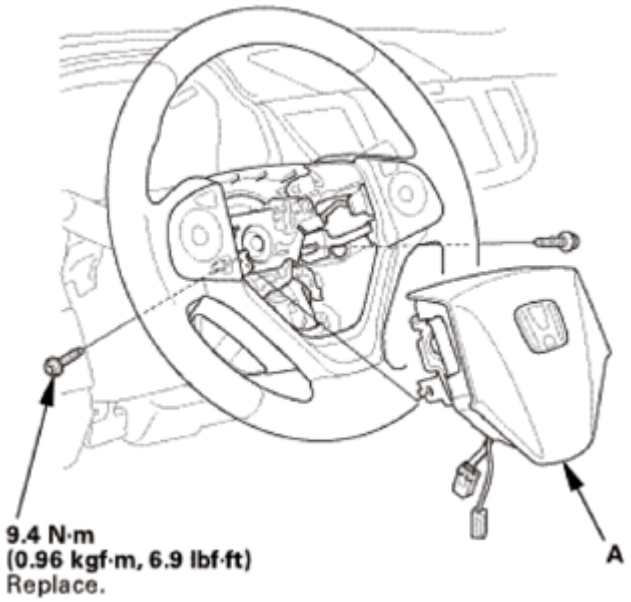

Fig. 416: Identifying Driver Airbag With Torque Specifications
Courtesy of AMERICAN HONDA MOTOR CO., INC.

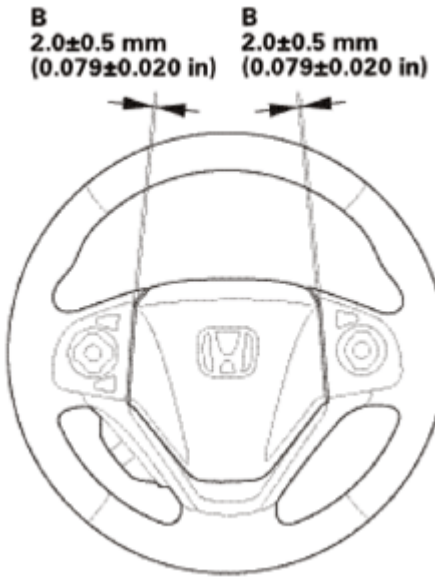

Fig. 417: Identifying Clearance Between Steering Wheel And Horn Pad
Courtesy of AMERICAN HONDA MOTOR CO., INC.

3. Connect the driver's airbag inflator connector (A) on the cable reel harness.
4. Connect the horn switch connector (B).

NOTE: **After reconnecting the negative cable to the battery, make sure the horn works properly.**

GETtheMANUALS.org

5. Install the access panel (C).

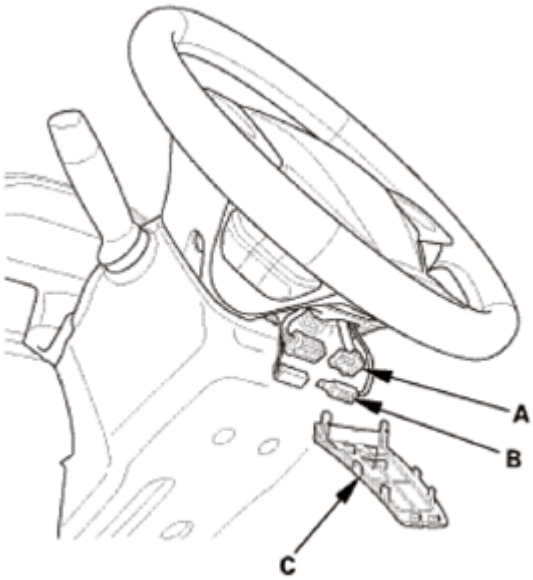

Fig. 418: Identifying Driver Airbag Inflator Connector, Horn Switch Connector And Access Panel
Courtesy of AMERICAN HONDA MOTOR CO., INC.

3. Battery Terminal (SRS) - Reconnection

NOTE: If the battery performance is abnormal, test the battery.

1. Clean the battery terminals.
2. Connect the positive cable (A) to the battery.

NOTE: Always connect the positive side first.

3. Connect the negative cable (B) to the battery.
4. Apply multipurpose grease to the terminals to prevent corrosion.

GETtheMANUALS.org

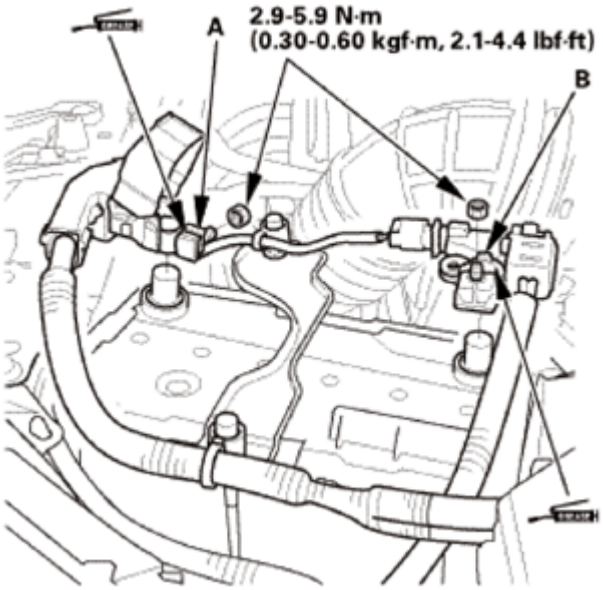

Fig. 419: Identifying Battery Positive And Negative Cable With Torque Specifications
Courtesy of AMERICAN HONDA MOTOR CO., INC.

4. Steering Wheel Spoke Angle - Check
    1. Check the steering wheel spoke angle.
    2. If steering spoke angles to the right and left are not equal (steering wheel is not centered), correct the engagement of the wheel/column shaft splines.
5. HDS DLC - Connection
    1. Connect the HDS to the data link connector (DLC) (A) located under the driver's side of the dashboard.
    2. Turn the ignition switch to ON (II).
    3. Make sure the HDS communicates with the vehicle. If it does not communicate, go to the DLC circuit troubleshooting.

GETtheMANUALS.org

Fig. 420: Identifying Data Link Connector
Courtesy of AMERICAN HONDA MOTOR CO., INC.

6. VSA Sensor Neutral Position - Memorization
    1. Park the vehicle on a flat and level surface, with the steering wheel in the straight ahead position.
    2. Select VSA ADJUSTMENT, then select ALL SENSORS with the HDS, and follow the screen prompts.

    NOTE: See the HDS Help menu for specific instructions.

7. Steering Angle Sensor Neutral Position - Clear
    1. Select EPS ADJUSTMENT, then select EPS STEERING ANGLE SENSOR VALUE CLEAR and follow the screen prompts on the HDS.

    NOTE: See the HDS Help menu for specific instructions.

STEERING WHEEL ROTATIONAL PLAY CHECK

CHECK

1. Steering Wheel Rotational Play Check
    1. Set the front wheels in the straight ahead position.
    2. Measure how far you can turn the steering wheel left and right without moving the front wheels.
        - If the play is within the limit, the steering gearbox and the steering linkage are OK.
        - If the play exceeds the limit, adjust the rack guide. If the play is still excessive after rack guide adjustment, inspect the steering linkage and the steering gearbox.

    Rotational play: 0-10 mm (0-0.39 in)

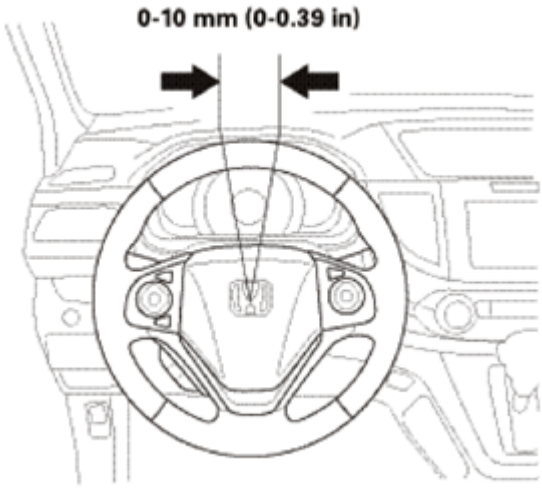

Fig. 421: Checking Steering Wheel Rotational Play

GETtheMANUALS.org

Courtesy of AMERICAN HONDA MOTOR CO., INC.

GETtheMANUALS.org

FRONT DOOR GLASS ADJUSTMENT

REMOVAL

1. Door Mirror Cover
    1. Carefully pry out the door mirror cover (A) with the appropriate trim tool to detach the clips (B), then remove the door mirror cover.
    2. With tweeter: Disconnect the connector (C).

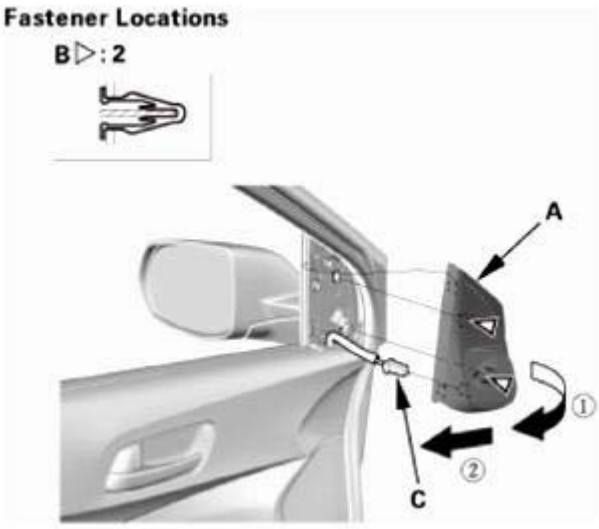

Fig. 1: Removing Door Mirror Cover
Courtesy of AMERICAN HONDA MOTOR CO., INC.

2. Front Door Power Window Switch Panel
    1. Carefully pry out on the notch (A) in the power window switch panel (B) with the appropriate trim tool to detach the clips (C) and the hooks (D). Disconnect the connectors (E), then remove the power window switch panel.

GETtheMANUALS.org

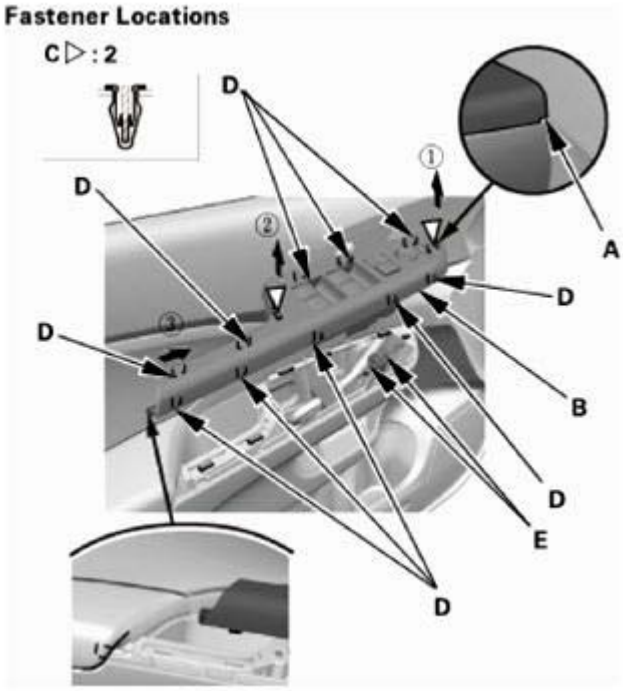

Fig. 2: Removing Power Window Switch Panel
Courtesy of AMERICAN HONDA MOTOR CO., INC.

3. Front Door Panel
    1. Carefully pry out on the upper hook (A) in the inner handle cap (B) with the appropriate trim tool, then pull back the inner handle cap to remove it.

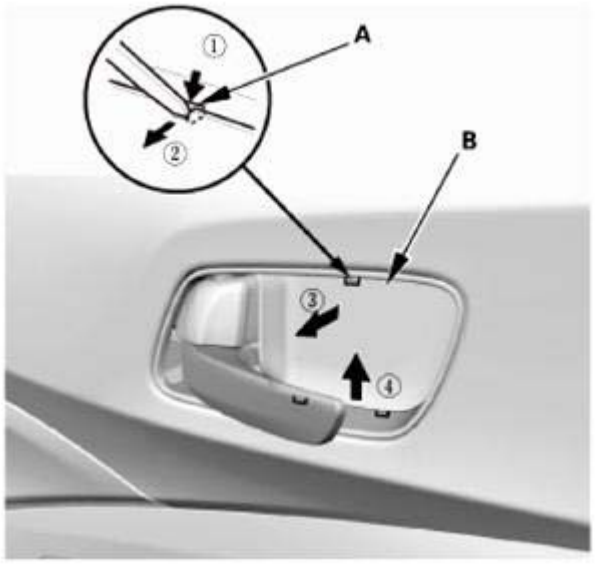

Fig. 3: Removing Front Door Panel Upper Hook Using Tool
Courtesy of AMERICAN HONDA MOTOR CO., INC.

GETtheMANUALS.org

2. Remove the screws (A) securing the inner handle (B).

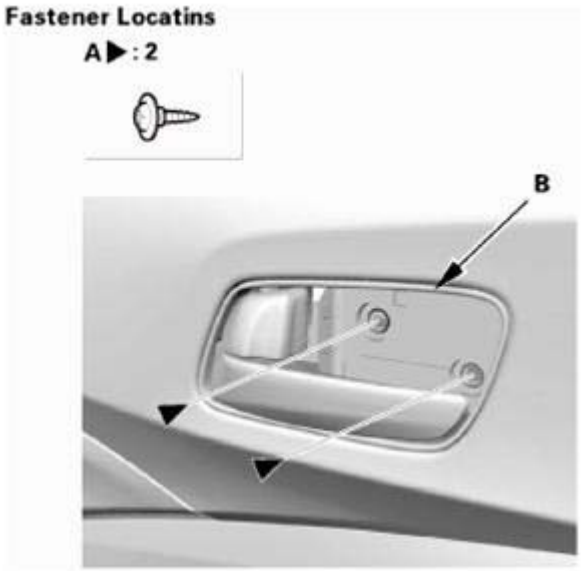

Fig. 4: Identifying Inner Handle And Screws
Courtesy of AMERICAN HONDA MOTOR CO., INC.

3. Remove the pull pocket mat (A), then remove the screw (B).

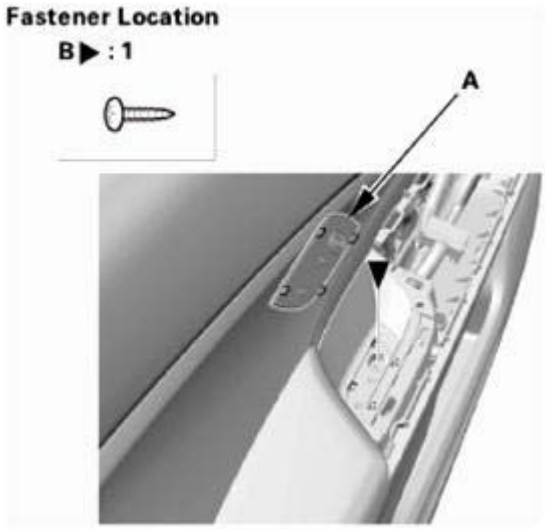

Fig. 5: Identifying Pocket Mat And Screw
Courtesy of AMERICAN HONDA MOTOR CO., INC.

4. Starting at the bottom edge of the door panel (A), detach the clips (B) with a commercially available trim pad remover.
5. Starting at the rear, pull the door panel upward.
6. Remove the inner handle (C) from the door panel, then remove the door panel.

GETtheMANUALS.org

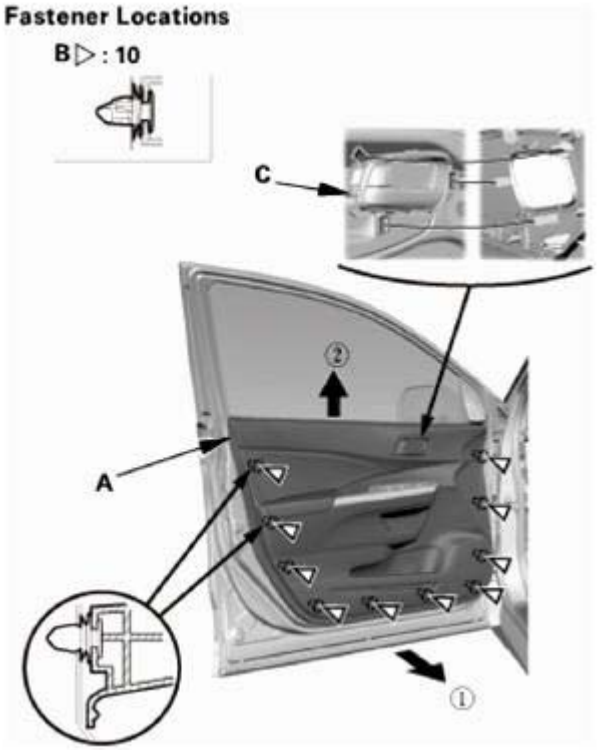

Fig. 6: Removing Door Panel
Courtesy of AMERICAN HONDA MOTOR CO., INC.

4. Front Door Plastic Cover As Needed
    1. Disconnect the connector (A), then detach the harness clips (B).
    2. Remove the screws (C), then remove the pull pocket bracket (D).
    3. Remove the plug caps (E), then carefully detach the plastic cover (F) as needed.

NOTE: **If the plastic cover is damaged or torn, replace it.**

GETtheMANUALS.org

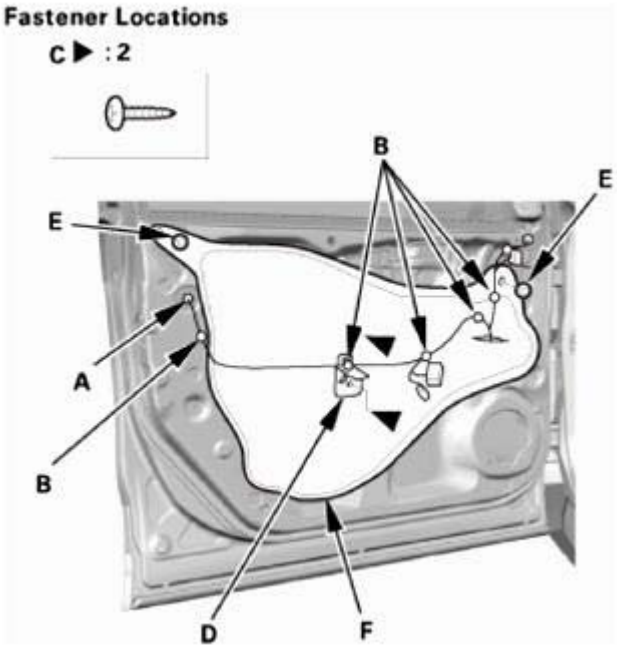

Fig. 7: Identifying Connector, Pocket Bracket, Plug Caps, Plastic Cover, Harness Clips And Screws
Courtesy of AMERICAN HONDA MOTOR CO., INC.

ADJUSTMENT

1. Front Door Glass - Adjustment

NOTE:

- **Check the weatherstrip and the glass run channel for damage or deterioration, and replace them if necessary.**
- **Wipe the run channel clean with a shop towel.**

1. Place the vehicle on a firm, level surface.
2. Carefully move the glass (A) until you can see the glass mounting bolts (B), then loosen them.
3. Push the glass against the center lower channel (C), then tighten the glass mounting bolts.
4. Make sure that the glass moves smoothly.

GETtheMANUALS.org

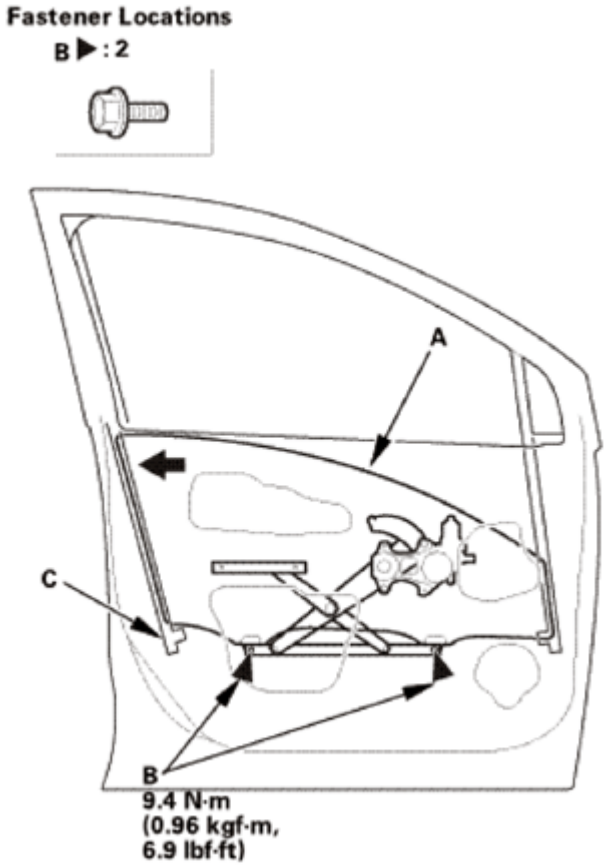

Fig. 8: Moving Glass And Mounting Bolts With Torque Specifications
Courtesy of AMERICAN HONDA MOTOR CO., INC.

5. Raise the glass fully, and check for gaps. Also make sure that the glass (A) contacts the glass run channel (B) evenly.

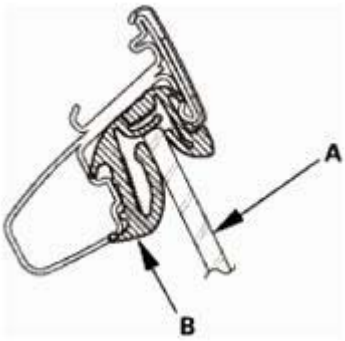

Fig. 9: Checking Gap Between Glass And Glass Run Channel
Courtesy of AMERICAN HONDA MOTOR CO., INC.

INSTALLATION

1. Front Door Plastic Cover As Needed

GETtheMANUALS.org

1. Install the plastic cover (A), then install the plug caps (B).
2. Install the pull pocket bracket (C), then install the screws (D).
3. Connect the connector (E), then install the harness clips (F).

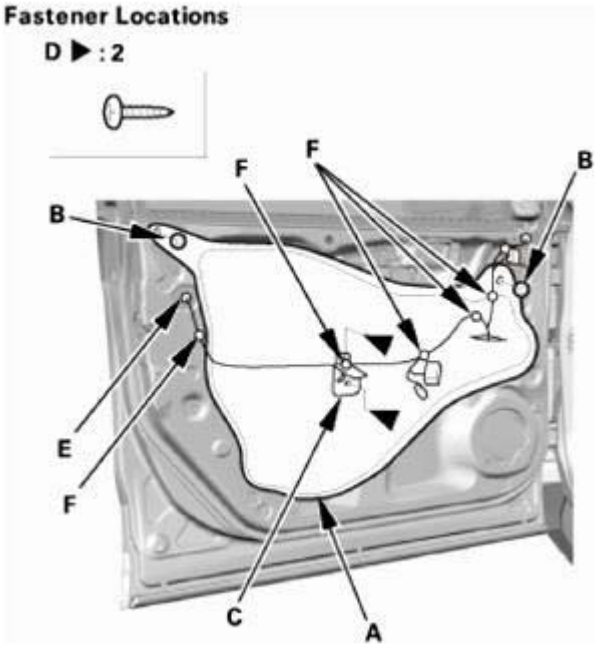

Fig. 10: Identifying Connector, Pocket Bracket, Plug Caps, Plastic Cover, Harness Clips And Screws
Courtesy of AMERICAN HONDA MOTOR CO., INC.

2. Front Door Panel
    1. Install the inner handle (A) in the door panel (B).
    2. Install the door panel. Make sure the clips (C) snap into place securely.

GETtheMANUALS.org

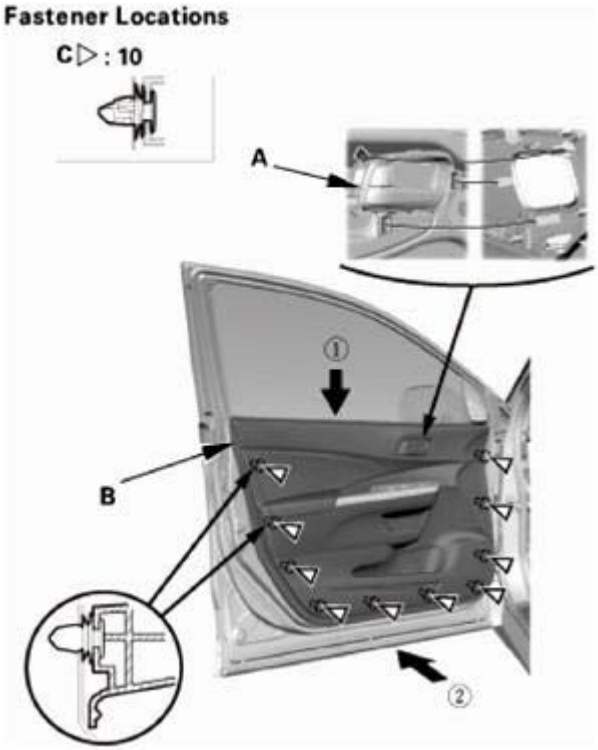

Fig. 11: Installing Inner Handle To Door Panel
Courtesy of AMERICAN HONDA MOTOR CO., INC.

3. Install the screw (A), then install the pull pocket mat (B).

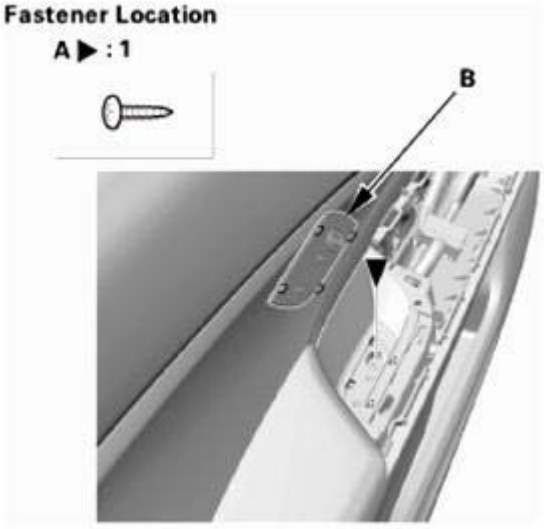

Fig. 12: Identifying Pocket Mat And Screw
Courtesy of AMERICAN HONDA MOTOR CO., INC.

4. Install the screws (A) securing the inner handle (B).

GETtheMANUALS.org

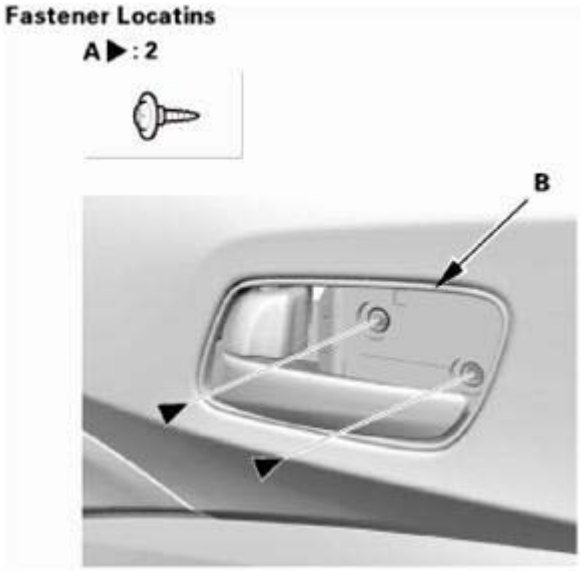

Fig. 13: Identifying Inner Handle And Screw
Courtesy of AMERICAN HONDA MOTOR CO., INC.

5. Install the inner handle cap (A). Make sure the upper hook (B) and the lower hooks (C) snap into place securely.

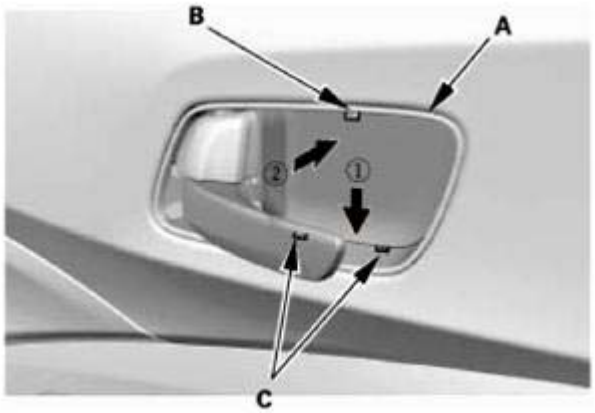

Fig. 14: Installing Inner Handle Cap
Courtesy of AMERICAN HONDA MOTOR CO., INC.

3. Front Door Power Window Switch Panel
    1. Connect the connectors (A), then install the power window switch panel (B). Make sure the clips (C) and the hooks (D) snap into place securely.

GETtheMANUALS.org

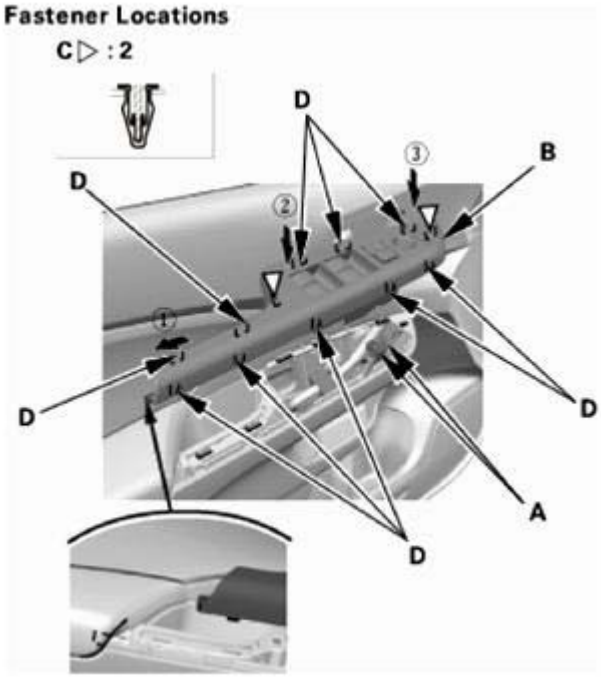

Fig. 15: Installing Power Window Switch Panel
Courtesy of AMERICAN HONDA MOTOR CO., INC.

4. Door Mirror Cover
    1. With tweeter: Connect the connector (A).
    2. Install the door mirror cover (B). Make sure the clips (C) snap into place securely.

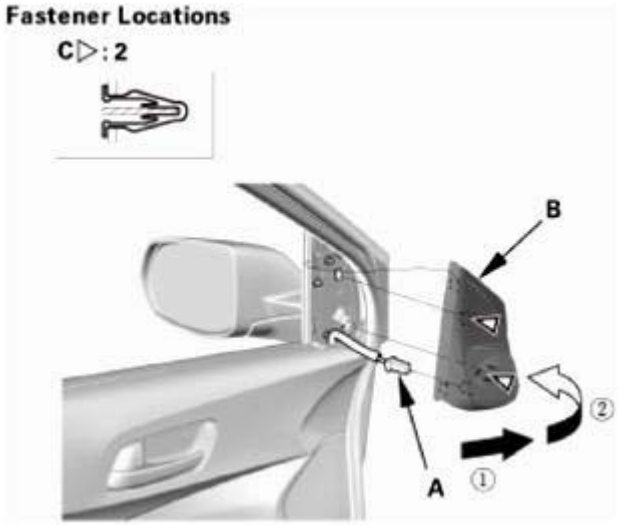

Fig. 16: Installing Door Mirror Cover
Courtesy of AMERICAN HONDA MOTOR CO., INC.

5. Power Window Control Unit - Reset

GETtheMANUALS.org

1. **DO THE POWER WINDOW CONTROL UNIT RESETTING PROCEDURE**.

FRONT DOOR GLASS REMOVAL AND INSTALLATION

REMOVAL

1. Door Mirror Cover
    1. Carefully pry out the door mirror cover (A) with the appropriate trim tool to detach the clips (B), then remove the door mirror cover.
    2. With tweeter: Disconnect the connector (C).

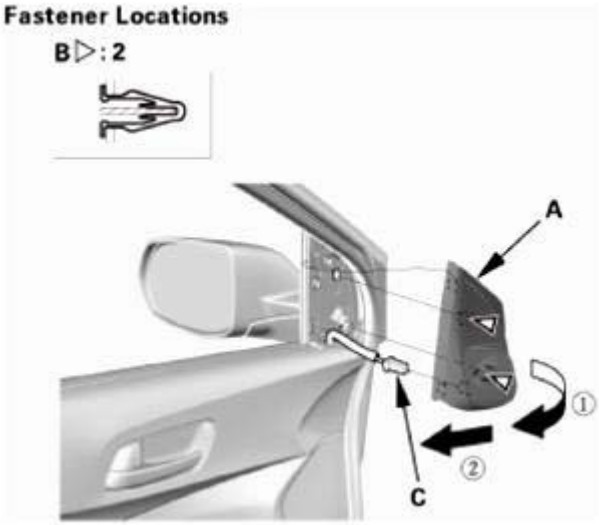

Fig. 17: Removing Door Mirror Cover
Courtesy of AMERICAN HONDA MOTOR CO., INC.

2. Front Door Power Window Switch Panel
    1. Carefully pry out on the notch (A) in the power window switch panel (B) with the appropriate trim tool to detach the clips (C) and the hooks (D). Disconnect the connectors (E), then remove the power window switch panel.

GETtheMANUALS.org

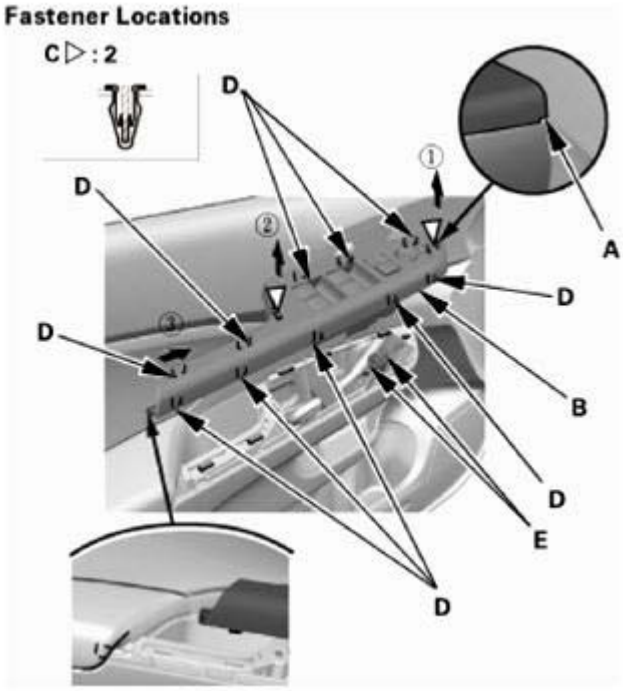

Fig. 18: Removing Power Window Switch Panel
Courtesy of AMERICAN HONDA MOTOR CO., INC.

3. Front Door Panel
    1. Carefully pry out on the upper hook (A) in the inner handle cap (B) with the appropriate trim tool, then pull back the inner handle cap to remove it.

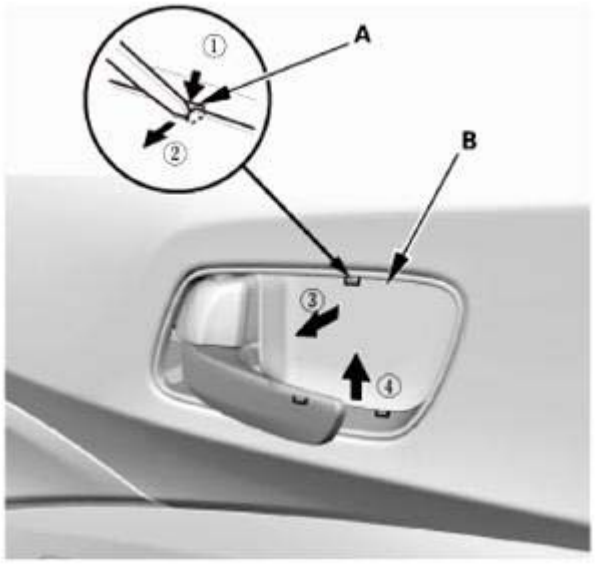

Fig. 19: Removing Front Door Panel Upper Hook Using Tool
Courtesy of AMERICAN HONDA MOTOR CO., INC.

GETtheMANUALS.org

2. Remove the screws (A) securing the inner handle (B).

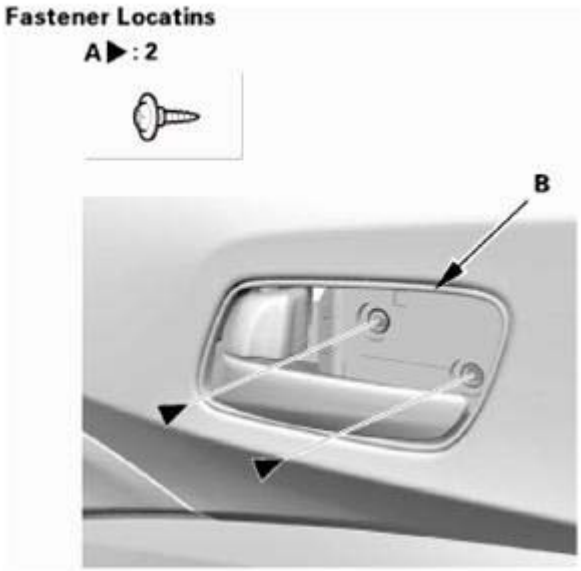

Fig. 20: Identifying Inner Handle And Screws
Courtesy of AMERICAN HONDA MOTOR CO., INC.

3. Remove the pull pocket mat (A), then remove the screw (B).

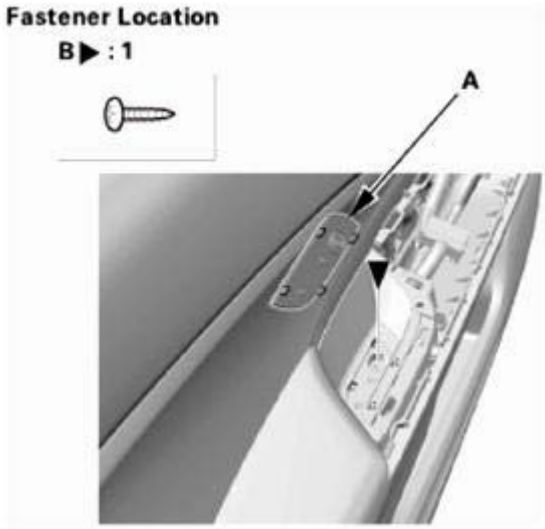

Fig. 21: Identifying Pocket Mat And Screw
Courtesy of AMERICAN HONDA MOTOR CO., INC.

4. Starting at the bottom edge of the door panel (A), detach the clips (B) with a commercially available trim pad remover.
5. Starting at the rear, pull the door panel upward.
6. Remove the inner handle (C) from the door panel, then remove the door panel.

GETtheMANUALS.org

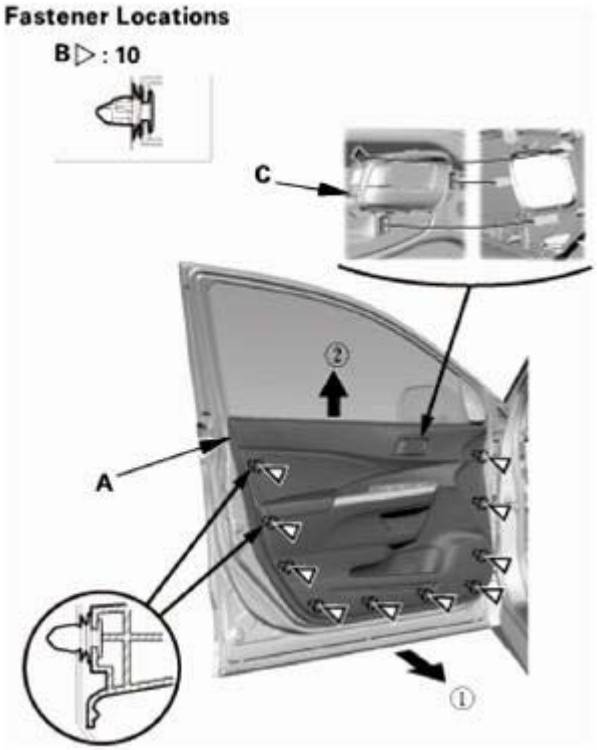

Fig. 22: Removing Door Panel
Courtesy of AMERICAN HONDA MOTOR CO., INC.

4. Front Door Plastic Cover
    1. Disconnect the connector (A), then detach the harness clips (B).
    2. Remove the screws (C), then remove the pull pocket bracket (D).
    3. Remove the plug caps (E), then carefully remove the plastic cover (F).

NOTE: **If the plastic cover is damaged or torn, replace it with a new one.**

GETtheMANUALS.org

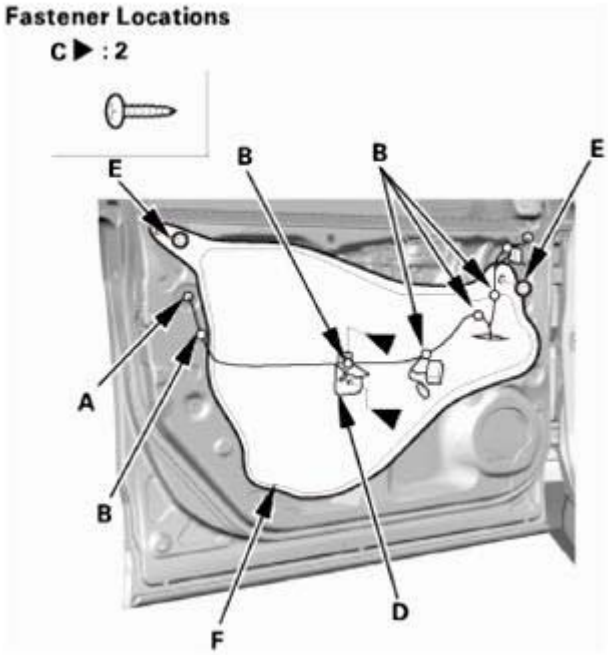

Fig. 23: Identifying Connector, Pocket Bracket, Plug Caps, Plastic Cover, Harness Clips And Screws
Courtesy of AMERICAN HONDA MOTOR CO., INC.

5. Front Door Glass
    1. Carefully lower the glass (A) until you can see the glass mounting bolts (B), then remove them. Carefully pull out the glass through the window slot. Take care not to drop the glass inside the door.

GETtheMANUALS.org

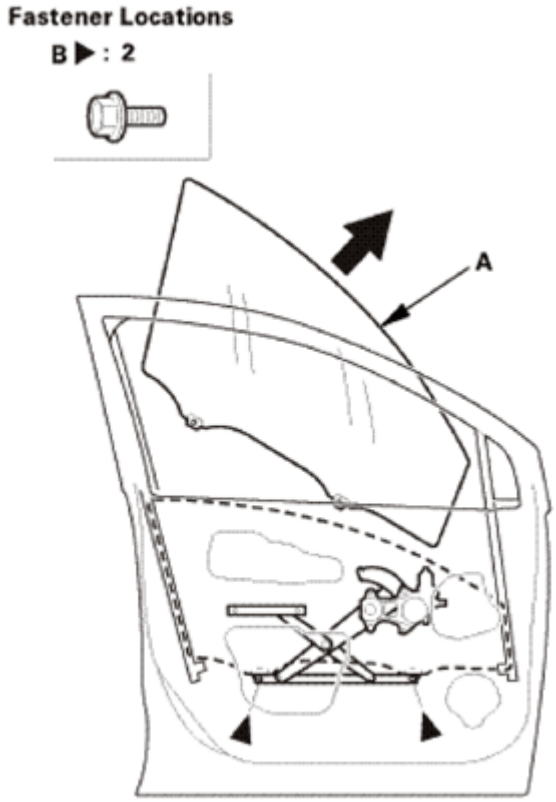

Fig. 24: Removing Front Door Glass
Courtesy of AMERICAN HONDA MOTOR CO., INC.

6. Front Door Glass Run Channel
    1. Remove the front door glass run channel (A).

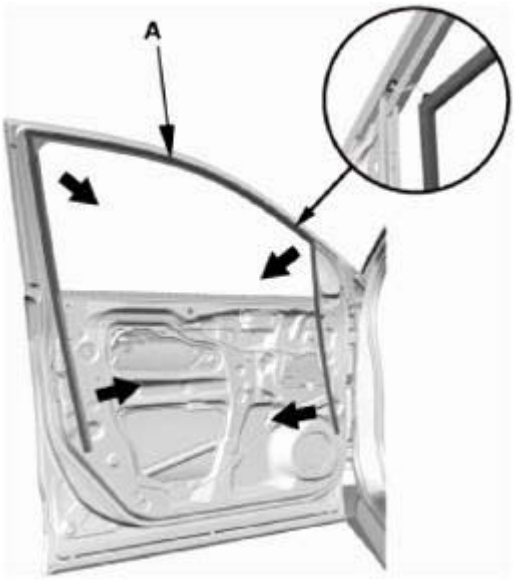

Fig. 25: Removing Front Door Glass Run Channel

GETtheMANUALS.org

Courtesy of AMERICAN HONDA MOTOR CO., INC.

7. Front Door Center Lower Channel
    1. Remove the bolt (A), then remove the center lower channel (B).

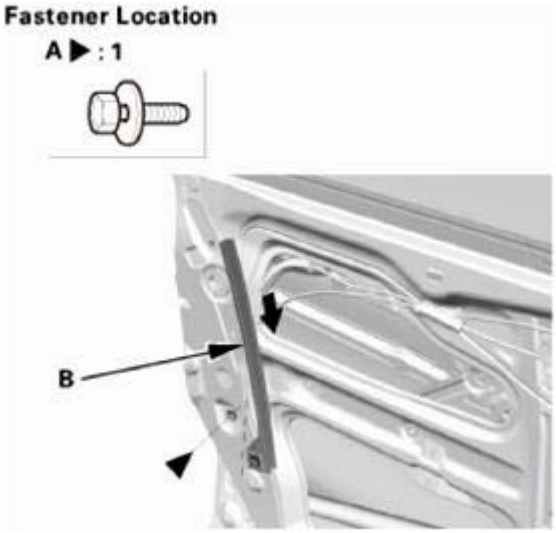

Fig. 26: Removing Center Lower Channel
Courtesy of AMERICAN HONDA MOTOR CO., INC.

8. Door Mirror
    1. Disconnect the connector.
    2. Detach the harness clip (A).
    3. While holding the power mirror (B), remove the nuts (C) securing the mirror.

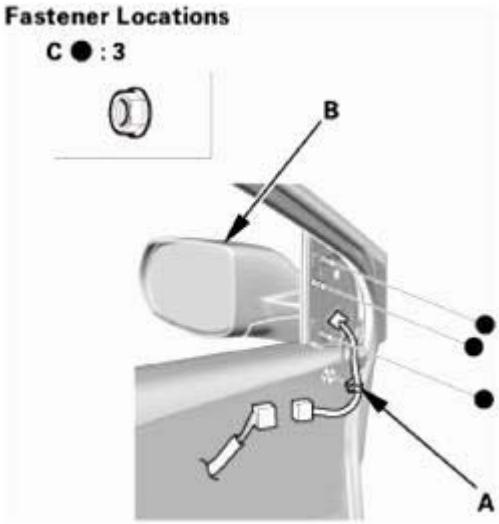

Fig. 27: Identifying Power Mirror And Harness Clip
Courtesy of AMERICAN HONDA MOTOR CO., INC.

GETtheMANUALS.org

4. Remove the power mirror (A) and carefully pull out the harness (B).

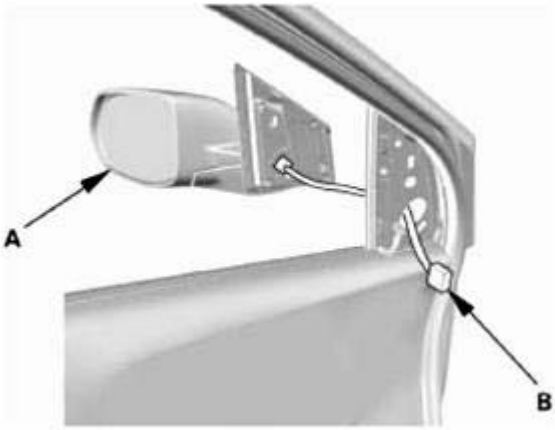

Fig. 28: Identifying Power Mirror And Harness
Courtesy of AMERICAN HONDA MOTOR CO., INC.

9. Front Door Glass Outer Weatherstrip
    1. Remove the screw (A) securing the front door glass outer weatherstrip.
    2. Slide the front door glass outer weatherstrip clips (B) forward to release it from the door.

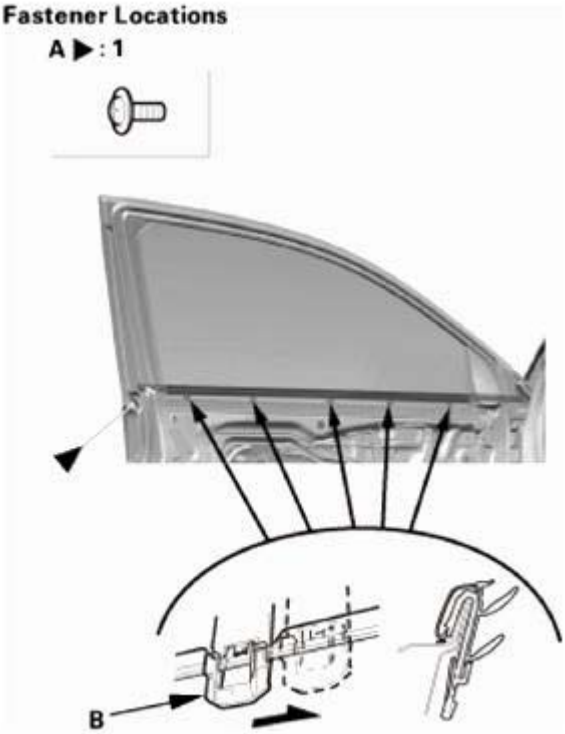

Fig. 29: Sliding Front Door Glass Outer Weatherstrip Clips
Courtesy of AMERICAN HONDA MOTOR CO., INC.

GETtheMANUALS.org

3. Remove the front door glass outer weatherstrip (A).

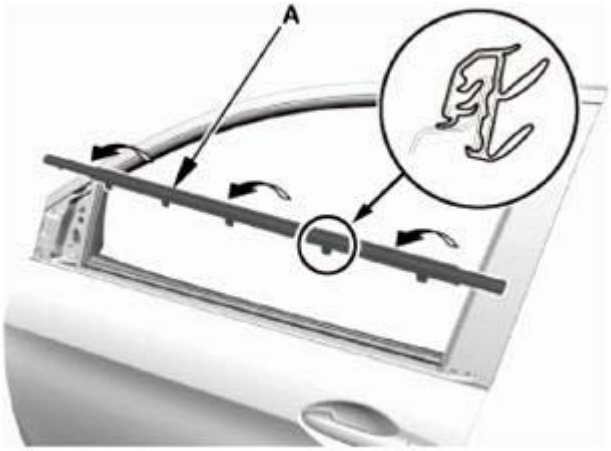

Fig. 30: Removing Front Door Glass Outer Weatherstrip
Courtesy of AMERICAN HONDA MOTOR CO., INC.

10. Front Door Front Lower Channel
    1. Remove the nuts (A) and the bolt (B), then remove the front lower channel (C).

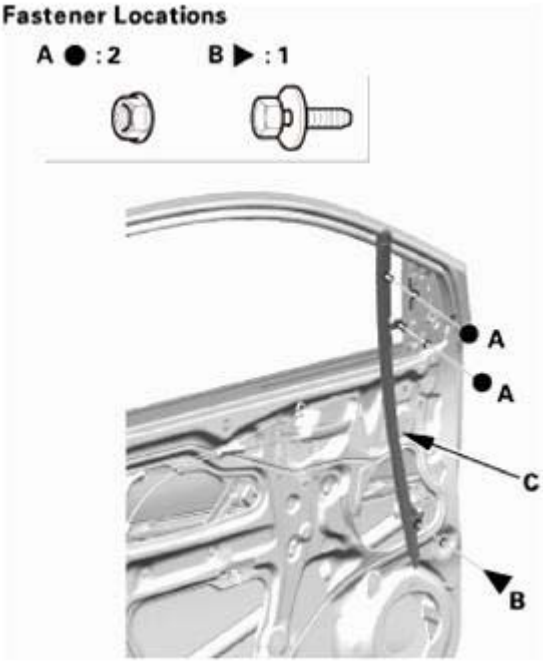

Fig. 31: Identifying Front Lower Channel, Nuts And Bolts
Courtesy of AMERICAN HONDA MOTOR CO., INC.

INSTALLATION

1. Front Door Front Lower Channel

GETtheMANUALS.org

1. Install the front lower channel (A), then install the nuts (B) and the bolt (C).

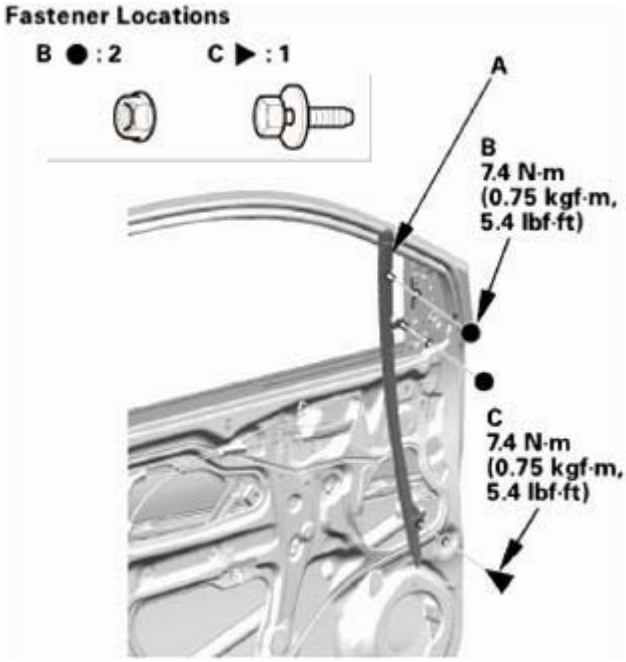

Fig. 32: Identifying Front Lower Channel, Nuts And Bolt With Torque Specifications
Courtesy of AMERICAN HONDA MOTOR CO., INC.

2. Front Door Glass Outer Weatherstrip
   1. Install the front door glass outer weatherstrip (A).

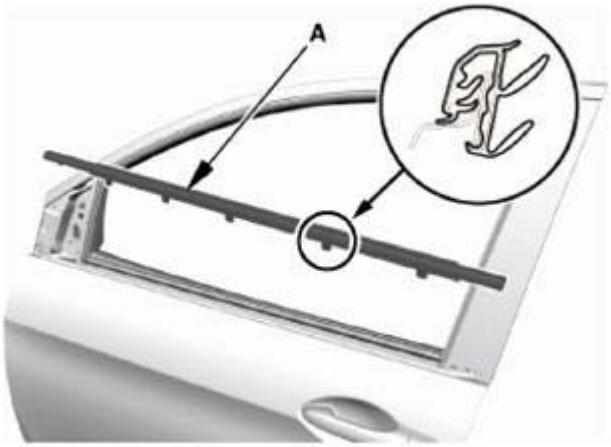

Fig. 33: Identifying Front Door Glass Outer Weatherstrip
Courtesy of AMERICAN HONDA MOTOR CO., INC.

   2. Slide the front door glass outer weatherstrip clips (A) securely onto the flanges, then install the screw (B).

GETtheMANUALS.org

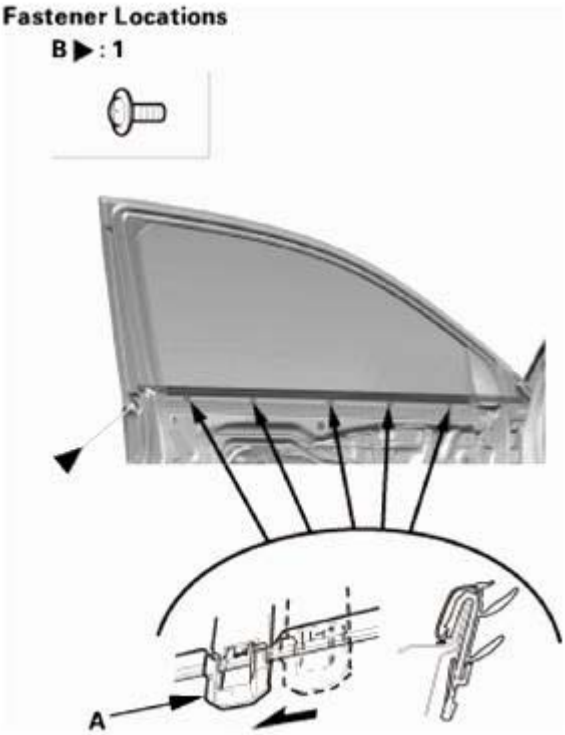

Fig. 34: Sliding Front Door Glass Outer Weatherstrip Clips Onto Flanges
Courtesy of AMERICAN HONDA MOTOR CO., INC.

3. Door Mirror
    1. Insert the harness (A) into the hole in the door, then install the power mirror (B).

Fig. 35: Identifying Power Door Mirror And Harness
Courtesy of AMERICAN HONDA MOTOR CO., INC.

    2. Install the nuts (A).
    3. Attach the harness clip (B).
    4. Connect the connector.

GETtheMANUALS.org

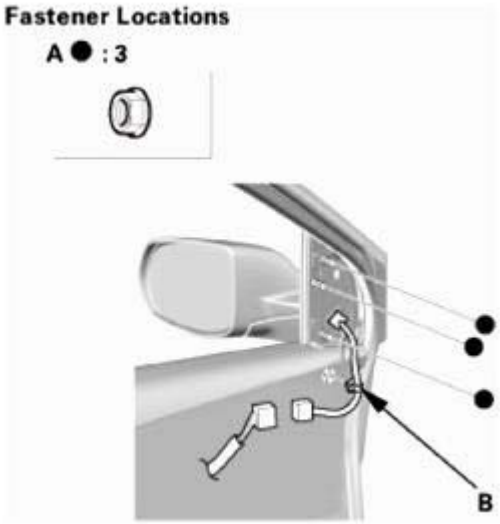

Fig. 36: Identifying Door Mirror Harness Clip And Nuts
Courtesy of AMERICAN HONDA MOTOR CO., INC.

4. Front Door Center Lower Channel
    1. Install the center lower channel (A), then install the bolt (B).

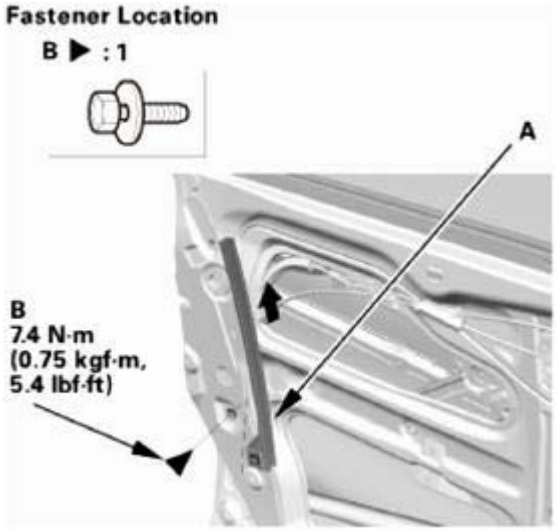

Fig. 37: Installing Center Lower Channel And Bolt With Torque Specifications
Courtesy of AMERICAN HONDA MOTOR CO., INC.

5. Front Door Glass Run Channel
    1. Align the notch (A) of the glass run channel with the alignment mark (B) on the body, then install the run channel all the way around.

GETtheMANUALS.org

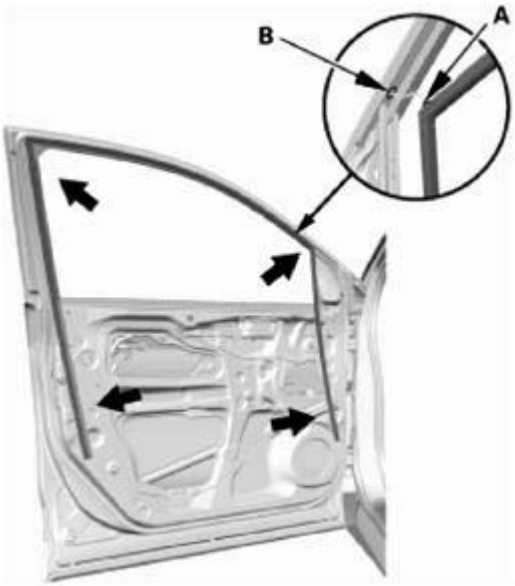

Fig. 38: Installing Run Channel
Courtesy of AMERICAN HONDA MOTOR CO., INC.

6. Front Door Glass
    1. Install the glass (A) through the window slot, then install the glass mounting bolts (B). Take care not to drop the glass inside the door.

GETtheMANUALS.org

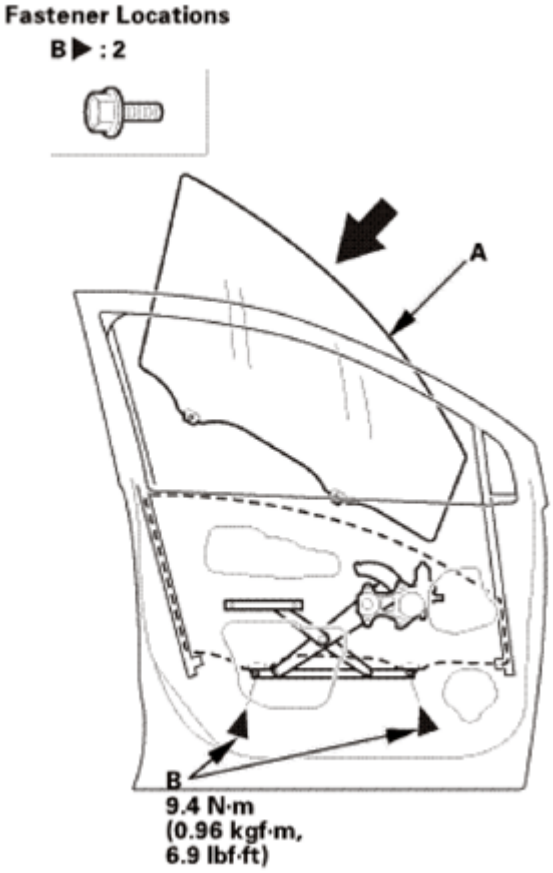

Fig. 39: Installing Front Door Glass
Courtesy of AMERICAN HONDA MOTOR CO., INC.

7. Front Door Glass - Adjustment

NOTE:

- **Check the weatherstrip and the glass run channel for damage or deterioration, and replace them if necessary.**
- **Wipe the run channel clean with a shop towel.**

1. Place the vehicle on a firm, level surface.
2. Carefully move the glass (A) until you can see the glass mounting bolts (B), then loosen them.
3. Push the glass against the center lower channel (C), then tighten the glass mounting bolts.
4. Make sure that the glass moves smoothly.

GETtheMANUALS.org

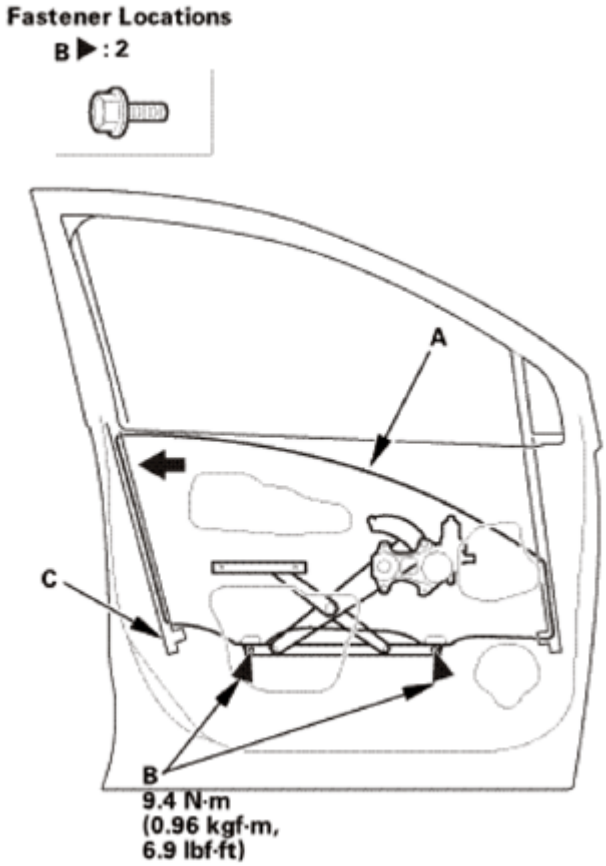

Fig. 40: Moving Glass And Mounting Bolts With Torque Specifications
Courtesy of AMERICAN HONDA MOTOR CO., INC.

5. Raise the glass fully, and check for gaps. Also make sure that the glass (A) contacts the glass run channel (B) evenly.

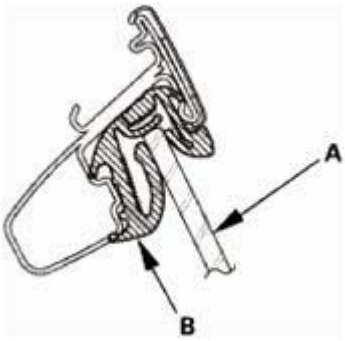

Fig. 41: Checking Gap Between Glass And Glass Run Channel
Courtesy of AMERICAN HONDA MOTOR CO., INC.

8. Front Door Plastic Cover
    1. Install the plastic cover (A), then install the plug caps (B).
    2. Install the pull pocket bracket (C), then install the screws (D).

GETtheMANUALS.org

3. Connect the connector (E), then install the harness clips (F).

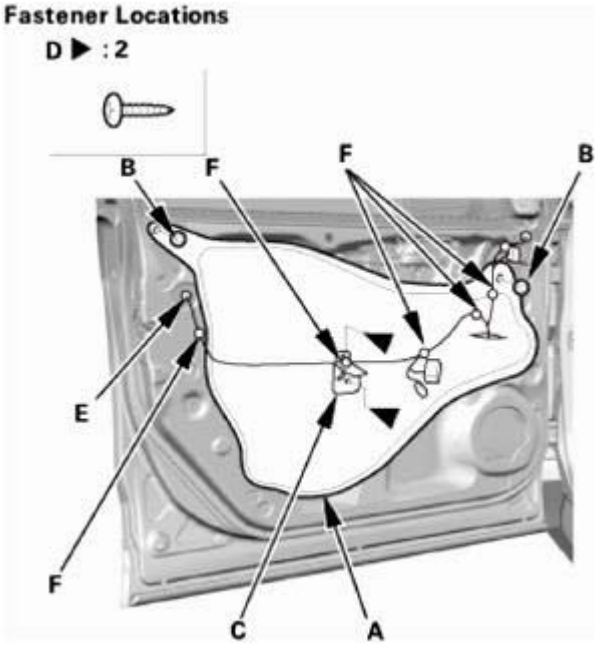

Fig. 42: Identifying Connector, Pocket Bracket, Plug Caps, Plastic Cover, Harness Clips And Screws
Courtesy of AMERICAN HONDA MOTOR CO., INC.

9. Front Door Panel
    1. Install the inner handle (A) in the door panel (B).
    2. Install the door panel. Make sure the clips (C) snap into place securely.

GETtheMANUALS.org

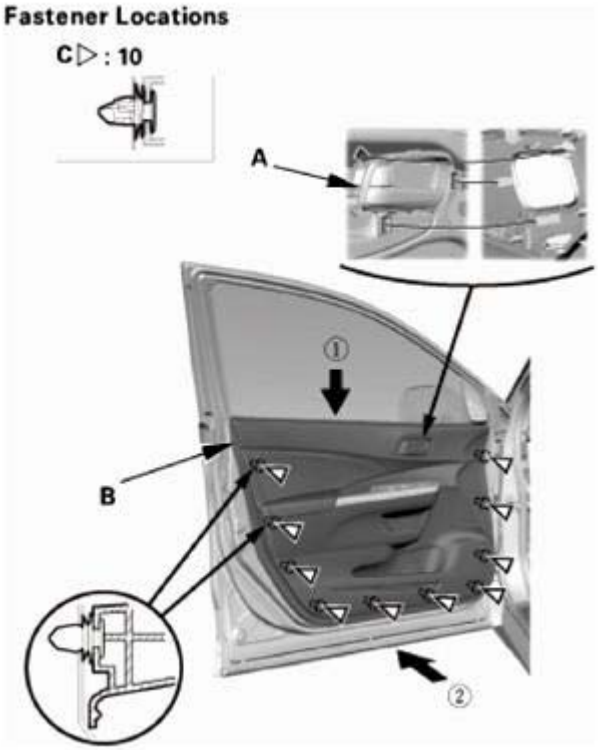

Fig. 43: Installing Inner Handle To Door Panel
Courtesy of AMERICAN HONDA MOTOR CO., INC.

3. Install the screw (A), then install the pull pocket mat (B).

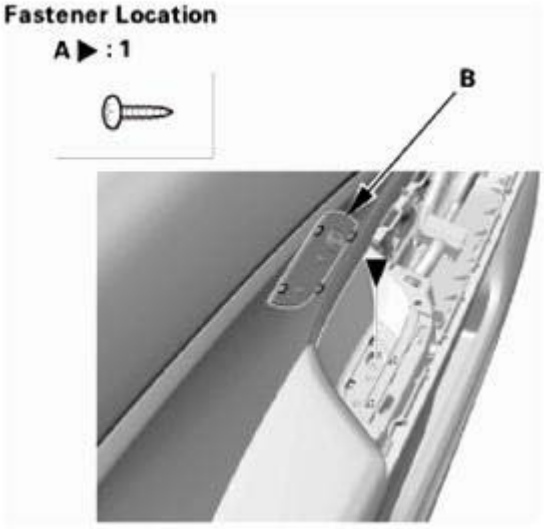

Fig. 44: Identifying Pocket Mat And Screw
Courtesy of AMERICAN HONDA MOTOR CO., INC.

4. Install the screws (A) securing the inner handle (B).

GETtheMANUALS.org

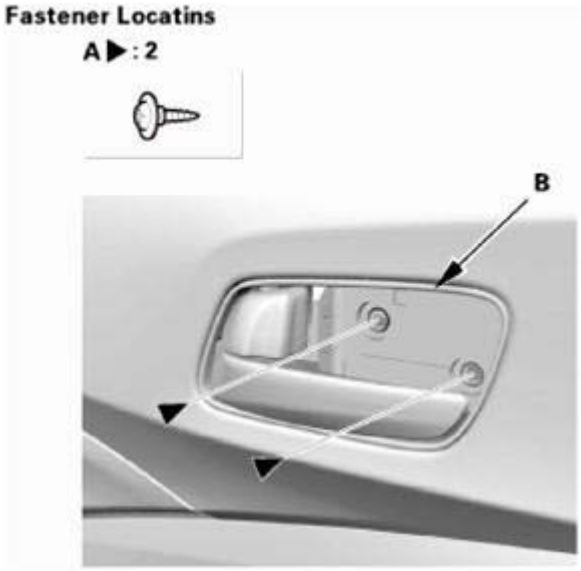

Fig. 45: Identifying Inner Handle And Screw
Courtesy of AMERICAN HONDA MOTOR CO., INC.

5. Install the inner handle cap (A). Make sure the upper hook (B) and the lower hooks (C) snap into place securely.

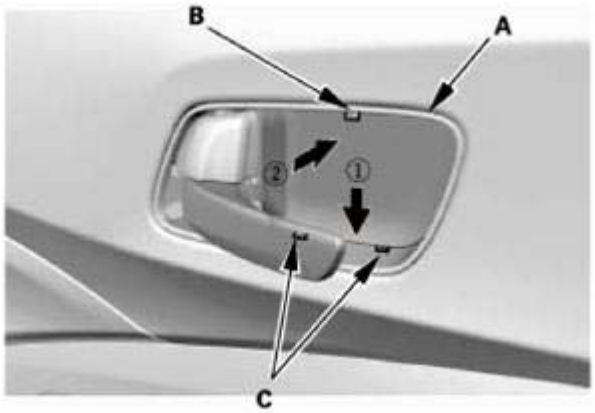

Fig. 46: Installing Inner Handle Cap
Courtesy of AMERICAN HONDA MOTOR CO., INC.

10. Front Door Power Window Switch Panel
    1. Connect the connectors (A), then install the power window switch panel (B). Make sure the clips (C) and the hooks (D) snap into place securely.

GETtheMANUALS.org

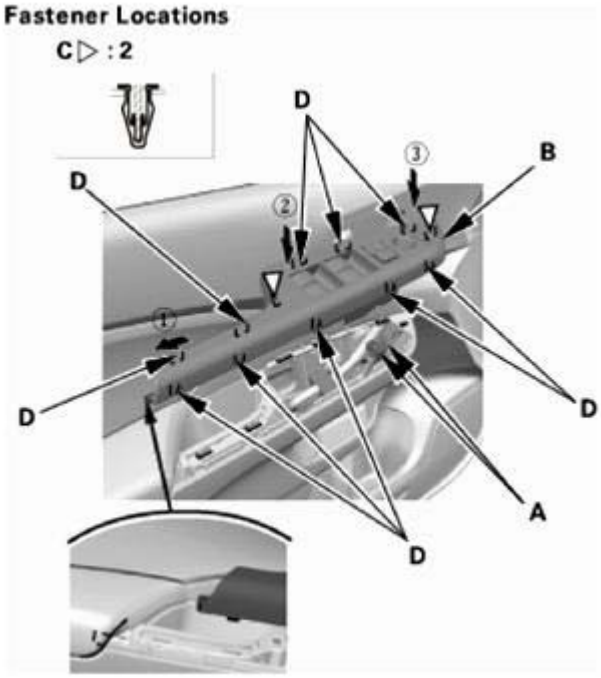

Fig. 47: Installing Power Window Switch Panel
Courtesy of AMERICAN HONDA MOTOR CO., INC.

11. Door Mirror Cover
    1. With tweeter: Connect the connector (A).
    2. Install the door mirror cover (B). Make sure the clips (C) snap into place securely.

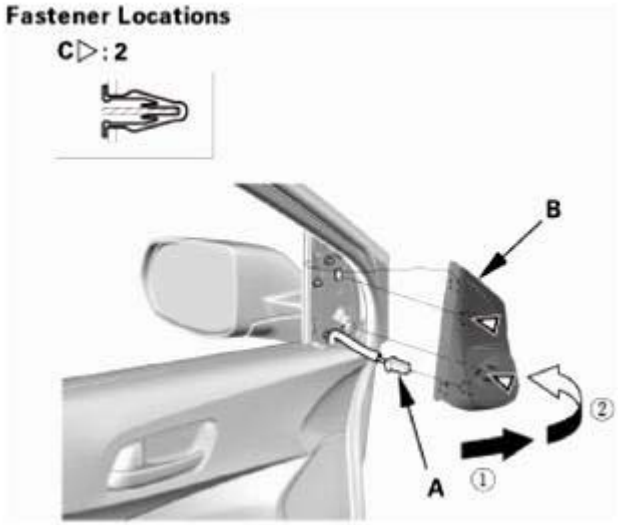

Fig. 48: Installing Door Mirror Cover
Courtesy of AMERICAN HONDA MOTOR CO., INC.

12. Power Window Control Unit - Reset

GETtheMANUALS.org

1. **DO THE POWER WINDOW CONTROL UNIT RESETTING PROCEDURE**.

FRONT PASSENGER'S POWER WINDOW SWITCH REMOVAL AND INSTALLATION

REMOVAL

1. Front Door Power Window Switch Panel - Passenger's Side
    1. Carefully pry out on the notch (A) in the power window switch panel (B) with the appropriate trim tool to detach the clips (C) and the hooks (D). Disconnect the connector (E), then remove the power window switch panel.

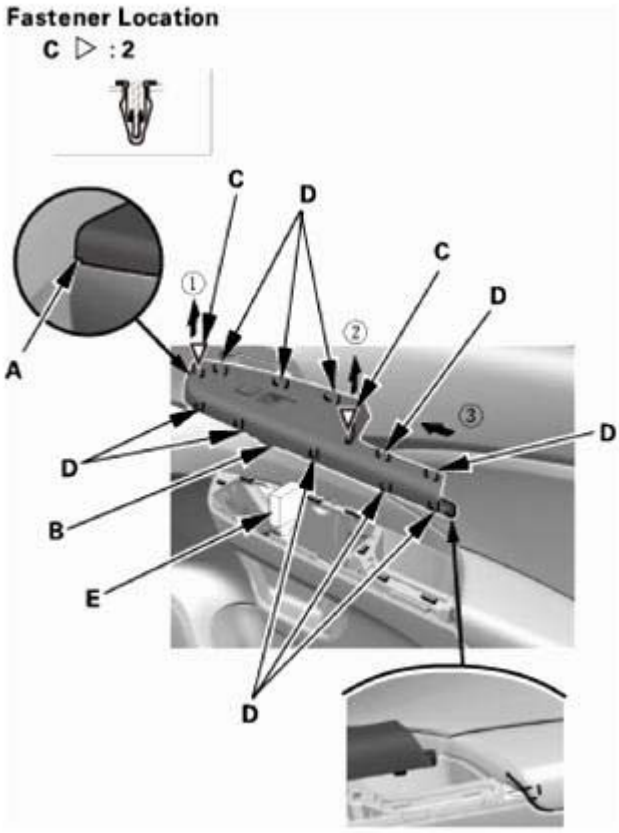

Fig. 49: Removing Power Window Switch Panel
Courtesy of AMERICAN HONDA MOTOR CO., INC.

2. Front Door Power Window Switch - Passenger's Side
    1. Remove the front passenger's power window switch (A).

GETtheMANUALS.org

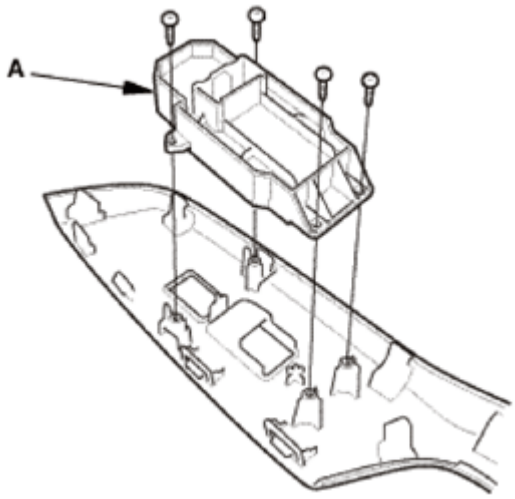

Fig. 50: Identifying Front Passenger's Power Window Switch And Mounting Bolts
Courtesy of AMERICAN HONDA MOTOR CO., INC.

INSTALLATION

1. Front Door Power Window Switch - Passenger's Side
    1. Install the front passenger's power window switch (A).

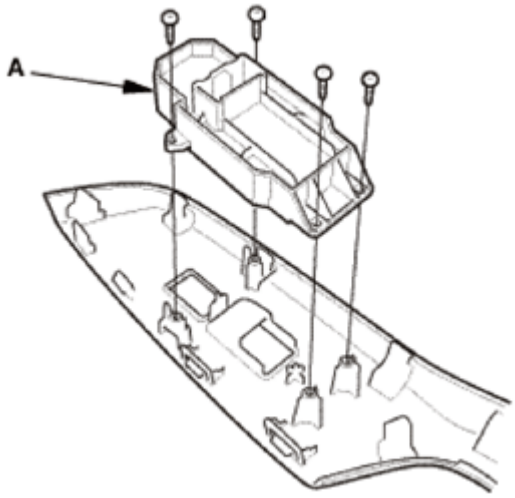

Fig. 51: Identifying Front Passenger's Power Window Switch And Mounting Bolts
Courtesy of AMERICAN HONDA MOTOR CO., INC.

2. Front Door Power Window Switch Panel - Passenger's Side
    1. Connect the connector (A), then install the power window switch panel (B). Make sure the clips (C) and the hooks (D) snap into place securely.

GETtheMANUALS.org

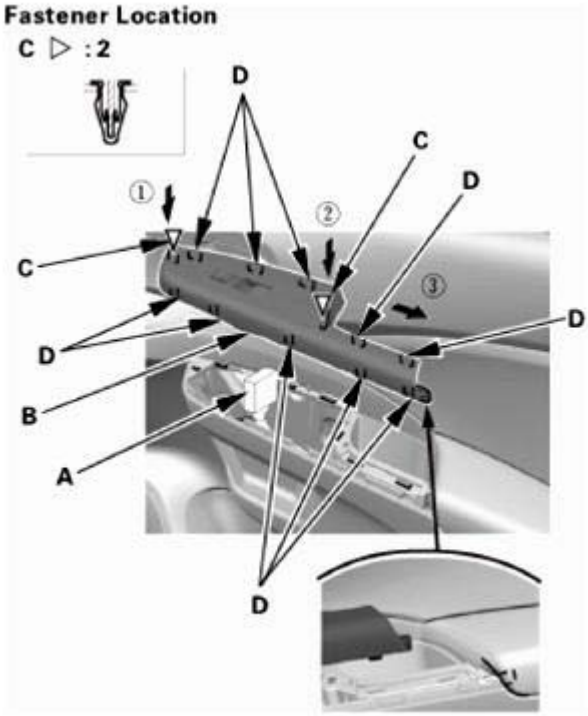

Fig. 52: Installing Power Window Switch Panel
Courtesy of AMERICAN HONDA MOTOR CO., INC.

FRONT PASSENGER'S POWER WINDOW SWITCH TEST

REMOVAL

1. Front Door Power Window Switch Panel - Passenger's Side
    1. Carefully pry out on the notch (A) in the power window switch panel (B) with the appropriate trim tool to detach the clips (C) and the hooks (D). Disconnect the connector (E), then remove the power window switch panel.

GETtheMANUALS.org

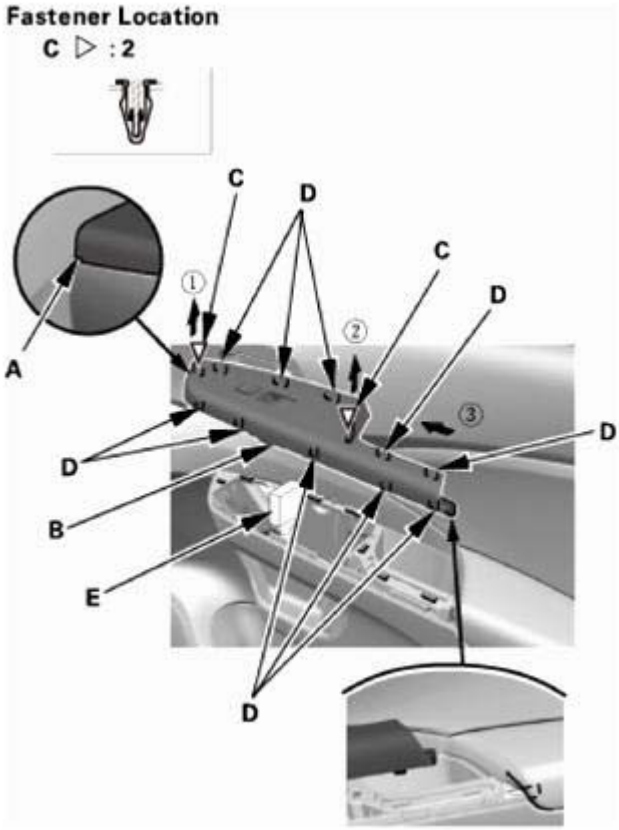

Fig. 53: Removing Power Window Switch Panel
Courtesy of AMERICAN HONDA MOTOR CO., INC.

TEST

1. Front Passenger's Power Window Switch - Test
    1. Check for continuity between the terminals in each position according to the table.
    2. If the continuity is not as specified, replace the front passenger's power window switch (A).

GETtheMANUALS.org

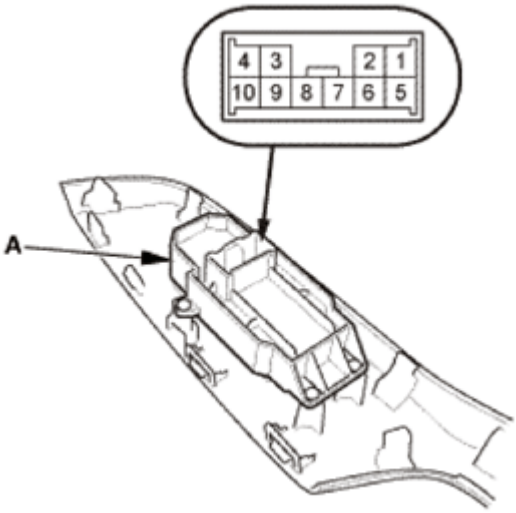

Fig. 54: Identifying Front Passenger's Power Window Switch And Connector Terminals
Courtesy of AMERICAN HONDA MOTOR CO., INC.

Position \ Terminal	6	7	8	9	10
OFF	○	○	○		○
UP	○		○	○	○
DOWN		○	○	○	○

Fig. 55: Front Passenger's Power Window Switch Continuity Reference Chart
Courtesy of AMERICAN HONDA MOTOR CO., INC.

INSTALLATION

1. Front Door Power Window Switch Panel - Passenger's Side
    1. Connect the connector (A), then install the power window switch panel (B). Make sure the clips (C) and the hooks (D) snap into place securely.

GETtheMANUALS.org

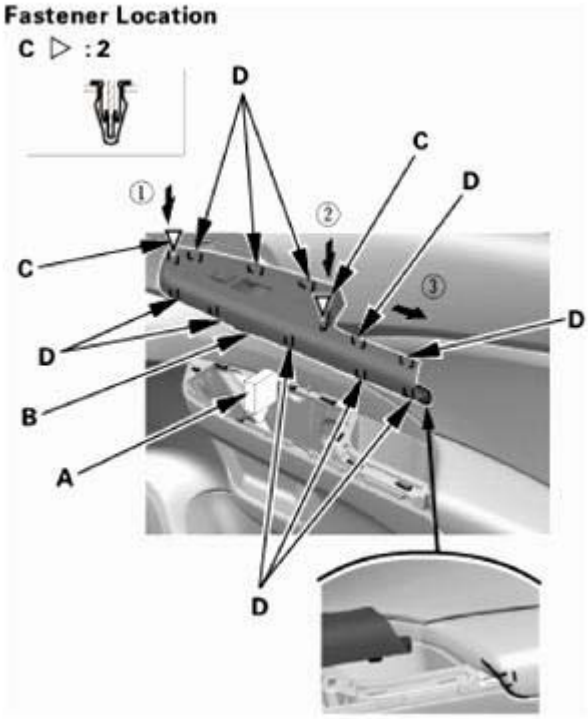

Fig. 56: Installing Power Window Switch Panel
Courtesy of AMERICAN HONDA MOTOR CO., INC.

FRONT POWER WINDOW MOTOR REMOVAL AND INSTALLATION

REMOVAL

1. Door Mirror Cover
    1. Carefully pry out the door mirror cover (A) with the appropriate trim tool to detach the clips (B), then remove the door mirror cover.
    2. With tweeter: Disconnect the connector (C).

GETtheMANUALS.org

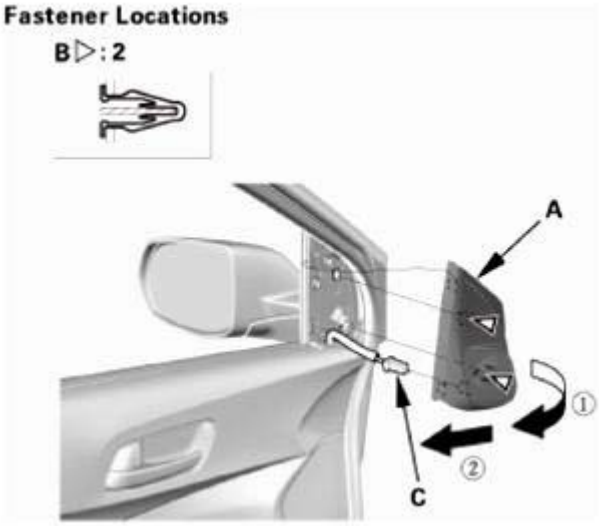

Fig. 57: Removing Door Mirror Cover
Courtesy of AMERICAN HONDA MOTOR CO., INC.

2. Front Door Power Window Switch Panel
    1. Carefully pry out on the notch (A) in the power window switch panel (B) with the appropriate trim tool to detach the clips (C) and the hooks (D). Disconnect the connectors (E), then remove the power window switch panel.

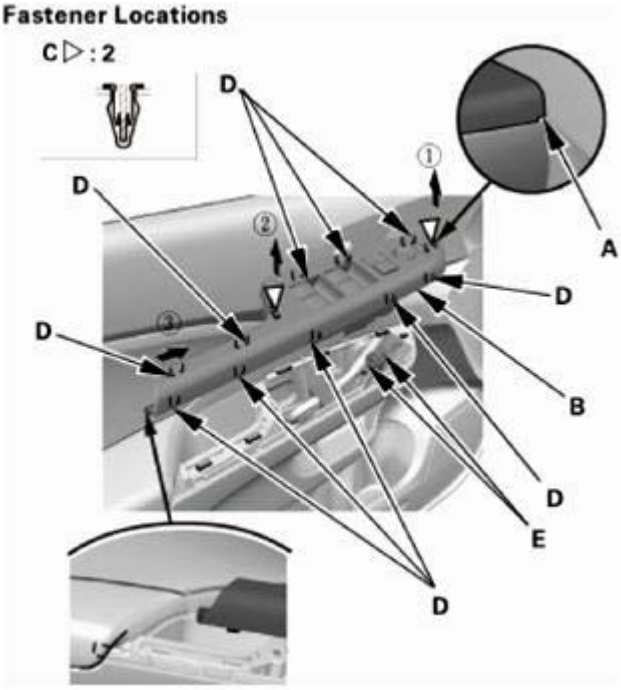

Fig. 58: Removing Power Window Switch Panel
Courtesy of AMERICAN HONDA MOTOR CO., INC.

3. Front Door Panel

GETtheMANUALS.org

1. Carefully pry out on the upper hook (A) in the inner handle cap (B) with the appropriate trim tool, then pull back the inner handle cap to remove it.

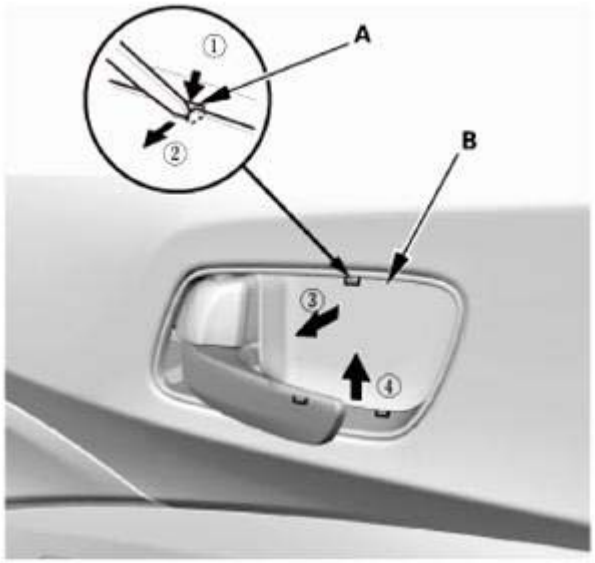

Fig. 59: Removing Front Door Panel Upper Hook Using Tool
Courtesy of AMERICAN HONDA MOTOR CO., INC.

2. Remove the screws (A) securing the inner handle (B).

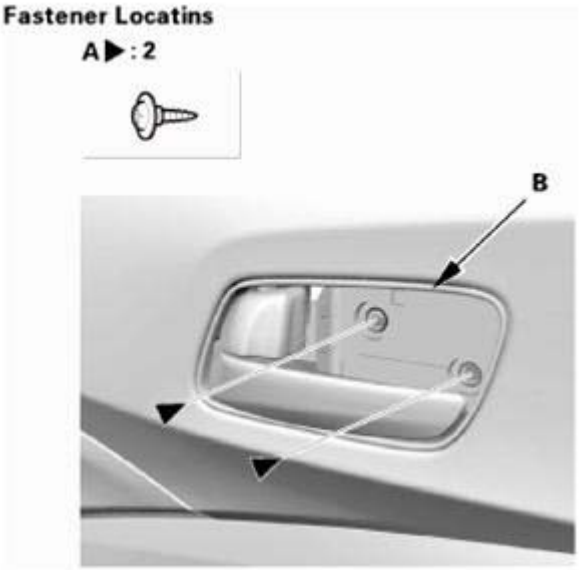

Fig. 60: Identifying Inner Handle And Screws
Courtesy of AMERICAN HONDA MOTOR CO., INC.

3. Remove the pull pocket mat (A), then remove the screw (B).

GETtheMANUALS.org

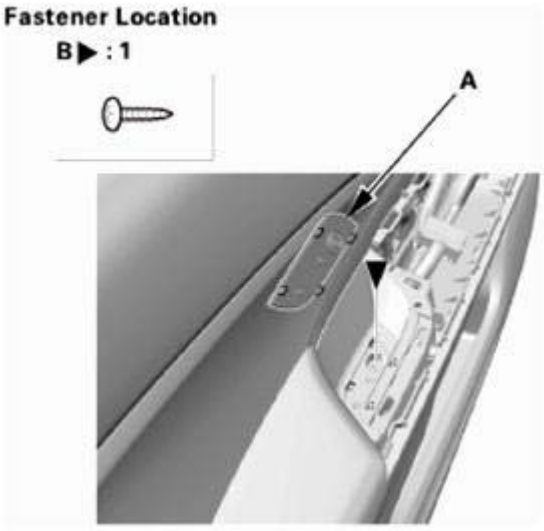

Fig. 61: Identifying Pocket Mat And Screw
Courtesy of AMERICAN HONDA MOTOR CO., INC.

4. Starting at the bottom edge of the door panel (A), detach the clips (B) with a commercially available trim pad remover.
5. Starting at the rear, pull the door panel upward.
6. Remove the inner handle (C) from the door panel, then remove the door panel.

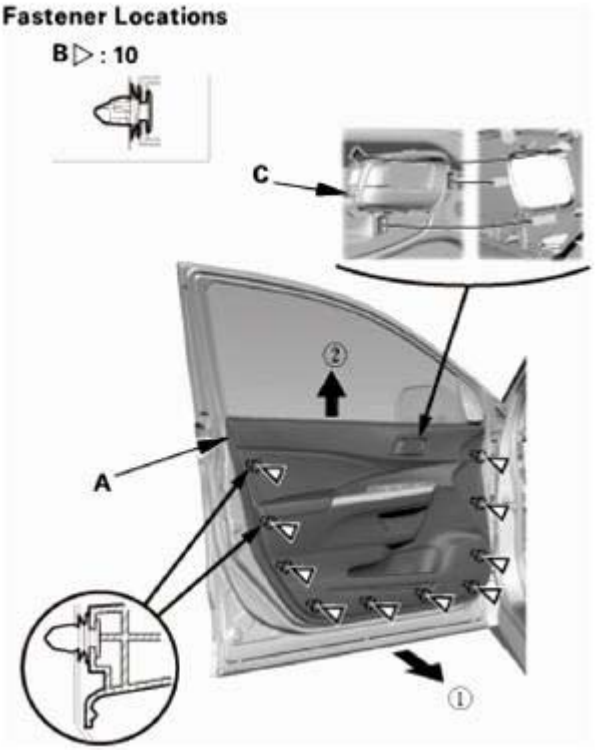

Fig. 62: Removing Door Panel
Courtesy of AMERICAN HONDA MOTOR CO., INC.

GETtheMANUALS.org

4. Front Door Plastic Cover
    1. Disconnect the connector (A), then detach the harness clips (B).
    2. Remove the screws (C), then remove the pull pocket bracket (D).

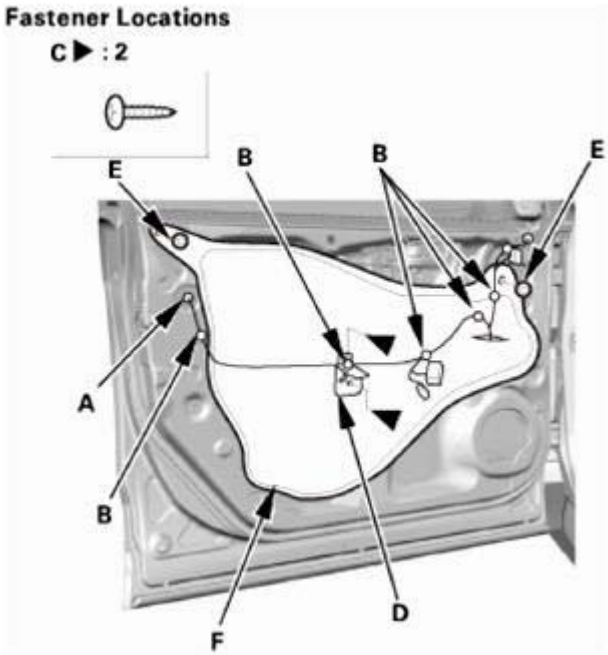

Fig. 63: Identifying Connector, Pocket Bracket, Plug Caps, Plastic Cover, Harness Clips And Screws
Courtesy of AMERICAN HONDA MOTOR CO., INC.

    3. Remove the plug caps (E), then carefully remove the plastic cover (F).

NOTE: If the plastic cover is damaged or torn, replace it with a new one.

5. Front Door Glass Support
    1. Carefully lower the glass (A) until you can see the glass mounting bolts (B), then remove them.

GETtheMANUALS.org

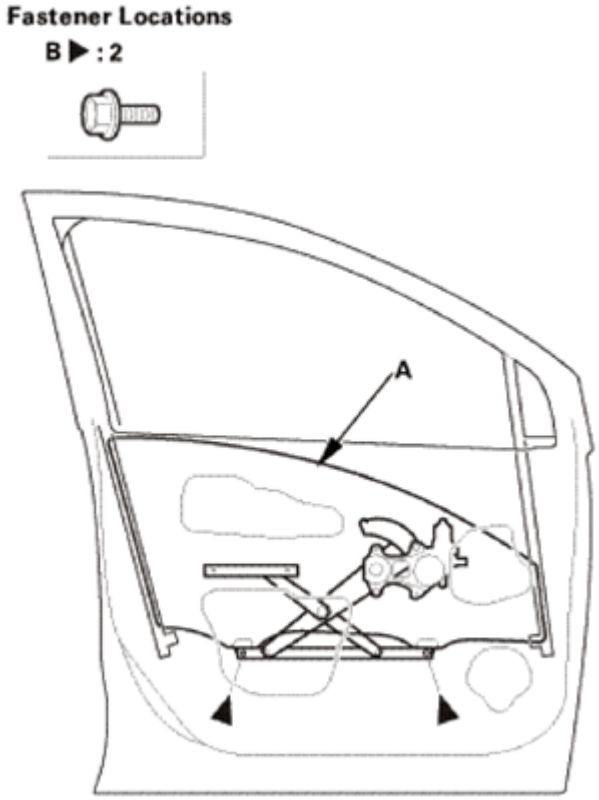

Fig. 64: Removing Front Door Glass
Courtesy of AMERICAN HONDA MOTOR CO., INC.

2. Raise the glass (A), then secure the glass with tape (B). Take care not to drop the glass inside the door.

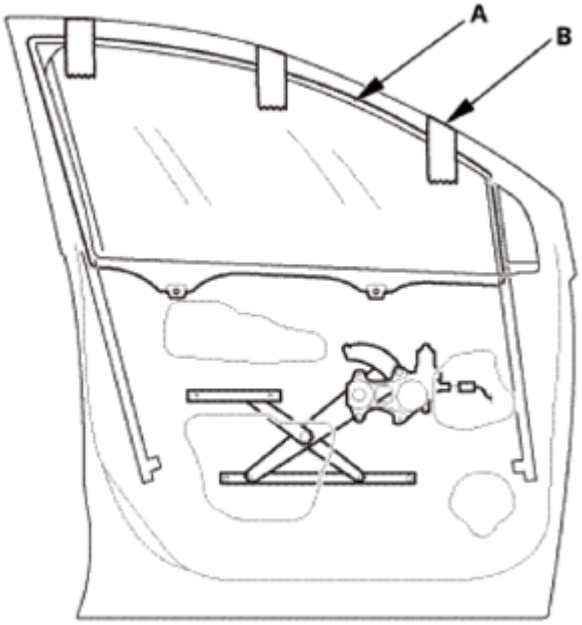

GETtheMANUALS.org

Fig. 65: Securing Glass Using Tape
Courtesy of AMERICAN HONDA MOTOR CO., INC.

6. Front Door Regulator
    1. Disconnect the connector (A) from the regulator (B).
    2. Remove the nuts (C).
    3. Remove the bolts (D), and loosen the bolts (E), then remove the regulator through the hole in the door.

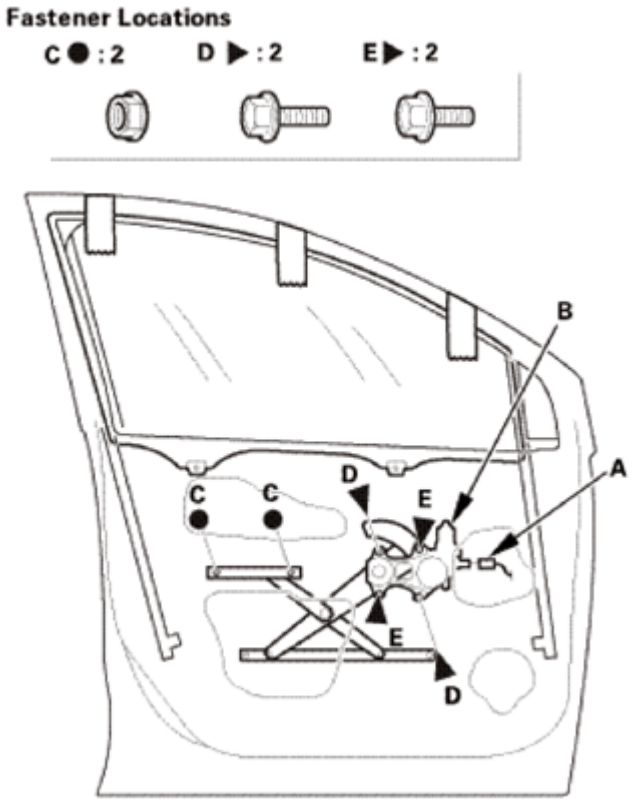

Fig. 66: Identifying Door Regulator, Connector, Nuts And Bolts
Courtesy of AMERICAN HONDA MOTOR CO., INC.

7. Front Power Window Motor
    1. Remove the power window motor (A).

GETtheMANUALS.org

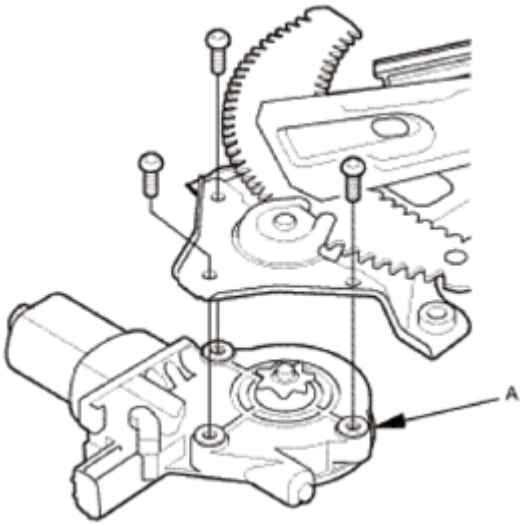

Fig. 67: Identifying Power Window Motor And Bolts
Courtesy of AMERICAN HONDA MOTOR CO., INC.

INSTALLATION

1. Front Power Window Motor

NOTE: **Screw threads are not tapped into the new power window motor. Install the new motor as follows, using the self-tapping screws (A) provided.**

1. Position the power window motor (B) under the regulator (C) as shown, and tighten the self-tapping screws until the screw heads just make contact with the linkage.

NOTE:
- **Keep the screws perfectly straight while screwing them in.**
- **Do not use an air tool or impact wrench to install the screws.**
- **Use only the self-tapping bolts provided with the motor.**

2. Loosen the screws, then retighten them to the specified torque.

GETtheMANUALS.org

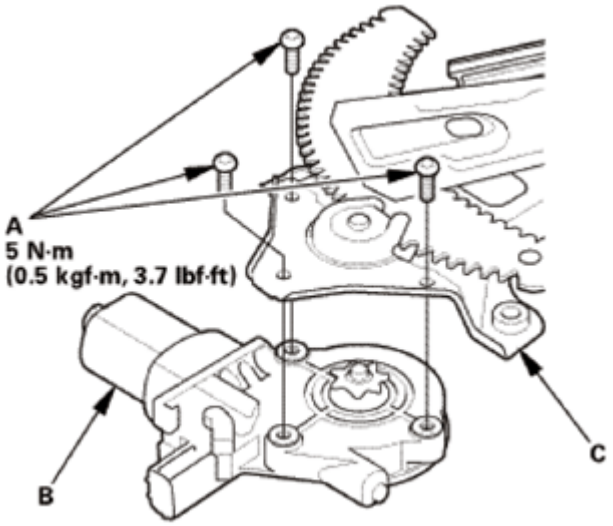

Fig. 68: Identifying Power Window Motor, Regulator And Screws
Courtesy of AMERICAN HONDA MOTOR CO., INC.

2. Front Door Regulator
    1. Apply multipurpose grease to the sliding surfaces of the regulator (A) where as shown.

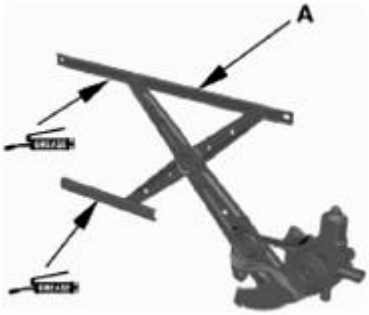

Fig. 69: Identifying Multipurpose Grease Applying Area On Sliding Surfaces Of Regulator
Courtesy of AMERICAN HONDA MOTOR CO., INC.

    2. Install the regulator (A) through the hole in the door, then install the nuts (B) and the bolts (C, D).
    3. Connect the connector (E) to the regulator.

GETtheMANUALS.org

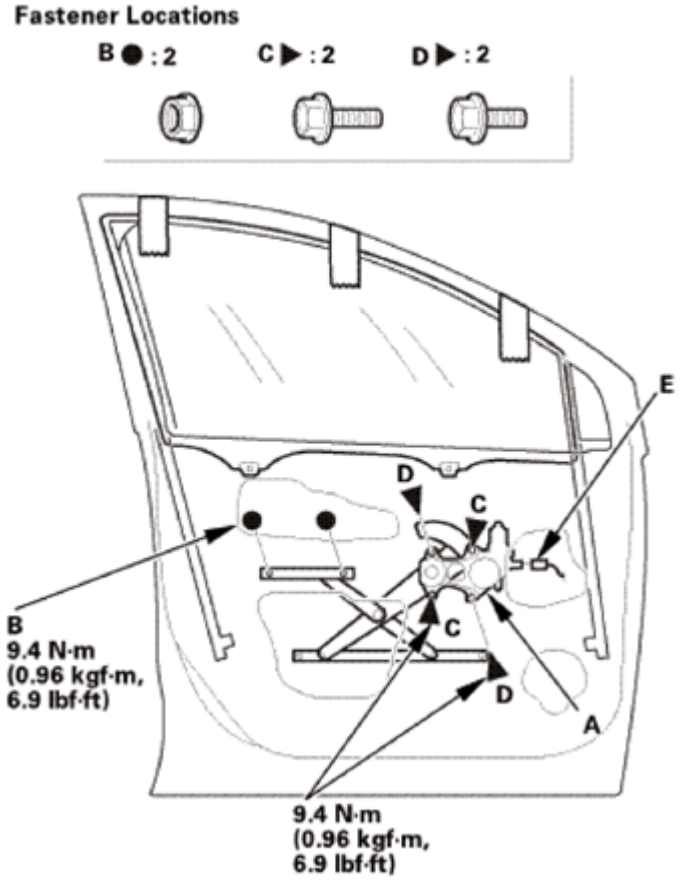

Fig. 70: Identifying Door Regulator, Connector, Nuts And Bolts
Courtesy of AMERICAN HONDA MOTOR CO., INC.

3. Front Door Glass Support
    1. While holding the glass (A), remove the tape (B), then carefully lower the glass. Take care not to drop the glass inside the door.

GETtheMANUALS.org

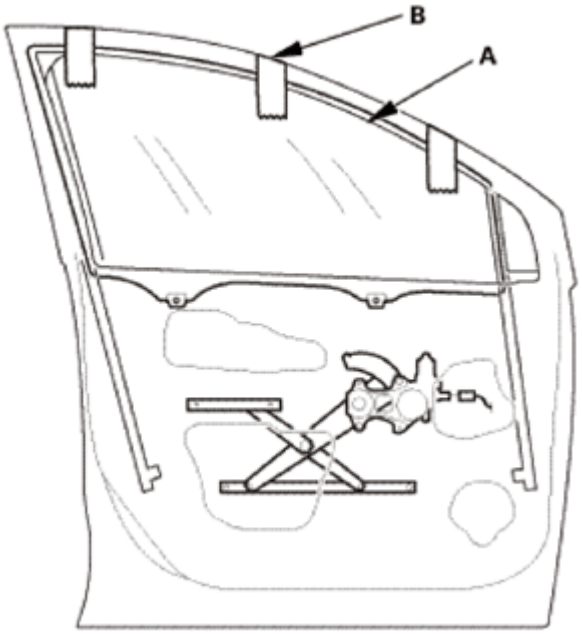

Fig. 71: Holding Glass Using Tape
Courtesy of AMERICAN HONDA MOTOR CO., INC.

2. Install the glass mounting bolts (A).

GETtheMANUALS.org

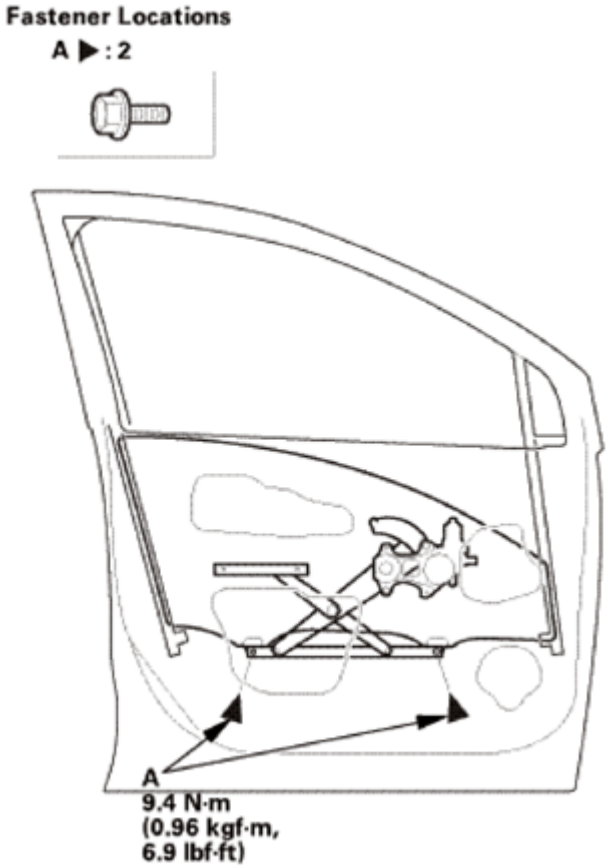

Fig. 72: Identifying Glass Mounting Bolts With Torque Specifications
Courtesy of AMERICAN HONDA MOTOR CO., INC.

4. Front Door Glass - Adjustment
    1. Do the **Front Door Glass Adjustment**
5. Front Door Plastic Cover
    1. Install the plastic cover (A), then install the plug caps (B).
    2. Install the pull pocket bracket (C), then install the screws (D).
    3. Connect the connector (E), then install the harness clips (F).

GETtheMANUALS.org

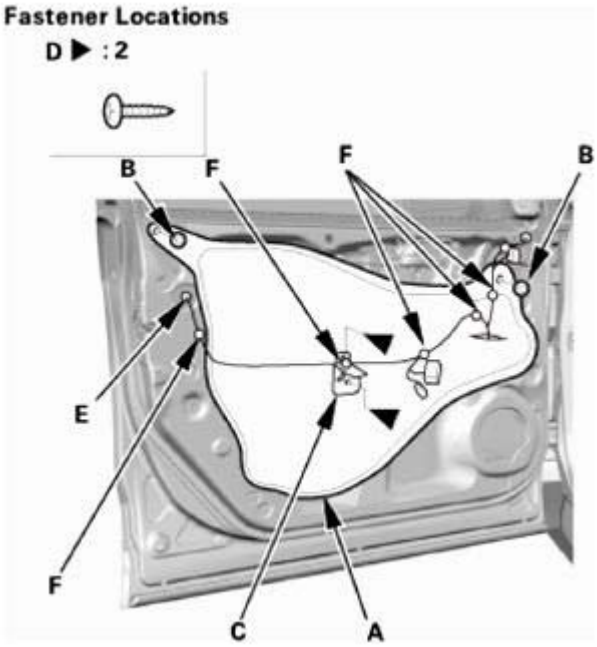

Fig. 73: Identifying Connector, Pocket Bracket, Plug Caps, Plastic Cover, Harness Clips And Screws
Courtesy of AMERICAN HONDA MOTOR CO., INC.

6. Front Door Panel
    1. Install the inner handle (A) in the door panel (B).
    2. Install the door panel. Make sure the clips (C) snap into place securely.

GETtheMANUALS.org

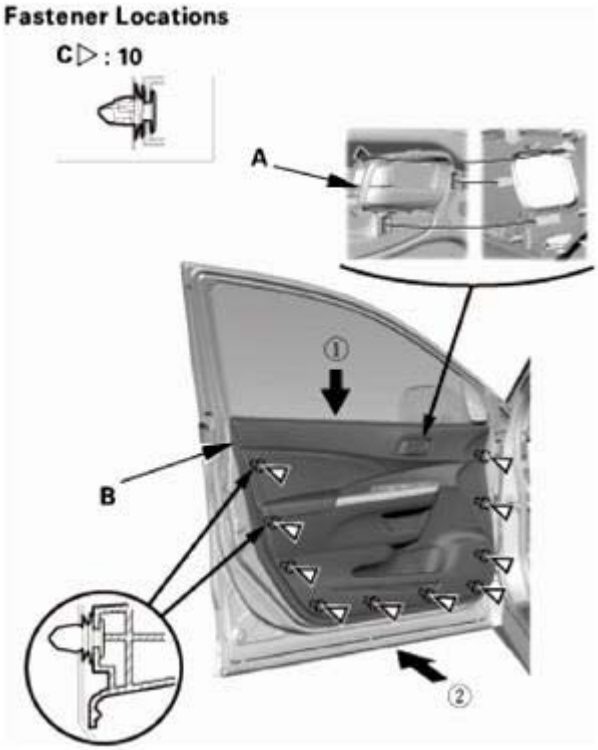

Fig. 74: Installing Inner Handle To Door Panel
Courtesy of AMERICAN HONDA MOTOR CO., INC.

3. Install the screw (A), then install the pull pocket mat (B).

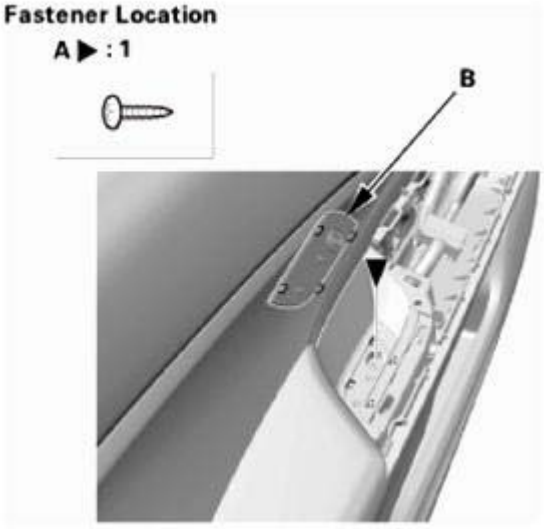

Fig. 75: Identifying Pocket Mat And Screw
Courtesy of AMERICAN HONDA MOTOR CO., INC.

4. Install the screws (A) securing the inner handle (B).

GETtheMANUALS.org

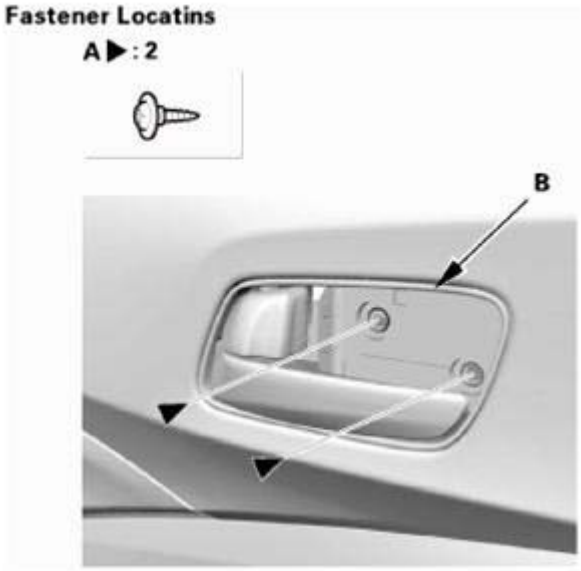

Fig. 76: Identifying Inner Handle And Screw
Courtesy of AMERICAN HONDA MOTOR CO., INC.

5. Install the inner handle cap (A). Make sure the upper hook (B) and the lower hooks (C) snap into place securely.

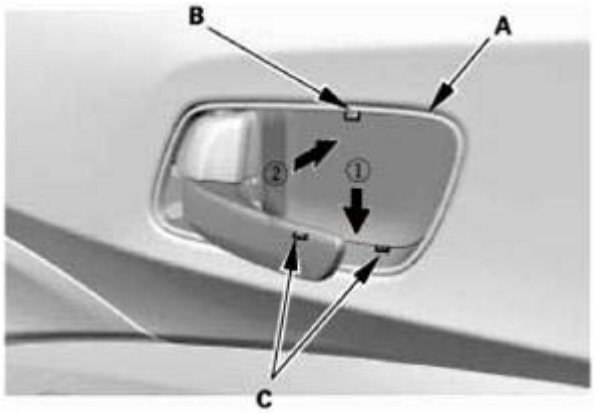

Fig. 77: Installing Inner Handle Cap
Courtesy of AMERICAN HONDA MOTOR CO., INC.

7. Front Door Power Window Switch Panel
    1. Connect the connectors (A), then install the power window switch panel (B). Make sure the clips (C) and the hooks (D) snap into place securely.

GETtheMANUALS.org

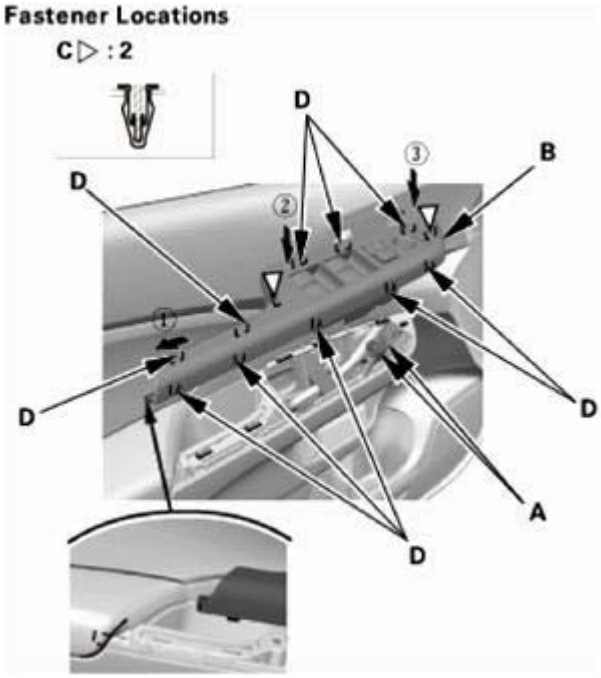

Fig. 78: Installing Power Window Switch Panel
Courtesy of AMERICAN HONDA MOTOR CO., INC.

8. Door Mirror Cover
    1. With tweeter: Connect the connector (A).
    2. Install the door mirror cover (B). Make sure the clips (C) snap into place securely.

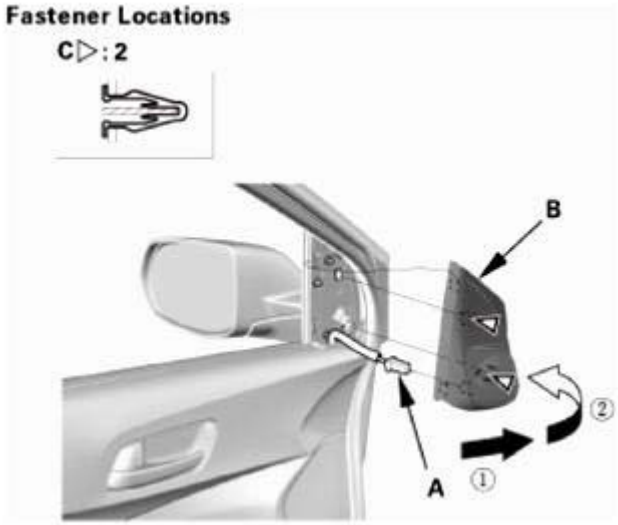

Fig. 79: Installing Door Mirror Cover
Courtesy of AMERICAN HONDA MOTOR CO., INC.

9. Power Window Control Unit - Reset

GETtheMANUALS.org

1. **DO THE POWER WINDOW CONTROL UNIT RESETTING PROCEDURE**.

GLASS COMPONENT LOCATION INDEX

FRONT

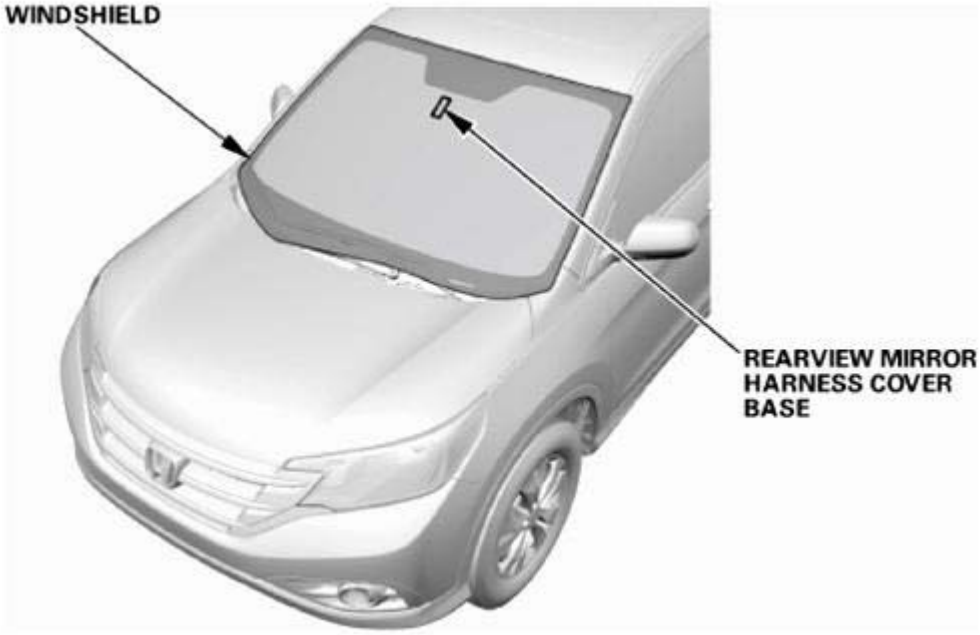

Fig. 80: Identifying Windshield And Rearview Mirror Harness Cover Base
Courtesy of AMERICAN HONDA MOTOR CO., INC.

WINDSHIELD	**REMOVAL AND INSTALLATION**
REARVIEW MIRROR HARNESS COVER BASE	**REMOVAL AND INSTALLATION**

Rear

GETtheMANUALS.org

Fig. 81: Identifying Quarter Glass And Rear Window
Courtesy of AMERICAN HONDA MOTOR CO., INC.

QUARTER GLASS	**REMOVAL AND INSTALLATION**
REAR WINDOW	**REMOVAL AND INSTALLATION**

POWER WINDOW MASTER SWITCH REMOVAL AND INSTALLATION

REMOVAL

1. Front Door Power Window Switch Panel
    1. Carefully pry out on the notch (A) in the power window switch panel (B) with the appropriate trim tool to detach the clips (C) and the hooks (D). Disconnect the connectors (E), then remove the power window switch panel.

GETtheMANUALS.org

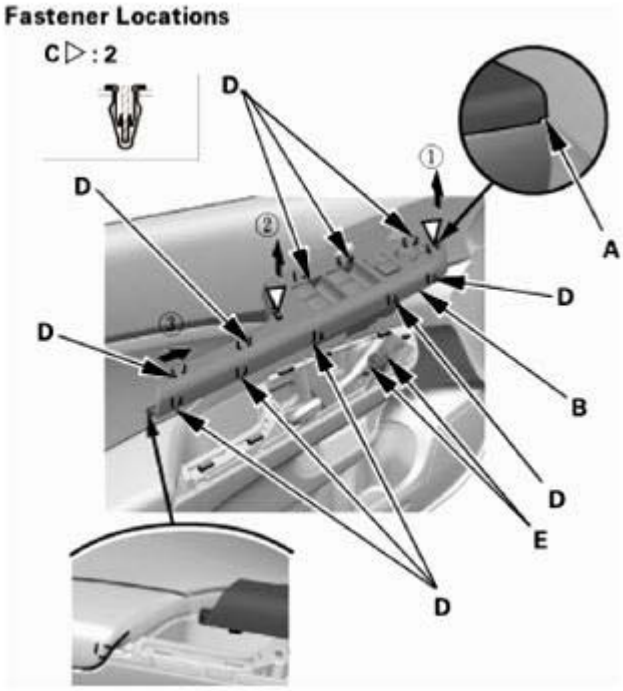

Fig. 82: Removing Power Window Switch Panel
Courtesy of AMERICAN HONDA MOTOR CO., INC.

2. Front Door Power Window Switch - Driver's Side
    1. Remove the power window master switch (A).

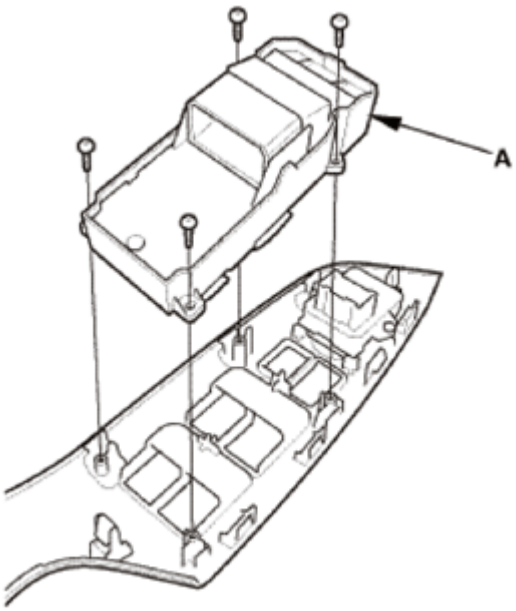

Fig. 83: Identifying Power Window Master Switch And Mounting Bolts
Courtesy of AMERICAN HONDA MOTOR CO., INC.

GETtheMANUALS.org

INSTALLATION

1. Front Door Power Window Switch - Driver's Side
    1. Install the power window master switch (A).

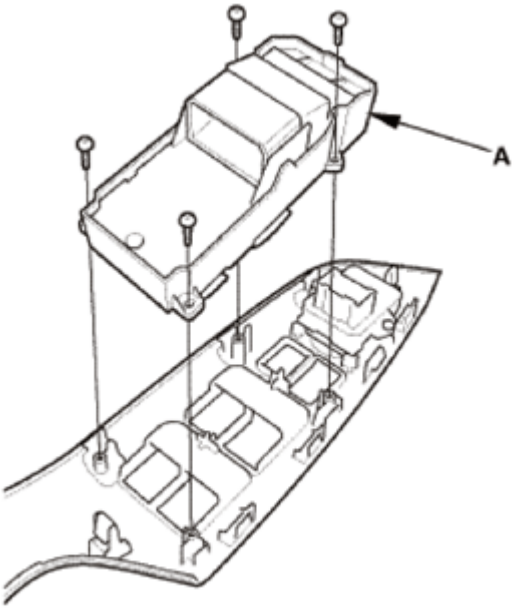

Fig. 84: Identifying Power Window Master Switch And Mounting Bolts
Courtesy of AMERICAN HONDA MOTOR CO., INC.

2. Front Door Power Window Switch Panel
    1. Connect the connectors (A), then install the power window switch panel (B). Make sure the clips (C) and the hooks (D) snap into place securely.

GETtheMANUALS.org

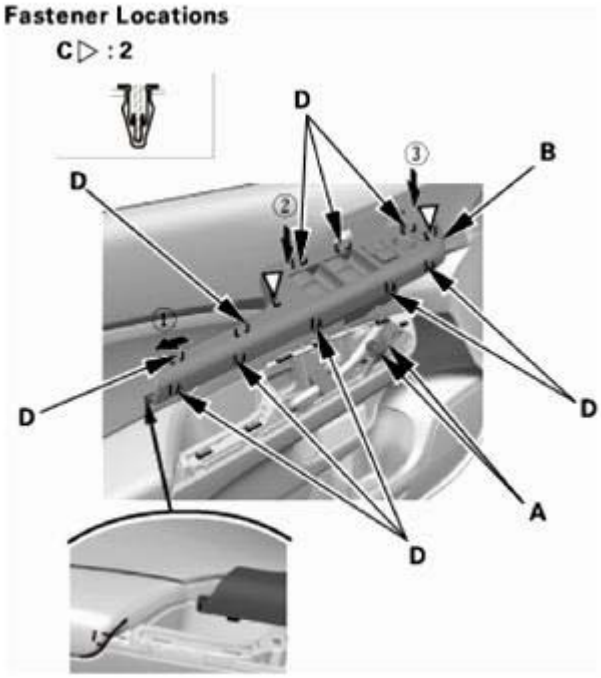

Fig. 85: Installing Power Window Switch Panel
Courtesy of AMERICAN HONDA MOTOR CO., INC.

3. Power Window Control Unit - Reset
    1. **DO THE POWER WINDOW CONTROL UNIT RESETTING PROCEDURE**.

POWER WINDOWS COMPONENT LOCATION INDEX

GETtheMANUALS.org

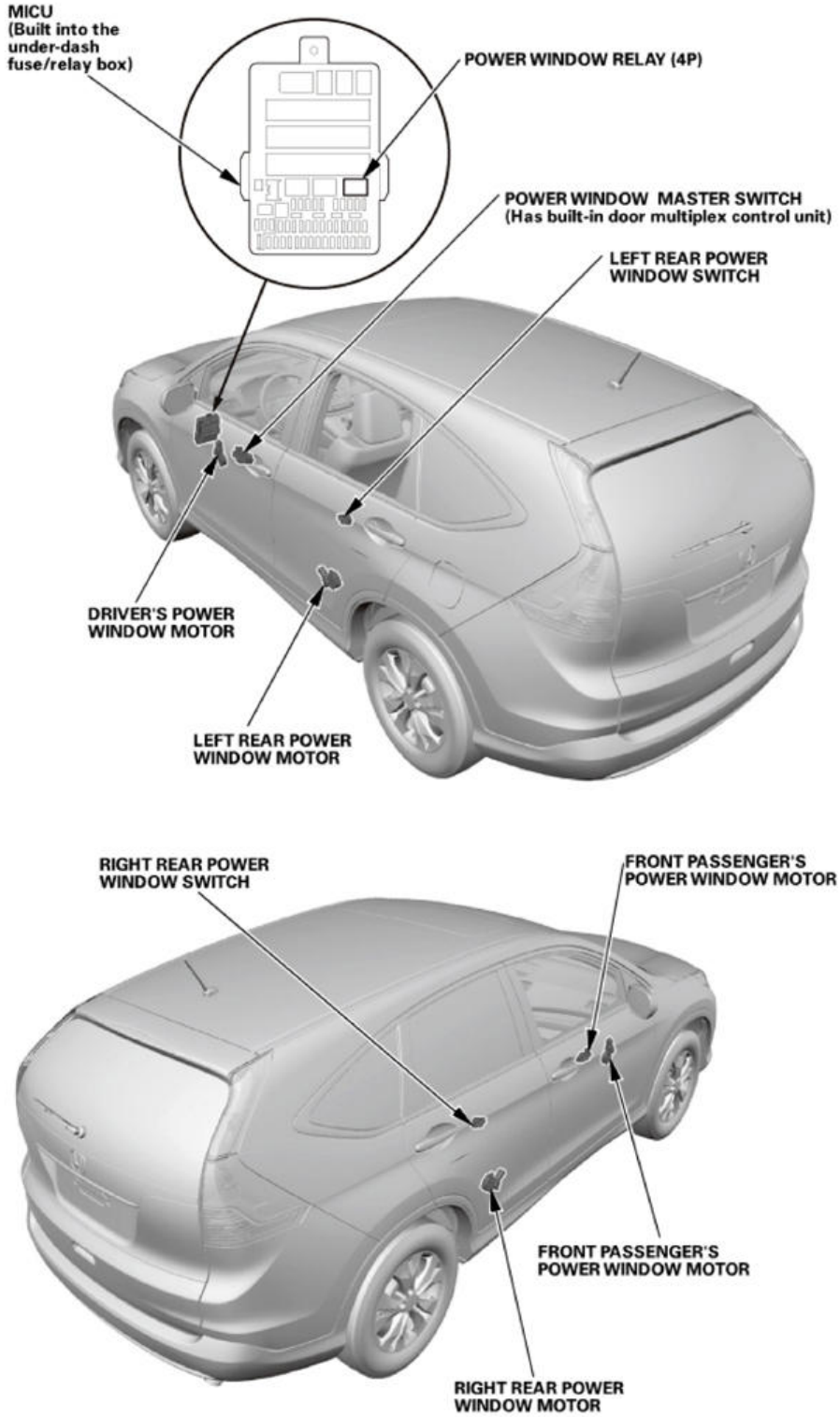

Fig. 86: Power Windows Components Location
Courtesy of AMERICAN HONDA MOTOR CO., INC.

DRIVER'S POWER	**REMOVAL AND INSTALLATION**

GETtheMANUALS.org

WINDOW MOTOR POWER	**Test** See **DRIVER'S POWER WINDOW MOTOR TEST**, **FRONT PASSENGER'S POWER WINDOW MOTOR TEST** or **REAR POWER WINDOW MOTOR TEST**
FRONT PASSENGER'S POWER WINDOW MOTOR	**REMOVAL AND INSTALLATION**
	Test See **DRIVER'S POWER WINDOW MOTOR TEST**, **FRONT PASSENGER'S POWER WINDOW MOTOR TEST** or **REAR POWER WINDOW MOTOR TEST**
FRONT PASSENGER'S POWER WINDOW SWITCH	**Removal and Installation** See **FRONT PASSENGER'S POWER WINDOW SWITCH REMOVAL AND INSTALLATION** or **REAR POWER WINDOW SWITCH REMOVAL AND INSTALLATION**
	Test See **FRONT PASSENGER'S POWER WINDOW SWITCH TEST** or **REAR POWER WINDOW SWITCH TEST**
LEFT REAR POWER WINDOW MOTOR	**Test** See **DRIVER'S POWER WINDOW MOTOR TEST**, **FRONT PASSENGER'S POWER WINDOW MOTOR TEST** or **REAR POWER WINDOW MOTOR TEST**
LEFT REAR POWER WINDOW SWITCH	**Removal and Installation** See **FRONT PASSENGER'S POWER WINDOW SWITCH REMOVAL AND INSTALLATION** or **REAR POWER WINDOW SWITCH REMOVAL AND INSTALLATION**
	Test See **FRONT PASSENGER'S POWER WINDOW SWITCH TEST** or **REAR POWER WINDOW SWITCH TEST**
POWER WINDOW MASTER SWITCH	**INPUT TEST**
	REMOVAL AND INSTALLATION
	RESETTING THE POWER WINDOW CONTROL UNIT
RIGHT REAR POWER WINDOW MOTOR	**Test** See **DRIVER'S POWER WINDOW MOTOR TEST** or **FRONT PASSENGER'S POWER WINDOW MOTOR TEST** or **REAR POWER WINDOW MOTOR TEST**
RIGHT REAR POWER WINDOW SWITCH	**Removal and Installation** See **FRONT PASSENGER'S POWER WINDOW SWITCH REMOVAL AND INSTALLATION** or **REAR POWER WINDOW SWITCH REMOVAL AND INSTALLATION**
	Test See **FRONT PASSENGER'S POWER WINDOW SWITCH TEST** or **REAR POWER WINDOW SWITCH TEST**

AUTO REVERSE POWER WINDOW OPERATION MALFUNCTION

GETtheMANUALS.org

Power Windows Symptom Troubleshooting - Auto reverse power window operation malfunction

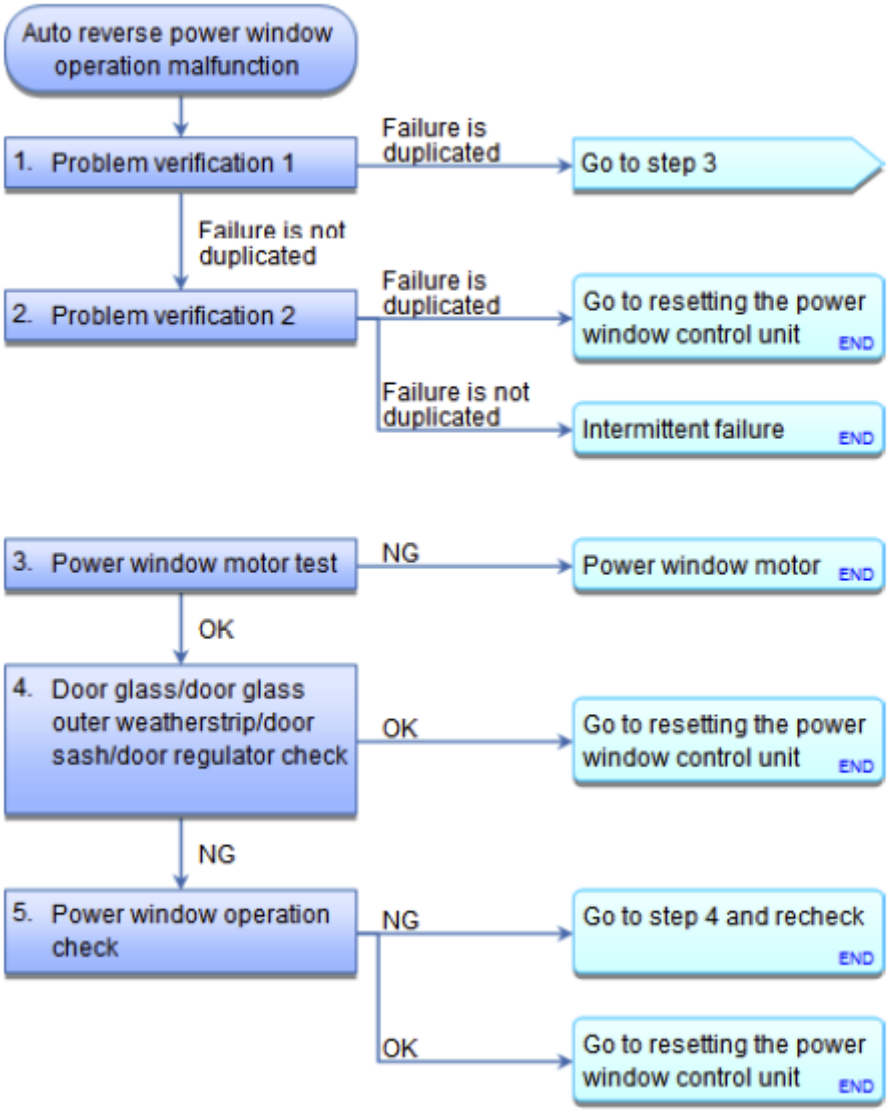

Fig. 87: Power Windows Symptom Troubleshooting Flow Chart (Auto Reverse Power Window Operation Malfunction)
Courtesy of AMERICAN HONDA MOTOR CO., INC.

NOTE: **Refer to the power windows system description in the construction and function guide.**

Incorrect actuation of the power window may occur in the following situations:

- AUTO UP/AUTO DOWN operation while the vehicle is driving over bad roads.
- AUTO UP/AUTO DOWN operation while the door is opening or closing.

1. Problem verification 1:

GETtheMANUALS.org

- 1. Start the engine.
- 2. Fully open the door glass using the power window AUTO DOWN switch.
- 3. Fully close the door glass using the power window AUTO UP switch.

Does the door glass reverse as it is closing?

YES : Go to step 3.

NO : Go to step 2.

2. Problem verification 2:
   - 1. Fully open the door glass using the power window AUTO DOWN switch.
   - 2. Fully close the door glass using the power window AUTO UP switch.

Does the door glass reverse at once, after it has closed completely?

YES : Go to **RESETTING THE POWER WINDOW CONTROL UNIT**.

NO : Intermittent failure, the power window is OK at this time.

3. Power window motor test:
   - 1. **Check the power window motor** See **DRIVER'S POWER WINDOW MOTOR TEST**, **FRONT PASSENGER'S POWER WINDOW MOTOR TEST** or **REAR POWER WINDOW MOTOR TEST**.

Is the power window motor OK?

YES : Go to step 4.

NO : **REPLACE THE POWER WINDOW MOTOR**.

4. Door glass/door glass outer weatherstrip/door sash/door regulator check:
   - 1. Remove the door panel and plastic cover, then remove the bolts holding the window glass to the regulator. See **Front Door Glass Adjustment**, **Rear Door Glass Adjustment**, **Front Door Regulator Removal and Installation** or **Rear Door Regulator Removal and Installation**
   - 2. Slide the window glass up and down in the run channel by hand and feel for any binding.

Does the window glass bind as it is moving up and down in the run channel?

YES : Repair or replace any parts necessary, then go to step 5.

NO : Go to **RESETTING THE POWER WINDOW CONTROL UNIT**, then recheck.

5. Power window operation check:
   - 1. **RESETTING THE POWER WINDOW CONTROL UNIT**.

GETtheMANUALS.org

- 2. Fully open the door glass using the power window AUTO DOWN switch.
- 3. Fully close the door glass using the power window AUTO UP switch.

Does the door glass reverse as it is closing?

YES : Troubleshooting is not complete; go to step 4 and recheck.

NO : Troubleshooting is complete; go to **RESETTING THE POWER WINDOW CONTROL UNIT**.

QUARTER GLASS REMOVAL AND INSTALLATION

REMOVAL

1. Rear Door Sill Trim
    1. Pull the release strap to fold down the rear seat, then lift-up and latch the rear seat-back in the upright position.
    2. Detach the hooks (A) and the tab (B) from the B-pillar lower trim (C) and the rear side trim panel (D), and pull up the rear door inner sill trim (E) by hand to detach the clips (F, G), then remove the trim.

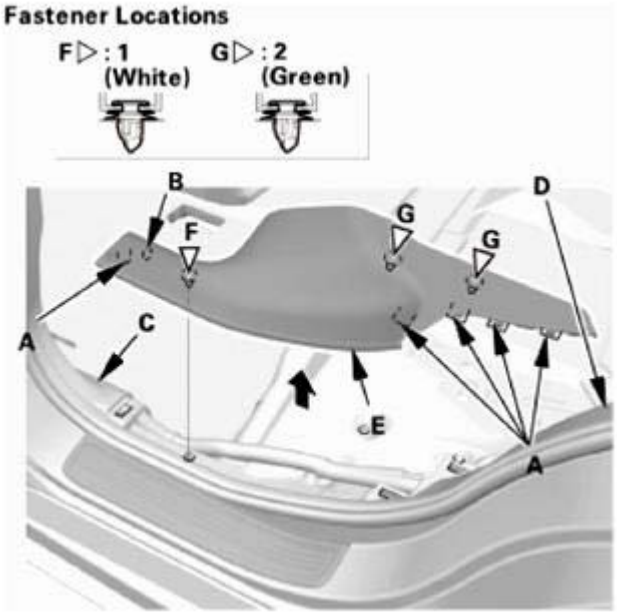

Fig. 88: Removing Rear Door Sill Trim
Courtesy of AMERICAN HONDA MOTOR CO., INC.

2. Rear Door Opening Seal As Needed
    1. Pull out the rear door opening seal (A) from the trim hooks (B) around the rear door opening flange as needed.

GETtheMANUALS.org

Fig. 89: Removing Rear Door Opening Seal From Trim Hooks
Courtesy of AMERICAN HONDA MOTOR CO., INC.

3. Tonneau Cover (For Some Models)
    1. Remove the tonneau cover (A).

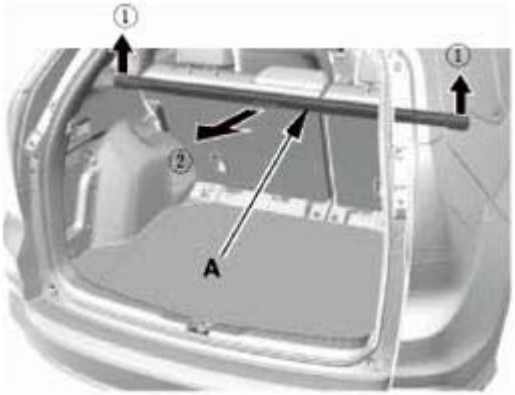

Fig. 90: Removing Tonneau Cover
Courtesy of AMERICAN HONDA MOTOR CO., INC.

4. Cargo Floor Cover
    1. Remove the cargo floor cover (A).

GETtheMANUALS.org

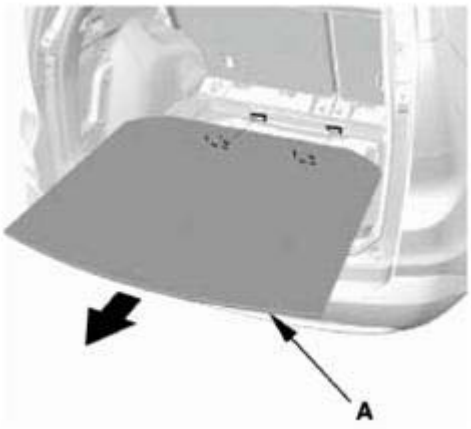

Fig. 91: Removing Cargo Floor Cover
Courtesy of AMERICAN HONDA MOTOR CO., INC.

5. Tailgate Weatherstrip As Needed
    1. Detach the tailgate weatherstrip (A) as needed.

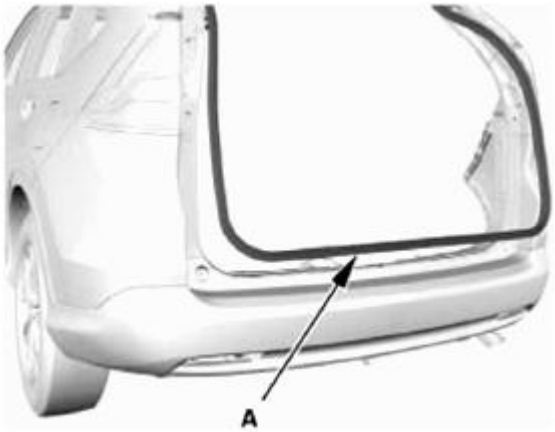

Fig. 92: Identifying Tailgate Weatherstrip
Courtesy of AMERICAN HONDA MOTOR CO., INC.

6. Rear Trim Panel
    1. Remove the clips (A).
    2. Detach the hooks (B) and the tabs (C) from the rear side trim panels (D), and pull up the rear trim panel (E) by hand to detach the clips (F, G), then remove the rear trim panel.

GETtheMANUALS.org

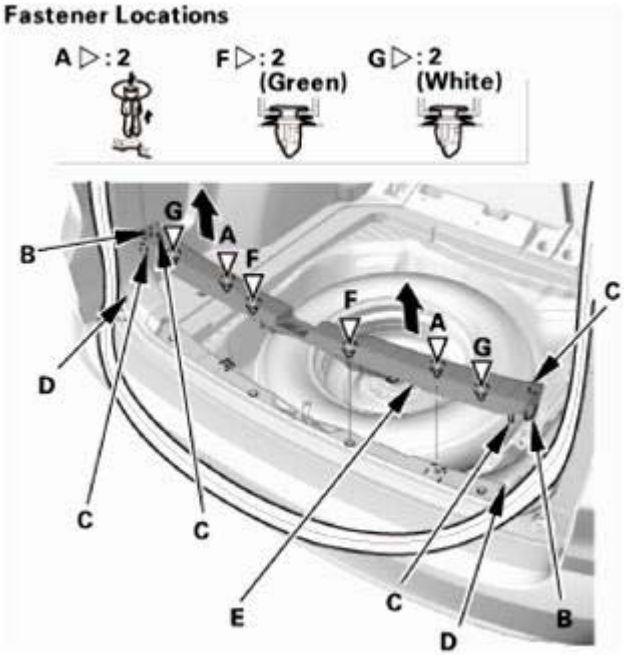

Fig. 93: Removing Rear Side Trim Panel
Courtesy of AMERICAN HONDA MOTOR CO., INC.

7. Rear Damper Maintenance Cover
    1. Fold down the rear seat-back.
    2. Pull up the rear damper maintenance cover (A) by hand to detach the hooks (B), then remove the rear damper maintenance cover.

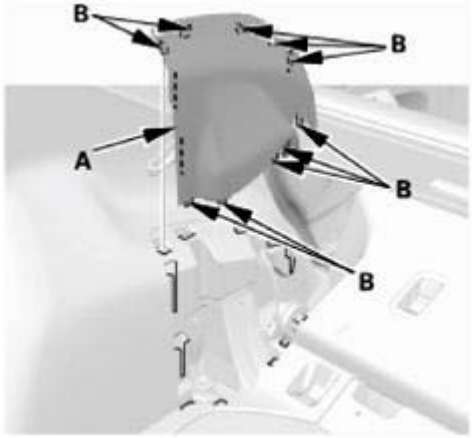

Fig. 94: Identifying Rear Damper Maintenance Cover And Hooks
Courtesy of AMERICAN HONDA MOTOR CO., INC.

8. Rear Carpet Trim
    1. Detach the clips (A), then tuck up the rear seat-back cover (B).

GETtheMANUALS.org

Left side

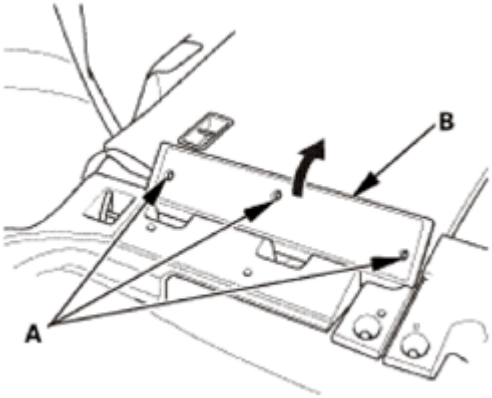

Fig. 95: Removing Rear Seat-Back Cover (Left Side)
Courtesy of AMERICAN HONDA MOTOR CO., INC.

Right side

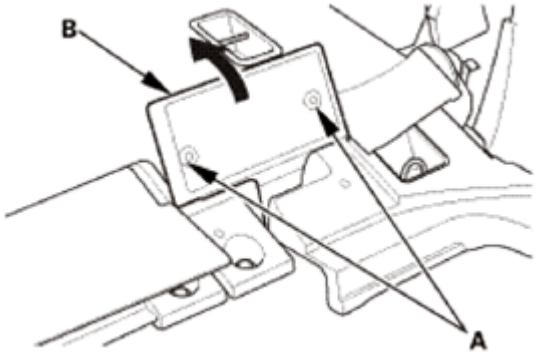

Fig. 96: Removing Rear Seat-Back Cover (Right Side)
Courtesy of AMERICAN HONDA MOTOR CO., INC.

2. Detach the hooks (A) from the rear side trim panel (B), and pull up the rear carpet trim (C) by hand to detach the clips (D), then remove the rear carpet trims.

Left side

GETtheMANUALS.org

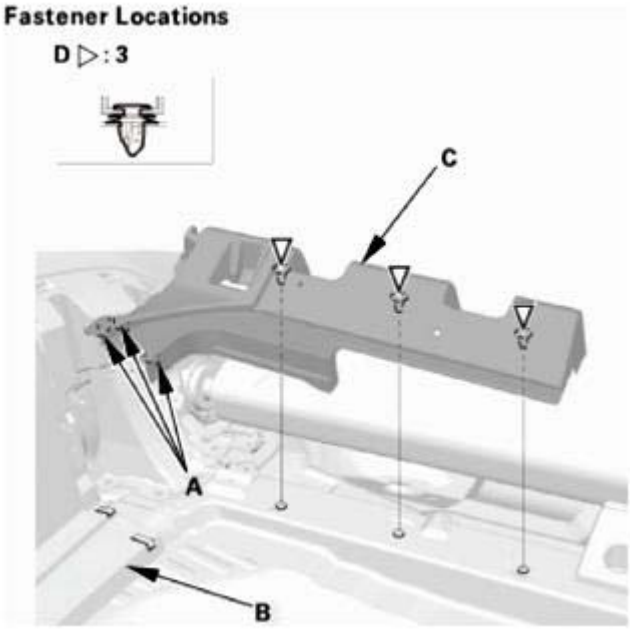

Fig. 97: Identifying Rear Side Trim Panel, Rear Carpet Trim, Hooks And Clips (Left Side)
Courtesy of AMERICAN HONDA MOTOR CO., INC.

Right side

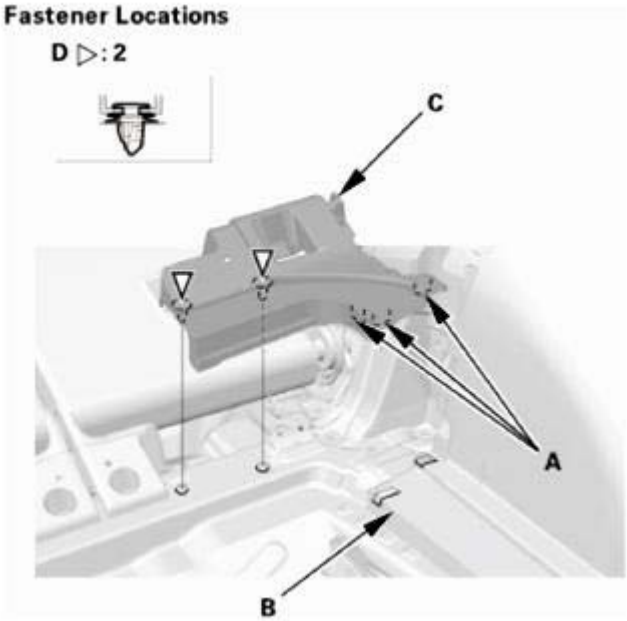

Fig. 98: Identifying Rear Side Trim Panel, Rear Carpet Trim, Hooks And Clips (Right Side)
Courtesy of AMERICAN HONDA MOTOR CO., INC.

9. Rear Seat Foot Cover
    1. Pull up the rear seat foot cover (A) by hand to detach the clips (B).

GETtheMANUALS.org

2. Detach the hooks (C), then remove the rear seat foot cover.

Left Side

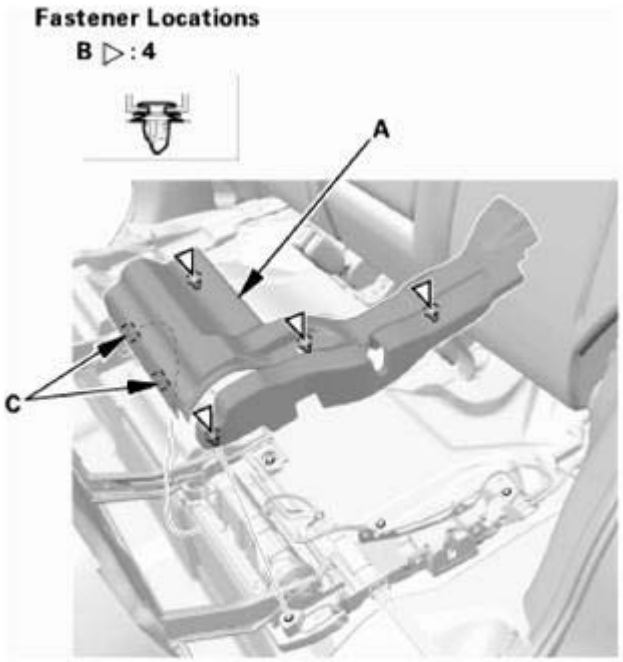

Fig. 99: Identifying Rear Seat Foot Cover, Clips And Hooks (Left Side)
Courtesy of AMERICAN HONDA MOTOR CO., INC.

Right Side

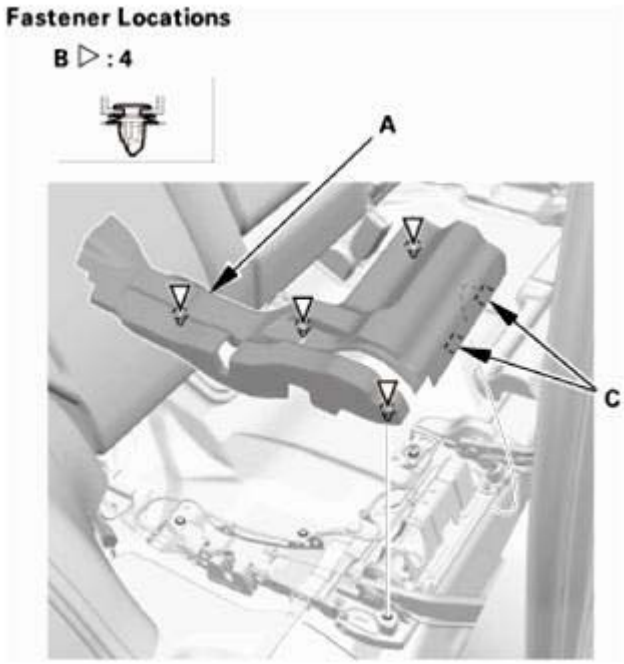

GETtheMANUALS.org

Fig. 100: Identifying Rear Seat Foot Cover, Clips And Hooks (Right Side)
Courtesy of AMERICAN HONDA MOTOR CO., INC.

10. Rear Seat Belt Lower Anchor Bolt
    1. Remove the rear seat belt lower anchor bolt (A).

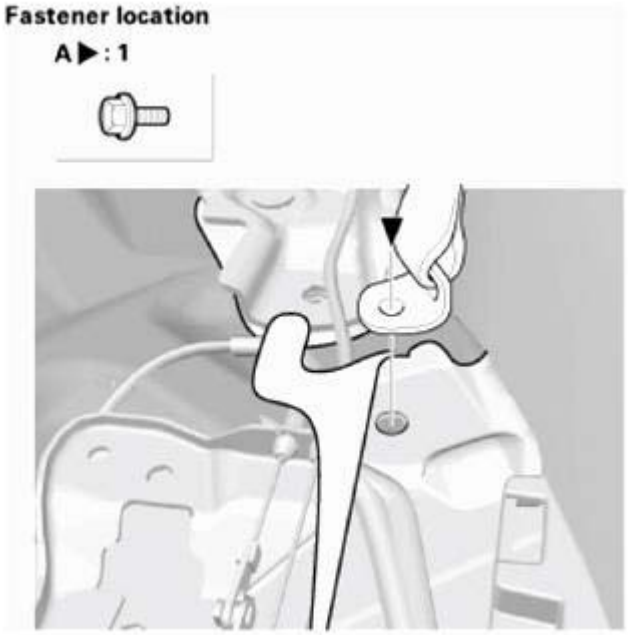

Fig. 101: Identifying Rear Seat Belt Lower Anchor Bolt
Courtesy of AMERICAN HONDA MOTOR CO., INC.

11. Rear Side Trim Panel
    1. Carefully pry out on the upper hook (A) in the rear seat release lever cap (B) with the appropriate trim tool, then pull back the rear seat release lever cap to remove it.
    2. Remove the screws (C).

GETtheMANUALS.org

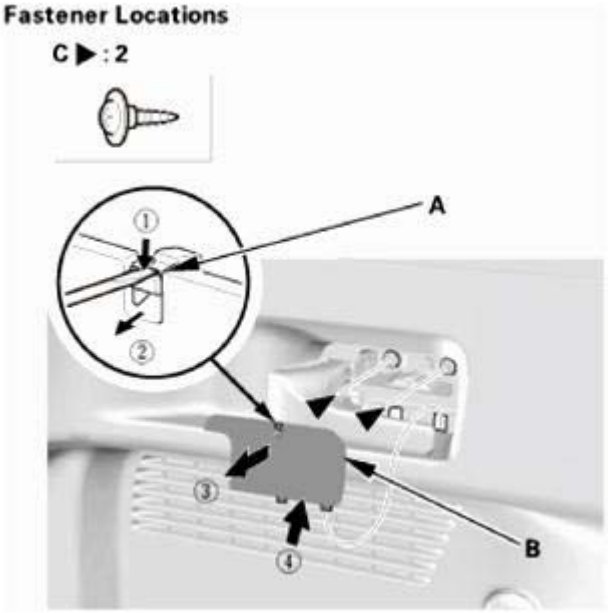

Fig. 102: Removing Rear Seat Release Lever Cap Upper Hook Using Tool
Courtesy of AMERICAN HONDA MOTOR CO., INC.

3. Push in the center pin (A), then remove the trunk hook (B).

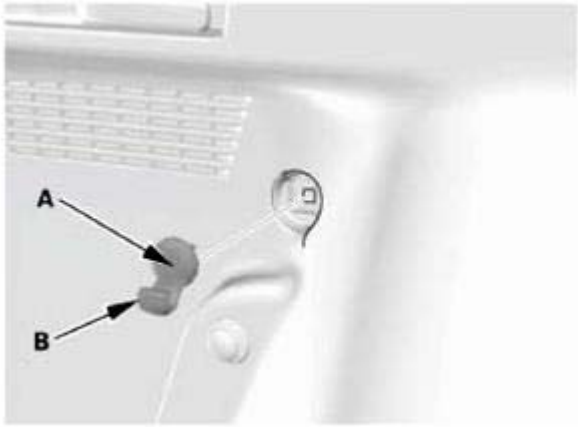

Fig. 103: Identifying Trunk Hook And Center Pin
Courtesy of AMERICAN HONDA MOTOR CO., INC.

4. Remove the bolt (A), then remove the tie-down hook (B).

GETtheMANUALS.org

Fig. 104: Identifying Tie-Down Hook And Bolt
Courtesy of AMERICAN HONDA MOTOR CO., INC.

5. Remove the clips (A, B).
6. Detach the hooks (C) and the tabs (D) from the quarter pillar trim (E), and pull out the rear side trim panel (F) by hand to detach the clips (G, H).

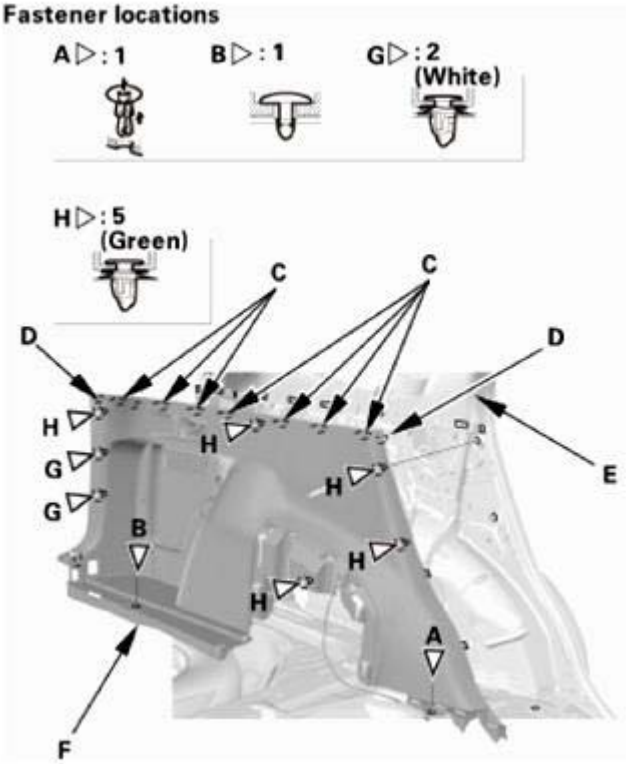

Fig. 105: Identifying Quarter Pillar Trim, Rear Side Trim Panel, Tabs, Hooks And Clips

GETtheMANUALS.org

Courtesy of AMERICAN HONDA MOTOR CO., INC.

7. Remove the rear seat release lever (A) from the rear side trim panel (B).

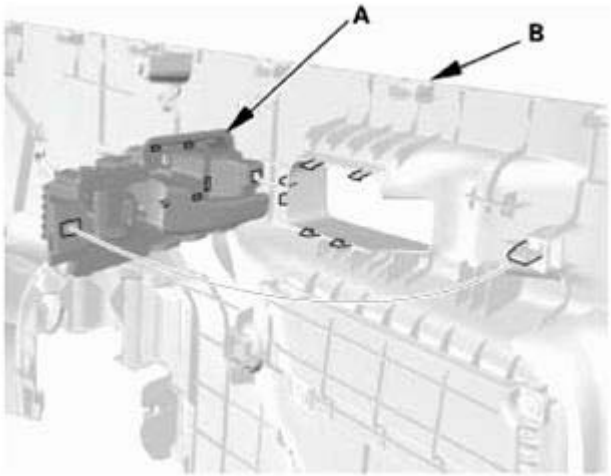

Fig. 106: Identifying Rear Seat Release Lever And Rear Side Trim Panel
Courtesy of AMERICAN HONDA MOTOR CO., INC.

8. Detach the rear seat release cable (A) from the clips of the rear side trim panel (B), then remove the rear side trim panel.

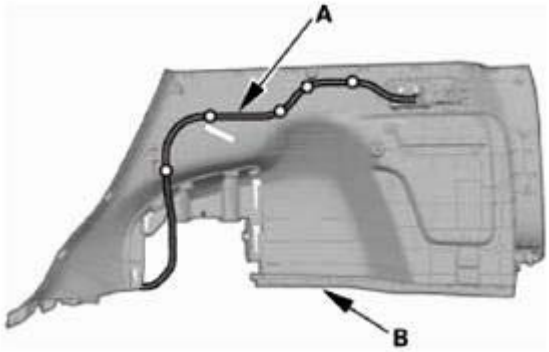

Fig. 107: Identifying Rear Seat Release Cable And Rear Side Trim Panel
Courtesy of AMERICAN HONDA MOTOR CO., INC.

12. Quarter Pillar Trim
    1. Pull out the quarter pillar trim (A) by hand to detach the clips (B, C, and D).
    2. Pass the rear seat belt lower anchor (E) out through the hole in the quarter pillar trim, then remove the quarter pillar trim.

GETtheMANUALS.org

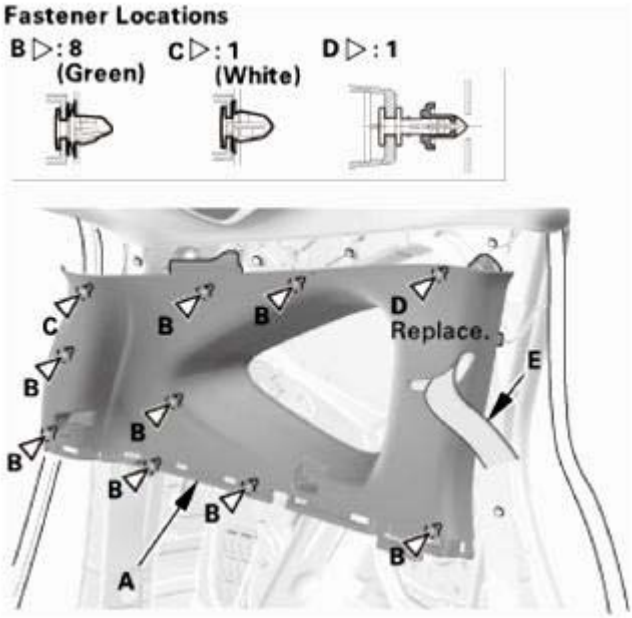

Fig. 108: Identifying Quarter Pillar Trim, Rear Seat Belt Lower Anchor And Clips
Courtesy of AMERICAN HONDA MOTOR CO., INC.

13. Quarter Glass
    1. Remove the front seal (A) from the front edge of the quarter glass (B). If necessary, cut the seal with a utility knife.

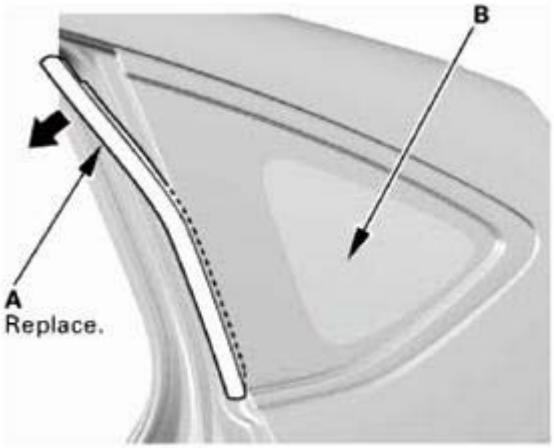

Fig. 109: Removing Front Seal From Quarter Glass Front Edge
Courtesy of AMERICAN HONDA MOTOR CO., INC.

    2. If the original quarter glass (A) will be reinstalled, make alignment marks (B) across the glass and the body with a grease pencil over the quarter glass molding (C).

GETtheMANUALS.org

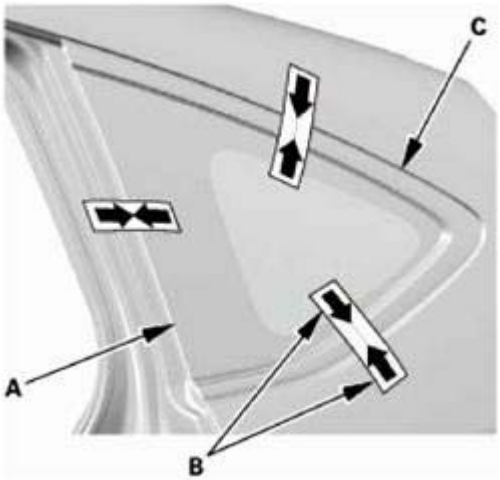

Fig. 110: Identifying Alignment Marks On Quarter Glass Molding
Courtesy of AMERICAN HONDA MOTOR CO., INC.

3. Apply protective tape along the inside and outside edges of the body. From the pillar side of the vehicle, to cut the adhesive (A) with a utility knife (B).

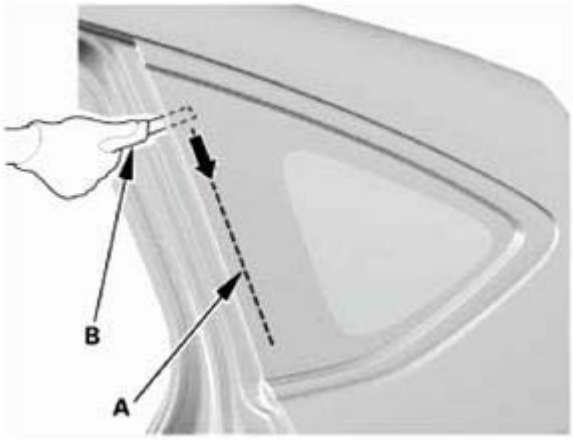

Fig. 111: Applying Protective Tape On Inside And Outside Edges Of Body
Courtesy of AMERICAN HONDA MOTOR CO., INC.

4. Make a hole with an awl through the adhesive from inside of the vehicle at the front corner of the quarter glass. Push a piece of piano wire through the hole, and wrap each end around a piece of wood.
5. With a helper on the outside, pull the piano wire (A) back and forth in a sawing motion. Hold the piano wire as close to the quarter glass (B) as possible to prevent damage to the body, and carefully cut through the adhesive (C) in the straight areas and the front corner, but not the rear corner.

GETtheMANUALS.org

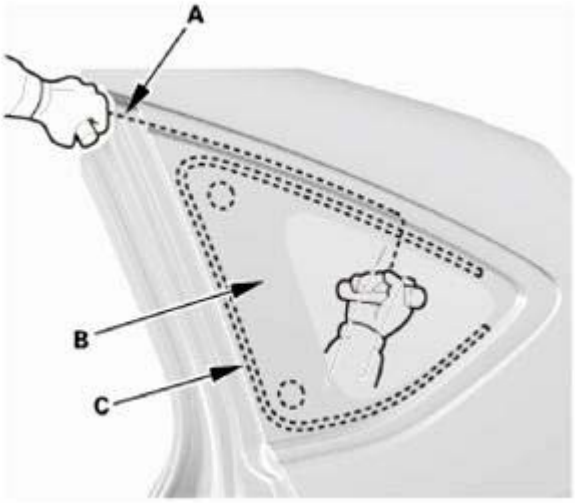

Fig. 112: Making Hole On Quarter Glass Using Awl
Courtesy of AMERICAN HONDA MOTOR CO., INC.

Cutting positions

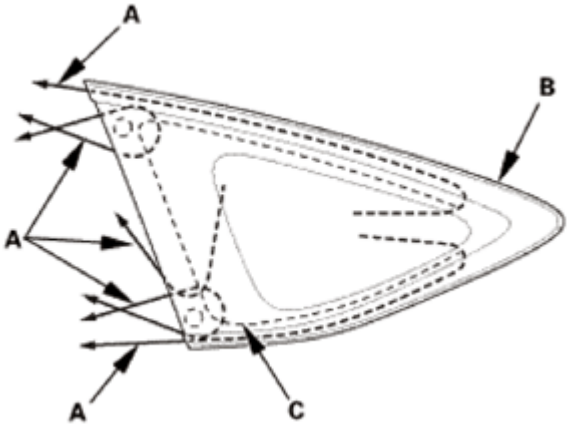

Fig. 113: Identifying Cutting Positions On Quarter Glass
Courtesy of AMERICAN HONDA MOTOR CO., INC.

6. From inside of the vehicle, cut through the adhesive (A) of quarter glass rear corner with a utility knife (B).
7. Carefully remove the quarter glass.

GETtheMANUALS.org

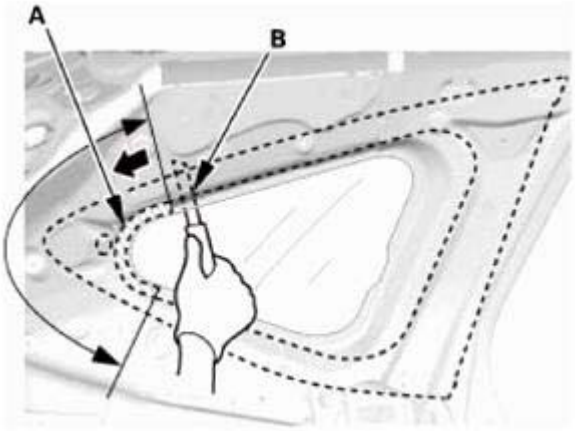

Fig. 114: Cutting Adhesive Of Quarter Glass Rear Corner Using Knife
Courtesy of AMERICAN HONDA MOTOR CO., INC.

8. If a new quarter glass will be installed, remove clips (A) from the body.

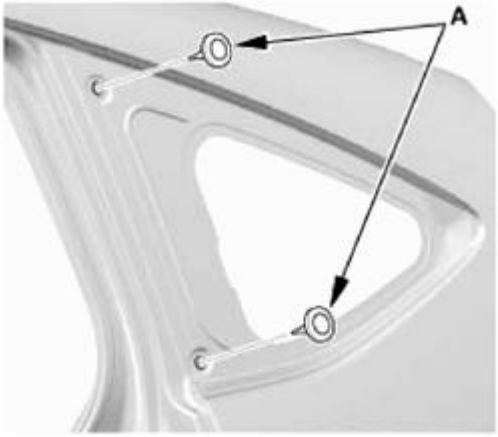

Fig. 115: Identifying Quarter Glass Clips
Courtesy of AMERICAN HONDA MOTOR CO., INC.

INSTALLATION

1. Quarter Glass
    1. Scrape smooth the original adhesive with a knife until there is a thickness of about 1 - 2 mm (0.04 - 0.08 in) on the bonding surface around the entire quarter glass opening flange.

        NOTE: Do not scrape down to the painted surface of the body; damaged paint will interfere with proper bonding.

    2. Clean the body bonding surface with a shop towel dampened with isopropyl alcohol. After cleaning, keep oil, grease, and water from getting on the surface.
    3. If you are reinstalling the original quarter glass, scrape off the original adhesive from the quarter

GETtheMANUALS.org

glass with a putty knife. Clean the bonding surfaces on the inside face and the edge of the quarter glass with isopropyl alcohol. Make sure the bonding surface is kept free of water, oil, and grease.

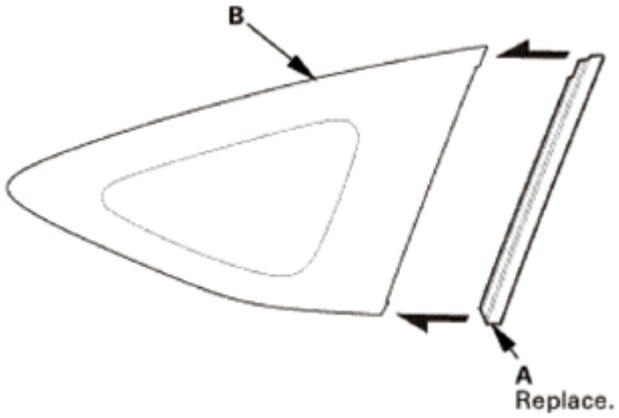

Fig. 116: Installing Front Seal And Adhesive Tape To Inside Face Of Quarter Glass
Courtesy of AMERICAN HONDA MOTOR CO., INC.

4. Attach the front seal (A) with adhesive tape to the inside face of the quarter glass (B) as shown. Before installing the front seal, apply primer to the inside face of the quarter glass.

   NOTE: Be careful not to touch the quarter glass where the adhesive will be applied.

5. If you are installing a new quarter glass, set the quarter glass (A) in the opening, and make alignment marks (B) across the quarter glass and the body with a grease pencil at the three points shown. Make sure the pins (C) of the clips (D) contact with the edge of the body holes.

   NOTE: Be careful not to touch the quarter glass where the adhesive will be applied.

6. Remove the quarter glass.

GETtheMANUALS.org

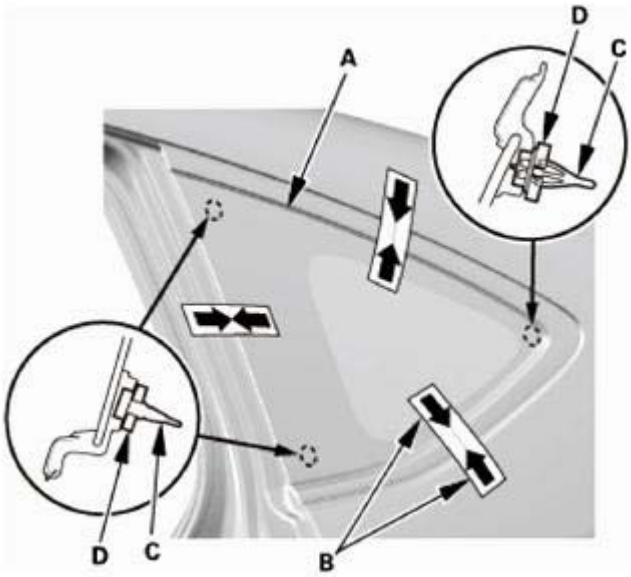

Fig. 117: Locating Alignment Marks On Quarter Glass And Body
Courtesy of AMERICAN HONDA MOTOR CO., INC.

7. Apply a light coat of primer along the edge of the quarter glass (A) and the front seal (B) as shown, then lightly wipe it off with gauze or cheesecloth:
    - Apply the primer to the rear corner, upper corner, and lower corner areas of the quarter glass using the printed dots (C) on the quarter glass as a guide.
    - Do not apply body primer to the quarter glass, and do not mix up the body primer applicator and the glass primer applicator.
    - Never touch the primed surfaces with your hands. If you do, adhesive may not bond to the quarter glass properly, causing a leak after the quarter glass is installed.
    - Keep water, dust, and abrasive materials away from the primed surfaces.

GETtheMANUALS.org

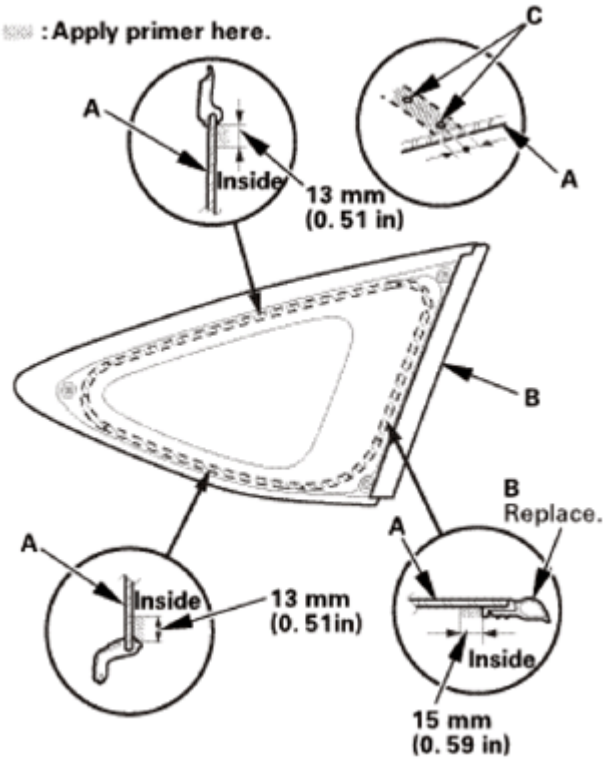

Fig. 118: Identifying Light Coat Of Primer Applying Area On Edge Of Quarter Glass And Front Seal
Courtesy of AMERICAN HONDA MOTOR CO., INC.

8. Carefully apply a light coat of body primer to any exposed paint or metal around the flange where new adhesive will be applied. Let the body primer dry for at least 10 minutes:
    - Do not apply body primer to any remaining original adhesive on the flange.
    - Do not mix up the body applicator and the glass primer applicator.
    - Never touch the primed surfaces with your hands.

GETtheMANUALS.org

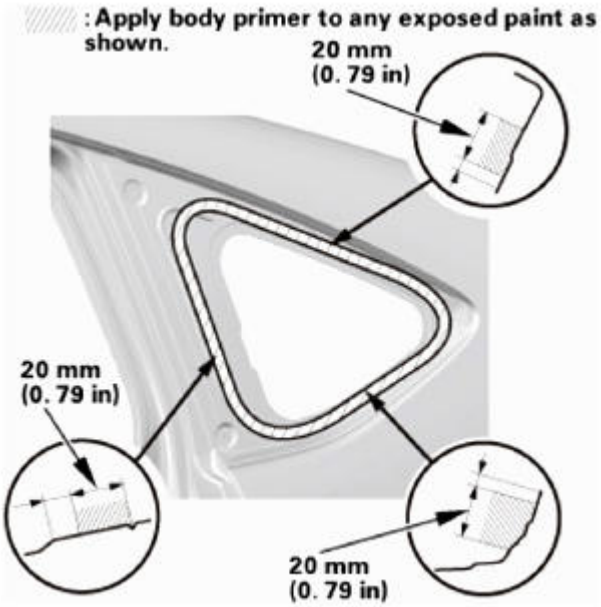

Fig. 119: Identifying Light Coat Of Body Primer Applying Area On Exposed Paint Or Metal Around Flange
Courtesy of AMERICAN HONDA MOTOR CO., INC.

9. Cut a "V" in the end of the nozzle (A) on the adhesive cartridge as shown.

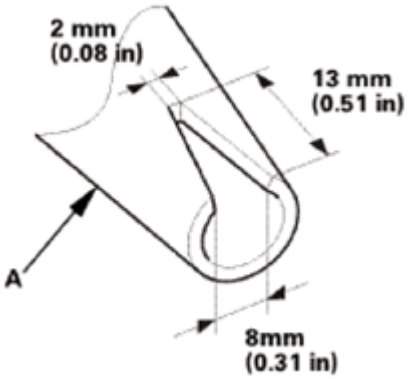

Fig. 120: Identifying Cut End Of Nozzle On Adhesive Cartridge
Courtesy of AMERICAN HONDA MOTOR CO., INC.

10. Put the cartridge in a caulking gun, and run a continuous bead of the adhesive (A) around the edge of the quarter glass (B) and along the front seal (C) as shown:
    - Use the printed dots (D) on the quarter glass as a guide, apply adhesive to the rear corner, upper corner and the lower corner areas of the quarter glass.
    - Apply adhesive within 30 minutes after applying the primer.
    - Make a slightly thicker bead at each corner.

GETtheMANUALS.org

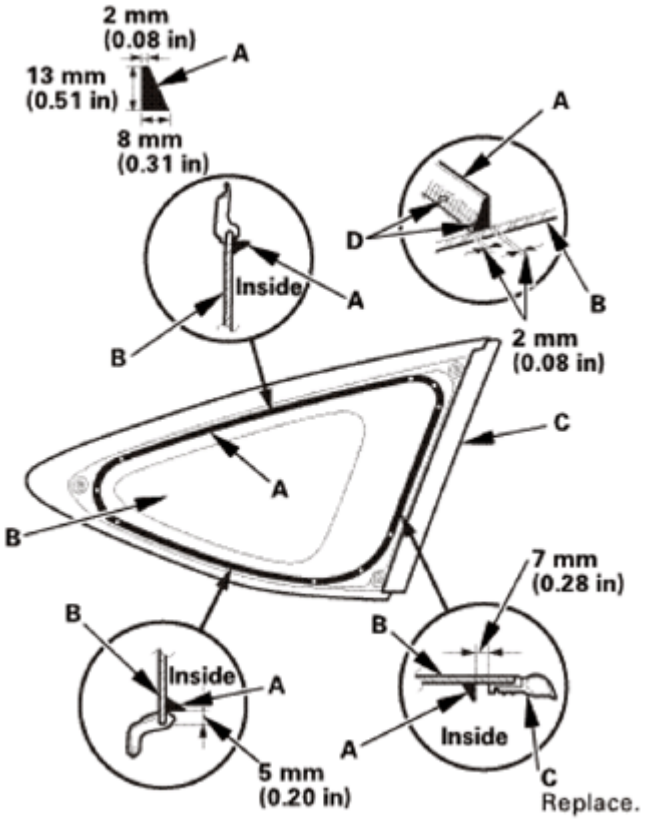

Fig. 121: Identifying Continuous Bead Of Adhesive Applying Area On Edge Of Quarter Glass And Front Seal
Courtesy of AMERICAN HONDA MOTOR CO., INC.

11. If the original quarter glass will be reinstalled, apply adhesive (A) to the rear clip area as shown.

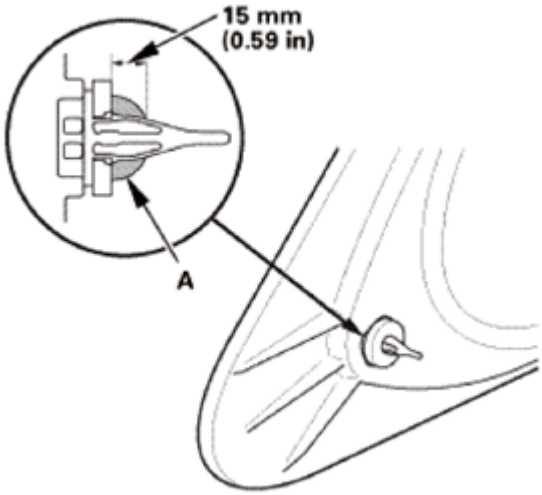

Fig. 122: Identifying Adhesive Applying Area On Rear Clip
Courtesy of AMERICAN HONDA MOTOR CO., INC.

GETtheMANUALS.org

12. Hold the quarter glass (A) with suction cups (B) over the opening, align it with the clips (C) and alignment marks (D), and set it down on the adhesive. Lightly push on the quarter glass until its edges are fully seated on the adhesive all the way around.

NOTE: Do not open or close any of the doors for about an hour until the adhesive is dry.

13. Remove the excess adhesive with a putty knife or a shop towel dampened with isopropyl alcohol.
14. Wait at least an hour for the adhesive to dry, then spray water over the quarter glass and check for leaks. Mark the leaking areas, let the quarter glass dry, then seal with sealant. Let the vehicle stand for at least 4 hours after quarter glass installation. If the vehicle has to be used within the first 4 hours, it must be driven slowly.
15. Advise the customer not to do the following things for 2 to 3 days:
    - Slam the doors with all the windows rolled up.
    - Twist the body excessively (such as when going in and out of driveways at an angle or driving over rough, uneven roads).

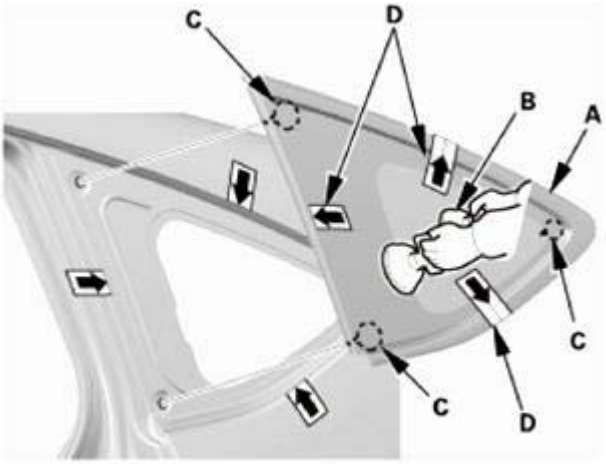

Fig. 123: Removing Excess Adhesive From Quarter Glass Using Putty Knife Or Shop Towel
Courtesy of AMERICAN HONDA MOTOR CO., INC.

2. Quarter Pillar Trim - Check
    1. If the side curtain airbag has deployed, replace the quarter pillar trim (A), along with the other parts listed for side curtain airbag deployment.
    2. If the side curtain airbag has not deployed, check the quarter pillar trim and note the following items:
        - To prevent the side curtain airbags from deploying improperly and possibly causing injury, inspect the quarter pillar trim and replace it with a new one if it has any of the following damage:
            - Any cracks, deformations, or stress-whitening in the quarter pillar trim
            - Any cracks or stress-whitened areas in the clip seating surfaces (B)

GETtheMANUALS.org

- After checking and adjusting the overlap between the headliner and the quarter pillar trim, replace the upper clip (C) with a new one.
- If the clips (D) are damaged or stress-whitened, replace them with new ones.

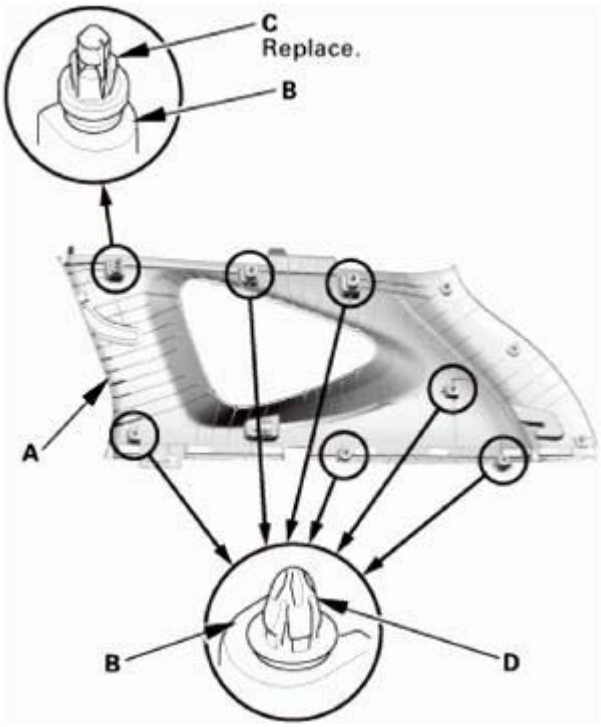

Fig. 124: Identifying Quarter Pillar Trim, Clip And Seating Surfaces
Courtesy of AMERICAN HONDA MOTOR CO., INC.

3. Headliner/Pillar Trim Overlap - Check

Checking and Adjusting the Headliner/Pillar Trim Overlap

To prevent the side curtain airbag from deploying and damaging the pillar trim (A-pillar trim, B-pillar trim, quarter pillar trim), the overlap between the headliner and pillar trim must be 8.0+0/-2.0 mm (0.31+0/-0.08 in). To check the overlap, do this:

1. Install the headliner (A) and the pillar trim (B).

GETtheMANUALS.org

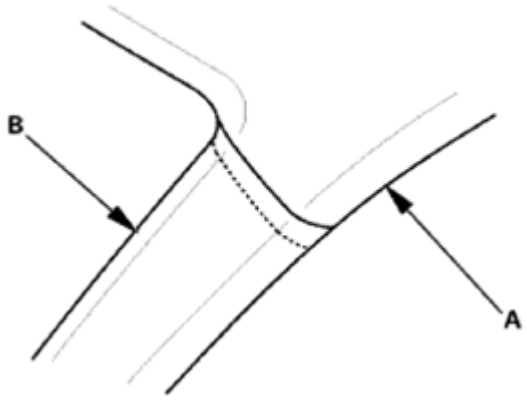

Fig. 125: Identifying Headliner And Pillar Trim
Courtesy of AMERICAN HONDA MOTOR CO., INC.

This illustration shows the A-pillar .

2. Apply masking tape (A) to the headliner (B) to mark the upper edge of the pillar trim (C).

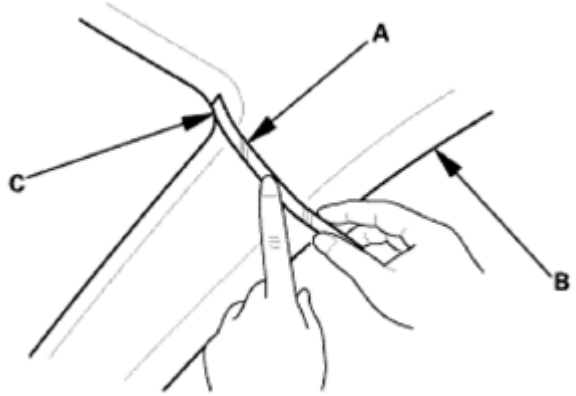

Fig. 126: Applying Masking Tape To Headliner
Courtesy of AMERICAN HONDA MOTOR CO., INC.

This illustration shows the A-pillar .

3. Remove the pillar trim, and measure the headliner overlap.
   - If the overlap is 8.0+0/-2.0 mm (0.31+0/-0.08 in), remove the tape, and install the pillar trim.
   - If the overlap is more than 8.0 mm (0.31 in), go to step 4.

GETtheMANUALS.org

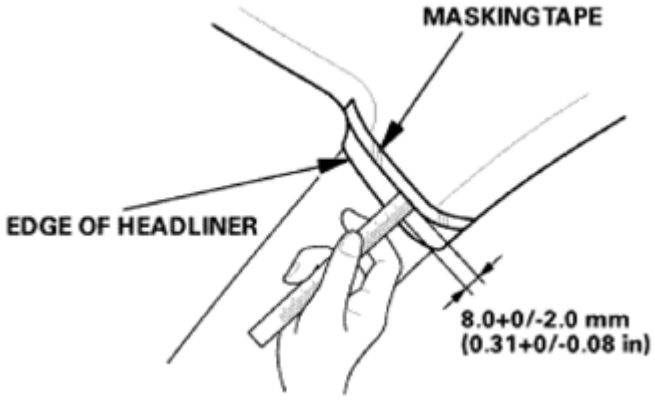

Fig. 127: Removing Pillar Trim
Courtesy of AMERICAN HONDA MOTOR CO., INC.

This illustration shows the A-pillar .

4. Carefully trim the headliner with a utility knife, reducing the overlap to 8.0+0/-2.0 mm (0.31+0/-0.08 in).
5. Remove the tape, and install the pillar trim.

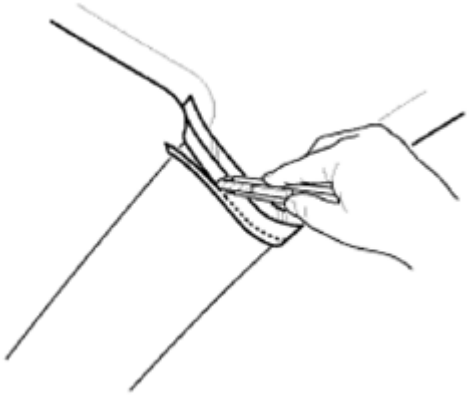

Fig. 128: Cutting Headliner Using Knife
Courtesy of AMERICAN HONDA MOTOR CO., INC.

This illustration shows the A-pillar .

4. Quarter Pillar Trim
    1. Install a new clip (A) to the quarter pillar trim (B).

GETtheMANUALS.org

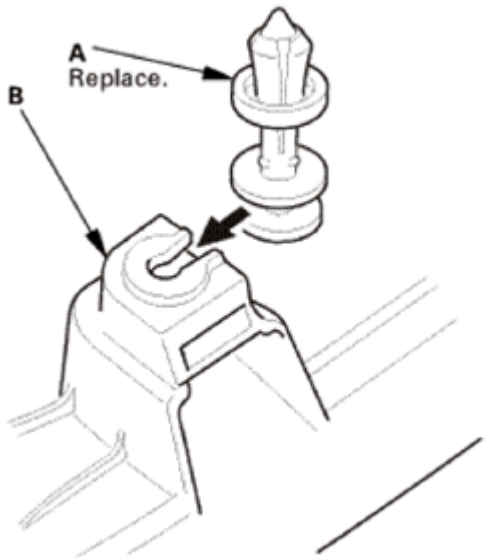

Fig. 129: Installing Clip To Quarter Pillar Trim
Courtesy of AMERICAN HONDA MOTOR CO., INC.

2. Pass the rear seat belt lower anchor (A) through the hole in the quarter pillar trim (B).
3. Fit the clips into the holes in the quarter pillar.
4. Lightly push the quarter pillar trim into place, then install the trim.

NOTE:

- **Make sure the side curtain airbag is not tucked under the clips or the ribs.**
- **Do not push too hard on the quarter pillar trim. If you push too hard, the clip will be damaged, and it will not hold the trim properly.**
- **Gently tug on the quarter pillar trim to verify that all clips are securely fastened.**
- **Make sure the clips (C, D, and E) snap into place securely.**

GETtheMANUALS.org

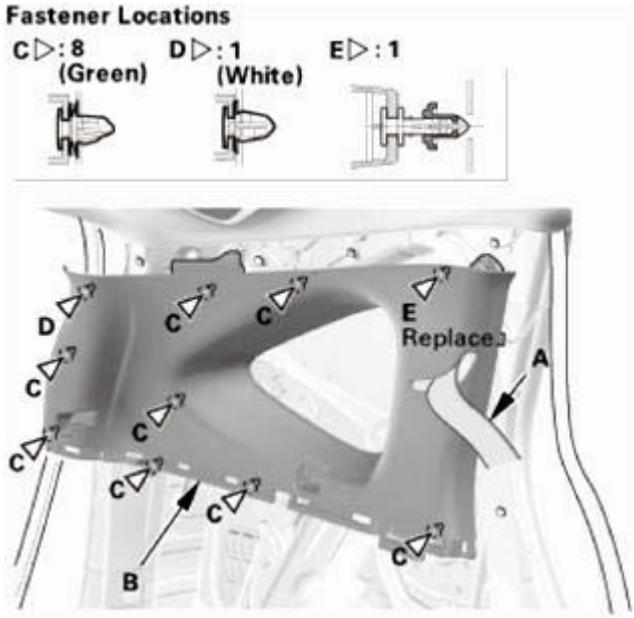

Fig. 130: Identifying Rear Seat Belt Lower Anchor, Quarter Pillar Trim And Clips
Courtesy of AMERICAN HONDA MOTOR CO., INC.

5. Rear Side Trim Panel
    1. Install the rear seat release cable (A) to the clips (B) of the rear side trim panel (C).

NOTE: Align the marks (D) with the clips as shown.

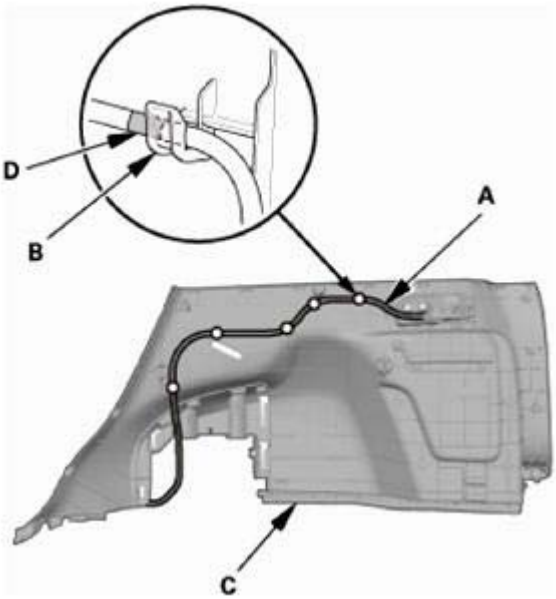

Fig. 131: Installing Rear Seat Release Cable To Rear Side Trim Panel Clips
Courtesy of AMERICAN HONDA MOTOR CO., INC.

GETtheMANUALS.org

2. Install the rear seat release lever (A) to the rear side trim panel (B).

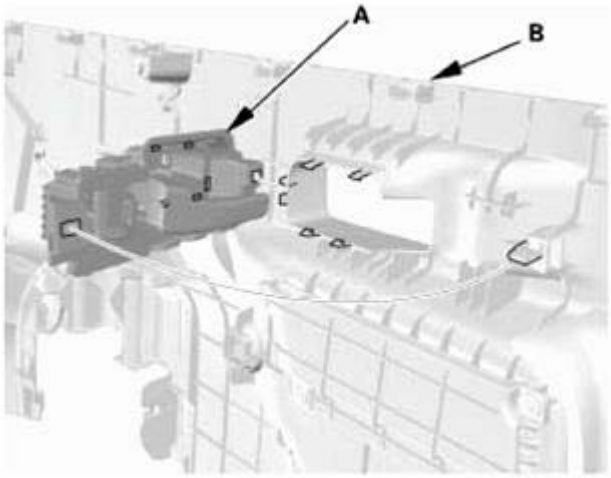

Fig. 132: Identifying Rear Seat Release Lever And Rear Side Trim Panel
Courtesy of AMERICAN HONDA MOTOR CO., INC.

3. Install the rear side trim panel (A). Make sure the hooks (B), the tabs (C), and the clips (D, E) snap into place securely.
4. Install the clips (F, G).

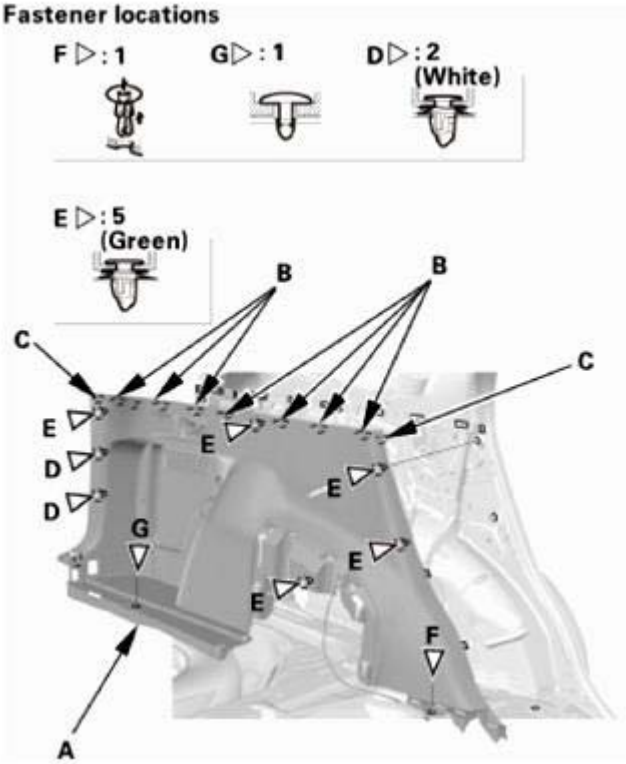

Fig. 133: Identifying Rear Side Trim Panel, Hooks, Tabs And Clips

GETtheMANUALS.org

Courtesy of AMERICAN HONDA MOTOR CO., INC.

5. Install the tie-down hook (A), then install the bolt (B).

Fig. 134: Identifying Tie-Down Hook And Bolt With Torque Specification
Courtesy of AMERICAN HONDA MOTOR CO., INC.

6. Install the trunk hook (A).

Fig. 135: Identifying Trunk Hook
Courtesy of AMERICAN HONDA MOTOR CO., INC.

7. Install the screws (A), then install the rear seat release lever cap (B). Make sure the upper hook (C) and the lower hooks (D) snap into place securely.

GETtheMANUALS.org

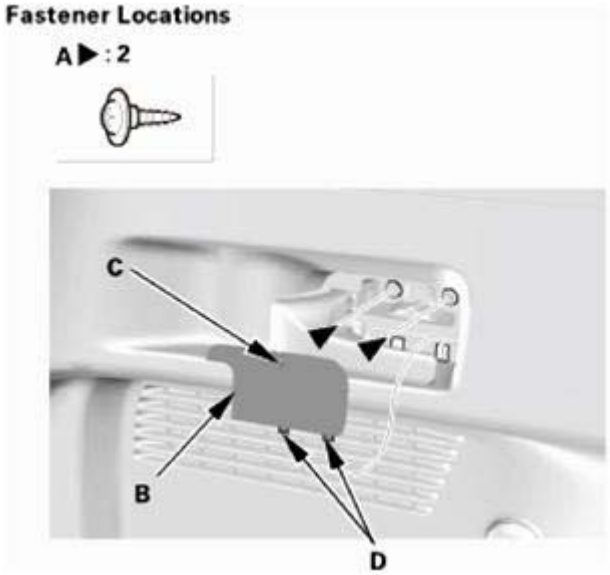

Fig. 136: Identifying Rear Seat Release Lever Cap, Hooks And Screws
Courtesy of AMERICAN HONDA MOTOR CO., INC.

6. Rear Seat Belt Lower Anchor Bolt
    1. Install the rear seat belt lower anchor bolt (A).

NOTE: **Before installing the anchor bolt, make sure there are no twists or kinks in the seat belt.**

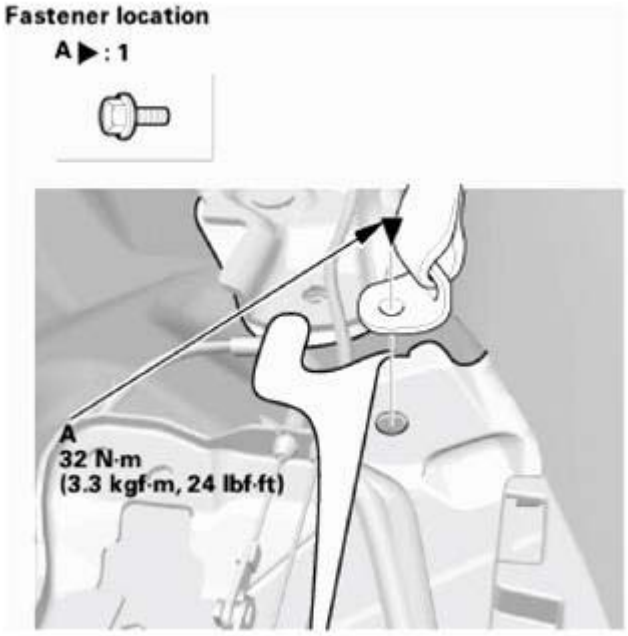

Fig. 137: Identifying Rear Seat Belt Lower Anchor Bolt With Torque Specification
Courtesy of AMERICAN HONDA MOTOR CO., INC.

GETtheMANUALS.org

7. Rear Seat Foot Cover
    1. Install the rear seat cushion foot cover (A). Make sure the clips (B) and the hooks (C) snap into place securely.

Left Side

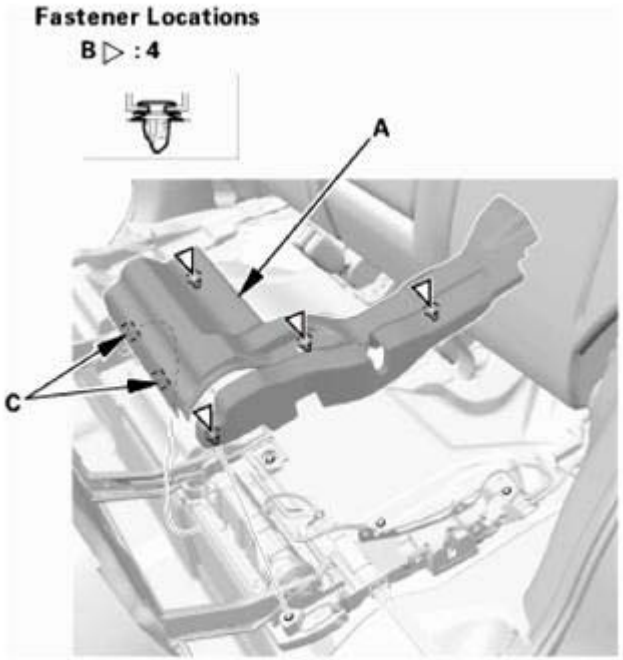

Fig. 138: Identifying Rear Seat Cushion Foot Cover, Clips And Hooks (Left Side)
Courtesy of AMERICAN HONDA MOTOR CO., INC.

Right Side

GETtheMANUALS.org

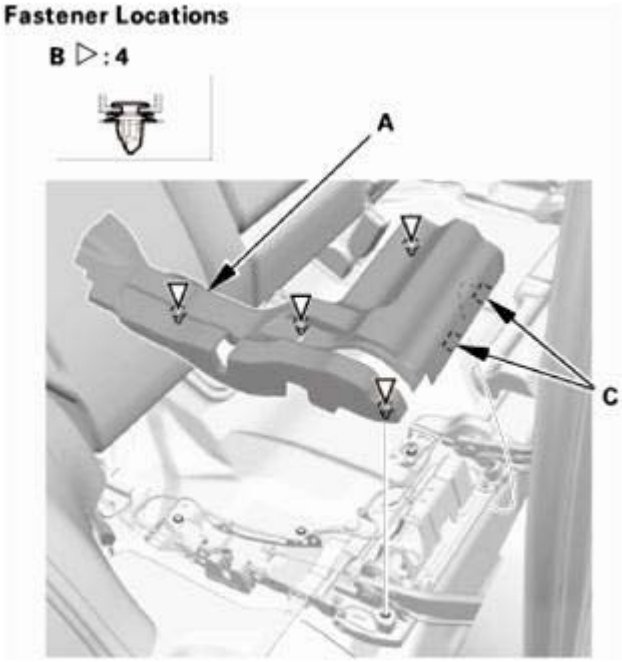

Fig. 139: Identifying Rear Seat Cushion Foot Cover, Clips And Hooks (Right Side)
Courtesy of AMERICAN HONDA MOTOR CO., INC.

8. Rear Carpet Trim
    1. Install the rear carpet trim (A). Make sure the clips (B) and the hooks (C) snap into place securely.

    Left side

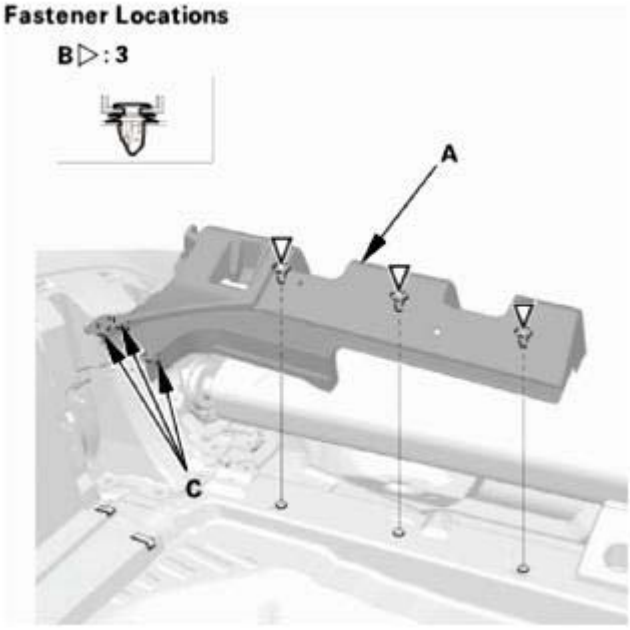

Fig. 140: Identifying Rear Carpet Trim, Clips And Hooks (Left Side)

GETtheMANUALS.org

Courtesy of AMERICAN HONDA MOTOR CO., INC.

Right side

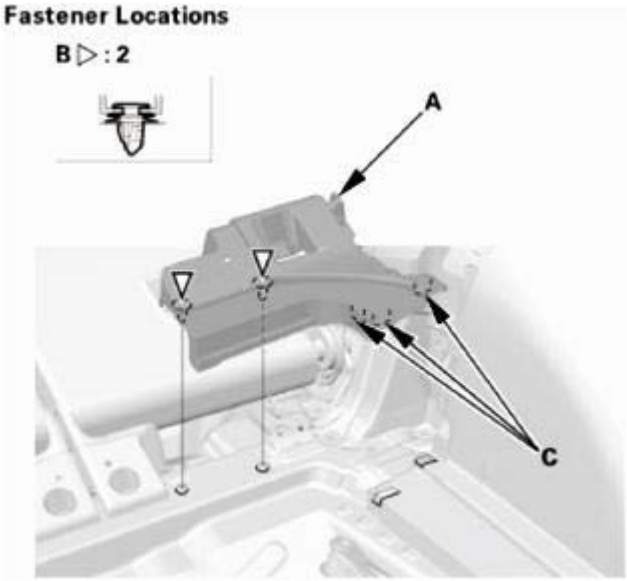

Fig. 141: Identifying Rear Carpet Trim, Clips And Hooks (Right Side)
Courtesy of AMERICAN HONDA MOTOR CO., INC.

2. Install the rear seat-back cover (A). Make sure the clips (B) snap into place securely.

Left side

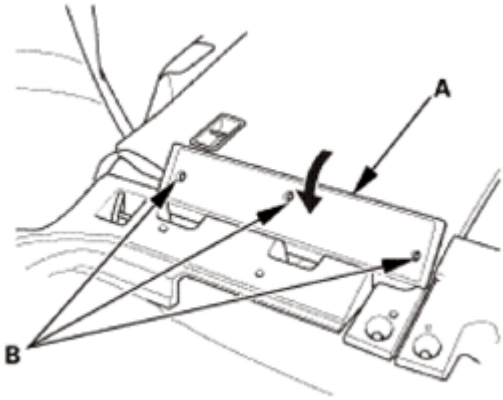

Fig. 142: Identifying Rear Seat-Back Cover, Clips And Hooks (Left Side)
Courtesy of AMERICAN HONDA MOTOR CO., INC.

Right side

GETtheMANUALS.org

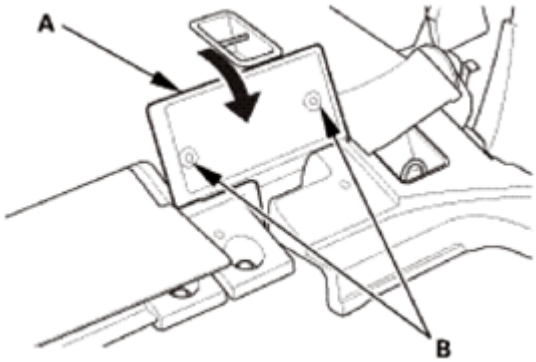

Fig. 143: Identifying Rear Seat-Back Cover, Clips And Hooks (Right Side)
Courtesy of AMERICAN HONDA MOTOR CO., INC.

9. Rear Damper Maintenance Cover
    1. Fold down the rear seat-back.
    2. Install the rear damper maintenance cover (A). Make sure the hooks (B) snap into place securely.

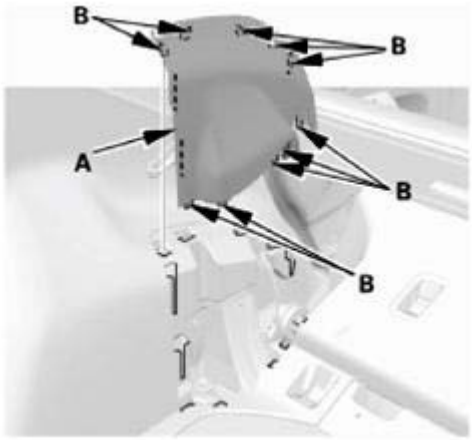

Fig. 144: Identifying Rear Damper Maintenance Cover And Hooks
Courtesy of AMERICAN HONDA MOTOR CO., INC.

10. Rear Trim Panel
    1. Install the rear trim panel (A). Make sure the clips (B, C), the hooks (D), and the tabs (E) snap into place securely.
    2. Install the clips (F).

GETtheMANUALS.org

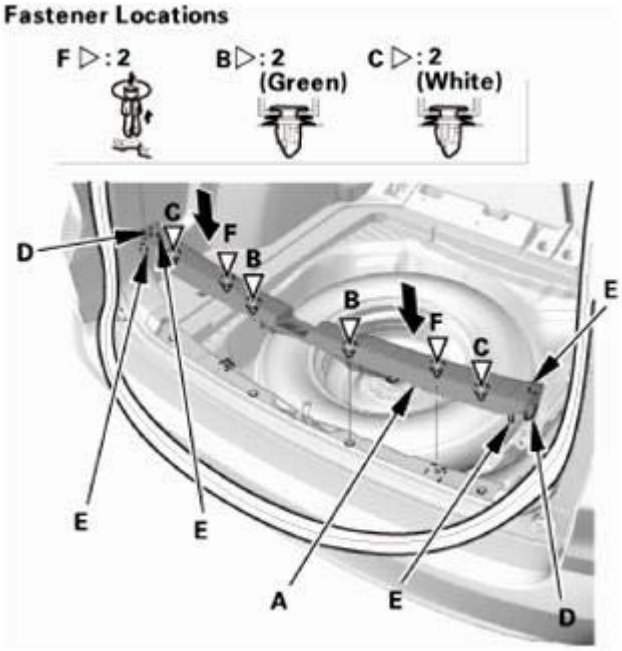

Fig. 145: Installing Rear Trim Panel
Courtesy of AMERICAN HONDA MOTOR CO., INC.

11. Tailgate Weatherstrip As Needed
    1. Locate the alignment mark (A) of the tailgate weatherstrip (B). Align the alignment mark (C) with the center of the lower area on the tailgate opening, then install the tailgate weatherstrip all the way around.

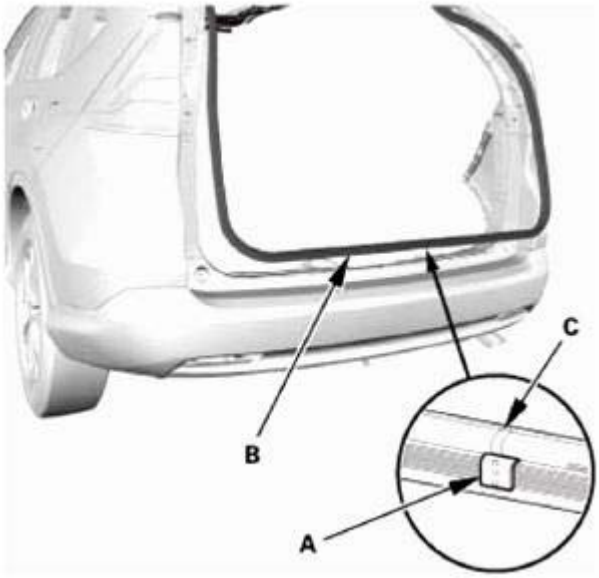

Fig. 146: Identifying Alignment Mark On Tailgate Weatherstrip
Courtesy of AMERICAN HONDA MOTOR CO., INC.

GETtheMANUALS.org

12. Cargo Floor Cover
    1. Install the cargo floor cover (A).

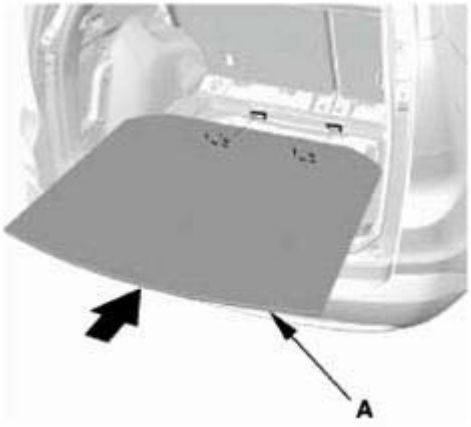

Fig. 147: Installing Cargo Floor Cover
Courtesy of AMERICAN HONDA MOTOR CO., INC.

13. Tonneau Cover (For Some Models)
    1. Install the tonneau cover (A).

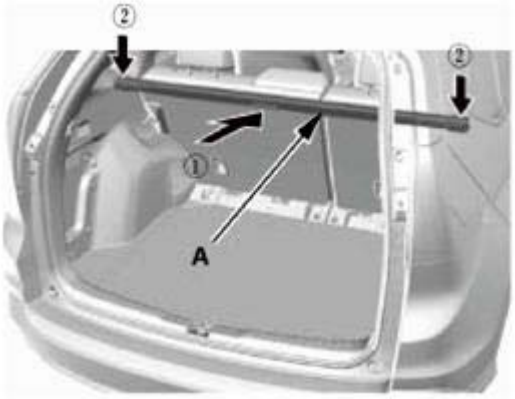

Fig. 148: Installing Tonneau Cover
Courtesy of AMERICAN HONDA MOTOR CO., INC.

14. Rear Door Opening Seal As Needed
    1. Install the rear door opening seal (A). Make sure the seal is installed securely into the hooks (B).

GETtheMANUALS.org

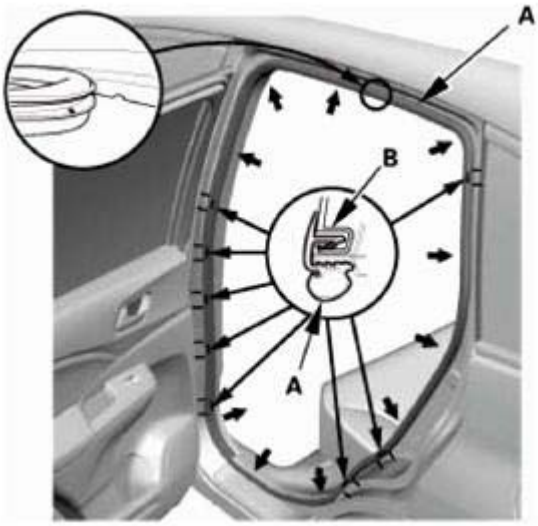

Fig. 149: Installing Rear Door Opening Seal
Courtesy of AMERICAN HONDA MOTOR CO., INC.

15. Rear Door Sill Trim
    1. Pull the release strap to fold down the rear seat, then lift-up and latch the rear seat-back in the upright position.
    2. Install the rear door inner sill trim (A). Make sure the clips (B, C), the hooks (D), and the tab (E) snap into place securely.

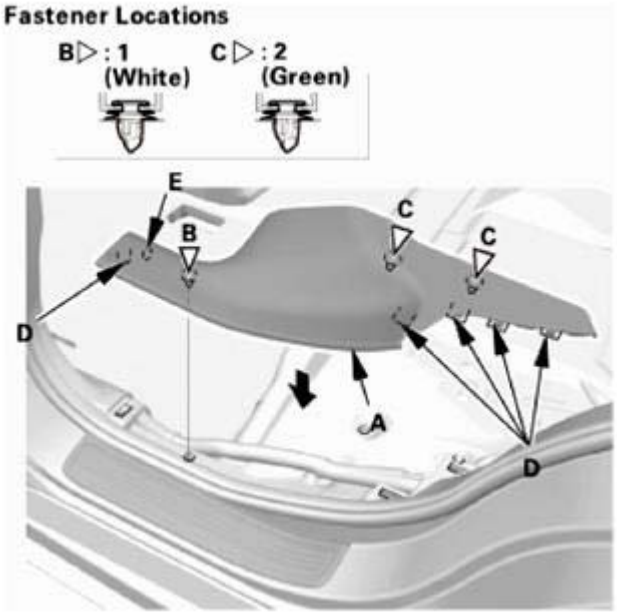

Fig. 150: Installing Rear Door Inner Sill Trim
Courtesy of AMERICAN HONDA MOTOR CO., INC.

16. Water Leak Test

GETtheMANUALS.org

Check for water leaks. Run water over the roof and on the sealing area as shown, and note these items:

- Use a 12 mm (0.47 in) diameter hose (A).
- Adjust the rate of water flow as shown.
- Do not use a nozzle.
- Hold the hose about 300 mm (11.81 in) away from the door.

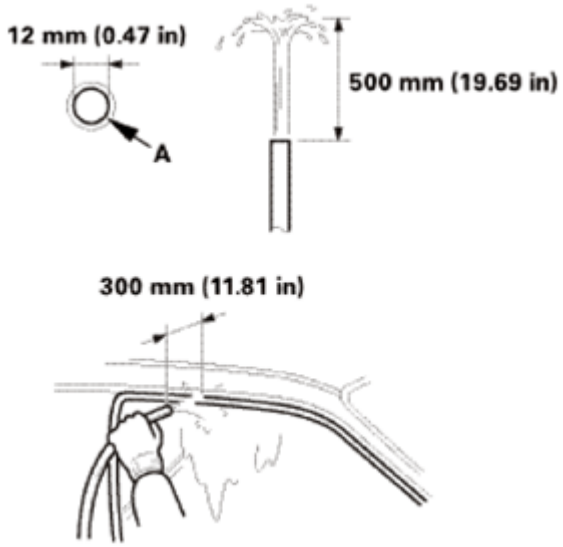

Fig. 151: Checking Water Leakage On Roof Sealing Area
Courtesy of AMERICAN HONDA MOTOR CO., INC.

REAR DOOR GLASS ADJUSTMENT

REMOVAL

1. Rear Door Power Window Switch Panel
    1. Carefully pry out on the notch (A) in the power window switch panel (B) with the appropriate trim tool to detach the clips (C) and the hooks (D). Disconnect the connector (E), then remove the power window switch panel.

GETtheMANUALS.org

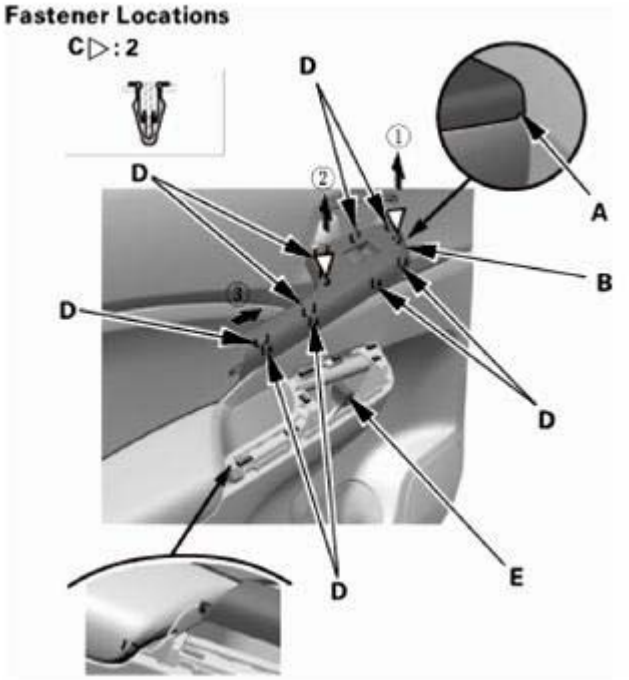

Fig. 152: Removing Power Window Switch Panel
Courtesy of AMERICAN HONDA MOTOR CO., INC.

2. Rear Door Panel
    1. Detach the clip (A) and the hooks (B), then remove the rear door quarter inner trim (C).

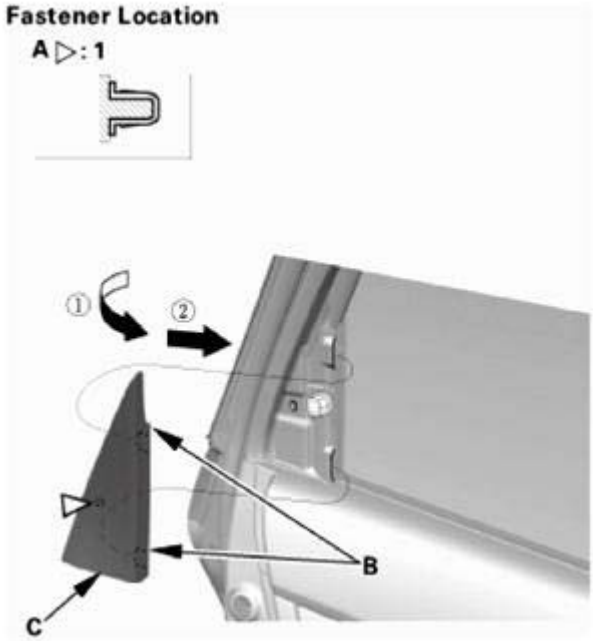

Fig. 153: Removing Rear Door Quarter Inner Trim
Courtesy of AMERICAN HONDA MOTOR CO., INC.

GETtheMANUALS.org

2. Carefully pry out on the upper hook (A) in the inner handle cap (B) with the appropriate trim tool, then pull back the inner handle cap to remove it.

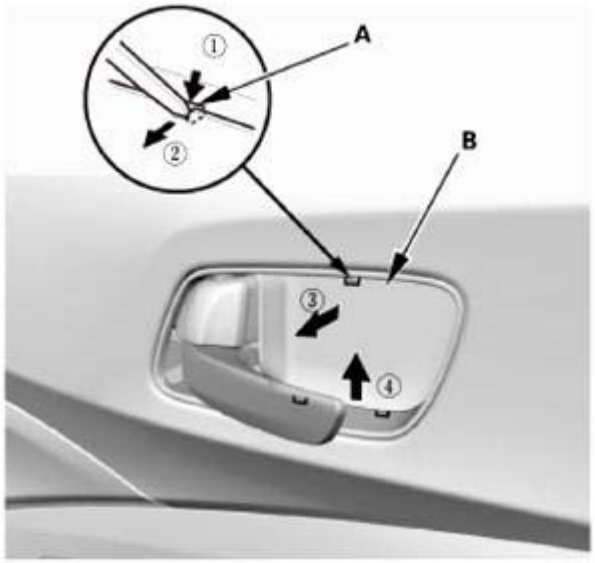

Fig. 154: Removing Rear Door Panel Upper Hook Using Tool
Courtesy of AMERICAN HONDA MOTOR CO., INC.

3. Remove the screws (A) securing the inner handle (B).

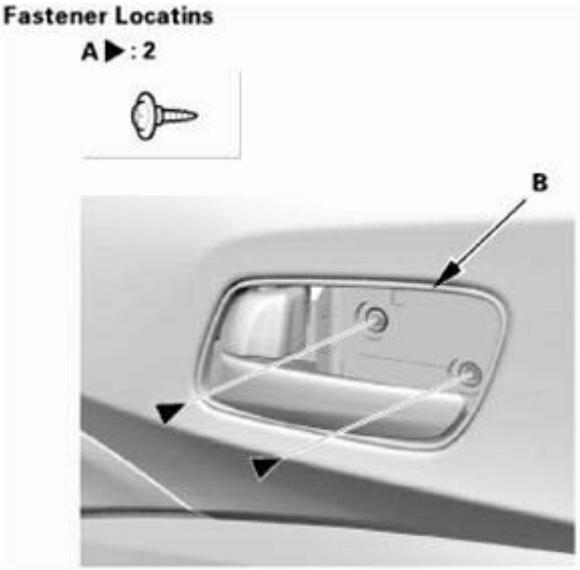

Fig. 155: Identifying Inner Handle And Screws
Courtesy of AMERICAN HONDA MOTOR CO., INC.

4. Remove the pull pocket mat (A), then remove the screw (B).

GETtheMANUALS.org

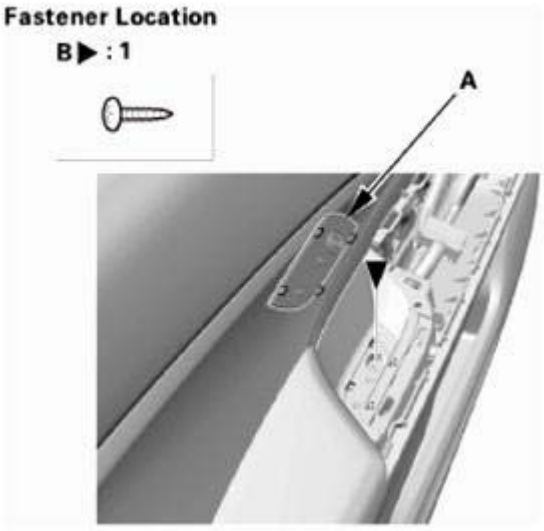

Fig. 156: Identifying Pocket Mat And Screw
Courtesy of AMERICAN HONDA MOTOR CO., INC.

5. Starting at the bottom edge of the door panel (A), detach the clips (B) with a commercially available trim pad remover.
6. Starting at the rear, pull the door panel up.
7. Remove the inner handle (C) from the door panel, then remove the door panel.

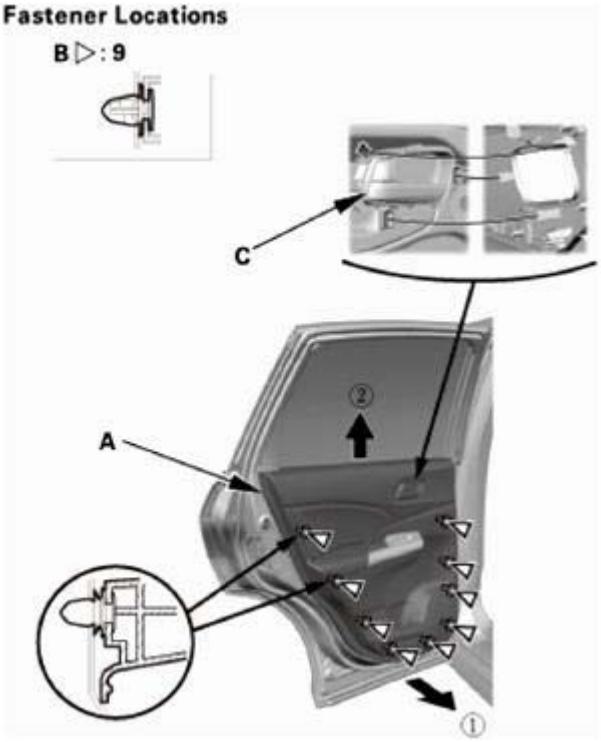

Fig. 157: Removing Door Panel
Courtesy of AMERICAN HONDA MOTOR CO., INC.

GETtheMANUALS.org

3. Rear Door Plastic Cover As Needed
    1. Disconnect the connector (A), then detach the harness clips (B).
    2. Remove the screws (C), then remove the door pull pocket bracket (D).
    3. Remove the plug caps (E), then carefully detach the plastic cover (F) as needed.

NOTE: **If the plastic cover is damaged or torn, replace it.**

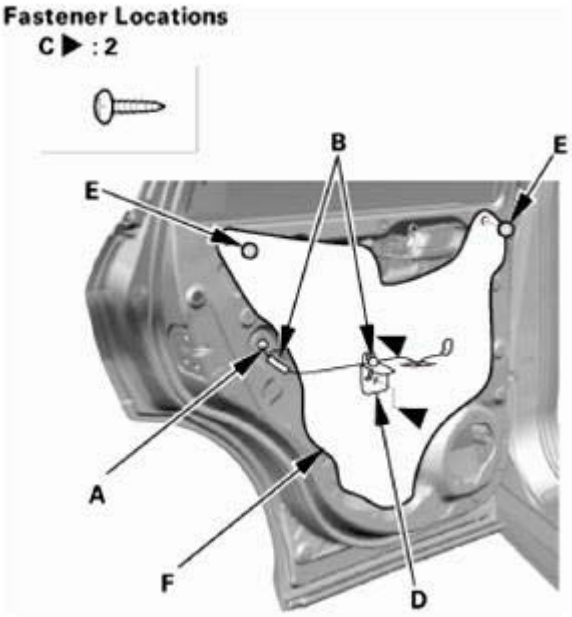

Fig. 158: Identifying Connector, Pocket Bracket, Plug Caps, Plastic Cover, Harness Clips And Screws
Courtesy of AMERICAN HONDA MOTOR CO., INC.

ADJUSTMENT

1. Rear Door Glass - Adjustment

NOTE:
- **Check the weatherstrip and the glass run channel for damage or deterioration, and replace them if necessary.**
- **Wipe the run channel clean with a shop towel.**

1. Place the vehicle on a firm, level surface.
2. Carefully move the glass (A) until you can see the glass mounting bolts (B), then loosen them.
3. Push the glass against the front side channel, then tighten the glass mounting bolts.
4. Make sure that the glass moves smoothly.

GETtheMANUALS.org

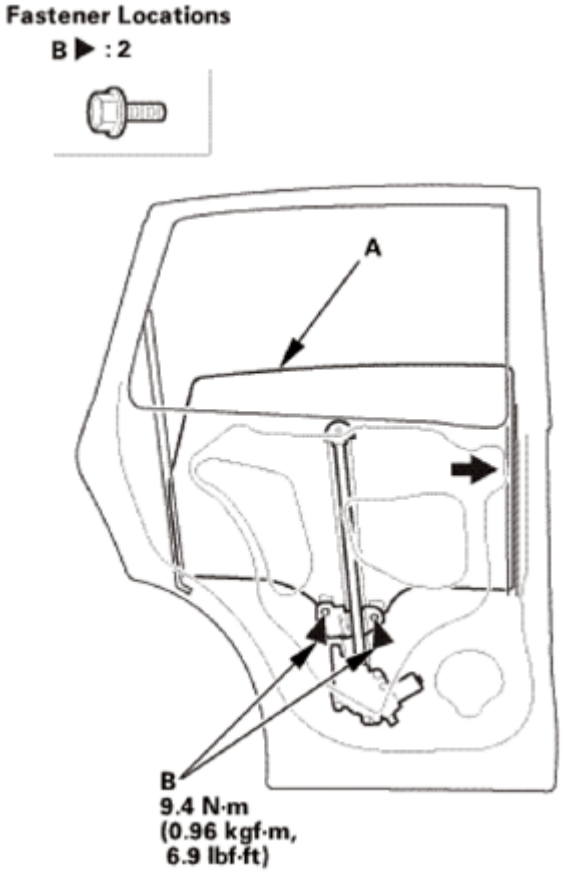

Fig. 159: Moving Glass And Mounting Bolts With Torque Specifications
Courtesy of AMERICAN HONDA MOTOR CO., INC.

5. Raise the glass fully, and check for gaps. Also make sure that the glass (A) contacts the glass run channel (B) evenly.

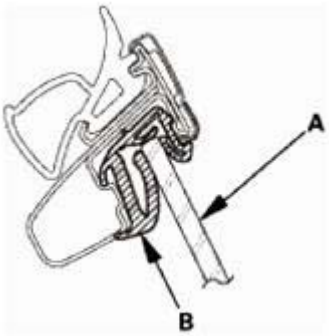

Fig. 160: Checking Gap Between Glass And Glass Run Channel
Courtesy of AMERICAN HONDA MOTOR CO., INC.

INSTALLATION

1. Rear Door Plastic Cover As Needed

GETtheMANUALS.org

1. Install the plastic cover (A), then install the plug caps (B).
2. Install the pull pocket bracket (C), then install the screws (D).
3. Connect the connector (E), then install the harness clips (F).

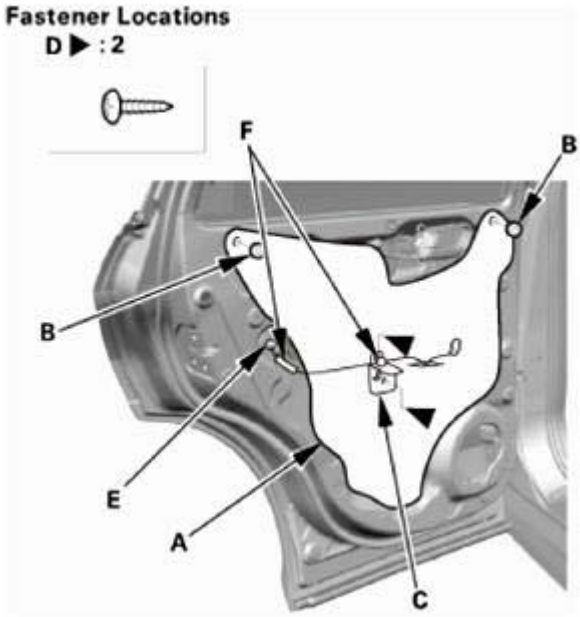

Fig. 161: Identifying Connector, Pocket Bracket, Plug Caps, Plastic Cover, Harness Clips And Screws
Courtesy of AMERICAN HONDA MOTOR CO., INC.

2. Rear Door Panel
    1. Install the inner handle (A) in the door panel (B).
    2. Install the door panel. Make sure the clips (C) snap into place securely.

GETtheMANUALS.org

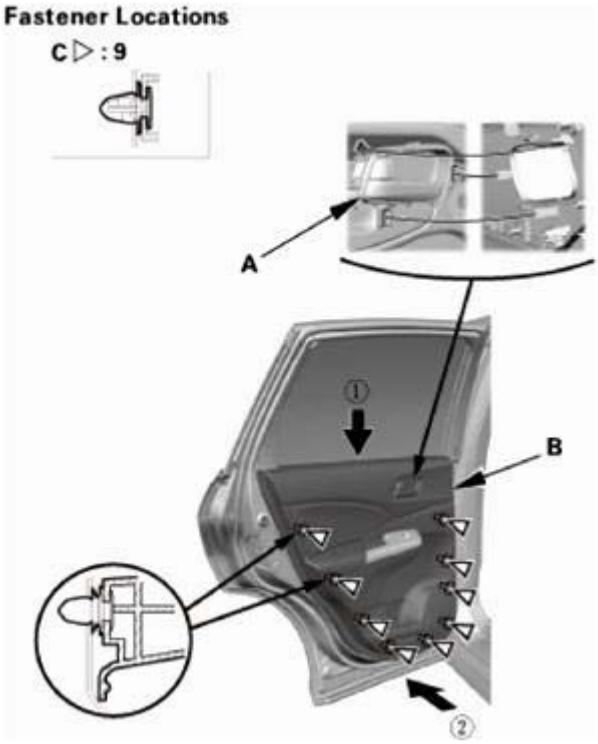

Fig. 162: Installing Inner Handle To Door Panel
Courtesy of AMERICAN HONDA MOTOR CO., INC.

3. Install the screw (A), then install the pull pocket mat (B).

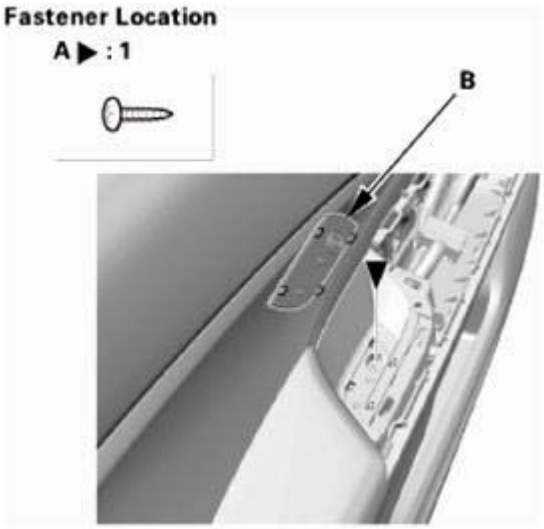

Fig. 163: Identifying Pocket Mat And Screw
Courtesy of AMERICAN HONDA MOTOR CO., INC.

4. Install the screws (A) securing the inner handle (B).

GETtheMANUALS.org

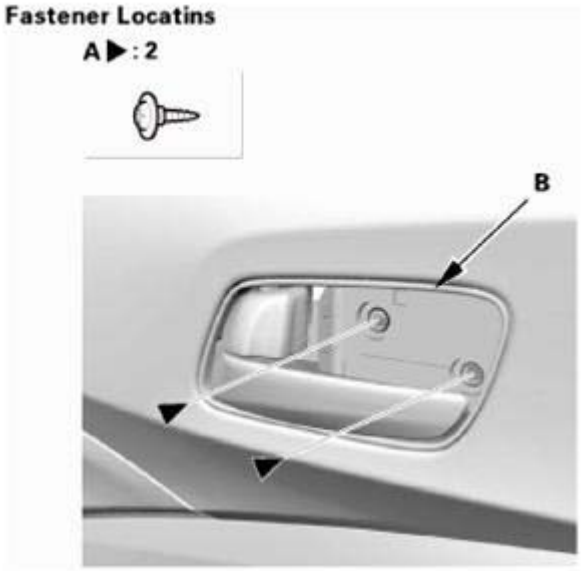

Fig. 164: Identifying Inner Handle And Screw
Courtesy of AMERICAN HONDA MOTOR CO., INC.

5. Install the inner handle cap (A). Make sure the upper hook (B) and the lower hooks (C) snap into place securely.

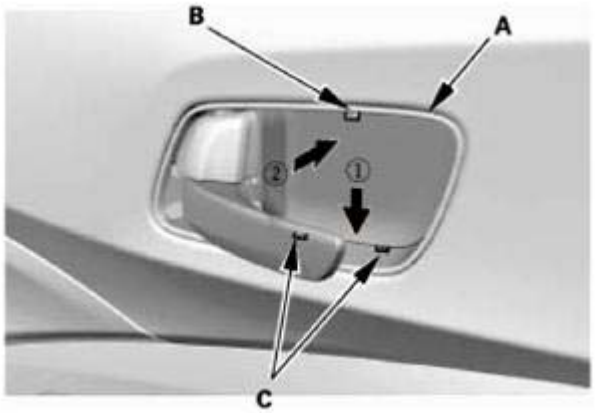

Fig. 165: Installing Inner Handle Cap
Courtesy of AMERICAN HONDA MOTOR CO., INC.

6. Install the rear door quarter inner trim (A). Make sure the clip (B) and the hooks (C) snap into place securely.

GETtheMANUALS.org

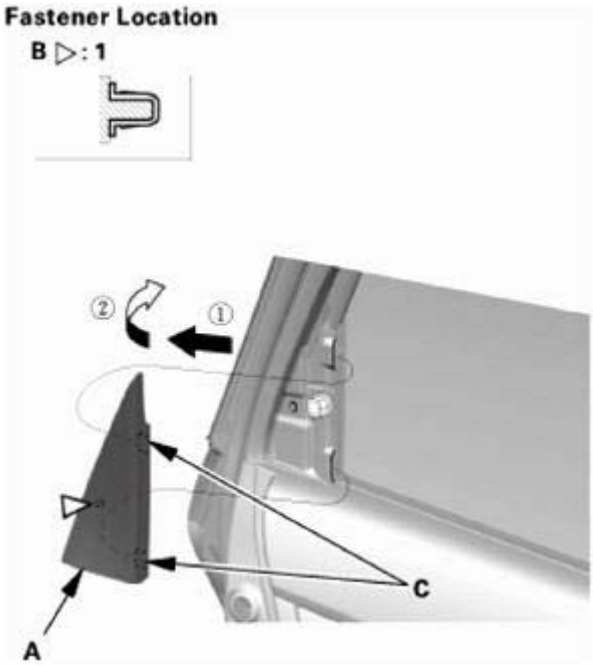

Fig. 166: Installing Rear Door Quarter Inner Trim
Courtesy of AMERICAN HONDA MOTOR CO., INC.

3. Rear Door Power Window Switch Panel
    1. Connect the connector (A), then install the power window switch panel (B). Make sure the clips (C) and the hooks (D) snap into place securely.

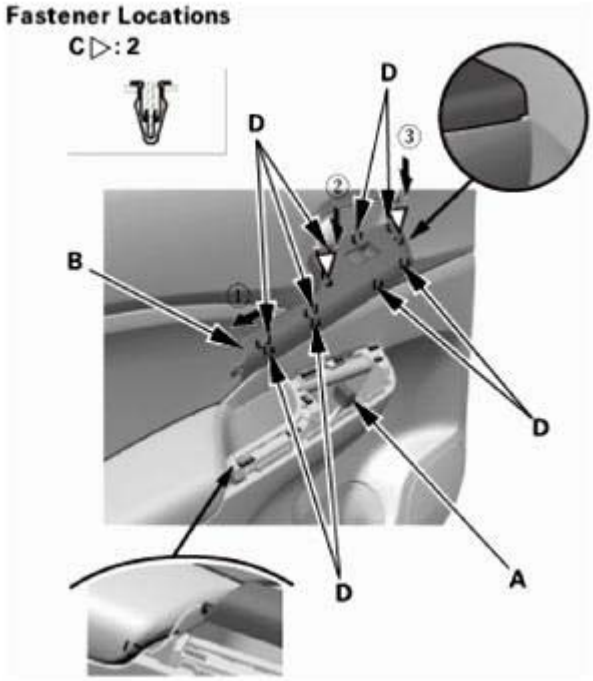

Fig. 167: Installing Power Window Switch Panel

GETtheMANUALS.org

Courtesy of AMERICAN HONDA MOTOR CO., INC.

REAR DOOR GLASS REMOVAL AND INSTALLATION

REMOVAL

1. Rear Door Power Window Switch Panel
    1. Carefully pry out on the notch (A) in the power window switch panel (B) with the appropriate trim tool to detach the clips (C) and the hooks (D). Disconnect the connector (E), then remove the power window switch panel.

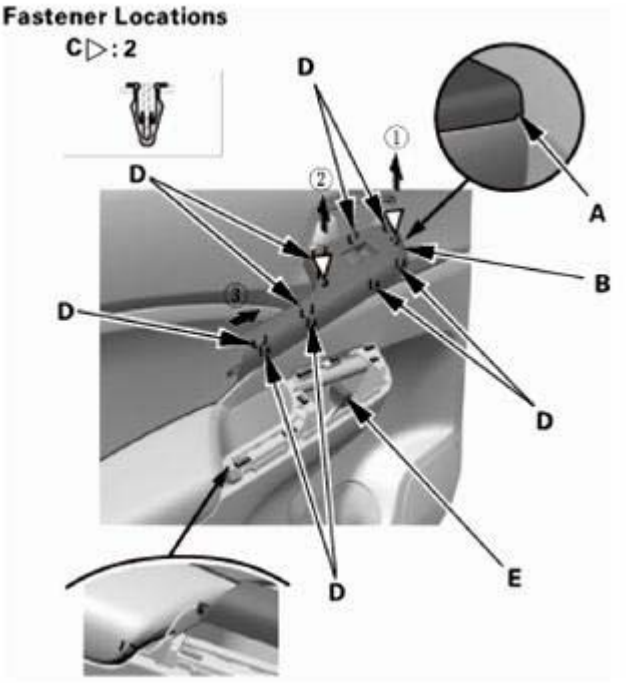

Fig. 168: Removing Power Window Switch Panel
Courtesy of AMERICAN HONDA MOTOR CO., INC.

2. Rear Door Panel
    1. Detach the clip (A) and the hooks (B), then remove the rear door quarter inner trim (C).

GETtheMANUALS.org

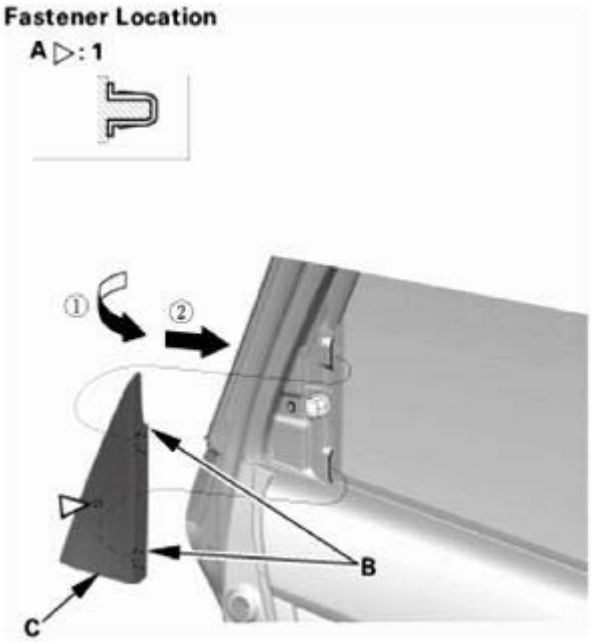

Fig. 169: Removing Rear Door Quarter Inner Trim
Courtesy of AMERICAN HONDA MOTOR CO., INC.

2. Carefully pry out on the upper hook (A) in the inner handle cap (B) with the appropriate trim tool, then pull back the inner handle cap to remove it.

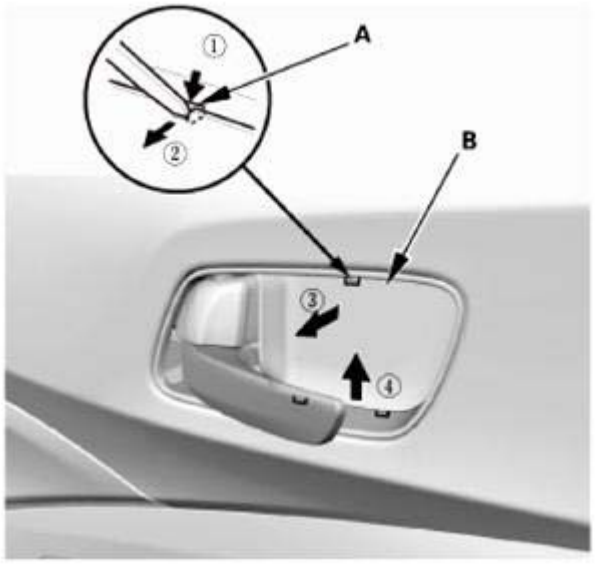

Fig. 170: Removing Rear Door Panel Upper Hook Using Tool
Courtesy of AMERICAN HONDA MOTOR CO., INC.

3. Remove the screws (A) securing the inner handle (B).

GETtheMANUALS.org

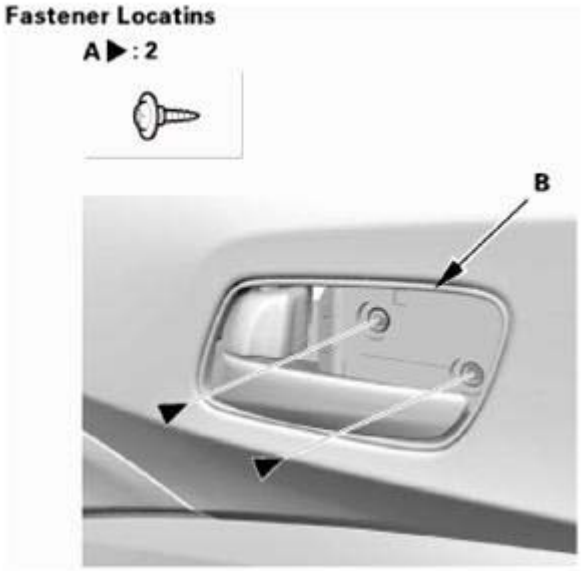

Fig. 171: Identifying Inner Handle And Screws
Courtesy of AMERICAN HONDA MOTOR CO., INC.

4. Remove the pull pocket mat (A), then remove the screw (B).

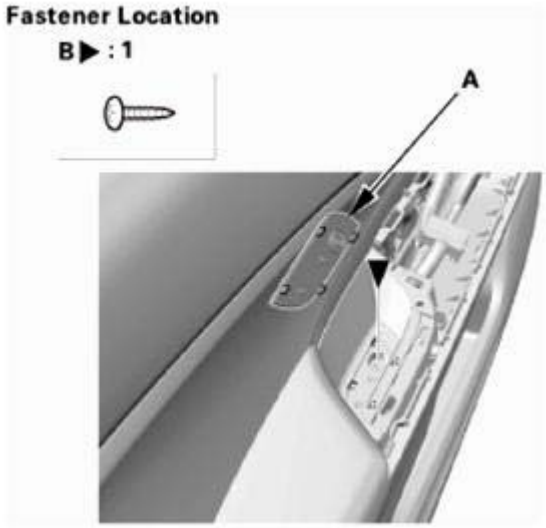

Fig. 172: Identifying Pocket Mat And Screw
Courtesy of AMERICAN HONDA MOTOR CO., INC.

5. Starting at the bottom edge of the door panel (A), detach the clips (B) with a commercially available trim pad remover.
6. Starting at the rear, pull the door panel up.
7. Remove the inner handle (C) from the door panel, then remove the door panel.

GETtheMANUALS.org

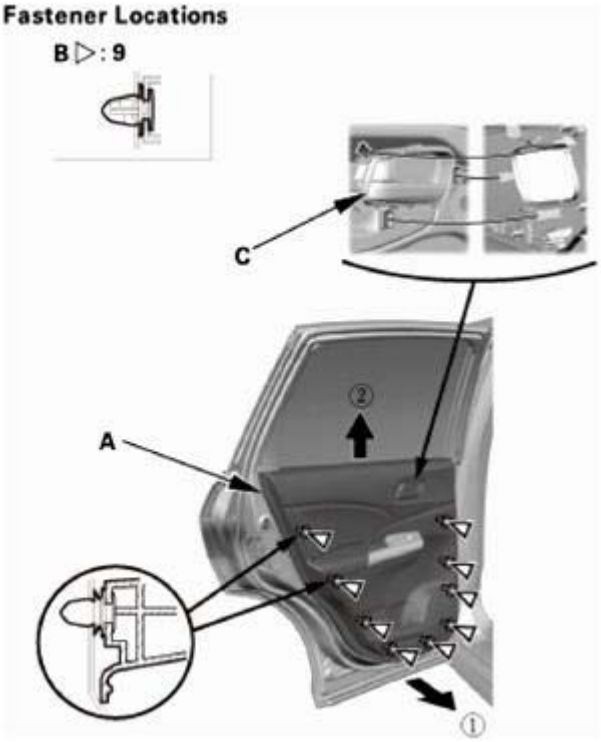

Fig. 173: Removing Door Panel
Courtesy of AMERICAN HONDA MOTOR CO., INC.

3. Rear Door Plastic Cover
    1. Disconnect the connector (A), then remove the harness clips (B).
    2. Remove the screws (C), then remove the door pull pocket bracket (D).
    3. Remove the plug caps (E), then carefully remove the plastic cover (F).

NOTE: If the plastic cover is damaged or torn, replace it.

GETtheMANUALS.org

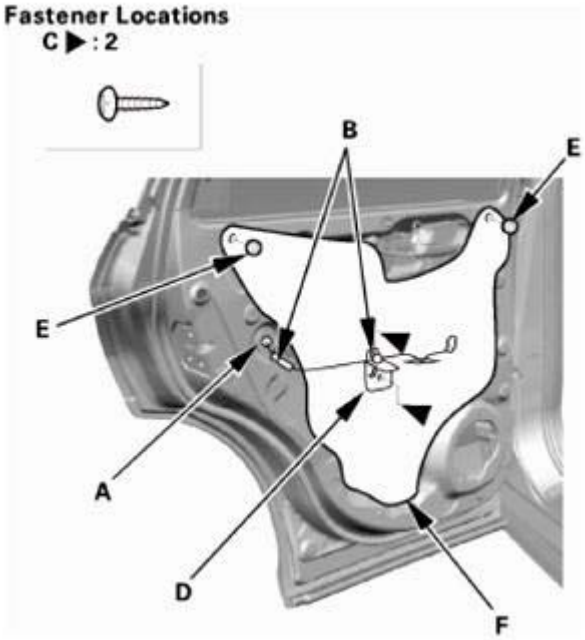

Fig. 174: Identifying Connector, Pocket Bracket, Plug Caps, Plastic Cover, Harness Clips And Screws
Courtesy of AMERICAN HONDA MOTOR CO., INC.

4. Rear Door Glass
    1. Carefully move the glass (A) until you can see the glass mounting bolts (B), then remove them. Carefully lower the glass into the door. Take care not to drop the glass inside the door.

GETtheMANUALS.org

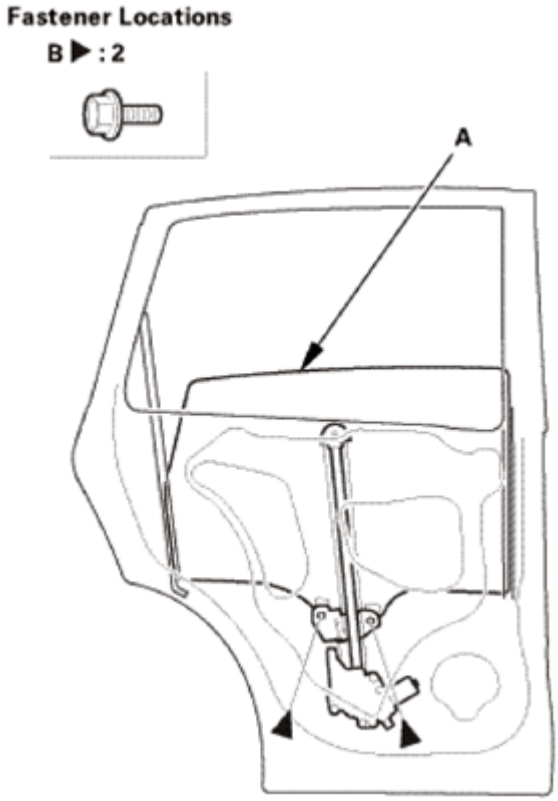

Fig. 175: Identifying Door Glass And Mounting Bolts
Courtesy of AMERICAN HONDA MOTOR CO., INC.

2. Remove the nut (A) and the bolt (B) securing the rear door rear lower channel.
3. Carefully pull out the glass (C) through the window slot. Take care not to drop the glass inside the door.

GETtheMANUALS.org

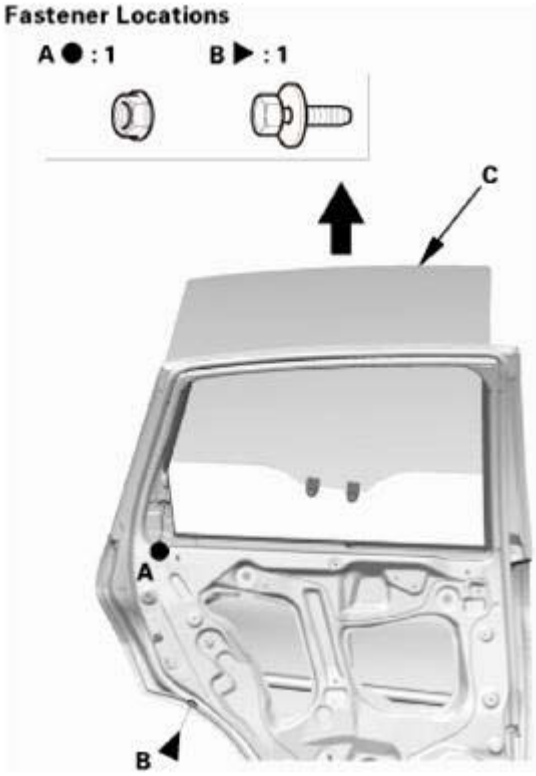

Fig. 176: Pulling Out Door Glass
Courtesy of AMERICAN HONDA MOTOR CO., INC.

5. Rear Door Glass Run Channel
    1. Remove the rear door glass run channel (A).

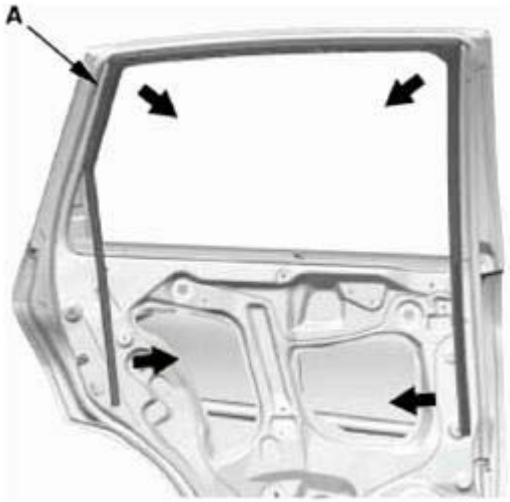

Fig. 177: Removing Rear Door Glass Run Channel
Courtesy of AMERICAN HONDA MOTOR CO., INC.

6. Rear Door Rear Lower Channel

GETtheMANUALS.org

1. Remove the rear door rear lower channel (A).

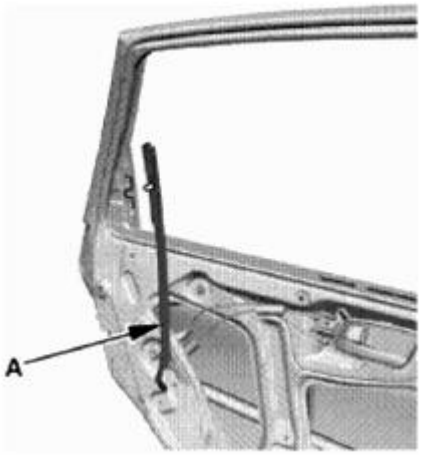

Fig. 178: Identifying Rear Door Rear Lower Channel
Courtesy of AMERICAN HONDA MOTOR CO., INC.

INSTALLATION

1. Rear Door Rear Lower Channel
    1. Install the rear door rear lower channel (A).

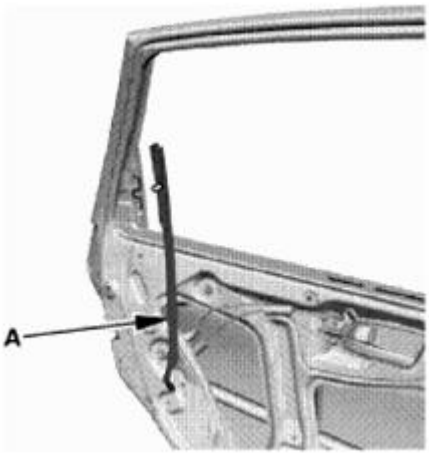

Fig. 179: Identifying Rear Door Rear Lower Channel
Courtesy of AMERICAN HONDA MOTOR CO., INC.

2. Rear Door Glass Run Channel
    1. Install the rear door glass run channel (A) all the way around.

GETtheMANUALS.org

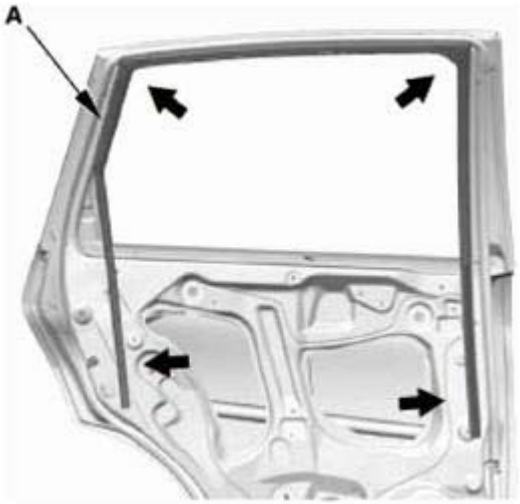

Fig. 180: Installing Rear Door Glass Run Channel
Courtesy of AMERICAN HONDA MOTOR CO., INC.

3. Rear Door Glass
    1. Install the glass (A) through the window slot.
    2. Install the nut (B) and the bolt (C) securing the rear door rear lower channel.

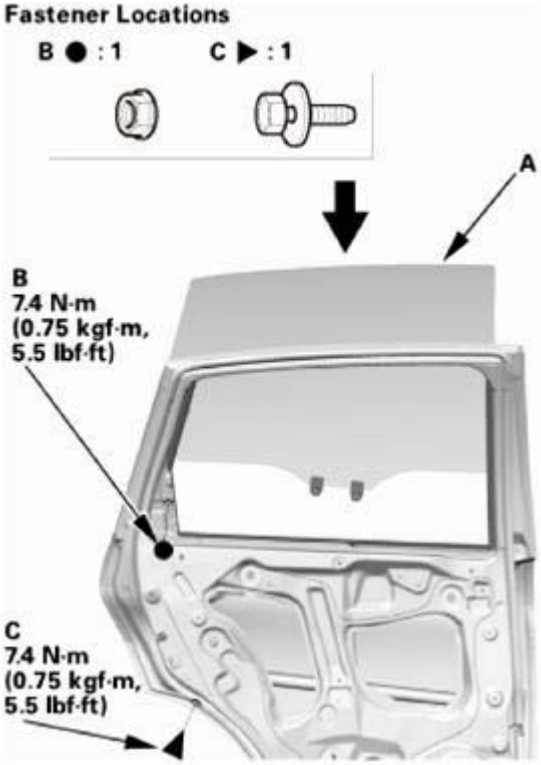

Fig. 181: Installing Door Glass With Torque Specifications
Courtesy of AMERICAN HONDA MOTOR CO., INC.

GETtheMANUALS.org

3. Install the glass mounting bolts (A) securing the rear door glass (B).

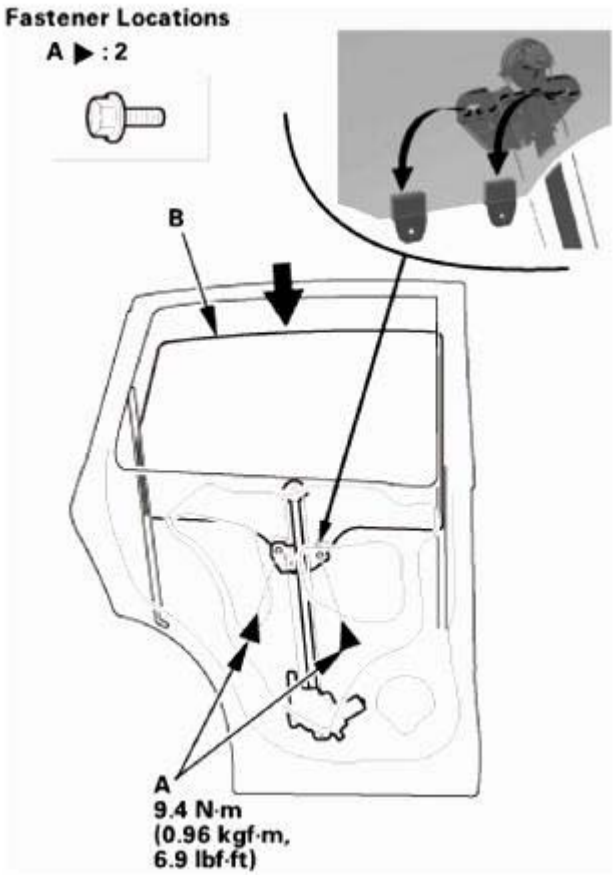

Fig. 182: Installing Door Glass Mounting Bolts With Torque Specifications
Courtesy of AMERICAN HONDA MOTOR CO., INC.

4. Rear Door Glass - Adjustment

NOTE:

- **Check the weatherstrip and the glass run channel for damage or deterioration, and replace them if necessary.**
- **Wipe the run channel clean with a shop towel.**

1. Place the vehicle on a firm, level surface.
2. Carefully move the glass (A) until you can see the glass mounting bolts (B), then loosen them.
3. Push the glass against the front side channel, then tighten the glass mounting bolts.
4. Make sure that the glass moves smoothly.

GETtheMANUALS.org

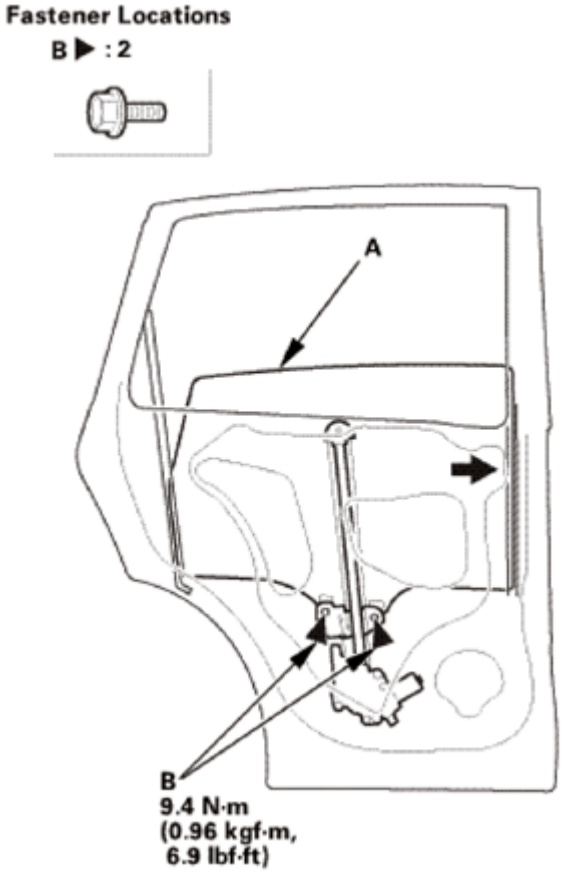

Fig. 183: Moving Glass And Mounting Bolts With Torque Specifications
Courtesy of AMERICAN HONDA MOTOR CO., INC.

5. Raise the glass fully, and check for gaps. Also make sure that the glass (A) contacts the glass run channel (B) evenly.

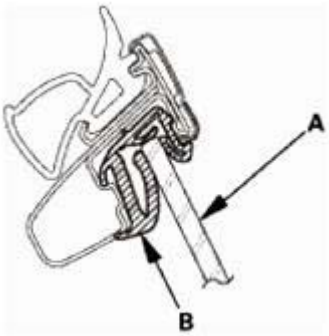

Fig. 184: Checking Gap Between Glass And Glass Run Channel
Courtesy of AMERICAN HONDA MOTOR CO., INC.

5. Rear Door Plastic Cover
    1. Install the plastic cover (A), then install the plug caps (B).

GETtheMANUALS.org

2. Install the pull pocket bracket (C), then install the screws (D).
3. Connect the connector (E), then install the harness clips (F).

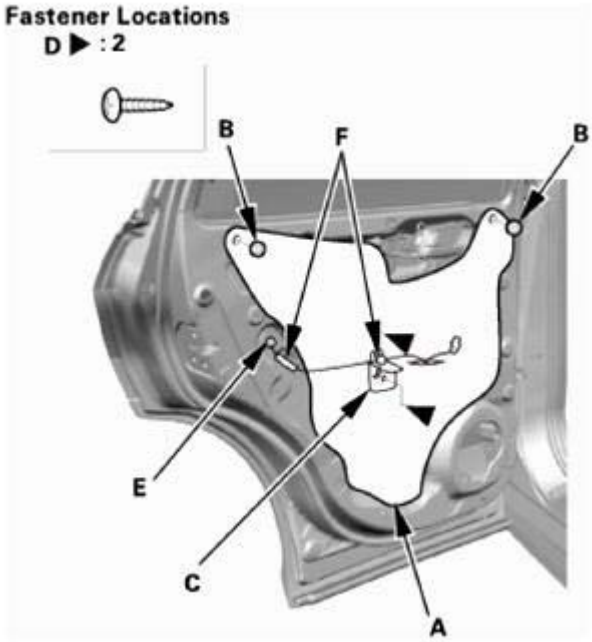

Fig. 185: Identifying Connector, Pocket Bracket, Plug Caps, Plastic Cover, Harness Clips And Screws
Courtesy of AMERICAN HONDA MOTOR CO., INC.

6. Rear Door Panel
    1. Install the inner handle (A) in the door panel (B).
    2. Install the door panel. Make sure the clips (C) snap into place securely.

GETtheMANUALS.org

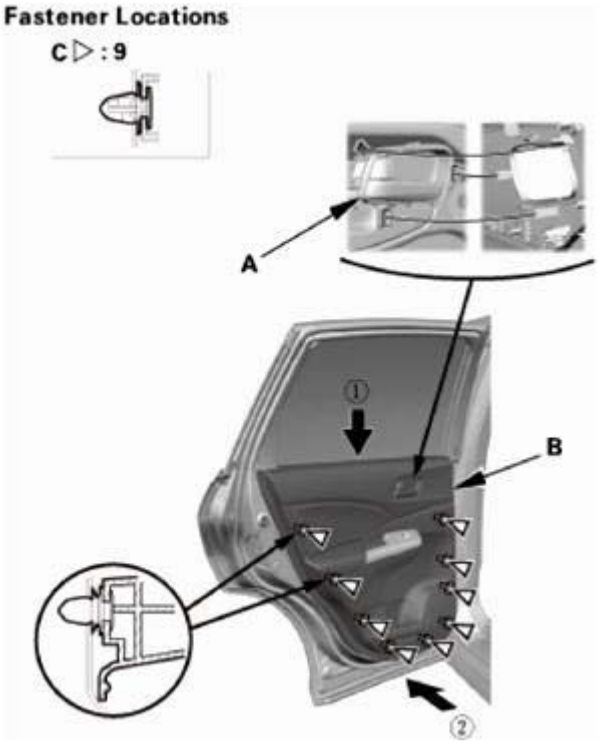

Fig. 186: Installing Inner Handle To Door Panel
Courtesy of AMERICAN HONDA MOTOR CO., INC.

3. Install the screw (A), then install the pull pocket mat (B).

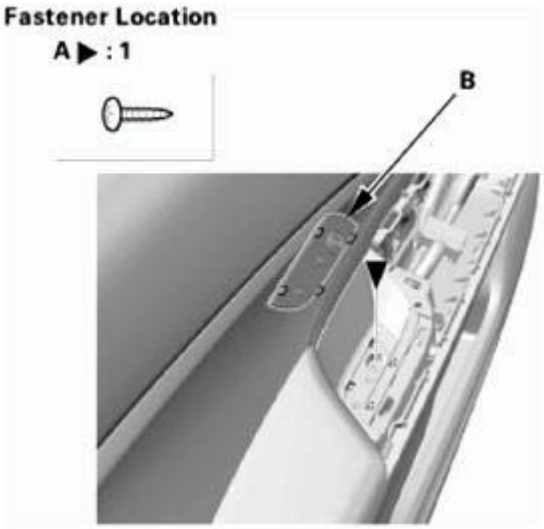

Fig. 187: Identifying Pocket Mat And Screw
Courtesy of AMERICAN HONDA MOTOR CO., INC.

4. Install the screws (A) securing the inner handle (B).

GETtheMANUALS.org

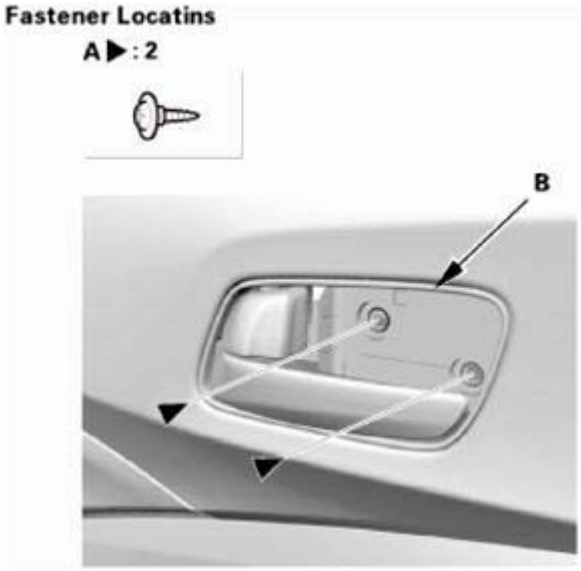

Fig. 188: Identifying Inner Handle And Screw
Courtesy of AMERICAN HONDA MOTOR CO., INC.

5. Install the inner handle cap (A). Make sure the upper hook (B) and the lower hooks (C) snap into place securely.

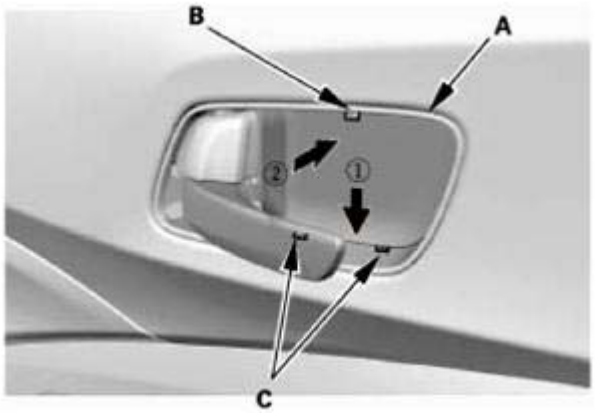

Fig. 189: Installing Inner Handle Cap
Courtesy of AMERICAN HONDA MOTOR CO., INC.

6. Install the rear door quarter inner trim (A). Make sure the clip (B) and the hooks (C) snap into place securely.

GETtheMANUALS.org

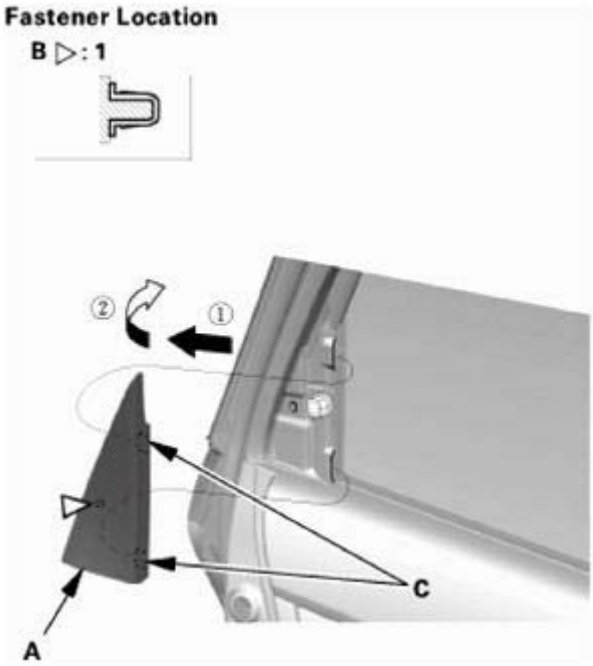

Fig. 190: Installing Rear Door Quarter Inner Trim
Courtesy of AMERICAN HONDA MOTOR CO., INC.

7. Rear Door Power Window Switch Panel
    1. Connect the connector (A), then install the power window switch panel (B). Make sure the clips (C) and the hooks (D) snap into place securely.

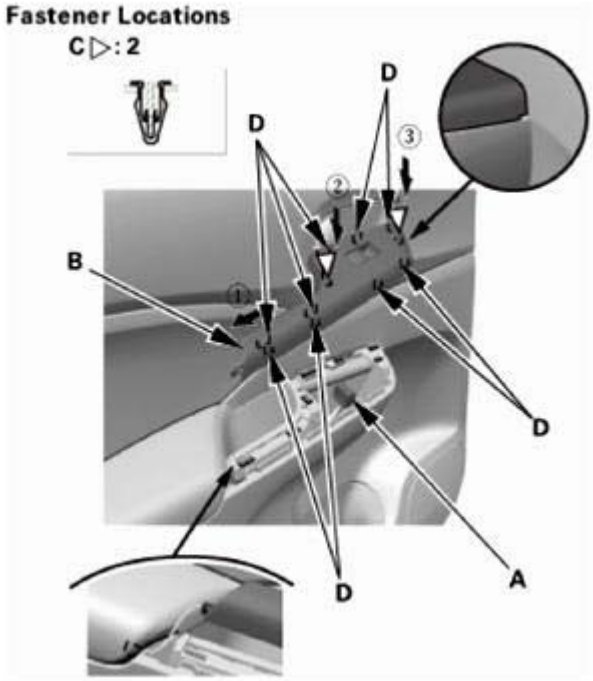

Fig. 191: Installing Power Window Switch Panel

GETtheMANUALS.org

Courtesy of AMERICAN HONDA MOTOR CO., INC.

REAR POWER WINDOW SWITCH REMOVAL AND INSTALLATION

REMOVAL

1. Rear Door Power Window Switch Panel
    1. Carefully pry out on the notch (A) in the power window switch panel (B) with the appropriate trim tool to detach the clips (C) and the hooks (D). Disconnect the connector (E), then remove the power window switch panel.

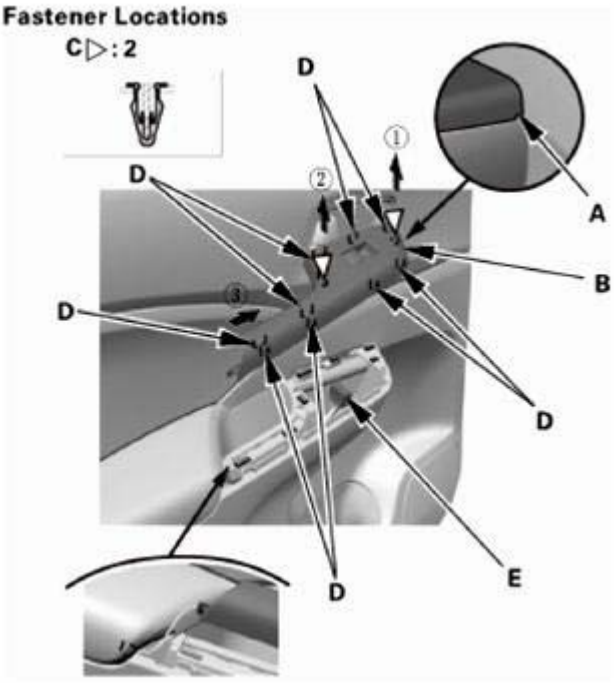

Fig. 192: Removing Power Window Switch Panel
Courtesy of AMERICAN HONDA MOTOR CO., INC.

2. Rear Power Window Switch
    1. Remove the rear power window switch (A).

GETtheMANUALS.org

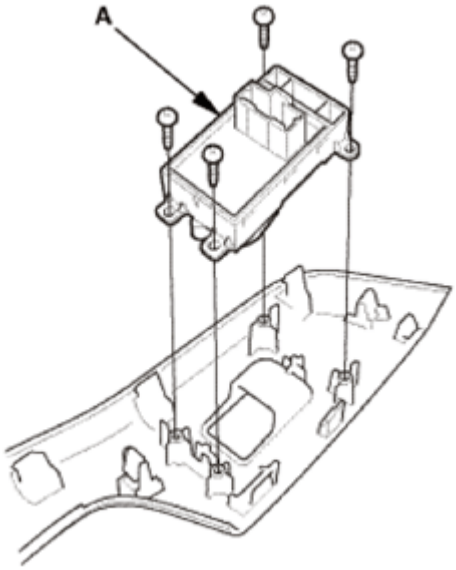

Fig. 193: Identifying Rear Power Window Switch And Bolts
Courtesy of AMERICAN HONDA MOTOR CO., INC.

INSTALLATION

1. Rear Power Window Switch
    1. Install the rear power window switch (A).

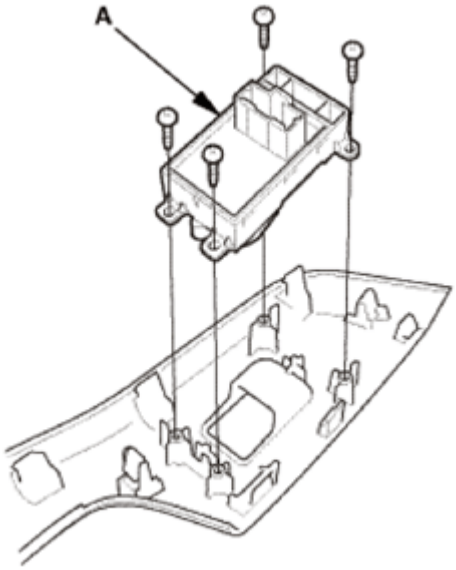

Fig. 194: Identifying Rear Power Window Switch And Bolts
Courtesy of AMERICAN HONDA MOTOR CO., INC.

2. Rear Door Power Window Switch Panel
    1. Connect the connector (A), then install the power window switch panel (B). Make sure the clips (C)

GETtheMANUALS.org

and the hooks (D) snap into place securely.

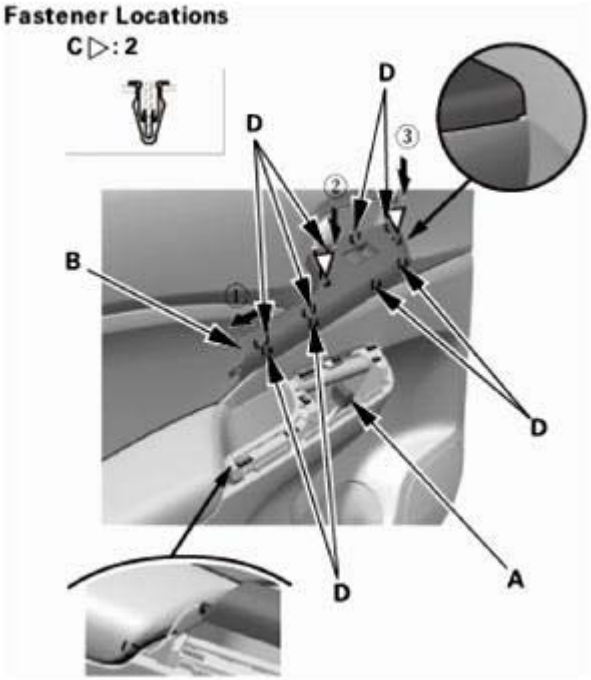

Fig. 195: Installing Power Window Switch Panel
Courtesy of AMERICAN HONDA MOTOR CO., INC.

REAR POWER WINDOW SWITCH TEST

REMOVAL

1. Rear Door Power Window Switch Panel
    1. Carefully pry out on the notch (A) in the power window switch panel (B) with the appropriate trim tool to detach the clips (C) and the hooks (D). Disconnect the connector (E), then remove the power window switch panel.

GETtheMANUALS.org

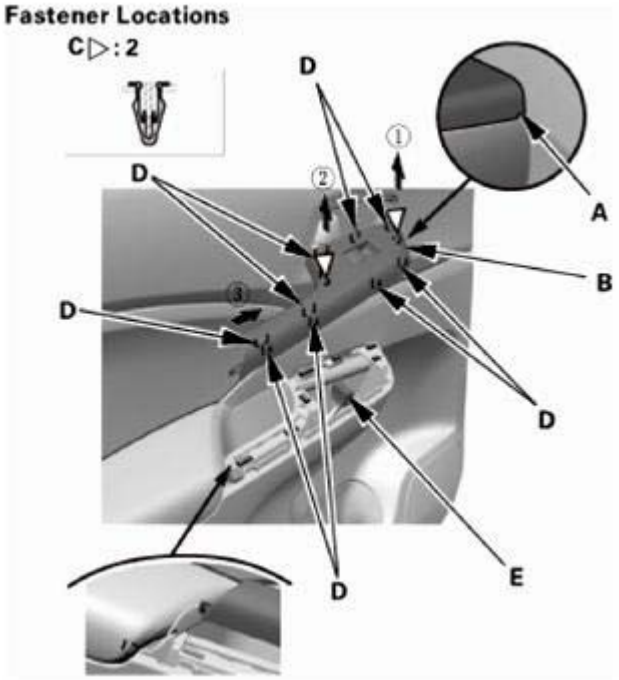

Fig. 196: Removing Power Window Switch Panel
Courtesy of AMERICAN HONDA MOTOR CO., INC.

TEST

1. Rear Power Window Switch - Test
    1. Check for continuity between the terminals in each position according to the table.
    2. If the continuity is not as specified, replace the rear power window switch (A).

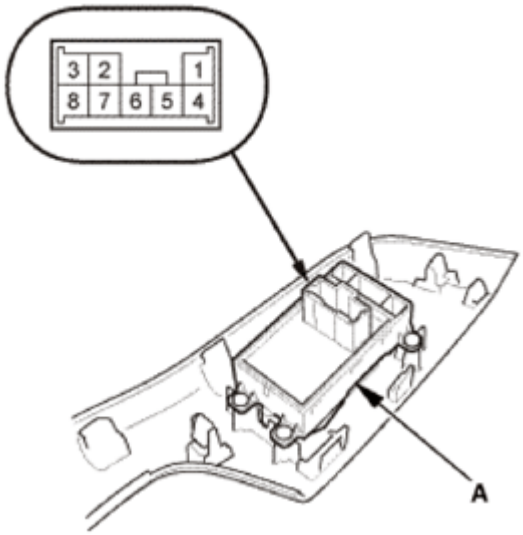

Fig. 197: Identifying Rear Passenger's Power Window Switch And Connector Terminals
Courtesy of AMERICAN HONDA MOTOR CO., INC.

GETtheMANUALS.org

Position \ Terminal	1	3	4	5	8
OFF	○	○	○	○	
UP	○	○	○		○
DOWN	○	○		○	○

Fig. 198: Rear Passenger's Power Window Switch Continuity Reference Chart
Courtesy of AMERICAN HONDA MOTOR CO., INC.

INSTALLATION

1. Rear Door Power Window Switch Panel
    1. Connect the connector (A), then install the power window switch panel (B). Make sure the clips (C) and the hooks (D) snap into place securely.

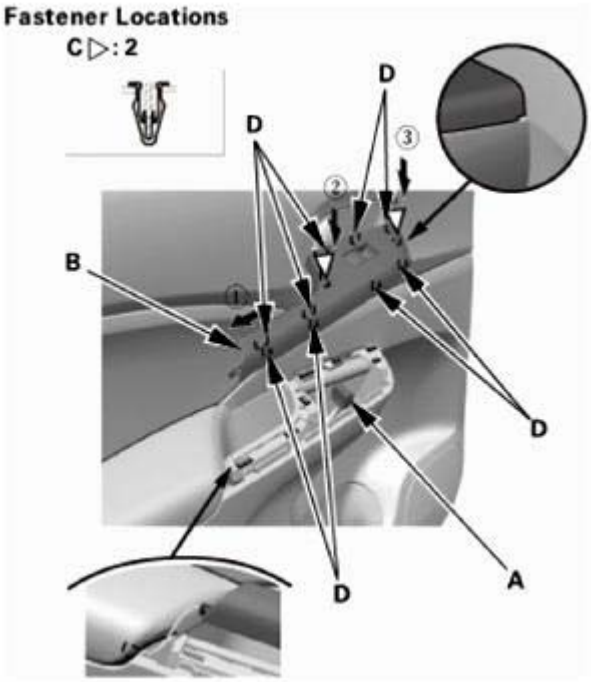

Fig. 199: Installing Power Window Switch Panel
Courtesy of AMERICAN HONDA MOTOR CO., INC.

REAR WINDOW REMOVAL AND INSTALLATION

REMOVAL

1. Tailgate Upper Trim Panel
    1. Carefully pry out the notch (A) in the tailgate upper trim (B) with the appropriate trim tool to detach the hooks (C) and the tabs (D) from the tailgate side trims (E), and pull back the tailgate

GETtheMANUALS.org

upper trim panel by hand to detach the clips (F), then remove the tailgate upper trim panel.

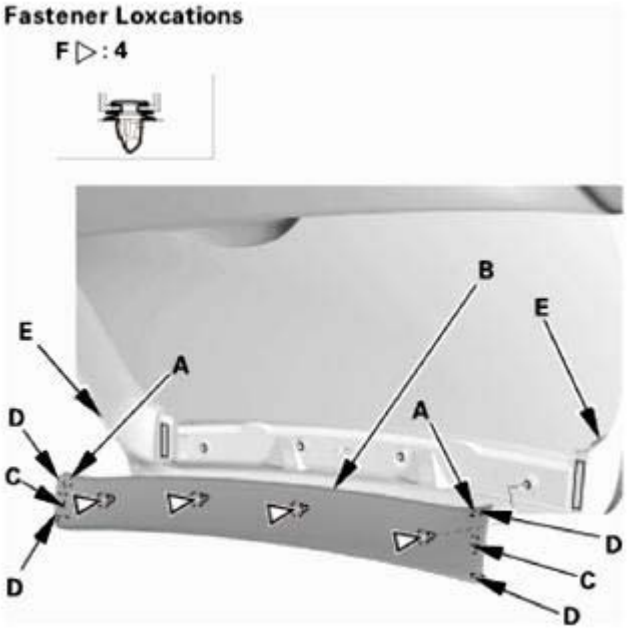

Fig. 200: Identifying Tailgate Upper Trim, Panel, Hooks, Notch And Clips
Courtesy of AMERICAN HONDA MOTOR CO., INC.

2. Tailgate Side Trim - Both Sides

NOTE: Repeat this procedure on the opposite side.

1. Detach the hook (A) and the tabs (B) from the tailgate lower trim panel (C), and pull back the tailgate side trim (D) by hand to detach the clips (E), then remove the tailgate side trim.

GETtheMANUALS.org

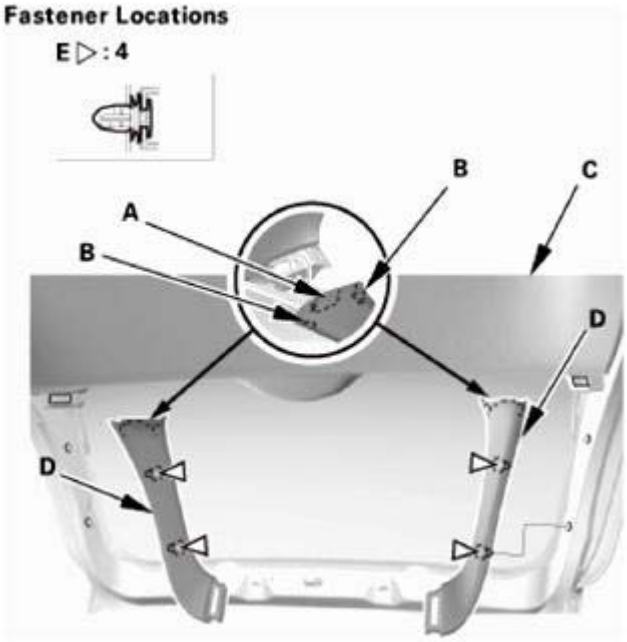

Fig. 201: Identifying Tailgate Lower Trim, Panel, Hooks, Tabs And Clips
Courtesy of AMERICAN HONDA MOTOR CO., INC.

3. Tailgate Lower Trim Panel
    1. Remove the screw (A), then remove the tailgate pull pocket (B).

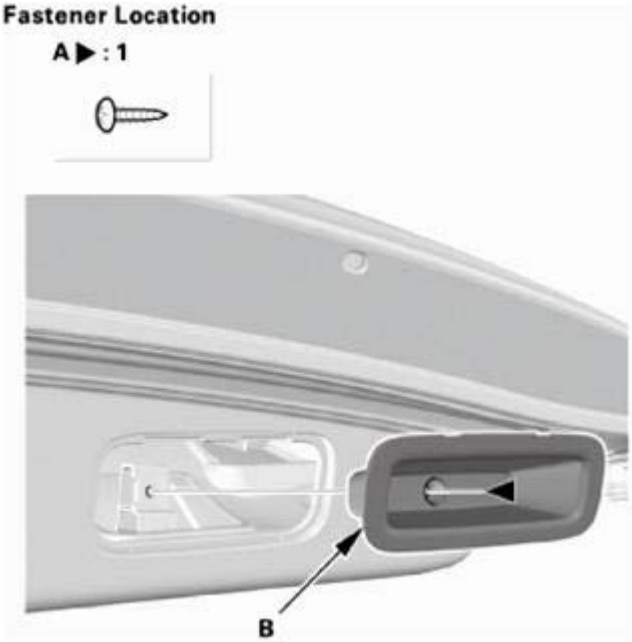

Fig. 202: Identifying Tailgate Pull Pocket And Screw
Courtesy of AMERICAN HONDA MOTOR CO., INC.

    2. Pull out the tailgate lower trim panel (A) by hand to detach the clips (B, C), then remove the

GETtheMANUALS.org

tailgate lower trim panel.

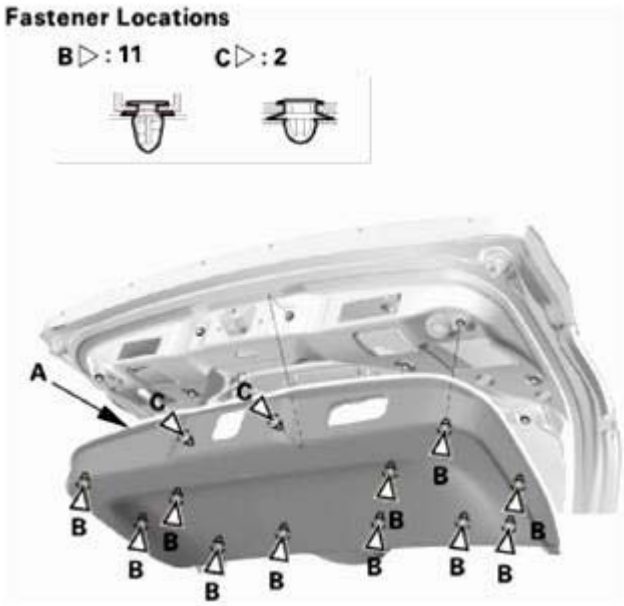

Fig. 203: Identifying Tailgate Lower Trim Panel And Clips
Courtesy of AMERICAN HONDA MOTOR CO., INC.

4. Rear License Trim
    1. Remove the bolts (A).

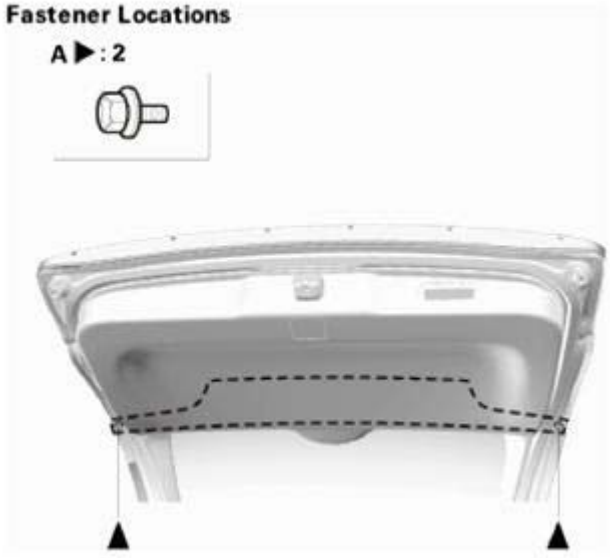

Fig. 204: Identifying Rear License Trim Bolts
Courtesy of AMERICAN HONDA MOTOR CO., INC.

    2. Spray soapy water solution onto the double-sided adhesive tape (A), then carefully cut the adhesive tape along the lower edge of the rear license trim (B) with a utility knife while separating the trim

GETtheMANUALS.org

from the tailgate (C) with a trim tool.

NOTE: Apply protective tape (D) around the cutting area as shown.

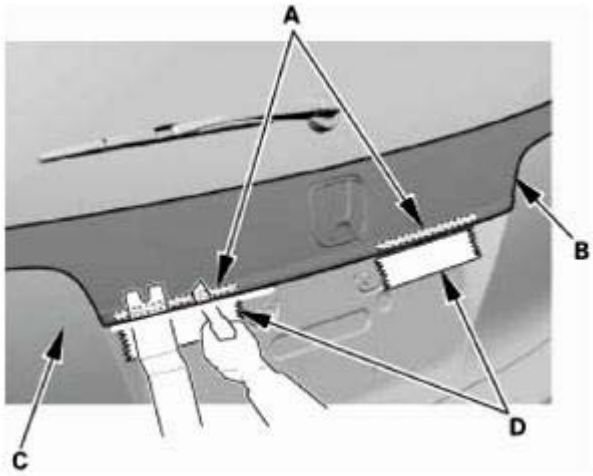

Fig. 205: Applying Protective Tape On Rear License Trim Cutting Area
Courtesy of AMERICAN HONDA MOTOR CO., INC.

3. Pull out the rear license trim (A) with the appropriate trim tool to release the clip pins (B) of the clips (C) from the clip grommets (D) on the tailgate, and detach the clips (E), then remove the rear license trim from the tailgate.

NOTE: The clip grommets will stay on the tailgate.

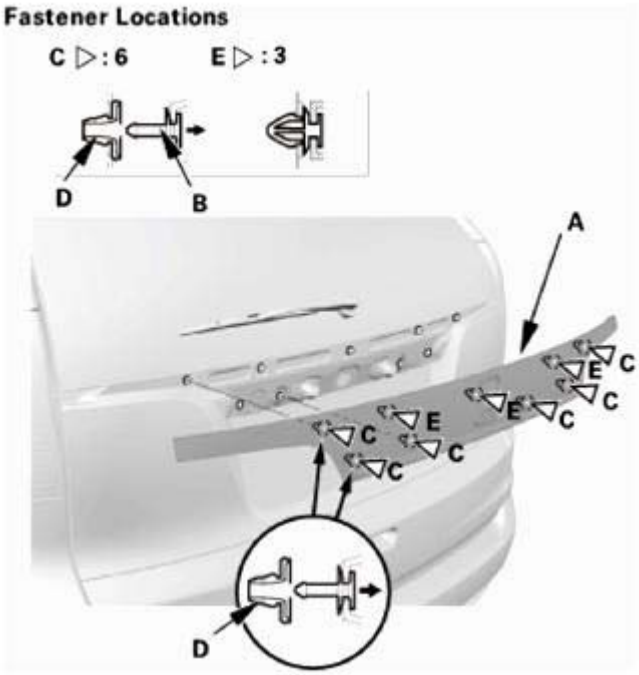

GETtheMANUALS.org

Fig. 206: Identifying Rear License Trim Clips And Grommets
Courtesy of AMERICAN HONDA MOTOR CO., INC.

4. Remove the clip grommets (A) from the tailgate.
5. Install the clip grommets into the clip pins on the rear license trim.

NOTE: **If the clip pins and the clip grommets are damaged or stress-whitened, replace them as an assembly with new ones.**

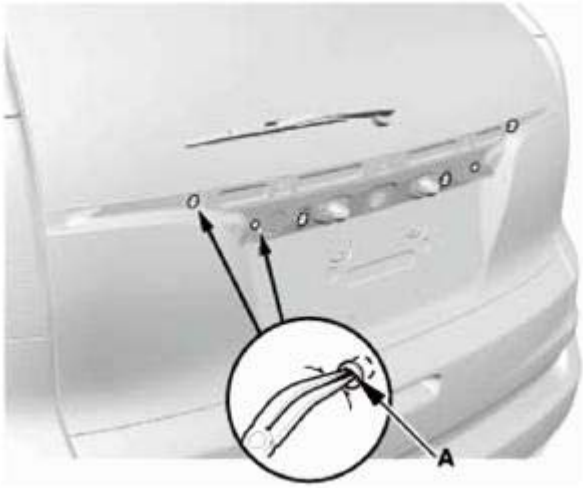

Fig. 207: Removing Clip Grommets From Tailgate
Courtesy of AMERICAN HONDA MOTOR CO., INC.

5. Rear Window Wiper Arm Assembly
   1. Raise the wiper arm (A) off the rear window, then remove the cover (B), the nut (C), and the wiper arm.

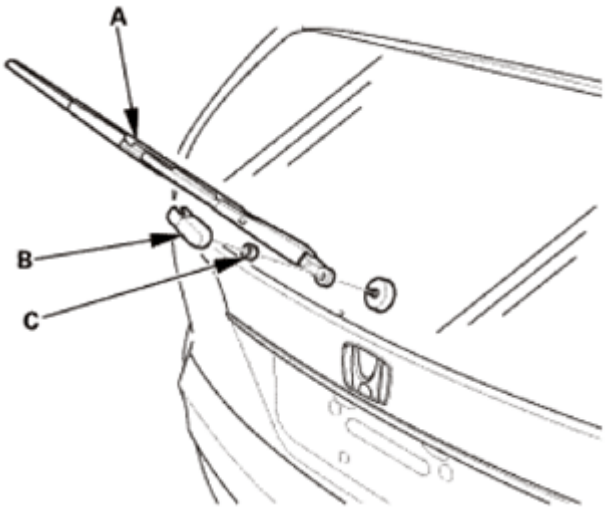

Fig. 208: Identifying Rear Window Wiper Arm, Cover And Nut With Torque Specification

GETtheMANUALS.org

Courtesy of AMERICAN HONDA MOTOR CO., INC.

6. Rear Window Wiper Motor
    1. Disconnect the connector.
    2. Remove the rear window wiper motor (A).

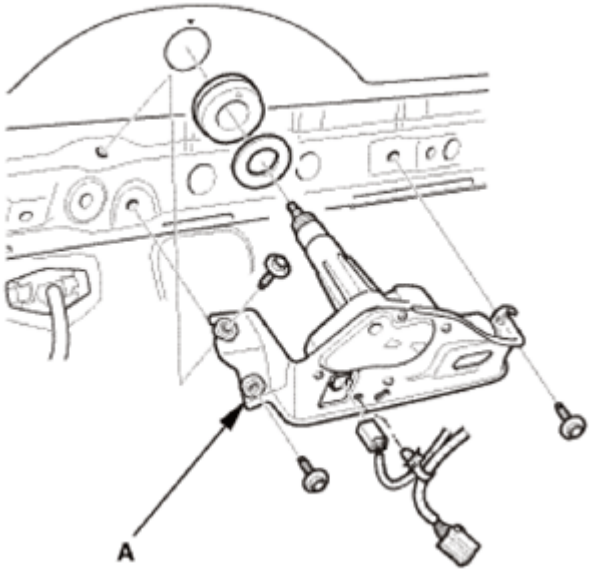

Fig. 209: Identifying Rear Window Wiper Motor
Courtesy of AMERICAN HONDA MOTOR CO., INC.

7. Rear Window
    1. Remove the rubber dams (A, B) from the edges of the rear window (C). If necessary, cut the rubber dams with a utility knife.

GETtheMANUALS.org

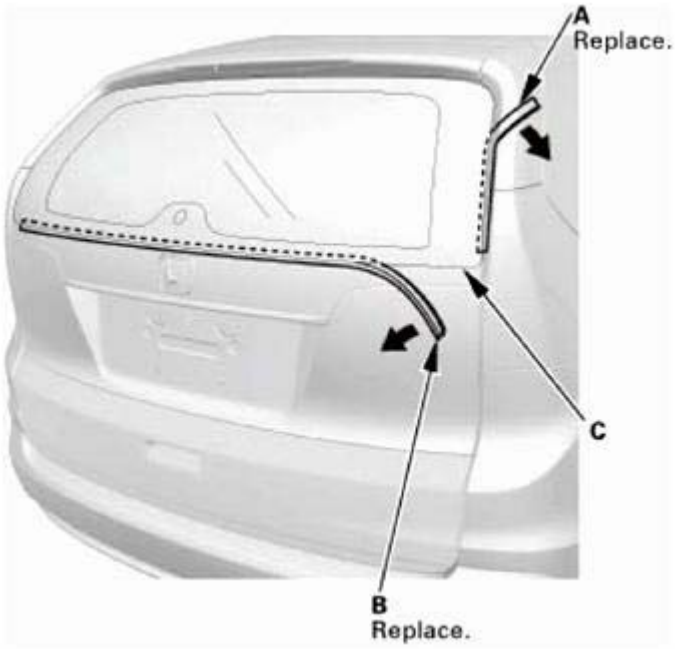

Fig. 210: Removing Rubber Dams From Rear Window Edges
Courtesy of AMERICAN HONDA MOTOR CO., INC.

2. Disconnect the connectors (A).

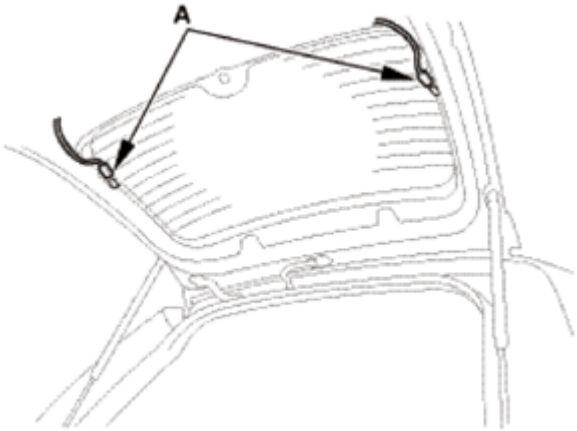

Fig. 211: Identifying Rear Window Connectors
Courtesy of AMERICAN HONDA MOTOR CO., INC.

3. If the original rear window will be reinstalled, make alignment marks (A) across the glass and the body with a grease pencil.

GETtheMANUALS.org

Fig. 212: Identifying Alignment Marks On Glass And Body Using Grease Pencil
Courtesy of AMERICAN HONDA MOTOR CO., INC.

4. Apply protective tape along the inside and the outside edges of the tailgate. Make a hole with an awl through the adhesive from inside of the vehicle at the corner portion of the rear window. Push a piece of piano wire through the hole, and wrap each end around a piece of wood.
5. With a helper on the outside, pull the piano wire (A) back and forth in a sawing motion. Hold the piano wire as close to the rear window (B) as possible to prevent damage to the tailgate, and carefully cut through the adhesive (C) around the entire rear window.

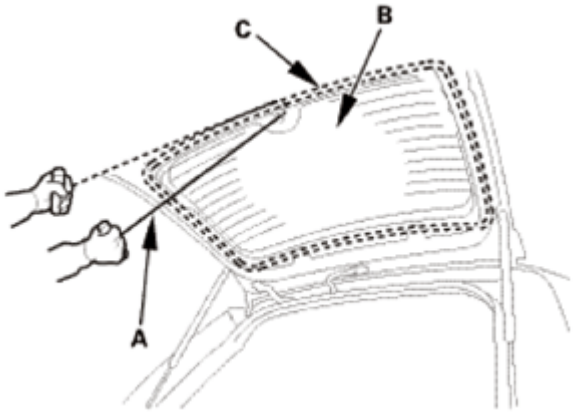

Fig. 213: Cutting Adhesive From Rear Window Corner Portion
Courtesy of AMERICAN HONDA MOTOR CO., INC.

6. Carefully remove the rear window.

Cutting positions

GETtheMANUALS.org

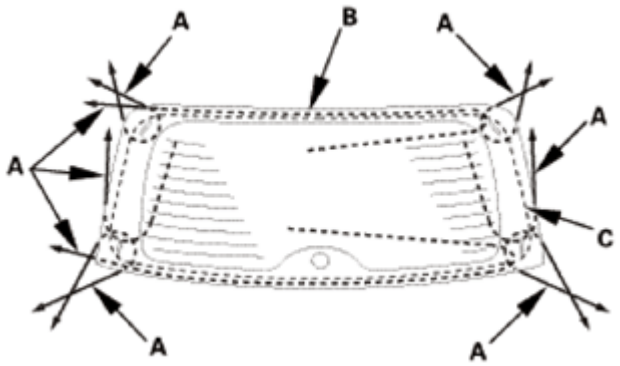

Fig. 214: Identifying Rear Window Adhesive Cutting Position
Courtesy of AMERICAN HONDA MOTOR CO., INC.

INSTALLATION

1. Rear Window
    1. Scrape smooth the original adhesive with a knife until there is a thickness of about 1~2 mm (0.04~0.08 in) on the bonding surface around the entire rear window opening flange:
        - Do not scrape down to the painted surface of the body; damaged paint will interfere with proper bonding.
        - Remove the fasteners or spacers from the tailgate.
    2. Clean the body bonding surface with a shop towel dampened in isopropyl alcohol. After cleaning, keep oil, grease, and water from getting on the surface.
    3. If you are reinstalling the original rear window, scrape off all of the original adhesive, the fasteners, the spacers (Sayama products), and the rubber dams from the rear window with a putty knife. Clean the bonding surface on the inside face and the edge of the rear window with isopropyl alcohol. Make sure the bonding surface is kept free of water, oil, and grease
    4. Except '14 Mexico factory model: Cut the rubber dam (A) to correct length according to the table.

Rubber dam	Length	QTY
A	900 mm (35.43 in)	1

Except '14 Mexico Factory Model

GETtheMANUALS.org

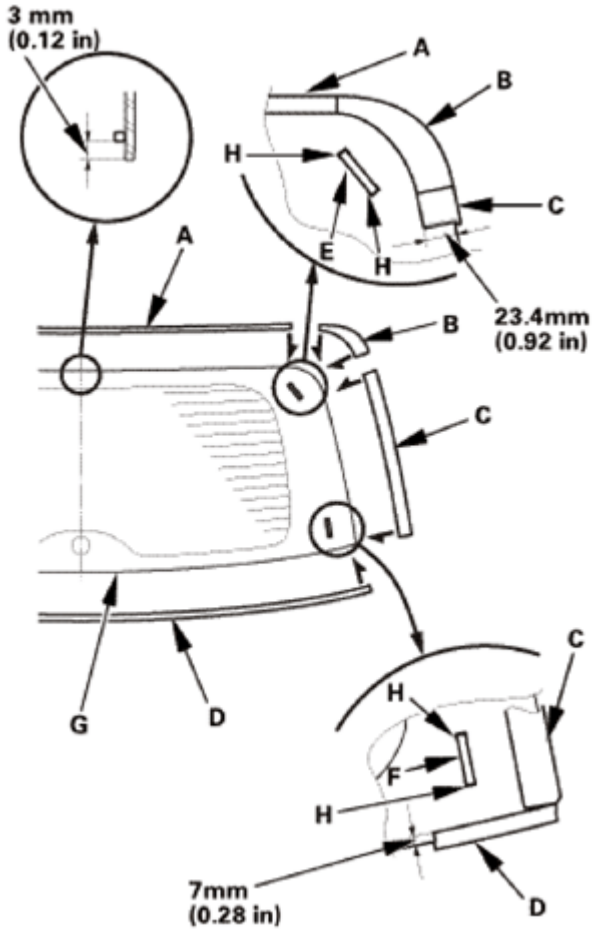

Fig. 215: Identifying Rear Window Corner Molding, Rubber Dam And Fasteners (Except '14 Mexico Factory Model)
Courtesy of AMERICAN HONDA MOTOR CO., INC.

5. '14 Mexico factory model: Cut the rubber dams (A, C) to correct length according to the table.

Rubber dam	Length	QTY
A	900 mm (35.43 in)	1
C	190 mm (7.48 in)	2

6. Apply a primer to the fasteners and the rubber dams mounting areas on the rear window, and let it dry. Attach rubber dam (A), the corner molding (B) (except '14 Mexico factory model), rubber dams (C), rubber dam (D), and the fasteners (E, F) with the adhesive tape to the inside face of the rear window (G) as shown.
   - Be sure the fasteners line up with alignment marks (H).
   - Be careful not to touch the rear window where the adhesive will be applied.
   - Except '14 Mexico factory model: First attach the corner molding (B), then attach rubber dam (A) and rubber dams (C) around the edge of the rear window. Make sure edges of rubber dam (A) contact with the edges of the corner molding (B). If necessary, cut rubber dam (A) with a

GETtheMANUALS.org

utility knife.

- '14 Mexico factory model: Make sure that there is no clearance between rubber dam (A) and rubber dams (C)
- Cut the excess rubber dams (C) along both beveled edges of the rear window.

'14 Mexico Factory Model

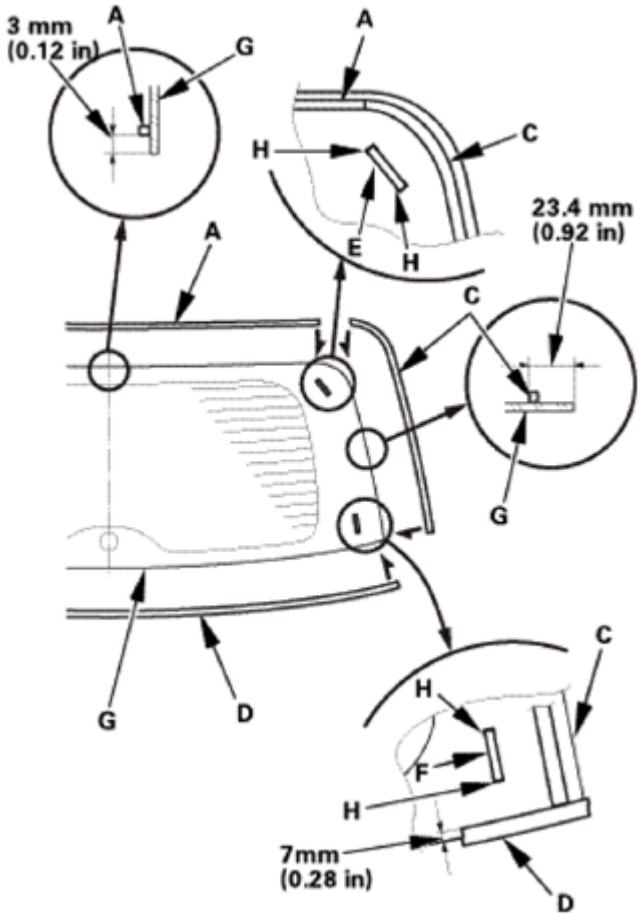

Fig. 216: Identifying Rear Window Corner Molding, Rubber Dam And Fasteners ('14 Mexico Factory Model)
Courtesy of AMERICAN HONDA MOTOR CO., INC.

7. Attach the fasteners (A, B) with adhesive tape to the tailgate as shown.

GETtheMANUALS.org

Fig. 217: Identifying Tailgate Fasteners
Courtesy of AMERICAN HONDA MOTOR CO., INC.

8. If you are installing a new rear window, set the rear window (A) in the opening, and center it. Make alignment marks (B) across the rear window and the body with a grease pencil at the four points shown. Make sure the pins (C) of both clips (D) contact with the holes of the tailgate corner. Be careful not to touch the rear window where the adhesive will be applied.
9. Remove the rear window.

GETtheMANUALS.org

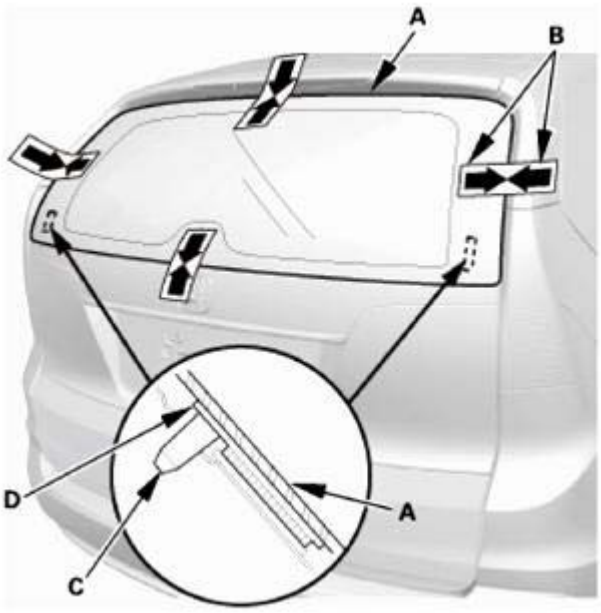

Fig. 218: Making Alignment Marks On Rear Window And Body Using Grease Pencil
Courtesy of AMERICAN HONDA MOTOR CO., INC.

10. Apply a light coat of primer to the rear window (A) along the edge of the rubber dams (B) and the corner molding as shown, then lightly wipe it off with gauze or cheesecloth:
    - Apply the primer to the corner portions of the rear window using the printed dots (C) on the rear window as a guide.
    - Do not apply body primer to the rear window, and do not mix up the body primer applicator and the glass primer applicator.

    Except '14 Mexico Factory Model

GETtheMANUALS.org

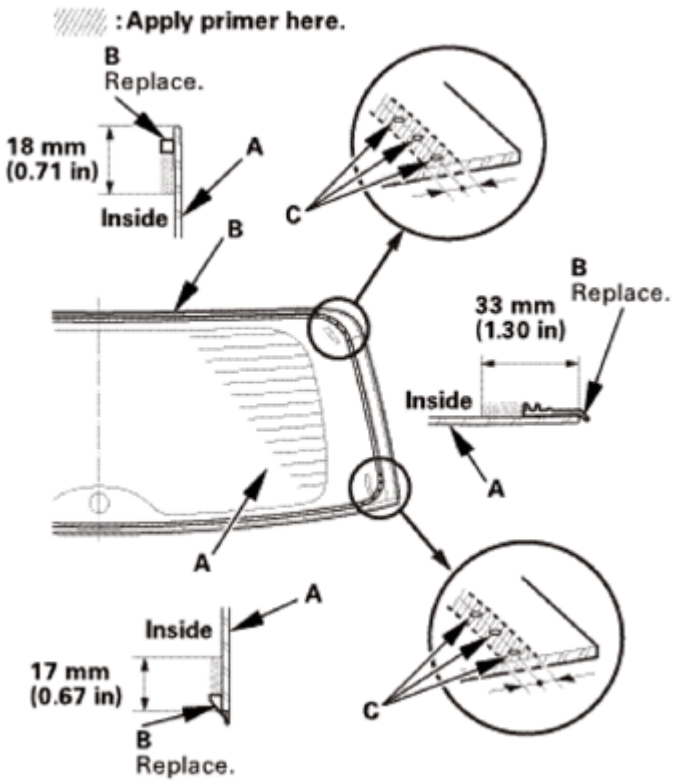

Fig. 219: Identifying Primer Applying Area On Rear Window (Except '14 Mexico Factory Model)
Courtesy of AMERICAN HONDA MOTOR CO., INC.

- Never touch the primed surfaces with your hands. If you do, the adhesive may not bond to the rear window properly, causing a leak after the rear window is installed.
- Keep water, dust, and abrasive materials away from the primed surface.

'14 Mexico Factory Model

GETtheMANUALS.org

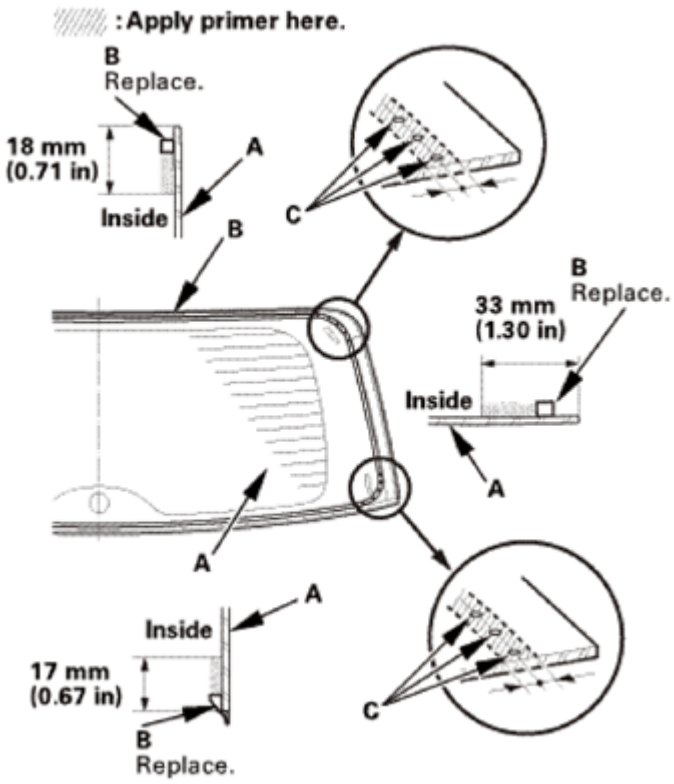

Fig. 220: Identifying Primer Applying Area On Rear Window ('14 Mexico Factory Model)
Courtesy of AMERICAN HONDA MOTOR CO., INC.

11. Carefully apply a light coat of body primer to any exposed paint or metal around the flange where the adhesive will be applied. Let the body primer dry for at least 10 minutes:
    - Do not apply body primer to any remaining original adhesive on the flange.
    - Do not mix up the body primer applicator and the glass primer applicator.
    - Never touch the primed surfaces with your hands.

GETtheMANUALS.org

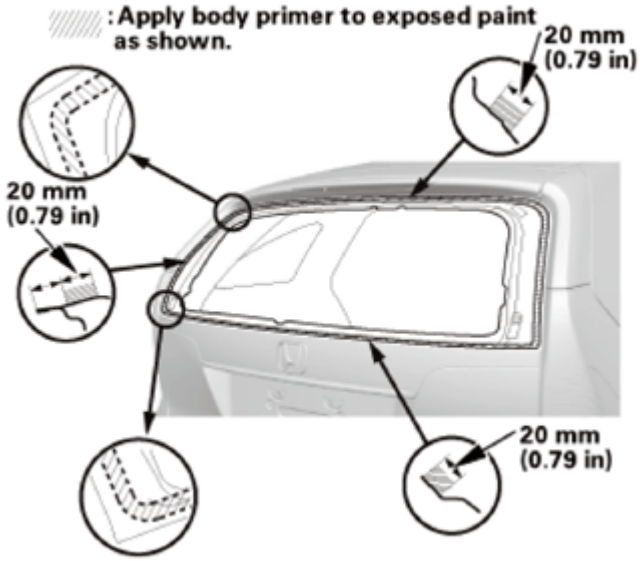

Fig. 221: Identifying Light Coat Of Body Primer Applying Area On Exposed Paint Or Metal Around Flange
Courtesy of AMERICAN HONDA MOTOR CO., INC.

12. Cut a "V" in the end of the nozzle (A) on the adhesive cartridge as shown.

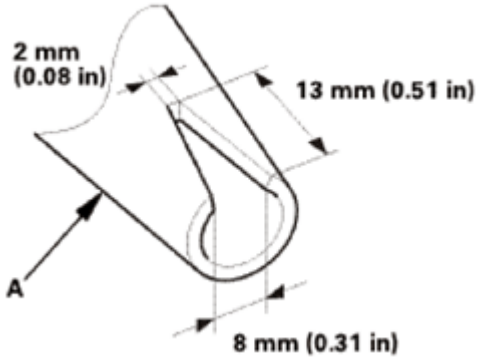

Fig. 222: Identifying Cut End Of Nozzle On Adhesive Cartridge
Courtesy of AMERICAN HONDA MOTOR CO., INC.

13. Put the cartridge in a caulking gun, and run a continuous bead of the adhesive (A) around the rear window (B) along the edge of the rubber dams (C) as shown:
    - Use the printed dots (D) as a guide when you apply the adhesive to the corners of the rear window.
    - Apply the adhesive within 30 minutes after applying the primer. Make a slightly thicker bead at each corner.
14. Hold the rear window with suction cups over the opening, align it with the alignment marks, and set it down on the adhesive. Lightly push on the rear window until its edges are fully seated on the adhesive all the way around.

GETtheMANUALS.org

NOTE: **Do not open or close any of the doors for about an hour until the adhesive is dry.**

15. Remove the excess adhesive with a putty knife or a shop towel dampened with isopropyl alcohol.
16. Wait at least an hour for the adhesive to dry, then spray water over the rear window and check for leaks. Mark the leaking areas, let the rear window dry, then seal with sealant. Let the vehicle stand for at least 4 hours after rear window installation. If the vehicle has to be used within the first 4 hours, it must be driven slowly.
17. Advise the customer not to do the following things for 2 to 3 days:
    - Slam the doors with all the windows rolled up.
    - Twist the body excessively (such as when going in and out of driveways at an angle or driving over rough, uneven roads).

Except '14 Mexico Factory Model

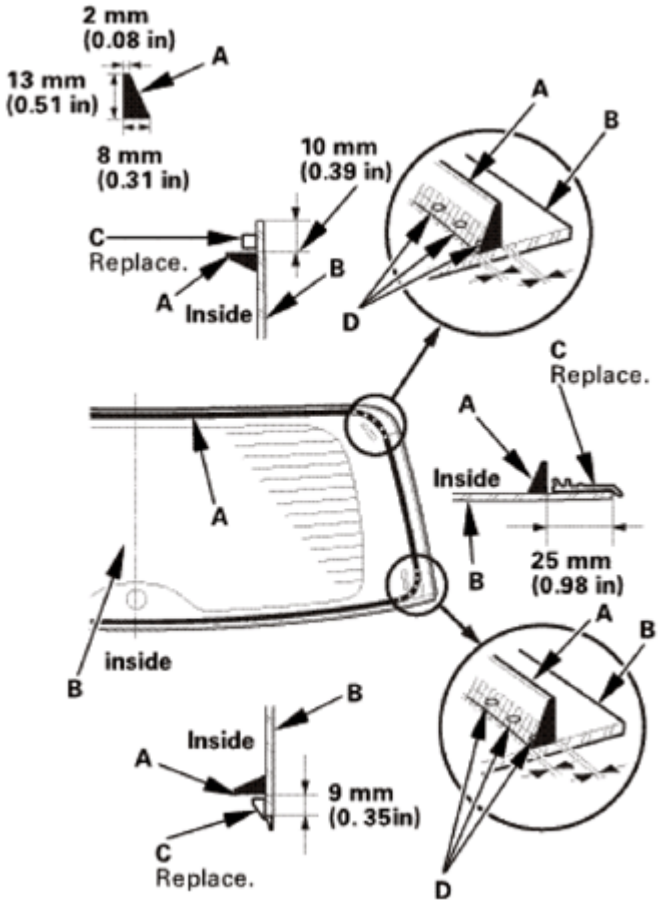

Fig. 223: Identifying Continuous Bead Of Adhesive Applying Area On Rear Window And Edge Of Rubber Dams (Except '14 Mexico Factory Model)
Courtesy of AMERICAN HONDA MOTOR CO., INC.

'14 Mexico Factory Model

GETtheMANUALS.org

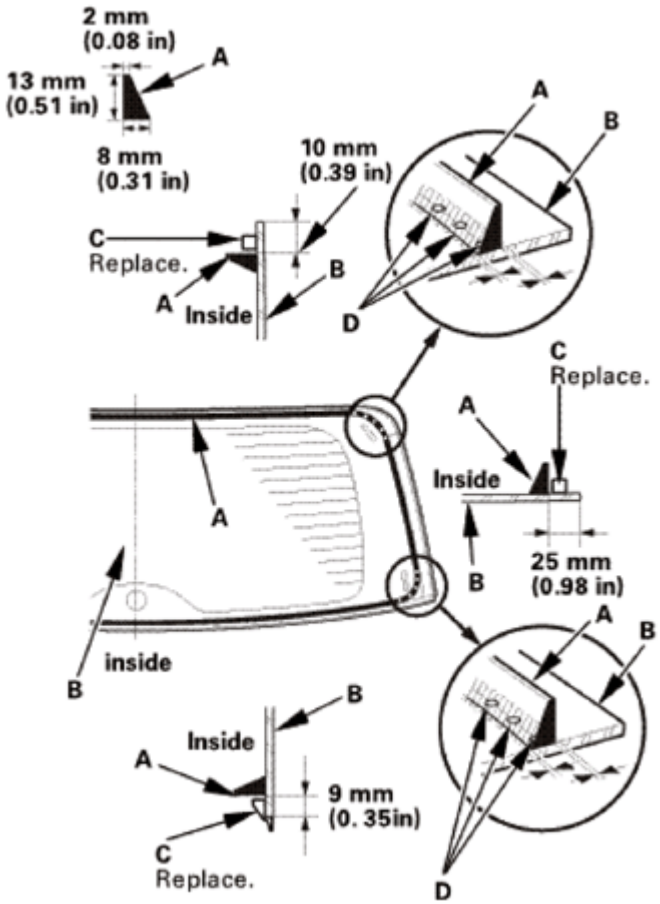

Fig. 224: Identifying Continuous Bead Of Adhesive Applying Area On Rear Window And Edge Of Rubber Dams ('14 Mexico Factory Model)
Courtesy of AMERICAN HONDA MOTOR CO., INC.

18. Connect the connectors (A).

Fig. 225: Identifying Rear Window Connectors
Courtesy of AMERICAN HONDA MOTOR CO., INC.

GETtheMANUALS.org

2. Rear Window Wiper Motor
    1. Align the position marks when installing the seal (A), then install the washer (B) and rear window motor (C).
    2. Connect the connector.

NOTE: **Before reinstalling the rear wiper arm, turn the rear window wiper switch ON, then OFF to return the wiper shaft to the park position.**

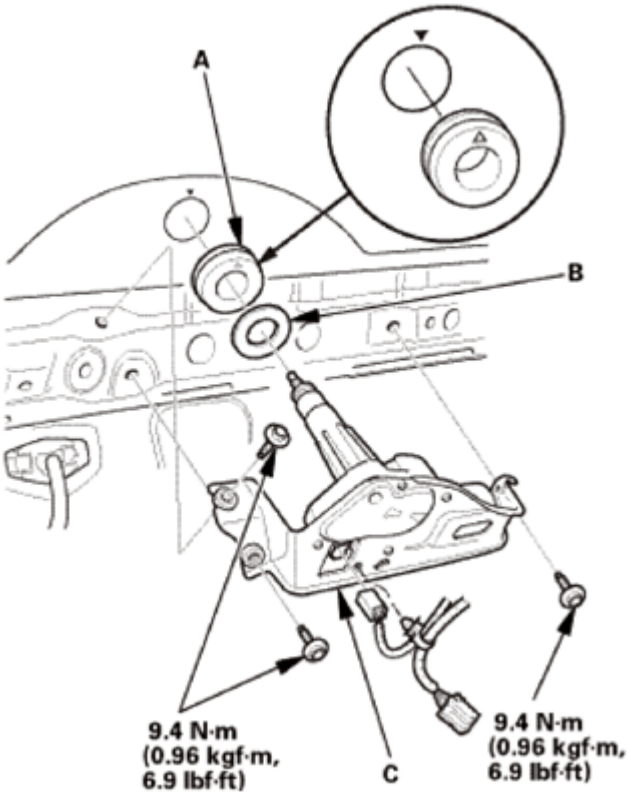

Fig. 226: Exploded View Of Rear Window Wiper Motor With Torque Specifications
Courtesy of AMERICAN HONDA MOTOR CO., INC.

3. Rear Window Wiper Arm Assembly
    1. Install the wiper arm (A), the nut (B), and the cover (C).

GETtheMANUALS.org

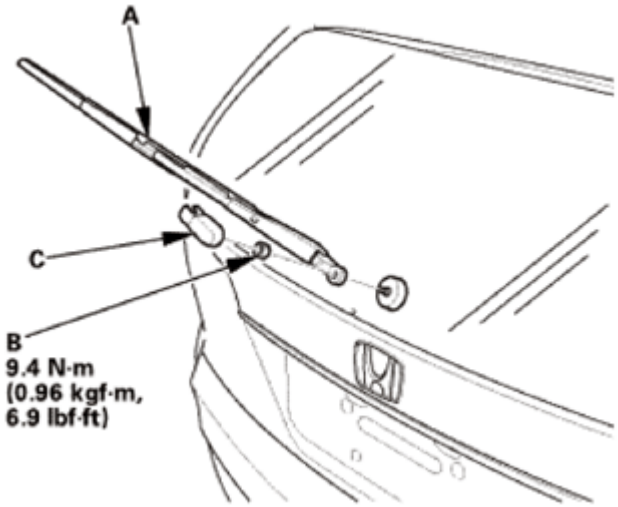

Fig. 227: Identifying Rear Window Wiper Arm, Cover And Nut With Torque Specification
Courtesy of AMERICAN HONDA MOTOR CO., INC.

4. Rear License Trim
    1. If you are reusing the original rear license trim (A), apply PP primer to the areas where new double-sided adhesive tapes (B, C) will be applied, then attach the new double-sided adhesive tapes to the trim as shown.

       Adhesive tape (B): Thickness 3 mm (0.12 in)

       Width 4 mm (0.16 in)

       Length 255 mm (10.04 in)

       Adhesive tape (C): Thickness 2 mm (0.08 in)

       Width 5 mm (0.20 in)

       Length 177 mm (6.97 in)

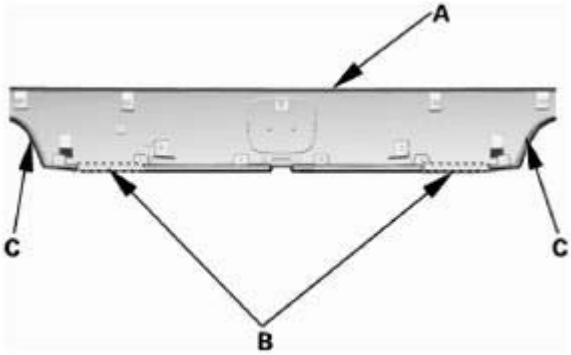

Fig. 228: Identifying Adhesive Tape Applying Area On Rear License Trim

GETtheMANUALS.org

Courtesy of AMERICAN HONDA MOTOR CO., INC.

2. Fold the edge of each adhesive backing from the double-sided adhesive tape.
3. Hold up the rear license trim (A), and fit the clips (B, C) into the holes in the tailgate. Push on the trim until the clips snap into place securely.

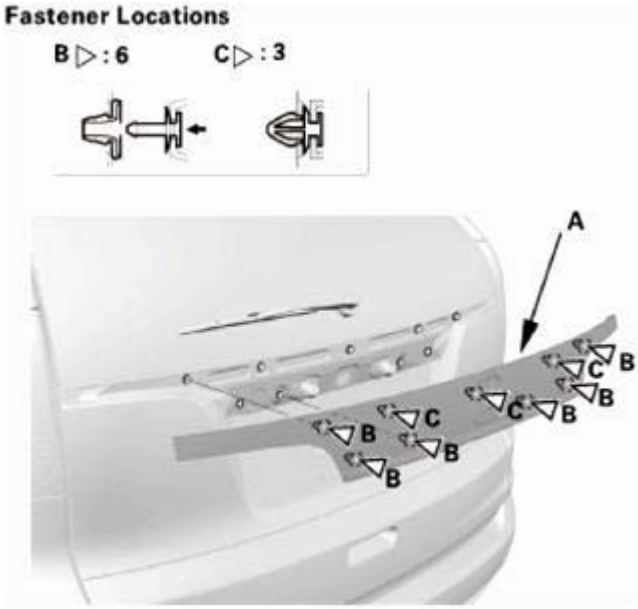

Fig. 229: Identifying Rear License Trim And Clips
Courtesy of AMERICAN HONDA MOTOR CO., INC.

4. Install the bolts (A).

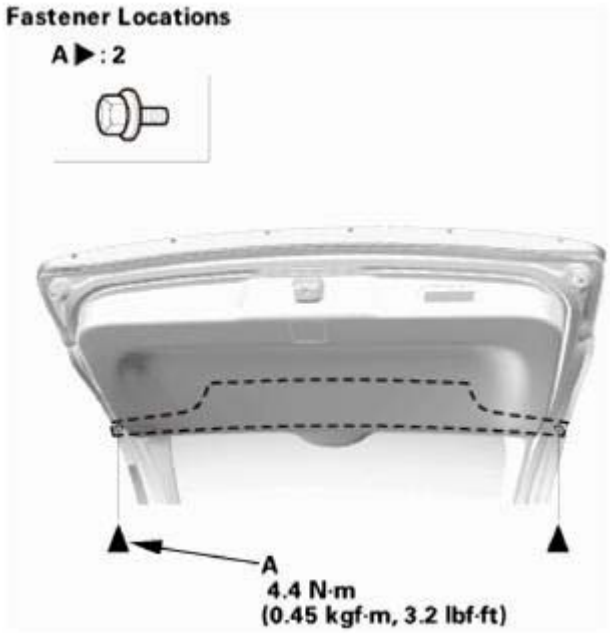

GETtheMANUALS.org

Fig. 230: Identifying Rear License Trim Bolt With Torque Specification
Courtesy of AMERICAN HONDA MOTOR CO., INC.

5. Tailgate Lower Trim Panel
    1. Hold up the tailgate lower trim panel (A), and fit the clips into the holes in the tailgate.
    2. Push on the trim until the clips (B, C) securely snap into place.

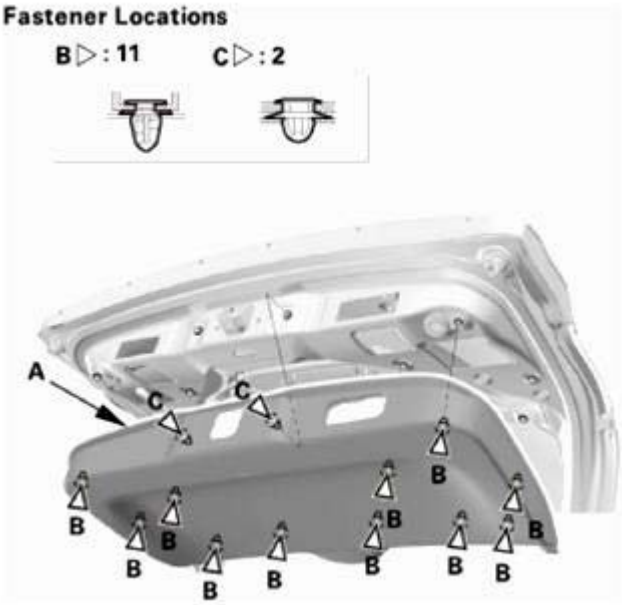

Fig. 231: Identifying Tailgate Lower Trim Panel And Clips
Courtesy of AMERICAN HONDA MOTOR CO., INC.

3. Install the tailgate pull pocket (A), then install the screw (B).

GETtheMANUALS.org

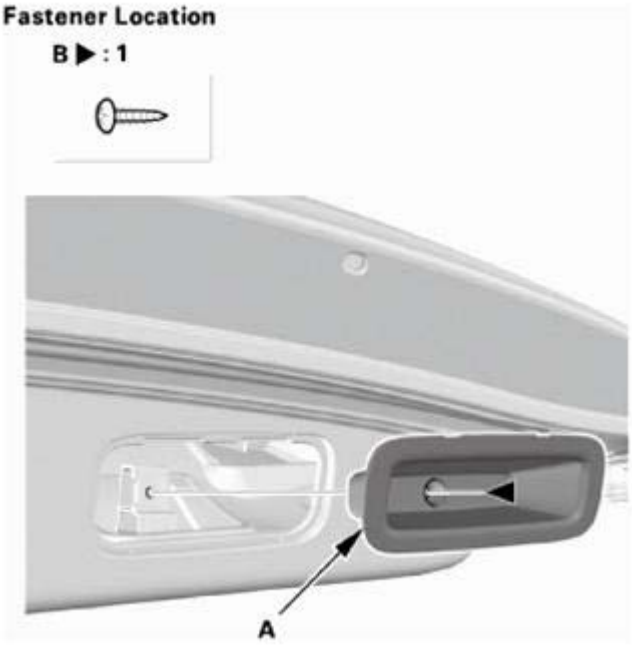

Fig. 232: Identifying Tailgate Pull Pocket And Screw
Courtesy of AMERICAN HONDA MOTOR CO., INC.

6. Tailgate Side Trim - Both Sides

NOTE: Repeat this procedure on the opposite side.

1. Install the tailgate side trim (A). Make sure the hook (B), the tabs (C), and the clips (D) snap into place securely.

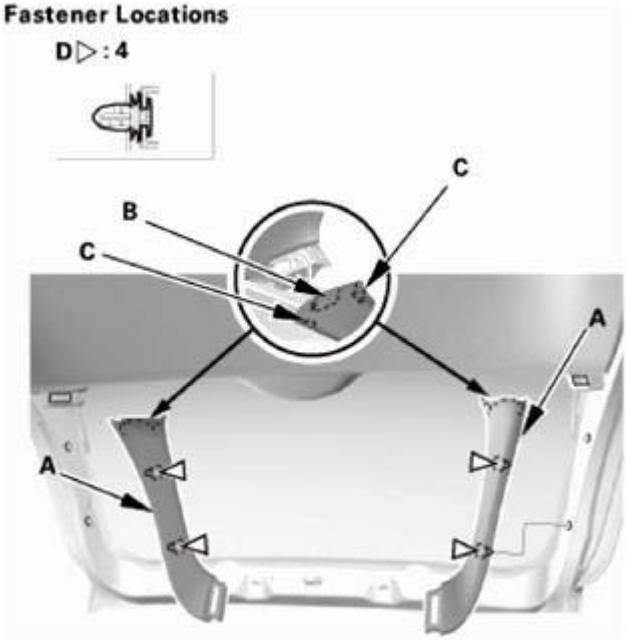

GETtheMANUALS.org

Fig. 233: Identifying Tailgate Side Trim, Hook, Tabs And Clips
Courtesy of AMERICAN HONDA MOTOR CO., INC.

7. Tailgate Upper Trim Panel
    1. Install the tailgate upper trim panel (A). Make sure the hooks (B), the tabs (C), and the clips (D) snap into place securely.

Fig. 234: Identifying Tailgate Upper Trim Panel, Hooks, Tabs And Clips
Courtesy of AMERICAN HONDA MOTOR CO., INC.

8. Rear Window Wiper Arm/Nozzle - Adjustment

NOTE:

- **Adjust the washer nozzle by gently gripping, and then moving, the outside of the nozzle (A).**
- **Do not insert tools into the nozzle hole (B), as it may cause the washer fluid to spray incorrectly.**

Wiper Arm Park Position

1. Turn the ignition switch to ON (II), then turn the wiper switch ON, and then back OFF.

GETtheMANUALS.org

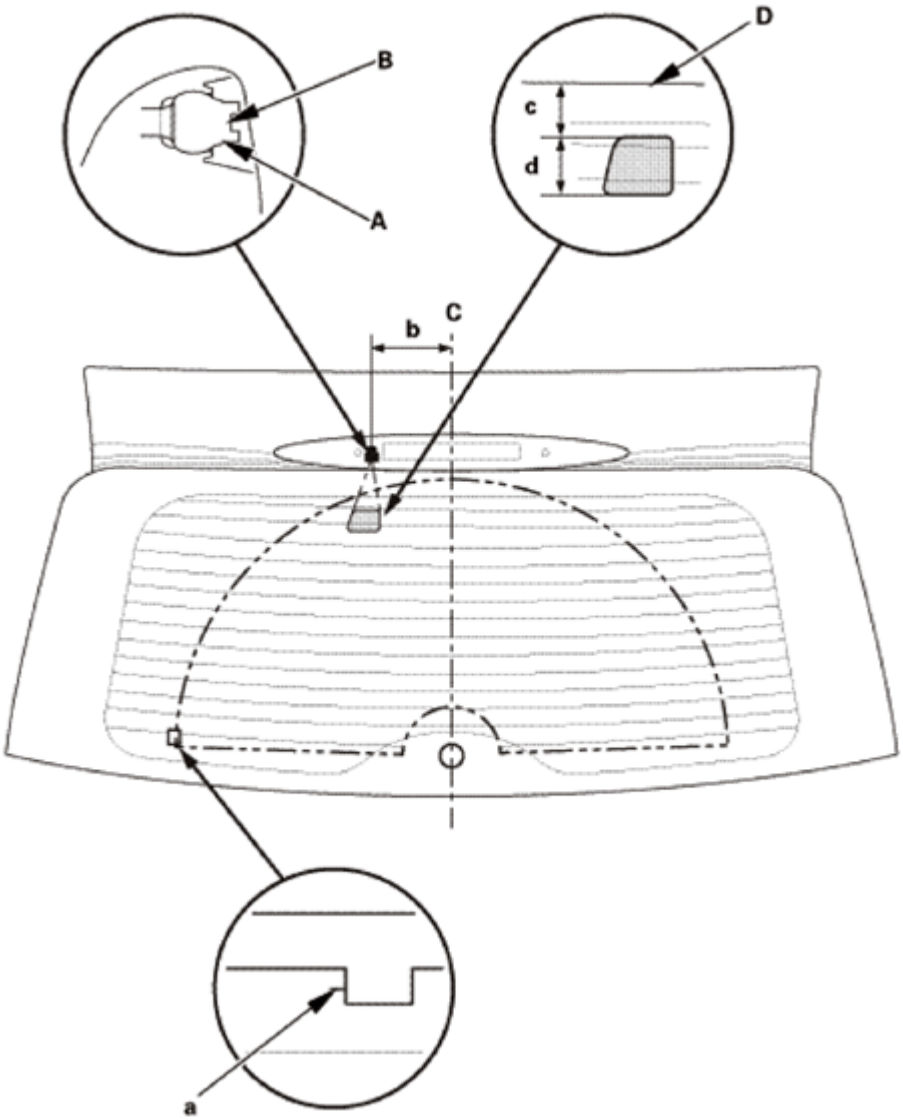

Fig. 235: Identifying Wiper Arm Park Position From Rear Window Center Line
Courtesy of AMERICAN HONDA MOTOR CO., INC.

2. When the wiper arm stops at the auto-stop position, make sure that it is at the correct position:
   a. Wiper arm stop position on the rear window defogger.

Washer Nozzle Position

3. When you turn on the washer, make sure 50% or more of the washer fluid lands within the spray area. If the spray area is not within the standard positions, adjust the nozzle:

   b: Position at about 108.5 mm (4.27 in) from the rear window center line (C).

   c: Position at about 21.2 mm (0.83 in) from the top of the black ceramic area (D).

   d: Position at about 21.9 mm (0.86 in) from the position (c).

9. Water Leak Test

GETtheMANUALS.org

Check for water leaks. Run water over the roof and on the sealing area as shown, and note these items:

- Use a 12 mm (0.47 in) diameter hose (A).
- Adjust the rate of water flow as shown.
- Do not use a nozzle.
- Hold the hose about 300 mm (11.81 in) away from the door.

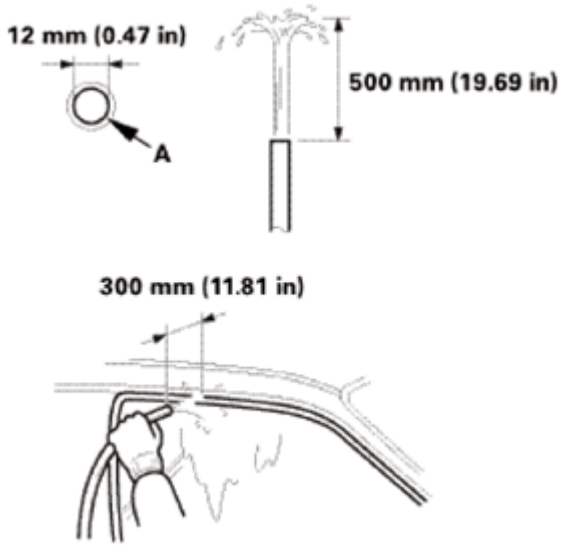

Fig. 236: Checking Water Leakage On Roof Sealing Area
Courtesy of AMERICAN HONDA MOTOR CO., INC.

RESETTING THE POWER WINDOW CONTROL UNIT

PROCEDURE

1. Power Window Control Unit - Reset

Resetting the power window is required when any of the following have occurred:

- Power window regulator replacement or repair
- Power window motor replacement or repair
- Glass run channel replacement
- Driver's door glass replacement
- Power window master switch replacement

1. Turn the ignition switch to ON (II).
2. Move the driver's window all the way down with the driver's window DOWN switch.
3. Open the driver's door.

NOTE: Steps 4-7 must be done within 5 seconds of each other.

GETtheMANUALS.org

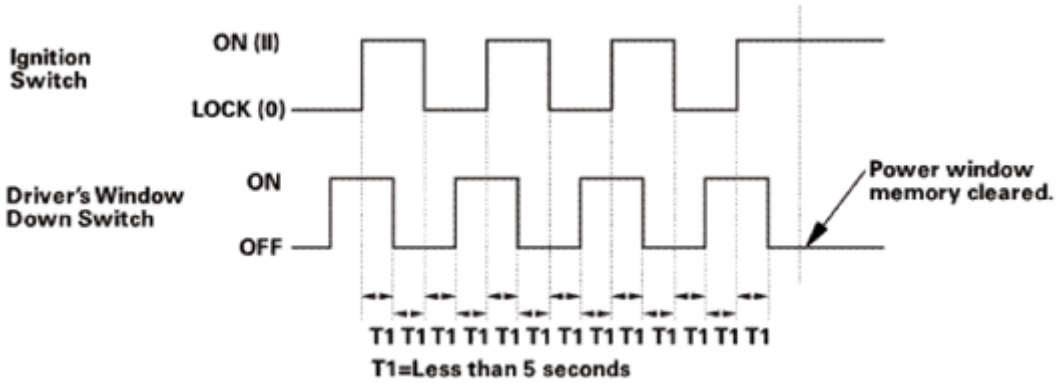

Fig. 237: Ignition Switch And Driver's Window Down Switch Blinking Pattern
Courtesy of AMERICAN HONDA MOTOR CO., INC.

4. Turn the ignition switch to LOCK (0).
5. Push and hold the driver's window DOWN switch.
6. Turn the ignition switch to ON (II).
7. Release the driver's window DOWN switch.
8. Repeat steps 4-7 three more times.
9. Confirm that AUTO UP and AUTO DOWN do not work. If AUTO UP and DOWN work, go back to step 1.
10. Pull up and hold the driver's window UP switch until the window reaches the fully closed position, then continue to hold the switch for at least 1 second.
11. Confirm that the power window control unit is reset by using the driver's window AUTO UP and AUTO DOWN functions:
    - If the window still does not work in AUTO, repeat the procedure several times, paying close attention to the 5 second time limit between steps.
    - If the window still does not work, refer to the **MASTER SWITCH INPUT TEST**.

WINDSHIELD REMOVAL AND INSTALLATION

REMOVAL

1. Both Windshield Wiper Arm Assemblies

NOTE: Set the wiper arms to the auto-stop position before removal.

1. Remove the caps (A) and nuts (B).
2. Remove the wiper arms (C).

GETtheMANUALS.org

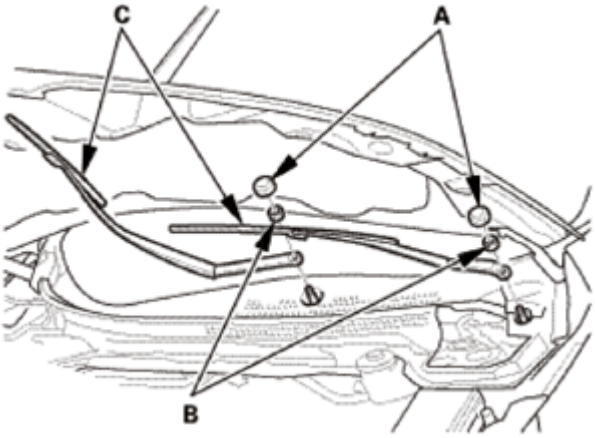

Fig. 238: Identifying Wiper Arms, Caps And Nuts
Courtesy of AMERICAN HONDA MOTOR CO., INC.

2. Front Fender Trim - Both Sides

NOTE: Repeat on the opposite side.

1. Remove the clips (A, B).
2. Pull up the front fender trim (C) by hand to detach the clips (D), then remove the trim.

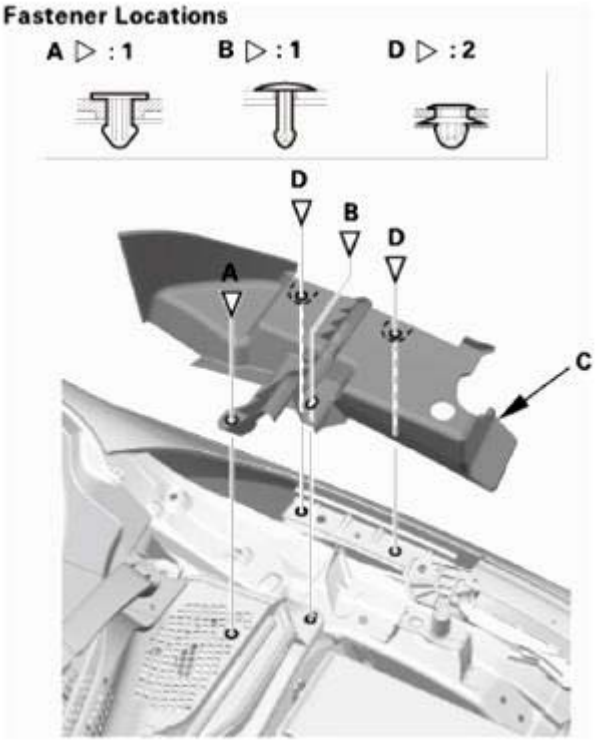

Fig. 239: Identifying Front Fender Trim And Clips
Courtesy of AMERICAN HONDA MOTOR CO., INC.

GETtheMANUALS.org

3. Cowl Top Cover - Both Sides

NOTE: Repeat this procedure on the opposite side.

1. Remove the clip (A).
2. Pull out the hood rear seal (B).
3. Detach the hooks, and remove the cowl top cover (C).

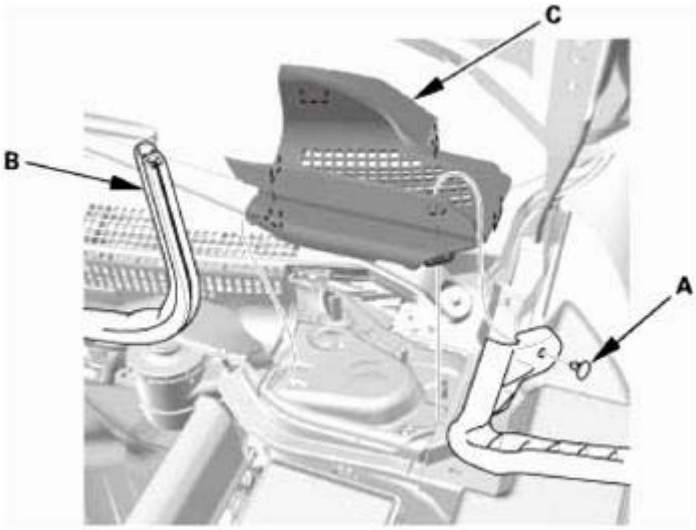

Fig. 240: Identifying Hood Rear Seal, Cowl Top Cover And Clip
Courtesy of AMERICAN HONDA MOTOR CO., INC.

4. Side Cowl Cover - Both Sides

NOTE: Repeat on the opposite side.

1. Detach the hook (A) at the inside of the cowl cover (B).
2. Release the hooks (C) from the cowl cover and the front fender (D), then remove the side cowl cover (E).
3. Right side; Detach the windshield washer tube.

GETtheMANUALS.org

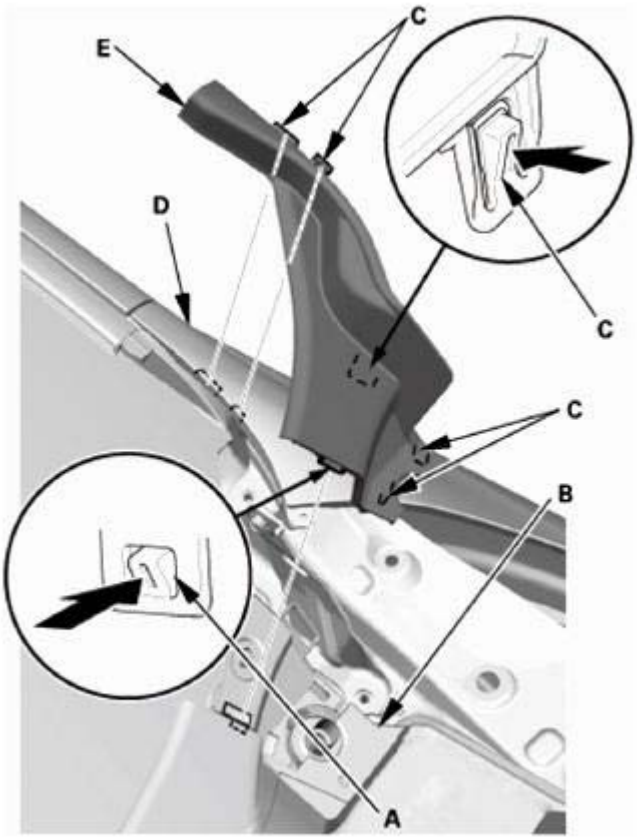

Fig. 241: Removing Front Fender Cowl Cover Hooks
Courtesy of AMERICAN HONDA MOTOR CO., INC.

5. Center Cowl Cover
    1. Remove the clips (A).
    2. Carefully pull the center cowl cover (B) forward to release the hooks (C) from the windshield and the body.

GETtheMANUALS.org

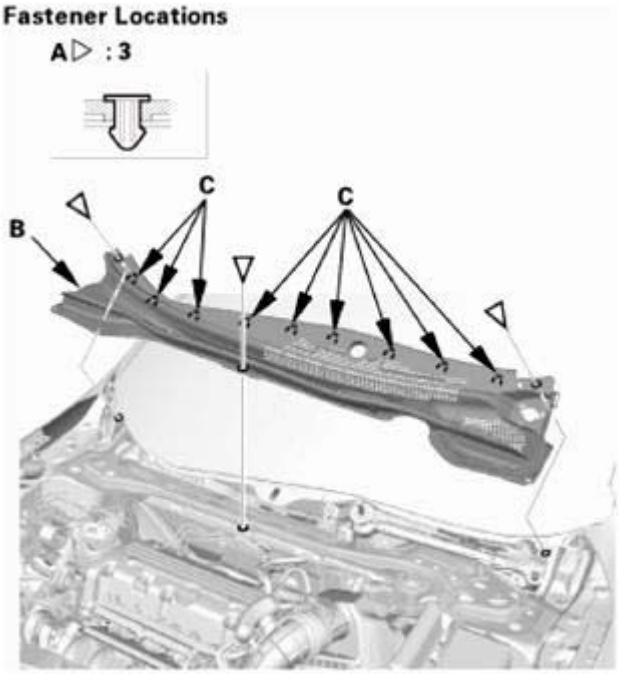

Fig. 242: Identifying Center Cowl Cover, Hook And Clips
Courtesy of AMERICAN HONDA MOTOR CO., INC.

6. Front Door Opening Seal As Needed - Both Sides

NOTE: Repeat on the opposite side.

1. Pull out the front door opening seal (A) from the trim hooks (B) around the front door opening flange, then detach the seal as needed.

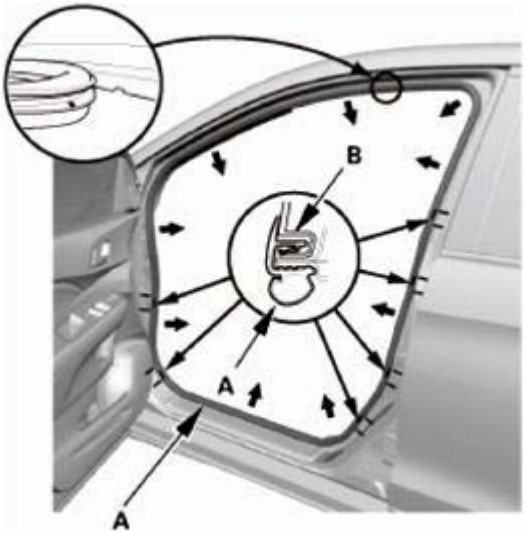

Fig. 243: Pulling Out Front Door Opening Seal From Trim Hooks
Courtesy of AMERICAN HONDA MOTOR CO., INC.

GETtheMANUALS.org

7. A-Pillar Trim - Both Sides

NOTE: Repeat this procedure on the opposite side.

1. Pull out the A-pillar trim (A) by hand to release the clips (B, C).

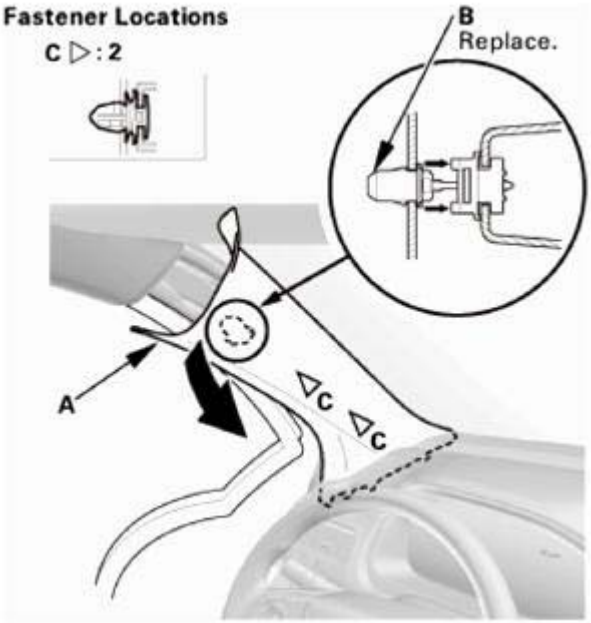

Fig. 244: Pulling Out A-Pillar Trim
Courtesy of AMERICAN HONDA MOTOR CO., INC.

2. Put a shop towel (A) in the opening between the A-pillar trim (B) and the dashboard to prevent dropping the A-pillar clips.

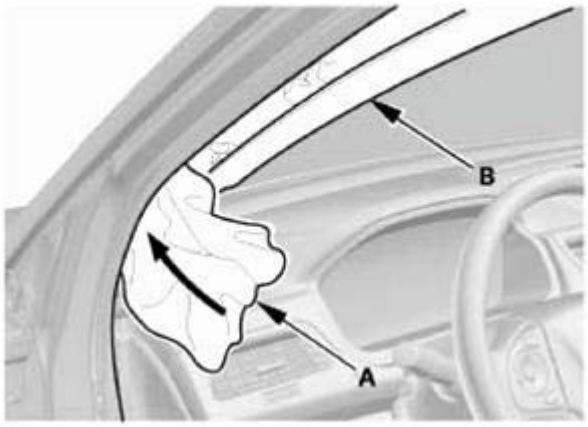

Fig. 245: Inserting Shop Towel In Opening Between A-Pillar Trim And Dashboard
Courtesy of AMERICAN HONDA MOTOR CO., INC.

3. Pull out and up on the A-pillar trim (A) to release it from the dashboard.

GETtheMANUALS.org

NOTE: **The upper clip will stay in the body.**

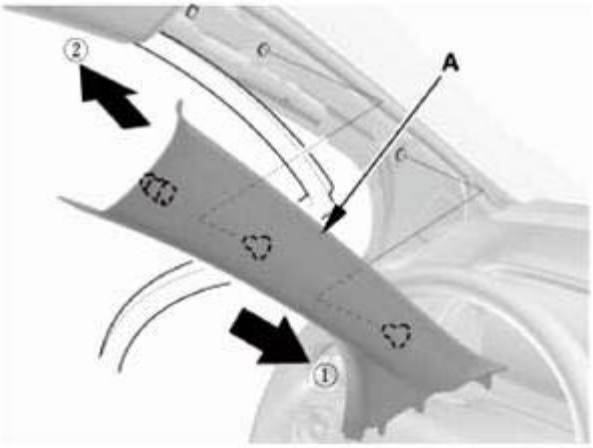

Fig. 246: Pulling Out A-Pillar Trim
Courtesy of AMERICAN HONDA MOTOR CO., INC.

4. Remove the upper clip (A) from the body.

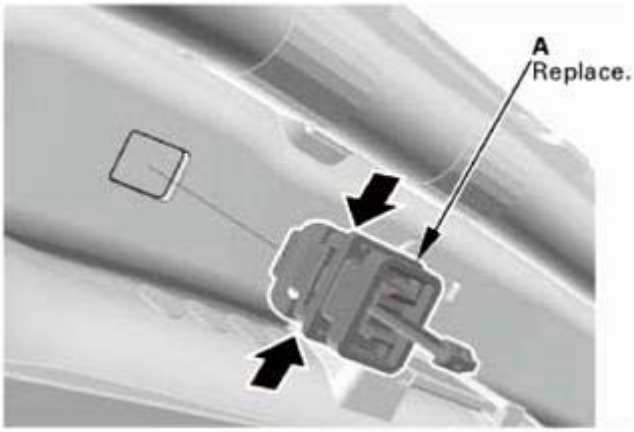

Fig. 247: Removing Upper Clip From Body
Courtesy of AMERICAN HONDA MOTOR CO., INC.

8. Rearview Mirror

Without auto dimming mirror

1. Using a plastic trim tool, press down on the tab, slide the mirror base (A) rearward, then remove the rearview mirror.

GETtheMANUALS.org

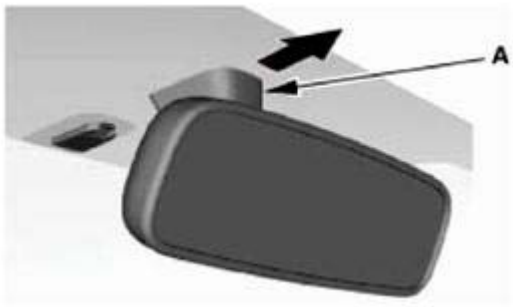

Fig. 248: Sliding Mirror Base
Courtesy of AMERICAN HONDA MOTOR CO., INC.

With auto dimming mirror

1. Carefully pry out the rearview mirror harness cover (A) to release the hooks (B), then slide the cover rearward.
2. Release the rearview mirror harness cover from the hooks (C) of the rearview mirror harness cover base (D).

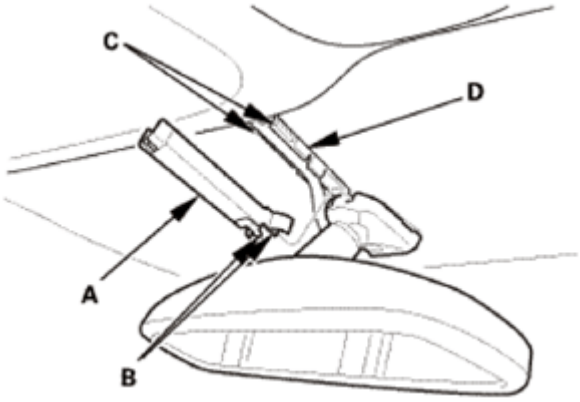

Fig. 249: Identifying Rearview Mirror Harness Cover, Base And Hooks
Courtesy of AMERICAN HONDA MOTOR CO., INC.

3. Disconnect the rearview mirror connector (A).

GETtheMANUALS.org

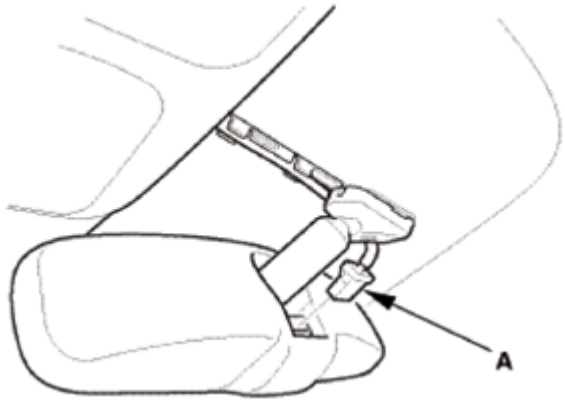

Fig. 250: Identifying Rearview Mirror Connector
Courtesy of AMERICAN HONDA MOTOR CO., INC.

4. Loosen the screw (A) with a TORX T20 bit, then slide the rearview mirror (B) rearward and off the mount (C).

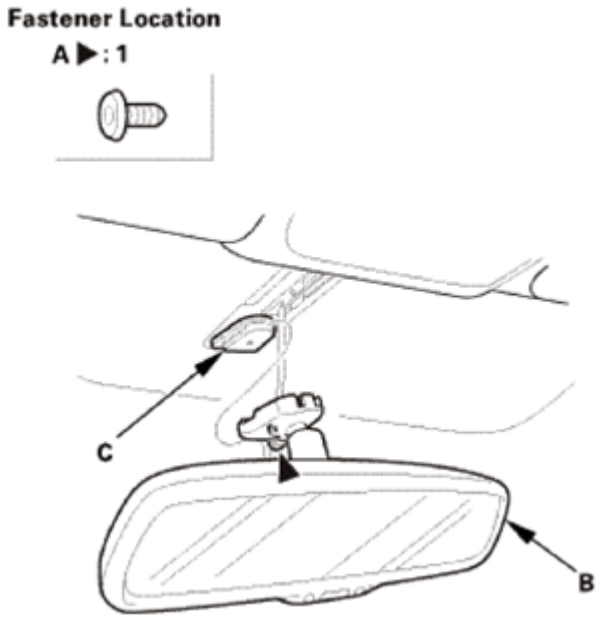

Fig. 251: Identifying Rearview Mirror, Mount And Screws
Courtesy of AMERICAN HONDA MOTOR CO., INC.

9. Sunvisor - Both Sides

NOTE: Repeat this procedure on the opposite side.

1. Push the tab (A) with a flat-tip screwdriver through the hole in the front side of the bracket cover (B).

GETtheMANUALS.org

NOTE: **Make sure the tab is unlocked.**

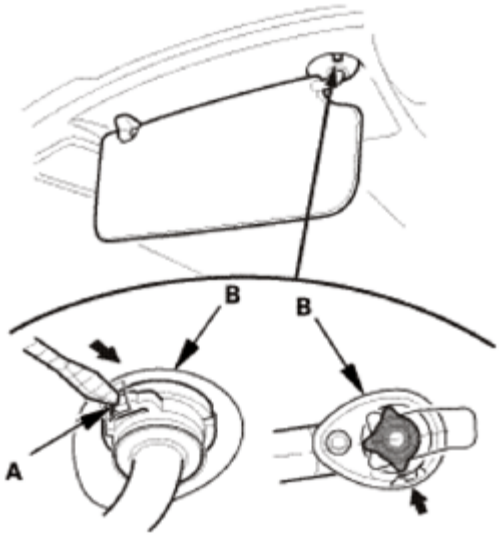

Fig. 252: Pushing Sunvisor Tab Using Flat-Tip Screwdriver
Courtesy of AMERICAN HONDA MOTOR CO., INC.

2. While pushing in the tab (A) with a flat-tip screwdriver, release the sunvisor (B) from the holder (C), and rotate the sunvisor backward 45 °.

NOTE: **Make sure the tab slides into the bracket cover as you rotate the sunvisor.**

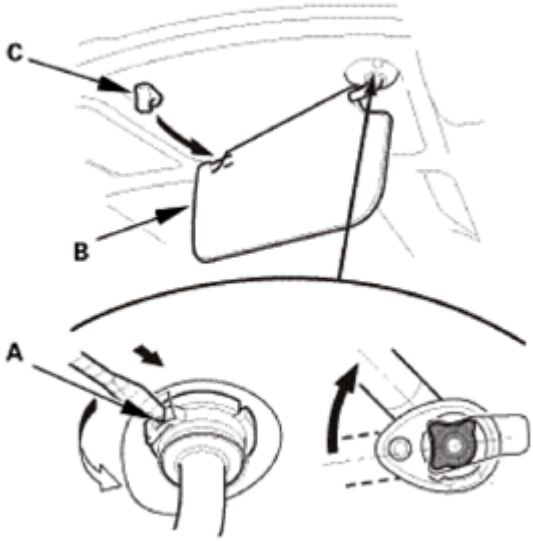

Fig. 253: Removing Sunvisor From Holder
Courtesy of AMERICAN HONDA MOTOR CO., INC.

3. Disconnect the connector (A), then remove the sunvisor (B).

GETtheMANUALS.org

NOTE: **If the sunvisor cannot be removed, the tab has not rotated into the bracket cover. Repeat step 2 to rotate the tab.**

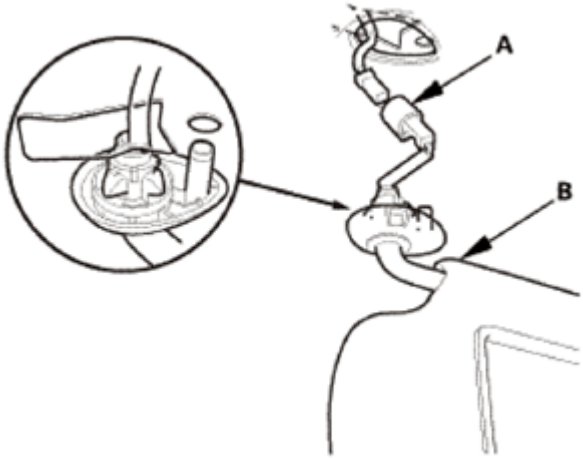

Fig. 254: Identifying Sunvisor And Connector
Courtesy of AMERICAN HONDA MOTOR CO., INC.

10. Sunvisor Holder - Both Sides

NOTE: **Repeat this procedure on the opposite side.**

1. Turn the sunvisor holder (A) 45 ° counterclockwise, then remove it from the holder grommet (B).

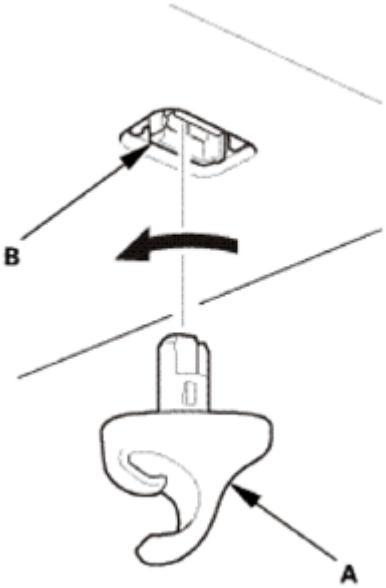

Fig. 255: Turning Sunvisor Holder
Courtesy of AMERICAN HONDA MOTOR CO., INC.

2. Remove the holder grommet (A).

GETtheMANUALS.org

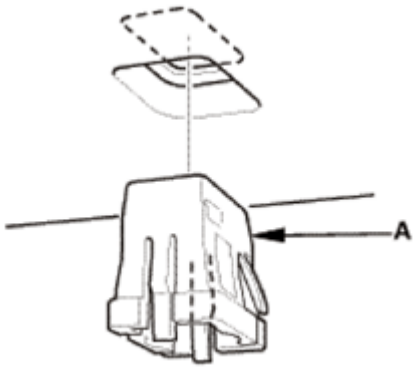

Fig. 256: Identifying Holder Grommet
Courtesy of AMERICAN HONDA MOTOR CO., INC.

11. Roof Console Assembly
    1. Remove the lenses (A), then remove the screws (B).
    2. Open the console, then remove the screws (C).
    3. Disconnect the connectors (D), then remove the roof console assembly (E).

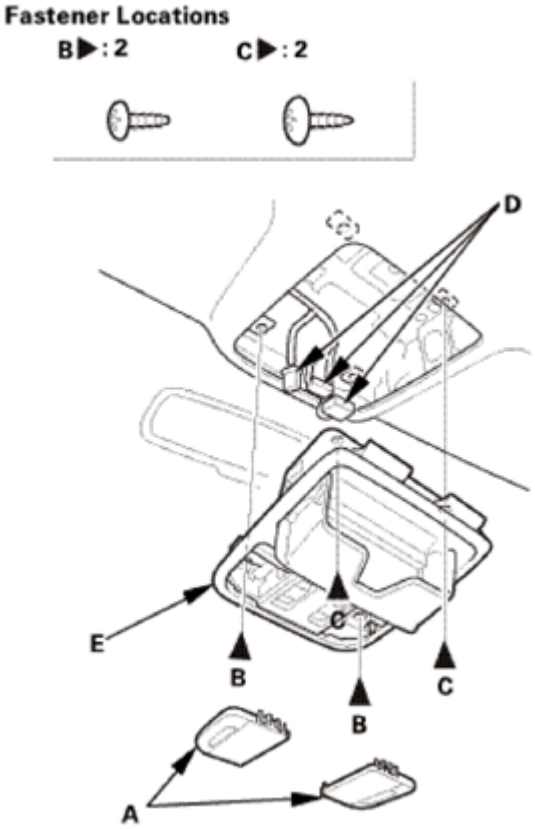

Fig. 257: Identifying Roof Console Assembly, Connectors And Mounting Screws
Courtesy of AMERICAN HONDA MOTOR CO., INC.

GETtheMANUALS.org

12. Headliner As Needed - Front Side
    1. Detach the front area of the headliner (A) as needed.

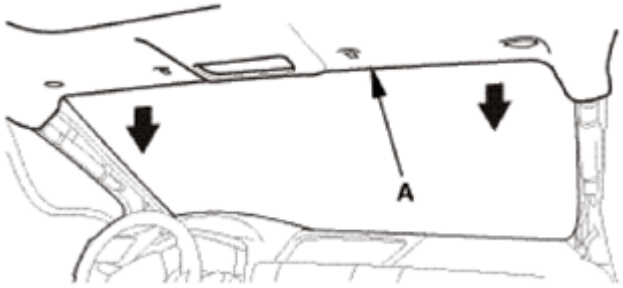

Fig. 258: Disconnecting Front Area Of Headliner
Courtesy of AMERICAN HONDA MOTOR CO., INC.

13. Roof Molding - Both Sides

NOTE: Repeat this procedure on the opposite side.

1. Carefully insert the large trim tool (A) under the molding next to the lower clip (B).
2. While pulling up the clip area of the molding by hand, push each of the six small hooks (C) to release the clip from the retainer (D) on the A-pillar. Do not pry up the clip if it is hard to release it from the clip on the A-pillar.
3. Gradually work your way up to release each of the upper clips (E, F, G).

GETtheMANUALS.org

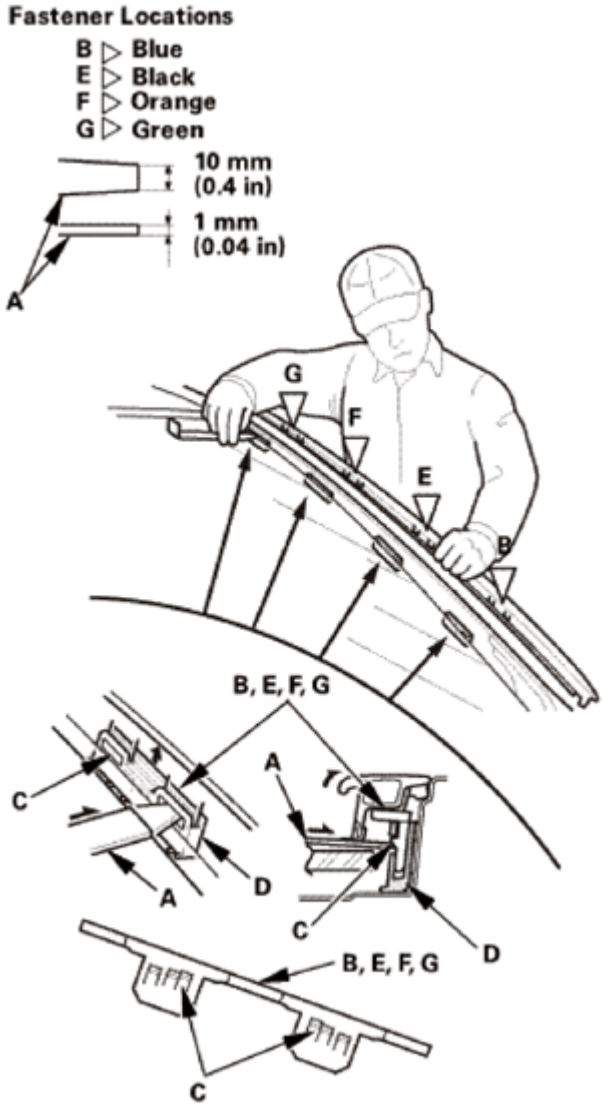

Fig. 259: Inserting Large Trim Tool Under Molding
Courtesy of AMERICAN HONDA MOTOR CO., INC.

4. Start from the front to the rear, carefully insert a trim tool in under the roof molding (A) next to each of the retainers (B, C). Slide and pry up the retainers to release it with the clips from the stud bolts (D) and the pins (E) on the body.

GETtheMANUALS.org

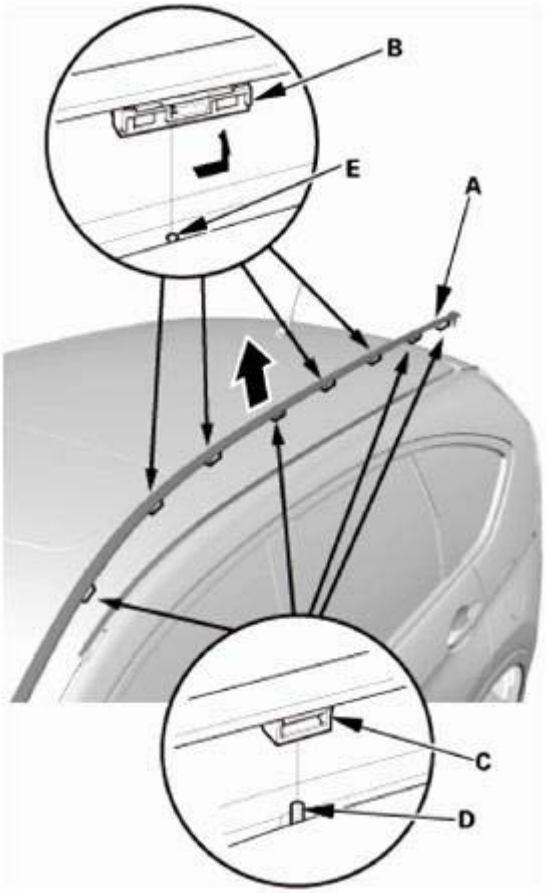

Fig. 260: Removing Roof Molding From Body Using Trim Tool
Courtesy of AMERICAN HONDA MOTOR CO., INC.

5. Slide the rear end of the roof molding (A) forward to release it from the body, then remove the roof molding from the body.

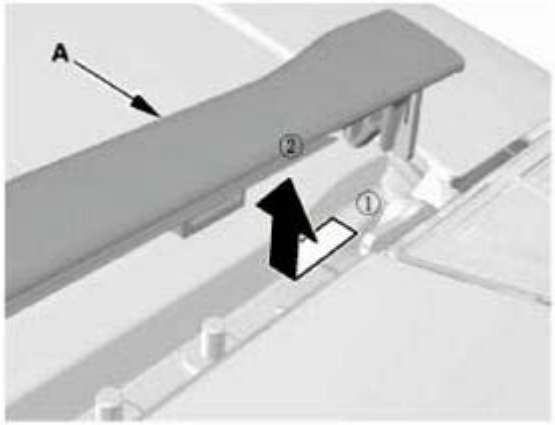

Fig. 261: Removing Roof Molding From Body
Courtesy of AMERICAN HONDA MOTOR CO., INC.

GETtheMANUALS.org

6. Pry up the middle hooks (A) with a flat-tip screw driver to release the retainer (B) from the roof molding (C).

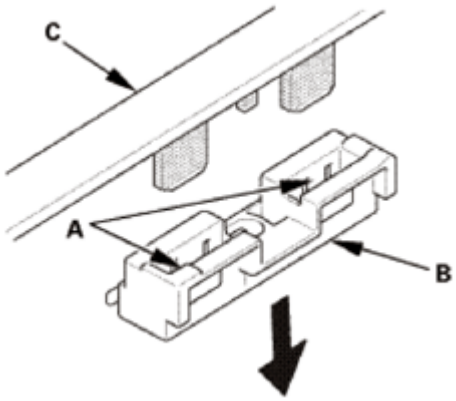

Fig. 262: Releasing Retainer From Roof Molding
Courtesy of AMERICAN HONDA MOTOR CO., INC.

14. Roof Rail - Both Sides

NOTE: Repeat this procedure on the opposite side.

1. Remove the caps (A). (4 Places)

Fig. 263: Identifying Roof Rail Caps
Courtesy of AMERICAN HONDA MOTOR CO., INC.

2. Remove the roof rail (A).

GETtheMANUALS.org

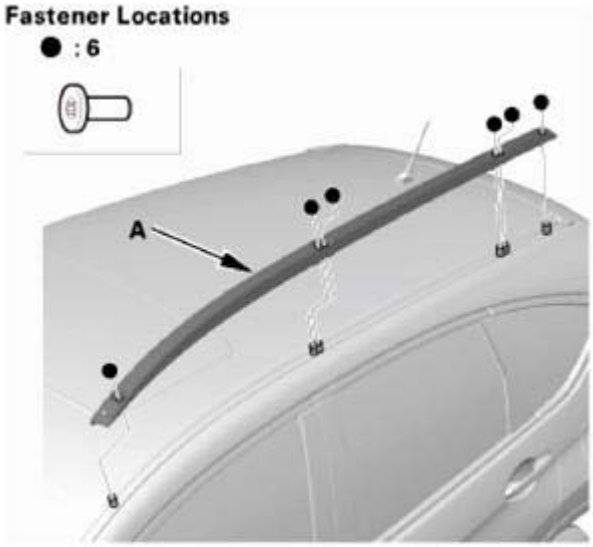

Fig. 264: Identifying Roof Rail Fasteners
Courtesy of AMERICAN HONDA MOTOR CO., INC.

15. Side Windshield Trim - Both Sides

NOTE: Repeat this procedure on the opposite side.

1. Carefully insert the large trim tool (A) under the trim next to the lower clip (B).
2. While pulling up the clip area of the trim by hand, push each of the six small hooks (C) to release the clip from the retainer (D) on the A-pillar. Do not pry up the clip if it is hard to release it from the clip on the A-pillar.
3. Gradually work your way up to release each of the upper clips (E, F, G).

GETtheMANUALS.org

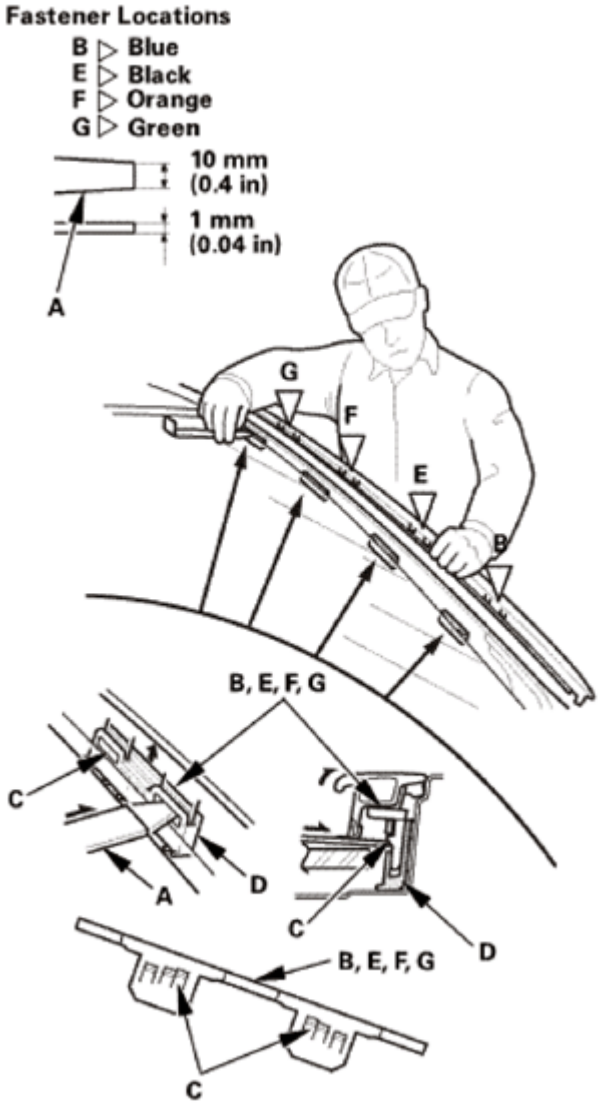

Fig. 265: Inserting Large Trim Tool Under Side Windshield Trim
Courtesy of AMERICAN HONDA MOTOR CO., INC.

16. Windshield
    1. Remove the windshield molding (A) from the upper edge of the windshield (B). If necessary, cut the windshield molding with a utility knife.

GETtheMANUALS.org

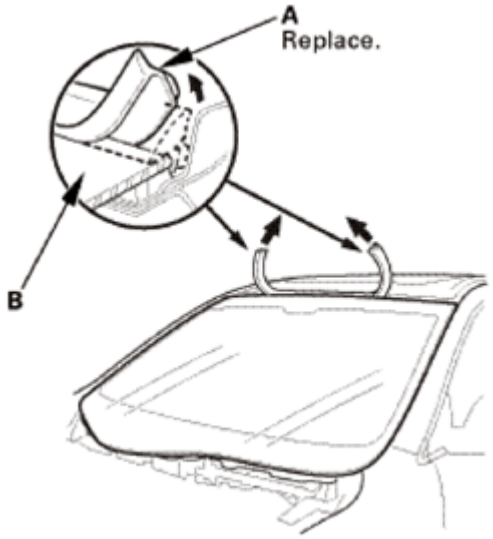

Fig. 266: Removing Windshield Molding From Upper Edge Of Windshield
Courtesy of AMERICAN HONDA MOTOR CO., INC.

2. If the original windshield will be reinstalled, make alignment marks (A) across the glass and the body with a grease pencil.
3. Apply protective tape along the edge of the dashboard and the body. Make a hole with an awl through the rubber dam, the adhesive, and the dashboard seal from inside of the vehicle at a corner portion of the windshield. Push a piece of piano wire through the hole, and wrap each end around a piece of wood.

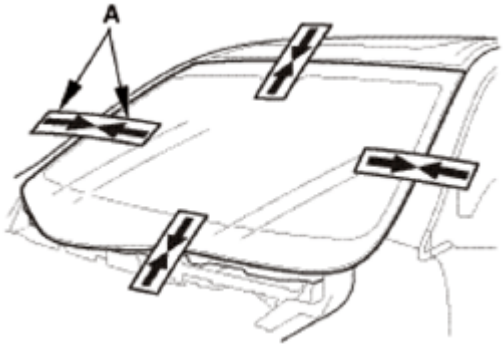

Fig. 267: Identifying Alignment Marks On Windshield Glass And Body
Courtesy of AMERICAN HONDA MOTOR CO., INC.

4. With a helper on the outside, pull the piano wire (A) back and forth in a sawing motion. Hold the piano wire as close to the windshield (B) as possible to prevent damage to the body and the dashboard. Carefully cut through the rubber dam and the adhesive (C) around the entire windshield.
5. Carefully remove the windshield.

GETtheMANUALS.org

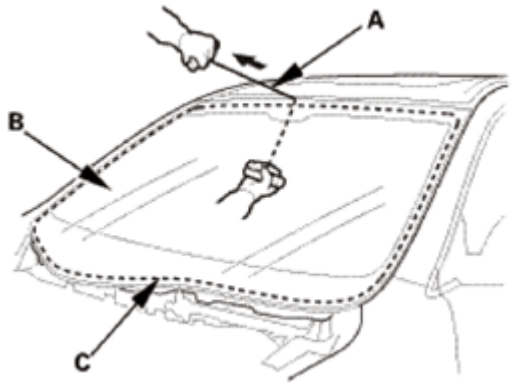

Fig. 268: Removing Windshield Using Piano Wire
Courtesy of AMERICAN HONDA MOTOR CO., INC.

Cutting positions

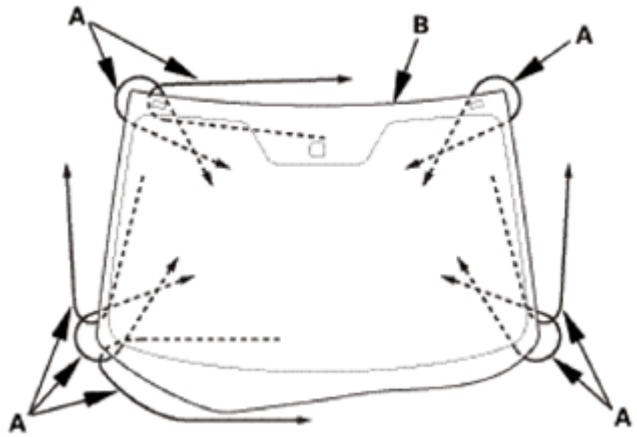

Fig. 269: Identifying Windshield Cutting Positions
Courtesy of AMERICAN HONDA MOTOR CO., INC.

INSTALLATION

1. Windshield
    1. Scrape smooth the original adhesive with a knife until there is a thickness of about 1~2 mm (0.04~0.08 in) on the bonding surface around the entire windshield opening flange:
        - Do not scrape down to the painted surface of the body; damaged paint will interfere with proper bonding.
        - Remove the rubber dam and the fasteners from the body.
    2. Clean the body bonding surface with a shop towel dampened in isopropyl alcohol. After cleaning, keep oil, grease, and water from getting on the clean surface.
    3. If you are reinstalling the original windshield, scrape off all of the original adhesive, the clips, the dashboard seal, and the rubber dam from the windshield with a putty knife. Clean the boning surface on the inside face and the edge of the windshield with isopropyl alcohol. Make sure the

GETtheMANUALS.org

bonding surface is kept free of water, oil, and grease.

4. Cut the side rubber dams (B) to correct length according to the table.

Length	QTY
970 mm (38.19 in)	3

5. Apply primer to the upper clip and the rubber dams mounting areas on the windshield (A), and let it dry. Remove the adhesive backing, and attach the side rubber dams (B) and the upper clips (C) to the inside face of the windshield as shown:

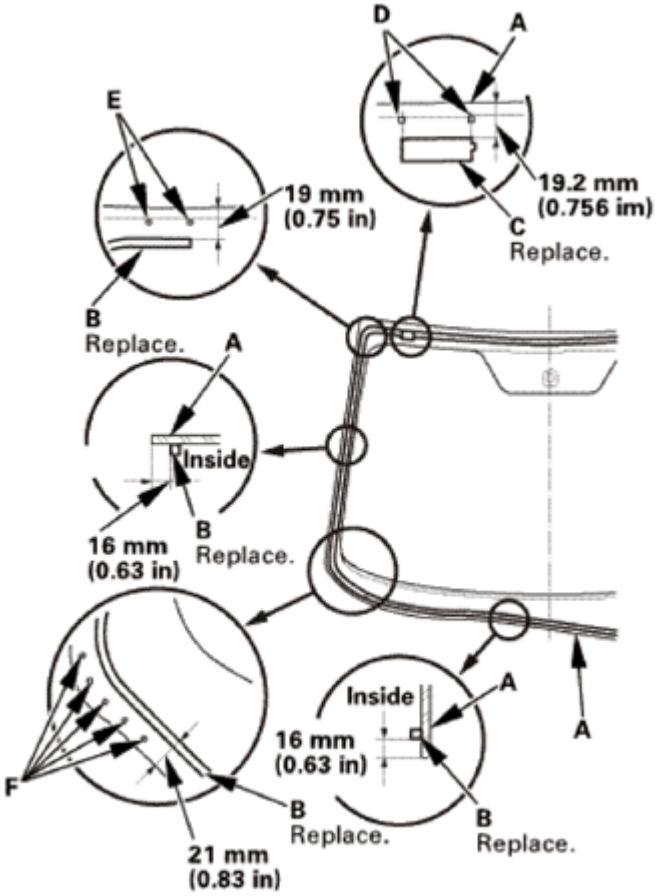

Fig. 270: Identifying Primer Applying Areas On Upper Clip And Rubber Dams Mounting Areas Of Windshield
Courtesy of AMERICAN HONDA MOTOR CO., INC.

- Be sure the rubber dams and the clips line up with the alignment marks (D, E, and F).
- Be careful not to touch the windshield where the adhesive will be applied.

6. Cut the dashboard seal (A) to correct length according to the table.

Length	QTY
1350 mm (53.15 in)	1

GETtheMANUALS.org

7. Attach the dashboard seal (A) with adhesive tape to the inside surface of the windshield (B) as shown, using the edge of the black ceramic-coated area (C) as shown:
   - Make sure the dashboard seal lines up with the alignment marks (D).
   - Be careful not to touch the windshield where the adhesive will be applied.

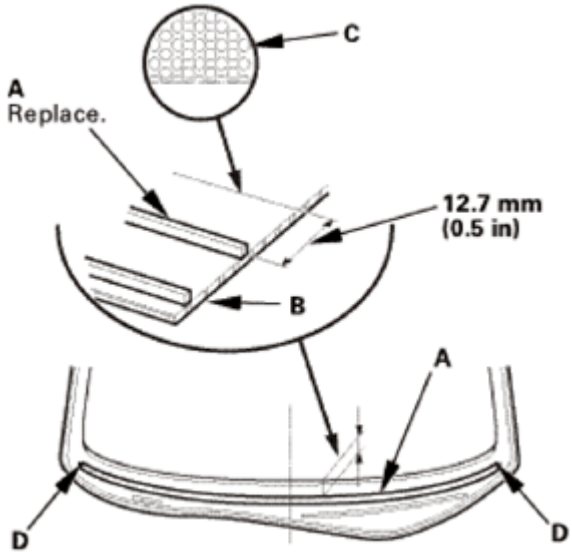

Fig. 271: Identifying Dashboard Seal And Black Ceramic-Coating Applying Areas On Windshield
Courtesy of AMERICAN HONDA MOTOR CO., INC.

8. Attach the windshield molding (A) with adhesive tape (B) to the upper edge of the windshield (C).

NOTE: **Be careful not to touch the windshield where the adhesive will be applied.**

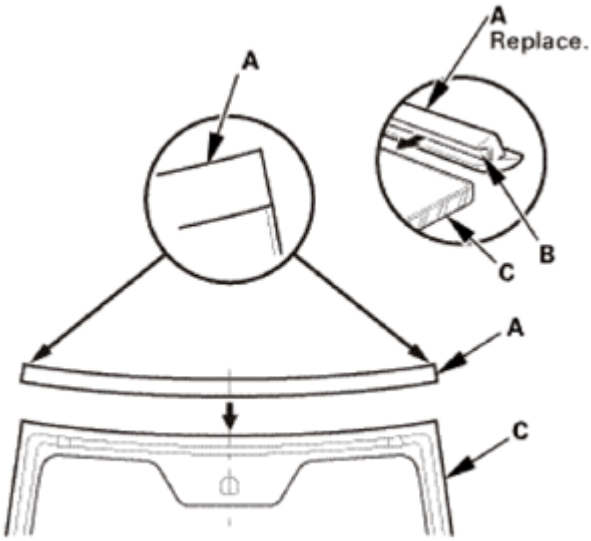

GETtheMANUALS.org

Fig. 272: Connecting Windshield Molding And Adhesive Tape On Upper Edge Of Windshield
Courtesy of AMERICAN HONDA MOTOR CO., INC.

9. Set the windshield (A) in the opening, and center it. Make alignment marks (B) across the windshield and the body with a grease pencil at the four points shown:
    - Make sure both clips (C) contact with the edge of the body holes.
    - Be careful not to touch the windshield where the adhesive will be applied.
10. Remove the windshield.

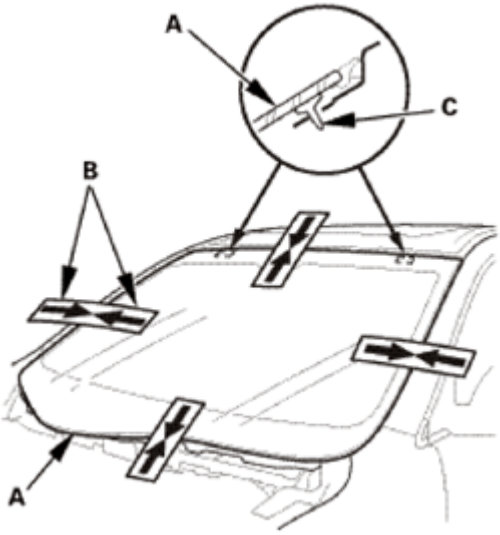

Fig. 273: Identifying Alignment Marks On Windshield Glass And Body
Courtesy of AMERICAN HONDA MOTOR CO., INC.

11. Apply a light coat of primer along the edge of the windshield (A) between the rubber dam (B) and the windshield molding (C) as shown, then lightly wipe it off with gauze or cheesecloth:
    - Apply the primer to around edge of the windshield using the printed dots (D) on the windshield as a guide.
    - Do not apply body primer to the windshield, and do not mix up the body primer applicator and the glass primer applicator.
    - Never touch the primed surfaces with your hands. If you do, the adhesive may not bond to the windshield properly, causing a leak after the windshield is installed.
    - Keep water, dust, and abrasive materials away from primed surfaces.

GETtheMANUALS.org

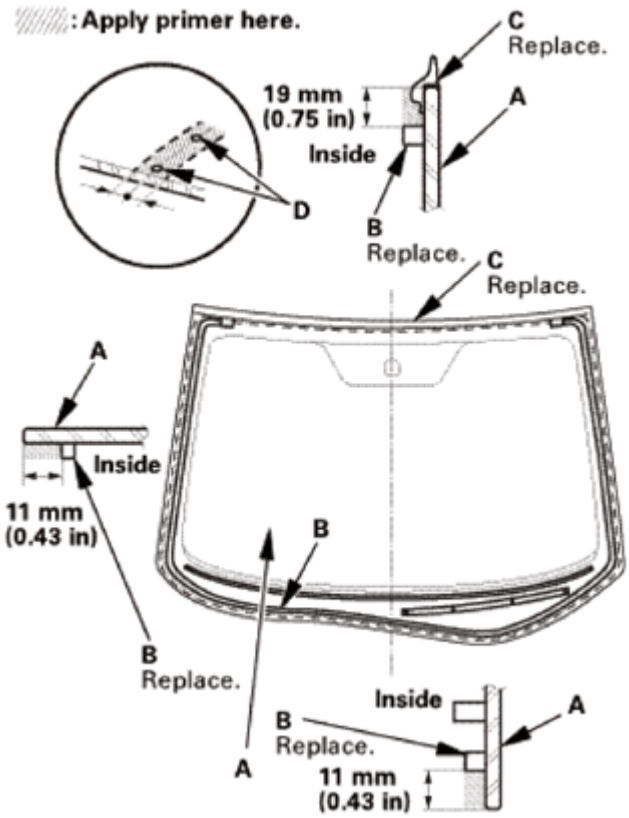

Fig. 274: Identifying Primer Applying Areas On Windshield Between Rubber Dam And Windshield Molding
Courtesy of AMERICAN HONDA MOTOR CO., INC.

12. Carefully apply a light coat of the body primer to any exposed paint or metal on the windshield mounting flange. Let the body primer dry for at least 10 minutes:
    - Do not apply the glass primer to any remaining original adhesive on the flange.
    - Cover on the dashboard before applying the body primer.
    - Do not to mix up the body primer applicator and the glass primer applicator.
    - Never touch the primed surfaces with your hands.

GETtheMANUALS.org

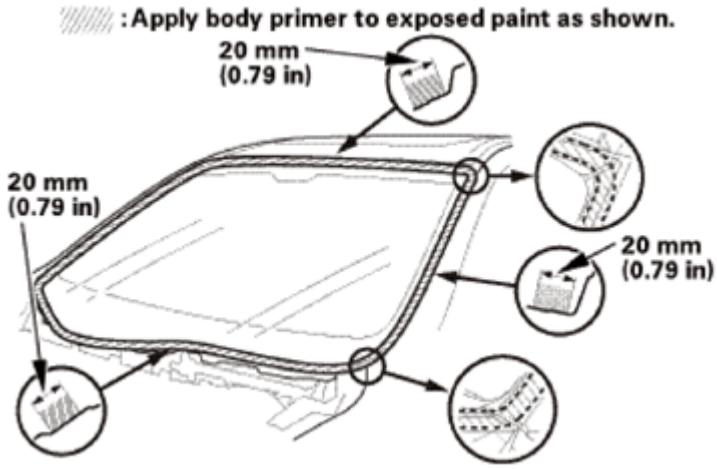

Fig. 275: Identifying Body Primer Applying Areas On Windshield Mounting Flange
Courtesy of AMERICAN HONDA MOTOR CO., INC.

13. Cut a "V" in the end of the nozzle (A) on the adhesive cartridge as shown.

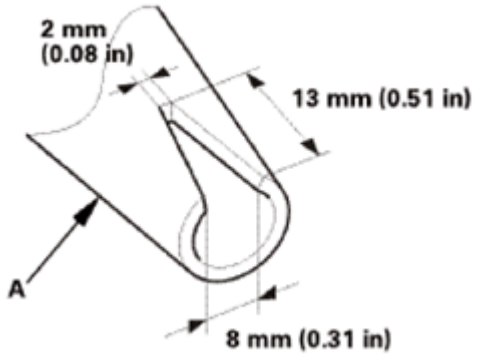

Fig. 276: Identifying Adhesive Cartridge Cutting Dimensions
Courtesy of AMERICAN HONDA MOTOR CO., INC.

14. Put the cartridge in a caulking gun, and run a continuous bead of the adhesive (A) around the edge of the windshield (B) along the edge of the rubber dam (C) and the windshield molding (D) as shown:
    - Use the printed dots (E) as a guide when you apply the adhesive to the windshield.
    - Apply the adhesive within 30 minutes after applying the primer.
    - Make a slightly thicker bead at each corner.
15. Hold the windshield with suction cups over the opening, align it with the alignment marks and set it down on the adhesive. Lightly push on the windshield until its edges are fully seated on the adhesive all the way around.

NOTE: **Do not open or close any of the doors for about an hour until the adhesive is dry.**

GETtheMANUALS.org

16. Remove the excess adhesive with a putty knife or a shop towel dampened with isopropyl alcohol.
17. Wait at least an hour for the adhesive to dry, then spray water over the windshield and check for leaks. Mark the leaking areas, let the windshield dry, then seal with sealant: Let the vehicle stand for at least 4 hours after windshield installation. If the vehicle has to be used within the first 4 hours, it must be driven slowly.

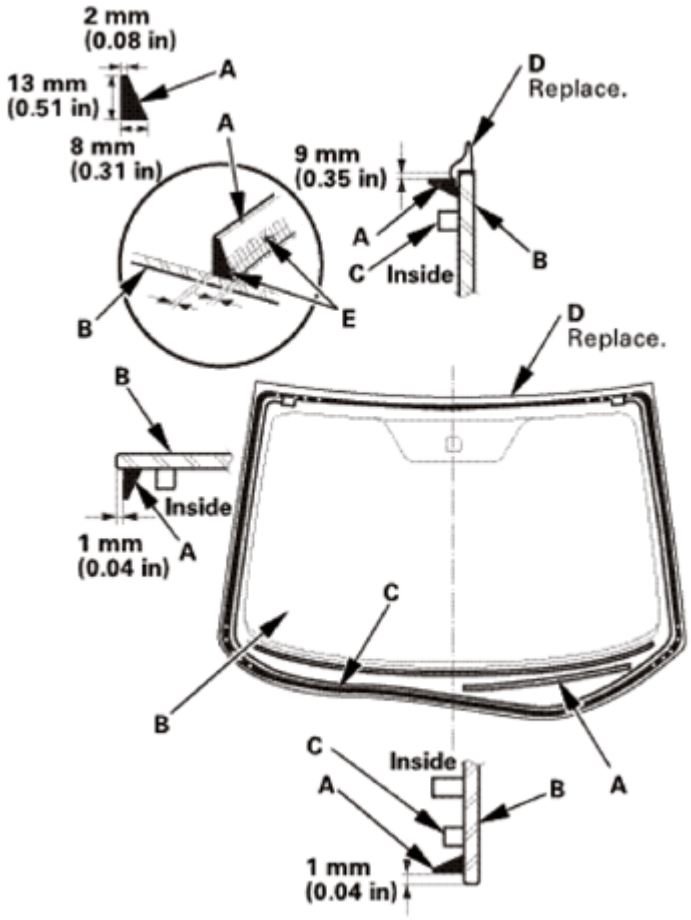

Fig. 277: Identifying Adhesive Applying Areas On Windshield
Courtesy of AMERICAN HONDA MOTOR CO., INC.

18. Advise the customer not to do the following things for 2 to 3 days:
    - Slam the doors with all the windows rolled up.
    - Twist the body excessively (such as when going in and out of driveways at an angle or driving over rough, uneven roads).

2. Side Windshield Trim - Both Sides

NOTE: Repeat this procedure on the opposite side.

1. Install the side windshield trim (A).

GETtheMANUALS.org

Fig. 278: Installing Side Windshield Trim
Courtesy of AMERICAN HONDA MOTOR CO., INC.

3. Roof Rail - Both Sides

NOTE: Repeat this procedure on the opposite side.

1. Install the roof rail (A), then install the nuts (B).

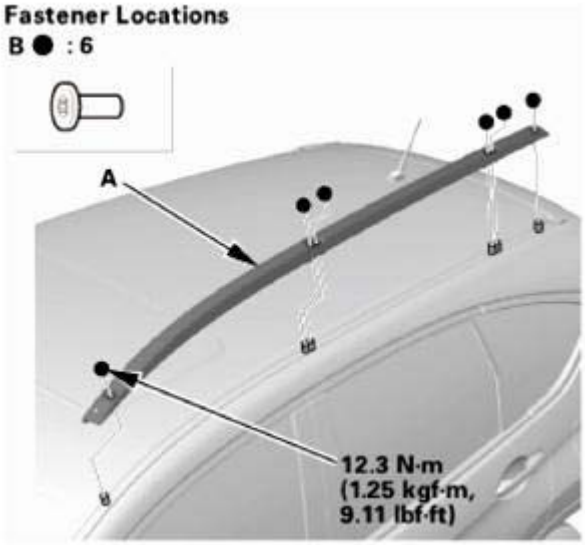

Fig. 279: Identifying Roof Rail And Nuts With Torque Specification
Courtesy of AMERICAN HONDA MOTOR CO., INC.

2. Install the caps (A). (4 Places)

GETtheMANUALS.org

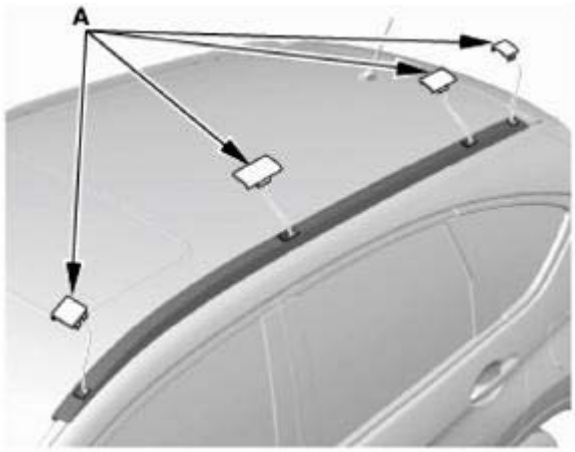

Fig. 280: Identifying Roof Rail Caps
Courtesy of AMERICAN HONDA MOTOR CO., INC.

4. Roof Molding - Both Sides

NOTE: Repeat this procedure on the opposite side.

1. Install the retainers (A) to the pins (B) on the body. (4 places)

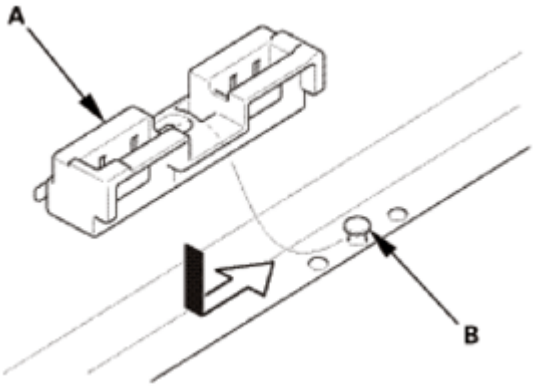

Fig. 281: Installing Retainers And Pins On Body
Courtesy of AMERICAN HONDA MOTOR CO., INC.

2. Slide the rear end of the roof molding (A) rearward to install it to the body.

GETtheMANUALS.org

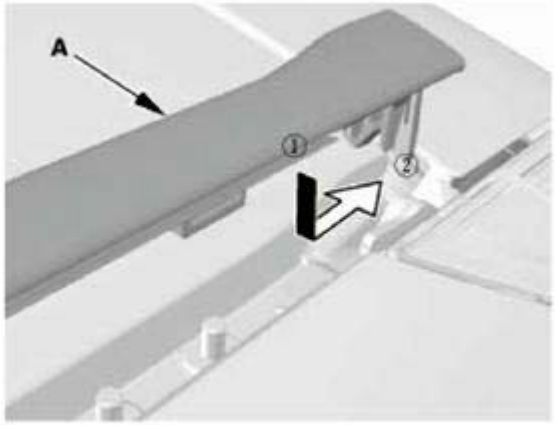

Fig. 282: Installing Roof Molding On Body
Courtesy of AMERICAN HONDA MOTOR CO., INC.

3. Push on the clip areas (A) of the roof molding (B) until the clips lock into the retainers (C) securely, and the retainer (D) into the stud bolts (E).
4. Make sure the roof molding is installed securely.

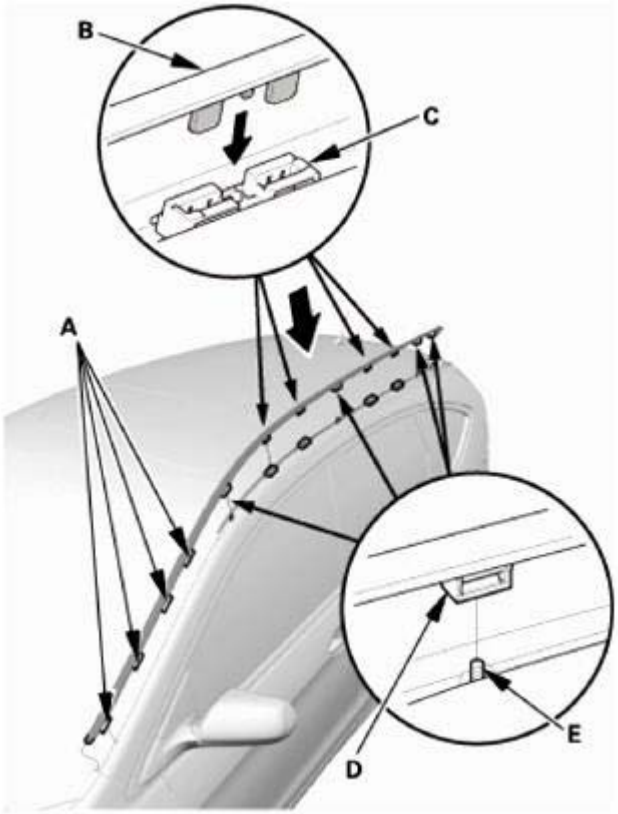

Fig. 283: Installing Roof Molding, Clips, Retainers And Stud Bolts
Courtesy of AMERICAN HONDA MOTOR CO., INC.

5. Headliner As Needed - Front Side

GETtheMANUALS.org

1. Install the headliner (A).

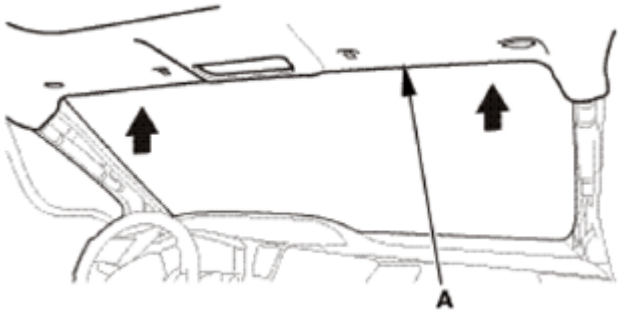

Fig. 284: Installing Headliner
Courtesy of AMERICAN HONDA MOTOR CO., INC.

6. Roof Console Assembly
    1. Connect the connectors (A), then install the roof console assembly (B).
    2. Install the screws (C, D), then install the lenses (E).

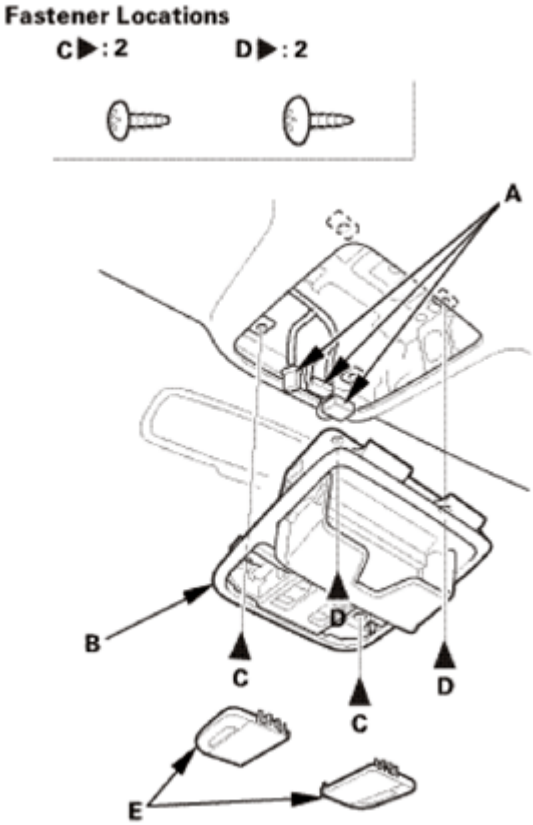

Fig. 285: Identifying Roof Console Assembly, Connectors, Lenses And Screws
Courtesy of AMERICAN HONDA MOTOR CO., INC.

7. Sunvisor Holder

GETtheMANUALS.org

1. Install the holder (A) into the holder grommet (B) by turning it 45 ° clockwise.
2. Install the holder and the holder grommet as an assembly into the body by pushing it until the hooks snap into place securely.

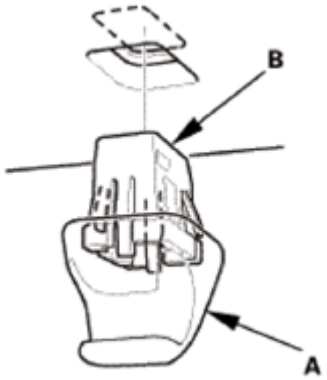

Fig. 286: Identifying Sunvisor Holder And Holder Grommet
Courtesy of AMERICAN HONDA MOTOR CO., INC.

8. Sunvisor - Both Sides

NOTE: Repeat this procedure on the opposite side.

1. Connect the connector (A), and install the sunvisor (B).

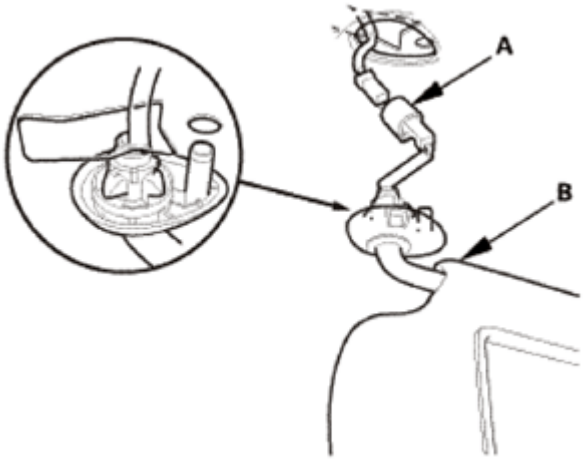

Fig. 287: Identifying Sunvisor And Connector
Courtesy of AMERICAN HONDA MOTOR CO., INC.

2. While holding the bracket cover (A), rotate the sunvisor (B) forward until the tab (C) snaps into place.
3. Gently pull down on the sunvisor to make sure it is properly secured in the body.
4. Rotate the sunvisor into the holder (D).

GETtheMANUALS.org

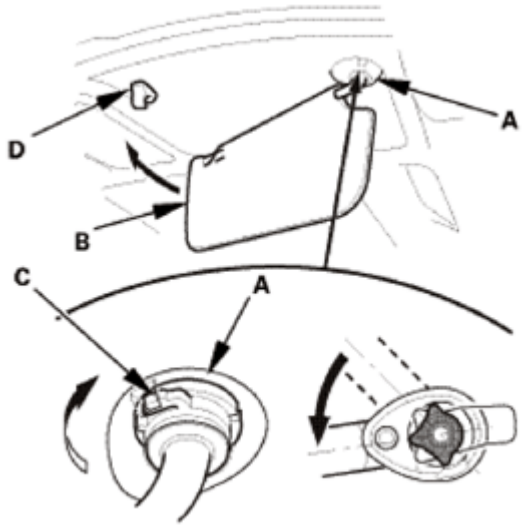

Fig. 288: Rotating Sunvisor Into Bracket Cover
Courtesy of AMERICAN HONDA MOTOR CO., INC.

9. Rearview Mirror

Without auto dimming mirror

1. Fit the mirror base (A) over the mount (B), and secure the rearview mirror.

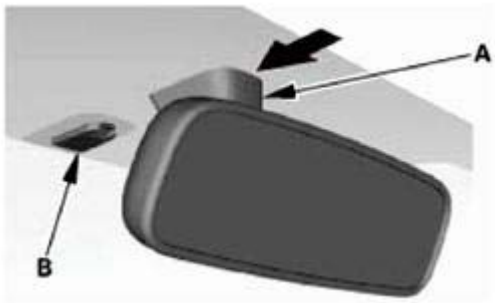

Fig. 289: Fitting Mirror Base Over Mount
Courtesy of AMERICAN HONDA MOTOR CO., INC.

With auto dimming mirror

1. Slide the rearview mirror (A) forward to the mount (B), then tighten the screw (C) with the TORX T20 bit.

NOTE: **Before installing the mirror, remove the screw, and apply medium strength liquid thread lock to it.**

GETtheMANUALS.org

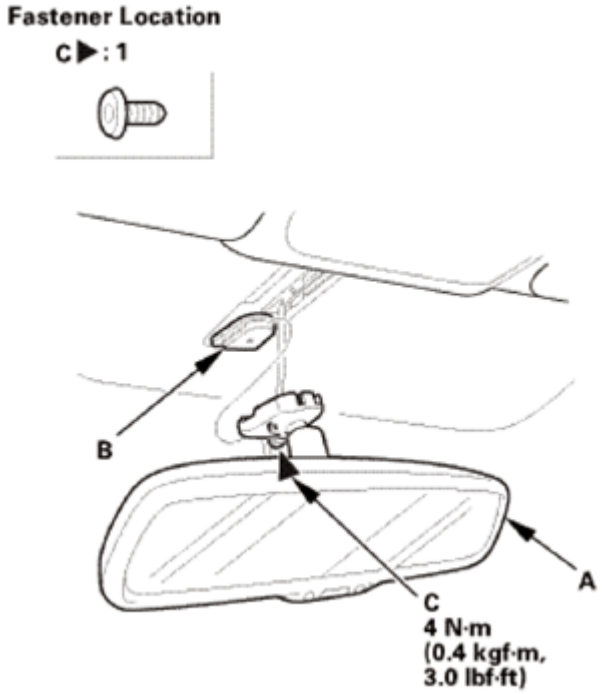

Fig. 290: Identifying Rearview Mirror, Mount And Screw With Torque Specification
Courtesy of AMERICAN HONDA MOTOR CO., INC.

2. Connect the rearview mirror connector (A).

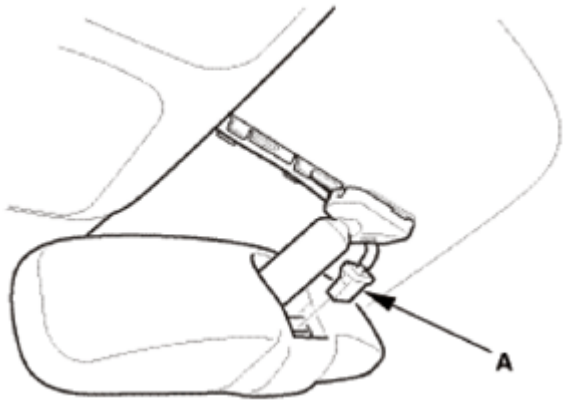

Fig. 291: Identifying Rearview Mirror Connector
Courtesy of AMERICAN HONDA MOTOR CO., INC.

3. Install the rearview mirror harness cover (A). Make sure the hooks (B, C) snap into place securely.

GETtheMANUALS.org

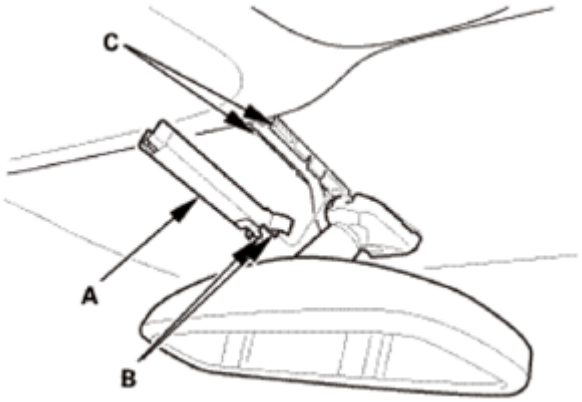

Fig. 292: Identifying Rearview Mirror Harness Cover And Hooks
Courtesy of AMERICAN HONDA MOTOR CO., INC.

10. A-Pillar Trim - Check
    1. If the side curtain airbag has deployed, replace the A-pillar trim (A), along with the other parts listed for side curtain airbag deployment.
    2. If the side curtain airbag has not deployed, check the A-pillar trim and note the following items:
        - To prevent the side curtain airbags from deploying improperly and possibly causing injury, inspect the A-pillar trim and replace it with a new one if it has any of the following damage:
            - Any cracks, deformations, or stress-whitened areas in the A-pillar trim
            - Any cracks or stress-whitening in the clip seating surfaces (B)
        - After checking and adjusting the overlap between the headliner and the A-pillar trim, replace the upper clip (C) with a new one.
        - If the clips (D) are damaged or stress-whitened, replace them with new ones.

GETtheMANUALS.org

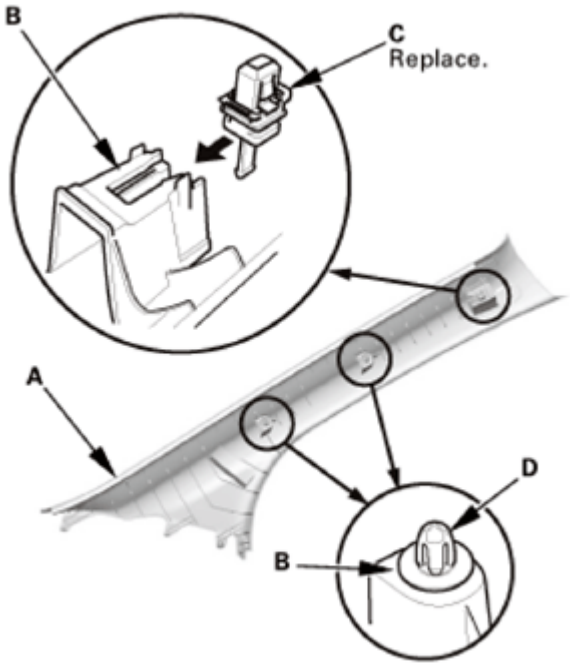

Fig. 293: Installing Upper Clip Into Clip Seating Surface
Courtesy of AMERICAN HONDA MOTOR CO., INC.

11. Headliner/Pillar Trim Overlap - Check

Checking and Adjusting the Headliner/Pillar Trim Overlap

To prevent the side curtain airbag from deploying and damaging the pillar trim (A-pillar trim, B-pillar trim, quarter pillar trim), the overlap between the headliner and pillar trim must be 8.0+0/-2.0 mm (0.31+0/-0.08 in). To check the overlap, do this:

1. Install the headliner (A) and the pillar trim (B).

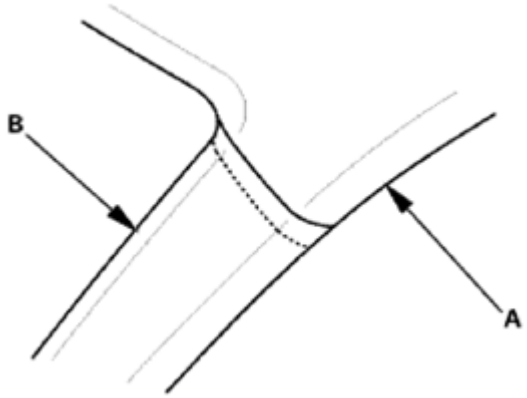

Fig. 294: Identifying Headliner And Pillar Trim
Courtesy of AMERICAN HONDA MOTOR CO., INC.

GETtheMANUALS.org

This illustration shows the A-pillar .

2. Apply masking tape (A) to the headliner (B) to mark the upper edge of the pillar trim (C).

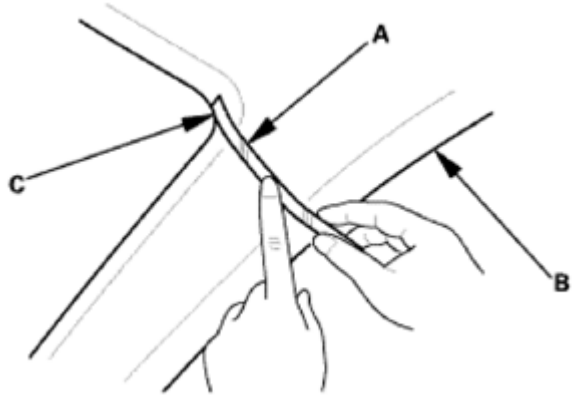

Fig. 295: Applying Masking Tape To Headliner
Courtesy of AMERICAN HONDA MOTOR CO., INC.

This illustration shows the A-pillar .

3. Remove the pillar trim, and measure the headliner overlap.
   - If the overlap is 8.0+0/-2.0 mm (0.31+0/-0.08 in), remove the tape, and install the pillar trim.
   - If the overlap is more than 8.0 mm (0.31 in), go to step 4.

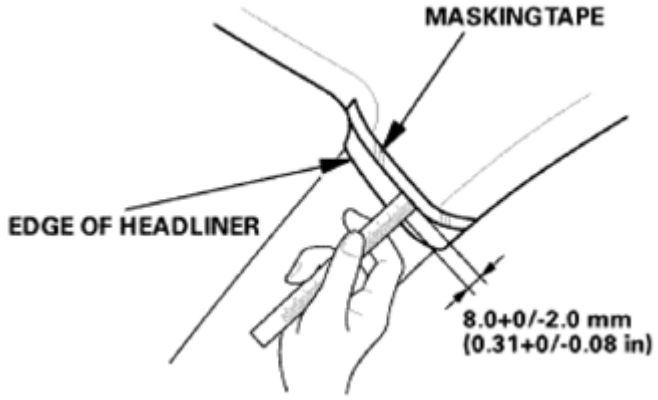

Fig. 296: Measuring Headliner Overlap
Courtesy of AMERICAN HONDA MOTOR CO., INC.

This illustration shows the A-pillar .

- Carefully trim the headliner with a utility knife, reducing the overlap to 8.0+0/-2.0 mm (0.31+0/-0.08 in).
- Remove the tape, and install the pillar trim.

GETtheMANUALS.org

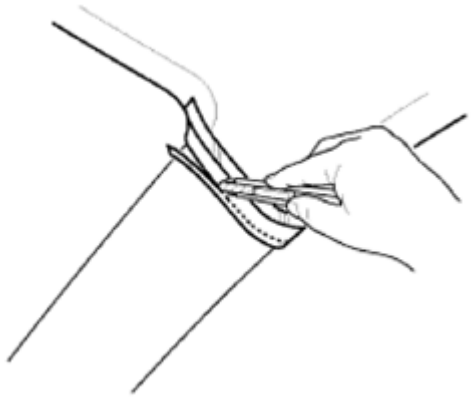

Fig. 297: Trimming Headliner Using Knife
Courtesy of AMERICAN HONDA MOTOR CO., INC.

This illustration shows the A-pillar .

12. A-Pillar Trim - Both Sides

NOTE: Repeat this procedure on the opposite side.

1. Carefully install a new upper clip (A) to the A-pillar trim (B).

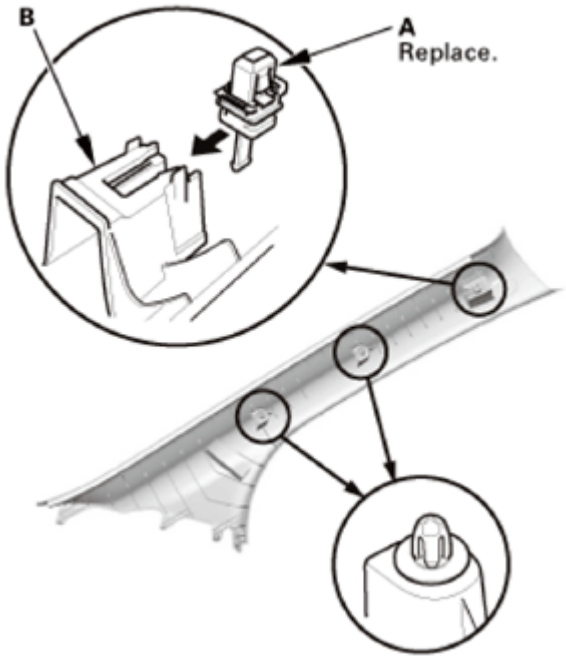

Fig. 298: Installing Upper Clip Into A-Pillar Trim
Courtesy of AMERICAN HONDA MOTOR CO., INC.

2. Insert the bottom portion of the A-pillar trim (A) into the dashboard (B). Place the trim over the A-pillar (C), and fit its upper clip (D) and the other clips (E) into the holes (F) in the A-pillar, then

GETtheMANUALS.org

lightly push the trim into place.

NOTE:

- **Make sure the side curtain airbag is not tucked under the clips or the trim ribs.**
- **Do not push too hard on the A-pillar trim. If you push too hard, the clip will be damaged, and it will not hold the trim properly.**
- **Gently tug on the A-pillar trim to verify that all clips are securely fastened.**

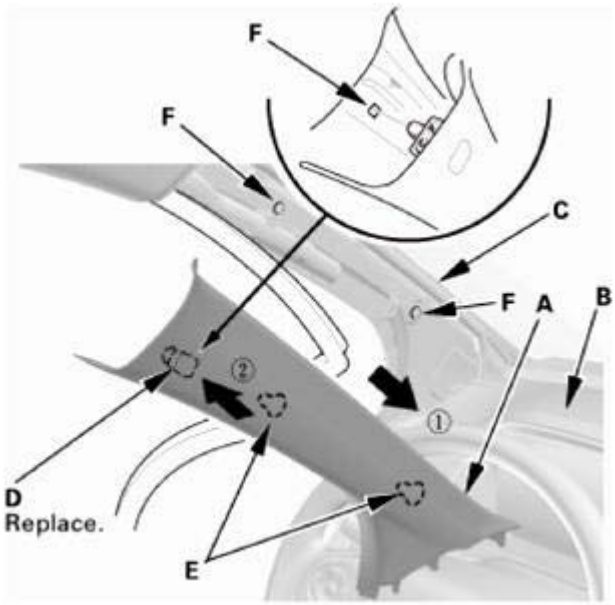

Fig. 299: Inserting Bottom Portion Of A-Pillar Trim Into Dashboard
Courtesy of AMERICAN HONDA MOTOR CO., INC.

13. Front Door Opening Seal As Needed - Both Sides

NOTE: **Repeat this procedure on the opposite side.**

1. Install the front door opening seal (A). Make sure the seal is installed securely into the hooks (B).

GETtheMANUALS.org

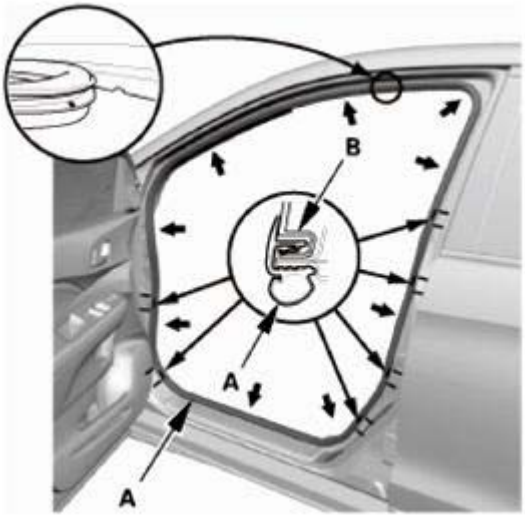

Fig. 300: Identifying Front Door Opening Seal Applying Areas On Hooks
Courtesy of AMERICAN HONDA MOTOR CO., INC.

14. Center Cowl Cover
    1. Install the center cowl cover (A). Make sure the clips (B) and the hooks (C) snap into place securely.

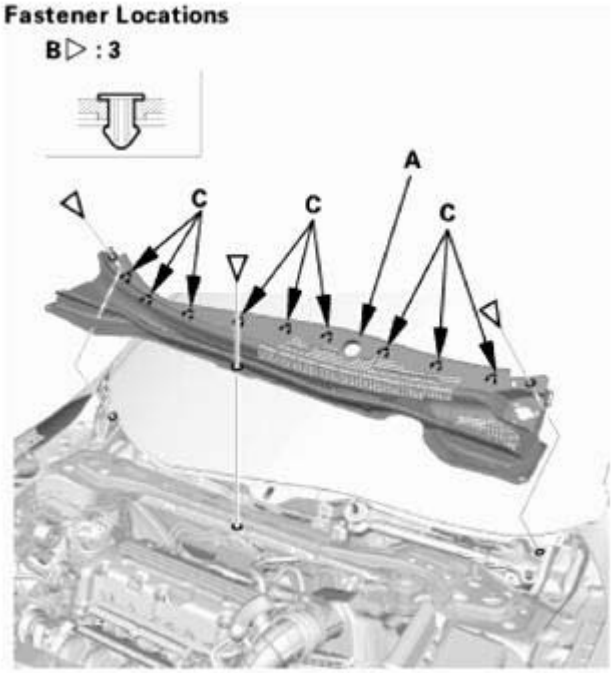

Fig. 301: Identifying Center Cowl Cover, Hooks And Clips
Courtesy of AMERICAN HONDA MOTOR CO., INC.

15. Side Cowl Cover - Both Sides

GETtheMANUALS.org

NOTE: **Repeat on the opposite side.**

1. Install the side cowl cover (A). Make sure the hooks (B) snap into place securely.
2. Right side; Install the windshield washer tube.

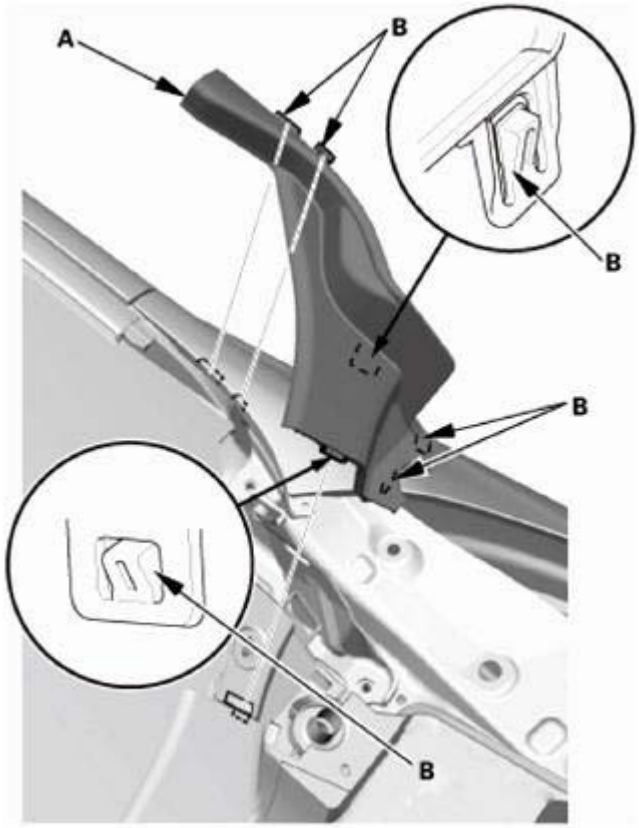

Fig. 302: Identifying Side Cowl Cover And Hooks
Courtesy of AMERICAN HONDA MOTOR CO., INC.

16. Cowl Top Cover - Both Sides

NOTE: **Repeat this procedure on the opposite side.**

1. Install the cowl top cover (A).
2. Install the hood rear seal (B).
3. Install the clip (C).

GETtheMANUALS.org

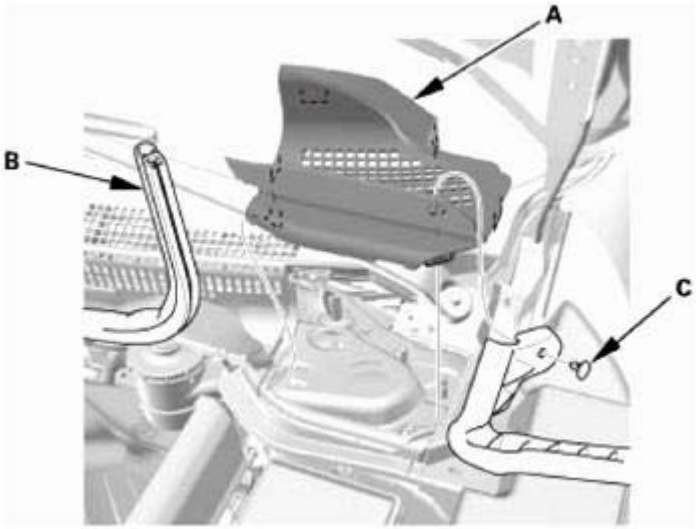

Fig. 303: Identifying Cowl Top Cover, Hood Rear Seal And Clip
Courtesy of AMERICAN HONDA MOTOR CO., INC.

17. Front Fender Trim - Both Sides

NOTE: Repeat on the opposite side.

1. Install the front fender trim (A), then install the clips (B, C). Make sure the clips (D) snap into place securely.

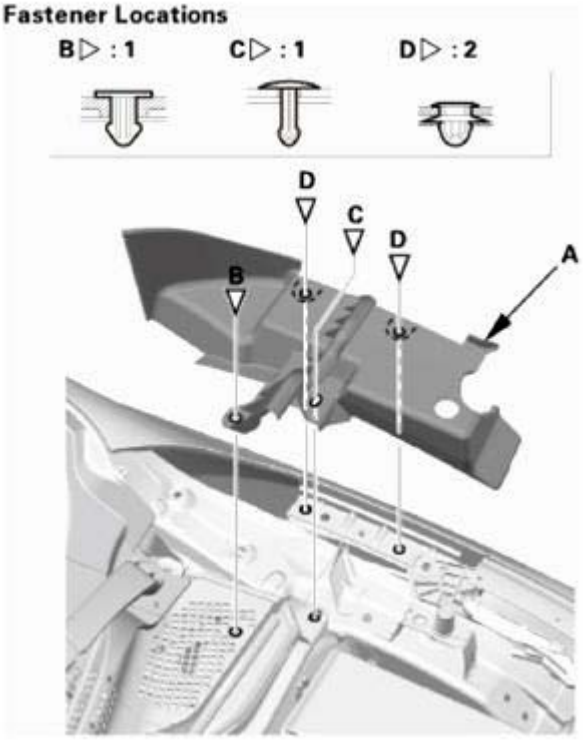

GETtheMANUALS.org

Fig. 304: Identifying Front Fender Trim And Clips
Courtesy of AMERICAN HONDA MOTOR CO., INC.

18. Both Windshield Wiper Arm Assemblies

NOTE: Set the wiper arms to the auto-stop position before installation.

1. Install the wiper arms (A), the nut (B), and the caps (C).

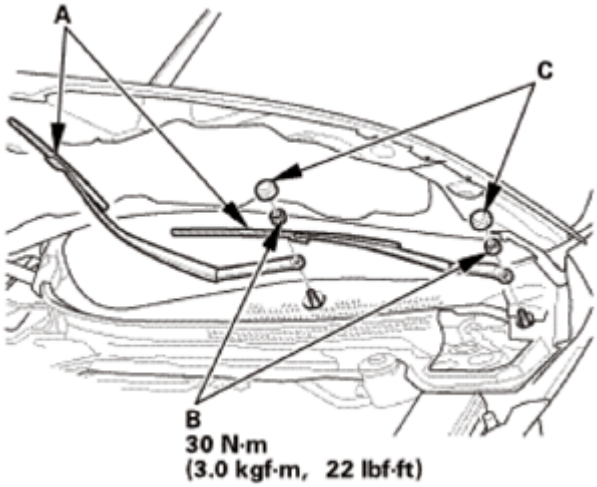

Fig. 305: Identifying Wiper Arms, Nut And Caps With Torque Specification
Courtesy of AMERICAN HONDA MOTOR CO., INC.

19. Water Leak Test

Check for water leaks. Run water over the roof and on the sealing area as shown, and note these items:

- Use a 12 mm (0.47 in) diameter hose (A).
- Adjust the rate of water flow as shown.
- Do not use a nozzle.
- Hold the hose about 300 mm (11.81 in) away from the door.

GETtheMANUALS.org

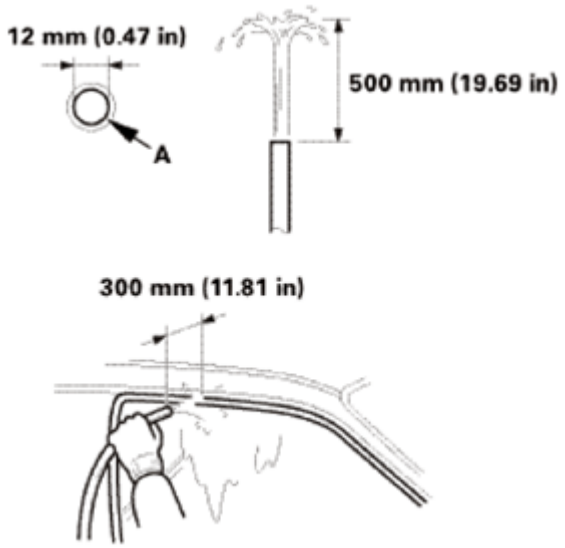

Fig. 306: Checking Roof And Sealing Areas For Water Leaks
Courtesy of AMERICAN HONDA MOTOR CO., INC.

20. Windshield Wiper Arm - Adjustment
    1. **Adjust the windshield wiper arms** See **WIPER ARM/NOZZLE ADJUSTMENT** or **WIPER ARM REMOVAL AND INSTALLATION** .

DRIVER'S POWER WINDOW MOTOR TEST

MOTOR TEST

1. **REMOVE THE POWER WINDOW MASTER SWITCH**.
2. Test the motor in each direction by connecting battery power and ground to the power window master switch 26P connector according to the table.

Terminal / Direction	14	19
UP	⊖	⊕
DOWN	⊕	⊖

Fig. 307: Driver's Power Window Motor Switch Condition Chart
Courtesy of AMERICAN HONDA MOTOR CO., INC.

GETtheMANUALS.org

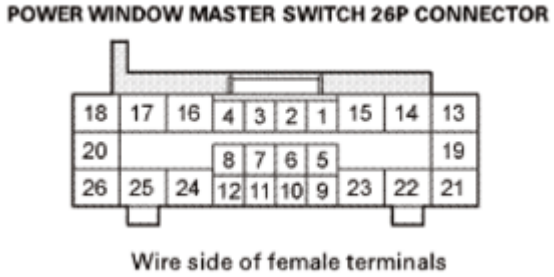

Fig. 308: Identifying Power Window Master Switch 26P Connector Terminals
Courtesy of AMERICAN HONDA MOTOR CO., INC.

3. If the motor does not run or fails to run smoothly, go to step **4** .
4. **REMOVE THE DOOR PANEL** .
5. Disconnect the 6P connector from the driver's power window motor.
6. Check for continuity between the power window master switch 26P connector terminals and driver's power window motor 6P connector terminals as shown. There should be continuity.

Power window master switch 26P connector	Driver's power window motor 6P connector
14 (GRY)	1 (GRY)
19 (PNK)	2 (PNK)

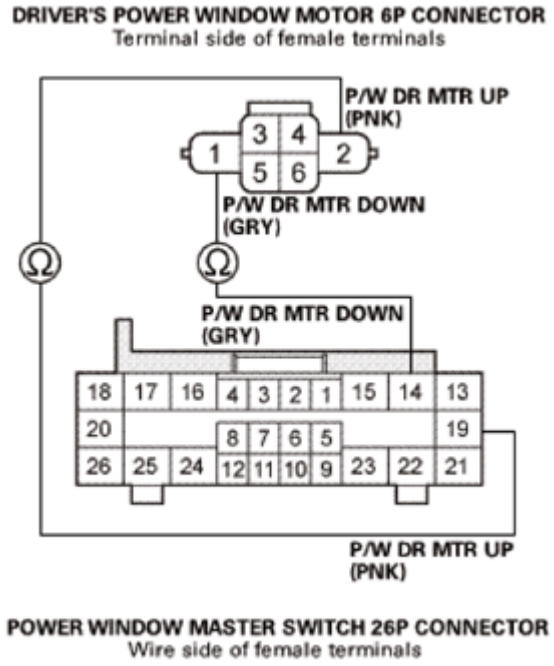

Fig. 309: Checking Continuity Between Power Window Master Switch 26P Connector And Driver's Power Window Motor 6P Connector Terminals
Courtesy of AMERICAN HONDA MOTOR CO., INC.

7. If there is no continuity, repair an open or high resistance in the wire(s). If the wire harness is OK,

GETtheMANUALS.org

REPLACE THE DRIVER'S DOOR POWER WINDOW MOTOR.

Hall IC Unit (Pulser) Test

8. Do the power window master switch input test for terminals No. 9, No. 10, No. 11, and No. 12.

FRONT PASSENGER'S POWER WINDOW MOTOR TEST

MOTOR TEST

1. **Remove the front passenger's power window switch** See **REAR POWER WINDOW SWITCH REMOVAL AND INSTALLATION** or **FRONT PASSENGER'S POWER WINDOW SWITCH REMOVAL AND INSTALLATION**.
2. Test the motor in each direction by connecting battery power and ground to the front passenger's power window switch 10P connector according to the table.

Terminal / Direction	8	10
UP	⊕	⊖
DOWN	⊖	⊕

Fig. 310: Front Passenger's Power Window Motor Switch Condition Chart
Courtesy of AMERICAN HONDA MOTOR CO., INC.

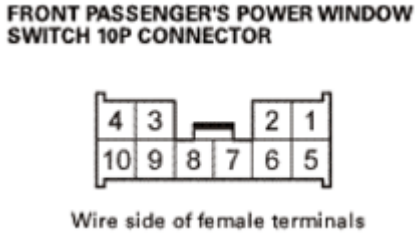

Fig. 311: Identifying Front Passenger's Power Window Switch 10P Connector Terminals
Courtesy of AMERICAN HONDA MOTOR CO., INC.

3. If the motor does not run or fails to run smoothly, go to step **4** .
4. **REMOVE THE DOOR PANEL** .
5. Disconnect the 2P connector from the front passenger's power window motor.
6. Check for continuity between the front passenger's power window switch 10P connector terminals and front passenger's power window motor 2P connector terminals as shown. There should be continuity.

Front passenger's power window switch 10P connector	Front passenger's power window motor 2P connector
10 (PNK)	1 (PNK)
8 (BLU)	2 (BLU)

GETtheMANUALS.org

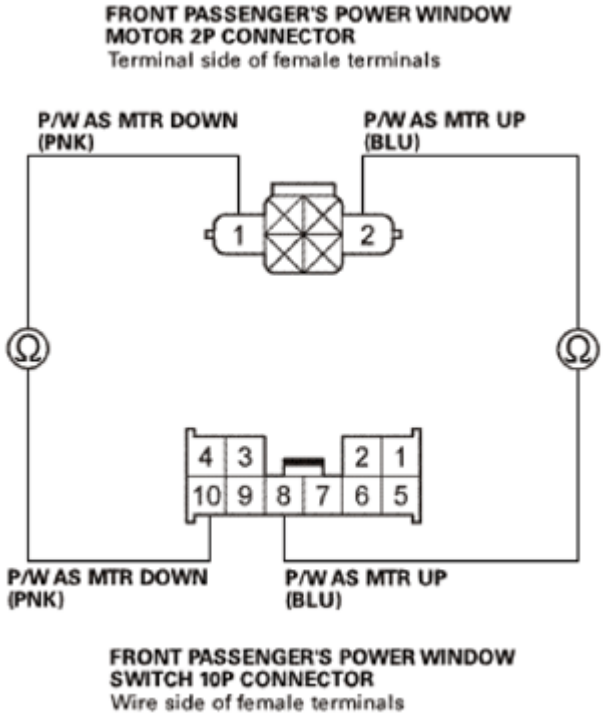

Fig. 312: Checking Continuity Between Front Passenger's Power Window Switch 10P And 2P Connector Terminals
Courtesy of AMERICAN HONDA MOTOR CO., INC.

7. If there is no continuity, repair an open or high resistance in the wire(s). If the wire harness is OK, **REPLACE THE FRONT PASSENGER'S POWER WINDOW MOTOR**.

POWER WINDOW MASTER SWITCH INPUT TEST

NOTE: **Before testing, make sure the No. B42 (20 A), No. B43 (20 A), No. B44 (20 A), and No. B45 (20 A) fuses in the under-dash fuse/relay box are OK.**

1. Turn the ignition switch to LOCK (0).
2. **DISCONNECT THE POWER WINDOW MASTER SWITCH 26P CONNECTOR**.

GETtheMANUALS.org

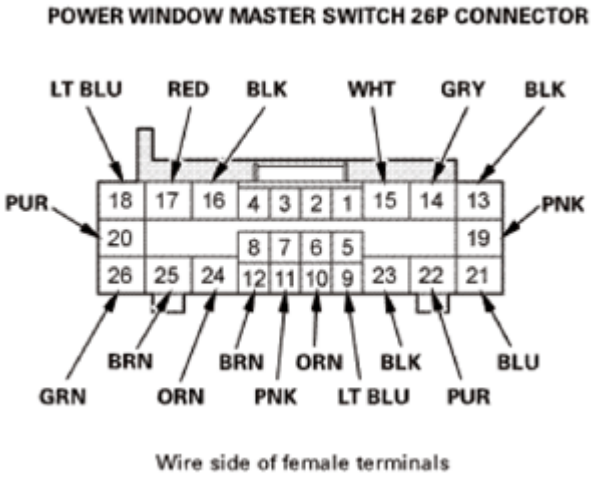

Fig. 313: Identifying Power Window Master Switch 26P Connector Terminals
Courtesy of AMERICAN HONDA MOTOR CO., INC.

3. Inspect the connector and socket terminals to be sure they are all making good contact:
   - If the terminals are bent, loose, or corroded, repair them as necessary, and recheck the system.
   - If the terminals are OK, go to step 4.
4. With the connector still disconnected, do the following input tests:
   - If any test indicates a problem, find and correct the cause, then recheck the system.
   - If all the input tests prove OK; go to step 5.

Cavity	Wire	Test condition	Test: Desired result	Possible cause if desired result is not obtained
19 14	PNK GRY	Connect terminals No. 19 (or No. 14) and No. 15, and terminals No. 14 (or No. 19) and No. 13 with jumper wires	Check driver's power window motor operation: The driver's power window should close (or open).	• Faulty driver's power window motor • An open or high resistance in the wire
24 25	ORN BRN	Connect terminals No. 24 (or No. 25) and No. 26, and terminals No. 25 (or No. 24) and No. 16 with jumper wires	Check front passenger's power window motor operation: The front passenger's power window should close (or open).	• Faulty front passenger's power window motor • Faulty front passenger's power window switch • An open or high resistance in the wire
			Check left rear power	• Faulty left rear power window motor

GETtheMANUALS.org

23 22	BLK PUR	Connect terminals No. 23 (or No. 22) and No. 21, and terminals No. 22 (or No. 23) and No. 16 with jumper wires	window motor operation: The left rear power window should close (or open).	• Faulty left rear power window switch • An open or high resistance in the wire
18 17	LT BLU RED	Connect terminals No. 18 (or No. 17) and No. 20, and terminals No. 17 (or No. 18) and No. 16 with jumper wires	Check right rear power window motor operation: The right rear power window should close (or open).	• Faulty right rear power window motor • Faulty right rear power window switch • An open or high resistance in the wire

5. Reconnect the connector to the power window master switch, do the following input tests:
   - If any test indicates a problem, find and correct the cause, then recheck the system.
   - If all the input tests prove OK; **REPLACE THE POWER WINDOW MASTER SWITCH**.

NOTE: **After replacing the power window master switch, DO THE RESETTING THE POWER WINDOW CONTROL UNIT.**

Cavity	Wire	Test condition	Test: Desired result	Possible cause if desired result is not obtained
15	WHT	Under all conditions	Measure the voltage to ground: There should be battery voltage.	• Blown No. B42 (20 A) fuse in the under-dash fuse/relay box • An open or high resistance in the wire
26	GRN	Ignition switch ON (II)	Measure the voltage to ground: There should be battery voltage.	• Blown No. B44 (20 A) fuse in the under-dash fuse/relay box • Faulty power window relay • An open or high resistance in the wire
21	BLU	Ignition switch ON (II)	Measure the voltage to ground: There should be battery voltage.	• Blown No. B45 (20 A) fuse in the under-dash fuse/relay box • Faulty power window relay

GETtheMANUALS.org

				• An open or high resistance in the wire
20	PUR	Ignition switch ON (II)	Measure the voltage to ground: There should be battery voltage.	• Blown No. B43 (20 A) fuse in the under-dash fuse/relay box • Faulty power window relay • An open or high resistance in the wire
13	BLK	In all ignition switch positions	Measure the voltage to ground: There should be less than 0.2 V.	• Poor ground (G501) • An open or high resistance in the ground wire
16	BLK	Window lock switch ON	Measure the voltage to ground: There should be less than 0.2 V.	• Poor ground (G501) • An open or high resistance in the ground wire
12	BRN	Ignition switch ON (II)	Measure the voltage to ground: There should be battery voltage.	• Faulty power window master switch • A short to ground in the wire
9	LT BLU	Ignition switch ON (II)	Measure the voltage to ground: There should be less than 0.2 V.	• Poor ground (G501) • Faulty power window master switch • An open or high resistance in the ground wire
11	PNK	Ignition switch ON (II), and power window master switch moving up or down.	Measure the voltage between terminals No. 11 and No. 13: An analog meter should alternate between 0 V and 5 V (a digital voltmeter should read about 2.5 V while the window moves).	• Faulty driver's power window motor • An open or high resistance in the wire • A short to ground in the wire
10	ORN	Ignition switch ON (II), and power window master switch moving up or down.	Measure the voltage between terminals No. 10 and No. 13: An analog meter should alternate between 0 V and 5 V (a digital voltmeter should read about 2.5 V while the window moves).	• Faulty driver's power window motor • An open or high resistance in the wire • A short to ground in the wire

GETtheMANUALS.org

REAR POWER WINDOW MOTOR TEST

MOTOR TEST

1. **Remove the rear power window switch** See **REAR POWER WINDOW SWITCH REMOVAL AND INSTALLATION** or **FRONT PASSENGER'S POWER WINDOW SWITCH REMOVAL AND INSTALLATION**.
2. Test the motor in each direction by connecting battery power and ground to the rear power window switch 8P connector according to the table.

Direction \ Terminal	1	3
UP	⊕	⊖
DOWN	⊖	⊕

Fig. 314: Rear Power Window Motor Switch Condition Chart
Courtesy of AMERICAN HONDA MOTOR CO., INC.

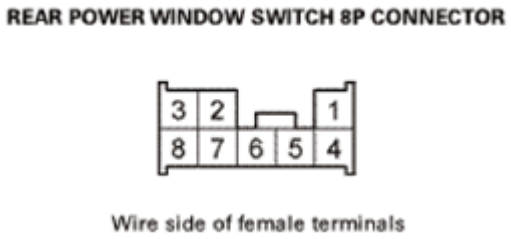

Fig. 315: Identifying Rear Power Window Switch 8P Connector Terminals
Courtesy of AMERICAN HONDA MOTOR CO., INC.

3. If the motor does not run or fails to run smoothly, go to step **4** .
4. **REMOVE THE DOOR PANEL** .
5. Disconnect the 2P connector from the rear power window motor.
6. Check for continuity between the rear power window switch 8P connector terminals and rear power window motor 2P connector terminals as shown. There should be continuity.

Left side

Left rear power window switch 8P connector	Left rear power window motor 2P connector
1 (YEL)	1 (YEL)
3 (BRN)	2 (BRN)

GETtheMANUALS.org

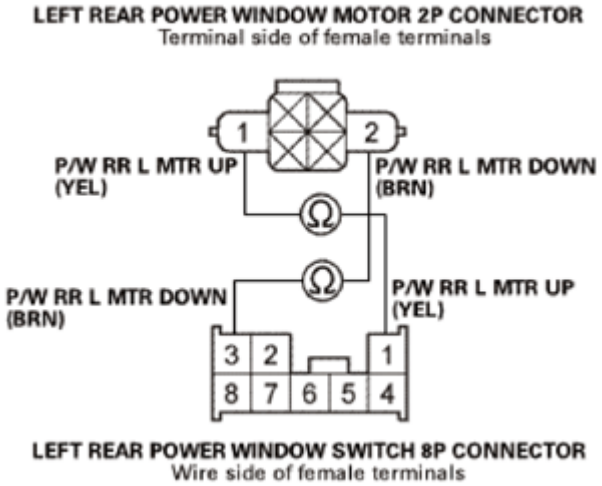

Fig. 316: Checking Continuity Between Rear Power Window Switch 8P Connector And Rear Power Window Motor 2P Connector Terminals
Courtesy of AMERICAN HONDA MOTOR CO., INC.

Right side

Right rear power window switch 8P connector	Right rear power window motor 2P connector
1 (WHT)	1 (WHT)
3 (BLU)	2 (BLU)

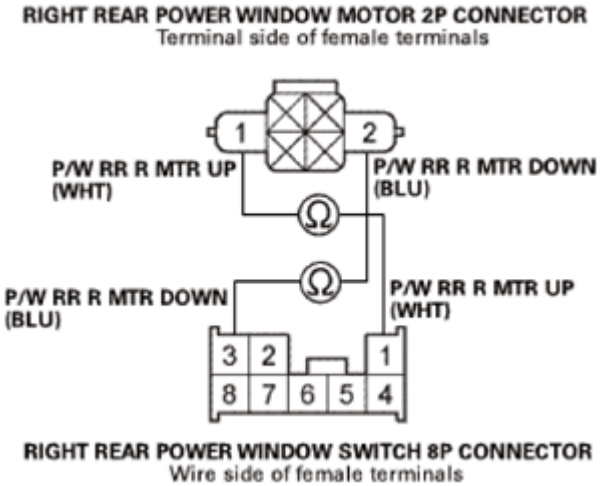

Fig. 317: Checking Continuity Between Rear Power Window Switch 8P Connector And Rear Power Window Motor 2P Connector Terminals
Courtesy of AMERICAN HONDA MOTOR CO., INC.

7. If there is no continuity, repair an open or high resistance in the wire(s). If the wire harness is OK, faulty rear power window motor; replace the rear door regulator. See **Rear Door Regulator Removal and Installation**

GETtheMANUALS.org

DTC C1840-12: DIFFERENTIAL FLUID PRESSURE SENSOR CIRCUIT HIGH VOLTAGE

GETtheMANUALS.org

DTC Troubleshooting: C1840-12

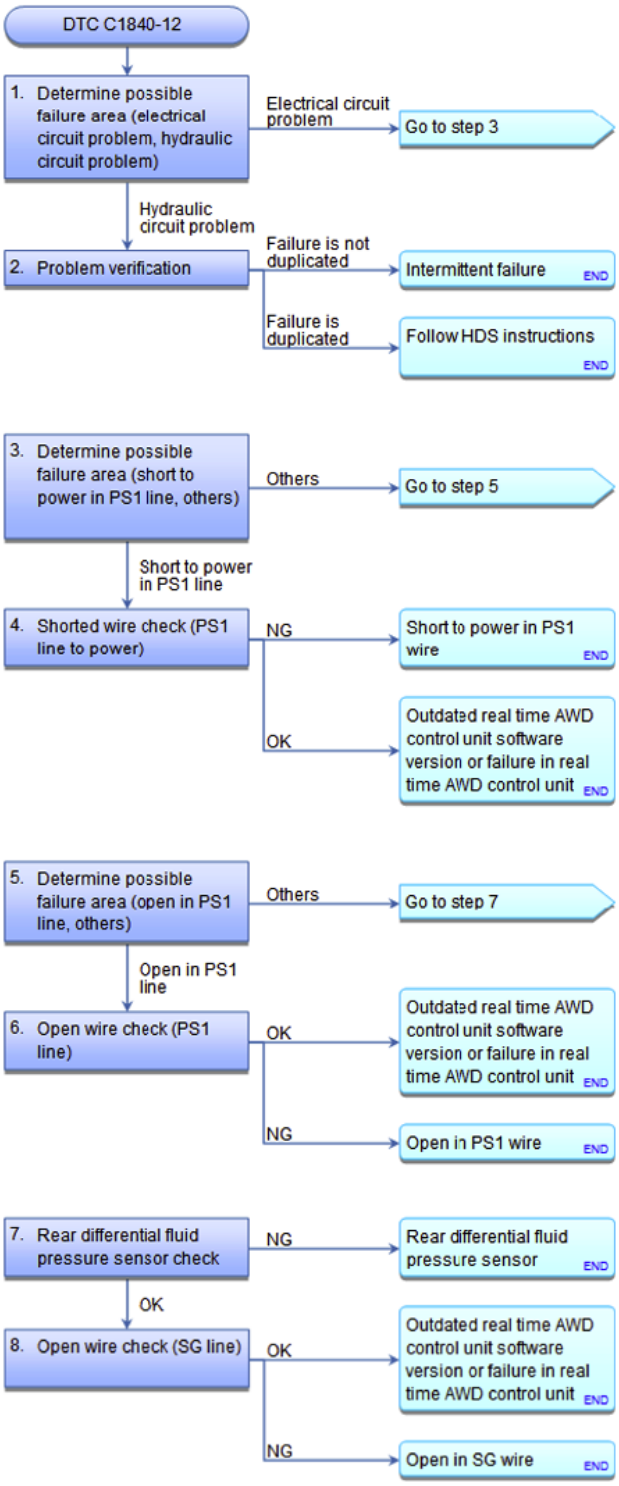

Fig. 1: DTC Troubleshooting Flow Chart (C1840-12)
Courtesy of AMERICAN HONDA MOTOR CO., INC.

NOTE: **Before you troubleshoot, REVIEW THE HOW TO TROUBLESHOOT THE REAL**

GETtheMANUALS.org

TIME AWD SYSTEM .

DTC Description	DTC	Freeze Frame
C1840-12 Differential Fluid Pressure Sensor Circuit High Voltage		

1. Determine possible failure area (electrical circuit problem, hydraulic circuit problem):
   - 1. Start the engine.
   - 2. Check the parameter(s) below with the HDS.

Signal	Threshold		Current conditions	
	Values	Unit	Values	Unit
Voltage of the oil pressure sensor for rear differential	More than 3.67	V		

Do the current condition(s) match the threshold?

YES : Go to step 3.

NO : Go to step 2.

2. Problem verification:
   - 1. Clear the DTC with the HDS.
   - 2. **DO THE OIL PRESSURE CONTROL TEST IN THE FUNCTIONAL TEST WITH THE HDS** .

Is the test result OK?

YES : Intermittent failure, the system is OK at this time.

NO : The failure is duplicated. **FOLLOW THE INSTRUCTIONS INDICATED ON THE HDS ACCORDING TO THE TEST RESULT** .

3. Determine possible failure area (short to power in PS1 line, others):
   - 1. Turn the ignition switch to LOCK (0).
   - 2. Disconnect the following connector.

     Rear differential fluid pressure sensor 3P connector

   - 3. Turn the ignition switch to ON (II).
   - 4. Measure the voltage between test points 1 and 2.

     Test condition IG ON (II)

     Rear differential fluid pressure sensor 3P connector: disconnected

GETtheMANUALS.org

Test circuit PS1, SG

Test point 1 Rear differential fluid pressure sensor 3P connector No. 1 (GRY)

Test point 2 Rear differential fluid pressure sensor 3P connector No. 2 (PNK)

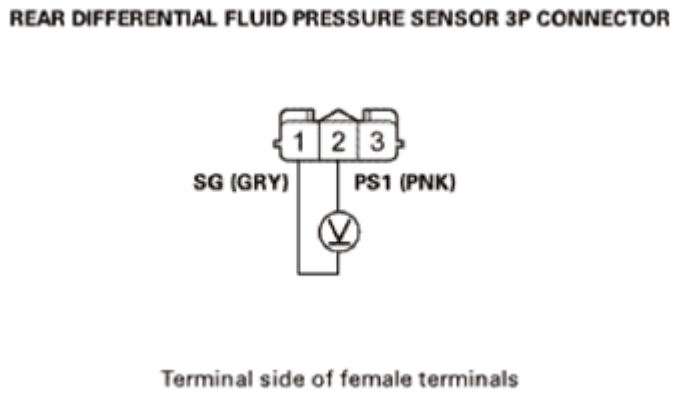

Fig. 2: Measuring Voltage Between Rear Differential Fluid Pressure Sensor 3P Connector No. 1 (GRY) And No. 2 (PNK)
Courtesy of AMERICAN HONDA MOTOR CO., INC.

Is there about 3.67 V or more?

YES : Go to step 4.

NO : Go to step 5.

4. Shorted wire check (PS1 line to power):
   - 1. Turn the ignition switch to LOCK (0).
   - 2. Disconnect the following connector.

     Real time AWD control unit 24P connector

   - 3. Turn the ignition switch to ON (II).
   - 4. Measure the voltage between test points 1 and 2.

     Test condition IG ON (II)

     Rear differential fluid pressure sensor 3P connector: disconnected

     Real time AWD control unit 24P connector: disconnected

     Test circuit PS1

     Test point 1 Rear differential fluid pressure sensor 3P connector No. 2 (PNK)

GETtheMANUALS.org

Test point 2 Body ground

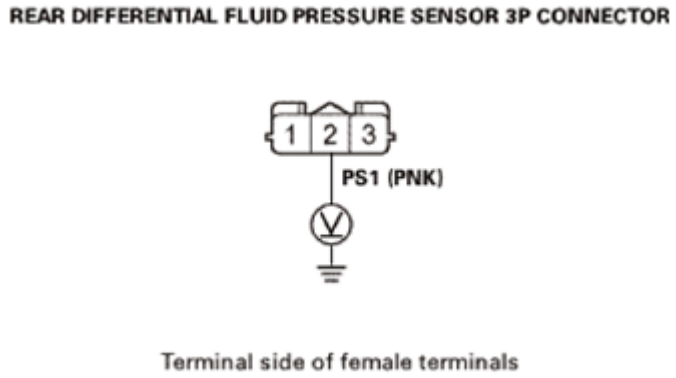

Fig. 3: Measuring Voltage Between Rear Differential Fluid Pressure Sensor 3P Connector No. 2 (PNK) And Body Ground
Courtesy of AMERICAN HONDA MOTOR CO., INC.

Is there about 0.5 V or more?

YES : Repair a short to power in the PS1 wire between the rear differential fluid pressure sensor and the real time AWD control unit.

NO : **Update the real time AWD control unit if it does not have the latest software** See **REAL TIME AWD CONTROL UNIT REMOVAL AND INSTALLATION** or **REAL TIME AWD CONTROL UNIT UPDATE** , or **substitute a known-good real time AWD control unit** See **REAL TIME AWD CONTROL UNIT REMOVAL AND INSTALLATION** or **REAL TIME AWD CONTROL UNIT UPDATE** , and recheck. If the symptom/indication goes away with the updated real time AWD control unit, troubleshooting is complete. If the symptom/indication goes away with a known-good real time AWD control unit, **replace the original real time AWD control unit** See **REAL TIME AWD CONTROL UNIT REMOVAL AND INSTALLATION** or **REAL TIME AWD CONTROL UNIT UPDATE** .

5. Determine possible failure area (open in PS1 line, others):
   - 1. Turn the ignition switch to LOCK (0).
   - 2. Connect terminals A and B with a jumper wire.

     Terminal A Rear differential fluid pressure sensor 3P connector No. 2 (PNK)

     Terminal B Body ground

GETtheMANUALS.org

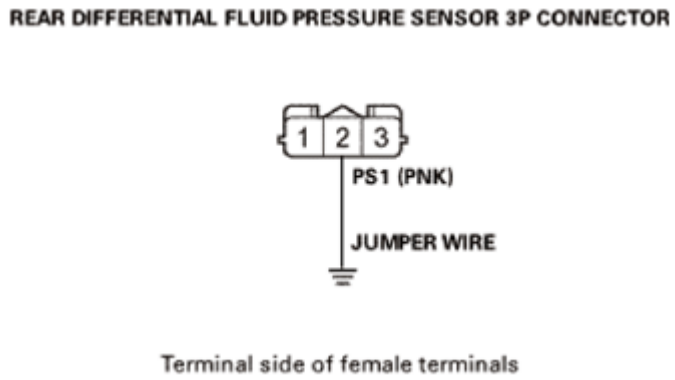

Fig. 4: Connecting Rear Differential Fluid Pressure Sensor 3P Connector No. 2 (PNK) And Body Ground
Courtesy of AMERICAN HONDA MOTOR CO., INC.

- 3. Turn the ignition switch to ON (II).
- 4. Check the parameter(s) below with the HDS.

Signal	Threshold		Current conditions	
	Values	Unit	Values	Unit
Voltage of the oil pressure sensor for rear differential	Less than 0.1	V		

Do the current condition(s) match the threshold?

YES : Go to step 7.

NO : Go to step 6.

6. Open wire check (PS1 line):
   - 1. Turn the ignition switch to LOCK (0).
   - 2. Remove the jumper wire.
   - 3. Disconnect the following connector.

     Real time AWD control unit 24P connector

   - 4. Check for continuity between test points 1 and 2.

     Test condition IG LOCK (0)

     Test circuit PS1

     Rear differential fluid pressure sensor 3P connector: disconnected

     Real time AWD control unit 24P connector: disconnected

GETtheMANUALS.org

Test point 1 Rear differential fluid pressure sensor 3P connector No. 2 (PNK)

Test point 2 Real time AWD control unit 24P connector No. 21 (PNK)

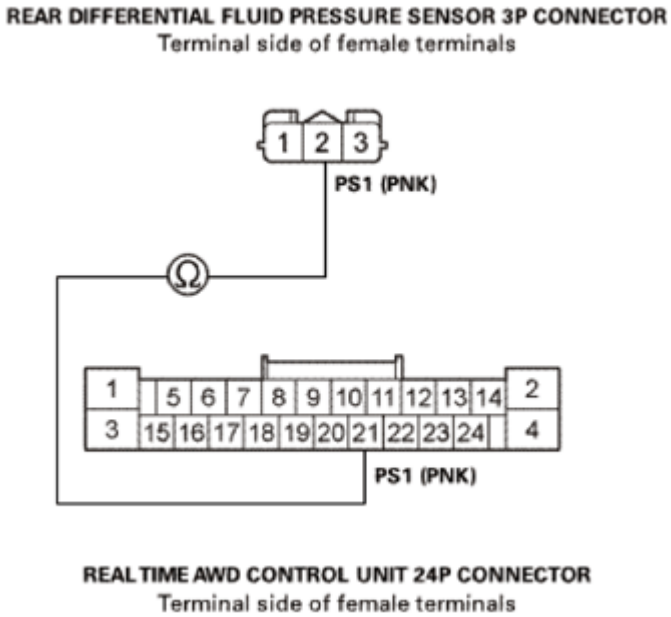

Fig. 5: Checking Continuity Between Rear Differential Fluid Pressure Sensor 3P Connector No. 2 (PNK) And Real Time AWD Control Unit 24P Connector No. 21 (PNK)
Courtesy of AMERICAN HONDA MOTOR CO., INC.

Is there continuity?

YES : **Update the real time AWD control unit if it does not have the latest software** See **REAL TIME AWD CONTROL UNIT REMOVAL AND INSTALLATION** or **REAL TIME AWD CONTROL UNIT UPDATE** , or **substitute a known-good real time AWD control unit** See **REAL TIME AWD CONTROL UNIT REMOVAL AND INSTALLATION** or **REAL TIME AWD CONTROL UNIT UPDATE** , and recheck. If the symptom/indication goes away with the updated real time AWD control unit, troubleshooting is complete. If the symptom/indication goes away with a known-good real time AWD control unit, **replace the original real time AWD control unit** See **REAL TIME AWD CONTROL UNIT REMOVAL AND INSTALLATION** or **REAL TIME AWD CONTROL UNIT UPDATE** .

NO : Repair an open in the PS1 wire between the rear differential fluid pressure sensor and the real time AWD control unit.

7. Rear differential fluid pressure sensor check:
   - 1. Turn the ignition switch to LOCK (0).
   - 2. Remove the jumper wire.
   - 3. Connect terminals A and B with a jumper wire.

   Terminal A Rear differential fluid pressure sensor 3P connector No. 1 (GRY)

GETtheMANUALS.org

Terminal B Rear differential fluid pressure sensor 3P connector No. 2 (PNK)

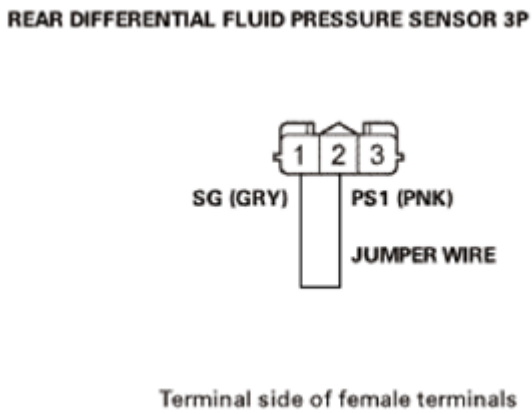

Fig. 6: Connecting Rear Differential Fluid Pressure Sensor 3P Connector No. 1 (GRY) And No. 2 (PNK) Using Jumper Wire
Courtesy of AMERICAN HONDA MOTOR CO., INC.

- 4. Turn the ignition switch to ON (II).
- 5. Check the parameter(s) below with the HDS.

Signal	Threshold		Current conditions	
	Values	Unit	Values	Unit
Voltage of the oil pressure sensor for rear differential	Less than 0.1	V		

Do the current condition(s) match the threshold?

YES : **REPLACE THE REAR DIFFERENTIAL FLUID PRESSURE SENSOR** .

NO : The rear differential fluid pressure sensor is OK. Go to step 8.

8. Open wire check (SG line):
   - 1. Turn the ignition switch to LOCK (0).
   - 2. Remove the jumper wire.
   - 3. Disconnect the following connector.

     Real time AWD control unit 24P connector

   - 4. Check for continuity between test points 1 and 2.

     Test condition IG LOCK (0)

     Rear differential fluid pressure sensor 3P connector: disconnected

     Real time AWD control unit 24P connector: disconnected

GETtheMANUALS.org

Test circuit SG

Test point 1 Rear differential fluid pressure sensor 3P connector No. 1 (GRY)

Test point 2 Real time AWD control unit 24P connector No. 11 (GRN)

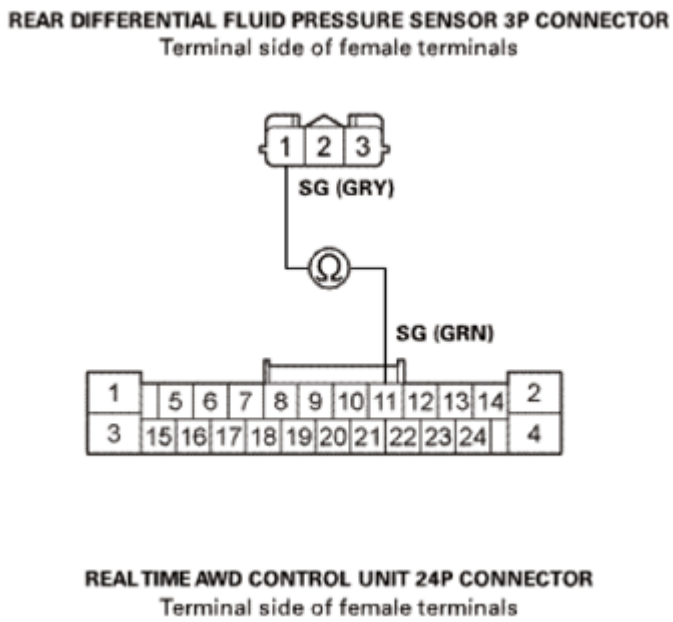

Fig. 7: Checking Continuity Between Rear Differential Fluid Pressure Sensor 3P Connector No. 1 (GRY) And Real Time AWD Control Unit 24P Connector No. 11 (GRN)
Courtesy of AMERICAN HONDA MOTOR CO., INC.

Is there continuity?

YES : **Update the real time AWD control unit if it does not have the latest software** See **REAL TIME AWD CONTROL UNIT REMOVAL AND INSTALLATION** or **REAL TIME AWD CONTROL UNIT UPDATE** , or **substitute a known-good real time AWD control unit** See **REAL TIME AWD CONTROL UNIT REMOVAL AND INSTALLATION** or **REAL TIME AWD CONTROL UNIT UPDATE** , and recheck. If the symptom/indication goes away with the updated real time AWD control unit, troubleshooting is complete. If the symptom/indication goes away with a known-good real time AWD control unit, **replace the original real time AWD control unit** See **REAL TIME AWD CONTROL UNIT REMOVAL AND INSTALLATION** or **REAL TIME AWD CONTROL UNIT UPDATE** .

NO : Repair an open in the SG wire between the rear differential fluid pressure sensor and the real time AWD control unit.

DTC C1840-14: DIFFERENTIAL FLUID PRESSURE SENSOR CIRCUIT LOW VOLTAGE

GETtheMANUALS.org

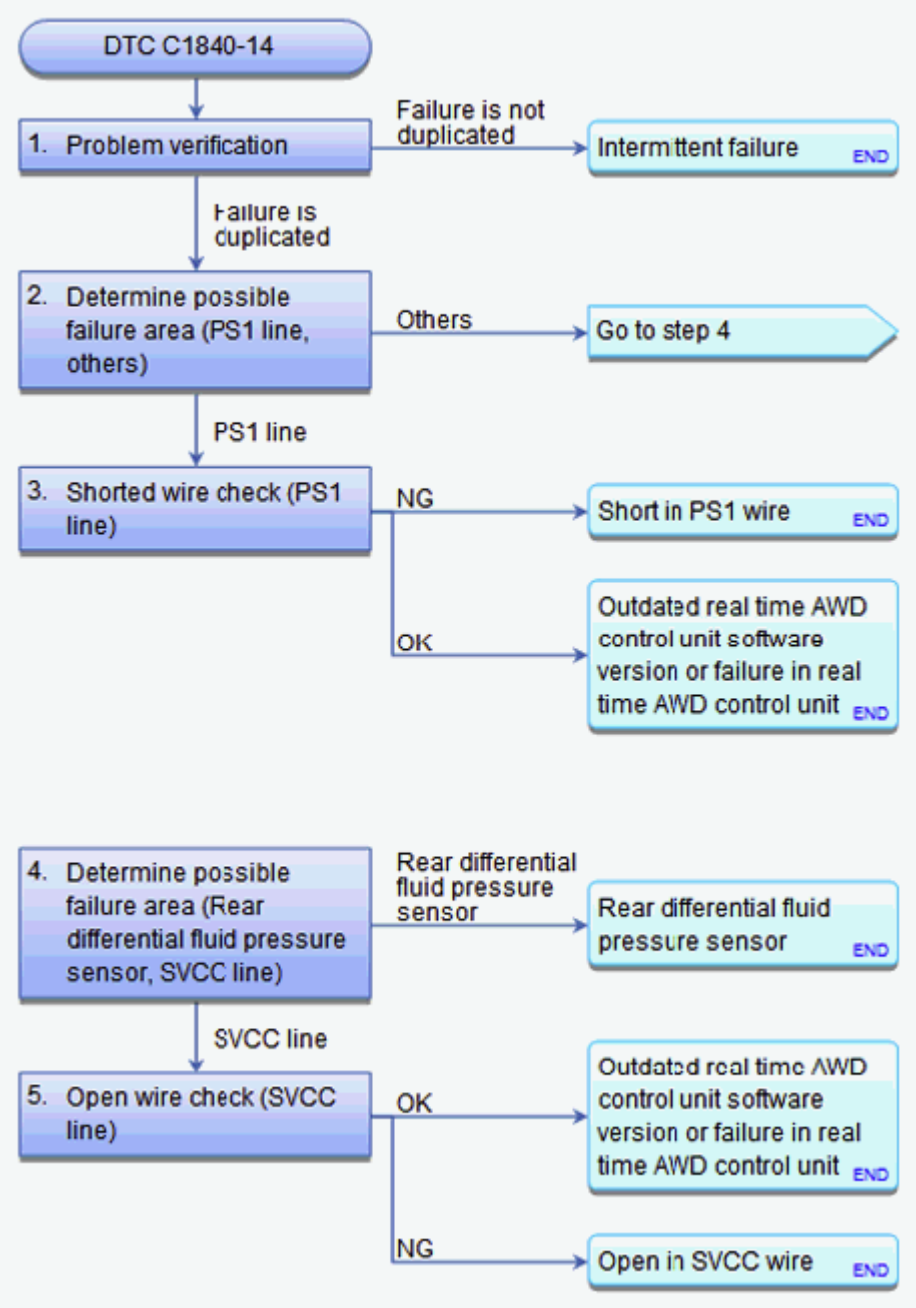

Fig. 8: DTC Troubleshooting Flow Chart (C1840-14)
Courtesy of AMERICAN HONDA MOTOR CO., INC.

NOTE: **Before you troubleshoot, REVIEW THE HOW TO TROUBLESHOOT THE REAL TIME AWD SYSTEM .**

DTC Description	DTC	Freeze Frame
C1840-14 Differential Fluid Pressure Sensor Circuit Low Voltage		

1. Problem verification:

GETtheMANUALS.org

- 1. Start the engine.
- 2. Check the parameter(s) below with the HDS.

Signal	Threshold		Current conditions	
	Values	Unit	Values	Unit
Voltage of the oil pressure sensor for rear differential	Less than 0.34	V		

Do the current condition(s) match the threshold?

YES : The failure is duplicated. Go to step 2.

NO : Intermittent failure, the system is OK at this time.

2. Determine possible failure area (PS1 line, others):
   - 1. Turn the ignition switch to LOCK (0).
   - 2. Disconnect the following connector.

     Rear differential fluid pressure sensor 3P connector

   - 3. Turn the ignition switch to ON (II).
   - 4. Check the parameter(s) below with the HDS.

Signal	Threshold		Current conditions	
	Values	Unit	Values	Unit
Voltage of the oil pressure sensor for rear differential	About 5 V			

Do the current condition(s) match the threshold?

YES : Go to step 4.

NO : Go to step 3.

3. Shorted wire check (PS1 line):
   - 1. Turn the ignition switch to LOCK (0).
   - 2. Disconnect the following connector.

     Real time AWD control unit 24P connector

   - 3. Check for continuity between test points 1 and 2.

     Test condition IG LOCK (0)

     Rear differential fluid pressure sensor 3P connector: disconnected

GETtheMANUALS.org

Real time AWD control unit 24P connector: disconnected

Test circuit PS1

Test point 1 Rear differential fluid pressure sensor 3P connector No. 2 (PNK)

Test point 2 Body ground

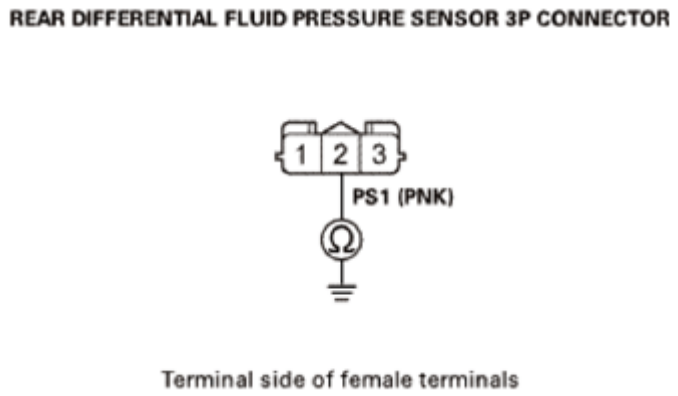

Fig. 9: Checking Continuity Between Rear Differential Fluid Pressure Sensor 3P Connector No. 2 (PNK) And Body Ground
Courtesy of AMERICAN HONDA MOTOR CO., INC.

Is there continuity?

YES : Repair a short in the PS1 wire between the rear differential fluid pressure sensor and the real time AWD control unit.

NO : **Update the real time AWD control unit if it does not have the latest software** See **REAL TIME AWD CONTROL UNIT REMOVAL AND INSTALLATION** or **REAL TIME AWD CONTROL UNIT UPDATE** , or **substitute a known-good real time AWD control unit** See **REAL TIME AWD CONTROL UNIT REMOVAL AND INSTALLATION** or **REAL TIME AWD CONTROL UNIT UPDATE** , and recheck. If the symptom/indication goes away with the updated real time AWD control unit, troubleshooting is complete. If the symptom/indication goes away with a known-good real time AWD control unit, **replace the original real time AWD control unit** See **REAL TIME AWD CONTROL UNIT REMOVAL AND INSTALLATION** or **REAL TIME AWD CONTROL UNIT UPDATE** .

4. Determine possible failure area (Rear differential fluid pressure sensor, SVCC line):
   - 1. Measure the voltage between test points 1 and 2.

     Test condition IG ON (II)

     Rear differential fluid pressure sensor 3P connector: disconnected

     Test circuit SVCC, SG

GETtheMANUALS.org

Test point 1 Rear differential fluid pressure sensor 3P connector No. 1 (GRY)

Test point 2 Rear differential fluid pressure sensor 3P connector No. 3 (TAN)

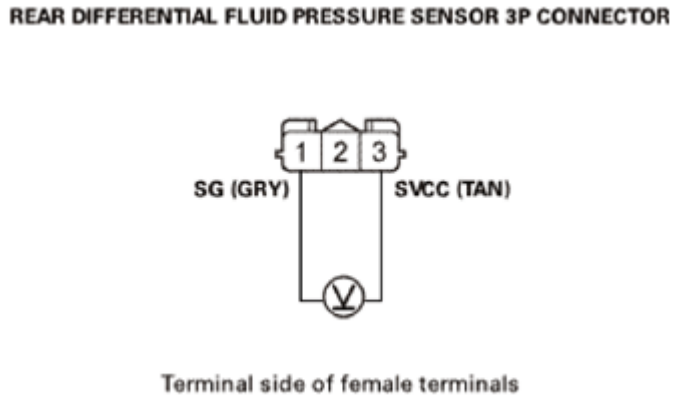

Fig. 10: Measuring Voltage Between Rear Differential Fluid Pressure Sensor 3P Connector No. 1 (GRY) And No. 3 (TAN)
Courtesy of AMERICAN HONDA MOTOR CO., INC.

Is there about 5 V?

YES : **REPLACE THE REAR DIFFERENTIAL FLUID PRESSURE SENSOR** .

NO : Go to step 5.

5. Open wire check (SVCC line):
   - 1. Turn the ignition switch to LOCK (0).
   - 2. Disconnect the following connector.

     Real time AWD control unit 24P connector

   - 3. Check for continuity between test points 1 and 2.

     Test condition IG LOCK (0)

     Rear differential fluid pressure sensor 3P connector: disconnected

     Real time AWD control unit 24P connector: disconnected

     Test circuit SVCC

     Test point 1 Rear differential fluid pressure sensor 3P connector No. 3 (TAN)

     Test point 2 Real time AWD control unit 24P connector No. 20 (WHT)

GETtheMANUALS.org

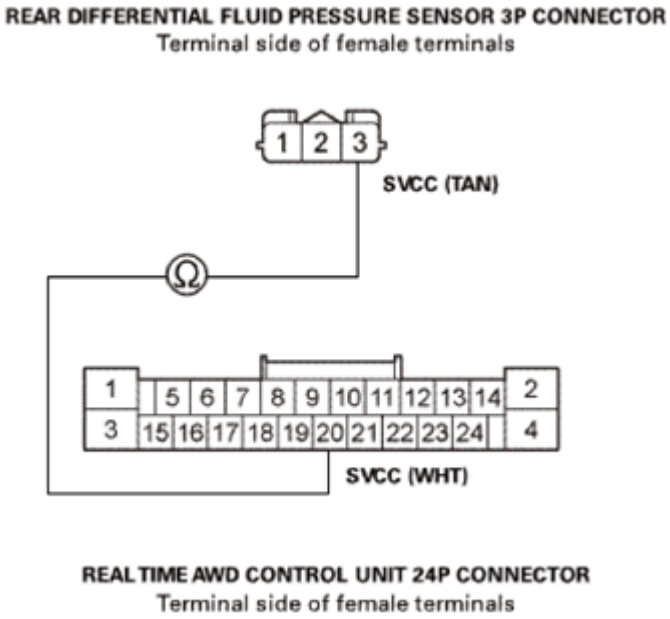

Fig. 11: Checking Continuity Between Rear Differential Fluid Pressure Sensor 3P Connector No. 3 (TAN) And Real Time AWD Control Unit 24P Connector No. 20 (WHT)
Courtesy of AMERICAN HONDA MOTOR CO., INC.

Is there continuity?

YES : **Update the real time AWD control unit if it does not have the latest software** See **REAL TIME AWD CONTROL UNIT REMOVAL AND INSTALLATION** or **REAL TIME AWD CONTROL UNIT UPDATE** , or **substitute a known-good real time AWD control unit** See **REAL TIME AWD CONTROL UNIT REMOVAL AND INSTALLATION** or **REAL TIME AWD CONTROL UNIT UPDATE** , and recheck. If the symptom/indication goes away with the updated real time AWD control unit, troubleshooting is complete. If the symptom/indication goes away with a known-good real time AWD control unit, **replace the original real time AWD control unit** See **REAL TIME AWD CONTROL UNIT REMOVAL AND INSTALLATION** or **REAL TIME AWD CONTROL UNIT UPDATE** .

NO : Repair an open in the SVCC wire between the rear differential fluid pressure sensor and the real time AWD control unit.

DTC C1841-11: DIFFERENTIAL FLUID TEMPERATURE SENSOR CIRCUIT LOW VOLTAGE

GETtheMANUALS.org

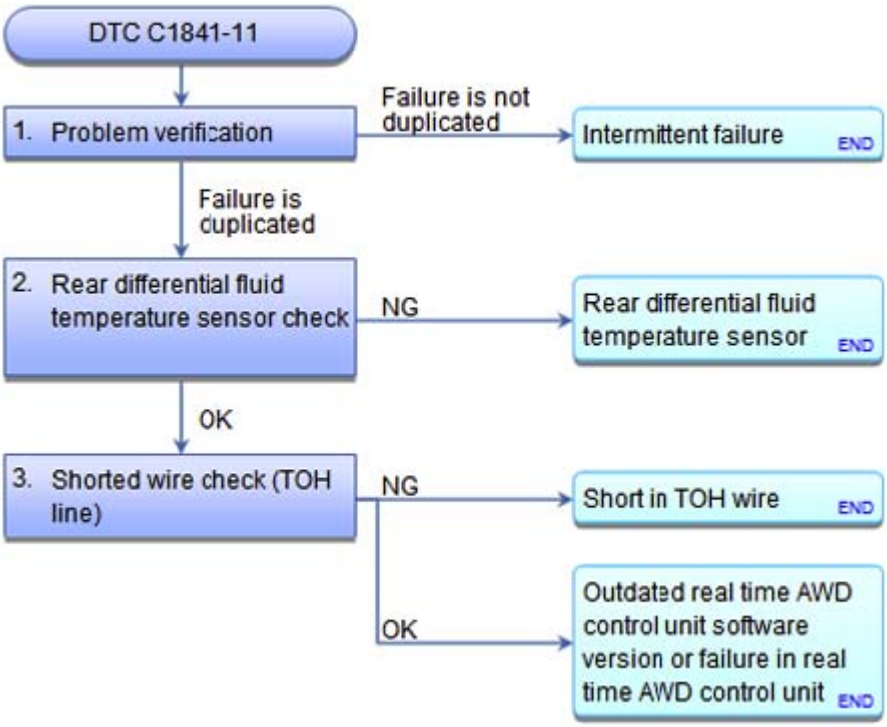

Fig. 12: DTC Troubleshooting Flow Chart (C1841-11)
Courtesy of AMERICAN HONDA MOTOR CO., INC.

NOTE: **Before you troubleshoot, REVIEW THE HOW TO TROUBLESHOOT THE REAL TIME AWD SYSTEM .**

DTC Description	DTC	Freeze Frame
C1841-11 Differential Fluid Temperature Sensor Circuit Low Voltage		

1. Problem verification:
   - 1. Turn the ignition switch to ON (II).
   - 2. Check the parameter(s) below with the HDS.

Signal	Threshold		Current conditions	
	Values	Unit	Values	Unit
Voltage of the oil temperature sensor for rear differential	Less than 0.08	V		

Do the current condition(s) match the threshold?

YES : The failure is duplicated. Go to step 2.

NO : Intermittent failure, the system is OK at this time.

2. Rear differential fluid temperature sensor check:

GETtheMANUALS.org

- 1. Turn the ignition switch to LOCK (0).
- 2. Disconnect the following connector.

  Rear differential fluid temperature sensor 2P connector

- 3. Turn the ignition switch to ON (II).
- 4. Check the parameter(s) below with the HDS.

Signal	Threshold		Current conditions	
	Values	Unit	Values	Unit
Voltage of the oil temperature sensor for rear differential	About 5	V		

Do the current condition(s) match the threshold?

YES : **REPLACE THE REAR DIFFERENTIAL FLUID TEMPERATURE SENSOR** .

NO : The rear differential fluid temperature sensor is OK. Go to step 3.

3. Shorted wire check (TOH line):
   - 1. Turn the ignition switch to LOCK (0).
   - 2. Disconnect the following connector.

     Real time AWD control unit 24P connector

   - 3. Check for continuity between test points 1 and 2.

     Test condition IG LOCK (0)

     Rear differential fluid temperature sensor 2P connector: disconnected

     Real time AWD control unit 24P connector: disconnected

     Test circuit TOH

     Test point 1 Rear differential fluid temperature sensor 2P connector No. 1 (YEL)

     Test point 2 Body ground

GETtheMANUALS.org

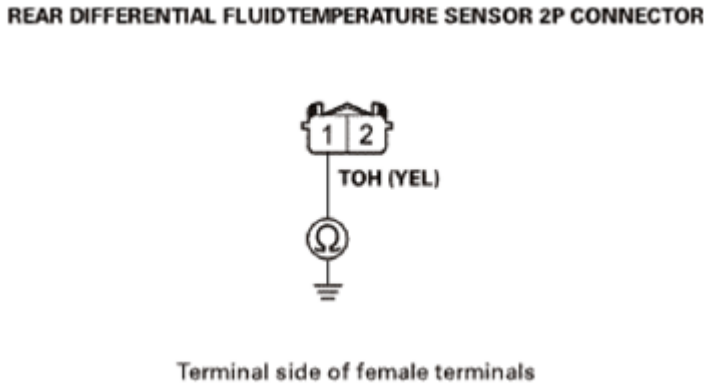

Fig. 13: Checking Continuity Between Rear Differential Fluid Temperature Sensor 2P Connector No. 1 (YEL) And Body Ground
Courtesy of AMERICAN HONDA MOTOR CO., INC.

Is there continuity?

YES : Repair a short in the TOH wire between the rear differential fluid temperature sensor and the real time AWD control unit.

NO : **Update the real time AWD control unit if it does not have the latest software** See **REAL TIME AWD CONTROL UNIT REMOVAL AND INSTALLATION** or **REAL TIME AWD CONTROL UNIT UPDATE** , or **substitute a known-good real time AWD control unit** See **REAL TIME AWD CONTROL UNIT REMOVAL AND INSTALLATION** or **REAL TIME AWD CONTROL UNIT UPDATE** , and recheck. If the symptom/indication goes away with the updated real time AWD control unit, troubleshooting is complete. If the symptom/indication goes away with a known-good real time AWD control unit, **replace the original real time AWD control unit** See **REAL TIME AWD CONTROL UNIT REMOVAL AND INSTALLATION** or **REAL TIME AWD CONTROL UNIT UPDATE** .

DTC C1841-13: DIFFERENTIAL FLUID TEMPERATURE SENSOR CIRCUIT HIGH VOLTAGE

GETtheMANUALS.org

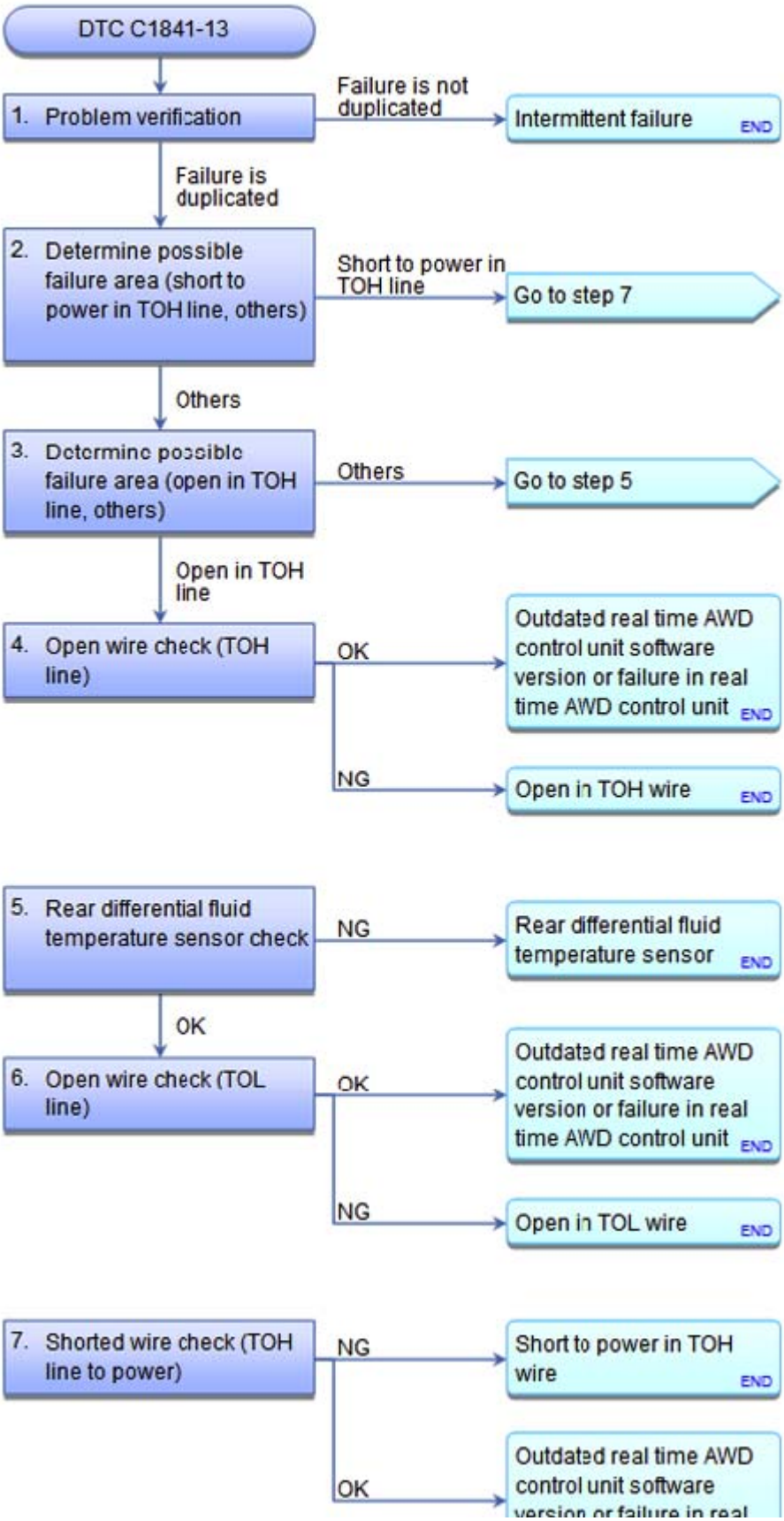

GETtheMANUALS.org

Fig. 14: DTC Troubleshooting Flow Chart (C1841-11)
Courtesy of AMERICAN HONDA MOTOR CO., INC.

NOTE: **Before you troubleshoot, REVIEW THE HOW TO TROUBLESHOOT THE REAL TIME AWD SYSTEM .**

DTC Description	DTC	Freeze Frame
C1841-13 Differential Fluid Temperature		
Sensor Circuit High Voltage		

1. Problem verification:
   - 1. Turn the ignition switch to ON (II).
   - 2. Check the parameter(s) below with the HDS.

Signal	Threshold		Current conditions	
	Values	Unit	Values	Unit
Voltage of the oil temperature sensor for rear differential	More than 4.9	V		

Do the current condition(s) match the threshold?

YES : The failure is duplicated. Go to step 2.

NO : Intermittent failure, the system is OK at this time.

2. Determine possible failure area (short to power in TOH line, others):
   - 1. Turn the ignition switch to LOCK (0).
   - 2. Disconnect the following connector.

     Rear differential fluid temperature sensor 2P connector

   - 3. Turn the ignition switch to ON (II).
   - 4. Measure the voltage between test points 1 and 2.

     Test condition IG ON (II)

     Rear differential fluid temperature sensor 2P connector: disconnected

     Test circuit TOH

     Test point 1 Rear differential fluid temperature sensor 2P connector No. 1 (YEL)

     Test point 2 Body ground

GETtheMANUALS.org

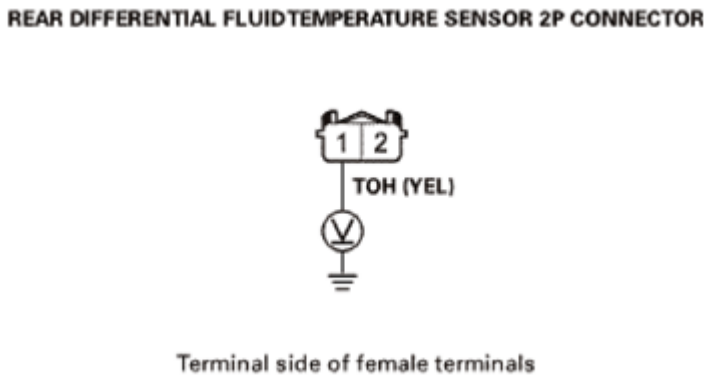

Fig. 15: Measuring Voltage Between Rear Differential Fluid Temperature Sensor 2P Connector No. 1 (YEL) And Body Ground
Courtesy of AMERICAN HONDA MOTOR CO., INC.

Is there about 4.9 V or more?

YES : Go to step 7.

NO : Go to step 3.

3. Determine possible failure area (open in TOH line, others):
   - 1. Turn the ignition switch to LOCK (0).
   - 2. Connect terminals A and B with a jumper wire.

     Terminal A Rear differential fluid temperature sensor 2P connector No. 1 (YEL)

     Terminal B Body ground

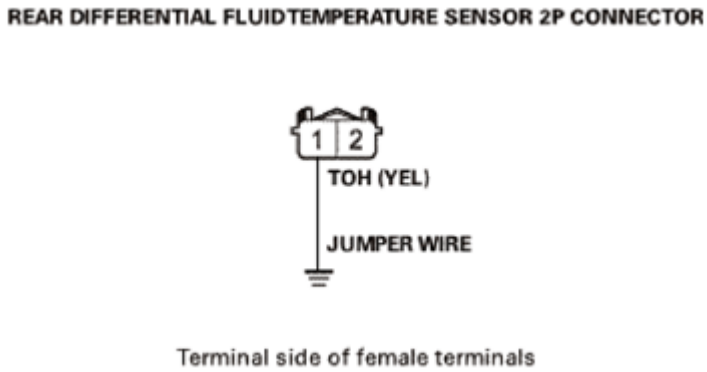

Fig. 16: Identifying Rear Differential Fluid Temperature Sensor 2P Connector Terminals
Courtesy of AMERICAN HONDA MOTOR CO., INC.

   - 3. Turn the ignition switch to ON (II).
   - 4. Check the parameter(s) below with the HDS.

GETtheMANUALS.org

Signal	Threshold		Current conditions	
	Values	Unit	Values	Unit
Voltage of the oil temperature sensor for rear differential	Less than 0.1	V		

Do the current condition(s) match the threshold?

YES : Go to step 5.

NO : Go to step 4.

4. Open wire check (TOH line):
   - 1. Turn the ignition switch to LOCK (0).
   - 2. Remove the jumper wire.
   - 3. Disconnect the following connector.

     Real time AWD control unit 24P connector

   - 4. Check for continuity between test points 1 and 2.

     Test condition IG LOCK (0)

     Rear differential fluid temperature sensor 2P connector: disconnected

     Real time AWD control unit 24P connector: disconnected

     Test circuit TOH

     Test point 1 Real time AWD control unit 24P connector No. 18 (ORN)

     Test point 2 Rear differential fluid temperature sensor 2P connector No. 1 (YEL)

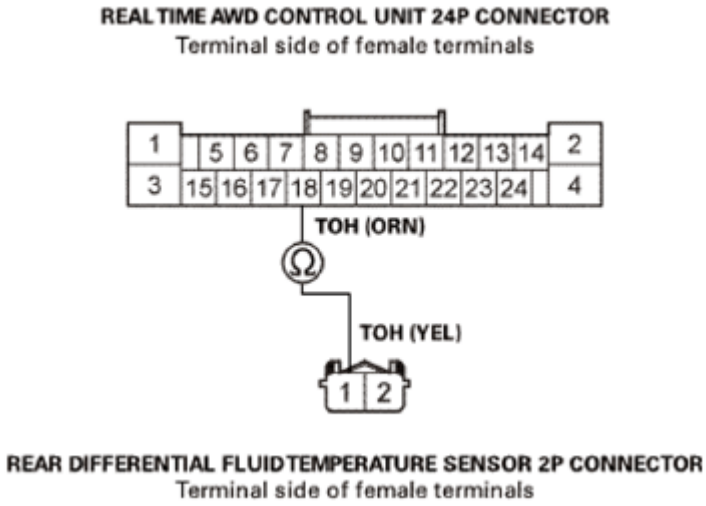

GETtheMANUALS.org

Fig. 17: Checking Continuity Between Real Time AWD Control Unit 24P Connector No. 18 (ORN) And Rear Differential Fluid Pressure Sensor 3P Connector No. 1 (YEL)
Courtesy of AMERICAN HONDA MOTOR CO., INC.

Is there continuity?

YES : **Update the real time AWD control unit if it does not have the latest software** See **REAL TIME AWD CONTROL UNIT REMOVAL AND INSTALLATION** or **REAL TIME AWD CONTROL UNIT UPDATE** , or **substitute a known-good real time AWD control unit** See **REAL TIME AWD CONTROL UNIT REMOVAL AND INSTALLATION** or **REAL TIME AWD CONTROL UNIT UPDATE** , and recheck. If the symptom/indication goes away with the updated real time AWD control unit, troubleshooting is complete. If the symptom/indication goes away with a known-good real time AWD control unit, **replace the original real time AWD control unit** See **REAL TIME AWD CONTROL UNIT REMOVAL AND INSTALLATION** or **REAL TIME AWD CONTROL UNIT UPDATE** .

NO : Repair an open in the TOH wire between the rear differential fluid temperature sensor and the real time AWD control unit.

5. Rear differential fluid temperature sensor check:
   - 1. Turn the ignition switch to LOCK (0).
   - 2. Remove the jumper wire.
   - 3. Connect terminals A and B with a jumper wire.

     Terminal A Rear differential fluid temperature sensor 2P connector No. 1 (YEL)

     Terminal B Rear differential fluid temperature sensor 2P connector No. 2 (WHT)

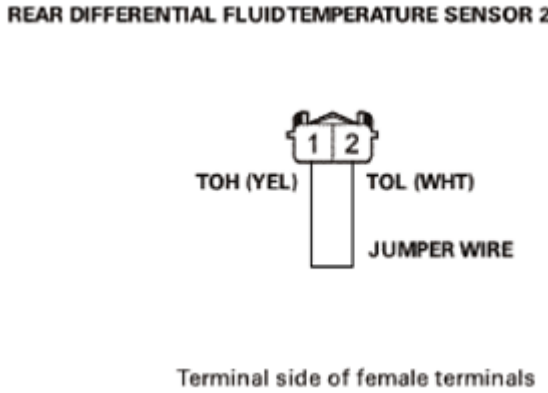

Fig. 18: Connecting Rear Differential Fluid Temperature Sensor 2P Connector No. 1 (YEL) No. 2 (WHT) Using Jumper Wire
Courtesy of AMERICAN HONDA MOTOR CO., INC.

   - 4. Turn the ignition switch to ON (II).
   - 5. Check the parameter(s) below with the HDS.

GETtheMANUALS.org

Signal	Threshold		Current conditions	
	Values	Unit	Values	Unit
Voltage of the oil temperature sensor for rear differential	Less than 0.1	V		

Do the current condition(s) match the threshold?

YES : **<u>REPLACE THE REAR DIFFERENTIAL FLUID TEMPERATURE SENSOR</u>** .

NO : The rear differential fluid temperature sensor is OK. Go to step 6.

6. Open wire check (TOL line):
   - 1. Turn the ignition switch to LOCK (0).
   - 2. Remove the jumper wire.
   - 3. Disconnect the following connector.

     Real time AWD control unit 24P connector

   - 4. Check for continuity between test points 1 and 2.

     Test condition IG LOCK (0)

     Rear differential fluid temperature sensor 2P connector: disconnected

     Real time AWD control unit 24P connector: disconnected

     Test circuit TOL

     Test point 1 Real time AWD control unit 24P connector No. 22 (LT BLU)

     Test point 2 Rear differential fluid temperature sensor 2P connector No. 2 (WHT)

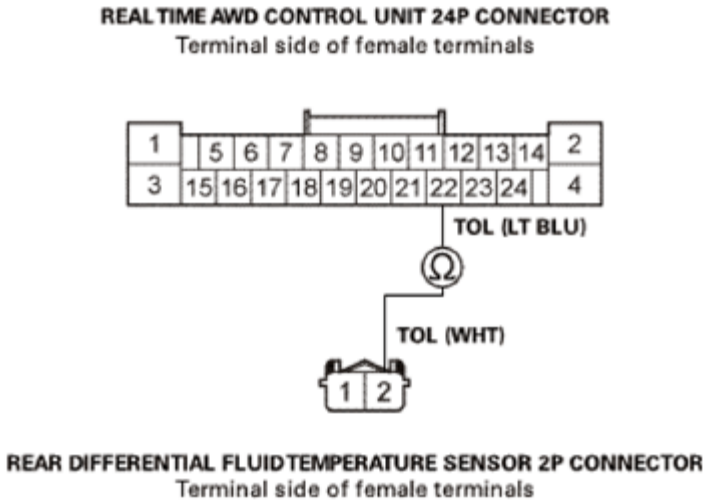

GETtheMANUALS.org

Fig. 19: Checking Continuity Between Real Time AWD Control Unit 24P Connector No. 22 (LT BLU) And Rear Differential Fluid Temperature Sensor 2P Connector No. 2 (WHT)
Courtesy of AMERICAN HONDA MOTOR CO., INC.

Is there continuity?

YES : **Update the real time AWD control unit if it does not have the latest software** See **REAL TIME AWD CONTROL UNIT REMOVAL AND INSTALLATION** or **REAL TIME AWD CONTROL UNIT UPDATE** , or **substitute a known-good real time AWD control unit** See **REAL TIME AWD CONTROL UNIT REMOVAL AND INSTALLATION** or **REAL TIME AWD CONTROL UNIT UPDATE** , and recheck. If the symptom/indication goes away with the updated real time AWD control unit, troubleshooting is complete. If the symptom/indication goes away with a known-good real time AWD control unit, **replace the original real time AWD control unit** See **REAL TIME AWD CONTROL UNIT REMOVAL AND INSTALLATION** or **REAL TIME AWD CONTROL UNIT UPDATE** .

NO : Repair an open in the TOL wire between the rear differential fluid temperature sensor and the real time AWD control unit.

7. Shorted wire check (TOH line to power):
   - 1. Turn the ignition switch to LOCK (0).
   - 2. Disconnect the following connector.

     Real time AWD control unit 24P connector

   - 3. Turn the ignition switch to ON (II).
   - 4. Measure the voltage between test points 1 and 2.

     Test condition IG ON (II)

     Rear differential fluid temperature sensor 2P connector: disconnected

     Real time AWD control unit 24P connector: disconnected

     Test circuit TOH

     Test point 1 Rear differential fluid temperature sensor 2P connector No. 1 (YEL)

     Test point 2 Body ground

GETtheMANUALS.org

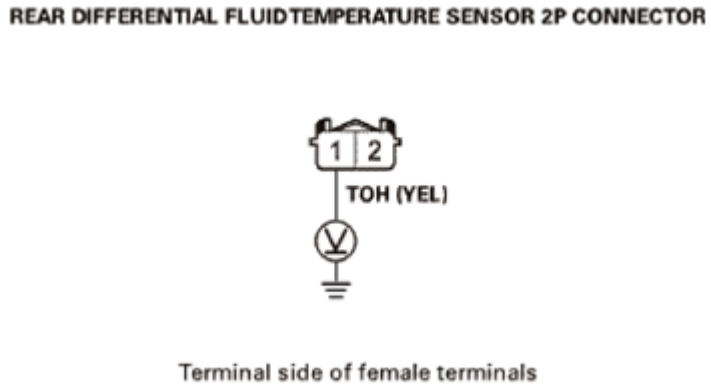

Fig. 20: Measuring Voltage Between Rear Differential Fluid Temperature Sensor 2P Connector No. 1 (YEL) And Body Ground
Courtesy of AMERICAN HONDA MOTOR CO., INC.

Is there about 0.5 V or more?

YES : Repair a short to power in the TOH wire between the rear differential fluid temperature sensor and the real time AWD control unit.

NO : **Update the real time AWD control unit if it does not have the latest software** See **REAL TIME AWD CONTROL UNIT REMOVAL AND INSTALLATION** or **REAL TIME AWD CONTROL UNIT UPDATE** , or **substitute a known-good real time AWD control unit** See **REAL TIME AWD CONTROL UNIT REMOVAL AND INSTALLATION** or **REAL TIME AWD CONTROL UNIT UPDATE** , and recheck. If the symptom/indication goes away with the updated real time AWD control unit, troubleshooting is complete. If the symptom/indication goes away with a known-good real time AWD control unit, **replace the original real time AWD control unit** See **REAL TIME AWD CONTROL UNIT REMOVAL AND INSTALLATION** or **REAL TIME AWD CONTROL UNIT UPDATE** .

DTC C1841-27: DIFFERENTIAL FLUID TEMPERATURE SENSOR CIRCUIT RANGE/PERFORMANCE PROBLEM

GETtheMANUALS.org

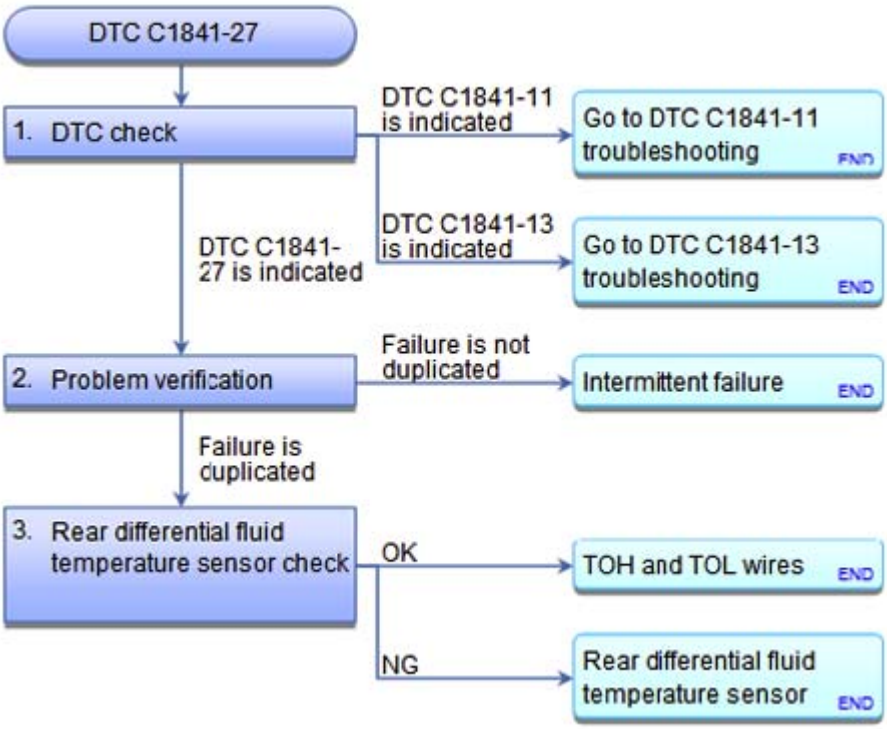

Fig. 21: DTC Troubleshooting Flow Chart (C1841-27)
Courtesy of AMERICAN HONDA MOTOR CO., INC.

NOTE: **Before you troubleshoot, REVIEW THE HOW TO TROUBLESHOOT THE REAL TIME AWD SYSTEM .**

DTC Description	DTC	Freeze Frame
C1841-27 Differential Fluid Temperature Sensor Circuit Range/Performance Problem		

1. DTC check:
   - 1. Turn the ignition switch to ON (II).
   - 2. Check for DTCs with the HDS.

DTC Description	DTC	Freeze Frame
C1841-11 Differential Fluid Temperature Sensor Circuit Low Voltage		
C1841-13 Differential Fluid Temperature Sensor Circuit High Voltage		

Is DTC C1841-11, C1841-13, or C1841-27 indicated?

DTC C1841-11 is indicated Go to **DTC C1841-11 TROUBLESHOOTING**.

DTC C1841-13 is indicated Go to **DTC C1841-13 TROUBLESHOOTING**.

GETtheMANUALS.org

DTC C1841-27 is indicated Go to step 2.

2. Problem verification:
   - 1. Clear the DTC with the HDS.
   - 2. Start the engine, and let it idle for 1 minute.
   - 3. Check for DTCs with the HDS.

DTC Description	DTC	Freeze Frame
C1841-27 Differential Fluid Temperature Sensor Circuit Range/Performance Problem		

Is DTC C1841-27 indicated?

YES : The failure is duplicated. Go to step 3.

NO : Intermittent failure, the system is OK at this time.

3. Rear differential fluid temperature sensor check:
   - Check the parameter(s) below with the HDS. Make note of this value as it will be needed in the following steps.

Signal	Current conditions	
	Values	Unit
Voltage of the oil temperature sensor for rear differential		

   - Turn the ignition switch to LOCK (0).
   - Turn the ignition switch to ON (II).
   - Check the parameter(s) below with the HDS then compare with the value checked in step 1.

Signal	Current conditions	
	Values	Unit
Voltage of the oil temperature sensor for rear differential		

Did the sensor value change?

YES : Check for an intermittent open or short in the TOH and TOL wires between the rear differential fluid temperature sensor and the real time AWD control unit, and recheck.

NO : **REPLACE THE REAR DIFFERENTIAL FLUID TEMPERATURE SENSOR** .

DTC C1850-12: FAIL SAFE RELAY STUCK ON

GETtheMANUALS.org

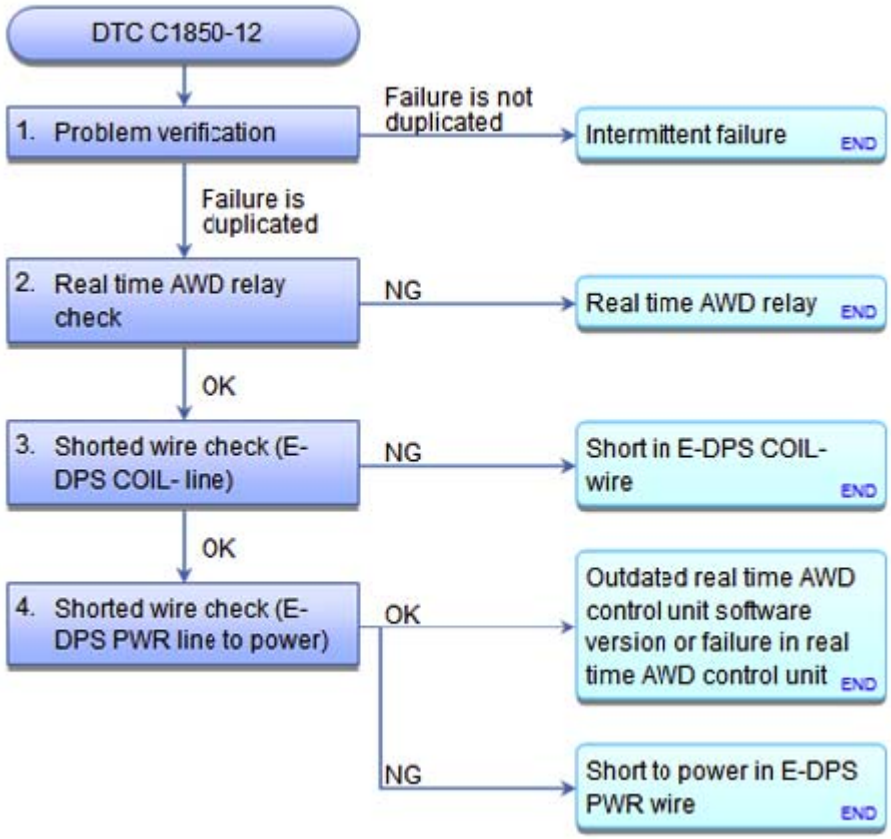

Fig. 22: DTC Troubleshooting Flow Chart (C1850-12)
Courtesy of AMERICAN HONDA MOTOR CO., INC.

NOTE: **Before you troubleshoot, REVIEW THE HOW TO TROUBLESHOOT THE REAL TIME AWD SYSTEM .**

DTC Description	DTC	Freeze Frame
C1850-12 Fail Safe Relay Stuck ON		

1. Problem verification:
   - 1. Turn the ignition switch to ON (II).
   - 2. Check the parameter(s) below with the HDS.

Signal	Threshold		Current conditions	
	Values	Unit	Values	Unit
Voltage of Battery	More than 8.3	V		

Do the current condition(s) match the threshold?

YES : The failure is duplicated. Go to step 2.

GETtheMANUALS.org

NO : Intermittent failure, the system is OK at this time.

2. Real time AWD relay check:
    - 1. Turn the ignition switch to LOCK (0).
    - 2. **REMOVE THE REAL TIME AWD RELAY** , then **TEST IT** .

Is the real time AWD relay OK?

YES : The real time AWD relay is OK. Go to step 3.

NO : **REPLACE THE REAL TIME AWD RELAY** .

3. Shorted wire check (E-DPS COIL- line):
    - 1. Disconnect the following connector.

      Real time AWD control unit 24P connector

    - 2. Check for continuity between test points 1 and 2.

      Test condition IG LOCK (0)

      Real time AWD relay: disconnected

      Real time AWD control unit 24P connector: disconnected

      Test circuit E-DPS COIL-

      Test point 1 Real time AWD relay 4P socket No. 4 (PUR)

      Test point 2 Body ground

GETtheMANUALS.org

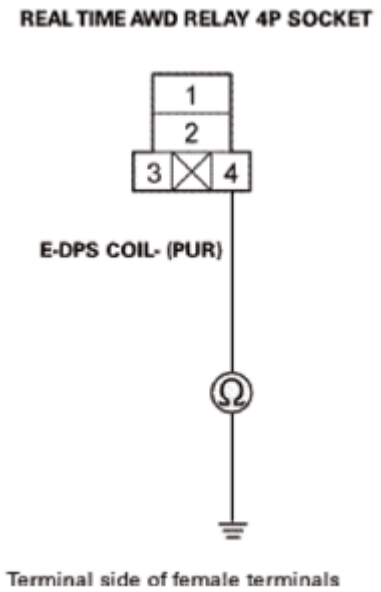

Fig. 23: Checking Continuity Between Real Time AWD Relay 4P Socket No. 4 (PUR) And Body Ground
Courtesy of AMERICAN HONDA MOTOR CO., INC.

Is there continuity?

YES : Repair a short in the E-DPS COIL- wire between the real time AWD relay and the real time AWD control unit.

NO : The E-DPS COIL- wire is OK. Go to step 4.

4. Shorted wire check (E-DPS PWR line to power):
   - 1. Turn the ignition switch to ON (II).
   - 2. Measure the voltage between test points 1 and 2.

     Test condition IG ON (II)

     Real time AWD relay: disconnected

     Real time AWD control unit 24P connector: disconnected

     Test circuit E-DPS PWR

     Test point 1 Real time AWD relay 4P socket No. 2 (WHT)

     Test point 2 Body ground

GETtheMANUALS.org

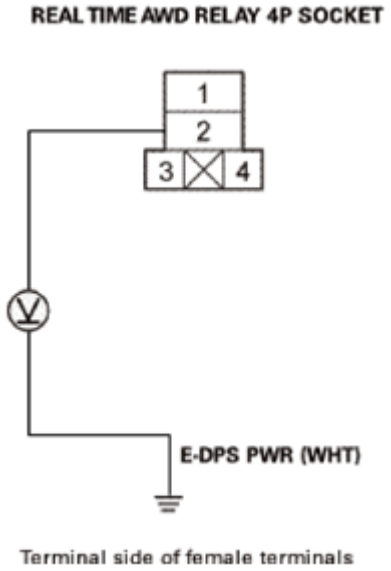

Fig. 24: Measuring Voltage Between Real Time AWD Relay 4P Socket No. 2 (WHT) And Body Ground
Courtesy of AMERICAN HONDA MOTOR CO., INC.

Is there about 0.1 V or less?

YES : **Update the real time AWD control unit if it does not have the latest software** See **REAL TIME AWD CONTROL UNIT REMOVAL AND INSTALLATION** or **REAL TIME AWD CONTROL UNIT UPDATE** , or **substitute a known-good real time AWD control unit** See **REAL TIME AWD CONTROL UNIT REMOVAL AND INSTALLATION** or **REAL TIME AWD CONTROL UNIT UPDATE** , and recheck. If the symptom/indication goes away with the updated real time AWD control unit, troubleshooting is complete. If the symptom/indication goes away with a known-good real time AWD control unit, **replace the original real time AWD control unit** See **REAL TIME AWD CONTROL UNIT REMOVAL AND INSTALLATION** or **REAL TIME AWD CONTROL UNIT UPDATE** .

NO : Repair a short to power in the E-DPS PWR wire between the real time AWD relay and the real time AWD control unit.

DTC C1850-14: FAIL SAFE RELAY STUCK OFF

GETtheMANUALS.org

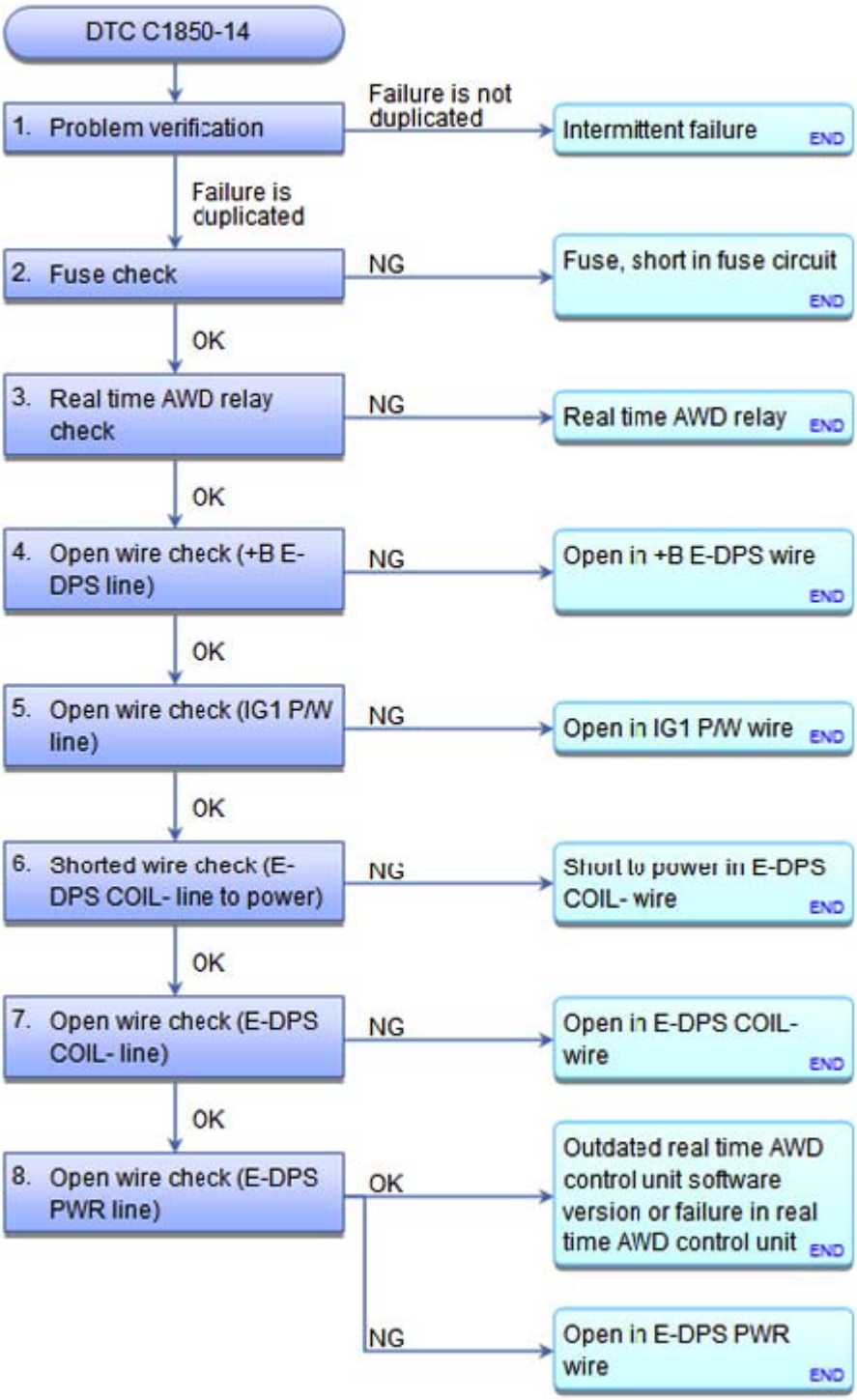

Fig. 25: DTC Troubleshooting Flow Chart (C1850-14)
Courtesy of AMERICAN HONDA MOTOR CO., INC.

NOTE: **Before you troubleshoot, REVIEW THE HOW TO TROUBLESHOOT THE REAL TIME AWD SYSTEM .**

GETtheMANUALS.org

DTC Description	DTC	Freeze Frame
C1850-14 Fail Safe Relay Stuck OFF		

1. Problem verification:
   - 1. Start the engine.
   - 2. Check the parameter(s) below with the HDS.

Signal	Threshold		Current conditions	
	Values	Unit	Values	Unit
Voltage of Battery	Less than 3.0	V		

Do the current condition(s) match the threshold?

YES : The failure is duplicated. Go to step 2.

NO : Intermittent failure, the system is OK at this time.

2. Fuse check:
   - 1. Turn the ignition switch to LOCK (0).
   - 2. Check the following fuse.

     Fuse No. A1-5 (30 A)

     Location Under-hood fuse/relay box

Is the fuse OK?

YES : The fuse is OK. Reinstall the fuses, then go to step 3.

NO : Replace the fuse, and recheck. If the fuse blows again, repair a short in the No. A1-5 (30 A) fuse circuit.

3. Real time AWD relay check:
   - 1. **REMOVE THE REAL TIME AWD RELAY** , then **TEST IT** .

Is the real time AWD relay OK?

YES : The real time AWD relay is OK. Go to step 4.

NO : **REPLACE THE REAL TIME AWD RELAY** .

4. Open wire check (+B E-DPS line):
   - 1. Measure the voltage between test points 1 and 2.

GETtheMANUALS.org

Test condition IG LOCK (0)

Real time AWD relay: disconnected

Test circuit +B E-DPS

Test point 1 Real time AWD relay 4P socket No. 1 (BLU)

Test point 2 Body ground

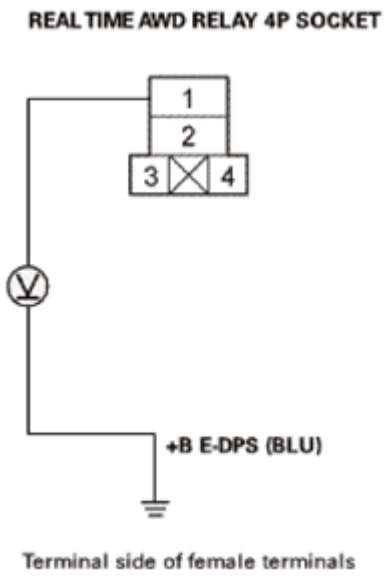

Fig. 26: Measuring Voltage Between Real Time AWD Relay 4P Socket No. 1 (BLU) And Body Ground
Courtesy of AMERICAN HONDA MOTOR CO., INC.

Is there battery voltage?

YES : The +B E-DPS wire is OK. Go to step 5.

NO : Repair an open in the +B E-DPS wire between the real time AWD relay and the No. A1-5 (30 A) fuse in the under-hood fuse/relay box.

5. Open wire check (IG1 P/W line):
   - 1. Turn the ignition switch to ON (II).
   - 2. Measure the voltage between test points 1 and 2.

   Test condition IG ON (II)

   Real time AWD relay: disconnected

   Test circuit IG1 P/W

GETtheMANUALS.org

Test point 1 Real time AWD relay 4P socket No. 3 (RED)

Test point 2 Body ground

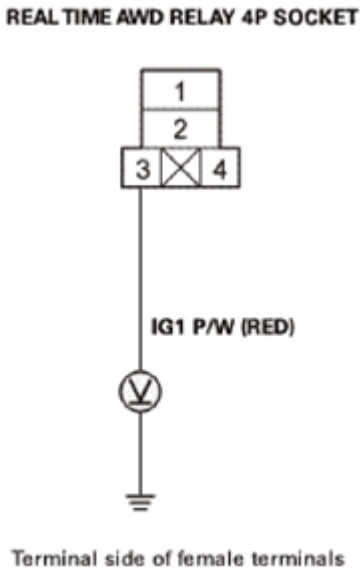

Fig. 27: Measuring Voltage Between Real Time AWD Relay 4P Socket No. 3 (RED) And Body Ground
Courtesy of AMERICAN HONDA MOTOR CO., INC.

Is there battery voltage?

YES : The IG1 P/W wire is OK. Go to step 6.

NO : Repair an open in the IG1 P/W wire between the real time AWD relay and the ignition switch.

6. Shorted wire check (E-DPS COIL- line to power):
   - 1. Turn the ignition switch to LOCK (0).
   - 2. Disconnect the following connector.

     Real time AWD control unit 24P connector

   - 3. Turn the ignition switch to ON (II).
   - 4. Measure the voltage between test points 1 and 2.

     Test condition IG ON (II)

     Real time AWD relay: disconnected

     Real time AWD control unit 24P connector: disconnected

     Test circuit E-DPS COIL-

GETtheMANUALS.org

Test point 1 Real time AWD control unit 24P connector No. 6 (PUR)

Test point 2 Body ground

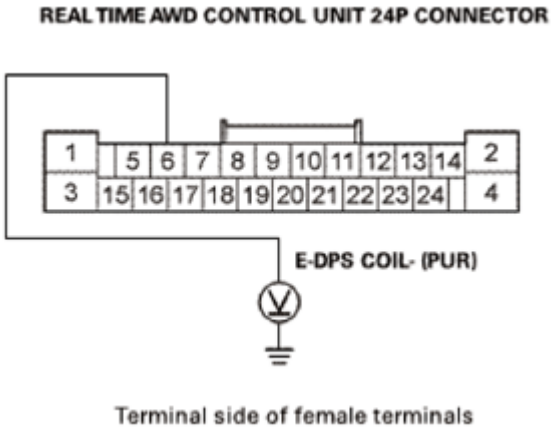

Fig. 28: Measuring Voltage Between Real Time AWD Control Unit 24P Connector No. 6 (PUR) And Body Ground
Courtesy of AMERICAN HONDA MOTOR CO., INC.

Is there about 0.1 V or less?

YES : The E-DPS COIL- wire is not shorted to power. Go to step 7.

NO : Repair a short to power in the E-DPS COIL- wire between the real time AWD relay and the real time AWD control unit, then **replace the real time AWD control unit** See **REAL TIME AWD CONTROL UNIT REMOVAL AND INSTALLATION** or **REAL TIME AWD CONTROL UNIT UPDATE** .

7. Open wire check (E-DPS COIL- line):
   - 1. Turn the ignition switch to LOCK (0).
   - 2. Check for continuity between test points 1 and 2.

     Test condition IG LOCK (0)

     Real time AWD relay: disconnected

     Real time AWD control unit 24P connector: disconnected

     Test circuit E-DPS COIL-

     Test point 1 Real time AWD relay 4P socket No. 4 (PUR)

     Test point 2 Real time AWD control unit 24P connector No. 6 (PUR)

GETtheMANUALS.org

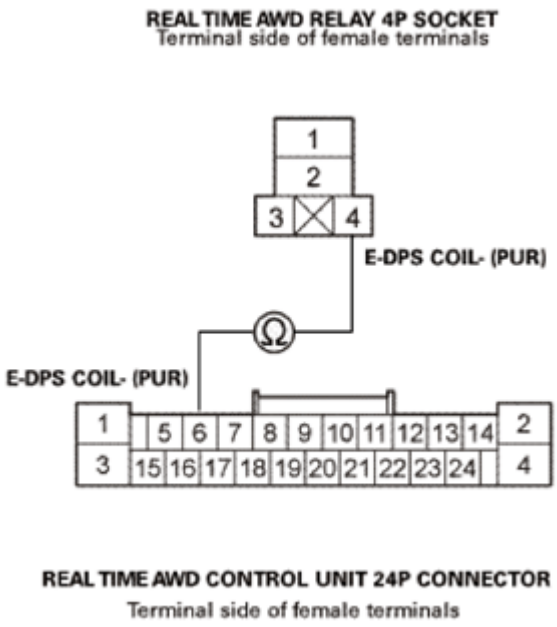

Fig. 29: Checking Continuity Between Real Time AWD Relay 4P Socket No. 4 (PUR) And Real Time AWD Control Unit 24P Connector No. 6 (PUR)
Courtesy of AMERICAN HONDA MOTOR CO., INC.

Is there continuity?

YES : The E-DPS COIL- wire is OK. Go to step 8.

NO : Repair an open in the E-DPS COIL- wire between the real time AWD relay and the real time AWD control unit.

8. Open wire check (E-DPS PWR line):
   - 1. Check for continuity between test points 1 and 2.

     Test condition IG LOCK (0)

     Real time AWD relay: disconnected

     Real time AWD control unit 24P connector: disconnected

     Test circuit E-DPS PWR

     Test point 1 Real time AWD relay 4P socket No. 2 (WHT)

     Test point 2 Real time AWD control unit 24P connector No. 2 (WHT)

GETtheMANUALS.org

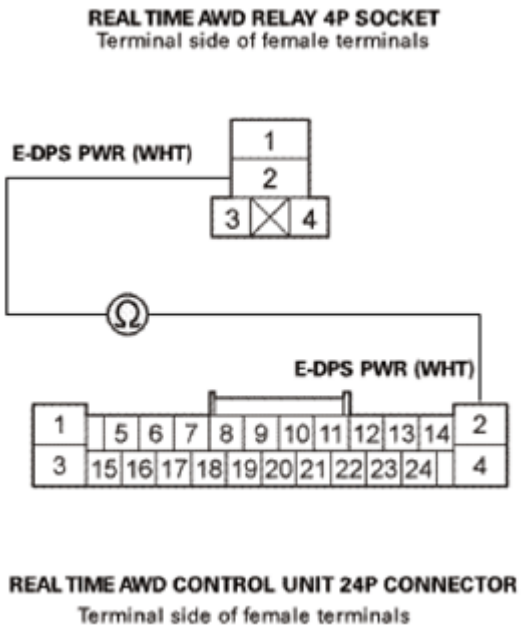

Fig. 30: Checking Continuity Between Real Time AWD Relay 4P Socket No. 2 (WHT) And Real Time AWD Control Unit 24P Connector No. 2 (WHT)
Courtesy of AMERICAN HONDA MOTOR CO., INC.

Is there continuity?

YES : **Update the real time AWD control unit if it does not have the latest software** See **REAL TIME AWD CONTROL UNIT REMOVAL AND INSTALLATION** or **REAL TIME AWD CONTROL UNIT UPDATE** , or **substitute a known-good real time AWD control unit** See **REAL TIME AWD CONTROL UNIT REMOVAL AND INSTALLATION** or **REAL TIME AWD CONTROL UNIT UPDATE** , and recheck. If the symptom/indication goes away with the updated real time AWD control unit, troubleshooting is complete. If the symptom/indication goes away with a known-good real time AWD control unit, **replace the original real time AWD control unit** See **REAL TIME AWD CONTROL UNIT REMOVAL AND INSTALLATION** or **REAL TIME AWD CONTROL UNIT UPDATE** .

NO : Repair an open in the E-DPS PWR wire between the real time AWD relay and the real time AWD control unit.

DTC C1851-18: MOTOR CIRCUIT LOW CURRENT

GETtheMANUALS.org

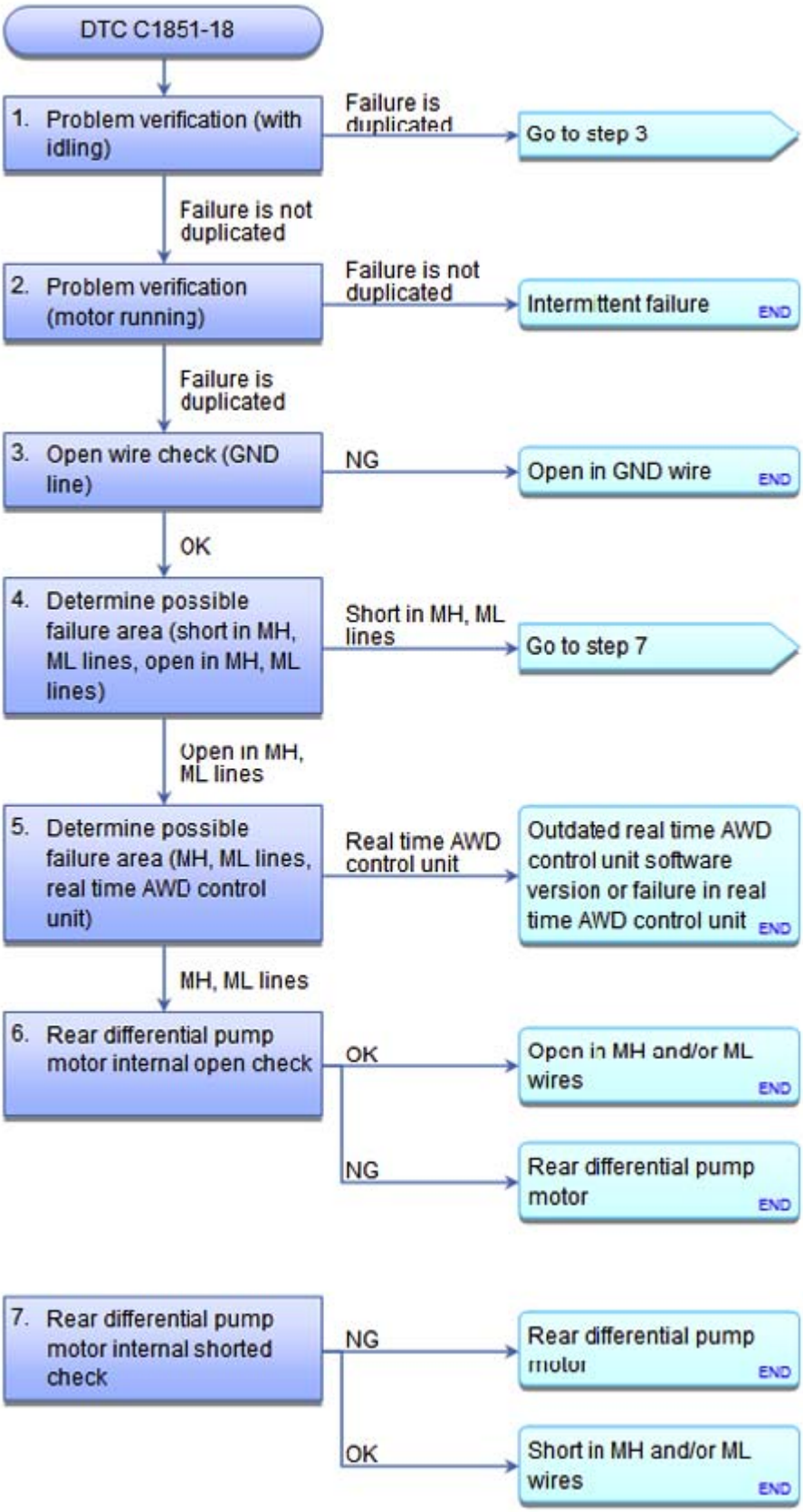

GETtheMANUALS.org

Fig. 31: DTC Troubleshooting Flow Chart (C1851-18)
Courtesy of AMERICAN HONDA MOTOR CO., INC.

NOTE: **Before you troubleshoot, REVIEW THE HOW TO TROUBLESHOOT THE REAL TIME AWD SYSTEM .**

DTC Description	DTC	Freeze Frame
C1851-18 Motor Circuit Low Current		

1. Problem verification (with idling):
   - 1. Turn the ignition switch to ON (II).
   - 2. Clear the DTC with the HDS.
   - 3. Start the engine.
   - 4. Check for DTCs with the HDS.

DTC Description	DTC	Freeze Frame
C1851-18 Motor Circuit Low Current		

Is DTC C1851-18 indicated?

YES : The failure is duplicated. Go to step 3.

NO : Go to step 2.

2. Problem verification (motor running):
   - 1. Clear the DTC with the HDS.
   - 2. With the engine running, **DO THE AIR BLEEDING IN THE ADJUSTMENT MENU WITH THE HDS** .
   - 3. Check for DTCs with the HDS.

DTC Description	DTC	Freeze Frame
C1851-18 Motor Circuit Low Current		

Is DTC C1851-18 indicated?

YES : The failure is duplicated. Go to step 3.

NO : Intermittent failure, the system is OK at this time.

3. Open wire check (GND line):
   - 1. Turn the ignition switch to LOCK (0).
   - 2. Disconnect the following connector.

GETtheMANUALS.org

Real time AWD control unit 24P connector

- 3. Check for continuity between test points 1 and 2.

  Test condition IG LOCK (0)

  Real time AWD control unit 24P connector: disconnected

  Test circuit GND

  Test point 1 Real time AWD control unit 24P connector No. 4 (BLK)

  Test point 2 Body ground

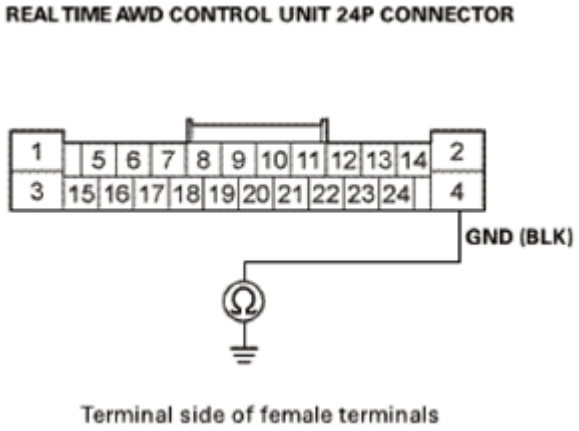

Fig. 32: Checking Continuity Between Real Time AWD Control Unit 24P Connector No. 4 (BLK) And Body Ground
Courtesy of AMERICAN HONDA MOTOR CO., INC.

Is there continuity?

YES : The GND wire is OK. Go to step 4.

NO : Check for poor connections or loose terminals between the real time AWD control unit and ground (G603). If the connections are OK, repair an open in the GND wire between the real time AWD control unit and ground (G603).

4. Determine possible failure area (short in MH, ML lines, open in MH, ML lines):
   - 1. Check for continuity between test points 1 and 2.

     Test condition IG LOCK (0)

     Real time AWD control unit 24P connector: disconnected

     Test circuit MH

GETtheMANUALS.org

Test point 1 Real time AWD control unit 24P connector No. 1 (RED)

Test point 2 Body ground

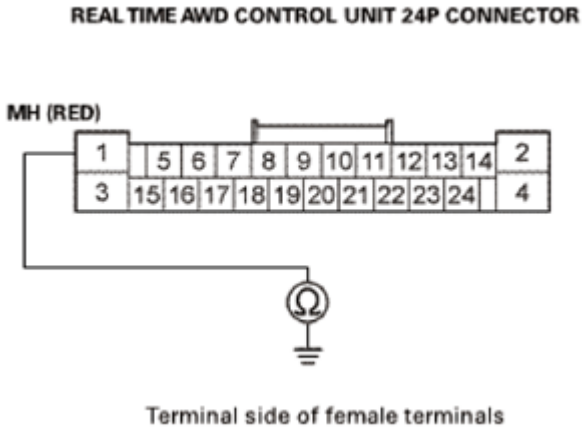

Fig. 33: Checking Continuity Between Real Time AWD Control Unit 24P Connector No. 1 (RED) And Body Ground
Courtesy of AMERICAN HONDA MOTOR CO., INC.

Is there continuity?

YES : Go to step 7.

NO : Go to step 5.

5. Determine possible failure area (MH, ML lines, real time AWD control unit):
   - 1. Measure the resistance between test points 1 and 2.

     Test condition IG LOCK (0), At normal air temperature

     Real time AWD control unit 24P connector: disconnected

     Test circuit MH, ML

     Test point 1 Real time AWD control unit 24P connector No. 1 (RED)

     Test point 2 Real time AWD control unit 24P connector No. 3 (BLK)

GETtheMANUALS.org

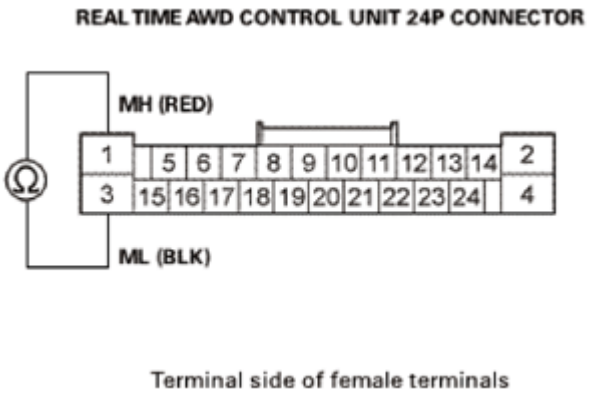

Fig. 34: Measuring Resistance Between Real Time AWD Control Unit 24P Connector No. 1 (RED) And No. 3 (BLK)
Courtesy of AMERICAN HONDA MOTOR CO., INC.

Is there about 10 ohms or less?

YES : **Update the real time AWD control unit if it does not have the latest software** See **REAL TIME AWD CONTROL UNIT REMOVAL AND INSTALLATION** or **REAL TIME AWD CONTROL UNIT UPDATE** , or **substitute a known-good real time AWD control unit** See **REAL TIME AWD CONTROL UNIT REMOVAL AND INSTALLATION** or **REAL TIME AWD CONTROL UNIT UPDATE** , and recheck. If the symptom/indication goes away with the updated real time AWD control unit, troubleshooting is complete. If the symptom/indication goes away with a known-good real time AWD control unit, **replace the original real time AWD control unit** See **REAL TIME AWD CONTROL UNIT REMOVAL AND INSTALLATION** or **REAL TIME AWD CONTROL UNIT UPDATE** .

NO : Go to step 6.

6. Rear differential pump motor internal open check:
   - 1. Disconnect the following connector.

     Rear differential pump motor 2P connector

   - 2. Measure the resistance between test points 1 and 2.

     Test condition IG LOCK (0)

     Real time AWD control unit 24P connector: disconnected

     Rear differential pump motor 2P connector: disconnected

     Test circuit MH, ML

     Test point 1 Rear differential pump motor 2P connector No. 1

GETtheMANUALS.org

Test point 2 Rear differential pump motor 2P connector No. 2

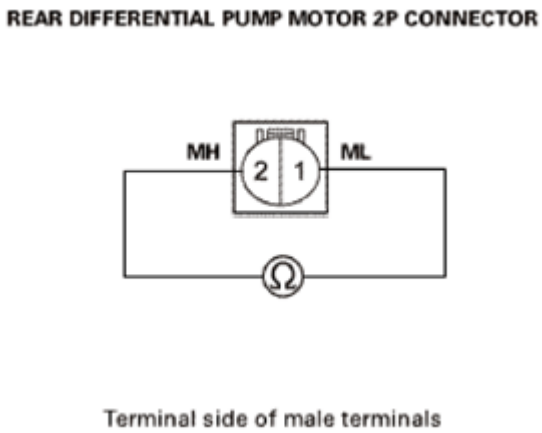

Fig. 35: Measuring Resistance Between Rear Differential Pump Motor 2P Connector No. 1 And No. 2
Courtesy of AMERICAN HONDA MOTOR CO., INC.

Is there about 10 ohms or less?

YES : Repair an open in the MH and/or ML wires between the rear differential pump motor and the real time AWD control unit.

NO : **REPLACE THE REAR DIFFERENTIAL PUMP MOTOR** .

7. Rear differential pump motor internal shorted check:
   - 1. Disconnect the following connector.

     Rear differential pump motor 2P connector

   - 2. Check for continuity between the following test points and the rear differential pump motor body individually.

     Test condition IG LOCK (0)

     Real time AWD control unit 24P connector: disconnected

     Rear differential pump motor 2P connector: disconnected

Connector	Test circuit	Terminal
Rear differential pump motor 2P	ML	No. 1
	MH	No. 2

GETtheMANUALS.org

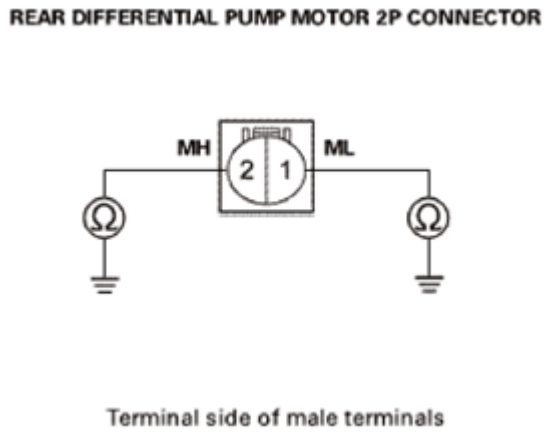

Fig. 36: Checking Continuity Between Test Points And Rear Differential Pump Motor Body
Courtesy of AMERICAN HONDA MOTOR CO., INC.

Are there continuity?

YES : **REPLACE THE REAR DIFFERENTIAL PUMP MOTOR** .

NO : Repair a short in the MH and/or ML wires between the rear differential pump motor and the real time AWD control unit.

DTC C1851-19: CONTROL MODULE INTERNAL CONTROL MODULE MALFUNCTION

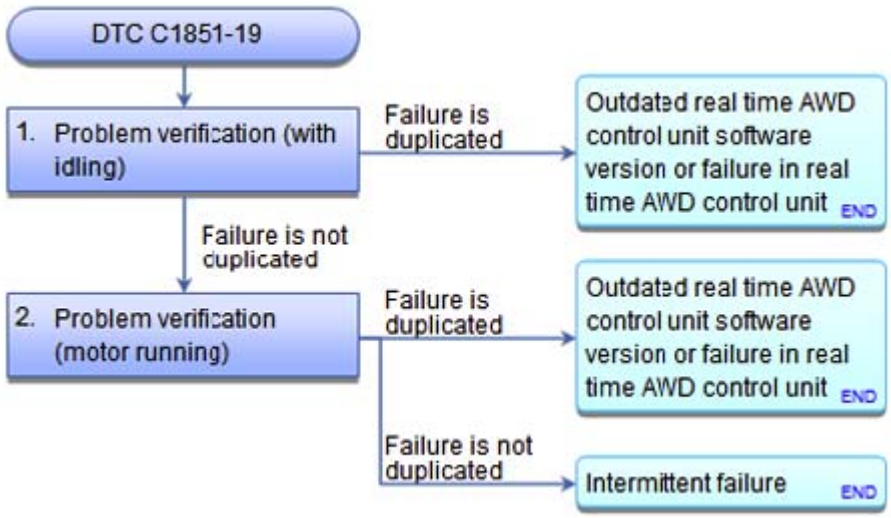

Fig. 37: DTC Troubleshooting Flow Chart (C1851-19)
Courtesy of AMERICAN HONDA MOTOR CO., INC.

NOTE: **Before you troubleshoot, REVIEW THE HOW TO TROUBLESHOOT THE REAL TIME AWD SYSTEM .**

GETtheMANUALS.org

DTC Description	DTC	Freeze Frame
C1851-19 Control Module Internal Control Module Malfunction		

1. Problem verification (with idling):
   - 1. Turn the ignition switch to ON (II).
   - 2. Clear the DTC with the HDS.
   - 3. Start the engine.
   - 4. Check for DTCs with the HDS.

DTC Description	DTC	Freeze Frame
C1851-19 Control Module Internal Control Module Malfunction		

Is DTC C1851-19 indicated?

YES : The failure is duplicated. **Update the real time AWD control unit if it does not have the latest software** See **REAL TIME AWD CONTROL UNIT REMOVAL AND INSTALLATION** or **REAL TIME AWD CONTROL UNIT UPDATE** , or **substitute a known-good real time AWD control unit** See **REAL TIME AWD CONTROL UNIT REMOVAL AND INSTALLATION** or **REAL TIME AWD CONTROL UNIT UPDATE** , and recheck. If the symptom/indication goes away with the updated real time AWD control unit, troubleshooting is complete. If the symptom/indication goes away with a known-good real time AWD control unit, **replace the original real time AWD control unit** See **REAL TIME AWD CONTROL UNIT REMOVAL AND INSTALLATION** or **REAL TIME AWD CONTROL UNIT UPDATE** .

NO : Go to step 2.

2. Problem verification (motor running):
   - 1. Clear the DTC with the HDS.
   - 2. With the engine running, **DO THE AIR BLEEDING IN THE ADJUSTMENT MENU WITH THE HDS** .
   - 3. Check for DTCs with the HDS.

DTC Description	DTC	Freeze Frame
C1851-19 Control Module Internal Control Module Malfunction		

Is DTC C1851-19 indicated?

YES : **Update the real time AWD control unit if it does not have the latest software** See **REAL TIME AWD CONTROL UNIT REMOVAL AND INSTALLATION** or **REAL TIME AWD CONTROL UNIT UPDATE** , or **substitute a known-good real time AWD control unit** See **REAL TIME AWD CONTROL UNIT REMOVAL AND INSTALLATION** or **REAL TIME AWD CONTROL UNIT UPDATE** , and recheck. If the symptom/indication goes away with the updated real time AWD control unit, troubleshooting is complete. If the symptom/indication goes away with a known-good real time AWD control unit, **replace the original real time AWD control unit** See **REAL TIME**

GETtheMANUALS.org

AWD CONTROL UNIT REMOVAL AND INSTALLATION or **REAL TIME AWD CONTROL UNIT UPDATE** .

NO : Intermittent failure, the system is OK at this time.

DTC C1851-1E: MOTOR CIRCUIT HIGH CURRENT

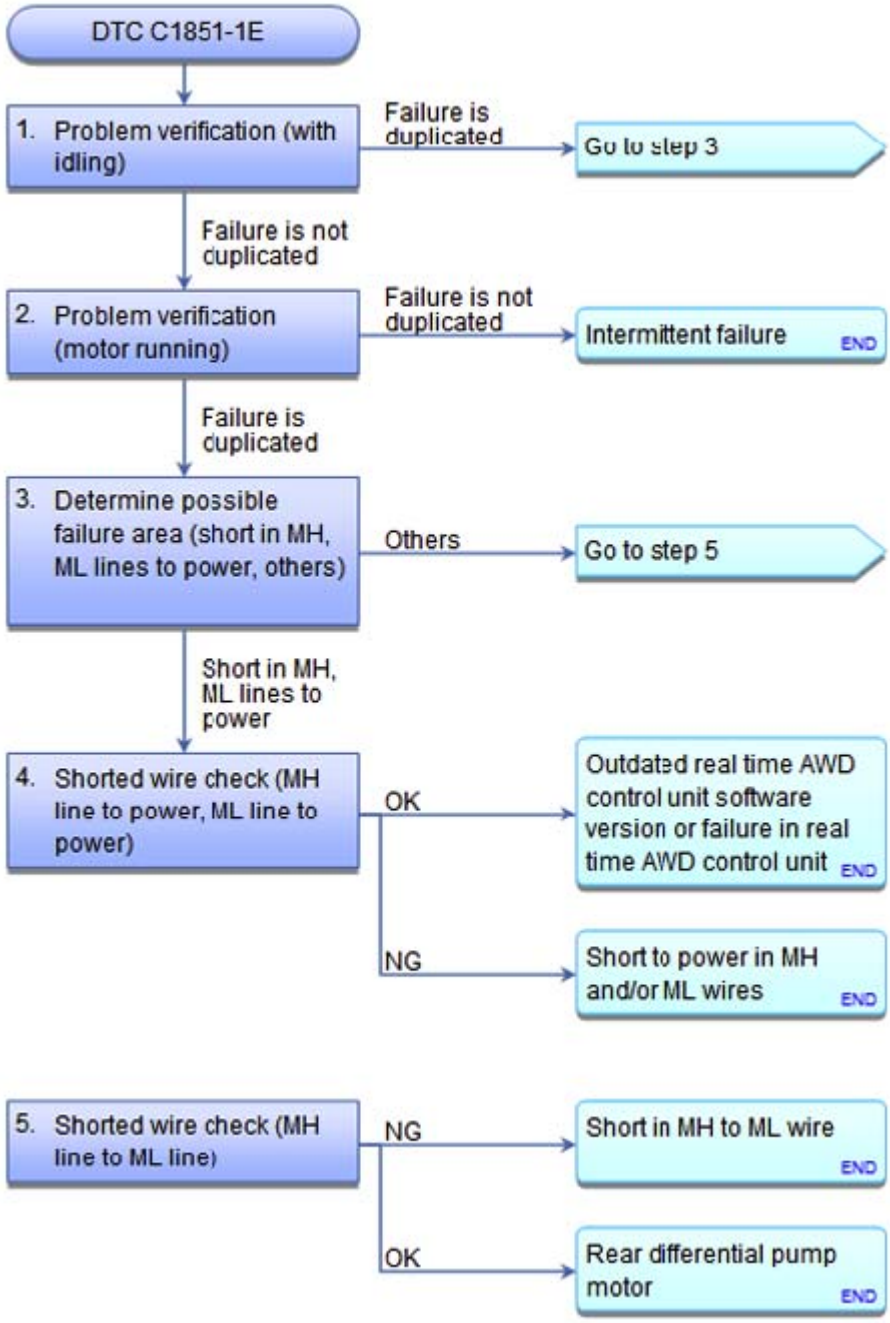

Fig. 38: DTC Troubleshooting Flow Chart (C1851-1E)
Courtesy of AMERICAN HONDA MOTOR CO., INC.

GETtheMANUALS.org

NOTE: **Before you troubleshoot, REVIEW THE HOW TO TROUBLESHOOT THE REAL TIME AWD SYSTEM .**

DTC Description	DTC	Freeze Frame
C1851-1E Motor Circuit High Current		

1. Problem verification (with idling):
   - 1. Turn the ignition switch to ON (II).
   - 2. Clear the DTC with the HDS.
   - 3. Start the engine.
   - 4. Check for DTCs with the HDS.

DTC Description	DTC	Freeze Frame
C1851-1E Motor Circuit High Current		

Is DTC C1851-1E indicated?

YES : The failure is duplicated. Go to step 3.

NO : Go to step 2.

2. Problem verification (motor running):
   - 1. Clear the DTC with the HDS.
   - 2. With the engine running, **DO THE AIR BLEEDING IN THE ADJUSTMENT MENU WITH THE HDS** .
   - 3. Check for DTCs with the HDS.

DTC Description	DTC	Freeze Frame
C1851-1E Motor Circuit High Current		

Is DTC C1851-1E indicated?

YES : The failure is duplicated. Go to step 3.

NO : Intermittent failure, the system is OK at this time.

3. Determine possible failure area (short in MH, ML lines to power, others):
   - 1. Turn the ignition switch to LOCK (0).
   - 2. Disconnect the following connector.

     Rear differential pump motor 2P connector

   - 3. Turn the ignition switch to ON (II).

GETtheMANUALS.org

- 4. Wait for 10 seconds.
- 5. Measure the voltage between the following test points and body ground individually.

  Test condition IG ON (II)

  Rear differential pump motor 2P connector: disconnected

Connector	Test circuit	Terminal
Rear differential pump motor 2P	ML	No. 1 (BLK)
	MH	No. 2 (RED)

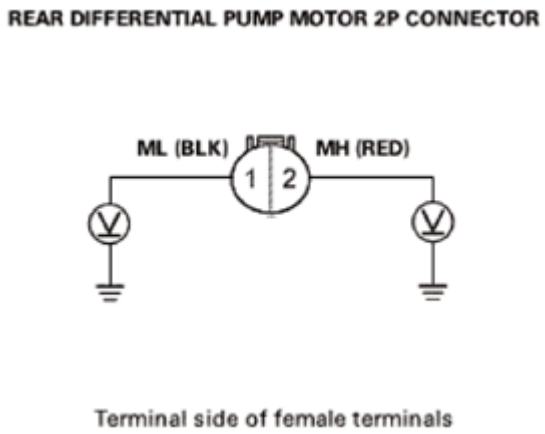

Fig. 39: Measuring Voltage Between Test Points And Body Ground
Courtesy of AMERICAN HONDA MOTOR CO., INC.

Is there about 0.1 V or less?

YES : Go to step 5.

NO : Go to step 4.

4. Shorted wire check (MH line to power, ML line to power):
   - 1. Turn the ignition switch to LOCK (0).
   - 2. Disconnect the following connector.

     Real time AWD control unit 24P connector

   - 3. Turn the ignition switch to ON (II).
   - 4. Measure the voltage between the following test points and body ground individually.

     Test condition IG ON (II)

     Rear differential pump motor 2P connector: disconnected

GETtheMANUALS.org

Real time AWD control unit 24P connector: disconnected

Connector	Test circuit	Terminal
Rear differential pump motor 2P	ML	No. 1 (BLK)
	MH	No. 2 (RED)

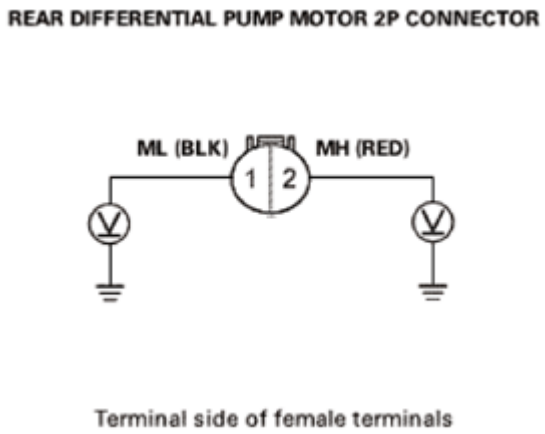

Fig. 40: Measuring Voltage Between Test Points And Body Ground
Courtesy of AMERICAN HONDA MOTOR CO., INC.

Is there about 0.1 V or less?

YES : **Update the real time AWD control unit if it does not have the latest software** See **REAL TIME AWD CONTROL UNIT REMOVAL AND INSTALLATION** or **REAL TIME AWD CONTROL UNIT UPDATE** , or **substitute a known-good real time AWD control unit** See **REAL TIME AWD CONTROL UNIT REMOVAL AND INSTALLATION** or **REAL TIME AWD CONTROL UNIT UPDATE** , and recheck. If the symptom/indication goes away with the updated real time AWD control unit, troubleshooting is complete. If the symptom/indication goes away with a known-good real time AWD control unit, **replace the original real time AWD control unit** See **REAL TIME AWD CONTROL UNIT REMOVAL AND INSTALLATION** or **REAL TIME AWD CONTROL UNIT UPDATE** .

NO : Repair short to power in the MH and/or ML wires between the rear differential pump motor and the real time AWD control unit.

5. Shorted wire check (MH line to ML line):
   - 1. Turn the ignition switch to LOCK (0).
   - 2. Disconnect the following connector.

     Real time AWD control unit 24P connector

   - 3. Check for continuity between test points 1 and 2.

     Test condition IG LOCK (0)

GETtheMANUALS.org

Rear differential pump motor 2P connector: disconnected

Real time AWD control unit 24P connector: disconnected

Test circuit MH, ML

Test point 1 Rear differential pump motor 2P connector No. 1 (BLK)

Test point 2 Rear differential pump motor 2P connector No. 2 (RED)

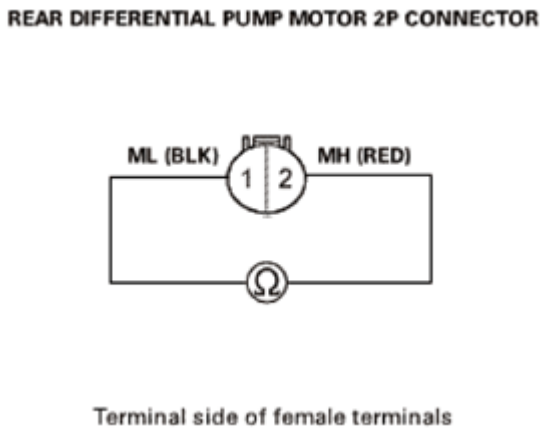

Fig. 41: Checking Continuity Between Rear Differential Pump Motor 2P Connector No. 1 (BLK) And No. 2 (RED)
Courtesy of AMERICAN HONDA MOTOR CO., INC.

Is there continuity?

YES : Repair a short in the MH wire to the ML wire between rear differential pump motor connectors No. 1 and No. 2.

NO : **REPLACE THE REAR DIFFERENTIAL PUMP MOTOR** .

GETtheMANUALS.org

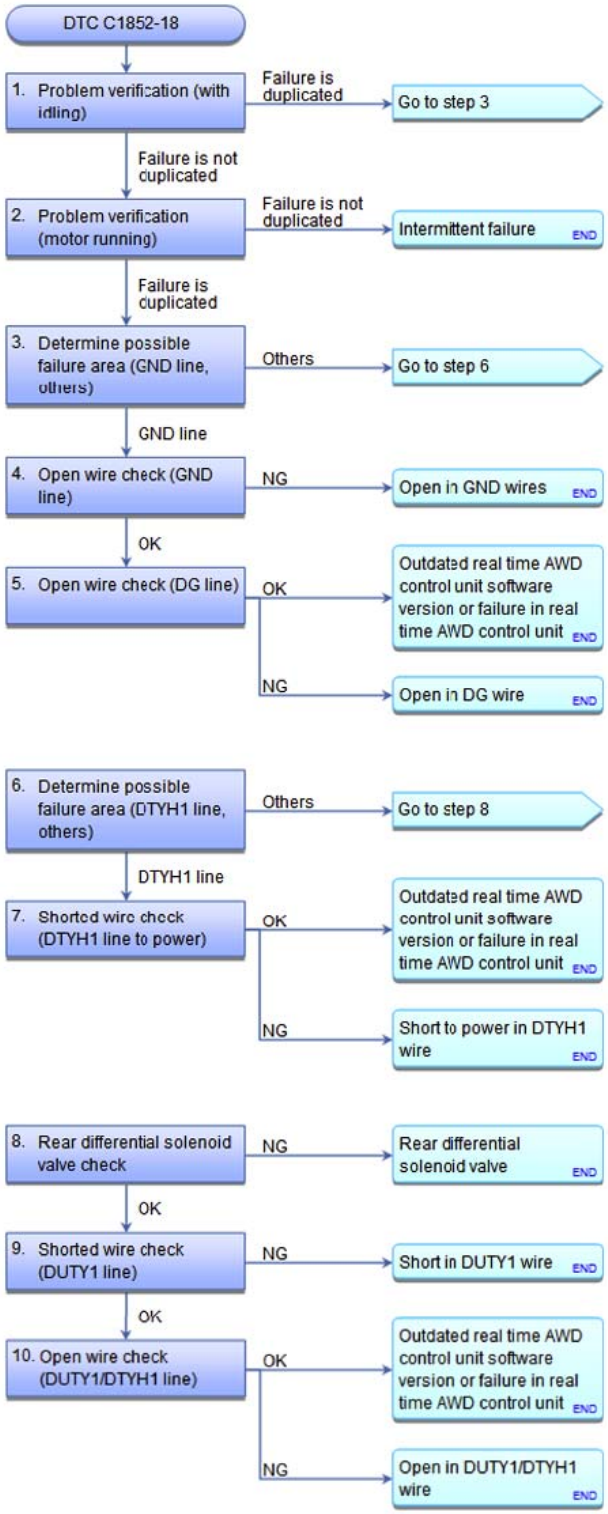

Fig. 42: DTC Troubleshooting Flow Chart (C1852-18)
Courtesy of AMERICAN HONDA MOTOR CO., INC.

DTC C1852-18: SOLENOID VALVE CIRCUIT LOW CURRENT

GETtheMANUALS.org

NOTE: **Before you troubleshoot, REVIEW THE HOW TO TROUBLESHOOT THE REAL TIME AWD SYSTEM .**

DTC Description	DTC	Freeze Frame
C1852-18 Solenoid Valve Circuit Low Current		

1. Problem verification (with idling):
   - 1. Turn the ignition switch to ON (II).
   - 2. Clear the DTC with the HDS.
   - 3. Start the engine.
   - 4. Check for DTCs with the HDS.

DTC Description	DTC	Freeze Frame
C1852-18 Solenoid Valve Circuit Low Current		

Is DTC C1852-18 indicated?

YES : The failure is duplicated. Go to step 3.

NO : Go to step 2.

2. Problem verification (motor running):
   - 1. Clear the DTC with the HDS.
   - 2. With the engine running, **DO THE AIR BLEEDING IN THE ADJUSTMENT MENU WITH THE HDS** .
   - 3. Check for DTCs with the HDS.

DTC Description	DTC	Freeze Frame
C1852-18 Solenoid Valve Circuit Low Current		

Is DTC C1852-18 indicated?

YES : The failure is duplicated. Go to step 3.

NO : Intermittent failure, the system is OK at this time.

3. Determine possible failure area (GND line, others):
   - 1. Check for continuity between test points 1 and 2.

     Test condition IG ON (II)

     Test point 1 Rear differential body

GETtheMANUALS.org

Test point 2 Body ground

Is there continuity?

YES : Go to step 6.

NO : Go to step 4.

4. Open wire check (GND line):
   - 1. Turn the ignition switch to LOCK (0).
   - 2. Disconnect the following connector.

     Real time AWD control unit 24P connector

   - 3. Check for continuity between the following test points and body ground.

     Test condition IG LOCK (0)

     Real time AWD control unit 24P connector: disconnected

Connector	Test circuit	Terminal
Real time AWD control unit 24P	GND	No. 4 (BLK)
	GND	No. 8 (BLK)

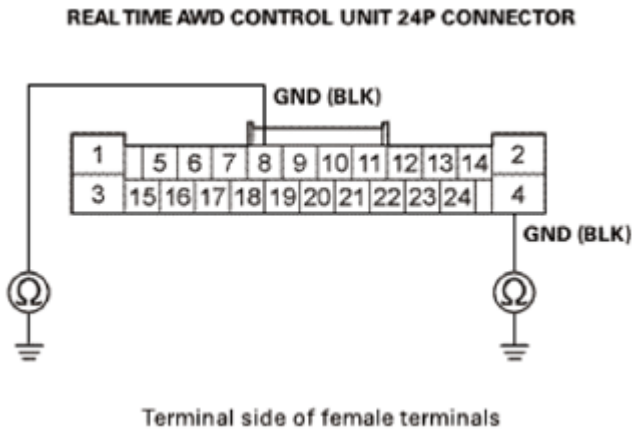

Fig. 43: Checking Continuity Between Rear Differential Body And Body Ground
Courtesy of AMERICAN HONDA MOTOR CO., INC.

Is there continuity?

YES : The GND wires are OK. Go to step 5.

NO : Repair an open in the GND wires between the real time AWD control unit and ground (G603).

GETtheMANUALS.org

5. Open wire check (DG line):
    - 1. Check for continuity between test points 1 and 2.

      Test condition IG LOCK (0)

      Real time AWD control unit 24P connector: disconnected

      Test circuit DG

      Test point 1 Real time AWD control unit 24P connector No. 5 (BLK)

      Test point 2 Rear differential body

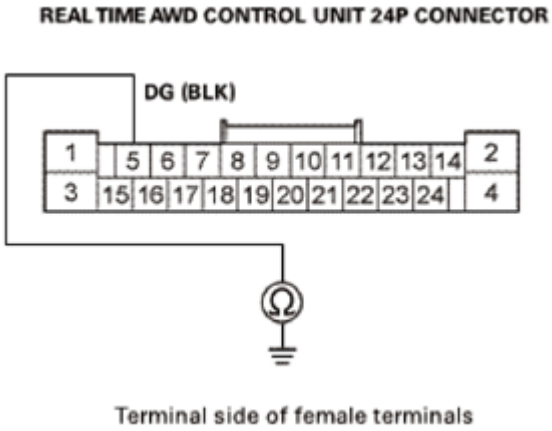

Fig. 44: Checking Continuity Between Real Time AWD Control Unit 24P Connector No. 5 (BLK) And Rear Differential Body
Courtesy of AMERICAN HONDA MOTOR CO., INC.

Is there continuity?

YES : **Update the real time AWD control unit if it does not have the latest software** See **REAL TIME AWD CONTROL UNIT REMOVAL AND INSTALLATION** or **REAL TIME AWD CONTROL UNIT UPDATE** , or **substitute a known-good real time AWD control unit** See **REAL TIME AWD CONTROL UNIT REMOVAL AND INSTALLATION** or **REAL TIME AWD CONTROL UNIT UPDATE** , and recheck. If the symptom/indication goes away with the updated real time AWD control unit, troubleshooting is complete. If the symptom/indication goes away with a known-good real time AWD control unit, **replace the original real time AWD control unit** See **REAL TIME AWD CONTROL UNIT REMOVAL AND INSTALLATION** or **REAL TIME AWD CONTROL UNIT UPDATE** .

NO : Check for poor connections or loose terminals between the real time AWD control unit and the rear differential body ground (T7). If the connections are OK, repair an open in the DG wire between the rear differential body and the real time AWD control unit.

6. Determine possible failure area (DTYH1 line, others):

GETtheMANUALS.org

- 1. Turn the ignition switch to LOCK (0).
- 2. Disconnect the following connector.

  Rear differential solenoid valve 1P connector

- 3. Turn the ignition switch to ON (II).
- 4. Wait for 10 seconds.
- 5. Measure the voltage between test points 1 and 2.

  Test condition IG ON (II)

  Rear differential solenoid valve 1P connector: disconnected

  Test circuit DTYH1

  Test point 1 Rear differential solenoid valve 1P connector No. 1 (BLU)

  Test point 2 Body ground

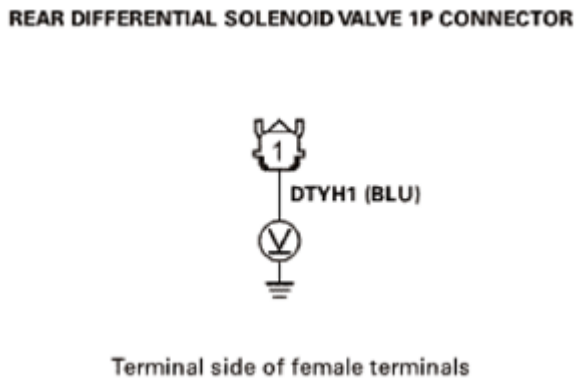

Fig. 45: Measuring Voltage Between Rear Differential Solenoid Valve 1P Connector No. 1 (BLU) And Body Ground
Courtesy of AMERICAN HONDA MOTOR CO., INC.

Is there about 0.1 V or less?

YES : Go to step 8.

NO : Go to step 7.

7. Shorted wire check (DTYH1 line to power):
   - 1. Turn the ignition switch to LOCK (0).
   - 2. Disconnect the following connector.

     Real time AWD control unit 24P connector

GETtheMANUALS.org

- 3. Turn the ignition switch to ON (II).
- 4. Measure the voltage between test points 1 and 2.

Test condition IG ON (II)

Rear differential solenoid valve 1P connector: disconnected

Real time AWD control unit 24P connector: disconnected

Test circuit DTYH1

Test point 1 Rear differential solenoid valve 1P connector No. 1 (BLU)

Test point 2 Body ground

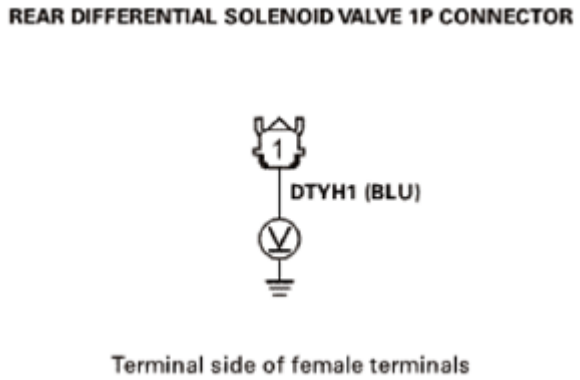

Fig. 46: Measuring Voltage Between Rear Differential Solenoid Valve 1P Connector No. 1 (BLU) And Body Ground
Courtesy of AMERICAN HONDA MOTOR CO., INC.

Is there about 0.1 V or less?

YES : **Update the real time AWD control unit if it does not have the latest software** See **REAL TIME AWD CONTROL UNIT REMOVAL AND INSTALLATION** or **REAL TIME AWD CONTROL UNIT UPDATE** , or **substitute a known-good real time AWD control unit** See **REAL TIME AWD CONTROL UNIT REMOVAL AND INSTALLATION** or **REAL TIME AWD CONTROL UNIT UPDATE** , and recheck. If the symptom/indication goes away with the updated real time AWD control unit, troubleshooting is complete. If the symptom/indication goes away with a known-good real time AWD control unit, **replace the original real time AWD control unit** See **REAL TIME AWD CONTROL UNIT REMOVAL AND INSTALLATION** or **REAL TIME AWD CONTROL UNIT UPDATE** .

NO : Repair a short to power in the DTYH1 wire between the rear differential solenoid valve and the real time AWD control unit.

8. Rear differential solenoid valve check:

GETtheMANUALS.org

- 1. Measure the resistance between test points 1 and 2.

  Test condition IG ON (II)

  Rear differential solenoid valve 1P connector: disconnected

  Test circuit DTYH1

  Test point 1 Rear differential solenoid valve 1P connector No. 1

  Test point 2 Rear differential solenoid valve body

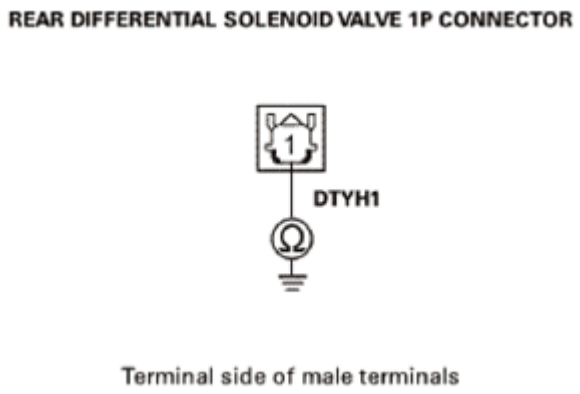

Fig. 47: Measuring Resistance Between Rear Differential Solenoid Valve 1P Connector No. 1 And Rear Differential Solenoid Valve Body
Courtesy of AMERICAN HONDA MOTOR CO., INC.

Is there about 100 ohms or less?

YES : The rear differential solenoid valve is OK. Go to step 9.

NO : Replace the rear differential solenoid valve **Rear Differential Solenoid Valve Test**

9. Shorted wire check (DUTY1 line):
   - 1. Turn the ignition switch to LOCK (0).
   - 2. Disconnect the following connector.

     Real time AWD control unit 24P connector

   - 3. Check for continuity between test points 1 and 2.

     Test condition IG LOCK (0)

     Rear differential solenoid valve 1P connector: disconnected

     Real time AWD control unit 24P connector: disconnected

GETtheMANUALS.org

Test circuit DUTY1

Test point 1 Real time AWD control unit 24P connector No. 15 (RED)

Test point 2 Body ground

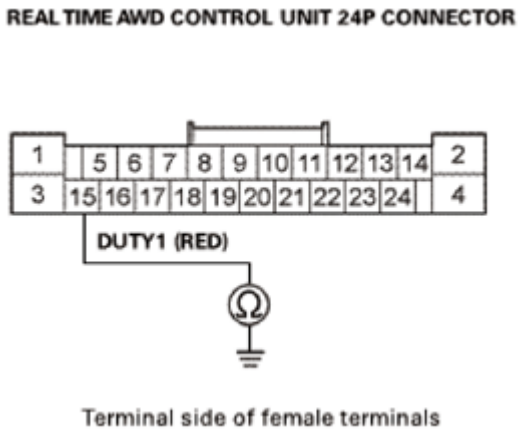

Fig. 48: Checking Continuity Between Real Time AWD Control Unit 24P Connector No. 15 (RED) And Body Ground
Courtesy of AMERICAN HONDA MOTOR CO., INC.

Is there continuity?

YES : Repair a short in the DUTY1 wire between the rear differential solenoid valve and the real time AWD control unit.

NO : The DUTY1 wire is not shorted. Go to step 10.

10. Open wire check (DUTY1/DTYH1 line):
    - 1. Check for continuity between test points 1 and 2.

      Test condition IG LOCK (0)

      Rear differential solenoid valve 1P connector: disconnected

      Real time AWD control unit 24P connector: disconnected

      Test circuit DUTY1/DTYH1

      Test point 1 Rear differential solenoid valve 1P connector No. 1 (BLU)

      Test point 2 Real time AWD control unit 24P connector No. 15 (RED)

GETtheMANUALS.org

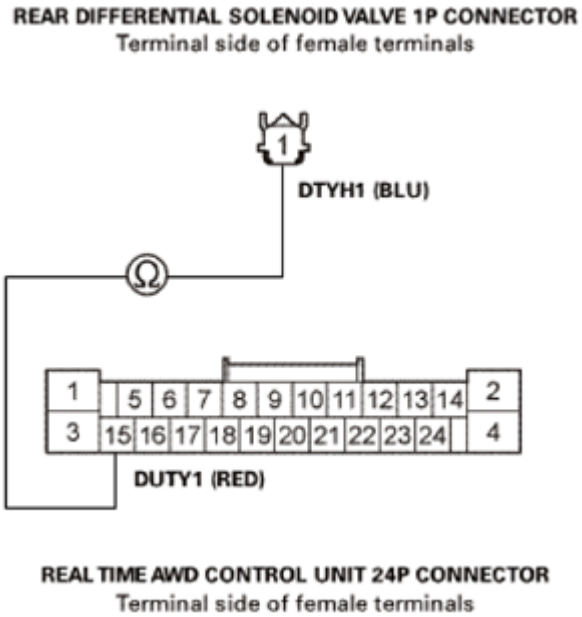

Fig. 49: Checking Continuity Between Rear Differential Solenoid Valve 1P Connector No. 1 (BLU) And Real Time AWD Control Unit 24P Connector No. 15 (RED)
Courtesy of AMERICAN HONDA MOTOR CO., INC.

Is there continuity?

YES : **Update the real time AWD control unit if it does not have the latest software** See **REAL TIME AWD CONTROL UNIT REMOVAL AND INSTALLATION** or **REAL TIME AWD CONTROL UNIT UPDATE** , or **substitute a known-good real time AWD control unit** See **REAL TIME AWD CONTROL UNIT REMOVAL AND INSTALLATION** or **REAL TIME AWD CONTROL UNIT UPDATE** , and recheck. If the symptom/indication goes away with the updated real time AWD control unit, troubleshooting is complete. If the symptom/indication goes away with a known-good real time AWD control unit, **replace the original real time AWD control unit** See **REAL TIME AWD CONTROL UNIT REMOVAL AND INSTALLATION** or **REAL TIME AWD CONTROL UNIT UPDATE** .

NO : Repair an open in the DUTY1/DTYH1 wire between the rear differential solenoid valve and the real time AWD control unit.

DTC C1852-19: SOLENOID VALVE CIRCUIT HIGH CURRENT

GETtheMANUALS.org

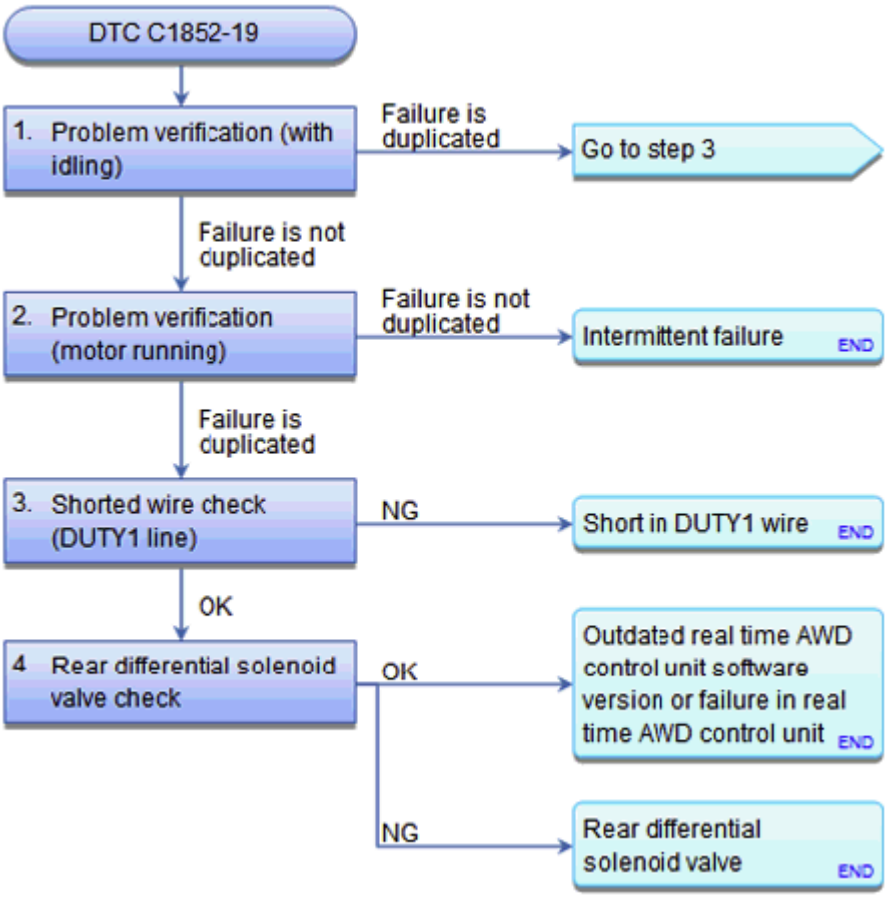

Fig. 50: DTC Troubleshooting Flow Chart (C1852-19)
Courtesy of AMERICAN HONDA MOTOR CO., INC.

NOTE: **Before you troubleshoot, REVIEW THE HOW TO TROUBLESHOOT THE REAL TIME AWD SYSTEM .**

DTC Description	DTC	Freeze Frame
C1852-19 Solenoid Valve Circuit High Current		

1. Problem verification (with idling):
   - 1. Turn the ignition switch to ON (II).
   - 2. Clear the DTC with the HDS.
   - 3. Start the engine.
   - 4. Check for DTCs with the HDS.

DTC Description	DTC	Freeze Frame
C1852-19 Solenoid Valve Circuit High Current		

Is DTC C1852-19 indicated?

GETtheMANUALS.org

YES : The failure is duplicated. Go to step 3.

NO : Go to step 2.

2. Problem verification (motor running):
   - 1. With the engine running, **DO THE AIR BLEEDING IN THE ADJUSTMENT MENU WITH THE HDS** .
   - 2. Check for DTCs with the HDS.

DTC Description	DTC	Freeze Frame
C1852-19 Solenoid Valve Circuit High Current		

Is DTC C1852-19 indicated?

YES : The failure is duplicated. Go to step 3.

NO : Intermittent failure, the system is OK at this time.

3. Shorted wire check (DUTY1 line):
   - 1. Turn the ignition switch to LOCK (0).
   - 2. Disconnect the following connectors.

     Rear differential solenoid valve 1P connector

     Real time AWD control unit 24P connector

   - 3. Check for continuity between test points 1 and 2.

     Test condition IG LOCK (0)

     Rear differential solenoid valve 1P connector: disconnected

     Real time AWD control unit 24P connector: disconnected

     Test circuit DUTY1

     Test point 1 Real time AWD control unit 24P connector No. 15 (RED)

     Test point 2 Body ground

GETtheMANUALS.org

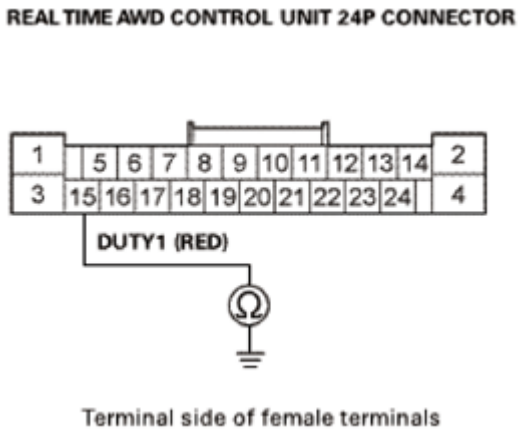

Fig. 51: Checking Continuity Between Real Time AWD Control Unit 24P Connector No. 15 (RED) And Body Ground
Courtesy of AMERICAN HONDA MOTOR CO., INC.

Is there continuity?

YES : Repair a short in the DUTY1 wire between the rear differential solenoid valve and the real time AWD control unit.

NO : The DUTY1 wire is OK. Go to step 4.

4. Rear differential solenoid valve check:
   - 1. Check the parameter(s) below with the HDS.

NOTE: **The rear differential fluid temperature should be 50 °F (10 °C)-86 °F (30 °C). If the value is not within the enable temperature, warm up the rear differential fluid temperature by raising the vehicle on a lift and run the vehicle at speeds 13 mph (20 km/h) for 5 seconds then slow down, and stop the wheels.**

Signal	Current conditions	
	Values	Unit
Oil temperature for rear differential		

   - 2. Turn the ignition switch to LOCK (0).
   - 3. Measure the resistance between test points 1 and 2.

Test condition IG LOCK (0)

Rear differential solenoid valve 1P connector: disconnected

Real time AWD control unit 24P connector: disconnected

GETtheMANUALS.org

Test circuit DTYH1

Test point 1 Rear differential solenoid valve 1P connector No. 1

Test point 2 Body ground

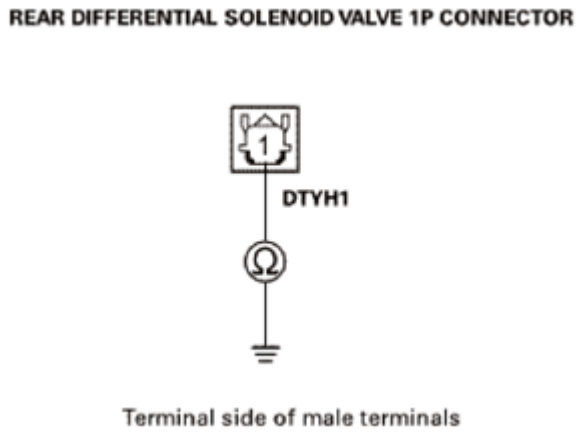

Fig. 52: Measuring Resistance Between Rear Differential Solenoid Valve 1P Connector No. 1 And Body Ground
Courtesy of AMERICAN HONDA MOTOR CO., INC.

Is there about 10 ohms or more?

YES : **Update the real time AWD control unit if it does not have the latest software** See **REAL TIME AWD CONTROL UNIT REMOVAL AND INSTALLATION** or **REAL TIME AWD CONTROL UNIT UPDATE** , or **substitute a known-good real time AWD control unit** See **REAL TIME AWD CONTROL UNIT REMOVAL AND INSTALLATION** or **REAL TIME AWD CONTROL UNIT UPDATE** , and recheck. If the symptom/indication goes away with the updated real time AWD control unit, troubleshooting is complete. If the symptom/indication goes away with a known-good real time AWD control unit, **replace the original real time AWD control unit** See **REAL TIME AWD CONTROL UNIT REMOVAL AND INSTALLATION** or **REAL TIME AWD CONTROL UNIT UPDATE** .

NO : Replace the rear differential solenoid valve **Rear Differential Solenoid Valve Test** .

DTC C1858-72: DIFFERENTIAL FLUID PRESSURE DEVIATION LOW

GETtheMANUALS.org

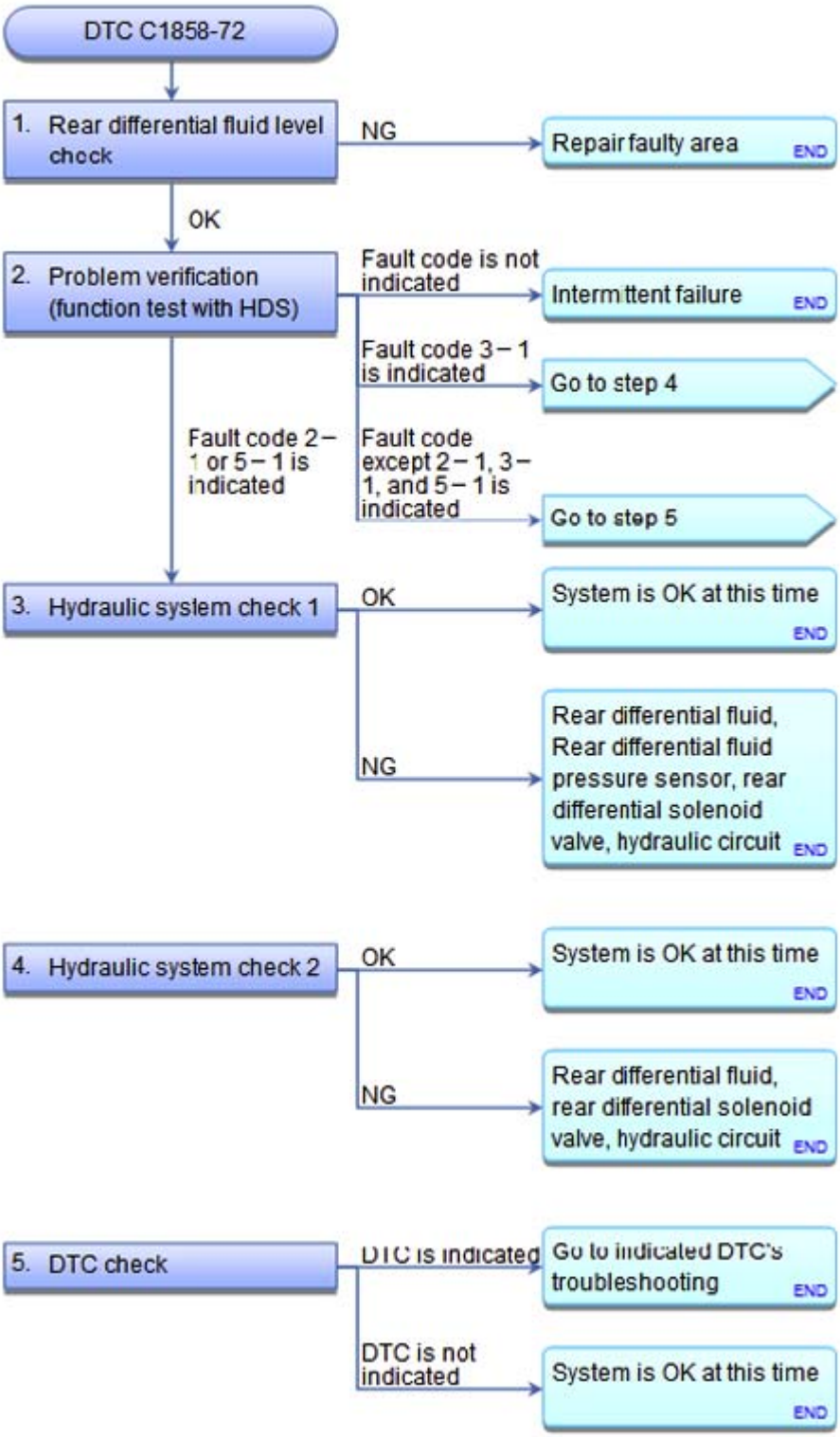

Fig. 53: DTC Troubleshooting Flow Chart (C1858-72)
Courtesy of AMERICAN HONDA MOTOR CO., INC.

NOTE: **Before you troubleshoot, REVIEW THE HOW TO TROUBLESHOOT THE REAL**

GETtheMANUALS.org

TIME AWD SYSTEM .

DTC Description	DTC	Freeze Frame
C1858-72 Differential Fluid Pressure Deviation Low		

1. Rear differential fluid level check:
   - 1. **CHECK THE REAR DIFFERENTIAL FLUID LEVEL** , and check for rear differential fluid leakage.

   Is the check result OK?

   YES : Go to step 2.

   NO : Find and repair the source of the fluid leak then **ADD RECOMMENDED FLUID** .

2. Problem verification (function test with HDS):
   - 1. Turn the ignition switch to ON (II).
   - 2. **DO THE OIL PRESSURE CONTROL TEST IN THE FUNCTIONAL TEST MENU WITH THE HDS** .

   Is the test result OK?

   Fault code is not indicated Intermittent failure, the system is OK at this time.

   Fault code 2-1 or 5-1 is indicated Go to step 3.

   Fault code 3-1 is indicated Go to step 4.

   Fault code except 2-1, 3-1, and 5-1 is indicated Go to step 5.

3. Hydraulic system check 1:
   - 1. **DO THE AIR BLEEDING IN THE ADJUSTMENT MENU WITH THE HDS** .
   - 2. **DO THE OIL PRESSURE CONTROL TEST IN THE FUNCTIONAL TEST MENU WITH THE HDS** .

   Is the test result OK?

   YES : System is OK at this time.

   NO : **REPLACE THE REAR DIFFERENTIAL FLUID** then **DO THE REAR DIFFERENTIAL FLUID PRESSURE SENSOR TEST** and **DO THE REAR DIFFERENTIAL SOLENOID VALVE TEST** . If they are OK, replace the rear differential assembly.

4. Hydraulic system check 2:
   - 1. **DO THE AIR BLEEDING IN THE ADJUSTMENT MENU WITH THE HDS** .

GETtheMANUALS.org

- 2. **DO THE OIL PRESSURE CONTROL TEST IN THE FUNCTIONAL TEST MENU WITH THE HDS** .

Is the test result OK?

YES : System is OK at this time.

NO : **REPLACE THE REAR DIFFERENTIAL FLUID** , then **DO THE REAR DIFFERENTIAL SOLENOID VALVE TEST** . If it is OK, replace the rear differential assembly.

5. DTC check:
   - 1. **DO THE OIL PRESSURE CONTROL TEST IN THE FUNCTIONAL TEST MENU WITH THE HDS** three times.
   - 2. Check for DTCs with the HDS.

DTC Description	DTC	Freeze Frame

Are there any DTCs?

YES : Go to the indicated DTC's troubleshooting.

NO : System is OK at this time.

DTC C1858-73: DIFFERENTIAL FLUID PRESSURE DEVIATION HIGH

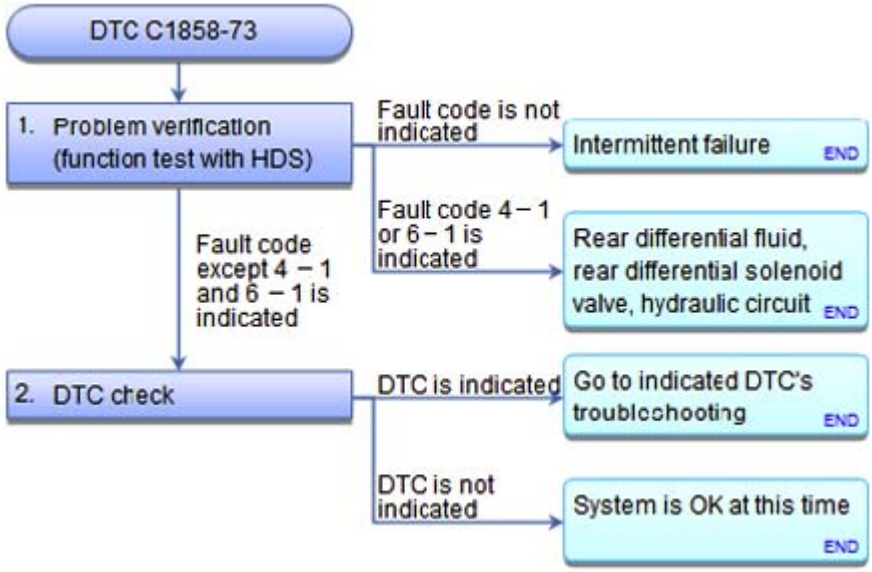

Fig. 54: DTC Troubleshooting Flow Chart (C1858-73)
Courtesy of AMERICAN HONDA MOTOR CO., INC.

GETtheMANUALS.org

NOTE: **Before you troubleshoot, REVIEW THE HOW TO TROUBLESHOOT THE REAL TIME AWD SYSTEM .**

DTC Description	DTC	Freeze Frame
C1858-73 Differential Fluid Pressure Deviation High		

1. Problem verification (function test with HDS):
   - 1. Turn the ignition switch to ON (II).
   - 2. **DO THE OIL PRESSURE CONTROL TEST IN THE FUNCTIONAL TEST MENU WITH THE HDS** .

   Is the test result OK?

   Fault code is not indicated Intermittent failure, the system is OK at this time.

   Fault code 4-1 or 6-1 is indicated **REPLACE THE REAR DIFFERENTIAL FLUID** , then **DO THE REAR DIFFERENTIAL SOLENOID VALVE TEST** . If it is OK, replace the rear differential assembly.

   Fault code except 4 -1 and 6 -1 is indicated Go to step 2.

2. DTC check:
   - 1. **DO THE OIL PRESSURE CONTROL TEST IN THE FUNCTIONAL TEST MENU WITH THE HDS** three times.
   - 2. Check for DTCs with the HDS.

DTC Description	DTC	Freeze Frame

   Are there any DTCs?

   YES : Go to the indicated DTC's troubleshooting.

   NO : System is OK at this time.

DTC C1860-98: DIFFERENTIAL FLUID OVERHEATED

GETtheMANUALS.org

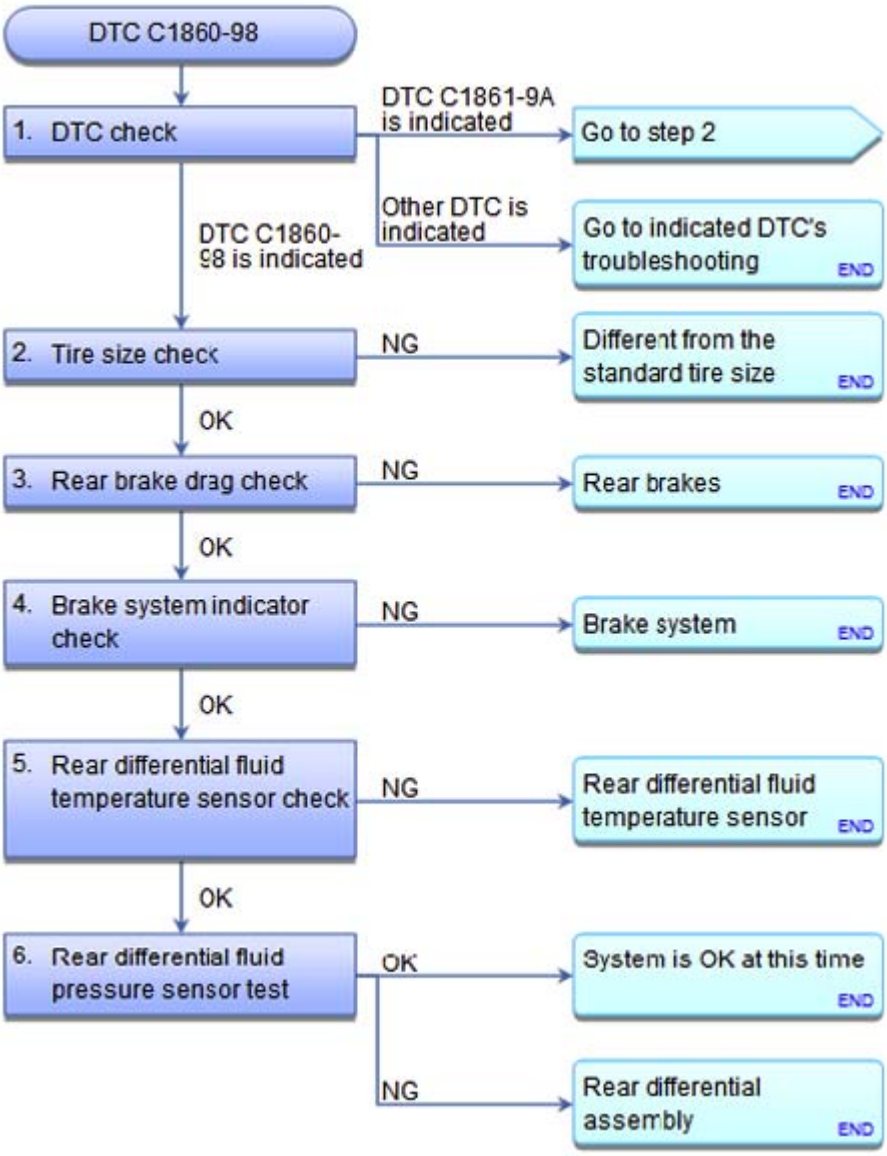

Fig. 55: DTC Troubleshooting Flow Chart (C1860-98)
Courtesy of AMERICAN HONDA MOTOR CO., INC.

NOTE:

- **Before you troubleshoot, REVIEW THE HOW TO TROUBLESHOOT THE REAL TIME AWD SYSTEM .**
- **When the clutch is presumed to be overheated, DTC C1860-98 is set and the system turns off the clutch engagement to protect the clutch. This DTC may also set under the following conditions.**
  - **When spinning the rear wheels while the vehicle is stuck in sand, mud, snow, etc**
  - **When the VSA system is OFF**

DTC Description	DTC	Freeze Frame

GETtheMANUALS.org

C1860-98 Differential Fluid Overheated		

1. DTC check:
   - 1. Turn the ignition switch to ON (II).
   - 2. Check for DTCs with the HDS.

DTC Description	DTC	Freeze Frame
C1860-98 Differential Fluid Overheated		
C1861-9A Vehicle Spin Detected		
Other DTC		

Is DTC C1860-98, C1861-9A, or other DTC indicated?

DTC C1860-98 is indicated Go to step 2.

DTC C1861-9A is indicated Go to step 2.

Other DTC is indicated Go to the indicated DTC's troubleshooting.

2. Tire size check:
   - 1. Check the tire size of the four wheels.

Is the tire size same?

YES : Go to step 3.

NO : Replace the tire with the standard size.

3. Rear brake drag check:
   - 1. **Check for rear brake drag** .

Are the rear brakes OK?

YES : Go to step 4.

NO : **Inspect and repair the rear brakes** .

4. Brake system indicator check:
   - 1. Press the parking brake pedal.

Does the brake system indicator come on?

YES : Go to step 5.

NO : **INSPECT AND REPAIR THE BRAKE SYSTEM** .

GETtheMANUALS.org

5. Rear differential fluid temperature sensor check:
   - Check the parameter(s) below with the HDS.

Signal	Current conditions	
	Values	Unit
Oil temperature for rear differential		

   - Check the temperature of the rear differential fluid then compare it with the value checked in step 1.

Is the difference small?

YES : Go to step 6.

NO : **REPLACE THE REAR DIFFERENTIAL FLUID TEMPERATURE SENSOR** .

6. Rear differential fluid pressure sensor test:
   - 1. **DO THE REAR DIFFERENTIAL FLUID PRESSURE SENSOR TEST** .

Is the test result OK?

YES : System is OK at this time.

NO : **DO THE REPAIR DEPENDING ON THE TEST RESULT** .

DTC C1861-9A: VEHICLE SPIN DETECTED

GETtheMANUALS.org

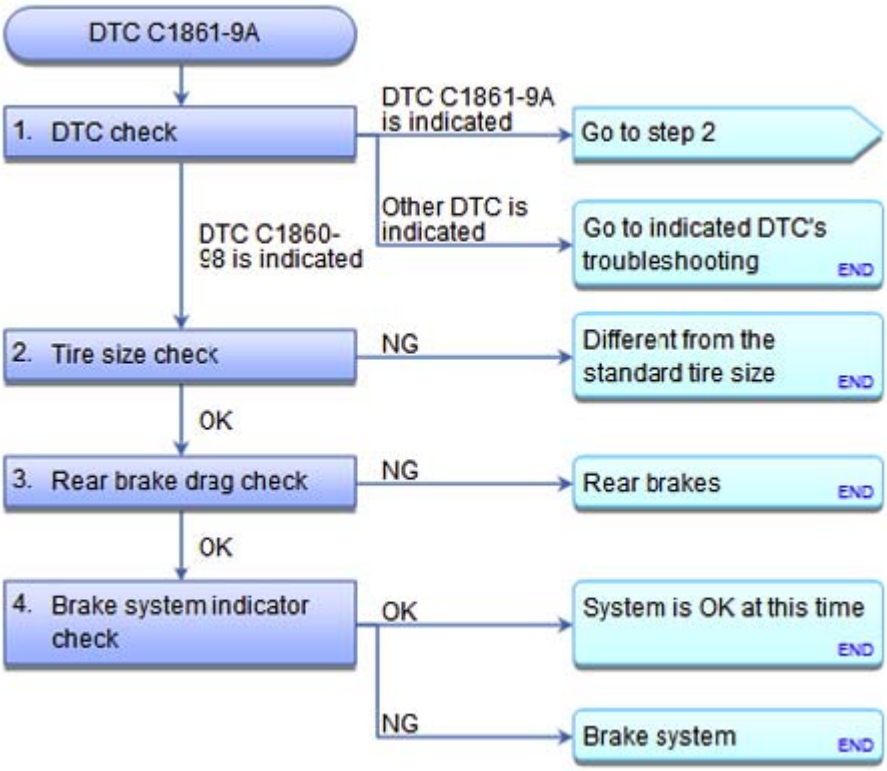

Fig. 56: DTC Troubleshooting Flow Chart (C1861-9A)
Courtesy of AMERICAN HONDA MOTOR CO., INC.

NOTE:

- **Before you troubleshoot, REVIEW THE HOW TO TROUBLESHOOT THE REAL TIME AWD SYSTEM .**
- **When a vehicle spin is detected, DTC C1861-9A is set for the purpose of protecting the real time AWD system. When this condition occurs, the system will temporarily stop the real time AWD function. This DTC may also set under these conditions.**
  - **When spinning the rear wheels while stuck in sand, mud, snow, etc**
  - **When the VSA system is OFF**

DTC Description	DTC	Freeze Frame
C1861-9A Vehicle Spin Detected		

1. DTC check:
   - 1. Turn the ignition switch to ON (II).
   - 2. Check for DTCs with the HDS.

DTC Description	DTC	Freeze Frame

GETtheMANUALS.org

Is DTC C1860-98, C1861-9A, or other DTCs indicated?

DTC C1860-98 is indicated Go to step 2.

DTC C1861-9A is indicated Go to step 2.

Other DTC is indicated Go to the indicated DTC's troubleshooting.

2. Tire size check:
   - 1. Check the tire size of the four wheels.

Is the tire size same?

YES : Go to step 3.

NO : Replace the tire with the standard size.

3. Rear brake drag check:
   - 1. **Check for rear brake drag** .

Are the rear brakes OK?

YES : Go to step 4.

NO : **Inspect and repair the rear brakes** .

4. Brake system indicator check:
   - 1. Press the parking brake pedal.

Does the brake system indicator come on?

YES : System is OK at this time.

NO : **INSPECT AND REPAIR THE BRAKE SYSTEM** .

DTC C1870-00: FUEL AND EMISSIONS RELATED MALFUNCTION; DTC C1871-00: AUTOMATIC TRANSMISSION RELATED MALFUNCTION; DTC C1872-00: VSA MODULATOR-CONTROL UNIT RELATED MALFUNCTION

GETtheMANUALS.org

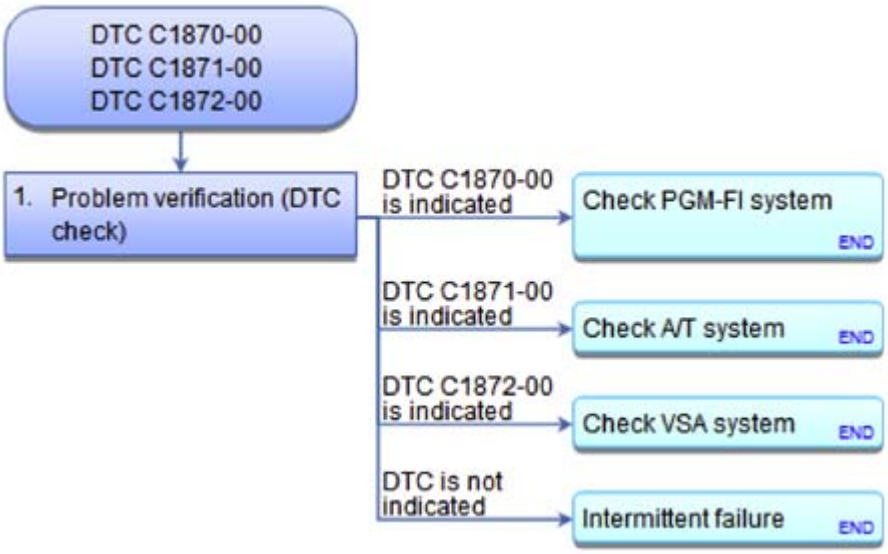

Fig. 57: DTC Troubleshooting Flow Chart (C1870-00, C1871-00, C1872-00)
Courtesy of AMERICAN HONDA MOTOR CO., INC.

NOTE: **Before you troubleshoot, REVIEW THE HOW TO TROUBLESHOOT THE REAL TIME AWD SYSTEM .**

DTC Description	DTC	Freeze Frame
C1870-00 Fuel and Emissions Related Malfunction		
C1871-00 Automatic Transmission Related Malfunction		
C1872-00 VSA Modulator-Control Unit Related Malfunction		

1. Problem verification (DTC check):
   - 1. Turn the ignition switch to ON (II).
   - 2. Clear the DTC with the HDS.
   - 3. Start the engine.
   - 4. Check for DTCs with the HDS.

NOTE: **These codes are stored whenever the following systems DTCs are detected.**

- When DTC C1870-00 is indicated, check the PGM-FI system DTC.
- When DTC C1871-00 is indicated, check the A/T system DTC.
- When DTC C1872-00 is indicated, check the VSA system DTC.

DTC Description	DTC	Freeze Frame
C1870-00 Fuel and Emissions Related Malfunction		
C1871-00 Automatic Transmission Related Malfunction		

GETtheMANUALS.org

C1872-00 VSA Modulator-Control Unit Related Malfunction		

Is DTC C1870-00, C1871-00, or C1872-00 indicated?

DTC C1870-00 is indicated **Check the PGM-FI system DTC** See **HOW TO TROUBLESHOOT THE A/T SYSTEM** or **HOW TO TROUBLESHOOT THE FUEL AND EMISSIONS SYSTEMS** .

DTC C1871-00 is indicated **Check the A/T system DTC** See **HOW TO TROUBLESHOOT THE A/T SYSTEM** or **HOW TO TROUBLESHOOT THE FUEL AND EMISSIONS SYSTEMS** .

DTC C1872-00 is indicated **CHECK THE VSA SYSTEM DTC** .

DTC is not indicated Intermittent failure, the system is OK at this time.

DTC C1873-00: STEERING ANGLE SENSOR MALFUNCTION

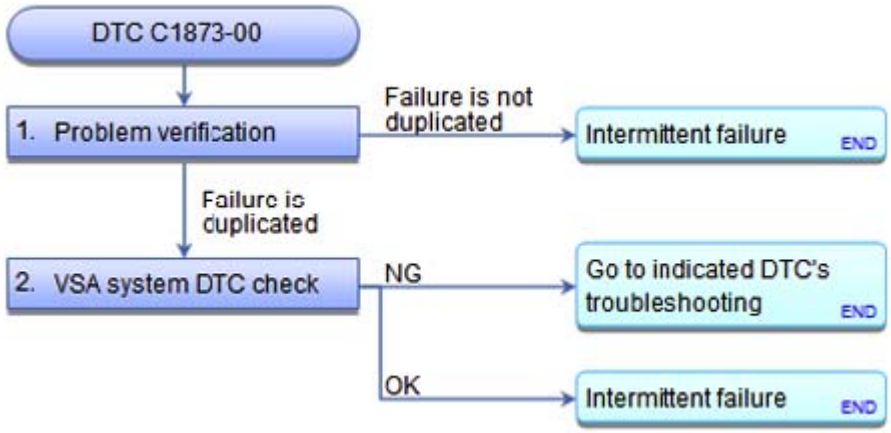

Fig. 58: DTC Troubleshooting Flow Chart (C1873-00)
Courtesy of AMERICAN HONDA MOTOR CO., INC.

NOTE: **Before you troubleshoot, REVIEW THE HOW TO TROUBLESHOOT THE REAL TIME AWD SYSTEM .**

DTC Description	DTC	Freeze Frame
C1873-00 Steering Angle Sensor Malfunction		

1. Problem verification:
   - 1. Turn the ignition switch to ON (II).
   - 2. Clear the DTC with the HDS.
   - 3. Start the engine.
   - 4. Check for DTCs with the HDS.

DTC Description	DTC	Freeze Frame

GETtheMANUALS.org

C1873-00 Steering Angle Sensor Malfunction		

Is DTC C1873-00 indicated?

YES : The failure is duplicated. Go to step 2.

NO : Intermittent failure, the system is OK at this time.

2. VSA system DTC check:
   - 1. Check for DTCs in the VSA system with the HDS.

DTC Description	Confirmed DTC	Freeze Frame

Are any DTCs stored?

YES : **GO TO THE INDICATED DTC'S TROUBLESHOOTING IN THE VSA SYSTEM** .

NO : Intermittent failure, the system is OK at this time.

GETtheMANUALS.org

HOW TO TROUBLESHOOT THE REAL TIME AWD SYSTEMS

AWD SYSTEM INDICATOR

The AWD system indicator will come on under certain conditions even if the real time AWD system is working normally. Here are some examples:

- When you use high-powered wireless equipment such as a CB or Ham radio in the vehicle.
- When you keep spinning the rear wheels while the vehicle is stuck in sand, mud, snow, etc.
- When the battery voltage suddenly drops below 8 volts.

After the AWD system indicator comes on, it stays on until you turn the ignition switch to LOCK (0).

DIAGNOSTIC TROUBLE CODE (DTC)

- The real time AWD control unit can memorize up to eight different DTCs. The system displays the DTCs by blinking the AWD system indicator. Multiple DTCs are displayed in the order they occurred, beginning with the most recent.
- If the same DTC is detected more than once, the most recent DTC is written over the earlier one. Therefore, when the same problem is detected more than once, it is memorized as a single DTC.
- The DTCs are memorized in the real time AWD control units EEPROM (non-volatile memory). Therefore, the memorized DTCs are not cleared when the battery is disconnected or when the real time AWD control unit is disconnected.
- If there is a problem in the central processing unit (CPU) of the real time AWD control unit, the AWD system indicator comes on, but no DTC is memorized. Refer to the symptom troubleshooting.

SELF-DIAGNOSIS

When a problem is detected during self-diagnosis, the system does the following:

- Turns the AWD system indicator on.
- Memorizes the DTC if possible.
- Stops AWD control and puts the vehicle back into two-wheel drive (front wheel only).

HOW TO USE THE HDS (HONDA DIAGNOSTIC SYSTEM)

1. With the ignition switch in LOCK (0) connect the Honda Diagnostic System (HDS) to the DLC (A) located under the driver's side of the dashboard.

GETtheMANUALS.org

Fig. 1: Identifying Data Link Connector
Courtesy of AMERICAN HONDA MOTOR CO., INC.

2. Turn the ignition switch to ON (II).
3. Make sure the HDS communicates with the vehicle and the real time AWD control unit. If it does not, go to the symptom troubleshooting for **HDS does not communicate**.
4. Check the diagnostic trouble code (DTC) and the freeze data, for all systems in the vehicle, troubleshoot the powertrain DTCs first and note them. Then refer to the indicated DTC's troubleshooting, and do the appropriate troubleshooting procedure.

NOTE:

- **The HDS can read the DTC, the freeze data, the current data, and other system data.**
- **For specific operations, refer to the Help menu that came with the HDS.**
- **It is best do an ALL DTC CHECK to look for other systems DTCs that are related to the problem.**

HOW TO CHECK FOR DIAGNOSTIC TROUBLE CODES (DTCS)

When the real time AWD control unit senses an abnormality in the input or output systems, the AWD system indicator in the gauge control module will usually come on, and the malfunction indicator lamp (MIL), the D indicator, the VSA indicator, and/or the ABS indicator may also come on.

NOTE: **Check the vehicle battery condition and charging system before troubleshooting.**

1. With the ignition switch in LOCK (0) connect the HDS to the DLC (A) located under the driver's side of the dashboard.

GETtheMANUALS.org

Fig. 2: Identifying Data Link Connector
Courtesy of AMERICAN HONDA MOTOR CO., INC.

2. Turn the ignition switch to ON (II). Make sure the HDS communicates with the vehicle and the real time AWD control unit. If it does not, go to the symptom troubleshooting for **HDS does not communicate**. Follow the prompts on the HDS to display the DTC(s) on the screen. Check the DTC and the freeze data for all systems. After determining the DTC(s), refer to the DTC Troubleshooting.

NOTE: See the HDS help menu for specific instructions.

3. If there are PGM-FI system DTCs and other system DTCs at the same time, troubleshoot the PGM-FI system DTCs first, otherwise the real time AWD DTC may return.
4. After recording the DTCs, clear all DTCs.
5. Test-drive the vehicle for several minutes in AWD mode, and check for DTCs. If the DTC returns, refer to the DTC Troubleshooting. If the DTC does not return, there was an intermittent problem within the circuit. Make sure all connectors and terminals in the circuit are tight.

HOW TO CLEAR DTCS

1. With the ignition switch in LOCK (0) connect the HDS to the DLC (A) located under the driver's side of the dashboard.

GETtheMANUALS.org

Fig. 3: Identifying Data Link Connector
Courtesy of AMERICAN HONDA MOTOR CO., INC.

2. Turn the ignition switch to ON (II).

   Make sure the HDS communicates with the vehicle and the real time AWD control unit. If it does not,

3. go to the symptom troubleshooting for **HDS does not communicate**.
4. Clear the DTC(s) by following the screen prompts on the HDS in the Real Time AWD Data List.
5. Turn the ignition switch to LOCK (0).

NOTE: **If the DTC that was cleared is related to another system, that system's DTC must be repaired, or the real time AWD DTC will return.**

HOW TO TROUBLESHOOT CIRCUITS AT THE REAL TIME AWD CONTROL UNIT

Special Tools Required

Backprobe Set 07SAZ-001000A

1. Remove the left rear side trim panel.
2. Inspect the circuit on the real time AWD control unit according to the DTC Troubleshooting using the backprobe set and a digital multimeter or an analog circuit tester.
3. Connect the backprobe adapters (A) to the stacking patch cords (B), and connect the cords to a digital multimeter or an analog circuit tester (C). Using the wire insulator as a guide for the contoured-tip of the backprobe adapter, gently slide the tip into the connector from the wire side until it comes in contact with the terminal end of the wires.

GETtheMANUALS.org

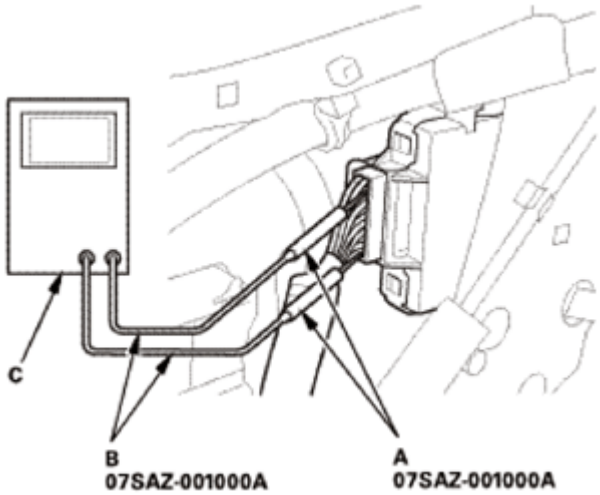

Fig. 4: Connecting Backprobe Adapters To Stacking Patch Cords
Courtesy of AMERICAN HONDA MOTOR CO., INC.

PRECAUTIONS FOR REAL-TIME AWD (ALL-WHEEL DRIVE)

Under normal conditions, the AWD vehicle is in 2WD (front-wheel drive). However, the system will instantly transmit appropriate driving force to the rear wheels (depending on the driving force of the front wheels and the road conditions).

The Real-time AWD System does not have a manual switch to disable the AWD system. Whenever service work requires spinning the front or rear wheels with the engine, always lift and support the vehicle so all four wheels are off the ground.

REAL TIME AWD SYSTEM SYMPTOM TROUBLESHOOTING INDEX

Symptom	Probable Cause	Remedy
Rear differential overheats	• Fluid level too low • Incorrect fluid type	• Add recommended fluid • Drain and fill the differential with the recommended fluid
Rear differential leaks fluid	• Fluid level too high • Clogged breather hose • Worn or damaged oil seal • Damaged sealing washer • Loose mounting bolts or inadequate sealing	• Lower to proper level • Clean or replace • Replace the oil seal • Replace the sealing washer • Recheck torque or apply sealant
HDS does not communicate with vehicle		**TROUBLESHOOTING THE DLC CIRCUIT**
HDS does not communicate with real time AWD control unit		Do the symptom troubleshooting for **HDS does not communicate**

GETtheMANUALS.org

AWD system indicator does not come on		Do the symptom troubleshooting for **AWD system indicator does not come on**
AWD system indicator does not go off, and no DTCs are stored		Do the symptom troubleshooting for **AWD system indicator does not go off, and no DTCs are stored**
Will not go into 4WD mode, Poor traction, Poor acceleration (at start), Poor climbing ability		Do the symptom troubleshooting for **Will not go into 4WD mode, Poor traction, Poor acceleration (at start), Poor climbing ability**
Real Time AWD System is stuck in 4WD mode		Do the symptom troubleshooting for **Real Time AWD System is stuck in 4WD mode**

Abnormal noise	• Gear noise
	  ○ Poor meshing hypoid gear (ring gear and drive pinion)
	  ○ Hypoid gear (wear or damage)
	  ○ Poor pre-road (drive pinion)
	  ○ Dust got into hypoid gear area
	  ○ Fluid level too low
	  ○ Distortion of the differential carrier case
	• Bearing noise
	  ○ Bearing (wear or damage)
	  ○ Drive pinion taper bearing (wear)
	  ○ Dust got into bearing
	• Pump noise (at lubrication)
	  ○ Dust got into pump
	  ○ Rotor (wear or damage)
	• Torque shortage	

	• Gear noise ○ Poor meshing hypoid gear (ring gear and drive	

GETtheMANUALS.org

Abnormal noise (at start)	pinion) ○ Hypoid gear (wear or damage) ○ Poor pre-road (drive pinion) ○ Dust got into hypoid gear area ○ Fluid level too low ○ Distortion of the differential carrier case ○ Excessive backlash (hypoid gear) ○ Excessive backlash (differential gear) ○ Differential side gear spline (wear) • Bearing noise ○ Bearing (wear or damage) ○ Drive pinion taper bearing (wear) ○ Dust got into bearing • Pump noise (at lubrication) ○ Dust got into pump ○ Rotor (wear or damage) • Rear differential pump motor noise ○ Bearing (wear or damage) ○ Dust got into rear differential pump motor • Pump noise (at control) ○ Dust got into pump ○ Rotor (wear or damage) • Rear differential solenoid valve noise ○ Dust got into rear	

GETtheMANUALS.org

	differential solenoid valve ○ Plunger area or shaft area (wear) ○ Rear differential solenoid valve (wear or damage) • Clutch chatter ○ Fluid deterioration ○ Clutch facing (burnt or deterioration) ○ Clutch plate (deterioration) • Torque shortage	
	• Gear noise ○ Poor meshing hypoid gear (ring gear and drive pinion) ○ Hypoid gear (wear or damage) ○ Poor pre-road (drive pinion) ○ Dust got into hypoid gear area ○ Fluid level too low ○ Distortion of the differential carrier case ○ Excessive backlash (hypoid gear) ○ Excessive backlash (differential gear) ○ Differential side gear spline (wear) • Bearing noise ○ Bearing (wear or damage) ○ Drive pinion taper bearing (wear) ○ Dust got into bearing • Pump noise (at lubrication)	

GETtheMANUALS.org

accelerate)	○ Dust got into pump ○ Rotor (wear or damage) • Rear differential pump motor noise ○ Bearing (wear or damage) ○ Dust got into rear differential pump motor • Pump noise (at control) ○ Dust got into pump ○ Rotor (wear or damage) • Rear differential solenoid valve noise ○ Dust got into rear differential solenoid valve ○ Plunger area or shaft area (wear) ○ Rear differential solenoid valve (wear or damage) • Clutch chatter ○ Fluid deterioration ○ Clutch facing (burnt or deterioration) ○ Clutch plate (deterioration) • Torque shortage	
	• Gear noise ○ Poor meshing hypoid gear (ring gear and drive pinion) ○ Hypoid gear (wear or damage) ○ Poor pre-road (drive pinion) ○ Dust got into hypoid gear area	

GETtheMANUALS.org

Abnormal noise (at turning)	○ Fluid level too low ○ Distortion of the differential carrier case • Bearing noise ○ Bearing (wear or damage) ○ Drive pinion taper bearing (wear) ○ Dust got into bearing • Differential gear noise ○ Side gear and pinion gear (wear or damage) ○ Pinion shaft (damage) ○ Dust got into differential gear area • Clutch chatter ○ Fluid deterioration ○ Clutch facing (burnt or deterioration) ○ Clutch plate (deterioration) • Torque shortage	Do the symptom troubleshooting for **Abnormal noise**
	• Gear noise ○ Poor meshing hypoid gear (ring gear and drive pinion) ○ Hypoid gear (wear or damage) ○ Poor pre-road (drive pinion) ○ Dust got into hypoid gear area ○ Fluid level too low ○ Distortion of the differential carrier case ○ Excessive backlash	

GETtheMANUALS.org

Abnormal noise (at turning and accelerate)	(hypoid gear) ○ Excessive backlash (differential gear) ○ Differential side gear spline (wear) • Bearing noise ○ Bearing (wear or damage) ○ Drive pinion taper bearing (wear) ○ Dust got into bearing • Differential gear noise ○ Side gear and pinion gear (wear or damage) ○ Pinion shaft (damage) ○ Dust got into differential gear area • Pump noise (at lubrication) ○ Dust got into pump ○ Rotor (wear or damage) • Rear differential pump motor noise ○ Bearing (wear or damage) ○ Dust got into rear differential pump motor • Pump noise (at control) ○ Dust got into pump ○ Rotor (wear or damage) • Rear differential solenoid valve noise ○ Dust got into rear differential solenoid valve ○ Plunger area or shaft area (wear)	

GETtheMANUALS.org

	○ Rear differential solenoid valve (wear or damage) • Clutch chatter ○ Fluid deterioration ○ Clutch facing (burnt or deterioration) ○ Clutch plate (deterioration) • Torque shortage	

REAL TIME AWD CONTROL UNIT CONNECTOR FOR INPUTS AND OUTPUTS

REAL TIME AWD CONTROL UNIT INPUTS AND OUTPUTS FOR 24P CONNECTOR (CONNECTOR DISCONNECTED)

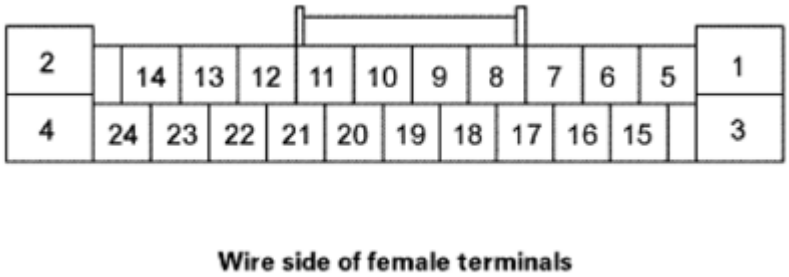

Fig. 5: Identifying Real Time AWD Control Unit Inputs And Outputs For 24P Connector
Courtesy of AMERICAN HONDA MOTOR CO., INC.

Terminal number	Wire color	Terminal sign	Description	Signal
1	RED	MH	Power supply for pump motor	With pump motor off: about 0 V With pump motor on: battery voltage
2	WHT	PWR	Power supply for actuator	With engine running: battery voltage
3	BLK	ML	Ground for the pump motor	With ignition switch ON (II): about 0 V
4	BLK	PG	Ground for the actuator	With ignition switch ON (II): about 0 V
5	BLK	DG	Ground for the differential assembly	With ignition switch ON (II): about 0 V
6	PUR	FSR	Ground for the real time AWD relay	With ignition switch ON (II): about 0 V to battery voltage
7	Not used	Not used	---------	---------
8	BLK	LG	Ground for the real time AWD control unit	With ignition switch ON (II): about 0 V
9	Not used	Not used		

GETtheMANUALS.org

10	Not used	Not used	---------	---------
11	GRN	SG	Ground for the differential fluid pressure sensor	With ignition switch ON (II): about 0 V
12	RED	IG1	Power supply for real time AWD control unit	With ignition switch ON (II): battery voltage
13	Not used	Not used	---------	---------
14	WHT	F_CAN-H	F-CAN communication circuit	With ignition switch ON (II): pulses
15	RED	DTYH	Power supply the differential solenoid valve	With solenoid valve off: about 0 V With solenoid valver on: battery voltage
16	Not used	Not used	---------	---------
17	Not used	Not used		
18	ORN	TOH	Detects differential fluid temperature sensor signal (positive)	With ignition switch ON (II): about 0.1 V to 4.9 V (Depending on rear differential fluid temperature)
19	Not used	Not used	---------	---------
20	WHT	SVCC	Power supply for differential fluid pressure sensor	With ignition switch ON (II): about 5.0 V
21	PNK	PS	Detects differential fluid pressure sensor signal (positive)	With ignition switch ON (II): about 0.4 V to 4.1 V (Depending on rear differential fluid pressure)
22	LTBLU	TOL	Detects differential fluid temperature sensor (negative)	With ignition switch ON (II): about 0 V
23	Not used	Not used	---------	---------
24	RED	F_CAN-L	F-CAN communication circuit	With ignition switch ON (II): pulses

REAL TIME AWD CONTROL UNIT INITIALIZATION

PROCEDURE

NOTE:

- **Whenever the real time AWD control unit is replaced, it must be initialized.**
- **Park the vehicle on a flat and level surface.**

1. HDS DLC - Connection
    1. Connect the HDS to the data link connector (DLC) (A) located under the driver's side of the dashboard.
    2. Turn the ignition switch to ON (II).
    3. Make sure the HDS communicates with the vehicle. If it does not communicate, go to the DLC circuit troubleshooting.

GETtheMANUALS.org

Fig. 6: Identifying Data Link Connector
Courtesy of AMERICAN HONDA MOTOR CO., INC.

2. Real Time AWD Control Unit Initialization
    1. Select the ADJUSTMENT in the REAL TIME AWD SYSTEM with the HDS.
    2. Select the ECU REPLACEMENT in the ADJUSTMENT with the HDS.

NOTE: See the HDS Help menu for specific instructions.

REAL TIME AWD CONTROL UNIT REMOVAL AND INSTALLATION

REMOVAL

1. Tonneau Cover (For Some Models)
    1. Remove the tonneau cover (A).

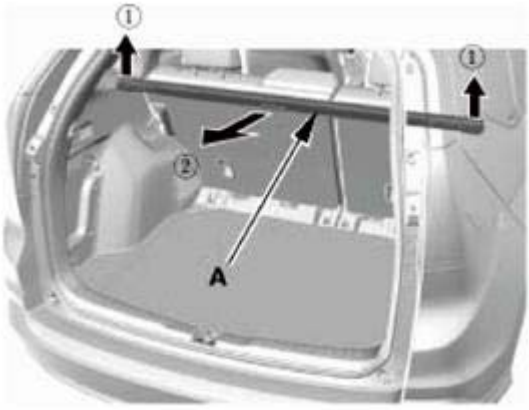

Fig. 7: Removing Tonneau Cover
Courtesy of AMERICAN HONDA MOTOR CO., INC.

GETtheMANUALS.org

2. Cargo Floor Cover
    1. Remove the cargo floor cover (A).

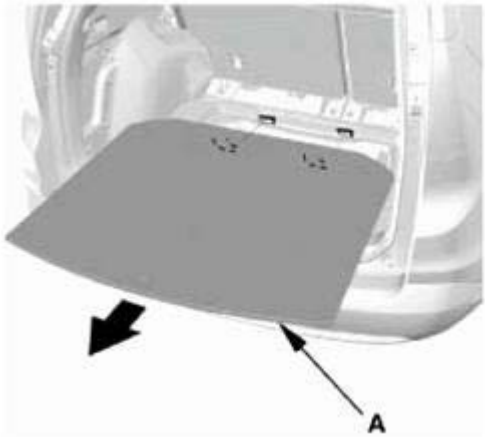

Fig. 8: Removing Cargo Floor Cover
Courtesy of AMERICAN HONDA MOTOR CO., INC.

3. Left Rear Door Sill Trim
    1. Fold down the left rear seat, then lift-up and latch the left rear seat back in the up right position.
    2. Detach the hooks (A) and the tab (B) from the left B-pillar lower trim (C) and the left rear side trim panel (D), and pull up the rear door inner sill trim (E) by hand to detach the clips (F, G), then remove the trim.

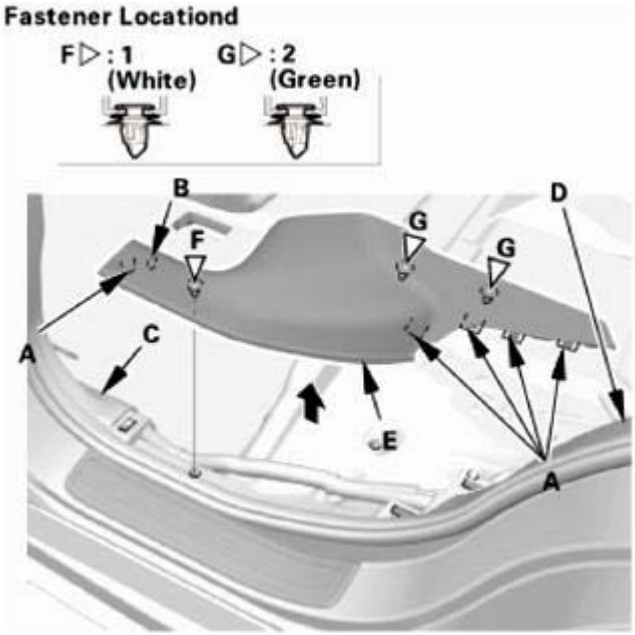

Fig. 9: Removing Left Rear Door Sill Trim
Courtesy of AMERICAN HONDA MOTOR CO., INC.

GETtheMANUALS.org

4. Rear Door Opening Seal As Needed
    1. Pull out the rear door opening seal (A) from the trim hooks (B) around the rear door opening flange as needed.

Fig. 10: Identifying Rear Door Opening Seal And Trim Hooks
Courtesy of AMERICAN HONDA MOTOR CO., INC.

5. Left Rear Damper Maintenance Cover
    1. Fold down the left rear seat back.
    2. Pull up the rear damper maintenance cover (A) by hand to detach the hooks (B), then remove the rear damper maintenance cover.

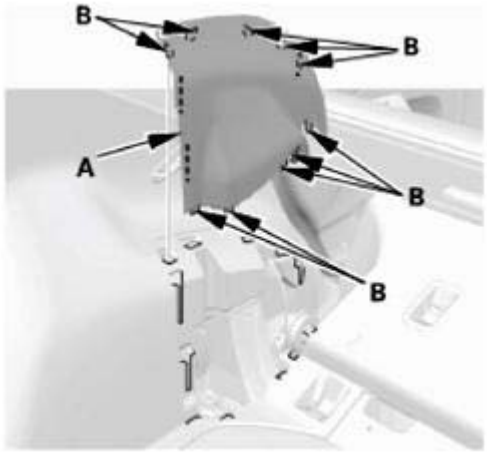

Fig. 11: Identifying Rear Damper Maintenance Cover And Hooks
Courtesy of AMERICAN HONDA MOTOR CO., INC.

6. Left Rear Carpet Trim
    1. Detach the clips (A), then detach the left rear seat-back cover (B).

GETtheMANUALS.org

2. Detach the hooks (C) from the left rear side trim panel (D), and pull up the left rear carpet trims (E) by hand to detach the clips, then remove the left rear carpet trim.

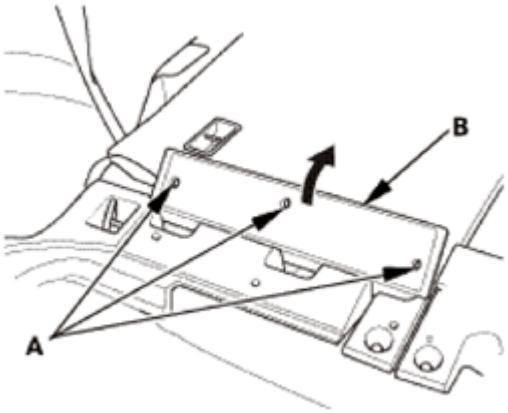

Fig. 12: Removing Left Rear Carpet Trim
Courtesy of AMERICAN HONDA MOTOR CO., INC.

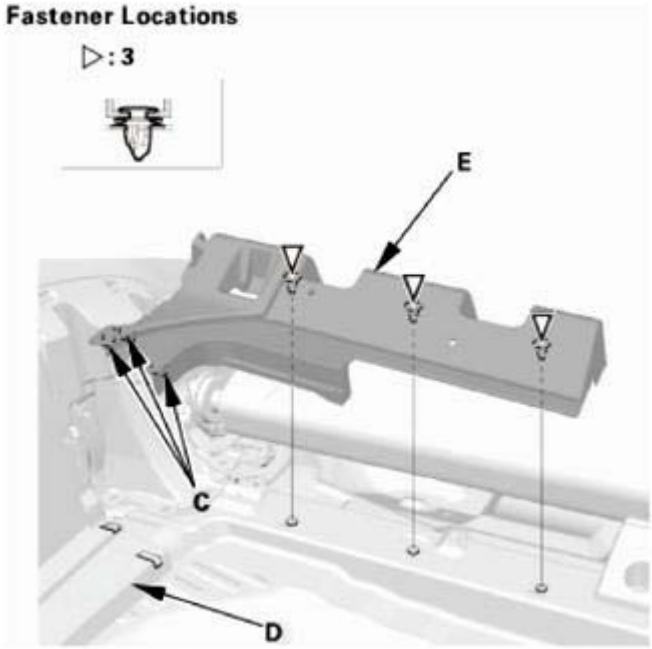

Fig. 13: Identifying Left Rear Carpet Trims, Left Rear Side Trim Panel, Hooks
Courtesy of AMERICAN HONDA MOTOR CO., INC.

7. Tailgate Weatherstrip As Needed
    1. Detach the tailgate weatherstrip (A) as needed.

GETtheMANUALS.org

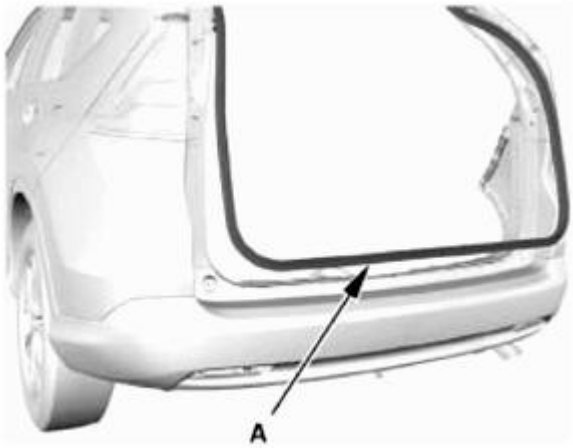

Fig. 14: Identifying Tailgate Weatherstrip
Courtesy of AMERICAN HONDA MOTOR CO., INC.

8. Rear Trim Panel
    1. Remove the clips (A).
    2. Detach the hooks (B) and the tabs (C) from the rear side trim panels (D), and pull up the rear trim panel (E) by hand to detach the clips (F, G), then remove the rear trim panel.

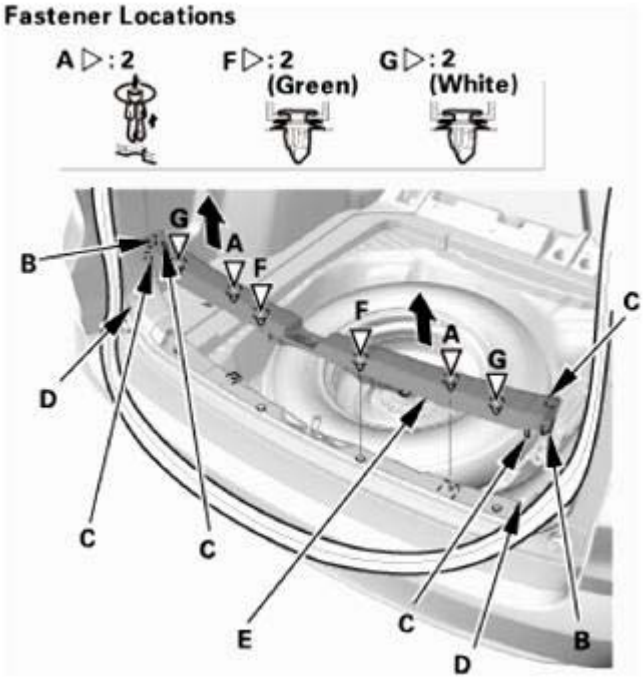

Fig. 15: Removing Rear Trim Panel
Courtesy of AMERICAN HONDA MOTOR CO., INC.

9. Left Rear Side Trim Panel
    1. Remove the rear seat release lever cap (A), then remove the screws.

GETtheMANUALS.org

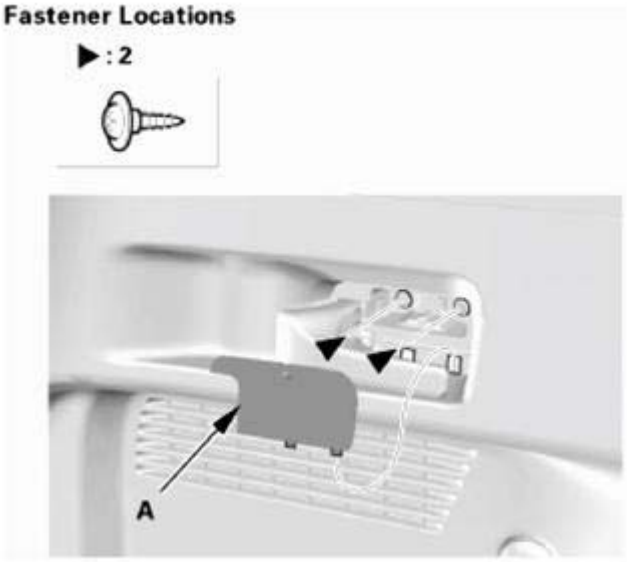

Fig. 16: Removing Rear Seat Release Lever Cap And Screws
Courtesy of AMERICAN HONDA MOTOR CO., INC.

2. Push in on the center pin (A), then remove the trunk hook (B).

Fig. 17: Identifying Center Pin And Trunk Hook
Courtesy of AMERICAN HONDA MOTOR CO., INC.

3. Remove the bolt, then remove the tie-down hook (A).

GETtheMANUALS.org

Fig. 18: Identifying Tie-Down Hook And Bolt
Courtesy of AMERICAN HONDA MOTOR CO., INC.

4. Remove the clips (A, B).
5. Detach the hooks (C) and the tabs (D) from the quarter pillar trim (E), and pull out the left rear side trim panel (F) by hand to detach the clips (G, H).
6. Carefully move the left rear side trim panel aside.

GETtheMANUALS.org

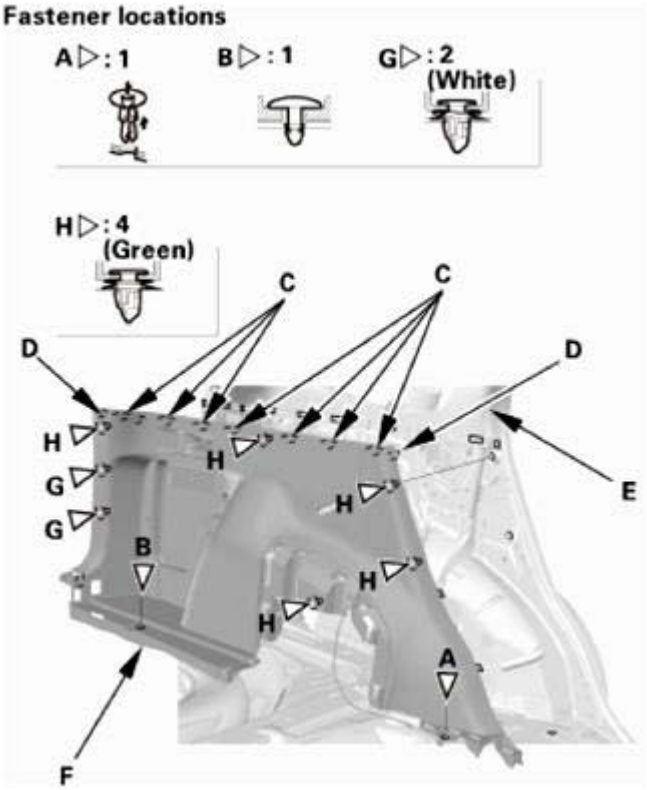

Fig. 19: Identifying Left Rear Side Trim Panel Fasteners Location
Courtesy of AMERICAN HONDA MOTOR CO., INC.

10. Real Time AWD Control Unit
    1. Disconnect the connector (A) by pushing the lock (B) and Pull down the lever (C); the connector disconnects itself.
    2. Loosen the real time AWD control unit mounting bolts (D), then remove the real time AWD control unit (E).

GETtheMANUALS.org

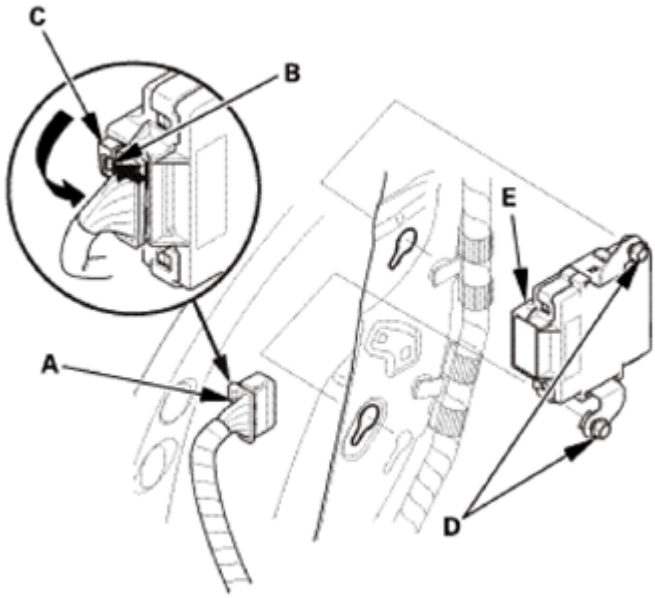

Fig. 20: Pulling Down Connector Lever
Courtesy of AMERICAN HONDA MOTOR CO., INC.

INSTALLATION

1. Real Time AWD Control Unit
    1. Install the real time AWD control unit (A).
    2. Align the connecting surface of the connector (B).
    3. pulling up the lever (C) of the connector, then confirm the connector is fully seated.

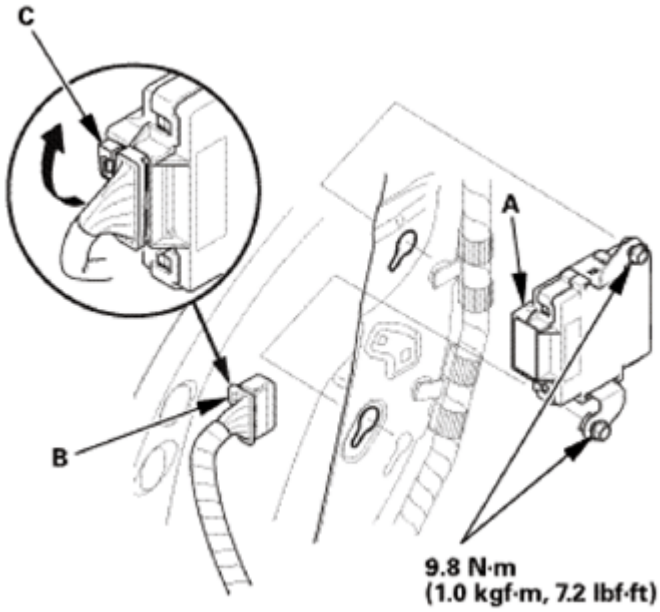

Fig. 21: Identifying Real Time AWD Control Unit, Connector And Lever With Torque

GETtheMANUALS.org

Specifications
Courtesy of AMERICAN HONDA MOTOR CO., INC.

2. Left Rear Side Trim Panel
    1. Install the left rear side trim panel (A). Make sure the hooks (B), the tabs (C), and the clips (D, E) snap into place securely.
    2. Install the clips (F, G).

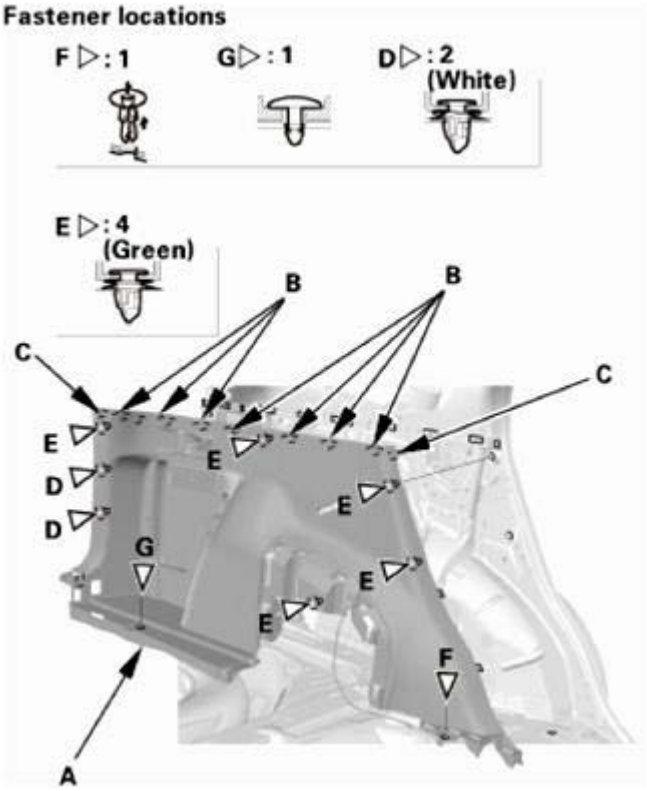

Fig. 22: Identifying Left Rear Side Trim Panel, Tab, Hook And Clip
Courtesy of AMERICAN HONDA MOTOR CO., INC.

3. Install the tie-down hook (A).

GETtheMANUALS.org

Fig. 23: Identifying Tie-Down Hook With Torque Specifications
Courtesy of AMERICAN HONDA MOTOR CO., INC.

4. Install the trunk hook (A).

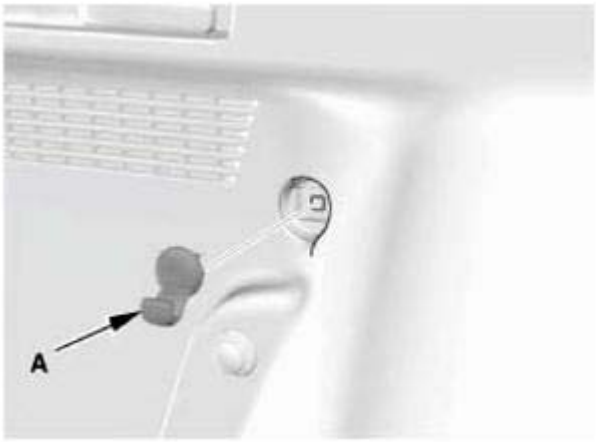

Fig. 24: Identifying Trunk Hook
Courtesy of AMERICAN HONDA MOTOR CO., INC.

5. Install the screws, then install the left rear seat release lever cap (A).

GETtheMANUALS.org

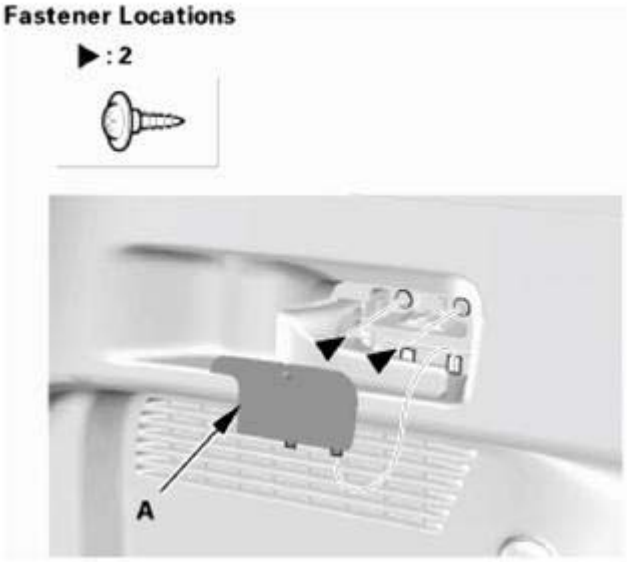

Fig. 25: Identifying Left Rear Seat Lever Cap And Screws
Courtesy of AMERICAN HONDA MOTOR CO., INC.

3. Rear Trim Panel
    1. Install the rear trim panel (A). Make sure the clips (B, C), the hooks (D), and the tabs (E) snap into place securely.
    2. Install the clips (F).

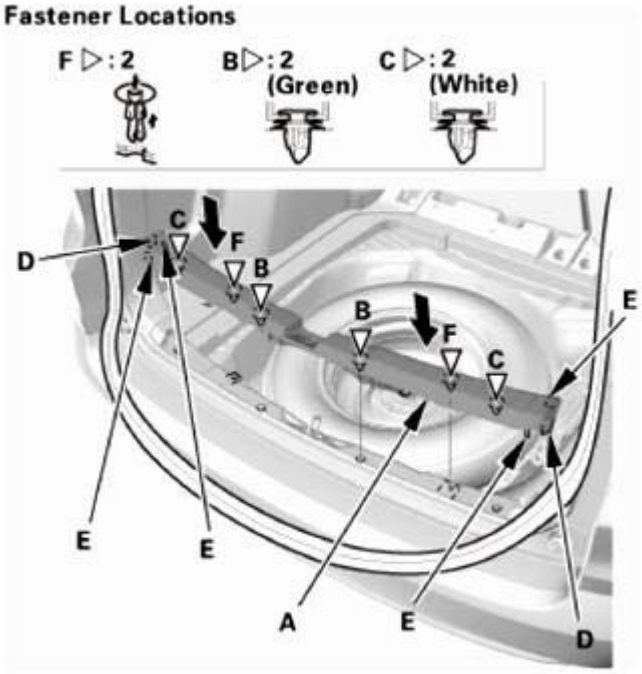

Fig. 26: Installing Rear Trim Panel
Courtesy of AMERICAN HONDA MOTOR CO., INC.

GETtheMANUALS.org

4. Tailgate Weatherstrip As Needed
    1. Locate the alignment mark (A) of the tailgate weatherstrip (B). Align the alignment mark (C) with the center of the lower area on the tailgate opening, then install the tailgate weatherstrip all the way around.

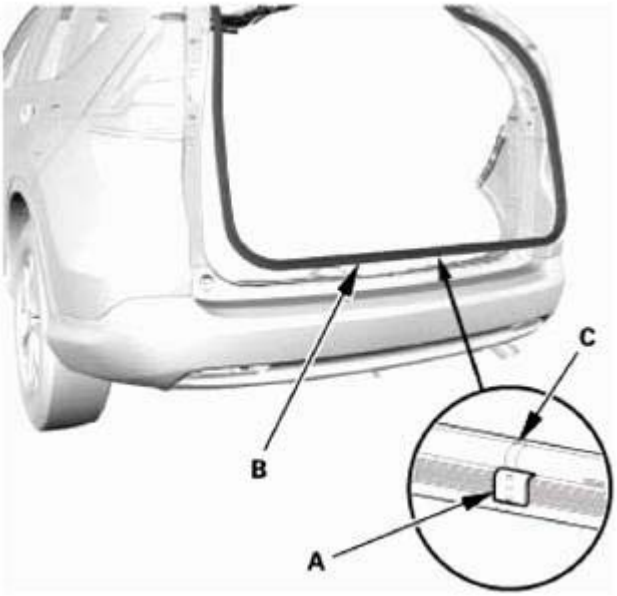

Fig. 27: Identifying Tailgate Weatherstrip With Alignment Mark
Courtesy of AMERICAN HONDA MOTOR CO., INC.

5. Left Rear Carpet Trim
    1. Install the left rear carpet trim (A). Make sure the clips and the hooks (B) snap into place securely.
    2. Install the rear seat-back cover (C). Make sure the clips (D) snap into place securely.

GETtheMANUALS.org

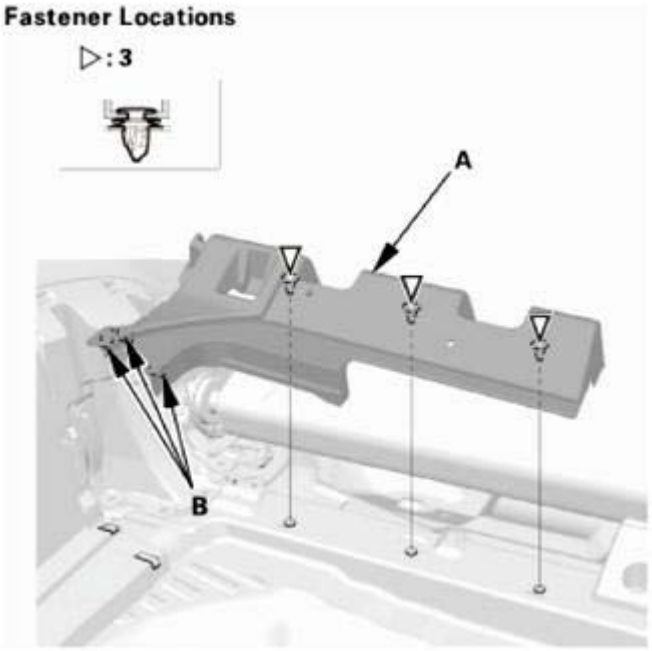

Fig. 28: Identifying Left Rear Carpet Trim And Hooks
Courtesy of AMERICAN HONDA MOTOR CO., INC.

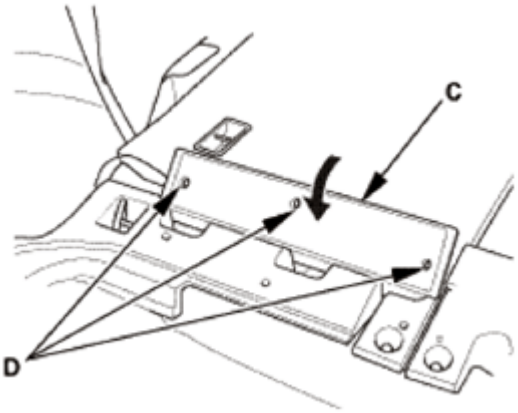

Fig. 29: Installing Rear Seat-Back Cover
Courtesy of AMERICAN HONDA MOTOR CO., INC.

6. Left Rear Damper Maintenance Cover
    1. Install the rear damper maintenance cover (A). Make sure the hooks (B) snap into place securely.

GETtheMANUALS.org

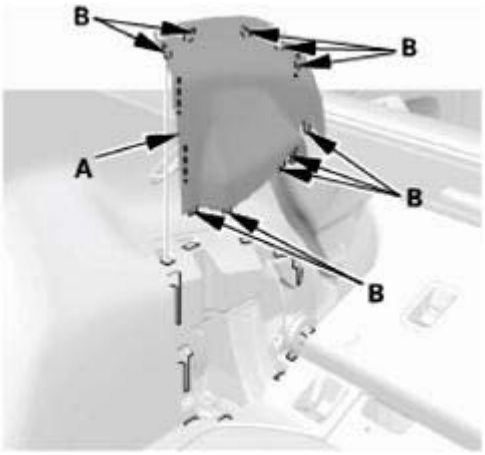

Fig. 30: Identifying Rear Damper Maintenance Cover And Hooks
Courtesy of AMERICAN HONDA MOTOR CO., INC.

7. Rear Door Opening Seal As Needed
    1. Install the rear door opening seal (A). Make sure the seal is installed securely into the hooks (B).

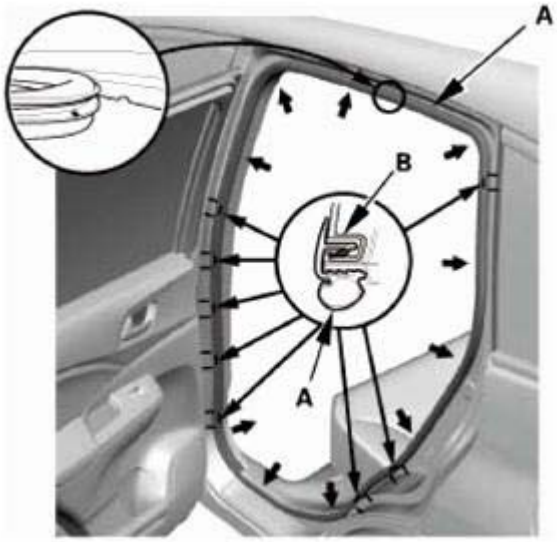

Fig. 31: Identifying Rear Door Opening Seal And Hooks
Courtesy of AMERICAN HONDA MOTOR CO., INC.

8. Left Rear Door Sill Trim
    1. Lift up and latch the left rear seat back in the up right position.
    2. Install the left rear door inner sill trim (A). Make sure the clips (B, C), the hooks (D), and the tab (E) snap into place securely.

GETtheMANUALS.org

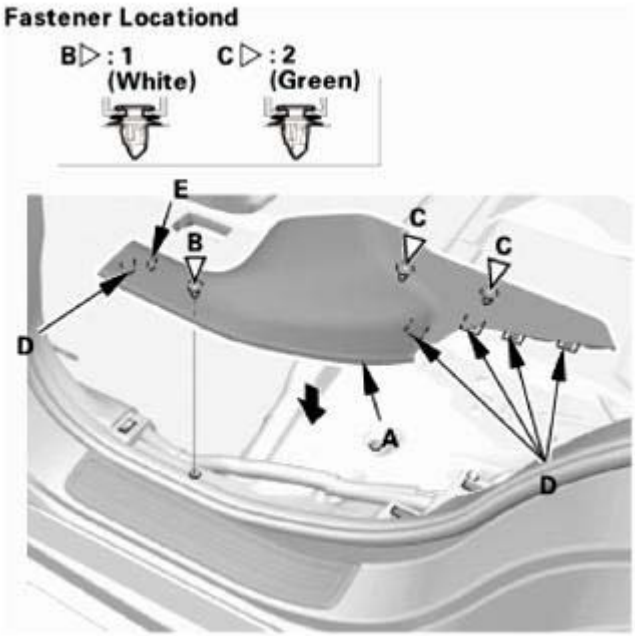

Fig. 32: Installing Left Rear Door Inner Sill Trim
Courtesy of AMERICAN HONDA MOTOR CO., INC.

9. Cargo Floor Cover
    1. Install the cargo floor cover (A).

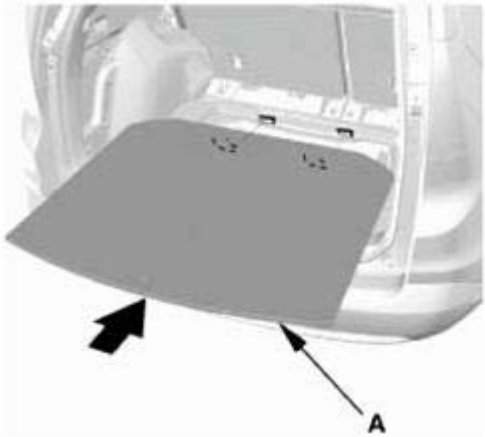

Fig. 33: Installing Cargo Floor Cover
Courtesy of AMERICAN HONDA MOTOR CO., INC.

10. Tonneau Cover (For Some Models)
    1. Install the tonneau cover (A).

GETtheMANUALS.org

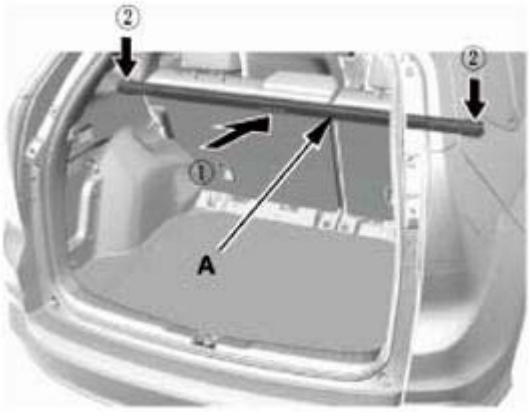

Fig. 34: Installing Tonneau Cover
Courtesy of AMERICAN HONDA MOTOR CO., INC.

11. HDS DLC - Connection
    1. Connect the HDS to the data link connector (DLC) (A) located under the driver's side of the dashboard.
    2. Turn the ignition switch to ON (II).
    3. Make sure the HDS communicates with the vehicle. If it does not communicate, go to the DLC circuit troubleshooting.

Fig. 35: Identifying Data Link Connector
Courtesy of AMERICAN HONDA MOTOR CO., INC.

12. Real Time AWD Control Unit Initialization
    1. Select the ADJUSTMENT in the REAL TIME AWD SYSTEM with the HDS.
    2. Select the ECU REPLACEMENT in the ADJUSTMENT with the HDS.

NOTE: See the HDS Help menu for specific instructions.

GETtheMANUALS.org

REAL TIME AWD CONTROL UNIT UPDATE

SPECIAL TOOL DESCRIPTION

Image	Description/Tool Number
	MVCI unit with the latest control module (CM) update software installed

Any one of the above updating tools can be used.

PROCEDURE

1. Real Time AWD Control Unit Update

NOTE: **Check any official Honda service website for more service information about updating the MVCI and control units.**

REAL TIME AWD RELAY REMOVAL AND INSTALLATION

REMOVAL

GETtheMANUALS.org

1. Tonneau Cover (For Some Models)
    1. Remove the tonneau cover (A).

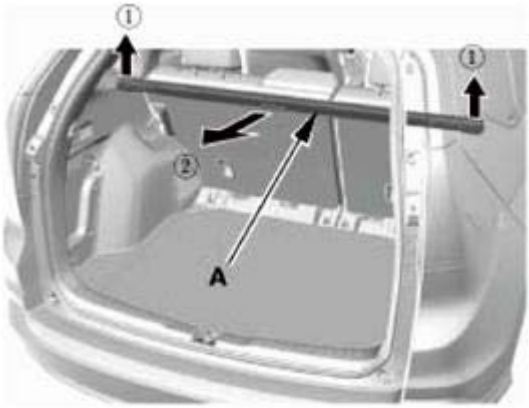

Fig. 36: Removing Tonneau Cover
Courtesy of AMERICAN HONDA MOTOR CO., INC.

2. Cargo Floor Cover
    1. Remove the cargo floor cover (A).

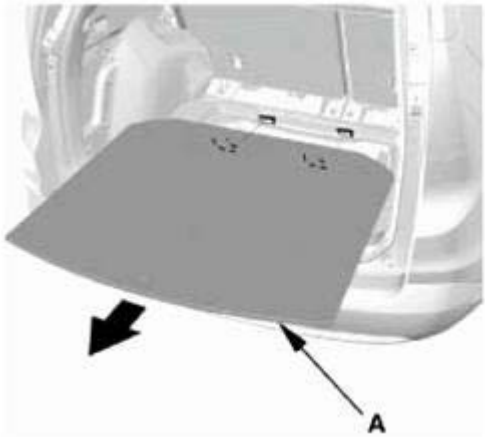

Fig. 37: Removing Cargo Floor Cover
Courtesy of AMERICAN HONDA MOTOR CO., INC.

3. Left Rear Door Sill Trim
    1. Fold down the left rear seat, then lift-up and latch the left rear seat back in the up right position.
    2. Detach the hooks (A) and the tab (B) from the left B-pillar lower trim (C) and the left rear side trim panel (D), and pull up the rear door inner sill trim (E) by hand to detach the clips (F, G), then remove the trim.

GETtheMANUALS.org

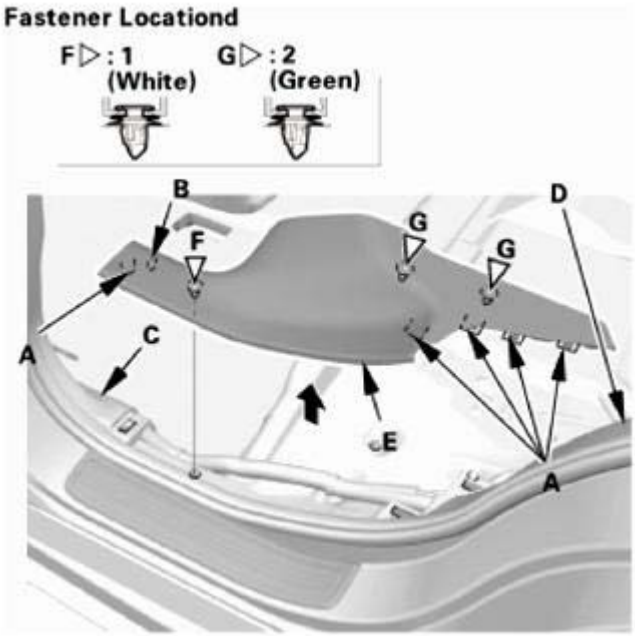

Fig. 38: Removing Left Rear Door Sill Trim
Courtesy of AMERICAN HONDA MOTOR CO., INC.

4. Rear Door Opening Seal As Needed
    1. Pull out the rear door opening seal (A) from the trim hooks (B) around the rear door opening flange as needed.

Fig. 39: Identifying Rear Door Opening Seal And Hooks
Courtesy of AMERICAN HONDA MOTOR CO., INC.

5. Left Rear Damper Maintenance Cover
    1. Fold down the left rear seat back.

GETtheMANUALS.org

2. Pull up the rear damper maintenance cover (A) by hand to detach the hooks (B), then remove the rear damper maintenance cover.

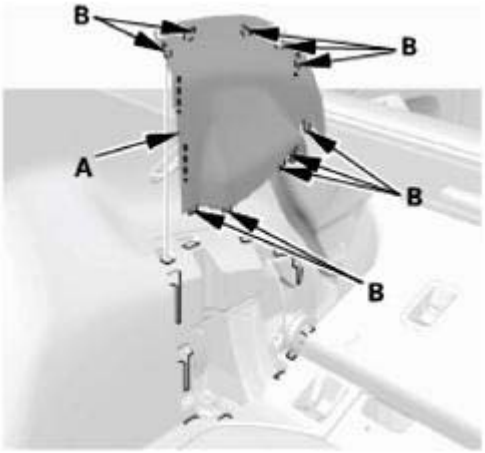

Fig. 40: Identifying Rear Damper Maintenance Cover And Hooks
Courtesy of AMERICAN HONDA MOTOR CO., INC.

6. Left Rear Carpet Trim
    1. Detach the clips (A), then detach the left rear seat-back cover (B).
    2. Detach the hooks (C) from the left rear side trim panel (D), and pull up the left rear carpet trims (E) by hand to detach the clips, then remove the left rear carpet trim.

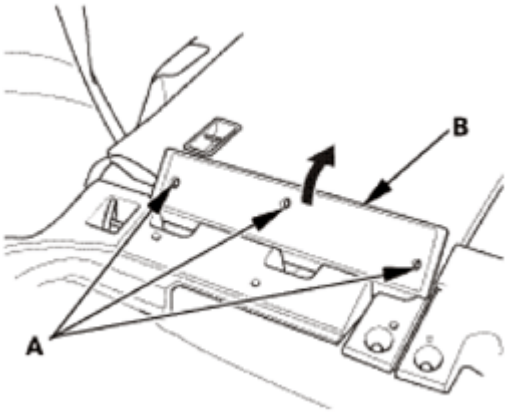

Fig. 41: Removing Left Rear Carpet Trim
Courtesy of AMERICAN HONDA MOTOR CO., INC.

GETtheMANUALS.org

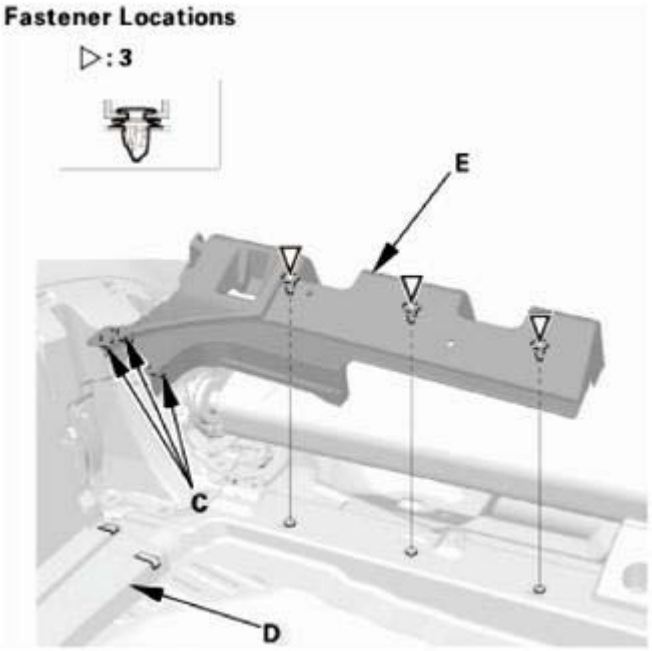

Fig. 42: Identifying Left Rear Carpet Trims, Left Rear Side Trim Panel, Hooks
Courtesy of AMERICAN HONDA MOTOR CO., INC.

7. Tailgate Weatherstrip As Needed
    1. Detach the tailgate weatherstrip (A) as needed.

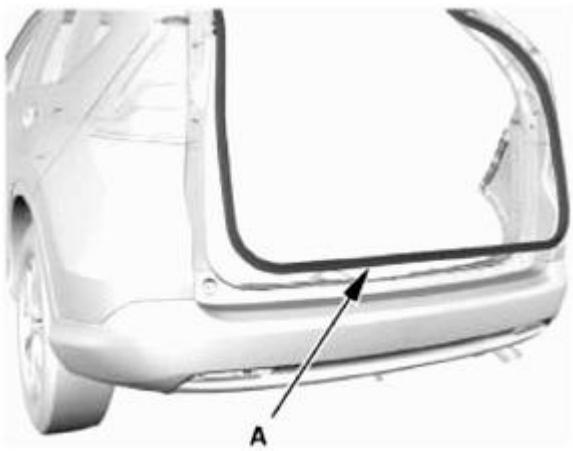

Fig. 43: Identifying Tailgate Weatherstrip
Courtesy of AMERICAN HONDA MOTOR CO., INC.

8. Rear Trim Panel
    1. Remove the clips (A).
    2. Detach the hooks (B) and the tabs (C) from the rear side trim panels (D), and pull up the rear trim panel (E) by hand to detach the clips (F, G), then remove the rear trim panel.

GETtheMANUALS.org

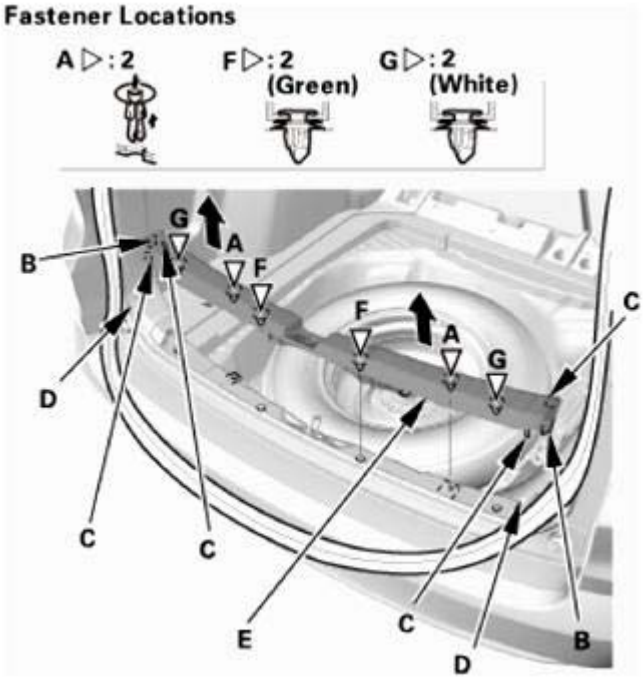

Fig. 44: Removing Rear Trim Panel
Courtesy of AMERICAN HONDA MOTOR CO., INC.

9. Left Rear Side Trim Panel
    1. Remove the rear seat release lever cap (A), then remove the screws.

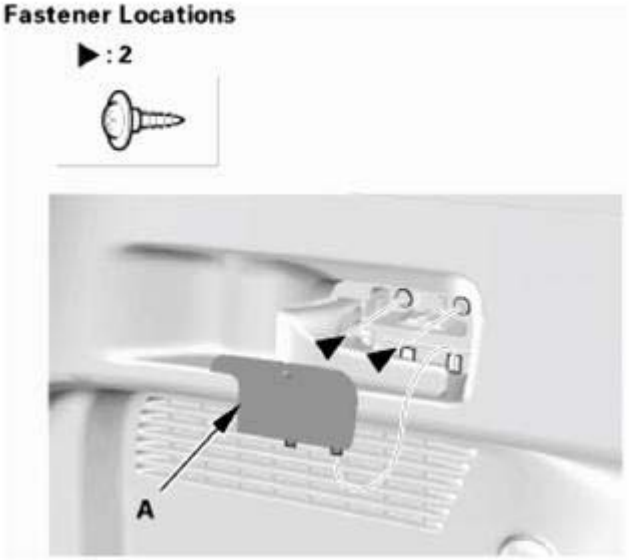

Fig. 45: Identifying Rear Seat Release Lever Cap
Courtesy of AMERICAN HONDA MOTOR CO., INC.

    2. Push in on the center pin (A), then remove the trunk hook (B).

GETtheMANUALS.org

Fig. 46: Identifying Center Pin And Trunk Hook
Courtesy of AMERICAN HONDA MOTOR CO., INC.

3. Remove the bolt, then remove the tie-down hook (A).

Fig. 47: Identifying Tie-Down Hook And Bolt
Courtesy of AMERICAN HONDA MOTOR CO., INC.

4. Remove the clips (A, B).
5. Detach the hooks (C) and the tabs (D) from the quarter pillar trim (E), and pull out the left rear side trim panel (F) by hand to detach the clips (G, H).
6. Carefully move the left rear side trim panel aside.

GETtheMANUALS.org

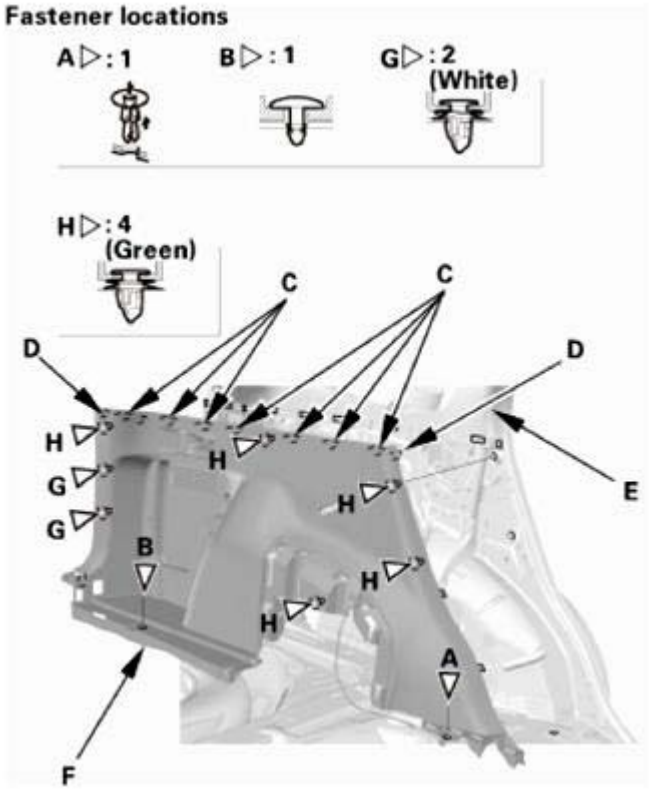

Fig. 48: Identifying Quarter Pillar Trim, Left Rear Side Trim Panel, Hooks, Tabs And Clip
Courtesy of AMERICAN HONDA MOTOR CO., INC.

10. Real Time AWD Relay
    1. Remove the real time AWD relay (A).

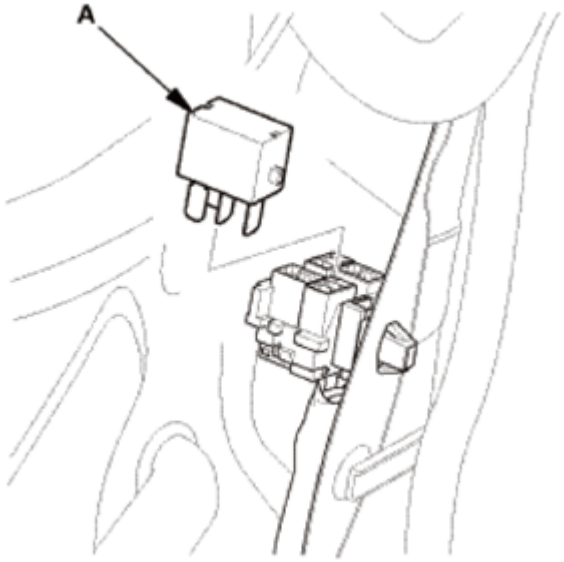

Fig. 49: Identifying Real Time AWD Relay
Courtesy of AMERICAN HONDA MOTOR CO., INC.

GETtheMANUALS.org

INSTALLATION

1. Real Time AWD Relay
    1. Install the real time AWD relay (A).

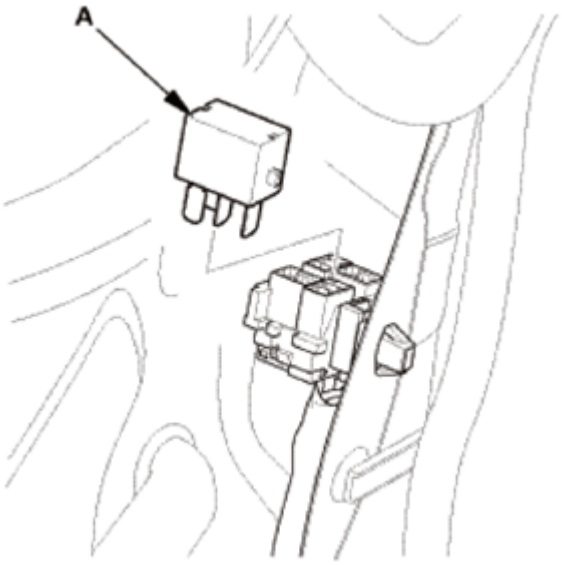

Fig. 50: Identifying Real Time AWD Relay
Courtesy of AMERICAN HONDA MOTOR CO., INC.

2. Left Rear Side Trim Panel
    1. Install the left rear side trim panel (A). Make sure the hooks (B), the tabs (C), and the clips (D, E) snap into place securely.
    2. Install the clips (F, G).

GETtheMANUALS.org

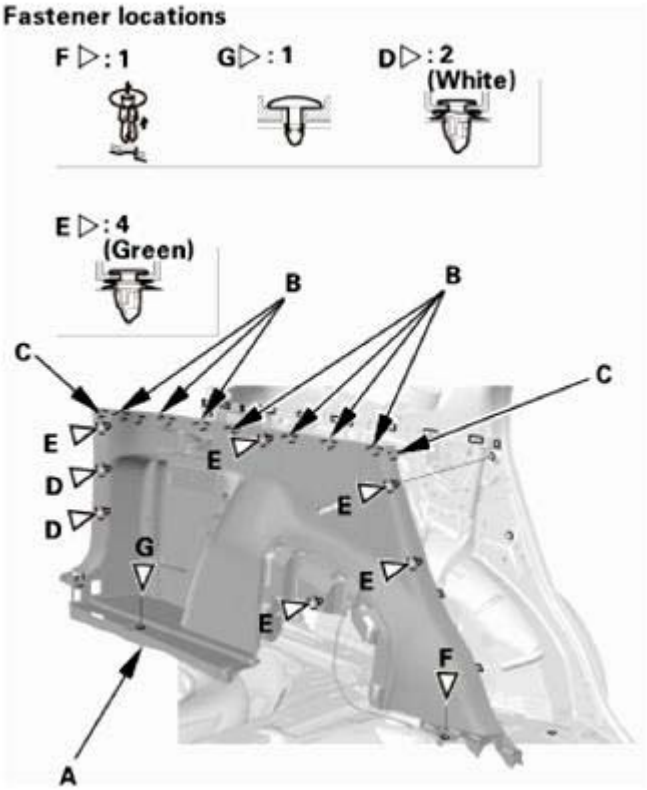

Fig. 51: Identifying Left Rear Side Trim Panel, Hooks, Tabs And Clips
Courtesy of AMERICAN HONDA MOTOR CO., INC.

3. Install the tie-down hook (A).

Fig. 52: Identifying Tie-Down Hook With Torque Specifications
Courtesy of AMERICAN HONDA MOTOR CO., INC.

GETtheMANUALS.org

4. Install the trunk hook (A).

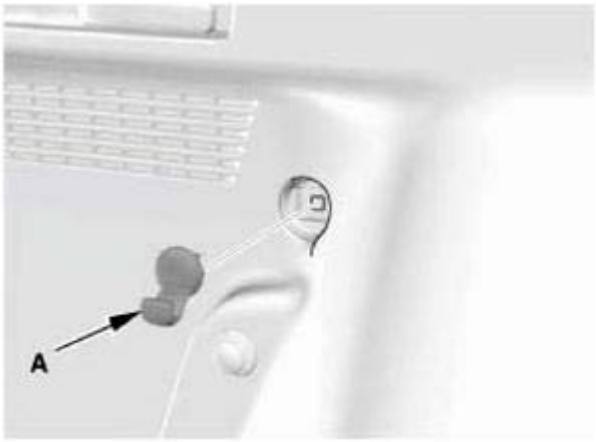

Fig. 53: Identifying Trunk Hook With Torque Specifications
Courtesy of AMERICAN HONDA MOTOR CO., INC.

5. Install the screws, then install the left rear seat release lever cap (A).

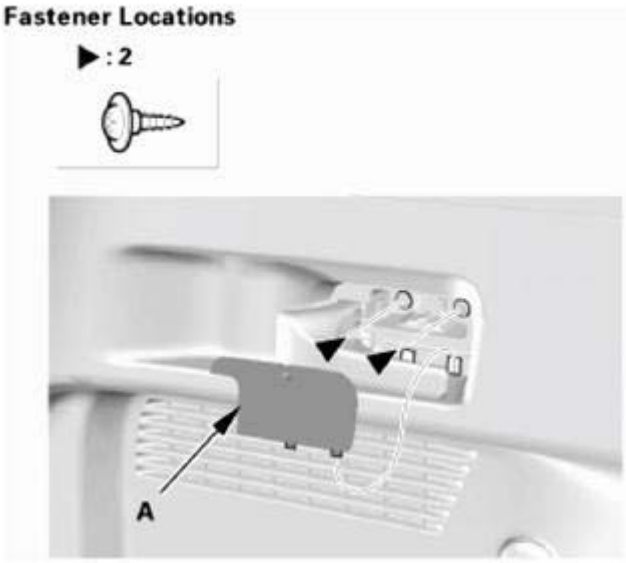

Fig. 54: Identifying Left Rear Seat Release Lever Cap And Screws
Courtesy of AMERICAN HONDA MOTOR CO., INC.

3. Rear Trim Panel
    1. Install the rear trim panel (A). Make sure the clips (B, C), the hooks (D), and the tabs (E) snap into place securely.
    2. Install the clips (F).

GETtheMANUALS.org

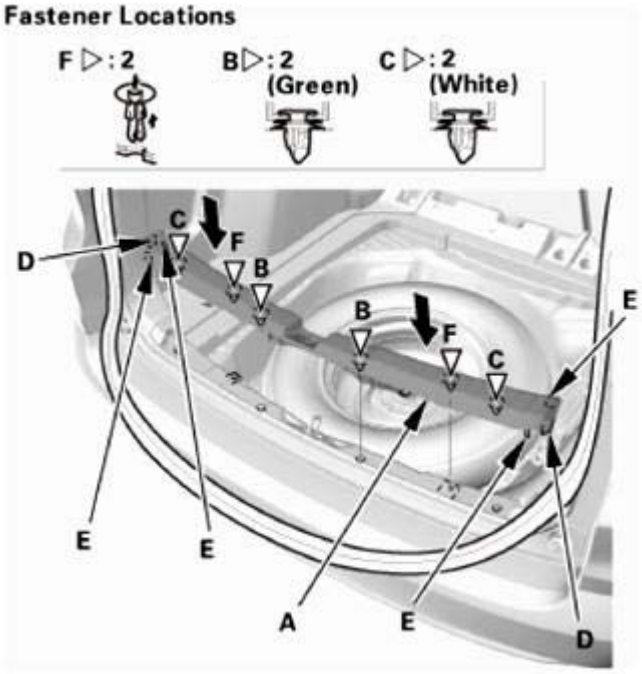

Fig. 55: Installing Rear Trim Panel
Courtesy of AMERICAN HONDA MOTOR CO., INC.

4. Tailgate Weatherstrip As Needed
    1. Locate the alignment mark (A) of the tailgate weatherstrip (B). Align the alignment mark (C) with the center of the lower area on the tailgate opening, then install the tailgate weatherstrip all the way around.

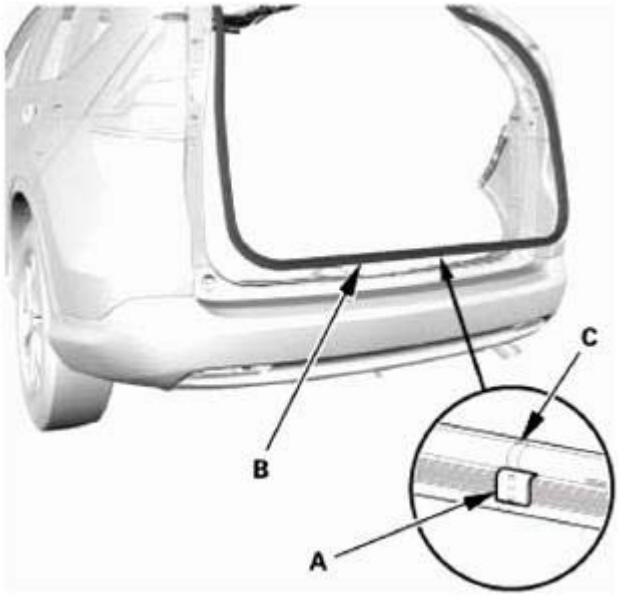

Fig. 56: Identifying Tailgate Weatherstrip With Alignment Mark
Courtesy of AMERICAN HONDA MOTOR CO., INC.

GETtheMANUALS.org

5. Left Rear Carpet Trim
    1. Install the left rear carpet trim (A). Make sure the clips and the hooks (B) snap into place securely.
    2. Install the rear seat-back cover (C). Make sure the clips (D) snap into place securely.

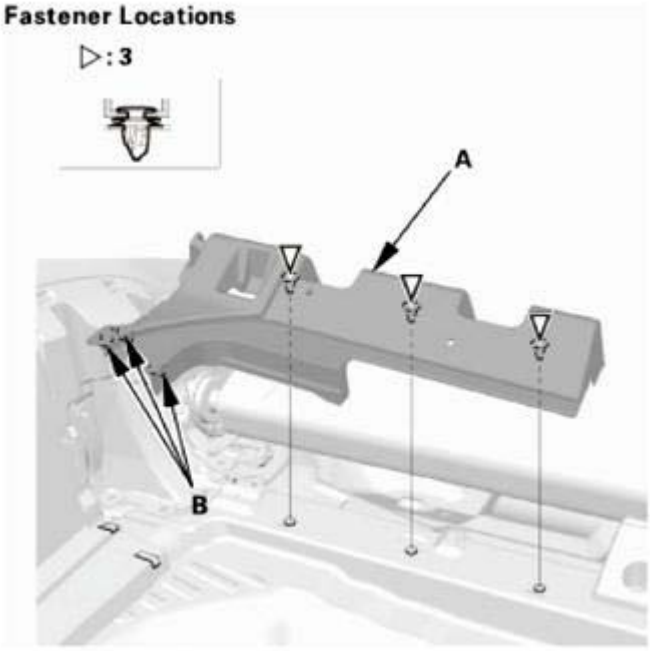

Fig. 57: Identifying Left Rear Carpet Trim, Clips And Hooks
Courtesy of AMERICAN HONDA MOTOR CO., INC.

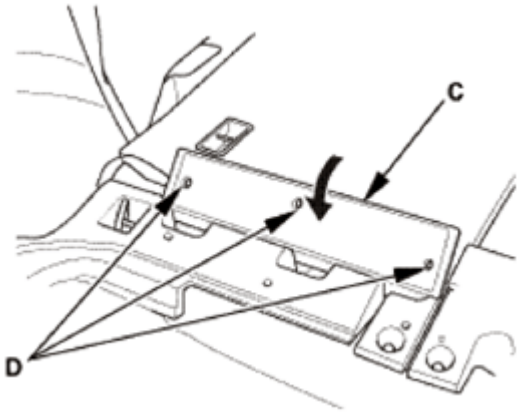

Fig. 58: Installing Rear Seat-Back Cover
Courtesy of AMERICAN HONDA MOTOR CO., INC.

6. Left Rear Damper Maintenance Cover
    1. Install the rear damper maintenance cover (A). Make sure the hooks (B) snap into place securely.

GETtheMANUALS.org

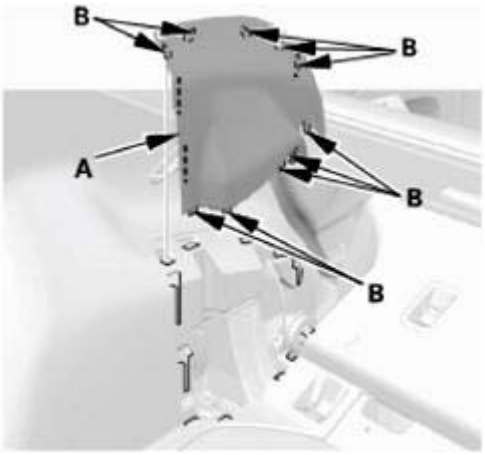

Fig. 59: Identifying Rear Damper Maintenance Cover And Hook
Courtesy of AMERICAN HONDA MOTOR CO., INC.

7. Rear Door Opening Seal As Needed
    1. Install the rear door opening seal (A). Make sure the seal is installed securely into the hooks (B).

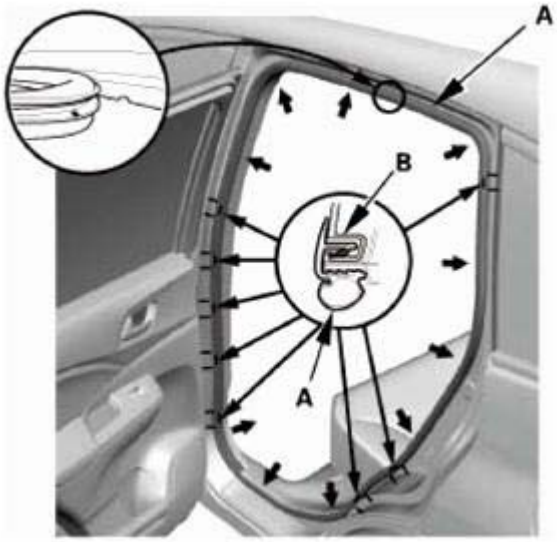

Fig. 60: Identifying Rear Door Opening Seal And Hooks
Courtesy of AMERICAN HONDA MOTOR CO., INC.

8. Left Rear Door Sill Trim
    1. Lift up and latch the left rear seat back in the up right position.
    2. Install the left rear door inner sill trim (A). Make sure the clips (B, C), the hooks (D), and the tab (E) snap into place securely.

GETtheMANUALS.org

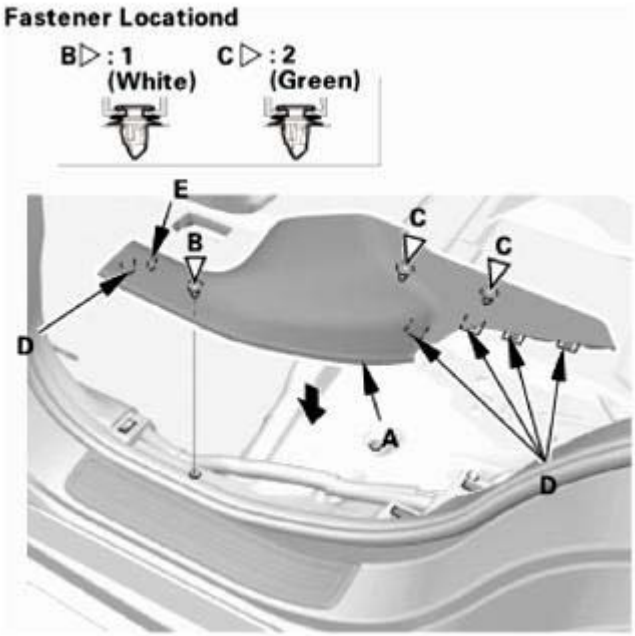

Fig. 61: Installing Left Rear Door Inner Sill Trim
Courtesy of AMERICAN HONDA MOTOR CO., INC.

9. Cargo Floor Cover
    1. Install the cargo floor cover (A).

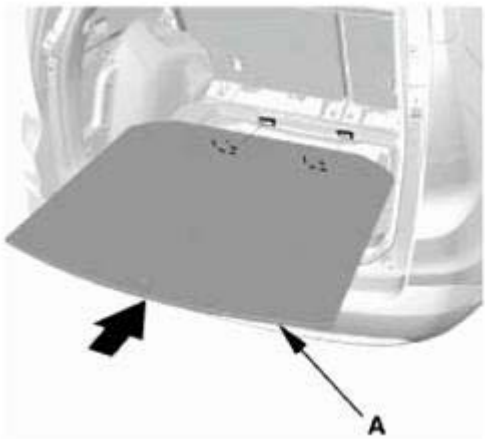

Fig. 62: Installing Cargo Floor Cover
Courtesy of AMERICAN HONDA MOTOR CO., INC.

10. Tonneau Cover (For Some Models)
    1. Install the tonneau cover (A).

GETtheMANUALS.org

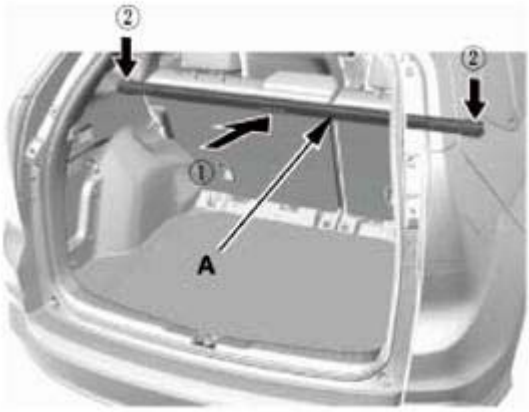

Fig. 63: Installing Tonneau Cover
Courtesy of AMERICAN HONDA MOTOR CO., INC.

REAL TIME AWD SYSTEM BLEEDING

PROCEDURE

NOTE: **Whenever the rear differential assembly is disassembly, its real time AWD system must be bled.**

1. HDS DLC - Connection
    1. Connect the HDS to the data link connector (DLC) (A) located under the driver's side of the dashboard.
    2. Turn the ignition switch to ON (II).
    3. Make sure the HDS communicates with the vehicle. If it does not communicate, go to the DLC circuit troubleshooting.

Fig. 64: Identifying Data Link Connector

GETtheMANUALS.org

Courtesy of AMERICAN HONDA MOTOR CO., INC.

2. Real Time AWD System Bleeding
    1. Select the ADJUSTMENT in the REAL TIME AWD SYSTEM with the HDS.
    2. Select the AIR BLEEDING in the ADJUSTMENT with the HDS.

NOTE: See the HDS Help menu for specific instructions.

REAL TIME AWD SYSTEM DTC TROUBLESHOOTING INDEX

DTC	AWD System Indicator	Detection Item
C1840-12 (47)	ON	Differential Fluid Pressure Sensor Circuit High Voltage
C1840-14 (47)	ON	Differential Fluid Pressure Sensor Circuit Low Voltage
C1841-11 (42)	ON	Differential Fluid Temperature Sensor Circuit Low Voltage
C1841-13 (42)	ON	Differential Fluid Temperature Sensor Circuit High Voltage
C1841-27 (43)	ON	Differential Fluid Temperature Sensor Circuit Range/Performance Problem
C1850-12 (44)	ON	Fail Safe Relay Stuck ON
C1850-14 (44)	ON	Fail Safe Relay Stuck OFF
C1851-18 (63)	ON	Motor Circuit Low Current
C1851-19 (63)	ON	Control Module Internal Control Module Malfunction
C1851-1E (63)	ON	Motor Circuit High Current
C1852-18 (62)	ON	Solenoid Valve Circuit Low Current
C1852-19 (62)	ON	Solenoid Valve Circuit High Current
C1858-72 (71)	ON	Differential Fluid Pressure Deviation Low
C1858-73 (71)	ON	Differential Fluid Pressure Deviation High
C1860-98 (76)	ON	Differential Fluid Overheated
C1861-9A (76)	ON	Vehicle Spin Detected

GETtheMANUALS.org

C1870-00 (77)	ON	Fuel and Emissions Related Malfunction
C1871-00 (77)	ON	Automatic Transmission Related Malfunction
C1872-00 (77)	ON	VSA Modulator-Control Unit Related Malfunction
C1873-00 (16)	ON	Steering Angle Sensor Malfunction
U0100-00 (41)	ON	F-CAN Malfunction (Lost Communication with Powertrain Control Module (PCM))
U0101-00 (41)	ON	F-CAN Malfunction (Lost Communication with A/T Control System)
U0122-00 (41)	ON	F-CAN Malfunction (Lost Communication with VSA Modulator-Control Unit)
U0126-00 (41)	ON	F-CAN Malfunction (Lost Communication with Steering Angle Sensor)
U3000-49 (78)	ON	Control Module Internal Control Module Malfunction
U3000-51 (91)	ON	Control Module Programming Error

ABNORMAL NOISE

GETtheMANUALS.org

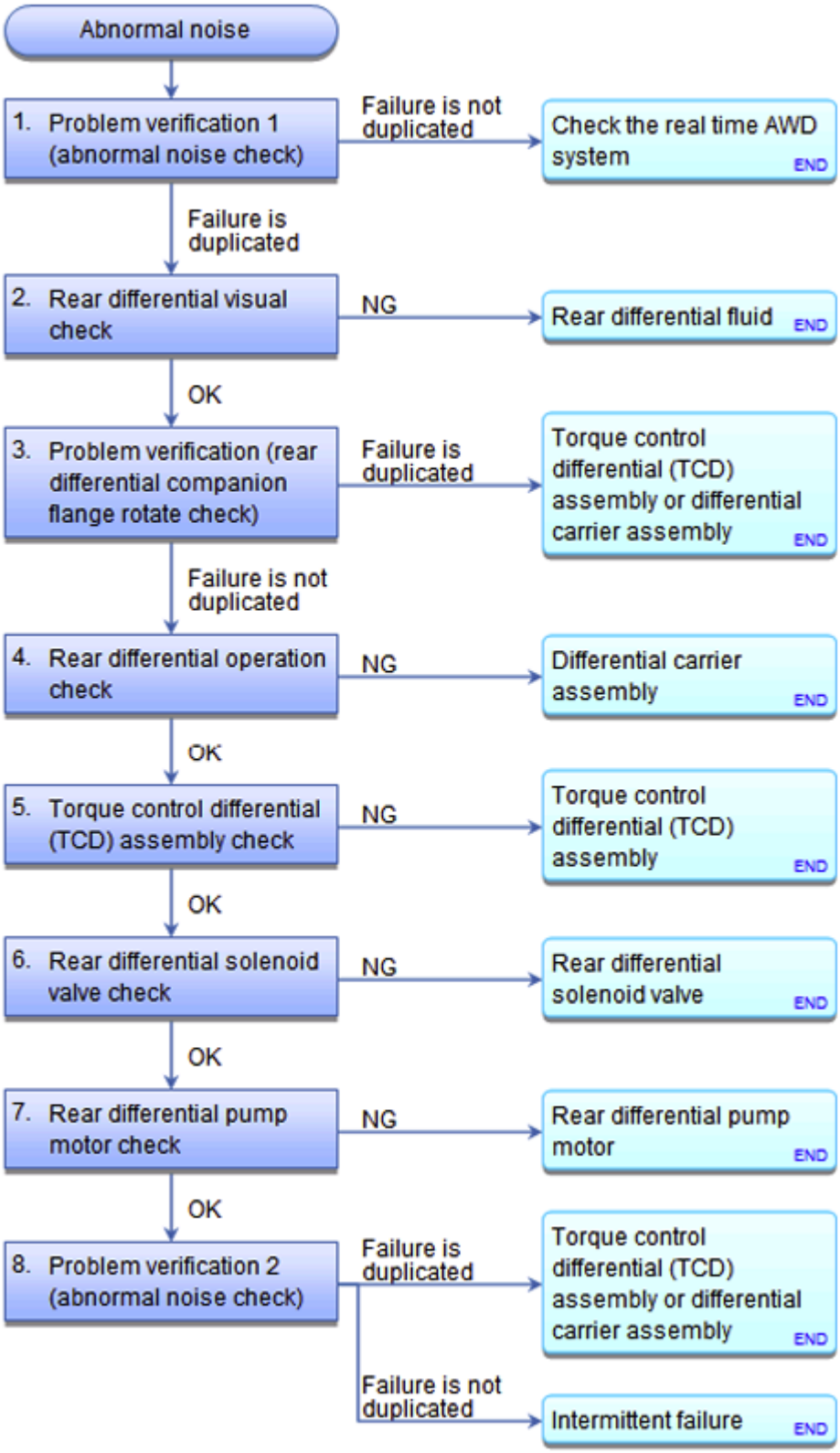

Fig. 65: Real Time AWD System Symptom Troubleshooting Chart (Abnormal Noise)
Courtesy of AMERICAN HONDA MOTOR CO., INC.

GETtheMANUALS.org

NOTE:

- **Before you troubleshoot, <u>REVIEW THE HOW TO TROUBLESHOOT THE REAL TIME AWD SYSTEM</u>.**
- **If necessary, comparison the noise with a know-good vehicle of the same type, if the noise is remarkably abnormal, do the following troubleshooting.**

1. Problem verification 1 (abnormal noise check):
   - 1. Test-drive the vehicle and check for abnormal noise.

   Did abnormal noise reappear?

   YES : Go to step 2.

   NO : Check the following items.

   - Check the rear differential fluid level and the fluid condition.
   - Check for rear differential fluid leaks.
   - Check for interference with items such as the harness.
   - Rotate either rear wheel by hand, and check that the other wheel rotates.
   - **<u>DO THE OIL PRESSURE CONTROL TEST IN THE FUNCTIONAL TEST MENU WITH THE HDS</u>** .
   - **<u>DO THE REAR DIFFERENTIAL FLUID PRESSURE SENSOR TEST</u>** .
2. Rear differential visual check:
   - 1. Check the following items.
     - Check the rear differential fluid level and the fluid condition.
     - Check for rear differential fluid leaks.
     - Check the interference such as the harness.

   Is the check result OK?

   YES : Go to step 3.

   NO : **<u>REPLACE THE REAR DIFFERENTIAL FLUID OR ADD RECOMMENDED FLUID</u>** .

3. Problem verification (rear differential companion flange rotate check):
   - 1. Release the parking brake.
   - 2. Shift the transmission to N.
   - 3. Raise the vehicle on a lift.
   - 4. Make a reference mark (A) across the propeller shaft and the rear companion flange.

GETtheMANUALS.org

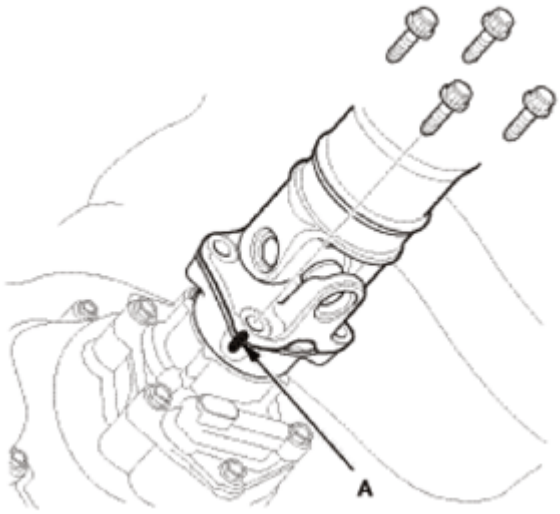

Fig. 66: Identifying Propeller Shaft Reference Mark
Courtesy of AMERICAN HONDA MOTOR CO., INC.

- 5. Remove the propeller shaft mounting bolts from the rear differential companion flange.
- 6. Rotate the companion flange by hand.

Can the rear differential companion flange be rotated smoothly by hand?

YES : Go to step 4.

NO : Replace the **Rear Differential Housing Assembly Removal and Installation**

4. Rear differential operation check:
   - 1. Rotate either rear wheel by hand, and check that the other wheel rotates.

Does the other wheel rotate?

YES : Go to step 5.

NO : Replace the **Rear Differential Housing Assembly Removal and Installation**

5. Torque control differential (TCD) assembly check:
   - 1. Realign the reference mark (A) on the propeller shaft and the rear differential companion flange, then install new flange bolts (B).

GETtheMANUALS.org

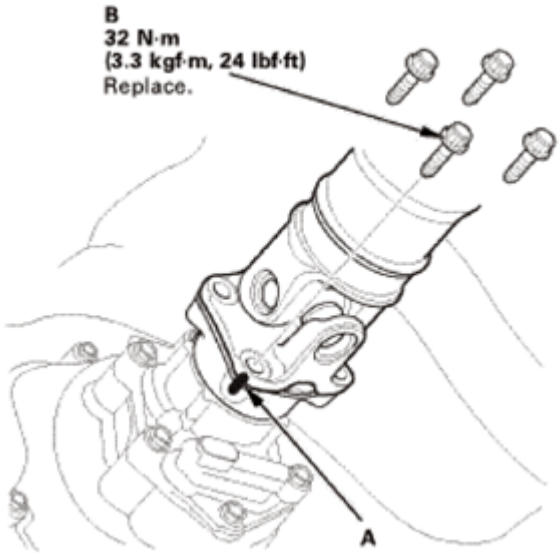

Fig. 67: Identifying Propeller Shaft Reference Mark With Flange Bolt And Torque Specifications
Courtesy of AMERICAN HONDA MOTOR CO., INC.

- 2. Remove the following fuse.

  Fuse No. A1-5 (30 A)

  Location Under-food fuse/relay box

- 3. Test-drive the vehicle on the lift.

Is the abnormal noise still present?

YES : Replace the **Rear Differential Housing Assembly Removal and Installation** .

NO : Go to step 6.

6. Rear differential solenoid valve check:
   - 1. Do the SOLENOID TEST LEVEL 7, and then do SOLENOID TEST LEVEL 1 with the HDS.

Did abnormal noise happen when testing LEVEL 7 to LEVEL 1?

YES : Replace the rear differential solenoid valve. Go to **Rear Differential Solenoid Valve**

NO : Go to step 7.

7. Rear differential pump motor check:
   - 1. Do the Air Bleeding in the Adjustment Menu with the HDS.
   - 2. Listen for any abnormal noise coming from the rear differential pump motor.

GETtheMANUALS.org

Did abnormal noise happen while doing Air Bleeding?

YES : **REPLACE THE REAR DIFFERENTIAL PUMP MOTOR** .

NO : Go to step 8.

8. Problem verification 2 (abnormal noise check):
   - 1. **REPLACE THE REAR DIFFERENTIAL FLUID** .
   - 2. Do the Air Bleeding in the Adjustment Menu with the HDS.
   - 3. Test-drive the vehicle on the lift.

YES : Replace the **Rear Differential Housing Assembly Removal and Installation**

NO : Intermittent failure, the system is OK at this time.

AWD SYSTEM INDICATOR DOES NOT COME ON

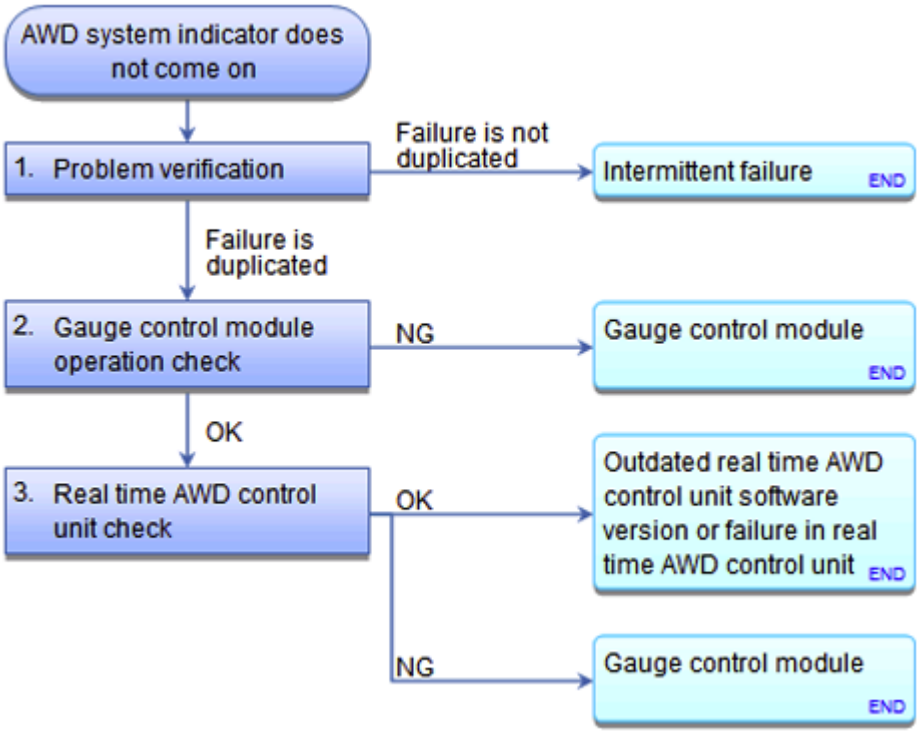

Fig. 68: Real Time AWD System Symptom Troubleshooting (AWD System Indicator Not Come On)
Courtesy of AMERICAN HONDA MOTOR CO., INC.

NOTE: **Before you troubleshoot, REVIEW THE HOW TO TROUBLESHOOT THE REAL TIME AWD SYSTEM.**

1. Problem verification:

GETtheMANUALS.org

- 1. Turn the ignition switch to ON (II).

Does the AWD system indicator come on?

YES : Intermittent failure, the system is OK at this time.

NO : The failure is duplicated. Go to step 2.

2. Gauge control module operation check:
   - 1. **DO THE GAUGE CONTROL MODULE SELF-DIAGNOSTIC FUNCTION** .

Does the AWD system indicator blink?

YES : Go to step 3.

NO : **Replace the gauge control module** See **GAUGE CONTROL MODULE REMOVAL AND INSTALLATION** or **Rewriting the ODO Data and Transferring the Maintenance Minder™ Data to a New Gauge Control Module** .

3. Real time AWD control unit check:
   - 1. Turn the ignition switch to LOCK (0).
   - 2. Remove the following fuse.

     Fuse No. B6 (7.5 A)

     Location Under-dash fuse/relay box

   - 3. Turn the ignition switch to ON (II).

Does the AWD system indicator come on?

YES : **Update the real time AWD control unit if it does not have the latest software** See **REAL TIME AWD CONTROL UNIT REMOVAL AND INSTALLATION** or **REAL TIME AWD CONTROL UNIT UPDATE**, or **substitute a known-good real time AWD control unit** See **REAL TIME AWD CONTROL UNIT REMOVAL AND INSTALLATION** or **REAL TIME AWD CONTROL UNIT UPDATE**, and recheck. If the symptom/indication goes away with the updated real time AWD control unit, troubleshooting is complete. If the symptom/indication goes away with a known-good real time AWD control unit, **replace the original real time AWD control unit** See **REAL TIME AWD CONTROL UNIT REMOVAL AND INSTALLATION** or **REAL TIME AWD CONTROL UNIT UPDATE**.

NO : **Replace the gauge control module** See **GAUGE CONTROL MODULE REMOVAL AND INSTALLATION** or **Rewriting the ODO Data and Transferring the Maintenance Minder™ Data to a New Gauge Control Module** .

AWD SYSTEM INDICATOR DOES NOT GO OFF, AND NO DTCS ARE

GETtheMANUALS.org

STORED

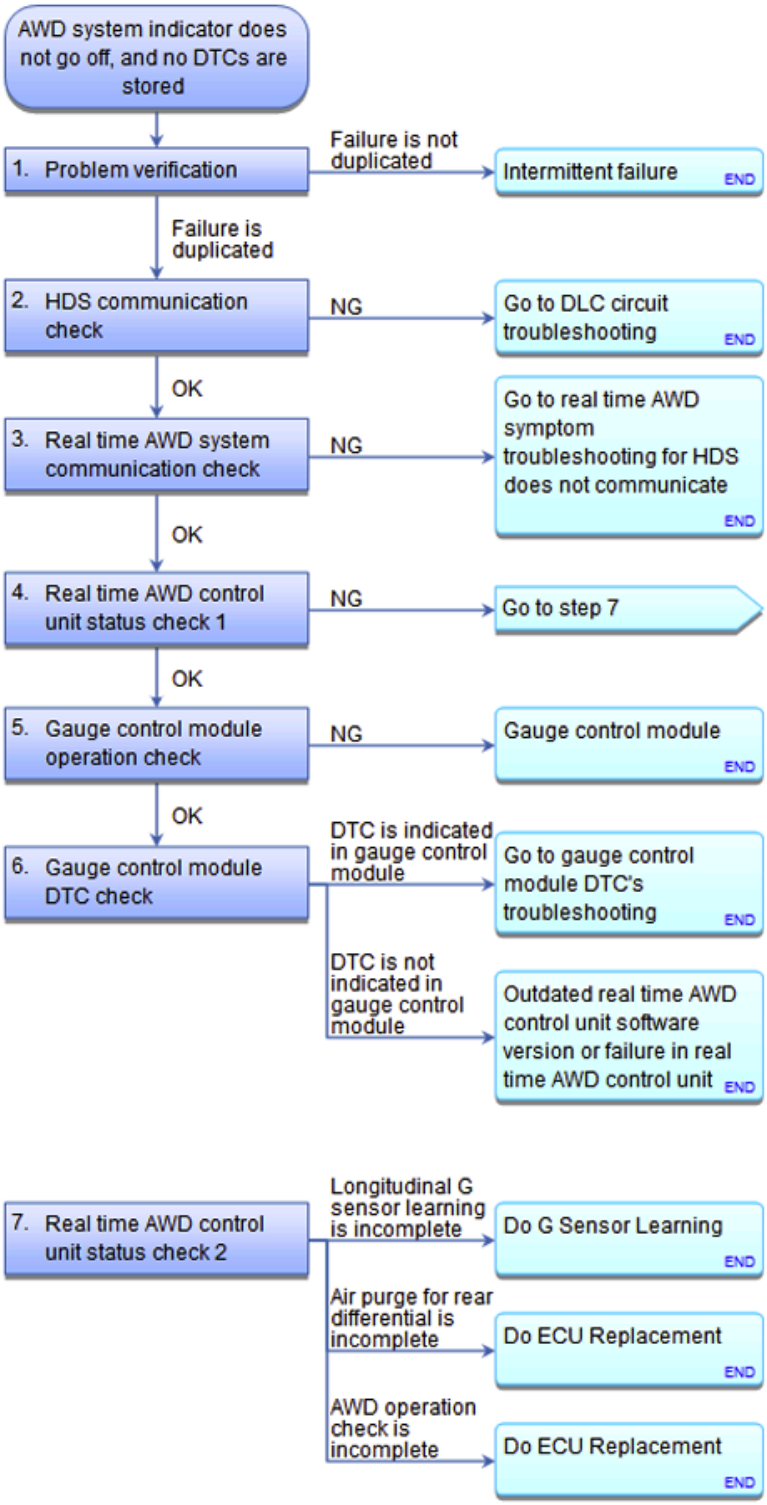

Fig. 69: Real Time AWD System Symptom Troubleshooting (AWD System Indicator Not Go Off)
Courtesy of AMERICAN HONDA MOTOR CO., INC.

GETtheMANUALS.org

NOTE:

- **Before you troubleshoot, <u>REVIEW THE HOW TO TROUBLESHOOT THE REAL TIME AWD SYSTEM</u>.**
- **Do not jump the SCS line.**

1. Problem verification:
   - 1. Test the battery. Charge or replace the battery if necessary.
   - 2. Turn the ignition switch to ON (II).

   Does the AWD system indicator come on?

   YES : The failure is duplicated. Go to step 2.

   NO : Intermittent failure, the system is OK at this time.

2. HDS communication check:
   - 1. Check that the HDS communicates with the vehicle.

   Does the HDS communicate with the vehicle?

   YES : Go to step 3.

   NO : **<u>GO TO THE DLC CIRCUIT TROUBLESHOOTING</u>** .

3. Real time AWD system communication check:
   - 1. Check the Main Menu of the real time AWD system with the HDS.

   Does the HDS show the Main Menu of the real time AWD system?

   YES : Go to step 4.

   NO : Go to the real time AWD symptom troubleshooting for **<u>HDS does not communicate</u>**.

4. Real time AWD control unit status check 1:
   - 1. Check the parameter(s) below with the HDS.

Signal	Threshold		Current conditions	
	Values	Unit	Values	Unit
Longitudinal G sensor learning	Complete			
Air purge for rear differential	Complete			
AWD operation check	Complete			

   Do the current condition(s) match the threshold?

   YES : Go to step 5.

GETtheMANUALS.org

NO : Go to step 7.

5. Gauge control module operation check:
   - 1. **DO THE GAUGE CONTROL MODULE SELF-DIAGNOSTIC FUNCTION** .

Does the AWD system indicator blink?

YES : Go to step 6.

NO : **Replace the gauge control module** See **GAUGE CONTROL MODULE REMOVAL AND INSTALLATION** or **Rewriting the ODO Data and Transferring the Maintenance Minder™ Data to a New Gauge Control Module** .

6. Gauge control module DTC check:
   - 1. Check for DTCs in the METER system with the HDS.

DTC Description	DTC	Freeze Frame

Is DTC indicated?

YES : Go to the indicated DTC's troubleshooting in the gauge control module.

NO : **Update the real time AWD control unit if it does not have the latest software** See **REAL TIME AWD CONTROL UNIT REMOVAL AND INSTALLATION** or **REAL TIME AWD CONTROL UNIT UPDATE**, or **substitute a known-good real time AWD control unit** See **REAL TIME AWD CONTROL UNIT REMOVAL AND INSTALLATION** or **REAL TIME AWD CONTROL UNIT UPDATE**, and recheck. If the symptom/indication goes away with the updated real time AWD control unit, troubleshooting is complete. If the symptom/indication goes away with a known-good real time AWD control unit, **replace the original real time AWD control unit** See **REAL TIME AWD CONTROL UNIT REMOVAL AND INSTALLATION** or **REAL TIME AWD CONTROL UNIT UPDATE**.

7. Real time AWD control unit status check 2:
   - 1. Check the parameter(s) below with the HDS.

Signal	Threshold		Current conditions	
	Values	Unit	Values	Unit
Longitudinal G sensor learning	Incomplete			
Air purge for rear differential	Incomplete			
AWD operation check	Incomplete			

Do the current condition(s) match the threshold?

Longitudinal G sensor learning is incomplete

GETtheMANUALS.org

Do the G Sensor Learning in the Adjustment MENU with the HDS.

Air purge for rear differential is incomplete

Do the ECU Replacement in the Adjustment MENU with the HDS.

AWD operation check is incomplete

Do the ECU Replacement in the Adjustment MENU with the HDS.

HDS DOES NOT COMMUNICATE

GETtheMANUALS.org

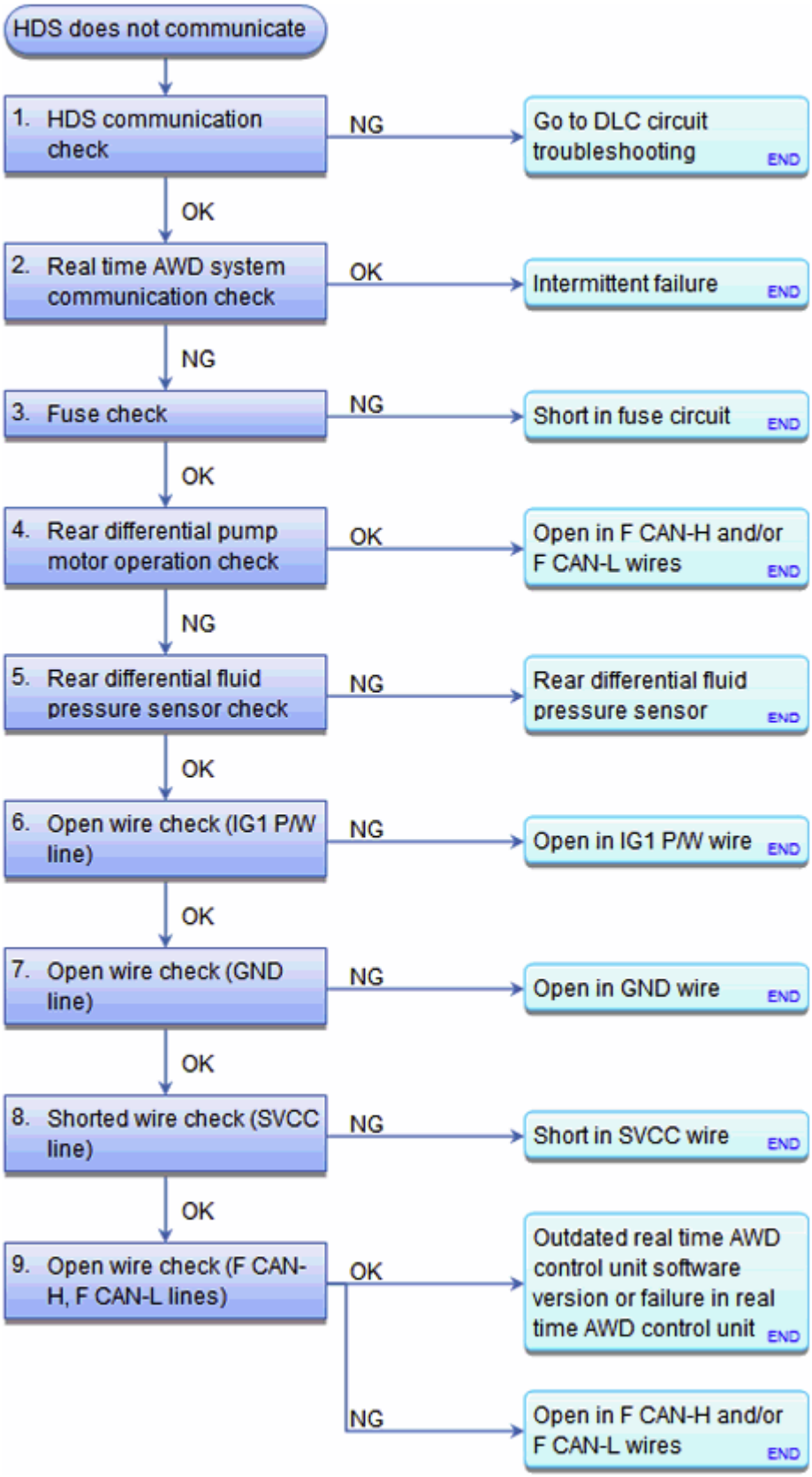

GETtheMANUALS.org

Fig. 70: Real Time AWD System Symptom Troubleshooting (HDS Not Communicate)
Courtesy of AMERICAN HONDA MOTOR CO., INC.

NOTE: **Before you troubleshoot, REVIEW THE HOW TO TROUBLESHOOT THE REAL TIME AWD SYSTEM.**

1. HDS communication check:
   - 1. Turn the ignition switch to ON (II).
   - 2. Check that the HDS communicates with the vehicle.

   Does the HDS communicate with the vehicle?

   YES : Go to step 2.

   NO : **GO TO THE DLC CIRCUIT TROUBLESHOOTING** .

2. Real time AWD system communication check:
   - 1. Check the Main Menu of the real time AWD system with the HDS.

   Does the HDS show the Main Menu of the real time AWD system?

   YES : The real time AWD system communication is OK. Intermittent failure, the system is OK at this time.

   NO : Go to step 3.

3. Fuse check:
   - 1. Turn the ignition switch to LOCK (0).
   - 2. Check the following fuse.

     Fuse No. B6 (7.5 A)

     Location Under-dash fuse/relay box

   Is the fuse OK?

   YES : The fuse is OK. Reinstall the fuse, then go to step 4.

   NO : Repair a short in the No. B6 (7.5 A) fuse circuit.

4. Rear differential pump motor operation check:
   - 1. Turn the ignition switch to ON (II).
   - 2. Check the operation sound of the rear differential pump motor on the rear differential with a stethoscope or a flat-tip screwdriver (at the rear differential pump motor) when the engine is started.

GETtheMANUALS.org

NOTE: **The rear differential pump motor operates within several seconds after the engine is started.**

Rear differential pump motor operation sound heard?

YES : Repair an open in the F CAN-H and/or F can-L wires.

NO : Go to step 5.

5. Rear differential fluid pressure sensor check:
   - 1. Turn the ignition switch to LOCK (0).
   - 2. Disconnect the following connector.

     Rear differential fluid pressure sensor 3P connector

   - 3. Turn the ignition switch to ON (II).
   - 4. Check the Main Menu of the real time AWD system with the HDS.

Does the HDS show the Main Menu of the real time AWD system?

YES : Go to step 6.

NO : **REPLACE THE REAR DIFFERENTIAL FLUID PRESSURE SENSOR** .

6. Open wire check (IG1 P/W line):
   - 1. Turn the ignition switch to LOCK (0).
   - 2. Disconnect the following connector.

     Real time AWD control unit 24P connector

   - 3. Start the engine.
   - 4. Measure the voltage between test points 1 and 2.

     Test condition IG ON (II)

     Rear differential fluid pressure sensor 3P connector: disconnected

     Real time AWD control unit 24P connector: disconnected

     Test circuit IG1 P/W

     Test point 1 Real time AWD control unit 24P connector No. 12 (RED)

     Test point 2 Body ground

GETtheMANUALS.org

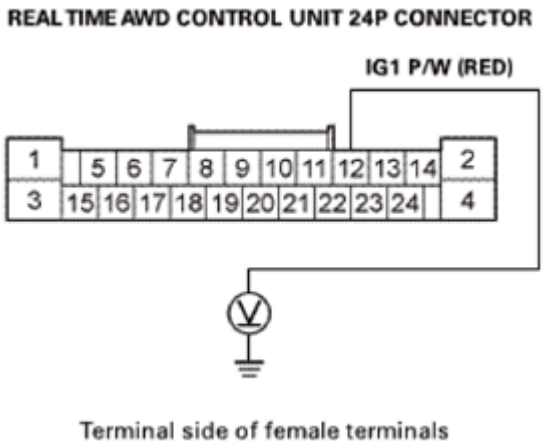

Fig. 71: Measuring Voltage Between Real Time AWD Control Unit 24P Connector No. 12 (Red) And Body Ground
Courtesy of AMERICAN HONDA MOTOR CO., INC.

Is there battery voltage?

YES : The IG1 P/W wire is OK. Go to step 7.

NO : Repair an open in the IG1 P/W wire between the real time AWD control unit and the No. B6 (7.5 A) fuse in the under-dash fuse/relay box.

7. Open wire check (GND line):
   - 1. Turn the ignition switch to LOCK (0).
   - 2. Check for continuity between test points 1 and 2.

     Test condition IG LOCK (0)

     Rear differential fluid pressure sensor 3P connector: disconnected

     Real time AWD control unit 24P connector: disconnected

     Test circuit GND

     Test point 1 Real time AWD control unit 24P connector No. 8 (BLK)

     Test point 2 Body ground

GETtheMANUALS.org

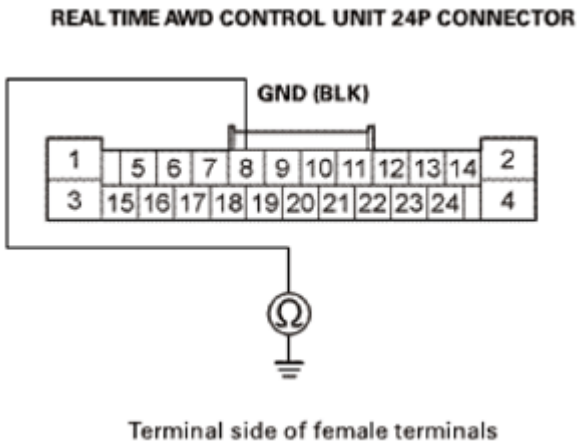

Fig. 72: Checking Continuity Between Real Time AWD Control Unit 24P Connector No. 8 (BLK) And Body Ground
Courtesy of AMERICAN HONDA MOTOR CO., INC.

Is there continuity?

YES : The GND wire is OK. Go to step 8.

NO : Repair an open in the GND wire between the real time AWD control unit and ground (G603).

8. Shorted wire check (SVCC line):
   - 1. Check for continuity between test points 1 and 2.

     Test condition IG LOCK (0)

     Rear differential fluid pressure sensor 3P connector: disconnected

     Real time AWD control unit 24P connector: disconnected

     Test circuit SVCC

     Test point 1 Real time AWD control unit 24P connector No. 20 (WHT)

     Test point 2 Body ground

GETtheMANUALS.org

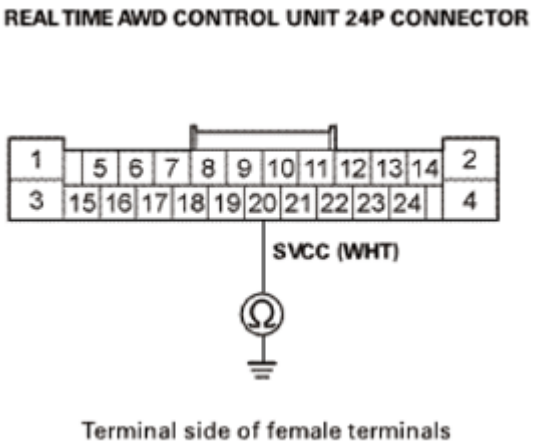

Fig. 73: Checking Continuity Between Real Time AWD Control Unit 24P Connector No. 20 (WHT) And Body Ground
Courtesy of AMERICAN HONDA MOTOR CO., INC.

Is there continuity?

YES : Repair a short to ground in the SVCC wire between the real time AWD control unit and body ground.

NO : The SVCC wire is OK. Go to step 9.

9. Open wire check (F CAN-H, F CAN-L lines):
   - 1. Check for continuity between test points 1 and 2.

     Test condition IG LOCK (0)

     Rear differential fluid pressure sensor 3P connector: disconnected

     Real time AWD control unit 24P connector: disconnected

     Test circuit F CAN-H

     Test point 1 Real time AWD control unit 24P connector No. 14 (WHT)

     Test point 2 DLC (16P) No. 6 (WHT)

     Test circuit F CAN-L

     Test point 1 Real time AWD control unit 24P connector No. 24 (RED)

     Test point 2 DLC (16P) No. 14 (RED)

GETtheMANUALS.org

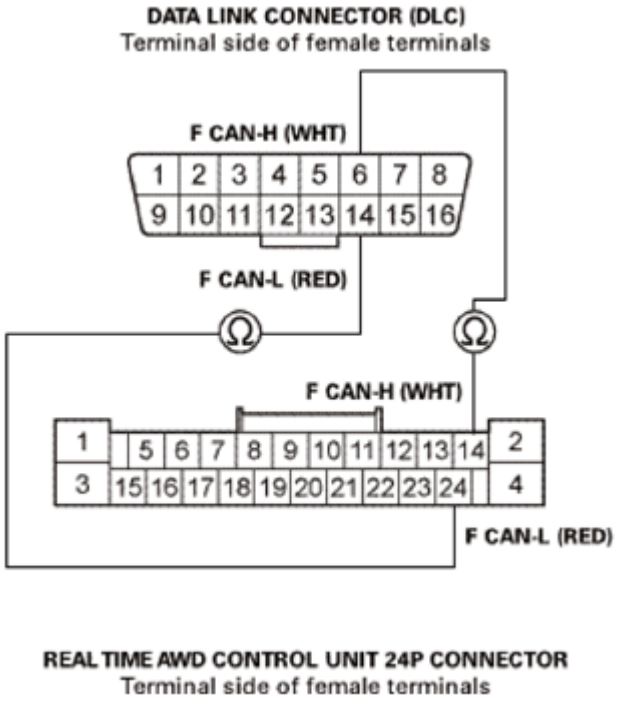

Fig. 74: Checking Continuity Between Real Time AWD Control Unit 24P Connector No. 14 (WHT) And DLC (16P) No. 6 (WHT)
Courtesy of AMERICAN HONDA MOTOR CO., INC.

Is there continuity?

YES : **Update the real time AWD control unit if it does not have the latest software** See **REAL TIME AWD CONTROL UNIT REMOVAL AND INSTALLATION** or **REAL TIME AWD CONTROL UNIT UPDATE**, or **substitute a known-good real time AWD control unit** See **REAL TIME AWD CONTROL UNIT REMOVAL AND INSTALLATION** or **REAL TIME AWD CONTROL UNIT UPDATE**, and recheck. If the symptom/indication goes away with the updated real time AWD control unit, troubleshooting is complete. If the symptom/indication goes away with a known-good real time AWD control unit, **replace the original real time AWD control unit** See **REAL TIME AWD CONTROL UNIT REMOVAL AND INSTALLATION** or **REAL TIME AWD CONTROL UNIT UPDATE**.

NO : Repair an open in the F CAN-H and/or F CAN-L wires between the real time AWD control unit and the DLC.

REAL TIME AWD SYSTEM IS STUCK IN 4WD MODE

GETtheMANUALS.org

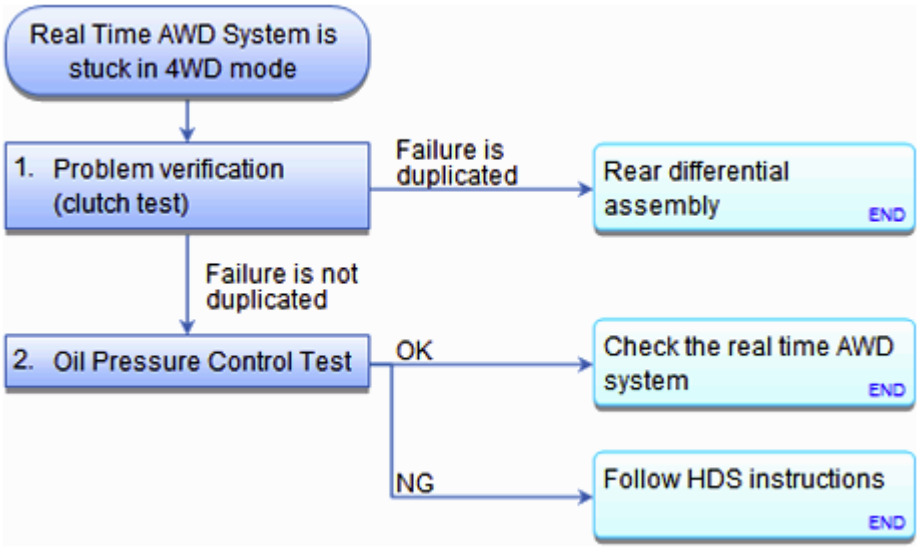

Fig. 75: Real Time AWD System Symptom Troubleshooting (Real Time AWD System Stuck In 4WD Mode)
Courtesy of AMERICAN HONDA MOTOR CO., INC.

NOTE: **Before you troubleshoot, REVIEW THE HOW TO TROUBLESHOOT THE REAL TIME AWD SYSTEM.**

1. Problem verification (clutch test):
   - 1. **DO THE CLUTCH TEST** .

   Is the test result OK?

   YES : Go to step 2.

   NO : The failure is duplicated. **DO THE REPAIR DEPENDING ON THE TEST RESULT** .

2. Oil Pressure Control Test:
   - 1. Turn the ignition switch to ON (II).
   - 2. **DO THE OIL PRESSURE CONTROL TEST IN THE FUNCTIONAL TEST MENU WITH THE HDS** .

   Is the test result OK?

   YES : Check the following items.

   - Check the rear differential fluid level and the fluid condition.
   - Check for rear differential fluid leaks.
   - **DO THE REAR DIFFERENTIAL FLUID PRESSURE SENSOR TEST** .

GETtheMANUALS.org

NO : The failure is duplicated. **FOLLOW THE INSTRUCTIONS INDICATED ON THE HDS ACCORDING TO THE TEST RESULT** .

WILL NOT GO INTO 4WD MODE, POOR TRACTION, POOR ACCELERATION (AT START), POOR CLIMBING ABILITY

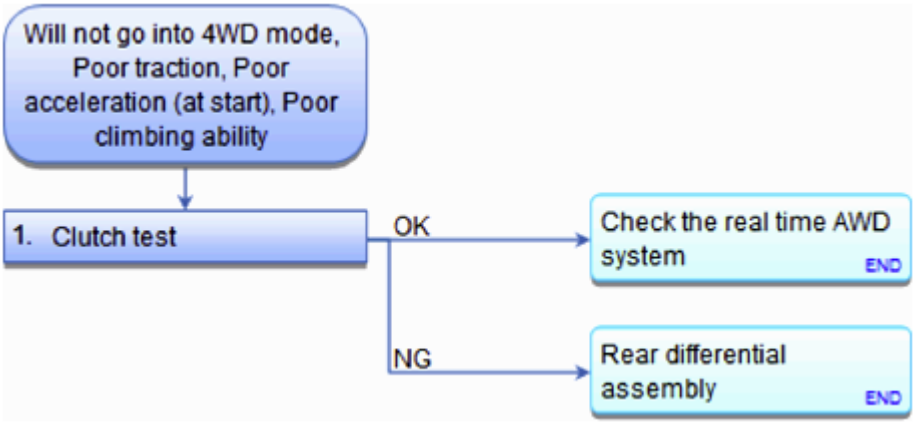

Fig. 76: Real Time AWD System Symptom Troubleshooting (Poor Traction)
Courtesy of AMERICAN HONDA MOTOR CO., INC.

NOTE: **Before you troubleshoot, REVIEW THE HOW TO TROUBLESHOOT THE REAL TIME AWD SYSTEM.**

1. Clutch test:
   - 1. **DO THE CLUTCH TEST** .

Is the test result OK?

YES : Check the following items.

- Check the rear differential fluid level and the fluid condition.
- Check for rear differential fluid leaks.
- **DO THE OIL PRESSURE CONTROL TEST IN THE FUNCTIONAL TEST MENU WITH THE HDS** .
- **DO THE REAR DIFFERENTIAL FLUID PRESSURE SENSOR TEST** .

NO : The failure is duplicated. **DO THE REPAIR DEPENDING ON THE TEST RESULT** .

GETtheMANUALS.org

REAR DIFFERENTIAL BREATHER BOX AND HOSE REMOVAL AND INSTALLATION

REMOVAL

1. Vehicle Lift
    1. Raise the vehicle on a lift, and make sure it is securely supported.
2. Rear Differential Breather Box And Hose
    1. Disconnect the breather hose (A) from the rear differential breather pipe (B).
    2. Remove the breather hoses from the clamps (C) on the sensor cover.

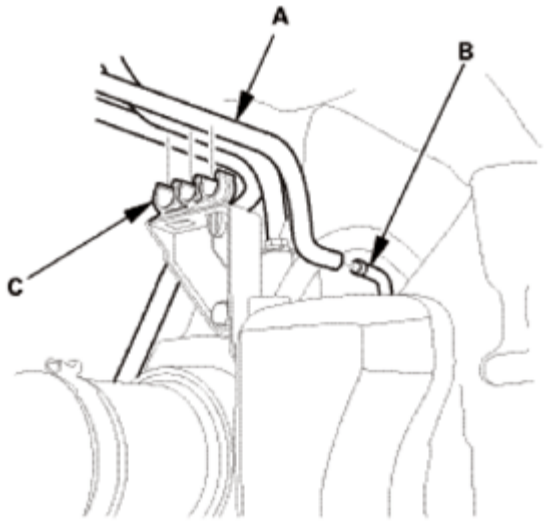

Fig. 1: Identifying Breather Hose, Rear Differential Breather Pipe And Clamp

3. Disconnect the breather hose (A) from the pump motor breather pipe (B) and clamp (C).

GETtheMANUALS.org

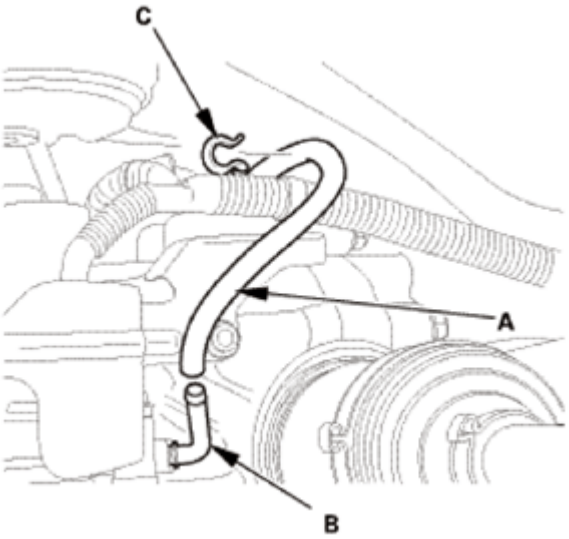

Fig. 2: Identifying Breather Hose, Pump Motor Breather Pipe And Clamp

4. Remove the breather hose (A) from the clamp (C) on the right rear differential mount bracket B.

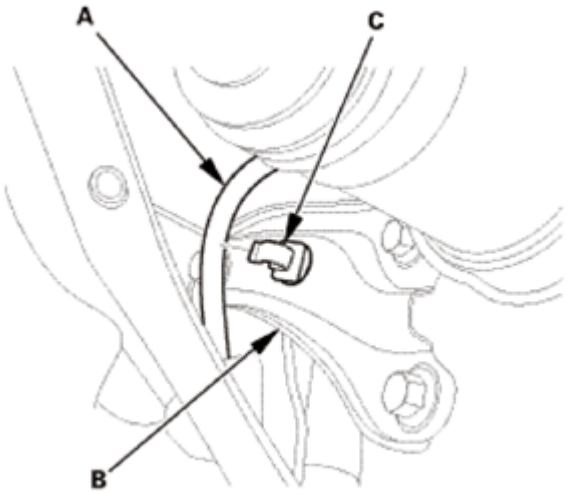

Fig. 3: Identifying Breather Hose And Clamp

5. Disconnect the breather hoses (A) from the breather box (B).
6. Remove the breather box from the body.

GETtheMANUALS.org

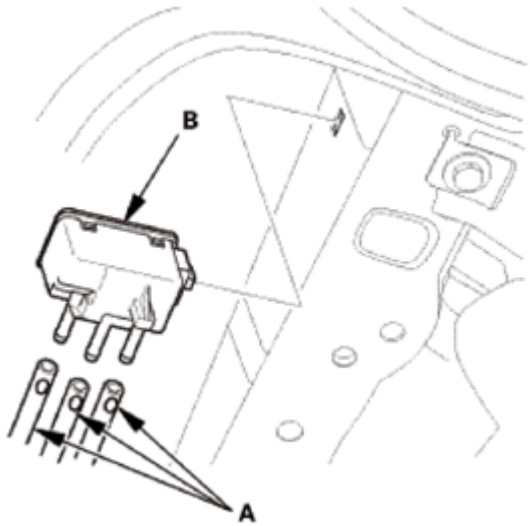

Fig. 4: Identifying Breather Hoses And Breather Box

INSTALLATION

1. Rear Differential Breather Box And Hose
    1. Install the breather box (A) to the body.
    2. Connect the breather hoses (B) to the breather box at the paint marks (C).

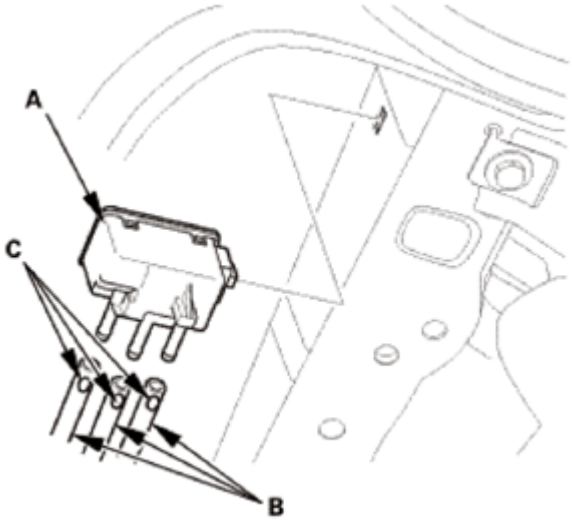

Fig. 5: Identifying Breather Box, Hoses And Paint Marks

3. Install the breather hoses (A) to the clamps (B) at the paint marks (C).
4. Connect the breather hose to the rear differential breather pipe (D) at the paint marks (E).

GETtheMANUALS.org

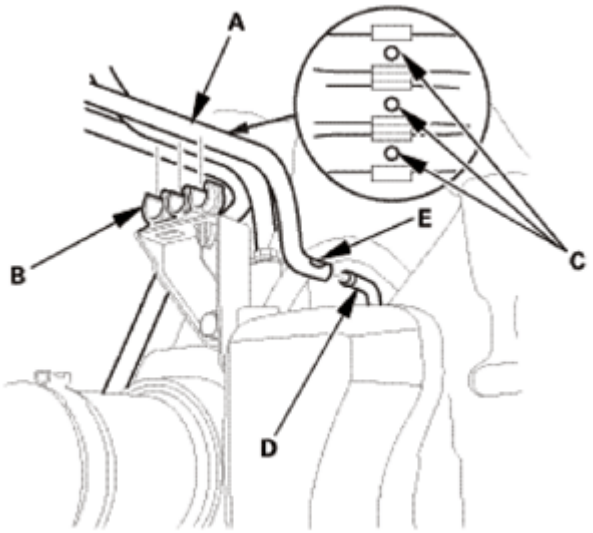

Fig. 6: Identifying Breather Hoses, Pipe, Clamps And Paint Marks

5. Connect the breather hose (A) to the pump motor breather pipe (B) and clamp (C) at the paint marks (D).

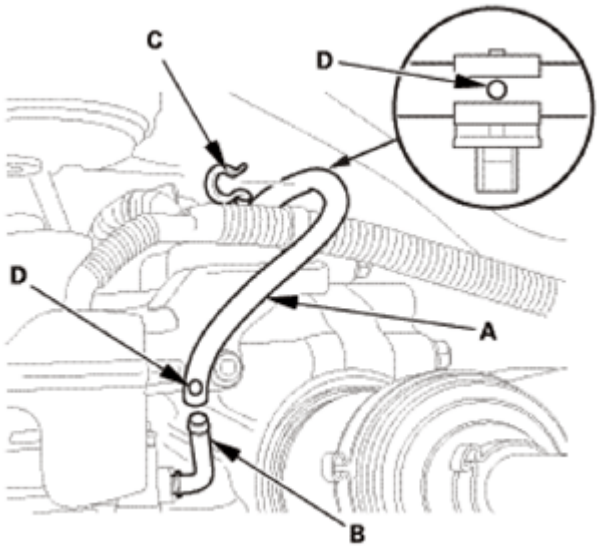

Fig. 7: Identifying Breather Hose, Pump Motor Breather Pipe, Clamp And Paint Marks

6. Install the breather hose (A) to the clamp (B) at the paint mark (C).

GETtheMANUALS.org

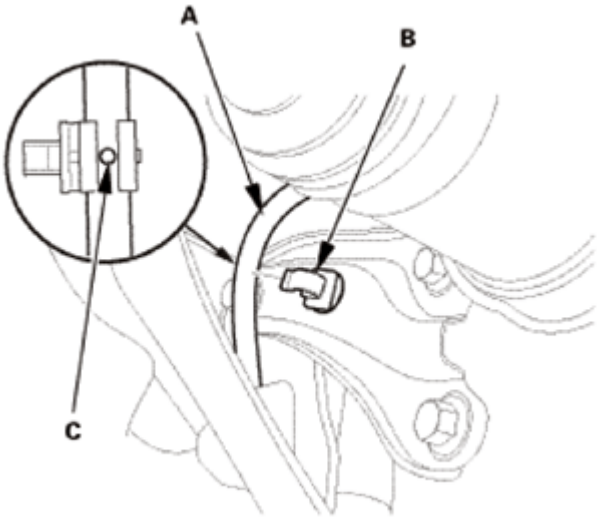

Fig. 8: Identifying Breather Hose, Clamp And Paint Mark

REAR DIFFERENTIAL CLUTCH TEST

TEST

1. HDS DLC - Connection
    1. Connect the HDS to the data link connector (DLC) (A) located under the driver's side of the dashboard.
    2. Turn the ignition switch to ON (II).
    3. Make sure the HDS communicates with the vehicle. If it does not communicate, go to the DLC circuit troubleshooting.

Fig. 9: Identifying Data Link Connector

2. Rear Differential Clutch Test

GETtheMANUALS.org

1. Block the front wheels (A), raise the left rear wheel, and support it with a safety stand (B) as shown.
2. Release the parking brake.

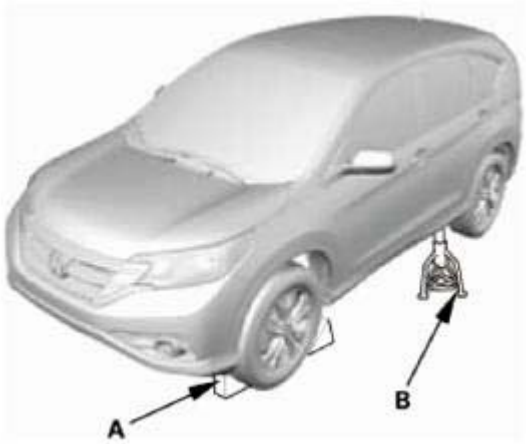

Fig. 10: Letting Rear Wheel

3. Hold the left rear tire, and turn it counterclockwise continuously for more than one rotation.
   - If the wheel rotates, go to step 4.
   - If the wheel does not rotate, replace the rear differential fluid, and retest. If the result is the same, replace the rear differential assembly.
4. Select the FUNCTIONAL TEST in the REAL TIME AWD SYSTEM with the HDS.
5. Select the SOLENOID TEST in the FUNCTIONAL TEST with the HDS.
6. Do LEVEL 7 of the SOLENOID TEST with the HDS.

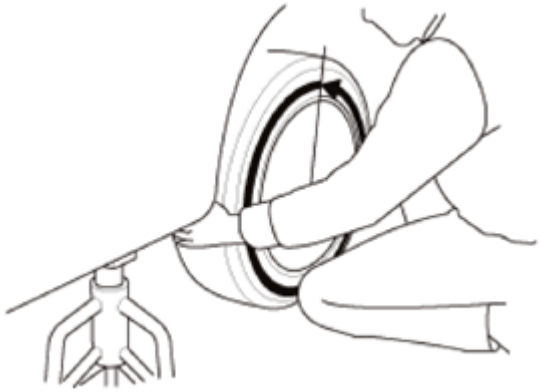

Fig. 11: Turning Left Rear Tire Counterclockwise

7. Hold the left rear tire, and turn it counterclockwise continuously for more than one rotation.
   - If the wheel rotates, go to step 8.
   - If the wheel does not rotate, the system is OK at this time and the test is complete.
8. **CHECK THE CONDITION OF THE REAR DIFFERENTIAL FLUID**.

GETtheMANUALS.org

- If the fluid is dirty or burnt, replace the rear differential fluid.
- If the fluid is normal, go to step 9.

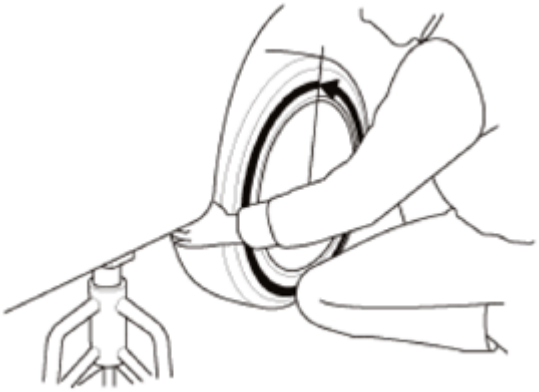

Fig. 12: Checking Condition Of Rear Differential Fluid

9. **MAKE SURE THE REAR DIFFERENTIAL FLUID IS AT THE PROPER LEVEL**.
   - If the level is below the proper level, check for rear differential fluid leaks at the differential assembly.
   - If the level is normal, go to step 10.
10. Check peripheral the rear differential for deformed or damaged.
   - If the deformed or damaged peripheral the rear differential, replace the defective part.
   - If the rear differential. is normal, go to step 11.
11. **DO THE REAR DIFFERENTIAL PRESSURE TEST WITH THE HDS**. If the Normal is displayed, go to step 12.
12. **DO THE REAR DIFFERENTIAL FLUID PRESSURE SENSOR TEST**. If the rear differential fluid pressure sensor is OK, replace the rear differential fluid, and retest. If the result is the same, replace the rear differential assembly.

REAR DIFFERENTIAL COMPONENT LOCATION INDEX

GETtheMANUALS.org

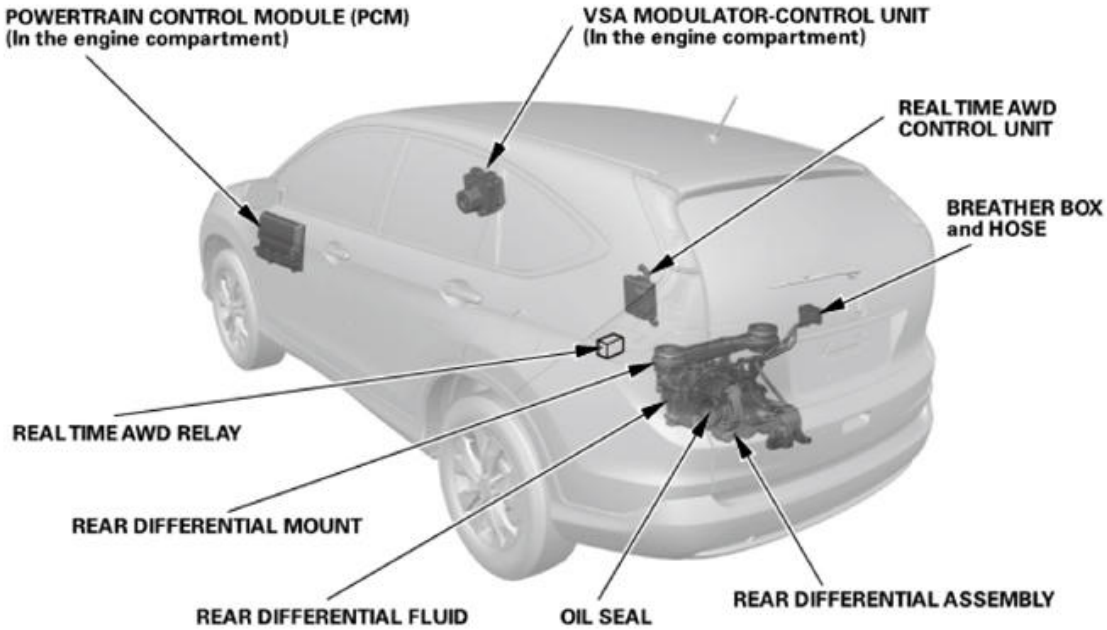

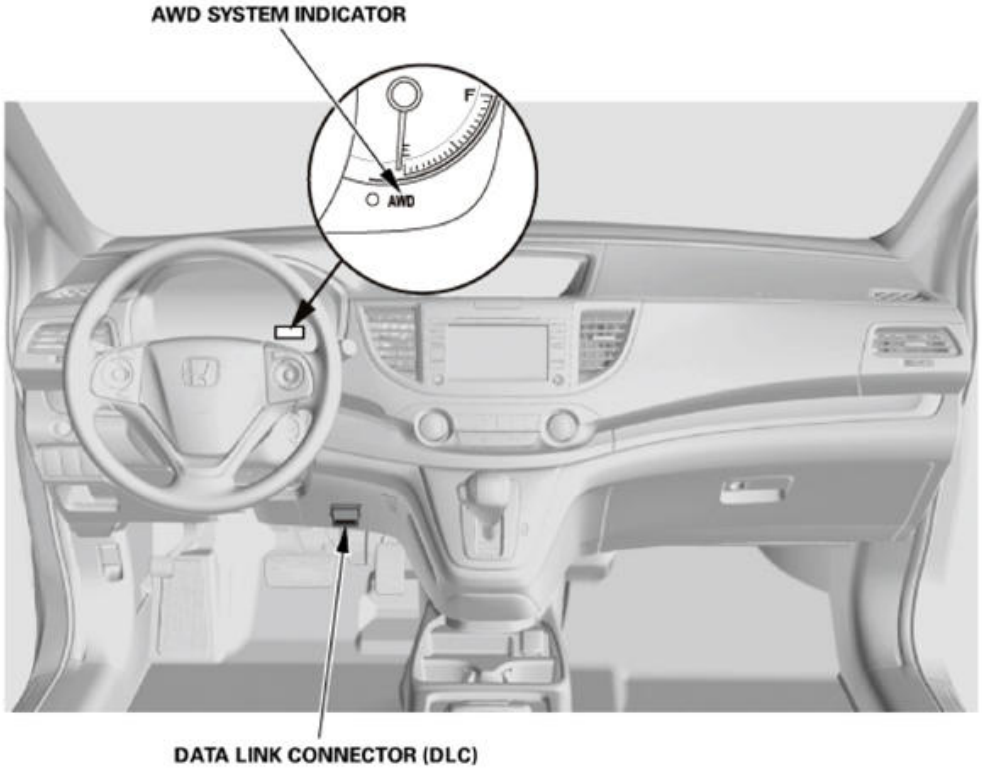

Fig. 13: Rear Differential Components Location

	Rear Differential Housing Assembly Removal and Installation
	Rear Differential Disassembly and Reassembly

GETtheMANUALS.org

REAR DIFFERENTIAL ASSEMBLY	**HOUSING ASSEMBLY REMOVAL AND INSTALLATION**
	REAR DIFFERENTIAL PUMP MOTOR REMOVAL AND INSTALLATION
	REAR DIFFERENTIAL FLUID TEMPERATURE SENSOR REMOVAL AND INSTALLATION
	REAR DIFFERENTIAL FLUID PRESSURE SENSOR REMOVAL AND INSTALLATION
	REAR DIFFERENTIAL FLUID PRESSURE SENSOR TEST
	REAR DIFFERENTIAL SOLENOID VALVE TEST
	REAR DIFFERENTIAL PRESSURE TEST
	REAR DIFFERENTIAL CLUTCH TEST
REAR DIFFERENTIAL FLUID	**INSPECTION**
	REPLACEMENT
	REAL TIME AWD SYSTEM BLEEDING
REAR DIFFERENTIAL MOUNT	**REMOVAL AND INSTALLATION**
OIL SEAL	**Rear Differential Oil Seal Replacement - Driveshaft Side**
	Rear Differential Oil Seal Replacement - Propeller Shaft Side on Vehicle
BREATHER BOX and HOSE	**REMOVAL AND INSTALLATION**
REAL TIME AWD RELAY	**REMOVAL AND INSTALLATION**
REAL TIME AWD CONTROL UNIT	**Removal and Installation** See **REAL TIME AWD CONTROL UNIT REMOVAL AND INSTALLATION** or **REAL TIME AWD CONTROL UNIT UPDATE**
	Update See **REAL TIME AWD CONTROL UNIT REMOVAL AND INSTALLATION** or **REAL TIME AWD CONTROL UNIT UPDATE**
	INITALIZATION
	YAW RATE-ACCELERATION NEUTRAL POSITION MEMORIZATION

REAR DIFFERENTIAL DISASSEMBLY AND REASSEMBLY

SPECIAL TOOL DESCRIPTION

Image	Description/Tool Number

GETtheMANUALS.org

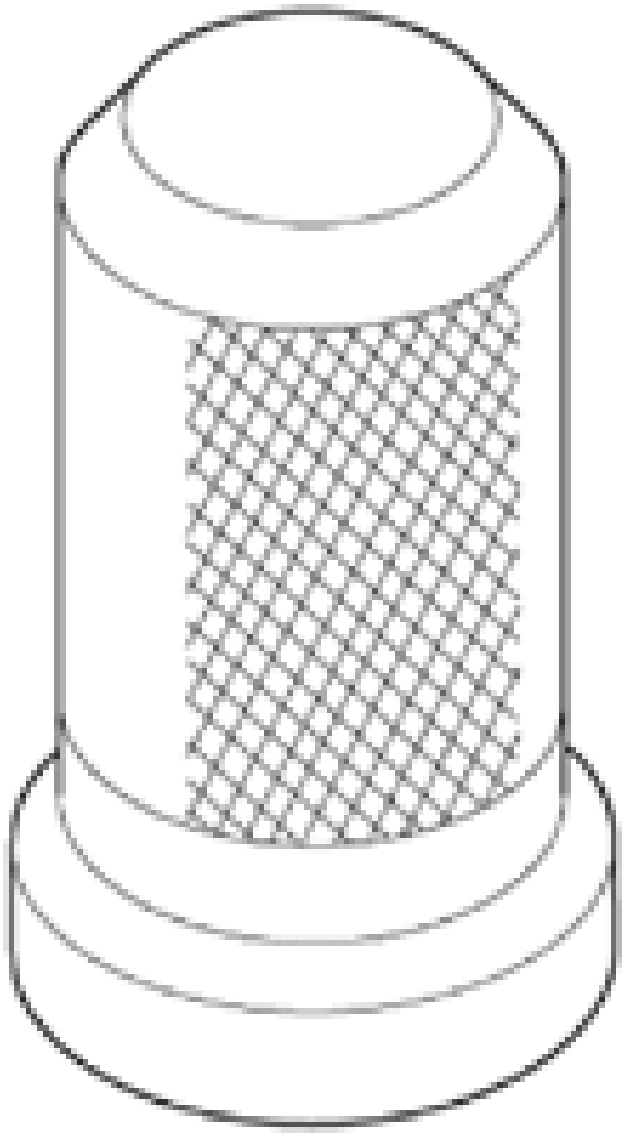	Oil Seal Driver, 41.8 mm 07947-6890100
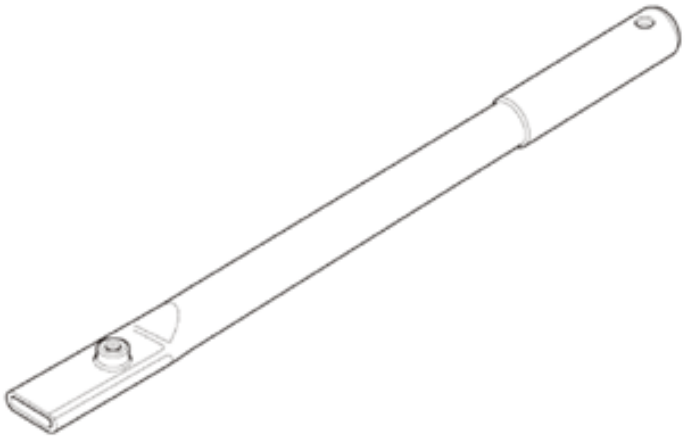	Holder Handle 07JAB-001020B

GETtheMANUALS.org

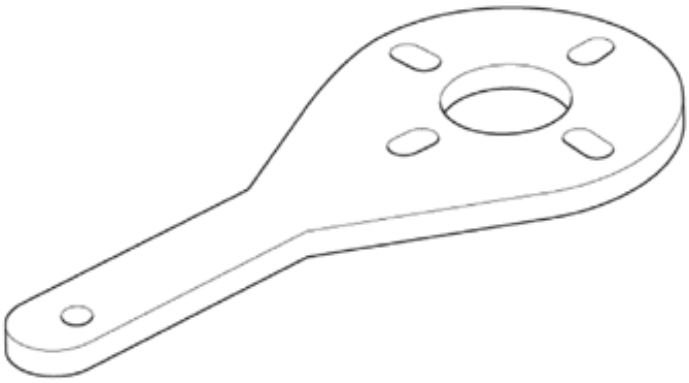	Companion Flange Holder 07RAB-TB4010B

EXPLODED VIEW

1. Rear Differential Exploded View (Real Time AWD System)

   Exploded View

GETtheMANUALS.org

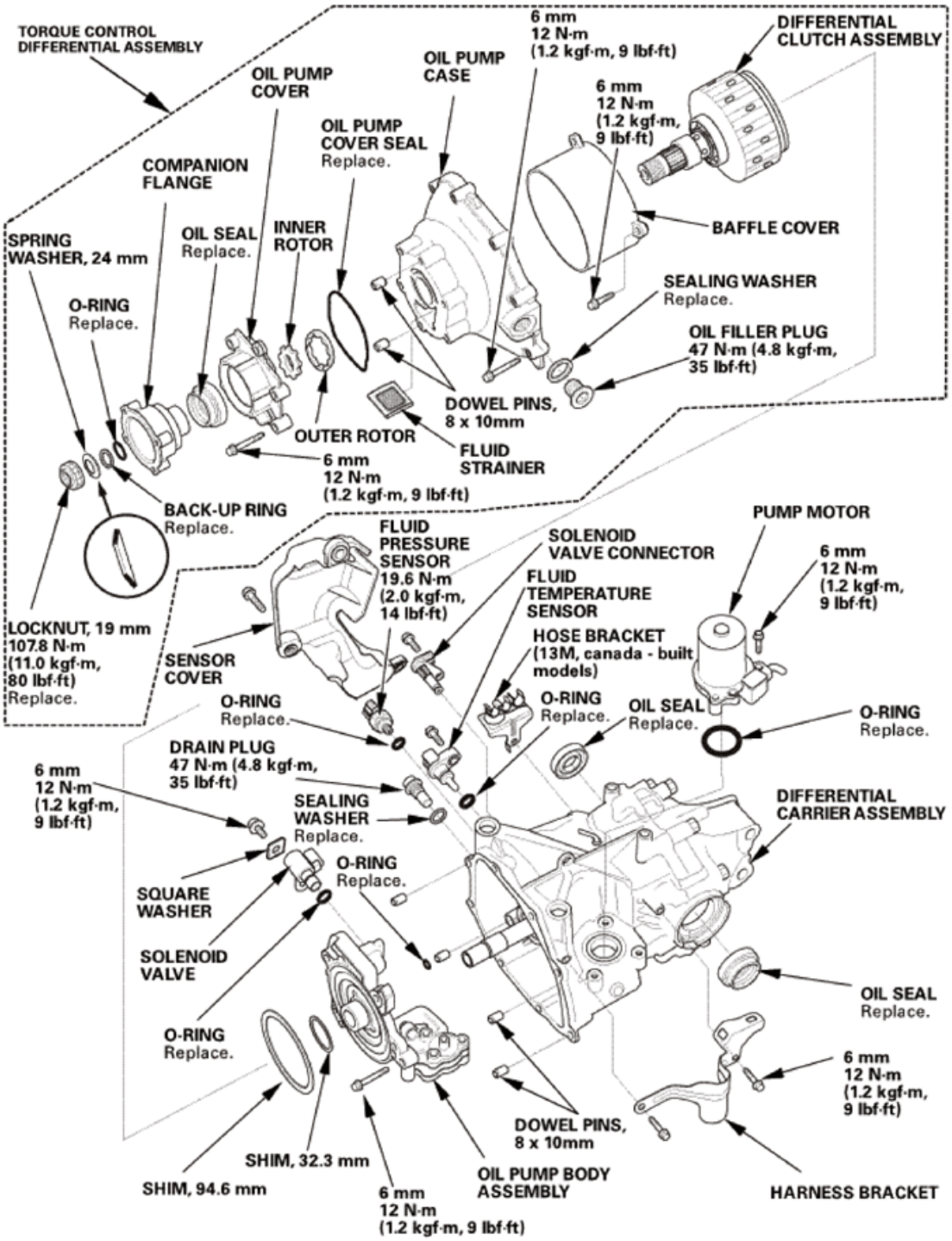

Fig. 14: Exploded View Of Rear Differential (Real Time AWD System) With Torque Specifications

DISASSEMBLY

1. Rear Differential Harness Bracket
    1. Remove the harness clip (A) and the harness bracket (B).

GETtheMANUALS.org

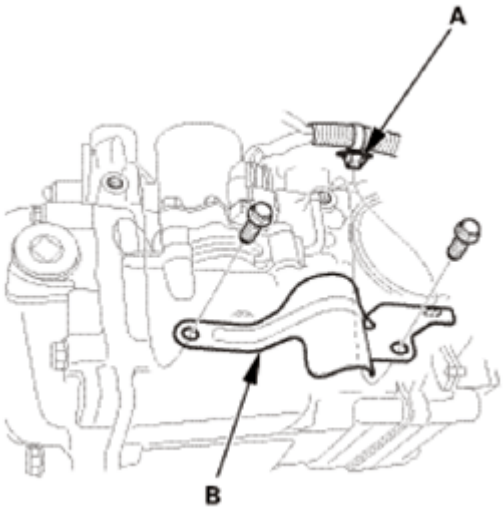

Fig. 15: Identifying Harness Clip And Harness Bracket

2. Rear Differential Motor Connector
    1. Disconnect the connector (A).

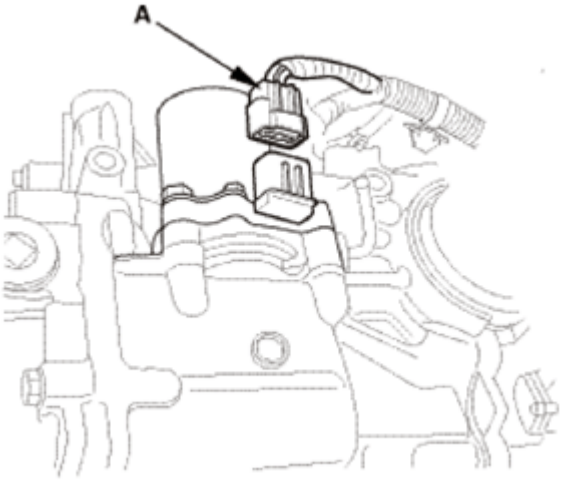

Fig. 16: Identifying Rear Differential Motor Connector

3. Rear Differential Motor Assembly
    1. Remove the rear differential pump motor (A) and the O-ring (B).

GETtheMANUALS.org

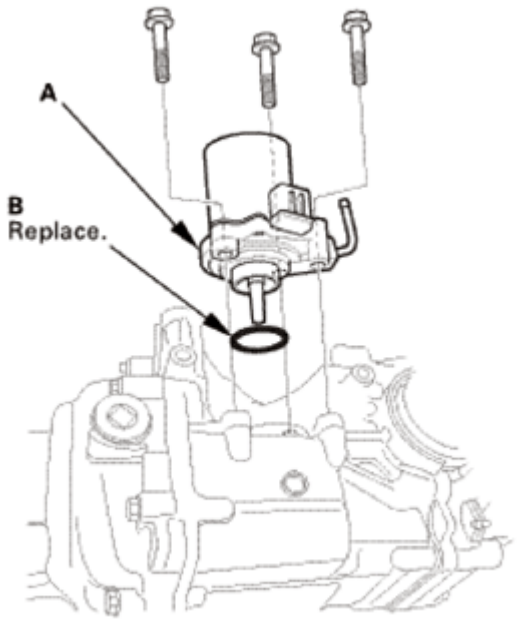

Fig. 17: Identifying Rear Differential Pump Motor And O-Ring

4. Rear Differential Sensor Cover
    1. Remove the rear differential sensor cover (A).

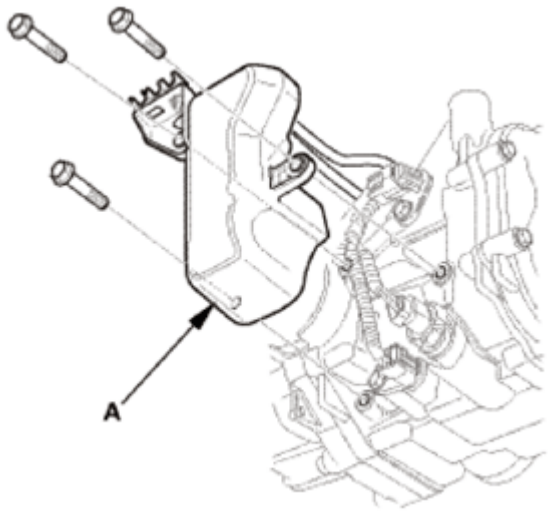

Fig. 18: Identifying Rear Differential Sensor Cover

5. Rear Differential Fluid Temperature Sensor Connector
    1. Disconnect the connector (A).

GETtheMANUALS.org

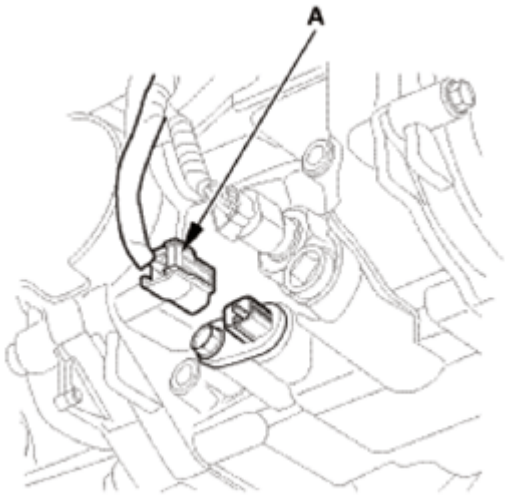

Fig. 19: Identifying Rear Differential Fluid Temperature Sensor Connector

6. Rear Differential Fluid Temperature Sensor
    1. Remove the rear differential fluid temperature sensor (A) and the O-ring (B).

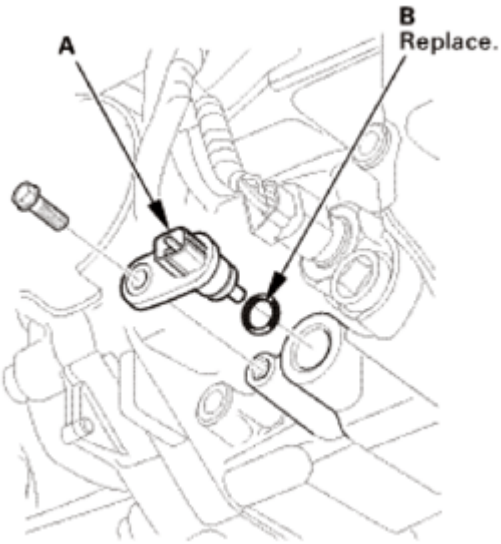

Fig. 20: Identifying Rear Differential Fluid Temperature Sensor And O-Ring

7. Rear Differential Fluid Pressure Sensor Connector
    1. Disconnect the connector (A).

GETtheMANUALS.org

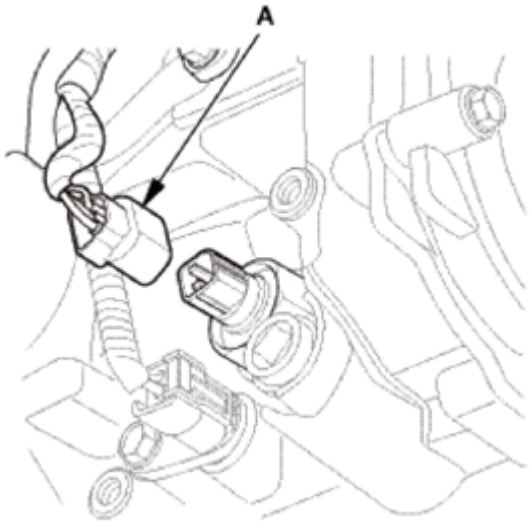

Fig. 21: Identifying Rear Differential Fluid Pressure Sensor Connector

8. Rear Differential Fluid Pressure Sensor
    1. Remove the rear differential fluid pressure sensor (A) and the O-ring (B).

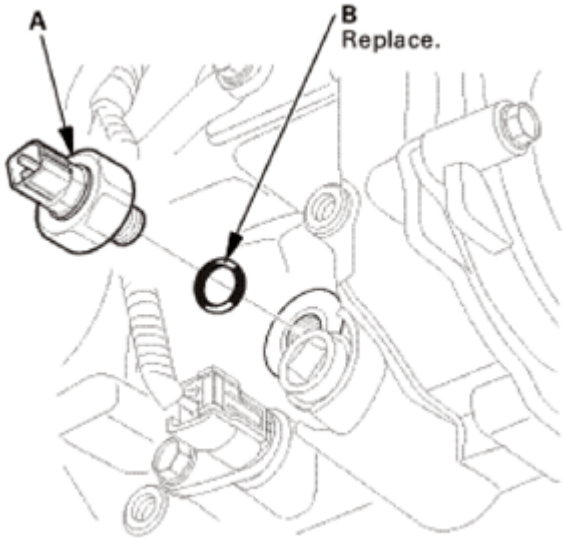

Fig. 22: Identifying Rear Differential Fluid Pressure Sensor And O-Ring

9. Rear Differential Solenoid Valve Connector
    1. Disconnect the connector (A).

GETtheMANUALS.org

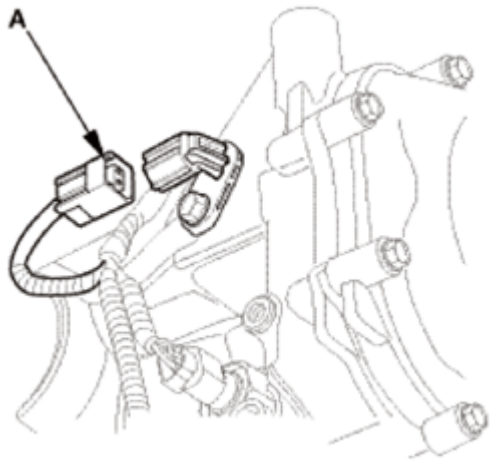

Fig. 23: Identifying Rear Differential Solenoid Valve Connector

2. Remove the rear differential solenoid valve connector (A).

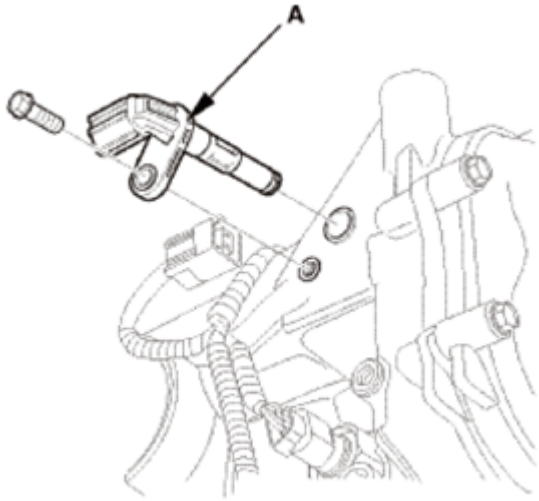

Fig. 24: Identifying Rear Differential Solenoid Valve Connector

10. Oil Filler Plug And Drain Plug
    1. Remove the drain plug (A) and the oil filler plug (B) with sealing washers (C).

GETtheMANUALS.org

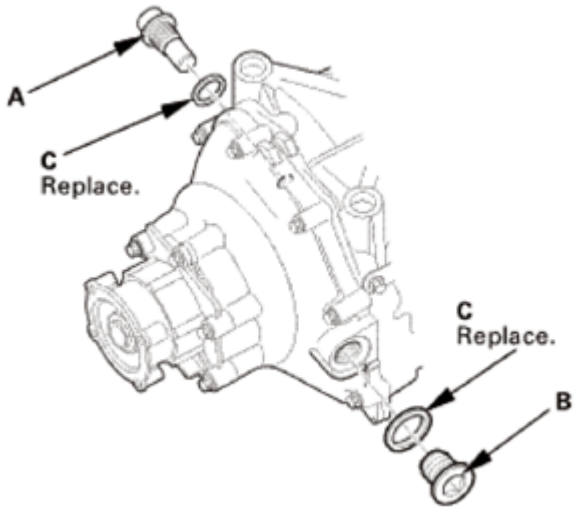

Fig. 25: Identifying Oil Filler Plug, Drain Plug And Sealing Washer

11. Rear Differential Subharness
    1. Disconnect the ground terminal (A).
    2. Remove the rear differential subharness (B).

Except 13M, canada-built models

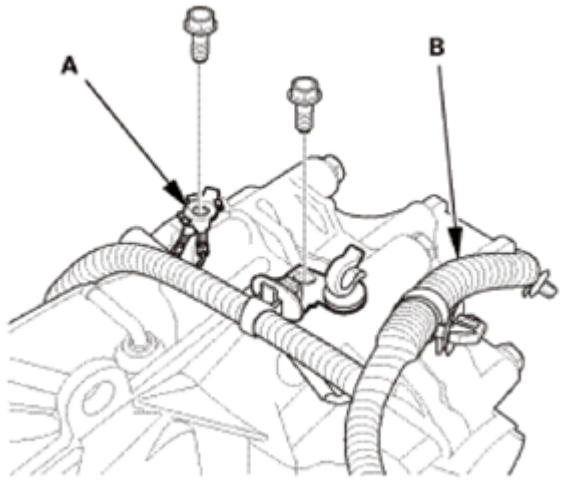

Fig. 26: Identifying Rear Differential Subharness And Ground Terminal (Except 13M, Canada-Built Models)

13M, canada-built models

GETtheMANUALS.org

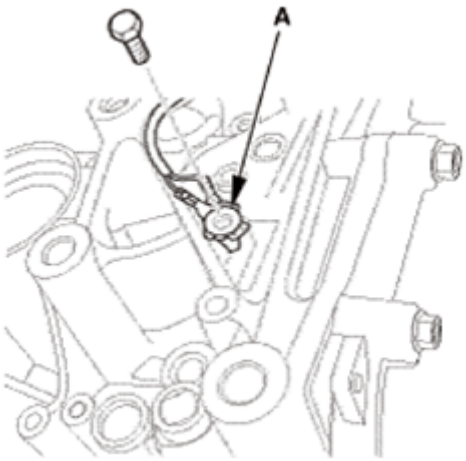

Fig. 27: Identifying Rear Differential Subharness And Ground Terminal (13M, Canada-Built Models)

13M, canada-built models

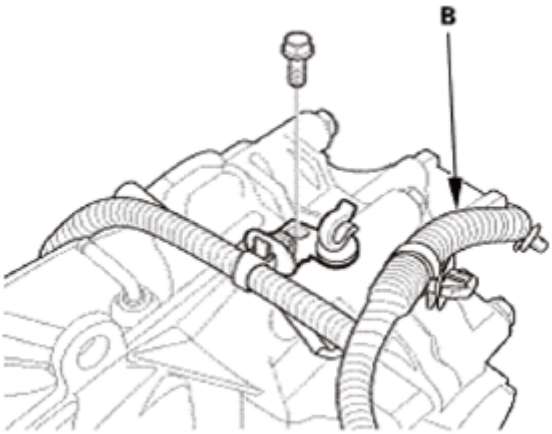

Fig. 28: Identifying Rear Differential Subharness And Ground Terminal (13M, Canada-Built Models)

3. 13M canada-built models: Remove the hose bracket (A) from the rear differential.

GETtheMANUALS.org

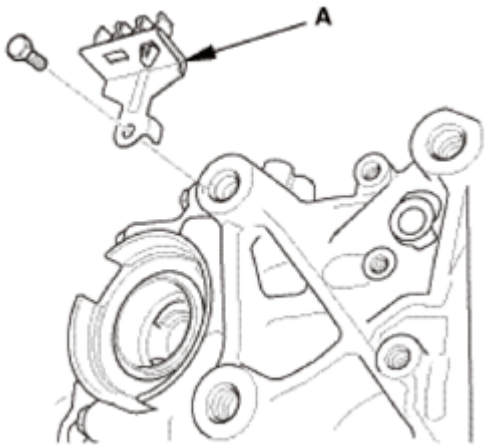

Fig. 29: Identifying Hose Bracket (13M Canada-Built Models)

12. Rear Differential Companion Flange
    1. Pry up the stake on the locknut (A) from the groove of the clutch guide, making sure the tab completely clears the groove to prevent damaging the clutch guide.

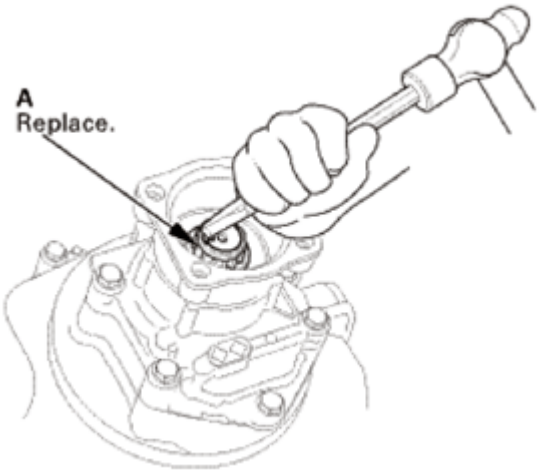

Fig. 30: Prying Up Stake On Locknut Clutch Groove

    2. Install the companion flange holder (A) and holder handle (B) on the companion flange.

GETtheMANUALS.org

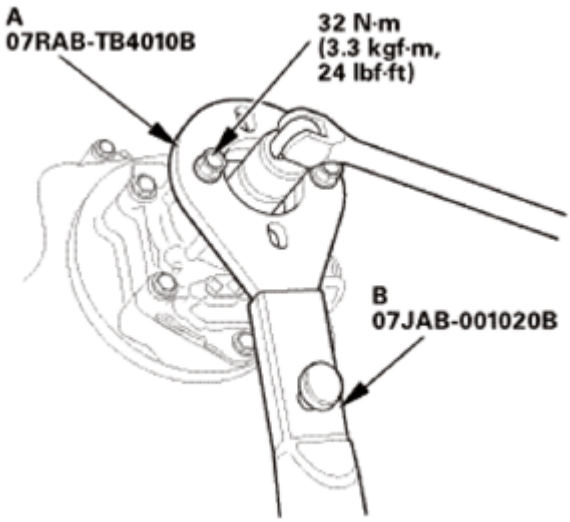

Fig. 31: Installing Companion Flange Holder And Holder Handle With Torque Specifications

3. Loosen the locknut (A) counterclockwise so its tab (B) comes out from the groove (C) in the clutch guide.

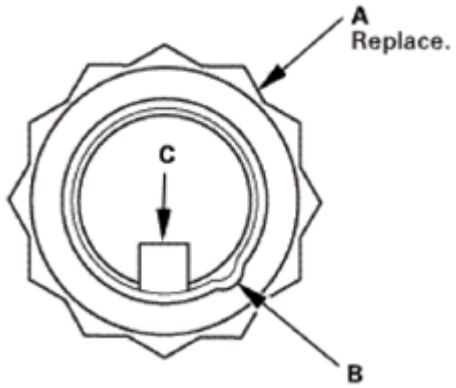

Fig. 32: Identifying Locknut, Tab, Clutch Guide Groove

4. Tighten the locknut (A) until its tab (B) aligns with the groove (C).
5. Clean any dirt from inside the groove in the clutch guide, then loosen the locknut.

GETtheMANUALS.org

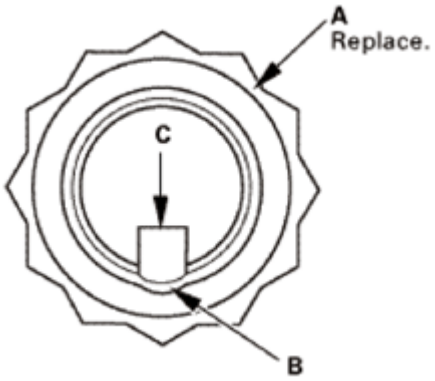

Fig. 33: Identifying Locknut, Tab, Clutch Guide Groove

6. Remove the locknut (A), the spring washer (B), the back-up ring (C), and the O-ring (D).

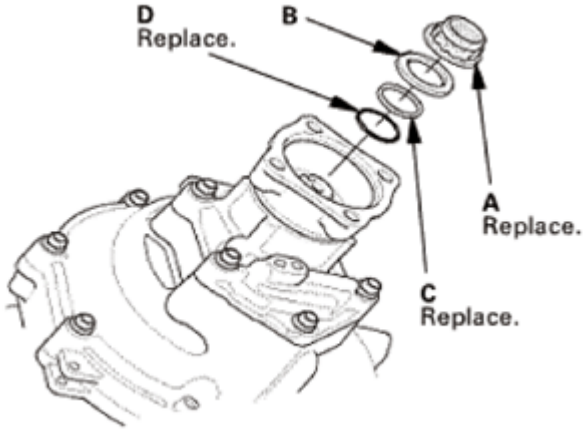

Fig. 34: Identifying Locknut, Spring Washer, Back-Up Ring And O-Ring

7. Remove the companion flange (A) with a commercially available puller.

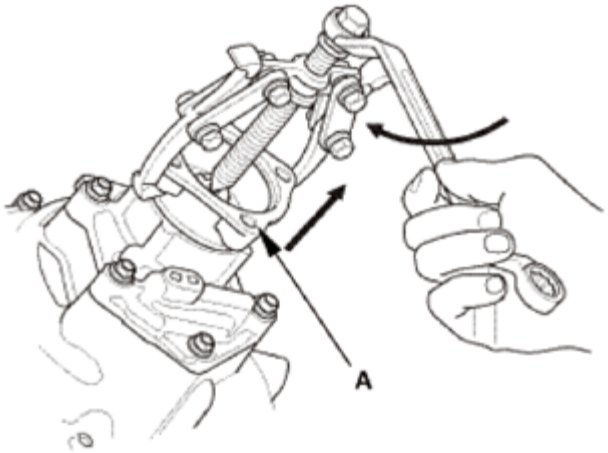

Fig. 35: Removing Companion Flange Using Puller

GETtheMANUALS.org

13. Oil Pump Cover
    1. Remove the oil pump cover (A) and oil pump cover seal (B).
    2. Remove the inner rotor (C) and the outer rotor (D).
    3. Remove the fluid strainer (E) and the dowel pins (F).

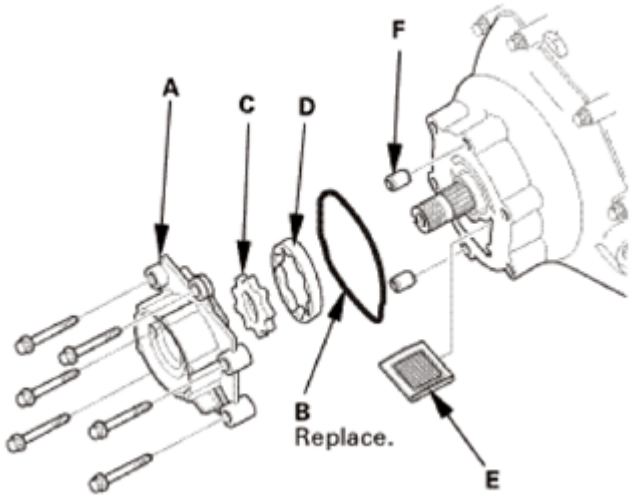

Fig. 36: Identifying Oil Pump Cover, Seal, Inner And Outer Rotor, Fluid Strainer And Dowel Pins

14. Oil Pump Case
    1. Remove the oil pump case (A).
    2. Remove the dowel pins (B).

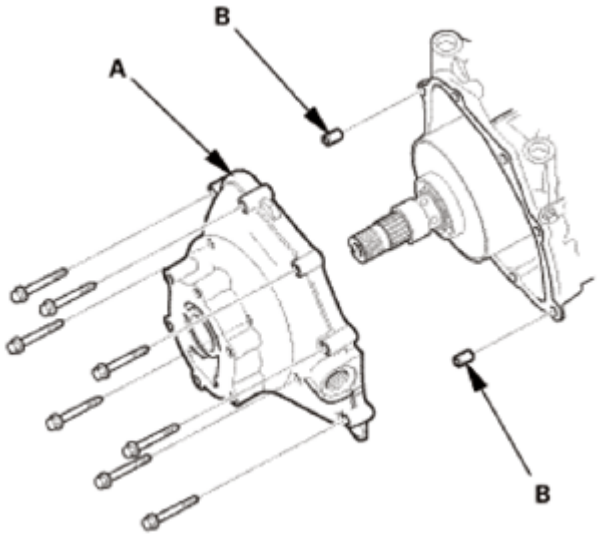

Fig. 37: Identifying Oil Pump Case And Dowel Pins

15. Rear Differential Clutch Assembly

GETtheMANUALS.org

1. Remove the baffle cover (A).
2. Remove the differential clutch assembly (B).

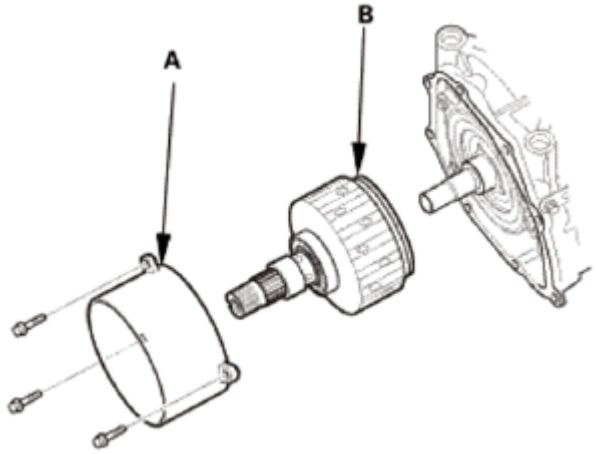

Fig. 38: Identifying Differential Clutch Assembly And Baffle Cover

16. Oil Pump Body Assembly
    1. Remove the 32.3 mm shim (A).
    2. Remove the 94.6 mm shim (B).

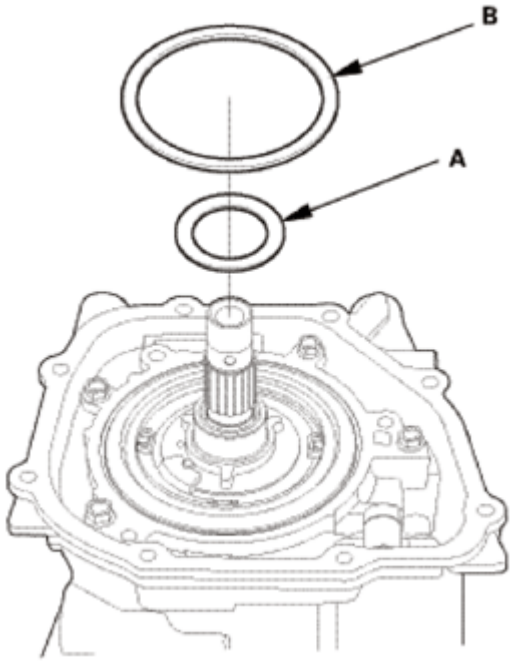

Fig. 39: Identifying Oil Pump Body Shim

3. Remove the oil pump body assembly (A).
4. Remove the dowel pins (B) and the O-ring (C).

GETtheMANUALS.org

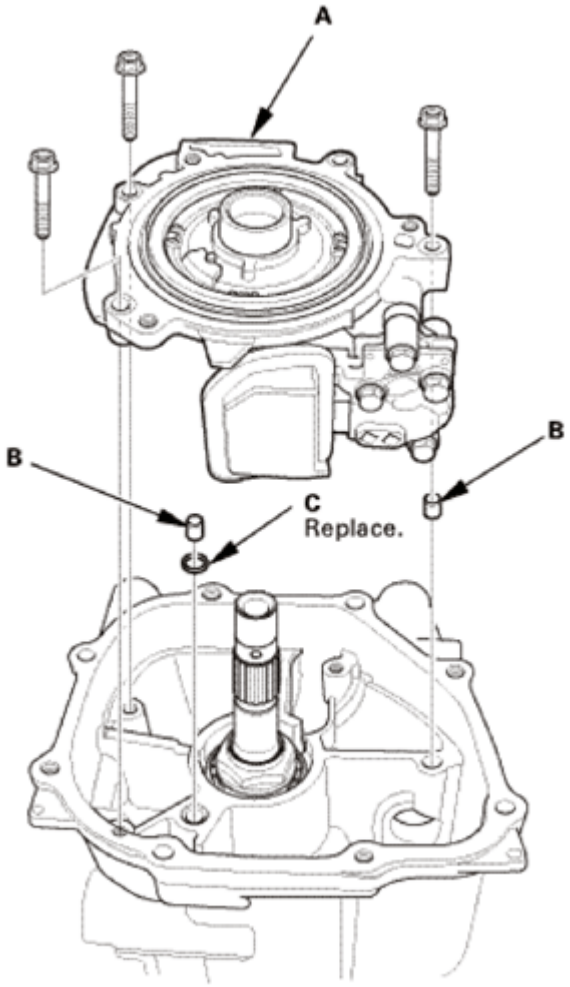

Fig. 40: Identifying Oil Pump Body Assembly, Dowel Pins And O-Ring

17. Rear Differential Solenoid Valve
    1. Remove the rear differential solenoid valve (A), the O-ring (B), and the square washer (C) from the oil pump body assembly (D).

GETtheMANUALS.org

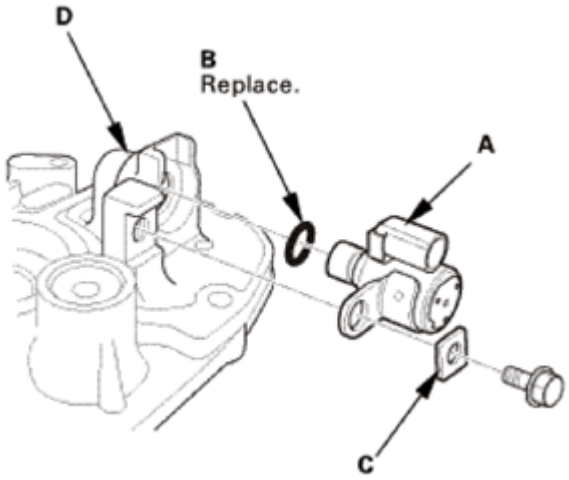

Fig. 41: Identifying Oil Pump Body Assembly, Rear Differential Solenoid Valve, O-Ring, Square Washer

REASSEMBLY

1. Rear Differential Solenoid Valve
    1. Apply Dual Pump Fluid II to a new O-ring (A).
    2. Install the rear differential solenoid valve (B) with the O-ring, and the square washer (C).

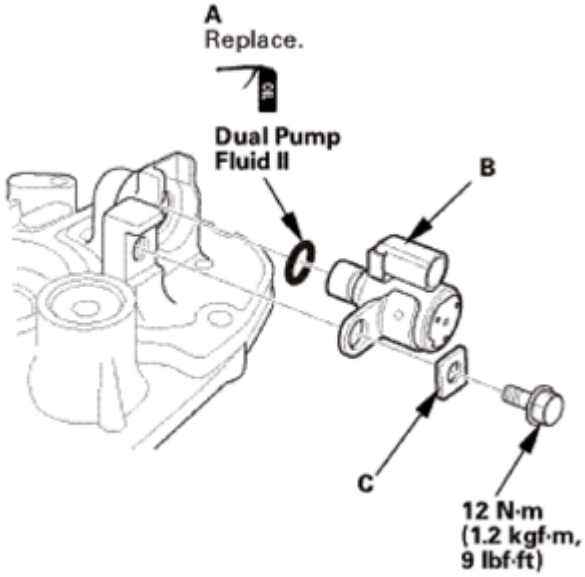

Fig. 42: Identifying Rear Differential Solenoid Valve, O-Ring And Square Washer

2. Oil Pump Body Assembly
    1. Apply Dual Pump Fluid II to a new O-ring (A).
    2. Install the dowel pins (B) with the O-ring.
    3. Install the oil pump body assembly (C).

GETtheMANUALS.org

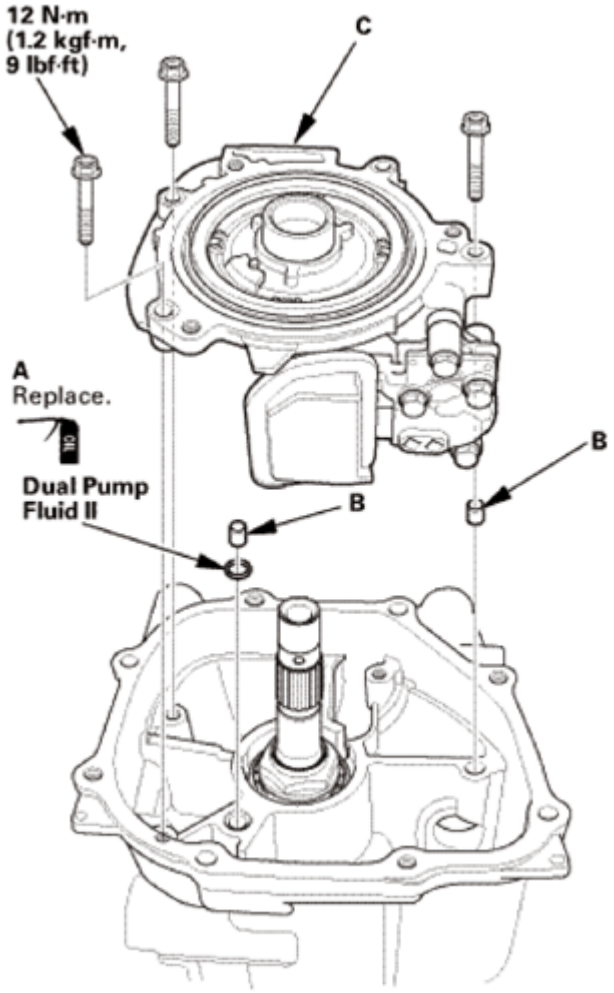

Fig. 43: Identifying Oil Pump Body Assembly, Dowel Pins And O-Ring

4. Install the 32.3 mm shim (A).
5. Install the 94.6 mm shim (B).

GETtheMANUALS.org

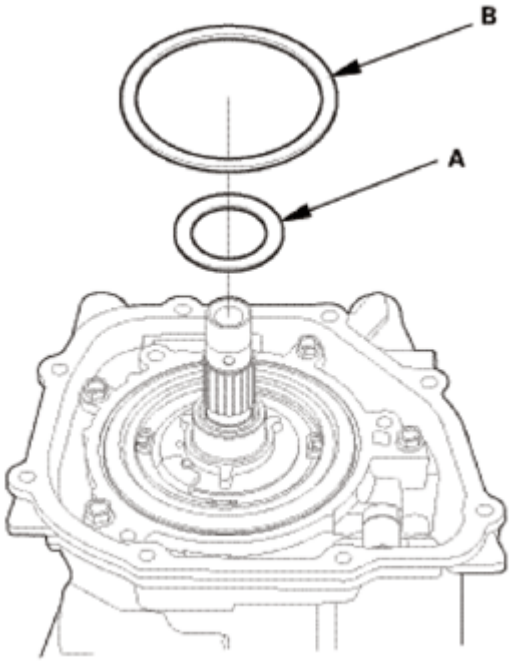

Fig. 44: Identifying Oil Pump Body Assembly Shim

3. Rear Differential Clutch Assembly
    1. Install the differential clutch assembly (A).
    2. Install the baffle cover (B).

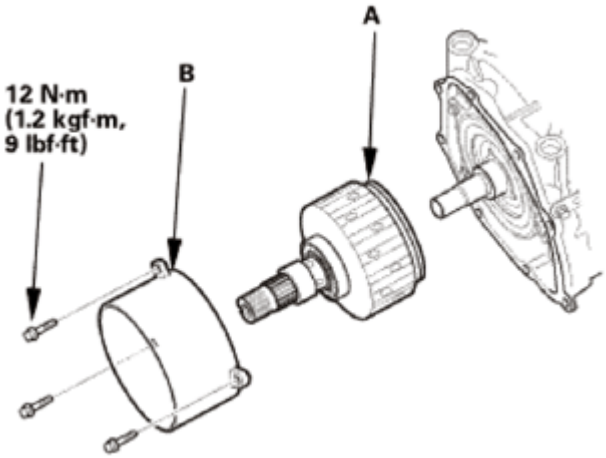

Fig. 45: Identifying Differential Clutch Assembly And Baffle Cover

4. Oil Pump Case
    1. Remove the dirt and oil from the sealing surfaces.
    2. Apply liquid gasket (P/N 08718-0004 or 08718-0009) evenly to the sealing surface.
    3. Install the component within 5 minutes of applying the liquid gasket. Make sure you seal the entire circumference of the bolt holes to prevent fluid leakage.

GETtheMANUALS.org

NOTE:

- **If you apply liquid gasket P/N 08718-0012, the component must be installed within 4 minutes.**
- **If too much time has passed after applying the liquid gasket, remove the old liquid gasket and residue, then reapply the new liquid gasket.**
- **Allow it to cure at least 30 minutes after assembly before filling the differential with the recommended fluid.**

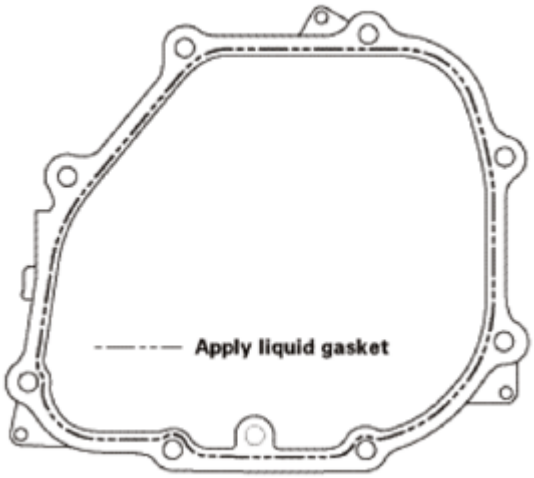

Fig. 46: Identifying Liquid Gasket Applying Area

4. Install the dowel pins (A).
5. Install the oil pump case (B).
6. Torque the eight mounting bolts in a crisscross pattern in several steps.

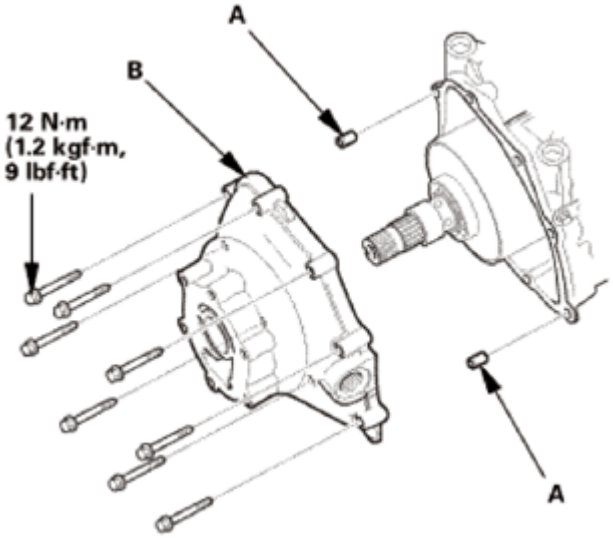

Fig. 47: Identifying Oil Pump Case, Dowel Pins With Torque Specifications

GETtheMANUALS.org

5. Oil Pump Cover
    1. Install the fluid strainer (A) and the dowel pins (B).
    2. Install the inner rotor (C) and the outer rotor (D) with the "." marks (E) facing the oil pump case side.
    3. Install the oil pump cover (F) with a new oil pump cover seal (G).
    4. Torque the six mounting bolts in a crisscross pattern in several steps.

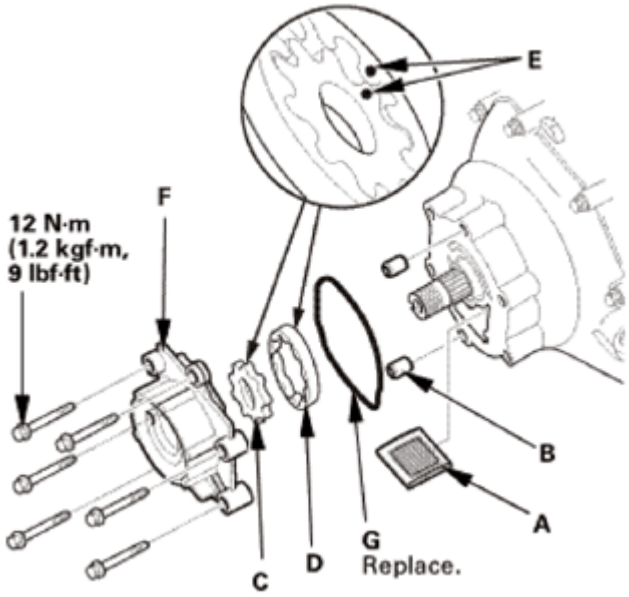

Fig. 48: Identifying Oil Pump Cover, Seal, Inner And Outer Rotor, Fluid Strainer And Dowel Pins

6. Rear Differential Companion Flange
    1. Set the companion flange (A) to the clutch guide shaft.
    2. Drive on the companion flange using the 41.8 mm oil seal driver.

GETtheMANUALS.org

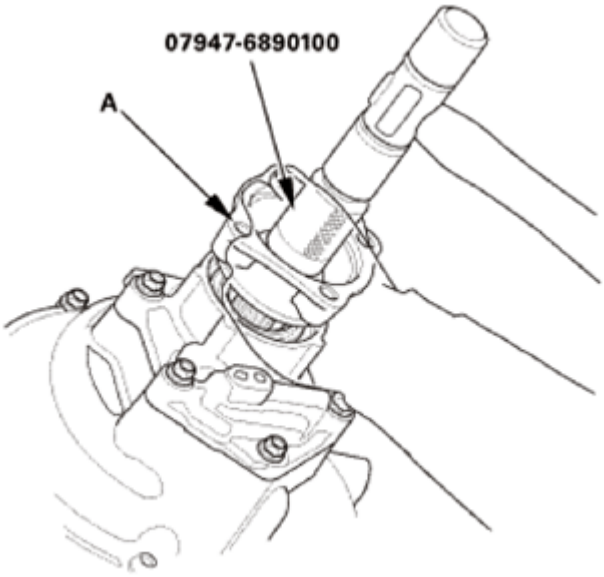

Fig. 49: Driving On Companion Flange Using Oil Seal Driver

3. Check the length of clutch guide shaft as shown.

NOTE: **Make sure to drive on the companion flange until 2 to 3 thread pitches of the clutch guide shaft appears.**

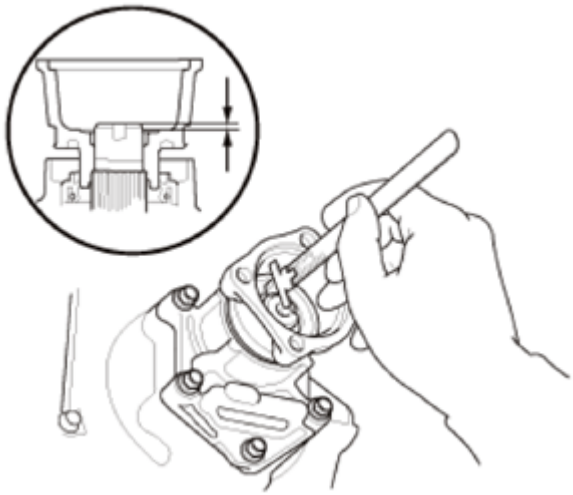

Fig. 50: Checking Length Of Clutch Guide Shaft Using Gauge

4. Apply Dual Pump Fluid II to the used locknut.
5. Set the used locknut to the clutch guide shaft.
6. Install the companion flange holder (A) and holder handle (B) on the companion flange.

GETtheMANUALS.org

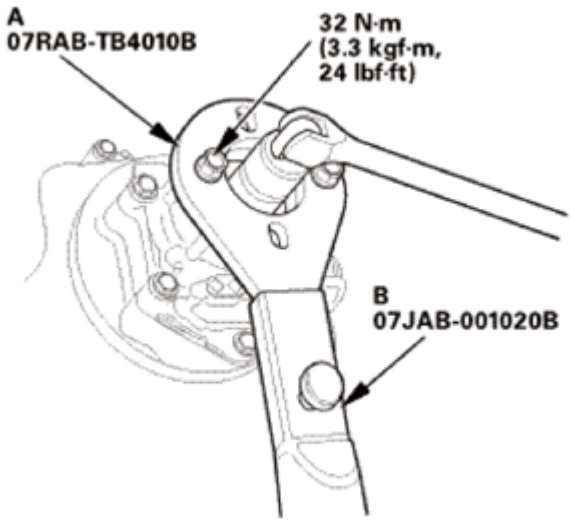

Fig. 51: Removing Used Locknut And Companion Holder

7. Tighten the used locknut.
8. Remove the used locknut and the companion holder.
9. Check the companion flange has been set to the bottom.
10. Apply Dual Pump Fluid II to a new O-ring (A).
11. Install the O-ring, a new back-up ring (B), the spring washer (C), and a new locknut (D).

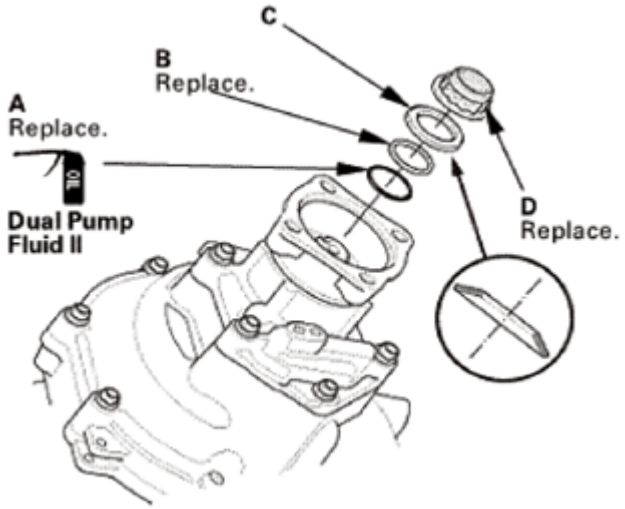

Fig. 52: Identifying O-Ring, Back-Up Ring, Spring Washer And Locknut

12. Install the companion flange holder (A) and holder handle (B) on the companion flange.
13. Tighten the locknut to the specified torque.

Specified Torque:

GETtheMANUALS.org

107.8 N.m (11.0 kgf.m, 80 lbf.ft)

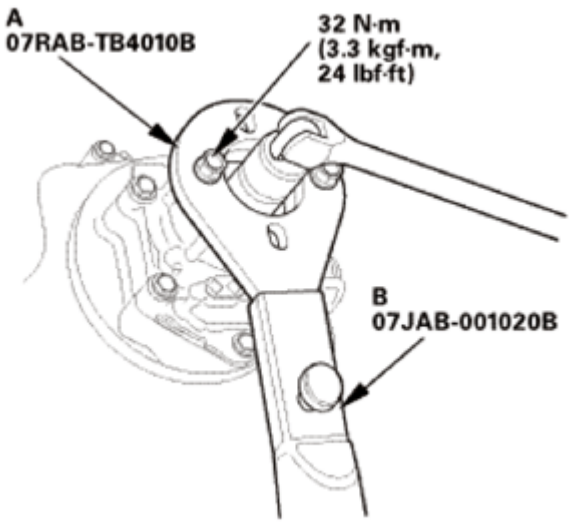

Fig. 53: Tightening Locknut

14. Stake the locknut tab (A) into the groove in the clutch guide.

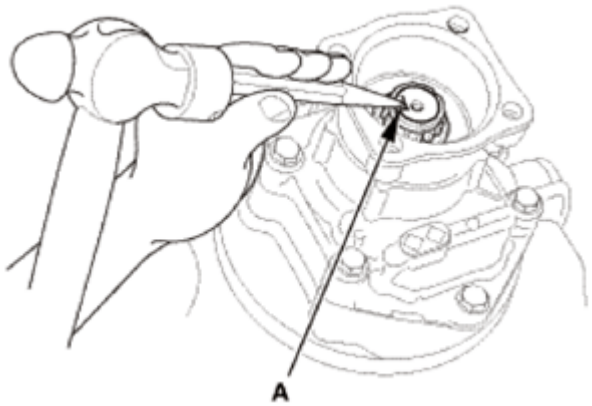

Fig. 54: Staking Locknut Tab Into Clutch Guide Groove

7. Rear Differential Subharness
    1. 13M canada-built models: Install the hose bracket (A) to the rear differential.

GETtheMANUALS.org

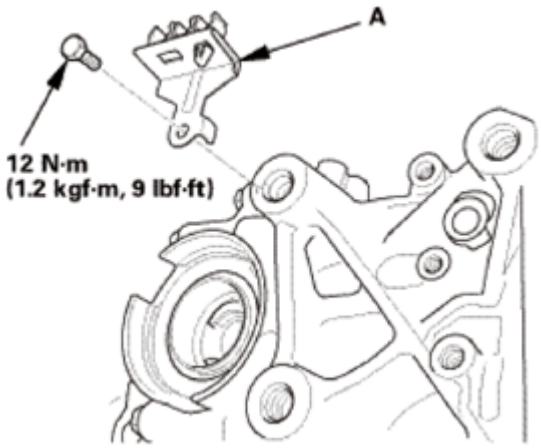

Fig. 55: Identifying Hose Bracket And Mounting Bolts With Torque Specification (13M Canada-Built Models)

Except 13M, canada-built models

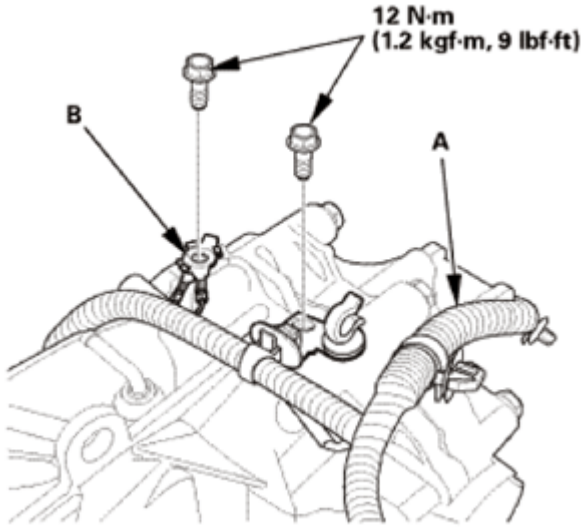

Fig. 56: Identifying Rear Differential Subharness And Ground Terminal With Torque Specifications (Except 13M, Canada-Built Models)

13M, canada-built models

GETtheMANUALS.org

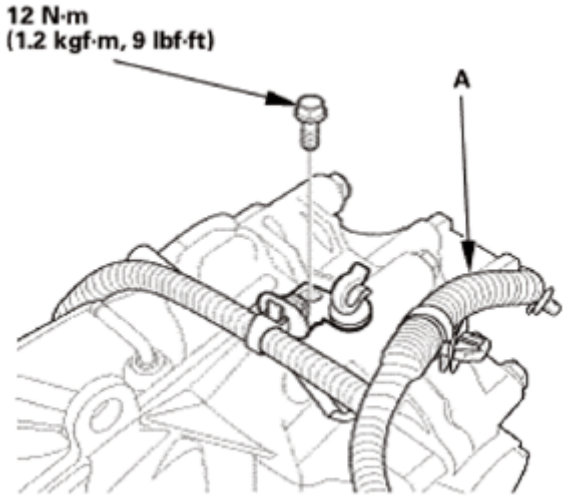

Fig. 57: Identifying Rear Differential Subharness And Ground Terminal With Torque Specifications (Except 13M, Canada-Built Models)

13M, canada-built models

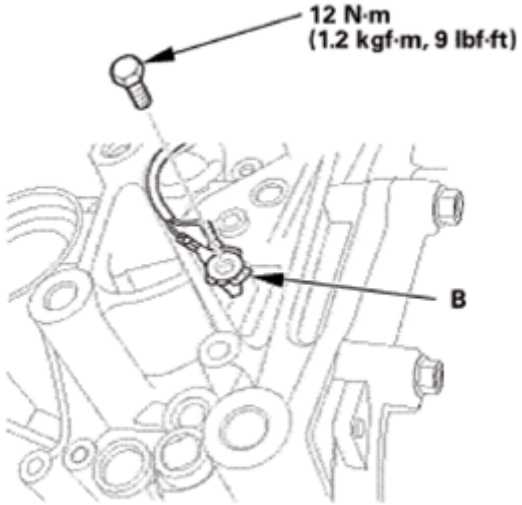

Fig. 58: Identifying Rear Differential Subharness And Ground Terminal With Torque Specifications (13M, Canada-Built Models)

2. Install the rear differential subharness (A).
3. Connect the ground terminal (B).

8. Oil Filler Plug And Drain Plug
   1. Install the drain plug (A) and the oil filler plug (B) with new sealing washers (C).

GETtheMANUALS.org

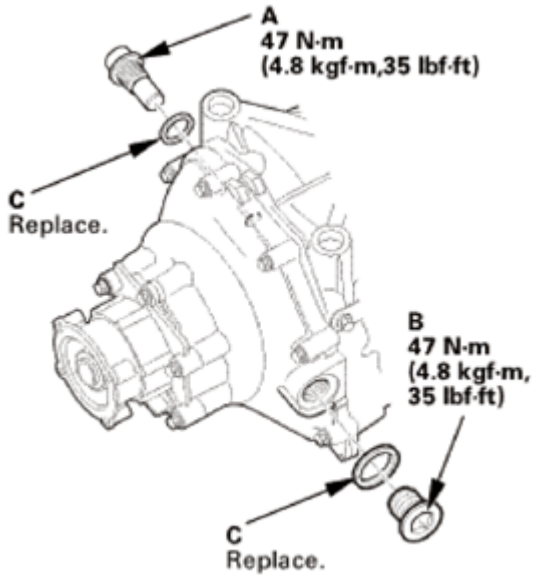

Fig. 59: Identifying Drain Plug, Oil Filler Plug And Sealing Washers With Torque Specifications

9. Rear Differential Solenoid Valve Connector
    1. Install the rear differential solenoid valve connector (A).

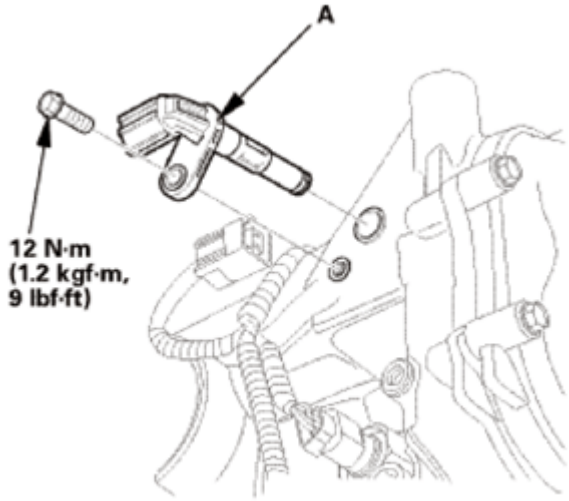

Fig. 60: Identifying Rear Differential Solenoid Valve Connector With Mounting Bolts Torque Specifications

    2. Connect the connector (A).

GETtheMANUALS.org

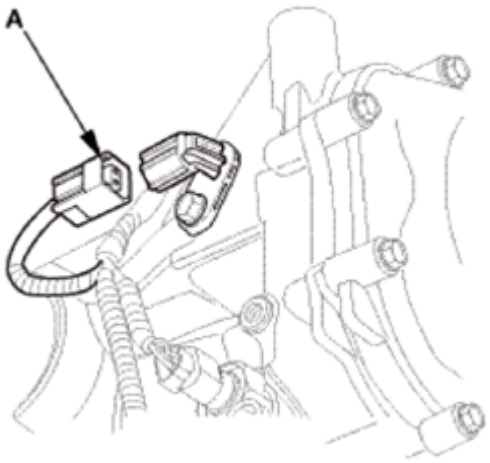

Fig. 61: Identifying Rear Differential Solenoid Valve Connector

10. Rear Differential Fluid Pressure Sensor
    1. Install the rear differential fluid pressure sensor (A) with a new O-ring (B).

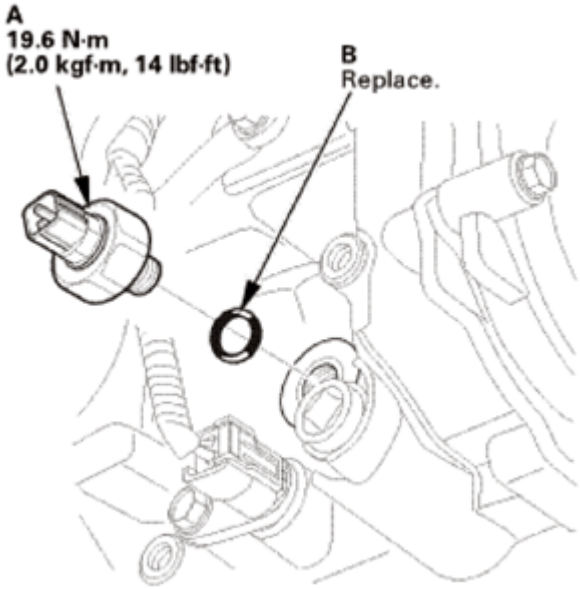

Fig. 62: Identifying Rear Differential Fluid Pressure Sensor With O-Ring

11. Rear Differential Fluid Pressure Sensor Connector
    1. Connect the connector (A).

GETtheMANUALS.org

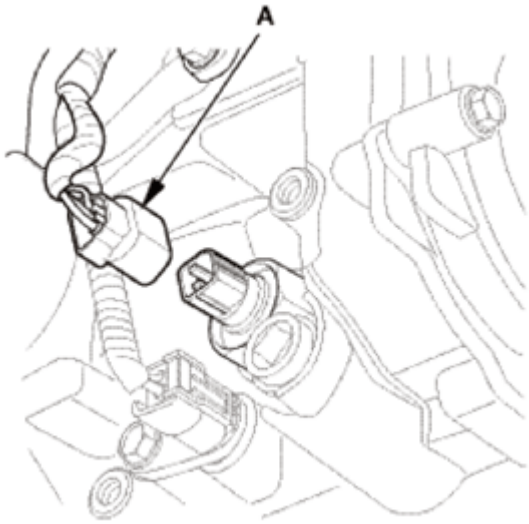

Fig. 63: Identifying Rear Differential Fluid Pressure Sensor Connector With Torque Specifications

12. Rear Differential Fluid Temperature Sensor
    1. Apply Dual Pump Fluid II to a new O-ring (A).
    2. Install the rear differential fluid temperature sensor (B) with the O-ring.

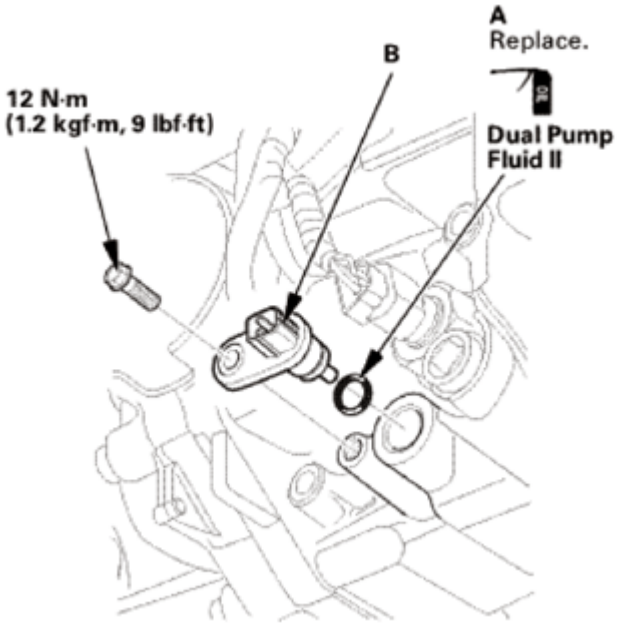

Fig. 64: Identifying Rear Differential Fluid Temperature Sensor With O-Ring

13. Rear Differential Fluid Temperature Sensor Connector
    1. Connect the connector (A).

GETtheMANUALS.org

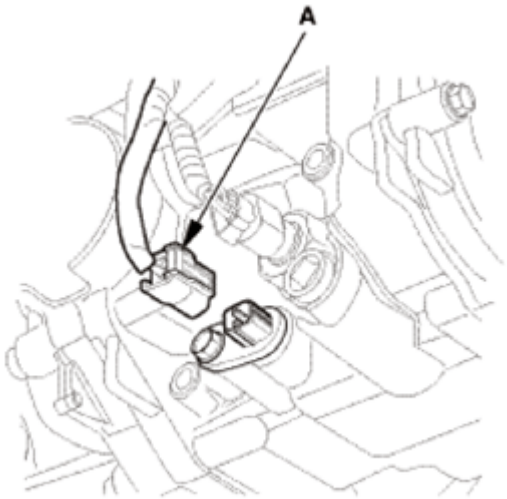

Fig. 65: Identifying Rear Differential Fluid Temperature Sensor Connector With Torque Specification

14. Rear Differential Sensor Cover
    1. Install the rear differential sensor cover (A).
    2. Connect the breather hoses (B) to the clamps (C).

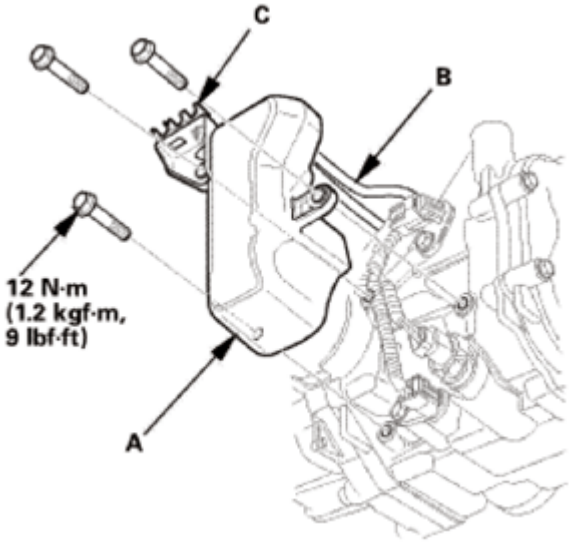

Fig. 66: Identifying Rear Differential Sensor Cover, Breather Hoses And Clamps

15. Rear Differential Motor Assembly
    1. Install the rear differential pump motor (A) with a new O-ring (B).

GETtheMANUALS.org

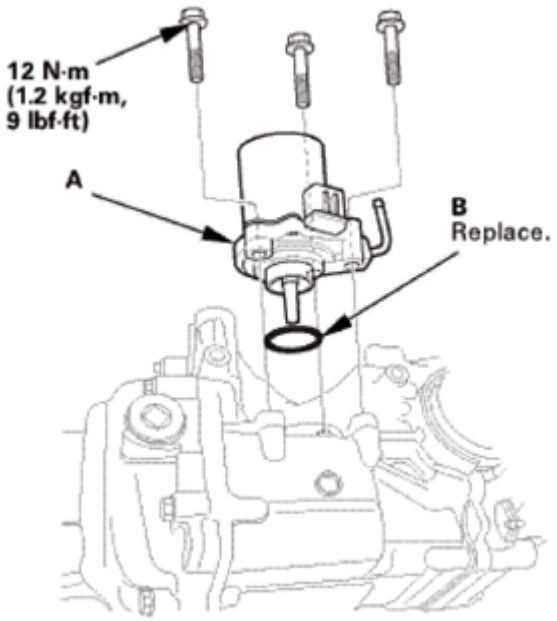

Fig. 67: Identifying Rear Differential Pump Motor And O-Ring

16. Rear Differential Motor Connector
    1. Connect the connector (A).

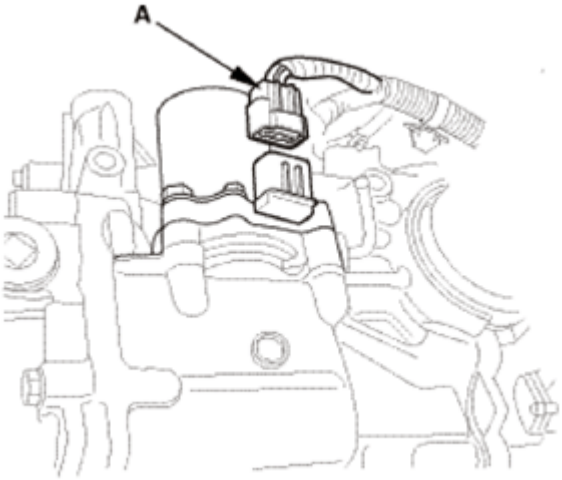

Fig. 68: Identifying Rear Differential Motor Connector

17. Rear Differential Harness Bracket
    1. Install the harness bracket (A) and the harness clip (B).

GETtheMANUALS.org

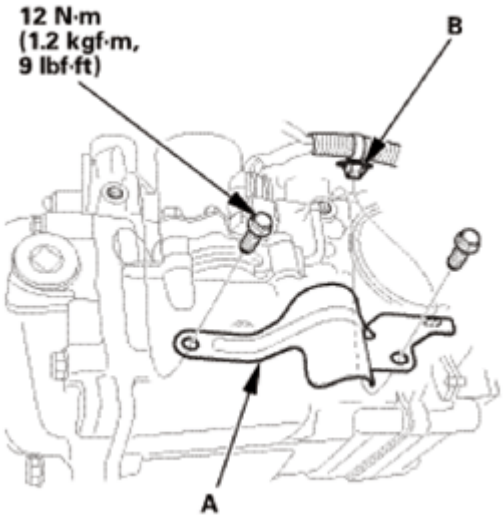

Fig. 69: Identifying Harness Bracket And Harness Clip With Torque Specifications

REAR DIFFERENTIAL FLUID INSPECTION

INSPECTION

1. Vehicle Lift
    1. Raise the vehicle on a lift, and make sure it is securely supported.
2. Rear Differential Fluid - Inspection
    1. Use solvent and a brush to wash any oil and dirt off the oil filler plug, and dry them with compressed air.
    2. Remove the oil filler plug (A) and the sealing washer (B).
    3. Check the condition of the rear differential fluid, if the fluid is dirty or burnt, replace it.
    4. Make sure the rear differential fluid is at the proper level (C).
        - If the level is below the proper level, check for rear differential fluid leaks at the differential.
        - If a problem is found, fix it before filling the differential with fluid.

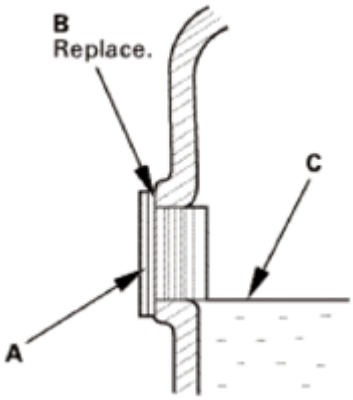

Fig. 70: Identifying Rear Differential Fluid Level

GETtheMANUALS.org

5. The fluid level must reach up to the bottom of the oil filler plug hole.
6. If necessary, add the rear differential fluid until it runs out, then reinstall the oil filler plug with a new sealing washer.

REAR DIFFERENTIAL FLUID PRESSURE SENSOR REMOVAL AND INSTALLATION

REMOVAL

1. Vehicle Lift
    1. Raise the vehicle on a lift, and make sure it is securely supported.
2. Rear Differential Fluid - Replacement (Real Time AWD System)
    1. Remove the oil filler plug (A) and the sealing washer (B).

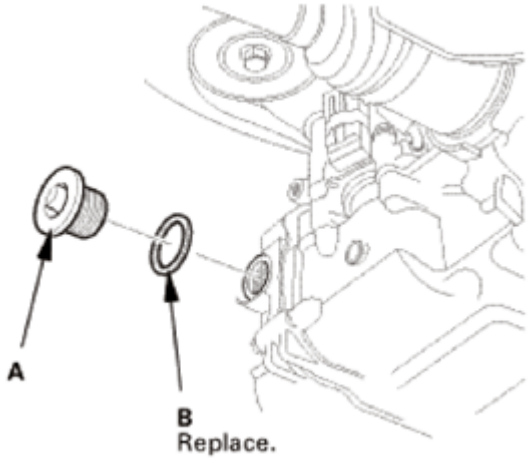

Fig. 71: Identifying Oil Filler Plug And Sealing Washer With Torque Specifications (Real Time AWD System)

2. Remove the drain plug (A) and the sealing washer (B), then drain the rear differential fluid.

GETtheMANUALS.org

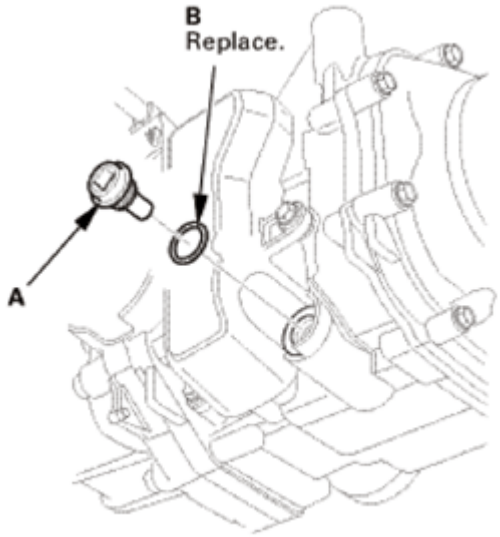

Fig. 72: Identifying Drain Plug And Sealing Washer With Torque Specifications (Real Time AWD System)

3. Rear Differential Sensor Cover
    1. Remove the rear differential sensor cover (A).

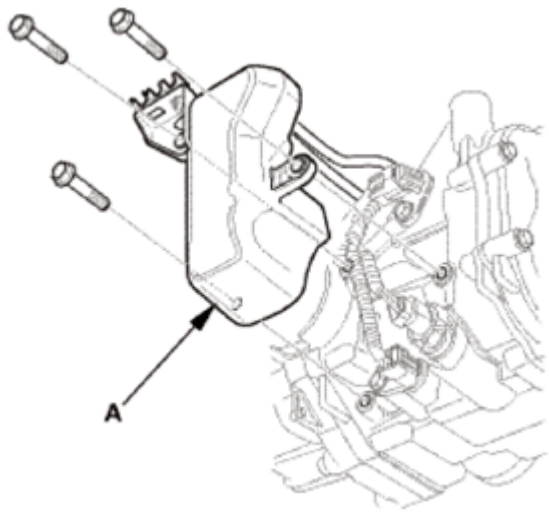

Fig. 73: Identifying Rear Differential Sensor Cover

4. Rear Differential Fluid Pressure Sensor Connector
    1. Disconnect the connector (A).

GETtheMANUALS.org

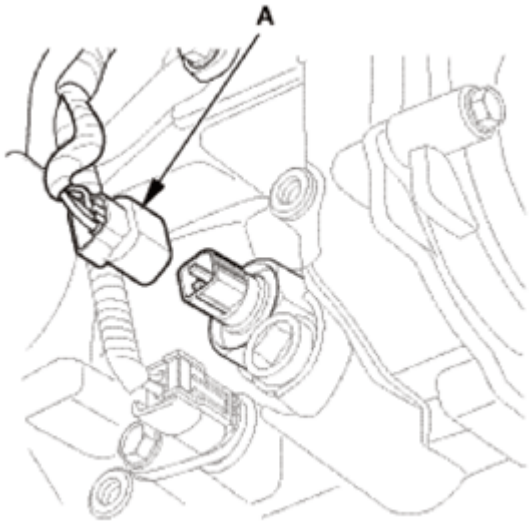

Fig. 74: Identifying Rear Differential Fluid Pressure Sensor Connector

5. Rear Differential Fluid Pressure Sensor
    1. Remove the rear differential fluid pressure sensor (A) and the O-ring (B).

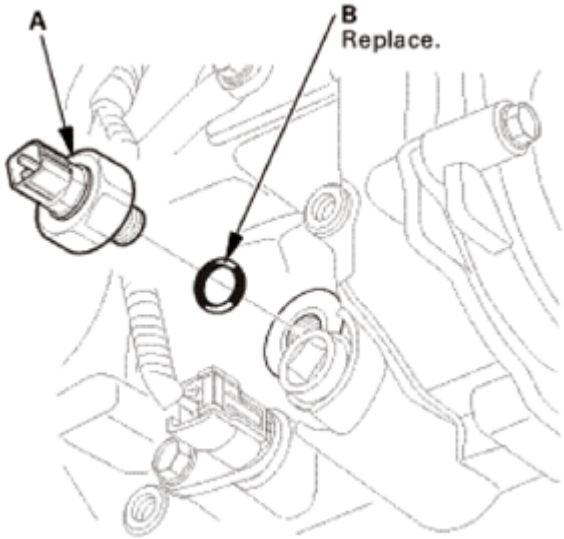

Fig. 75: Identifying Rear Differential Fluid Pressure Sensor And O-Ring With Torque Specifications

INSTALLATION

1. Rear Differential Fluid Pressure Sensor
    1. Install the rear differential fluid pressure sensor (A) with a new O-ring (B).

GETtheMANUALS.org

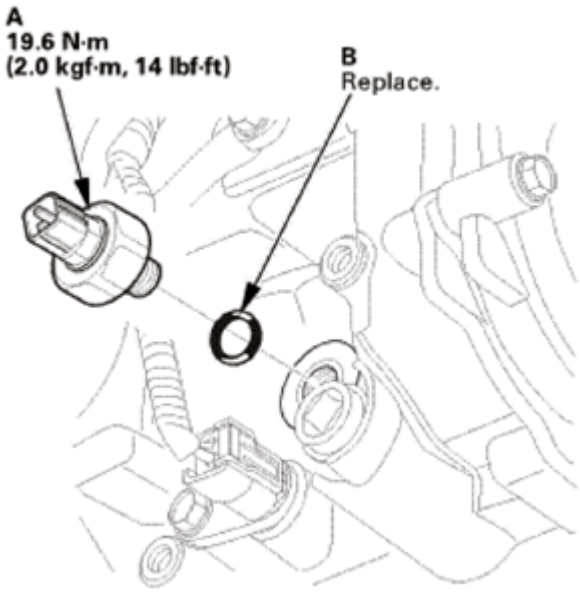

Fig. 76: Identifying Rear Differential Fluid Pressure Sensor With O-Ring With Torque Specification

2. Rear Differential Fluid Pressure Sensor Connector
    1. Connect the connector (A).

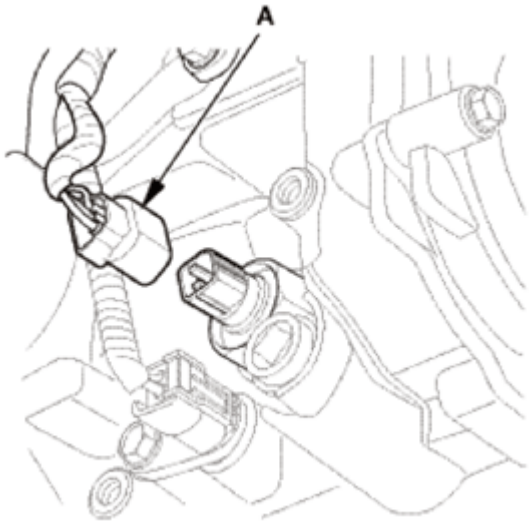

Fig. 77: Identifying Rear Differential Fluid Pressure Sensor Connector

3. Rear Differential Sensor Cover
    1. Install the rear differential sensor cover (A).
    2. Connect the breather hoses (B) to the clamps (C).

GETtheMANUALS.org

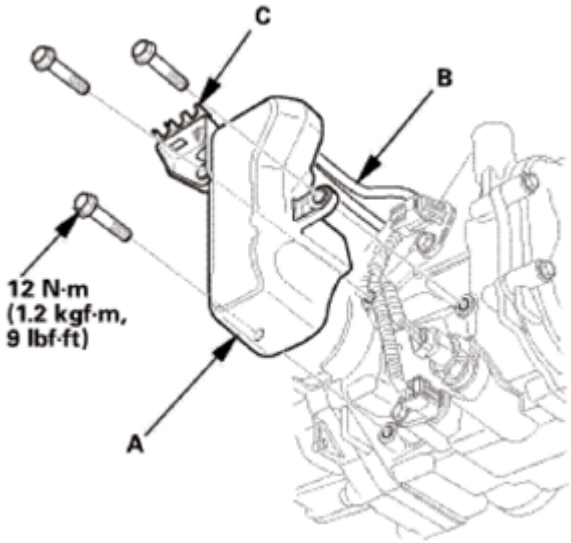

Fig. 78: Identifying Rear Differential Sensor Cover, Breather Hoses And Clamps

4. Rear Differential Fluid - Replacement (Real Time AWD System)
    1. Clean the drain plug (A), then install it with a new sealing washer (B).
    2. Refill the differential with rear differential fluid to the proper level.

NOTE: **If you disassemble the differential, check the rear differential fluid level again after the 4WD system check is finished. Add fluid if necessary.**

Fluid Capacity:

1.2 L (1.3 US qt) at fluid change

1.5 L (1.6 US qt) at overhaul

Recommended fluid: Honda Dual Pump Fluid II

GETtheMANUALS.org

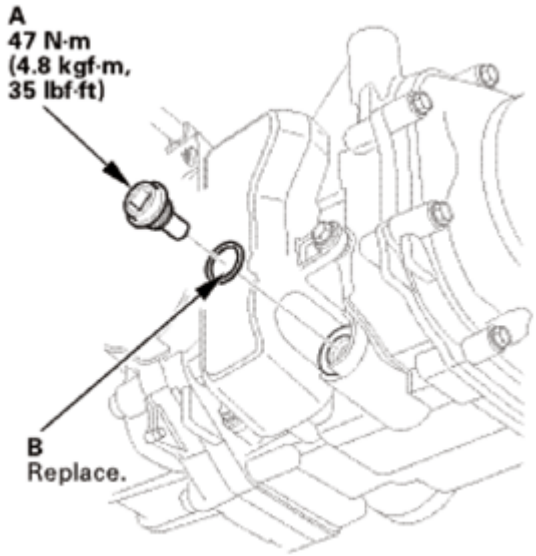

Fig. 79: Identifying Drain Plug Sealing Washer With Torque Specifications (Real Time AWD System)

3. Install the oil filler plug (A) with a new sealing washer (B).

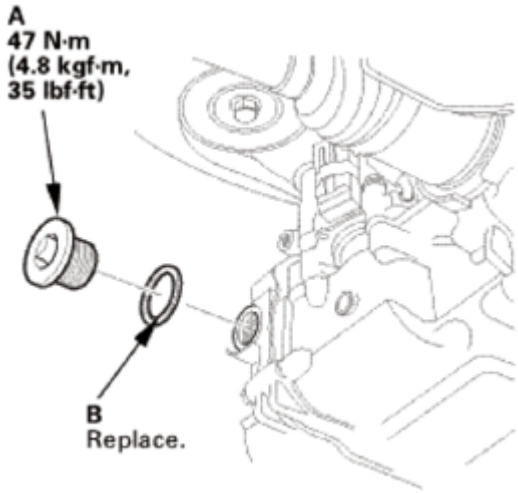

Fig. 80: Identifying Oil Filler Plug With Sealing Washer With Torque Specifications (Real Time AWD System)

5. Rear Differential Fluid After Replacement - Check (Real Time AWD System)
    1. Apply the parking brake, and block all four wheels.
    2. Start the engine, and let it idle more than 6 seconds, then turn the engine off. Repeat this step three more times.
    3. Shift to D while pressing the brake pedal firmly. Press the accelerator pedal for 2 seconds, then let it idle. Repeat this three more times.
    4. Check that the real time AWD indicator does not come on. If it does, check for real time AWD

GETtheMANUALS.org

system DTC's.

6. HDS DLC - Connection
    1. Connect the HDS to the data link connector (DLC) (A) located under the driver's side of the dashboard.
    2. Turn the ignition switch to ON (II).
    3. Make sure the HDS communicates with the vehicle. If it does not communicate, go to the DLC circuit troubleshooting.

Fig. 81: Identifying Data Link Connector

7. Maintenance Minder Reset
    1. **RESET THE MAINTENANCE MINDER** .

REAR DIFFERENTIAL FLUID PRESSURE SENSOR TEST

SPECIAL TOOL DESCRIPTION

Image	Description/Tool Number
	A/T Low Pressure Gauge w/Panel 07406-0070301

GETtheMANUALS.org

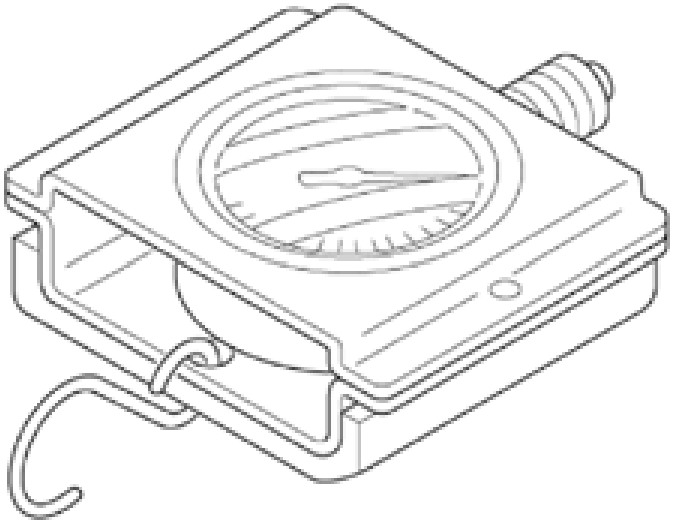	
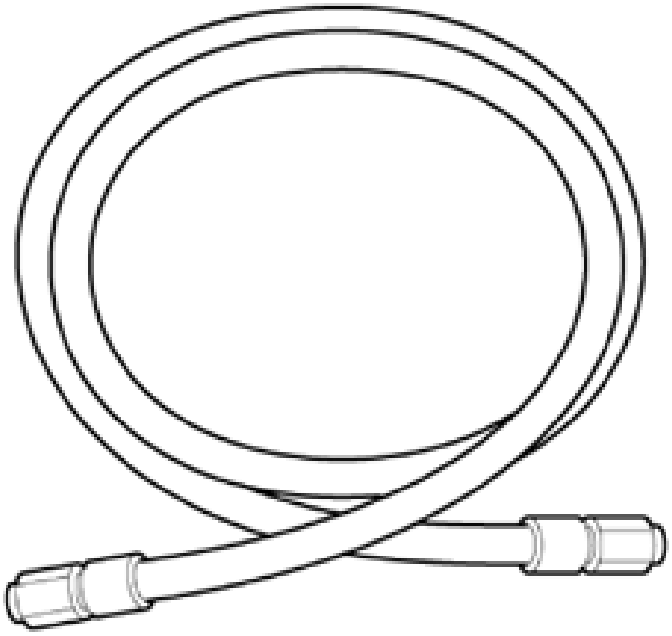	A/T Pressure Test Hose 07AAJ-PY4A100
	A/T Pressure Adapter 07MAJ-PY40120

GETtheMANUALS.org

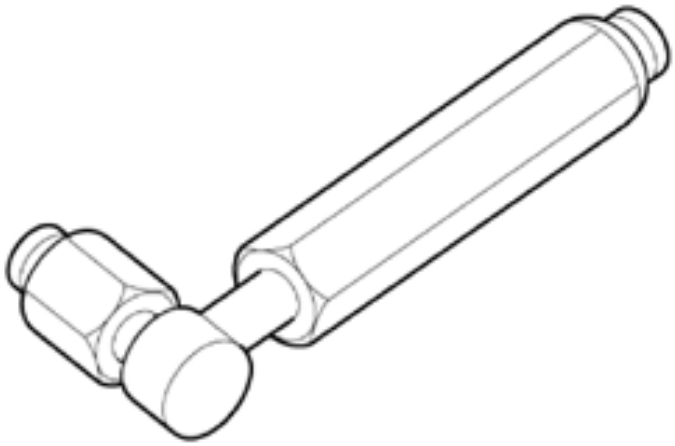	
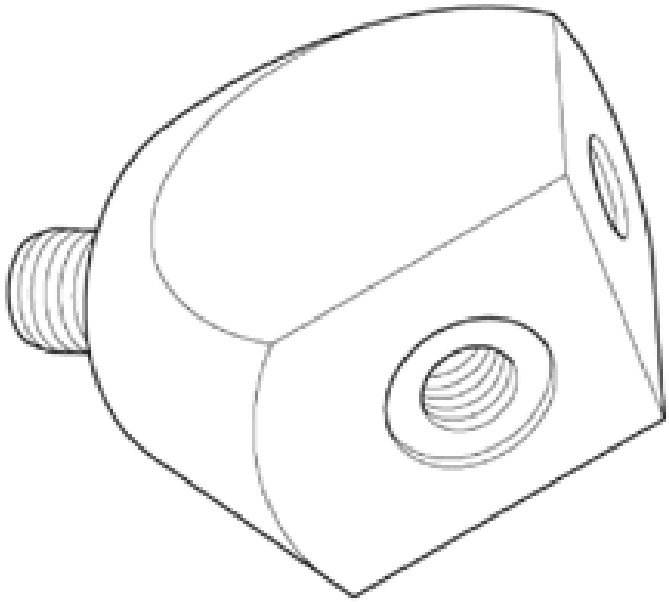	Pressure Gauge Adapter 07NAJ-P07010A
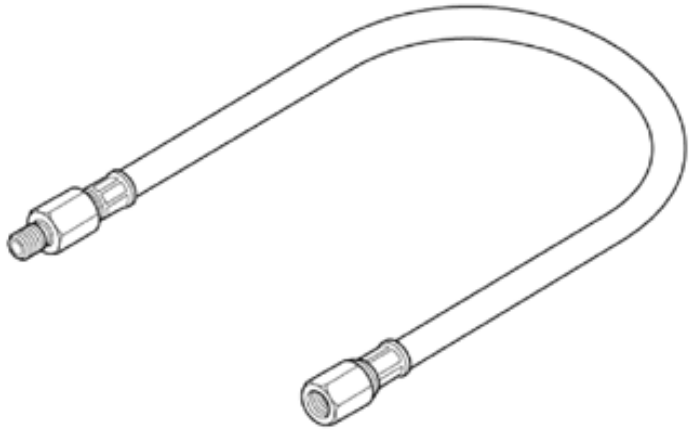	Oil Pressure Hose 07ZAJ-S5AA200

REMOVAL

GETtheMANUALS.org

1. Vehicle Lift
    1. Raise the vehicle on a lift, and make sure it is securely supported.
2. Rear Differential Sensor Cover
    1. Remove the rear differential sensor cover (A).

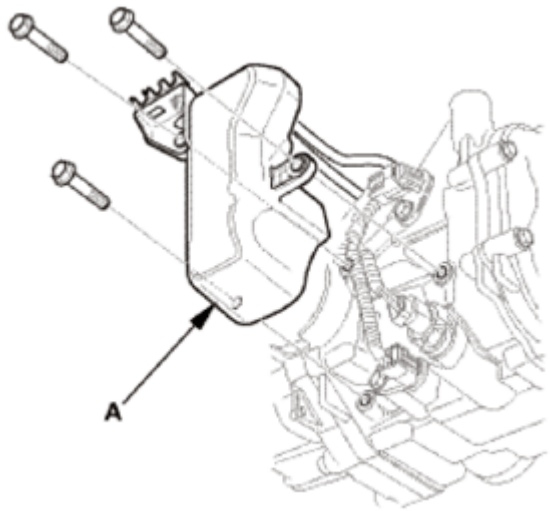

Fig. 82: Identifying Rear Differential Sensor Cover

3. Rear Differential Fluid Pressure Sensor Connector
    1. Disconnect the connector (A).

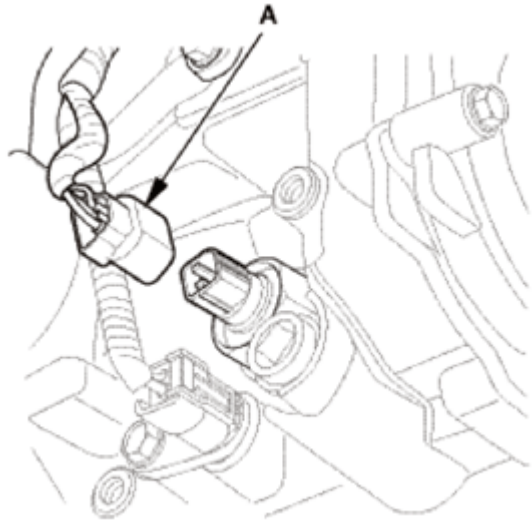

Fig. 83: Identifying Rear Differential Fluid Pressure Sensor Connector

4. Rear Differential Fluid Pressure Sensor
    1. Remove the rear differential fluid pressure sensor (A) and the O-ring (B).

GETtheMANUALS.org

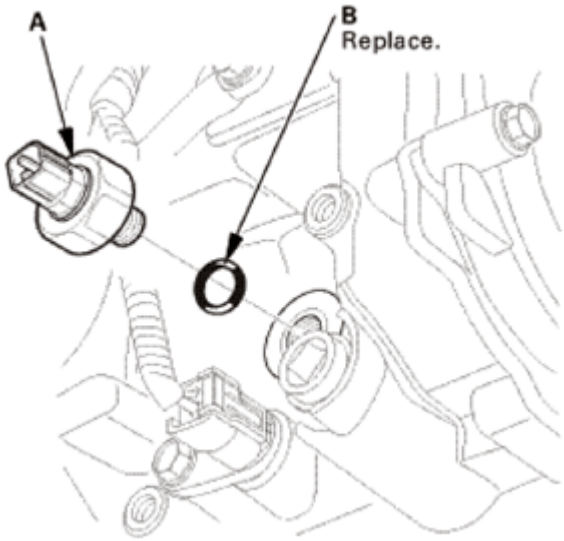

Fig. 84: Identifying Rear Differential Fluid Pressure Sensor And O-Ring

TEST

NOTE: **Check that the real time AWD indicator does not come on. If it does, check for real time AWD system DTC's.**

1. HDS DLC - Connection
    1. Connect the HDS to the data link connector (DLC) (A) located under the driver's side of the dashboard.
    2. Turn the ignition switch to ON (II).
    3. Make sure the HDS communicates with the vehicle. If it does not communicate, go to the DLC circuit troubleshooting.

Fig. 85: Identifying Data Link Connector

GETtheMANUALS.org

2. Rear Differential Fluid Pressure Sensor - Test
    1. Turn the ignition switch to LOCK (0).
    2. Reconnect the rear differential fluid pressure sensor connector (A) to the rear differential pressure sensor (B).
    3. Turn the ignition switch to ON (II).
    4. Select the DATA LIST in the REAL TIME AWD SYSTEM with the HDS.
    5. Check the ACTUAL OIL PRESSURE OF THE OIL PRESSURE SENSOR FOR REAR DIFFERENTIAL in the DATA LIST with the HDS.

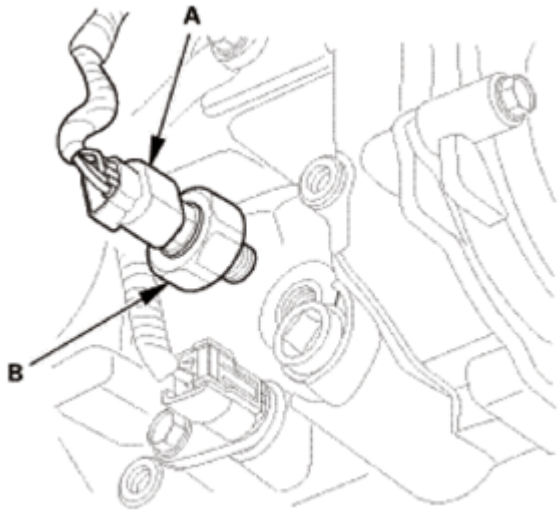

Fig. 86: Identifying Rear Differential Fluid Pressure Sensor Connector And Sensor

- If the fluid pressure is higher than 0-77 kPa (0.0-0.8 kgf/cm^2 , 0-11 psi), replace the rear differential fluid pressure sensor.
- If the fluid pressure is within the range of 0-77 kPa (0.0-0.8 kgf/cm^2 , 0-11 psi), go to step 6.

    6. Turn the ignition switch to LOCK (0).
    7. Attach the A/T pressure test hose, the A/T pressure adapter, the pressure gauge adapter, and the oil pressure hose as shown, then attach the rear differential fluid pressure sensor (A) to the pressure gauge adapter (B).
    8. Place the end of the A/T pressure test hose into a drain pan (C).
    9. Start the engine, the real time AWD pump will do a brief low pressure purge of the system, this will cause air and fluid to flow out of the test hose.
    10. Turn the ignition switch to LOCK (0).
    11. Repeat step 9 again to assure the A/T pressure test hose is full of fluid without air bubbles
    12. Turn the ignition switch to LOCK (0).

GETtheMANUALS.org

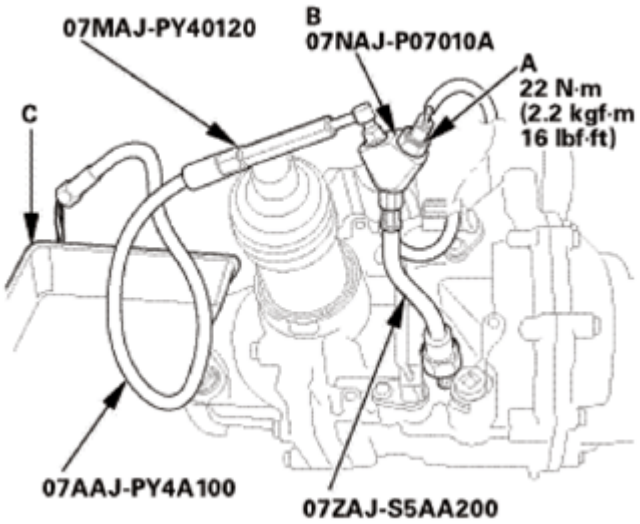

Fig. 87: Performing A/T Pressure Test Hose Using Adapter

13. Attach the A/T low pressure gauge w/panel (A) onto the end of the A/T pressure test hose (B).
14. Turn the ignition switch to ON (II).
15. Select the ADJUSTMENT in the REAL TIME AWD SYSTEM with the HDS.
16. Select the AIR BLEEDING in the ADJUSTMENT with the HDS.

NOTE: See the HDS Help menu for specific instructions.

17. Select the FUNCTIONAL TEST in the REAL TIME AWD SYSTEM with the HDS.

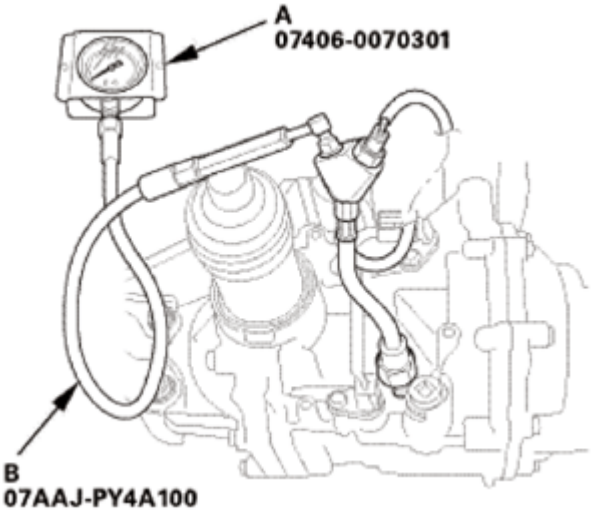

Fig. 88: Checking Differential Fluid Pressure Value

18. Select the SOLENOID TEST in the FUNCTIONAL TEST with the HDS.
19. Do LEVEL 7 of the SOLENOID TEST with the HDS.

GETtheMANUALS.org

20. Check the differential fluid pressure value of the pressure gauge.
    - If the fluid pressure is not within the range of 280-560 kPa (2.86-5.71 kgf/cm^2 , 40.6-81.2 psi), replace the rear differential pump motor.
    - If the fluid pressure is within the range of 280-560 kPa (2.86-5.71 kgf/cm^2 , 40.6-81.2 psi), go to step 21.
21. Check the ACTUAL OIL PRESSURE OF THE OIL PRESSURE SENSOR FOR REAR DIFFERENTIAL in the DATA LIST with the HDS.
    - If the fluid pressure is not within the range of 280-560 kPa (2.86-5.71 kgf/cm^2 , 40.6-81.2 psi), replace the rear differential fluid pressure sensor.
    - If the fluid pressure is within the range of 280-560 kPa (2.86-5.71 kgf/cm^2 , 40.6-81.2 psi), differential fluid pressure sensor is OK, and the test is complete.

INSTALLATION

1. Rear Differential Fluid Pressure Sensor
    1. Install the rear differential fluid pressure sensor (A) with a new O-ring (B).

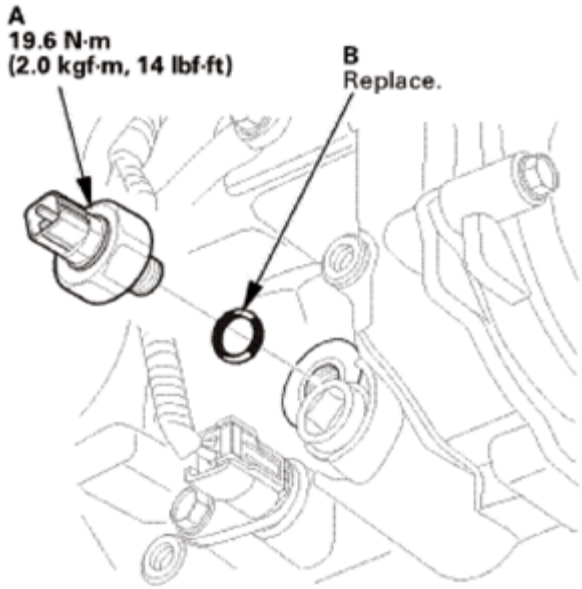

Fig. 89: Identifying Rear Differential Fluid Pressure Sensor With O-Ring With Torque Specification

2. Rear Differential Fluid Pressure Sensor Connector
    1. Connect the connector (A).

GETtheMANUALS.org

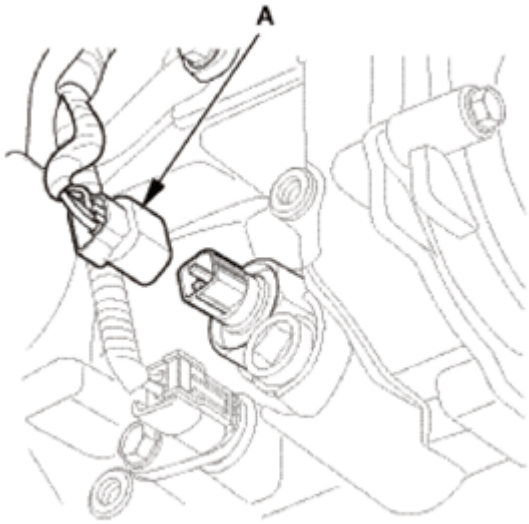

Fig. 90: Identifying Rear Differential Fluid Pressure Sensor Connector

3. Rear Differential Sensor Cover
    1. Install the rear differential sensor cover (A).
    2. Connect the breather hoses (B) to the clamps (C).

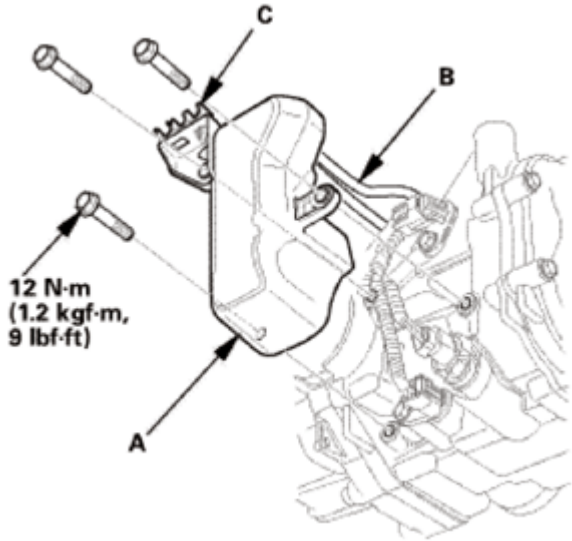

Fig. 91: Identifying Rear Differential Sensor Cover, Breather Hoses And Clamps With Torque Specifications

4. Rear Differential Fluid - Inspection
    1. Use solvent and a brush to wash any oil and dirt off the oil filler plug, and dry them with compressed air.
    2. Remove the oil filler plug (A) and the sealing washer (B).
    3. Check the condition of the rear differential fluid, if the fluid is dirty or burnt, replace it.

GETtheMANUALS.org

4. Make sure the rear differential fluid is at the proper level (C).
    - If the level is below the proper level, check for rear differential fluid leaks at the differential.
    - If a problem is found, fix it before filling the differential with fluid.

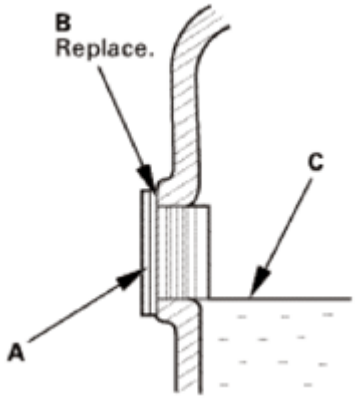

Fig. 92: Identifying Rear Differential Fluid Level

5. The fluid level must reach up to the bottom of the oil filler plug hole.
6. If necessary, add the rear differential fluid until it runs out, then reinstall the oil filler plug with a new sealing washer.

5. Rear Differential Fluid After Replacement - Check (Real Time AWD System)
    1. Apply the parking brake, and block all four wheels.
    2. Start the engine, and let it idle more than 6 seconds, then turn the engine off. Repeat this step three more times.
    3. Shift to D while pressing the brake pedal firmly. Press the accelerator pedal for 2 seconds, then let it idle. Repeat this three more times.
    4. Check that the real time AWD indicator does not come on. If it does, check for real time AWD system DTC's.
6. Maintenance Minder Reset
    1. **RESET THE MAINTENANCE MINDER** .

REAR DIFFERENTIAL FLUID REPLACEMENT

DRAIN

NOTE: Check that the real time AWD indicator does not come on. If it does, check for real time AWD system DTC's.

1. Vehicle Lift
    1. Raise the vehicle on a lift, and make sure it is securely supported.
2. Rear Differential Fluid - Replacement (Real Time AWD System)
    1. Remove the oil filler plug (A) and the sealing washer (B).

GETtheMANUALS.org

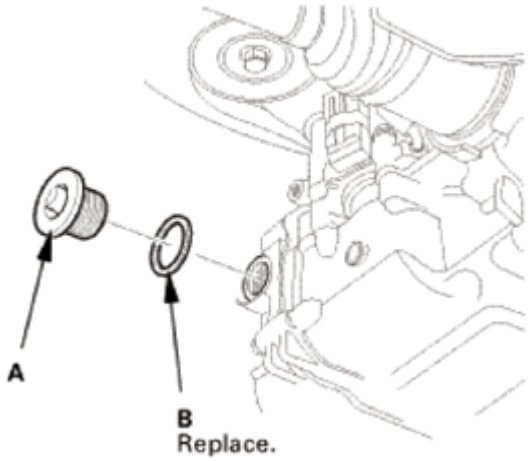

Fig. 93: Identifying Oil Filler Plug And Sealing Washer (Real Time AWD System)

2. Remove the drain plug (A) and the sealing washer (B), then drain the rear differential fluid.

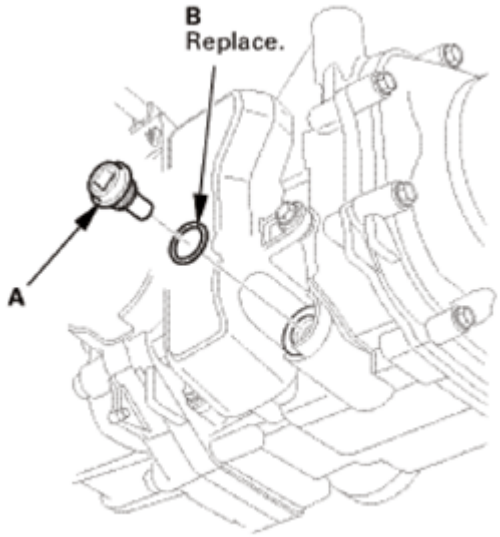

Fig. 94: Identifying Drain Plug And Sealing Washer (Real Time AWD System)

REFILL

1. Rear Differential Fluid - Replacement (Real Time AWD System)
    1. Clean the drain plug (A), then install it with a new sealing washer (B).
    2. Refill the differential with rear differential fluid to the proper level.

NOTE: **If you disassemble the differential, check the rear differential fluid level again after the 4WD system check is finished. Add fluid if necessary.**

Fluid Capacity:

GETtheMANUALS.org

1.2 L (1.3 US qt) at fluid change

1.5 L (1.6 US qt) at overhaul

Recommended fluid: Honda Dual Pump Fluid II

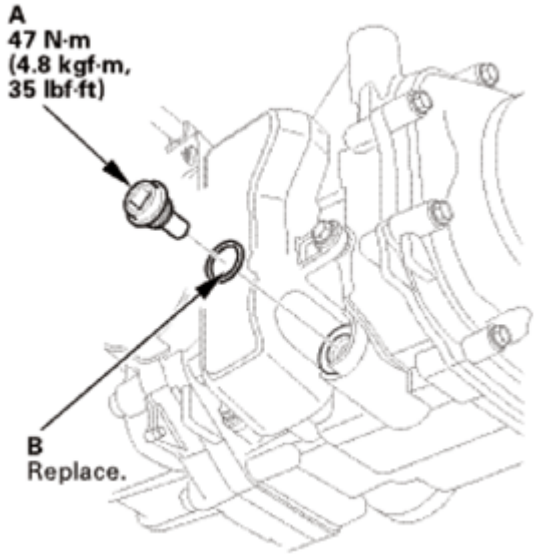

Fig. 95: Identifying Drain Plug And Sealing Washer (Real Time AWD System)

3. Install the oil filler plug (A) with a new sealing washer (B).

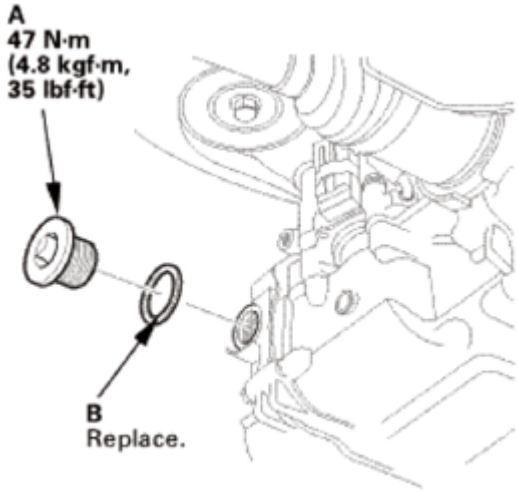

Fig. 96: Identifying Oil Filler Plug And Sealing Washer (Real Time AWD System)

2. Rear Differential Fluid After Replacement - Check (Real Time AWD System)
    1. Apply the parking brake, and block all four wheels.
    2. Start the engine, and let it idle more than 6 seconds, then turn the engine off. Repeat this step three more times.

GETtheMANUALS.org

    3. Shift to D while pressing the brake pedal firmly. Press the accelerator pedal for 2 seconds, then let it idle. Repeat this three more times.
    4. Check that the real time AWD indicator does not come on. If it does, check for real time AWD system DTC's.
3. HDS DLC - Connection
    1. Connect the HDS to the data link connector (DLC) (A) located under the driver's side of the dashboard.
    2. Turn the ignition switch to ON (II).
    3. Make sure the HDS communicates with the vehicle. If it does not communicate, go to the DLC circuit troubleshooting.

Fig. 97: Identifying Data Link Connector

4. Maintenance Minder Reset
    1. **RESET THE MAINTENANCE MINDER** .

REAR DIFFERENTIAL FLUID TEMPERATURE SENSOR REMOVAL AND INSTALLATION

REMOVAL

1. Vehicle Lift
    1. Raise the vehicle on a lift, and make sure it is securely supported.
2. Rear Differential Fluid - Replacement (Real Time AWD System)
    1. Remove the oil filler plug (A) and the sealing washer (B).

GETtheMANUALS.org

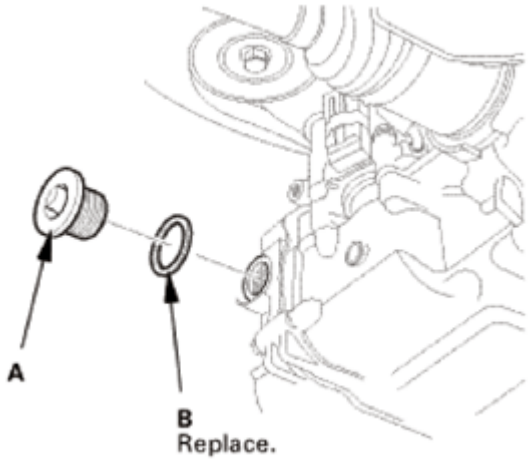

Fig. 98: Identifying Oil Filler Plug And Sealing Washer (Real Time AWD System)

2. Remove the drain plug (A) and the sealing washer (B), then drain the rear differential fluid.

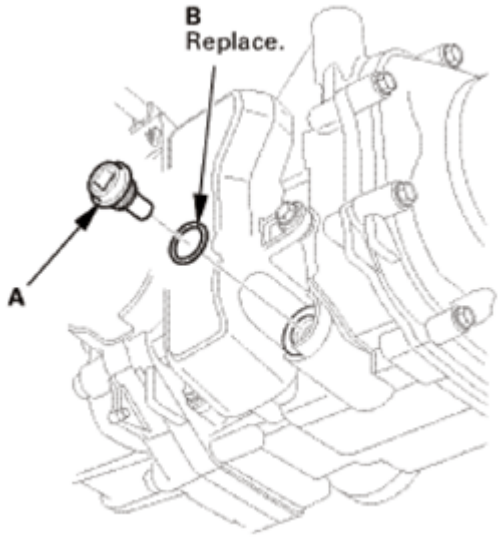

Fig. 99: Identifying Drain Plug And Sealing Washer (Real Time AWD System)

3. Rear Differential Sensor Cover
    1. Remove the rear differential sensor cover (A).

GETtheMANUALS.org

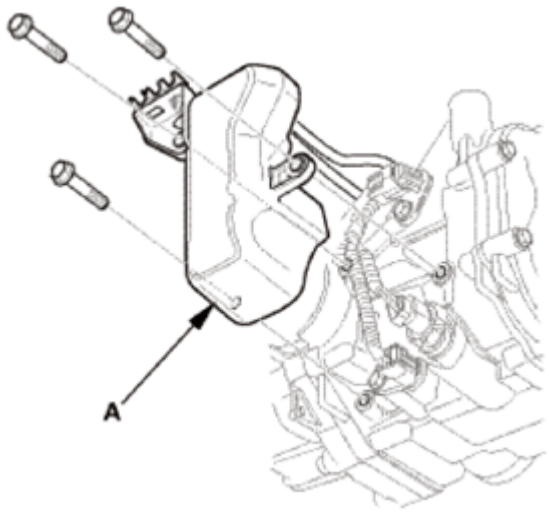

Fig. 100: Identifying Rear Differential Sensor Cover

4. Rear Differential Fluid Temperature Sensor Connector
    1. Disconnect the connector (A).

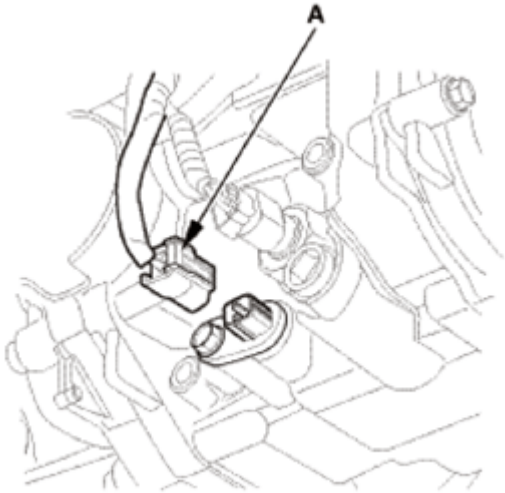

Fig. 101: Identifying Rear Differential Fluid Temperature Sensor Connector

5. Rear Differential Fluid Temperature Sensor
    1. Remove the rear differential fluid temperature sensor (A) and the O-ring (B).

GETtheMANUALS.org

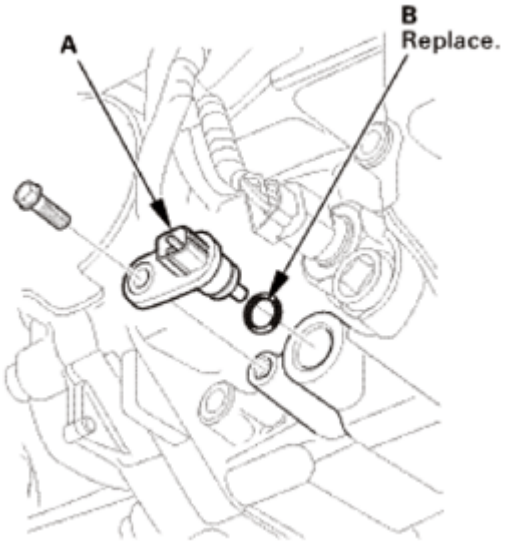

Fig. 102: Identifying Rear Differential Fluid Temperature Sensor And O-Ring

INSTALLATION

1. Rear Differential Fluid Temperature Sensor
    1. Apply Dual Pump Fluid II to a new O-ring (A).
    2. Install the rear differential fluid temperature sensor (B) with the O-ring.

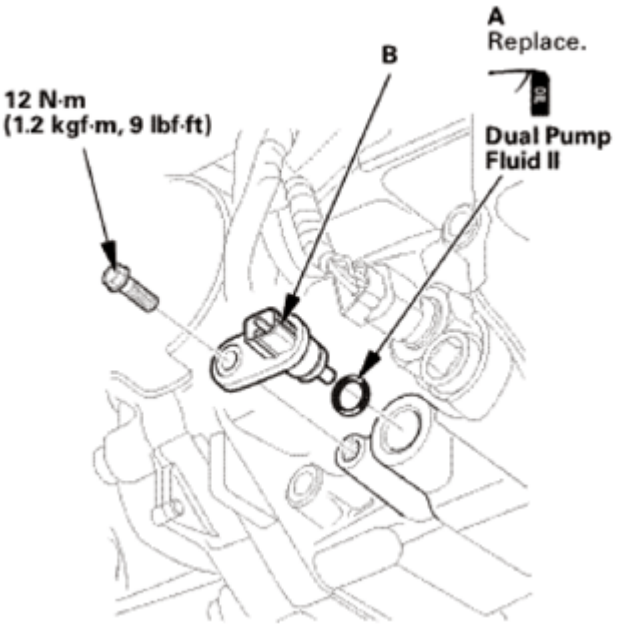

Fig. 103: Identifying Rear Differential Fluid Temperature Sensor With O-Ring

2. Rear Differential Fluid Temperature Sensor Connector
    1. Connect the connector (A).

GETtheMANUALS.org

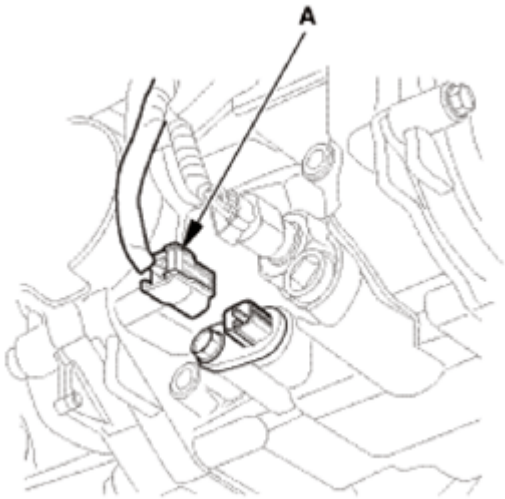

Fig. 104: Identifying Rear Differential Fluid Temperature Sensor Connector

3. Rear Differential Sensor Cover
    1. Install the rear differential sensor cover (A).
    2. Connect the breather hoses (B) to the clamps (C).

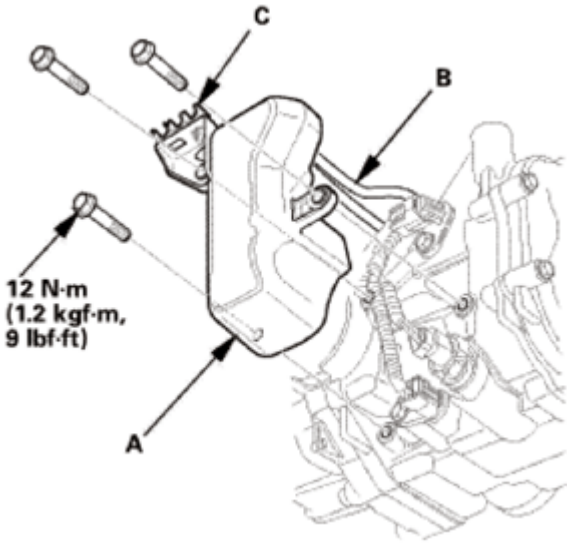

Fig. 105: Identifying Rear Differential Sensor Cover, Breather Hoses And Clamps With Torque Specifications

4. Rear Differential Fluid - Replacement (Real Time AWD System)
    1. Clean the drain plug (A), then install it with a new sealing washer (B).
    2. Refill the differential with rear differential fluid to the proper level.

NOTE: **If you disassemble the differential, check the rear differential fluid level again after the 4WD system check is finished. Add fluid if**

GETtheMANUALS.org

necessary.

Fluid Capacity:

1.2 L (1.3 US qt) at fluid change

1.5 L (1.6 US qt) at overhaul

Recommended fluid: Honda Dual Pump Fluid II

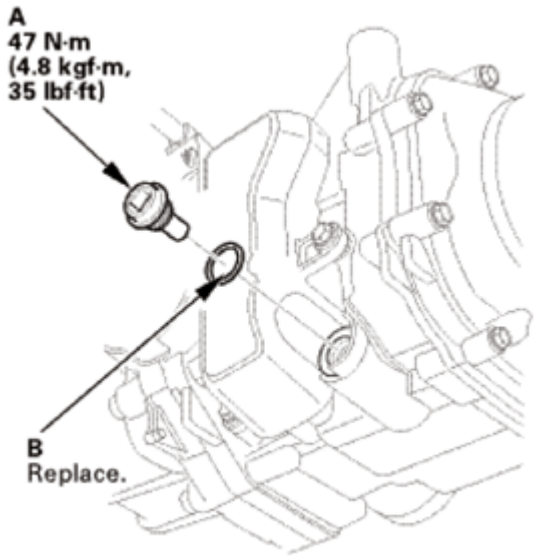

Fig. 106: Identifying Drain Plug And Sealing Washer (Real Time AWD System)

3. Install the oil filler plug (A) with a new sealing washer (B).

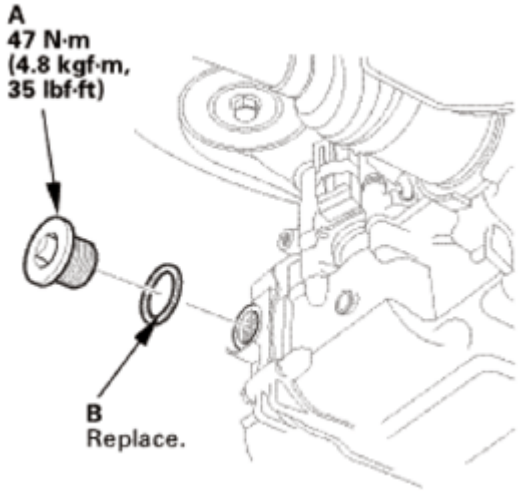

Fig. 107: Identifying Oil Filler Plug And Sealing Washer (Real Time AWD System)

GETtheMANUALS.org

5. Rear Differential Fluid After Replacement - Check (Real Time AWD System)
    1. Apply the parking brake, and block all four wheels.
    2. Start the engine, and let it idle more than 6 seconds, then turn the engine off. Repeat this step three more times.
    3. Shift to D while pressing the brake pedal firmly. Press the accelerator pedal for 2 seconds, then let it idle. Repeat this three more times.
    4. Check that the real time AWD indicator does not come on. If it does, check for real time AWD system DTC's.
6. HDS DLC - Connection
    1. Connect the HDS to the data link connector (DLC) (A) located under the driver's side of the dashboard.
    2. Turn the ignition switch to ON (II).
    3. Make sure the HDS communicates with the vehicle. If it does not communicate, go to the DLC circuit troubleshooting.

Fig. 108: Identifying Data Link Connector

7. Maintenance Minder Reset
    1. **RESET THE MAINTENANCE MINDER** .

REAR DIFFERENTIAL HOUSING ASSEMBLY REMOVAL AND INSTALLATION

SPECIAL TOOL DESCRIPTION

Image	Description/Tool Number

GETtheMANUALS.org

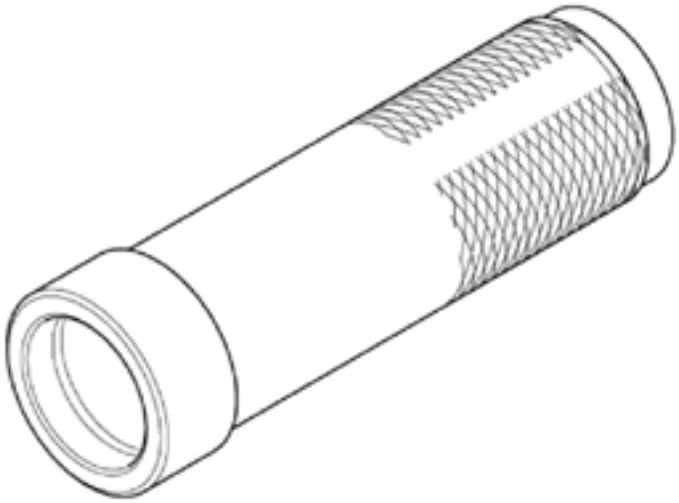	Driver Handle, 40 mm I.D. 07746-0030100

REMOVAL

1. Vehicle Lift
    1. Raise the vehicle on a lift, and make sure it is securely supported.
2. Rear Differential Fluid - Replacement (Real Time AWD System)
    1. Remove the oil filler plug (A) and the sealing washer (B).

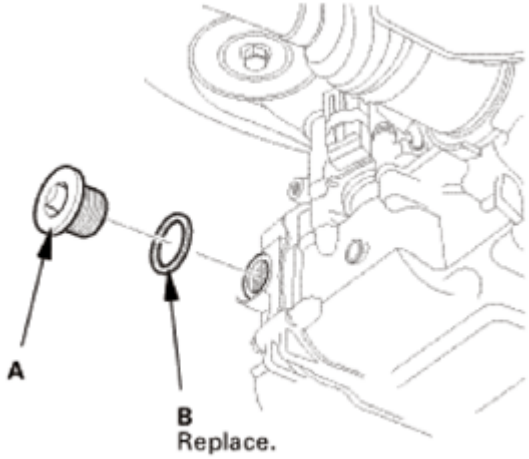

Fig. 109: Identifying Drain Plug And Sealing Washer (Real Time AWD System)

2. Remove the drain plug (A) and the sealing washer (B), then drain the rear differential fluid.

GETtheMANUALS.org

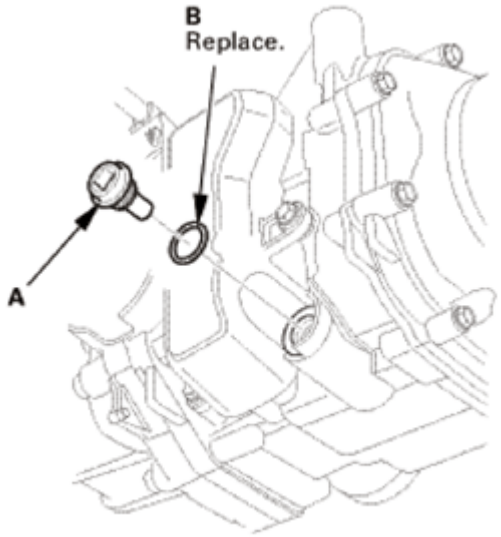

Fig. 110: Identifying Drain Plug And Sealing Washer (Real Time AWD System)

3. Propeller Shaft Rear Differential Side - Disconnection (With Nylon Strap)
    1. Make a reference mark (A) across the No. 2 propeller shaft (B) and the rear differential companion flange (C).
    2. Remove the No. 2 propeller shaft flange bolts (D).
    3. Separate the No. 2 propeller shaft from the rear differential.

NOTE: Suspend the propeller shaft with an appropriate size nylon strap.

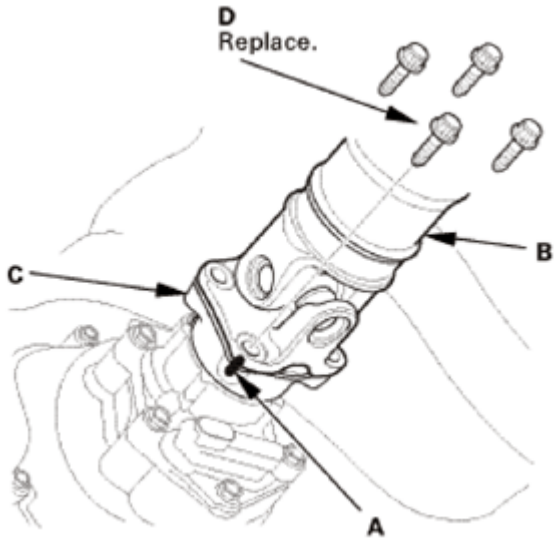

Fig. 111: Identifying Rear Differential Companion Flange, Reference Mark, Shaft And Bolts

4. Rear Differential Connector
    1. Remove the connector cover (A).

GETtheMANUALS.org

2. Disconnect the connectors (B).

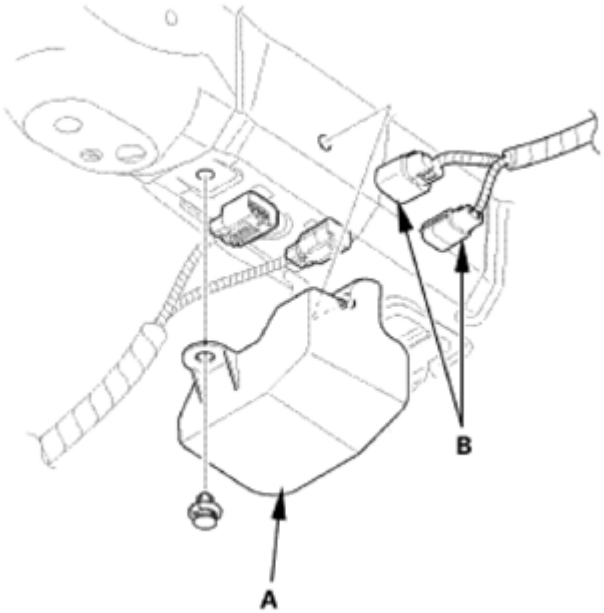

Fig. 112: Identifying Connector Cover And Connectors

3. Release the harness clips (A).

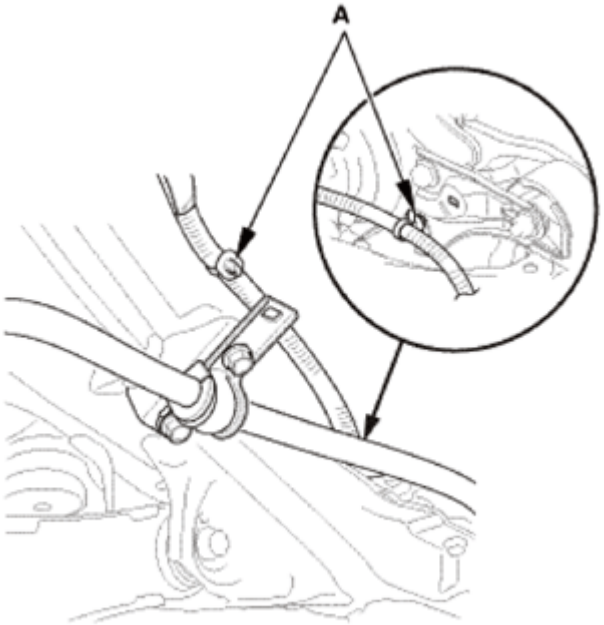

Fig. 113: Identifying Rear Differential Connector Harness Clips

5. Rear Differential Breather Hoses
    1. Disconnect the breather hoses (A) from the breather pipes (B) and clamps (C).

GETtheMANUALS.org

Differential upper side

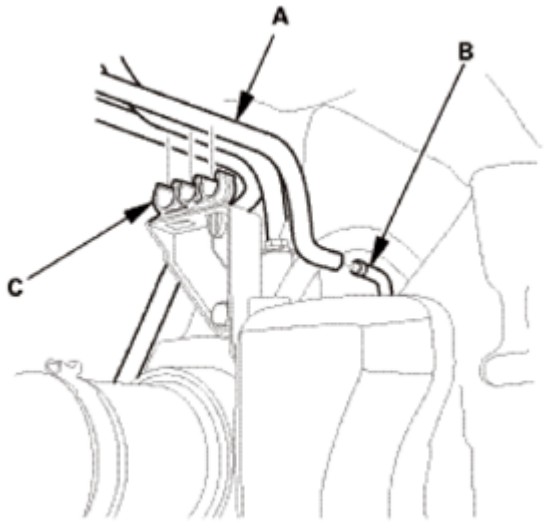

Fig. 114: Identifying Breather Hoses, Breather Pipes And Clamps

Pump motor side

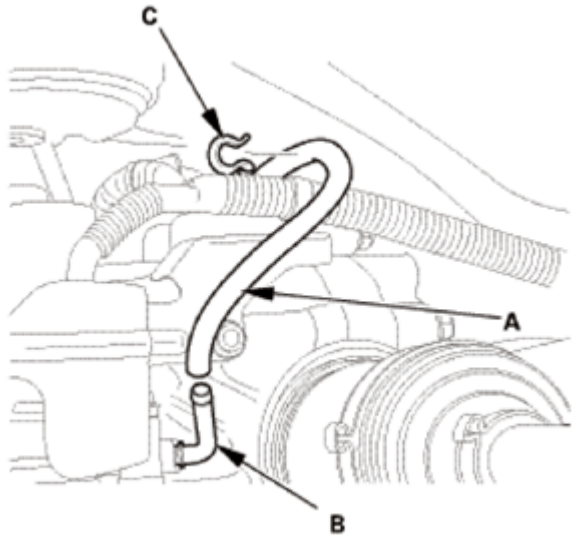

Fig. 115: Identifying Breather Hoses, Breather Pipes And Clamps (Pump Motor Side)

2. Disconnect the breather hose (A) from the clamp (B).

GETtheMANUALS.org

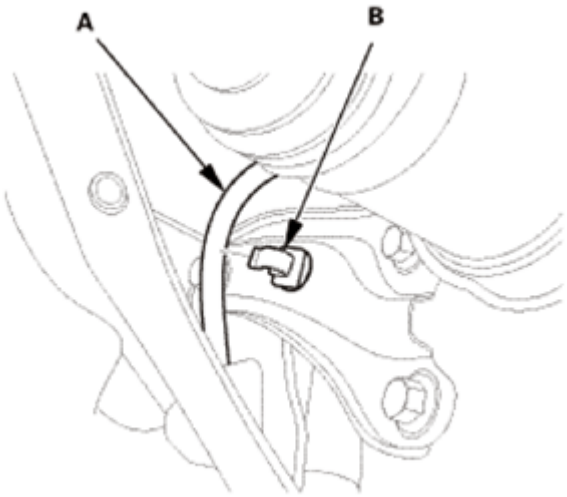

Fig. 116: Identifying Breather Hose And Clamp

6. Rear Differential Jack Support
    1. Place a transmission jack under the rear differential assembly.
7. Rear Differential Mount Bracket
    1. Remove the left and right rear differential mount brackets B.

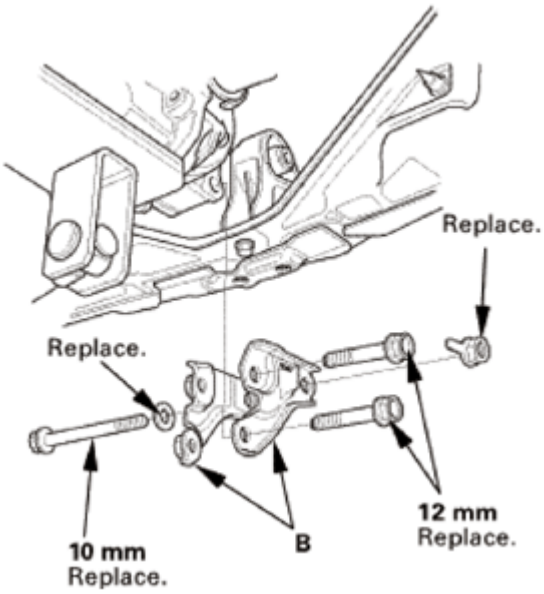

Fig. 117: Identifying Left And Right Rear Differential Mount Brackets With Bolts

2. Remove the mounting bolts (A) and the plates (B).

GETtheMANUALS.org

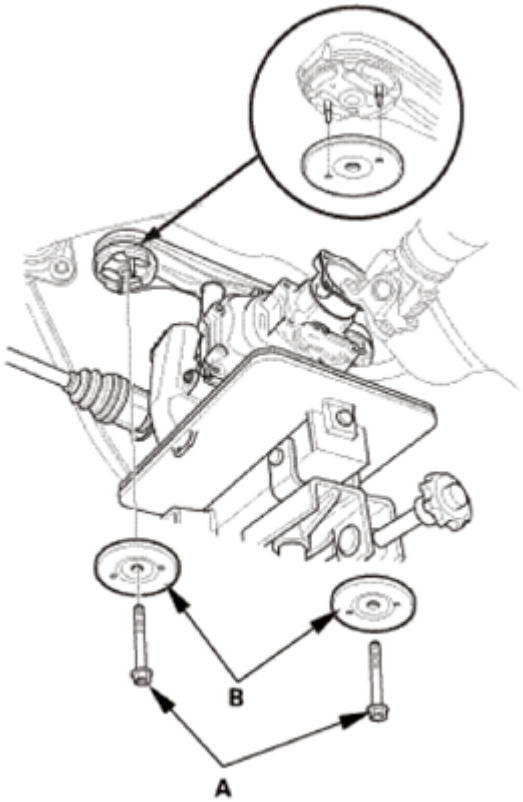

Fig. 118: Identifying Mounting Bolts And Plates

8. Rear Driveshaft Inboard Side Both - Disconnection
    1. Lower the rear differential assembly (A) while pulling both rear driveshaft inboard joints (B) out of the rear differential assembly.

NOTE:

- **Be careful not to damage the driveshaft ring (C) when prying out the driveshaft inboard joints.**
- **Be careful not to damage the oil seals (D).**

GETtheMANUALS.org

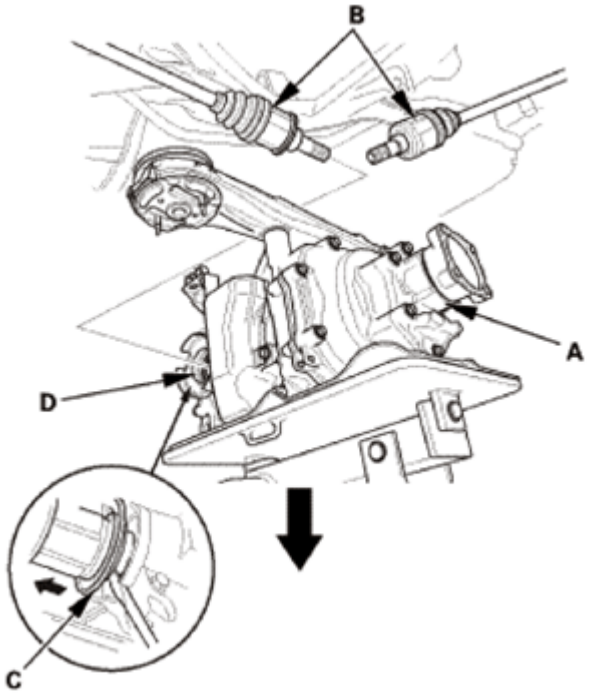

Fig. 119: Pulling Both Rear Driveshaft Inboard Joints Out Of Rear Differential Assembly

2. Remove the set ring (A) from inboard joint.

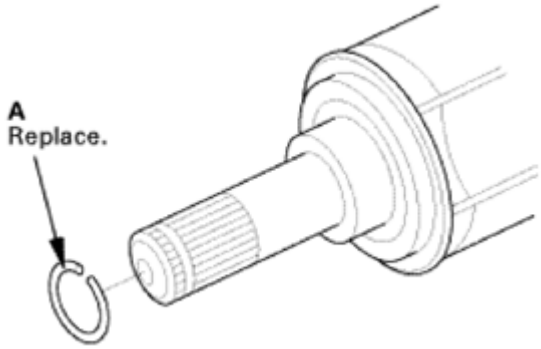

Fig. 120: Identifying Inboard Joint Set Ring

9. Rear Differential Assembly
    1. Remove the rear differential mount assembly A from the rear differential assembly (B).

GETtheMANUALS.org

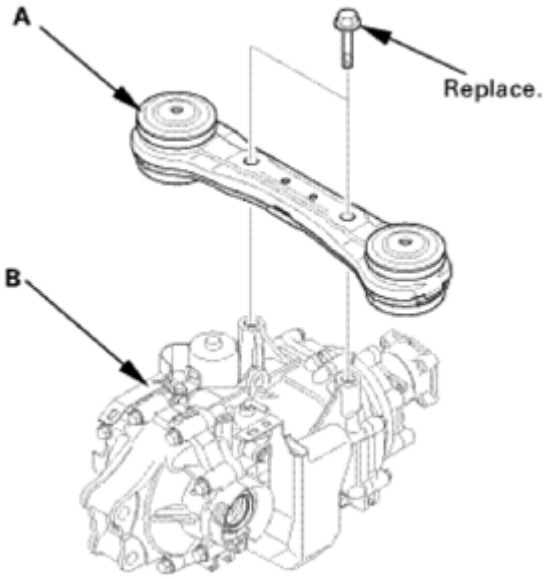

Fig. 121: Identifying Rear Differential Mount Assembly And Rear Differential Assembly

10. Rear Differential Housing Assembly
    1. Remove the mounting bolts (A) in a crisscross pattern in several steps.
    2. Remove the differential housing assembly (B) and the oil seals (C).

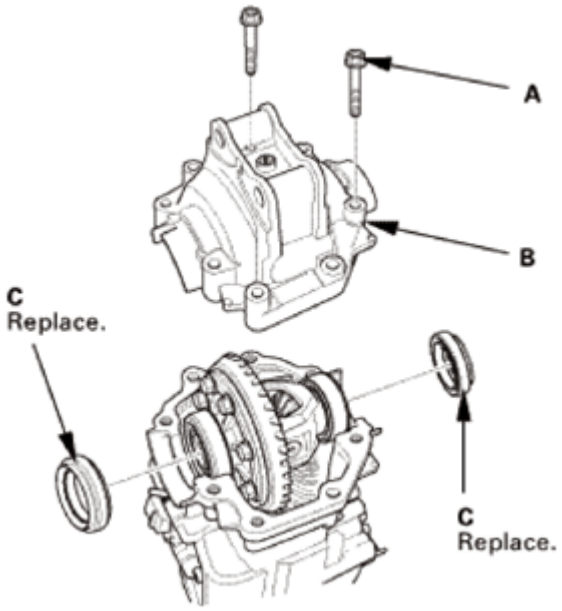

Fig. 122: Identifying Differential Housing Assembly, Oil Seals And Mounting Bolts

INSTALLATION

1. Rear Differential Housing Assembly
    1. Remove the dirt and oil from the sealing surfaces.

GETtheMANUALS.org

2. Apply liquid gasket (P/N 08718-0004 or 08718-0009) evenly to the sealing surface.
3. Install the component within 5 minutes of applying the liquid gasket. Make sure you seal the entire circumference of the bolt holes to prevent fluid leakage.

NOTE:

- **If you apply liquid gasket P/N 08718-0012, the component must be installed within 4 minutes.**
- **If too much time has passed after applying the liquid gasket, remove the old liquid gasket and residue, then reapply the new liquid gasket.**
- **Allow it to cure at least 30 minutes after assembly before filling the differential with the recommended fluid.**

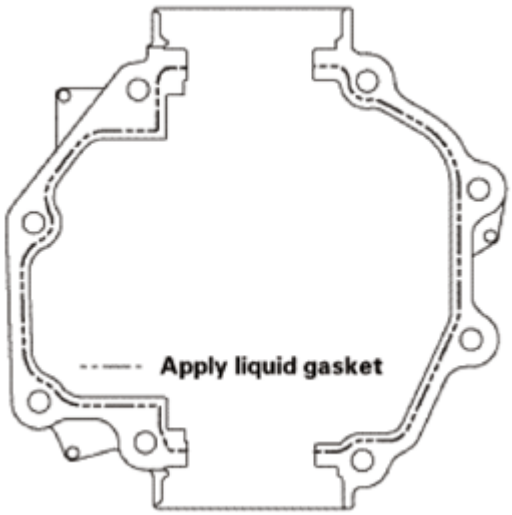

Fig. 123: Identifying Liquid Gasket Applying Area

4. Install the differential housing assembly (A).
5. Torque the mounting bolts (B) in a crisscross pattern in several steps.

GETtheMANUALS.org

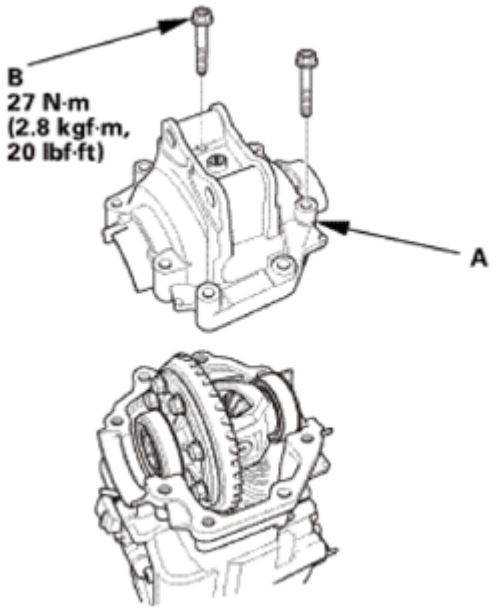

Fig. 124: Identifying Differential Housing Assembly With Mounting Bolts

2. Rear Differential Right Side Oil Seal (Real Time AWD System)
    1. Install a new rear differential right side oil seal (A) even and flush with the machined edge of the differential carrier assembly using the 40 mm driver handle (B).

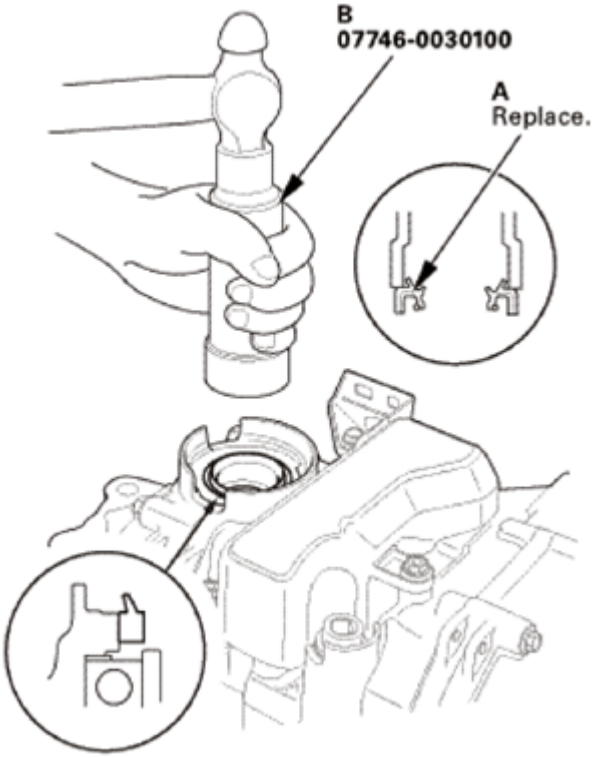

Fig. 125: Installing Rear Differential Right Side Oil Seal

GETtheMANUALS.org

3. Rear Differential Left Side Oil Seal (Real Time AWD System)
    1. Install a new rear differential right side oil seal (A) even and flush with the machined edge of the differential carrier assembly using the 40 mm driver handle (B).

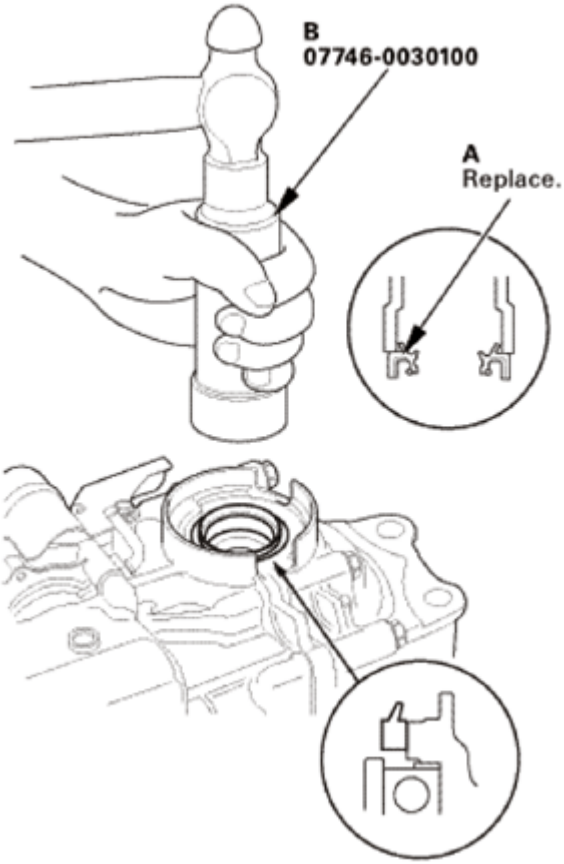

Fig. 126: Installing Rear Differential Right Side Oil Seal

4. Rear Differential Assembly
    1. Install the rear differential mount assembly A to the rear differential assembly (B) with new bolts.

GETtheMANUALS.org

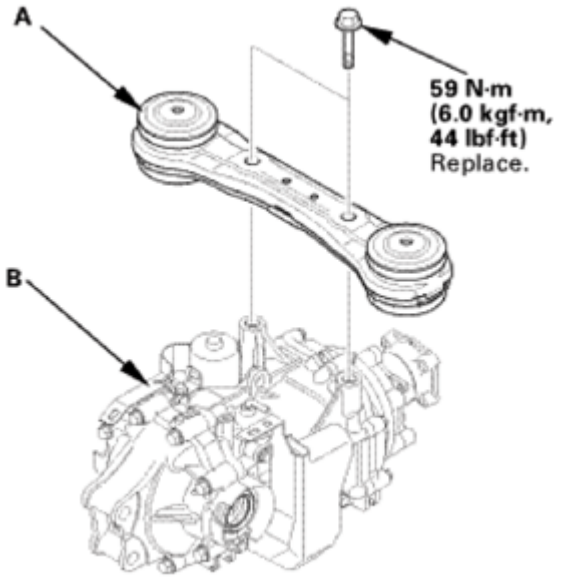

Fig. 127: Identifying Rear Differential Mount Assembly And Rear Differential Assembly With Torque Specifications

5. Rear Driveshaft Inboard Side Both - Reconnection
    1. Install new set ring (A) into the groove (B) of the rear driveshaft inboard joint on both side.

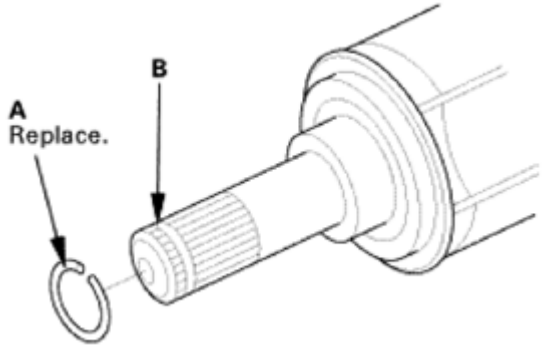

Fig. 128: Identifying Rear Driveshaft Inboard Side Ring And Groove

    2. Lift the rear differential assembly (A) up into position.
    3. Insert the inboard end (B) of the rear driveshafts (C) into the differential (D) until the set ring (E) locks in the groove (F).

NOTE: **Insert the driveshaft horizontally to prevent damaging the oil seals (G).**

GETtheMANUALS.org

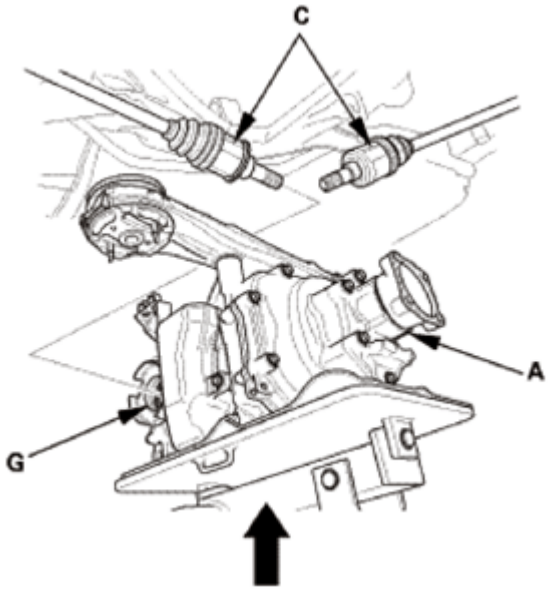

Fig. 129: Lifting Rear Differential Assembly

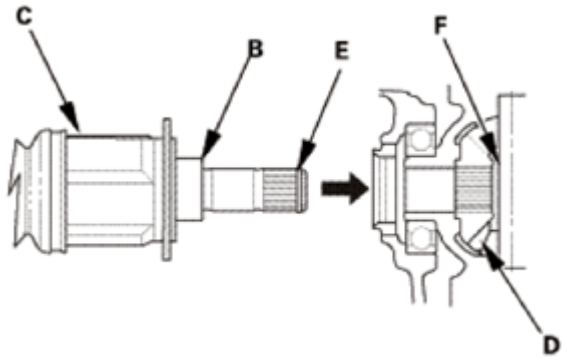

Fig. 130: Installing Inboard End Of Rear Driveshafts Into Differential

6. Rear Differential Mount Bracket
    1. Align the tabs (A) of the rubber mount (B) with the holes (C) of the plates (D).
    2. Install the rear differential mounting bolts (E).

GETtheMANUALS.org

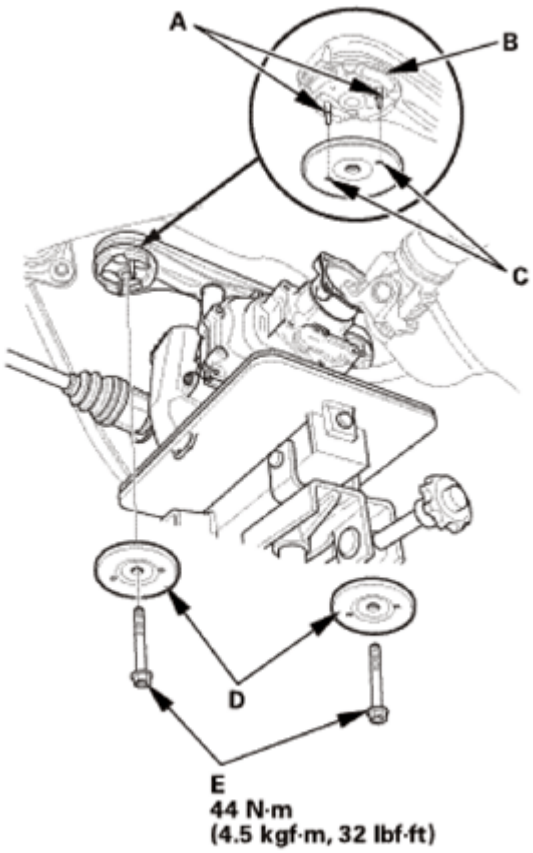

Fig. 131: Identifying Left And Right Rear Differential Mount Brackets With Bolts

3. Install the left and right rear differential mount brackets B.
4. Tighten new differential mount brackets B mounting bolts (A) to the specified torque.
5. Loosely install new differential mount brackets B mounting bolt (C).

GETtheMANUALS.org

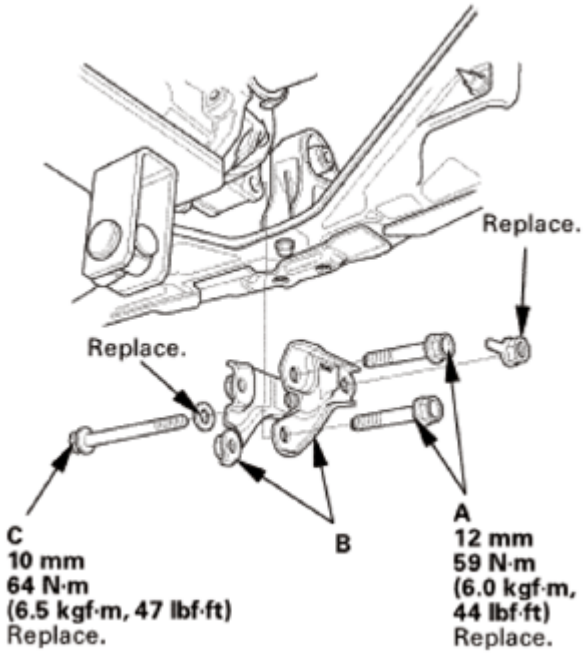

Fig. 132: Identifying Mounting Bolts And Plates

7. Rear Differential Mount Bolt - Tighten
    1. Lower the transmission jack.
    2. Tighten differential mount brackets B mounting bolt to the specified torque.
8. Rear Differential Breather Hoses
    1. Connect the breather hoses (A) to the breather pipes (B) and clamps (C).

Differential upper side

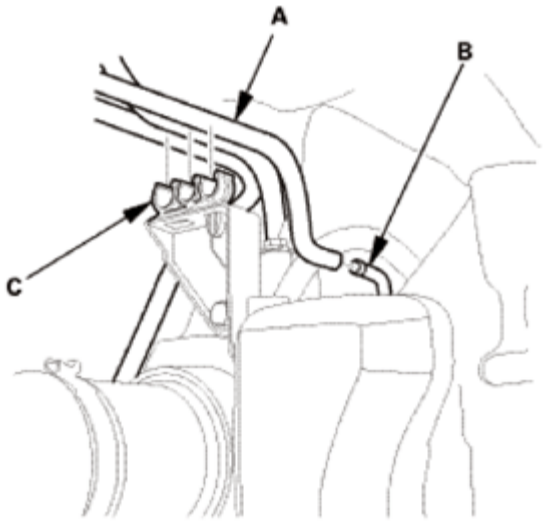

Fig. 133: Identifying Breather Hoses, Breather Pipes And Clamps

GETtheMANUALS.org

Pump motor side

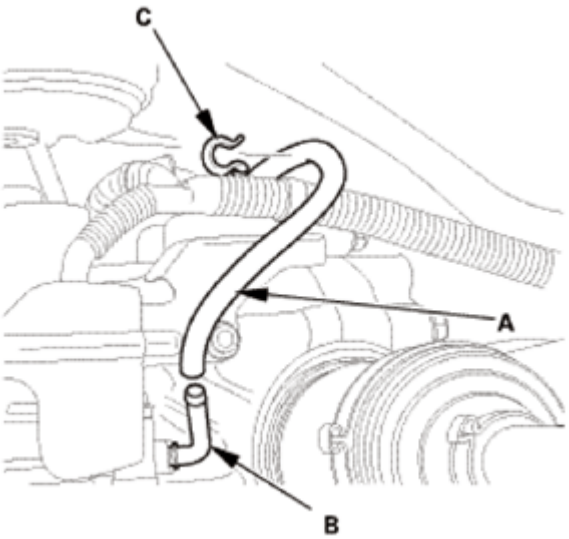

Fig. 134: Identifying Breather Hoses, Breather Pipes And Clamps (Pump Motor Side)

2. Connect the breather hose (A) to the clamp (B).

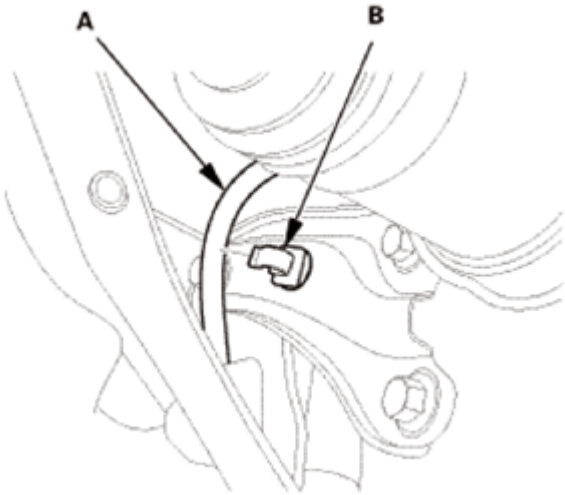

Fig. 135: Identifying Breather Hose And Clamp

9. Rear Differential Connector
    1. Install the harness clips (A).

GETtheMANUALS.org

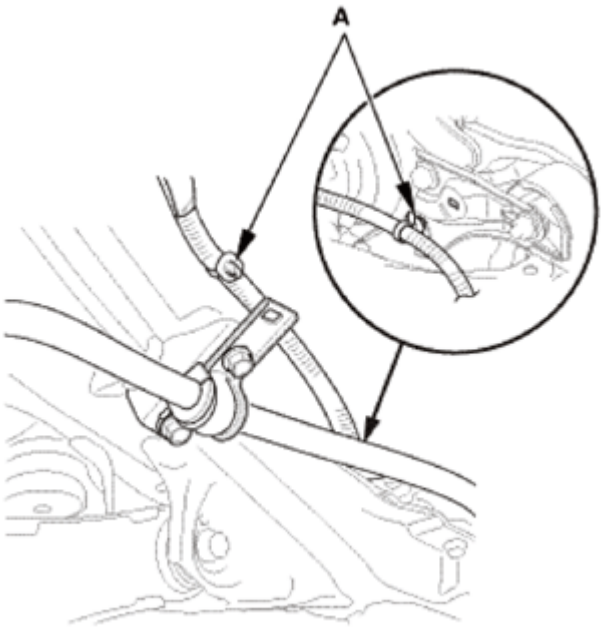

Fig. 136: Identifying Rear Differential Connector Harness Clips

2. Connect the connectors (A).
3. Install the connector cover (B).

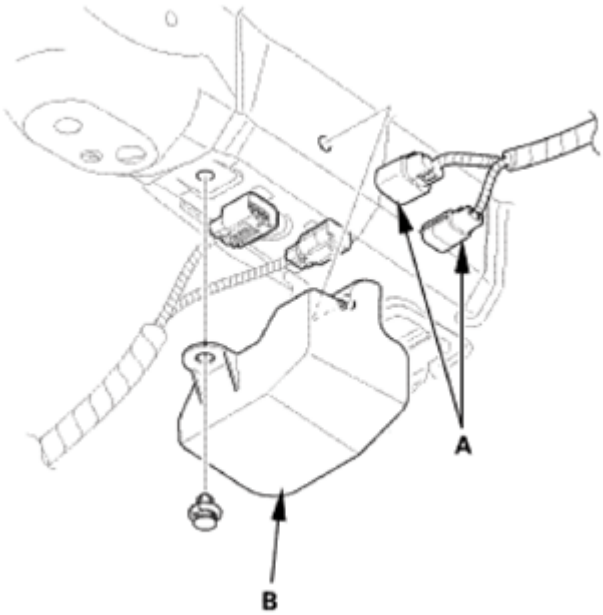

Fig. 137: Identifying Connector Cover And Connectors

10. Propeller Shaft Rear Differential Side - Disconnection (With Nylon Strap)
    1. Attach the No. 2 propeller shaft (A) to the rear differential companion flange (B) by aligning the reference mark (C) you made during the removal procedure.

GETtheMANUALS.org

2. Install new flange bolts (D) to the specified torque.

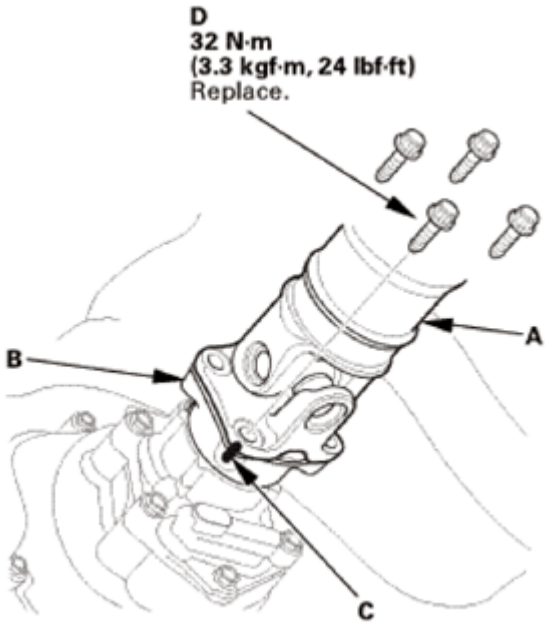

Fig. 138: Identifying Rear Differential Companion Flange, Reference Mark, Shaft And Bolts

11. Rear Differential Fluid - Replacement (Real Time AWD System)
    1. Clean the drain plug (A), then install it with a new sealing washer (B).
    2. Refill the differential with rear differential fluid to the proper level.

NOTE: **If you disassemble the differential, check the rear differential fluid level again after the 4WD system check is finished. Add fluid if necessary.**

Fluid Capacity:

1.2 L (1.3 US qt) at fluid change

1.5 L (1.6 US qt) at overhaul

Recommended fluid: Honda Dual Pump Fluid II

GETtheMANUALS.org

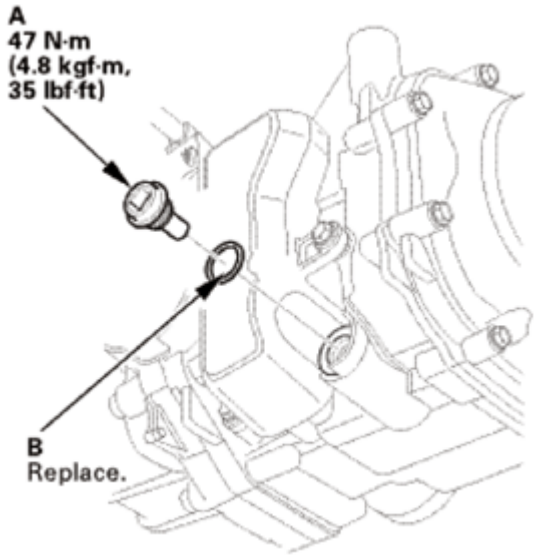

Fig. 139: Identifying Drain Plug And Sealing Washer (Real Time AWD System)

3. Install the oil filler plug (A) with a new sealing washer (B).

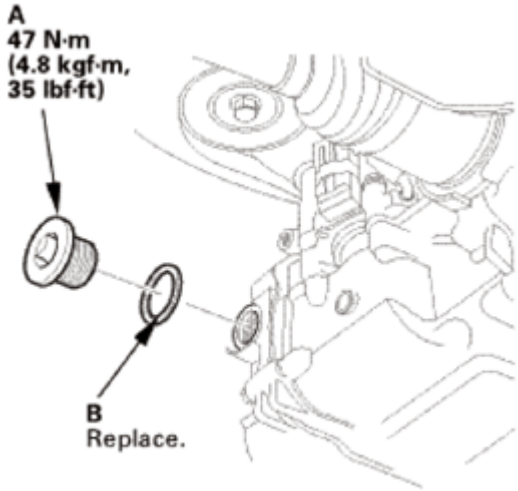

Fig. 140: Identifying Oil Filler Plug And Sealing Washer (Real Time AWD System)

12. HDS DLC - Connection
    1. Connect the HDS to the data link connector (DLC) (A) located under the driver's side of the dashboard.
    2. Turn the ignition switch to ON (II).
    3. Make sure the HDS communicates with the vehicle. If it does not communicate, go to the DLC circuit troubleshooting.

GETtheMANUALS.org

Fig. 141: Identifying Data Link Connector

13. Real Time AWD System Bleeding
    1. Select the ADJUSTMENT in the REAL TIME AWD SYSTEM with the HDS.
    2. Select the AIR BLEEDING in the ADJUSTMENT with the HDS.

NOTE: See the HDS Help menu for specific instructions.

14. Test Drive
    1. Test-drive the vehicle.
15. Maintenance Minder Reset
    1. **RESET THE MAINTENANCE MINDER** .

REAR DIFFERENTIAL MOUNT REMOVAL AND INSTALLATION

REMOVAL

1. Vehicle Lift
    1. Raise the vehicle on a lift, and make sure it is securely supported.
2. Propeller Shaft Rear Differential Side - Disconnection (With Nylon Strap)
    1. Make a reference mark (A) across the No. 2 propeller shaft (B) and the rear differential companion flange (C).
    2. Remove the No. 2 propeller shaft flange bolts (D).
    3. Separate the No. 2 propeller shaft from the rear differential.

NOTE: Suspend the propeller shaft with an appropriate size nylon strap.

GETtheMANUALS.org

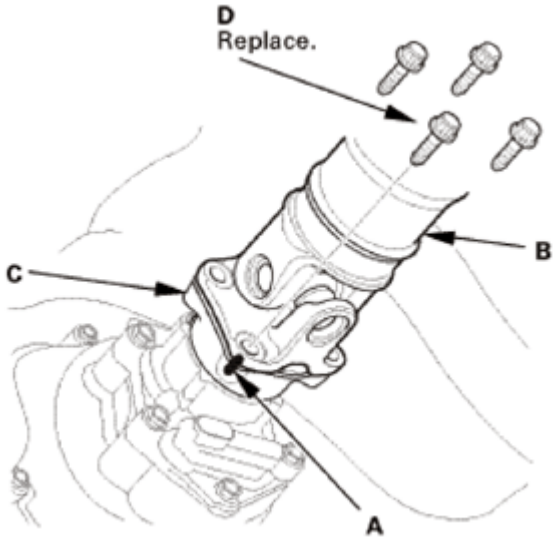

Fig. 142: Identifying Rear Differential Companion Flange, Reference Mark, Shaft And Bolts

3. Rear Differential Jack Support
    1. Place a transmission jack under the rear differential assembly.
4. Rear Differential Mount Bracket
    1. Remove the left and right rear differential mount brackets B.

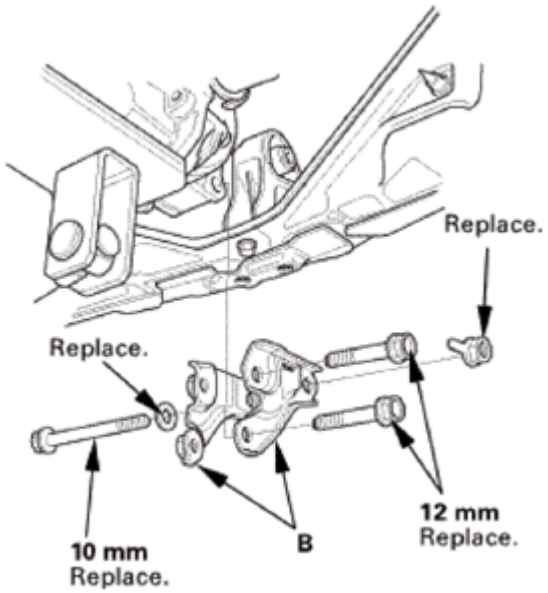

Fig. 143: Identifying Left And Right Rear Differential Mount Brackets With Bolts

2. Remove the mounting bolts (A) and the plates (B).

GETtheMANUALS.org

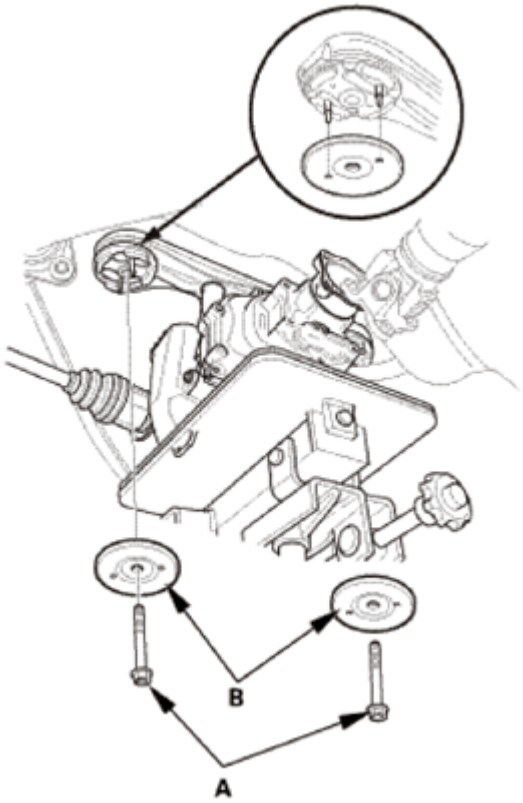

Fig. 144: Identifying Mounting Bolts And Plates

5. Rear Differential Mount Rubber
    1. Remove the rear differential mount rubber (A).

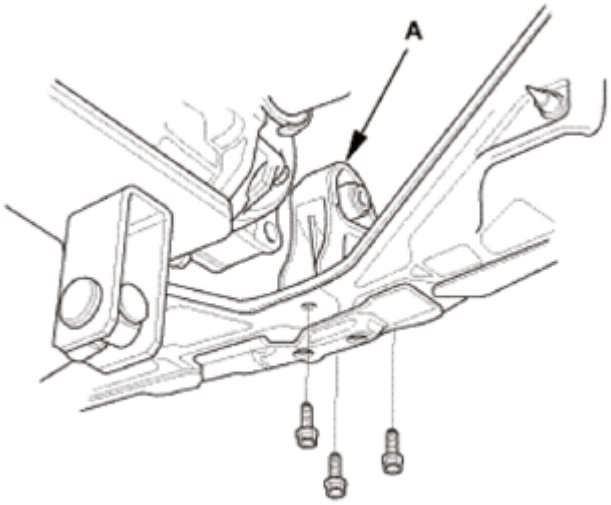

Fig. 145: Identifying Rear Differential Mount Rubber

6. Rear Differential Mount Assembly A
    1. Slightly lower the rear differential on the transmission jack.

GETtheMANUALS.org

NOTE: **Make sure you do not over extend the wire harness and the breather hose.**

2. Remove the rear differential mount assembly A stopper (B).
3. Remove the rear differential mount assembly A.

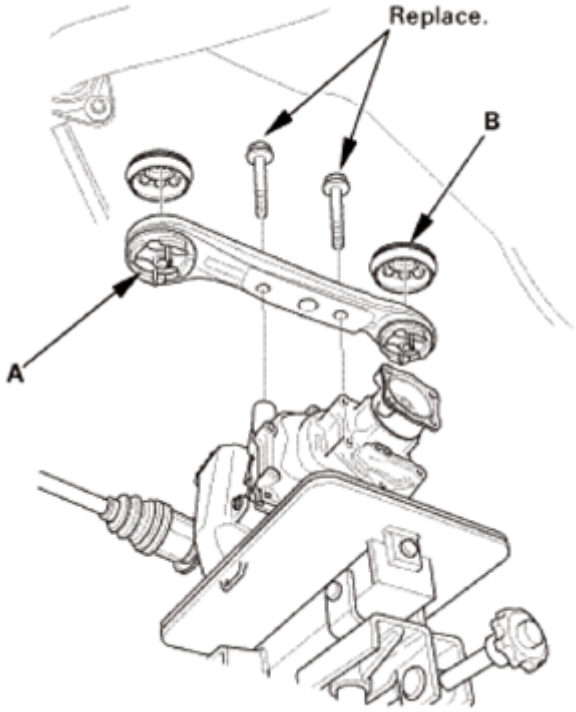

Fig. 146: Identifying Rear Differential Mount Assembly And Stopper

INSTALLATION

1. Rear Differential Mount Assembly A
    1. Install the differential mount assembly A stopper (B).
    2. Install the rear differential mount assembly A.
    3. Raise the rear differential to the mounting level.

GETtheMANUALS.org

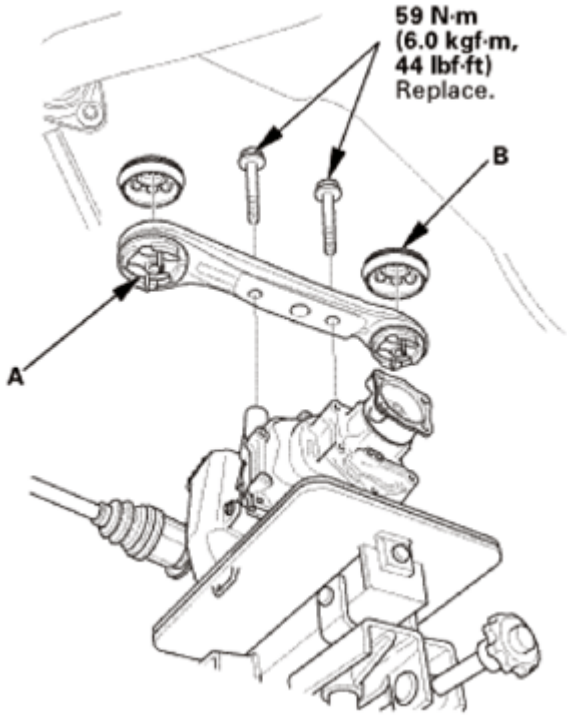

Fig. 147: Identifying Rear Differential Mount Assembly And Stopper With Torque Specifications

2. Rear Differential Mount Rubber
    1. Install the rear differential mount rubber (A).

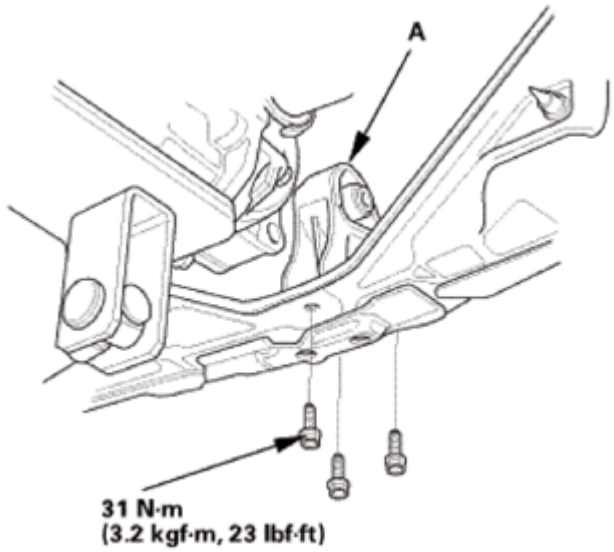

Fig. 148: Identifying Rear Differential Mount Rubber

3. Rear Differential Mount Bracket
    1. Align the tabs (A) of the rubber mount (B) with the holes (C) of the plates (D).

GETtheMANUALS.org

2. Install the rear differential mounting bolts (E).

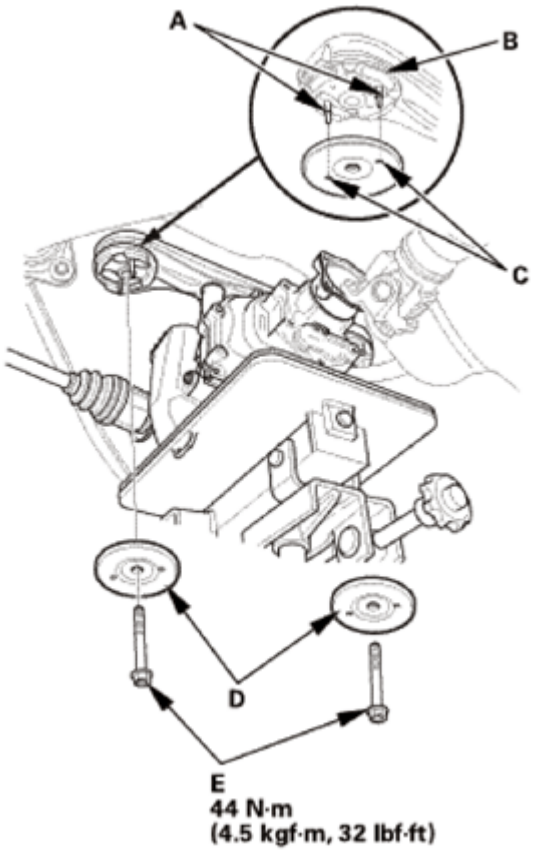

Fig. 149: Identifying Rear Differential Mounting Bolts, Tabs, Rubber Mount And Holes With Torque Specifications

3. Install the left and right rear differential mount brackets B.
4. Tighten new differential mount brackets B mounting bolts (A) to the specified torque.
5. Loosely install new differential mount brackets B mounting bolt (C).

GETtheMANUALS.org

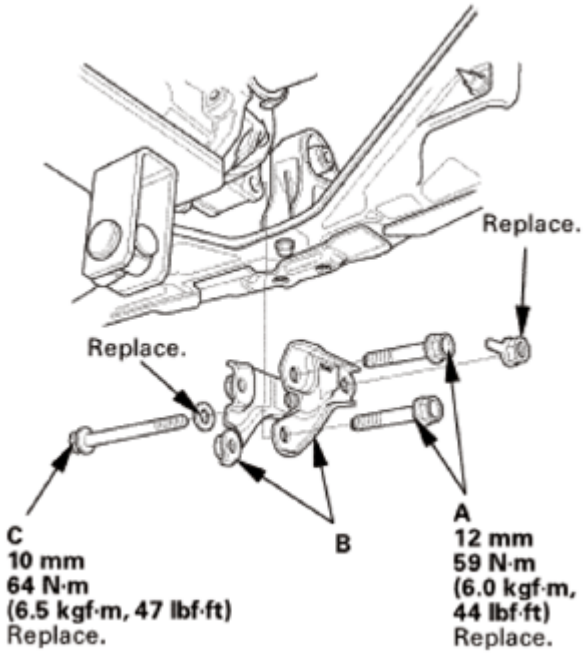

Fig. 150: Identifying Rear Differential Mount Brackets And Mounting Bolts With Torque Specifications

4. Rear Differential Mount Bolt - Tighten
    1. Lower the transmission jack.
    2. Tighten differential mount brackets B mounting bolt to the specified torque.
5. Propeller Shaft Rear Differential Side - Disconnection (With Nylon Strap)
    1. Attach the No. 2 propeller shaft (A) to the rear differential companion flange (B) by aligning the reference mark (C) you made during the removal procedure.
    2. Install new flange bolts (D) to the specified torque.

GETtheMANUALS.org

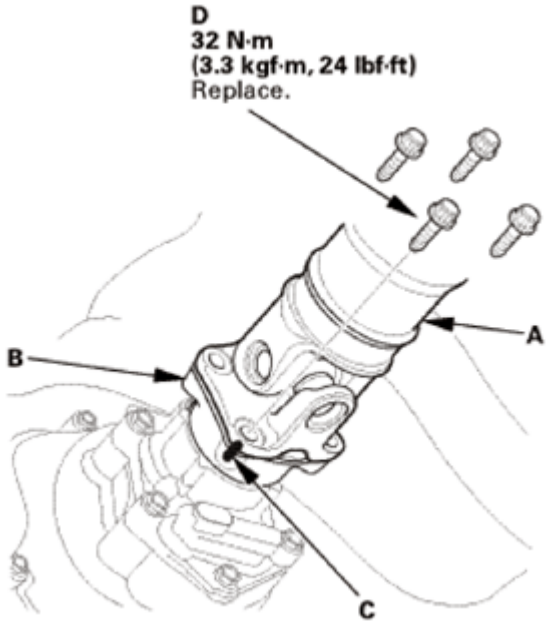

Fig. 151: Identifying Rear Differential Companion Flange, Reference Mark, Shaft And Bolts

REAR DIFFERENTIAL OIL SEAL REPLACEMENT - DRIVESHAFT SIDE

SPECIAL TOOL DESCRIPTION

Image	Description/Tool Number
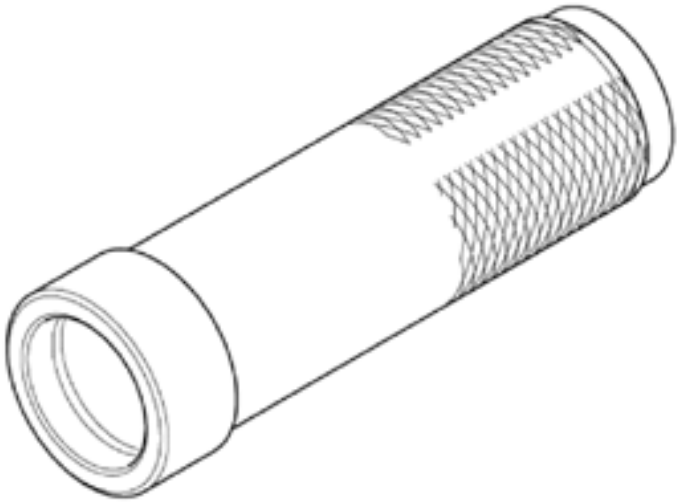	Driver Handle, 40 mm I.D. 07746-0030100

REMOVAL

1. Vehicle Lift
    1. Raise the vehicle on a lift, and make sure it is securely supported.
2. Rear Differential Fluid - Replacement (Real Time AWD System)

GETtheMANUALS.org

1. Remove the oil filler plug (A) and the sealing washer (B).

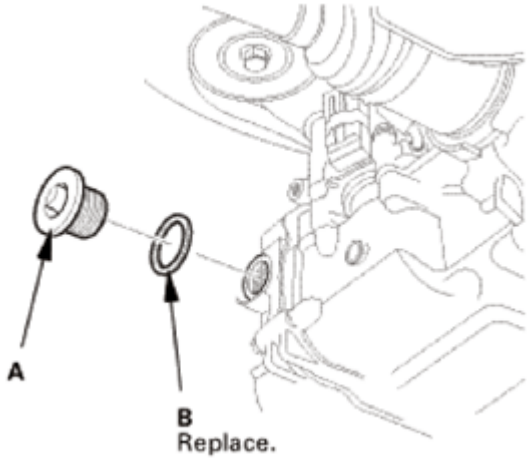

Fig. 152: Identifying Oil Filler Plug And Sealing Washer (Real Time AWD System)

2. Remove the drain plug (A) and the sealing washer (B), then drain the rear differential fluid.

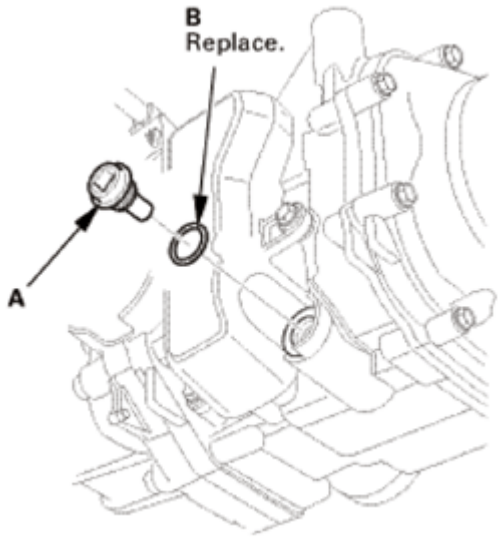

Fig. 153: Identifying Drain Plug And Sealing Washer (Real Time AWD System)

3. Propeller Shaft Rear Differential Side - Disconnection (With Nylon Strap)
    1. Make a reference mark (A) across the No. 2 propeller shaft (B) and the rear differential companion flange (C).
    2. Remove the No. 2 propeller shaft flange bolts (D).
    3. Separate the No. 2 propeller shaft from the rear differential.

NOTE: Suspend the propeller shaft with an appropriate size nylon strap.

GETtheMANUALS.org

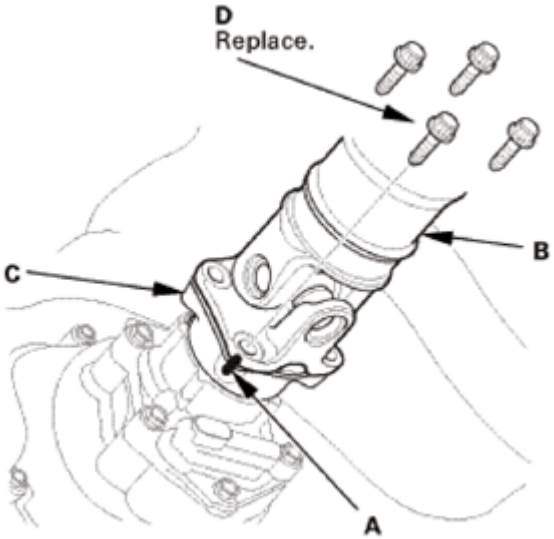

Fig. 154: Identifying Rear Differential Companion Flange, Reference Mark, Shaft And Bolts

4. Rear Differential Connector
    1. Remove the connector cover (A).
    2. Disconnect the connectors (B).

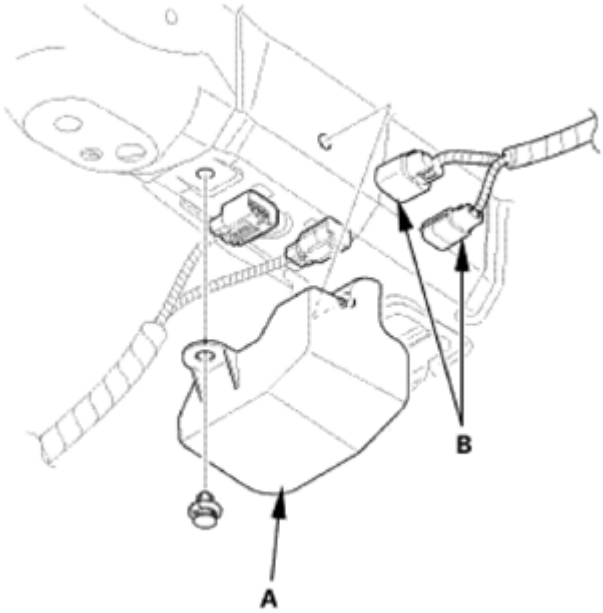

Fig. 155: Identifying Connector Cover And Connectors

3. Release the harness clips (A).

GETtheMANUALS.org

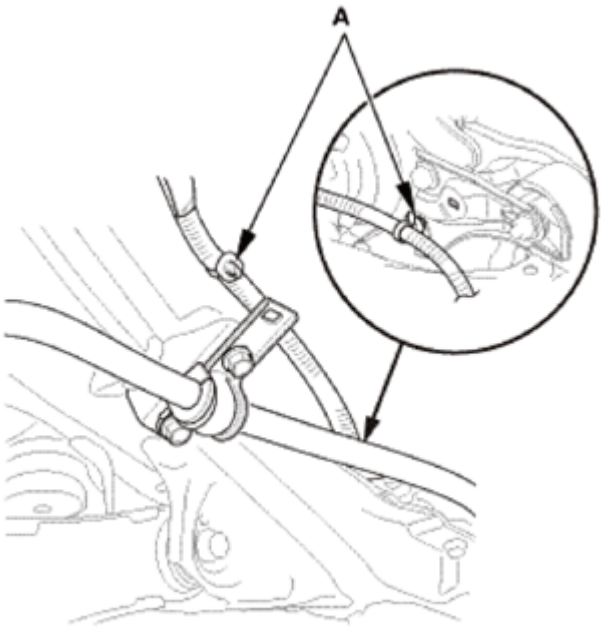

Fig. 156: Identifying Rear Differential Connector Harness Clips

5. Rear Differential Breather Hoses
    1. Disconnect the breather hoses (A) from the breather pipes (B) and clamps (C).

Differential upper side

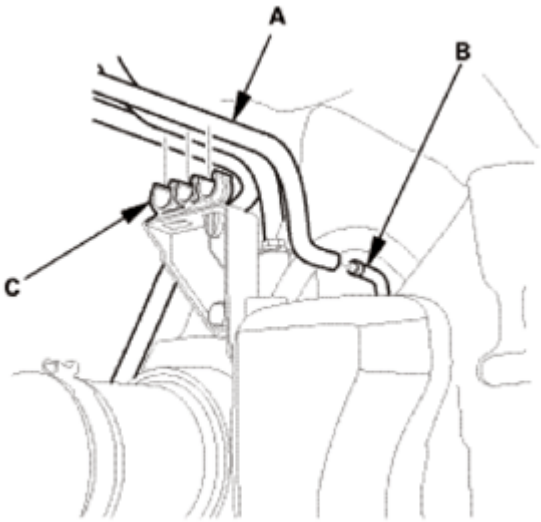

Fig. 157: Identifying Breather Hoses, Breather Pipes And Clamps

Pump motor side

GETtheMANUALS.org

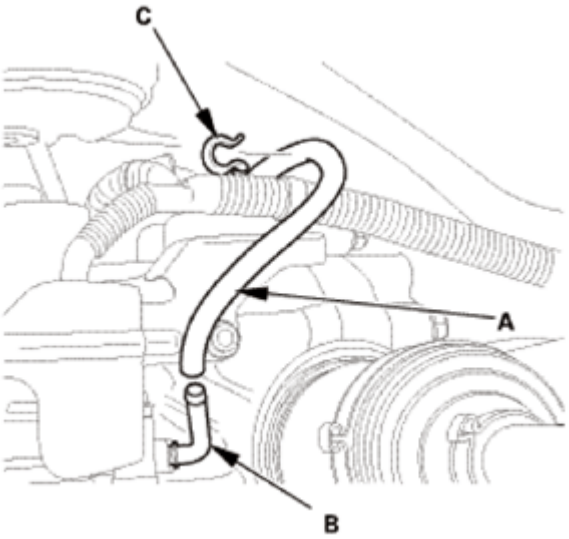

Fig. 158: Identifying Breather Hoses, Breather Pipes And Clamps (Pump Motor Side)

2. Disconnect the breather hose (A) from the clamp (B).

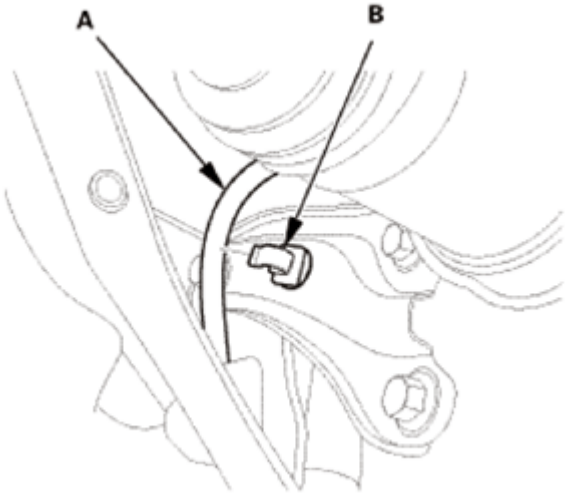

Fig. 159: Identifying Breather Hose And Clamp

6. Rear Differential Jack Support
    1. Place a transmission jack under the rear differential assembly.
7. Rear Differential Mount Bracket
    1. Remove the left and right rear differential mount brackets B.

GETtheMANUALS.org

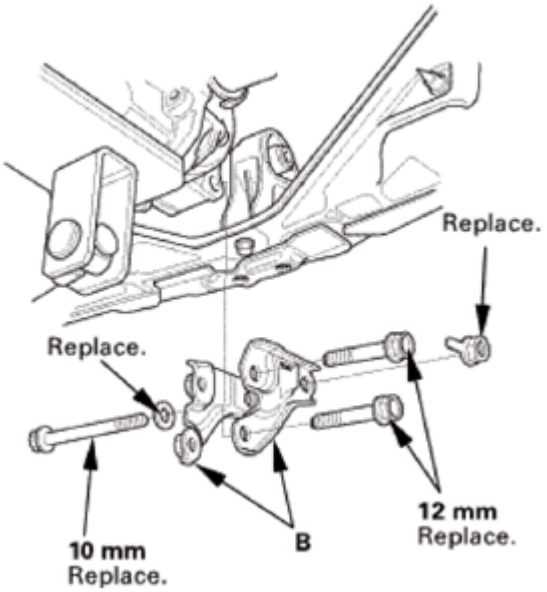

Fig. 160: Identifying Left And Right Rear Differential Mount Brackets With Bolts

2. Remove the mounting bolts (A) and the plates (B).

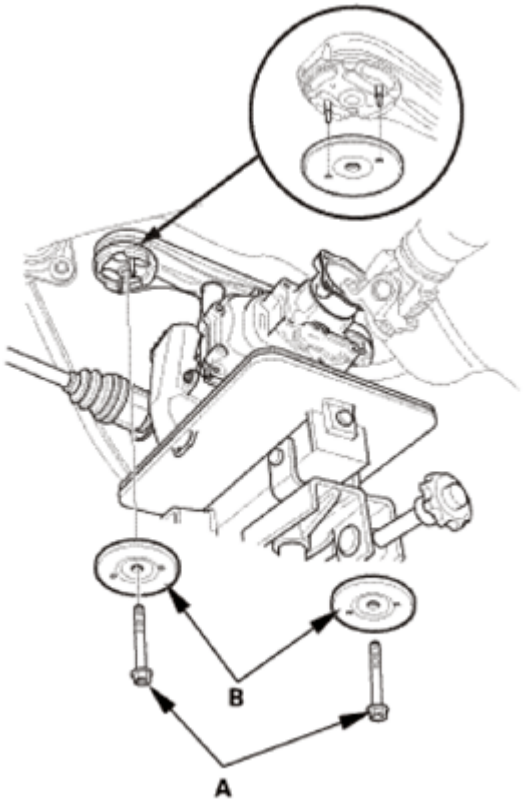

Fig. 161: Identifying Mounting Bolts And Plates

8. Rear Driveshaft Inboard Side Both - Disconnection

GETtheMANUALS.org

1. Lower the rear differential assembly (A) while pulling both rear driveshaft inboard joints (B) out of the rear differential assembly.

NOTE:

- **Be careful not to damage the driveshaft ring (C) when prying out the driveshaft inboard joints.**
- **Be careful not to damage the oil seals (D).**

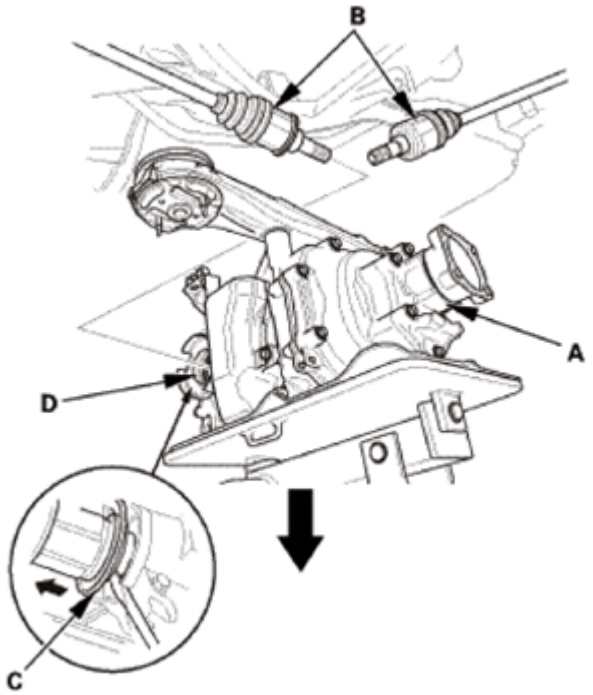

Fig. 162: Pulling Both Rear Driveshaft Inboard Joints Out Of Rear Differential Assembly

2. Remove the set ring (A) from inboard joint.

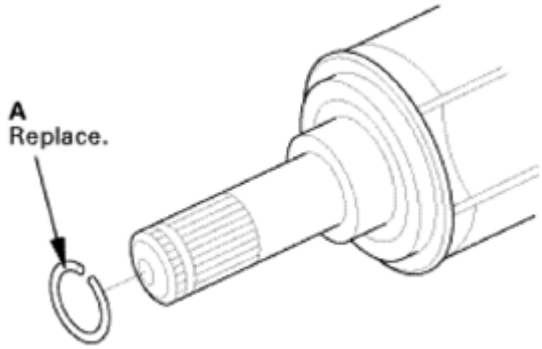

Fig. 163: Identifying Inboard Joint Set Ring

9. Rear Differential Assembly
   1. Remove the rear differential mount assembly A from the rear differential assembly (B).

GETtheMANUALS.org

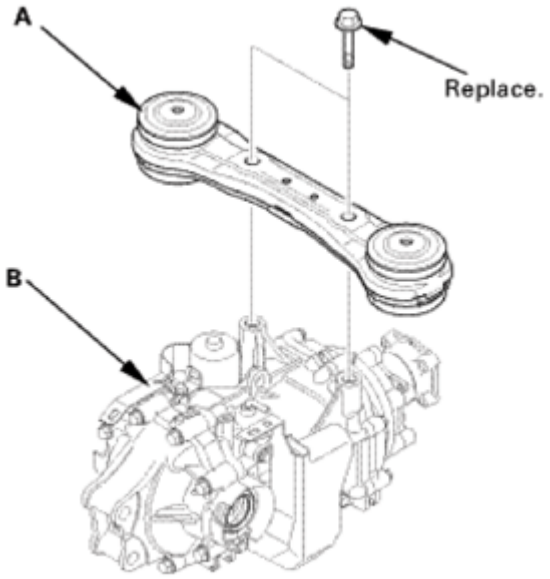

Fig. 164: Identifying Rear Differential Mount Assembly And Rear Differential Assembly

10. Rear Differential Left Side Oil Seal (Real Time AWD System)
    1. Remove the rear differential left side oil seal (A) from the differential housing.

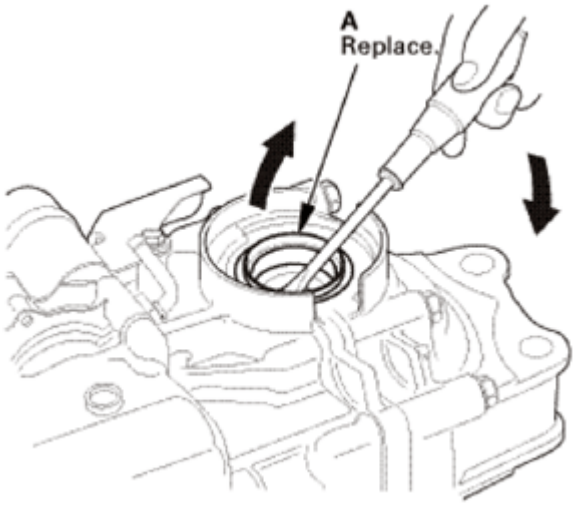

Fig. 165: Installing Rear Differential Right Side Oil Seal

11. Rear Differential Right Side Oil Seal (Real Time AWD System)
    1. Remove the rear differential right side oil seal (A) from the differential housing.

GETtheMANUALS.org

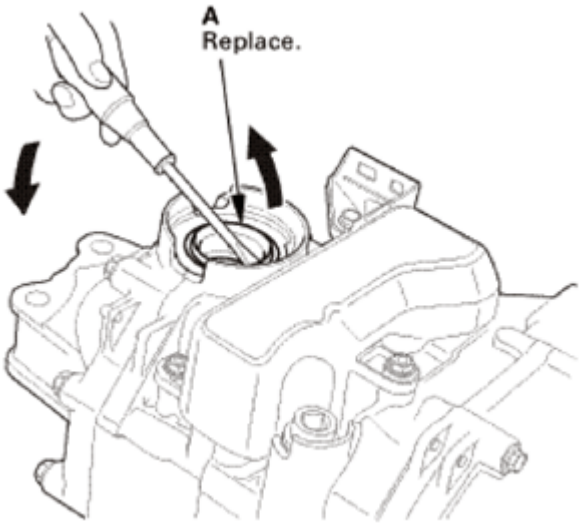

Fig. 166: Removing Rear Differential Right Side Oil Seal

INSTALLATION

1. Rear Differential Right Side Oil Seal (Real Time AWD System)
    1. Install a new rear differential right side oil seal (A) even and flush with the machined edge of the differential carrier assembly using the 40 mm driver handle (B).

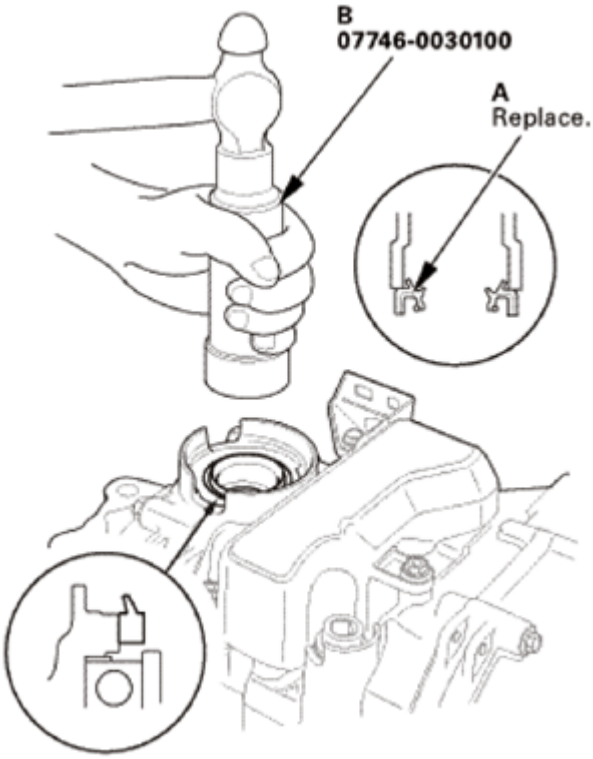

Fig. 167: Installing Rear Differential Right Side Oil Seal

GETtheMANUALS.org

2. Rear Differential Left Side Oil Seal (Real Time AWD System)
    1. Install a new rear differential right side oil seal (A) even and flush with the machined edge of the differential carrier assembly using the 40 mm driver handle (B).

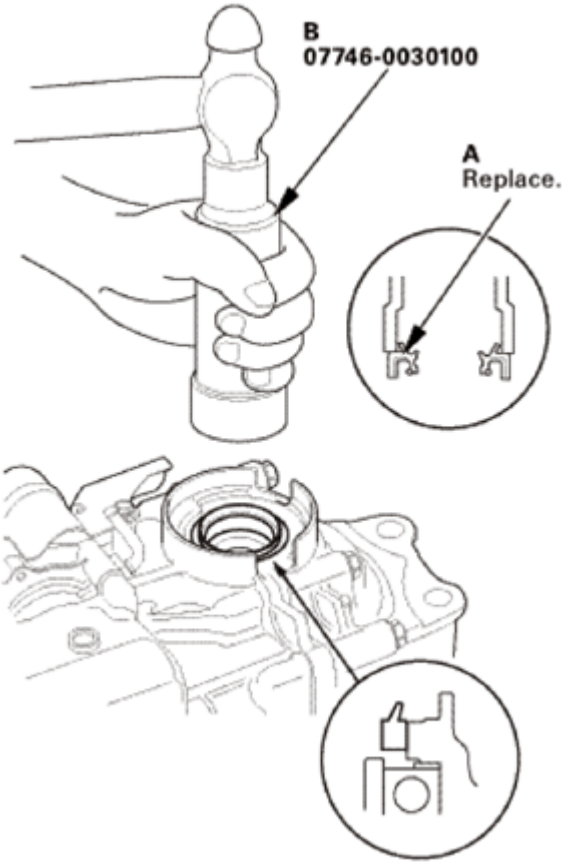

Fig. 168: Installing Rear Differential Right Side Oil Seal

3. Rear Differential Assembly
    1. Install the rear differential mount assembly A to the rear differential assembly (B) with new bolts.

GETtheMANUALS.org

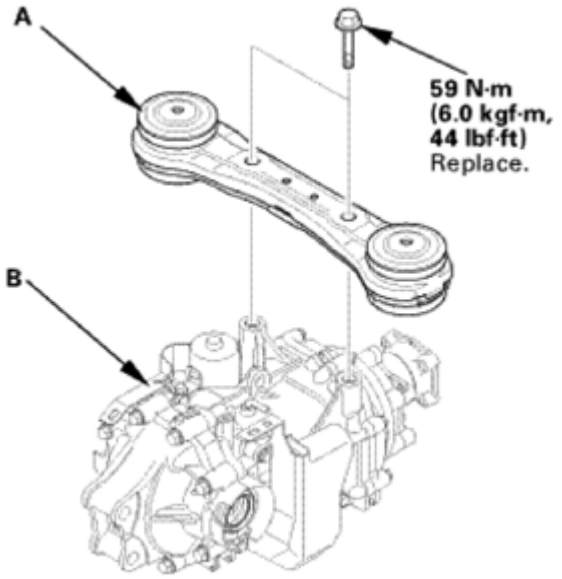

Fig. 169: Identifying Rear Differential Mount Assembly And Rear Differential Assembly With Torque Specifications

4. Rear Driveshaft Inboard Side Both - Reconnection
    1. Install new set ring (A) into the groove (B) of the rear driveshaft inboard joint on both side.

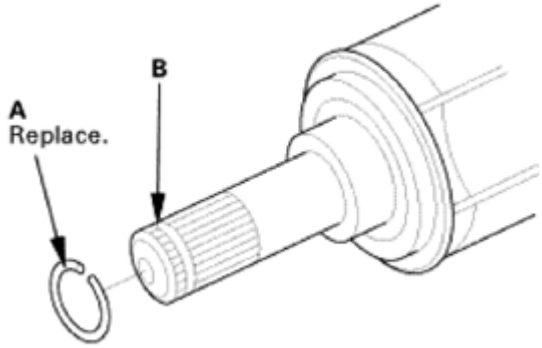

Fig. 170: Identifying Rear Driveshaft Inboard Side Ring And Groove

    2. Lift the rear differential assembly (A) up into position.
    3. Insert the inboard end (B) of the rear driveshafts (C) into the differential (D) until the set ring (E) locks in the groove (F).

NOTE: **Insert the driveshaft horizontally to prevent damaging the oil seals (G).**

GETtheMANUALS.org

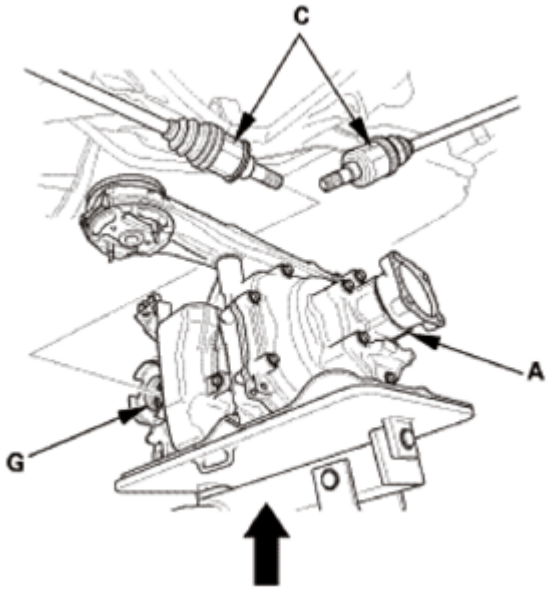

Fig. 171: Lifting Rear Differential Assembly

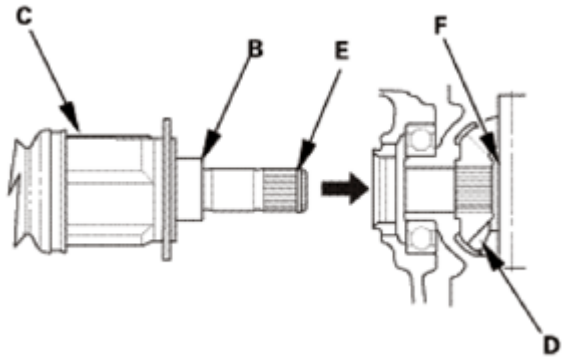

Fig. 172: Installing Inboard End Of Rear Driveshafts Into Differential

5. Rear Differential Mount Bracket
    1. Align the tabs (A) of the rubber mount (B) with the holes (C) of the plates (D).
    2. Install the rear differential mounting bolts (E).

GETtheMANUALS.org

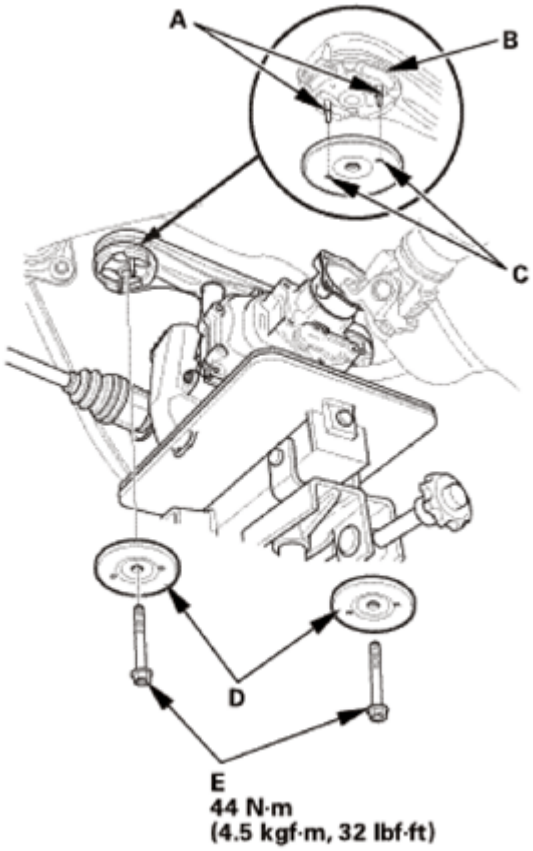

Fig. 173: Identifying Rear Differential Mounting Bolts, Tabs, Rubber Mount And Holes With Torque Specifications

3. Install the left and right rear differential mount brackets B.
4. Tighten new differential mount brackets B mounting bolts (A) to the specified torque.
5. Loosely install new differential mount brackets B mounting bolt (C).

GETtheMANUALS.org

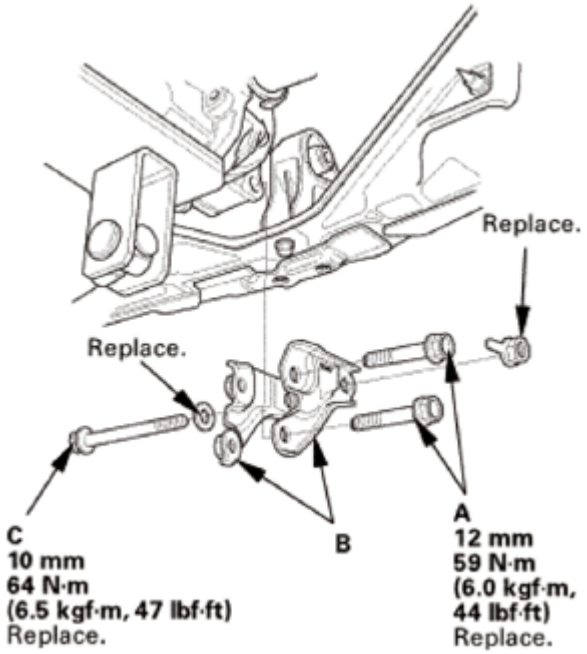

Fig. 174: Identifying Rear Differential Mount Brackets And Mounting Bolts With Torque Specifications

6. Rear Differential Mount Bolt - Tighten
    1. Lower the transmission jack.
    2. Tighten differential mount brackets B mounting bolt to the specified torque.
7. Rear Differential Breather Hoses
    1. Connect the breather hoses (A) to the breather pipes (B) and clamps (C).

Differential upper side

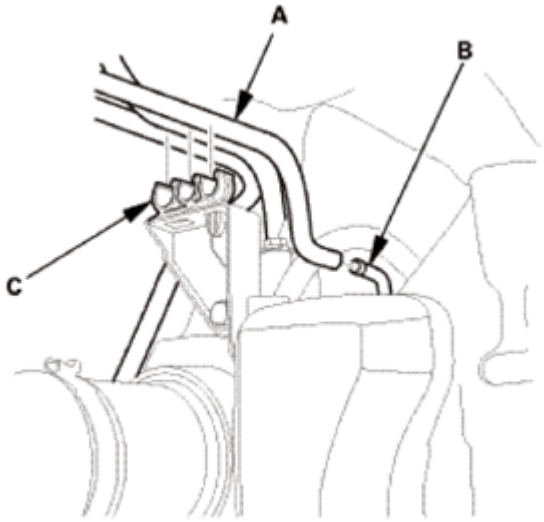

Fig. 175: Identifying Breather Hoses, Breather Pipes And Clamps

GETtheMANUALS.org

Pump motor side

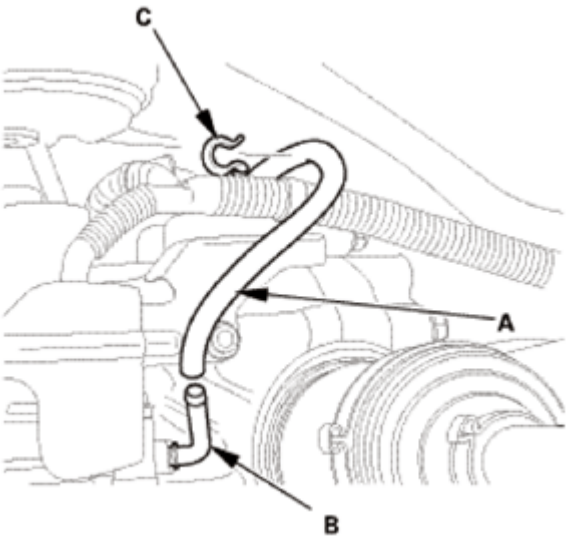

Fig. 176: Identifying Breather Hoses, Breather Pipes And Clamps (Pump Motor Side)

2. Connect the breather hose (A) to the clamp (B).

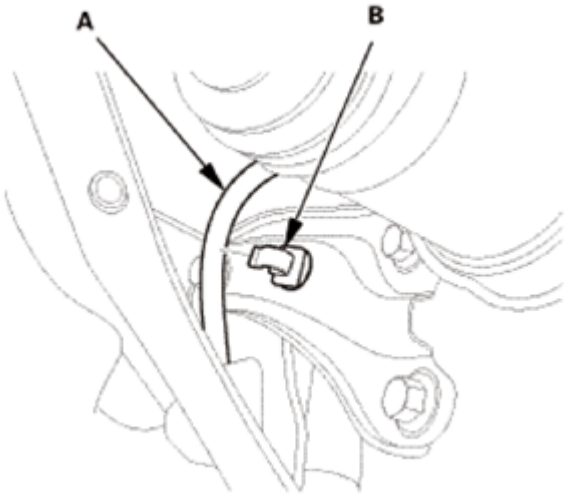

Fig. 177: Identifying Breather Hose And Clamp

8. Rear Differential Connector
    1. Install the harness clips (A).

GETtheMANUALS.org

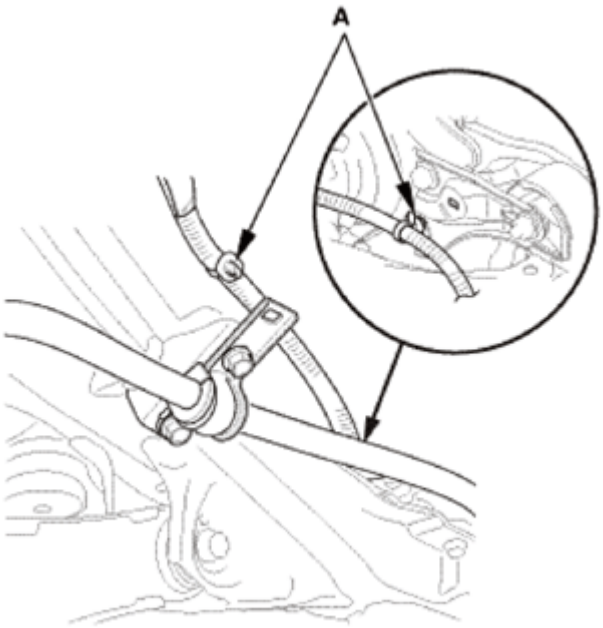

Fig. 178: Identifying Rear Differential Connector Harness Clips

2. Connect the connectors (A).
3. Install the connector cover (B).

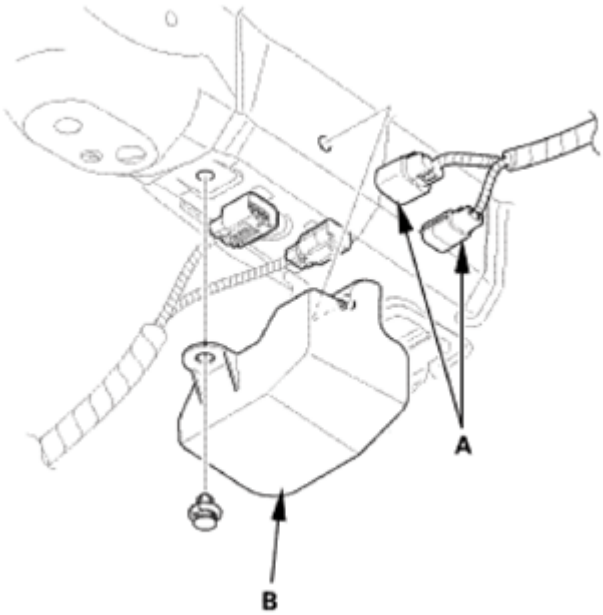

Fig. 179: Identifying Connector Cover And Connectors

9. Propeller Shaft Rear Differential Side - Disconnection (With Nylon Strap)
    1. Attach the No. 2 propeller shaft (A) to the rear differential companion flange (B) by aligning the reference mark (C) you made during the removal procedure.

GETtheMANUALS.org

2. Install new flange bolts (D) to the specified torque.

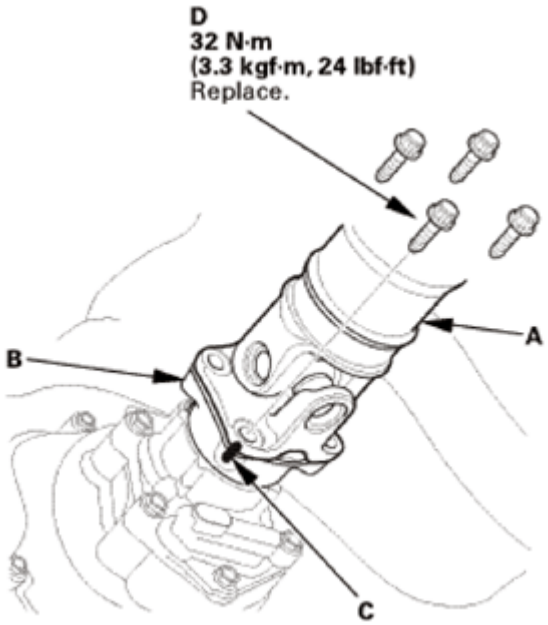

Fig. 180: Identifying Rear Differential Companion Flange, Reference Mark, Shaft And Bolts

10. Rear Differential Fluid - Replacement (Real Time AWD System)
    1. Clean the drain plug (A), then install it with a new sealing washer (B).
    2. Refill the differential with rear differential fluid to the proper level.

NOTE: **If you disassemble the differential, check the rear differential fluid level again after the 4WD system check is finished. Add fluid if necessary.**

Fluid Capacity:

1.2 L (1.3 US qt) at fluid change

1.5 L (1.6 US qt) at overhaul

Recommended fluid: Honda Dual Pump Fluid II

GETtheMANUALS.org

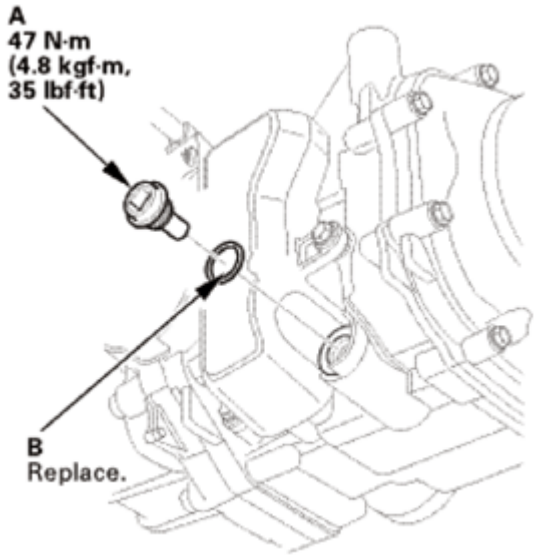

Fig. 181: Identifying Drain Plug And Sealing Washer (Real Time AWD System)

3. Install the oil filler plug (A) with a new sealing washer (B).

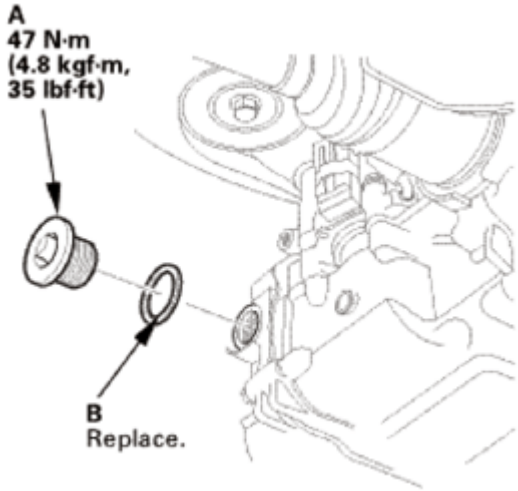

Fig. 182: Identifying Oil Filler Plug And Sealing Washer (Real Time AWD System)

11. HDS DLC - Connection
    1. Connect the HDS to the data link connector (DLC) (A) located under the driver's side of the dashboard.
    2. Turn the ignition switch to ON (II).
    3. Make sure the HDS communicates with the vehicle. If it does not communicate, go to the DLC circuit troubleshooting.

GETtheMANUALS.org

Fig. 183: Identifying Data Link Connector

12. Real Time AWD System Bleeding
    1. Select the ADJUSTMENT in the REAL TIME AWD SYSTEM with the HDS.
    2. Select the AIR BLEEDING in the ADJUSTMENT with the HDS.

NOTE: See the HDS Help menu for specific instructions.

13. Test Drive
    1. Test-drive the vehicle.
14. Maintenance Minder Reset
    1. **RESET THE MAINTENANCE MINDER** .

REAR DIFFERENTIAL OIL SEAL REPLACEMENT - PROPELLER SHAFT SIDE ON VEHICLE

SPECIAL TOOL DESCRIPTION

Image	Description/Tool Number
	Driver Handle, 40 mm I.D. 07746-0030100

GETtheMANUALS.org

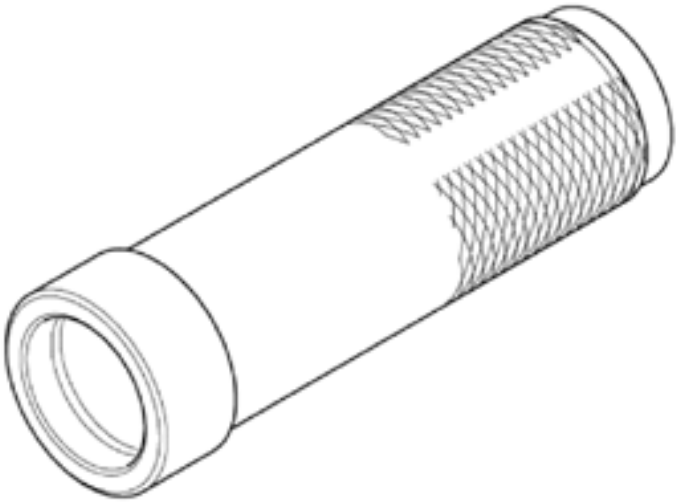	
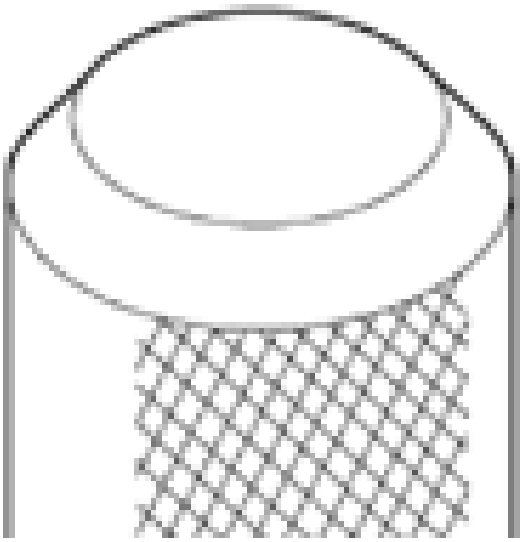	Oil Seal Driver, 41.8 mm 07947-6890100

GETtheMANUALS.org

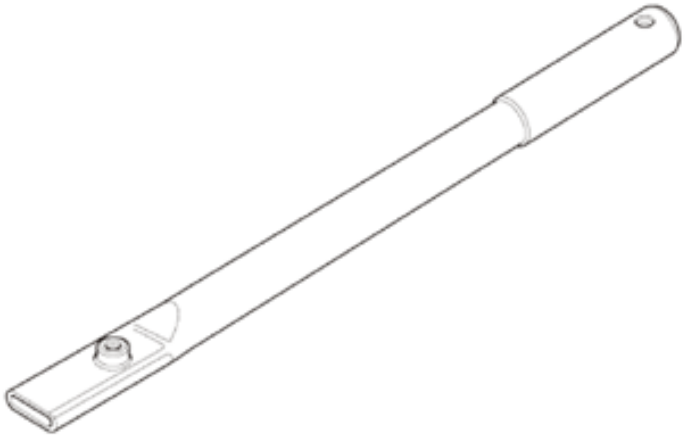	Holder Handle 07JAB-001020B
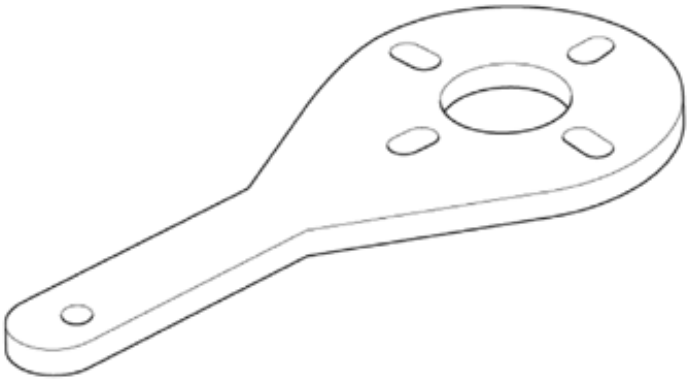	Companion Flange Holder 07RAB-TB4010B

REMOVAL

1. Vehicle Lift
    1. Raise the vehicle on a lift, and make sure it is securely supported.
2. Rear Differential Fluid - Replacement (Real Time AWD System)
    1. Remove the oil filler plug (A) and the sealing washer (B).

GETtheMANUALS.org

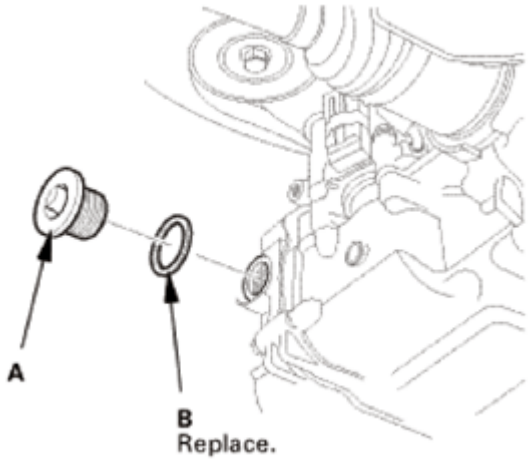

Fig. 184: Identifying Oil Filler Plug And Sealing Washer (Real Time AWD System)

2. Remove the drain plug (A) and the sealing washer (B), then drain the rear differential fluid.

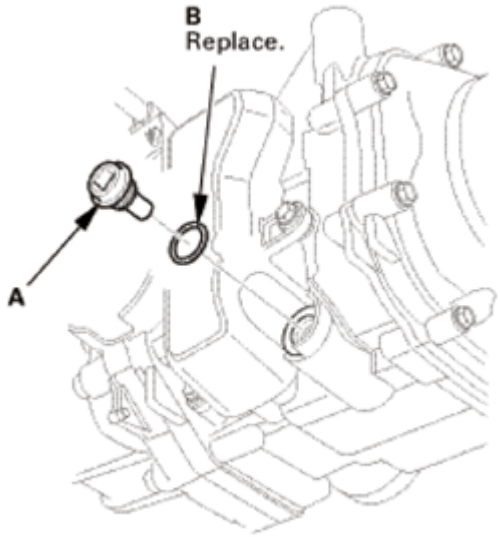

Fig. 185: Identifying Drain Plug And Sealing Washer (Real Time AWD System)

3. Propeller Shaft Rear Differential Side - Disconnection (With Nylon Strap)
    1. Make a reference mark (A) across the No. 2 propeller shaft (B) and the rear differential companion flange (C).
    2. Remove the No. 2 propeller shaft flange bolts (D).
    3. Separate the No. 2 propeller shaft from the rear differential.

NOTE: Suspend the propeller shaft with an appropriate size nylon strap.

GETtheMANUALS.org

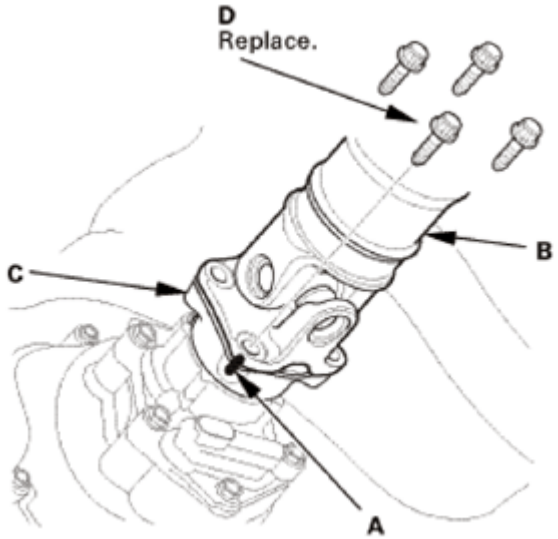

Fig. 186: Identifying Rear Differential Companion Flange, Reference Mark, Shaft And Bolts

4. Rear Differential Companion Flange
    1. Pry up the stake on the locknut (A) from the groove of the clutch guide, making sure the tab completely clears the groove to prevent damaging the clutch guide.

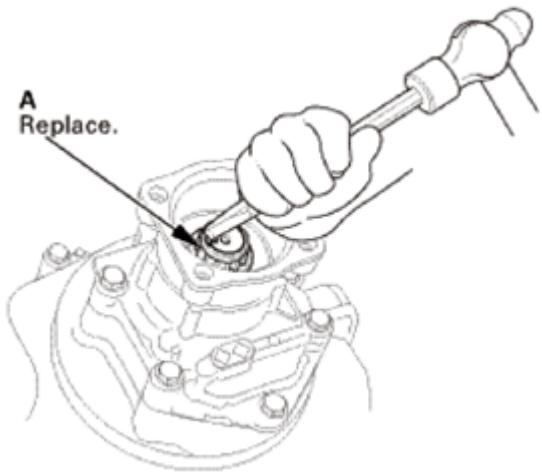

Fig. 187: Prying Up Stake On Locknut Clutch Groove

    2. Install the companion flange holder (A) and holder handle (B) on the companion flange.

GETtheMANUALS.org

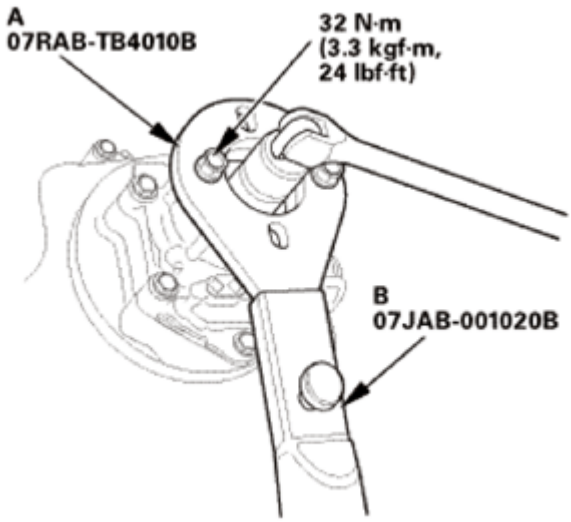

Fig. 188: Installing Companion Flange Holder And Holder Handle With Torque Specifications

3. Loosen the locknut (A) counterclockwise so its tab (B) comes out from the groove (C) in the clutch guide.

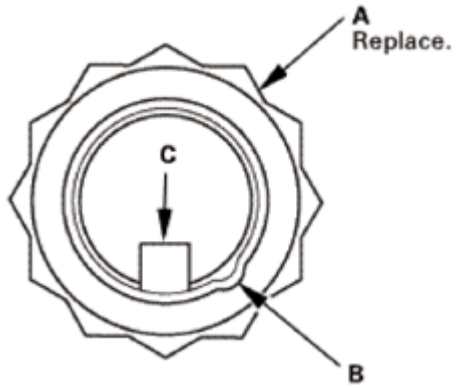

Fig. 189: Identifying Locknut, Tab, Clutch Guide Groove

4. Tighten the locknut (A) until its tab (B) aligns with the groove (C).
5. Clean any dirt from inside the groove in the clutch guide, then loosen the locknut.

GETtheMANUALS.org

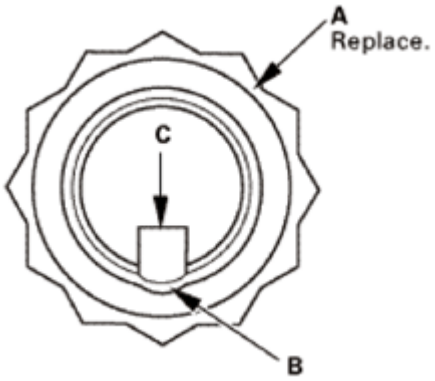

Fig. 190: Identifying Locknut, Tab, Clutch Guide Groove

6. Remove the locknut (A), the spring washer (B), the back-up ring (C), and the O-ring (D).

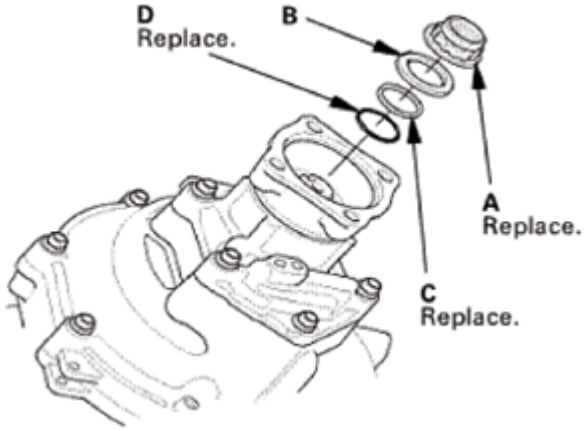

Fig. 191: Identifying Locknut, Spring Washer, Back-Up Ring And O-Ring

7. Remove the companion flange (A) with a commercially available puller.

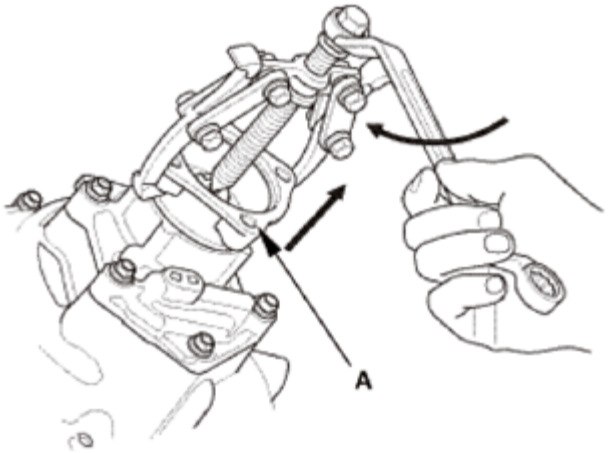

Fig. 192: Removing Companion Flange Using Puller

GETtheMANUALS.org

5. Rear Differential Oil Seal Propeller Shaft Side (Real Time AWD System)
    1. Remove the rear differential propeller shaft side oil seal (A).

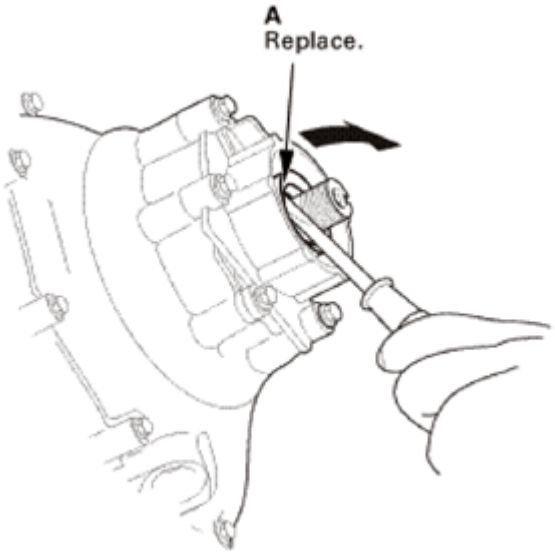

Fig. 193: Removing Rear Differential Oil Seal Propeller Shaft Side (Real Time AWD System)

INSTALLATION

1. Rear Differential Oil Seal Propeller Shaft Side (Real Time AWD System)
    1. Install a new rear differential propeller shaft side oil seal (A) even and flush with the rear differential oil pump cover using the 40 mm driver handle (B).

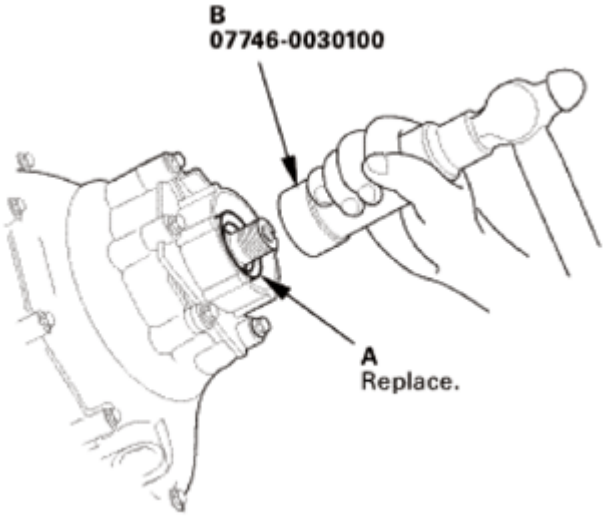

Fig. 194: Installing Rear Differential Propeller Shaft Side Oil Seal

2. Rear Differential Companion Flange
    1. Set the companion flange (A) to the clutch guide shaft.

GETtheMANUALS.org

2. Drive on the companion flange using the 41.8 mm oil seal driver.

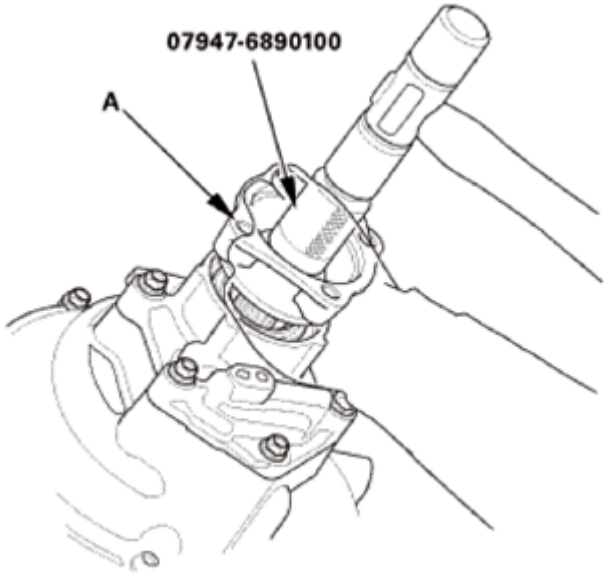

Fig. 195: Driving On Companion Flange Using Oil Seal Driver

3. Check the length of clutch guide shaft as shown.

NOTE: Make sure to drive on the companion flange until 2 to 3 thread pitches of the clutch guide shaft appears.

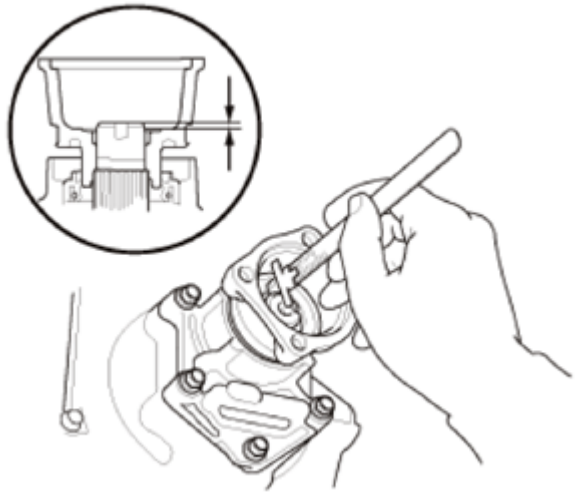

Fig. 196: Checking Length Of Clutch Guide Shaft Using Gauge

4. Apply Dual Pump Fluid II to the used locknut.
5. Set the used locknut to the clutch guide shaft.
6. Install the companion flange holder (A) and holder handle (B) on the companion flange.

GETtheMANUALS.org

7. Tighten the used locknut.
8. Remove the used locknut and the companion holder.
9. Check the companion flange has been set to the bottom.

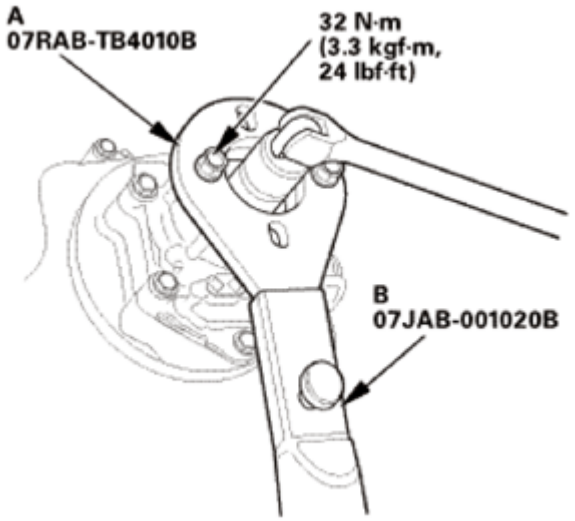

Fig. 197: Installing Companion Flange Holder And Holder Handle On Companion Flange With Torque Specification

10. Apply Dual Pump Fluid II to a new O-ring (A).
11. Install the O-ring, a new back-up ring (B), the spring washer (C), and a new locknut (D).

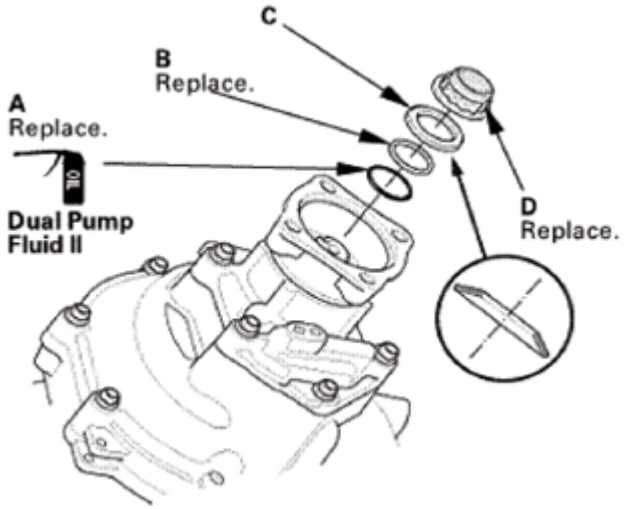

Fig. 198: Identifying O-Ring, Back-Up Ring, Spring Washer And Locknut

12. Install the companion flange holder (A) and holder handle (B) on the companion flange.
13. Tighten the locknut to the specified torque.

GETtheMANUALS.org

Specified Torque:

107.8 N.m (11.0 kgf.m, 80 lbf.ft)

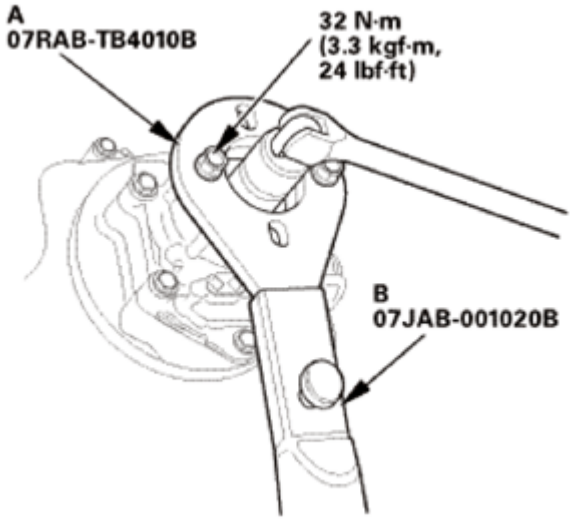

Fig. 199: Installing Companion Flange Holder And Holder Handle On Companion Flange

14. Stake the locknut tab (A) into the groove in the clutch guide.

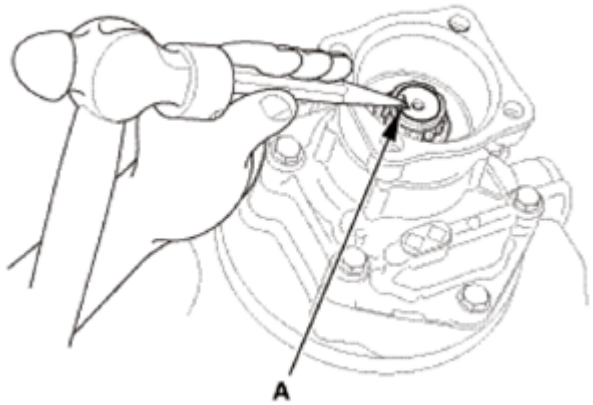

Fig. 200: Staking Locknut Tab Into Clutch Guide Groove

3. Propeller Shaft Rear Differential Side - Disconnection (With Nylon Strap)
    1. Attach the No. 2 propeller shaft (A) to the rear differential companion flange (B) by aligning the reference mark (C) you made during the removal procedure.
    2. Install new flange bolts (D) to the specified torque.

GETtheMANUALS.org

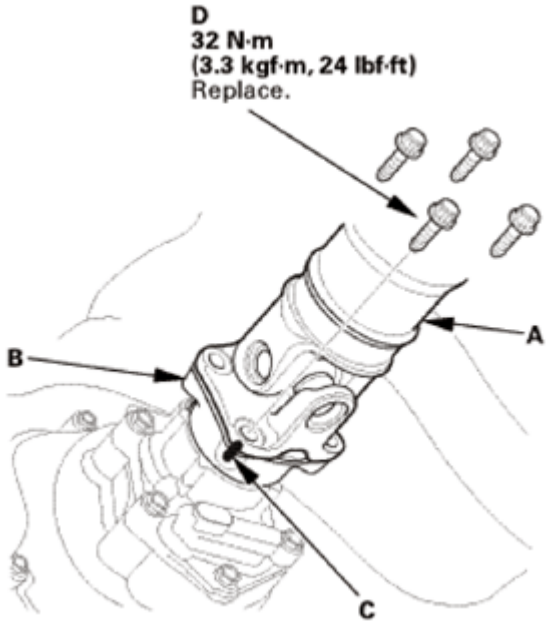

Fig. 201: Identifying Rear Differential Companion Flange, Reference Mark, Shaft And Bolts

4. Rear Differential Fluid - Replacement (Real Time AWD System)
    1. Clean the drain plug (A), then install it with a new sealing washer (B).
    2. Refill the differential with rear differential fluid to the proper level.

NOTE: **If you disassemble the differential, check the rear differential fluid level again after the 4WD system check is finished. Add fluid if necessary.**

Fluid Capacity:

1.2 L (1.3 US qt) at fluid change

1.5 L (1.6 US qt) at overhaul

Recommended fluid: Honda Dual Pump Fluid II

GETtheMANUALS.org

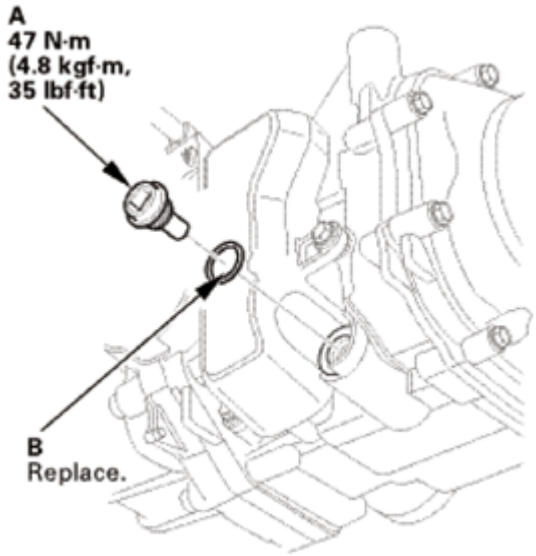

Fig. 202: Identifying Drain Plug And Sealing Washer (Real Time AWD System)

3. Install the oil filler plug (A) with a new sealing washer (B).

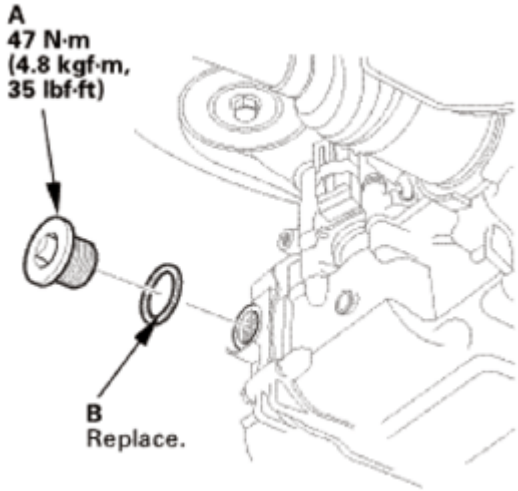

Fig. 203: Identifying Oil Filler Plug And Sealing Washer (Real Time AWD System)

5. Rear Differential Fluid After Replacement - Check (Real Time AWD System)
    1. Apply the parking brake, and block all four wheels.
    2. Start the engine, and let it idle more than 6 seconds, then turn the engine off. Repeat this step three more times.
    3. Shift to D while pressing the brake pedal firmly. Press the accelerator pedal for 2 seconds, then let it idle. Repeat this three more times.
    4. Check that the real time AWD indicator does not come on. If it does, check for real time AWD system DTC's.
6. HDS DLC - Connection

GETtheMANUALS.org

1. Connect the HDS to the data link connector (DLC) (A) located under the driver's side of the dashboard.
2. Turn the ignition switch to ON (II).
3. Make sure the HDS communicates with the vehicle. If it does not communicate, go to the DLC circuit troubleshooting.

Fig. 204: Identifying Data Link Connector

7. Maintenance Minder Reset
    1. **RESET THE MAINTENANCE MINDER** .

REAR DIFFERENTIAL PRESSURE TEST

TEST

NOTE: Before doing the Pressure Test, check the following conditions.

- Check that the real time AWD indicator does not come on. If it does, check for real time AWD system DTC's.
- Check the rear differential fluid level.
- Check for rear differential fluid leaks at the rear differential assembly.

1. HDS DLC - Connection
    1. Connect the HDS to the data link connector (DLC) (A) located under the driver's side of the dashboard.
    2. Turn the ignition switch to ON (II).
    3. Make sure the HDS communicates with the vehicle. If it does not communicate, go to the DLC circuit troubleshooting.

GETtheMANUALS.org

Fig. 205: Identifying Data Link Connector

2. Pressure Test
    1. Select DATA LIST in the REAL TIME AWD SYSTEM with the HDS.
    2. Select OIL TEMPERATURE FOR REAR DIFFERENTIAL in the DATA LIST with the HDS.
        - If the temperature is above 68 °F (20 °C), go to step 3.
        - If the temperature is below 68 °F (20 °C), drive the vehicle to warm up the rear differential until the fluid temperature reaches at least 68 °F (20 °C), then go to step 3.
    3. Start the engine.
    4. Select FUNCTIONAL TEST in the REAL TIME AWD SYSTEM with the HDS.
    5. Select OIL PRESSURE CONTROL TEST in the FUNCTIONAL TEST with the HDS.
    6. Look at the results displayed on the HDS.
        - If Normal is displayed, test is completed.
        - If 1-1 is displayed, go to step 7.
        - If 2-1 and 5-1 is displayed: Go to step 21.
        - If 3-1 is displayed: Go to step 35.
        - If 4-1 and 6-1 is displayed: Go to step 49.
    7. Turn the ignition switch to LOCK (0).
    8. Disconnect the rear differential fluid pressure sensor connector.
    9. Remove the rear differential fluid pressure sensor.
    10. Reconnect the rear differential fluid pressure sensor connector.
    11. Turn the ignition switch to ON (II).
    12. Select the DATA LIST in the REAL TIME AWD SYSTEM with the HDS.
    13. Check the ACTUAL OIL PRESSURE OF THE OIL PRESSURE SENSOR FOR REAR DIFFERENTIAL in the DATA LIST with the HDS.
        - If the fluid pressure is higher than 0-77 kPa (0.0-0.8 kgf/cm^2 , 0-11 psi), replace the rear differential fluid pressure sensor.

GETtheMANUALS.org

- If the fluid pressure is within the range of 0-77 kPa (0.0-0.8 kgf/cm^2 , 0-11 psi), go to step 14.

14. Replace the rear differential fluid.
15. **DO THE REAL TIME AWD SYSTEM BLEEDING WITH THE HDS** .
16. Start the engine.
17. Select FUNCTIONAL TEST in the REAL TIME AWD SYSTEM with the HDS.
18. Select OIL PRESSURE CONTROL TEST in the FUNCTIONAL TEST with the HDS.
19. Look at the results displayed on the HDS.
    - If Normal is displayed, test is completed.
    - If 1-1 is displayed: Go to step 20.
20. **DO THE REAR DIFFERENTIAL FLUID PRESSURE SENSOR TEST WITH THE HDS**. If the rear differential fluid pressure sensor test is OK, replace the rear differential assembly.
21. Turn the ignition switch to LOCK (0).
22. Turn the ignition switch to ON (II).
23. **DO THE REAL TIME AWD SYSTEM BLEEDING WITH THE HDS** .
24. Start the engine.
25. Select FUNCTIONAL TEST in the REAL TIME AWD SYSTEM with the HDS.
26. Select OIL PRESSURE CONTROL TEST in the FUNCTIONAL TEST with the HDS.
27. Look at the results displayed on the HDS.
    - If Normal is displayed, intermittent failure, the system is OK at this time, test is completed.
    - If 2-1 and 5-1 is displayed: Go to step 28.
28. Replace the rear differential fluid.
29. **DO THE REAL TIME AWD SYSTEM BLEEDING WITH THE HDS** .
30. Start the engine.
31. Select FUNCTIONAL TEST in the REAL TIME AWD SYSTEM with the HDS.
32. Select OIL PRESSURE CONTROL TEST in the FUNCTIONAL TEST with the HDS.
33. Look at the results displayed on the HDS.
    - If Normal is displayed, test is completed.
    - If 2-1 and 5-1 is displayed: Go to step 34.
34. Do **THE REAR DIFFERENTIAL FLUID PRESSURE SENSOR TEST** and **THE REAR DIFFERENTIAL SOLENOID VALVE TEST** with the HDS. If the rear differential fluid pressure sensor test and the rear differential solenoid valve test is OK, replace the rear differential assembly.
35. Turn the ignition switch to LOCK (0).
36. Turn the ignition switch to ON (II).
37. **DO THE REAL TIME AWD SYSTEM BLEEDING WITH THE HDS** .
38. Start the engine.
39. Select FUNCTIONAL TEST in the REAL TIME AWD SYSTEM with the HDS.

GETtheMANUALS.org

40. Select OIL PRESSURE CONTROL TEST in the FUNCTIONAL TEST with the HDS.
41. Look at the results displayed on the HDS.
    - If Normal is displayed, intermittent failure, the system is OK at this time, test is completed.
    - If 3-1 is displayed: Go to step 42.
42. Replace the rear differential fluid.
43. **DO THE REAL TIME AWD SYSTEM BLEEDING WITH THE HDS** .
44. Start the engine.
45. Select FUNCTIONAL TEST in the REAL TIME AWD SYSTEM with the HDS.
46. Select OIL PRESSURE CONTROL TEST in the FUNCTIONAL TEST with the HDS.
47. Look at the results displayed on the HDS.
    - If Normal is displayed, test is completed.
    - If 3-1 is displayed: Go to step 48.
48. **DO THE REAR DIFFERENTIAL SOLENOID VALVE TEST WITH THE HDS**. If the rear differential solenoid valve test is OK, replace the rear differential assembly.
49. Turn the ignition switch to LOCK (0).
50. Replace the rear differential fluid.
51. **DO THE REAL TIME AWD SYSTEM BLEEDING WITH THE HDS** .
52. Start the engine.
53. Select FUNCTIONAL TEST in the REAL TIME AWD SYSTEM with the HDS.
54. Select OIL PRESSURE CONTROL TEST in the FUNCTIONAL TEST with the HDS.
55. Look at the results displayed on the HDS.
    - If Normal is displayed, test is completed.
    - If 4-1 and 6-1 is displayed: Go to step 56.
56. **DO THE REAR DIFFERENTIAL SOLENOID VALVE TEST WITH THE HDS**. If the rear differential solenoid valve test is OK, replace the rear differential assembly.

REAR DIFFERENTIAL PUMP MOTOR REMOVAL AND INSTALLATION

REMOVAL

1. Vehicle Lift
    1. Raise the vehicle on a lift, and make sure it is securely supported.
2. Rear Differential Harness Bracket
    1. Disconnect the breather hose (A) from the pump motor breather pipe (B).
    2. Remove the harness clip (C) and the harness bracket (D).

GETtheMANUALS.org

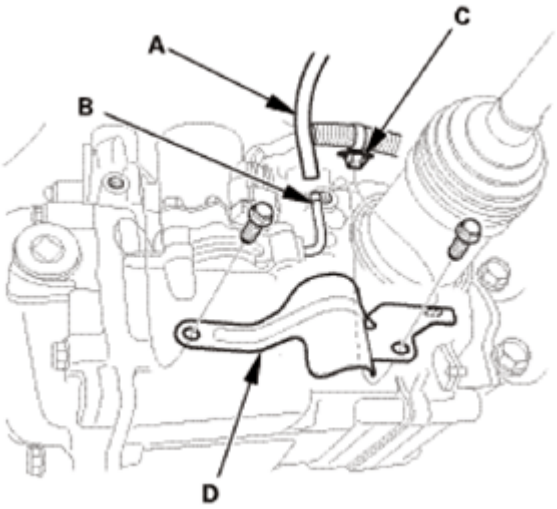

Fig. 206: Identifying Breather Hose, Pump Motor Breather Pipe, Clip And Harness Bracket

3. Rear Differential Motor Connector
    1. Disconnect the connector (A).

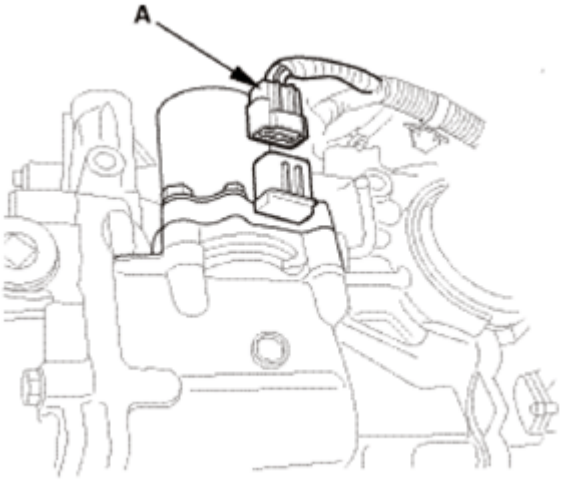

Fig. 207: Identifying Rear Differential Motor Connector

4. Rear Differential Motor Assembly
    1. Remove the rear differential pump motor (A) and the O-ring (B).

GETtheMANUALS.org

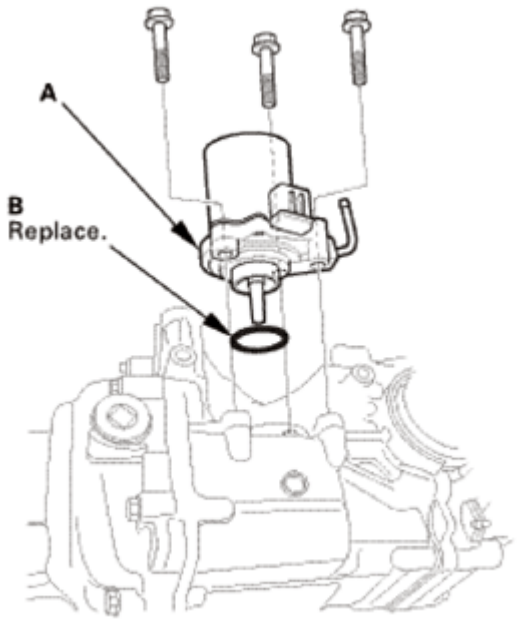

Fig. 208: Identifying Rear Differential Pump Motor And O-Ring

INSTALLATION

1. Rear Differential Motor Assembly
    1. Install the rear differential pump motor (A) with a new O-ring (B).

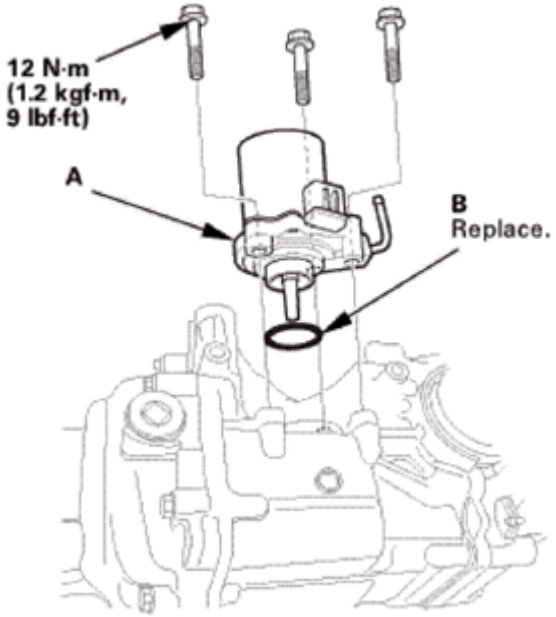

Fig. 209: Identifying Rear Differential Pump Motor And O-Ring

2. Rear Differential Motor Connector

GETtheMANUALS.org

1. Connect the connector (A).

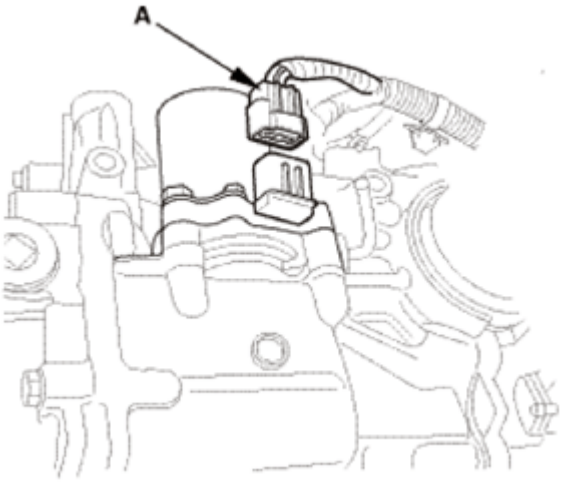

Fig. 210: Identifying Rear Differential Motor Connector

3. Rear Differential Harness Bracket
    1. Install the harness bracket (A) and the harness clip (B).
    2. Connect the breather hose (C) to the pump motor breather pipe (D).

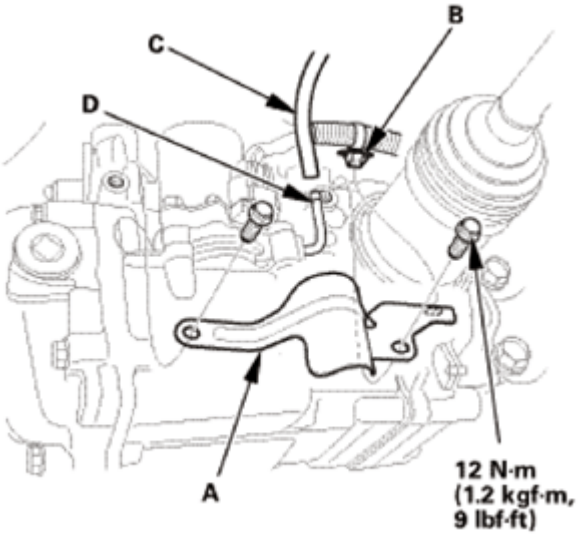

Fig. 211: Identifying Harness Bracket, Harness Clip, Breather Hose, Pump Motor Breather Pipe

REAR DIFFERENTIAL REMOVAL AND INSTALLATION

REMOVAL

1. Vehicle Lift

GETtheMANUALS.org

1. Raise the vehicle on a lift, and make sure it is securely supported.

2. Rear Differential Fluid - Replacement (Real Time AWD System)
    1. Remove the oil filler plug (A) and the sealing washer (B).

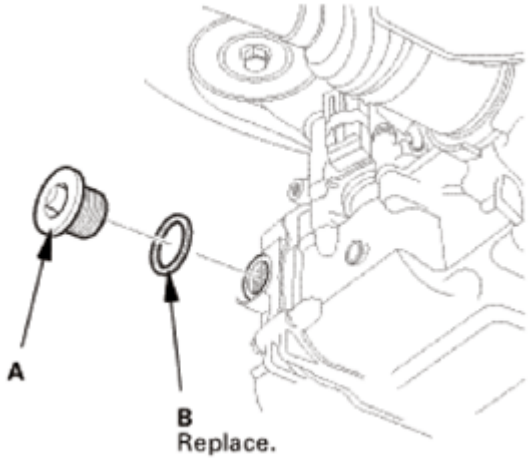

Fig. 212: Identifying Oil Filler Plug And Sealing Washer (Real Time AWD System)

    2. Remove the drain plug (A) and the sealing washer (B), then drain the rear differential fluid.

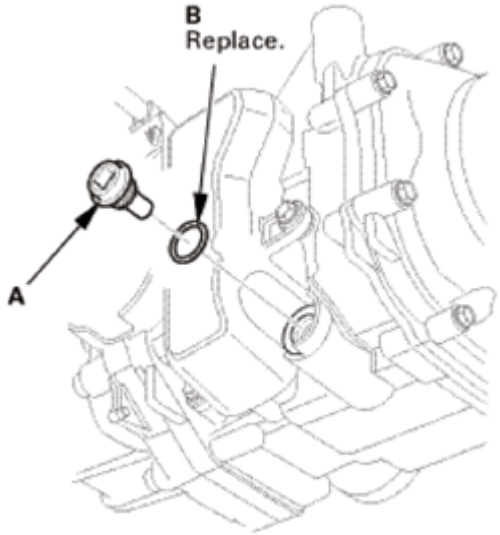

Fig. 213: Identifying Drain Plug And Sealing Washer (Real Time AWD System)

3. Propeller Shaft Rear Differential Side - Disconnection (With Nylon Strap)
    1. Make a reference mark (A) across the No. 2 propeller shaft (B) and the rear differential companion flange (C).
    2. Remove the No. 2 propeller shaft flange bolts (D).
    3. Separate the No. 2 propeller shaft from the rear differential.

GETtheMANUALS.org

NOTE: **Suspend the propeller shaft with an appropriate size nylon strap.**

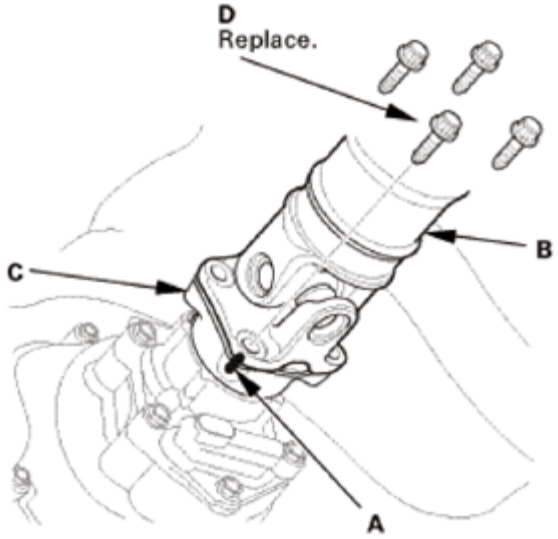

Fig. 214: Identifying Rear Differential Companion Flange, Reference Mark, Shaft And Bolts

4. Rear Differential Connector
    1. Remove the connector cover (A).
    2. Disconnect the connectors (B).

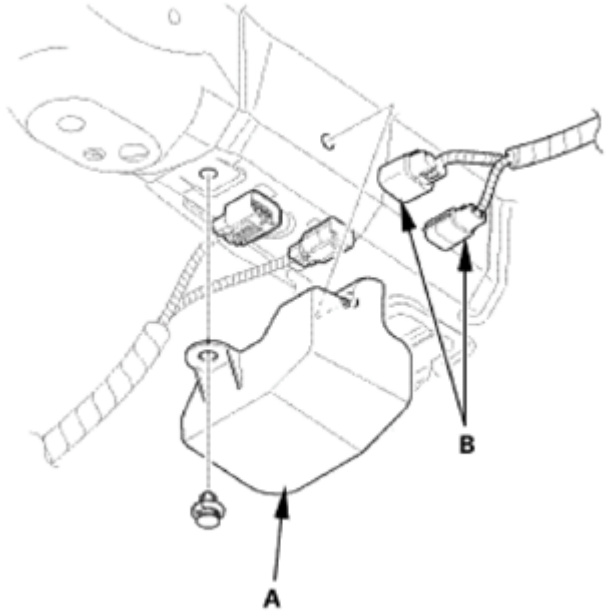

Fig. 215: Identifying Connector Cover And Connectors

    3. Release the harness clips (A).

GETtheMANUALS.org

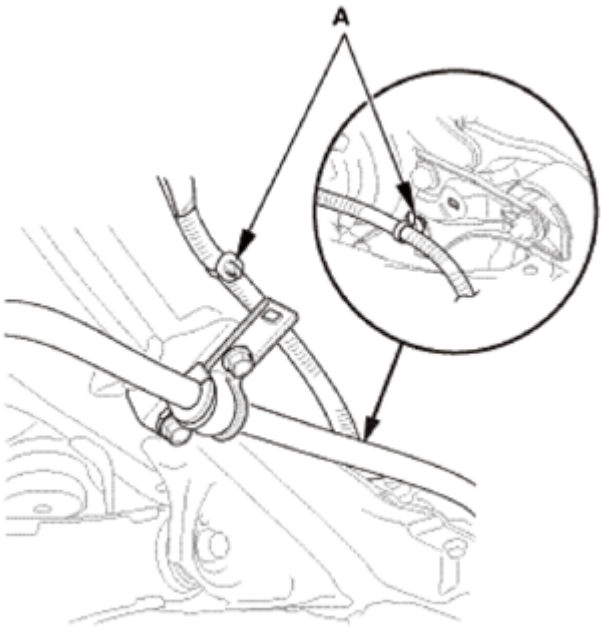

Fig. 216: Identifying Rear Differential Connector Harness Clips

5. Rear Differential Breather Hoses
    1. Disconnect the breather hoses (A) from the breather pipes (B) and clamps (C).

Differential upper side

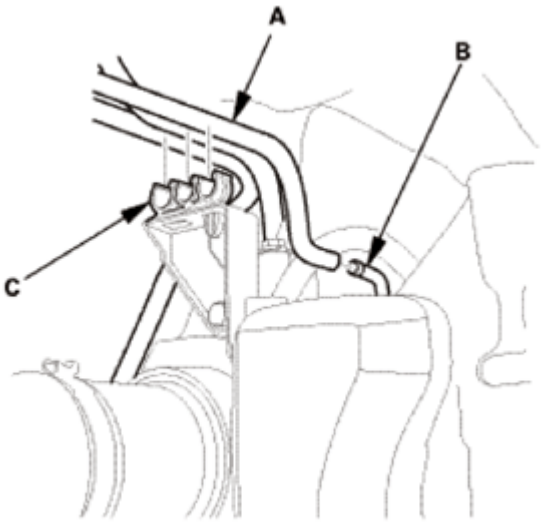

Fig. 217: Identifying Breather Hoses, Breather Pipes And Clamps

Pump motor side

GETtheMANUALS.org

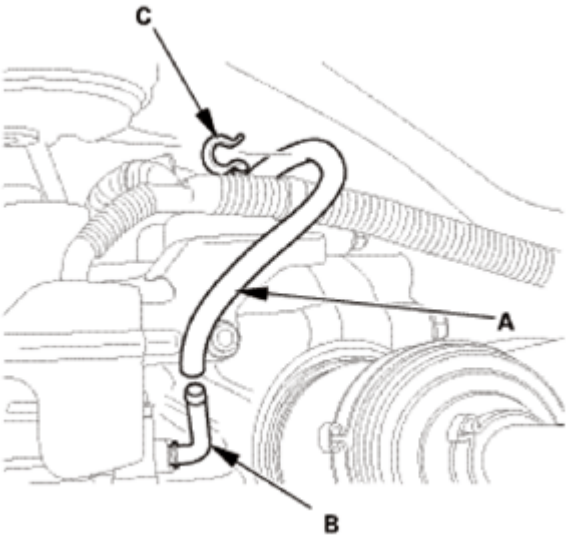

Fig. 218: Identifying Breather Hoses, Breather Pipes And Clamps (Pump Motor Side)

2. Disconnect the breather hose (A) from the clamp (B).

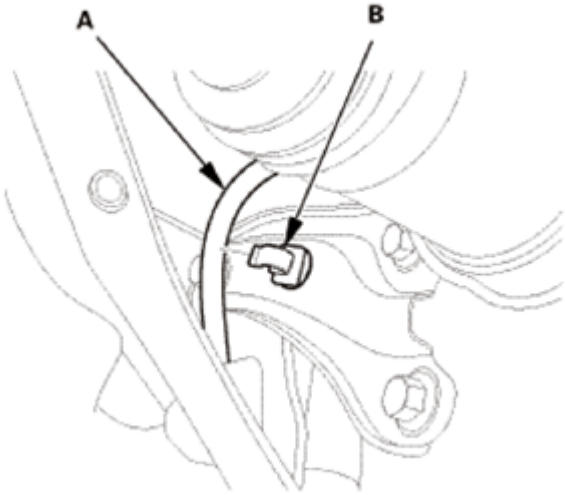

Fig. 219: Identifying Breather Hose And Clamp

6. Rear Differential Jack Support
    1. Place a transmission jack under the rear differential assembly.
7. Rear Differential Mount Bracket
    1. Remove the left and right rear differential mount brackets B.

GETtheMANUALS.org

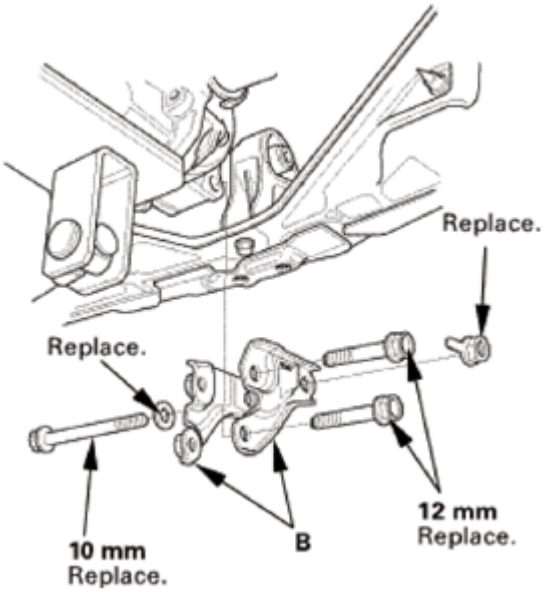

Fig. 220: Identifying Left And Right Rear Differential Mount Brackets With Bolts

2. Remove the mounting bolts (A) and the plates (B).

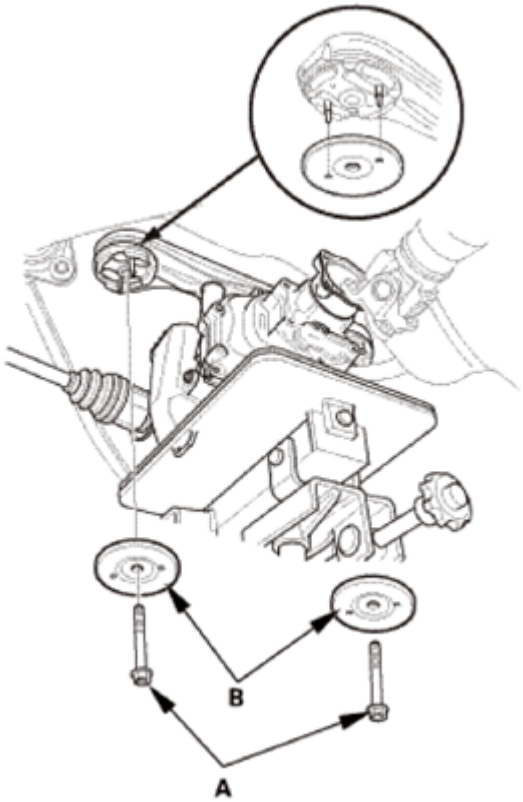

Fig. 221: Identifying Mounting Bolts And Plates

8. Rear Driveshaft Inboard Side Both - Disconnection

GETtheMANUALS.org

1. Lower the rear differential assembly (A) while pulling both rear driveshaft inboard joints (B) out of the rear differential assembly.

NOTE:

- **Be careful not to damage the driveshaft ring (C) when prying out the driveshaft inboard joints.**
- **Be careful not to damage the oil seals (D).**

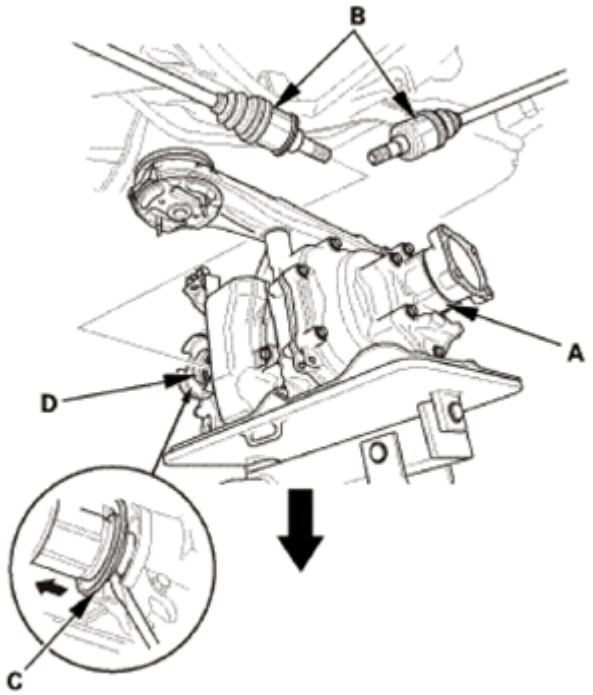

Fig. 222: Pulling Both Rear Driveshaft Inboard Joints Out Of Rear Differential Assembly

2. Remove the set ring (A) from inboard joint.

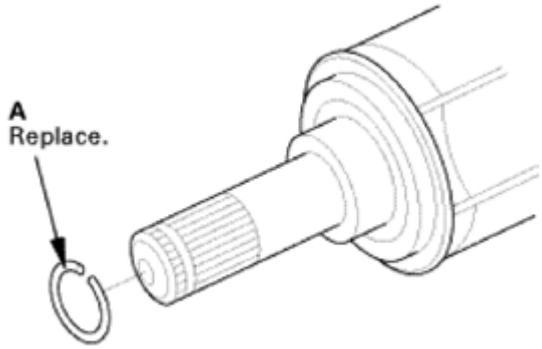

Fig. 223: Identifying Inboard Joint Set Ring

9. Rear Differential Assembly
    1. Remove the rear differential mount assembly A from the rear differential assembly (B).

GETtheMANUALS.org

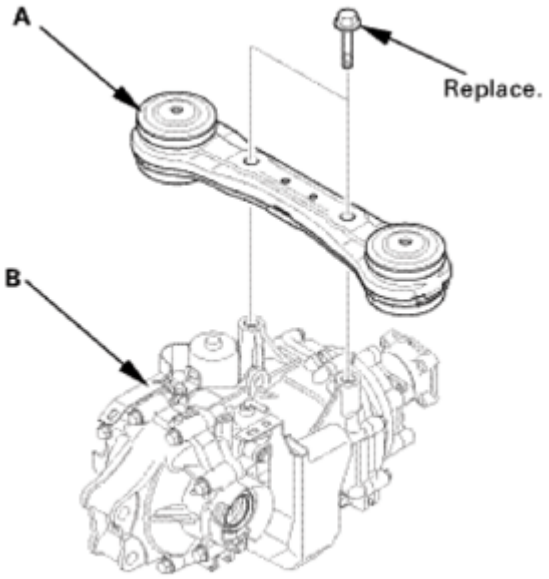

Fig. 224: Identifying Rear Differential Mount Assembly And Rear Differential Assembly

INSTALLATION

1. Rear Differential Assembly
    1. Install the rear differential mount assembly A to the rear differential assembly (B) with new bolts.

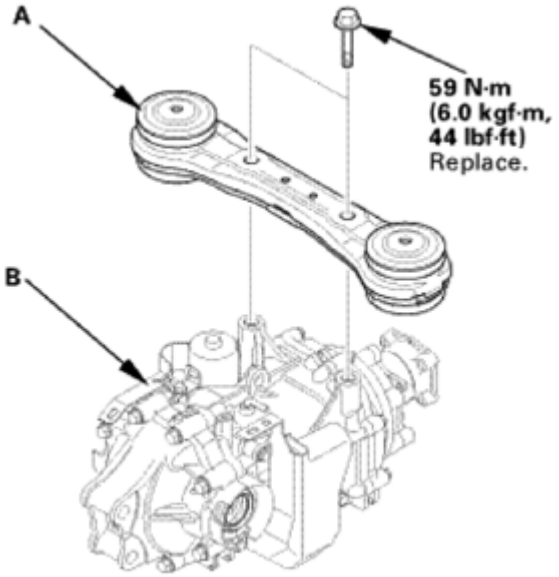

Fig. 225: Identifying Rear Differential Mount Assembly And Rear Differential Assembly With Torque Specifications

2. Rear Driveshaft Inboard Side Both - Reconnection
    1. Install new set ring (A) into the groove (B) of the rear driveshaft inboard joint on both side.

GETtheMANUALS.org

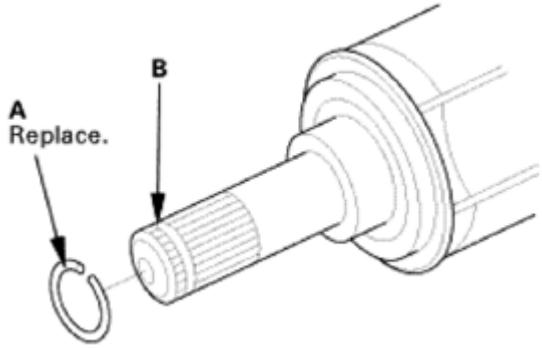

Fig. 226: Identifying Rear Driveshaft Inboard Side Ring And Groove

2. Lift the rear differential assembly (A) up into position.
3. Insert the inboard end (B) of the rear driveshafts (C) into the differential (D) until the set ring (E) locks in the groove (F).

NOTE: **Insert the driveshaft horizontally to prevent damaging the oil seals (G).**

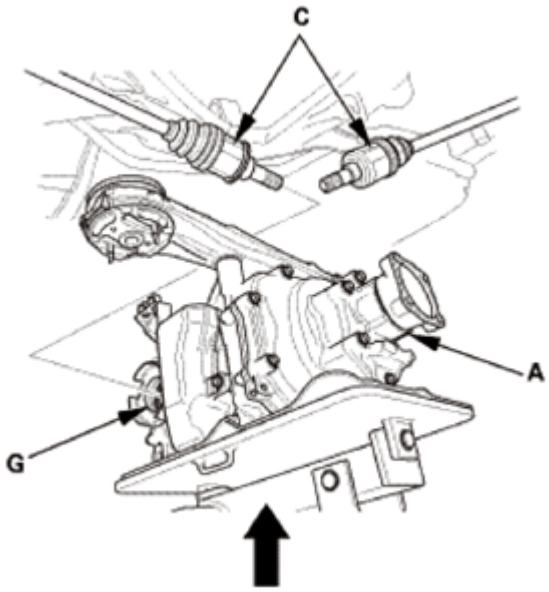

Fig. 227: Lifting Rear Differential Assembly

GETtheMANUALS.org

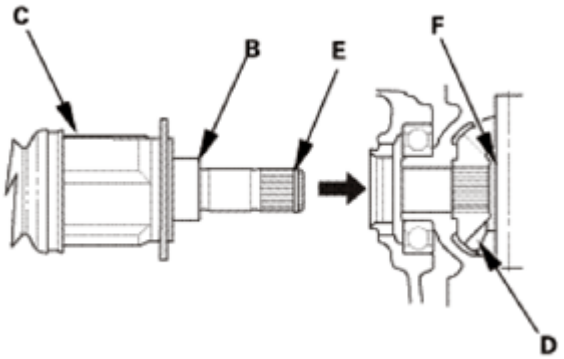

Fig. 228: Installing Inboard End Of Rear Driveshafts Into Differential

3. Rear Differential Mount Bracket
    1. Align the tabs (A) of the rubber mount (B) with the holes (C) of the plates (D).
    2. Install the rear differential mounting bolts (E).

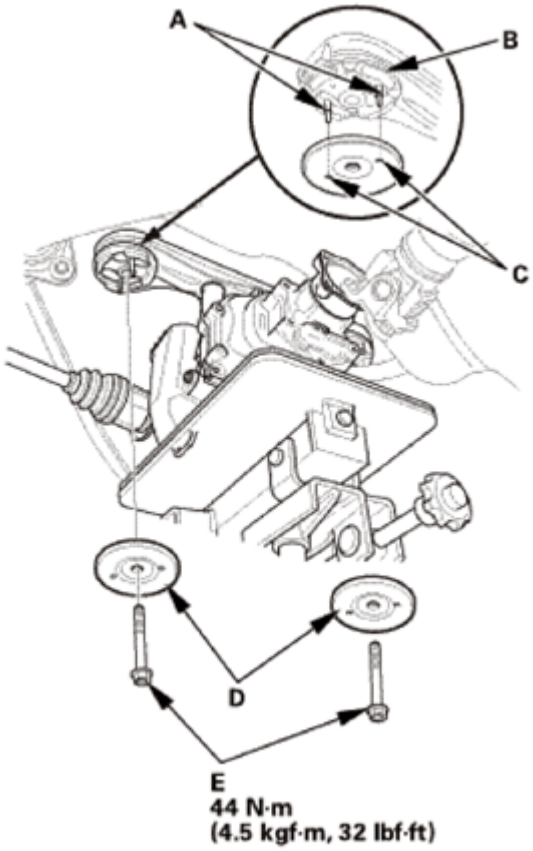

Fig. 229: Identifying Rear Differential Mounting Bolts, Tabs, Rubber Mount And Holes With Torque Specifications

    3. Install the left and right rear differential mount brackets B.
    4. Tighten new differential mount brackets B mounting bolts (A) to the specified torque.

GETtheMANUALS.org

5. Loosely install new differential mount brackets B mounting bolt (C).

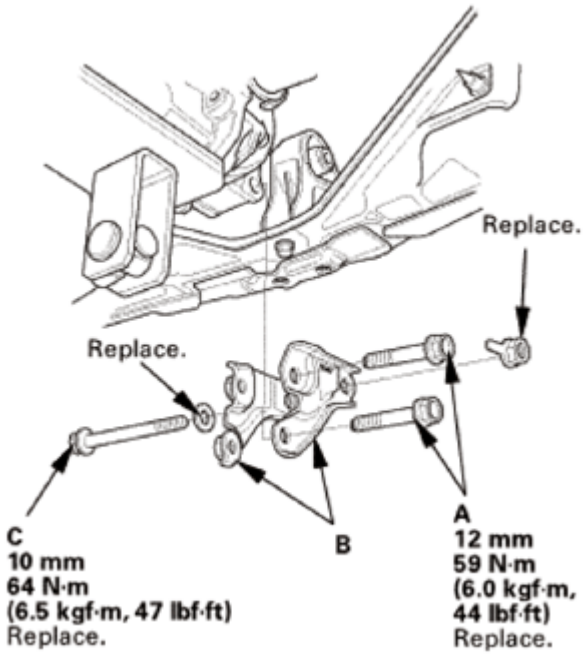

Fig. 230: Identifying Rear Differential Mount Brackets And Mounting Bolts With Torque Specifications

4. Rear Differential Mount Bolt - Tighten
    1. Lower the transmission jack.
    2. Tighten differential mount brackets B mounting bolt to the specified torque.
5. Rear Differential Breather Hoses
    1. Connect the breather hoses (A) to the breather pipes (B) and clamps (C).

Differential upper side

GETtheMANUALS.org

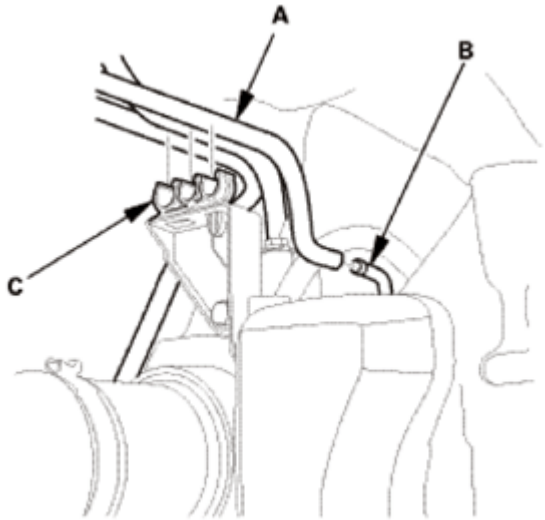

Fig. 231: Identifying Breather Hoses, Breather Pipes And Clamps

Pump motor side

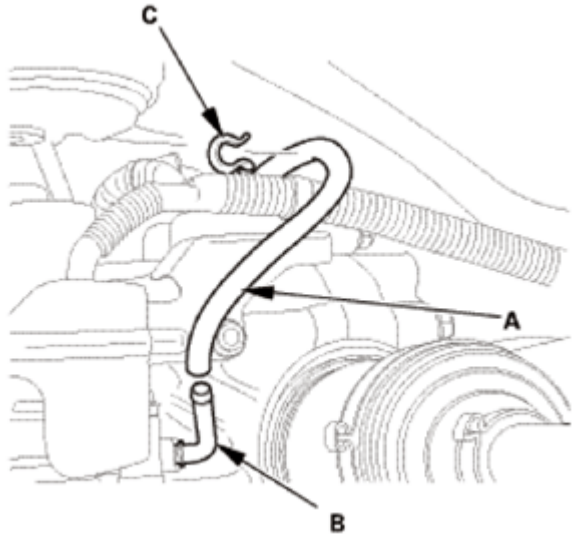

Fig. 232: Identifying Breather Hoses, Breather Pipes And Clamps (Pump Motor Side)

2. Connect the breather hose (A) to the clamp (B).

GETtheMANUALS.org

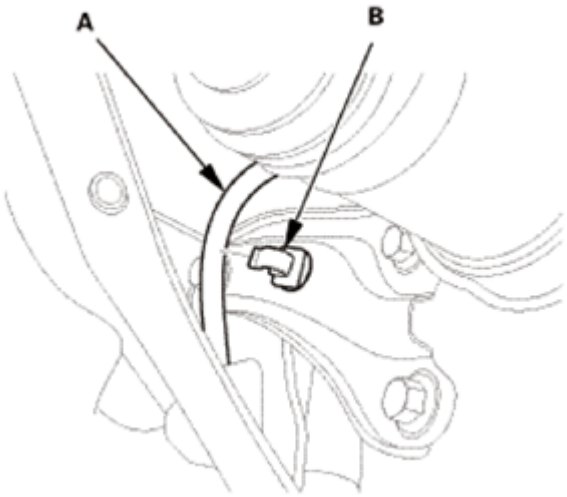

Fig. 233: Identifying Breather Hose And Clamp

6. Rear Differential Connector
    1. Install the harness clips (A).

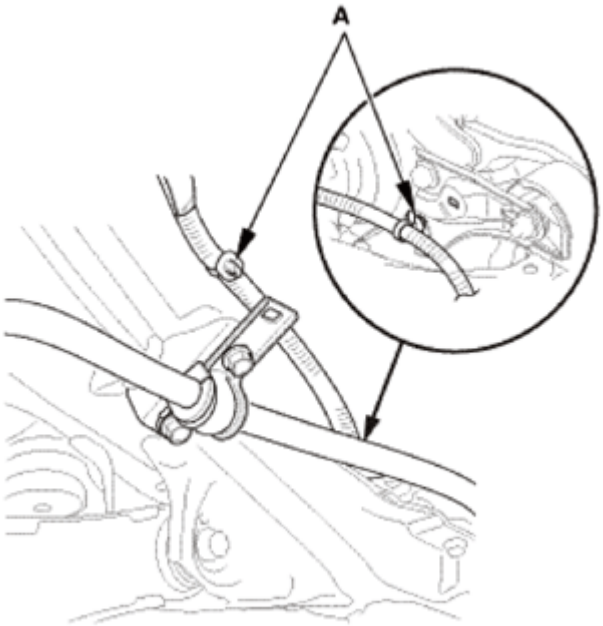

Fig. 234: Identifying Rear Differential Connector Harness Clips

    2. Connect the connectors (A).
    3. Install the connector cover (B).

GETtheMANUALS.org

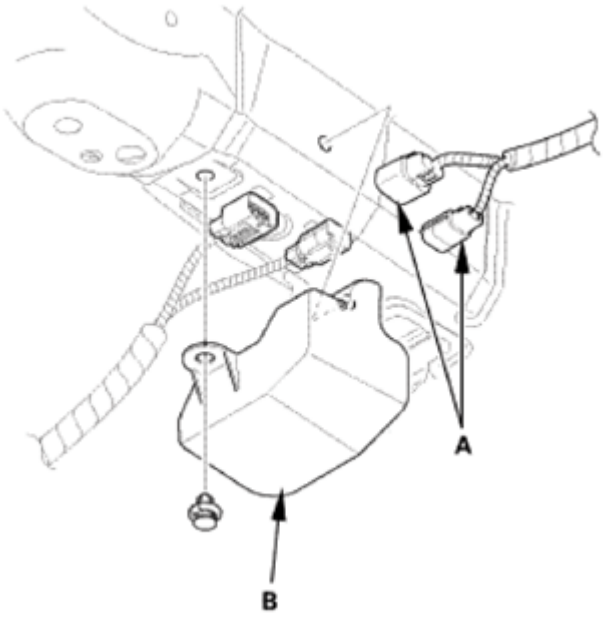

Fig. 235: Identifying Connector Cover And Connectors

7. Propeller Shaft Rear Differential Side - Disconnection (With Nylon Strap)
    1. Attach the No. 2 propeller shaft (A) to the rear differential companion flange (B) by aligning the reference mark (C) you made during the removal procedure.
    2. Install new flange bolts (D) to the specified torque.

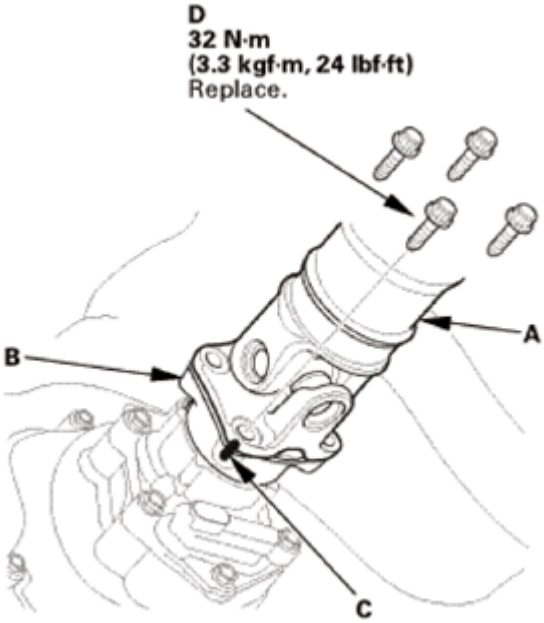

Fig. 236: Identifying Rear Differential Companion Flange, Reference Mark, Shaft And Bolts

8. Rear Differential Fluid - Replacement (Real Time AWD System)

GETtheMANUALS.org

1. Clean the drain plug (A), then install it with a new sealing washer (B).
2. Refill the differential with rear differential fluid to the proper level.

NOTE: **If you disassemble the differential, check the rear differential fluid level again after the 4WD system check is finished. Add fluid if necessary.**

Fluid Capacity:

1.2 L (1.3 US qt) at fluid change

1.5 L (1.6 US qt) at overhaul

Recommended fluid: Honda Dual Pump Fluid II

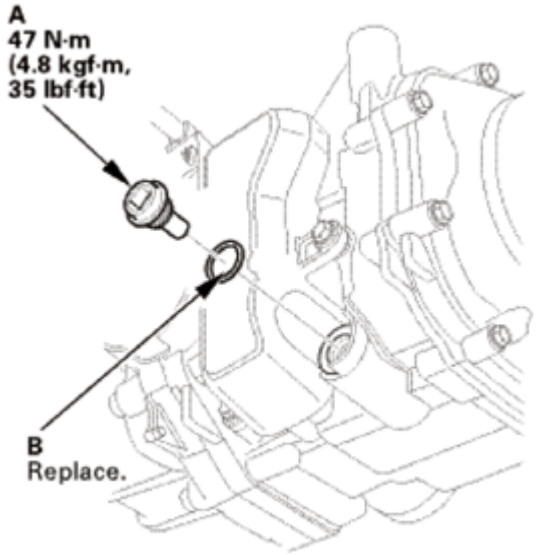

Fig. 237: Identifying Drain And Sealing Washer (Real Time AWD System)

3. Install the oil filler plug (A) with a new sealing washer (B).

GETtheMANUALS.org

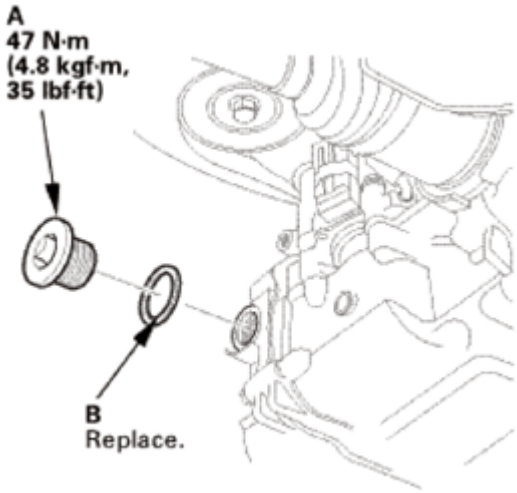

Fig. 238: Identifying Oil Filler Plug And Sealing Washer (Real Time AWD System)

9. HDS DLC - Connection

Fig. 239: Identifying Data Link Connector

   1. Connect the HDS to the data link connector (DLC) (A) located under the driver's side of the dashboard.
   2. Turn the ignition switch to ON (II).
   3. Make sure the HDS communicates with the vehicle. If it does not communicate, go to the DLC circuit troubleshooting.
10. Real Time AWD System Bleeding
   1. Select the ADJUSTMENT in the REAL TIME AWD SYSTEM with the HDS.
   2. Select the AIR BLEEDING in the ADJUSTMENT with the HDS.

NOTE: See the HDS Help menu for specific instructions.

GETtheMANUALS.org

11. Test Drive
    1. Test-drive the vehicle.
12. Maintenance Minder Reset
    1. **RESET THE MAINTENANCE MINDER** .

REAR DIFFERENTIAL SOLENOID VALVE TEST

SPECIAL TOOL DESCRIPTION

Image	Description/Tool Number
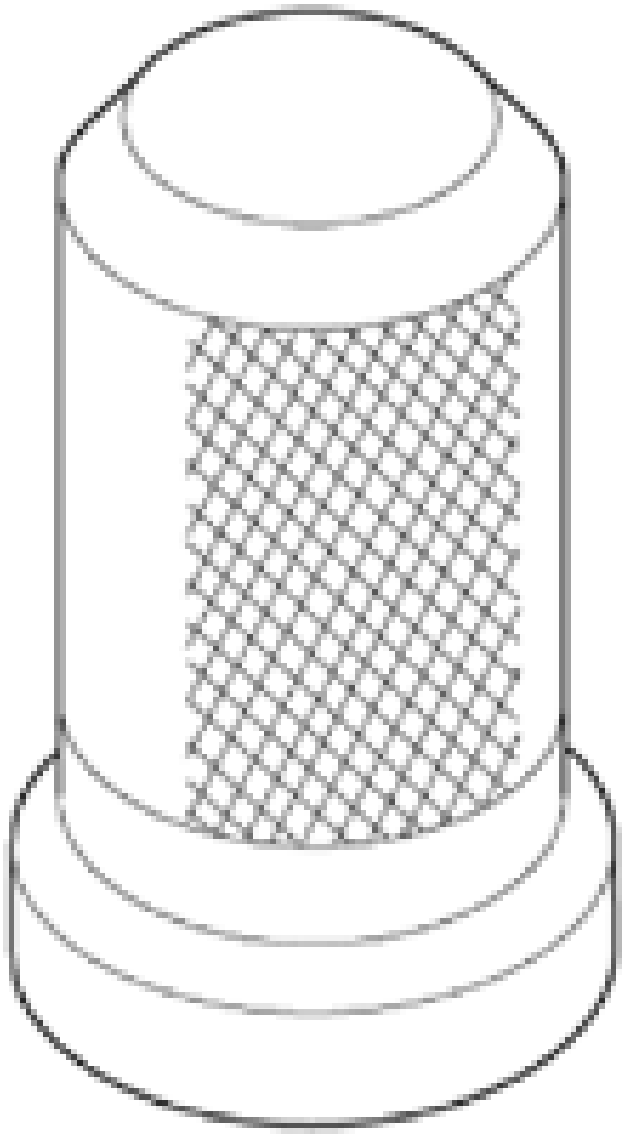	Oil Seal Driver, 41.8 mm 07947-6890100

GETtheMANUALS.org

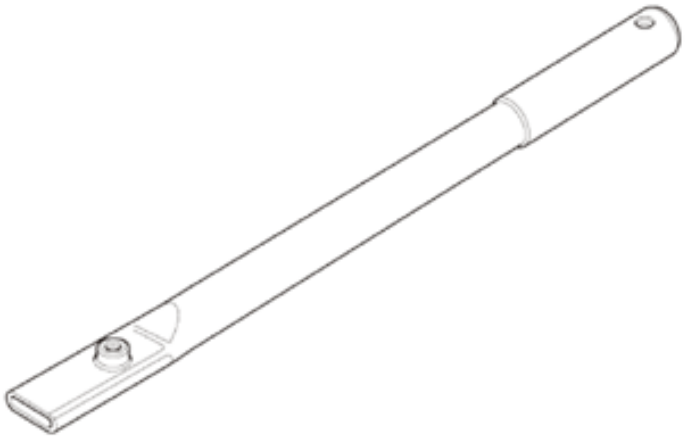	Holder Handle 07JAB-001020B
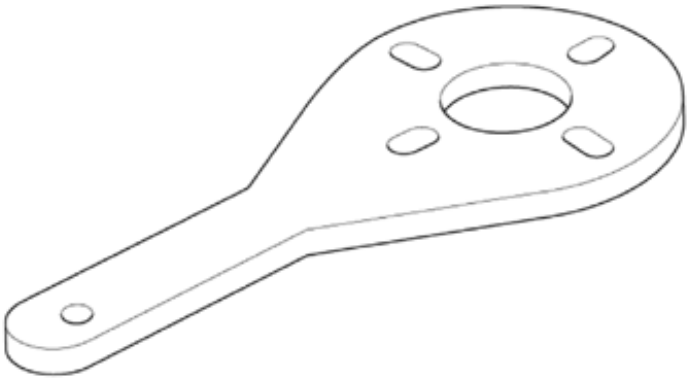	Companion Flange Holder 07RAB-TB4010B

TEST

1. HDS DLC - Connection
    1. Connect the HDS to the data link connector (DLC) (A) located under the driver's side of the dashboard.
    2. Turn the ignition switch to ON (II).
    3. Make sure the HDS communicates with the vehicle. If it does not communicate, go to the DLC circuit troubleshooting.

GETtheMANUALS.org

Fig. 240: Identifying Data Link Connector

2. Rear Differential Solenoid Valve - Test (With The HDS)
    1. Start the engine.
    2. Select the FUNCTIONAL TEST in the REAL TIME AWD SYSTEM with the HDS.
    3. Select the SOLENOID TEST in the FUNCTIONAL TEST with the HDS.
    4. Do LEVEL 1, then do LEVEL 7 of the SOLENOID TEST in that order with the HDS.
    5. Check for rear differential solenoid valve operation with the HDS. A clicking sound should be heard.
        - If no clicking sound is heard, replace the rear differential solenoid valve.
        - If a clicking sound is heard, go to next procedure.

REMOVAL

1. Vehicle Lift
    1. Raise the vehicle on a lift, and make sure it is securely supported.
2. Rear Differential Fluid - Replacement (Real Time AWD System)
    1. Remove the oil filler plug (A) and the sealing washer (B).

GETtheMANUALS.org

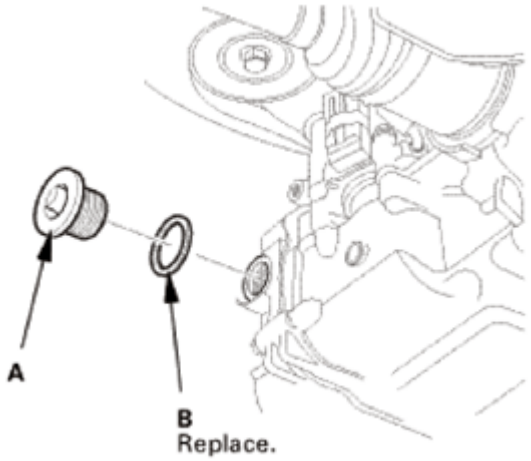

Fig. 241: Identifying Oil Filler Plug And Sealing Washer (Real Time AWD System)

2. Remove the drain plug (A) and the sealing washer (B), then drain the rear differential fluid.

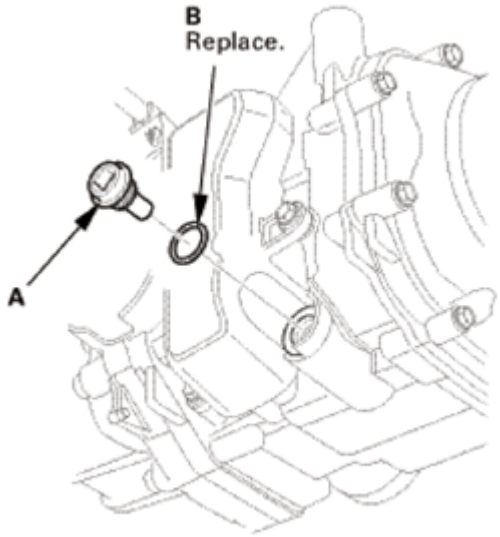

Fig. 242: Identifying Drain Plug And Sealing Washer (Real Time AWD System)

3. Propeller Shaft Rear Differential Side - Disconnection (With Nylon Strap)
    1. Make a reference mark (A) across the No. 2 propeller shaft (B) and the rear differential companion flange (C).
    2. Remove the No. 2 propeller shaft flange bolts (D).
    3. Separate the No. 2 propeller shaft from the rear differential.

NOTE: Suspend the propeller shaft with an appropriate size nylon strap.

GETtheMANUALS.org

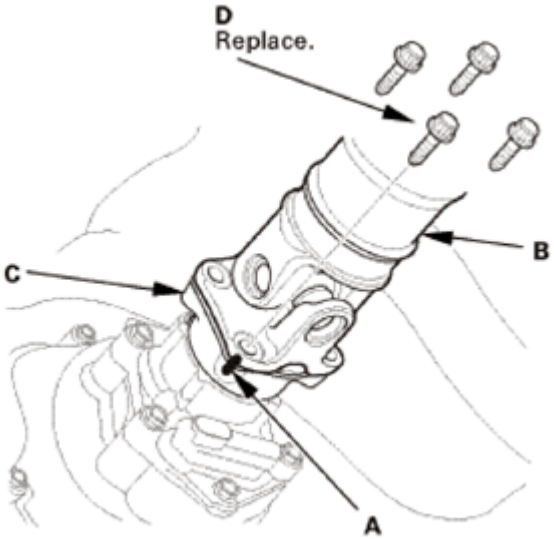

Fig. 243: Identifying Rear Differential Companion Flange, Reference Mark, Shaft And Bolts

4. Rear Differential Connector
    1. Remove the connector cover (A).
    2. Disconnect the connectors (B).

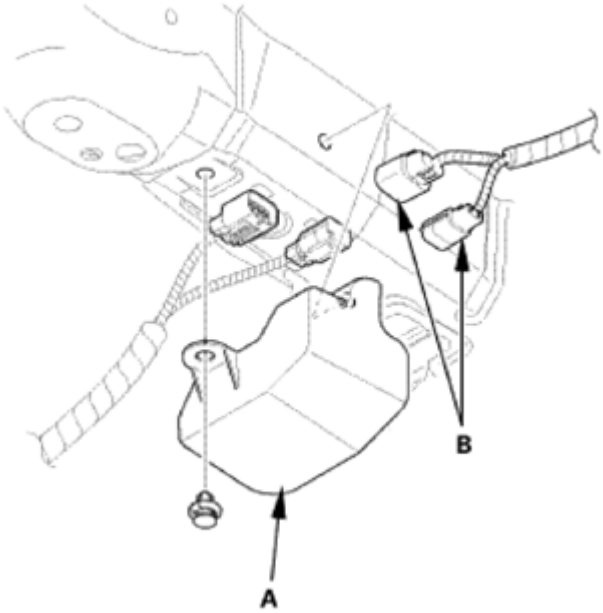

Fig. 244: Identifying Connector Cover And Connectors

3. Release the harness clips (A).

GETtheMANUALS.org

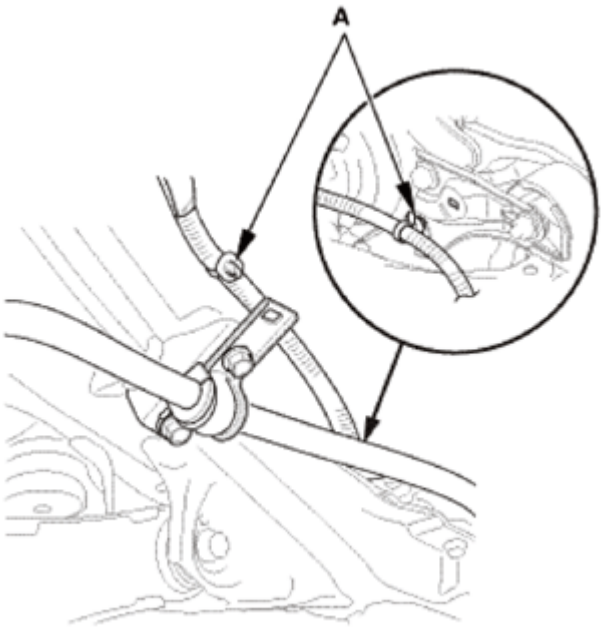

Fig. 245: Identifying Rear Differential Connector Harness Clips

5. Rear Differential Breather Hoses
    1. Disconnect the breather hoses (A) from the breather pipes (B) and clamps (C).

Differential upper side

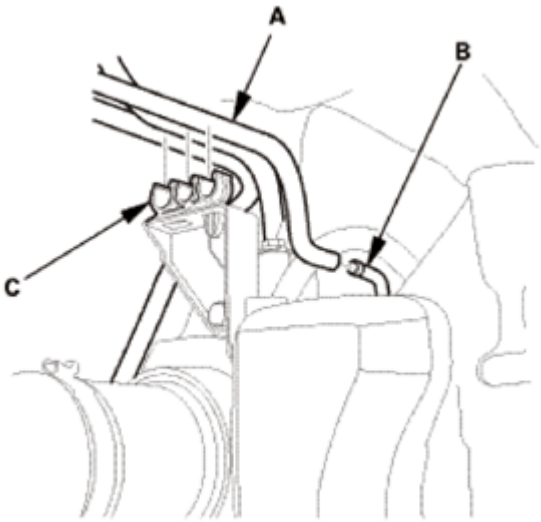

Fig. 246: Identifying Breather Hoses, Breather Pipes And Clamps

Pump motor side

GETtheMANUALS.org

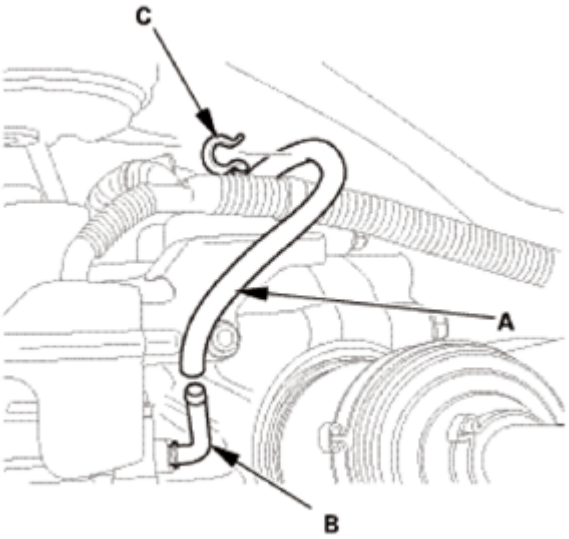

Fig. 247: Identifying Breather Hoses, Breather Pipes And Clamps (Pump Motor Side)

2. Disconnect the breather hose (A) from the clamp (B).

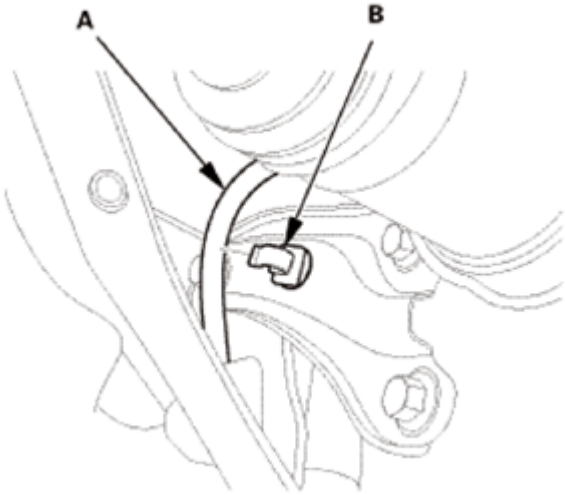

Fig. 248: Identifying Breather Hose And Clamp

6. Rear Differential Jack Support
    1. Place a transmission jack under the rear differential assembly.
7. Rear Differential Mount Bracket
    1. Remove the left and right rear differential mount brackets B.

GETtheMANUALS.org

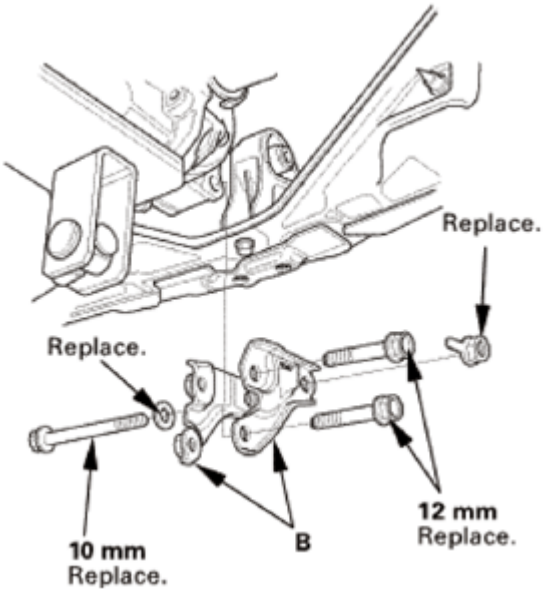

Fig. 249: Identifying Left And Right Rear Differential Mount Brackets With Bolts

2. Remove the mounting bolts (A) and the plates (B).

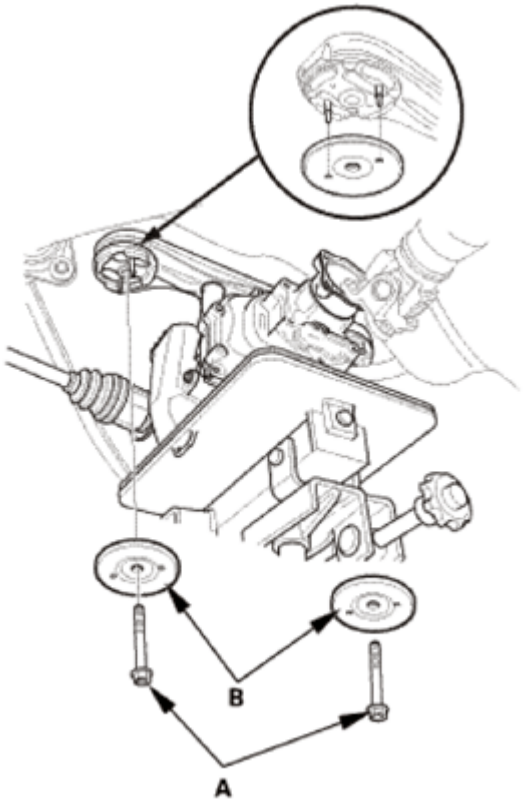

Fig. 250: Identifying Mounting Bolts And Plates

8. Rear Driveshaft Inboard Side Both - Disconnection

GETtheMANUALS.org

1. Lower the rear differential assembly (A) while pulling both rear driveshaft inboard joints (B) out of the rear differential assembly.

NOTE:

- **Be careful not to damage the driveshaft ring (C) when prying out the driveshaft inboard joints.**
- **Be careful not to damage the oil seals (D).**

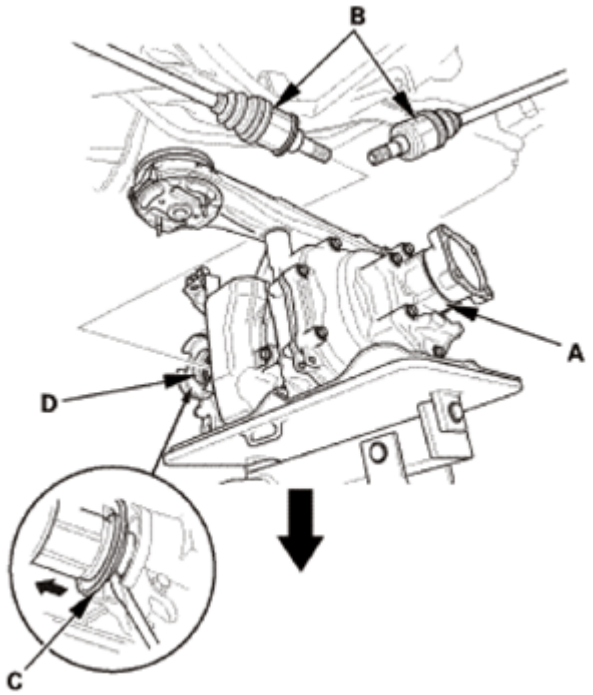

Fig. 251: Pulling Both Rear Driveshaft Inboard Joints Out Of Rear Differential Assembly

2. Remove the set ring (A) from inboard joint.

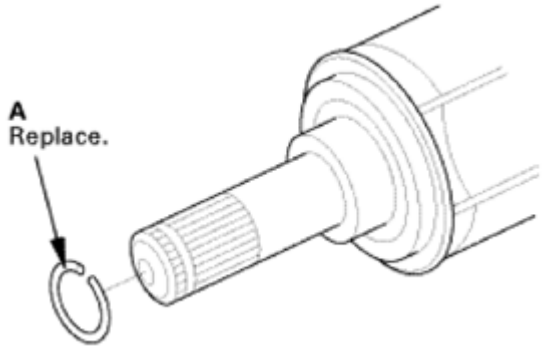

Fig. 252: Identifying Inboard Joint Set Ring

9. Rear Differential Assembly
   1. Remove the rear differential mount assembly A from the rear differential assembly (B).

GETtheMANUALS.org

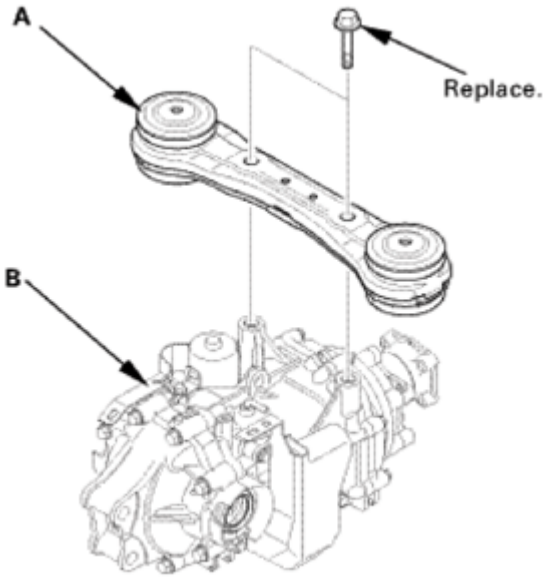

Fig. 253: Identifying Rear Differential Mount Assembly And Rear Differential Assembly With Torque Specifications

10. Rear Differential Harness Bracket
    1. Remove the harness clip (A) and the harness bracket (B).

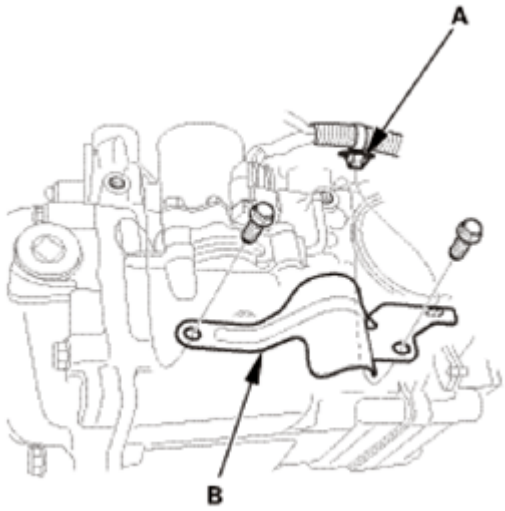

Fig. 254: Identifying Harness Clip And Harness Bracket

11. Rear Differential Motor Connector
    1. Disconnect the connector (A).

GETtheMANUALS.org

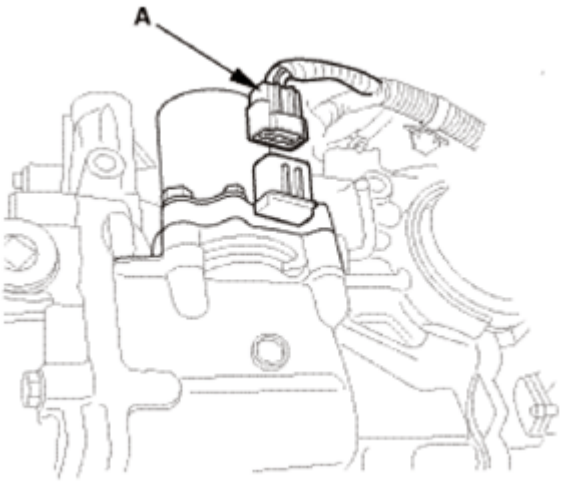

Fig. 255: Identifying Rear Differential Motor Connector

12. Rear Differential Motor Assembly
    1. Remove the rear differential pump motor (A) and the O-ring (B).

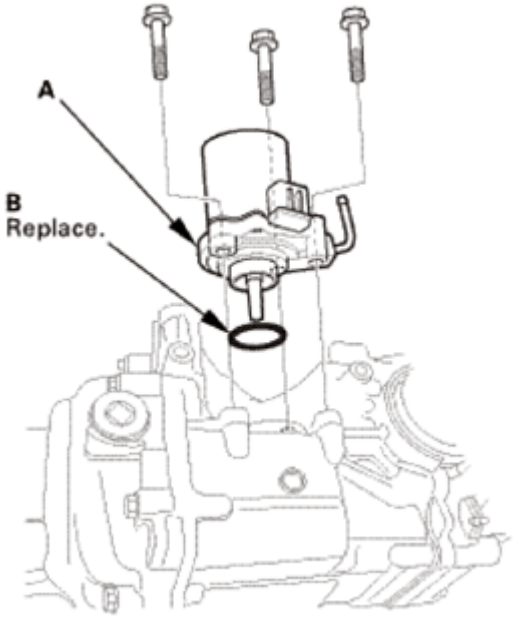

Fig. 256: Identifying Rear Differential Pump Motor And O-Ring

13. Rear Differential Sensor Cover
    1. Remove the rear differential sensor cover (A).

GETtheMANUALS.org

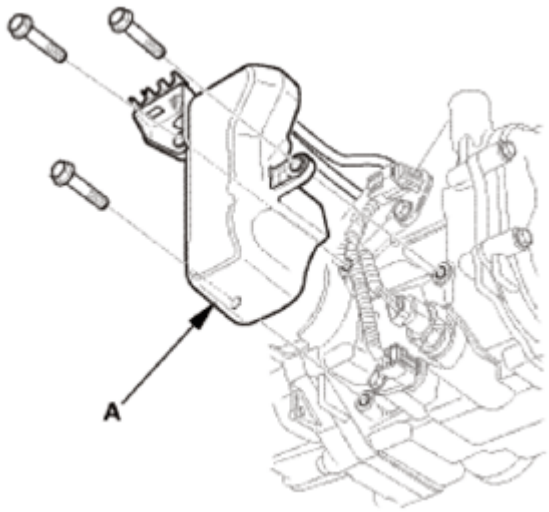

Fig. 257: Identifying Rear Differential Sensor Cover

14. Rear Differential Fluid Temperature Sensor Connector
    1. Disconnect the connector (A).

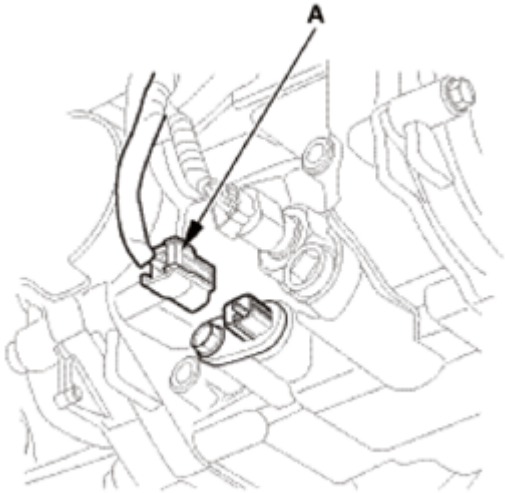

Fig. 258: Identifying Rear Differential Fluid Temperature Sensor Connector

15. Rear Differential Fluid Temperature Sensor
    1. Remove the rear differential fluid temperature sensor (A) and the O-ring (B).

GETtheMANUALS.org

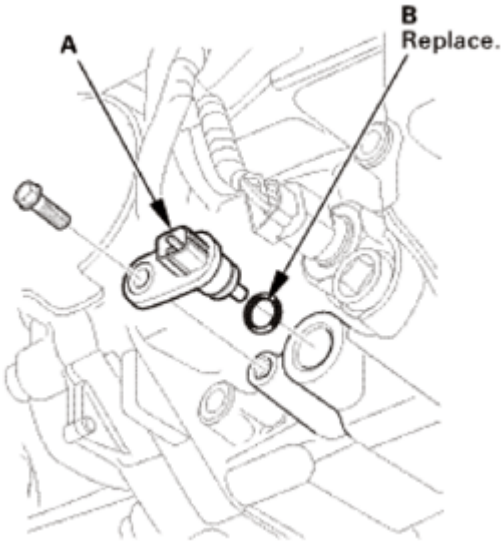

Fig. 259: Identifying Rear Differential Fluid Temperature Sensor And O-Ring

16. Rear Differential Fluid Pressure Sensor Connector
    1. Disconnect the connector (A).

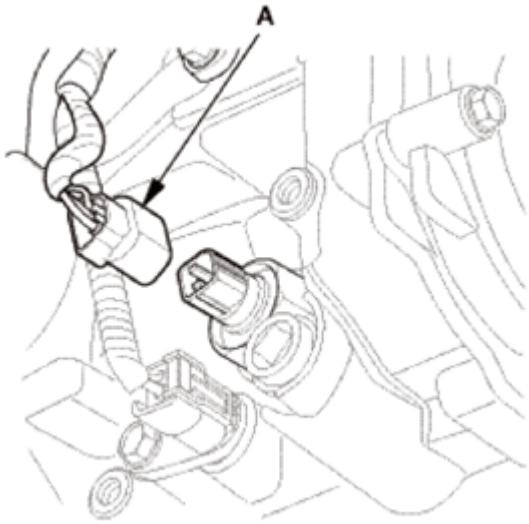

Fig. 260: Identifying Rear Differential Fluid Pressure Sensor Connector

17. Rear Differential Fluid Pressure Sensor
    1. Remove the rear differential fluid pressure sensor (A) and the O-ring (B).

GETtheMANUALS.org

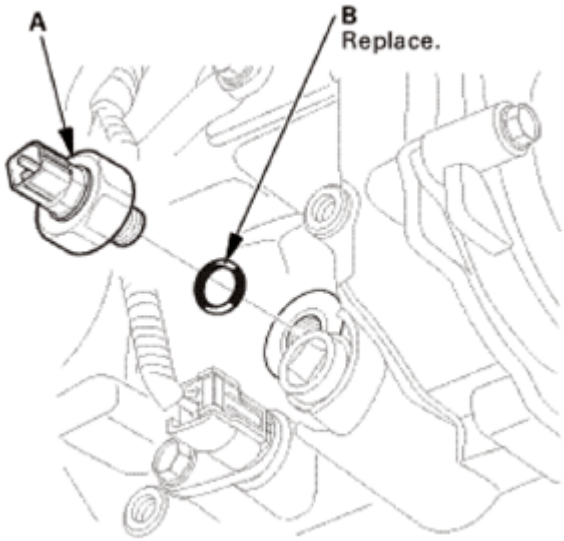

Fig. 261: Identifying Rear Differential Fluid Pressure Sensor And O-Ring

18. Rear Differential Solenoid Valve Connector
    1. Disconnect the connector (A).

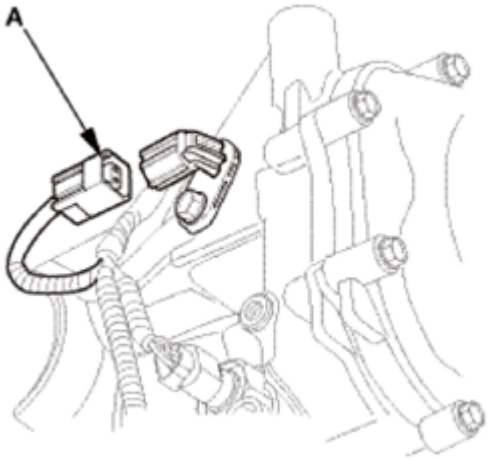

Fig. 262: Identifying Rear Differential Solenoid Valve Connector

    2. Remove the rear differential solenoid valve connector (A).

GETtheMANUALS.org

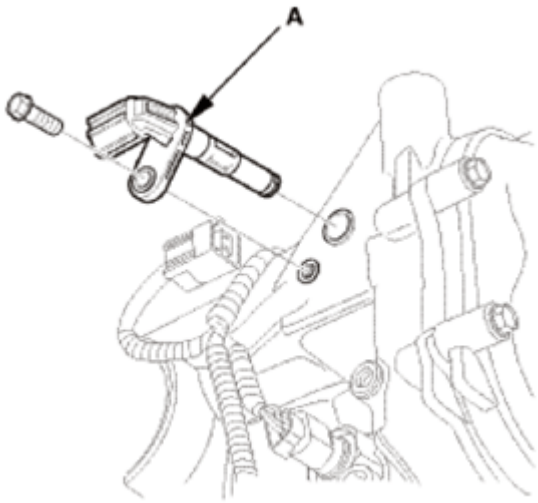

Fig. 263: Identifying Rear Differential Solenoid Valve Connector

19. Rear Differential Subharness
    1. Disconnect the ground terminal (A).
    2. Remove the rear differential subharness (B).

Except 13M, canada-built models

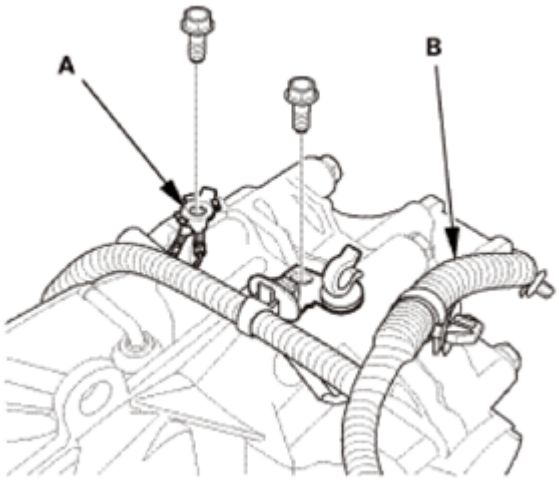

Fig. 264: Identifying Rear Differential Subharness And Ground Terminal (Except 13M, Canada-Built Models)

13M, canada-built models

GETtheMANUALS.org

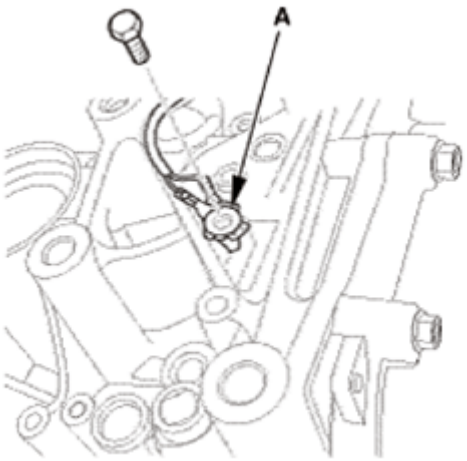

Fig. 265: Identifying Ground Terminal (13M, Canada-Built Models)

13M, canada-built models

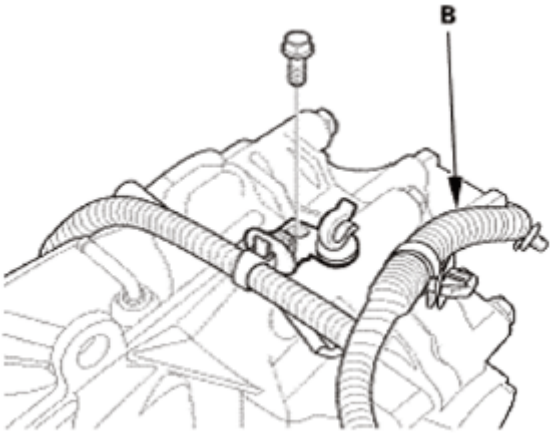

Fig. 266: Identifying Ground Terminal (13M, Canada-Built Models)

3. 13M canada-built models: Remove the hose bracket (A) from the rear differential.

GETtheMANUALS.org

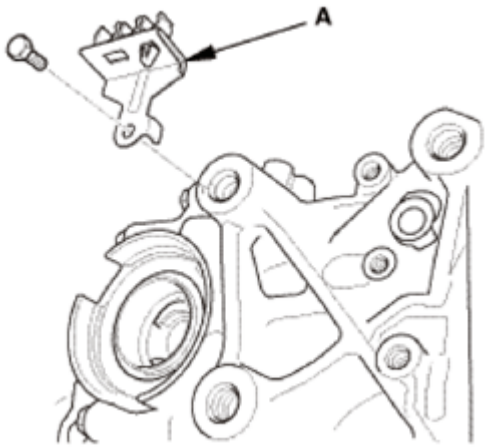

Fig. 267: Identifying Hose Bracket

20. Rear Differential Companion Flange
    1. Pry up the stake on the locknut (A) from the groove of the clutch guide, making sure the tab completely clears the groove to prevent damaging the clutch guide.

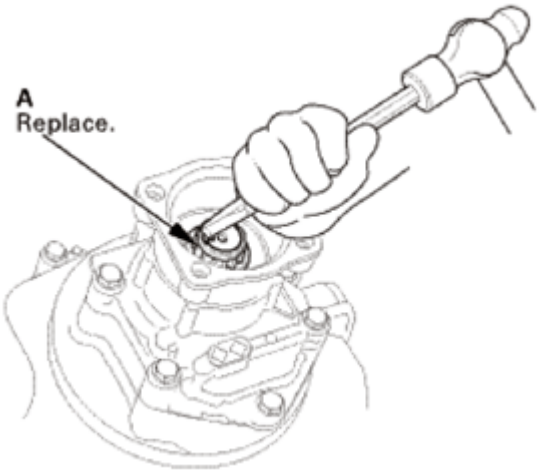

Fig. 268: Prying Up Stake On Locknut Clutch Groove

    2. Install the companion flange holder (A) and holder handle (B) on the companion flange.

GETtheMANUALS.org

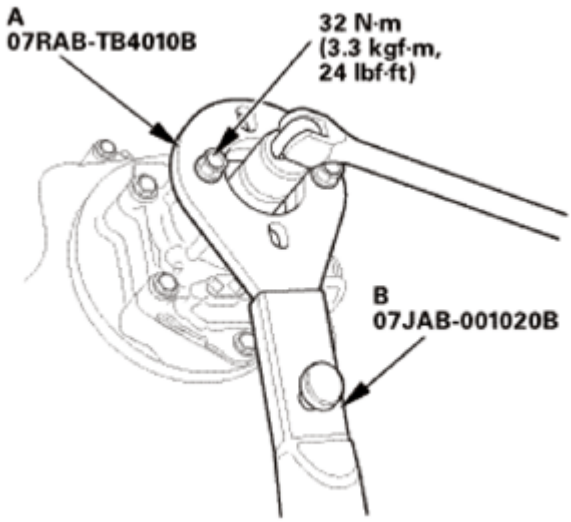

Fig. 269: Installing Companion Flange Holder And Holder Handle With Torque Specifications

3. Loosen the locknut (A) counterclockwise so its tab (B) comes out from the groove (C) in the clutch guide.

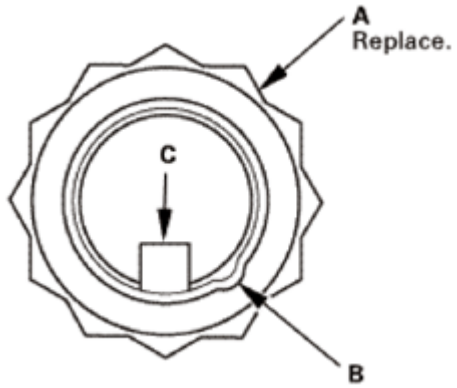

Fig. 270: Identifying Locknut, Tab, Clutch Guide Groove

4. Tighten the locknut (A) until its tab (B) aligns with the groove (C).
5. Clean any dirt from inside the groove in the clutch guide, then loosen the locknut.

GETtheMANUALS.org

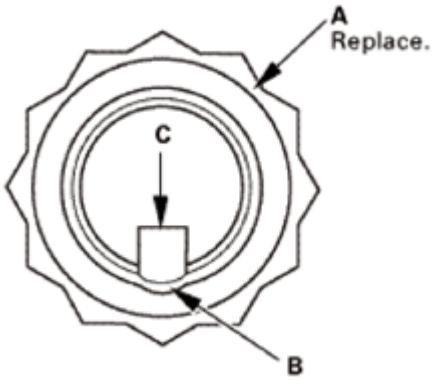

Fig. 271: Identifying Locknut, Tab, Clutch Guide Groove

6. Remove the locknut (A), the spring washer (B), the back-up ring (C), and the O-ring (D).

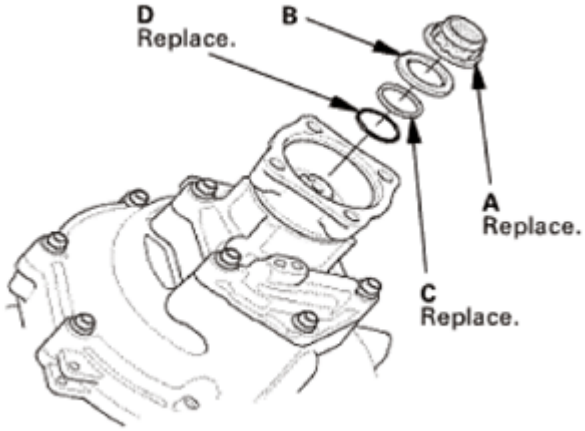

Fig. 272: Identifying Locknut, Spring Washer, Back-Up Ring And O-Ring

7. Remove the companion flange (A) with a commercially available puller.

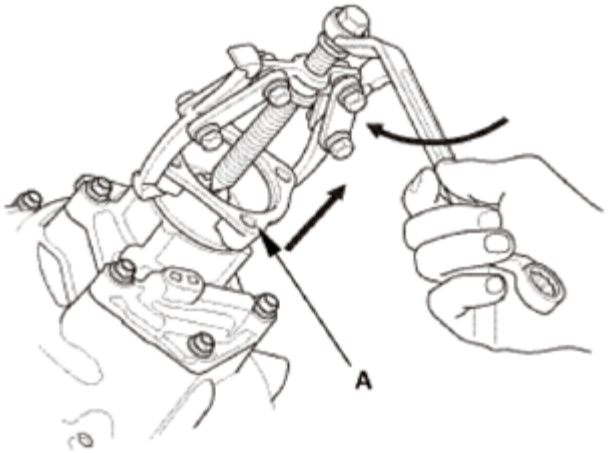

Fig. 273: Removing Companion Flange Using Puller

GETtheMANUALS.org

21. Oil Pump Cover
    1. Remove the oil pump cover (A) and oil pump cover seal (B).
    2. Remove the inner rotor (C) and the outer rotor (D).
    3. Remove the fluid strainer (E) and the dowel pins (F).

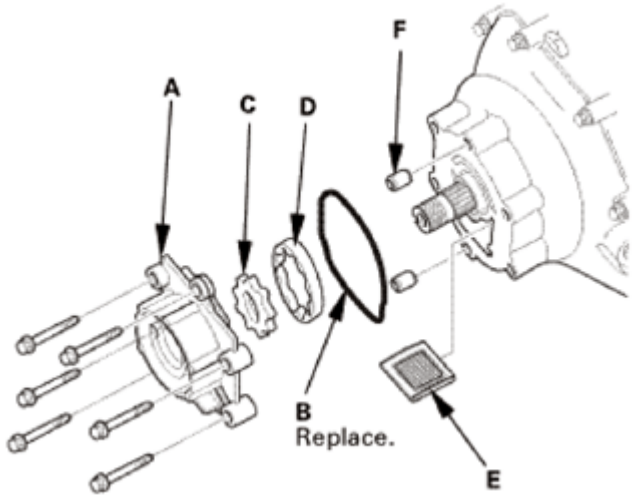

Fig. 274: Identifying Oil Pump Cover, Seal, Inner And Outer Rotor, Fluid Strainer And Dowel Pins

22. Oil Pump Case
    1. Remove the oil pump case (A).
    2. Remove the dowel pins (B).

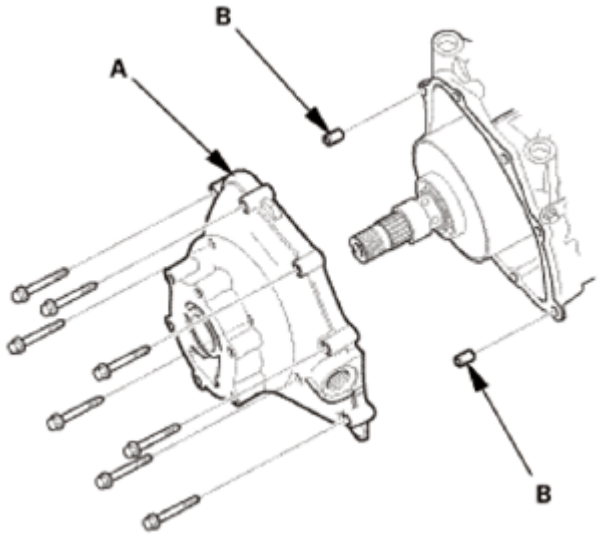

Fig. 275: Identifying Oil Pump Case And Dowel Pins

23. Rear Differential Clutch Assembly

GETtheMANUALS.org

1. Remove the baffle cover (A).
2. Remove the differential clutch assembly (B).

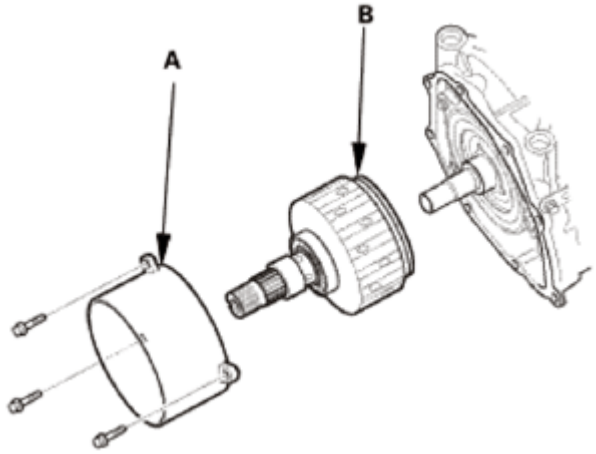

Fig. 276: Identifying Differential Clutch Assembly And Baffle Cover

24. Oil Pump Body Assembly
    1. Remove the 32.3 mm shim (A).
    2. Remove the 94.6 mm shim (B).

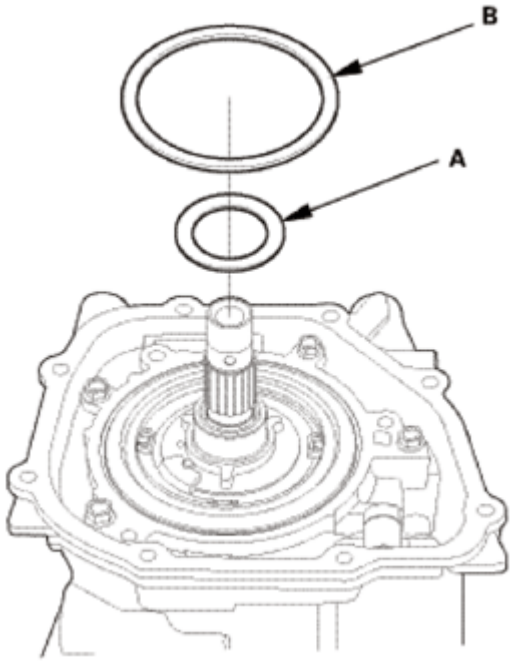

Fig. 277: Identifying Oil Pump Body Assembly Shim

3. Remove the oil pump body assembly (A).
4. Remove the dowel pins (B) and the O-ring (C).

GETtheMANUALS.org

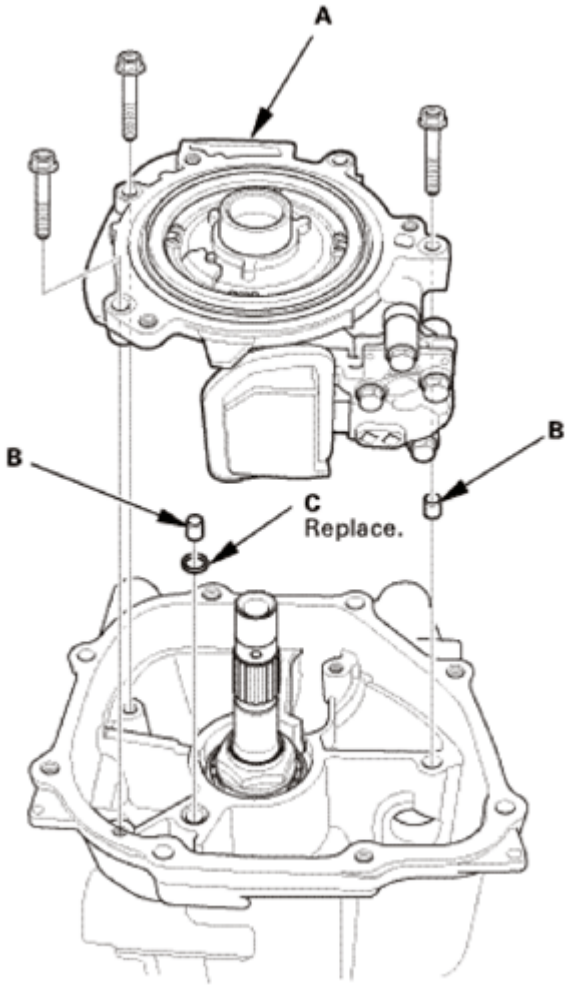

Fig. 278: Identifying Oil Pump Body Assembly, Dowel Pins And O-Ring

25. Rear Differential Solenoid Valve
    1. Remove the rear differential solenoid valve (A), the O-ring (B), and the square washer (C) from the oil pump body assembly (D).

GETtheMANUALS.org

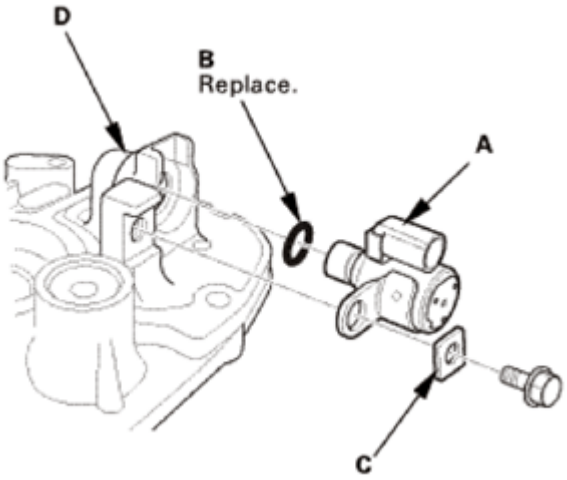

Fig. 279: Identifying Oil Pump Body Assembly, Rear Differential Solenoid Valve, O-Ring, Square Washer

TEST

1. Rear Differential Solenoid Valve - Test
    1. Connect the tube (A) to the rear differential solenoid valve (B).
    2. Blown the air to the tube.
        - If the air flows out of the port, go to step 3.
        - If the air does not flow out of the port, replace the rear differential solenoid valve.

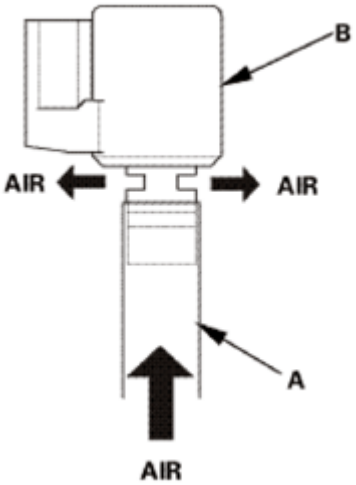

Fig. 280: Connecting Tube To Rear Differential Solenoid Valve

    3. Connect a jumper wire from the negative battery terminal to the rear differential solenoid valve body, and connect another jumper wire from the positive battery terminal to connector terminal No. 1.
    4. Blown the air to the tube.

GETtheMANUALS.org

- If the air flows out of the port, replace the rear differential solenoid valve.
- If the air does not flow out of the port, the rear differential solenoid valve is OK, and the test is complete.

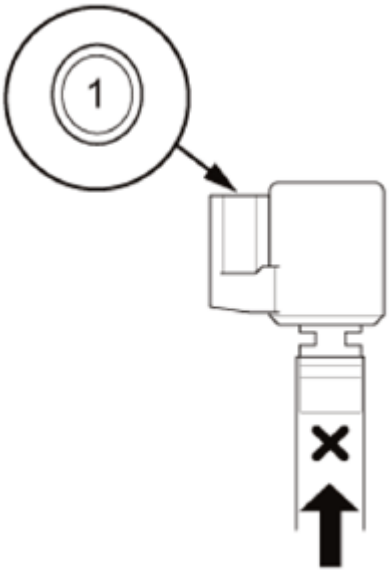

Fig. 281: Blowing Air To Tube

INSTALLATION

1. Rear Differential Solenoid Valve
    1. Apply Dual Pump Fluid II to a new O-ring (A).
    2. Install the rear differential solenoid valve (B) with the O-ring, and the square washer (C).

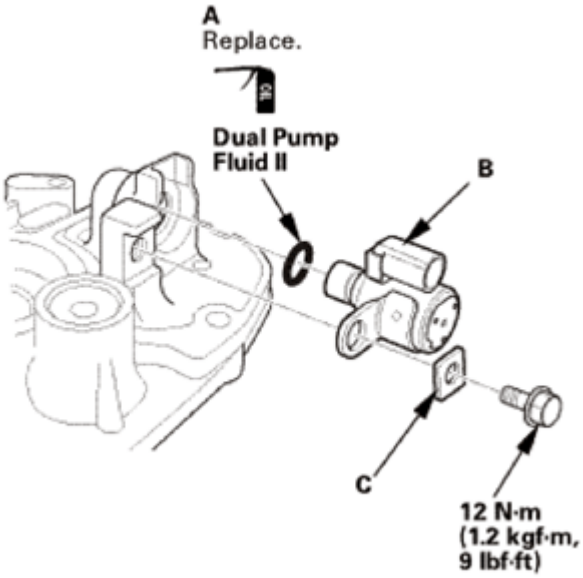

GETtheMANUALS.org

Fig. 282: Identifying Rear Differential Solenoid Valve, O-Ring And Square Washer

2. Oil Pump Body Assembly
    1. Apply Dual Pump Fluid II to a new O-ring (A).
    2. Install the dowel pins (B) with the O-ring.
    3. Install the oil pump body assembly (C).

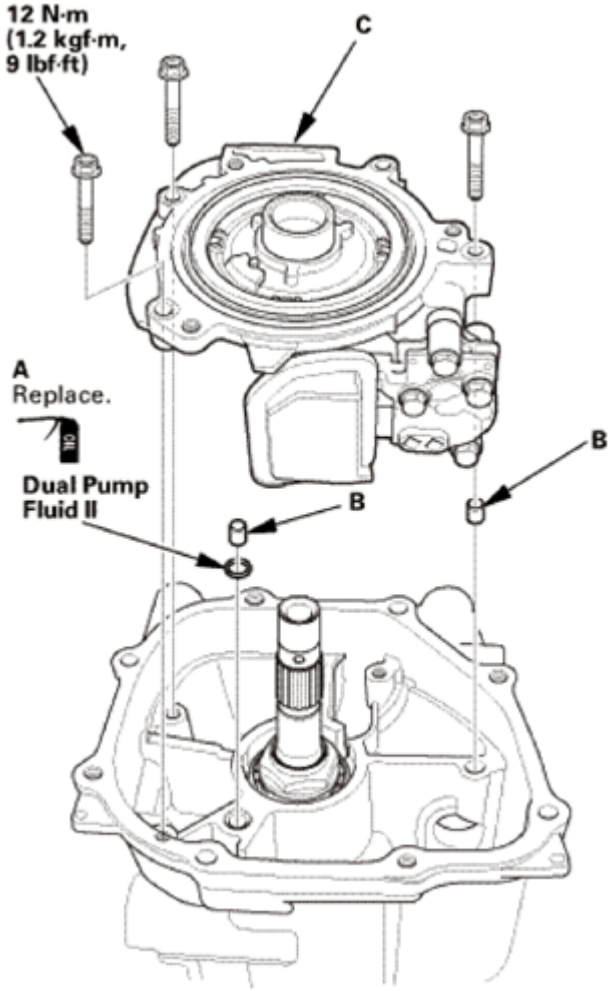

Fig. 283: Identifying Oil Pump Body Assembly, Dowel Pins With O-Ring

4. Install the 32.3 mm shim (A).
5. Install the 94.6 mm shim (B).

GETtheMANUALS.org

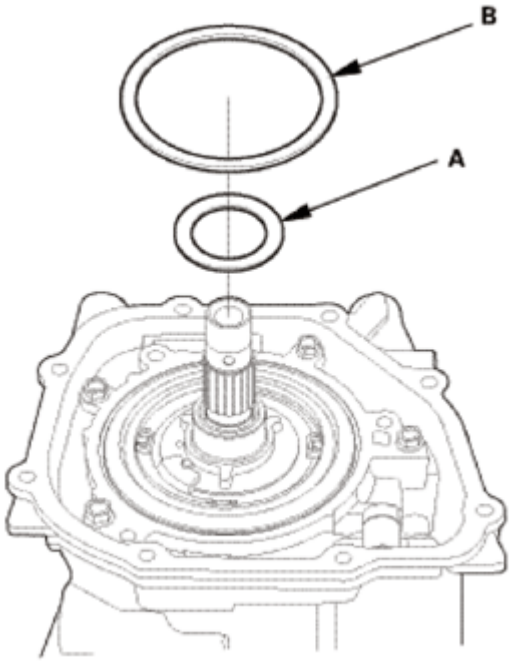

Fig. 284: Identifying Oil Pump Body Assembly Shim

3. Rear Differential Clutch Assembly
    1. Install the differential clutch assembly (A).
    2. Install the baffle cover (B).

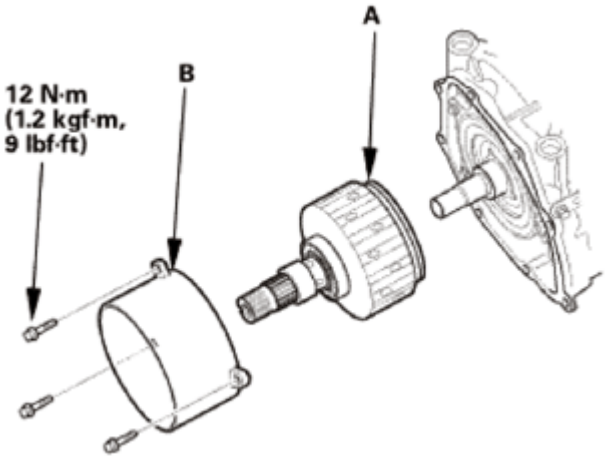

Fig. 285: Identifying Differential Clutch Assembly And Baffle Cover

4. Oil Pump Case
    1. Remove the dirt and oil from the sealing surfaces.
    2. Apply liquid gasket (P/N 08718-0004 or 08718-0009) evenly to the sealing surface.
    3. Install the component within 5 minutes of applying the liquid gasket. Make sure you seal the entire circumference of the bolt holes to prevent fluid leakage.

GETtheMANUALS.org

NOTE:

- **If you apply liquid gasket P/N 08718-0012, the component must be installed within 4 minutes.**
- **If too much time has passed after applying the liquid gasket, remove the old liquid gasket and residue, then reapply the new liquid gasket.**
- **Allow it to cure at least 30 minutes after assembly before filling the differential with the recommended fluid.**

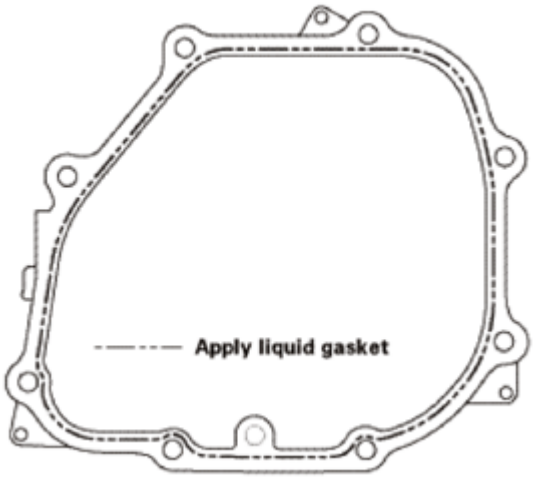

Fig. 286: Identifying Liquid Gasket Applying Area

4. Install the dowel pins (A).
5. Install the oil pump case (B).
6. Torque the eight mounting bolts in a crisscross pattern in several steps.

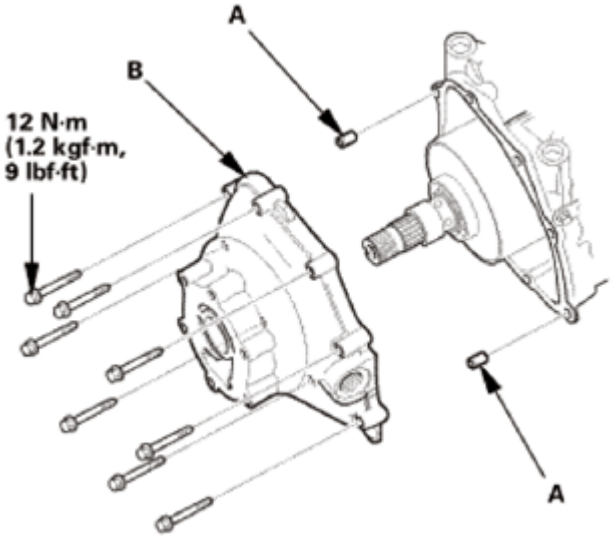

Fig. 287: Identifying Oil Pump Case, Dowel Pins With Torque Specifications

GETtheMANUALS.org

5. Oil Pump Cover
    1. Install the fluid strainer (A) and the dowel pins (B).
    2. Install the inner rotor (C) and the outer rotor (D) with the "." marks (E) facing the oil pump case side.
    3. Install the oil pump cover (F) with a new oil pump cover seal (G).
    4. Torque the six mounting bolts in a crisscross pattern in several steps.

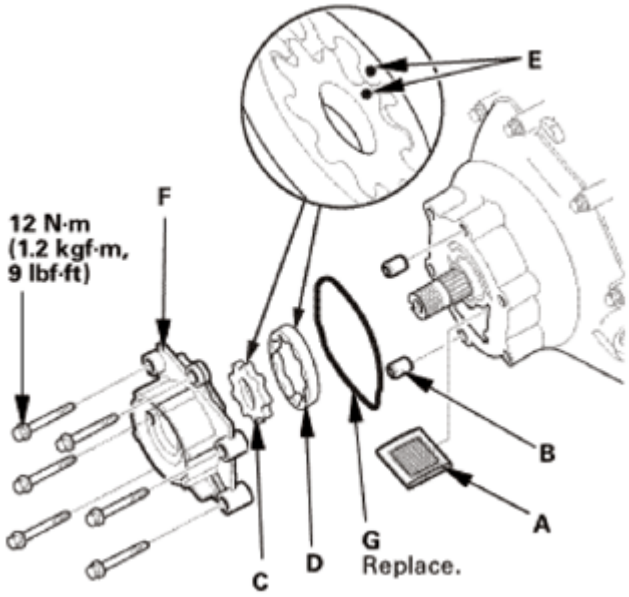

Fig. 288: Identifying Oil Pump Cover, Seal, Inner And Outer Rotor, Fluid Strainer And Dowel Pins

6. Rear Differential Companion Flange
    1. Set the companion flange (A) to the clutch guide shaft.
    2. Drive on the companion flange using the 41.8 mm oil seal driver.

GETtheMANUALS.org

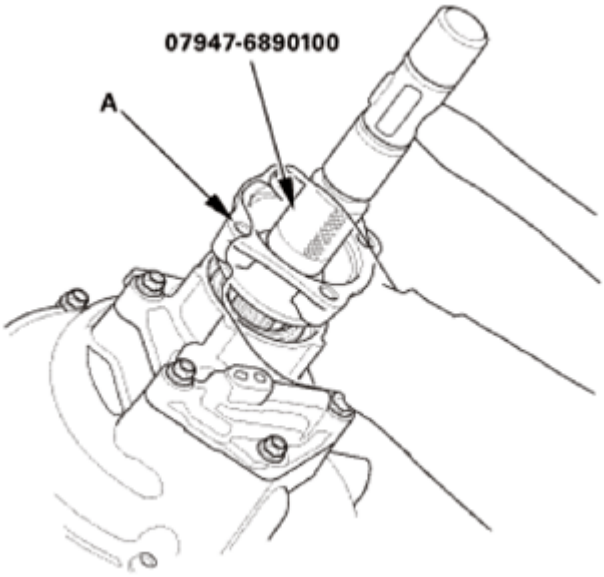

Fig. 289: Driving On Companion Flange Using Oil Seal Driver

3. Check the length of clutch guide shaft as shown.

NOTE: **Make sure to drive on the companion flange until 2 to 3 thread pitches of the clutch guide shaft appears.**

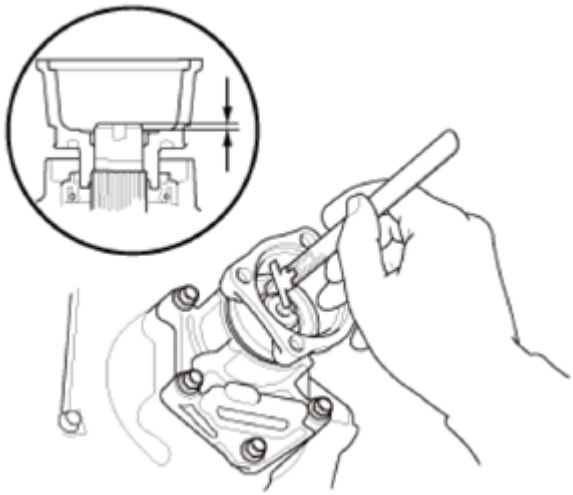

Fig. 290: Checking Length Of Clutch Guide Shaft Using Gauge

4. Apply Dual Pump Fluid II to the used locknut.
5. Set the used locknut to the clutch guide shaft.
6. Install the companion flange holder (A) and holder handle (B) on the companion flange.
7. Tighten the used locknut.
8. Remove the used locknut and the companion holder.

GETtheMANUALS.org

9. Check the companion flange has been set to the bottom.

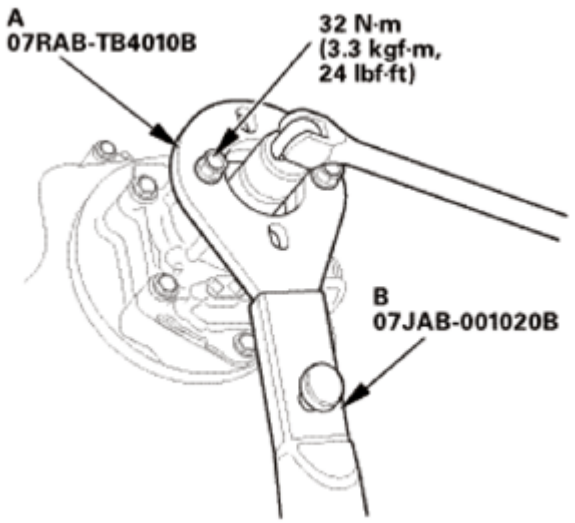

Fig. 291: Installing Companion Flange Holder And Holder Handle On Companion Flange

10. Apply Dual Pump Fluid II to a new O-ring (A).
11. Install the O-ring, a new back-up ring (B), the spring washer (C), and a new locknut (D).

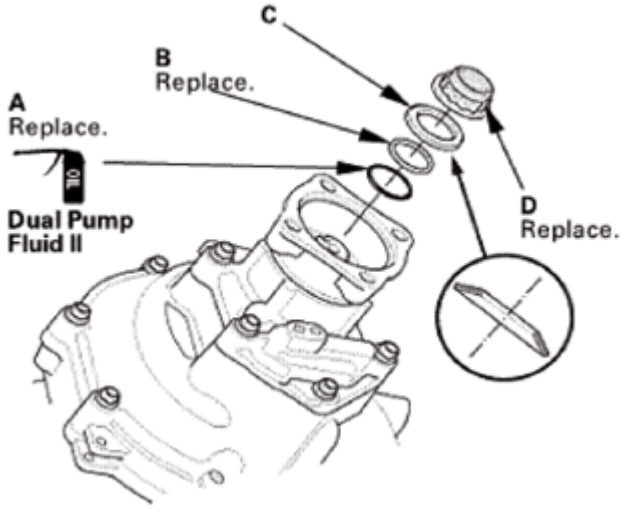

Fig. 292: Identifying O-Ring, Back-Up Ring, Spring Washer And Locknut

12. Install the companion flange holder (A) and holder handle (B) on the companion flange.
13. Tighten the locknut to the specified torque.

Specified Torque:

107.8 N.m (11.0 kgf.m, 80 lbf.ft)

GETtheMANUALS.org

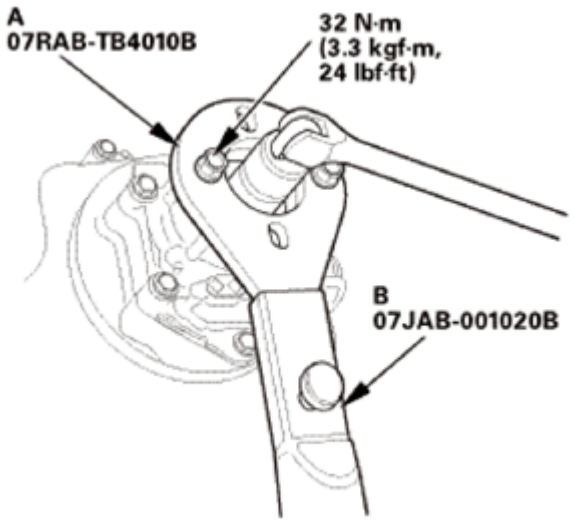

Fig. 293: Installing Companion Flange Holder And Holder Handle On Companion Flange

14. Stake the locknut tab (A) into the groove in the clutch guide.

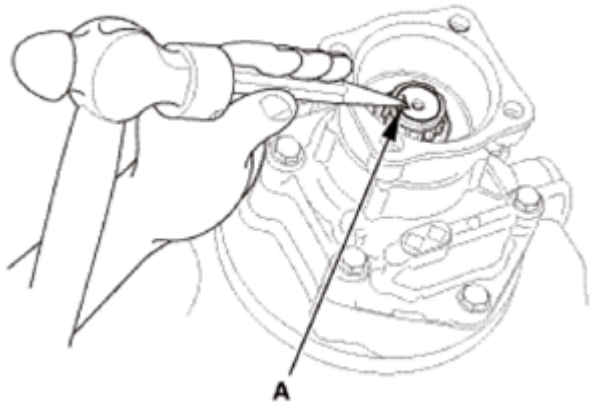

Fig. 294: Staking Locknut Tab Into Clutch Guide Groove

7. Rear Differential Subharness
    1. 13M canada-built models: Install the hose bracket (A) to the rear differential.

GETtheMANUALS.org

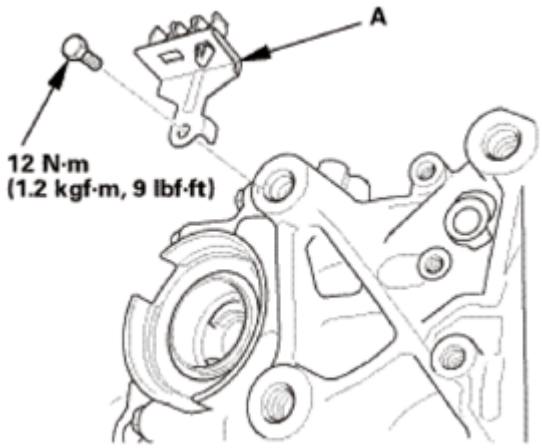

Fig. 295: Identifying Hose Bracket With Torque Specification (13M Canada-Built Models)

2. Install the rear differential subharness (A).
3. Connect the ground terminal (B).

Except 13M, canada-built models

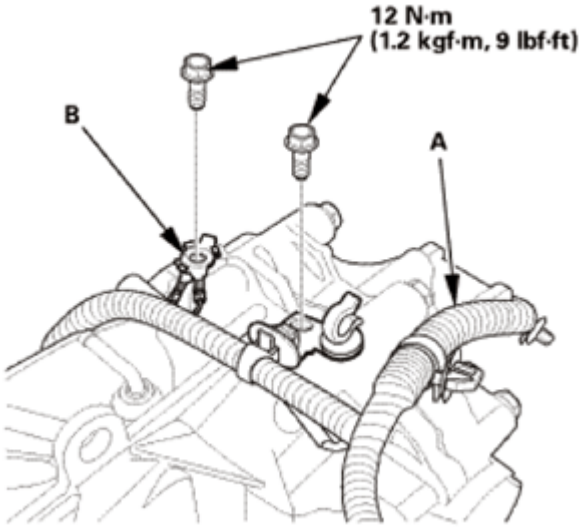

Fig. 296: Identifying Rear Differential Subharness And Ground Terminal

13M, canada-built models

GETtheMANUALS.org

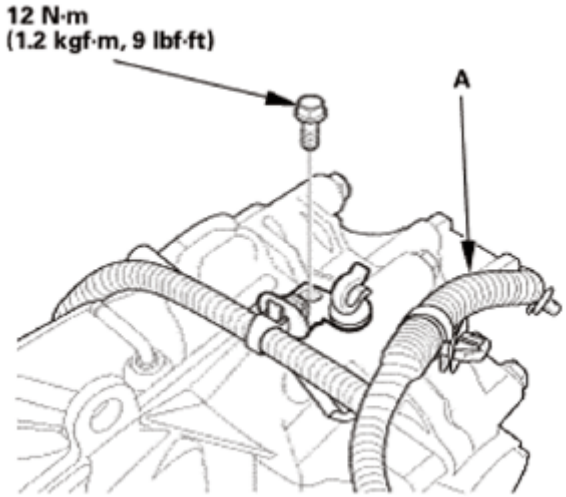

Fig. 297: Identifying Rear Differential Subharness With Torque Specification

13M, canada-built models

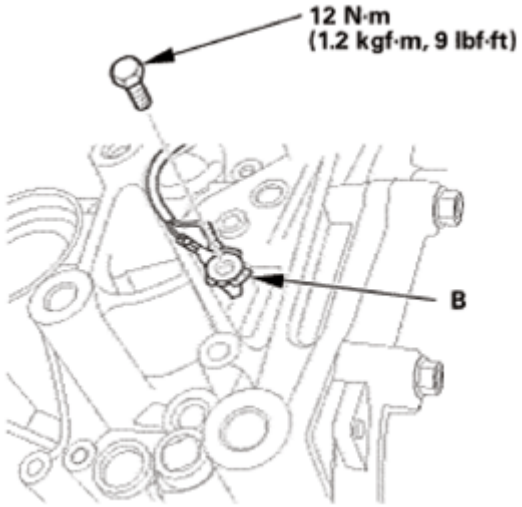

Fig. 298: Identifying Ground Terminal With Torque Specification

8. Rear Differential Solenoid Valve Connector
    1. Install the rear differential solenoid valve connector (A).

GETtheMANUALS.org

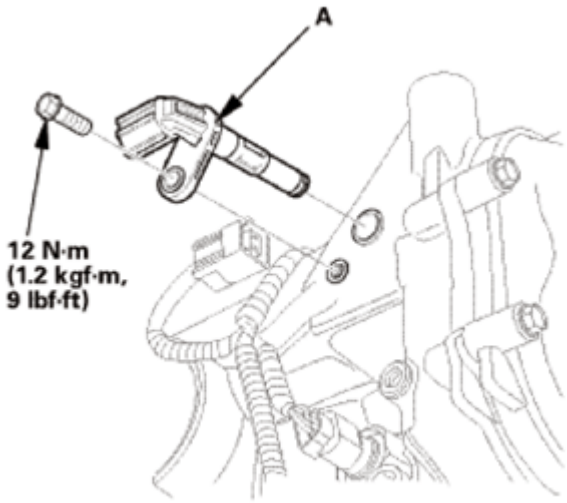

Fig. 299: Identifying Rear Differential Solenoid Valve Connector With Torque Specification

2. Connect the connector (A).

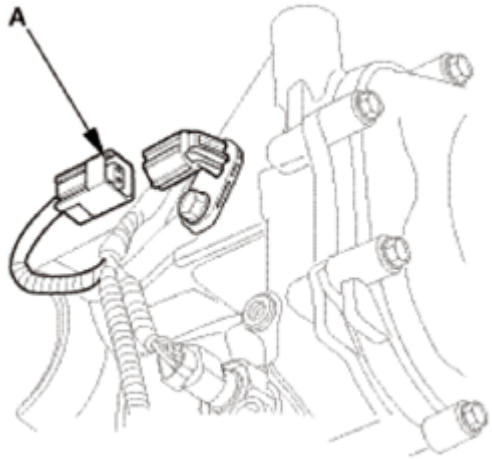

Fig. 300: Identifying Rear Differential Solenoid Valve Connector

9. Rear Differential Fluid Pressure Sensor
    1. Install the rear differential fluid pressure sensor (A) with a new O-ring (B).

GETtheMANUALS.org

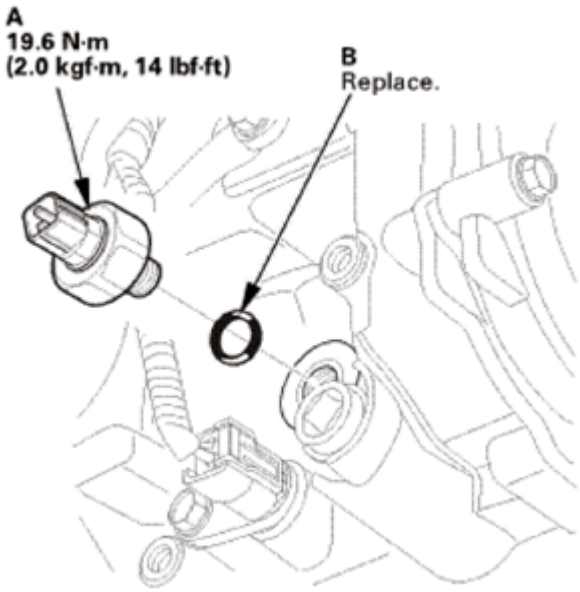

Fig. 301: Identifying Rear Differential Fluid Pressure Sensor With O-Ring And Torque Specification

10. Rear Differential Fluid Pressure Sensor Connector
    1. Connect the connector (A).

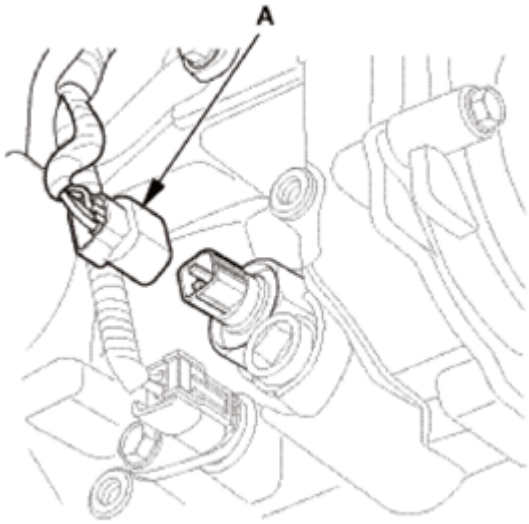

Fig. 302: Identifying Rear Differential Fluid Pressure Sensor Connector

11. Rear Differential Fluid Temperature Sensor
    1. Apply Dual Pump Fluid II to a new O-ring (A).
    2. Install the rear differential fluid temperature sensor (B) with the O-ring.

GETtheMANUALS.org

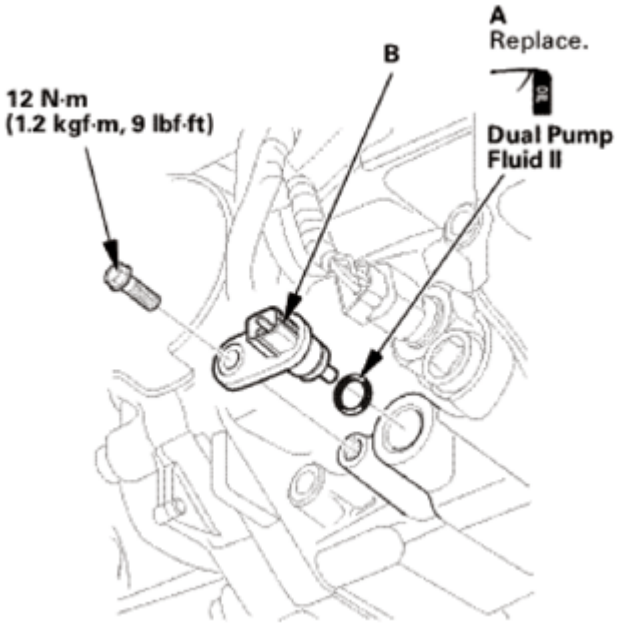

Fig. 303: Identifying Rear Differential Fluid Temperature Sensor And O-Ring

12. Rear Differential Fluid Temperature Sensor Connector
    1. Connect the connector (A).

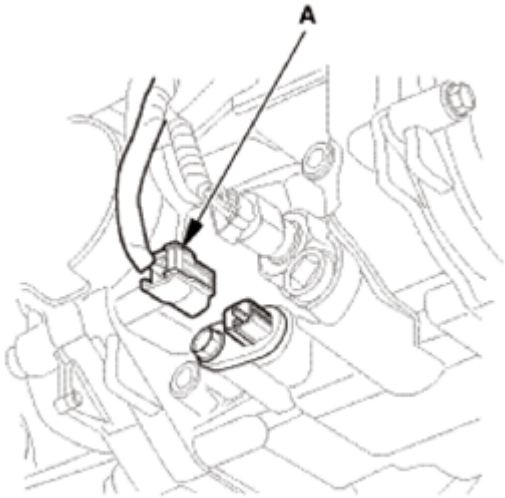

Fig. 304: Identifying Rear Differential Fluid Temperature Sensor Connector

13. Rear Differential Sensor Cover
    1. Install the rear differential sensor cover (A).
    2. Connect the breather hoses (B) to the clamps (C).

GETtheMANUALS.org

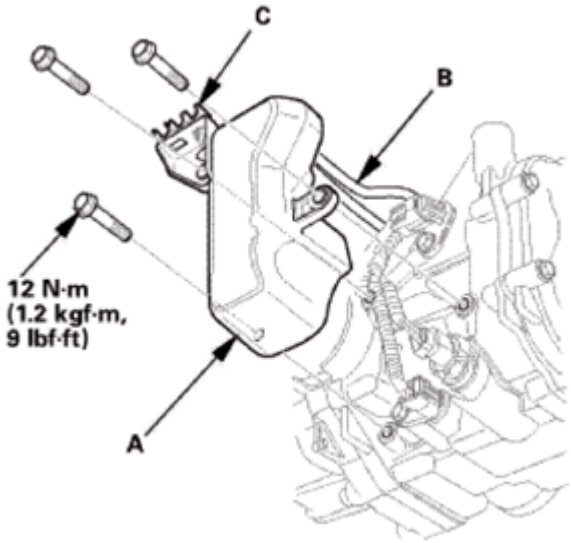

Fig. 305: Identifying Rear Differential Sensor Cover, Breather Hoses And Clamps With Torque Specifications

14. Rear Differential Motor Assembly
    1. Install the rear differential pump motor (A) with a new O-ring (B).

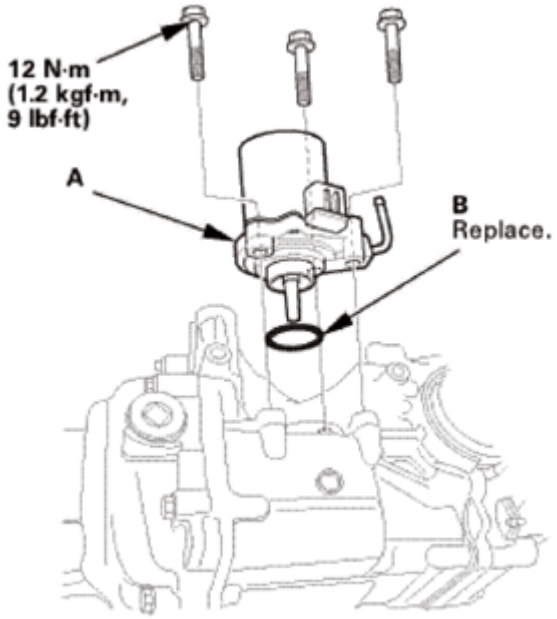

Fig. 306: Identifying Rear Differential Pump Motor And O-Ring

15. Rear Differential Motor Connector
    1. Connect the connector (A).

GETtheMANUALS.org

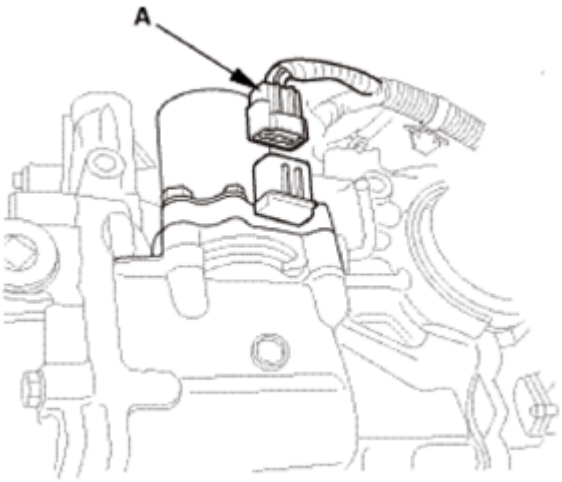

Fig. 307: Identifying Rear Differential Motor Connector

16. Rear Differential Harness Bracket
    1. Install the harness bracket (A) and the harness clip (B).

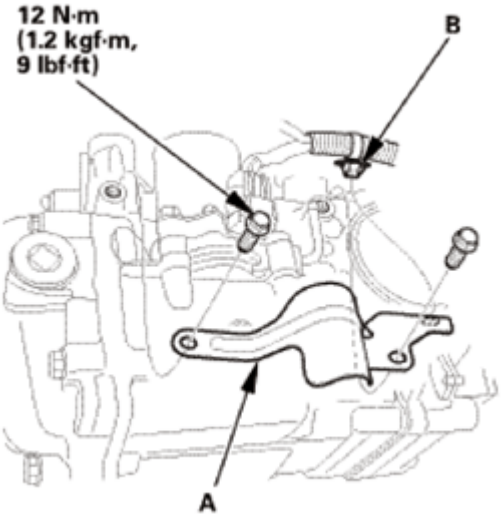

Fig. 308: Identifying Harness Bracket And Harness Clip With Torque Specification

17. Rear Differential Assembly
    1. Install the rear differential mount assembly A to the rear differential assembly (B) with new bolts.

GETtheMANUALS.org

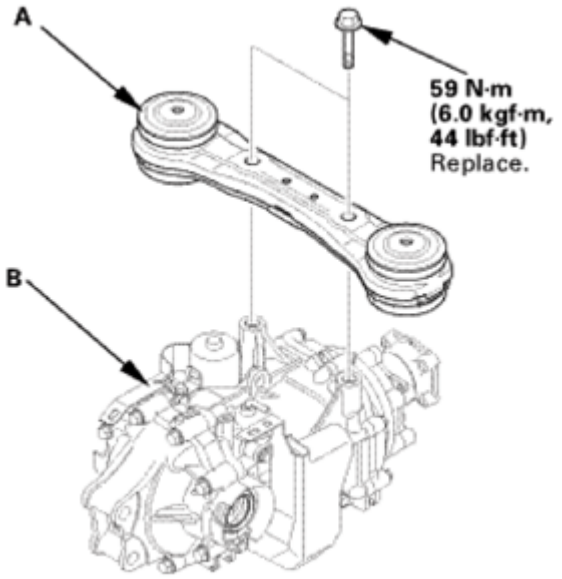

Fig. 309: Identifying Rear Differential Mount Assembly And Rear Differential Assembly With Torque Specifications

18. Rear Driveshaft Inboard Side Both - Reconnection
    1. Install new set ring (A) into the groove (B) of the rear driveshaft inboard joint on both side.

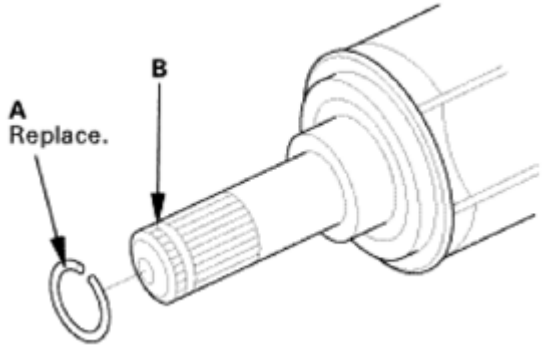

Fig. 310: Identifying Rear Driveshaft Inboard Side Ring And Groove

    2. Lift the rear differential assembly (A) up into position.
    3. Insert the inboard end (B) of the rear driveshafts (C) into the differential (D) until the set ring (E) locks in the groove (F).

NOTE: **Insert the driveshaft horizontally to prevent damaging the oil seals (G).**

GETtheMANUALS.org

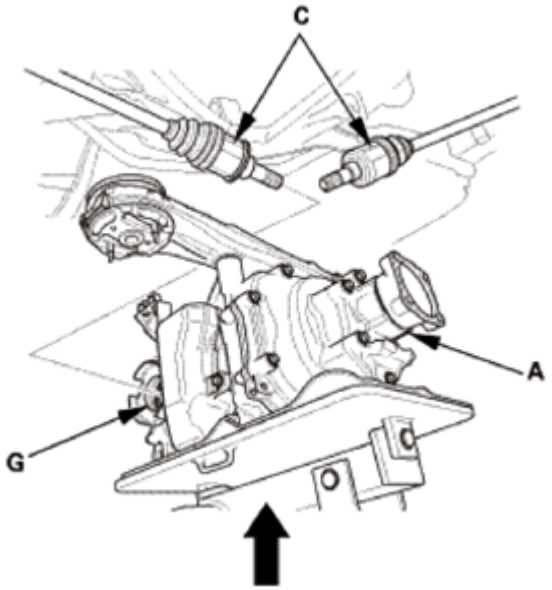

Fig. 311: Lifting Rear Differential Assembly

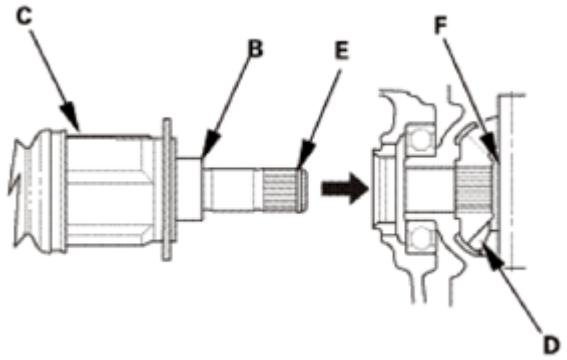

Fig. 312: Installing Inboard End Of Rear Driveshafts Into Differential

19. Rear Differential Mount Bracket
    1. Align the tabs (A) of the rubber mount (B) with the holes (C) of the plates (D).
    2. Install the rear differential mounting bolts (E).

GETtheMANUALS.org

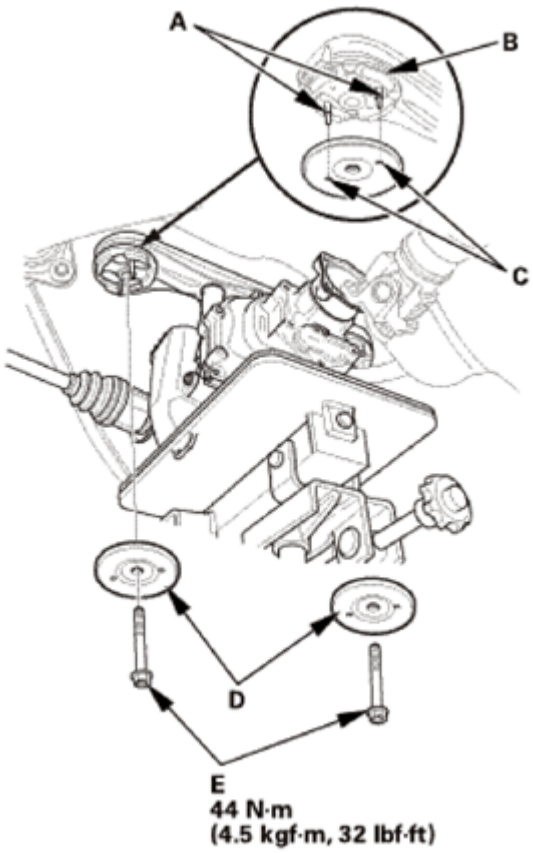

Fig. 313: Identifying Rear Differential Mounting Bolts, Tabs, Rubber Mount And Holes With Torque Specifications

3. Install the left and right rear differential mount brackets B.
4. Tighten new differential mount brackets B mounting bolts (A) to the specified torque.
5. Loosely install new differential mount brackets B mounting bolt (C).

GETtheMANUALS.org

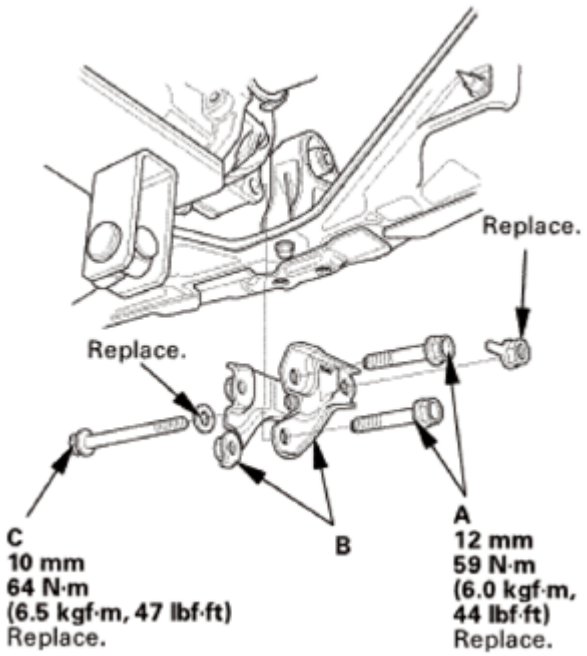

Fig. 314: Identifying Rear Differential Mount Brackets And Mounting Bolts With Torque Specifications

20. Rear Differential Mount Bolt - Tighten
    1. Lower the transmission jack.
    2. Tighten differential mount brackets B mounting bolt to the specified torque.
21. Rear Differential Breather Hoses
    1. Connect the breather hoses (A) to the breather pipes (B) and clamps (C).

Differential upper side

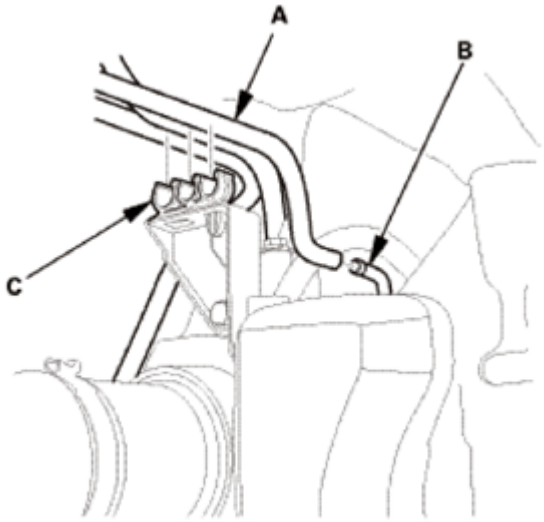

Fig. 315: Identifying Breather Hoses, Breather Pipes And Clamps

GETtheMANUALS.org

Pump motor side

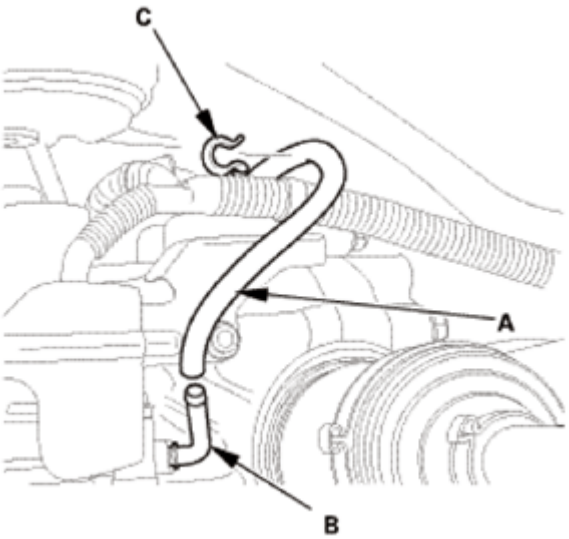

Fig. 316: Identifying Breather Hoses, Breather Pipes And Clamps (Pump Motor Side)

2. Connect the breather hose (A) to the clamp (B).

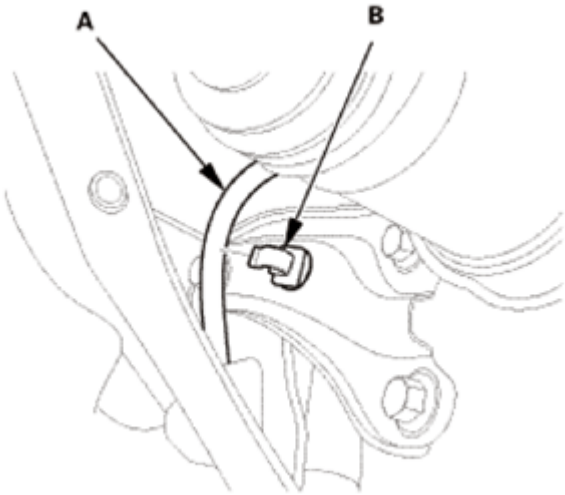

Fig. 317: Identifying Breather Hose And Clamp

22. Rear Differential Connector
    1. Install the harness clips (A).

GETtheMANUALS.org

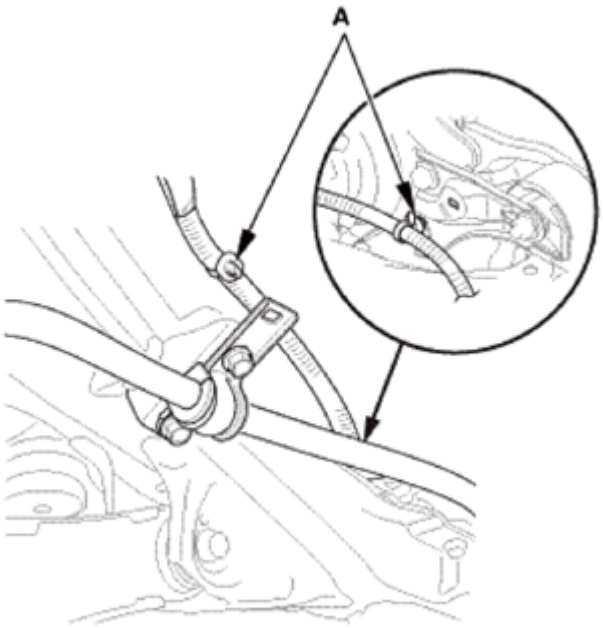

Fig. 318: Identifying Rear Differential Connector Harness Clips

2. Connect the connectors (A).
3. Install the connector cover (B).

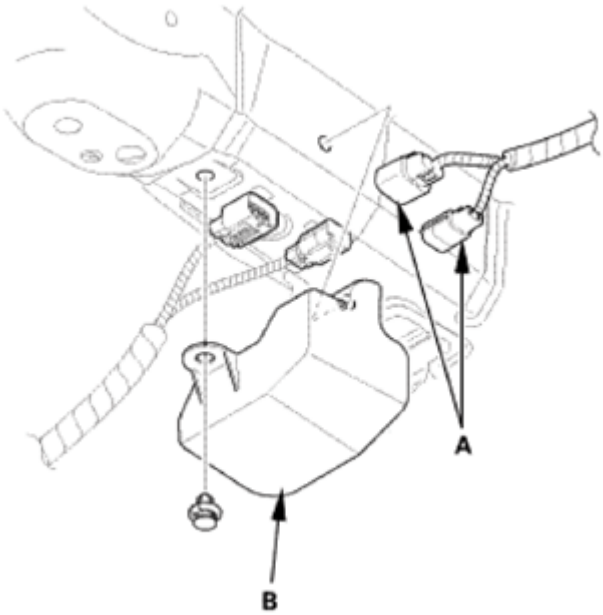

Fig. 319: Identifying Connector Cover And Connectors

23. Propeller Shaft Rear Differential Side - Disconnection (With Nylon Strap)
    1. Attach the No. 2 propeller shaft (A) to the rear differential companion flange (B) by aligning the reference mark (C) you made during the removal procedure.

GETtheMANUALS.org

2. Install new flange bolts (D) to the specified torque.

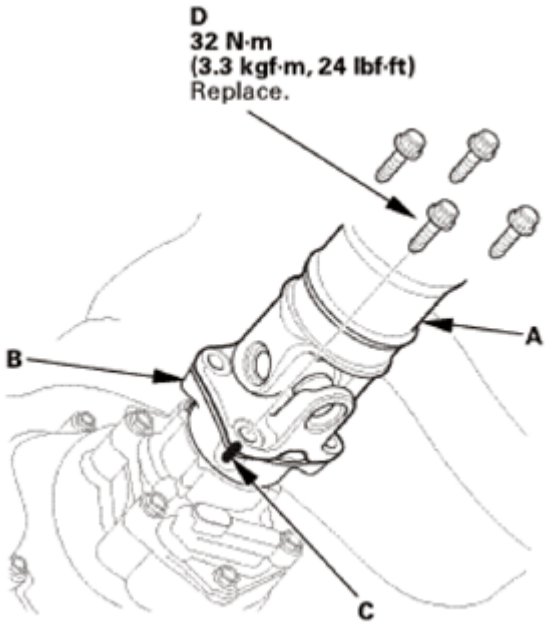

Fig. 320: Identifying Rear Differential Companion Flange, Reference Mark, Shaft And Bolts

24. Rear Differential Fluid - Replacement (Real Time AWD System)
    1. Clean the drain plug (A), then install it with a new sealing washer (B).
    2. Refill the differential with rear differential fluid to the proper level.

NOTE: **If you disassemble the differential, check the rear differential fluid level again after the 4WD system check is finished. Add fluid if necessary.**

Fluid Capacity:

1.2 L (1.3 US qt) at fluid change

1.5 L (1.6 US qt) at overhaul

Recommended fluid: Honda Dual Pump Fluid II

GETtheMANUALS.org

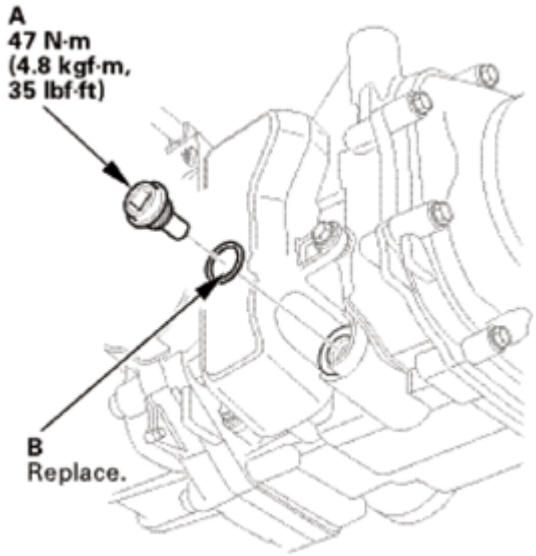

Fig. 321: Identifying Drain Plug And Sealing Washer (Real Time AWD System)

3. Install the oil filler plug (A) with a new sealing washer (B).

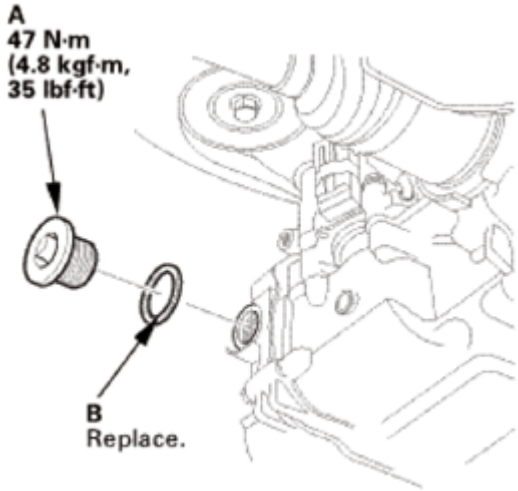

Fig. 322: Identifying Oil Filler Plug And Sealing Washer (Real Time AWD System)

25. Real Time AWD System Bleeding
    1. Select the ADJUSTMENT in the REAL TIME AWD SYSTEM with the HDS.
    2. Select the AIR BLEEDING in the ADJUSTMENT with the HDS.

NOTE: See the HDS Help menu for specific instructions.

26. Test Drive
    1. Test-drive the vehicle.
27. Maintenance Minder Reset

GETtheMANUALS.org

1. **RESET THE MAINTENANCE MINDER** .

GETtheMANUALS.org

REAR CONTROLLER AND SCREEN REMOVAL AND INSTALLATION

LON > 0101D7

REMOVAL

1. Rear Display Cover
    1. Turn the ceiling light switch OFF.
    2. Carefully pry off the lenses (A) with a flat-tip screwdriver.
    3. Remove the ceiling light (B).
    4. Disconnect the connector.

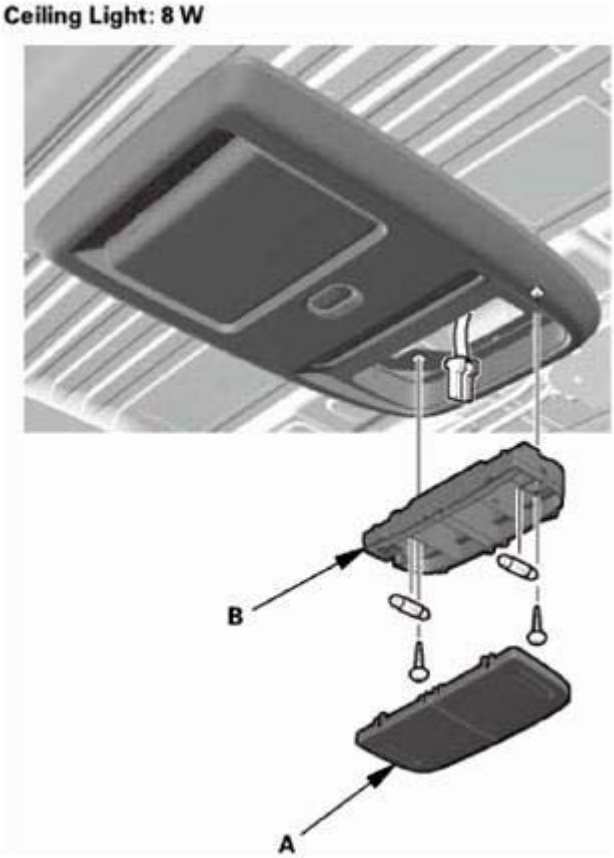

Fig. 1: Identifying Ceiling Light And Cover
Courtesy of AMERICAN HONDA MOTOR CO., INC.

5. Remove the rear display cover (A).

GETtheMANUALS.org

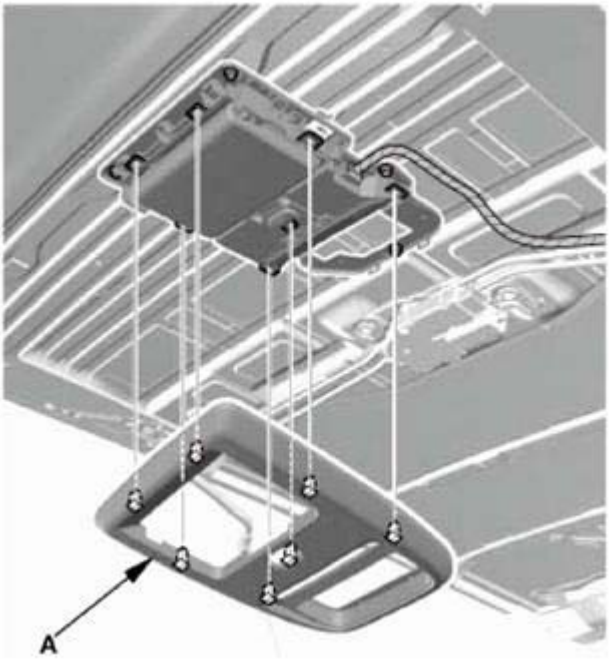

Fig. 2: Identifying Rear Display Cover
Courtesy of AMERICAN HONDA MOTOR CO., INC.

2. Rear Controller and Screen
    1. Disconnect the connector.
    2. Remove the rear controller and screen (A).

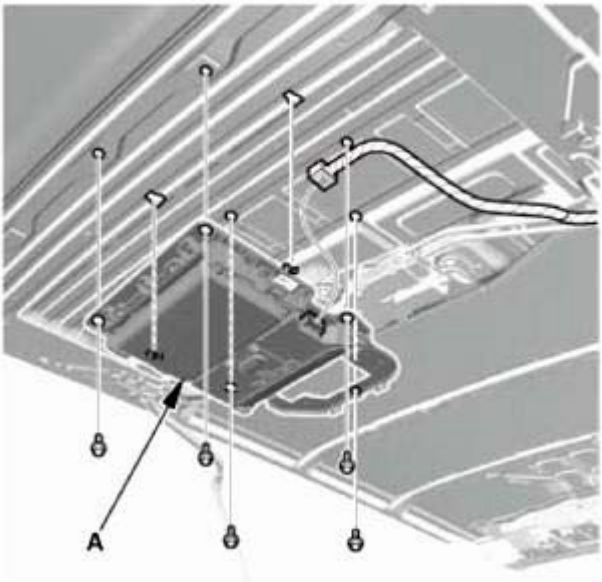

Fig. 3: Identifying Rear Controller And Screen
Courtesy of AMERICAN HONDA MOTOR CO., INC.

GETtheMANUALS.org

INSTALLATION

1. Rear Controller and Screen
    1. Install the rear controller and screen (A).
    2. Connect the connector.

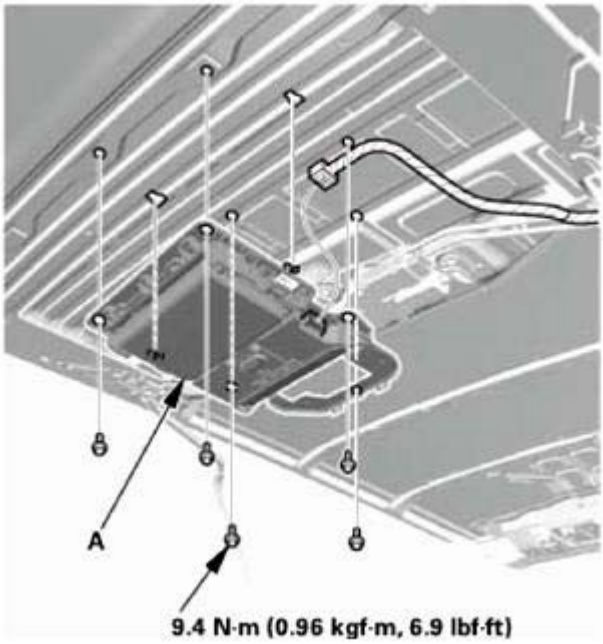

Fig. 4: Identifying Rear Controller And Screen With Torque Specifications
Courtesy of AMERICAN HONDA MOTOR CO., INC.

2. Rear Display Cover
    1. Install the rear display cover (A).

GETtheMANUALS.org

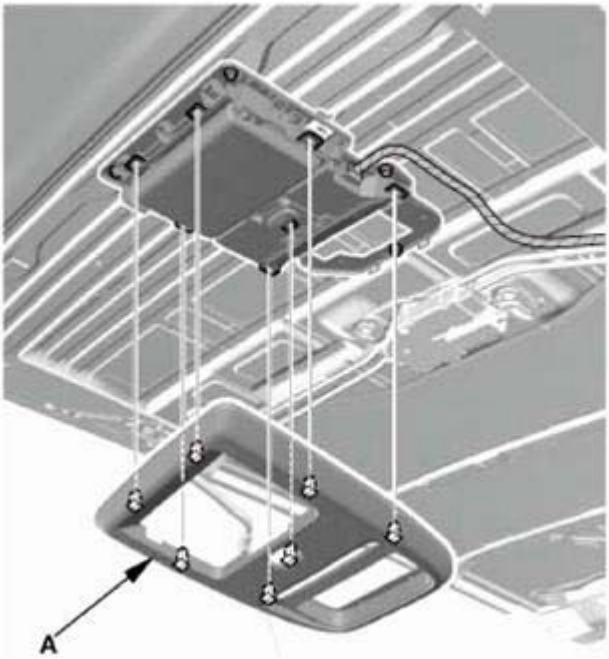

Fig. 5: Installing Rear Display Cover
Courtesy of AMERICAN HONDA MOTOR CO., INC.

2. Connect the connector.
3. Install the ceiling light (B).
4. Carefully install the lenses (C).

GETtheMANUALS.org

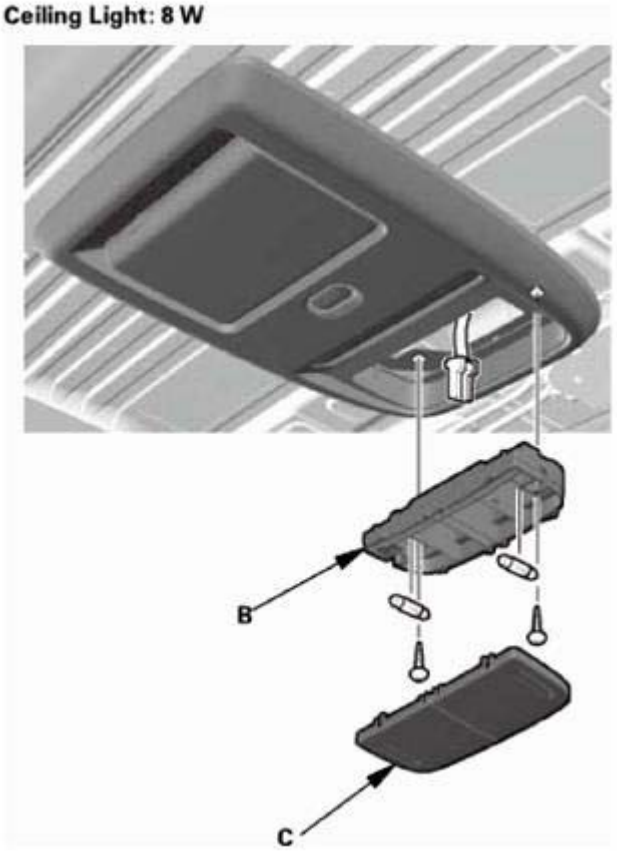

Fig. 6: Identifying Ceiling Light And Lenses
Courtesy of AMERICAN HONDA MOTOR CO., INC.

REAR ENTERTAINMENT DVD PLAYER UNIT CONNECTOR FOR INPUTS AND OUTPUTS

DVD PLAYER UNIT CONNECTOR FOR INPUTS AND OUTPUTS

GETtheMANUALS.org

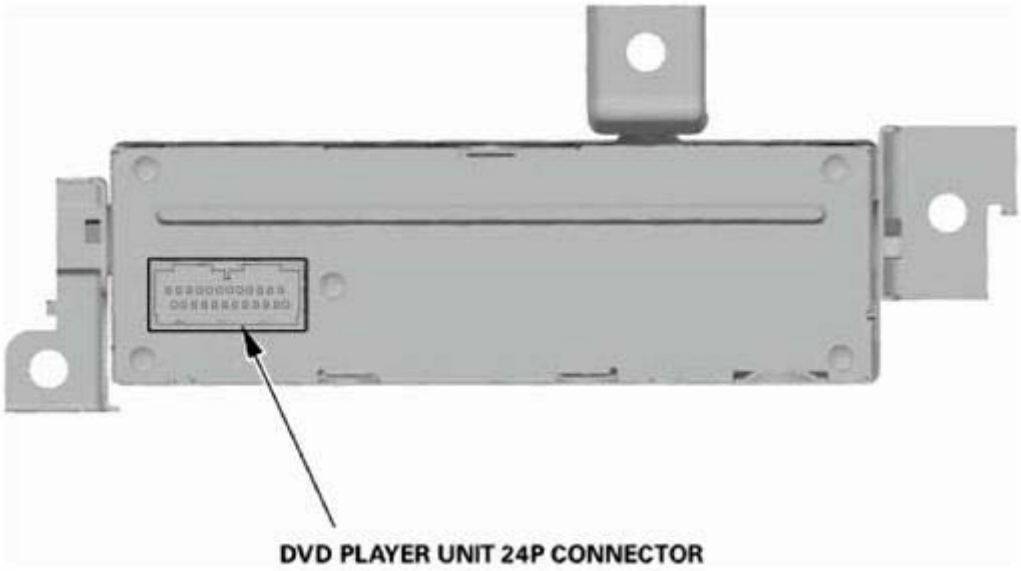

Fig. 7: Identifying DVD Player Unit Connector
Courtesy of AMERICAN HONDA MOTOR CO., INC.

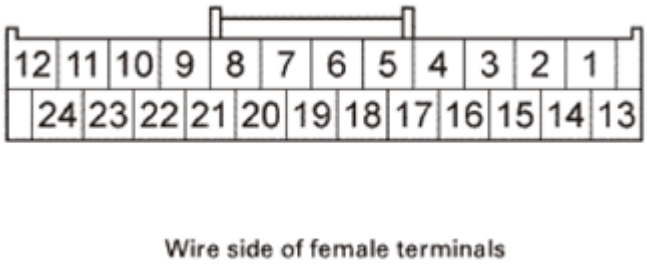

Fig. 8: Identifying DVD Player Unit Connector Terminals
Courtesy of AMERICAN HONDA MOTOR CO., INC.

DVD PLAYER UNIT 24P CONNECTOR

Cavity	Wire Color	Terminal Name	Description
1	PNK	RES_SYS_ACC	Detects DVD player unit switching ON/OFF
2	GRY	ILLUMI+	Detects parking light on signal
3	LT GRN	AUX_GND	Ground for AUX sound signal
4	GRY(1)	SH _AUX	Shield for terminals No. 5, No. 16, and No. 17
5	BLK	AUX_SGND	Ground for sound signal from DVD player unit
6	GRY(1)	SH_HP_LR	Shield for terminals No. 7, No. 18, and No. 19
7	WHT	HP_LR_GND	Ground for sound signal
8	YEL	RES_VIDEO_GND	Ground for video signal
9	BLU	SCTY_DVD	Security signal from DVD player unit
10	RED	RES_BUS+	RES (GA-Net) bus communication signal
11	LT GRN	ACC	Power source for accessories
12	GRN	+B_BACK_UP	Continuous power source

GETtheMANUALS.org

13	BLK	GND	Ground for DVD player unit (G503)
14	GRN	ILL-(LED)	Detects illumination control signal
15	LT BLU	AUX_DET	Detects connection signal for DVD player unit
16	RED	AUX_R_CH	Outputs AUX sound signal to audio unit
17	WHT	AUX_L_CH	Outputs AUX sound signal to audio unit
18	RED	HP_R_SIG	Outputs video signal from rear controller and screen
19	BLK	HP_L_SIG	Outputs video signal from rear controller and screen
20	GRY(1)	SH_RES_VIDEO	Shield for terminals No. 8 and No. 21
21	BRN	RES_VIDEO_SIG	Outputs RES video signal
22	WHT	SCTY_RADIO_SW	Security signal to audio unit
23	GRN	RES_BUS-	RES (GA-Net) bus communication signal
24	GRY(1)	SH_RES_BUS	Shield for terminals No. 10 and No. 23

(1) The shielded wires have a heat-shrink tube insulating the outside of the wire. The color of the insulating tube, typically black or dark gray, may not match the color of the wire shown on the circuit diagram.

REAR ENTERTAINMENT REAR CONTROLLER AND SCREEN CONNECTOR FOR INPUTS AND OUTPUTS

REAR CONTROLLER AND SCREEN CONNECTOR FOR INPUTS AND OUTPUTS

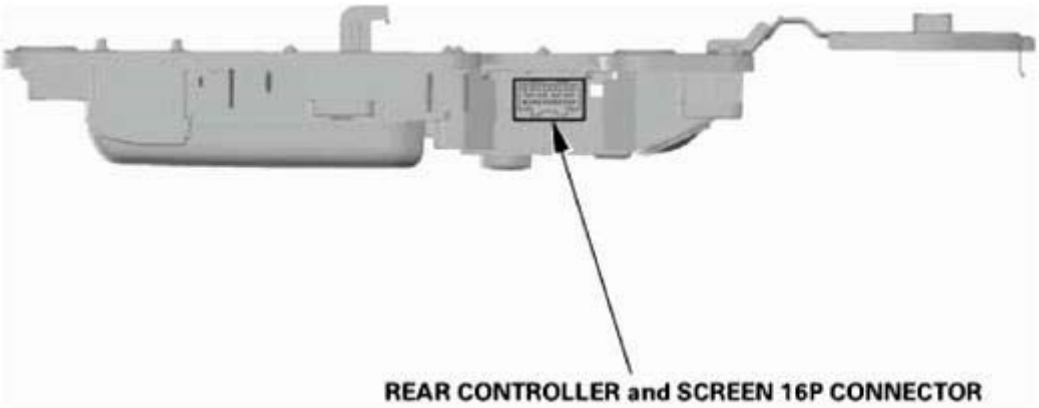

Fig. 9: Identifying Rear Controller And Screen 16P Connector
Courtesy of AMERICAN HONDA MOTOR CO., INC.

GETtheMANUALS.org

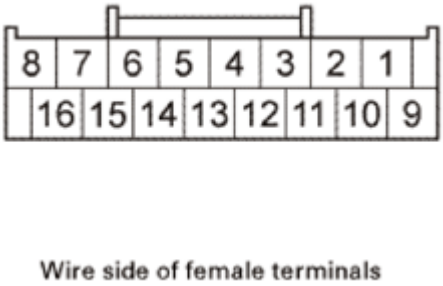

Fig. 10: Identifying Rear Controller And Screen 16P Connector Terminals
Courtesy of AMERICAN HONDA MOTOR CO., INC.

REAR CONTROLLER AND SCREEN 16P CONNECTOR

Cavity	Wire Color	Terminal Name	Description
1	RED	+B_BACK_UP	Continuous power source
2	RED	RES_BUS+	RES (GA-Net) bus communication signal
3	GRY	ILLUMI+	Detects parking light on signal
4	YEL	RES_VIDEO_GND	Ground for video signal
5	WHT	HP_LR_GND	Ground for video signal
6	GRY(1)	SH_HP_LR	Shield for terminals No. 5, No. 13, and No. 14
7	GRN	SCTY_RADIO_SW	Security signal from MICU
8	PNK	RES_SYS_ACC	Detects rear controller and screen switching ON/OFF
9	GRY(1)	SH_RES_BUS	Shield for terminals No. 2 and No. 10
10	GRN	RES_BUS-	RES (GA-Net) bus communication signal
11	BRN	RES_VIDEO_SIG	Outputs RES video signal
12	GRY(1)	SH_RES _VIDEO	Shield for terminals No. 4 and No. 11
13	BLK	HP_L_SIG	Inputs video signal from DVD player unit
14	RED	HP_R_SIG	Inputs video signal from DVD player unit
15	BLU	SCTY_DVD	Security signal from rear controller and screen
16	BLK	GND	Ground for rear controller and screen (G501)

(1) The shielded wires have a heat-shrink tube insulating the outside of the wire. The color of the insulating tube, typically black or dark gray, may not match the color of the wire shown on the circuit diagram.

REAR ENTERTAINMENT SYSTEM COMPONENT LOCATION INDEX

GETtheMANUALS.org

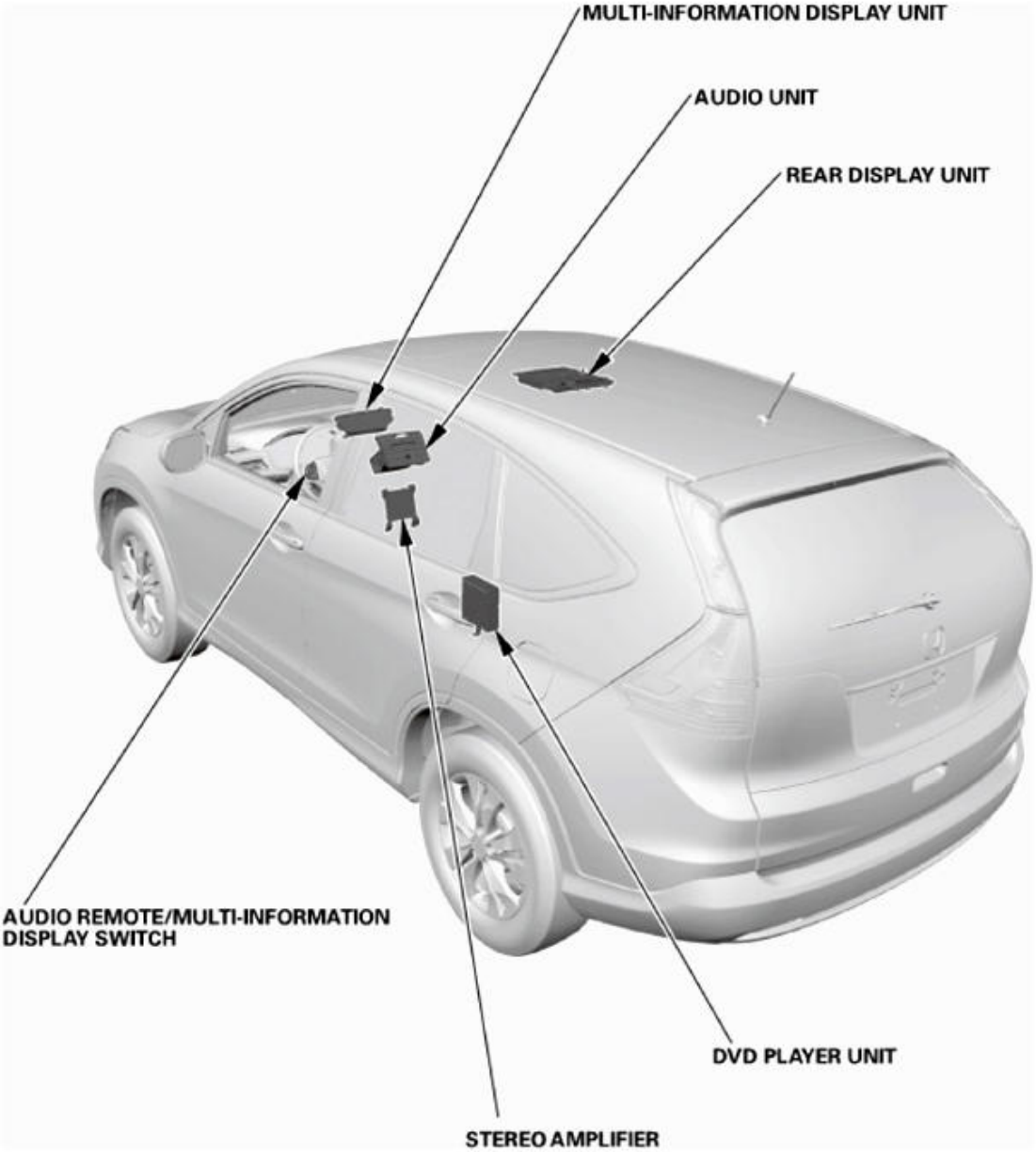

Fig. 11: Rear Entertainment System Component Location (LH)
Courtesy of AMERICAN HONDA MOTOR CO., INC.

AUDIO UNIT	REMOVAL AND INSTALLATION
	SELF-DIAGNOSTIC FUNCTION
AUDIO REMOTE/MULTI-INFORMATION DISPLAY SWITCH	REMOVAL, INSTALLATION, AND TEST
MULTI-INFORMATION DISPLAY UNIT	**REMOVAL AND INSTALLATION**
STEREO AMPLIFIER	REMOVAL AND INSTALLATION
DVD PLAYER UNIT	REMOVAL AND INSTALLATION
REAR DISPLAY UNIT	**REMOVAL AND INSTALLATION**

GETtheMANUALS.org

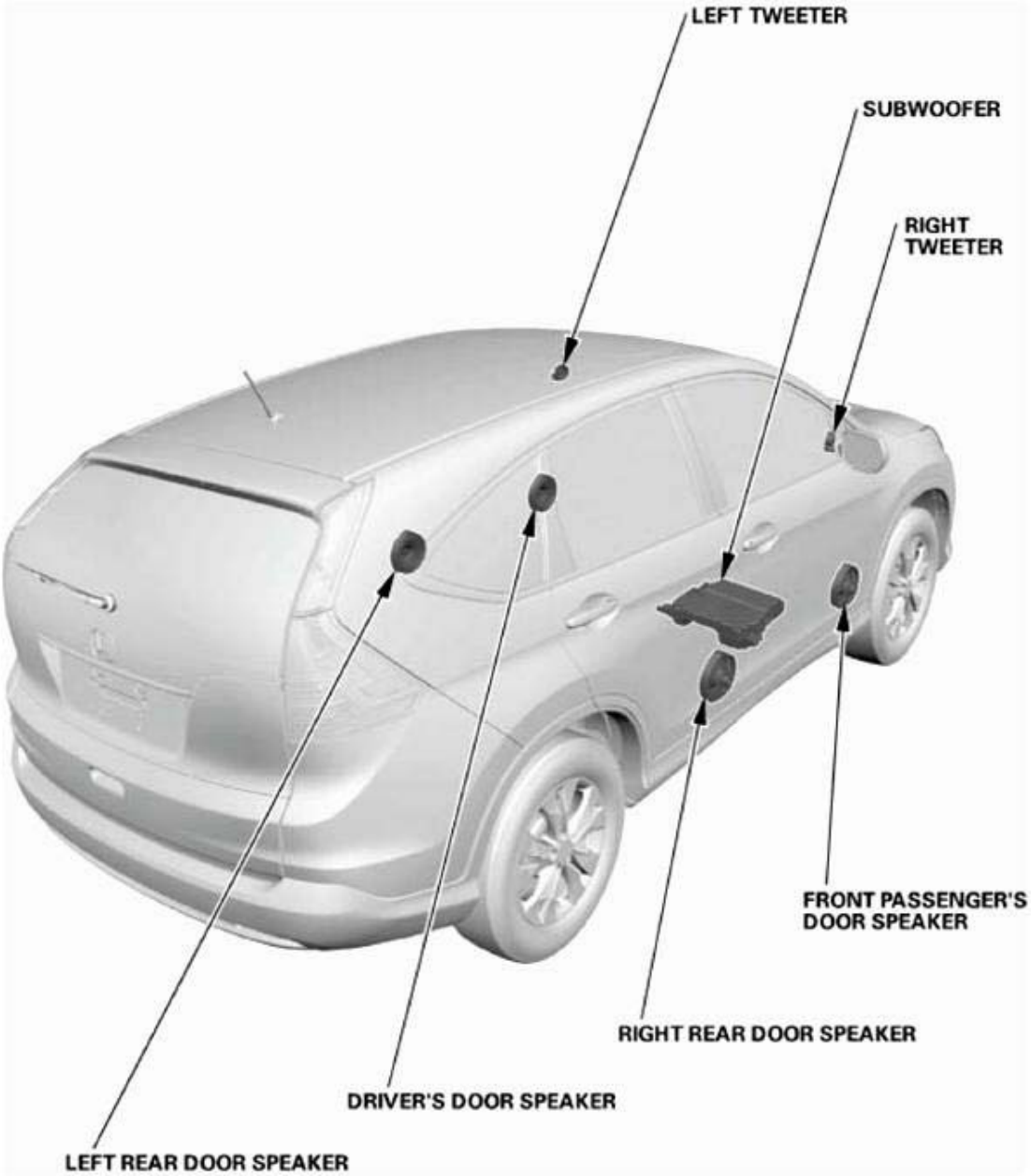

Fig. 12: Rear Entertainment System Component Location (RH)
Courtesy of AMERICAN HONDA MOTOR CO., INC.

FRONT DOOR SPEAKER	REMOVAL, INSTALLATION, AND TEST
TWEETER	REMOVAL, INSTALLATION, AND TEST
SUBWOOFER	REMOVAL, INSTALLATION, AND TEST
REAR DOOR SPEAKER	REMOVAL, INSTALLATION, AND TEST

GETtheMANUALS.org

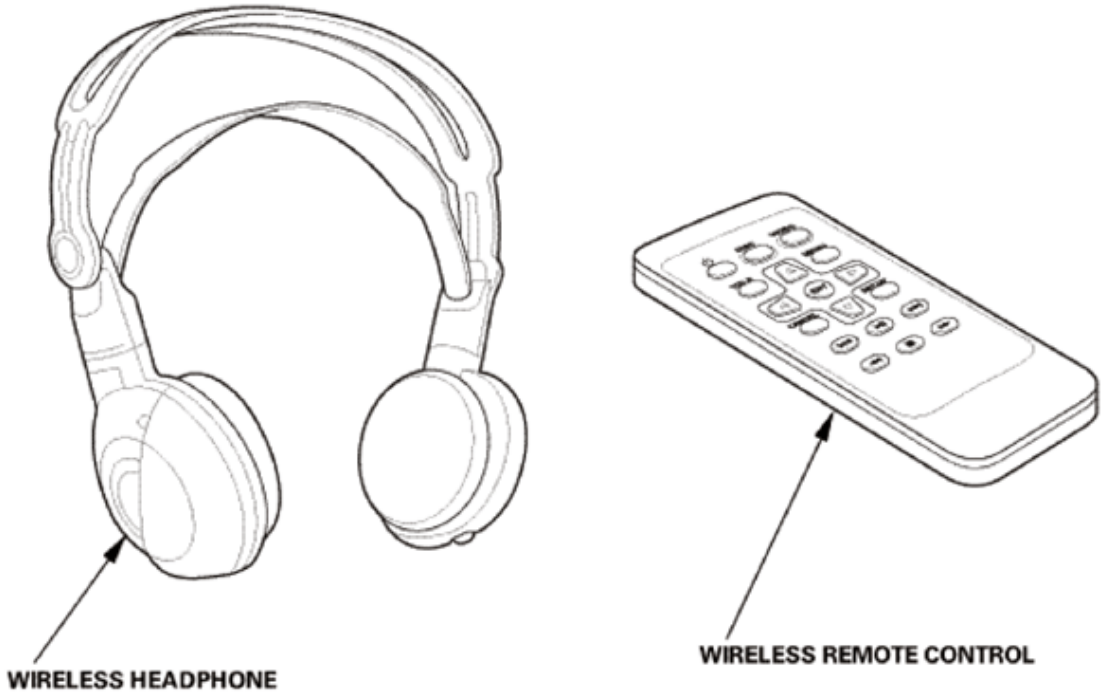

Fig. 13: Identifying Wireless Headphone And Wireless Remote Control
Courtesy of AMERICAN HONDA MOTOR CO., INC.

WIRELESS HEADPHONE	**BATTERY REMOVAL AND INSTALLATION**
WIRELESS REMOTE CONTROL	**BATTERY REMOVAL AND INSTALLATION**

DVD PLAYER UNIT BUTTON ILLUMINATION DOES NOT WORK

GETtheMANUALS.org

Rear Entertainment System Symptom Troubleshooting - DVD player unit button illumination does not work

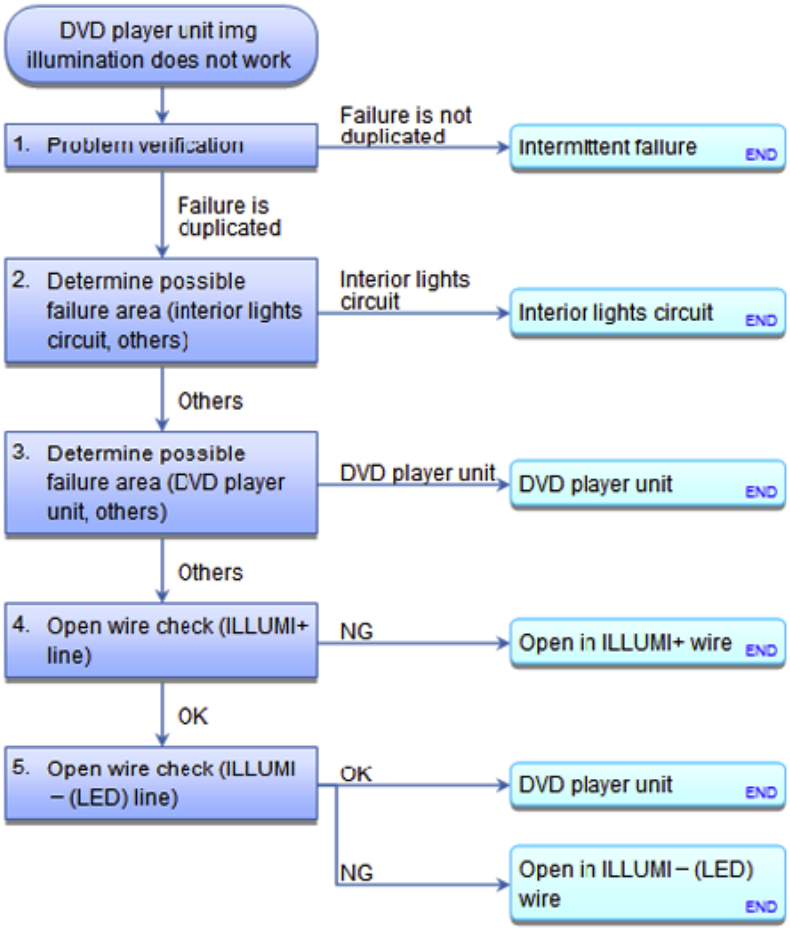

Fig. 14: Rear Entertainment System Symptom Troubleshooting Flow Chart (DVD Player Unit Button Illumination Not Working)
Courtesy of AMERICAN HONDA MOTOR CO., INC.

NOTE:

- **CHECK THE VEHICLE BATTERY CONDITION FIRST .**
- **Check the connectors for poor connections or loose terminals.**

1. Problem verification:
   - 1. Turn the ignition switch to ON (II).
   - 2. Turn the combination lighting switch to the parking light position.
   - 3. Check if the DVD player unit buttons are illuminated.

Are the buttons illuminated?

YES : Intermittent failure, the audio unit is OK at this time.

NO : The failure is duplicated, go to step 2.

GETtheMANUALS.org

2. Determine possible failure area (interior lights circuit, others):
    - 1. Check if several other buttons that are not related to the rear entertainment system are illuminated.

Are the buttons illuminated?

YES : Go to step 3.

NO : Troubleshoot the interior lights.

3. Determine possible failure area (DVD player unit, others):
    - 1. **Do the RES self-diagnostic function to check the DVD INFO diagnosis** See **HOW TO TROUBLESHOOT THE REAR ENTERTAINMENT SYSTEM** or **REAR ENTERTAINMENT SYSTEM SELF-DIAGNOSTIC FUNCTION** .

Are the ILL+ and the ILL-LED value OK?

YES : REPLACE THE DVD PLAYER UNIT .

NO : Go to step 4.

4. Open wire check (ILLUMI+ line):
    - 1. Turn the combination lighting switch off.
    - 2. Turn the ignition switch to LOCK (0).
    - 3. Disconnect the following connector.

      DVD player unit 24P connector

    - 4. Turn the ignition switch to ON (II).
    - 5. Turn the combination lighting switch to the parking light position.
    - 6. Measure the voltage between test points 1 and 2.

      Test condition IG ON (II)

      DVD player unit 24P connector: disconnected

      Test circuit ILLUMI+

      Test point 1 DVD player unit 24P connector No. 2 (GRY)

      Test point 2 Body ground

GETtheMANUALS.org

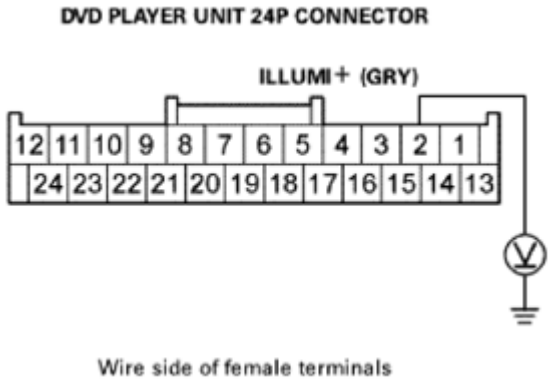

Fig. 15: Measuring Voltage Between DVD Player Unit 24P Connector No. 2 (GRY) And Body Ground
Courtesy of AMERICAN HONDA MOTOR CO., INC.

Is there battery voltage?

YES : The ILLUMI+ wire is OK. Go to step 5.

NO : Repair an open in the wire between the No. B35 (7.5 A) fuse in the under-dash fuse/relay box and the DVD player unit.

5. Open wire check (ILLUMI-(LED) line):
   - 1. Turn the combination lighting switch off.
   - 2. Turn the ignition switch to LOCK (0).
   - 3. Disconnect the following connector.

     Gauge control module 32P connector

   - 4. Check for continuity between test points 1 and 2.

     Test condition IG LOCK (0)

     DVD player unit 24P connector: disconnected

     Gauge control module 32P connector: disconnected

     Test circuit ILLUMI-(LED)

     Test point 1 DVD player unit 24P connector No. 14 (GRN)

     Test point 2 Gauge control module 32P connector No. 15 (GRN)

GETtheMANUALS.org

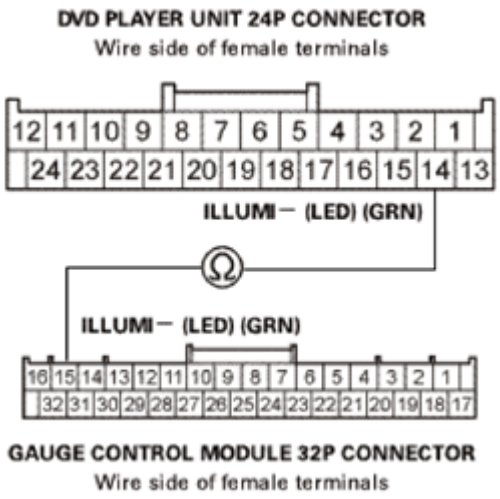

Fig. 16: Checking Continuity Between DVD Player Unit 24P Connector No. 14 (GRN) And Gauge Control Module 32P Connector No. 15 (GRN)
Courtesy of AMERICAN HONDA MOTOR CO., INC.

Is there continuity?

YES : REPLACE THE DVD PLAYER UNIT .

NO : Repair an open in the wire between the DVD player unit and the gauge control module.

NO RES SOUND IS HEARD FROM THE SPEAKER(S) (REAR DISPLAY IS NORMAL)

GETtheMANUALS.org

Rear Entertainment System Symptom Troubleshooting - No RES sound is heard from the speaker(s) (rear display is normal)

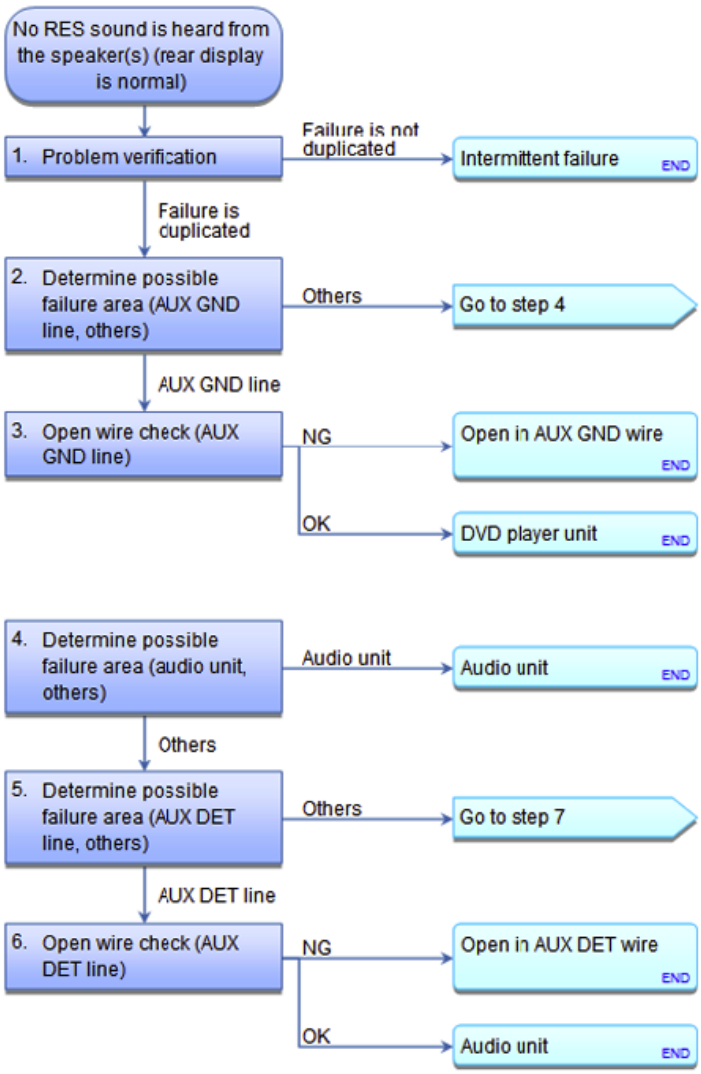

Fig. 17: Rear Entertainment System Symptom Troubleshooting Flow Chart (No RES Sound Heard From Speaker 1 Of 2)

Courtesy of AMERICAN HONDA MOTOR CO., INC.

GETtheMANUALS.org

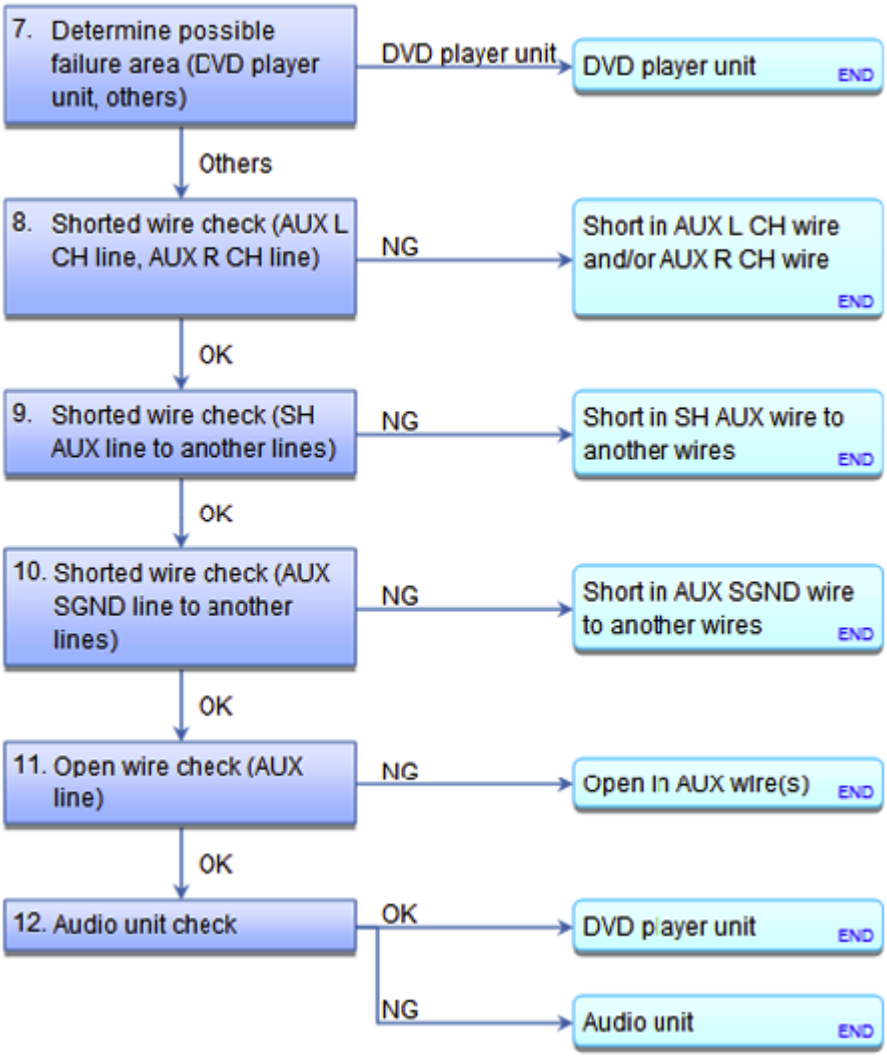

Fig. 18: Rear Entertainment System Symptom Troubleshooting Flow Chart (No RES Sound Heard From Speaker 2 Of 2)
Courtesy of AMERICAN HONDA MOTOR CO., INC.

NOTE:

- **CHECK THE VEHICLE BATTERY CONDITION FIRST .**
- **DVD-R/RWs will not work in the DVD player unit.**
- **Damaged or contaminated discs may not always play properly.**
- **Discs with labels should not be used in the DVD player unit. They may damage the player mechanism.**
- **Check the connectors for poor connections or loose terminals.**

1. Problem verification:
    - 1. Turn the ignition switch to ON (II).
    - 2. Open the rear screen.
    - 3. Play a known-good disc to see if the symptom can be duplicated.

GETtheMANUALS.org

Is the symptom duplicated?

YES : The failure is duplicated, go to step 2.

NO : Intermittent failure, the system is OK at this time.

2. Determine possible failure area (AUX GND line, others):
    - 1. Turn the ignition switch to LOCK (0).
    - 2. Disconnect the following connector.

      Audio unit connector B (20P)

    - 3. Turn the ignition switch to ON (II).
    - 4. Measure the voltage between test points 1 and 2.

      Test condition IG ON (II)

      Audio unit connector B (20P): disconnected

      Test circuit AUX GND

      Test point 1 Audio unit connector B (20P) No. 6 (LT GRN)

      Test point 2 Body ground

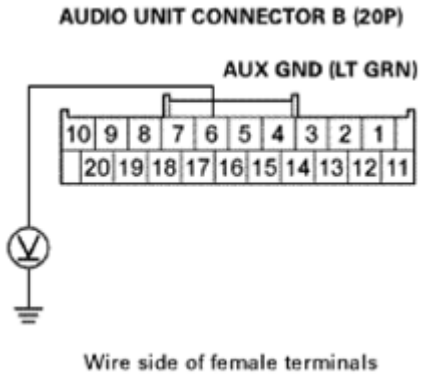

Fig. 19: Measuring Voltage Between Audio Unit Connector B (20P) No. 6 (LT GRN) And Body Ground
Courtesy of AMERICAN HONDA MOTOR CO., INC.

Is there about 3.0 V?

YES : The AUX GND wire is OK. Go to step 4.

NO : Go to step 3.

GETtheMANUALS.org

3. Open wire check (AUX GND line):
    - 1. Measure the voltage between test points 1 and 2.

      Test condition IG ON (II)

      Audio unit connector B (20P): disconnected

      Test circuit AUX GND

      Test point 1 DVD player unit 24P connector No. 3 (LT GRN)

      Test point 2 Body ground

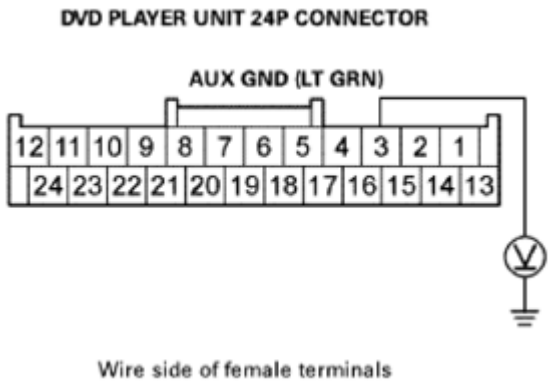

Fig. 20: Measuring Voltage Between DVD Player Unit 24P Connector No. 3 (LT GRN) And Body Ground
Courtesy of AMERICAN HONDA MOTOR CO., INC.

Is there about 3.0 V?

YES : Repair an open in the wire between the DVD player unit and the audio unit.

NO : REPLACE THE DVD PLAYER UNIT .

4. Determine possible failure area (audio unit, others):
    - 1. Turn the ignition switch to LOCK (0).
    - 2. Reconnect audio unit connector B (20P).
    - 3. Turn the ignition switch to ON (II).
    - 4. Measure the voltage between test points 1 and 2.

      Test condition IG ON (II)

      Test circuit AUX GND

      Test point 1 Audio unit connector B (20P) No. 6 (LT GRN)

GETtheMANUALS.org

Test point 2 Body ground

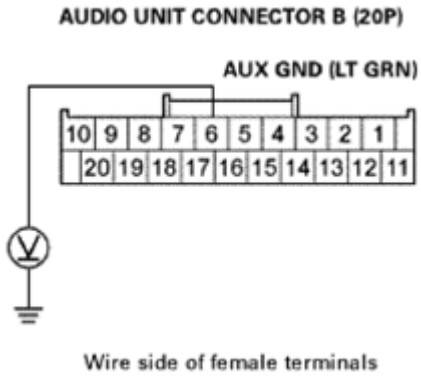

Fig. 21: Measuring Voltage Between Audio Unit Connector B (20P) No. 6 (LT GRN) And Body Ground
Courtesy of AMERICAN HONDA MOTOR CO., INC.

Is there less than 0.2 V?

YES : Go to step 5.

NO : REPLACE THE AUDIO UNIT .

5. Determine possible failure area (AUX DET line, others):
   - 1. Turn the ignition switch to LOCK (0).
   - 2. Disconnect the following connector.

     DVD player unit 24P connector

   - 3. Turn the ignition switch to ON (II).
   - 4. Measure the voltage between test points 1 and 2.

     Test condition IG ON (II)

     DVD player unit 24P connector: disconnected

     Test circuit AUX DET

     Test point 1 DVD player unit 24P connector No. 15 (LT BLU)

     Test point 2 Body ground

GETtheMANUALS.org

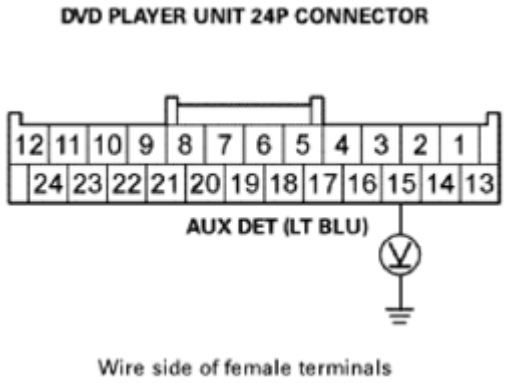

Fig. 22: Measuring Voltage Between DVD Player Unit 24P Connector No. 15 (LT BLU) And Body Ground
Courtesy of AMERICAN HONDA MOTOR CO., INC.

Is there about 3.0 V?

YES : The AUX DET wire is OK. Go to step 7.

NO : Go to step 6.

6. Open wire check (AUX DET line):
   - 1. Measure the voltage between test points 1 and 2.

     Test condition IG ON (II)

     DVD player unit 24P connector: disconnected

     Test circuit AUX DET

     Test point 1 Audio unit connector B (20P) No. 16 (LT BLU)

     Test point 2 Body ground

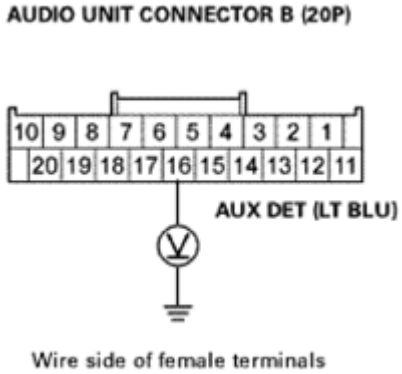

Fig. 23: Measuring Voltage Between Audio Unit Connector B (20P) No. 16 (LT BLU) And

GETtheMANUALS.org

Body Ground
Courtesy of AMERICAN HONDA MOTOR CO., INC.

Is there about 3.0 V?

YES : Repair an open in the wire between the DVD player unit and the audio unit.

NO : REPLACE THE AUDIO UNIT .

7. Determine possible failure area (DVD player unit, others):
   - 1. Turn the ignition switch to LOCK (0).
   - 2. Reconnect the DVD player unit 24P connector.
   - 3. Turn the ignition switch to ON (II).
   - 4. Measure the voltage between test points 1 and 2.

   Test condition IG ON (II)

   Test circuit AUX DET

   Test point 1 DVD player unit 24P connector No. 15 (LT BLU)

   Test point 2 Body ground

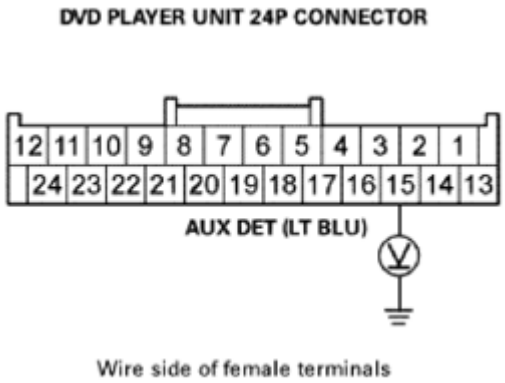

Fig. 24: Measuring Voltage Between DVD Player Unit 24P Connector No. 15 (LT BLU) And Body Ground
Courtesy of AMERICAN HONDA MOTOR CO., INC.

Is there less than 0.2 V?

YES : Go to step 8.

NO : REPLACE THE DVD PLAYER UNIT .

8. Shorted wire check (AUX L CH line, AUX R CH line):

GETtheMANUALS.org

- 1. Turn the ignition switch to LOCK (0).
- 2. Disconnect the following connectors.

  Audio unit connector B (20P)

  DVD player unit 24P connector

- 3. Check for continuity between test points 1 and 2.

  Test condition IG LOCK (0)

  Audio unit connector B (20P): disconnected

  DVD player unit 24P connector: disconnected

  Test circuit AUX L CH

  Test point 1 Audio unit connector B (20P) No. 18 (WHT)

  Test point 2 Body ground

  Test circuit AUX R CH

  Test point 1 Audio unit connector B (20P) No. 17 (RED)

  Test point 2 Body ground

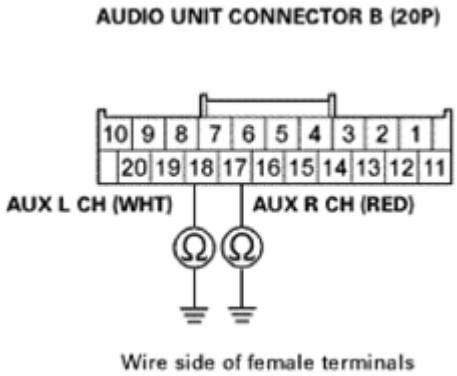

Fig. 25: Checking Continuity Between Audio Unit Connector B (20P) No. 17 (RED) And Body Ground
Courtesy of AMERICAN HONDA MOTOR CO., INC.

Is there continuity?

YES : There is a short to body ground in the wire(s) between the audio unit and the DVD player unit. Replace the affected shielded harness.

GETtheMANUALS.org

NO : The AUX R CH and the AUX L CH wires are not shorted to ground. Go to step 9.

9. Shorted wire check (SH AUX line to another lines):
   - 1. Check for continuity between test points 1 and 2.

     Test condition IG LOCK (0)

     Audio unit connector B (20P): disconnected

     DVD player unit 24P connector: disconnected

     Test circuit AUX R CH, SH AUX

     Test point 1 Audio unit connector B (20P) No. 17 (RED)

     Test point 2 Audio unit connector B (20P) No. 7 (GRY)

     Test circuit AUX L CH, SH AUX

     Test point 1 Audio unit connector B (20P) No. 18 (WHT)

     Test point 2 Audio unit connector B (20P) No. 7 (GRY)

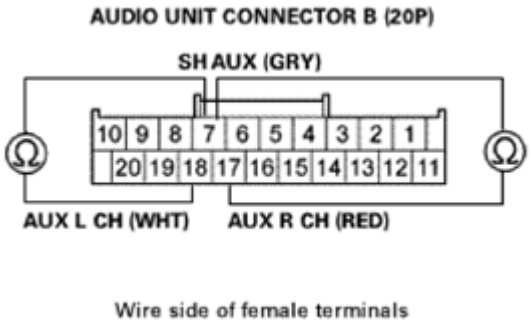

Fig. 26: Checking Continuity Between Audio Unit Connector B (20P) No. 17 (RED) And No. 7 (GRY)
Courtesy of AMERICAN HONDA MOTOR CO., INC.

Is there continuity?

YES : There is a short in the wires between the audio unit and the DVD player unit. Replace the affected shielded harness.

NO : The SH AUX wire is OK. Go to step 10.

10. Shorted wire check (AUX SGND line to another lines):
    - 1. Check for continuity between test points 1 and 2.

GETtheMANUALS.org

Test condition IG LOCK (0)

Audio unit connector B (20P): disconnected

DVD player unit 24P connector: disconnected

Test circuit AUX R CH, AUX SGND

Test point 1 Audio unit connector B (20P) No. 17 (RED)

Test point 2 Audio unit connector B (20P) No. 8 (BLK)

Test circuit AUX L CH, AUX SGND

Test point 1 Audio unit connector B (20P) No. 18 (WHT)

Test point 2 Audio unit connector B (20P) No. 8 (BLK)

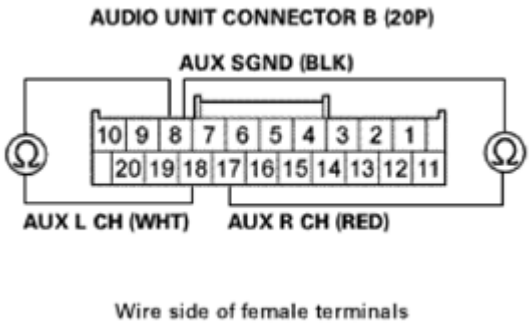

Fig. 27: Checking Continuity Between Audio Unit Connector B (20P) No. 17 (RED) And No. 8 (BLK)
Courtesy of AMERICAN HONDA MOTOR CO., INC.

Is there continuity?

YES : There is a short in the wires between the audio unit and the DVD player unit. Replace the affected shielded harness.

NO : The AUX SGND wire is not shorted. Go to step 11.

11. Open wire check (AUX line):
    - 1. Check for continuity between test points 1 and 2.

    Test condition IG LOCK (0)

    Audio unit connector B (20P): disconnected

    DVD player unit 24P connector: disconnected

GETtheMANUALS.org

Test circuit	Test point 1: Audio unit connector B (20P)	Test point 2: DVD player unit 24P connector
AUX SGND	No. 8 (BLK)	No. 5 (BLK)
AUX R CH	No. 17 (RED)	No. 16 (RED)
AUX L CH	No. 18 (WHT)	No. 17 (WHT)

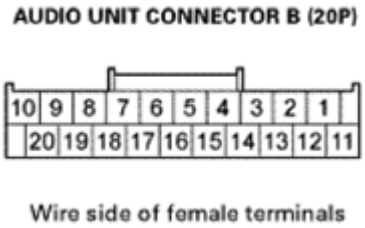

Fig. 28: Checking Continuity Between Audio Unit Connector B (20P) And DVD Player Unit 24P Connector
Courtesy of AMERICAN HONDA MOTOR CO., INC.

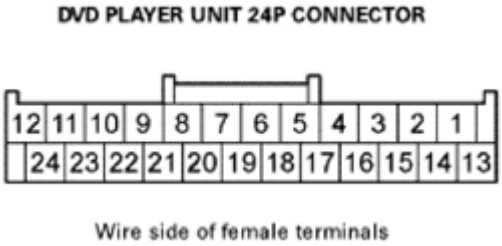

Fig. 29: Identifying DVD Player Unit 24P Connector Terminals
Courtesy of AMERICAN HONDA MOTOR CO., INC.

Is there continuity?

YES : The AUX wires are OK. Go to step 12.

NO : There is an open in the wire(s) between the audio unit and the auxiliary jack assembly. Replace the affected harness.

12. Audio unit check:
    - 1. SUBSTITUTE A KNOWN-GOOD DVD PLAYER UNIT, AND RECHECK .

Does the symptom go away?

YES : Replace the original DVD player unit.

NO : REPLACE THE AUDIO UNIT .

NO SOUND/NO DISPLAY WITH AUXILIARY VIDEO UNIT INPUTS ONLY

GETtheMANUALS.org

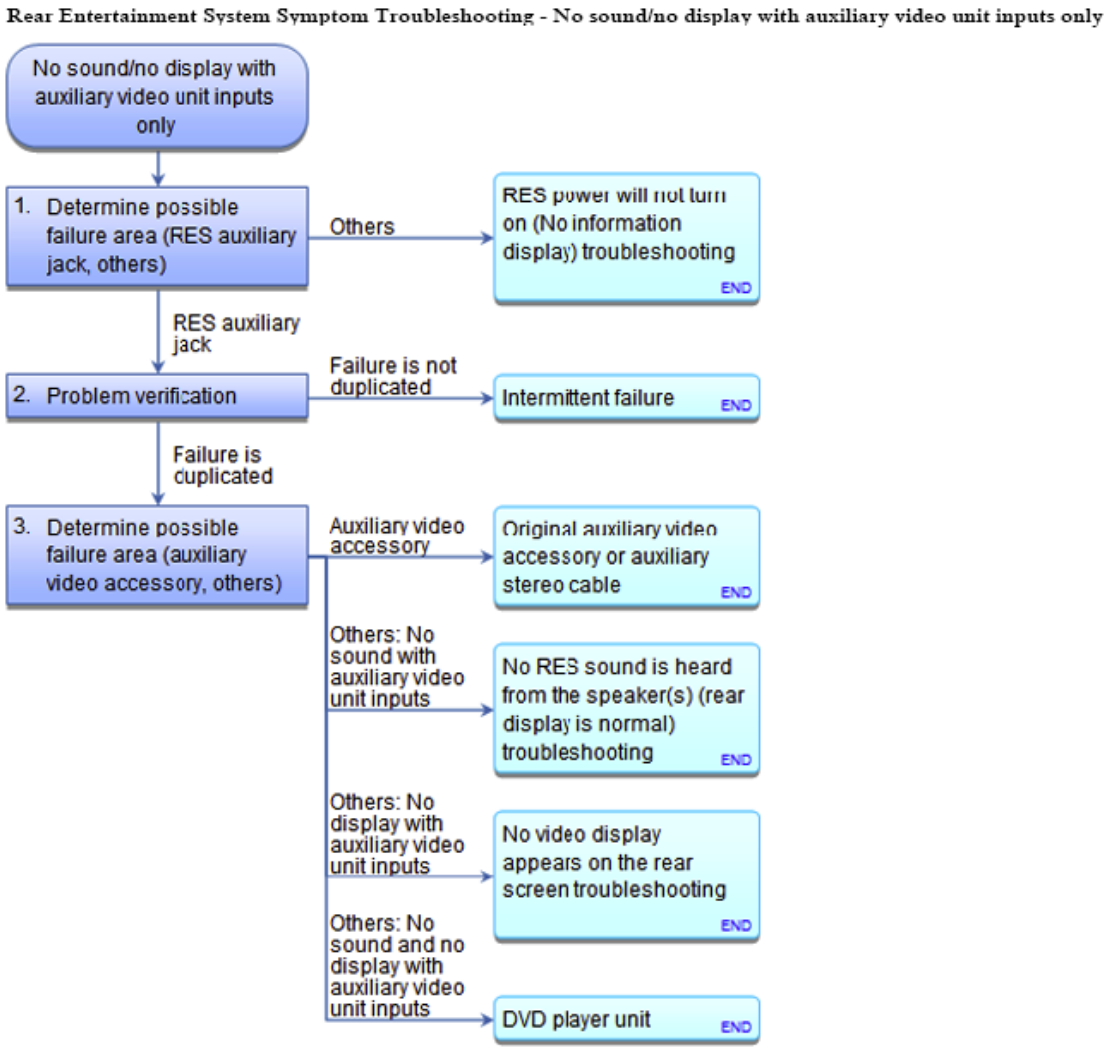

Fig. 30: Rear Entertainment System Symptom Troubleshooting Flow Chart (No Sound/No Display With Auxiliary Video Unit Inputs Only)
Courtesy of AMERICAN HONDA MOTOR CO., INC.

NOTE:

- **CHECK THE VEHICLE BATTERY CONDITION FIRST .**
- **Check that the auxiliary device is properly connected, and has fresh batteries or power source connected.**
- **Do not connect an RCA type shorting plug with the RES auxiliary jack connected, or system damage may occur.**
- **You need to switch the DVD player unit REAR POWER button on for the rear display, remote controls, and sound to operate.**
- **Check the connectors for poor connections or loose terminals.**

1. Determine possible failure area (RES auxiliary jack, others):
    - 1. Turn the ignition switch to ON (II).

GETtheMANUALS.org

- 2. Open the rear screen.
- 3. Press the REAR POWER button, then press the SOURCE button to select the AUX mode.

Does the rear screen change to the AUX mode?

YES : Go to step 2.

NO : Go to **RES POWER WILL NOT TURN ON (NO INFORMATION DISPLAY) TROUBLESHOOTING**.

2. Problem verification:
   - 1. Connect an auxiliary video source to the RES auxiliary jack on the DVD player unit, and check the volume/display operation.

Does the display operate properly and does the audio sound normal?

YES : Intermittent failure, the system is OK at this time.

NO : The failure is duplicated, go to step 3

3. Determine possible failure area (auxiliary video accessory, others):
   - 1. Substitute a known-good auxiliary video accessory and/or auxiliary stereo cable, and recheck.

Does the auxiliary video accessory operate properly?

YES : Original auxiliary video accessory or auxiliary stereo cable is faulty.

NO : **No RES sound is heard from the speaker(s) (rear display is normal)**.

NO : **No video display appears on the rear screen**.

NO : REPLACE THE DVD PLAYER UNIT .

NO VIDEO DISPLAY APPEARS ON THE REAR SCREEN

GETtheMANUALS.org

Rear Entertainment System Symptom Troubleshooting - No video display appears on the rear screen

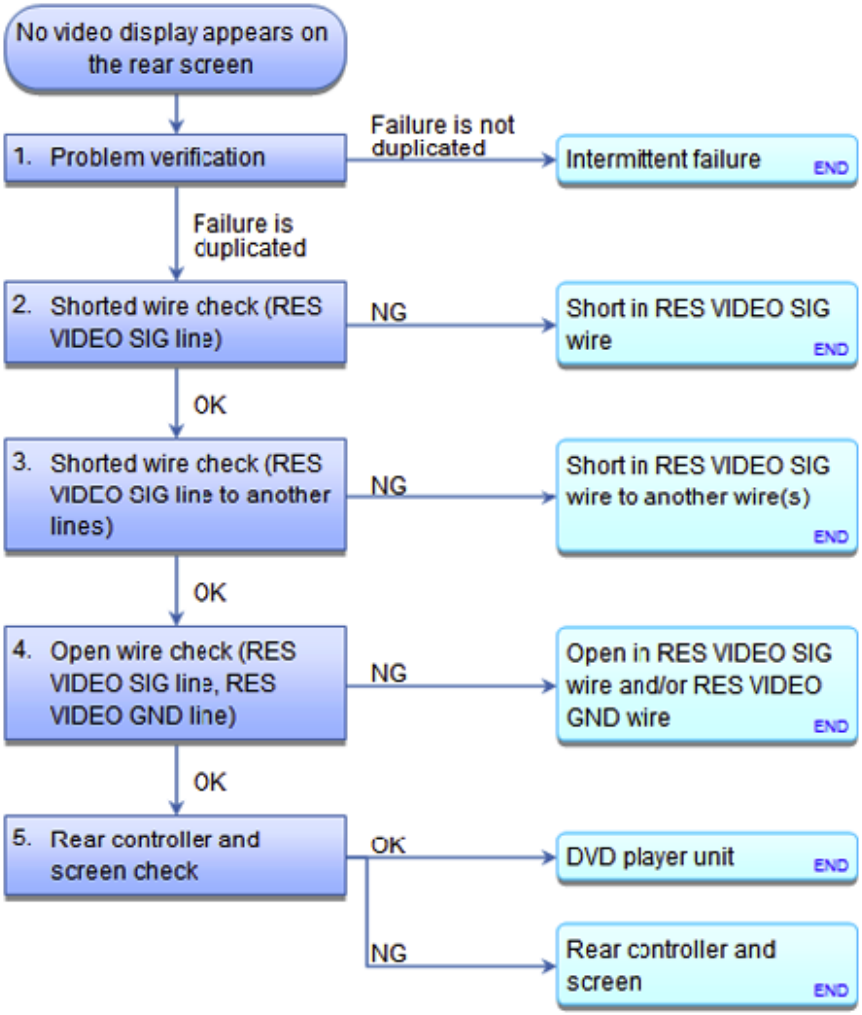

Fig. 31: Rear Entertainment System Symptom Troubleshooting Flow Chart (No Video Display Appears On Rear Screen)
Courtesy of AMERICAN HONDA MOTOR CO., INC.

NOTE:

- **CHECK THE VEHICLE BATTERY CONDITION FIRST .**
- **DVD-R/RWs will not work in the DVD player unit.**
- **Damaged or contaminated discs may not always play properly.**
- **Discs with labels should not be used in the DVD player unit. They may damage the player mechanism.**
- **Check the connectors for poor connections or loose terminals.**

1. Problem verification:
    - 1. Turn the ignition switch to ON (II).
    - 2. Open the rear screen.
    - 3. Play a known-good disc to see if the symptom can be duplicated.

GETtheMANUALS.org

Is the symptom duplicated?

YES : The failure is duplicated, go to step 2.

NO : Intermittent failure, the system is OK at this time.

2. Shorted wire check (RES VIDEO SIG line):
   - 1. Turn the ignition switch to LOCK (0).
   - 2. Disconnect the following connectors.

     DVD player unit 24P connector

     Rear controller and screen 16P connector

   - 3. Check for continuity between test points 1 and 2.

     Test condition IG LOCK (0)

     DVD player unit 24P connector: disconnected

     Rear controller and screen 16P connector: disconnected

     Test circuit RES VIDEO SIG

     Test point 1 DVD player unit 24P connector No. 21 (BRN)

     Test point 2 Body ground

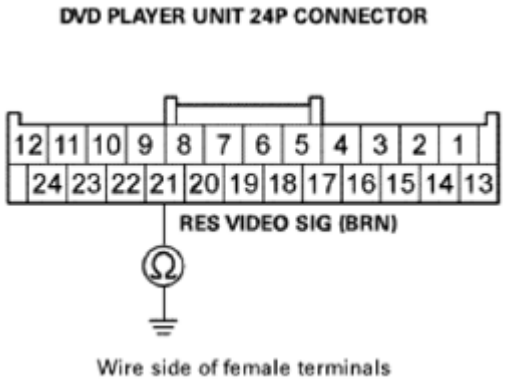

Fig. 32: Checking Continuity Between DVD Player Unit 24P Connector No. 21 (BRN) And Body Ground
Courtesy of AMERICAN HONDA MOTOR CO., INC.

Is there continuity?

YES : There is a short to body ground in the wire between the DVD player unit and the rear controller

GETtheMANUALS.org

and screen. Replace the affected shielded harness.

NO : The RES VIDEO SIG wire is not shorted to ground. Go to step 3.

3. Shorted wire check (RES VIDEO SIG line to another lines):
   - 1. Check for continuity between test points 1 and 2.

     Test condition IG LOCK (0)

     DVD player unit 24P connector: disconnected

     Rear controller and screen 16P connector: disconnected

     Test circuit RES VIDEO SIG, RES VIDEO GND

     Test point 1 DVD player unit 24P connector No. 21 (BRN)

     Test point 2 DVD player unit 24P connector No. 8 (YEL)

     Test circuit RES VIDEO SIG, SH RES VIDEO

     Test point 1 DVD player unit 24P connector No. 21 (BRN)

     Test point 2 DVD player unit 24P connector No. 20 (GRY)

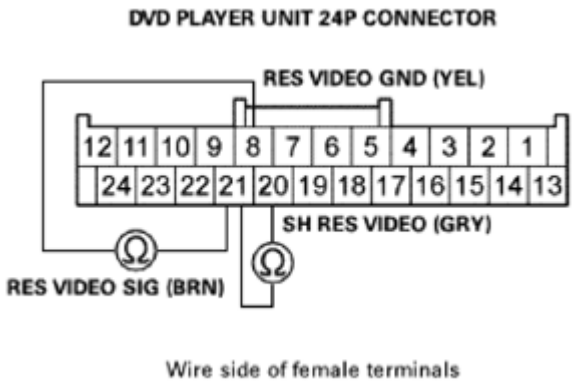

Fig. 33: Checking Continuity Between DVD Player Unit 24P Connector No. 21 (BRN) And No. 20 (GRY)
Courtesy of AMERICAN HONDA MOTOR CO., INC.

Is there continuity?

YES : There is a short in the wires between the DVD player unit and the rear controller and screen. Replace the affected shielded harness.

NO : The RES VIDEO SIG wire is OK. Go to step 4.

GETtheMANUALS.org

4. Open wire check (RES VIDEO SIG line, RES VIDEO GND line):
   - 1. Check for continuity between test points 1 and 2.

     Test condition IG LOCK (0)

     DVD player unit 24P connector: disconnected

     Rear controller and screen 16P connector: disconnected

     Test circuit RES VIDEO SIG

     Test point 1 Rear controller and screen 16P connector No. 11 (BRN)

     Test point 2 DVD player unit 24P connector No. 21 (BRN)

     Test circuit RES VIDEO GND

     Test point 1 Rear controller and screen 16P connector No. 4 (YEL)

     Test point 2 DVD player unit 24P connector No. 8 (YEL)

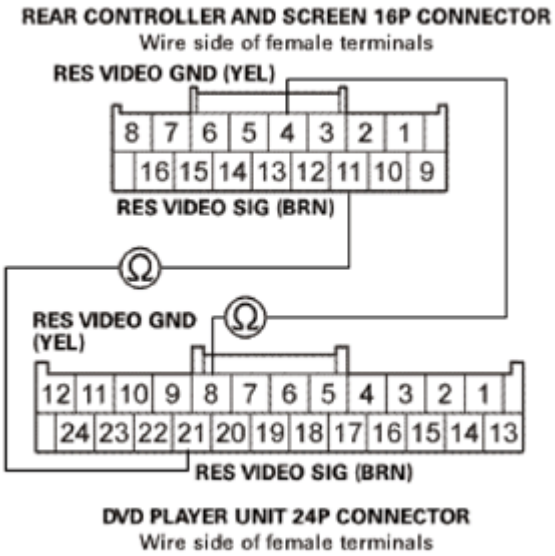

Fig. 34: Checking Continuity Between Rear Controller And Screen 16P Connector No. 4 (YEL) And No. 8 (YEL)
Courtesy of AMERICAN HONDA MOTOR CO., INC.

Is there continuity?

YES : The RES VIDEO SIG and the RES VIDEO GND wires are OK. Go to step 5.

NO : There is an open in the wire(s) between the DVD player unit and the rear controller and screen.

GETtheMANUALS.org

Replace the affected shielded harness.

5. Rear controller and screen check:
   - 1. SUBSTITUTE A KNOWN-GOOD DVD PLAYER UNIT, AND RECHECK .

   Does the symptom go away?

   YES : Replace the original DVD player unit.

   NO : **REPLACE THE REAR CONTROLLER AND SCREEN**.

REAR SCREEN BACKLIGHT DOES NOT DIM/REMAINS DIM

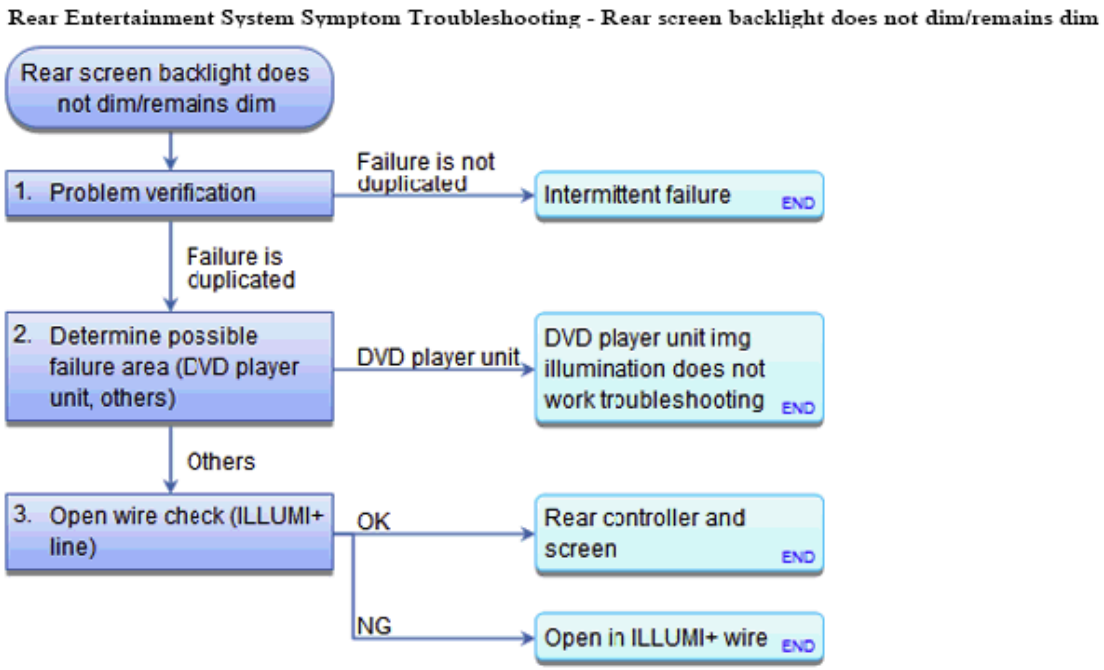

Fig. 35: Rear Entertainment System Symptom Troubleshooting Flow Chart (Rear Screen Backlight Does Not Dim/Remains Dim)
Courtesy of AMERICAN HONDA MOTOR CO., INC.

NOTE:

- **CHECK THE VEHICLE BATTERY CONDITION FIRST .**
- **Check the connectors for poor connections or loose terminals.**

1. Problem verification:
   - 1. Turn the ignition switch to ON (II).
   - 2. Turn the combination lighting switch to the parking light position.
   - 3. Rotate the dashlights brightness controller knob several times.

   Does the rear screen brightness change?

GETtheMANUALS.org

YES : Intermittent failure, the system is OK at this time.

NO : The failure is duplicated, go to step 2.

2. Determine possible failure area (DVD player unit, others):
    - 1. Rotate the dashlights brightness controller knob several times.

Does the DVD player unit buttons brightness change?

YES : Go to step 3.

NO : Go to **DVD PLAYER UNIT BUTTON ILLUMINATION DOES NOT WORK TROUBLESHOOTING**.

3. Open wire check (ILLUMI+ line):
    - 1. Turn the combination lighting switch off.
    - 2. Turn the ignition switch to LOCK (0).
    - 3. Disconnect the following connector.

      Rear controller and screen 16P connector

    - 4. Turn the ignition switch to ON (II).
    - 5. Turn the combination lighting switch to the parking light position.
    - 6. Measure the voltage between test points 1 and 2.

      Test condition IG ON (II)

      Rear controller and screen 16P connector: disconnected

      Test circuit ILLUMI+

      Test point 1 Rear controller and screen 16P connector No. 3 (GRY)

      Test point 2 Body ground

REAR CONTROLLER AND SCREEN 16P CONNECTOR

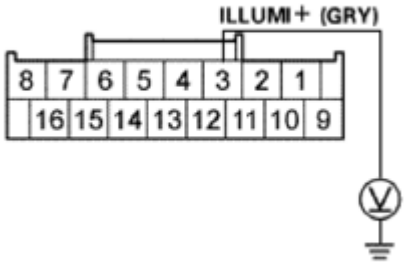

Wire side of female terminals

GETtheMANUALS.org

Fig. 36: Measuring Voltage Between Rear Controller And Screen 16P Connector No. 3 (GRY) And Body Ground
Courtesy of AMERICAN HONDA MOTOR CO., INC.

Is there battery voltage?

YES : **REPLACE THE REAR CONTROLLER AND SCREEN**.

NO : Repair an open in the wire between the No. B35 (7.5 A) fuse in the under-dash fuse/relay box and the rear controller and screen.

RES DISC DOES NOT EJECT

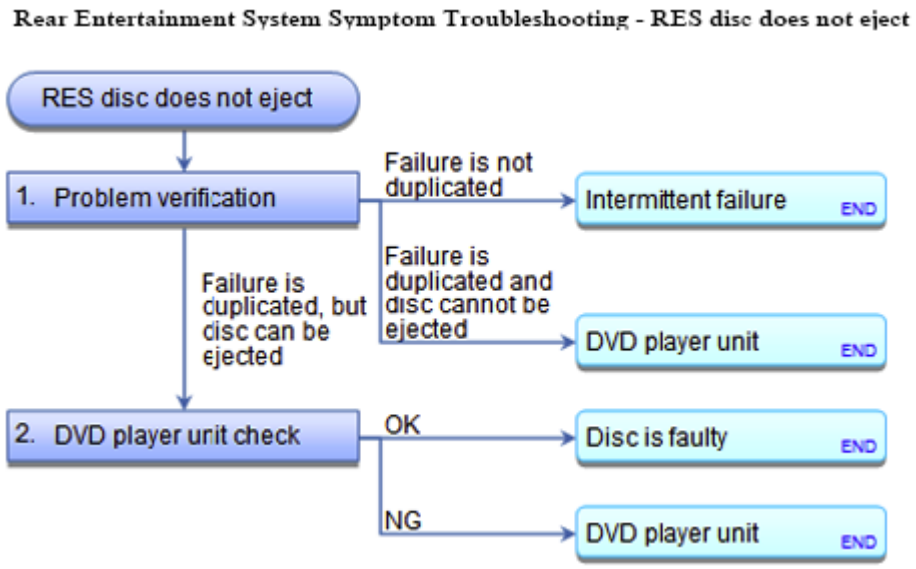

Fig. 37: Rear Entertainment System Symptom Troubleshooting Flow Chart (RES Disc Not Eject)
Courtesy of AMERICAN HONDA MOTOR CO., INC.

NOTE:

- **CHECK THE VEHICLE BATTERY CONDITION FIRST .**
- **Discs with labels should not be used in the DVD player unit. They may damage the player mechanism.**
- **Make sure the disc is compatible with the system (see the Owner's Manual for more information).**
- **Check the connectors for poor connections or loose terminals.**

1. Problem verification:
   - 1. Turn the ignition switch to ON (II).
   - 2. Check to see if the disc ejects correctly with no binding by pushing the EJECT button.

Does the disc eject normally?

GETtheMANUALS.org

YES : Intermittent failure, the system is OK at this time.

NO : The failure is duplicated, but the disc can be ejected, go to step 2.

NO : REPLACE THE DVD PLAYER UNIT .

2. DVD player unit check:
   - 1. Insert another disc.

Does the disc eject normally?

YES : The original disc is faulty.

NO : REPLACE THE DVD PLAYER UNIT .

RES DISC DOES NOT LOAD

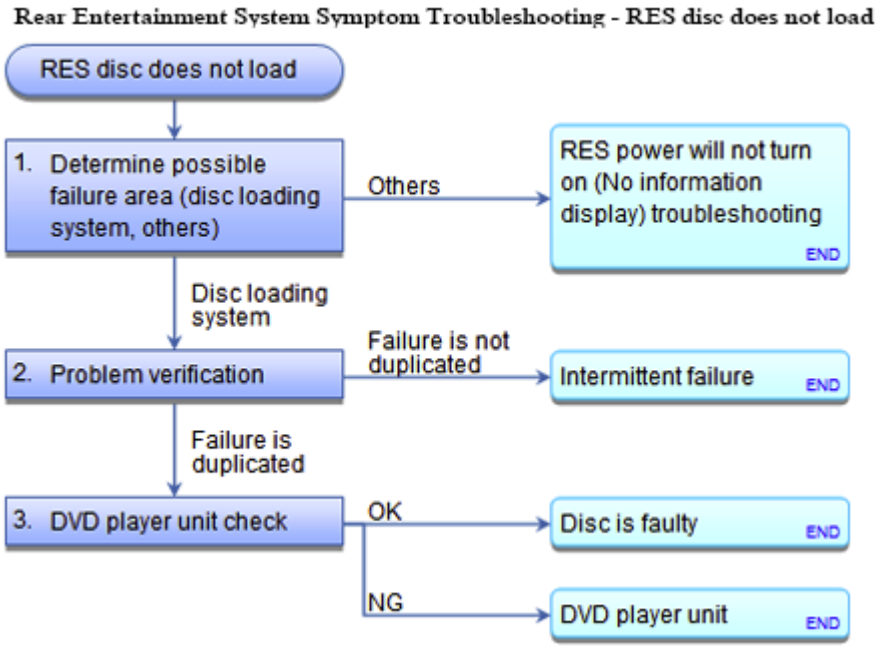

Fig. 38: Rear Entertainment System Symptom Troubleshooting Flow Chart (RES Disc Not Load)
Courtesy of AMERICAN HONDA MOTOR CO., INC.

NOTE:

- **CHECK THE VEHICLE BATTERY CONDITION FIRST .**
- **Discs with labels should not be used in the DVD player unit. They may damage the player mechanism.**
- **Make sure the disc is compatible with the system (see the Owner's Manual for more information).**
- **Check the connectors for poor connections or loose terminals.**

GETtheMANUALS.org

1. Determine possible failure area (disc loading system, others):
    - 1. Turn the ignition switch to ON (II).
    - 2. Press the REAR POWER button, and check if the REAR POWER button LED comes on.

    Is the REAR POWER button LED come on?

    YES : Go to step 2.

    NO : Go to **RES POWER WILL NOT TURN ON (NO INFORMATION DISPLAY) TROUBLESHOOTING**.

2. Problem verification:
    - 1. Try loading a disc.

    Does the disc load?

    YES : Intermittent failure, the system is OK at this time. If the disc loads normally, but will not play, go to **RES DISC DOES NOT PLAY TROUBLESHOOTING**.

    NO : The failure is duplicated, go to step 3.

3. DVD player unit check:
    - 1. Insert another disc.

    Does the disc load?

    YES : The original disc is faulty.

    NO : REPLACE THE DVD PLAYER UNIT .

RES DISC DOES NOT PLAY

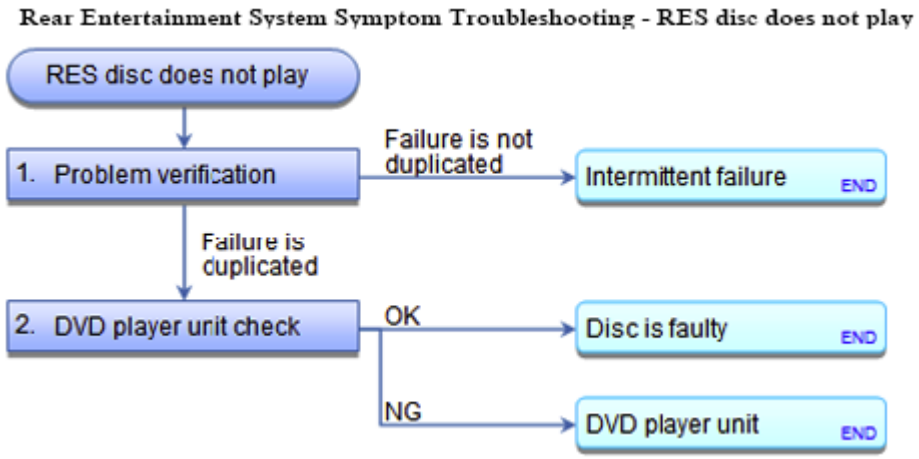

GETtheMANUALS.org

Fig. 39: Rear Entertainment System Symptom Troubleshooting Flow Chart (RES Disc Not Play)
Courtesy of AMERICAN HONDA MOTOR CO., INC.

NOTE:

- **CHECK THE VEHICLE BATTERY CONDITION FIRST .**
- **DVD-R/RWs will not work in the DVD player unit.**
- **Damaged or contaminated discs may not always play properly.**
- **Discs with labels should not be used in the DVD player unit. They may damage the player mechanism.**
- **You need to switch the DVD player unit REAR POWER button on for the rear screen, remote controls, and sound to operate.**
- **Check the connectors for poor connections or loose terminals.**

1. Problem verification:
   - 1. Turn the ignition switch to ON (II).
   - 2. Insert a disc to see if the symptom can be duplicated.

   Does the disc play?

   YES : Intermittent failure, the system is OK at this time.

   NO : The failure is duplicated, go to step 2.

2. DVD player unit check:
   - 1. Insert a known-good disc.

   Does the DVD play (display properly and sound normal)?

   YES : The original disc is faulty, or has an unreadable format.

   NO : REPLACE THE DVD PLAYER UNIT .

RES DISC SKIPS

GETtheMANUALS.org

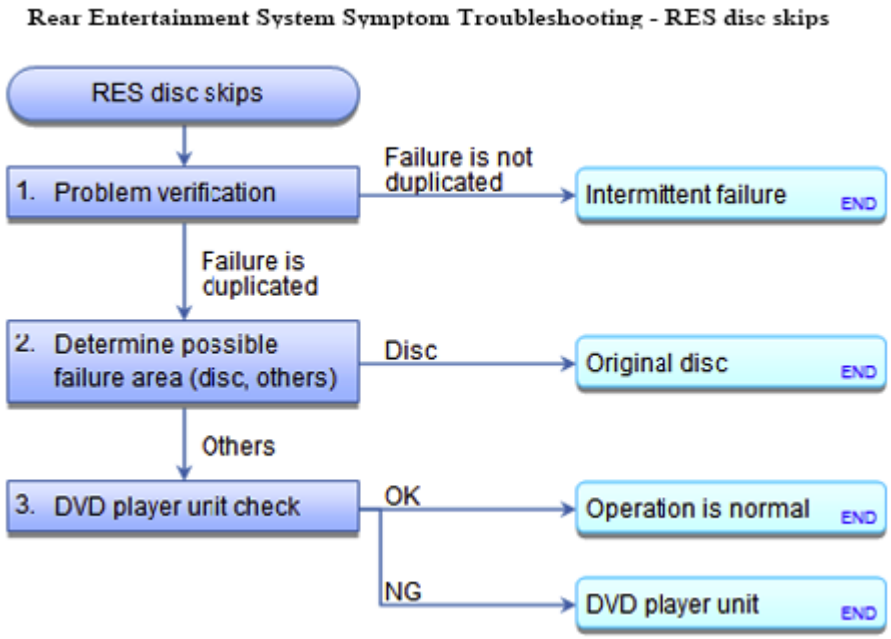

Fig. 40: Rear Entertainment System Symptom Troubleshooting Flow Chart (RES Disc Skips)
Courtesy of AMERICAN HONDA MOTOR CO., INC.

NOTE:

- **CHECK THE VEHICLE BATTERY CONDITION FIRST .**
- **Copy protected material on a CD-R/RW or a DVD-R/RW disc will skip or not play.**
- **Check for scratches, smudges, and fingerprints on the disc.**

1. Problem verification:
   - 1. Turn the ignition switch to ON (II).
   - 2. Try playing a disc.

   Does the disc skip?

   YES : The failure is duplicated, go to step 2.

   NO : Intermittent failure, the system is OK at this time.

2. Determine possible failure area (disc, others):
   - 1. Eject the original disc, and insert a known-good disc, and recheck.

   Does the disc play properly?

   YES : The original disc is dirty or the wrong type.

   NO : Go to step 3.

GETtheMANUALS.org

3. DVD player unit check:
    - 1. Compare the disc skipping to a known-good vehicle under the same conditions.

    Does the known-good vehicle's disc skip under the same conditions (over the same bumps and on the same rough roads)?

    YES : Operation is normal.

    NO : REPLACE THE DVD PLAYER UNIT .

GETtheMANUALS.org

Rear Entertainment System Symptom Troubleshooting - RES power will not turn on (No information display)

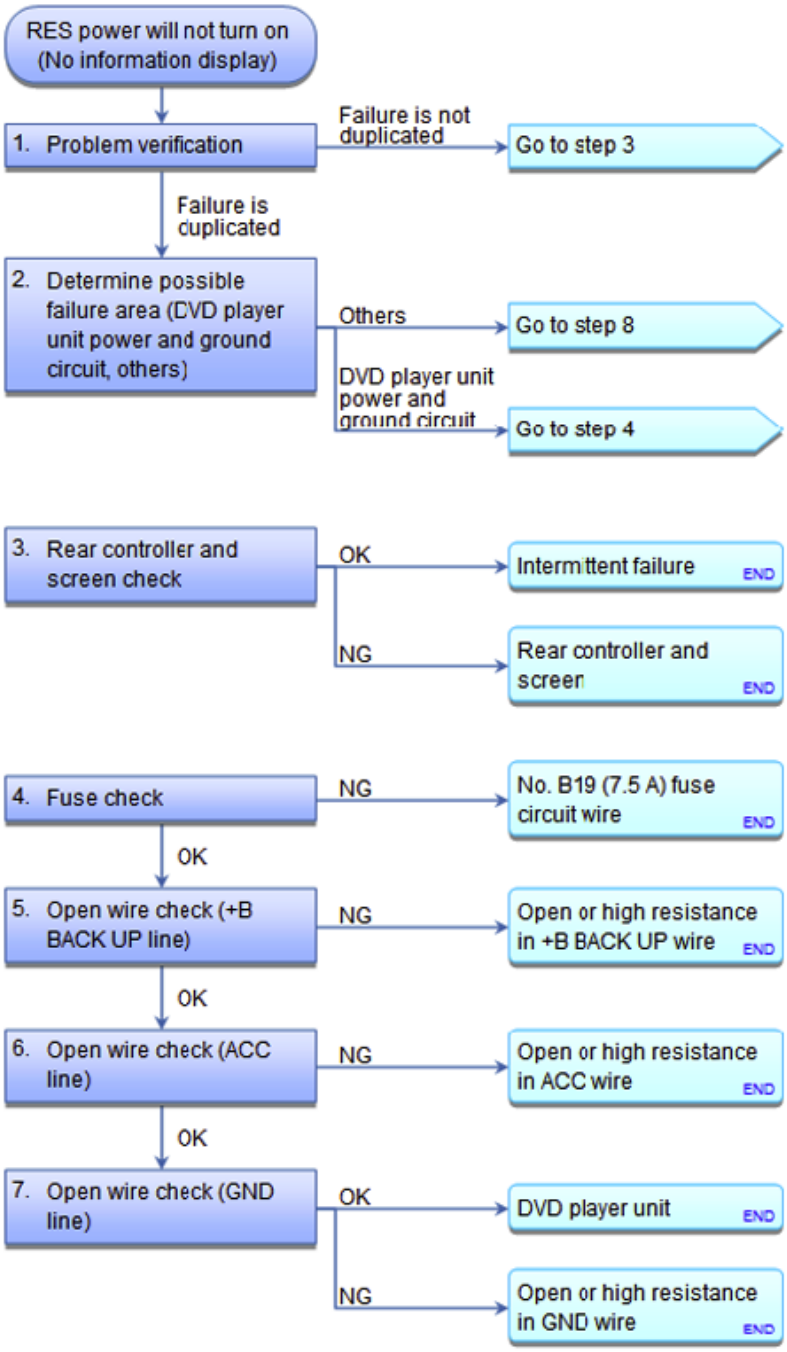

Fig. 41: Rear Entertainment System Symptom Troubleshooting Flow Chart (RES Power Will Not Turn On 1 Of 2)
Courtesy of AMERICAN HONDA MOTOR CO., INC.

RES POWER WILL NOT TURN ON (NO INFORMATION DISPLAY)

GETtheMANUALS.org

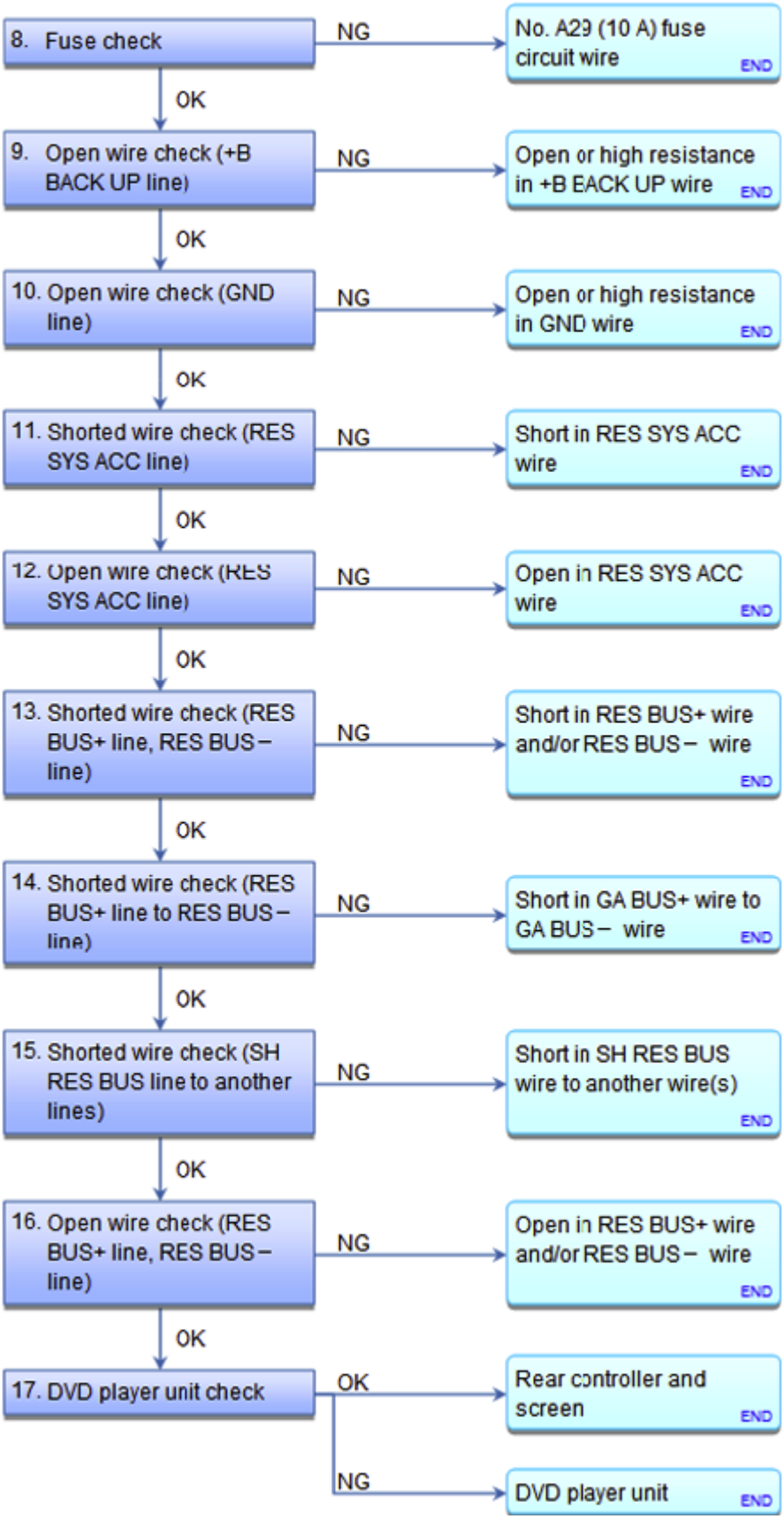

GETtheMANUALS.org

Fig. 42: Rear Entertainment System Symptom Troubleshooting Flow Chart (RES Power Will Not Turn On 2 Of 2)
Courtesy of AMERICAN HONDA MOTOR CO., INC.

NOTE:

- **CHECK THE VEHICLE BATTERY CONDITION FIRST .**
- **Before you troubleshoot, make sure to follow the How to Troubleshoot the Rear Entertainment System See HOW TO TROUBLESHOOT THE REAR ENTERTAINMENT SYSTEM or REAR ENTERTAINMENT SYSTEM SELF-DIAGNOSTIC FUNCTION .**
- **Check the connectors for poor connections or loose terminals.**

1. Problem verification:
   - 1. Turn the ignition switch to ON (II).
   - 2. Turn the Rear Power button on.
   - 3. Open the rear screen, and check if the rear screen turns on.

   Does the rear screen turns on (displays the opening screen)?

   YES : Go to step 3.

   NO : The failure is duplicated, go to step 2.

2. Determine possible failure area (DVD player unit power and ground circuit, others):
   - 1. Press the REAR POWER button on the DVD player unit, and check if the REAR POWER button LED comes on.

   Does the REAR POWER button LED come on?

   YES : Go to step 8.

   NO : Go to step 4.

3. Rear controller and screen check:
   - 1. **Do the RES self-diagnostic function with the DVD player unit** See **HOW TO TROUBLESHOOT THE REAR ENTERTAINMENT SYSTEM** or **REAR ENTERTAINMENT SYSTEM SELF-DIAGNOSTIC FUNCTION** .

   Does the self-diagnosis start, and is the CONNECT diagnosis OK?

   YES : Intermittent failure, the system is OK at this time.

   NO : **REPLACE THE REAR CONTROLLER AND SCREEN**.

4. Fuse check:
   - 1. Turn the ignition switch to LOCK (0).

GETtheMANUALS.org

- 2. Check the following fuse.

  Fuse No. B19 (7.5 A)

  Location Under-dash fuse/relay box

Is the fuse OK?

YES : Go to step 5.

NO : Replace the fuse, and recheck. If the fuse blows again, check for a short in the No. B19 (7.5 A) fuse circuit.

5. Open wire check (+B BACK UP line):
   - 1. Measure the voltage between test points 1 and 2.

     Test condition IG LOCK (0)

     Test circuit +B BACK UP

     Test point 1 DVD player unit 24P connector No. 12 (GRN)

     Test point 2 Body ground

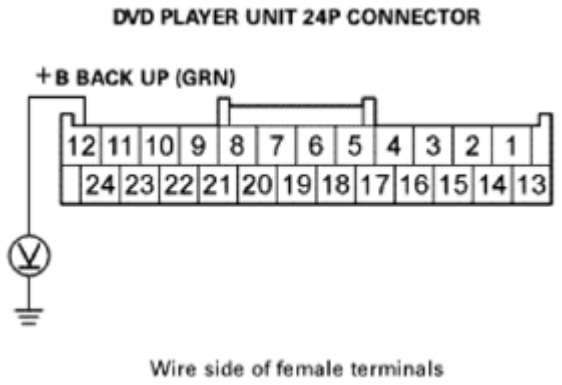

Fig. 43: Measuring Voltage Between DVD Player Unit 24P Connector No. 12 (GRN) And Body Ground
Courtesy of AMERICAN HONDA MOTOR CO., INC.

Is there battery voltage?

YES : The +B BACK UP wire is OK. Go to step 6.

NO : Repair an open or high resistance in the wire between the No. A29 (10 A) fuse in the under-hood fuse/relay box and the DVD player unit.

GETtheMANUALS.org

6. Open wire check (ACC line):
    - 1. Turn the ignition switch to ON (II).
    - 2. Measure the voltage between test points 1 and 2.

    Test condition IG ON (II)

    Test circuit ACC

    Test point 1 DVD player unit 24P connector No. 11 (LT GRN)

    Test point 2 Body ground

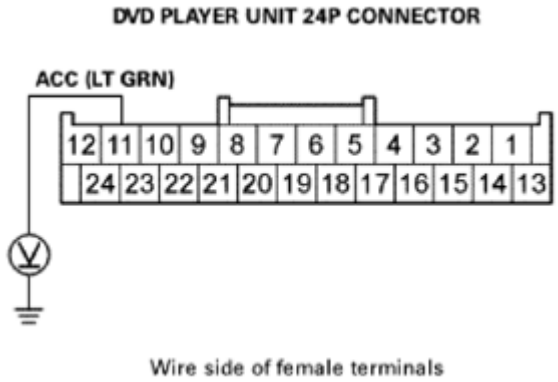

Fig. 44: Measuring Voltage Between DVD Player Unit 24P Connector No. 11 (LT GRN) And Body Ground
Courtesy of AMERICAN HONDA MOTOR CO., INC.

Is there battery voltage?

YES : The ACC wire is OK. Go to step 7.

NO : Repair an open or high resistance in the wire between the No. B19 (7.5 A) fuse in the under-dash fuse/relay box and the DVD player unit.

7. Open wire check (GND line):
    - 1. Measure the voltage between test points 1 and 2.

    Test condition IG ON (II)

    Test circuit GND

    Test point 1 DVD player unit 24P connector No. 13 (BLK)

    Test point 2 Body ground

GETtheMANUALS.org

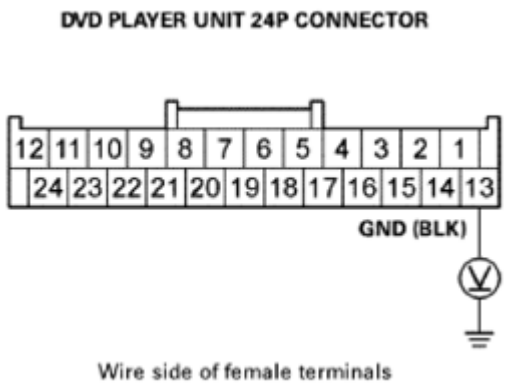

Fig. 45: Measuring Voltage Between DVD Player Unit 24P Connector No. 13 (BLK) And Body Ground
Courtesy of AMERICAN HONDA MOTOR CO., INC.

Is there less than 0.2 V?

YES : REPLACE THE DVD PLAYER UNIT .

NO : Repair an open or high resistance in the wire between the DVD player unit and body ground (G503).

8. Fuse check:
   - 1. Turn the ignition switch to LOCK (0).
   - 2. Check the following fuse.

     Fuse No. A29 (10 A)

     Location Under-hood fuse/relay box

Is the fuse OK?

YES : Go to step 9.

NO : Replace the fuse, and recheck. If the fuse blows again, check for a short in the No. A29 (10 A) fuse circuit.

9. Open wire check (+B BACK UP line):
   - 1. Measure the voltage between test points 1 and 2.

     Test condition IG LOCK (0)

     Test circuit +B BACK UP

     Test point 1 Rear controller and screen 16P connector No. 1 (RED)

GETtheMANUALS.org

Test point 2 Body ground

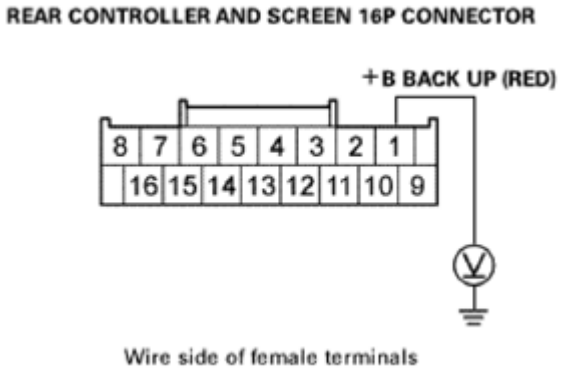

Fig. 46: Measuring Voltage Between Rear Controller And Screen 16P Connector No. 1 (RED) And Body Ground
Courtesy of AMERICAN HONDA MOTOR CO., INC.

Is there battery voltage?

YES : The +B BACK UP wire is OK. Go to step 10.

NO : Repair an open or high resistance in the wire between the No. A29 (10 A) fuse in the under-hood fuse/relay box and the rear controller and screen.

10. Open wire check (GND line):
    - 1. Turn the ignition switch to ON (II).
    - 2. Measure the voltage between test points 1 and 2.

    Test condition IG ON (II)

    Test circuit GND

    Test point 1 Rear controller and screen 16P connector No. 16 (BLK)

    Test point 2 Body ground

GETtheMANUALS.org

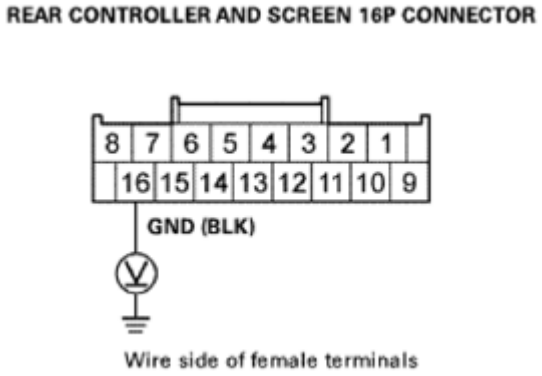

Fig. 47: Measuring Voltage Between Rear Controller And Screen 16P Connector No. 16 (BLK) And Body Ground
Courtesy of AMERICAN HONDA MOTOR CO., INC.

Is there less than 0.2 V?

YES : The GND wire is OK. Go to step 11.

NO : Repair an open or high resistance in the wire between the rear controller and screen and body ground (G501).

11. Shorted wire check (RES SYS ACC line):
    - 1. Turn the ignition switch to LOCK (0).
    - 2. Disconnect the following connectors.

      DVD player unit 24P connector

      Rear controller and screen 16P connector

    - 3. Check for continuity between test points 1 and 2.

      Test condition IG LOCK (0)

      DVD player unit 24P connector: disconnected

      Rear controller and screen 16P connector: disconnected

      Test circuit RES SYS ACC

      Test point 1 Rear controller and screen 16P connector No. 8 (PNK)

      Test point 2 Body ground

GETtheMANUALS.org

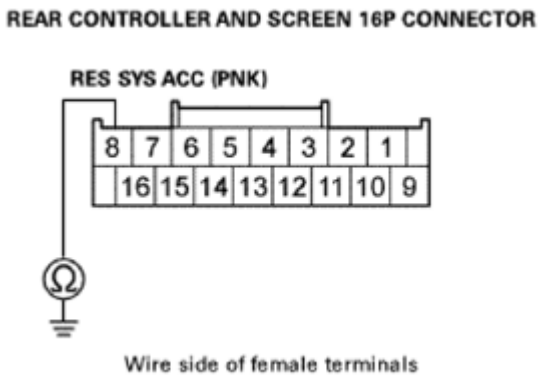

Fig. 48: Checking Continuity Between Rear Controller And Screen 16P Connector No. 8 (PNK) And Body Ground
Courtesy of AMERICAN HONDA MOTOR CO., INC.

Is there continuity?

YES : Repair a short to body ground in the wire between the DVD player unit and the rear controller and screen.

NO : The RES SYS ACC wire is not shorted to ground. Go to step 12.

12. Open wire check (RES SYS ACC line):
    - 1. Check for continuity between test points 1 and 2.

      Test condition IG LOCK (0)

      DVD player unit 24P connector: disconnected

      Rear controller and screen 16P connector: disconnected

      Test circuit RES SYS ACC

      Test point 1 Rear controller and screen 16P connector No. 8 (PNK)

      Test point 2 DVD player unit 24P connector No. 1 (PNK)

GETtheMANUALS.org

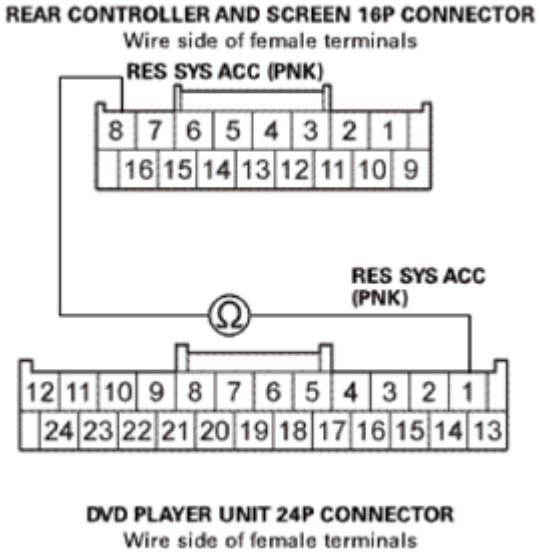

Fig. 49: Checking Continuity Between Rear Controller And Screen 16P Connector No. 8 (PNK) And DVD Player Unit 24P Connector No. 1 (PNK)
Courtesy of AMERICAN HONDA MOTOR CO., INC.

Is there continuity?

YES : The RES SYS ACC wire is OK. Go to step 13.

NO : Repair an open in the wire between the DVD player unit and the rear controller and screen.

13. Shorted wire check (RES BUS+ line, RES BUS- line):
    - 1. Check for continuity between test points 1 and 2.

      Test condition IG LOCK (0)

      DVD player unit 24P connector: disconnected

      Rear controller and screen 16P connector: disconnected

      Test circuit RES BUS+

      Test point 1 DVD player unit 24P connector No. 10 (RED)

      Test point 2 Body ground

      Test circuit RES BUS-

      Test point 1 DVD player unit 24P connector No. 23 (GRN)

      Test point 2 Body ground

GETtheMANUALS.org

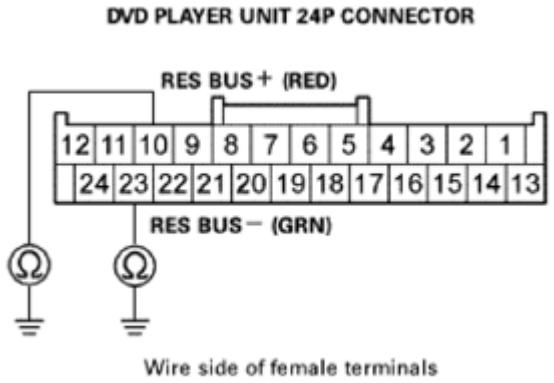

Fig. 50: Checking Continuity Between DVD Player Unit 24P Connector No. 10 (RED) And Body Ground
Courtesy of AMERICAN HONDA MOTOR CO., INC.

Is there continuity?

YES : There is a short to body ground in the wire(s) between the DVD player unit and the rear controller and screen. Replace the affected shielded harness.

NO : The RES BUS+ and the RES BUS- wires are not shorted to ground. Go to step 14.

14. Shorted wire check (RES BUS+ line to RES BUS- line):
    - 1. Check for continuity between test points 1 and 2.

      Test condition IG LOCK (0)

      DVD player unit 24P connector: disconnected

      Rear controller and screen 16P connector: disconnected

      Test circuit RES BUS+, RES BUS-

      Test point 1 DVD player unit 24P connector No. 10 (RED)

      Test point 2 DVD player unit 24P connector No. 23 (GRN)

GETtheMANUALS.org

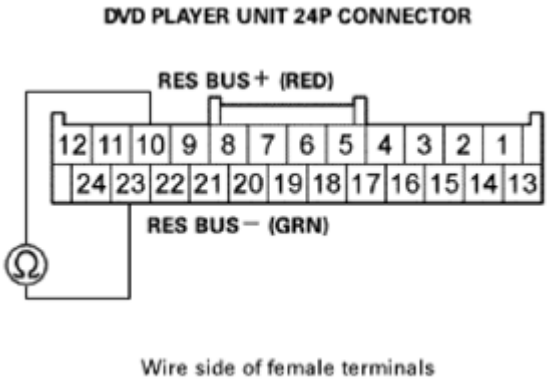

Fig. 51: Checking Continuity Between DVD Player Unit 24P Connector No. 10 (RED) And DVD Player Unit 24P Connector No. 23 (GRN)
Courtesy of AMERICAN HONDA MOTOR CO., INC.

Is there continuity?

YES : There is a short in the wires between the DVD player unit and the rear controller and screen. Replace the affected shielded harness.

NO : The RES BUS+ and the RES BUS- wires are not shorted. Go to step 15.

15. Shorted wire check (SH RES BUS line to another lines):
    - 1. Check for continuity between test points 1 and 2.

      Test condition IG LOCK (0)

      DVD player unit 24P connector: disconnected

      Rear controller and screen 16P connector: disconnected

      Test circuit SH RES BUS, RES BUS+

      Test point 1 DVD player unit 24P connector No. 24 (GRY)

      Test point 2 DVD player unit 24P connector No. 10 (RED)

      Test circuit SH RES BUS, RES BUS-

      Test point 1 DVD player unit 24P connector No. 24 (GRY)

      Test point 2 DVD player unit 24P connector No. 23 (GRN)

GETtheMANUALS.org

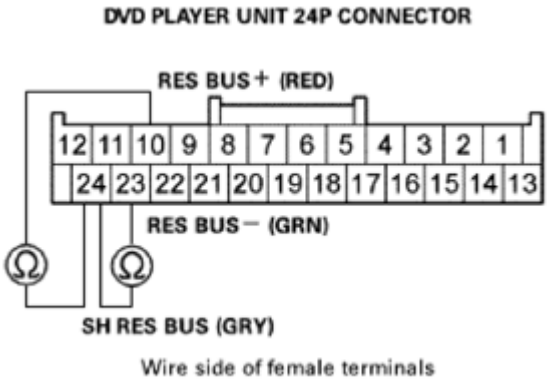

Fig. 52: Checking Continuity Between DVD Player Unit 24P Connector No. 24 (GRY) And No. 10 (RED)
Courtesy of AMERICAN HONDA MOTOR CO., INC.

Is there continuity?

YES : There is a short in the wires between the DVD player unit and the rear controller and screen. Replace the affected shielded harness.

NO : The SH RES BUS wire is OK. Go to step 16.

16. Open wire check (RES BUS+ line, RES BUS- line):
    - 1. Check for continuity between test points 1 and 2.

      Test condition IG LOCK (0)

      DVD player unit 24P connector: disconnected

      Rear controller and screen 16P connector: disconnected

      Test circuit GA BUS+

      Test point 1 Rear controller and screen 16P connector No. 2 (RED)

      Test point 2 DVD player unit 24P connector No. 10 (RED)

      Test circuit GA BUS-

      Test point 1 Rear controller and screen 16P connector No. 10 (GRN)

      Test point 2 DVD player unit 24P connector No. 23 (GRN)

GETtheMANUALS.org

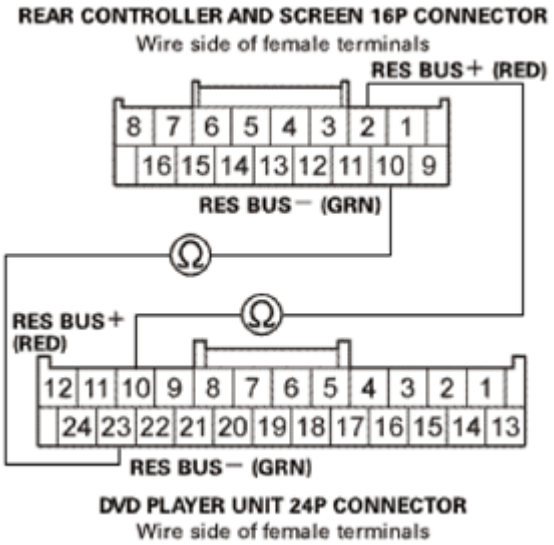

Fig. 53: Checking Continuity Between Rear Controller And Screen 16P Connector No. 10 (GRN) And DVD Player Unit 24P Connector No. 23 (GRN)
Courtesy of AMERICAN HONDA MOTOR CO., INC.

Is there continuity?

YES : The RES BUS+ and the RES BUS- wires are OK. Go to step 17.

NO : There is an open in the wire(s) between the DVD player unit and the rear controller and screen. Replace the affected shielded harness.

17. DVD player unit check:
    - 1. **SUBSTITUTE A KNOWN-GOOD REAR CONTROLLER AND SCREEN, AND RECHECK**.

Does the symptom go away?

YES : Replace the original rear controller and screen.

NO : REPLACE THE DVD PLAYER UNIT .

WIRELESS HEADPHONE SOUND IS WEAK, SOUND IS DISTORTED, THERE IS STATIC, VOLUME DOES NOT CHANGE, OR THERE IS NO SOUND IN ALL MODES

GETtheMANUALS.org

Rear Entertainment System Symptom Troubleshooting - Wireless headphone sound is weak, sound is distorted, there is static, volume does not change, or there is no sound in all modes

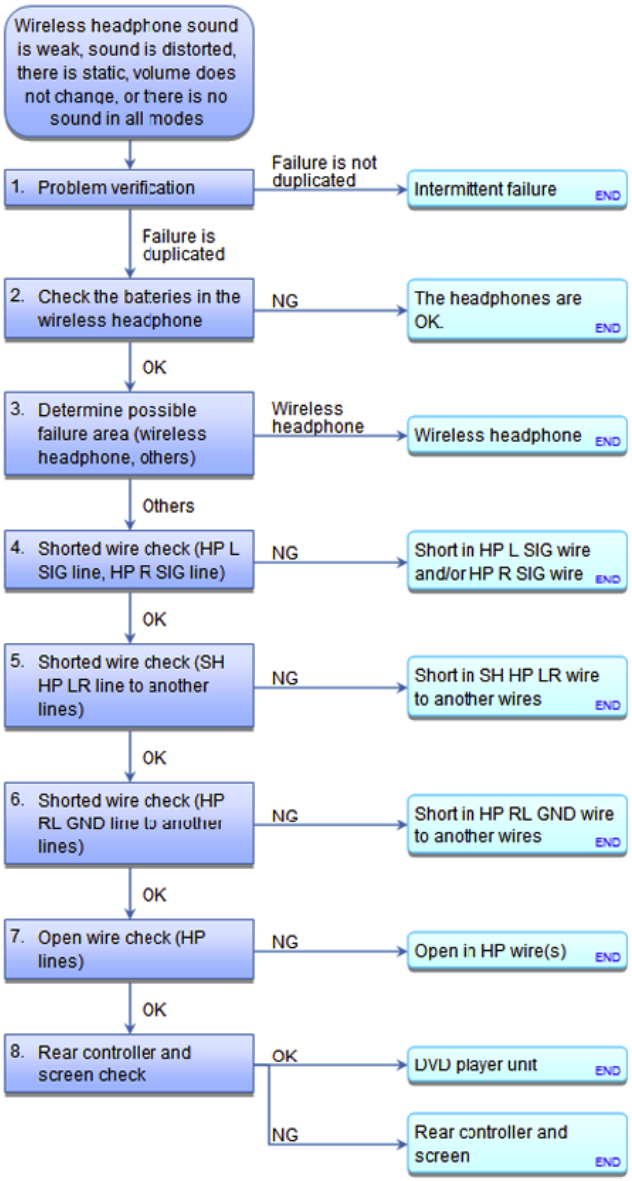

Fig. 54: Rear Entertainment System Symptom Troubleshooting Flow Chart (Wireless Headphone Weak Sound)
Courtesy of AMERICAN HONDA MOTOR CO., INC.

NOTE:

- **CHECK THE VEHICLE BATTERY CONDITION FIRST .**
- **Check the wireless headphone battery condition.**
- **Check the lens on the rear edge of the rear screen for dirt or damage.**
- **You may use known-good headphones from a factory installed or accessory RES, but it must be a similar vehicle.**
- **Check the connectors for poor connections or loose terminals.**

GETtheMANUALS.org

1. Problem verification:
    - 1. Turn the ignition switch to ON (II).
    - 2. Play a known-good disc to see if the symptom can be duplicated.

    Is the symptom duplicated?

    YES : The failure is duplicated, go to step 2.

    NO : Intermittent failure, the system is OK at this time.

2. Check the batteries in the wireless headphone:
    - 1. Replace the batteries in the wireless headphone.

    Does the symptom go away?

    YES : Weak or poor batteries. The headphones are OK.

    NO : Go to step 3.

3. Determine possible failure area (wireless headphone, others):
    - 1. Substitute a known-good wireless headphone, and recheck.

    Does the symptom go away?

    YES : Replace the original wireless headphone.

    NO : Go to step 4.

4. Shorted wire check (HP L SIG line, HP R SIG line):
    - 1. Turn the ignition switch to LOCK (0).
    - 2. Disconnect the following connectors.

      DVD player unit 24P connector

      Rear controller and screen 16P connector

    - 3. Check for continuity between test points 1 and 2.

      Test condition IG LOCK (0)

      DVD player unit 24P connector: disconnected

      Rear controller and screen 16P connector: disconnected

      Test circuit HP L SIG

GETtheMANUALS.org

Test point 1 DVD player unit 24P connector No. 19 (BLK)

Test point 2 Body ground

Test circuit HP R SIG

Test point 1 DVD player unit 24P connector No. 18 (RED)

Test point 2 Body ground

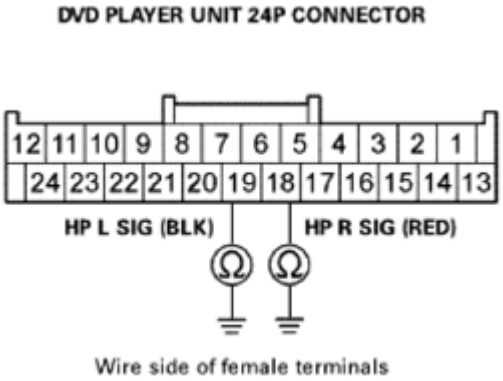

Fig. 55: Checking Continuity Between DVD Player Unit 24P Connector No. 18 (RED) And Body Ground
Courtesy of AMERICAN HONDA MOTOR CO., INC.

Is there continuity?

YES : There is a short to body ground in the wire(s) between the DVD player unit and the rear controller and screen. Replace the affected shielded harness.

NO : The HP L SIG and the HP R SIG wires are not shorted to ground. Go to step 5.

5. Shorted wire check (SH HP LR line to another lines):
   - 1. Check for continuity between test points 1 and 2.

     Test condition IG LOCK (0)

     DVD player unit 24P connector: disconnected

     Rear controller and screen 16P connector: disconnected

     Test circuit HP L SIG, SH HP LR

     Test point 1 DVD player unit 24P connector No. 19 (BLK)

     Test point 2 DVD player unit 24P connector No. 6 (GRY)

GETtheMANUALS.org

Test circuit HP R SIG, SH HP LR

Test point 1 DVD player unit 24P connector No. 18 (RED)

Test point 2 DVD player unit 24P connector No. 6 (GRY)

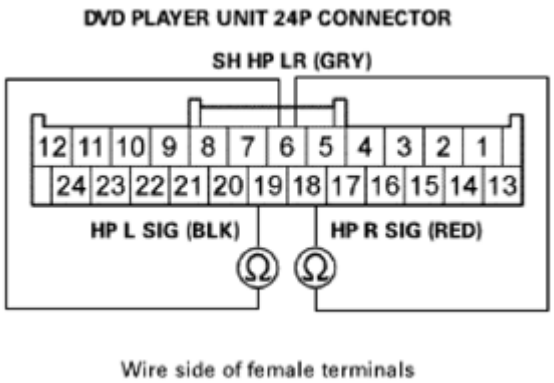

Fig. 56: Checking Continuity Between DVD Player Unit 24P Connector No. 18 (RED) And No. 6 (GRY)
Courtesy of AMERICAN HONDA MOTOR CO., INC.

Is there continuity?

YES : There is a short in the wires between the DVD player unit and the rear controller and screen. Replace the affected shielded harness.

NO : The SH HP LR wire is OK. Go to step 6.

6. Shorted wire check (HP RL GND line to another lines):
   - 1. Check for continuity between test points 1 and 2.

     Test condition IG LOCK (0)

     DVD player unit 24P connector: disconnected

     Rear controller and screen 16P connector: disconnected

     Test circuit HP L SIG, HP RL GND

     Test point 1 DVD player unit 24P connector No. 19 (BLK)

     Test point 2 DVD player unit 24P connector No. 7 (WHT)

     Test circuit HP R SIG, HP RL GND

     Test point 1 DVD player unit 24P connector No. 18 (RED)

GETtheMANUALS.org

Test point 2 DVD player unit 24P connector No. 7 (WHT)

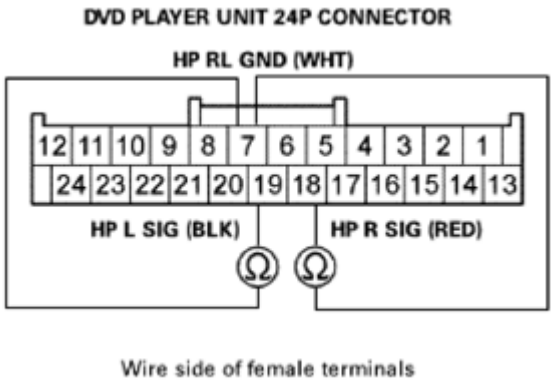

Fig. 57: Checking Continuity Between DVD Player Unit 24P Connector No. 18 (RED) And DVD Player Unit 24P Connector No. 7 (WHT)
Courtesy of AMERICAN HONDA MOTOR CO., INC.

Is there continuity?

YES : There is a short in the wires between the DVD player unit and the rear controller and screen. Replace the affected shielded harness.

NO : The HP RL GND wire is not shorted. Go to step 7.

7. Open wire check (HP lines):
   - 1. Check for continuity between test points 1 and 2.

     Test condition IG LOCK (0)

     DVD player unit 24P connector: disconnected

     Rear controller and screen 16P connector: disconnected

Test circuit	Test point 1: DVD player unit 24P connector	Test point 2: Rear controller and screen 16P connector
HP RL GND	No. 7 (WHT)	No. 5 (WHT)
HP R SIG	No. 18 (RED)	No. 14 (RED)
HP L SIG	No. 19 (BLK)	No. 13 (BLK)

GETtheMANUALS.org

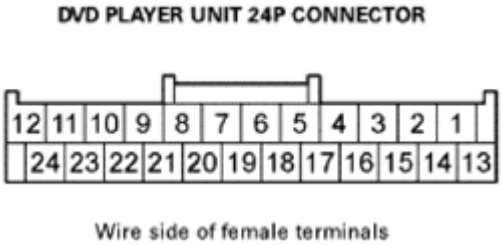

Fig. 58: Checking Continuity Between DVD Player Unit 24P Connector And Rear Controller And Screen 16P Connector (1 Of 2)
Courtesy of AMERICAN HONDA MOTOR CO., INC.

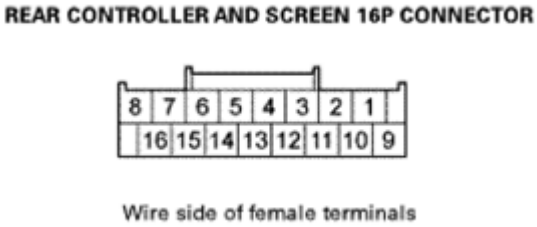

Fig. 59: Checking Continuity Between DVD Player Unit 24P Connector And Rear Controller And Screen 16P Connector (2 Of 2)
Courtesy of AMERICAN HONDA MOTOR CO., INC.

Is there continuity?

YES : The HP wires are OK. Go to step 8.

NO : There is an open in the wire(s) between the DVD player unit and the rear controller and screen. Replace the affected harness.

8. Rear controller and screen check:
   - 1. SUBSTITUTE A KNOWN-GOOD DVD PLAYER UNIT, AND RECHECK .

Does the symptom go away?

YES : Replace the original DVD player unit.

NO : **REPLACE THE REAR CONTROLLER AND SCREEN**.

WIRELESS REMOTE CONTROL DOES NOT WORK

GETtheMANUALS.org

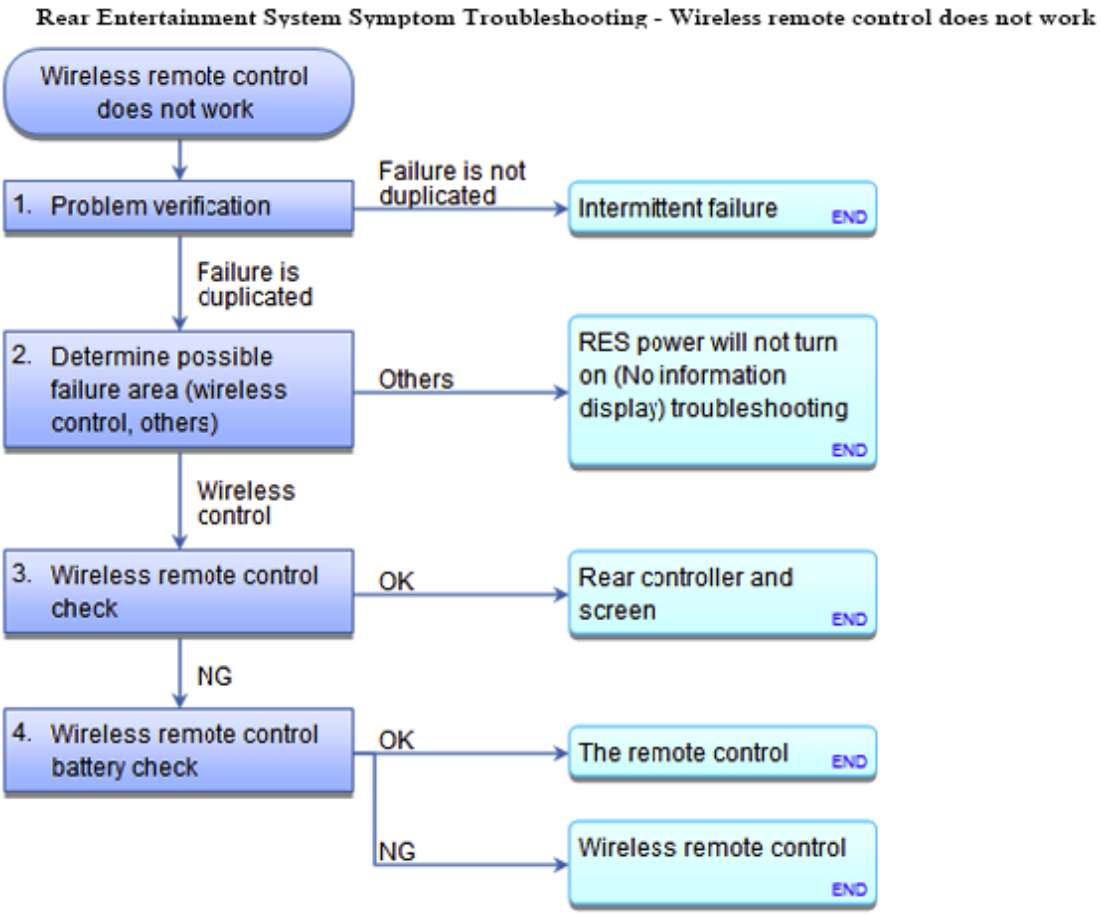

Fig. 60: Rear Entertainment System Symptom Troubleshooting Flow Chart (Wireless Remote Control Not Working)
Courtesy of AMERICAN HONDA MOTOR CO., INC.

NOTE:

- **CHECK THE VEHICLE BATTERY CONDITION FIRST .**
- **Check the lens on the rear edge of the rear screen for dirt or damage.**
- **The DVD player unit REAR PWR button must be ON, and the REAR CTRL OFF button must be OFF before the wireless remote control power button will operate.**
- **Check the connectors for poor connections or loose terminals.**

1. Problem verification:
   - 1. Turn the ignition switch to ON (II).
   - 2. Check the wireless remote control operation.

Does the wireless remote control operate normally?

YES : Intermittent failure, the system is OK at this time.

GETtheMANUALS.org

NO : The failure is duplicated, go to step 2

2. Determine possible failure area (wireless control, others):
    - 1. **Do the RES self-diagnostic function with the DVD player unit** See **HOW TO TROUBLESHOOT THE REAR ENTERTAINMENT SYSTEM** or **REAR ENTERTAINMENT SYSTEM SELF-DIAGNOSTIC FUNCTION** .

Does the self-diagnosis start?

YES : Go to step 3.

NO : Go to **RES POWER WILL NOT TURN ON (NO INFORMATION DISPLAY) TROUBLESHOOTING**.

3. Wireless remote control check:
    - 1. Turn the ignition switch to LOCK (0).
    - 2. **Do the RES self-diagnostic function with the wireless remote control** See **REAR ENTERTAINMENT SYSTEM SELF-DIAGNOSTIC FUNCTION** or **HOW TO TROUBLESHOOT THE REAR ENTERTAINMENT SYSTEM** .

Does the self-diagnosis start?

YES : **REPLACE THE REAR CONTROLLER AND SCREEN**.

NO : Go to step.4

4. Wireless remote control battery check:
    - 1. Replace the wireless remote control batteries.
    - 2. **Do the RES self-diagnostic function with the wireless remote control** See **HOW TO TROUBLESHOOT THE REAR ENTERTAINMENT SYSTEM** or **REAR ENTERTAINMENT SYSTEM SELF-DIAGNOSTIC FUNCTION** .

Does the self-diagnosis start?

YES : The remote control is OK.

NO : Choose appropiate troubleshooting **Rear Controller and Screen Removal and Installation**

GETtheMANUALS.org

REAR DAMPER/SPRING DISASSEMBLY, REASSEMBLY, AND INSPECTION

EXPLODED VIEW

1. Rear Damper/Spring Exploded View

Exploded View

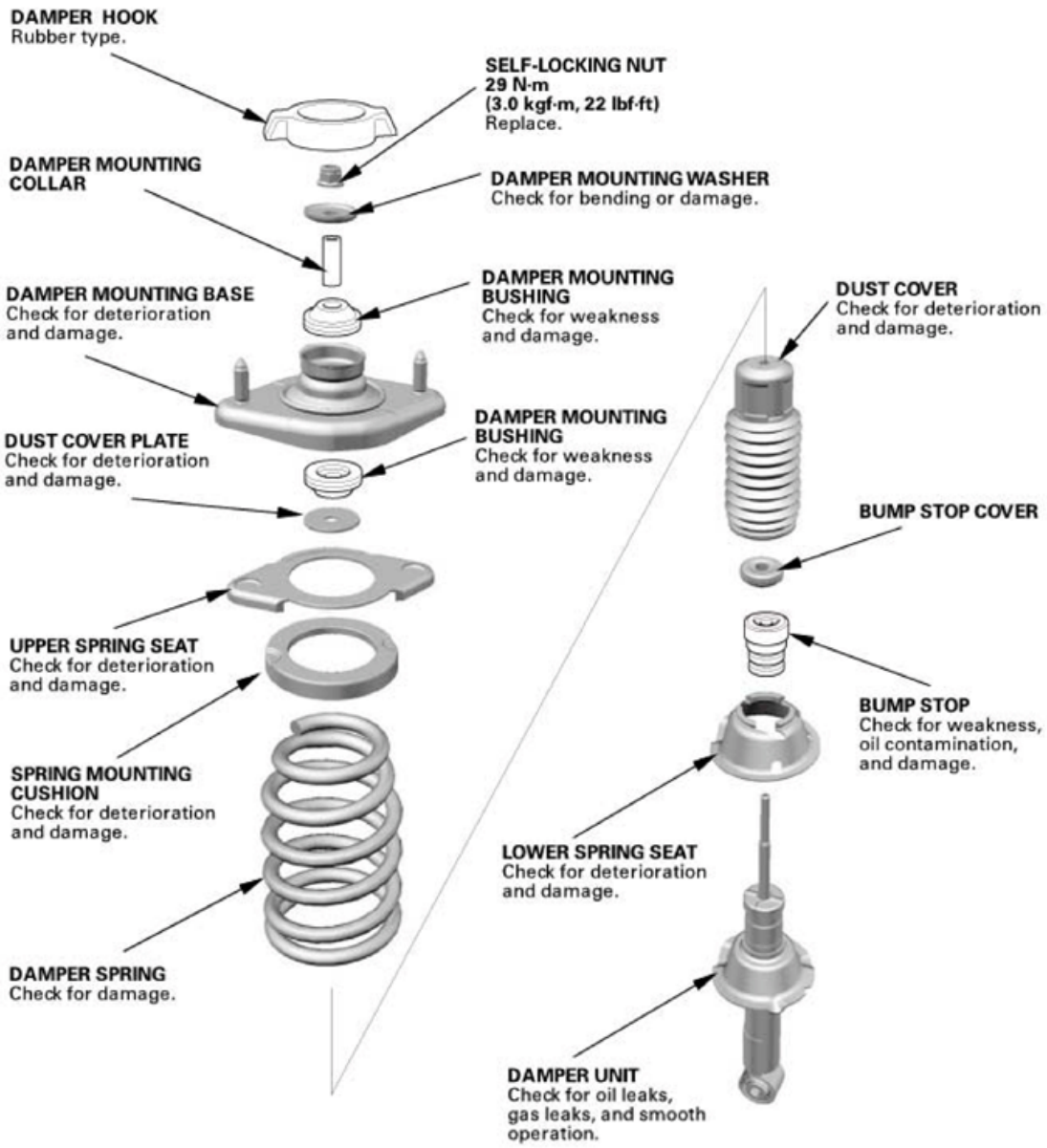

Fig. 1: Exploded View Of Rear Damper/Spring

GETtheMANUALS.org

Courtesy of AMERICAN HONDA MOTOR CO., INC.

DISASSEMBLY

NOTE:

- **When compressing the damper spring, use a commercially available strut spring compressor (Branick MST-580A or Model 7200, or equivalent) according to the manufacturer's instructions.**
- **Refer to the Exploded View as needed during the following procedure.**

1. Rear Damper
    1. Remove the rubber type damper hook (A) (if equipped).

    NOTE: **If a metal type damper hook is installed, discard it. The metal type damper hook is for factory assembly only.**

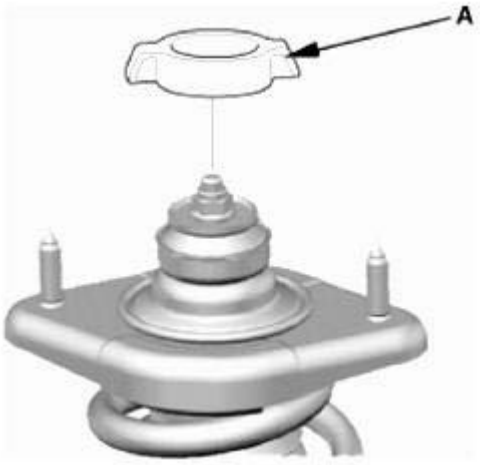

Fig. 2: Identifying Rubber Type Damper Hook
Courtesy of AMERICAN HONDA MOTOR CO., INC.

    2. Compress the damper spring.

    NOTE: **Do not compress the spring more than necessary to remove the nut.**

    3. Remove the self-locking nut (A) while holding the damper shaft with a hex wrench (B).
    4. Release the pressure from the strut spring compressor.
    5. Disassemble the damper as shown in the Exploded View.

GETtheMANUALS.org

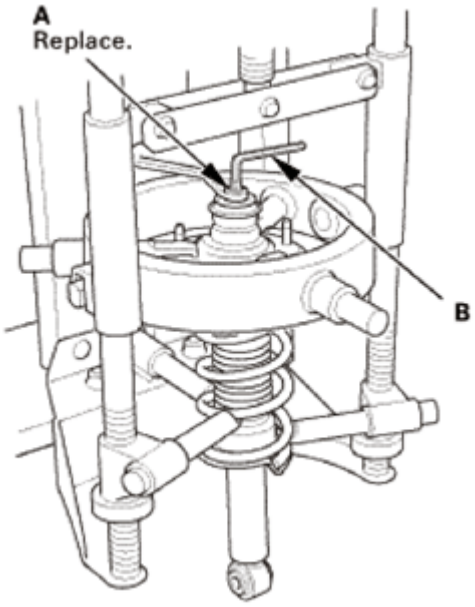

Fig. 3: Compressing Damper Spring
Courtesy of AMERICAN HONDA MOTOR CO., INC.

INSPECTION

1. Rear Damper - Inspection
    1. Reassemble all the parts, except the spring mounting cushion, the dust cover, the bump stop, and the damper spring.
    2. Compress the damper assembly by hand, and check for smooth operation through a full stroke, both compression and extension. The damper should extend smoothly and constantly when compression is released. If it does not, the gas is leaking and the damper should be replaced.
    3. Check for oil leaks, abnormal noises, or binding during these tests.

GETtheMANUALS.org

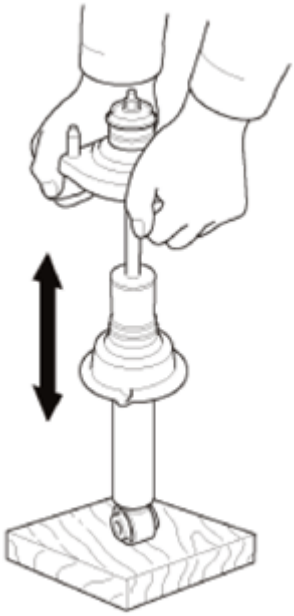

Fig. 4: Checking For Oil Leaks, Abnormal Noises And Binding
Courtesy of AMERICAN HONDA MOTOR CO., INC.

REASSEMBLY

NOTE:

- **When compressing the damper spring, use a commercially available strut spring compressor (Branick MST-580A or Model 7200, or equivalent) according to the manufacturer's instructions.**
- **Refer to the Exploded View as needed during the following procedure.**

1. Rear Damper
    1. Install all the parts except the self-locking nut and the cap onto the damper unit (A) by referring to the **EXPLODED VIEW**.
    2. Compress the damper spring.

        NOTE: Do not compress the spring excessively.

    3. Align the bottom of the damper spring (B) with the stepped part (C) of the lower spring seat.

GETtheMANUALS.org

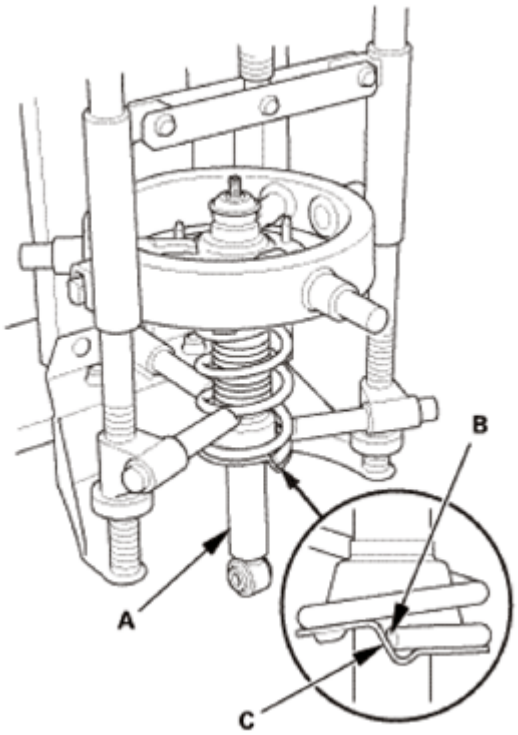

Fig. 5: Compressing Damper Spring
Courtesy of AMERICAN HONDA MOTOR CO., INC.

4. Align the angle of the stud (A) on the damper mounting base (B) with the bolt hole (C) on the bottom of the damper unit as shown.

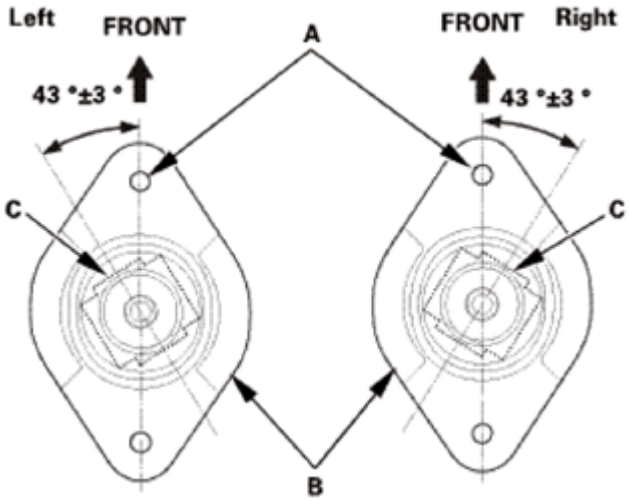

Fig. 6: Aligning Angle Of Stud On Damper Mounting Base With Bolt Hole
Courtesy of AMERICAN HONDA MOTOR CO., INC.

5. Install the damper mounting washer (A).
6. Install the new self-locking nut (B).

GETtheMANUALS.org

7. Hold the damper shaft using a hex wrench (C), and tighten the self-locking nut.
8. Remove the damper/spring from the strut spring compressor.

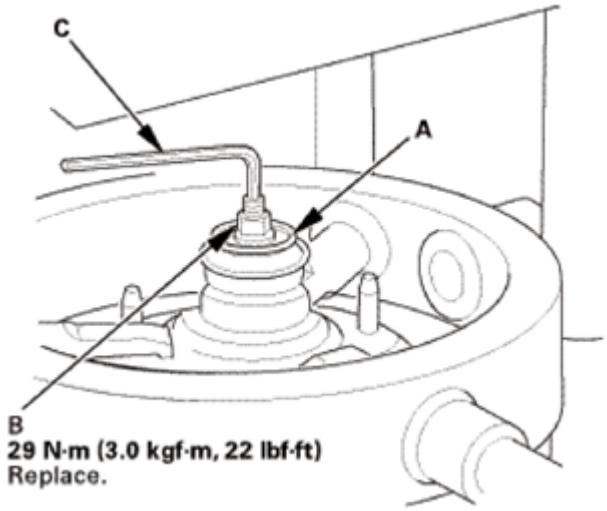

Fig. 7: Removing Damper/Spring From Strut Spring Compressor
Courtesy of AMERICAN HONDA MOTOR CO., INC.

9. Install the rubber type damper hook (A) (if equipped).

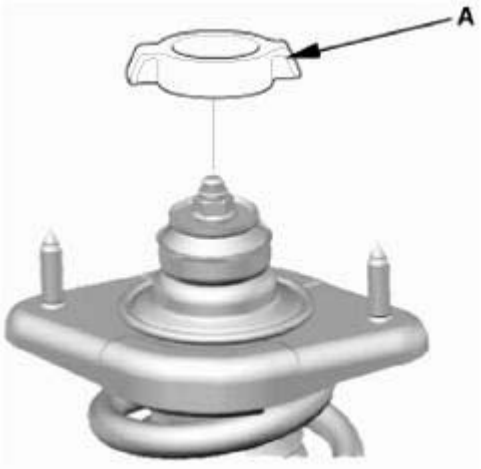

Fig. 8: Identifying Rubber Type Damper Hook
Courtesy of AMERICAN HONDA MOTOR CO., INC.

REAR DAMPER/SPRING REMOVAL AND INSTALLATION

REMOVAL

1. Vehicle Lift
    1. Raise the vehicle on a lift, and make sure it is securely supported.

GETtheMANUALS.org

2. Rear Wheel
    1. Remove the rear wheel.

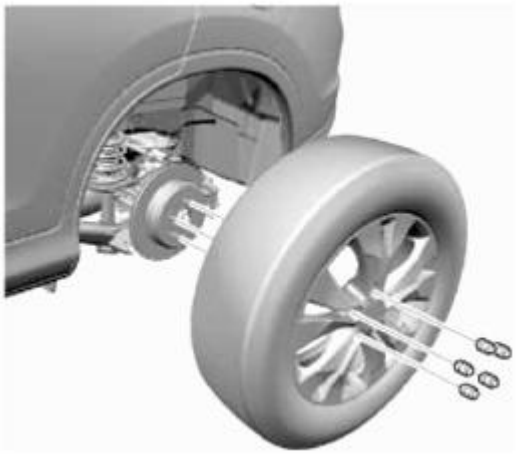

Fig. 9: Identifying Rear Wheel
Courtesy of AMERICAN HONDA MOTOR CO., INC.

3. Rear Knuckle - Jack Up
    1. Position a floor jack at the connecting point of the trailing arm (A) and the knuckle (B).
    2. Raise the floor jack until the suspension begins to compress.

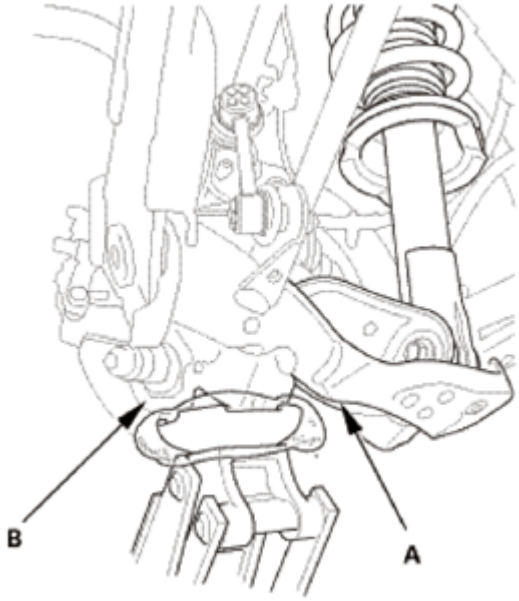

Fig. 10: Identifying Trailing Arm And Knuckle
Courtesy of AMERICAN HONDA MOTOR CO., INC.

4. Rear Damper Maintenance Cover
    1. Fold down the rear seat-back.

GETtheMANUALS.org

2. Pull up the rear damper maintenance cover (A) by hand to detach the hooks (B), then remove the rear damper maintenance cover.

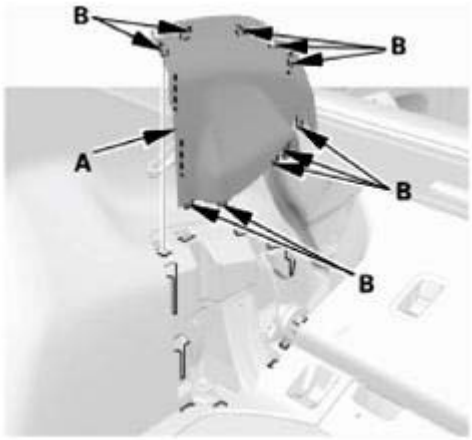

Fig. 11: Identifying Rear Damper Maintenance Cover And Hooks
Courtesy of AMERICAN HONDA MOTOR CO., INC.

5. Rear Damper Upper Side
    1. Remove the flange nuts (A) from the top of damper.

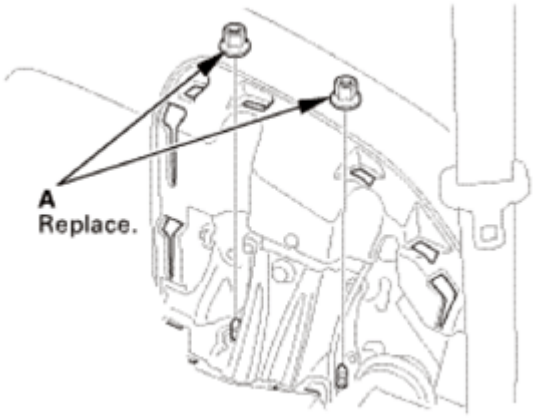

Fig. 12: Identifying Flange Nuts
Courtesy of AMERICAN HONDA MOTOR CO., INC.

6. Stabilizer Link Trailing Arm Side - Disconnection
    1. Remove the flange nut (A) while holding the respective joint pin (B) with a hex wrench (C).
    2. Disconnect the stabilizer link (D) from the trailing arm.

GETtheMANUALS.org

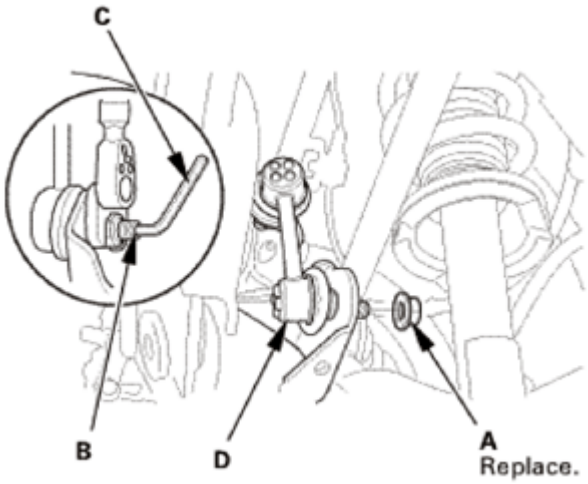

Fig. 13: Disconnecting Stabilizer Link From Trailing Arm
Courtesy of AMERICAN HONDA MOTOR CO., INC.

7. Rear Brake Hose - Disconnection
    1. Remove the brake hose (A) from the brake hose mounting bracket (B).

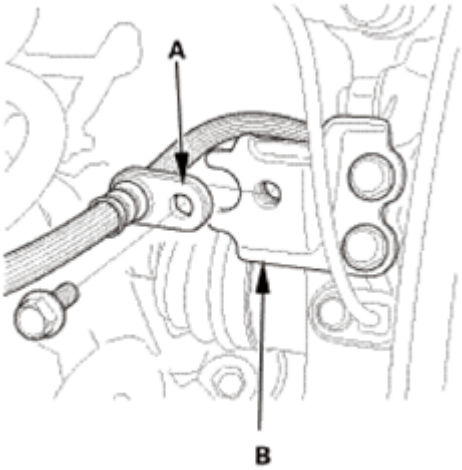

Fig. 14: Identifying Brake Hose And Brake Hose Mounting Bracket
Courtesy of AMERICAN HONDA MOTOR CO., INC.

8. Rear Trailing Arm Front Side - Disconnection
    1. Remove the flange bolt (A), then remove the parking brake cable (B).
    2. Remove the trailing arm mounting bolts (C).

GETtheMANUALS.org

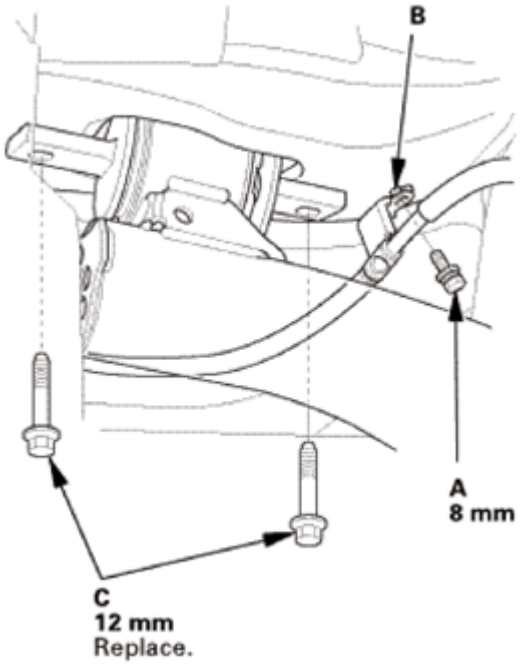

Fig. 15: Identifying Flange Bolt, Parking Brake Cable And Trailing Arm Mounting Bolts
Courtesy of AMERICAN HONDA MOTOR CO., INC.

9. Rear Damper Lower Side - Disconnection
    1. Remove the damper mounting bolt (A).

NOTE: Install the damper mounting bolt to the same direction as removal.

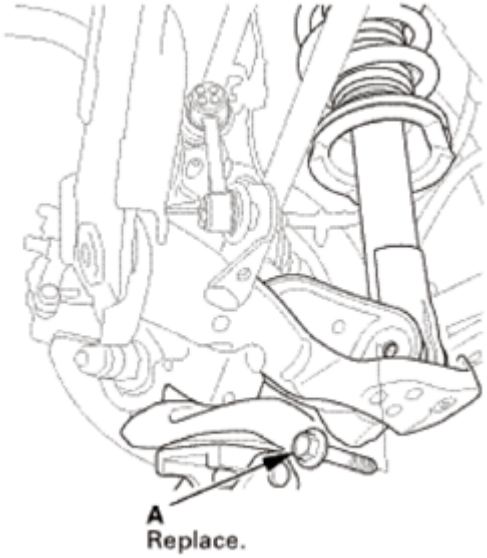

Fig. 16: Identifying Damper Mounting Bolt
Courtesy of AMERICAN HONDA MOTOR CO., INC.

GETtheMANUALS.org

10. Rear Damper/Spring
    1. Lower the rear suspension, then remove the damper/spring (A) from the vehicle.

NOTE: Be careful not to damage the body.

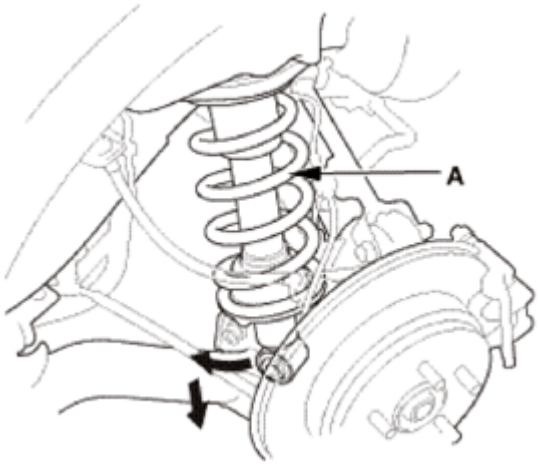

Fig. 17: Removing Damper/Spring From Vehicle
Courtesy of AMERICAN HONDA MOTOR CO., INC.

INSTALLATION

1. Rear Damper/Spring
    1. Position the damper/spring (A) between the body and the trailing arm.

NOTE: Be careful not to damage the body.

    2. Note the direction of the stepped part (B) of the lower spring seat on it is toward the inside of the vehicle.

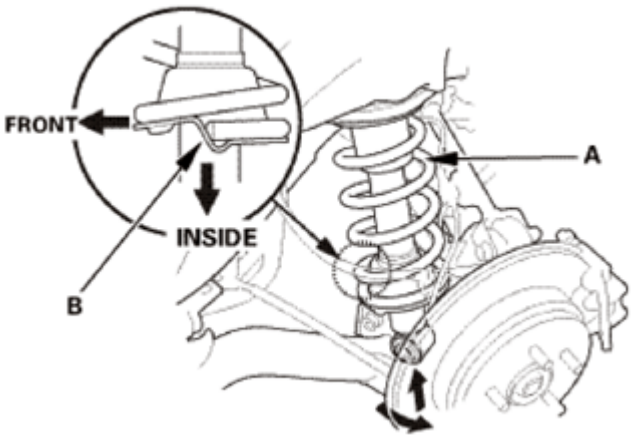

Fig. 18: Positioning Damper/Spring Between Body And Trailing Arm

GETtheMANUALS.org

Courtesy of AMERICAN HONDA MOTOR CO., INC.

2. Rear Knuckle - Jack Up
    1. Position a floor jack at the connecting point of the trailing arm (A) and the knuckle (B).
    2. Raise the floor jack until the suspension begins to compress.

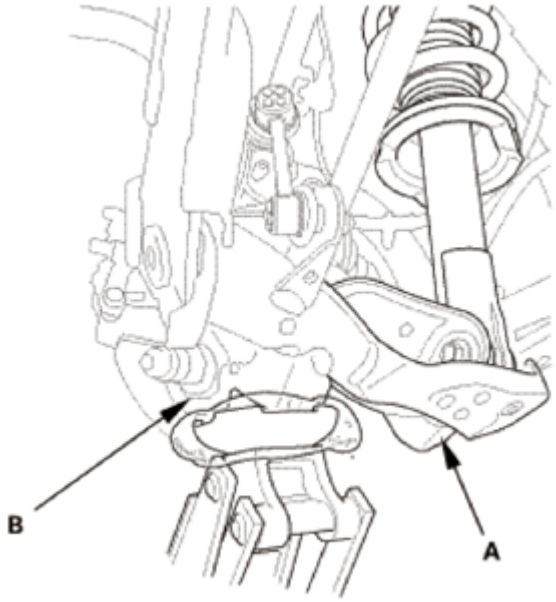

Fig. 19: Identifying Trailing Arm And Knuckle
Courtesy of AMERICAN HONDA MOTOR CO., INC.

3. Rear Damper Lower Side - Reconnection
    1. Loosely install the new damper mounting bolt (A).

NOTE: Install the damper mounting bolt to the same direction as removal.

GETtheMANUALS.org

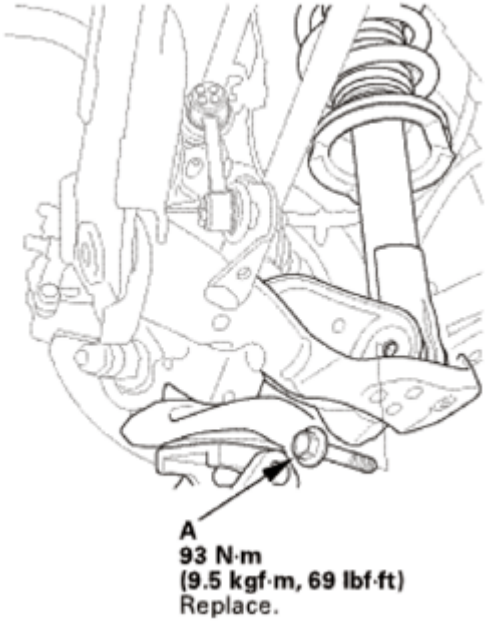

Fig. 20: Identifying Damper Mounting Bolt With Torque Specifications
Courtesy of AMERICAN HONDA MOTOR CO., INC.

4. Rear Trailing Arm Front Side - Reconnection
    1. Loosely install new trailing arm mounting bolts (A).
    2. Install the parking brake cable (B).

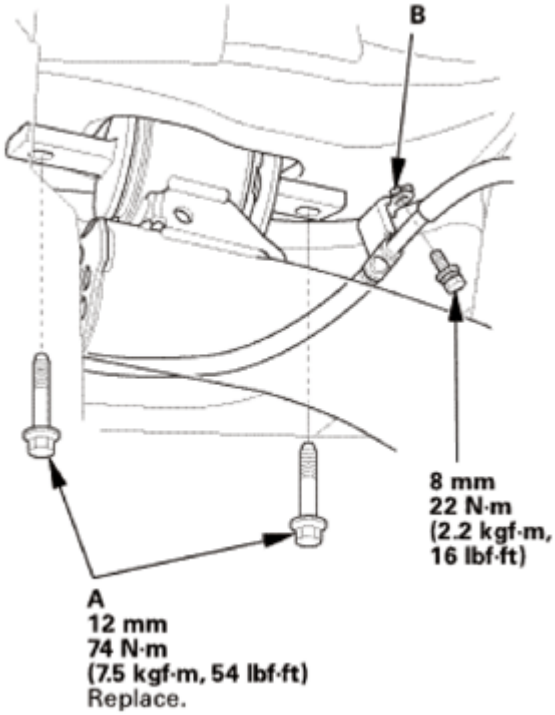

Fig. 21: Identifying Parking Brake Cable And Trailing Arm Mounting Bolts With Torque

GETtheMANUALS.org

Specifications
Courtesy of AMERICAN HONDA MOTOR CO., INC.

5. Rear Brake Hose - Reconnection
    1. Install the parking brake cable mounting bolt (A).

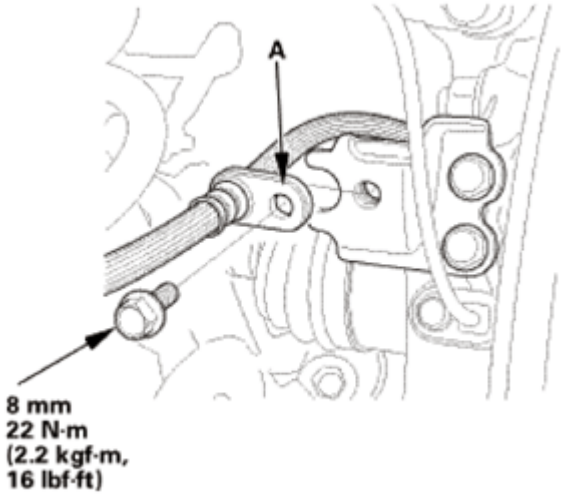

Fig. 22: Identifying Parking Brake Cable Mounting Bolt
Courtesy of AMERICAN HONDA MOTOR CO., INC.

6. Stabilizer Link Trailing Arm Side - Reconnection
    1. Connect the stabilizer link (A) to the trailing arm.
    2. Install the new flange nut (B), and tighten them to the specified torque while holding the respective joint pin (C) with a hex wrench (D).

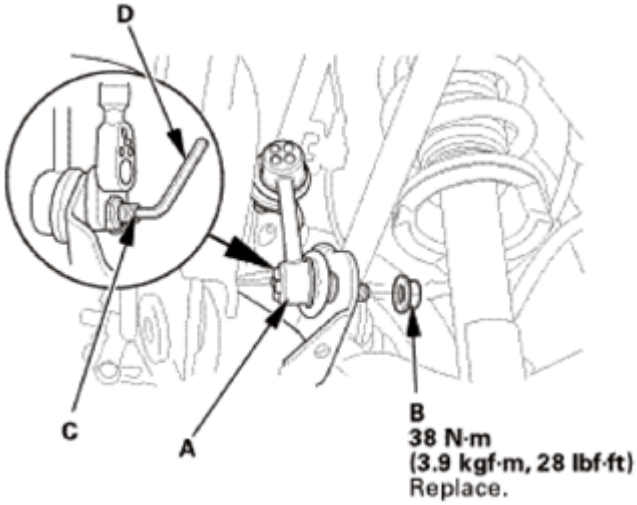

Fig. 23: Connecting Stabilizer Link To Trailing Arm
Courtesy of AMERICAN HONDA MOTOR CO., INC.

GETtheMANUALS.org

7. Rear Damper Upper Side
    1. Loosely install new flange nuts (A) to the top of the damper.

Fig. 24: Identifying Rear Damper Flange Nuts With Torque Specifications
Courtesy of AMERICAN HONDA MOTOR CO., INC.

8. Rear Damper Lower Side - Tighten Under Vehicle's Weight
    1. Raise the rear suspension with the jack until the vehicle just lifts off of the safety stands.
    2. Tighten the damper mounting bolt and the flange nuts to the specified torque.
9. Rear Damper Maintenance Cover
    1. Fold down the rear seat-back.
    2. Install the rear damper maintenance cover (A). Make sure the hooks (B) snap into place securely.

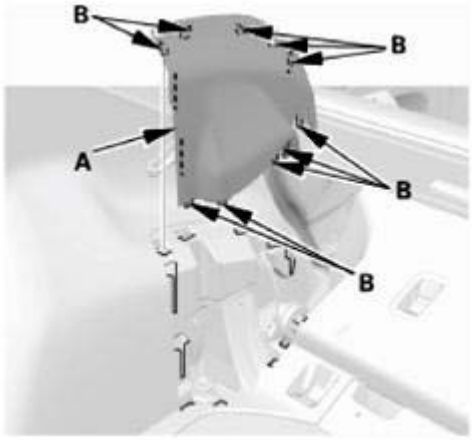

Fig. 25: Identifying Rear Damper Maintenance Cover And Hooks
Courtesy of AMERICAN HONDA MOTOR CO., INC.

10. Rear Wheel
    1. Install the rear wheel.

GETtheMANUALS.org

NOTE: **Before installing the wheel, clean the mating surfaces between the brake disc/drum and the inside of the wheel.**

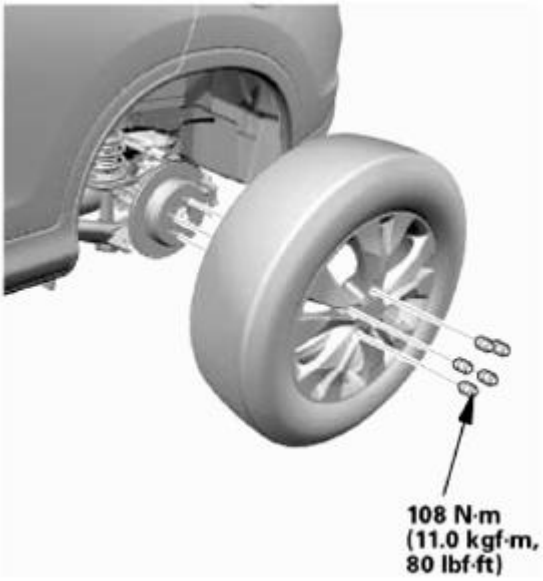

Fig. 26: Identifying Rear Wheel With Torque Specifications
Courtesy of AMERICAN HONDA MOTOR CO., INC.

11. Pre-Alignment Checks

    For proper inspection and adjustment of the wheel alignment, do these checks:

    1. Release the parking brake to avoid an incorrect measurement.
    2. Make sure the suspension is not modified.
    3. Make sure the fuel tank is full, and that the spare tire, the jack, and the tools are in place on the vehicle.
    4. Check the tire size and tire pressure according to tire information.
    5. Set the steering column to the middle tilt position and telescopic position.
12. Camber - Inspection

    Use commercially available computerized four wheel alignment equipment to measure wheel alignment (caster, camber, toe, and turning angle). Follow the equipment manufacturer's instructions.

    1. Check the camber angle.

       Camber angle:

       2WD:

       Front:

GETtheMANUALS.org

With 16 inch wheel: -0 ° 01 '±1 ° 00 '

Without 16 inch wheel: -0 ° 10 '±1 ° 00 '

(Maximum difference between the front right and left side: 1 °00 ')

Rear:

With 16 inch wheel: -1 ° 06 '±45 '

Without 16 inch wheel: -1 ° 12 '±45 '

(Maximum difference between the front right and left side: 0 °45 ')

AWD/4WD:

Front:

With 16 inch wheel: -0 ° 08 '±1 ° 00 '

Without 16 inch wheel: 0 ° 00 '±1 ° 00 '

(Maximum difference between the front right and left side: 1 °00 ')

Rear:

With 16 inch wheel: -0 ° 50 '±45 '

Without 16 inch wheel: -1 ° 00 '±45 '

(Maximum difference between the front right and left side: 0 °45 ')

- If the measurement is within specification, measure the toe-in.
- If the measurement for the front camber is not within the specification, go to front camber adjustment.
- If the measurement for the rear camber is not within the specification, check for bent or damaged suspension components.

13. Rear Toe - Inspection

Use commercially available computerized four wheel alignment equipment to measure wheel alignment (caster, camber, toe, and turning angle). Follow the equipment manufacturer's instructions.

1. Release the parking brake to avoid an incorrect measurement.
2. Check the toe.

Rear toe-in: 2^{+2}_{-1} mm ($0.08^{+0.08}_{-0.04}$ in)

GETtheMANUALS.org

- If adjustment is required, go to the rear toe adjustment.
- If no adjustment is required, go to front toe inspection.

14. HDS DLC - Connection
    1. Connect the HDS to the data link connector (DLC) (A) located under the driver's side of the dashboard.
    2. Turn the ignition switch to ON (II).
    3. Make sure the HDS communicates with the vehicle. If it does not communicate, go to the DLC circuit troubleshooting.

Fig. 27: Identifying Data Link Connector
Courtesy of AMERICAN HONDA MOTOR CO., INC.

15. VSA Sensor Neutral Position - Memorization
    1. Park the vehicle on a flat and level surface, with the steering wheel in the straight ahead position.
    2. Select VSA ADJUSTMENT, then select ALL SENSORS with the HDS, and follow the screen prompts.

NOTE: See the HDS Help menu for specific instructions.

16. Steering Angle Sensor Neutral Position - Clear
    1. Select EPS ADJUSTMENT, then select EPS STEERING ANGLE SENSOR VALUE CLEAR and follow the screen prompts on the HDS.

NOTE: See the HDS Help menu for specific instructions.

REAR HUB BEARING UNIT REPLACEMENT

REMOVAL

GETtheMANUALS.org

1. Vehicle Lift
    1. Raise the vehicle on a lift, and make sure it is securely supported.
2. Rear Wheel
    1. Remove the rear wheel.

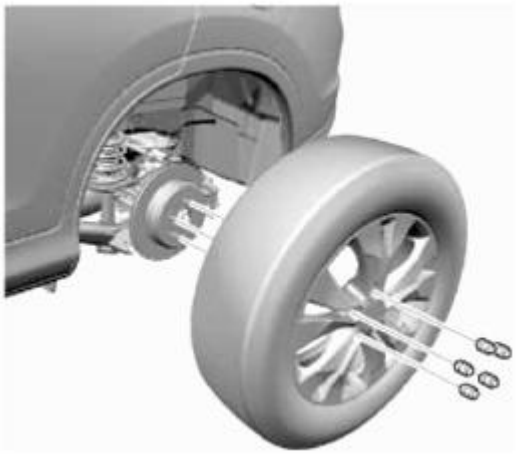

Fig. 28: Identifying Rear Wheel
Courtesy of AMERICAN HONDA MOTOR CO., INC.

3. Rear Driveshaft Spindle Nut
    1. Pry up the stake (A) on the spindle nut (B), then remove the nut.

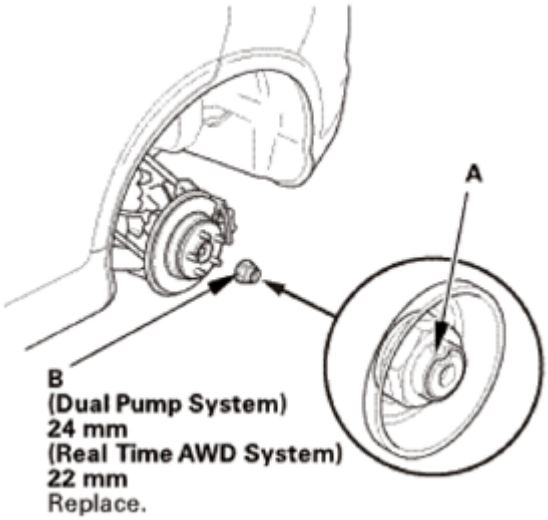

Fig. 29: Identifying Stake And Spindle Nut With Dimensions
Courtesy of AMERICAN HONDA MOTOR CO., INC.

4. Rear Brake Caliper - Detach
    1. Remove the brake hose mounting bolt (A).

GETtheMANUALS.org

2. Remove the caliper assembly (B).

NOTE:

- **To prevent damage to the caliper assembly or brake hose, use a short piece of wire to hang the caliper assembly from the undercarriage.**
- **Do not twist the brake hose and the parking brake cable excessively.**

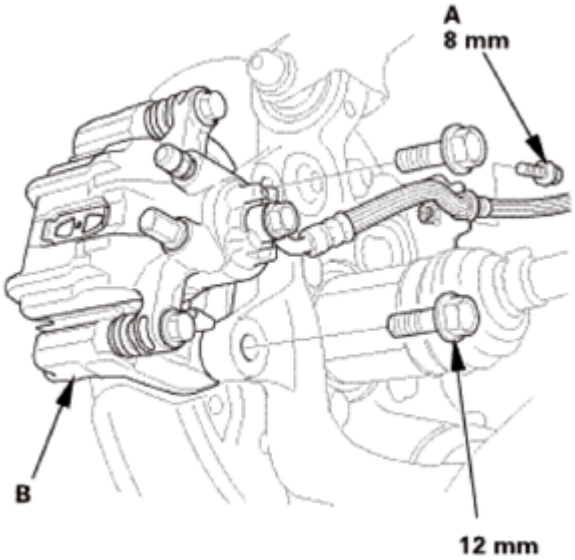

Fig. 30: Identifying Brake Hose Mounting Bolt And Caliper Assembly
Courtesy of AMERICAN HONDA MOTOR CO., INC.

5. Rear Brake Disc
   1. Remove the brake disc/drum flathead screws (A).
   2. Remove the brake disc/drum (B).

NOTE:

- **Remove the adjuster plug (C), then if necessary, turn the adjuster bolt (D) with a flat-tip screwdriver until the shoes become loose.**
- **If the brake disc/drum is stuck to the hub bearing unit, thread two 8 x 1.25 mm bolts (E) into the brake disc/drum to push it away from the hub bearing unit. Turn each bolt 90 degrees at a time to prevent the brake disc/drum from binding.**

GETtheMANUALS.org

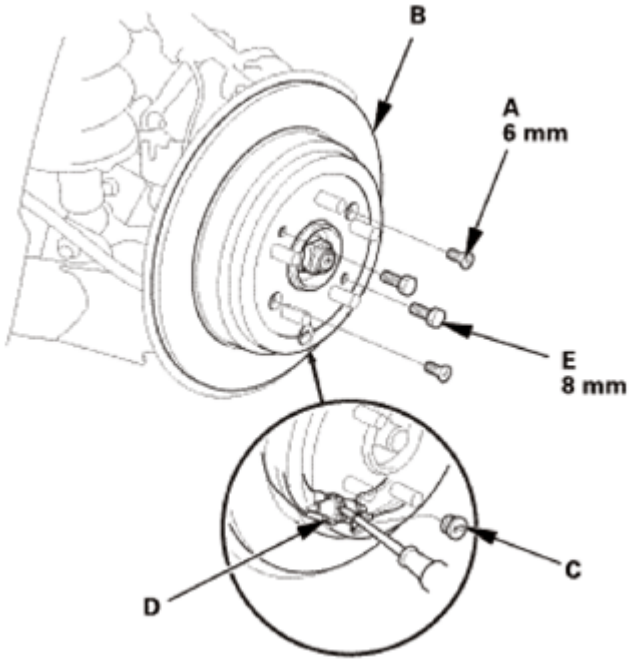

Fig. 31: Removing Brake Disc/Drum Flathead Screws
Courtesy of AMERICAN HONDA MOTOR CO., INC.

6. Rear Hub Bearing Unit
    1. 2WD: Remove the hub bearing unit (A).

NOTE: **Keep the wheel bearing/encoder away from any magnetic field. Encoder can be damaged or erased.**

2WD

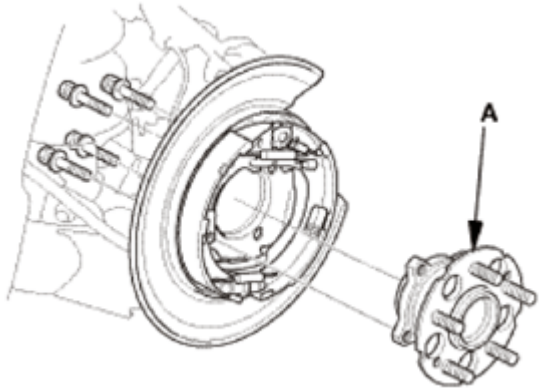

Fig. 32: Identifying Hub Bearing Unit And Driveshaft End (2WD)
Courtesy of AMERICAN HONDA MOTOR CO., INC.

AWD/4WD

GETtheMANUALS.org

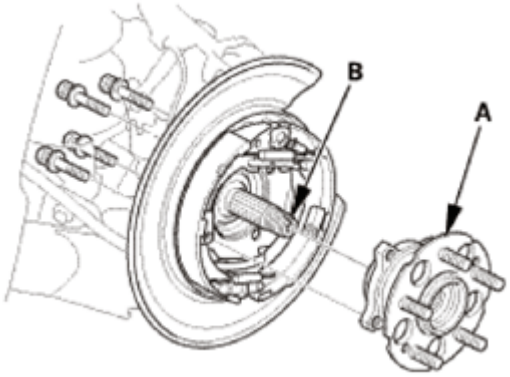

Fig. 33: Identifying Hub Bearing Unit And Driveshaft End (AWD/4WD)
Courtesy of AMERICAN HONDA MOTOR CO., INC.

2. AWD/4WD: Remove the hub bearing unit (A) by tapping the driveshaft end (B) with a soft face hammer while drawing the hub bearing unit outward.

NOTE: Keep the wheel bearing/encoder away from any magnetic field. Encoder can be damaged or erased.

INSTALLATION

1. Rear Hub Bearing Unit
    1. Install the hub bearing unit (A).

NOTE: Keep the wheel bearing/encoder away from any magnetic field. Encoder can be damaged or erased.

2WD

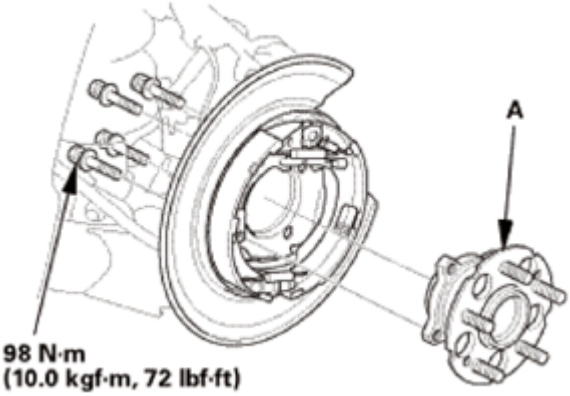

Fig. 34: Identifying Rear Hub Bearing Unit And Bolts With Torque Specifications (2WD)
Courtesy of AMERICAN HONDA MOTOR CO., INC.

AWD/4WD

GETtheMANUALS.org

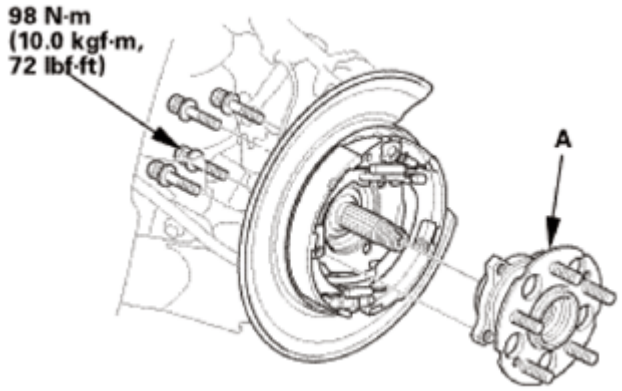

Fig. 35: Identifying Rear Hub Bearing Unit And Bolts With Torque Specifications (AWD/4WD)
Courtesy of AMERICAN HONDA MOTOR CO., INC.

2. Rear Brake Disc
    1. Install the brake disc (A).

NOTE: **Before installing the brake disc, clean the mating surfaces between the hub bearing unit and the inside of the brake disc.**

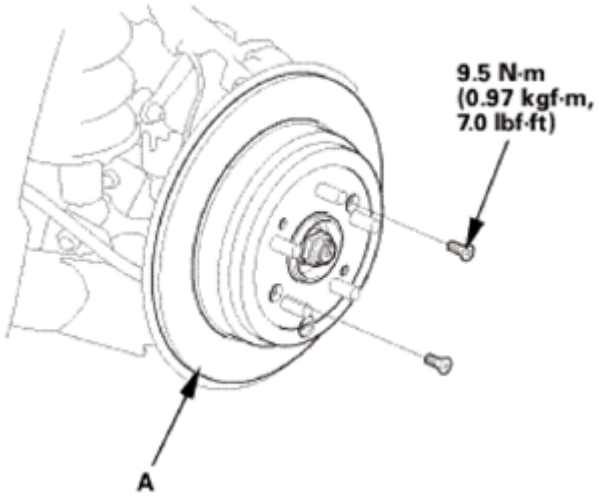

Fig. 36: Identifying Rear Brake Disc And Mounting Bolts With Torque Specifications
Courtesy of AMERICAN HONDA MOTOR CO., INC.

3. Rear Brake Caliper - Reattach
    1. Install the caliper assembly (A).
    2. Install the brake hose mounting bolt (B).

GETtheMANUALS.org

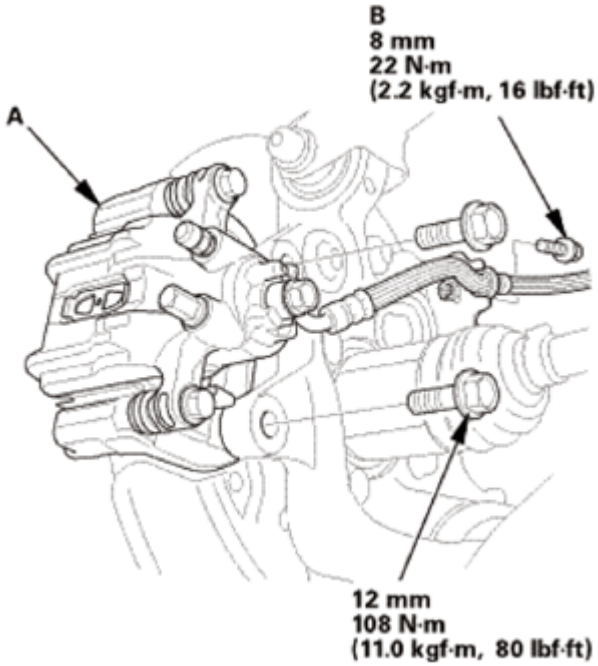

Fig. 37: Identifying Caliper Assembly And Brake Hose Mounting Bolt With Torque Specifications
Courtesy of AMERICAN HONDA MOTOR CO., INC.

4. Rear Driveshaft Spindle Nut
    1. Apply a small amount of engine oil to the seating surface of a new spindle nut (A).
    2. Install the spindle nut, then tighten it. After tightening, use a drift to stake the spindle nut shoulder (B) against the driveshaft.

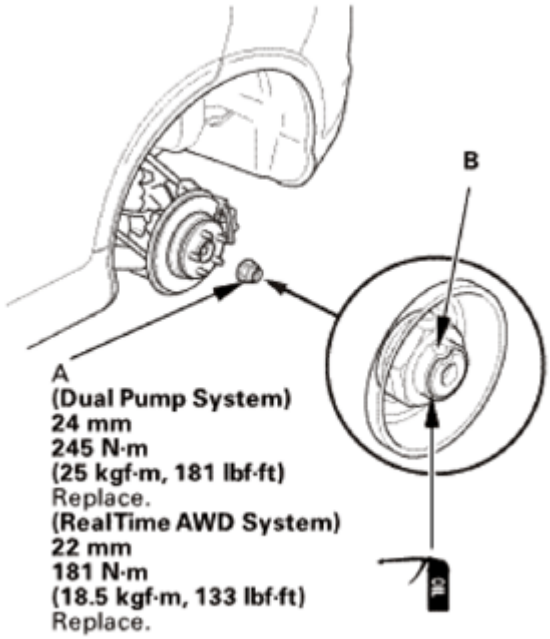

GETtheMANUALS.org

Fig. 38: Identifying Spindle Nut And Spindle Nut Shoulder
Courtesy of AMERICAN HONDA MOTOR CO., INC.

5. Rear Wheel
    1. Install the rear wheel.

NOTE: **Before installing the wheel, clean the mating surfaces between the brake disc/drum and the inside of the wheel.**

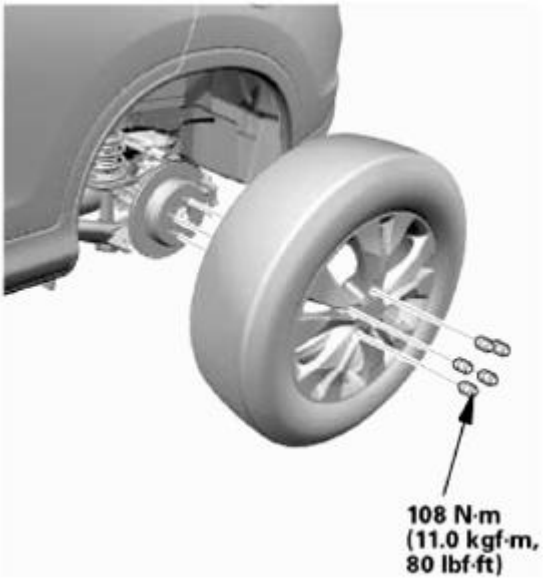

Fig. 39: Identifying Rear Wheel With Torque Specifications
Courtesy of AMERICAN HONDA MOTOR CO., INC.

REAR KNUCKLE REMOVAL AND INSTALLATION

EXPLODED VIEW

1. Rear Knuckle/Hub Bearing Unit Exploded View

Exploded View

GETtheMANUALS.org

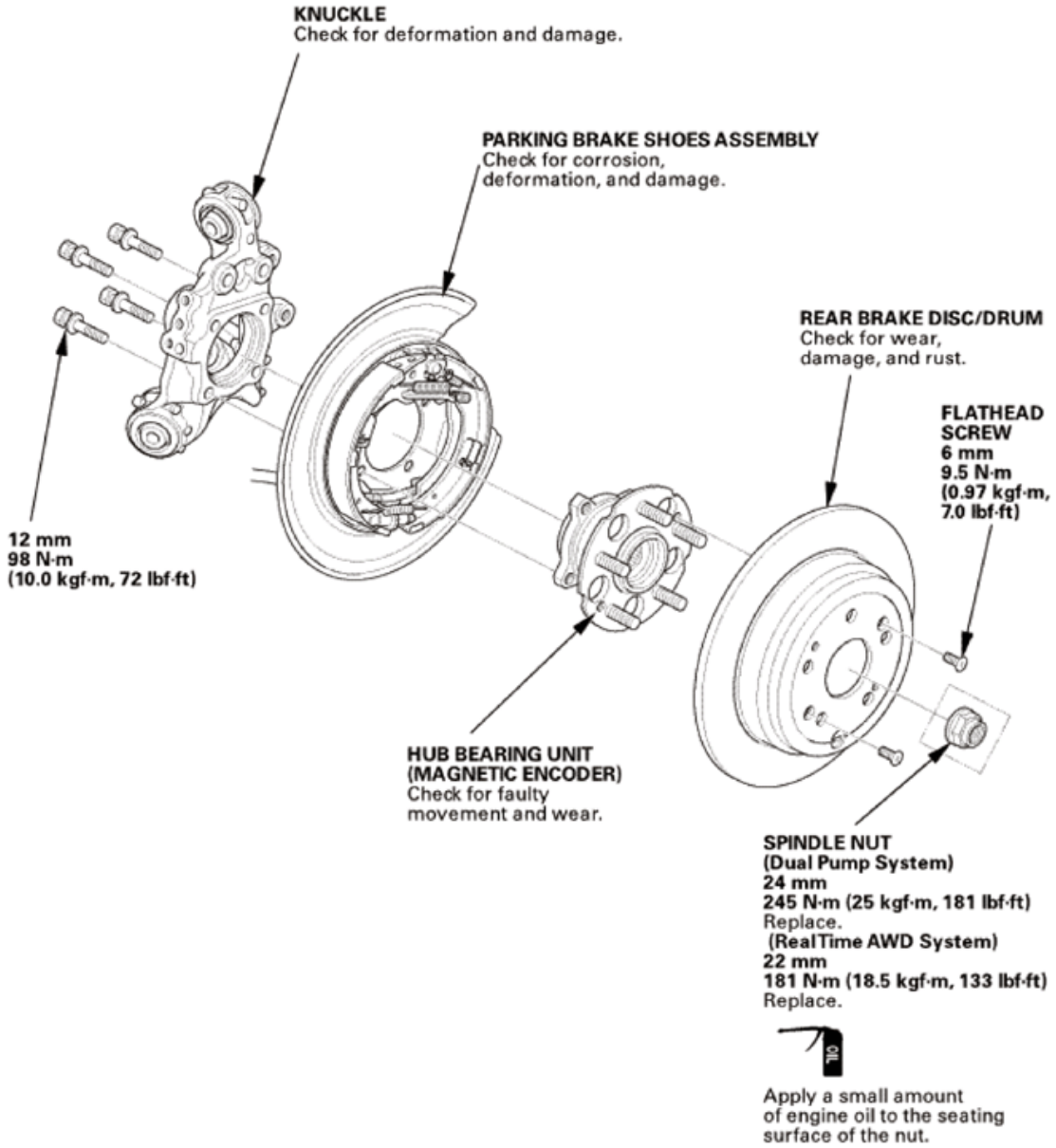

Fig. 40: Exploded View Of Rear Knuckle/Hub Bearing With Torque Specifications
Courtesy of AMERICAN HONDA MOTOR CO., INC.

REMOVAL

1. Vehicle Lift
    1. Raise the vehicle on a lift, and make sure it is securely supported.
2. Rear Wheel
    1. Remove the rear wheel.

GETtheMANUALS.org

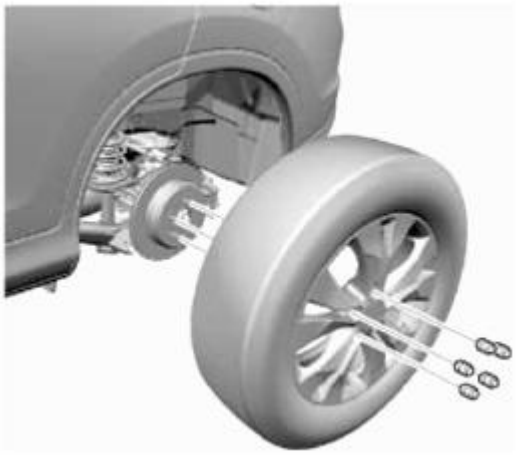

Fig. 41: Identifying Rear Wheel
Courtesy of AMERICAN HONDA MOTOR CO., INC.

3. Rear Driveshaft Spindle Nut
    1. Pry up the stake (A) on the spindle nut (B), then remove the nut.

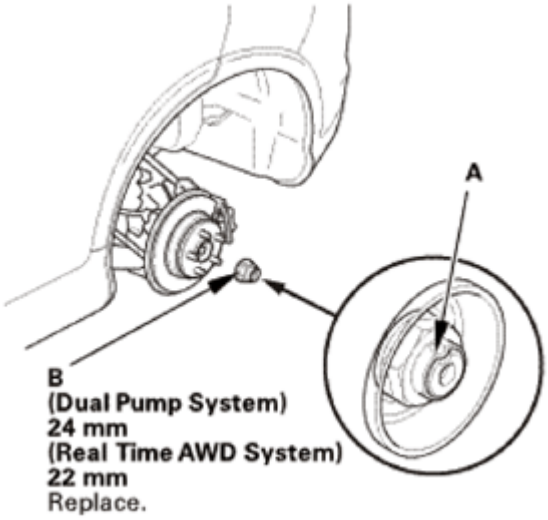

Fig. 42: Identifying Stake And Spindle Nut With Dimensions
Courtesy of AMERICAN HONDA MOTOR CO., INC.

4. Rear Brake Caliper - Detach
    1. Remove the brake hose mounting bolt (A).
    2. Remove the caliper assembly (B).

NOTE:

- **To prevent damage to the caliper assembly or brake hose, use a short piece of wire to hang the caliper assembly from the undercarriage.**
- **Do not twist the brake hose and the parking brake cable**

GETtheMANUALS.org

excessively.

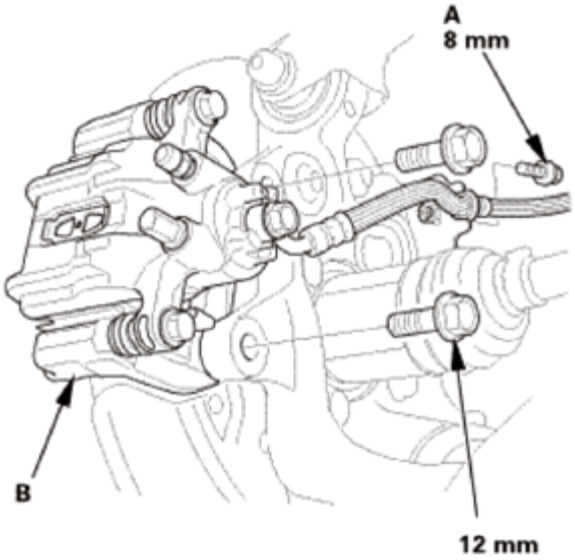

Fig. 43: Identifying Brake Hose Mounting Bolt And Caliper Assembly
Courtesy of AMERICAN HONDA MOTOR CO., INC.

5. Rear Brake Disc
    1. Remove the brake disc/drum flathead screws (A).
    2. Remove the brake disc/drum (B).

NOTE:

- **Remove the adjuster plug (C), then if necessary, turn the adjuster bolt (D) with a flat-tip screwdriver until the shoes become loose.**
- **If the brake disc/drum is stuck to the hub bearing unit, thread two 8 x 1.25 mm bolts (E) into the brake disc/drum to push it away from the hub bearing unit. Turn each bolt 90 degrees at a time to prevent the brake disc/drum from binding.**

GETtheMANUALS.org

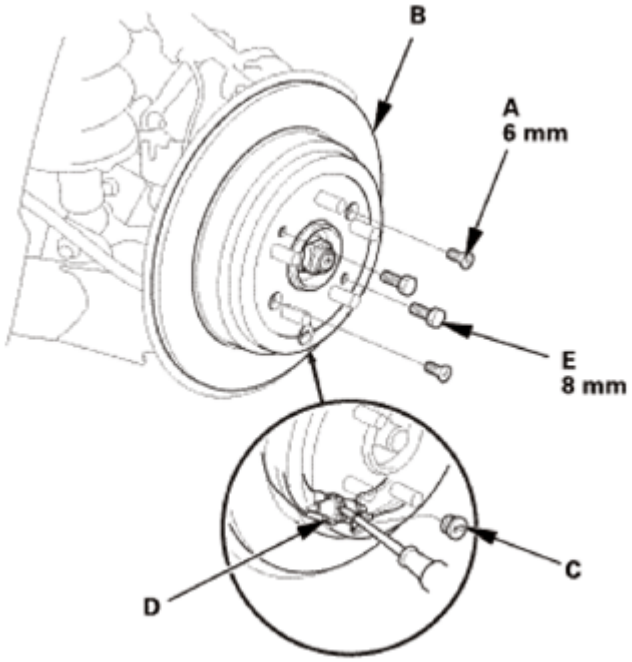

Fig. 44: Removing Brake Disc/Drum Flathead Screws
Courtesy of AMERICAN HONDA MOTOR CO., INC.

6. Rear Hub Bearing Unit
    1. 2WD: Remove the hub bearing unit (A).

NOTE: **Keep the wheel bearing/encoder away from any magnetic field. Encoder can be damaged or erased.**

2WD

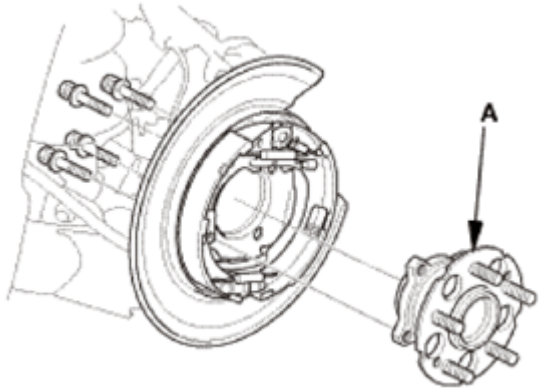

Fig. 45: Identifying Rear Hub Bearing Unit (2WD)
Courtesy of AMERICAN HONDA MOTOR CO., INC.

2. AWD/4WD: Remove the hub bearing unit (A) by tapping the driveshaft end (B) with a soft face hammer while drawing the hub bearing unit outward.

GETtheMANUALS.org

NOTE: **Keep the wheel bearing/encoder away from any magnetic field. Encoder can be damaged or erased.**

AWD/4WD

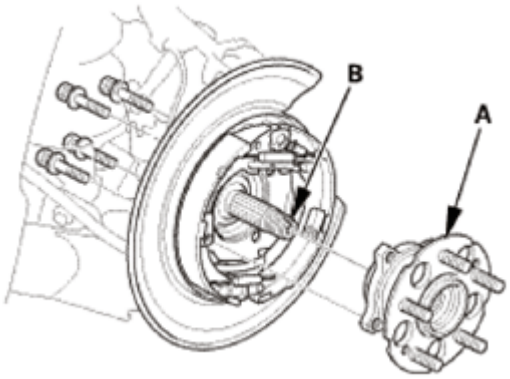

Fig. 46: Identifying Rear Hub Bearing Unit (AWD/4WD)
Courtesy of AMERICAN HONDA MOTOR CO., INC.

7. Rear Parking Brake Assembly
    1. Remove the parking brake assembly (A).

NOTE: **To prevent damage to the backing plate or parking brake shoes assembly and cable, use a short piece of wire to hang the backing plate from the undercarriage. Do not twist the parking brake cable excessively.**

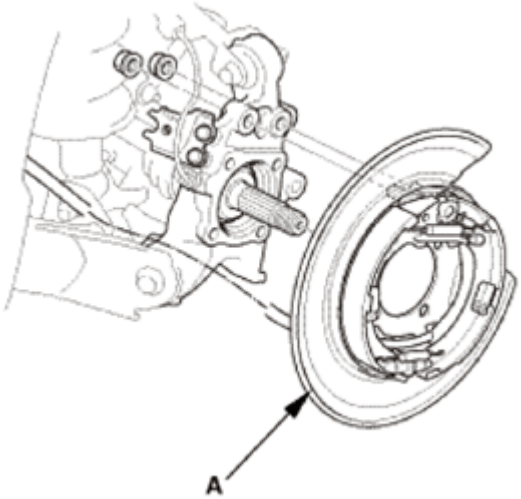

Fig. 47: Identifying Rear Parking Brake Assembly
Courtesy of AMERICAN HONDA MOTOR CO., INC.

8. Rear Wheel Speed Sensor

GETtheMANUALS.org

1. Remove the wheel speed sensor (A).

NOTE: Do not disconnect the wheel speed sensor connector.

Fig. 48: Identifying Wheel Speed Sensor
Courtesy of AMERICAN HONDA MOTOR CO., INC.

9. Rear Trailing Arm - Jack Support
    1. Place a floor jack under the trailing arm to support it.

NOTE: Do not place the jack against the plate section of the lower arm. Be careful not to damage any suspension components.

10. Rear Upper Arm Knuckle Side - Disconnection
    1. Remove the flange bolt (A).
    2. Disconnect the upper arm (B) from the knuckle (C).

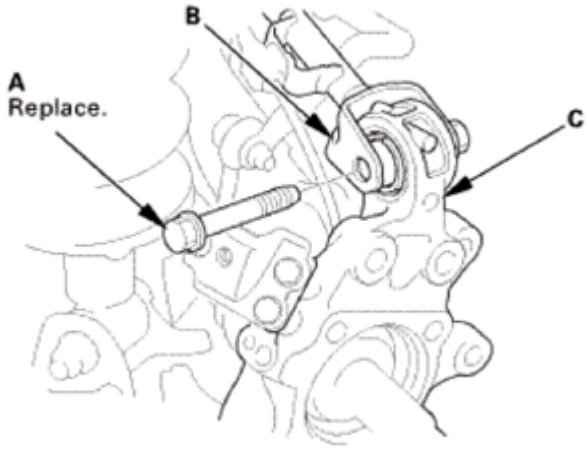

Fig. 49: Identifying Upper Arm, Knuckle And Flange Bolt
Courtesy of AMERICAN HONDA MOTOR CO., INC.

GETtheMANUALS.org

11. Rear Trailing Arm Knuckle Side - Disconnection
    1. Mark the cam positions of the adjusting bolt (A) with the frame.
    2. Mark the cam positions of the adjusting cam plate (B) with the frame.
    3. Remove the self-locking nut (C), the adjusting cam plate, and the adjusting bolt.
    4. Remove the flange bolt (D).
    5. Disconnect the knuckle from the trailing arm (E).

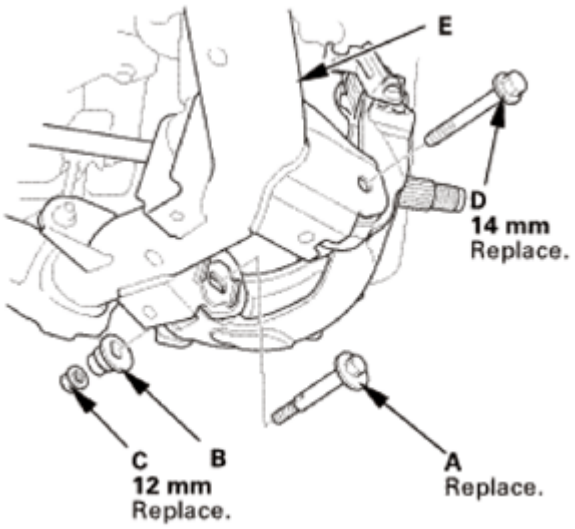

Fig. 50: Identifying Adjusting Bolt, Adjusting Cam Plate, Self-Locking Nut, Flange Bolt, Trailing Arm
Courtesy of AMERICAN HONDA MOTOR CO., INC.

12. Brake Hose Mounting Bracket
    1. Remove the brake hose mounting bracket (A).

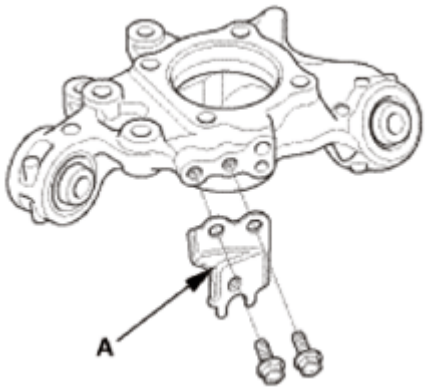

Fig. 51: Identifying Brake Hose Mounting Bracket
Courtesy of AMERICAN HONDA MOTOR CO., INC.

INSTALLATION

GETtheMANUALS.org

1. Brake Hose Mounting Bracket
    1. the brake hose mounting bracket (A).

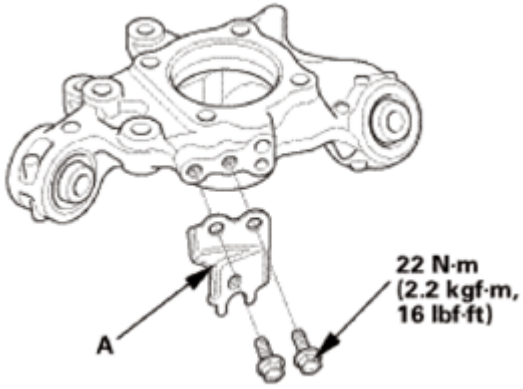

Fig. 52: Identifying Brake Hose Mounting Bracket
Courtesy of AMERICAN HONDA MOTOR CO., INC.

2. Rear Trailing Arm Knuckle Side - Reconnection
    1. Connect the knuckle to the trailing arm.
    2. Loosely install the new flange bolt (A).
    3. Loosely install the new self-locking nut (B), the adjusting cam plate (C), and the new adjusting bolt (D).

NOTE: **Align the cam positions of the adjusting bolt and the adjusting cam plate with the marked positions when tightening the self-locking nut.**

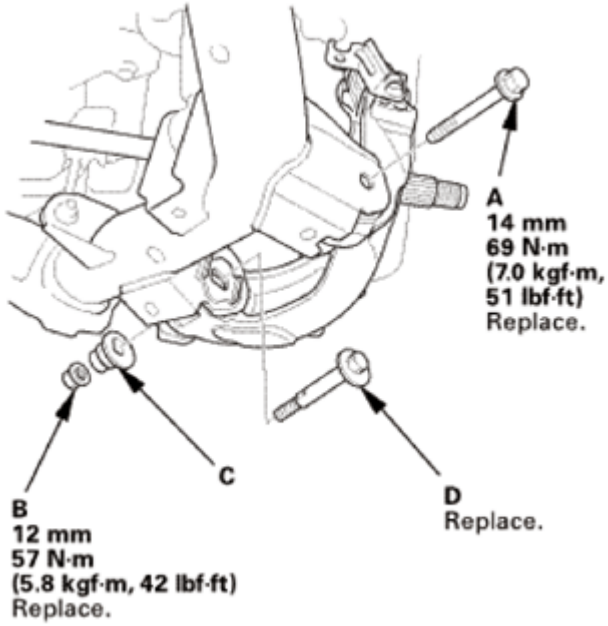

Fig. 53: Identifying Self-Locking Nut, Adjusting Cam Plate And Adjusting Bolt With Torque

GETtheMANUALS.org

Specifications
Courtesy of AMERICAN HONDA MOTOR CO., INC.

3. Rear Upper Arm Knuckle Side - Reconnection
    1. Connect the upper arm (A) to the knuckle (B).
    2. Loosely install the new flange bolt (C).

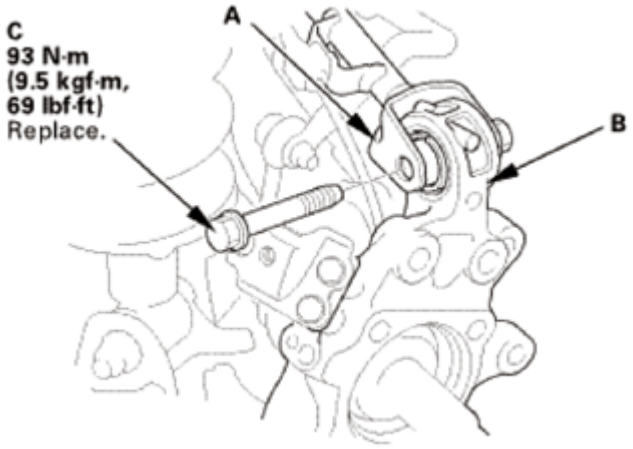

Fig. 54: Identifying Upper Arm, Knuckle And Flange Bolt With Torque Specifications
Courtesy of AMERICAN HONDA MOTOR CO., INC.

4. Rear Suspension All Mounting - Tighten Under Vehicle's Weight
    1. Raise the rear suspension with a floor jack to load the vehicle weight.
    2. Tighten all mounting hardware to the specified torque.
5. Rear Wheel Speed Sensor
    1. the wheel speed sensor (A).

NOTE: Do not disconnect the wheel speed sensor connector.

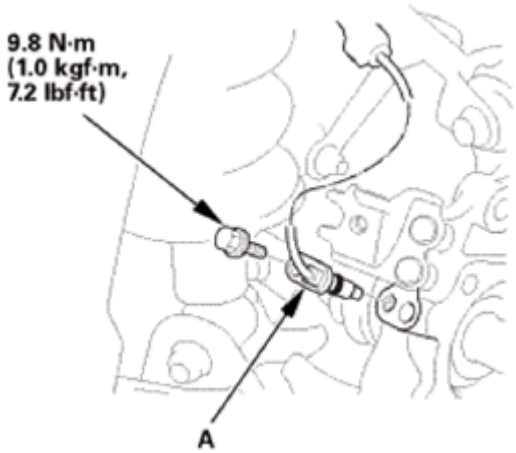

GETtheMANUALS.org

Fig. 55: Identifying Rear Wheel Speed Sensor And Mounting Bolts With Torque Specifications
Courtesy of AMERICAN HONDA MOTOR CO., INC.

6. Rear Parking Brake Assembly
    1. Install the parking brake assembly (A).

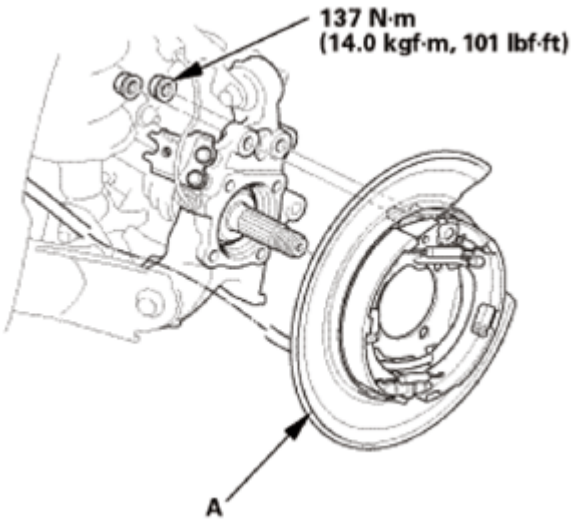

Fig. 56: Identifying Rear Parking Brake Assembly With Torque Specification
Courtesy of AMERICAN HONDA MOTOR CO., INC.

7. Rear Hub Bearing Unit
    1. Install the hub bearing unit (A).

NOTE: **Keep the wheel bearing/encoder away from any magnetic field. Encoder can be damaged or erased.**

2WD

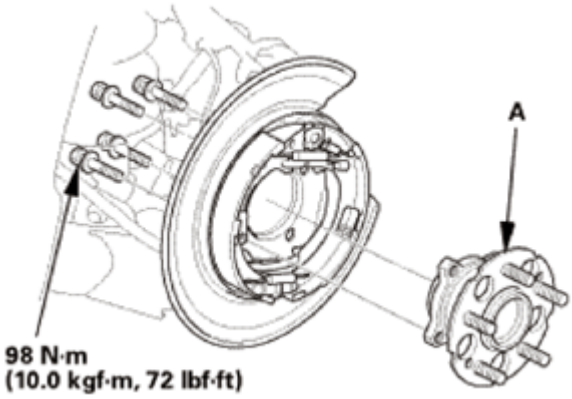

Fig. 57: Identifying Rear Hub Bearing Unit (2WD)

GETtheMANUALS.org

Courtesy of AMERICAN HONDA MOTOR CO., INC.

AWD/4WD

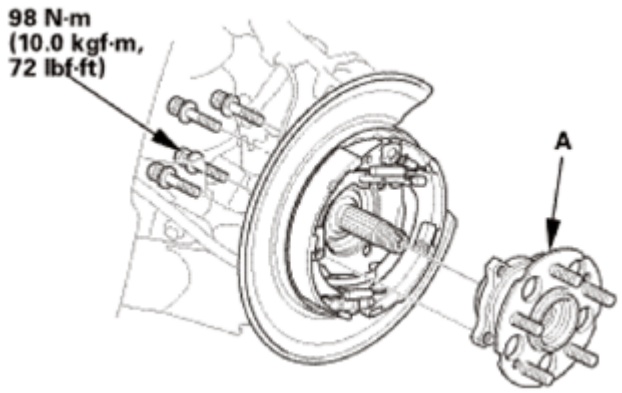

Fig. 58: Identifying Rear Hub Bearing Unit (AWD/4WD)
Courtesy of AMERICAN HONDA MOTOR CO., INC.

8. Rear Brake Disc
    1. Install the brake disc (A).

NOTE: **Before installing the brake disc, clean the mating surfaces between the hub bearing unit and the inside of the brake disc.**

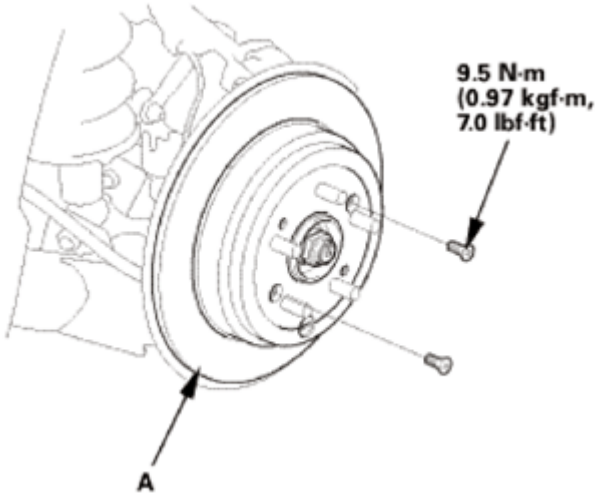

Fig. 59: Identifying Rear Brake Disc And Mounting Bolts With Torque Specifications
Courtesy of AMERICAN HONDA MOTOR CO., INC.

9. Rear Brake Caliper - Reattach
    1. Install the caliper assembly (A).
    2. Install the brake hose mounting bolt (B).

GETtheMANUALS.org

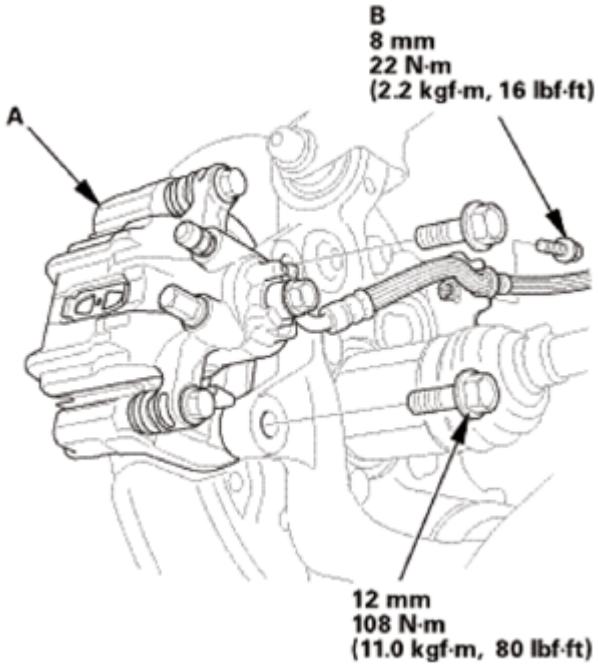

Fig. 60: Identifying Caliper Assembly And Brake Hose Mounting Bolt With Torque Specifications
Courtesy of AMERICAN HONDA MOTOR CO., INC.

10. Rear Driveshaft Spindle Nut
    1. Apply a small amount of engine oil to the seating surface of a new spindle nut (A).
    2. Install the spindle nut, then tighten it. After tightening, use a drift to stake the spindle nut shoulder (B) against the driveshaft.

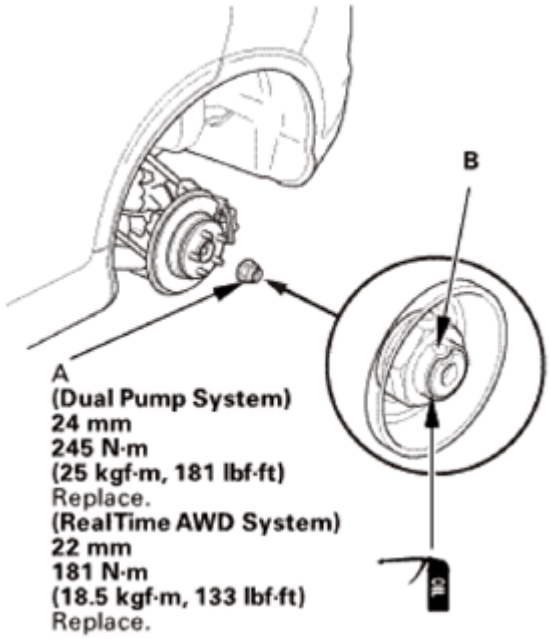

GETtheMANUALS.org

Fig. 61: Identifying Spindle Nut And Spindle Nut Shoulder
Courtesy of AMERICAN HONDA MOTOR CO., INC.

11. Rear Wheel
    1. Install the rear wheel.

NOTE: **Before installing the wheel, clean the mating surfaces between the brake disc/drum and the inside of the wheel.**

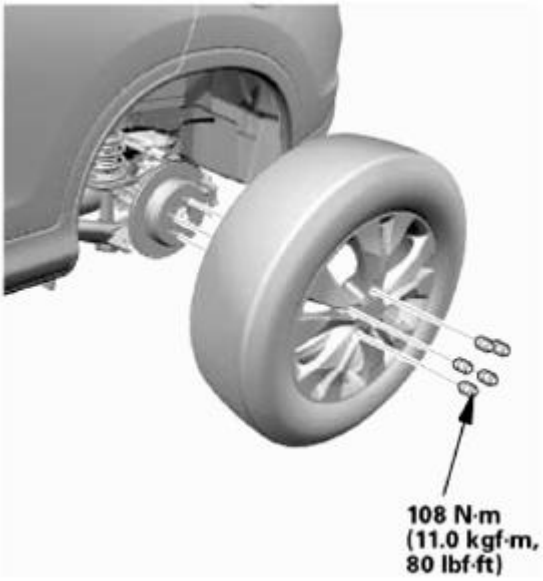

Fig. 62: Identifying Rear Wheel With Torque Specifications
Courtesy of AMERICAN HONDA MOTOR CO., INC.

12. Pre-Alignment Checks

    For proper inspection and adjustment of the wheel alignment, do these checks:

    1. Release the parking brake to avoid an incorrect measurement.
    2. Make sure the suspension is not modified.
    3. Make sure the fuel tank is full, and that the spare tire, the jack, and the tools are in place on the vehicle.
    4. Check the tire size and tire pressure according to tire information.
    5. Set the steering column to the middle tilt position and telescopic position.
13. Camber - Inspection

    Use commercially available computerized four wheel alignment equipment to measure wheel alignment (caster, camber, toe, and turning angle). Follow the equipment manufacturer's instructions.

    1. Check the camber angle.

GETtheMANUALS.org

Camber angle:

2WD:

Front:

With 16 inch wheel: -0 ° 01 '±1 ° 00 '

Without 16 inch wheel: -0 ° 10 '±1 ° 00 '

(Maximum difference between the front right and left side: 1 °00 ')

Rear:

With 16 inch wheel: -1 ° 06 '±45 '

Without 16 inch wheel: -1 ° 12 '±45 '

(Maximum difference between the front right and left side: 0 °45 ')

AWD/4WD:

Front:

With 16 inch wheel: -0 ° 08 '±1 ° 00 '

Without 16 inch wheel: 0 ° 00 '±1 ° 00 '

(Maximum difference between the front right and left side: 1 °00 ')

Rear:

With 16 inch wheel: -0 ° 50 '±45 '

Without 16 inch wheel: -1 ° 00 '±45 '

(Maximum difference between the front right and left side: 0 °45 ')

- If the measurement is within specification, measure the toe-in.
- If the measurement for the front camber is not within the specification, go to front camber adjustment.
- If the measurement for the rear camber is not within the specification, check for bent or damaged suspension components.

14. Rear Toe - Inspection

Use commercially available computerized four wheel alignment equipment to measure wheel alignment

GETtheMANUALS.org

(caster, camber, toe, and turning angle). Follow the equipment manufacturer's instructions.

1. Release the parking brake to avoid an incorrect measurement.
2. Check the toe.

   Rear toe-in: 2^{+2}_{-1} mm ($0.08^{+0.08}_{-0.04}$ in)

   - If adjustment is required, go to the rear toe adjustment.
   - If no adjustment is required, go to front toe inspection.

15. HDS DLC - Connection
    1. Connect the HDS to the data link connector (DLC) (A) located under the driver's side of the dashboard.
    2. Turn the ignition switch to ON (II).
    3. Make sure the HDS communicates with the vehicle. If it does not communicate, go to the DLC circuit troubleshooting.

Fig. 63: Identifying Data Link Connector
Courtesy of AMERICAN HONDA MOTOR CO., INC.

16. VSA Sensor Neutral Position - Memorization
    1. Park the vehicle on a flat and level surface, with the steering wheel in the straight ahead position.
    2. Select VSA ADJUSTMENT, then select ALL SENSORS with the HDS, and follow the screen prompts.

    NOTE: See the HDS Help menu for specific instructions.

17. Steering Angle Sensor Neutral Position - Clear
    1. Select EPS ADJUSTMENT, then select EPS STEERING ANGLE SENSOR VALUE CLEAR and follow the screen prompts on the HDS.

GETtheMANUALS.org

NOTE: **See the HDS Help menu for specific instructions.**

REAR STABILIZER BAR REMOVAL AND INSTALLATION

REMOVAL

1. Vehicle Lift
    1. Raise the vehicle on a lift, and make sure it is securely supported.
2. Rear Wheel - Both Side
    1. Remove both rear wheels.

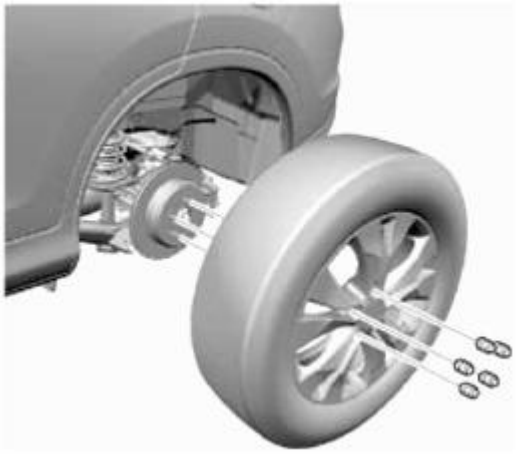

Fig. 64: Identifying Rear Wheels
Courtesy of AMERICAN HONDA MOTOR CO., INC.

3. Rear Stabilizer Link Stabilizer Bar Side - Disconnection
    1. Remove the self-locking nut (A) while holding the respective joint pin (B) with a hex wrench (C).
    2. Disconnect stabilizer link (D) from the stabilizer bar (E).

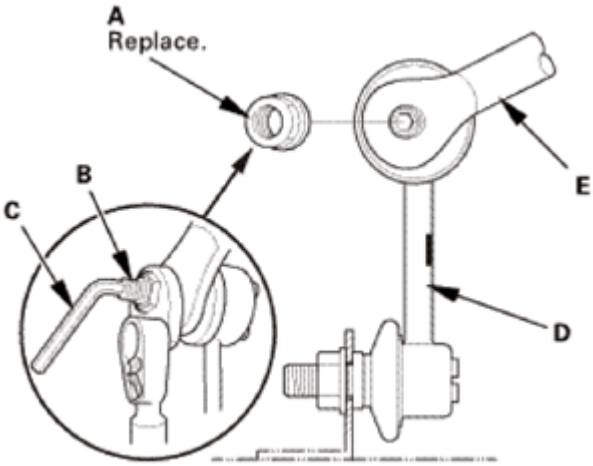

GETtheMANUALS.org

Fig. 65: Removing Self-Locking Nut Using Hex Wrench
Courtesy of AMERICAN HONDA MOTOR CO., INC.

4. Rear Stabilizer Bar

Dual pump system

1. Remove the bushing holders (A).
2. Remove the bushings (B).
3. Remove the stabilizer bar (C).

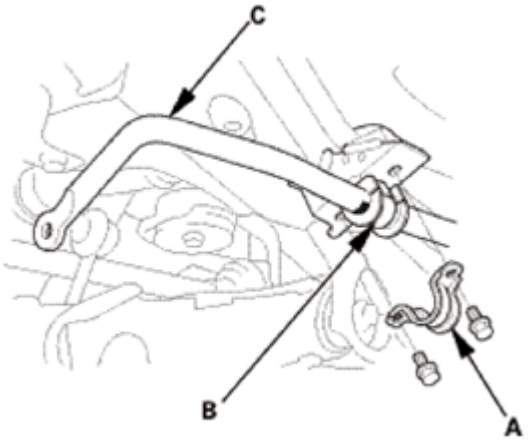

Fig. 66: Identifying Stabilizer Bar, Bushing Holders, Bushings With Torque Specifications
Courtesy of AMERICAN HONDA MOTOR CO., INC.

Real time AWD system

1. Remove the harness clip (A) from the bushing holders (B).
2. Remove the bushings (C).
3. Remove the stabilizer bar (D).

GETtheMANUALS.org

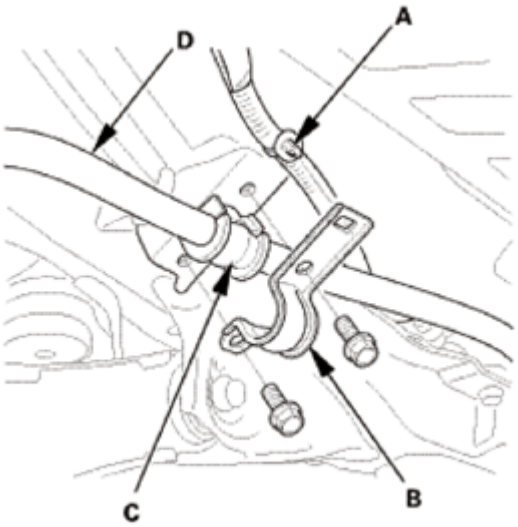

Fig. 67: Identifying Harness Clip, Bushing Holders, Bushings And Stabilizer Bar
Courtesy of AMERICAN HONDA MOTOR CO., INC.

INSTALLATION

1. Rear Stabilizer Bar

   Dual pump system

   1. Install the stabilizer bar (A).
   2. Install the bushing (B).

      NOTE:

      - **Note the direction of installation for the bushing.**
      - **Align the paint mark (C) on the stabilizer bar with the side of the bushing.**

   3. Install the bushing holder (D).

GETtheMANUALS.org

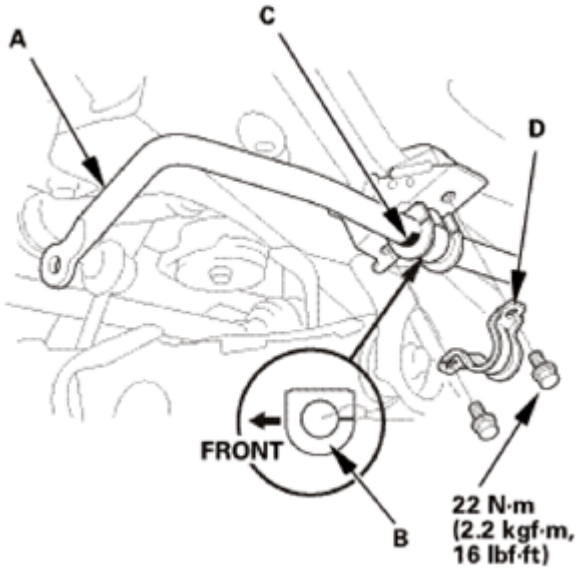

Fig. 68: Identifying Stabilizer Bar, Bushing Holders, Bushings With Torque Specifications
Courtesy of AMERICAN HONDA MOTOR CO., INC.

Real time AWD system

1. Install the stabilizer bar (A).
2. Install the bushing (B).

NOTE:

- **Note the direction of installation for the bushing.**
- **Align the paint mark (C) on the stabilizer bar with the side of the bushing.**

3. Install the bushing holder (D).
4. Install the harness clip (E) to the bushing holder.

GETtheMANUALS.org

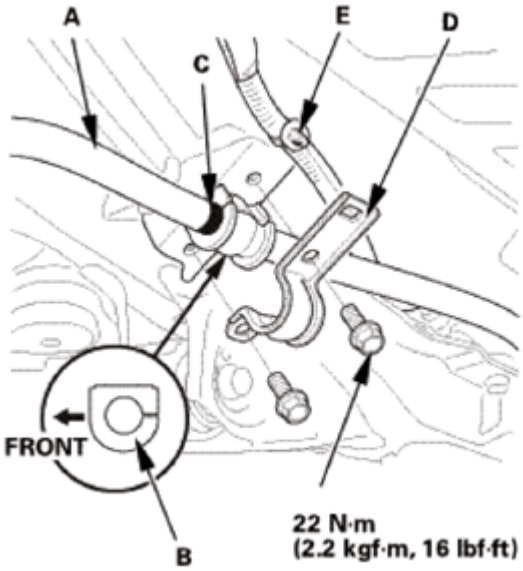

Fig. 69: Identifying Harness Clip, Bushing Holders, Bushing Holder, Paint Mark
Courtesy of AMERICAN HONDA MOTOR CO., INC.

2. Rear Stabilizer Link Stabilizer Bar Side - Reconnection
    1. Connect both stabilizer link (A) to the stabilizer bar (B).
    2. Install the new self-locking nut (C) while holding the respective joint pin (D) with a hex wrench (E).

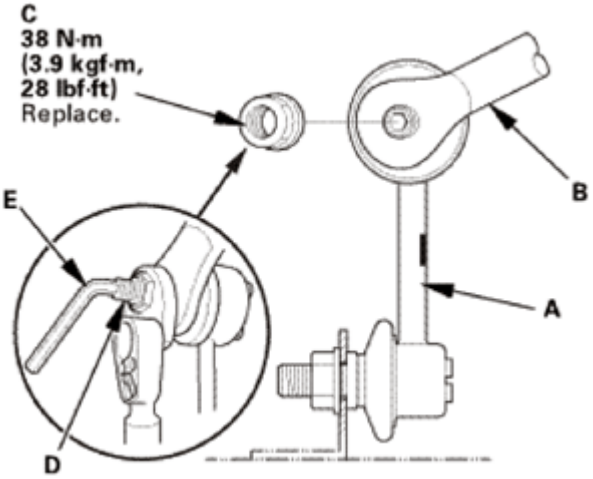

Fig. 70: Installing Self-Locking Nut Using Hex Wrench
Courtesy of AMERICAN HONDA MOTOR CO., INC.

3. Rear Wheel - Both Side
    1. Install both rear wheels.

NOTE: Before installing the wheel, clean the mating surfaces between the

GETtheMANUALS.org

brake disc/drum and the inside of the wheel.

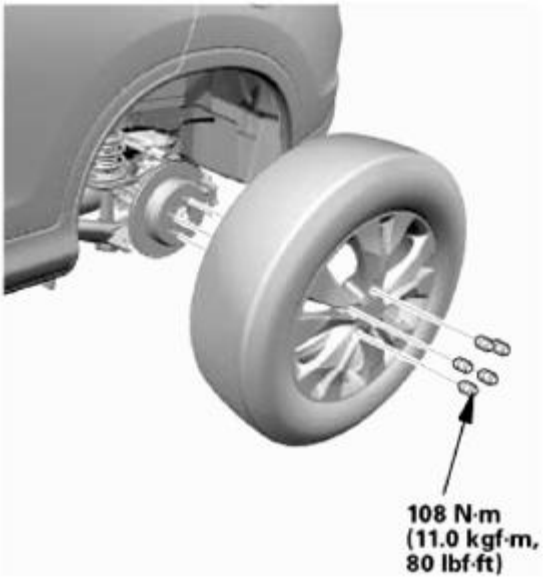

Fig. 71: Identifying Rear Wheels
Courtesy of AMERICAN HONDA MOTOR CO., INC.

4. Test Drive
    1. Test-drive the vehicle.
5. Rear Stabilizer Link - Tighten
    1. After 5 minutes of driving, torque the self-locking nut again to the specified torque.

REAR STABILIZER LINK REMOVAL AND INSTALLATION

REMOVAL

1. Vehicle Lift
    1. Raise the vehicle on a lift, and make sure it is securely supported.
2. Rear Wheel
    1. Remove the rear wheel.

GETtheMANUALS.org

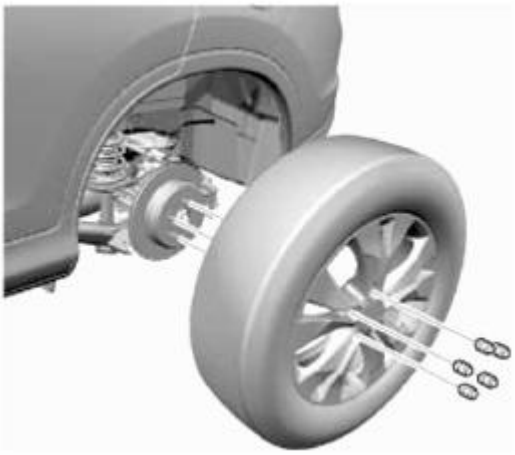

Fig. 72: Identifying Rear Wheel
Courtesy of AMERICAN HONDA MOTOR CO., INC.

3. Rear Stabilizer Link
    1. Remove the self-locking nut (A) and the flange nut (B) while holding the respective joint pin (C) with a hex wrench (D).
    2. Remove the stabilizer link (E).

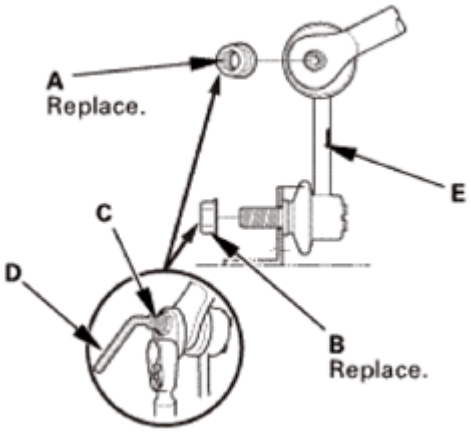

Fig. 73: Identifying Self-Locking Nut Using Hex Wrench
Courtesy of AMERICAN HONDA MOTOR CO., INC.

INSTALLATION

1. Rear Stabilizer Link
    1. Install the stabilizer link (A).

        NOTE: The stabilizer link has a paint mark (B). Align the paint mark on the stabilizer link facing rearward.

    2. Install the new self-locking nut (C) and the new flange nut (D), and tighten them to the specified

GETtheMANUALS.org

torque while holding the respective joint pin (E) with a hex wrench (F).

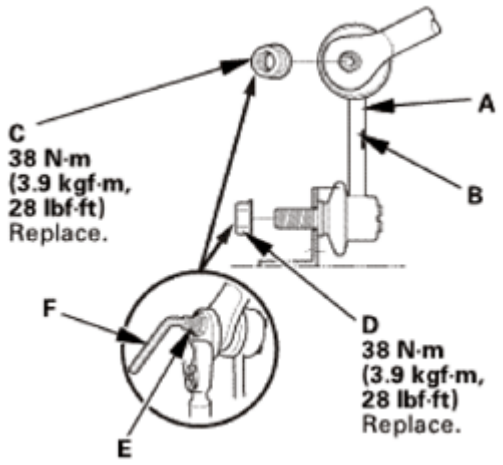

Fig. 74: Installing Self-Locking Nut Using Hex Wrench
Courtesy of AMERICAN HONDA MOTOR CO., INC.

2. Rear Wheel
    1. Install the rear wheel.

NOTE: **Before installing the wheel, clean the mating surfaces between the brake disc/drum and the inside of the wheel.**

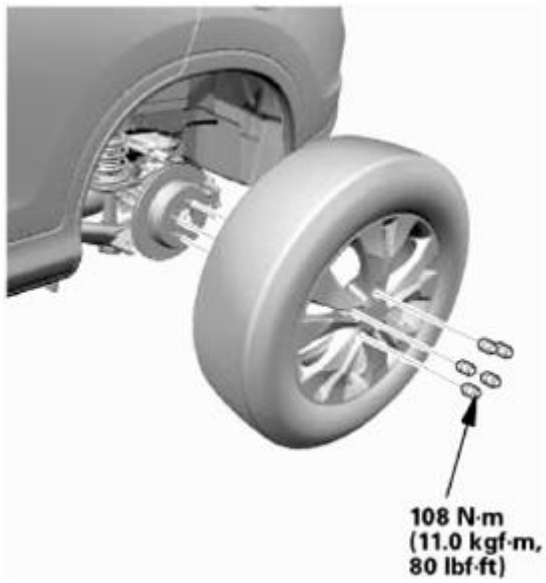

Fig. 75: Identifying Rear Wheel With Torque Specifications
Courtesy of AMERICAN HONDA MOTOR CO., INC.

3. Test Drive
    1. Test-drive the vehicle.

GETtheMANUALS.org

4. Rear Stabilizer Link - Tighten
    1. After 5 minutes of driving, torque the self-locking nut again to the specified torque.

REAR STRAKE REMOVAL AND INSTALLATION

REMOVAL

1. Rear Strake
    1. Remove the screws (A, B).

Fig. 76: Identifying Rear Strake Screws
Courtesy of AMERICAN HONDA MOTOR CO., INC.

2. Remove the clip (A), then remove the rear strake (B).

GETtheMANUALS.org

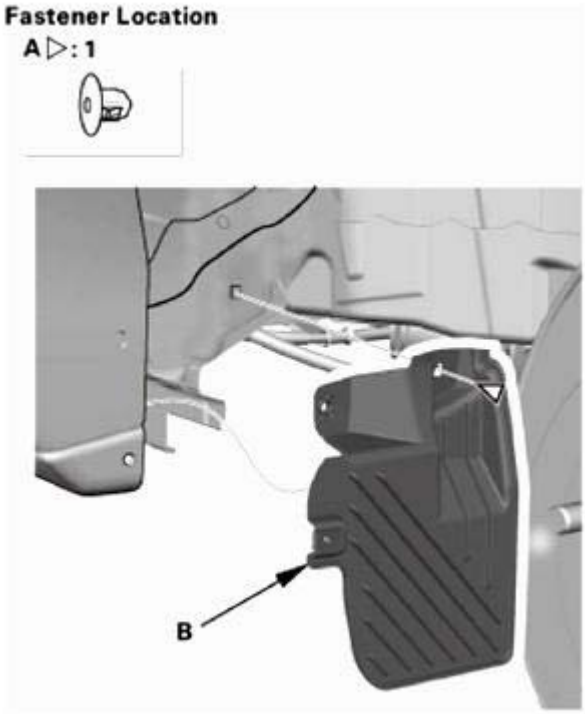

Fig. 77: Identifying Rear Strake With Clip
Courtesy of AMERICAN HONDA MOTOR CO., INC.

INSTALLATION

1. Rear Strake
    1. Install the rear strake (A), then install the clip (B).

GETtheMANUALS.org

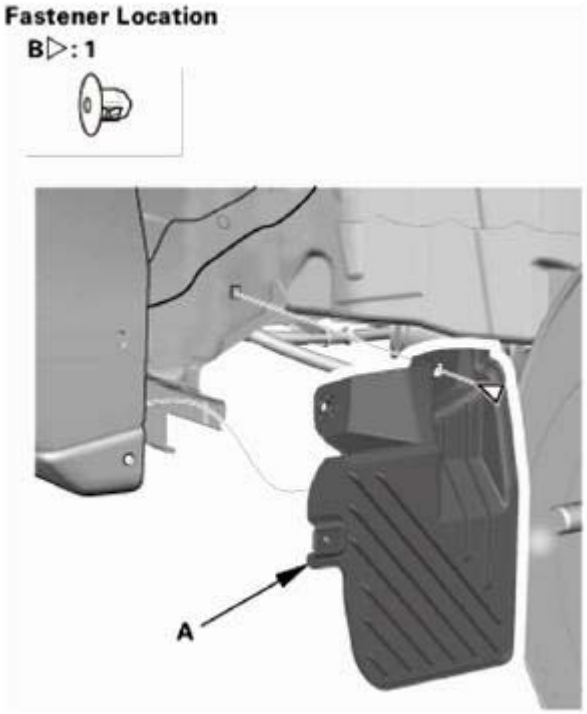

Fig. 78: Identifying Rear Strake With Clip
Courtesy of AMERICAN HONDA MOTOR CO., INC.

2. Install the screws (A, B).

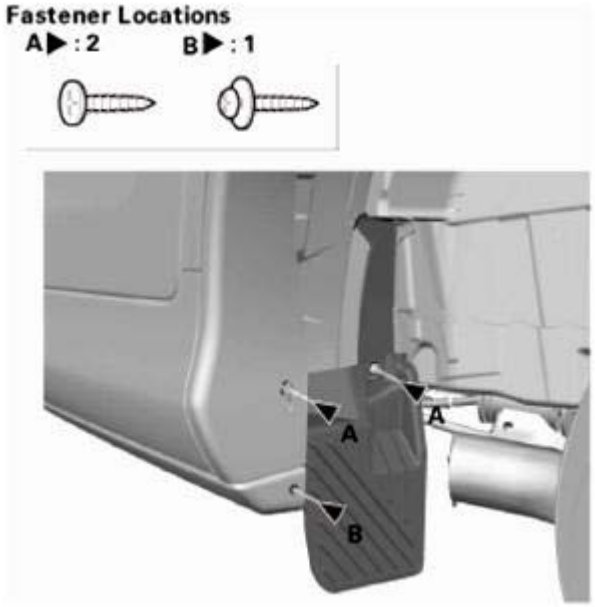

Fig. 79: Identifying Rear Strake With Screws
Courtesy of AMERICAN HONDA MOTOR CO., INC.

REAR TRAILING ARM REMOVAL AND INSTALLATION

GETtheMANUALS.org

REMOVAL

1. Vehicle Lift
    1. Raise the vehicle on a lift, and make sure it is securely supported.
2. Rear Wheel
    1. Remove the rear wheel.

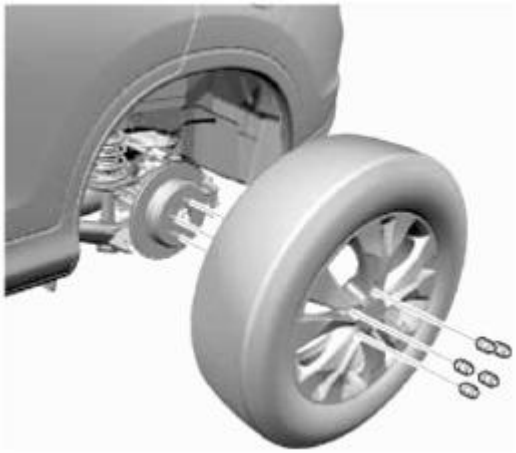

Fig. 80: Identifying Rear Wheel With Torque Specifications
Courtesy of AMERICAN HONDA MOTOR CO., INC.

3. Rear Knuckle - Jack Up
    1. Position a floor jack at the connecting point of the trailing arm (A) and the knuckle (B).
    2. Raise the floor jack until the suspension begins to compress.

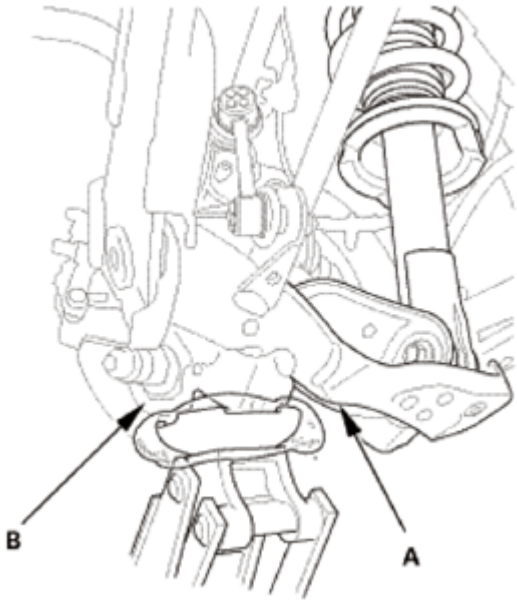

Fig. 81: Identifying Trailing Arm And Knuckle

GETtheMANUALS.org

Courtesy of AMERICAN HONDA MOTOR CO., INC.

4. Rear Damper Lower Side - Disconnection
    1. Remove the damper mounting bolt (A).

NOTE: Install the damper mounting bolt to the same direction as removal.

Fig. 82: Identifying Damper Mounting Bolt
Courtesy of AMERICAN HONDA MOTOR CO., INC.

5. Rear Trailing Arm Knuckle Side - Disconnection
    1. Mark the cam positions of the adjusting bolt (A) with the frame.
    2. Mark the cam positions of the adjusting cam plate (B) with the frame.
    3. Remove the self-locking nut (C), the adjusting cam plate, and the adjusting bolt.
    4. Remove the flange bolt (D).
    5. Disconnect the knuckle from the trailing arm (E).

GETtheMANUALS.org

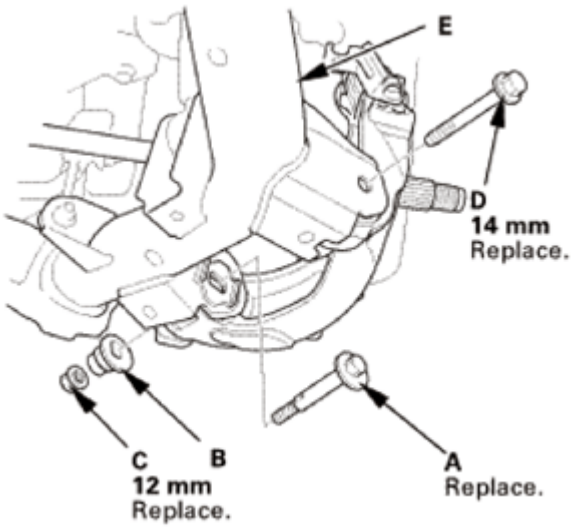

Fig. 83: Identifying Adjusting Bolt, Adjusting Cam Plate, Trailing Arm And Flange Bolt
Courtesy of AMERICAN HONDA MOTOR CO., INC.

6. Stabilizer Link Trailing Arm Side - Disconnection
    1. Remove the flange nut (A) while holding the respective joint pin (B) with a hex wrench (C).
    2. Disconnect the stabilizer link (D) from the trailing arm.

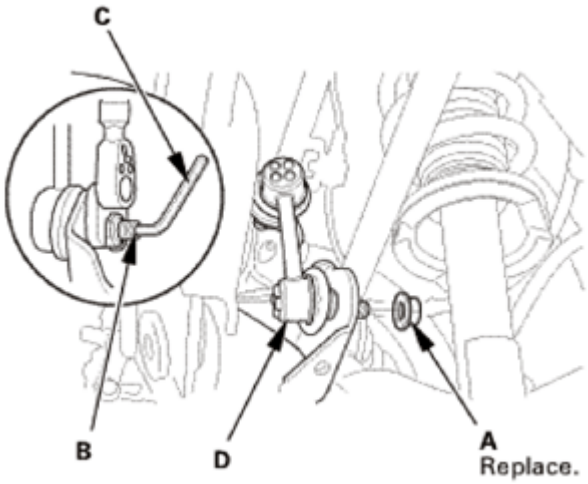

Fig. 84: Removing Flange Nut Using Hex Wrench
Courtesy of AMERICAN HONDA MOTOR CO., INC.

7. Rear Trailing Arm
    1. Remove the trailing arm front mounting bolts (A).

GETtheMANUALS.org

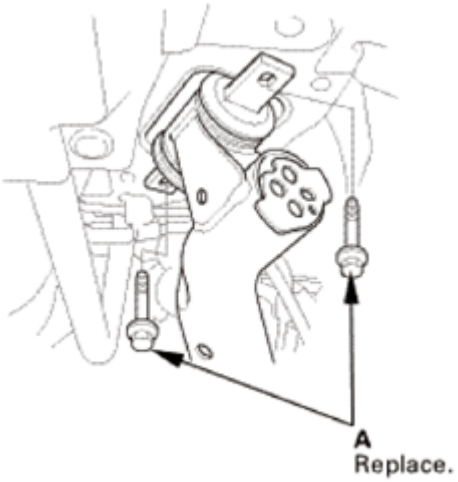

Fig. 85: Identifying Trailing Arm Front Mounting Bolts
Courtesy of AMERICAN HONDA MOTOR CO., INC.

2. Remove the trailing arm rear mounting bolt (A).
3. Lower the jack, and remove the trailing arm (B).

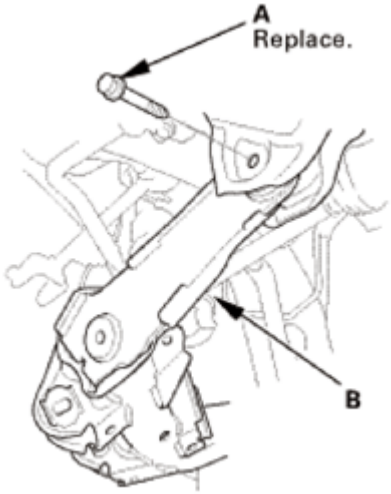

Fig. 86: Identifying Trailing Arm Rear Mounting Bolt And Trailing Arm
Courtesy of AMERICAN HONDA MOTOR CO., INC.

INSTALLATION

1. Rear Trailing Arm
    1. Install the trailing arm (A).
    2. Loosely install the new trailing arm rear mounting bolt (B).

GETtheMANUALS.org

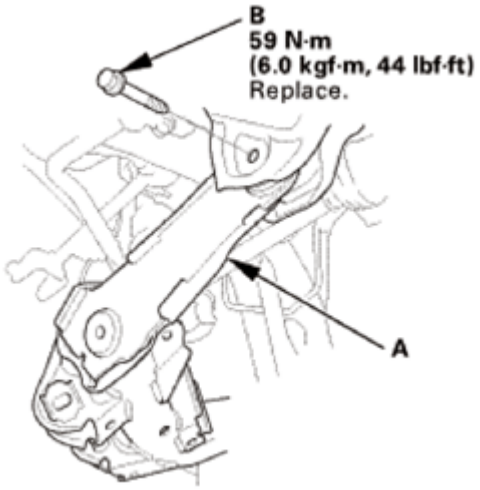

Fig. 87: Identifying Trailing Arm Rear Mounting Bolt And Trailing Arm With Torque Specifications
Courtesy of AMERICAN HONDA MOTOR CO., INC.

3. Loosely install the new trailing arm front mounting bolt (A).

Fig. 88: Identifying Trailing Arm Front Mounting Bolt With Torque Specifications
Courtesy of AMERICAN HONDA MOTOR CO., INC.

2. Stabilizer Link Trailing Arm Side - Reconnection
    1. Connect the stabilizer link (A) to the trailing arm.
    2. Install the new flange nut (B), and tighten them to the specified torque while holding the respective joint pin (C) with a hex wrench (D).

GETtheMANUALS.org

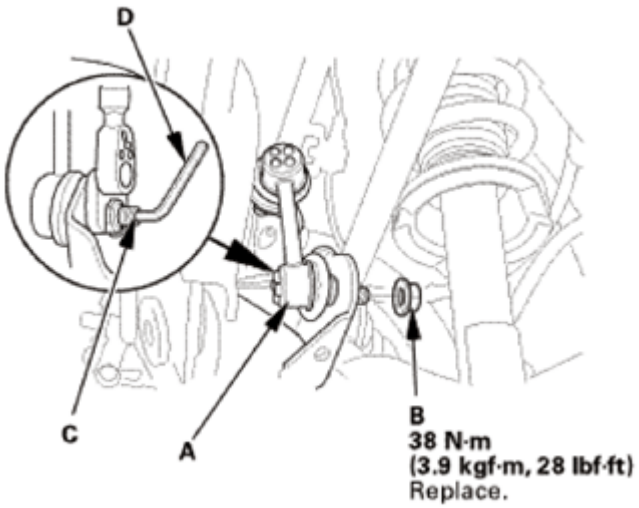

Fig. 89: Tightening Flange Nut Using Hex Wrench
Courtesy of AMERICAN HONDA MOTOR CO., INC.

3. Rear Trailing Arm Knuckle Side - Reconnection
    1. Connect the knuckle to the trailing arm.
    2. Loosely install the new flange bolt (A).
    3. Loosely install the new self-locking nut (B), the adjusting cam plate (C), and the new adjusting bolt (D).

NOTE: **Align the cam positions of the adjusting bolt and the adjusting cam plate with the marked positions when tightening the self-locking nut.**

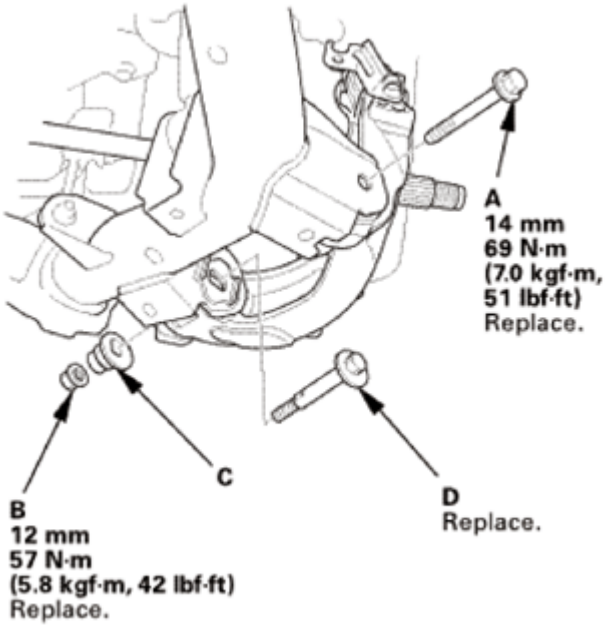

Fig. 90: Identifying Self-Locking Nut, Adjusting Cam Plate And Adjusting Bolt With Torque

GETtheMANUALS.org

Specifications
Courtesy of AMERICAN HONDA MOTOR CO., INC.

4. Rear Damper Lower Side - Reconnection
    1. Loosely install the new damper mounting bolt (A).

NOTE: **Install the damper mounting bolt to the same direction as removal.**

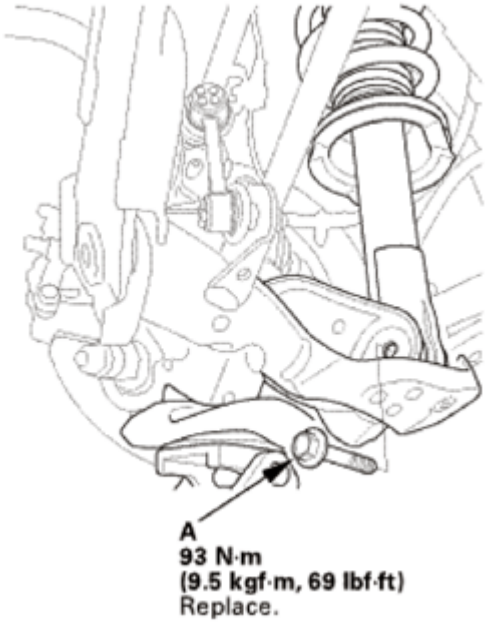

Fig. 91: Identifying Damper Mounting Bolt
Courtesy of AMERICAN HONDA MOTOR CO., INC.

5. Rear Suspension All Mounting - Tighten Under Vehicle's Weight
    1. Raise the rear suspension with a floor jack to load the vehicle weight.
    2. Tighten all mounting hardware to the specified torque.
6. Rear Wheel
    1. Install the rear wheel.

NOTE: **Before installing the wheel, clean the mating surfaces between the brake disc/drum and the inside of the wheel.**

GETtheMANUALS.org

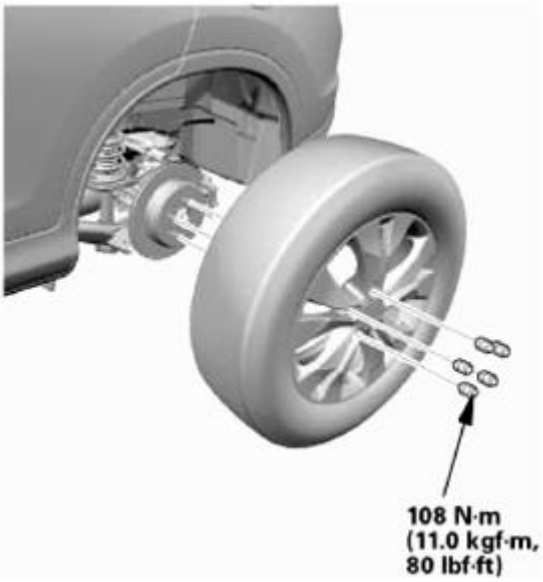

Fig. 92: Identifying Rear Wheel With Torque Specifications
Courtesy of AMERICAN HONDA MOTOR CO., INC.

7. Pre-Alignment Checks

   For proper inspection and adjustment of the wheel alignment, do these checks:

   1. Release the parking brake to avoid an incorrect measurement.
   2. Make sure the suspension is not modified.
   3. Make sure the fuel tank is full, and that the spare tire, the jack, and the tools are in place on the vehicle.
   4. Check the tire size and tire pressure according to tire information.
   5. Set the steering column to the middle tilt position and telescopic position.
8. Camber - Inspection

   Use commercially available computerized four wheel alignment equipment to measure wheel alignment (caster, camber, toe, and turning angle). Follow the equipment manufacturer's instructions.

   1. Check the camber angle.

      Camber angle:

      2WD:

      Front:

      With 16 inch wheel: -0 ° 01 '±1 ° 00 '

      Without 16 inch wheel: -0 ° 10 '±1 ° 00 '

GETtheMANUALS.org

(Maximum difference between the front right and left side: 1 °00 ')

Rear:

With 16 inch wheel: -1 ° 06 '±45 '

Without 16 inch wheel: -1 ° 12 '±45 '

(Maximum difference between the front right and left side: 0 °45 ')

AWD/4WD:

Front:

With 16 inch wheel: -0 ° 08 '±1 ° 00 '

Without 16 inch wheel: 0 ° 00 '±1 ° 00 '

(Maximum difference between the front right and left side: 1 °00 ')

Rear:

With 16 inch wheel: -0 ° 50 '±45 '

Without 16 inch wheel: -1 ° 00 '±45 '

(Maximum difference between the front right and left side: 0 °45 ')

- If the measurement is within specification, measure the toe-in.
- If the measurement for the front camber is not within the specification, go to front camber adjustment.
- If the measurement for the rear camber is not within the specification, check for bent or damaged suspension components.

9. Rear Toe - Inspection

   Use commercially available computerized four wheel alignment equipment to measure wheel alignment (caster, camber, toe, and turning angle). Follow the equipment manufacturer's instructions.

   1. Release the parking brake to avoid an incorrect measurement.
   2. Check the toe.

      Rear toe-in: 2^{+2}_{-1} mm ($0.08^{+0.08}_{-0.04}$ in)

      - If adjustment is required, go to the rear toe adjustment.
      - If no adjustment is required, go to front toe inspection.

GETtheMANUALS.org

10. HDS DLC - Connection
    1. Connect the HDS to the data link connector (DLC) (A) located under the driver's side of the dashboard.
    2. Turn the ignition switch to ON (II).
    3. Make sure the HDS communicates with the vehicle. If it does not communicate, go to the DLC circuit troubleshooting.

Fig. 93: Identifying Data Link Connector
Courtesy of AMERICAN HONDA MOTOR CO., INC.

11. VSA Sensor Neutral Position - Memorization
    1. Park the vehicle on a flat and level surface, with the steering wheel in the straight ahead position.
    2. Select VSA ADJUSTMENT, then select ALL SENSORS with the HDS, and follow the screen prompts.

    NOTE: See the HDS Help menu for specific instructions.

12. Steering Angle Sensor Neutral Position - Clear
    1. Select EPS ADJUSTMENT, then select EPS STEERING ANGLE SENSOR VALUE CLEAR and follow the screen prompts on the HDS.

    NOTE: See the HDS Help menu for specific instructions.

13. Test Drive
    1. Test-drive the vehicle.
14. Rear Stabilizer Link - Tighten
    1. After 5 minutes of driving, torque the self-locking nut again to the specified torque.

REAR UPPER ARM REMOVAL AND INSTALLATION

GETtheMANUALS.org

REMOVAL

1. Vehicle Lift
    1. Raise the vehicle on a lift, and make sure it is securely supported.
2. Rear Wheel
    1. Remove the rear wheel.

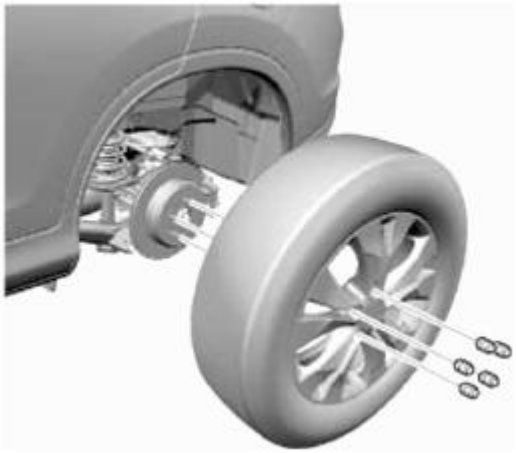

Fig. 94: Identifying Rear Wheel
Courtesy of AMERICAN HONDA MOTOR CO., INC.

3. Rear Knuckle - Jack Up
    1. Position a floor jack at the connecting point of the trailing arm (A) and the knuckle (B).
    2. Raise the floor jack until the suspension begins to compress.

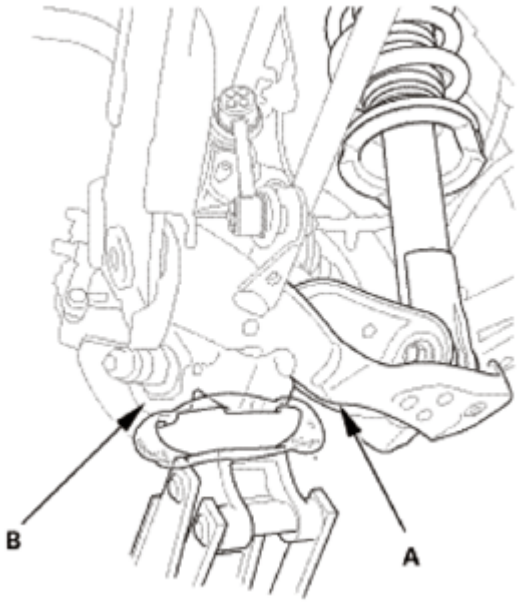

Fig. 95: Identifying Trailing Arm And Knuckle

GETtheMANUALS.org

Courtesy of AMERICAN HONDA MOTOR CO., INC.

4. Rear Upper Arm
    1. Remove the wheel speed sensor harness bracket (A).

Fig. 96: Identifying Wheel Speed Sensor Harness Bracket
Courtesy of AMERICAN HONDA MOTOR CO., INC.

2. Remove the flange bolts (A), and remove the upper arm (B).

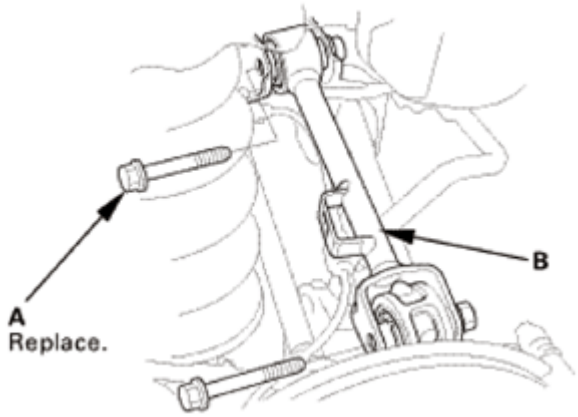

Fig. 97: Identifying Flange Bolts And Upper Arm
Courtesy of AMERICAN HONDA MOTOR CO., INC.

INSTALLATION

1. Rear Upper Arm
    1. Install the upper arm (A).

GETtheMANUALS.org

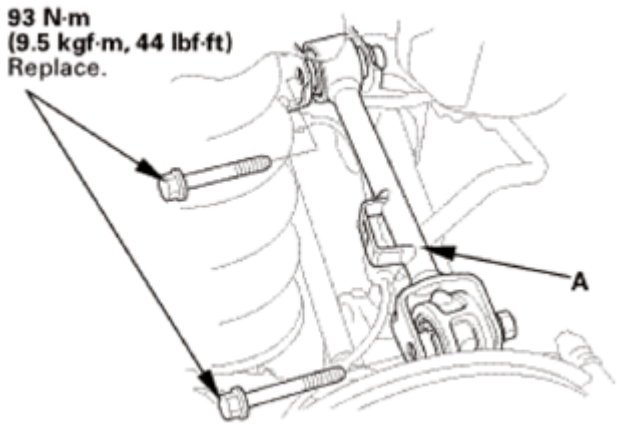

Fig. 98: Identifying Rear Upper Arm And Mounting Bolts With Torque Specifications
Courtesy of AMERICAN HONDA MOTOR CO., INC.

2. Install the wheel speed sensor harness bracket (A).

Fig. 99: Identifying Wheel Speed Sensor Harness Bracket
Courtesy of AMERICAN HONDA MOTOR CO., INC.

2. Rear Suspension All Mounting - Tighten Under Vehicle's Weight
    1. Raise the rear suspension with a floor jack to load the vehicle weight.
    2. Tighten all mounting hardware to the specified torque.
3. Rear Wheel
    1. Install the rear wheel.

NOTE: **Before installing the wheel, clean the mating surfaces between the brake disc/drum and the inside of the wheel.**

GETtheMANUALS.org

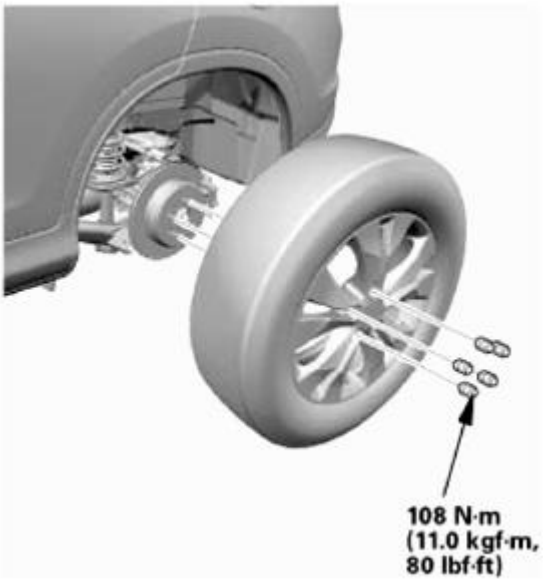

Fig. 100: Identifying Rear Wheel With Torque Specifications
Courtesy of AMERICAN HONDA MOTOR CO., INC.

4. Pre-Alignment Checks

   For proper inspection and adjustment of the wheel alignment, do these checks:

   1. Release the parking brake to avoid an incorrect measurement.
   2. Make sure the suspension is not modified.
   3. Make sure the fuel tank is full, and that the spare tire, the jack, and the tools are in place on the vehicle.
   4. Check the tire size and tire pressure according to tire information.
   5. Set the steering column to the middle tilt position and telescopic position.
5. Camber - Inspection

   Use commercially available computerized four wheel alignment equipment to measure wheel alignment (caster, camber, toe, and turning angle). Follow the equipment manufacturer's instructions.

   1. Check the camber angle.

      Camber angle:

      2WD:

      Front:

      With 16 inch wheel: -0 ° 01 '±1 ° 00 '

      Without 16 inch wheel: -0 ° 10 '±1 ° 00 '

GETtheMANUALS.org

(Maximum difference between the front right and left side: 1 °00 ')

Rear:

With 16 inch wheel: -1 ° 06 '±45 '

Without 16 inch wheel: -1 ° 12 '±45 '

(Maximum difference between the front right and left side: 0 °45 ')

AWD/4WD:

Front:

With 16 inch wheel: -0 ° 08 '±1 ° 00 '

Without 16 inch wheel: 0 ° 00 '±1 ° 00 '

(Maximum difference between the front right and left side: 1 °00 ')

Rear:

With 16 inch wheel: -0 ° 50 '±45 '

Without 16 inch wheel: -1 ° 00 '±45 '

(Maximum difference between the front right and left side: 0 °45 ')

- If the measurement is within specification, measure the toe-in.
- If the measurement for the front camber is not within the specification, go to front camber adjustment.
- If the measurement for the rear camber is not within the specification, check for bent or damaged suspension components.

6. Rear Toe - Inspection

   Use commercially available computerized four wheel alignment equipment to measure wheel alignment (caster, camber, toe, and turning angle). Follow the equipment manufacturer's instructions.

   1. Release the parking brake to avoid an incorrect measurement.
   2. Check the toe.

      Rear toe-in: 2^{+2}_{-1} mm ($0.08^{+0.08}_{-0.04}$ in)

      - If adjustment is required, go to the rear toe adjustment.
      - If no adjustment is required, go to front toe inspection.

GETtheMANUALS.org

7. HDS DLC - Connection
    1. Connect the HDS to the data link connector (DLC) (A) located under the driver's side of the dashboard.
    2. Turn the ignition switch to ON (II).
    3. Make sure the HDS communicates with the vehicle. If it does not communicate, go to the DLC circuit troubleshooting.

Fig. 101: Identifying Data Link Connector
Courtesy of AMERICAN HONDA MOTOR CO., INC.

8. VSA Sensor Neutral Position - Memorization
    1. Park the vehicle on a flat and level surface, with the steering wheel in the straight ahead position.
    2. Select VSA ADJUSTMENT, then select ALL SENSORS with the HDS, and follow the screen prompts.

    NOTE: See the HDS Help menu for specific instructions.

9. Steering Angle Sensor Neutral Position - Clear
    1. Select EPS ADJUSTMENT, then select EPS STEERING ANGLE SENSOR VALUE CLEAR and follow the screen prompts on the HDS.

    NOTE: See the HDS Help menu for specific instructions.

REAR WHEEL BOLT REMOVAL AND INSTALLATION

SPECIAL TOOL DESCRIPTION

Image	Description/Tool Number

GETtheMANUALS.org

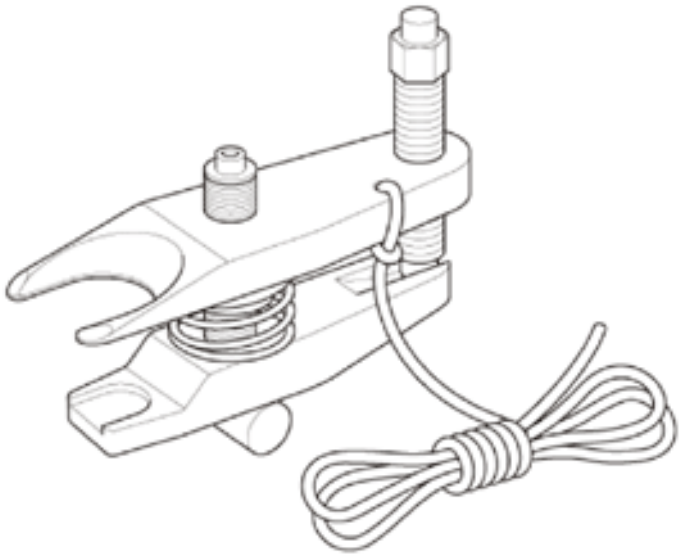	Ball Joint Remover, 28 mm 07MAC-SL00202

REMOVAL

1. Vehicle Lift
    1. Raise the vehicle on a lift, and make sure it is securely supported.
2. Rear Wheel
    1. Remove the rear wheel.

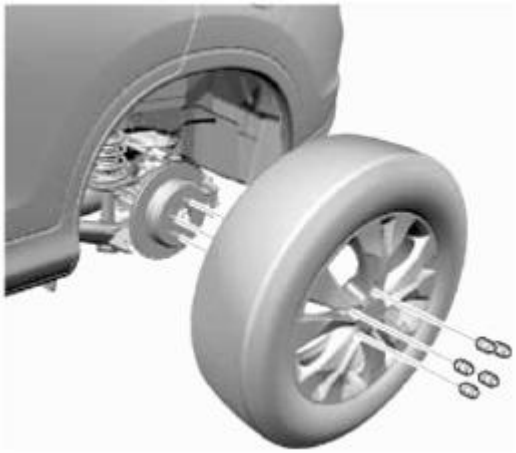

Fig. 102: Identifying Rear Wheel
Courtesy of AMERICAN HONDA MOTOR CO., INC.

3. Rear Brake Caliper - Detach
    1. Remove the brake hose mounting bolt (A).
    2. Remove the caliper assembly (B).

GETtheMANUALS.org

NOTE:

- **To prevent damage to the caliper assembly or brake hose, use a short piece of wire to hang the caliper assembly from the undercarriage.**
- **Do not twist the brake hose and the parking brake cable excessively.**

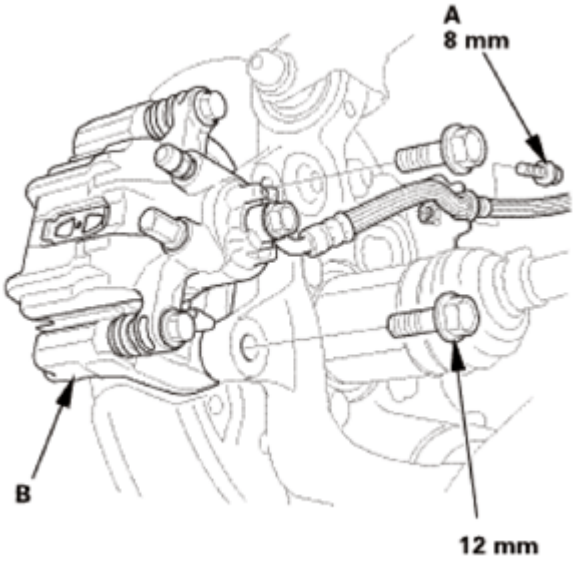

Fig. 103: Identifying Brake Hose Mounting Bolt And Caliper Assembly
Courtesy of AMERICAN HONDA MOTOR CO., INC.

4. Rear Brake Disc
    1. Remove the brake disc/drum flathead screws (A).
    2. Remove the brake disc/drum (B).

NOTE:

- **Remove the adjuster plug (C), then if necessary, turn the adjuster bolt (D) with a flat-tip screwdriver until the shoes become loose.**
- **If the brake disc/drum is stuck to the hub bearing unit, thread two 8 x 1.25 mm bolts (E) into the brake disc/drum to push it away from the hub bearing unit. Turn each bolt 90 degrees at a time to prevent the brake disc/drum from binding.**

GETtheMANUALS.org

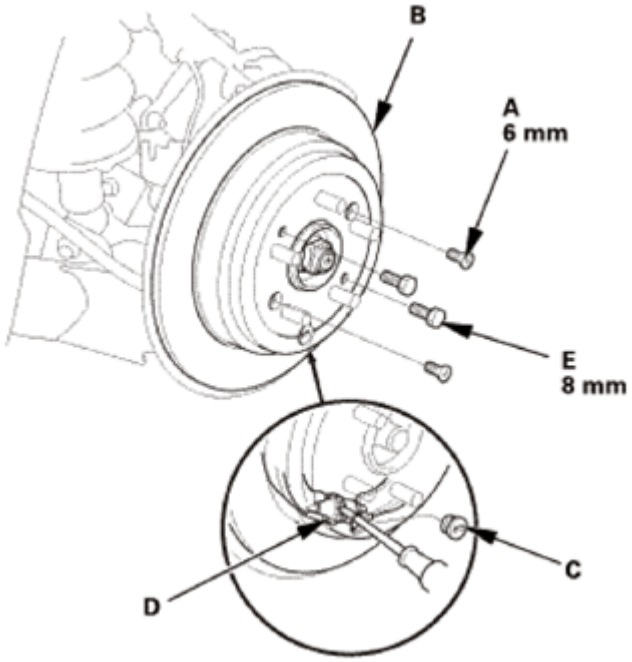

Fig. 104: Removing Brake Disc/Drum Flathead Screws
Courtesy of AMERICAN HONDA MOTOR CO., INC.

5. Rear Wheel Bolt

NOTE:

- **Do not use a hammer or impact tools (pneumatic or electric).**
- **Be careful not to damage the threads of the wheel bolts.**

1. Separate the wheel bolt (A) from the hub (B).

NOTE: **If the angle of the remover against the wheel bolt is not vertical, readjust the ball joint remover by turning the head (C) of the adjusting bolt (D).**

GETtheMANUALS.org

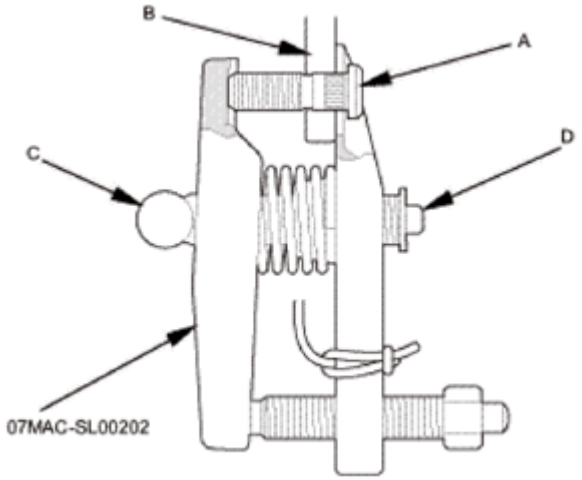

Fig. 105: Separating Wheel Bolt From Hub
Courtesy of AMERICAN HONDA MOTOR CO., INC.

INSTALLATION

1. Rear Wheel Bolt

NOTE:

- **Do not use a hammer or impact tools (pneumatic or electric).**
- **Be careful not to damage the threads of the wheel bolts.**

1. Insert the new wheel bolt (A) into the hub (B).

NOTE:

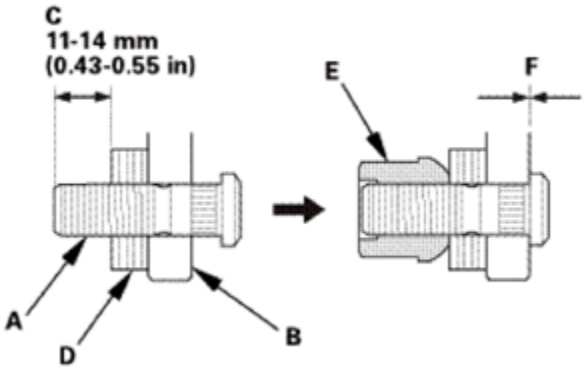

Fig. 106: Installing Rear Wheel Bolt To Nut
Courtesy of AMERICAN HONDA MOTOR CO., INC.

- **Before installing the new wheel bolt, clean the mating surfaces on the bolt and the hub.**
- **Degrease the area around the wheel bolt and the threaded section of the nut.**

GETtheMANUALS.org

2. Adjust the measurement (C) with the washers (P/N 94101-12800 or equivalent) (D).
3. Install a nut (P/N 90304-SC2-000 or equivalent) (E) hand-tight.

NOTE:

- **Make sure the wheel bolt is installed vertically to the hub disc surface.**
- **Do not install the nut and the washers that have been used as tools on a vehicle.**

4. Tighten the nut.

NOTE:

- **Do not exceed the maximum torque limit.**
- **Make sure there is no gap (F) between the bolt and the hub.**

Limited torque: 108 N.m (11.0 kgf.m, 80 lbf.ft) max .

NOTE: **If you cannot tighten the wheel nut to the specified torque when installing the wheel, replace the rear hub bearing unit as an assembly.**

2. Rear Brake Disc
   1. Install the brake disc (A).

NOTE: **Before installing the brake disc, clean the mating surfaces between the hub bearing unit and the inside of the brake disc.**

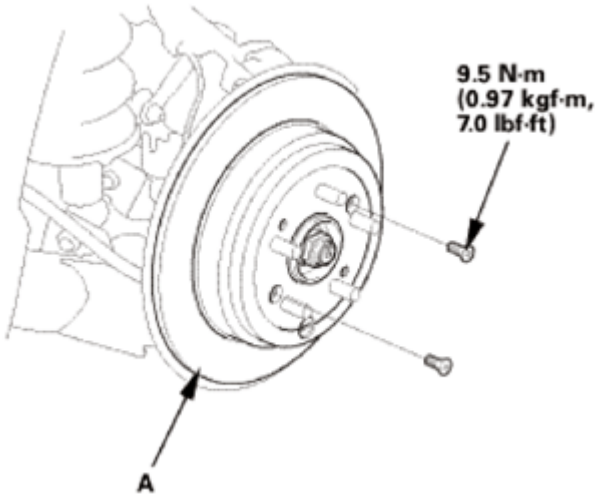

Fig. 107: Identifying Rear Brake Disc And Mounting Bolts With Torque Specifications
Courtesy of AMERICAN HONDA MOTOR CO., INC.

3. Rear Brake Caliper - Reattach

GETtheMANUALS.org

1. Install the caliper assembly (A).
2. Install the brake hose mounting bolt (B).

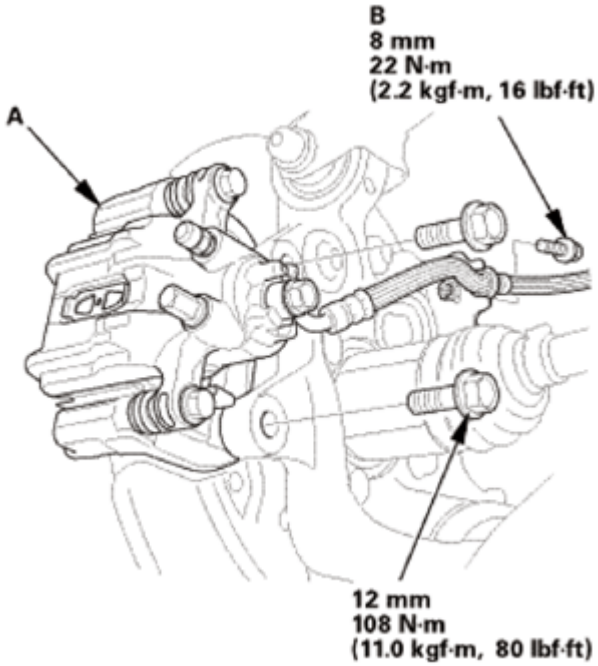

Fig. 108: Identifying Caliper Assembly And Brake Hose Mounting Bolt With Torque Specifications
Courtesy of AMERICAN HONDA MOTOR CO., INC.

4. Rear Wheel
    1. Install the rear wheel.

NOTE: **Before installing the wheel, clean the mating surfaces between the brake disc/drum and the inside of the wheel.**

GETtheMANUALS.org

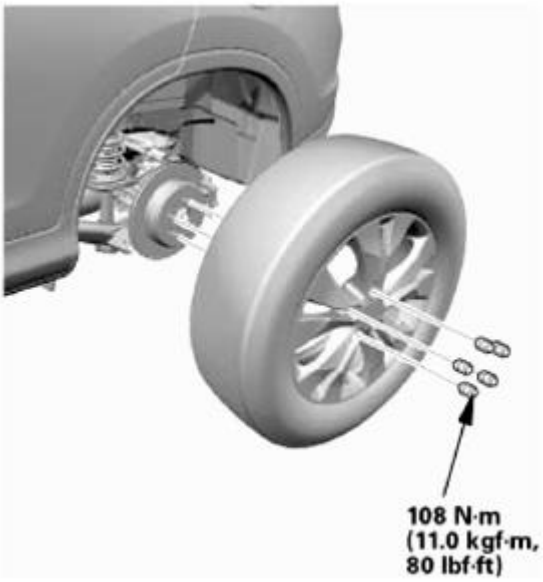

Fig. 109: Identifying Rear Wheel With Torque Specifications
Courtesy of AMERICAN HONDA MOTOR CO., INC.

GETtheMANUALS.org

REAR WINDOW DEFOGGER COMPONENT LOCATION INDEX

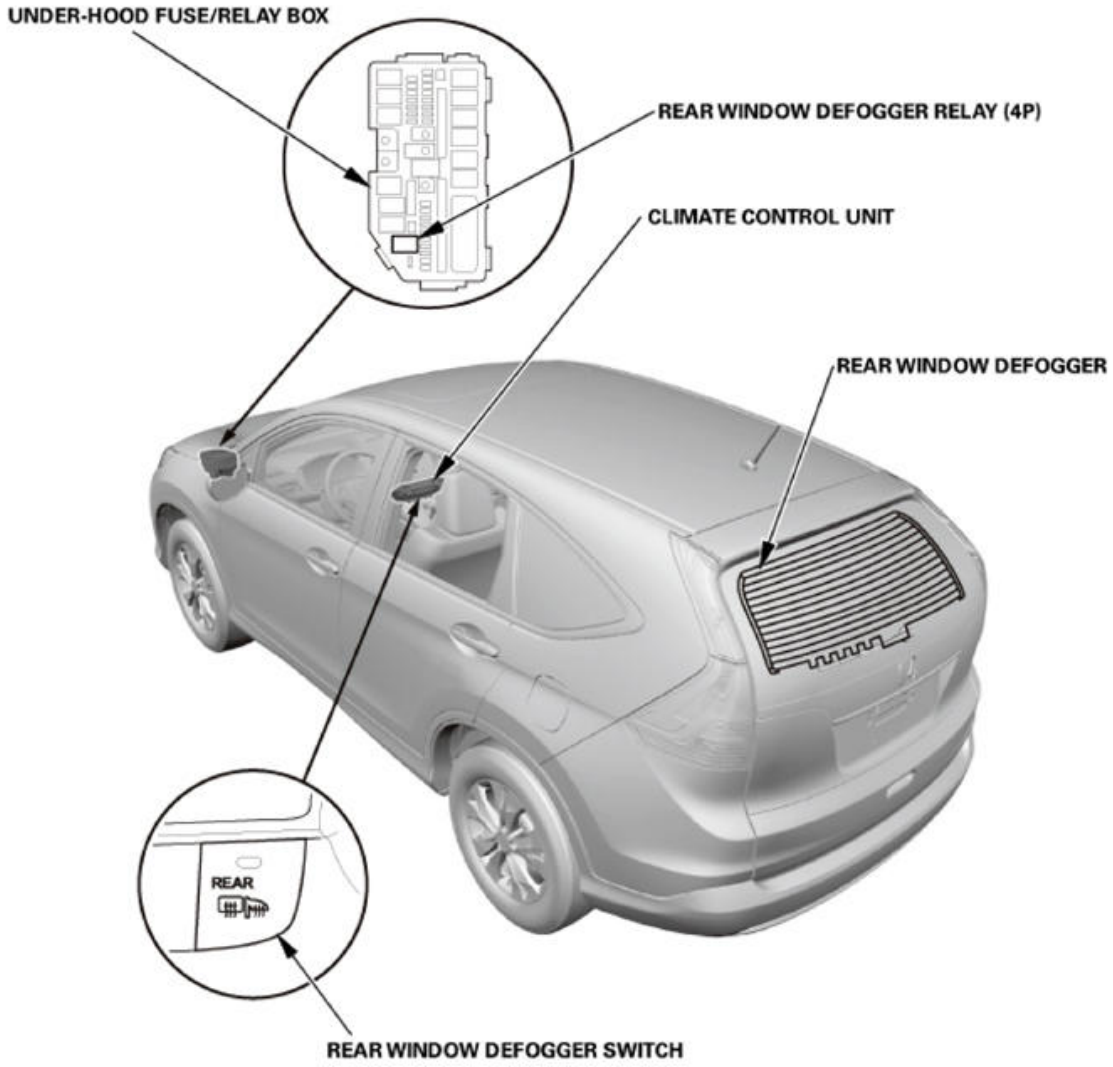

Fig. 1: Rear Window Defogger Components Location
Courtesy of AMERICAN HONDA MOTOR CO., INC.

REAR WINDOW DEFOGGER	**DEFOGGER WIRE REPAIR**
	FUNCTION TEST
REAR WINDOW DEFOGGER RELAY (4P)	**TEST**

REAR WINDOW DEFOGGER WIRE REPAIR

RECONDITIONING

GETtheMANUALS.org

1. Defogger Wire - Repair

NOTE: **To make an effective repair, the broken section must be no longer than 25 mm (1.0 in).**

1. Lightly rub the area around the broken section (A) with fine steel wool, then clean it with isopropyl alcohol.
2. Carefully mask above and below the broken area of the rear window defogger wire (B) with cellophane tape (C).

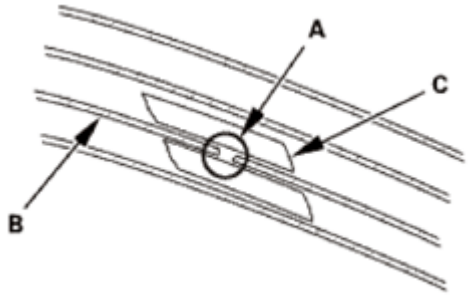

Fig. 2: Identifying Defogger Wire Broken Section And Cellophane Tape
Courtesy of AMERICAN HONDA MOTOR CO., INC.

3. Using a small brush, apply a heavy coat of silver conductive paint (commercially available) (A) extending about 3.0 mm (0.12 in) on both sides of the break. Allow 25 minutes to dry.
4. Do the function test to confirm that the wire is repaired.
5. Apply a second coat of paint in the same way. Let it dry 3 hours before removing the tape.

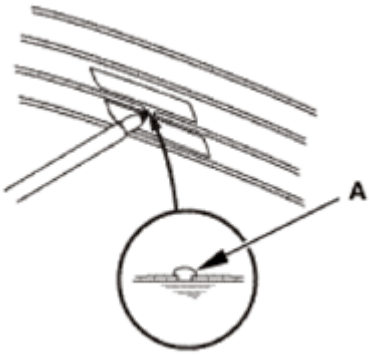

Fig. 3: Applying Heavy Coat Of Silver Conductive Paint Using Small Brush
Courtesy of AMERICAN HONDA MOTOR CO., INC.

REAR WINDOW DEFOGGER FUNCTION TEST

NOTE:

- **Before testing, make sure the No. A2-6 (30 A) fuse in the under-hood fuse/relay box, and the No. B22 (7.5 A) fuse in the under-dash fuse/relay**

GETtheMANUALS.org

box are OK.

- **Aftermarket window tinting should be removed before testing.**
- **With the defogger ON, holding a cup of hot water to the rear window will form steam that can assist in diagnosing a broken or under-performing grid line or section.**
- **Be careful not to scratch or damage the defogger wires with the tester probe. To avoid damaging the defogger grid, wrap a single strand of bare copper wire or aluminum foil around the voltmeter probe. Use the foil or wire as a contact brush when moving across the defogger grid.**

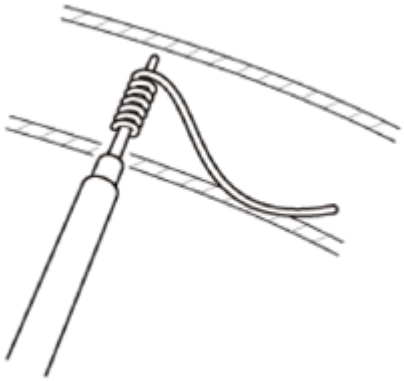

Fig. 4: Testing Rear Window Defogger Function Using Tester Probe
Courtesy of AMERICAN HONDA MOTOR CO., INC.

1. Turn the ignition switch to ON (II), then turn the rear window defogger switch ON.
2. Measure the voltage between the rear window defogger A (1P) positive terminal and body ground. There should be battery voltage.
   - If there is no voltage, check for:
     - Faulty rear window defogger relay.
     - Faulty climate control unit or HVAC control unit.
     - An open or high resistance in the GRN wire to the positive terminal.
   - If there is battery voltage, go to step 3.

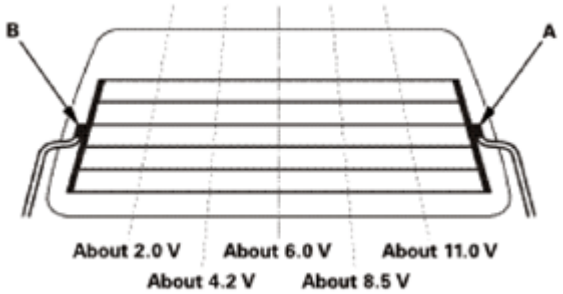

Fig. 5: Identifying Rear Window Defogger Positive And Negative Terminals
Courtesy of AMERICAN HONDA MOTOR CO., INC.

GETtheMANUALS.org

3. Measure the voltage between the rear window defogger B (1P) negative terminal and body ground. There should be less than 0.2 V.

   If there is more than 0.2 V, check for an open in the ground (BLK) wire or poor ground (G603). If there is 0.2 V or less, go to step 4.

4. Touch the voltmeter positive probe along each defogger wire, and the negative probe to the negative terminal.
   - If the voltage is as specified, the defogger wire up to that point is OK.
   - If the voltage is not as specified, repair the defogger wire.
     - If voltage is more than specified at one of the points, there is a break or high resistance toward the negative half of the wire.
     - If voltage is less than specified at one of the points, there is a break or high resistance toward the positive half of the wire.

GETtheMANUALS.org

REARVIEW CAMERA CONNECTOR FOR INPUTS AND OUTPUTS

REARVIEW CAMERA CONNECTOR FOR INPUTS AND OUTPUTS (12P CONNECTOR TYPE)

Fig. 1: Identifying Rear View Camera 12P Connector
Courtesy of AMERICAN HONDA MOTOR CO., INC.

REARVIEW CAMERA 12P CONNECTOR

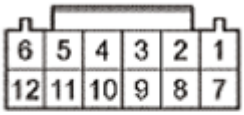

Wire side of female terminals

Fig. 2: Identifying Rear View Camera 12P Connector Terminals
Courtesy of AMERICAN HONDA MOTOR CO., INC.

REARVIEW CAMERA 12P CONNECTOR

Cavity	Wire color	Terminal Name	Description	Voltage (about)	Symptom
1	BLU	CAMERA_BIT1	Mode select signal for rearview camera	Top down view: 8V	If open: No change to rearview camera image. If short to ground: No change to rearview camera image.
2	GRN	CAMERA_BIT0	Mode select signal for rearview camera	Normal view: 8V If open: No change to rearview camera image.	If short to ground: No change to rearview camera image.

GETtheMANUALS.org

3	Not Used	Not Used	-	-	-
4	GRN	CAMERA_VCC	Power source for rearview camera	8V	If open: When put into reverse, the navigation screen or multi-information display unit goes black (backlight still operation) If short to ground: When put into reverse, the navigation screen or multi-information display goes black (backlight still operative).
5	Not Used	Not Used	-	-	-
6	WHT	CAMERA_V_GND	Ground for rearview camera	0V	If open: No change to rearview camera image. If short to ground: No change to rearview camera image.
7	BLK	CAMERA_GND	Ground for rearview camera	In reverse: battery voltage	If open: No change to rearview camera image. If short to ground: No change to rearview camera image.
8	Not Used	Not Used	-	-	-
9	RED	CAMERA_V	Video signal for review camera	0.3V	If open: No change to rearview camera image. If short to ground: No change to rearview camera image.
10	Not Used	Not Used	-	-	-
11	YEL	CAMERA_ADPT	Control signal for rearview camera	0V	If open: No change to display. If short to ground: No effect on system.
12	GRY (1)	SH_CAMERA	Shield for terminals No. 4, No. 6 No. 7, No. 9, and No. 11	-	-

(1) The shielded wires have a heat-shrink tube insulating the outside of the wire. The color of the insulating tube, typically black or dark gray, may not match the color of the wire shown on the circuit diagram.

REARVIEW CAMERA CONNECTOR FOR INPUTS AND OUTPUTS (8P CONNECTOR TYPE)

GETtheMANUALS.org

Fig. 3: Identifying Rear View Camera 8P Connector
Courtesy of AMERICAN HONDA MOTOR CO., INC.

REARVIEW CAMERA 8P CONNECTOR

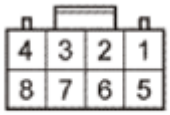

Wire side of female terminals

Fig. 4: Identifying Rear View Camera 8P Connector Terminals
Courtesy of AMERICAN HONDA MOTOR CO., INC.

REARVIEW CAMERA 8P CONNECTOR

Cavity	Wire Color	Terminal Name	Description	Voltage (about)	Symptom
1	BLU	CAMERA_BIT1	Mode select signal for rearview camera	Top down view: 8V	If open: No change to rearview camera image. If short to ground: No change to rearview camera image.
2	GRN	CAMERA_BIT0	Mode select signal for rearview camera	Normal view: 8V If open: No change to rearview camera image.	If short to ground: No change to rearview camera image.
3	GRN	CAMERA_VCC	Power source for rearview camera	8V	If open: When put into reverse, the navigation screen or multi-information display unit goes black (backlight still operation) If short to ground: When put into reverse, the navigation screen or multi-information display goes black (backlight still operative).
4	WHT	CAMERA_V_GND	Ground for rearview camera	0V	If open: No change to rearview camera image. If short to ground: No

GETtheMANUALS.org

					change to rearview camera image.
5	BLK	CAMERA_GND	Ground for rearview camera	In reverse: battery voltage	If open: No change to rearview camera image. If short to ground: No change to rearview camera image.
6	RED	CAMERA_V	Video signal for rearview camera	0.3V	If open: No change to rearview camera image. If short to ground: No change to rearview camera image.
7	YEL	CAMERA_ADPT	Control signal for rearview camera	0V	If open: No change to display. If short to ground: No effect on system.
8	GRY (1)	SH_CAMERA	Shield for terminals No. 3, No. 4 No. 5, No. 6, and No. 7	-	-
(1) The shielded wires have a heat-shrink tube insulating the outside of the wire. The color of the insulating tube, typically black or dark gray, may not match the color of the wire shown on the circuit diagram.					

REARVIEW CAMERA REMOVAL AND INSTALLATION

REMOVAL

1. Tailgate Upper Trim Panel
    1. Carefully pry out the notch (A) in the tailgate upper trim (B) with the appropriate trim tool to detach the hooks (C) and the tabs (D) from the tailgate side trims (E), and pull back the tailgate upper trim panel by hand to detach the clips (F), then remove the tailgate upper trim panel.

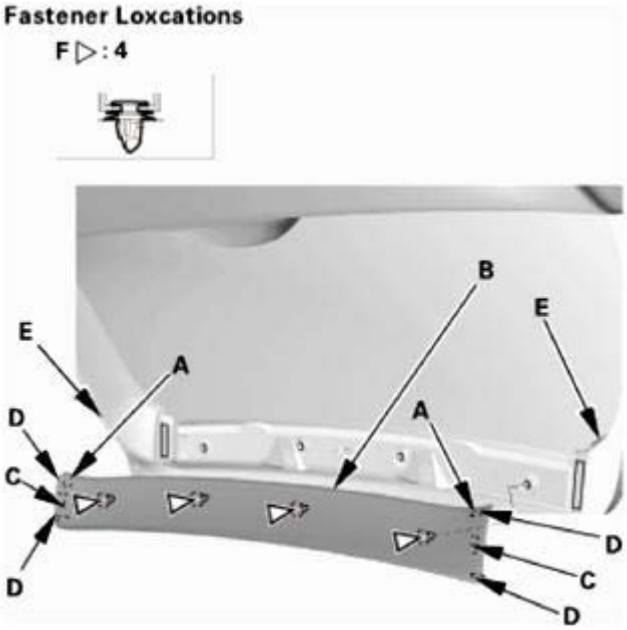

GETtheMANUALS.org

Fig. 5: Identifying Upper Trim Panel Fasteners
Courtesy of AMERICAN HONDA MOTOR CO., INC.

2. Tailgate Side Trim - Both Sides

NOTE: Repeat this procedure on the opposite side.

1. Detach the hook (A) and the tabs (B) from the tailgate lower trim panel (C), and pull back the tailgate side trim (D) by hand to detach the clips (E), then remove the tailgate side trim.

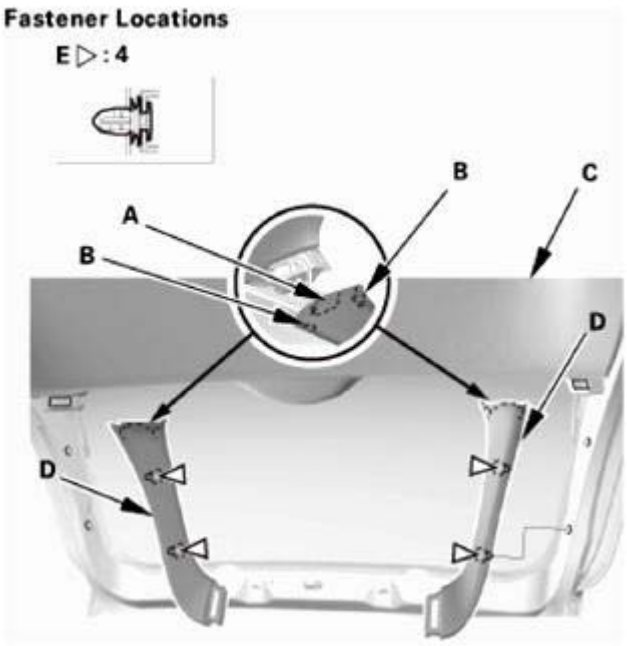

Fig. 6: Identifying Tailgate Side Trim Fastener
Courtesy of AMERICAN HONDA MOTOR CO., INC.

3. Tailgate Lower Trim Panel
   1. Remove the screw (A), then remove the tailgate pull pocket (B).

GETtheMANUALS.org

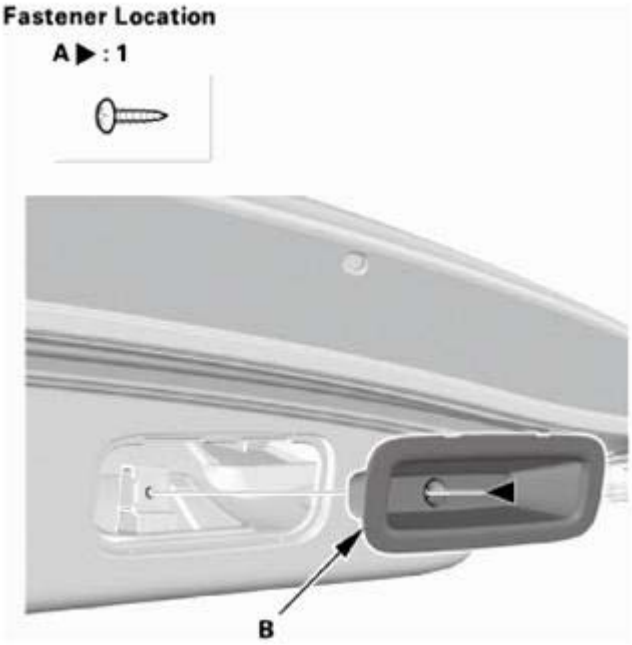

Fig. 7: Identifying Tailgate Pull Pocket And Screw
Courtesy of AMERICAN HONDA MOTOR CO., INC.

2. Pull out the tailgate lower trim panel (A) by hand to detach the clips (B, C), then remove the tailgate lower trim panel.

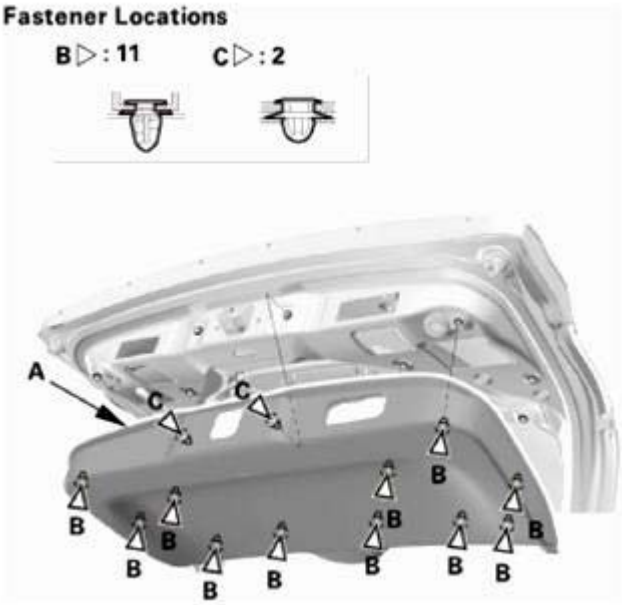

Fig. 8: Identifying Tailgate Lower Trim Panel Clips
Courtesy of AMERICAN HONDA MOTOR CO., INC.

4. Rear License Trim
    1. Remove the bolts (A).

GETtheMANUALS.org

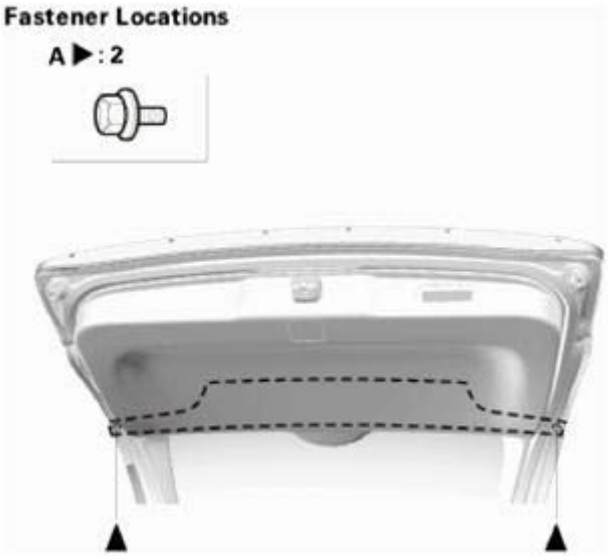

Fig. 9: Identifying Rear License Trim Bolts
Courtesy of AMERICAN HONDA MOTOR CO., INC.

2. Spray soapy water solution onto the double-sided adhesive tape (A), then carefully cut the adhesive tape along the lower edge of the rear license trim (B) with a utility knife while separating the trim from the tailgate (C) with a trim tool.

NOTE: Apply protective tape (D) around the cutting area as shown.

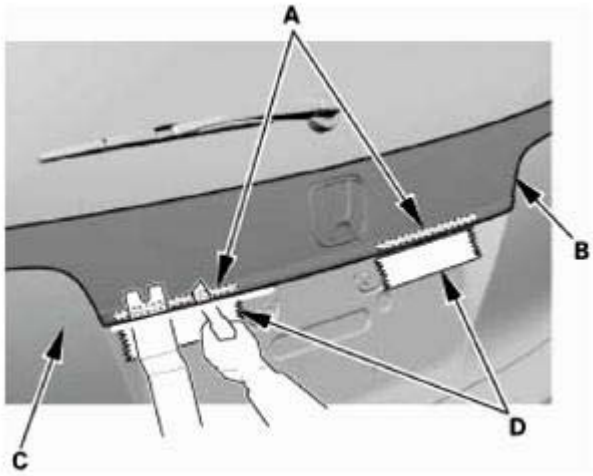

Fig. 10: Applying Protective Tape Upon Cutting Area
Courtesy of AMERICAN HONDA MOTOR CO., INC.

3. Pull out the rear license trim (A) with the appropriate trim tool to release the clip pins (B) of the clips (C) from the clip grommets (D) on the tailgate, and detach the clips (E), then remove the rear license trim from the tailgate.

GETtheMANUALS.org

NOTE: **The clip grommets will stay on the tailgate.**

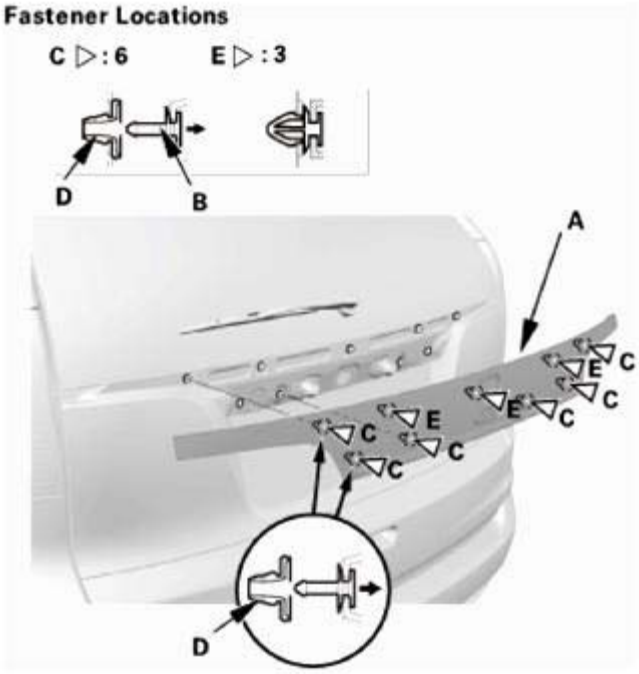

Fig. 11: Identifying Rear License Trim Fasteners
Courtesy of AMERICAN HONDA MOTOR CO., INC.

4. Remove the clip grommets (A) from the tailgate.
5. Install the clip grommets into the clip pins on the rear license trim.

NOTE: **If the clip pins and the clip grommets are damaged or stress-whitened, replace them as an assembly with new ones.**

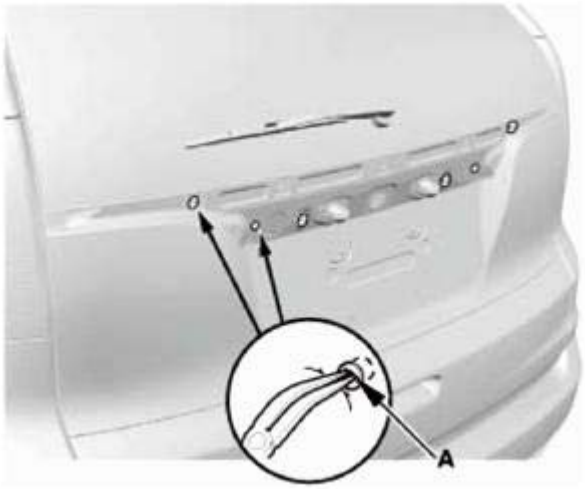

Fig. 12: Identifying Tailgate Clip Grommets

GETtheMANUALS.org

Courtesy of AMERICAN HONDA MOTOR CO., INC.

5. Rearview Camera
    1. Disconnect the connector, then push the tab (A).

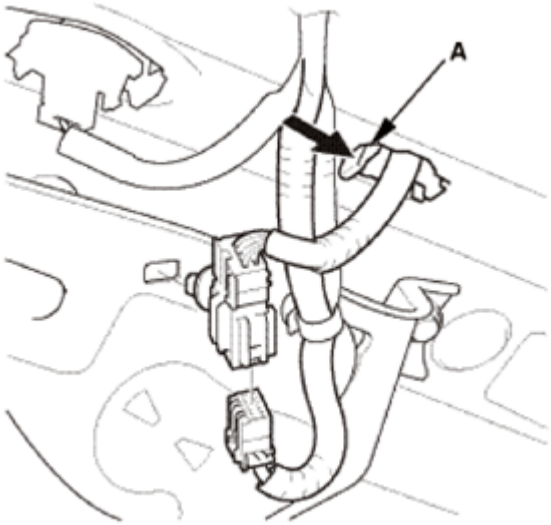

Fig. 13: Identifying Rearview Camera Tab
Courtesy of AMERICAN HONDA MOTOR CO., INC.

    2. Remove the rearview camera (A).

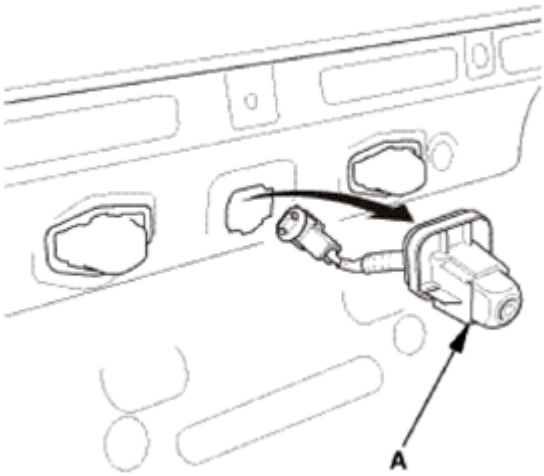

Fig. 14: Removing Rearview Camera
Courtesy of AMERICAN HONDA MOTOR CO., INC.

INSTALLATION

1. Rearview Camera
    1. Install the rearview camera (A).

GETtheMANUALS.org

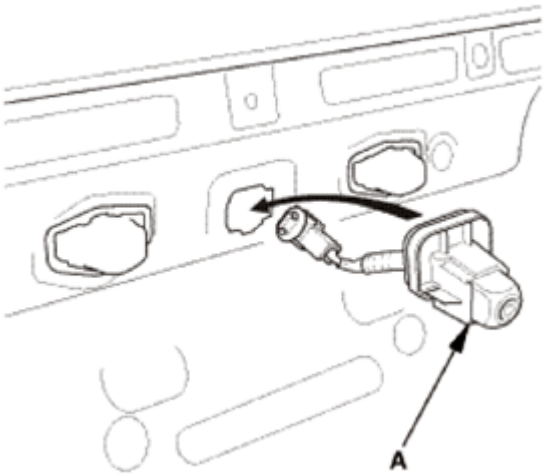

Fig. 15: Installing Rearview Camera
Courtesy of AMERICAN HONDA MOTOR CO., INC.

2. Connect the connector.

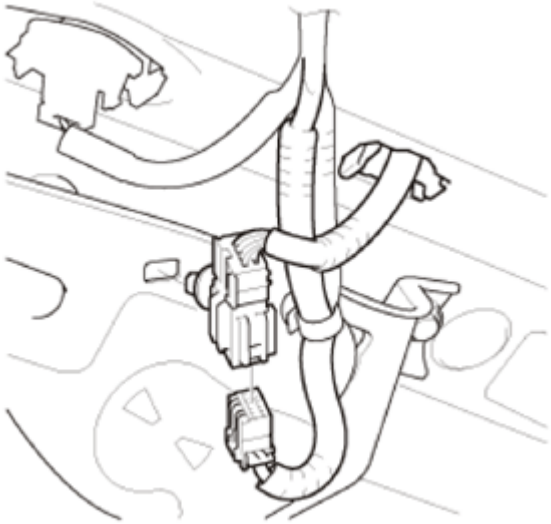

Fig. 16: Identifying Rearview Camera Connector
Courtesy of AMERICAN HONDA MOTOR CO., INC.

2. Rear License Trim
    1. If you are reusing the original rear license trim (A), apply PP primer to the areas where new double-sided adhesive tapes (B, C) will be applied, then attach the new double-sided adhesive tapes to the trim as shown.

       Adhesive tape (B): Thickness 3 mm (0.12 in)

       Width 4 mm (0.16 in)

GETtheMANUALS.org

Length 255 mm (10.04 in)

Adhesive tape (C): Thickness 2 mm (0.08 in)

Width 5 mm (0.20 in)

Length 177 mm (6.97 in)

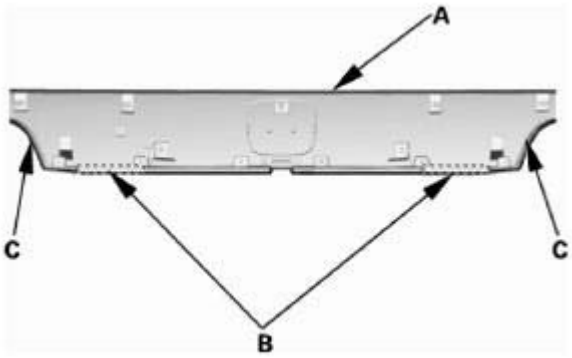

Fig. 17: Identifying Rear License Trim With Adhesive Tapes
Courtesy of AMERICAN HONDA MOTOR CO., INC.

2. Fold the edge of each adhesive backing from the double-sided adhesive tape.
3. Hold up the rear license trim (A), and fit the clips (B, C) into the holes in the tailgate. Push on the trim until the clips snap into place securely.

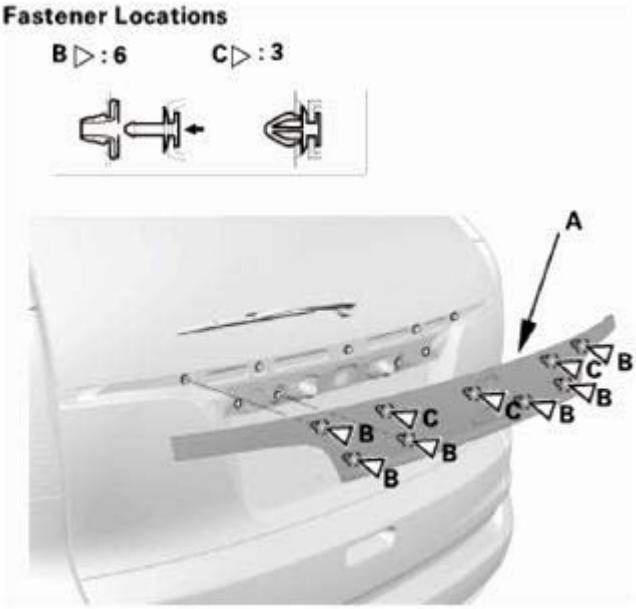

Fig. 18: Identifying Rear License Trim Fastener
Courtesy of AMERICAN HONDA MOTOR CO., INC.

GETtheMANUALS.org

4. Install the bolts (A).

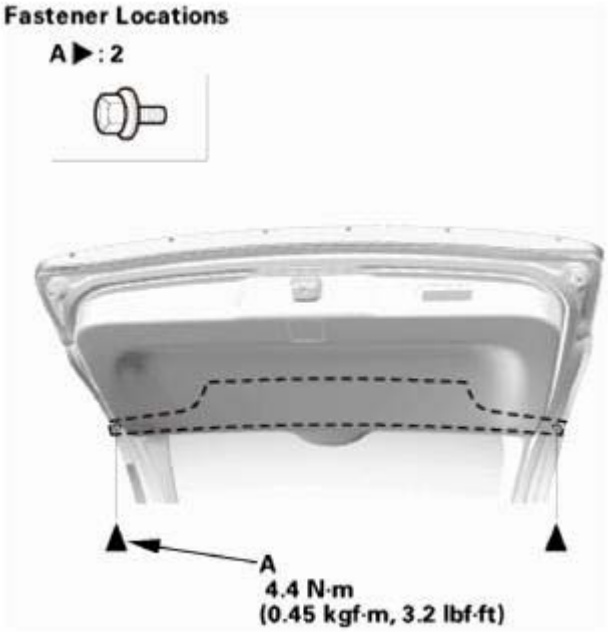

Fig. 19: Identifying Rear License Trim Bolts
Courtesy of AMERICAN HONDA MOTOR CO., INC.

3. Tailgate Lower Trim Panel
    1. Hold up the tailgate lower trim panel (A), and fit the clips into the holes in the tailgate.
    2. Push on the trim until the clips (B, C) securely snap into place.

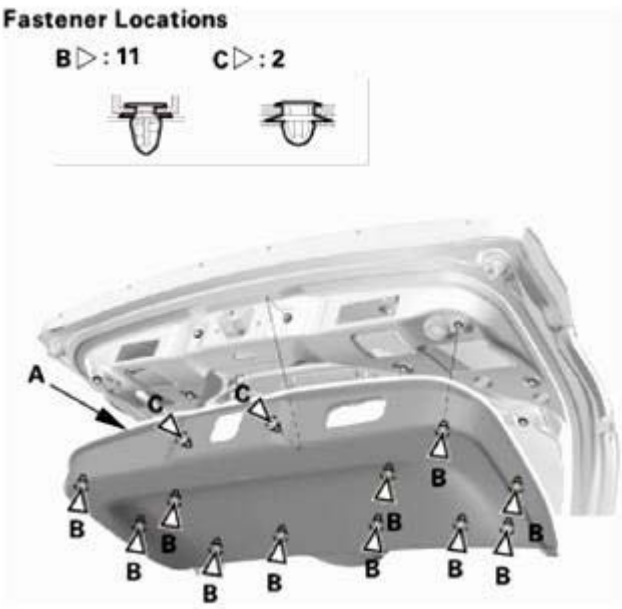

Fig. 20: Identifying Rear License Trim Fastener And Clip

GETtheMANUALS.org

Courtesy of AMERICAN HONDA MOTOR CO., INC.

3. Install the tailgate pull pocket (A), then install the screw (B).

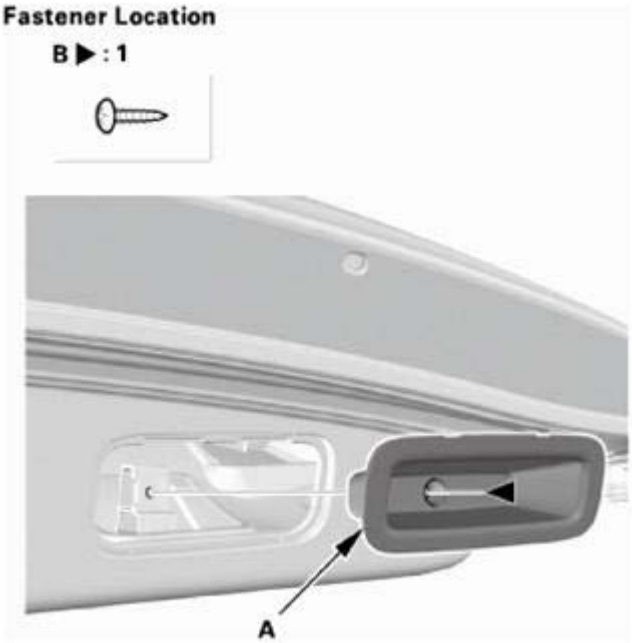

Fig. 21: Identifying Tailgate Pull Pocket And Screw
Courtesy of AMERICAN HONDA MOTOR CO., INC.

4. Tailgate Side Trim - Both Sides

NOTE: Repeat this procedure on the opposite side.

1. Install the tailgate side trim (A). Make sure the hook (B), the tabs (C), and the clips (D) snap into place securely.

GETtheMANUALS.org

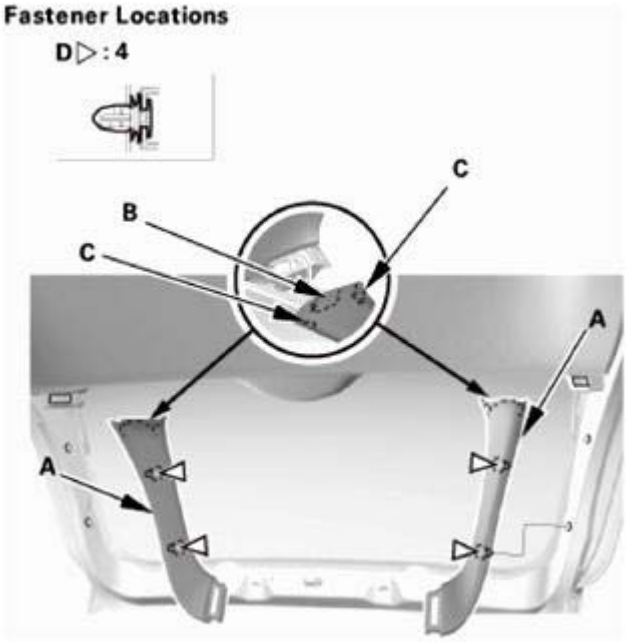

Fig. 22: Identifying Tailgate Side Trim With Fasteners
Courtesy of AMERICAN HONDA MOTOR CO., INC.

5. Tailgate Upper Trim Panel
    1. Install the tailgate upper trim panel (A). Make sure the hooks (B), the tabs (C), and the clips (D) snap into place securely.

Fig. 23: Identifying Tailgate Upper Trim Panel With Hooks, Tabs And Clips
Courtesy of AMERICAN HONDA MOTOR CO., INC.

GETtheMANUALS.org

REMINDER SYSTEMS COMPONENT LOCATION INDEX

GETtheMANUALS.org

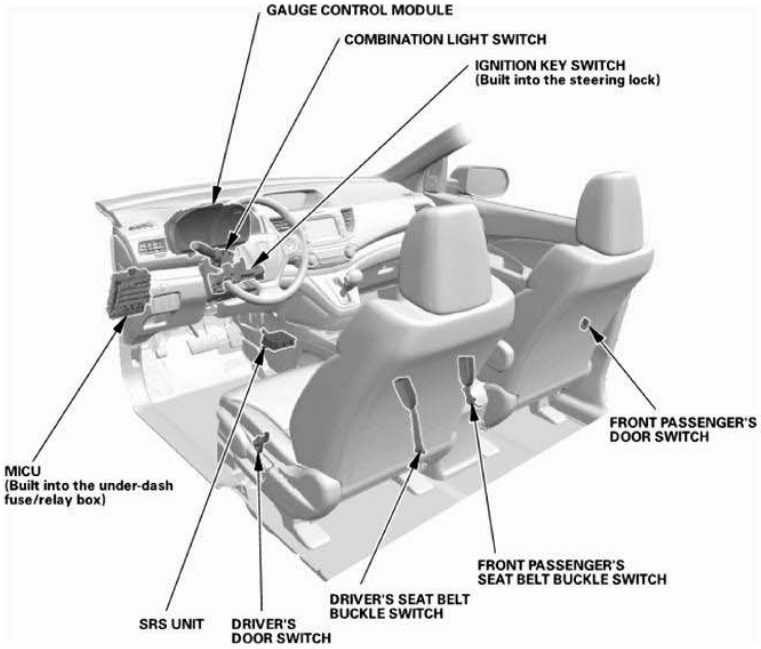

Fig. 1: Identifying Reminder Systems Component Location
Courtesy of AMERICAN HONDA MOTOR CO., INC.

COMBINATION LIGHT	**REMOVAL, INSTALLATION, AND TEST**

GETtheMANUALS.org

SWITCH	
GAUGE CONTROL MODULE	**INPUT TEST**
	Removal and Installation See **GAUGE CONTROL MODULE REMOVAL AND INSTALLATION** or **Rewriting the ODO Data and Transferring the Maintenance Minder™ Data to a New Gauge Control Module** .
IGNITION KEY SWITCH	**TEST**
MICU (Built into the under-dash fuse/relay box)	**INPUT TEST (FOR COMBINATION SWITCH CIRCUIT)**
	REMOVAL AND INSTALLATION
TAILGATE LATCH SWITCH	**REMOVAL AND INSTALLATION**
	TEST

GETtheMANUALS.org

FRONT SEAT BELT BUCKLE REMOVAL AND INSTALLATION

REMOVAL

SRS components are located in this area. Review the **SRS COMPONENT LOCATIONS** and the **PRECAUTIONS AND PROCEDURES** before doing repairs or service.

1. Front Seat Belt Lower Anchor Bolt
    1. Slide the front seat forward fully, carefully pry up on the bottom edge of the anchor cover (A) at the pry point (B) with the appropriate trim tool to release the hooks (C) and the tab (D), then remove the cover by pulling it up.

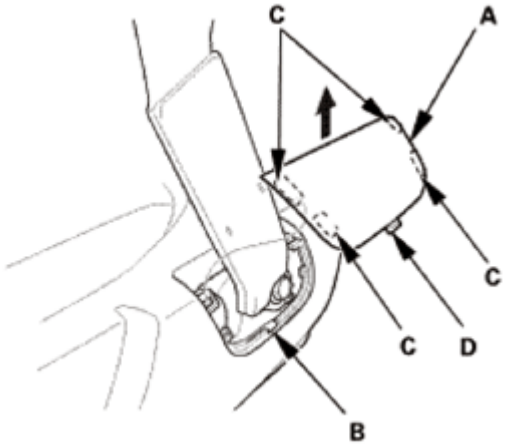

Fig. 1: Pulling Front Seat Belt Lower Anchor Bolt Cover
Courtesy of AMERICAN HONDA MOTOR CO., INC.

2. Remove the lower anchor bolt (A).

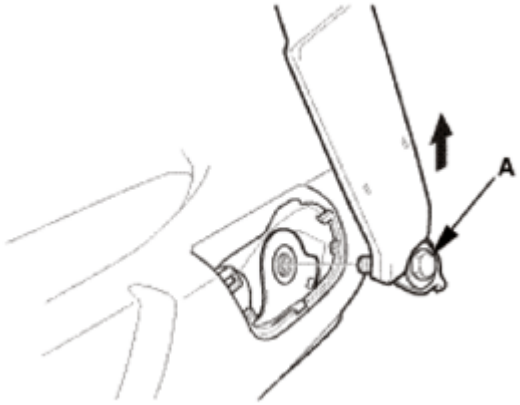

GETtheMANUALS.org

Fig. 2: Removing Lower Anchor Bolt
Courtesy of AMERICAN HONDA MOTOR CO., INC.

2. Battery Terminal (SRS) - Disconnection
    1. Make sure the ignition switch is in LOCK (0).
    2. Disconnect and isolate the negative cable (A) from the battery.

    NOTE: Always disconnect the negative side first.

    3. Disconnect the positive cable (B) from the battery.
    4. Wait at least 3 minutes before starting work.

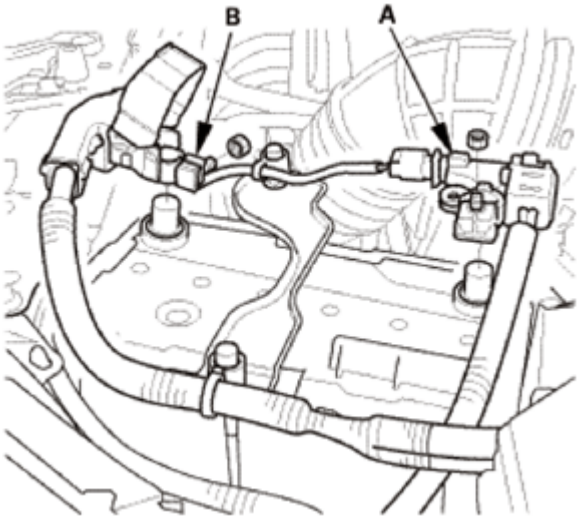

Fig. 3: Identifying Battery Negative And Positive Cable
Courtesy of AMERICAN HONDA MOTOR CO., INC.

3. Head Restraint - Driver's Side
    1. Push and hold the knob (A), then pull out the head restraint (B) as shown.

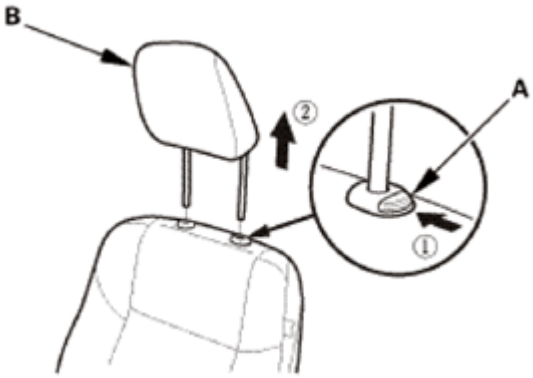

Fig. 4: Pulling Out Head Restraint

GETtheMANUALS.org

Courtesy of AMERICAN HONDA MOTOR CO., INC.

4. Front Seat Assembly
    1. Detach the hooks (A), then remove the rear inner seat track end cover (B) and the rear outer seat track end cover (C).

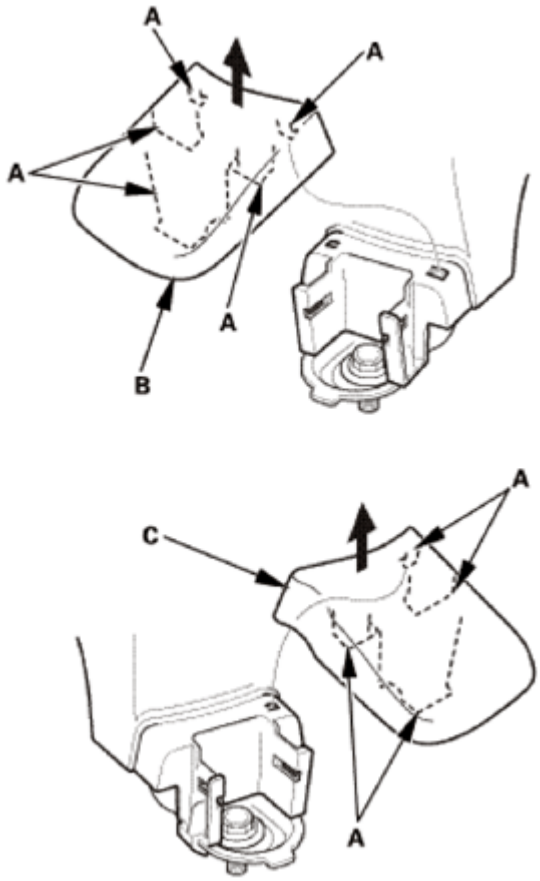

<u>Fig. 5: Removing Rear Inner And Outer Seat Track End Cover</u>
Courtesy of AMERICAN HONDA MOTOR CO., INC.

    2. Remove the seat mounting bolts (A) from the front side of the front seat.

GETtheMANUALS.org

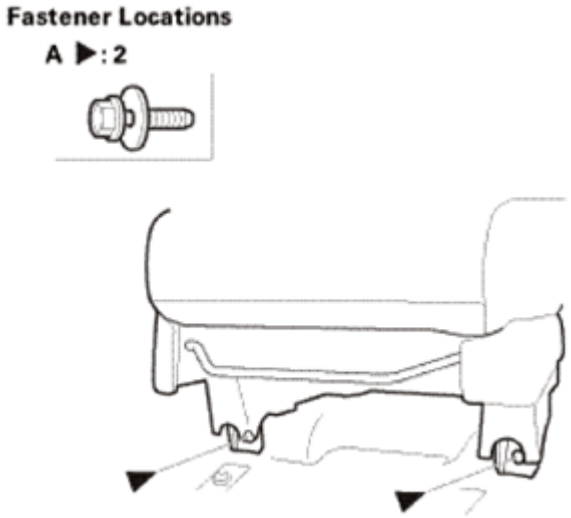

Fig. 6: Identifying Front Seat Mounting Bolts (Front Side)
Courtesy of AMERICAN HONDA MOTOR CO., INC.

3. Remove the seat mounting bolts (A) from the rear side of the front seat.

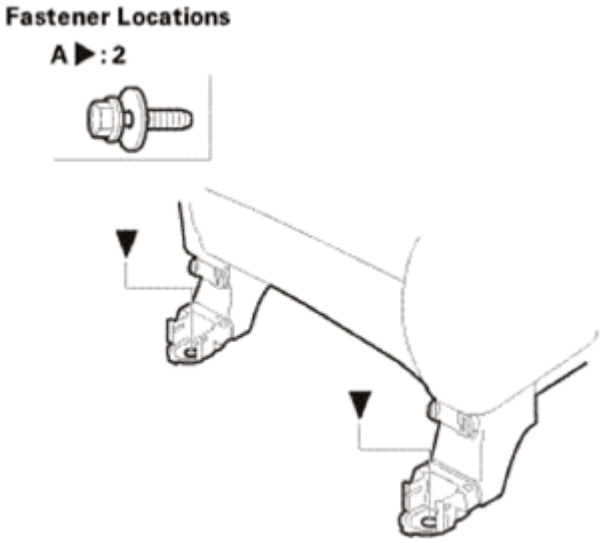

Fig. 7: Identifying Front Seat Mounting Bolts (Rear Side)
Courtesy of AMERICAN HONDA MOTOR CO., INC.

4. Disconnect the connectors (A).
5. Detach the harness clip (B).

Driver's Seat

GETtheMANUALS.org

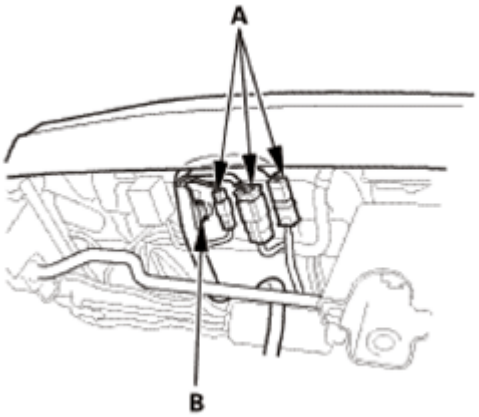

Fig. 8: Identifying Driver Seat Connectors And Harness Clip
Courtesy of AMERICAN HONDA MOTOR CO., INC.

Passenger's Seat (Without Subwoofer)

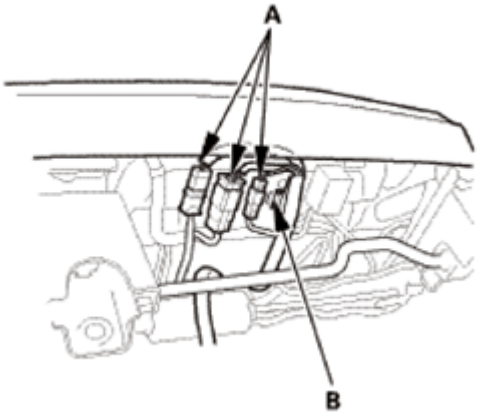

Fig. 9: Identifying Passenger Seat (Without Subwoofer) Connectors And Harness Clip
Courtesy of AMERICAN HONDA MOTOR CO., INC.

Passenger's Seat (With Subwoofer)

GETtheMANUALS.org

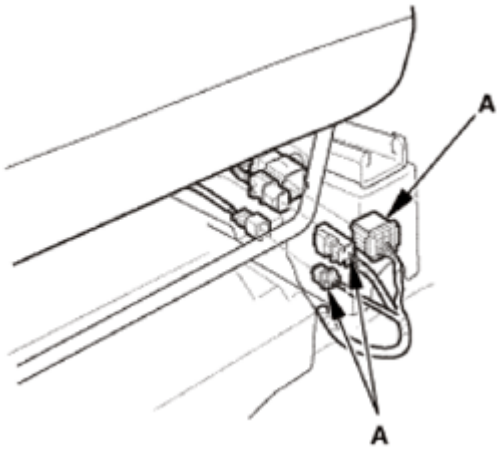

Fig. 10: Identifying Passenger Seat (With Subwoofer) Connectors And Harness Clip
Courtesy of AMERICAN HONDA MOTOR CO., INC.

5. Front Seat Belt Buckle
    1. Detach the connector clip (A) and the harness clip(s) (B).
    2. Passenger's seat - Except KX: Pry up the hook (C) of the harness holder (D), then release them from the seat cushion frame spring (E).

    Driver's seat

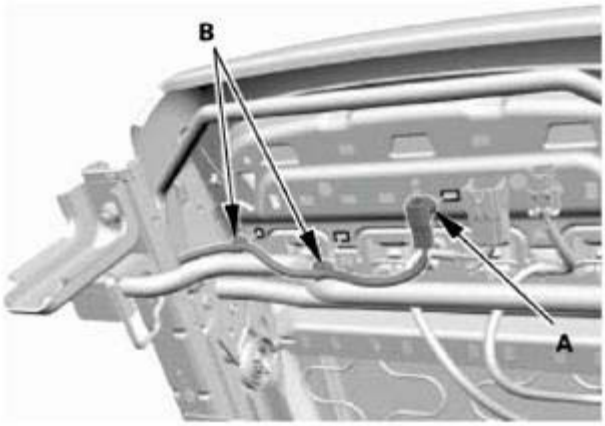

Fig. 11: Identifying Front Seat Belt Buckle Driver Seat Connectors And Harness Clip
Courtesy of AMERICAN HONDA MOTOR CO., INC.

Passenger's seat - Except KX

GETtheMANUALS.org

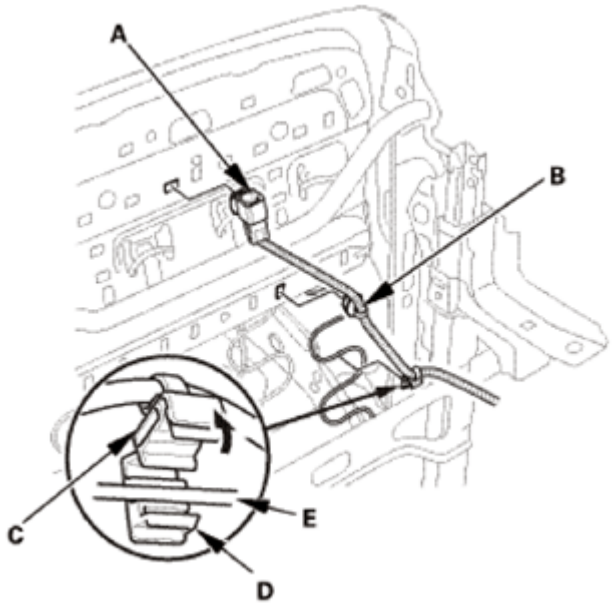

Fig. 12: Identifying Front Seat Belt Buckle Passenger Seat Connectors And Harness Clip (Except KX)
Courtesy of AMERICAN HONDA MOTOR CO., INC.

Passenger's seat - KX

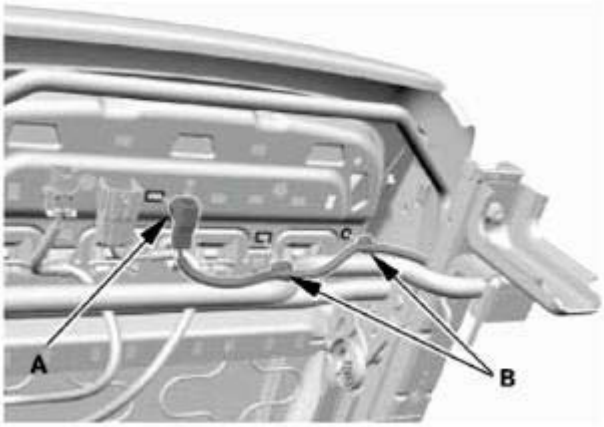

Fig. 13: Identifying Front Seat Belt Buckle Passenger Seat Connectors And Harness Clip (KX)
Courtesy of AMERICAN HONDA MOTOR CO., INC.

3. Detach the harness clip(s) (A).
4. Remove the bolt securing the seat belt buckle (B), then remove the seat belt buckle.

Driver's seat

GETtheMANUALS.org

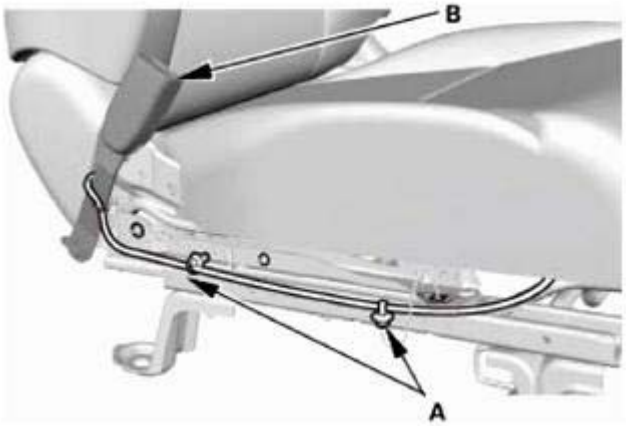

Fig. 14: Identifying Driver's Seat Belt Buckle And Harness Clip
Courtesy of AMERICAN HONDA MOTOR CO., INC.

Passenger's seat - Except KX

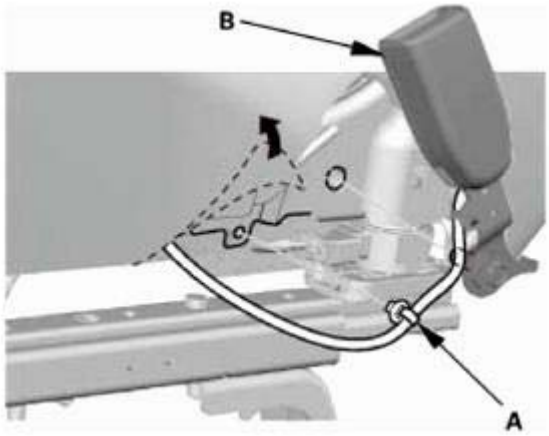

Fig. 15: Identifying Passenger Seat Belt Buckle And Harness Clip (Except KX)
Courtesy of AMERICAN HONDA MOTOR CO., INC.

Passenger's seat - KX

GETtheMANUALS.org

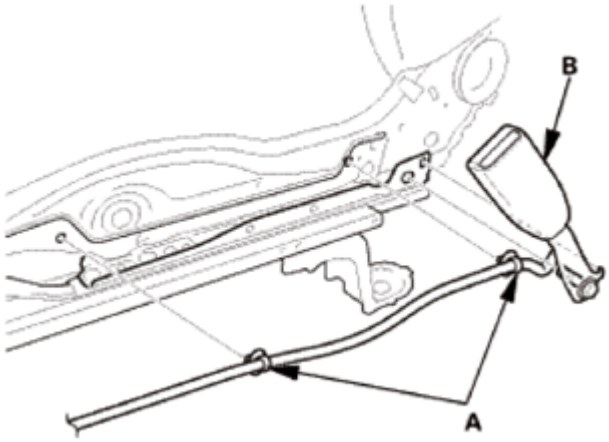

Fig. 16: Identifying Passenger Seat Belt Buckle And Harness Clip (KX)
Courtesy of AMERICAN HONDA MOTOR CO., INC.

INSTALLATION

SRS components are located in this area. Review the **SRS COMPONENT LOCATIONS** and the **PRECAUTIONS AND PROCEDURES** before doing repairs or service.

1. Front Seat Belt Buckle
    1. Assemble the washers and the collar on the anchor bolt as shown.

NOTE:

- **Apply medium strength liquid thread lock to the anchor bolt before reinstallation.**
- **Tighten the bolts by hand first, then tighten to the specified torque.**

Fig. 17: Identifying Washers And Collar On Anchor Bolt
Courtesy of AMERICAN HONDA MOTOR CO., INC.

2. Install the seat belt buckle (A), then install the bolt.
3. Install the harness clip(s) (B).

Driver's seat

GETtheMANUALS.org

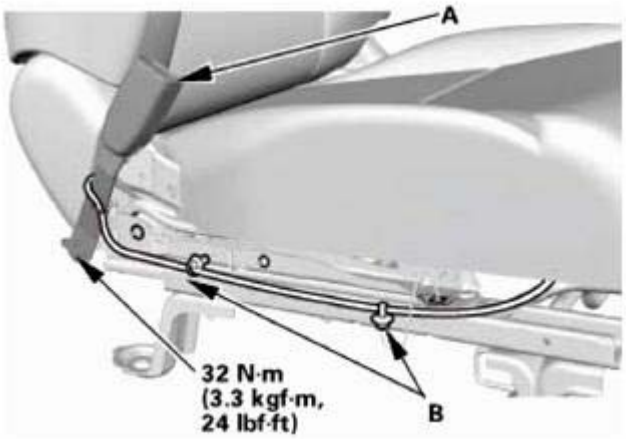

Fig. 18: Identifying Driver Front Seat Belt Buckle And Harness Clip With Torque Specifications
Courtesy of AMERICAN HONDA MOTOR CO., INC.

Passenger's seat - Except KX

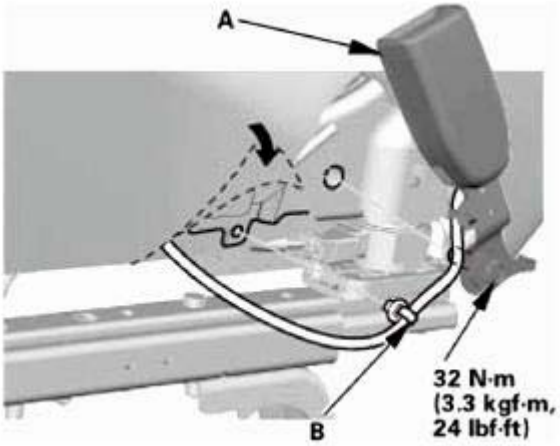

Fig. 19: Identifying Passenger Front Seat Belt Buckle And Harness Clip With Torque Specifications (Except KX)
Courtesy of AMERICAN HONDA MOTOR CO., INC.

Passenger's seat - KX

GETtheMANUALS.org

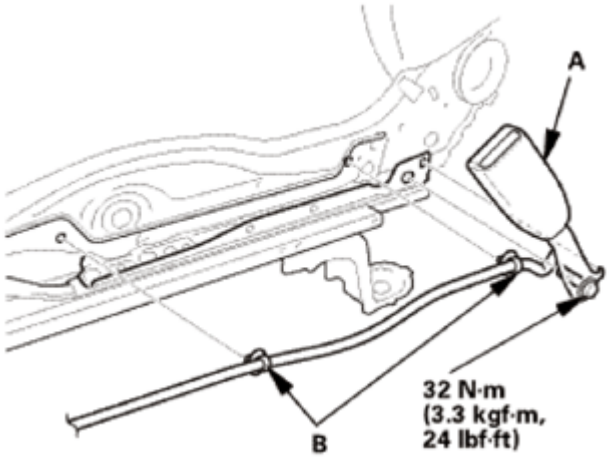

Fig. 20: Identifying Passenger Front Seat Belt Buckle And Harness Clip With Torque Specifications (KX)
Courtesy of AMERICAN HONDA MOTOR CO., INC.

4. Install the connector clip (A) and the harness clip(s) (B).
5. Passenger's seat - Except KX: Install the harness holder (C) to the seat cushion frame spring (D).

Driver's seat

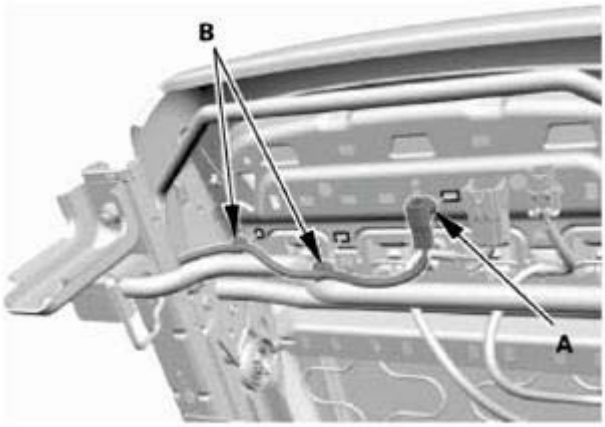

Fig. 21: Identifying Driver Seat Connector And Harness Clip
Courtesy of AMERICAN HONDA MOTOR CO., INC.

Passenger's seat - Except KX

GETtheMANUALS.org

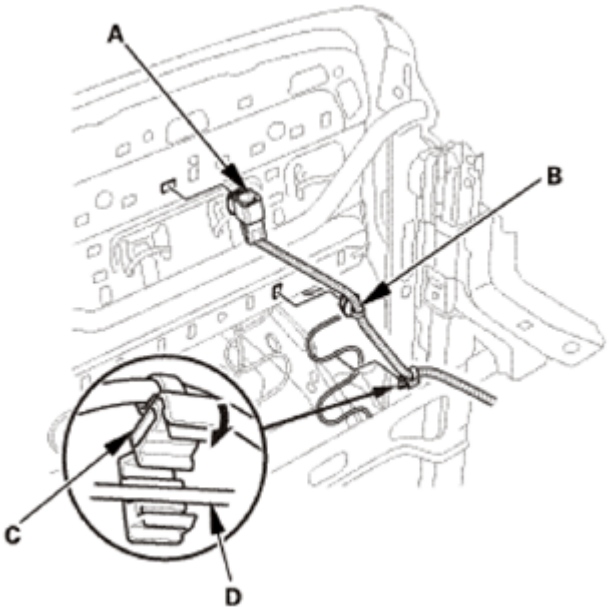

Fig. 22: Identifying Passenger Seat Connector And Harness Clip (Except KX)
Courtesy of AMERICAN HONDA MOTOR CO., INC.

Passenger's seat - KX

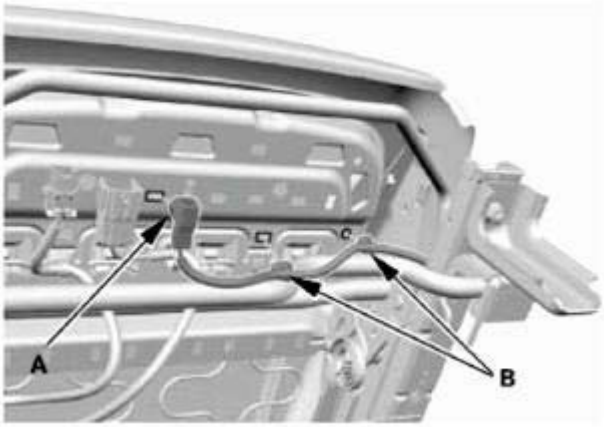

Fig. 23: Identifying Passenger Seat Connector And Harness Clip (KX)
Courtesy of AMERICAN HONDA MOTOR CO., INC.

2. Front Seat Assembly
    1. Connect the connectors (A).
    2. Install the harness clip (B).

Driver's Seat

GETtheMANUALS.org

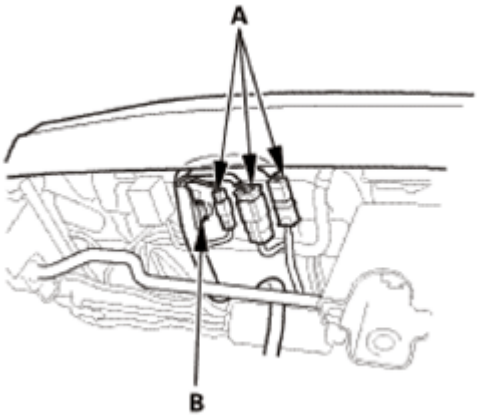

Fig. 24: Identifying Front Seat Assembly Connector And Harness Clip (Except KX)
Courtesy of AMERICAN HONDA MOTOR CO., INC.

Passenger's Seat (Without Subwoofer)

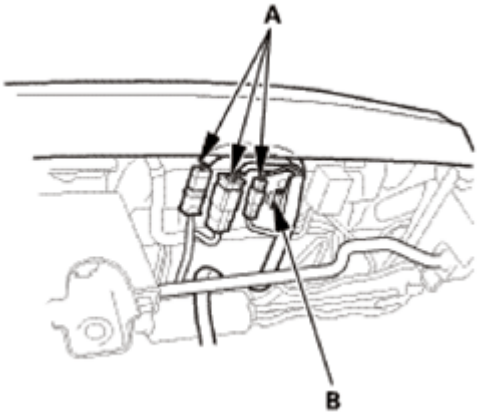

Fig. 25: Identifying Passenger Seat Assembly Connector And Harness Clip (Without Subwoofer)
Courtesy of AMERICAN HONDA MOTOR CO., INC.

Passenger's Seat (With Subwoofer)

GETtheMANUALS.org

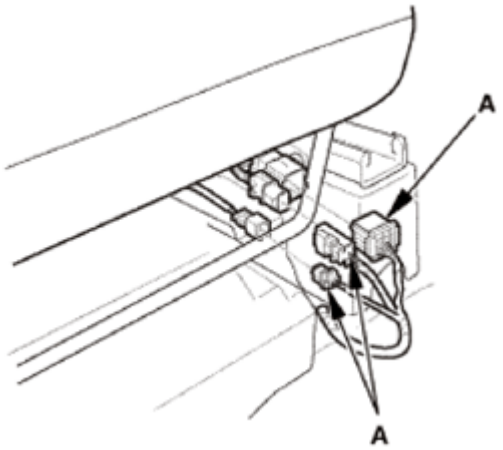

Fig. 26: Identifying Passenger Seat Assembly Connector And Harness Clip (With Subwoofer)
Courtesy of AMERICAN HONDA MOTOR CO., INC.

3. Install the seat mounting bolts.

NOTE:

- **Tighten the bolts by hand first, then tighten them to the specified torque.**
- **Tighten the seat mounting bolts (A) to the specified torque in the sequence shown. Slide the seat all the way back and tighten bolts 1 and 2, then slide it forward and tighten bolts 3 and 4.**

Front Side

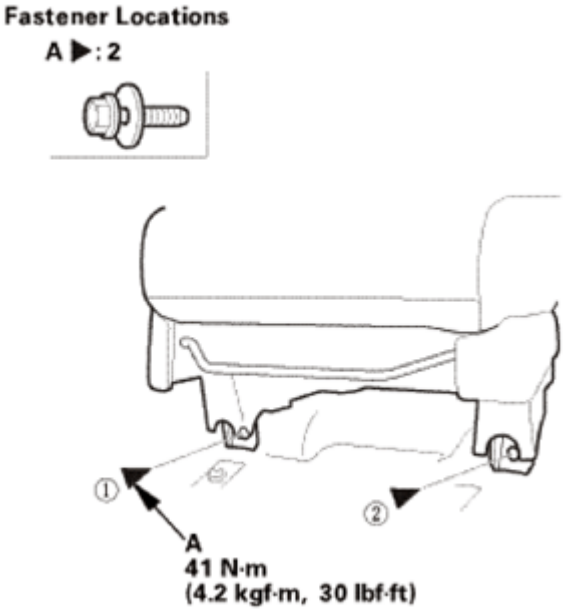

Fig. 27: Identifying Seat Mounting Bolts With Torque Specification (Front Side)
Courtesy of AMERICAN HONDA MOTOR CO., INC.

GETtheMANUALS.org

Rear Side

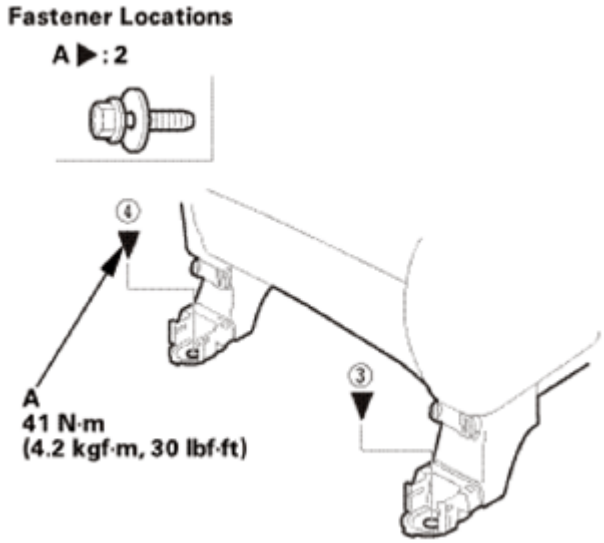

Fig. 28: Identifying Seat Mounting Bolts With Torque Specification (Rear Side)
Courtesy of AMERICAN HONDA MOTOR CO., INC.

4. Install the rear inner seat track end cover (A) and the rear outer seat track end cover (B). Make sure the hooks (C) snap into place securely.

NOTE: Repeat this procedure on the opposite side.

GETtheMANUALS.org

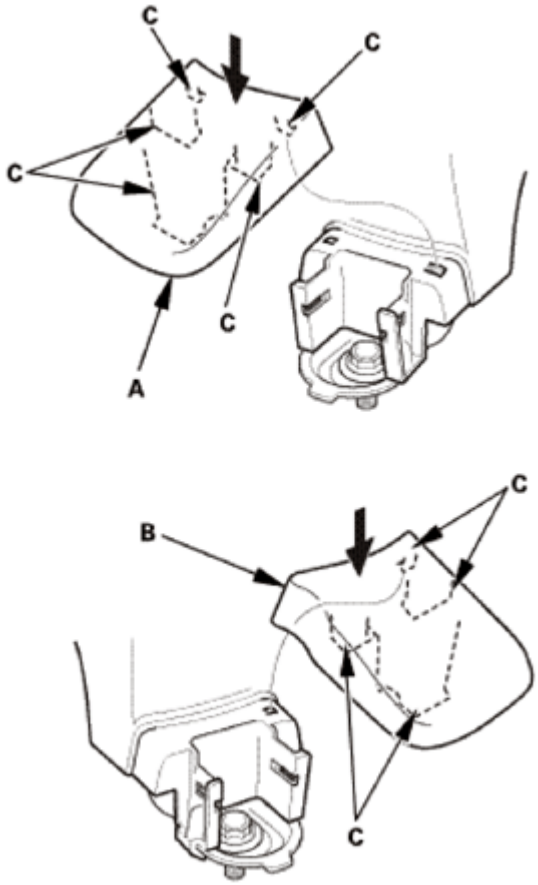

Fig. 29: Installing Rear Inner And Outer Seat Track End Cover
Courtesy of AMERICAN HONDA MOTOR CO., INC.

3. Head Restraint - Driver's Side
    1. Insert the head restraint (A) to the seat-back as shown.

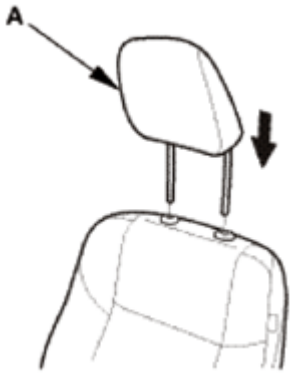

Fig. 30: Inserting Head Restraint To Seat-Back
Courtesy of AMERICAN HONDA MOTOR CO., INC.

4. Battery Terminal (SRS) - Reconnection

GETtheMANUALS.org

NOTE: **If the battery performance is abnormal, test the battery.**

1. Clean the battery terminals.
2. Connect the positive cable (A) to the battery.

   NOTE: **Always connect the positive side first.**

3. Connect the negative cable (B) to the battery.
4. Apply multipurpose grease to the terminals to prevent corrosion.

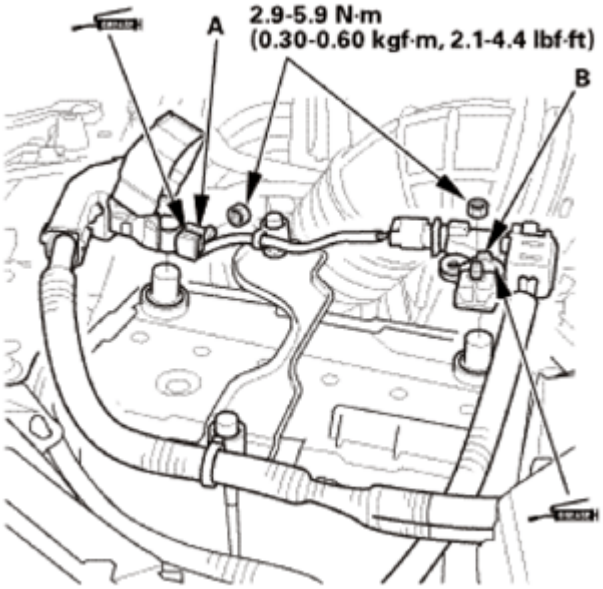

Fig. 31: Identifying Battery Positive And Negative Cable
Courtesy of AMERICAN HONDA MOTOR CO., INC.

5. Front Seat Belt Lower Anchor Bolt
   1. Install the lower anchor bolt.

      NOTE: **Before installing the anchor bolt, make sure there are no twists or kinks in the seat belt.**

GETtheMANUALS.org

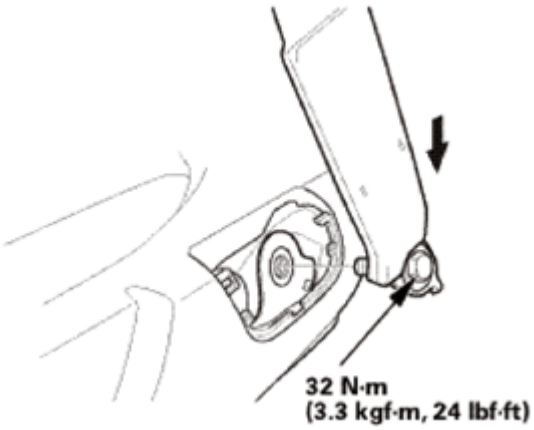

Fig. 32: Installing Lower Anchor Bolt With Torque Specification
Courtesy of AMERICAN HONDA MOTOR CO., INC.

2. Install the anchor cover (A). Make sure the hooks (B) and the tab (C) snap into place securely.

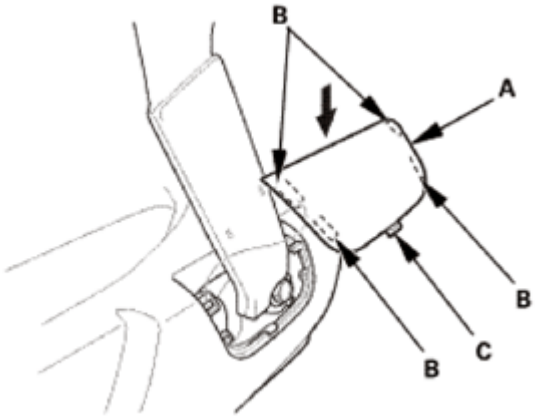

Fig. 33: Installing Anchor Cover, Hooks And Tab
Courtesy of AMERICAN HONDA MOTOR CO., INC.

FRONT SEAT BELT REMOVAL AND INSTALLATION

REMOVAL

SRS components are located in this area. Review the **SRS COMPONENT LOCATIONS** and the **PRECAUTIONS AND PROCEDURES** before doing repairs or service.

1. Front Seat Belt Lower Anchor Bolt
    1. Slide the front seat forward fully, carefully pry up on the bottom edge of the anchor cover (A) at the pry point (B) with the appropriate trim tool to release the hooks (C) and the tab (D), then remove the cover by pulling it up.

GETtheMANUALS.org

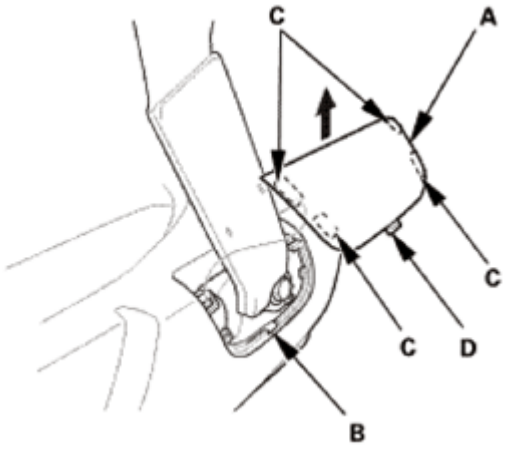

Fig. 34: Removing Anchor Cover
Courtesy of AMERICAN HONDA MOTOR CO., INC.

2. Remove the lower anchor bolt (A).

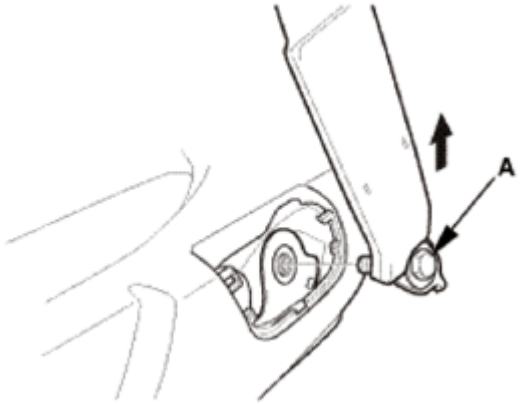

Fig. 35: Removing Lower Anchor Bolt
Courtesy of AMERICAN HONDA MOTOR CO., INC.

2. Battery Terminal (SRS) - Disconnection
    1. Make sure the ignition switch is in LOCK (0).
    2. Disconnect and isolate the negative cable (A) from the battery.

    NOTE: Always disconnect the negative side first.

    3. Disconnect the positive cable (B) from the battery.
    4. Wait at least 3 minutes before starting work.

GETtheMANUALS.org

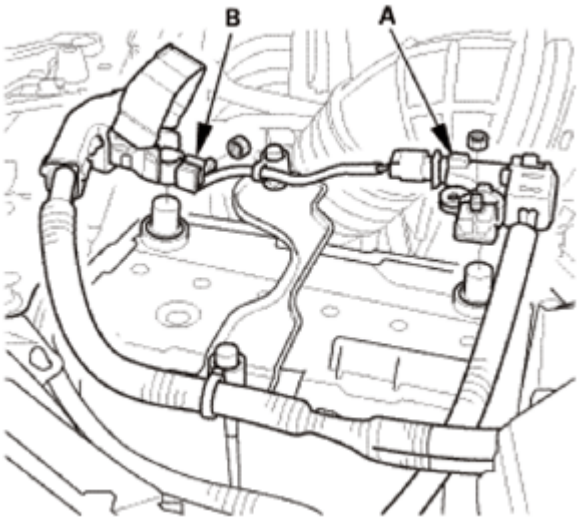

Fig. 36: Identifying Battery Negative And Positive Cable
Courtesy of AMERICAN HONDA MOTOR CO., INC.

3. Front Door Sill Trim
    1. Detach the hooks (A) and the tabs (B) from the kick panel (C) and the B-pillar lower trim (D), and pull up the front door inner sill trim (E) by hand to detach the clips (F), then remove the trim.

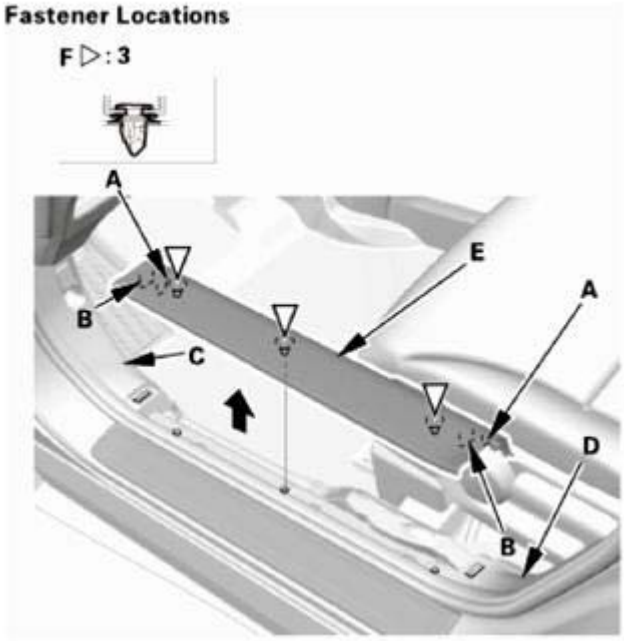

Fig. 37: Identifying Front Door Sill Trim And Fasteners
Courtesy of AMERICAN HONDA MOTOR CO., INC.

4. Rear Door Sill Trim
    1. Pull the release strap to fold down the rear seat, then lift-up and latch the rear seat-back in the upright position.

GETtheMANUALS.org

2. Detach the hooks (A) and the tab (B) from the B-pillar lower trim (C) and the rear side trim panel (D), and pull up the rear door inner sill trim (E) by hand to detach the clips (F, G), then remove the trim.

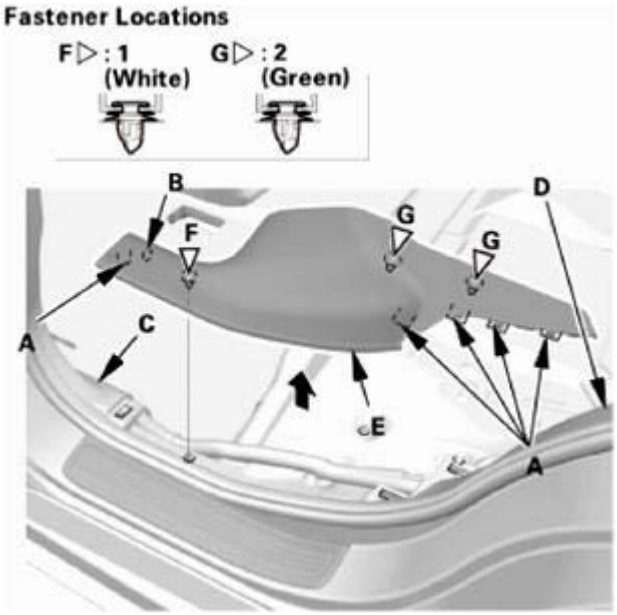

Fig. 38: Identifying Rear Door Sill Trim And Fasteners
Courtesy of AMERICAN HONDA MOTOR CO., INC.

5. Front/Rear Door Opening Seals As Needed
   1. Pull out the door opening seals (A) from the trim hooks (B) around the door opening flange as needed.

Front

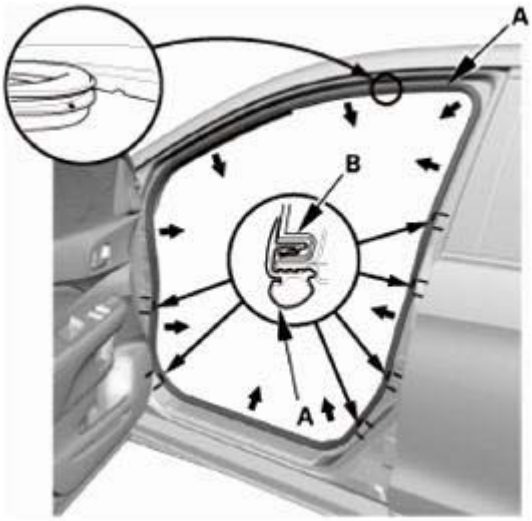

GETtheMANUALS.org

Fig. 39: Identifying Front Door Opening Seals And Hooks
Courtesy of AMERICAN HONDA MOTOR CO., INC.

Rear

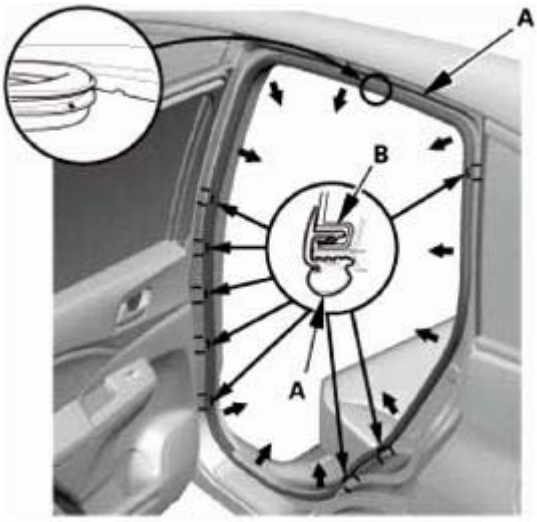

Fig. 40: Identifying Rear Door Opening Seals And Trim Hooks
Courtesy of AMERICAN HONDA MOTOR CO., INC.

6. B-Pillar Lower Trim
    1. Slide the front seat forward fully.
    2. Pull back the bottom portion of the B-pillar lower trim (A) by hand to detach the clips (B).
    3. Pull back the upper portion of the B-pillar lower trim to detach the upper hooks (C), then remove the B-pillar lower trim.

GETtheMANUALS.org

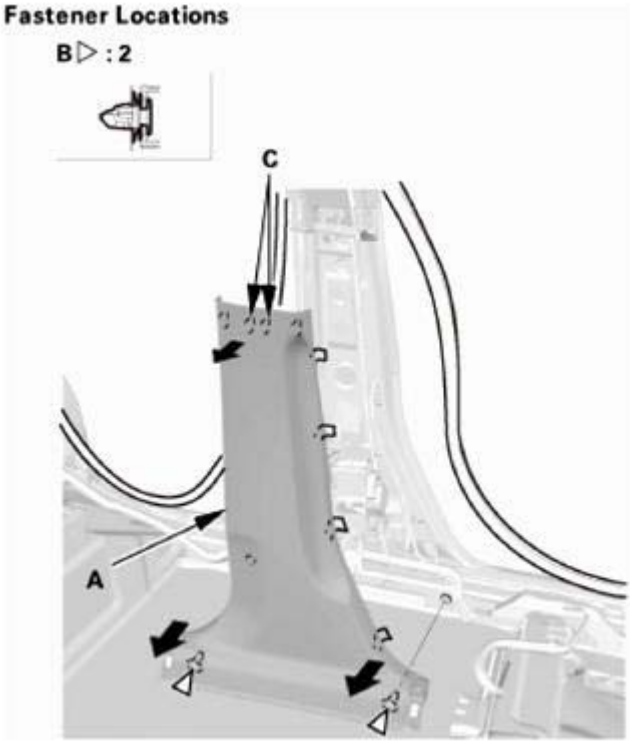

Fig. 41: Removing B-Pillar Lower Trim
Courtesy of AMERICAN HONDA MOTOR CO., INC.

7. Front Seat Belt Upper Anchor Bolt
    1. Remove the front seat belt shoulder anchor adjuster cap (A), then remove the front seat belt upper anchor bolt (B).

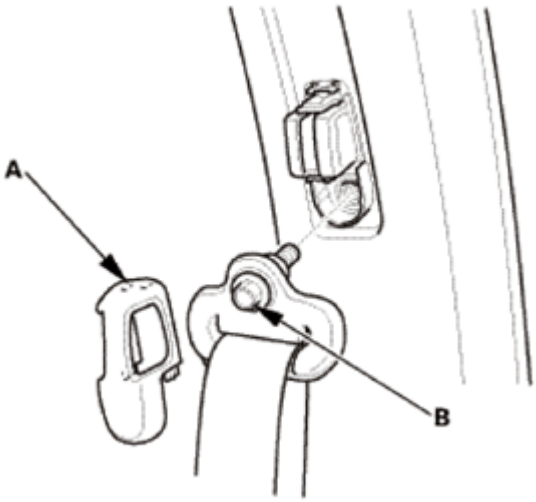

Fig. 42: Identifying Front Seat Belt Adjuster Cap And Upper Anchor Bolt
Courtesy of AMERICAN HONDA MOTOR CO., INC.

8. B-Pillar Upper Trim

GETtheMANUALS.org

1. Pull back the bottom portion of the B-pillar upper trim (A) by hand to detach the hooks (B). Pull down the trim to release the upper hook (C) from the hole (D) in the body, then remove the B-pillar upper trim.

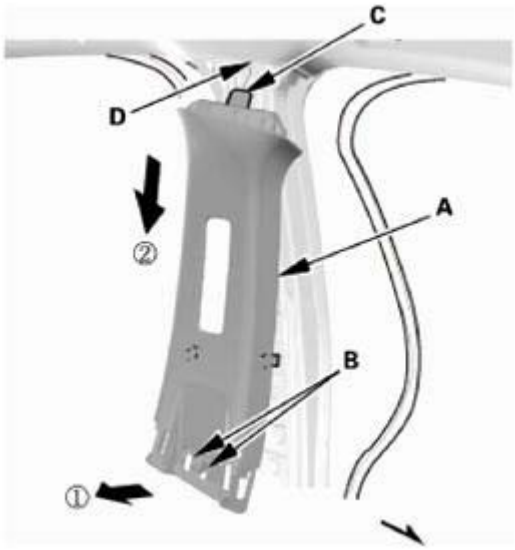

Fig. 43: Removing B-Pillar Upper Trim
Courtesy of AMERICAN HONDA MOTOR CO., INC.

9. Front Seat Belt Assembly
    1. Disconnect the connector (A).
    2. Remove the retractor mounting bolt (B) and the retractor bolt (C), then remove the front seat belt assembly (D).

GETtheMANUALS.org

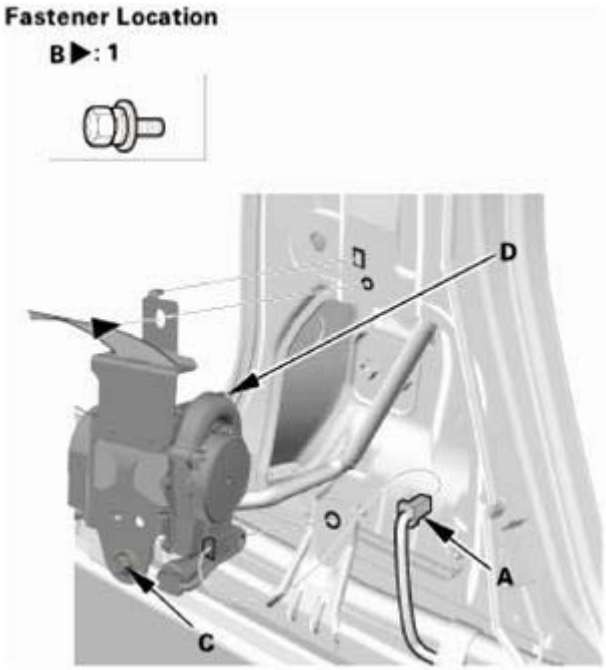

Fig. 44: Identifying Front Seat Belt Assembly, Retractor Mounting Bolt And Connector With Torque Specification
Courtesy of AMERICAN HONDA MOTOR CO., INC.

INSTALLATION

SRS components are located in this area. Review the **SRS COMPONENT LOCATIONS** and the **PRECAUTIONS AND PROCEDURES** before doing repairs or service.

1. Front Seat Belt Assembly
    1. Install the front seat belt assembly (A), then install the retractor mounting bolt (B) and the retractor bolt (C),
    2. Connect the connector (D).

GETtheMANUALS.org

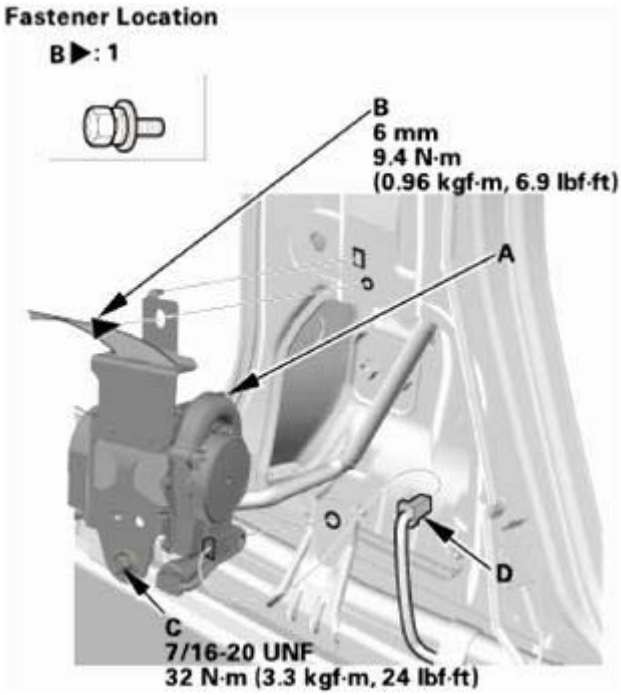

Fig. 45: Identifying Front Seat Belt Assembly, Retractor Mounting Bolt And Connector With Torque Specification
Courtesy of AMERICAN HONDA MOTOR CO., INC.

2. B-Pillar Upper Trim
    1. Install the upper hook (A) of the B-pillar upper trim (B) to the hole in the body. Push the bottom portion of the B-pillar upper trim to install the lower hooks (C). Make sure the hooks snap into place securely.

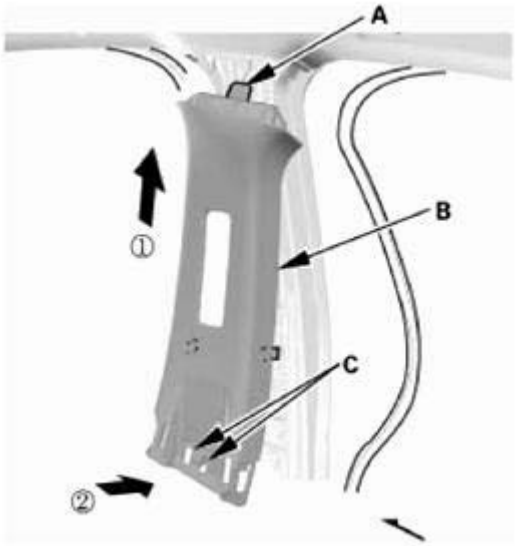

Fig. 46: Installing B-Pillar Upper Trim
Courtesy of AMERICAN HONDA MOTOR CO., INC.

GETtheMANUALS.org

3. Front Seat Belt Upper Anchor Bolt
    1. Assemble the washer, the collar, and the bushing on the upper anchor bolt as shown.

NOTE: **Apply medium strength liquid thread lock to the upper anchor bolt before installation.**

Fig. 47: Identifying Front Seat Belt Adjuster Cap And Upper Anchor Bolt
Courtesy of AMERICAN HONDA MOTOR CO., INC.

2. Install the front seat belt upper anchor bolt (A), then install the front seat belt shoulder anchor adjuster cap (B).

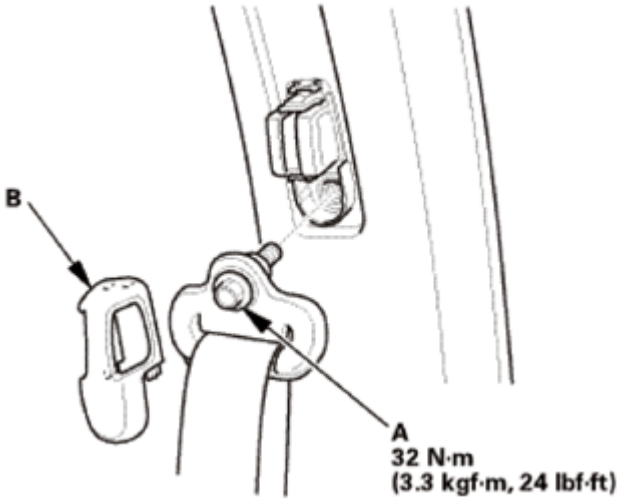

Fig. 48: Identifying Front Seat Belt Upper Anchor Bolt And Adjuster Cap With Torque Specification
Courtesy of AMERICAN HONDA MOTOR CO., INC.

4. B-Pillar Lower Trim
    1. Install the B-pillar lower trim (A). Make sure the clips (B) and the hooks (C) snap into place securely.

GETtheMANUALS.org

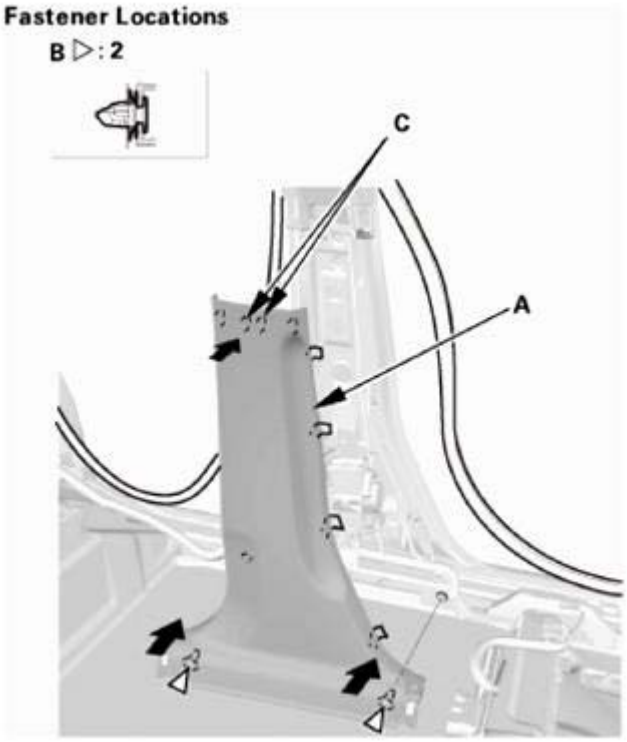

Fig. 49: Installing B-Pillar Lower Trim
Courtesy of AMERICAN HONDA MOTOR CO., INC.

5. Front/Rear Door Opening Seals As Needed
    1. Install the door opening seals (A). Make sure the seal is installed securely into the hooks (B).

Front

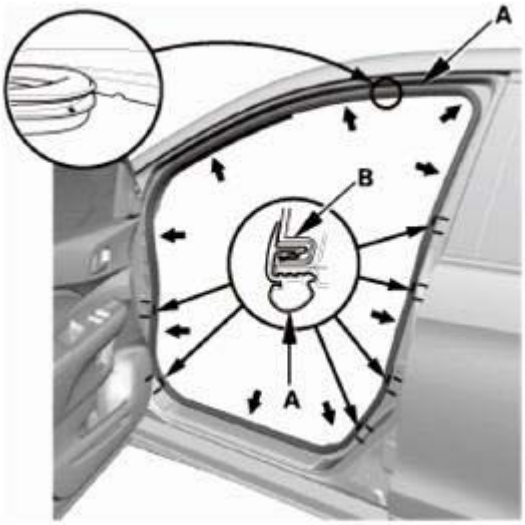

Fig. 50: Identifying Front Door Opening Seals And Hooks
Courtesy of AMERICAN HONDA MOTOR CO., INC.

GETtheMANUALS.org

Rear

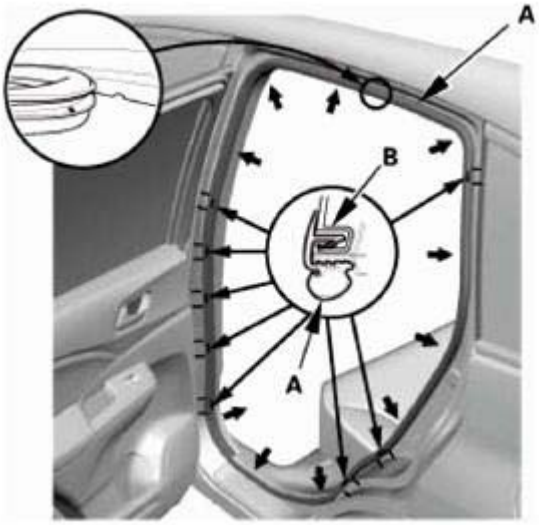

Fig. 51: Identifying Rear Door Opening Seals And Hooks
Courtesy of AMERICAN HONDA MOTOR CO., INC.

6. Rear Door Sill Trim
    1. Pull the release strap to fold down the rear seat, then lift-up and latch the rear seat-back in the upright position.
    2. Install the rear door inner sill trim (A). Make sure the clips (B, C), the hooks (D), and the tab (E) snap into place securely.

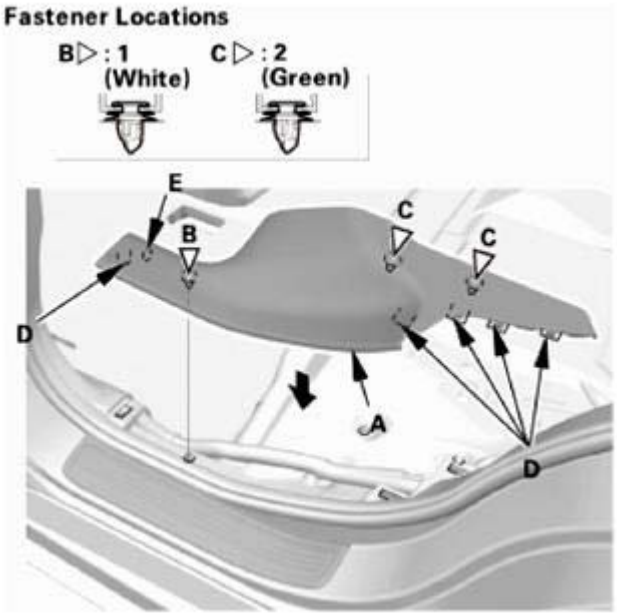

Fig. 52: Identifying Rear Door Sill Trim And Fasteners
Courtesy of AMERICAN HONDA MOTOR CO., INC.

GETtheMANUALS.org

7. Front Door Sill Trim
    1. Install the front door inner sill trim (A). Make sure the clips (B), the hooks (C), and the tabs (D) snap into place securely.

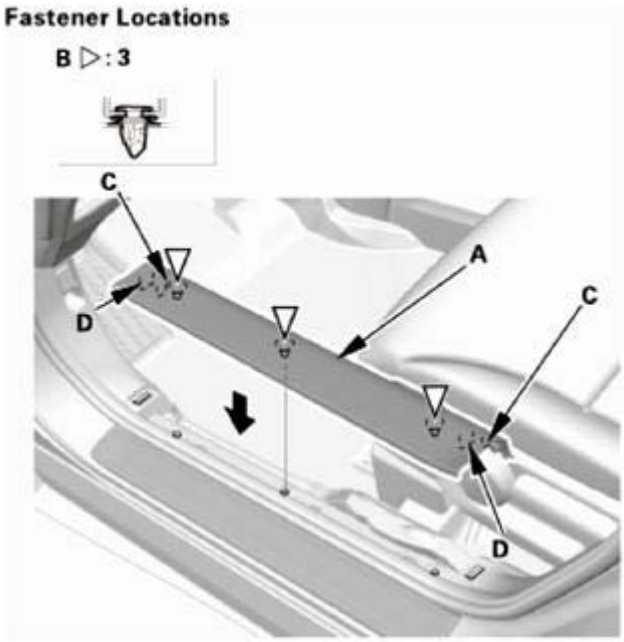

Fig. 53: Installing Front Door Inner Sill Trim
Courtesy of AMERICAN HONDA MOTOR CO., INC.

8. Battery Terminal (SRS) - Reconnection

NOTE: If the battery performance is abnormal, test the battery.

1. Clean the battery terminals.
2. Connect the positive cable (A) to the battery.

NOTE: Always connect the positive side first.

3. Connect the negative cable (B) to the battery.
4. Apply multipurpose grease to the terminals to prevent corrosion.

GETtheMANUALS.org

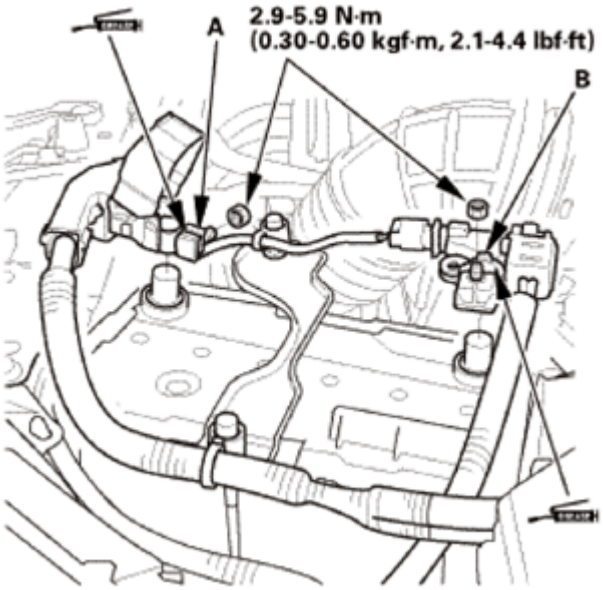

Fig. 54: Identifying Battery Positive And Negative Cable
Courtesy of AMERICAN HONDA MOTOR CO., INC.

9. Front Seat Belt Lower Anchor Bolt
    1. Install the lower anchor bolt.

NOTE: **Before installing the anchor bolt, make sure there are no twists or kinks in the seat belt.**

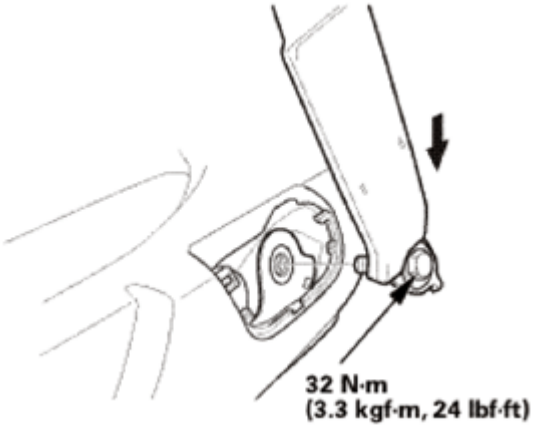

Fig. 55: Installing Lower Anchor Bolt
Courtesy of AMERICAN HONDA MOTOR CO., INC.

    2. Install the anchor cover (A). Make sure the hooks (B) and the tab (C) snap into place securely.

GETtheMANUALS.org

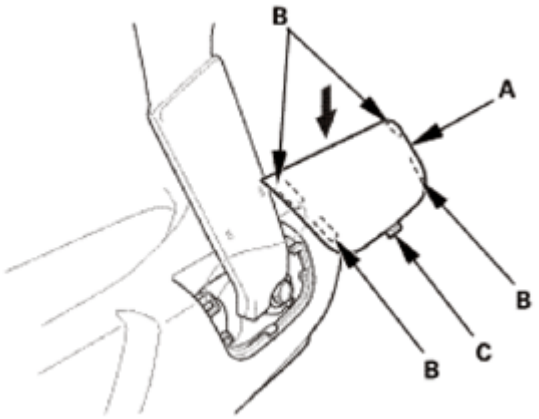

Fig. 56: Installing Anchor Cover
Courtesy of AMERICAN HONDA MOTOR CO., INC.

REAR SEAT BELT BUCKLE REMOVAL AND INSTALLATION

REMOVAL

1. Rear Seat Belt Buckle
    1. Pull the release strap to fold down the rear seat, then lift-up and latch the rear seat-back in the upright position.
    2. Remove the bolt (A), then remove the rear seat belt buckles (B) and the detachable anchor (C).

    Left side

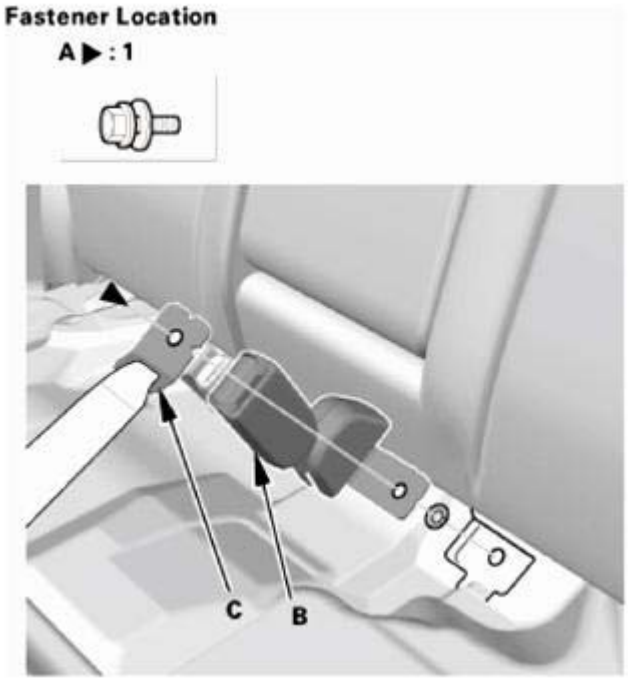

GETtheMANUALS.org

Fig. 57: Identifying Rear Seat Belt Buckles, Detachable Anchor And Bolt (Left Side) With Torque Specification
Courtesy of AMERICAN HONDA MOTOR CO., INC.

Right side

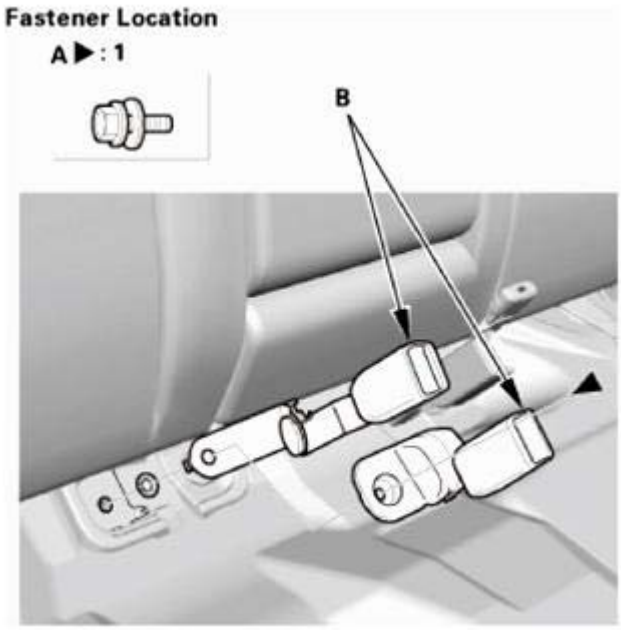

Fig. 58: Identifying Rear Seat Belt Buckles, Detachable Anchor And Bolt (Right Side) With Torque Specification
Courtesy of AMERICAN HONDA MOTOR CO., INC.

INSTALLATION

1. Rear Seat Belt Buckle
    1. Install the rear seat belt buckles (A) and the detachable anchor (B), then install the bolt (C).

NOTE:

- **Apply medium strength liquid thread lock to the anchor bolts before installation.**
- **Tighten the bolts by hand first, then tighten to the specified torque.**

Left side

GETtheMANUALS.org

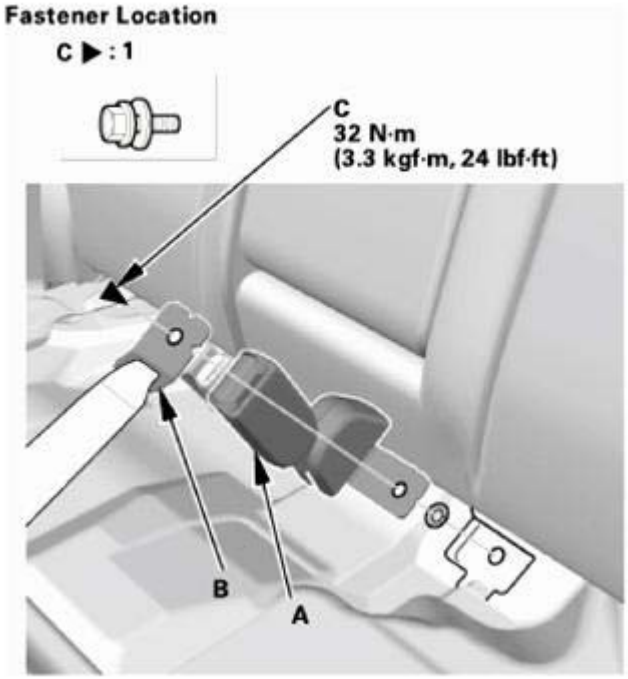

Fig. 59: Identifying Rear Seat Belt Buckles, Detachable Anchor And Bolt (Left Side) With Torque Specification
Courtesy of AMERICAN HONDA MOTOR CO., INC.

Right side

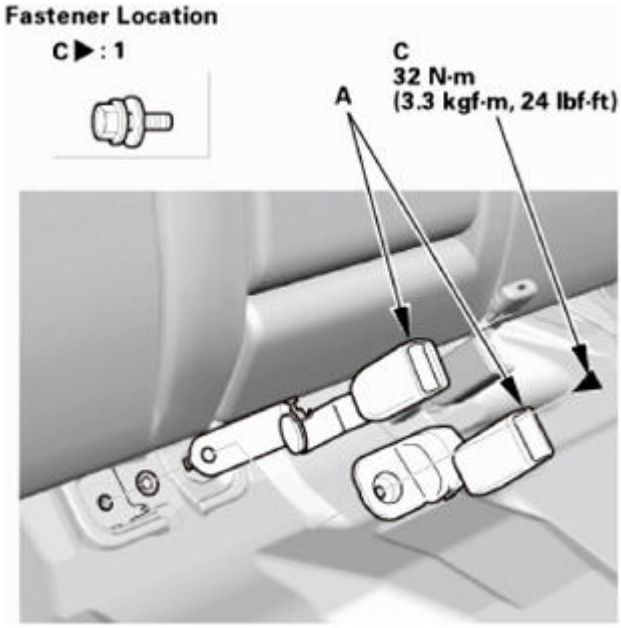

Fig. 60: Identifying Rear Seat Belt Buckles, Detachable Anchor And Bolt (Right Side) With Torque Specifications
Courtesy of AMERICAN HONDA MOTOR CO., INC.

GETtheMANUALS.org

REAR SEAT BELT REMOVAL AND INSTALLATION

REMOVAL

1. Tonneau Cover (For Some Models)
    1. Remove the tonneau cover (A).

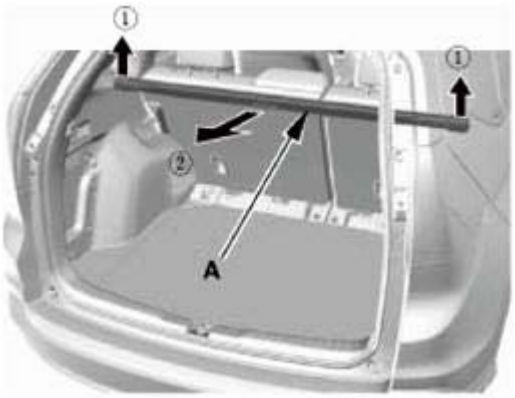

Fig. 61: Removing Tonneau Cover
Courtesy of AMERICAN HONDA MOTOR CO., INC.

2. Cargo Floor Cover
    1. Remove the cargo floor cover (A).

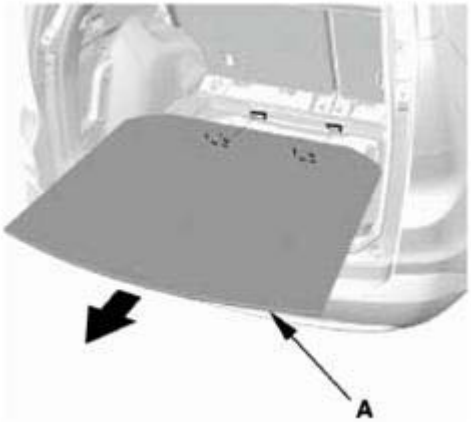

Fig. 62: Removing Cargo Floor Cover
Courtesy of AMERICAN HONDA MOTOR CO., INC.

3. Rear Door Sill Trim
    1. Pull the release strap to fold down the rear seat, then lift-up and latch the rear seat-back in the upright position.
    2. Detach the hooks (A) and the tab (B) from the B-pillar lower trim (C) and the rear side trim panel (D), and pull up the rear door inner sill trim (E) by hand to detach the clips (F, G), then remove the

GETtheMANUALS.org

trim.

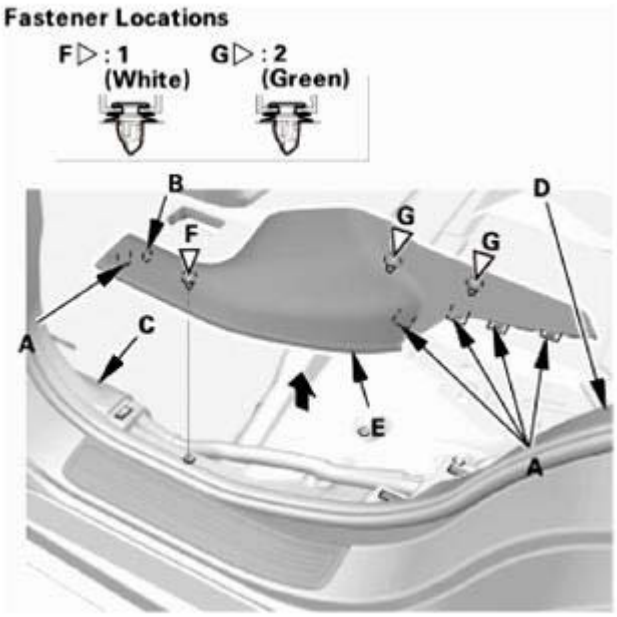

Fig. 63: Identifying Rear Door Sill Trim And Fasteners
Courtesy of AMERICAN HONDA MOTOR CO., INC.

4. Rear Door Opening Seal As Needed
    1. Pull out the rear door opening seal (A) from the trim hooks (B) around the rear door opening flange as needed.

Fig. 64: Identifying Rear Door Opening Seal With Trim Hooks
Courtesy of AMERICAN HONDA MOTOR CO., INC.

5. Rear Seat Foot Cover

GETtheMANUALS.org

1. Pull up the rear seat foot cover (A) by hand to detach the clips (B).
2. Detach the hooks (C), then remove the rear seat foot cover.

Left Side

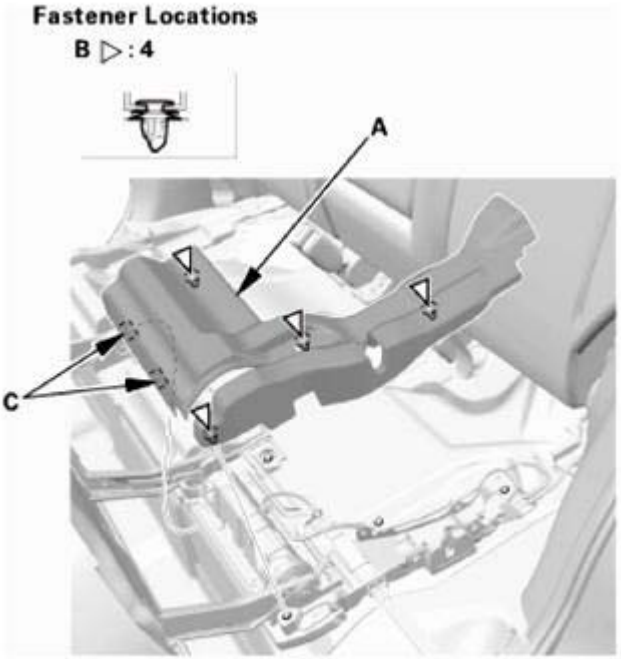

Fig. 65: Identifying Rear Seat Foot Cover, Clips And Hooks (Left Side)
Courtesy of AMERICAN HONDA MOTOR CO., INC.

Right Side

GETtheMANUALS.org

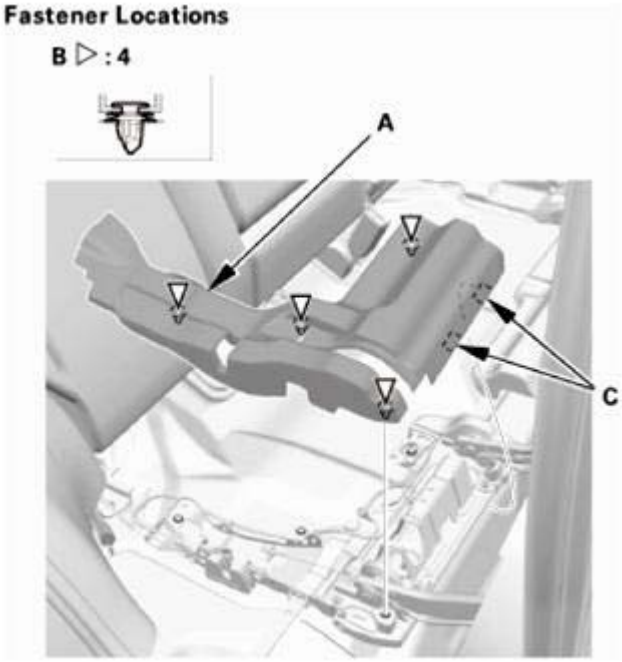

Fig. 66: Identifying Rear Seat Foot Cover, Clips And Hooks (Right Side)
Courtesy of AMERICAN HONDA MOTOR CO., INC.

6. Rear Damper Maintenance Cover
    1. Fold down the rear seat-back.
    2. Pull up the rear damper maintenance cover (A) by hand to detach the hooks (B), then remove the rear damper maintenance cover.

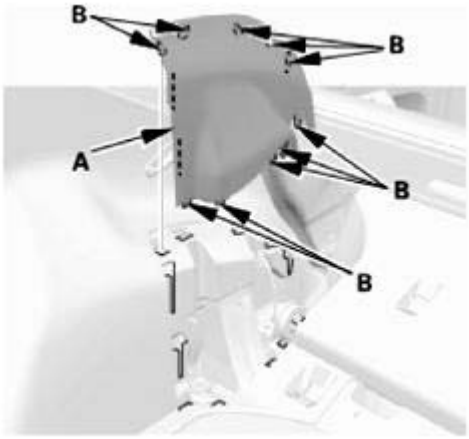

Fig. 67: Identifying Rear Damper Maintenance Cover And Hooks
Courtesy of AMERICAN HONDA MOTOR CO., INC.

7. Rear Carpet Trim
    1. Detach the clips (A), then tuck up the rear seat-back cover (B).

GETtheMANUALS.org

Left side

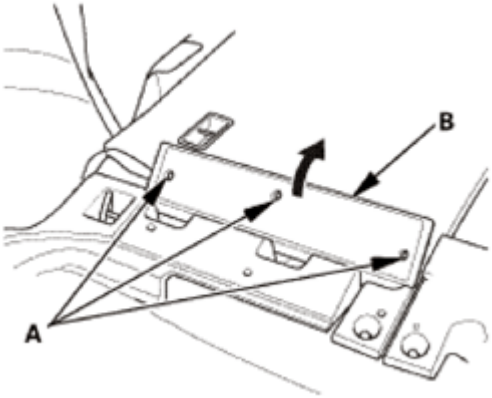

Fig. 68: Removing Rear Carpet Trim (Left Side)
Courtesy of AMERICAN HONDA MOTOR CO., INC.

Right side

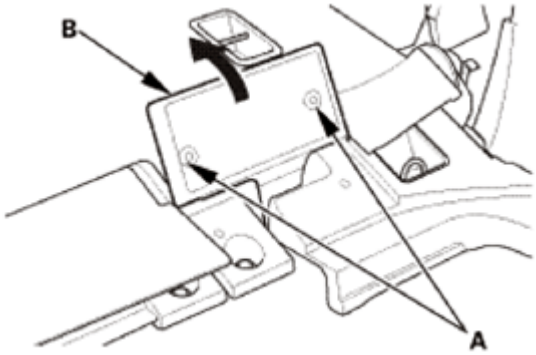

Fig. 69: Removing Rear Carpet Trim (Right Side)
Courtesy of AMERICAN HONDA MOTOR CO., INC.

2. Detach the hooks (A) from the rear side trim panel (B), and pull up the rear carpet trim (C) by hand to detach the clips (D), then remove the rear carpet trims.

Left side

GETtheMANUALS.org

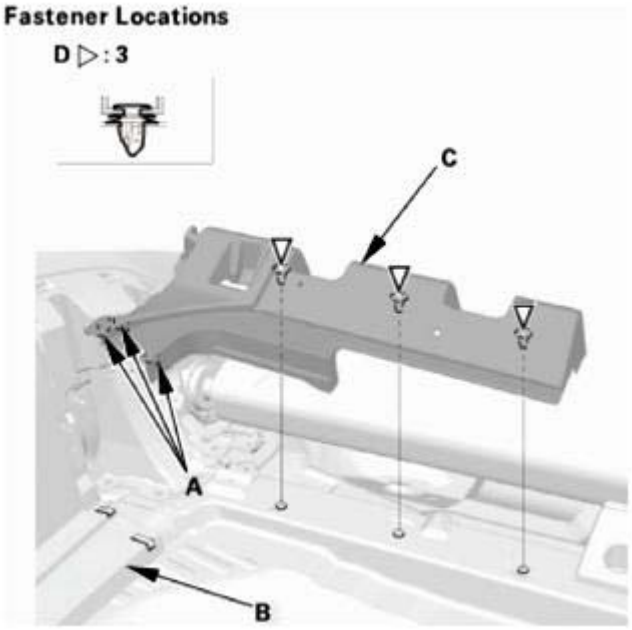

Fig. 70: Identifying Rear Carpet Trim, Hooks And Clips (Left Side)
Courtesy of AMERICAN HONDA MOTOR CO., INC.

Right side

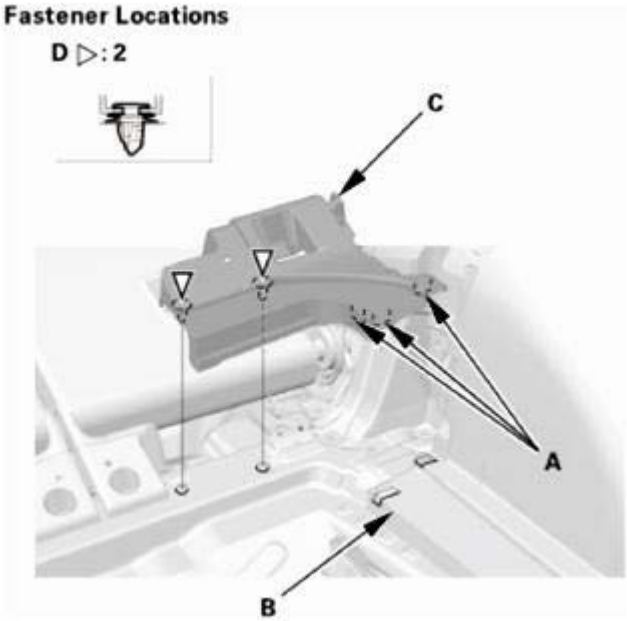

Fig. 71: Identifying Rear Carpet Trim, Hooks And Clips (Right Side)
Courtesy of AMERICAN HONDA MOTOR CO., INC.

8. Tailgate Weatherstrip As Needed
    1. Detach the tailgate weatherstrip (A) as needed.

GETtheMANUALS.org

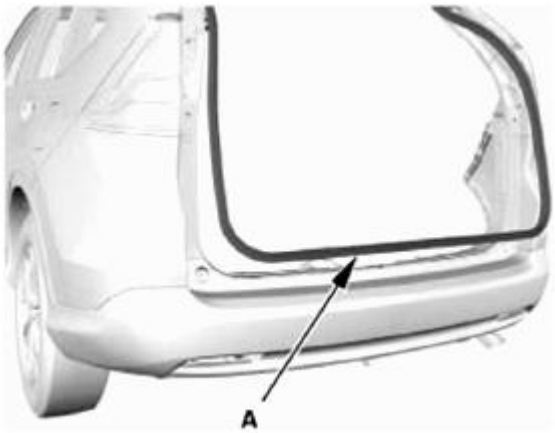

Fig. 72: Identifying Tailgate Weatherstrip
Courtesy of AMERICAN HONDA MOTOR CO., INC.

9. Rear Trim Panel
    1. Remove the clips (A).
    2. Detach the hooks (B) and the tabs (C) from the rear side trim panels (D), and pull up the rear trim panel (E) by hand to detach the clips (F, G), then remove the rear trim panel.

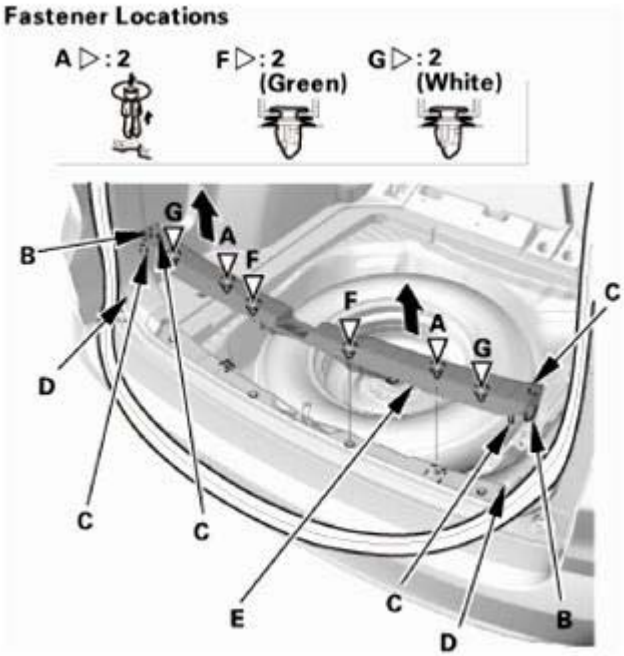

Fig. 73: Removing Rear Trim Panel
Courtesy of AMERICAN HONDA MOTOR CO., INC.

10. Rear Side Trim Panel
    1. Carefully pry out on the upper hook (A) in the rear seat release lever cap (B) with the appropriate trim tool, then pull back the rear seat release lever cap to remove it.

GETtheMANUALS.org

2. Remove the screws (C).

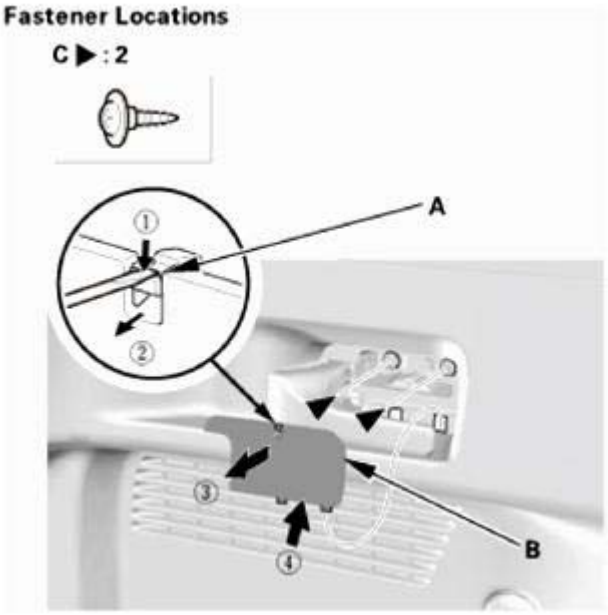

Fig. 74: Removing Rear Side Trim Panel
Courtesy of AMERICAN HONDA MOTOR CO., INC.

3. Push in the center pin (A), then remove the trunk hook (B).

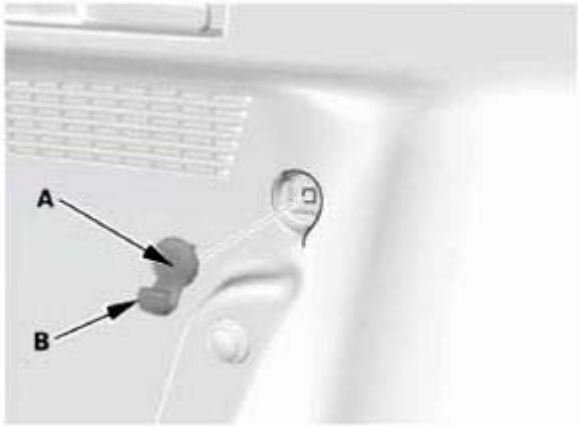

Fig. 75: Identifying Center Pin And Trunk Hook
Courtesy of AMERICAN HONDA MOTOR CO., INC.

4. Remove the bolt (A), then remove the tie-down hook (B).

GETtheMANUALS.org

Fig. 76: Identifying Tie-Down Hook And Bolt
Courtesy of AMERICAN HONDA MOTOR CO., INC.

5. Remove the clips (A, B).
6. Detach the hooks (C) and the tabs (D) from the quarter pillar trim (E), and pull out the rear side trim panel (F) by hand to detach the clips (G, H).

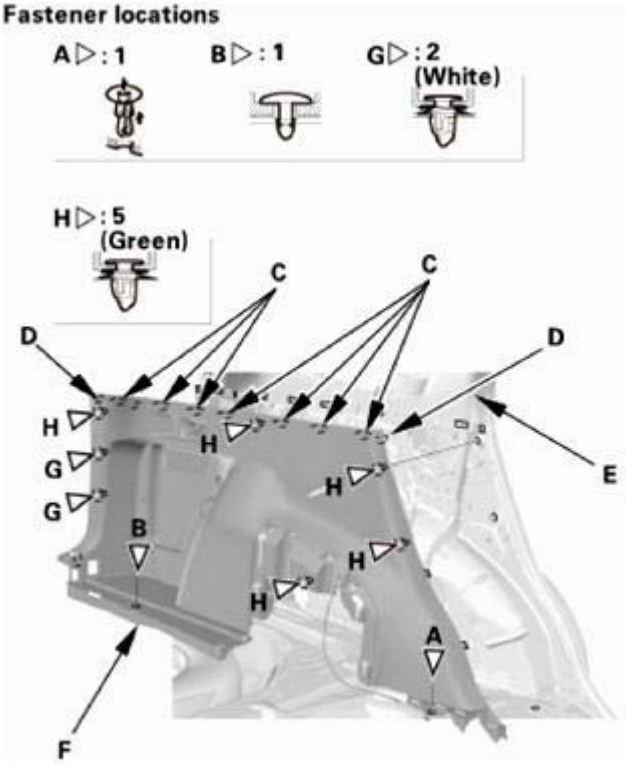

Fig. 77: Identifying Quarter Pillar Trim, Rear Side Trim Panel, Hooks And Tabs

GETtheMANUALS.org

Courtesy of AMERICAN HONDA MOTOR CO., INC.

7. Remove the rear seat release lever (A) from the rear side trim panel (B).

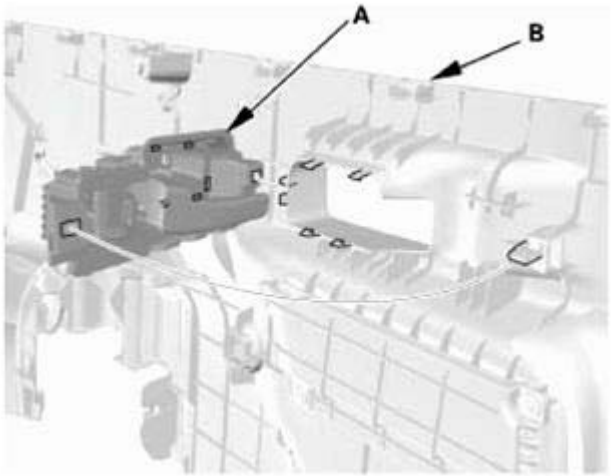

Fig. 78: Identifying Rear Seat Release Lever And Rear Side Trim Panel
Courtesy of AMERICAN HONDA MOTOR CO., INC.

8. Detach the rear seat release cable (A) from the clips of the rear side trim panel (B), then remove the rear side trim panel.

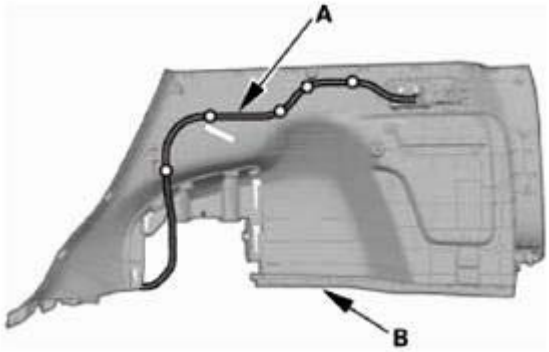

Fig. 79: Identifying Rear Seat Release Cable And Rear Side Trim Panel
Courtesy of AMERICAN HONDA MOTOR CO., INC.

11. Rear Seat Belt Lower Anchor Bolt
    1. Remove the rear seat belt lower anchor bolt (A).

GETtheMANUALS.org

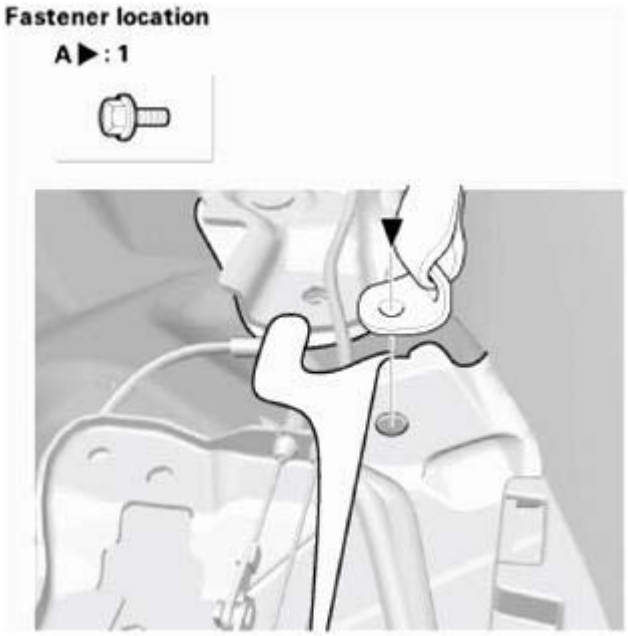

Fig. 80: Identifying Rear Seat Belt Lower Anchor Bolt
Courtesy of AMERICAN HONDA MOTOR CO., INC.

12. Quarter Pillar Trim
    1. Pull out the quarter pillar trim (A) by hand to detach the clips (B, C, and D).
    2. Pass the rear seat belt lower anchor (E) out through the hole in the quarter pillar trim, then remove the quarter pillar trim.

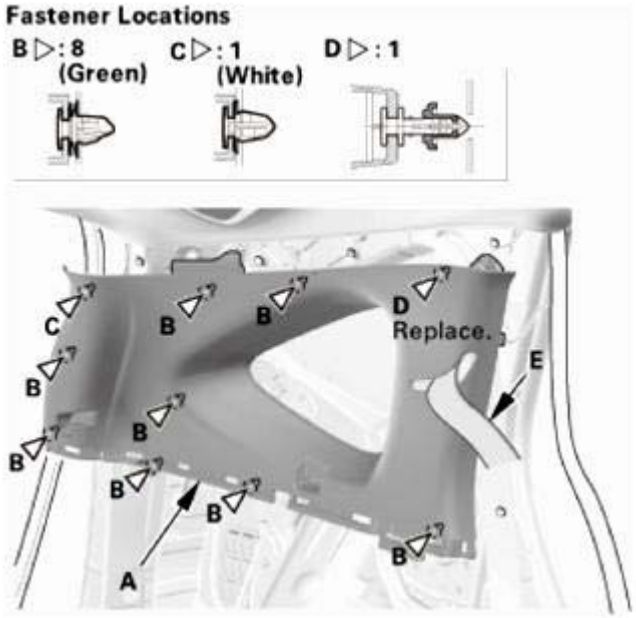

Fig. 81: Identifying Quarter Pillar Trim And Rear Seat Belt Lower Anchor With Fastener
Courtesy of AMERICAN HONDA MOTOR CO., INC.

GETtheMANUALS.org

13. Rear Seat Belt Assembly
    1. Remove the bolt securing the rear seat belt upper anchor (A).

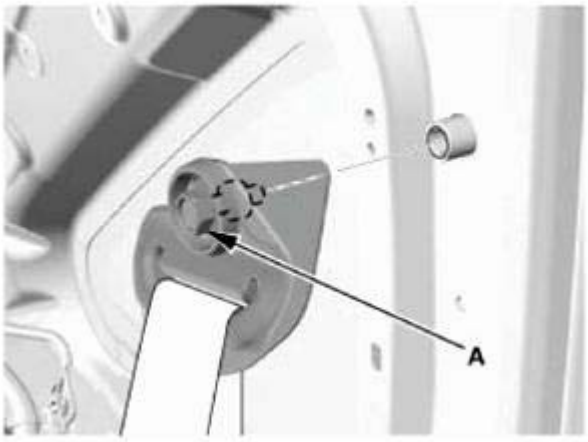

Fig. 82: Identifying Rear Seat Belt Upper Anchor Bolt
Courtesy of AMERICAN HONDA MOTOR CO., INC.

    2. Remove the retractor mounting bolt (A) and the retractor bolt (B), then remove the rear seat belt assembly (C).
    3. If necessary, remove the retractor protector (D).

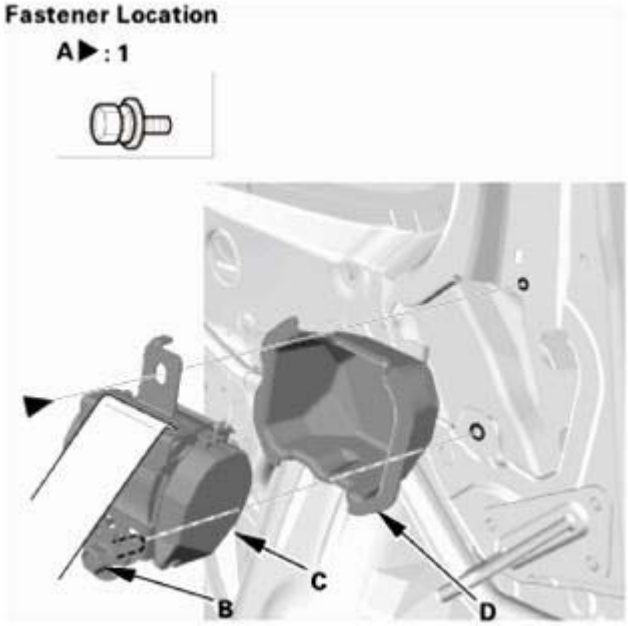

Fig. 83: Identifying Retractor Mounting Bolt, Rear Seat Belt Assembly And Retractor Protector
Courtesy of AMERICAN HONDA MOTOR CO., INC.

INSTALLATION

GETtheMANUALS.org

1. Rear Seat Belt Assembly
    1. Install the retractor protector (A).
    2. Install the rear seat belt assembly (B), then install the retractor mounting bolt (C) and the retractor bolt (D),

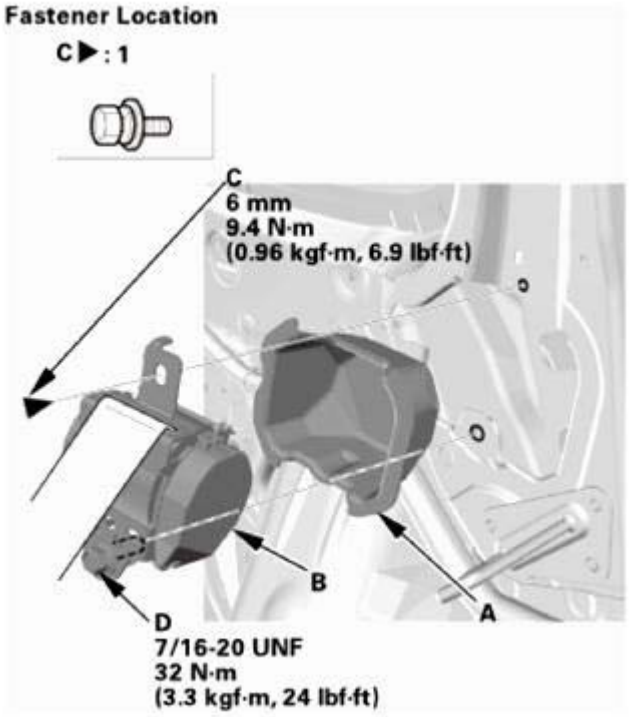

Fig. 84: Identifying Retractor Mounting Bolt, Rear Seat Belt Assembly And Retractor Protector With Torque Specifications
Courtesy of AMERICAN HONDA MOTOR CO., INC.

3. Assemble the washer, the collar, and the bushing on the upper anchor bolt as shown.

NOTE: **Apply medium strength liquid thread lock to the upper anchor bolt before installation.**

Fig. 85: Identifying Washer, Collar, Bushing And Upper Anchor Bolt
Courtesy of AMERICAN HONDA MOTOR CO., INC.

GETtheMANUALS.org

4. Install the rear seat belt upper anchor bolt (A).

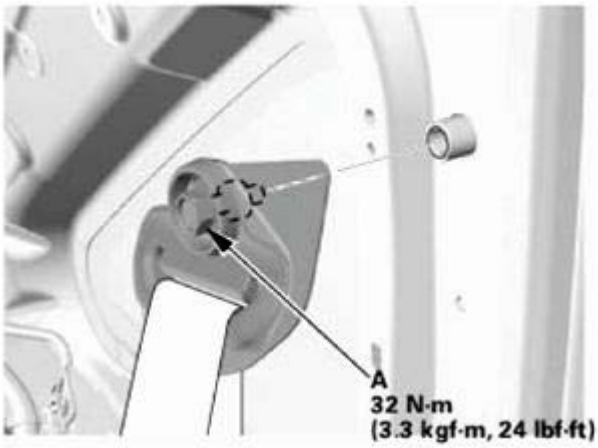

Fig. 86: Identifying Rear Seat Belt Upper Anchor Bolt With Torque Specifications
Courtesy of AMERICAN HONDA MOTOR CO., INC.

2. Quarter Pillar Trim
   1. Install a new clip (A) to the quarter pillar trim (B).

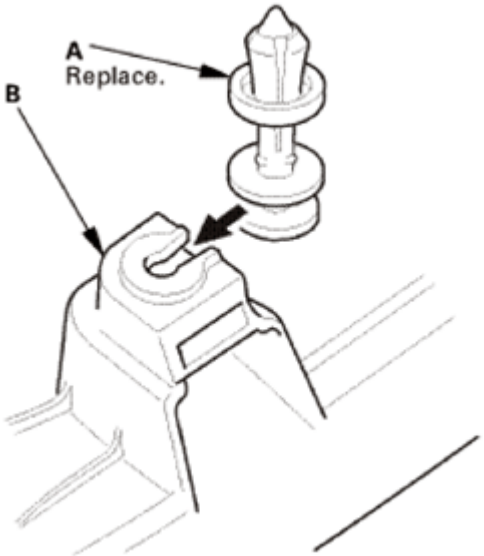

Fig. 87: Installing Clip To Quarter Pillar Trim
Courtesy of AMERICAN HONDA MOTOR CO., INC.

   2. Pass the rear seat belt lower anchor (A) through the hole in the quarter pillar trim (B).
   3. Fit the clips into the holes in the quarter pillar.
   4. Lightly push the quarter pillar trim into place, then install the trim.

NOTE:

- **Make sure the side curtain airbag is not tucked under the clips**

GETtheMANUALS.org

or the ribs.

- **Do not push too hard on the quarter pillar trim. If you push too hard, the clip will be damaged, and it will not hold the trim properly.**
- **Gently tug on the quarter pillar trim to verify that all clips are securely fastened.**
- **Make sure the clips (C, D, and E) snap into place securely.**

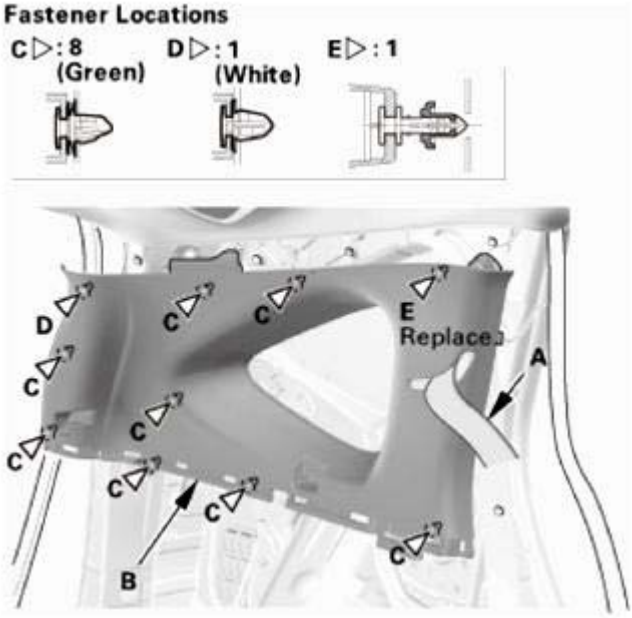

Fig. 88: Identifying Rear Seat Belt Lower Anchor And Quarter Pillar Trim With Torque Specifications
Courtesy of AMERICAN HONDA MOTOR CO., INC.

3. Rear Seat Belt Lower Anchor Bolt
    1. Install the rear seat belt lower anchor bolt (A).

NOTE: **Before installing the anchor bolt, make sure there are no twists or kinks in the seat belt.**

GETtheMANUALS.org

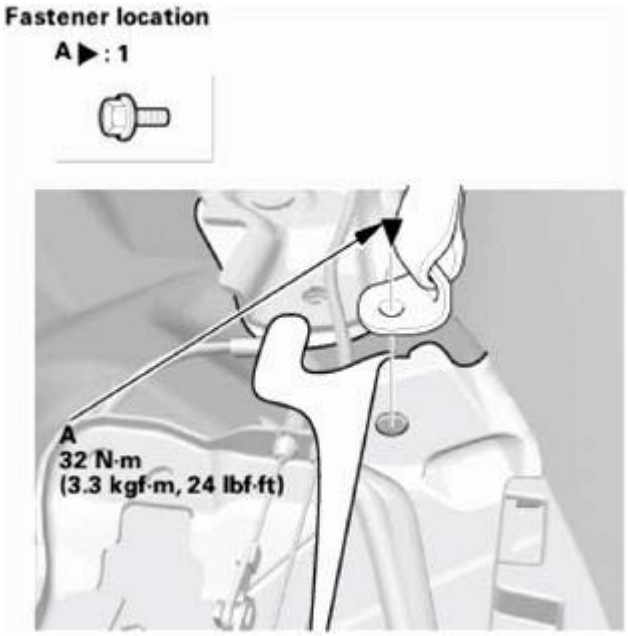

Fig. 89: Identifying Rear Seat Belt Lower Anchor Bolt With Torque Specification
Courtesy of AMERICAN HONDA MOTOR CO., INC.

4. Rear Side Trim Panel
    1. Install the rear seat release cable (A) to the clips (B) of the rear side trim panel (C).

NOTE: Align the marks (D) with the clips as shown.

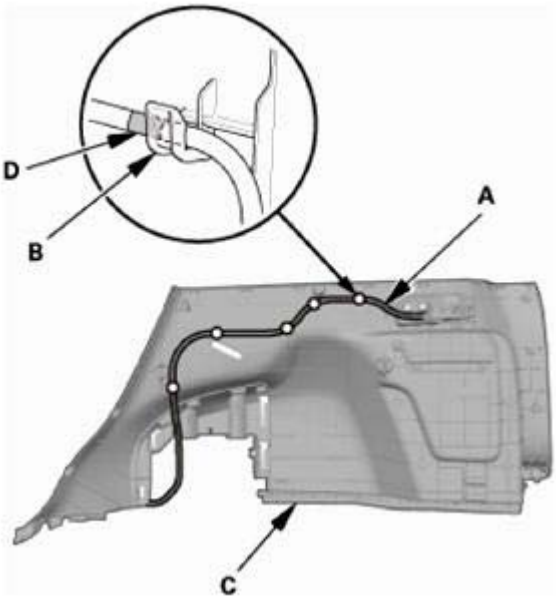

Fig. 90: Identifying Rear Side Trim Panel, Rear Seat Release Cable, Clip And Marks
Courtesy of AMERICAN HONDA MOTOR CO., INC.

GETtheMANUALS.org

2. Install the rear seat release lever (A) to the rear side trim panel (B).

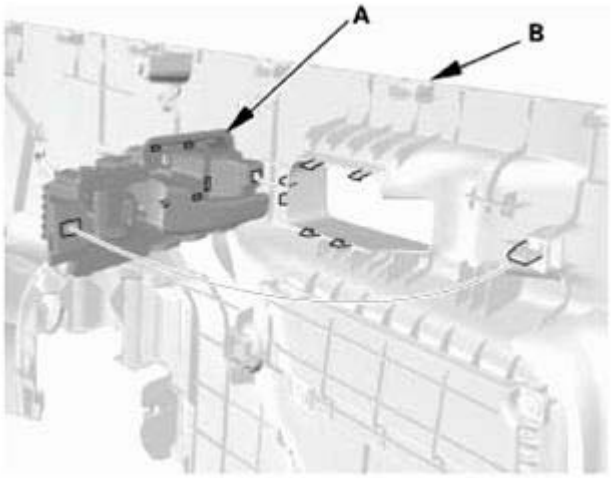

Fig. 91: Identifying Rear Seat Release Lever And Rear Side Trim Panel
Courtesy of AMERICAN HONDA MOTOR CO., INC.

3. Install the rear side trim panel (A). Make sure the hooks (B), the tabs (C), and the clips (D, E) snap into place securely.
4. Install the clips (F, G).

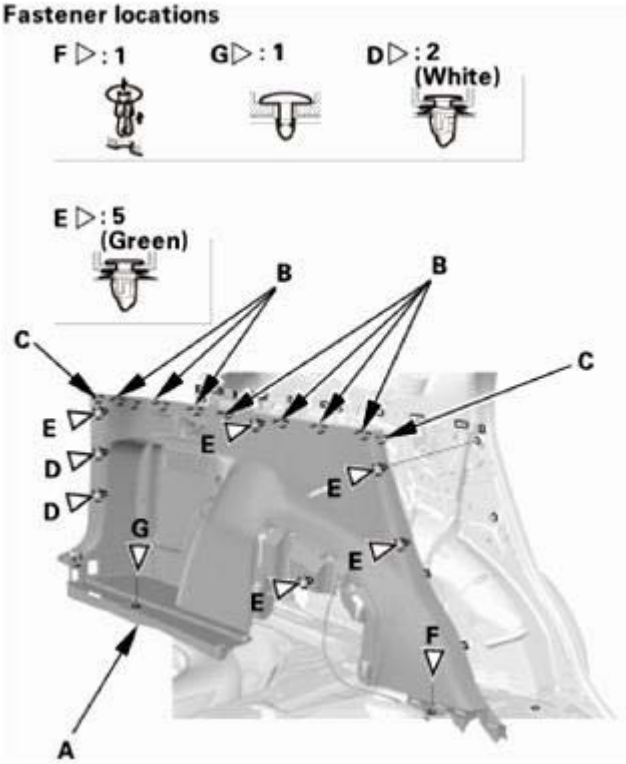

Fig. 92: Identifying Rear Side Trim Panel, Hooks And Tabs

GETtheMANUALS.org

Courtesy of AMERICAN HONDA MOTOR CO., INC.

5. Install the tie-down hook (A), then install the bolt (B).

Fig. 93: Identifying Tie-Down Hook And Bolt With Torque Specifications
Courtesy of AMERICAN HONDA MOTOR CO., INC.

6. Install the trunk hook (A).

Fig. 94: Identifying Trunk Hook
Courtesy of AMERICAN HONDA MOTOR CO., INC.

7. Install the screws (A), then install the rear seat release lever cap (B). Make sure the upper hook (C) and the lower hooks (D) snap into place securely.

GETtheMANUALS.org

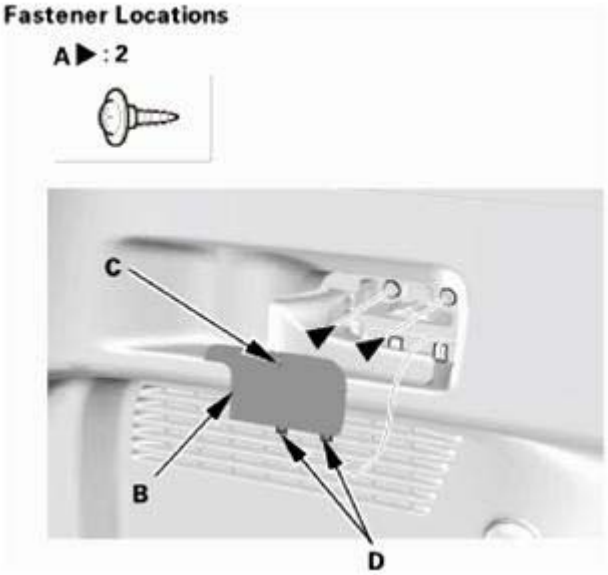

Fig. 95: Identifying Rear Seat Release Lever Cap, Hook And Screws
Courtesy of AMERICAN HONDA MOTOR CO., INC.

5. Rear Trim Panel
    1. Install the rear trim panel (A). Make sure the clips (B, C), the hooks (D), and the tabs (E) snap into place securely.
    2. Install the clips (F).

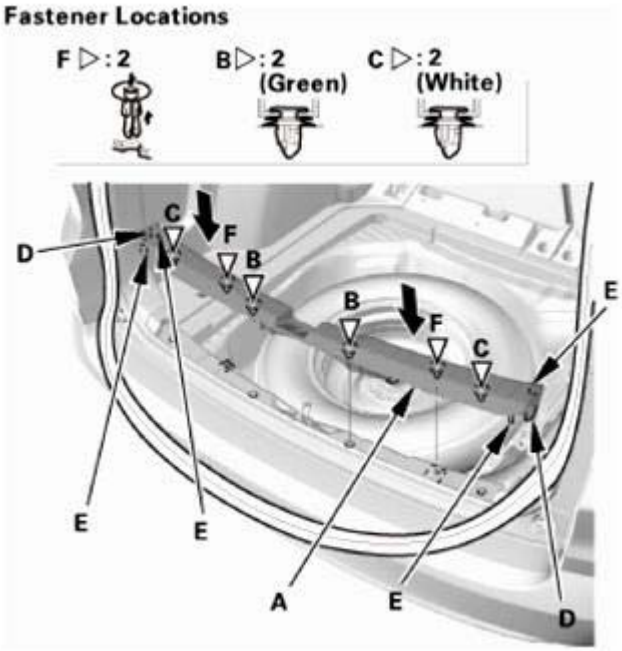

Fig. 96: Installing Rear Trim Panel
Courtesy of AMERICAN HONDA MOTOR CO., INC.

GETtheMANUALS.org

6. Tailgate Weatherstrip As Needed
    1. Locate the alignment mark (A) of the tailgate weatherstrip (B). Align the alignment mark (C) with the center of the lower area on the tailgate opening, then install the tailgate weatherstrip all the way around.

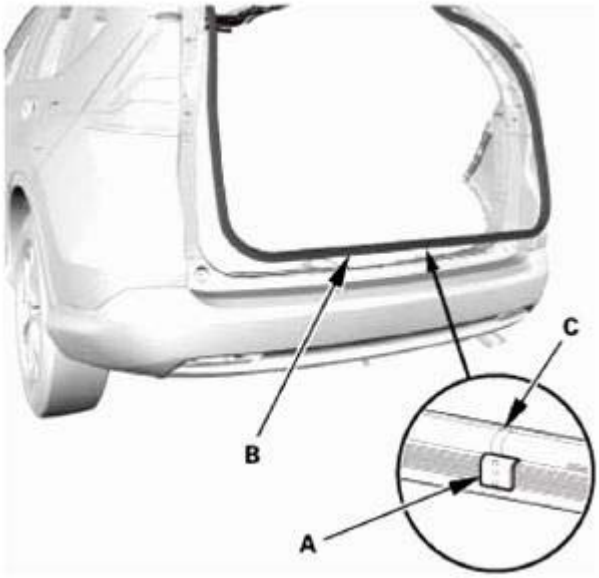

Fig. 97: Identifying Tailgate Weatherstrip With Alignment Mark
Courtesy of AMERICAN HONDA MOTOR CO., INC.

7. Rear Carpet Trim
    1. Install the rear carpet trim (A). Make sure the clips (B) and the hooks (C) snap into place securely.

Left side

GETtheMANUALS.org

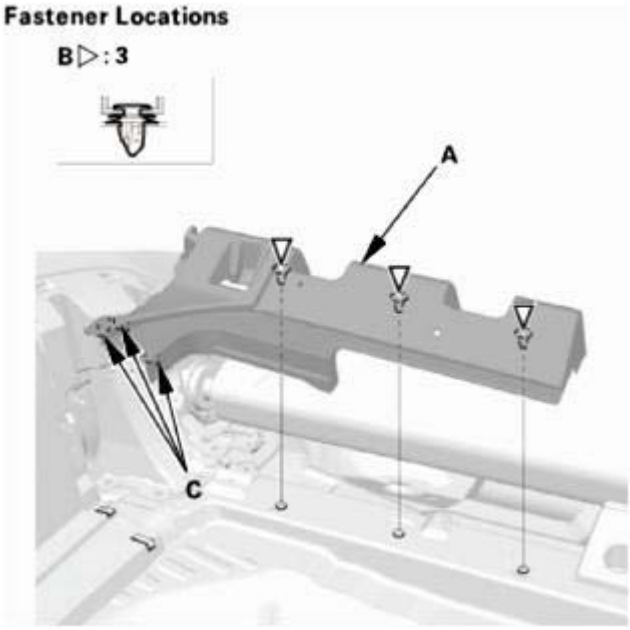

Fig. 98: Identifying Rear Carpet Trim With Clips And Hooks (Left Side)
Courtesy of AMERICAN HONDA MOTOR CO., INC.

Right side

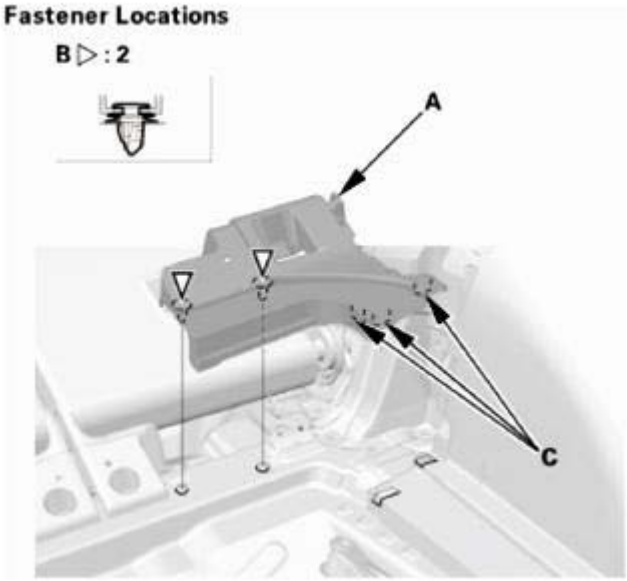

Fig. 99: Identifying Rear Carpet Trim With Clips And Hooks (Right Side)
Courtesy of AMERICAN HONDA MOTOR CO., INC.

2. Install the rear seat-back cover (A). Make sure the clips (B) snap into place securely.

Left side

GETtheMANUALS.org

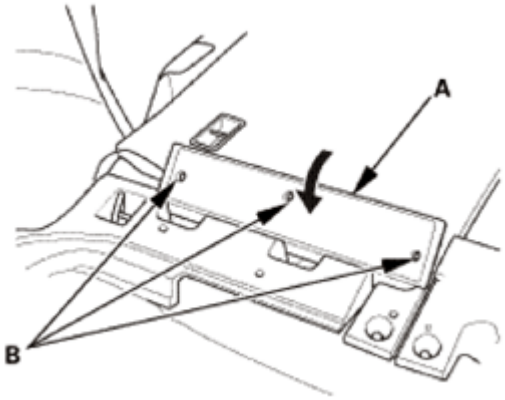

Fig. 100: Identifying Rear Seat Release Lever Cap, Hook And Screws (Left Side)
Courtesy of AMERICAN HONDA MOTOR CO., INC.

Right side

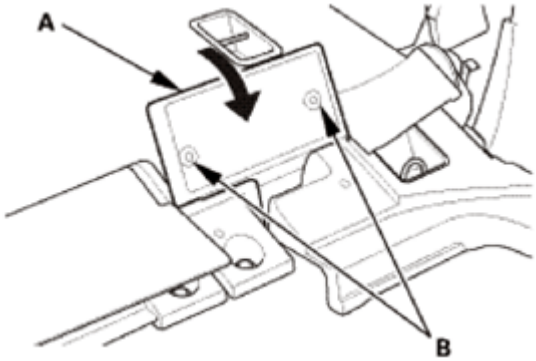

Fig. 101: Identifying Rear Seat Release Lever Cap, Hook And Screws (Right Side)
Courtesy of AMERICAN HONDA MOTOR CO., INC.

8. Rear Damper Maintenance Cover
    1. Fold down the rear seat-back.
    2. Install the rear damper maintenance cover (A). Make sure the hooks (B) snap into place securely.

GETtheMANUALS.org

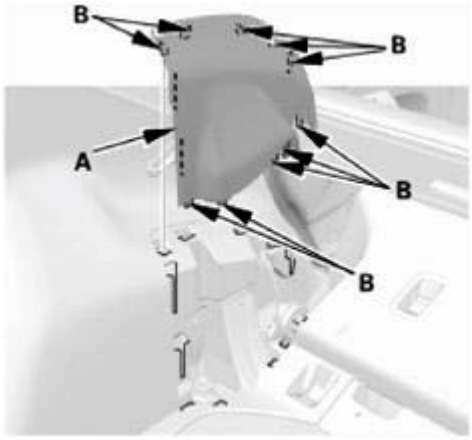

Fig. 102: Identifying Rear Damper Maintenance Cover And Hooks
Courtesy of AMERICAN HONDA MOTOR CO., INC.

9. Rear Seat Foot Cover
    1. Install the rear seat cushion foot cover (A). Make sure the clips (B) and the hooks (C) snap into place securely.

    Left Side

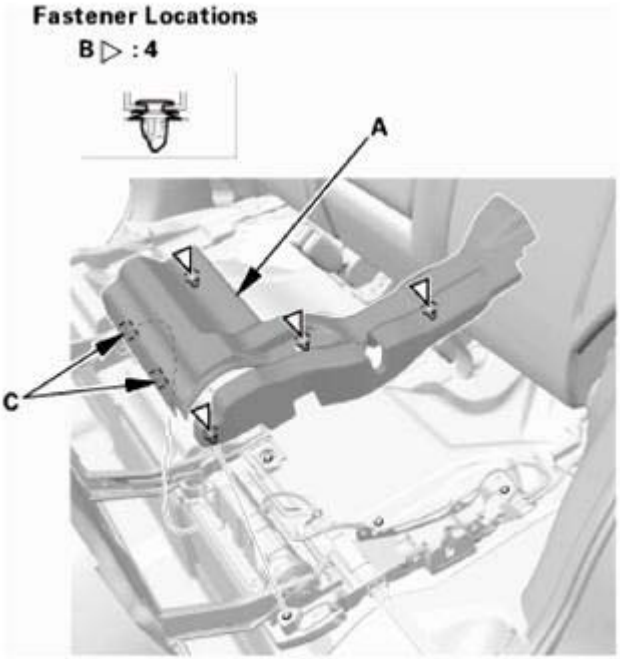

Fig. 103: Identifying Rear Seat Foot Cover, Clips And Hooks (Left Side)
Courtesy of AMERICAN HONDA MOTOR CO., INC.

Right Side

GETtheMANUALS.org

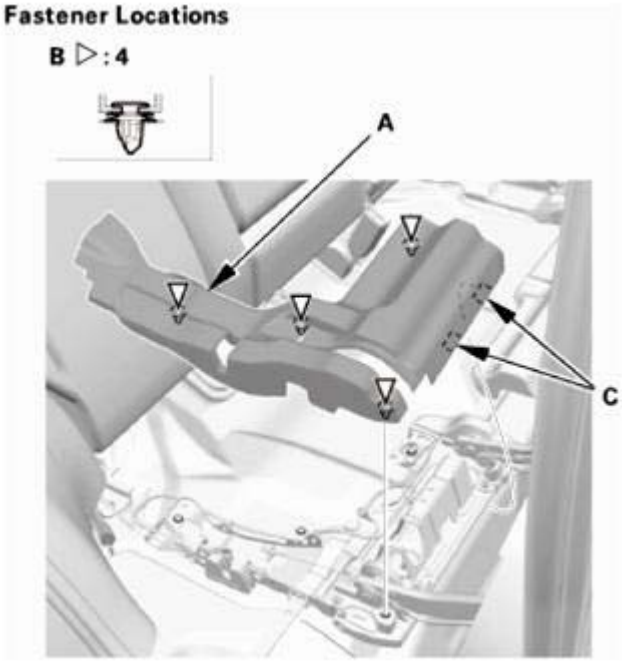

Fig. 104: Identifying Rear Seat Foot Cover, Clips And Hooks (Right Side)
Courtesy of AMERICAN HONDA MOTOR CO., INC.

10. Rear Door Opening Seal As Needed
    1. Install the rear door opening seal (A). Make sure the seal is installed securely into the hooks (B).

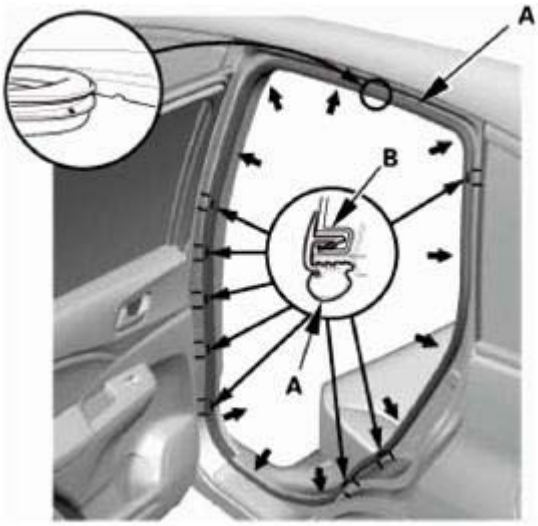

Fig. 105: Identifying Rear Door Opening Seal With Trim Hooks
Courtesy of AMERICAN HONDA MOTOR CO., INC.

11. Rear Door Sill Trim
    1. Pull the release strap to fold down the rear seat, then lift-up and latch the rear seat-back in the upright position.

GETtheMANUALS.org

2. Install the rear door inner sill trim (A). Make sure the clips (B, C), the hooks (D), and the tab (E) snap into place securely.

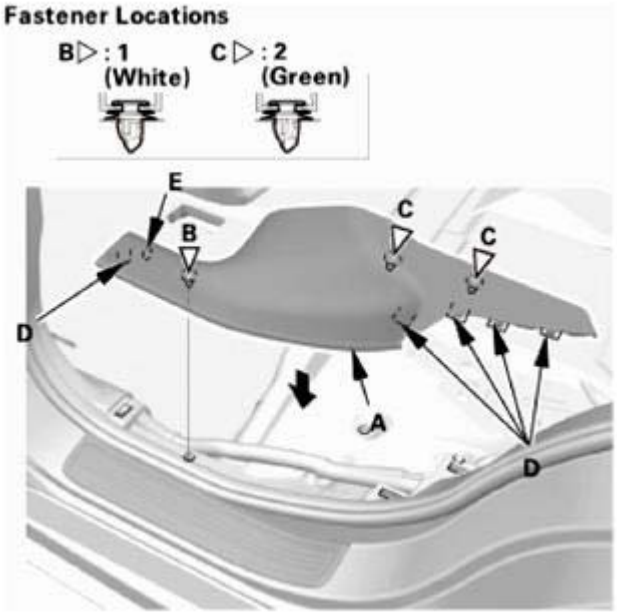

Fig. 106: Installing Rear Door Inner Sill Trim
Courtesy of AMERICAN HONDA MOTOR CO., INC.

12. Cargo Floor Cover
    1. Install the cargo floor cover (A).

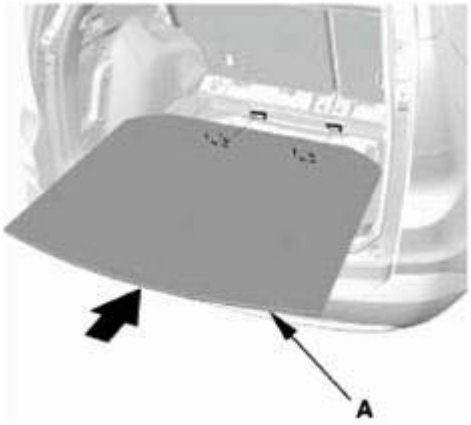

Fig. 107: Installing Cargo Floor Cover
Courtesy of AMERICAN HONDA MOTOR CO., INC.

13. Tonneau Cover (For Some Models)
    1. Install the tonneau cover (A).

GETtheMANUALS.org

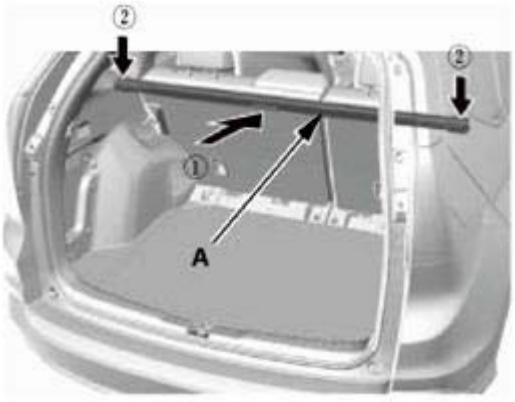

Fig. 108: Installing Tonneau Cover
Courtesy of AMERICAN HONDA MOTOR CO., INC.

REAR SEAT BELT REMOVAL AND INSTALLATION - CENTER

SPECIAL TOOL DESCRIPTION

Image	Description/Tool Number
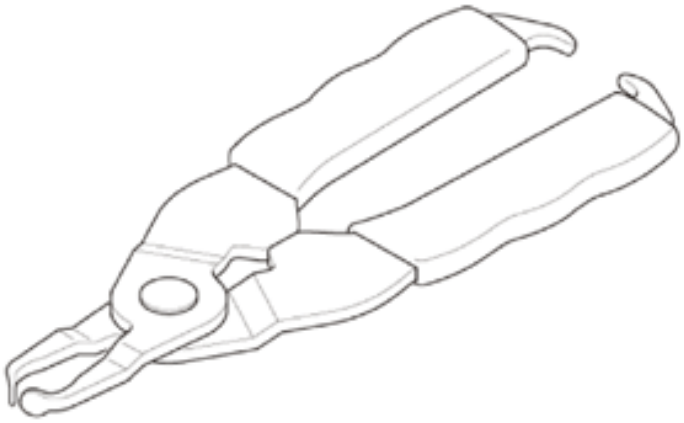	Push Pin/Grab Rail Cap Pliers 07AAC-001A100

REMOVAL

SRS components are located in this area. Review the **SRS COMPONENT LOCATIONS** and the **PRECAUTIONS AND PROCEDURES** before doing repairs or service.

1. Battery Terminal (SRS) - Disconnection
    1. Make sure the ignition switch is in LOCK (0).
    2. Disconnect and isolate the negative cable (A) from the battery.

    NOTE: Always disconnect the negative side first.

    3. Disconnect the positive cable (B) from the battery.
    4. Wait at least 3 minutes before starting work.

GETtheMANUALS.org

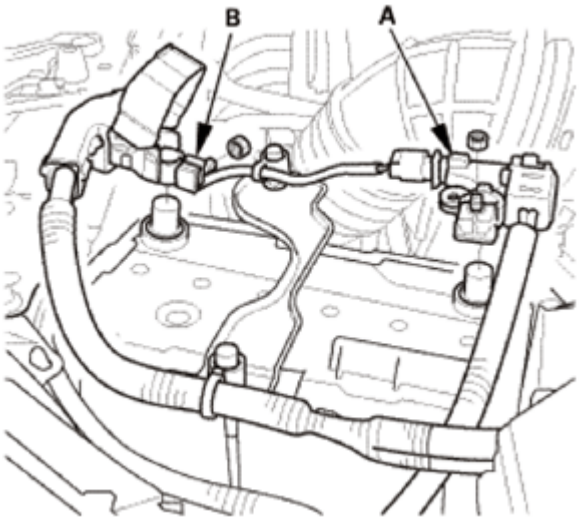

Fig. 109: Identifying Battery Negative And Positive Cable
Courtesy of AMERICAN HONDA MOTOR CO., INC.

2. Front Door Sill Trim - Both Sides

NOTE: Repeat on the opposite side.

1. Detach the hooks (A) and the tabs (B) from the kick panel (C) and the B-pillar lower trim (D), and pull up the front door inner sill trim (E) by hand to detach the clips (F), then remove the trim.

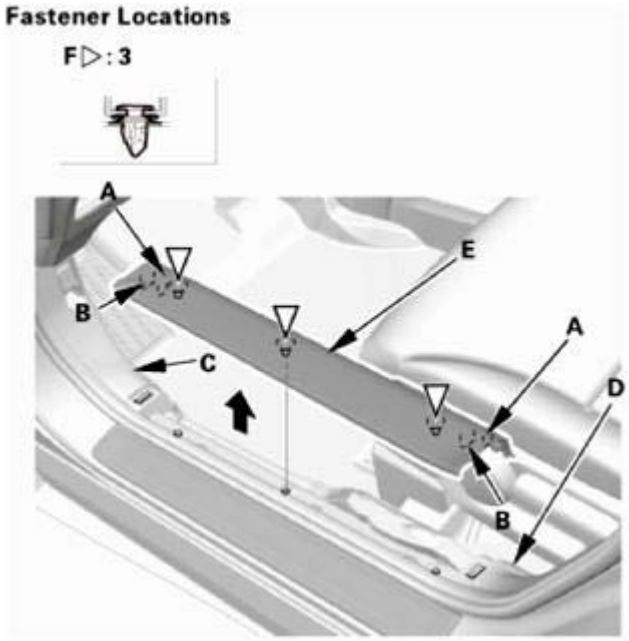

Fig. 110: Pulling Up Front Door Inner Sill Trim
Courtesy of AMERICAN HONDA MOTOR CO., INC.

GETtheMANUALS.org

3. Front Door Opening Seal As Needed - Both Sides

NOTE: Repeat on the opposite side.

1. Pull out the front door opening seal (A) from the trim hooks (B) around the front door opening flange, then detach the seal as needed.

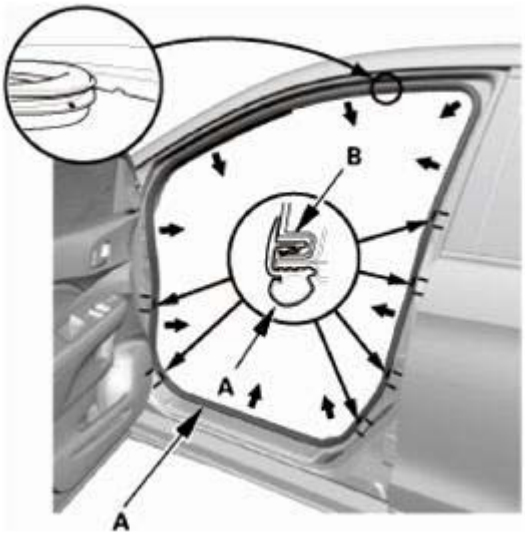

Fig. 111: Identifying Front Door Opening Seal, Trim Hooks And Front Door Opening Flange
Courtesy of AMERICAN HONDA MOTOR CO., INC.

4. A-Pillar Trim - Both Sides

NOTE: Repeat this procedure on the opposite side.

1. Pull out the A-pillar trim (A) by hand to release the clips (B, C).

GETtheMANUALS.org

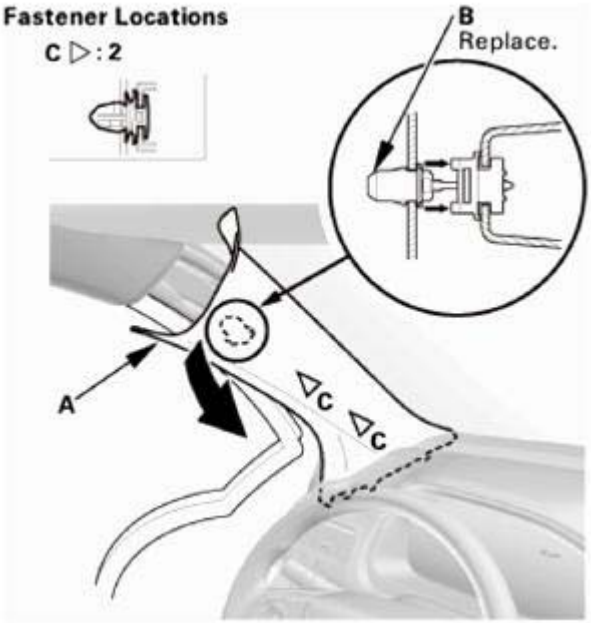

Fig. 112: Pulling Out A-Pillar Trim
Courtesy of AMERICAN HONDA MOTOR CO., INC.

2. Put a shop towel (A) in the opening between the A-pillar trim (B) and the dashboard to prevent dropping the A-pillar clips.

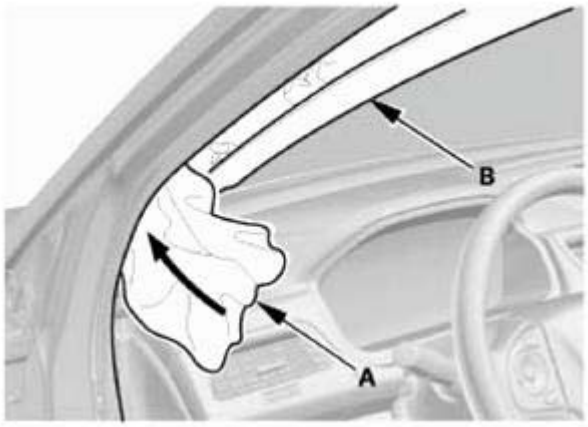

Fig. 113: Putting Shop Towel Between A-Pillar Trim And Dashboard
Courtesy of AMERICAN HONDA MOTOR CO., INC.

3. Pull out and up on the A-pillar trim (A) to release it from the dashboard.

NOTE: The upper clip will stay in the body.

GETtheMANUALS.org

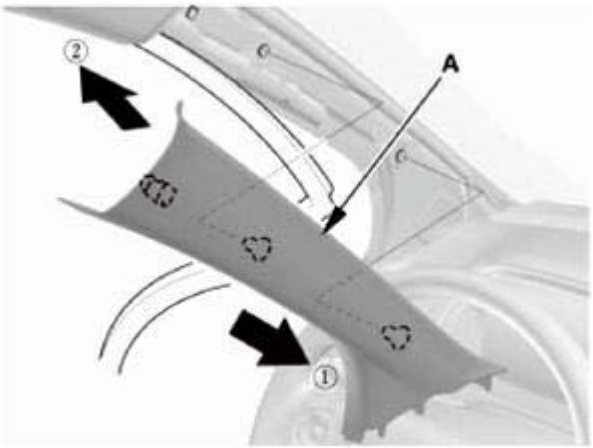

Fig. 114: Pulling Out A-Pillar Trim
Courtesy of AMERICAN HONDA MOTOR CO., INC.

4. Remove the upper clip (A) from the body.

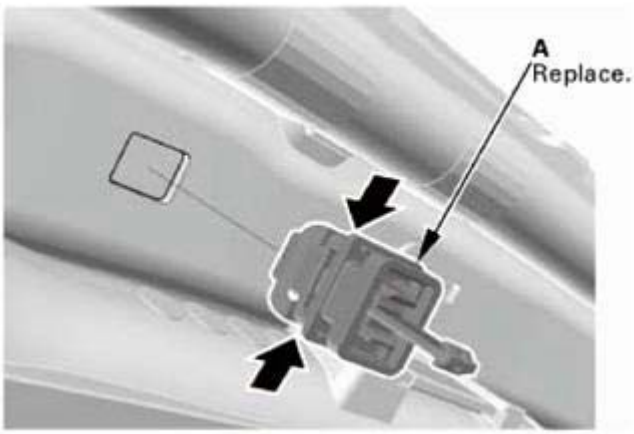

Fig. 115: Removing Upper Clip From Body
Courtesy of AMERICAN HONDA MOTOR CO., INC.

5. Rear Door Sill Trim - Both Sides

NOTE: Repeat this procedure on the opposite side.

1. Pull the release strap to fold down the rear seat, then lift-up and latch the rear seat-back in the upright position.
2. Detach the hooks (A) and the tab (B) from the B-pillar lower trim (C) and the rear side trim panel (D), and pull up the rear door inner sill trim (E) by hand to detach the clips (F, G), then remove the trim.

GETtheMANUALS.org

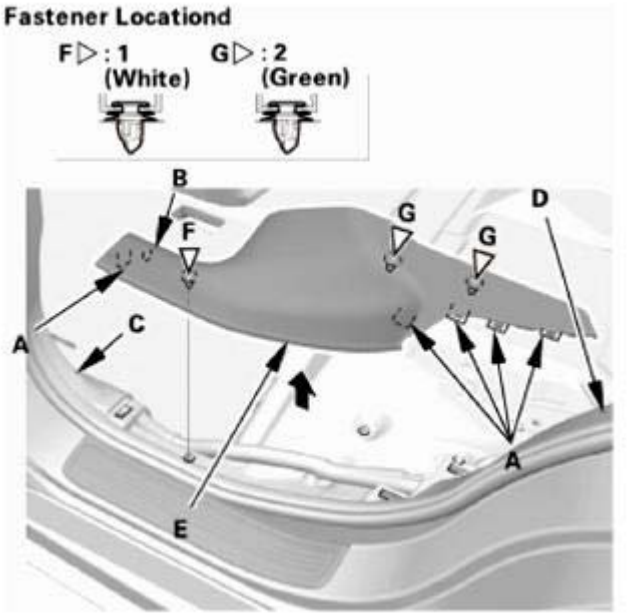

Fig. 116: Identifying Rear Door Sill Trim With Fasteners
Courtesy of AMERICAN HONDA MOTOR CO., INC.

6. Rear Door Opening Seal As Needed - Both Sides

NOTE: Repeat this procedure on the opposite side.

1. Pull out the rear door opening seal (A) from the trim hooks (B) around the rear door opening flange, then detach the seal as needed.

Fig. 117: Identifying Rear Door Opening Seal And Trim Hooks
Courtesy of AMERICAN HONDA MOTOR CO., INC.

7. B-Pillar Lower Trim - Both Sides

GETtheMANUALS.org

NOTE: **Repeat this procedure on the opposite side.**

1. Slide the front seat forward fully.
2. Pull back the bottom portion of the B-pillar lower trim (A) by hand to detach the clips (B).
3. Pull back the upper portion of the B-pillar lower trim to detach the upper hooks (C), then remove the B-pillar lower trim.

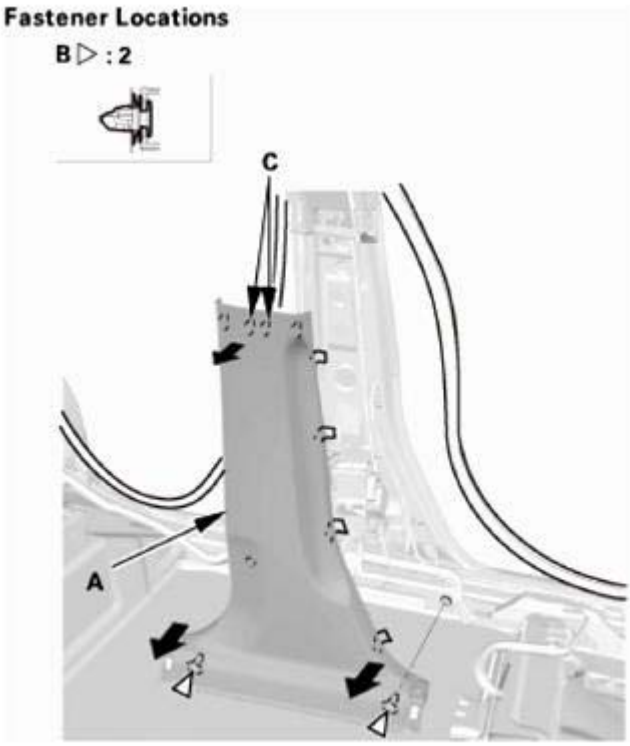

Fig. 118: Removing B-Pillar Lower Trim
Courtesy of AMERICAN HONDA MOTOR CO., INC.

8. Front Seat Belt Upper Anchor Bolt - Both Sides

NOTE: **Repeat this procedure on the opposite side.**

1. Remove the front seat belt shoulder anchor adjuster cap (A), then remove the front seat belt upper anchor bolt.

GETtheMANUALS.org

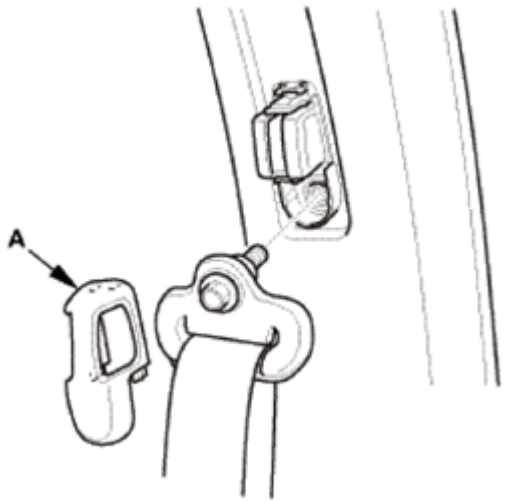

Fig. 119: Identifying Front Seat Belt Shoulder Anchor Adjuster Cap
Courtesy of AMERICAN HONDA MOTOR CO., INC.

9. B-Pillar Upper Trim - Both Sides

NOTE: Repeat this procedure on the opposite side.

1. Pull back the bottom portion of the B-pillar upper trim (A) by hand to detach the hooks (B). Pull down the trim to release the upper hook (C) from the hole (D) in the body, then remove the B-pillar upper trim.

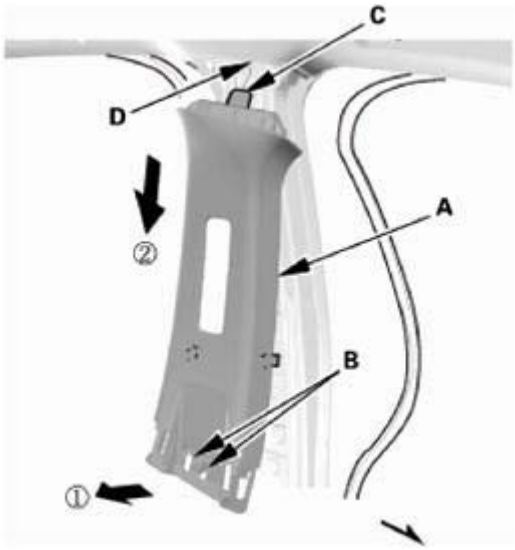

Fig. 120: Removing B-Pillar Upper Trim
Courtesy of AMERICAN HONDA MOTOR CO., INC.

10. Tonneau Cover (For Some Models)
    1. Remove the tonneau cover (A).

GETtheMANUALS.org

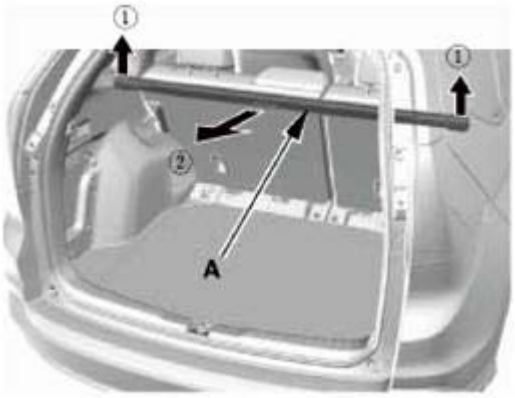

Fig. 121: Removing Tonneau Cover
Courtesy of AMERICAN HONDA MOTOR CO., INC.

11. Cargo Floor Cover
    1. Remove the cargo floor cover (A).

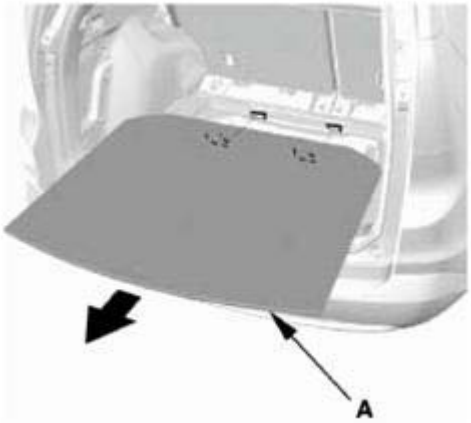

Fig. 122: Removing Cargo Floor Cover
Courtesy of AMERICAN HONDA MOTOR CO., INC.

12. Tailgate Weatherstrip As Needed
    1. Detach the tailgate weatherstrip (A) as needed.

GETtheMANUALS.org

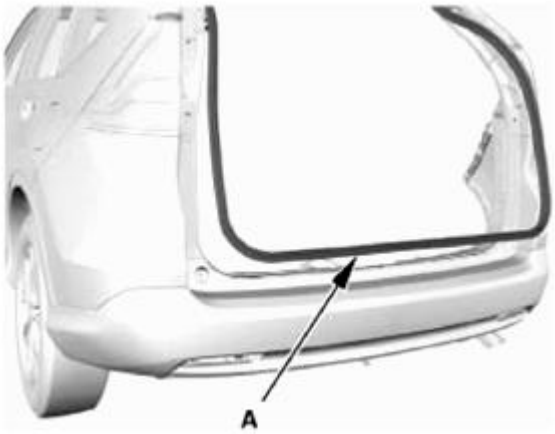

Fig. 123: Identifying Tailgate Weatherstrip
Courtesy of AMERICAN HONDA MOTOR CO., INC.

13. Rear Trim Panel
    1. Remove the clips (A).
    2. Detach the hooks (B) and the tabs (C) from the rear side trim panels (D), and pull up the rear trim panel (E) by hand to detach the clips (F, G), then remove the rear trim panel.

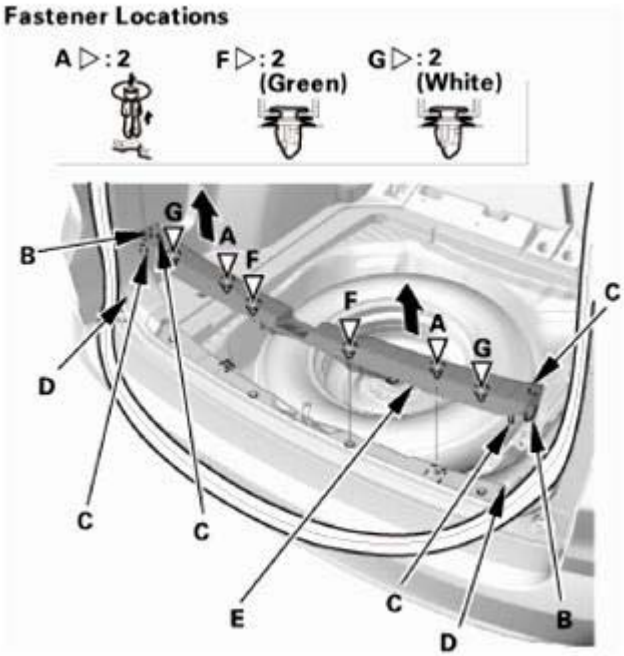

Fig. 124: Removing Rear Trim Panel
Courtesy of AMERICAN HONDA MOTOR CO., INC.

14. Rear Damper Maintenance Cover - Both Sides

NOTE: **Repeat this procedure on the opposite side.**

GETtheMANUALS.org

1. Fold down the rear seat-back.
2. Pull up the rear damper maintenance cover (A) by hand to detach the hooks (B), then remove the rear damper maintenance cover.

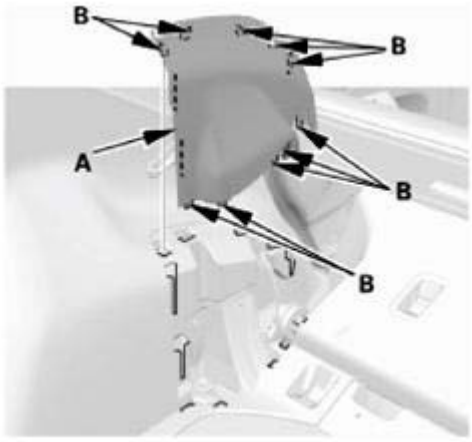

Fig. 125: Identifying Rear Damper Maintenance Cover And Hook
Courtesy of AMERICAN HONDA MOTOR CO., INC.

15. Rear Carpet Trim - Both Sides
    1. Detach the clips (A), then tuck up the rear seat-back cover (B).

Left side

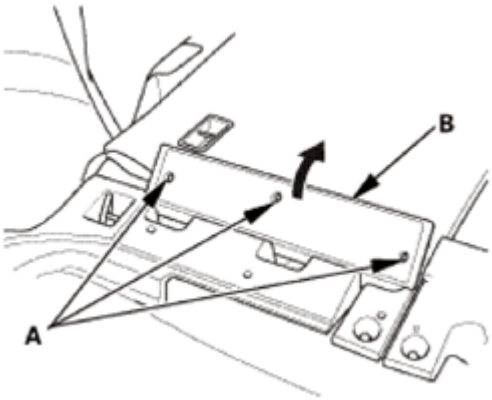

Fig. 126: Removing Rear Seat-Back Cover (Left Side)
Courtesy of AMERICAN HONDA MOTOR CO., INC.

Right side

GETtheMANUALS.org

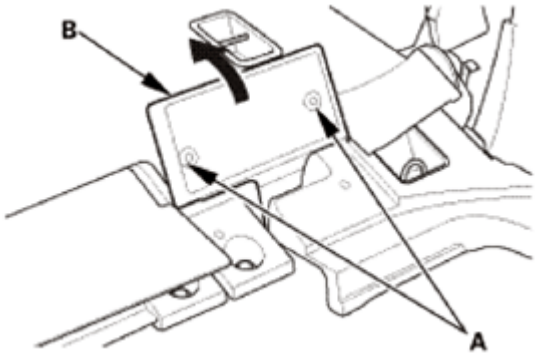

Fig. 127: Removing Rear Seat-Back Cover (Right Side)
Courtesy of AMERICAN HONDA MOTOR CO., INC.

2. Detach the hooks (A) from the rear side trim panel (B), and pull up the rear carpet trims (C) by hand to detach the clips (D), then remove the rear carpet trims.

Left side

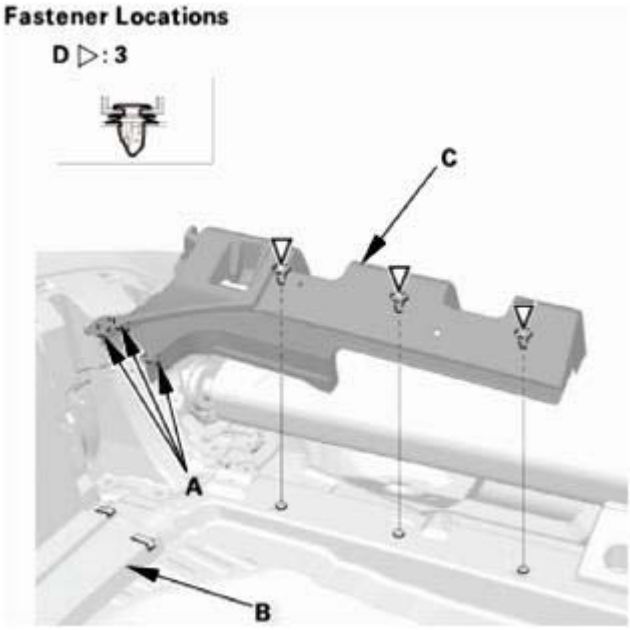

Fig. 128: Identifying Rear Seat Cushion Foot Cover, Clips And Hooks (Left Side)
Courtesy of AMERICAN HONDA MOTOR CO., INC.

Right side

GETtheMANUALS.org

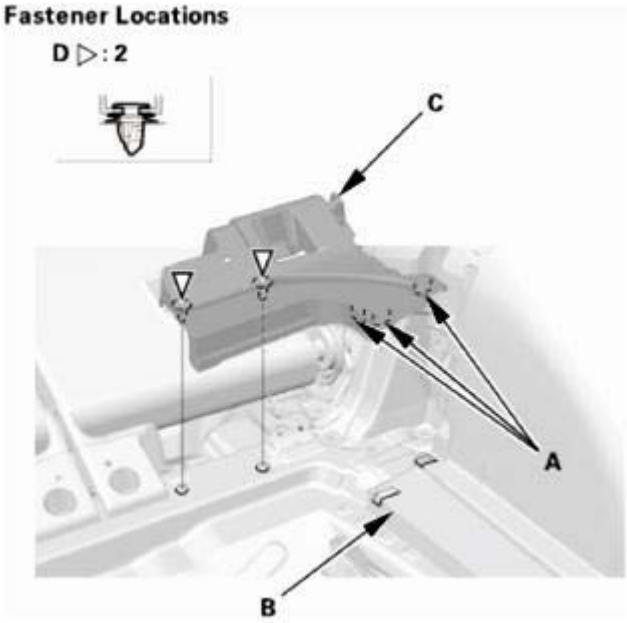

Fig. 129: Identifying Rear Seat Cushion Foot Cover, Clips And Hooks (Right Side)
Courtesy of AMERICAN HONDA MOTOR CO., INC.

16. Rear Seat Cushion Foot Cover - Both Sides (Remove The Outer Left Side Only)
    1. Pull up the rear seat cushion foot cover (A) by hand to detach the clips (B).
    2. Detach the hooks (C), then remove the rear seat cushion foot cover.

Left side

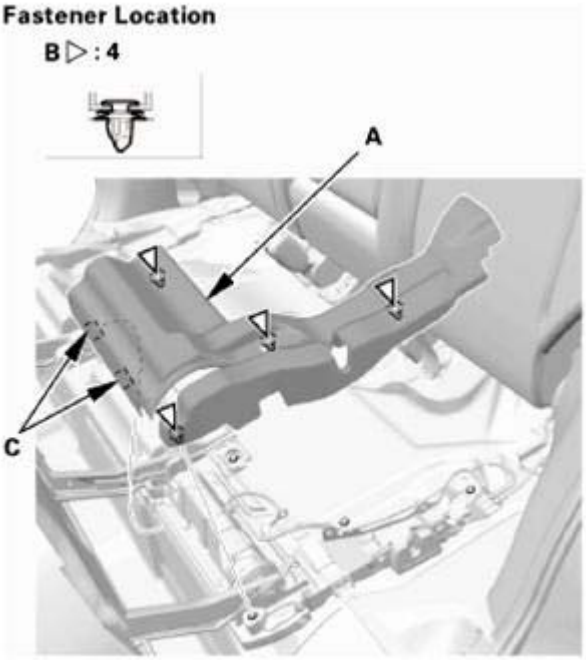

GETtheMANUALS.org

Fig. 130: Identifying Rear Seat Cushion Foot Cover, Clip And Hook (Left Side)
Courtesy of AMERICAN HONDA MOTOR CO., INC.

Right side

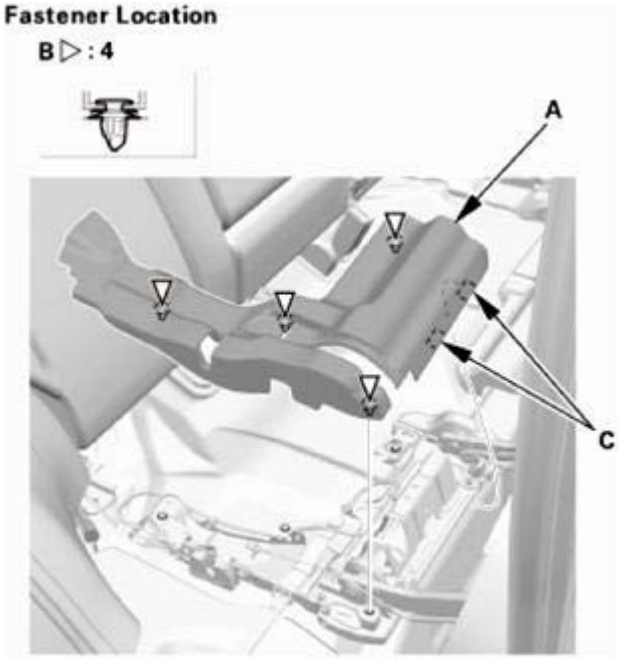

Fig. 131: Identifying Rear Seat Cushion Foot Cover, Clip And Hook (Right Side)
Courtesy of AMERICAN HONDA MOTOR CO., INC.

17. Rear Seat Belt Lower Anchor Bolt - Both Sides

NOTE: Repeat this procedure on the opposite side.

1. Remove the rear seat belt lower anchor bolt (A).

GETtheMANUALS.org

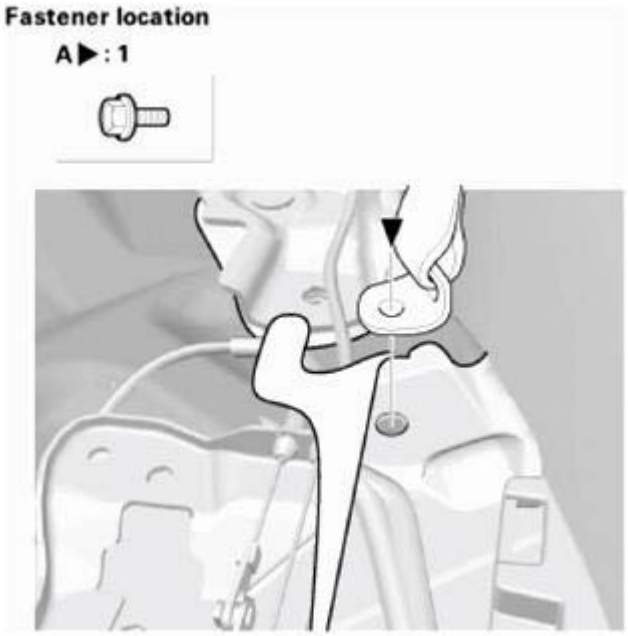

Fig. 132: Identifying Rear Seat Belt Lower Anchor Bolt
Courtesy of AMERICAN HONDA MOTOR CO., INC.

18. Rear Side Trim Panel - Both Sides

NOTE: Repeat this procedure on the opposite side.

1. Carefully pry out on the upper hook (A) in the rear seat release lever cap (B) with the appropriate trim tool, then pull back the rear seat release lever cap to remove it.
2. Remove the screws (C).

GETtheMANUALS.org

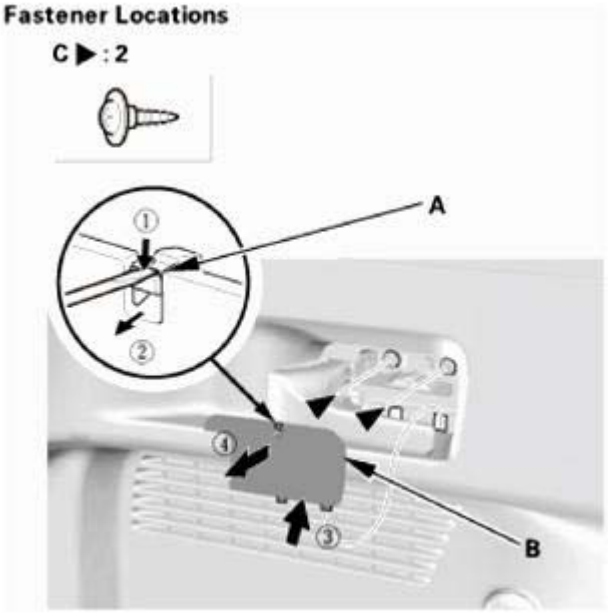

Fig. 133: Removing Rear Side Trim Panel
Courtesy of AMERICAN HONDA MOTOR CO., INC.

3. Push in the center pin (A), then remove the trunk hook (B).

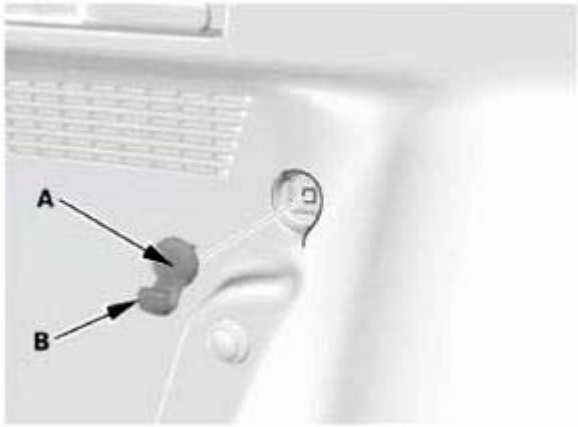

Fig. 134: Identifying Center Pin And Trunk Hook
Courtesy of AMERICAN HONDA MOTOR CO., INC.

4. Remove the bolt (A), then remove the tie-down hook (B).

GETtheMANUALS.org

Fig. 135: Identifying Tie-Down Hook And Bolt
Courtesy of AMERICAN HONDA MOTOR CO., INC.

5. Detach the clips (A, B).
6. Detach the hooks (C) and the tabs (D) from the quarter pillar trim (E), and pull out the rear side trim panel (F) by hand to detach the clips (G, H).

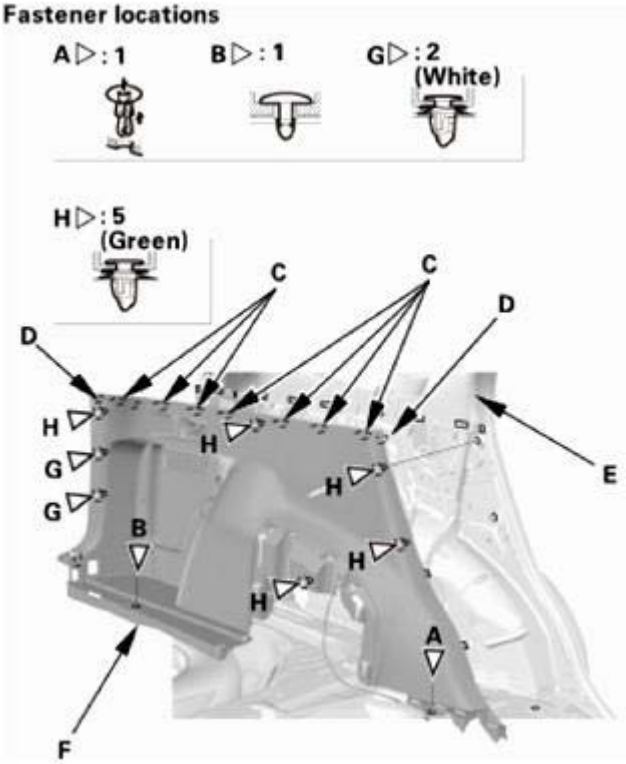

Fig. 136: Identifying Rear Seat Release Lever And Rear Side Trim Panel

GETtheMANUALS.org

Courtesy of AMERICAN HONDA MOTOR CO., INC.

7. Remove the rear seat release lever (A) from the rear side trim panel (B).

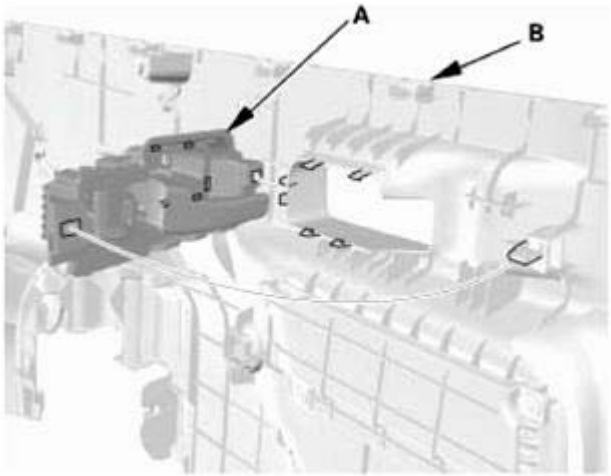

Fig. 137: Identifying Rear Seat Release Lever And Rear Side Trim Panel
Courtesy of AMERICAN HONDA MOTOR CO., INC.

8. Detach the rear seat release cable (A) from the clips of the rear side trim panel (B), then remove the rear side trim panel.

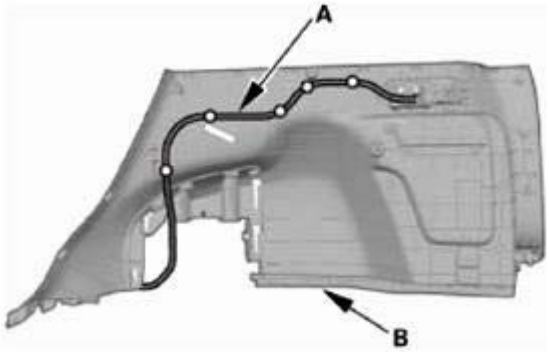

Fig. 138: Identifying Rear Seat Release Cable And Rear Side Trim Panel
Courtesy of AMERICAN HONDA MOTOR CO., INC.

19. Quarter Pillar Trim - Both Sides

NOTE: Repeat this procedure on the opposite side.

1. Pull out the quarter pillar trim (A) by hand to detach the clips (B, C, and D).
2. Pass the rear seat belt lower anchor (E) out through the hole in the quarter pillar trim, then remove the quarter pillar trim.

GETtheMANUALS.org

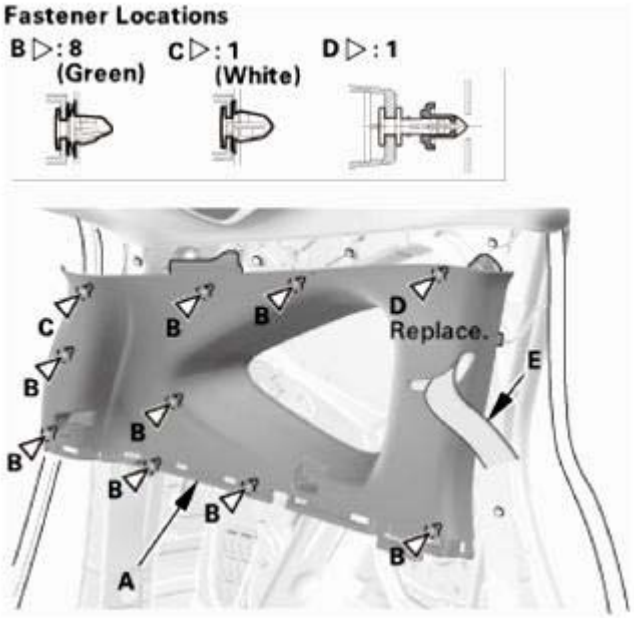

Fig. 139: Identifying Quarter Pillar Trim And Rear Seat Belt Lower Anchor With Fastener
Courtesy of AMERICAN HONDA MOTOR CO., INC.

20. Roof Console Assembly
    1. Remove the lenses (A), then remove the screws (B).
    2. Open the console, then remove the screws (C).
    3. Disconnect the connectors (D), then remove the roof console assembly (E).

GETtheMANUALS.org

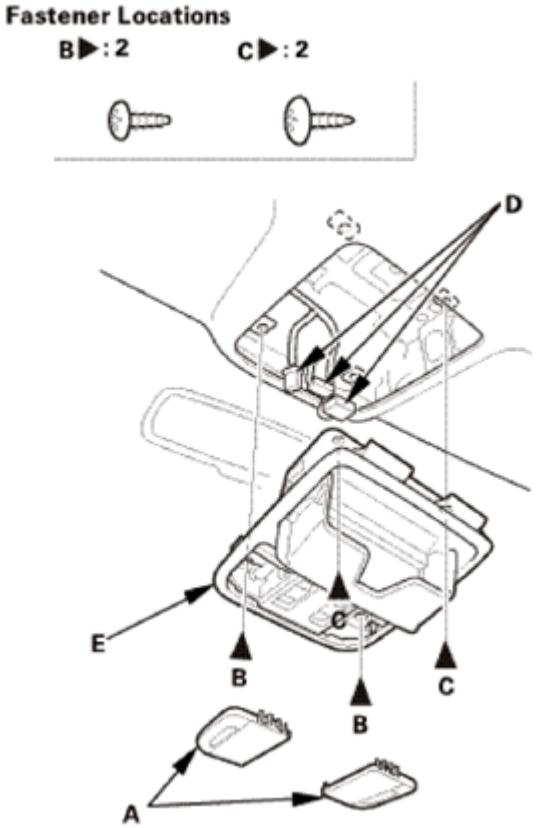

Fig. 140: Identifying Lenses, Screws, Connectors And Roof Console Assembly
Courtesy of AMERICAN HONDA MOTOR CO., INC.

21. Ceiling Light (without RES)
    1. Turn the ceiling light switch OFF.
    2. Carefully pry off the lens (A).
    3. Remove the bulb.
    4. Remove the ceiling light (B).
    5. Disconnect the connector.

GETtheMANUALS.org

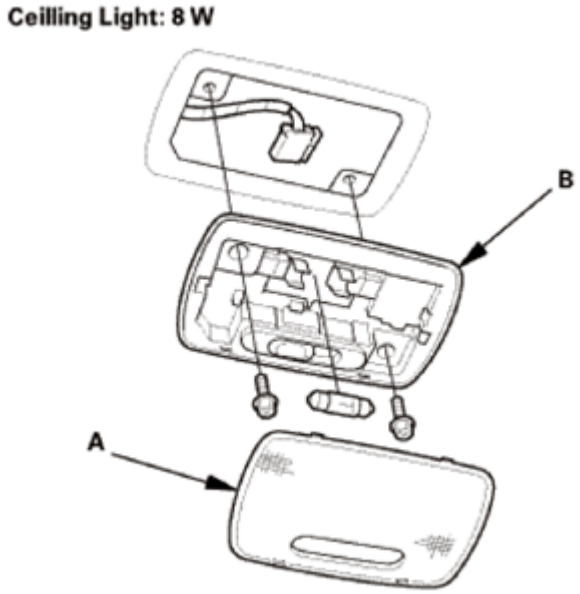

Fig. 141: Identifying Ceiling Light And Lens
Courtesy of AMERICAN HONDA MOTOR CO., INC.

22. Rear Display Cover (With RES)
    1. Turn the ceiling light switch OFF.
    2. Carefully pry off the lenses (A) with a flat-tip screwdriver.
    3. Remove the ceiling light (B).
    4. Disconnect the connector.

GETtheMANUALS.org

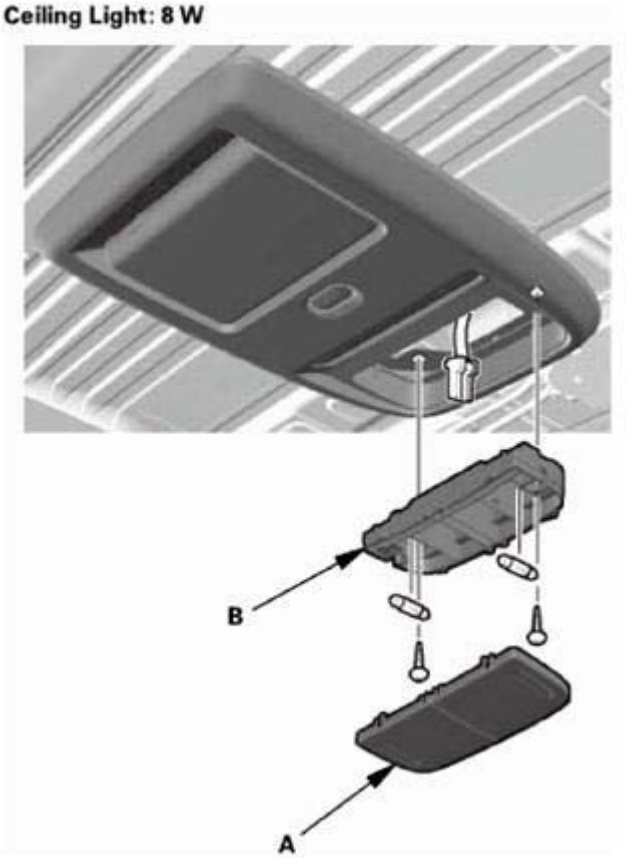

Fig. 142: Identifying Ceiling Light And Lens
Courtesy of AMERICAN HONDA MOTOR CO., INC.

5. Remove the rear display cover (A).

GETtheMANUALS.org

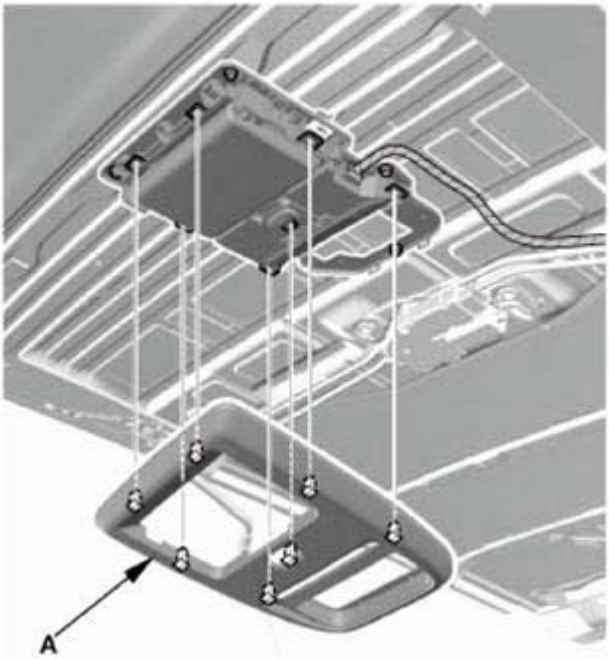

Fig. 143: Identifying Rear Display Cover
Courtesy of AMERICAN HONDA MOTOR CO., INC.

23. Rear Controller and Screen (With RES)
    1. Disconnect the connector.
    2. Remove the rear controller and screen (A).

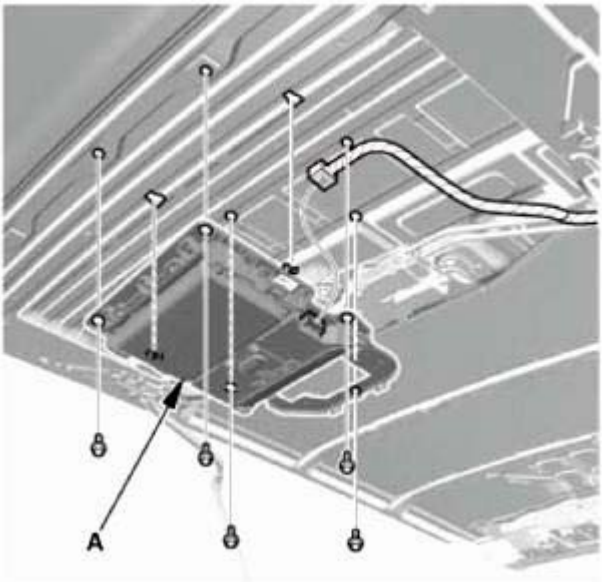

Fig. 144: Identifying Rear Controller And Screen (With RES)
Courtesy of AMERICAN HONDA MOTOR CO., INC.

GETtheMANUALS.org

24. Cargo Area Light
    1. Turn the cargo area light switch OFF.
    2. Carefully pry off the lens (A).
    3. Remove the bulb.
    4. Remove the cargo area light (B).
    5. Disconnect the connector.

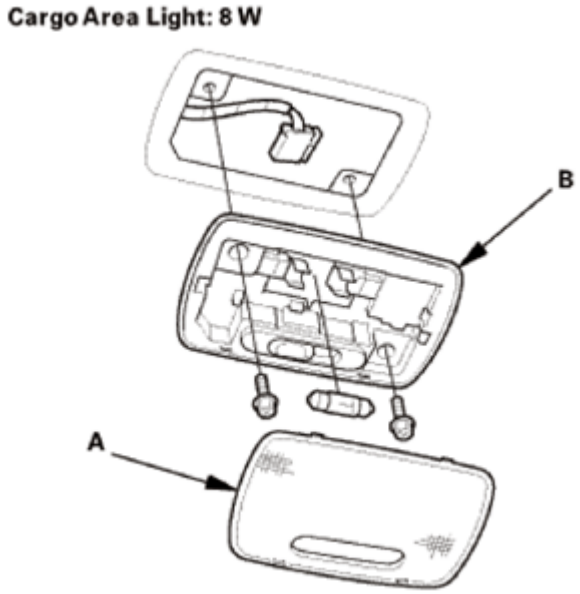

Fig. 145: Identifying Cargo Area Light And Lens
Courtesy of AMERICAN HONDA MOTOR CO., INC.

25. Grab Handles for One Vehicle
    1. Lower the grab handle (A).
    2. Insert the tips of the push pin/grab rail cap pliers (B) into the notch.

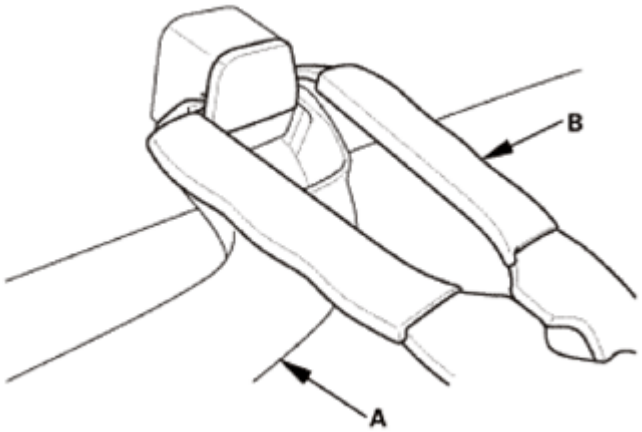

Fig. 146: Inserting Tips Of Push Pin/Grab Rail Cap Pliers Into Notch

GETtheMANUALS.org

Courtesy of AMERICAN HONDA MOTOR CO., INC.

3. Gently squeeze the handles of the push pin/grab rail cap pliers (A), and pull the cap (B) straight out.

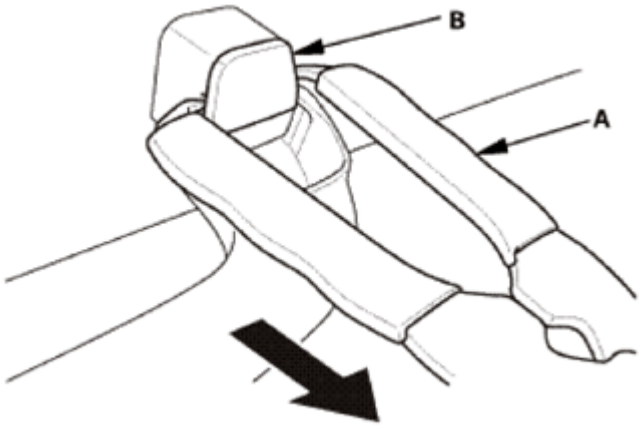

Fig. 147: Squeezing Handles Of Push Pin/Grab Rail Cap Pliers
Courtesy of AMERICAN HONDA MOTOR CO., INC.

4. Remove the grab handle (A).

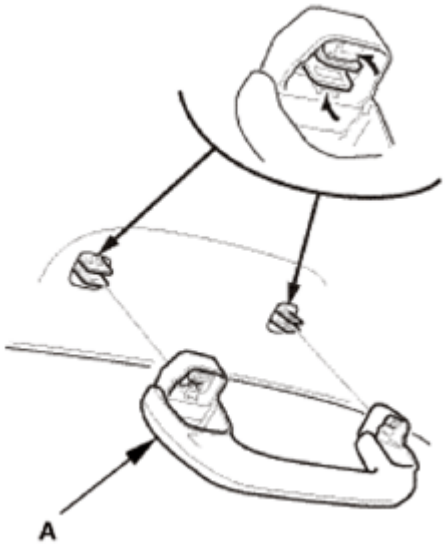

Fig. 148: Identifying Grab Handle
Courtesy of AMERICAN HONDA MOTOR CO., INC.

5. Remove the clips (A).

GETtheMANUALS.org

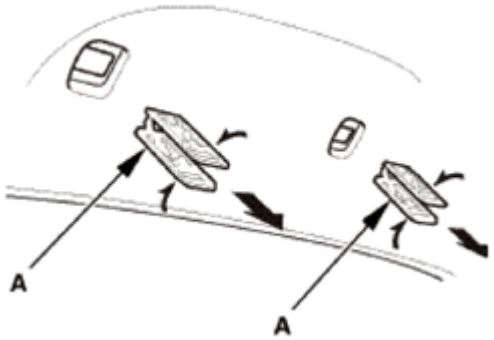

Fig. 149: Removing Grab Handles Clips
Courtesy of AMERICAN HONDA MOTOR CO., INC.

26. Sunvisor - Both Sides

NOTE: Repeat this procedure on the opposite side.

1. Push the tab (A) with a flat-tip screwdriver through the hole in the front side of the bracket cover (B).

NOTE: Make sure the tab is unlocked.

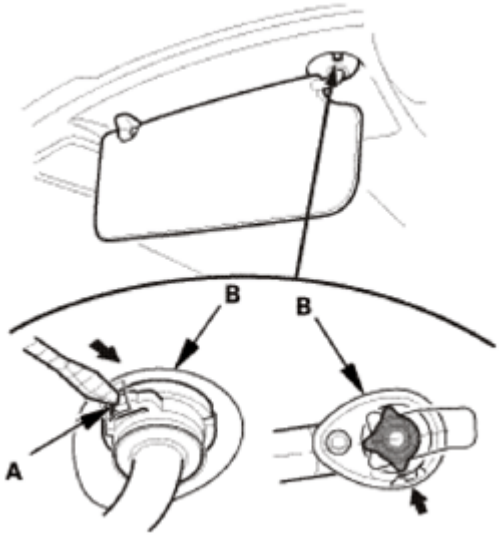

Fig. 150: Pushing Tab Using Flat-Tip Screwdriver
Courtesy of AMERICAN HONDA MOTOR CO., INC.

2. While pushing in the tab (A) with a flat-tip screwdriver, release the sunvisor (B) from the holder (C), and rotate the sunvisor backward 45 °.

NOTE: Make sure the tab slides into the bracket cover as you rotate the sunvisor.

GETtheMANUALS.org

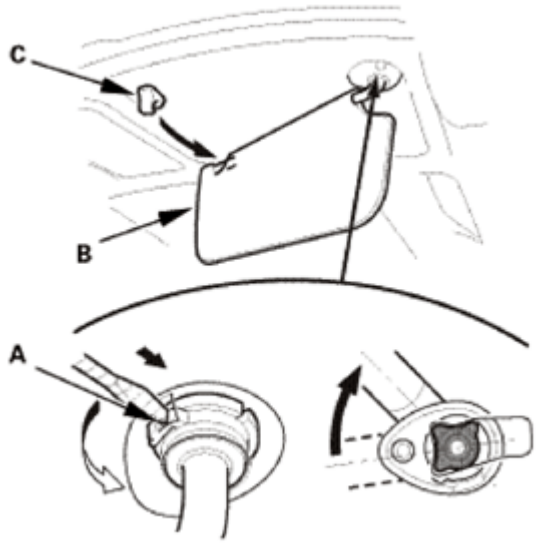

Fig. 151: Removing Sunvisor From Holder
Courtesy of AMERICAN HONDA MOTOR CO., INC.

3. Disconnect the connector (A), then remove the sunvisor (B).

NOTE: **If the sunvisor cannot be removed, the tab has not rotated into the bracket cover. Repeat step 2 to rotate the tab.**

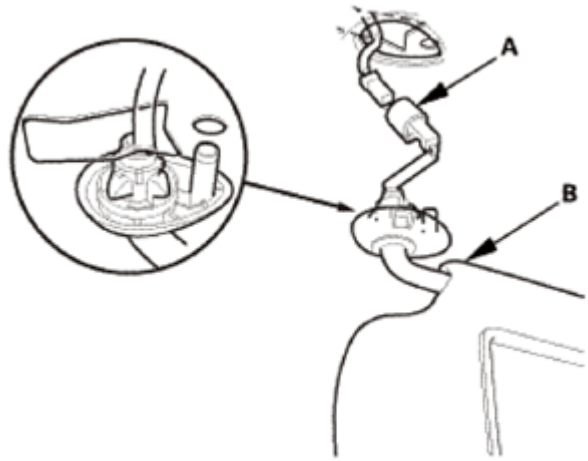

Fig. 152: Identifying Sunvisor And Connector
Courtesy of AMERICAN HONDA MOTOR CO., INC.

27. Sunvisor Holder - Both Sides

NOTE: **Repeat this procedure on the opposite side.**

1. Turn the sunvisor holder (A) 45 ° counterclockwise, then remove it from the holder grommet (B).

GETtheMANUALS.org

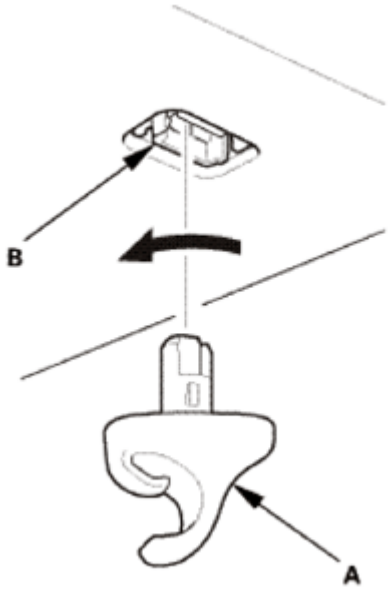

Fig. 153: Removing Sunvisor Holder From Holder Grommet
Courtesy of AMERICAN HONDA MOTOR CO., INC.

2. Remove the holder grommet (A).

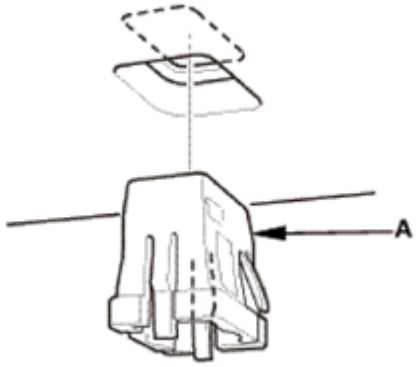

Fig. 154: Identifying Holder Grommet
Courtesy of AMERICAN HONDA MOTOR CO., INC.

28. Headliner
    1. Without moonroof: Disconnect the connector (A), and detach the harness clips (B) from the driver's side A-pillar.

GETtheMANUALS.org

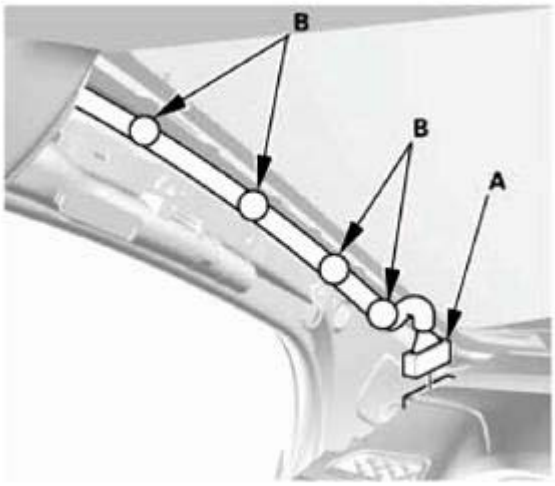

Fig. 155: Identifying Headliner Connector And Harness Clips (Driver Side A-Pillar)
Courtesy of AMERICAN HONDA MOTOR CO., INC.

2. Disconnect the connectors (A), and detach the harness clips (B) from the passenger's side A-pillar.

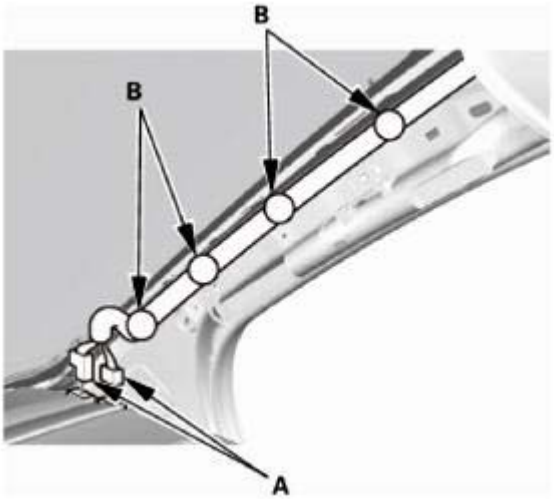

Fig. 156: Identifying Headliner Connector And Harness Clips (Passenger Side A-Pillar)
Courtesy of AMERICAN HONDA MOTOR CO., INC.

3. Disconnect the connectors (A), and detach the connector clips (B) and the harness clip (C) from the right quarter pillar.

GETtheMANUALS.org

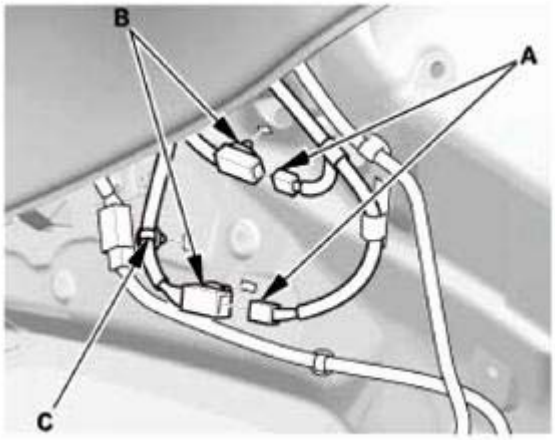

Fig. 157: Identifying Headliner Connector And Harness Clips (Right Quarter Pillar)
Courtesy of AMERICAN HONDA MOTOR CO., INC.

4. Slide the front seats all the way back, and recline the seat-back fully.
5. Fold down the rear seats.
6. Detach the clips (A) and release the fasteners (B) from the headliner (C) by pulling it down.
7. With the help of an assistant, lower the headliner.

Without moonroof

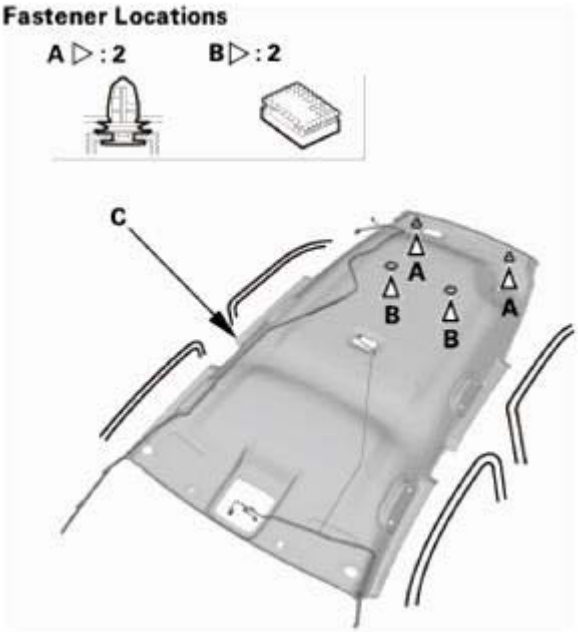

Fig. 158: Identifying Headliner, Fasteners And Clips (Without Moonroof)
Courtesy of AMERICAN HONDA MOTOR CO., INC.

With moonroof

GETtheMANUALS.org

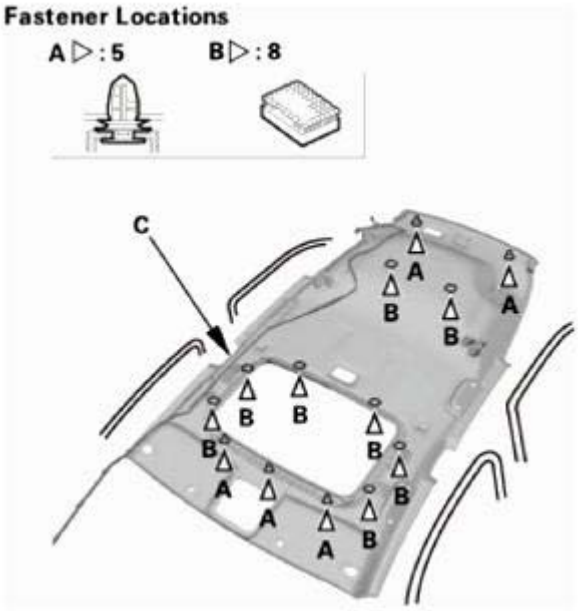

Fig. 159: Identifying Headliner, Fasteners And Clips (With Moonroof)
Courtesy of AMERICAN HONDA MOTOR CO., INC.

8. With the help of an assistant, remove the headliner (A) through the tailgate opening.

NOTE: **Do not bend the headliner. Bending the headliner will crease and damage it.**

Fig. 160: Identifying Headliner
Courtesy of AMERICAN HONDA MOTOR CO., INC.

29. Rear Seat Belt Assembly - Center
    1. Remove the retractor mounting bolt (A) and the retractor bolt (B), then remove the rear seat belt assembly (C).

GETtheMANUALS.org

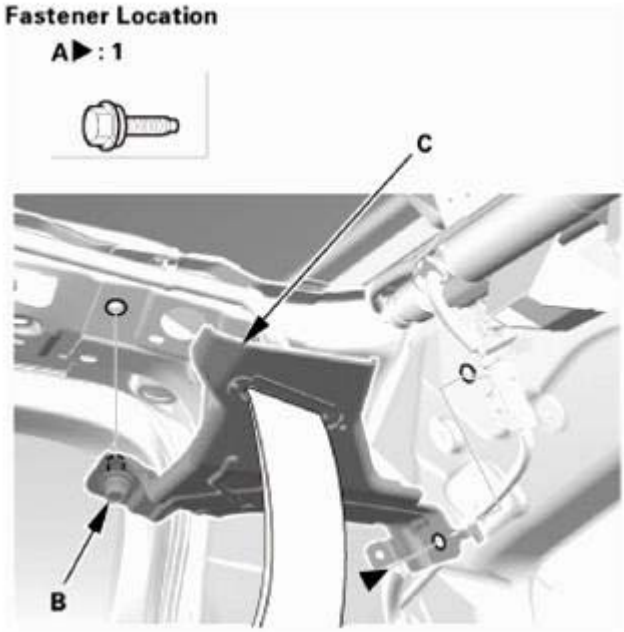

Fig. 161: Identifying Retractor Mounting Bolt, Rear Seat Belt Assembly And Retractor Protector
Courtesy of AMERICAN HONDA MOTOR CO., INC.

INSTALLATION

SRS components are located in this area. Review the **SRS COMPONENT LOCATIONS** and the **PRECAUTIONS AND PROCEDURES** before doing repairs or service.

1. Rear Seat Belt Assembly - Center
    1. Install the rear seat belt assembly (A), then install the retractor mounting bolt (B) and the retractor bolt (C).

GETtheMANUALS.org

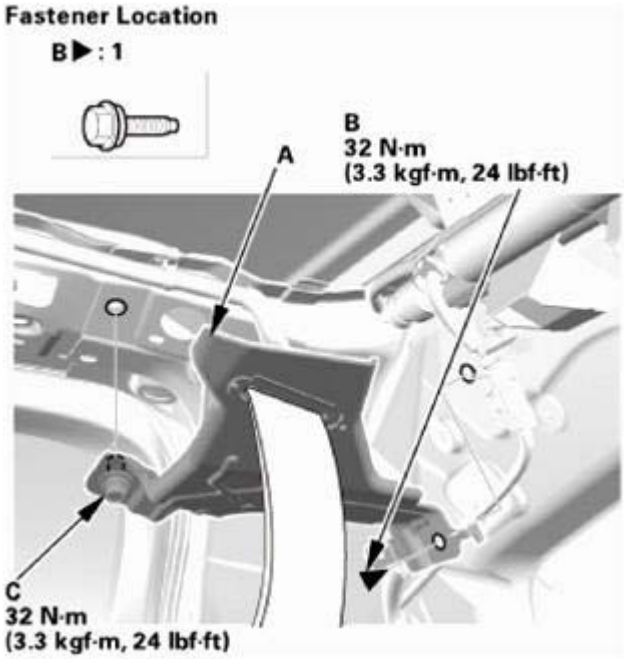

Fig. 162: Identifying Retractor Mounting Bolt, Rear Seat Belt Assembly And Retractor Bolt With Torque Specifications
Courtesy of AMERICAN HONDA MOTOR CO., INC.

2. Headliner - Check
    1. If the side curtain airbag has deployed, replace the headliner and removed trim pieces, along with the other parts listed for side curtain airbag deployment.
    2. To prevent the side curtain airbags from deploying improperly and possibly causing injury, inspect the headliner and all removed trim. Replace any pieces with the following damage:
        - Any creases or tears in the headliner (A)
        - Any damages around the grab handle holes (B) or the sunvisor holes (C) in the headliner
        - Any clip bases (D) which have come off the headliner
        - Any fasteners (E) or clip bases (F) which have come off the headliner

GETtheMANUALS.org

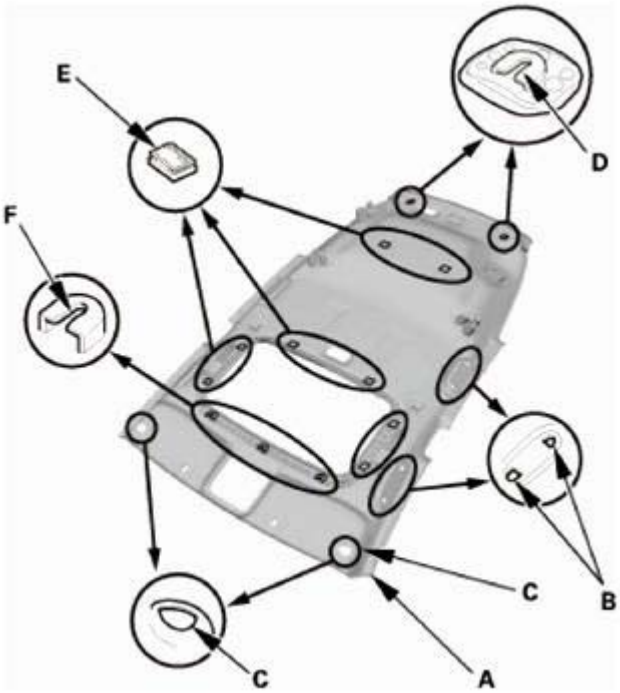

Fig. 163: Identifying Headliner, Fasteners, Clip Bases, Handle And Sunvisor Holes
Courtesy of AMERICAN HONDA MOTOR CO., INC.

3. Headliner
    1. With the help of an assistant, slide the headliner (A) through the tailgate opening.

NOTE: **Do not bend the headliner. Bending the headliner will crease and damage it.**

Fig. 164: Identifying Headliner
Courtesy of AMERICAN HONDA MOTOR CO., INC.

GETtheMANUALS.org

2. With the help of an assistant, install the headliner (A), then push on the clips (B) and the fasteners (C) which will snap into place securely.

Without moonroof

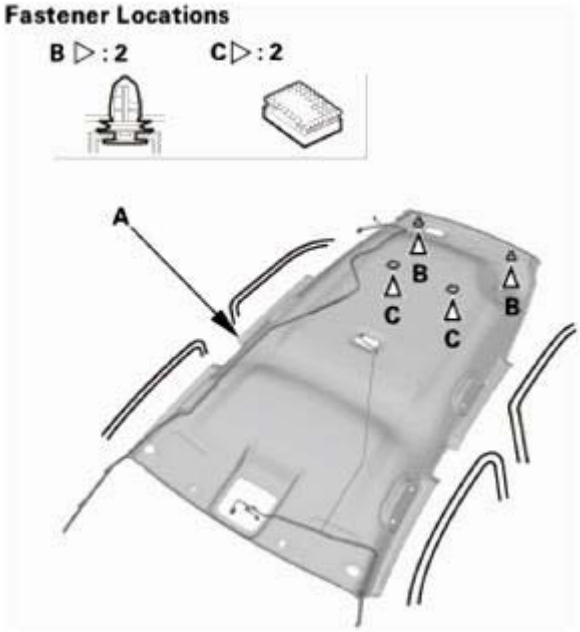

Fig. 165: Identifying Headliner, Fasteners And Clips (Without Moonroof)
Courtesy of AMERICAN HONDA MOTOR CO., INC.

With moonroof

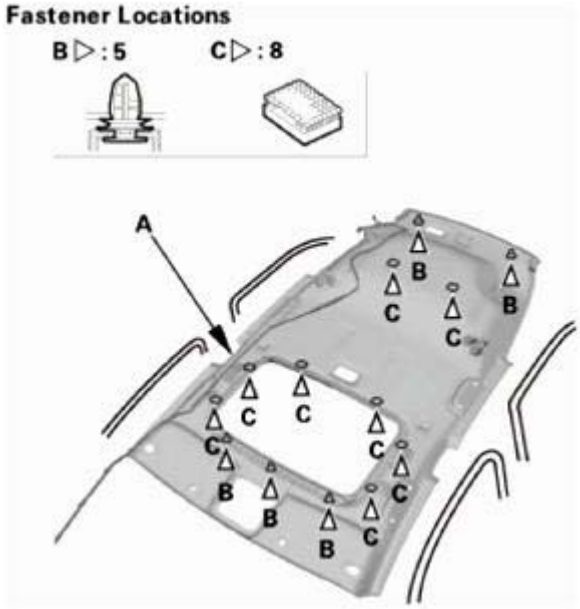

Fig. 166: Identifying Headliner, Fasteners And Clips (With Moonroof)

GETtheMANUALS.org

Courtesy of AMERICAN HONDA MOTOR CO., INC.

3. At the right quarter pillar, connect the connectors (A), and install the connector clips (B) and the harness clip (C).

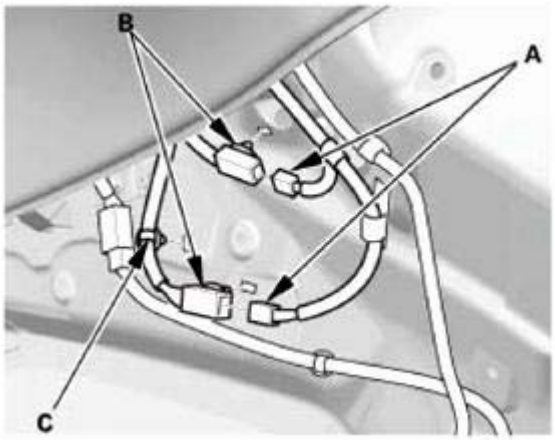

Fig. 167: Identifying Connectors, Connector Clips And Harness Clip (Right Quarter Pillar)
Courtesy of AMERICAN HONDA MOTOR CO., INC.

4. At the passenger's A-pillar, connect the connectors (A), and install the harness clips (B).

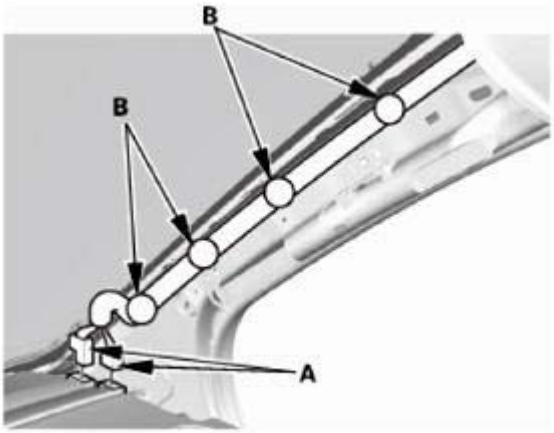

Fig. 168: Identifying Connectors, Connector Clips And Harness Clip (Passenger A-Pillar)
Courtesy of AMERICAN HONDA MOTOR CO., INC.

5. Without moonroof: At the driver's A-pillar, connect the connector (A), and install the harness clips (B).

GETtheMANUALS.org

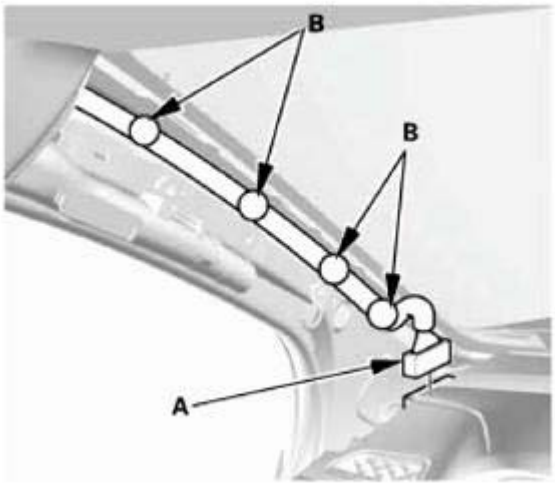

Fig. 169: Identifying Connectors, Connector Clips And Harness Clip (Driver A-Pillar)
Courtesy of AMERICAN HONDA MOTOR CO., INC.

4. Sunvisor Holder
    1. Install the holder (A) into the holder grommet (B) by turning it 45 ° clockwise.
    2. Install the holder and the holder grommet as an assembly into the body by pushing it until the hooks snap into place securely.

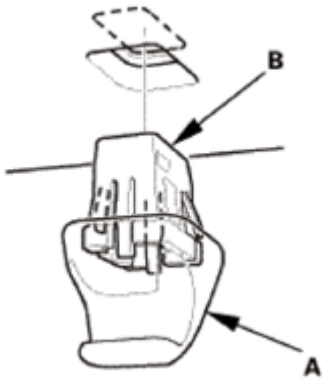

Fig. 170: Identifying Holder And Holder Grommet
Courtesy of AMERICAN HONDA MOTOR CO., INC.

5. Sunvisor - Check
    1. If the side curtain airbag has deployed, replace the sunvisor, along with the other parts listed for side curtain airbag deployment.
    2. If the side curtain airbag has not deployed, inspect the sunvisor for damage. A damaged sunvisor may cause the side curtain airbags to deploy improperly, possibly causing injury. Replace the sunvisor if it has any of the following damage:
        - Any cracks in the sunvisor bracket (A)
        - Any cracks in the sunvisor bracket cover (B)
        - Any bends or cracks in the sunvisor shaft (C)

GETtheMANUALS.org

- Any cracks in the sunvisor base (D)
- Any cracks in the vanity mirror base (E)

3. If the holder grommet is damaged or stress-whitened, replace the holder grommet and the holder as an assembly.

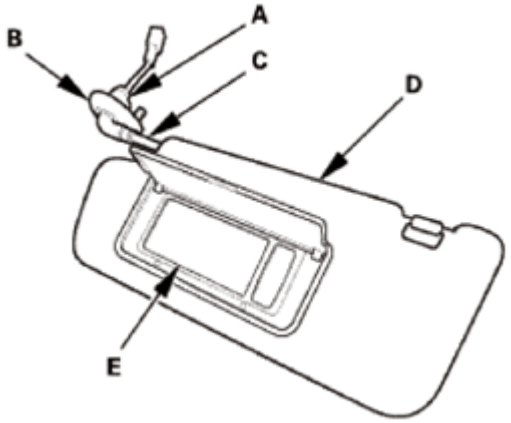

Fig. 171: Identifying Sunvisor Bracket, Cover, Shaft, Base And Vanity Mirror Base
Courtesy of AMERICAN HONDA MOTOR CO., INC.

6. Sunvisor - Both Sides

NOTE: Repeat this procedure on the opposite side.

1. Connect the connector (A), and install the sunvisor (B).

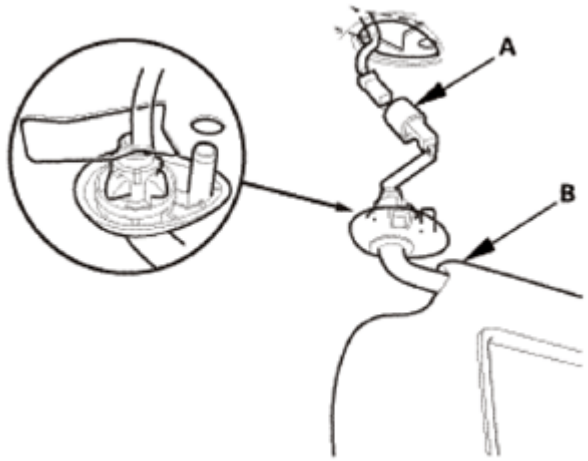

Fig. 172: Identifying Connector And Sunvisor
Courtesy of AMERICAN HONDA MOTOR CO., INC.

2. While holding the bracket cover (A), rotate the sunvisor (B) forward until the tab (C) snaps into place.

GETtheMANUALS.org

3. Gently pull down on the sunvisor to make sure it is properly secured in the body.
4. Rotate the sunvisor into the holder (D).

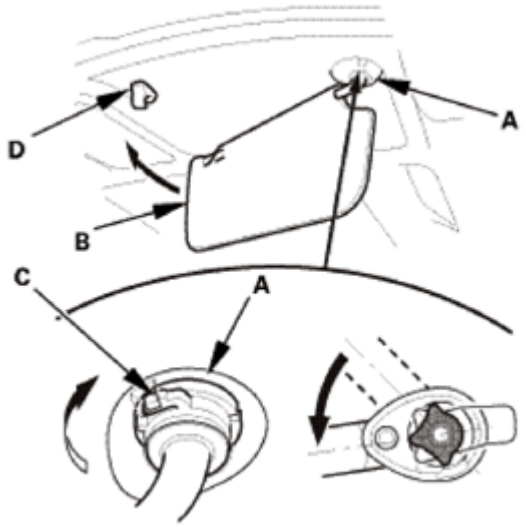

Fig. 173: Rotating Sunvisor Into Holder
Courtesy of AMERICAN HONDA MOTOR CO., INC.

7. Grab Handle - Check
    1. If the side curtain airbag has not deployed, inspect the grab handle (A) for damage. A damaged grab handle may cause the side curtain airbag to deploy improperly, possibly causing injury. Replace the grab handle if it has any of the following damage:
        - Any cracks or breakage in the grab handle
        - Any cracks or stress-whitening in the caps (B)

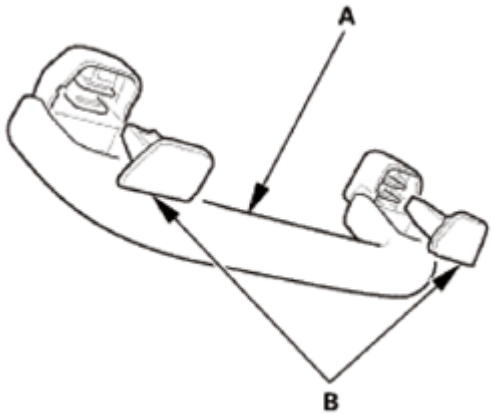

Fig. 174: Identifying Grab Handle With Caps
Courtesy of AMERICAN HONDA MOTOR CO., INC.

8. Grab Handles for One Vehicle
    1. Install the clips (A) on the grab handle (B).

GETtheMANUALS.org

2. Install the caps (C) fully into the clips.

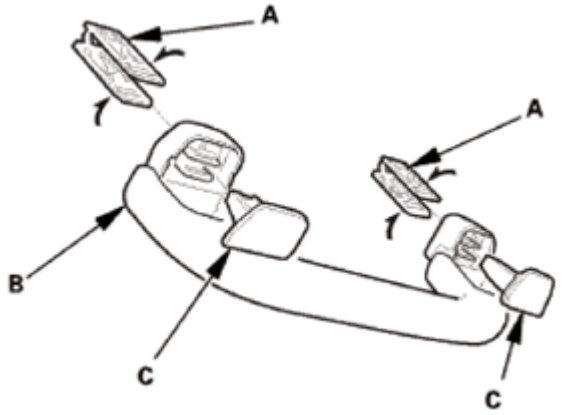

Fig. 175: Installing Clips On Grab Handle
Courtesy of AMERICAN HONDA MOTOR CO., INC.

3. Position the grab handle (A) on the grab handle bracket (B).
4. Push on the grab handle until the clips (C) snap into place securely.

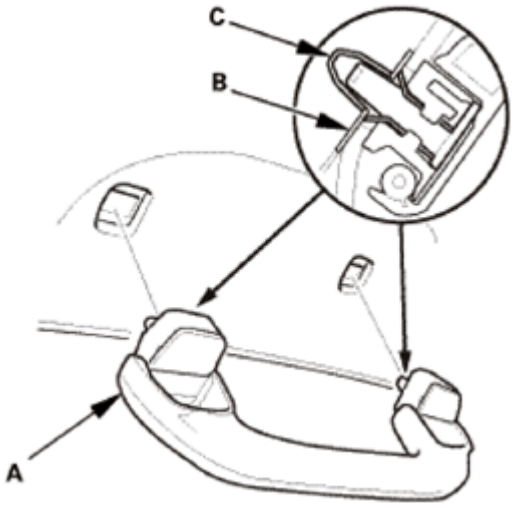

Fig. 176: Identifying Grab Handle, Grab Handle Bracket And Clip
Courtesy of AMERICAN HONDA MOTOR CO., INC.

9. Cargo Area Light
    1. Connect the connector.
    2. Install the cargo area light (A).
    3. Install the bulb.
    4. Carefully install the lens (B).

GETtheMANUALS.org

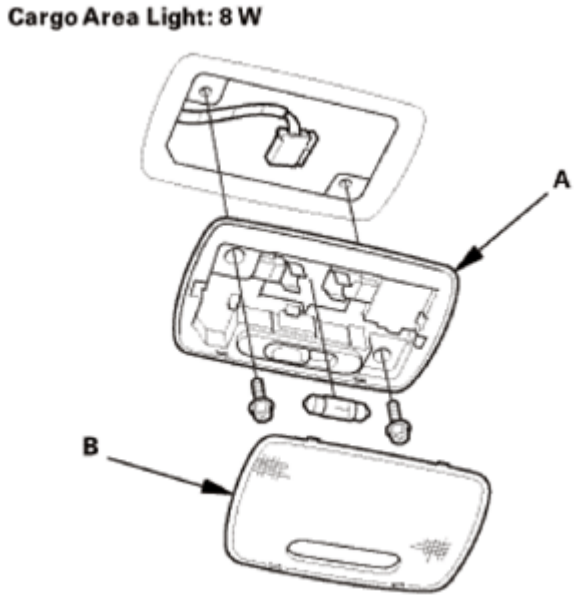

Fig. 177: Identifying Cargo Area Light And Lens
Courtesy of AMERICAN HONDA MOTOR CO., INC.

10. Rear Controller and Screen (With RES)
    1. Install the rear controller and screen (A).
    2. Connect the connector.

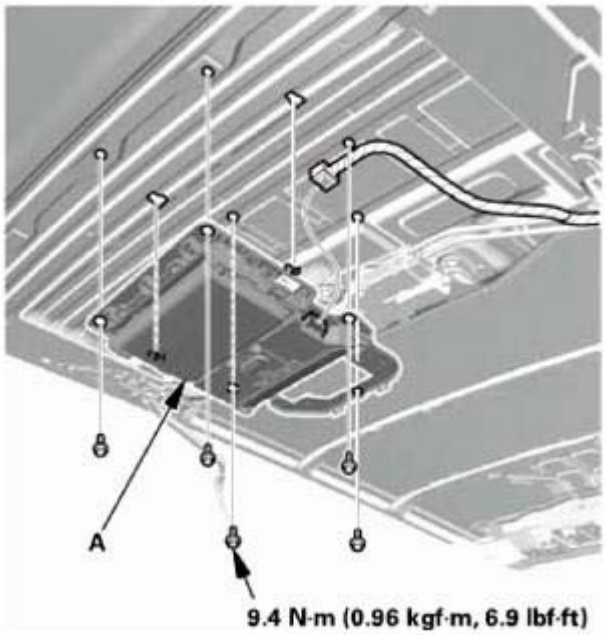

Fig. 178: Identifying Rear Controller And Screen (With RES)
Courtesy of AMERICAN HONDA MOTOR CO., INC.

11. Rear Display Cover (With RES)

GETtheMANUALS.org

1. Install the rear display cover (A).

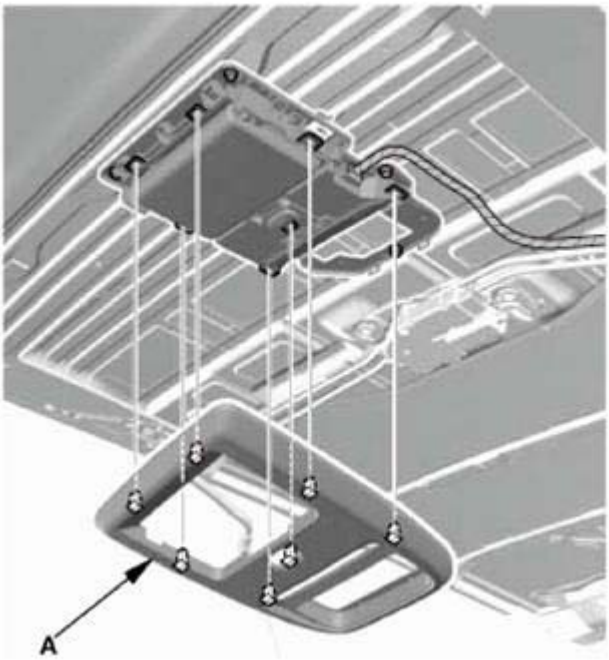

Fig. 179: Identifying Rear Display Cover
Courtesy of AMERICAN HONDA MOTOR CO., INC.

2. Connect the connector.
3. Install the ceiling light (B).
4. Carefully install the lenses (C).

GETtheMANUALS.org

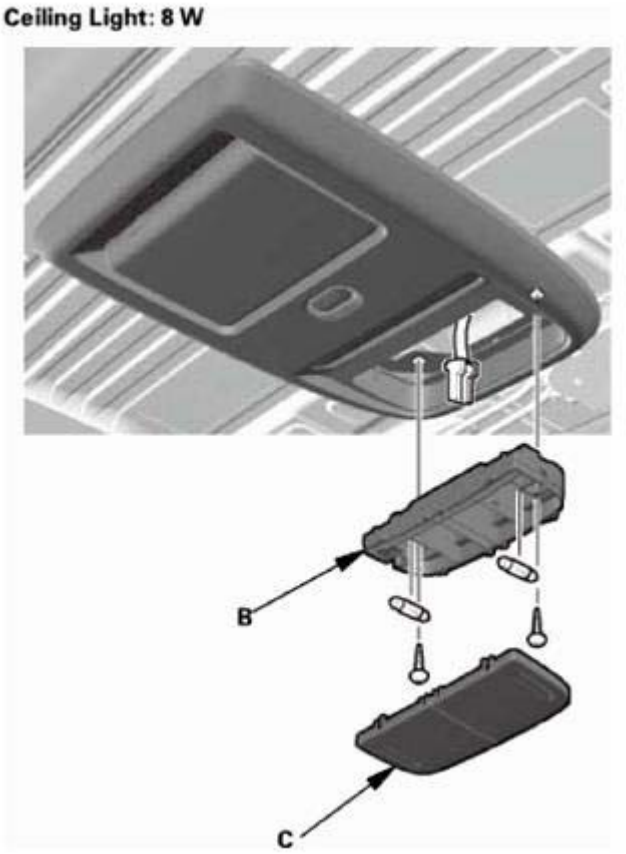

Fig. 180: Identifying Connector, Ceiling Light, Lenses
Courtesy of AMERICAN HONDA MOTOR CO., INC.

12. Ceiling Light (without RES)
    1. Connect the connector.
    2. Install the ceiling light (A).
    3. Install the bulb.
    4. Carefully install the lens (B).

GETtheMANUALS.org

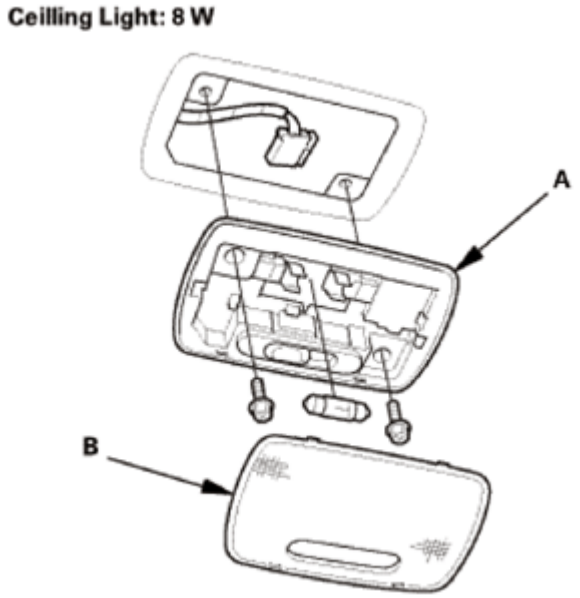

Fig. 181: Identifying Ceiling Light And Lens
Courtesy of AMERICAN HONDA MOTOR CO., INC.

13. Roof Console Assembly
    1. Connect the connectors (A), then install the roof console assembly (B).
    2. Install the screws (C, D), then install the lenses (E).

GETtheMANUALS.org

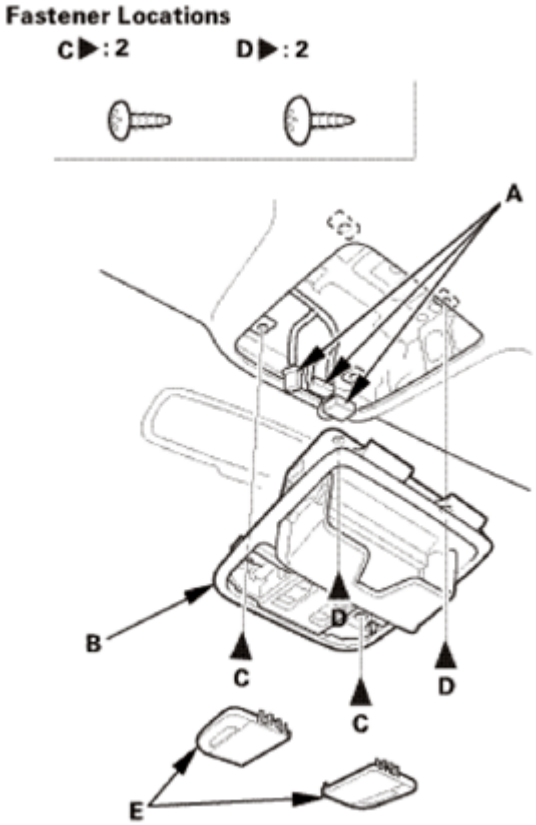

Fig. 182: Identifying Lenses, Screws, Connectors And Roof Console Assembly
Courtesy of AMERICAN HONDA MOTOR CO., INC.

14. Quarter Pillar Trim - Check
    1. If the side curtain airbag has deployed, replace the quarter pillar trim (A), along with the other parts listed for side curtain airbag deployment.
    2. If the side curtain airbag has not deployed, check the quarter pillar trim and note the following items:
        - To prevent the side curtain airbags from deploying improperly and possibly causing injury, inspect the quarter pillar trim and replace it with a new one if it has any of the following damage:
            - Any cracks, deformations, or stress-whitening in the quarter pillar trim
            - Any cracks or stress-whitened areas in the clip seating surfaces (B)
        - After checking and adjusting the overlap between the headliner and the quarter pillar trim, replace the upper clip (C) with a new one.
        - If the clips (D) are damaged or stress-whitened, replace them with new ones.

GETtheMANUALS.org

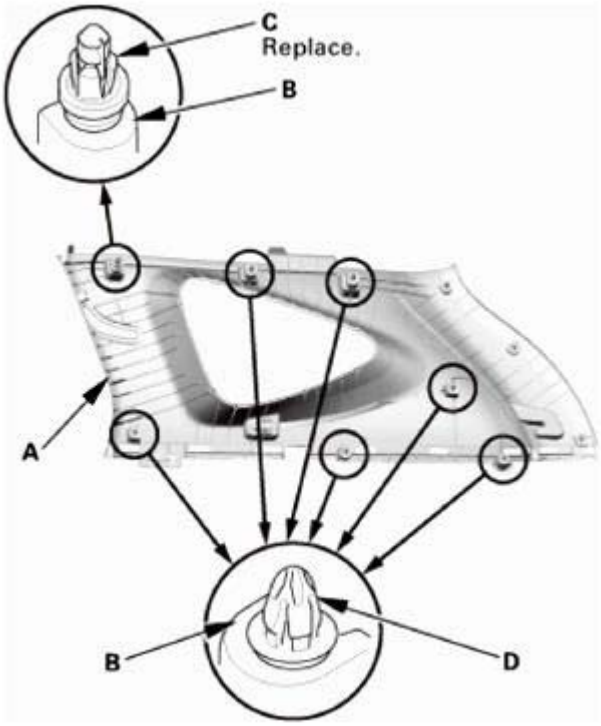

Fig. 183: Identifying Quarter Pillar Trim, Clip Seating Surfaces And Upper Clip
Courtesy of AMERICAN HONDA MOTOR CO., INC.

15. Headliner/Pillar Trim Overlap - Check

Checking and Adjusting the Headliner/Pillar Trim Overlap

To prevent the side curtain airbag from deploying and damaging the pillar trim (A-pillar trim, B-pillar trim, quarter pillar trim), the overlap between the headliner and pillar trim must be 8.0+0/-2.0 mm (0.31+0/-0.08 in). To check the overlap, do this:

1. Install the headliner (A) and the pillar trim (B).

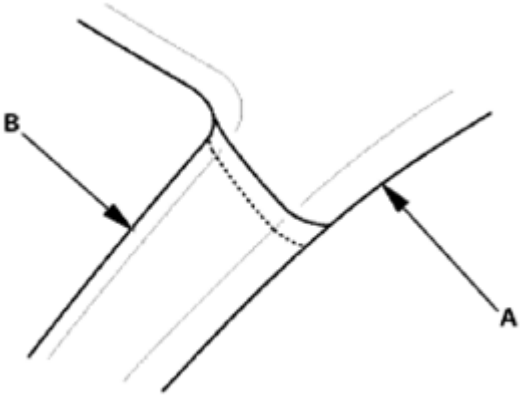

This illustration shows the A-pillar.

GETtheMANUALS.org

Fig. 184: Identifying Headliner And Pillar Trim
Courtesy of AMERICAN HONDA MOTOR CO., INC.

2. Apply masking tape (A) to the headliner (B) to mark the upper edge of the pillar trim (C).

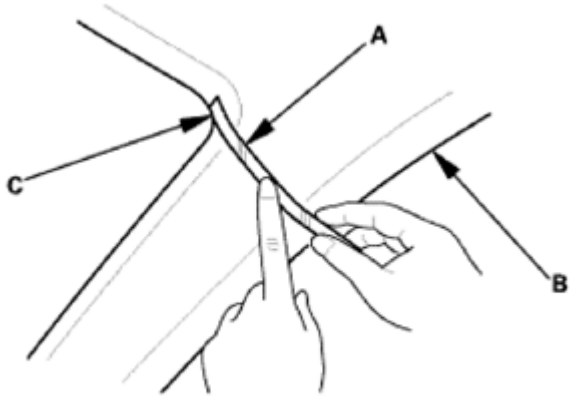

This illustration shows the A-pillar.

Fig. 185: Applying Masking Tape On Headliner
Courtesy of AMERICAN HONDA MOTOR CO., INC.

3. Remove the pillar trim, and measure the headliner overlap.
   - If the overlap is 8.0+0/-2.0 mm (0.31+0/-0.08 in), remove the tape, and install the pillar trim.
   - If the overlap is more than 8.0 mm (0.31 in), go to step 4.

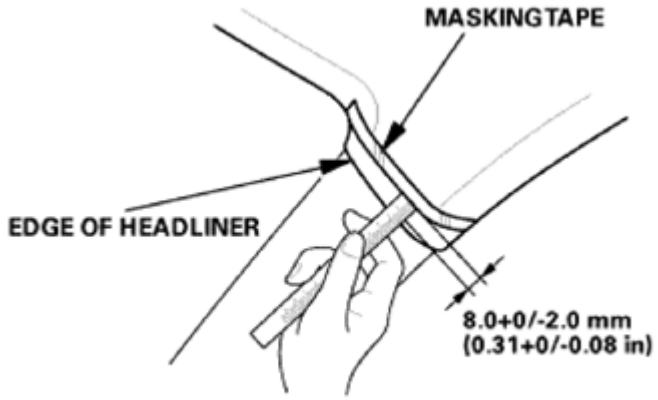

This illustration shows the A-pillar.

Fig. 186: Measuring Headliner Overlap
Courtesy of AMERICAN HONDA MOTOR CO., INC.

4. Carefully trim the headliner with a utility knife, reducing the overlap to 8.0+0/-2.0 mm (0.31+0/-0.08 in).
5. Remove the tape, and install the pillar trim.

GETtheMANUALS.org

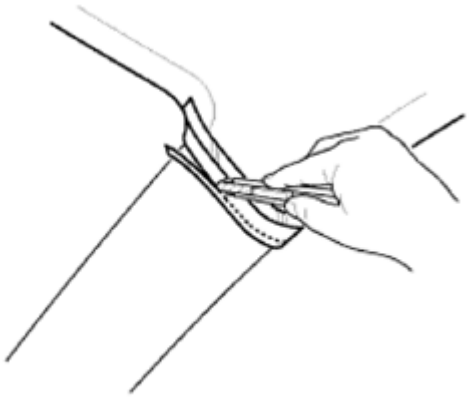

This illustration shows the A-pillar.

Fig. 187: Installing Pillar Trim
Courtesy of AMERICAN HONDA MOTOR CO., INC.

16. Quarter Pillar Trim - Both Sides
    1. Install a new clip (A) to the quarter pillar trim (B).

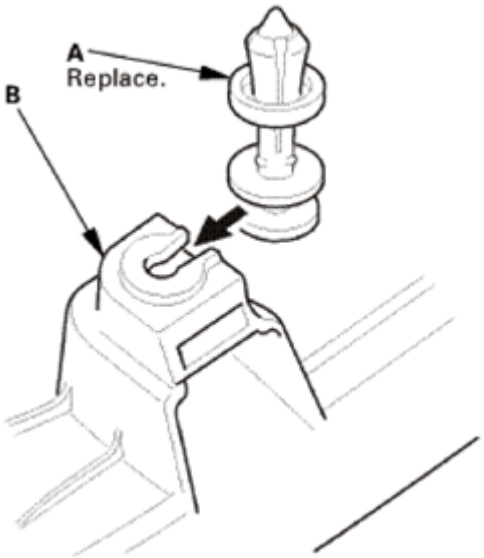

Fig. 188: Installing Clip Into Quarter Pillar Trim
Courtesy of AMERICAN HONDA MOTOR CO., INC.

    2. Pass the rear seat belt lower anchor (A) through the hole in the quarter pillar trim (B).
    3. Fit the clips into the holes in the quarter pillar.
    4. Lightly push the quarter pillar trim into place, then install the trim.

NOTE:

- **Make sure the side curtain airbag is not tucked under the clips or the ribs.**

GETtheMANUALS.org

- **Do not push too hard on the quarter pillar trim. If you push too hard, the clip will be damaged, and it will not hold the trim properly.**
- **Gently tug on the quarter pillar trim to verify that all clips are securely fastened.**
- **Make sure the clips (C, D, and E) snap into place securely.**

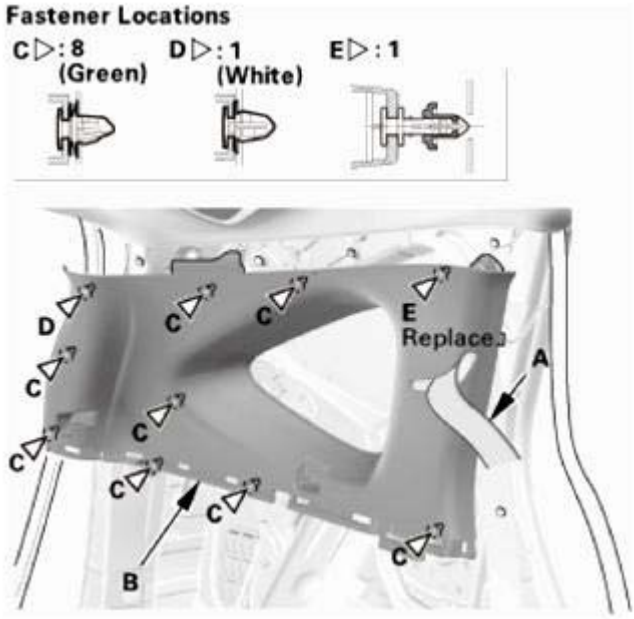

Fig. 189: Identifying Rear Seat Belt Lower Anchor And Quarter Pillar Trim With Clip
Courtesy of AMERICAN HONDA MOTOR CO., INC.

17. Rear Side Trim Panel - Both Sides

NOTE: Repeat this procedure on the opposite side.

1. Install the rear seat release cable (A) to the clips (B) of the rear side trim panel (C).

NOTE: Align the marks (D) with the clips as shown.

GETtheMANUALS.org

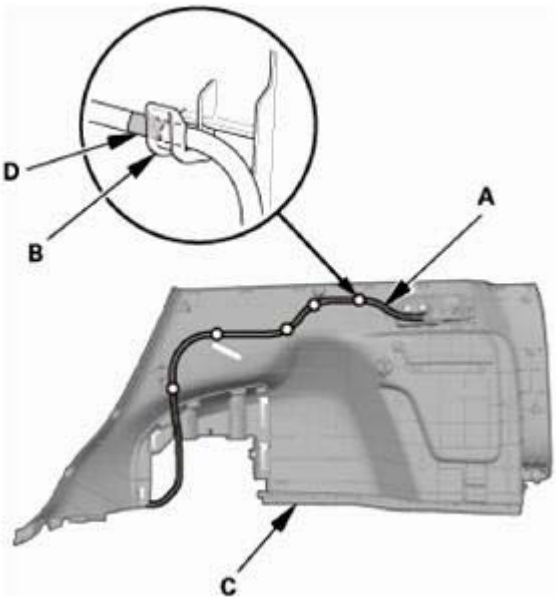

Fig. 190: Identifying Rear Side Trim Panel, Rear Seat Release Cable, Clip And Marks
Courtesy of AMERICAN HONDA MOTOR CO., INC.

2. Install the rear seat release lever (A) to the rear side trim panel (B).

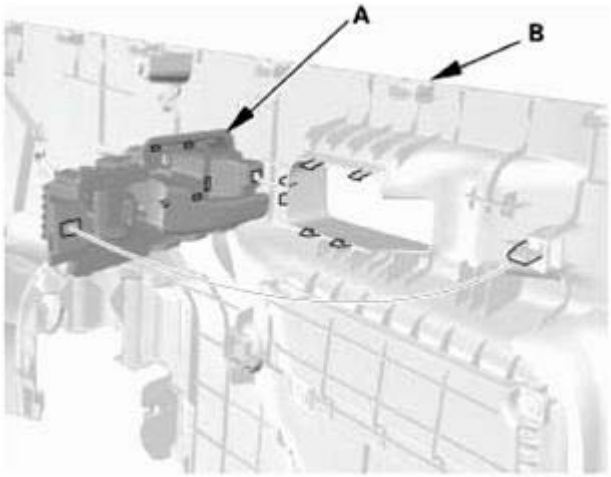

Fig. 191: Identifying Rear Seat Release Lever And Rear Side Trim Panel
Courtesy of AMERICAN HONDA MOTOR CO., INC.

3. Install the rear side trim panel (A). Make sure the hooks (B), the tabs (C), and the clips (D, E) snap into place securely.
4. Install the clips (F, G).

GETtheMANUALS.org

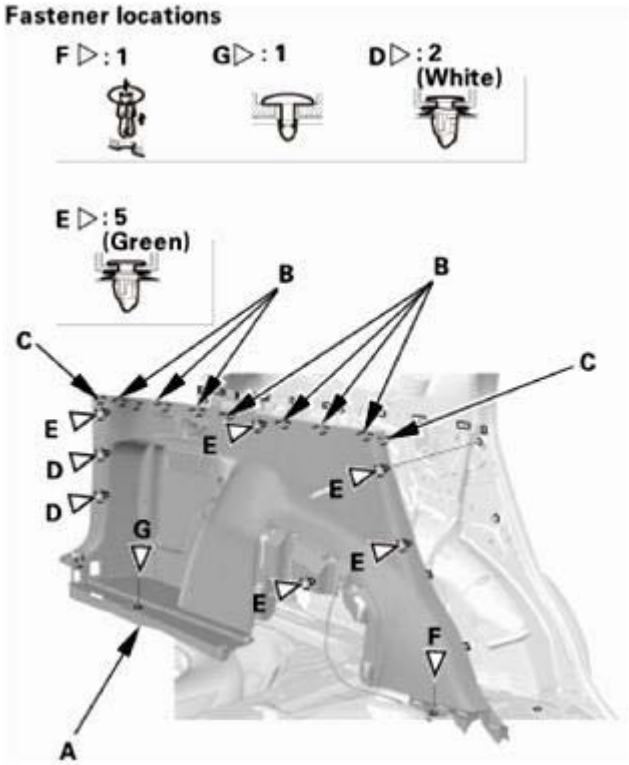

Fig. 192: Identifying Rear Side Trim Panel, Hooks And Tabs
Courtesy of AMERICAN HONDA MOTOR CO., INC.

5. Install the tie-down hook (A), then install the bolt (B).

Fig. 193: Identifying Tie-Down Hook And Bolt With Torque Specifications
Courtesy of AMERICAN HONDA MOTOR CO., INC.

GETtheMANUALS.org

6. Install the trunk hook (A).

Fig. 194: Identifying Trunk Hook
Courtesy of AMERICAN HONDA MOTOR CO., INC.

7. Install the screws (A), then install the rear seat release lever cap (B). Make sure the upper hook (C) and the lower hooks (D) snap into place securely.

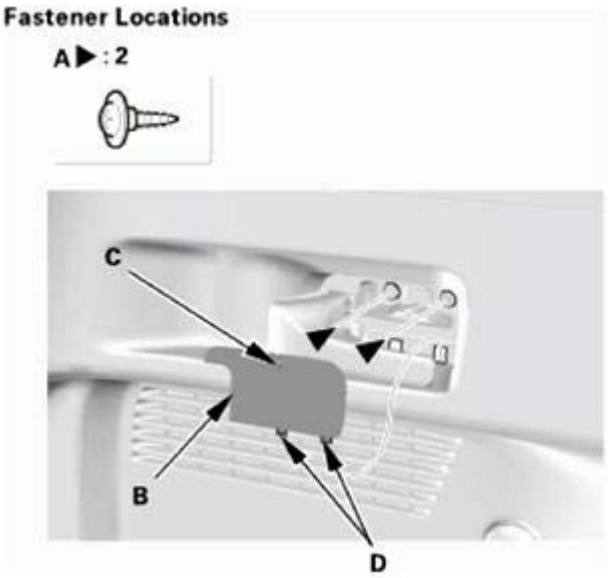

Fig. 195: Identifying Rear Seat Release Lever Cap, Hook And Screws
Courtesy of AMERICAN HONDA MOTOR CO., INC.

18. Rear Seat Belt Lower Anchor Bolt - Both Sides

NOTE: Repeat this procedure on the opposite side.

1. Install the rear seat belt lower anchor bolt (A).

GETtheMANUALS.org

NOTE: **Before installing the anchor bolt, make sure there are no twists or kinks in the seat belt.**

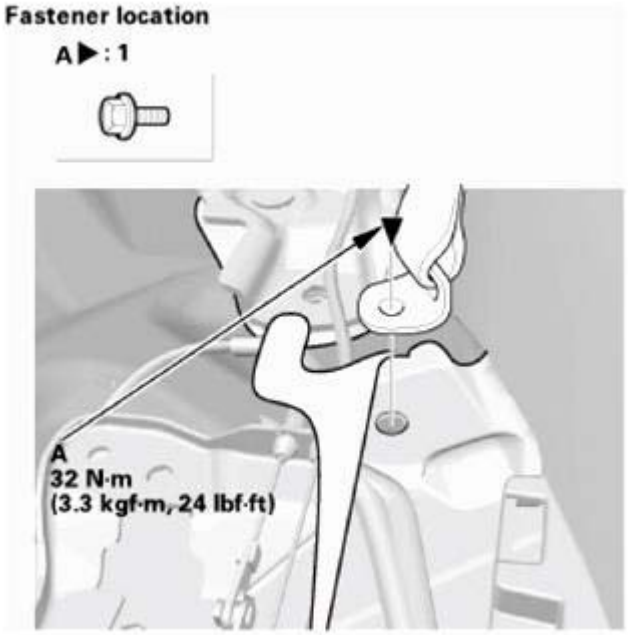

Fig. 196: Identifying Rear Seat Belt Lower Anchor Bolt With Torque Specifications
Courtesy of AMERICAN HONDA MOTOR CO., INC.

19. Rear Seat Cushion Foot Cover - Both Sides (Remove The Outer Left Side Only)
    1. Install the rear seat cushion foot cover (A). Make sure the clips (B) and the hooks (C) snap into place securely.

    Left side

GETtheMANUALS.org

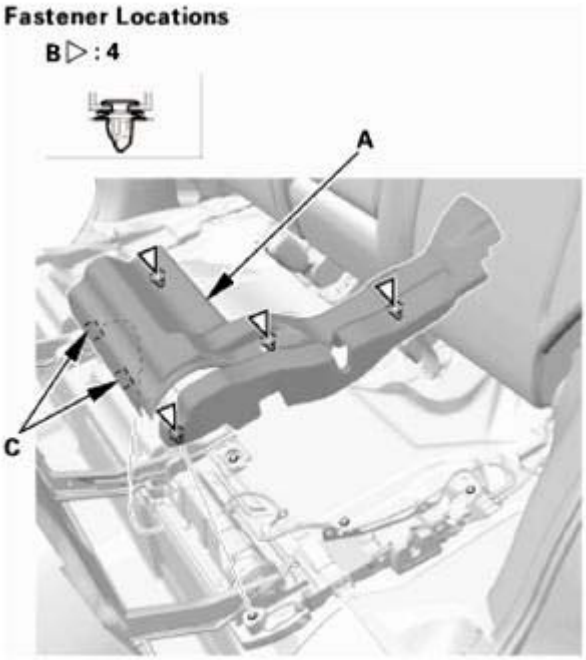

Fig. 197: Identifying Rear Seat Cushion Foot Cover, Clips And Hooks (Left Side)
Courtesy of AMERICAN HONDA MOTOR CO., INC.

Right side

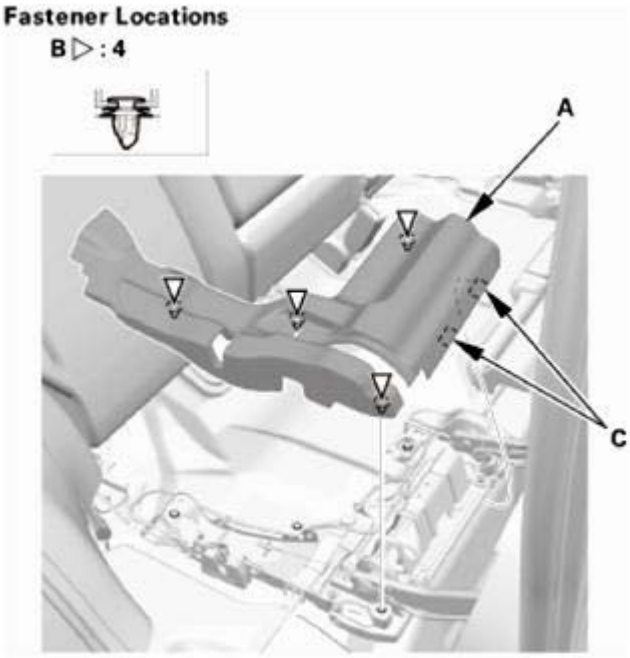

Fig. 198: Identifying Rear Seat Cushion Foot Cover, Clips And Hooks (Right Side)
Courtesy of AMERICAN HONDA MOTOR CO., INC.

20. Rear Carpet Trim - Both Sides

GETtheMANUALS.org

1. Install the rear carpet trims (A). Make sure the clips (B) and the hooks (C) snap into place securely.

Left side

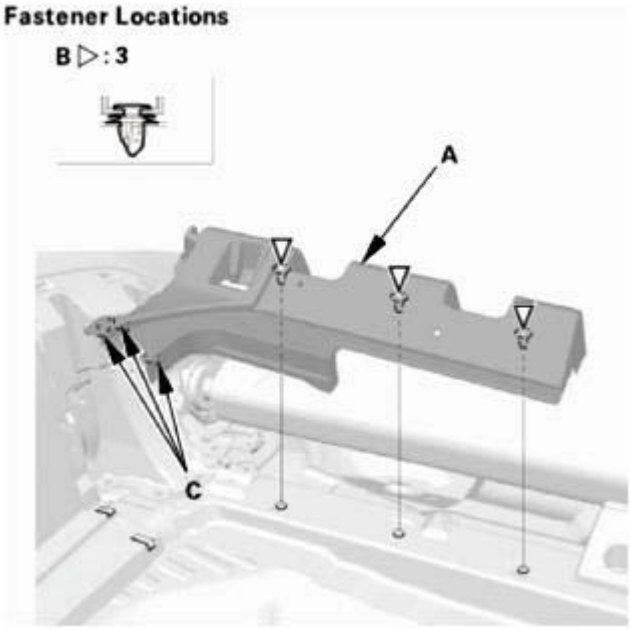

Fig. 199: Removing Rear Seat-Back Cover (Left Side)
Courtesy of AMERICAN HONDA MOTOR CO., INC.

Right side

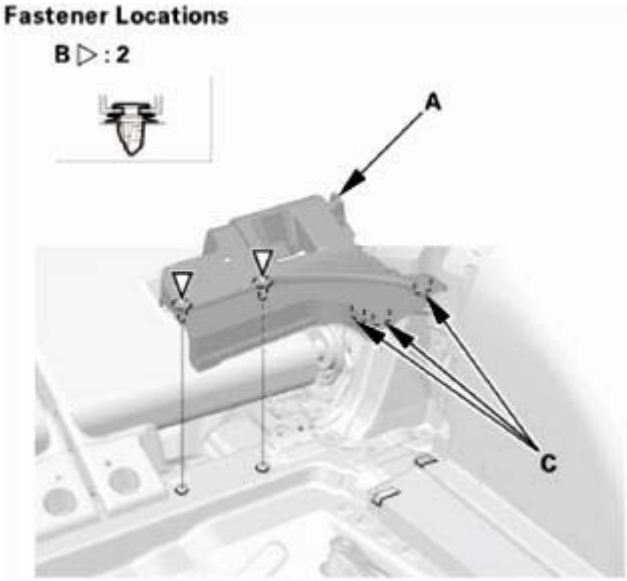

Fig. 200: Removing Rear Seat-Back Cover (Right Side)
Courtesy of AMERICAN HONDA MOTOR CO., INC.

GETtheMANUALS.org

2. Install the rear seat-back cover (A). Make sure the clips (B) snap into place securely.

Left side

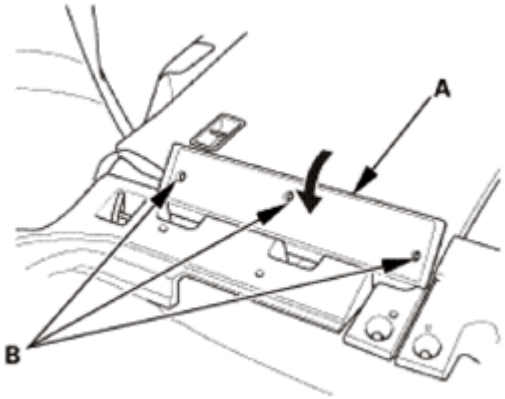

Fig. 201: Identifying Rear Seat Release Lever Cap, Hook And Screws (Left Side)
Courtesy of AMERICAN HONDA MOTOR CO., INC.

Right side

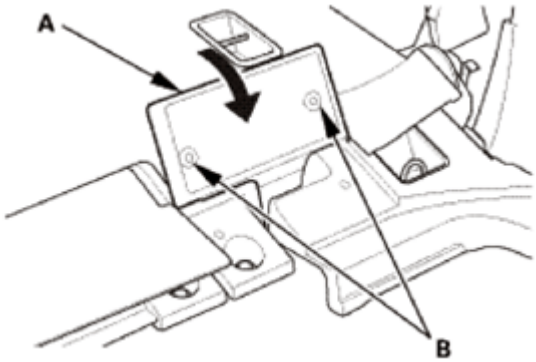

Fig. 202: Identifying Rear Seat Release Lever Cap, Hook And Screws (Right Side)
Courtesy of AMERICAN HONDA MOTOR CO., INC.

21. Rear Damper Maintenance Cover - Both Sides

NOTE: Repeat this procedure on the opposite side.

1. Fold down the rear seat-back.
2. Install the rear damper maintenance cover (A). Make sure the hooks (B) snap into place securely.

GETtheMANUALS.org

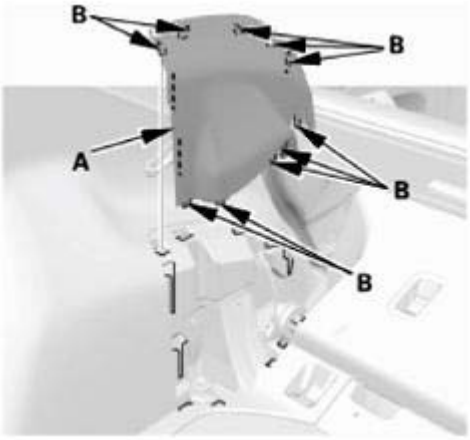

Fig. 203: Identifying Rear Damper Maintenance Cover And Hook
Courtesy of AMERICAN HONDA MOTOR CO., INC.

22. Rear Trim Panel
    1. Install the rear trim panel (A). Make sure the clips (B, C), the hooks (D), and the tabs (E) snap into place securely.
    2. Install the clips (F).

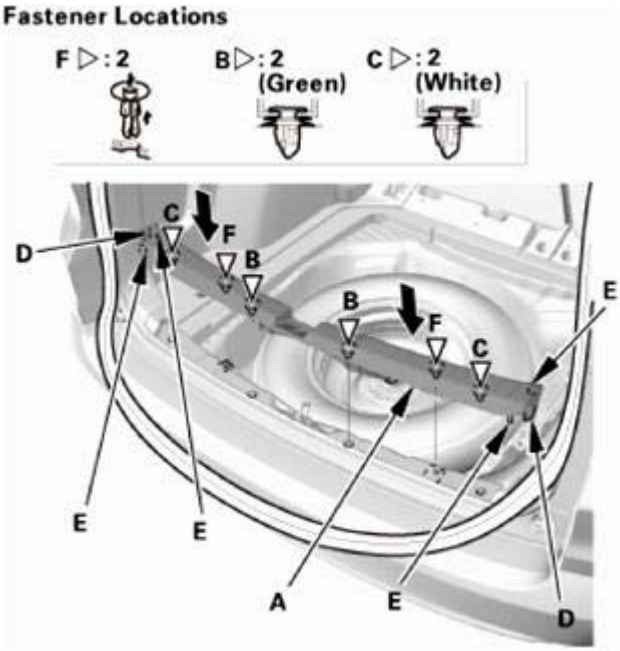

Fig. 204: Installing Rear Trim Panel
Courtesy of AMERICAN HONDA MOTOR CO., INC.

23. Tailgate Weatherstrip As Needed
    1. Locate the alignment mark (A) of the tailgate weatherstrip (B). Align the alignment mark (C) with the center of the lower area on the tailgate opening, then install the tailgate weatherstrip all the way

GETtheMANUALS.org

around.

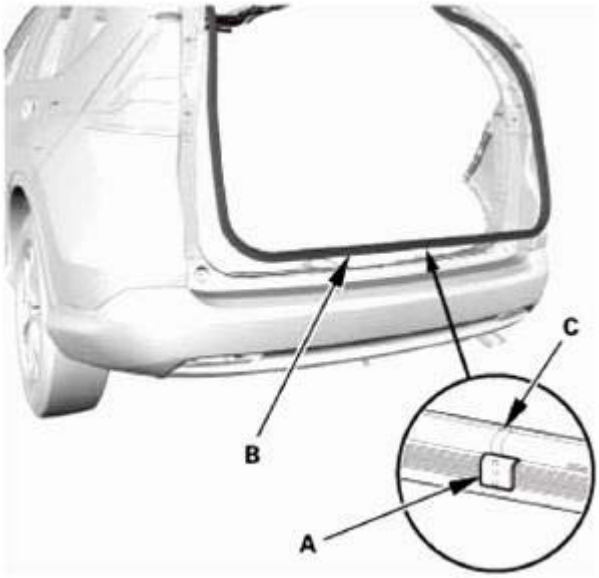

Fig. 205: Identifying Tailgate Weatherstrip With Alignment Mark
Courtesy of AMERICAN HONDA MOTOR CO., INC.

24. Cargo Floor Cover
    1. Install the cargo floor cover (A).

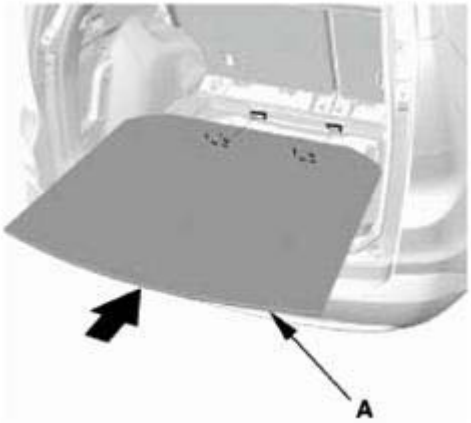

Fig. 206: Installing Cargo Floor Cover
Courtesy of AMERICAN HONDA MOTOR CO., INC.

25. Tonneau Cover (For Some Models)
    1. Install the tonneau cover (A).

GETtheMANUALS.org

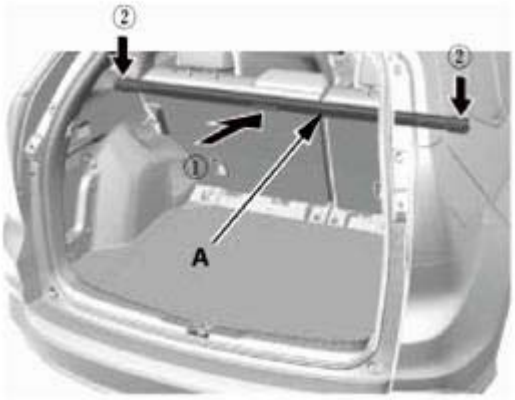

Fig. 207: Installing Tonneau Cover
Courtesy of AMERICAN HONDA MOTOR CO., INC.

26. B-Pillar Upper/Lower Trim - Check
    1. If the side curtain airbag has deployed, replace the B-pillar upper trim (A) and the B-pillar lower trim (B), along with the other parts listed for side curtain airbag deployment.
    2. If the side curtain airbag has not deployed, check the B-pillar upper/lower trim and note the following items:
        - To prevent the side curtain airbags from deploying improperly and possibly causing injury, inspect the trim and replace it with a new one if it has any of the following damage:
            - Any cracks or deformations in the B-pillar upper trim or the upper hooks (C), or any stress-whitened areas in the upper part of the trim
            - Any cracks or deformations in the B-pillar lower trim, or any breakages in the part (D) fitted with the B-pillar upper trim
            - Any cracks or stress-whitening areas in the clip seating surfaces (E)
    3. If the clips (F) are damaged or stress-whitened, replace them with new ones.

Trim inspection

GETtheMANUALS.org

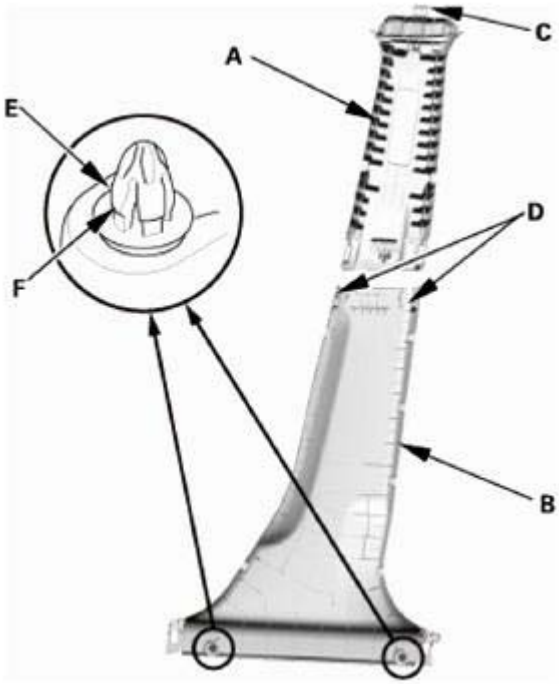

Fig. 208: Identifying B-Pillar Trim (Lower And Upper), Upper Hooks, Clip Seating Surfaces And Clip
Courtesy of AMERICAN HONDA MOTOR CO., INC.

27. Headliner/Pillar Trim Overlap - Check

Checking and Adjusting the Headliner/Pillar Trim Overlap

To prevent the side curtain airbag from deploying and damaging the pillar trim (A-pillar trim, B-pillar trim, quarter pillar trim), the overlap between the headliner and pillar trim must be 8.0+0/-2.0 mm (0.31+0/-0.08 in). To check the overlap, do this:

1. Install the headliner (A) and the pillar trim (B).

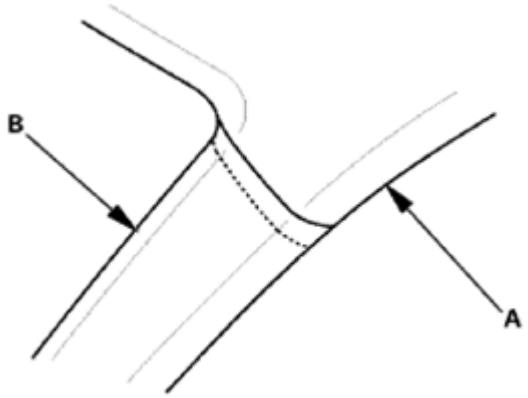

This illustration shows the A-pillar.

GETtheMANUALS.org

Fig. 209: Identifying Headliner And Pillar Trim
Courtesy of AMERICAN HONDA MOTOR CO., INC.

2. Apply masking tape (A) to the headliner (B) to mark the upper edge of the pillar trim (C).

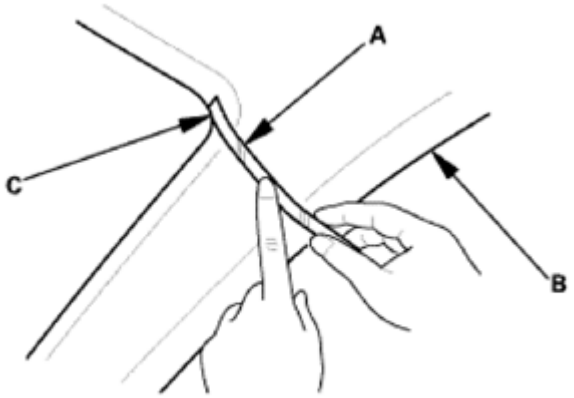

This illustration shows the A-pillar.

Fig. 210: Applying Masking Tape On Headliner
Courtesy of AMERICAN HONDA MOTOR CO., INC.

3. Remove the pillar trim, and measure the headliner overlap.
   - If the overlap is 8.0+0/-2.0 mm (0.31+0/-0.08 in), remove the tape, and install the pillar trim.
   - If the overlap is more than 8.0 mm (0.31 in), go to step 4.

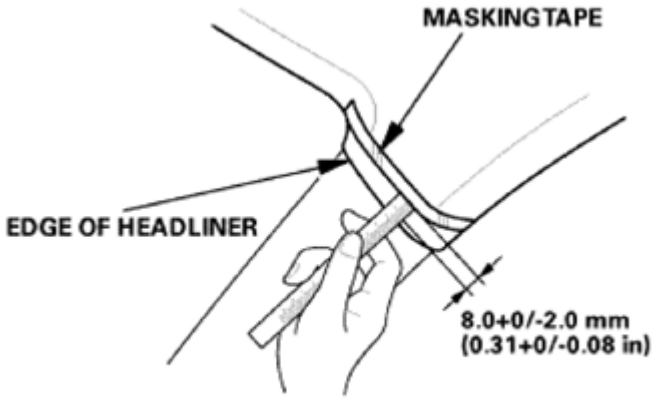

This illustration shows the A-pillar.

Fig. 211: Measuring Headliner Overlap
Courtesy of AMERICAN HONDA MOTOR CO., INC.

4. Carefully trim the headliner with a utility knife, reducing the overlap to 8.0+0/-2.0 mm (0.31+0/-0.08 in).
5. Remove the tape, and install the pillar trim.

GETtheMANUALS.org

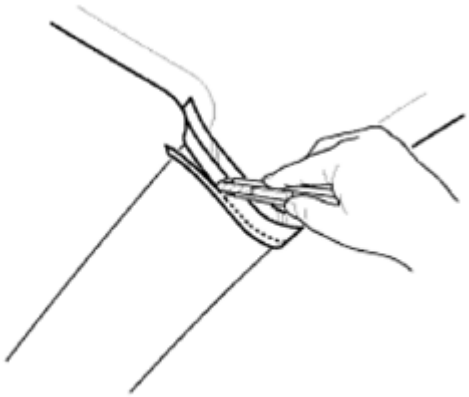

This illustration shows the A-pillar.

Fig. 212: Installing Pillar Trim
Courtesy of AMERICAN HONDA MOTOR CO., INC.

28. B-Pillar Upper Trim - Both Sides

NOTE: Repeat this procedure on the opposite side.

1. Install the upper hook (A) of the B-pillar upper trim (B) to the hole in the body. Push the bottom portion of the B-pillar upper trim to install the lower hooks (C). Make sure the hooks snap into place securely.

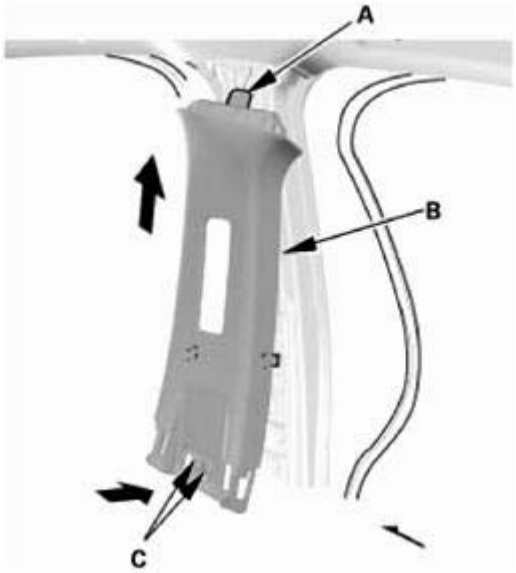

Fig. 213: Removing B-Pillar Upper Trim
Courtesy of AMERICAN HONDA MOTOR CO., INC.

29. Front Seat Belt Upper Anchor Bolt - Both Sides

GETtheMANUALS.org

NOTE: **Repeat this procedure on the opposite side.**

1. Install the front seat belt upper anchor bolt, then install the front seat belt shoulder anchor adjuster cap (A).

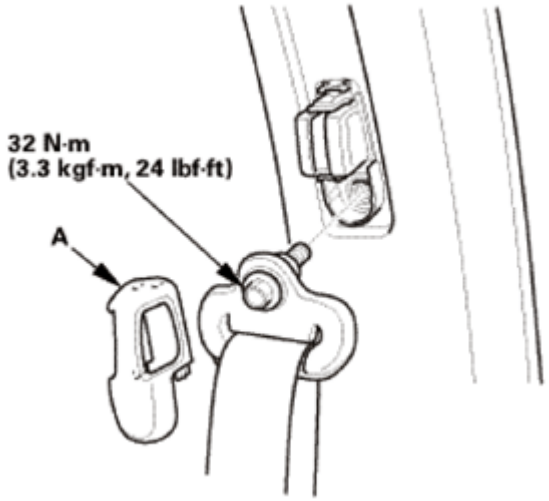

Fig. 214: Identifying Front Seat Belt Upper Anchor Bolt And Adjuster Cap With Torque Specification
Courtesy of AMERICAN HONDA MOTOR CO., INC.

30. B-Pillar Lower Trim - Both Sides

NOTE: **Repeat this procedure on the opposite side.**

1. Install the B-pillar lower trim (A). Make sure the clips (B) and the hooks (C) snap into place securely.

GETtheMANUALS.org

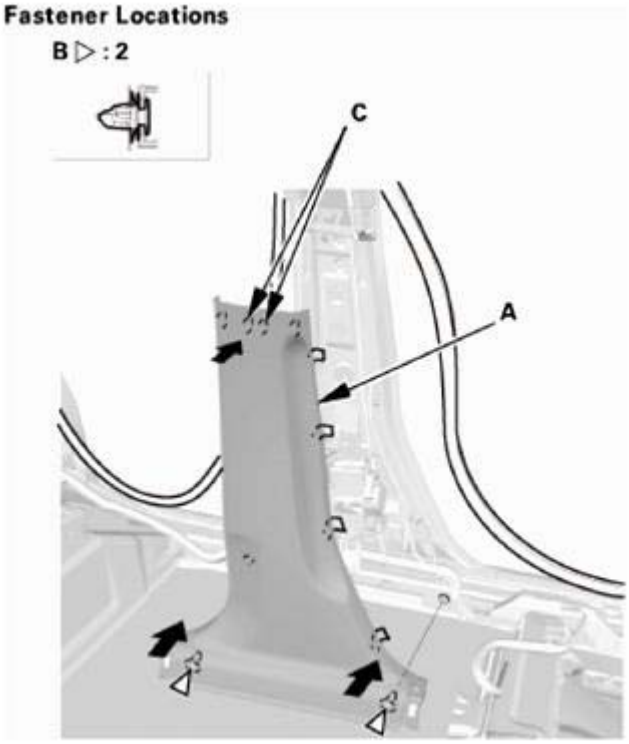

Fig. 215: Installing B-Pillar Lower Trim
Courtesy of AMERICAN HONDA MOTOR CO., INC.

31. Rear Door Opening Seal As Needed - Both Sides

NOTE: Repeat this procedure on the opposite side.

1. Install the rear door opening seal (A). Make sure the seal is installed securely into the hooks (B).

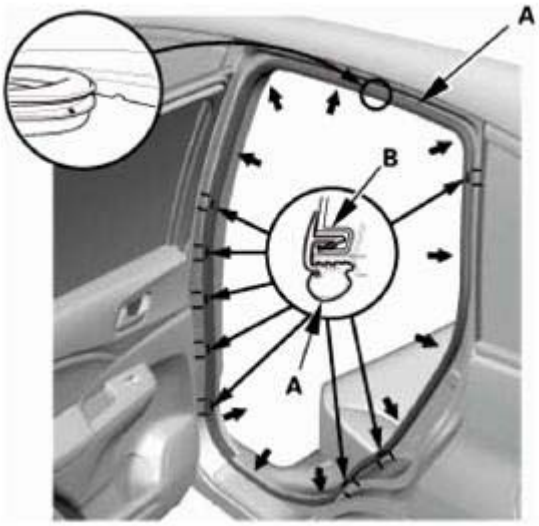

Fig. 216: Identifying Rear Door Opening Seal With Trim Hooks

GETtheMANUALS.org

Courtesy of AMERICAN HONDA MOTOR CO., INC.

32. Rear Door Sill Trim - Both Sides

NOTE: Repeat this procedure on the opposite side.

1. Pull the release strap to fold down the rear seat, then lift-up and latch the rear seat-back in the upright position.
2. Install the rear door inner sill trim (A). Make sure the clips (B, C), the hooks (D), and the tab (E) snap into place securely.

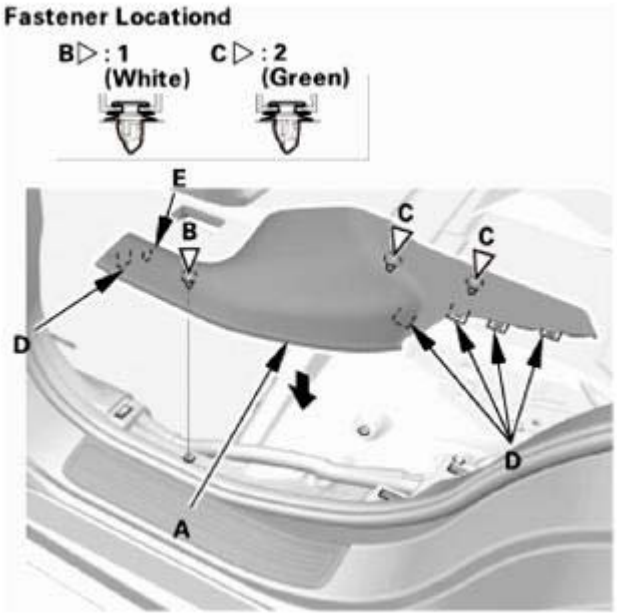

Fig. 217: Identifying Rear Door Sill Trim With Fasteners
Courtesy of AMERICAN HONDA MOTOR CO., INC.

33. A-Pillar Trim - Check
    1. If the side curtain airbag has deployed, replace the A-pillar trim (A), along with the other parts listed for side curtain airbag deployment.
    2. If the side curtain airbag has not deployed, check the A-pillar trim and note the following items:
        - To prevent the side curtain airbags from deploying improperly and possibly causing injury, inspect the A-pillar trim and replace it with a new one if it has any of the following damage:
            - Any cracks, deformations, or stress-whitened areas in the A-pillar trim
            - Any cracks or stress-whitening in the clip seating surfaces (B)
    3. After checking and adjusting the overlap between the headliner and the A-pillar trim, replace the upper clip (C) with a new one.
    4. If the clips (D) are damaged or stress-whitened, replace them with new ones.

GETtheMANUALS.org

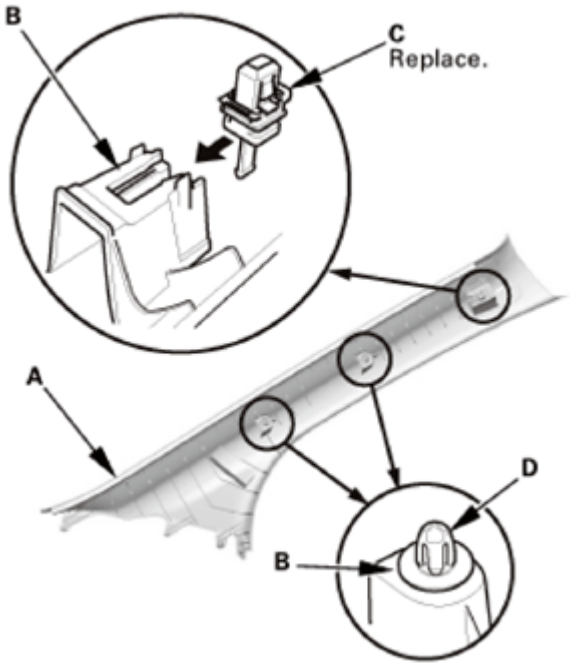

Fig. 218: Identifying Quarter Pillar Trim, Clip Seating Surfaces And Upper Clip
Courtesy of AMERICAN HONDA MOTOR CO., INC.

34. Headliner/Pillar Trim Overlap - Check

Checking and Adjusting the Headliner/Pillar Trim Overlap

To prevent the side curtain airbag from deploying and damaging the pillar trim (A-pillar trim, B-pillar trim, quarter pillar trim), the overlap between the headliner and pillar trim must be 8.0+0/-2.0 mm (0.31+0/-0.08 in). To check the overlap, do this:

1. Install the headliner (A) and the pillar trim (B).

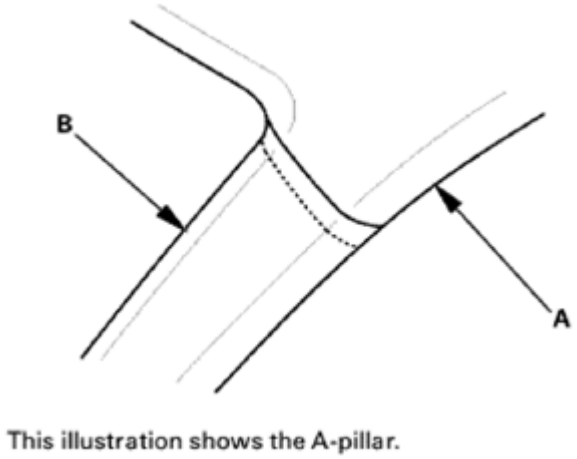

Fig. 219: Identifying Headliner And Pillar Trim

GETtheMANUALS.org

Courtesy of AMERICAN HONDA MOTOR CO., INC.

2. Apply masking tape (A) to the headliner (B) to mark the upper edge of the pillar trim (C).

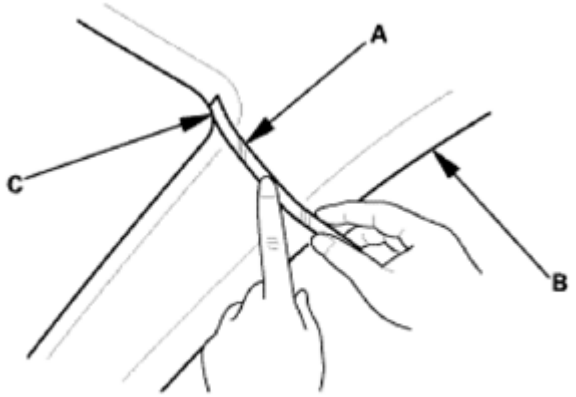

This illustration shows the A-pillar.

Fig. 220: Applying Masking Tape On Headliner
Courtesy of AMERICAN HONDA MOTOR CO., INC.

3. Remove the pillar trim, and measure the headliner overlap.
   - If the overlap is 8.0+0/-2.0 mm (0.31+0/-0.08 in), remove the tape, and install the pillar trim.
   - If the overlap is more than 8.0 mm (0.31 in), go to step 4.

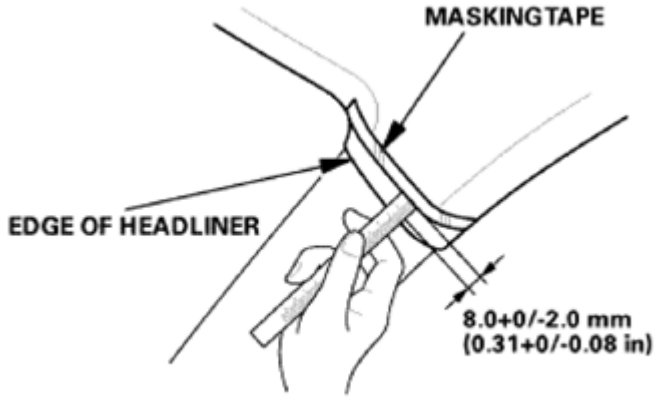

This illustration shows the A-pillar.

Fig. 221: Measuring Headliner Overlap
Courtesy of AMERICAN HONDA MOTOR CO., INC.

4. Carefully trim the headliner with a utility knife, reducing the overlap to 8.0+0/-2.0 mm (0.31+0/-0.08 in).
5. Remove the tape, and install the pillar trim.

GETtheMANUALS.org

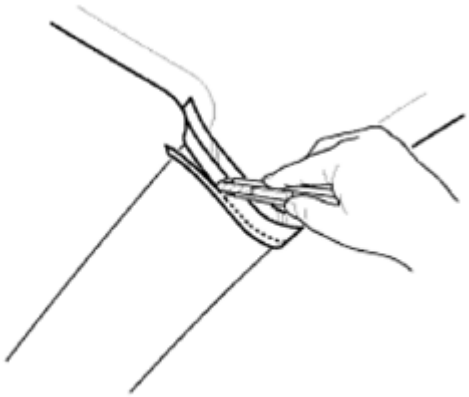

This illustration shows the A-pillar.

Fig. 222: Installing Pillar Trim
Courtesy of AMERICAN HONDA MOTOR CO., INC.

35. A-Pillar Trim - Both Sides

NOTE: Repeat this procedure on the opposite side.

1. Carefully install a new upper clip (A) to the A-pillar trim (B).

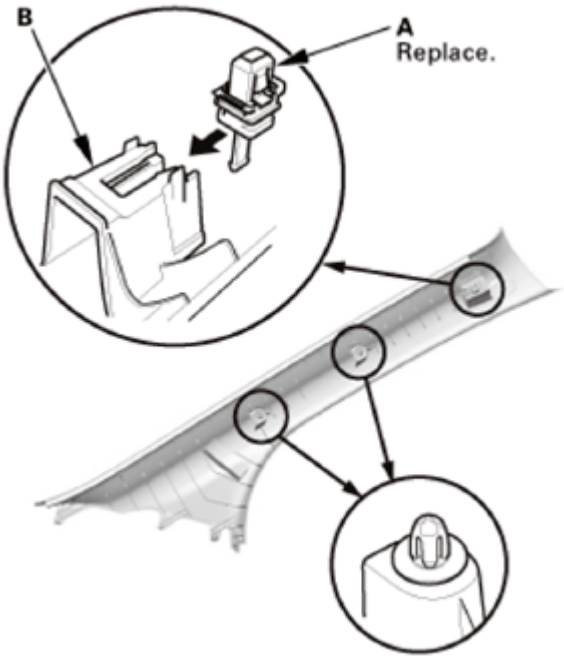

Fig. 223: Installing Upper Clip To A-Pillar Trim
Courtesy of AMERICAN HONDA MOTOR CO., INC.

2. Insert the bottom portion of the A-pillar trim (A) into the dashboard (B). Place the trim over the A-pillar (C), and fit its upper clip (D) and the other clips (E) into the holes (F) in the A-pillar, then

GETtheMANUALS.org

lightly push the trim into place.

NOTE:

- **Make sure the side curtain airbag is not tucked under the clips or the trim ribs.**
- **Do not push too hard on the A-pillar trim. If you push too hard, the clip will be damaged, and it will not hold the trim properly.**
- **Gently tug on the A-pillar trim to verify that all clips are securely fastened.**

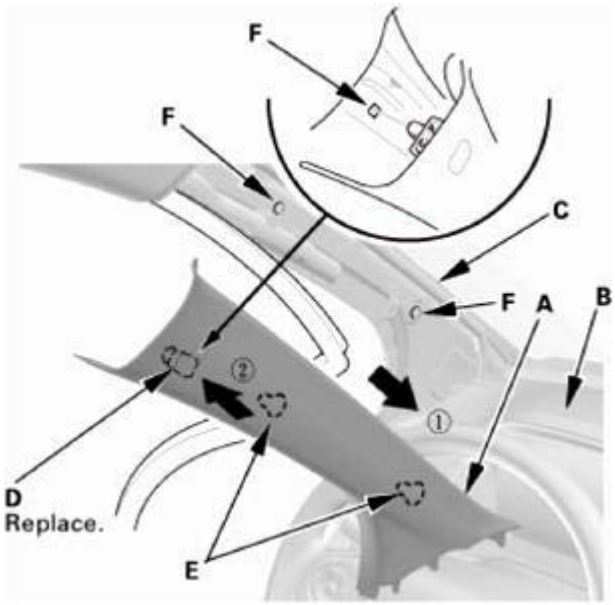

Fig. 224: Inserting Bottom Portion Of A-Pillar Trim Into Dashboard
Courtesy of AMERICAN HONDA MOTOR CO., INC.

36. Front Door Opening Seal As Needed - Both Sides

NOTE: **Repeat this procedure on the opposite side.**

1. Install the front door opening seal (A). Make sure the seal is installed securely into the hooks (B).

GETtheMANUALS.org

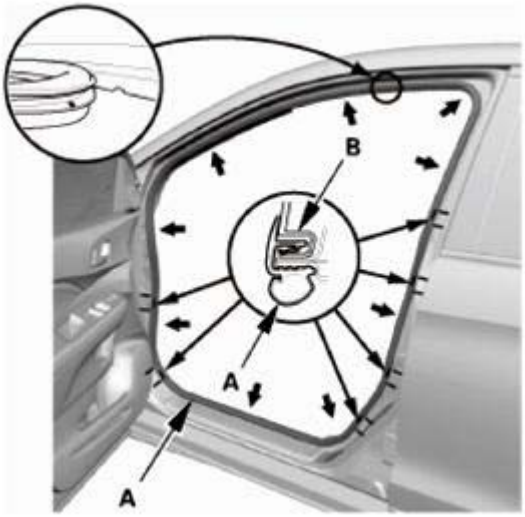

Fig. 225: Identifying Front Door Opening Seal And Hooks
Courtesy of AMERICAN HONDA MOTOR CO., INC.

37. Front Door Sill Trim - Both Sides

NOTE: Repeat this procedure on the opposite side.

1. Install the front door inner sill trim (A). Make sure the clips (B), the hooks (C), and the tabs (D) snap into place securely.

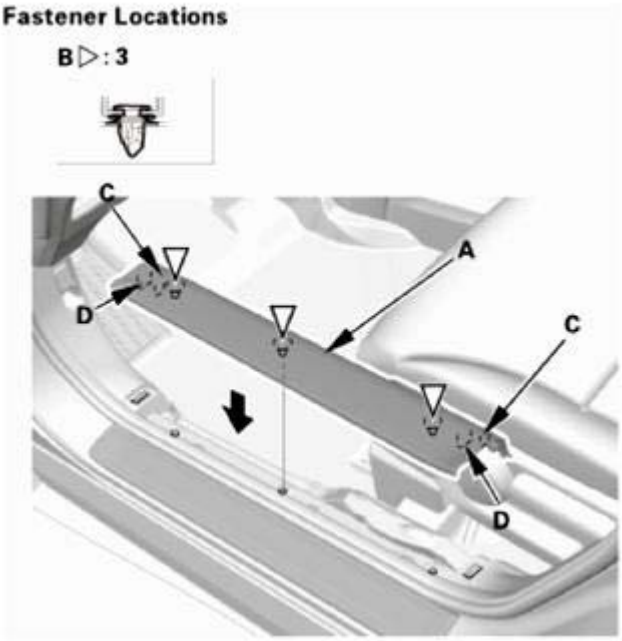

Fig. 226: Installing Front Door Inner Sill Trim
Courtesy of AMERICAN HONDA MOTOR CO., INC.

GETtheMANUALS.org

38. Battery Terminal (SRS) - Reconnection

NOTE: If the battery performance is abnormal, test the battery.

1. Clean the battery terminals.
2. Connect the positive cable (A) to the battery.

NOTE: Always connect the positive side first.

3. Connect the negative cable (B) to the battery.
4. Apply multipurpose grease to the terminals to prevent corrosion.

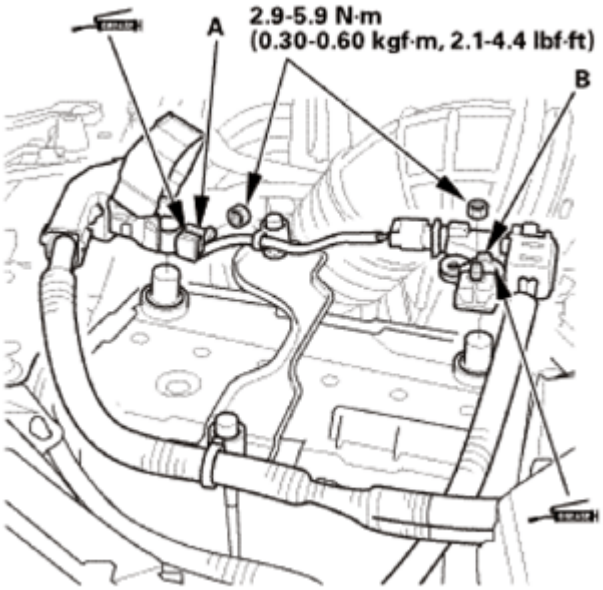

Fig. 227: Identifying Battery Positive And Negative Cable
Courtesy of AMERICAN HONDA MOTOR CO., INC.

SEAT BELT INSPECTION

SPECIAL TOOL DESCRIPTION

Image	Description/Tool Number
	Push Pin/Grab Rail Cap Pliers 07AAC-001A100

GETtheMANUALS.org

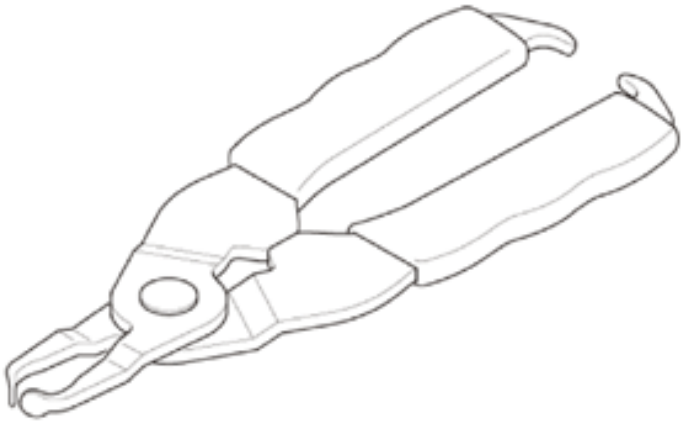

INSPECTION

1. Seat Belt - Inspection (In Vehicle)

   In-Vehicle

   1. Check that the seat belt is not twisted or caught on anything.
   2. After installing the anchors, check for free movement on the anchor bolts. If necessary, remove the anchor bolts, and check that the washers and other parts are not damaged or improperly installed.
   3. Check the seat belts for damage or discoloration. Clean with a shop towel if necessary. Use only soap and water to clean the seat belts.

      NOTE: Dirt build-up in the loops of the upper anchors can cause the seat belts to retract slowly. Wipe the inside of the loops with a shop towel dampened with isopropyl alcohol.

   4. Check that the seat belt does not lock when pulled out slowly. The seat belt is designed to lock only during a sudden stop or impact.
   5. Make sure that the seat belt will retract automatically when released.
   6. For each passenger's seat belt, check the seat belt retractor locking mechanism automatic locking retractor (ALR). This function is for securing child seats.
   7. Pull out the seat belt all the way to engage the ALR. The seat belt should retract with a ratcheting sound, but not extend. This is normal.
   8. To disengage the ALR, release the seat belt and allow it to fully retract, then pull out the seat belt part-way. The seat belt should retract and extend normally.
   9. Replace the seat belt with a new assembly if there is any abnormality. Do not disassemble any part of the seat belt for any reason.

REMOVAL

SRS components are located in this area. Review the **SRS COMPONENT LOCATIONS** and the

GETtheMANUALS.org

PRECAUTIONS AND PROCEDURES before doing repairs or service.

1. Battery Terminal (SRS) - Disconnection
    1. Make sure the ignition switch is in LOCK (0).
    2. Disconnect and isolate the negative cable (A) from the battery.

    NOTE: Always disconnect the negative side first.

    3. Disconnect the positive cable (B) from the battery.
    4. Wait at least 3 minutes before starting work.

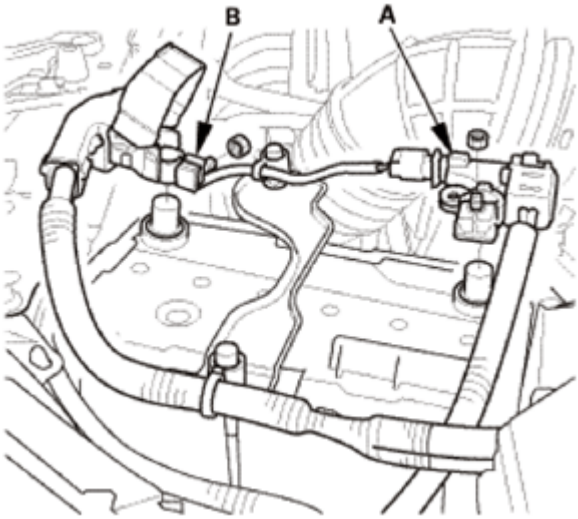

Fig. 228: Identifying Battery Negative And Positive Cable
Courtesy of AMERICAN HONDA MOTOR CO., INC.

2. Front Door Sill Trim - Both Sides

NOTE: Repeat on the opposite side.

1. Detach the hooks (A) and the tabs (B) from the kick panel (C) and the B-pillar lower trim (D), and pull up the front door inner sill trim (E) by hand to detach the clips (F), then remove the trim.

GETtheMANUALS.org

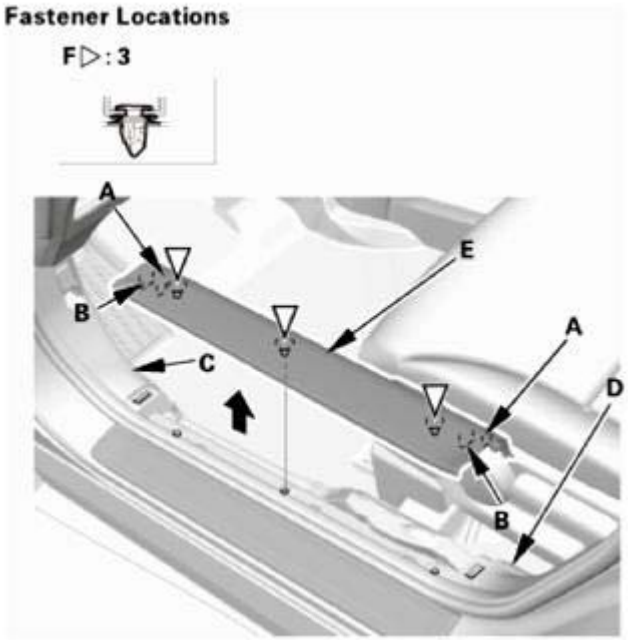

Fig. 229: Pulling Up Front Door Inner Sill Trim
Courtesy of AMERICAN HONDA MOTOR CO., INC.

3. Front Door Opening Seal As Needed - Both Sides

NOTE: Repeat on the opposite side.

1. Pull out the front door opening seal (A) from the trim hooks (B) around the front door opening flange, then detach the seal as needed.

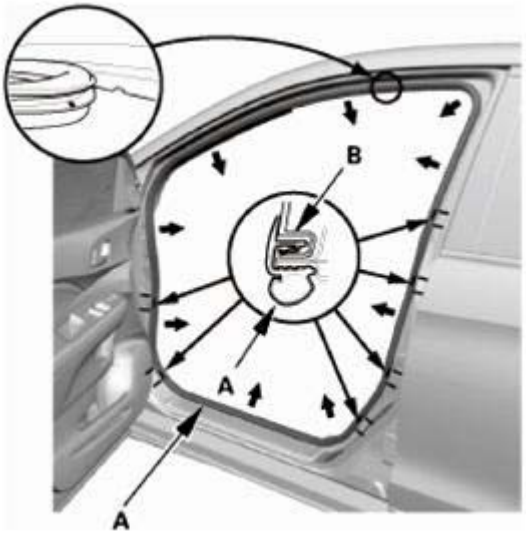

Fig. 230: Identifying Front Door Opening Seal, Trim Hooks And Front Door Opening Flange
Courtesy of AMERICAN HONDA MOTOR CO., INC.

GETtheMANUALS.org

4. A-Pillar Trim - Both Sides

NOTE: Repeat this procedure on the opposite side.

1. Pull out the A-pillar trim (A) by hand to release the clips (B, C).

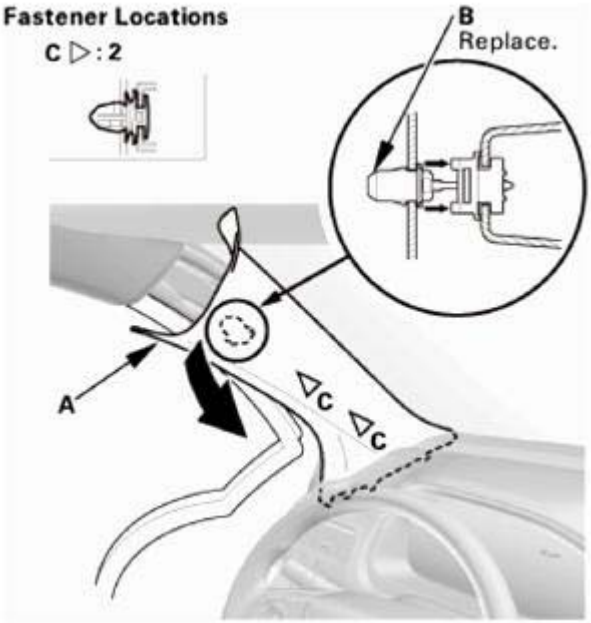

Fig. 231: Pulling Out A-Pillar Trim
Courtesy of AMERICAN HONDA MOTOR CO., INC.

2. Put a shop towel (A) in the opening between the A-pillar trim (B) and the dashboard to prevent dropping the A-pillar clips.

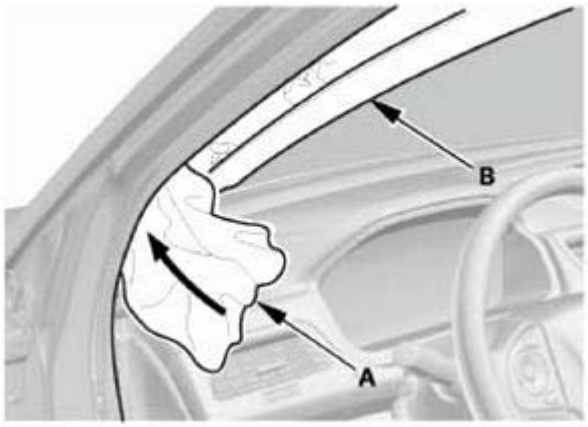

Fig. 232: Putting Shop Towel Between A-Pillar Trim And Dashboard
Courtesy of AMERICAN HONDA MOTOR CO., INC.

3. Pull out and up on the A-pillar trim (A) to release it from the dashboard.

GETtheMANUALS.org

NOTE: The upper clip will stay in the body.

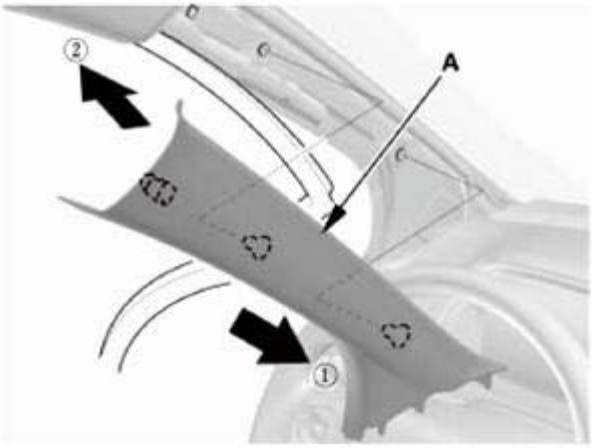

Fig. 233: Pulling Out A-Pillar Trim
Courtesy of AMERICAN HONDA MOTOR CO., INC.

4. Remove the upper clip (A) from the body.

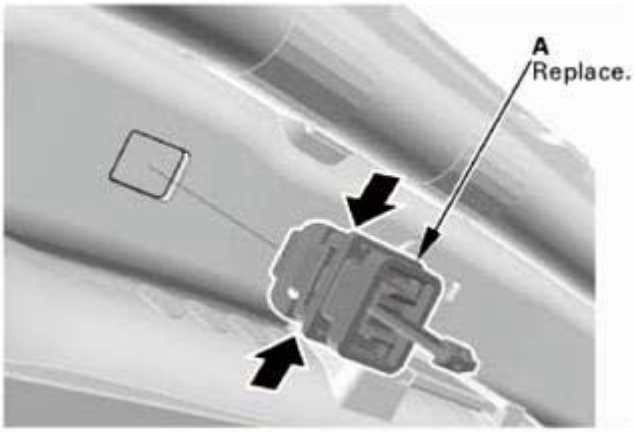

Fig. 234: Removing Upper Clip From Body
Courtesy of AMERICAN HONDA MOTOR CO., INC.

5. Rear Door Sill Trim - Both Sides

NOTE: Repeat this procedure on the opposite side.

1. Pull the release strap to fold down the rear seat, then lift-up and latch the rear seat-back in the upright position.
2. Detach the hooks (A) and the tab (B) from the B-pillar lower trim (C) and the rear side trim panel (D), and pull up the rear door inner sill trim (E) by hand to detach the clips (F, G), then remove the trim.

GETtheMANUALS.org

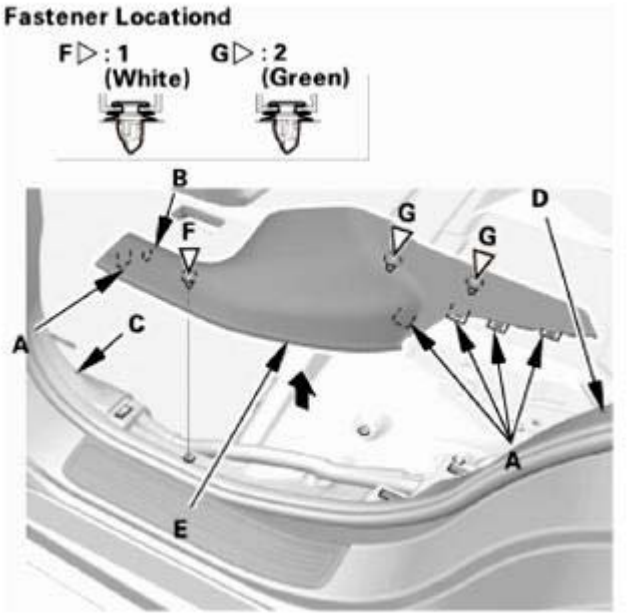

Fig. 235: Identifying Rear Door Sill Trim With Fasteners
Courtesy of AMERICAN HONDA MOTOR CO., INC.

6. Rear Door Opening Seal As Needed - Both Sides

NOTE: Repeat this procedure on the opposite side.

1. Pull out the rear door opening seal (A) from the trim hooks (B) around the rear door opening flange, then detach the seal as needed.

Fig. 236: Identifying Rear Door Opening Seal And Trim Hooks
Courtesy of AMERICAN HONDA MOTOR CO., INC.

7. B-Pillar Lower Trim - Both Sides

GETtheMANUALS.org

NOTE: **Repeat this procedure on the opposite side.**

1. Slide the front seat forward fully.
2. Pull back the bottom portion of the B-pillar lower trim (A) by hand to detach the clips (B).
3. Pull back the upper portion of the B-pillar lower trim to detach the upper hooks (C), then remove the B-pillar lower trim.

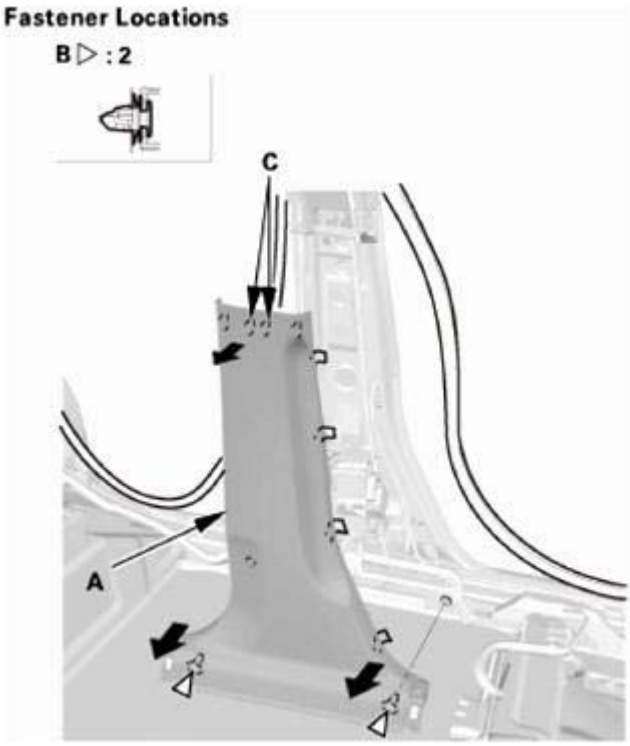

Fig. 237: Removing B-Pillar Lower Trim
Courtesy of AMERICAN HONDA MOTOR CO., INC.

8. Front Seat Belt Upper Anchor Bolt - Both Sides

NOTE: **Repeat this procedure on the opposite side.**

1. Remove the front seat belt shoulder anchor adjuster cap (A), then remove the front seat belt upper anchor bolt.

GETtheMANUALS.org

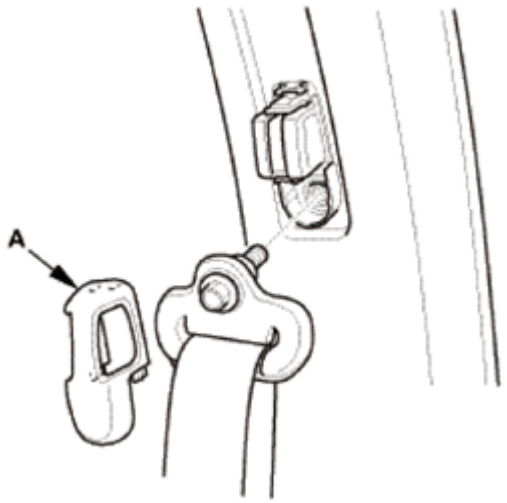

Fig. 238: Identifying Front Seat Belt Shoulder Anchor Adjuster Cap
Courtesy of AMERICAN HONDA MOTOR CO., INC.

9. B-Pillar Upper Trim - Both Sides

NOTE: Repeat this procedure on the opposite side.

1. Pull back the bottom portion of the B-pillar upper trim (A) by hand to detach the hooks (B). Pull down the trim to release the upper hook (C) from the hole (D) in the body, then remove the B-pillar upper trim.

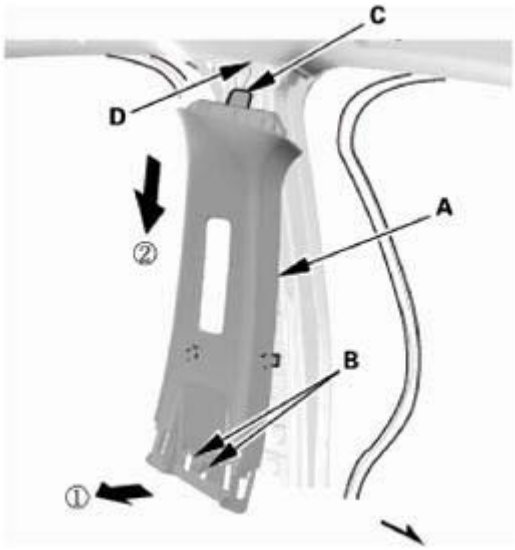

Fig. 239: Removing B-Pillar Upper Trim
Courtesy of AMERICAN HONDA MOTOR CO., INC.

10. Tonneau Cover (For Some Models)
    1. Remove the tonneau cover (A).

GETtheMANUALS.org

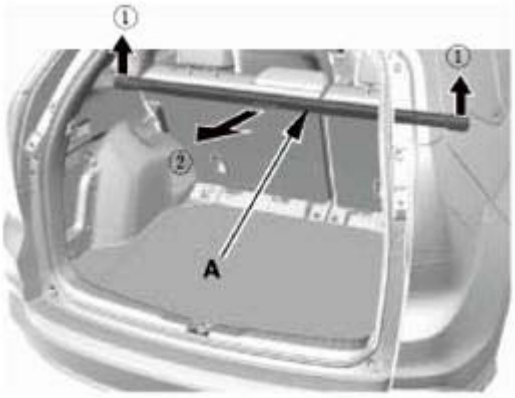

Fig. 240: Removing Tonneau Cover
Courtesy of AMERICAN HONDA MOTOR CO., INC.

11. Cargo Floor Cover
    1. Remove the cargo floor cover (A).

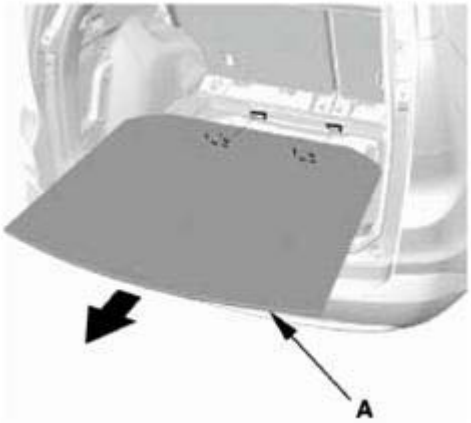

Fig. 241: Removing Cargo Floor Cover
Courtesy of AMERICAN HONDA MOTOR CO., INC.

12. Tailgate Weatherstrip As Needed
    1. Detach the tailgate weatherstrip (A) as needed.

GETtheMANUALS.org

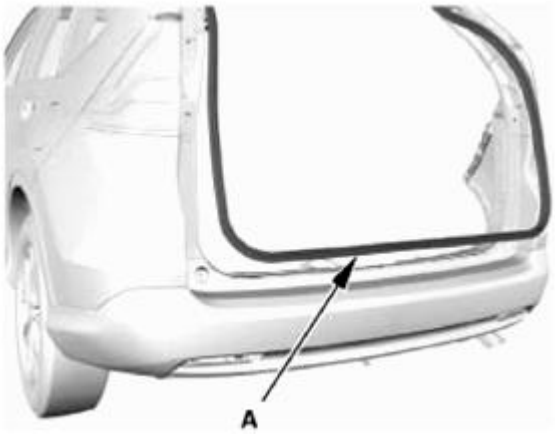

Fig. 242: Identifying Tailgate Weatherstrip
Courtesy of AMERICAN HONDA MOTOR CO., INC.

13. Rear Trim Panel
    1. Remove the clips (A).
    2. Detach the hooks (B) and the tabs (C) from the rear side trim panels (D), and pull up the rear trim panel (E) by hand to detach the clips (F, G), then remove the rear trim panel.

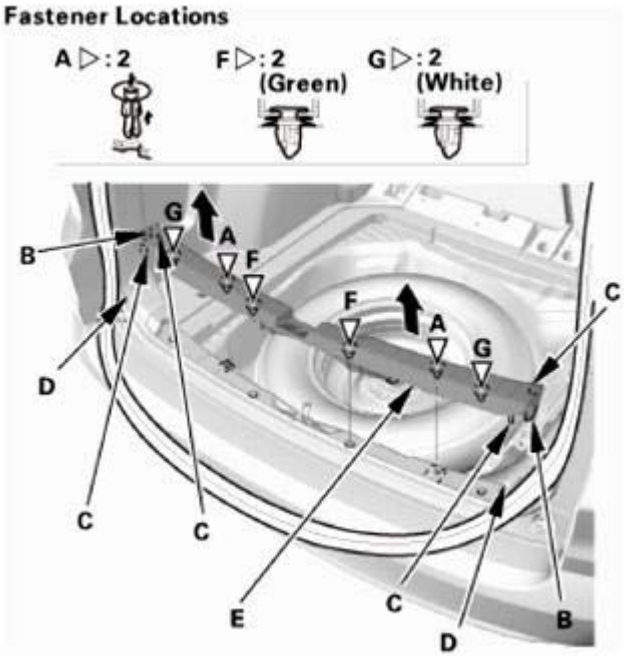

Fig. 243: Removing Rear Trim Panel
Courtesy of AMERICAN HONDA MOTOR CO., INC.

14. Rear Damper Maintenance Cover - Both Sides

NOTE: **Repeat this procedure on the opposite side.**

GETtheMANUALS.org

1. Fold down the rear seat-back.
2. Pull up the rear damper maintenance cover (A) by hand to detach the hooks (B), then remove the rear damper maintenance cover.

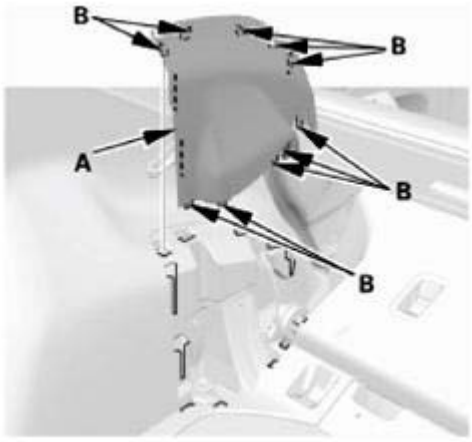

Fig. 244: Identifying Rear Damper Maintenance Cover And Hook
Courtesy of AMERICAN HONDA MOTOR CO., INC.

15. Rear Carpet Trim - Both Sides
    1. Detach the clips (A), then tuck up the rear seat-back cover (B).

Left side

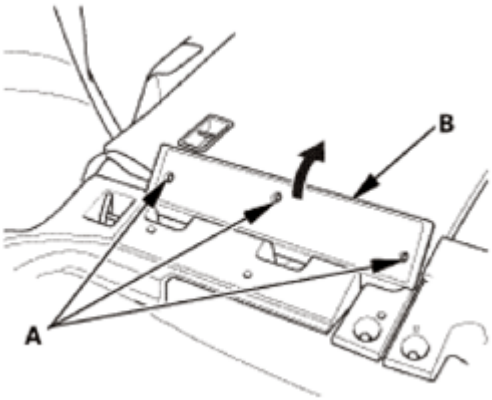

Fig. 245: Removing Rear Seat-Back Cover (Left Side)
Courtesy of AMERICAN HONDA MOTOR CO., INC.

Right side

GETtheMANUALS.org

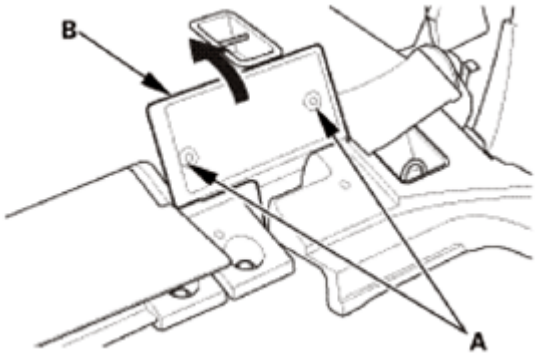

Fig. 246: Removing Rear Seat-Back Cover (Right Side)
Courtesy of AMERICAN HONDA MOTOR CO., INC.

2. Detach the hooks (A) from the rear side trim panel (B), and pull up the rear carpet trims (C) by hand to detach the clips (D), then remove the rear carpet trims.

Left side

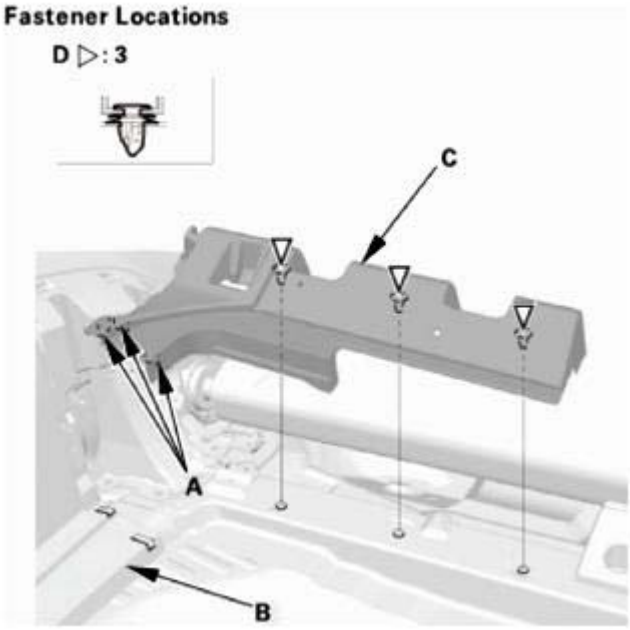

Fig. 247: Identifying Rear Seat Cushion Foot Cover, Clips And Hooks (Left Side)
Courtesy of AMERICAN HONDA MOTOR CO., INC.

Right side

GETtheMANUALS.org

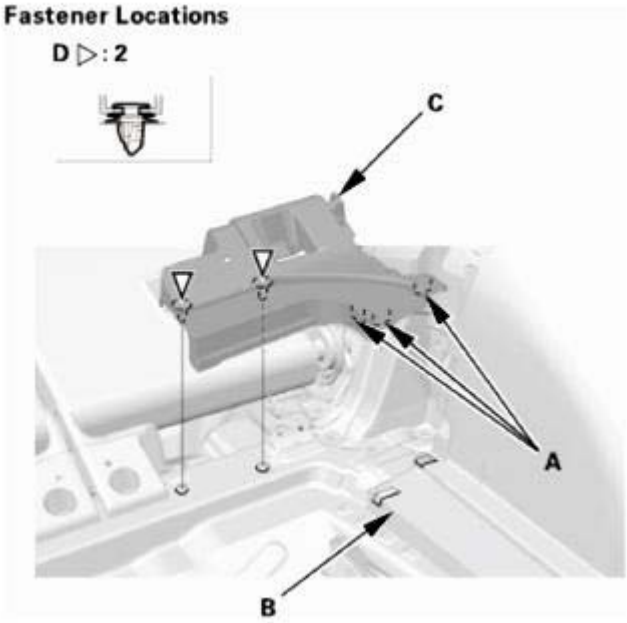

Fig. 248: Identifying Rear Seat Cushion Foot Cover, Clips And Hooks (Right Side)
Courtesy of AMERICAN HONDA MOTOR CO., INC.

16. Rear Seat Cushion Foot Cover - Both Sides (Remove The Outer Left Side Only)
    1. Pull up the rear seat cushion foot cover (A) by hand to detach the clips (B).
    2. Detach the hooks (C), then remove the rear seat cushion foot cover.

Left side

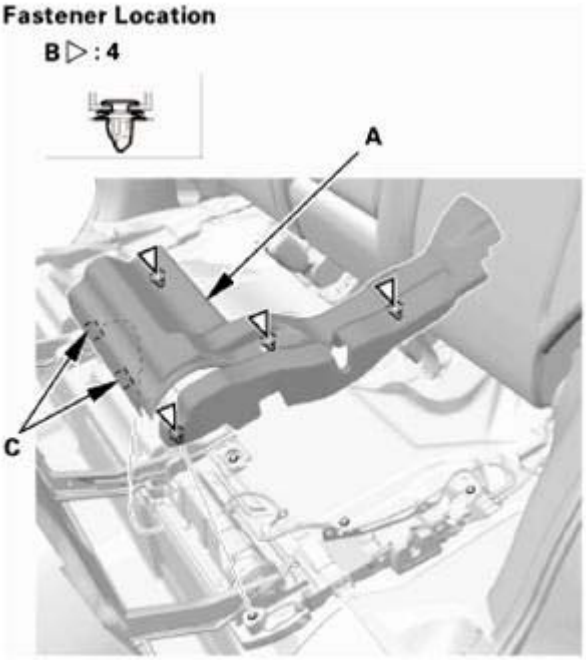

GETtheMANUALS.org

Fig. 249: Identifying Rear Seat Cushion Foot Cover, Clip And Hook (Left Side)
Courtesy of AMERICAN HONDA MOTOR CO., INC.

Right side

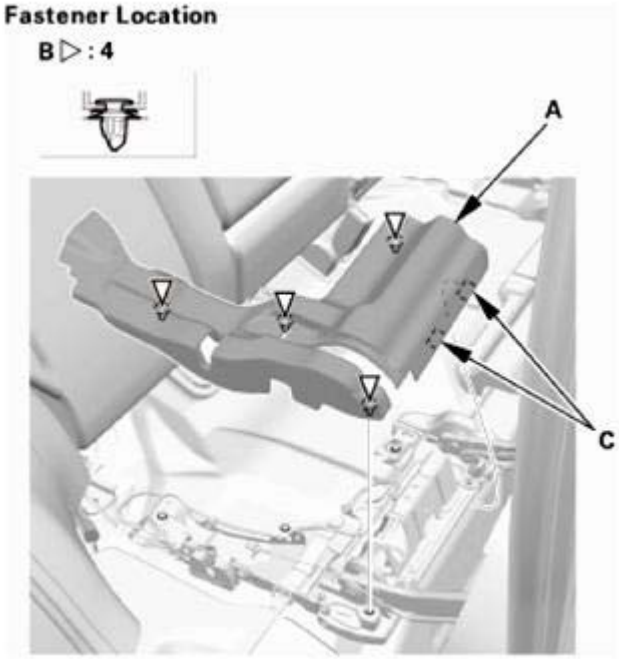

Fig. 250: Identifying Rear Seat Cushion Foot Cover, Clip And Hook (Right Side)
Courtesy of AMERICAN HONDA MOTOR CO., INC.

17. Rear Seat Belt Lower Anchor Bolt - Both Sides

NOTE: Repeat this procedure on the opposite side.

1. Remove the rear seat belt lower anchor bolt (A).

GETtheMANUALS.org

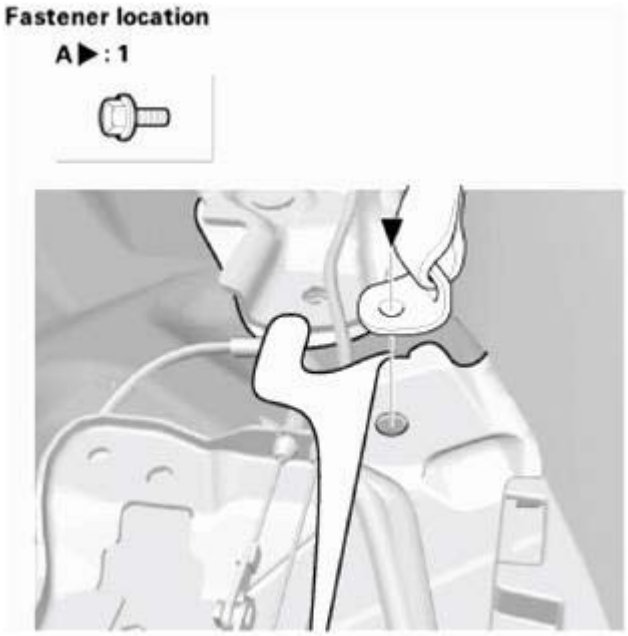

Fig. 251: Identifying Rear Seat Belt Lower Anchor Bolt
Courtesy of AMERICAN HONDA MOTOR CO., INC.

18. Rear Side Trim Panel - Both Sides

NOTE: Repeat this procedure on the opposite side.

1. Carefully pry out on the upper hook (A) in the rear seat release lever cap (B) with the appropriate trim tool, then pull back the rear seat release lever cap to remove it.
2. Remove the screws (C).

GETtheMANUALS.org

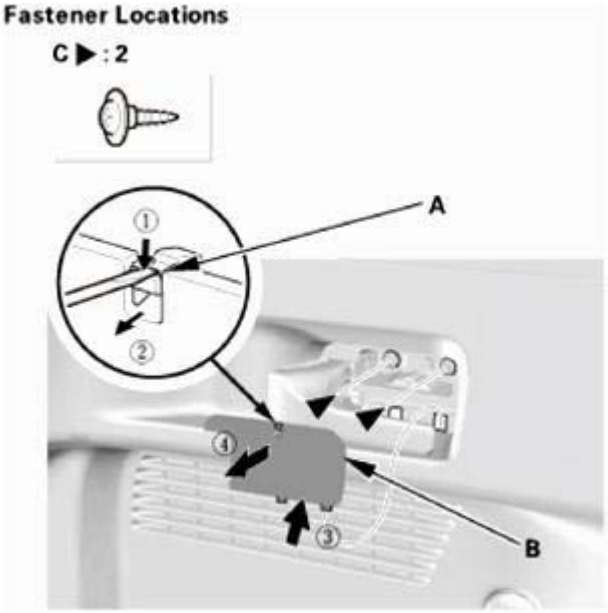

Fig. 252: Removing Rear Side Trim Panel
Courtesy of AMERICAN HONDA MOTOR CO., INC.

3. Push in the center pin (A), then remove the trunk hook (B).

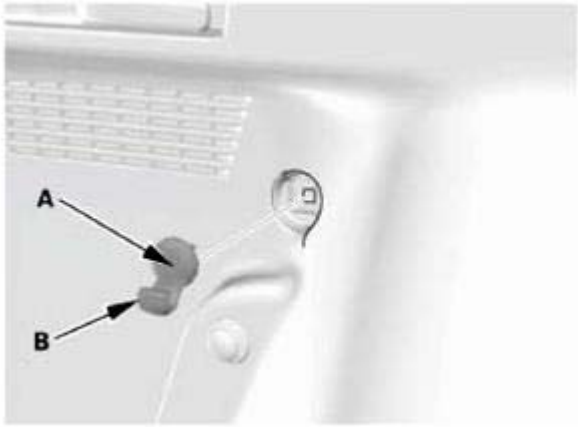

Fig. 253: Identifying Center Pin And Trunk Hook
Courtesy of AMERICAN HONDA MOTOR CO., INC.

4. Remove the bolt (A), then remove the tie-down hook (B).

GETtheMANUALS.org

Fig. 254: Identifying Tie-Down Hook And Bolt
Courtesy of AMERICAN HONDA MOTOR CO., INC.

5. Detach the clips (A, B).
6. Detach the hooks (C) and the tabs (D) from the quarter pillar trim (E), and pull out the rear side trim panel (F) by hand to detach the clips (G, H).

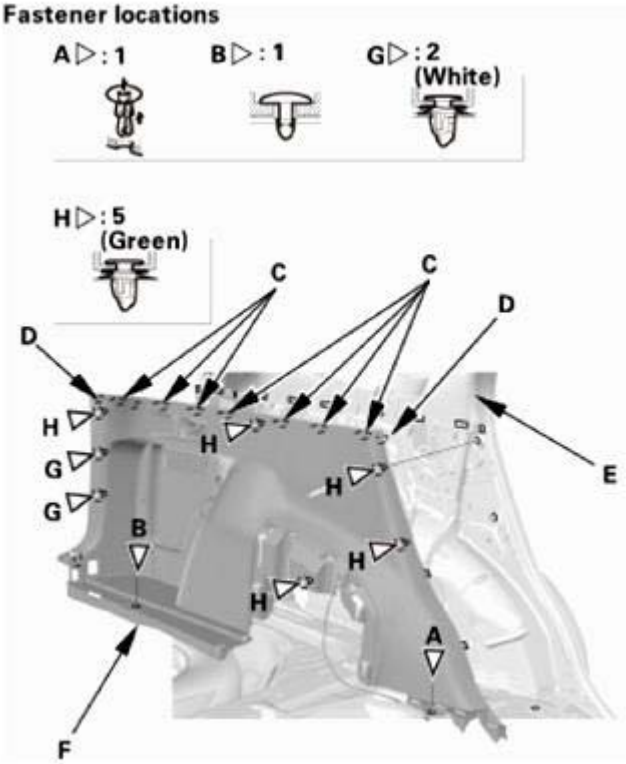

Fig. 255: Identifying Rear Seat Release Lever And Rear Side Trim Panel

GETtheMANUALS.org

Courtesy of AMERICAN HONDA MOTOR CO., INC.

7. Remove the rear seat release lever (A) from the rear side trim panel (B).

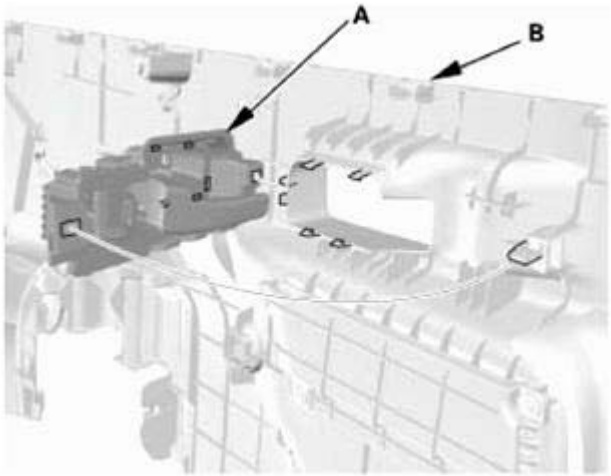

Fig. 256: Identifying Rear Seat Release Lever And Rear Side Trim Panel
Courtesy of AMERICAN HONDA MOTOR CO., INC.

8. Detach the rear seat release cable (A) from the clips of the rear side trim panel (B), then remove the rear side trim panel.

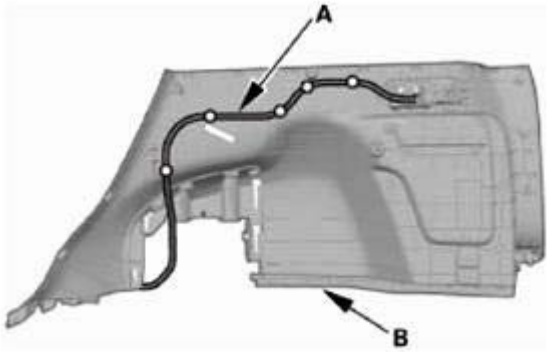

Fig. 257: Identifying Rear Seat Release Cable And Rear Side Trim Panel
Courtesy of AMERICAN HONDA MOTOR CO., INC.

19. Quarter Pillar Trim - Both Sides

NOTE: Repeat this procedure on the opposite side.

1. Pull out the quarter pillar trim (A) by hand to detach the clips (B, C, and D).
2. Pass the rear seat belt lower anchor (E) out through the hole in the quarter pillar trim, then remove the quarter pillar trim.

GETtheMANUALS.org

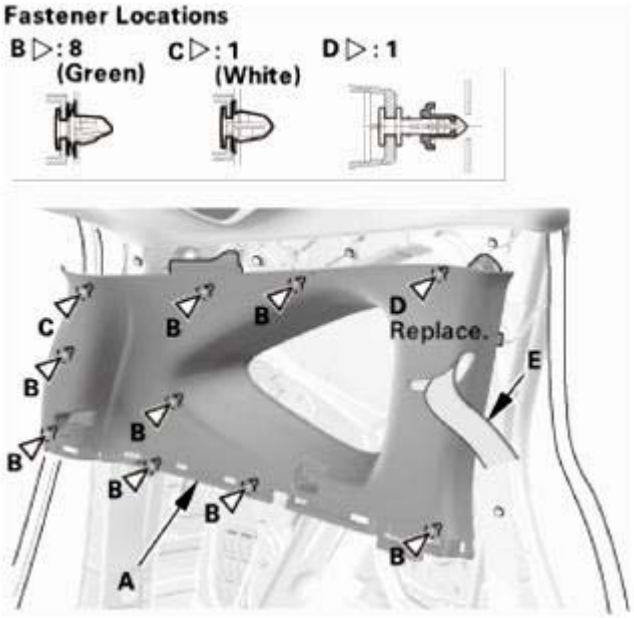

Fig. 258: Identifying Quarter Pillar Trim And Rear Seat Belt Lower Anchor With Fastener
Courtesy of AMERICAN HONDA MOTOR CO., INC.

20. Roof Console Assembly
    1. Remove the lenses (A), then remove the screws (B).
    2. Open the console, then remove the screws (C).
    3. Disconnect the connectors (D), then remove the roof console assembly (E).

GETtheMANUALS.org

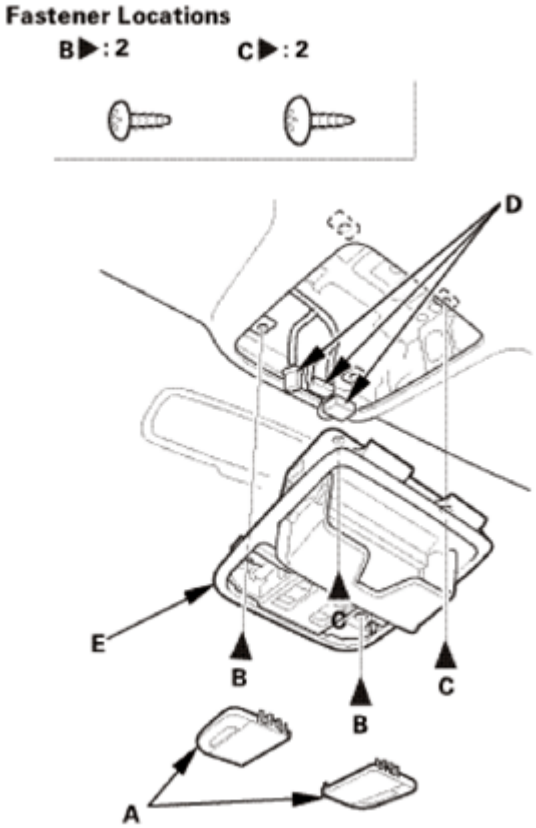

Fig. 259: Identifying Lenses, Screws, Connectors And Roof Console Assembly
Courtesy of AMERICAN HONDA MOTOR CO., INC.

21. Ceiling Light (without RES)
    1. Turn the ceiling light switch OFF.
    2. Carefully pry off the lens (A).
    3. Remove the bulb.
    4. Remove the ceiling light (B).
    5. Disconnect the connector.

GETtheMANUALS.org

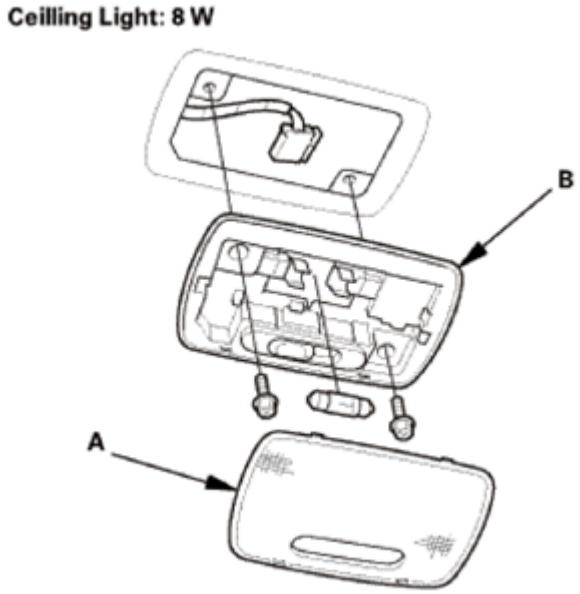

Fig. 260: Identifying Ceiling Light And Lens
Courtesy of AMERICAN HONDA MOTOR CO., INC.

22. Rear Display Cover (With RES)
    1. Turn the ceiling light switch OFF.
    2. Carefully pry off the lenses (A) with a flat-tip screwdriver.
    3. Remove the ceiling light (B).
    4. Disconnect the connector.

GETtheMANUALS.org

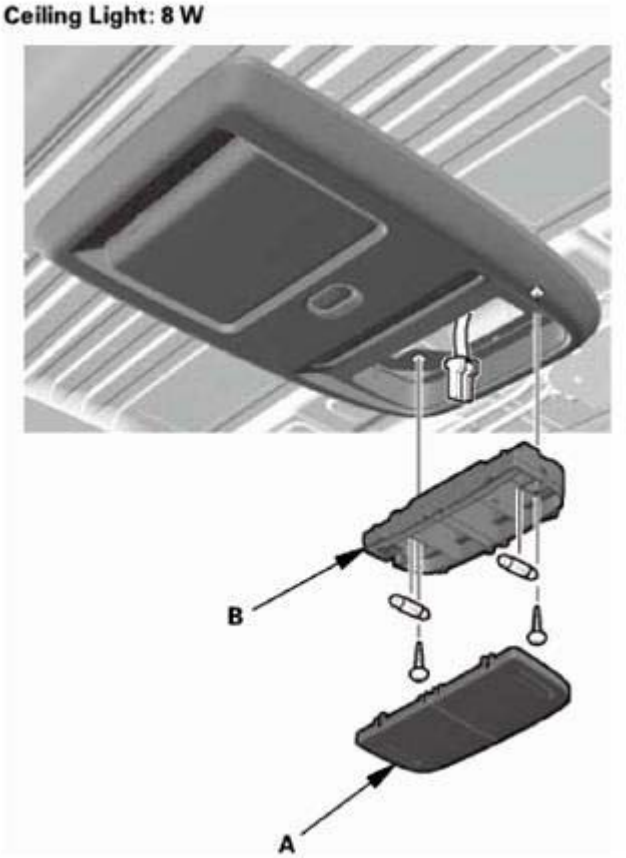

Fig. 261: Identifying Ceiling Light And Lens
Courtesy of AMERICAN HONDA MOTOR CO., INC.

5. Remove the rear display cover (A).

GETtheMANUALS.org

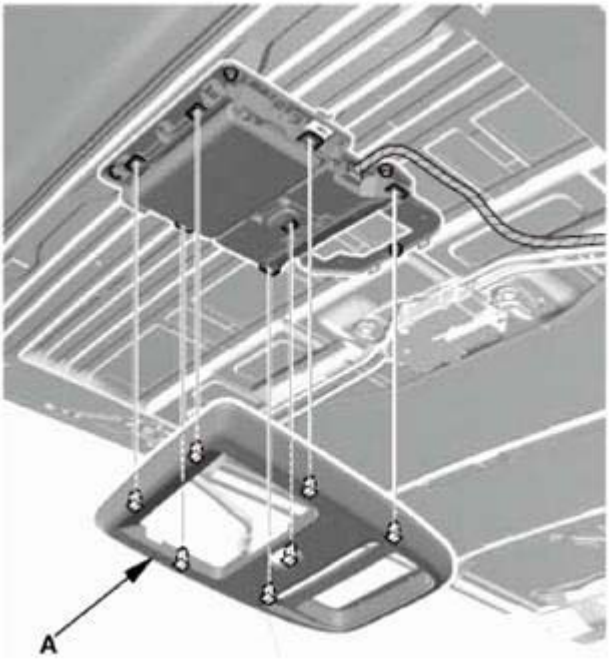

Fig. 262: Identifying Rear Display Cover
Courtesy of AMERICAN HONDA MOTOR CO., INC.

23. Rear Controller and Screen (With RES)
    1. Disconnect the connector.
    2. Remove the rear controller and screen (A).

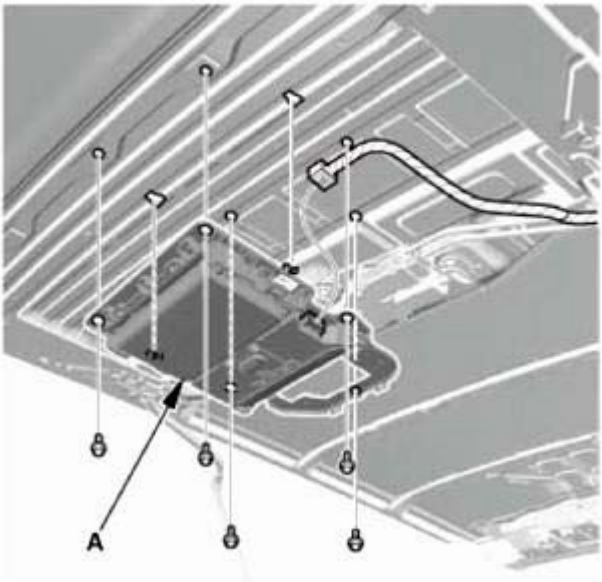

Fig. 263: Identifying Rear Controller And Screen (With RES)
Courtesy of AMERICAN HONDA MOTOR CO., INC.

GETtheMANUALS.org

24. Cargo Area Light
    1. Turn the cargo area light switch OFF.
    2. Carefully pry off the lens (A).
    3. Remove the bulb.
    4. Remove the cargo area light (B).
    5. Disconnect the connector.

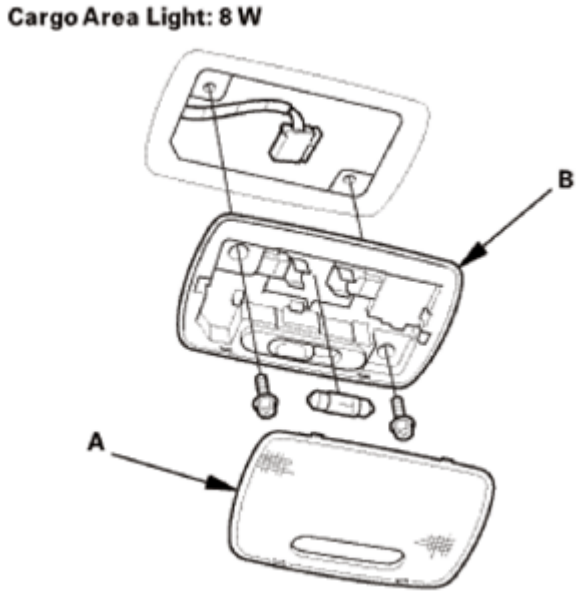

Fig. 264: Identifying Cargo Area Light And Lens
Courtesy of AMERICAN HONDA MOTOR CO., INC.

25. Grab Handles for One Vehicle
    1. Lower the grab handle (A).
    2. Insert the tips of the push pin/grab rail cap pliers (B) into the notch.

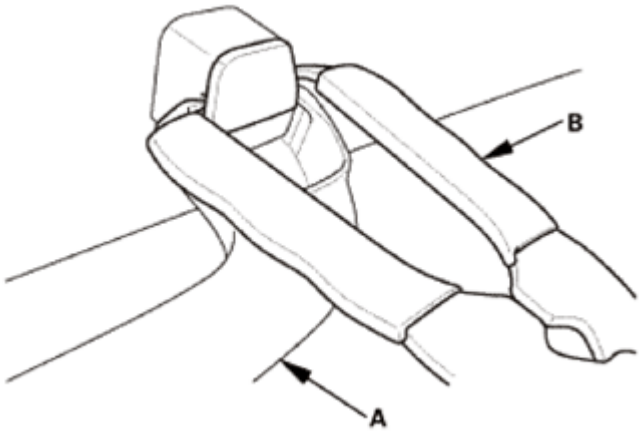

Fig. 265: Inserting Tips Of Push Pin/Grab Rail Cap Pliers Into Notch

GETtheMANUALS.org

Courtesy of AMERICAN HONDA MOTOR CO., INC.

3. Gently squeeze the handles of the push pin/grab rail cap pliers (A), and pull the cap (B) straight out.

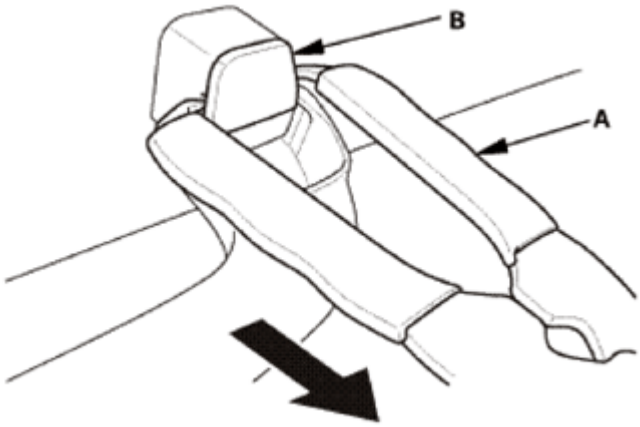

Fig. 266: Squeezing Handles Of Push Pin/Grab Rail Cap Pliers
Courtesy of AMERICAN HONDA MOTOR CO., INC.

4. Remove the grab handle (A).

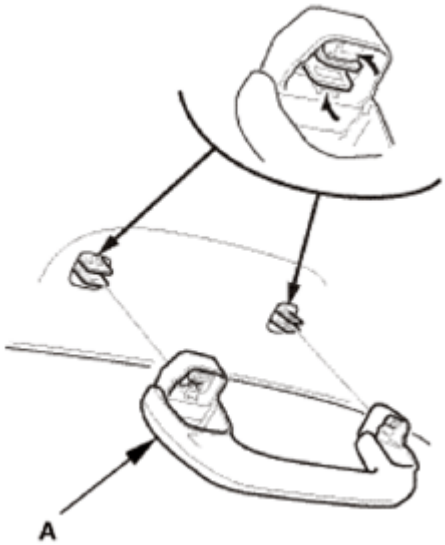

Fig. 267: Identifying Grab Handle
Courtesy of AMERICAN HONDA MOTOR CO., INC.

5. Remove the clips (A).

GETtheMANUALS.org

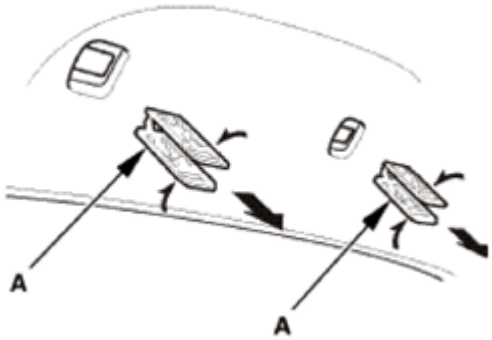

Fig. 268: Removing Grab Handles Clips
Courtesy of AMERICAN HONDA MOTOR CO., INC.

26. Sunvisor - Both Sides

NOTE: Repeat this procedure on the opposite side.

1. Push the tab (A) with a flat-tip screwdriver through the hole in the front side of the bracket cover (B).

NOTE: Make sure the tab is unlocked.

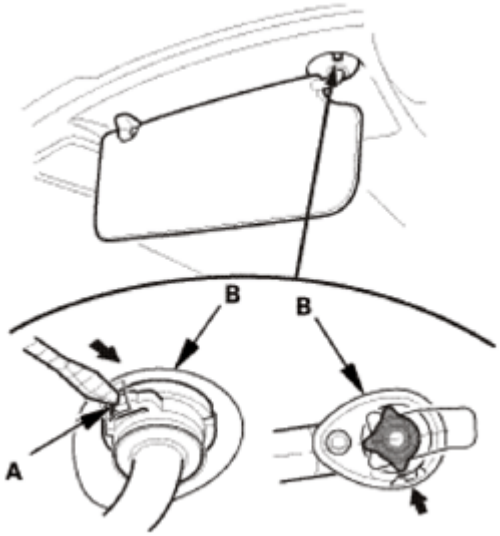

Fig. 269: Pushing Tab Using Flat-Tip Screwdriver
Courtesy of AMERICAN HONDA MOTOR CO., INC.

2. While pushing in the tab (A) with a flat-tip screwdriver, release the sunvisor (B) from the holder (C), and rotate the sunvisor backward 45 °.

NOTE: Make sure the tab slides into the bracket cover as you rotate the sunvisor.

GETtheMANUALS.org

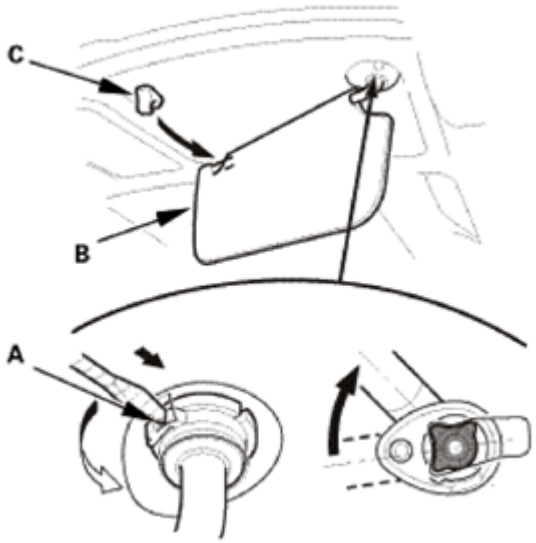

Fig. 270: Pushing Tab Using Flat-Tip Screwdriver
Courtesy of AMERICAN HONDA MOTOR CO., INC.

3. Disconnect the connector (A), then remove the sunvisor (B).

NOTE: **If the sunvisor cannot be removed, the tab has not rotated into the bracket cover. Repeat step 2 to rotate the tab.**

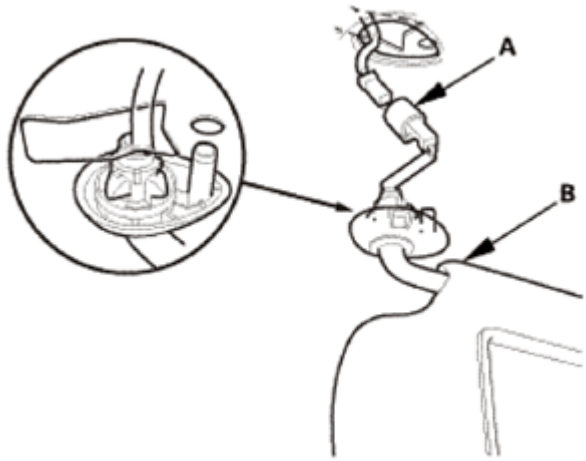

Fig. 271: Identifying Connector And Sunvisor
Courtesy of AMERICAN HONDA MOTOR CO., INC.

27. Sunvisor Holder - Both Sides

NOTE: **Repeat this procedure on the opposite side.**

1. Turn the sunvisor holder (A) 45 ° counterclockwise, then remove it from the holder grommet (B).

GETtheMANUALS.org

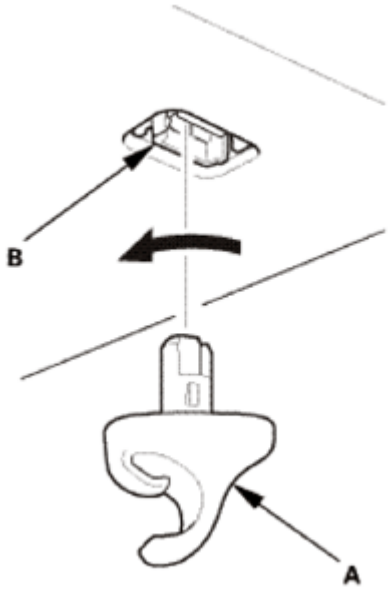

Fig. 272: Turning Sunvisor Holder
Courtesy of AMERICAN HONDA MOTOR CO., INC.

2. Remove the holder grommet (A).

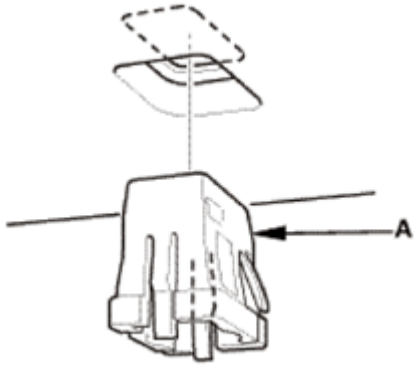

Fig. 273: Identifying Holder Grommet
Courtesy of AMERICAN HONDA MOTOR CO., INC.

28. Headliner
    1. Without moonroof: Disconnect the connector (A), and detach the harness clips (B) from the driver's side A-pillar.

GETtheMANUALS.org

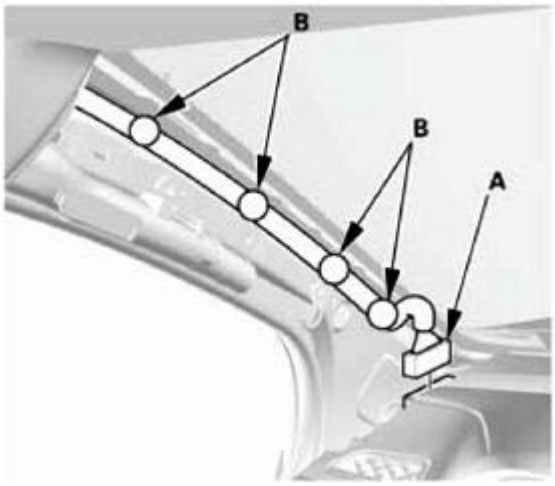

Fig. 274: Identifying Headliner Connector And Harness Clips (Driver Side A-Pillar)
Courtesy of AMERICAN HONDA MOTOR CO., INC.

2. Disconnect the connectors (A), and detach the harness clips (B) from the passenger's side A-pillar.

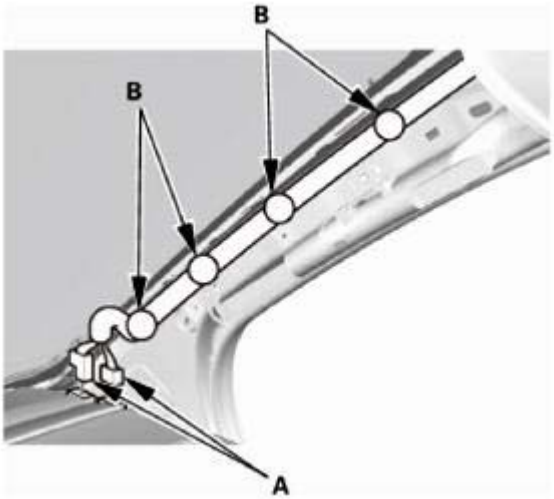

Fig. 275: Identifying Headliner Connector And Harness Clips (Passenger Side A-Pillar)
Courtesy of AMERICAN HONDA MOTOR CO., INC.

3. Disconnect the connectors (A), and detach the connector clips (B) and the harness clip (C) from the right quarter pillar.

GETtheMANUALS.org

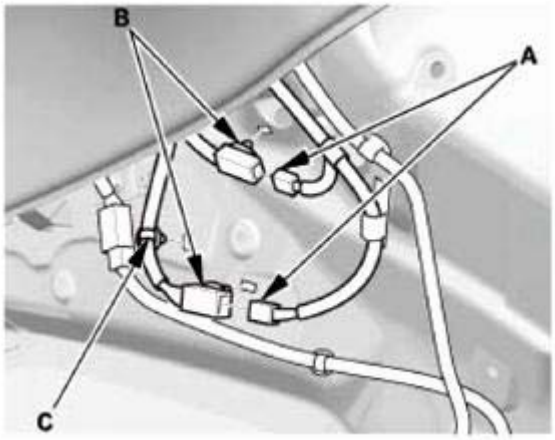

Fig. 276: Identifying Headliner Connector And Harness Clips (Right Quarter Pillar)
Courtesy of AMERICAN HONDA MOTOR CO., INC.

4. Slide the front seats all the way back, and recline the seat-back fully.
5. Fold down the rear seats.
6. Detach the clips (A) and release the fasteners (B) from the headliner (C) by pulling it down.
7. With the help of an assistant, lower the headliner.

Without moonroof

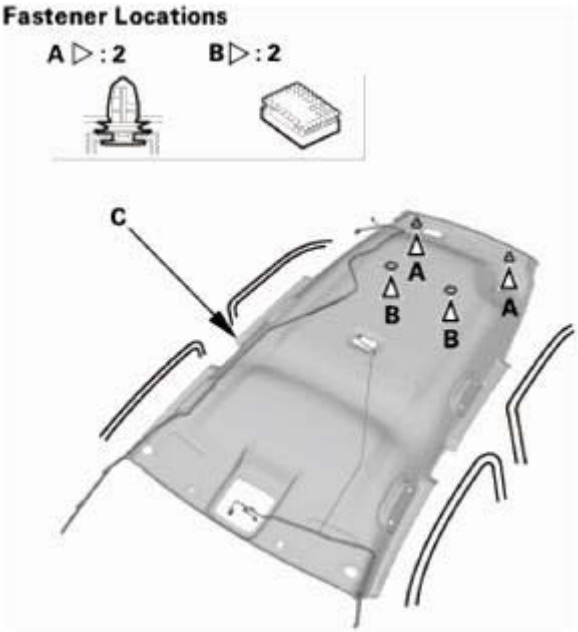

Fig. 277: Identifying Headliner, Fasteners And Clips (Without Moonroof)
Courtesy of AMERICAN HONDA MOTOR CO., INC.

With moonroof

GETtheMANUALS.org

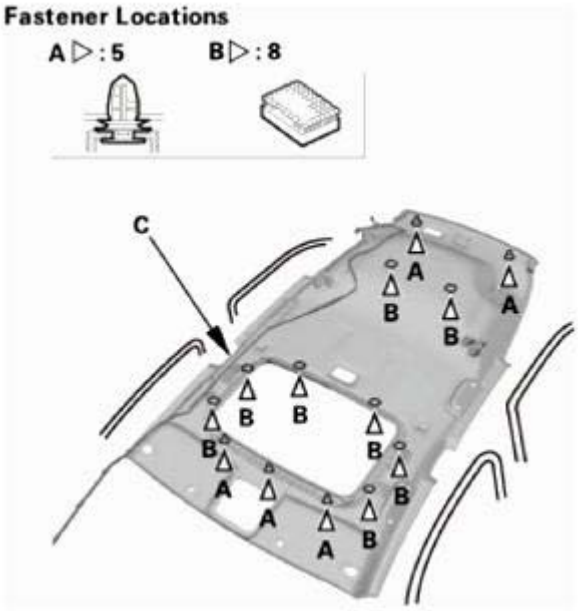

Fig. 278: Identifying Headliner, Fasteners And Clips (With Moonroof)
Courtesy of AMERICAN HONDA MOTOR CO., INC.

8. With the help of an assistant, remove the headliner (A) through the tailgate opening.

NOTE: **Do not bend the headliner. Bending the headliner will crease and damage it.**

Fig. 279: Identifying Headliner
Courtesy of AMERICAN HONDA MOTOR CO., INC.

INSPECTION

1. Seat Belt - Inspection (Out of Vehicle)

GETtheMANUALS.org

Out of Vehicle

For front seat belt retractors with seat belt tensioners, review **THE SRS COMPONENT LOCATIONS** , and **THE PRECAUTIONS AND PROCEDURES** before doing repairs or service.

Retractor

1. Before installing the retractor, check that the seat belt can be pulled out freely.
2. Make sure that the seat belt does not lock when the retractor (A) is leaned slowly up to 15 ° from the mounted position. The seat belt should lock when the retractor is leaned over 40 °. Do not attempt to disassemble the retractor.
3. Replace the seat belt with a new assembly if there is any abnormality. Do not disassemble any part of the seat belt for any reason.

Front

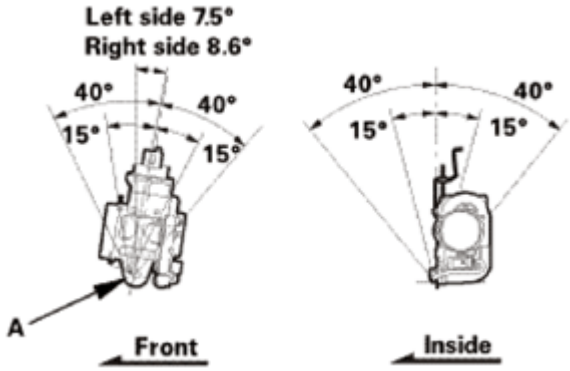

Fig. 280: Identifying Front Retractor Installing Angle
Courtesy of AMERICAN HONDA MOTOR CO., INC.

Rear

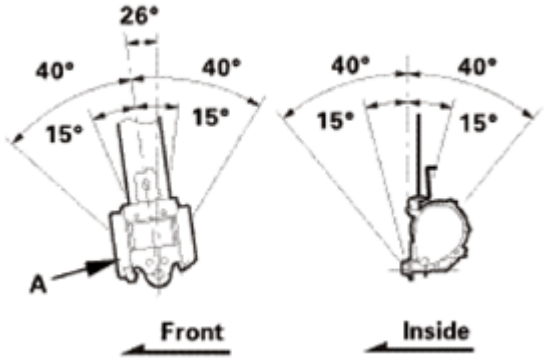

Fig. 281: Identifying Rear Retractor Installing Angle
Courtesy of AMERICAN HONDA MOTOR CO., INC.

Rear center

GETtheMANUALS.org

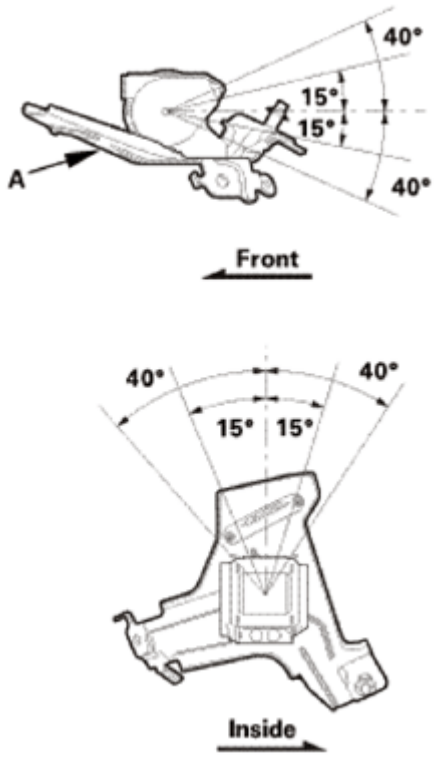

Fig. 282: Identifying Rear Center Retractor Installing Angle
Courtesy of AMERICAN HONDA MOTOR CO., INC.

INSTALLATION

SRS components are located in this area. Review the **SRS COMPONENT LOCATIONS** and the **PRECAUTIONS AND PROCEDURES** before doing repairs or service.

1. Headliner - Check
    1. If the side curtain airbag has deployed, replace the headliner and removed trim pieces, along with the other parts listed for side curtain airbag deployment.
    2. To prevent the side curtain airbags from deploying improperly and possibly causing injury, inspect the headliner and all removed trim. Replace any pieces with the following damage:
        - Any creases or tears in the headliner (A)
        - Any damages around the grab handle holes (B) or the sunvisor holes (C) in the headliner
        - Any clip bases (D) which have come off the headliner
        - Any fasteners (E) or clip bases (F) which have come off the headliner

GETtheMANUALS.org

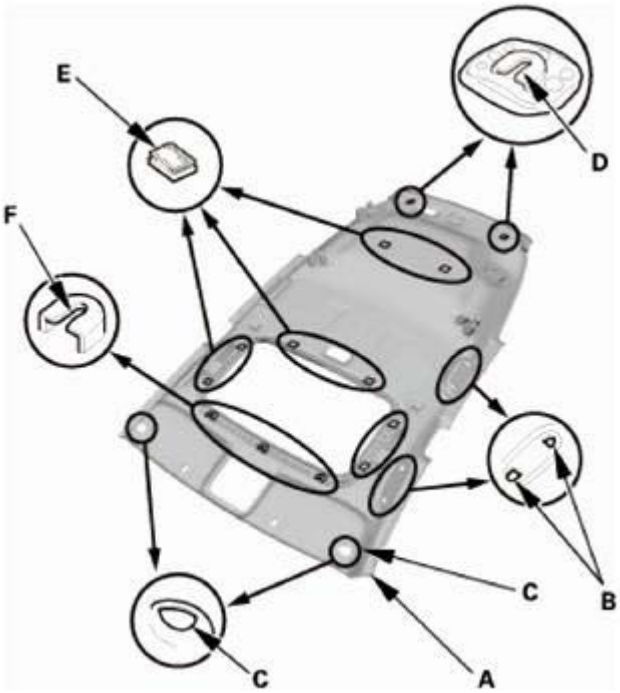

Fig. 283: Identifying Headliner, Fasteners, Clip Bases, Handle And Sunvisor Holes
Courtesy of AMERICAN HONDA MOTOR CO., INC.

2. Headliner
    1. With the help of an assistant, slide the headliner (A) through the tailgate opening.

NOTE: **Do not bend the headliner. Bending the headliner will crease and damage it.**

Fig. 284: Identifying Headliner
Courtesy of AMERICAN HONDA MOTOR CO., INC.

GETtheMANUALS.org

2. With the help of an assistant, install the headliner (A), then push on the clips (B) and the fasteners (C) which will snap into place securely.

Without moonroof

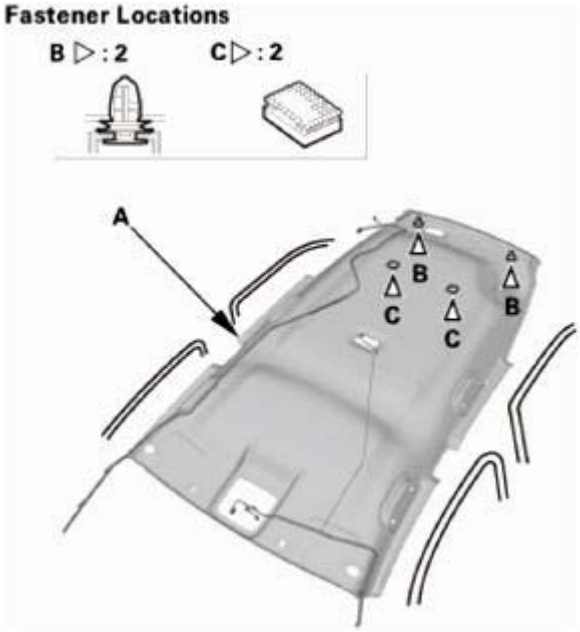

Fig. 285: Identifying Headliner, Fasteners And Clip
Courtesy of AMERICAN HONDA MOTOR CO., INC.

With moonroof

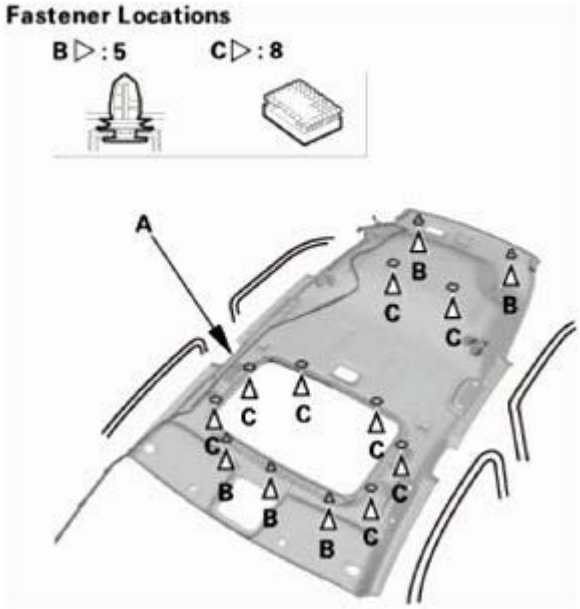

Fig. 286: Identifying Headliner, Fasteners And Clip (With Moonroof)

GETtheMANUALS.org

Courtesy of AMERICAN HONDA MOTOR CO., INC.

3. At the right quarter pillar, connect the connectors (A), and install the connector clips (B) and the harness clip (C).

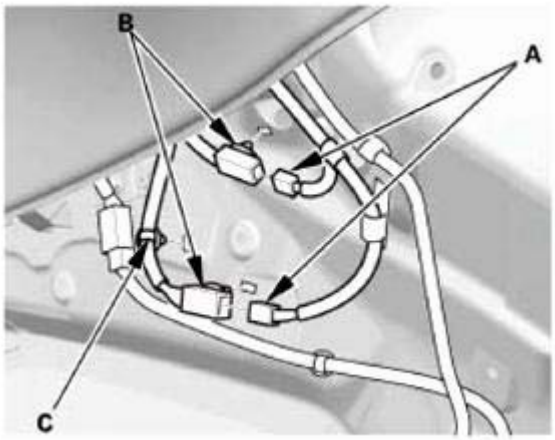

Fig. 287: Identifying Connectors, Connector Clips And Harness Clip (Right Quarter Pillar)
Courtesy of AMERICAN HONDA MOTOR CO., INC.

4. At the passenger's A-pillar, connect the connectors (A), and install the harness clips (B).

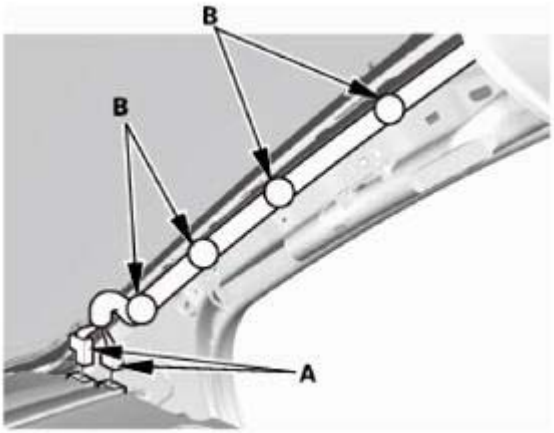

Fig. 288: Identifying Connectors And Harness Clip (Passenger A-Pillar)
Courtesy of AMERICAN HONDA MOTOR CO., INC.

5. Without moonroof: At the driver's A-pillar, connect the connector (A), and install the harness clips (B).

GETtheMANUALS.org

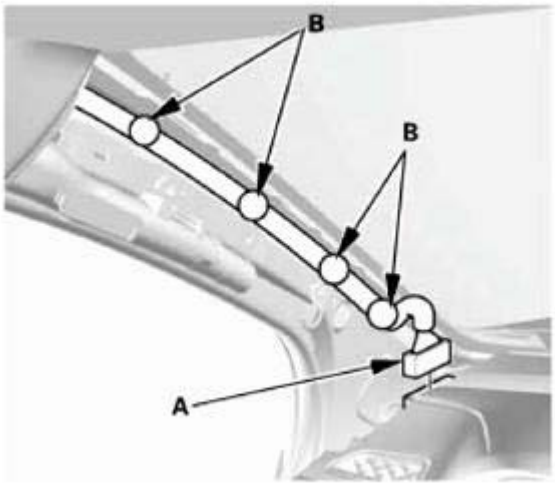

Fig. 289: Identifying Connectors And Harness Clip (Driver A-pillar)
Courtesy of AMERICAN HONDA MOTOR CO., INC.

3. Sunvisor Holder
    1. Install the holder (A) into the holder grommet (B) by turning it 45 ° clockwise.
    2. Install the holder and the holder grommet as an assembly into the body by pushing it until the hooks snap into place securely.

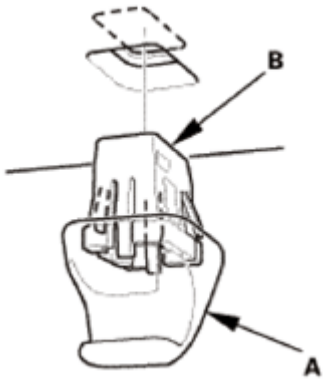

Fig. 290: Identifying Holder And Holder Grommet
Courtesy of AMERICAN HONDA MOTOR CO., INC.

4. Sunvisor - Check
    1. If the side curtain airbag has deployed, replace the sunvisor, along with the other parts listed for side curtain airbag deployment.
    2. If the side curtain airbag has not deployed, inspect the sunvisor for damage. A damaged sunvisor may cause the side curtain airbags to deploy improperly, possibly causing injury. Replace the sunvisor if it has any of the following damage:
        - Any cracks in the sunvisor bracket (A)
        - Any cracks in the sunvisor bracket cover (B)
        - Any bends or cracks in the sunvisor shaft (C)

GETtheMANUALS.org

- Any cracks in the sunvisor base (D)
- Any cracks in the vanity mirror base (E)

3. If the holder grommet is damaged or stress-whitened, replace the holder grommet and the holder as an assembly.

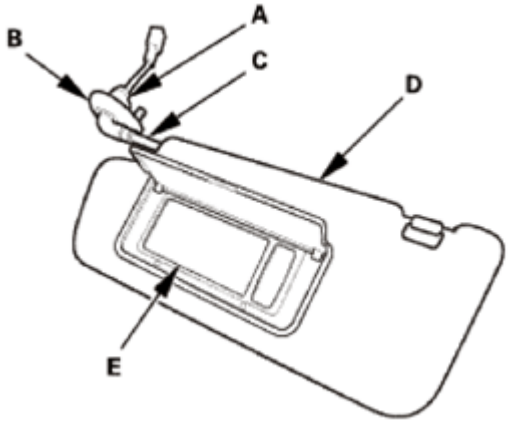

Fig. 291: Identifying Sunvisor Bracket, Cover, Shaft, Base And Vanity Mirror Base
Courtesy of AMERICAN HONDA MOTOR CO., INC.

5. Sunvisor - Both Sides

NOTE: Repeat this procedure on the opposite side.

1. Connect the connector (A), and install the sunvisor (B).

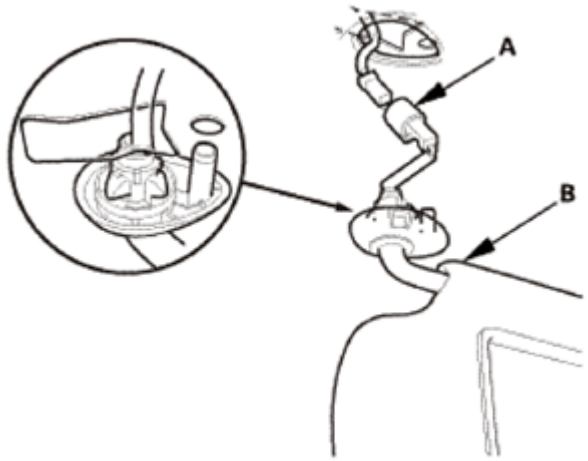

Fig. 292: Identifying Connector And Sunvisor
Courtesy of AMERICAN HONDA MOTOR CO., INC.

2. While holding the bracket cover (A), rotate the sunvisor (B) forward until the tab (C) snaps into place.

GETtheMANUALS.org

3. Gently pull down on the sunvisor to make sure it is properly secured in the body.
4. Rotate the sunvisor into the holder (D).

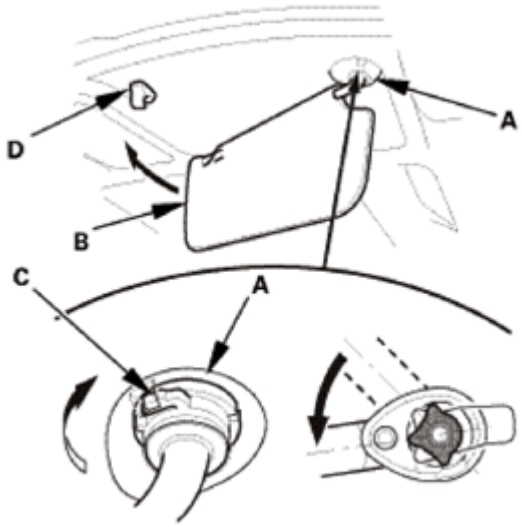

Fig. 293: Rotating Sunvisor Into Holder
Courtesy of AMERICAN HONDA MOTOR CO., INC.

6. Grab Handle - Check
    1. If the side curtain airbag has not deployed, inspect the grab handle (A) for damage. A damaged grab handle may cause the side curtain airbag to deploy improperly, possibly causing injury. Replace the grab handle if it has any of the following damage:
        - Any cracks or breakage in the grab handle
        - Any cracks or stress-whitening in the caps (B)

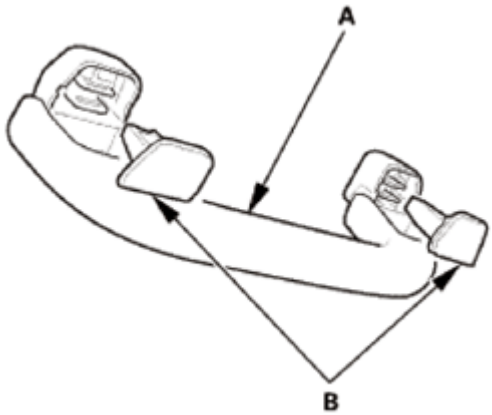

Fig. 294: Identifying Grab Handle With Caps
Courtesy of AMERICAN HONDA MOTOR CO., INC.

7. Grab Handles for One Vehicle
    1. Install the clips (A) on the grab handle (B).

GETtheMANUALS.org

2. Install the caps (C) fully into the clips.

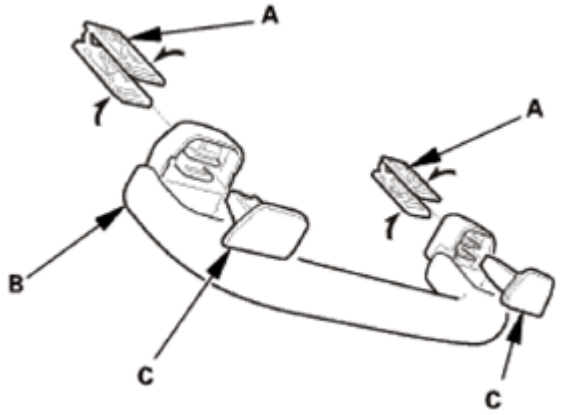

Fig. 295: Installing Clips On Grab Handle
Courtesy of AMERICAN HONDA MOTOR CO., INC.

3. Position the grab handle (A) on the grab handle bracket (B).
4. Push on the grab handle until the clips (C) snap into place securely.

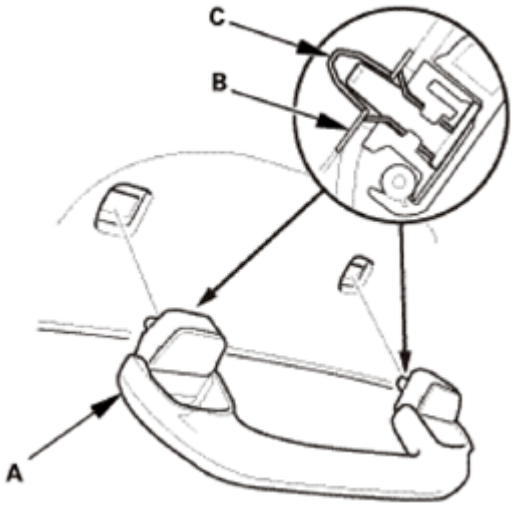

Fig. 296: Identifying Grab Handle, Grab Handle Bracket And Clip
Courtesy of AMERICAN HONDA MOTOR CO., INC.

8. Cargo Area Light
    1. Connect the connector.
    2. Install the cargo area light (A).
    3. Install the bulb.
    4. Carefully install the lens (B).

GETtheMANUALS.org

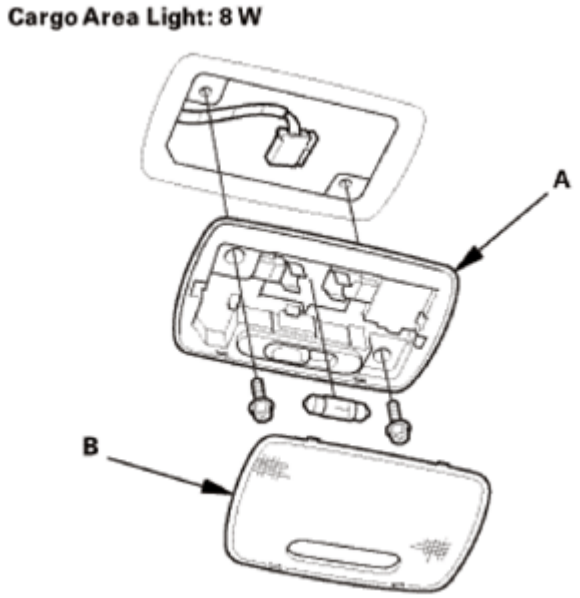

Fig. 297: Identifying Cargo Area Light And Lens
Courtesy of AMERICAN HONDA MOTOR CO., INC.

9. Rear Controller and Screen (With RES)
    1. Install the rear controller and screen (A).
    2. Connect the connector.

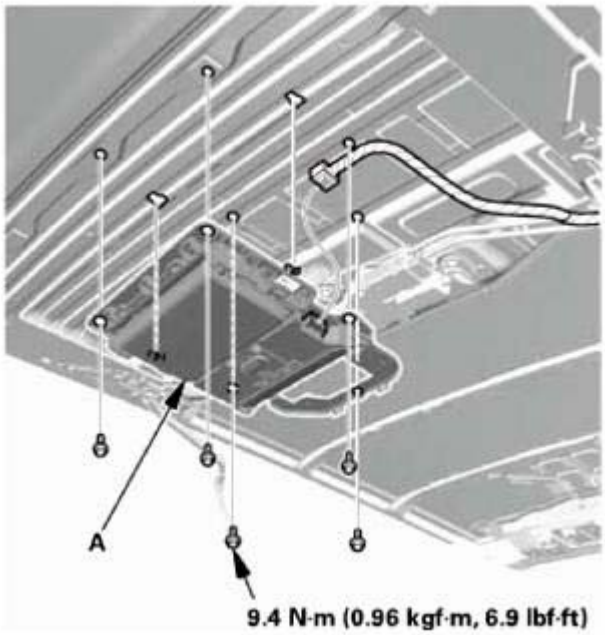

Fig. 298: Identifying Rear Controller And Screen (With RES)
Courtesy of AMERICAN HONDA MOTOR CO., INC.

10. Rear Display Cover (With RES)

GETtheMANUALS.org

1. Install the rear display cover (A).

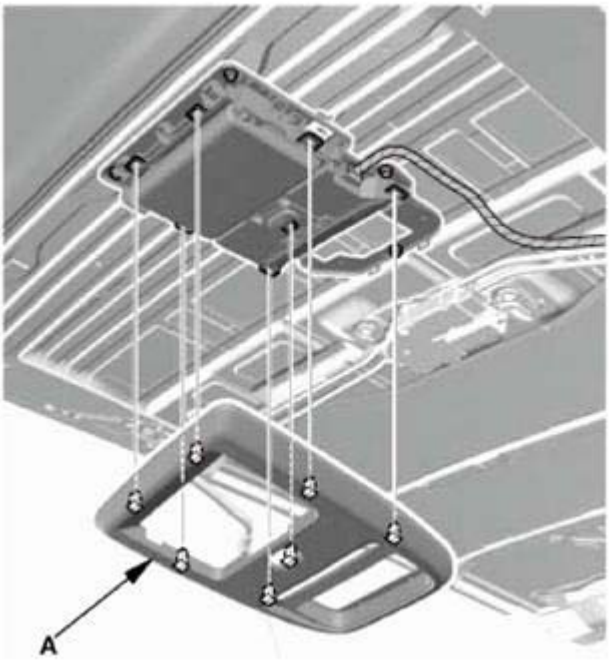

Fig. 299: Identifying Rear Display Cover
Courtesy of AMERICAN HONDA MOTOR CO., INC.

2. Connect the connector.
3. Install the ceiling light (B).
4. Carefully install the lenses (C).

GETtheMANUALS.org

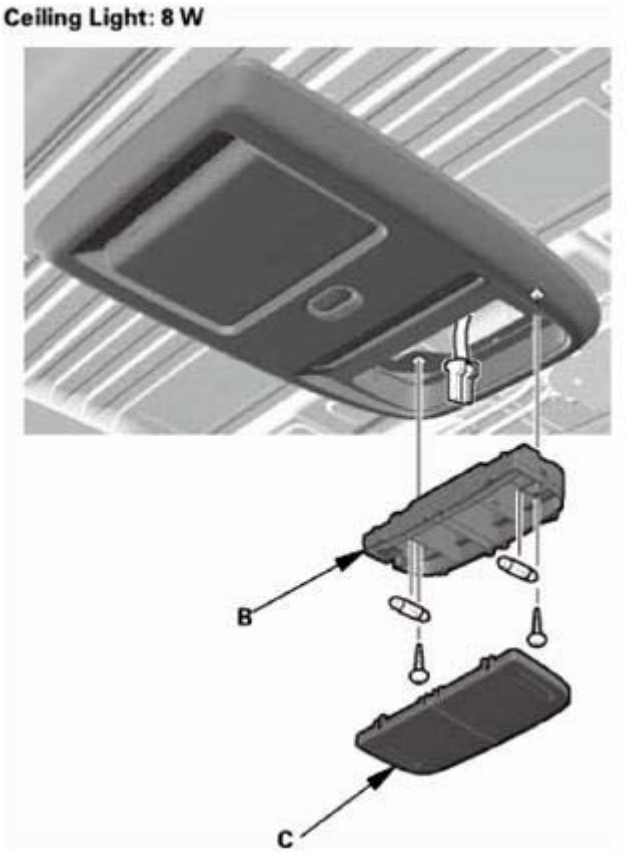

Fig. 300: Identifying Connector, Ceiling Light, Lenses
Courtesy of AMERICAN HONDA MOTOR CO., INC.

11. Ceiling Light (without RES)
    1. Connect the connector.
    2. Install the ceiling light (A).
    3. Install the bulb.
    4. Carefully install the lens (B).

GETtheMANUALS.org

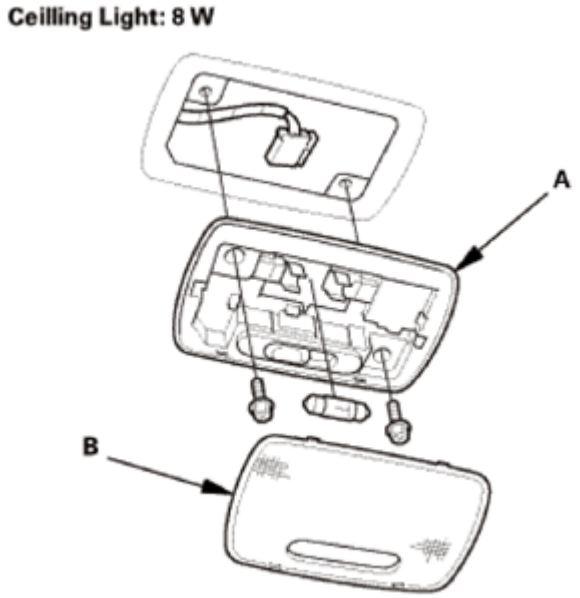

Fig. 301: Identifying Ceiling Light And Lens
Courtesy of AMERICAN HONDA MOTOR CO., INC.

12. Roof Console Assembly
    1. Connect the connectors (A), then install the roof console assembly (B).
    2. Install the screws (C, D), then install the lenses (E).

GETtheMANUALS.org

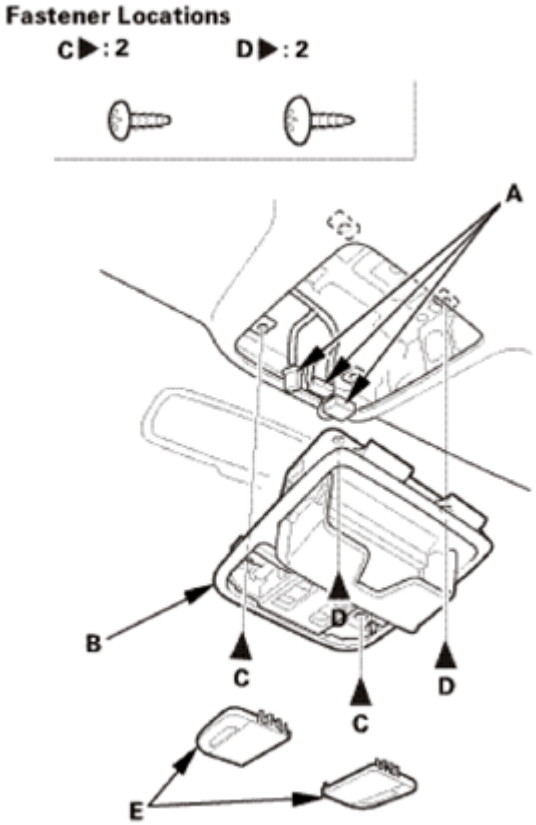

Fig. 302: Identifying Lenses, Screws, Connectors And Roof Console Assembly
Courtesy of AMERICAN HONDA MOTOR CO., INC.

13. Quarter Pillar Trim - Check
    1. If the side curtain airbag has deployed, replace the quarter pillar trim (A), along with the other parts listed for side curtain airbag deployment.
    2. If the side curtain airbag has not deployed, check the quarter pillar trim and note the following items:
        - To prevent the side curtain airbags from deploying improperly and possibly causing injury, inspect the quarter pillar trim and replace it with a new one if it has any of the following damage:
            - Any cracks, deformations, or stress-whitening in the quarter pillar trim
            - Any cracks or stress-whitened areas in the clip seating surfaces (B)
    3. After checking and adjusting the overlap between the headliner and the quarter pillar trim, replace the upper clip (C) with a new one.
    4. If the clips (D) are damaged or stress-whitened, replace them with new ones.

GETtheMANUALS.org

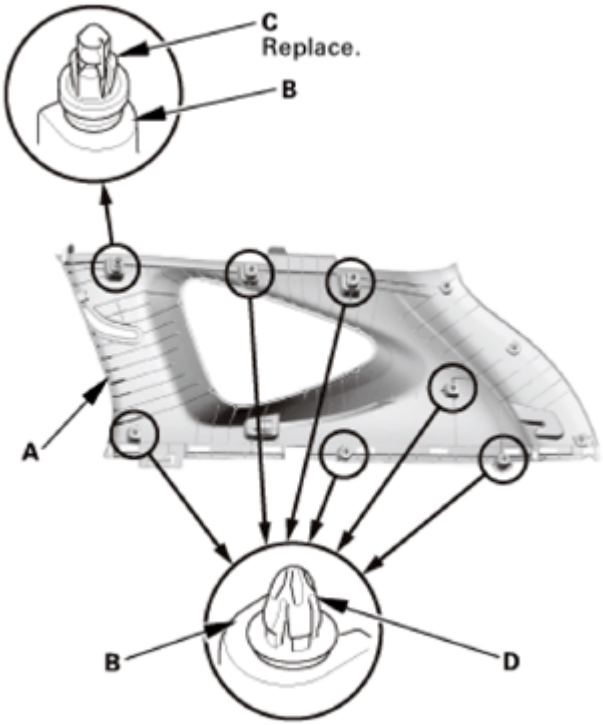

Fig. 303: Identifying Quarter Pillar Trim, Clip Seating Surfaces And Upper Clip
Courtesy of AMERICAN HONDA MOTOR CO., INC.

14. Headliner/Pillar Trim Overlap - Check

Checking and Adjusting the Headliner/Pillar Trim Overlap

To prevent the side curtain airbag from deploying and damaging the pillar trim (A-pillar trim, B-pillar trim, quarter pillar trim), the overlap between the headliner and pillar trim must be 8.0+0/-2.0 mm (0.31+0/-0.08 in). To check the overlap, do this:

1. Install the headliner (A) and the pillar trim (B).

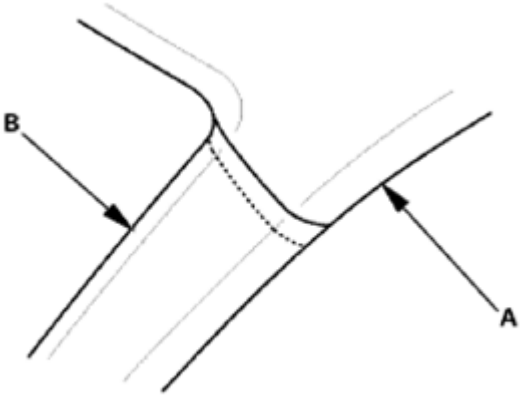

This illustration shows the A-pillar.

GETtheMANUALS.org

Fig. 304: Identifying Headliner And Pillar Trim
Courtesy of AMERICAN HONDA MOTOR CO., INC.

2. Apply masking tape (A) to the headliner (B) to mark the upper edge of the pillar trim (C).

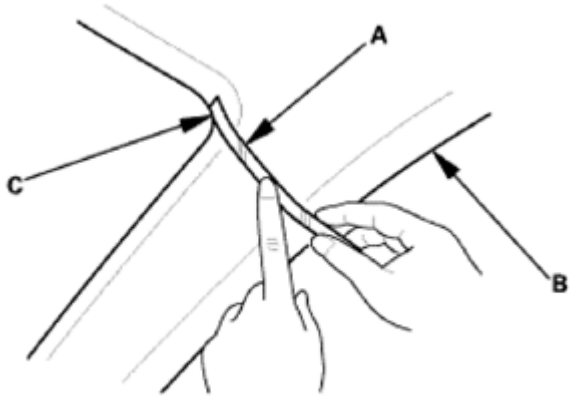

This illustration shows the A-pillar.

Fig. 305: Applying Masking Tape On Headliner
Courtesy of AMERICAN HONDA MOTOR CO., INC.

3. Remove the pillar trim, and measure the headliner overlap.
   - If the overlap is 8.0+0/-2.0 mm (0.31+0/-0.08 in), remove the tape, and install the pillar trim.
   - If the overlap is more than 8.0 mm (0.31 in), go to step 4.

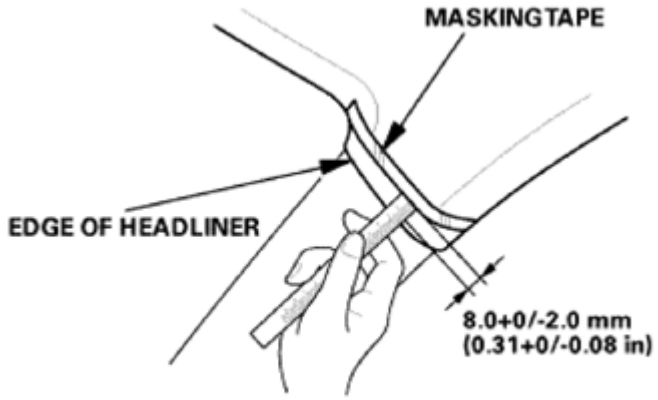

This illustration shows the A-pillar.

Fig. 306: Measuring Headliner Overlap
Courtesy of AMERICAN HONDA MOTOR CO., INC.

4. Carefully trim the headliner with a utility knife, reducing the overlap to 8.0+0/-2.0 mm (0.31+0/-0.08 in).
5. Remove the tape, and install the pillar trim.

GETtheMANUALS.org

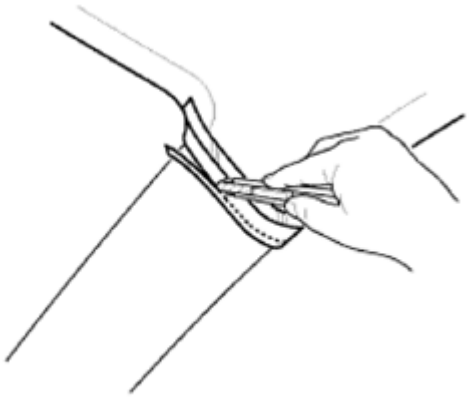

This illustration shows the A-pillar.

Fig. 307: Installing Pillar Trim
Courtesy of AMERICAN HONDA MOTOR CO., INC.

15. Quarter Pillar Trim - Both Sides
    1. Install a new clip (A) to the quarter pillar trim (B).

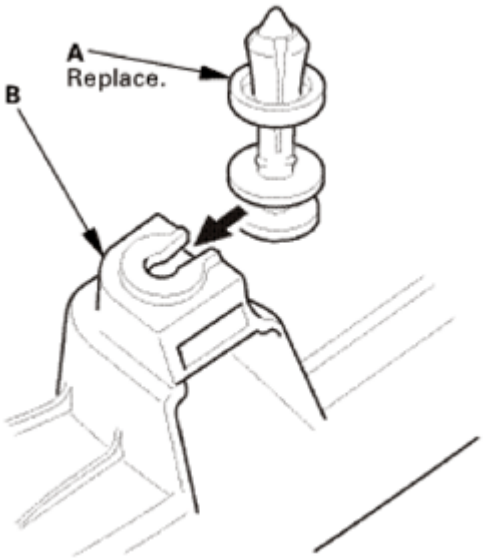

Fig. 308: Installing Clip Into Quarter Pillar Trim
Courtesy of AMERICAN HONDA MOTOR CO., INC.

    2. Pass the rear seat belt lower anchor (A) through the hole in the quarter pillar trim (B).
    3. Fit the clips into the holes in the quarter pillar.
    4. Lightly push the quarter pillar trim into place, then install the trim.

NOTE:

- **Make sure the side curtain airbag is not tucked under the clips or the ribs.**

GETtheMANUALS.org

- **Do not push too hard on the quarter pillar trim. If you push too hard, the clip will be damaged, and it will not hold the trim properly.**
- **Gently tug on the quarter pillar trim to verify that all clips are securely fastened.**
- **Make sure the clips (C, D, and E) snap into place securely.**

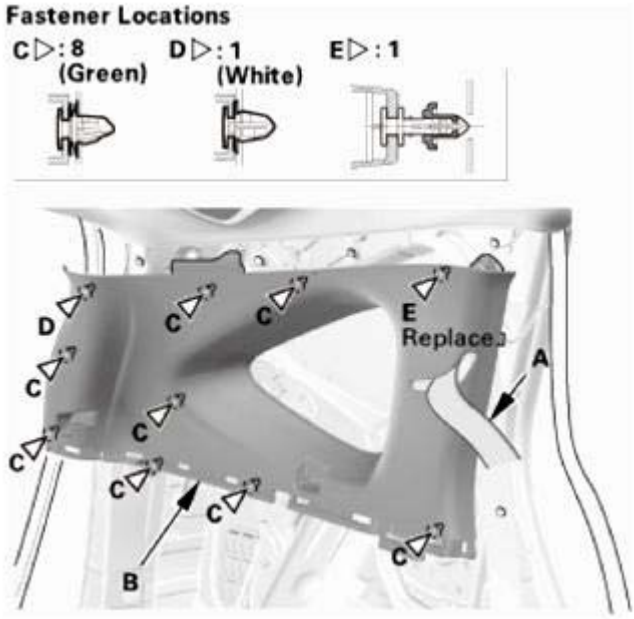

Fig. 309: Identifying Rear Seat Belt Lower Anchor And Quarter Pillar Trim With Clip
Courtesy of AMERICAN HONDA MOTOR CO., INC.

16. Rear Side Trim Panel - Both Sides

NOTE: Repeat this procedure on the opposite side.

1. Install the rear seat release cable (A) to the clips (B) of the rear side trim panel (C).

NOTE: Align the marks (D) with the clips as shown.

GETtheMANUALS.org

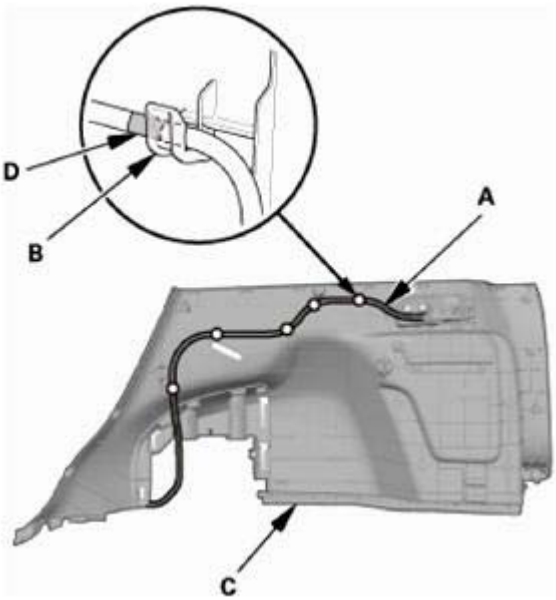

Fig. 310: Identifying Rear Side Trim Panel, Rear Seat Release Cable, Clip And Marks
Courtesy of AMERICAN HONDA MOTOR CO., INC.

2. Install the rear seat release lever (A) to the rear side trim panel (B).

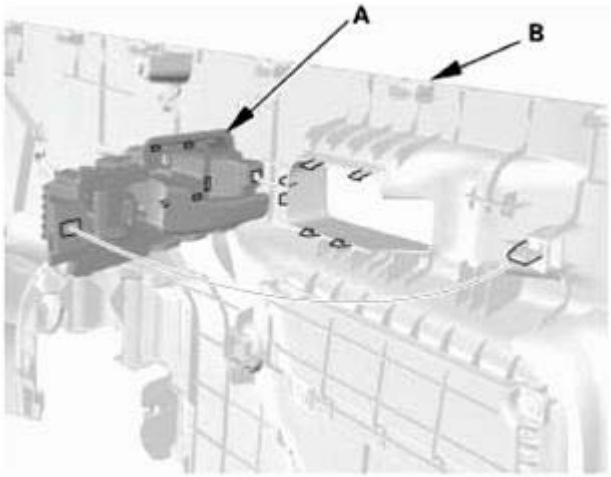

Fig. 311: Identifying Rear Seat Release Lever And Rear Side Trim Panel
Courtesy of AMERICAN HONDA MOTOR CO., INC.

3. Install the rear side trim panel (A). Make sure the hooks (B), the tabs (C), and the clips (D, E) snap into place securely.
4. Install the clips (F, G).

GETtheMANUALS.org

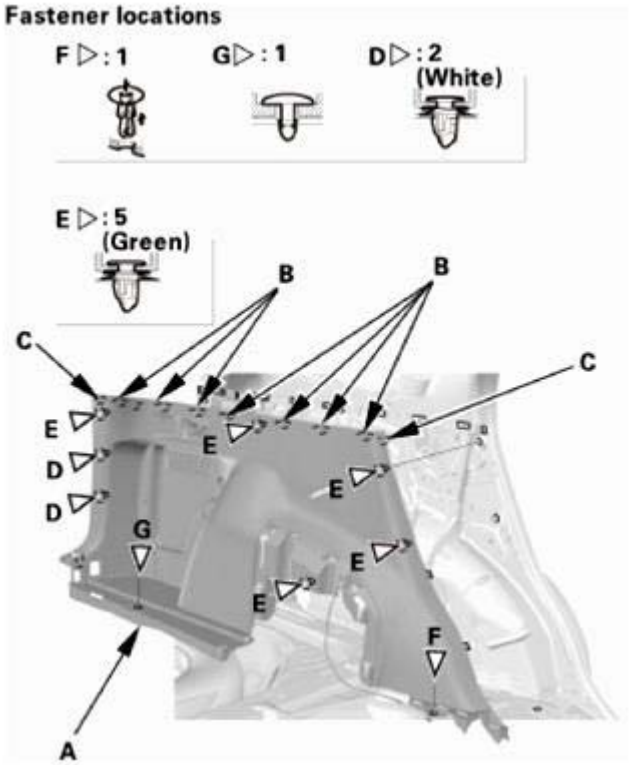

Fig. 312: Identifying Rear Side Trim Panel, Hooks And Tabs
Courtesy of AMERICAN HONDA MOTOR CO., INC.

5. Install the tie-down hook (A), then install the bolt (B).

Fig. 313: Identifying Tie-Down Hook And Bolt With Torque Specifications
Courtesy of AMERICAN HONDA MOTOR CO., INC.

GETtheMANUALS.org

6. Install the trunk hook (A).

Fig. 314: Identifying Trunk Hook
Courtesy of AMERICAN HONDA MOTOR CO., INC.

7. Install the screws (A), then install the rear seat release lever cap (B). Make sure the upper hook (C) and the lower hooks (D) snap into place securely.

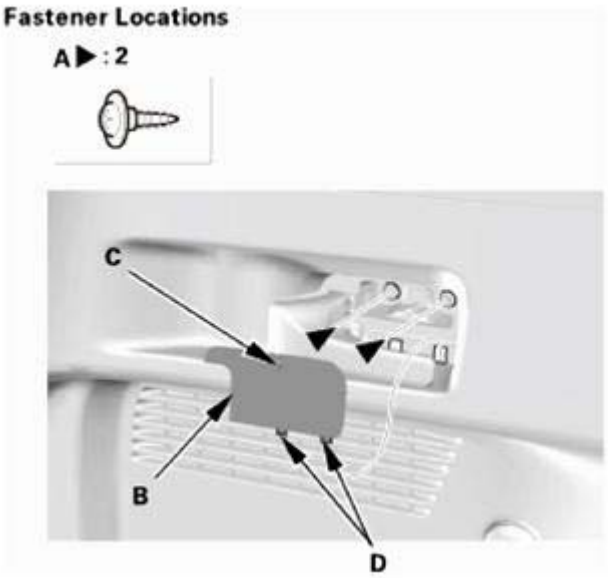

Fig. 315: Identifying Rear Seat Release Lever Cap, Hook And Screws
Courtesy of AMERICAN HONDA MOTOR CO., INC.

17. Rear Seat Belt Lower Anchor Bolt - Both Sides

NOTE: Repeat this procedure on the opposite side.

1. Install the rear seat belt lower anchor bolt (A).

GETtheMANUALS.org

NOTE: **Before installing the anchor bolt, make sure there are no twists or kinks in the seat belt.**

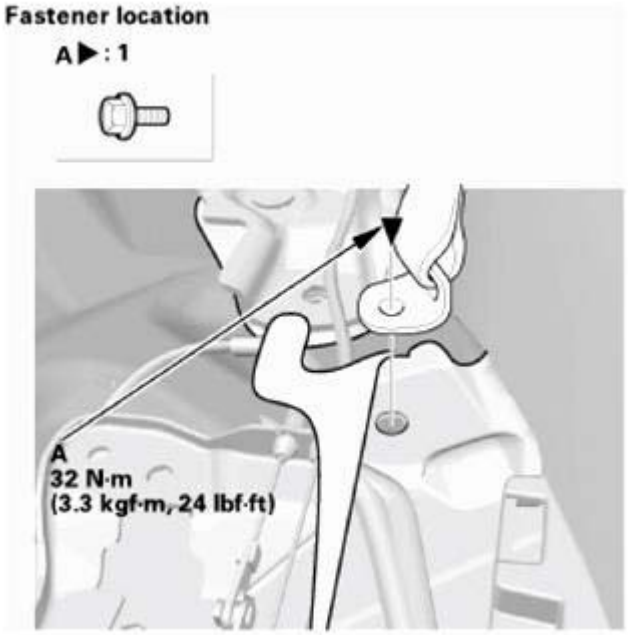

Fig. 316: Identifying Rear Seat Belt Lower Anchor Bolt With Torque Specifications
Courtesy of AMERICAN HONDA MOTOR CO., INC.

18. Rear Seat Cushion Foot Cover - Both Sides (Remove The Outer Left Side Only)
    1. Install the rear seat cushion foot cover (A). Make sure the clips (B) and the hooks (C) snap into place securely.

    Left side

GETtheMANUALS.org

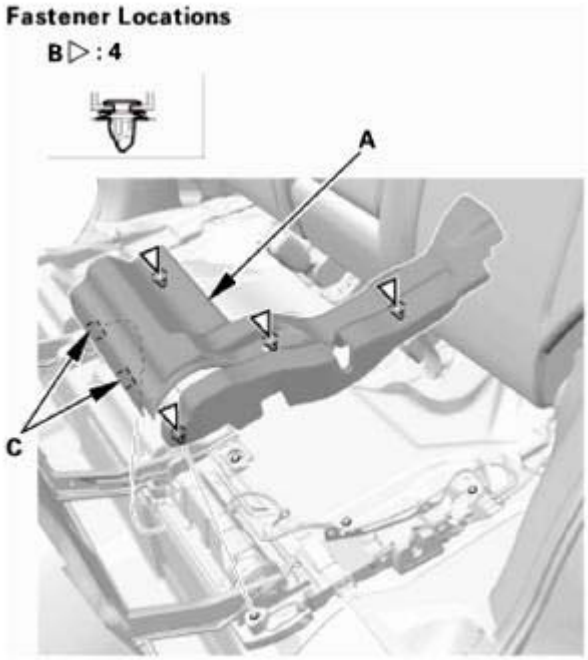

Fig. 317: Identifying Rear Seat Cushion Foot Cover, Clips And Hooks (Left Side)
Courtesy of AMERICAN HONDA MOTOR CO., INC.

Right side

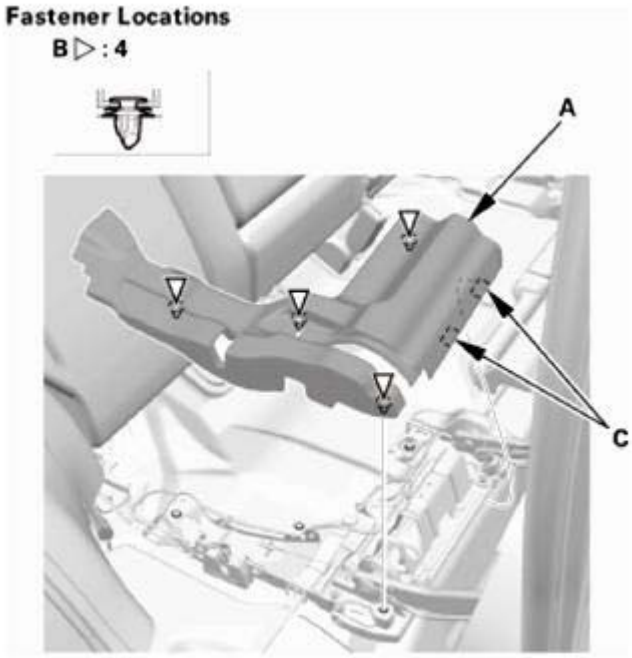

Fig. 318: Identifying Rear Seat Cushion Foot Cover, Clips And Hooks (Right Side)
Courtesy of AMERICAN HONDA MOTOR CO., INC.

19. Rear Carpet Trim - Both Sides

GETtheMANUALS.org

1. Install the rear carpet trims (A). Make sure the clips (B) and the hooks (C) snap into place securely.

Left side

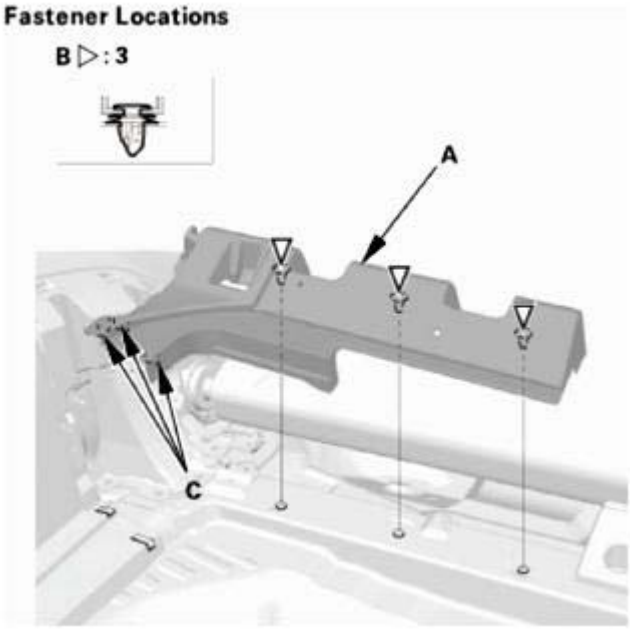

Fig. 319: Installing Rear Seat-Back Cover (Left Side)
Courtesy of AMERICAN HONDA MOTOR CO., INC.

Right side

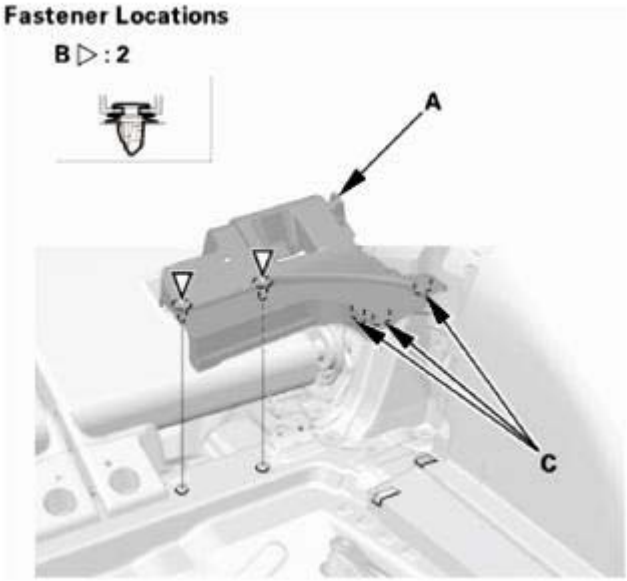

Fig. 320: Installing Rear Seat-Back Cover (Right Side)
Courtesy of AMERICAN HONDA MOTOR CO., INC.

GETtheMANUALS.org

2. Install the rear seat-back cover (A). Make sure the clips (B) snap into place securely.

Left side

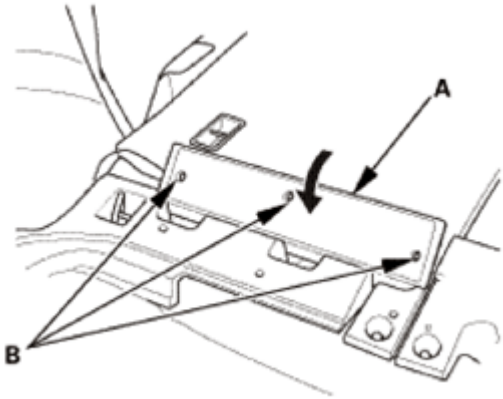

Fig. 321: Identifying Rear Seat Back Cover And Clip (Left Side)
Courtesy of AMERICAN HONDA MOTOR CO., INC.

Right side

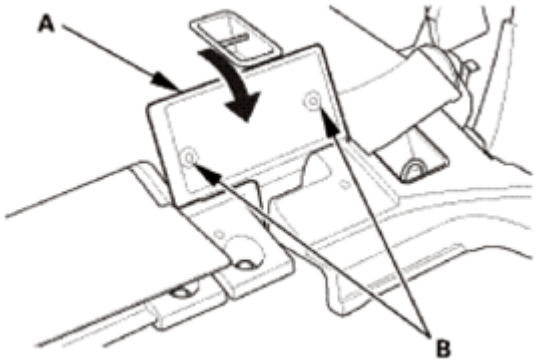

Fig. 322: Identifying Rear Seat Back Cover And Clip (Right Side)
Courtesy of AMERICAN HONDA MOTOR CO., INC.

20. Rear Damper Maintenance Cover - Both Sides

NOTE: Repeat this procedure on the opposite side.

1. Fold down the rear seat-back.
2. Install the rear damper maintenance cover (A). Make sure the hooks (B) snap into place securely.

GETtheMANUALS.org

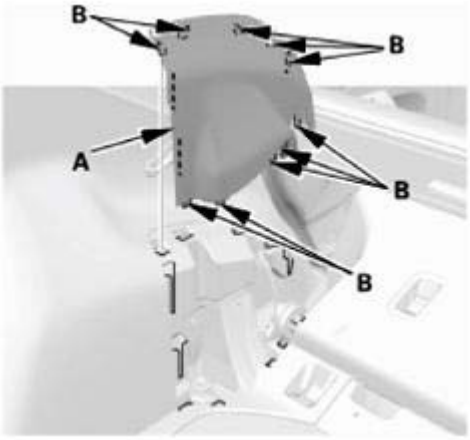

Fig. 323: Identifying Rear Damper Maintenance Cover And Hook
Courtesy of AMERICAN HONDA MOTOR CO., INC.

21. Rear Trim Panel
    1. Install the rear trim panel (A). Make sure the clips (B, C), the hooks (D), and the tabs (E) snap into place securely.
    2. Install the clips (F).

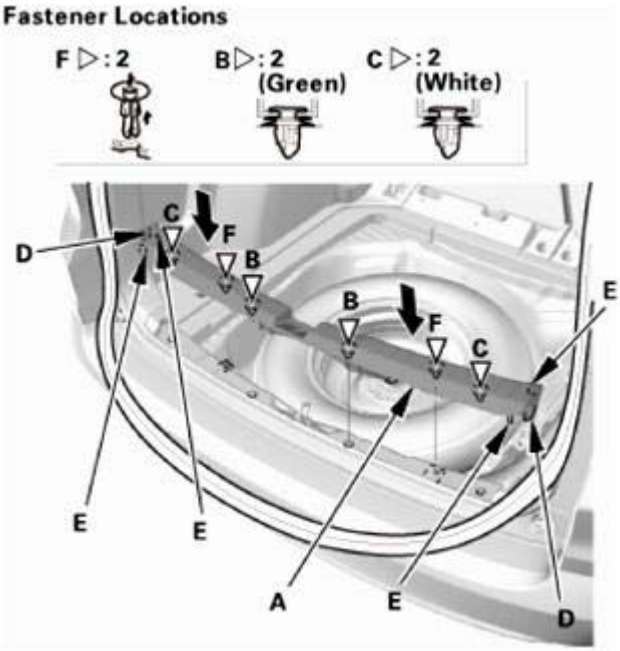

Fig. 324: Installing Rear Trim Panel
Courtesy of AMERICAN HONDA MOTOR CO., INC.

22. Tailgate Weatherstrip As Needed
    1. Locate the alignment mark (A) of the tailgate weatherstrip (B). Align the alignment mark (C) with the center of the lower area on the tailgate opening, then install the tailgate weatherstrip all the way

GETtheMANUALS.org

around.

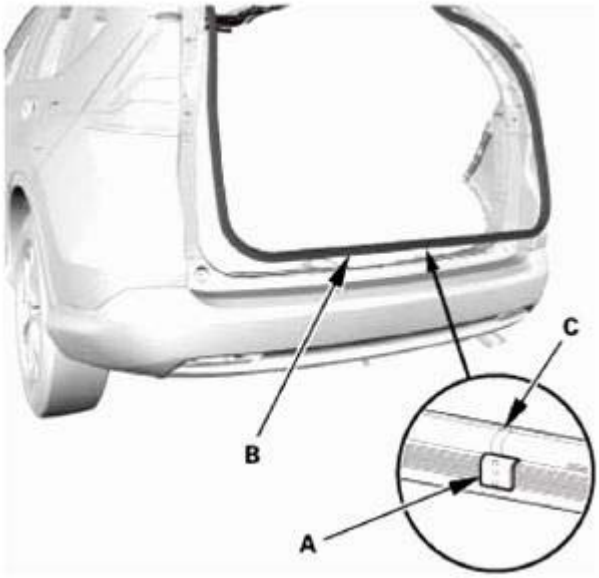

Fig. 325: Identifying Tailgate Weatherstrip With Alignment Mark
Courtesy of AMERICAN HONDA MOTOR CO., INC.

23. Cargo Floor Cover
    1. Install the cargo floor cover (A).

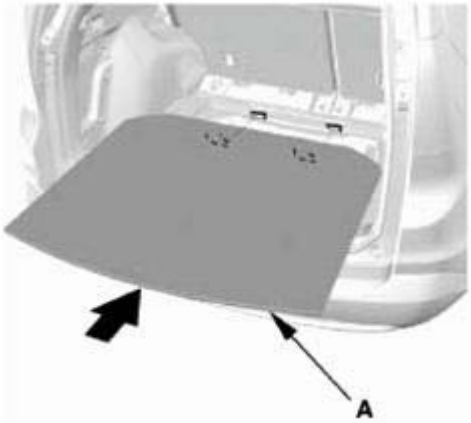

Fig. 326: Installing Cargo Floor Cover
Courtesy of AMERICAN HONDA MOTOR CO., INC.

24. Tonneau Cover (For Some Models)
    1. Install the tonneau cover (A).

GETtheMANUALS.org

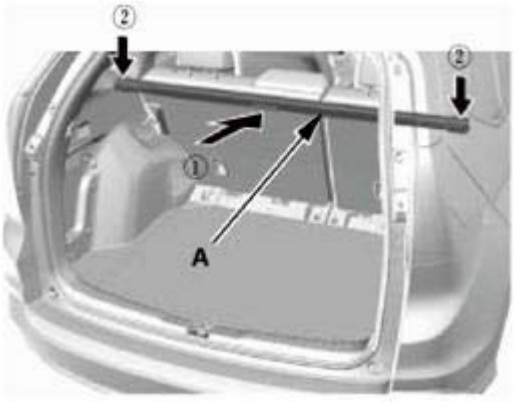

Fig. 327: Installing Tonneau Cover
Courtesy of AMERICAN HONDA MOTOR CO., INC.

25. B-Pillar Upper/Lower Trim - Check
    1. If the side curtain airbag has deployed, replace the B-pillar upper trim (A) and the B-pillar lower trim (B), along with the other parts listed for side curtain airbag deployment.
    2. If the side curtain airbag has not deployed, check the B-pillar upper/lower trim and note the following items:
        - To prevent the side curtain airbags from deploying improperly and possibly causing injury, inspect the trim and replace it with a new one if it has any of the following damage:
            - Any cracks or deformations in the B-pillar upper trim or the upper hooks (C), or any stress-whitened areas in the upper part of the trim
            - Any cracks or deformations in the B-pillar lower trim, or any breakages in the part (D) fitted with the B-pillar upper trim
            - Any cracks or stress-whitening areas in the clip seating surfaces (E)
        - If the clips (F) are damaged or stress-whitened, replace them with new ones.

Trim inspection

GETtheMANUALS.org

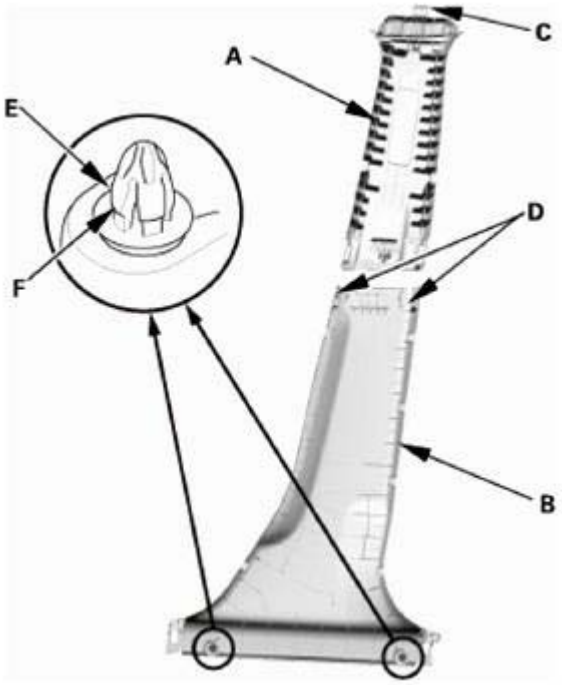

Fig. 328: Identifying B-Pillar Trim (Lower And Upper), Upper Hooks, Clip Seating Surfaces And Clip
Courtesy of AMERICAN HONDA MOTOR CO., INC.

26. Headliner/Pillar Trim Overlap - Check

Checking and Adjusting the Headliner/Pillar Trim Overlap

To prevent the side curtain airbag from deploying and damaging the pillar trim (A-pillar trim, B-pillar trim, quarter pillar trim), the overlap between the headliner and pillar trim must be 8.0+0/-2.0 mm (0.31+0/-0.08 in). To check the overlap, do this:

1. Install the headliner (A) and the pillar trim (B).

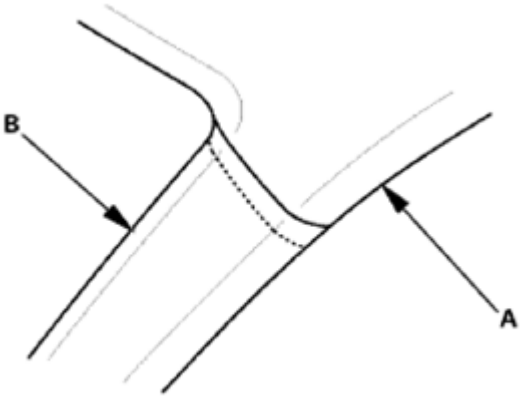

This illustration shows the A-pillar.

GETtheMANUALS.org

Fig. 329: Identifying Headliner And Pillar Trim
Courtesy of AMERICAN HONDA MOTOR CO., INC.

2. Apply masking tape (A) to the headliner (B) to mark the upper edge of the pillar trim (C).

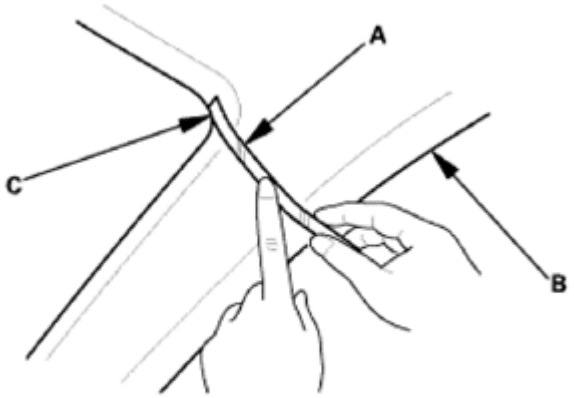

This illustration shows the A-pillar.

Fig. 330: Applying Masking Tape On Headliner
Courtesy of AMERICAN HONDA MOTOR CO., INC.

3. Remove the pillar trim, and measure the headliner overlap.
   - If the overlap is 8.0+0/-2.0 mm (0.31+0/-0.08 in), remove the tape, and install the pillar trim.
   - If the overlap is more than 8.0 mm (0.31 in), go to step 4.

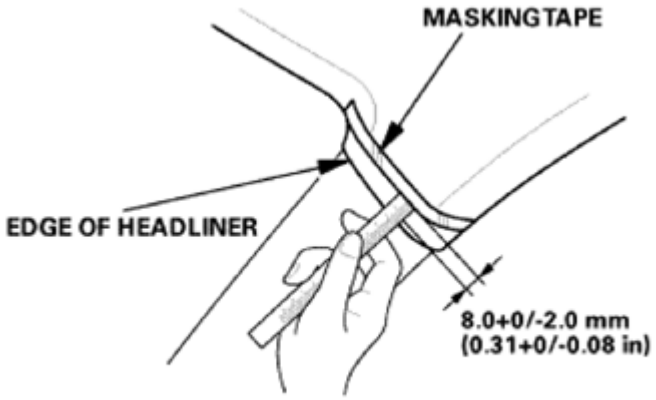

This illustration shows the A-pillar.

Fig. 331: Measuring Headliner Overlap
Courtesy of AMERICAN HONDA MOTOR CO., INC.

4. Carefully trim the headliner with a utility knife, reducing the overlap to 8.0+0/-2.0 mm (0.31+0/-0.08 in).
5. Remove the tape, and install the pillar trim.

GETtheMANUALS.org

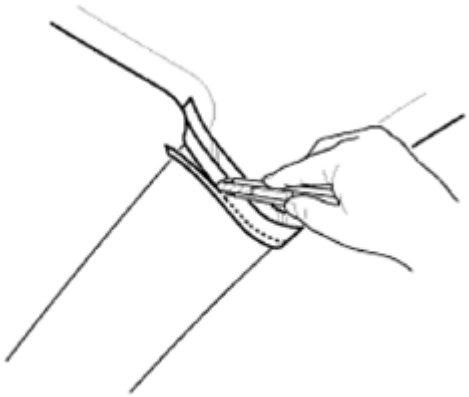

This illustration shows the A-pillar.

Fig. 332: Installing Pillar Trim
Courtesy of AMERICAN HONDA MOTOR CO., INC.

27. B-Pillar Upper Trim - Both Sides

NOTE: Repeat this procedure on the opposite side.

1. Install the upper hook (A) of the B-pillar upper trim (B) to the hole in the body. Push the bottom portion of the B-pillar upper trim to install the lower hooks (C). Make sure the hooks snap into place securely.

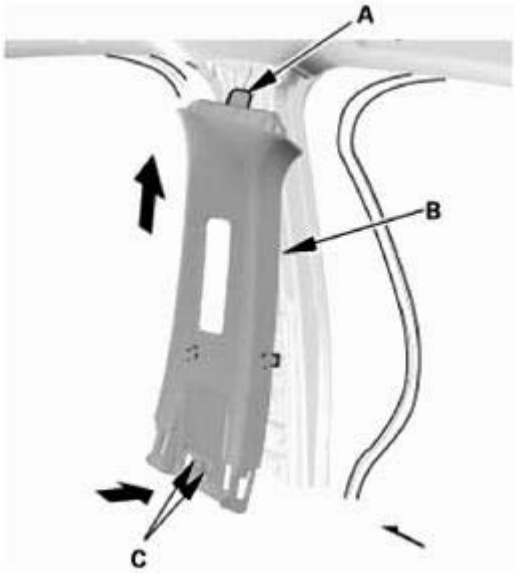

Fig. 333: Removing B-Pillar Upper Trim
Courtesy of AMERICAN HONDA MOTOR CO., INC.

28. Front Seat Belt Upper Anchor Bolt - Both Sides

GETtheMANUALS.org

NOTE: **Repeat this procedure on the opposite side.**

1. Install the front seat belt upper anchor bolt, then install the front seat belt shoulder anchor adjuster cap (A).

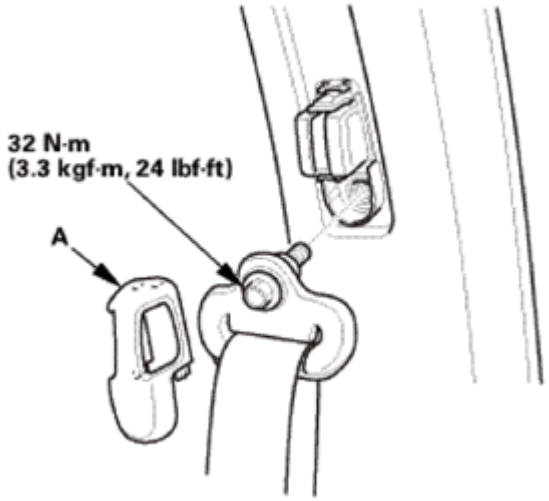

Fig. 334: Identifying Front Seat Belt Upper Anchor Bolt And Adjuster Cap With Torque Specification
Courtesy of AMERICAN HONDA MOTOR CO., INC.

29. B-Pillar Lower Trim - Both Sides

NOTE: **Repeat this procedure on the opposite side.**

1. Install the B-pillar lower trim (A). Make sure the clips (B) and the hooks (C) snap into place securely.

GETtheMANUALS.org

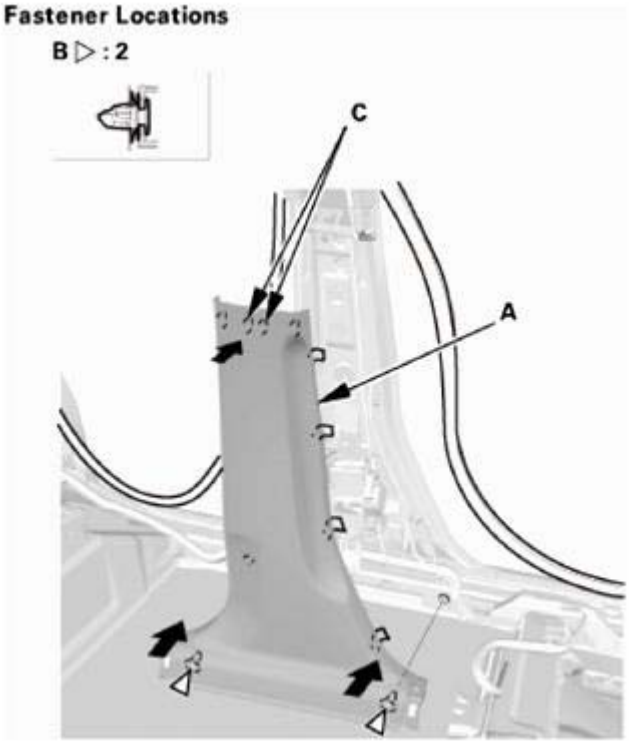

Fig. 335: Installing B-Pillar Lower Trim
Courtesy of AMERICAN HONDA MOTOR CO., INC.

30. Rear Door Opening Seal As Needed - Both Sides

NOTE: Repeat this procedure on the opposite side.

1. Install the rear door opening seal (A). Make sure the seal is installed securely into the hooks (B).

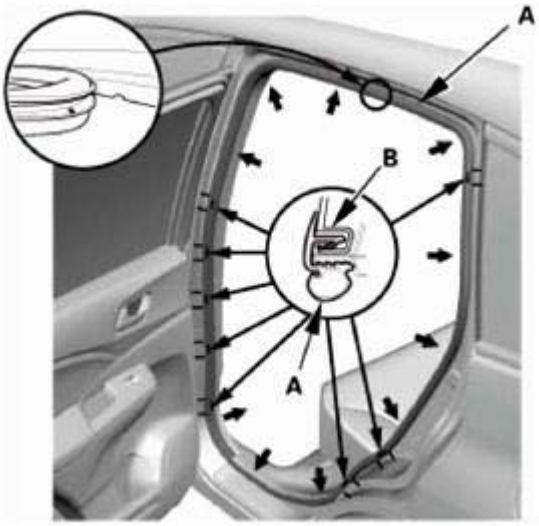

Fig. 336: Identifying Rear Door Opening Seal With Trim Hooks

GETtheMANUALS.org

Courtesy of AMERICAN HONDA MOTOR CO., INC.

31. Rear Door Sill Trim - Both Sides

NOTE: Repeat this procedure on the opposite side.

1. Pull the release strap to fold down the rear seat, then lift-up and latch the rear seat-back in the upright position.
2. Install the rear door inner sill trim (A). Make sure the clips (B, C), the hooks (D), and the tab (E) snap into place securely.

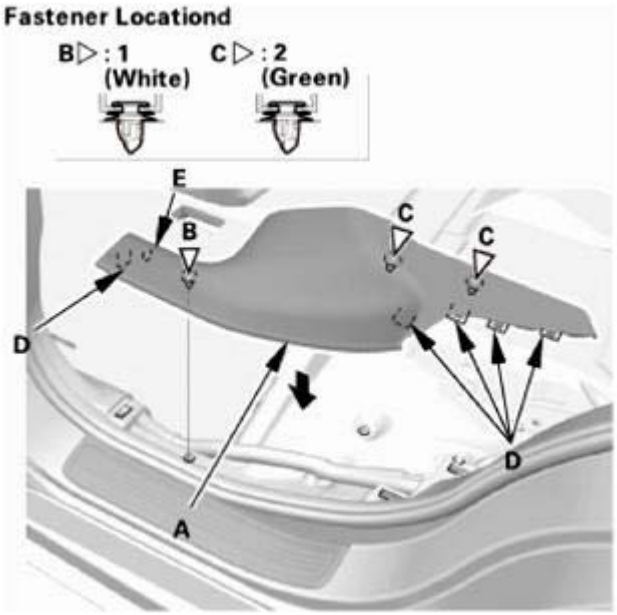

Fig. 337: Identifying Rear Door Sill Trim With Fasteners
Courtesy of AMERICAN HONDA MOTOR CO., INC.

32. A-Pillar Trim - Check
    1. If the side curtain airbag has deployed, replace the A-pillar trim (A), along with the other parts listed for side curtain airbag deployment.
    2. If the side curtain airbag has not deployed, check the A-pillar trim and note the following items:
        - To prevent the side curtain airbags from deploying improperly and possibly causing injury, inspect the A-pillar trim and replace it with a new one if it has any of the following damage:
            - Any cracks, deformations, or stress-whitened areas in the A-pillar trim
            - Any cracks or stress-whitening in the clip seating surfaces (B)
        - After checking and adjusting the overlap between the headliner and the A-pillar trim, replace the upper clip (C) with a new one.
        - If the clips (D) are damaged or stress-whitened, replace them with new ones.

GETtheMANUALS.org

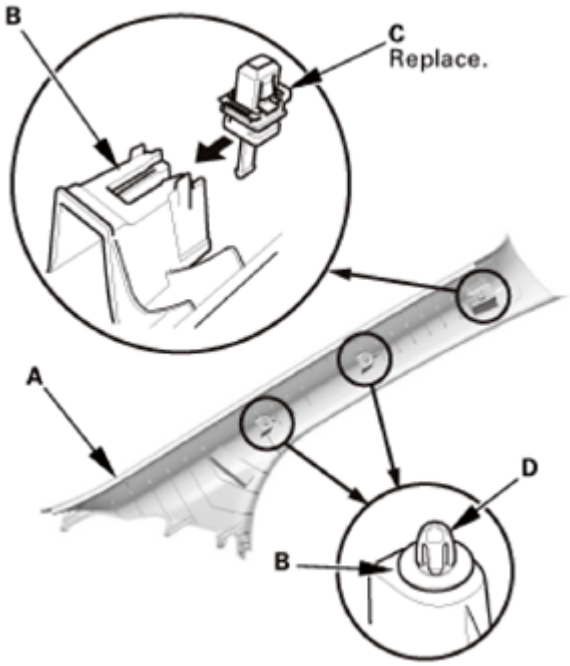

Fig. 338: Identifying Quarter Pillar Trim, Clip Seating Surfaces And Upper Clip
Courtesy of AMERICAN HONDA MOTOR CO., INC.

33. Headliner/Pillar Trim Overlap - Check

Checking and Adjusting the Headliner/Pillar Trim Overlap

To prevent the side curtain airbag from deploying and damaging the pillar trim (A-pillar trim, B-pillar trim, quarter pillar trim), the overlap between the headliner and pillar trim must be 8.0+0/-2.0 mm (0.31+0/-0.08 in). To check the overlap, do this:

1. Install the headliner (A) and the pillar trim (B).

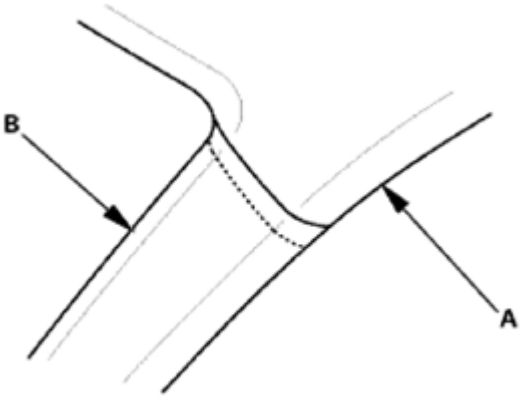

This illustration shows the A-pillar.

Fig. 339: Identifying Headliner And Pillar Trim

GETtheMANUALS.org

Courtesy of AMERICAN HONDA MOTOR CO., INC.

2. Apply masking tape (A) to the headliner (B) to mark the upper edge of the pillar trim (C).

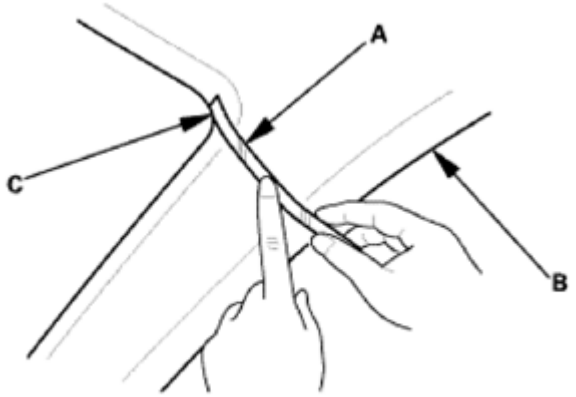

This illustration shows the A-pillar.

Fig. 340: Applying Masking Tape On Headliner
Courtesy of AMERICAN HONDA MOTOR CO., INC.

3. Remove the pillar trim, and measure the headliner overlap.
   - If the overlap is 8.0+0/-2.0 mm (0.31+0/-0.08 in), remove the tape, and install the pillar trim.
   - If the overlap is more than 8.0 mm (0.31 in), go to step 4.

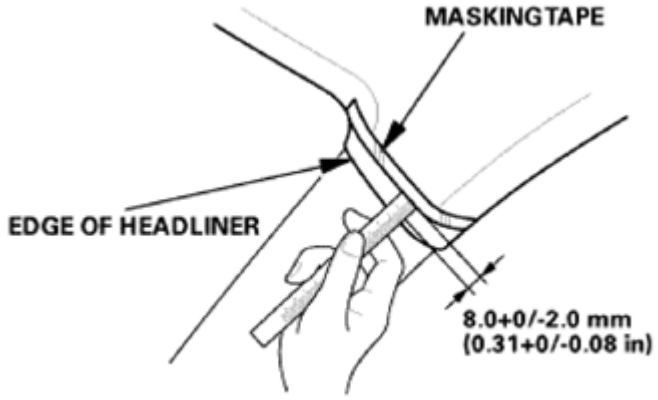

This illustration shows the A-pillar.

Fig. 341: Measuring Headliner Overlap
Courtesy of AMERICAN HONDA MOTOR CO., INC.

4. Carefully trim the headliner with a utility knife, reducing the overlap to 8.0+0/-2.0 mm (0.31+0/-0.08 in).
5. Remove the tape, and install the pillar trim.

GETtheMANUALS.org

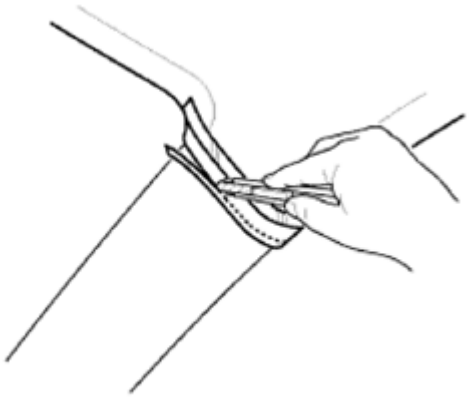

This illustration shows the A-pillar.

Fig. 342: Installing Pillar Trim
Courtesy of AMERICAN HONDA MOTOR CO., INC.

34. A-Pillar Trim - Both Sides

NOTE: Repeat this procedure on the opposite side.

1. Carefully install a new upper clip (A) to the A-pillar trim (B).

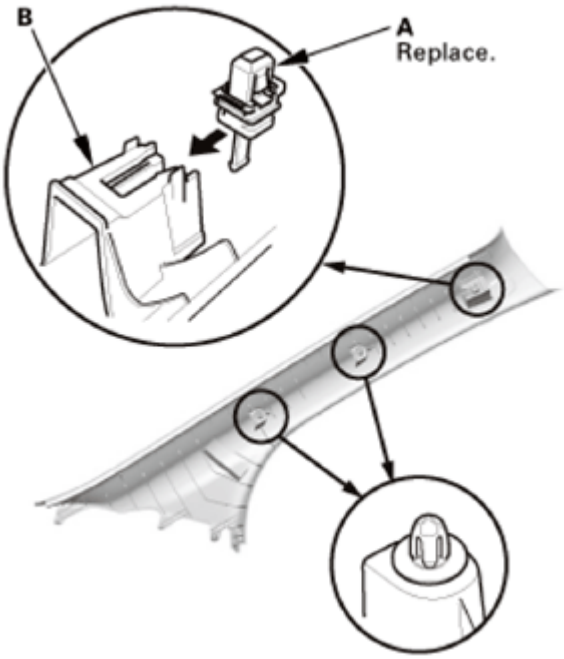

Fig. 343: Installing Upper Clip To A-Pillar Trim
Courtesy of AMERICAN HONDA MOTOR CO., INC.

2. Insert the bottom portion of the A-pillar trim (A) into the dashboard (B). Place the trim over the A-pillar (C), and fit its upper clip (D) and the other clips (E) into the holes (F) in the A-pillar, then

GETtheMANUALS.org

lightly push the trim into place.

NOTE:

- **Make sure the side curtain airbag is not tucked under the clips or the trim ribs.**
- **Do not push too hard on the A-pillar trim. If you push too hard, the clip will be damaged, and it will not hold the trim properly.**
- **Gently tug on the A-pillar trim to verify that all clips are securely fastened.**

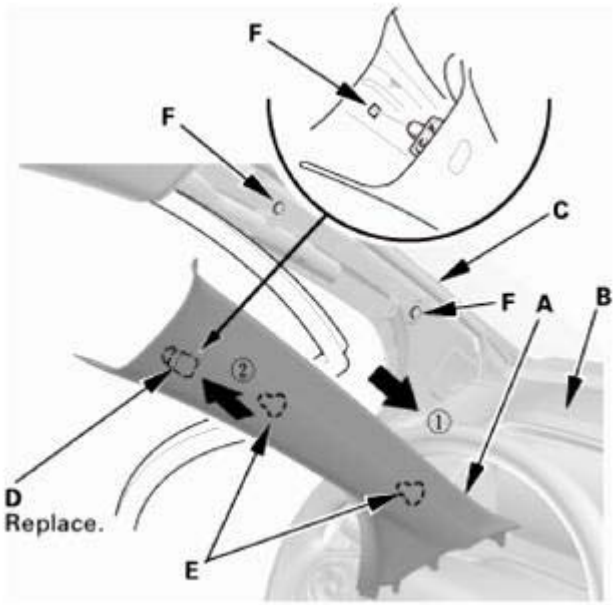

Fig. 344: Inserting Bottom Portion Of A-Pillar Trim Into Dashboard
Courtesy of AMERICAN HONDA MOTOR CO., INC.

35. Front Door Opening Seal As Needed - Both Sides

NOTE: **Repeat this procedure on the opposite side.**

1. Install the front door opening seal (A). Make sure the seal is installed securely into the hooks (B).

GETtheMANUALS.org

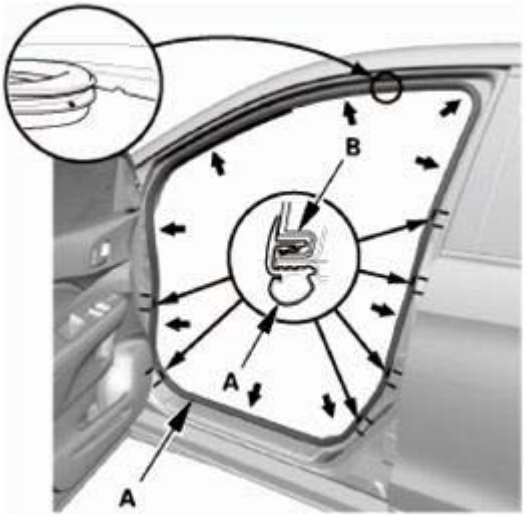

Fig. 345: Identifying Front Door Opening Seal And Hooks
Courtesy of AMERICAN HONDA MOTOR CO., INC.

36. Front Door Sill Trim - Both Sides

NOTE: Repeat this procedure on the opposite side.

1. Install the front door inner sill trim (A). Make sure the clips (B), the hooks (C), and the tabs (D) snap into place securely.

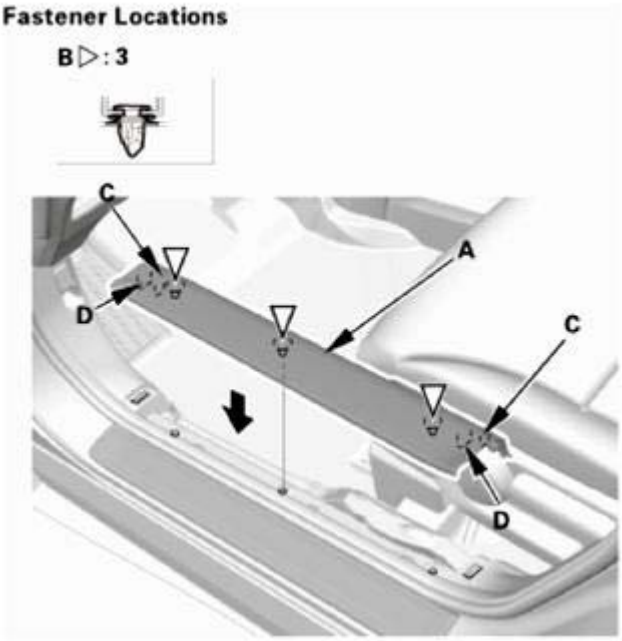

Fig. 346: Installing Front Door Inner Sill Trim
Courtesy of AMERICAN HONDA MOTOR CO., INC.

GETtheMANUALS.org

37. Battery Terminal (SRS) - Reconnection

NOTE: If the battery performance is abnormal, test the battery.

1. Clean the battery terminals.
2. Connect the positive cable (A) to the battery.

NOTE: Always connect the positive side first.

3. Connect the negative cable (B) to the battery.
4. Apply multipurpose grease to the terminals to prevent corrosion.

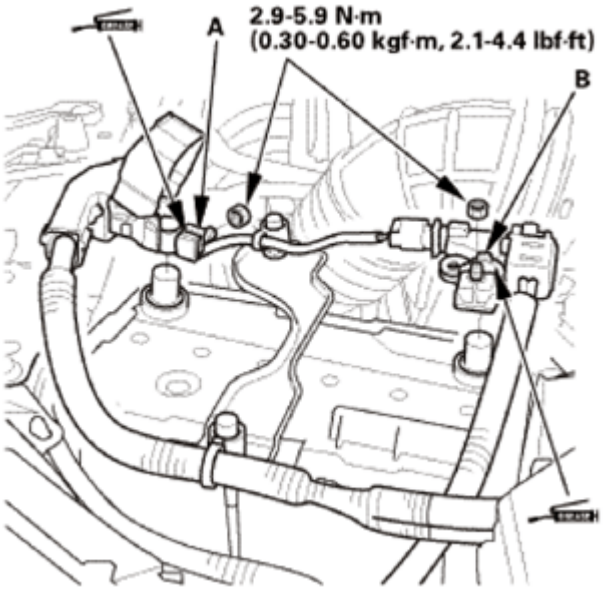

Fig. 347: Identifying Battery Positive And Negative Cable
Courtesy of AMERICAN HONDA MOTOR CO., INC.

SEAT BELT SHOULDER ANCHOR ADJUSTER REMOVAL AND INSTALLATION

REMOVAL

1. Front Seat Belt Lower Anchor Bolt
    1. Slide the front seat forward fully, carefully pry up on the bottom edge of the anchor cover (A) at the pry point (B) with the appropriate trim tool to release the hooks (C) and the tab (D), then remove the cover by pulling it up.

GETtheMANUALS.org

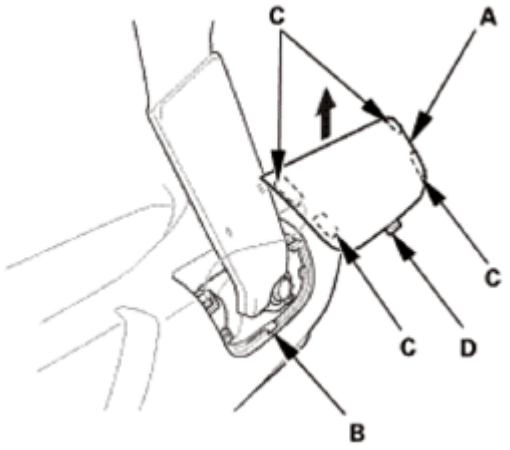

Fig. 348: Pulling Front Seat Belt Lower Anchor Bolt Cover
Courtesy of AMERICAN HONDA MOTOR CO., INC.

2. Remove the lower anchor bolt (A).

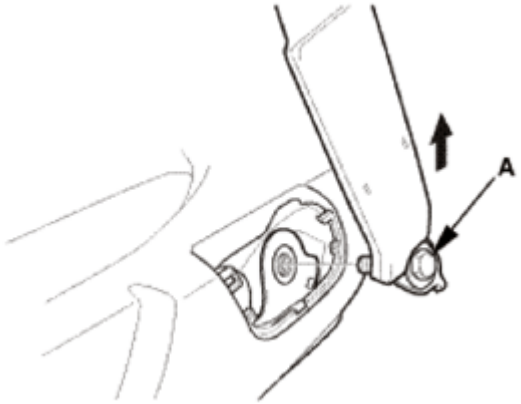

Fig. 349: Removing Lower Anchor Bolt
Courtesy of AMERICAN HONDA MOTOR CO., INC.

2. Battery Terminal (SRS) - Disconnection
    1. Make sure the ignition switch is in LOCK (0).
    2. Disconnect and isolate the negative cable (A) from the battery.

    NOTE: Always disconnect the negative side first.

    3. Disconnect the positive cable (B) from the battery.
    4. Wait at least 3 minutes before starting work.

GETtheMANUALS.org

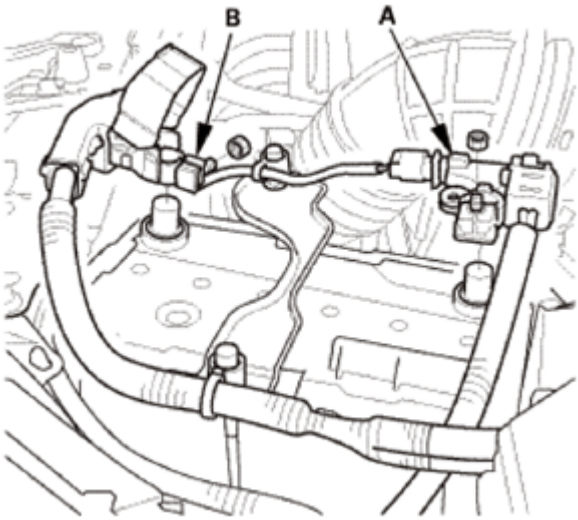

Fig. 350: Identifying Battery Negative And Positive Cable
Courtesy of AMERICAN HONDA MOTOR CO., INC.

3. Front Door Sill Trim
    1. Detach the hooks (A) and the tabs (B) from the kick panel (C) and the B-pillar lower trim (D), and pull up the front door inner sill trim (E) by hand to detach the clips (F), then remove the trim.

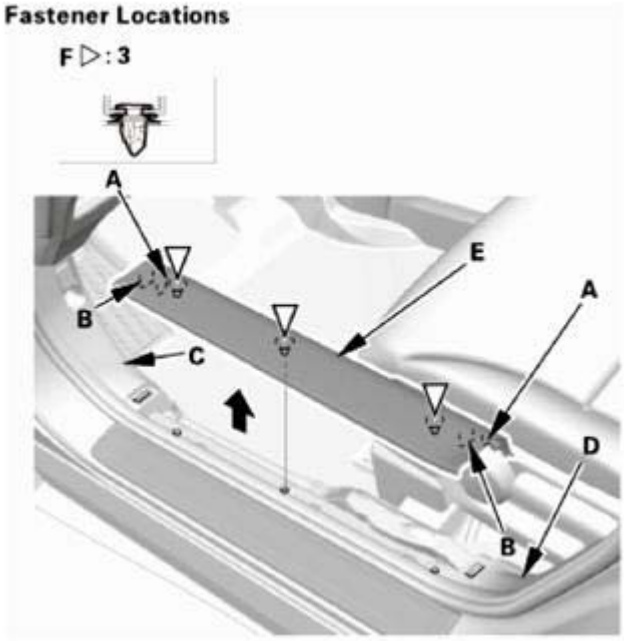

Fig. 351: Identifying Front Door Sill Trim And Fasteners
Courtesy of AMERICAN HONDA MOTOR CO., INC.

4. Rear Door Sill Trim
    1. Pull the release strap to fold down the rear seat, then lift-up and latch the rear seat-back in the upright position.

GETtheMANUALS.org

2. Detach the hooks (A) and the tab (B) from the B-pillar lower trim (C) and the rear side trim panel (D), and pull up the rear door inner sill trim (E) by hand to detach the clips (F, G), then remove the trim.

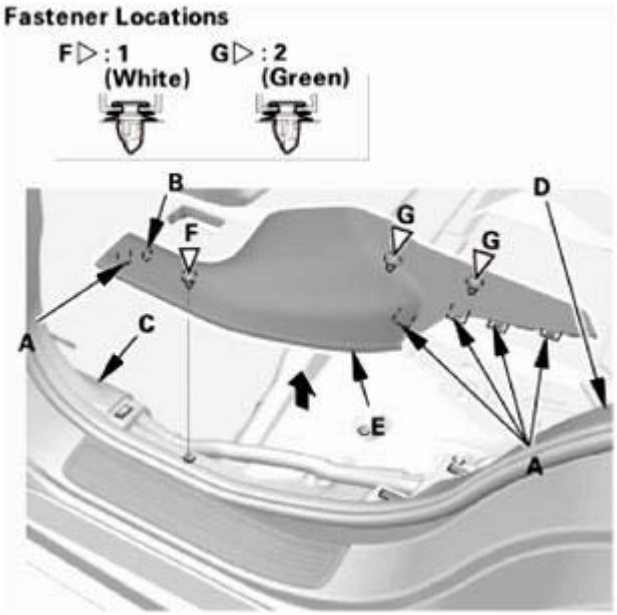

Fig. 352: Identifying Rear Door Sill Trim And Fasteners
Courtesy of AMERICAN HONDA MOTOR CO., INC.

5. Front/Rear Door Opening Seals As Needed
   1. Pull out the door opening seals (A) from the trim hooks (B) around the door opening flange as needed.

Front

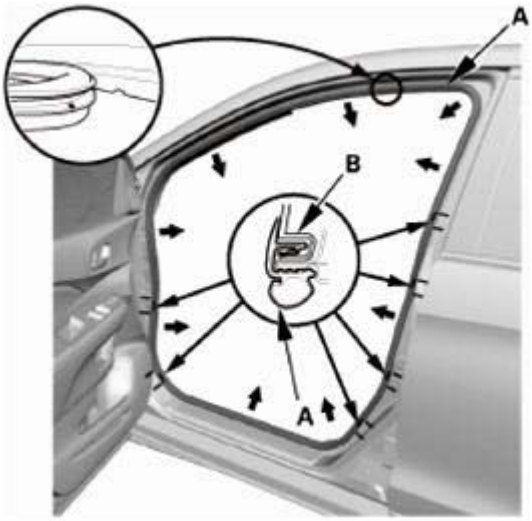

GETtheMANUALS.org

Fig. 353: Identifying Front Door Opening Seals And Hooks
Courtesy of AMERICAN HONDA MOTOR CO., INC.

Rear

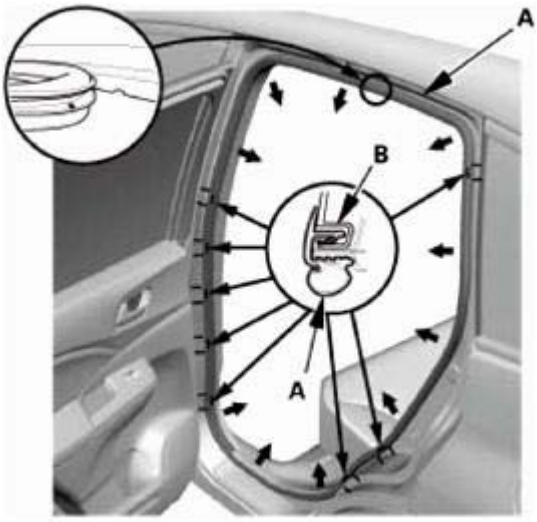

Fig. 354: Identifying Rear Door Opening Seals And Hooks
Courtesy of AMERICAN HONDA MOTOR CO., INC.

6. B-Pillar Lower Trim
    1. Slide the front seat forward fully.
    2. Pull back the bottom portion of the B-pillar lower trim (A) by hand to detach the clips (B).
    3. Pull back the upper portion of the B-pillar lower trim to detach the upper hooks (C), then remove the B-pillar lower trim.

GETtheMANUALS.org

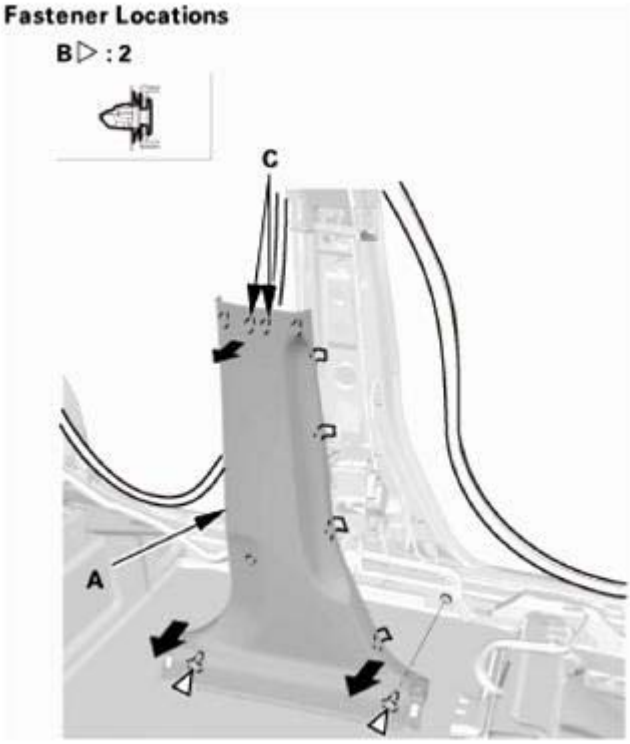

Fig. 355: Removing B-Pillar Lower Trim
Courtesy of AMERICAN HONDA MOTOR CO., INC.

7. Front Seat Belt Upper Anchor Bolt
    1. Remove the front seat belt shoulder anchor adjuster cap (A), then remove the front seat belt upper anchor bolt (B).

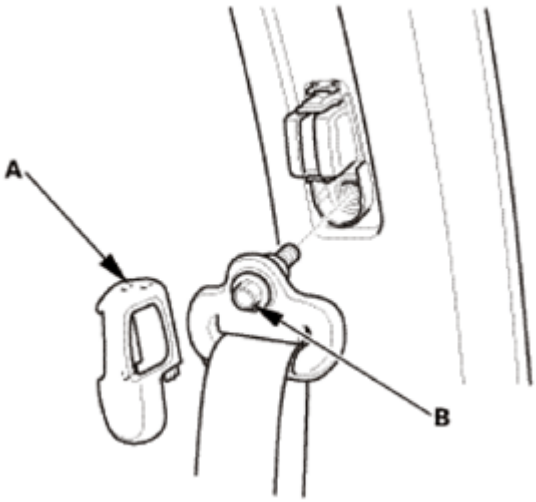

Fig. 356: Identifying Front Seat Belt Adjuster Cap And Upper Anchor Bolt
Courtesy of AMERICAN HONDA MOTOR CO., INC.

8. B-Pillar Upper Trim

GETtheMANUALS.org

1. Pull back the bottom portion of the B-pillar upper trim (A) by hand to detach the hooks (B). Pull down the trim to release the upper hook (C) from the hole (D) in the body, then remove the B-pillar upper trim.

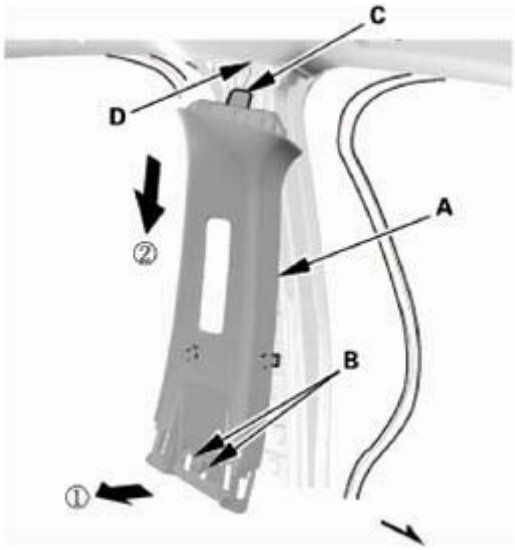

Fig. 357: Removing B-Pillar Upper Trim
Courtesy of AMERICAN HONDA MOTOR CO., INC.

9. Front Seat Belt Shoulder Anchor Adjuster
    1. Remove the bolts securing the shoulder anchor adjuster (A), then remove the shoulder anchor adjuster.

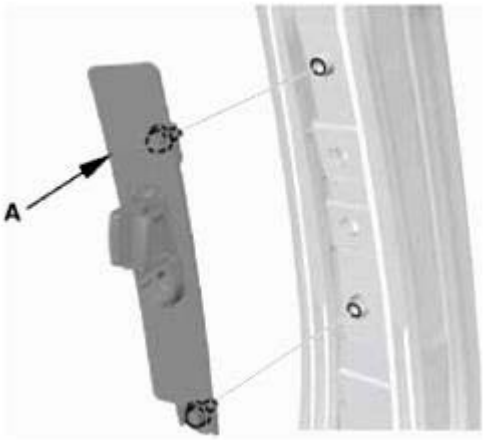

Fig. 358: Identifying Shoulder Anchor Adjuster With Bolts
Courtesy of AMERICAN HONDA MOTOR CO., INC.

INSTALLATION

1. Front Seat Belt Shoulder Anchor Adjuster

GETtheMANUALS.org

1. Install the shoulder anchor adjuster (A), then install the bolts.

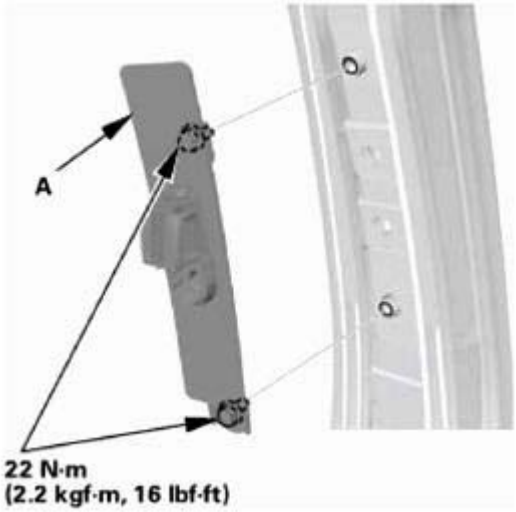

Fig. 359: Identifying Shoulder Anchor Adjuster With Bolts With Torque Specifications
Courtesy of AMERICAN HONDA MOTOR CO., INC.

2. B-Pillar Upper Trim
    1. Install the upper hook (A) of the B-pillar upper trim (B) to the hole in the body. Push the bottom portion of the B-pillar upper trim to install the lower hooks (C). Make sure the hooks snap into place securely.

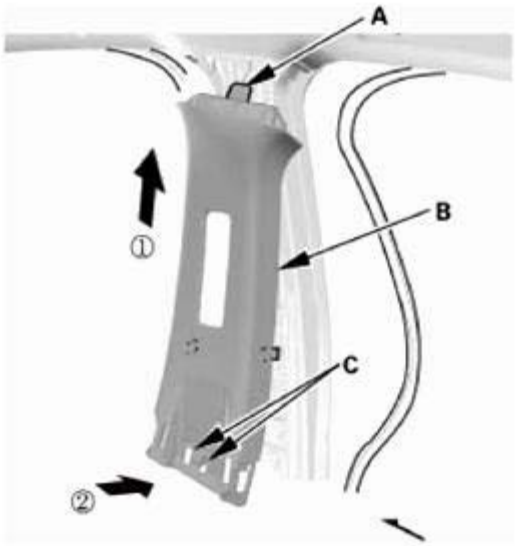

Fig. 360: Installing B-Pillar Upper Trim
Courtesy of AMERICAN HONDA MOTOR CO., INC.

3. Front Seat Belt Upper Anchor Bolt
    1. Assemble the washer, the collar, and the bushing on the upper anchor bolt as shown.

GETtheMANUALS.org

NOTE: **Apply medium strength liquid thread lock to the upper anchor bolt before installation.**

Fig. 361: Identifying Washer, Collar, And Bushing On Upper Anchor Bolt
Courtesy of AMERICAN HONDA MOTOR CO., INC.

2. Install the front seat belt upper anchor bolt (A), then install the front seat belt shoulder anchor adjuster cap (B).

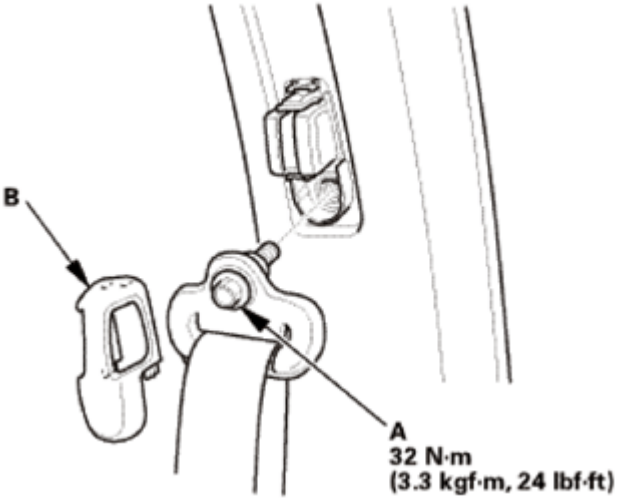

Fig. 362: Identifying Front Seat Belt Upper Anchor Bolt And Adjuster Cap With Torque Specification
Courtesy of AMERICAN HONDA MOTOR CO., INC.

4. B-Pillar Lower Trim
    1. Install the B-pillar lower trim (A). Make sure the clips (B) and the hooks (C) snap into place securely.

GETtheMANUALS.org

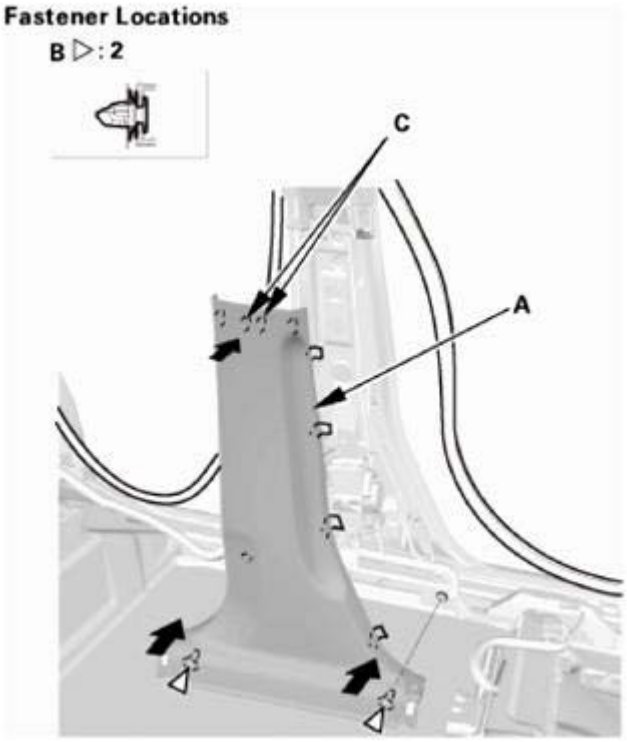

Fig. 363: Installing B-Pillar Lower Trim
Courtesy of AMERICAN HONDA MOTOR CO., INC.

5. Front/Rear Door Opening Seals As Needed
    1. Install the door opening seals (A). Make sure the seal is installed securely into the hooks (B).

Front

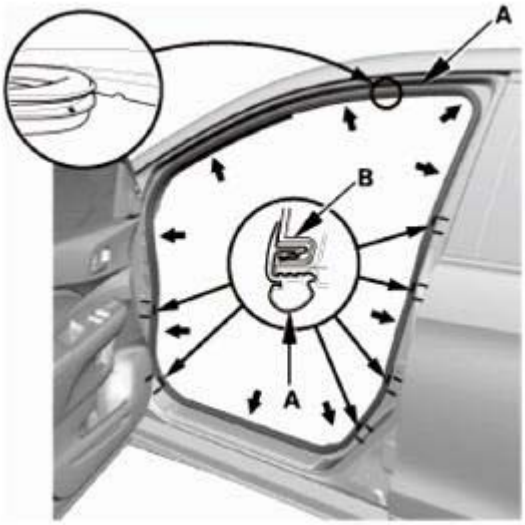

Fig. 364: Identifying Front Door Opening Seals And Hooks
Courtesy of AMERICAN HONDA MOTOR CO., INC.

GETtheMANUALS.org

Rear

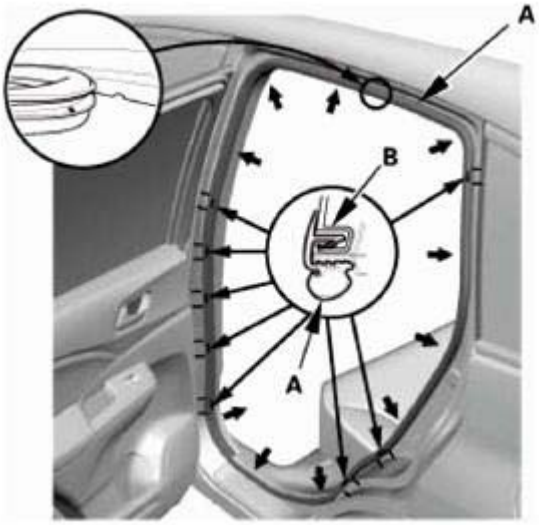

Fig. 365: Identifying Rear Door Opening Seals And Hooks
Courtesy of AMERICAN HONDA MOTOR CO., INC.

6. Rear Door Sill Trim
    1. Pull the release strap to fold down the rear seat, then lift-up and latch the rear seat-back in the upright position.
    2. Install the rear door inner sill trim (A). Make sure the clips (B, C), the hooks (D), and the tab (E) snap into place securely.

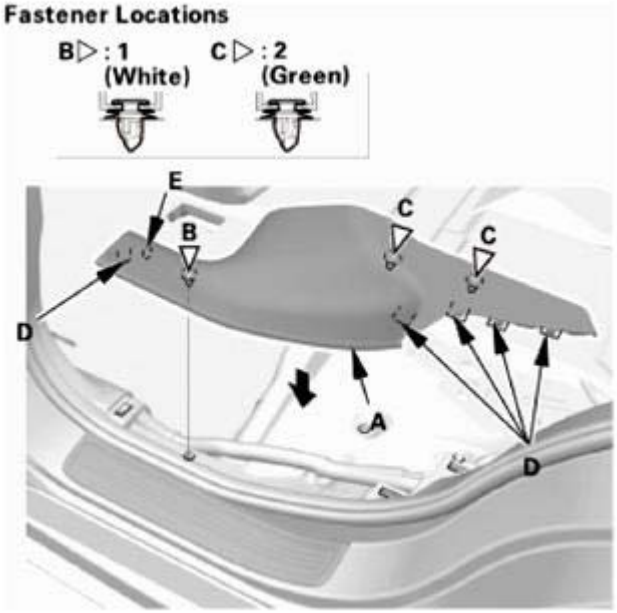

Fig. 366: Installing Rear Door Inner Sill Trim
Courtesy of AMERICAN HONDA MOTOR CO., INC.

GETtheMANUALS.org

7. Front Door Sill Trim
    1. Install the front door inner sill trim (A). Make sure the clips (B), the hooks (C), and the tabs (D) snap into place securely.

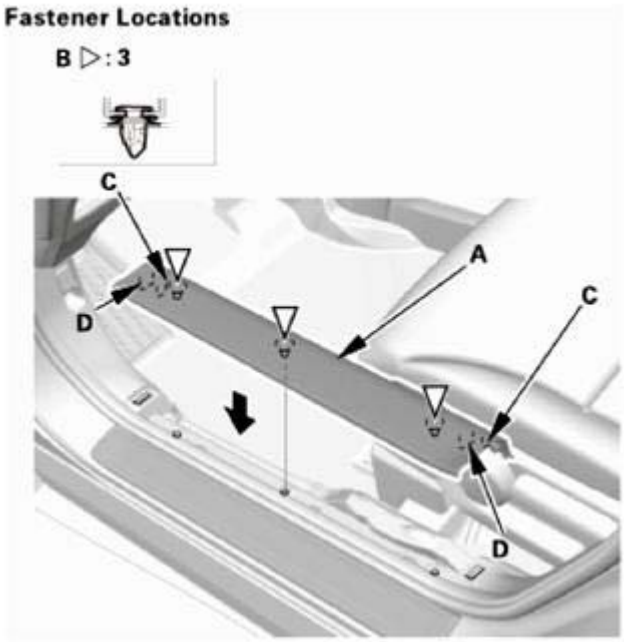

Fig. 367: Installing Front Door Inner Sill Trim
Courtesy of AMERICAN HONDA MOTOR CO., INC.

8. Battery Terminal (SRS) - Reconnection

NOTE: If the battery performance is abnormal, test the battery.

1. Clean the battery terminals.
2. Connect the positive cable (A) to the battery.

NOTE: Always connect the positive side first.

3. Connect the negative cable (B) to the battery.
4. Apply multipurpose grease to the terminals to prevent corrosion.

GETtheMANUALS.org

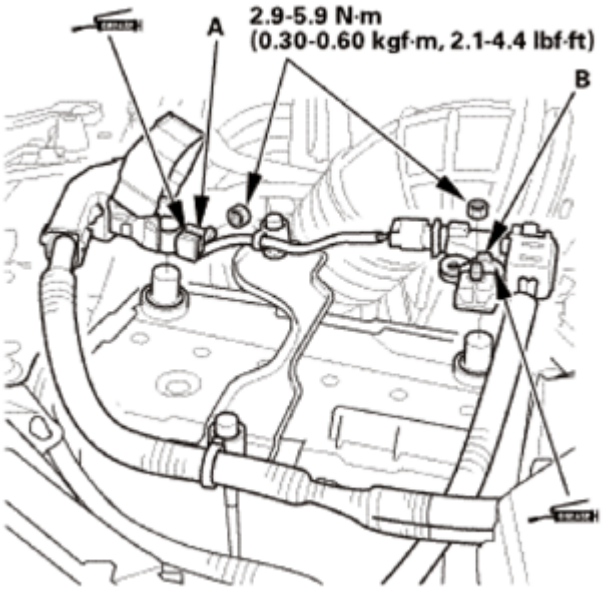

Fig. 368: Identifying Battery Positive And Negative Cable
Courtesy of AMERICAN HONDA MOTOR CO., INC.

9. Front Seat Belt Lower Anchor Bolt
    1. Install the lower anchor bolt.

NOTE: **Before installing the anchor bolt, make sure there are no twists or kinks in the seat belt.**

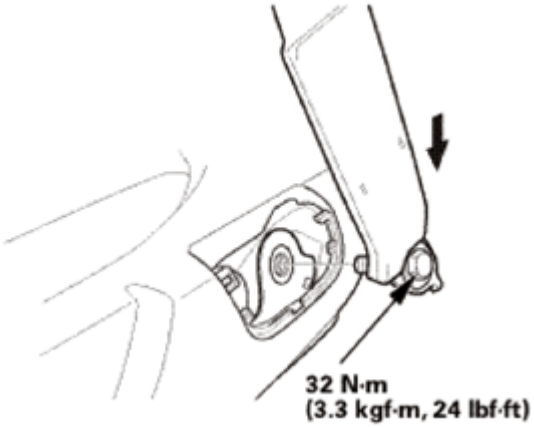

Fig. 369: Installing Lower Anchor Bolt
Courtesy of AMERICAN HONDA MOTOR CO., INC.

    2. Install the anchor cover (A). Make sure the hooks (B) and the tab (C) snap into place securely.

GETtheMANUALS.org

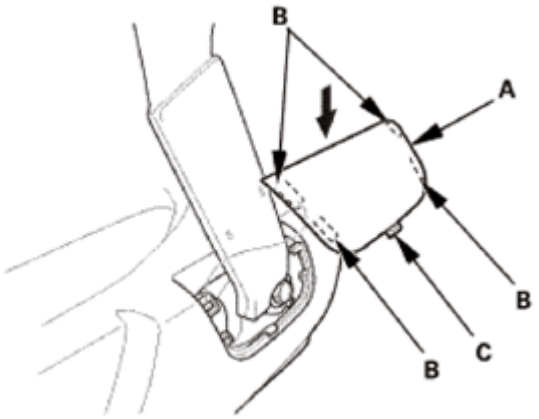

Fig. 370: Installing Anchor Cover
Courtesy of AMERICAN HONDA MOTOR CO., INC.

SEAT BELTS COMPONENT LOCATION INDEX

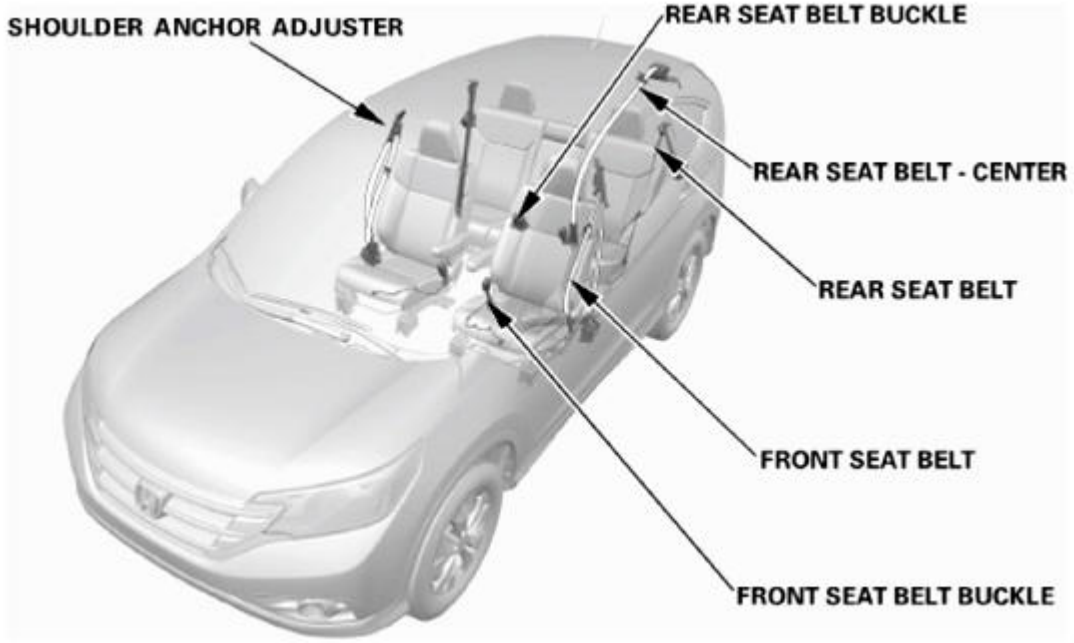

Fig. 371: Seat Belts Components Location
Courtesy of AMERICAN HONDA MOTOR CO., INC.

SEAT BELT	**INSPECTION**
FRONT SEAT BELT BUCKLE	**REMOVAL AND INSTALLATION**
SHOULDER ANCHOR ADJUSTER	**REMOVAL AND INSTALLATION**
FRONT SEAT BELT	**REMOVAL AND INSTALLATION**

GETtheMANUALS.org

REAR SEAT BELT	**Removal and Installation** See **REAR SEAT BELT REMOVAL AND INSTALLATION** or **REAR SEAT BELT REMOVAL AND INSTALLATION - CENTER**
REAR SEAT BELT BUCKLE	**REMOVAL AND INSTALLATION**
REAR SEAT BELT - CENTER	**Removal and Installation** See **REAR SEAT BELT REMOVAL AND INSTALLATION** or **REAR SEAT BELT REMOVAL AND INSTALLATION - CENTER**

GETtheMANUALS.org

DRIVER'S POWER SEAT ADJUSTMENT SWITCH REMOVAL, INSTALLATION, AND TEST

REMOVAL

SRS components are located in this area. Review the **SRS COMPONENT LOCATIONS** and the **PRECAUTIONS AND PROCEDURES** before doing repairs or service.

NOTE: Before the front power seat is removed, slide the front power seat to the half-way position, then raise the seat to the highest position.

1. Front Cover
    1. Remove the screw (A), and release the hook (B), the pin (C), and the tabs (D), then remove the front cover (E).

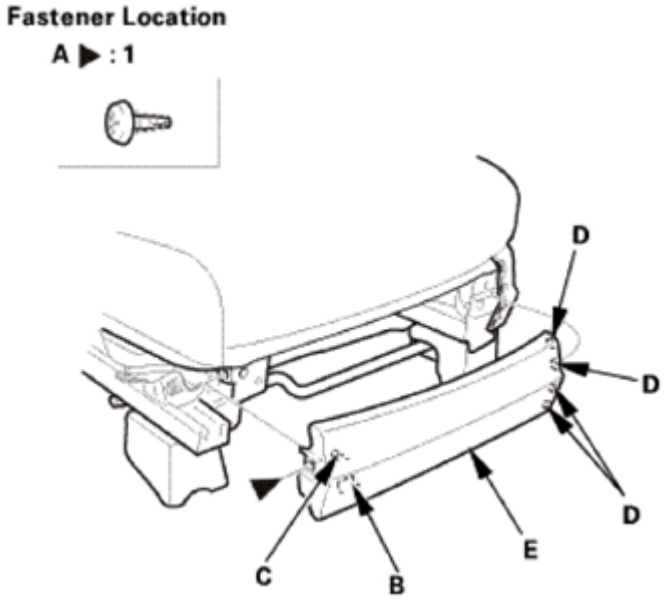

Fig. 1: Identifying Front Cover, Hook, Tabs, Pin And Screws
Courtesy of AMERICAN HONDA MOTOR CO., INC.

2. Front Seat Recline Cover
    1. Remove the screw (A), and detach the clip (B).
    2. Release the tabs (C).
    3. Pull up the recline cover (D) to release the hook (E).
    4. Disconnect the connectors.

GETtheMANUALS.org

5. Remove the upper center inner cover (F).
6. Remove the wire harness (G) from the hooks (H), then remove the recline cover.

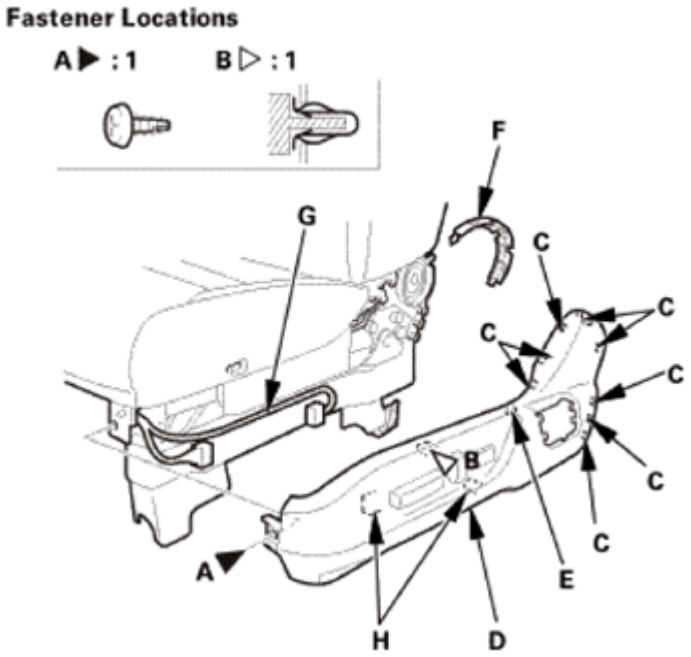

Fig. 2: Identifying Front Seat Recline Cover And Related Components
Courtesy of AMERICAN HONDA MOTOR CO., INC.

3. Power Seat Adjustment Switch
    1. Remove the power seat adjustment switch knobs (A).
    2. Remove the power seat adjustment switch (B) from the recline cover (C).

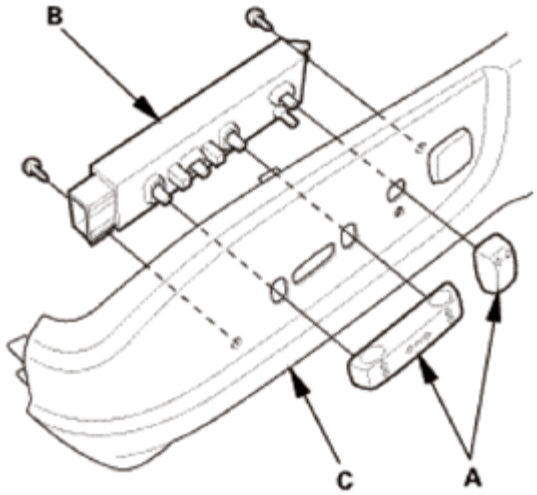

Fig. 3: Identifying Power Seat Adjustment Switch, Knob And Recline Cover
Courtesy of AMERICAN HONDA MOTOR CO., INC.

GETtheMANUALS.org

TEST

1. Power Seat Adjustment Switch - Test
    1. Reinstall the power seat adjustment switch knobs (A) to the power seat adjustment switch (B).

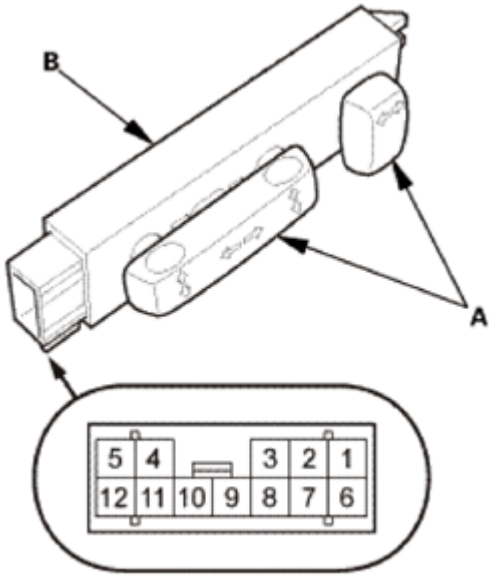

Fig. 4: Identifying Power Seat Adjustment Switch Connector Terminals
Courtesy of AMERICAN HONDA MOTOR CO., INC.

2. Check for continuity between the terminals in each position according to the table.

Position \ Terminal		1	2	3	4	5	6	7	8	9	10	11	12
SLIDE SWITCH	Forward							○	○	○	○	○	
									*				
	Backward										○	○	
								*	○				
RECLINE SWITCH	Forward				○	○	○						
			*										○
	Backward				○	○	○						
			*										○
FRONT UP-DOWN SWITCH	UP			○	○	○	○	○	○	○	○		
									*				
	DOWN									○	○		
				*	○	○	○	○	○				
REAR UP-DOWN SWITCH	UP				○	○							
		*	○										
	DOWN	○	○	○	○								
			*			○							

*:There is continuity without operating a switch.

Fig. 5: Power Seat Adjustment Switch Continuity Reference Chart
Courtesy of AMERICAN HONDA MOTOR CO., INC.

GETtheMANUALS.org

3. If the continuity is not as specified, replace the power seat adjustment switch.

INSTALLATION

SRS components are located in this area. Review the **SRS COMPONENT LOCATIONS** and the **PRECAUTIONS AND PROCEDURES** before doing repairs or service.

1. Power Seat Adjustment Switch
    1. Install the power seat adjustment switch (A) from the recline cover (B).
    2. Install the power seat adjustment switch knobs (C).

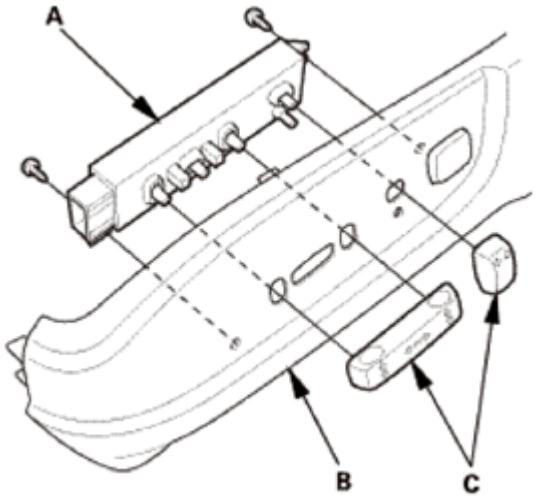

Fig. 6: Identifying Power Seat Adjustment Switch, Knob And Recline Cover
Courtesy of AMERICAN HONDA MOTOR CO., INC.

2. Front Seat Recline Cover
    1. Install the upper center inner cover (A) to the recline cover (B).
    2. Connect the connector, then install the wire harness (C) to the hooks (D).
    3. Install the clip (E) and tabs (F), then install the recline cover.
    4. Install the tabs (G), then install the screw (H).

GETtheMANUALS.org

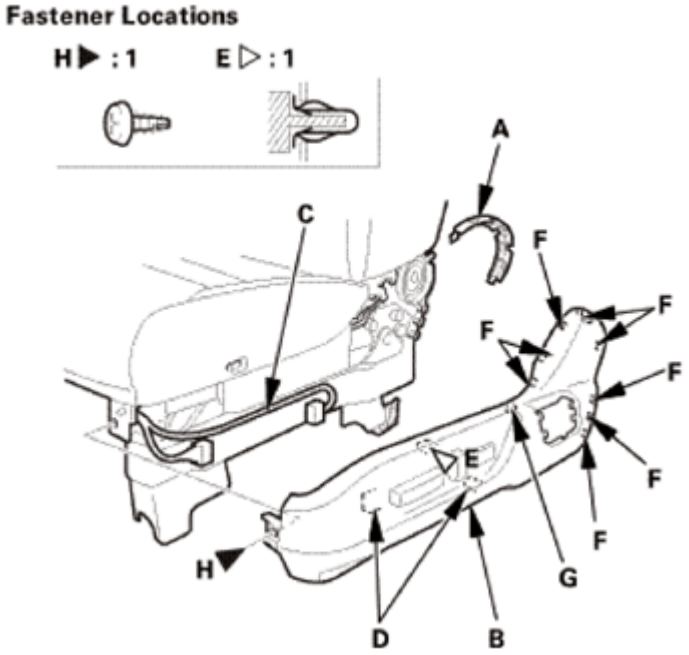

Fig. 7: Identifying Upper Center Inner Cover, Recline Cover, Wire Harness, Hooks, Clips And Tabs
Courtesy of AMERICAN HONDA MOTOR CO., INC.

3. Front Cover
    1. Install the tabs (A), set the pin (B), and install the hook (C), then install the front cover (D). Make sure the hooks snap into place securely.

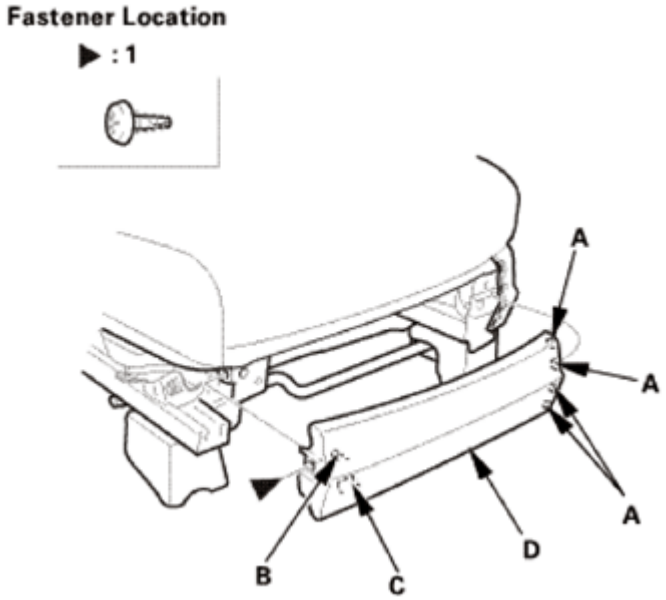

Fig. 8: Identifying Front Cover, Hook, Tabs, Pin And Screws
Courtesy of AMERICAN HONDA MOTOR CO., INC.

GETtheMANUALS.org

DRIVER'S POWER SEAT MOTOR TEST

REMOVAL

SRS components are located in this area. Review the **SRS COMPONENT LOCATIONS** and the **PRECAUTIONS AND PROCEDURES** before doing repairs or service.

NOTE: Before the front power seat is removed, slide the front power seat to the half-way position, then raise the seat to the highest position.

1. Front Seat Belt Lower Anchor Bolt
    1. Slide the front seat forward fully, carefully pry up on the bottom edge of the anchor cover (A) at the pry point (B) with the appropriate trim tool to release the hooks (C) and the tab (D), then remove the cover by pulling it up.

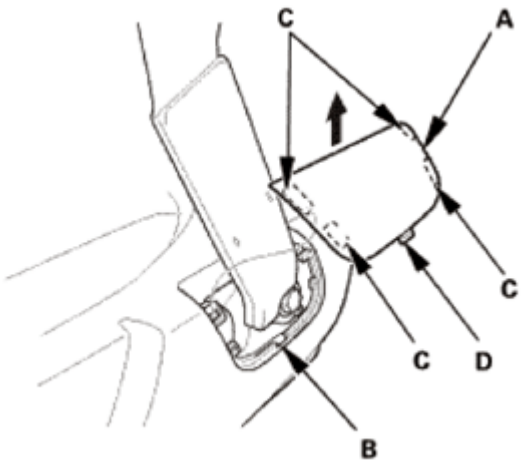

Fig. 9: Removing Front Seat Cover
Courtesy of AMERICAN HONDA MOTOR CO., INC.

2. Remove the lower anchor bolt (A).

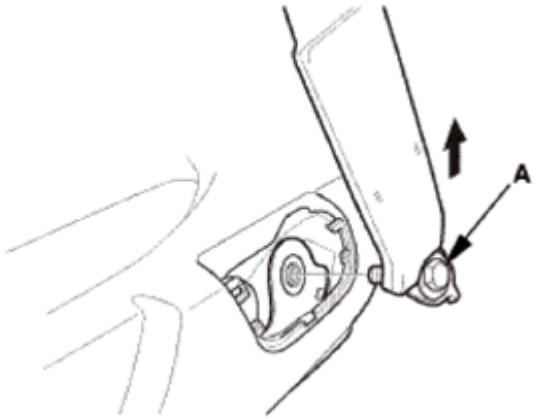

GETtheMANUALS.org

Fig. 10: Removing Front Seat Belt Lower Anchor Bolt
Courtesy of AMERICAN HONDA MOTOR CO., INC.

2. Battery Terminal (SRS) - Disconnection
    1. Make sure the ignition switch is in LOCK (0).
    2. Disconnect and isolate the negative cable (A) from the battery.

    NOTE: Always disconnect the negative side first.

    3. Disconnect the positive cable (B) from the battery.
    4. Wait at least 3 minutes before starting work.

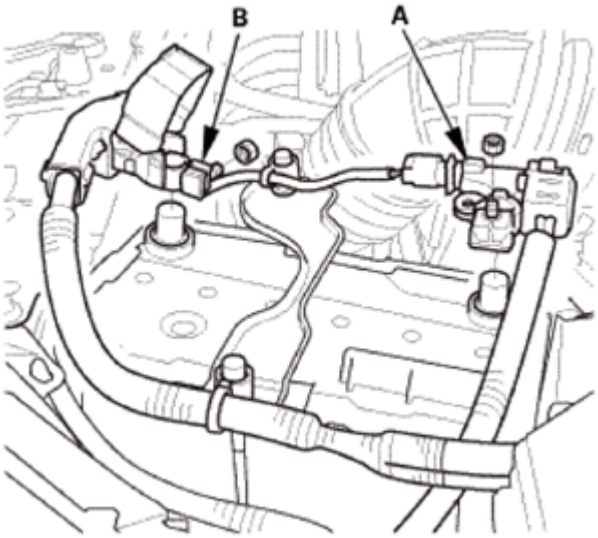

Fig. 11: Identifying Battery Positive And Negative Cable
Courtesy of AMERICAN HONDA MOTOR CO., INC.

3. Head Restraint - Driver's Side
    1. Push and hold the knob (A), then pull out the head restraint (B) as shown.

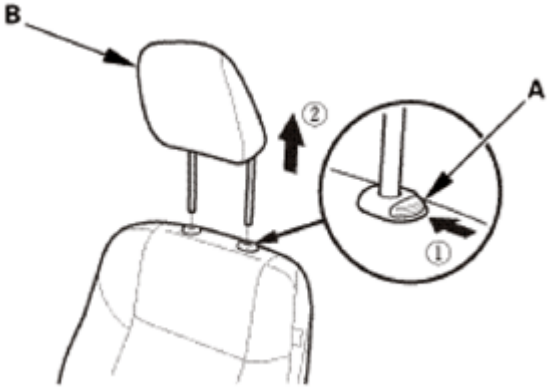

GETtheMANUALS.org

Fig. 12: Pulling Head Restraint (Driver Side)
Courtesy of AMERICAN HONDA MOTOR CO., INC.

4. Front Seat - Driver's Side
    1. Detach the hooks (A), then remove the rear inner seat track end cover (B) and the rear outer seat track end cover (C).

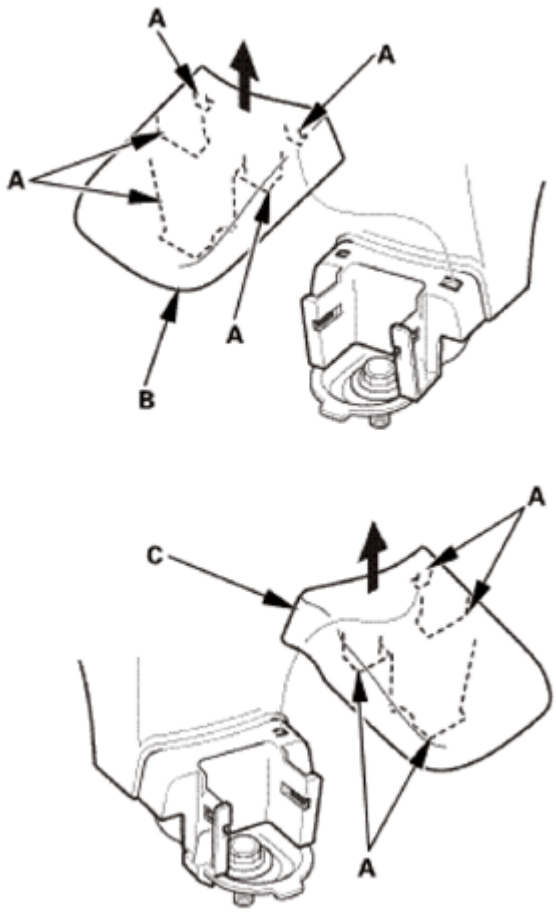

Fig. 13: Removing Rear Inner And Outer Seat Track End Cover
Courtesy of AMERICAN HONDA MOTOR CO., INC.

    2. Remove the front mounting bolts (A) from the front seat.

GETtheMANUALS.org

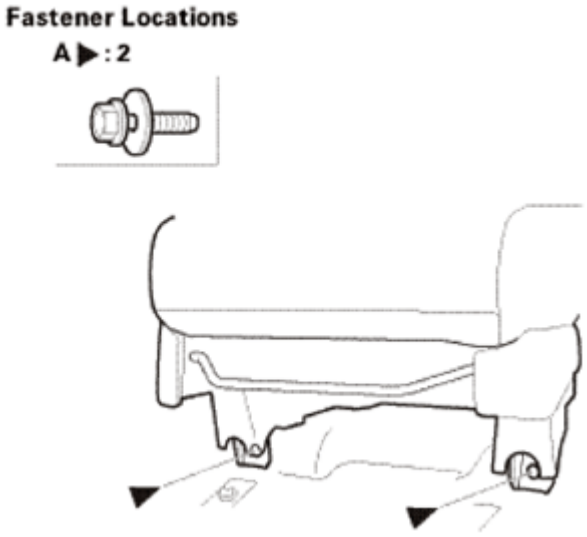

Fig. 14: Identifying Front Seat Front Mounting Bolts
Courtesy of AMERICAN HONDA MOTOR CO., INC.

3. Remove the rear mounting bolts (A) from the front seat.

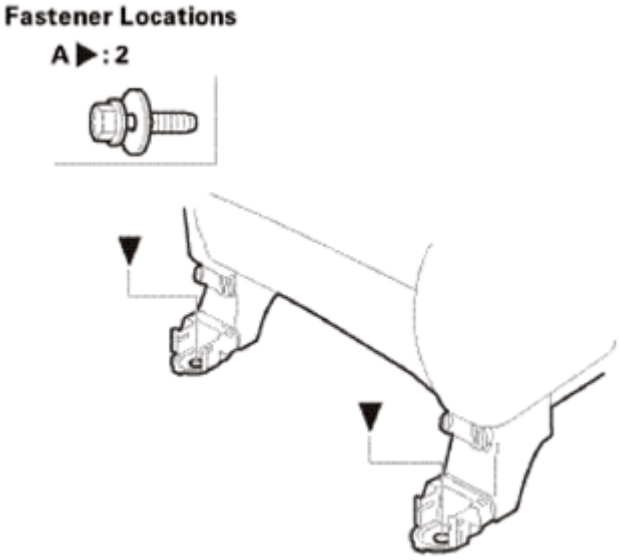

Fig. 15: Identifying Front Seat Rear Mounting Bolts
Courtesy of AMERICAN HONDA MOTOR CO., INC.

4. Disconnect the connectors (A).
5. Detach the harness clip (B).

GETtheMANUALS.org

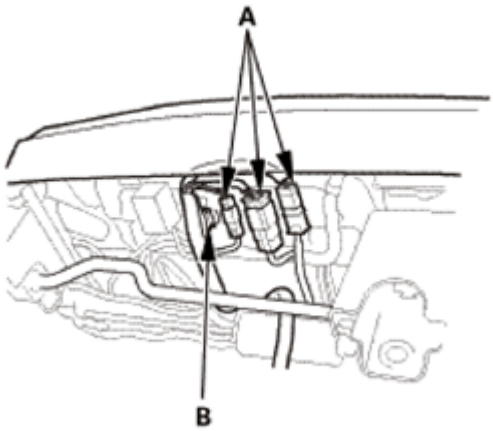

Fig. 16: Identifying Front Seat Connectors And Harness Clips
Courtesy of AMERICAN HONDA MOTOR CO., INC.

5. Front Seat-Back As Needed - Driver's Side
    1. Release the elastic strap (A) from the seat cushion frame springs (B), then pull back the under cover (C) of the seat-back cover.

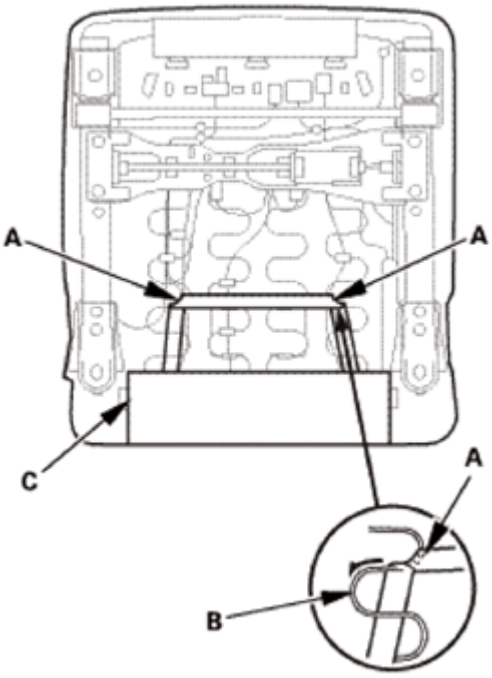

Fig. 17: Releasing Elastic Strap From Seat Cushion Frame Springs
Courtesy of AMERICAN HONDA MOTOR CO., INC.

    2. Release the hook strip (A).
    3. Unzip the seat-back cover (B).

GETtheMANUALS.org

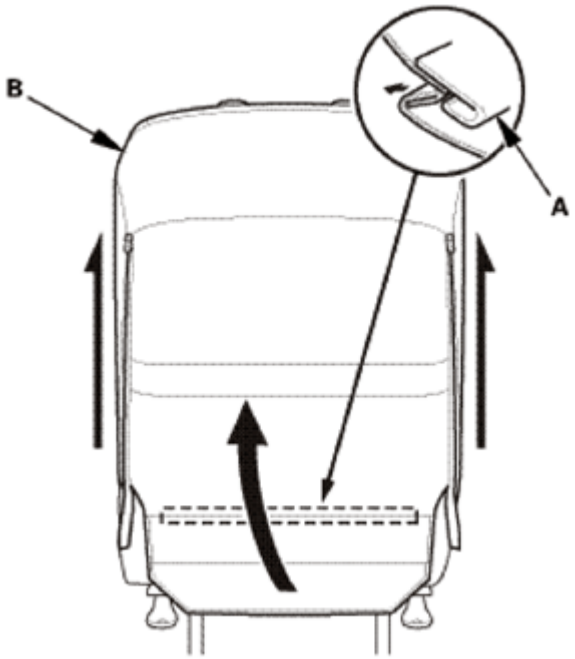

Fig. 18: Removing Seat-Back Cover
Courtesy of AMERICAN HONDA MOTOR CO., INC.

4. Release the hook strips (A).

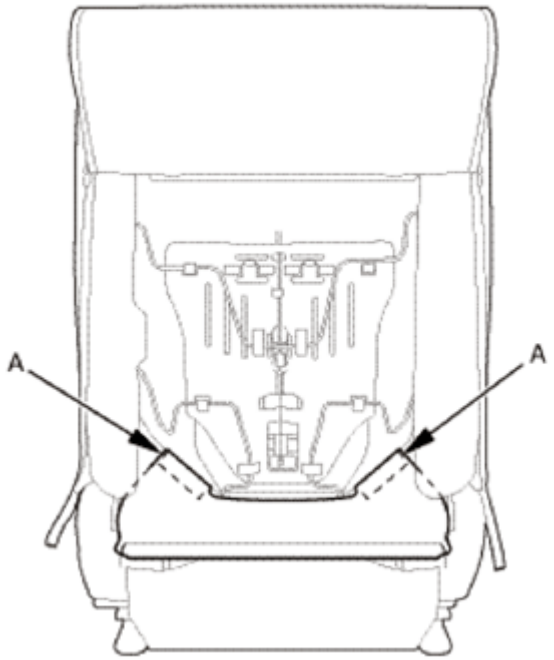

Fig. 19: Identifying Front Seat Hook Strips (Driver Side)
Courtesy of AMERICAN HONDA MOTOR CO., INC.

TEST

GETtheMANUALS.org

1. Power Seat Motor - Test
    1. Disconnect the connectors.

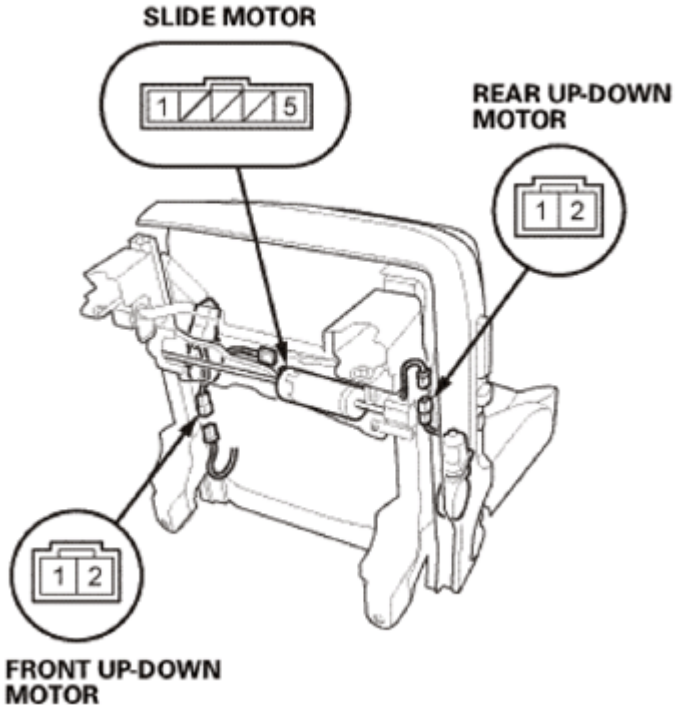

Fig. 20: Identifying Slide, Rear And Front Up-Down Motor Connector Terminals
Courtesy of AMERICAN HONDA MOTOR CO., INC.

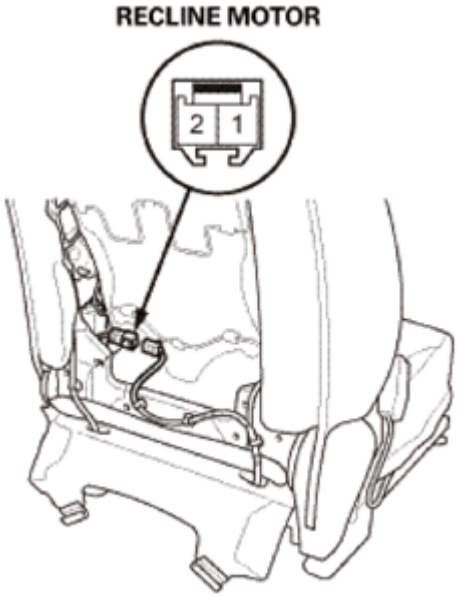

Fig. 21: Identifying Recline Motor Connector Terminals
Courtesy of AMERICAN HONDA MOTOR CO., INC.

GETtheMANUALS.org

2. Check the motor operation by connecting power and ground according to the table.

NOTE: **To prevent damage to the motor, apply battery voltage only momentarily.**

3. If the slide motor does not run or fails to run smoothly, replace it.

NOTE: **If the front up-down motor, rear up-down motor, or the recline motor does not run or fails to run smoothly, replace the seat frame assembly.**

4. Connect the connectors.

Slide motor

Terminal / Position	1	5
Forward	⊖	⊕
Backward	⊕	⊖

Fig. 22: Slide Motor Condition Chart
Courtesy of AMERICAN HONDA MOTOR CO., INC.

Recline motor

Terminal / Position	1	2
Forward	⊕	⊖
Backward	⊖	⊕

Fig. 23: Recline Motor Condition Chart
Courtesy of AMERICAN HONDA MOTOR CO., INC.

Front up-down motor

Terminal / Position	1	2
UP	⊖	⊕
DOWN	⊕	⊖

Fig. 24: Front Up-Down Motor Condition Chart

GETtheMANUALS.org

Courtesy of AMERICAN HONDA MOTOR CO., INC.

Rear up-down motor

Terminal / Position	1	2
UP	⊕	⊖
DOWN	⊖	⊕

Fig. 25: Rear Up-Down Motor Condition Chart
Courtesy of AMERICAN HONDA MOTOR CO., INC.

INSTALLATION

SRS components are located in this area. Review the **SRS COMPONENT LOCATIONS** and the **PRECAUTIONS AND PROCEDURES** before doing repairs or service.

1. Front Seat-Back As Needed - Driver's Side
    1. Install the hook strips (A) to the seat frame.

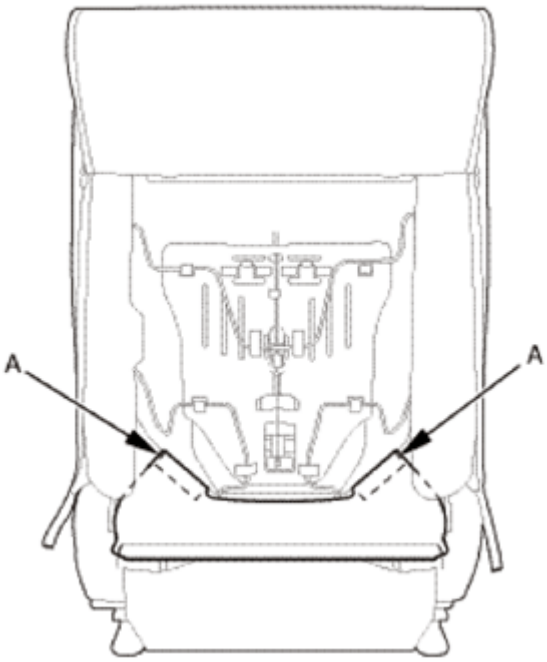

Fig. 26: Identifying Front Seat Frame Hook Strips (Driver Side)
Courtesy of AMERICAN HONDA MOTOR CO., INC.

2. Zip the seat-back cover (A).
3. Install the hook strip (B).

GETtheMANUALS.org

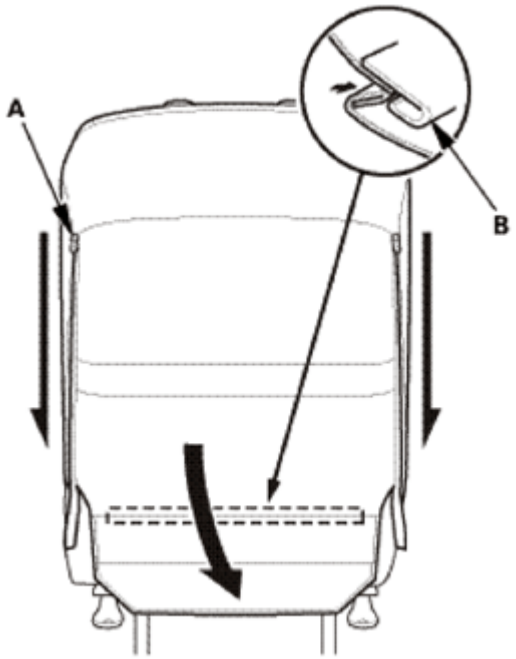

Fig. 27: Placing Seat-Back Cover
Courtesy of AMERICAN HONDA MOTOR CO., INC.

4. Install the elastic strap (A) to the seat cushion frame springs (B).

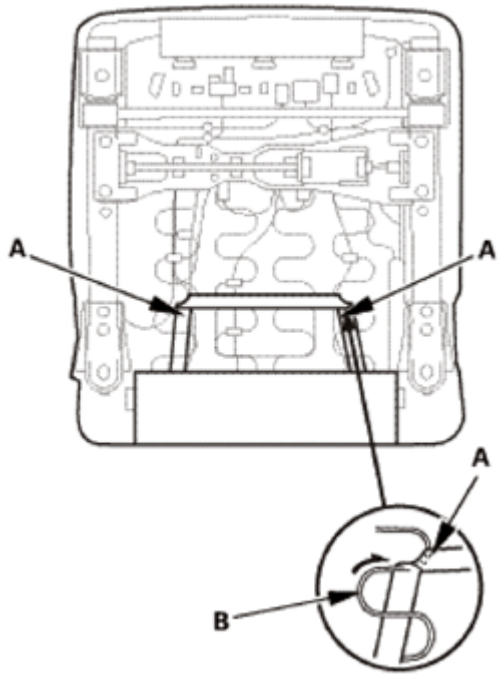

Fig. 28: Installing Elastic Strap To Seat Cushion Frame Springs
Courtesy of AMERICAN HONDA MOTOR CO., INC.

GETtheMANUALS.org

2. Front Seat - Driver's Side
    1. Connect the connectors (A).
    2. Install the harness clip (B).

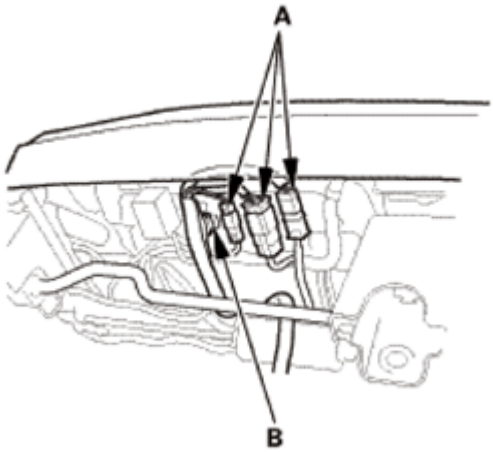

Fig. 29: Identifying Front Seat Connectors And Clips (Driver Side)
Courtesy of AMERICAN HONDA MOTOR CO., INC.

3. Install the seat mounting bolts (A).

NOTE:

- **Tighten the bolts by hand first, then tighten them to the specified torque.**
- **Tighten the seat mounting bolts to the specified torque in the sequence shown. Slide the seat all the way back and tighten bolts 1 and 2, then slide it forward and tighten bolts 3 and 4.**

Front Side

GETtheMANUALS.org

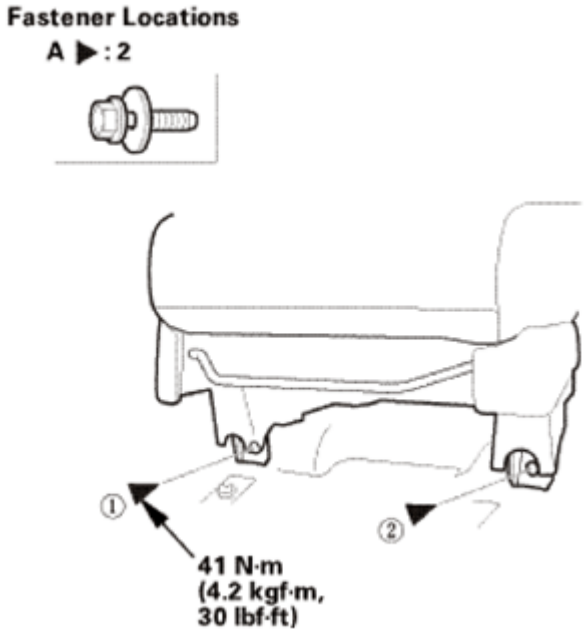

Fig. 30: Identifying Seat Mounting Bolts With Torque Specifications (Front Side)
Courtesy of AMERICAN HONDA MOTOR CO., INC.

Rear Side

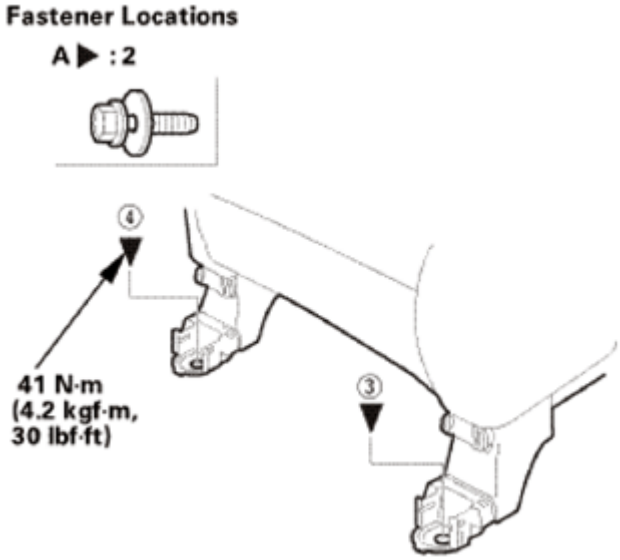

Fig. 31: Identifying Seat Mounting Bolts With Torque Specifications (Rear Side)
Courtesy of AMERICAN HONDA MOTOR CO., INC.

4. Install the rear inner seat track end cover (A) and the rear outer seat track end cover (B). Make sure the hooks (C) snap into place securely.

GETtheMANUALS.org

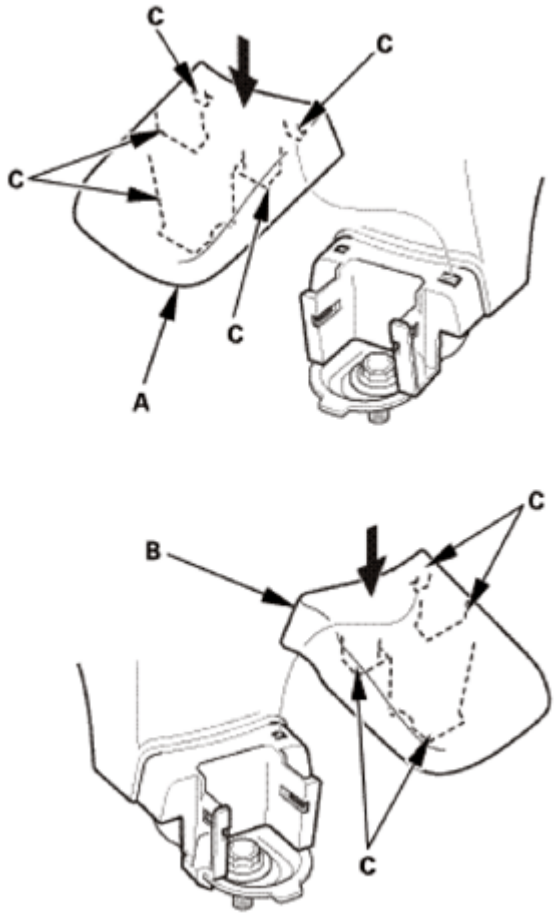

Fig. 32: Installing Rear Inner And Outer Seat Track End Cover
Courtesy of AMERICAN HONDA MOTOR CO., INC.

3. Head Restraint - Driver's Side
    1. Insert the head restraint (A) to the seat-back as shown.

Fig. 33: Inserting Head Restraint To Seat-Back (Driver Side)
Courtesy of AMERICAN HONDA MOTOR CO., INC.

GETtheMANUALS.org

4. Battery Terminal (SRS) - Reconnection

NOTE: If the battery performance is abnormal, test the battery.

1. Clean the battery terminals.
2. Connect the positive cable (A) to the battery.

NOTE: Always connect the positive side first.

3. Connect the negative cable (B) to the battery.
4. Apply multipurpose grease to the terminals to prevent corrosion.

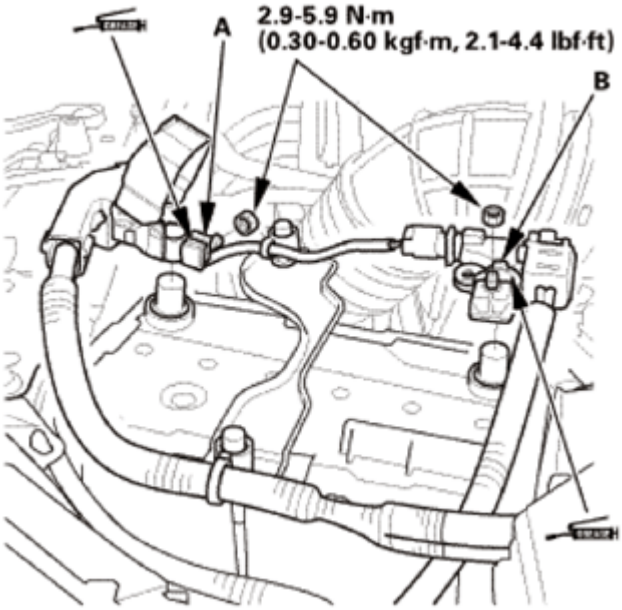

Fig. 34: Identifying Battery Positive And Negative Cable With Torque Specifications
Courtesy of AMERICAN HONDA MOTOR CO., INC.

5. Front Seat Belt Lower Anchor Bolt
   1. Install the lower anchor bolt.

NOTE: Before installing the anchor bolt, make sure there are no twists or kinks in the seat belt.

GETtheMANUALS.org

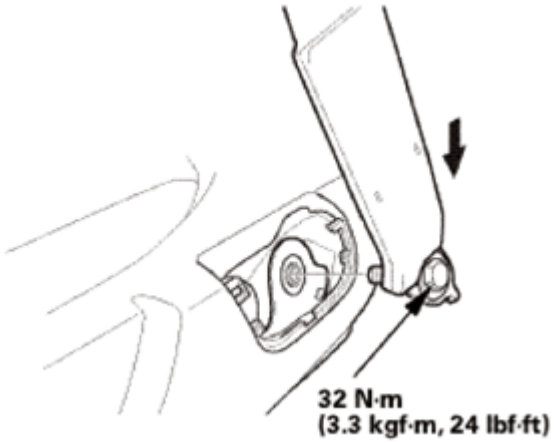

Fig. 35: Installing Front Seat Belt Lower Anchor Bolt
Courtesy of AMERICAN HONDA MOTOR CO., INC.

2. Install the anchor cover (A). Make sure the hooks (B) and the tab (C) snap into place securely.

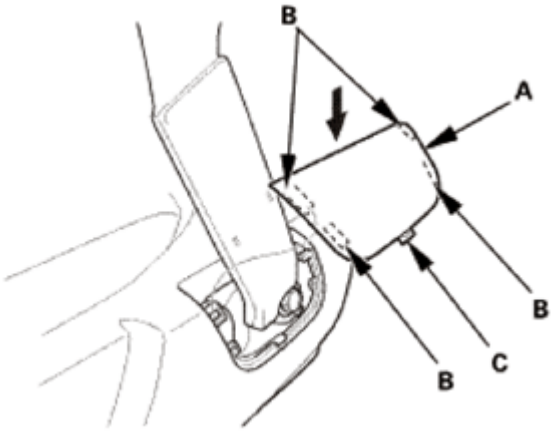

Fig. 36: Installing Front Seat Belt Lower Anchor Cover
Courtesy of AMERICAN HONDA MOTOR CO., INC.

DRIVER'S SEAT POSITION SENSOR OPERATION CHECK

PROCEDURE

Check the driver's seat position sensor operation after the driver's seat position sensor replacement.

1. HDS DLC - Connection
    1. Connect the HDS to the data link connector (DLC) (A) located under the driver's side of the dashboard.
    2. Turn the ignition switch to ON (II).
    3. Make sure the HDS communicates with the vehicle. If it does not communicate, go to the DLC circuit troubleshooting.

GETtheMANUALS.org

Fig. 37: Identifying Data Link Connector
Courtesy of AMERICAN HONDA MOTOR CO., INC.

2. Driver's Seat Position Sensor Operation Check
    1. Make sure the driver's seat is in the full forward position.
    2. From the HDS Main Menu, select SRS, then Data List.
    3. Using two pieces of tape (A), make alignment marks (B) on the recline cover (C) and the front door sill trim (D) as shown. The driver's seat position sensor should read NEAR on the HDS.
    4. Move the seat back in small increments (about 5 mm, 0.20 in) until the driver's seat position sensor reads NOT NEAR on the HDS. The seat should be about 55 mm (2.17 in) from the front.

GETtheMANUALS.org

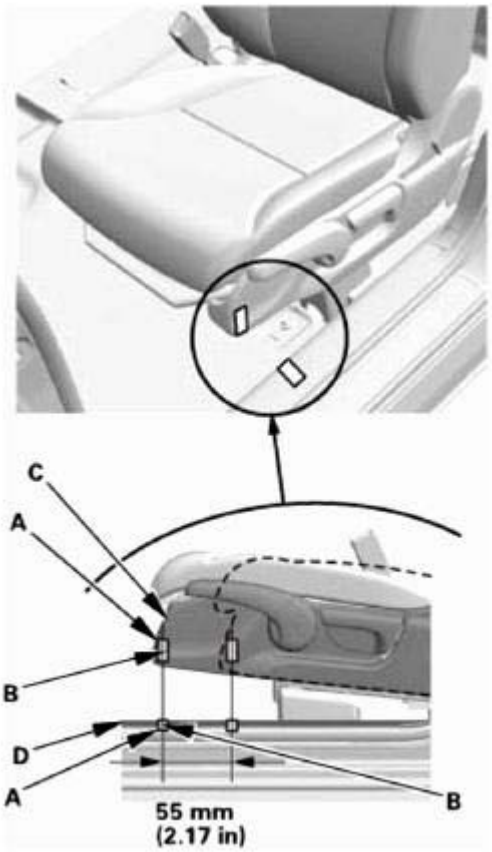

Fig. 38: Identifying Alignment Marks On Recline Cover And Front Door Sill Trim
Courtesy of AMERICAN HONDA MOTOR CO., INC.

NOTE: **It takes a few seconds for the HDS to display changes, so wait for about 5 seconds between each movement. If the driver's seat position sensor data does not work as described above, check the driver's seat position sensor for damage, and replace parts as needed.**

5. Turn the ignition switch to LOCK (0).

DRIVER'S SEAT POSITION SENSOR REMOVAL AND INSTALLATION

REMOVAL

NOTE:

- **SRS components are located in this area. Review the SRS COMPONENT LOCATIONS and the PRECAUTIONS AND PROCEDURES before doing repairs or service.**
- **Before doing this procedure, raise the driver's seat all the way up, and position all the way rearward.**

GETtheMANUALS.org

1. Front Seat Belt Lower Anchor Bolt
    1. Slide the front seat forward fully, carefully pry up on the bottom edge of the anchor cover (A) at the pry point (B) with the appropriate trim tool to release the hooks (C) and the tab (D), then remove the cover by pulling it up.

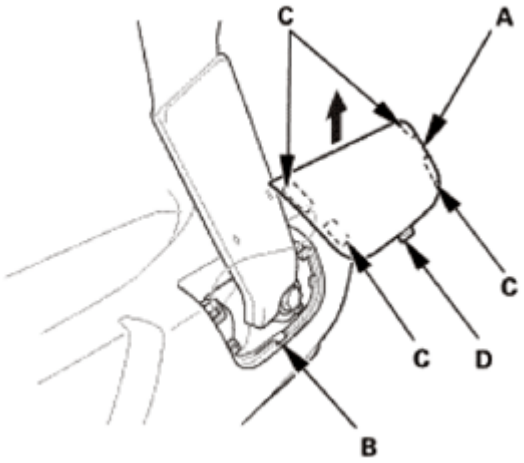

Fig. 39: Removing Front Seat Belt Lower Anchor Cover
Courtesy of AMERICAN HONDA MOTOR CO., INC.

    2. Remove the lower anchor bolt (A).

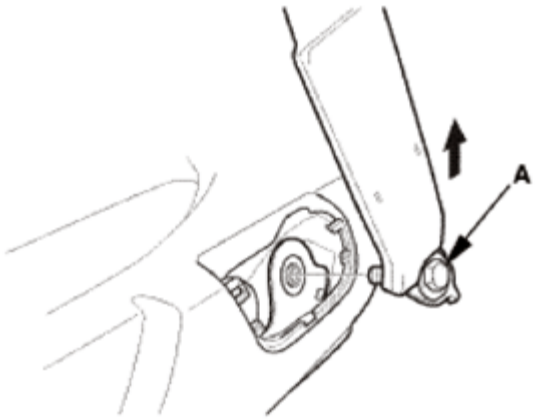

Fig. 40: Removing Front Seat Belt Lower Anchor Bolt
Courtesy of AMERICAN HONDA MOTOR CO., INC.

2. Battery Terminal (SRS) - Disconnection
    1. Make sure the ignition switch is in LOCK (0).
    2. Disconnect and isolate the negative cable (A) from the battery.

NOTE: Always disconnect the negative side first.

    3. Disconnect the positive cable (B) from the battery.

GETtheMANUALS.org

4. Wait at least 3 minutes before starting work.

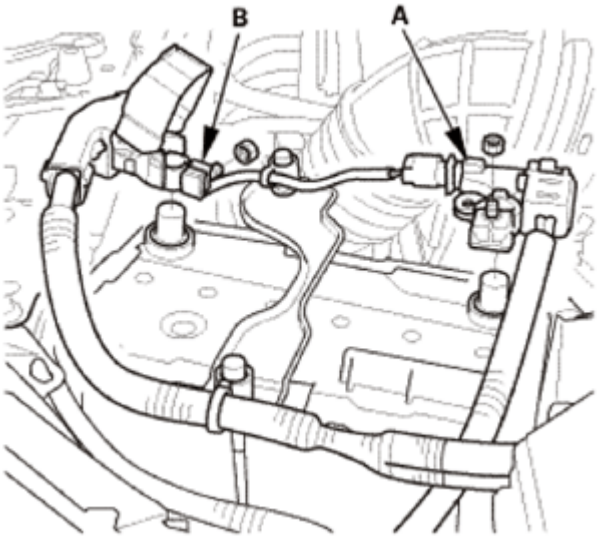

Fig. 41: Identifying Battery Positive And Negative Cable
Courtesy of AMERICAN HONDA MOTOR CO., INC.

3. Front Seat - Driver's Side
    1. Detach the hooks (A), then remove the rear inner seat track end cover (B) and the rear outer seat track end cover (C).

GETtheMANUALS.org

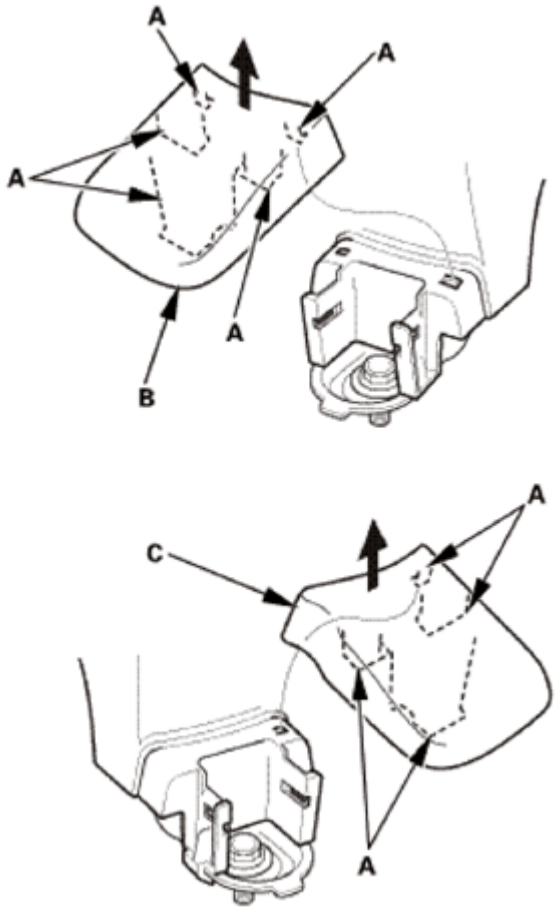

Fig. 42: Removing Rear Inner And Outer Seat Track End Cover
Courtesy of AMERICAN HONDA MOTOR CO., INC.

2. Remove the front mounting bolts (A) from the front seat.

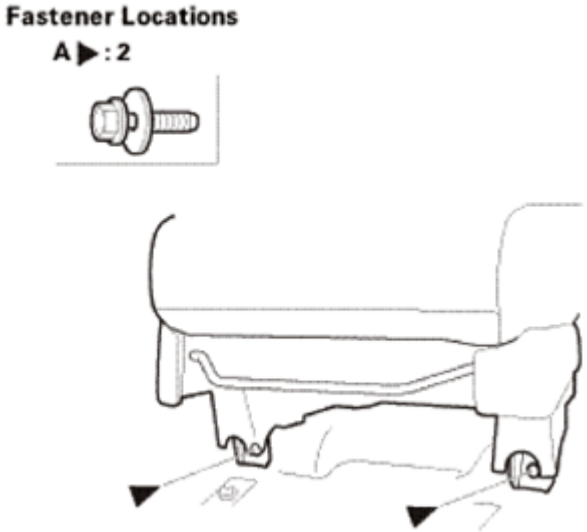

GETtheMANUALS.org

Fig. 43: Identifying Front Seat Front Mounting Bolts
Courtesy of AMERICAN HONDA MOTOR CO., INC.

3. Remove the rear mounting bolts (A) from the front seat.

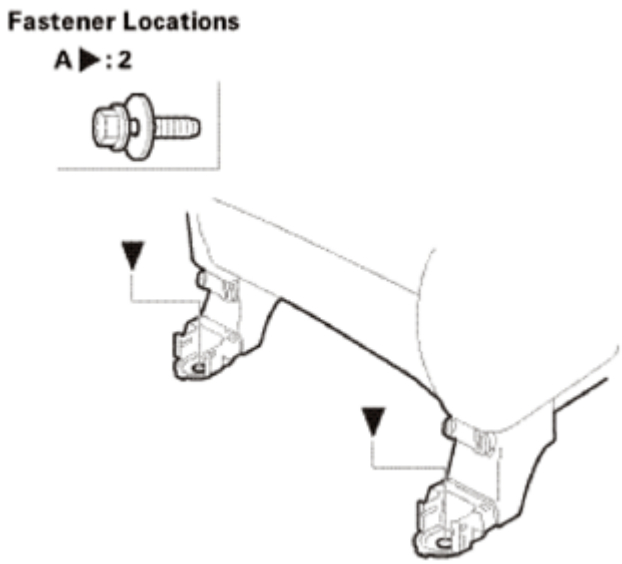

Fig. 44: Identifying Front Seat Rear Mounting Bolts
Courtesy of AMERICAN HONDA MOTOR CO., INC.

4. Disconnect the connectors (A).
5. Detach the harness clip (B).

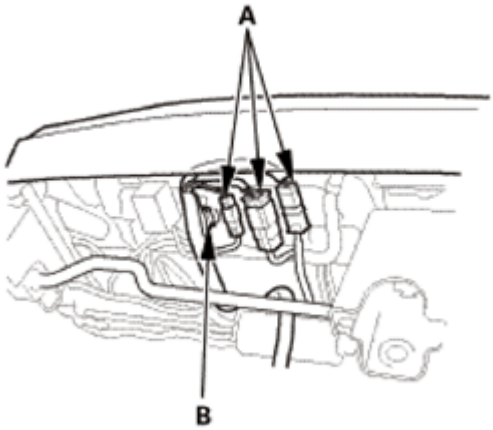

Fig. 45: Identifying Front Seat Connector And Clips (Driver Side)
Courtesy of AMERICAN HONDA MOTOR CO., INC.

4. Front Seat Height Adjuster Handle - Manual Seat
    1. Pry out the cap (A) to release the hooks (B), and remove the screws (C), then remove the height adjuster handle (D).

GETtheMANUALS.org

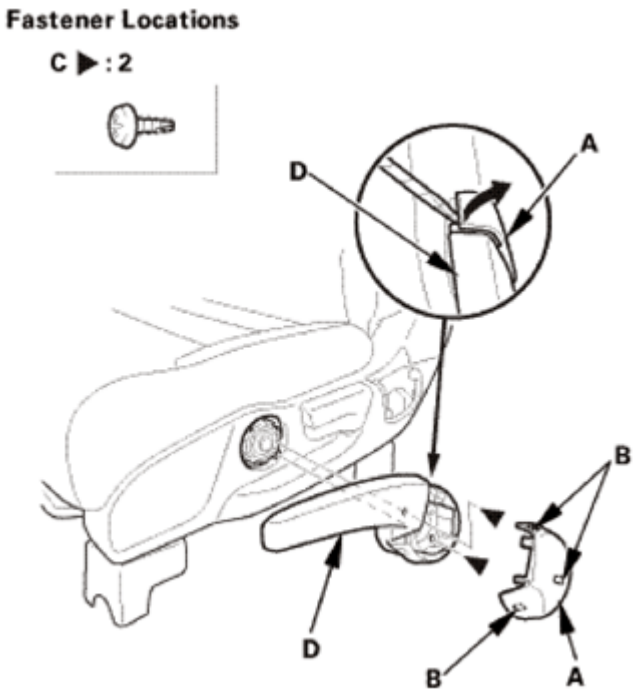

Fig. 46: Removing Height Adjuster Handle (Manual Seat)
Courtesy of AMERICAN HONDA MOTOR CO., INC.

5. Front Seat Recline Cover - Driver's Side

Power Seat

1. Remove the screw (A), and detach the clip (B).
2. Release the tabs (C).
3. Pull up the recline cover (D) to release the hook (E).
4. Disconnect the connectors.
5. Remove the upper center inner cover (F).
6. Remove the wire harness (G) from the hooks (H), then remove the recline cover.

GETtheMANUALS.org

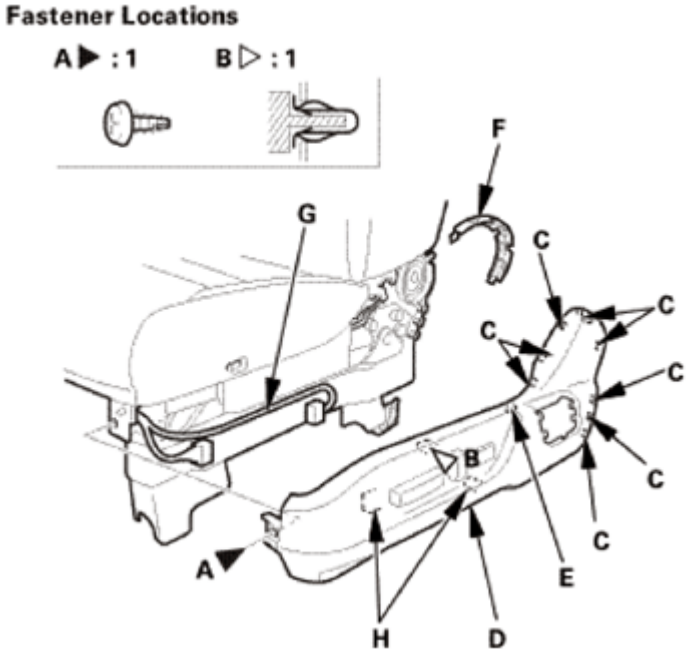

Fig. 47: Identifying Front Seat Recline Cover And Related Components (Power Seat)
Courtesy of AMERICAN HONDA MOTOR CO., INC.

Manual Seat

1. Remove the recline knob (A).
2. Remove the screw (B), and detach the clip (C).
3. Release the front hooks (D) of the recline cover (E) from the recline inner cover (F).
4. Release the rear hooks (G) of the recline cover from the recline inner cover.
5. Detach the hook (H) by pulling the recline cover back by hand.
6. Gently pull out the recline cover and remove it.

GETtheMANUALS.org

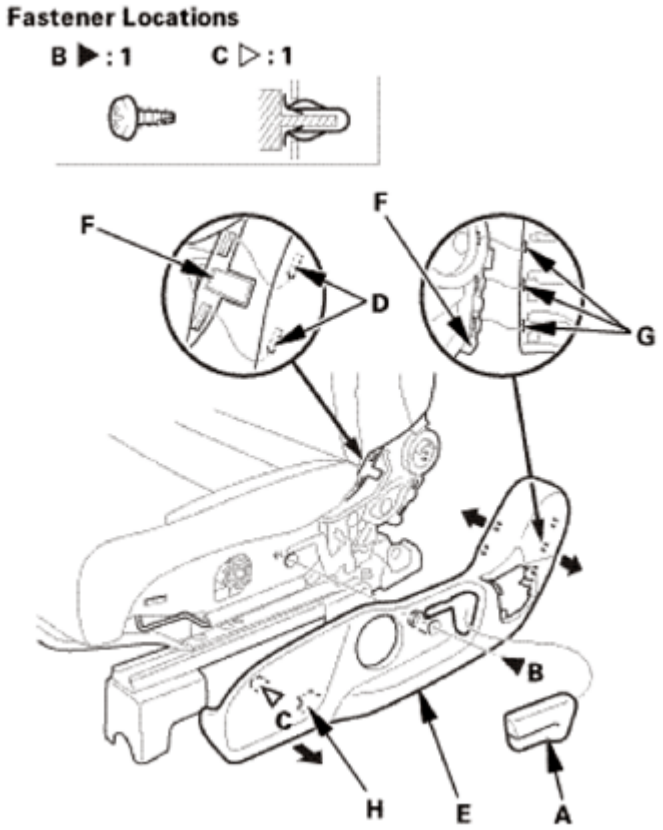

Fig. 48: Identifying Front Seat Recline Cover And Related Components (Manual Seat Seat)
Courtesy of AMERICAN HONDA MOTOR CO., INC.

6. Driver's Seat Position Sensor
    1. Disconnect the driver's seat position sensor connector on the driver's seat wire harness.
    2. Power seat: Remove the TORX bolt and nut using a TORX T30 bit, then remove the driver's seat position sensor (A).
    3. Manual seat: Remove the TORX bolt using a TORX T30 bit, then remove the driver's seat position sensor (A).

    Power seat

GETtheMANUALS.org

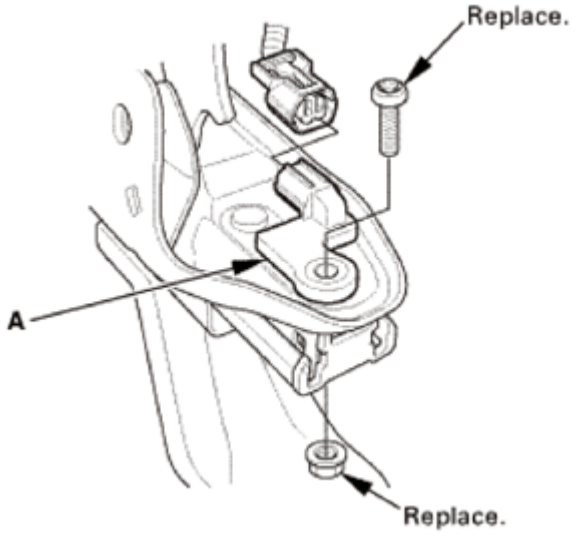

Fig. 49: Identifying Driver Seat Position Sensor (Power Seat)
Courtesy of AMERICAN HONDA MOTOR CO., INC.

Manual seat

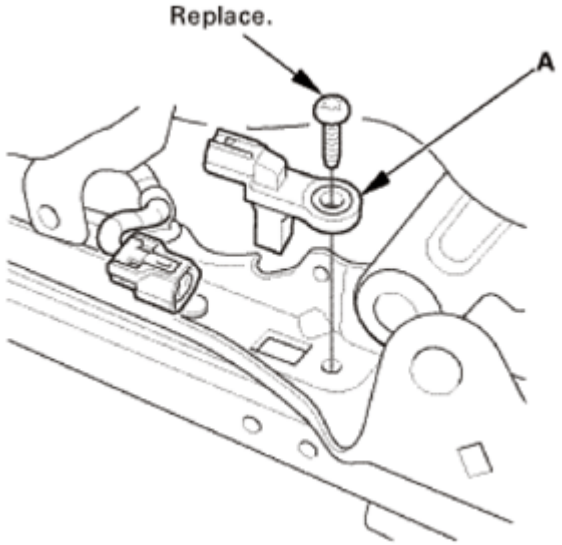

Fig. 50: Identifying Driver Seat Position Sensor (Manual Seat)
Courtesy of AMERICAN HONDA MOTOR CO., INC.

INSTALLATION

NOTE:

- **SRS components are located in this area. Review the SRS COMPONENT LOCATIONS and the PRECAUTIONS AND PROCEDURES before doing repairs or service.**
- **Be sure to install the harness so it is not pinched or interferes with other parts.**

GETtheMANUALS.org

- **Check the driver's seat position sensor operation after the driver's seat position sensor replacement.**

1. Driver's Seat Position Sensor
    1. Power seat: Install the driver's seat position sensor (A) with the new TORX bolts using a TORX T30 bit, and new nut.
    2. Manual seat: Install the driver's seat position sensor (A) with the new TORX bolts using a TORX T30 bit.
    3. Connect the driver's seat position sensor connector on the driver's seat wire harness.

    Power seat

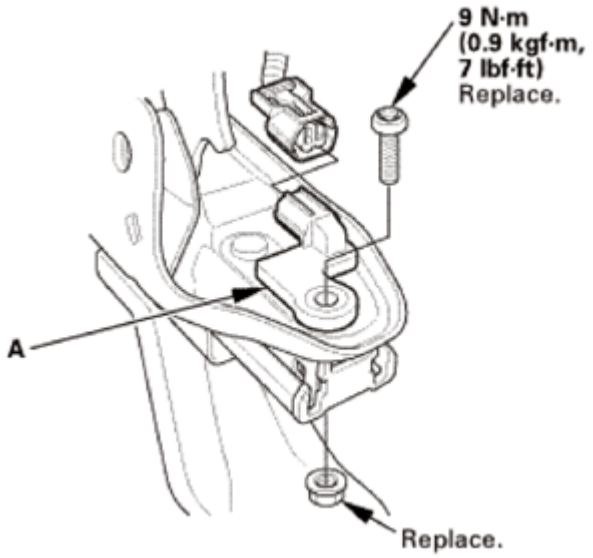

Fig. 51: Identifying Driver Seat Position Sensor And Bolt With Torque Specifications (Power Seat)
Courtesy of AMERICAN HONDA MOTOR CO., INC.

Manual seat

GETtheMANUALS.org

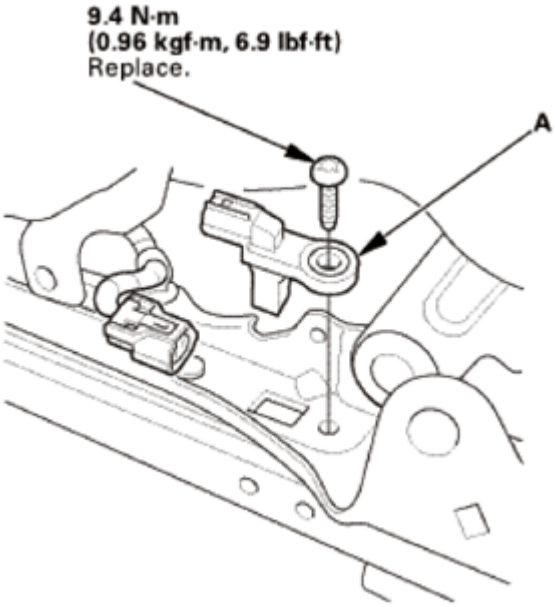

Fig. 52: Identifying Driver Seat Position Sensor And Bolt With Torque Specifications (Manual Seat)
Courtesy of AMERICAN HONDA MOTOR CO., INC.

2. Front Seat Recline Cover - Driver's Side

Power Seat

1. Install the upper center inner cover (A) to the recline cover (B).
2. Connect the connector, then install the wire harness (C) to the hooks (D).
3. Install the clip (E) and tabs (F), then install the recline cover.
4. Install the tabs (G), then install the screw (H).

GETtheMANUALS.org

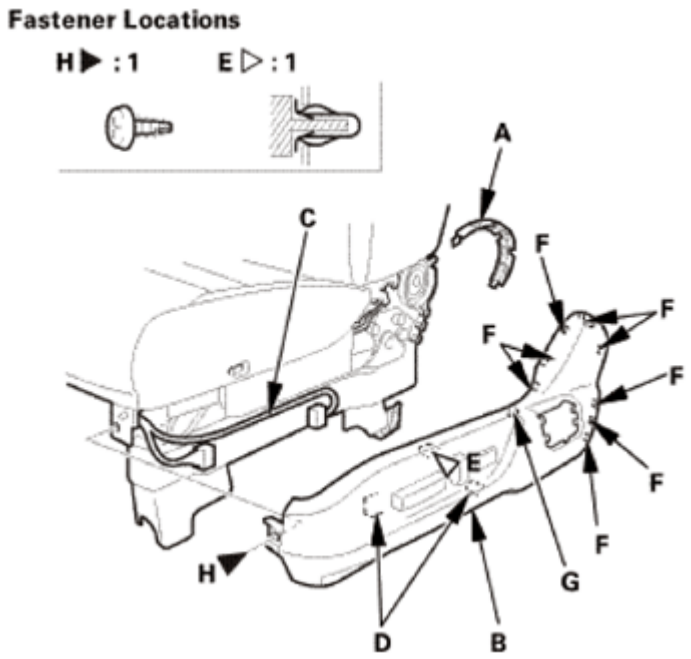

Fig. 53: Identifying Front Seat Recline Cover And Related Components (Power Seat)
Courtesy of AMERICAN HONDA MOTOR CO., INC.

Manual Seat

1. Install the hook (A) and clip (B) of the recline cover (C).
2. Install the front hooks (D) to the recline inner cover (E).
3. Install the hook (F) of the recline cover to the recline inner cover.
4. Install the recline knob (G) and the screw (H).

GETtheMANUALS.org

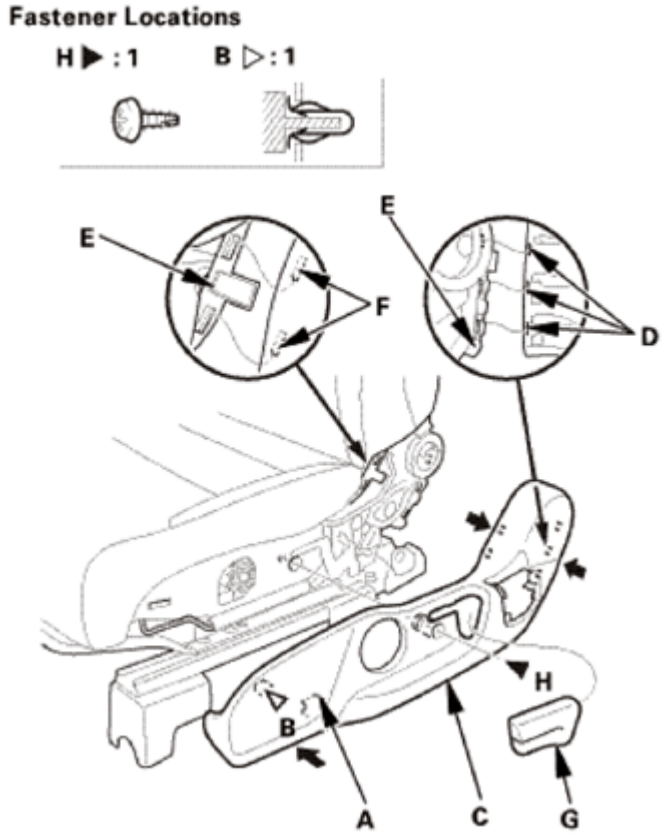

Fig. 54: Installing Front Seat Recline Cover (Manual Seat)
Courtesy of AMERICAN HONDA MOTOR CO., INC.

3. Front Seat Height Adjuster Handle - Manual Seat
    1. Install the height adjuster handle (A) and the screws (B).
    2. Install the cap (C). Make sure the hooks (D) snap into place securely.

GETtheMANUALS.org

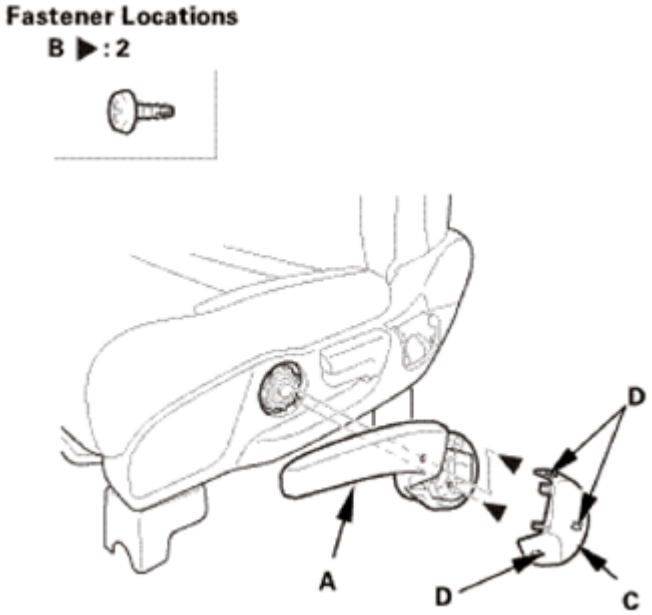

Fig. 55: Identifying Height Adjuster Handle, Cap, Hooks And Screws
Courtesy of AMERICAN HONDA MOTOR CO., INC.

4. Front Seat - Driver's Side
    1. Connect the connectors (A).
    2. Install the harness clip (B).

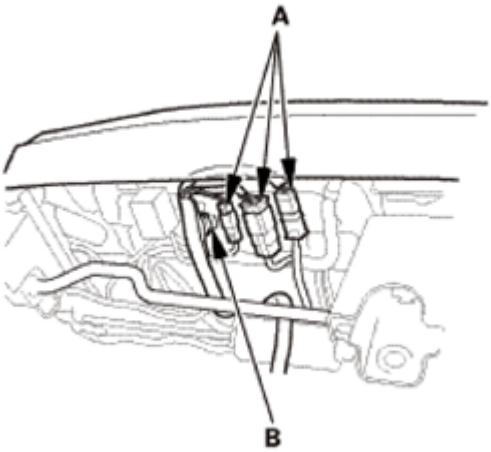

Fig. 56: Identifying Front Seat Connectors And Clips
Courtesy of AMERICAN HONDA MOTOR CO., INC.

3. Install the seat mounting bolts (A).

NOTE:

- **Tighten the bolts by hand first, then tighten them to the specified torque.**

GETtheMANUALS.org

- **Tighten the seat mounting bolts to the specified torque in the sequence shown. Slide the seat all the way back and tighten bolts 1 and 2, then slide it forward and tighten bolts 3 and 4.**

Front Side

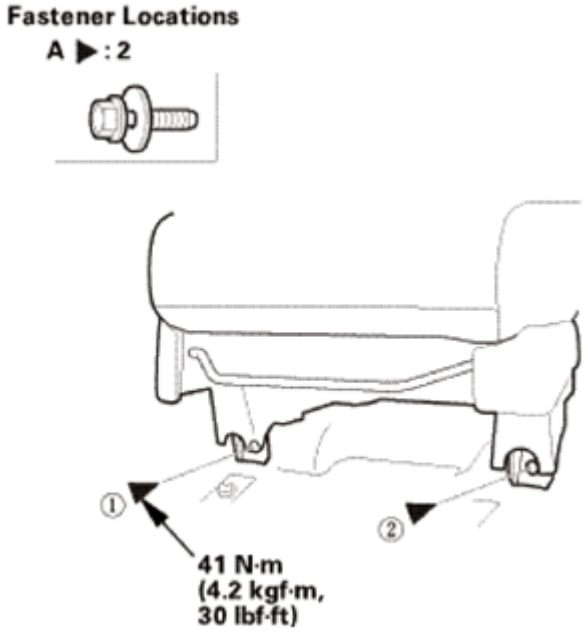

Fig. 57: Identifying Seat Mounting Bolts With Torque Specifications (Front Side)
Courtesy of AMERICAN HONDA MOTOR CO., INC.

Rear Side

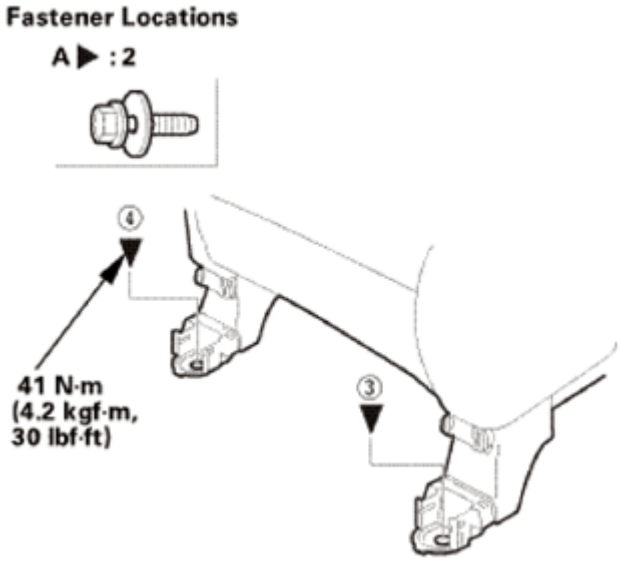

Fig. 58: Identifying Seat Mounting Bolts With Torque Specifications (Rear Side)

GETtheMANUALS.org

Courtesy of AMERICAN HONDA MOTOR CO., INC.

4. Install the rear inner seat track end cover (A) and the rear outer seat track end cover (B). Make sure the hooks (C) snap into place securely.

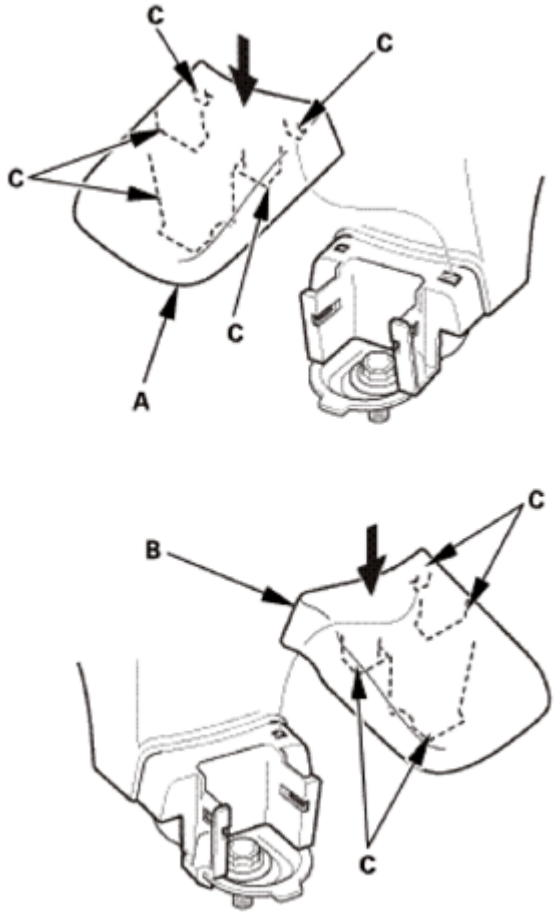

Fig. 59: Installing Rear Inner And Outer Seat Track End Cover
Courtesy of AMERICAN HONDA MOTOR CO., INC.

5. Battery Terminal (SRS) - Reconnection

NOTE: If the battery performance is abnormal, test the battery.

1. Clean the battery terminals.
2. Connect the positive cable (A) to the battery.

NOTE: Always connect the positive side first.

3. Connect the negative cable (B) to the battery.
4. Apply multipurpose grease to the terminals to prevent corrosion.

GETtheMANUALS.org

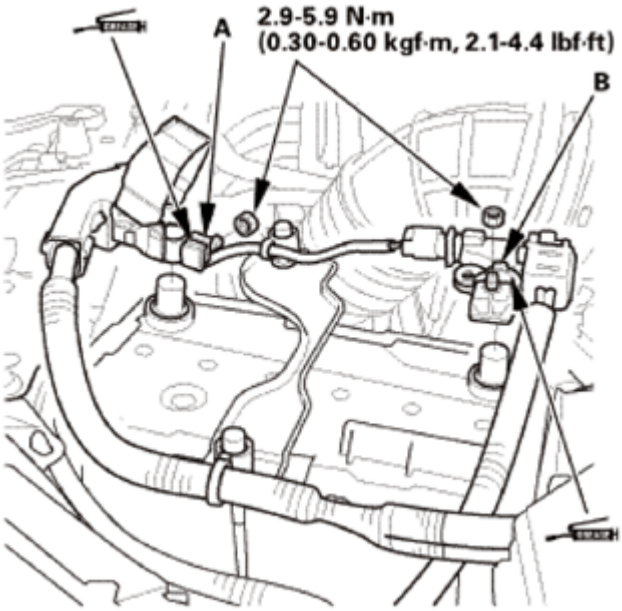

Fig. 60: Identifying Battery Positive And Negative Cable With Torque Specifications
Courtesy of AMERICAN HONDA MOTOR CO., INC.

6. Front Seat Belt Lower Anchor Bolt
    1. Install the lower anchor bolt.

NOTE: **Before installing the anchor bolt, make sure there are no twists or kinks in the seat belt.**

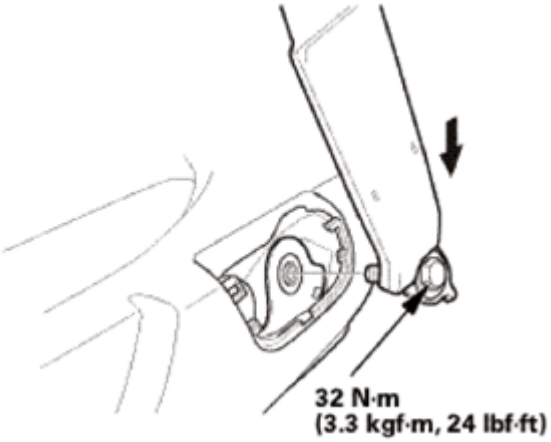

Fig. 61: Installing Front Seat Lower Anchor Bolt
Courtesy of AMERICAN HONDA MOTOR CO., INC.

2. Install the anchor cover (A). Make sure the hooks (B) and the tab (C) snap into place securely.

GETtheMANUALS.org

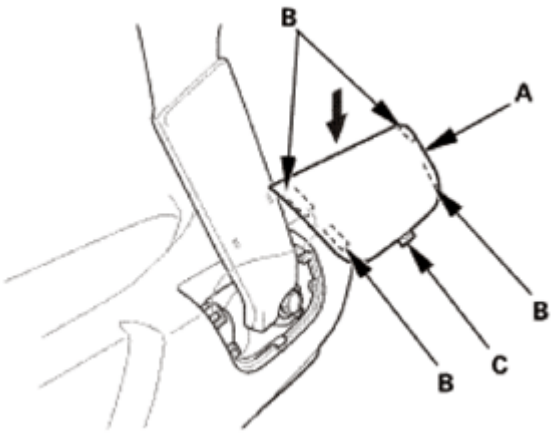

Fig. 62: Installing Front Seat Lower Anchor Cover
Courtesy of AMERICAN HONDA MOTOR CO., INC.

7. HDS DLC - Connection
    1. Connect the HDS to the data link connector (DLC) (A) located under the driver's side of the dashboard.
    2. Turn the ignition switch to ON (II).
    3. Make sure the HDS communicates with the vehicle. If it does not communicate, go to the DLC circuit troubleshooting.

Fig. 63: Identifying Data Link Connector
Courtesy of AMERICAN HONDA MOTOR CO., INC.

8. DTC - Clear
    1. Clear the DTC(s) by following the screen prompts on the HDS.
    2. Turn the ignition switch to LOCK (0), then wait for 10 seconds.
9. Driver's Seat Position Sensor Operation Check

GETtheMANUALS.org

1. Make sure the driver's seat is in the full forward position.
2. From the HDS Main Menu, select SRS, then Data List.
3. Using two pieces of tape (A), make alignment marks (B) on the recline cover (C) and the front door sill trim (D) as shown. The driver's seat position sensor should read NEAR on the HDS.
4. Move the seat back in small increments (about 5 mm, 0.20 in) until the driver's seat position sensor reads NOT NEAR on the HDS. The seat should be about 55 mm (2.17 in) from the front.

NOTE: **It takes a few seconds for the HDS to display changes, so wait for about 5 seconds between each movement. If the driver's seat position sensor data does not work as described above, check the driver's seat position sensor for damage, and replace parts as needed.**

5. Turn the ignition switch to LOCK (0).

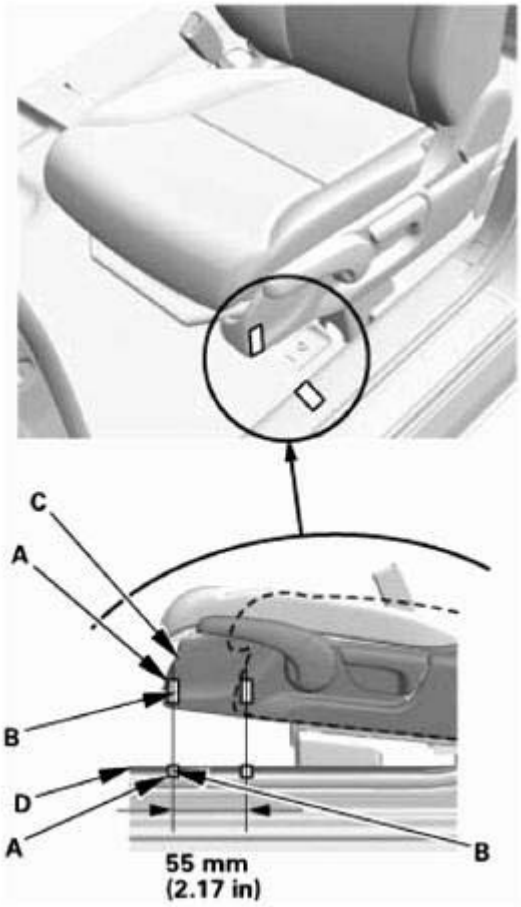

Fig. 64: Identifying Alignment Marks On Recline Cover And Front Door Sill Trim
Courtesy of AMERICAN HONDA MOTOR CO., INC.

10. Confirm Proper SRS Operation
    1. Turn the ignition switch to ON (II), and check that the SRS indicator comes on for about 6 seconds

GETtheMANUALS.org

and then goes off.

FRONT SEAT ARMREST REMOVAL AND INSTALLATION

REMOVAL

1. Front Seat Armrest
    1. Remove the cap (A) with the appropriate trim tool.
    2. Remove the center pin (B), the bushing (C), and the washer (D), then remove the armrest (E).

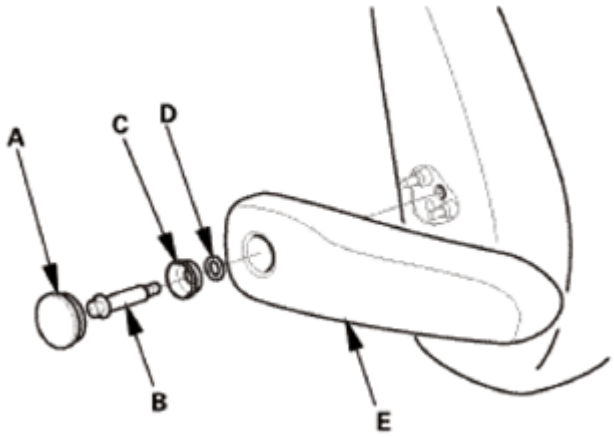

Fig. 65: Identifying Front Seat Armrest, Center Pin, Bushing, Washer And Cap
Courtesy of AMERICAN HONDA MOTOR CO., INC.

3. Remove the pins (A) from the seat-back.

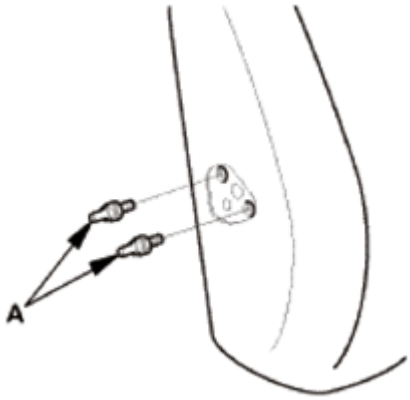

Fig. 66: Identifying Seat Back Pins
Courtesy of AMERICAN HONDA MOTOR CO., INC.

INSTALLATION

1. Front Seat Armrest

GETtheMANUALS.org

1. Install the pins (A) to the seat-back.

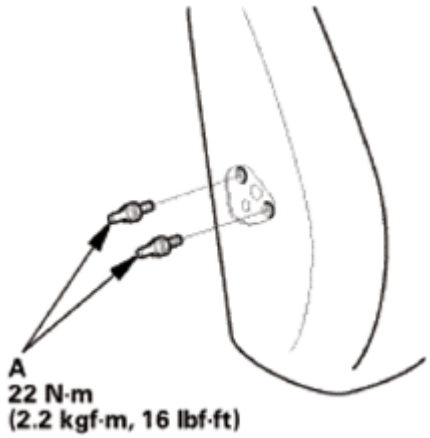

Fig. 67: Identifying Seat Back Pins With Torque Specifications
Courtesy of AMERICAN HONDA MOTOR CO., INC.

2. Install the armrest (A), then install the washer (B), the bushing (C), and the center pin (D).
3. Install the cap (E) to the armrest.

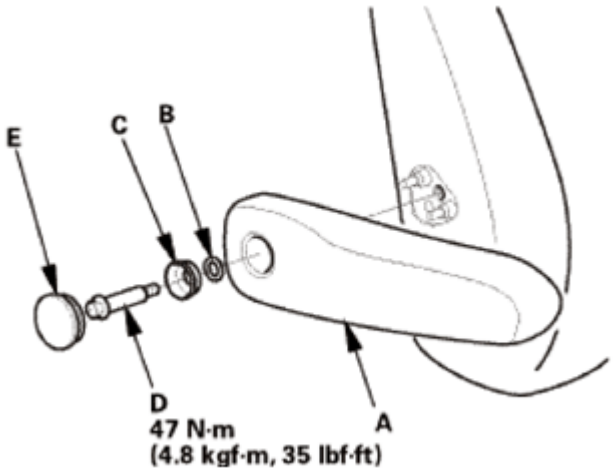

Fig. 68: Identifying Front Seat Armrest, Center Pin, Bushing, Washer And Cap With Torque Specifications
Courtesy of AMERICAN HONDA MOTOR CO., INC.

FRONT SEAT CUSHION COVER REMOVAL AND INSTALLATION

REMOVAL

SRS components are located in this area. Review the **SRS COMPONENT LOCATIONS** and the **PRECAUTIONS AND PROCEDURES** before doing repairs or service.

GETtheMANUALS.org

NOTE:

- **Steps 1-10 show removing the driver's side, steps 11-17 show removing the passenger's side.**
- **Before the front power seat is removed, slide the front power seat to the half-way position, then raise the seat to the highest position.**

1. Front Seat Belt Lower Anchor Bolt
    1. Slide the front seat forward fully, carefully pry up on the bottom edge of the anchor cover (A) at the pry point (B) with the appropriate trim tool to release the hooks (C) and the tab (D), then remove the cover by pulling it up.

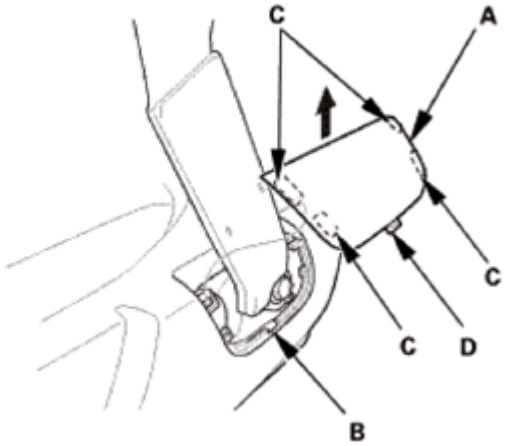

Fig. 69: Removing Front Seat Lower Anchor Cover
Courtesy of AMERICAN HONDA MOTOR CO., INC.

    2. Remove the lower anchor bolt (A).

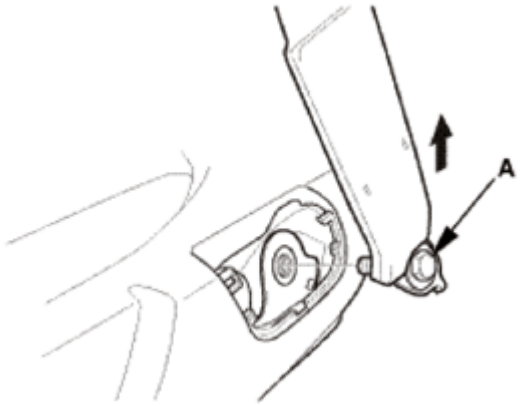

Fig. 70: Removing Front Seat Lower Anchor Bolt
Courtesy of AMERICAN HONDA MOTOR CO., INC.

2. Battery Terminal (SRS) - Disconnection
    1. Make sure the ignition switch is in LOCK (0).

GETtheMANUALS.org

2. Disconnect and isolate the negative cable (A) from the battery.

NOTE: Always disconnect the negative side first.

3. Disconnect the positive cable (B) from the battery.
4. Wait at least 3 minutes before starting work.

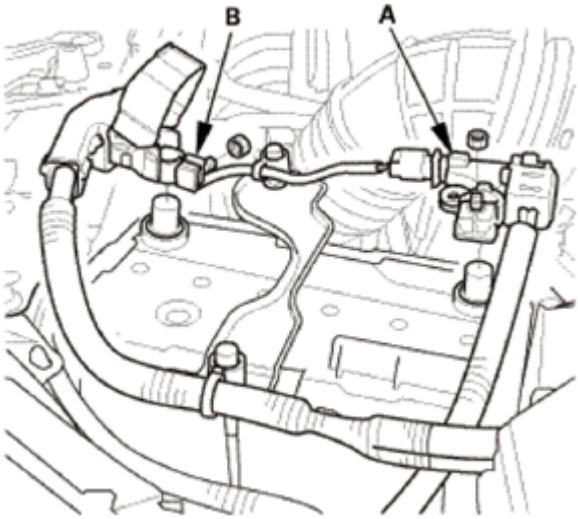

Fig. 71: Identifying Battery Positive And Negative Cable
Courtesy of AMERICAN HONDA MOTOR CO., INC.

3. Head Restraint - Driver's Side
   1. Push and hold the knob (A), then pull out the head restraint (B) as shown.

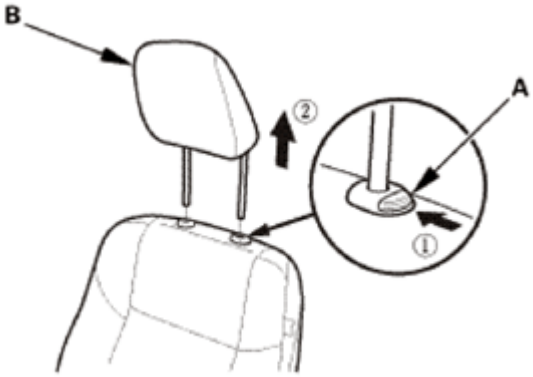

Fig. 72: Pulling Head Restraint (Driver Side)
Courtesy of AMERICAN HONDA MOTOR CO., INC.

4. Front Seat - Driver's Side
   1. Detach the hooks (A), then remove the rear inner seat track end cover (B) and the rear outer seat track end cover (C).

GETtheMANUALS.org

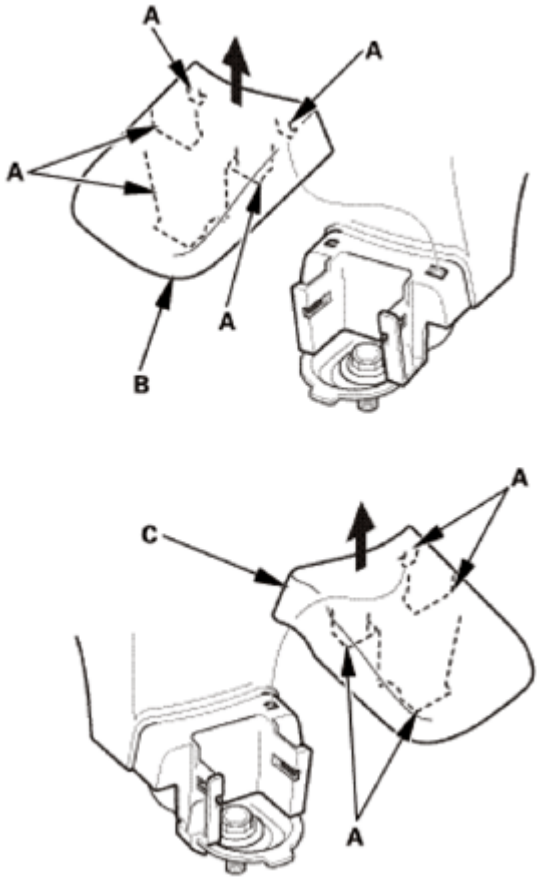

Fig. 73: Removing Rear Inner And Outer Seat Track End Cover
Courtesy of AMERICAN HONDA MOTOR CO., INC.

2. Remove the front mounting bolts (A) from the front seat.

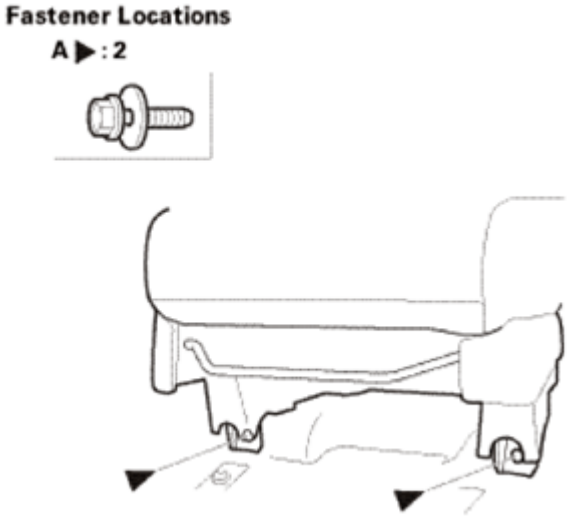

Fig. 74: Identifying Front Seat Front Mounting Bolts
Courtesy of AMERICAN HONDA MOTOR CO., INC.

GETtheMANUALS.org

3. Remove the rear mounting bolts (A) from the front seat.

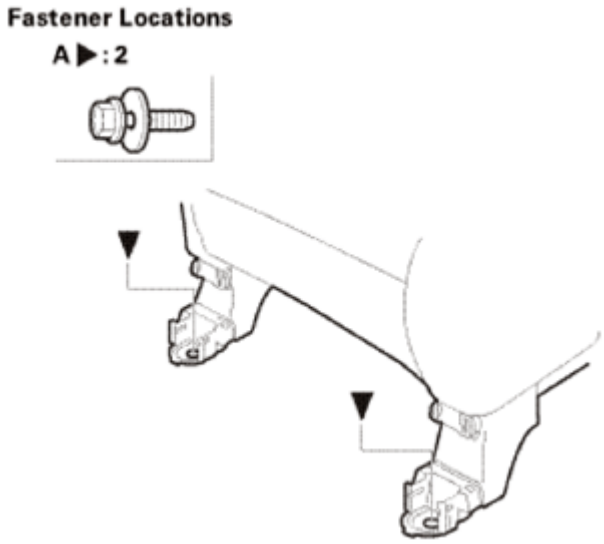

Fig. 75: Identifying Front Seat Rear Mounting Bolts
Courtesy of AMERICAN HONDA MOTOR CO., INC.

4. Disconnect the connectors (A).
5. Detach the harness clip (B).

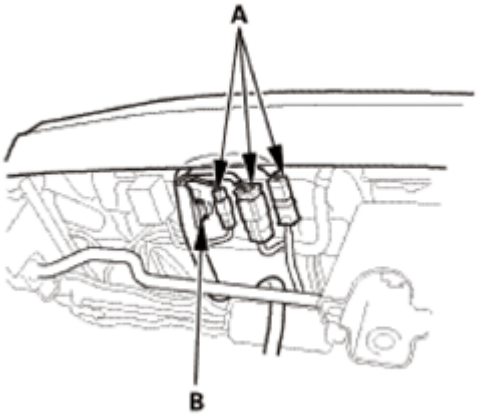

Fig. 76: Identifying Front Seat Connector And Clips
Courtesy of AMERICAN HONDA MOTOR CO., INC.

5. Front Cover - Power Seat
    1. Remove the screw (A), and release the hook (B), the pin (C), and the tabs (D), then remove the front cover (E).

GETtheMANUALS.org

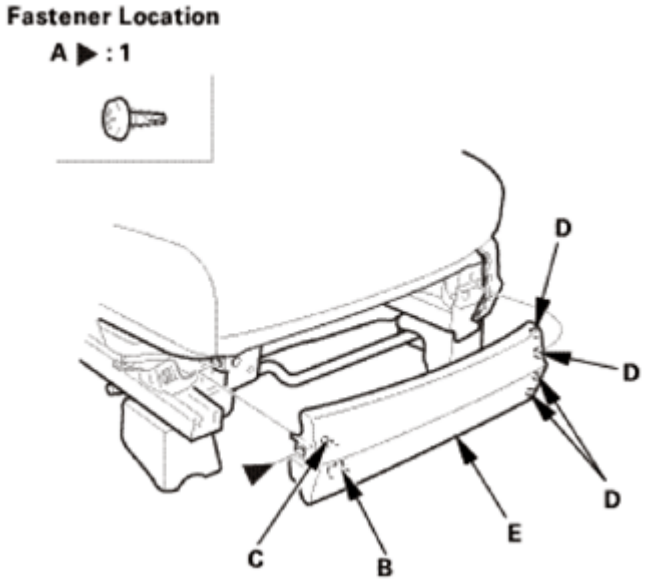

Fig. 77: Identifying Front Cover, Hook, Tabs, Pin And Screws
Courtesy of AMERICAN HONDA MOTOR CO., INC.

6. Front Seat Height Adjuster Handle - Manual Seat
    1. Pry out the cap (A) to release the hooks (B), and remove the screws (C), then remove the height adjuster handle (D).

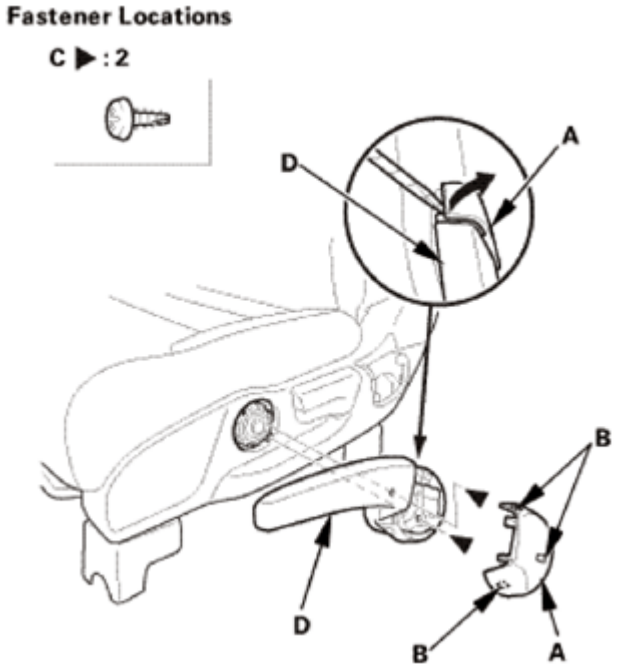

Fig. 78: Removing Height Adjuster Handle
Courtesy of AMERICAN HONDA MOTOR CO., INC.

7. Front Seat Recline Cover - Driver's Side

GETtheMANUALS.org

Power Seat

1. Remove the screw (A), and detach the clip (B).
2. Release the tabs (C).
3. Pull up the recline cover (D) to release the hook (E).
4. Disconnect the connectors.
5. Remove the upper center inner cover (F).
6. Remove the wire harness (G) from the hooks (H), then remove the recline cover.

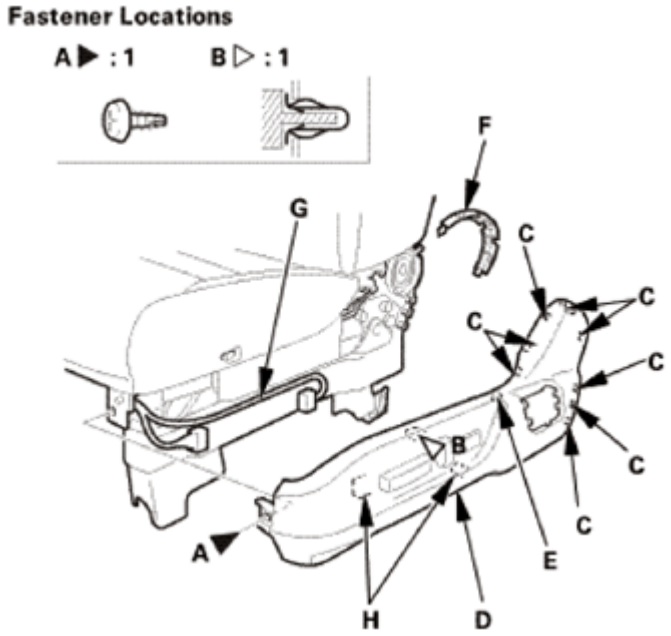

Fig. 79: Identifying Front Seat Recline Cover And Related Components (Power Seat)
Courtesy of AMERICAN HONDA MOTOR CO., INC.

Manual Seat

1. Remove the recline knob (A).
2. Remove the screw (B), and detach the clip (C).
3. Release the front hooks (D) of the recline cover (E) from the recline inner cover (F).
4. Release the rear hooks (G) of the recline cover from the recline inner cover.
5. Detach the hook (H) by pulling the recline cover back by hand.
6. Gently pull out the recline cover and remove it.

GETtheMANUALS.org

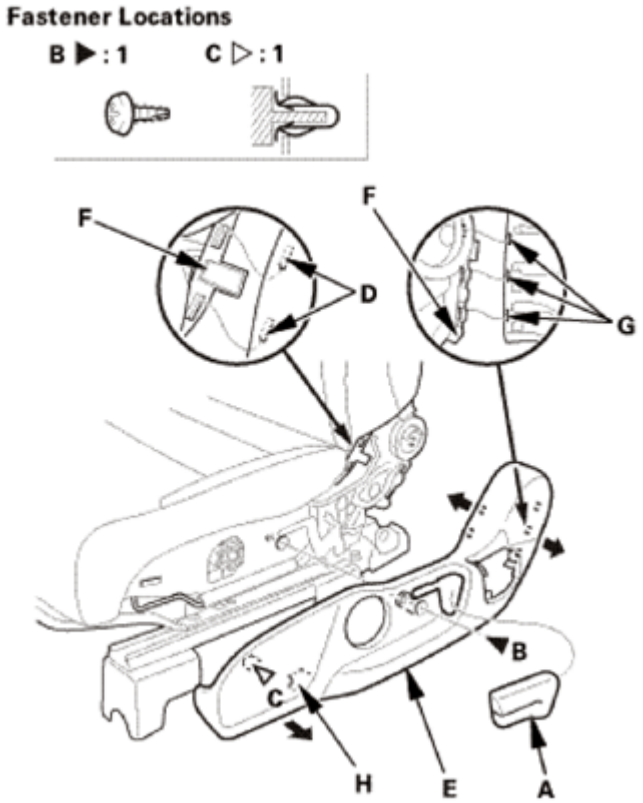

Fig. 80: Identifying Front Seat Recline Cover And Related Components (Manual Seat)
Courtesy of AMERICAN HONDA MOTOR CO., INC.

8. Front Seat Center Cover - Driver's Side

Power Seat

1. Remove the screw (A).
2. Release the tabs (B), then remove the center cover (C).
3. Remove the upper center inner cover (D).

GETtheMANUALS.org

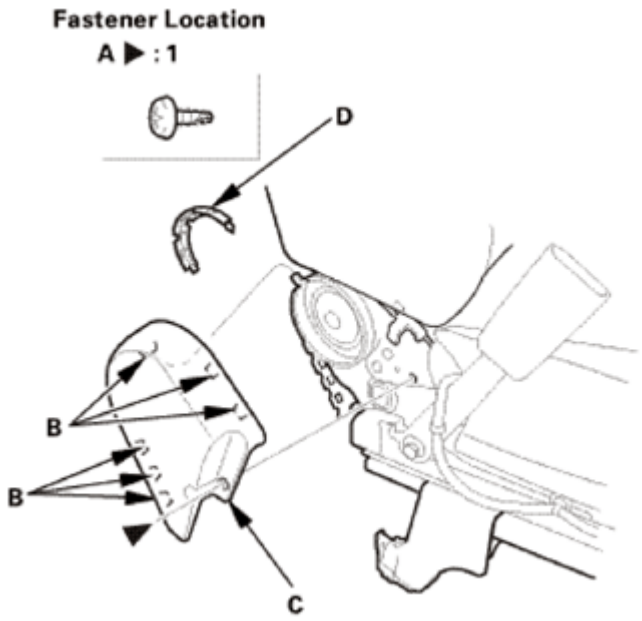

Fig. 81: Identifying Front Seat Center Cover, Upper Center Inner Cover, Tabs And Screws (Power Seat)
Courtesy of AMERICAN HONDA MOTOR CO., INC.

Manual Seat

1. Pull up the center cover (A) to release the tabs (B) from the inner cover (C).

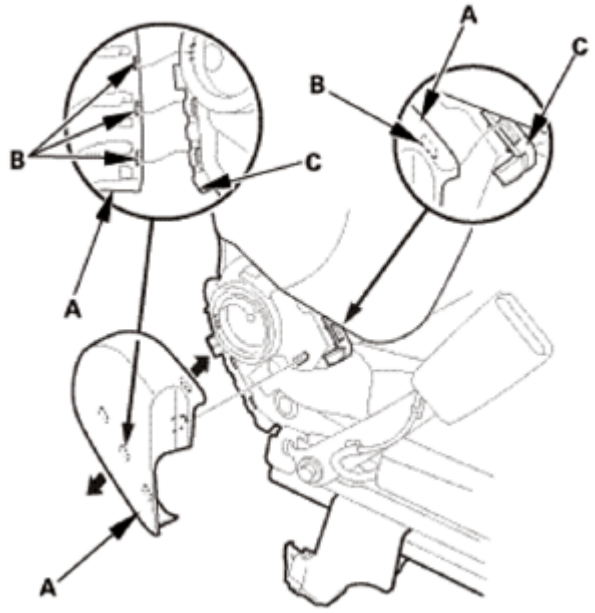

Fig. 82: Identifying Front Seat Center Cover, Upper Center Inner Cover, Tabs And Screws (Manual Seat)
Courtesy of AMERICAN HONDA MOTOR CO., INC.

GETtheMANUALS.org

9. Front Seat Cushion - Driver's Side
    1. Release the elastic strap (A) from the seat cushion frame springs (B), then pull back the under cover (C) of the seat-back cover.

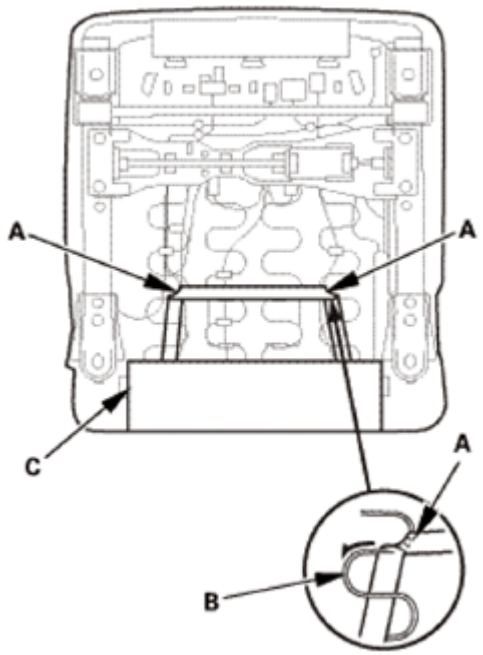

Fig. 83: Releasing Elastic Strap From Seat Cushion Frame Springs
Courtesy of AMERICAN HONDA MOTOR CO., INC.

    2. With seat heater: Disconnect the connectors (A).
    3. With seat heater: Detach the harness clip (B).
    4. With seat heater: Pry up the hook (C) of the harness holders (D), then release them from the seat cushion frame springs (E).

With Seat Heater

GETtheMANUALS.org

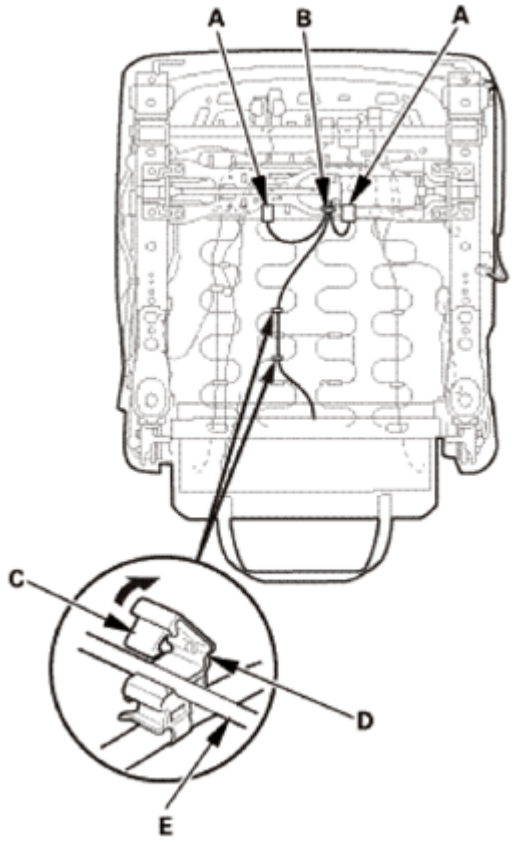

Fig. 84: Prying Up Harness Holders Hook (With Seat Heater)
Courtesy of AMERICAN HONDA MOTOR CO., INC.

5. Release the hook strips (A) from both sides of the seat cushion frame.
6. Detach the clip (B) from the seat cushion frame.

Power Seat

GETtheMANUALS.org

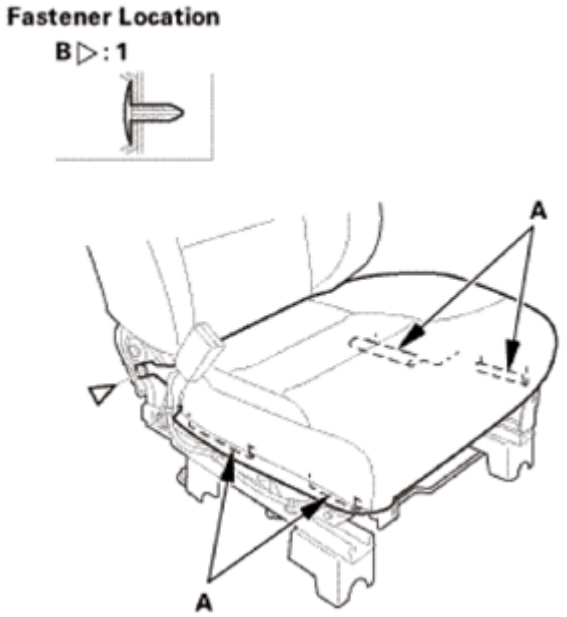

Fig. 85: Identifying Front Seat Cushion Hook Strips And Clips (Power Seat)
Courtesy of AMERICAN HONDA MOTOR CO., INC.

Manual Seat

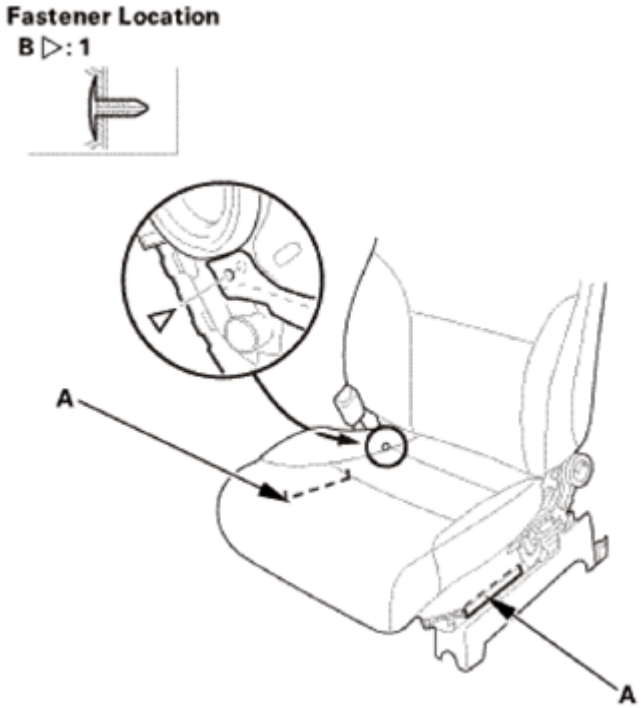

Fig. 86: Identifying Front Seat Cushion Hook Strips And Clips (Manual Seat)
Courtesy of AMERICAN HONDA MOTOR CO., INC.

7. Release the hook strips (A) from under the seat cushion.

GETtheMANUALS.org

Power Seat

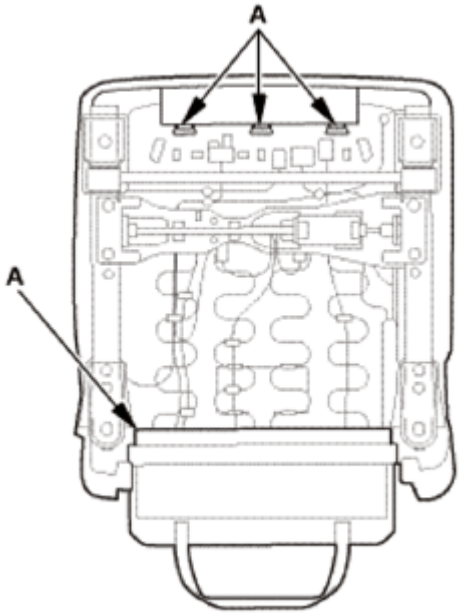

Fig. 87: Identifying Hook Strips Under Seat Cushion (Power Seat)
Courtesy of AMERICAN HONDA MOTOR CO., INC.

Manual Seat

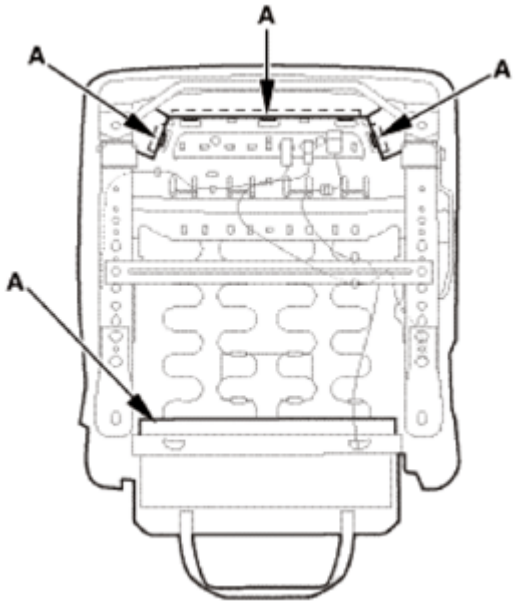

Fig. 88: Identifying Hook Strips Under Seat Cushion (Manual Seat)
Courtesy of AMERICAN HONDA MOTOR CO., INC.

8. Remove the seat cushion cover/pad (A) from the seat frame (B).

GETtheMANUALS.org

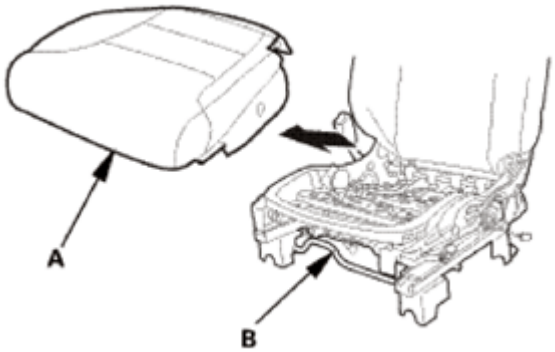

Fig. 89: Removing Seat Cushion Cover/Pad From Seat Frame
Courtesy of AMERICAN HONDA MOTOR CO., INC.

10. Front Seat Cushion Cover - Driver's Side
    1. Release the hook strips (A) fastening the seat cushion cover (B) on the seat cushion pad (C).

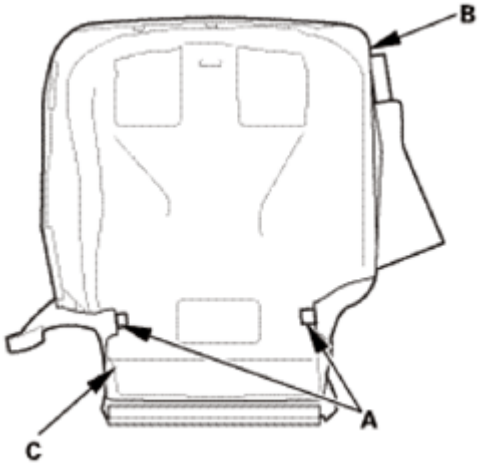

Fig. 90: Identifying Front Seat Cushion Cover, Pad And Hook Strips
Courtesy of AMERICAN HONDA MOTOR CO., INC.

    2. Pull back the edges of the seat cushion cover (A) all the way around, and release the upholstery rings (B).
    3. Remove the seat cushion cover.

Leather Seat

GETtheMANUALS.org

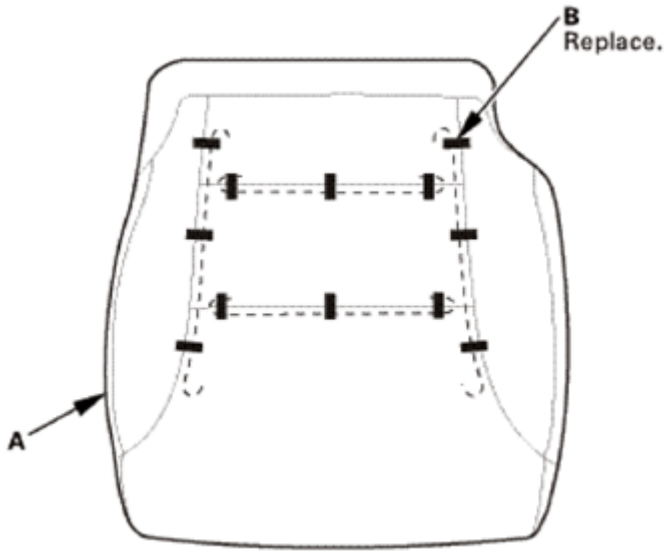

Fig. 91: Identifying Seat Cushion Cover And Upholstery Rings (Leather Seat)
Courtesy of AMERICAN HONDA MOTOR CO., INC.

Fabric Seat

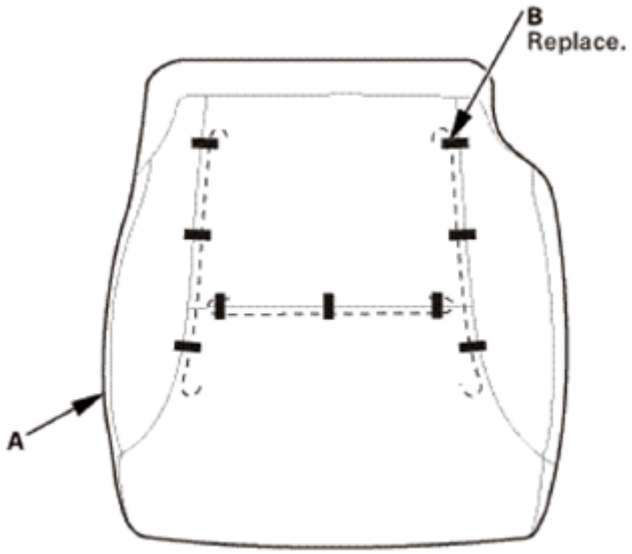

Fig. 92: Identifying Seat Cushion Cover And Upholstery Rings (Fabric Seat)
Courtesy of AMERICAN HONDA MOTOR CO., INC.

11. Front Seat Belt Lower Anchor Bolt - Passenger's Side
    1. Carefully pry up on the bottom of the anchor cover (A) at the pry point (B) with the appropriate trim tool to release the hooks (C) and the tab (D), then remove the cover by pulling it upward.

GETtheMANUALS.org

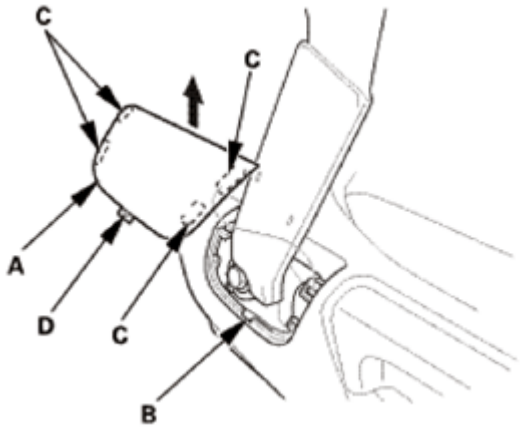

Fig. 93: Removing Front Seat Belt Lower Anchor Cover (Passenger Side)
Courtesy of AMERICAN HONDA MOTOR CO., INC.

2. Remove the lower anchor bolt (A).

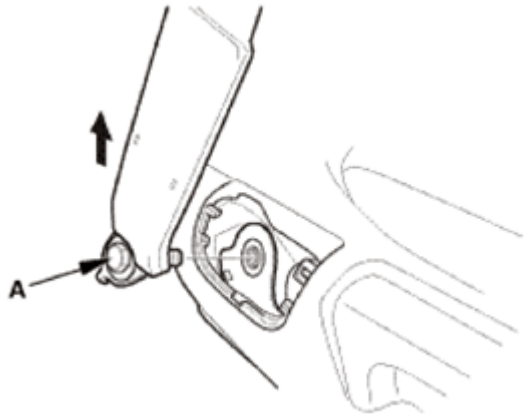

Fig. 94: Removing Front Seat Belt Lower Anchor Bolt (Passenger Side)
Courtesy of AMERICAN HONDA MOTOR CO., INC.

12. Head Restraint - Passenger's Side
    1. Push and hold the knob (A), then pull out the head restraint (B) as shown.

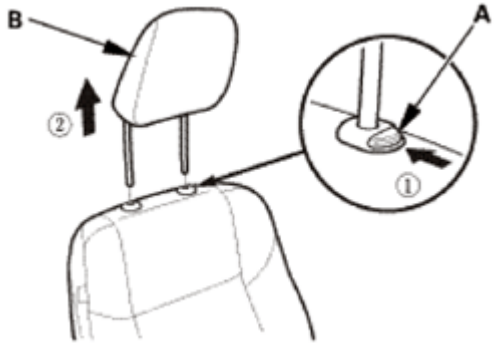

GETtheMANUALS.org

Fig. 95: Pulling Head Restraint (Passenger Side)
Courtesy of AMERICAN HONDA MOTOR CO., INC.

13. Front Seat - Passenger's Side
    1. Detach the hooks (A), then remove the rear inner seat track end cover (B) and the rear outer seat track end cover (C).

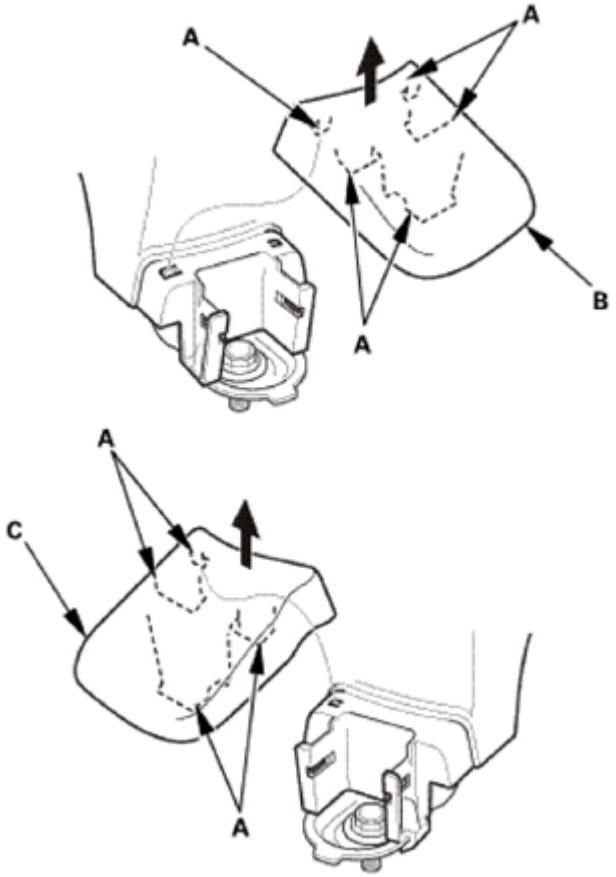

Fig. 96: Removing Rear Inner And Outer Seat Track End Cover
Courtesy of AMERICAN HONDA MOTOR CO., INC.

    2. Remove the front mounting bolts (A) from the front seat.

GETtheMANUALS.org

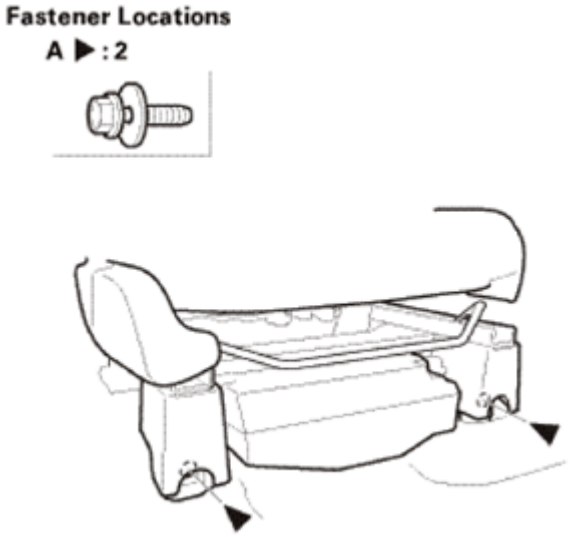

Fig. 97: Identifying Front Seat Front Mounting Bolts
Courtesy of AMERICAN HONDA MOTOR CO., INC.

3. Remove the rear mounting bolts (A) from the front seat.

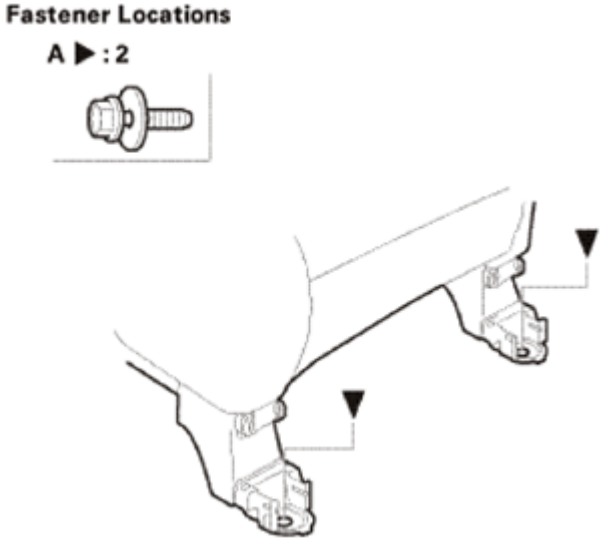

Fig. 98: Identifying Front Seat Rear Mounting Bolts
Courtesy of AMERICAN HONDA MOTOR CO., INC.

4. Disconnect the connectors (A).
5. Detach the harness clip (B).

Without Subwoofer

GETtheMANUALS.org

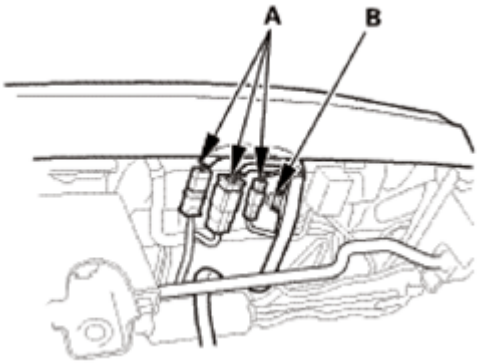

Fig. 99: Identifying Front Seat - Passenger Side Connector And Clips (Without Subwoofer)
Courtesy of AMERICAN HONDA MOTOR CO., INC.

With Subwoofer

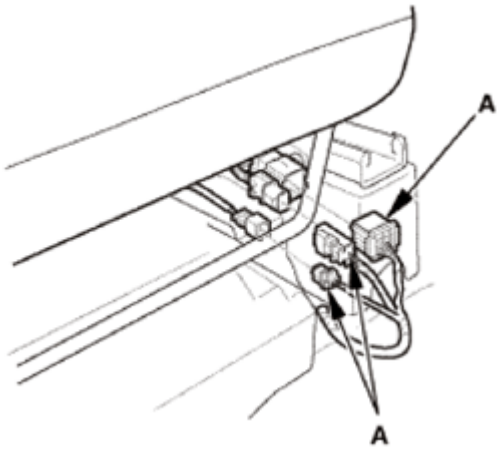

Fig. 100: Identifying Front Seat - Passenger Side Connectors (With Subwoofer)
Courtesy of AMERICAN HONDA MOTOR CO., INC.

14. Front Seat Recline Cover - Passenger's Side
    1. Remove the recline knob (A).
    2. Remove the screw (B), and detach the clip (C).
    3. Release the front hooks (D) of the recline cover (E) from the recline inner cover (F).
    4. Release the rear hooks (G) of the recline cover from the recline inner cover.
    5. Detach the hook (H) by pulling the recline cover back by hand.
    6. Gently pull out the recline cover and remove it.

GETtheMANUALS.org

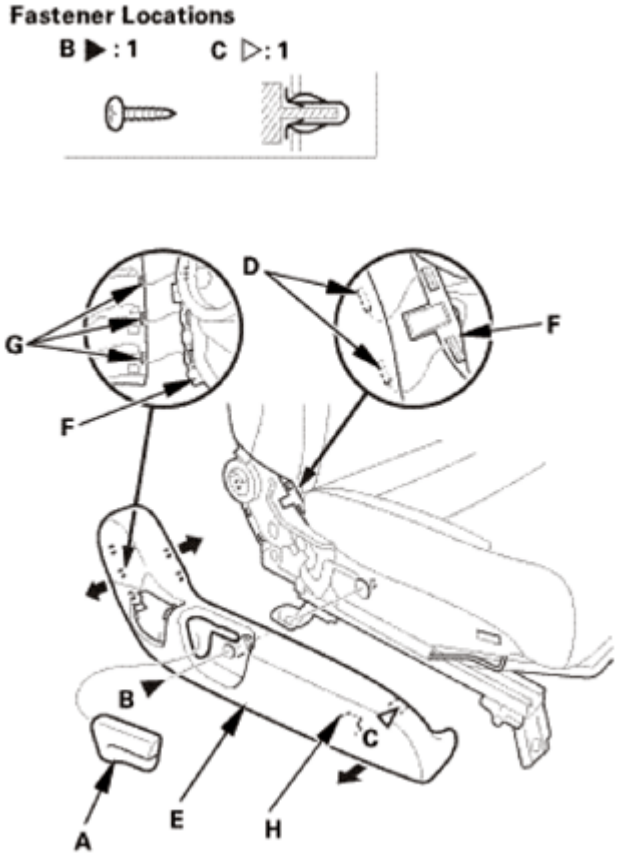

Fig. 101: Identifying Front Seat Recline Cover And Related Components With Torque Specifications (Passenger Side)
Courtesy of AMERICAN HONDA MOTOR CO., INC.

15. Front Seat Center Cover - Passenger's Side
    1. Pull up the center cover (A) to release the tabs (B) from the inner cover (C).

GETtheMANUALS.org

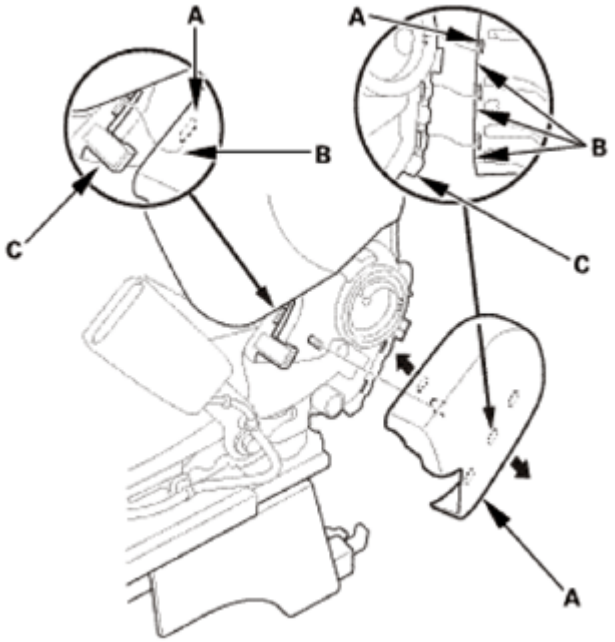

Fig. 102: Identifying Front Seat Center Cover, Tabs And Inner Cover (Passenger Side)
Courtesy of AMERICAN HONDA MOTOR CO., INC.

16. Front Seat Cushion - Passenger's Side
    1. Release the elastic strap (A) from the seat cushion frame springs (B), then pull back the under cover (C) of the seat-back cover.

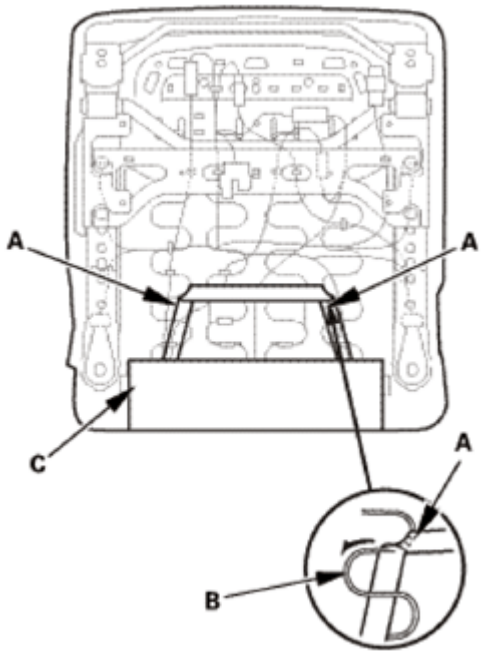

Fig. 103: Releasing Elastic Strap From Seat Cushion Frame Springs
Courtesy of AMERICAN HONDA MOTOR CO., INC.

GETtheMANUALS.org

2. Disconnect the connector(s) (A).
3. Detach the harness clip (B).
4. With sheet heater: Pry up the hook (C) of the harness holders (D), then release them from the seat cushion frame springs (E).

Except KX - With Seat Heater

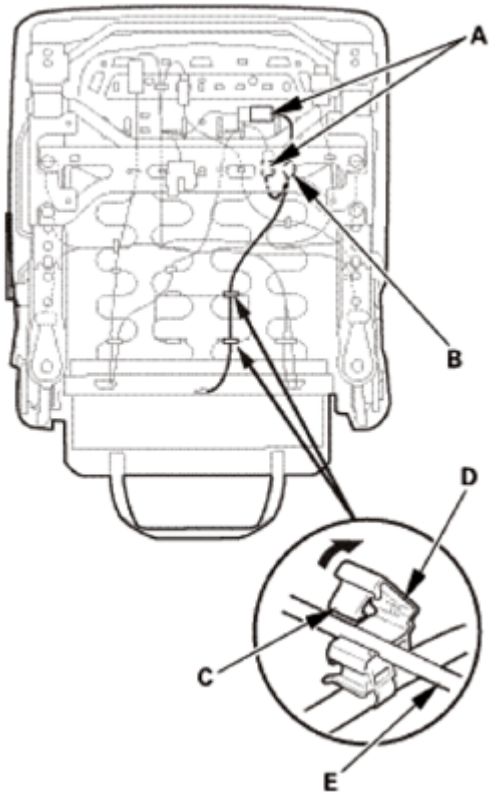

Fig. 104: Removing Hooks From Seat Cushion Frame Springs (Except KX)
Courtesy of AMERICAN HONDA MOTOR CO., INC.

KX

GETtheMANUALS.org

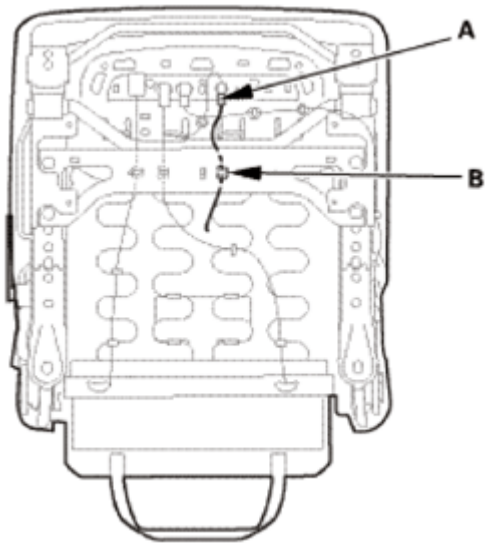

Fig. 105: Identifying Front Seat Connectors And Clips (For KX)
Courtesy of AMERICAN HONDA MOTOR CO., INC.

5. Release the hook strips (A) from both sides of the seat cushion frame.
6. Detach the clip (B) from the seat cushion frame.

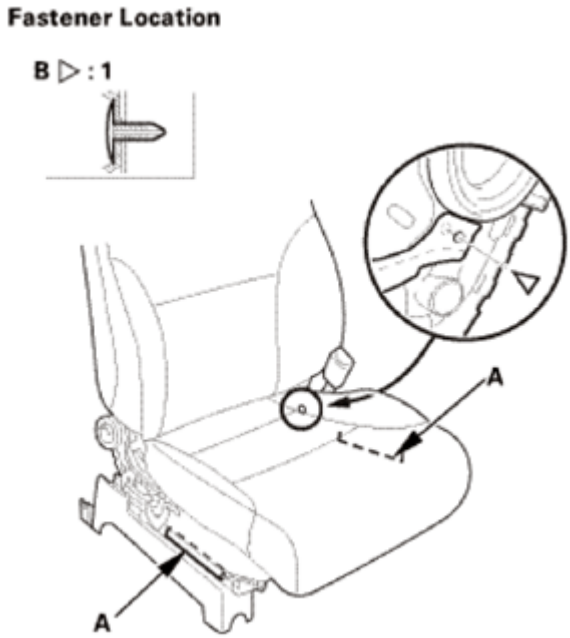

Fig. 106: Identifying Front Seat Cushion Hook Strips And Clips
Courtesy of AMERICAN HONDA MOTOR CO., INC.

7. Release the hook strips (A) from under the seat cushion.

GETtheMANUALS.org

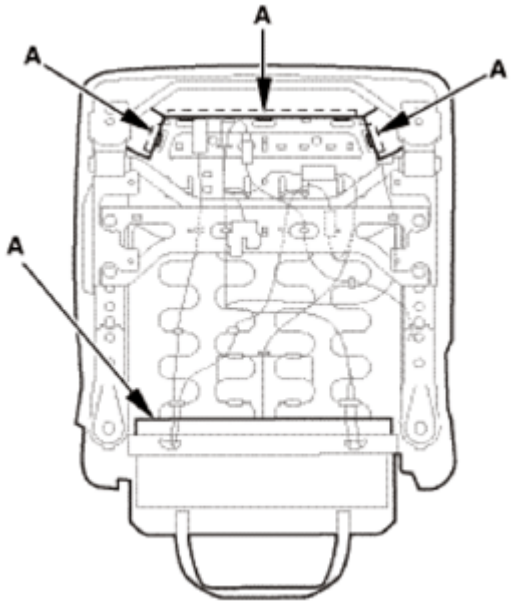

Fig. 107: Identifying Hook Strips Under Seat Cushion
Courtesy of AMERICAN HONDA MOTOR CO., INC.

8. Remove the seat cushion cover/pad (A) from the seat frame (B).

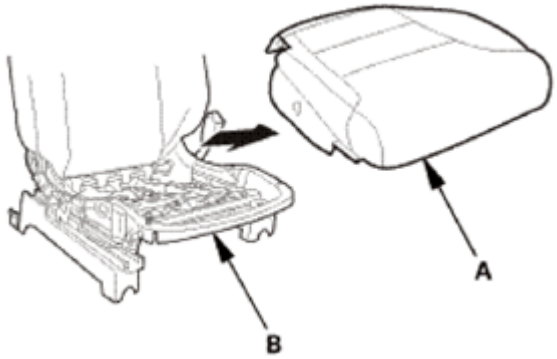

Fig. 108: Removing Seat Cushion Cover/Pad From Seat Frame
Courtesy of AMERICAN HONDA MOTOR CO., INC.

17. Front Seat Cushion Cover - Passenger's Side
    1. Release the hook strips (A) fastening the seat cushion cover (B) on the seat cushion pad (C).

GETtheMANUALS.org

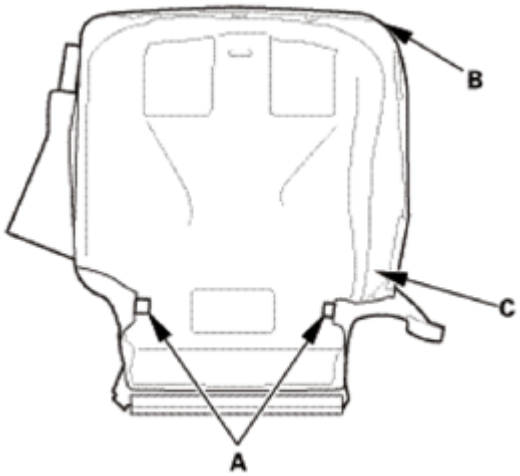

Fig. 109: Identifying Front Seat Cushion Cover, Pad And Hook Strips (Passenger Side)
Courtesy of AMERICAN HONDA MOTOR CO., INC.

2. Pull back the edges of the seat cushion cover (A) all the way around, and release the upholstery rings (B).
3. Remove the seat cushion cover.

Leather Seat

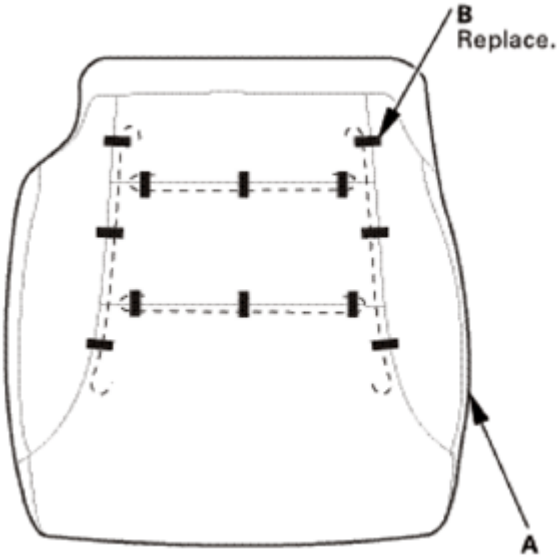

Fig. 110: Identifying Seat Cushion Cover And Upholstery Rings (Leather Seat)
Courtesy of AMERICAN HONDA MOTOR CO., INC.

Fabric Seat

GETtheMANUALS.org

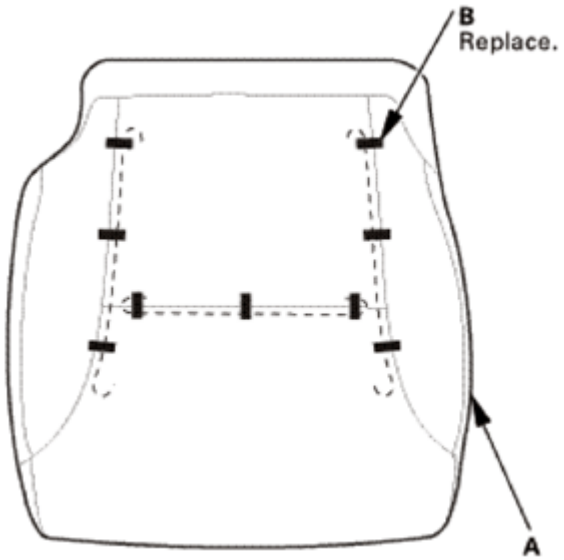

Fig. 111: Identifying Seat Cushion Cover And Upholstery Rings (Fabric Seat)
Courtesy of AMERICAN HONDA MOTOR CO., INC.

INSTALLATION

SRS components are located in this area. Review the **SRS COMPONENT LOCATIONS** and the **PRECAUTIONS AND PROCEDURES** before doing repairs or service.

NOTE: Steps 1-7 show installing the passenger's side, steps 8-17 show installing the driver's side.

1. Front Seat Cushion Cover - Passenger's Side

NOTE: Replace all of the upholstery rings (A) fastening the seat cushion cover (B) to the pad wires (C) with new ones using commercially available upholstery ring pliers (D).

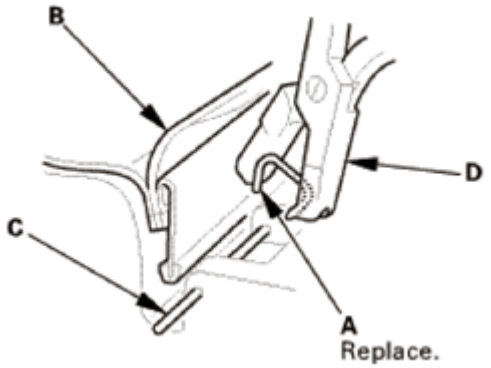

Fig. 112: Removing Seat Cushion Cover To Pad Wires Fastening Upholstery Ring Using Tool
Courtesy of AMERICAN HONDA MOTOR CO., INC.

GETtheMANUALS.org

1. Install the seat cushion cover (A) with the upholstery rings (B).

Leather Seat

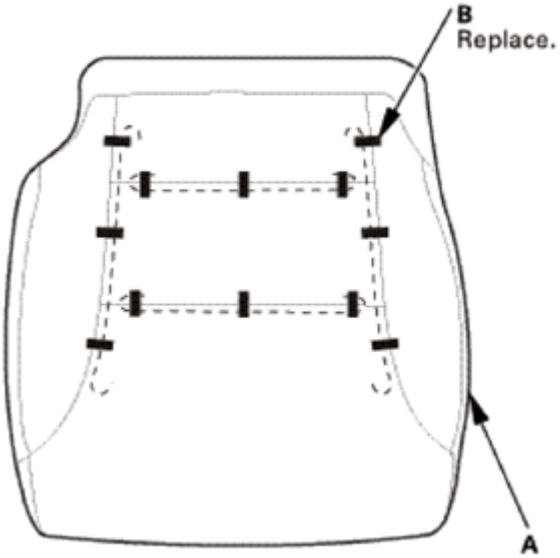

Fig. 113: Identifying Seat Cushion Cover And Upholstery Rings (Leather Seat)
Courtesy of AMERICAN HONDA MOTOR CO., INC.

Fabric Seat

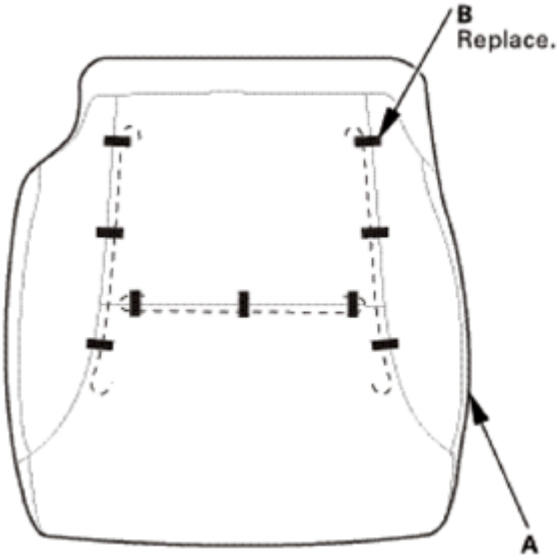

Fig. 114: Identifying Seat Cushion Cover And Upholstery Rings (Fabric Seat)
Courtesy of AMERICAN HONDA MOTOR CO., INC.

2. Install the hook strips (A) to the seat cushion pad (B).

GETtheMANUALS.org

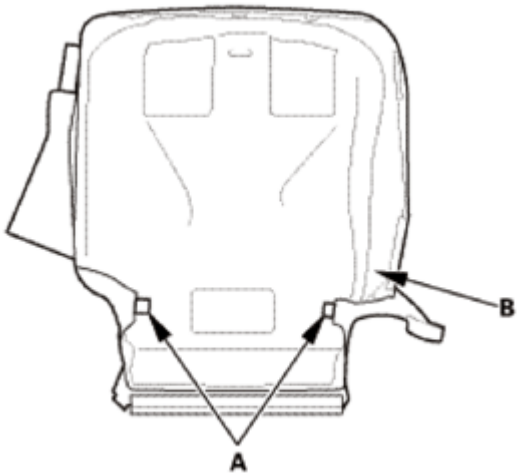

Fig. 115: Identifying Seat Cushion Pad Hook Strips
Courtesy of AMERICAN HONDA MOTOR CO., INC.

2. Front Seat Cushion - Passenger's Side
    1. Install the seat cushion cover/pad (A) on the seat frame (B).

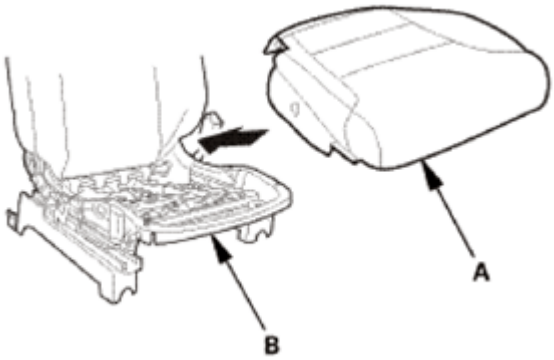

Fig. 116: Installing Seat Cushion Cover/Pad On Seat Frame
Courtesy of AMERICAN HONDA MOTOR CO., INC.

    2. Install the hook strips (A) to under the seat cushion.

GETtheMANUALS.org

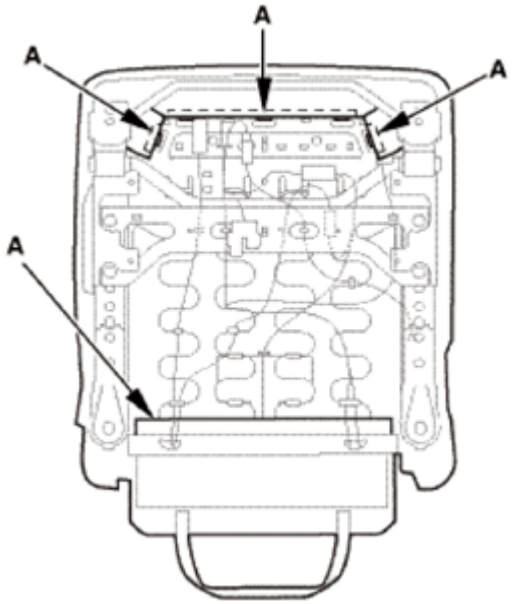

Fig. 117: Identifying Under Seat Cushion Hook Strips
Courtesy of AMERICAN HONDA MOTOR CO., INC.

3. Install the hook strips (A), then install the clip (B).

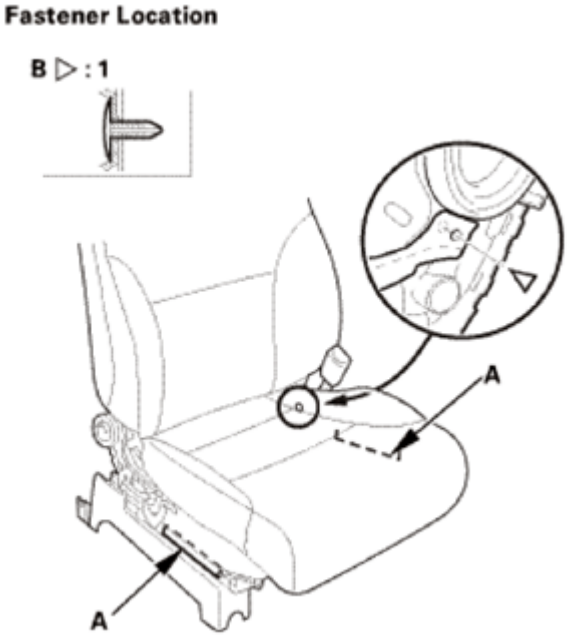

Fig. 118: Identifying Front Seat Cushion Hook Strips
Courtesy of AMERICAN HONDA MOTOR CO., INC.

4. With seat heater: Install the harness holder (A) to the seat cushion frame springs (B).
5. Install the harness clip (C).
6. Connect the connecter(s) (D).

GETtheMANUALS.org

Except KX - With Seat Heater

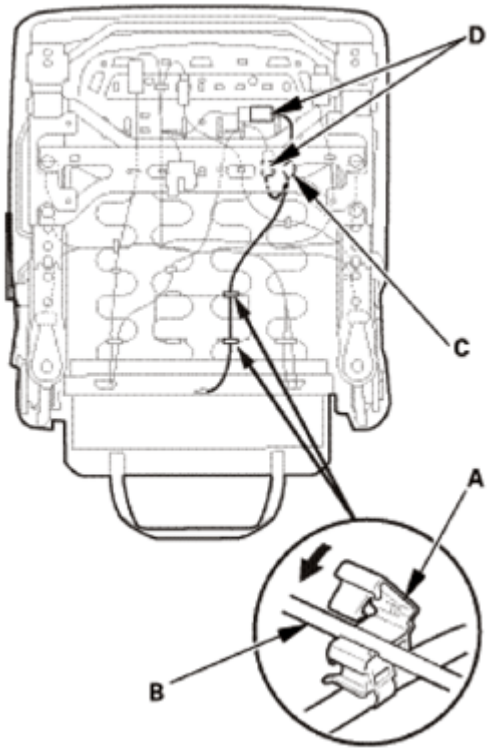

Fig. 119: Installing Harness Holder To Seat Cushion Frame Springs (Except KX)
Courtesy of AMERICAN HONDA MOTOR CO., INC.

KX

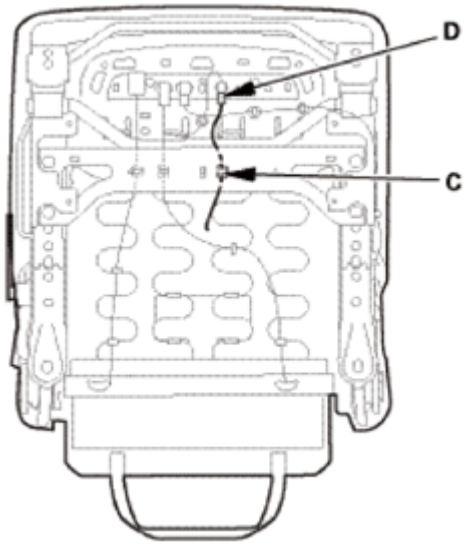

Fig. 120: Identifying Seat Cushion Frame Springs, Connector, Holder And Clips (For KX)
Courtesy of AMERICAN HONDA MOTOR CO., INC.

GETtheMANUALS.org

7. Install the elastic strap (A) to the seat cushion frame springs (B).

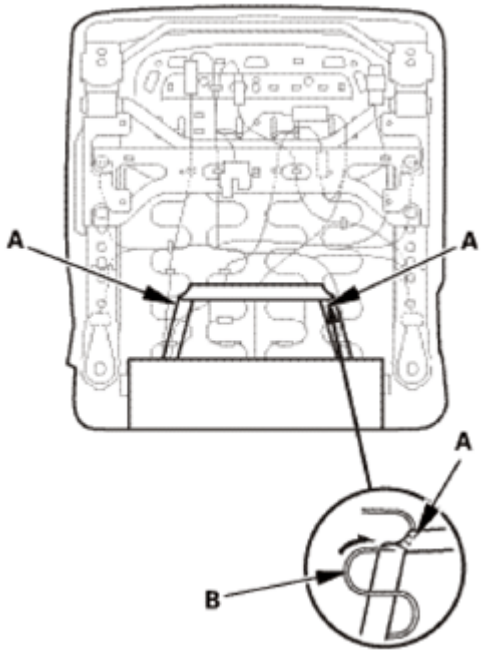

Fig. 121: Installing Elastic Strap To Seat Cushion Frame Springs
Courtesy of AMERICAN HONDA MOTOR CO., INC.

3. Front Seat Center Cover - Passenger's Side
    1. Install the center cover (A) to the recline inner cover (B). Make sure the tabs (C) snap into place securely.

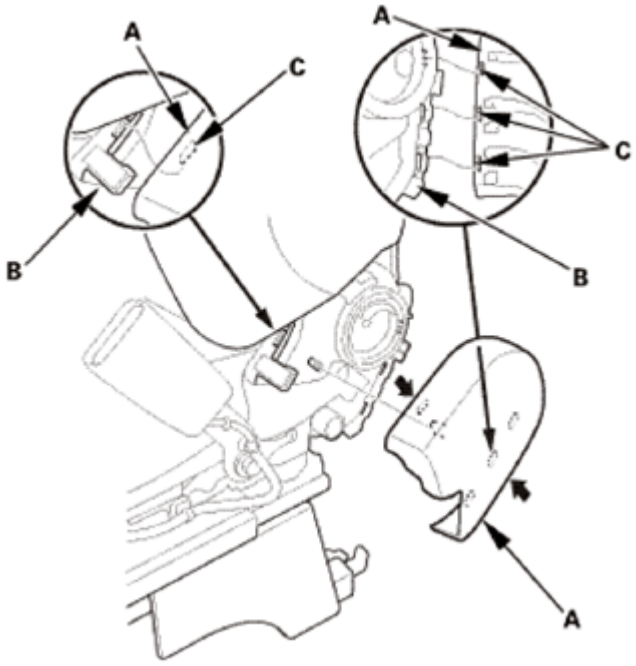

GETtheMANUALS.org

Fig. 122: Installing Center Cover To Recline Inner Cover
Courtesy of AMERICAN HONDA MOTOR CO., INC.

4. Front Seat Recline Cover - Passenger's Side
    1. Install the hook (A) and the clip (B) of the recline cover (C).
    2. Install the front hooks (D) to the recline inner cover (E).
    3. Install the rear hooks (F) of the recline cover to the recline inner cover.
    4. Install the recline knob (G) and the screw (H).

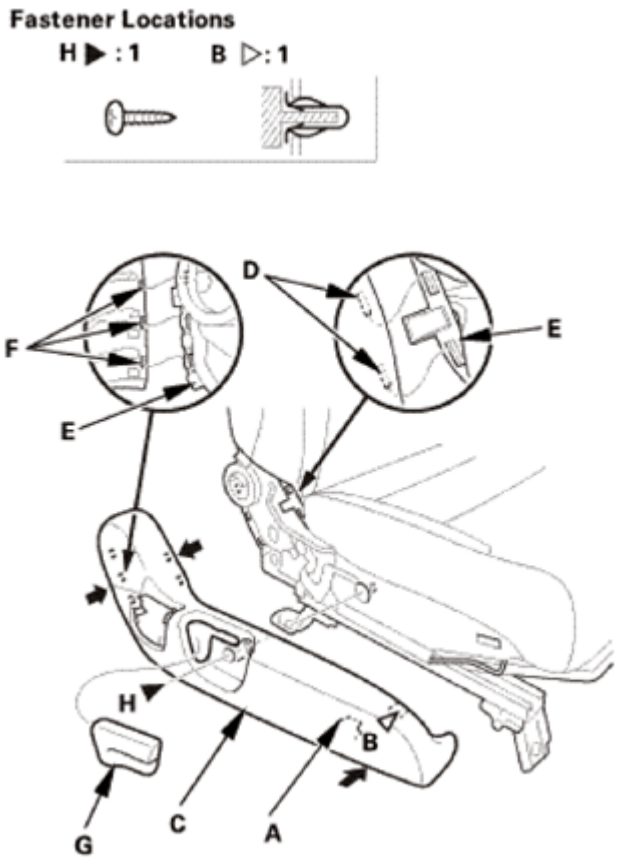

Fig. 123: Identifying Front Seat Recline Cover And Related Components
Courtesy of AMERICAN HONDA MOTOR CO., INC.

5. Front Seat Assembly - Passenger's Side
    1. Connect the connectors (A).
    2. Install the harness clip (B).

Without Subwoofer

GETtheMANUALS.org

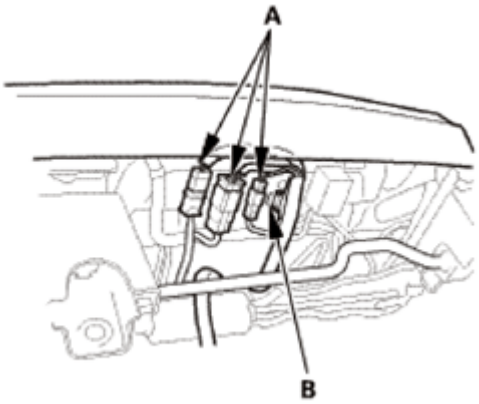

Fig. 124: Identifying Front Seat Connectors And Clips (Without Subwoofer)
Courtesy of AMERICAN HONDA MOTOR CO., INC.

With Subwoofer

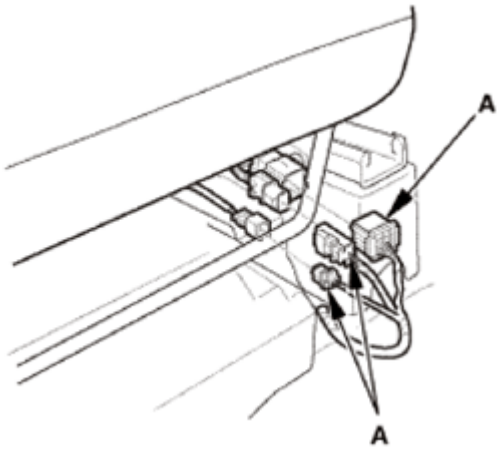

Fig. 125: Identifying Front Seat Connectors And Clips (With Subwoofer)
Courtesy of AMERICAN HONDA MOTOR CO., INC.

3. Install the seat mounting bolts (A).

NOTE:

- **Tighten the bolts by hand first, then tighten them to the specified torque.**
- **Tighten the seat mounting bolts to the specified torque in the sequence shown. Slide the seat all the way back and tighten bolts 1 and 2, then slide it forward and tighten bolts 3 and 4.**

Front Side

GETtheMANUALS.org

Fig. 126: Identifying Seat Mounting Bolts With Torque Specifications (Front Side)
Courtesy of AMERICAN HONDA MOTOR CO., INC.

Rear Side

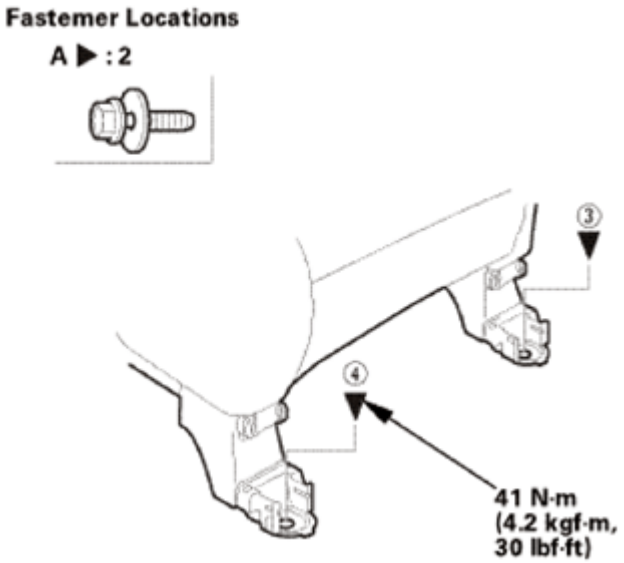

Fig. 127: Identifying Seat Mounting Bolts With Torque Specifications (Rear Side)
Courtesy of AMERICAN HONDA MOTOR CO., INC.

4. Install rear inner seat track end cover (A) and the rear outer seat track end cover (B). Make sure the hooks (C) snap into place securely.

GETtheMANUALS.org

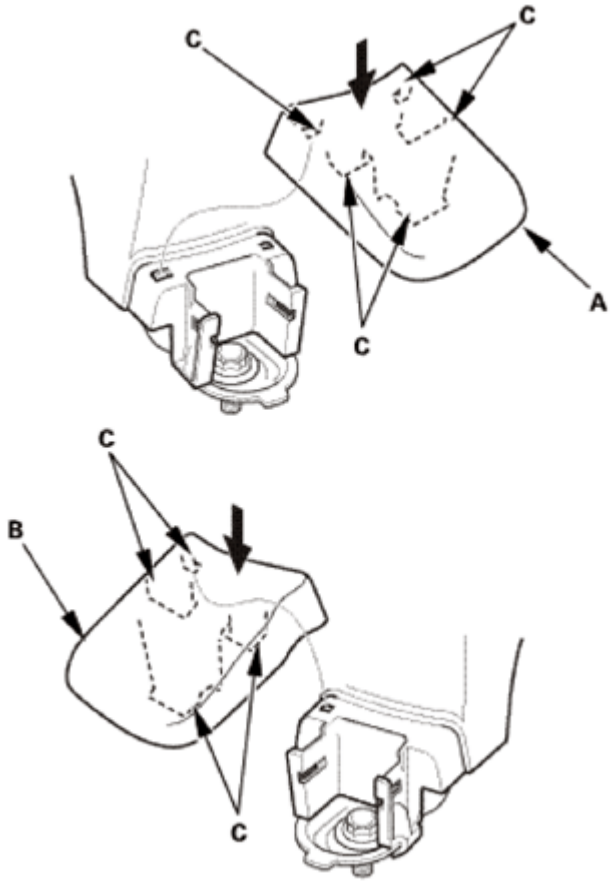

Fig. 128: Installing Rear Inner And Outer Seat Track End Cover
Courtesy of AMERICAN HONDA MOTOR CO., INC.

6. Head Restraint - Passenger's Side
    1. Insert the head restraint (A) into the seat-back as shown.

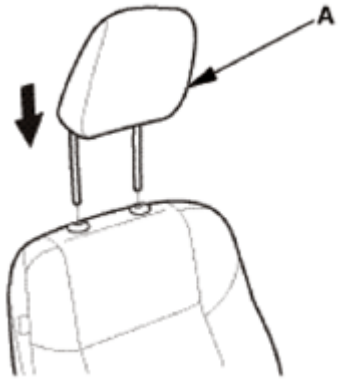

Fig. 129: Inserting Head Restraint Into Seat-Back (Passenger Side)
Courtesy of AMERICAN HONDA MOTOR CO., INC.

7. Front Seat Belt Lower Anchor Bolt - Passenger's Side

GETtheMANUALS.org

1. Install the lower anchor bolt (A).

NOTE: **Before installing the anchor bolt, make sure there are no twists or kinks in the seat belt.**

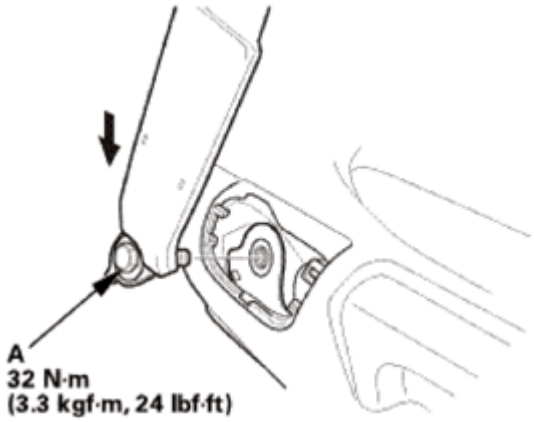

Fig. 130: Installing Front Seat Belt Lower Anchor Bolt
Courtesy of AMERICAN HONDA MOTOR CO., INC.

2. Install the anchor cover (A). Make sure the hooks (B) and the tab (C) snap into place securely.

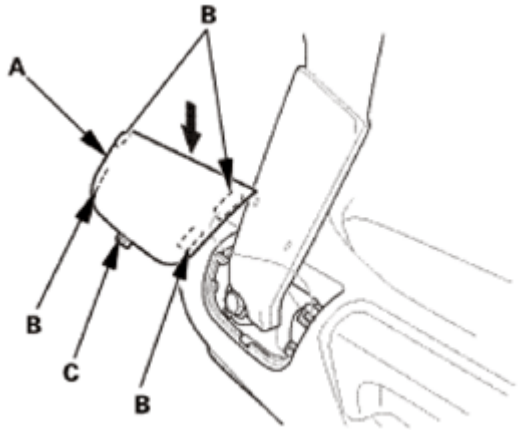

Fig. 131: Installing Front Seat Belt Lower Anchor Cover
Courtesy of AMERICAN HONDA MOTOR CO., INC.

8. Front Seat Cushion Cover - Driver's Side

NOTE: **Replace all of the upholstery rings (A) fastening the seat cushion cover (B) to the pad wires (C) with new ones using commercially available upholstery ring pliers (D).**

GETtheMANUALS.org

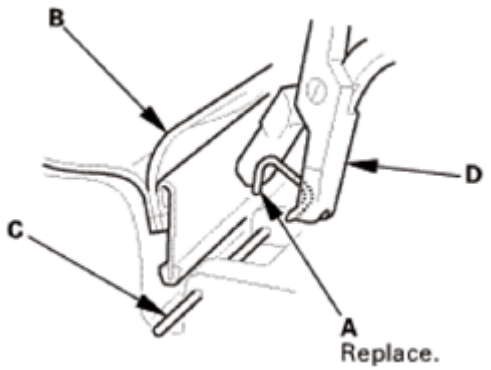

Fig. 132: Removing Seat Cushion Cover To Pad Wires Fastening Upholstery Ring Using Tool
Courtesy of AMERICAN HONDA MOTOR CO., INC.

1. Install the seat cushion cover (A) with the upholstery rings (B).

   Leather Seat

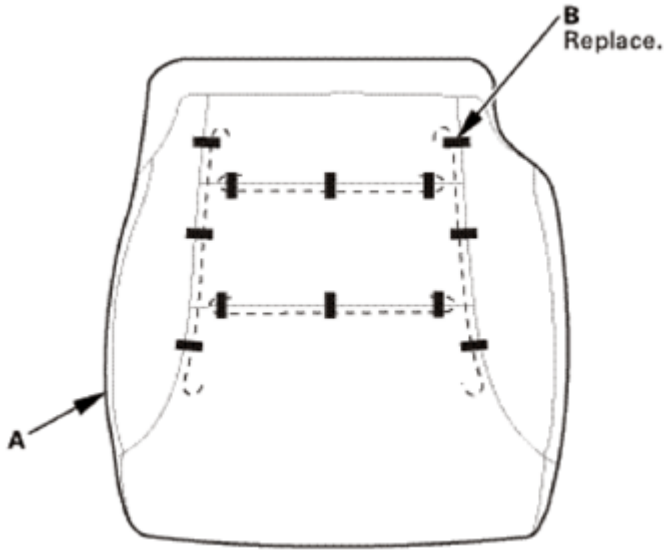

Fig. 133: Identifying Seat Cushion Cover And Upholstery Rings (Leather Seat)
Courtesy of AMERICAN HONDA MOTOR CO., INC.

Fabric Seat

GETtheMANUALS.org

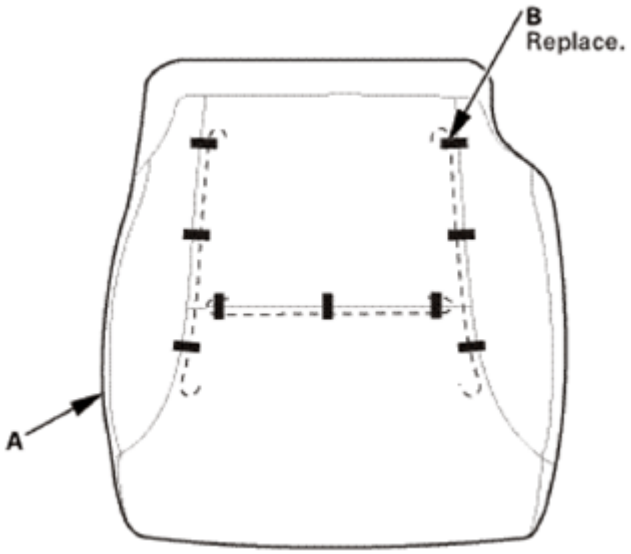

Fig. 134: Identifying Seat Cushion Cover And Upholstery Rings (Fabric Seat)
Courtesy of AMERICAN HONDA MOTOR CO., INC.

2. Install the hook strips (A) to the seat cushion pad (B).

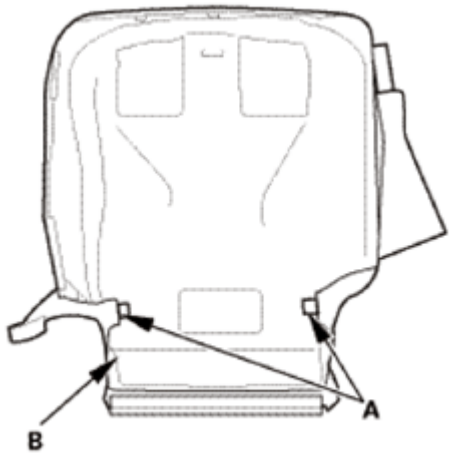

Fig. 135: Identifying Seat Cushion Pad Hook Strips
Courtesy of AMERICAN HONDA MOTOR CO., INC.

9. Front Seat Cushion - Driver's Side
    1. Install the seat cushion cover/pad (A) on the seat frame (B).

GETtheMANUALS.org

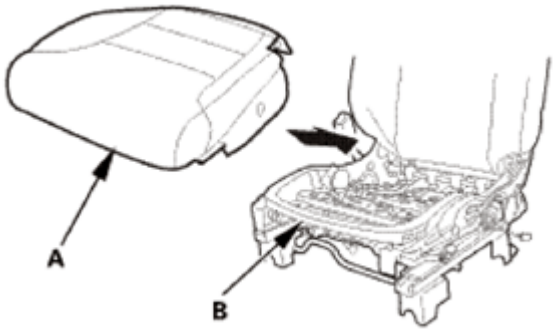

Fig. 136: Installing Seat Cushion Cover/Pad On Seat Frame
Courtesy of AMERICAN HONDA MOTOR CO., INC.

2. Install the hook strips (A) under the seat cushion.

Power Seat

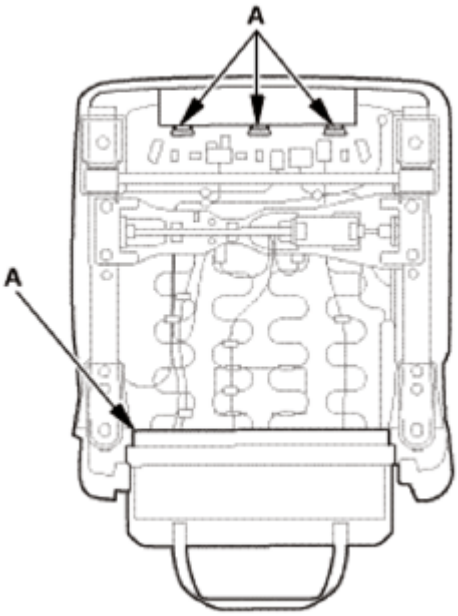

Fig. 137: Identifying Under Seat Cushion Hook Strips (Power Seat)
Courtesy of AMERICAN HONDA MOTOR CO., INC.

Manual Seat

GETtheMANUALS.org

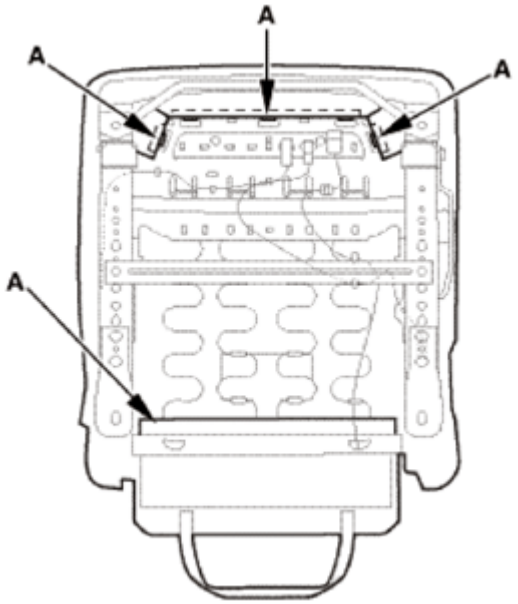

Fig. 138: Identifying Under Seat Cushion Hook Strips (Manual Seat)
Courtesy of AMERICAN HONDA MOTOR CO., INC.

3. Install the hook strips (A) to both sides of the seat cushion frame.
4. Install the clip (B) to the seat cushion frame.

Power Seat

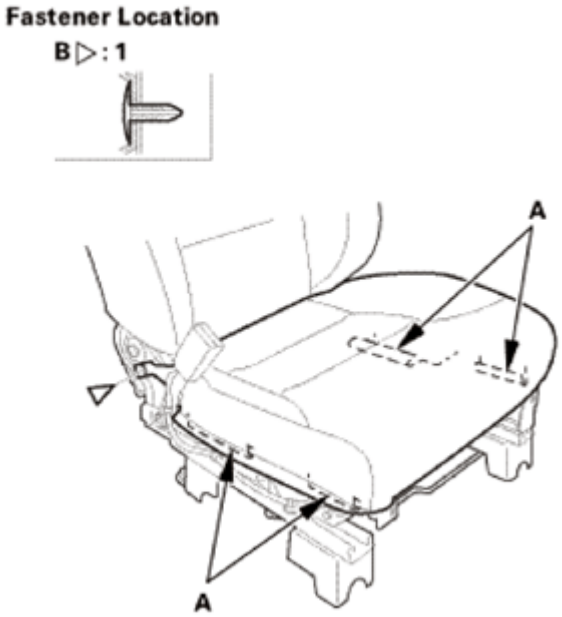

Fig. 139: Identifying Seat Cushion Frame Hook Strips And Clips (Power Seat)
Courtesy of AMERICAN HONDA MOTOR CO., INC.

GETtheMANUALS.org

Manual Seat

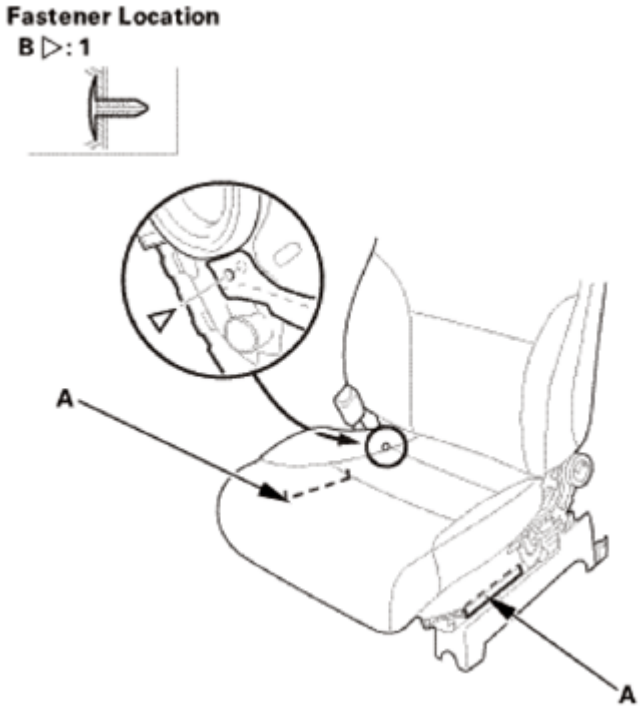

Fig. 140: Identifying Seat Cushion Frame Hook Strips And Clips (Manual Seat)
Courtesy of AMERICAN HONDA MOTOR CO., INC.

5. With seat heater: Connect the connectors (A).
6. With seat heater: Install the harness clip (B).
7. With seat heater: Install the holders (C) to the seat cushion frame springs (D).

With Seat Heater

GETtheMANUALS.org

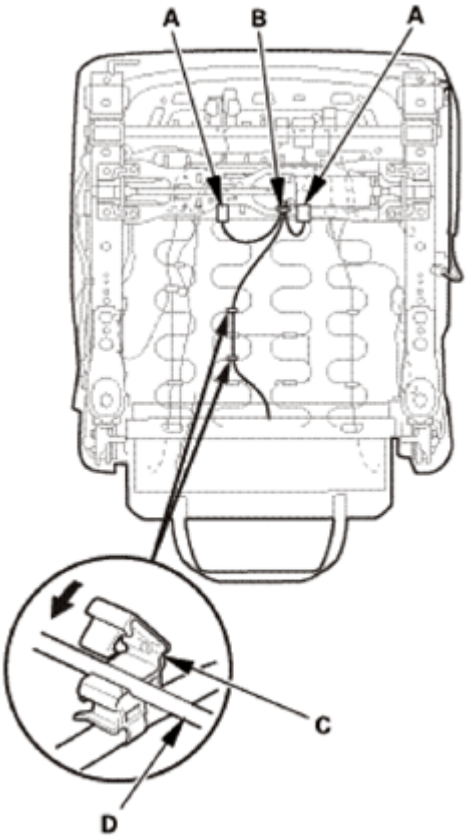

Fig. 141: Installing Holder To Seat Cushion Frame Springs (With Seat Heater)
Courtesy of AMERICAN HONDA MOTOR CO., INC.

8. Install the elastic strap (A) to the seat cushion frame springs (B).

GETtheMANUALS.org

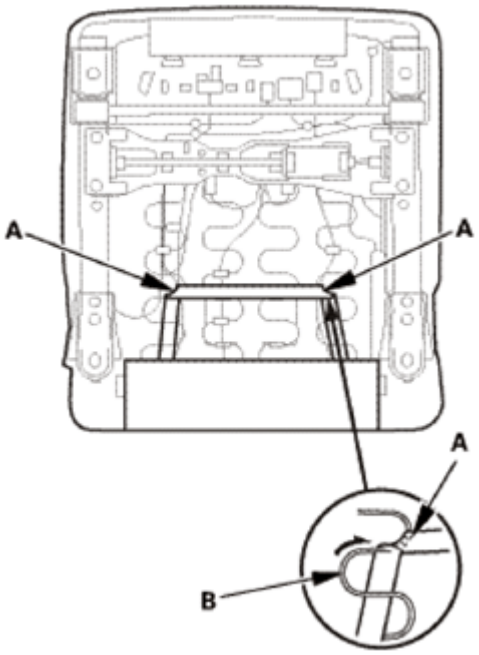

Fig. 142: Installing Elastic Strap To Seat Cushion Frame Springs
Courtesy of AMERICAN HONDA MOTOR CO., INC.

10. Front Seat Center Cover - Driver's Side

Power Seat

1. Install the upper center inner cover (A).
2. Install the center cover (B). Make sure the tabs (C) snap into place securely.
3. Install the screw (D).

GETtheMANUALS.org

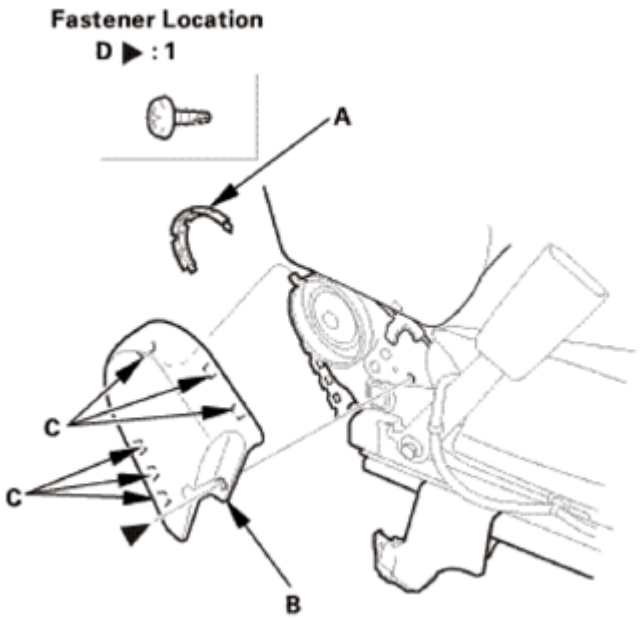

Fig. 143: Identifying Front Seat Center Cover, Upper Center Inner Cover, Tabs And Screws (Power Seat)
Courtesy of AMERICAN HONDA MOTOR CO., INC.

Manual Seat

1. Install the center cover (A) to the recline inner cover (B). make sure the tabs (C) snap into place securely.

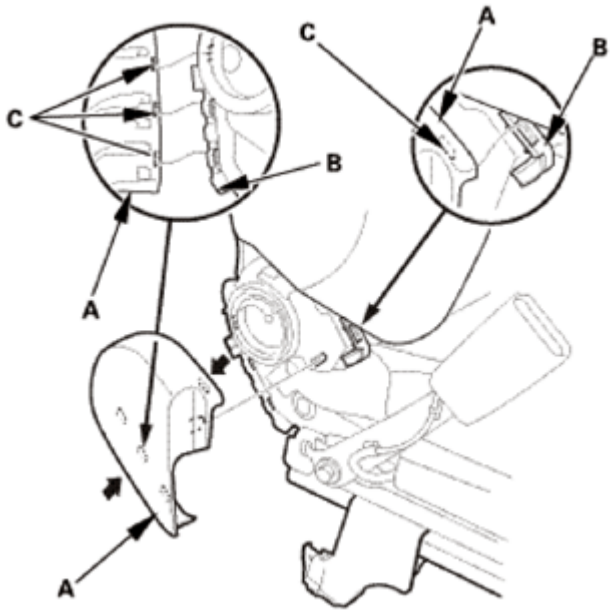

Fig. 144: Installing Center Cover To Recline Inner Cover (Manual Seat)
Courtesy of AMERICAN HONDA MOTOR CO., INC.

GETtheMANUALS.org

11. Front Seat Recline Cover - Driver's Side

Power Seat

1. Install the upper center inner cover (A) to the recline cover (B).
2. Connect the connector, then install the wire harness (C) to the hooks (D).
3. Install the clip (E) and tabs (F), then install the recline cover.
4. Install the tabs (G), then install the screw (H).

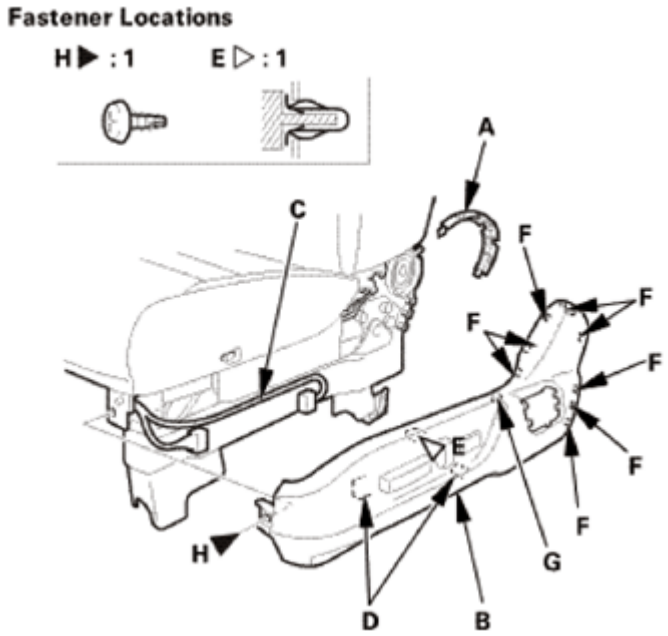

Fig. 145: Identifying Front Seat Recline Cover And Related Components (Power Seat)
Courtesy of AMERICAN HONDA MOTOR CO., INC.

Manual Seat

1. Install the hook (A) and clip (B) of the recline cover (C).
2. Install the front hooks (D) to the recline inner cover (E).
3. Install the hook (F) of the recline cover to the recline inner cover.
4. Install the recline knob (G) and the screw (H).

GETtheMANUALS.org

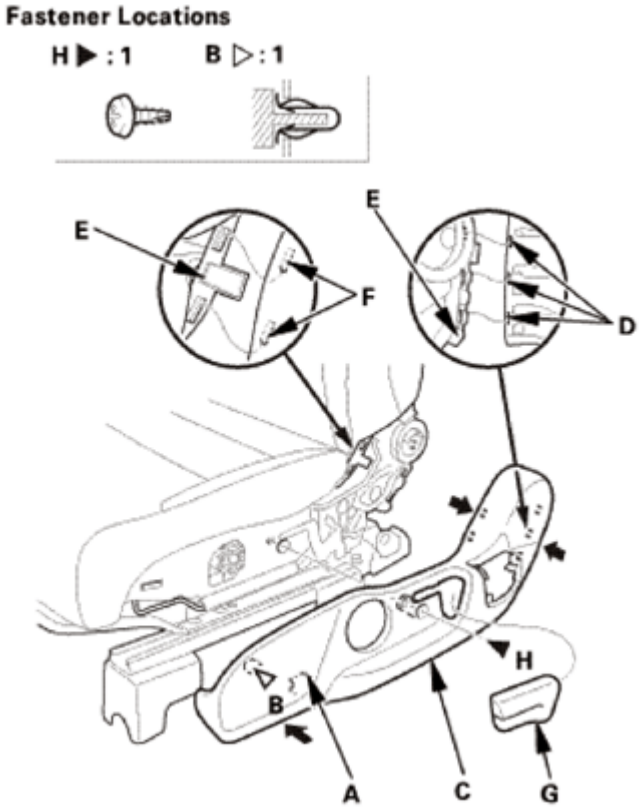

Fig. 146: Installing Front Seat Recline Cover (Manual Seat)
Courtesy of AMERICAN HONDA MOTOR CO., INC.

12. Front Seat Height Adjuster Handle - Manual Seat
    1. Install the height adjuster handle (A) and the screws (B).
    2. Install the cap (C). Make sure the hooks (D) snap into place securely.

GETtheMANUALS.org

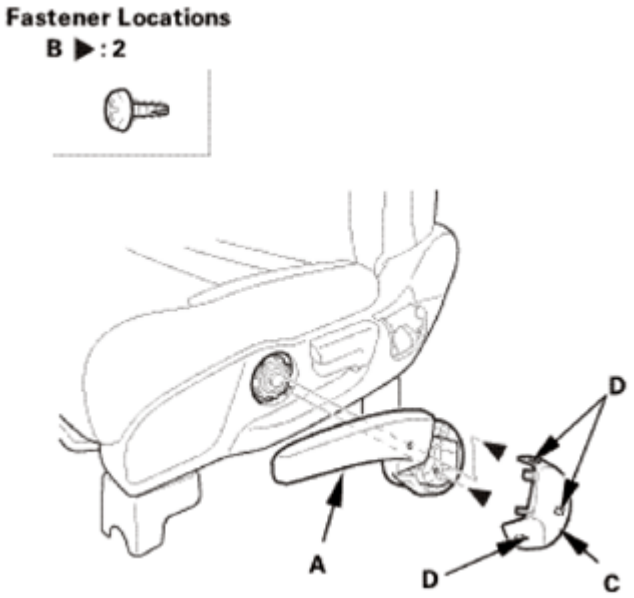

Fig. 147: Identifying Height Adjuster Handle, Cap, Hooks And Screws
Courtesy of AMERICAN HONDA MOTOR CO., INC.

13. Front Cover - Power Seat
    1. Install the tabs (A), set the pin (B), and install the hook (C), then install the front cover (D). Make sure the hooks snap into place securely.

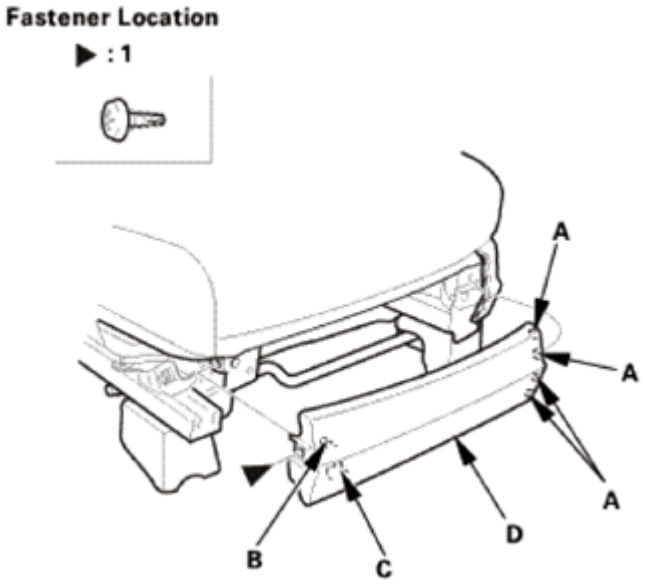

Fig. 148: Identifying Front Cover, Hook, Tabs, Pin And Screws (Power Seat)
Courtesy of AMERICAN HONDA MOTOR CO., INC.

14. Front Seat - Driver's Side
    1. Connect the connectors (A).

GETtheMANUALS.org

2. Install the harness clip (B).

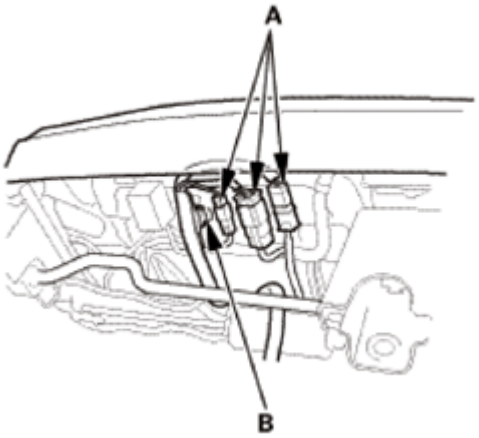

Fig. 149: Identifying Front Seat Connectors And Clips (Driver Side)
Courtesy of AMERICAN HONDA MOTOR CO., INC.

3. Install the seat mounting bolts (A).

NOTE:

- **Tighten the bolts by hand first, then tighten them to the specified torque.**
- **Tighten the seat mounting bolts to the specified torque in the sequence shown. Slide the seat all the way back and tighten bolts 1 and 2, then slide it forward and tighten bolts 3 and 4.**

Front Side

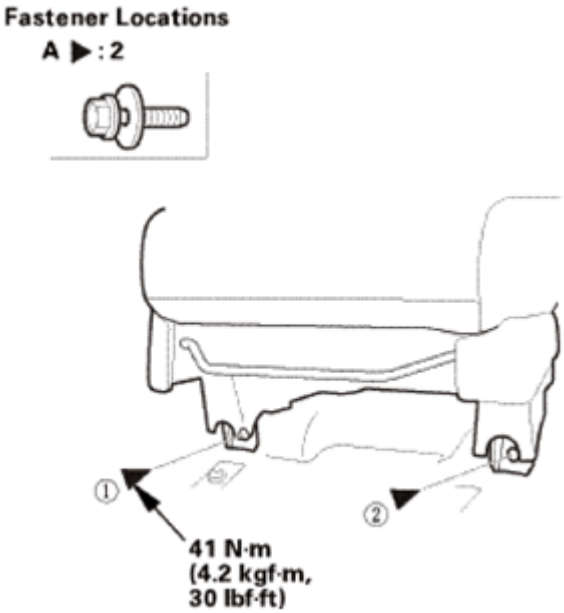

GETtheMANUALS.org

Fig. 150: Identifying Seat Mounting Bolts With Torque Specifications (Front Side)
Courtesy of AMERICAN HONDA MOTOR CO., INC.

Rear Side

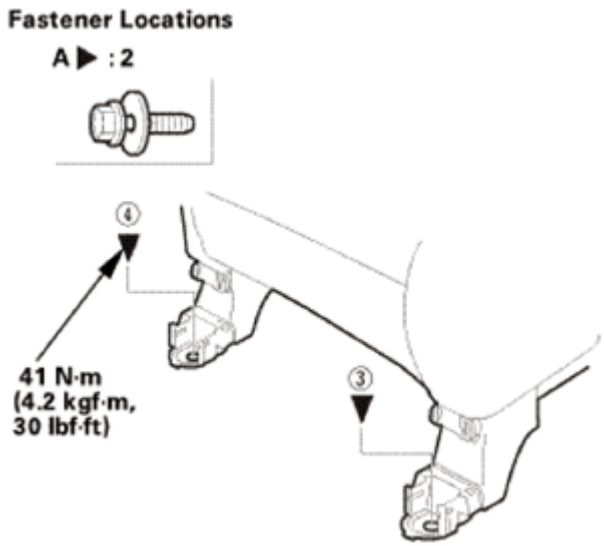

Fig. 151: Identifying Seat Mounting Bolts With Torque Specifications (Rear Side)
Courtesy of AMERICAN HONDA MOTOR CO., INC.

4. Install the rear inner seat track end cover (A) and the rear outer seat track end cover (B). Make sure the hooks (C) snap into place securely.

GETtheMANUALS.org

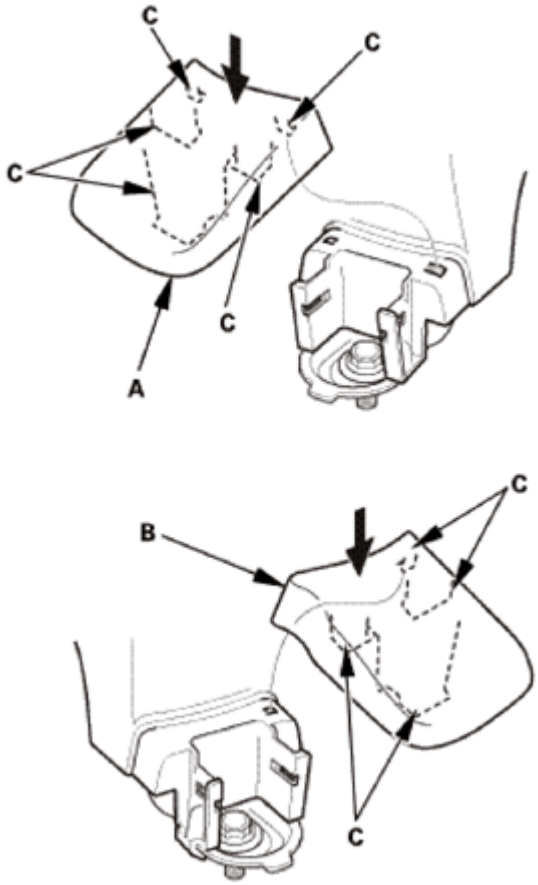

Fig. 152: Installing Rear Inner And Outer Seat Track End Cover
Courtesy of AMERICAN HONDA MOTOR CO., INC.

15. Head Restraint - Driver's Side
    1. Insert the head restraint (A) to the seat-back as shown.

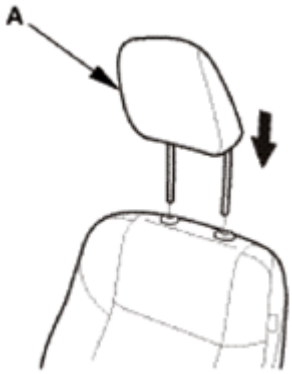

Fig. 153: Inserting Head Restraint To Seat-Back (Driver Side)
Courtesy of AMERICAN HONDA MOTOR CO., INC.

16. Battery Terminal (SRS) - Reconnection

GETtheMANUALS.org

NOTE: **If the battery performance is abnormal, test the battery.**

1. Clean the battery terminals.
2. Connect the positive cable (A) to the battery.

   NOTE: **Always connect the positive side first.**

3. Connect the negative cable (B) to the battery.
4. Apply multipurpose grease to the terminals to prevent corrosion.

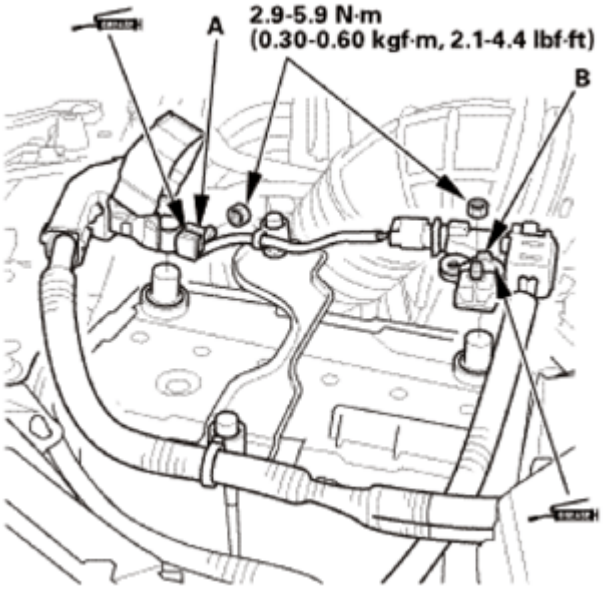

Fig. 154: Identifying Battery Positive And Negative Cable With Torque Specifications
Courtesy of AMERICAN HONDA MOTOR CO., INC.

17. Front Seat Belt Lower Anchor Bolt
    1. Install the lower anchor bolt.

       NOTE: **Before installing the anchor bolt, make sure there are no twists or kinks in the seat belt.**

GETtheMANUALS.org

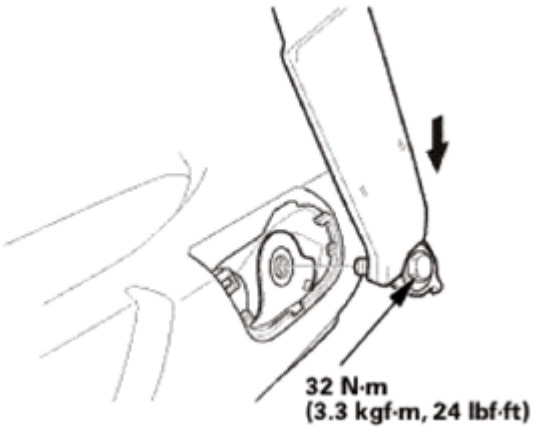

Fig. 155: Installing Front Seat Belt Lower Anchor Bolt
Courtesy of AMERICAN HONDA MOTOR CO., INC.

2. Install the anchor cover (A). Make sure the hooks (B) and the tab (C) snap into place securely.

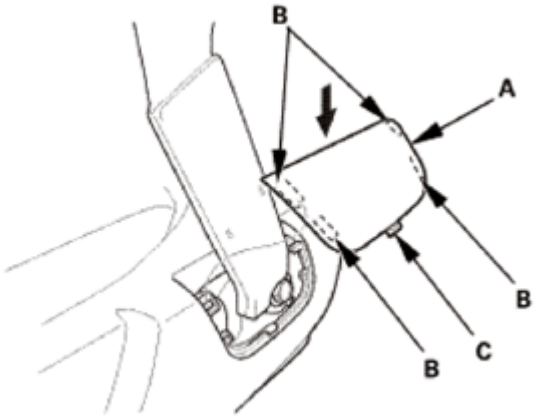

Fig. 156: Installing Front Seat Belt Lower Anchor Cover
Courtesy of AMERICAN HONDA MOTOR CO., INC.

FRONT SEAT FRAME REMOVAL AND INSTALLATION

REMOVAL

SRS components are located in this area. Review the **SRS COMPONENT LOCATIONS** and the **PRECAUTIONS AND PROCEDURES** before doing repairs or service.

NOTE:

- **Steps 1-19 show removing the driver's side, steps 20-35 show removing the passenger's side.**
- **Before the front power seat is removed, slide the front power seat to the half-way position, then raise the seat to the highest position.**

1. Front Seat Belt Lower Anchor Bolt

GETtheMANUALS.org

1. Slide the front seat forward fully, carefully pry up on the bottom edge of the anchor cover (A) at the pry point (B) with the appropriate trim tool to release the hooks (C) and the tab (D), then remove the cover by pulling it up.

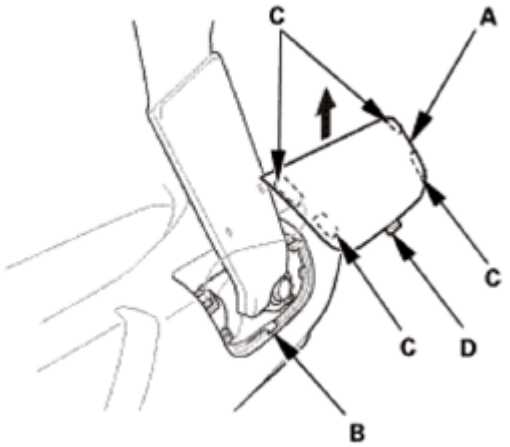

Fig. 157: Removing Front Seat Lower Anchor Cover
Courtesy of AMERICAN HONDA MOTOR CO., INC.

2. Remove the lower anchor bolt (A).

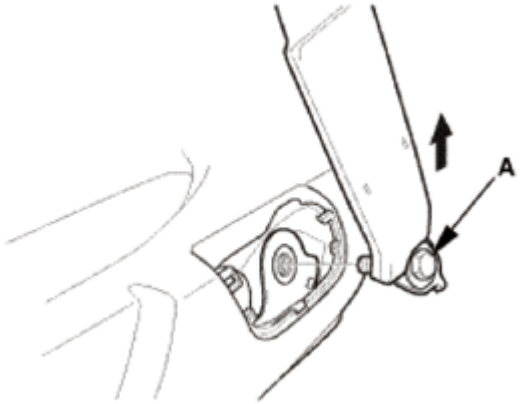

Fig. 158: Removing Front Seat Belt Lower Anchor Bolt
Courtesy of AMERICAN HONDA MOTOR CO., INC.

2. Battery Terminal (SRS) - Disconnection
   1. Make sure the ignition switch is in LOCK (0).
   2. Disconnect and isolate the negative cable (A) from the battery.

      NOTE: Always disconnect the negative side first.

   3. Disconnect the positive cable (B) from the battery.
   4. Wait at least 3 minutes before starting work.

GETtheMANUALS.org

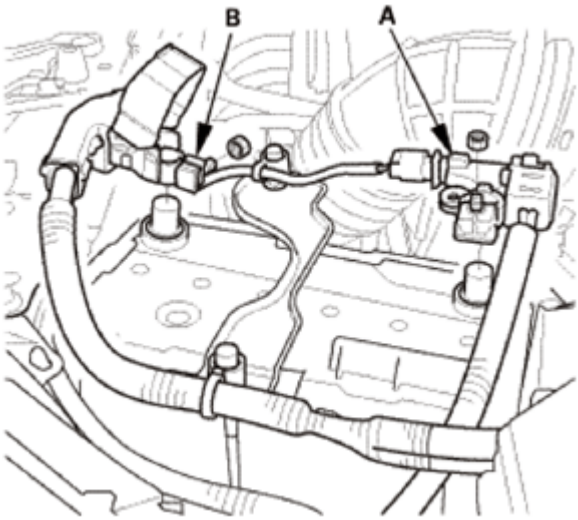

Fig. 159: Identifying Battery Positive And Negative Cable
Courtesy of AMERICAN HONDA MOTOR CO., INC.

3. Head Restraint - Driver's Side
    1. Push and hold the knob (A), then pull out the head restraint (B) as shown.

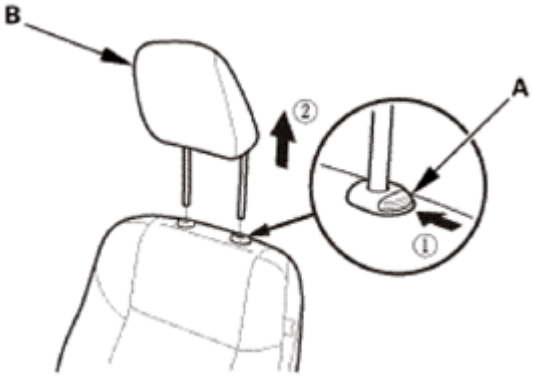

Fig. 160: Pulling Head Restraint (Driver Side)
Courtesy of AMERICAN HONDA MOTOR CO., INC.

4. Front Seat - Driver's Side
    1. Detach the hooks (A), then remove the rear inner seat track end cover (B) and the rear outer seat track end cover (C).

GETtheMANUALS.org

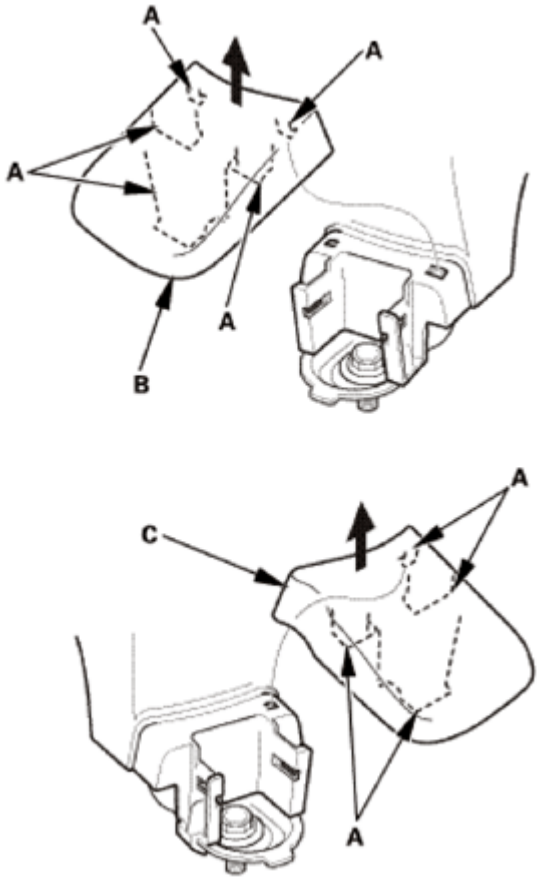

Fig. 161: Removing Rear Inner And Outer Seat Track End Cover
Courtesy of AMERICAN HONDA MOTOR CO., INC.

2. Remove the front mounting bolts (A) from the front seat.

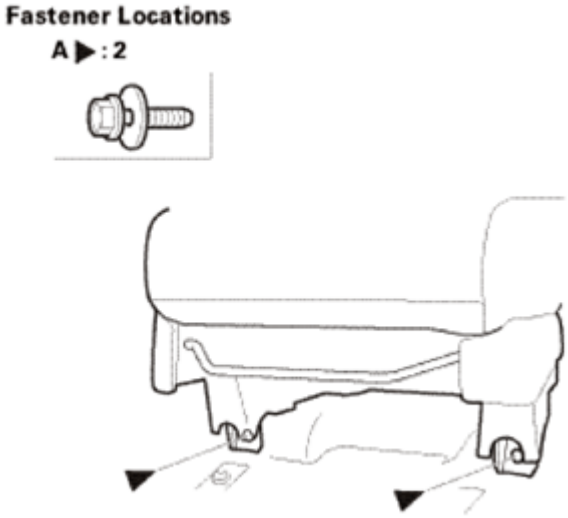

Fig. 162: Identifying Front Seat Front Mounting Bolts
Courtesy of AMERICAN HONDA MOTOR CO., INC.

GETtheMANUALS.org

3. Remove the rear mounting bolts (A) from the front seat.

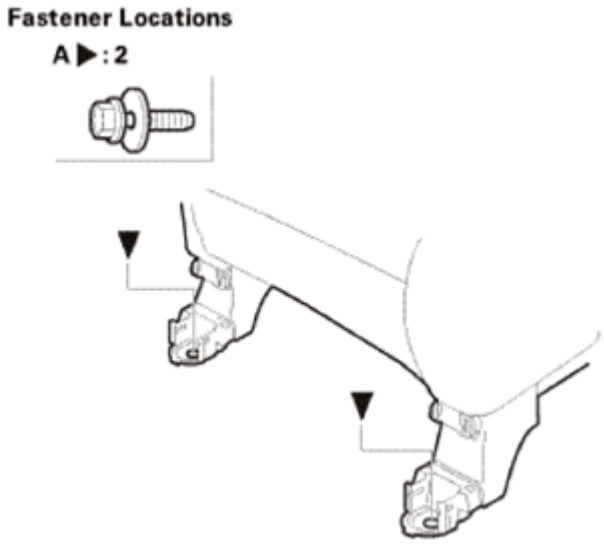

Fig. 163: Identifying Front Seat Rear Mounting Bolts
Courtesy of AMERICAN HONDA MOTOR CO., INC.

4. Disconnect the connectors (A).
5. Detach the harness clip (B).

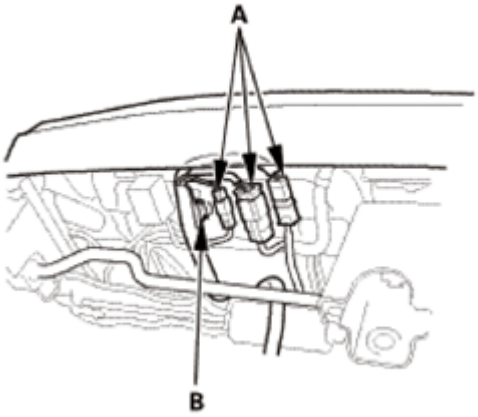

Fig. 164: Identifying Front Seat Connectors And Clips
Courtesy of AMERICAN HONDA MOTOR CO., INC.

5. Front Seat Armrest
    1. Remove the cap (A) with the appropriate trim tool.
    2. Remove the center pin (B), the bushing (C), and the washer (D), then remove the armrest (E).

GETtheMANUALS.org

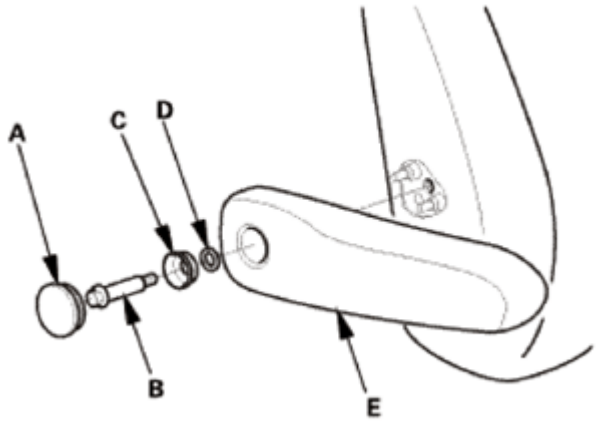

Fig. 165: Identifying Front Seat Armrest, Center Pin, Bushing, Washer And Cap
Courtesy of AMERICAN HONDA MOTOR CO., INC.

3. Remove the pins (A) from the seat-back.

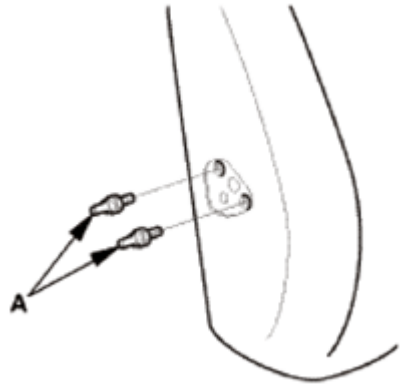

Fig. 166: Identifying Seat Back Pins
Courtesy of AMERICAN HONDA MOTOR CO., INC.

6. Front Seat Slide Lever - Manual Seat
    1. Slide the front seat all the way forward.
    2. Release the hooks (A), then remove both seat slide lever springs (B) from the front seat rail (C).

GETtheMANUALS.org

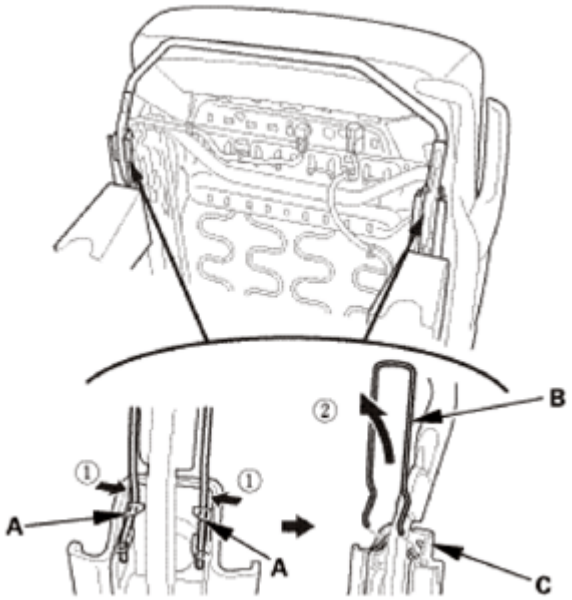

Fig. 167: Removing Seat Slide Lever Springs From Front Seat Rail (Manual Seat)
Courtesy of AMERICAN HONDA MOTOR CO., INC.

3. Release both sides of tabs (A) from the front seat rail (B), then remove the seat slide lever (C).

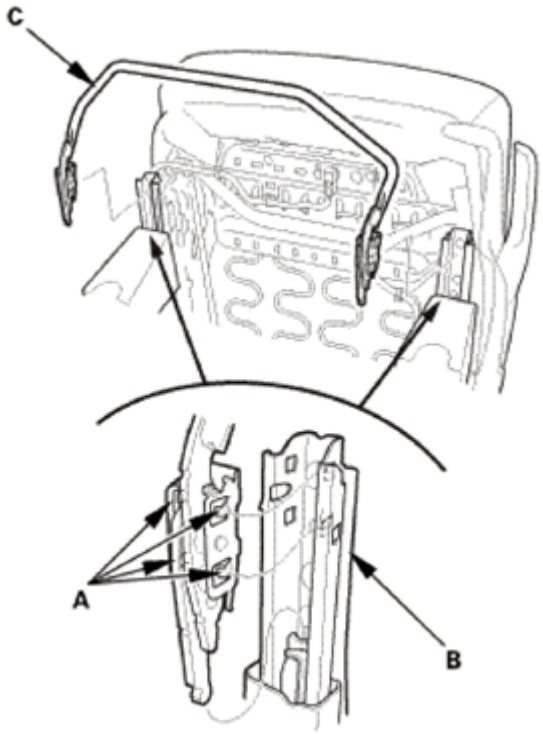

Fig. 168: Identifying Seat Slide Lever, Front Seat Rail And Tabs
Courtesy of AMERICAN HONDA MOTOR CO., INC.

GETtheMANUALS.org

7. Front Cover - Power Seat
    1. Remove the screw (A), and release the hook (B), the pin (C), and the tabs (D), then remove the front cover (E).

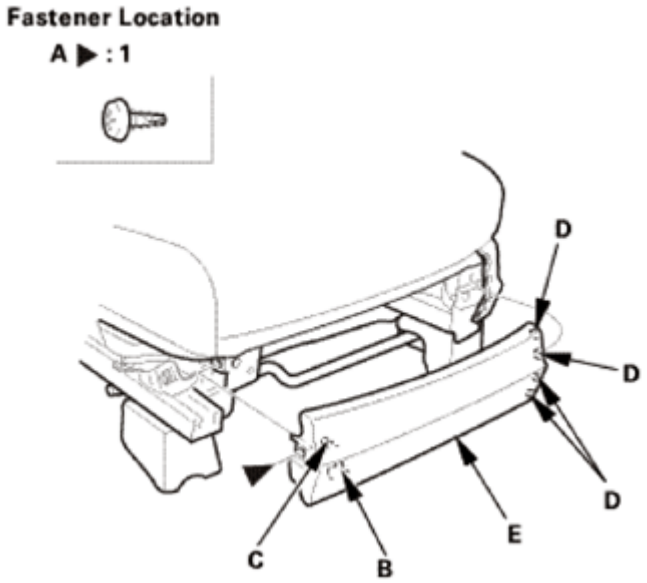

Fig. 169: Identifying Front Cover, Hook, Tabs, Pin And Screws (Power Seat)
Courtesy of AMERICAN HONDA MOTOR CO., INC.

8. Front Seat Height Adjuster Handle - Manual Seat
    1. Pry out the cap (A) to release the hooks (B), and remove the screws (C), then remove the height adjuster handle (D).

GETtheMANUALS.org

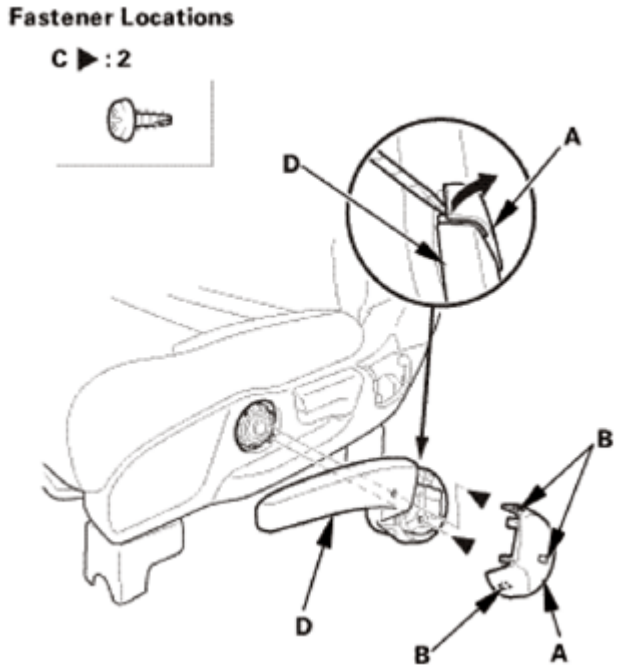

Fig. 170: Removing Height Adjuster Handle (Manual Seat)
Courtesy of AMERICAN HONDA MOTOR CO., INC.

9. Front Seat Recline Cover - Driver's Side

Power Seat

1. Remove the screw (A), and detach the clip (B).
2. Release the tabs (C).
3. Pull up the recline cover (D) to release the hook (E).
4. Disconnect the connectors.
5. Remove the upper center inner cover (F).
6. Remove the wire harness (G) from the hooks (H), then remove the recline cover.

GETtheMANUALS.org

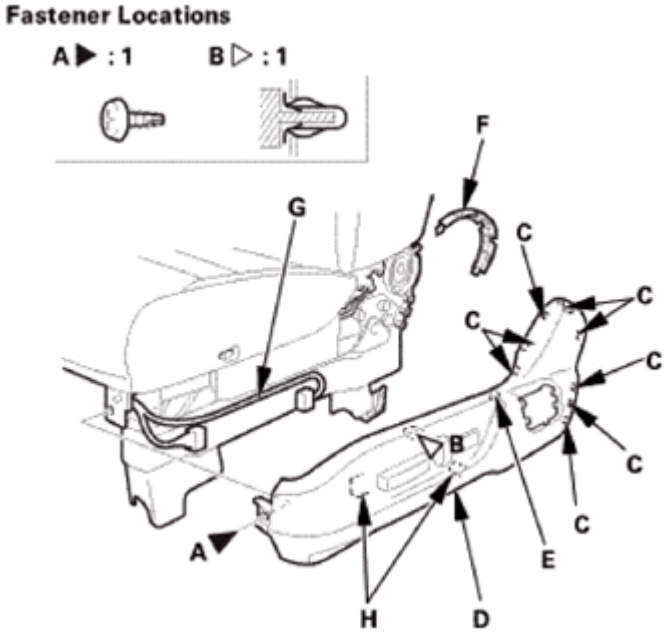

Fig. 171: Identifying Front Seat Recline Cover And Related Components
Courtesy of AMERICAN HONDA MOTOR CO., INC.

Manual Seat

1. Remove the recline knob (A).
2. Remove the screw (B), and detach the clip (C).
3. Release the front hooks (D) of the recline cover (E) from the recline inner cover (F).
4. Release the rear hooks (G) of the recline cover from the recline inner cover.
5. Detach the hook (H) by pulling the recline cover back by hand.
6. Gently pull out the recline cover and remove it.

GETtheMANUALS.org

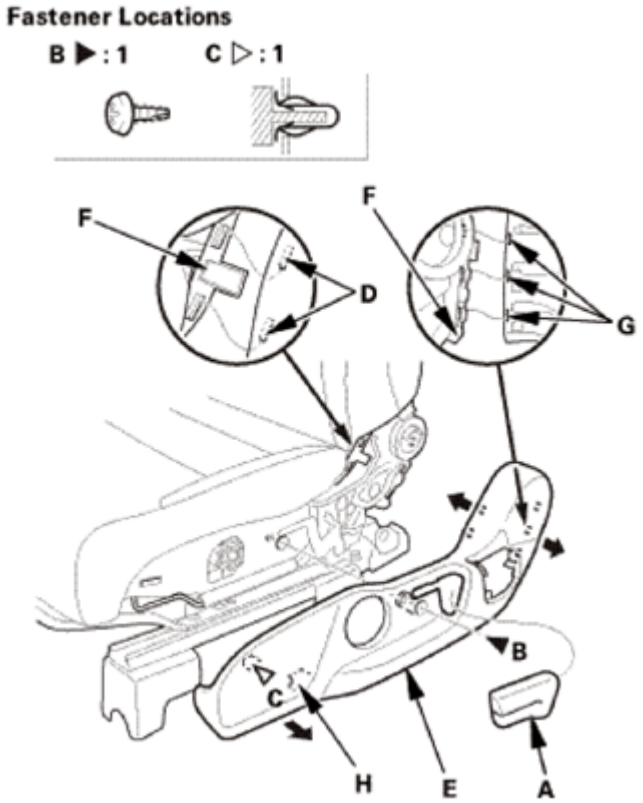

Fig. 172: Removing Recline Cover
Courtesy of AMERICAN HONDA MOTOR CO., INC.

10. Front Seat Center Cover - Driver's Side

Power Seat

1. Remove the screw (A).
2. Release the tabs (B), then remove the center cover (C).
3. Remove the upper center inner cover (D).

GETtheMANUALS.org

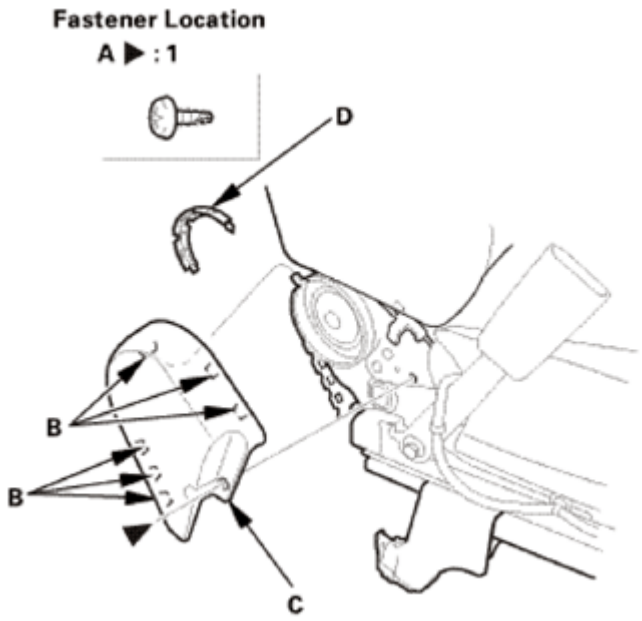

Fig. 173: Identifying Front Seat Center Cover, Upper Center Inner Cover, Tabs And Screws (Power Seat)
Courtesy of AMERICAN HONDA MOTOR CO., INC.

Manual Seat

1. Pull up the center cover (A) to release the tabs (B) from the inner cover (C).

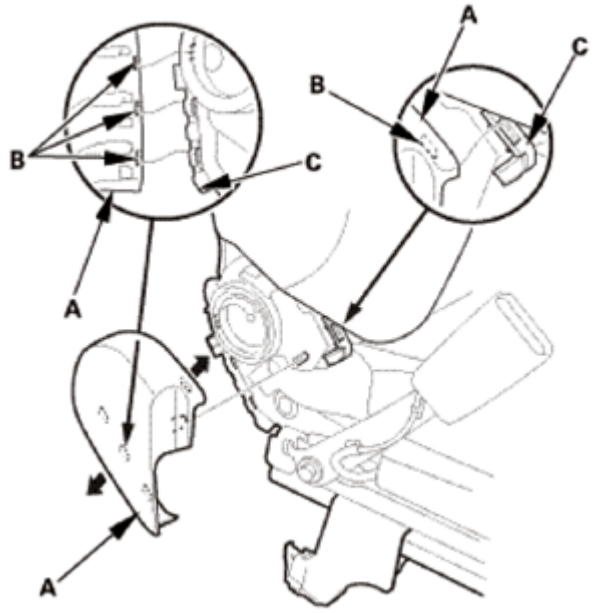

Fig. 174: Removing Center Cover (Manual Seat)
Courtesy of AMERICAN HONDA MOTOR CO., INC.

GETtheMANUALS.org

11. Front Seat Cushion - Driver's Side
    1. Release the elastic strap (A) from the seat cushion frame springs (B), then pull back the under cover (C) of the seat-back cover.

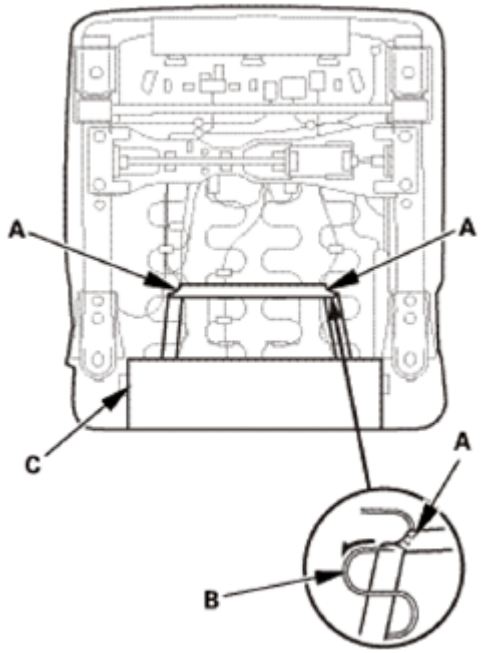

Fig. 175: Releasing Elastic Strap From Seat Cushion Frame Springs
Courtesy of AMERICAN HONDA MOTOR CO., INC.

    2. With seat heater: Disconnect the connectors (A).
    3. With seat heater: Detach the harness clip (B).
    4. With seat heater: Pry up the hook (C) of the harness holders (D), then release them from the seat cushion frame springs (E).

With Seat Heater

GETtheMANUALS.org

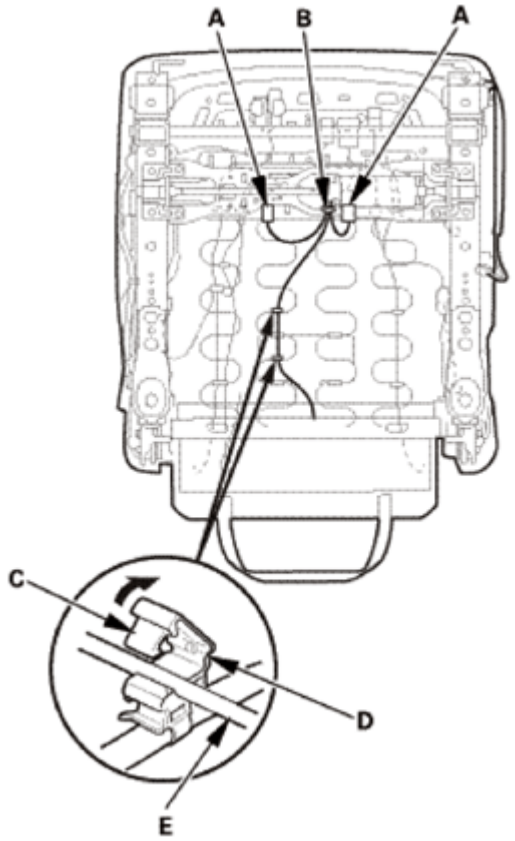

Fig. 176: Prying Up Hook Of Harness Holders (With Seat Heater)
Courtesy of AMERICAN HONDA MOTOR CO., INC.

5. Release the hook strips (A) from both sides of the seat cushion frame.
6. Detach the clip (B) from the seat cushion frame.

Power Seat

GETtheMANUALS.org

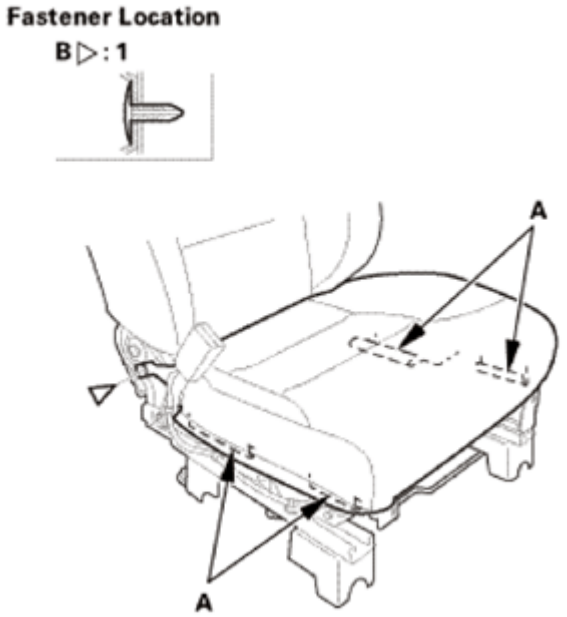

Fig. 177: Identifying Front Seat Cushion Hook Strips And Clips (Power Seat)
Courtesy of AMERICAN HONDA MOTOR CO., INC.

Manual Seat

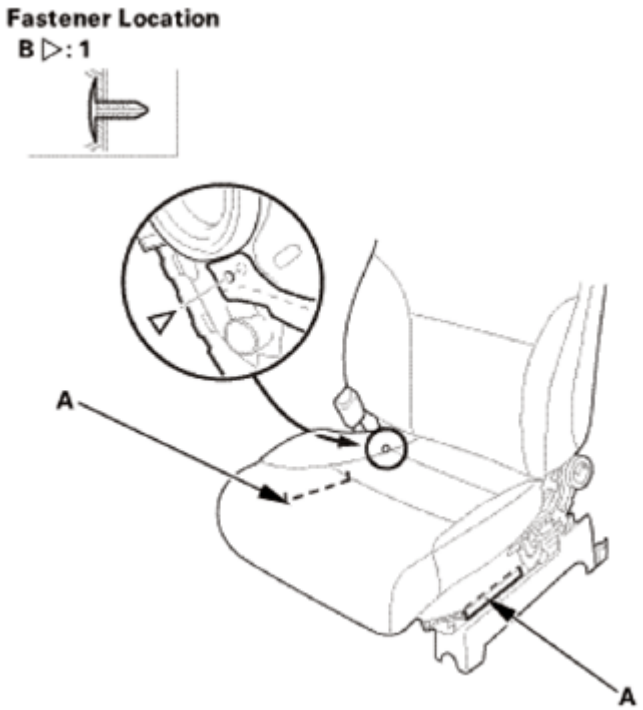

Fig. 178: Identifying Front Seat Cushion Hook Strips And Clips (Manual Seat)
Courtesy of AMERICAN HONDA MOTOR CO., INC.

7. Release the hook strips (A) from under the seat cushion.

GETtheMANUALS.org

Power Seat

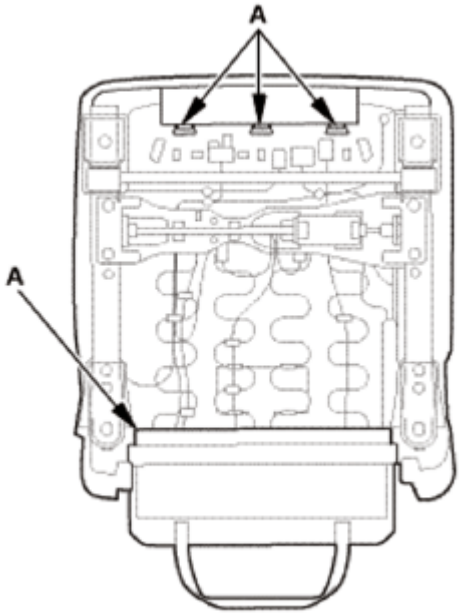

Fig. 179: Identifying Hook Strips Under Seat Cushion (Power Seat)
Courtesy of AMERICAN HONDA MOTOR CO., INC.

Manual Seat

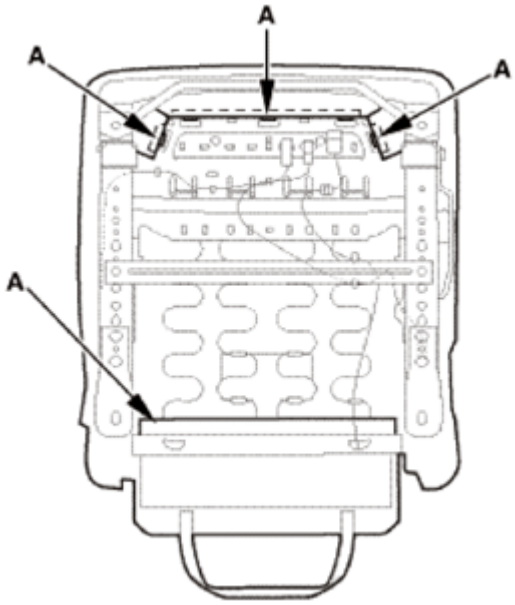

Fig. 180: Identifying Hook Strips Under Seat Cushion (Manual Seat)
Courtesy of AMERICAN HONDA MOTOR CO., INC.

8. Remove the seat cushion cover/pad (A) from the seat frame (B).

GETtheMANUALS.org

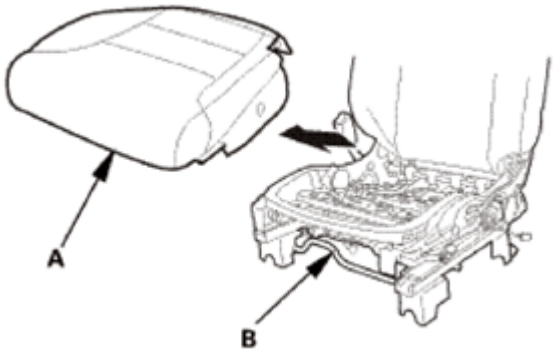

Fig. 181: Removing Seat Cushion Cover/Pad From Seat Frame
Courtesy of AMERICAN HONDA MOTOR CO., INC.

12. Front Seat-Back - Driver's Side
    1. Detach the connector clips (A).
    2. Detach the harness clips (B).
    3. Pry up the hooks (C) of the harness holders (D), then release them from the seat cushion frame springs (E).
    4. Disconnect the connectors (F).

Power Seat

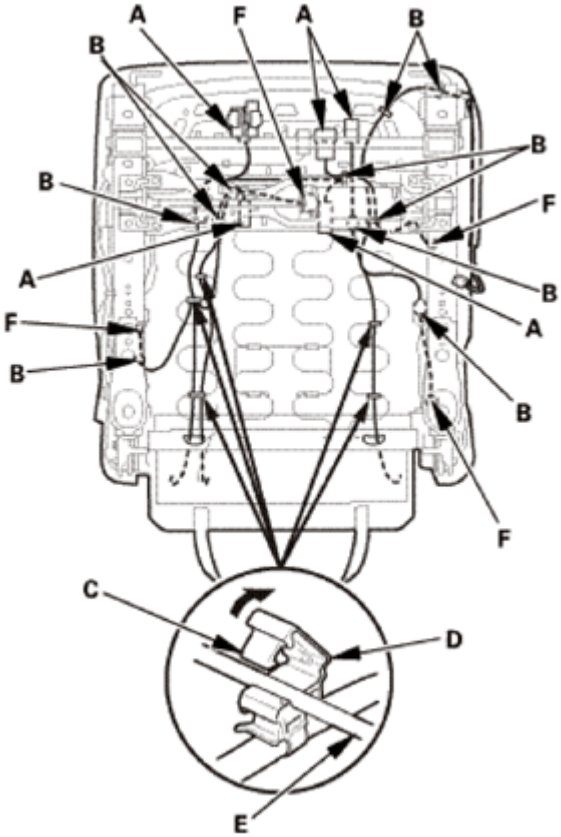

GETtheMANUALS.org

Fig. 182: Removing Seat Cushion Frame Springs Holder (Power Seat)
Courtesy of AMERICAN HONDA MOTOR CO., INC.

Manual Seat

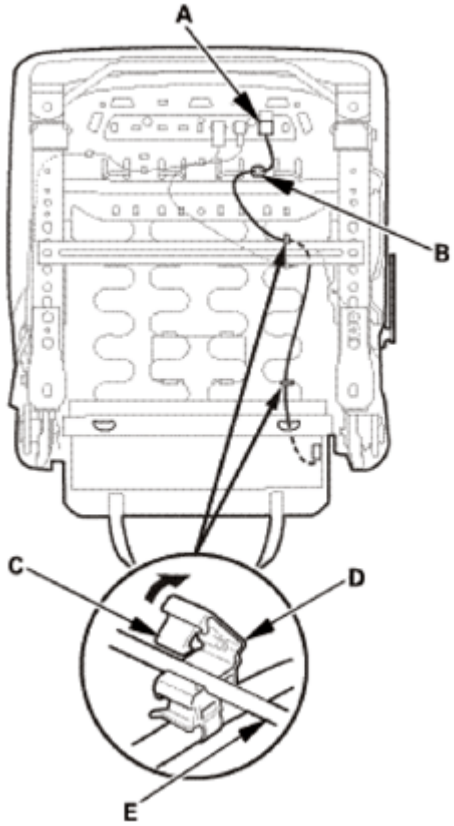

Fig. 183: Removing Seat Cushion Frame Springs Holder (Manual Seat)
Courtesy of AMERICAN HONDA MOTOR CO., INC.

5. Release the hook strip (A).
6. Unzip the seat-back cover (B).

GETtheMANUALS.org

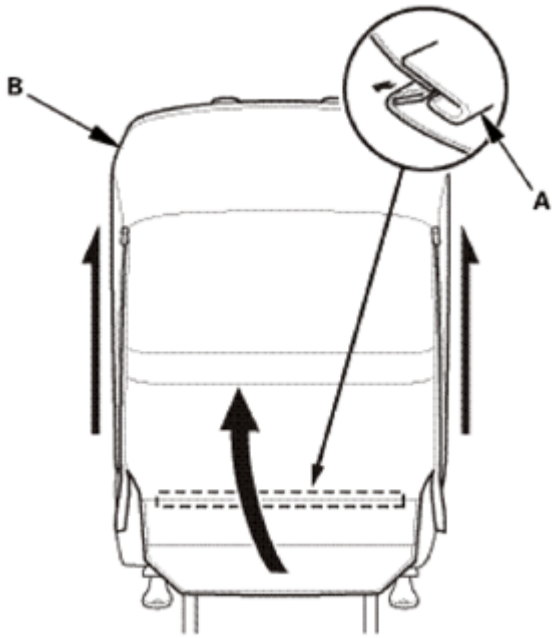

Fig. 184: Removing Seat-Back Cover
Courtesy of AMERICAN HONDA MOTOR CO., INC.

7. Release the hook strips (A), and loosen the seat-back cover (B).

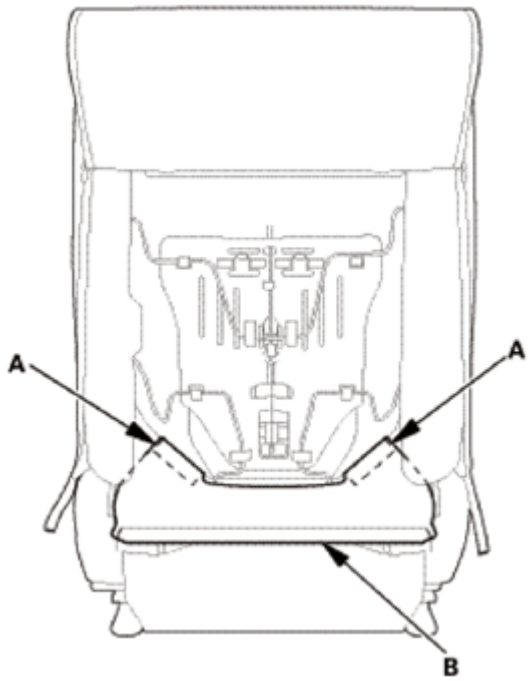

Fig. 185: Identifying Seat-Back Cover Hook Strips
Courtesy of AMERICAN HONDA MOTOR CO., INC.

8. Detach the harness clips (A).

GETtheMANUALS.org

9. Pull out the harnesses (B) through the holes (C) in the seat-back cover (D).

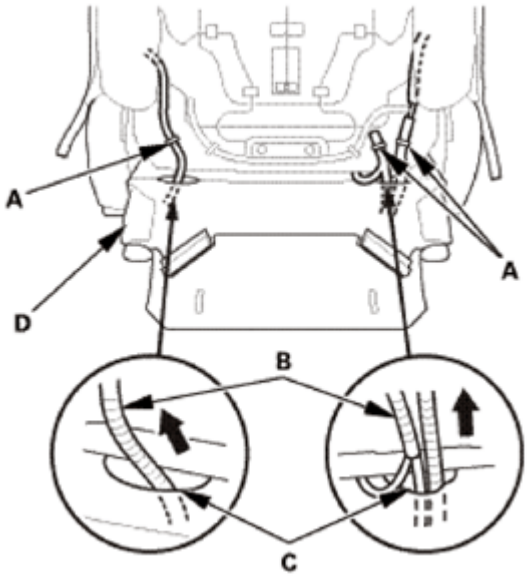

Fig. 186: Removing Harnesses Through Holes From Seat-Back Cover
Courtesy of AMERICAN HONDA MOTOR CO., INC.

10. Release airbag attachment wires A, B from the seat-back frame (C).

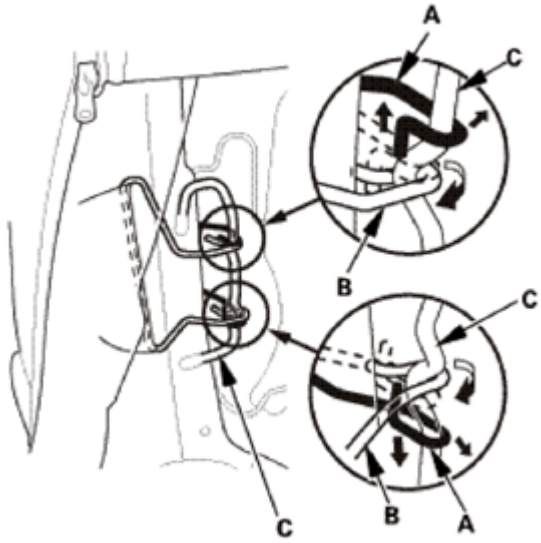

Fig. 187: Releasing Airbag Attachment Wires From Seat-Back Frame
Courtesy of AMERICAN HONDA MOTOR CO., INC.

11. Release the hook strips (A) from the seat-back frame (B).

GETtheMANUALS.org

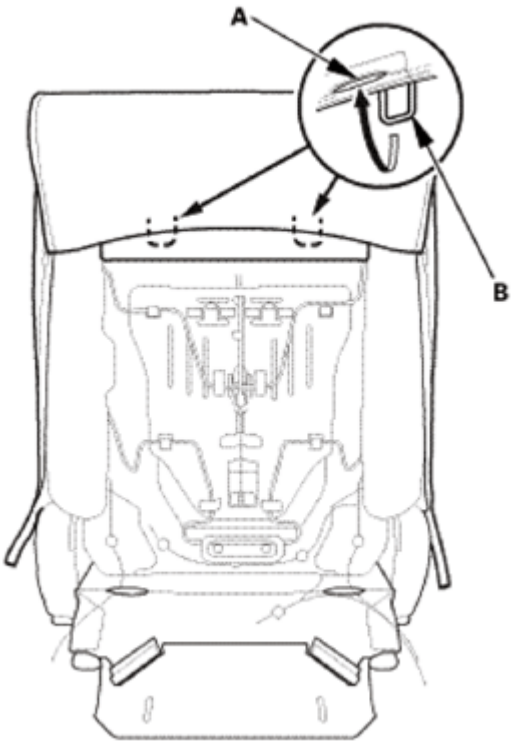

Fig. 188: Releasing Hook Strips From Seat-Back Frame
Courtesy of AMERICAN HONDA MOTOR CO., INC.

13. Head Restraint Guides - Driver's Side
    1. Pinch the tabs (A) on the end of the head restraint guides (B), and remove the guides from the seat-back.

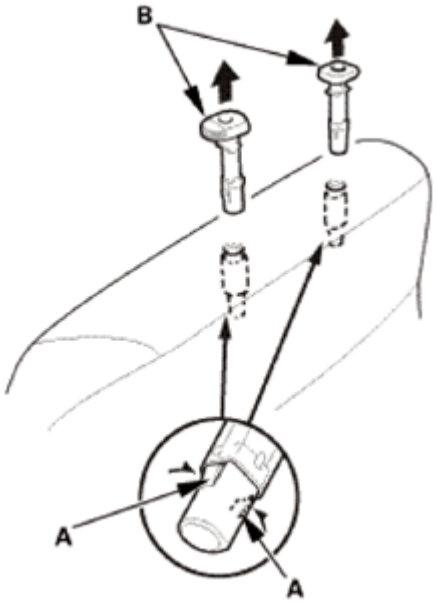

Fig. 189: Removing Guides From Seat-Back

GETtheMANUALS.org

Courtesy of AMERICAN HONDA MOTOR CO., INC.

14. Front Seat-Back Cover/Pad - Driver's Side
    1. Remove the seat-back cover/pad (A) from the seat-back frame (B).

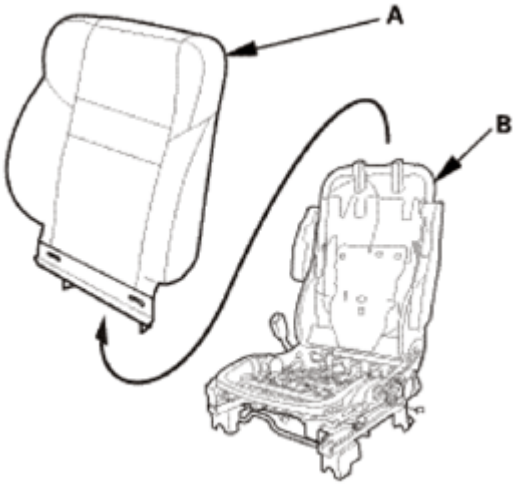

Fig. 190: Removing Seat-Back Cover/Pad From Seat-Back Frame
Courtesy of AMERICAN HONDA MOTOR CO., INC.

15. Side Airbag
    1. Detach the harness clip (A), then remove the side airbag (B).

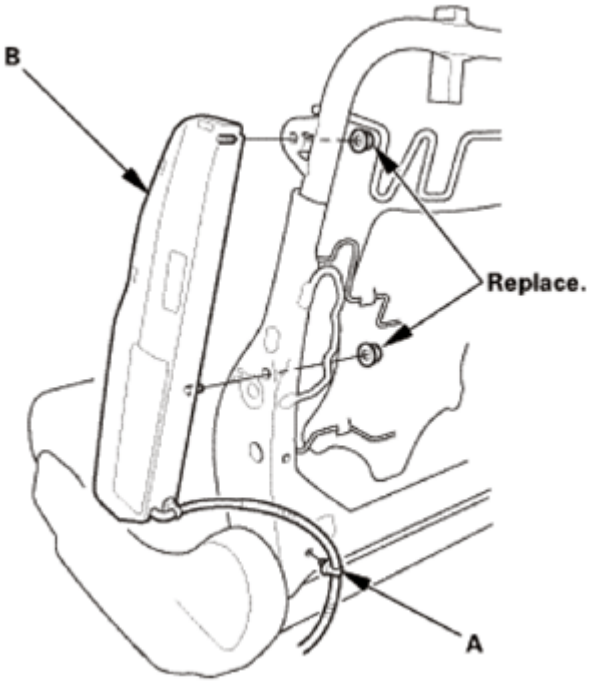

Fig. 191: Identifying Side Airbag And Harness Clips

GETtheMANUALS.org

Courtesy of AMERICAN HONDA MOTOR CO., INC.

16. Front Seat Belt Buckle - Driver's Side
    1. Detach the connector clip (A) and the harness clips (B) from under the seat cushion.

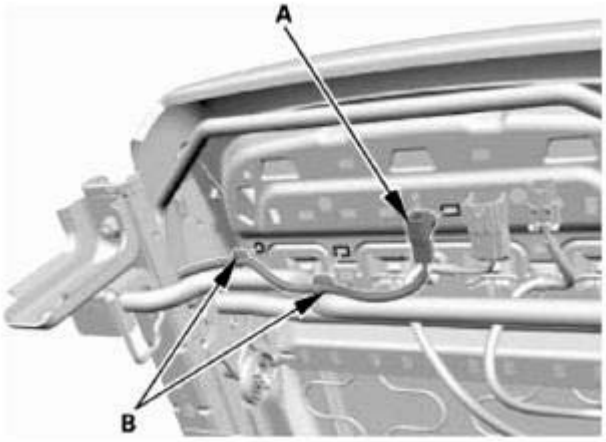

Fig. 192: Identifying Under Seat Cushion Connector And Harness Clips
Courtesy of AMERICAN HONDA MOTOR CO., INC.

    2. Remove the center anchor bolt (A), and detach the harness clips (B), then remove the front seat belt buckle (C).

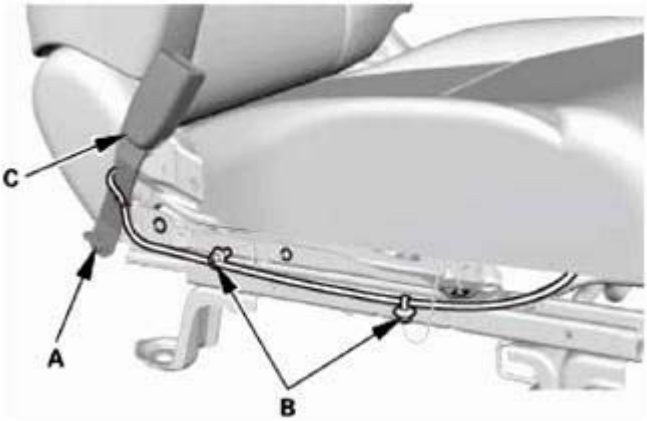

Fig. 193: Identifying Front Seat Belt Buckle, Center Anchor Bolt And Clips
Courtesy of AMERICAN HONDA MOTOR CO., INC.

17. Front Seat Lumbar Support
    1. Remove the cable band (A) fastening the lumbar support cable (B).
    2. Remove the two screws (C) and the plate (D).

GETtheMANUALS.org

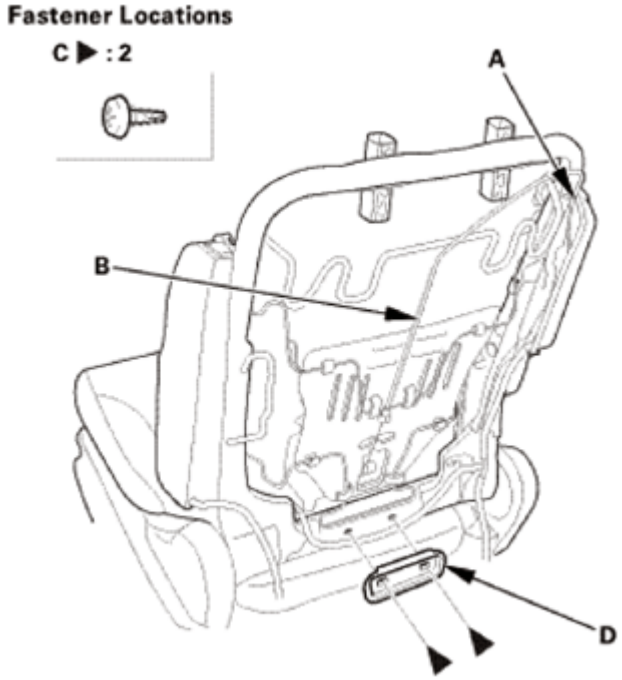

Fig. 194: Identifying Lumbar Support Cable, Plate, Cable Band And Screws
Courtesy of AMERICAN HONDA MOTOR CO., INC.

3. Release the lower wire (A) from both seat-back side frames (B), then remove the lumbar support (C).

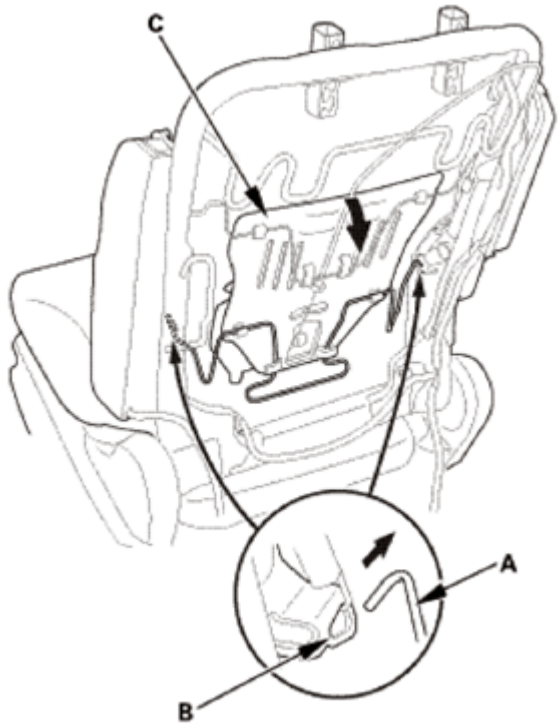

Fig. 195: Removing Lumbar Support

GETtheMANUALS.org

Courtesy of AMERICAN HONDA MOTOR CO., INC.

4. Release the hook (A), then remove the pin (B).
5. Pull the cover up to release it from the upper hook (C), then remove the power lumbar support motor cover (D).

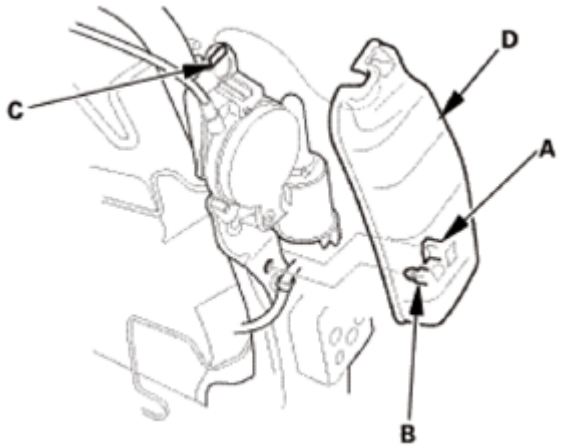

Fig. 196: Identifying Power Lumbar Support Motor Cover, Hooks And Pin
Courtesy of AMERICAN HONDA MOTOR CO., INC.

6. Disconnect the connector and detach the harness clip (A).
7. Remove the nuts (B), and separate the lumbar support motor (C) from the seat frame (D), then remove the lumbar support.

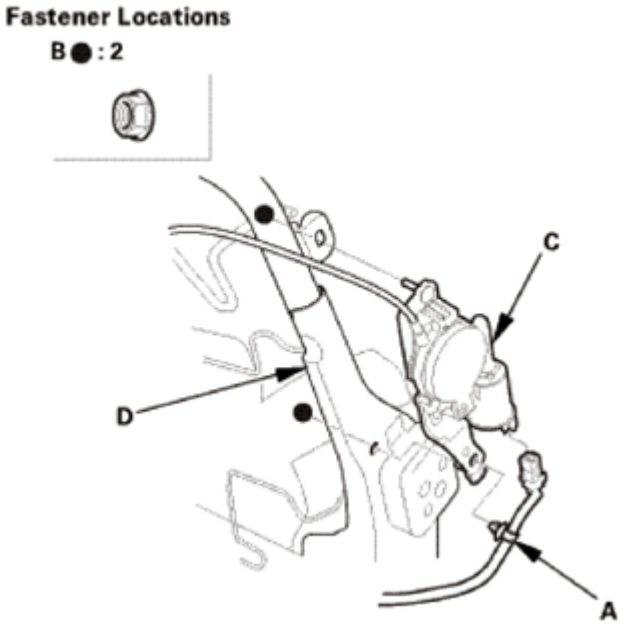

Fig. 197: Identifying Lumbar Support Motor, Seat Frame, Nuts And Clips
Courtesy of AMERICAN HONDA MOTOR CO., INC.

GETtheMANUALS.org

18. Front Seat Slide Motor
    1. Remove the slide motor cover (A).

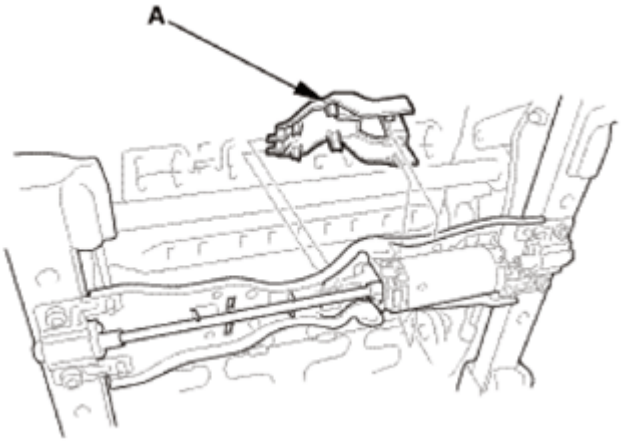

Fig. 198: Identifying Slide Motor Cover
Courtesy of AMERICAN HONDA MOTOR CO., INC.

    2. Release the cable housing (A) from the hooks (B).
    3. Disconnect the flex cable (C) from the worm gear (D) in the inner seat track by pulling out the cable housing.
    4. Disconnect the flex cable from the slide motor (E).

NOTE: Take care not to kink the cable.

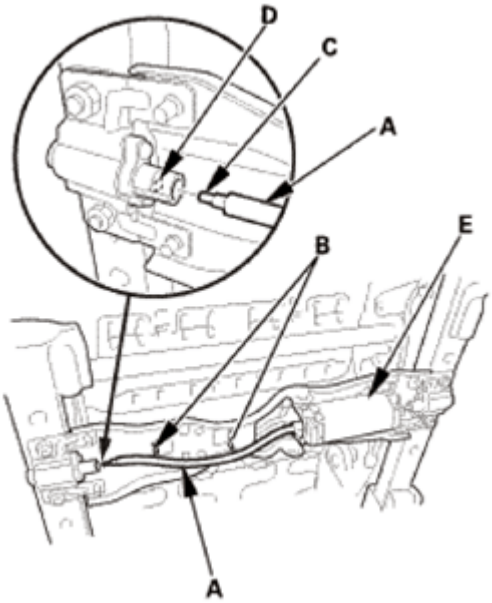

Fig. 199: Disconnecting Flex Cable From Worm Gear
Courtesy of AMERICAN HONDA MOTOR CO., INC.

GETtheMANUALS.org

5. Disconnect the connector.
6. Detach the harness clip (A).
7. Remove the bolts (B) securing the motor bracket (C) with a TORX T30 bit.

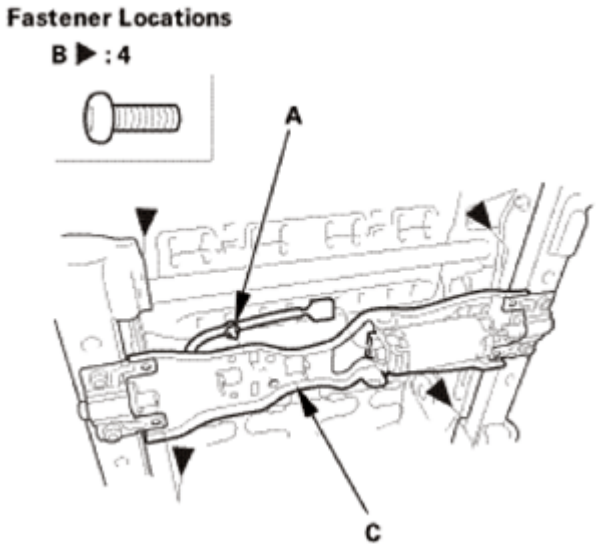

Fig. 200: Identifying Motor Bracket, Bolts And Clips
Courtesy of AMERICAN HONDA MOTOR CO., INC.

8. Disconnect the slide motor (A) from the short flex cable (B), and remove the slide motor bracket (C) from the slide gearbox bracket (D).

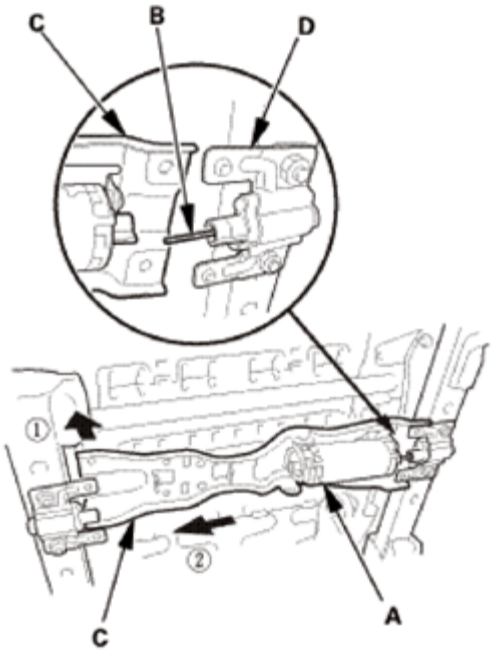

Fig. 201: Removing Slide Motor From Slide Gearbox Bracket

GETtheMANUALS.org

Courtesy of AMERICAN HONDA MOTOR CO., INC.

9. Pull out the short flex cable (A) from the worm gear (B).

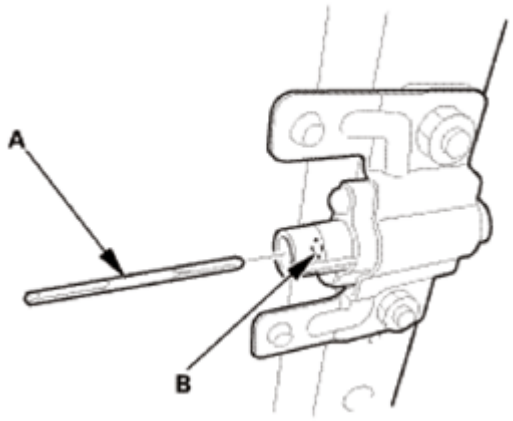

Fig. 202: Identifying Short Flex Cable And Worm Gear
Courtesy of AMERICAN HONDA MOTOR CO., INC.

10. Remove the screws (A), then remove the slide motor (B) from the slide motor bracket (C).

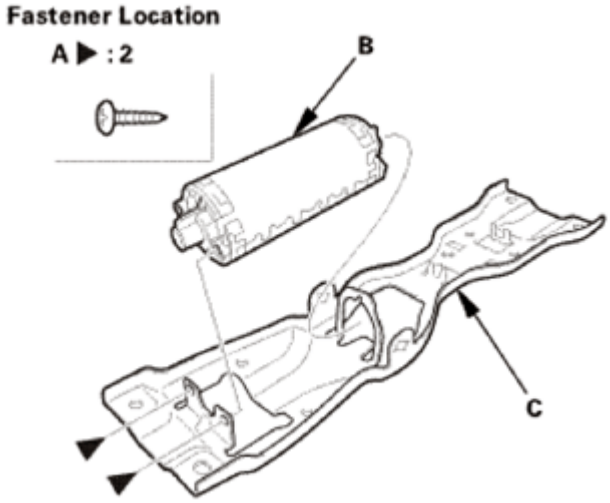

Fig. 203: Identifying Slide Motor, Bracket And Screws
Courtesy of AMERICAN HONDA MOTOR CO., INC.

19. Front Seat Frame - Driver's Side
    1. Detach the clips (A, B), then remove the side cover (C).

    Power Seat (side)

GETtheMANUALS.org

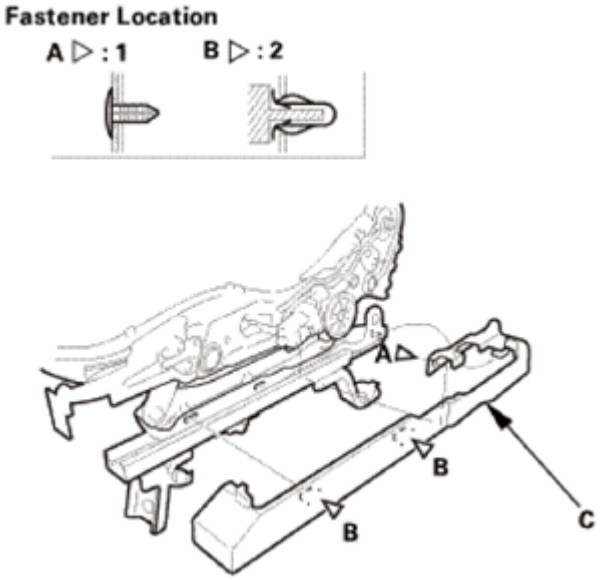

Fig. 204: Identifying Front Seat Side Cover And Clips (Power Seat)
Courtesy of AMERICAN HONDA MOTOR CO., INC.

2. Detach the hooks (A) and the clip (B), then remove the upper rail covers (C).

Manual Seat

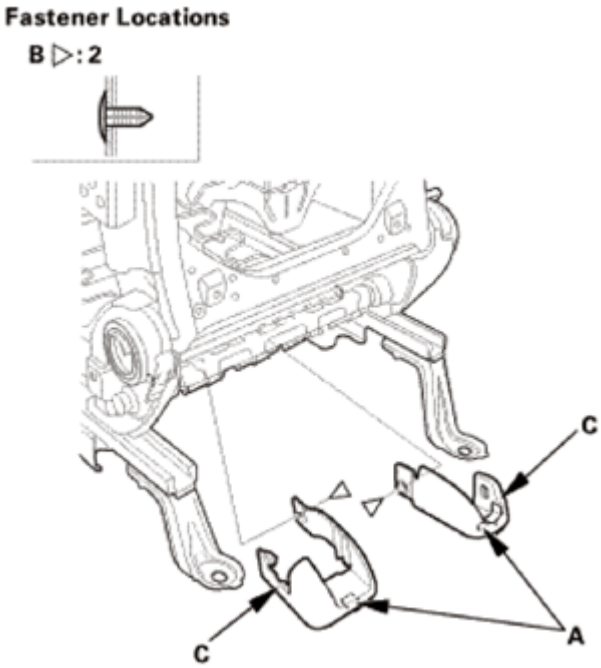

Fig. 205: Identifying Front Seat Upper Rail Cover, Hooks And Clips (Manual Seat)
Courtesy of AMERICAN HONDA MOTOR CO., INC.

3. Detach the hooks (A) and the clip (B), then remove the front foot covers (C).

GETtheMANUALS.org

Front Side

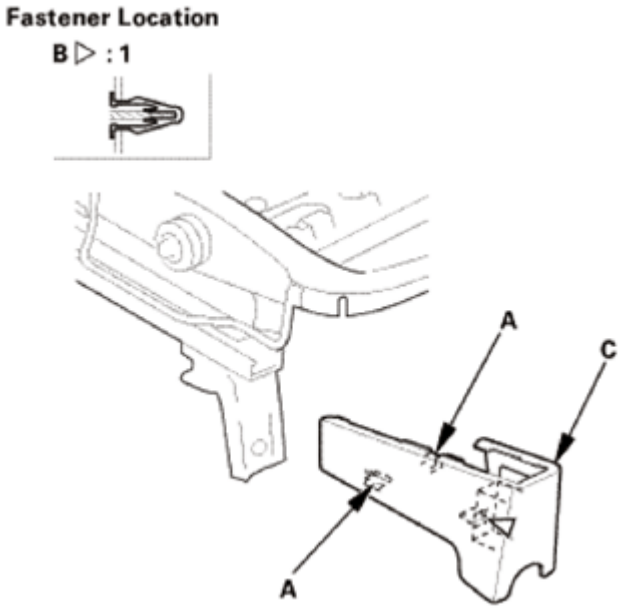

Fig. 206: Identifying Front Seat Front Foot Cover, Hooks And Clips (Front Side; 1 Of 2)
Courtesy of AMERICAN HONDA MOTOR CO., INC.

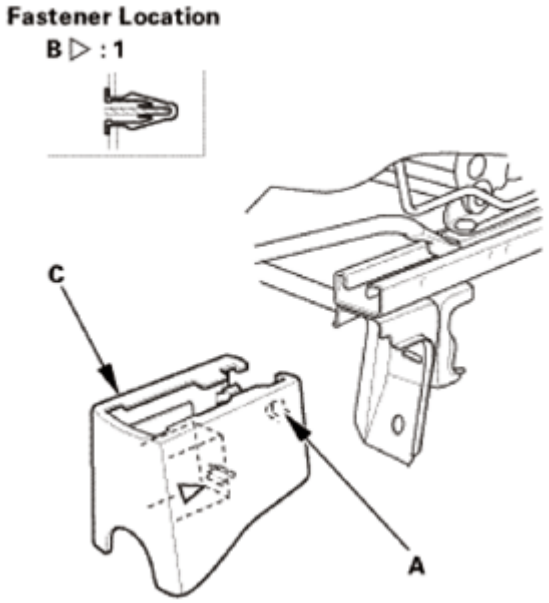

Fig. 207: Identifying Front Seat Front Foot Cover, Hooks And Clips (Front Side; 2 Of 2)
Courtesy of AMERICAN HONDA MOTOR CO., INC.

4. Detach the hooks (A), then remove the rear raiser covers (B).

Rear Side

GETtheMANUALS.org

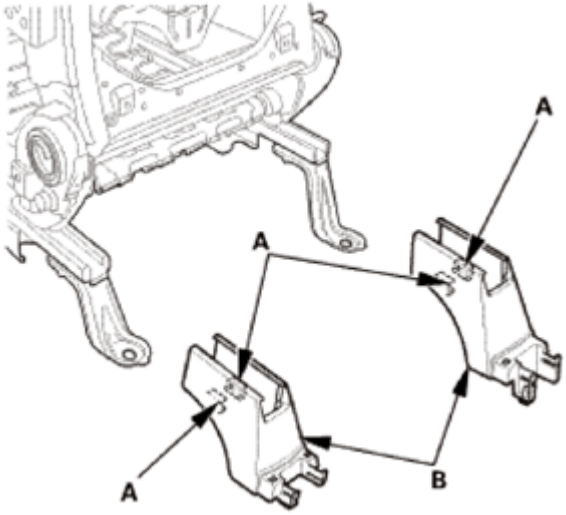

Fig. 208: Identifying Rear Raiser Cover And Hooks (Rear Side)
Courtesy of AMERICAN HONDA MOTOR CO., INC.

5. Remove the hook(s), then remove the outer recline inner cover (A) and the inner recline inner cover (B) from the seat frame (C).

Power Seat

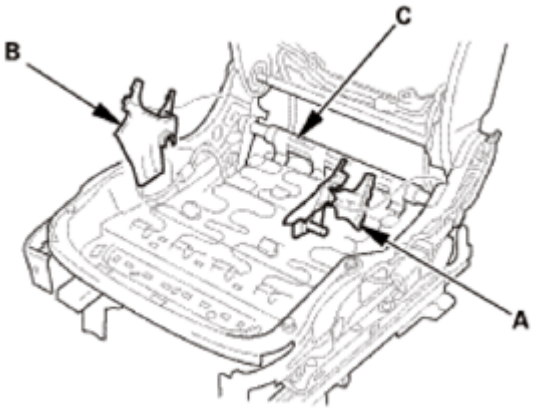

Fig. 209: Identifying Seat Cover, Inner And Outer Recline Cover And Hooks (Power Seat)
Courtesy of AMERICAN HONDA MOTOR CO., INC.

Manual Seat

GETtheMANUALS.org

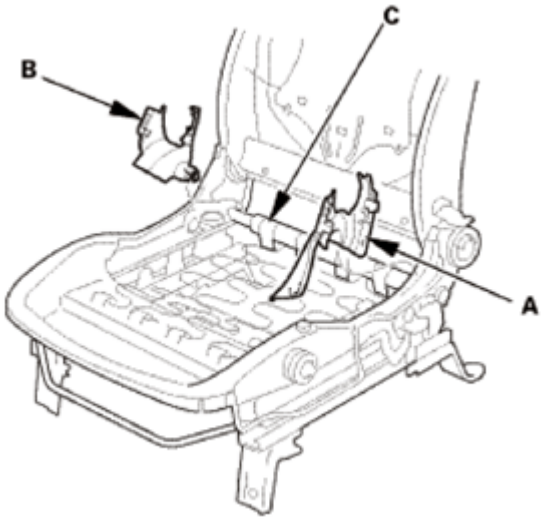

Fig. 210: Identifying Seat Cover, Inner And Outer Recline Cover And Hooks (Manual Seat)
Courtesy of AMERICAN HONDA MOTOR CO., INC.

20. Front Seat Belt Lower Anchor Bolt - Passenger's Side
    1. Carefully pry up on the bottom of the anchor cover (A) at the pry point (B) with the appropriate trim tool to release the hooks (C) and the tab (D), then remove the cover by pulling it upward.

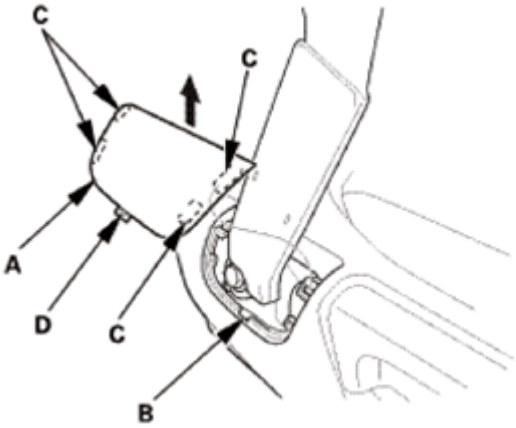

Fig. 211: Removing Front Seat Belt Lower Anchor Cover (Passenger Side)
Courtesy of AMERICAN HONDA MOTOR CO., INC.

    2. Remove the lower anchor bolt (A).

GETtheMANUALS.org

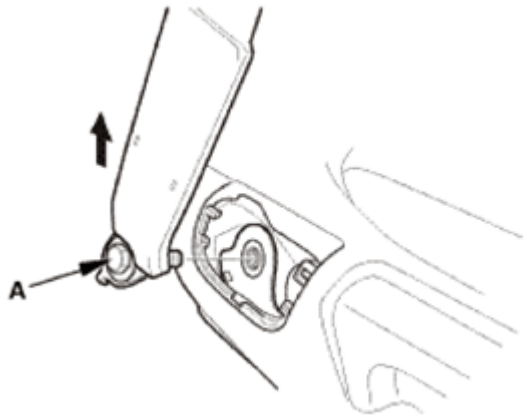

Fig. 212: Removing Front Seat Belt Lower Anchor Bolt (Passenger Side)
Courtesy of AMERICAN HONDA MOTOR CO., INC.

21. Head Restraint - Passenger's Side
    1. Push and hold the knob (A), then pull out the head restraint (B) as shown.

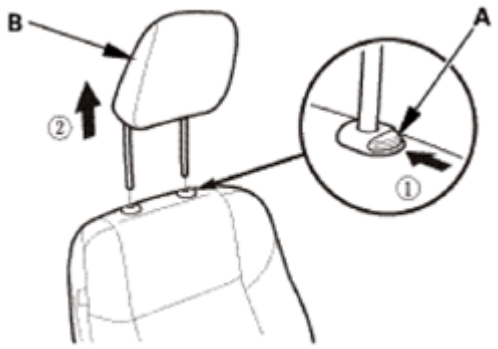

Fig. 213: Pulling Head Restraint (Passenger Side)
Courtesy of AMERICAN HONDA MOTOR CO., INC.

22. Front Seat - Passenger's Side
    1. Detach the hooks (A), then remove the rear inner seat track end cover (B) and the rear outer seat track end cover (C).

GETtheMANUALS.org

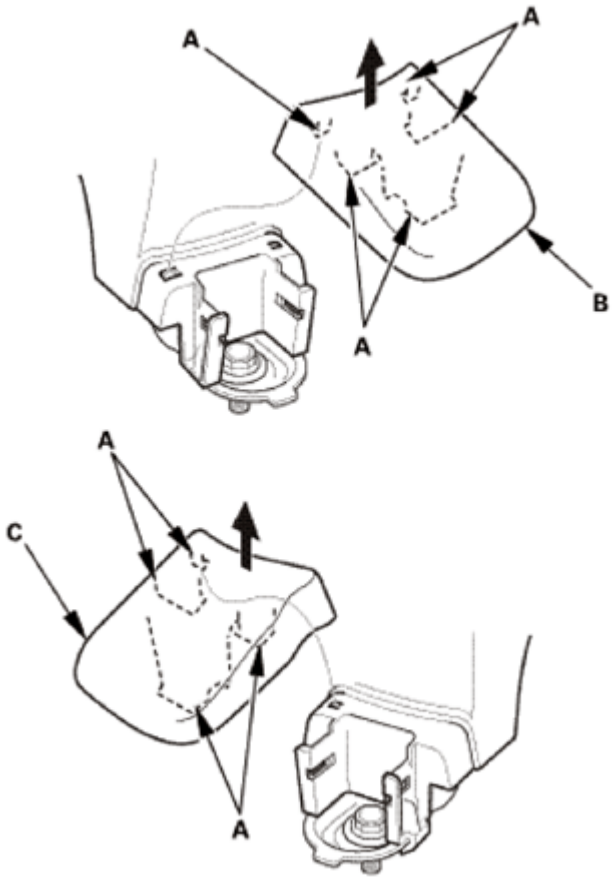

Fig. 214: Removing Rear Inner And Outer Seat Track End Cover
Courtesy of AMERICAN HONDA MOTOR CO., INC.

2. Remove the front mounting bolts (A) from the front seat.

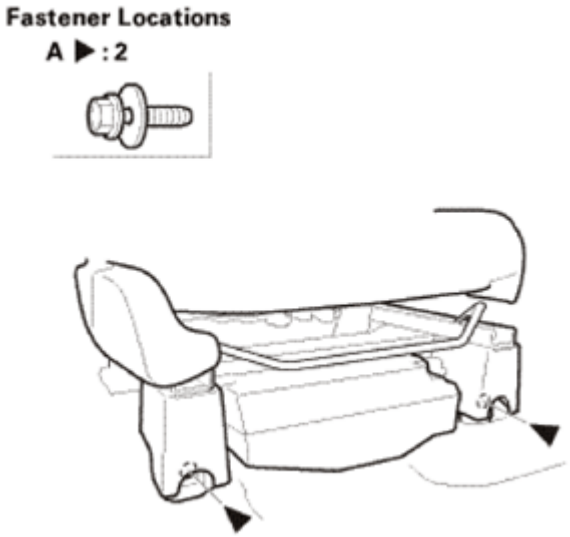

Fig. 215: Identifying Front Seat Front Mounting Bolts

GETtheMANUALS.org

Courtesy of AMERICAN HONDA MOTOR CO., INC.

3. Remove the rear mounting bolts (A) from the front seat.

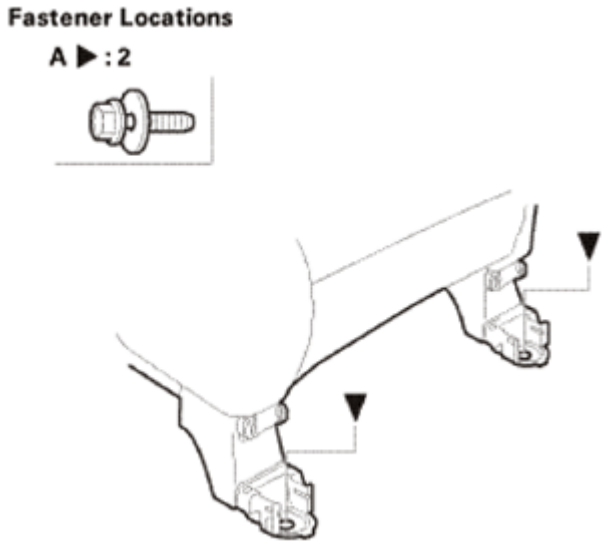

Fig. 216: Identifying Front Seat Rear Mounting Bolts
Courtesy of AMERICAN HONDA MOTOR CO., INC.

4. Disconnect the connectors (A).
5. Detach the harness clip (B).

Without Subwoofer

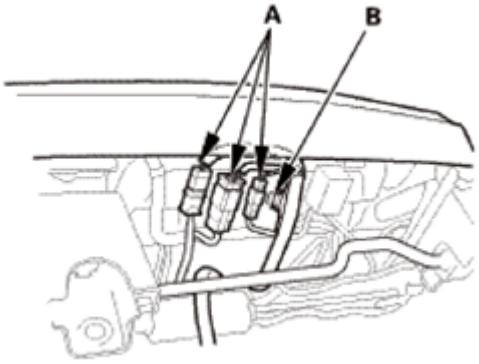

Fig. 217: Identifying Front Seat Connectors And Clips (Without Subwoofer)
Courtesy of AMERICAN HONDA MOTOR CO., INC.

With Subwoofer

GETtheMANUALS.org

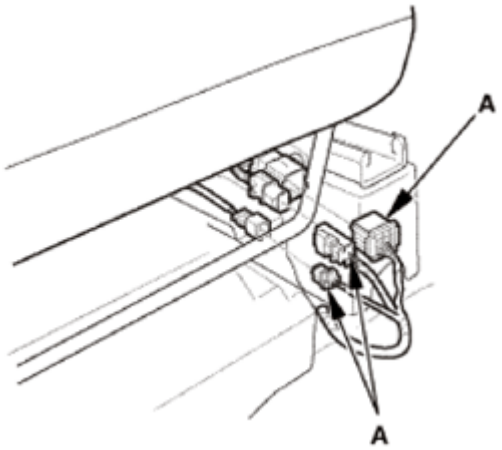

Fig. 218: Identifying Front Seat Connectors And Clips (With Subwoofer)
Courtesy of AMERICAN HONDA MOTOR CO., INC.

23. Front Seat Armrest - Passenger's Side
    1. Remove the cap (A) with the appropriate trim tool.
    2. Remove the center pin (B), the bushing (C), and the washer (D), then remove the armrest (E).

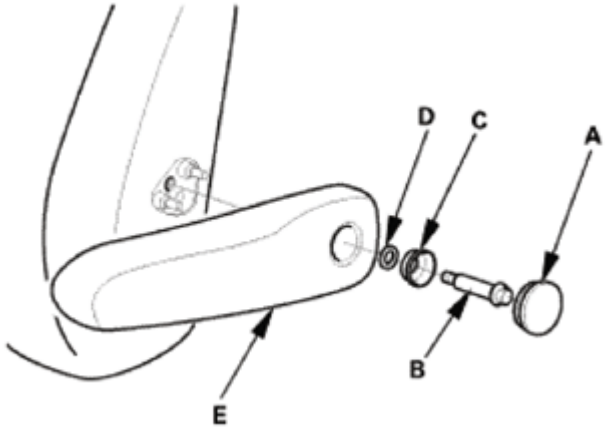

Fig. 219: Identifying Front Seat Armrest, Center Pin, Bushing, Washer And Cap
Courtesy of AMERICAN HONDA MOTOR CO., INC.

    3. Remove the pins (A) from the seat-back.

GETtheMANUALS.org

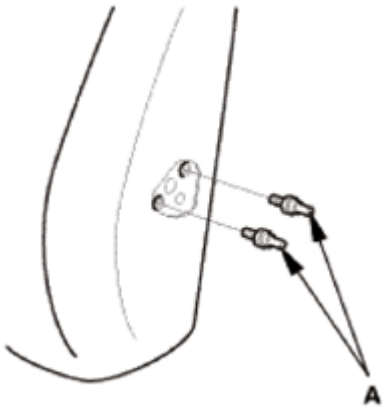

Fig. 220: Identifying Seat Back Pins
Courtesy of AMERICAN HONDA MOTOR CO., INC.

24. Front Seat Slide Lever - Passenger's Side
    1. Slide the front seat all the way forward.
    2. Release the hooks (A), then remove both seat slide lever springs (B) from the front seat rail (C).

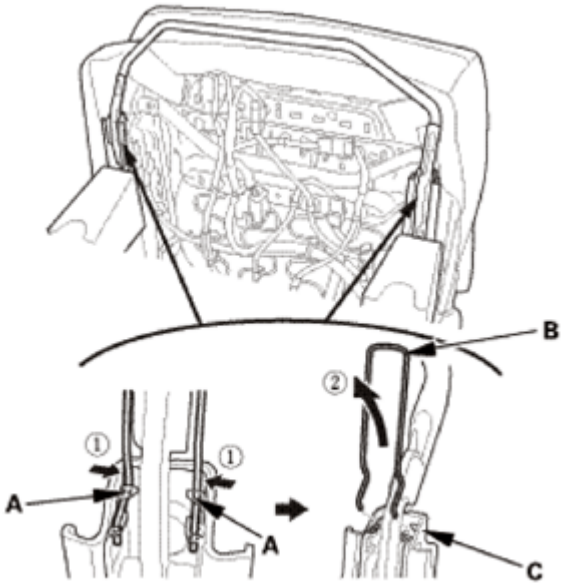

Fig. 221: Removing Seat Slide Lever Springs From Front Seat Rail
Courtesy of AMERICAN HONDA MOTOR CO., INC.

    3. Release both sides of the tabs (A) from the front seat rail (B), then remove the seat slide lever (C).

GETtheMANUALS.org

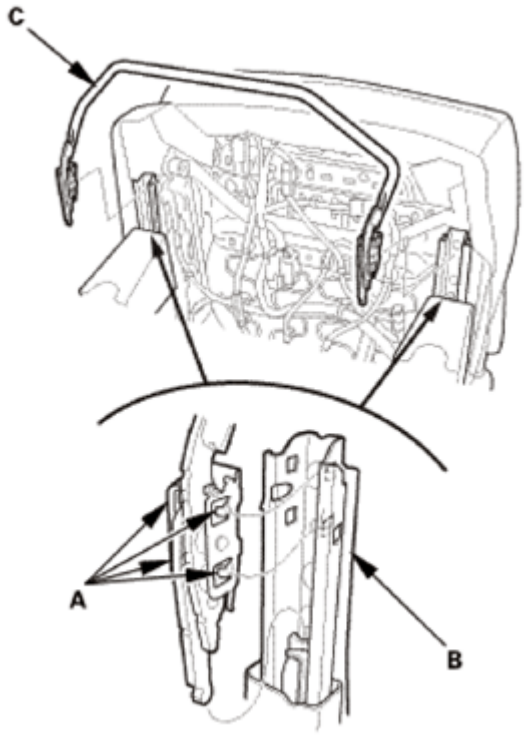

Fig. 222: Identifying Front Seat Rail, Seat Slide Rail And Tabs
Courtesy of AMERICAN HONDA MOTOR CO., INC.

25. Front Seat Recline Cover - Passenger's Side
    1. Remove the recline knob (A).
    2. Remove the screw (B), and detach the clip (C).
    3. Release the front hooks (D) of the recline cover (E) from the recline inner cover (F).
    4. Release the rear hooks (G) of the recline cover from the recline inner cover.
    5. Detach the hook (H) by pulling the recline cover back by hand.
    6. Gently pull out the recline cover and remove it.

GETtheMANUALS.org

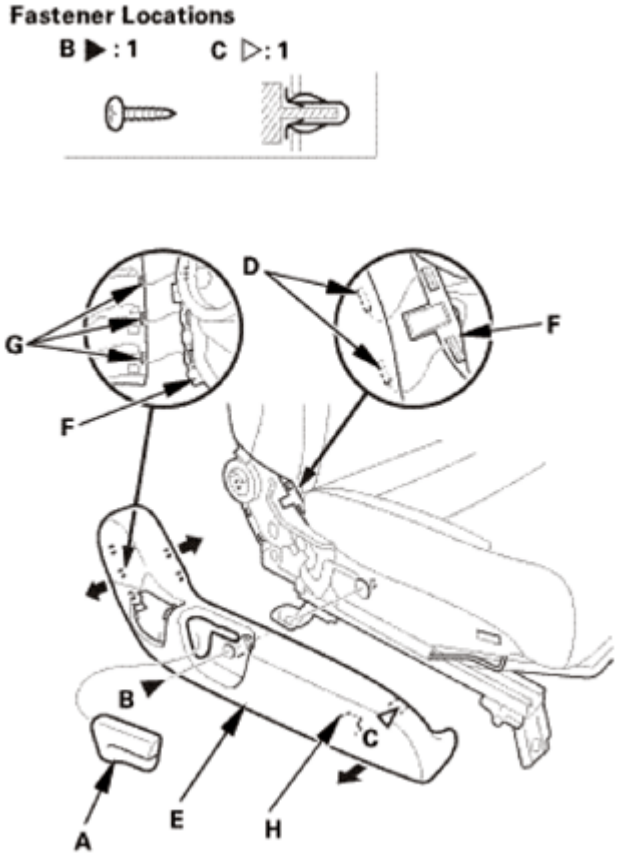

Fig. 223: Removing Recline Cover
Courtesy of AMERICAN HONDA MOTOR CO., INC.

26. Front Seat Center Cover - Passenger's Side
    1. Pull up the center cover (A) to release the tabs (B) from the inner cover (C).

GETtheMANUALS.org

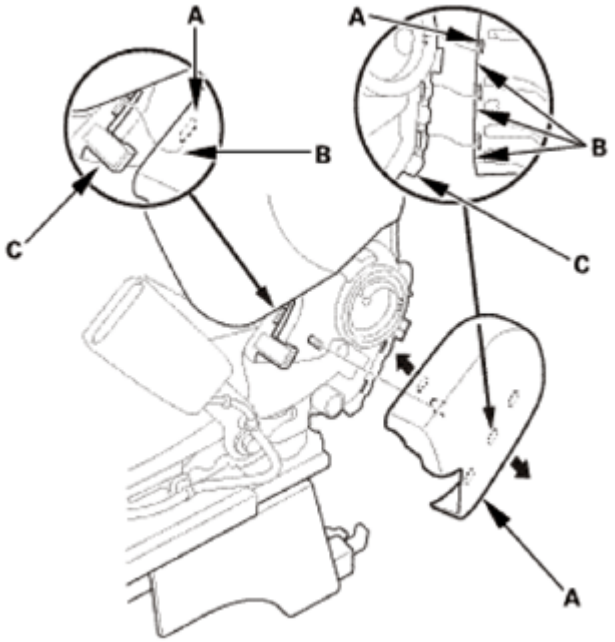

Fig. 224: Removing Center Cover
Courtesy of AMERICAN HONDA MOTOR CO., INC.

27. Front Seat Cushion - Passenger's Side
    1. Release the elastic strap (A) from the seat cushion frame springs (B), then pull back the under cover (C) of the seat-back cover.

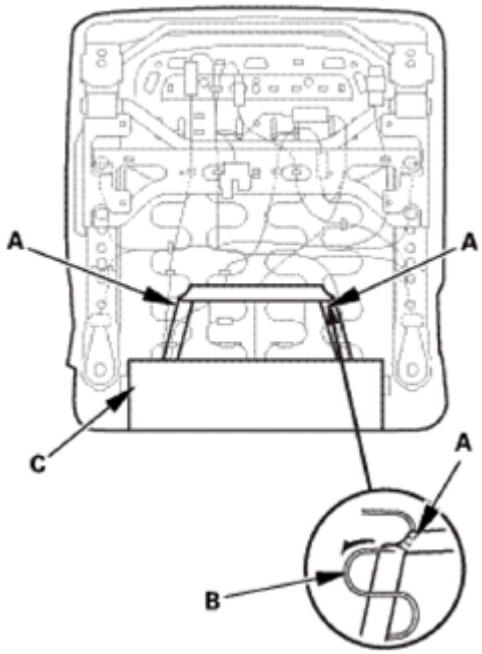

Fig. 225: Releasing Elastic Strap From Seat Cushion Frame Springs
Courtesy of AMERICAN HONDA MOTOR CO., INC.

GETtheMANUALS.org

2. Disconnect the connector(s) (A).
3. Detach the harness clip (B).
4. With sheet heater: Pry up the hook (C) of the harness holders (D), then release them from the seat cushion frame springs (E).

Except KX - With Seat Heater

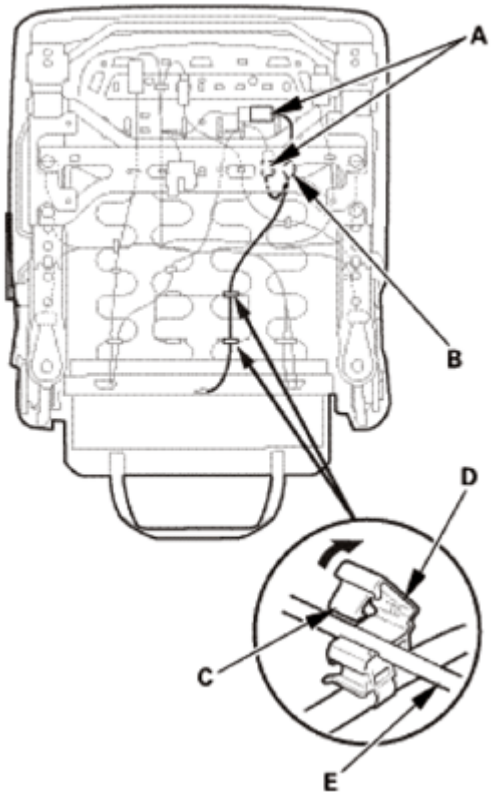

Fig. 226: Removing Hooks From Seat Cushion Frame Springs (Except KX)
Courtesy of AMERICAN HONDA MOTOR CO., INC.

KX

GETtheMANUALS.org

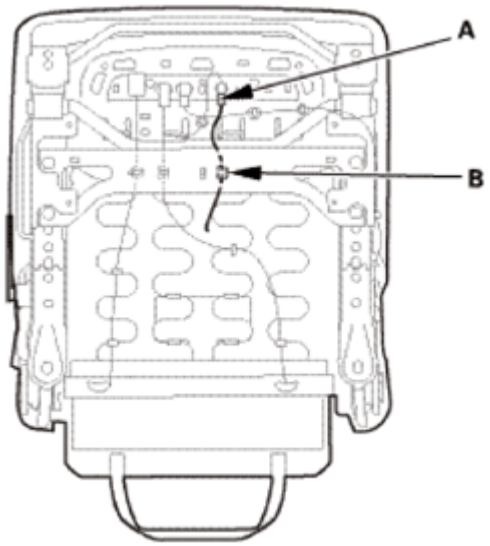

Fig. 227: Identifying Front Seat Connectors And Clips (For KX)
Courtesy of AMERICAN HONDA MOTOR CO., INC.

5. Release the hook strips (A) from both sides of the seat cushion frame.
6. Detach the clip (B) from the seat cushion frame.

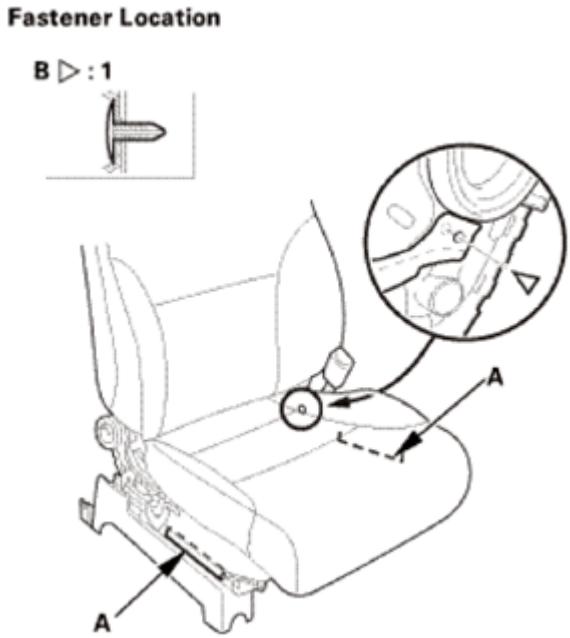

Fig. 228: Identifying Front Seat Cushion Hook Strips And Clips (Power Seat)
Courtesy of AMERICAN HONDA MOTOR CO., INC.

7. Release the hook strips (A) from under the seat cushion.

GETtheMANUALS.org

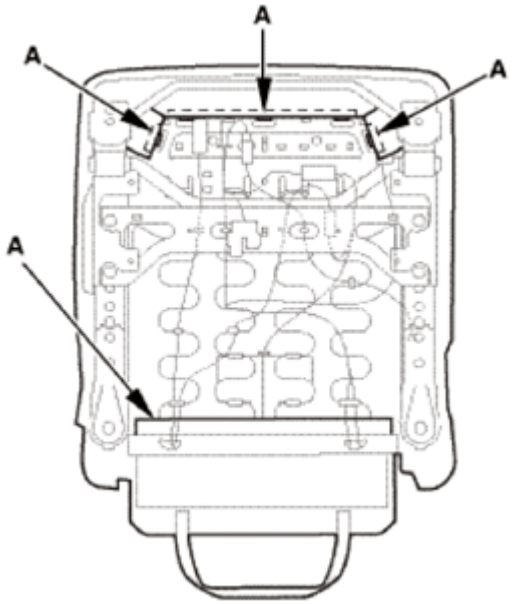

Fig. 229: Identifying Hook Strips Under Seat Cushion (Power Seat)
Courtesy of AMERICAN HONDA MOTOR CO., INC.

8. Remove the seat cushion cover/pad (A) from the seat frame (B).

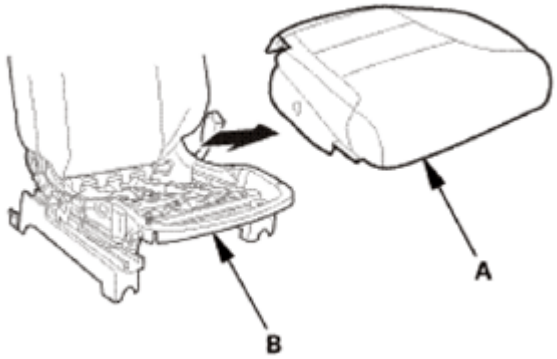

Fig. 230: Removing Seat Cushion Cover/Pad From Seat Frame
Courtesy of AMERICAN HONDA MOTOR CO., INC.

28. Front Seat-Back - Passenger's Side
    1. Detach the connector clips (A).
    2. Detach the harness clips (B).
    3. Pry up the hooks (C) of the harness holders (D), then release them from the seat cushion frame springs (E).
    4. Except KX: Disconnect the connectors (F).

    Except KX - With Seat Heater

GETtheMANUALS.org

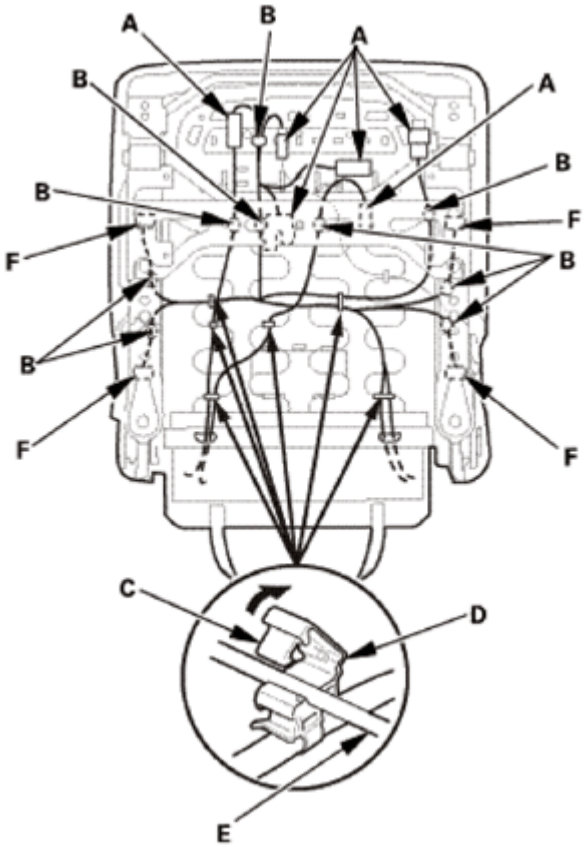

Fig. 231: Removing Seat Cushion Frame Springs Holder (Except KX - With Seat Heater)
Courtesy of AMERICAN HONDA MOTOR CO., INC.

Except KX - Without Seat Heater

GETtheMANUALS.org

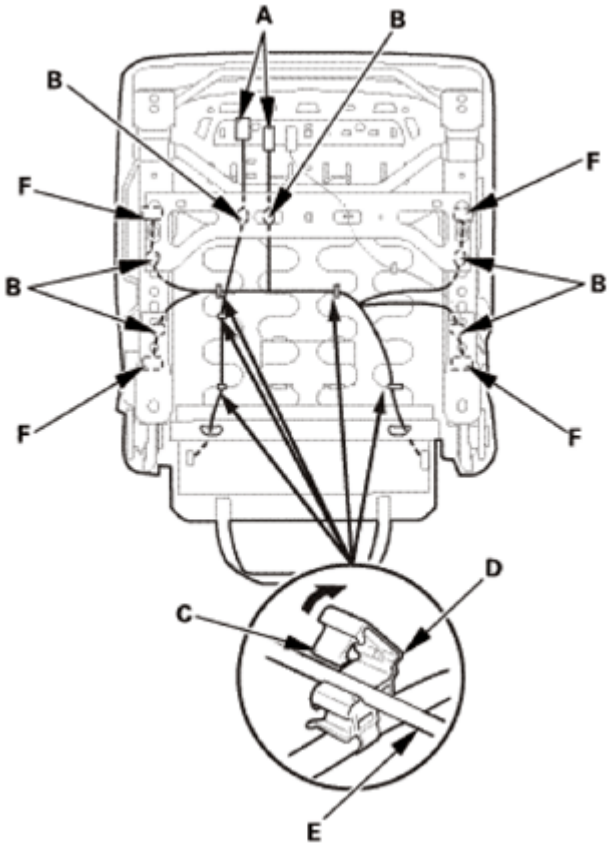

Fig. 232: Removing Seat Cushion Frame Springs Holder (Except KX - Without Seat Heater)
Courtesy of AMERICAN HONDA MOTOR CO., INC.

KX

GETtheMANUALS.org

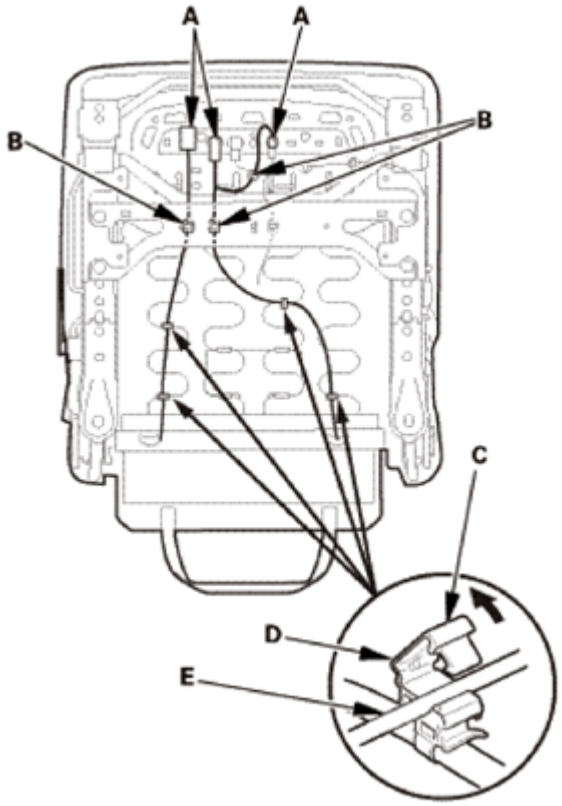

Fig. 233: Removing Seat Cushion Frame Springs Holder (For KX)
Courtesy of AMERICAN HONDA MOTOR CO., INC.

5. Release the hook strip (A).
6. Unzip the seat-back cover (B).

GETtheMANUALS.org

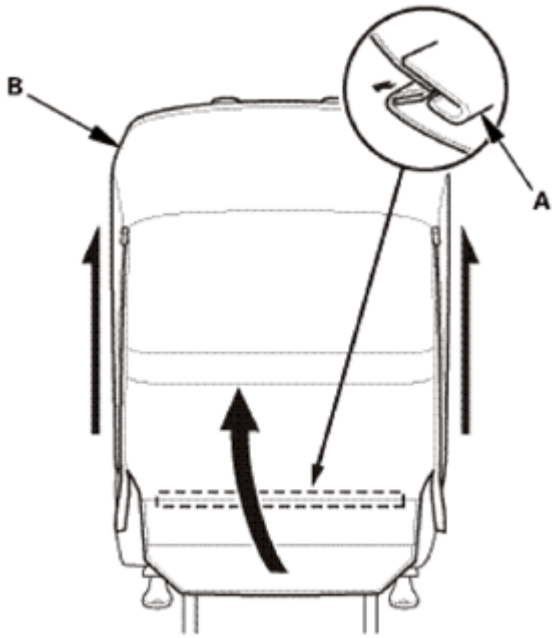

Fig. 234: Removing Seat-Back Cover
Courtesy of AMERICAN HONDA MOTOR CO., INC.

7. Release the hook strips (A), and loosen the seat-back cover (B).

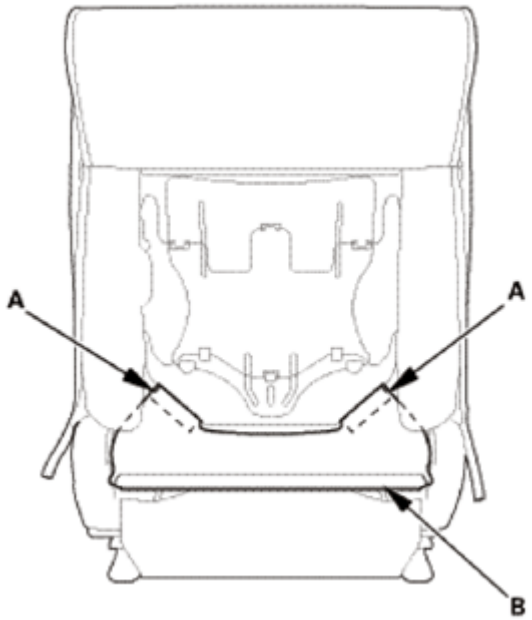

Fig. 235: Identifying Seat-Back Cover Hook Strips
Courtesy of AMERICAN HONDA MOTOR CO., INC.

8. Detach the harness clips (A).
9. Pull out the harnesses (B) through the holes (C) in the seat-back cover (D).

GETtheMANUALS.org

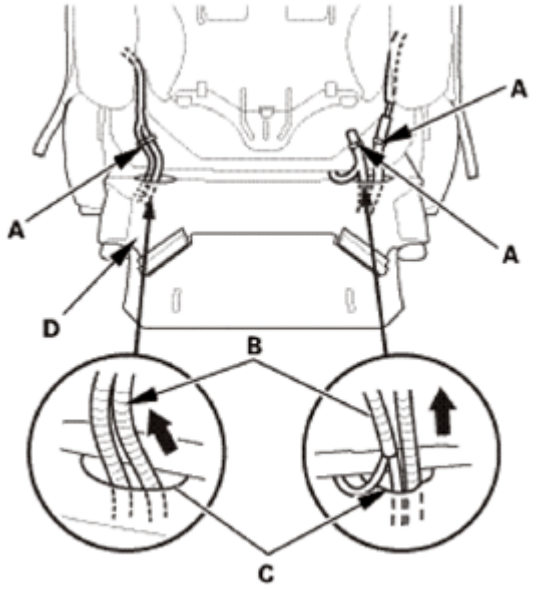

Fig. 236: Removing Harnesses Through Holes From Seat-Back Cover
Courtesy of AMERICAN HONDA MOTOR CO., INC.

10. Release airbag attachment wires A, B from the seat-back frame (C).

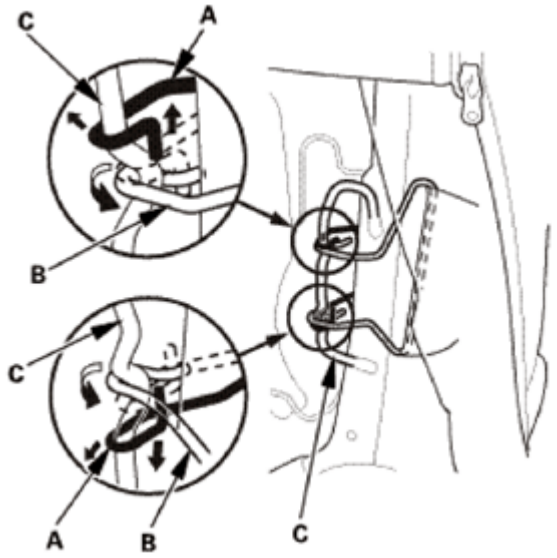

Fig. 237: Releasing Airbag Attachment Wires From Seat-Back Frame
Courtesy of AMERICAN HONDA MOTOR CO., INC.

11. Remove the screw (A), and release the hooks (B), then remove the cover (C) and detach the harness clip (D).

GETtheMANUALS.org

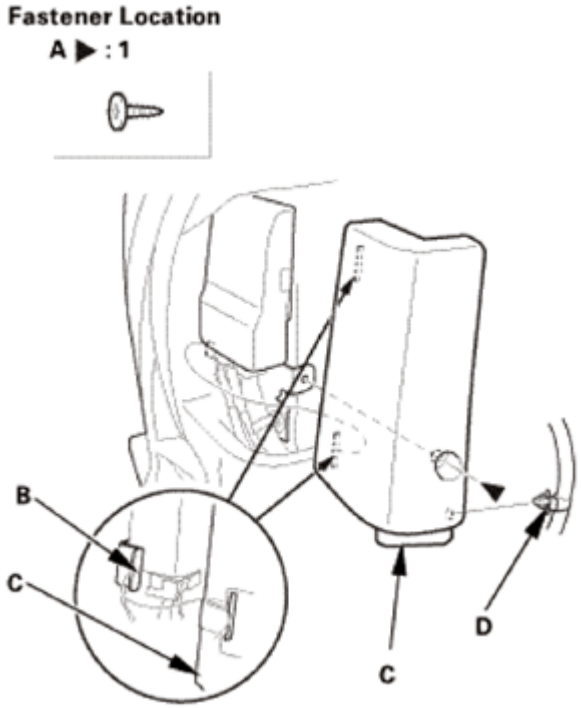

Fig. 238: Identifying Airbag Cover, Hooks, Clips And Screws
Courtesy of AMERICAN HONDA MOTOR CO., INC.

12. Disconnect the connectors (A) and detach the harness clips (B) from the ODS unit (USA and Canada models) or OPDS unit (Mexico models) (C).

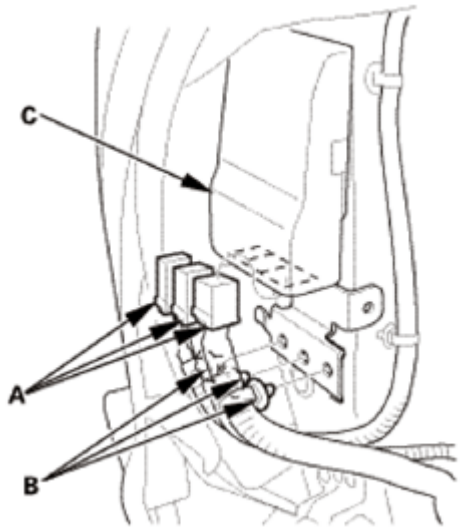

Fig. 239: Identifying ODS/OPDS Unit Connectors And Clips
Courtesy of AMERICAN HONDA MOTOR CO., INC.

13. Release the hook strips (A) from the seat-back frame (B).
14. Detach the harness clips (C).

GETtheMANUALS.org

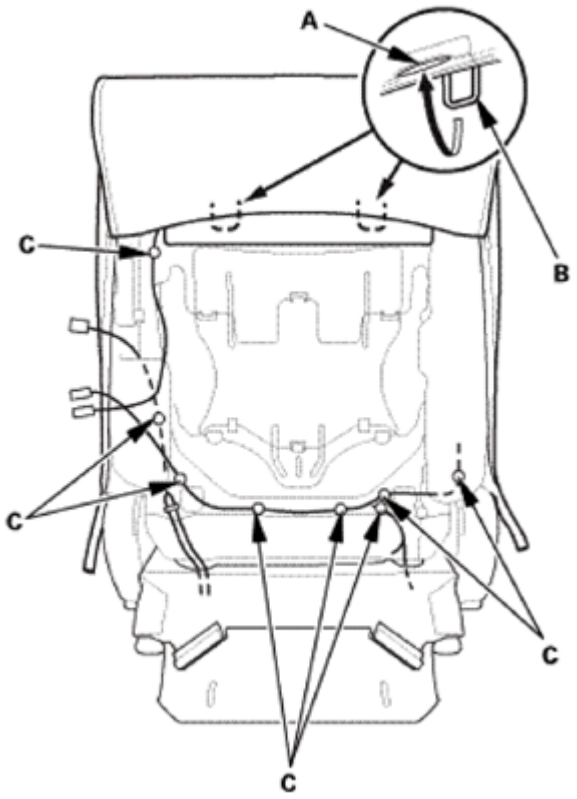

Fig. 240: Releasing Hook Strips From Seat-Back Frame
Courtesy of AMERICAN HONDA MOTOR CO., INC.

29. Head Restraint Guide - Passenger's Side
    1. Pinch the tabs (A) on the end of the head restraint guides (B), and remove the guides from the seat-back.

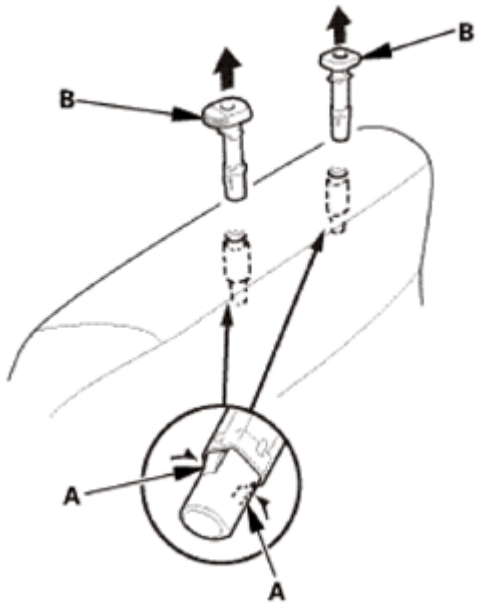

GETtheMANUALS.org

Fig. 241: Removing Guides From Seat-Back
Courtesy of AMERICAN HONDA MOTOR CO., INC.

30. Front Seat-Back Cover/Pad - Passenger's Side
    1. Remove the seat-back cover/pad (A) from the seat-back frame (B).

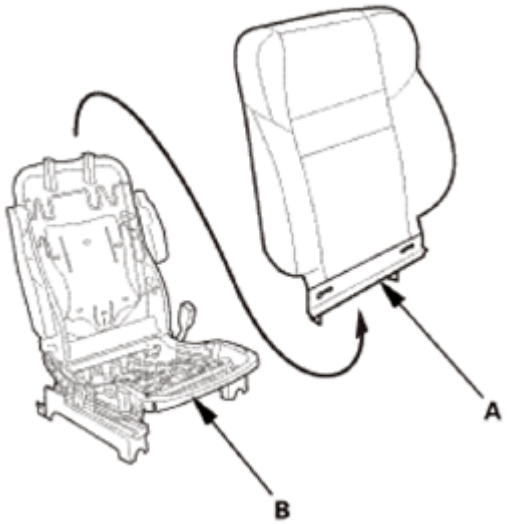

Fig. 242: Removing Seat-Back Cover/Pad From Seat-Back Frame
Courtesy of AMERICAN HONDA MOTOR CO., INC.

31. Side Airbag
    1. Remove the nuts and detach the harness clip (A), then remove the side airbag (B).

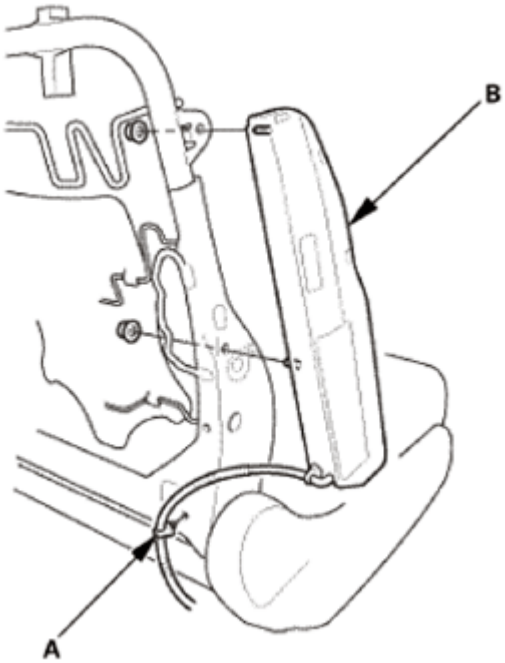

GETtheMANUALS.org

Fig. 243: Identifying Side Airbag And Harness Clip
Courtesy of AMERICAN HONDA MOTOR CO., INC.

32. ODS Unit (For some models)
    1. Remove the ODS unit (A).

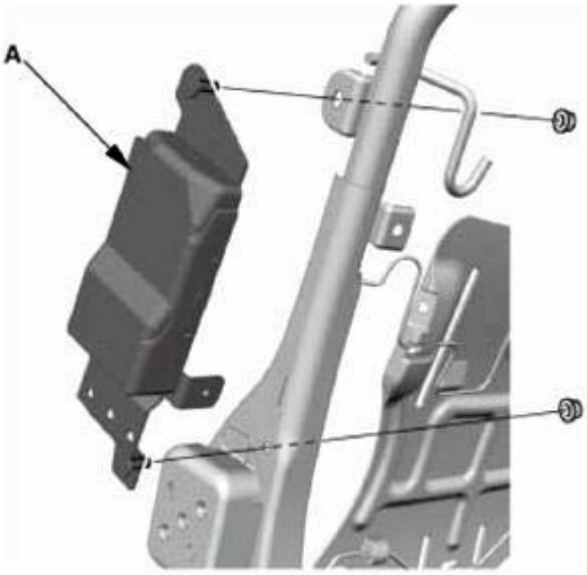

Fig. 244: Identifying ODS Unit
Courtesy of AMERICAN HONDA MOTOR CO., INC.

33. OPDS Unit (For some models)
    1. Remove the OPDS unit (A).

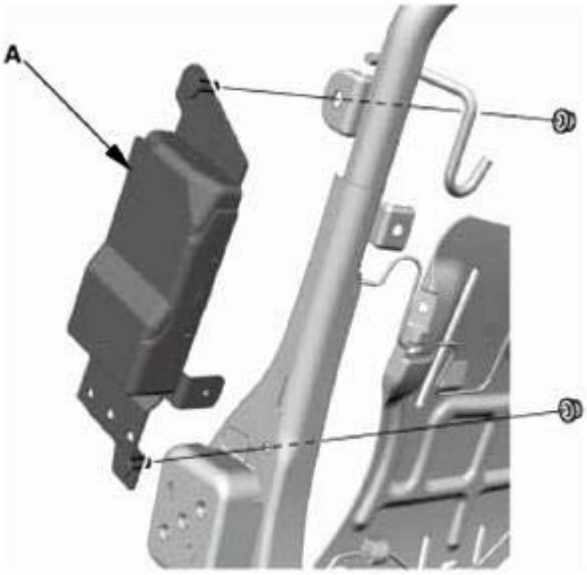

Fig. 245: Identifying OPDS Unit

GETtheMANUALS.org

Courtesy of AMERICAN HONDA MOTOR CO., INC.

34. Front Seat Belt Buckle - Passenger's Side
    1. Detach the connector clip (A) and the harness clip(s) (B) from the under seat cushion.
    2. Except KX: Pry up the hook (C) of the harness holder (D), then release them from the seat cushion frame spring (E).

Except KX

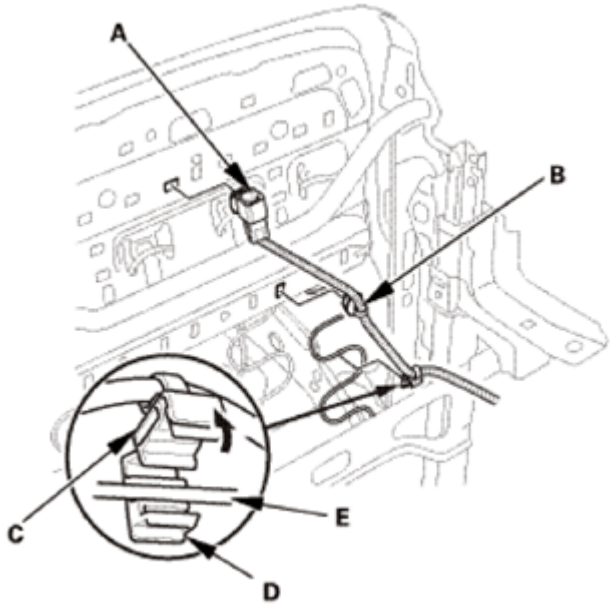

Fig. 246: Releasing Holder From Seat Cushion Frame Spring (Except KX)
Courtesy of AMERICAN HONDA MOTOR CO., INC.

KX

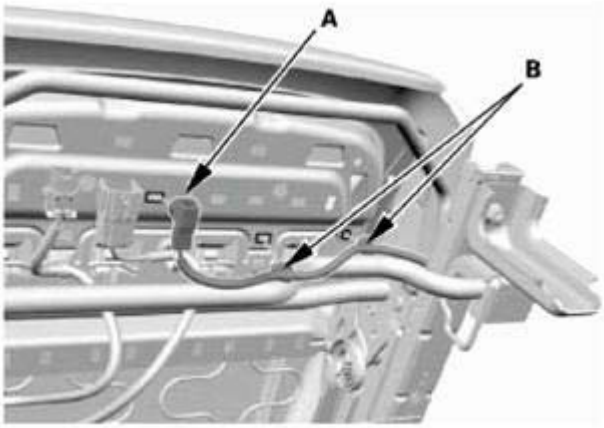

Fig. 247: Identifying Front Seat Belt Buckle Connector And Harness Clip (For KX)
Courtesy of AMERICAN HONDA MOTOR CO., INC.

GETtheMANUALS.org

3. Remove the center anchor bolt (A), and detach the harness clip(s) (B), then remove the front seat belt buckle (C).

Except KX

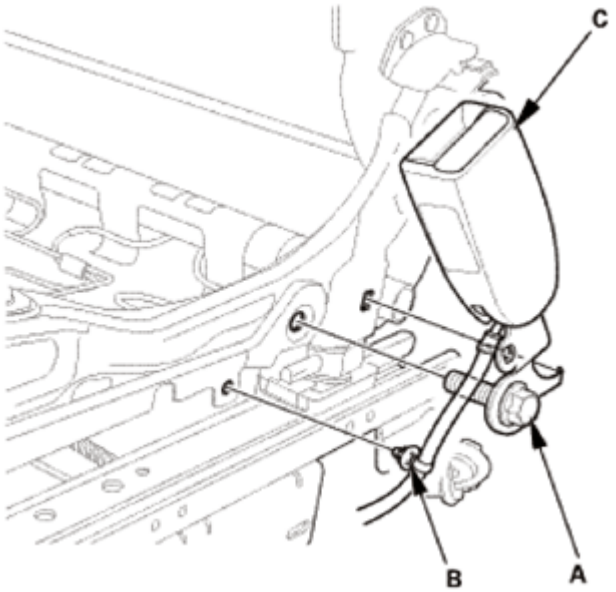

Fig. 248: Identifying Front Seat Belt Buckle, Anchor Bolt And Clip (Except KX)
Courtesy of AMERICAN HONDA MOTOR CO., INC.

KX

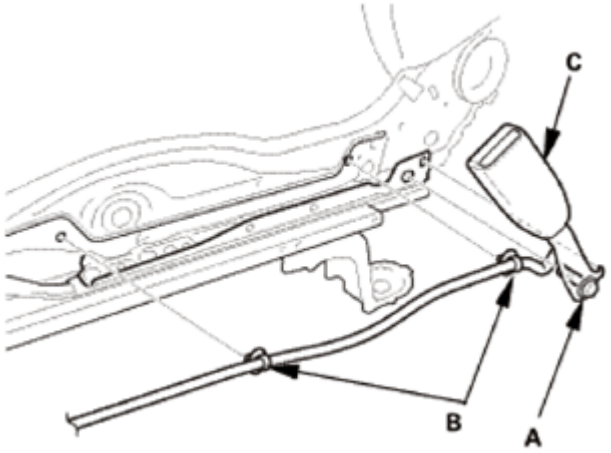

Fig. 249: Identifying Front Seat Belt Buckle, Anchor Bolt And Clip (For KX)
Courtesy of AMERICAN HONDA MOTOR CO., INC.

35. Front Seat Frame - Passenger's Side
    1. Detach the hook(s) (A) and the clip (B), then remove the front foot covers (C).

GETtheMANUALS.org

Front Side

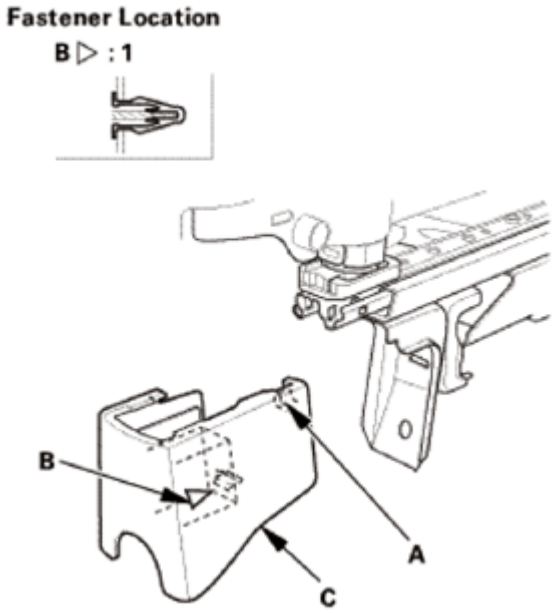

Fig. 250: Identifying Front Foot Cover, Hooks And Clips (1 Of 2)
Courtesy of AMERICAN HONDA MOTOR CO., INC.

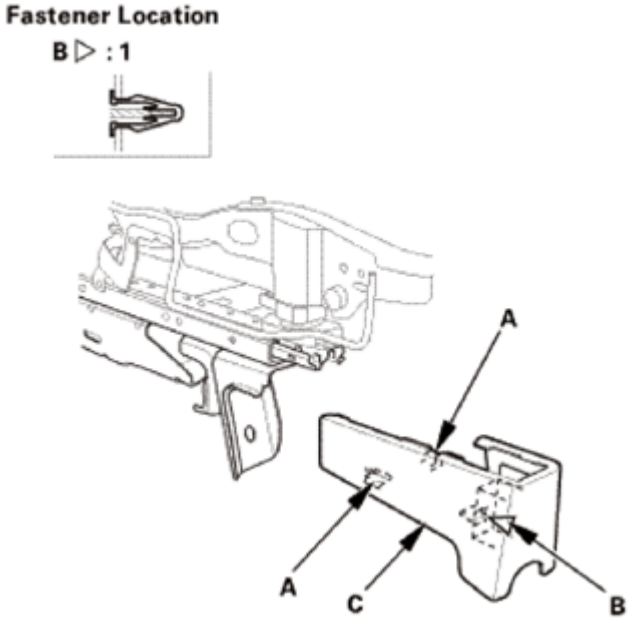

Fig. 251: Identifying Front Foot Cover, Hooks And Clips (2 Of 2)
Courtesy of AMERICAN HONDA MOTOR CO., INC.

2. Detach the hooks (A), then remove the rear raiser covers (B).

Rear Side

GETtheMANUALS.org

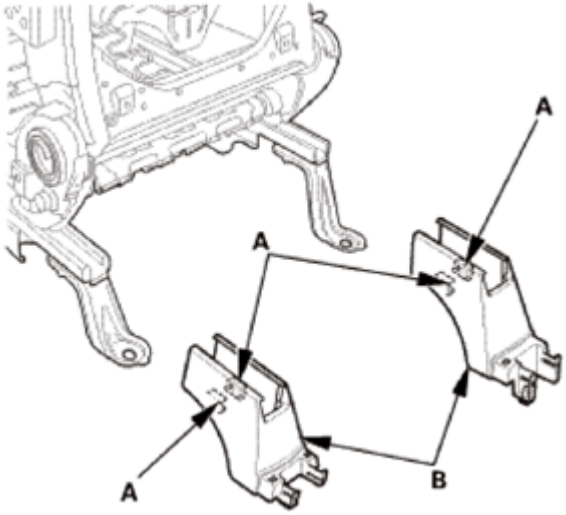

Fig. 252: Identifying Rear Raiser Covers And Hooks (Rear Side)
Courtesy of AMERICAN HONDA MOTOR CO., INC.

3. Remove the hooks (A), then remove the outer recline inner cover (B) and the inner recline inner cover (C).

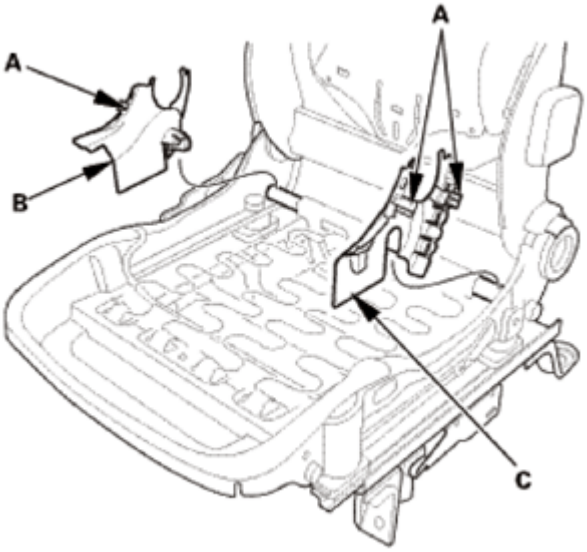

Fig. 253: Identifying Inner And Outer Recline Inner Cover And Hooks
Courtesy of AMERICAN HONDA MOTOR CO., INC.

INSTALLATION

SRS components are located in this area. Review the SRS COMPONENT LOCATIONS and the PRECAUTIONS AND PROCEDURES before doing repairs or service .

NOTE: Steps 1-16 show installing the passenger's side, steps 17-35 show installing the

GETtheMANUALS.org

driver's side.

1. Front Seat Frame - Passenger's Side
    1. Install the outer recline inner cover (A) and the inner recline inner cover (B) to the seat frame (C).

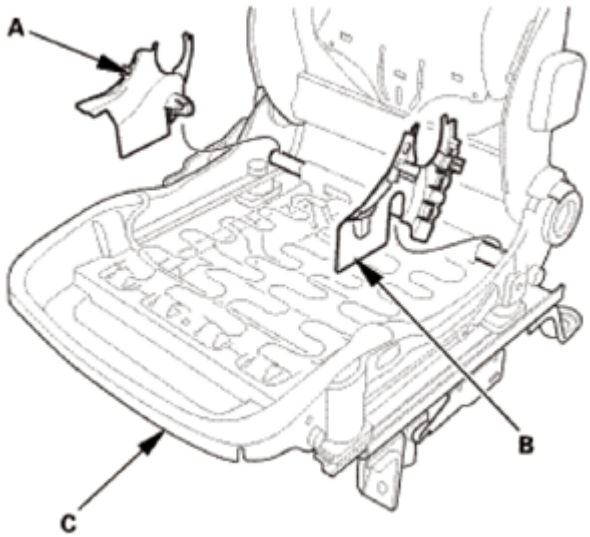

Fig. 254: Identifying Inner And Outer Recline Inner Cover And Seat Frame
Courtesy of AMERICAN HONDA MOTOR CO., INC.

2. Install the rear raiser covers (A). Make sure the hooks (B) snap into place securely.

Rear Side

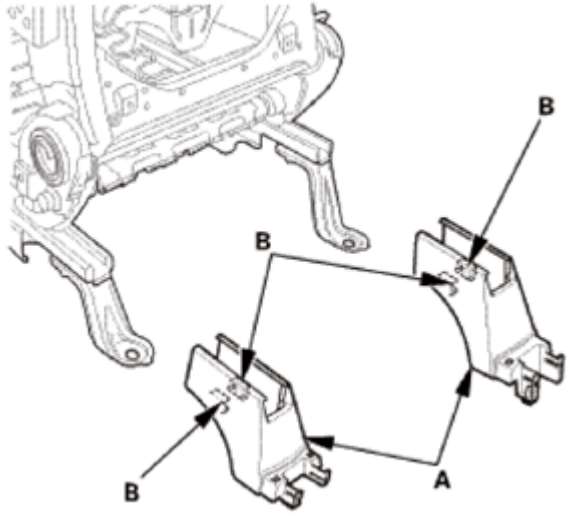

Fig. 255: Identifying Rear Raiser Covers And Hooks (Rear Side)
Courtesy of AMERICAN HONDA MOTOR CO., INC.

GETtheMANUALS.org

3. Install the front foot covers (A). Make sure the hook(s) (B) and the clip (C) snap into place securely.

Front Side

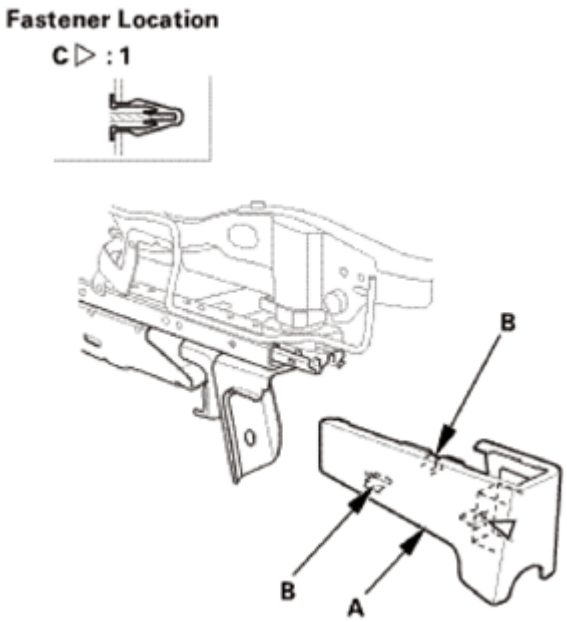

Fig. 256: Identifying Front Foot Covers, Hooks And Clips (Front Side; 1 Of 2)
Courtesy of AMERICAN HONDA MOTOR CO., INC.

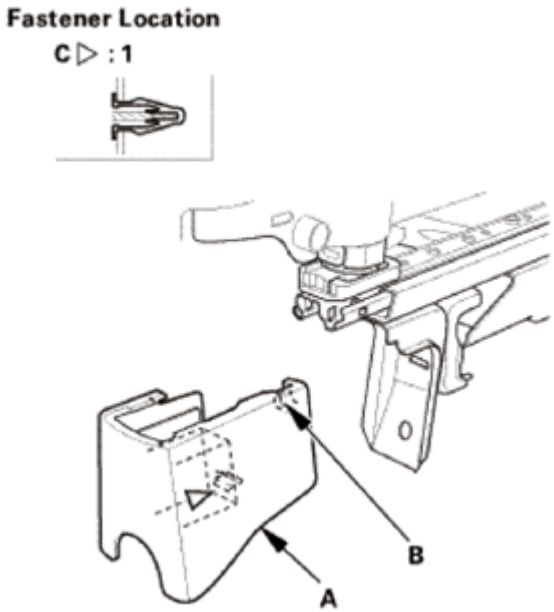

Fig. 257: Identifying Front Foot Covers, Hooks And Clips (Front Side; 2 Of 2)
Courtesy of AMERICAN HONDA MOTOR CO., INC.

GETtheMANUALS.org

2. Front Seat Belt Buckle - Passenger's Side
    1. Assemble the washers and the collar on the center anchor bolt as shown.

NOTE:

- **Apply medium strength liquid thread lock to the center anchor bolt before reinstallation.**
- **Tighten the bolts by hand first, then tighten to the specified torque.**

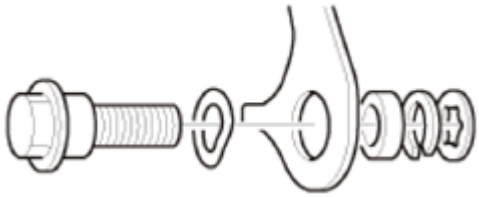

Fig. 258: Identifying Front Seat Belt Buckle Washer, Collar And Center Anchor Bolt
Courtesy of AMERICAN HONDA MOTOR CO., INC.

2. Install the seat belt buckle (A) and harness clip(s) (B), then tighten the center anchor bolt (C) to the specified torque.

Except KX

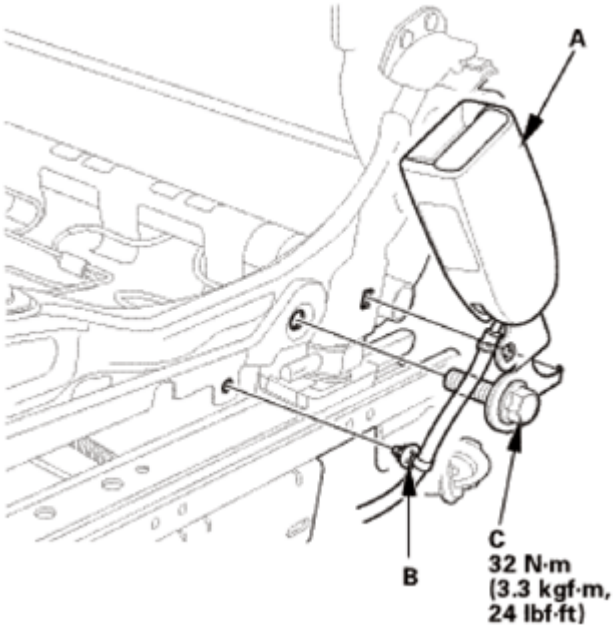

Fig. 259: Identifying Seat Belt Buckle, Center Anchor Bolt And Clip With Torque Specifications (Except KX)
Courtesy of AMERICAN HONDA MOTOR CO., INC.

KX

GETtheMANUALS.org

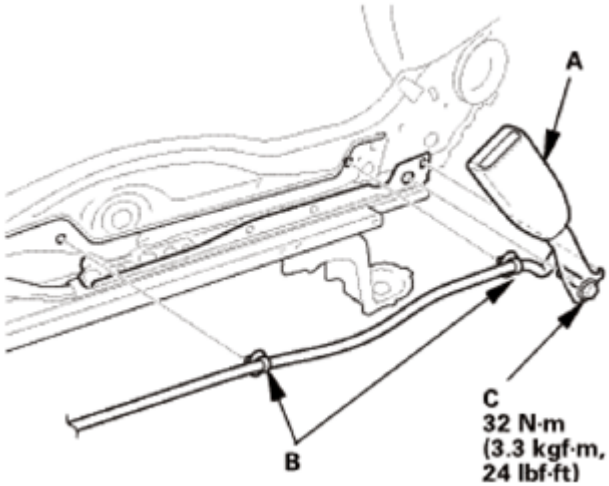

Fig. 260: Identifying Seat Belt Buckle, Center Anchor Bolt And Clip With Torque Specifications (For KX)
Courtesy of AMERICAN HONDA MOTOR CO., INC.

3. Install the connector clip (A) and the harness clip(s) (B).
4. Except KX: Install the harness holder (C) to the seat cushion frame spring (D).

Except KX

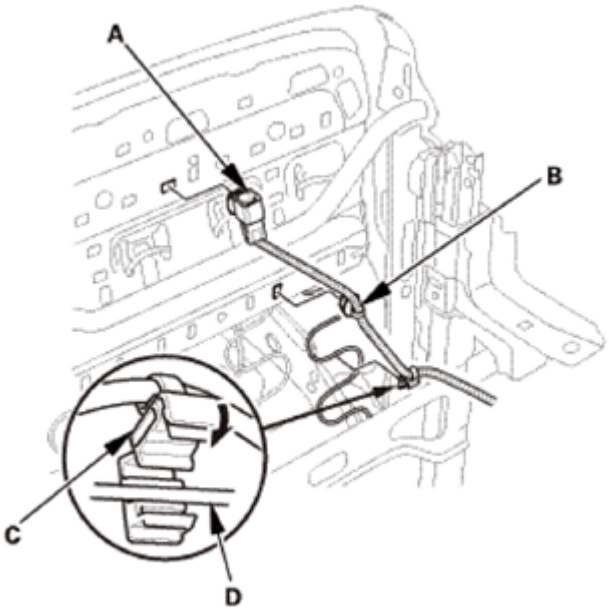

Fig. 261: Installing Harness Holder To Seat Cushion Frame Spring (Except KX)
Courtesy of AMERICAN HONDA MOTOR CO., INC.

KX

GETtheMANUALS.org

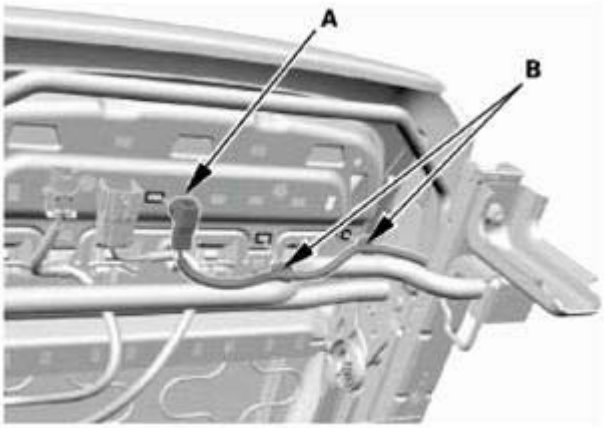

Fig. 262: Identifying Front Seat Belt Buckle Connector And Clip (For KX)
Courtesy of AMERICAN HONDA MOTOR CO., INC.

3. OPDS Unit (For some models)

NOTE:

- **Be sure to install the harness so that they are not pinched or interfering with other parts.**
- **Make sure that the seat-back cover/pad is installed properly. Improper installation may prevent proper deployment.**

1. Install the OPDS unit (A).

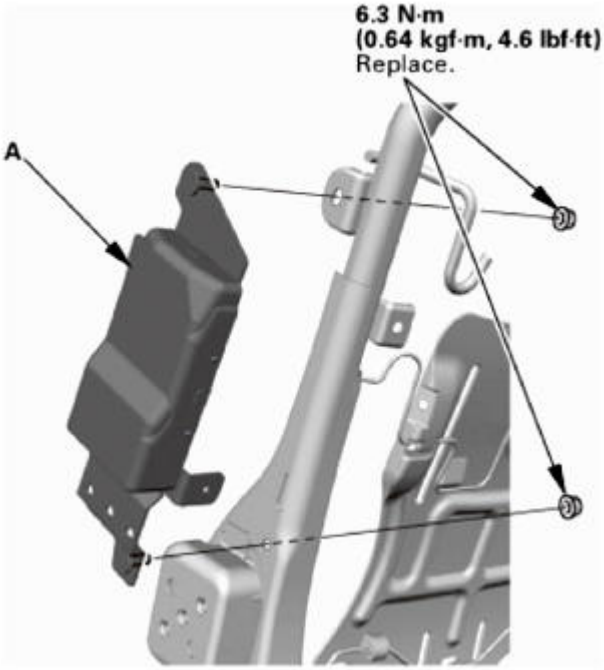

Fig. 263: Identifying OPDS Unit With Torque Specifications
Courtesy of AMERICAN HONDA MOTOR CO., INC.

GETtheMANUALS.org

4. ODS Unit (For some models)

NOTE:

- **Be sure to install the harness so that they are not pinched or interfering with other parts.**
- **Make sure that the seat-back cover/pad is installed properly. Improper installation may prevent proper deployment.**

1. Install the ODS unit (A).

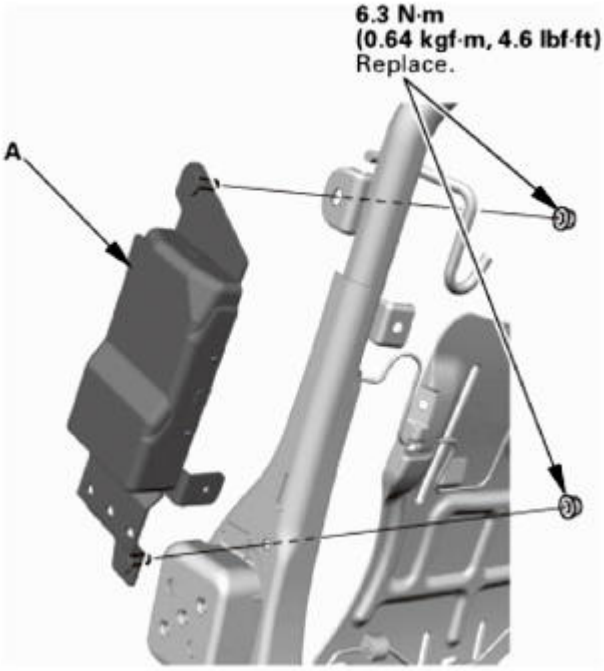

Fig. 264: Identifying OPDS Unit With Torque Specifications
Courtesy of AMERICAN HONDA MOTOR CO., INC.

5. Side Airbag

NOTE:

- **If the side airbag cover is secured with tape, remove the tape.**
- **Do not open the lid on the side airbag cover.**
- **Make sure that the seat-back cover/pad is installed properly. Improper installation may prevent proper deployment.**
- **Be sure to install the harness so that they are not pinched or interfering with other parts.**

1. Install the side airbag (A), then tighten the new mounting nuts.
2. Install the harness clip (B).

GETtheMANUALS.org

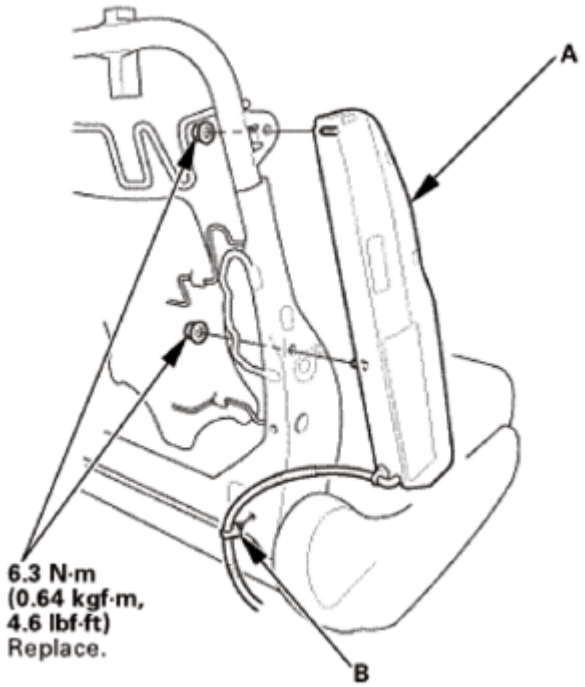

Fig. 265: Identifying Side Airbag With Torque Specifications
Courtesy of AMERICAN HONDA MOTOR CO., INC.

6. Front Seat-Back Cover/Pad - Passenger's Side
    1. Install the seat-back cover/pad (A) on the seat-back frame (B).

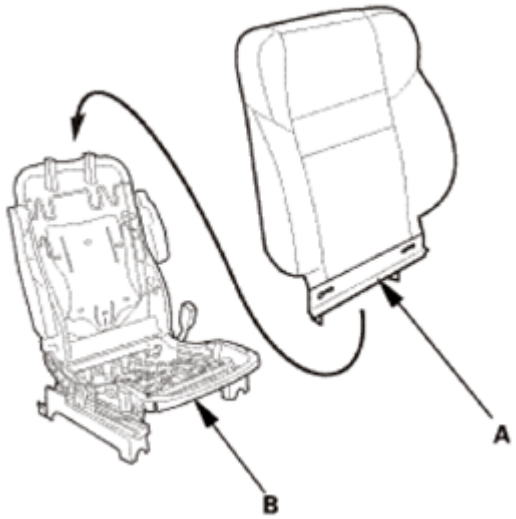

Fig. 266: Installing Seat-Back Cover/Pad On Seat-Back Frame
Courtesy of AMERICAN HONDA MOTOR CO., INC.

7. Head Restraint Guide - Passenger's Side
    1. Install the head restraint guides (A).

GETtheMANUALS.org

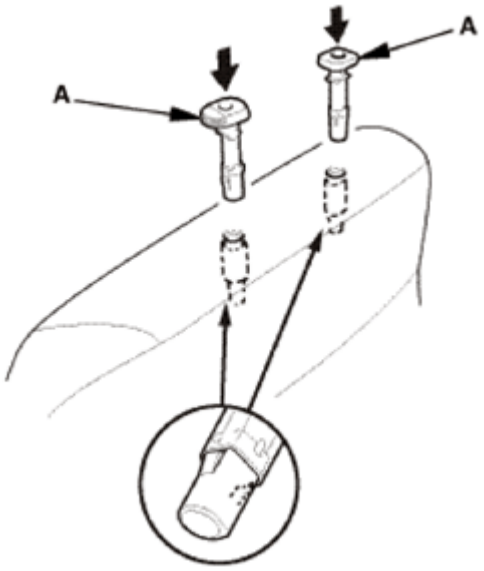

Fig. 267: Installing Head Restraint Guides
Courtesy of AMERICAN HONDA MOTOR CO., INC.

8. Front Seat-Back - Passenger's Side
    1. Install the hook strips (A) to the seat-back frame (B).
    2. Install the harness clips (C).

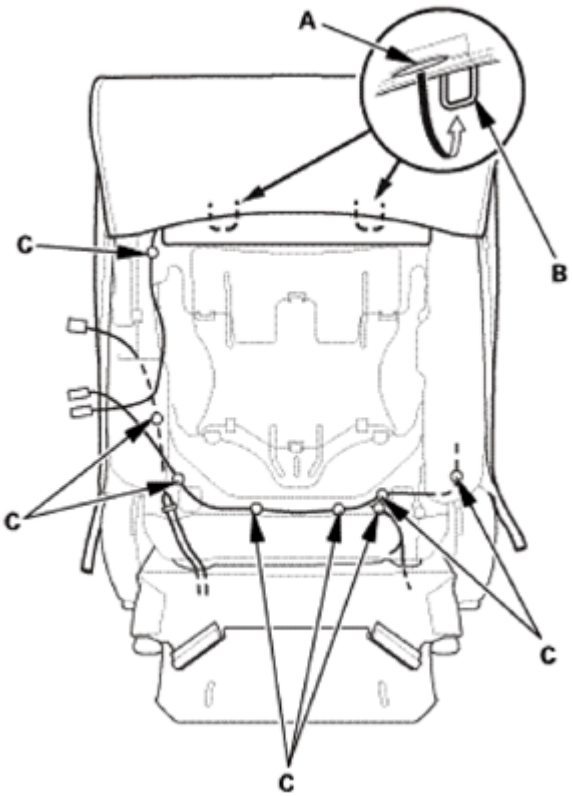

GETtheMANUALS.org

Fig. 268: Installing Hook Strips To Seat-Back Frame
Courtesy of AMERICAN HONDA MOTOR CO., INC.

3. Connect the connectors (A) and install the harness clips (B) to the ODS unit (USA and Canada models) or OPDS unit (Mexico models) (C).

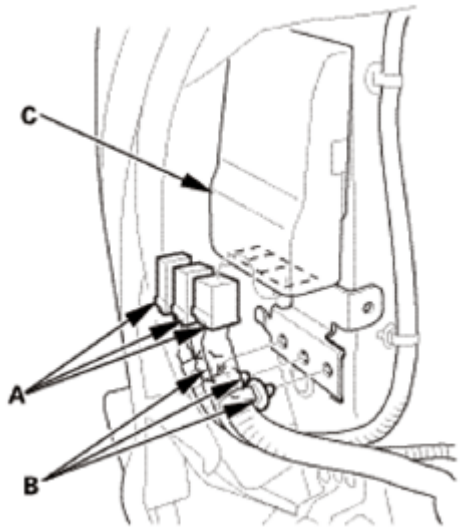

Fig. 269: Identifying ODS/OPDS Unit, Connectors And Clips
Courtesy of AMERICAN HONDA MOTOR CO., INC.

4. Insert the hooks (A) and install the cover (B), then install the screw (C) and the harness clip (D).

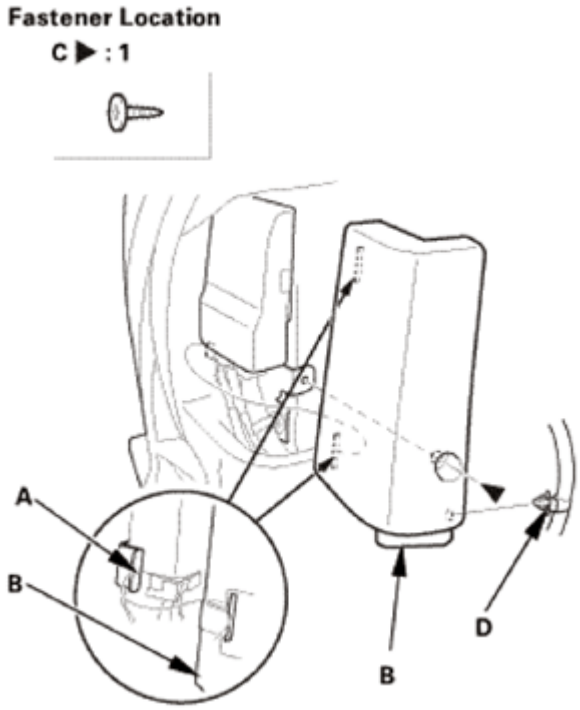

GETtheMANUALS.org

Fig. 270: Identifying Front Seat-Back Cover, Hooks, Clips And Screws
Courtesy of AMERICAN HONDA MOTOR CO., INC.

5. Install airbag attachment wires A, B to the seat-back frame (C).

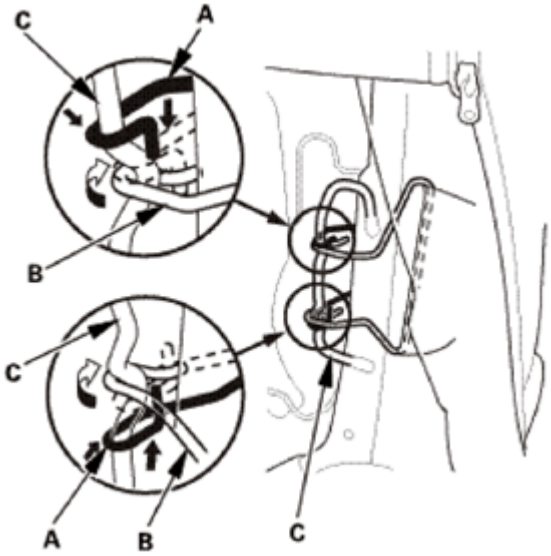

Fig. 271: Installing Airbag Attachment Wires To Seat-Back Frame
Courtesy of AMERICAN HONDA MOTOR CO., INC.

6. Install the harness clips (A).
7. Install the harnesses (B) through the holes (C) in the seat-back cover (D).

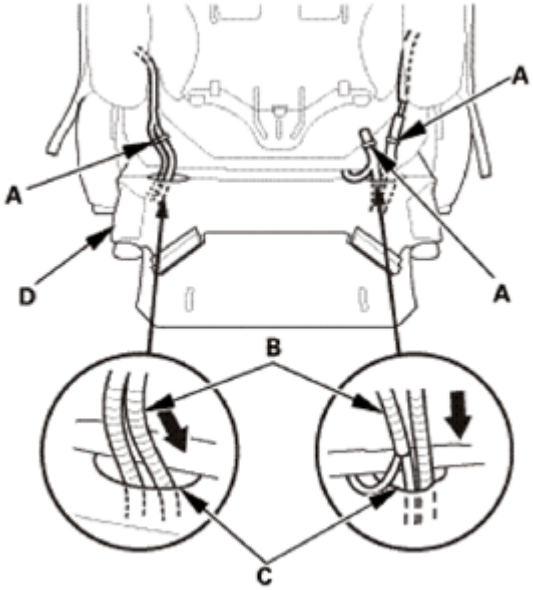

Fig. 272: Installing Harnesses Through Holes In Seat-Back Cover
Courtesy of AMERICAN HONDA MOTOR CO., INC.

GETtheMANUALS.org

8. Install the hook strips (A) to the seat-back frame.

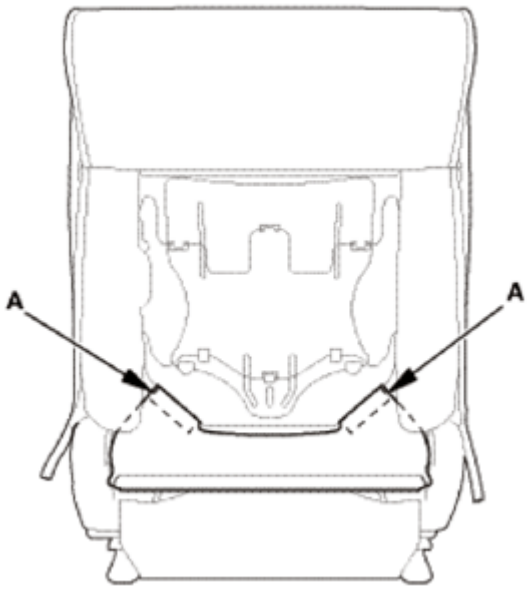

Fig. 273: Identifying Seat-Back Frame Hook Strips
Courtesy of AMERICAN HONDA MOTOR CO., INC.

9. Zip the seat-back cover (A).
10. Install the hook strip (B).

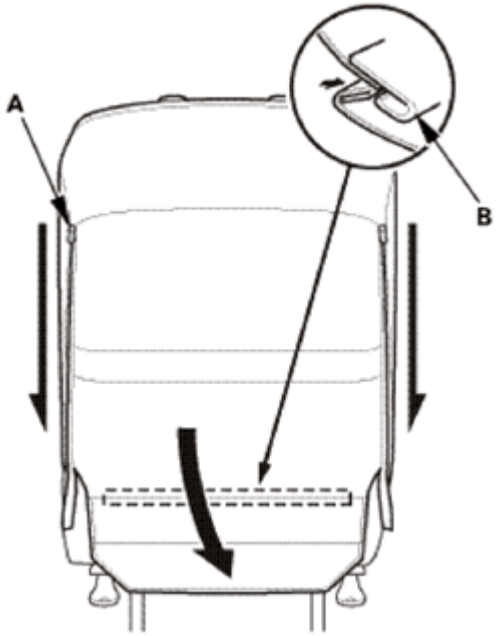

Fig. 274: Removing Seat Back Cover
Courtesy of AMERICAN HONDA MOTOR CO., INC.

GETtheMANUALS.org

11. Install the connector clips (A).
12. Install the harness clips (B).
13. Install the harness holders (C) to the seat cushion frame springs (D).
14. Except KX: Connect the connectors (E).

Except KX - With Seat Heater

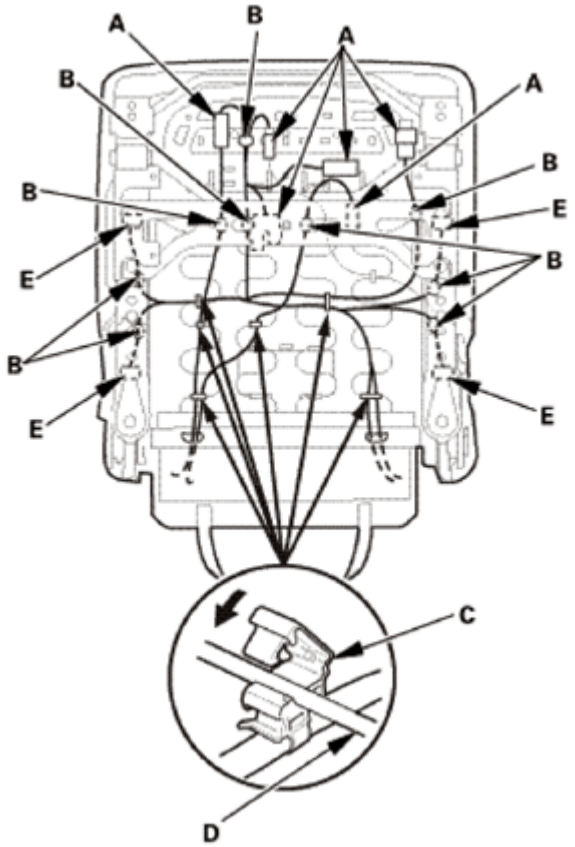

Fig. 275: Installing Harness Holder To Seat Cushion Frame Springs (Except KX - With Seat Heater)
Courtesy of AMERICAN HONDA MOTOR CO., INC.

Except KX - Without Seat Heater

GETtheMANUALS.org

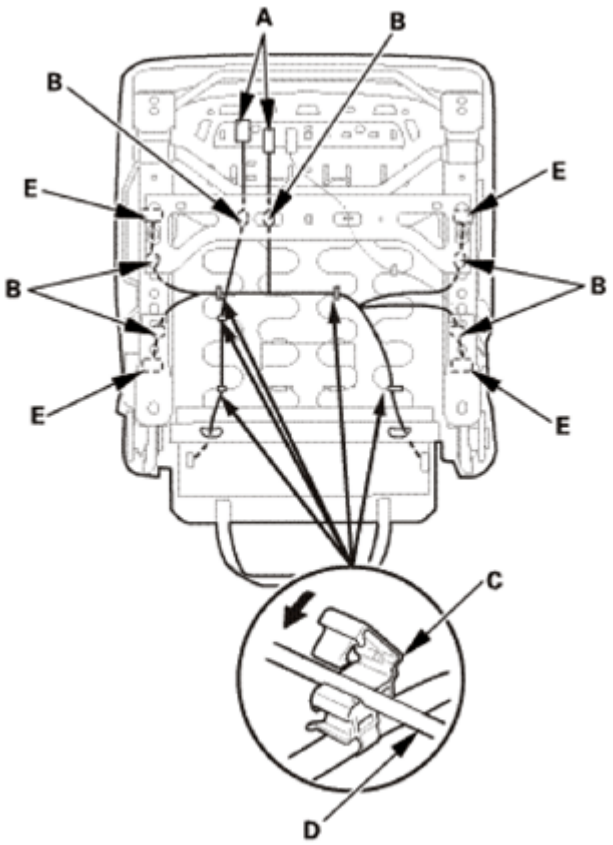

Fig. 276: Installing Harness Holder To Seat Cushion Frame Springs (Except KX - Without Seat Heater)
Courtesy of AMERICAN HONDA MOTOR CO., INC.

KX

GETtheMANUALS.org

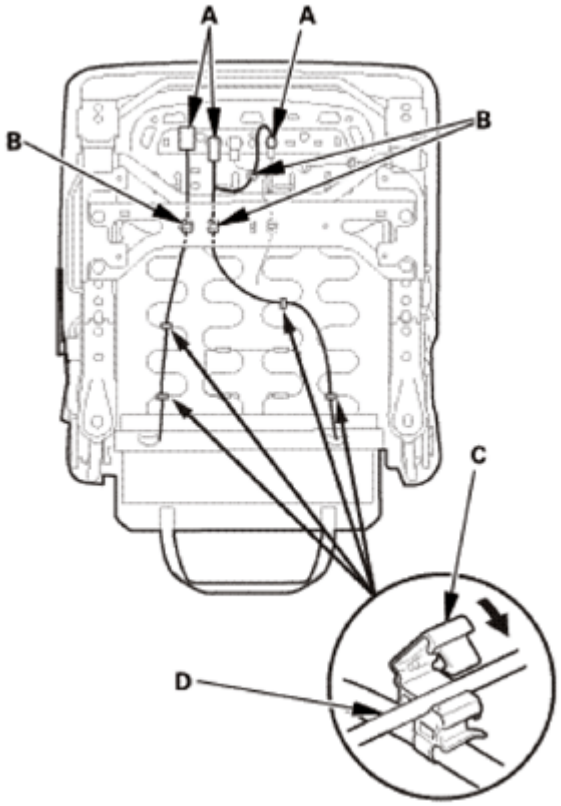

Fig. 277: Installing Harness Holder To Seat Cushion Frame Springs (For KX)
Courtesy of AMERICAN HONDA MOTOR CO., INC.

9. Front Seat Cushion - Passenger's Side
    1. Install the seat cushion cover/pad (A) on the seat frame (B).

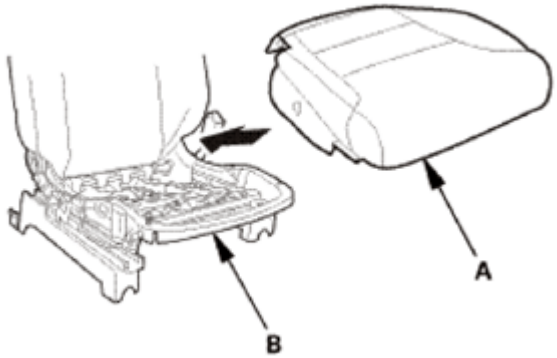

Fig. 278: Installing Seat Cushion Cover/Pad On Seat Frame
Courtesy of AMERICAN HONDA MOTOR CO., INC.

    2. Install the hook strips (A) to under the seat cushion.

GETtheMANUALS.org

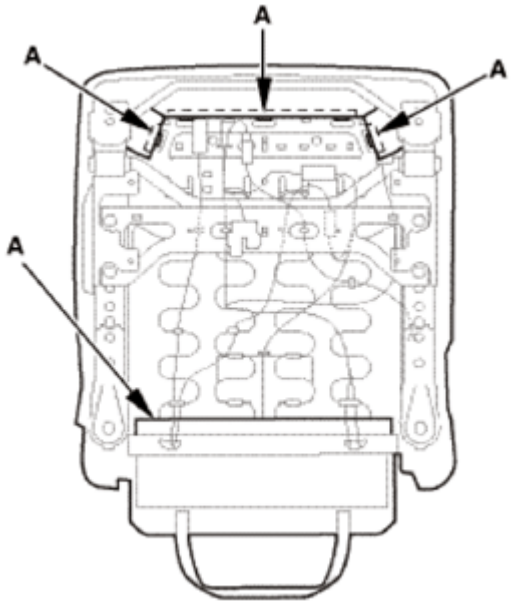

Fig. 279: Identifying Under Seat Cushion Hook Strips
Courtesy of AMERICAN HONDA MOTOR CO., INC.

3. Install the hook strips (A), then install the clip (B).

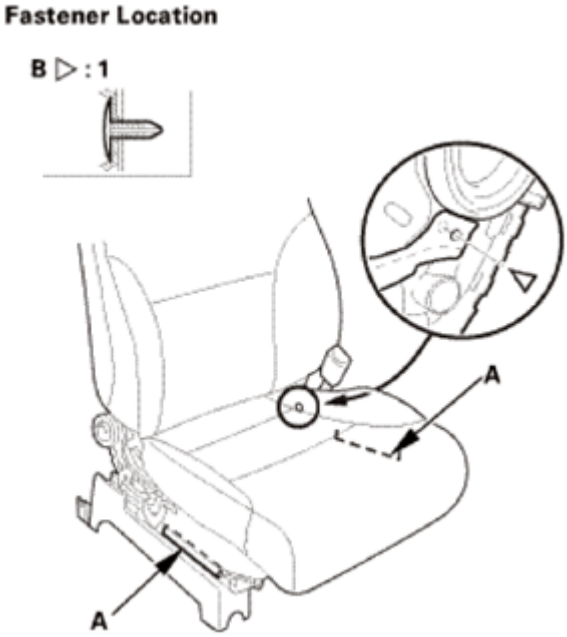

Fig. 280: Identifying Front Seat Cushion Hook Strips
Courtesy of AMERICAN HONDA MOTOR CO., INC.

4. With seat heater: Install the harness holder (A) to the seat cushion frame springs (B).
5. Install the harness clip (C).
6. Connect the connecter(s) (D).

GETtheMANUALS.org

Except KX - With Seat Heater

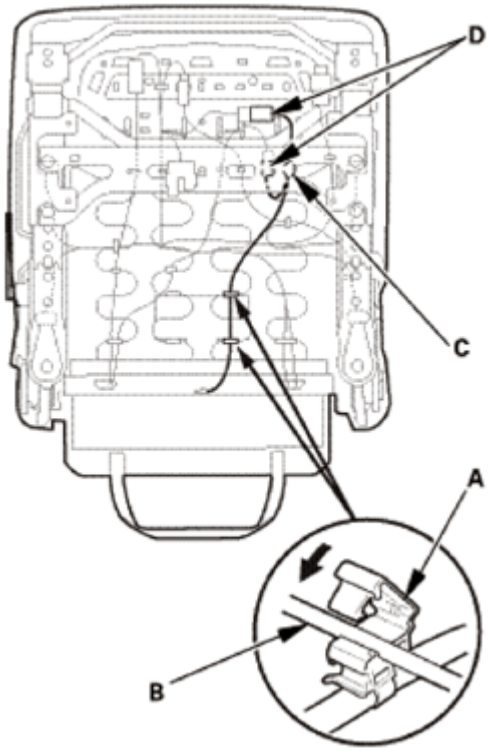

Fig. 281: Installing Harness Holder To Seat Cushion Frame Springs (Except KX)
Courtesy of AMERICAN HONDA MOTOR CO., INC.

KX

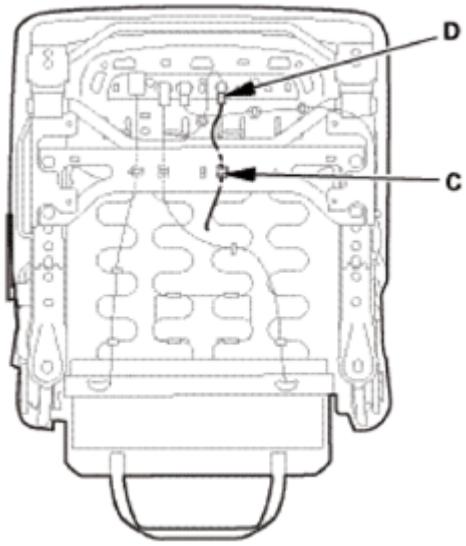

Fig. 282: Identifying Seat Cushion Frame Springs, Connector, Holder And Clips
Courtesy of AMERICAN HONDA MOTOR CO., INC.

GETtheMANUALS.org

7. Install the elastic strap (A) to the seat cushion frame springs (B).

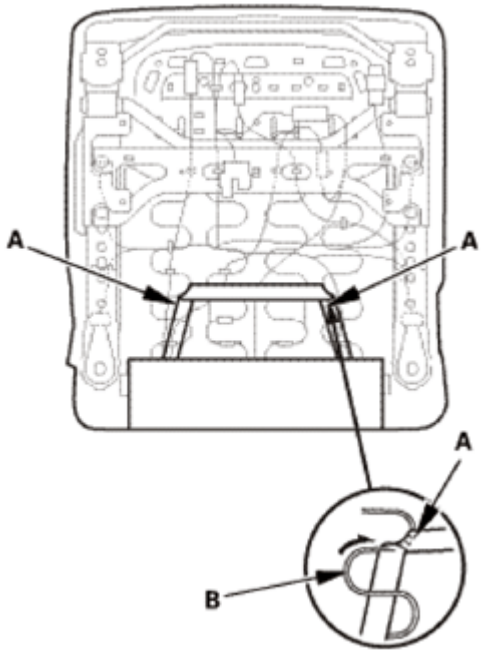

Fig. 283: Installing Elastic Strap To Seat Cushion Frame Springs
Courtesy of AMERICAN HONDA MOTOR CO., INC.

10. Front Seat Center Cover - Passenger's Side
    1. Install the center cover (A) to the recline inner cover (B). Make sure the tabs (C) snap into place securely.

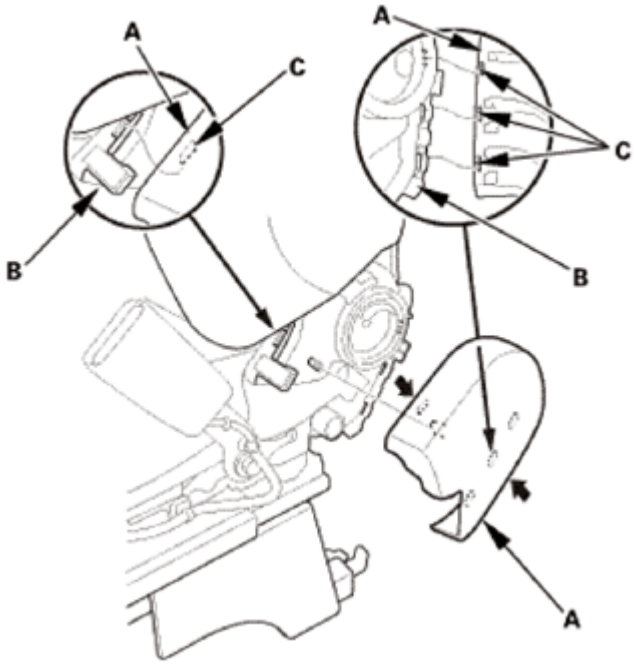

GETtheMANUALS.org

Fig. 284: Installing Center Cover To Recline Inner Cover
Courtesy of AMERICAN HONDA MOTOR CO., INC.

11. Front Seat Recline Cover - Passenger's Side
    1. Install the hook (A) and the clip (B) of the recline cover (C).
    2. Install the front hooks (D) to the recline inner cover (E).
    3. Install the rear hooks (F) of the recline cover to the recline inner cover.
    4. Install the recline knob (G) and the screw (H).

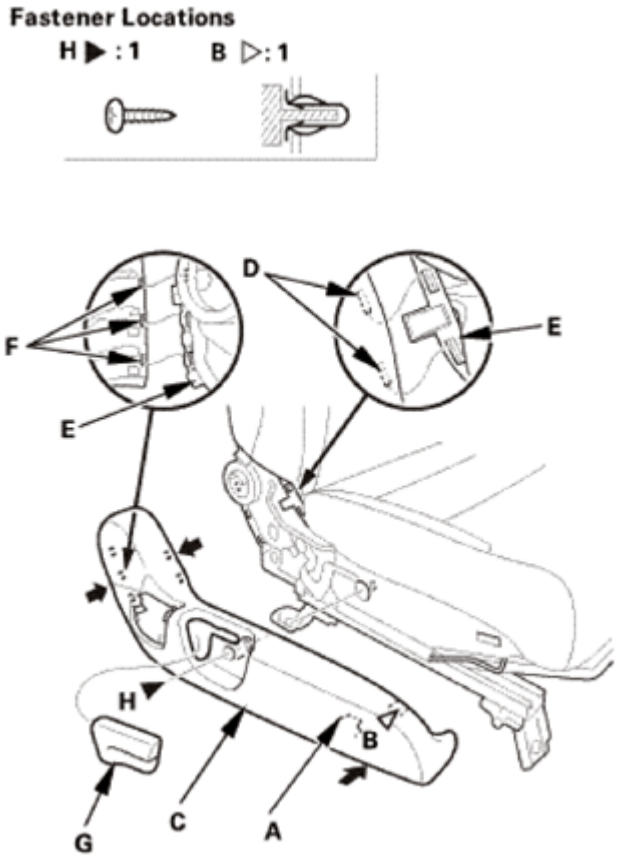

Fig. 285: Installing Front Seat Recline Cover
Courtesy of AMERICAN HONDA MOTOR CO., INC.

12. Front Seat Slide Lever - Passenger's Side
    1. Install the seat slide lever (A), and install both sides of tabs (B) to the front seat rail (C).

GETtheMANUALS.org

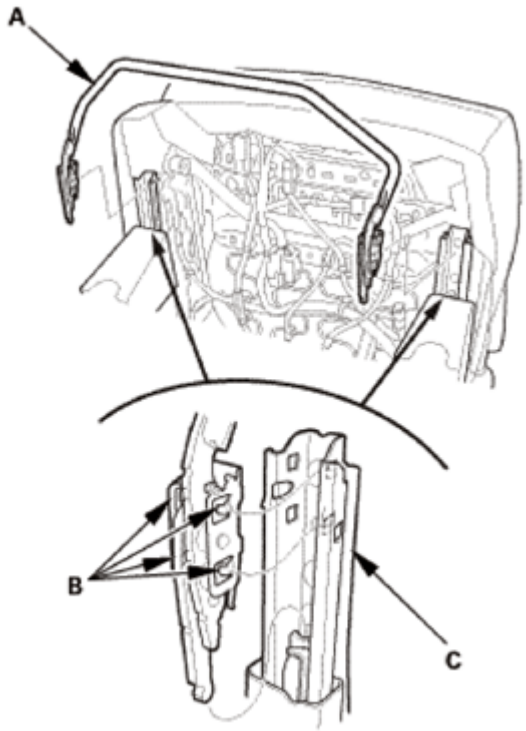

Fig. 286: Identifying Seat Slide Lever, Front Seat Rail And Tabs
Courtesy of AMERICAN HONDA MOTOR CO., INC.

2. Install both seat slide lever springs (A) to the front seat rail (B).
3. Set the seat slide lever springs through the hooks (C) of the seat rail.

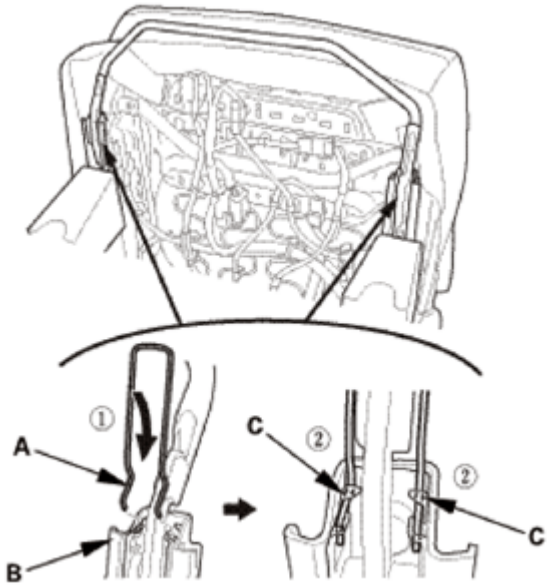

Fig. 287: Installing Seat Slide Lever Springs To Front Seat Rail
Courtesy of AMERICAN HONDA MOTOR CO., INC.

GETtheMANUALS.org

13. Front Seat Armrest - Passenger's Side
    1. Install the pins (A) to the seat-back.

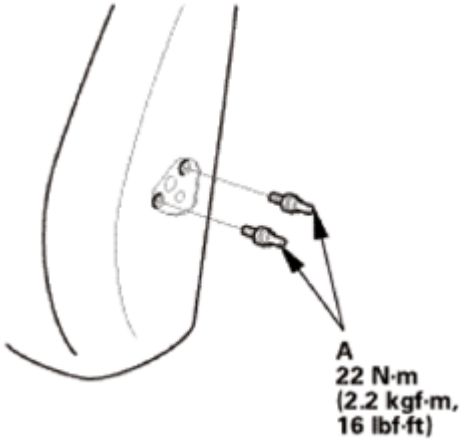

Fig. 288: Identifying Seat Back Pins With Torque Specifications
Courtesy of AMERICAN HONDA MOTOR CO., INC.

    2. Install the armrest (A), then install the washer (B), the bushing (C), and the center pin (D).
    3. Install the cap (E) to the armrest.

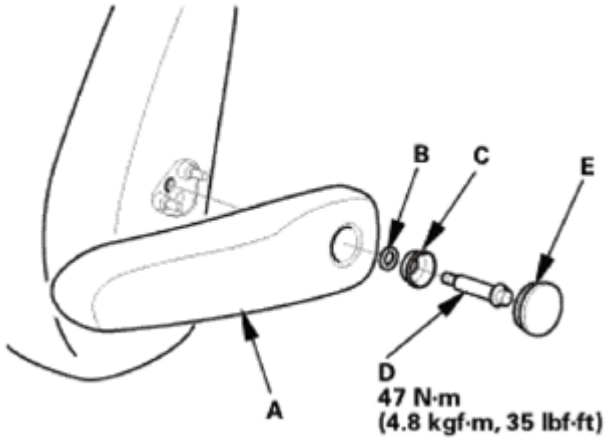

Fig. 289: Identifying Front Seat Armrest, Center Pin, Bushing, Washer And Cap With Torque Specifications
Courtesy of AMERICAN HONDA MOTOR CO., INC.

14. Front Seat Assembly - Passenger's Side
    1. Connect the connectors (A).
    2. Install the harness clip (B).

Without Subwoofer

GETtheMANUALS.org

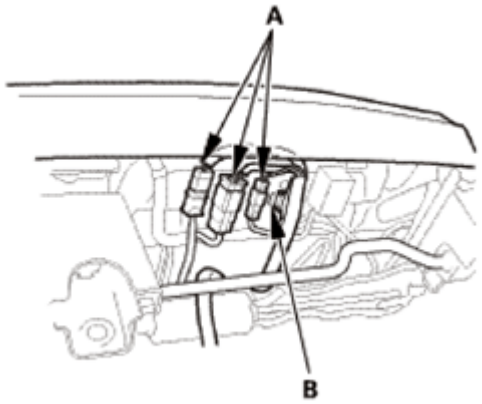

Fig. 290: Identifying Front Seat Connectors And Clips (Without Subwoofer)
Courtesy of AMERICAN HONDA MOTOR CO., INC.

With Subwoofer

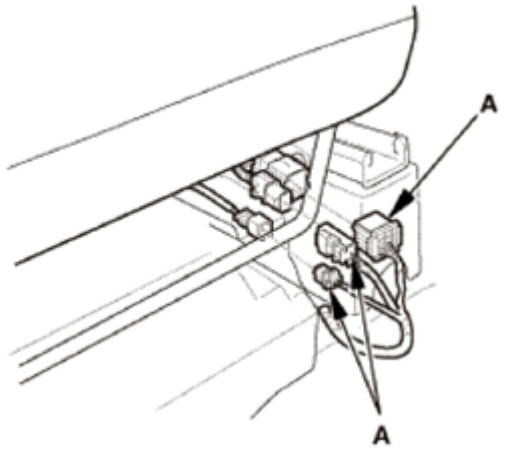

Fig. 291: Identifying Front Seat Connectors And Clips (With Subwoofer)
Courtesy of AMERICAN HONDA MOTOR CO., INC.

3. Install the seat mounting bolts (A).

NOTE:

- **Tighten the bolts by hand first, then tighten them to the specified torque.**
- **Tighten the seat mounting bolts to the specified torque in the sequence shown. Slide the seat all the way back and tighten bolts 1 and 2, then slide it forward and tighten bolts 3 and 4.**

Front Side

GETtheMANUALS.org

Fig. 292: Identifying Seat Mounting Bolts With Torque Specifications (Front Side)
Courtesy of AMERICAN HONDA MOTOR CO., INC.

Rear Side

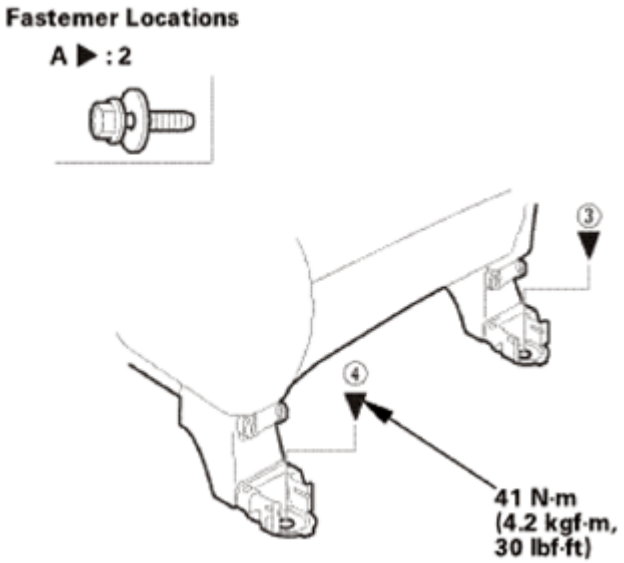

Fig. 293: Identifying Seat Mounting Bolts With Torque Specifications (Rear Side)
Courtesy of AMERICAN HONDA MOTOR CO., INC.

4. Install rear inner seat track end cover (A) and the rear outer seat track end cover (B). Make sure the hooks (C) snap into place securely.

GETtheMANUALS.org

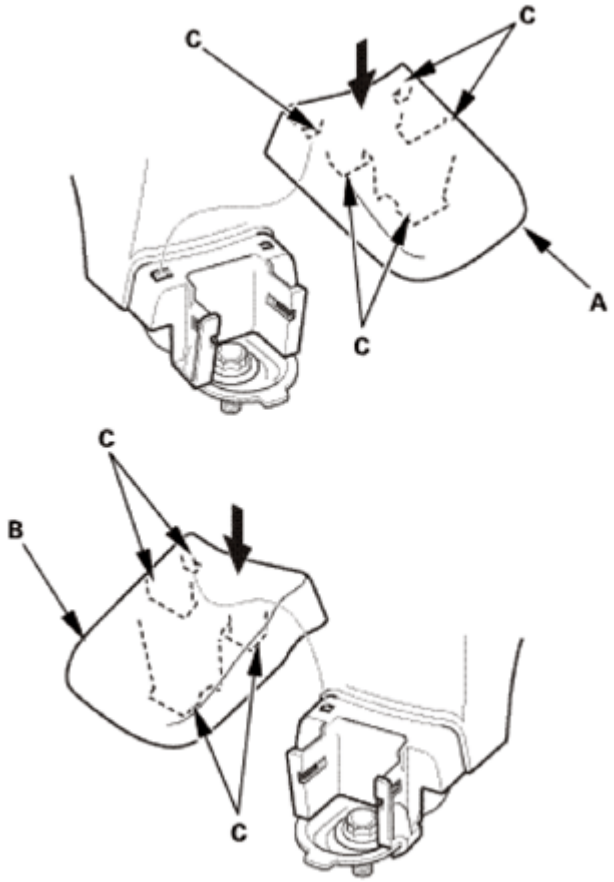

Fig. 294: Installing Rear Inner And Outer Seat Track End Cover
Courtesy of AMERICAN HONDA MOTOR CO., INC.

15. Head Restraint - Passenger's Side
    1. Insert the head restraint (A) into the seat-back as shown.

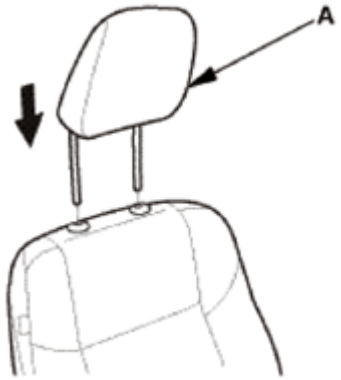

Fig. 295: Inserting Head Restraint Into Seat-Back (Passenger Side)
Courtesy of AMERICAN HONDA MOTOR CO., INC.

16. Front Seat Belt Lower Anchor Bolt - Passenger's Side

GETtheMANUALS.org

1. Install the lower anchor bolt (A).

NOTE: **Before installing the anchor bolt, make sure there are no twists or kinks in the seat belt.**

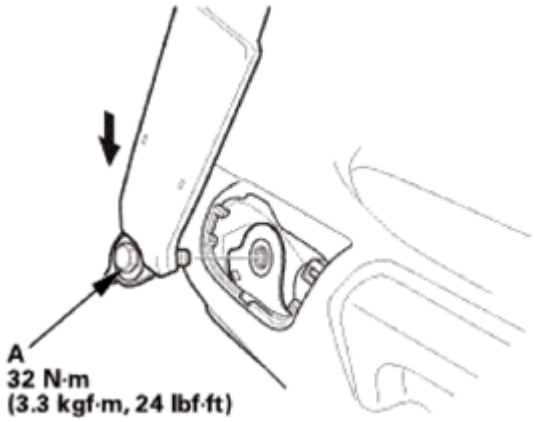

Fig. 296: Installing Front Seat Belt Lower Anchor Bolt
Courtesy of AMERICAN HONDA MOTOR CO., INC.

2. Install the anchor cover (A). Make sure the hooks (B) and the tab (C) snap into place securely.

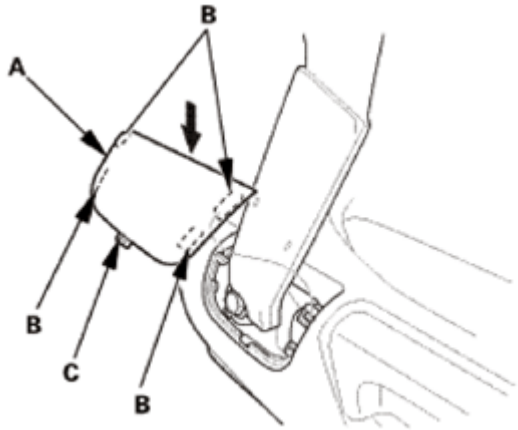

Fig. 297: Installing Front Seat Belt Lower Anchor Cover
Courtesy of AMERICAN HONDA MOTOR CO., INC.

17. Front Seat Frame - Driver's Side
    1. Install the outer recline inner cover (A) and the inner recline inner cover (B) to the seat frame (C).

Power Seat

GETtheMANUALS.org

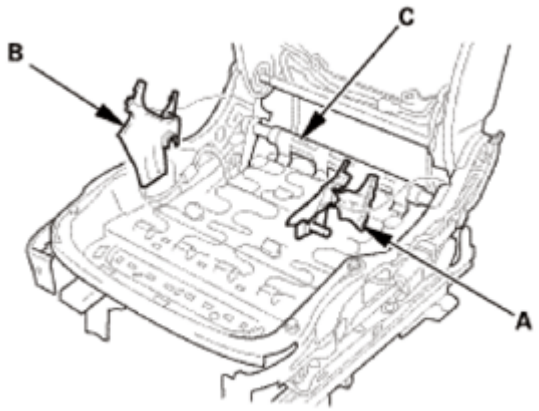

Fig. 298: Identifying Inner And Outer Recline Inner Cover And Seat Frame (Power Seat)
Courtesy of AMERICAN HONDA MOTOR CO., INC.

Manual Seat

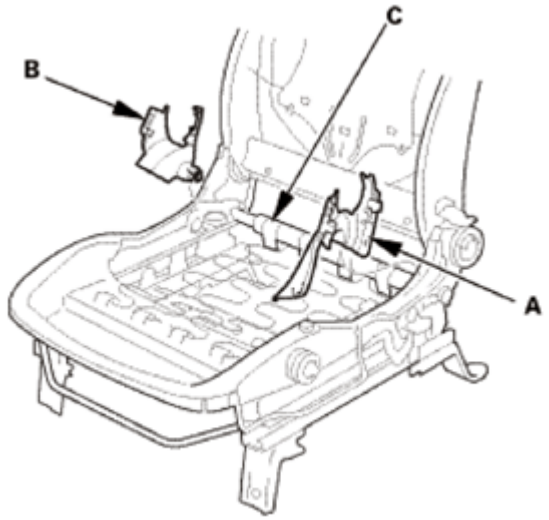

Fig. 299: Identifying Inner And Outer Recline Inner Cover And Seat Frame (Manual Seat)
Courtesy of AMERICAN HONDA MOTOR CO., INC.

2. Install the rear raiser covers (A). Make sure the hooks (B) snap into place securely.

Rear Side

GETtheMANUALS.org

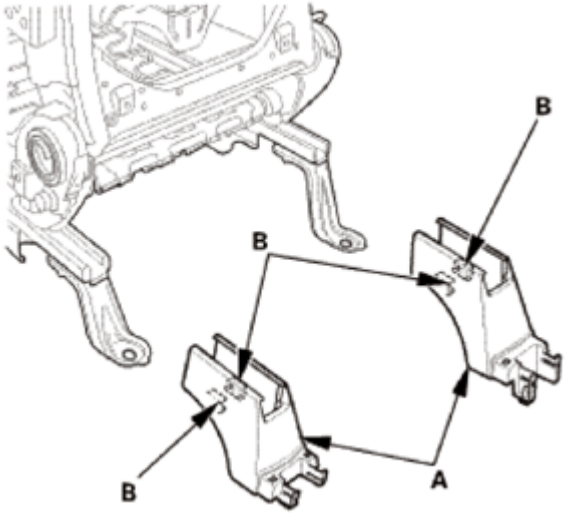

Fig. 300: Identifying Rear Raiser Covers And Hooks (Rear Side)
Courtesy of AMERICAN HONDA MOTOR CO., INC.

3. Install the front foot covers (A). Make sure the hook(s) (B) and the clip (C) snap into place securely.

Front Side

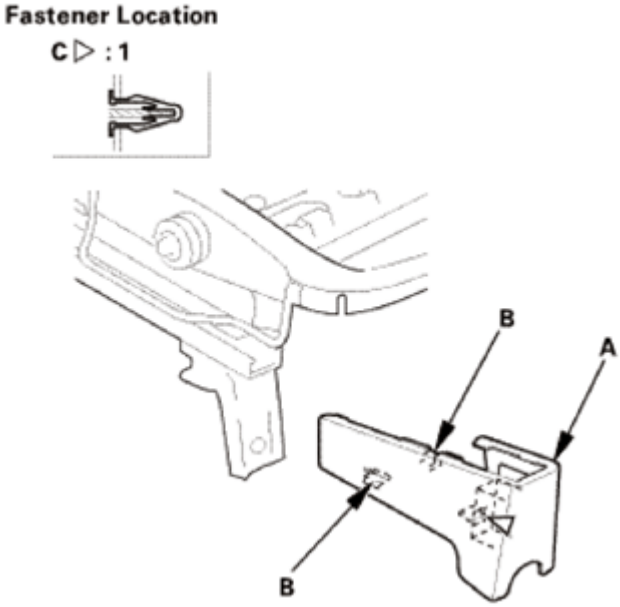

Fig. 301: Identifying Front Foot Covers, Hooks And Clips (Front Side; 1 Of 2)
Courtesy of AMERICAN HONDA MOTOR CO., INC.

GETtheMANUALS.org

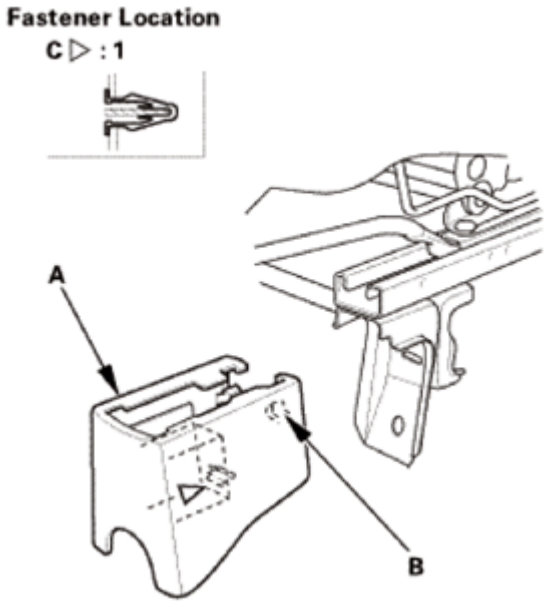

Fig. 302: Identifying Front Foot Covers, Hooks And Clips (Front Side; 2 Of 2)
Courtesy of AMERICAN HONDA MOTOR CO., INC.

4. Install the upper rail covers (A). Make sure the hooks (C) and the clips (B) snap into place securely.

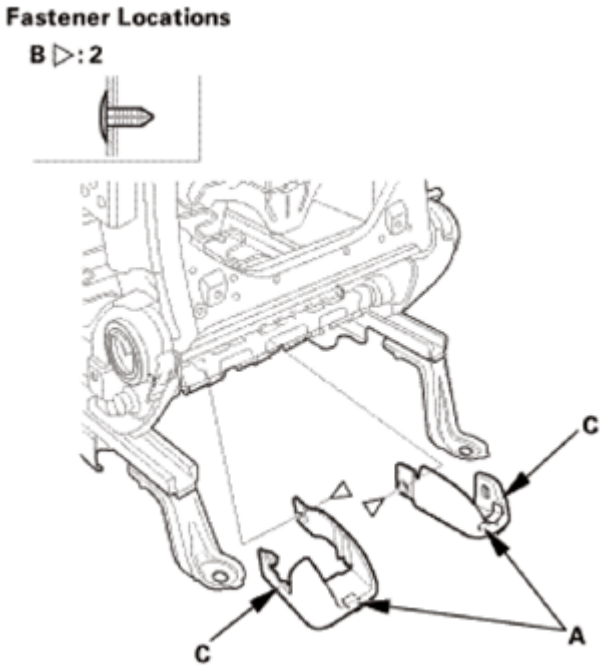

Fig. 303: Identifying Front Seat Frame Upper Rail Covers, Hooks And Clips
Courtesy of AMERICAN HONDA MOTOR CO., INC.

5. Install the side cover (A). Make sure the clips (B, C) snap into place securely.

GETtheMANUALS.org

Power Seat (side)

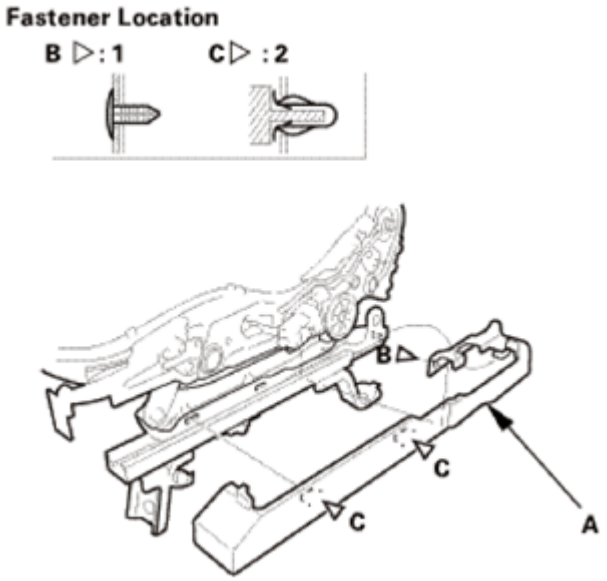

Fig. 304: Identifying Front Seat Frame Side Cover (Power Seat)
Courtesy of AMERICAN HONDA MOTOR CO., INC.

18. Front Seat Slide Motor
    1. Install the slide motor (A) to the slide motor bracket (B) with the screws (C).

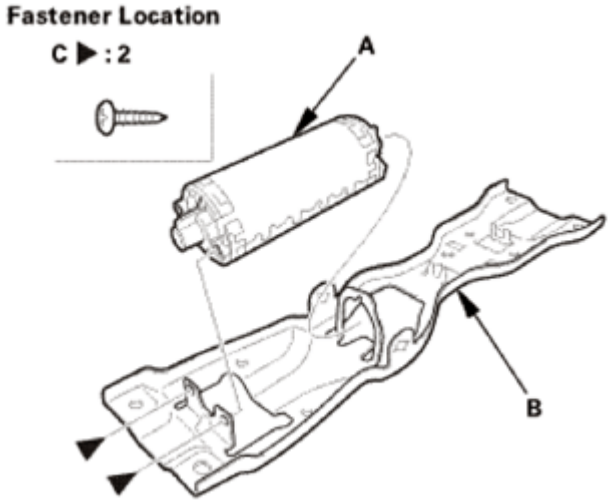

Fig. 305: Identifying Front Seat Slide Motor, Bracket And Screws
Courtesy of AMERICAN HONDA MOTOR CO., INC.

    2. Install the short flex cable (A) to the worm gear (B).

NOTE: **Apply multipurpose grease to the warm gear area.**

GETtheMANUALS.org

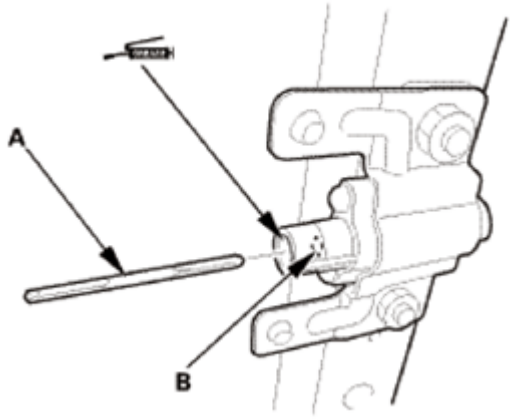

Fig. 306: Identifying Short Flex Cable And Worm Gear
Courtesy of AMERICAN HONDA MOTOR CO., INC.

3. Install the slide motor (A) to the short flex cable (B), and install the slide motor bracket (C) to the slide gearbox bracket (D).

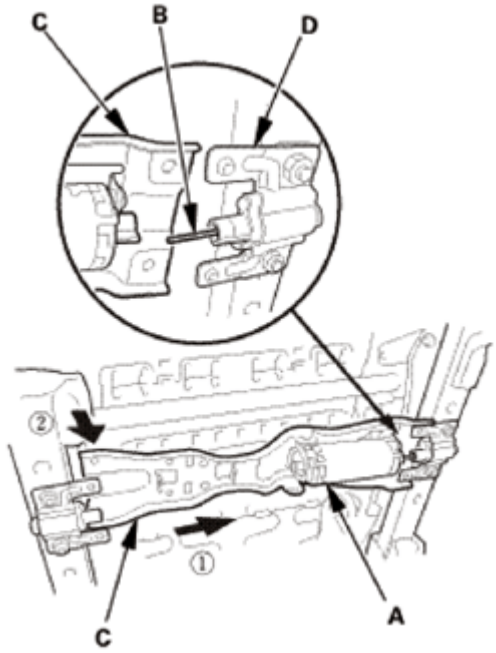

Fig. 307: Installing Slide Motor To Short Flex Cable
Courtesy of AMERICAN HONDA MOTOR CO., INC.

4. Tighten the bolts (A) securing the motor bracket (B) with a TORX T30 bit.
5. Install the harness clip (C).
6. Connect the connector.

GETtheMANUALS.org

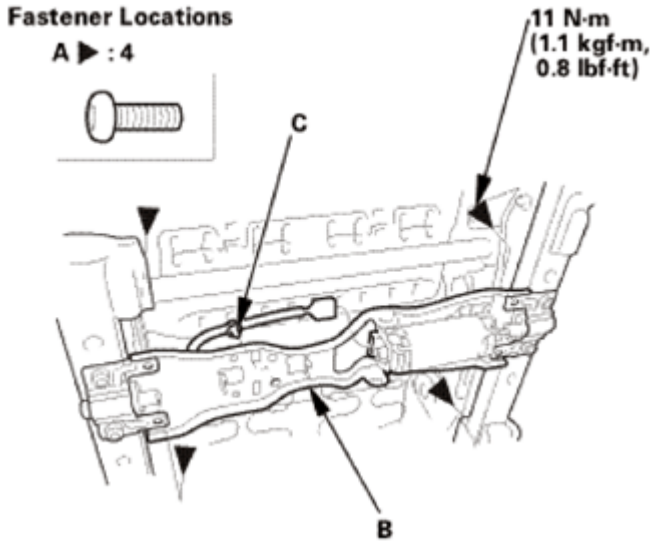

Fig. 308: Identifying Front Seat Motor Connector, Bracket, Clip And Bolts With Torque Specifications
Courtesy of AMERICAN HONDA MOTOR CO., INC.

7. Install the flex cable (A) to the slide motor (B).
8. Install the flex cable to the worm gear (C).

NOTE: Apply multipurpose grease to the worm gear area.

9. Install the cable housing (D) to the hooks (E).

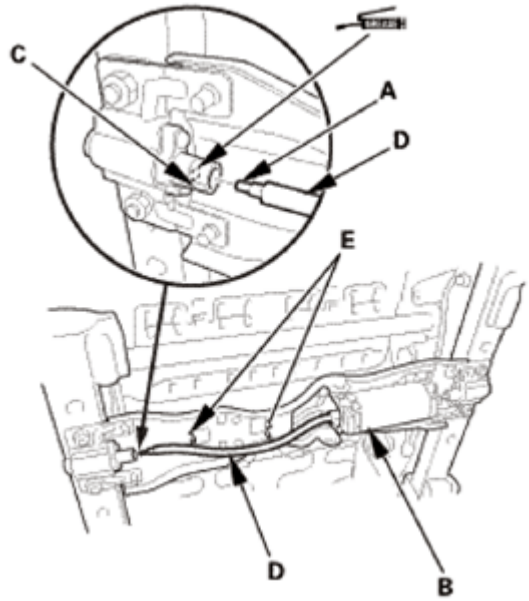

Fig. 309: Identifying Slide Motor, Flex Cable, Worm Gear, Cable Housing And Hooks
Courtesy of AMERICAN HONDA MOTOR CO., INC.

GETtheMANUALS.org

10. Install the slide motor cover (A).

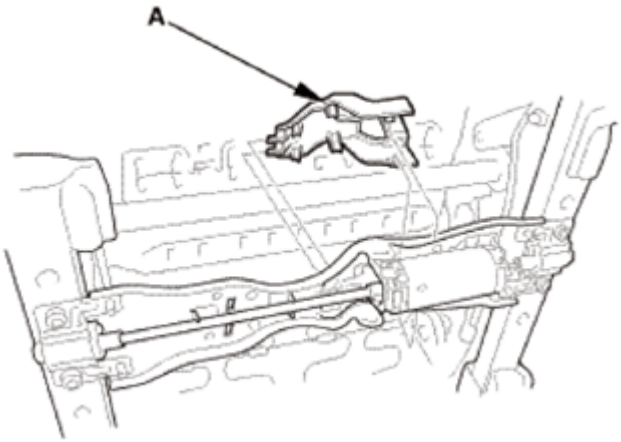

Fig. 310: Identifying Slide Motor Cover
Courtesy of AMERICAN HONDA MOTOR CO., INC.

19. Front Seat Lumbar Support
    1. Install the lumbar support motor (A) to the seat frame (B), then install the nuts (C).
    2. Connect the connector and install the harness clip (D).

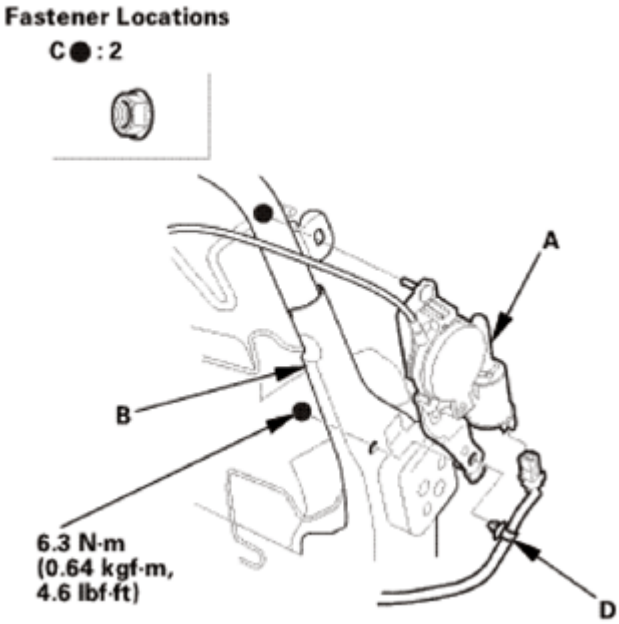

Fig. 311: Identifying Lumbar Support Motor, Seat Frame, Clip And Nuts With Torque Specifications
Courtesy of AMERICAN HONDA MOTOR CO., INC.

    3. Insert the lumbar support motor cover (A) down to install it to the upper hook (B).
    4. Install the cover to the lower hook (C) and the pin (D). Make sure the hooks snap into place

GETtheMANUALS.org

securely.

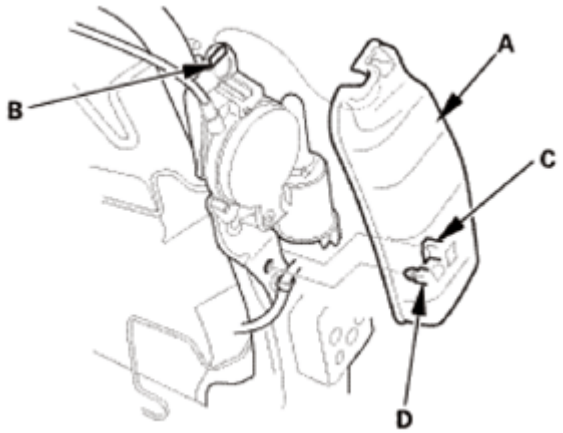

Fig. 312: Identifying Lumbar Support Motor Cover, Hooks And Pin
Courtesy of AMERICAN HONDA MOTOR CO., INC.

5. Install the lower wire (A) to both seat-back side frames (B), then install the lumbar support (C).

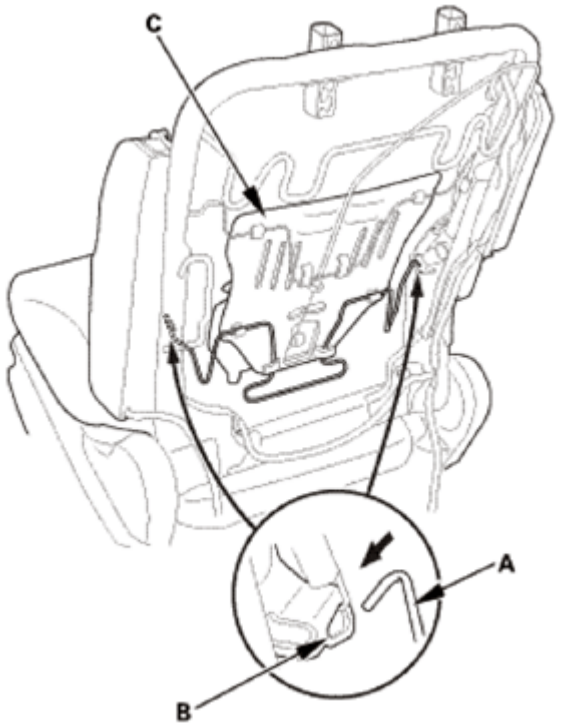

Fig. 313: Installing Lower Wire To Seat-Back Side Frame
Courtesy of AMERICAN HONDA MOTOR CO., INC.

6. Install the plate (A) and the two screws (B) to the seat frame (C).
7. Install the cable band (D) securing the lumbar support cable (E).

GETtheMANUALS.org

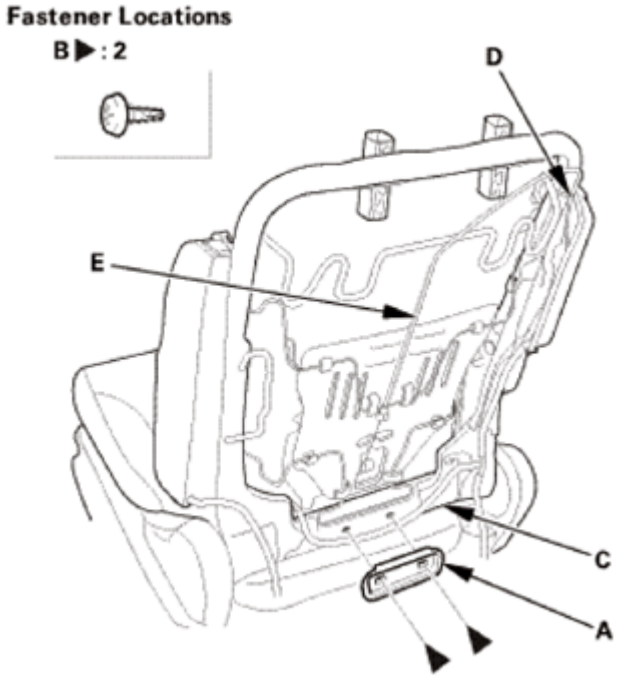

Fig. 314: Identifying Lumbar Support Cable, Seat Frame, Band, Plate And Screws
Courtesy of AMERICAN HONDA MOTOR CO., INC.

20. Front Seat Belt Buckle - Driver's Side
    1. Assemble the washers and the collar on the center anchor bolt as shown.

NOTE:

- **Apply medium strength liquid thread lock to the center anchor bolt before reinstallation.**
- **Tighten the bolts by hand first, then tighten to the specified torque.**

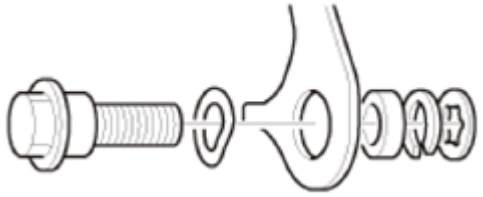

Fig. 315: Identifying Front Seat Belt Buckle Washer, Collar And Center Anchor Bolt
Courtesy of AMERICAN HONDA MOTOR CO., INC.

    2. Install the seat belt buckle (A) and harness clips (B), then tighten the center anchor bolt (C) to the specified torque.

GETtheMANUALS.org

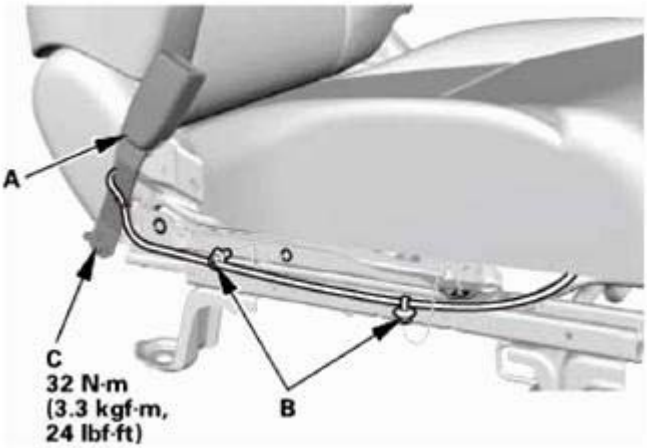

Fig. 316: Identifying Seat Belt Buckle, Center Anchor Bolt And Clip With Torque Specifications
Courtesy of AMERICAN HONDA MOTOR CO., INC.

3. Install the connector clip (A) and the harness clips (B).

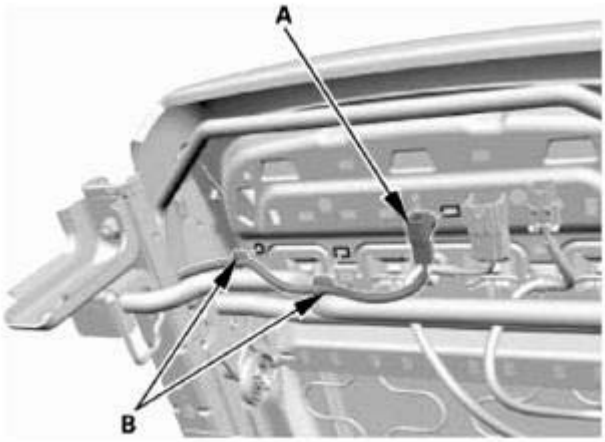

Fig. 317: Identifying Seat Belt Buckle Connector And Harness Clips
Courtesy of AMERICAN HONDA MOTOR CO., INC.

21. Side Airbag

NOTE:

- **If the side airbag cover is secured with tape, remove the tape.**
- **Do not open the cover on the side airbag cover.**
- **Make sure that the seat-back cover/pad is installed properly. Improper installation may prevent proper deployment.**
- **Be sure to install the harness so that they are not pinched or interfering with other parts.**

1. Install the side airbag (A), then tighten the new mounting nuts.

GETtheMANUALS.org

2. Install the clip (B).

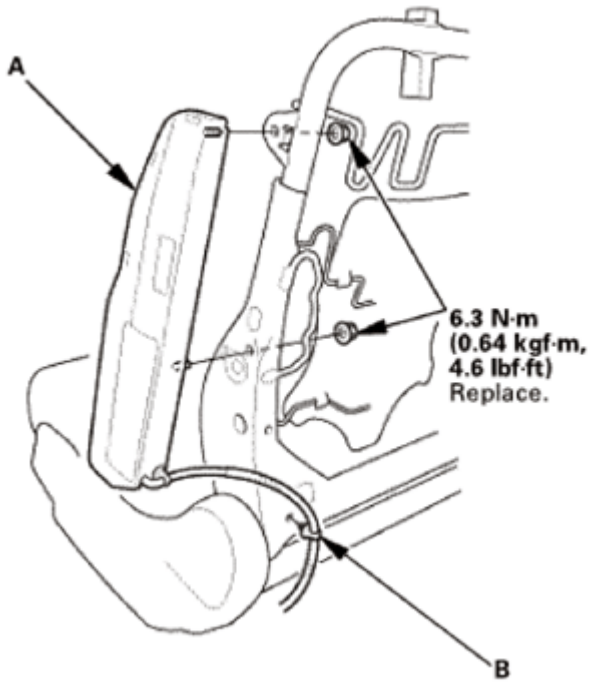

Fig. 318: Identifying Side Airbag And Clips With Torque Specifications
Courtesy of AMERICAN HONDA MOTOR CO., INC.

22. Front Seat-Back Cover/Pad - Driver's Side
    1. Install the seat-back cover/pad (A) on the seat-back frame (B).

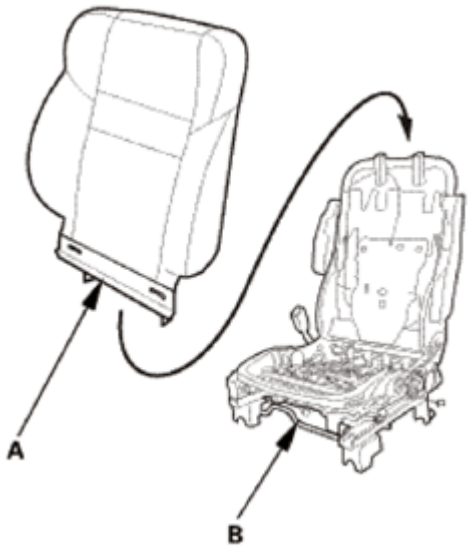

Fig. 319: Installing Seat-Back Cover/Pad On Seat-Back Frame
Courtesy of AMERICAN HONDA MOTOR CO., INC.

GETtheMANUALS.org

23. Head Restraint Guides - Driver's Side
    1. Install the head restraint guides (A).

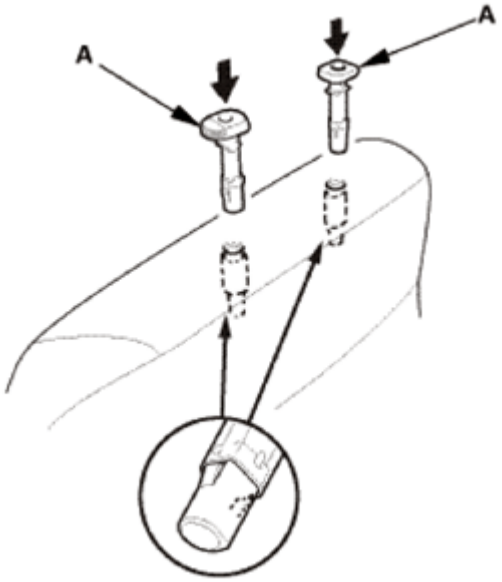

Fig. 320: Installing Head Restraint Guides
Courtesy of AMERICAN HONDA MOTOR CO., INC.

24. Front Seat Back - Driver's Side
    1. Install the hook strips (A) to the seat-back frame (B).

GETtheMANUALS.org

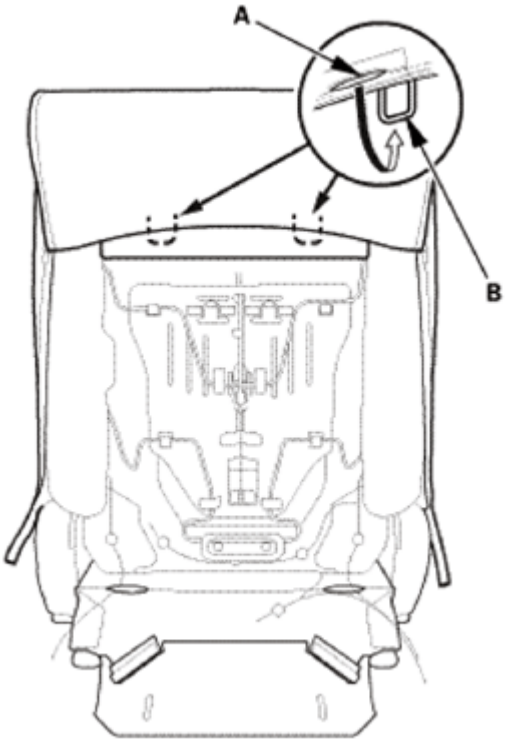

Fig. 321: Installing Hook Strips To Seat-Back Frame
Courtesy of AMERICAN HONDA MOTOR CO., INC.

2. Install airbag attachment wires A, B to the seat-back frame (C).

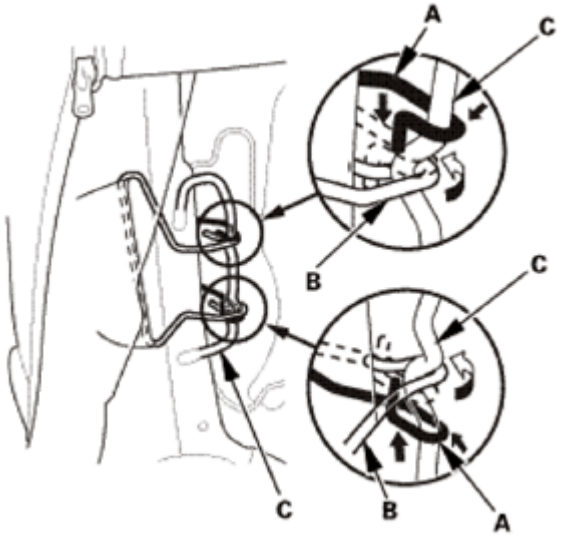

Fig. 322: Installing Airbag Attachment Wires To Seat-Back Frame
Courtesy of AMERICAN HONDA MOTOR CO., INC.

3. Install the harness clips (A).
4. Install the harnesses (B) through the holes (C) in the seat-back cover (D).

GETtheMANUALS.org

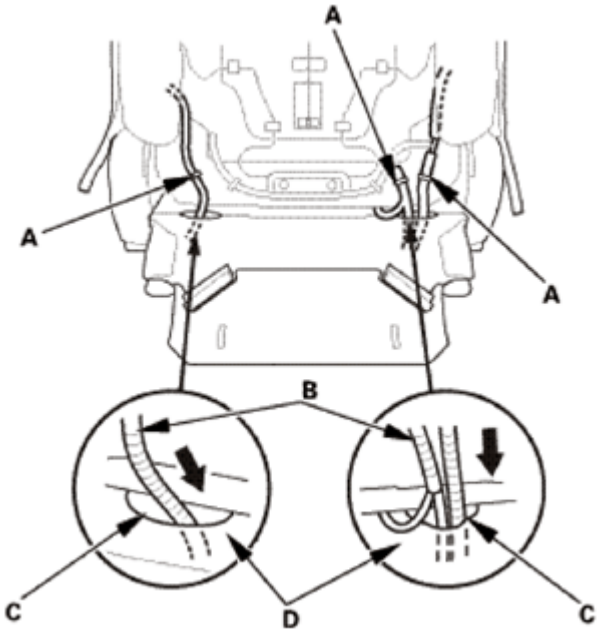

Fig. 323: Installing Harnesses Through Holes In Seat-Back Cover
Courtesy of AMERICAN HONDA MOTOR CO., INC.

5. Install the hook strips (A).

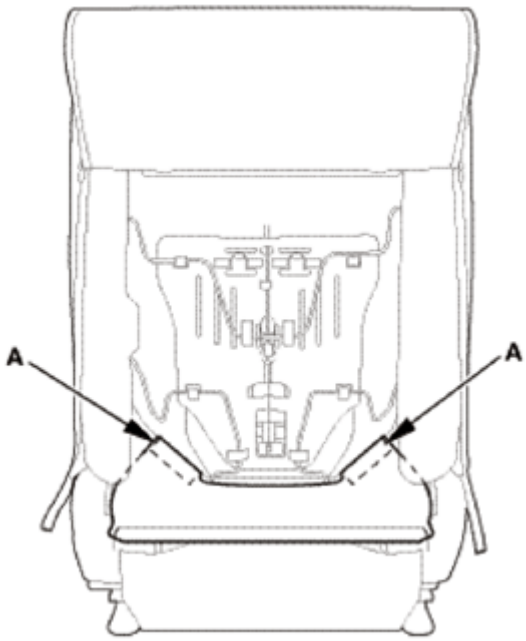

Fig. 324: Installing Hook Strips
Courtesy of AMERICAN HONDA MOTOR CO., INC.

6. Zip the seat-back cover (A).
7. Install the hook strip (B).

GETtheMANUALS.org

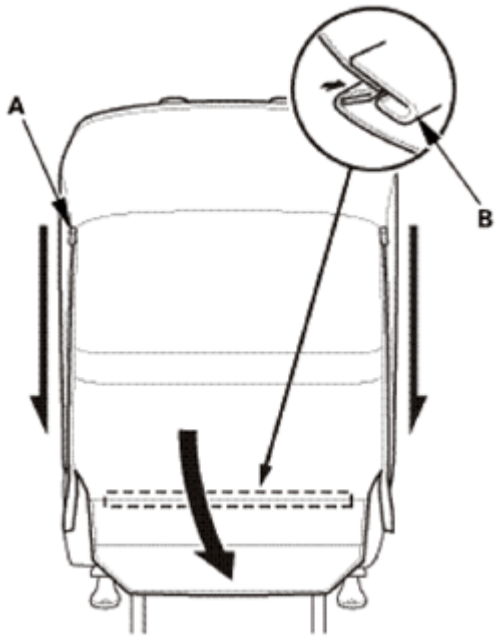

Fig. 325: Removing Seat Back Cover
Courtesy of AMERICAN HONDA MOTOR CO., INC.

8. Install the connector clips (A).
9. Install the harness clips (B).
10. Install the harness holders (C) to the seat cushion frame springs (D).
11. Connect the connector (E).

Power Seat

GETtheMANUALS.org

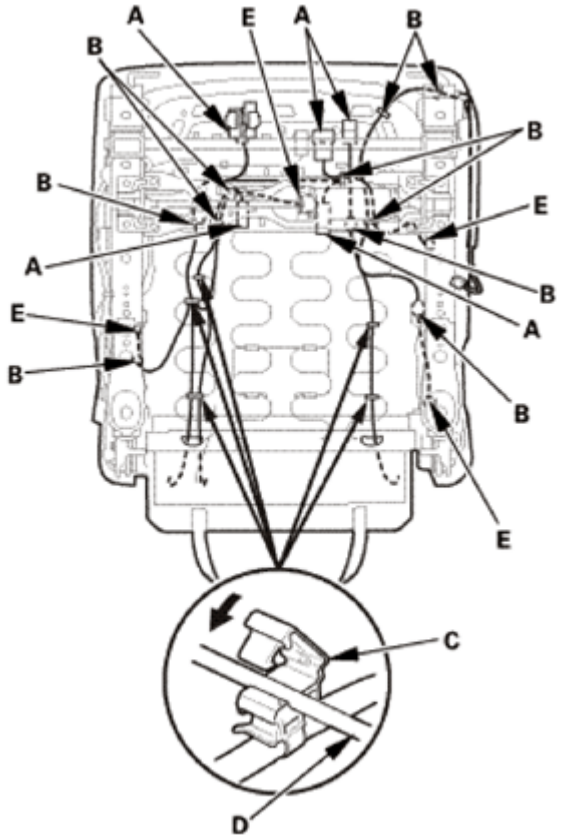

Fig. 326: Installing Harness Holder To Seat Cushion Frame Springs (Power Seat)
Courtesy of AMERICAN HONDA MOTOR CO., INC.

Manual Seat

GETtheMANUALS.org

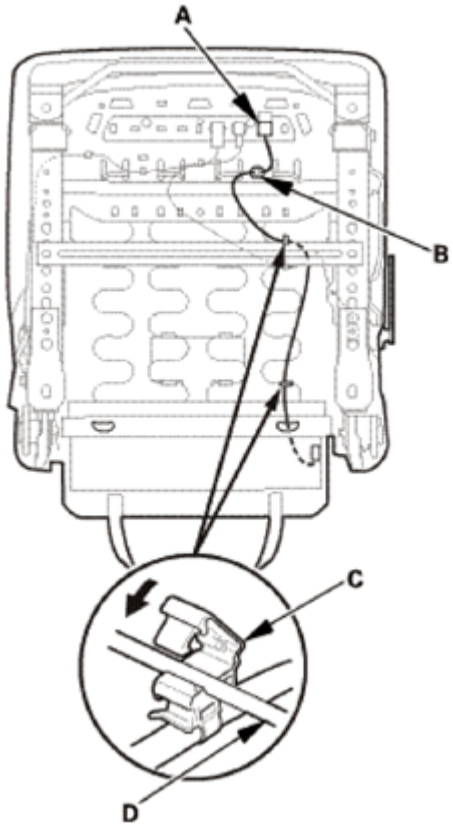

Fig. 327: Installing Harness Holder To Seat Cushion Frame Springs (Manual Seat)
Courtesy of AMERICAN HONDA MOTOR CO., INC.

25. Front Seat Cushion - Driver's Side
    1. Install the seat cushion cover/pad (A) on the seat frame (B).

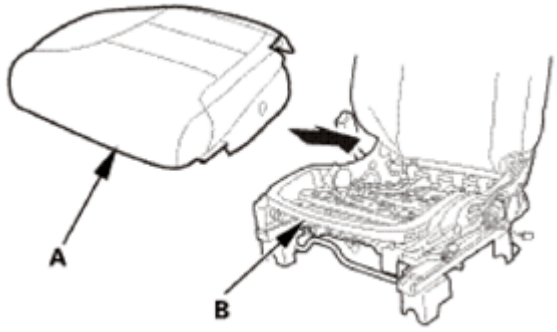

Fig. 328: Installing Seat Cushion Cover/Pad On Seat Frame
Courtesy of AMERICAN HONDA MOTOR CO., INC.

    2. Install the hook strips (A) under the seat cushion.

Power Seat

GETtheMANUALS.org

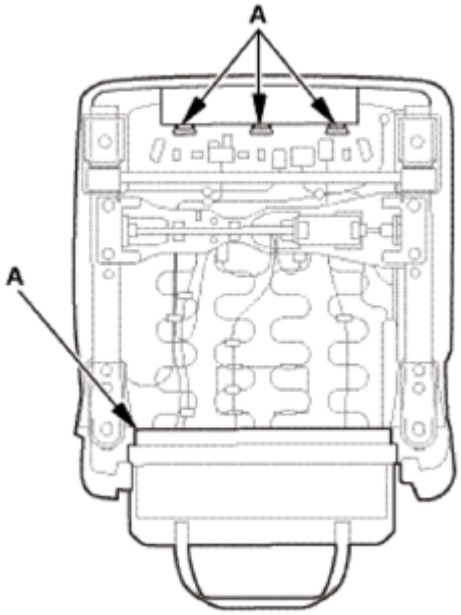

Fig. 329: Identifying Under Seat Cushion Hook Strips (Power Seat)
Courtesy of AMERICAN HONDA MOTOR CO., INC.

Manual Seat

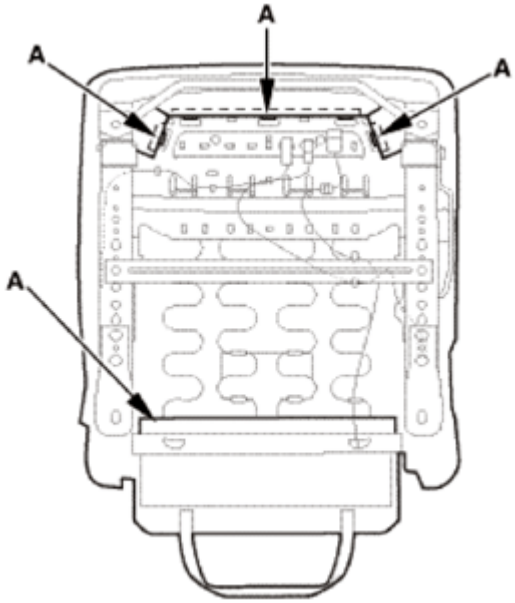

Fig. 330: Identifying Under Seat Cushion Hook Strips (Manual Seat)
Courtesy of AMERICAN HONDA MOTOR CO., INC.

3. Install the hook strips (A) to both sides of the seat cushion frame.
4. Install the clip (B) to the seat cushion frame.

GETtheMANUALS.org

Power Seat

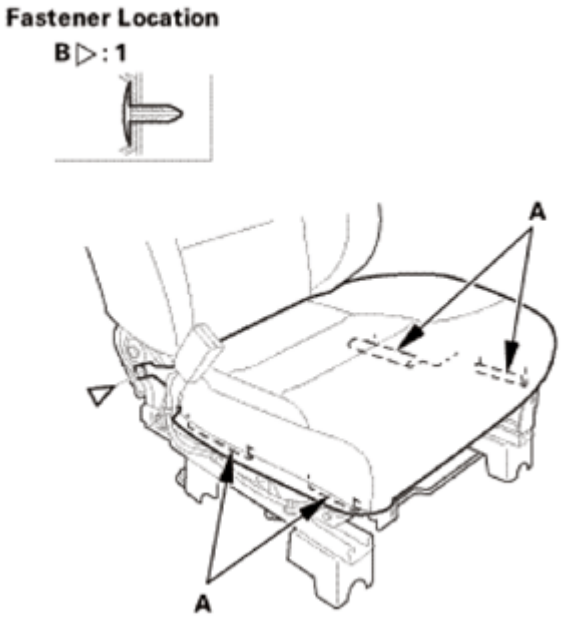

Fig. 331: Identifying Seat Cushion Frame Hook Strips And Clips (Power Seat)
Courtesy of AMERICAN HONDA MOTOR CO., INC.

Manual Seat

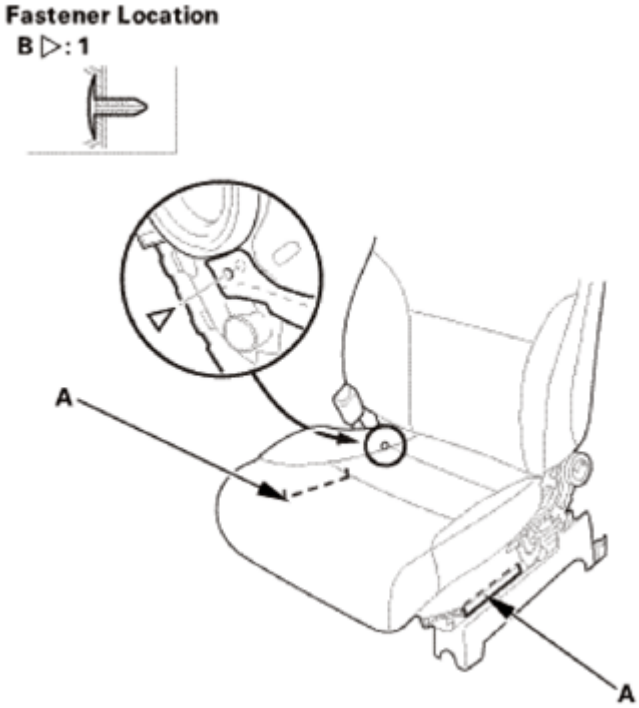

Fig. 332: Identifying Seat Cushion Frame Hook Strips And Clips (Manual Seat)
Courtesy of AMERICAN HONDA MOTOR CO., INC.

GETtheMANUALS.org

5. With seat heater: Connect the connectors (A).
6. With seat heater: Install the harness clip (B).
7. With seat heater: Install the holders (C) to the seat cushion frame springs (D).

With Seat Heater

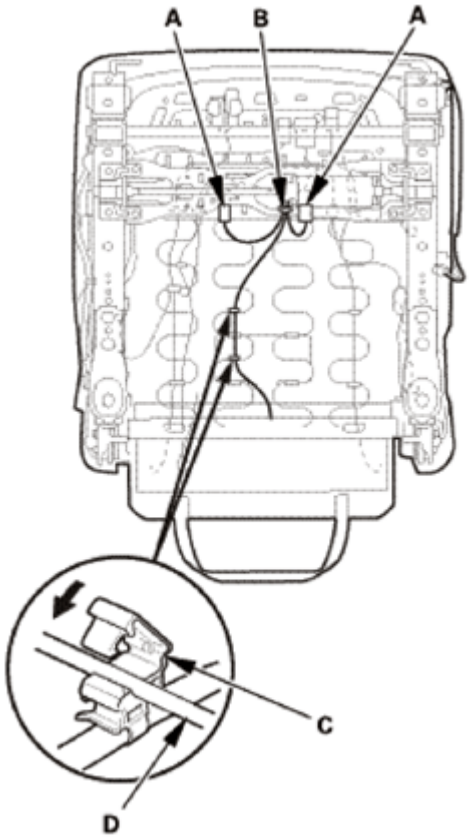

Fig. 333: Installing Holder To Seat Cushion Frame Springs (With Seat Heater)
Courtesy of AMERICAN HONDA MOTOR CO., INC.

8. Install the elastic strap (A) to the seat cushion frame springs (B).

GETtheMANUALS.org

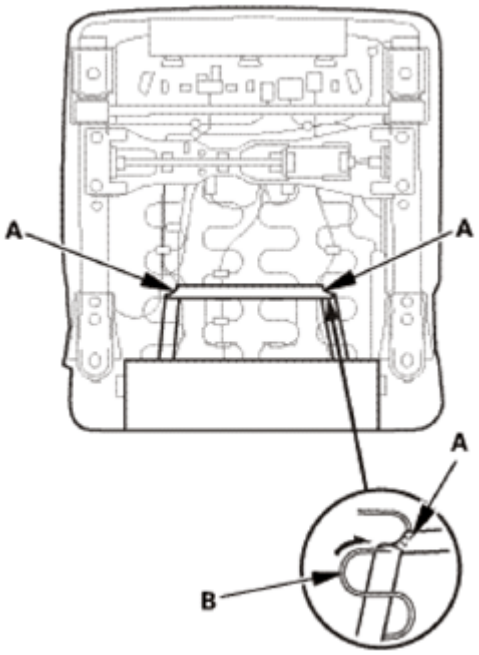

Fig. 334: Installing Elastic Strap To Seat Cushion Frame Springs
Courtesy of AMERICAN HONDA MOTOR CO., INC.

26. Front Seat Center Cover - Driver's Side

Power Seat

1. Install the upper center inner cover (A).
2. Install the center cover (B). Make sure the tabs (C) snap into place securely.
3. Install the screw (D).

GETtheMANUALS.org

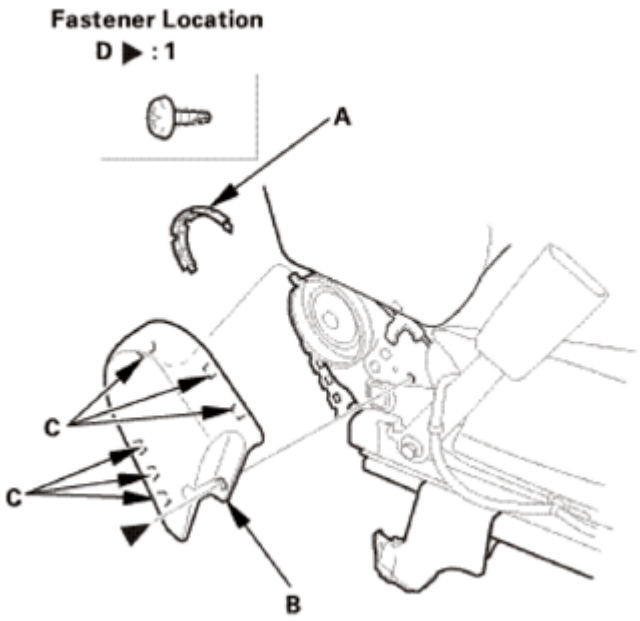

Fig. 335: Identifying Front Seat Center Cover, Upper Center Inner Cover, Tabs And Screws (Power Seat)
Courtesy of AMERICAN HONDA MOTOR CO., INC.

Manual Seat

1. Install the center cover (A) to the recline inner cover (B). make sure the tabs (C) snap into place securely.

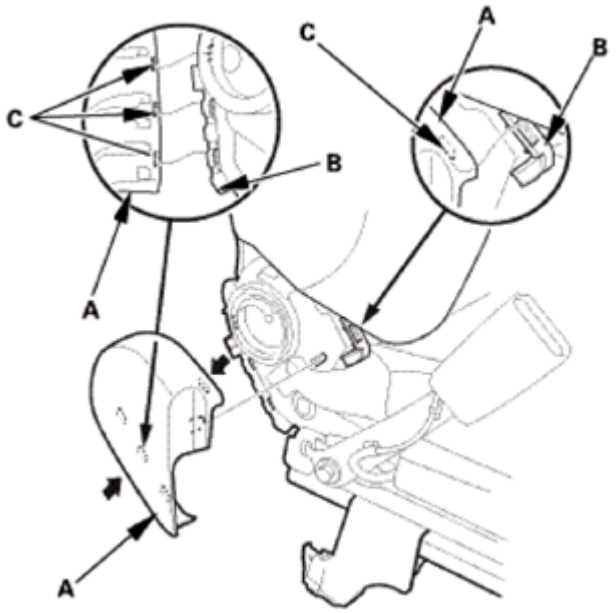

Fig. 336: Installing Center Cover To Recline Inner Cover
Courtesy of AMERICAN HONDA MOTOR CO., INC.

GETtheMANUALS.org

27. Front Seat Recline Cover - Driver's Side

Power Seat

1. Install the upper center inner cover (A) to the recline cover (B).
2. Connect the connector, then install the wire harness (C) to the hooks (D).
3. Install the clip (E) and tabs (F), then install the recline cover.
4. Install the tabs (G), then install the screw (H).

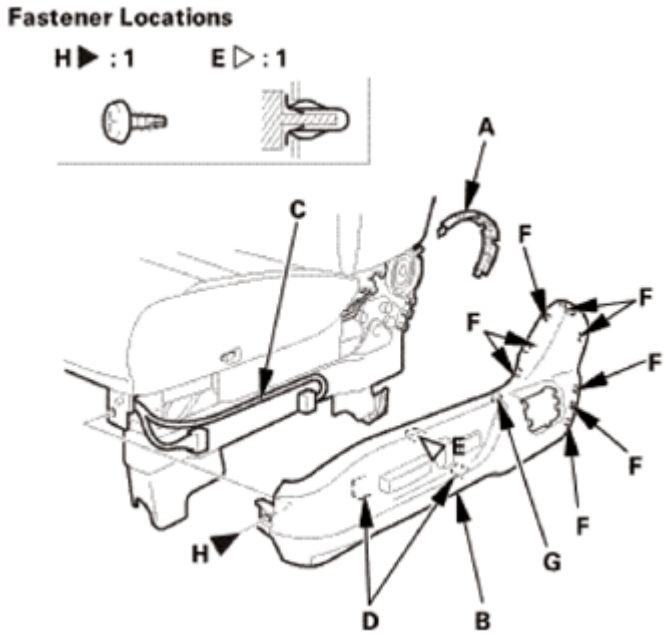

Fig. 337: Identifying Front Seat Recline Cover And Related Components (Power Seat)
Courtesy of AMERICAN HONDA MOTOR CO., INC.

Manual Seat

1. Install the hook (A) and clip (B) of the recline cover (C).
2. Install the front hooks (D) to the recline inner cover (E).
3. Install the hook (F) of the recline cover to the recline inner cover.
4. Install the recline knob (G) and the screw (H).

GETtheMANUALS.org

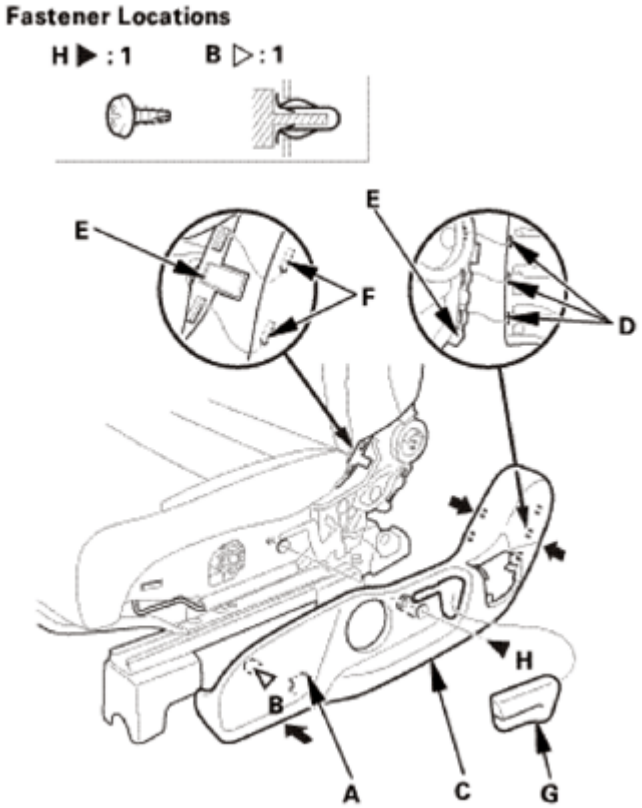

Fig. 338: Installing Front Seat Recline Cover (Manual Seat)
Courtesy of AMERICAN HONDA MOTOR CO., INC.

28. Front Seat Height Adjuster Handle - Manual Seat
    1. Install the height adjuster handle (A) and the screws (B).
    2. Install the cap (C). Make sure the hooks (D) snap into place securely.

GETtheMANUALS.org

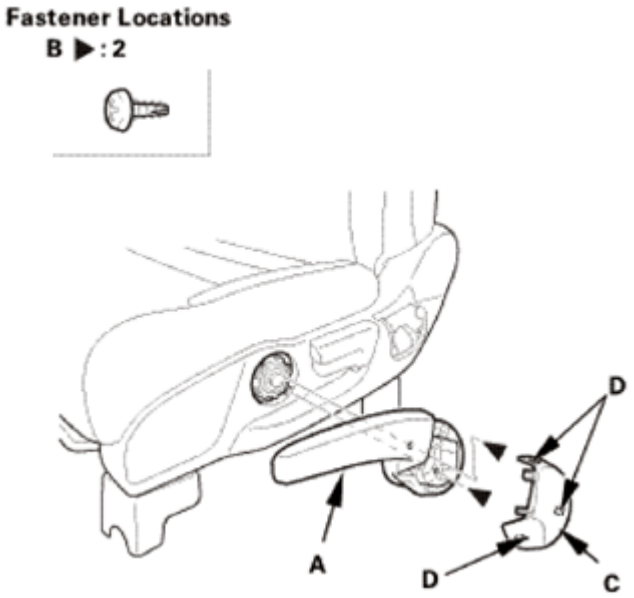

Fig. 339: Identifying Height Adjuster Handle, Cap, Hooks And Screws
Courtesy of AMERICAN HONDA MOTOR CO., INC.

29. Front Cover - Power Seat
    1. Install the tabs (A), set the pin (B), and install the hook (C), then install the front cover (D). Make sure the hooks snap into place securely.

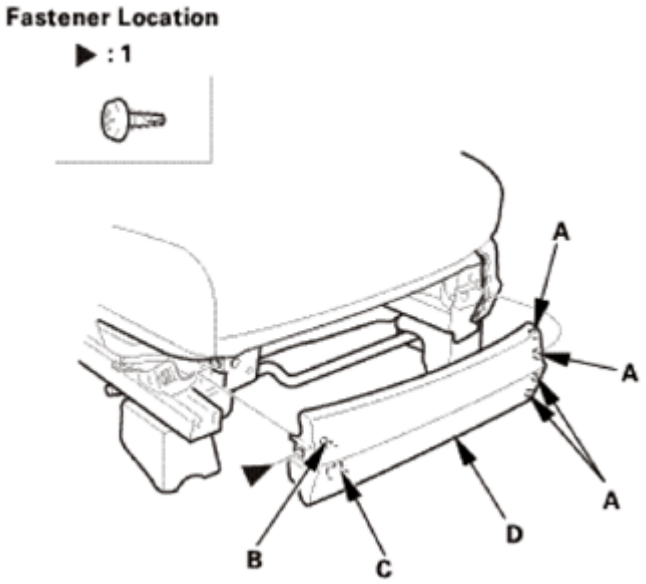

Fig. 340: Identifying Front Cover, Hook, Tabs, Pin And Screws
Courtesy of AMERICAN HONDA MOTOR CO., INC.

30. Front Seat Slide Lever - Manual Seat
    1. Install the seat slide lever (A), and install both sides of tabs (B) to the front seat rail (C).

GETtheMANUALS.org

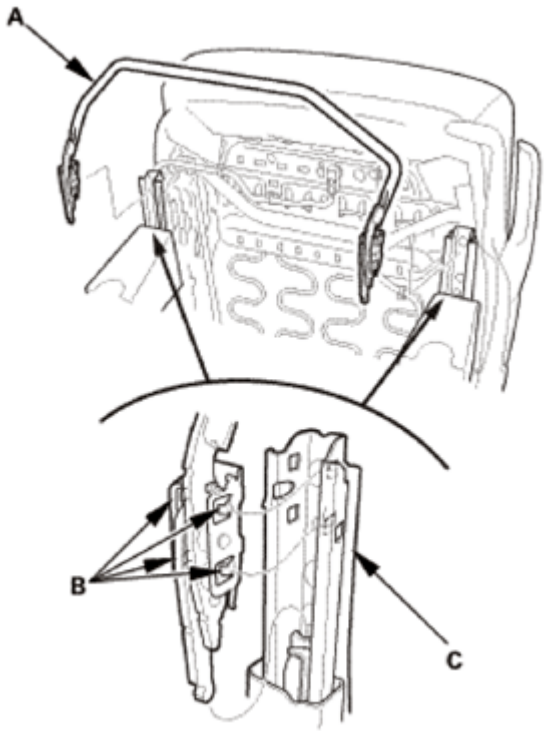

Fig. 341: Identifying Seat Slide Lever, Front Seat Rail And Tabs
Courtesy of AMERICAN HONDA MOTOR CO., INC.

2. Install both seat slide lever springs (A) to the front seat rail (B).
3. Set the seat slide lever springs through the hooks (C) of the seat rail.

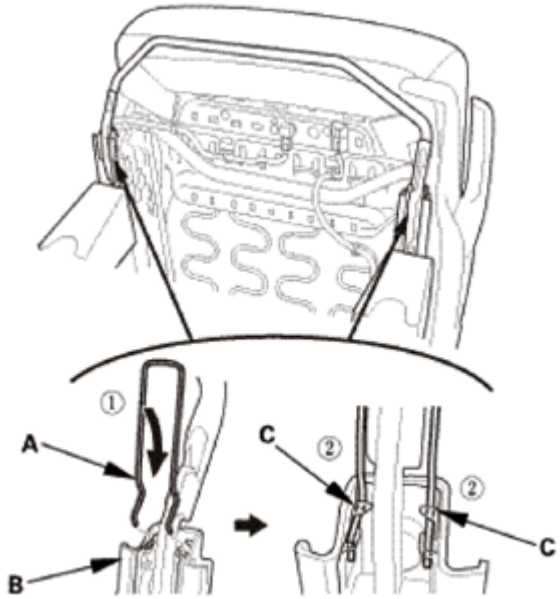

Fig. 342: Installing Seat Slide Lever Springs To Front Seat Rail
Courtesy of AMERICAN HONDA MOTOR CO., INC.

GETtheMANUALS.org

31. Front Seat Armrest
    1. Install the pins (A) to the seat-back.

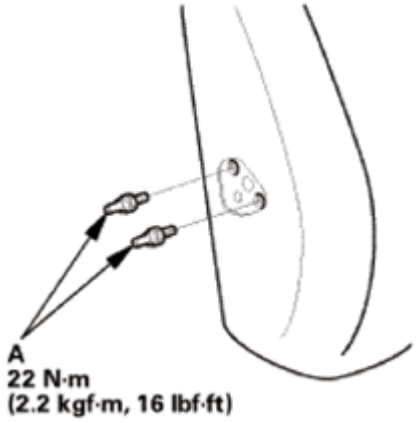

Fig. 343: Identifying Seat Back Pins With Torque Specifications
Courtesy of AMERICAN HONDA MOTOR CO., INC.

    2. Install the armrest (A), then install the washer (B), the bushing (C), and the center pin (D).
    3. Install the cap (E) to the armrest.

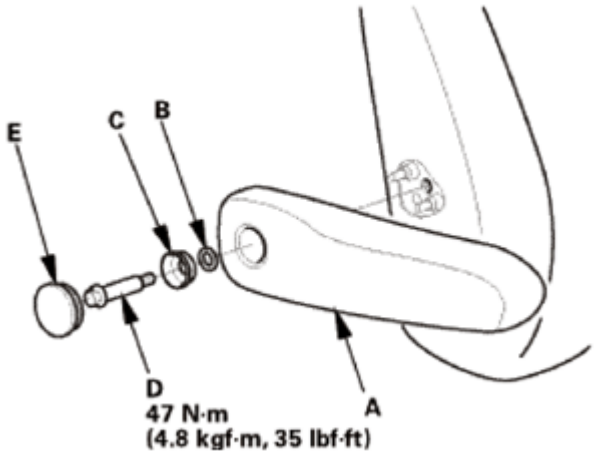

Fig. 344: Identifying Front Seat Armrest, Center Pin, Bushing, Washer And Cap With Torque Specifications
Courtesy of AMERICAN HONDA MOTOR CO., INC.

32. Front Seat - Driver's Side
    1. Connect the connectors (A).
    2. Install the harness clip (B).

GETtheMANUALS.org

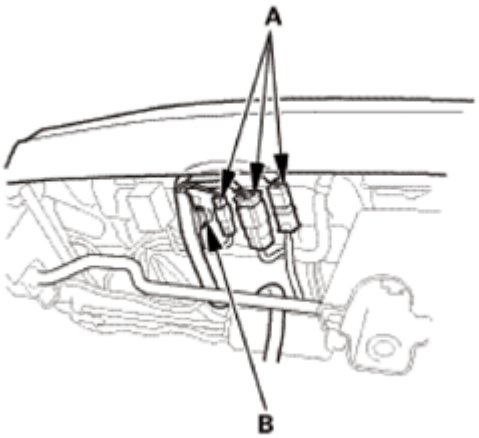

Fig. 345: Identifying Front Seat Connectors And Clips (Driver Side)
Courtesy of AMERICAN HONDA MOTOR CO., INC.

3. Install the seat mounting bolts (A).

NOTE:

- **Tighten the bolts by hand first, then tighten them to the specified torque.**
- **Tighten the seat mounting bolts to the specified torque in the sequence shown. Slide the seat all the way back and tighten bolts 1 and 2, then slide it forward and tighten bolts 3 and 4.**

Front Side

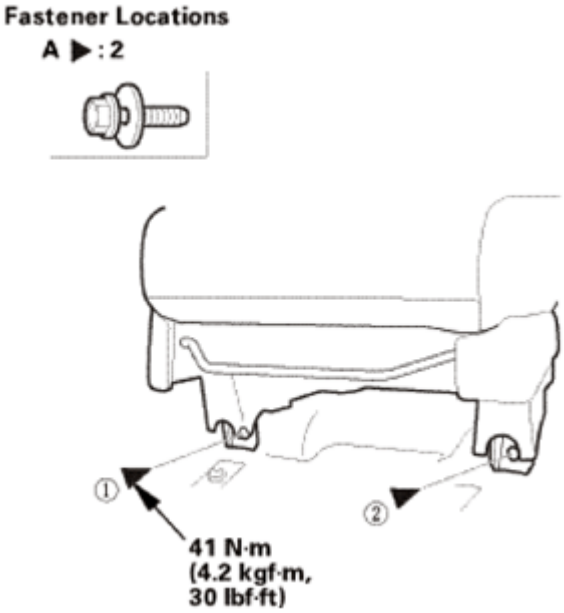

Fig. 346: Identifying Seat Mounting Bolts With Torque Specifications (Front Side)
Courtesy of AMERICAN HONDA MOTOR CO., INC.

GETtheMANUALS.org

Rear Side

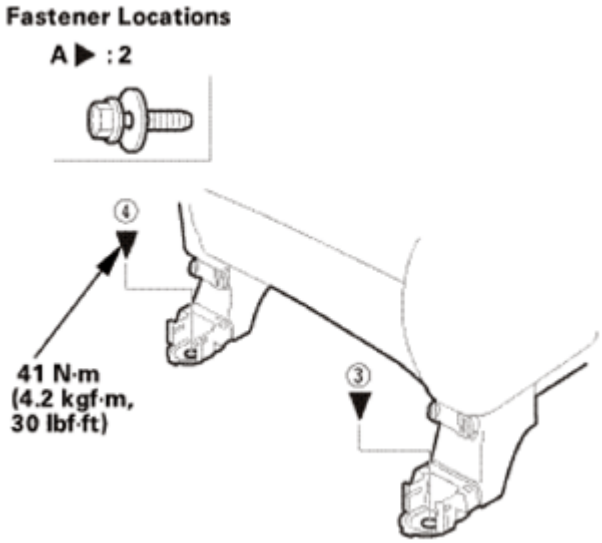

Fig. 347: Identifying Seat Mounting Bolts With Torque Specifications (Rear Side)
Courtesy of AMERICAN HONDA MOTOR CO., INC.

4. Install the rear inner seat track end cover (A) and the rear outer seat track end cover (B). Make sure the hooks (C) snap into place securely.

GETtheMANUALS.org

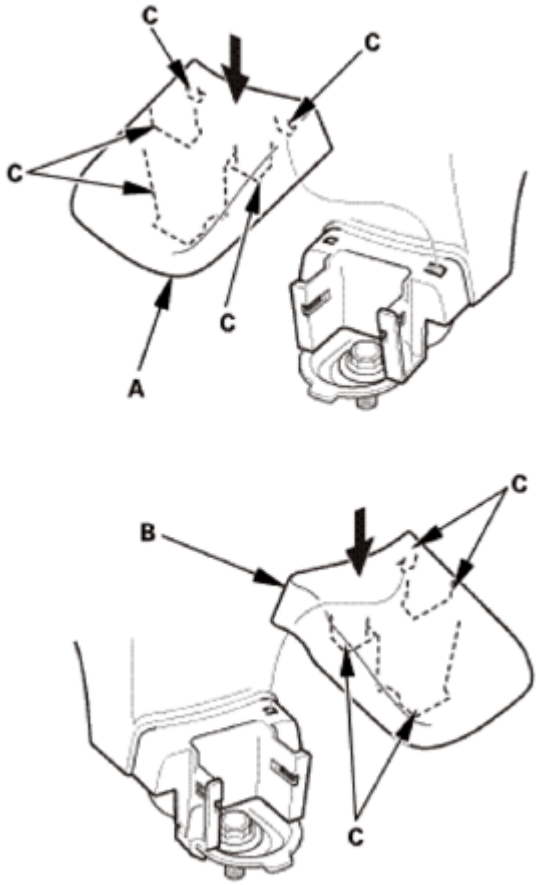

Fig. 348: Installing Rear Inner And Outer Seat Track End Cover
Courtesy of AMERICAN HONDA MOTOR CO., INC.

33. Head Restraint - Driver's Side
    1. Insert the head restraint (A) to the seat-back as shown.

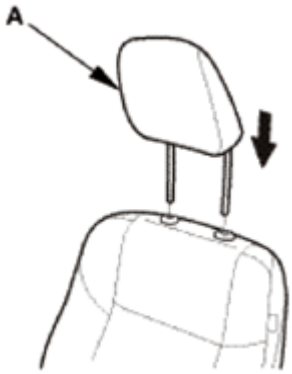

Fig. 349: Inserting Head Restraint To Seat-Back (Driver Side)
Courtesy of AMERICAN HONDA MOTOR CO., INC.

34. Battery Terminal (SRS) - Reconnection

GETtheMANUALS.org

NOTE: **If the battery performance is abnormal, test the battery.**

1. Clean the battery terminals.
2. Connect the positive cable (A) to the battery.

   NOTE: **Always connect the positive side first.**

3. Connect the negative cable (B) to the battery.
4. Apply multipurpose grease to the terminals to prevent corrosion.

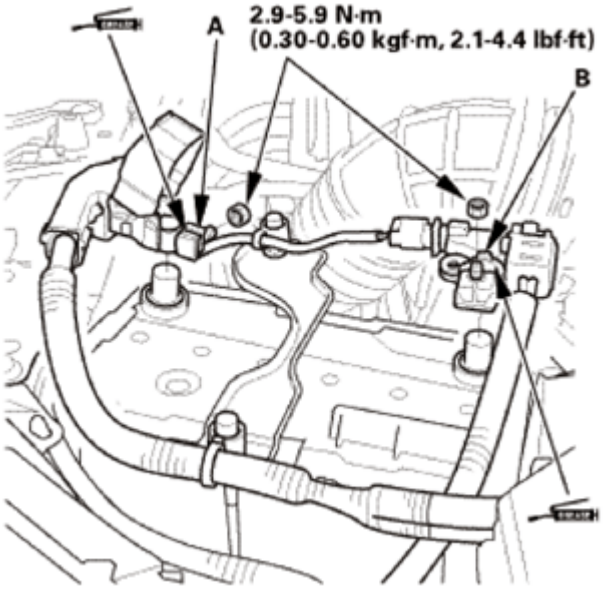

Fig. 350: Identifying Battery Positive And Negative Cable With Torque Specifications
Courtesy of AMERICAN HONDA MOTOR CO., INC.

35. Front Seat Belt Lower Anchor Bolt
    1. Install the lower anchor bolt.

       NOTE: **Before installing the anchor bolt, make sure there are no twists or kinks in the seat belt.**

GETtheMANUALS.org

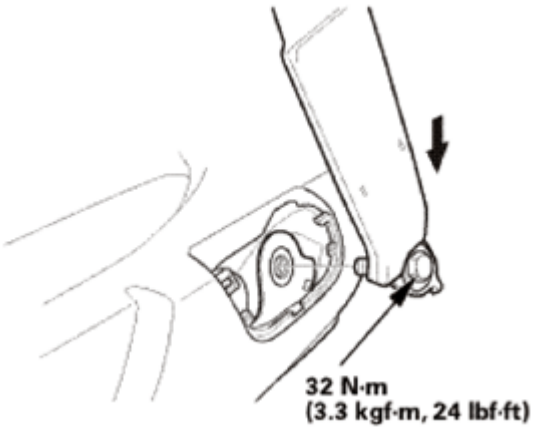

Fig. 351: Installing Front Seat Belt Lower Anchor Bolt
Courtesy of AMERICAN HONDA MOTOR CO., INC.

2. Install the anchor cover (A). Make sure the hooks (B) and the tab (C) snap into place securely.

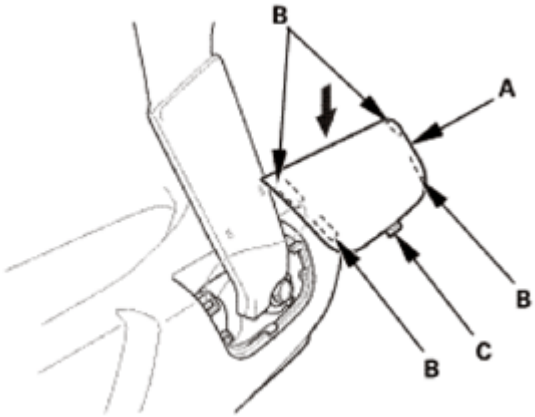

Fig. 352: Installing Front Seat Belt Lower Anchor Cover
Courtesy of AMERICAN HONDA MOTOR CO., INC.

36. HDS DLC - Connection
    1. Connect the HDS to the data link connector (DLC) (A) located under the driver's side of the dashboard.
    2. Turn the ignition switch to ON (II).
    3. Make sure the HDS communicates with the vehicle. If it does not communicate, go to the DLC circuit troubleshooting.

GETtheMANUALS.org

Fig. 353: Identifying Data Link Connector
Courtesy of AMERICAN HONDA MOTOR CO., INC.

37. DTC - Clear
    1. Clear the DTC(s) by following the screen prompts on the HDS.
    2. Turn the ignition switch to LOCK (0), then wait for 10 seconds.
38. OPDS Sensor Initialization

OPDS Sensor Initialization

When you replace the front passenger's seat-back cover/pad, the SRS unit, and/or the ODS unit, initialize the OPDS sensor with the HDS.

NOTE:

- **Before initializing the OPDS sensor, clear the DTCs.**
- **Before initializing the OPDS sensor, make sure the battery is fully charged.**
- **A new (uninitialized) ODS unit installed with a faulty OPDS sensor (DTC 86-1x or 86-2x) can cause DTCs 85-71 and 85-78. If the SRS has a hard DTC 86-1x or 86-2x, troubleshoot the DTCs completely before replacing the ODS unit.**
- **Make sure all components of the front passenger's seat are correctly installed.**
- **Make sure nothing is on the front passenger's seat, including aftermarket seat covers or mats.**
- **Make sure there is nothing in the front passenger's seat-back pocket.**
- **Dehumidify inside of the vehicle with A/C.**

1. Set the seat-back in a normal position.
2. From the HDS Main Menu, select SRS, then INITIALIZATION. In the INITIALIZATION Menu,

GETtheMANUALS.org

select ODS Initialization. Follow the prompts until the OPDS sensor initialization has been completed.

3. Turn the ignition switch to LOCK (0), then wait for 10 seconds.

NOTE: **If the ODS unit fails to initialize after several attempts, replace the seat-back cover/pad equipped with an OPDS sensor, and retry. If the ODS unit continues to fail to initialize, replace the ODS unit.**

FRONT SEAT LUMBAR SUPPORT REMOVAL AND INSTALLATION

REMOVAL

SRS components are located in this area. Review the **SRS COMPONENT LOCATIONS** and the **PRECAUTIONS AND PROCEDURES** before doing repairs or service.

NOTE: **Before the front power seat is removed, slide the front power seat to the half-way position, then raise the seat to the highest position.**

1. Front Seat Belt Lower Anchor Bolt
   1. Slide the front seat forward fully, carefully pry up on the bottom edge of the anchor cover (A) at the pry point (B) with the appropriate trim tool to release the hooks (C) and the tab (D), then remove the cover by pulling it up.

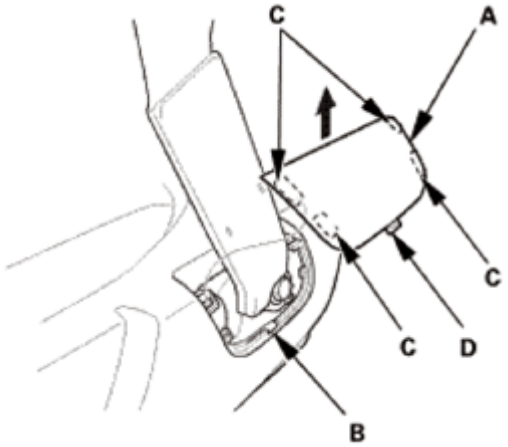

Fig. 354: Removing Front Seat Lower Anchor Cover
Courtesy of AMERICAN HONDA MOTOR CO., INC.

   2. Remove the lower anchor bolt (A).

GETtheMANUALS.org

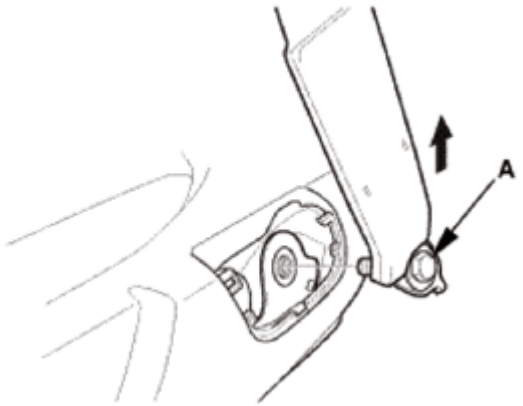

Fig. 355: Removing Front Seat Belt Lower Anchor Bolt
Courtesy of AMERICAN HONDA MOTOR CO., INC.

2. Battery Terminal (SRS) - Disconnection
    1. Make sure the ignition switch is in LOCK (0).
    2. Disconnect and isolate the negative cable (A) from the battery.

    NOTE: Always disconnect the negative side first.

    3. Disconnect the positive cable (B) from the battery.
    4. Wait at least 3 minutes before starting work.

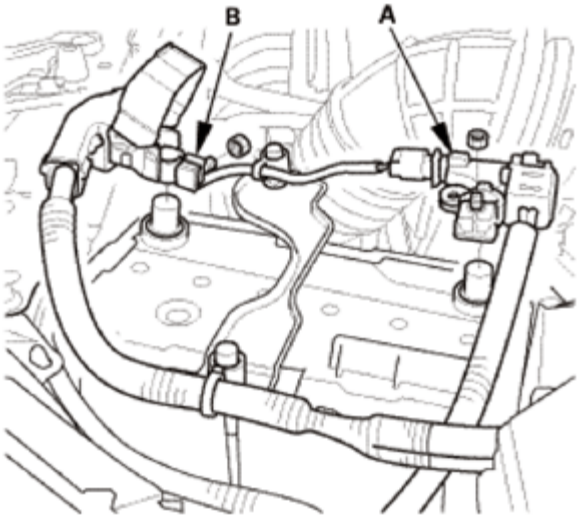

Fig. 356: Identifying Battery Positive And Negative Cable
Courtesy of AMERICAN HONDA MOTOR CO., INC.

3. Head Restraint - Driver's Side
    1. Push and hold the knob (A), then pull out the head restraint (B) as shown.

GETtheMANUALS.org

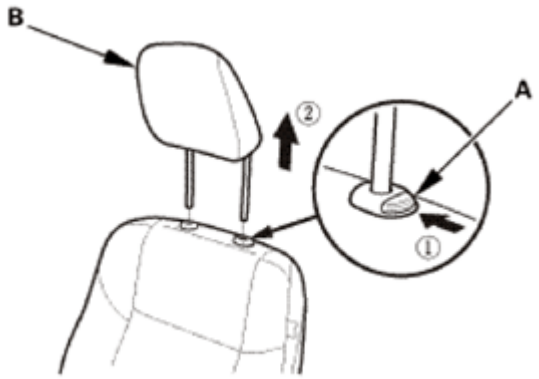

Fig. 357: Pulling Head Restraint (Driver Side)
Courtesy of AMERICAN HONDA MOTOR CO., INC.

4. Front Seat - Driver's Side
    1. Detach the hooks (A), then remove the rear inner seat track end cover (B) and the rear outer seat track end cover (C).

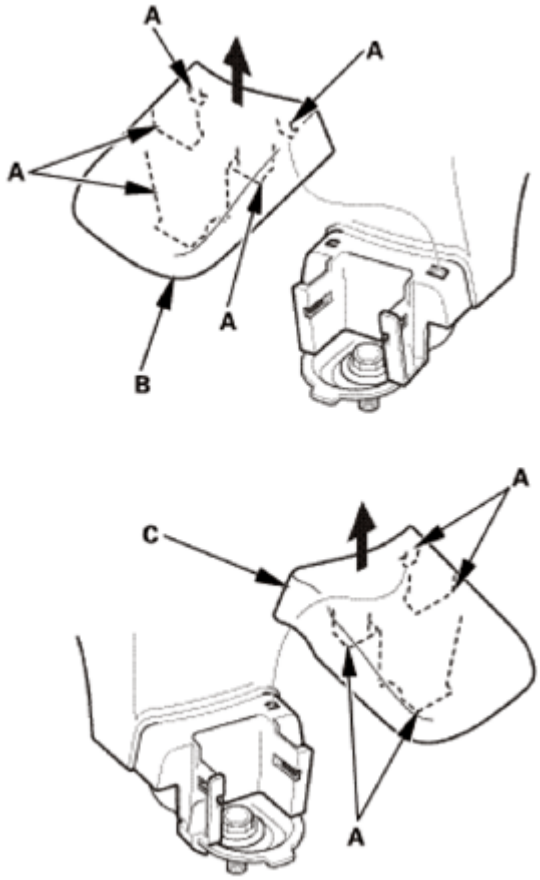

Fig. 358: Removing Rear Inner And Outer Seat Track End Cover
Courtesy of AMERICAN HONDA MOTOR CO., INC.

GETtheMANUALS.org

2. Remove the front mounting bolts (A) from the front seat.

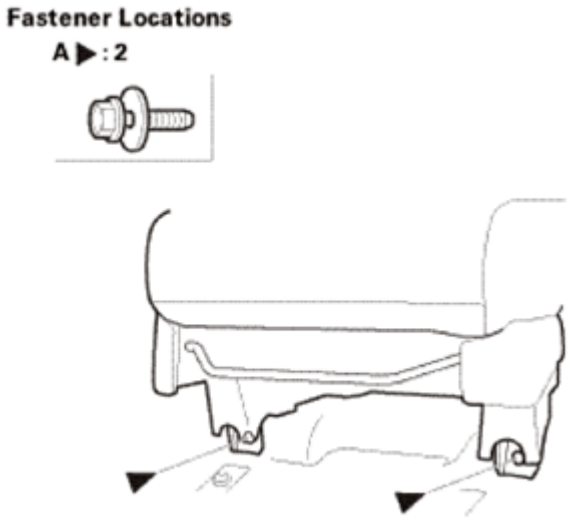

Fig. 359: Identifying Front Seat Mounting Bolts
Courtesy of AMERICAN HONDA MOTOR CO., INC.

3. Remove the rear mounting bolts (A) from the front seat.

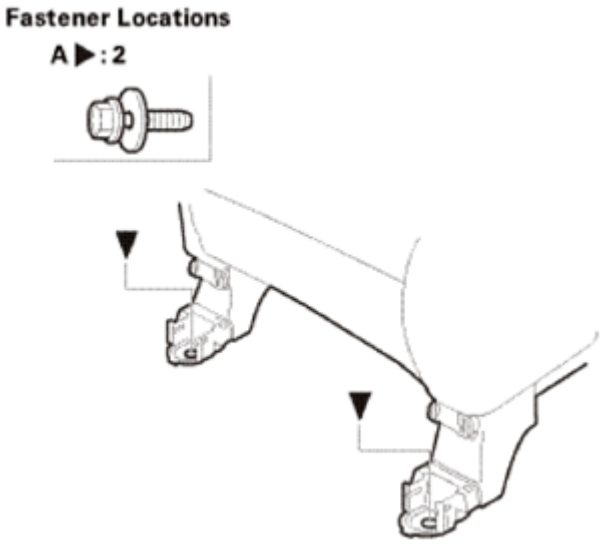

Fig. 360: Identifying Front Seat Rear Mounting Bolts
Courtesy of AMERICAN HONDA MOTOR CO., INC.

4. Disconnect the connectors (A).
5. Detach the harness clip (B).

GETtheMANUALS.org

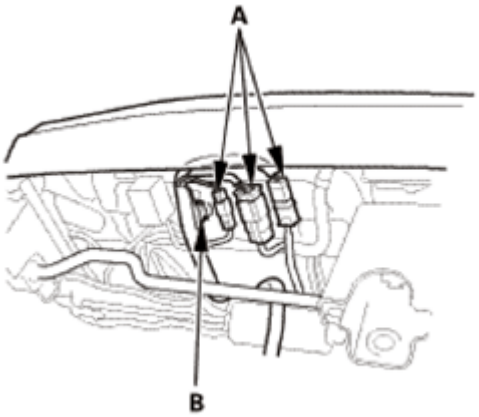

Fig. 361: Identifying Front Seat Connectors And Clips
Courtesy of AMERICAN HONDA MOTOR CO., INC.

5. Front Seat Armrest
    1. Remove the cap (A) with the appropriate trim tool.
    2. Remove the center pin (B), the bushing (C), and the washer (D), then remove the armrest (E).

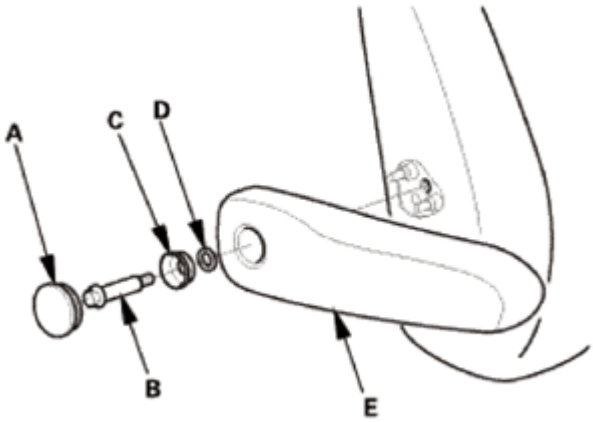

Fig. 362: Identifying Front Seat Armrest, Center Pin, Bushing, Washer And Cap
Courtesy of AMERICAN HONDA MOTOR CO., INC.

    3. Remove the pins (A) from the seat-back.

GETtheMANUALS.org

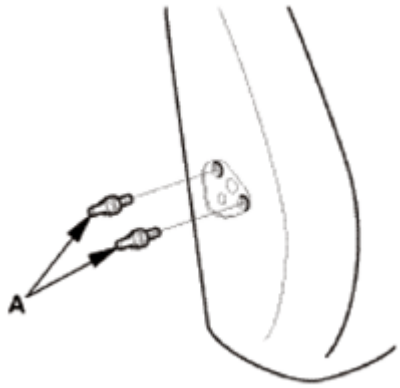

Fig. 363: Identifying Seat Back Pins
Courtesy of AMERICAN HONDA MOTOR CO., INC.

6. Front Seat-Back - Driver's Side
    1. Release the elastic strap (A) from the seat cushion frame springs (B), then pull back the under cover (C) of the seat-back cover.

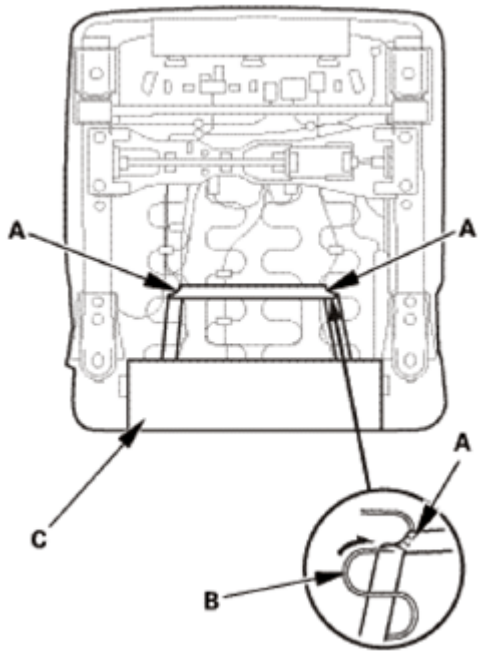

Fig. 364: Releasing Elastic Strap From Seat Cushion Frame Springs
Courtesy of AMERICAN HONDA MOTOR CO., INC.

    2. Detach the connector clips (A).
    3. Detach the harness clips (B).
    4. Pry up the hooks (C) of the harness holders (D), then release them from the seat cushion frame springs (E).
    5. Disconnect the connectors (F).

GETtheMANUALS.org

Power Seat

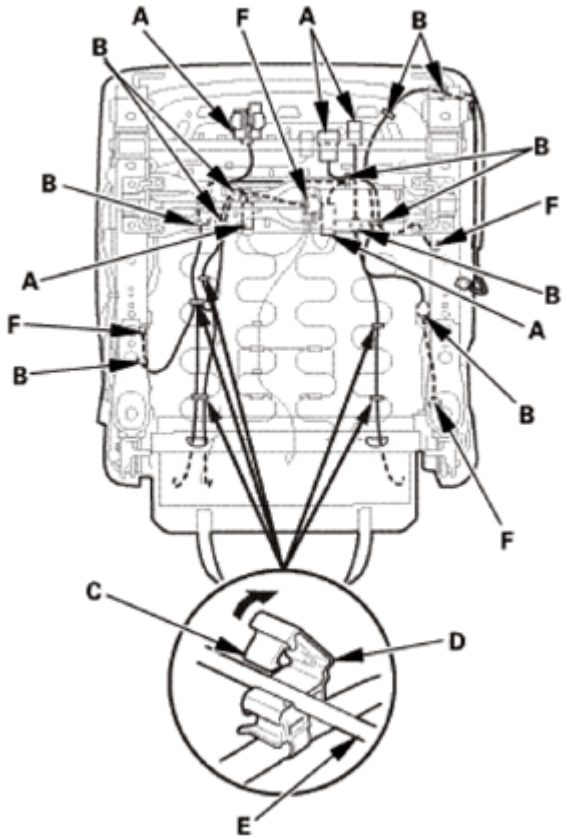

Fig. 365: Removing Seat Cushion Frame Springs Holder (Power Seat)
Courtesy of AMERICAN HONDA MOTOR CO., INC.

Manual Seat with Seat Heater

GETtheMANUALS.org

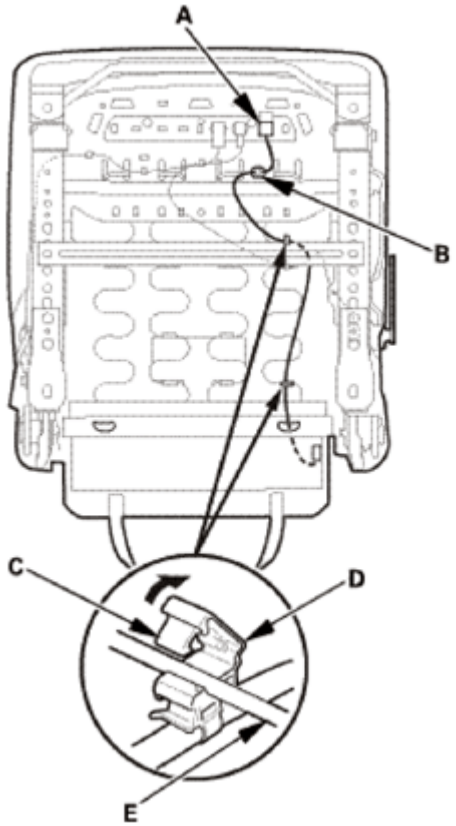

Fig. 366: Removing Seat Cushion Frame Springs Holder (Manual Seat With Seat Heater)
Courtesy of AMERICAN HONDA MOTOR CO., INC.

6. Release the hook strip (A).
7. Unzip the seat-back cover (B).

GETtheMANUALS.org

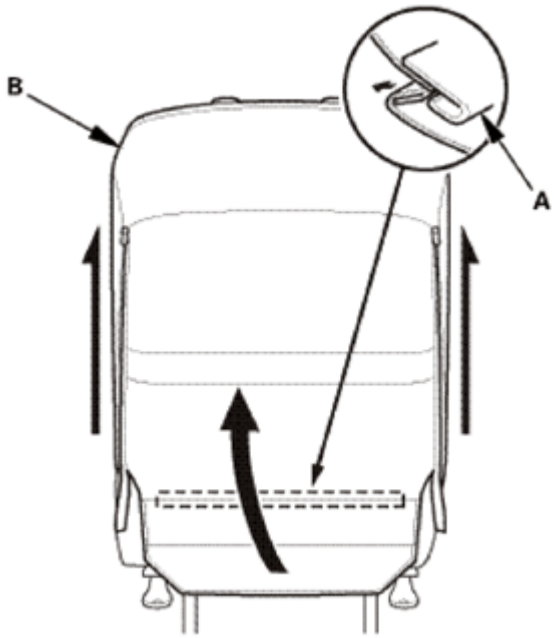

Fig. 367: Removing Seat-Back Cover
Courtesy of AMERICAN HONDA MOTOR CO., INC.

8. Release the hook strips (A), and loosen the seat-back cover (B).

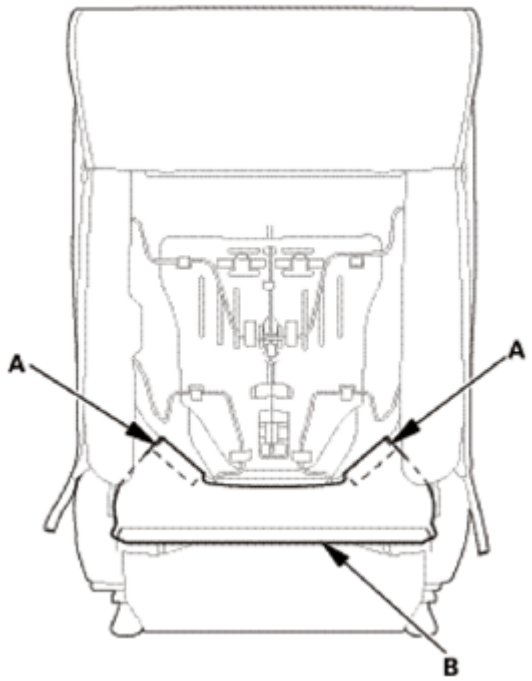

Fig. 368: Identifying Seat-Back Cover Hook Strips
Courtesy of AMERICAN HONDA MOTOR CO., INC.

9. Detach the harness clips (A).

GETtheMANUALS.org

10. Pull out the harnesses (B) through the holes (C) in the seat-back cover (D).

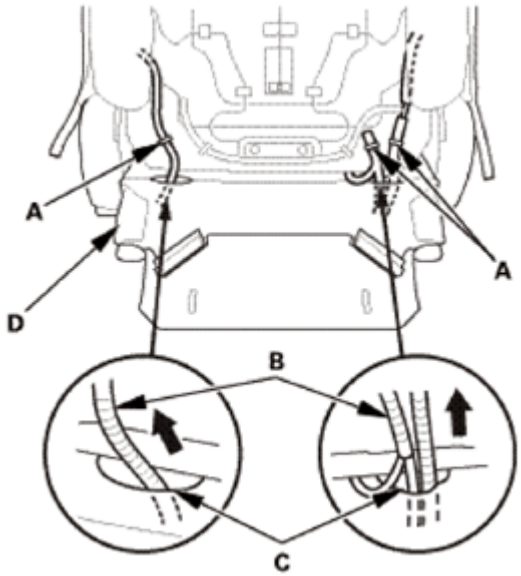

Fig. 369: Removing Harnesses Through Holes From Seat-Back Cover
Courtesy of AMERICAN HONDA MOTOR CO., INC.

11. Release airbag attachment wires A, B from the seat-back frame (C).

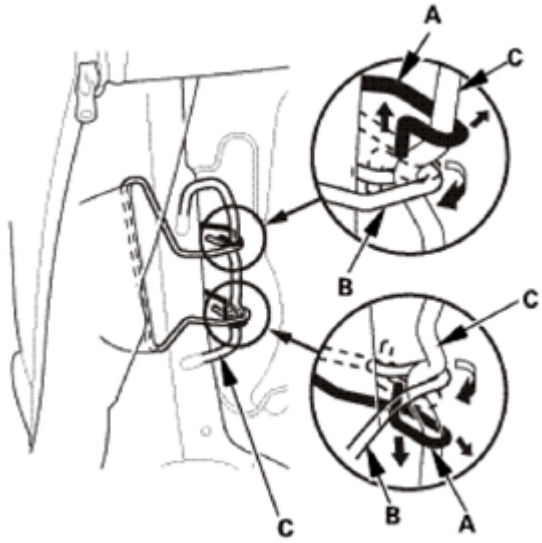

Fig. 370: Releasing Airbag Attachment Wires From Seat-Back Frame
Courtesy of AMERICAN HONDA MOTOR CO., INC.

12. Release the hook strips (A) from the seat-back frame (B).

GETtheMANUALS.org

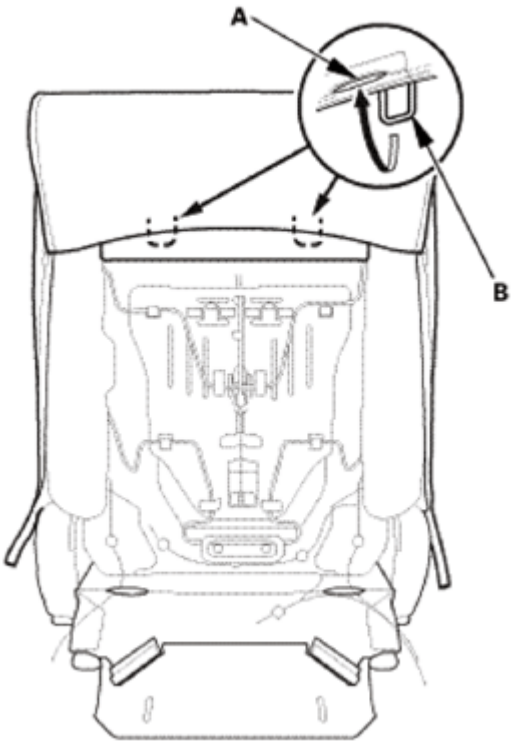

Fig. 371: Releasing Hook Strips From Seat-Back Frame
Courtesy of AMERICAN HONDA MOTOR CO., INC.

7. Head Restraint Guides - Driver's Side
    1. Pinch the tabs (A) on the end of the head restraint guides (B), and remove the guides from the seat-back.

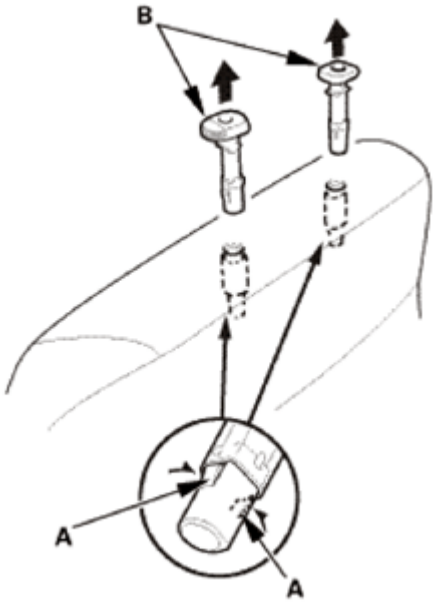

Fig. 372: Removing Guides From Seat-Back

GETtheMANUALS.org

Courtesy of AMERICAN HONDA MOTOR CO., INC.

8. Front Seat-Back Cover/Pad - Driver's Side
    1. Remove the seat-back cover/pad (A) from the seat-back frame (B).

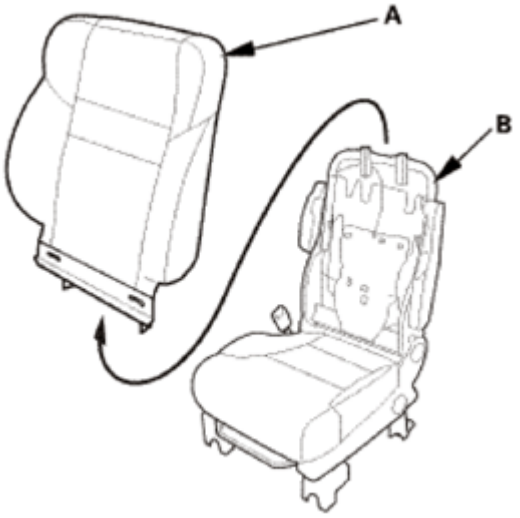

Fig. 373: Removing Seat-Back Cover/Pad From Seat-Back Frame
Courtesy of AMERICAN HONDA MOTOR CO., INC.

9. Front Seat Lumbar Support
    1. Remove the cable band (A) fastening the lumbar support cable (B).
    2. Remove the two screws (C) and the plate (D).

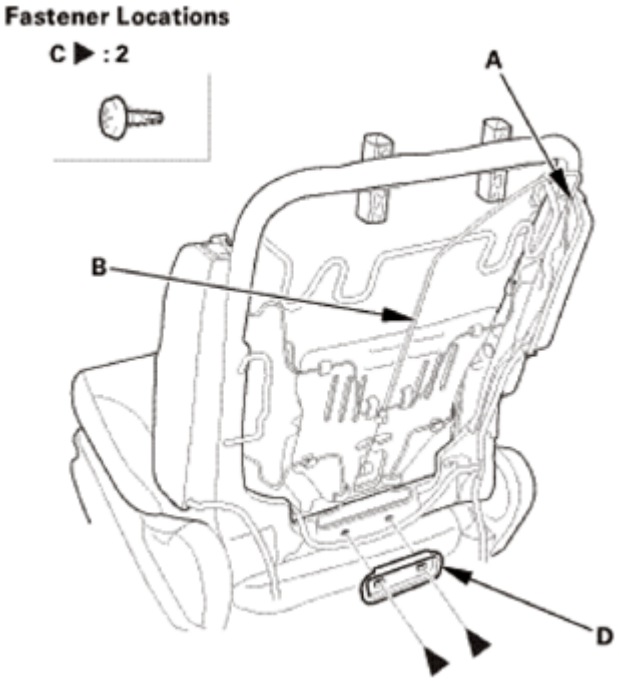

GETtheMANUALS.org

Fig. 374: Identifying Lumbar Support Cable, Plate, Cable Band And Screws
Courtesy of AMERICAN HONDA MOTOR CO., INC.

3. Release the lower wire (A) from both seat-back side frames (B), then remove the lumbar support (C).

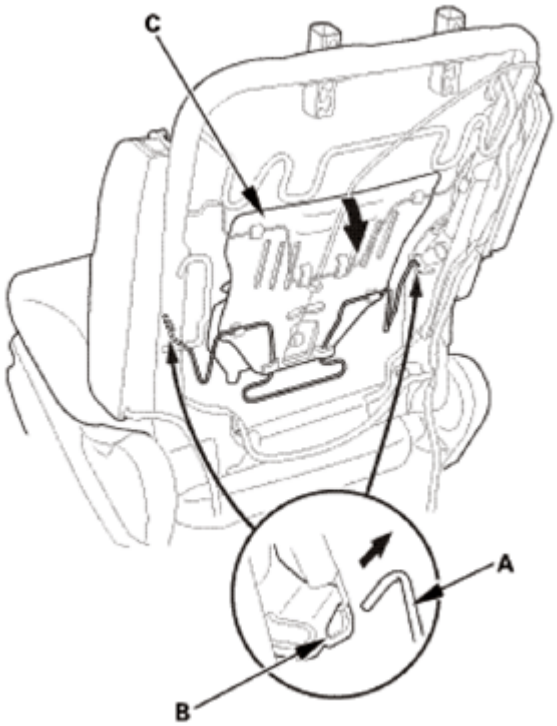

Fig. 375: Removing Lumbar Support
Courtesy of AMERICAN HONDA MOTOR CO., INC.

4. Release the hook (A), then remove the pin (B).
5. Pull the cover up to release it from the upper hook (C), then remove the power lumbar support motor cover (D).

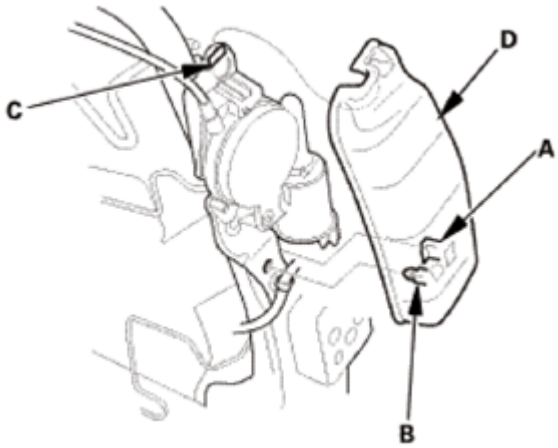

GETtheMANUALS.org

Fig. 376: Identifying Power Lumbar Support Motor Cover, Hooks And Pin
Courtesy of AMERICAN HONDA MOTOR CO., INC.

6. Disconnect the connector and detach the harness clip (A).
7. Remove the nuts (B), and separate the lumbar support motor (C) from the seat frame (D), then remove the lumbar support.

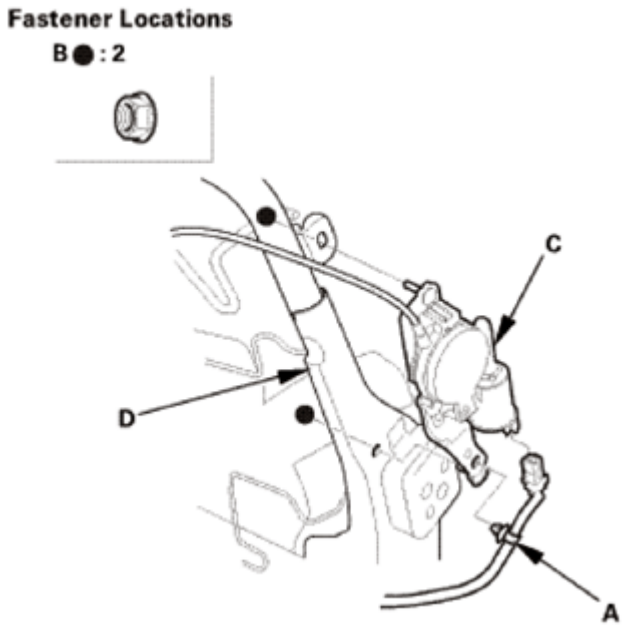

Fig. 377: Identifying Lumbar Support Motor, Seat Frame, Nuts And Clips
Courtesy of AMERICAN HONDA MOTOR CO., INC.

INSTALLATION

SRS components are located in this area. Review the **SRS COMPONENT LOCATIONS** and the **PRECAUTIONS AND PROCEDURES** before doing repairs or service.

1. Front Seat Lumbar Support
    1. Install the lumbar support motor (A) to the seat frame (B), then install the nuts (C).
    2. Connect the connector and install the harness clip (D).

GETtheMANUALS.org

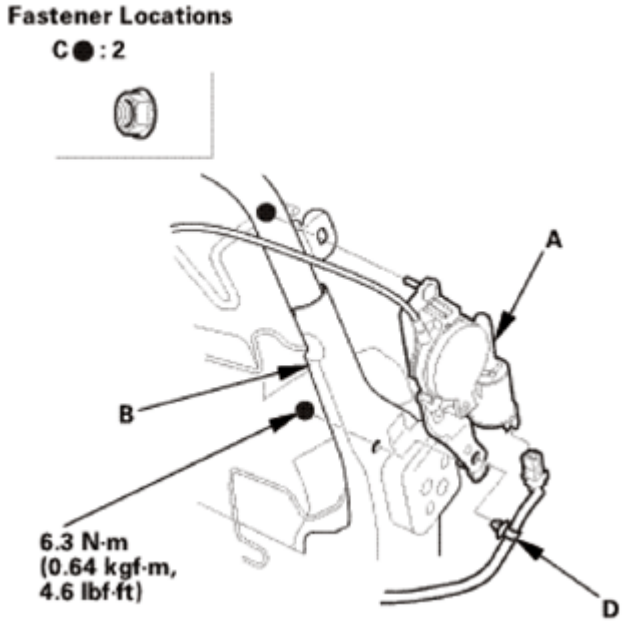

Fig. 378: Identifying Lumbar Support Motor, Seat Frame, Clip And Nuts With Torque Specifications
Courtesy of AMERICAN HONDA MOTOR CO., INC.

3. Insert the lumbar support motor cover (A) down to install it to the upper hook (B).
4. Install the cover to the lower hook (C) and the pin (D). Make sure the hooks snap into place securely.

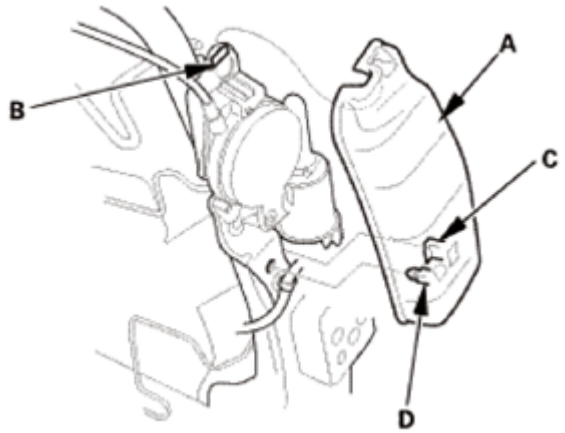

Fig. 379: Identifying Lumbar Support Motor Cover, Hooks And Pin
Courtesy of AMERICAN HONDA MOTOR CO., INC.

5. Install the lower wire (A) to both seat-back side frames (B), then install the lumbar support (C).

GETtheMANUALS.org

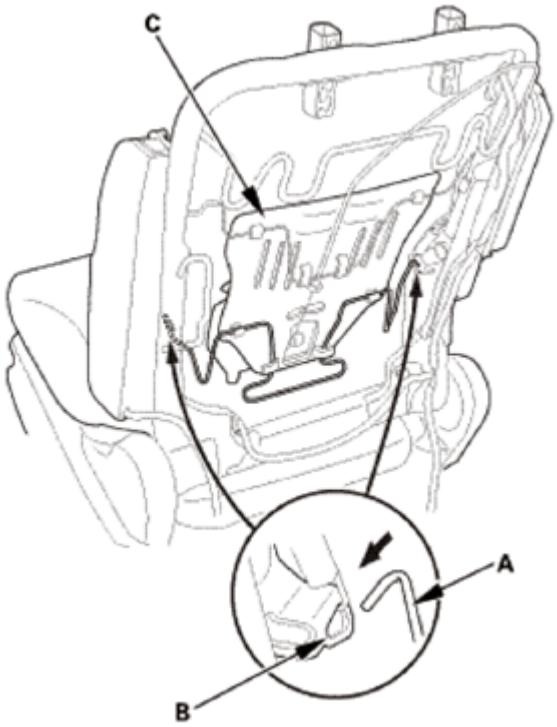

Fig. 380: Installing Lower Wire To Seat-Back Side Frame
Courtesy of AMERICAN HONDA MOTOR CO., INC.

6. Install the plate (A) and the two screws (B) to the seat frame (C).
7. Install the cable band (D) securing the lumbar support cable (E).

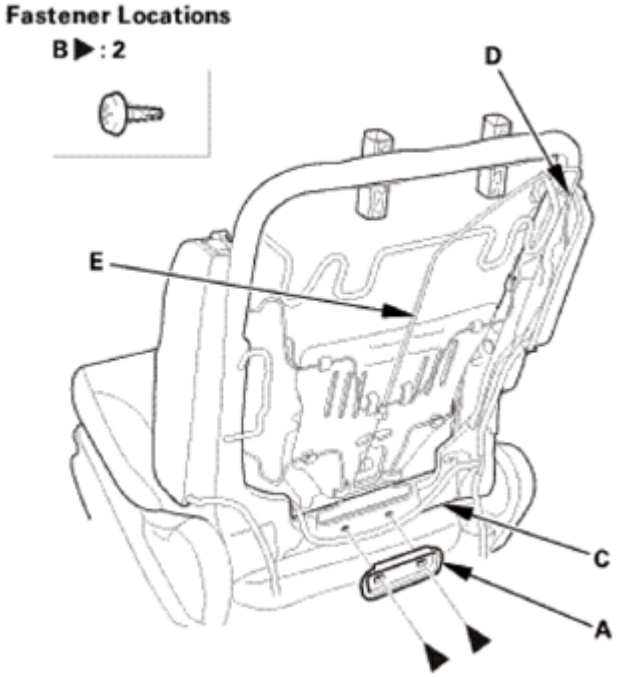

GETtheMANUALS.org

Fig. 381: Identifying Lumbar Support Cable, Seat Frame, Band, Plate And Screws
Courtesy of AMERICAN HONDA MOTOR CO., INC.

2. Front Seat-Back Cover/Pad - Driver's Side
    1. Install the seat-back cover/pad (A) on the seat-back frame (B).

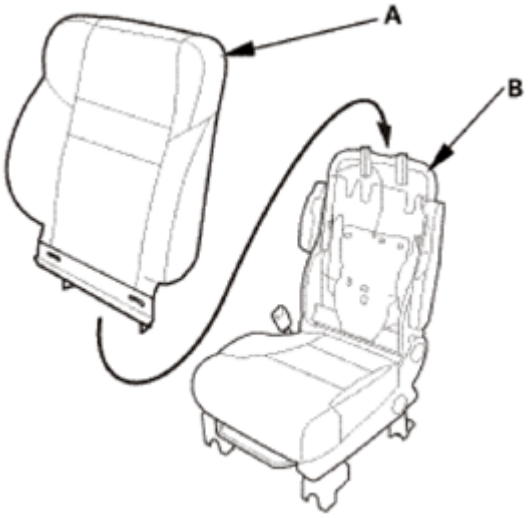

Fig. 382: Installing Seat-Back Cover/Pad On Seat-Back Frame
Courtesy of AMERICAN HONDA MOTOR CO., INC.

3. Head Restraint Guides - Driver's Side
    1. Install the head restraint guides (A).

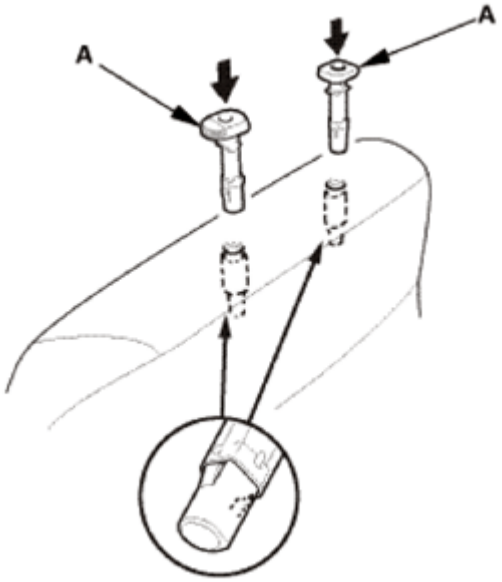

Fig. 383: Installing Head Restraint Guides
Courtesy of AMERICAN HONDA MOTOR CO., INC.

GETtheMANUALS.org

4. Front Seat-Back - Driver's Side
    1. Install the hook strips (A) to the seat-back frame (B).

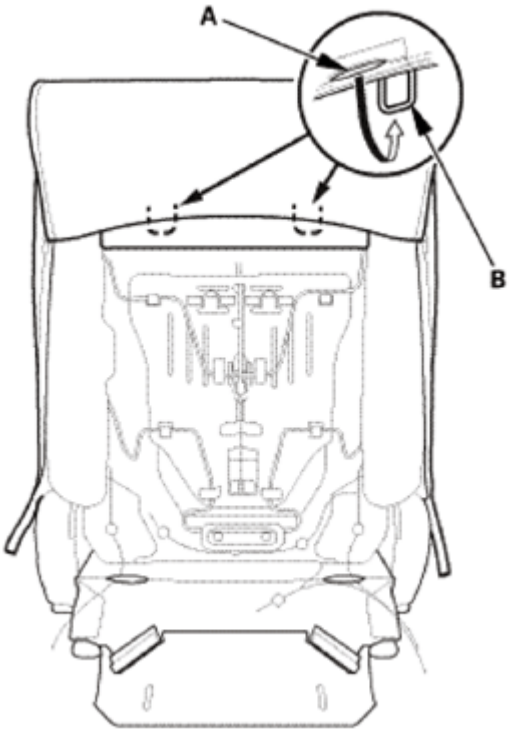

Fig. 384: Installing Hook Strips To Seat-Back Frame
Courtesy of AMERICAN HONDA MOTOR CO., INC.

    2. Install airbag attachment wires A, B to the seat-back frame (C).

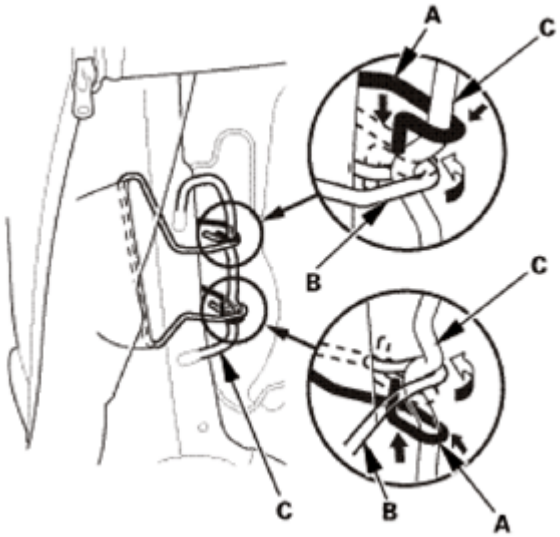

Fig. 385: Installing Airbag Attachment Wires To Seat-Back Frame
Courtesy of AMERICAN HONDA MOTOR CO., INC.

GETtheMANUALS.org

3. Install the harness clips (A).
4. Install the harnesses (B) through the holes (C) in the seat-back cover (D).

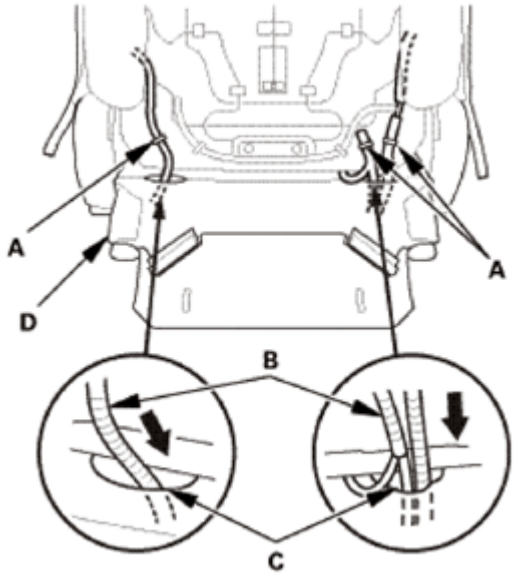

Fig. 386: Installing Harnesses Through Holes In Seat-Back Cover
Courtesy of AMERICAN HONDA MOTOR CO., INC.

5. Install the hook strips (A) to the seat frame.

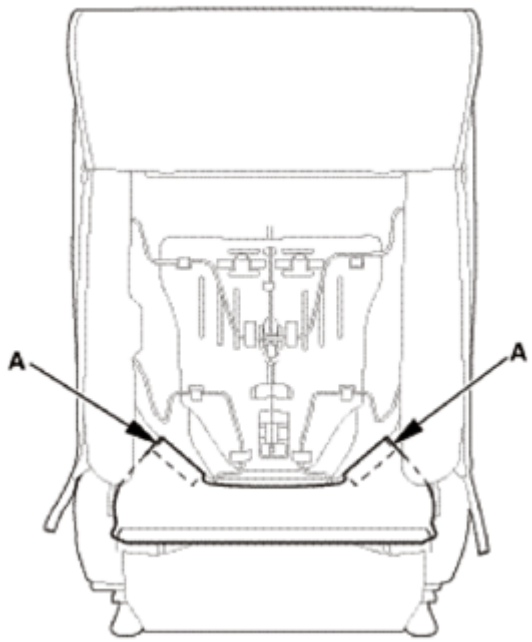

Fig. 387: Installing Hook Strips To Seat-Back Frame
Courtesy of AMERICAN HONDA MOTOR CO., INC.

GETtheMANUALS.org

6. Zip the seat-back cover (A).
7. Install the hook strip (B).

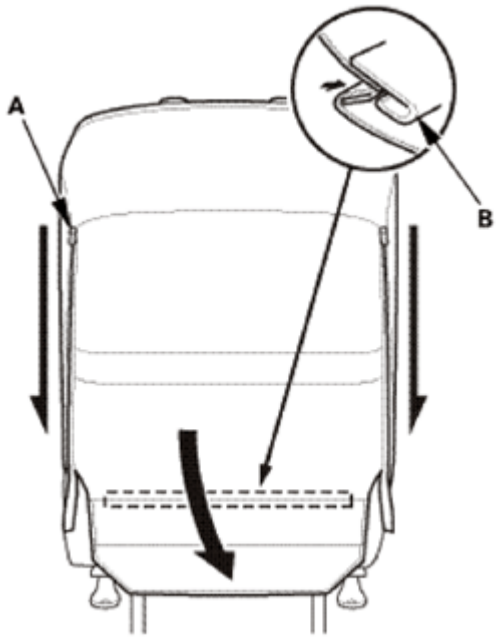

Fig. 388: Removing Seat Back Cover
Courtesy of AMERICAN HONDA MOTOR CO., INC.

8. Install the connector clips (A).
9. Install the harness clips (B).
10. Install the harness holders (C) to the seat cushion frame springs (D).
11. Connect the connector (E).

Power Seat

GETtheMANUALS.org

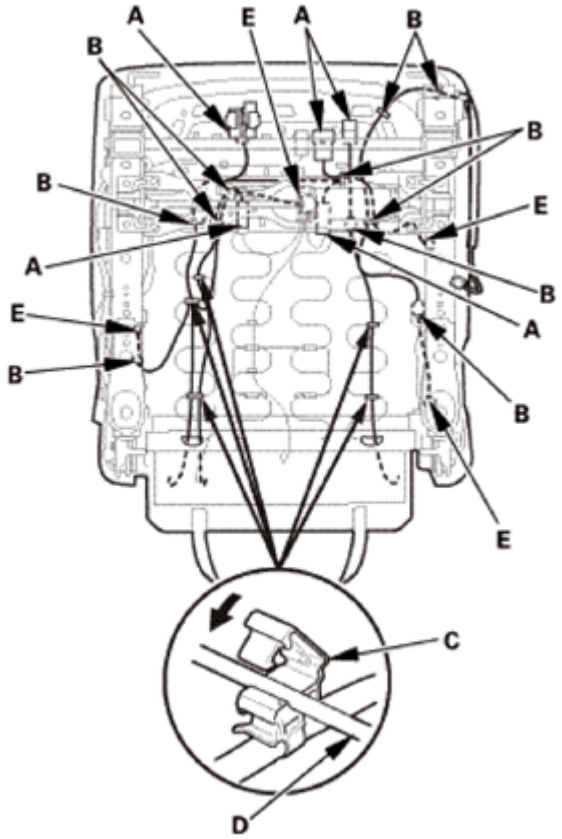

Fig. 389: Installing Harness Holder To Seat Cushion Frame Springs (Power Seat)
Courtesy of AMERICAN HONDA MOTOR CO., INC.

Manual Seat with Seat Heater

GETtheMANUALS.org

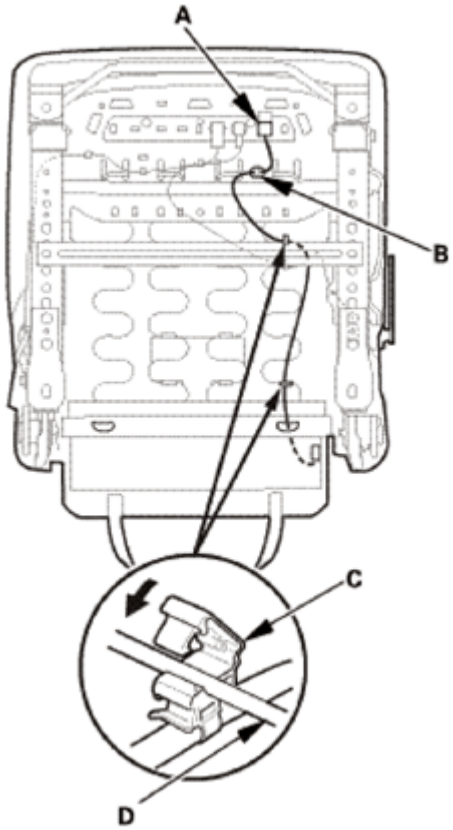

Fig. 390: Installing Harness Holder To Seat Cushion Frame Springs (Manual Seat With Seat Heater)
Courtesy of AMERICAN HONDA MOTOR CO., INC.

12. Install the elastic strap (A) to the seat cushion frame springs (B).

GETtheMANUALS.org

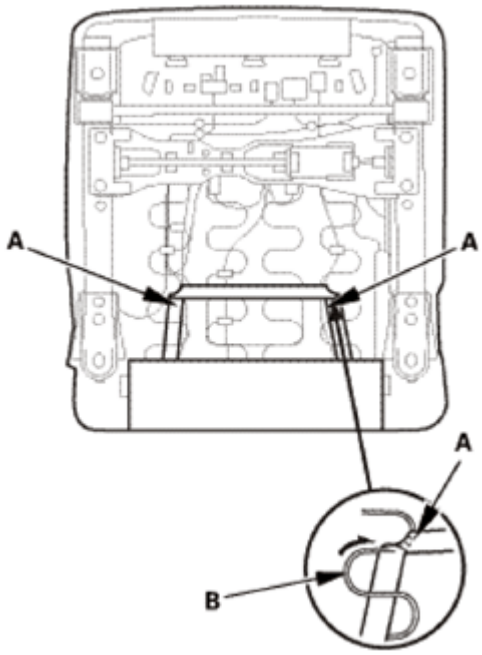

Fig. 391: Installing Elastic Strap To Seat Cushion Frame Springs
Courtesy of AMERICAN HONDA MOTOR CO., INC.

5. Front Seat Armrest
    1. Install the pins (A) to the seat-back.

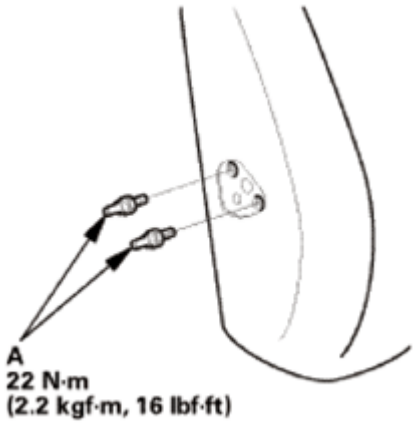

Fig. 392: Identifying Seat Back Pins With Torque Specifications
Courtesy of AMERICAN HONDA MOTOR CO., INC.

    2. Install the armrest (A), then install the washer (B), the bushing (C), and the center pin (D).
    3. Install the cap (E) to the armrest.

GETtheMANUALS.org

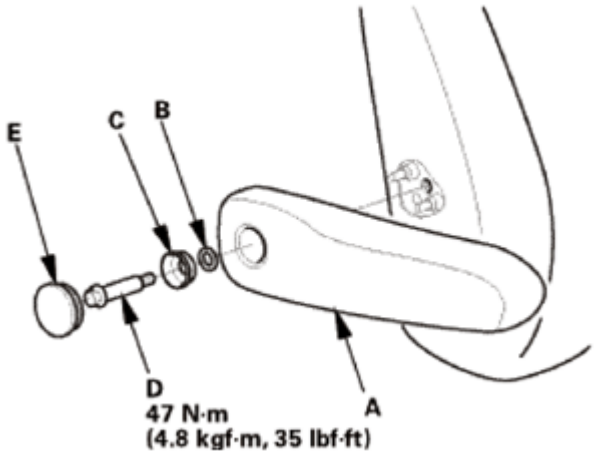

Fig. 393: Identifying Front Seat Armrest, Center Pin, Bushing, Washer And Cap With Torque Specifications
Courtesy of AMERICAN HONDA MOTOR CO., INC.

6. Front Seat - Driver's Side
    1. Connect the connectors (A).
    2. Install the harness clip (B).

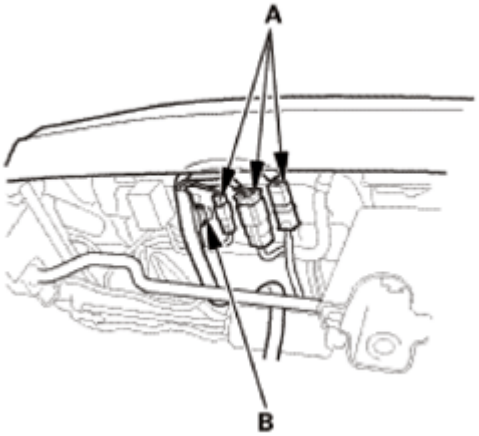

Fig. 394: Identifying Front Seat Connectors And Clips (Driver Side)
Courtesy of AMERICAN HONDA MOTOR CO., INC.

3. Install the seat mounting bolts (A).

NOTE:

- **Tighten the bolts by hand first, then tighten them to the specified torque.**
- **Tighten the seat mounting bolts to the specified torque in the sequence shown. Slide the seat all the way back and tighten bolts 1 and 2, then slide it forward and tighten bolts 3 and 4.**

GETtheMANUALS.org

Front Side

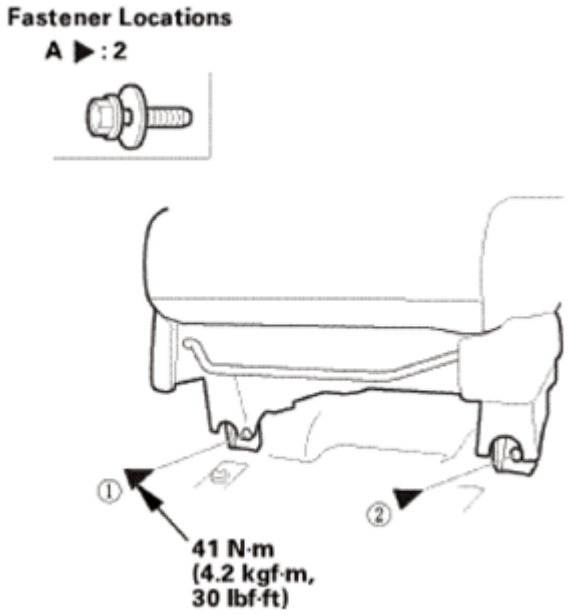

Fig. 395: Identifying Seat Mounting Bolts With Torque Specifications (Front Side)
Courtesy of AMERICAN HONDA MOTOR CO., INC.

Rear Side

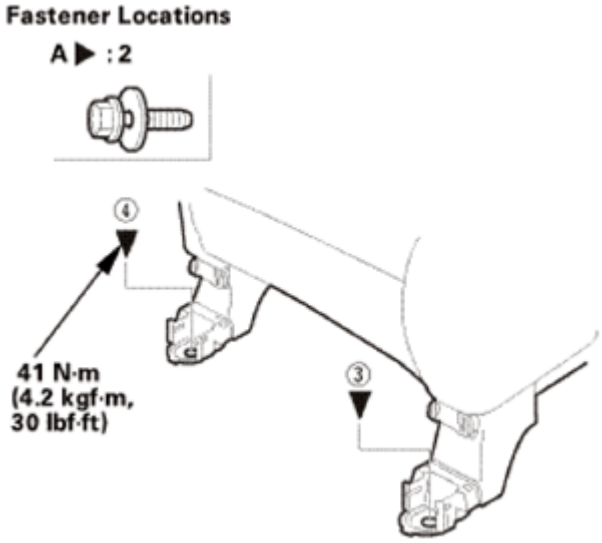

Fig. 396: Identifying Seat Mounting Bolts With Torque Specifications (Rear Side)
Courtesy of AMERICAN HONDA MOTOR CO., INC.

4. Install the rear inner seat track end cover (A) and the rear outer seat track end cover (B). Make sure the hooks (C) snap into place securely.

GETtheMANUALS.org

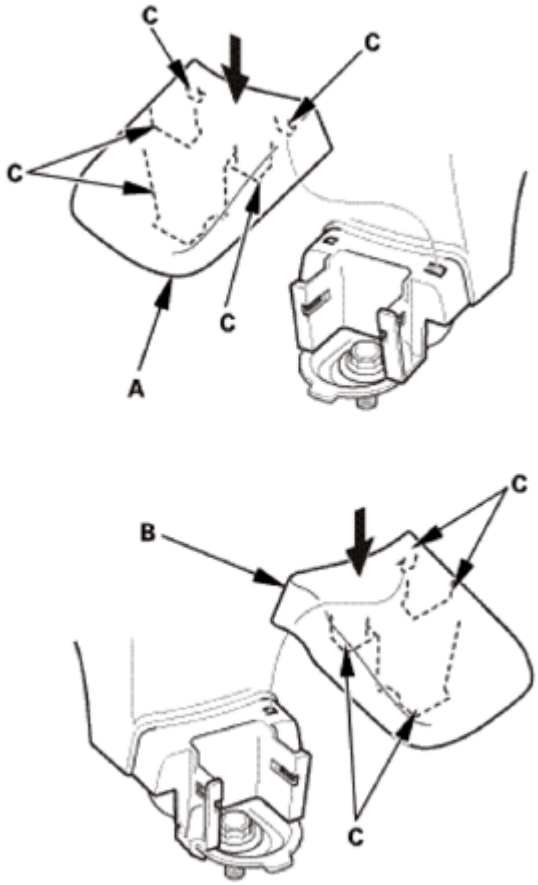

Fig. 397: Installing Rear Inner And Outer Seat Track End Cover
Courtesy of AMERICAN HONDA MOTOR CO., INC.

7. Head Restraint - Driver's Side
    1. Insert the head restraint (A) to the seat-back as shown.

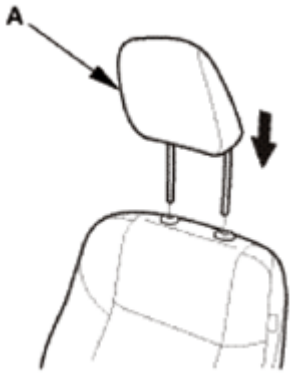

Fig. 398: Inserting Head Restraint To Seat-Back (Driver Side)
Courtesy of AMERICAN HONDA MOTOR CO., INC.

8. Battery Terminal (SRS) - Reconnection

GETtheMANUALS.org

NOTE: **If the battery performance is abnormal, test the battery.**

1. Clean the battery terminals.
2. Connect the positive cable (A) to the battery.

   NOTE: **Always connect the positive side first.**

3. Connect the negative cable (B) to the battery.
4. Apply multipurpose grease to the terminals to prevent corrosion.

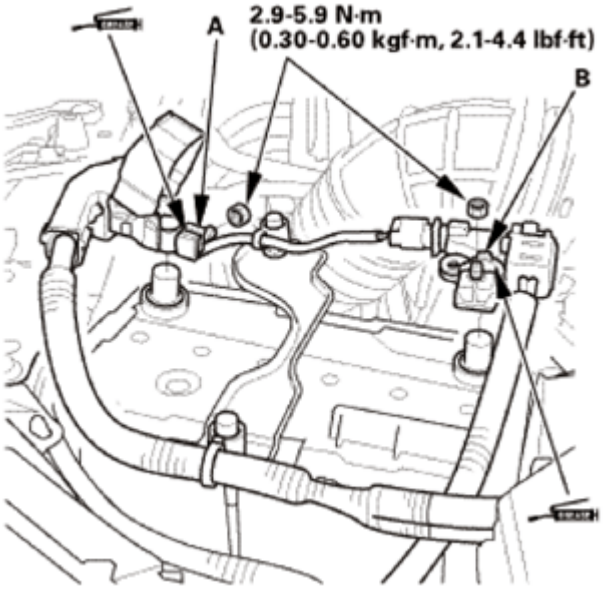

Fig. 399: Identifying Battery Positive And Negative Cable With Torque Specifications
Courtesy of AMERICAN HONDA MOTOR CO., INC.

9. Front Seat Belt Lower Anchor Bolt
   1. Install the lower anchor bolt.

      NOTE: **Before installing the anchor bolt, make sure there are no twists or kinks in the seat belt.**

GETtheMANUALS.org

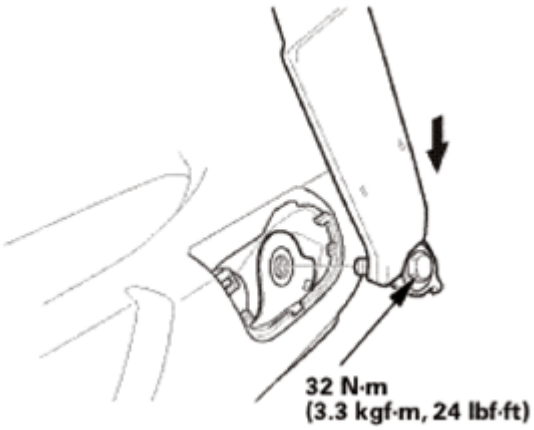

Fig. 400: Installing Front Seat Belt Lower Anchor Bolt
Courtesy of AMERICAN HONDA MOTOR CO., INC.

2. Install the anchor cover (A). Make sure the hooks (B) and the tab (C) snap into place securely.

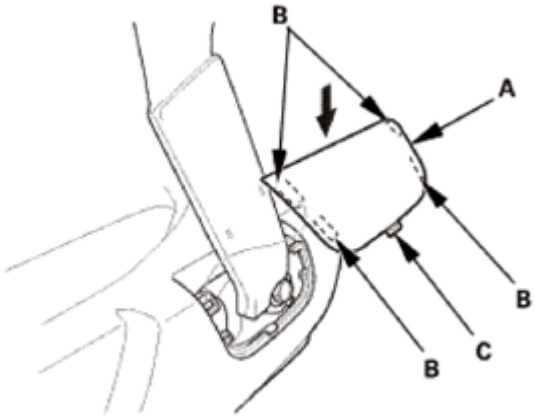

Fig. 401: Installing Front Seat Belt Lower Anchor Cover
Courtesy of AMERICAN HONDA MOTOR CO., INC.

FRONT SEAT REMOVAL AND INSTALLATION

REMOVAL

SRS components are located in this area. Review the SRS COMPONENT LOCATIONS and the PRECAUTIONS AND PROCEDURES before doing repairs or service .

NOTE: Before the front power seat is removed, slide the front power seat to the half-way position, then raise the seat to the highest position.

1. Front Seat Belt Lower Anchor Bolt
    1. Slide the front seat forward fully, carefully pry up on the bottom edge of the anchor cover (A) at the pry point (B) with the appropriate trim tool to release the hooks (C) and the tab (D), then remove

GETtheMANUALS.org

the cover by pulling it up.

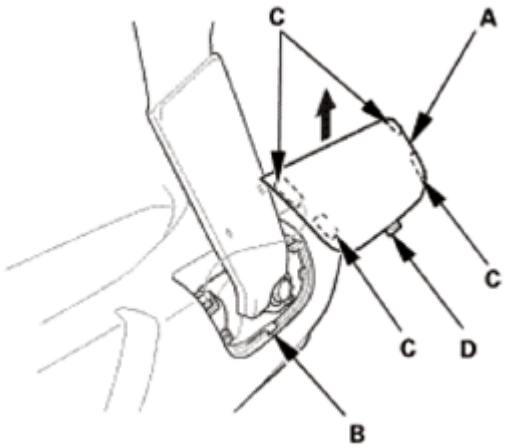

Fig. 402: Removing Front Seat Lower Anchor Cover
Courtesy of AMERICAN HONDA MOTOR CO., INC.

2. Remove the lower anchor bolt (A).

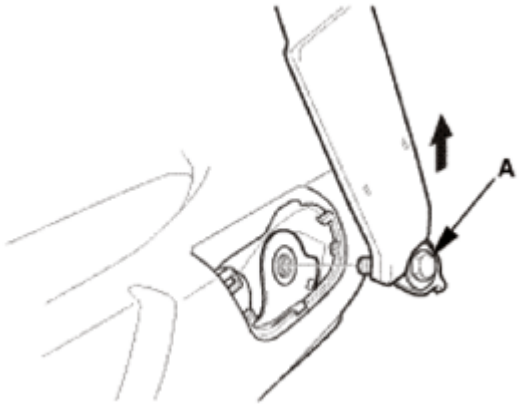

Fig. 403: Removing Front Seat Belt Lower Anchor Bolt
Courtesy of AMERICAN HONDA MOTOR CO., INC.

2. Battery Terminal (SRS) - Disconnection
    1. Make sure the ignition switch is in LOCK (0).
    2. Disconnect and isolate the negative cable (A) from the battery.

    NOTE: Always disconnect the negative side first.

    3. Disconnect the positive cable (B) from the battery.
    4. Wait at least 3 minutes before starting work.

GETtheMANUALS.org

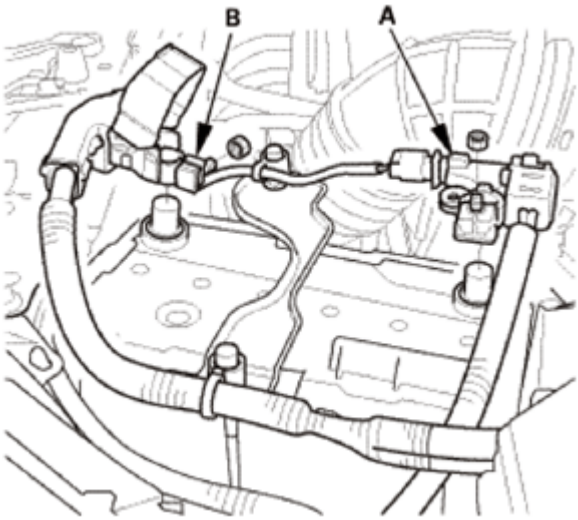

Fig. 404: Identifying Battery Positive And Negative Cable
Courtesy of AMERICAN HONDA MOTOR CO., INC.

3. Head Restraint - Driver's Side
    1. Push and hold the knob (A), then pull out the head restraint (B) as shown.

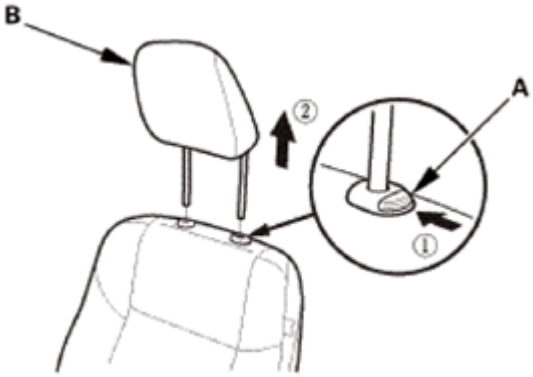

Fig. 405: Pulling Head Restraint (Driver Side)
Courtesy of AMERICAN HONDA MOTOR CO., INC.

4. Front Seat Assembly
    1. Detach the hooks (A), then remove the rear inner seat track end cover (B) and the rear outer seat track end cover (C).

GETtheMANUALS.org

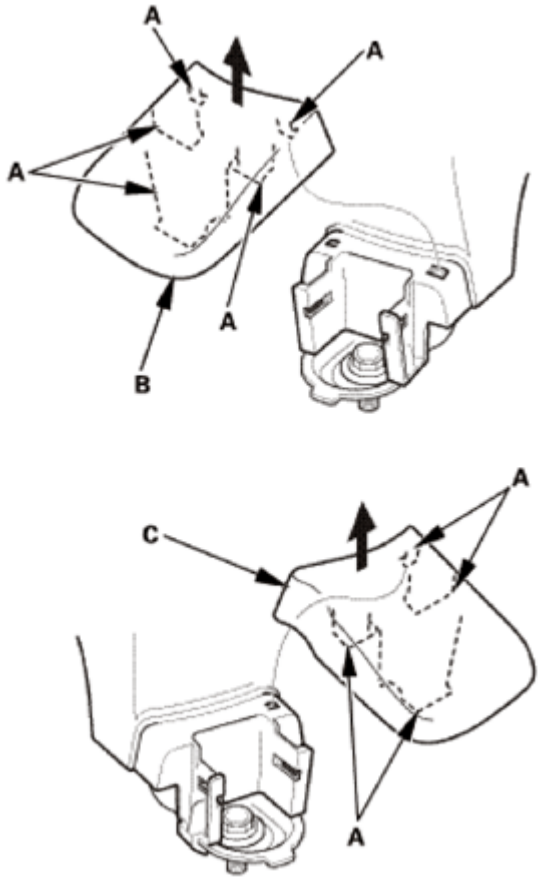

Fig. 406: Removing Rear Inner And Outer Seat Track End Cover
Courtesy of AMERICAN HONDA MOTOR CO., INC.

2. Remove the seat mounting bolts (A) from the front side of the front seat.

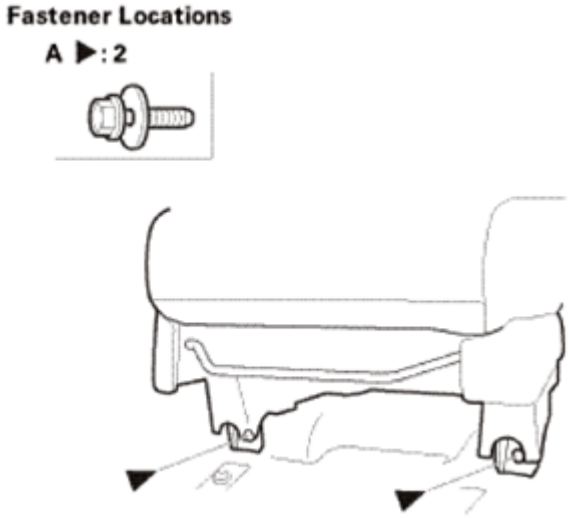

Fig. 407: Identifying Front Seat Mounting Bolts (Front Side)
Courtesy of AMERICAN HONDA MOTOR CO., INC.

GETtheMANUALS.org

3. Remove the seat mounting bolts (A) from the rear side of the front seat.

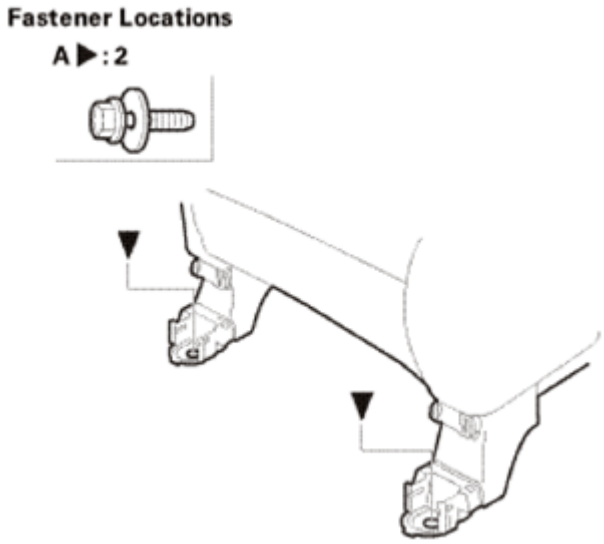

Fig. 408: Identifying Front Seat Mounting Bolts (Rear Side)
Courtesy of AMERICAN HONDA MOTOR CO., INC.

4. Disconnect the connectors (A).
5. Detach the harness clip (B).

Driver's Seat

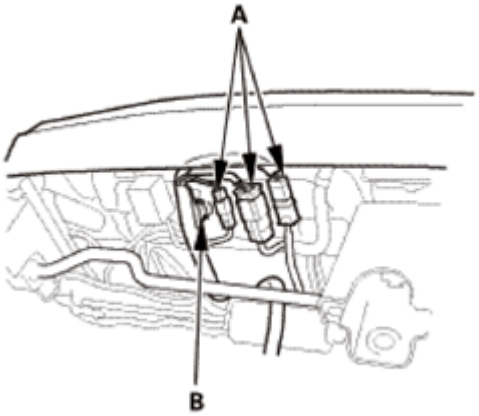

Fig. 409: Identifying Front Seat Connectors And Clips (Driver Seat)
Courtesy of AMERICAN HONDA MOTOR CO., INC.

Passenger's Seat (Without Subwoofer)

GETtheMANUALS.org

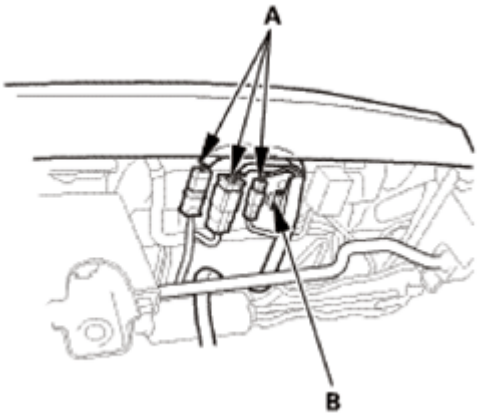

Fig. 410: Identifying Front Seat Connectors And Clips (Passenger Seat - Without Subwoofer)
Courtesy of AMERICAN HONDA MOTOR CO., INC.

Passenger's Seat (With Subwoofer)

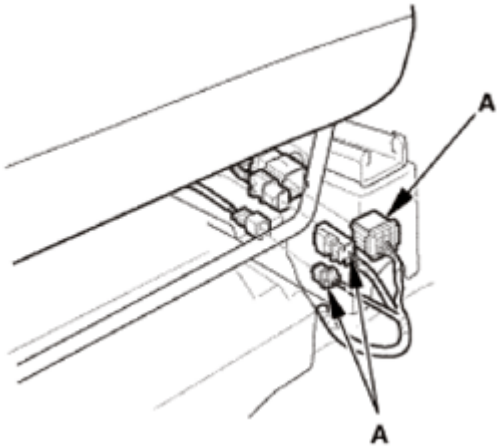

Fig. 411: Identifying Front Seat Connectors And Clips (Passenger Seat - With Subwoofer)
Courtesy of AMERICAN HONDA MOTOR CO., INC.

INSTALLATION

SRS components are located in this area. Review the **SRS COMPONENT LOCATIONS** and the **PRECAUTIONS AND PROCEDURES** before doing repairs or service.

1. Front Seat Assembly
    1. Connect the connectors (A).
    2. Install the harness clip (B).

    Driver's Seat

GETtheMANUALS.org

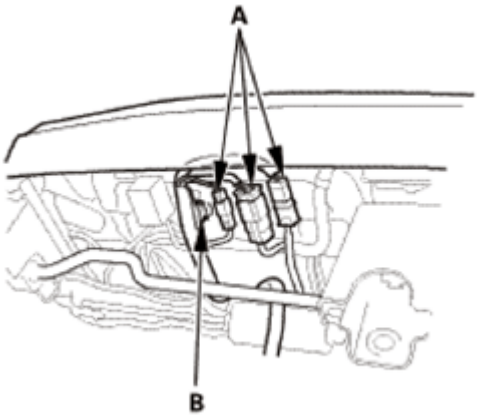

Fig. 412: Identifying Front Seat Connectors And Clips (Driver Seat)
Courtesy of AMERICAN HONDA MOTOR CO., INC.

Passenger's Seat (Without Subwoofer)

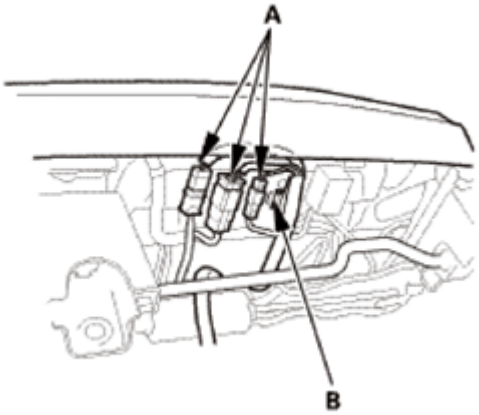

Fig. 413: Identifying Front Seat Connectors And Clips (Passenger Seat - Without Subwoofer)
Courtesy of AMERICAN HONDA MOTOR CO., INC.

Passenger's Seat (With Subwoofer)

GETtheMANUALS.org

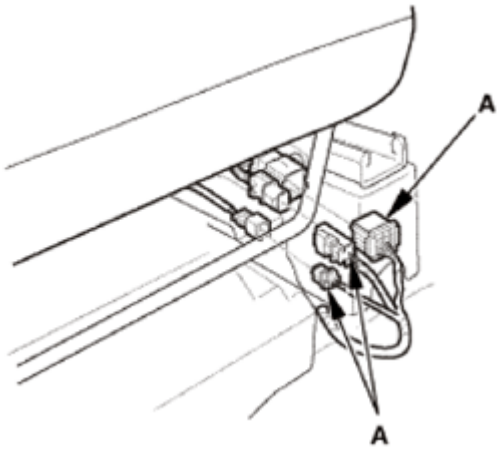

Fig. 414: Identifying Front Seat Connectors And Clips (Passenger Seat - With Subwoofer)
Courtesy of AMERICAN HONDA MOTOR CO., INC.

3. Install the seat mounting bolts.

NOTE:

- **Tighten the bolts by hand first, then tighten them to the specified torque.**
- **Tighten the seat mounting bolts (A) to the specified torque in the sequence shown. Slide the seat all the way back and tighten bolts 1 and 2, then slide it forward and tighten bolts 3 and 4.**

Front Side

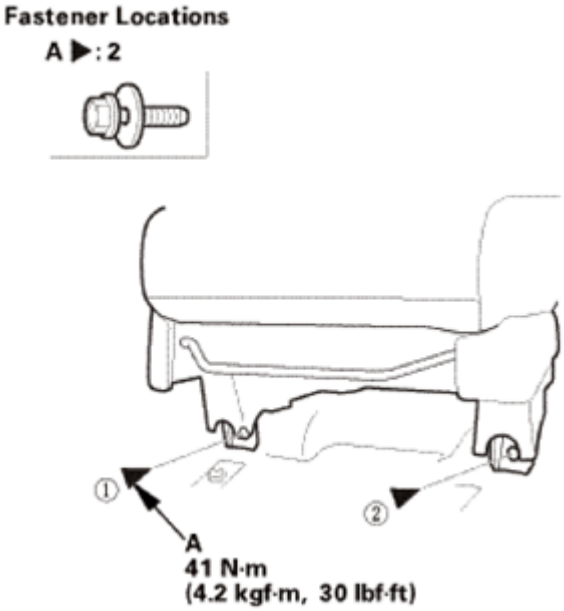

Fig. 415: Identifying Seat Mounting Bolts With Torque Specifications (Front Side)
Courtesy of AMERICAN HONDA MOTOR CO., INC.

GETtheMANUALS.org

Rear Side

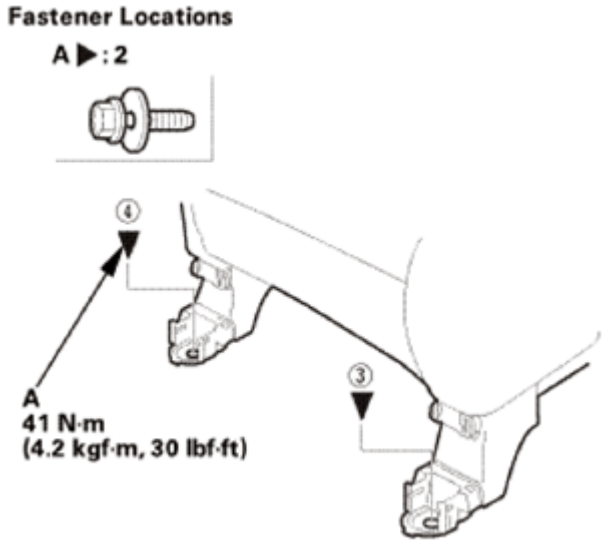

Fig. 416: Identifying Seat Mounting Bolts With Torque Specifications (Rear Side)
Courtesy of AMERICAN HONDA MOTOR CO., INC.

4. Install the rear inner seat track end cover (A) and the rear outer seat track end cover (B). Make sure the hooks (C) snap into place securely.

NOTE: Repeat this procedure on the opposite side.

GETtheMANUALS.org

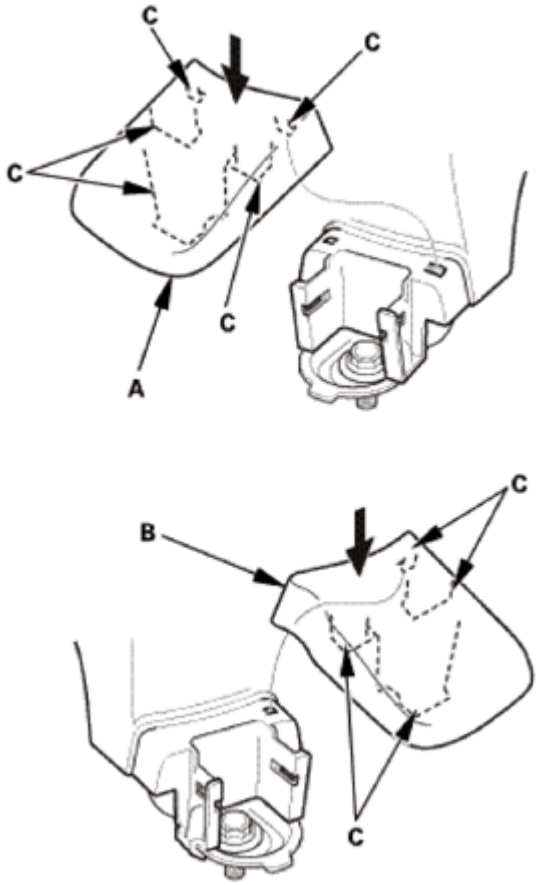

Fig. 417: Installing Rear Inner And Outer Seat Track End Cover
Courtesy of AMERICAN HONDA MOTOR CO., INC.

2. Head Restraint - Driver's Side
    1. Insert the head restraint (A) to the seat-back as shown.

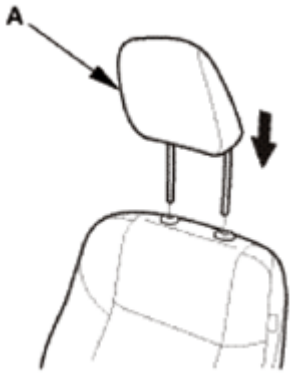

Fig. 418: Inserting Head Restraint To Seat-Back (Driver Side)
Courtesy of AMERICAN HONDA MOTOR CO., INC.

3. Battery Terminal (SRS) - Reconnection

GETtheMANUALS.org

NOTE: **If the battery performance is abnormal, test the battery.**

1. Clean the battery terminals.
2. Connect the positive cable (A) to the battery.

   NOTE: **Always connect the positive side first.**

3. Connect the negative cable (B) to the battery.
4. Apply multipurpose grease to the terminals to prevent corrosion.

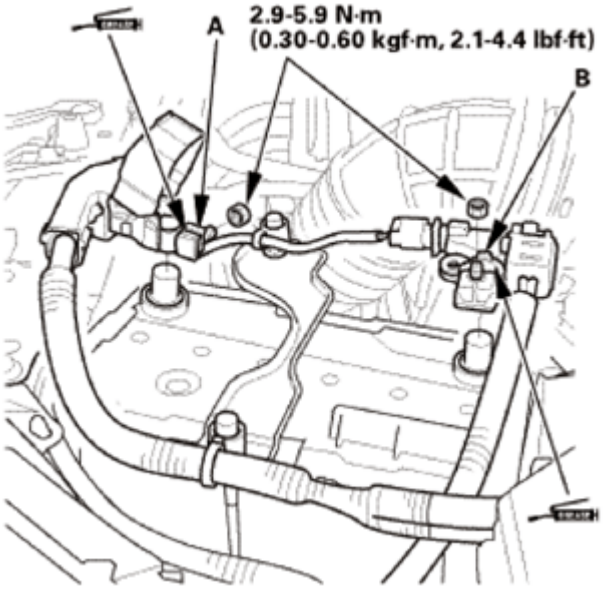

Fig. 419: Identifying Battery Positive And Negative Cable With Torque Specifications
Courtesy of AMERICAN HONDA MOTOR CO., INC.

4. Front Seat Belt Lower Anchor Bolt
   1. Install the lower anchor bolt.

      NOTE: **Before installing the anchor bolt, make sure there are no twists or kinks in the seat belt.**

GETtheMANUALS.org

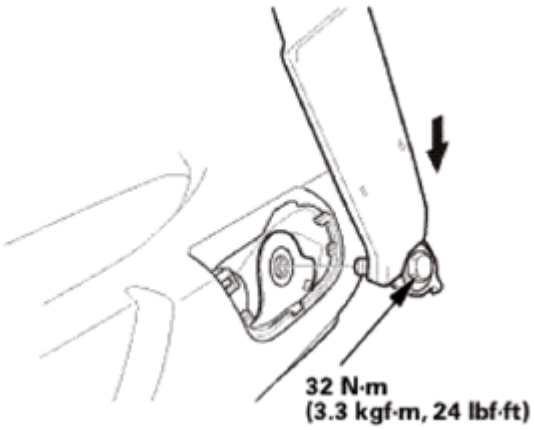

Fig. 420: Installing Front Seat Belt Lower Anchor Bolt
Courtesy of AMERICAN HONDA MOTOR CO., INC.

2. Install the anchor cover (A). Make sure the hooks (B) and the tab (C) snap into place securely.

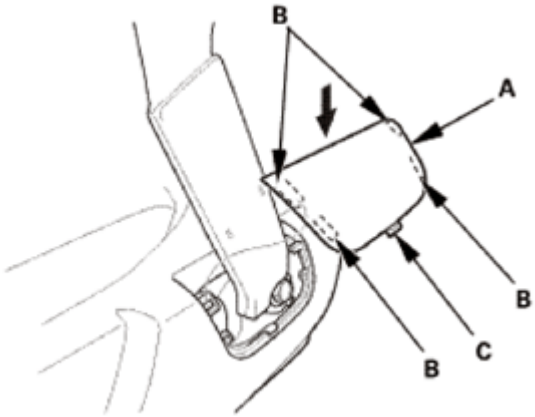

Fig. 421: Installing Front Seat Belt Lower Anchor Cover
Courtesy of AMERICAN HONDA MOTOR CO., INC.

FRONT SEAT SLIDE MOTOR REMOVAL AND INSTALLATION

REMOVAL

SRS components are located in this area. Review the **SRS COMPONENT LOCATIONS** and the **PRECAUTIONS AND PROCEDURES** before doing repairs or service.

NOTE: Before the front power seat is removed, slide the front power seat to the half-way position, then raise the seat to the highest position.

1. Front Seat Belt Lower Anchor Bolt
    1. Slide the front seat forward fully, carefully pry up on the bottom edge of the anchor cover (A) at the pry point (B) with the appropriate trim tool to release the hooks (C) and the tab (D), then remove

GETtheMANUALS.org

the cover by pulling it up.

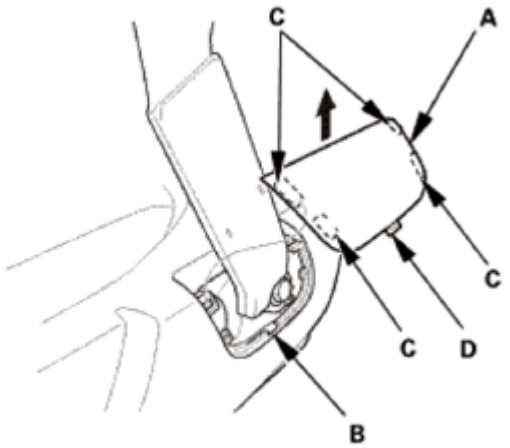

Fig. 422: Removing Front Seat Lower Anchor Cover
Courtesy of AMERICAN HONDA MOTOR CO., INC.

2. Remove the lower anchor bolt (A).

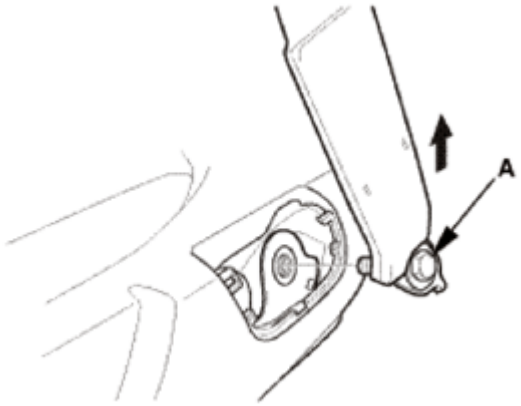

Fig. 423: Removing Front Seat Belt Lower Anchor Bolt
Courtesy of AMERICAN HONDA MOTOR CO., INC.

2. Battery Terminal (SRS) - Disconnection
    1. Make sure the ignition switch is in LOCK (0).
    2. Disconnect and isolate the negative cable (A) from the battery.

    NOTE: Always disconnect the negative side first.

    3. Disconnect the positive cable (B) from the battery.
    4. Wait at least 3 minutes before starting work.

GETtheMANUALS.org

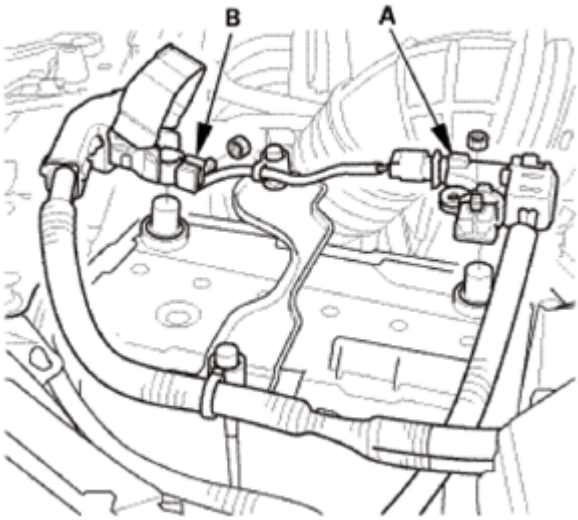

Fig. 424: Identifying Battery Positive And Negative Cable
Courtesy of AMERICAN HONDA MOTOR CO., INC.

3. Head Restraint - Driver's Side
    1. Push and hold the knob (A), then pull out the head restraint (B) as shown.

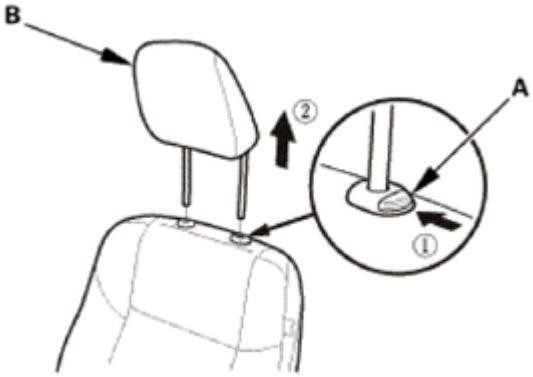

Fig. 425: Pulling Head Restraint (Driver Side)
Courtesy of AMERICAN HONDA MOTOR CO., INC.

4. Front Seat - Driver's Side
    1. Detach the hooks (A), then remove the rear inner seat track end cover (B) and the rear outer seat track end cover (C).

GETtheMANUALS.org

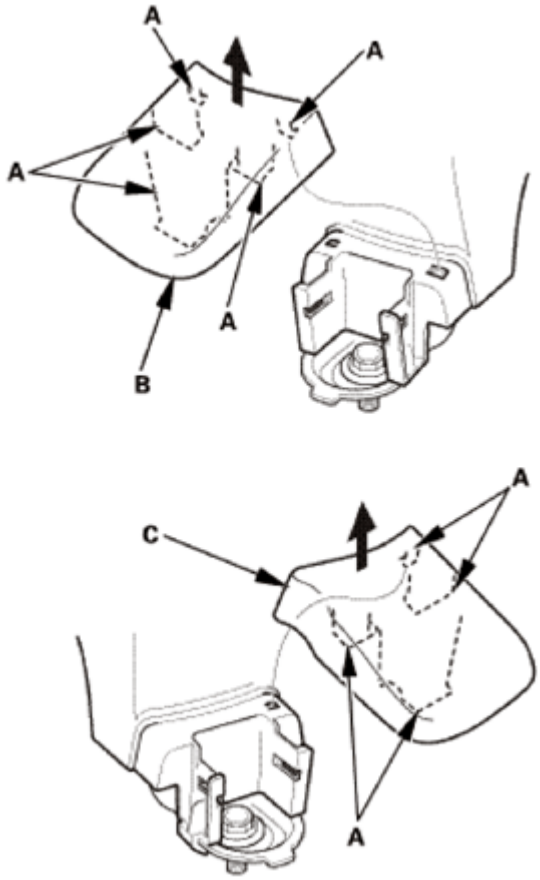

Fig. 426: Removing Rear Inner And Outer Seat Track End Cover
Courtesy of AMERICAN HONDA MOTOR CO., INC.

2. Remove the front mounting bolts (A) from the front seat.

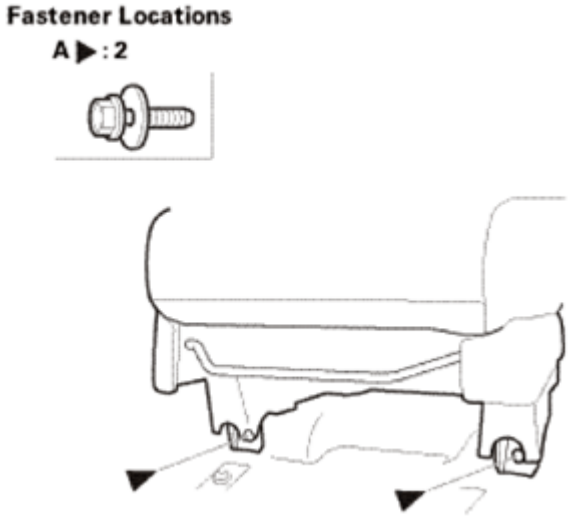

Fig. 427: Identifying Front Seat Front Mounting Bolts
Courtesy of AMERICAN HONDA MOTOR CO., INC.

GETtheMANUALS.org

3. Remove the rear mounting bolts (A) from the front seat.

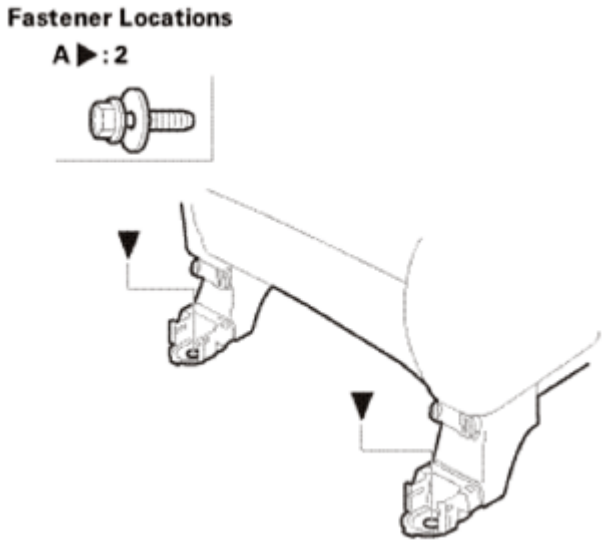

Fig. 428: Identifying Front Seat Rear Mounting Bolts
Courtesy of AMERICAN HONDA MOTOR CO., INC.

4. Disconnect the connectors (A).
5. Detach the harness clip (B).

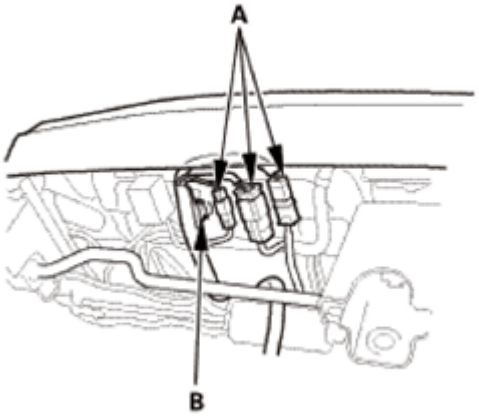

Fig. 429: Identifying Front Seat Connectors And Clips
Courtesy of AMERICAN HONDA MOTOR CO., INC.

5. Front Seat Slide Motor
    1. Remove the slide motor cover (A).

GETtheMANUALS.org

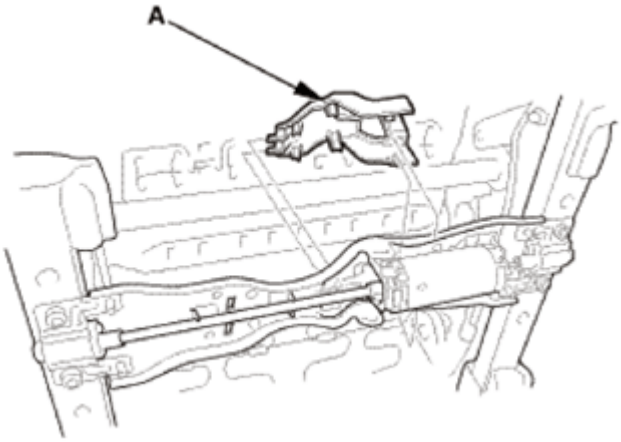

Fig. 430: Identifying Front Seat Slide Motor Cover
Courtesy of AMERICAN HONDA MOTOR CO., INC.

2. Release the cable housing (A) from the hooks (B).
3. Disconnect the flex cable (C) from the worm gear (D) in the inner seat track by pulling out the cable housing.
4. Disconnect the flex cable from the slide motor (E).

NOTE: Take care not to kink the cable.

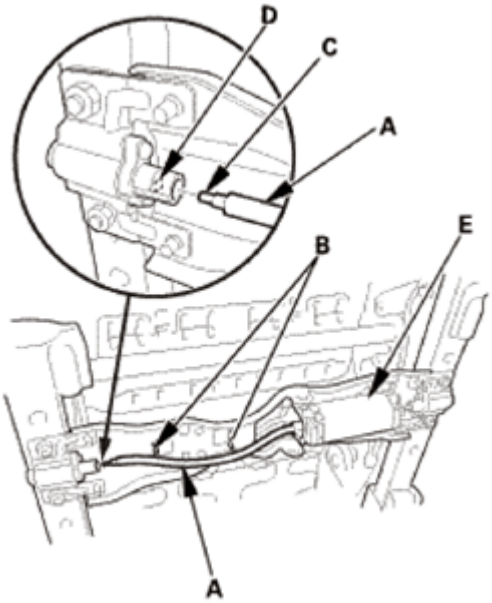

Fig. 431: Disconnecting Flex Cable From Worm Gear
Courtesy of AMERICAN HONDA MOTOR CO., INC.

5. Disconnect the connector.
6. Detach the harness clip (A).

GETtheMANUALS.org

7. Remove the bolts (B) securing the motor bracket (C) with a TORX T30 bit.

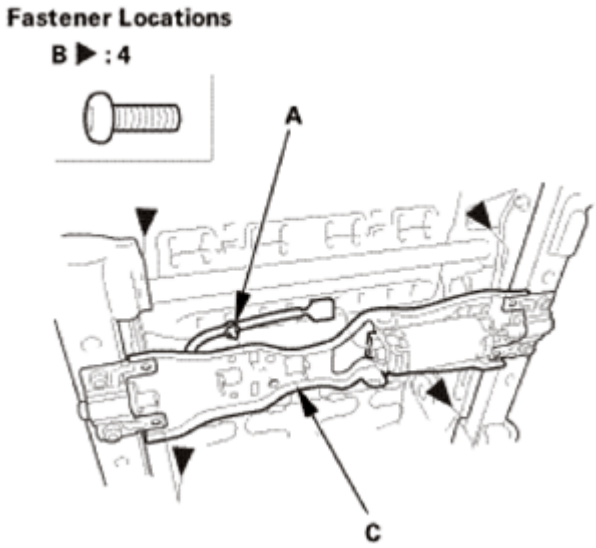

Fig. 432: Identifying Motor Bracket, Bolts And Clips
Courtesy of AMERICAN HONDA MOTOR CO., INC.

8. Disconnect the slide motor (A) from the short flex cable (B), and remove the slide motor bracket (C) from the slide gearbox bracket (D).

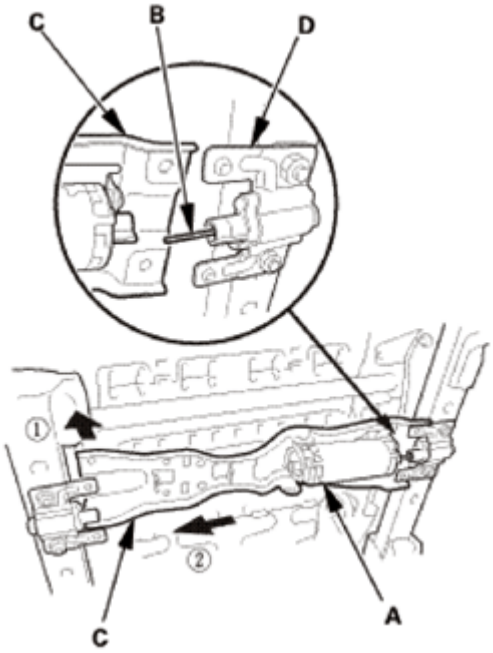

Fig. 433: Removing Slide Motor From Slide Gearbox Bracket
Courtesy of AMERICAN HONDA MOTOR CO., INC.

9. Pull out the short flex cable (A) from the worm gear (B).

GETtheMANUALS.org

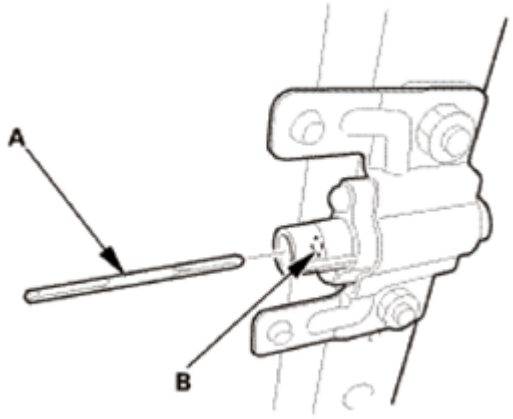

Fig. 434: Identifying Short Flex Cable And Worm Gear
Courtesy of AMERICAN HONDA MOTOR CO., INC.

10. Remove the screws (A), then remove the slide motor (B) from the slide motor bracket (C).

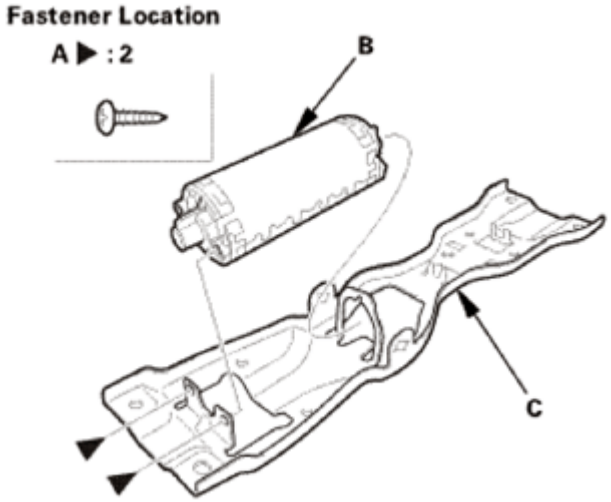

Fig. 435: Identifying Front Seat Slide Motor, Bracket And Screws
Courtesy of AMERICAN HONDA MOTOR CO., INC.

INSTALLATION

SRS components are located in this area. Review the **SRS COMPONENT LOCATIONS** and the **PRECAUTIONS AND PROCEDURES** before doing repairs or service.

1. Front Seat Slide Motor
    1. Install the slide motor (A) to the slide motor bracket (B) with the screws (C).

GETtheMANUALS.org

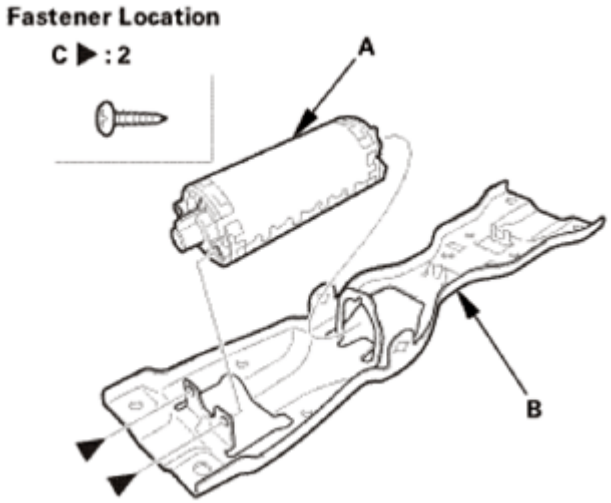

Fig. 436: Identifying Front Seat Slide Motor, Bracket And Screws
Courtesy of AMERICAN HONDA MOTOR CO., INC.

2. Install the short flex cable (A) to the worm gear (B).

NOTE: Apply multipurpose grease to the warm gear area.

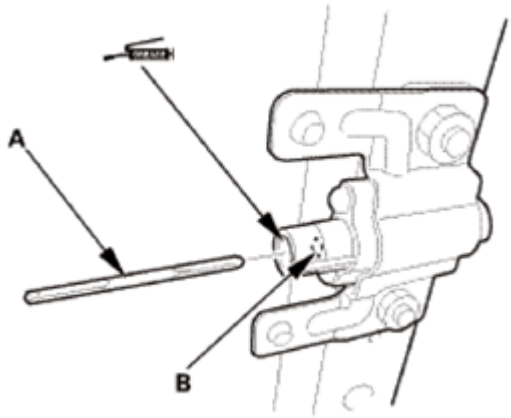

Fig. 437: Identifying Short Flex Cable And Worm Gear
Courtesy of AMERICAN HONDA MOTOR CO., INC.

3. Install the slide motor (A) to the short flex cable (B), and install the slide motor bracket (C) to the slide gearbox bracket (D).

GETtheMANUALS.org

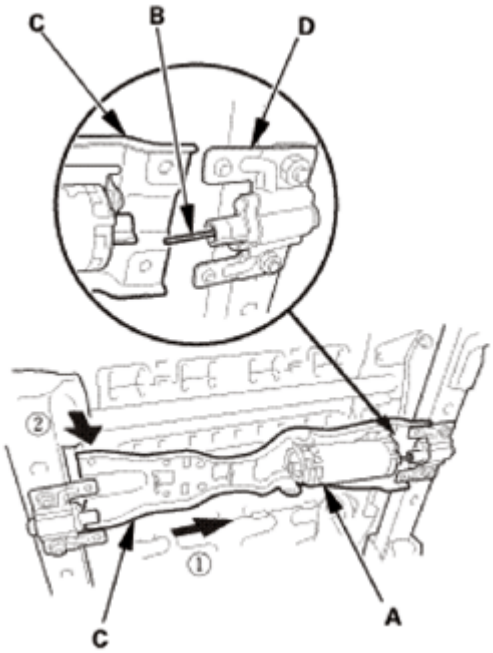

Fig. 438: Installing Slide Motor To Short Flex Cable
Courtesy of AMERICAN HONDA MOTOR CO., INC.

4. Tighten the bolts (A) securing the motor bracket (B) with a TORX T30 bit.
5. Install the harness clip (C).
6. Connect the connector.

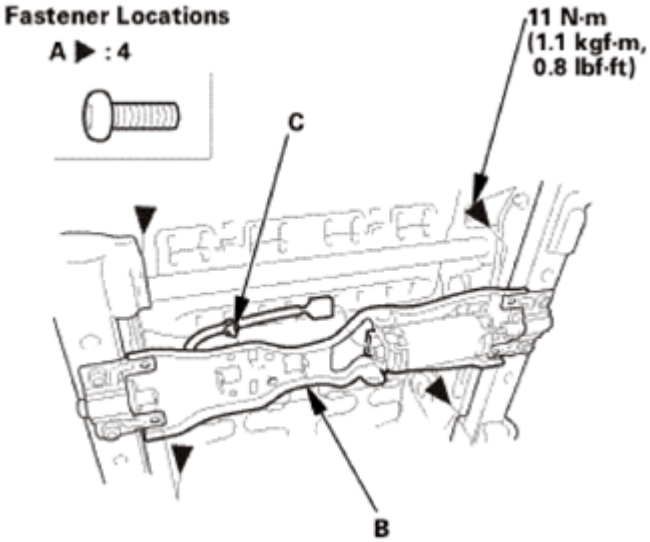

Fig. 439: Identifying Front Seat Motor Connector, Bracket, Clip And Bolts With Torque Specifications
Courtesy of AMERICAN HONDA MOTOR CO., INC.

7. Install the flex cable (A) to the slide motor (B).

GETtheMANUALS.org

8. Install the flex cable to the worm gear (C).

NOTE: Apply multipurpose grease to the worm gear area.

9. Install the cable housing (D) to the hooks (E).

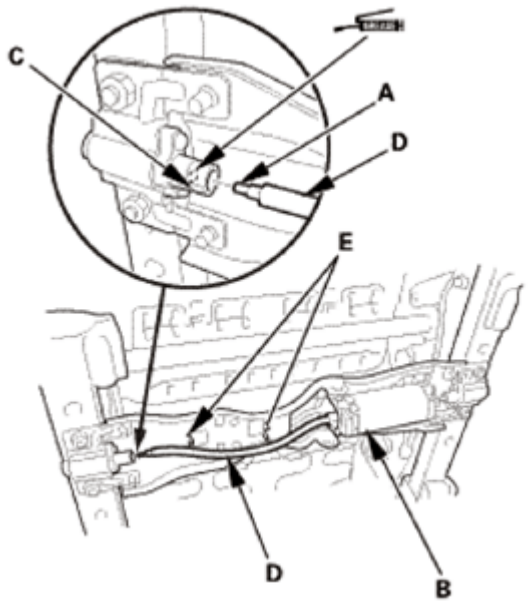

Fig. 440: Identifying Slide Motor, Flex Cable, Worm Gear, Cable Housing And Hooks
Courtesy of AMERICAN HONDA MOTOR CO., INC.

10. Install the slide motor cover (A).

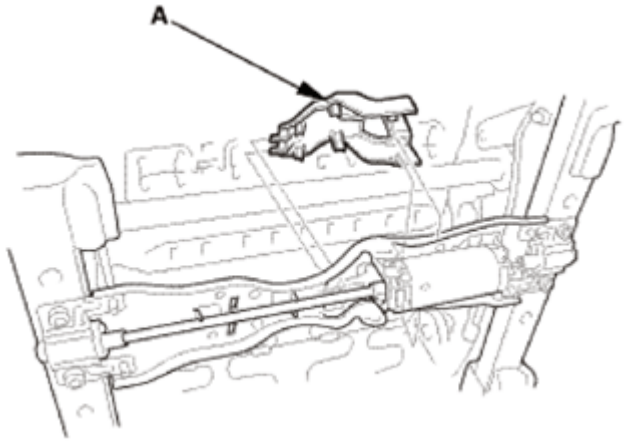

Fig. 441: Identifying Slide Motor Cover
Courtesy of AMERICAN HONDA MOTOR CO., INC.

2. Front Seat - Driver's Side
    1. Connect the connectors (A).

GETtheMANUALS.org

2. Install the harness clip (B).

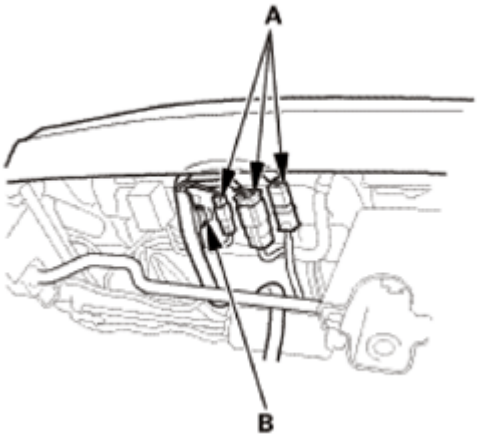

Fig. 442: Identifying Front Seat Connectors And Clips (Driver Side)
Courtesy of AMERICAN HONDA MOTOR CO., INC.

3. Install the seat mounting bolts (A).

NOTE:

- **Tighten the bolts by hand first, then tighten them to the specified torque.**
- **Tighten the seat mounting bolts to the specified torque in the sequence shown. Slide the seat all the way back and tighten bolts 1 and 2, then slide it forward and tighten bolts 3 and 4.**

Front Side

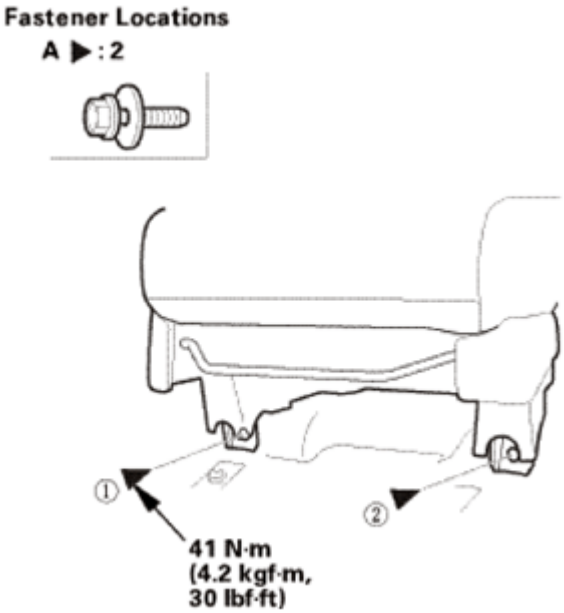

GETtheMANUALS.org

Fig. 443: Identifying Seat Mounting Bolts With Torque Specifications (Front Side)
Courtesy of AMERICAN HONDA MOTOR CO., INC.

Rear Side

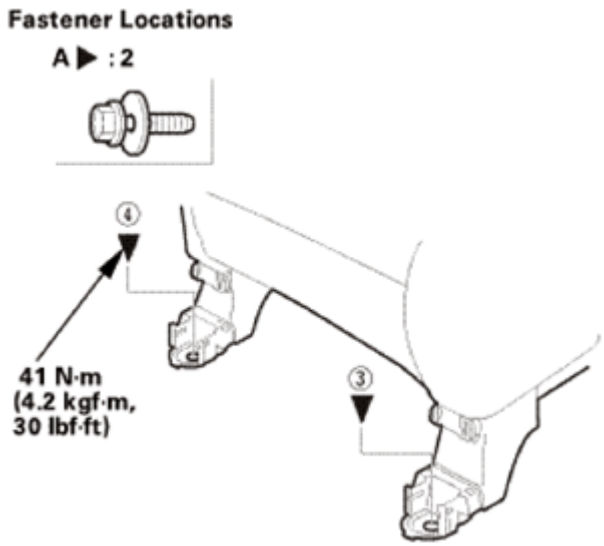

Fig. 444: Identifying Seat Mounting Bolts With Torque Specifications (Rear Side)
Courtesy of AMERICAN HONDA MOTOR CO., INC.

4. Install the rear inner seat track end cover (A) and the rear outer seat track end cover (B). Make sure the hooks (C) snap into place securely.

GETtheMANUALS.org

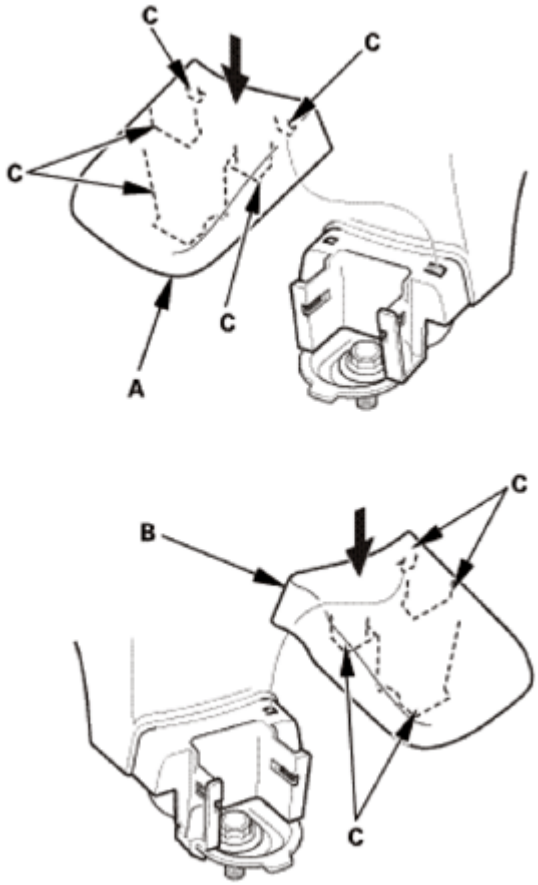

Fig. 445: Installing Rear Inner And Outer Seat Track End Cover
Courtesy of AMERICAN HONDA MOTOR CO., INC.

3. Head Restraint - Driver's Side
    1. Insert the head restraint (A) to the seat-back as shown.

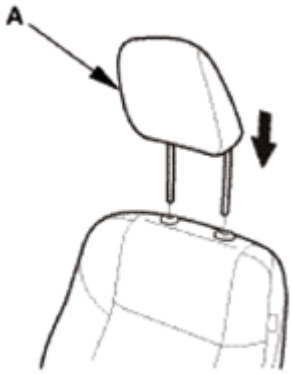

Fig. 446: Inserting Head Restraint To Seat-Back (Driver Side)
Courtesy of AMERICAN HONDA MOTOR CO., INC.

4. Battery Terminal (SRS) - Reconnection

GETtheMANUALS.org

NOTE: **If the battery performance is abnormal, test the battery.**

1. Clean the battery terminals.
2. Connect the positive cable (A) to the battery.

   NOTE: **Always connect the positive side first.**

3. Connect the negative cable (B) to the battery.
4. Apply multipurpose grease to the terminals to prevent corrosion.

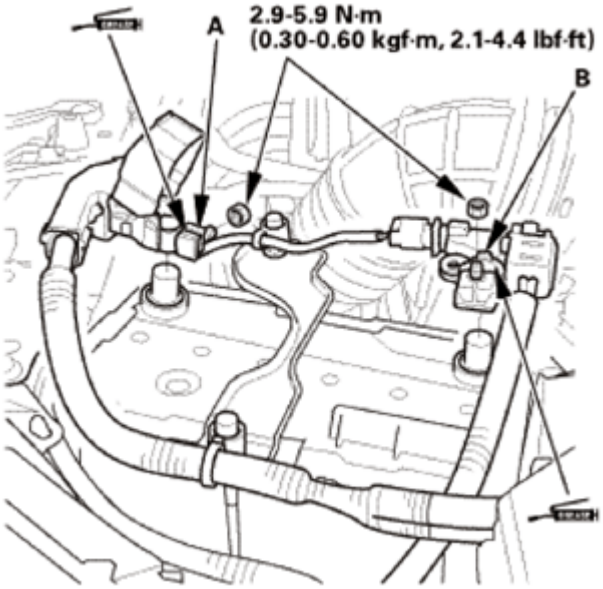

Fig. 447: Identifying Battery Positive And Negative Cable With Torque Specifications
Courtesy of AMERICAN HONDA MOTOR CO., INC.

5. Front Seat Belt Lower Anchor Bolt
   1. Install the lower anchor bolt.

      NOTE: **Before installing the anchor bolt, make sure there are no twists or kinks in the seat belt.**

GETtheMANUALS.org

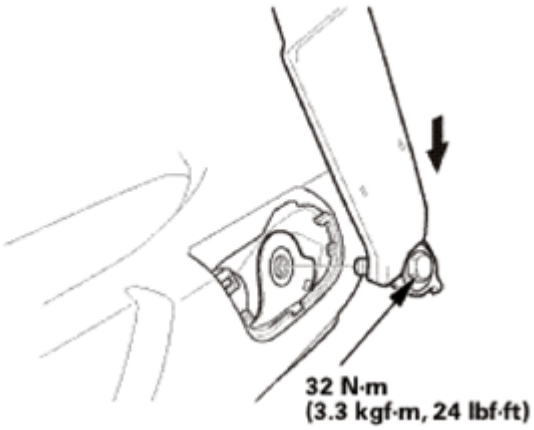

Fig. 448: Installing Front Seat Belt Lower Anchor Bolt
Courtesy of AMERICAN HONDA MOTOR CO., INC.

2. Install the anchor cover (A). Make sure the hooks (B) and the tab (C) snap into place securely.

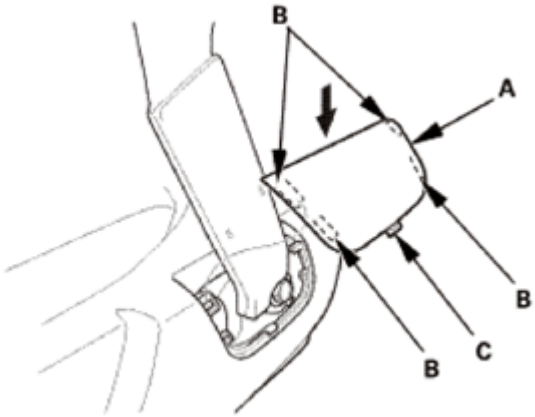

Fig. 449: Installing Front Seat Belt Lower Anchor Cover
Courtesy of AMERICAN HONDA MOTOR CO., INC.

FRONT SEAT-BACK COVER REMOVAL AND INSTALLATION

REMOVAL

SRS components are located in this area. Review the **SRS COMPONENT LOCATIONS** and the **PRECAUTIONS AND PROCEDURES** before doing repairs or service.

NOTE:

- **Steps 1-9 show removing the driver's side, steps 10-17 show removing the passenger's side.**
- **Before the front power seat is removed, slide the front power seat to the half-way position, then raise the seat to the highest position.**

1. Front Seat Belt Lower Anchor Bolt

GETtheMANUALS.org

1. Slide the front seat forward fully, carefully pry up on the bottom edge of the anchor cover (A) at the pry point (B) with the appropriate trim tool to release the hooks (C) and the tab (D), then remove the cover by pulling it up.

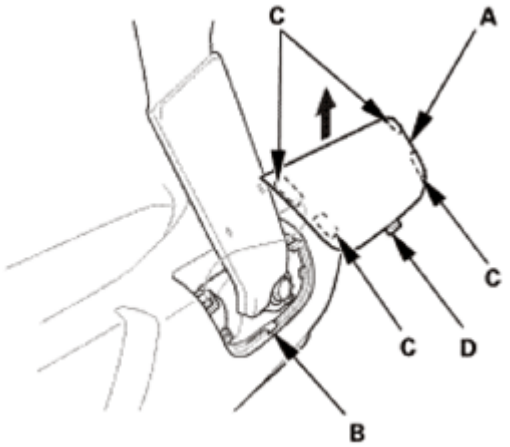

Fig. 450: Removing Front Seat Lower Anchor Cover
Courtesy of AMERICAN HONDA MOTOR CO., INC.

2. Remove the lower anchor bolt (A).

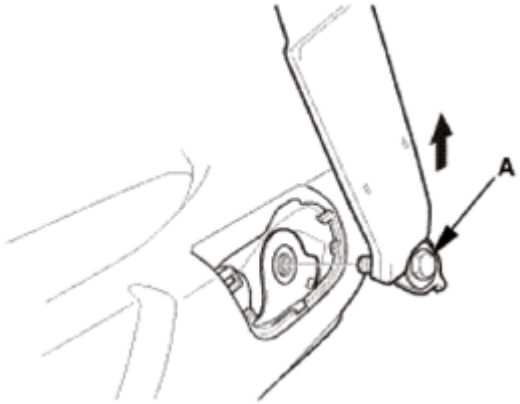

Fig. 451: Removing Front Seat Belt Lower Anchor Bolt
Courtesy of AMERICAN HONDA MOTOR CO., INC.

2. Battery Terminal (SRS) - Disconnection
   1. Make sure the ignition switch is in LOCK (0).
   2. Disconnect and isolate the negative cable (A) from the battery.

      NOTE: Always disconnect the negative side first.

   3. Disconnect the positive cable (B) from the battery.
   4. Wait at least 3 minutes before starting work.

GETtheMANUALS.org

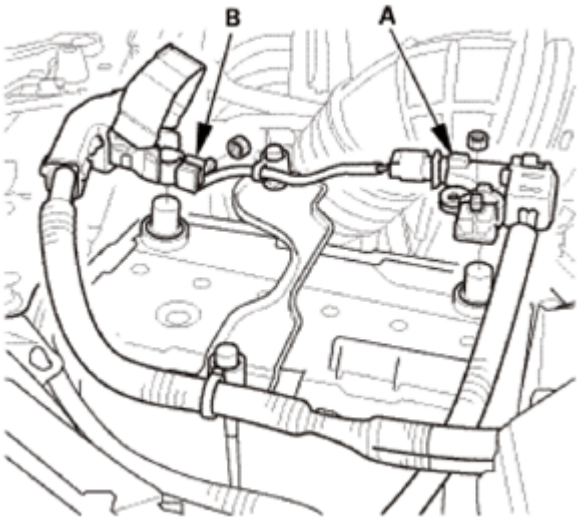

Fig. 452: Identifying Battery Positive And Negative Cable
Courtesy of AMERICAN HONDA MOTOR CO., INC.

3. Head Restraint - Driver's Side
    1. Push and hold the knob (A), then pull out the head restraint (B) as shown.

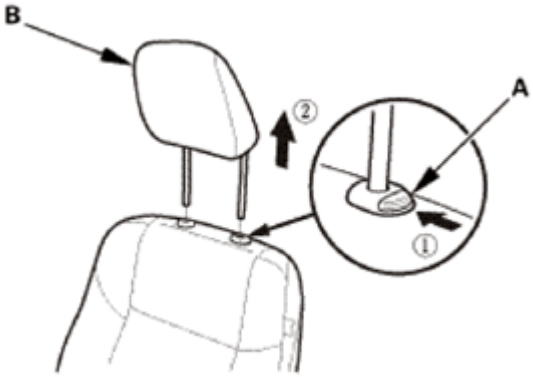

Fig. 453: Pulling Head Restraint (Driver Side)
Courtesy of AMERICAN HONDA MOTOR CO., INC.

4. Front Seat - Driver's Side
    1. Detach the hooks (A), then remove the rear inner seat track end cover (B) and the rear outer seat track end cover (C).

GETtheMANUALS.org

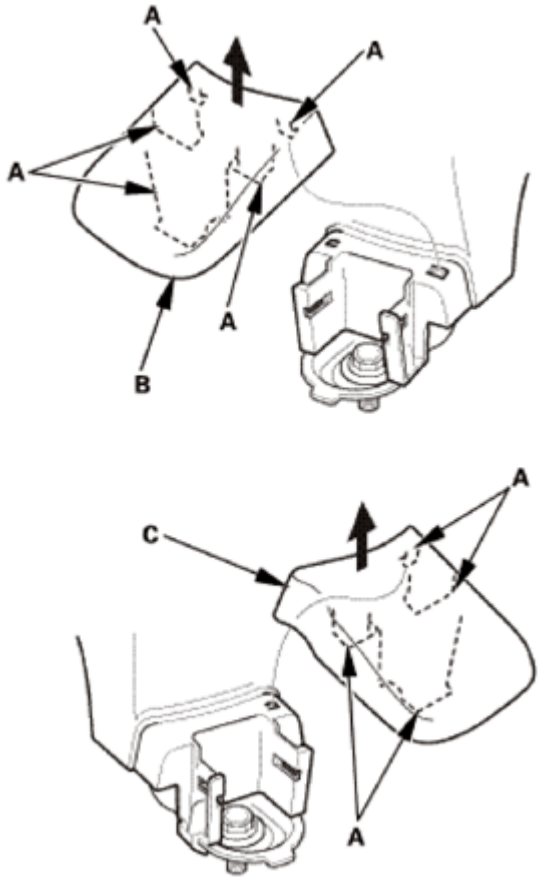

Fig. 454: Removing Rear Inner And Outer Seat Track End Cover
Courtesy of AMERICAN HONDA MOTOR CO., INC.

2. Remove the front mounting bolts (A) from the front seat.

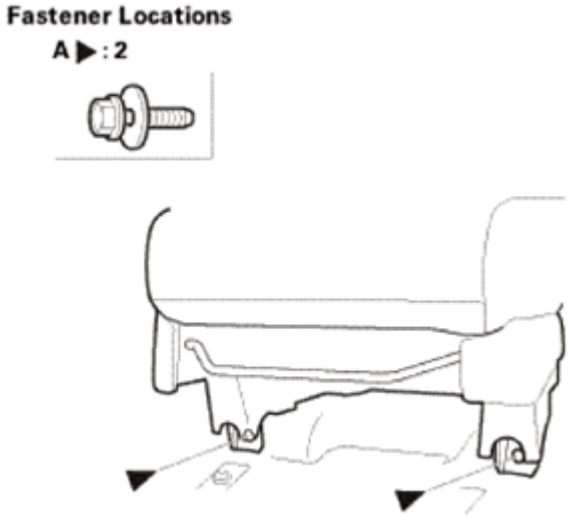

Fig. 455: Identifying Front Seat Front Mounting Bolts
Courtesy of AMERICAN HONDA MOTOR CO., INC.

GETtheMANUALS.org

3. Remove the rear mounting bolts (A) from the front seat.

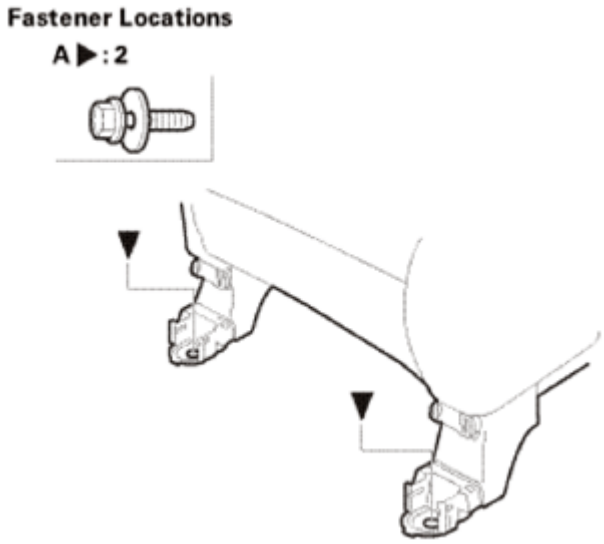

Fig. 456: Identifying Front Seat Rear Mounting Bolts
Courtesy of AMERICAN HONDA MOTOR CO., INC.

4. Disconnect the connectors (A).
5. Detach the harness clip (B).

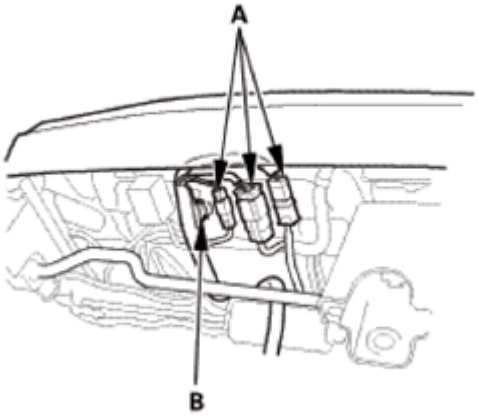

Fig. 457: Identifying Front Seat Connectors And Clips
Courtesy of AMERICAN HONDA MOTOR CO., INC.

5. Front Seat Armrest
    1. Remove the cap (A) with the appropriate trim tool.
    2. Remove the center pin (B), the bushing (C), and the washer (D), then remove the armrest (E).

GETtheMANUALS.org

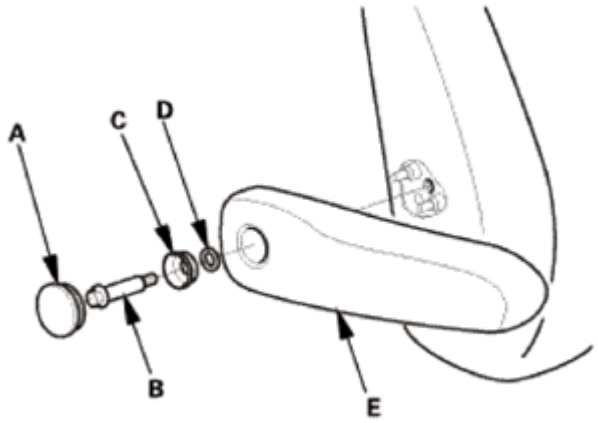

Fig. 458: Identifying Front Seat Armrest, Center Pin, Bushing, Washer And Cap
Courtesy of AMERICAN HONDA MOTOR CO., INC.

3. Remove the pins (A) from the seat-back.

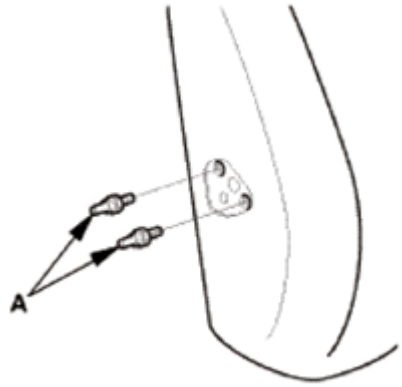

Fig. 459: Identifying Seat Back Pins
Courtesy of AMERICAN HONDA MOTOR CO., INC.

6. Front Seat-Back - Driver's Side
    1. Release the elastic strap (A) from the seat cushion frame springs (B), then pull back the under cover (C) of the seat-back cover.

GETtheMANUALS.org

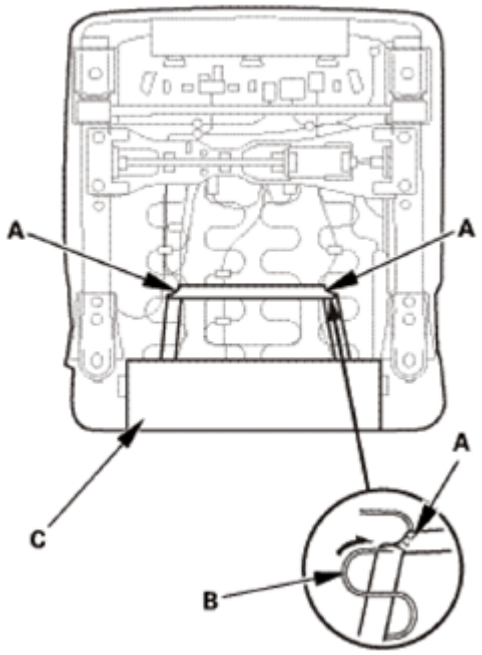

Fig. 460: Releasing Elastic Strap From Seat Cushion Frame Springs
Courtesy of AMERICAN HONDA MOTOR CO., INC.

2. Detach the connector clips (A).
3. Detach the harness clips (B).
4. Pry up the hooks (C) of the harness holders (D), then release them from the seat cushion frame springs (E).
5. Disconnect the connectors (F).

Power Seat

GETtheMANUALS.org

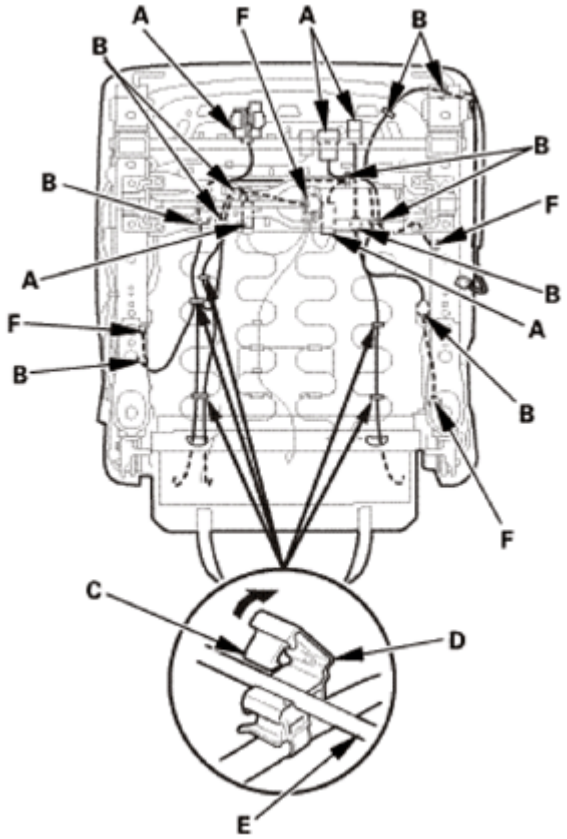

Fig. 461: Removing Seat Cushion Frame Springs Holder (Power Seat)
Courtesy of AMERICAN HONDA MOTOR CO., INC.

Manual Seat with Seat Heater

GETtheMANUALS.org

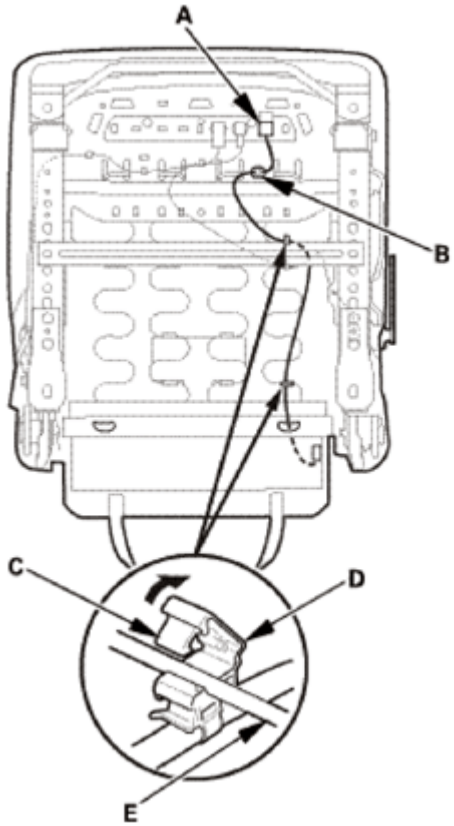

Fig. 462: Removing Seat Cushion Frame Springs Holder (Manual Seat With Seat Heater)
Courtesy of AMERICAN HONDA MOTOR CO., INC.

6. Release the hook strip (A).
7. Unzip the seat-back cover (B).

GETtheMANUALS.org

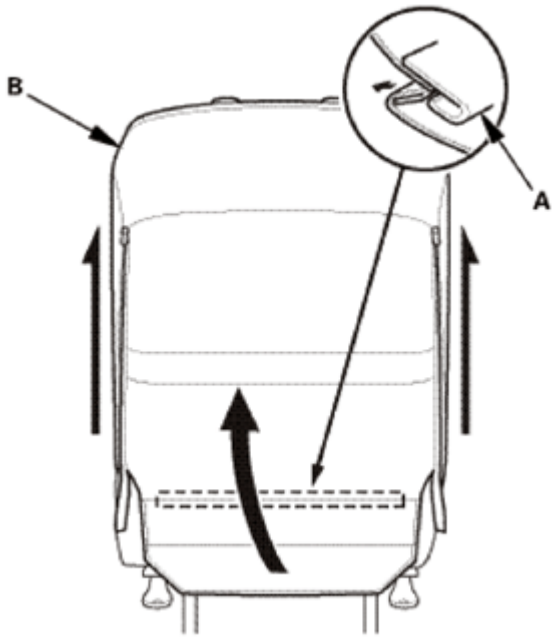

Fig. 463: Removing Seat-Back Cover
Courtesy of AMERICAN HONDA MOTOR CO., INC.

8. Release the hook strips (A), and loosen the seat-back cover (B).

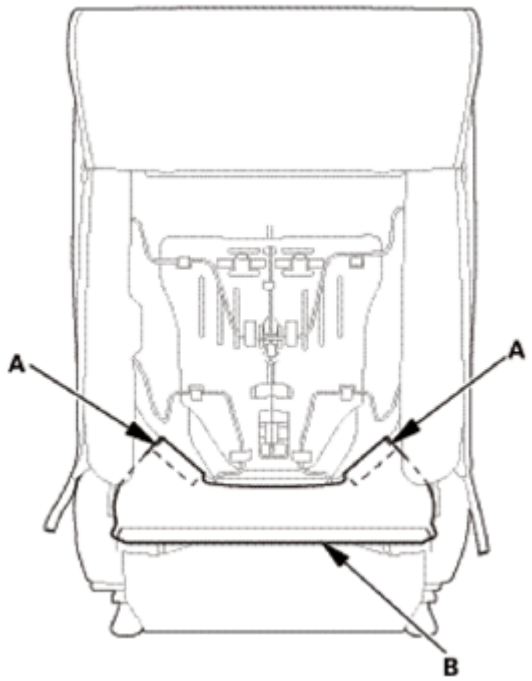

Fig. 464: Identifying Seat-Back Cover Hook Strips
Courtesy of AMERICAN HONDA MOTOR CO., INC.

9. Detach the harness clips (A).

GETtheMANUALS.org

10. Pull out the harnesses (B) through the holes (C) in the seat-back cover (D).

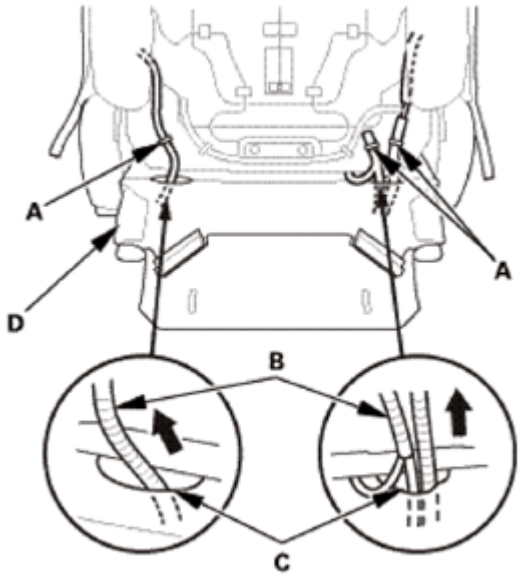

Fig. 465: Removing Harnesses Through Holes From Seat-Back Cover
Courtesy of AMERICAN HONDA MOTOR CO., INC.

11. Release airbag attachment wires A, B from the seat-back frame (C).

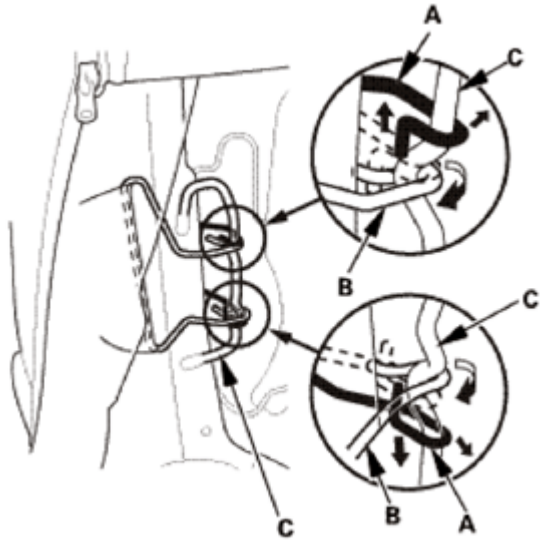

Fig. 466: Releasing Airbag Attachment Wires From Seat-Back Frame
Courtesy of AMERICAN HONDA MOTOR CO., INC.

12. Release the hook strips (A) from the seat-back frame (B).

GETtheMANUALS.org

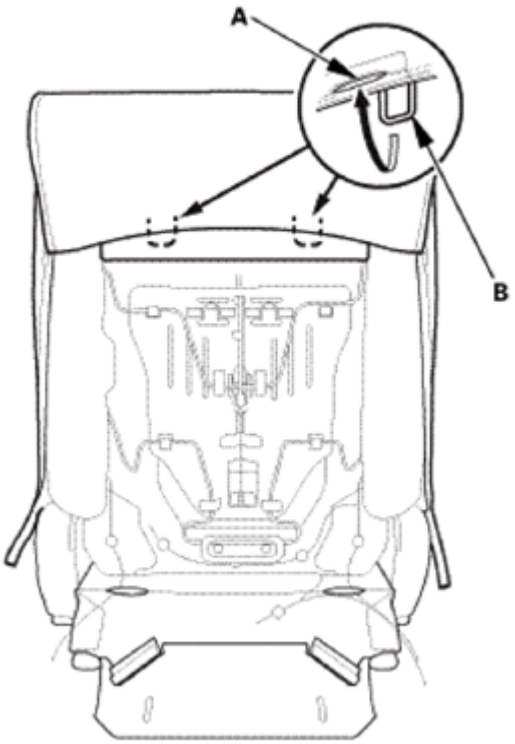

Fig. 467: Releasing Hook Strips From Seat-Back Frame
Courtesy of AMERICAN HONDA MOTOR CO., INC.

7. Head Restraint Guides - Driver's Side
    1. Pinch the tabs (A) on the end of the head restraint guides (B), and remove the guides from the seat-back.

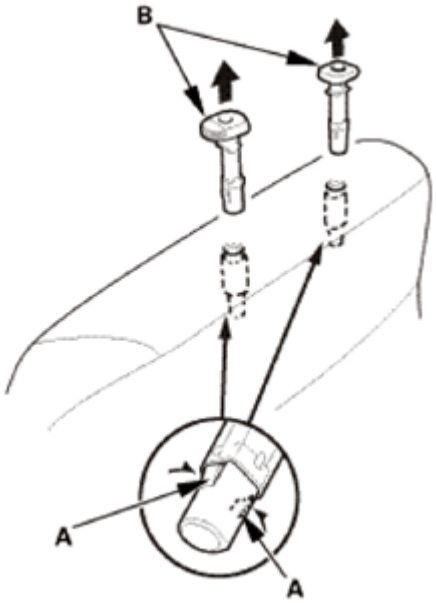

Fig. 468: Removing Guides From Seat-Back

GETtheMANUALS.org

Courtesy of AMERICAN HONDA MOTOR CO., INC.

8. Front Seat-Back Cover/Pad - Driver's Side
    1. Remove the seat-back cover/pad (A) from the seat-back frame (B).

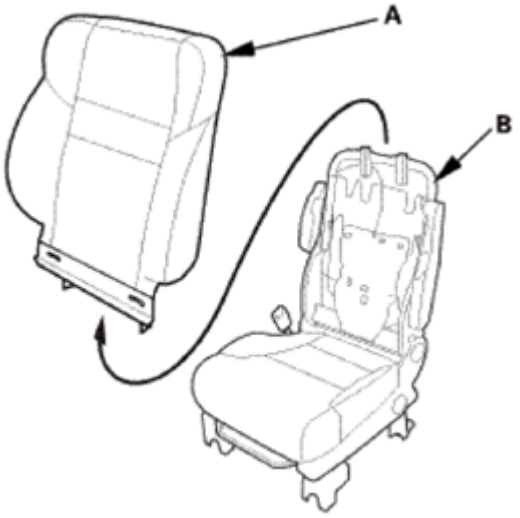

Fig. 469: Removing Seat-Back Cover/Pad From Seat-Back Frame
Courtesy of AMERICAN HONDA MOTOR CO., INC.

9. Front Seat-Back Cover - Driver's Side
    1. Remove airbag attachment wire B from the outside reinforcing cloth (C).
    2. Remove airbag attachment wire A from the inside reinforcing cloth (D).

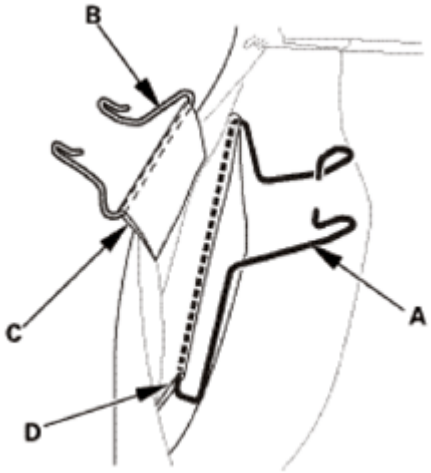

Fig. 470: Removing Airbag Attachment Wire From Outside Reinforcing Cloth
Courtesy of AMERICAN HONDA MOTOR CO., INC.

    3. Pull back the edge of the seat-back cover (A) all the way around, and release the upholstery rings (B), then remove the seat-back cover.

GETtheMANUALS.org

Leather Seat

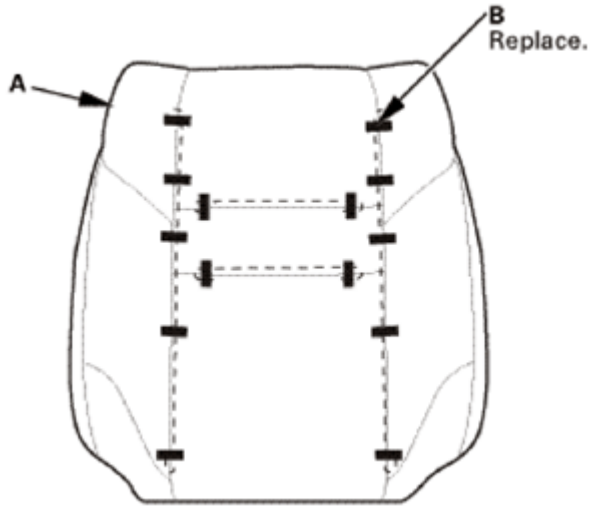

Fig. 471: Identifying Seat Cushion Cover And Upholstery Rings (Leather Seat)
Courtesy of AMERICAN HONDA MOTOR CO., INC.

Fabric Seat

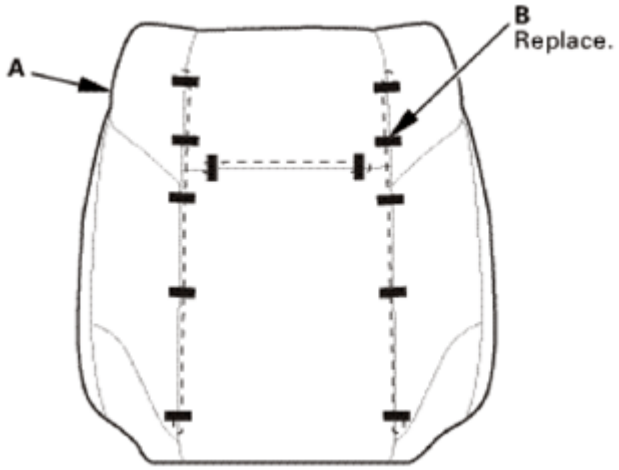

Fig. 472: Identifying Seat Cushion Cover And Upholstery Rings (Fabric Seat)
Courtesy of AMERICAN HONDA MOTOR CO., INC.

10. Front Seat Belt Lower Anchor Bolt - Passenger's Side
    1. Carefully pry up on the bottom of the anchor cover (A) at the pry point (B) with the appropriate trim tool to release the hooks (C) and the tab (D), then remove the cover by pulling it upward.

GETtheMANUALS.org

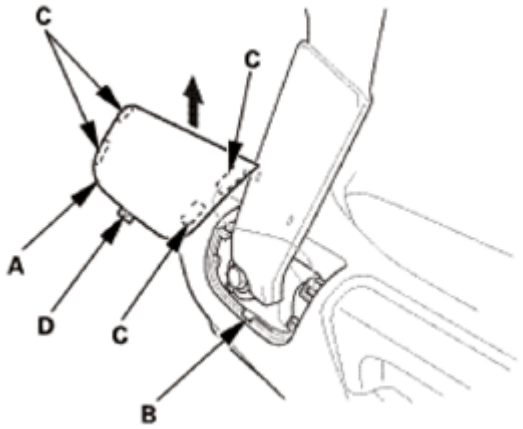

Fig. 473: Removing Front Seat Belt Lower Anchor Cover (Passenger Side)
Courtesy of AMERICAN HONDA MOTOR CO., INC.

2. Remove the lower anchor bolt (A).

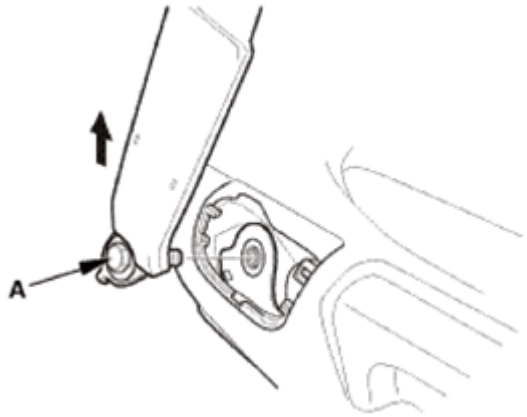

Fig. 474: Removing Front Seat Belt Lower Anchor Bolt (Passenger Side)
Courtesy of AMERICAN HONDA MOTOR CO., INC.

11. Head Restraint - Passenger's Side
    1. Push and hold the knob (A), then pull out the head restraint (B) as shown.

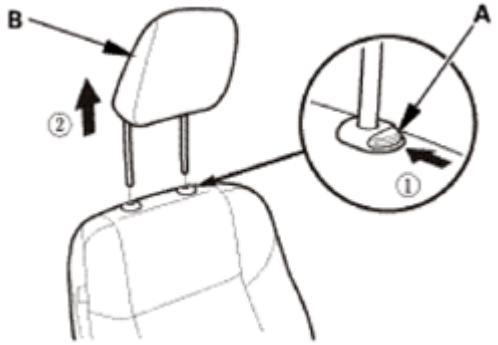

GETtheMANUALS.org

Fig. 475: Pulling Head Restraint (Driver Side)
Courtesy of AMERICAN HONDA MOTOR CO., INC.

12. Front Seat - Passenger's Side
    1. Detach the hooks (A), then remove the rear inner seat track end cover (B) and the rear outer seat track end cover (C).

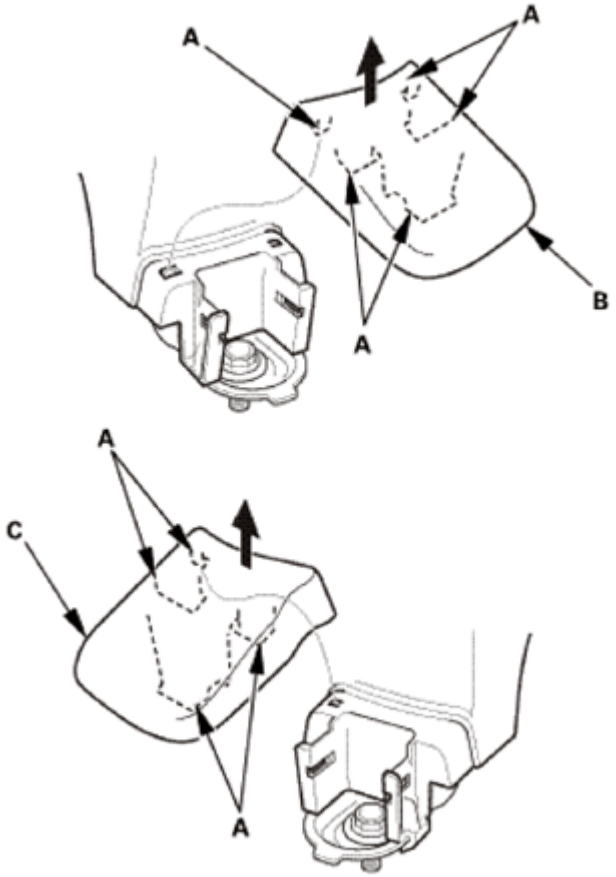

Fig. 476: Removing Rear Inner And Outer Seat Track End Cover
Courtesy of AMERICAN HONDA MOTOR CO., INC.

    2. Remove the front mounting bolts (A) from the front seat.

GETtheMANUALS.org

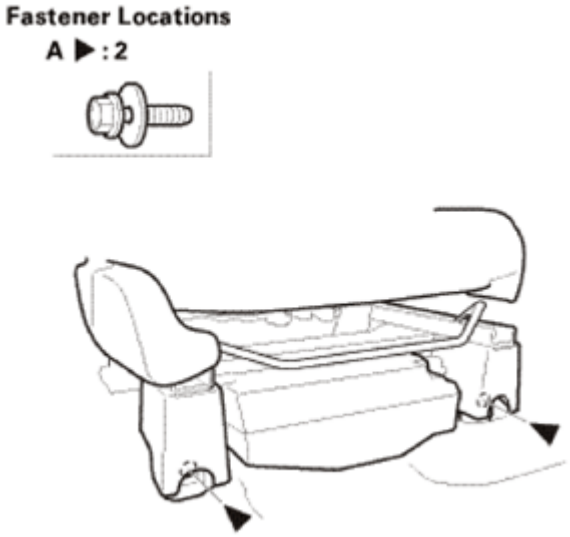

Fig. 477: Identifying Front Seat Mounting Bolts
Courtesy of AMERICAN HONDA MOTOR CO., INC.

3. Remove the rear mounting bolts (A) from the front seat.

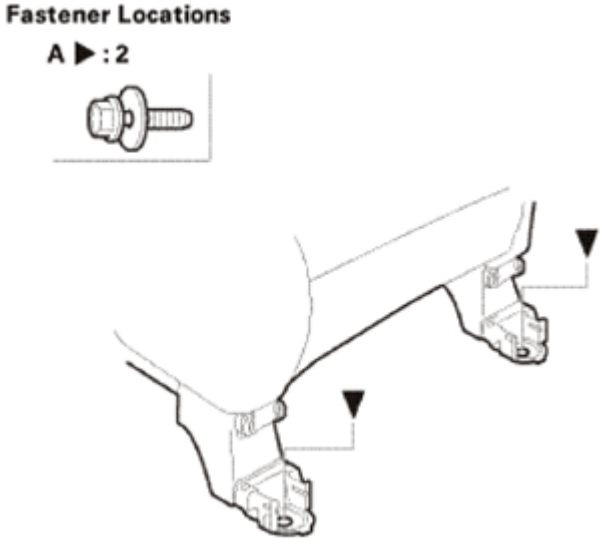

Fig. 478: Identifying Front Seat Rear Mounting Bolts
Courtesy of AMERICAN HONDA MOTOR CO., INC.

4. Disconnect the connectors (A).
5. Detach the harness clip (B).

Without Subwoofer

GETtheMANUALS.org

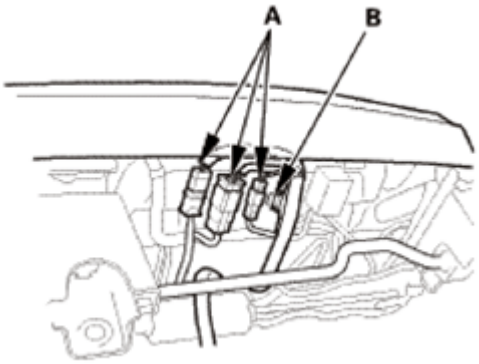

Fig. 479: Identifying Front Seat Connectors And Clips (Without Subwoofer)
Courtesy of AMERICAN HONDA MOTOR CO., INC.

With Subwoofer

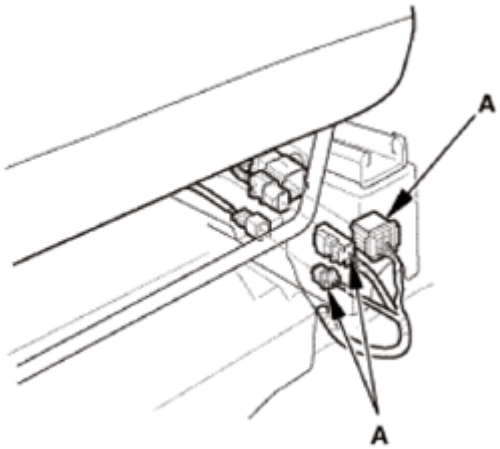

Fig. 480: Identifying Front Seat Connectors And Clips (With Subwoofer)
Courtesy of AMERICAN HONDA MOTOR CO., INC.

13. Front Seat Armrest - Passenger's Side
    1. Remove the cap (A) with the appropriate trim tool.
    2. Remove the center pin (B), the bushing (C), and the washer (D), then remove the armrest (E).

GETtheMANUALS.org

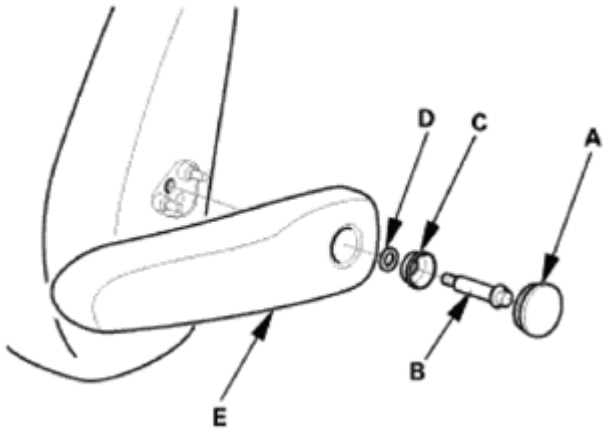

Fig. 481: Identifying Front Seat Armrest, Center Pin, Bushing, Washer And Cap
Courtesy of AMERICAN HONDA MOTOR CO., INC.

3. Remove the pins (A) from the seat-back.

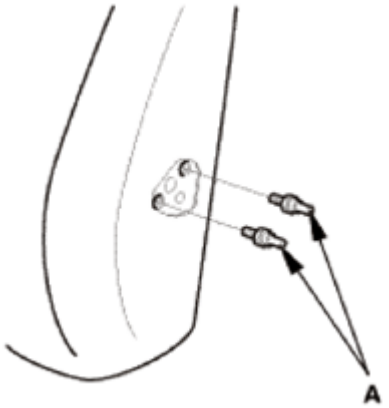

Fig. 482: Identifying Seat Back Pins
Courtesy of AMERICAN HONDA MOTOR CO., INC.

14. Front Seat-Back - Passenger's Side
    1. Release the elastic strap (A) from the seat cushion frame springs (B), then pull back the under cover (C) of the seat-back cover.

GETtheMANUALS.org

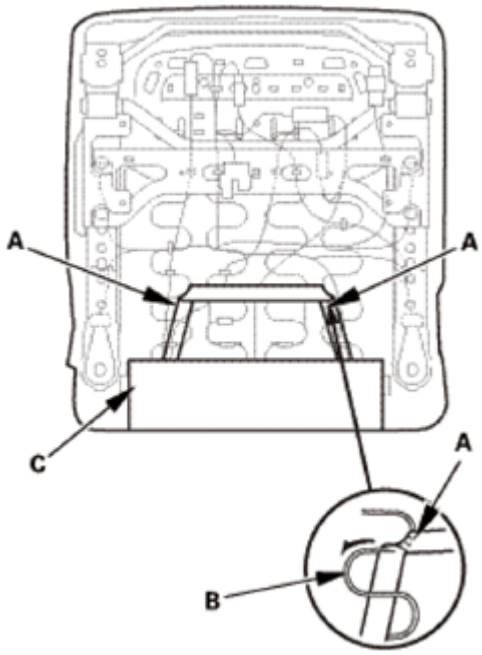

Fig. 483: Releasing Elastic Strap From Seat Cushion Frame Springs
Courtesy of AMERICAN HONDA MOTOR CO., INC.

2. Detach the connector clips (A).
3. Detach the harness clips (B).
4. Pry up the hooks (C) of the harness holders (D), then release them from the seat cushion frame springs (E).
5. Disconnect the connectors (F).

Except KX - Without Seat Heater

GETtheMANUALS.org

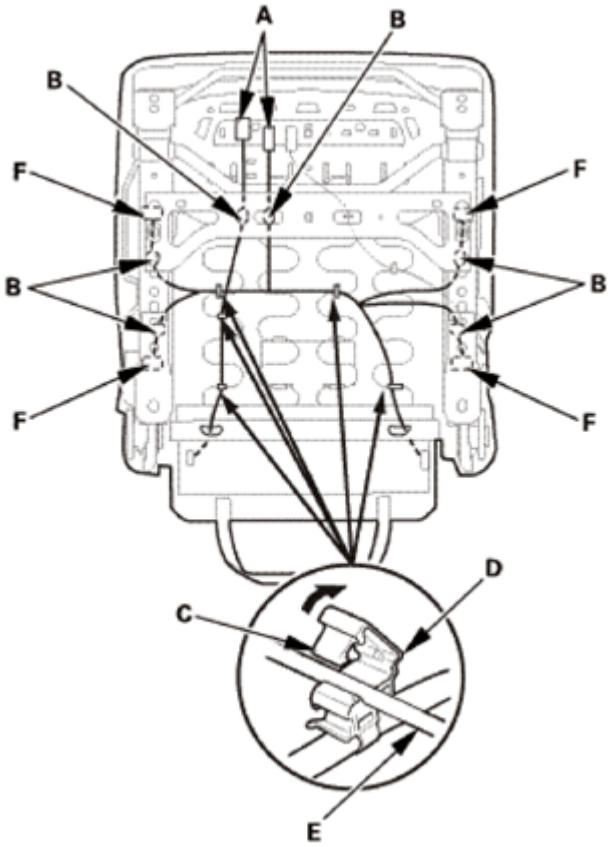

Fig. 484: Removing Seat Cushion Frame Springs Holder (Except KX - Without Seat Heater)
Courtesy of AMERICAN HONDA MOTOR CO., INC.

Except KX - With Seat Heater

GETtheMANUALS.org

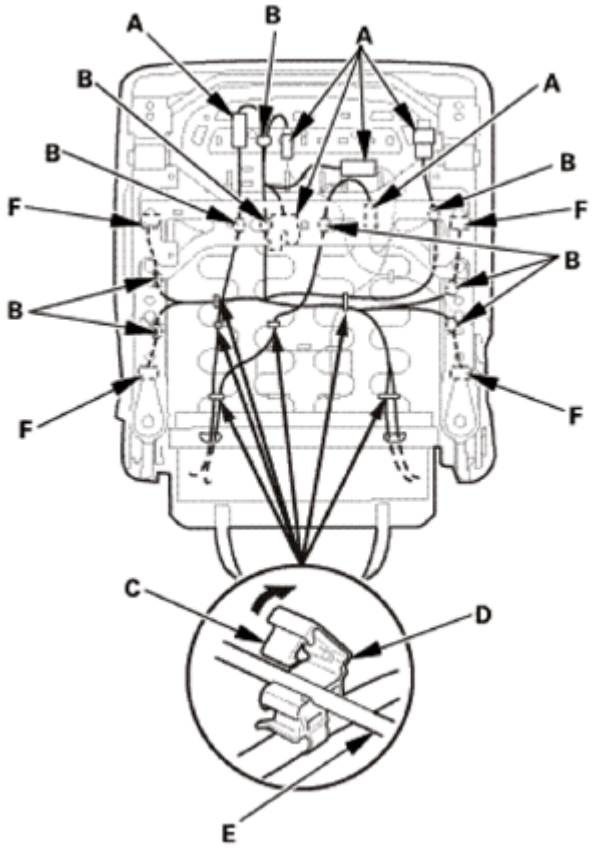

Fig. 485: Removing Seat Cushion Frame Springs Holder (Except KX With Seat Heater)
Courtesy of AMERICAN HONDA MOTOR CO., INC.

KX

GETtheMANUALS.org

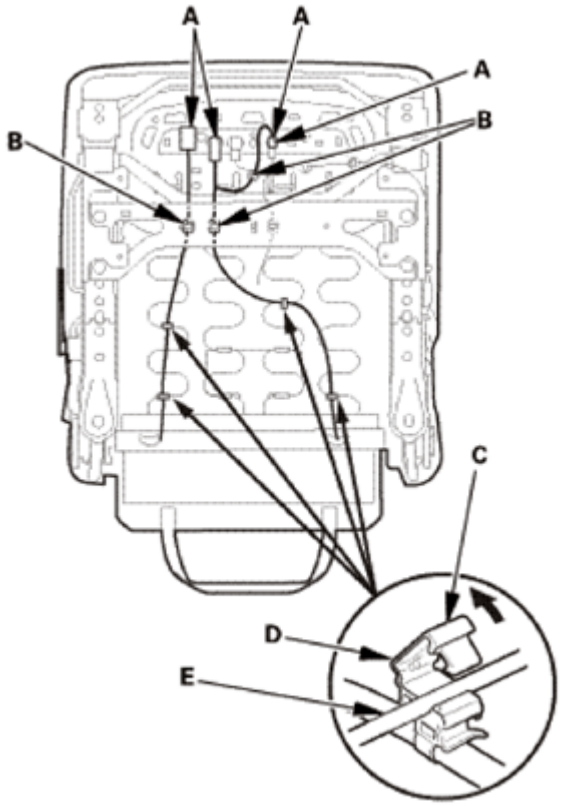

Fig. 486: Removing Seat Cushion Frame Springs Holder (For KX)
Courtesy of AMERICAN HONDA MOTOR CO., INC.

6. Release the hook strip (A).
7. Unzip the seat-back cover (B).

GETtheMANUALS.org

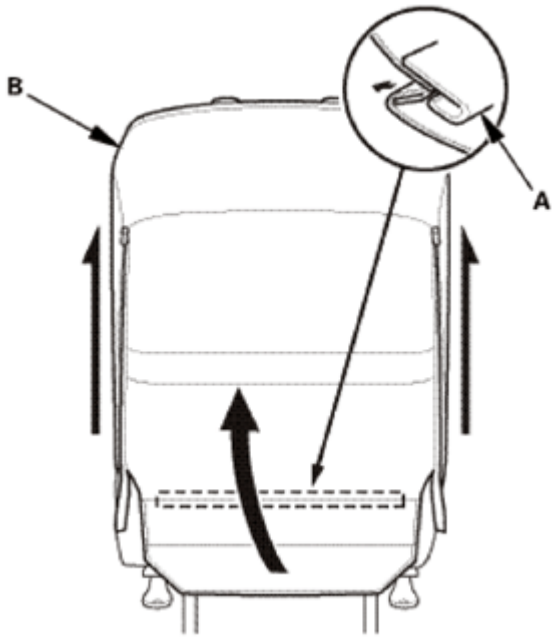

Fig. 487: Removing Seat-Back Cover
Courtesy of AMERICAN HONDA MOTOR CO., INC.

8. Release the hook strips (A), and loosen the seat-back cover (B).

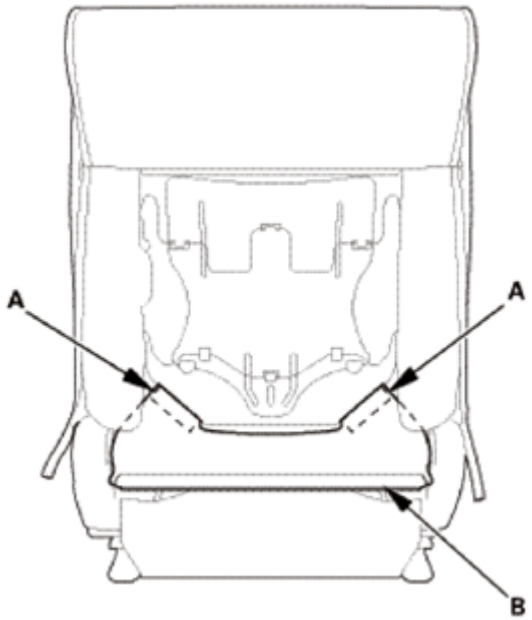

Fig. 488: Identifying Seat-Back Cover Hook Strips
Courtesy of AMERICAN HONDA MOTOR CO., INC.

9. Detach the harness clips (A).
10. Pull out the harnesses (B) through the holes (C) in the seat-back cover (D).

GETtheMANUALS.org

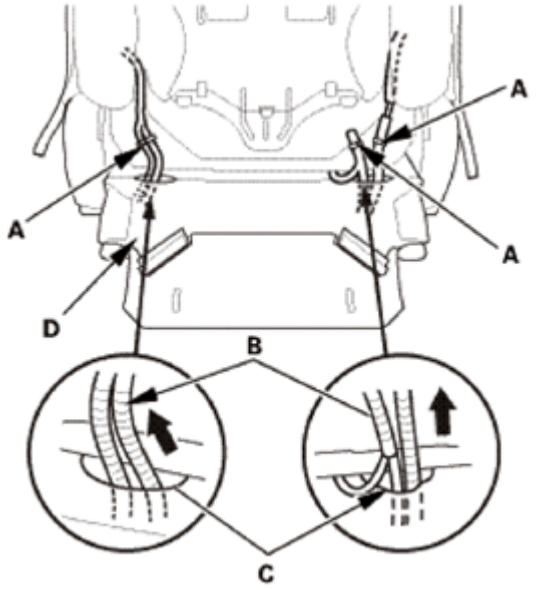

Fig. 489: Removing Harnesses Through Holes From Seat-Back Cover
Courtesy of AMERICAN HONDA MOTOR CO., INC.

11. Release airbag attachment wires A, B from the seat-back frame (C).

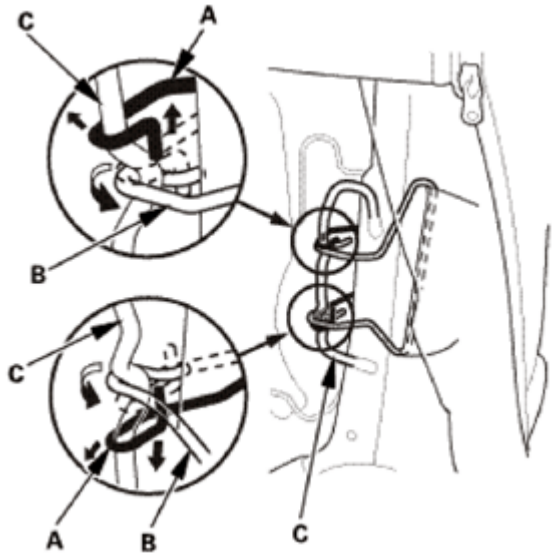

Fig. 490: Releasing Airbag Attachment Wires From Seat-Back Frame
Courtesy of AMERICAN HONDA MOTOR CO., INC.

12. Remove the screw (A), and release the hooks (B), then remove the cover (C), and detach the harness clip (D).

GETtheMANUALS.org

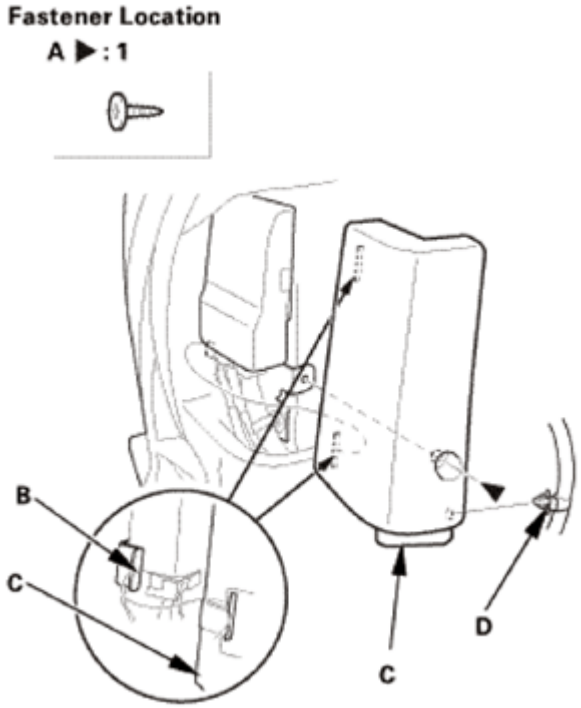

Fig. 491: Identifying Airbag Cover, Hooks, Clips And Screws
Courtesy of AMERICAN HONDA MOTOR CO., INC.

13. Disconnect the connectors (A) detach the and harness clips (B) from the ODS unit (USA and Canada models) or OPDS unit (Mexico models) (C).

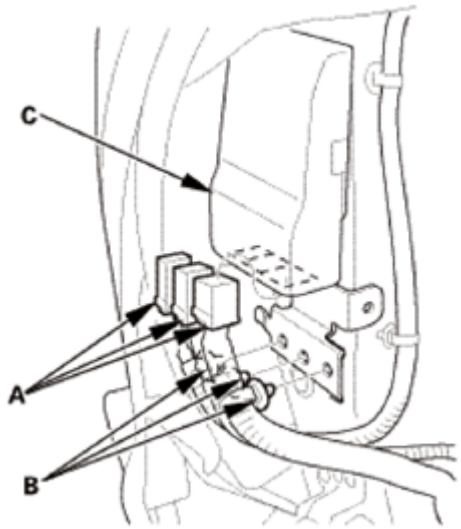

Fig. 492: Identifying ODS/OPDS Unit, Connectors And Clips
Courtesy of AMERICAN HONDA MOTOR CO., INC.

14. Release the hook strips (A) from the seat-back frame (B).
15. Detach the harness clips (C).

GETtheMANUALS.org

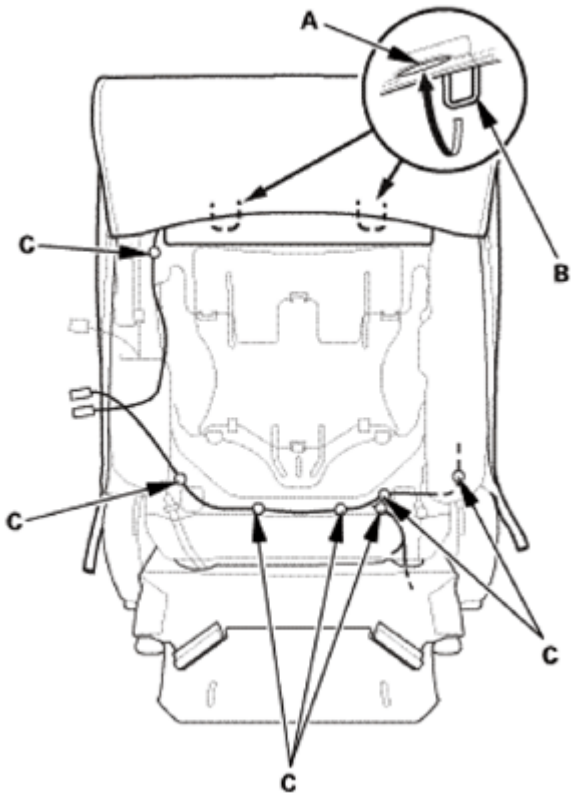

Fig. 493: Releasing Hook Strips From Seat-Back Frame
Courtesy of AMERICAN HONDA MOTOR CO., INC.

15. Head Restraint Guide - Passenger's Side
    1. Pinch the tabs (A) on the end of the head restraint guides (B), and remove the guides from the seat-back.

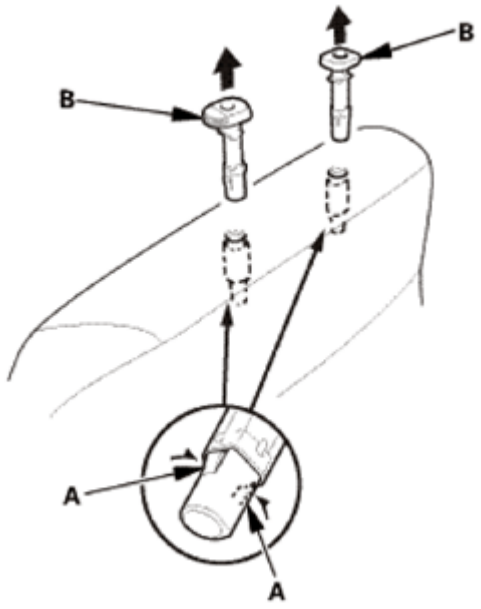

GETtheMANUALS.org

Fig. 494: Removing Guides From Seat-Back
Courtesy of AMERICAN HONDA MOTOR CO., INC.

16. Front Seat-Back Cover/Pad - Passenger's Side
    1. Remove the seat-back cover/pad (A) from the seat-back frame (B).

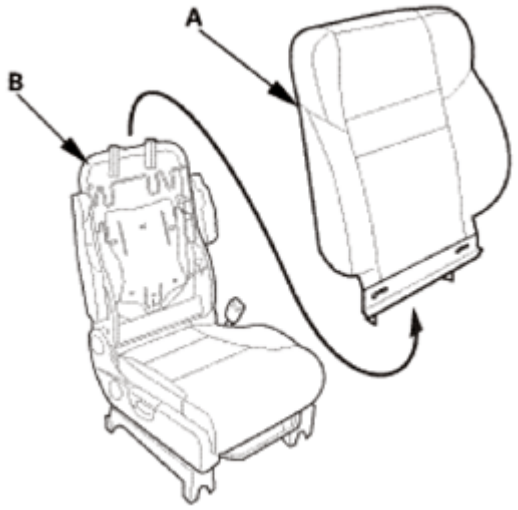

Fig. 495: Removing Seat-Back Cover/Pad From Seat-Back Frame
Courtesy of AMERICAN HONDA MOTOR CO., INC.

17. Front Seat-Back Cover - Passenger's Side
    1. Remove airbag attachment wire B from the outside reinforcing cloth (C).
    2. Remove airbag attachment wire A from the inside reinforcing cloth (D).

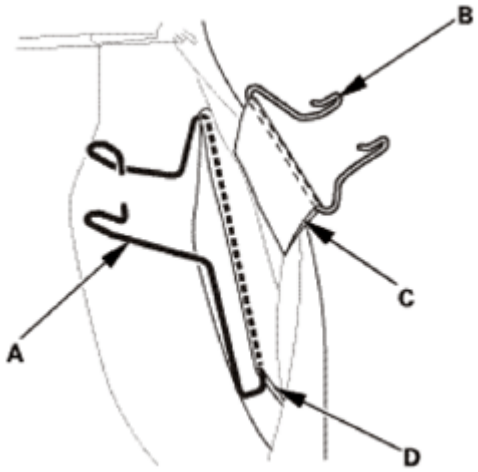

Fig. 496: Removing Airbag Attachment Wire From Outside Reinforcing Cloth
Courtesy of AMERICAN HONDA MOTOR CO., INC.

    3. Pull back the edge of the seat-back cover (A) all the way around, and release the upholstery rings (B), then remove the seat-back cover.

GETtheMANUALS.org

Leather Seat

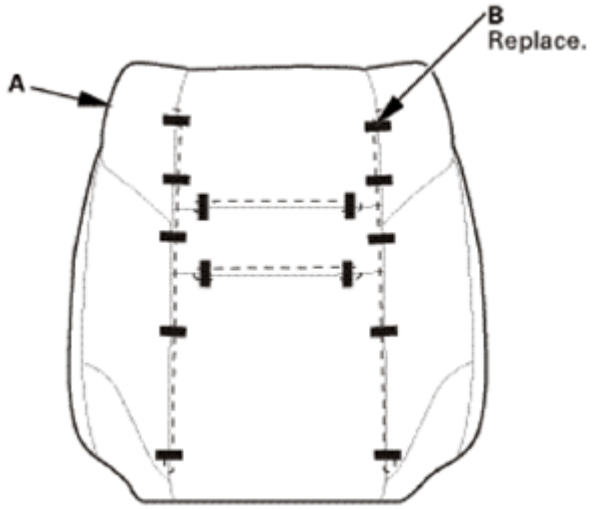

Fig. 497: Identifying Seat Cushion Cover And Upholstery Rings (Leather Seat)
Courtesy of AMERICAN HONDA MOTOR CO., INC.

Fabric Seat

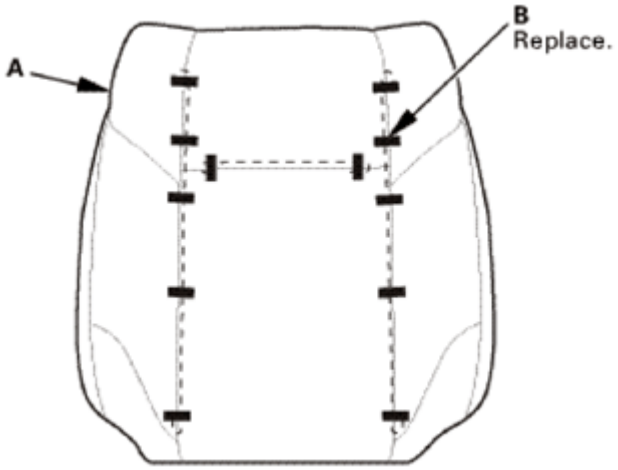

Fig. 498: Identifying Seat Cushion Cover And Upholstery Rings (Fabric Seat)
Courtesy of AMERICAN HONDA MOTOR CO., INC.

INSTALLATION

SRS components are located in this area. Review the **SRS COMPONENT LOCATIONS** and the **PRECAUTIONS AND PROCEDURES** before doing repairs or service.

NOTE: **Steps 1-8 show installing the passenger's side, steps 9-17 show installing the driver's side.**

GETtheMANUALS.org

1. Front Seat-Back Cover - Passenger's Side

NOTE: **Replace all of the upholstery rings (A) fastening the seat cushion cover (B) to the pad wires (C) with new ones using commercially available upholstery ring pliers (D).**

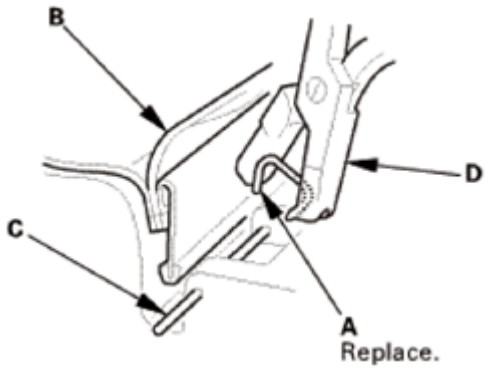

Fig. 499: Removing Seat Cushion Cover To Pad Wires Fastening Upholstery Ring Using Tool
Courtesy of AMERICAN HONDA MOTOR CO., INC.

1. Install the seat-back cover (A) with the upholstery rings (B).

Leather Seat

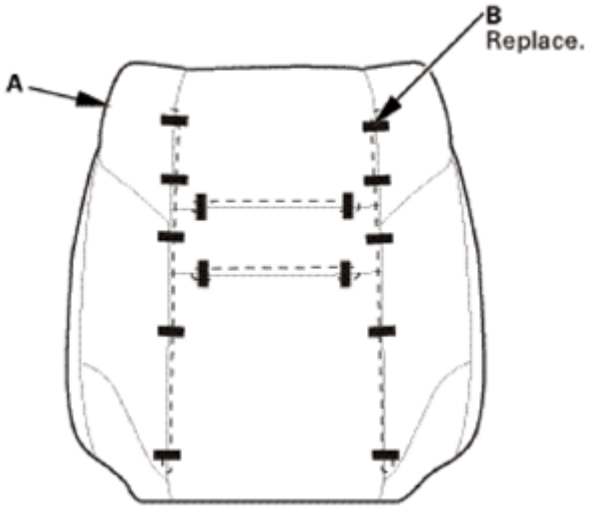

Fig. 500: Identifying Seat Cushion Cover And Upholstery Rings (Leather Seat)
Courtesy of AMERICAN HONDA MOTOR CO., INC.

Fabric Seat

GETtheMANUALS.org

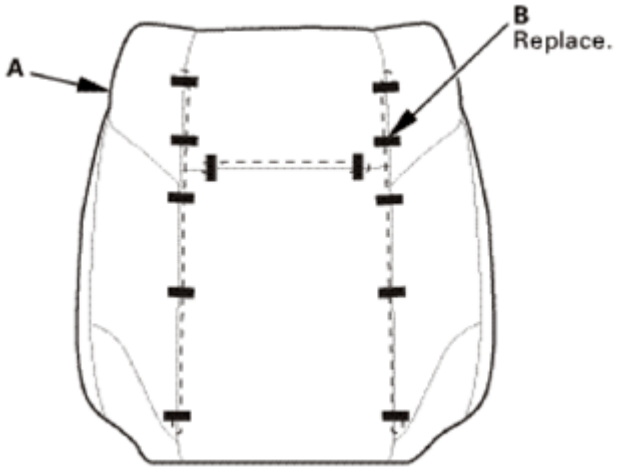

Fig. 501: Identifying Seat Cushion Cover And Upholstery Rings (Fabric Seat)
Courtesy of AMERICAN HONDA MOTOR CO., INC.

2. Loop airbag attachment wire A through the inside reinforcing cloth (C).
3. Loop airbag attachment wire B through the outside reinforcing cloth (D).

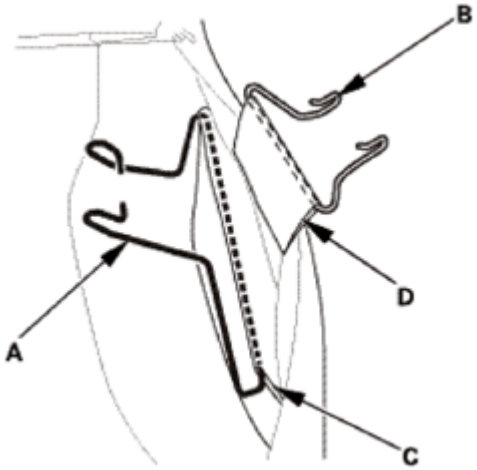

Fig. 502: Connecting Airbag Attachment Wire Through Outside Reinforcing Cloth
Courtesy of AMERICAN HONDA MOTOR CO., INC.

2. Front Seat-Back Cover/Pad - Passenger's Side
    1. Install the seat-back cover/pad (A) on the seat-back frame (B).

GETtheMANUALS.org

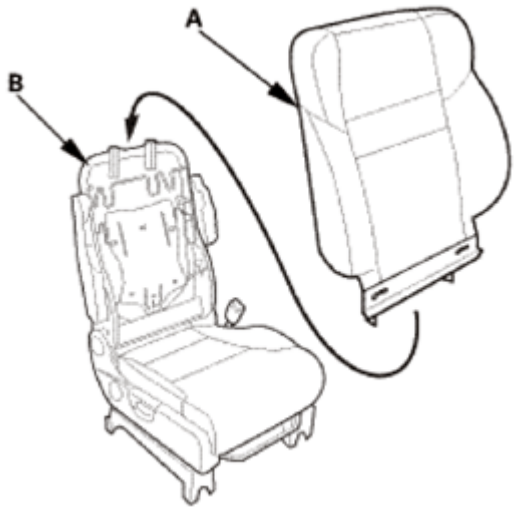

Fig. 503: Installing Seat-Back Cover/Pad On Seat-Back Frame
Courtesy of AMERICAN HONDA MOTOR CO., INC.

3. Head Restraint Guide - Passenger's Side
    1. Install the head restraint guides (A).

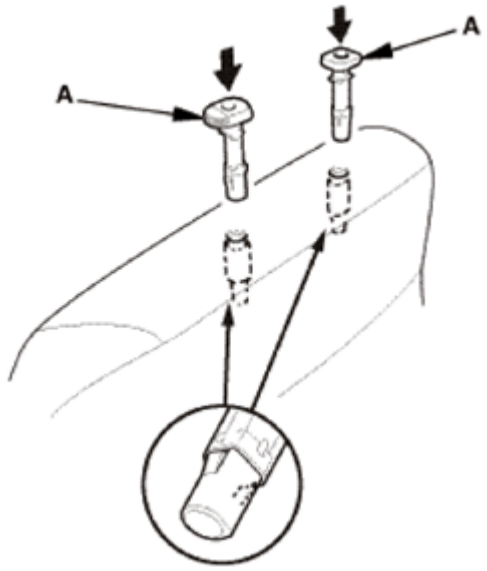

Fig. 504: Installing Head Restraint Guides
Courtesy of AMERICAN HONDA MOTOR CO., INC.

4. Front Seat-Back - Passenger's Side
    1. Install the hook strips (A) to the seat-back frame (B).
    2. Install the harness clips (C).

GETtheMANUALS.org

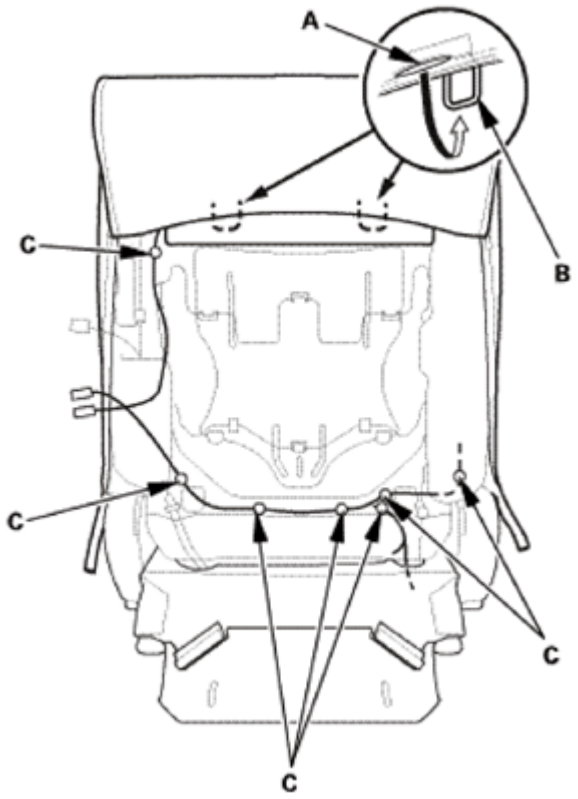

Fig. 505: Installing Hook Strips To Seat-Back Frame
Courtesy of AMERICAN HONDA MOTOR CO., INC.

3. Connect the connectors (A) and install the harness clips (B) to the ODS unit (USA and Canada models) or OPDS unit (Mexico models) (C).

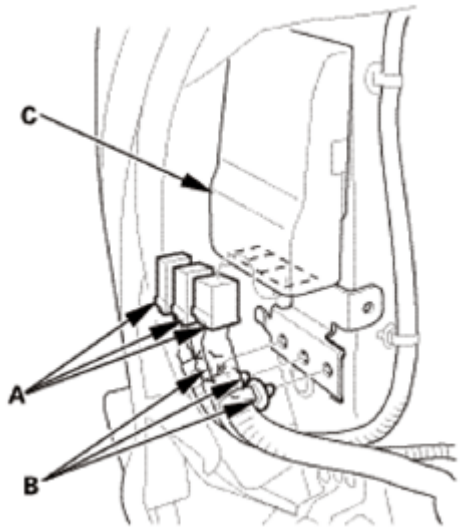

Fig. 506: Identifying ODS/OPDS Unit, Connectors And Clips
Courtesy of AMERICAN HONDA MOTOR CO., INC.

GETtheMANUALS.org

4. Insert the hooks (A), and install the cover (B), and install the screw (C) and the harness clip (D).

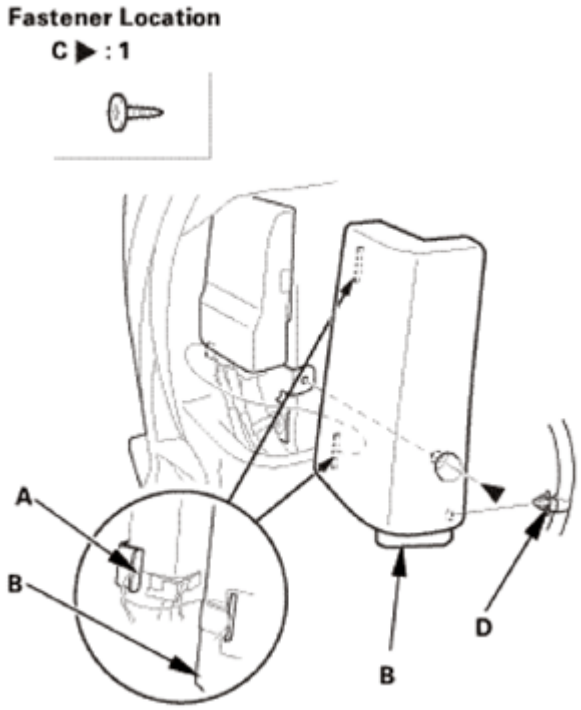

Fig. 507: Identifying Front Seat-Back Cover, Hooks, Clips And Screws
Courtesy of AMERICAN HONDA MOTOR CO., INC.

5. Install airbag attachment wires A, B to the seat-back frame (C).

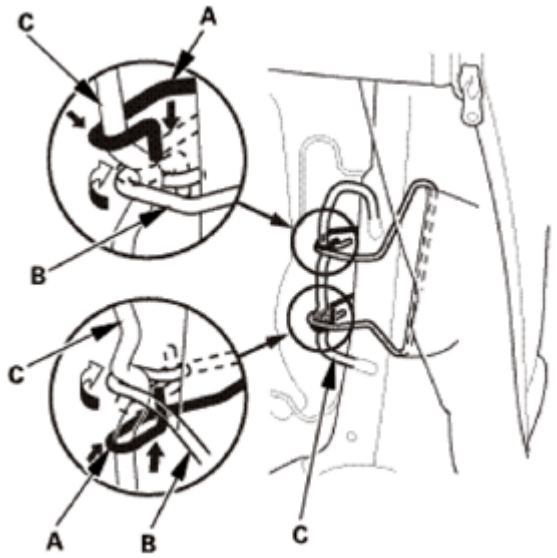

Fig. 508: Installing Airbag Attachment Wires To Seat-Back Frame
Courtesy of AMERICAN HONDA MOTOR CO., INC.

GETtheMANUALS.org

6. Install the harness clips (A).
7. Install the harnesses (B) through the holes (C) in the seat-back cover (D).

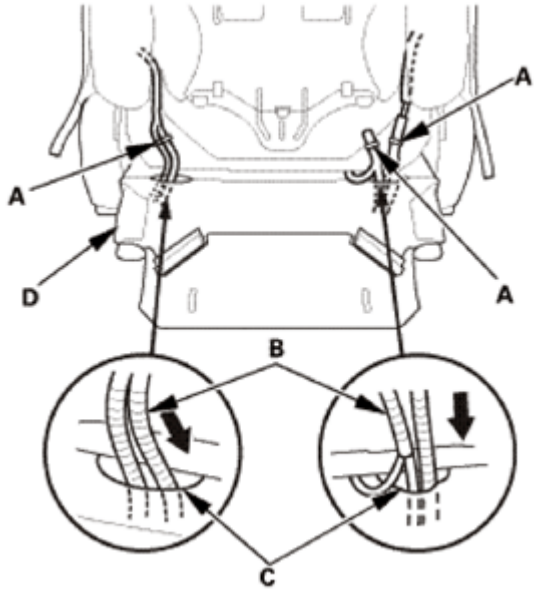

Fig. 509: Installing Harnesses Through Holes In Seat-Back Cover
Courtesy of AMERICAN HONDA MOTOR CO., INC.

8. Install the hook strips (A) to the seat-back frame.

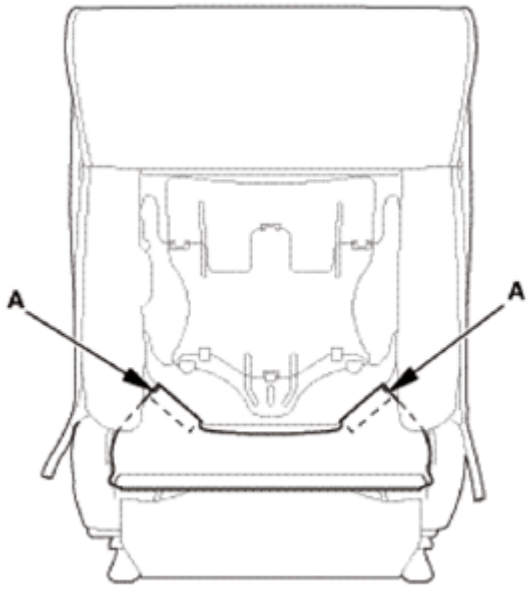

Fig. 510: Installing Hook Strips To Seat-Back Frame
Courtesy of AMERICAN HONDA MOTOR CO., INC.

9. Zip the seat-back cover (A).

GETtheMANUALS.org

10. Install the hook strip (B).

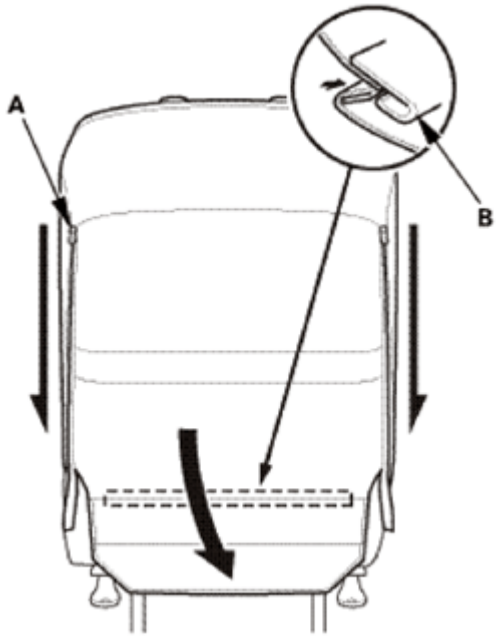

Fig. 511: Removing Seat Back Cover
Courtesy of AMERICAN HONDA MOTOR CO., INC.

11. Install the connector clips (A).
12. Install the harness clips (B).
13. Install the harness holders (C) to the seat cushion frame springs (D).
14. Connect the connector (E).

Except KX - Without Seat Heater

GETtheMANUALS.org

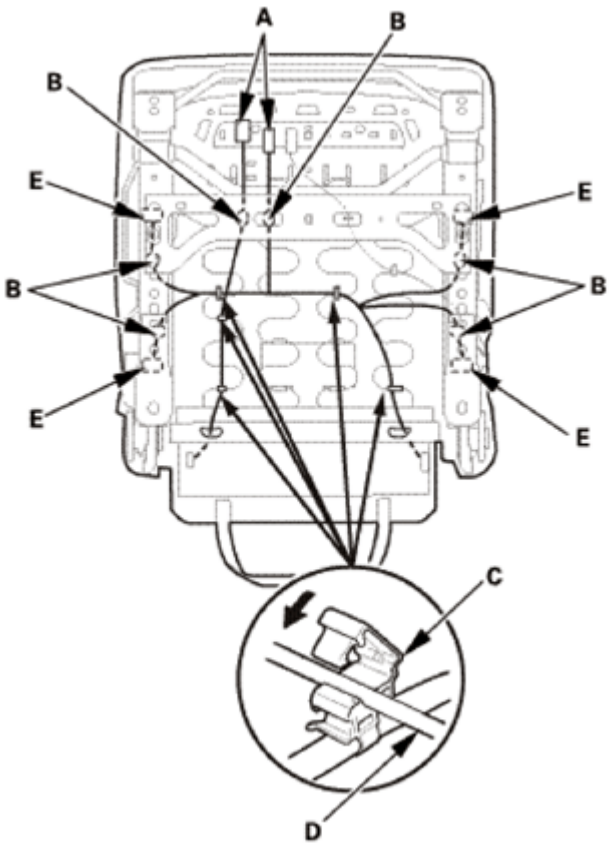

Fig. 512: Installing Harness Holder To Seat Cushion Frame Springs (Except KX - Without Seat Heater)
Courtesy of AMERICAN HONDA MOTOR CO., INC.

Except KX - With Seat Heater

GETtheMANUALS.org

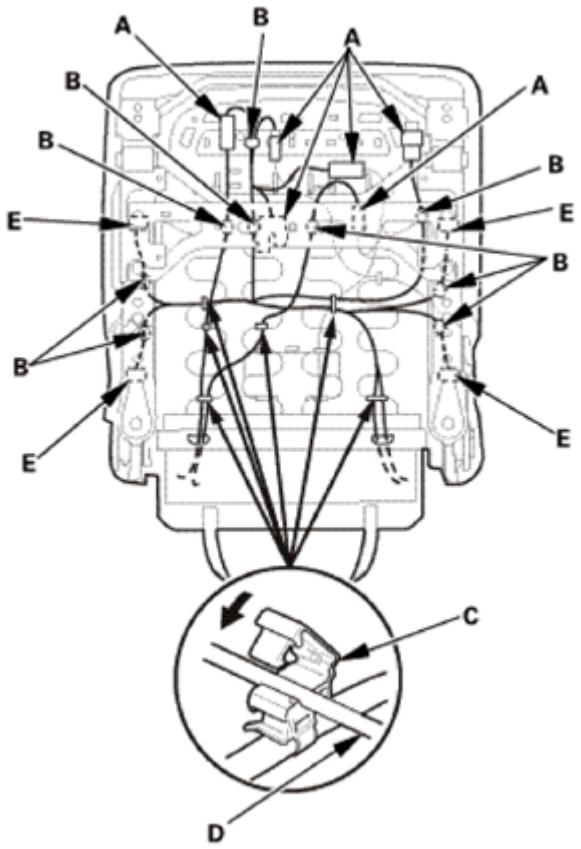

Fig. 513: Installing Harness Holder To Seat Cushion Frame Springs (Except KX - With Seat Heater)
Courtesy of AMERICAN HONDA MOTOR CO., INC.

KX

GETtheMANUALS.org

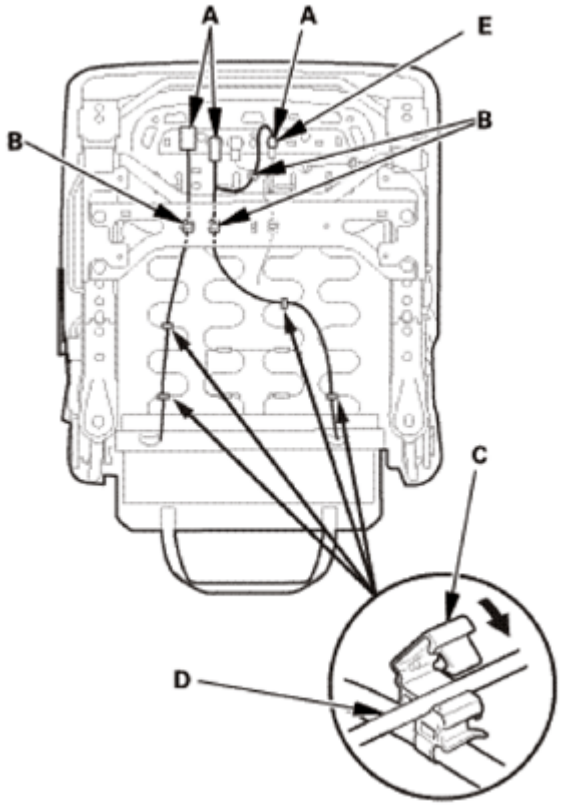

Fig. 514: Installing Harness Holder To Seat Cushion Frame Springs (For KX)
Courtesy of AMERICAN HONDA MOTOR CO., INC.

15. Install the elastic strap (A) to the seat cushion frame springs (B).

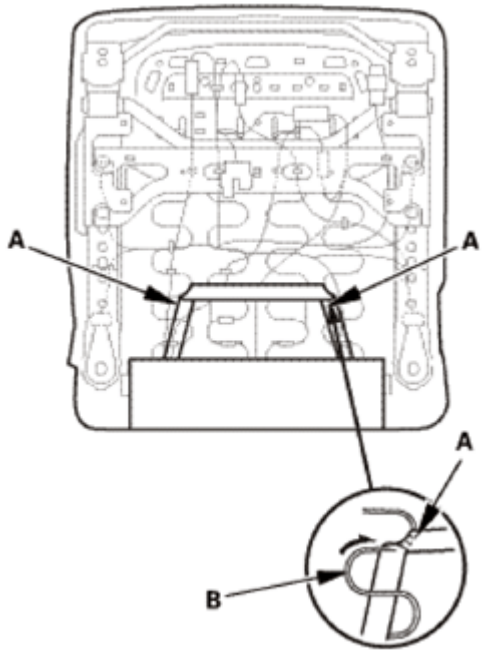

GETtheMANUALS.org

Fig. 515: Installing Elastic Strap To Seat Cushion Frame Springs
Courtesy of AMERICAN HONDA MOTOR CO., INC.

5. Front Seat Armrest - Passenger's Side
    1. Install the pins (A) to the seat-back.

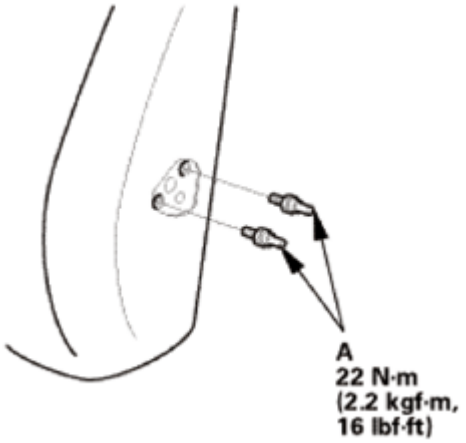

Fig. 516: Identifying Seat Back Pins With Torque Specifications
Courtesy of AMERICAN HONDA MOTOR CO., INC.

    2. Install the armrest (A), then install the washer (B), the bushing (C), and the center pin (D).
    3. Install the cap (E) to the armrest.

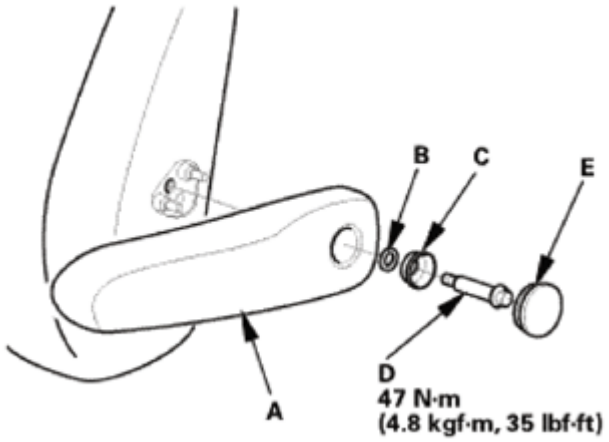

Fig. 517: Identifying Front Seat Armrest, Center Pin, Bushing, Washer And Cap With Torque Specifications
Courtesy of AMERICAN HONDA MOTOR CO., INC.

6. Front Seat Assembly - Passenger's Side
    1. Connect the connectors (A).
    2. Install the harness clip (B).

GETtheMANUALS.org

Without Subwoofer

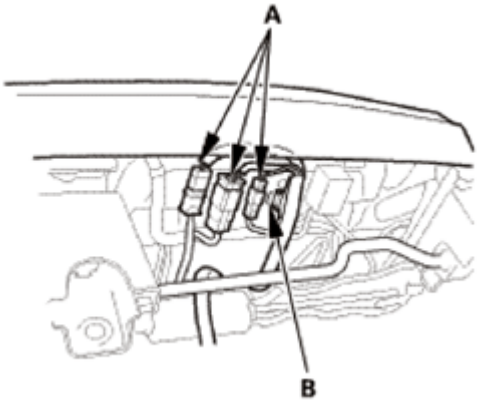

Fig. 518: Identifying Front Seat Connectors And Clips (Without Subwoofer)
Courtesy of AMERICAN HONDA MOTOR CO., INC.

With Subwoofer

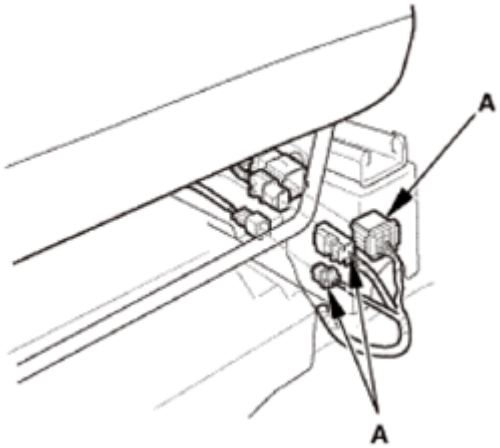

Fig. 519: Identifying Front Seat Connectors And Clips (With Subwoofer)
Courtesy of AMERICAN HONDA MOTOR CO., INC.

3. Install the seat mounting bolts (A).

NOTE:

- **Tighten the bolts by hand first, then tighten them to the specified torque.**
- **Tighten the seat mounting bolts to the specified torque in the sequence shown. Slide the seat all the way back and tighten bolts 1 and 2, then slide it forward and tighten bolts 3 and 4.**

Front Side

GETtheMANUALS.org

Fig. 520: Identifying Seat Mounting Bolts With Torque Specifications (Front Side)
Courtesy of AMERICAN HONDA MOTOR CO., INC.

Rear Side

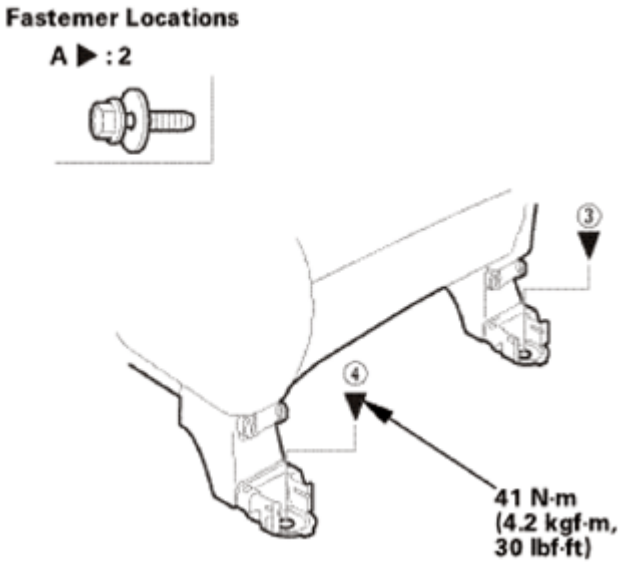

Fig. 521: Identifying Seat Mounting Bolts With Torque Specifications (Rear Side)
Courtesy of AMERICAN HONDA MOTOR CO., INC.

4. Install rear inner seat track end cover (A) and the rear outer seat track end cover (B). Make sure the hooks (C) snap into place securely.

GETtheMANUALS.org

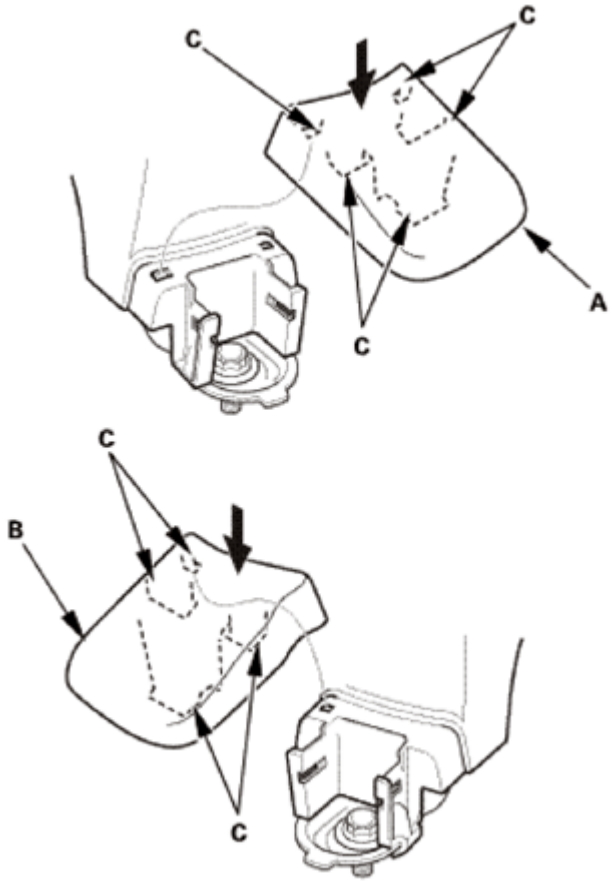

Fig. 522: Installing Rear Inner And Outer Seat Track End Cover
Courtesy of AMERICAN HONDA MOTOR CO., INC.

7. Head Restraint - Passenger's Side
    1. Insert the head restraint (A) into the seat-back as shown.

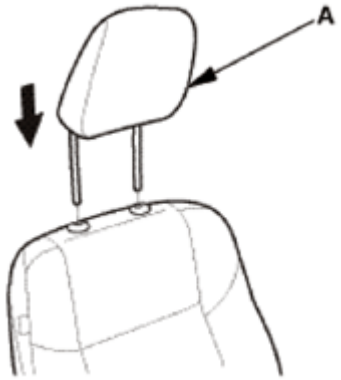

Fig. 523: Inserting Head Restraint Into Seat-Back (Passenger Side)
Courtesy of AMERICAN HONDA MOTOR CO., INC.

8. Front Seat Belt Lower Anchor Bolt - Passenger's Side

GETtheMANUALS.org

1. Install the lower anchor bolt (A).

NOTE: **Before installing the anchor bolt, make sure there are no twists or kinks in the seat belt.**

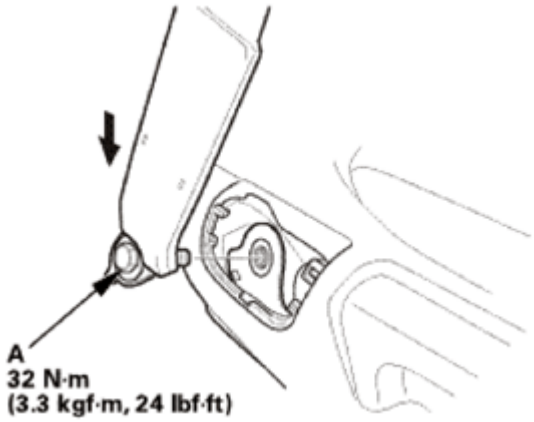

Fig. 524: Installing Front Seat Belt Lower Anchor Bolt
Courtesy of AMERICAN HONDA MOTOR CO., INC.

2. Install the anchor cover (A). Make sure the hooks (B) and the tab (C) snap into place securely.

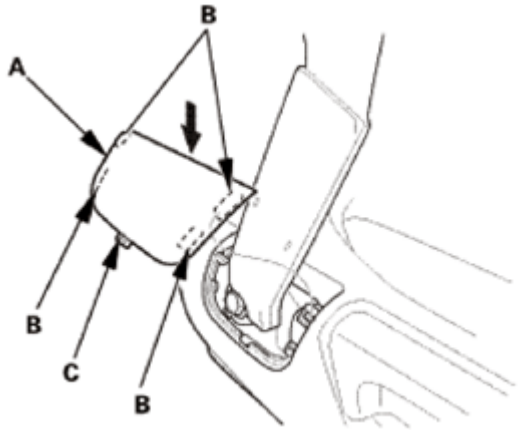

Fig. 525: Installing Front Seat Belt Lower Anchor Cover
Courtesy of AMERICAN HONDA MOTOR CO., INC.

9. Front Seat-Back Cover - Driver's Side

NOTE: **Replace all of the upholstery rings (A) fastening the seat cushion cover (B) to the pad wires (C) with new ones using commercially available upholstery ring pliers (D).**

GETtheMANUALS.org

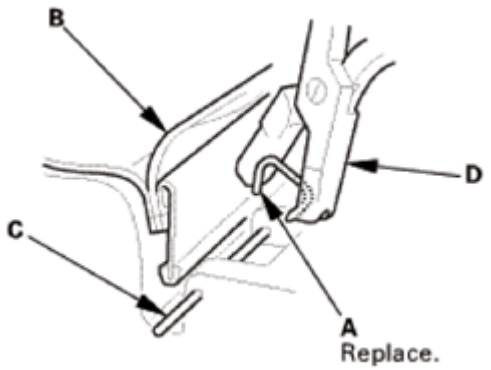

Fig. 526: Removing Seat Cushion Cover To Pad Wires Fastening Upholstery Ring Using Tool
Courtesy of AMERICAN HONDA MOTOR CO., INC.

1. Install the seat-back cover (A) with the upholstery rings (B).

   Leather Seat

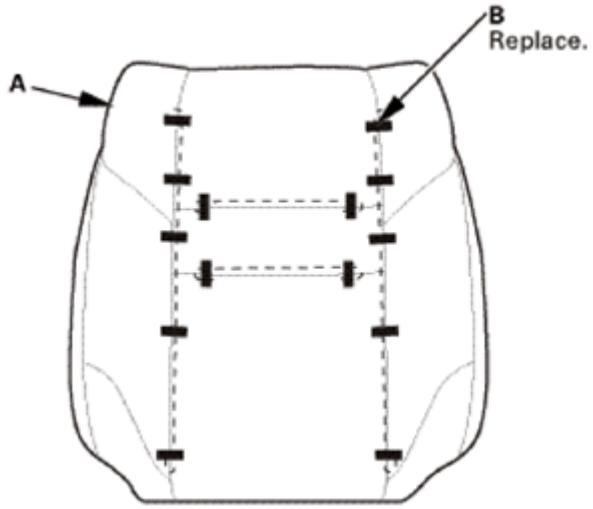

Fig. 527: Identifying Seat Cushion Cover And Upholstery Rings (Leather Seat)
Courtesy of AMERICAN HONDA MOTOR CO., INC.

Fabric Seat

GETtheMANUALS.org

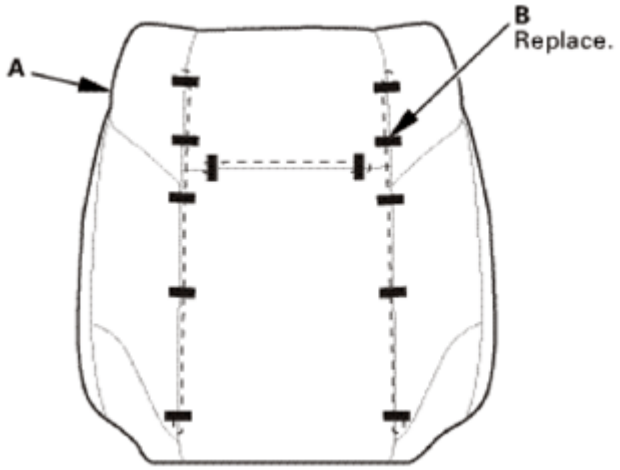

Fig. 528: Identifying Seat Cushion Cover And Upholstery Rings (Fabric Seat)
Courtesy of AMERICAN HONDA MOTOR CO., INC.

2. Loop airbag attachment wire A through the inside reinforcing cloth (C).
3. Loop airbag attachment wire B through the outside reinforcing cloth (D).

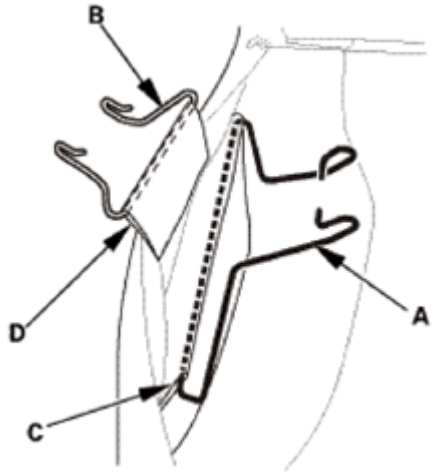

Fig. 529: Connecting Airbag Attachment Wire Through Outside Reinforcing Cloth
Courtesy of AMERICAN HONDA MOTOR CO., INC.

10. Front Seat-Back Cover/Pad - Driver's Side
    1. Install the seat-back cover/pad (A) on the seat-back frame (B).

GETtheMANUALS.org

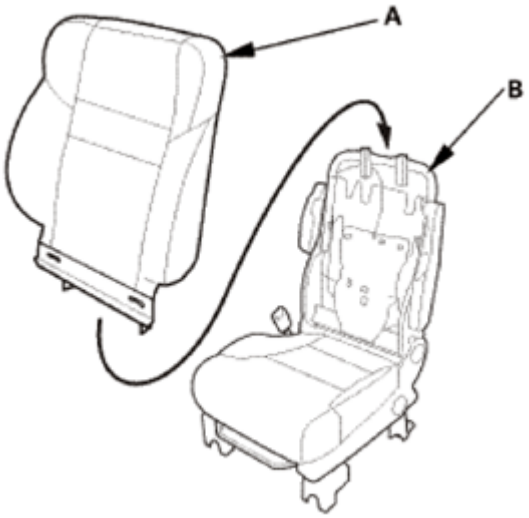

Fig. 530: Installing Seat-Back Cover/Pad On Seat-Back Frame
Courtesy of AMERICAN HONDA MOTOR CO., INC.

11. Head Restraint Guides - Driver's Side
    1. Install the head restraint guides (A).

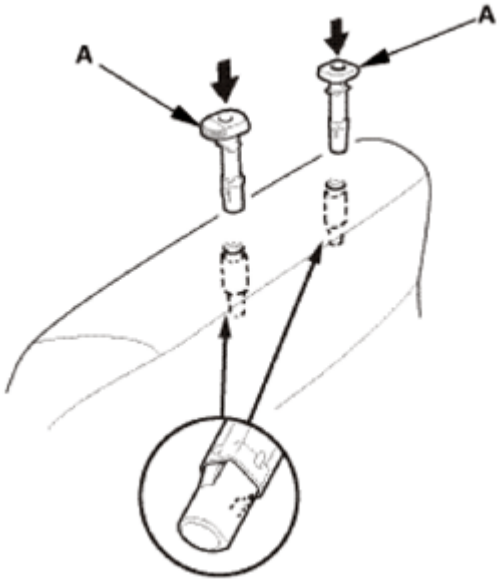

Fig. 531: Installing Head Restraint Guides
Courtesy of AMERICAN HONDA MOTOR CO., INC.

12. Front Seat-Back - Driver's Side
    1. Install the hook strips (A) to the seat-back frame (B).

GETtheMANUALS.org

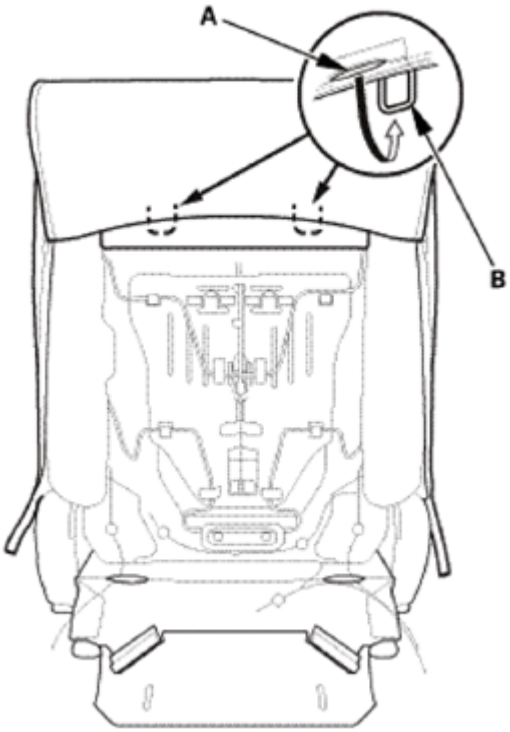

Fig. 532: Installing Hook Strips To Seat-Back Frame
Courtesy of AMERICAN HONDA MOTOR CO., INC.

2. Install airbag attachment wires A, B to the seat-back frame (C).

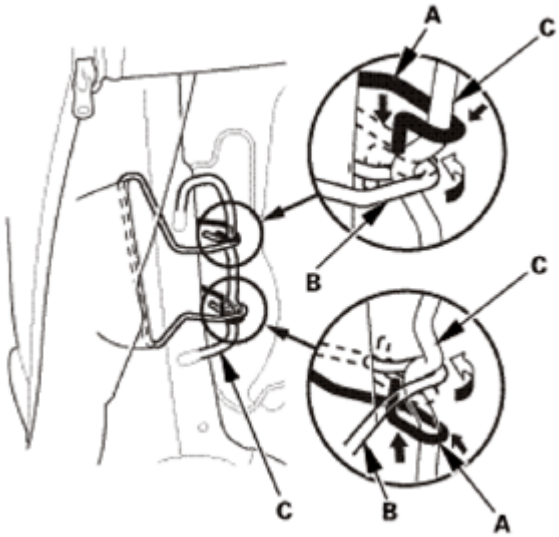

Fig. 533: Installing Airbag Attachment Wires To Seat-Back Frame
Courtesy of AMERICAN HONDA MOTOR CO., INC.

3. Install the harness clips (A).
4. Install the harnesses (B) through the holes (C) in the seat-back cover (D).

GETtheMANUALS.org

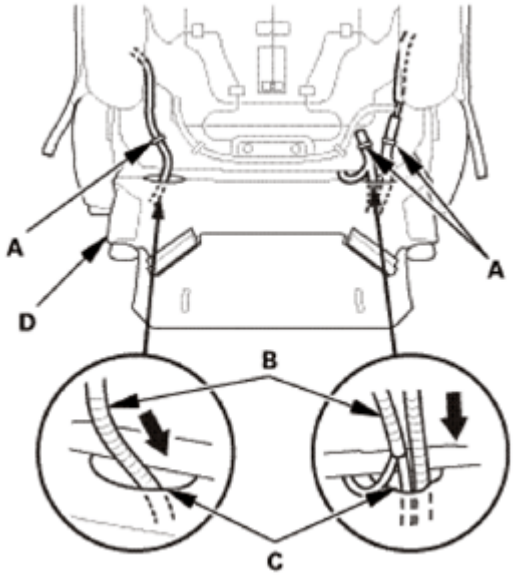

Fig. 534: Installing Harnesses Through Holes In Seat-Back Cover
Courtesy of AMERICAN HONDA MOTOR CO., INC.

5. Install the hook strips (A) to the seat frame.

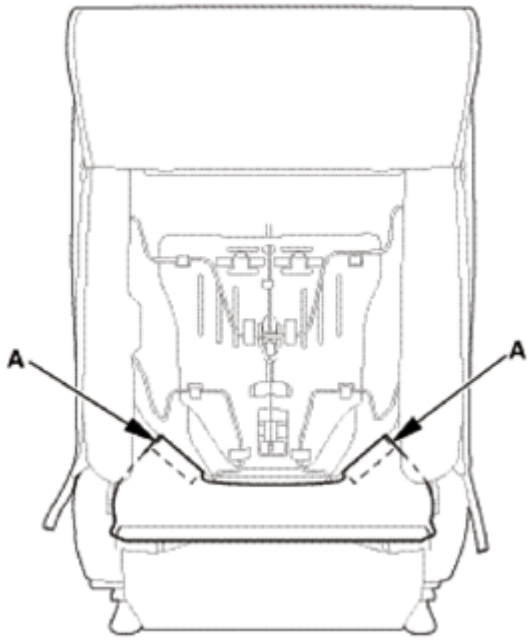

Fig. 535: Installing Hook Strips To Seat-Back Frame
Courtesy of AMERICAN HONDA MOTOR CO., INC.

6. Zip the seat-back cover (A).
7. Install the hook strip (B).

GETtheMANUALS.org

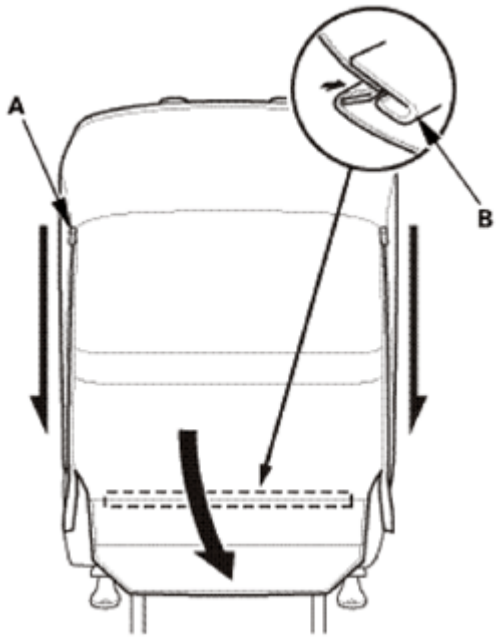

Fig. 536: Removing Seat Back Cover
Courtesy of AMERICAN HONDA MOTOR CO., INC.

8. Install the connector clips (A).
9. Install the harness clips (B).
10. Install the harness holders (C) to the seat cushion frame springs (D).
11. Connect the connector (E).

Power Seat

GETtheMANUALS.org

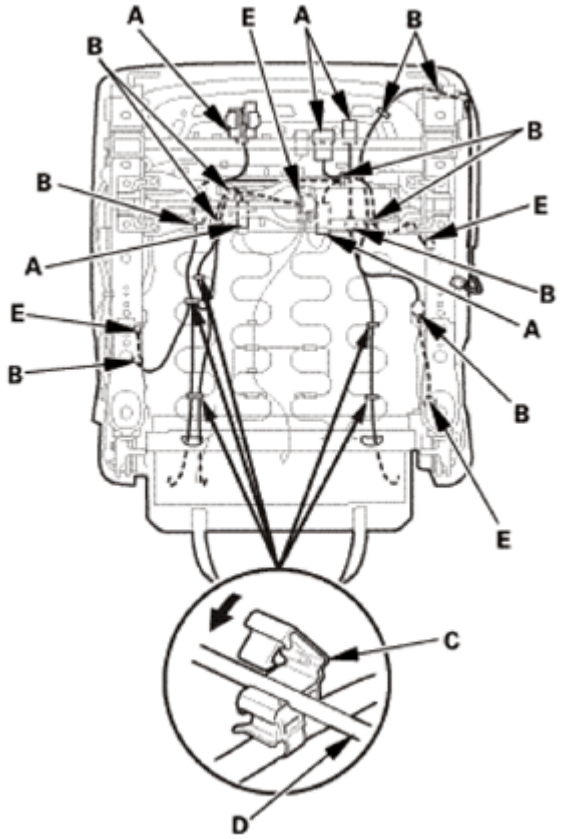

Fig. 537: Installing Harness Holder To Seat Cushion Frame Springs (Except KX - With Seat Heater)
Courtesy of AMERICAN HONDA MOTOR CO., INC.

Manual Seat with Seat Heater

GETtheMANUALS.org

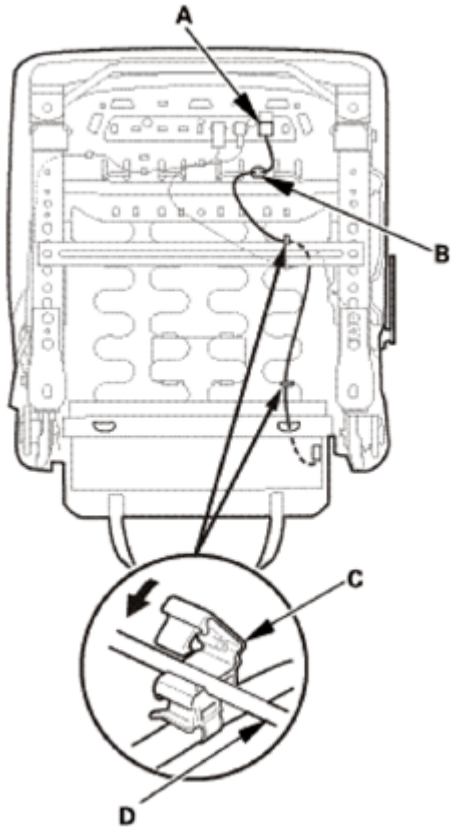

Fig. 538: Installing Harness Holder To Seat Cushion Frame Springs (Manual Seat With Seat Heater)
Courtesy of AMERICAN HONDA MOTOR CO., INC.

12. Install the elastic strap (A) to the seat cushion frame springs (B).

GETtheMANUALS.org

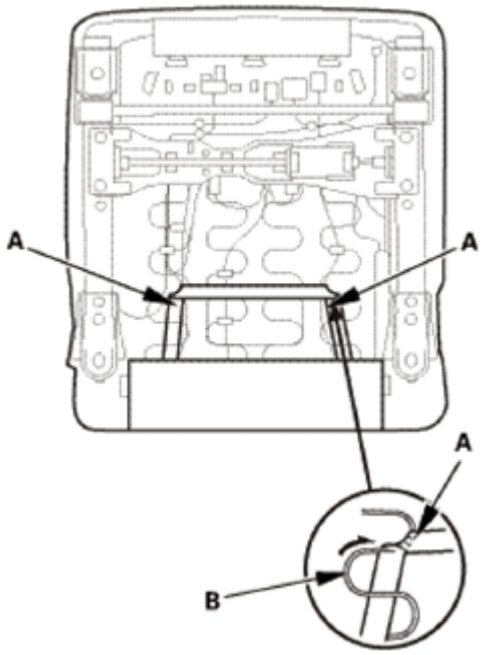

Fig. 539: Installing Elastic Strap To Seat Cushion Frame Springs
Courtesy of AMERICAN HONDA MOTOR CO., INC.

13. Front Seat Armrest
    1. Install the pins (A) to the seat-back.

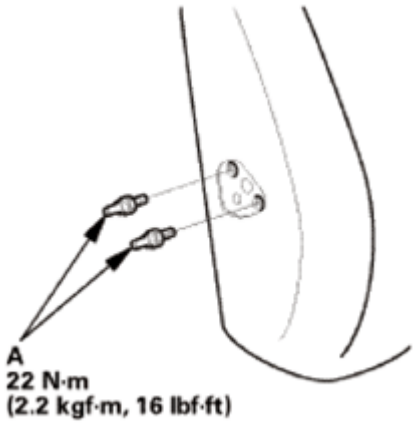

Fig. 540: Identifying Seat Back Pins With Torque Specifications
Courtesy of AMERICAN HONDA MOTOR CO., INC.

    2. Install the armrest (A), then install the washer (B), the bushing (C), and the center pin (D).
    3. Install the cap (E) to the armrest.

GETtheMANUALS.org

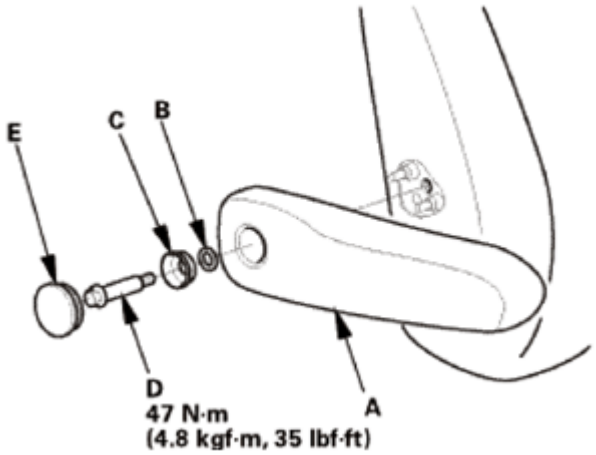

Fig. 541: Identifying Front Seat Armrest, Center Pin, Bushing, Washer And Cap With Torque Specifications
Courtesy of AMERICAN HONDA MOTOR CO., INC.

14. Front Seat - Driver's Side
    1. Connect the connectors (A).
    2. Install the harness clip (B).

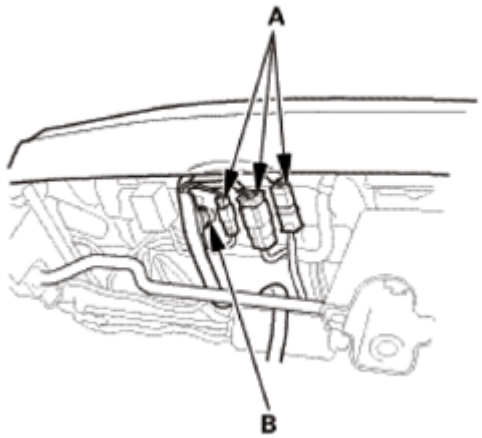

Fig. 542: Identifying Front Seat Connectors And Clips (Driver Side)
Courtesy of AMERICAN HONDA MOTOR CO., INC.

    3. Install the seat mounting bolts (A).

NOTE:

- **Tighten the bolts by hand first, then tighten them to the specified torque.**
- **Tighten the seat mounting bolts to the specified torque in the sequence shown. Slide the seat all the way back and tighten bolts 1 and 2, then slide it forward and tighten bolts 3 and 4.**

GETtheMANUALS.org

Front Side

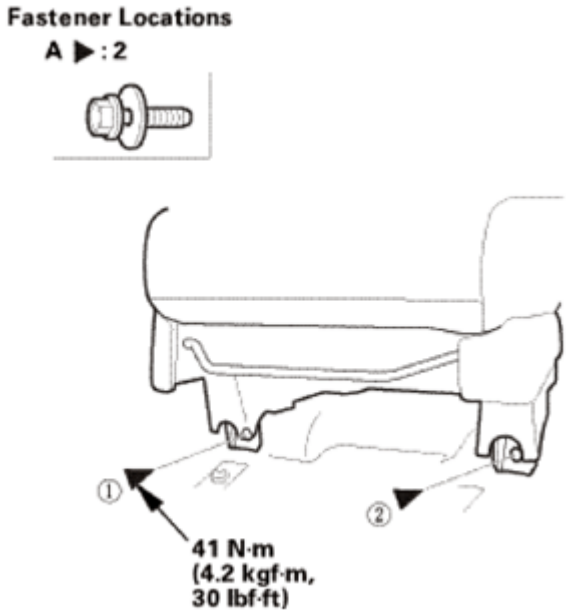

Fig. 543: Identifying Seat Mounting Bolts With Torque Specifications (Front Side)
Courtesy of AMERICAN HONDA MOTOR CO., INC.

Rear Side

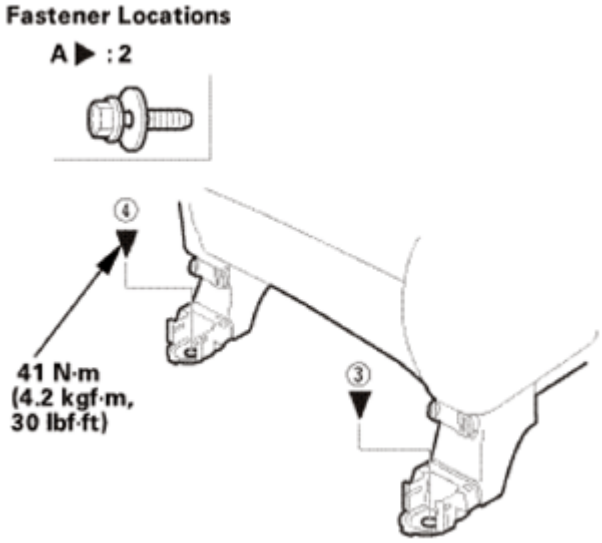

Fig. 544: Identifying Seat Mounting Bolts With Torque Specifications (Rear Side)
Courtesy of AMERICAN HONDA MOTOR CO., INC.

4. Install the rear inner seat track end cover (A) and the rear outer seat track end cover (B). Make sure the hooks (C) snap into place securely.

GETtheMANUALS.org

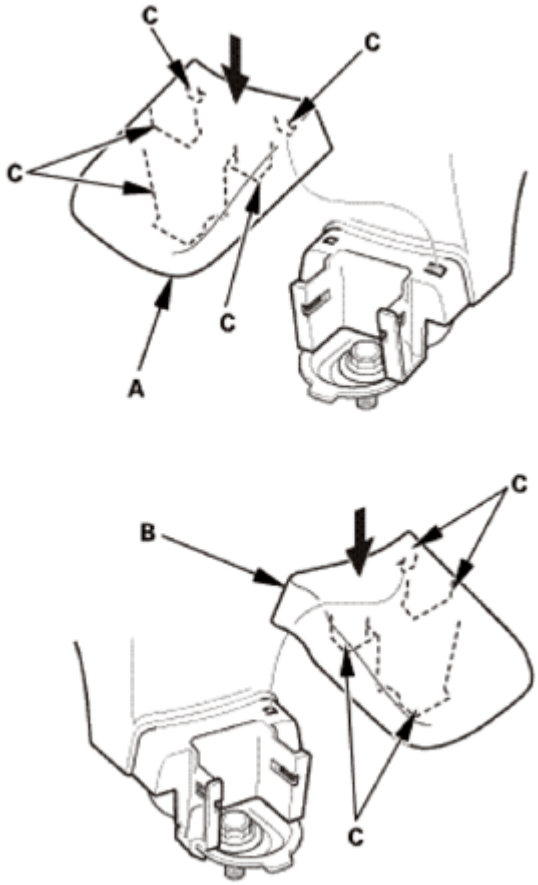

Fig. 545: Installing Rear Inner And Outer Seat Track End Cover
Courtesy of AMERICAN HONDA MOTOR CO., INC.

15. Head Restraint - Driver's Side
    1. Insert the head restraint (A) to the seat-back as shown.

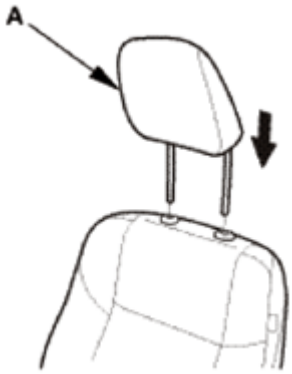

Fig. 546: Inserting Head Restraint To Seat-Back (Driver Side)
Courtesy of AMERICAN HONDA MOTOR CO., INC.

16. Battery Terminal (SRS) - Reconnection

GETtheMANUALS.org

NOTE: **If the battery performance is abnormal, test the battery.**

1. Clean the battery terminals.
2. Connect the positive cable (A) to the battery.

   NOTE: **Always connect the positive side first.**

3. Connect the negative cable (B) to the battery.
4. Apply multipurpose grease to the terminals to prevent corrosion.

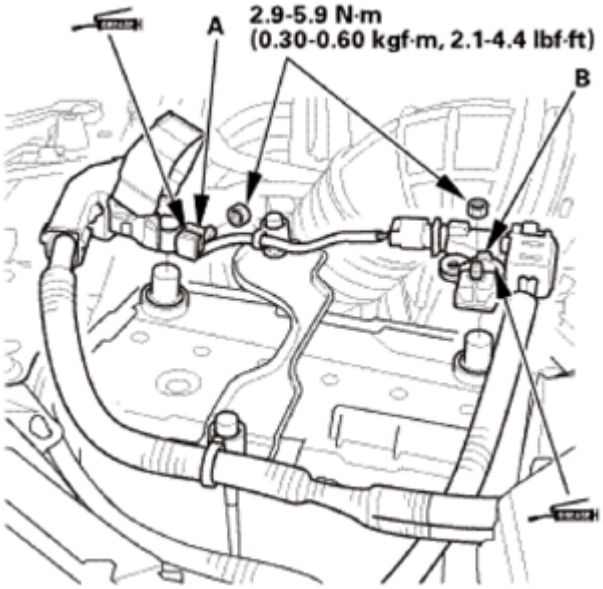

Fig. 547: Identifying Battery Positive And Negative Cable With Torque Specifications
Courtesy of AMERICAN HONDA MOTOR CO., INC.

17. Front Seat Belt Lower Anchor Bolt
    1. Install the lower anchor bolt.

       NOTE: **Before installing the anchor bolt, make sure there are no twists or kinks in the seat belt.**

GETtheMANUALS.org

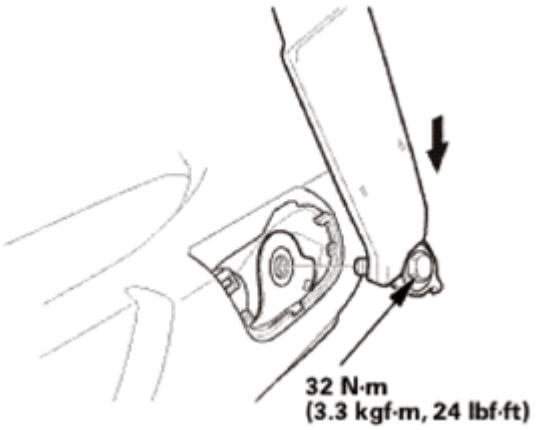

Fig. 548: Installing Front Seat Belt Lower Anchor Bolt
Courtesy of AMERICAN HONDA MOTOR CO., INC.

2. Install the anchor cover (A). Make sure the hooks (B) and the tab (C) snap into place securely.

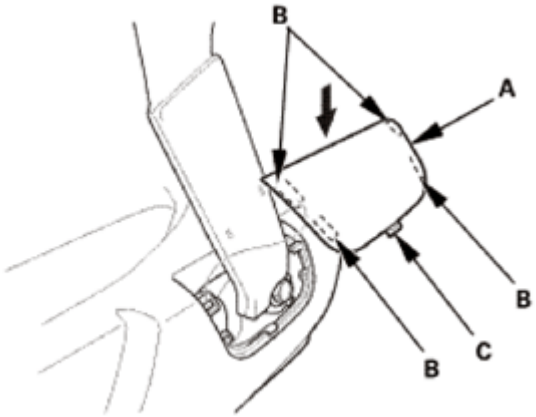

Fig. 549: Installing Front Seat Belt Lower Anchor Cover
Courtesy of AMERICAN HONDA MOTOR CO., INC.

18. HDS DLC - Connection
    1. Connect the HDS to the data link connector (DLC) (A) located under the driver's side of the dashboard.
    2. Turn the ignition switch to ON (II).
    3. Make sure the HDS communicates with the vehicle. If it does not communicate, go to the DLC circuit troubleshooting.

GETtheMANUALS.org

Fig. 550: Identifying Data Link Connector
Courtesy of AMERICAN HONDA MOTOR CO., INC.

19. DTC - Clear
    1. Clear the DTC(s) by following the screen prompts on the HDS.
    2. Turn the ignition switch to LOCK (0), then wait for 10 seconds.
20. OPDS Sensor Initialization

OPDS Sensor Initialization

When you replace the front passenger's seat-back cover/pad, the SRS unit, and/or the ODS unit, initialize the OPDS sensor with the HDS.

NOTE:

- **Before initializing the OPDS sensor, clear the DTCs.**
- **Before initializing the OPDS sensor, make sure the battery is fully charged.**
- **A new (uninitialized) ODS unit installed with a faulty OPDS sensor (DTC 86-1x or 86-2x) can cause DTCs 85-71 and 85-78. If the SRS has a hard DTC 86-1x or 86-2x, troubleshoot the DTCs completely before replacing the ODS unit.**
- **Make sure all components of the front passenger's seat are correctly installed.**
- **Make sure nothing is on the front passenger's seat, including aftermarket seat covers or mats.**
- **Make sure there is nothing in the front passenger's seat-back pocket.**
- **Dehumidify inside of the vehicle with A/C.**

1. Set the seat-back in a normal position.
2. From the HDS Main Menu, select SRS, then INITIALIZATION. In the INITIALIZATION Menu,

GETtheMANUALS.org

select ODS Initialization. Follow the prompts until the OPDS sensor initialization has been completed.

3. Turn the ignition switch to LOCK (0), then wait for 10 seconds.

NOTE: **If the ODS unit fails to initialize after several attempts, replace the seat-back cover/pad equipped with an OPDS sensor, and retry. If the ODS unit continues to fail to initialize, replace the ODS unit.**

POWER LUMBAR SUPPORT COMPONENT LOCATION INDEX

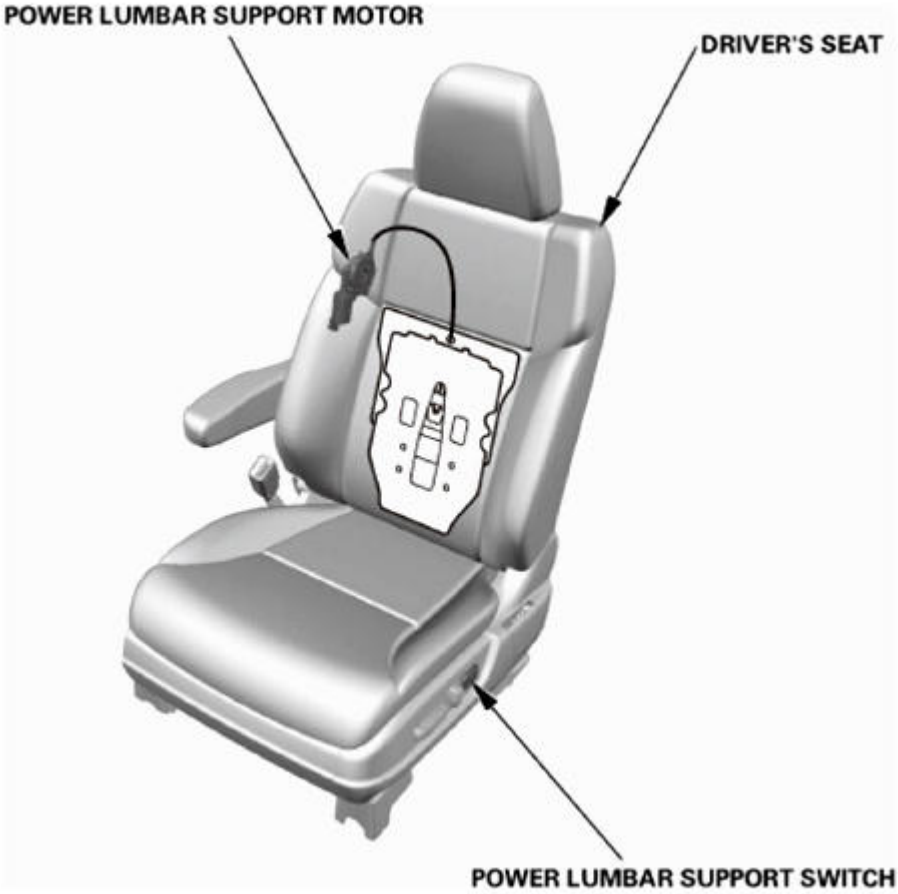

Fig. 551: Power Lumbar Support Components Location
Courtesy of AMERICAN HONDA MOTOR CO., INC.

POWER LUMBAR SUPPORT MOTOR	**REMOVAL AND INSTALLATION**
	TEST
POWER LUMBAR SUPPORT SWITCH	**REMOVAL, INSTALLATION, AND TEST**

POWER LUMBAR SUPPORT MOTOR TEST

REMOVAL

GETtheMANUALS.org

SRS components are located in this area. Review the **SRS COMPONENT LOCATIONS** and the **PRECAUTIONS AND PROCEDURES** before doing repairs or service.

NOTE: **Before the front power seat is removed, slide the front power seat to the half-way position, then raise the seat to the highest position.**

1. Front Seat Belt Lower Anchor Bolt
    1. Slide the front seat forward fully, carefully pry up on the bottom edge of the anchor cover (A) at the pry point (B) with the appropriate trim tool to release the hooks (C) and the tab (D), then remove the cover by pulling it up.

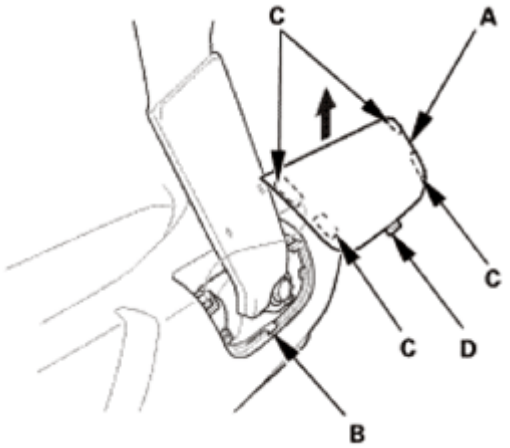

Fig. 552: Removing Front Seat Lower Anchor Cover
Courtesy of AMERICAN HONDA MOTOR CO., INC.

    2. Remove the lower anchor bolt (A).

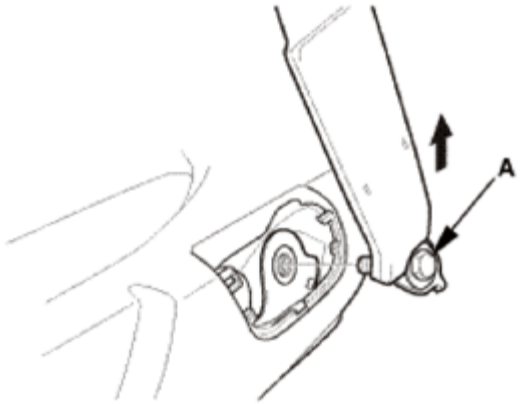

Fig. 553: Removing Front Seat Belt Lower Anchor Bolt
Courtesy of AMERICAN HONDA MOTOR CO., INC.

2. Battery Terminal (SRS) - Disconnection
    1. Make sure the ignition switch is in LOCK (0).

GETtheMANUALS.org

2. Disconnect and isolate the negative cable (A) from the battery.

NOTE: Always disconnect the negative side first.

3. Disconnect the positive cable (B) from the battery.
4. Wait at least 3 minutes before starting work.

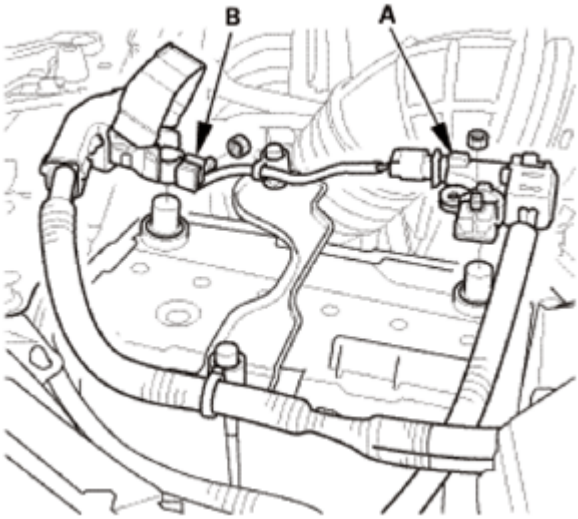

Fig. 554: Identifying Battery Positive And Negative Cable
Courtesy of AMERICAN HONDA MOTOR CO., INC.

3. Head Restraint - Driver's Side
   1. Push and hold the knob (A), then pull out the head restraint (B) as shown.

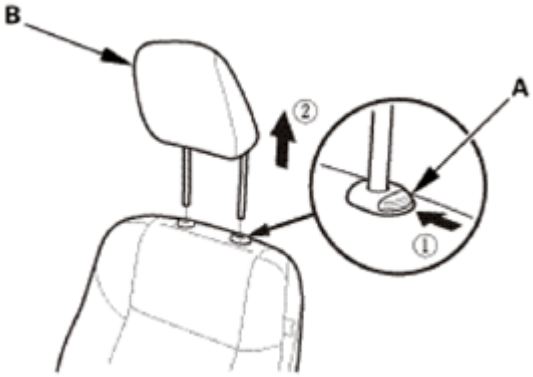

Fig. 555: Pulling Head Restraint (Driver Side)
Courtesy of AMERICAN HONDA MOTOR CO., INC.

4. Front Seat - Driver's Side
   1. Detach the hooks (A), then remove the rear inner seat track end cover (B) and the rear outer seat track end cover (C).

GETtheMANUALS.org

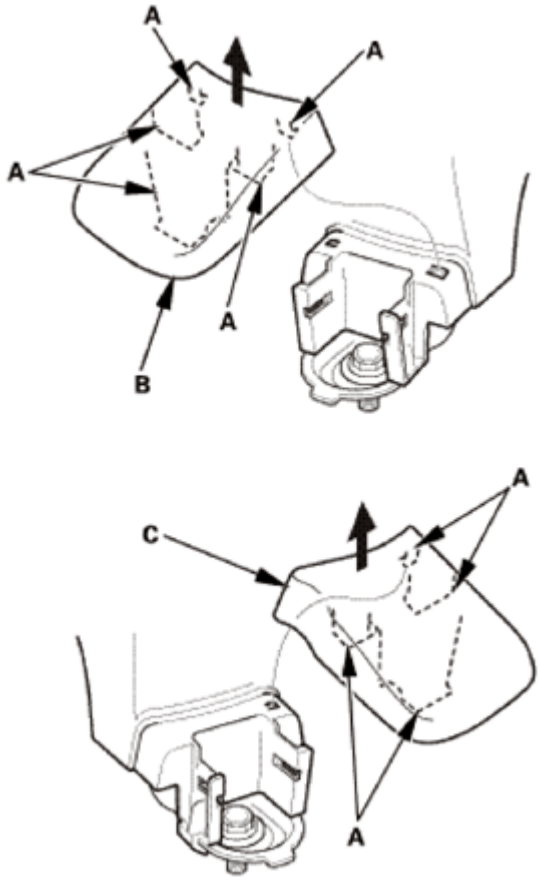

Fig. 556: Removing Rear Inner And Outer Seat Track End Cover
Courtesy of AMERICAN HONDA MOTOR CO., INC.

2. Remove the front mounting bolts (A) from the front seat.

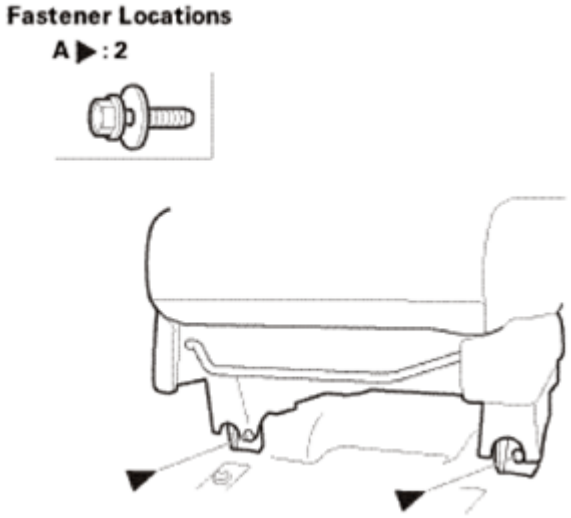

Fig. 557: Identifying Front Seat Front Mounting Bolts
Courtesy of AMERICAN HONDA MOTOR CO., INC.

GETtheMANUALS.org

3. Remove the rear mounting bolts (A) from the front seat.

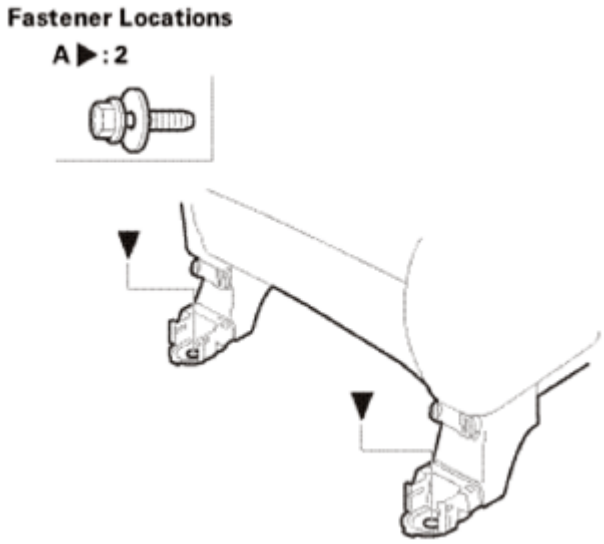

Fig. 558: Identifying Front Seat Rear Mounting Bolts
Courtesy of AMERICAN HONDA MOTOR CO., INC.

4. Disconnect the connectors (A).
5. Detach the harness clip (B).

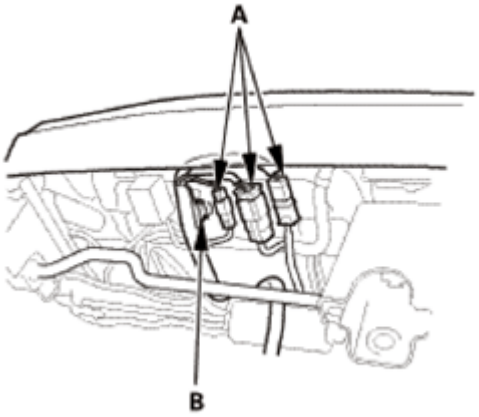

Fig. 559: Identifying Front Seat Connectors And Clips
Courtesy of AMERICAN HONDA MOTOR CO., INC.

5. Front Seat Armrest
    1. Remove the cap (A) with the appropriate trim tool.
    2. Remove the center pin (B), the bushing (C), and the washer (D), then remove the armrest (E).

GETtheMANUALS.org

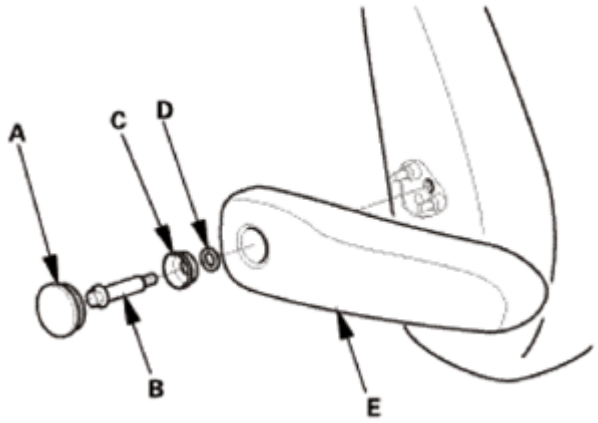

Fig. 560: Identifying Front Seat Armrest, Center Pin, Bushing, Washer And Cap
Courtesy of AMERICAN HONDA MOTOR CO., INC.

3. Remove the pins (A) from the seat-back.

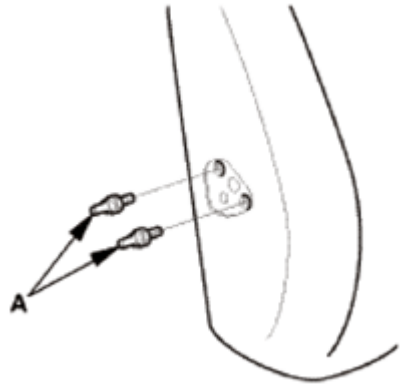

Fig. 561: Identifying Seat Back Pins
Courtesy of AMERICAN HONDA MOTOR CO., INC.

6. Front Seat-Back As Needed - Driver's Side
    1. Release the elastic strap (A) from the seat cushion frame springs (B), then pull back the under cover (C) of the seat-back cover.

GETtheMANUALS.org

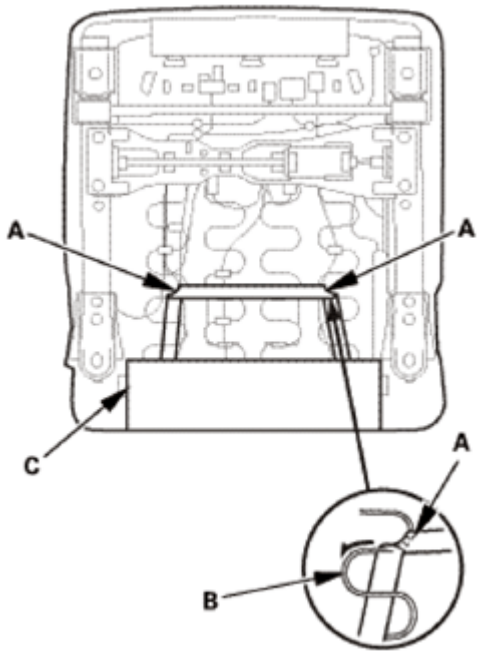

Fig. 562: Releasing Elastic Strap From Seat Cushion Frame Springs
Courtesy of AMERICAN HONDA MOTOR CO., INC.

2. Release the hook strip (A).
3. Unzip the seat-back cover (B).

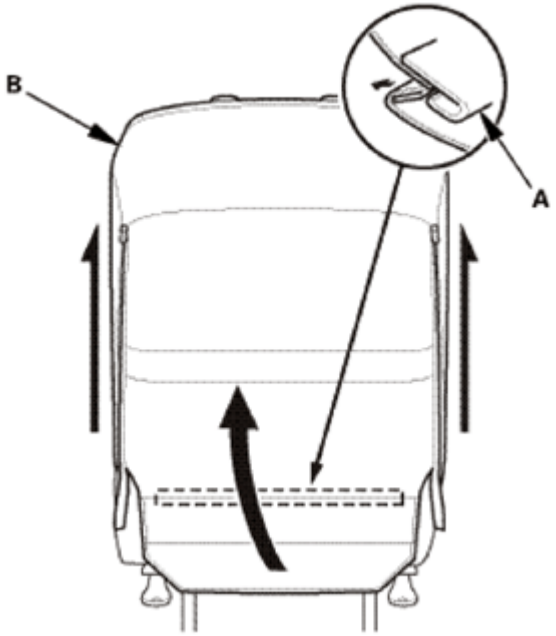

Fig. 563: Removing Seat-Back Cover
Courtesy of AMERICAN HONDA MOTOR CO., INC.

GETtheMANUALS.org

4. Release the hook strips (A).

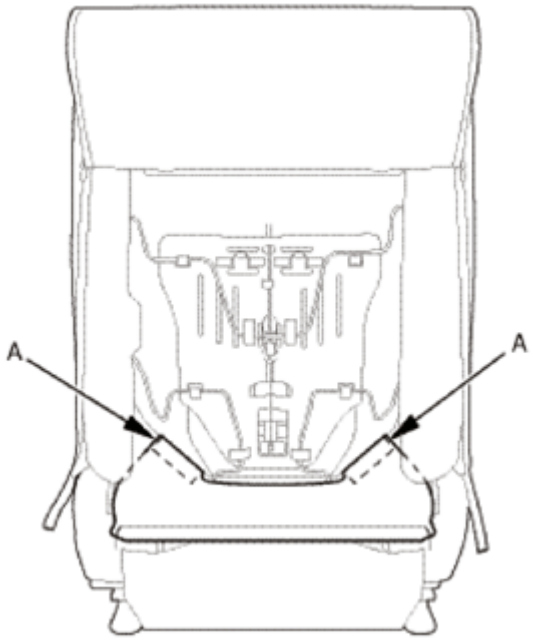

Fig. 564: Identifying Seat-Back Cover Hook Strips
Courtesy of AMERICAN HONDA MOTOR CO., INC.

5. Release the hooks (A).

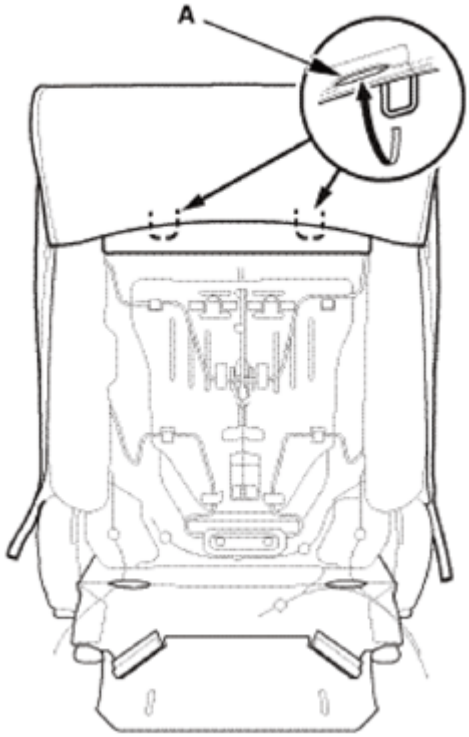

GETtheMANUALS.org

Fig. 565: Releasing Seat-Back Cover Hooks
Courtesy of AMERICAN HONDA MOTOR CO., INC.

7. Power Lumbar Support Motor Cover
    1. Release the hook (A), then remove the pin (B).
    2. Pull the cover up to release it from the upper hook (C), then remove the power lumbar support motor cover (D).

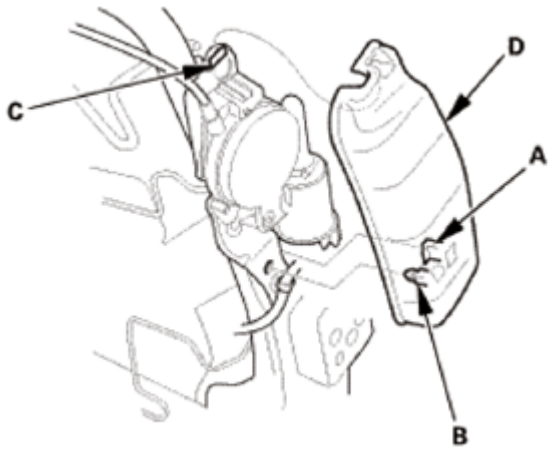

Fig. 566: Identifying Power Lumbar Support Motor Cover, Hooks And Pin
Courtesy of AMERICAN HONDA MOTOR CO., INC.

TEST

1. Power Lumbar Support Motor - Test
    1. Disconnect the connector.
    2. Test the power lumbar support motor by applying battery power and ground to the terminals according to the table.
    3. If the motor does not run smoothly, replace it.
    4. Connect the connector.

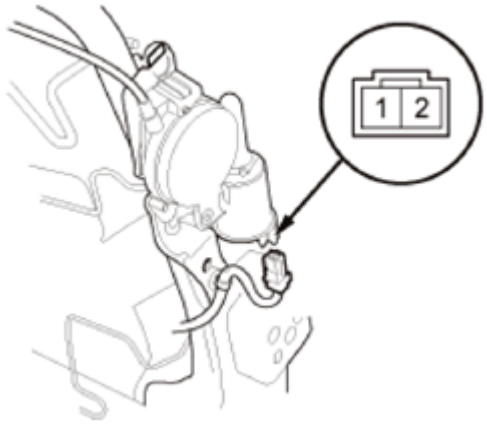

GETtheMANUALS.org

Fig. 567: Identifying Power Lumbar Support Motor Connector Terminals
Courtesy of AMERICAN HONDA MOTOR CO., INC.

Position \ Terminal	1	2
Forward	⊖	⊕
Backward	⊕	⊖

Fig. 568: Power Lumbar Support Motor Switch Terminal Position Chart
Courtesy of AMERICAN HONDA MOTOR CO., INC.

INSTALLATION

1. Power Lumbar Support Motor Cover
    1. Install the power lumbar support motor cover (A) upward to install it to the upper hook (B).
    2. Install the power lumbar support motor cover to the lower hook (C) and pin (D). Make sure the hook snaps into place securely.

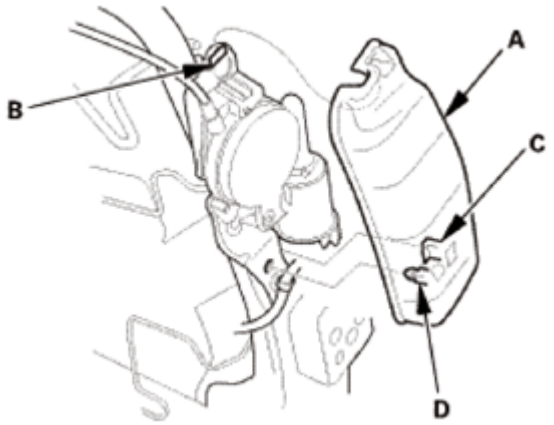

Fig. 569: Identifying Power Lumbar Support Motor Cover, Hooks And Pin
Courtesy of AMERICAN HONDA MOTOR CO., INC.

2. Front Seat-Back As Needed - Driver's Side
    1. Install the hook strips (A) to the seat-back frame (B).

GETtheMANUALS.org

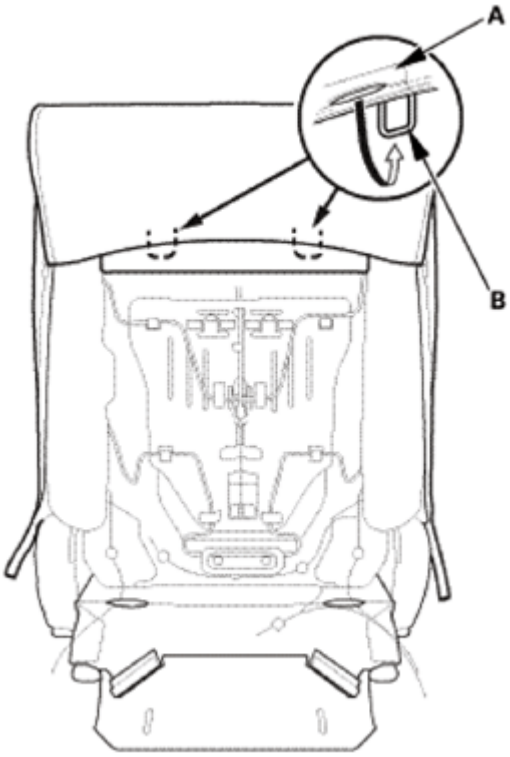

Fig. 570: Installing Hook Strips To Seat-Back Frame
Courtesy of AMERICAN HONDA MOTOR CO., INC.

2. Install the hook strips (A) to the seat frame.

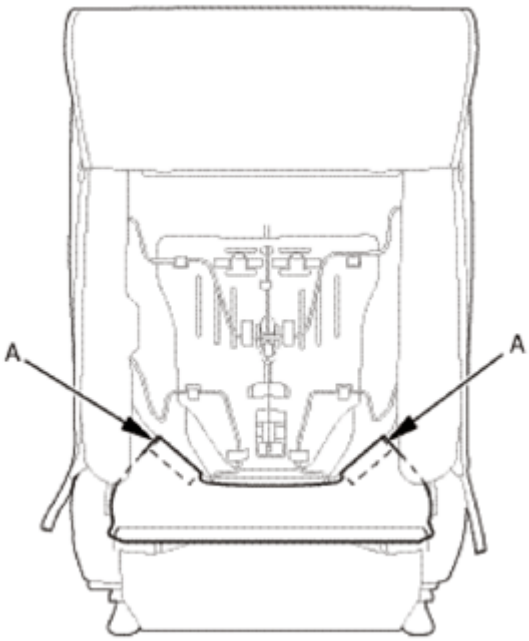

Fig. 571: Identifying Seat Frame Hook Strips
Courtesy of AMERICAN HONDA MOTOR CO., INC.

GETtheMANUALS.org

3. Zip the seat-back cover (A).
4. Install the hook strip (B).

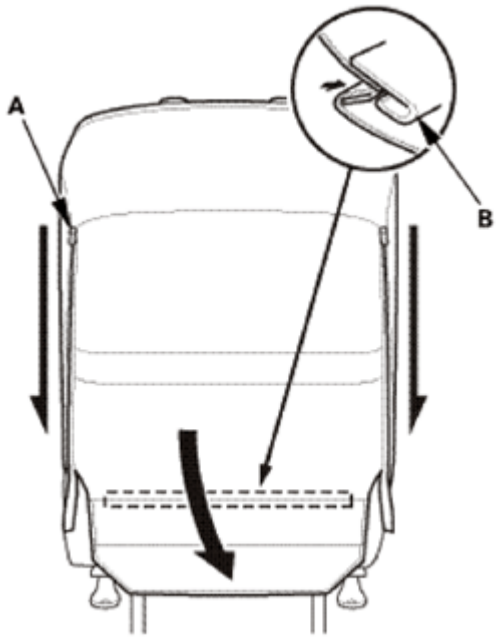

Fig. 572: Removing Seat Back Cover
Courtesy of AMERICAN HONDA MOTOR CO., INC.

5. Install the elastic strap (A) to the seat cushion frame springs (B).

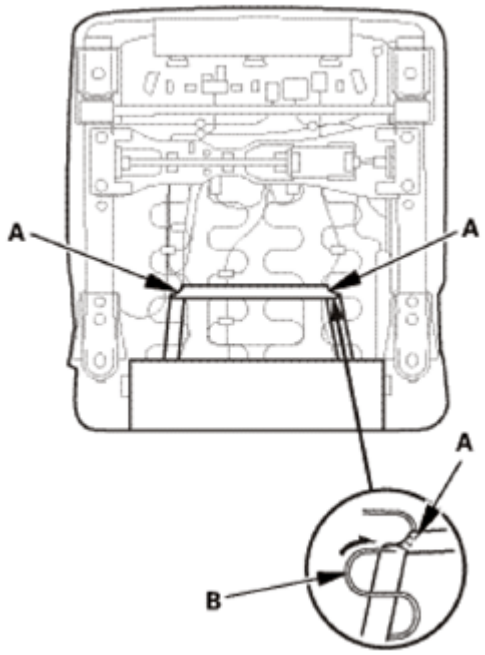

Fig. 573: Installing Elastic Strap To Seat Cushion Frame Springs

GETtheMANUALS.org

Courtesy of AMERICAN HONDA MOTOR CO., INC.

3. Front Seat Armrest
    1. Install the pins (A) to the seat-back.

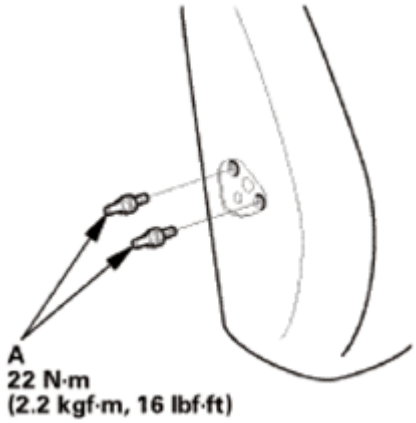

Fig. 574: Identifying Seat Back Pins With Torque Specifications
Courtesy of AMERICAN HONDA MOTOR CO., INC.

    2. Install the armrest (A), then install the washer (B), the bushing (C), and the center pin (D).
    3. Install the cap (E) to the armrest.

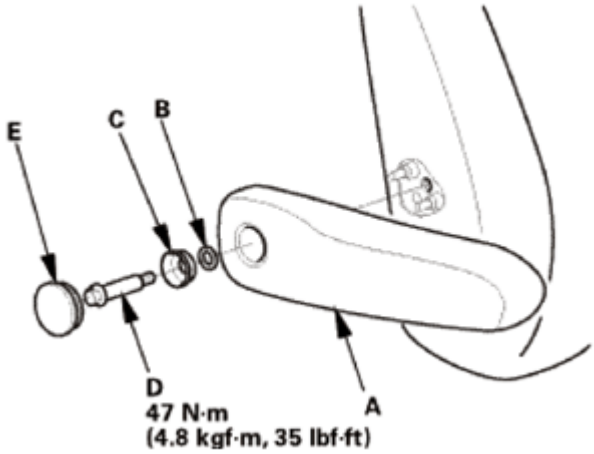

Fig. 575: Identifying Front Seat Armrest, Center Pin, Bushing, Washer And Cap With Torque Specifications
Courtesy of AMERICAN HONDA MOTOR CO., INC.

4. Front Seat - Driver's Side
    1. Connect the connectors (A).
    2. Install the harness clip (B).

GETtheMANUALS.org

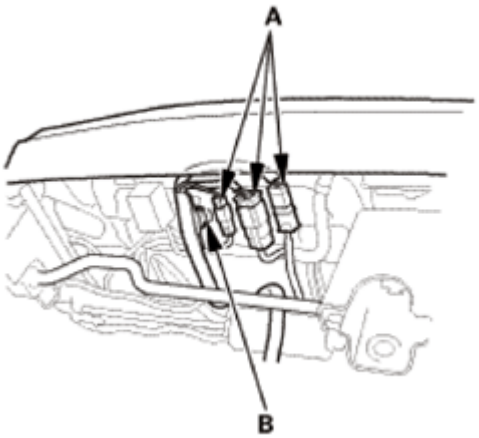

Fig. 576: Identifying Front Seat Connectors And Clips (Driver Side)
Courtesy of AMERICAN HONDA MOTOR CO., INC.

3. Install the seat mounting bolts (A).

NOTE:

- **Tighten the bolts by hand first, then tighten them to the specified torque.**
- **Tighten the seat mounting bolts to the specified torque in the sequence shown. Slide the seat all the way back and tighten bolts 1 and 2, then slide it forward and tighten bolts 3 and 4.**

Front Side

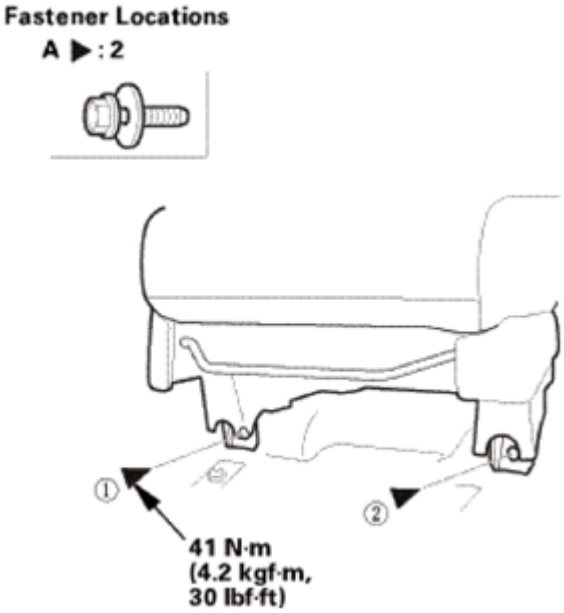

Fig. 577: Identifying Seat Mounting Bolts With Torque Specifications (Front Side)
Courtesy of AMERICAN HONDA MOTOR CO., INC.

GETtheMANUALS.org

Rear Side

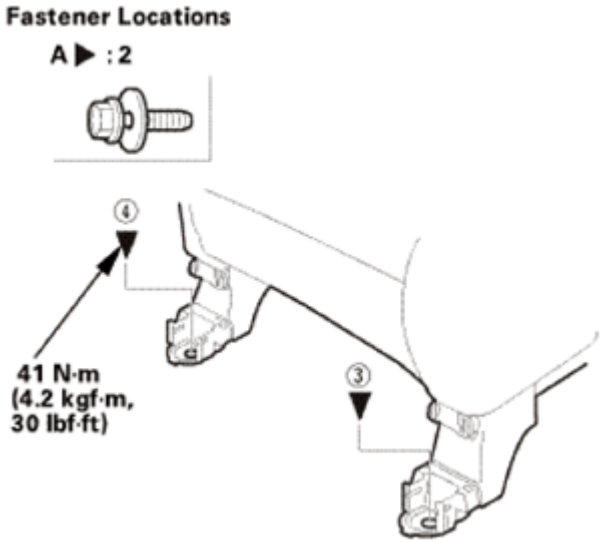

Fig. 578: Identifying Seat Mounting Bolts With Torque Specifications (Rear Side)
Courtesy of AMERICAN HONDA MOTOR CO., INC.

4. Install the rear inner seat track end cover (A) and the rear outer seat track end cover (B). Make sure the hooks (C) snap into place securely.

GETtheMANUALS.org

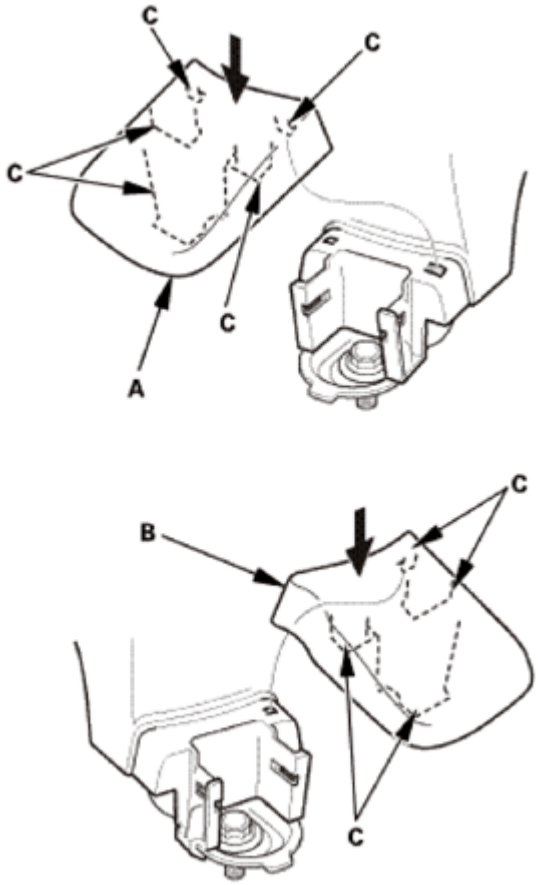

Fig. 579: Installing Rear Inner And Outer Seat Track End Cover
Courtesy of AMERICAN HONDA MOTOR CO., INC.

5. Head Restraint - Driver's Side
    1. Insert the head restraint (A) to the seat-back as shown.

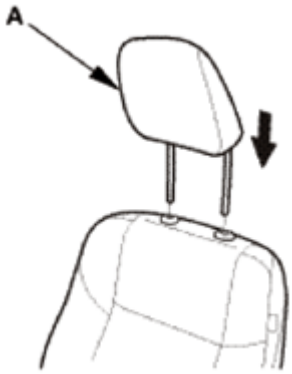

Fig. 580: Inserting Head Restraint To Seat-Back (Driver Side)
Courtesy of AMERICAN HONDA MOTOR CO., INC.

6. Battery Terminal (SRS) - Reconnection

GETtheMANUALS.org

NOTE: **If the battery performance is abnormal, test the battery.**

1. Clean the battery terminals.
2. Connect the positive cable (A) to the battery.

   NOTE: **Always connect the positive side first.**

3. Connect the negative cable (B) to the battery.
4. Apply multipurpose grease to the terminals to prevent corrosion.

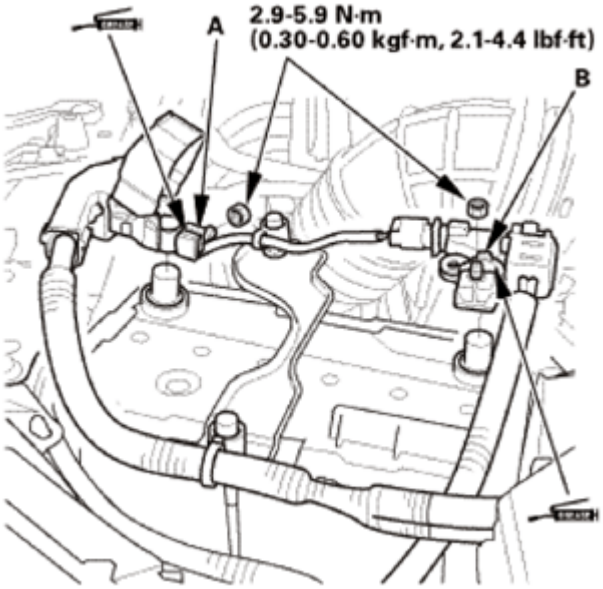

Fig. 581: Identifying Battery Positive And Negative Cable With Torque Specifications
Courtesy of AMERICAN HONDA MOTOR CO., INC.

7. Front Seat Belt Lower Anchor Bolt
   1. Install the lower anchor bolt.

      NOTE: **Before installing the anchor bolt, make sure there are no twists or kinks in the seat belt.**

GETtheMANUALS.org

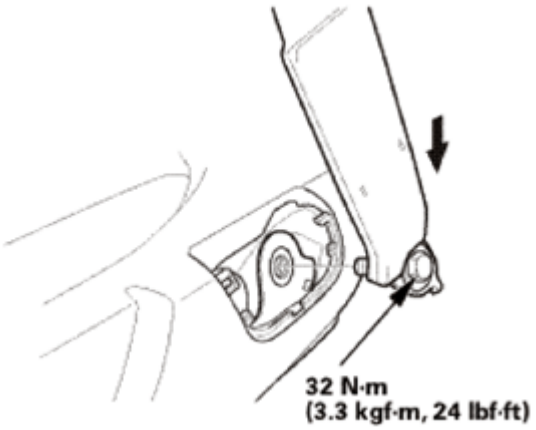

Fig. 582: Installing Front Seat Belt Lower Anchor Bolt
Courtesy of AMERICAN HONDA MOTOR CO., INC.

2. Install the anchor cover (A). Make sure the hooks (B) and the tab (C) snap into place securely.

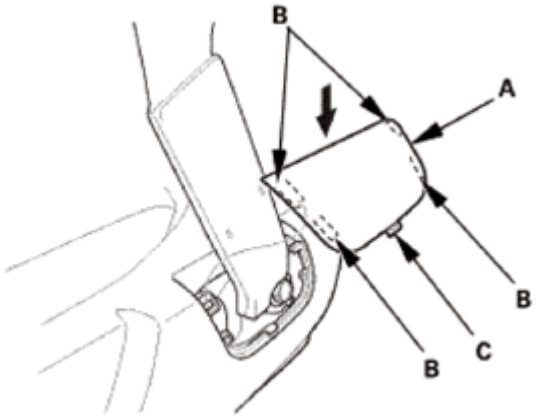

Fig. 583: Installing Front Seat Belt Lower Anchor Cover
Courtesy of AMERICAN HONDA MOTOR CO., INC.

POWER LUMBAR SUPPORT SWITCH REMOVAL, INSTALLATION, AND TEST

REMOVAL

SRS components are located in this area. Review the **SRS COMPONENT LOCATIONS** and the **PRECAUTIONS AND PROCEDURES** before doing repairs or service.

NOTE: Before the front power seat is removed, slide the front power seat to the half-way position, then raise the seat to the highest position.

1. Front Cover
    1. Remove the screw (A), and release the hook (B), the pin (C), and the tabs (D), then remove the

GETtheMANUALS.org

front cover (E).

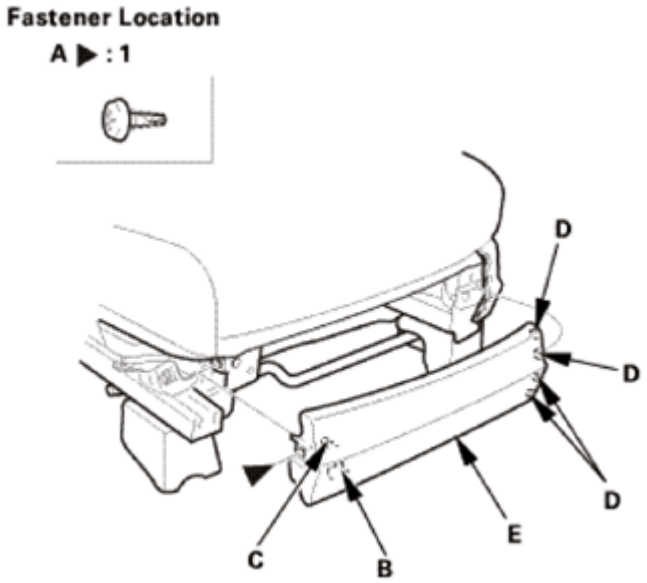

Fig. 584: Identifying Front Cover, Hook, Tabs, Pin And Screws
Courtesy of AMERICAN HONDA MOTOR CO., INC.

2. Front Seat Recline Cover
    1. Remove the screw (A), and detach the clip (B).
    2. Release the tabs (C).
    3. Pull up the recline cover (D) to release the hook (E).
    4. Disconnect the connectors.
    5. Remove the upper center inner cover (F).
    6. Remove the wire harness (G) from the hooks (H), then remove the recline cover.

GETtheMANUALS.org

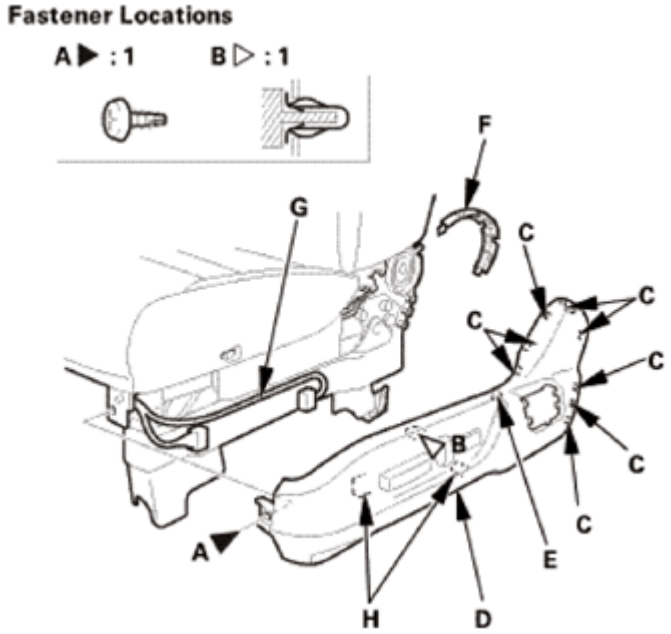

Fig. 585: Identifying Front Seat Recline Cover And Related Components
Courtesy of AMERICAN HONDA MOTOR CO., INC.

3. Power Lumbar Support Switch
    1. Remove the power lumbar support switch cover (A).
    2. Remove the power lumbar support switch (B) from the recline cover (C).

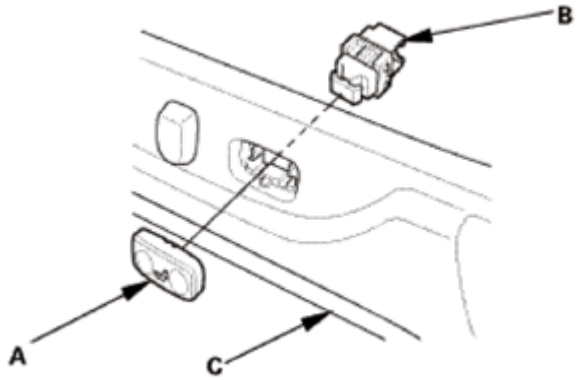

Fig. 586: Identifying Power Lumbar Support Switch, Cover And Recline Cover
Courtesy of AMERICAN HONDA MOTOR CO., INC.

TEST

1. Power Lumbar Support Switch - Test
    1. Reinstall the power lumbar support switch cover (A) to the power lumbar support switch (B).
    2. Check for continuity between the terminals in each switch position according to the table.
    3. If the continuity is not as specified, replace the switch.

GETtheMANUALS.org

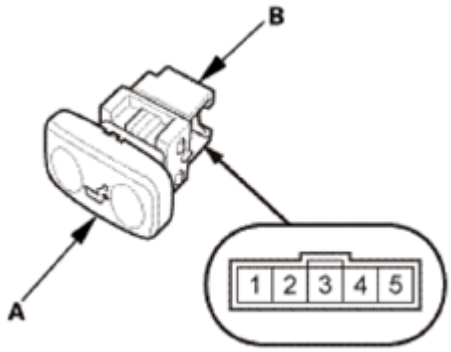

Fig. 587: Identifying Power Lumbar Support Switch Connector Terminals
Courtesy of AMERICAN HONDA MOTOR CO., INC.

Terminal / Position	1	2	3	4	5
Forward	*	○	○	○	
Backward	○	○		* ○	○

*:There is continuity without operating a switch.

Fig. 588: Power Lumbar Support Switch Continuity Reference Chart
Courtesy of AMERICAN HONDA MOTOR CO., INC.

INSTALLATION

1. Power Lumbar Support Switch
    1. Install the power lumbar support switch (A) to the recline cover (B).
    2. Install the power lumbar support switch cover (C).

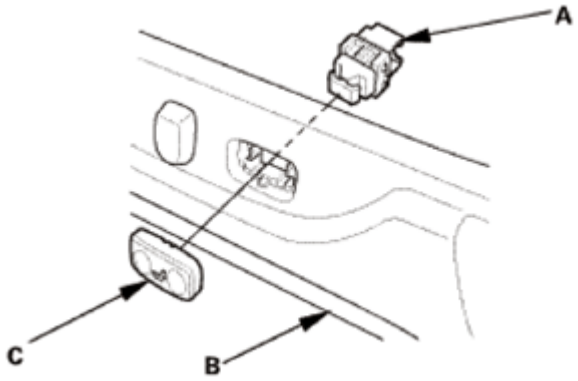

Fig. 589: Identifying Power Lumbar Support Switch, Cover And Recline Cover
Courtesy of AMERICAN HONDA MOTOR CO., INC.

2. Front Seat Recline Cover

GETtheMANUALS.org

1. Install the upper center inner cover (A) to the recline cover (B).
2. Connect the connector, then install the wire harness (C) to the hooks (D).
3. Install the clip (E) and tabs (F), then install the recline cover.
4. Install the tabs (G), then install the screw (H).

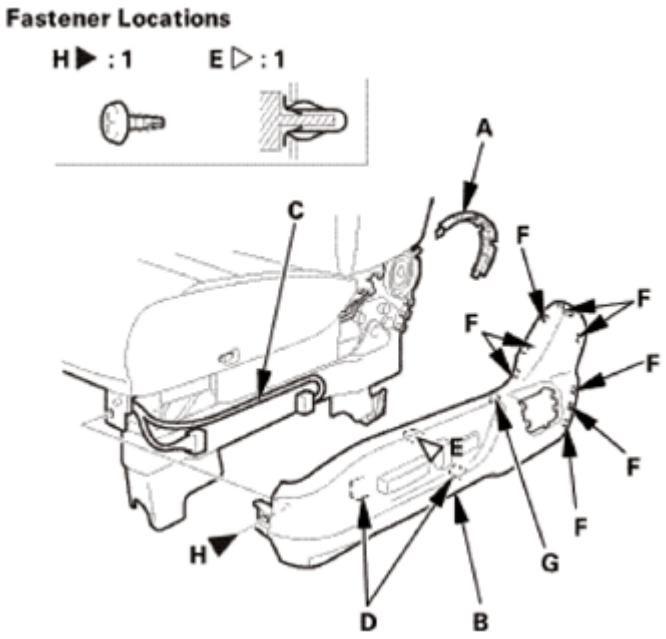

Fig. 590: Identifying Front Seat Recline Cover And Related Components
Courtesy of AMERICAN HONDA MOTOR CO., INC.

3. Front Cover
    1. Install the tabs (A), set the pin (B), and install the hook (C), then install the front cover (D). Make sure the hooks snap into place securely.

GETtheMANUALS.org

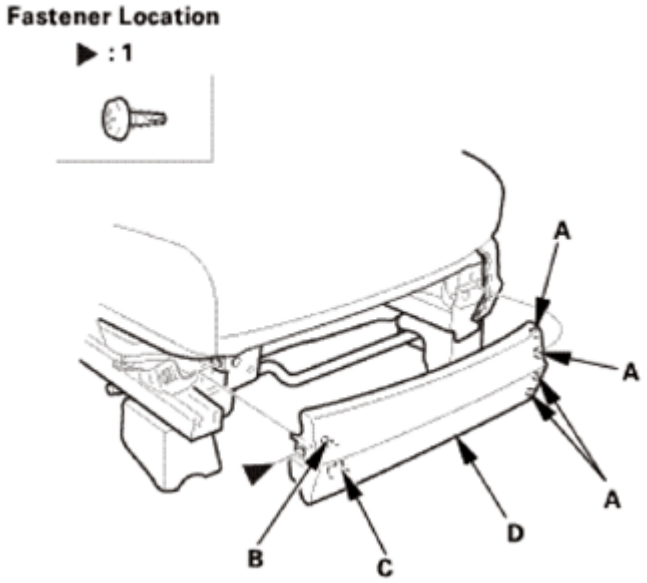

Fig. 591: Identifying Front Cover, Hook, Tabs, Pin And Screws
Courtesy of AMERICAN HONDA MOTOR CO., INC.

POWER SEATS COMPONENT LOCATION INDEX

Fig. 592: Power Seats Components Location

GETtheMANUALS.org

Courtesy of AMERICAN HONDA MOTOR CO., INC.

FRONT UP-DOWN MOTOR	**TEST**
POWER SEAT ADJUSTMENT SWITCH	**Driver's Power Seat Adjustment Switch Removal, Installation, and Test**
REAR UP-DOWN MOTOR	**TEST**
RECLINE MOTOR	**TEST**
SLIDE MOTOR	**Driver's Power Seat Adjustment Switch Removal, Installation, and Test**
	TEST

REAR SEAT ARMREST BEVERAGE HOLDER REMOVAL AND INSTALLATION

REMOVAL

1. Rear Seat Armrest Beverage Holder
    1. Push on the bottom ribs (A) of the left side hooks (B) with the appropriate trim tool to pull up the armrest beverage holder (C), then release the hooks from the wire (D).

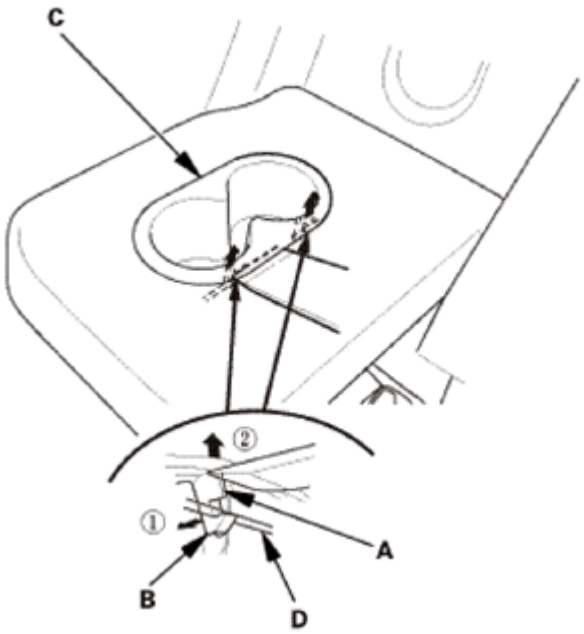

Fig. 593: Removing Rear Seat Armrest Beverage Holder
Courtesy of AMERICAN HONDA MOTOR CO., INC.

    2. Release the right side hooks (A) of the rear seat armrest beverage holder (B) from the wire (C), then remove the beverage holder.

GETtheMANUALS.org

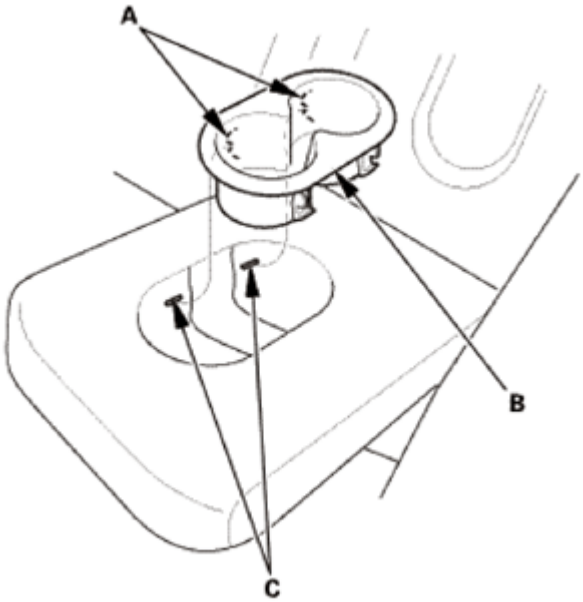

Fig. 594: Identifying Rear Seat Armrest Beverage Holder, Wire And Right Side Hook
Courtesy of AMERICAN HONDA MOTOR CO., INC.

INSTALLATION

1. Rear Seat Armrest Beverage Holder
    1. Install the right side hooks (A) of the rear seat armrest beverage holder (B) to the wire (C).

NOTE: Make sure the right side hooks are installed securely to the wire.

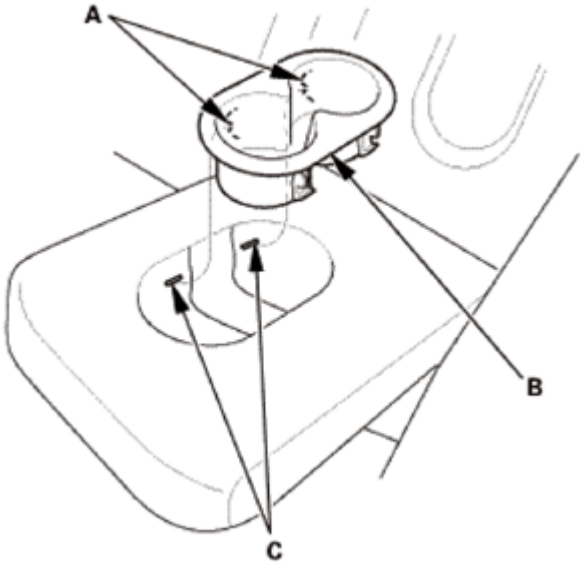

Fig. 595: Identifying Rear Seat Armrest Beverage Holder, Wire And Right Side Hook
Courtesy of AMERICAN HONDA MOTOR CO., INC.

GETtheMANUALS.org

2. Push down on the beverage holder (A), and install the left side hooks (B) into the wire (C).

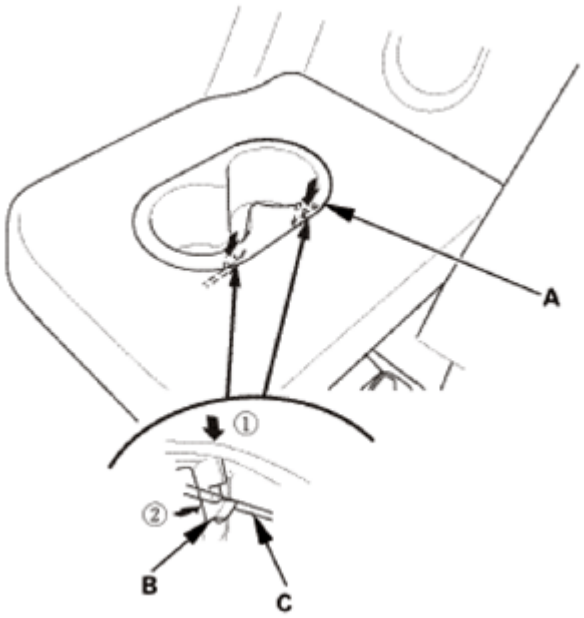

Fig. 596: Installing Rear Seat Armrest Beverage Holder
Courtesy of AMERICAN HONDA MOTOR CO., INC.

REAR SEAT ARMREST REMOVAL AND INSTALLATION

REMOVAL

1. Rear Seat Armrest
    1. Release the tab (A), then slide the armrest side cover (B) forward.
    2. Remove the bolt (C) with a 5 mm hex wrench.

GETtheMANUALS.org

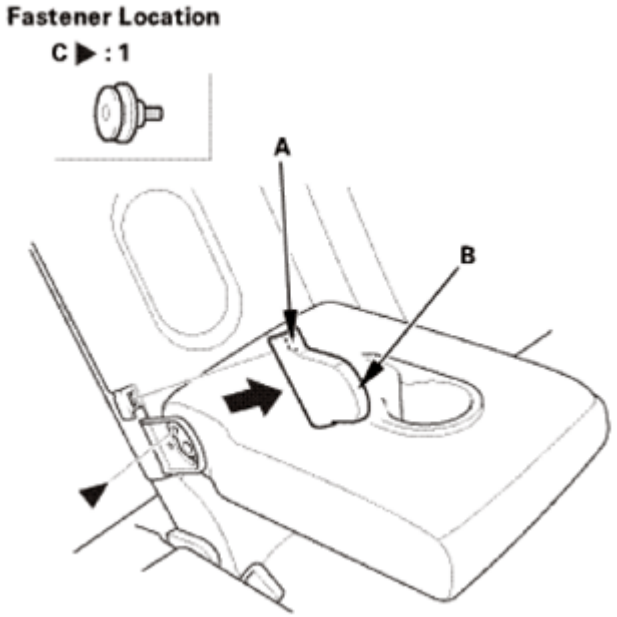

Fig. 597: Sliding Armrest Side Cover Forward
Courtesy of AMERICAN HONDA MOTOR CO., INC.

3. Slide the armrest (A) toward the left side.
4. Remove the right pivot shaft (B) from the friction plate (C).

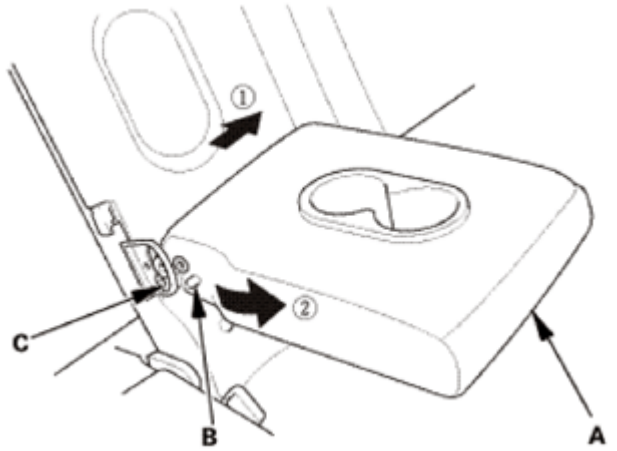

Fig. 598: Removing Right Pivot Shaft From Friction Plate
Courtesy of AMERICAN HONDA MOTOR CO., INC.

5. Slide the armrest (A) toward the right side.
6. Release the left pivot shaft (B) from the collar (C).
7. Pull up the armrest, then pull out the armrest shaft (D) from the rear seat-back frame (E), then remove the armrest.

GETtheMANUALS.org

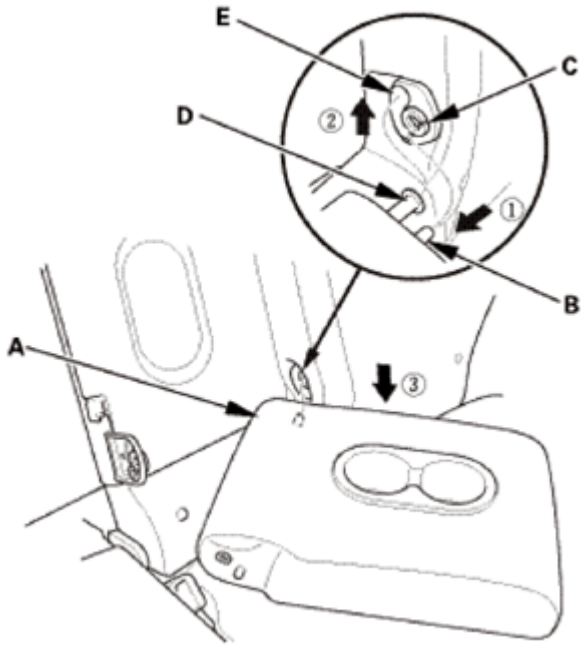

Fig. 599: Removing Armrest
Courtesy of AMERICAN HONDA MOTOR CO., INC.

8. Remove the collar (A), the inner friction plate (B), and the outer friction plate (C) from the rear seat-back frame.

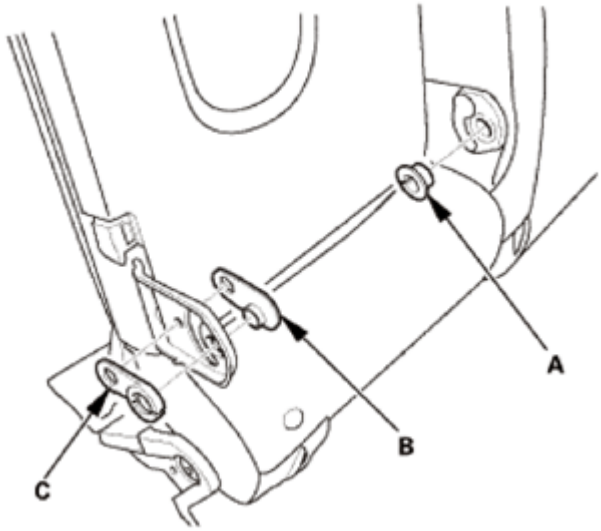

Fig. 600: Identifying Rear Seat-Back Frame Collar, Inner And Outer Friction Plate
Courtesy of AMERICAN HONDA MOTOR CO., INC.

INSTALLATION

1. Rear Seat Armrest

GETtheMANUALS.org

1. Install the collar (A), the inner friction plate (B), and the outer friction plate (C) to the rear seat-back frame.

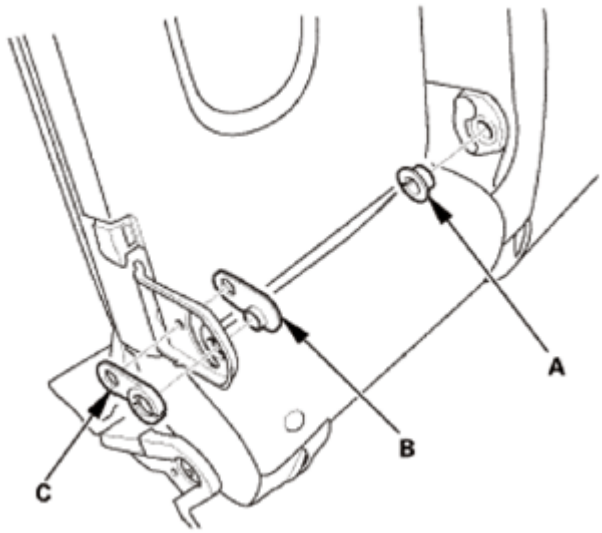

Fig. 601: Identifying Rear Seat-Back Frame Collar, Inner And Outer Friction Plate
Courtesy of AMERICAN HONDA MOTOR CO., INC.

2. Insert the armrest shaft (A) to the seat-back frame (B).
3. Insert the left pivot shaft (C) to the collar (D).
4. Slide the armrest (E) toward the left side.

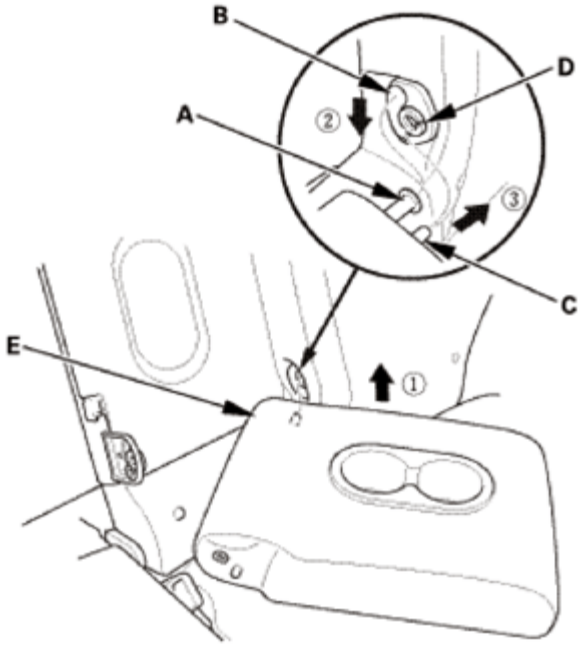

Fig. 602: Installing Armrest
Courtesy of AMERICAN HONDA MOTOR CO., INC.

GETtheMANUALS.org

5. Install the pivot shaft (A) to the friction plate (B).
6. Slide the armrest (C) toward the right side.

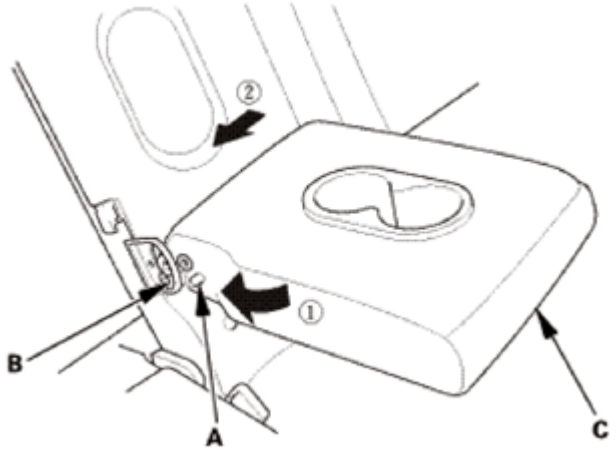

Fig. 603: Installing Pivot Shaft From Friction Plate
Courtesy of AMERICAN HONDA MOTOR CO., INC.

7. Install the bolt (A) with a 5 mm hex wrench to the armrest (B), then install the armrest side cover (C).

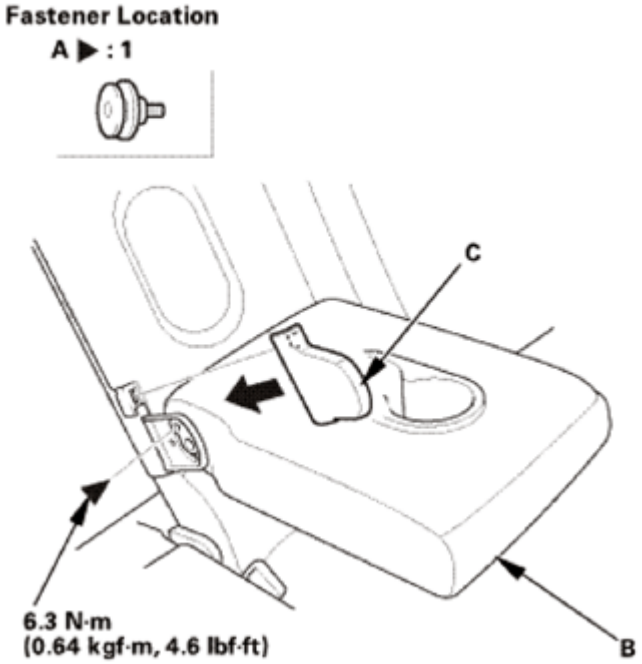

Fig. 604: Installing Armrest Side Cover
Courtesy of AMERICAN HONDA MOTOR CO., INC.

REAR SEAT CUSHION COVER REMOVAL AND INSTALLATION

GETtheMANUALS.org

REMOVAL

1. Upper Inner Seat Cushion Cover
    1. Detach the hooks (A), then remove the upper inner seat cushion cover (B) from the rear seat cushion (C).

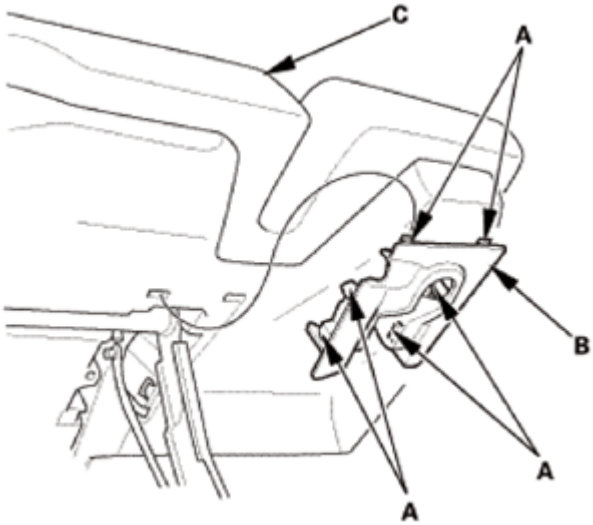

Fig. 605: Identifying Upper Inner Seat Cushion Cover, Rear Seat Cushion And Hooks
Courtesy of AMERICAN HONDA MOTOR CO., INC.

2. Upper Outer Seat Cushion Cover
    1. Detach the hooks (A), then remove the upper outer seat cushion cover (B) from the rear seat cushion (C).

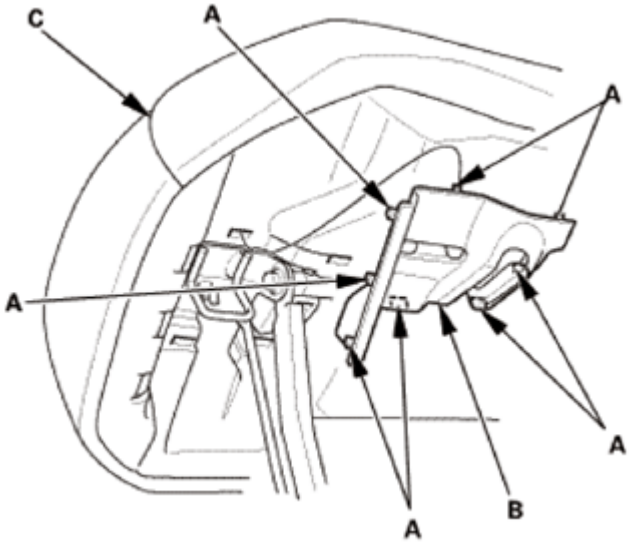

Fig. 606: Identifying Upper Outer Seat Cushion Cover, Rear Seat Cushion And Hooks
Courtesy of AMERICAN HONDA MOTOR CO., INC.

GETtheMANUALS.org

3. Rear Seat Cushion
    1. Remove the nuts (A), then remove the rear seat cushion (B) from the rear seat cushion foot assembly (C).

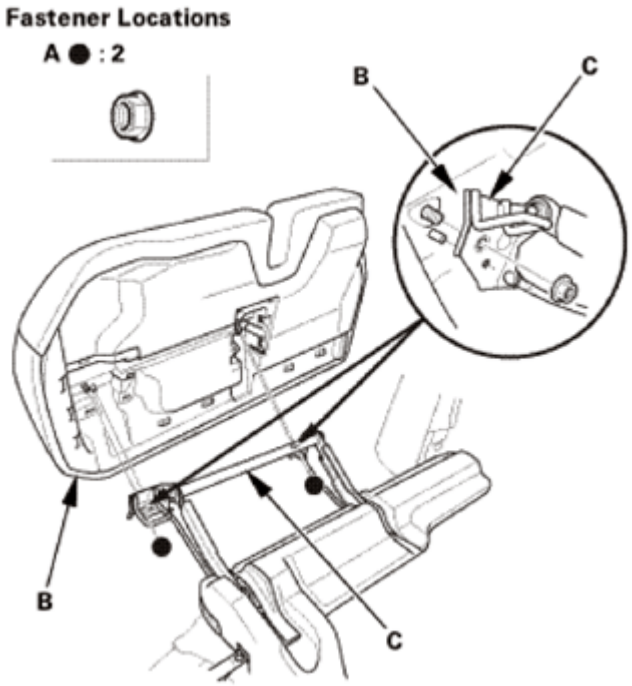

Fig. 607: Identifying Rear Seat Cushion Foot Assembly, Rear Seat Cushion And Nuts
Courtesy of AMERICAN HONDA MOTOR CO., INC.

4. Rear Seat Cushion Cover
    1. Pull back the edge of the rear seat cushion cover (A) all the way around.

Left Rear Seat Cushion Cover

GETtheMANUALS.org

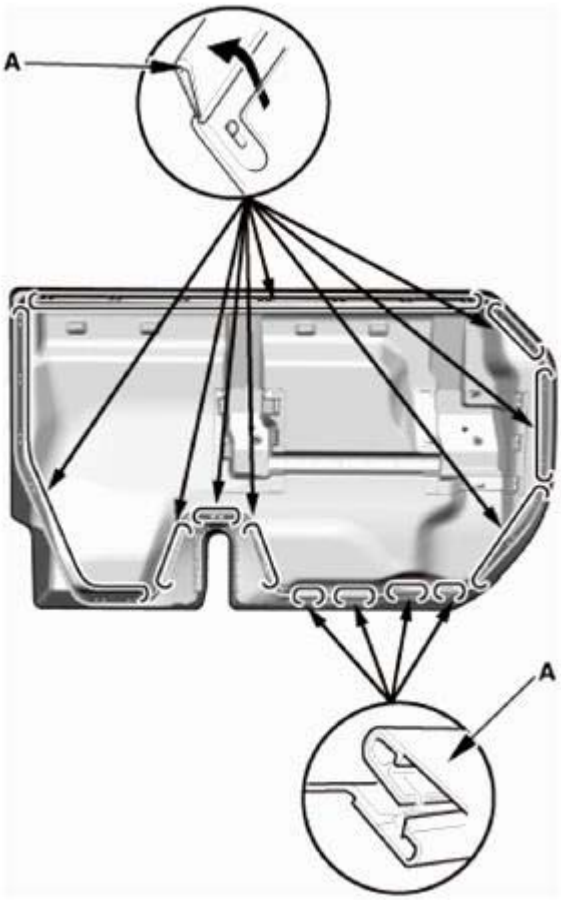

Fig. 608: Pulling Edge Of Rear Seat Cushion Cover (Left Side)
Courtesy of AMERICAN HONDA MOTOR CO., INC.

Right Rear Seat Cushion Cover

GETtheMANUALS.org

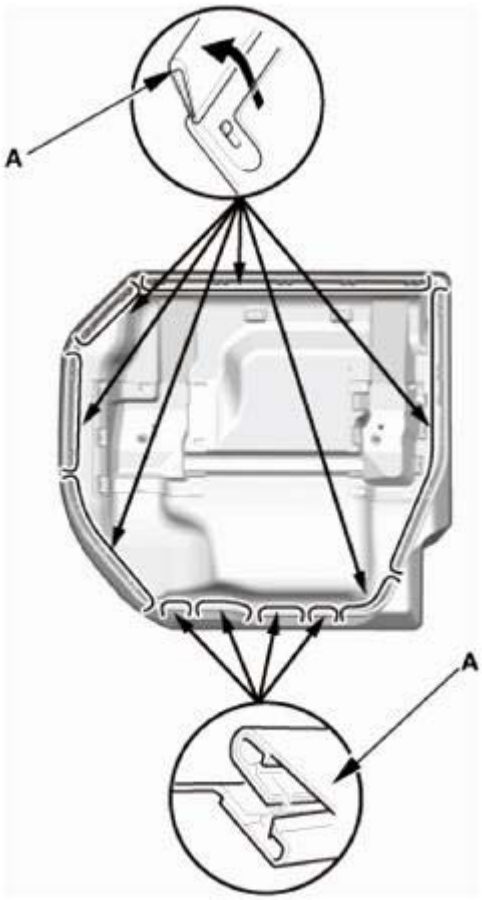

Fig. 609: Pulling Edge Of Rear Seat Cushion Cover (Right Side)
Courtesy of AMERICAN HONDA MOTOR CO., INC.

2. Remove the rear seat cushion under cover (A) from the rear seat cushion cover/pad (B).

GETtheMANUALS.org

Fig. 610: Removing Rear Seat Cushion Under Cover From Rear Seat Cushion Cover/Pad
Courtesy of AMERICAN HONDA MOTOR CO., INC.

3. Release the upholstery rings (A), then remove the rear seat cushion cover.

Left Rear Seat Cushion Cover - Leather

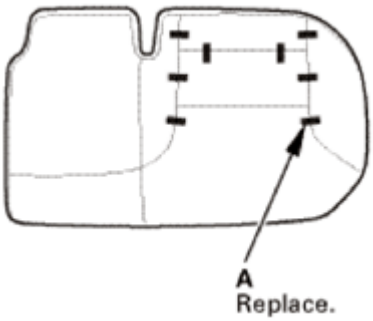

Fig. 611: Identifying Rear Seat Cushion Cover Upholstery Rings (Left Side-Leather; 1 Of 2)
Courtesy of AMERICAN HONDA MOTOR CO., INC.

GETtheMANUALS.org

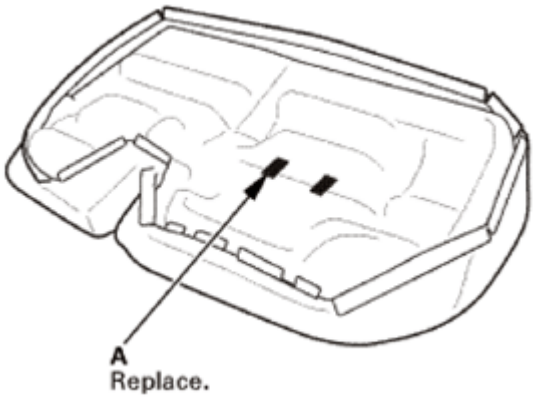

Fig. 612: Identifying Rear Seat Cushion Cover Upholstery Rings (Left Side-Leather; 2 Of 2)
Courtesy of AMERICAN HONDA MOTOR CO., INC.

Right Rear Seat Cushion Cover - Leather

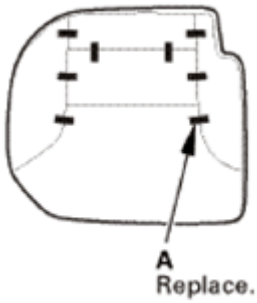

Fig. 613: Identifying Rear Seat Cushion Cover Upholstery Rings (Right Side-Leather; 1 Of 2)
Courtesy of AMERICAN HONDA MOTOR CO., INC.

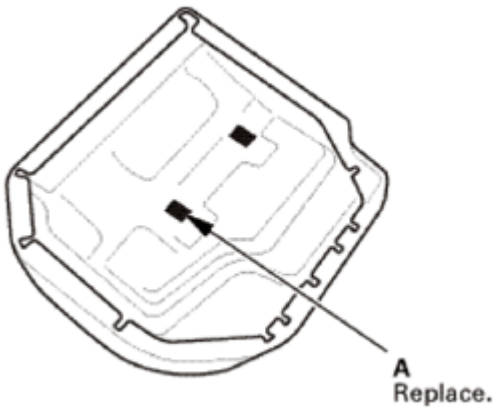

Fig. 614: Identifying Rear Seat Cushion Cover Upholstery Rings (Right Side-Leather; 2 Of 2)
Courtesy of AMERICAN HONDA MOTOR CO., INC.

Left Rear Seat Cushion Cover - Fabric

GETtheMANUALS.org

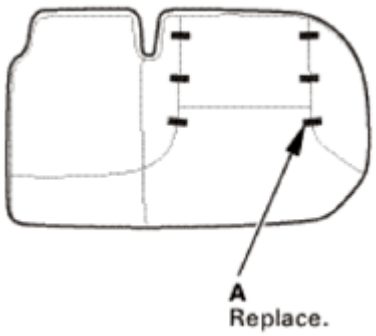

Fig. 615: Identifying Rear Seat Cushion Cover Upholstery Rings (Left Side-Fabric; 1 Of 2)
Courtesy of AMERICAN HONDA MOTOR CO., INC.

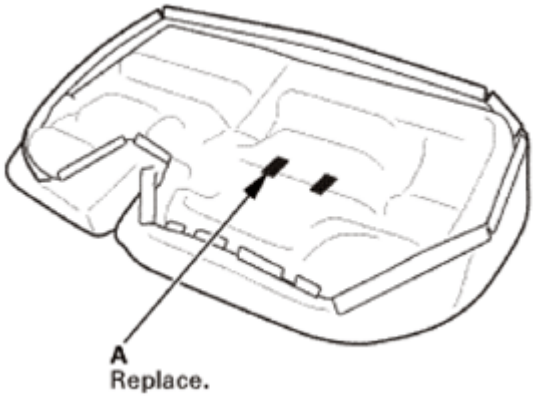

Fig. 616: Identifying Rear Seat Cushion Cover Upholstery Rings (Left Side-Fabric; 2 Of 2)
Courtesy of AMERICAN HONDA MOTOR CO., INC.

Right Rear Seat Cushion Cover - Fabric

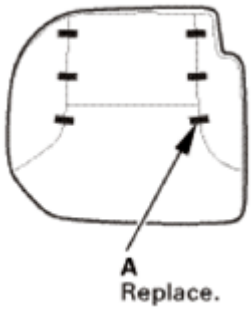

Fig. 617: Identifying Rear Seat Cushion Cover Upholstery Rings (Right Side-Fabric; 1 Of 2)
Courtesy of AMERICAN HONDA MOTOR CO., INC.

GETtheMANUALS.org

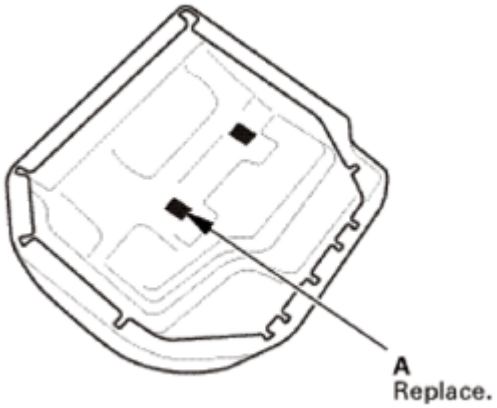

Fig. 618: Identifying Rear Seat Cushion Cover Upholstery Rings (Right Side-Fabric; 2 Of 2)
Courtesy of AMERICAN HONDA MOTOR CO., INC.

INSTALLATION

1. Rear Seat Cushion Cover

NOTE: **Replace all of the upholstery rings (A) fastening the seat cushion cover (B) to the pad wires (C) with new ones using commercially available upholstery ring pliers (D).**

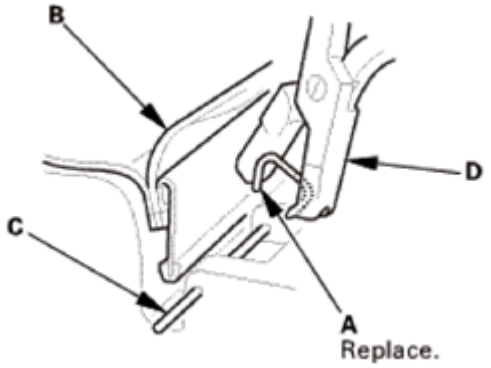

Fig. 619: Removing Seat Cushion Cover To Pad Wires Fastening Upholstery Ring Using Tool
Courtesy of AMERICAN HONDA MOTOR CO., INC.

1. Install the upholstery rings (A) securing the rear seat cushion cover.

Left Rear Seat Cushion Cover - Leather

GETtheMANUALS.org

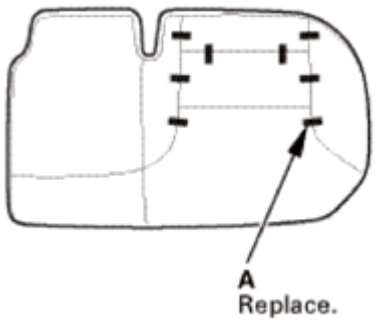

Fig. 620: Identifying Rear Seat Cushion Cover Upholstery Rings (Left Side-Leather; 1 Of 2)
Courtesy of AMERICAN HONDA MOTOR CO., INC.

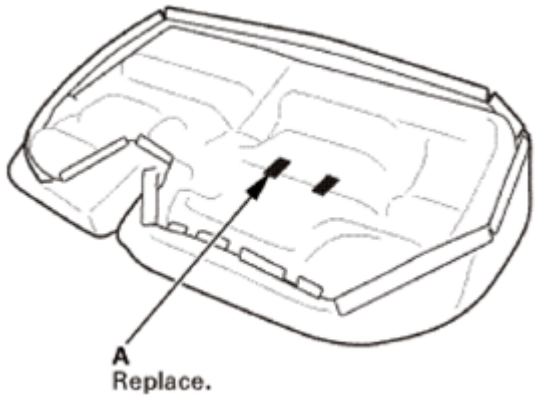

Fig. 621: Identifying Rear Seat Cushion Cover Upholstery Rings (Left Side-Leather; 2 Of 2)
Courtesy of AMERICAN HONDA MOTOR CO., INC.

Right Rear Seat Cushion Cover - Leather

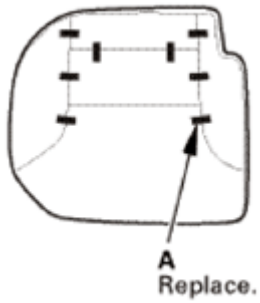

Fig. 622: Identifying Rear Seat Cushion Cover Upholstery Rings (Right Side-Leather; 1 Of 2)
Courtesy of AMERICAN HONDA MOTOR CO., INC.

GETtheMANUALS.org

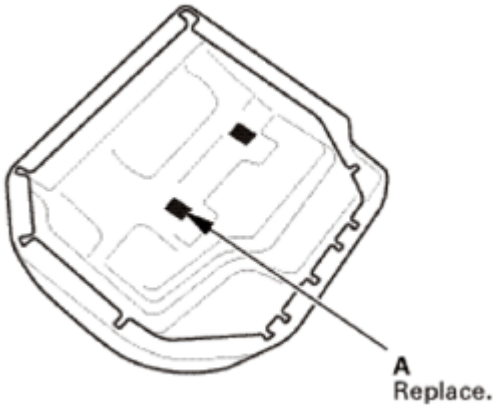

Fig. 623: Identifying Rear Seat Cushion Cover Upholstery Rings (Right Side-Leather; 2 Of 2)
Courtesy of AMERICAN HONDA MOTOR CO., INC.

Left Rear Seat Cushion Cover - Fabric

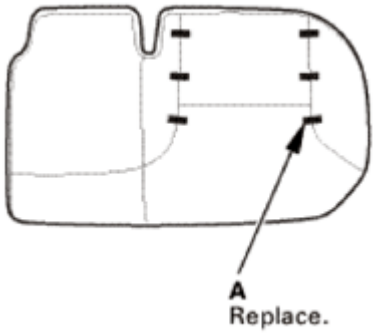

Fig. 624: Identifying Rear Seat Cushion Cover Upholstery Rings (Left Side-Fabric; 1 Of 2)
Courtesy of AMERICAN HONDA MOTOR CO., INC.

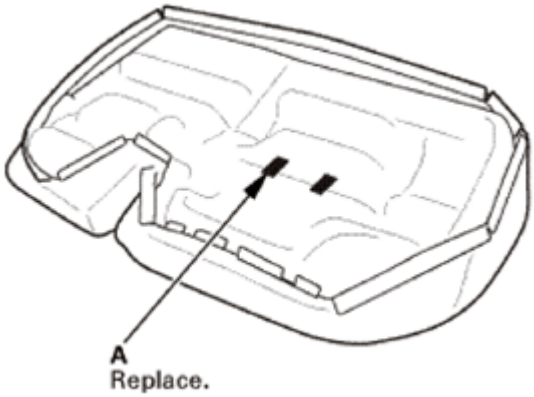

Fig. 625: Identifying Rear Seat Cushion Cover Upholstery Rings (Left Side-Fabric; 2 Of 2)
Courtesy of AMERICAN HONDA MOTOR CO., INC.

Right Rear Seat Cushion Cover - Fabric

GETtheMANUALS.org

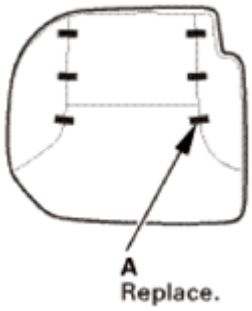

Fig. 626: Identifying Rear Seat Cushion Cover Upholstery Rings (Right Side-Fabric; 1 Of 2)
Courtesy of AMERICAN HONDA MOTOR CO., INC.

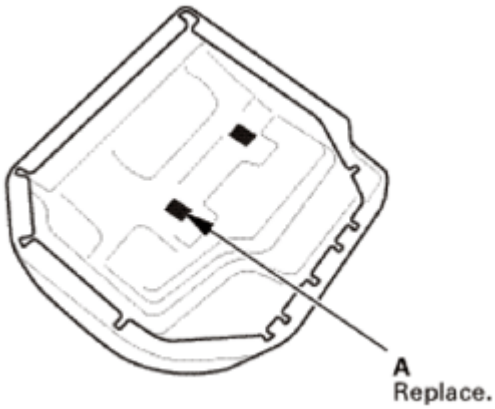

Fig. 627: Identifying Rear Seat Cushion Cover Upholstery Rings (Right Side-Fabric; 2 Of 2)
Courtesy of AMERICAN HONDA MOTOR CO., INC.

2. Install the edge of the rear seat cushion cover (A) all the way around.

Left Rear Seat Cushion Cover

GETtheMANUALS.org

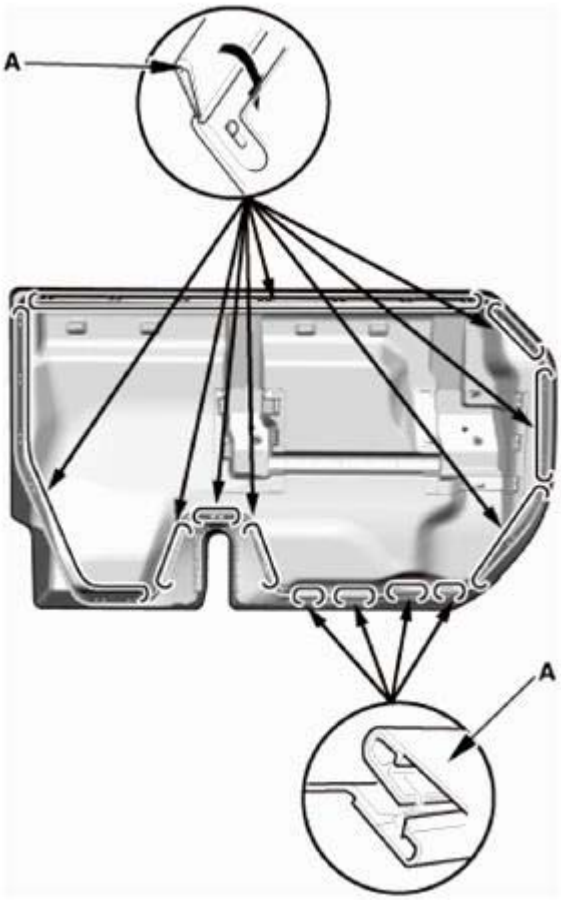

Fig. 628: Installing Rear Seat Cushion Cover (Left Side)
Courtesy of AMERICAN HONDA MOTOR CO., INC.

Right Rear Seat Cushion Cover

GETtheMANUALS.org

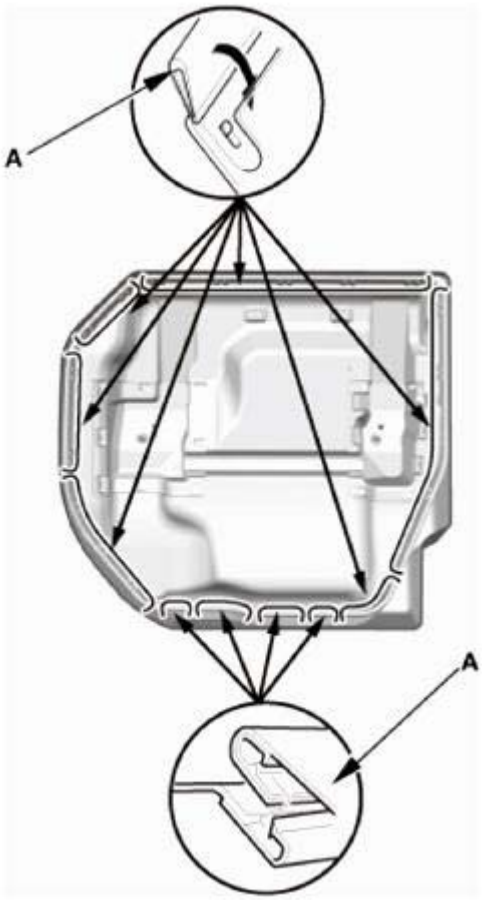

Fig. 629: Installing Rear Seat Cushion Cover (Right Side)
Courtesy of AMERICAN HONDA MOTOR CO., INC.

2. Rear Seat Cushion
    1. Set the position of the pins (A), then install the rear seat cushion (B) and the nuts (C) to the rear seat cushion foot assembly (D).

GETtheMANUALS.org

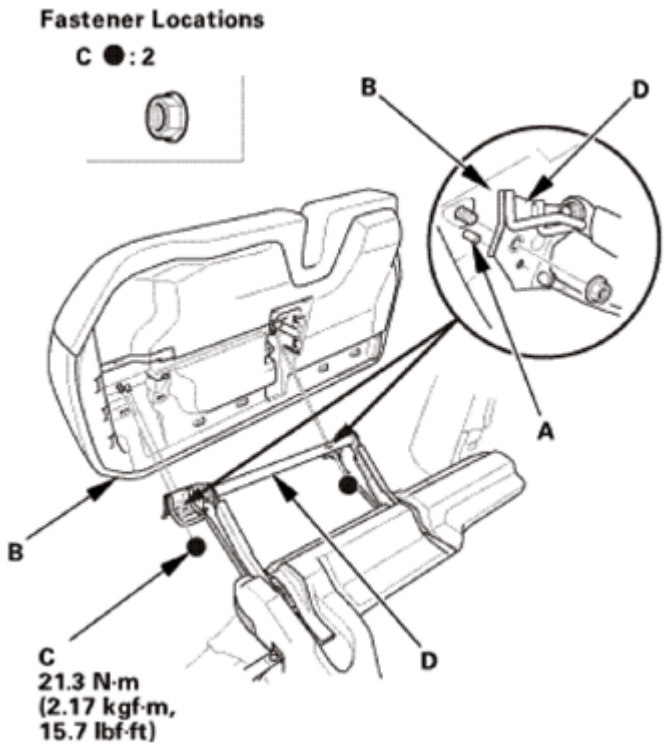

Fig. 630: Identifying Rear Seat Cushion Foot Assembly, Rear Seat Cushion And Nuts With Torque Specifications
Courtesy of AMERICAN HONDA MOTOR CO., INC.

3. Upper Outer Seat Cushion Cover
    1. Install the upper outer seat cushion cover (A) to the rear seat cushion (B). Make sure the hooks (C) snap into place securely.

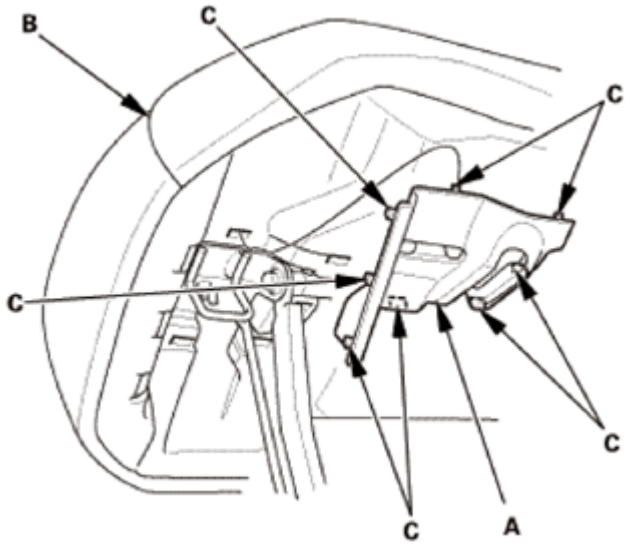

Fig. 631: Identifying Upper Outer Seat Cushion Cover, Rear Seat Cushion And Hooks
Courtesy of AMERICAN HONDA MOTOR CO., INC.

GETtheMANUALS.org

4. Upper Inner Seat Cushion Cover
    1. Install the upper inner seat cushion cover (A) to the rear seat cushion (B). Make sure the hooks (C) snap into place securely.

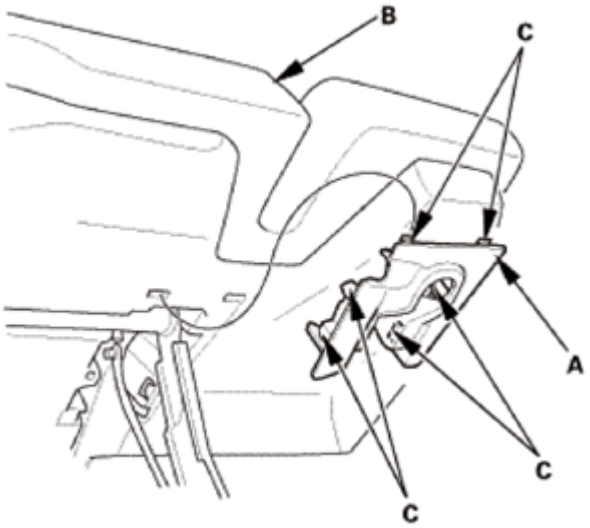

Fig. 632: Identifying Upper Inner Seat Cushion Cover, Rear Seat Cushion And Hooks
Courtesy of AMERICAN HONDA MOTOR CO., INC.

REAR SEAT CUSHION DISASSEMBLY AND REASSEMBLY

DISASSEMBLY

1. Rear Seat Cushion Foot Cover - Both Sides
    1. Pull up the rear seat cushion foot covers (A) by hand to detach the clips (B).
    2. Detach the hooks (C), then remove the rear seat cushion foot covers.

    Left side

GETtheMANUALS.org

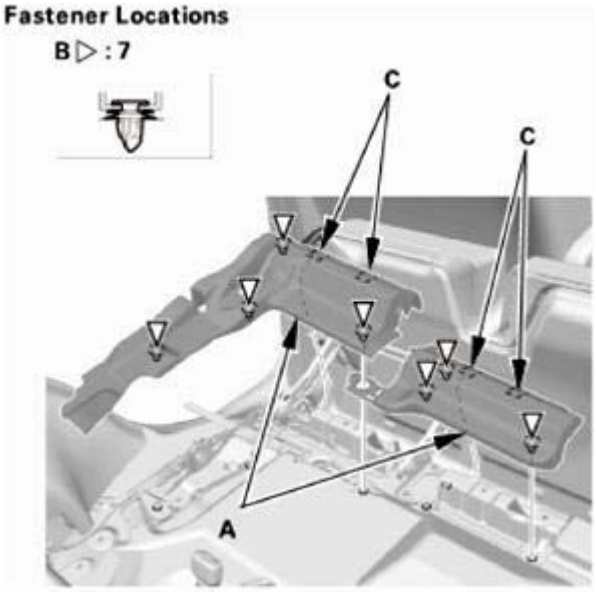

Fig. 633: Identifying Rear Seat Cushion Foot Cover, Clips And Hooks (Left Side)
Courtesy of AMERICAN HONDA MOTOR CO., INC.

Right side

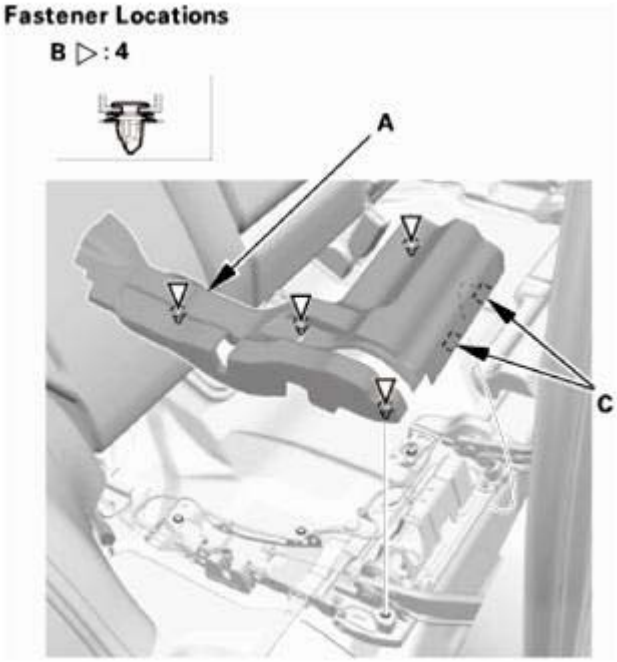

Fig. 634: Identifying Rear Seat Cushion Foot Cover, Clips And Hooks (Right Side)
Courtesy of AMERICAN HONDA MOTOR CO., INC.

2. Left Rear Seat Cushion Assembly
    1. Detach the cables (A) from the cable brackets (B), and detach the cable clip (C), then disconnect

GETtheMANUALS.org

the cables from the seat cushion assembly (D).

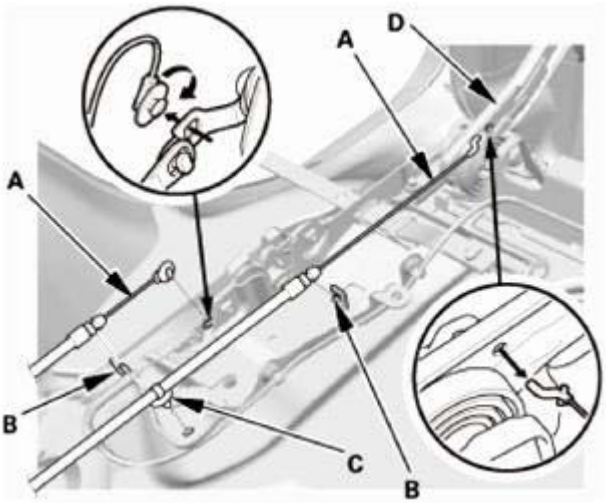

Fig. 635: Removing Left Rear Seat Cushion Assembly
Courtesy of AMERICAN HONDA MOTOR CO., INC.

2. Remove the bolts (A) securing the left rear seat cushion assembly (B), then remove the left rear seat cushion assembly.

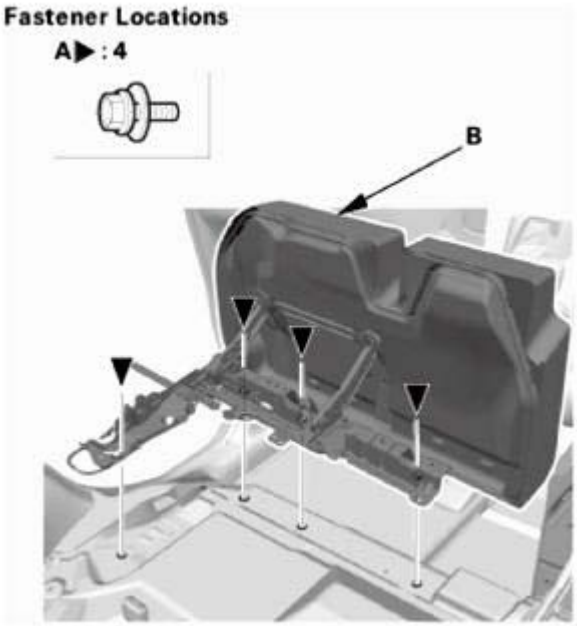

Fig. 636: Identifying Left Rear Seat Cushion Assembly And Bolts
Courtesy of AMERICAN HONDA MOTOR CO., INC.

3. Right Rear Seat Cushion Assembly
    1. Detach the cables (A) from the cable brackets (B), and detach the cable clip (C), then disconnect the cables from the seat cushion assembly (D).

GETtheMANUALS.org

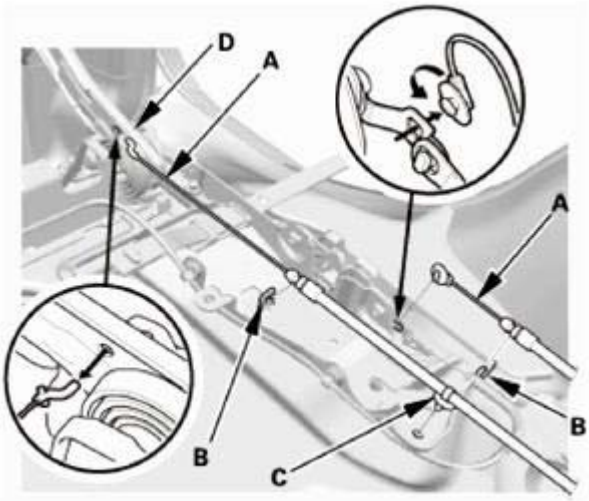

Fig. 637: Removing Right Rear Seat Cushion Assembly
Courtesy of AMERICAN HONDA MOTOR CO., INC.

2. Remove the bolts (A) securing the right rear seat cushion assembly (B), then remove the right rear seat cushion assembly.

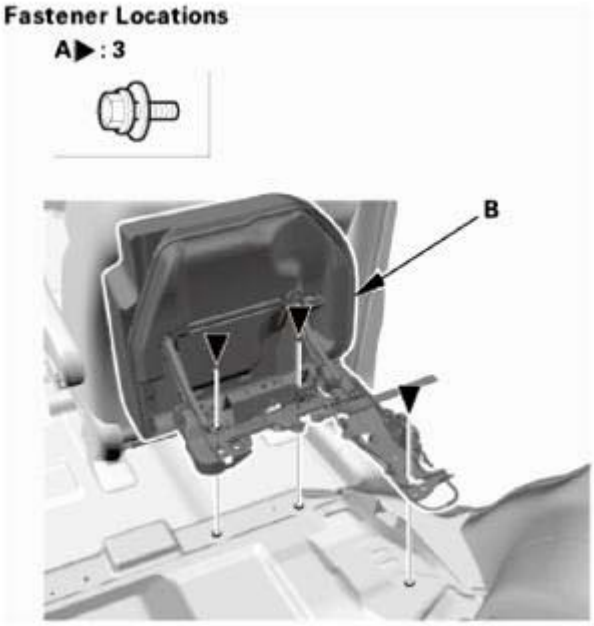

Fig. 638: Identifying Right Rear Seat Cushion Assembly And Bolts
Courtesy of AMERICAN HONDA MOTOR CO., INC.

4. Upper Inner Seat Cushion Cover
    1. Detach the hooks (A), then remove the upper inner seat cushion cover (B) from the rear seat cushion (C).

GETtheMANUALS.org

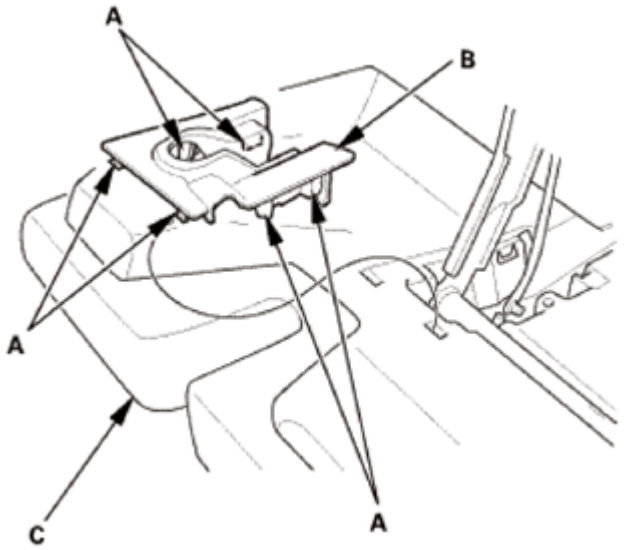

Fig. 639: Identifying Upper Inner Seat Cushion Cover, Rear Seat Cushion And Hooks
Courtesy of AMERICAN HONDA MOTOR CO., INC.

5. Upper Outer Seat Cushion Cover
    1. Detach the hooks (A), then remove the upper outer seat cushion cover (B) from the rear seat cushion (C).

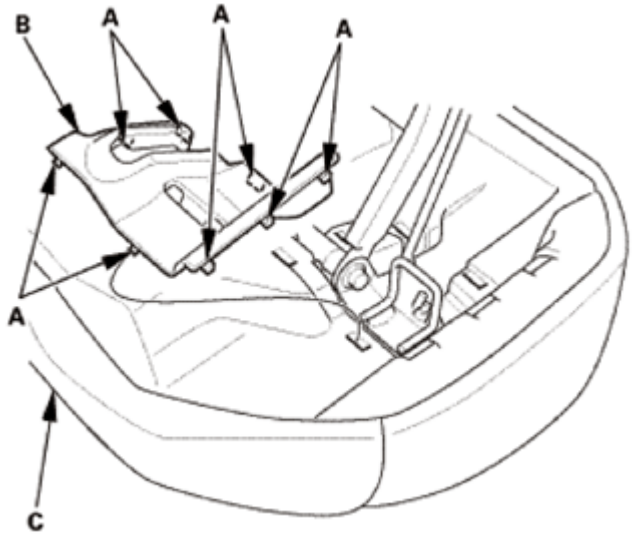

Fig. 640: Identifying Upper Outer Seat Cushion Cover, Rear Seat Cushion And Hooks
Courtesy of AMERICAN HONDA MOTOR CO., INC.

6. Rear Seat Cushion Foot Assembly
    1. Remove the nuts (A), then remove the rear seat cushion foot assembly (B).

GETtheMANUALS.org

Fig. 641: Identifying Rear Seat Cushion Foot Assembly And Nuts
Courtesy of AMERICAN HONDA MOTOR CO., INC.

7. Rear Seat Cushion Foot
    1. Remove the screws (A), then remove the cover(s) (B).

    Left Side

GETtheMANUALS.org

Fig. 642: Identifying Rear Seat Cushion Foot Cover And Screws (Left Side)
Courtesy of AMERICAN HONDA MOTOR CO., INC.

Right Side

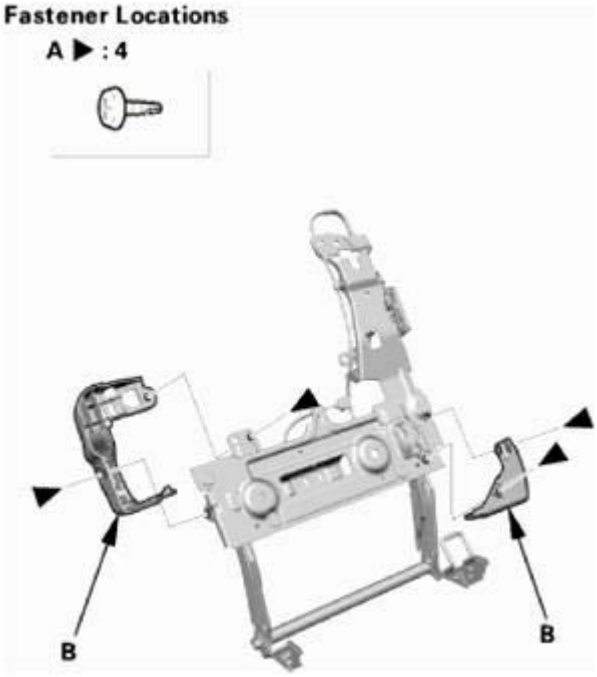

Fig. 643: Identifying Rear Seat Cushion Foot Cover And Screws (Right Side)
Courtesy of AMERICAN HONDA MOTOR CO., INC.

GETtheMANUALS.org

2. Remove the screws (A), then remove the rear seat cushion foot damper (B).
3. Disconnect the rear seat cushion control cable (C) from the rear seat cushion strap (D).
4. Remove the rear seat cushion strap guide (E) and the rear seat cushion strap.

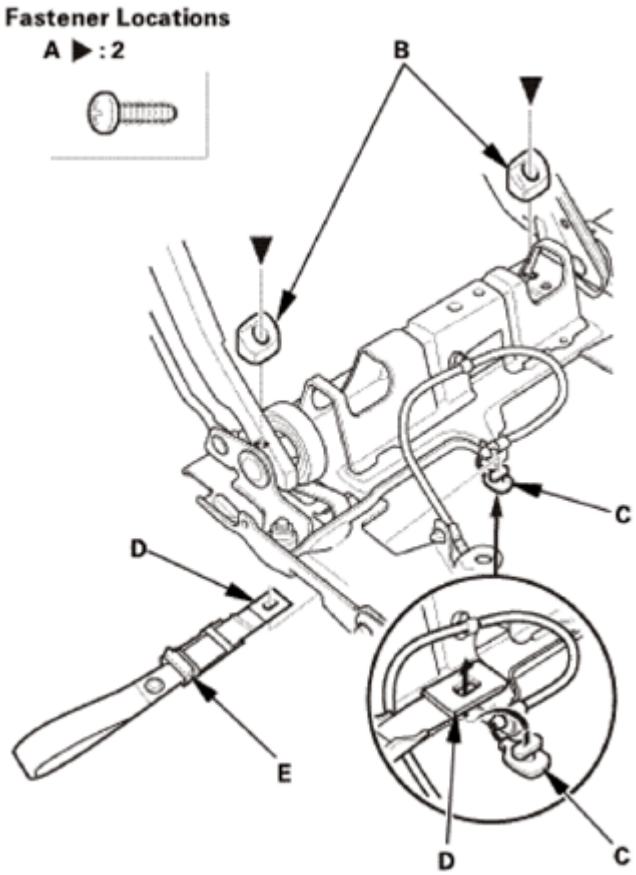

Fig. 644: Disconnecting Rear Seat Cushion Control Cable From Rear Seat Cushion Strap
Courtesy of AMERICAN HONDA MOTOR CO., INC.

5. Detach the rear seat cushion control cable (A) from the cable bracket (B), then remove the cable clips (C).
6. Disconnect the rear seat cushion control cable from the rear seat cushion latch (D).
7. Remove the bolts (E), then remove the rear seat cushion latch from the rear seat cushion foot assembly (F).

GETtheMANUALS.org

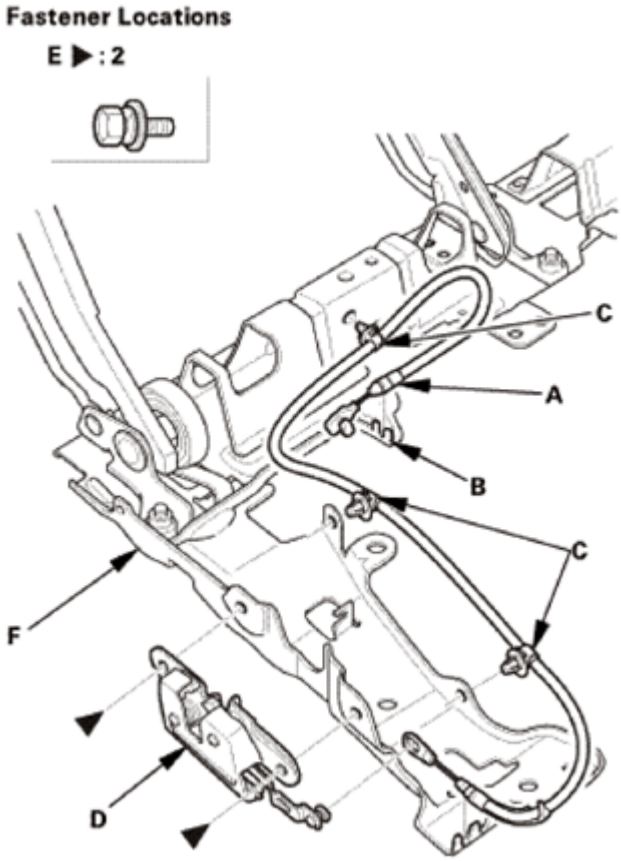

Fig. 645: Identifying Rear Seat Cushion Foot Assembly, Cable, Bracket, Latch, Clips And Bolts
Courtesy of AMERICAN HONDA MOTOR CO., INC.

8. Rear Seat Cushion Under Cover
    1. Pull back the edge of the rear seat cushion cover (A) all the way around.

    Left Side

GETtheMANUALS.org

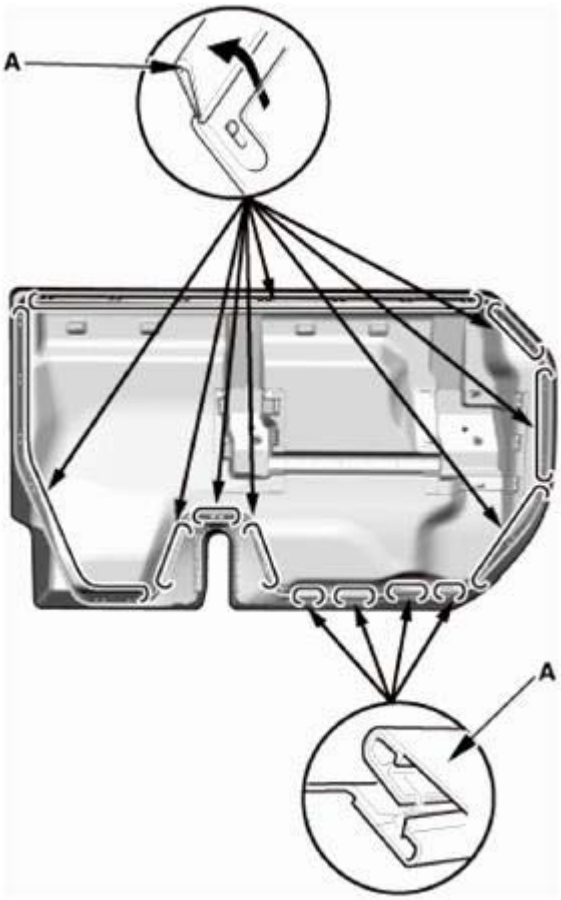

Fig. 646: Pulling Edge Of Rear Seat Cushion Cover (Left Side)
Courtesy of AMERICAN HONDA MOTOR CO., INC.

Right Side

GETtheMANUALS.org

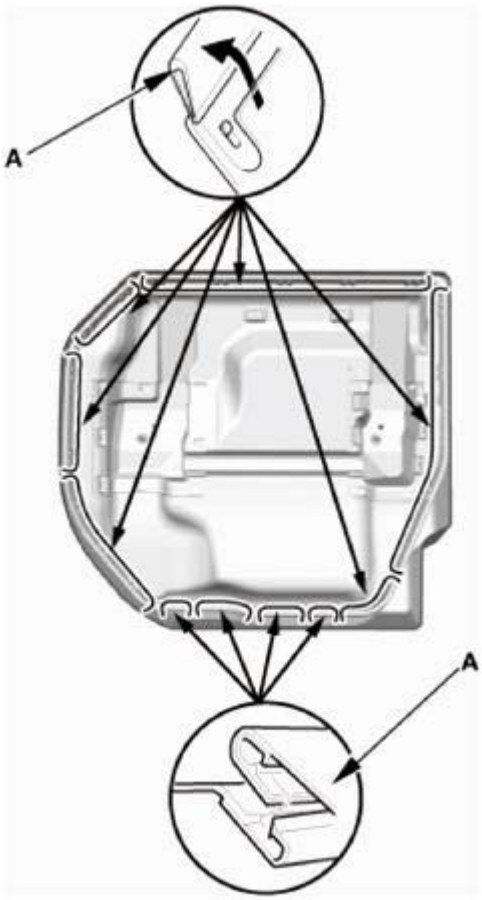

Fig. 647: Pulling Edge Of Rear Seat Cushion Cover (Right Side)
Courtesy of AMERICAN HONDA MOTOR CO., INC.

2. Remove the rear seat cushion under cover (A) from the rear seat cushion cover/pad (B).

GETtheMANUALS.org

Fig. 648: Removing Rear Seat Cushion Under Cover From Rear Seat Cushion Cover/Pad
Courtesy of AMERICAN HONDA MOTOR CO., INC.

3. Remove the screws (A), then remove the rear seat cushion under-trim cover (B) and the rear seat cushion member frame (C) from the rear seat cushion under cover (D).

GETtheMANUALS.org

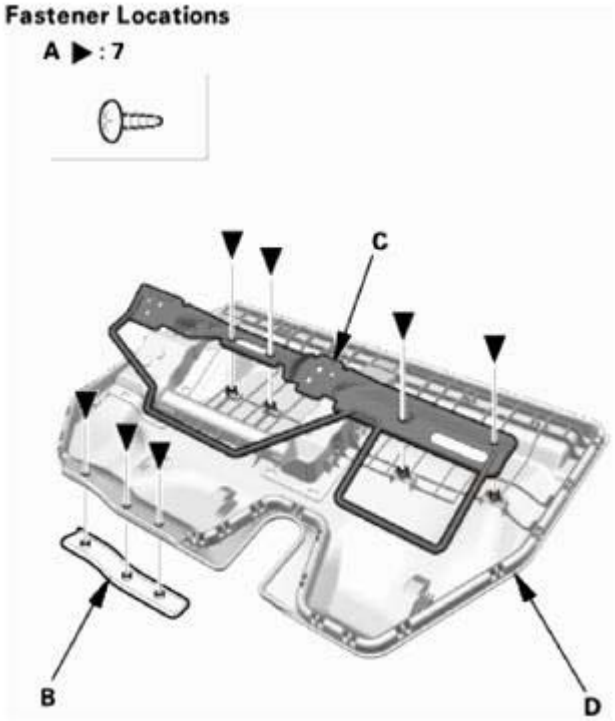

Fig. 649: Identifying Rear Seat Cushion Member Frame, Trim Cover, Under Cover And Screws
Courtesy of AMERICAN HONDA MOTOR CO., INC.

REASSEMBLY

1. Rear Seat Cushion Under Cover
    1. Install the rear seat cushion under-trim cover (A) and the rear seat cushion member frame (B) to the rear seat cushion under cover (C).

GETtheMANUALS.org

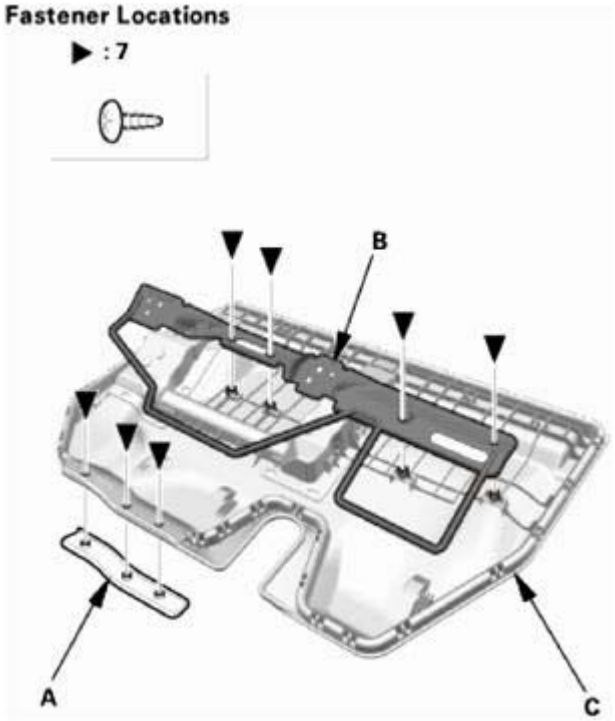

Fig. 650: Identifying Rear Seat Cushion Member Frame, Trim Cover, Under Cover And Screws
Courtesy of AMERICAN HONDA MOTOR CO., INC.

2. Install the rear seat cushion under cover (A) to the rear seat cushion cover/pad (B).

GETtheMANUALS.org

Fig. 651: Installing Rear Seat Cushion Under Cover To Rear Seat Cushion Cover/Pad
Courtesy of AMERICAN HONDA MOTOR CO., INC.

3. Install the edge of the rear seat cushion cover (A) all the way around.

Left Side

GETtheMANUALS.org

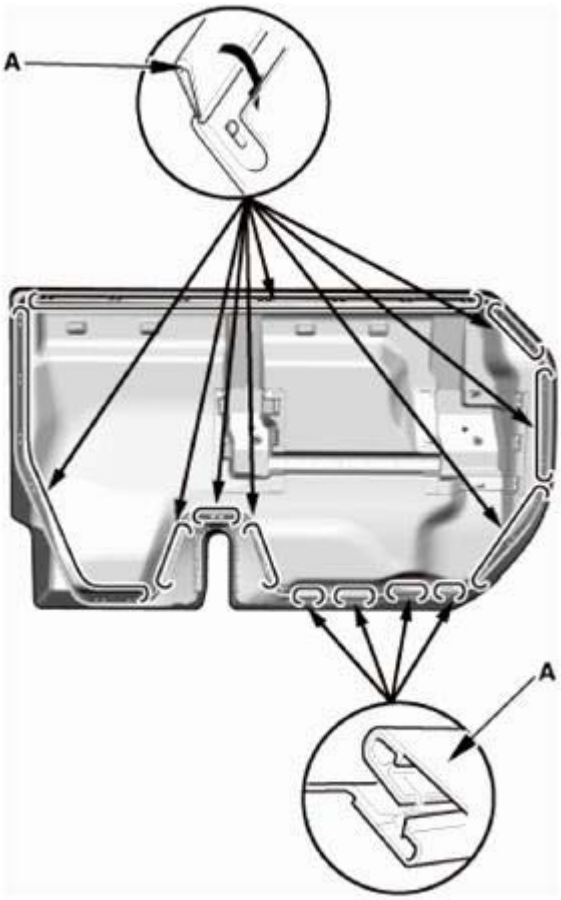

Fig. 652: Installing Rear Seat Cushion Cover (Left Side)
Courtesy of AMERICAN HONDA MOTOR CO., INC.

Right Side

GETtheMANUALS.org

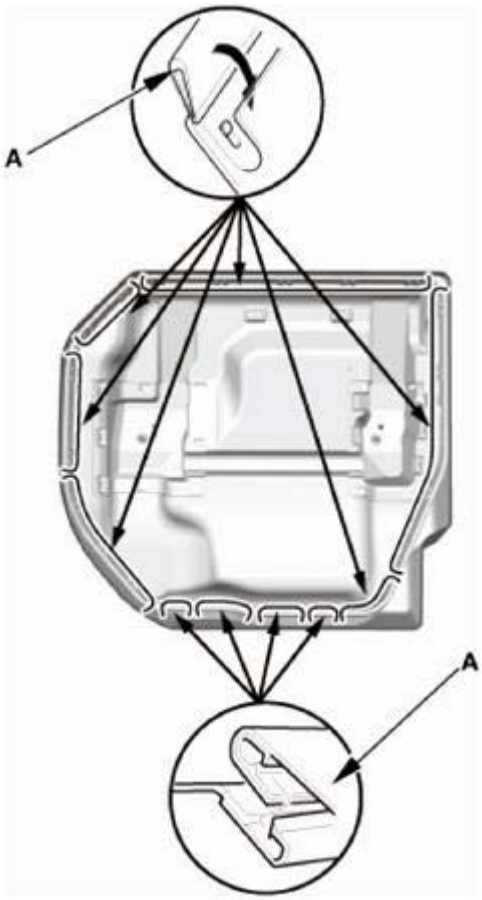

Fig. 653: Installing Rear Seat Cushion Cover (Right Side)
Courtesy of AMERICAN HONDA MOTOR CO., INC.

2. Rear Seat Cushion Foot
    1. Install the bolts (A) securing rear seat cushion latch (B).
    2. Connect the rear seat cushion control cable (C) to the rear seat cushion latch.
    3. Install the rear seat cushion control cable to the cable bracket (D).
    4. Install the cable clip (E).

GETtheMANUALS.org

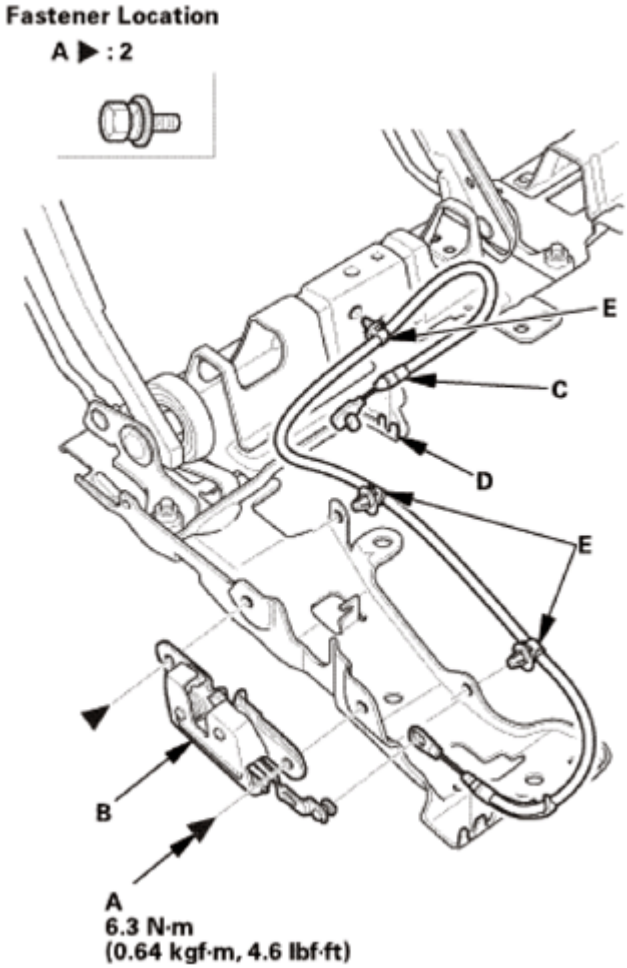

Fig. 654: Identifying Rear Seat Cushion Cable, Bracket, Latch, Clips And Bolts With Torque Specifications
Courtesy of AMERICAN HONDA MOTOR CO., INC.

5. Install the rear seat cushion strap (A) and the rear seat cushion strap guide (B).
6. Connect the rear seat cushion control cable (C) to the rear seat cushion strap.
7. Install the rear seat cushion foot damper (D).

GETtheMANUALS.org

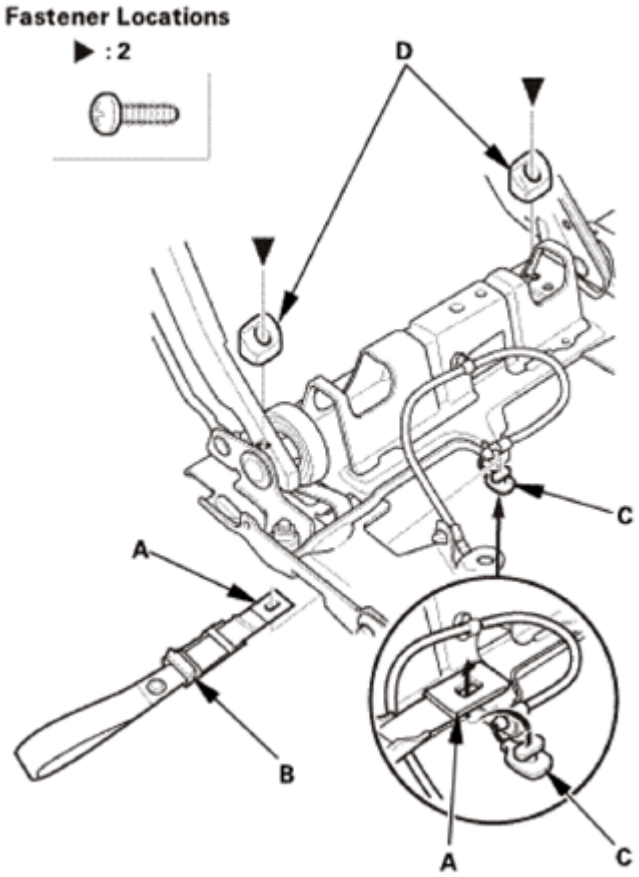

Fig. 655: Connecting Rear Seat Cushion Control Cable To Rear Seat Cushion Strap
Courtesy of AMERICAN HONDA MOTOR CO., INC.

8. Install the covers (A).

Left Side

GETtheMANUALS.org

Fig. 656: Identifying Rear Seat Cushion Foot Cover (Left Side)
Courtesy of AMERICAN HONDA MOTOR CO., INC.

Right Side

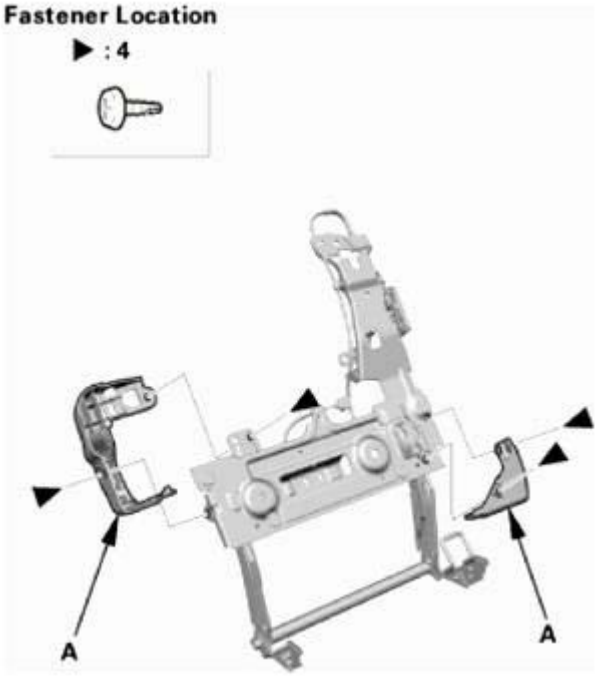

Fig. 657: Identifying Rear Seat Cushion Foot Cover (Right Side)
Courtesy of AMERICAN HONDA MOTOR CO., INC.

GETtheMANUALS.org

3. Rear Seat Cushion Foot Assembly
    1. Install the nuts (A) securing the rear seat cushion foot assembly (B).

Fig. 658: Identifying Rear Seat Cushion Foot Assembly And Nuts With Torque Specifications
Courtesy of AMERICAN HONDA MOTOR CO., INC.

4. Upper Outer Seat Cushion Cover
    1. Install the upper outer seat cushion cover (A) to the rear seat cushion (B). Make sure the hooks (C) snap into place securely.

GETtheMANUALS.org

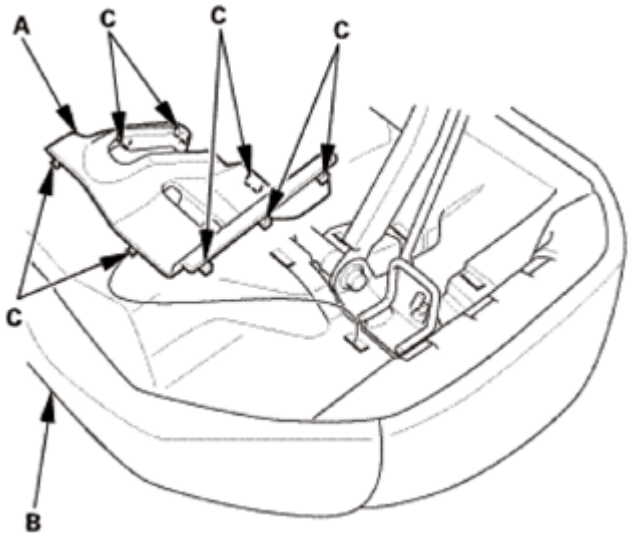

Fig. 659: Identifying Upper Outer Seat Cushion Cover, Rear Seat Cushion And Hooks
Courtesy of AMERICAN HONDA MOTOR CO., INC.

5. Upper Inner Seat Cushion Cover
    1. Install the upper inner seat cushion cover (A) to the rear seat cushion (B). Make sure the hooks (C) snap into place securely.

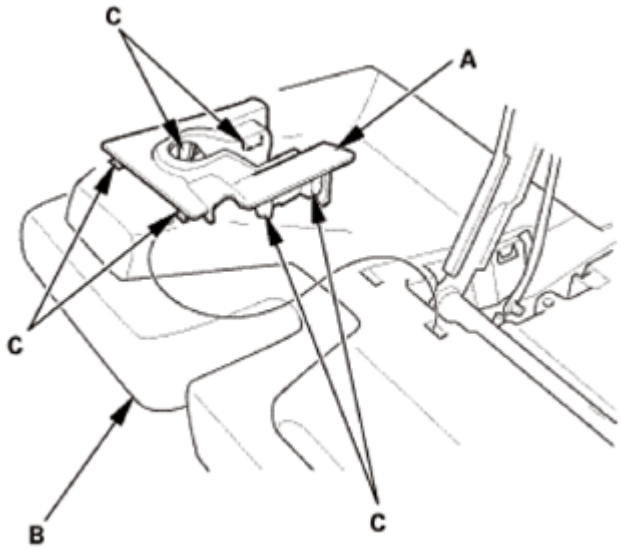

Fig. 660: Identifying Upper Inner Seat Cushion Cover, Rear Seat Cushion And Hooks
Courtesy of AMERICAN HONDA MOTOR CO., INC.

6. Right Rear Seat Cushion Assembly
    1. Install the right rear seat cushion assembly (A).

NOTE: **Tighten the bolts (B) by hand first, then tighten them to the specified torque.**

GETtheMANUALS.org

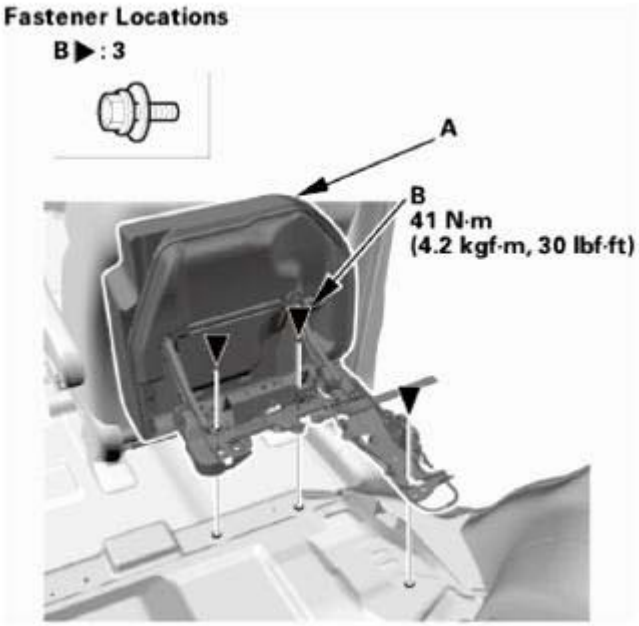

Fig. 661: Identifying Right Rear Seat Cushion Assembly And Bolts With Torque Specifications
Courtesy of AMERICAN HONDA MOTOR CO., INC.

2. Connect the cables (A) to the rear seat cushion assembly (B), then install the cables to the cable brackets (C), and install the cable clip (D).

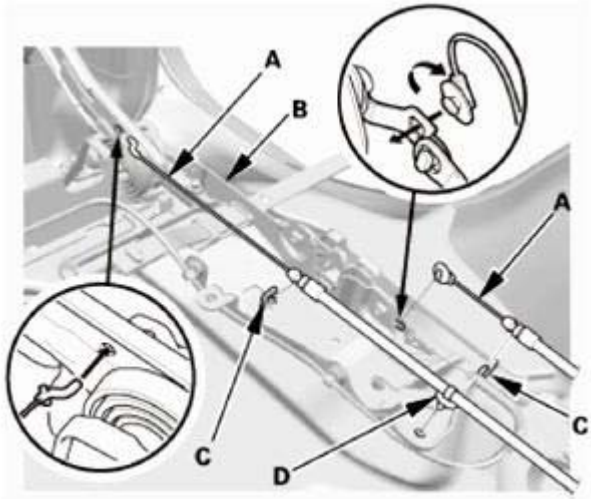

Fig. 662: Installing Right Rear Seat Cushion Assembly
Courtesy of AMERICAN HONDA MOTOR CO., INC.

7. Left Rear Seat Cushion Assembly
    1. Install the left rear seat cushion assembly (A).

GETtheMANUALS.org

NOTE: **Tighten the bolts (B) by hand first, then tighten them to the specified torque.**

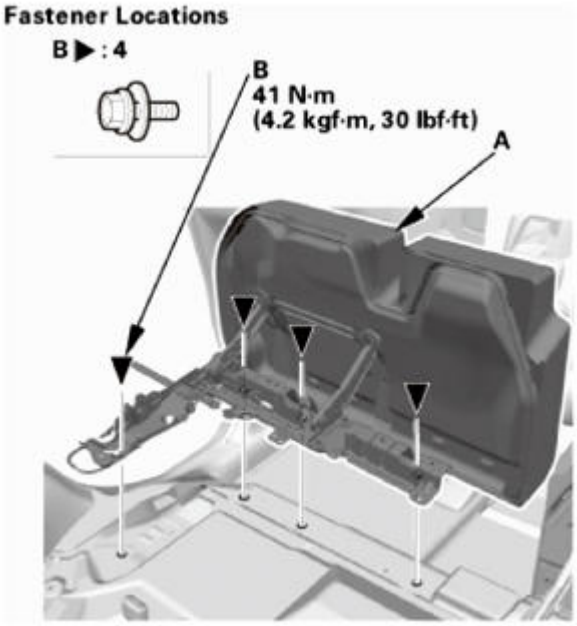

Fig. 663: Identifying Left Rear Seat Cushion Assembly And Bolts With Torque Specifications
Courtesy of AMERICAN HONDA MOTOR CO., INC.

2. Connect the cables (A) to the rear seat cushion assembly (B), then install the cables to the cable brackets (C), and install the cable clip (D).

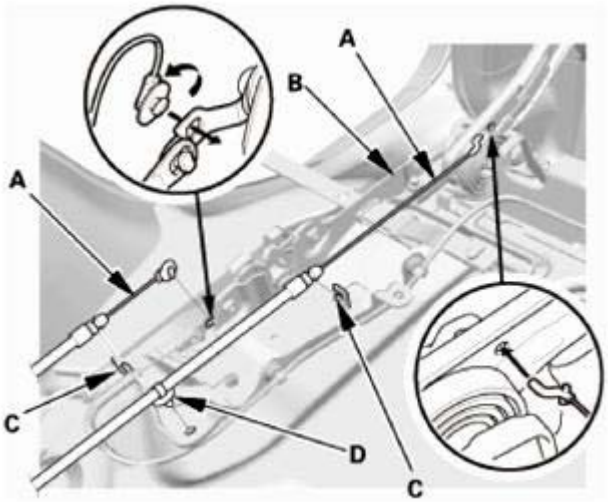

Fig. 664: Installing Left Rear Seat Cushion Assembly
Courtesy of AMERICAN HONDA MOTOR CO., INC.

8. Rear Seat Cushion Foot Cover - Both Sides

GETtheMANUALS.org

1. Install the rear seat cushion foot covers (A). Make sure the clips (B) and the hooks (C) snap into place securely.

Left side

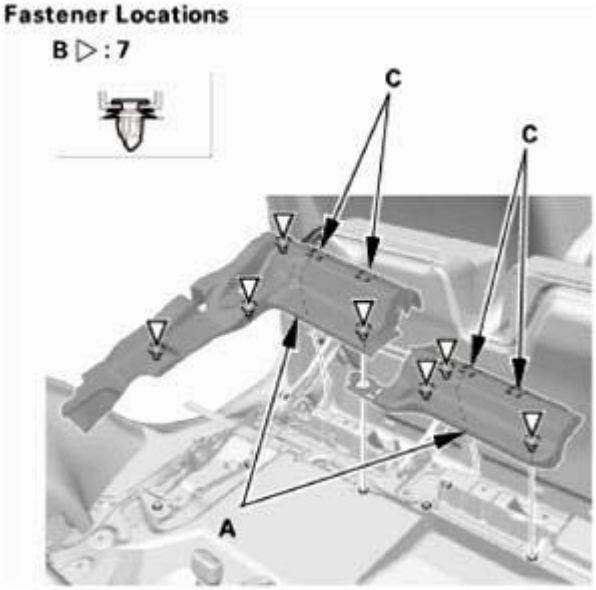

Fig. 665: Identifying Rear Seat Cushion Foot Cover, Hooks And Clips (Left Side)
Courtesy of AMERICAN HONDA MOTOR CO., INC.

Right side

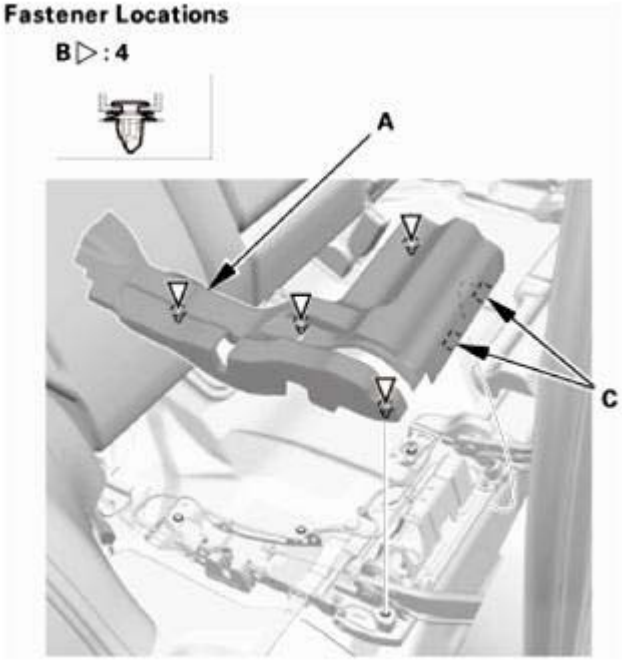

GETtheMANUALS.org

Fig. 666: Identifying Rear Seat Cushion Foot Cover, Hooks And Clips (Right Side)
Courtesy of AMERICAN HONDA MOTOR CO., INC.

REAR SEAT CUSHION LATCH REMOVAL AND INSTALLATION

REMOVAL

1. Rear Seat Cushion Foot Cover
    1. Pull up the rear seat cushion foot cover (A) by hand to detach the clips (B).
    2. Detach the hooks (C), then remove the rear seat foot cover.

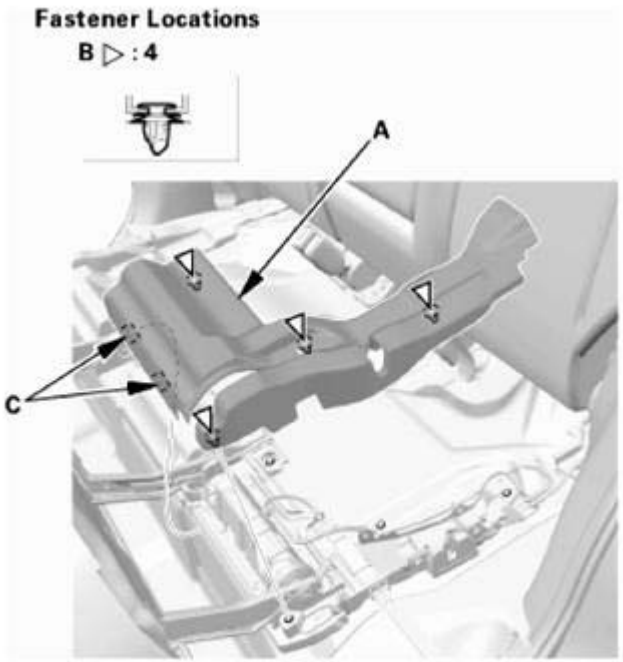

Fig. 667: Identifying Rear Seat Cushion Foot Cover, Hooks And Clips
Courtesy of AMERICAN HONDA MOTOR CO., INC.

2. Rear Seat Release Cable Latch Side - Disconnection/Reconnection
    1. Disconnect the rear seat release cable (A) and the rear seat cushion control cable (B) from the rear seat cushion latch (C).

GETtheMANUALS.org

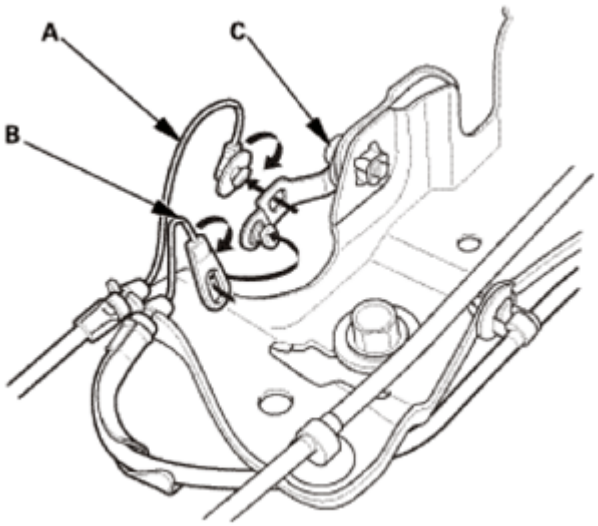

Fig. 668: Disconnecting Rear Seat Release Cable And Control Cable From Rear Seat Cushion Latch
Courtesy of AMERICAN HONDA MOTOR CO., INC.

3. Rear Seat Cushion Latch
    1. Remove the bolts (A), then remove the rear seat cushion latch (B) from the rear seat cushion foot assembly (C).

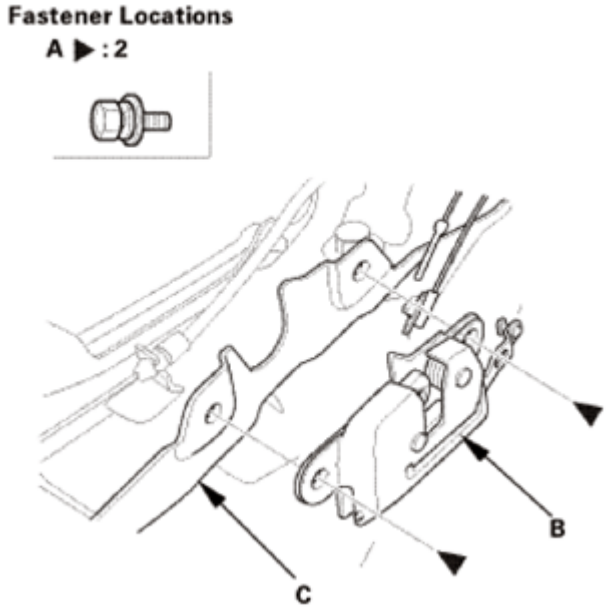

Fig. 669: Identifying Rear Seat Cushion Foot Assembly, Latch And Bolts
Courtesy of AMERICAN HONDA MOTOR CO., INC.

INSTALLATION

1. Rear Seat Cushion Latch

GETtheMANUALS.org

1. Install the rear seat cushion latch (A) to the rear seat cushion foot assembly (B).

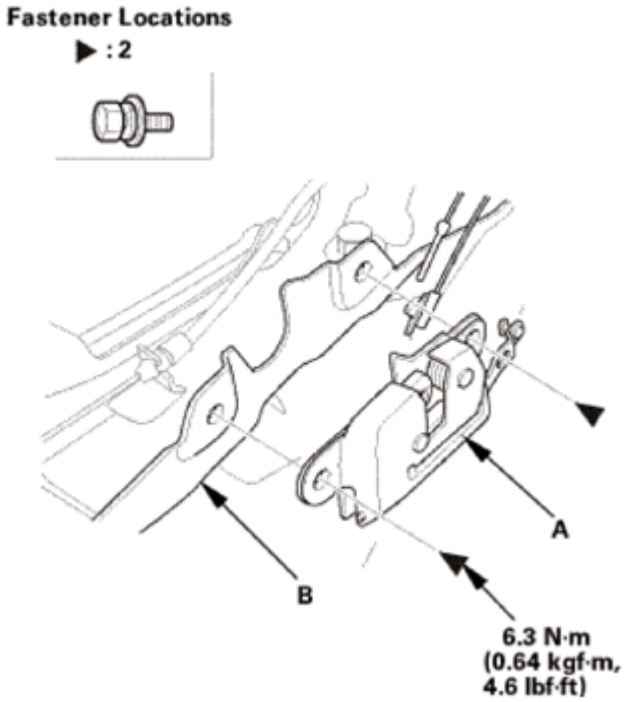

Fig. 670: Identifying Rear Seat Cushion Foot Assembly, Latch And Bolts With Torque Specifications
Courtesy of AMERICAN HONDA MOTOR CO., INC.

2. Rear Seat Release Cable Latch Side - Disconnection/Reconnection
    1. Connect the rear seat release cable (A) and the rear seat cushion control cable (B) to the rear seat cushion latch (C).

NOTE:

- **Make sure the cables are connected securely.**
- **Make sure the rear seat cushion latches and unlatches properly.**

GETtheMANUALS.org

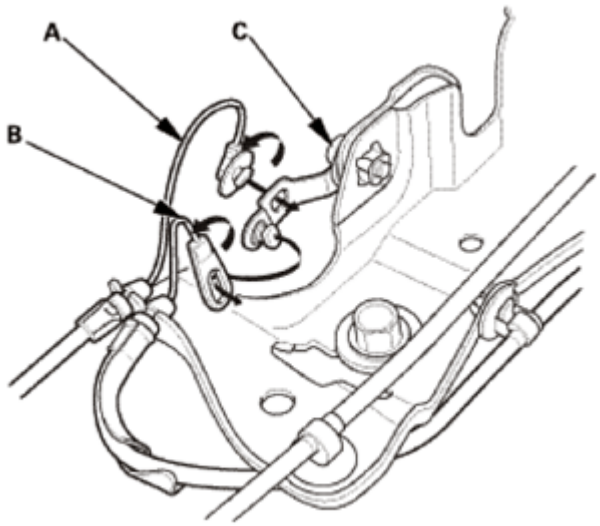

Fig. 671: Connecting Rear Seat Release Cable And Control Cable To Rear Seat Cushion Latch
Courtesy of AMERICAN HONDA MOTOR CO., INC.

3. Rear Seat Cushion Foot Cover
    1. Install the rear seat cushion foot cover (A). Make sure the clips (B) and the hooks (C) snap into place securely.

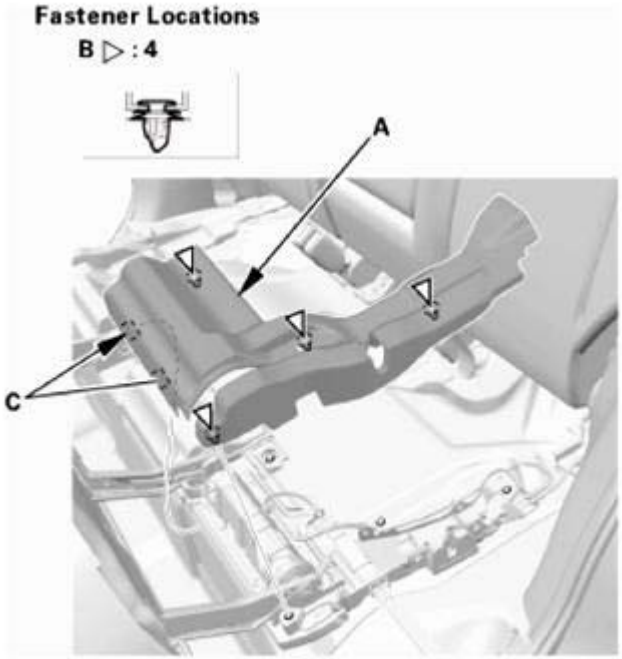

Fig. 672: Identifying Rear Seat Cushion Foot Cover, Hooks And Clips
Courtesy of AMERICAN HONDA MOTOR CO., INC.

REAR SEAT CUSHION REMOVAL AND INSTALLATION

GETtheMANUALS.org

REMOVAL

1. Upper Inner Seat Cushion Cover
    1. Detach the hooks (A), then remove the upper inner seat cushion cover (B) from the rear seat cushion (C).

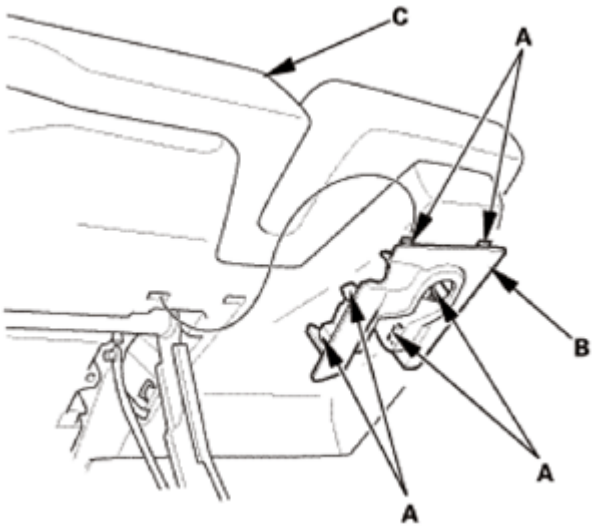

Fig. 673: Identifying Upper Inner Seat Cushion Cover, Rear Seat Cushion And Hooks
Courtesy of AMERICAN HONDA MOTOR CO., INC.

2. Upper Outer Seat Cushion Cover
    1. Detach the hooks (A), then remove the upper outer seat cushion cover (B) from the rear seat cushion (C).

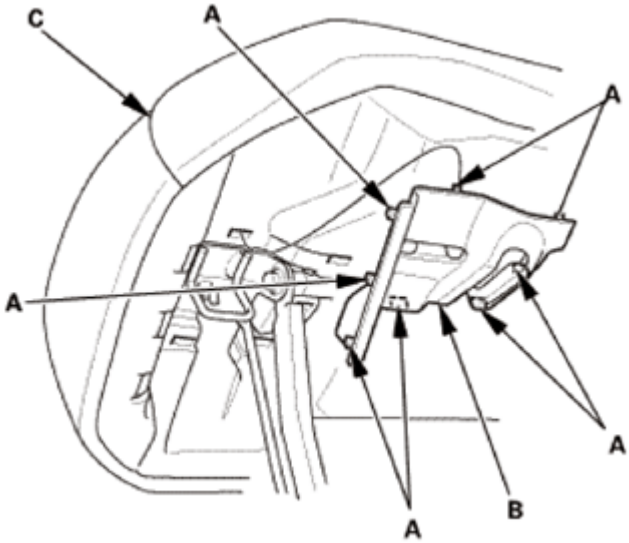

Fig. 674: Identifying Upper Outer Seat Cushion Cover, Rear Seat Cushion And Hooks
Courtesy of AMERICAN HONDA MOTOR CO., INC.

GETtheMANUALS.org

3. Rear Seat Cushion
    1. Remove the nuts (A), then remove the rear seat cushion (B) from the rear seat cushion foot assembly (C).

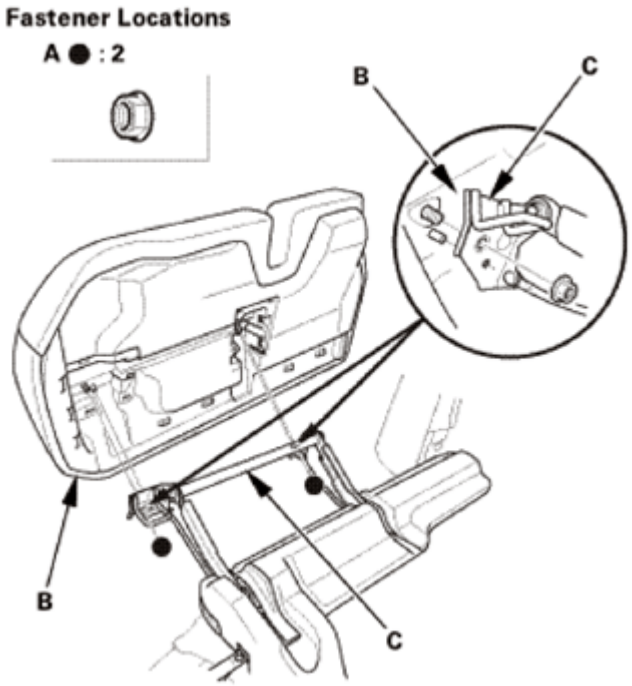

Fig. 675: Identifying Rear Seat Cushion Foot Assembly, Rear Seat Cushion And Nuts
Courtesy of AMERICAN HONDA MOTOR CO., INC.

INSTALLATION

1. Rear Seat Cushion
    1. Set the position of the pins (A), then install the rear seat cushion (B) and the nuts (C) to the rear seat cushion foot assembly (D).

GETtheMANUALS.org

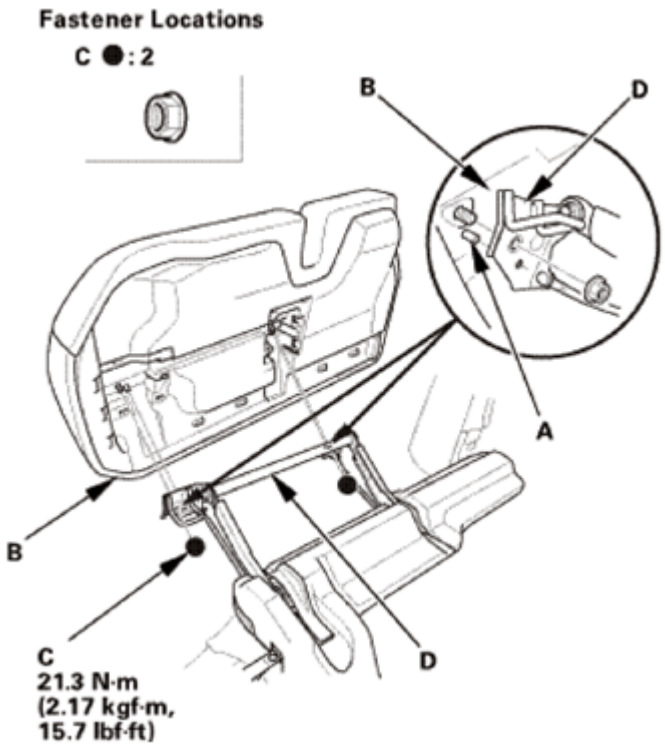

Fig. 676: Identifying Rear Seat Cushion Foot Assembly, Rear Seat Cushion And Nuts With Torque Specifications
Courtesy of AMERICAN HONDA MOTOR CO., INC.

2. Upper Outer Seat Cushion Cover
    1. Install the upper outer seat cushion cover (A) to the rear seat cushion (B). Make sure the hooks (C) snap into place securely.

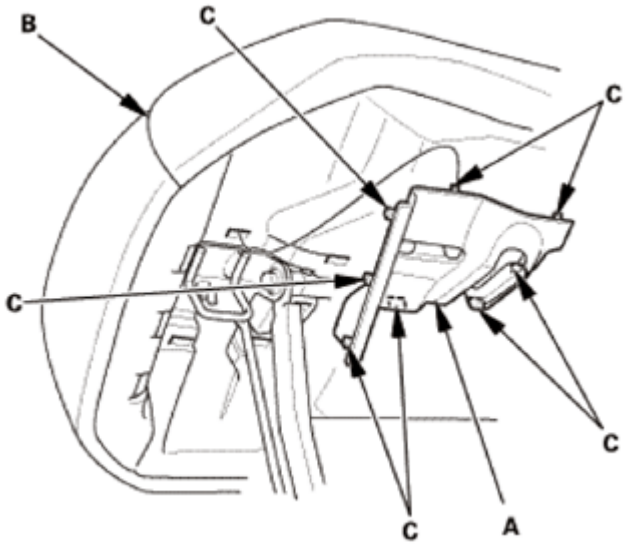

Fig. 677: Identifying Upper Outer Seat Cushion Cover, Rear Seat Cushion And Hooks
Courtesy of AMERICAN HONDA MOTOR CO., INC.

GETtheMANUALS.org

3. Upper Inner Seat Cushion Cover
    1. Install the upper inner seat cushion cover (A) to the rear seat cushion (B). Make sure the hooks (C) snap into place securely.

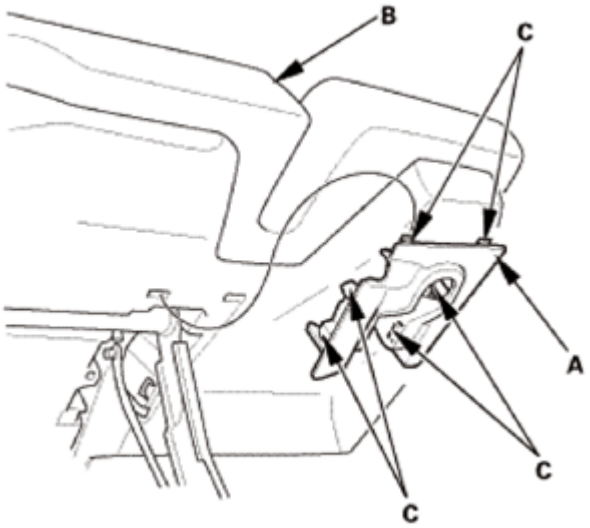

Fig. 678: Identifying Upper Inner Seat Cushion Cover, Rear Seat Cushion And Hooks
Courtesy of AMERICAN HONDA MOTOR CO., INC.

REAR SEAT RELEASE LEVER/CABLE REMOVAL AND INSTALLATION

REMOVAL

1. Tonneau Cover (For Some Models)
    1. Remove the tonneau cover (A).

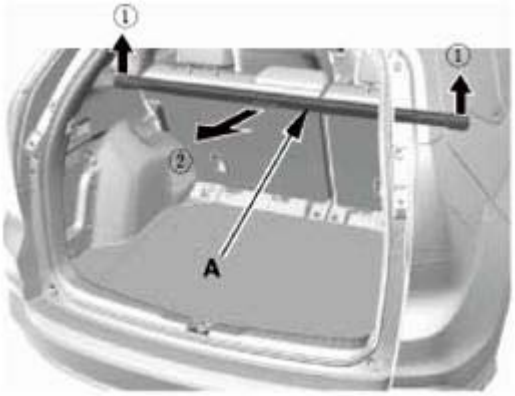

Fig. 679: Removing Tonneau Cover
Courtesy of AMERICAN HONDA MOTOR CO., INC.

2. Cargo Floor Cover

GETtheMANUALS.org

1. Remove the cargo floor cover (A).

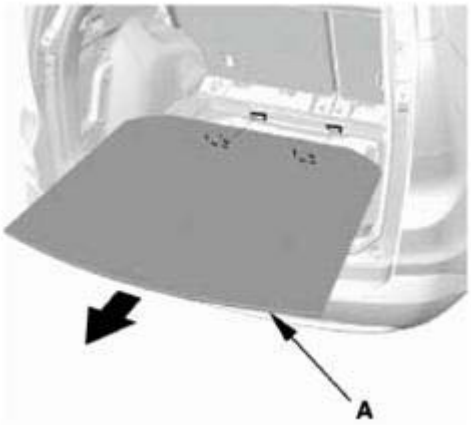

Fig. 680: Removing Cargo Floor Cover
Courtesy of AMERICAN HONDA MOTOR CO., INC.

3. Rear Door Sill Trim
    1. Pull the release strap to fold down the rear seat, then lift-up and latch the rear seat-back in the upright position.
    2. Detach the hooks (A) and the tab (B) from the B-pillar lower trim (C) and the rear side trim panel (D), and pull up the rear door inner sill trim (E) by hand to detach the clips (F, G), then remove the trim.

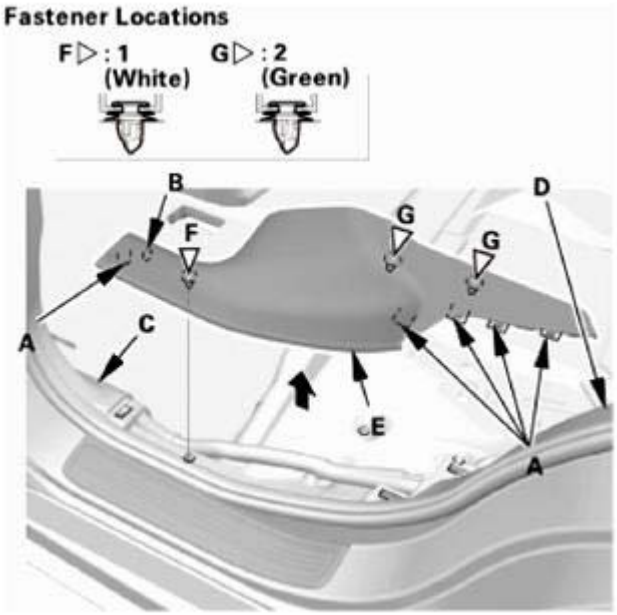

Fig. 681: Removing Rear Door Sill Trim
Courtesy of AMERICAN HONDA MOTOR CO., INC.

4. Rear Door Opening Seal As Needed

GETtheMANUALS.org

1. Pull out the rear door opening seal (A) from the trim hooks (B) around the rear door opening flange as needed.

Fig. 682: Removing Rear Door Opening Seal From Trim Hooks
Courtesy of AMERICAN HONDA MOTOR CO., INC.

5. Rear Damper Maintenance Cover
    1. Fold down the rear seat-back.
    2. Pull up the rear damper maintenance cover (A) by hand to detach the hooks (B), then remove the rear damper maintenance cover.

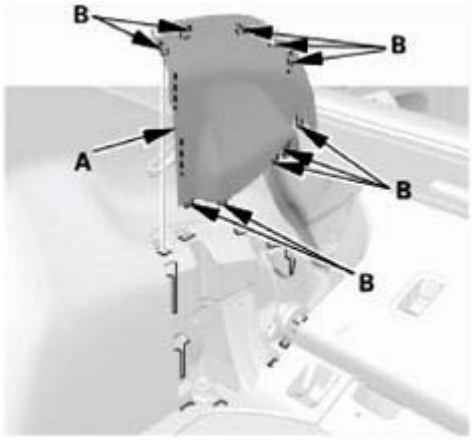

Fig. 683: Identifying Rear Damper Maintenance Cover And Hooks
Courtesy of AMERICAN HONDA MOTOR CO., INC.

6. Rear Carpet Trim
    1. Detach the clips (A), then tuck up the rear seat-back cover (B).

Left side

GETtheMANUALS.org

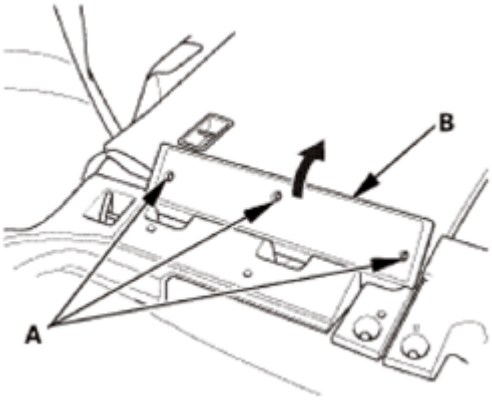

Fig. 684: Removing Rear Seat-Back Cover (Left Side)
Courtesy of AMERICAN HONDA MOTOR CO., INC.

Right side

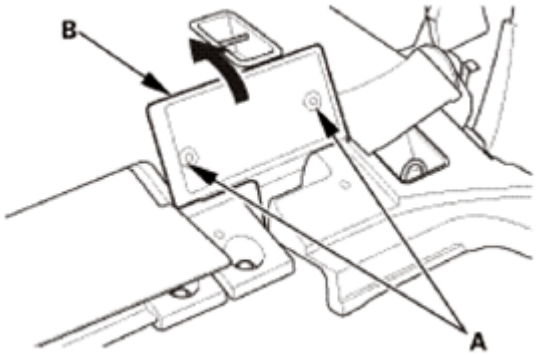

Fig. 685: Removing Rear Seat-Back Cover (Right Side)
Courtesy of AMERICAN HONDA MOTOR CO., INC.

2. Detach the hooks (A) from the rear side trim panel (B), and pull up the rear carpet trim (C) by hand to detach the clips (D), then remove the rear carpet trims.

Left side

GETtheMANUALS.org

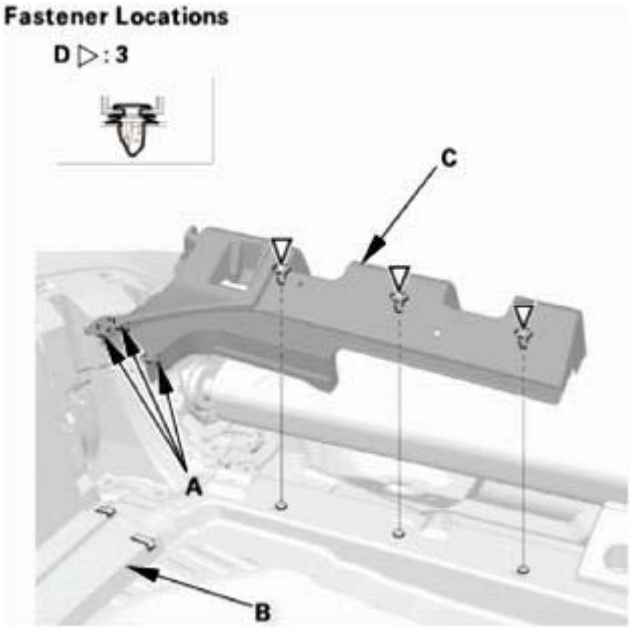

Fig. 686: Identifying Rear Side Trim Panel, Rear Carpet Trim, Hooks And Clips (Left Side)
Courtesy of AMERICAN HONDA MOTOR CO., INC.

Right side

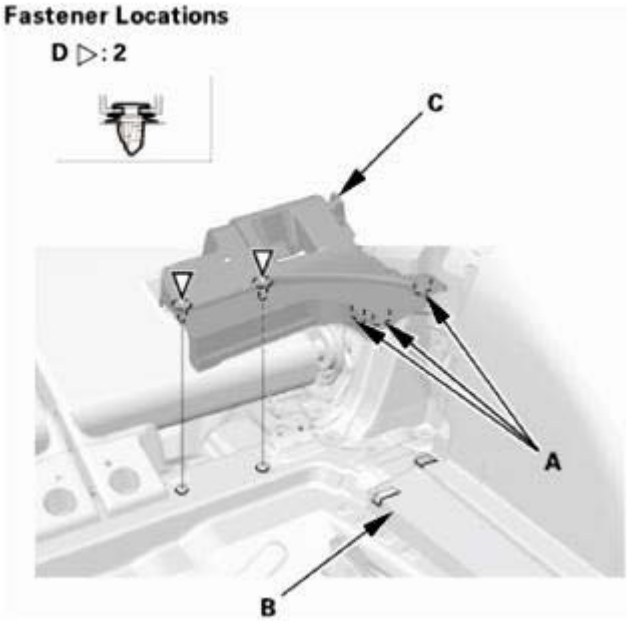

Fig. 687: Identifying Rear Side Trim Panel, Rear Carpet Trim, Hooks And Clips (Right Side)
Courtesy of AMERICAN HONDA MOTOR CO., INC.

7. Tailgate Weatherstrip As Needed
    1. Detach the tailgate weatherstrip (A) as needed.

GETtheMANUALS.org

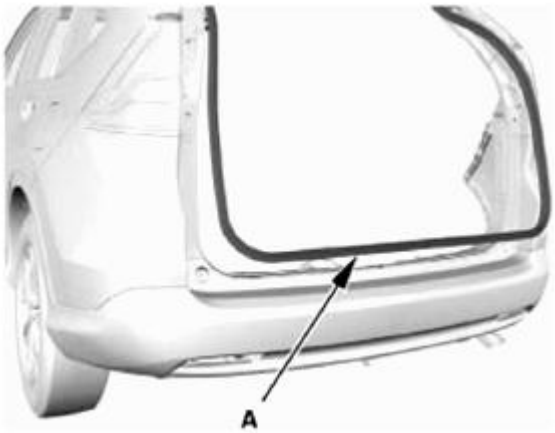

Fig. 688: Identifying Tailgate Weatherstrip
Courtesy of AMERICAN HONDA MOTOR CO., INC.

8. Rear Trim Panel
    1. Remove the clips (A).
    2. Detach the hooks (B) and the tabs (C) from the rear side trim panels (D), and pull up the rear trim panel (E) by hand to detach the clips (F, G), then remove the rear trim panel.

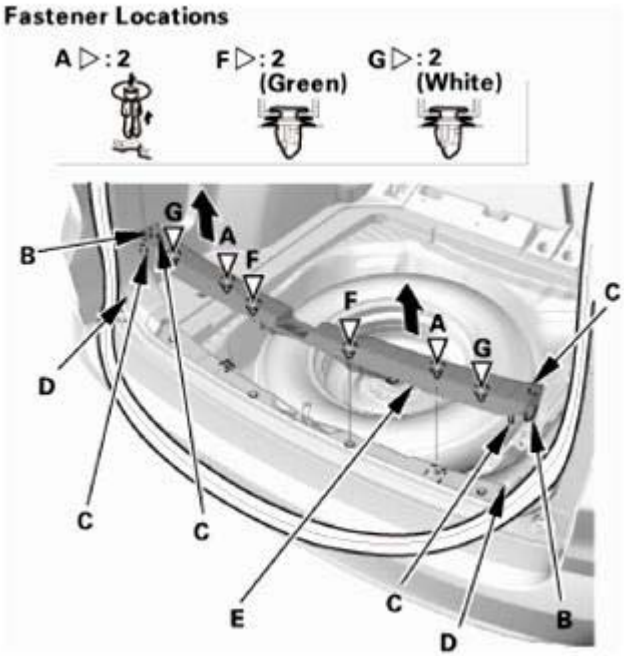

Fig. 689: Removing Rear Trim Panel
Courtesy of AMERICAN HONDA MOTOR CO., INC.

9. Rear Side Trim Panel
    1. Carefully pry out on the upper hook (A) in the rear seat release lever cap (B) with the appropriate trim tool, then pull back the rear seat release lever cap to remove it.

GETtheMANUALS.org

2. Remove the screws (C).

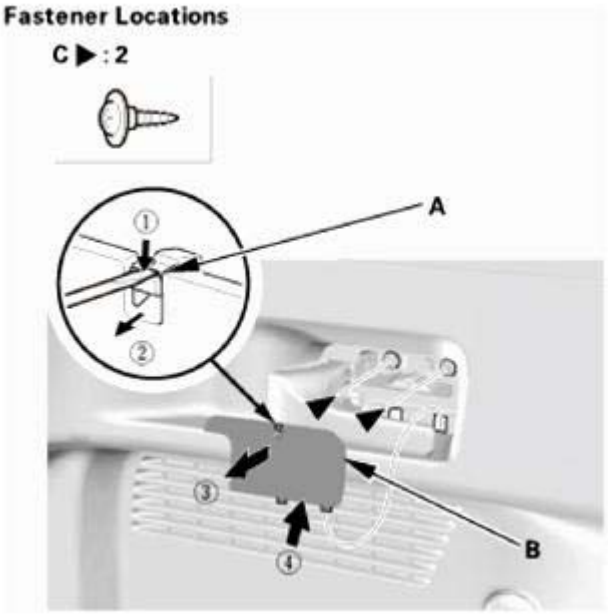

Fig. 690: Removing Rear Side Trim Panel
Courtesy of AMERICAN HONDA MOTOR CO., INC.

3. Push in the center pin (A), then remove the trunk hook (B).

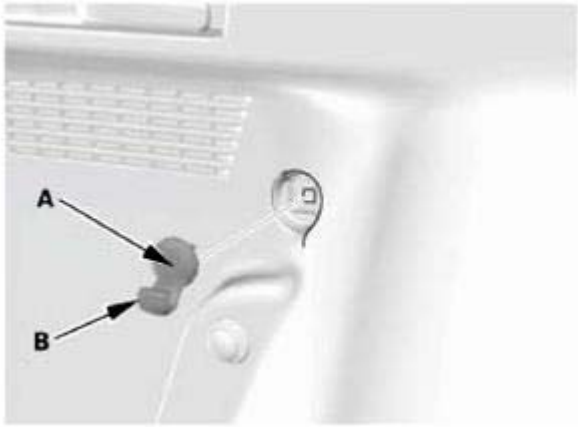

Fig. 691: Identifying Trunk Hook And Center Pin
Courtesy of AMERICAN HONDA MOTOR CO., INC.

4. Remove the bolt (A), then remove the tie-down hook (B).

GETtheMANUALS.org

Fig. 692: Identifying Tie-Down Hook And Bolt
Courtesy of AMERICAN HONDA MOTOR CO., INC.

5. Remove the clips (A, B).
6. Detach the hooks (C) and the tabs (D) from the quarter pillar trim (E), and pull out the rear side trim panel (F) by hand to detach the clips (G, H).

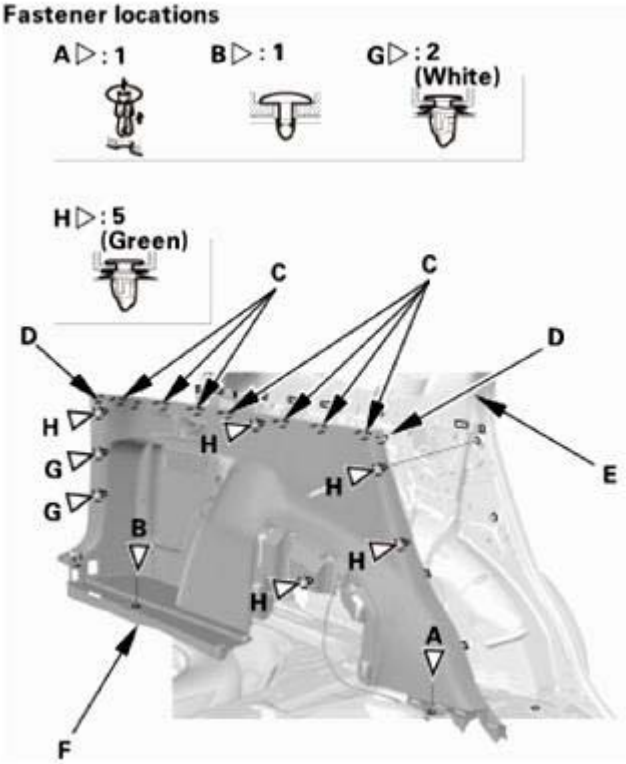

Fig. 693: Identifying Rear Side Trim Panel, Quarter Pillar Trim, Hooks And Clips

GETtheMANUALS.org

Courtesy of AMERICAN HONDA MOTOR CO., INC.

7. Remove the rear seat release lever (A) from the rear side trim panel (B).

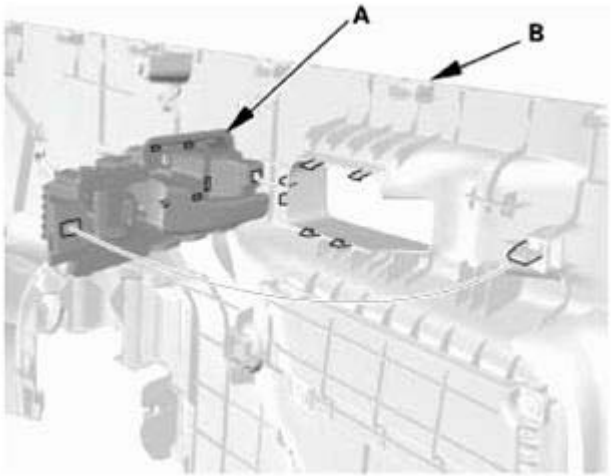

Fig. 694: Identifying Rear Seat Release Lever And Rear Side Trim Panel
Courtesy of AMERICAN HONDA MOTOR CO., INC.

8. Detach the rear seat release cable (A) from the clips of the rear side trim panel (B), then remove the rear side trim panel.

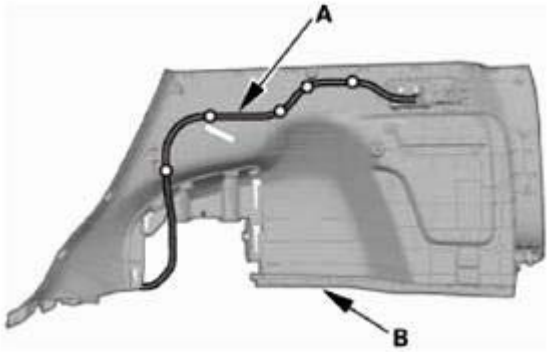

Fig. 695: Identifying Rear Seat Release Cable And Side Trim Panel
Courtesy of AMERICAN HONDA MOTOR CO., INC.

10. Rear Seat Foot Cover
    1. Pull up the rear seat foot cover (A) by hand to detach the clips (B).
    2. Detach the hooks (C), then remove the rear seat foot cover.

Left Side

GETtheMANUALS.org

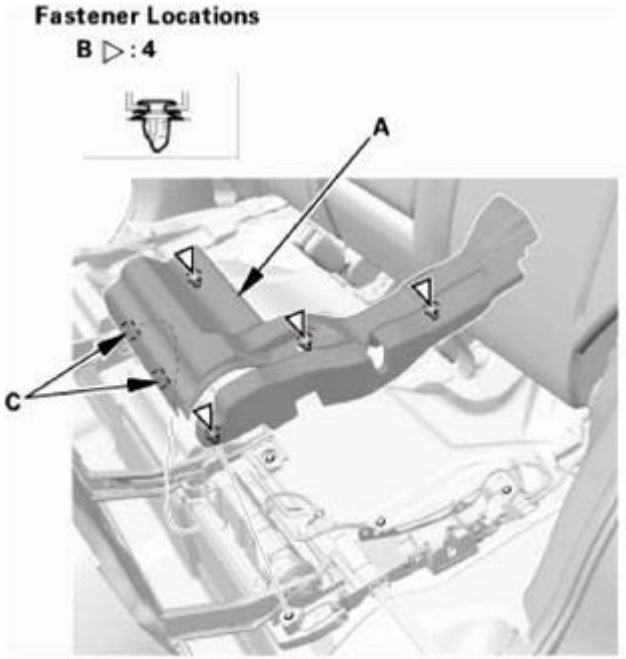

Fig. 696: Identifying Rear Seat Foot Cover, Clips And Hooks (Left Side)
Courtesy of AMERICAN HONDA MOTOR CO., INC.

Right Side

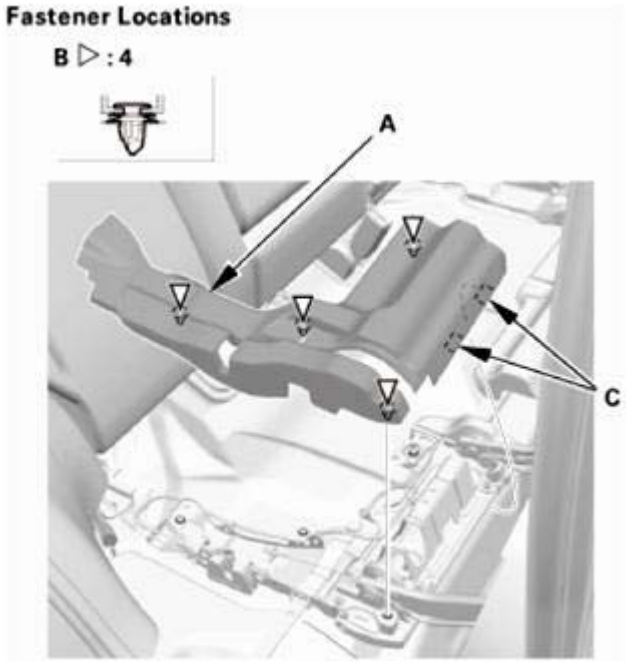

Fig. 697: Identifying Rear Seat Foot Cover, Clips And Hooks (Right Side)
Courtesy of AMERICAN HONDA MOTOR CO., INC.

11. Rear Seat-Back Release Lever/Cable

GETtheMANUALS.org

1. Detach the rear seat release cable (A) from the cable bracket (B).
2. Disconnect the rear seat release cable from the rear seat cushion latch (C).

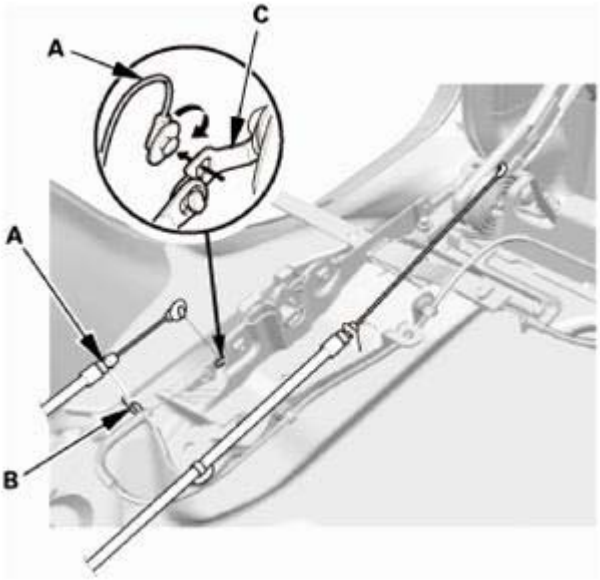

Fig. 698: Disconnecting Rear Seat Release Cable From Cushion Latch
Courtesy of AMERICAN HONDA MOTOR CO., INC.

3. Remove the rear seat release cable (A) from the cable bracket (B).
4. Remove the rear seat release cable from the rear seat release lever (C).

GETtheMANUALS.org

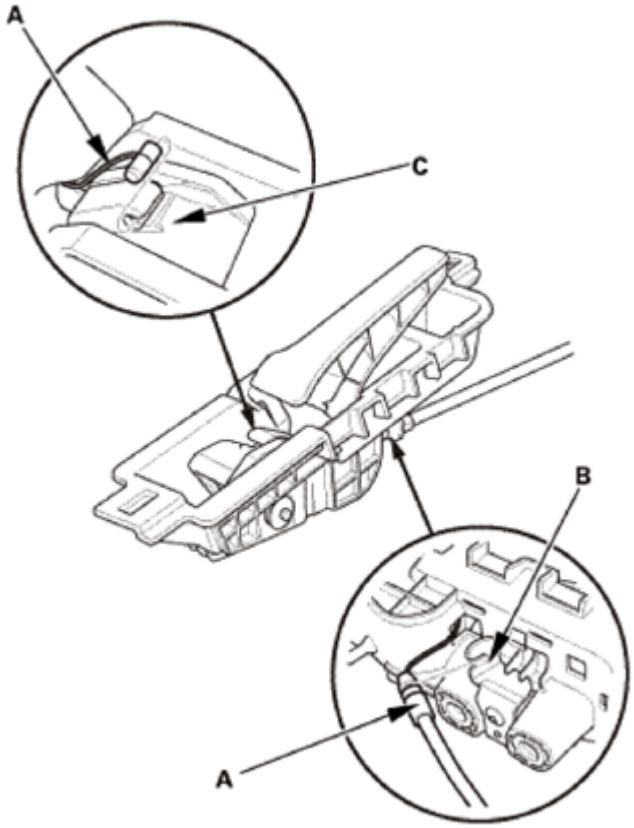

Fig. 699: Identifying Rear Seat Release Cable, Lever And Bracket
Courtesy of AMERICAN HONDA MOTOR CO., INC.

INSTALLATION

1. Rear Seat-Back Release Lever/Cable
    1. Install the rear seat release cable (A) to the rear seat release lever (B).
    2. Install the rear seat release cable to the cable bracket (C).

NOTE: **Make sure the rear seat release cable is connected securely.**

GETtheMANUALS.org

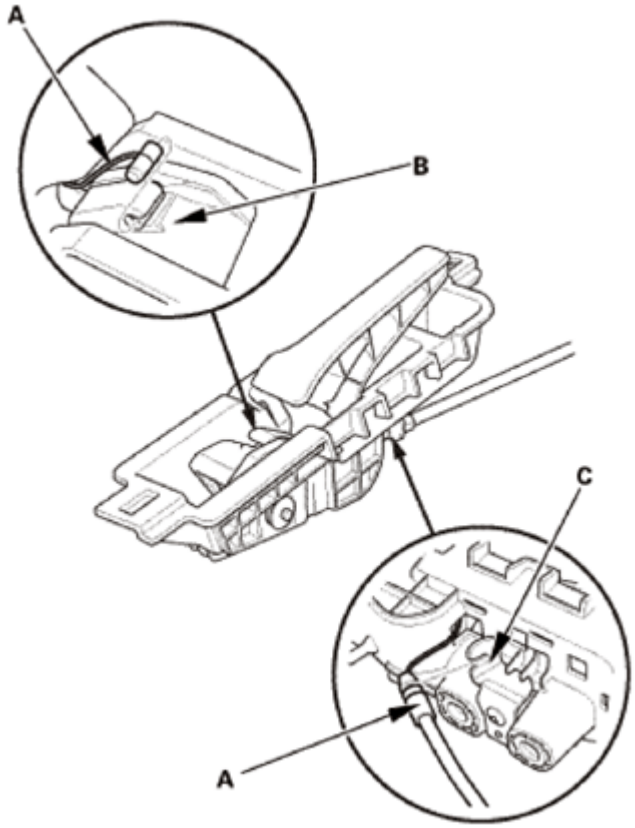

Fig. 700: Identifying Rear Seat Release Cable, Lever And Bracket
Courtesy of AMERICAN HONDA MOTOR CO., INC.

3. Connect the rear seat release cable (A) to the rear seat cushion latch (B).
4. Install the rear seat release cable to the cable bracket (C).

NOTE: Make sure the rear seat release cable is connected securely.

GETtheMANUALS.org

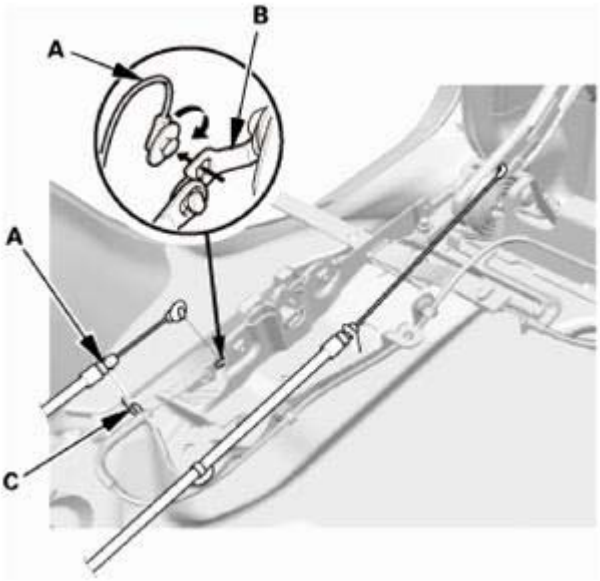

Fig. 701: Installing Rear Seat Release Cable To Cable Bracket
Courtesy of AMERICAN HONDA MOTOR CO., INC.

2. Rear Seat Foot Cover
    1. Install the rear seat cushion foot cover (A). Make sure the clips (B) and the hooks (C) snap into place securely.

    Left Side

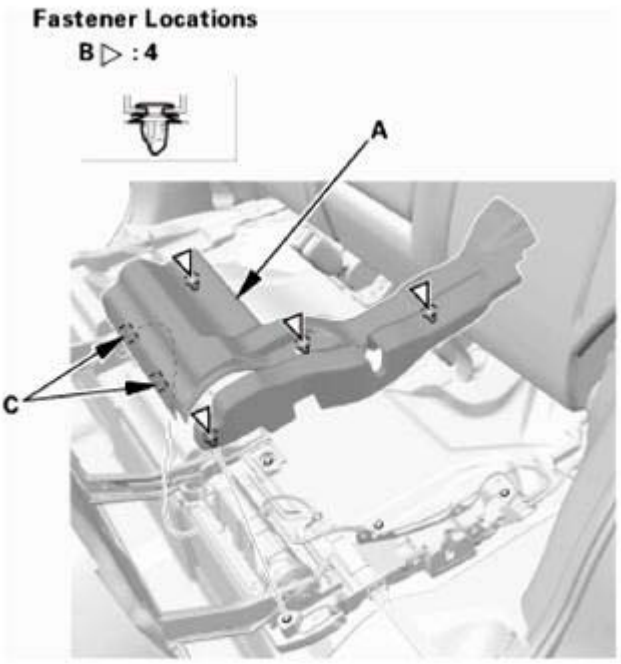

Fig. 702: Identifying Rear Seat Cushion Foot Cover, Hooks And Clips (Left Side)
Courtesy of AMERICAN HONDA MOTOR CO., INC.

GETtheMANUALS.org

Right Side

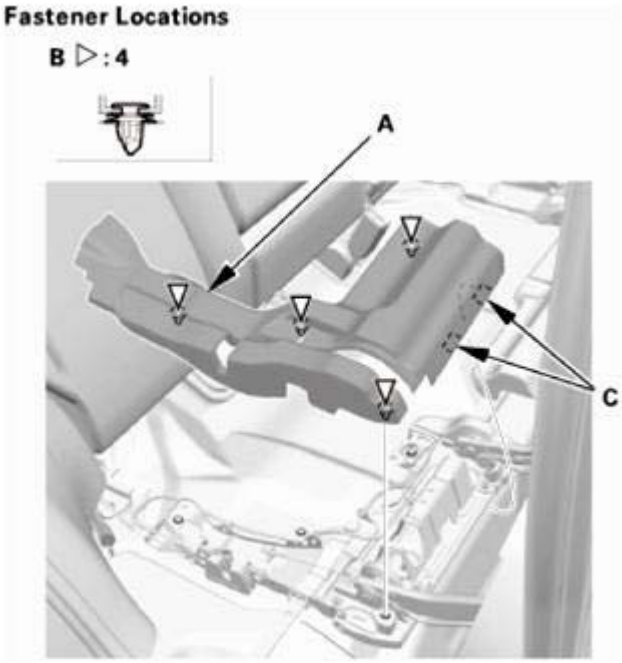

Fig. 703: Identifying Rear Seat Cushion Foot Cover, Hooks And Clips (Right Side)
Courtesy of AMERICAN HONDA MOTOR CO., INC.

3. Rear Side Trim Panel
    1. Install the rear seat release cable (A) to the clips (B) of the rear side trim panel (C).

NOTE: Align the marks (D) with the clips as shown.

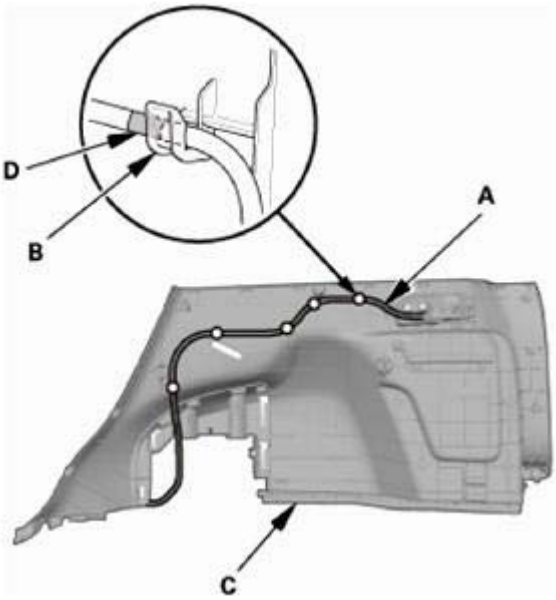

GETtheMANUALS.org

Fig. 704: Installing Rear Seat Release Cable To Clips Of Rear Side Trim Panel
Courtesy of AMERICAN HONDA MOTOR CO., INC.

2. Install the rear seat release lever (A) to the rear side trim panel (B).

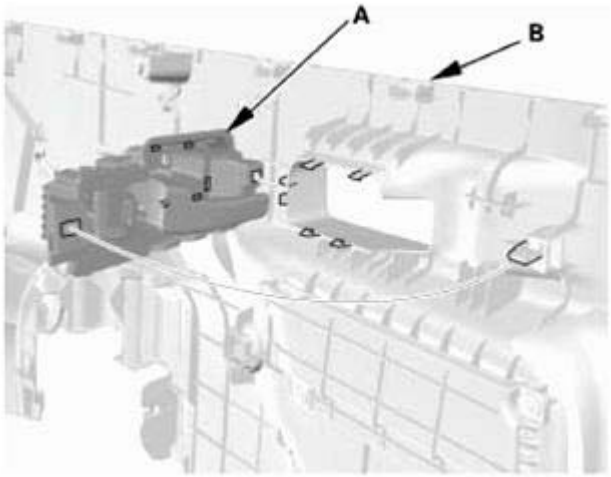

Fig. 705: Identifying Rear Seat Release Lever And Side Trim Panel
Courtesy of AMERICAN HONDA MOTOR CO., INC.

3. Install the rear side trim panel (A). Make sure the hooks (B), the tabs (C), and the clips (D, E) snap into place securely.
4. Install the clips (F, G).

GETtheMANUALS.org

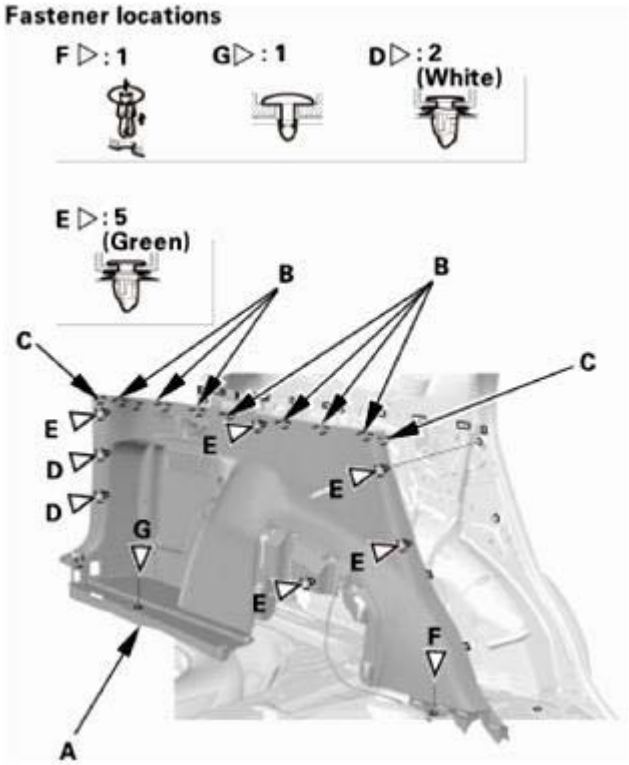

Fig. 706: Identifying Rear Side Trim Panel, Tabs, Hooks And Clips
Courtesy of AMERICAN HONDA MOTOR CO., INC.

5. Install the tie-down hook (A), then install the bolt (B).

Fig. 707: Identifying Tie-Down Hook And Bolt With Torque Specifications
Courtesy of AMERICAN HONDA MOTOR CO., INC.

GETtheMANUALS.org

6. Install the trunk hook (A).

Fig. 708: Identifying Trunk Hook
Courtesy of AMERICAN HONDA MOTOR CO., INC.

7. Install the screws (A), then install the rear seat release lever cap (B). Make sure the upper hook (C) and the lower hooks (D) snap into place securely.

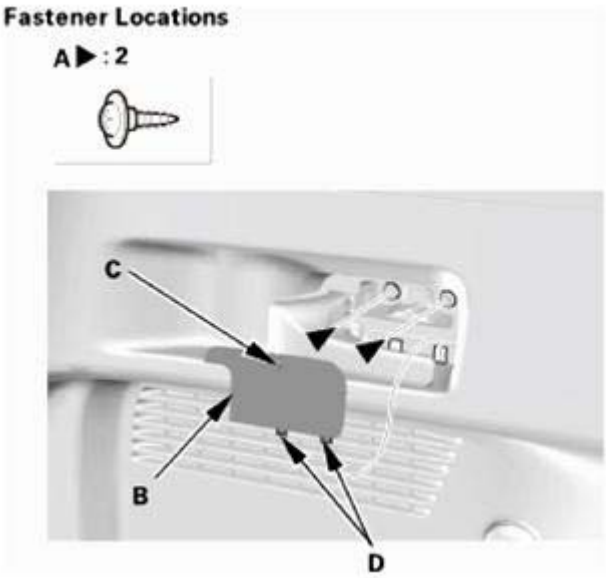

Fig. 709: Identifying Rear Seat Release Lever Cap, Hooks And Screws
Courtesy of AMERICAN HONDA MOTOR CO., INC.

4. Rear Trim Panel
    1. Install the rear trim panel (A). Make sure the clips (B, C), the hooks (D), and the tabs (E) snap into place securely.
    2. Install the clips (F).

GETtheMANUALS.org

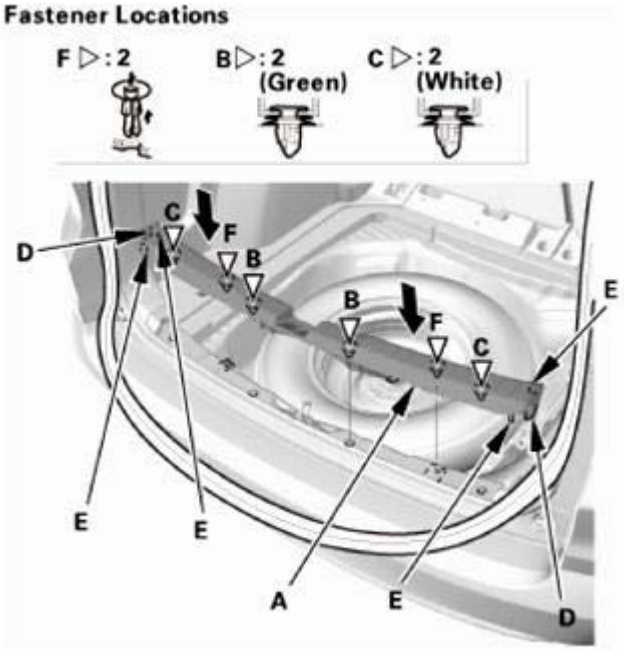

Fig. 710: Installing Rear Trim Panel
Courtesy of AMERICAN HONDA MOTOR CO., INC.

5. Tailgate Weatherstrip As Needed
    1. Locate the alignment mark (A) of the tailgate weatherstrip (B). Align the alignment mark (C) with the center of the lower area on the tailgate opening, then install the tailgate weatherstrip all the way around.

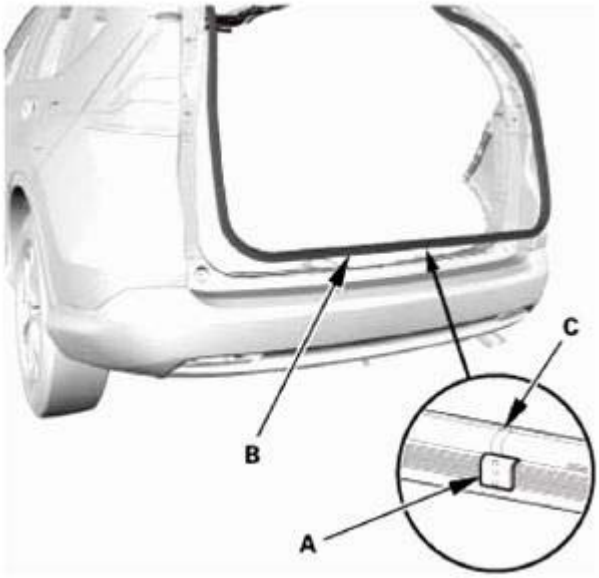

Fig. 711: Identifying Alignment Mark Of Tailgate Weatherstrip
Courtesy of AMERICAN HONDA MOTOR CO., INC.

GETtheMANUALS.org

6. Rear Carpet Trim
    1. Install the rear carpet trim (A). Make sure the clips (B) and the hooks (C) snap into place securely.

Left side

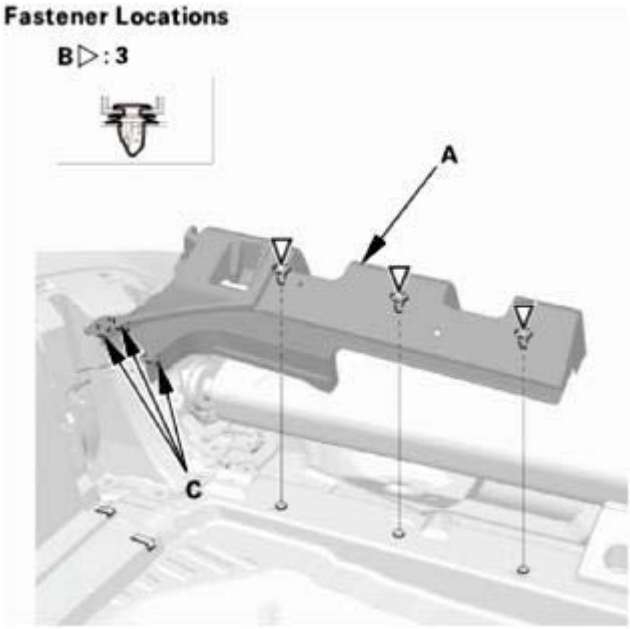

Fig. 712: Identifying Rear Carpet Trim, Hooks And Clips (Left Side)
Courtesy of AMERICAN HONDA MOTOR CO., INC.

Right side

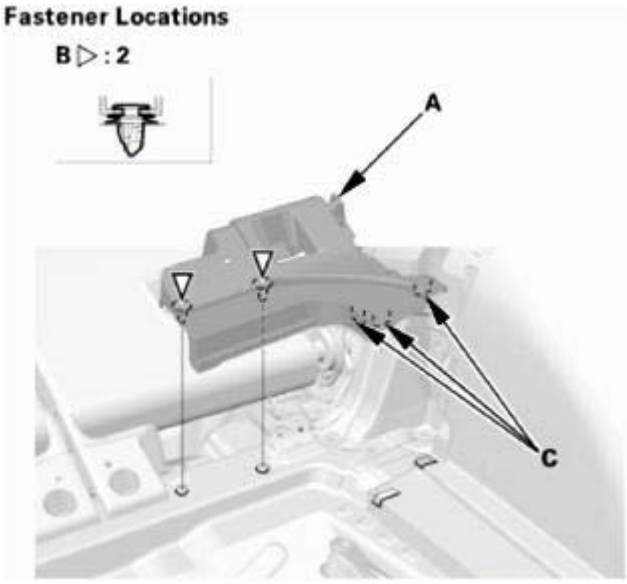

Fig. 713: Identifying Rear Carpet Trim, Hooks And Clips (Right Side)

GETtheMANUALS.org

Courtesy of AMERICAN HONDA MOTOR CO., INC.

2. Install the rear seat-back cover (A). Make sure the clips (B) snap into place securely.

Left side

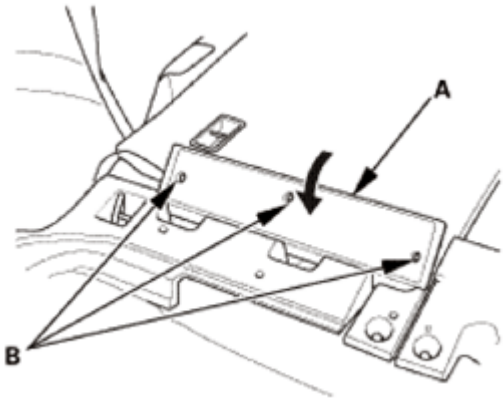

Fig. 714: Installing Rear Seat-Back Cover (Left Side)
Courtesy of AMERICAN HONDA MOTOR CO., INC.

Right side

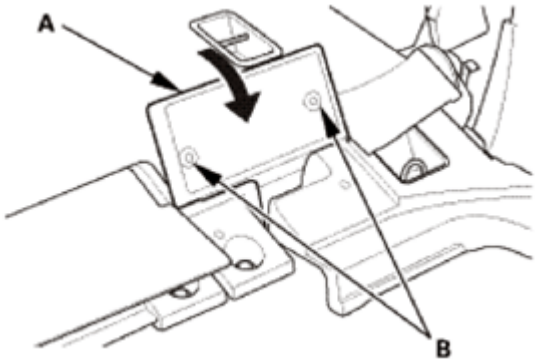

Fig. 715: Installing Rear Seat-Back Cover (Right Side)
Courtesy of AMERICAN HONDA MOTOR CO., INC.

7. Rear Damper Maintenance Cover
    1. Fold down the rear seat-back.
    2. Install the rear damper maintenance cover (A). Make sure the hooks (B) snap into place securely.

GETtheMANUALS.org

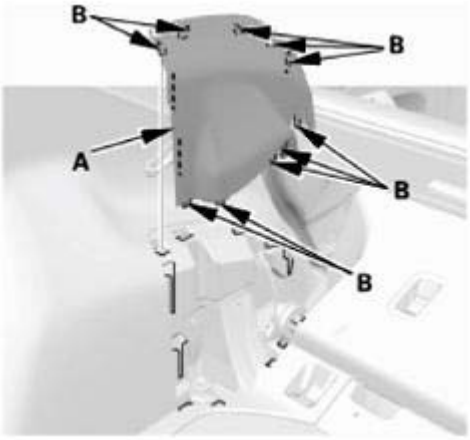

Fig. 716: Identifying Rear Damper Maintenance Cover And Hooks
Courtesy of AMERICAN HONDA MOTOR CO., INC.

8. Rear Door Opening Seal As Needed
    1. Install the rear door opening seal (A). Make sure the seal is installed securely into the hooks (B).

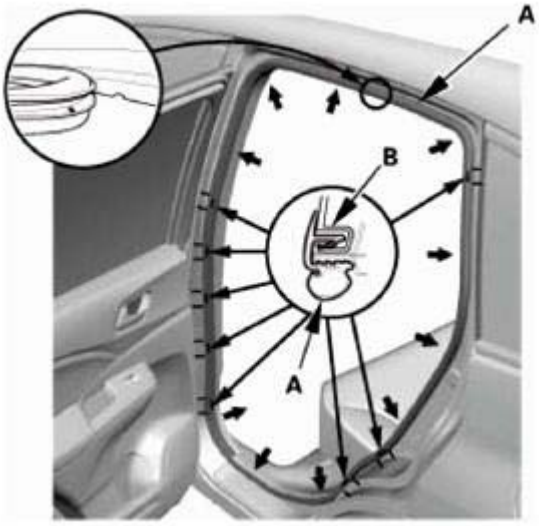

Fig. 717: Installing Rear Door Opening Seal
Courtesy of AMERICAN HONDA MOTOR CO., INC.

9. Rear Door Sill Trim
    1. Pull the release strap to fold down the rear seat, then lift-up and latch the rear seat-back in the upright position.
    2. Install the rear door inner sill trim (A). Make sure the clips (B, C), the hooks (D), and the tab (E) snap into place securely.

GETtheMANUALS.org

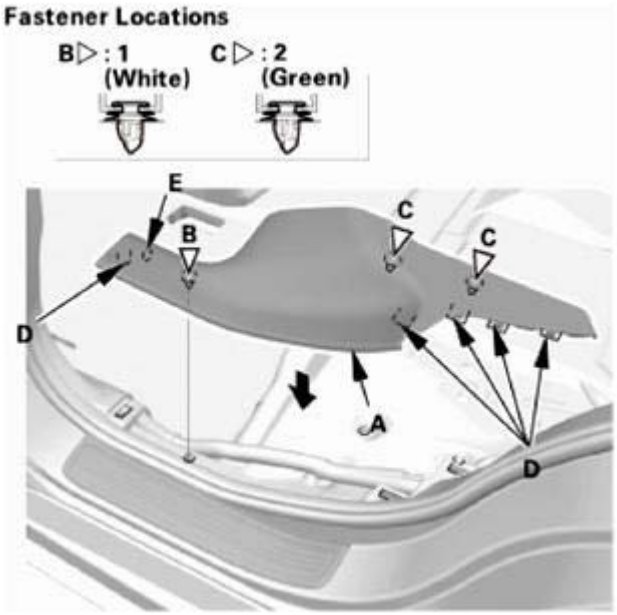

Fig. 718: Removing Rear Door Sill Trim
Courtesy of AMERICAN HONDA MOTOR CO., INC.

10. Cargo Floor Cover
    1. Install the cargo floor cover (A).

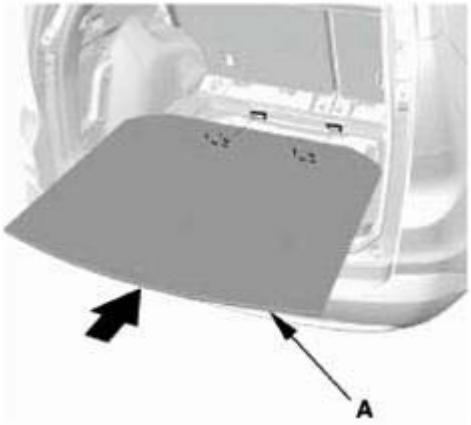

Fig. 719: Installing Cargo Floor Cover
Courtesy of AMERICAN HONDA MOTOR CO., INC.

11. Tonneau Cover (For Some Models)
    1. Install the tonneau cover (A).

GETtheMANUALS.org

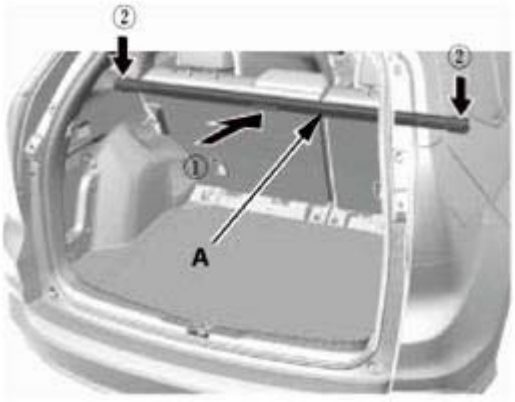

Fig. 720: Installing Tonneau Cover
Courtesy of AMERICAN HONDA MOTOR CO., INC.

REAR SEAT-BACK COVER REMOVAL AND INSTALLATION

REMOVAL

NOTE: Steps 6-9 show removing the left side, steps 10-12 is right side shown.

1. Tonneau Cover (For Some Models)
    1. Remove the tonneau cover (A).

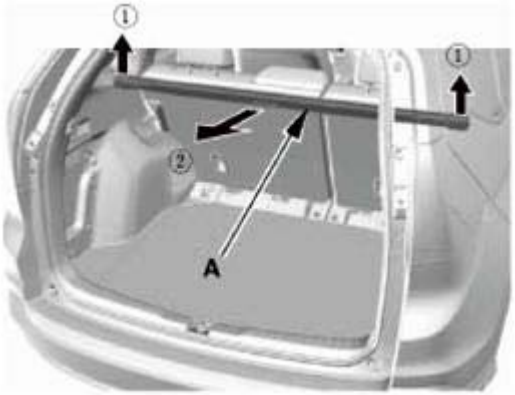

Fig. 721: Removing Tonneau Cover
Courtesy of AMERICAN HONDA MOTOR CO., INC.

2. Cargo Floor Cover
    1. Remove the cargo floor cover (A).

GETtheMANUALS.org

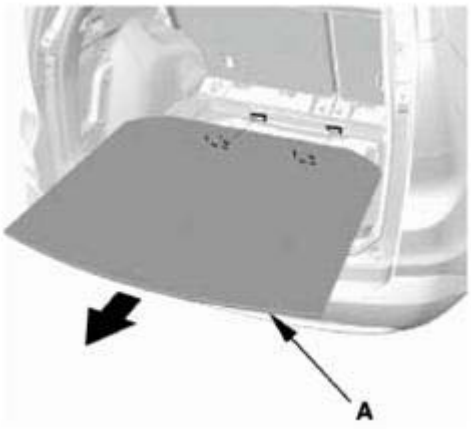

Fig. 722: Removing Cargo Floor Cover
Courtesy of AMERICAN HONDA MOTOR CO., INC.

3. Rear Damper Maintenance Cover
    1. Fold down the rear seat-back.
    2. Pull up the rear damper maintenance cover (A) by hand to detach the hooks (B), then remove the rear damper maintenance cover.

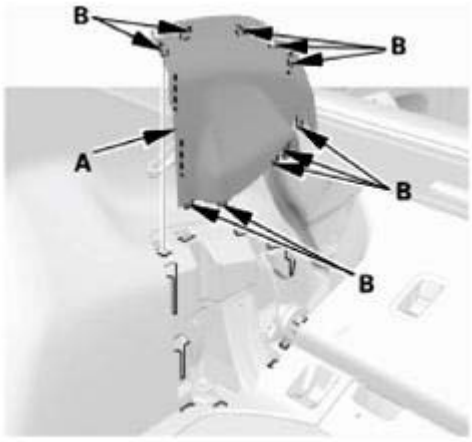

Fig. 723: Identifying Rear Damper Maintenance Cover And Hooks
Courtesy of AMERICAN HONDA MOTOR CO., INC.

4. Rear Seat Foot Cover
    1. Pull up the rear seat foot cover (A) by hand to detach the clips (B).
    2. Detach the hooks (C), then remove the rear seat foot cover.

Left Side

GETtheMANUALS.org

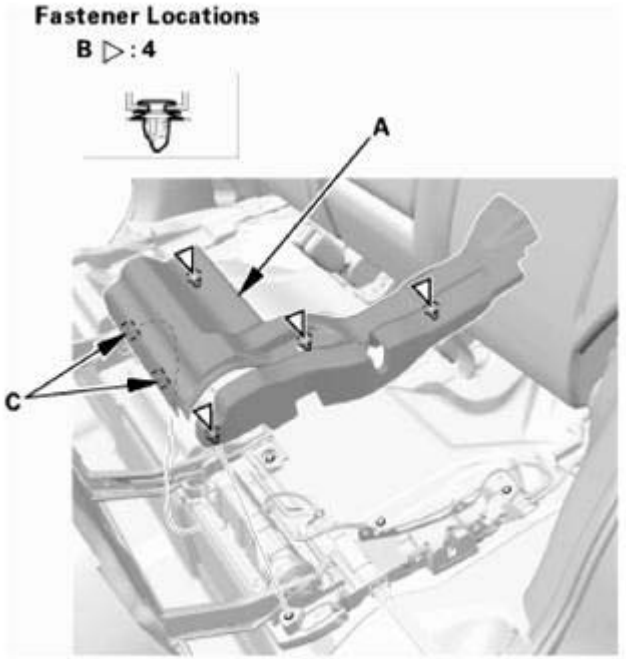

Fig. 724: Identifying Rear Seat Foot Cover, Hooks And Clips (Left Side)
Courtesy of AMERICAN HONDA MOTOR CO., INC.

Right Side

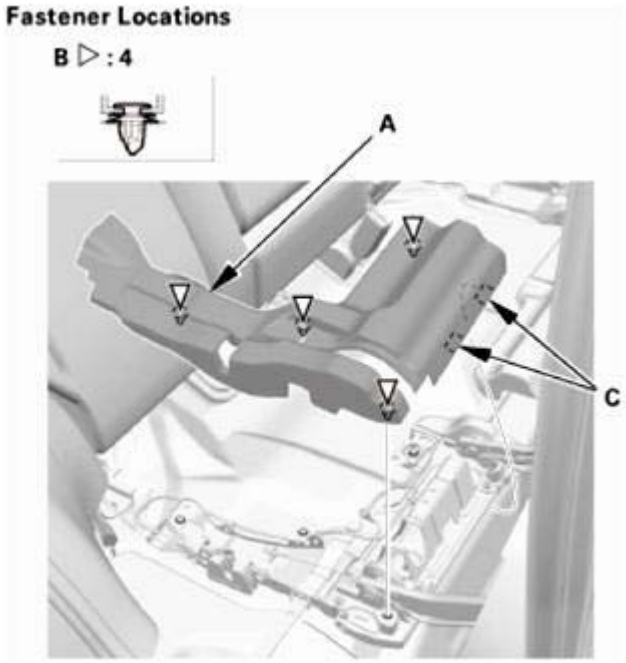

Fig. 725: Identifying Rear Seat Foot Cover, Hooks And Clips (Right Side)
Courtesy of AMERICAN HONDA MOTOR CO., INC.

5. Rear Seat-Back

GETtheMANUALS.org

1. Detach the rear seat-back arrange control cable (A) from the cable bracket (B).
2. Detach the cable clip (C), then disconnect the seat-back arrange control cable from the rear seat cushion foot (D).

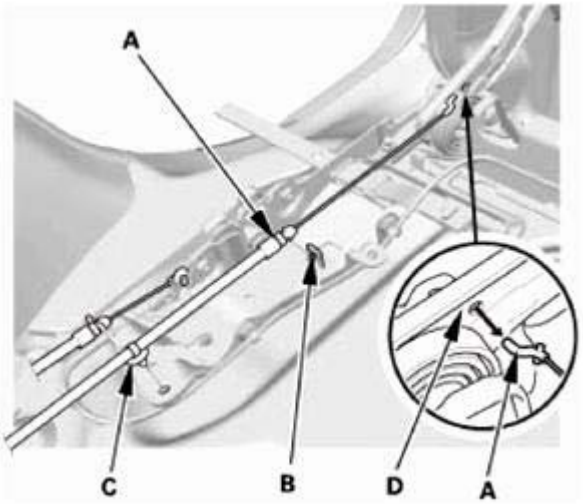

Fig. 726: Disconnecting Seat-Back Arrange Control Cable From Rear Seat Cushion Foot
Courtesy of AMERICAN HONDA MOTOR CO., INC.

3. Pull up the edge of seat-back cover (A), then detach the clips (B).
4. Left Side: Remove the mounting bolts (C), then remove the rear seat-back (D).
5. Right Side: Remove the mounting bolts (C) and the anchor bolt (E), then remove the rear seat-back (F).

Left Side

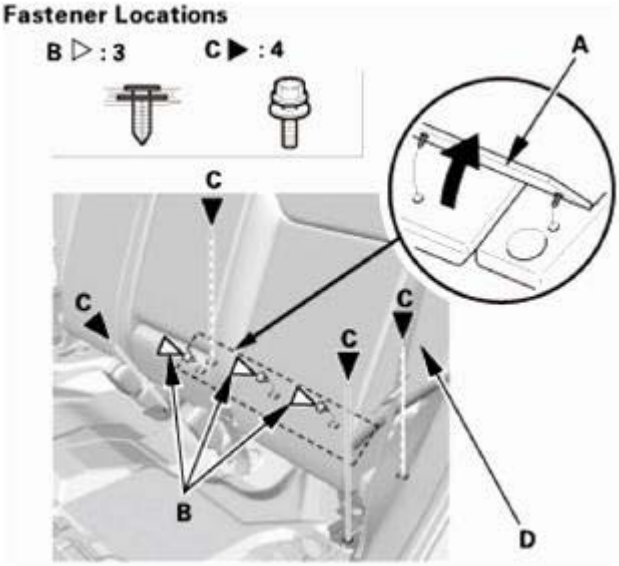

Fig. 727: Removing Rear Seat-Back (Left Side)

GETtheMANUALS.org

Courtesy of AMERICAN HONDA MOTOR CO., INC.

Right Side

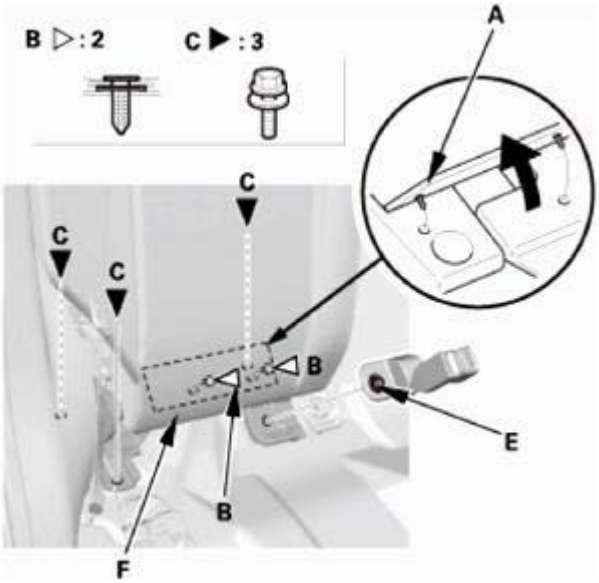

Fig. 728: Removing Rear Seat-Back (Right Side)
Courtesy of AMERICAN HONDA MOTOR CO., INC.

6. Rear Seat Head Restraint - Left Side

Left Rear Head Restraint

1. Push a flat-tip screwdriver (A) into the notch at the center of the knob (B) to release the tab (C).

GETtheMANUALS.org

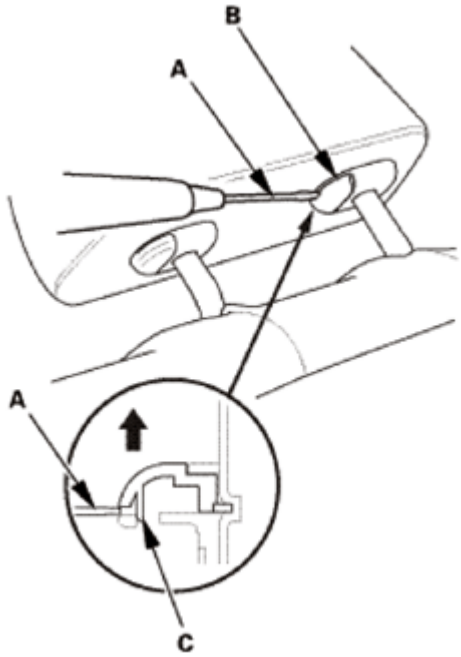

Fig. 729: Removing Rear Seat Head Restraint Using Flat-Tip Screwdriver
Courtesy of AMERICAN HONDA MOTOR CO., INC.

2. Insert a 5 mm (0.2 in) thickness flat-tip screwdriver in one side of the notch on both sides of the knob (A), then the knob is moved out about 2 mm (0.08 in).
3. Push and hold the knob (B), then pull out the head restraint (C) as shown.

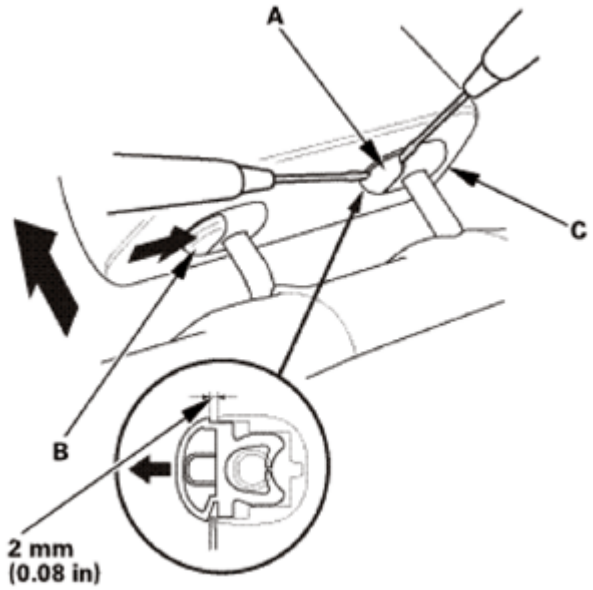

Fig. 730: Pulling Rear Seat Head Restraint
Courtesy of AMERICAN HONDA MOTOR CO., INC.

Center Rear Head Restraint

GETtheMANUALS.org

1. Push and hold the knob (A), then pull out the head restraint (B) as shown.

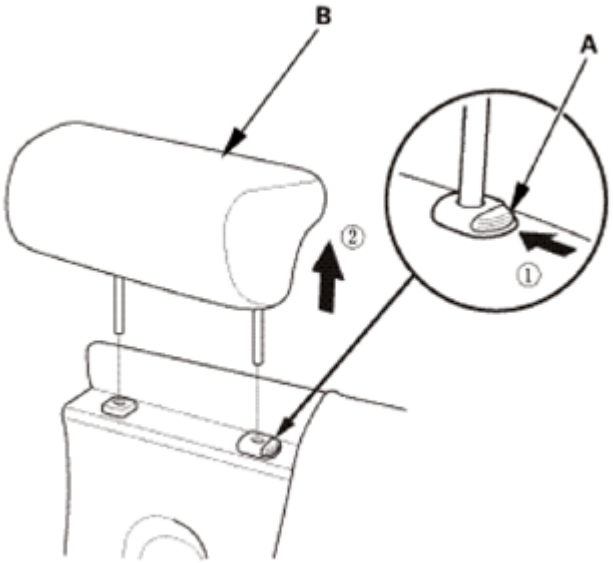

Fig. 731: Pulling Center Rear Head Restraint
Courtesy of AMERICAN HONDA MOTOR CO., INC.

7. Rear Seat Armrest
    1. Release the tab (A), then slide the armrest side cover (B) forward.
    2. Remove the bolt (C) with a 5 mm hex wrench.

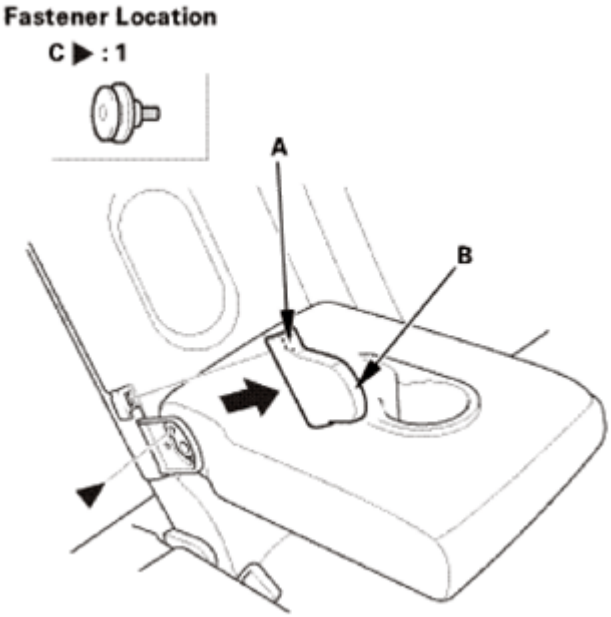

Fig. 732: Sliding Armrest Side Cover Forward
Courtesy of AMERICAN HONDA MOTOR CO., INC.

GETtheMANUALS.org

3. Slide the armrest (A) toward the left side.
4. Remove the right pivot shaft (B) from the friction plate (C).

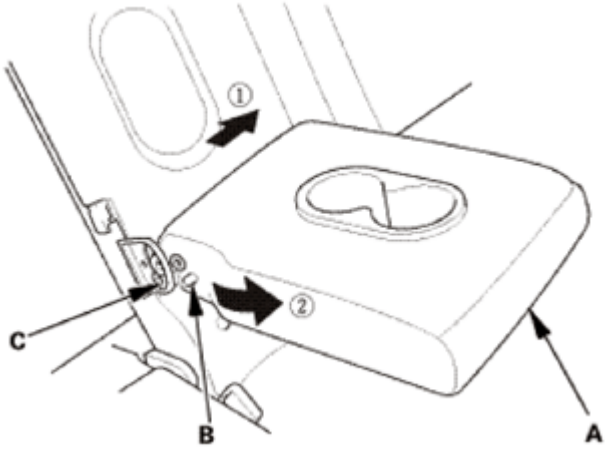

Fig. 733: Removing Right Pivot Shaft From Friction Plate
Courtesy of AMERICAN HONDA MOTOR CO., INC.

5. Slide the armrest (A) toward the right side.
6. Release the left pivot shaft (B) from the collar (C).
7. Pull up the armrest, then pull out the armrest shaft (D) from the rear seat-back frame (E), then remove the armrest.

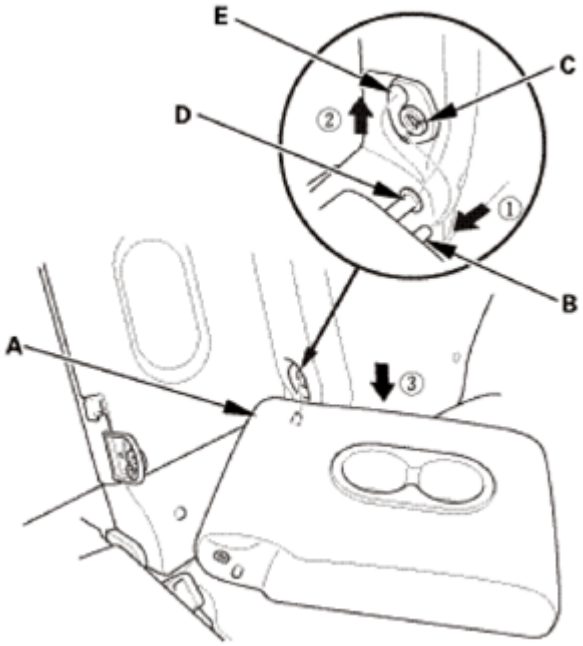

Fig. 734: Removing Armrest
Courtesy of AMERICAN HONDA MOTOR CO., INC.

GETtheMANUALS.org

8. Remove the collar (A), the inner friction plate (B), and the outer friction plate (C) from the rear seat-back frame.

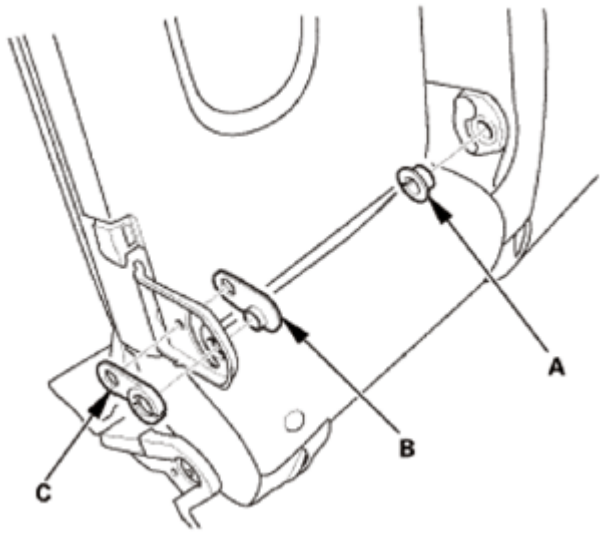

Fig. 735: Identifying Rear Seat-Back Frame Collar, Inner And Outer Friction Plate
Courtesy of AMERICAN HONDA MOTOR CO., INC.

8. Rear Seat-Back Latch Cover - Left Side
    1. Detach the clips (A) securing the latch cover (B), and pull out the cover to detach the hooks (C).

GETtheMANUALS.org

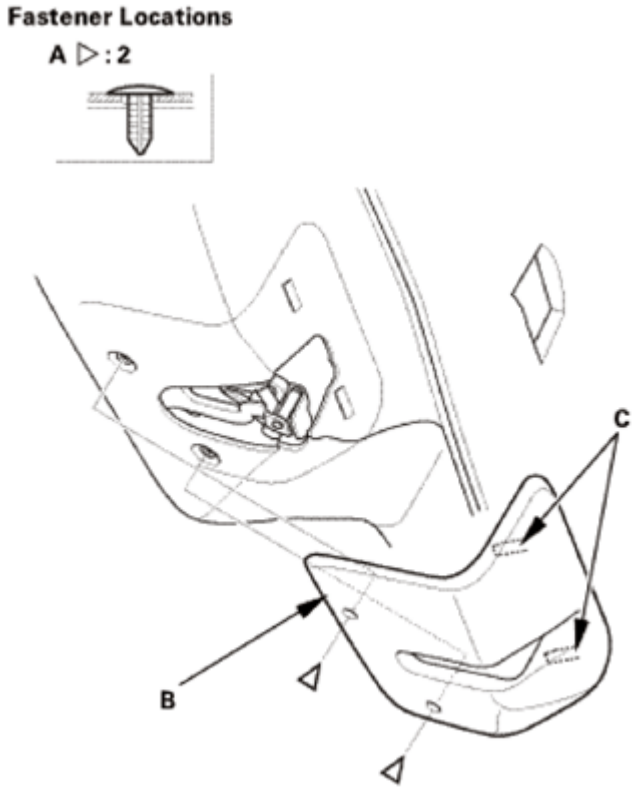

Fig. 736: Identifying Rear Seat-Back Latch Cover, Hooks And Clips
Courtesy of AMERICAN HONDA MOTOR CO., INC.

9. Rear Seat-Back Cover - Left Side
    1. Release the hooks (A), then remove the tether anchor cover (B).

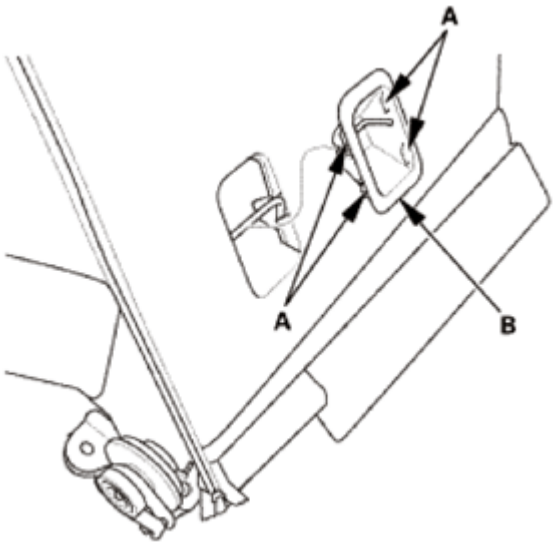

Fig. 737: Identifying Tether Anchor Cover And Hooks
Courtesy of AMERICAN HONDA MOTOR CO., INC.

GETtheMANUALS.org

2. Release the hooks (A), then pull up the armrest back panel (B).

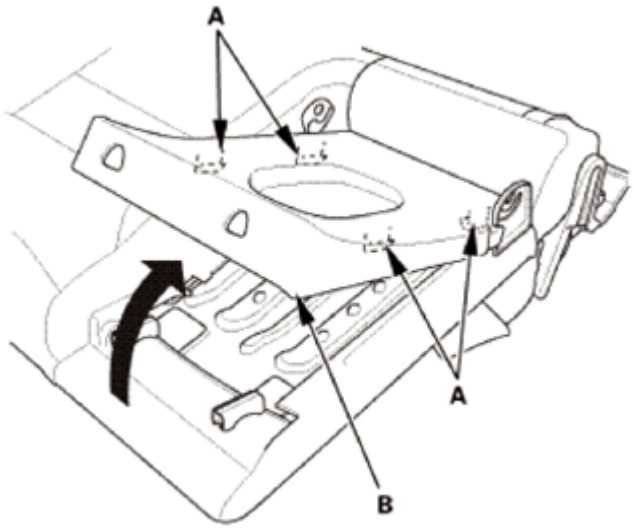

Fig. 738: Removing Armrest Back Panel
Courtesy of AMERICAN HONDA MOTOR CO., INC.

3. Remove the armrest back panel (A) from the hook strip (B).

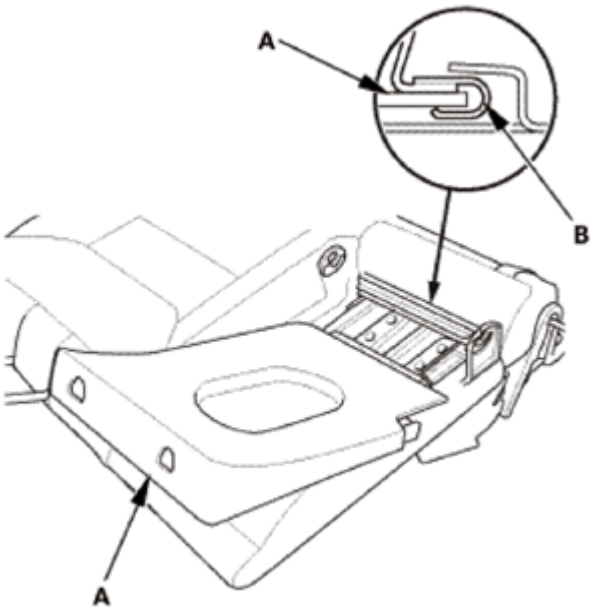

Fig. 739: Identifying Armrest Back Panel And Hook Strip
Courtesy of AMERICAN HONDA MOTOR CO., INC.

4. Remove the screw (A), while pulling the lock knob (B) out.
5. Pull out the lock knob trim (C).

GETtheMANUALS.org

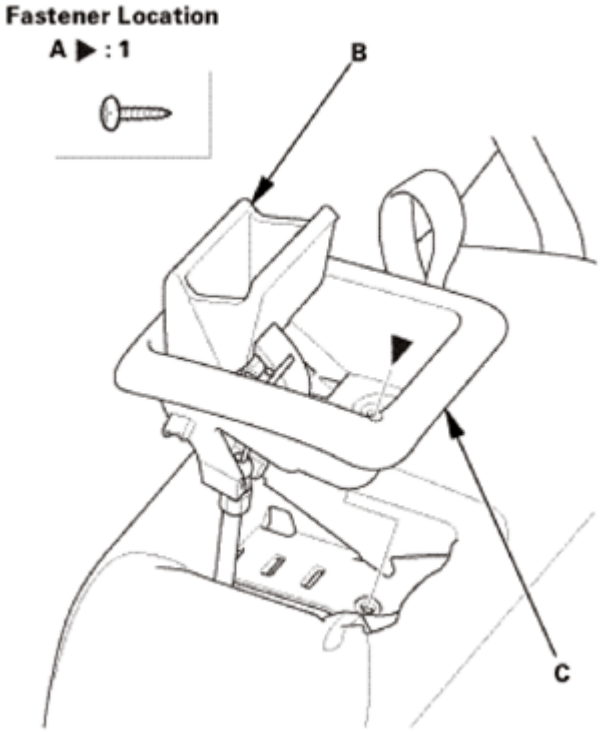

Fig. 740: Identifying Lock Knob, Trim And Screw
Courtesy of AMERICAN HONDA MOTOR CO., INC.

6. Detach the rear seat-back lock knob control cable (A) from the cable bracket (B).
7. Disconnect the rear seat-back lock knob control cable from the lock knob trim (C).

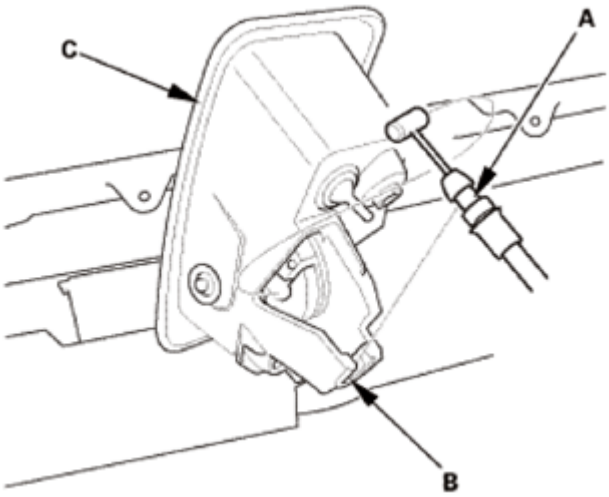

Fig. 741: Identifying Rear Seat-Back Lock Knob Control Cable, Bracket And Lock Knob Trim
Courtesy of AMERICAN HONDA MOTOR CO., INC.

8. Release the hooks (A) on the strap cover (B).

GETtheMANUALS.org

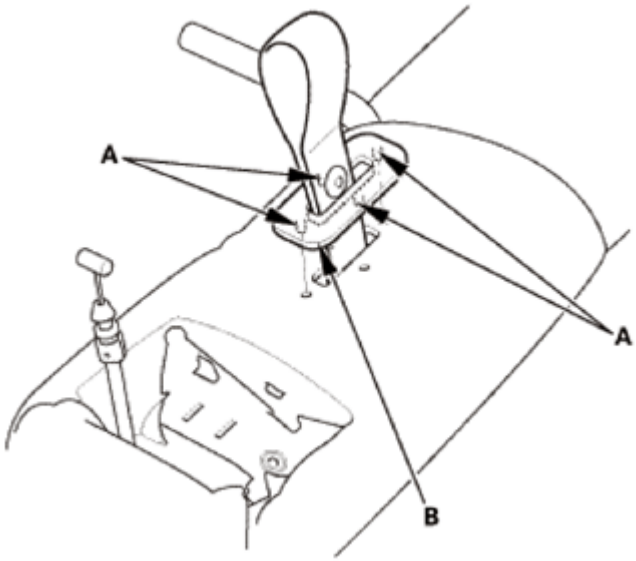

Fig. 742: Identifying Strap Cover And Hooks
Courtesy of AMERICAN HONDA MOTOR CO., INC.

9. Remove the bolt (A) with a 6 mm hex wrench.
10. Remove the washer (B), the left rear seat inner pivot (C), and the bushing (D).

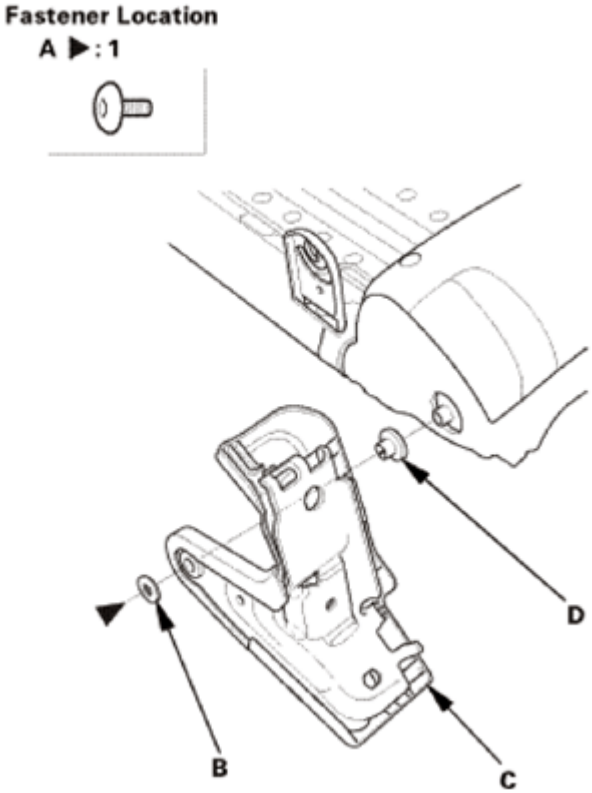

Fig. 743: Identifying Left Rear Seat Inner Pivot, Bushing, Washer And Bolt
Courtesy of AMERICAN HONDA MOTOR CO., INC.

GETtheMANUALS.org

11. Release the hooks (A), then remove the covers (B) from the left rear seat inner pivot (C).

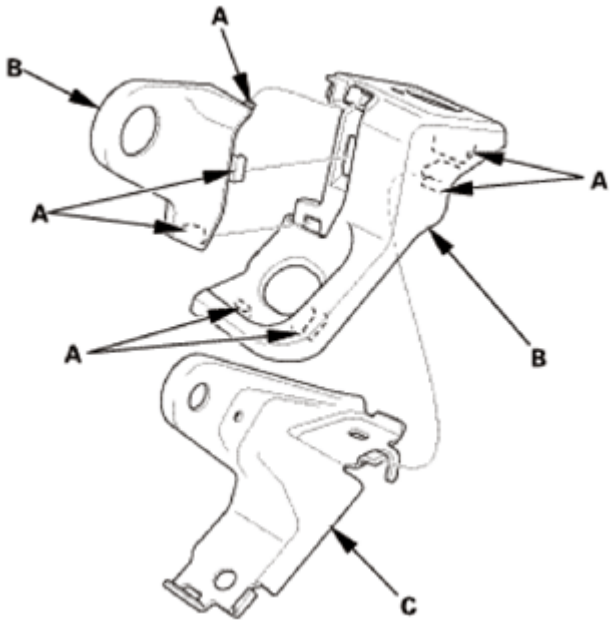

Fig. 744: Identifying Left Rear Seat Inner Pivot, Covers And Hooks
Courtesy of AMERICAN HONDA MOTOR CO., INC.

12. Release the hook strips (A) from the rear seat-back frame (B).
13. Release the hook and loop fastener (C).

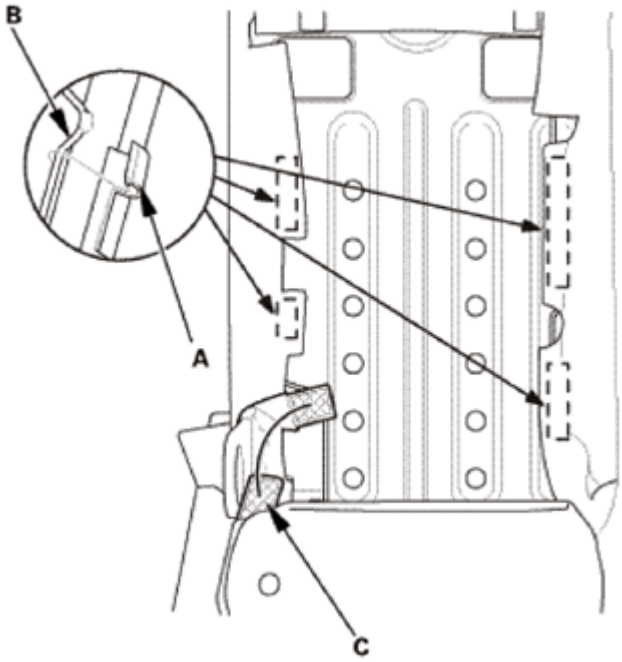

Fig. 745: Identifying Rear Seat-Back Frame, Fastener And Hook Strips

GETtheMANUALS.org

Courtesy of AMERICAN HONDA MOTOR CO., INC.

14. Remove the push nut (A), then disconnect the rear seat-back cancel control cable (B) from the left rear seat cushion pivot (C).
15. Pull out the rear seat arrange control cable (D) through the hole (E) in the rear seat-back cover (F).

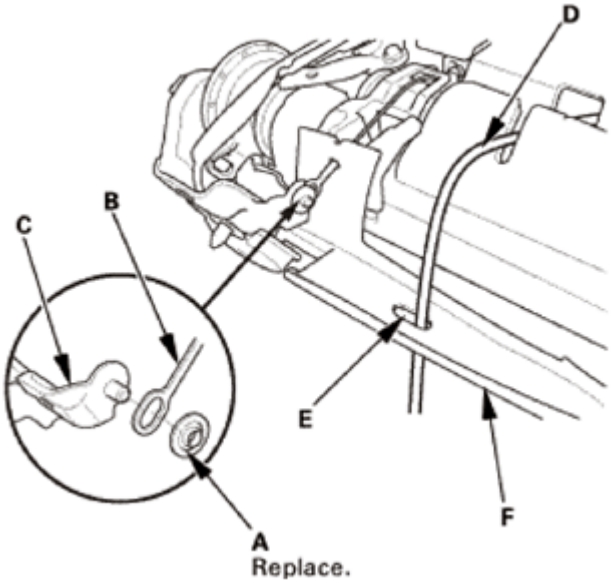

Fig. 746: Identifying Rear Seat-Back Cancel Control Cable, Seat Cushion Pivot, Seat Arrange Control Cable, Cover And Nut
Courtesy of AMERICAN HONDA MOTOR CO., INC.

16. Release the hook (A).
17. Release the hook and loop fastener (B).

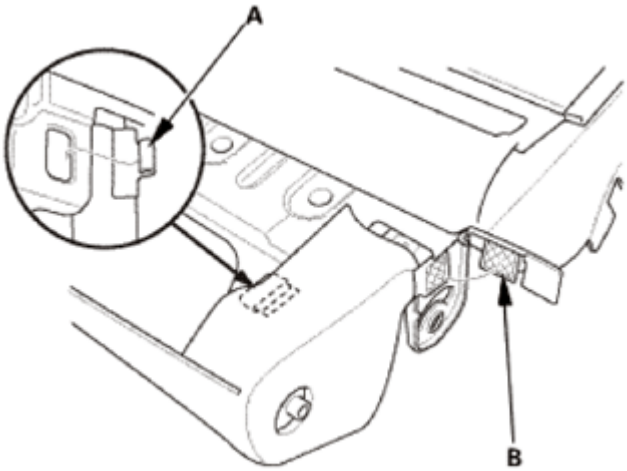

Fig. 747: Identifying Hook And Loop Fastener And Hooks
Courtesy of AMERICAN HONDA MOTOR CO., INC.

GETtheMANUALS.org

18. Detach the rear seat-back cover (A) from the hooks (B) of the rear seat-back inner trim (C).

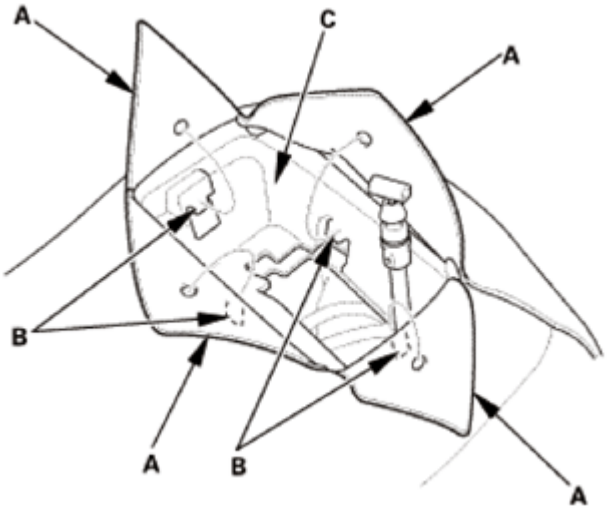

Fig. 748: Identifying Rear Seat-Back Cover, Trim And Hooks
Courtesy of AMERICAN HONDA MOTOR CO., INC.

19. Unzip the rear seat-back cover (A).
20. Release the hook strips (B).

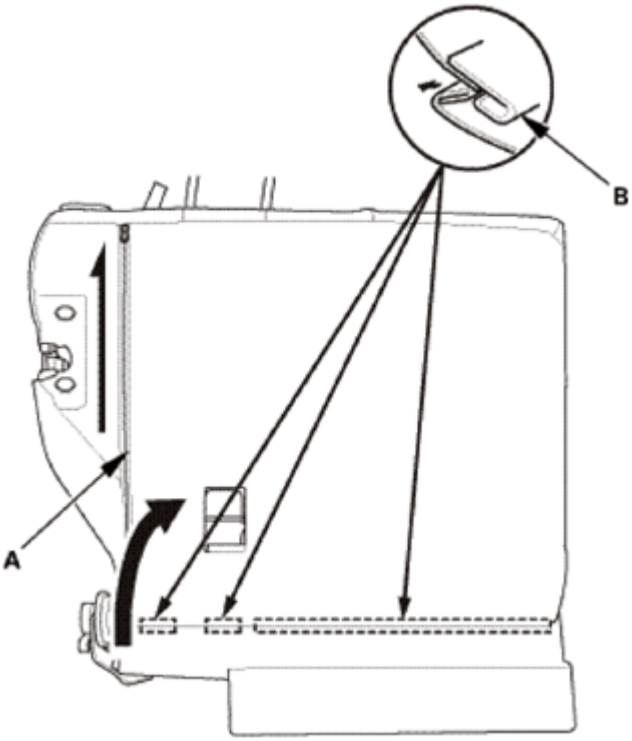

Fig. 749: Removing Rear Seat-Back Cover
Courtesy of AMERICAN HONDA MOTOR CO., INC.

GETtheMANUALS.org

21. Pinch the tabs (A) on the end of the head restraint guides (B), and remove the guides from the rear seat-back frame.

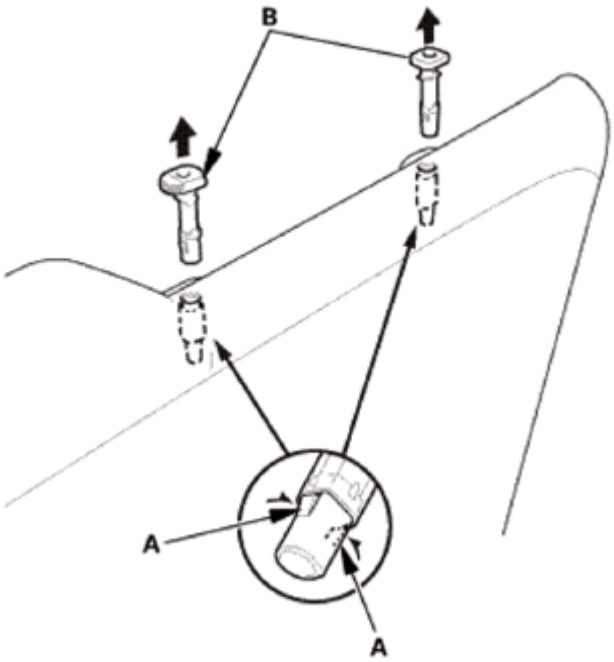

Fig. 750: Removing Guides From Seat-Back
Courtesy of AMERICAN HONDA MOTOR CO., INC.

22. Detach the clip (A) from the rear seat-back frame (B), then remove the seat-back cover/pad (C).

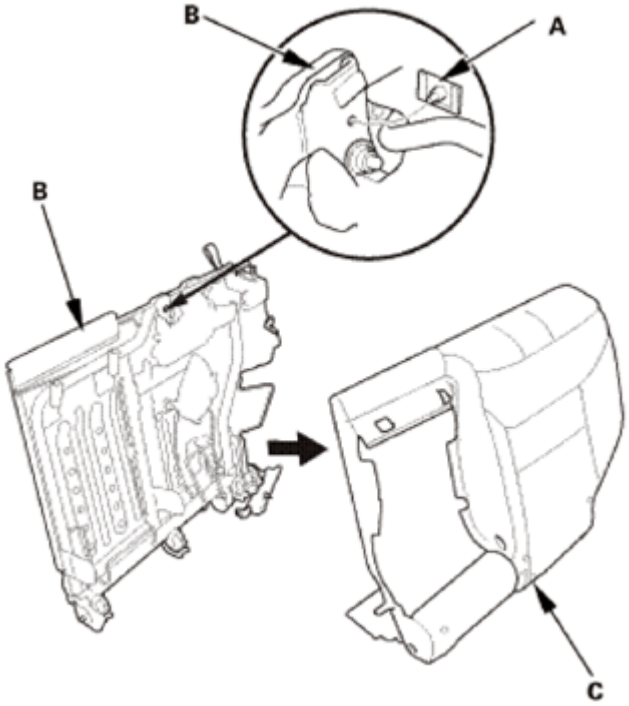

GETtheMANUALS.org

Fig. 751: Removing Seat-Back Cover/Pad
Courtesy of AMERICAN HONDA MOTOR CO., INC.

23. While pulling back the rear seat-back cover (A), release the upholstery rings (B), then remove the rear seat-back cover.

Leather Seat

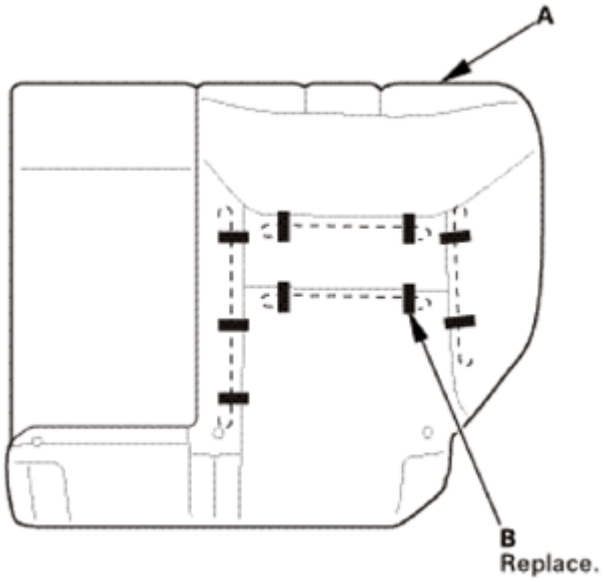

Fig. 752: Identifying Seat Cushion Cover And Upholstery Rings (Leather Seat)
Courtesy of AMERICAN HONDA MOTOR CO., INC.

Fabric Seat

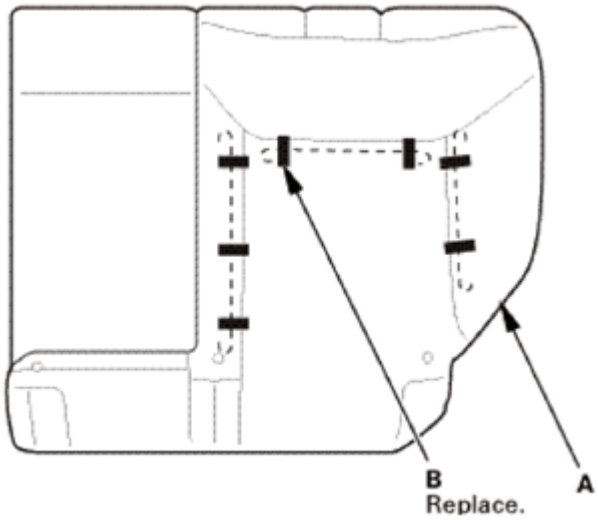

Fig. 753: Identifying Seat Cushion Cover And Upholstery Rings (Fabric Seat)
Courtesy of AMERICAN HONDA MOTOR CO., INC.

GETtheMANUALS.org

10. Rear Seat Head Restraint - Right Side
    1. Push a flat-tip screwdriver (A) into the notch at the center of the knob (B) to release the tab (C).

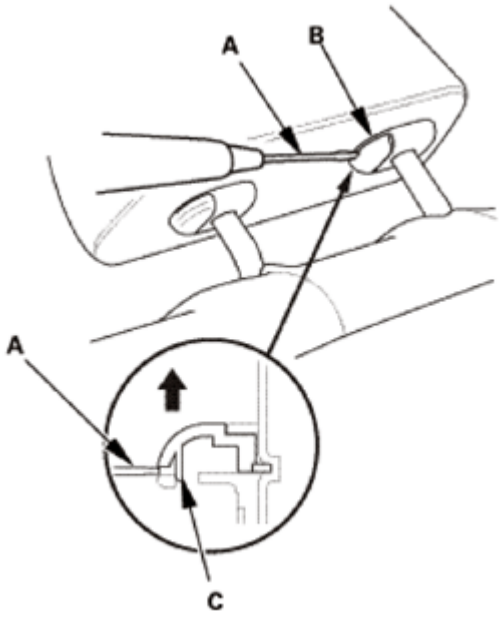

Fig. 754: Pushing Rear Seat Head Restraint Tab Using Flat-Tip Screwdriver
Courtesy of AMERICAN HONDA MOTOR CO., INC.

    2. Insert a 5 mm (0.2 in) thickness flat-tip screwdriver in one side of the notch on both sides of the knob (A), then the knob is moved out about 2 mm (0.08 in).
    3. Push and hold the knob (B), then pull out the head restraint (C) as shown.

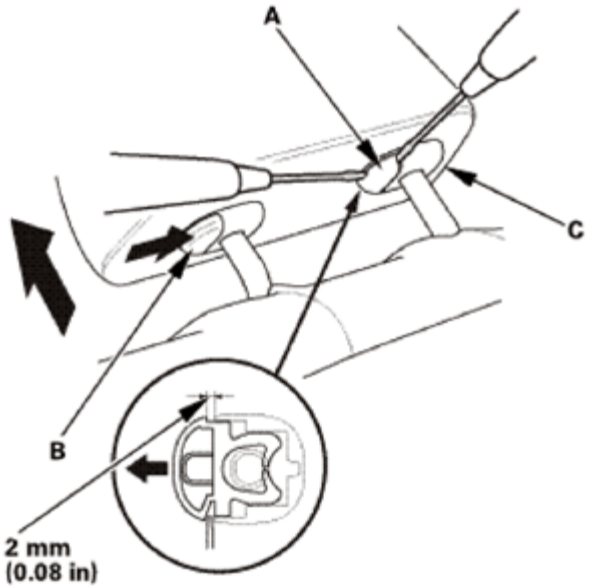

Fig. 755: Pulling Rear Seat Head Restraint

GETtheMANUALS.org

Courtesy of AMERICAN HONDA MOTOR CO., INC.

11. Rear Seat-Back Latch Cover - Right Side
    1. Detach the clips (A) securing the latch cover (B), and pull out the cover to detach the hooks (C).

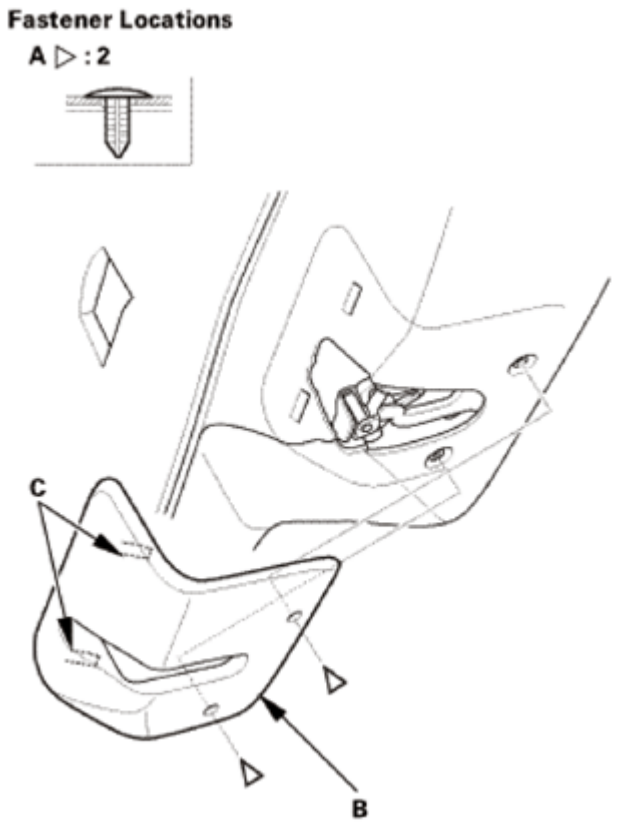

Fig. 756: Identifying Rear Seat-Back Latch Cover, Hooks And Clips
Courtesy of AMERICAN HONDA MOTOR CO., INC.

12. Rear Seat-Back Cover - Right Side
    1. Release the hooks (A), then remove the tether anchor cover (B).

GETtheMANUALS.org

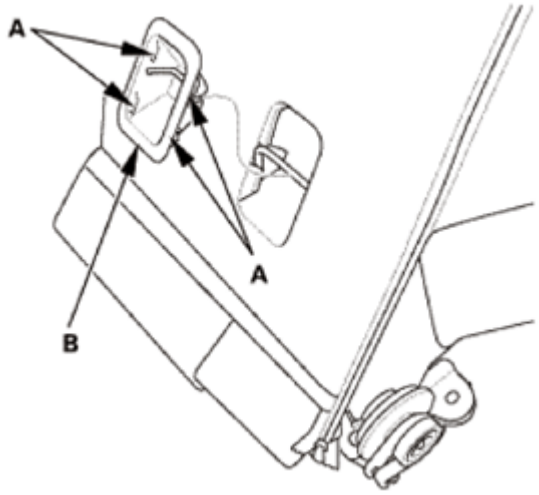

Fig. 757: Identifying Tether Anchor Cover And Hooks
Courtesy of AMERICAN HONDA MOTOR CO., INC.

2. Remove the screw (A), while pulling the lock knob (B) out.
3. Pull out the lock knob trim (C).

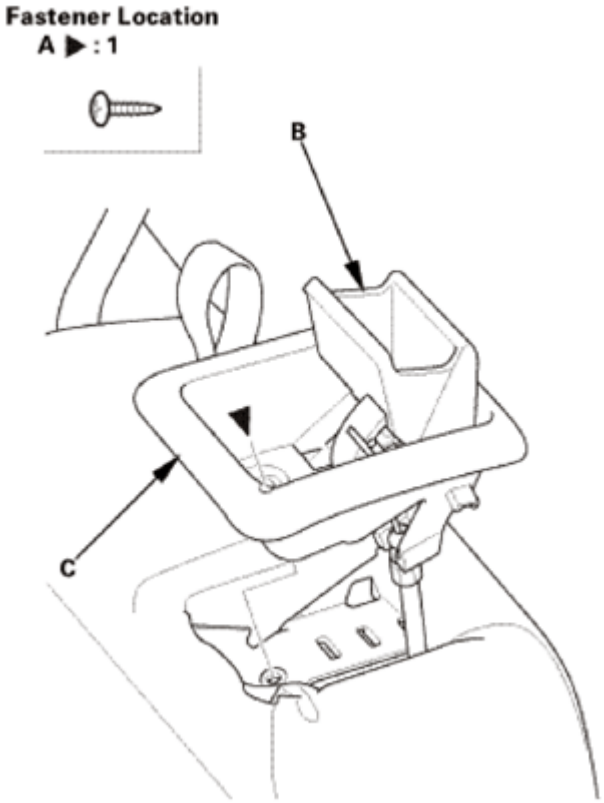

Fig. 758: Identifying Lock Knob, Trim And Screw
Courtesy of AMERICAN HONDA MOTOR CO., INC.

GETtheMANUALS.org

4. Detach the rear seat-back lock knob control cable (A) from the cable bracket (B).
5. Disconnect the rear seat-back lock knob control cable from the lock knob trim (C).

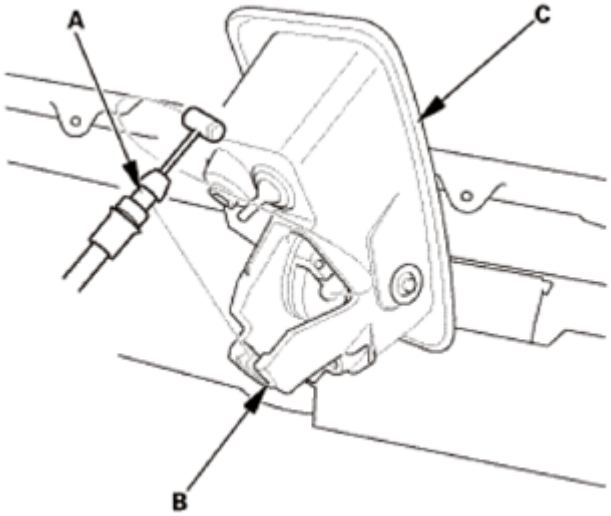

Fig. 759: Identifying Rear Seat-Back Lock Knob Control Cable, Bracket And Lock Knob Trim
Courtesy of AMERICAN HONDA MOTOR CO., INC.

6. Release the hooks (A) on the strap cover (B).

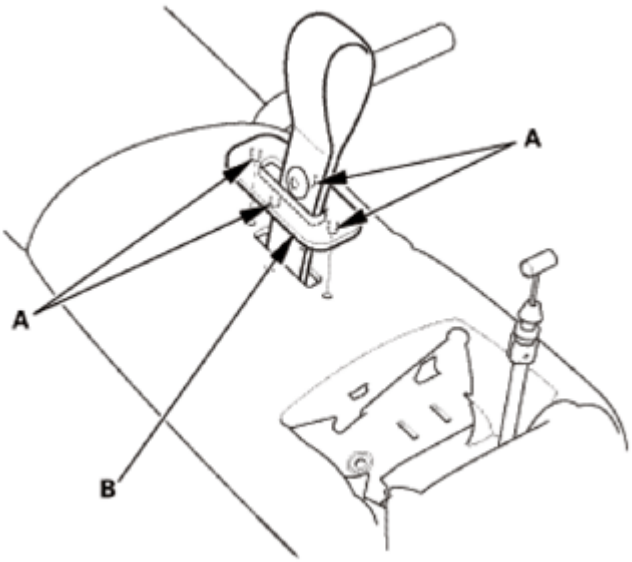

Fig. 760: Identifying Strap Cover And Hooks
Courtesy of AMERICAN HONDA MOTOR CO., INC.

7. Remove the bolt (A) with a 6 mm hex wrench.
8. Remove the washer (B), the right rear seat inner pivot (C), and the bushing (D).

GETtheMANUALS.org

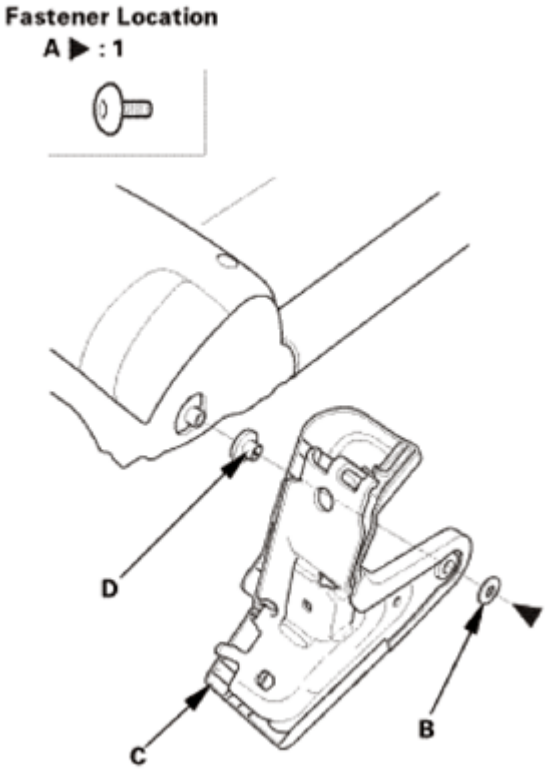

Fig. 761: Identifying Right Rear Seat Inner Pivot, Bushing, Washer And Bolt
Courtesy of AMERICAN HONDA MOTOR CO., INC.

9. Release the hooks (A), then remove the covers (B) from the right rear seat inner pivot (C).

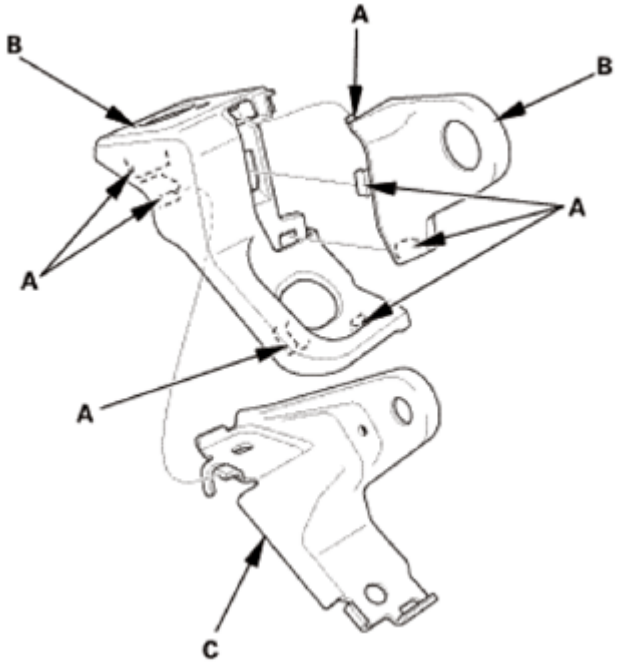

Fig. 762: Identifying Right Rear Seat Inner Pivot, Cover And Hooks

GETtheMANUALS.org

Courtesy of AMERICAN HONDA MOTOR CO., INC.

10. Remove the push nut (A), then disconnect the rear seat-back cancel control cable (B) from the right rear seat cushion pivot (C).
11. Pull out the rear seat arrange control cable (D) through the hole (E) in the rear seat-back cover (F).

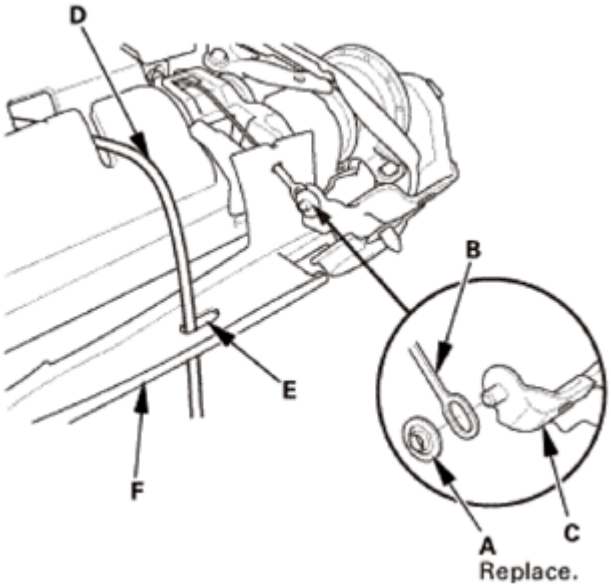

Fig. 763: Identifying Rear Seat-Back Cancel Control Cable, Seat Cushion Pivot, Seat Arrange Control Cable, Cover And Nut
Courtesy of AMERICAN HONDA MOTOR CO., INC.

12. Release the hook (A).
13. Release the hook and loop fastener (B).

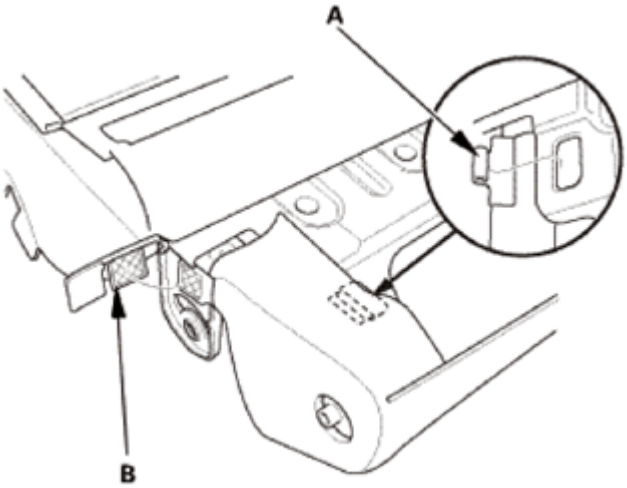

Fig. 764: Identifying Hook And Loop Fastener And Hooks
Courtesy of AMERICAN HONDA MOTOR CO., INC.

GETtheMANUALS.org

14. Detach the rear seat-back cover (A) from the hooks (B) of the rear seat-back inner trim (C).

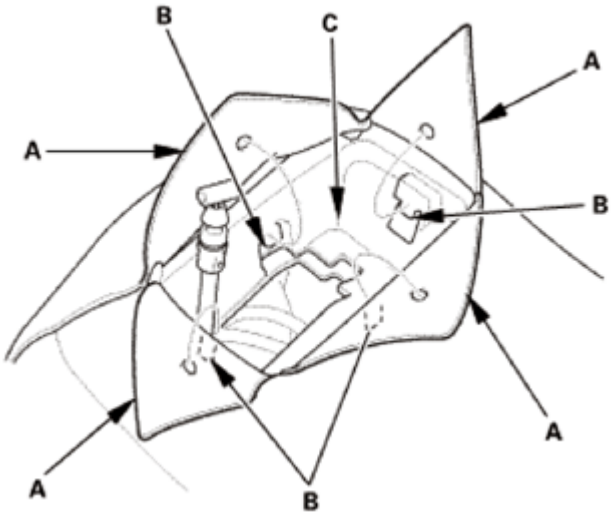

Fig. 765: Identifying Rear Seat-Back Cover, Trim And Hooks
Courtesy of AMERICAN HONDA MOTOR CO., INC.

15. Unzip the rear seat-back cover (A).
16. Release the hook strips (B).

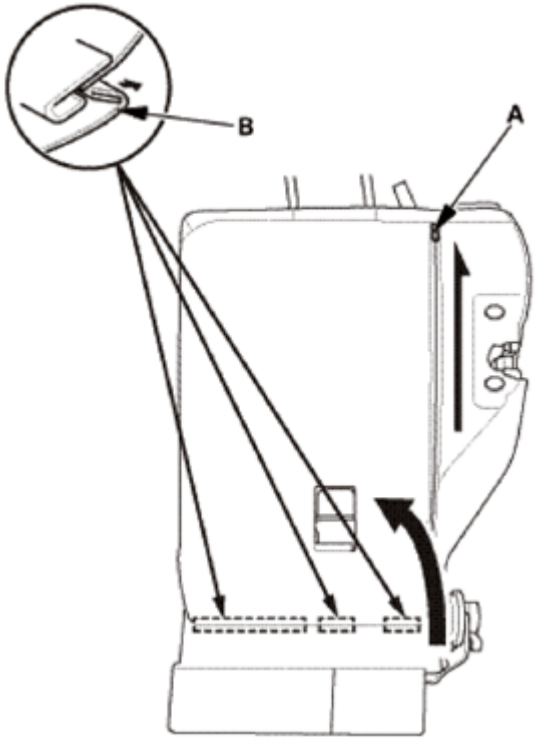

Fig. 766: Removing Rear Seat-Back Cover
Courtesy of AMERICAN HONDA MOTOR CO., INC.

GETtheMANUALS.org

17. Detach the clip (A) from the rear seat-back frame (B), then remove the seat-back cover/pad (C).

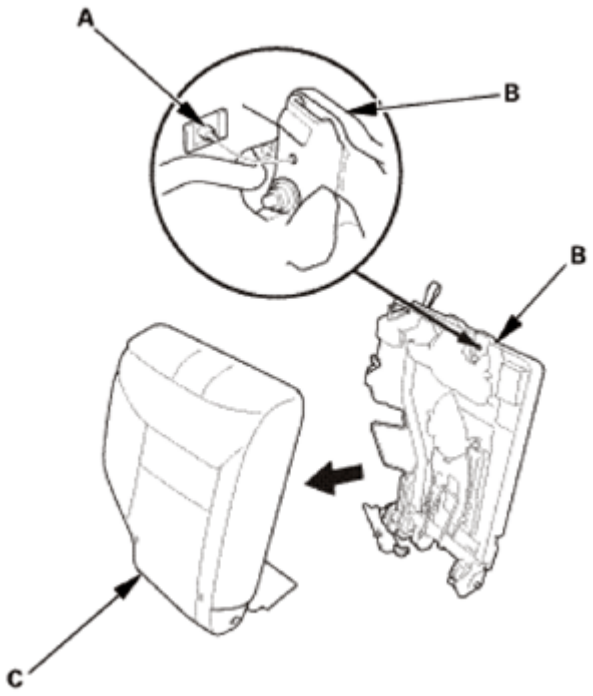

Fig. 767: Removing Seat-Back Cover/Pad
Courtesy of AMERICAN HONDA MOTOR CO., INC.

18. While pulling back the rear seat-back cover (A), release the upholstery rings (B), then remove the rear seat-back cover.

Leather Seat

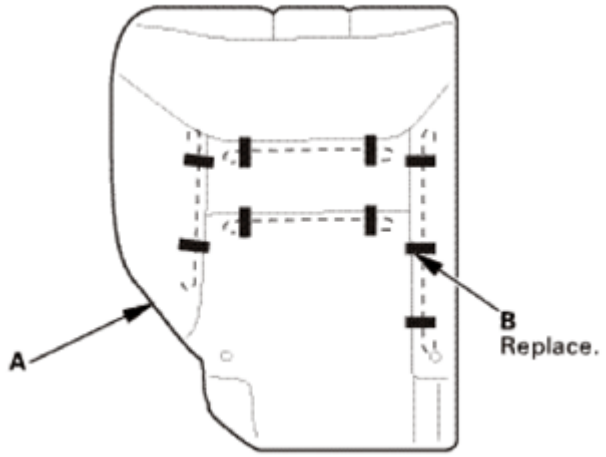

Fig. 768: Identifying Seat Cushion Cover And Upholstery Rings (Leather Seat)
Courtesy of AMERICAN HONDA MOTOR CO., INC.

GETtheMANUALS.org

Fabric Seat

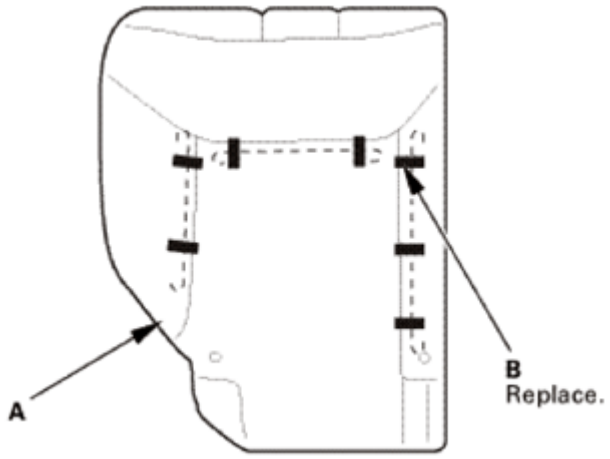

Fig. 769: Identifying Seat Cushion Cover And Upholstery Rings (Fabric Seat)
Courtesy of AMERICAN HONDA MOTOR CO., INC.

INSTALLATION

NOTE: Steps 1-3 show installing the right side, steps 4-7 show installing the left side.

1. Rear Seat-Back Cover - Right Side

NOTE: Replace all of the upholstery rings (A) fastening the seatback cover (B) to the pad wires (C) with new ones using commercially available upholstery ring pliers (D).

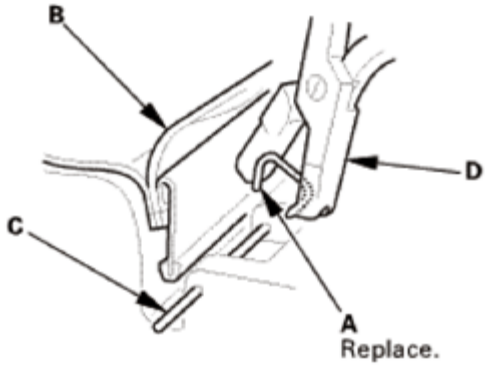

Fig. 770: Removing Seat Cushion Cover To Pad Wires Fastening Upholstery Ring Using Tool
Courtesy of AMERICAN HONDA MOTOR CO., INC.

1. Install the upholstery rings (B) securing the rear seat-back cover (A).

Leather Seat

GETtheMANUALS.org

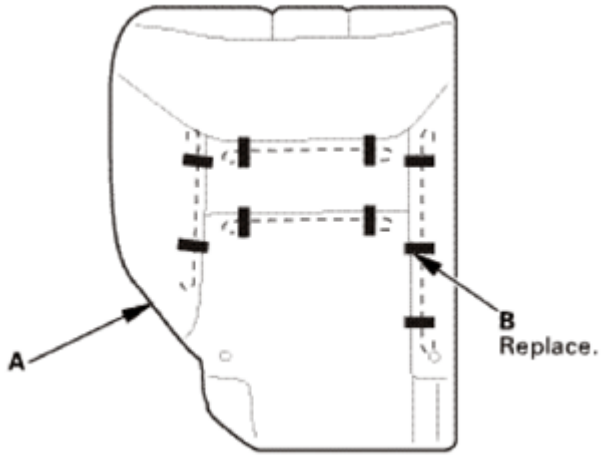

Fig. 771: Identifying Seat Cushion Cover And Upholstery Rings (Leather Seat)
Courtesy of AMERICAN HONDA MOTOR CO., INC.

Fabric Seat

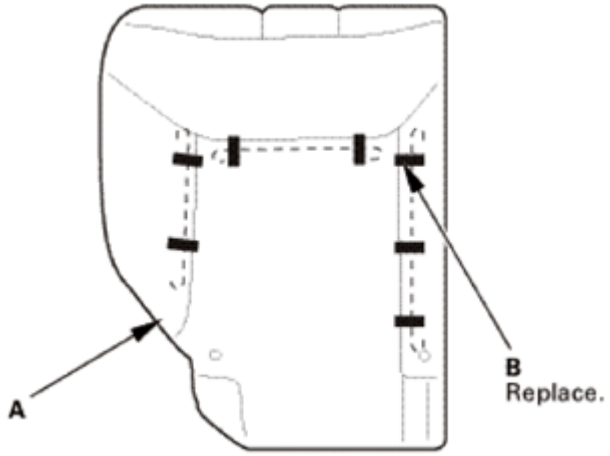

Fig. 772: Identifying Seat Cushion Cover And Upholstery Rings (Fabric Seat)
Courtesy of AMERICAN HONDA MOTOR CO., INC.

2. Install the rear seat-back cover/pad (A) to the rear seat-back frame (B). Make sure the clip (C) snaps into place securely.

GETtheMANUALS.org

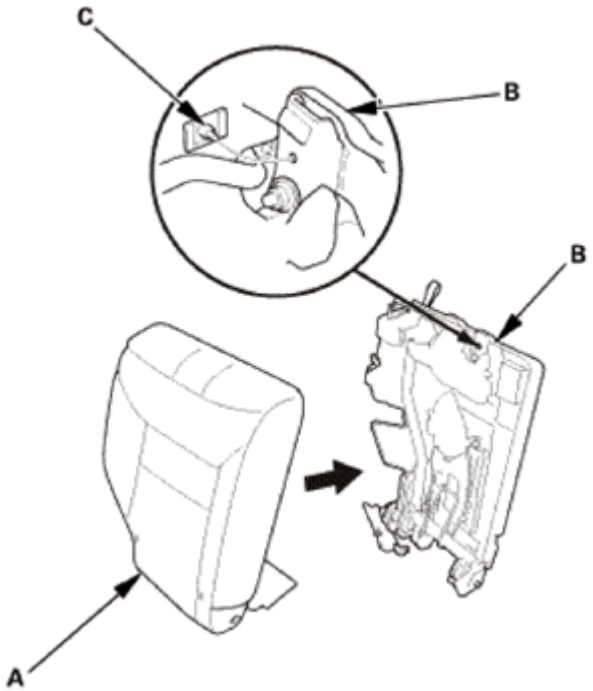

Fig. 773: Installing Rear Seat-Back Cover/Pad To Rear Seat-Back Frame
Courtesy of AMERICAN HONDA MOTOR CO., INC.

3. Zip the rear seat-back cover (A).
4. Install the hook strips (B) into place securely.

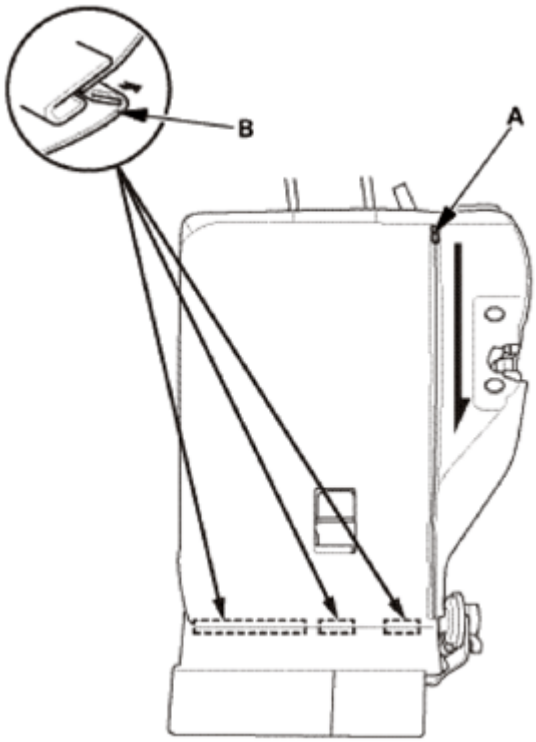

GETtheMANUALS.org

Fig. 774: Installing Rear Seat-Back Cover
Courtesy of AMERICAN HONDA MOTOR CO., INC.

5. Install the holes (A) to the hooks (B) of the seat-back inner trim (C).

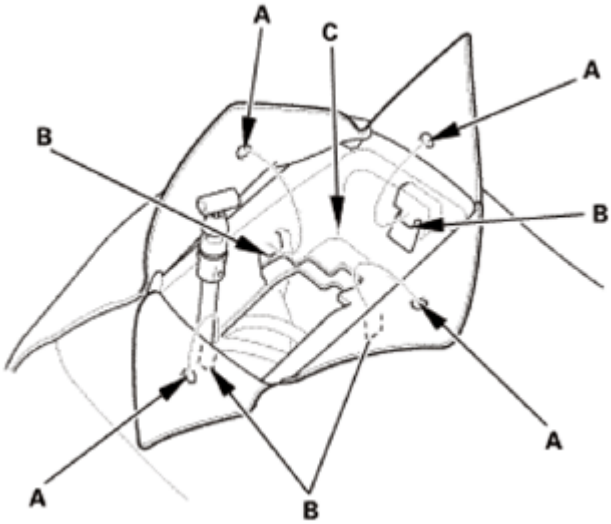

Fig. 775: Identifying Seat-Back Inner Trim, Hooks And Holes
Courtesy of AMERICAN HONDA MOTOR CO., INC.

6. Install the hook and loop fastener (A) into place securely.
7. Install the hook (B) into place securely.

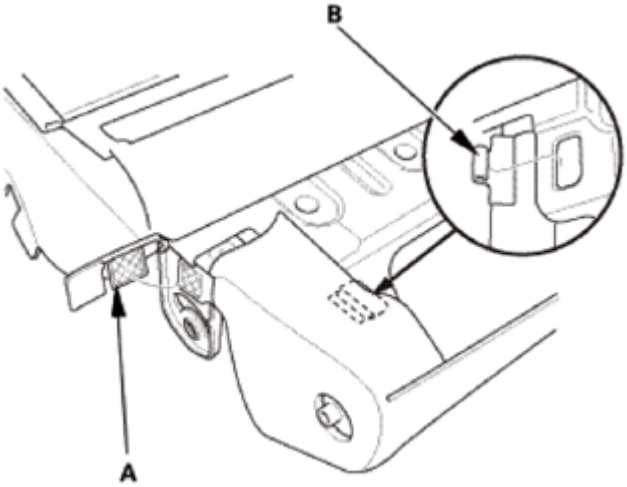

Fig. 776: Identifying Rear Seat-Back Cover Hook And Loop Fastener And Hook
Courtesy of AMERICAN HONDA MOTOR CO., INC.

8. Install the rear seat-back cancel control cable (A) to the right rear seat cushion pivot (B), then install the push nut (C).
9. Install the rear seat arrange control cable (D) through the hole (E) in the rear seat-back cover (F).

GETtheMANUALS.org

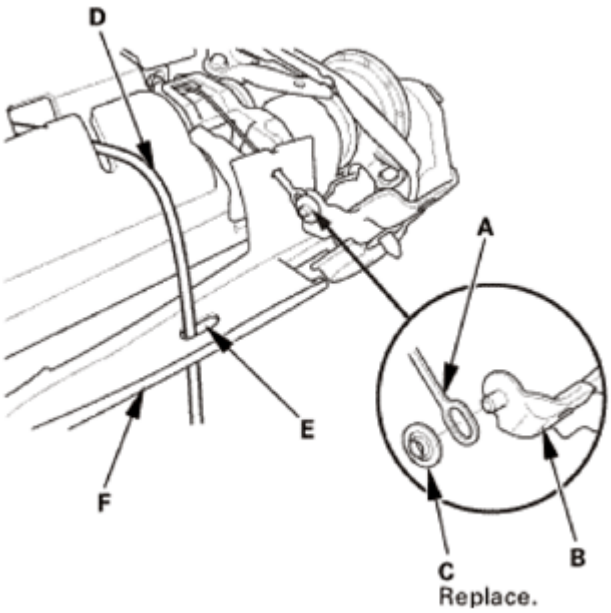

Fig. 777: Identifying Rear Seat-Back Cancel Control Cable, Right Rear Seat Cushion Pivot, Push Nut And Related Components
Courtesy of AMERICAN HONDA MOTOR CO., INC.

10. Install the covers (A) to the right rear seat pivot (B). Make sure the hooks (C) snap into place securely.

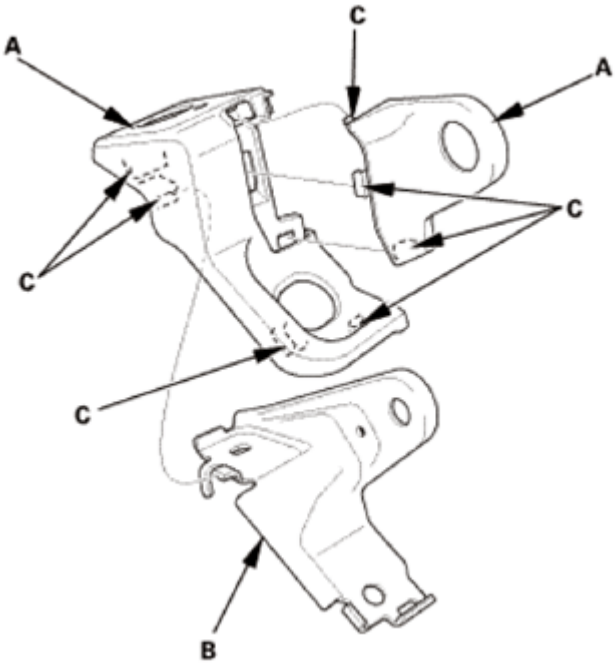

Fig. 778: Identifying Right Rear Seat Pivot, Covers And Hooks
Courtesy of AMERICAN HONDA MOTOR CO., INC.

GETtheMANUALS.org

11. Apply oil to the pivot bushing (A).
12. Install the pivot bushing, the right rear seat inner pivot (B), and the washer (C).
13. Install the bolt (D) with a 6 mm hex wrench.

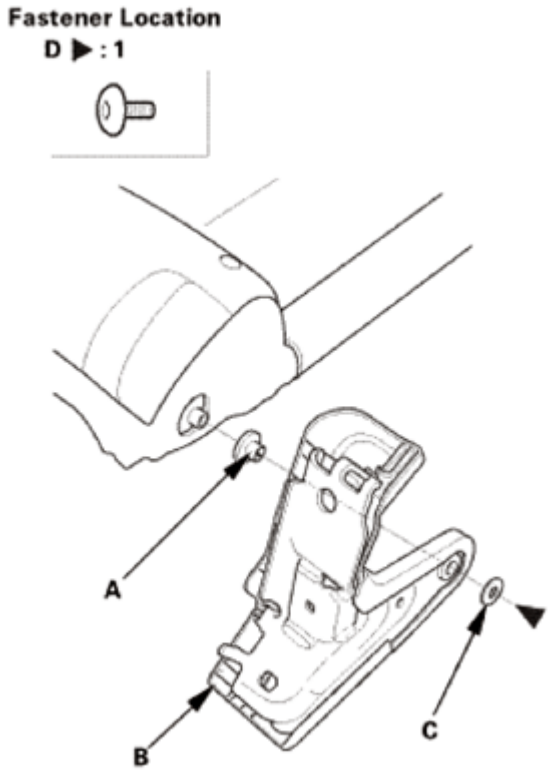

Fig. 779: Identifying Right Rear Seat Inner Pivot, Bushing, Washer And Bolt
Courtesy of AMERICAN HONDA MOTOR CO., INC.

14. Install the strap cover (A). Make sure the hooks (B) snap into place securely.

GETtheMANUALS.org

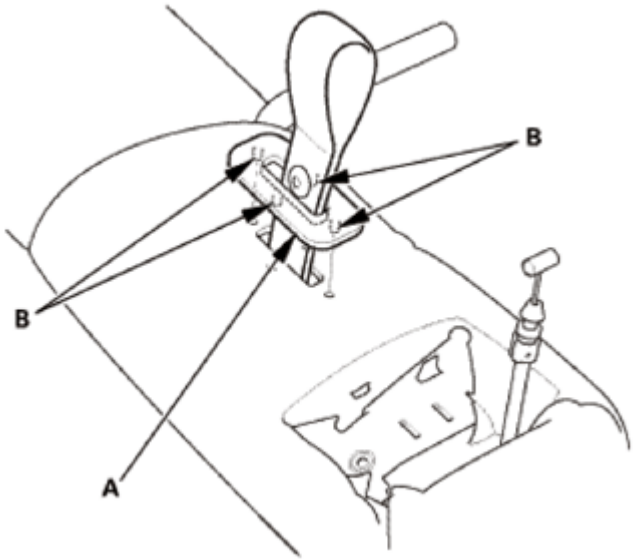

Fig. 780: Identifying Strap Cover And Hooks
Courtesy of AMERICAN HONDA MOTOR CO., INC.

15. Connect the rear seat-back lock knob control cable (A) to the lock knob trim (B).
16. Install the rear seat-back lock knob control cable to the cable bracket (C).

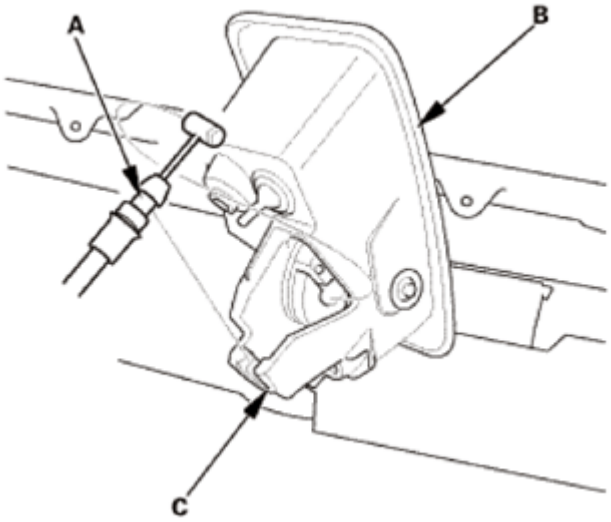

Fig. 781: Identifying Rear Seat-Back Lock Knob Control Cable And Bracket
Courtesy of AMERICAN HONDA MOTOR CO., INC.

17. Install the lock knob trim (A).
18. Install the screw (B), while pulling up the lock knob (C).

GETtheMANUALS.org

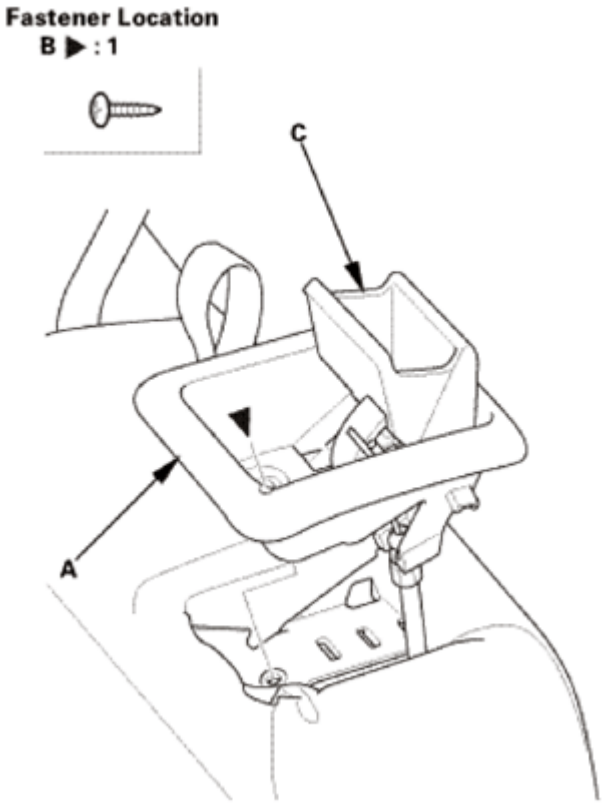

Fig. 782: Identifying Lock Knob Trim, Lock Knob And Screws
Courtesy of AMERICAN HONDA MOTOR CO., INC.

19. Install the tether anchor cover (A). Make sure the hooks (B) snap into place securely.

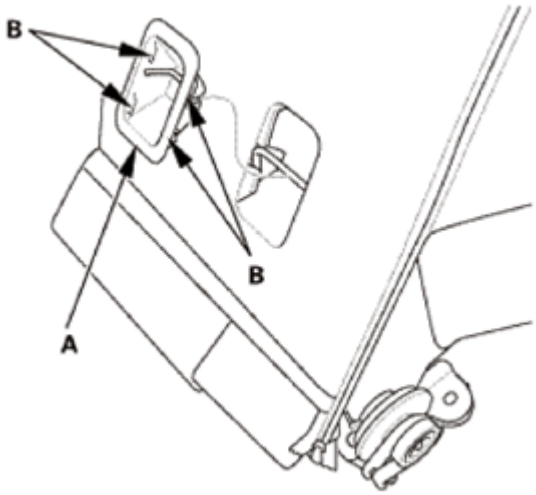

Fig. 783: Identifying Tether Anchor Cover And Hooks
Courtesy of AMERICAN HONDA MOTOR CO., INC.

2. Rear Seat-Back Latch Cover - Right Side

GETtheMANUALS.org

1. Install the right rear seat latch cover (A). Make sure the hooks (B) and the clips (C) snap into place securely.

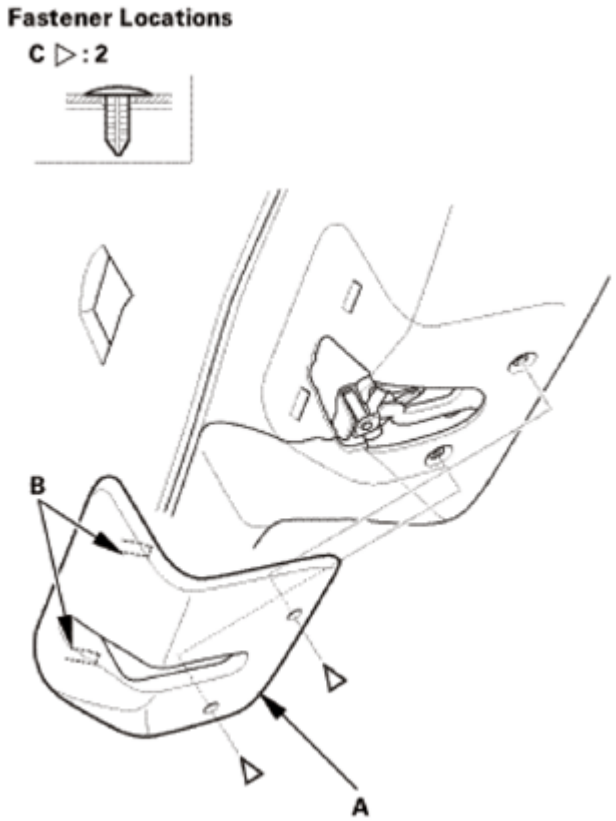

Fig. 784: Identifying Right Rear Seat Latch Cover, Hooks And Clips
Courtesy of AMERICAN HONDA MOTOR CO., INC.

3. Rear Seat Head Restraint
    1. Inspect the knob (A) if it has any of the following damage:
        - Any cracks or deformation at the tab (B) of the knob.
        - Any cracks or stress-whitening at the tab (B) of the knob.

GETtheMANUALS.org

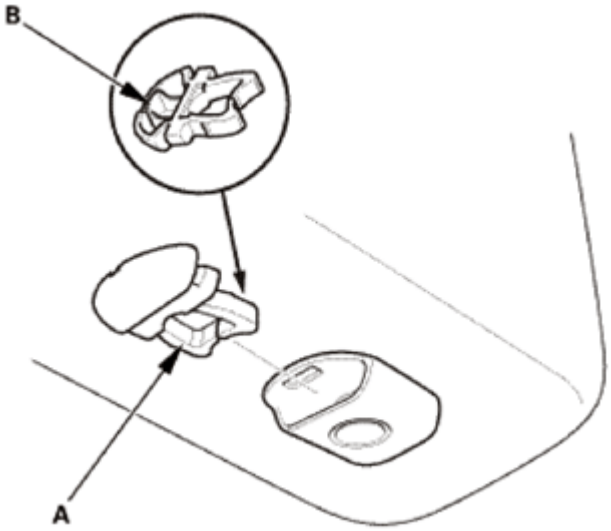

Fig. 785: Identifying Rear Seat Head Restraint Knob And Tab
Courtesy of AMERICAN HONDA MOTOR CO., INC.

2. Insert the knob (A) to the head restraint (B) as shown.
3. Install the head restraint.

NOTE: **Make sure the head restraint is locked securely. If not, replace the head restraint.**

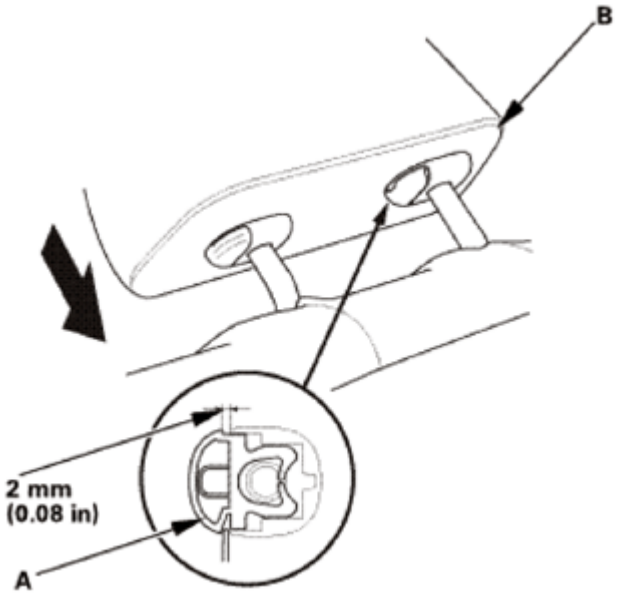

Fig. 786: Installing Head Restraint
Courtesy of AMERICAN HONDA MOTOR CO., INC.

4. Rear Seat-Back Cover - Left Side

GETtheMANUALS.org

NOTE: **Replace all of the upholstery rings (A) fastening the seatback cover (B) to the pad wires (C) with new ones using commercially available upholstery ring pliers (D).**

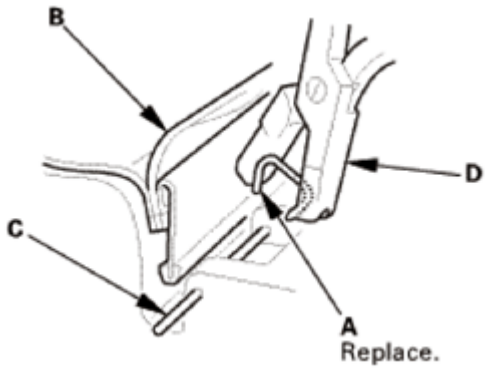

Fig. 787: Removing Seat Back Cover To Pad Wires Fastening Upholstery Ring Using Tool
Courtesy of AMERICAN HONDA MOTOR CO., INC.

1. Install the upholstery rings (B) securing the rear seat-back cover (A).

Leather Seat

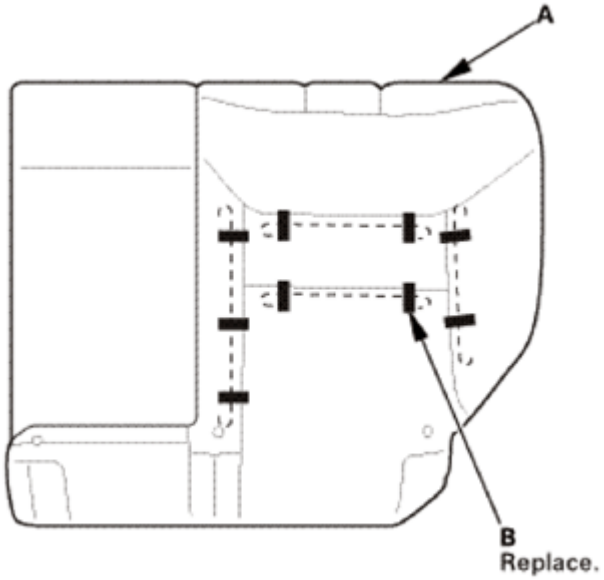

Fig. 788: Identifying Seat Cushion Cover And Upholstery Rings (Leather Seat)
Courtesy of AMERICAN HONDA MOTOR CO., INC.

Fabric seat

GETtheMANUALS.org

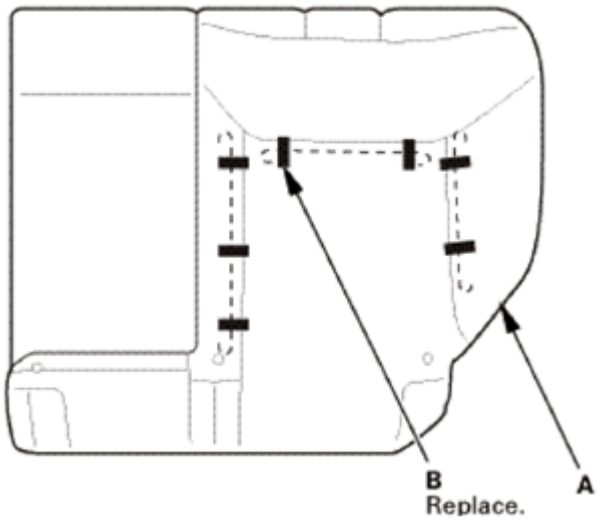

Fig. 789: Identifying Seat Cushion Cover And Upholstery Rings (Fabric Seat)
Courtesy of AMERICAN HONDA MOTOR CO., INC.

2. Install the rear seat-back cover/pad (A) to the rear seat-back frame (B). Make sure the clip (C) snaps into place securely.

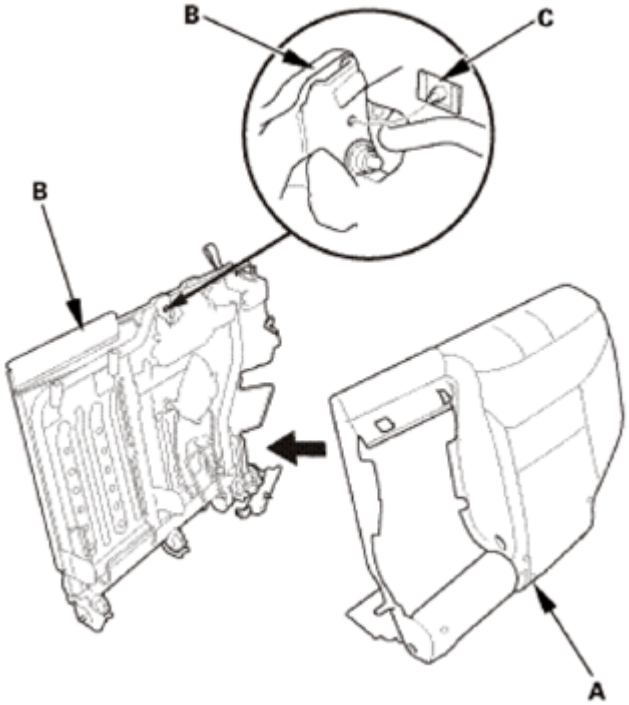

Fig. 790: Installing Rear Seat-Back Cover/Pad To Rear Seat-Back Frame
Courtesy of AMERICAN HONDA MOTOR CO., INC.

3. Install the head restraint guides (A). Make sure the guides are installed in the seat-back frame securely.

GETtheMANUALS.org

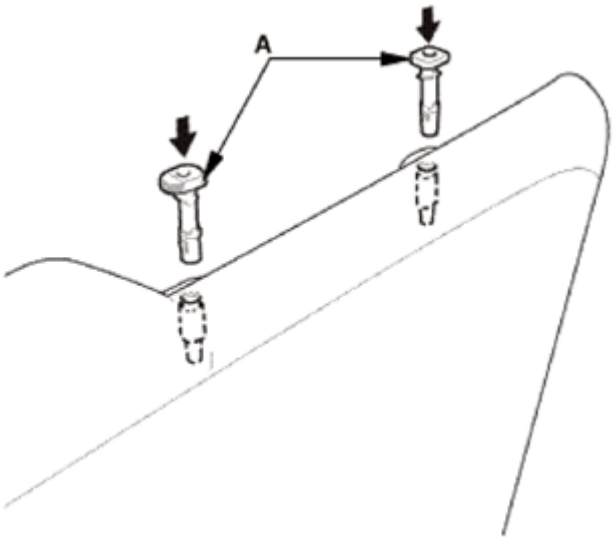

Fig. 791: Installing Head Restraint Guides
Courtesy of AMERICAN HONDA MOTOR CO., INC.

4. Zip the rear seat-back cover (A).
5. Install the hook strips (B) into place securely.

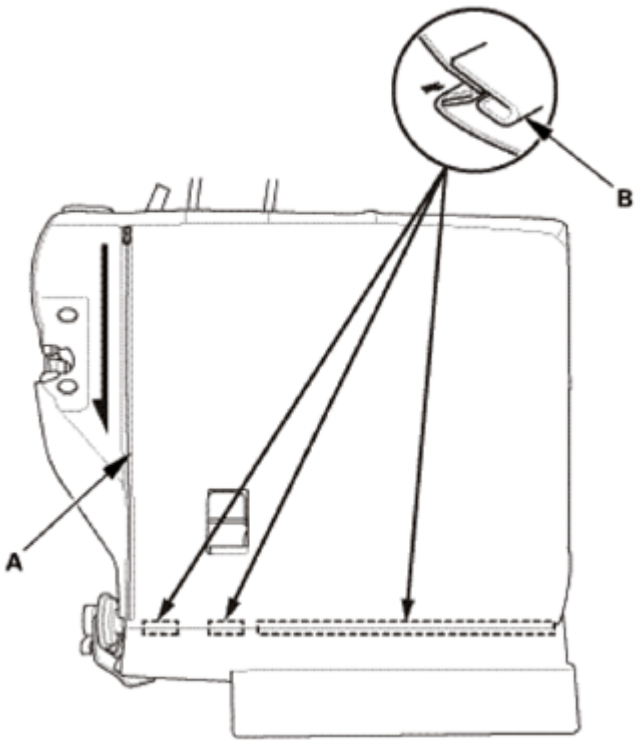

Fig. 792: Installing Rear Seat-Back Cover
Courtesy of AMERICAN HONDA MOTOR CO., INC.

6. Install the holes (A) to the hooks (B) of the seat-back inner trim (C).

GETtheMANUALS.org

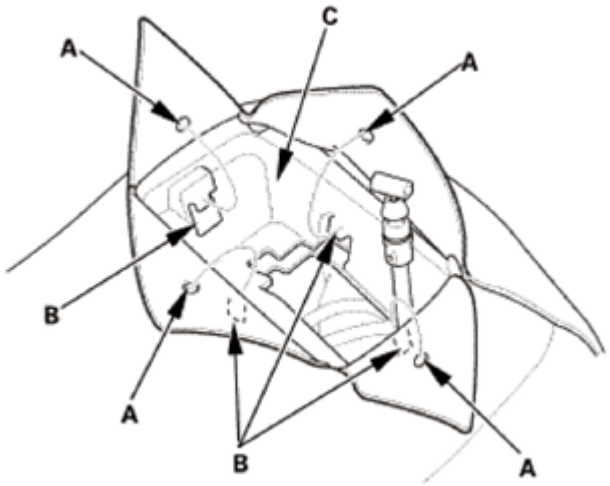

Fig. 793: Identifying Seat-Back Inner Trim, Hooks And Holes
Courtesy of AMERICAN HONDA MOTOR CO., INC.

7. Install the hook and loop fastener (A) into place securely.
8. Install the hook strip (B) into place securely.

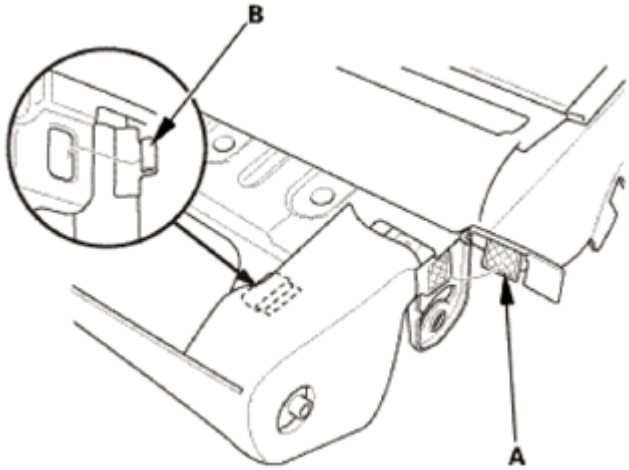

Fig. 794: Identifying Rear Seat-Back Cover Hook And Loop Fastener And Hook
Courtesy of AMERICAN HONDA MOTOR CO., INC.

9. Install the rear seat-back cancel control cable (A) to the left rear seat cushion pivot (C), then install the push nut (B).
10. Install the rear seat arrange control cable (D) through the hole (E) in the rear seat-back cover (F).

GETtheMANUALS.org

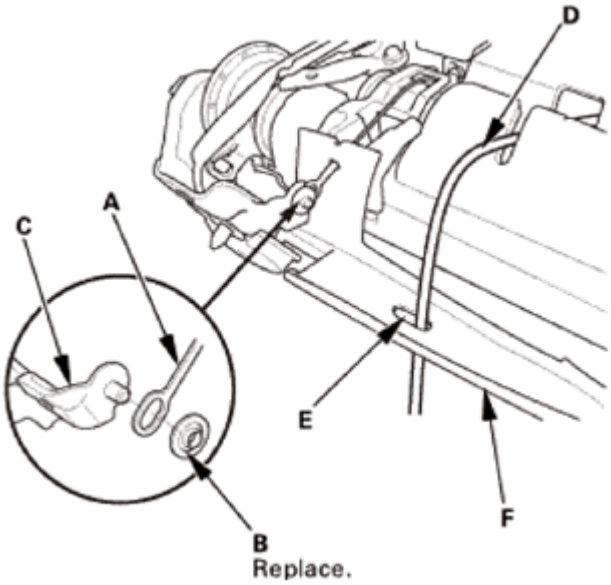

Fig. 795: Identifying Rear Seat-Back Cancel Control Cable, Left Rear Seat Cushion Pivot, Push Nut And Related Components
Courtesy of AMERICAN HONDA MOTOR CO., INC.

11. Install the hook strips (A) into place securely.
12. Install the hook and loop fastener (B) into place securely.

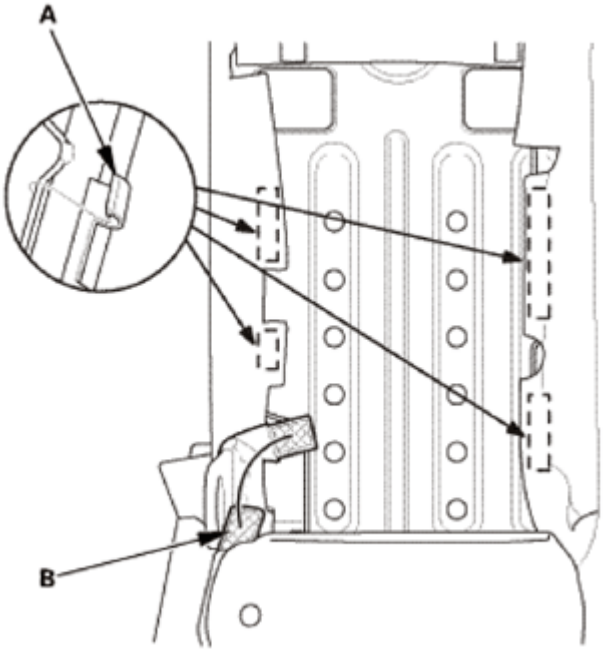

Fig. 796: Identifying Rear Seat-Back Cover Hook And Loop Fastener And Hook
Courtesy of AMERICAN HONDA MOTOR CO., INC.

13. Install the covers (A) to the left rear seat pivot (B). Make sure the hooks (C) snap into place

GETtheMANUALS.org

securely.

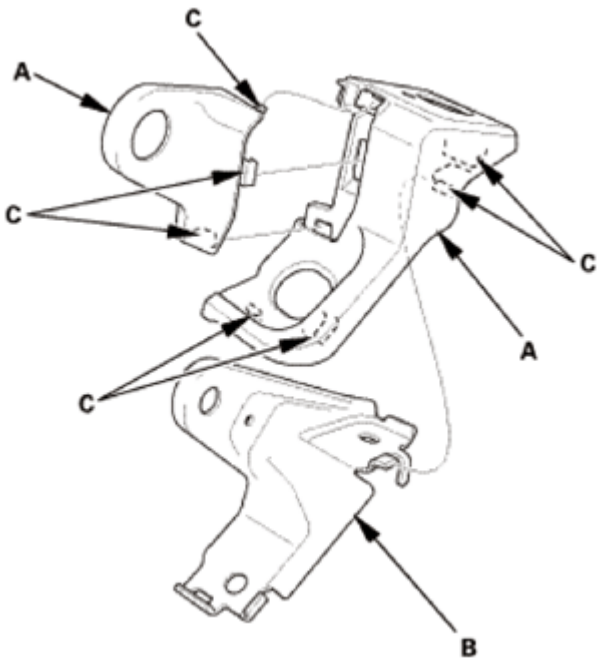

Fig. 797: Identifying Left Rear Seat Pivot, Cover And Hooks
Courtesy of AMERICAN HONDA MOTOR CO., INC.

14. Apply oil to the pivot bushing (A).
15. Install the pivot bushing, the left rear seat inner pivot (B), and the washer (C).
16. Install the bolt (D) with a 6 mm hex wrench.

GETtheMANUALS.org

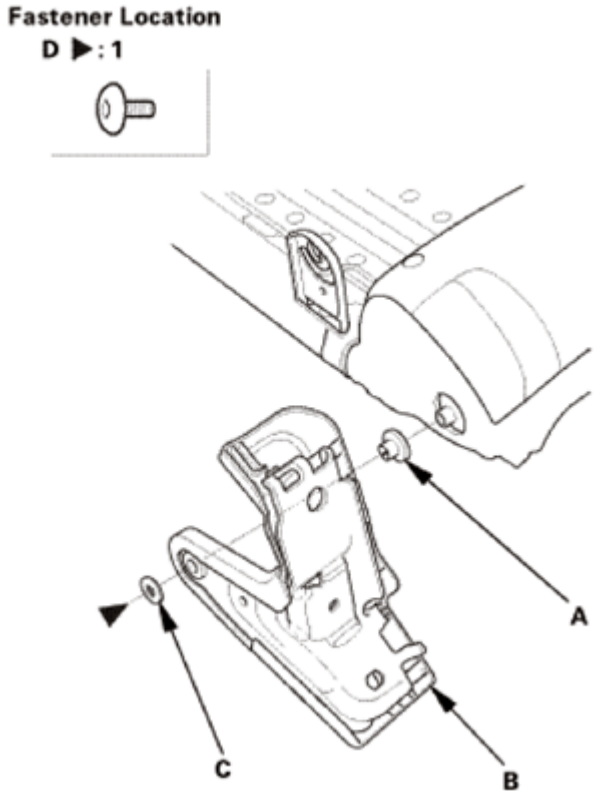

Fig. 798: Identifying Right Rear Seat Inner Pivot, Bushing, Washer And Bolt
Courtesy of AMERICAN HONDA MOTOR CO., INC.

17. Install the strap cover (A). Make sure the hooks (B) snap into place securely.

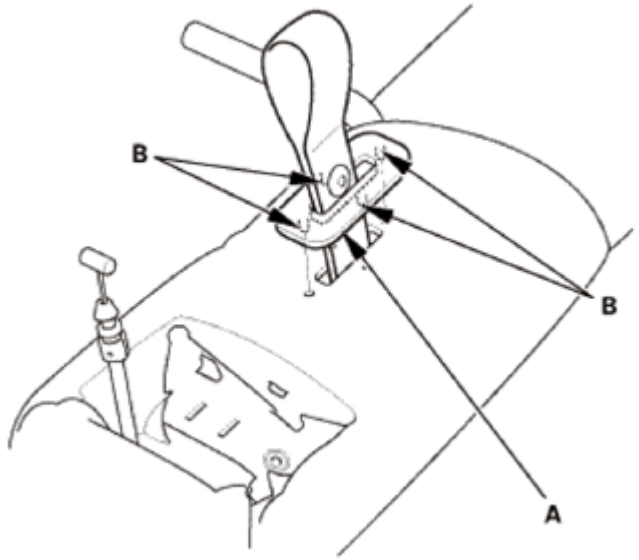

Fig. 799: Identifying Strap Cover And Hooks
Courtesy of AMERICAN HONDA MOTOR CO., INC.

GETtheMANUALS.org

18. Connect the rear seat-back lock knob control cable (A) to the lock knob trim (B).
19. Install the rear seat-back lock knob control cable to the cable bracket (C).

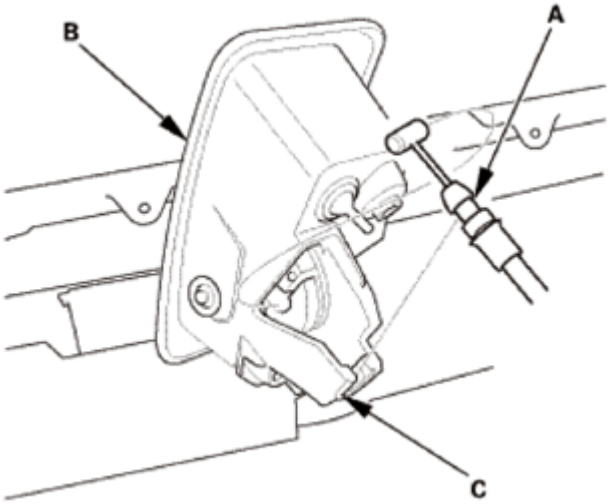

Fig. 800: Identifying Rear Seat-Back Lock Knob Control Cable And Bracket
Courtesy of AMERICAN HONDA MOTOR CO., INC.

20. Install the lock knob trim (A).
21. Install the screw (B), while pulling up the lock knob (C).

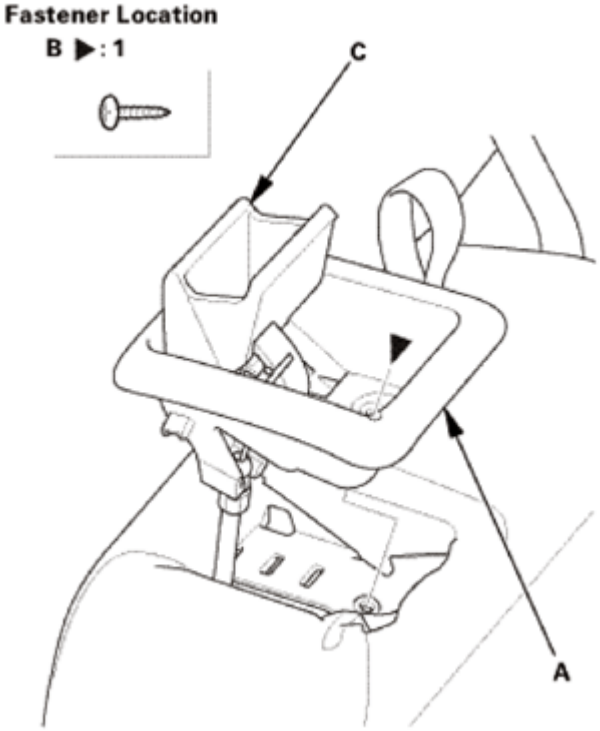

Fig. 801: Identifying Lock Knob Trim, Lock Knob And Screws

GETtheMANUALS.org

Courtesy of AMERICAN HONDA MOTOR CO., INC.

22. Install the lower edge of the armrest back panel (A) to the hook strip (B).

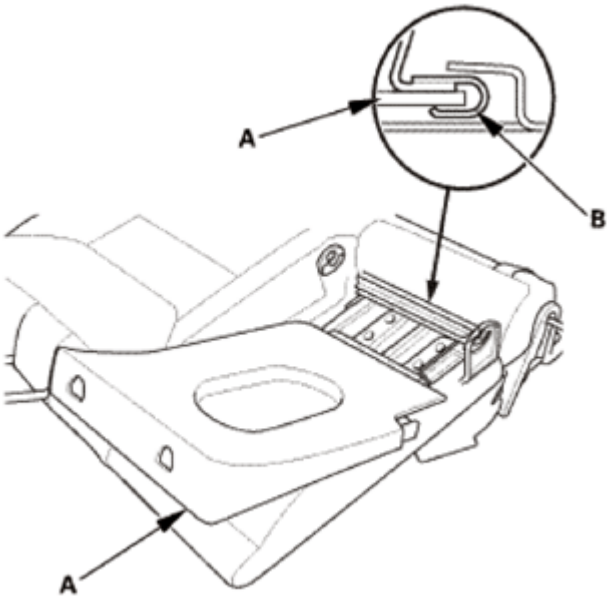

Fig. 802: Identifying Lower Edge Of Armrest Back Panel And Hook Strip
Courtesy of AMERICAN HONDA MOTOR CO., INC.

23. Install the rear armrest (A) back panel. The hooks (B) snap into place securely.

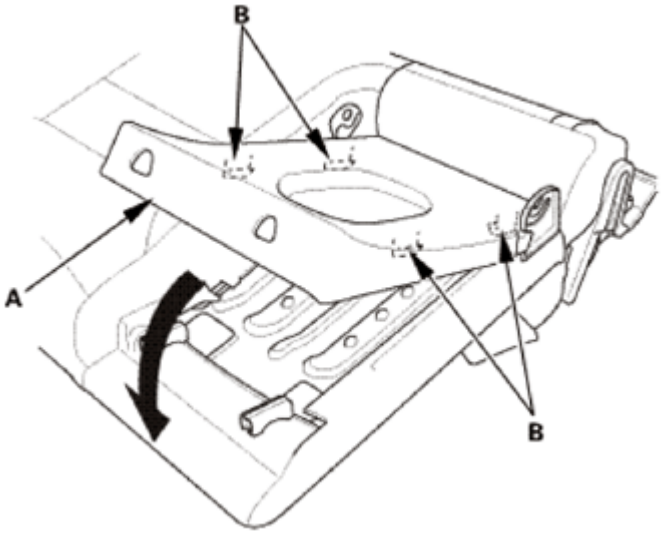

Fig. 803: Installing Rear Armrest Back Panel
Courtesy of AMERICAN HONDA MOTOR CO., INC.

24. Install the tether anchor cover (A). Make sure the hooks (B) snap into place securely.

GETtheMANUALS.org

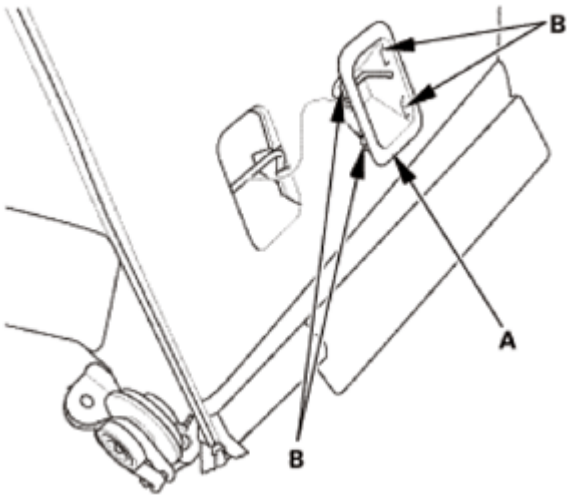

Fig. 804: Identifying Tether Anchor Cover And Hooks
Courtesy of AMERICAN HONDA MOTOR CO., INC.

5. Rear Seat-Back Latch Cover - Left Side
    1. Install the left rear seat latch cover (A). Make sure the hooks (B) and the clips (C) snap into place securely.

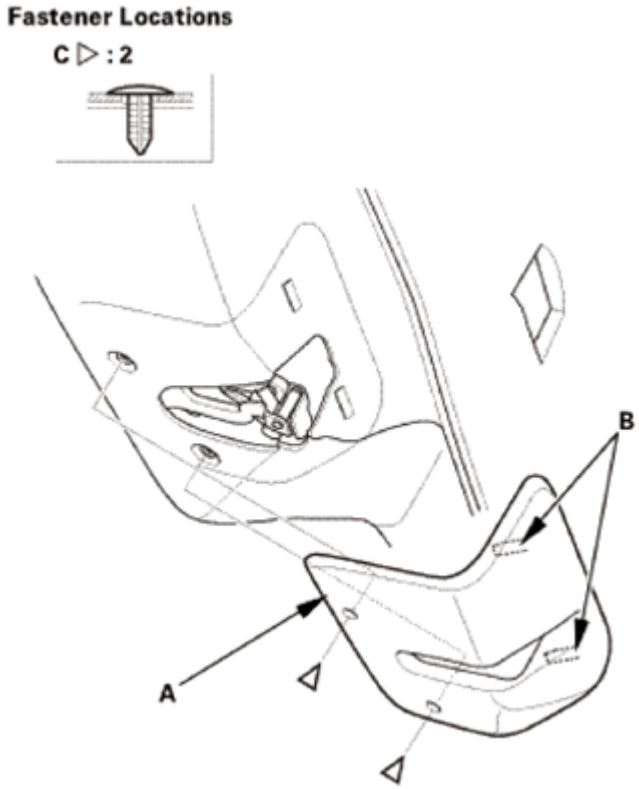

Fig. 805: Identifying Left Rear Seat Latch Cover, Hooks And Clips
Courtesy of AMERICAN HONDA MOTOR CO., INC.

GETtheMANUALS.org

6. Rear Seat Armrest
    1. Install the collar (A), the inner friction plate (B), and the outer friction plate (C) to the rear seat-back frame.

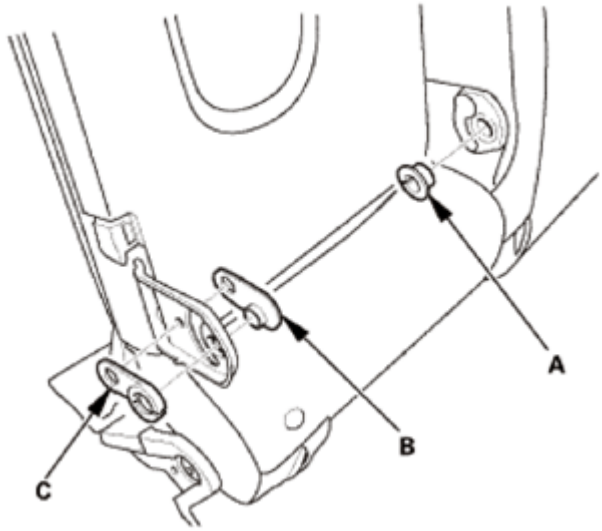

Fig. 806: Identifying Rear Seat-Back Frame Collar, Inner And Outer Friction Plate
Courtesy of AMERICAN HONDA MOTOR CO., INC.

2. Insert the armrest shaft (A) to the seat-back frame (B).
3. Insert the left pivot shaft (C) to the collar (D).
4. Slide the armrest (E) toward the left side.

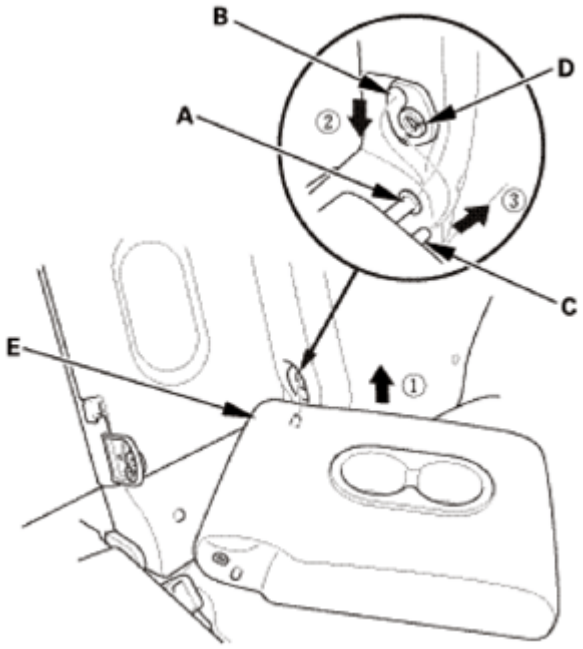

Fig. 807: Installing Armrest

GETtheMANUALS.org

Courtesy of AMERICAN HONDA MOTOR CO., INC.

5. Install the pivot shaft (A) to the friction plate (B).
6. Slide the armrest (C) toward the right side.

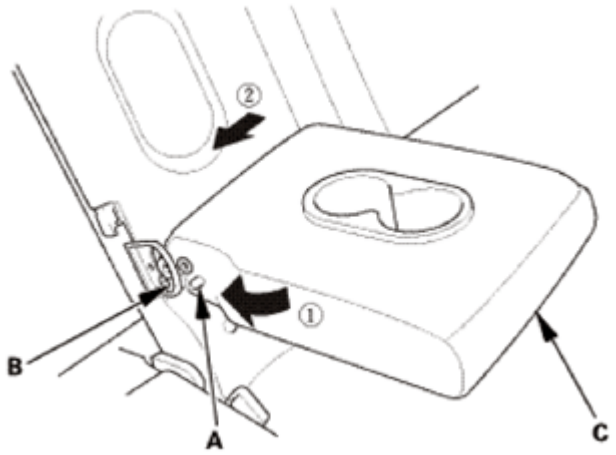

Fig. 808: Installing Pivot Shaft To Friction Plate
Courtesy of AMERICAN HONDA MOTOR CO., INC.

7. Install the bolt (A) with a 5 mm hex wrench to the armrest (B), then install the armrest side cover (C).

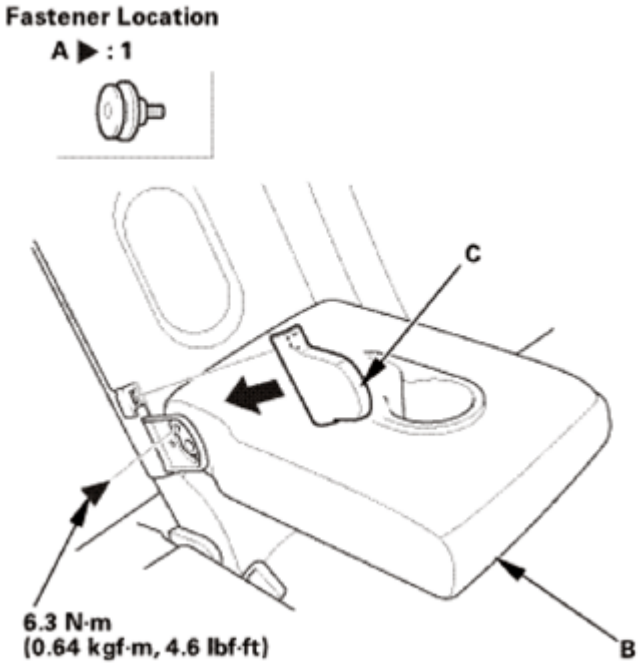

Fig. 809: Installing Armrest Side Cover
Courtesy of AMERICAN HONDA MOTOR CO., INC.

GETtheMANUALS.org

7. Rear Seat Head Restraint - Left Side

Left Rear Head Restraint

1. Inspect the knob (A) if it has any of the following damage:
   - Any cracks or deformation at the tab (B) of the knob.
   - Any cracks or stress-whitening at the tab (B) of the knob.

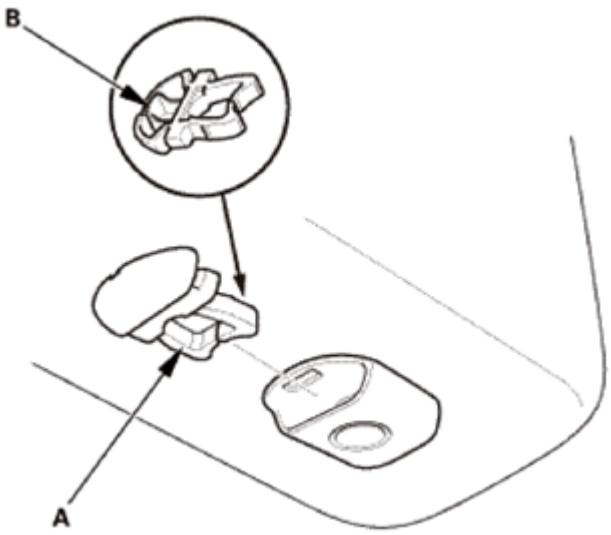

Fig. 810: Identifying Rear Seat Head Restraint Knob And Tab
Courtesy of AMERICAN HONDA MOTOR CO., INC.

2. Insert the knob (A) to the head restraint (B) as shown.
3. Install the head restraint.

NOTE: **Make sure the head restraint is locked securely. If not, replace the head restraint.**

GETtheMANUALS.org

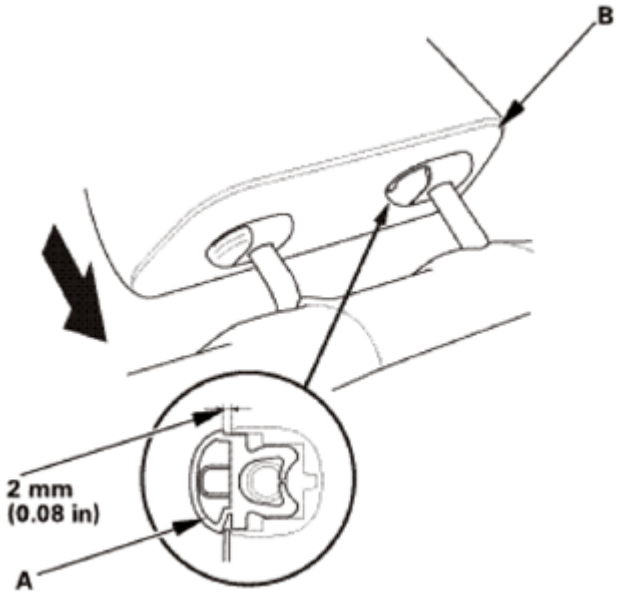

Fig. 811: Installing Head Restraint
Courtesy of AMERICAN HONDA MOTOR CO., INC.

Center Rear Head Restraint

1. Install the center rear head restraint (A).

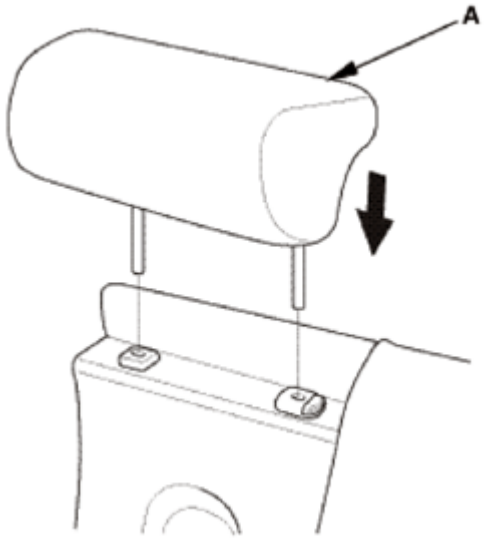

Fig. 812: Installing Center Rear Head Restraint
Courtesy of AMERICAN HONDA MOTOR CO., INC.

8. Rear Seat-Back
    1. Left Side: Install the mounting bolts (A), then install the rear seatback (C).
    2. Right Side: Install the mounting bolts (A) and anchor bolt (B), then install the rear seat-back (C).

GETtheMANUALS.org

3. Install the rear seat-back cover (D). The clips (E) snap into place securely.

Left Side

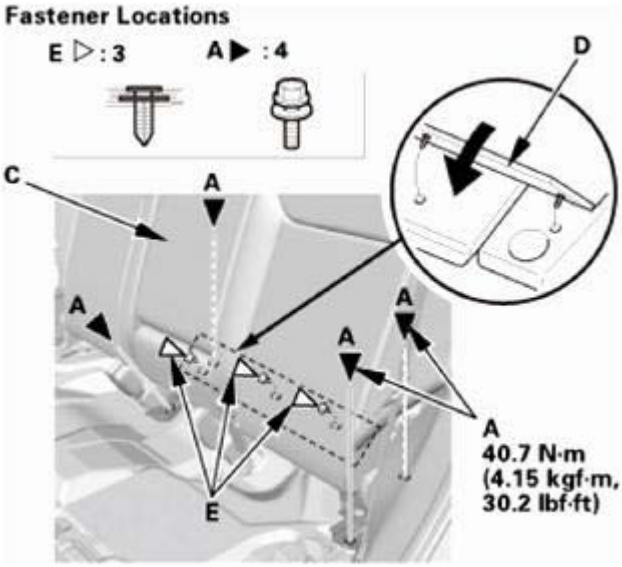

Fig. 813: Installing Rear Seat-Back Cover (Left Side)
Courtesy of AMERICAN HONDA MOTOR CO., INC.

Right Side

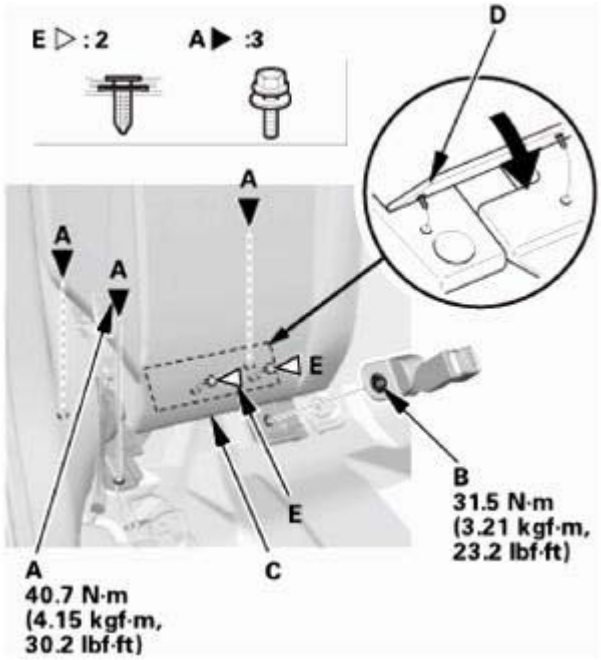

Fig. 814: Installing Rear Seat-Back Cover (Right Side)
Courtesy of AMERICAN HONDA MOTOR CO., INC.

GETtheMANUALS.org

4. Connect the rear seat-back arrange control cable (A) to the rear seat cushion foot (B).
5. Install the rear seat-back arrange control cable to the cable bracket (C).
6. Install the cable clip (D).

NOTE:

- **Make sure the cables are connected securely.**
- **Make sure the rear seat cushion latches and unlatches properly.**

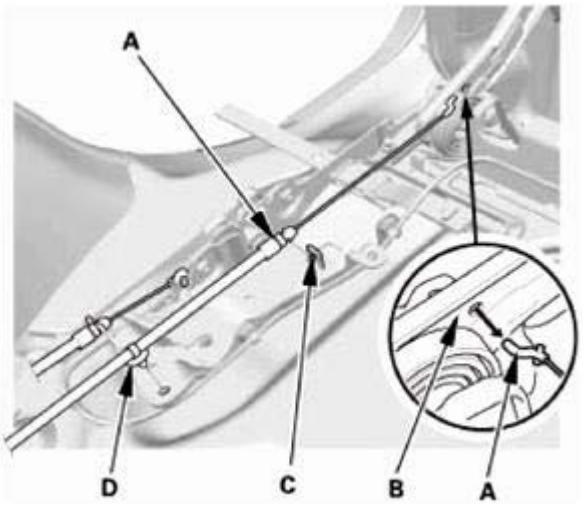

Fig. 815: Connecting Rear Seat-Back Arrange Control Cable To Rear Seat Cushion Foot
Courtesy of AMERICAN HONDA MOTOR CO., INC.

9. Rear Seat Foot Cover
    1. Install the rear seat cushion foot cover (A). Make sure the clips (B) and the hooks (C) snap into place securely.

    Left Side

GETtheMANUALS.org

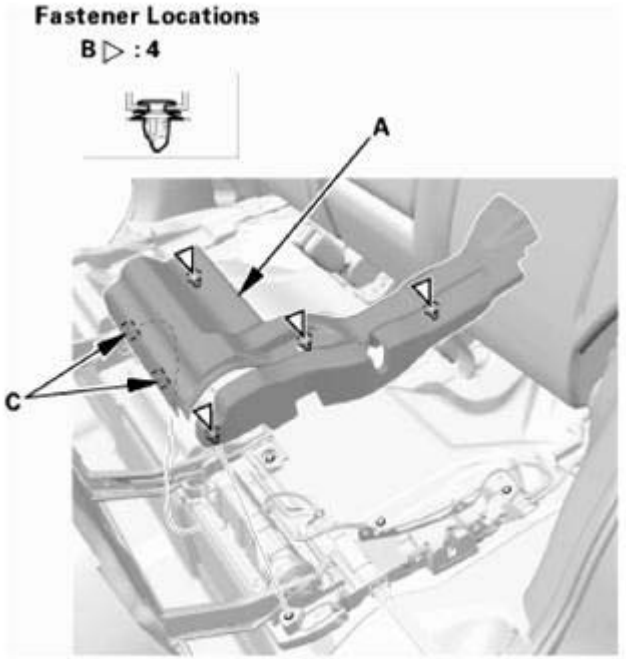

Fig. 816: Identifying Rear Seat Cushion Foot Cover, Hooks And Clips (Left Side)
Courtesy of AMERICAN HONDA MOTOR CO., INC.

Right Side

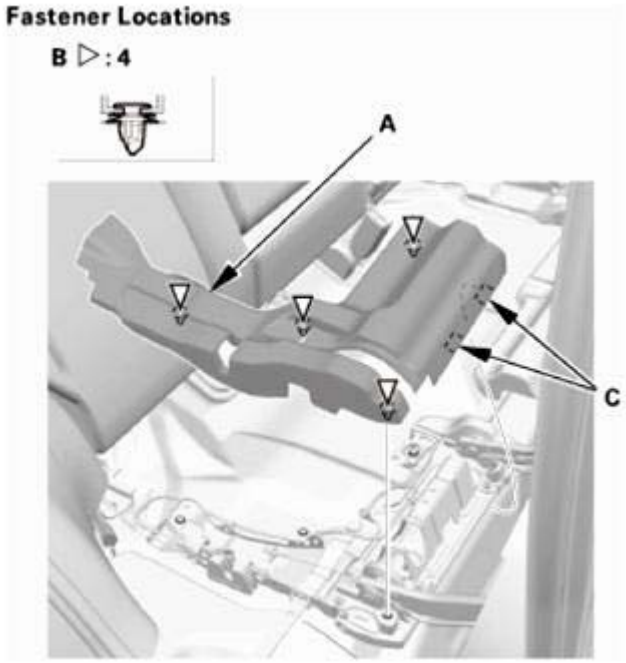

Fig. 817: Identifying Rear Seat Cushion Foot Cover, Hooks And Clips (Right Side)
Courtesy of AMERICAN HONDA MOTOR CO., INC.

10. Rear Damper Maintenance Cover

GETtheMANUALS.org

1. Fold down the rear seat-back.
2. Install the rear damper maintenance cover (A). Make sure the hooks (B) snap into place securely.

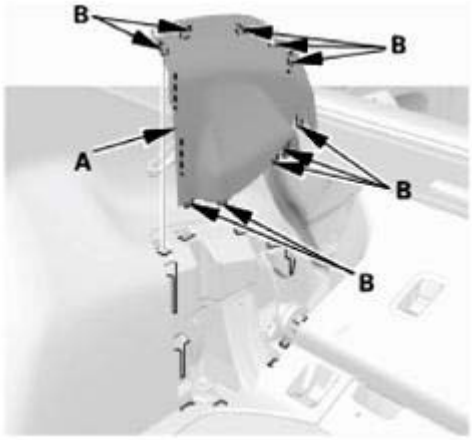

Fig. 818: Identifying Rear Damper Maintenance Cover And Hooks
Courtesy of AMERICAN HONDA MOTOR CO., INC.

11. Cargo Floor Cover
    1. Install the cargo floor cover (A).

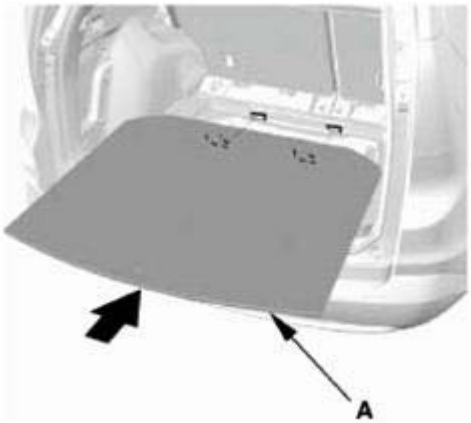

Fig. 819: Installing Cargo Floor Cover
Courtesy of AMERICAN HONDA MOTOR CO., INC.

12. Tonneau Cover (For Some Models)
    1. Install the tonneau cover (A).

GETtheMANUALS.org

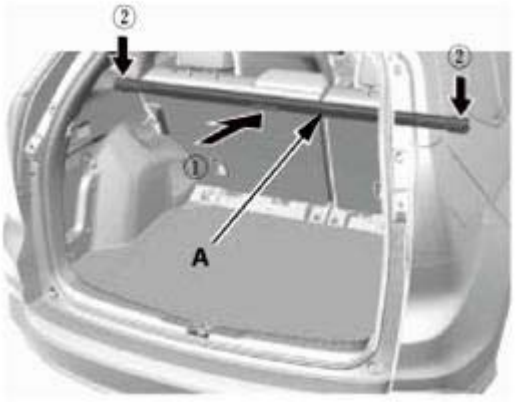

Fig. 820: Installing Tonneau Cover
Courtesy of AMERICAN HONDA MOTOR CO., INC.

REAR SEAT-BACK FRAME REMOVAL AND INSTALLATION

REMOVAL

NOTE: **Steps 6-11 show removing the left side, steps 12-16 show removing the right side.**

1. Tonneau Cover (For Some Models)
    1. Remove the tonneau cover (A).

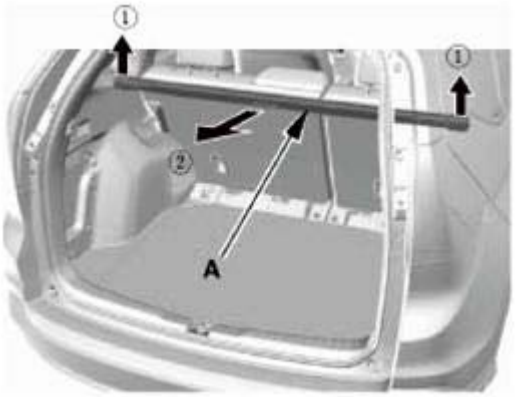

Fig. 821: Removing Tonneau Cover
Courtesy of AMERICAN HONDA MOTOR CO., INC.

2. Cargo Floor Cover
    1. Remove the cargo floor cover (A).

GETtheMANUALS.org

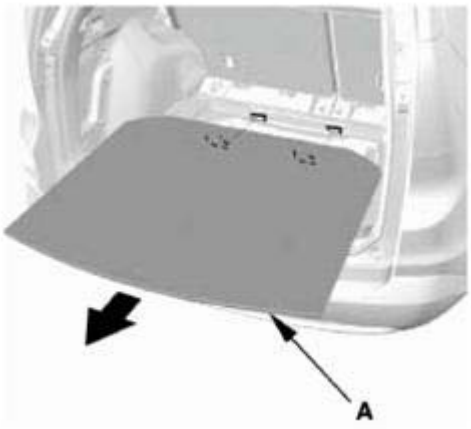

Fig. 822: Removing Cargo Floor Cover
Courtesy of AMERICAN HONDA MOTOR CO., INC.

3. Rear Damper Maintenance Cover
    1. Fold down the rear seat-back.
    2. Pull up the rear damper maintenance cover (A) by hand to detach the hooks (B), then remove the rear damper maintenance cover.

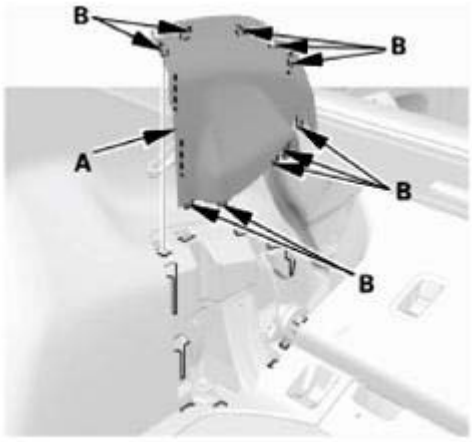

Fig. 823: Identifying Rear Damper Maintenance Cover And Hooks
Courtesy of AMERICAN HONDA MOTOR CO., INC.

4. Rear Seat Foot Cover
    1. Pull up the rear seat foot cover (A) by hand to detach the clips (B).
    2. Detach the hooks (C), then remove the rear seat foot cover.

Left Side

GETtheMANUALS.org

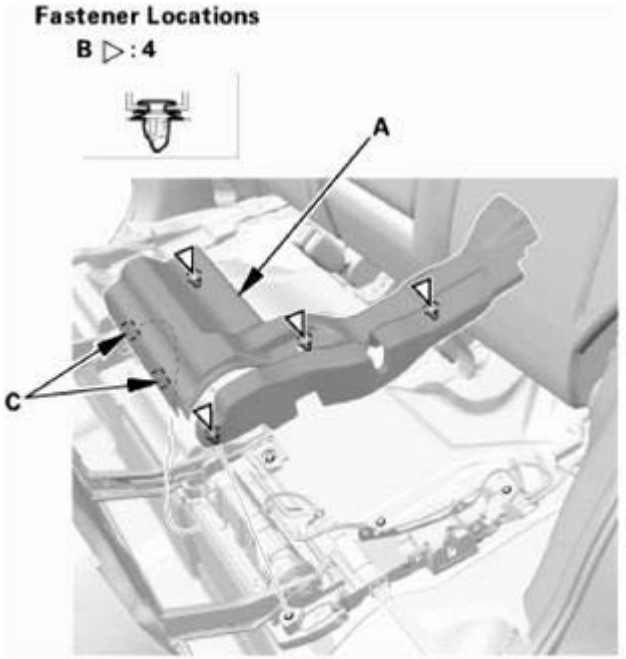

Fig. 824: Identifying Rear Seat Foot Cover, Hooks And Clips (Left Side)
Courtesy of AMERICAN HONDA MOTOR CO., INC.

Right Side

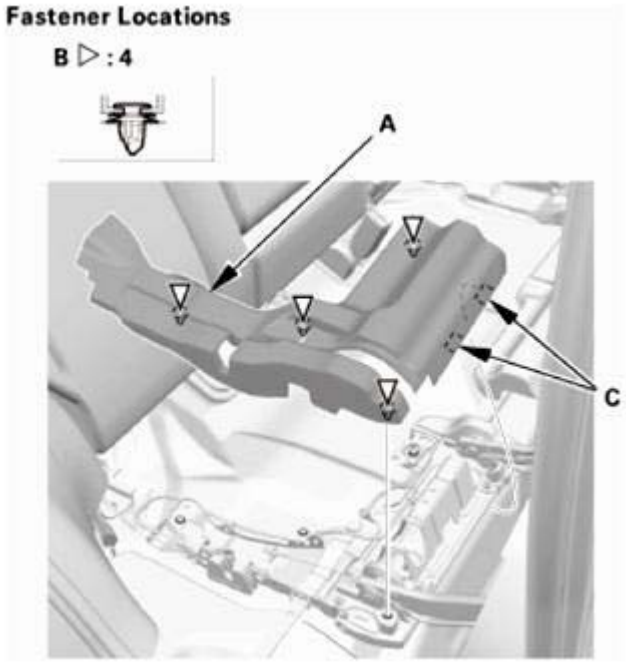

Fig. 825: Identifying Rear Seat Foot Cover, Hooks And Clips (Right Side)
Courtesy of AMERICAN HONDA MOTOR CO., INC.

5. Rear Seat-Back

GETtheMANUALS.org

1. Detach the rear seat-back arrange control cable (A) from the cable bracket (B).
2. Detach the cable clip (C), then disconnect the seat-back arrange control cable from the rear seat cushion foot (D).

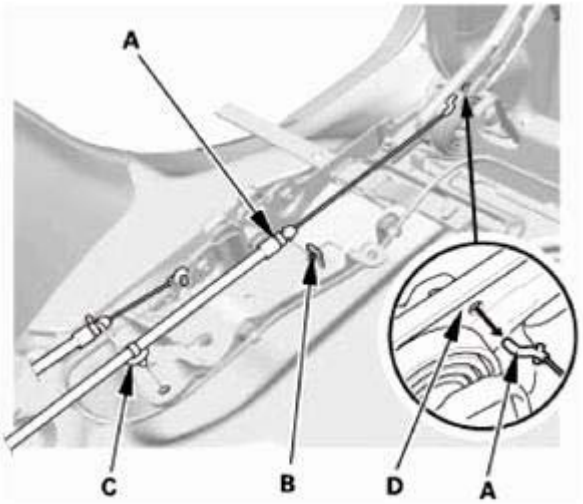

Fig. 826: Disconnecting Seat-Back Arrange Control Cable From Rear Seat Cushion Foot
Courtesy of AMERICAN HONDA MOTOR CO., INC.

3. Pull up the edge of seat-back cover (A), then detach the clips (B).
4. Left Side: Remove the mounting bolts (C), then remove the rear seat-back (D).
5. Right Side: Remove the mounting bolts (C) and the anchor bolt (E), then remove the rear seat-back (F).

Left Side

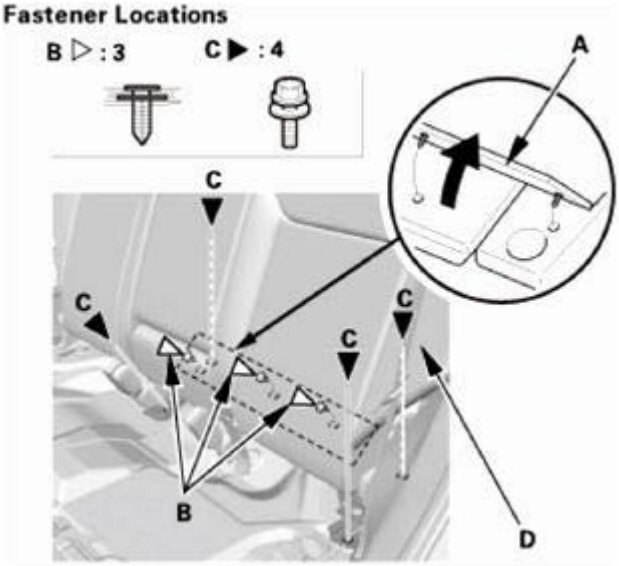

Fig. 827: Removing Seat-Back Cover (Left Side)

GETtheMANUALS.org

Courtesy of AMERICAN HONDA MOTOR CO., INC.

Right Side

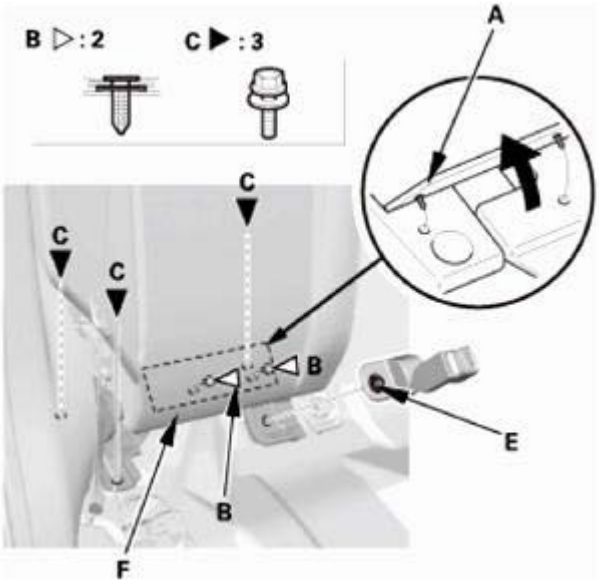

Fig. 828: Removing Seat-Back Cover (Right Side)
Courtesy of AMERICAN HONDA MOTOR CO., INC.

6. Rear Seat Head Restraint - Left Side

Left Rear Head Restraint

1. Push a flat-tip screwdriver (A) into the notch at the center of the knob (B) to release the tab (C).

GETtheMANUALS.org

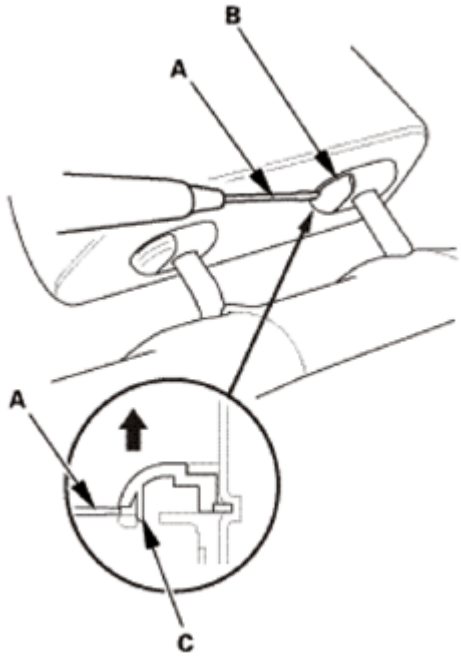

Fig. 829: Pushing Rear Seat Head Restraint Tab Using Flat-Tip Screwdriver
Courtesy of AMERICAN HONDA MOTOR CO., INC.

2. Insert a 5 mm (0.2 in) thickness flat-tip screwdriver in one side of the notch on both sides of the knob (A), then the knob is moved out about 2 mm (0.08 in).
3. Push and hold the knob (B), then pull out the head restraint (C) as shown.

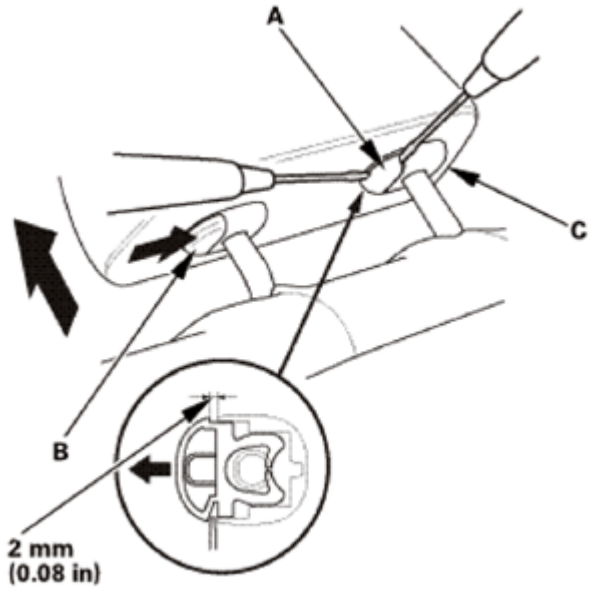

Fig. 830: Removing Head Restraint Using Tool
Courtesy of AMERICAN HONDA MOTOR CO., INC.

Center Rear Head Restraint

GETtheMANUALS.org

1. Push and hold the knob (A), then pull out the head restraint (B) as shown.

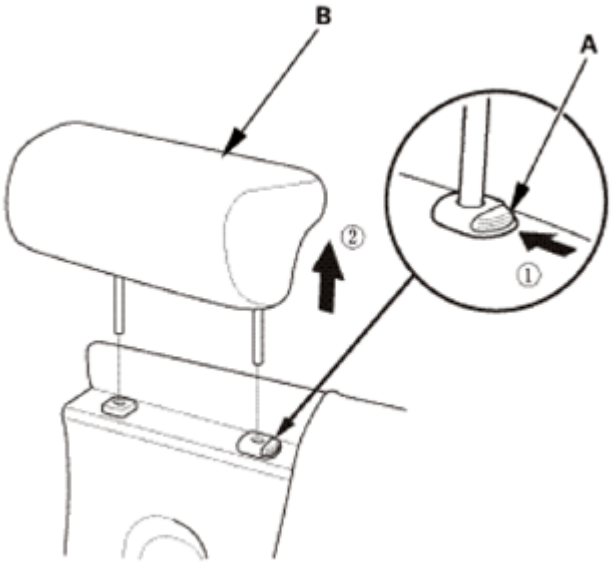

Fig. 831: Pulling Center Rear Head Restraint
Courtesy of AMERICAN HONDA MOTOR CO., INC.

7. Rear Seat Armrest
    1. Release the tab (A), then slide the armrest side cover (B) forward.
    2. Remove the bolt (C) with a 5 mm hex wrench.

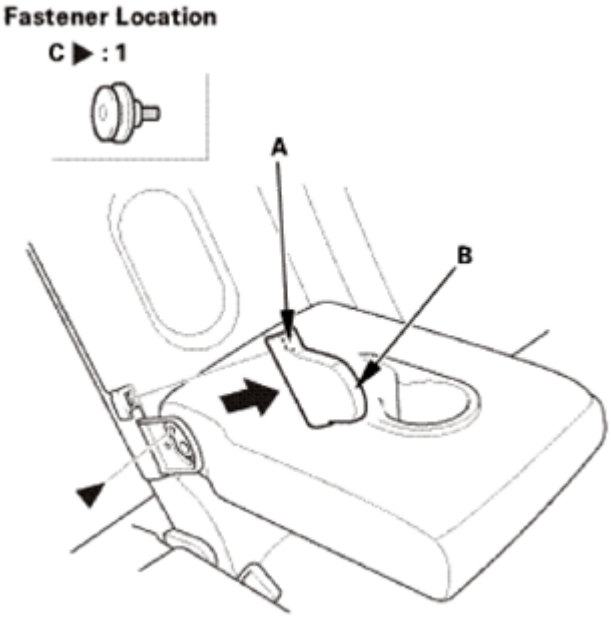

Fig. 832: Sliding Armrest Side Cover Forward
Courtesy of AMERICAN HONDA MOTOR CO., INC.

GETtheMANUALS.org

3. Slide the armrest (A) toward the left side.
4. Remove the right pivot shaft (B) from the friction plate (C).

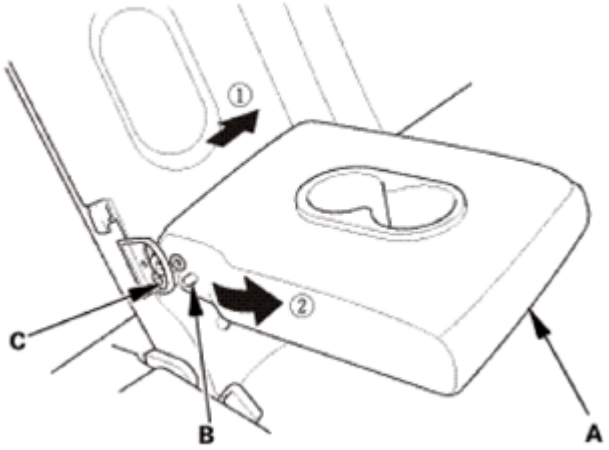

Fig. 833: Removing Right Pivot Shaft From Friction Plate
Courtesy of AMERICAN HONDA MOTOR CO., INC.

5. Slide the armrest (A) toward the right side.
6. Release the left pivot shaft (B) from the collar (C).
7. Pull up the armrest, then pull out the armrest shaft (D) from the rear seat-back frame (E), then remove the armrest.

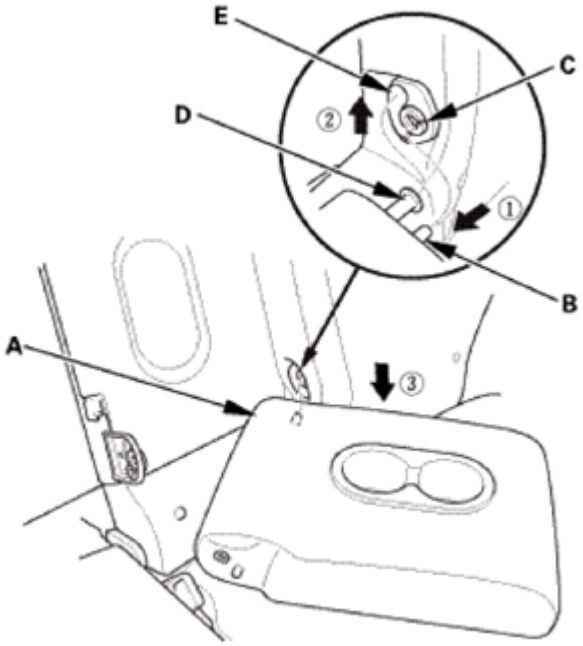

Fig. 834: Removing Armrest
Courtesy of AMERICAN HONDA MOTOR CO., INC.

GETtheMANUALS.org

8. Remove the collar (A), the inner friction plate (B), and the outer friction plate (C) from the rear seat-back frame.

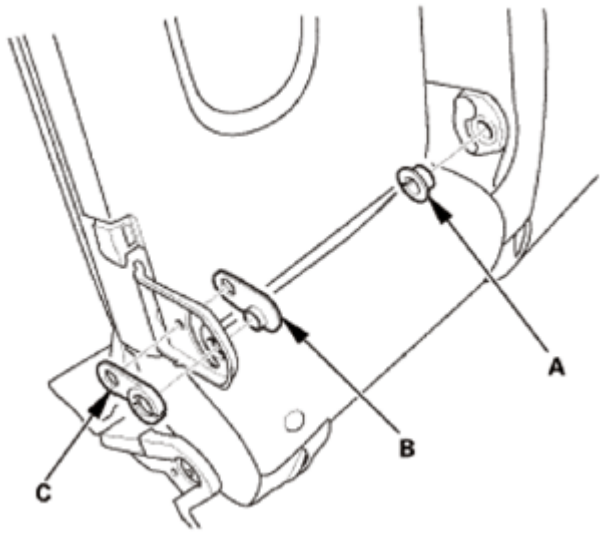

Fig. 835: Identifying Rear Seat-Back Frame Collar, Inner And Outer Friction Plate
Courtesy of AMERICAN HONDA MOTOR CO., INC.

8. Rear Seat-Back Latch Cover - Left Side
    1. Detach the clips (A) securing the latch cover (B), and pull out the cover to detach the hooks (C).

GETtheMANUALS.org

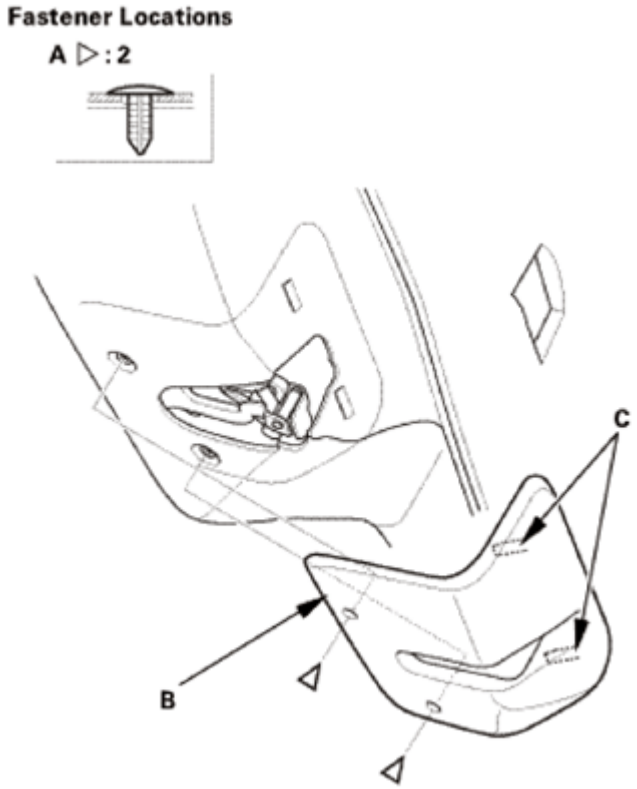

Fig. 836: Identifying Rear Seat-Back Latch Cover, Hooks And Clips
Courtesy of AMERICAN HONDA MOTOR CO., INC.

9. Rear Seat-Back Cover - Left Side
    1. Release the hooks (A), then remove the tether anchor cover (B).

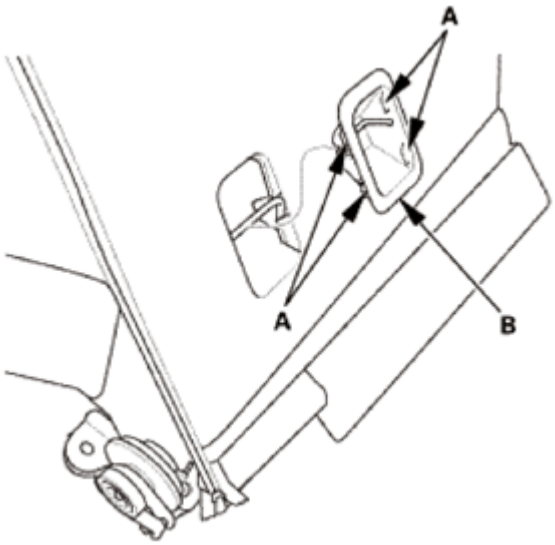

Fig. 837: Identifying Tether Anchor Cover And Hooks
Courtesy of AMERICAN HONDA MOTOR CO., INC.

GETtheMANUALS.org

2. Release the hooks (A), then pull up the armrest back panel (B).

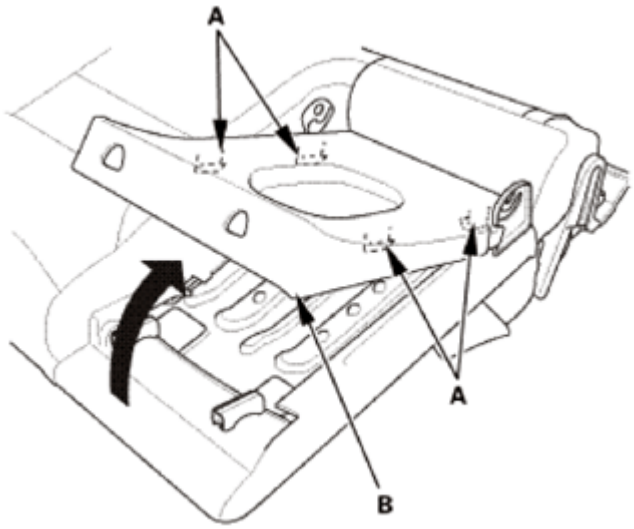

Fig. 838: Pulling Armrest Back Panel
Courtesy of AMERICAN HONDA MOTOR CO., INC.

3. Remove the armrest back panel (A) from the hook strip (B).

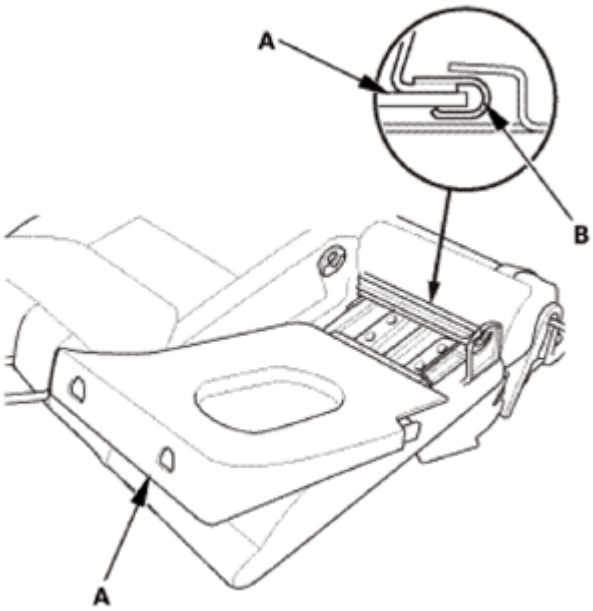

Fig. 839: Identifying Armrest Back Panel And Hook Strip
Courtesy of AMERICAN HONDA MOTOR CO., INC.

4. Remove the screw (A), while pulling up the lock knob (B).
5. Pull out the lock knob trim (C).

GETtheMANUALS.org

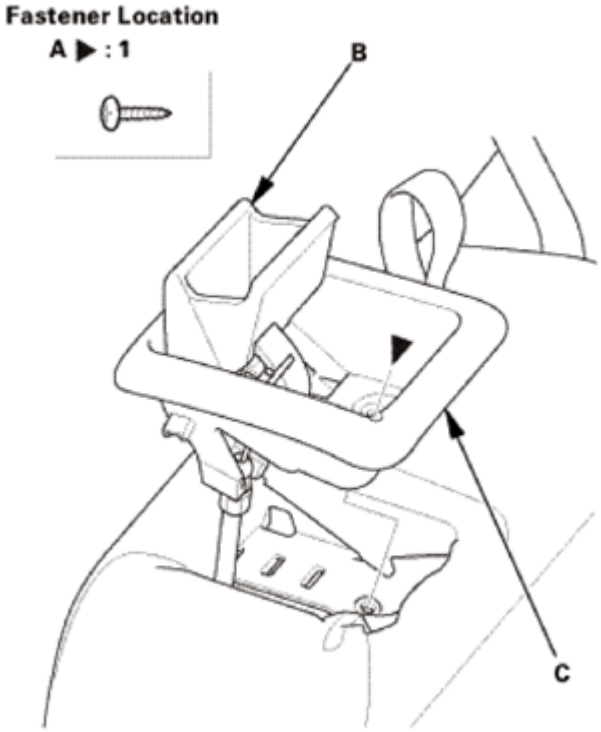

Fig. 840: Identifying Lock Knob Trim, Knob And Screws
Courtesy of AMERICAN HONDA MOTOR CO., INC.

6. Detach the rear seat-back lock knob control cable (A) from the cable bracket (B).
7. Disconnect the rear seat-back lock knob control cable from the lock knob trim (C).

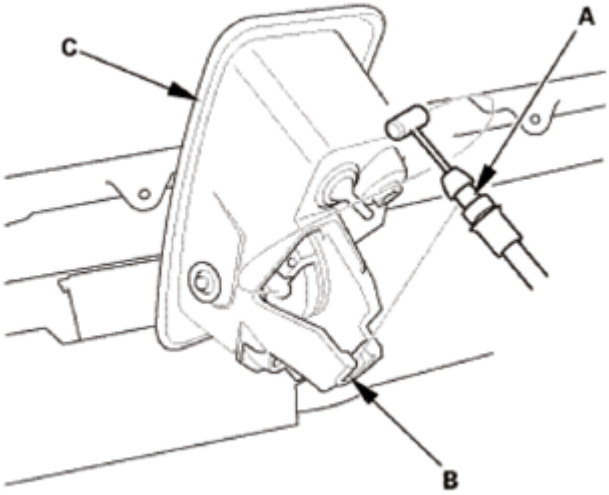

Fig. 841: Identifying Rear Seat-Back Lock Knob Control Cable, Bracket And Lock Knob Trim
Courtesy of AMERICAN HONDA MOTOR CO., INC.

8. Release the hooks (A) on the strap cover (B).

GETtheMANUALS.org

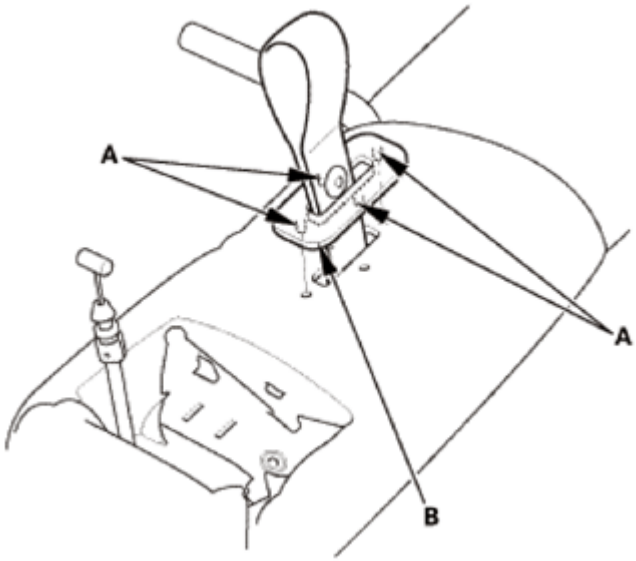

Fig. 842: Identifying Strap Cover And Hooks
Courtesy of AMERICAN HONDA MOTOR CO., INC.

9. Remove the bolt (A) with a 6 mm hex wrench.
10. Remove the washer (B), the left rear seat inner pivot (C), and bushing (D).

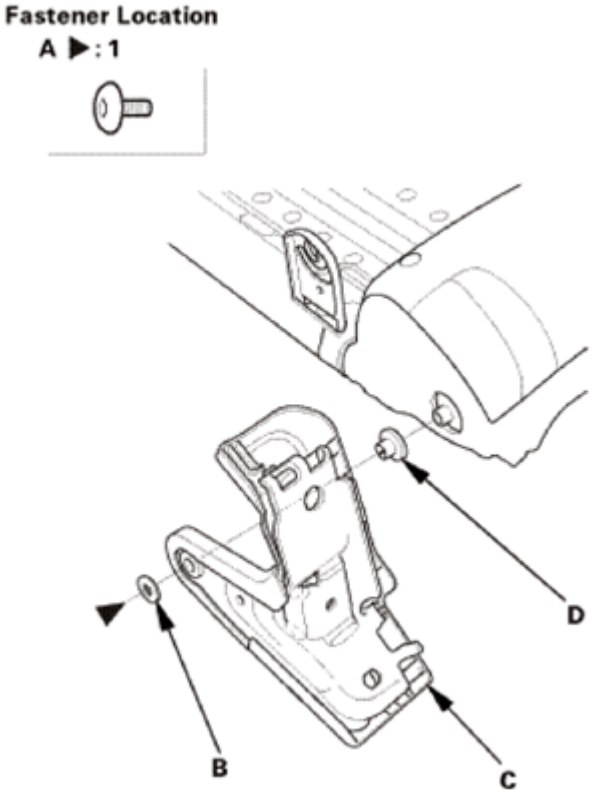

Fig. 843: Identifying Left Rear Seat Inner Pivot, Bushing, Washer And Bolt
Courtesy of AMERICAN HONDA MOTOR CO., INC.

GETtheMANUALS.org

11. Release the hooks (A), then remove the covers (B) from the left rear seat inner pivot (C).

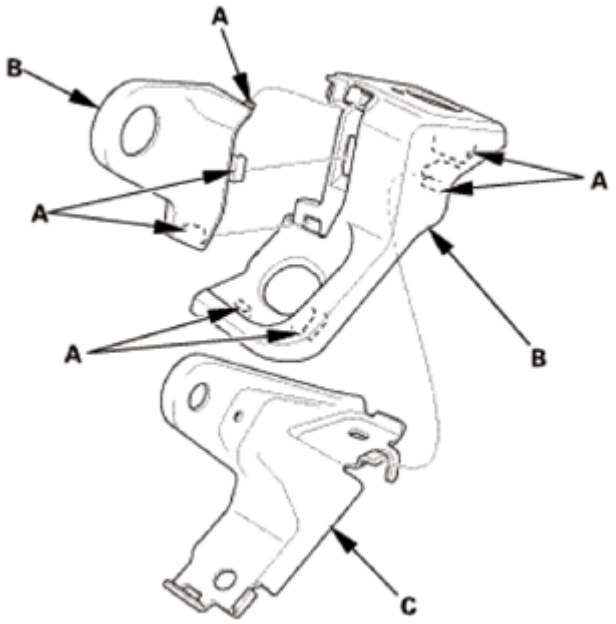

Fig. 844: Identifying Left Rear Seat Inner Pivot, Covers And Hooks
Courtesy of AMERICAN HONDA MOTOR CO., INC.

12. Release the hook strips (A) from the rear seat-back frame (B).
13. Release the hook and loop fastener (C).

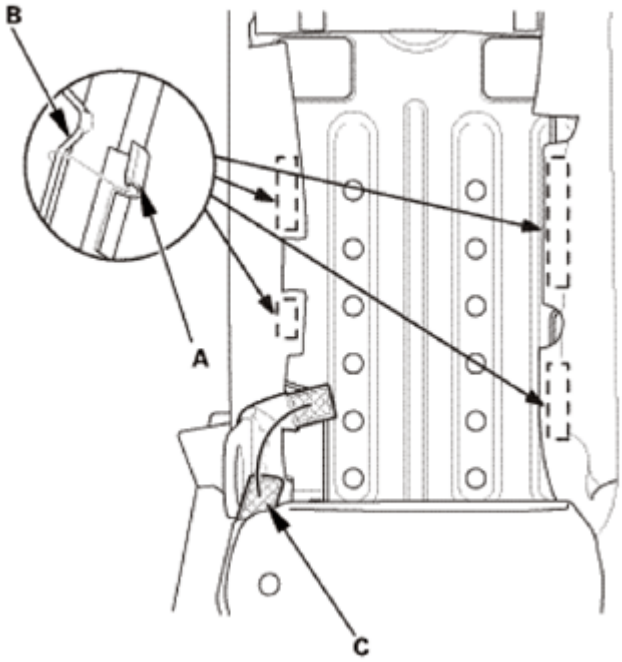

Fig. 845: Identifying Hook And Loop Fastener And Hooks

GETtheMANUALS.org

Courtesy of AMERICAN HONDA MOTOR CO., INC.

14. Remove the push nut (A), then disconnect the rear seat-back cancel control cable (B) from the left rear seat cushion pivot (C).
15. Pull out the rear seat arrange control cable (D) through the hole (E) in the rear seat-back cover (F).

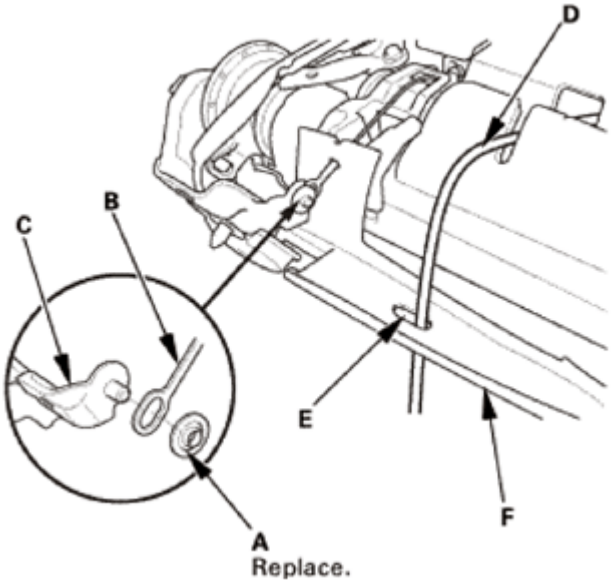

Fig. 846: Identifying Rear Seat-Back Cancel Control Cable, Seat Cushion Pivot, Seat Arrange Control Cable, Cover And Nut
Courtesy of AMERICAN HONDA MOTOR CO., INC.

16. Release the hook (A).
17. Release the hook and loop fastener (B).

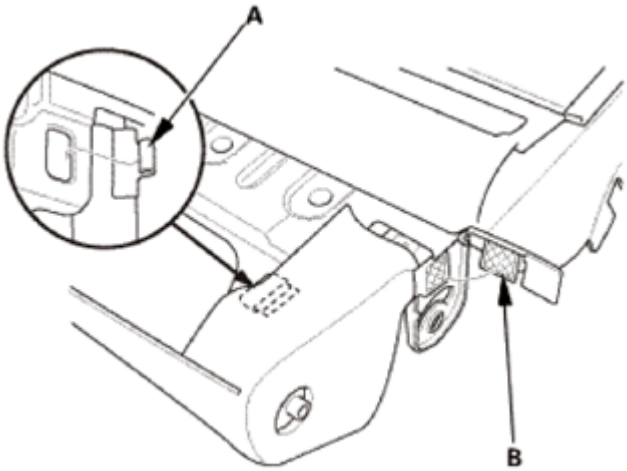

Fig. 847: Identifying Hook And Loop Fastener And Hooks
Courtesy of AMERICAN HONDA MOTOR CO., INC.

GETtheMANUALS.org

18. Detach the rear seat-back cover (A) from the hooks (B) of the rear seat-back inner trim (C).

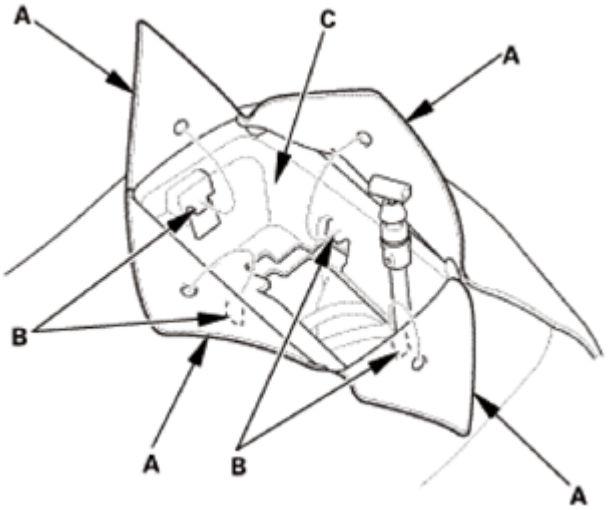

Fig. 848: Identifying Rear Seat-Back Cover, Trim And Hooks
Courtesy of AMERICAN HONDA MOTOR CO., INC.

19. Unzip the rear seat-back cover (A).
20. Release the hook strips (B).

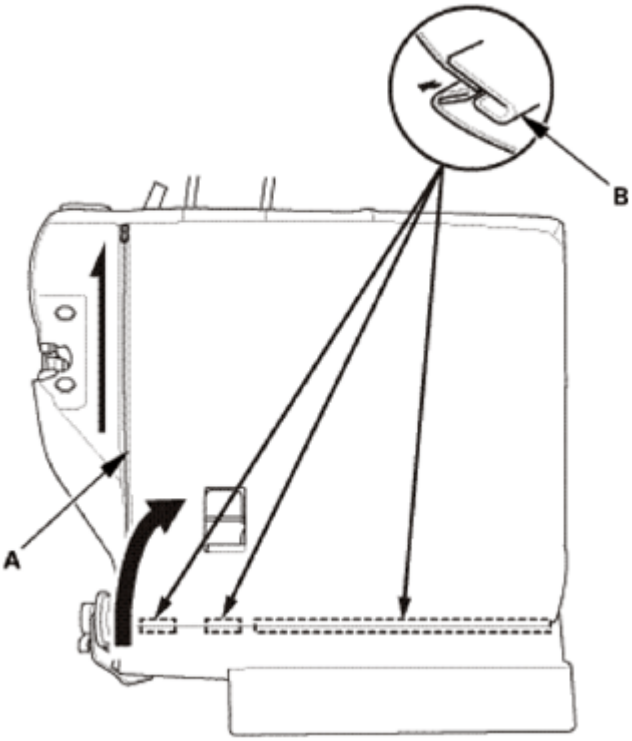

Fig. 849: Removing Rear Seat-Back Cover
Courtesy of AMERICAN HONDA MOTOR CO., INC.

GETtheMANUALS.org

21. Pinch the tabs (A) on the end of the head restraint guides (B), and remove the guides from the rear seat-back frame.

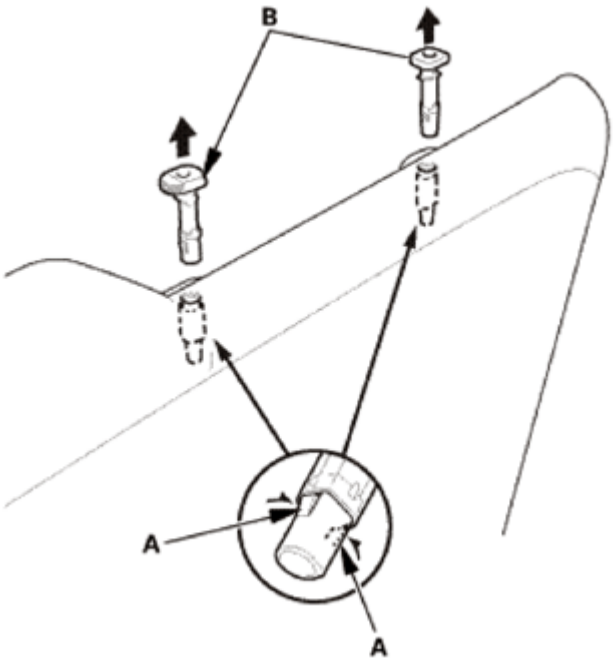

Fig. 850: Removing Guides From Seat-Back
Courtesy of AMERICAN HONDA MOTOR CO., INC.

22. Detach the clip (A) from the rear seat-back frame (B), then remove the seat-back cover/pad (C).

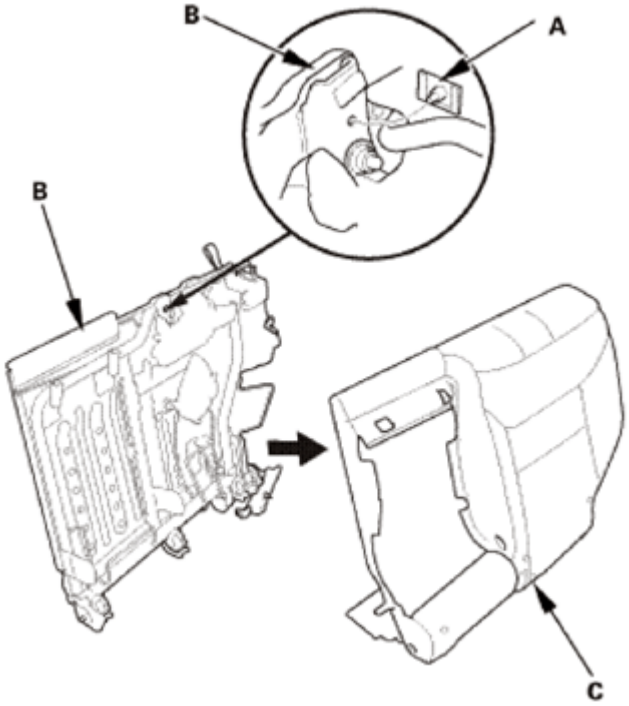

GETtheMANUALS.org

Fig. 851: Removing Seat-Back Cover/Pad
Courtesy of AMERICAN HONDA MOTOR CO., INC.

10. Rear Seat-Back Latch - Left Side
    1. Detach the rear seat-back lock knob control cable (A) and the rear seat-back lock control cable (B) from the cable bracket (C).
    2. Disconnect the rear seat-back lock knob control cable and the rear seat-back lock control cable from the rear seat-back latch (D).
    3. Remove the bolts (E), then remove the rear seat-back latch.

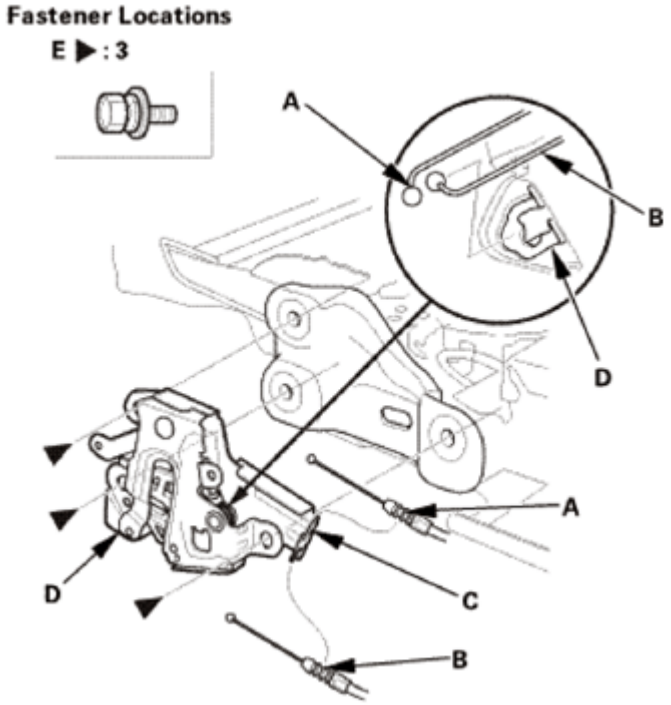

Fig. 852: Identifying Rear Seat-Back Lock And Lock Knob Control Cable, Bracket, Latch And Bolts
Courtesy of AMERICAN HONDA MOTOR CO., INC.

11. Rear Seat Back Frame - Left Side
    1. Remove the bolts (A, B), then remove the left rear seat-back outer pivot (C).

GETtheMANUALS.org

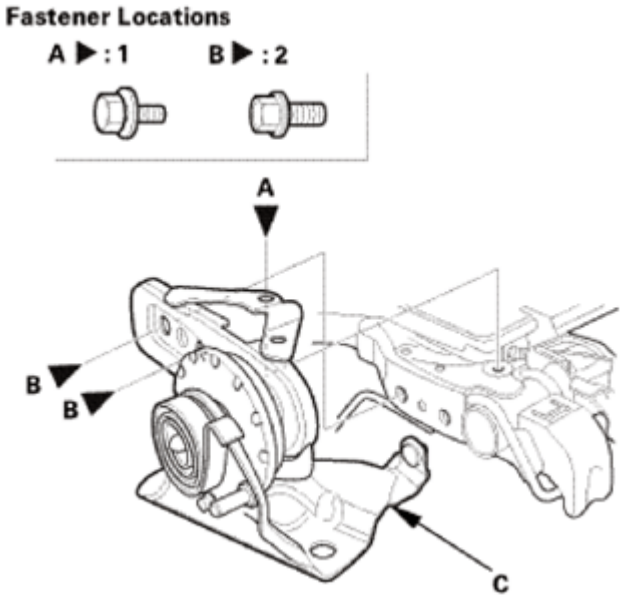

Fig. 853: Identifying Left Rear Seat-Back Outer Pivot And Bolts
Courtesy of AMERICAN HONDA MOTOR CO., INC.

2. Release the hooks (A), then remove the rear seat-back inner trim (B).
3. Remove the screw (C) and detach the hooks (D), then remove the seat-back head restraint protector (E).

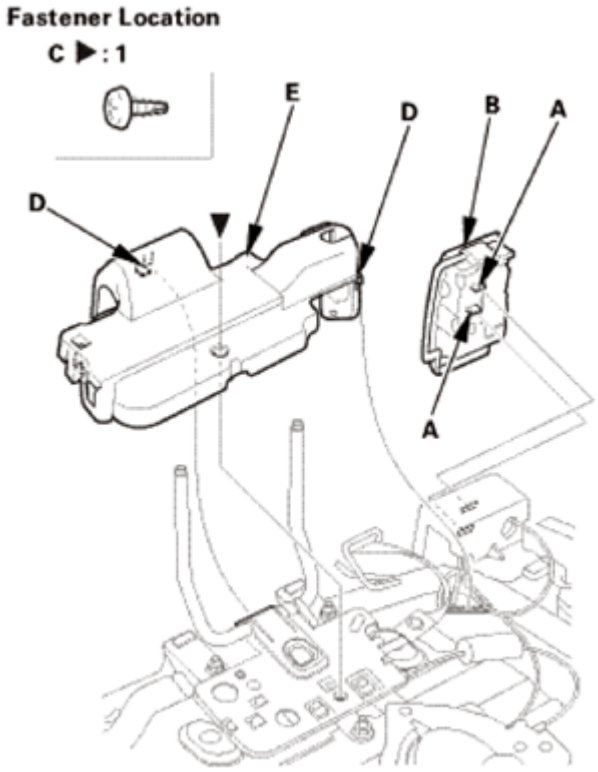

GETtheMANUALS.org

Fig. 854: Identifying Rear Seat-Back Inner Trim, Seat-Back Head Restraint Protector, Hooks And Screws
Courtesy of AMERICAN HONDA MOTOR CO., INC.

4. Remove the screws (A), then remove the rear seat-back outer cover (B).

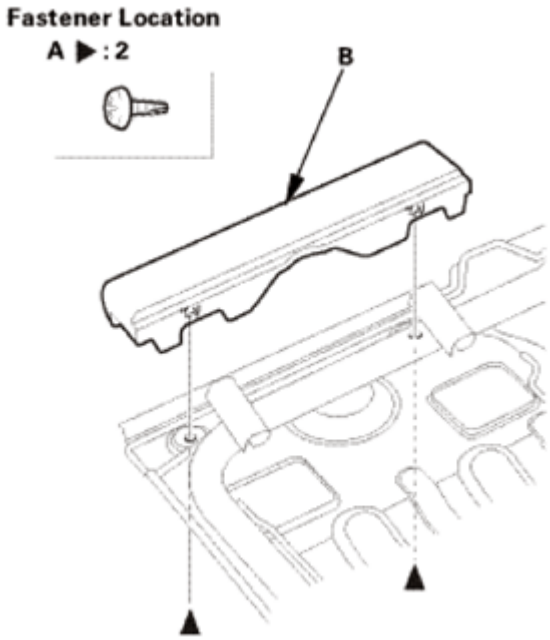

Fig. 855: Identifying Rear Seat-Back Outer Cover And Screws
Courtesy of AMERICAN HONDA MOTOR CO., INC.

5. Release the tabs (A), then remove the rear seat-back lower covers (B).
6. Remove the screw (C), then remove the rear seat-back inner cover (D).

GETtheMANUALS.org

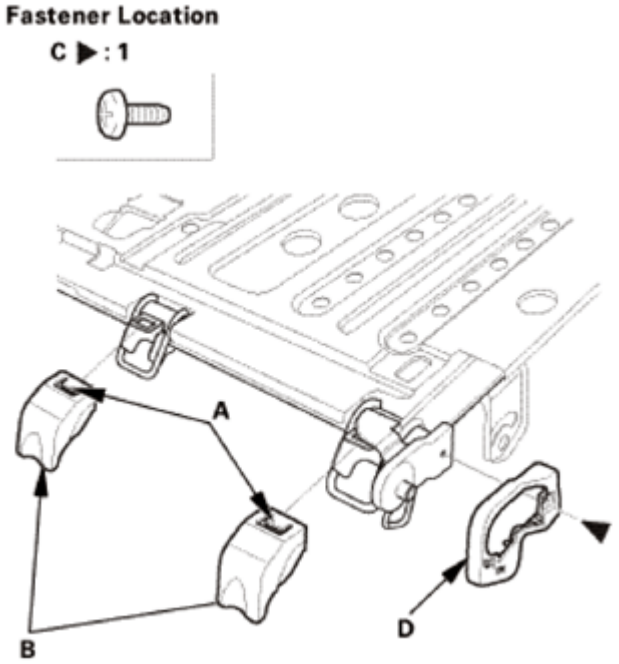

Fig. 856: Identifying Rear Seat-Back Lower And Inner Covers, Tabs And Screws
Courtesy of AMERICAN HONDA MOTOR CO., INC.

7. Release the tab (A), then remove the rear seat-back lower cover (B).
8. Release the hooks (C), then remove the rear seat-back cancel cover (D).

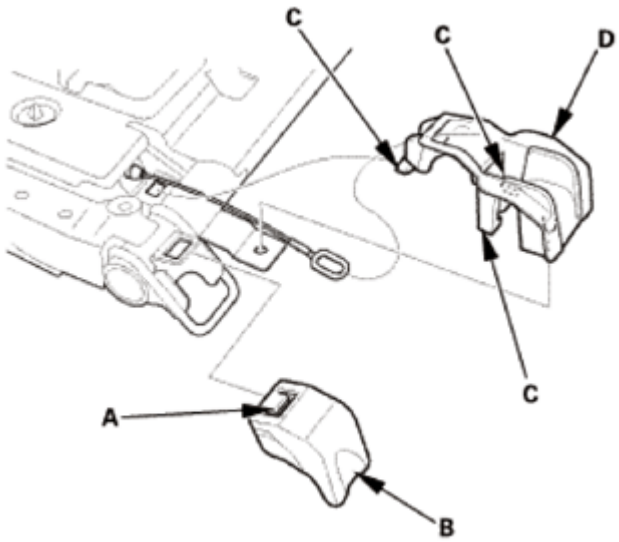

Fig. 857: Identifying Rear Seat-Back Lower And Cancel Covers, Tabs And Hooks
Courtesy of AMERICAN HONDA MOTOR CO., INC.

9. Remove the screw (A) and release the hooks (B), then remove the head restraint strap (C).
10. Remove the nuts (D), then remove the rear seat-back head restraint frame (E).

GETtheMANUALS.org

11. Detach the head restraint control cable (F) from the bracket (G).
12. Disconnect the head restraint control cable from the bracket (H).

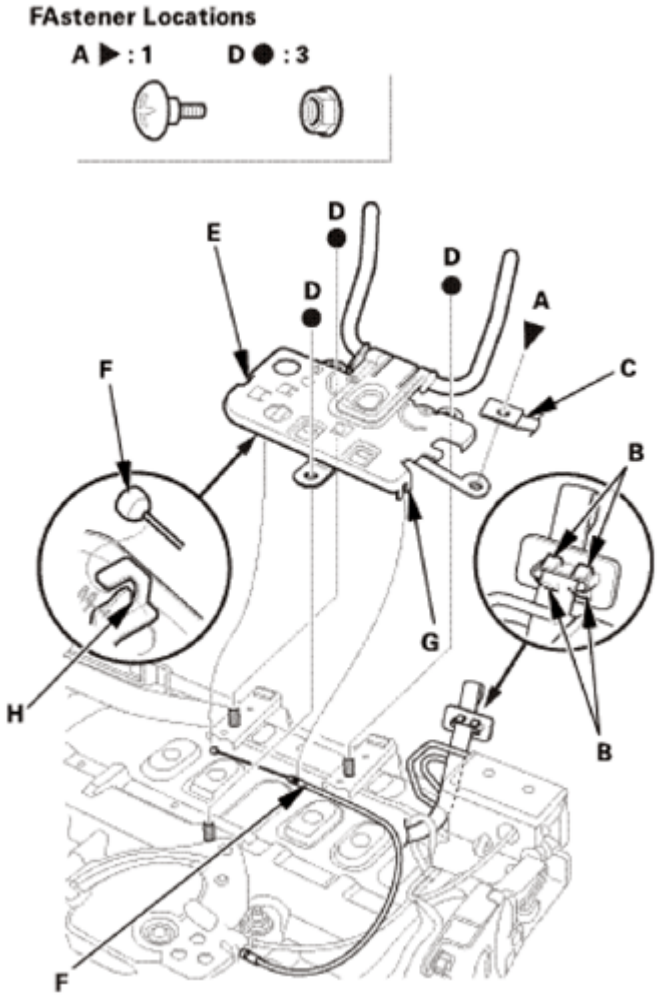

Fig. 858: Identifying Rear Seat-Back Head Restraint Frame, Bracket And Related Components
Courtesy of AMERICAN HONDA MOTOR CO., INC.

13. Remove the wire tie (A).

GETtheMANUALS.org

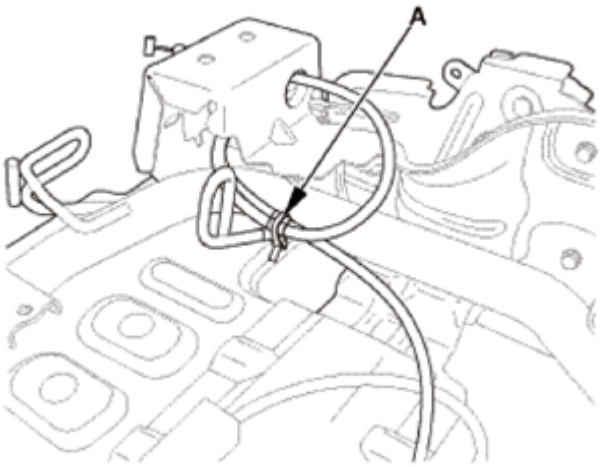

Fig. 859: Identifying Wire Tie
Courtesy of AMERICAN HONDA MOTOR CO., INC.

14. Remove the nuts (A), then remove the rear seat-back arrange unit (B).
15. Detach the rear seat-back cancel control cable (C) from the bracket (D).
16. Detach the cable clips (E).

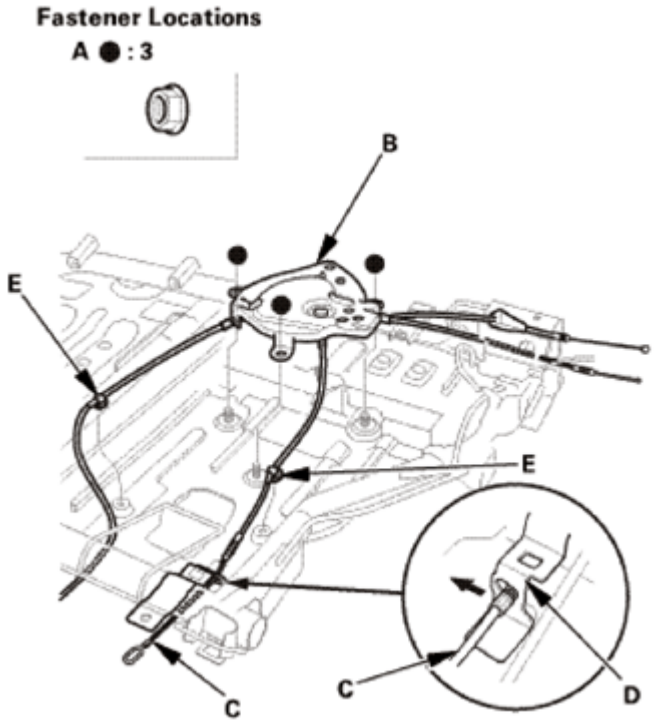

Fig. 860: Removing Rear Seat-Back Cancel Control Cable From Bracket
Courtesy of AMERICAN HONDA MOTOR CO., INC.

17. Detach the rear seat-back head restraint control cable (A), the rear seat-back lock control cable (B), the rear seat-back cancel control cable (C), and the rear seat-back arrange control cable (D) from

GETtheMANUALS.org

the cable bracket (E), then disconnect the cables from the rear seat-back arrange unit (F).

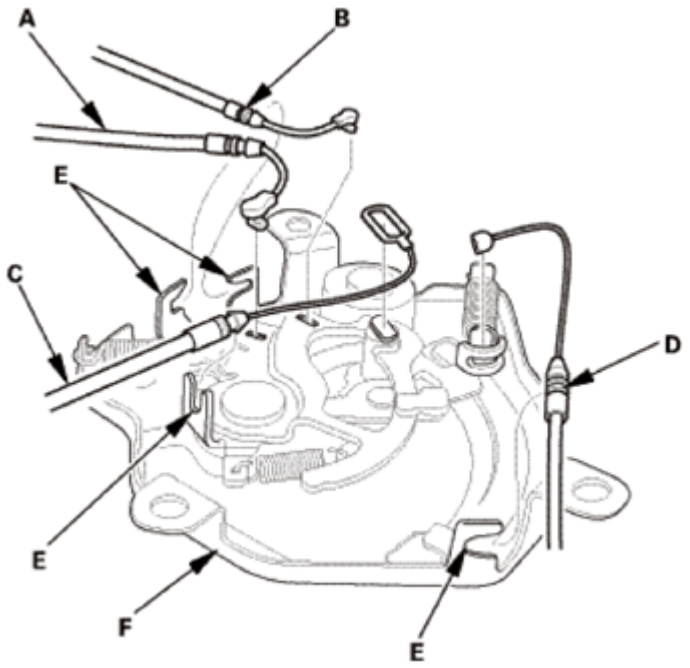

Fig. 861: Disconnecting Cables From Rear Seat-Back Arrange Unit
Courtesy of AMERICAN HONDA MOTOR CO., INC.

12. Rear Seat Head Restraint - Right Side
    1. Push a flat-tip screwdriver (A) into the notch at the center of the knob (B) to release the tab (C).

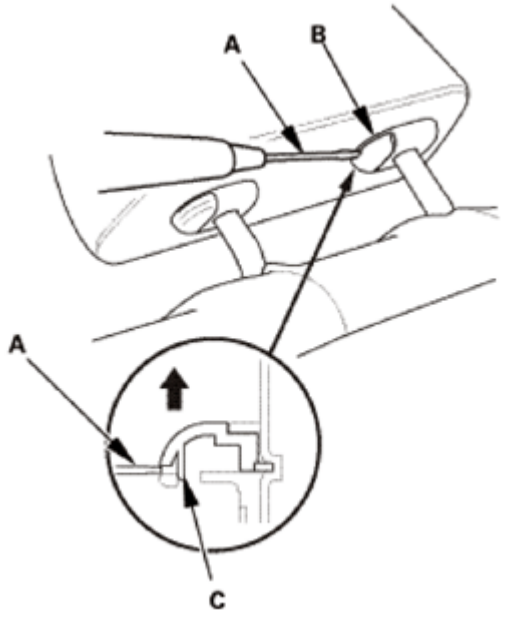

Fig. 862: Pushing Rear Seat Head Restraint Tab Using Flat-Tip Screwdriver
Courtesy of AMERICAN HONDA MOTOR CO., INC.

GETtheMANUALS.org

2. Insert a 5 mm (0.2 in) thickness flat-tip screwdriver in one side of the notch on both sides of the knob (A), then the knob is moved out about 2 mm (0.08 in).
3. Push and hold the knob (B), then pull out the head restraint (C) as shown.

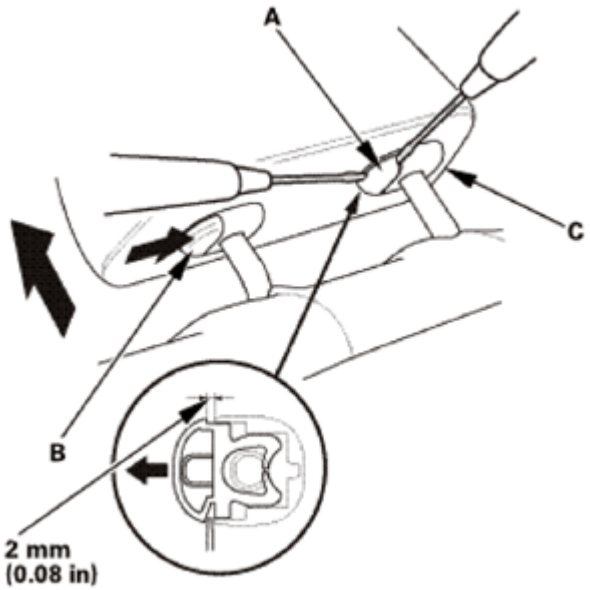

Fig. 863: Removing Head Restraint Using Tool
Courtesy of AMERICAN HONDA MOTOR CO., INC.

13. Rear Seat-Back Latch Cover - Right Side
    1. Detach the clips (A) securing the latch cover (B), and pull out the cover to detach the hooks (C).

GETtheMANUALS.org

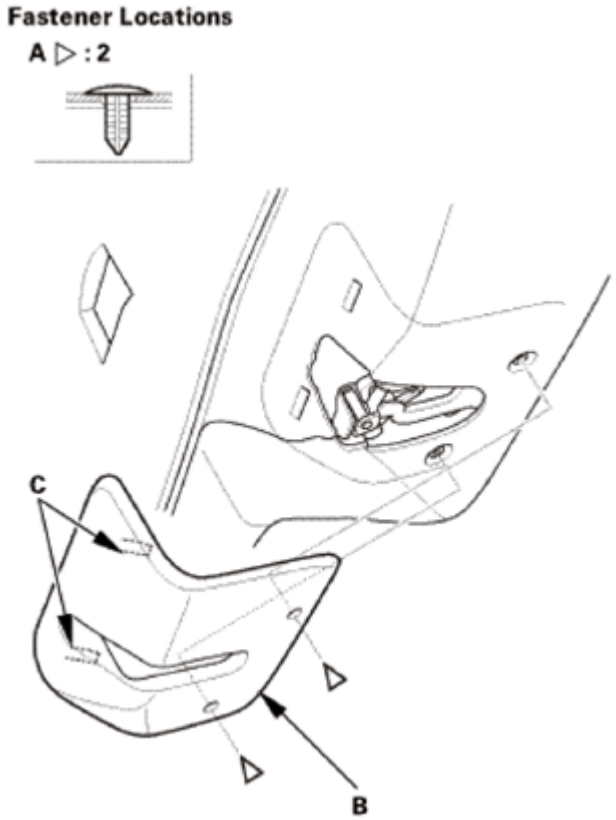

Fig. 864: Identifying Latch Cover, Hooks And Clips
Courtesy of AMERICAN HONDA MOTOR CO., INC.

14. Rear Seat-Back Cover - Right Side
    1. Release the hooks (A), then remove the tether anchor cover (B).

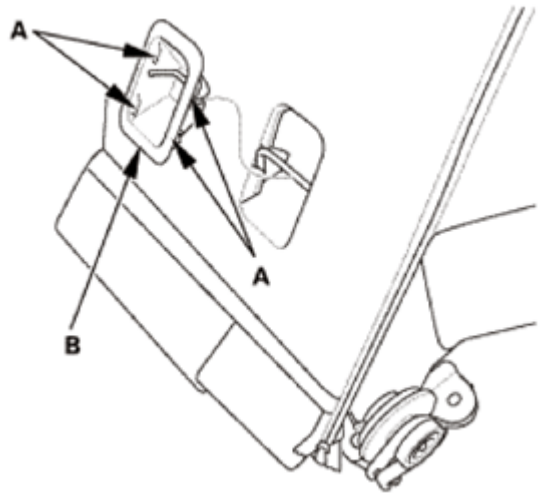

Fig. 865: Identifying Tether Anchor Cover And Hooks
Courtesy of AMERICAN HONDA MOTOR CO., INC.

GETtheMANUALS.org

2. Remove the screw (A), while pulling up the lock knob (B).
3. Pull out the lock knob trim (C).

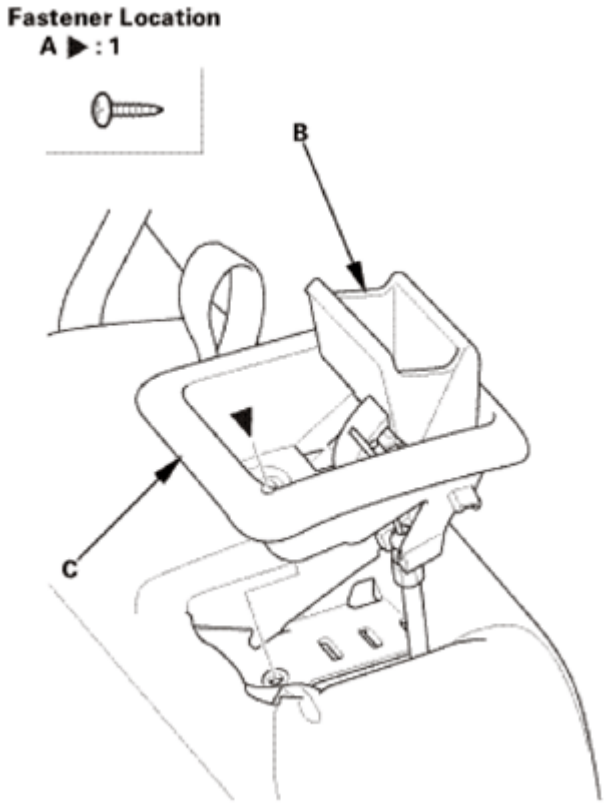

Fig. 866: Identifying Lock Knob Trim, Knob And Screw
Courtesy of AMERICAN HONDA MOTOR CO., INC.

4. Detach the rear seat-back lock knob control cable (A) from the cable bracket (B).
5. Disconnect the rear seat-back lock knob control cable from the lock knob trim (C).

GETtheMANUALS.org

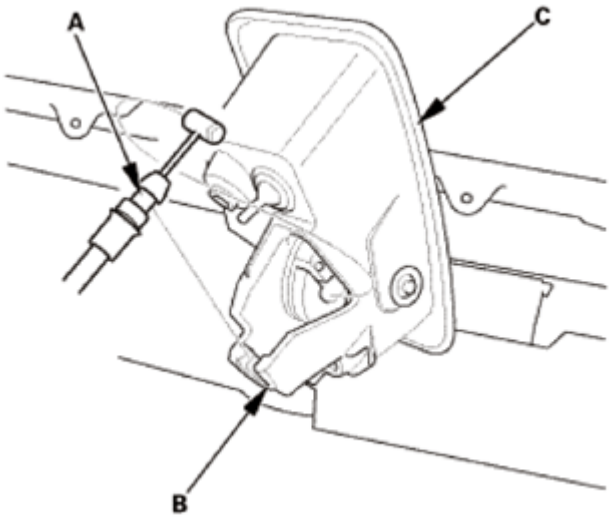

Fig. 867: Identifying Rear Seat-Back Lock Knob Control Cable, Lock Knob Trim And Bracket
Courtesy of AMERICAN HONDA MOTOR CO., INC.

6. Release the hooks (A) on the strap cover (B).

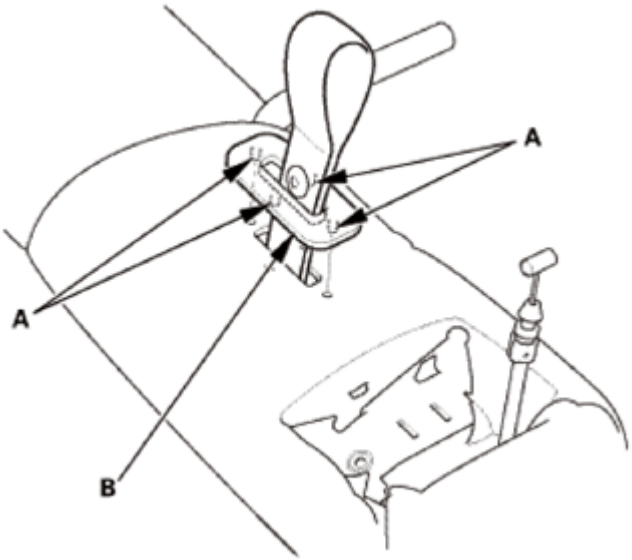

Fig. 868: Identifying Strap Cover And Hooks
Courtesy of AMERICAN HONDA MOTOR CO., INC.

7. Remove the bolt (A) with a 6 mm hex wrench.
8. Remove the washer (B), the right rear seat inner pivot (C), and the bushing (D).

GETtheMANUALS.org

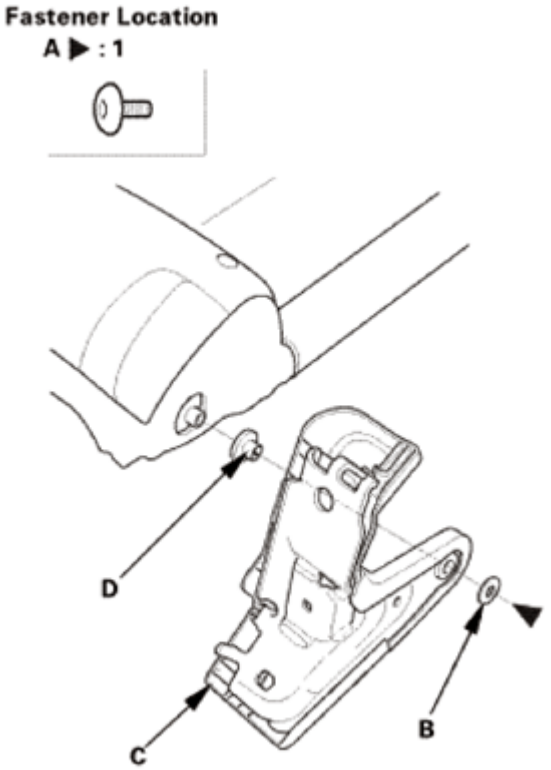

Fig. 869: Identifying Right Rear Seat Inner Pivot, Bushing, Washer And Bolt
Courtesy of AMERICAN HONDA MOTOR CO., INC.

9. Release the hooks (A), then remove the covers (B) from the right rear seat inner pivot (C).

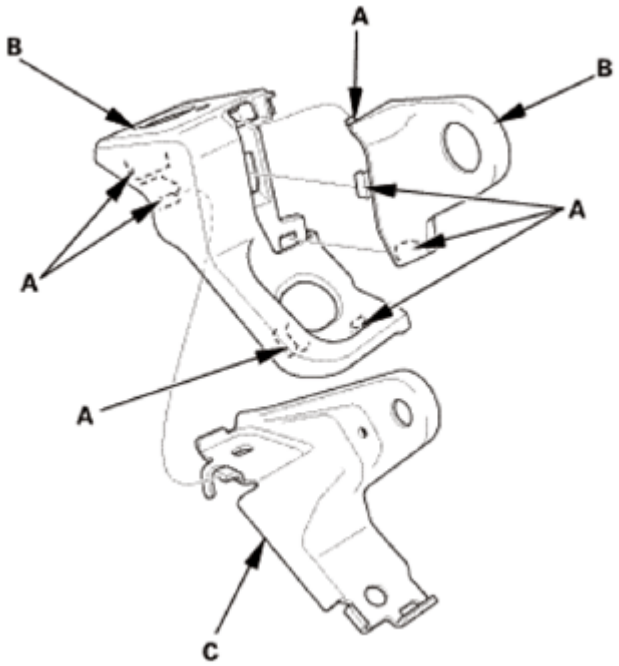

Fig. 870: Identifying Right Rear Seat Inner Pivot, Cover And Hooks

GETtheMANUALS.org

Courtesy of AMERICAN HONDA MOTOR CO., INC.

10. Remove the push nut (A), then disconnect the rear seat-back cancel control cable (B) from the right rear seat cushion pivot (C).
11. Pull out the rear seat arrange control cable (D) through the hole (E) in the rear seat-back cover (F).

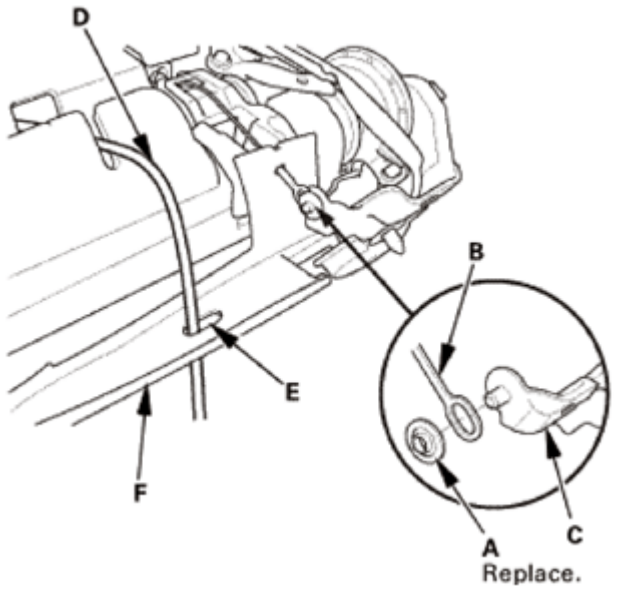

Fig. 871: Identifying Rear Seat-Back Cancel Control Cable, Seat Cushion Pivot, Seat Arrange Control Cable, Cover And Nut
Courtesy of AMERICAN HONDA MOTOR CO., INC.

12. Release the hook (A).
13. Release the hook and loop fastener (B).

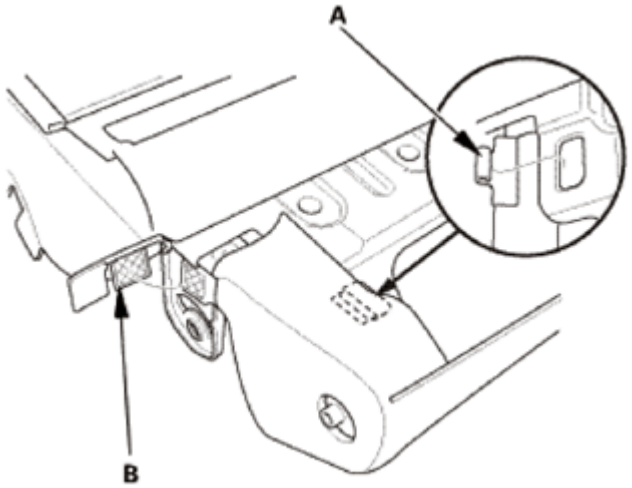

Fig. 872: Identifying Hook And Loop Fastener And Hooks
Courtesy of AMERICAN HONDA MOTOR CO., INC.

GETtheMANUALS.org

14. Detach the rear seat-back cover (A) from the hooks (B) of the rear seat-back inner trim (C).

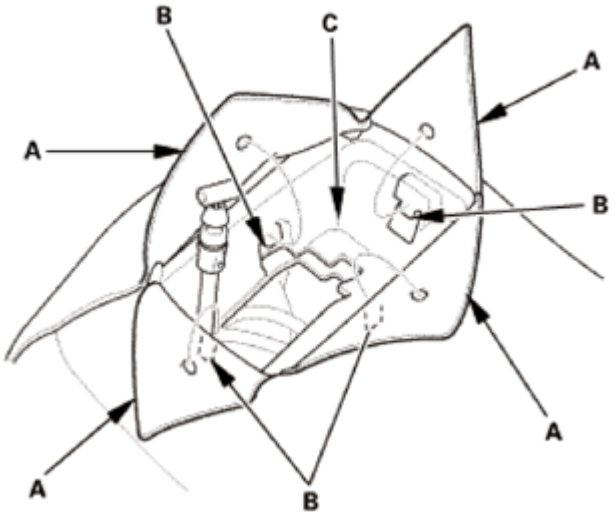

Fig. 873: Identifying Rear Seat-Back Cover, Trim And Hooks
Courtesy of AMERICAN HONDA MOTOR CO., INC.

15. Unzip the rear seat-back cover (A).
16. Release the hook strips (B).

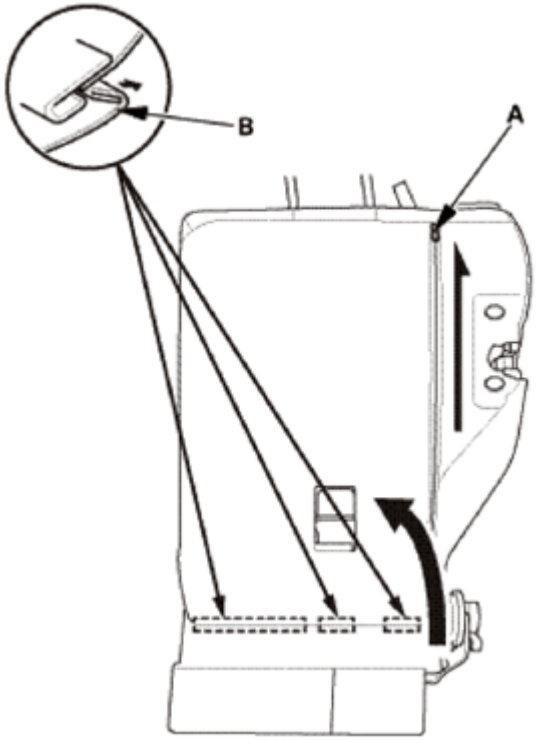

Fig. 874: Removing Rear Seat-Back Cover
Courtesy of AMERICAN HONDA MOTOR CO., INC.

GETtheMANUALS.org

17. Detach the clip (A) from the rear seat-back frame (B), then remove the seat-back cover/pad (C).

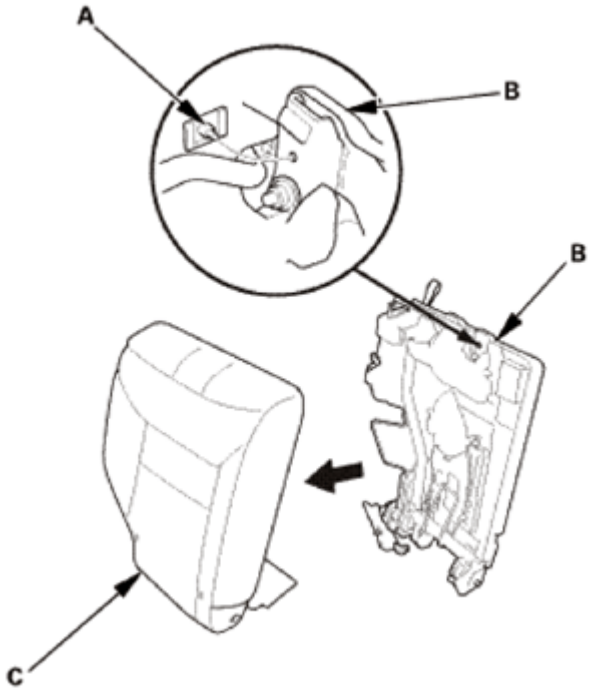

Fig. 875: Removing Seat-Back Cover/Pad
Courtesy of AMERICAN HONDA MOTOR CO., INC.

15. Rear Seat-Back Latch - Right Side
    1. Detach the rear seat-back lock knob control cable (A) and the rear seat-back lock control cable (B) from the cable bracket (C).
    2. Disconnect the rear seat-back lock knob control cable and the rear seat-back lock control cable from the rear seat-back latch (D).
    3. Remove the bolts (E), then remove the rear seat-back latch.

GETtheMANUALS.org

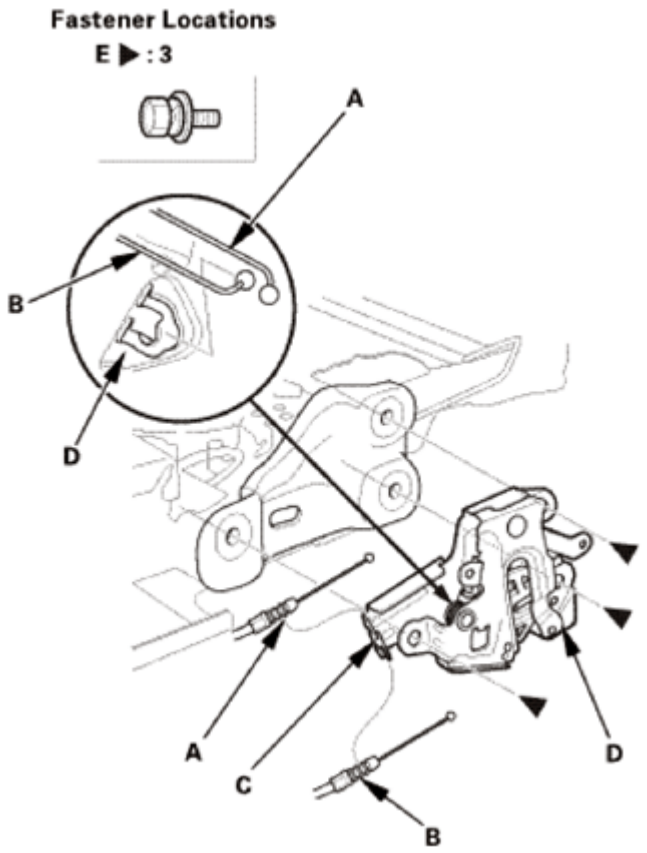

Fig. 876: Identifying Rear Seat-Back Lock And Lock Knob Control Cable, Bracket, Latch And Bolts
Courtesy of AMERICAN HONDA MOTOR CO., INC.

16. Rear Seat-Back Frame - Right Side
    1. Remove the bolts (A, B), then remove the right rear seat-back outer pivot (C).

GETtheMANUALS.org

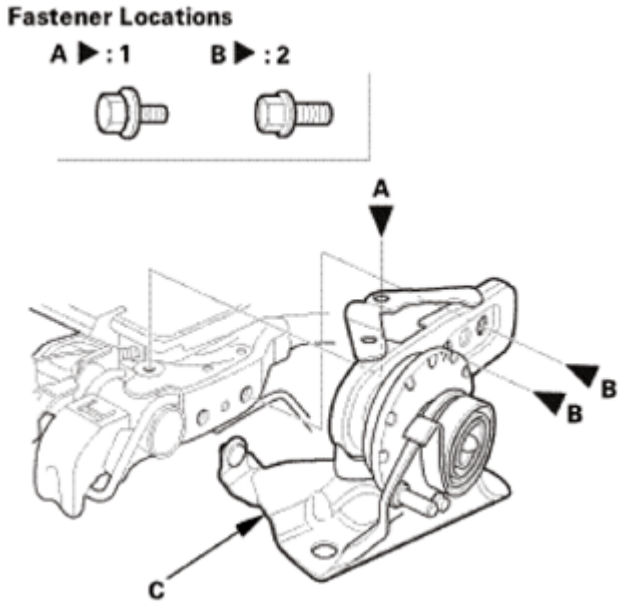

Fig. 877: Identifying Right Rear Seat-Back Outer Pivot And Bolts
Courtesy of AMERICAN HONDA MOTOR CO., INC.

2. Release the hooks (A), then remove the rear seat-back inner trim (B).
3. Remove the screw (C) and detach hooks (D), then remove the seat-back head restraint protector (E).

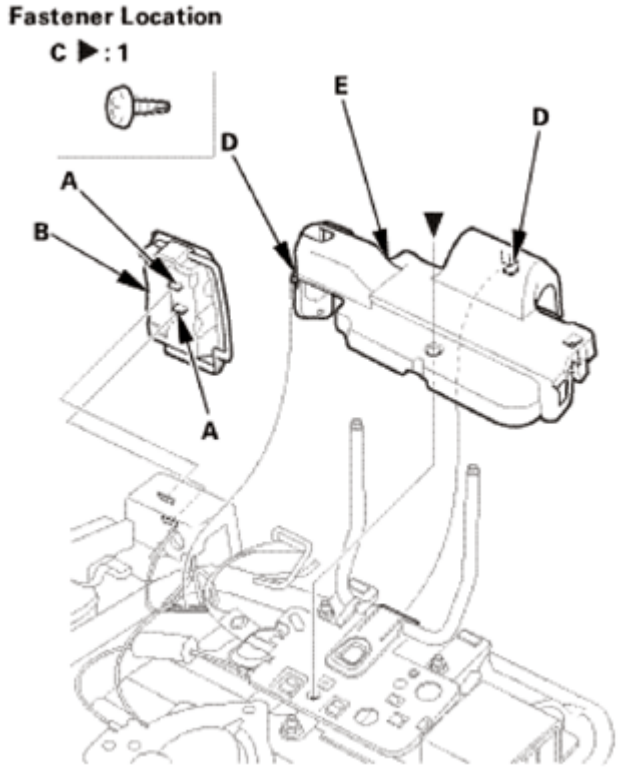

GETtheMANUALS.org

Fig. 878: Identifying Rear Seat-Back Inner Trim, Seat-Back Head Restraint Protector, Hooks And Screws
Courtesy of AMERICAN HONDA MOTOR CO., INC.

4. Release the tab (A), then remove the rear seat-back lower cover (B).
5. Remove the screw (C), then remove the rear seat-back inner cover (D).

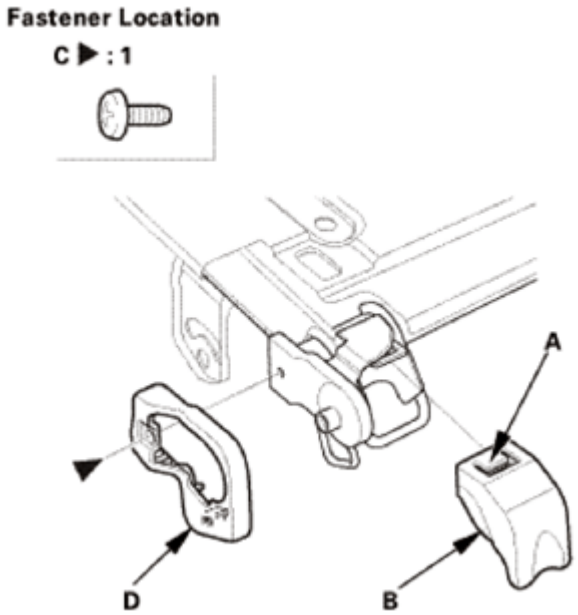

Fig. 879: Identifying Rear Seat-Back Lower And Inner Covers, Tabs And Screws
Courtesy of AMERICAN HONDA MOTOR CO., INC.

6. Release the tab (A), then remove the rear seat-back lower cover (B).
7. Release the hooks (C), then remove the rear seat-back cancel cover (D).

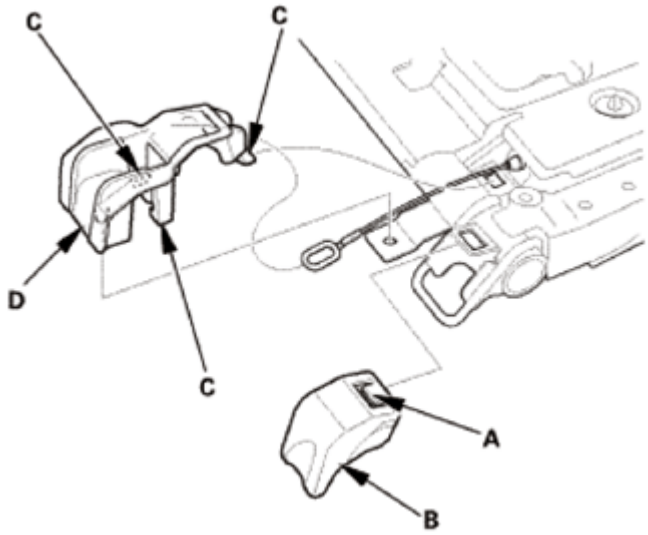

GETtheMANUALS.org

Fig. 880: Identifying Rear Seat-Back Lower And Cancel Covers, Tabs And Hooks
Courtesy of AMERICAN HONDA MOTOR CO., INC.

8. Remove the screw (A) and release the hooks (B), then remove the head restraint strap (C).
9. Remove the nuts (D), then remove the rear seat-back head restraint frame (E).
10. Detach the head restraint control cable (F) from the bracket (G).
11. Disconnect the head restraint control cable from the bracket (H).

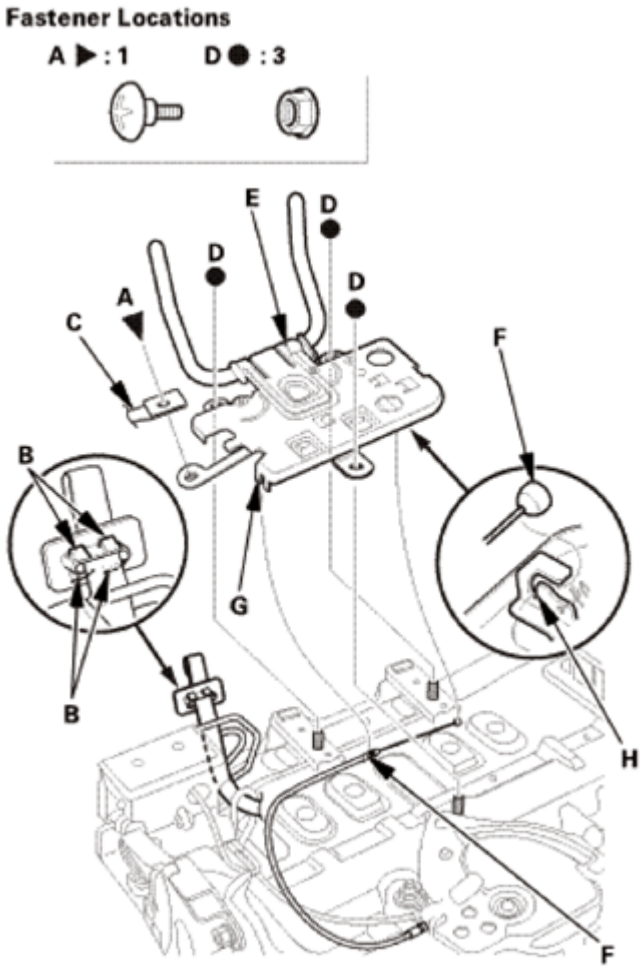

Fig. 881: Identifying Rear Seat-Back Head Restraint Frame, Bracket And Related Components
Courtesy of AMERICAN HONDA MOTOR CO., INC.

12. Remove the wire tie (A).

GETtheMANUALS.org

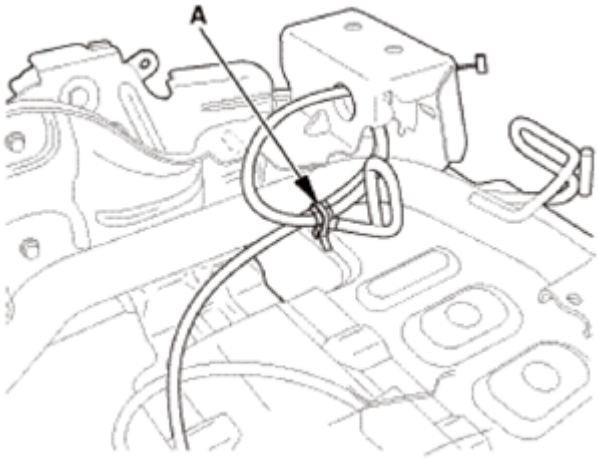

Fig. 882: Identifying Wire Tie
Courtesy of AMERICAN HONDA MOTOR CO., INC.

13. Remove the nuts (A), then remove the rear seat-back arrange unit (B).
14. Detach the rear seat-back cancel control cable (C) from the bracket (D).
15. Detach the cable clips (E).

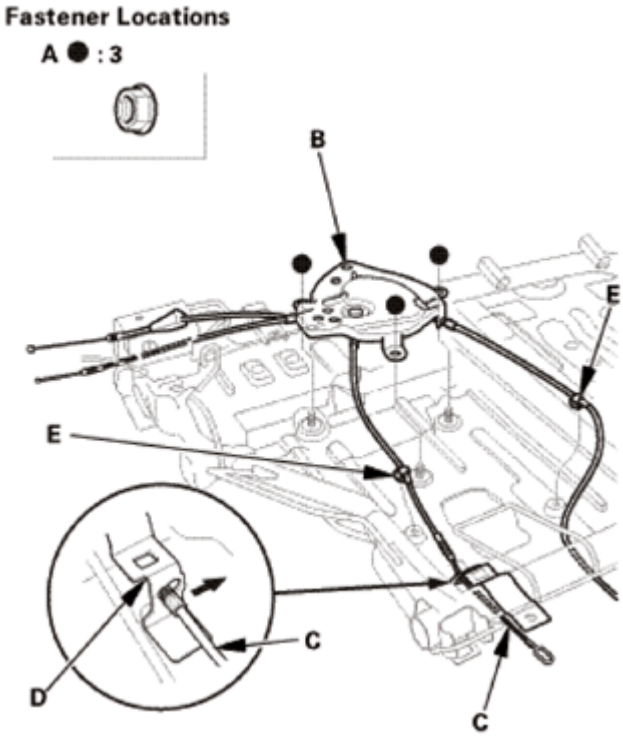

Fig. 883: Removing Rear Seat-Back Cancel Control Cable From Bracket
Courtesy of AMERICAN HONDA MOTOR CO., INC.

16. Detach the rear seat-back head restraint control cable (A), the rear seat-back lock control cable (B), the rear seat-back cancel control cable (C), and the rear seat-back arrange control cable (D) from

GETtheMANUALS.org

the cable bracket (E), then disconnect the cables from the rear seat-back arrange unit (F).

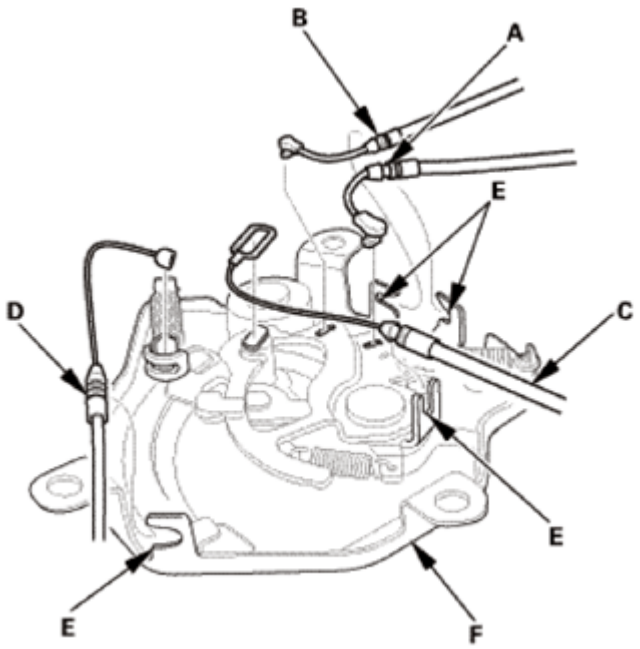

Fig. 884: Disconnecting Cables From Rear Seat-Back Arrange Unit
Courtesy of AMERICAN HONDA MOTOR CO., INC.

17. Remove the rear seat-back damper (A) from the rear seat-back frame (B).

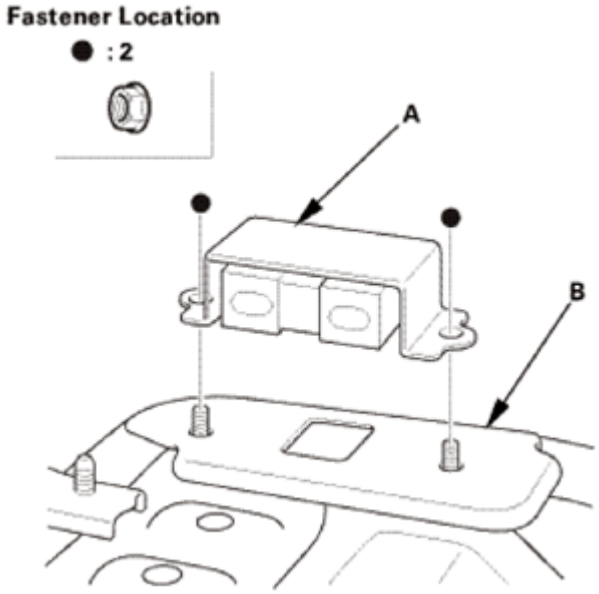

Fig. 885: Identifying Rear Seat-Back Damper And Frame
Courtesy of AMERICAN HONDA MOTOR CO., INC.

INSTALLATION

GETtheMANUALS.org

NOTE: Steps 1-5 show installing the right side, steps 6-11 show installing the left side.

1. Rear Seat-Back Frame - Right Side
    1. Install the rear seat-back damper (A) to the rear seat-back frame (B).

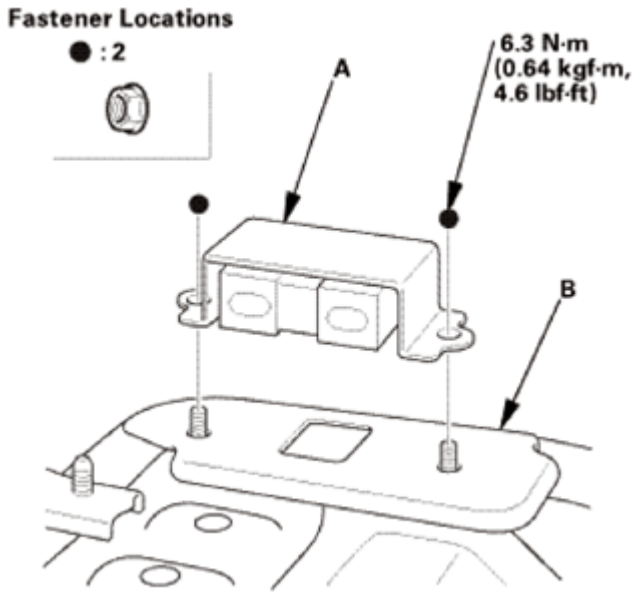

Fig. 886: Identifying Rear Seat-Back Damper And Frame With Torque Specifications
Courtesy of AMERICAN HONDA MOTOR CO., INC.

2. Connect the rear seat-back head restraint control cable (A), the rear seat-back lock knob control cable (B), the rear seat-back cancel control cable (C), and the rear seat-back arrange control cable (D) to the rear seat-back arrange unit (E), then install the cables to the cable bracket (F).

NOTE: Make sure each cable is connected securely.

GETtheMANUALS.org

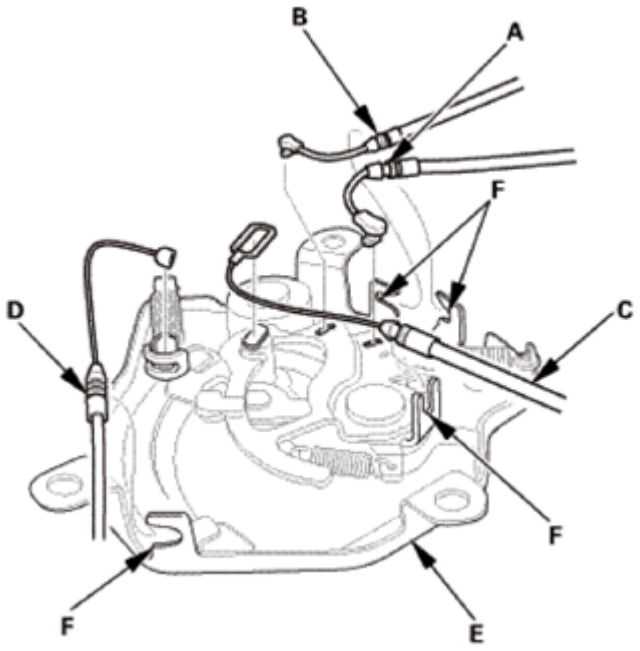

Fig. 887: Installing Cables To Cable Bracket
Courtesy of AMERICAN HONDA MOTOR CO., INC.

3. Insert the cables to the seat-back frame (A) as shown, and install the cable clips (B). The clips snap into place securely.
4. Install the rear seat-back cancel control cable (C) to the bracket (D).
5. Install the rear seat-back arrange unit (E).

GETtheMANUALS.org

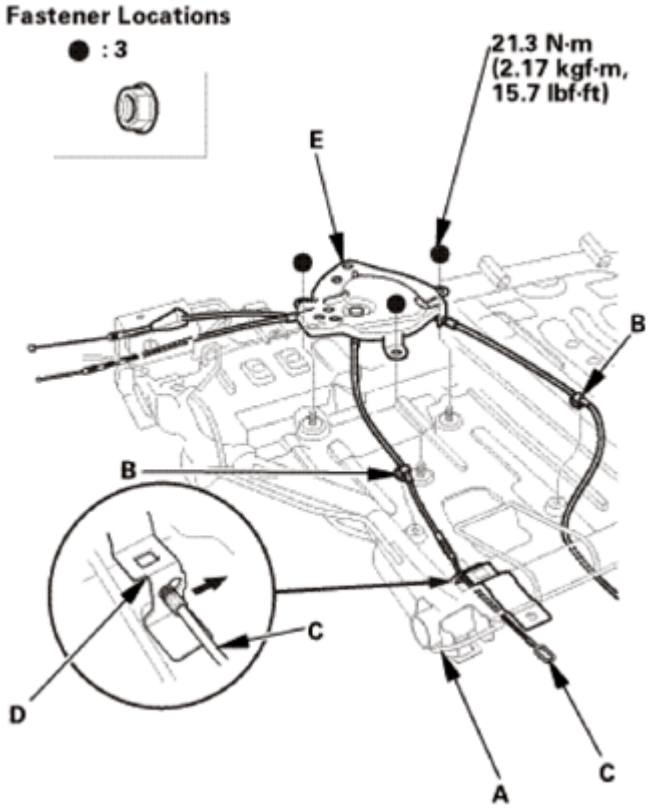

Fig. 888: Installing Rear Seat-Back Cancel Control Cable To Bracket
Courtesy of AMERICAN HONDA MOTOR CO., INC.

6. Install the wire tie (A) to the seat-back frame (B) as shown.

NOTE: Wire tie the cables at the locations marked with tape (C).

GETtheMANUALS.org

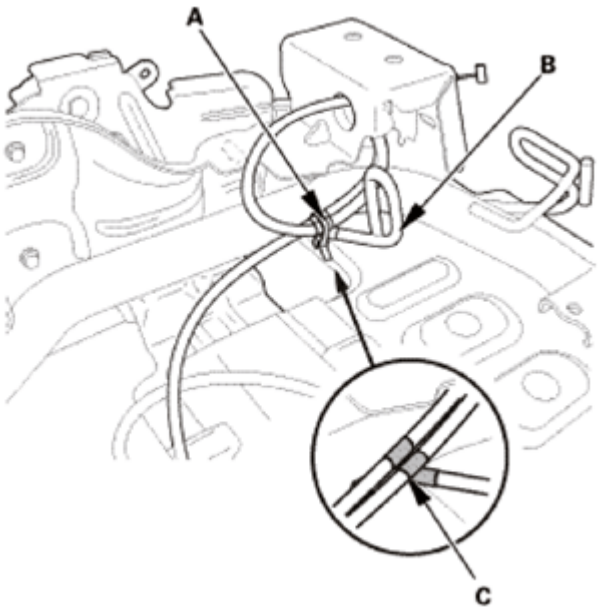

Fig. 889: Identifying Seat-Back Frame And Wire Tie
Courtesy of AMERICAN HONDA MOTOR CO., INC.

7. Install the head restraint control cable (A) to the bracket (B).
8. Install the head restraint control cable to the bracket (C).

NOTE: Make sure the cable is connected securely.

9. Install the rear seat-back head restraint frame (D) and nuts (E).
10. Install the head restraint strap (F), then install the screw (G).

Make sure the hooks (H) snap into place securely.

GETtheMANUALS.org

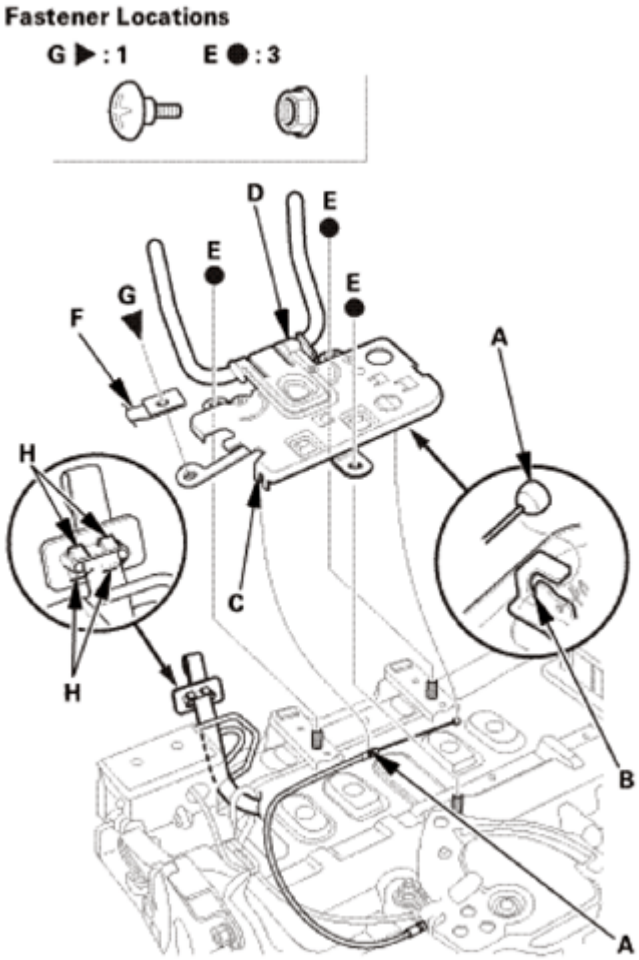

Fig. 890: Identifying Rear Seat-Back Head Restraint Frame And Related Components
Courtesy of AMERICAN HONDA MOTOR CO., INC.

11. Install the rear seat-back cancel control cable (A) through the holes (B) in the seat-back cancel cover (C).
12. Install the seat-back cancel cover. Make sure the hooks (D) snap into place securely.
13. Install the rear seat-back lower cover (E). Make sure the tab (F) snaps into place securely.

GETtheMANUALS.org

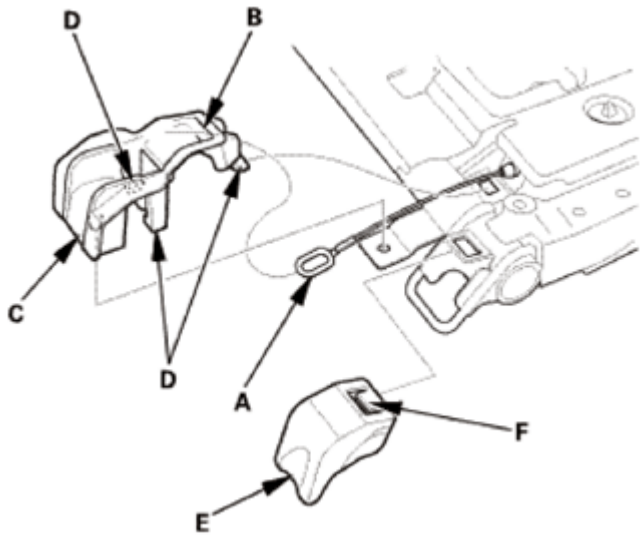

Fig. 891: Identifying Rear Seat-Back Cancel Control Cable, Holes, Seat-Back Cancel Cover And Hooks
Courtesy of AMERICAN HONDA MOTOR CO., INC.

14. Install the rear seat-back inner cover (A), then install the screw (B).
15. Install the rear seat-back lower cover (C). Make sure the tab (D) snaps into place securely.

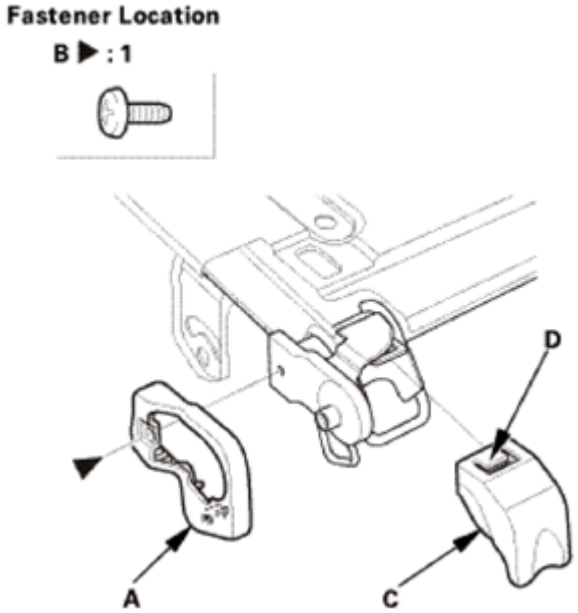

Fig. 892: Identifying Rear Seat-Back Inner And Lower Cover, Tabs And Screws
Courtesy of AMERICAN HONDA MOTOR CO., INC.

16. Install the seat-back head restraint protector (A). Make sure the hooks (B) snap into place securely.
17. Install the rear seat-back inner trim (C). Make sure the hooks (D) snap into place securely.

GETtheMANUALS.org

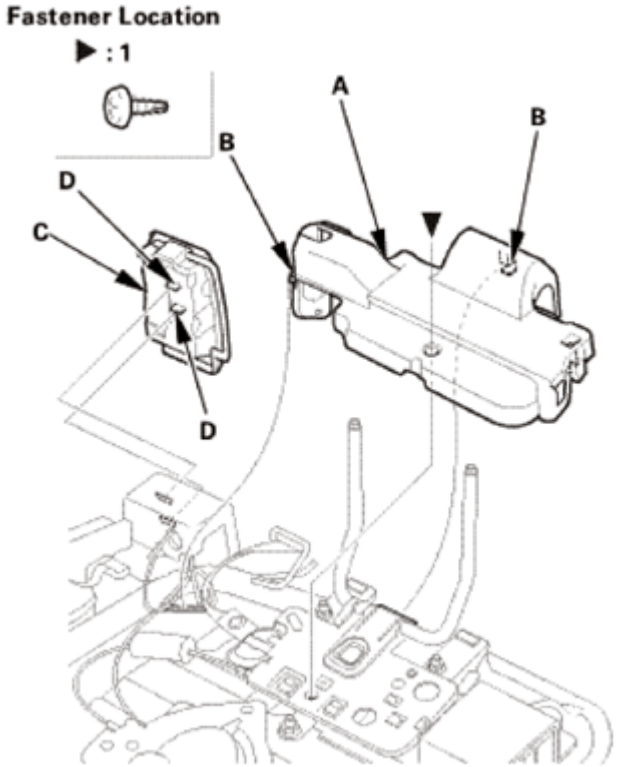

Fig. 893: Identifying Seat-Back Head Restraint Protector, Rear Seat-Back Inner Trim And Hooks
Courtesy of AMERICAN HONDA MOTOR CO., INC.

18. Install the right rear seat-back outer pivot (A), then install the bolts (B, C).

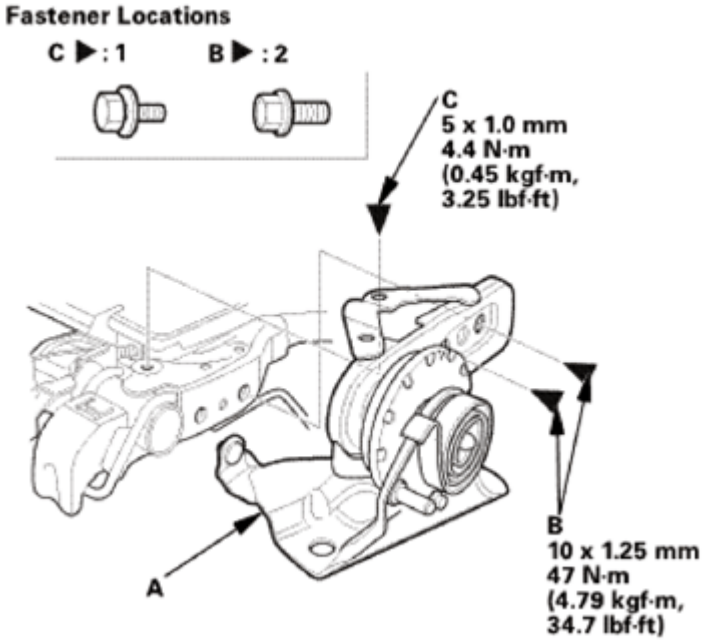

GETtheMANUALS.org

Fig. 894: Identifying Right Rear Seat-Back Outer Pivot And Bolts With Torque Specifications
Courtesy of AMERICAN HONDA MOTOR CO., INC.

2. Rear Seat-Back Latch - Right Side
    1. Install the rear seat-back latch (A) and the bolts (B).
    2. Connect the rear seat-back lock knob control cable (C) and the rear seat-back lock control cable (D) to the rear seat-back latch.
    3. Install the rear seat-back lock knob control cable and the rear seat-back lock control cable to the cable bracket (E).

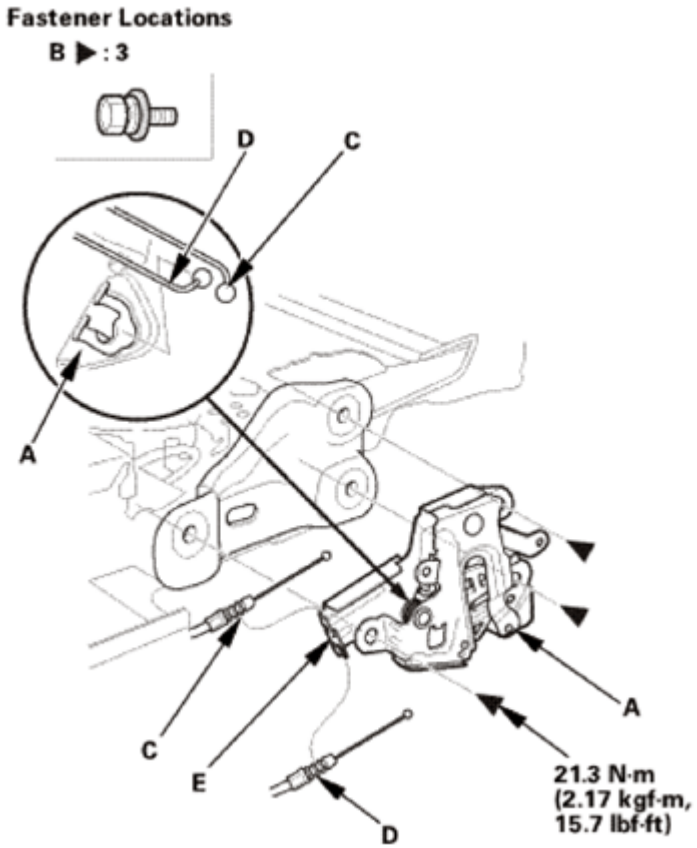

Fig. 895: Identifying Rear Seat-Back Lock And Lock Knob Control Cable, Bracket, Latch And Bolts With Torque Specifications
Courtesy of AMERICAN HONDA MOTOR CO., INC.

3. Rear Seat-Back Cover - Right Side
    1. Install the rear seat-back cover/pad (A) to the rear seat-back frame (B). Make sure the clip (C) snaps into place securely.

GETtheMANUALS.org

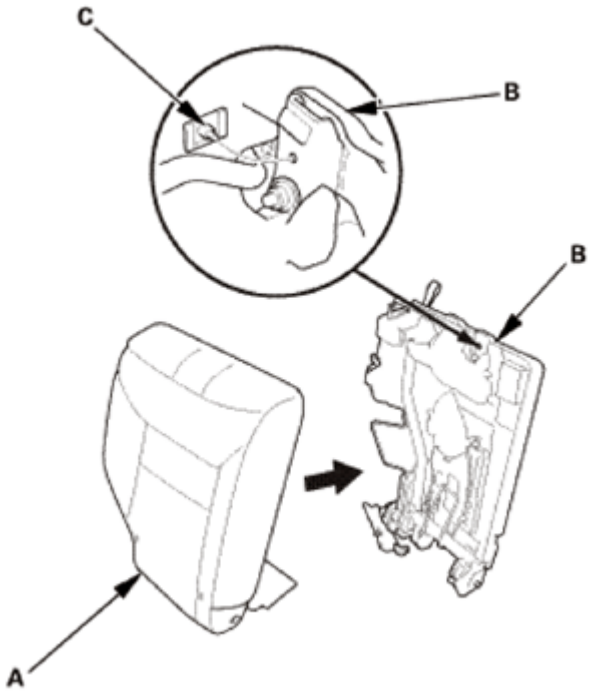

Fig. 896: Installing Rear Seat-Back Cover/Pad To Rear Seat-Back Frame
Courtesy of AMERICAN HONDA MOTOR CO., INC.

2. Zip the rear seat-back cover (A).
3. Install the hook strips (B) into place securely.

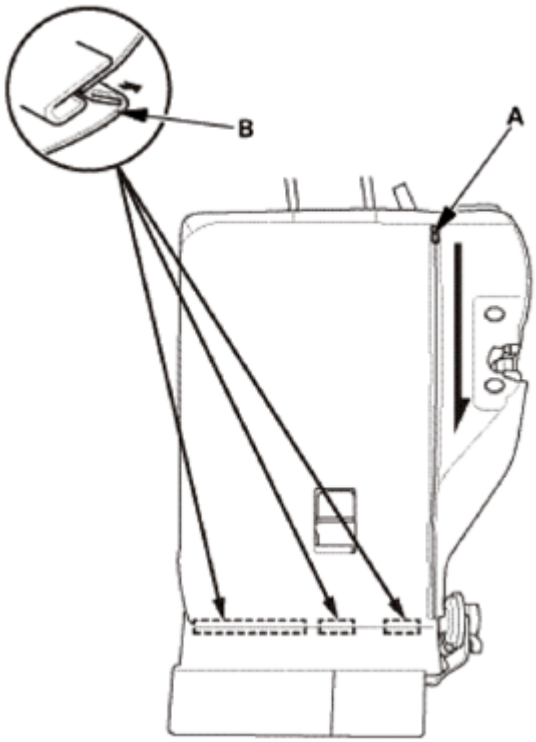

GETtheMANUALS.org

Fig. 897: Installing Rear Seat-Back Cover
Courtesy of AMERICAN HONDA MOTOR CO., INC.

4. Install the holes (A) to the hooks (B) of the seat-back inner trim (C).

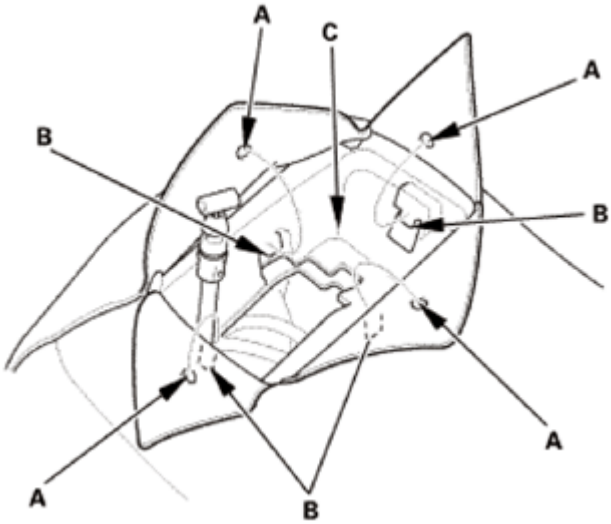

Fig. 898: Identifying Seat-Back Inner Trim, Hooks And Holes
Courtesy of AMERICAN HONDA MOTOR CO., INC.

5. Install the hook and loop fastener (A) into place securely.
6. Install the hook (B) into place securely.

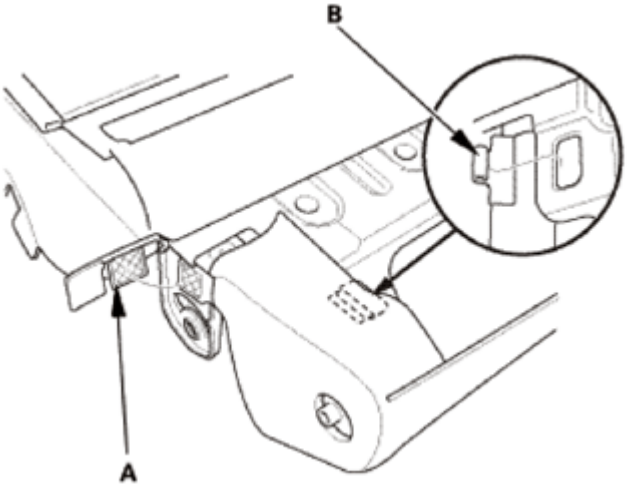

Fig. 899: Identifying Rear Seat-Back Cover Hook And Loop Fastener And Hook
Courtesy of AMERICAN HONDA MOTOR CO., INC.

7. Install the rear seat-back cancel control cable (A) to the right rear seat cushion pivot (B), then install the push nut (C).
8. Install the rear seat arrange control cable (D) through the hole (E) in the rear seat-back cover (F).

GETtheMANUALS.org

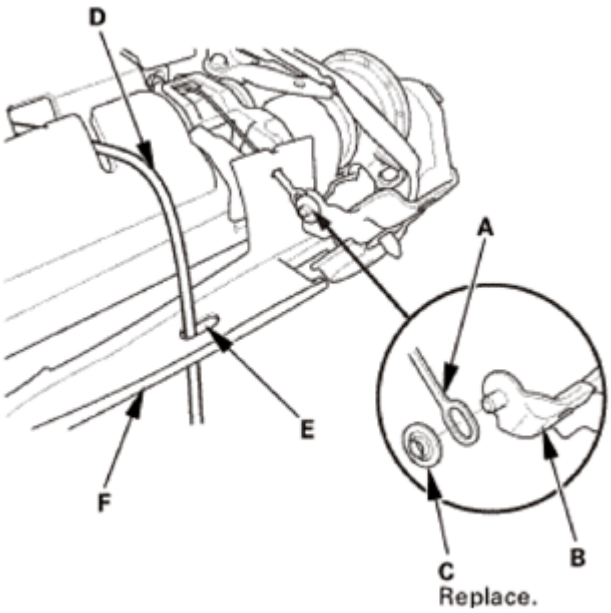

Fig. 900: Identifying Rear Seat-Back Cancel Control Cable, Right Rear Seat Cushion Pivot, Push Nut And Related Components
Courtesy of AMERICAN HONDA MOTOR CO., INC.

9. Install the covers (A) to right rear seat pivot (B). Make sure the hooks (C) snap into place securely.

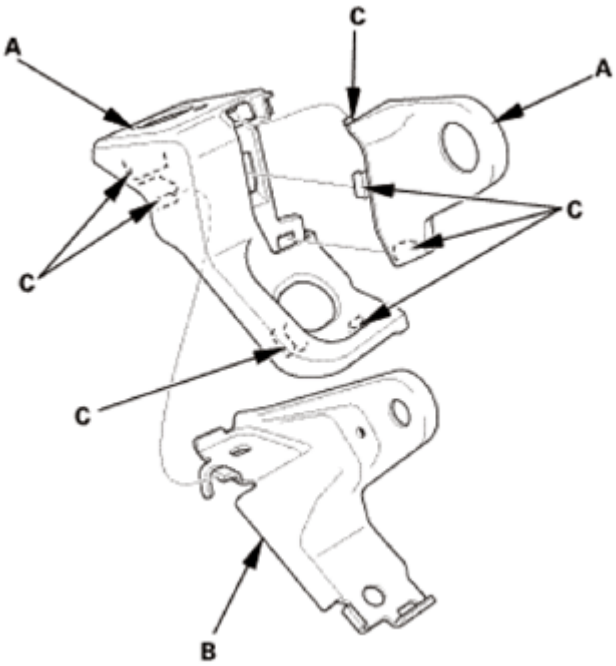

Fig. 901: Identifying Right Rear Seat Pivot, Covers And Hooks
Courtesy of AMERICAN HONDA MOTOR CO., INC.

10. Apply oil to the pivot bushing (A).

GETtheMANUALS.org

11. Install the pivot bushing, the right rear seat inner pivot (B), and the washer (C).
12. Install the bolt (D) with a 6 mm hex wrench.

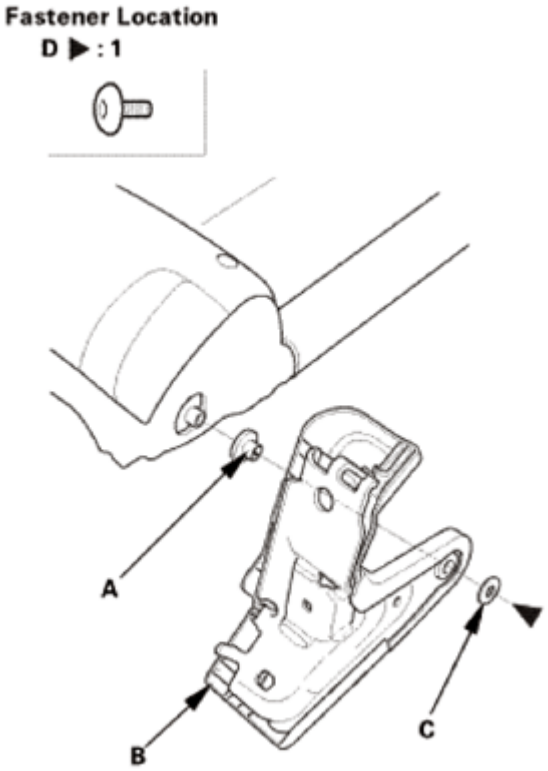

Fig. 902: Identifying Right Rear Seat Inner Pivot, Bushing, Washer And Bolt
Courtesy of AMERICAN HONDA MOTOR CO., INC.

13. Install the strap cover (A). Make sure the hooks (B) snap into place securely.

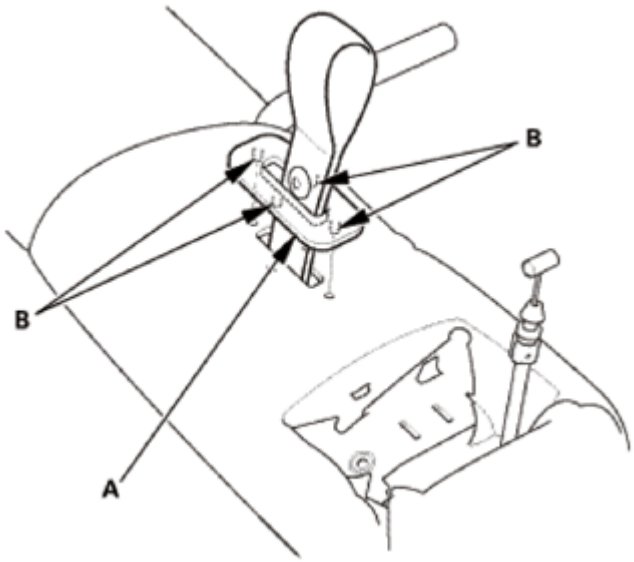

GETtheMANUALS.org

Fig. 903: Identifying Strap Cover And Hooks
Courtesy of AMERICAN HONDA MOTOR CO., INC.

14. Connect the rear seat-back lock knob control cable (A) to the lock knob trim (B).
15. Install the rear seat-back lock knob control cable to the cable bracket (C).

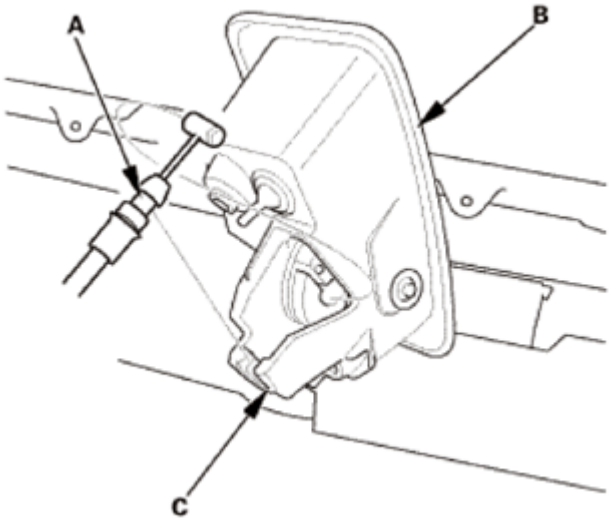

Fig. 904: Identifying Rear Seat-Back Lock Knob Control Cable And Bracket
Courtesy of AMERICAN HONDA MOTOR CO., INC.

16. Install the lock knob trim (A).
17. Install the screw (B), while pulling up the lock knob (C).

GETtheMANUALS.org

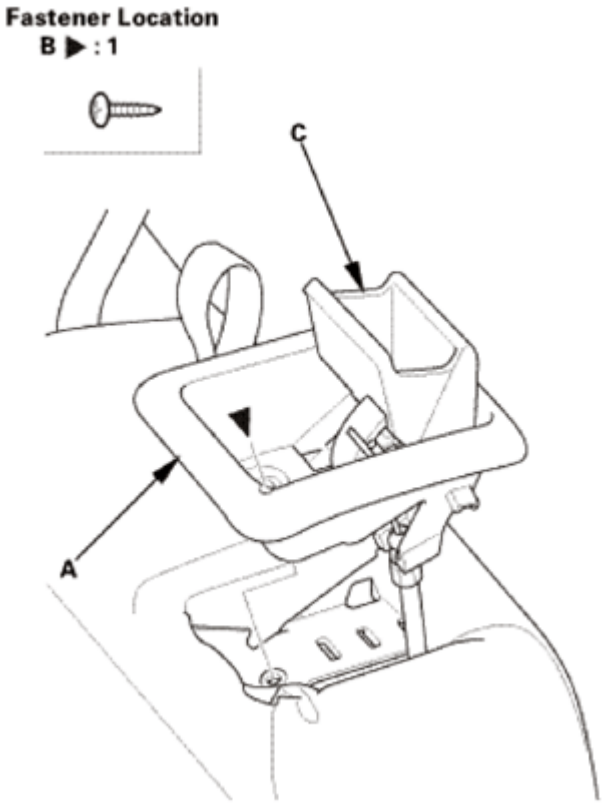

Fig. 905: Identifying Lock Knob Trim, Lock Knob And Screws
Courtesy of AMERICAN HONDA MOTOR CO., INC.

18. Install the tether anchor cover (A). Make sure the hooks (B) snap into place securely.

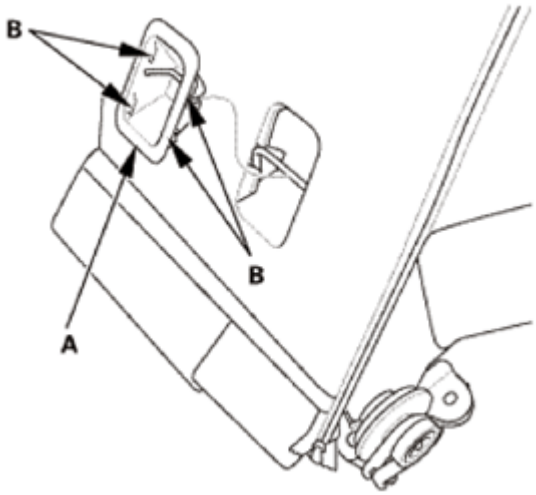

Fig. 906: Identifying Tether Anchor Cover And Hooks
Courtesy of AMERICAN HONDA MOTOR CO., INC.

4. Rear Seat-Back Latch Cover - Right Side

GETtheMANUALS.org

1. Install the right rear seat latch cover (A). Make sure the hooks (B) and the clips (C) snap into place securely.

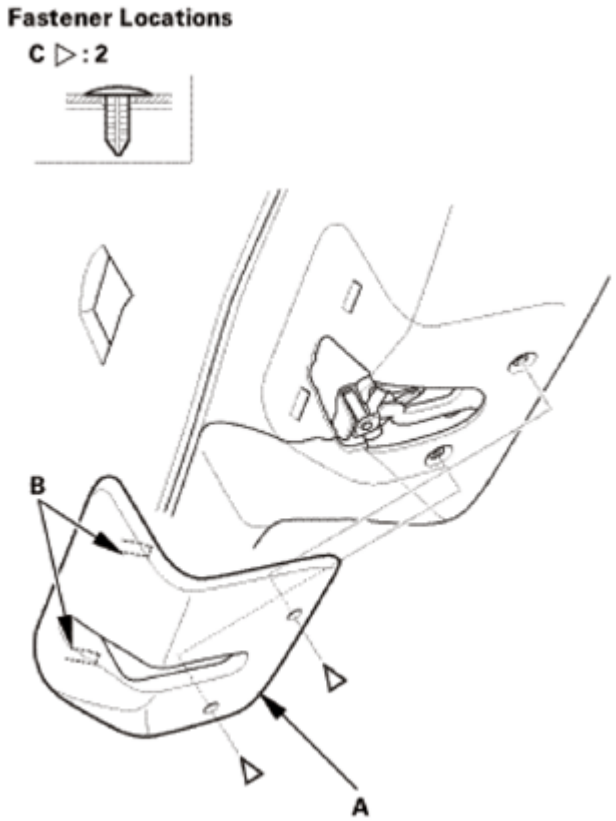

Fig. 907: Identifying Right Rear Seat Latch Cover, Hooks And Clips
Courtesy of AMERICAN HONDA MOTOR CO., INC.

5. Rear Seat Head Restraint
    1. Inspect the knob (A) if it has any of the following damage:
        - Any cracks or deformation at the tab (B) of the knob.
        - Any cracks or stress-whitening at the tab (B) of the knob.

GETtheMANUALS.org

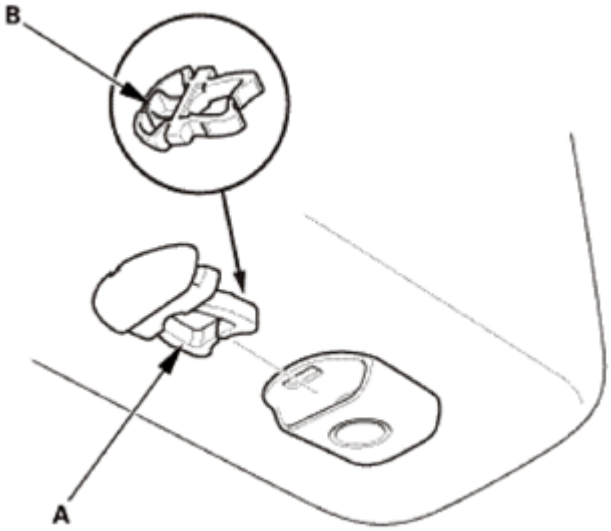

Fig. 908: Identifying Rear Seat Head Restraint Knob And Tab
Courtesy of AMERICAN HONDA MOTOR CO., INC.

2. Insert the knob (A) to the head restraint (B) as shown.
3. Install the head restraint.

NOTE: **Make sure the head restraint is locked securely. If not, replace the head restraint.**

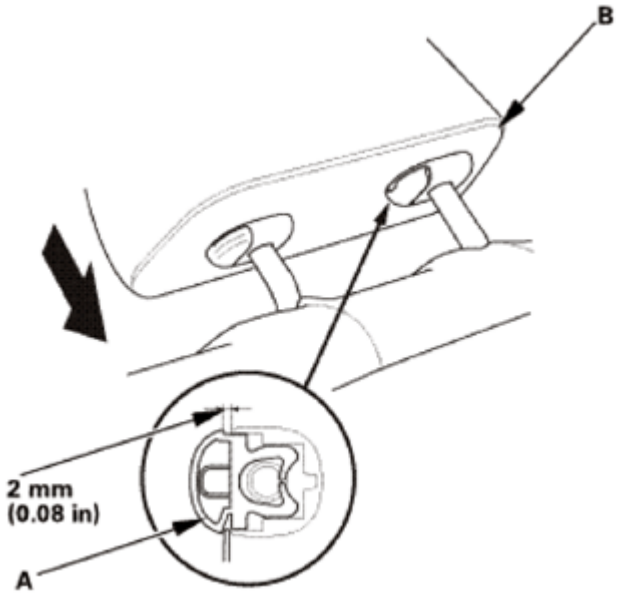

Fig. 909: Installing Head Restraint
Courtesy of AMERICAN HONDA MOTOR CO., INC.

6. Rear Seat-Back Frame - Left Side

GETtheMANUALS.org

1. Connect the rear seat-back head restraint control cable (A), the rear seat-back lock knob control cable (B), the rear seat-back cancel control cable (C), and the rear seat-back arrange control cable (D) to the rear seat-back arrange unit (E), then install the cables to the cable bracket (F).

NOTE: Make sure each cable is connected securely.

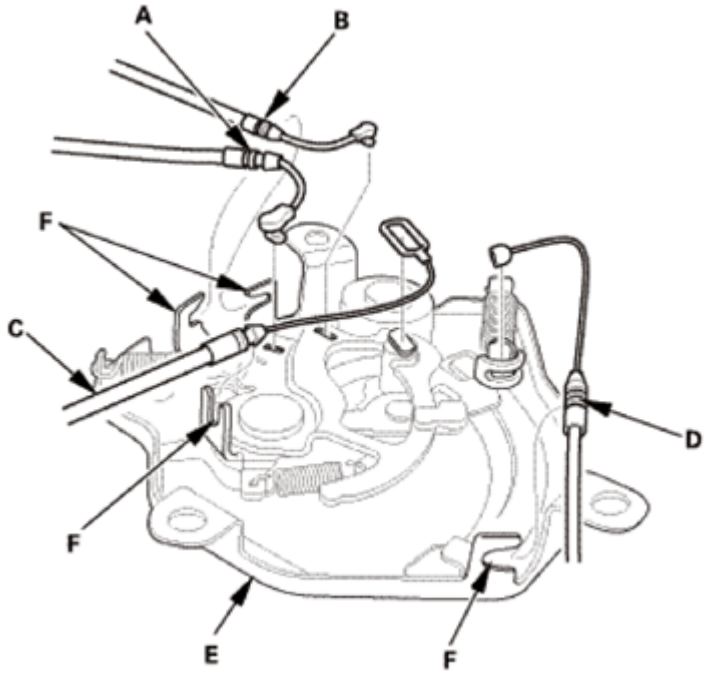

Fig. 910: Identifying Rear Seat-Back Frame And Related Components
Courtesy of AMERICAN HONDA MOTOR CO., INC.

2. Insert the cables to the seat-back frame (A) as shown, and install the cable clips (B). Make sure the clips snap into place securely.
3. Install the rear seat-back cancel control cable (C) to the bracket (D).
4. Install the rear seat-back arrange unit (E).

GETtheMANUALS.org

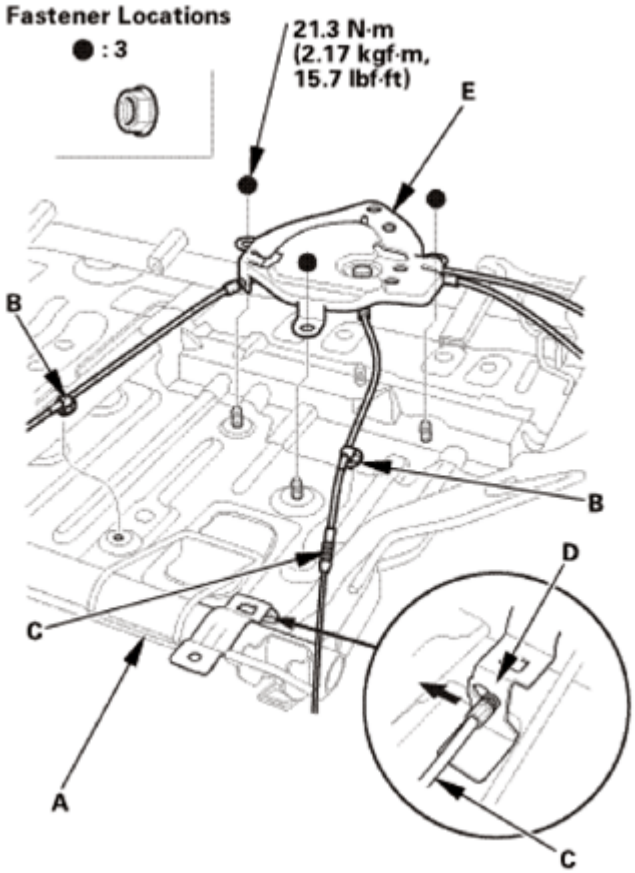

Fig. 911: Installing Rear Seat-Back Cancel Control Cable To Bracket
Courtesy of AMERICAN HONDA MOTOR CO., INC.

5. Install the wire tie (A) to the seat-back frame (B) as shown.

NOTE: Wire tie the cables at the locations marked with tape (C).

GETtheMANUALS.org

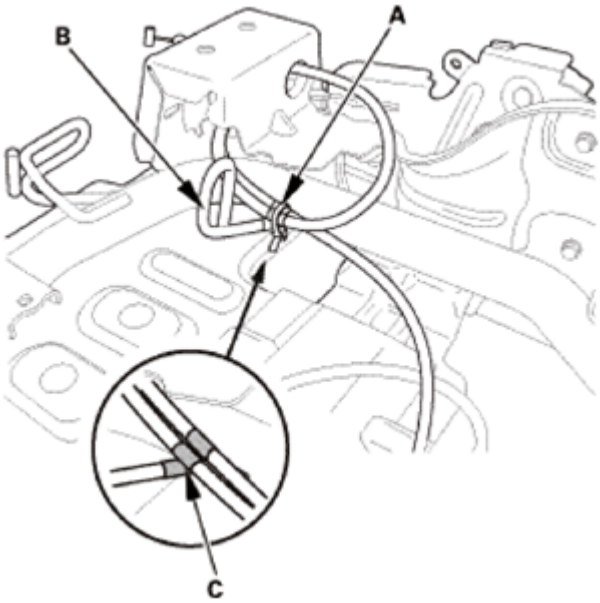

Fig. 912: Identifying Seat-Back Frame And Wire Tie
Courtesy of AMERICAN HONDA MOTOR CO., INC.

6. Install the head restraint control cable (A) to the bracket (B).
7. Install the head restraint control cable to the bracket (C).

NOTE: Make sure the cable is connected securely.

8. Install the rear seat-back head restraint frame (D) and the nuts (E).
9. Install the head restraint strap (F), then install the screw (G). Make sure the hooks (H) snap into place securely.

GETtheMANUALS.org

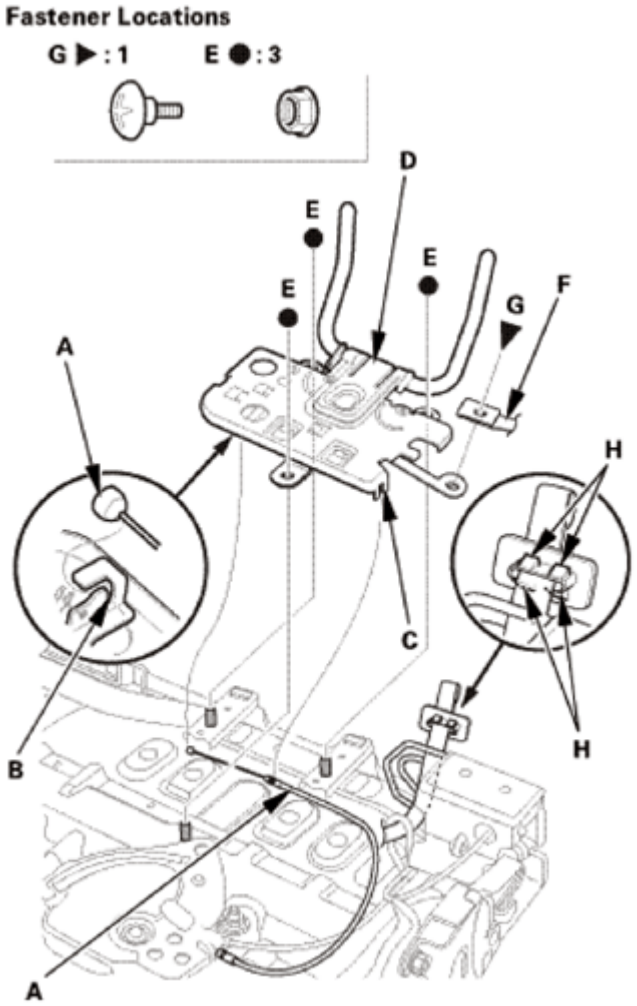

Fig. 913: Identifying Rear Seat-Back Frame, Head Restraint Strap And Related Components
Courtesy of AMERICAN HONDA MOTOR CO., INC.

10. Install the rear seat-back cancel control cable (A) through the holes (B) in the seat-back cancel cover (C).
11. Install the seat-back cancel cover. Make sure the hooks (D) snap into place securely.
12. Install the rear seat-back lower cover (E). Make sure the tab (F) snaps into place securely.

GETtheMANUALS.org

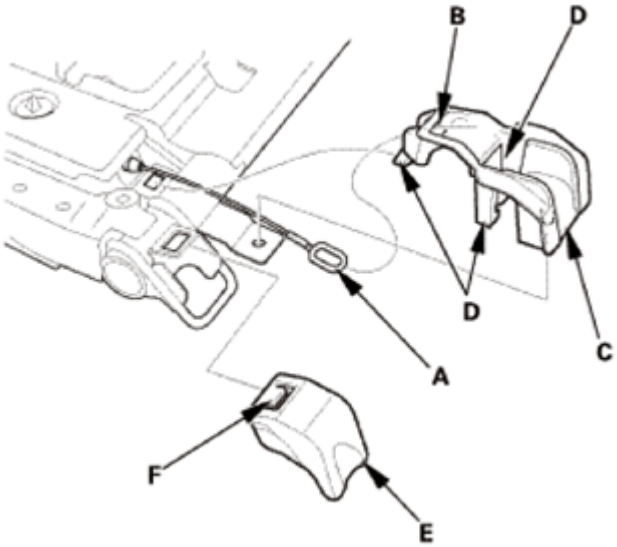

Fig. 914: Identifying Rear Seat-Back Cancel Control Cable, Seat Back Cancel And Lower Cover, Hooks And Tabs
Courtesy of AMERICAN HONDA MOTOR CO., INC.

13. Install the rear seat-back inner cover (A), then install the screw (B).
14. Install the rear seat-back lower covers (C). Make sure the tabs (D) snap into place securely.

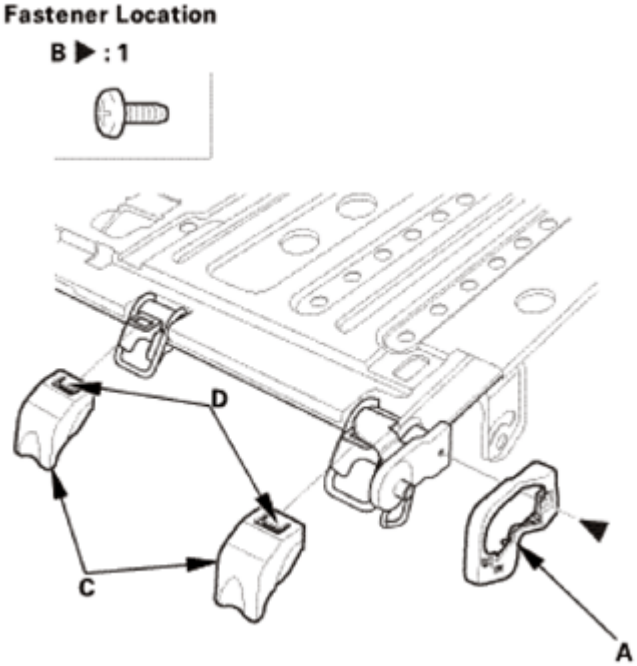

Fig. 915: Identifying Rear Seat-Back Inner And Lower Cover, Tabs And Screws
Courtesy of AMERICAN HONDA MOTOR CO., INC.

15. Install the rear seat-back outer cover (A).

GETtheMANUALS.org

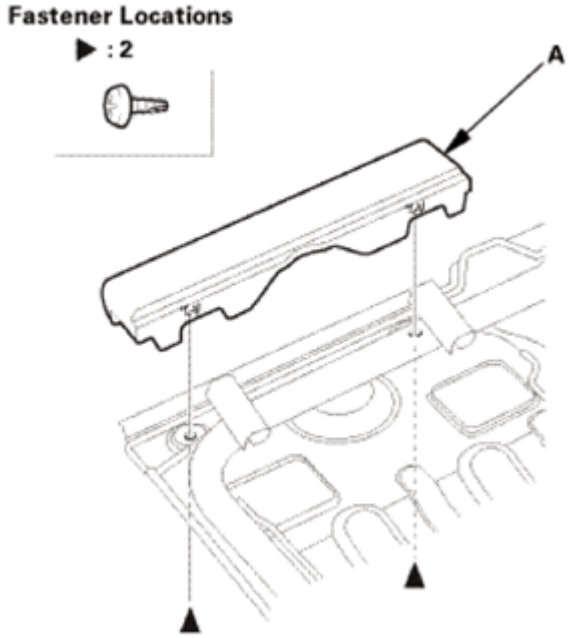

Fig. 916: Identifying Rear Seat-Back Outer Cover
Courtesy of AMERICAN HONDA MOTOR CO., INC.

16. Install the seat-back head restraint protector (A). Make sure the hooks (B) snap into place securely.
17. Install the rear seat-back inner trim (C). Make sure the hooks (D) snap into place securely.

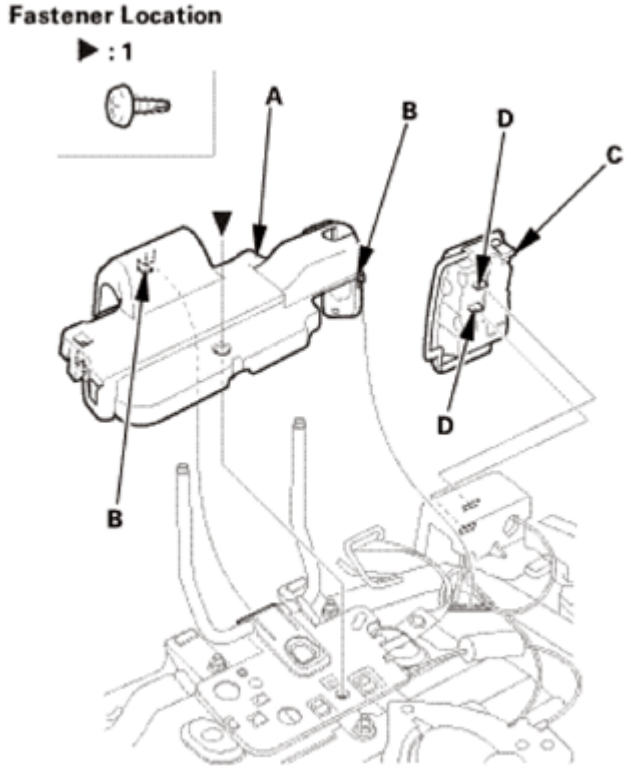

GETtheMANUALS.org

Fig. 917: Identifying Seat-Back Head Restraint Protector, Inner Trim And Hooks
Courtesy of AMERICAN HONDA MOTOR CO., INC.

18. Install the left rear seat-back outer pivot (A), then install the bolts (B, C).

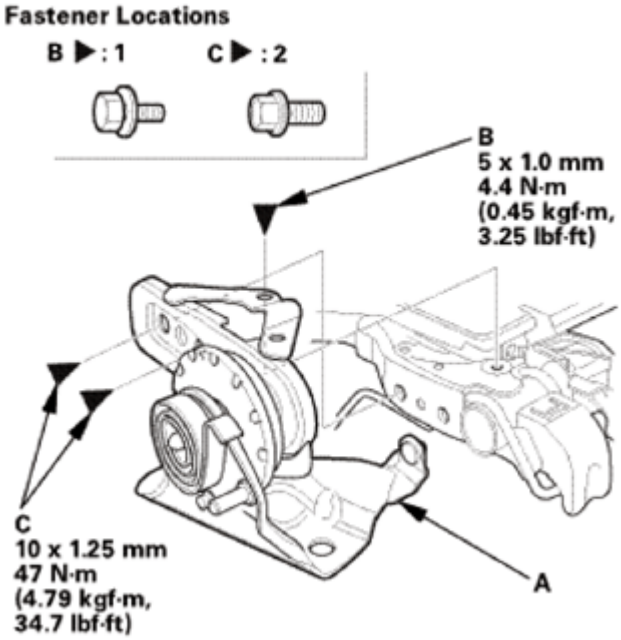

Fig. 918: Identifying Left Rear Seat-Back Outer Pivot And Bolts With Torque Specifications
Courtesy of AMERICAN HONDA MOTOR CO., INC.

7. Rear Seat-Back Latch - Left Side
    1. Install the rear seat-back latch (A) and the bolts (B).
    2. Connect the rear seat-back lock knob control cable (C) and the rear seat-back lock control cable (D) to the rear seat-back latch.
    3. Install the rear seat-back lock knob control cable and the rear seat-back lock control cable to the cable bracket (E).

GETtheMANUALS.org

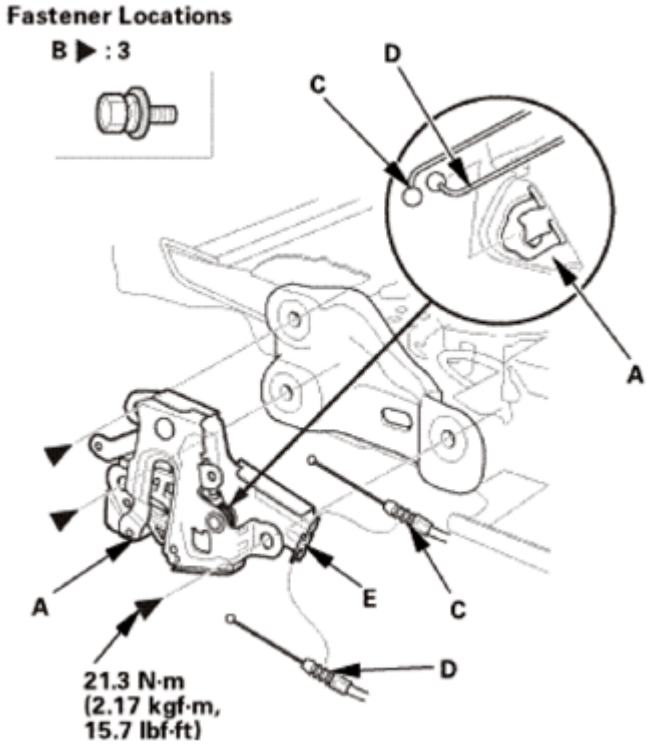

Fig. 919: Identifying Rear Seat-Back Lock And Lock Knob Control Cable, Bracket, Latch And Bolts
Courtesy of AMERICAN HONDA MOTOR CO., INC.

8. Rear Seat-Back Cover - Left Side
    1. Install the rear seat-back cover/pad (A) to the rear seat-back frame (B). Make sure the clip (C) snaps into place securely.

GETtheMANUALS.org

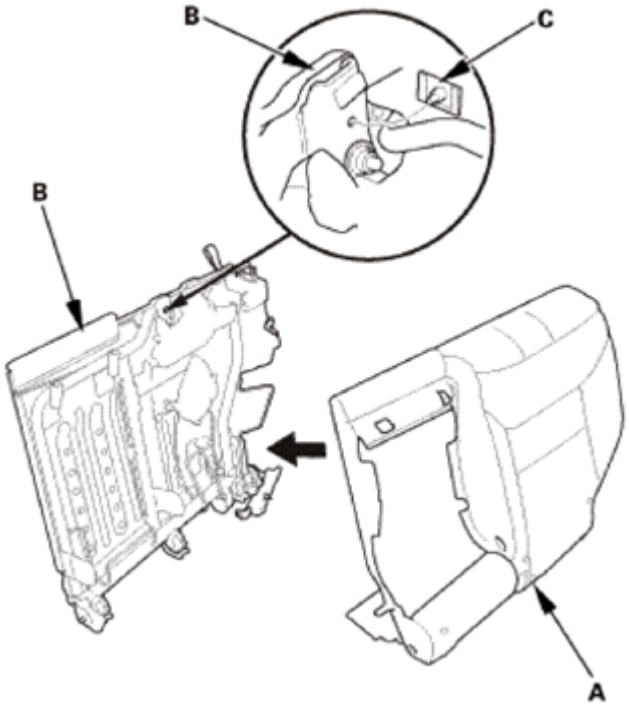

Fig. 920: Installing Rear Seat-Back Cover/Pad To Rear Seat-Back Frame
Courtesy of AMERICAN HONDA MOTOR CO., INC.

2. Install the head restraint guides (A). Make sure the guides are installed in the seat-back frame securely.

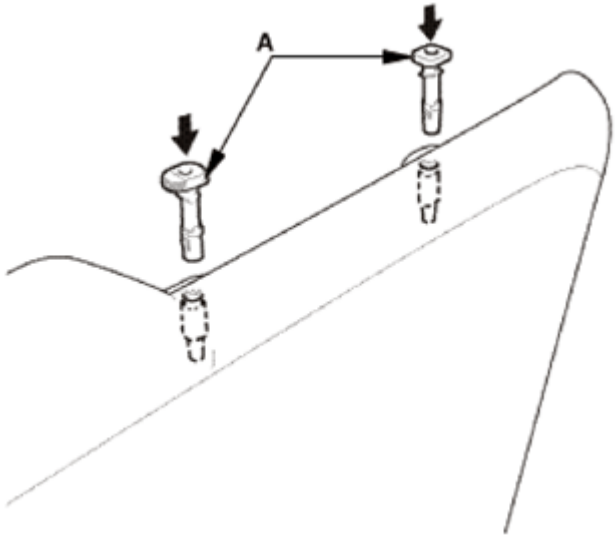

Fig. 921: Installing Head Restraint Guides
Courtesy of AMERICAN HONDA MOTOR CO., INC.

3. Zip the rear seat-back cover (A).
4. Install the hook strips (B) into place securely.

GETtheMANUALS.org

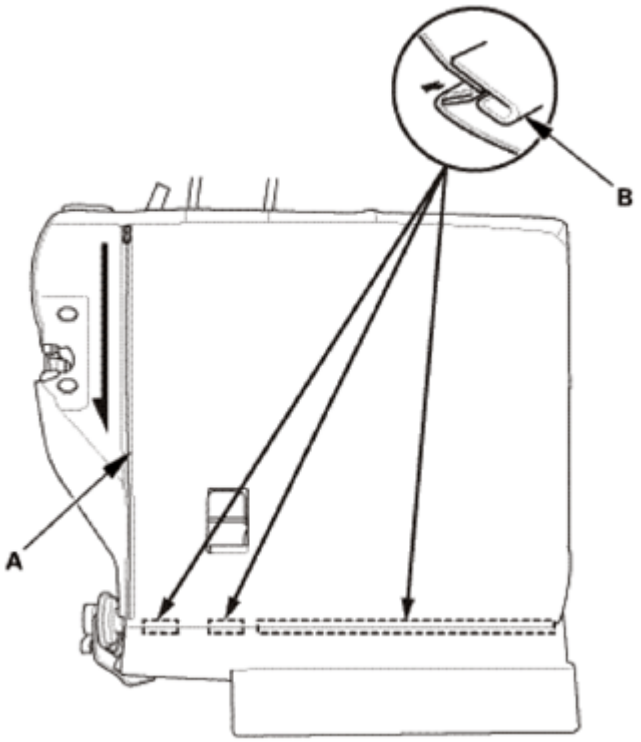

Fig. 922: Installing Rear Seat-Back Cover
Courtesy of AMERICAN HONDA MOTOR CO., INC.

5. Install the holes (A) to the hooks (B) of the seat-back inner trim (C).

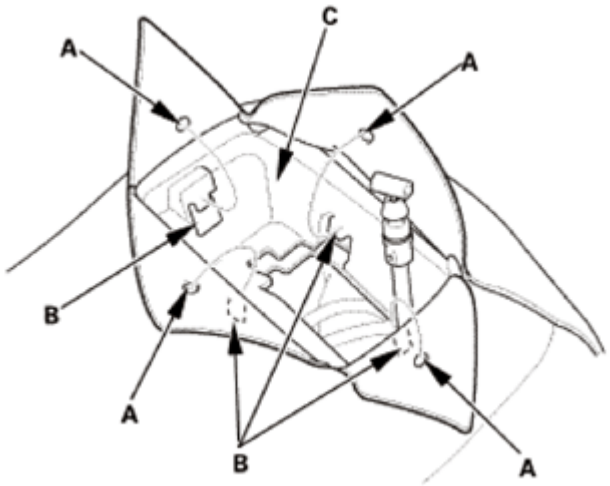

Fig. 923: Identifying Seat-Back Inner Trim, Holes And Hooks
Courtesy of AMERICAN HONDA MOTOR CO., INC.

6. Install the hook and loop fastener (A) into place securely.
7. Install the hook strip (B) into place securely.

GETtheMANUALS.org

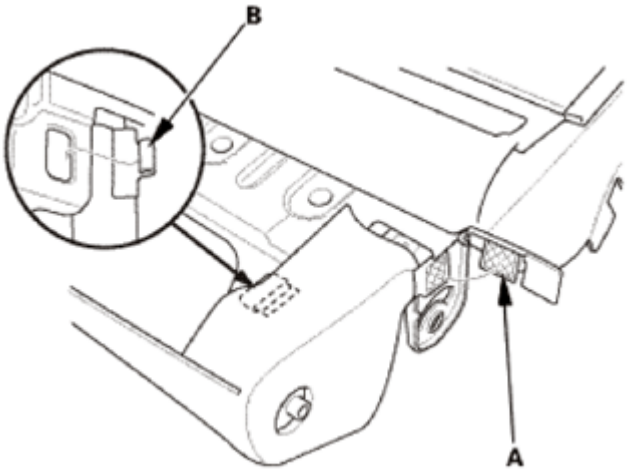

Fig. 924: Identifying Rear Seat-Back Cover Hook And Loop Fastener And Hook
Courtesy of AMERICAN HONDA MOTOR CO., INC.

8. Install the rear seat-back cancel control cable (A) to the left rear seat cushion pivot (B), then install the push nut (C).
9. Install the rear seat arrange control cable (D) through the hole (E) in the rear seat-back cover (F).

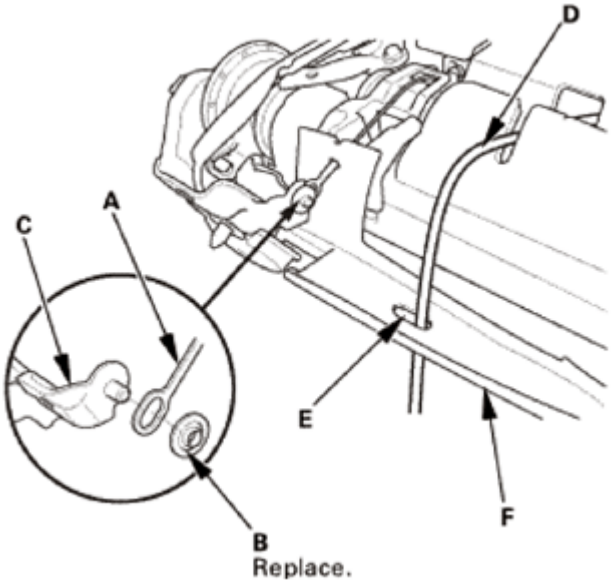

Fig. 925: Identifying Rear Seat-Back Cancel Control Cable, Right Rear Seat Cushion Pivot, Push Nut And Related Components
Courtesy of AMERICAN HONDA MOTOR CO., INC.

10. Install the hook strips (A) into place securely.
11. Install the hook and loop fastener (B) into place securely.

GETtheMANUALS.org

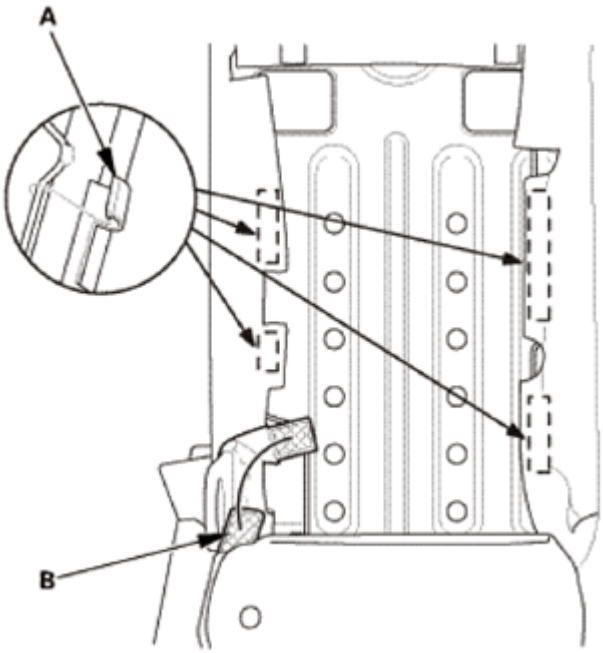

Fig. 926: Identifying Rear Seat-Back Cover Hook And Loop Fastener And Hook
Courtesy of AMERICAN HONDA MOTOR CO., INC.

12. Install the covers (A) to the left rear seat pivot (B). Make sure the hooks (C) snap into place securely.

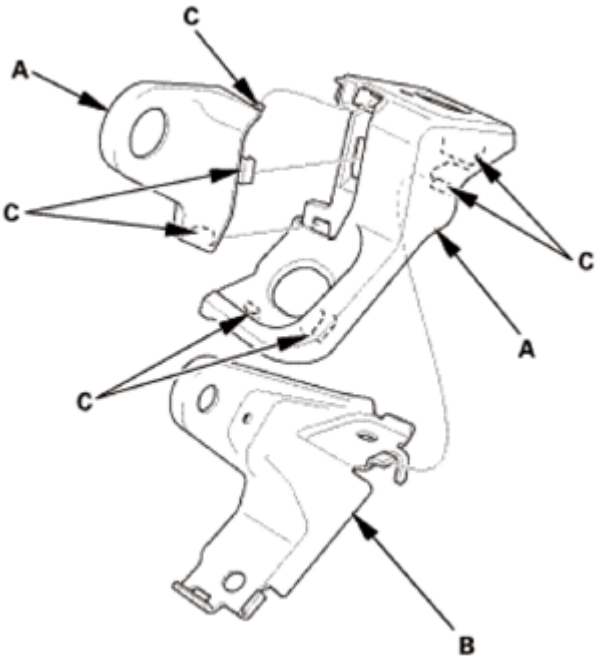

Fig. 927: Identifying Left Rear Seat Pivot, Covers And Hooks
Courtesy of AMERICAN HONDA MOTOR CO., INC.

GETtheMANUALS.org

13. Apply oil to the pivot bushing (A).
14. Install the pivot bushing, the left rear seat inner pivot (B), and the washer (C).
15. Install the bolt (D) with a 6 mm hex wrench.

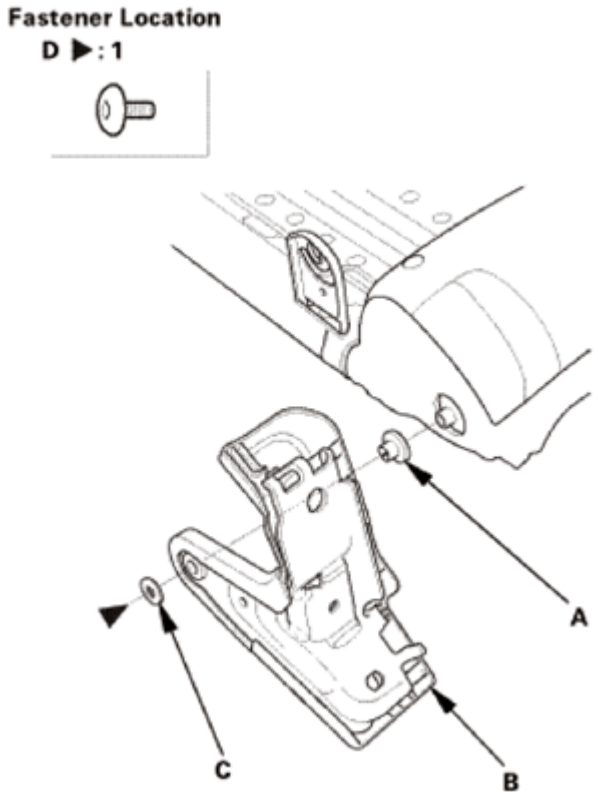

Fig. 928: Identifying Left Rear Seat Inner Pivot, Bushing, Washer And Bolt
Courtesy of AMERICAN HONDA MOTOR CO., INC.

16. Install the strap cover (A). Make sure the hooks (B) snap into place securely.

GETtheMANUALS.org

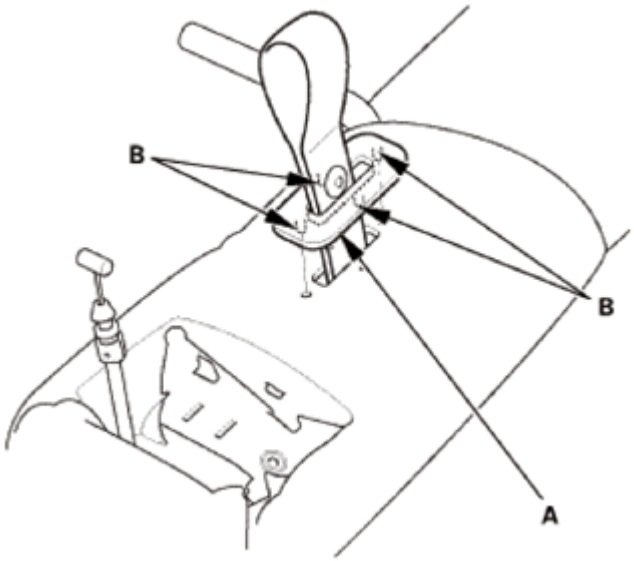

Fig. 929: Identifying Strap Cover And Hooks
Courtesy of AMERICAN HONDA MOTOR CO., INC.

17. Connect the rear seat-back lock knob control cable (A) to the lock knob trim (B).
18. Install the rear seat-back lock knob control cable to the cable bracket (C).

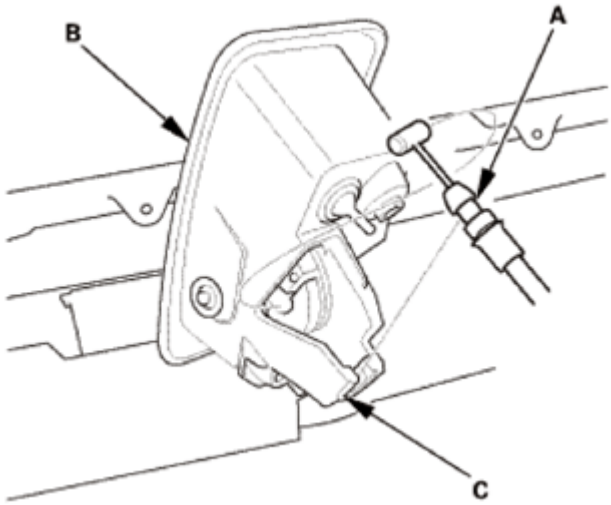

Fig. 930: Identifying Rear Seat-Back Lock Knob Control Cable And Bracket
Courtesy of AMERICAN HONDA MOTOR CO., INC.

19. Install the lock knob trim (A).
20. Install the screw (B), while pulling up the lock knob (C).

GETtheMANUALS.org

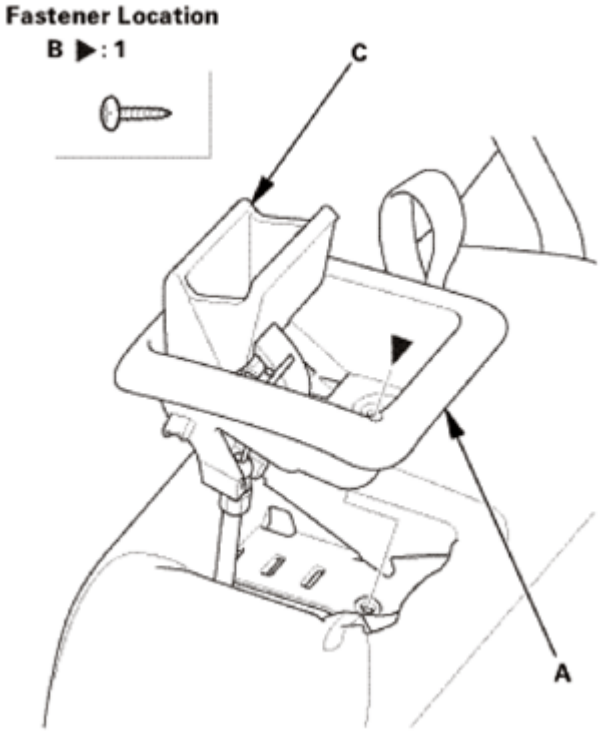

Fig. 931: Identifying Lock Knob Trim, Lock Knob And Screws
Courtesy of AMERICAN HONDA MOTOR CO., INC.

21. Install the lower edge of the armrest back panel (A) to the hook strip (B).

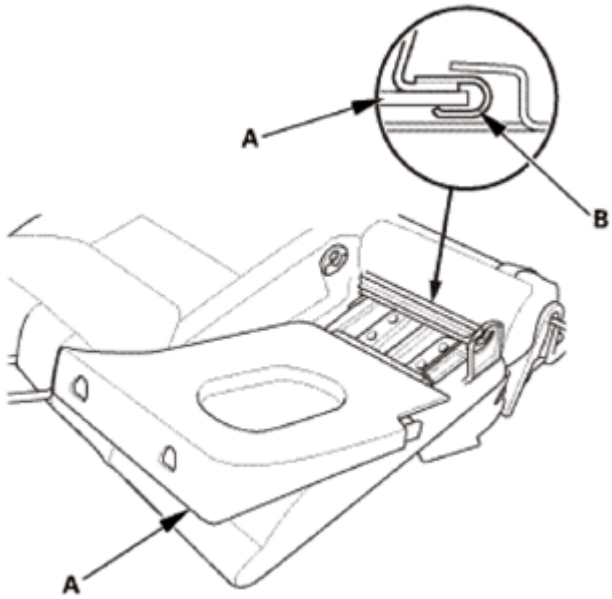

Fig. 932: Identifying Lower Edge Of Armrest Back Panel And Hook Strip
Courtesy of AMERICAN HONDA MOTOR CO., INC.

22. Install the rear armrest back panel(A). The hooks (B) snap into place securely.

GETtheMANUALS.org

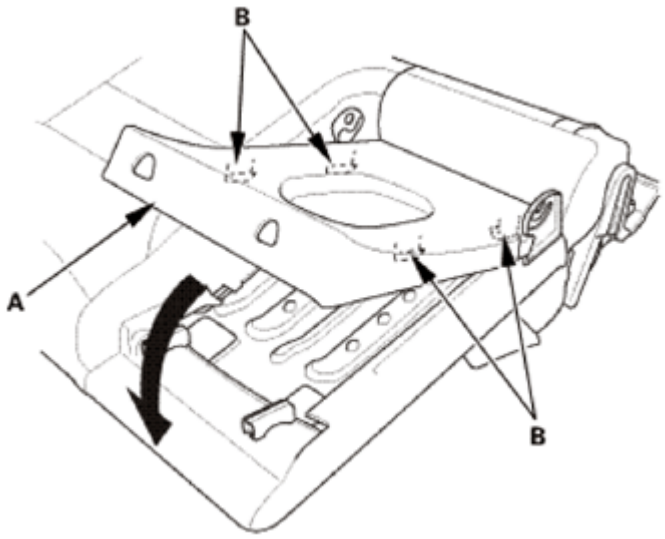

Fig. 933: Installing Rear Armrest Back Panel
Courtesy of AMERICAN HONDA MOTOR CO., INC.

23. Install the tether anchor cover (A). Make sure the hooks (B) snap into place securely.

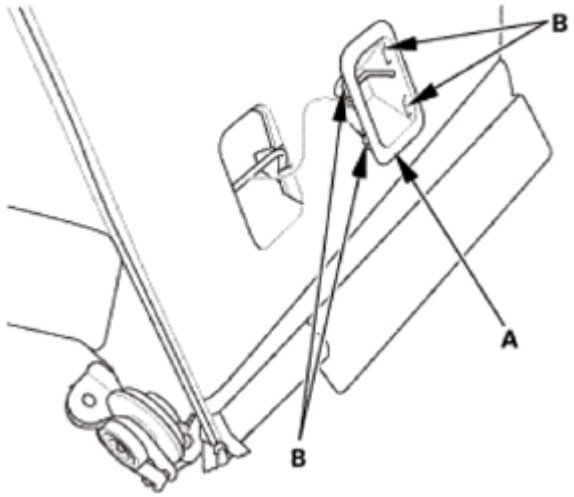

Fig. 934: Identifying Tether Anchor Cover And Hooks
Courtesy of AMERICAN HONDA MOTOR CO., INC.

9. Rear Seat-Back Latch Cover - Left Side
    1. Install the left rear seat latch cover (A). Make sure the hooks (B) and the clips (C) snap into place securely.

GETtheMANUALS.org

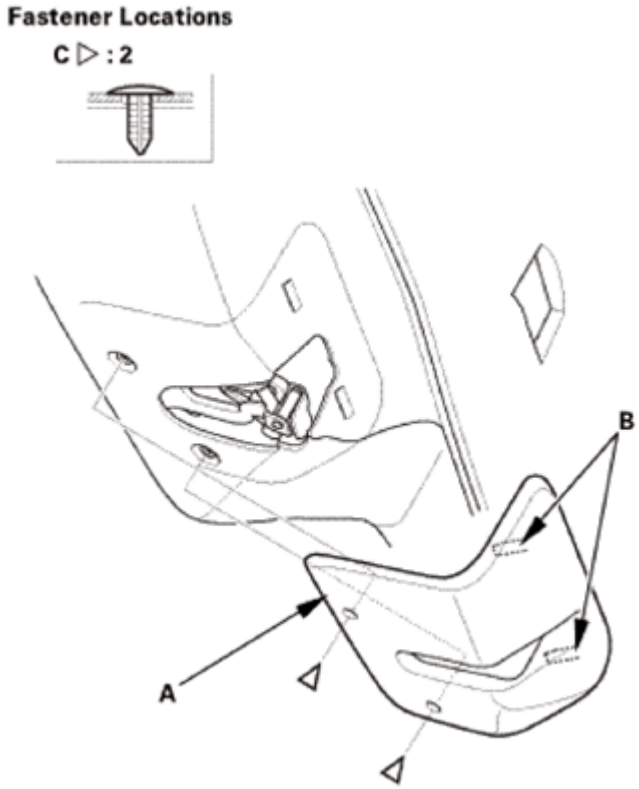

Fig. 935: Identifying Left Rear Seat Latch Cover, Hooks And Clips
Courtesy of AMERICAN HONDA MOTOR CO., INC.

10. Rear Seat Armrest
    1. Install the collar (A), the inner friction plate (B), and the outer friction plate (C) to the rear seat-back frame.

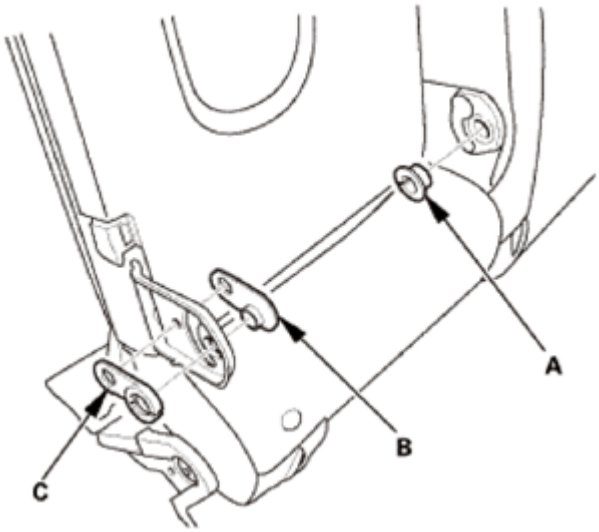

Fig. 936: Identifying Rear Seat-Back Frame Collar, Inner And Outer Friction Plate
Courtesy of AMERICAN HONDA MOTOR CO., INC.

GETtheMANUALS.org

2. Insert the armrest shaft (A) to the seat-back frame (B).
3. Insert the left pivot shaft (C) to the collar (D).
4. Slide the armrest (E) toward the left side.

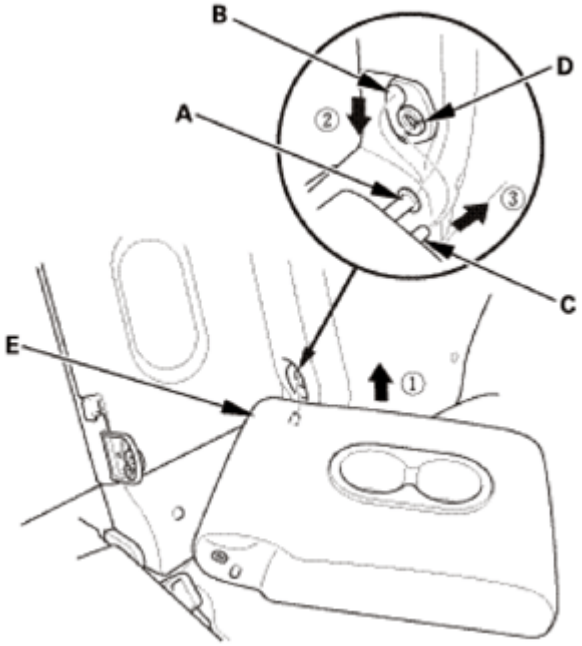

Fig. 937: Installing Armrest
Courtesy of AMERICAN HONDA MOTOR CO., INC.

5. Install the pivot shaft (A) to the friction plate (B).
6. Slide the armrest (C) toward the right side.

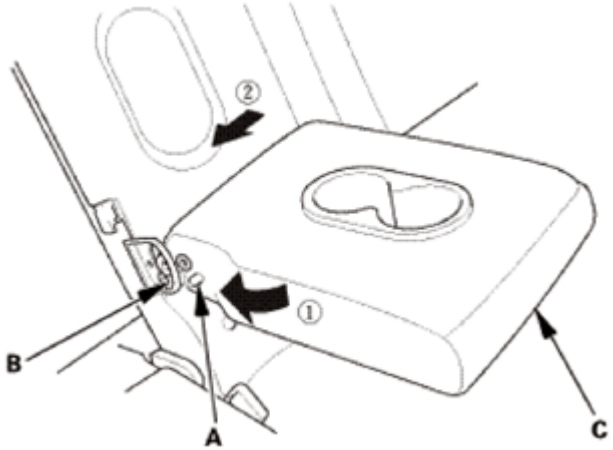

Fig. 938: Installing Pivot Shaft To Friction Plate
Courtesy of AMERICAN HONDA MOTOR CO., INC.

7. Install the bolt (A) with a 5 mm hex wrench to the armrest (B), then install the armrest side cover

GETtheMANUALS.org

(C).

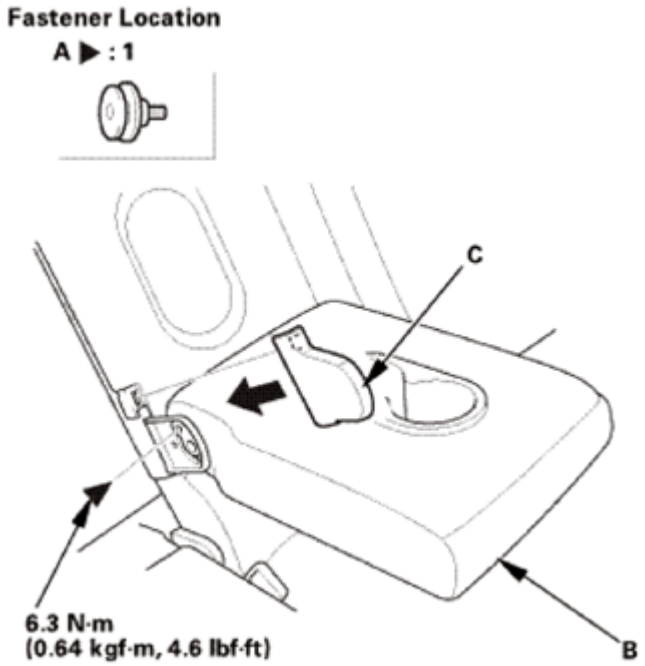

Fig. 939: Installing Armrest Side Cover
Courtesy of AMERICAN HONDA MOTOR CO., INC.

11. Rear Seat Head Restraint - Left Side

Left Rear Head Restraint

1. Inspect the knob (A) if it has any of the following damage:
    - Any cracks or deformation at the tab (B) of the knob.
    - Any cracks or stress-whitening at the tab (B) of the knob.

GETtheMANUALS.org

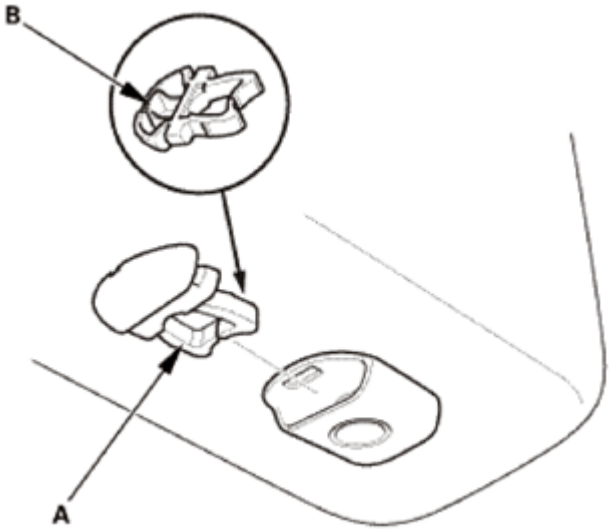

Fig. 940: Identifying Left Rear Head Restraint Knob And Tab
Courtesy of AMERICAN HONDA MOTOR CO., INC.

2. Insert the knob (A) to the head restraint (B) as shown.
3. Install the head restraint.

NOTE: **Make sure the head restraint is locked securely. If not, replace the head restraint.**

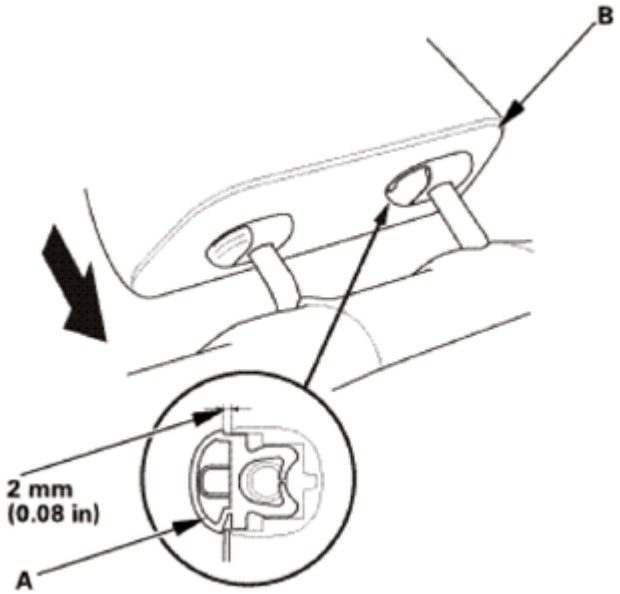

Fig. 941: Installing Head Restraint
Courtesy of AMERICAN HONDA MOTOR CO., INC.

Center Rear Head Restraint

GETtheMANUALS.org

1. Install the center rear head restraint (A).

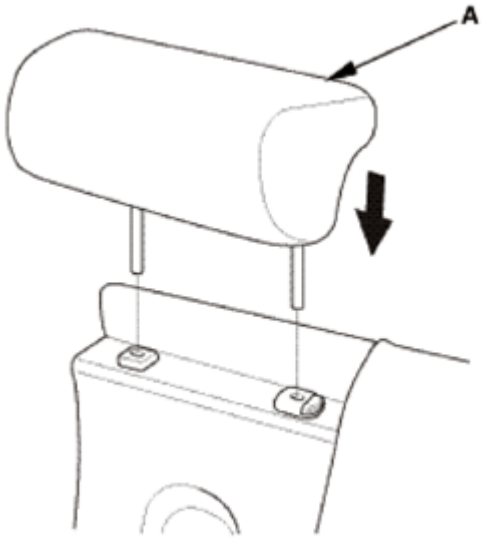

Fig. 942: Installing Center Rear Head Restraint
Courtesy of AMERICAN HONDA MOTOR CO., INC.

12. Rear Seat-Back
    1. Left Side: Install the mounting bolts (A), then install the rear seatback (C).
    2. Right Side: Install the mounting bolts (A) and anchor bolt (B), then install the rear seat-back (C).
    3. Install the rear seat-back cover (D). The clips (E) snap into place securely.

Left Side

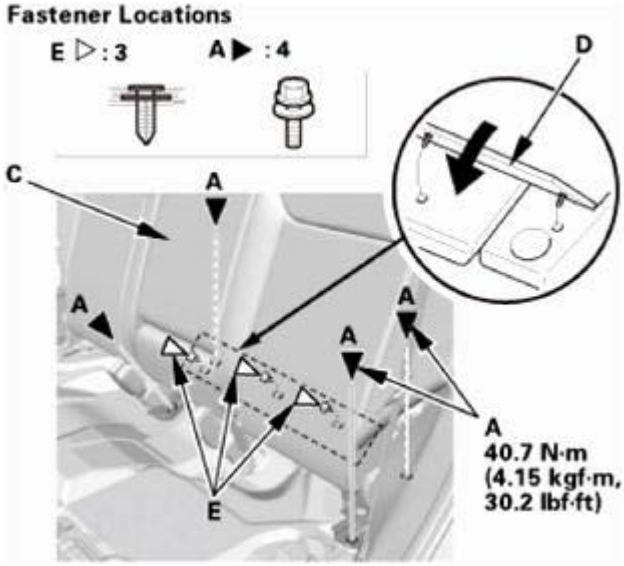

Fig. 943: Installing Rear Seat-Back Cover (Left Side)
Courtesy of AMERICAN HONDA MOTOR CO., INC.

GETtheMANUALS.org

Right Side

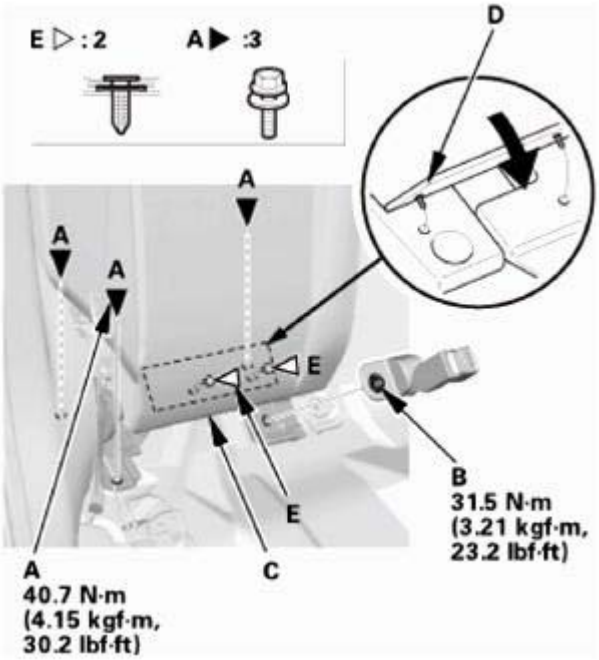

Fig. 944: Installing Rear Seat-Back Cover (Right Side)
Courtesy of AMERICAN HONDA MOTOR CO., INC.

4. Connect the rear seat-back arrange control cable (A) to the rear seat cushion foot (B).
5. Install the rear seat-back arrange control cable to the cable bracket (C).
6. Install the cable clip (D).

NOTE:

- **Make sure the cables are connected securely.**
- **Make sure the rear seat cushion latches and unlatches properly.**

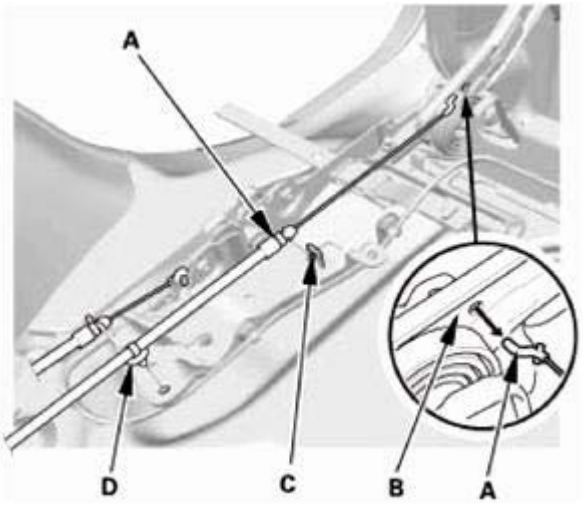

GETtheMANUALS.org

Fig. 945: Connecting Rear Seat-Back Arrange Control Cable To Rear Seat Cushion Foot
Courtesy of AMERICAN HONDA MOTOR CO., INC.

13. Rear Seat Foot Cover
    1. Install the rear seat cushion foot cover (A). Make sure the clips (B) and the hooks (C) snap into place securely.

Left Side

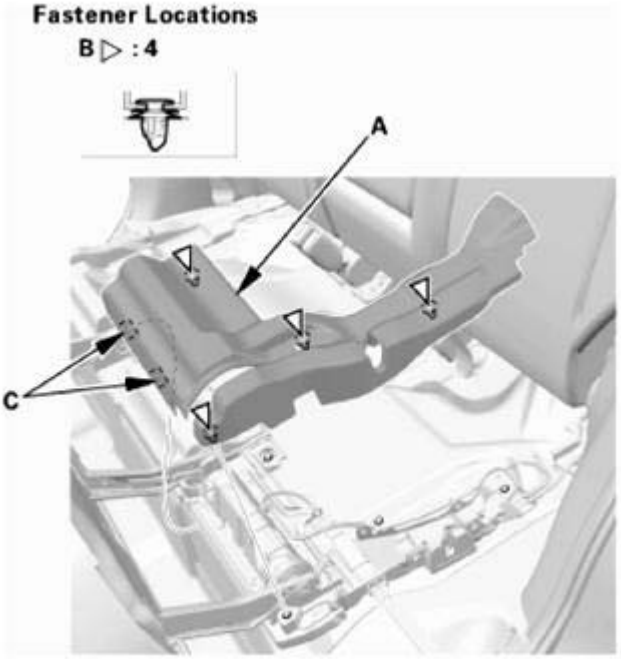

Fig. 946: Identifying Rear Seat Cushion Foot Cover, Hooks And Clips (Left Side)
Courtesy of AMERICAN HONDA MOTOR CO., INC.

Right Side

GETtheMANUALS.org

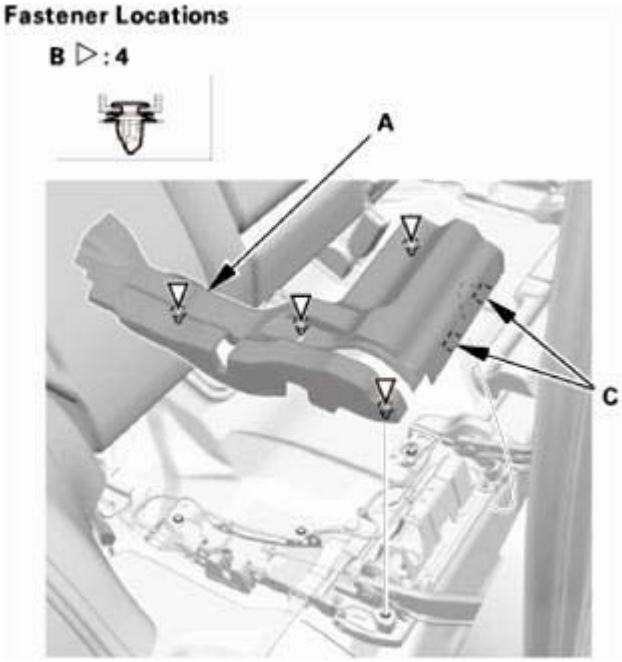

Fig. 947: Identifying Rear Seat Cushion Foot Cover, Hooks And Clips (Right Side)
Courtesy of AMERICAN HONDA MOTOR CO., INC.

14. Rear Damper Maintenance Cover
    1. Fold down the rear seat-back.
    2. Install the rear damper maintenance cover (A). Make sure the hooks (B) snap into place securely.

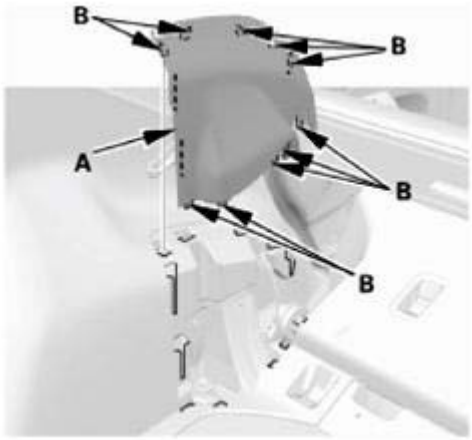

Fig. 948: Identifying Rear Damper Maintenance Cover And Hooks
Courtesy of AMERICAN HONDA MOTOR CO., INC.

15. Cargo Floor Cover
    1. Install the cargo floor cover (A).

GETtheMANUALS.org

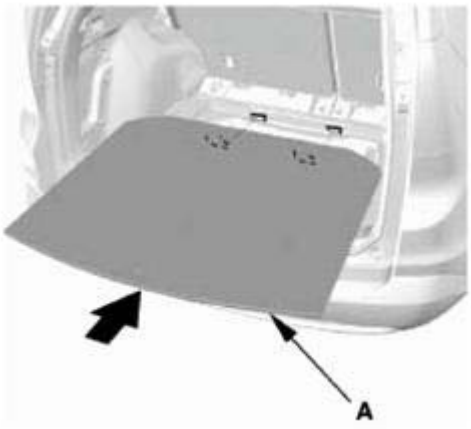

Fig. 949: Installing Cargo Floor Cover
Courtesy of AMERICAN HONDA MOTOR CO., INC.

16. Tonneau Cover (For Some Models)
    1. Install the tonneau cover (A).

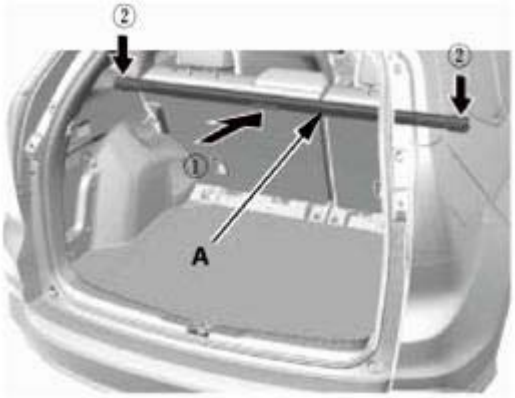

Fig. 950: Installing Tonneau Cover
Courtesy of AMERICAN HONDA MOTOR CO., INC.

REAR SEAT-BACK REMOVAL AND INSTALLATION

REMOVAL

1. Tonneau Cover (For Some Models)
    1. Remove the tonneau cover (A).

GETtheMANUALS.org

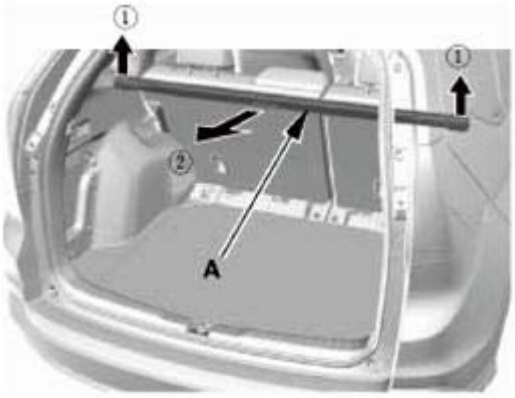

Fig. 951: Removing Tonneau Cover
Courtesy of AMERICAN HONDA MOTOR CO., INC.

2. Cargo Floor Cover
    1. Remove the cargo floor cover (A).

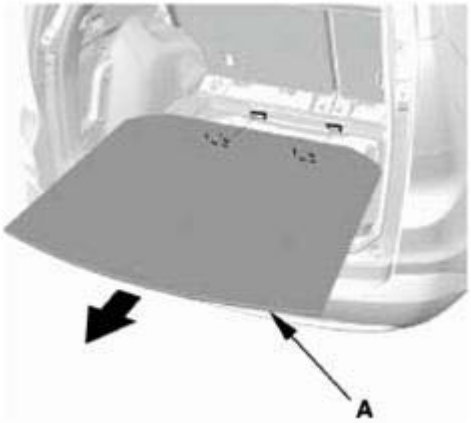

Fig. 952: Removing Cargo Floor Cover
Courtesy of AMERICAN HONDA MOTOR CO., INC.

3. Rear Damper Maintenance Cover
    1. Fold down the rear seat-back.
    2. Pull up the rear damper maintenance cover (A) by hand to detach the hooks (B), then remove the rear damper maintenance cover.

GETtheMANUALS.org

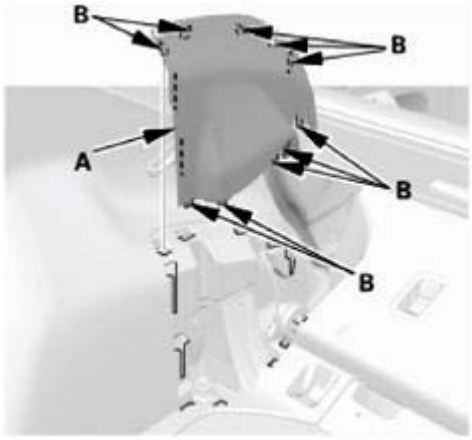

Fig. 953: Identifying Rear Damper Maintenance Cover And Hooks
Courtesy of AMERICAN HONDA MOTOR CO., INC.

4. Rear Seat Foot Cover
    1. Pull up the rear seat foot cover (A) by hand to detach the clips (B).
    2. Detach the hooks (C), then remove the rear seat foot cover.

Left Side

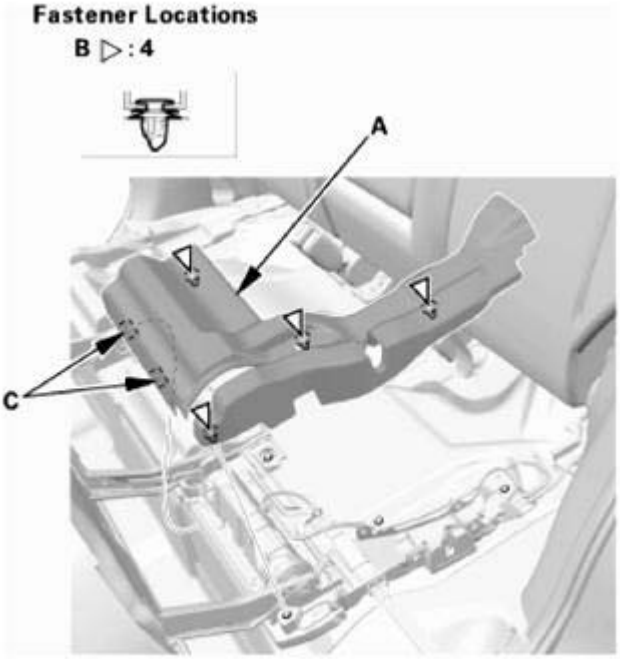

Fig. 954: Identifying Rear Seat Foot Cover, Hooks And Clips (Left Side)
Courtesy of AMERICAN HONDA MOTOR CO., INC.

Right Side

GETtheMANUALS.org

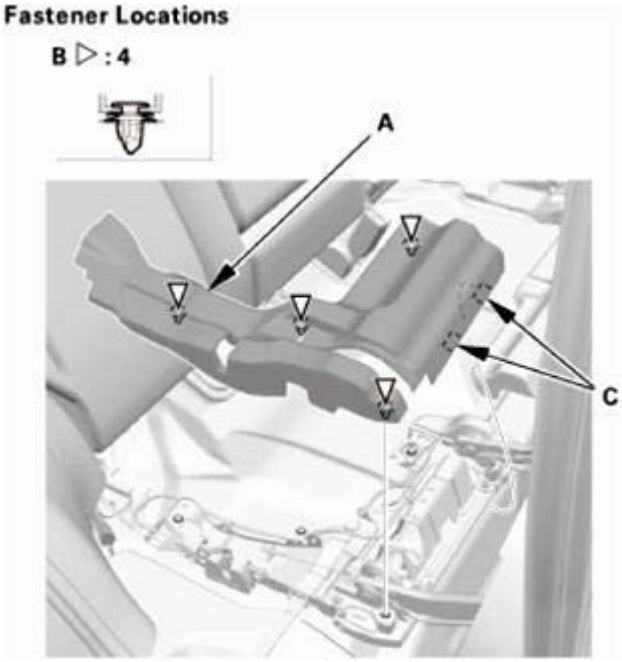

Fig. 955: Identifying Rear Seat Foot Cover, Hooks And Clips (Right Side)
Courtesy of AMERICAN HONDA MOTOR CO., INC.

5. Rear Seat-Back
    1. Detach the rear seat-back arrange control cable (A) from the cable bracket (B).
    2. Detach the cable clip (C), then disconnect the seat-back arrange control cable from the rear seat cushion foot (D).

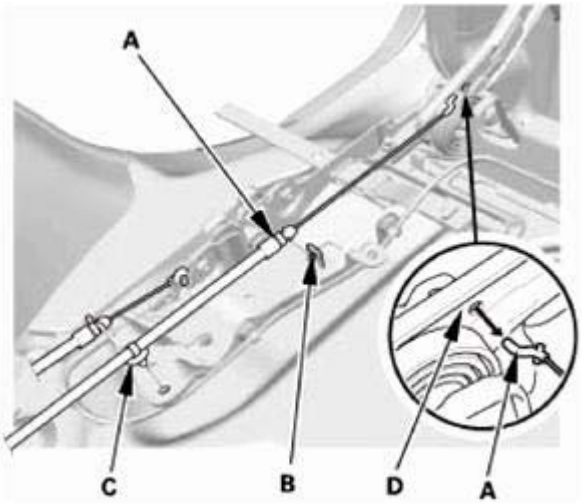

Fig. 956: Disconnecting Seat-Back Arrange Control Cable From Rear Seat Cushion Foot
Courtesy of AMERICAN HONDA MOTOR CO., INC.

    3. Pull up the edge of seat-back cover (A), then detach the clips (B).

GETtheMANUALS.org

4. Left Side: Remove the mounting bolts (C), then remove the rear seat-back (D).
5. Right Side: Remove the mounting bolts (C) and the anchor bolt (E), then remove the rear seat-back (F).

Left Side

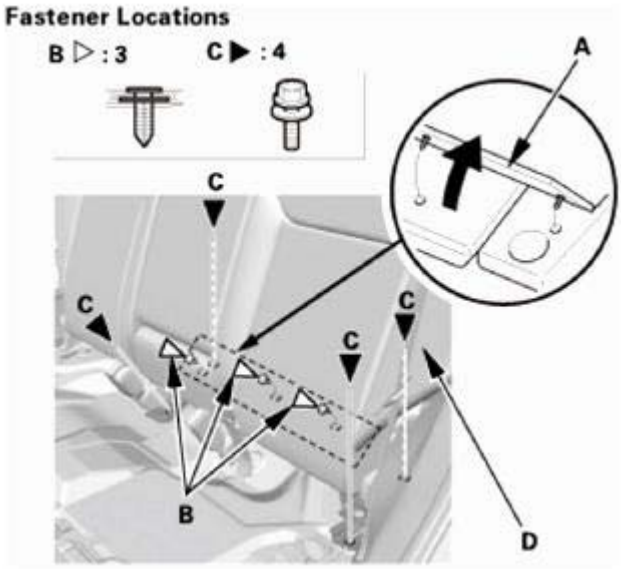

Fig. 957: Pulling Edge Of Seat-Back Cover (Left Side)
Courtesy of AMERICAN HONDA MOTOR CO., INC.

Right Side

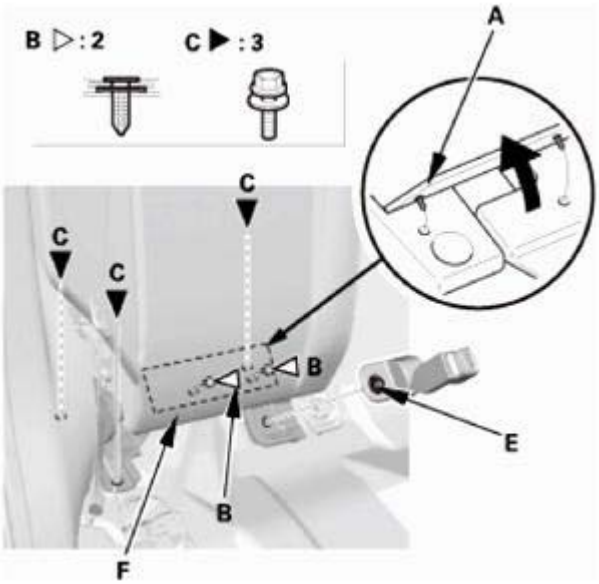

Fig. 958: Pulling Edge Of Seat-Back Cover (Right Side)
Courtesy of AMERICAN HONDA MOTOR CO., INC.

GETtheMANUALS.org

INSTALLATION

1. Rear Seat-Back
    1. Left Side: Install the mounting bolts (A), then install the rear seatback (C).
    2. Right Side: Install the mounting bolts (A) and anchor bolt (B), then install the rear seat-back (C).
    3. Install the rear seat-back cover (D). The clips (E) snap into place securely.

Left Side

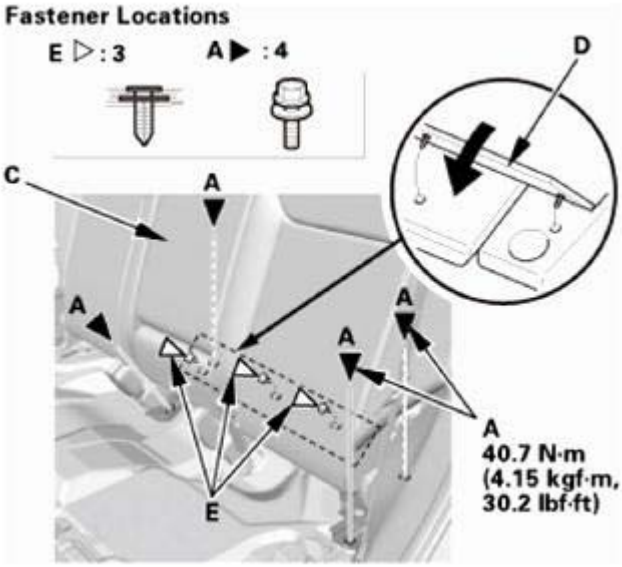

Fig. 959: Installing Rear Seat-Back Cover (Left Side)
Courtesy of AMERICAN HONDA MOTOR CO., INC.

Right Side

GETtheMANUALS.org

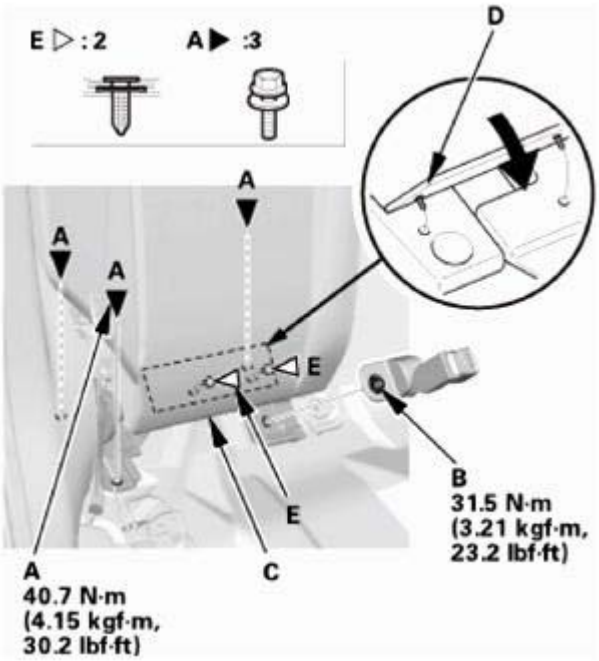

Fig. 960: Installing Rear Seat-Back Cover (Right Side)
Courtesy of AMERICAN HONDA MOTOR CO., INC.

4. Connect the rear seat-back arrange control cable (A) to the rear seat cushion foot (B).
5. Install the rear seat-back arrange control cable to the cable bracket (C).
6. Install the cable clip (D).

NOTE:

- **Make sure the cables are connected securely.**
- **Make sure the rear seat cushion latches and unlatches properly.**

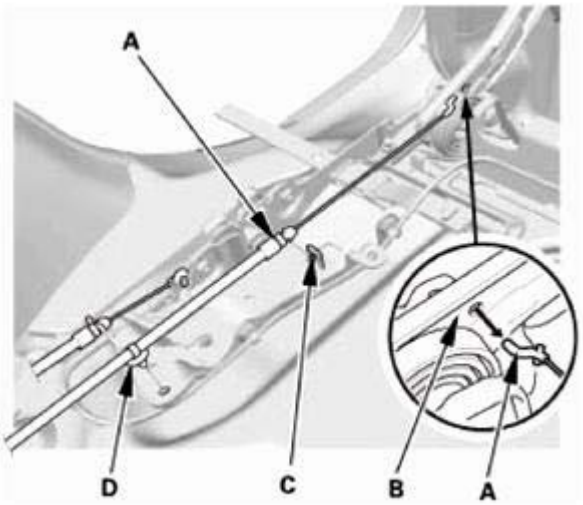

Fig. 961: Connecting Rear Seat-Back Arrange Control Cable To Rear Seat Cushion Foot
Courtesy of AMERICAN HONDA MOTOR CO., INC.

GETtheMANUALS.org

2. Rear Seat Foot Cover
    1. Install the rear seat cushion foot cover (A). Make sure the clips (B) and the hooks (C) snap into place securely.

Left Side

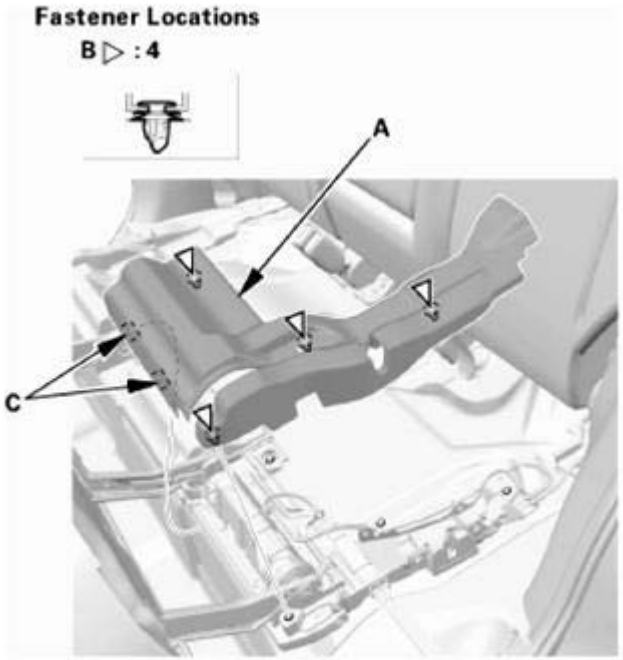

Fig. 962: Identifying Rear Seat Cushion Foot Cover, Hooks And Clips (Left Side)
Courtesy of AMERICAN HONDA MOTOR CO., INC.

Right Side

GETtheMANUALS.org

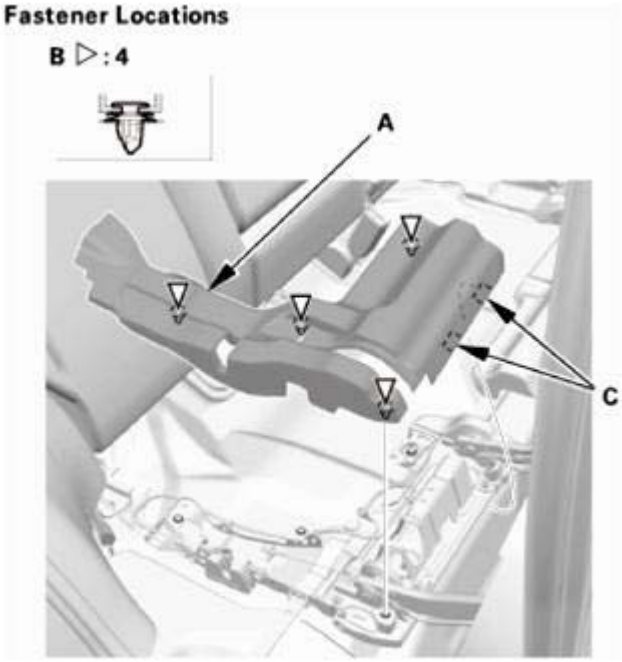

Fig. 963: Identifying Rear Seat Cushion Foot Cover, Hooks And Clips (Right Side)
Courtesy of AMERICAN HONDA MOTOR CO., INC.

3. Rear Damper Maintenance Cover
    1. Fold down the rear seat-back.
    2. Install the rear damper maintenance cover (A). Make sure the hooks (B) snap into place securely.

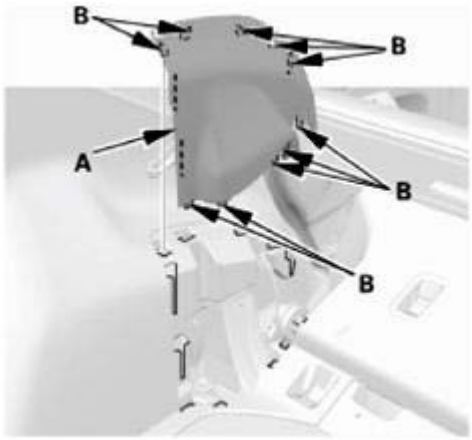

Fig. 964: Identifying Rear Damper Maintenance Cover And Hooks
Courtesy of AMERICAN HONDA MOTOR CO., INC.

4. Cargo Floor Cover
    1. Install the cargo floor cover (A).

GETtheMANUALS.org

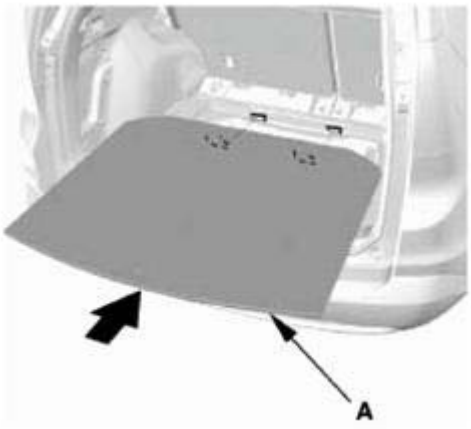

Fig. 965: Installing Cargo Floor Cover
Courtesy of AMERICAN HONDA MOTOR CO., INC.

5. Tonneau Cover (For Some Models)
    1. Install the tonneau cover (A).

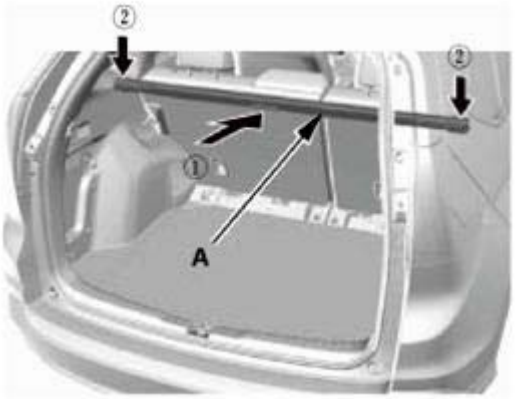

Fig. 966: Installing Tonneau Cover
Courtesy of AMERICAN HONDA MOTOR CO., INC.

SEAT HEATER REMOVAL AND INSTALLATION - SEAT CUSHION HEATER

REMOVAL

SRS components are located in this area. Review the **SRS COMPONENT LOCATIONS** and the **PRECAUTIONS AND PROCEDURES** before doing repairs or service.

NOTE:

- **Steps 1-10 show removing the driver's side, steps 11-18 show removing the passenger's side.**
- **Before the front power seat is removed, slide the front power seat to the half-way position, then raise the seat to the highest position.**

GETtheMANUALS.org

1. Front Seat Belt Lower Anchor Bolt
    1. Slide the front seat forward fully, carefully pry up on the bottom edge of the anchor cover (A) at the pry point (B) with the appropriate trim tool to release the hooks (C) and the tab (D), then remove the cover by pulling it up.

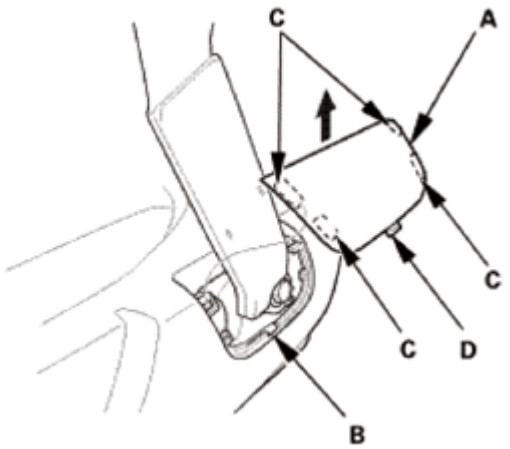

Fig. 967: Removing Front Seat Lower Anchor Cover
Courtesy of AMERICAN HONDA MOTOR CO., INC.

2. Remove the lower anchor bolt (A).

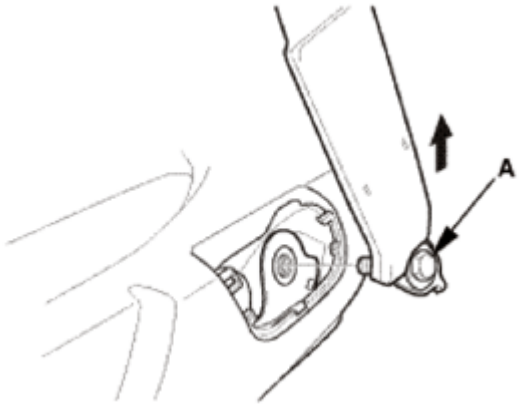

Fig. 968: Removing Front Seat Belt Lower Anchor Bolt
Courtesy of AMERICAN HONDA MOTOR CO., INC.

2. Battery Terminal (SRS) - Disconnection
    1. Make sure the ignition switch is in LOCK (0).
    2. Disconnect and isolate the negative cable (A) from the battery.

NOTE: Always disconnect the negative side first.

    3. Disconnect the positive cable (B) from the battery.

GETtheMANUALS.org

4. Wait at least 3 minutes before starting work.

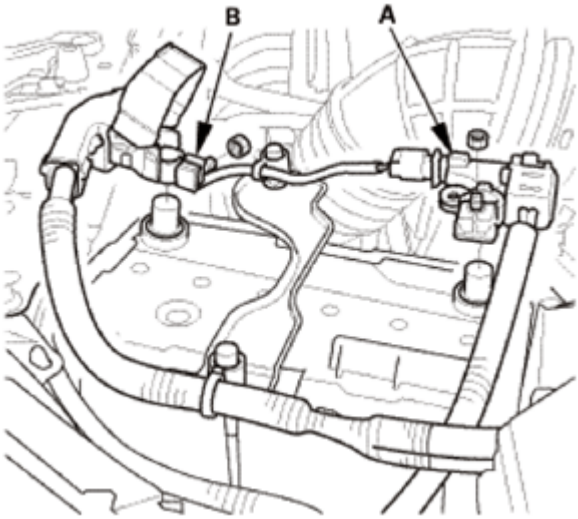

Fig. 969: Identifying Battery Positive And Negative Cable
Courtesy of AMERICAN HONDA MOTOR CO., INC.

3. Head Restraint - Driver's Side
    1. Push and hold the knob (A), then pull out the head restraint (B) as shown.

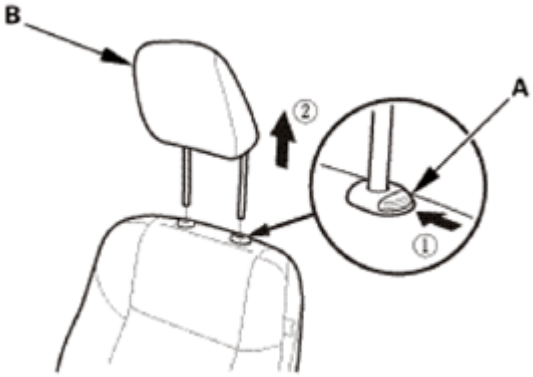

Fig. 970: Pulling Head Restraint (Driver Side)
Courtesy of AMERICAN HONDA MOTOR CO., INC.

4. Front Seat - Driver's Side
    1. Detach the hooks (A), then remove the rear inner seat track end cover (B) and the rear outer seat track end cover (C).

GETtheMANUALS.org

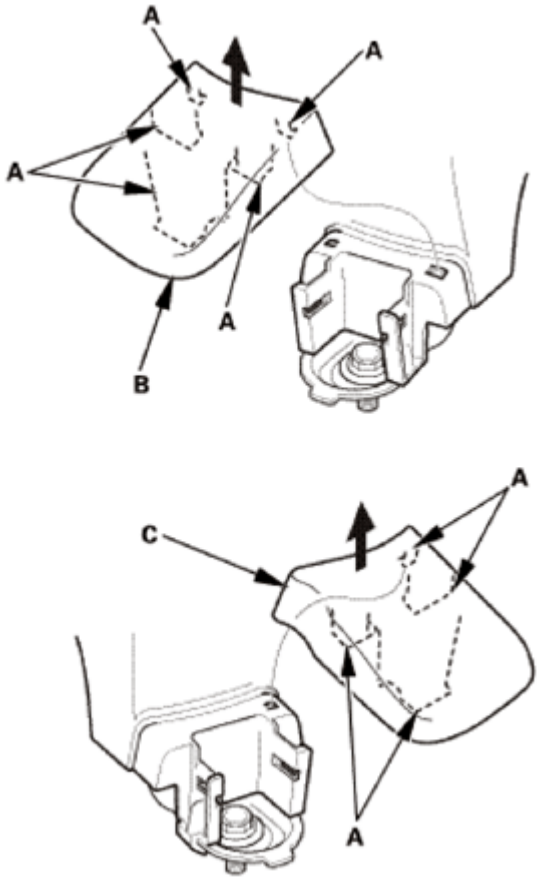

Fig. 971: Removing Rear Inner And Outer Seat Track End Cover
Courtesy of AMERICAN HONDA MOTOR CO., INC.

2. Remove the front mounting bolts (A) from the front seat.

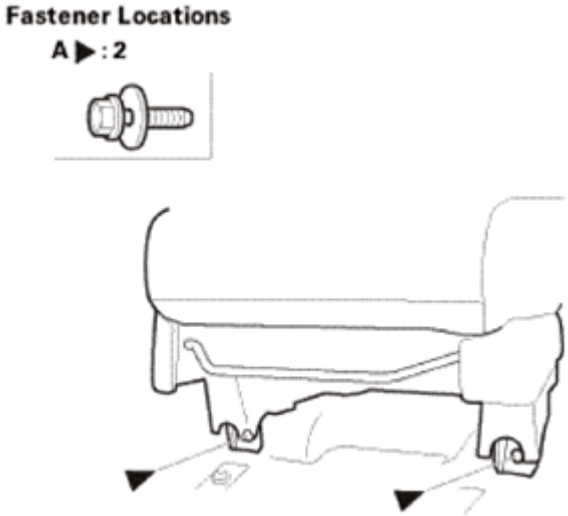

Fig. 972: Identifying Front Seat Mounting Bolts
Courtesy of AMERICAN HONDA MOTOR CO., INC.

GETtheMANUALS.org

3. Remove the rear mounting bolts (A) from the front seat.

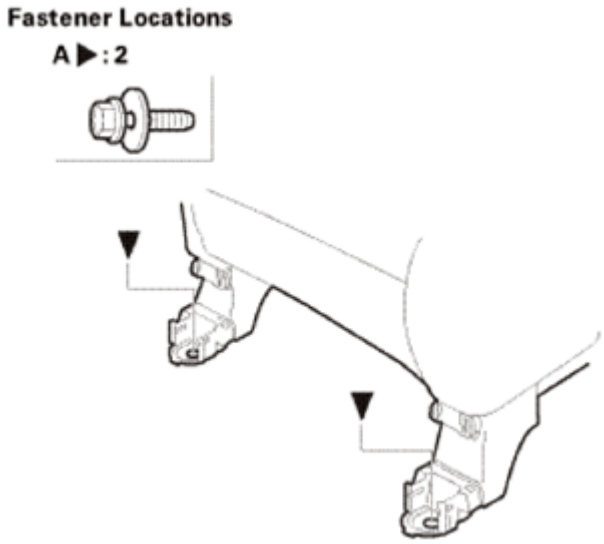

Fig. 973: Identifying Front Seat Rear Mounting Bolts
Courtesy of AMERICAN HONDA MOTOR CO., INC.

4. Disconnect the connectors (A).
5. Detach the harness clip (B).

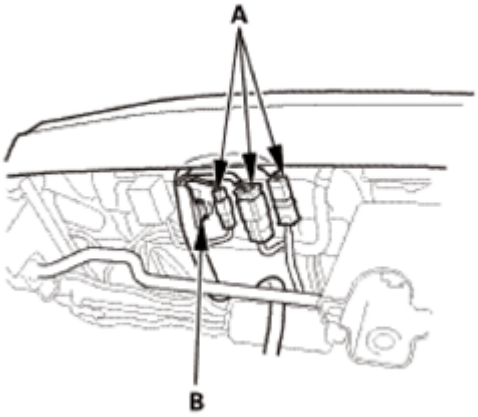

Fig. 974: Identifying Front Seat Connectors And Clips
Courtesy of AMERICAN HONDA MOTOR CO., INC.

5. Front Cover - Power Seat
    1. Remove the screw (A), and release the hook (B), the pin (C), and the tabs (D), then remove the front cover (E).

GETtheMANUALS.org

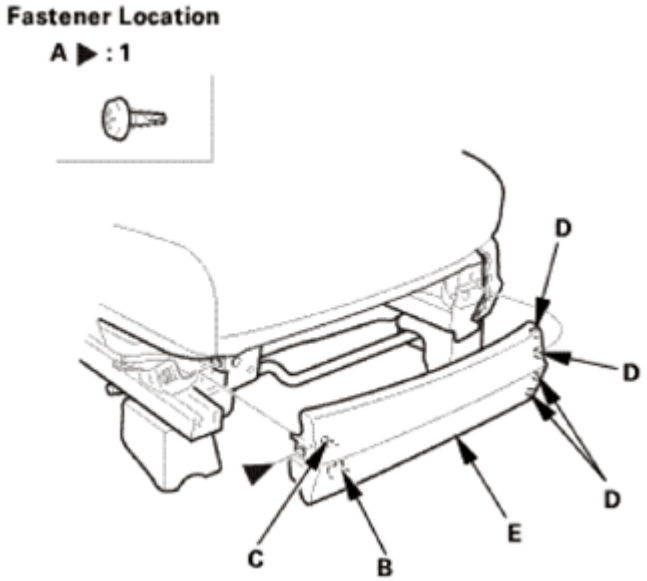

Fig. 975: Identifying Front Cover, Hook, Tabs, Pin And Screws
Courtesy of AMERICAN HONDA MOTOR CO., INC.

6. Front Seat Recline Cover - Driver's Side

Power Seat

1. Remove the screw (A), and detach the clip (B).
2. Release the tabs (C).
3. Pull up the recline cover (D) to release the hook (E).
4. Disconnect the connectors.
5. Remove the upper center inner cover (F).
6. Remove the wire harness (G) from the hooks (H), then remove the recline cover.

GETtheMANUALS.org

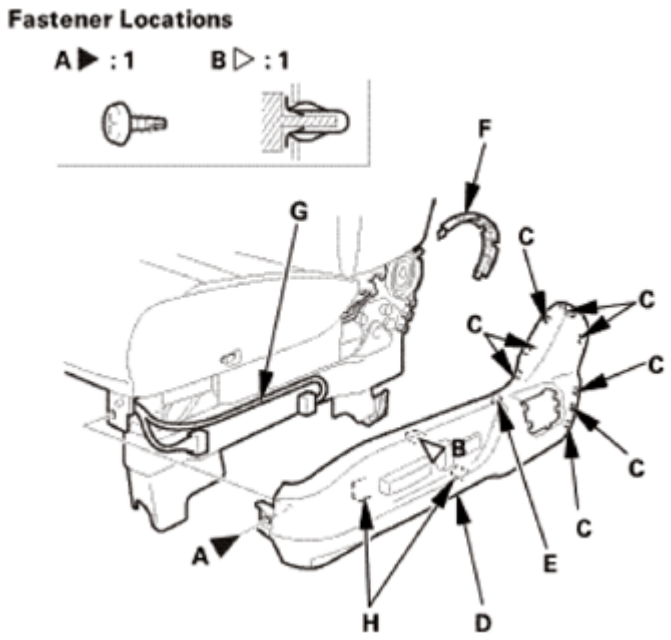

Fig. 976: Identifying Front Seat Recline Cover And Related Components (Power Seat)
Courtesy of AMERICAN HONDA MOTOR CO., INC.

Manual Seat

1. Remove the recline knob (A).
2. Remove the screw (B), and detach the clip (C).
3. Release the front hooks (D) of the recline cover (E) from the recline inner cover (F).
4. Release the rear hooks (G) of the recline cover from the recline inner cover.
5. Detach the hook (H) by pulling the recline cover back by hand.
6. Gently pull out the recline cover and remove it.

GETtheMANUALS.org

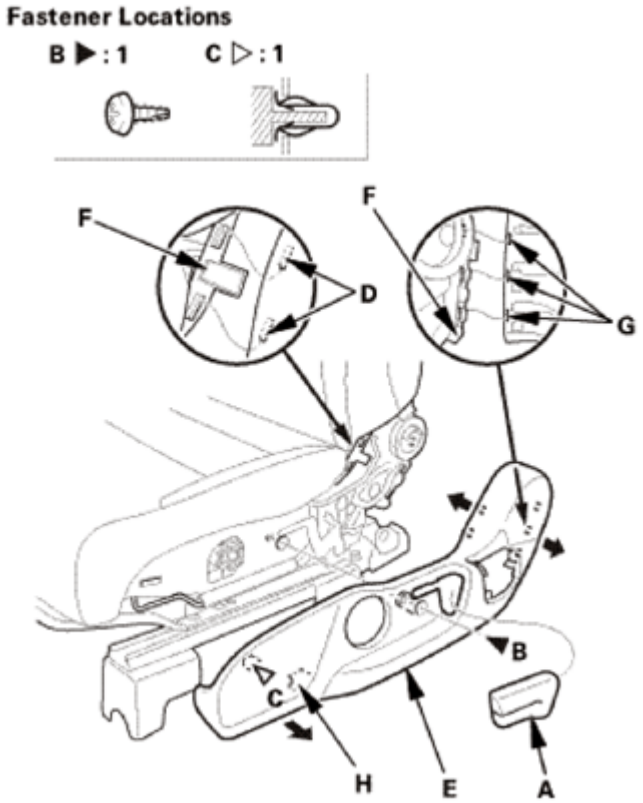

Fig. 977: Identifying Front Seat Recline Cover And Related Components (Manual Seat)
Courtesy of AMERICAN HONDA MOTOR CO., INC.

7. Front Seat Center Cover - Driver's Side

Power Seat

1. Remove the screw (A).
2. Release the tabs (B), then remove the center cover (C).
3. Remove the upper center inner cover (D).

GETtheMANUALS.org

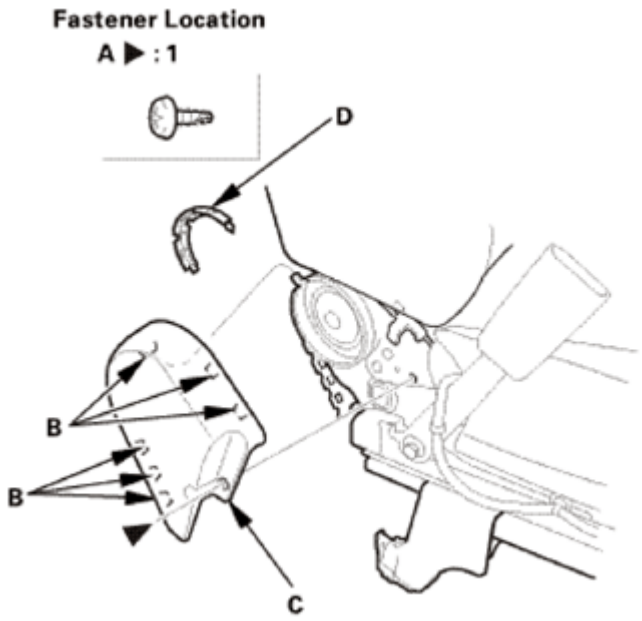

Fig. 978: Identifying Upper Center Inner Cover, Center Cover, Tabs And Screws
Courtesy of AMERICAN HONDA MOTOR CO., INC.

Manual Seat

1. Pull up the center cover (A) to release the tabs (B) from the inner cover (C).

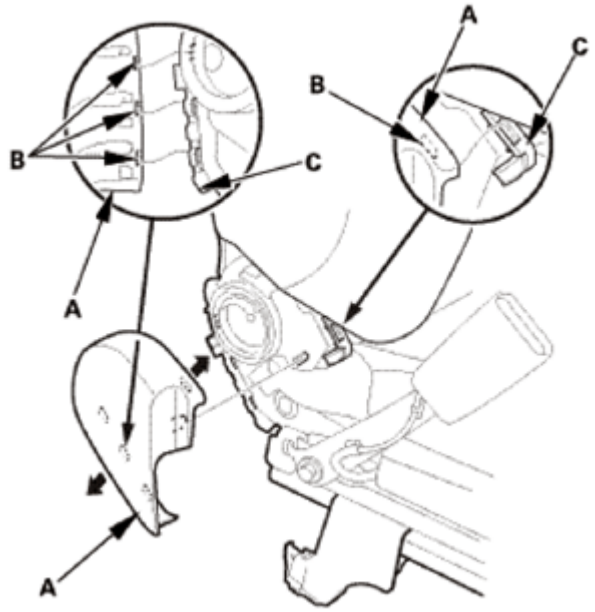

Fig. 979: Removing Center Cover (Manual Seat)
Courtesy of AMERICAN HONDA MOTOR CO., INC.

8. Front Seat Cushion - Driver's Side

GETtheMANUALS.org

1. Release the elastic strap (A) from the seat cushion frame springs (B), then pull back the under cover (C) of the seat-back cover.

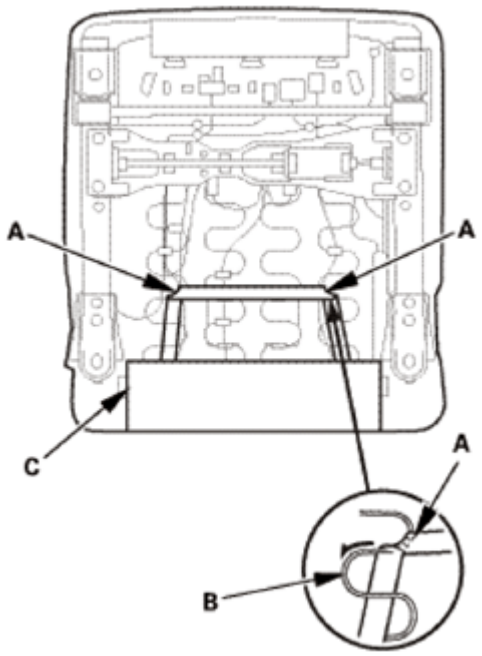

Fig. 980: Releasing Elastic Strap From Seat Cushion Frame Springs
Courtesy of AMERICAN HONDA MOTOR CO., INC.

2. With seat heater: Disconnect the connectors (A).
3. With seat heater: Detach the harness clip (B).
4. With seat heater: Pry up the hook (C) of the harness holders (D), then release them from the seat cushion frame springs (E).

With Seat Heater

GETtheMANUALS.org

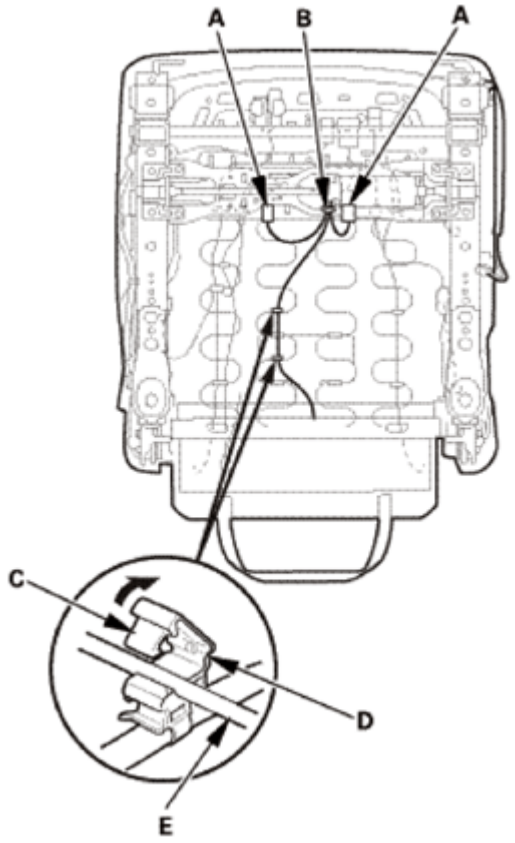

Fig. 981: Releasing Harness Holder From Seat Cushion Frame Springs (With Seat Heater)
Courtesy of AMERICAN HONDA MOTOR CO., INC.

5. Release the hook strips (A) from both sides of the seat cushion frame.
6. Detach the clip (B) from the seat cushion frame.

Power Seat

GETtheMANUALS.org

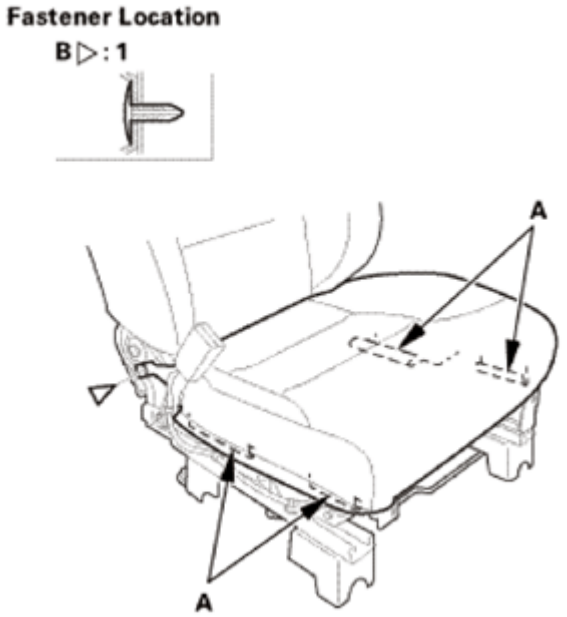

Fig. 982: Identifying Front Seat Cushion Hook Strips And Clips (Power Seat)
Courtesy of AMERICAN HONDA MOTOR CO., INC.

Manual Seat

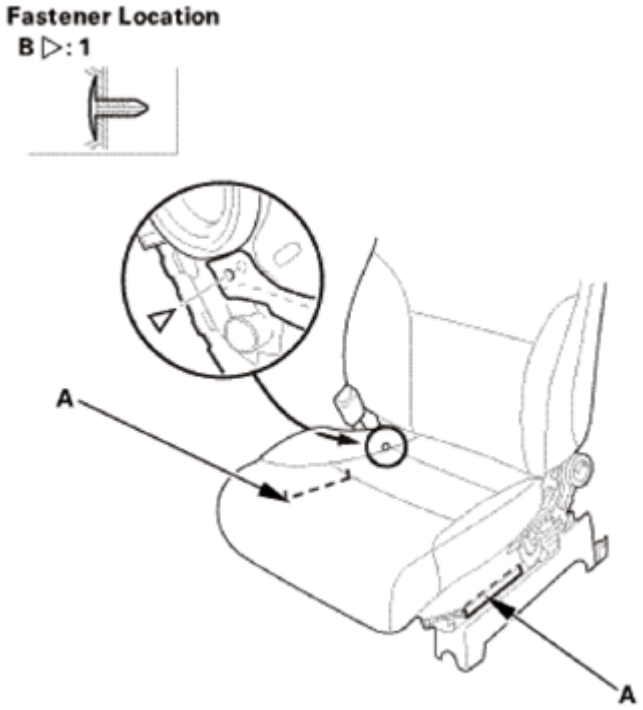

Fig. 983: Identifying Front Seat Cushion Hook Strips And Clips (Manual Seat)
Courtesy of AMERICAN HONDA MOTOR CO., INC.

7. Release the hook strips (A) from under the seat cushion.

GETtheMANUALS.org

Power Seat

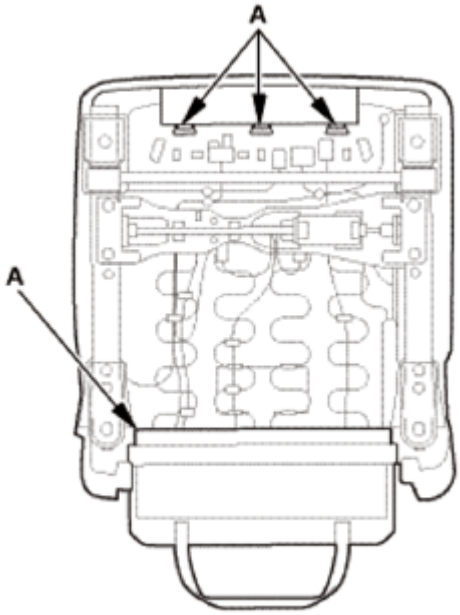

Fig. 984: Identifying Hook Strips Under Seat Cushion (Power Seat)
Courtesy of AMERICAN HONDA MOTOR CO., INC.

Manual Seat

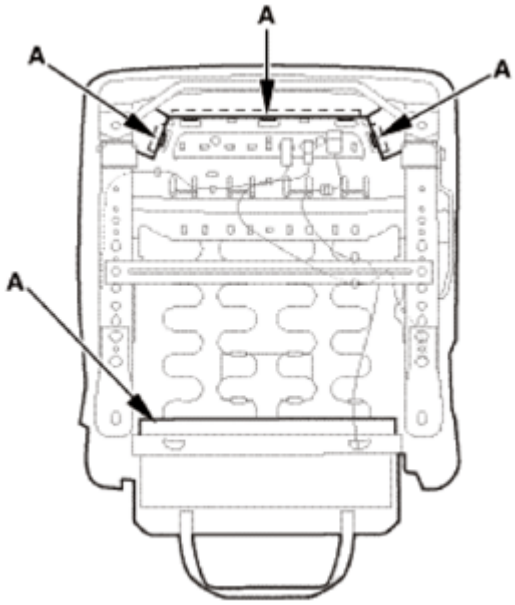

Fig. 985: Identifying Hook Strips Under Seat Cushion (Manual Seat)
Courtesy of AMERICAN HONDA MOTOR CO., INC.

8. Remove the seat cushion cover/pad (A) from the seat frame (B).

GETtheMANUALS.org

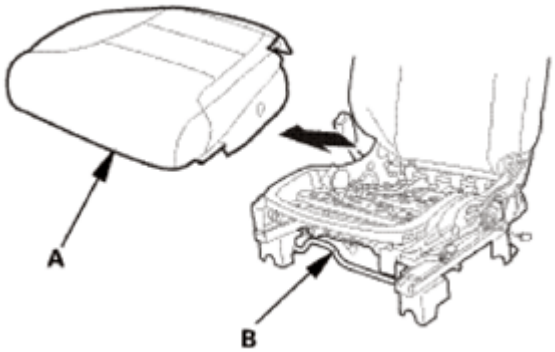

Fig. 986: Removing Seat Cushion Cover/Pad From Seat Frame
Courtesy of AMERICAN HONDA MOTOR CO., INC.

9. Front Seat Cushion Cover - Driver's Side
    1. Release the hook strips (A) fastening the seat cushion cover (B) on the seat cushion pad (C).

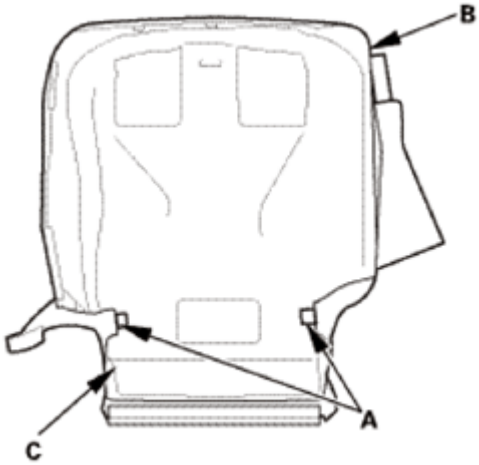

Fig. 987: Identifying Front Seat Cushion Cover, Pad And Hook Strips
Courtesy of AMERICAN HONDA MOTOR CO., INC.

    2. Pull back the edges of the seat cushion cover (A) all the way around, and release the upholstery rings (B).
    3. Remove the seat cushion cover.

Leather Seat

GETtheMANUALS.org

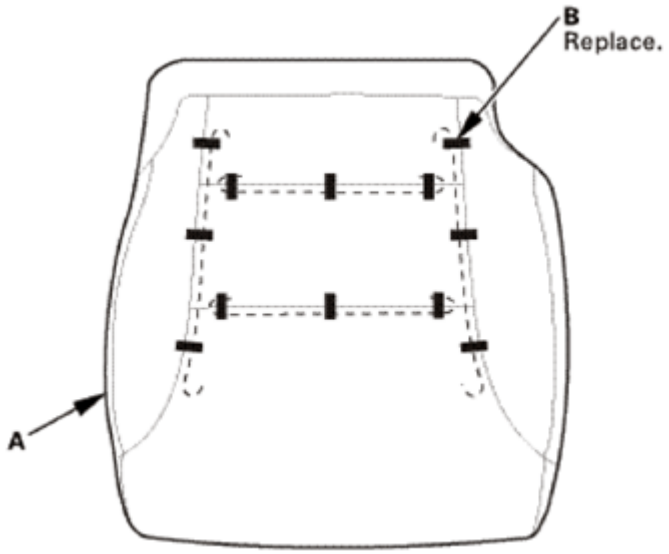

Fig. 988: Identifying Seat Cushion Cover And Upholstery Rings (Leather Seat)
Courtesy of AMERICAN HONDA MOTOR CO., INC.

Fabric Seat

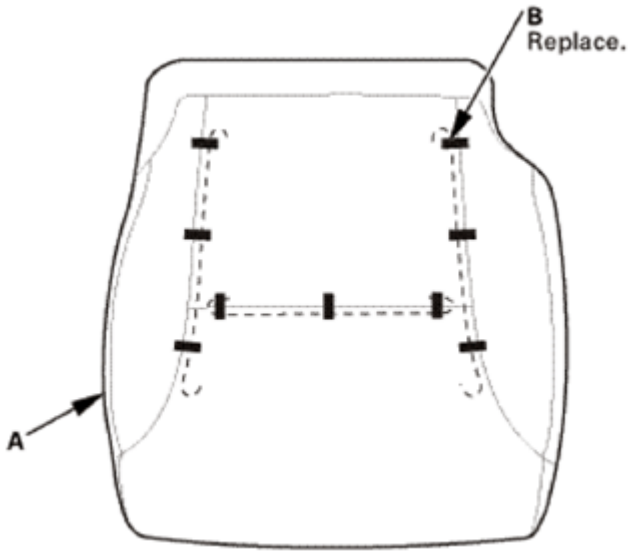

Fig. 989: Identifying Seat Cushion Cover And Upholstery Rings (Fabric Seat)
Courtesy of AMERICAN HONDA MOTOR CO., INC.

10. Seat Cushion Heater - Driver's Side
    1. Remove the seat cushion heater (A).

NOTE: **The seat cushion heater is glued to the seat cushion pad. When removing it, take care not to damage the seat cushion pad.**

GETtheMANUALS.org

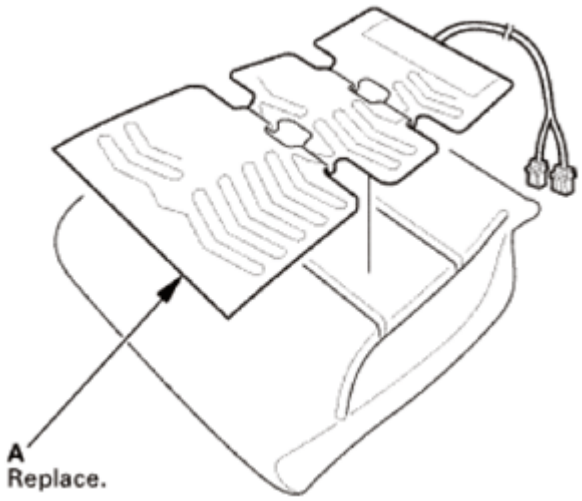

Fig. 990: Identifying Seat Cushion Heater
Courtesy of AMERICAN HONDA MOTOR CO., INC.

11. Front Seat Belt Lower Anchor Bolt - Passenger's Side
    1. Carefully pry up on the bottom of the anchor cover (A) at the pry point (B) with the appropriate trim tool to release the hooks (C) and the tab (D), then remove the cover by pulling it upward.

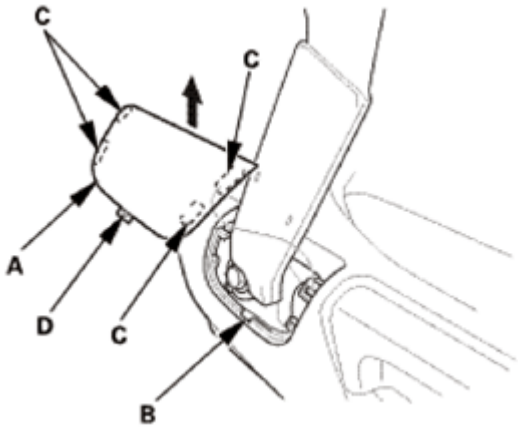

Fig. 991: Removing Front Seat Belt Lower Anchor Cover (Passenger Side)
Courtesy of AMERICAN HONDA MOTOR CO., INC.

    2. Remove the lower anchor bolt (A).

GETtheMANUALS.org

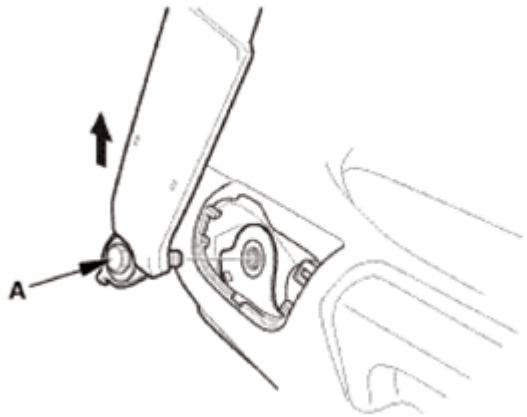

Fig. 992: Removing Front Seat Belt Lower Anchor Bolt (Passenger Side)
Courtesy of AMERICAN HONDA MOTOR CO., INC.

12. Head Restraint - Passenger's Side
    1. Push and hold the knob (A), then pull out the head restraint (B) as shown.

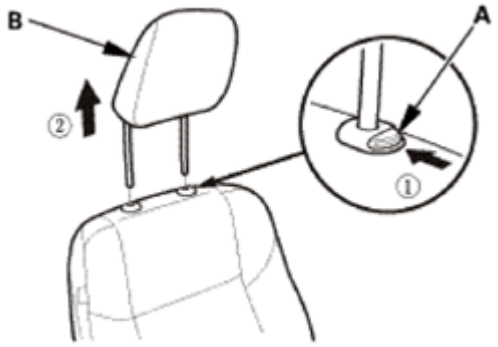

Fig. 993: Pulling Head Restraint (Driver Side)
Courtesy of AMERICAN HONDA MOTOR CO., INC.

13. Front Seat - Passenger's Side
    1. Detach the hooks (A), then remove the rear inner seat track end cover (B) and the rear outer seat track end cover (C).

GETtheMANUALS.org

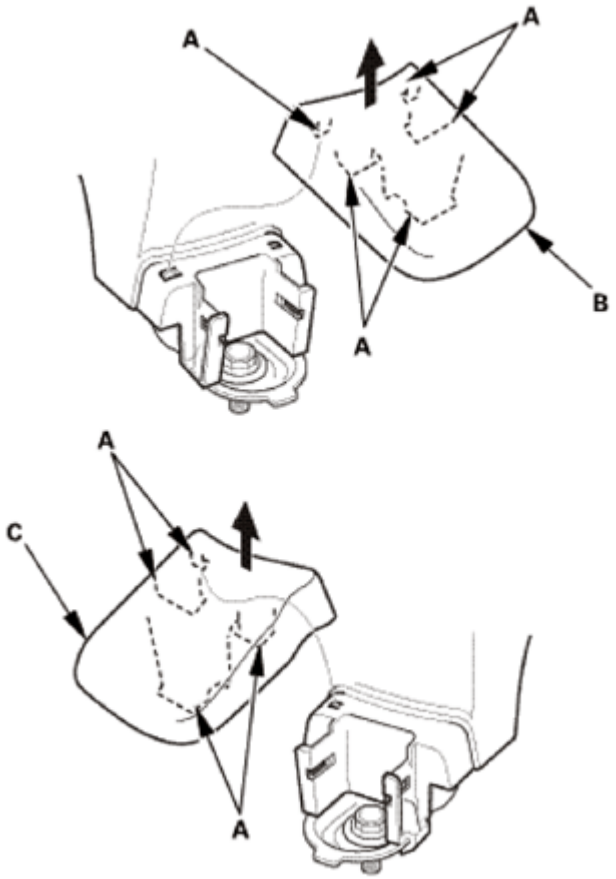

Fig. 994: Removing Rear Inner And Outer Seat Track End Cover
Courtesy of AMERICAN HONDA MOTOR CO., INC.

2. Remove the front mounting bolts (A) from the front seat.

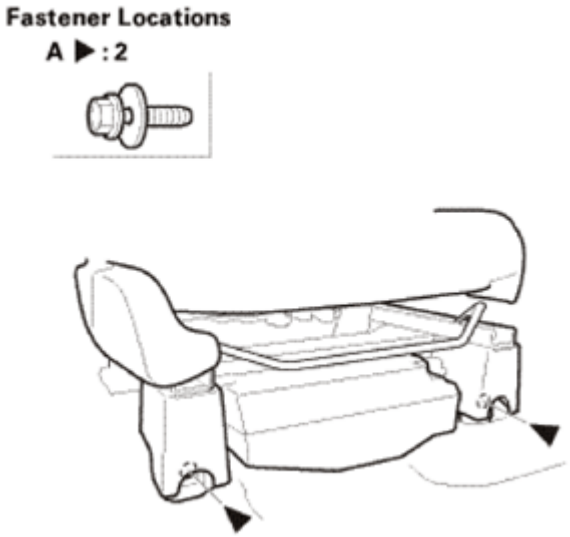

Fig. 995: Identifying Front Seat Mounting Bolts

GETtheMANUALS.org

Courtesy of AMERICAN HONDA MOTOR CO., INC.

3. Remove the rear mounting bolts (A) from the front seat.

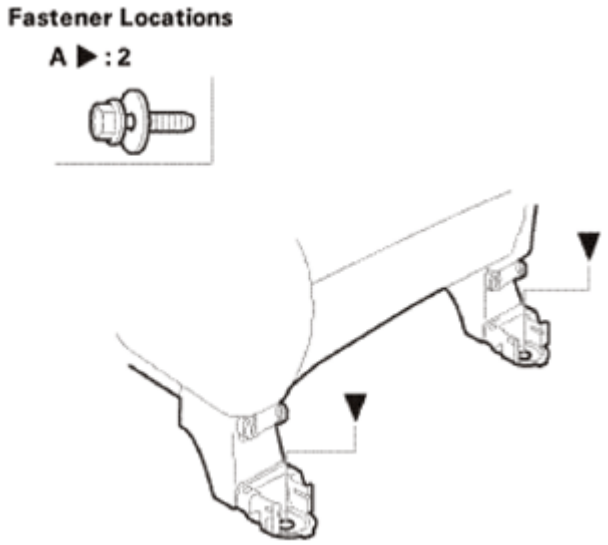

Fig. 996: Identifying Front Seat Rear Mounting Bolts
Courtesy of AMERICAN HONDA MOTOR CO., INC.

4. Disconnect the connectors (A).
5. Detach the harness clip (B).

Without Subwoofer

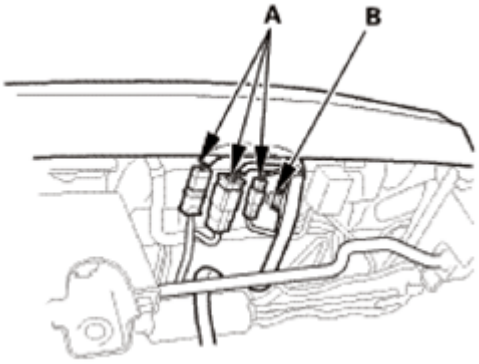

Fig. 997: Identifying Front Seat Connectors And Clips (Without Subwoofer)
Courtesy of AMERICAN HONDA MOTOR CO., INC.

With Subwoofer

GETtheMANUALS.org

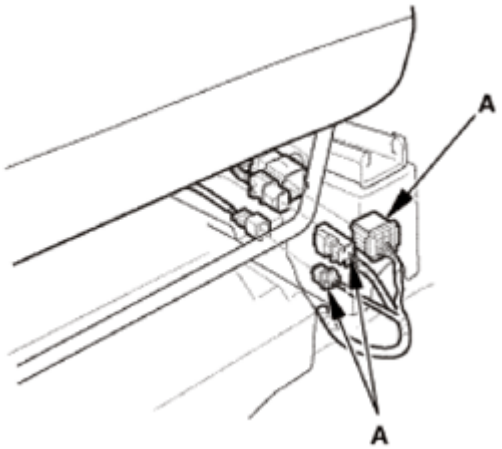

Fig. 998: Identifying Front Seat Connectors And Clips (With Subwoofer)
Courtesy of AMERICAN HONDA MOTOR CO., INC.

14. Front Seat Recline Cover - Passenger's Side
    1. Remove the recline knob (A).
    2. Remove the screw (B), and detach the clip (C).
    3. Release the front hooks (D) of the recline cover (E) from the recline inner cover (F).
    4. Release the rear hooks (G) of the recline cover from the recline inner cover.
    5. Detach the hook (H) by pulling the recline cover back by hand.
    6. Gently pull out the recline cover and remove it.

GETtheMANUALS.org

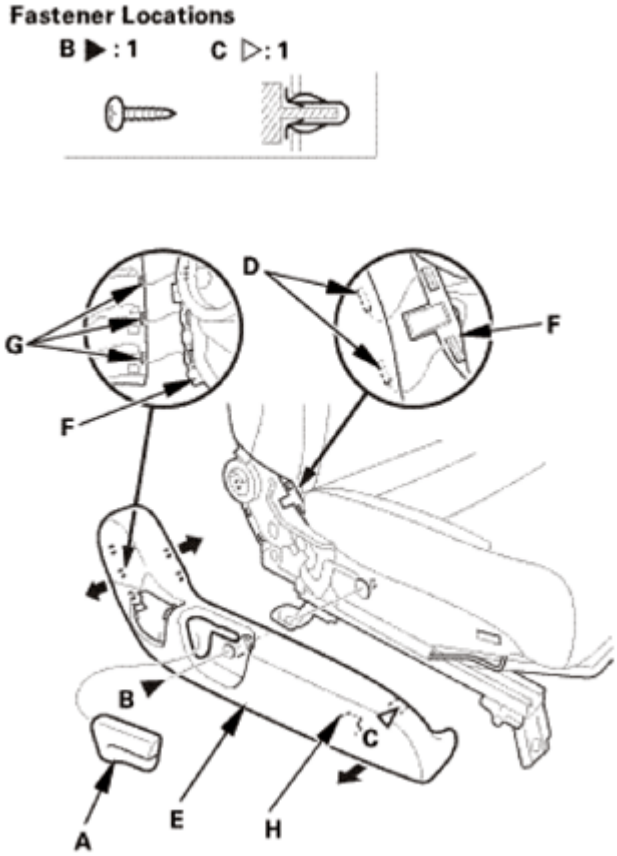

Fig. 999: Removing Front Seat Recline Cover
Courtesy of AMERICAN HONDA MOTOR CO., INC.

15. Front Seat Center Cover - Passenger's Side
    1. Pull up the center cover (A) to release the tabs (B) from the inner cover (C).

GETtheMANUALS.org

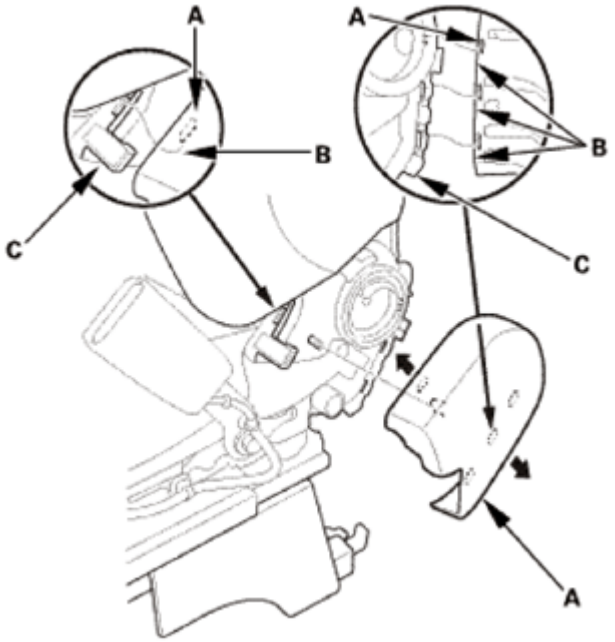

Fig. 1000: Removing Center Cover
Courtesy of AMERICAN HONDA MOTOR CO., INC.

16. Front Seat Cushion - Passenger's Side
    1. Release the elastic strap (A) from the seat cushion frame springs (B), then pull back the under cover (C) of the seat-back cover.

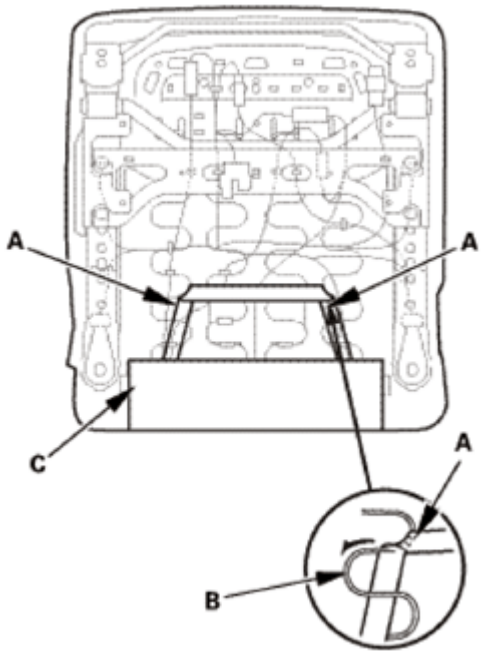

Fig. 1001: Releasing Elastic Strap From Seat Cushion Frame Springs
Courtesy of AMERICAN HONDA MOTOR CO., INC.

GETtheMANUALS.org

2. Disconnect the connector(s) (A).
3. Detach the harness clip (B).
4. With sheet heater: Pry up the hook (C) of the harness holders (D), then release them from the seat cushion frame springs (E).

Except KX - With Seat Heater

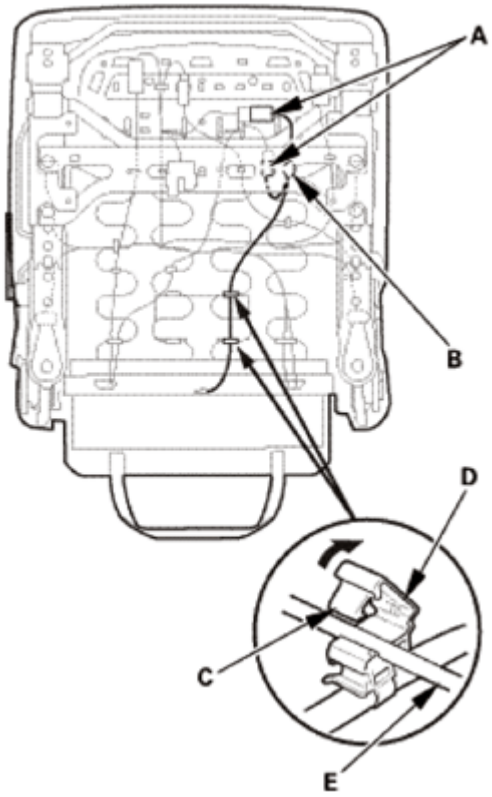

Fig. 1002: Removing Hooks From Seat Cushion Frame Springs (Except KX)
Courtesy of AMERICAN HONDA MOTOR CO., INC.

KX

GETtheMANUALS.org

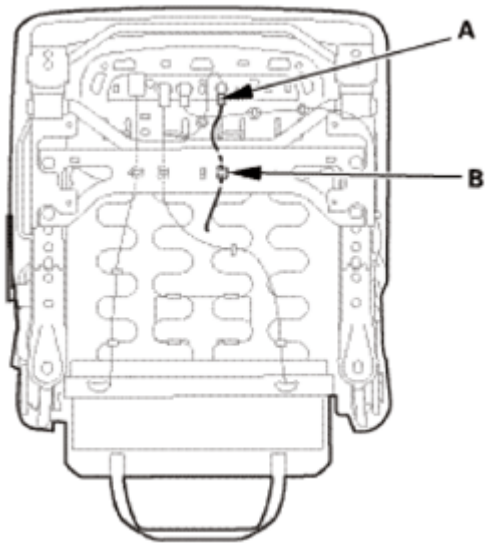

Fig. 1003: Identifying Front Seat Connectors And Clips (For KX)
Courtesy of AMERICAN HONDA MOTOR CO., INC.

5. Release the hook strips (A) from both sides of the seat cushion frame.
6. Detach the clip (B) from the seat cushion frame.

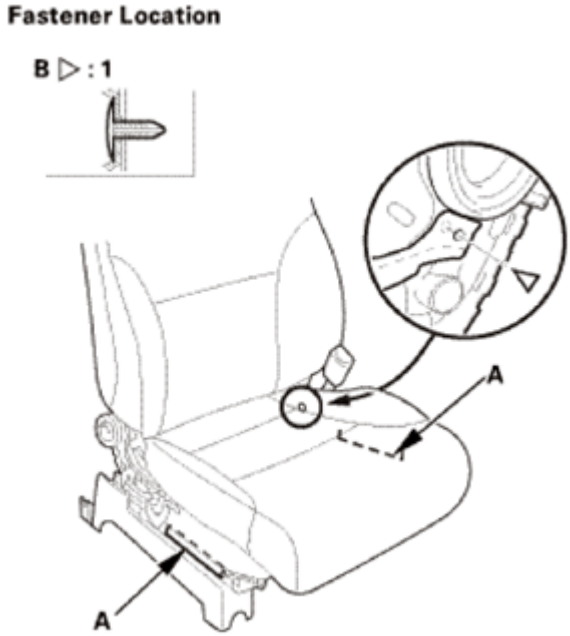

Fig. 1004: Identifying Front Seat Cushion Hook Strips And Clips
Courtesy of AMERICAN HONDA MOTOR CO., INC.

7. Release the hook strips (A) from under the seat cushion.

GETtheMANUALS.org

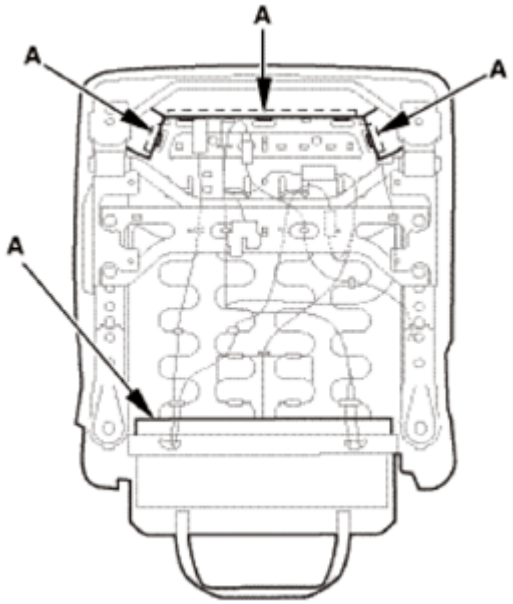

Fig. 1005: Identifying Hook Strips Under Seat Cushion (Power Seat)
Courtesy of AMERICAN HONDA MOTOR CO., INC.

8. Remove the seat cushion cover/pad (A) from the seat frame (B).

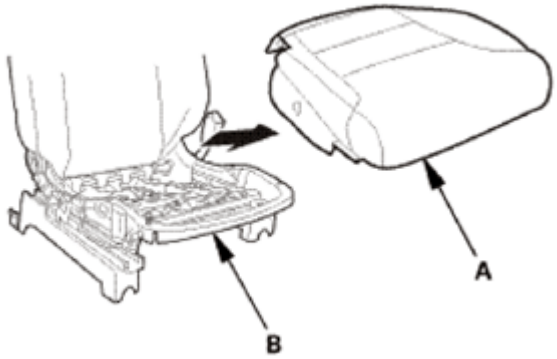

Fig. 1006: Removing Seat Cushion Cover/Pad From Seat Frame
Courtesy of AMERICAN HONDA MOTOR CO., INC.

17. Front Seat Cushion Cover - Passenger's Side
    1. Release the hook strips (A) fastening the seat cushion cover (B) on the seat cushion pad (C).

GETtheMANUALS.org

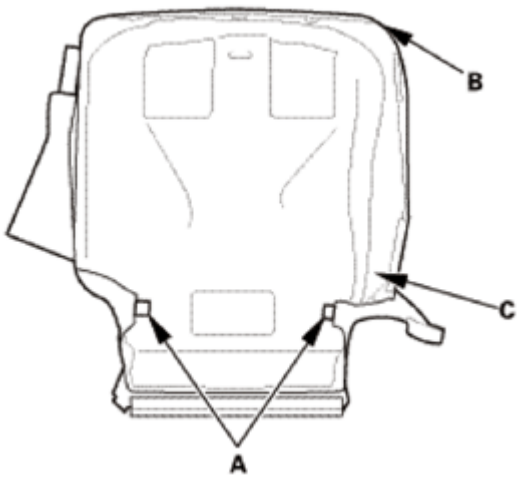

Fig. 1007: Identifying Front Seat Cushion Cover, Pad And Hook Strips
Courtesy of AMERICAN HONDA MOTOR CO., INC.

2. Pull back the edges of the seat cushion cover (A) all the way around, and release the upholstery rings (B).
3. Remove the seat cushion cover.

Leather Seat

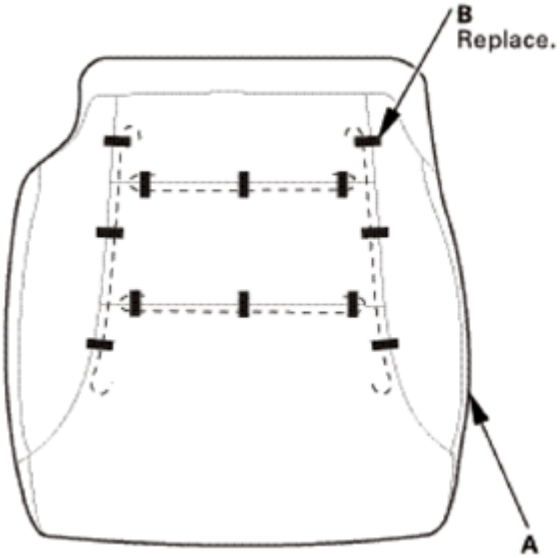

Fig. 1008: Identifying Seat Cushion Cover And Upholstery Rings (Leather Seat)
Courtesy of AMERICAN HONDA MOTOR CO., INC.

Fabric Seat

GETtheMANUALS.org

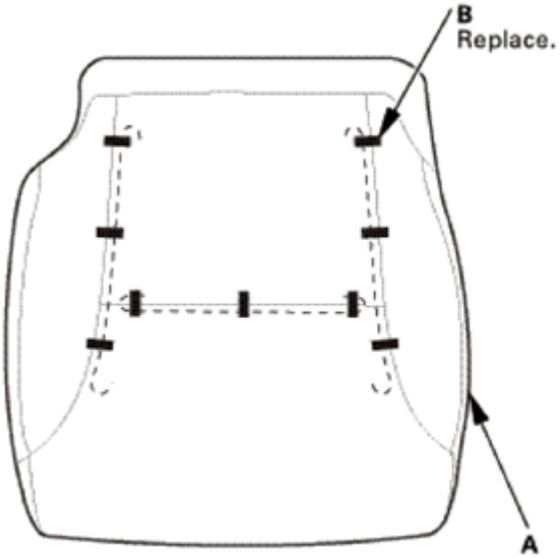

Fig. 1009: Identifying Seat Cushion Cover And Upholstery Rings (Fabric Seat)
Courtesy of AMERICAN HONDA MOTOR CO., INC.

18. Seat Cushion Heater - Passenger's Side
    1. Remove the seat cushion heater (A).

NOTE: **The seat cushion heater is glued to the seat cushion pad. When removing it, take care not to damage the seat cushion pad.**

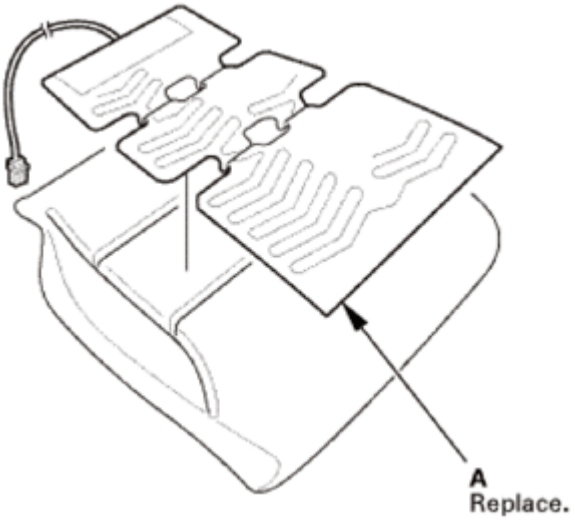

Fig. 1010: Identifying Seat Cushion Heater
Courtesy of AMERICAN HONDA MOTOR CO., INC.

INSTALLATION

SRS components are located in this area. Review the **SRS COMPONENT LOCATIONS** and the

GETtheMANUALS.org

PRECAUTIONS AND PROCEDURES before doing repairs or service.

NOTE: **Steps 1-8 show installing the passenger's side, steps 9-18 show installing the driver's side.**

1. Seat Cushion Heater - Passenger's Side
    1. Install the seat cushion heater (A).

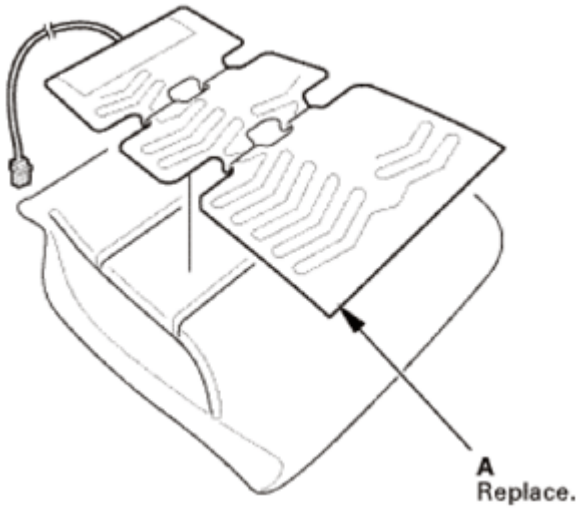

Fig. 1011: Identifying Seat Cushion Heater
Courtesy of AMERICAN HONDA MOTOR CO., INC.

2. Front Seat Cushion Cover - Passenger's Side

NOTE: **Replace all of the upholstery rings (A) fastening the seat cushion cover (B) to the pad wires (C) with new ones using commercially available upholstery ring pliers (D).**

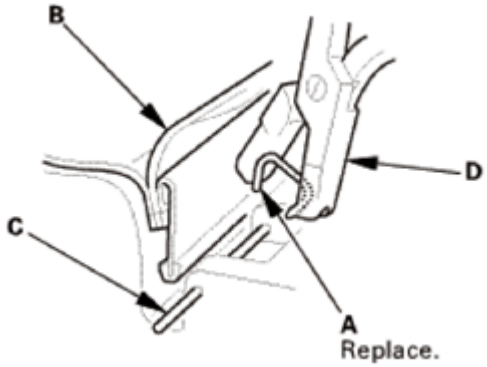

Fig. 1012: Removing Seat Cushion Cover To Pad Wires Fastening Upholstery Ring Using Tool
Courtesy of AMERICAN HONDA MOTOR CO., INC.

GETtheMANUALS.org

1. Install the seat cushion cover (A) with the upholstery rings (B).

Leather Seat

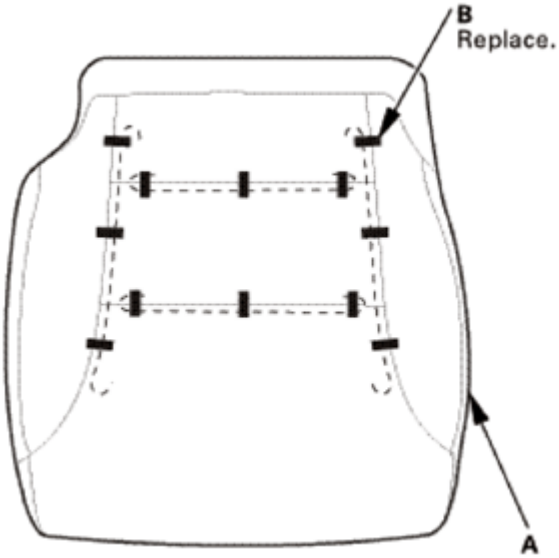

Fig. 1013: Identifying Seat Cushion Cover And Upholstery Rings (Leather Seat)
Courtesy of AMERICAN HONDA MOTOR CO., INC.

Fabric Seat

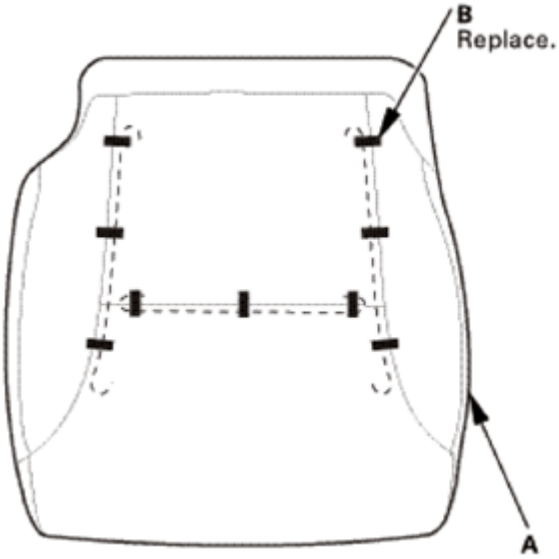

Fig. 1014: Identifying Seat Cushion Cover And Upholstery Rings (Fabric Seat)
Courtesy of AMERICAN HONDA MOTOR CO., INC.

2. Install the hook strips (A) to the seat cushion pad (B).

GETtheMANUALS.org

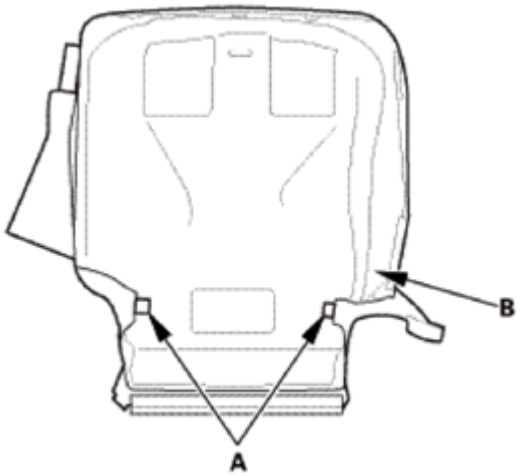

Fig. 1015: Identifying Seat Cushion Pad Hook Strips
Courtesy of AMERICAN HONDA MOTOR CO., INC.

3. Front Seat Cushion - Passenger's Side
    1. Install the seat cushion cover/pad (A) on the seat frame (B).

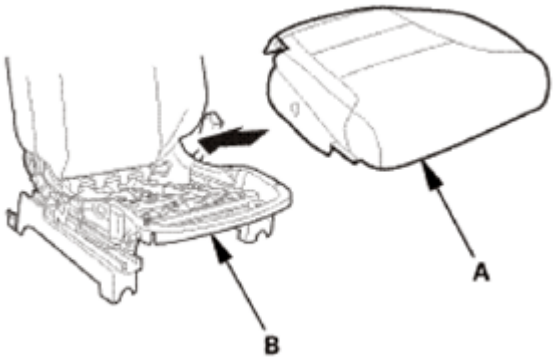

Fig. 1016: Installing Seat Cushion Cover/Pad On Seat Frame
Courtesy of AMERICAN HONDA MOTOR CO., INC.

    2. Install the hook strips (A) to under the seat cushion.

GETtheMANUALS.org

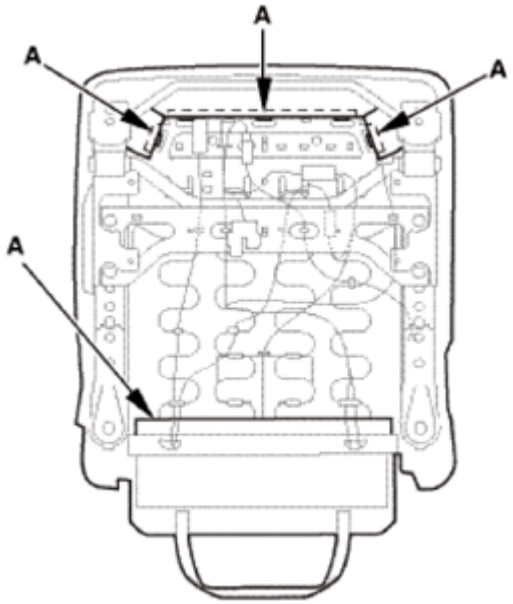

Fig. 1017: Identifying Under Seat Cushion Hook Strips
Courtesy of AMERICAN HONDA MOTOR CO., INC.

3. Install the hook strips (A), then install the clip (B).

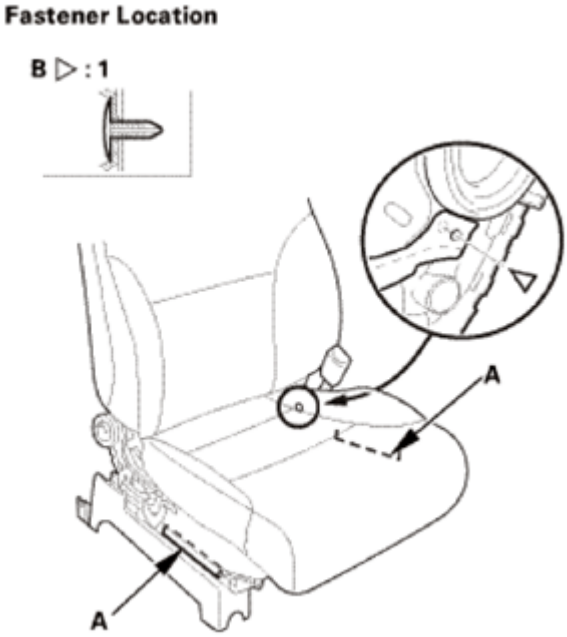

Fig. 1018: Identifying Front Seat Cushion Hook Strips
Courtesy of AMERICAN HONDA MOTOR CO., INC.

4. With seat heater: Install the harness holder (A) to the seat cushion frame springs (B).
5. Install the harness clip (C).
6. Connect the connecter(s) (D).

GETtheMANUALS.org

Except KX - With Seat Heater

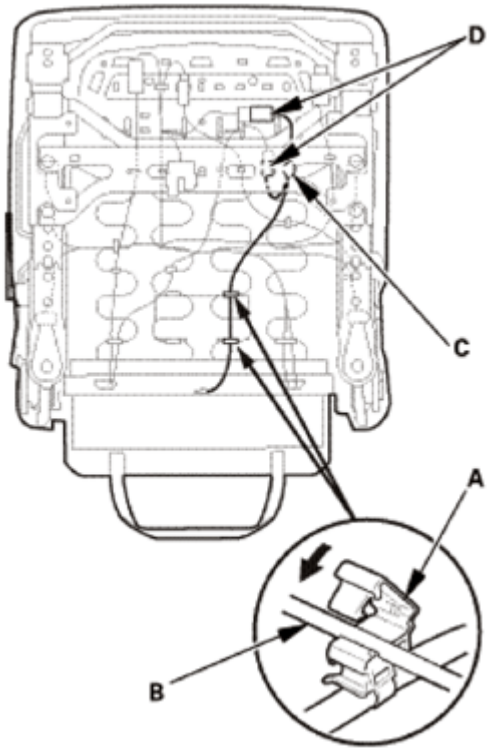

Fig. 1019: Installing Harness Holder To Seat Cushion Frame Springs (Except KX)
Courtesy of AMERICAN HONDA MOTOR CO., INC.

KX

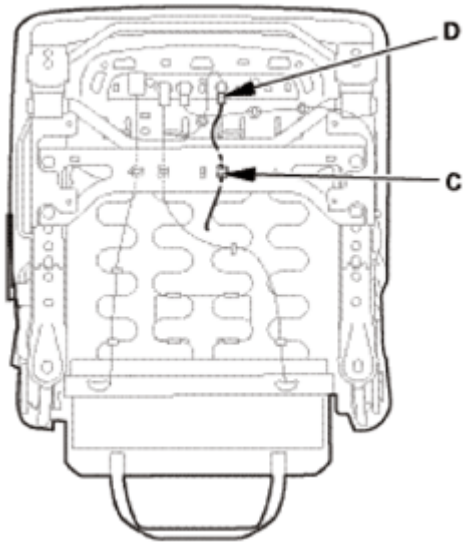

Fig. 1020: Identifying Seat Cushion Frame Springs, Connector, Holder And Clips
Courtesy of AMERICAN HONDA MOTOR CO., INC.

GETtheMANUALS.org

7. Install the elastic strap (A) to the seat cushion frame springs (B).

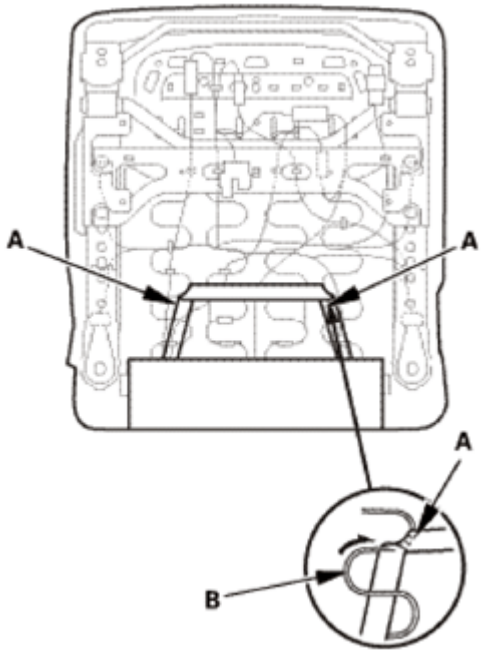

Fig. 1021: Installing Elastic Strap To Seat Cushion Frame Springs
Courtesy of AMERICAN HONDA MOTOR CO., INC.

4. Front Seat Center Cover - Passenger's Side
    1. Install the center cover (A) to the recline inner cover (B). Make sure the tabs (C) snap into place securely.

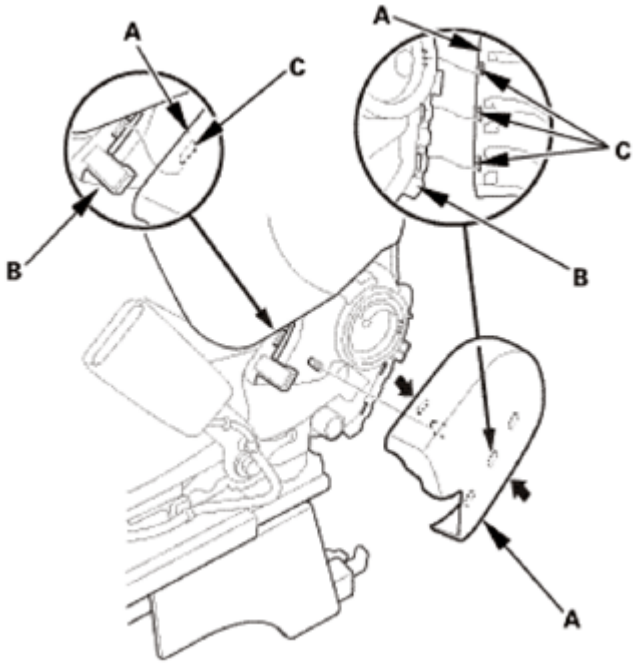

GETtheMANUALS.org

Fig. 1022: Installing Center Cover To Recline Inner Cover
Courtesy of AMERICAN HONDA MOTOR CO., INC.

5. Front Seat Recline Cover - Passenger's Side
    1. Install the hook (A) and the clip (B) of the recline cover (C).
    2. Install the front hooks (D) to the recline inner cover (E).
    3. Install the rear hooks (F) of the recline cover to the recline inner cover.
    4. Install the recline knob (G) and the screw (H).

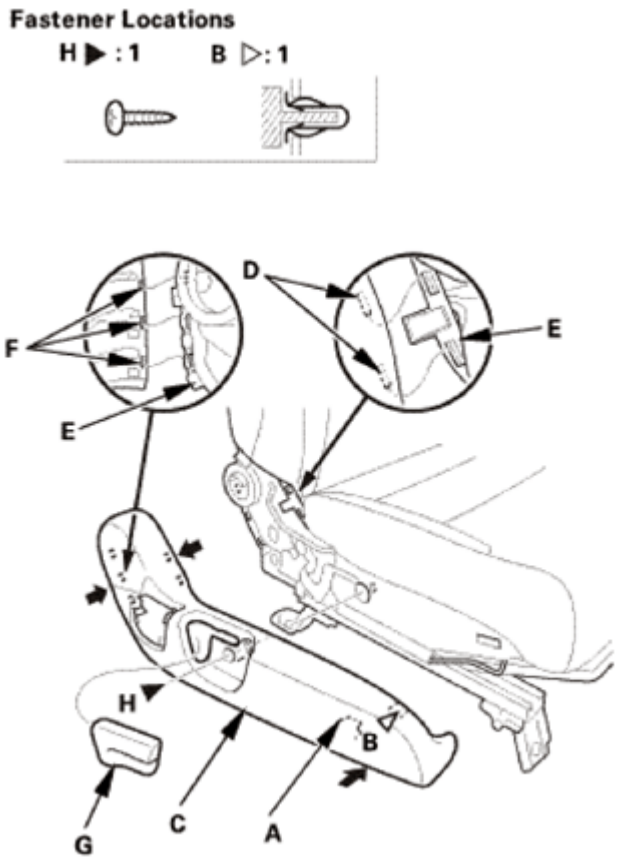

Fig. 1023: Installing Front Seat Recline Cover
Courtesy of AMERICAN HONDA MOTOR CO., INC.

6. Front Seat Assembly - Passenger's Side
    1. Connect the connectors (A).
    2. Install the harness clip (B).

Without Subwoofer

GETtheMANUALS.org

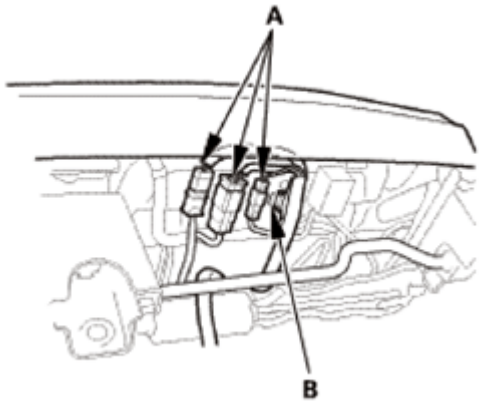

Fig. 1024: Identifying Front Seat Connectors And Clips (Without Subwoofer)
Courtesy of AMERICAN HONDA MOTOR CO., INC.

With Subwoofer

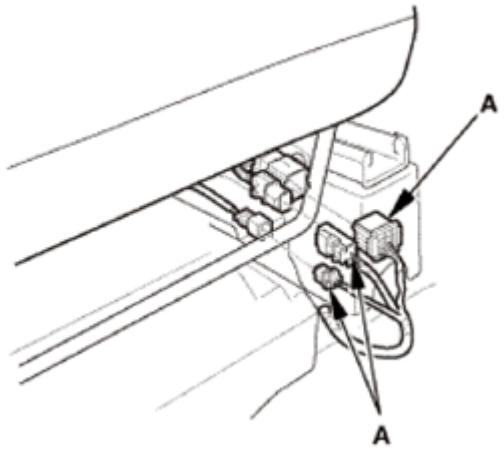

Fig. 1025: Identifying Front Seat Connectors And Clips (With Subwoofer)
Courtesy of AMERICAN HONDA MOTOR CO., INC.

3. Install the seat mounting bolts (A).

NOTE:

- **Tighten the bolts by hand first, then tighten them to the specified torque.**
- **Tighten the seat mounting bolts to the specified torque in the sequence shown. Slide the seat all the way back and tighten bolts 1 and 2, then slide it forward and tighten bolts 3 and 4.**

Front Side

GETtheMANUALS.org

Fig. 1026: Identifying Seat Mounting Bolts With Torque Specifications (Front Side)
Courtesy of AMERICAN HONDA MOTOR CO., INC.

Rear Side

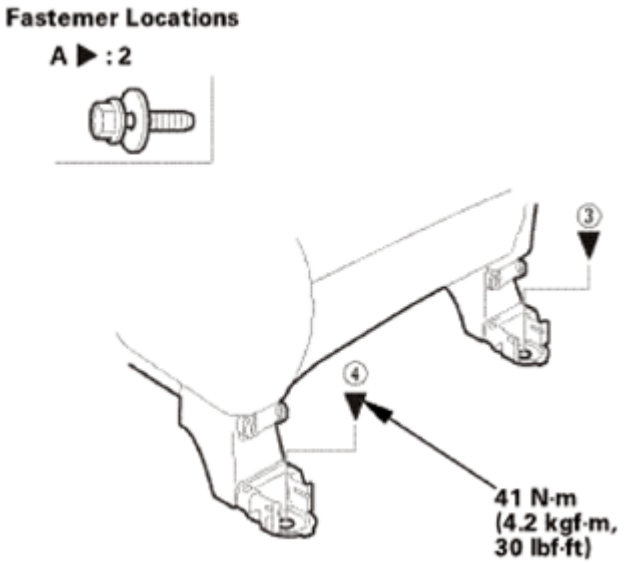

Fig. 1027: Identifying Seat Mounting Bolts With Torque Specifications (Rear Side)
Courtesy of AMERICAN HONDA MOTOR CO., INC.

4. Install rear inner seat track end cover (A) and the rear outer seat track end cover (B). Make sure the hooks (C) snap into place securely.

GETtheMANUALS.org

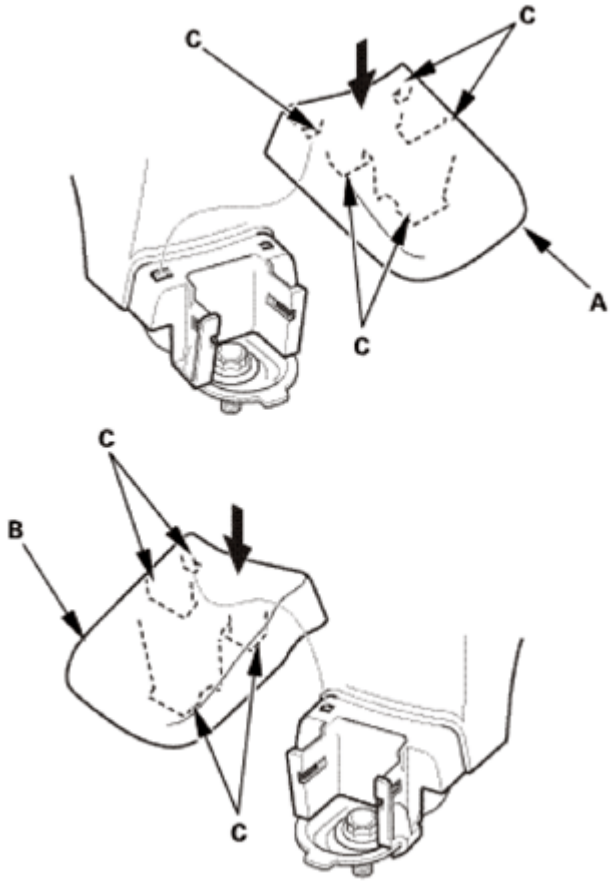

Fig. 1028: Installing Rear Inner And Outer Seat Track End Cover
Courtesy of AMERICAN HONDA MOTOR CO., INC.

7. Head Restraint - Passenger's Side
    1. Insert the head restraint (A) into the seat-back as shown.

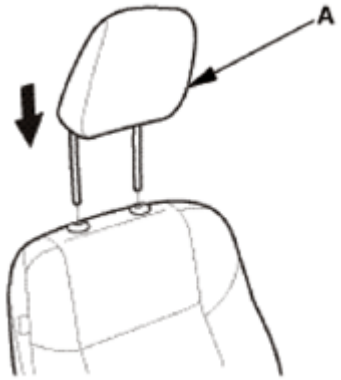

Fig. 1029: Inserting Head Restraint Into Seat-Back (Passenger Side)
Courtesy of AMERICAN HONDA MOTOR CO., INC.

8. Front Seat Belt Lower Anchor Bolt - Passenger's Side

GETtheMANUALS.org

1. Install the lower anchor bolt (A).

NOTE: **Before installing the anchor bolt, make sure there are no twists or kinks in the seat belt.**

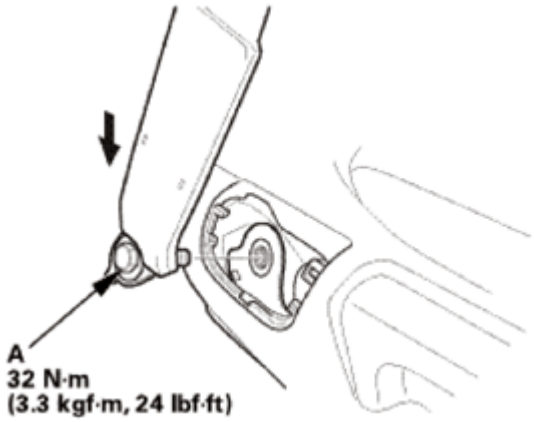

Fig. 1030: Installing Front Seat Belt Lower Anchor Bolt
Courtesy of AMERICAN HONDA MOTOR CO., INC.

2. Install the anchor cover (A). Make sure the hooks (B) and the tab (C) snap into place securely.

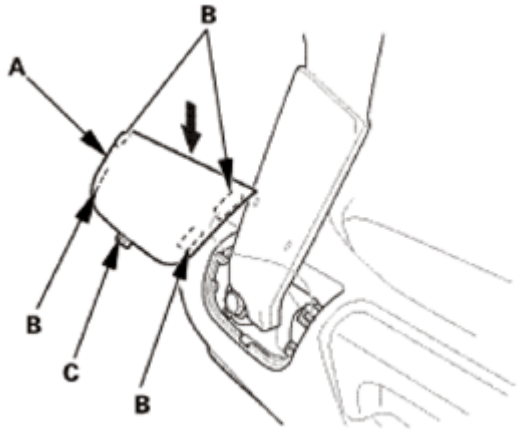

Fig. 1031: Installing Front Seat Belt Lower Anchor Cover
Courtesy of AMERICAN HONDA MOTOR CO., INC.

9. Seat Cushion Heater - Driver's Side
    1. Install the seat cushion heater (A).

GETtheMANUALS.org

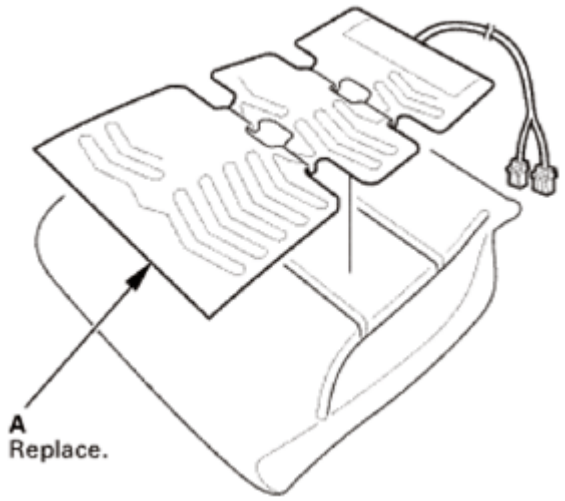

Fig. 1032: Identifying Seat Cushion Heater
Courtesy of AMERICAN HONDA MOTOR CO., INC.

10. Front Seat Cushion Cover - Driver's Side

NOTE: **Replace all of the upholstery rings (A) fastening the seat cushion cover (B) to the pad wires (C) with new ones using commercially available upholstery ring pliers (D).**

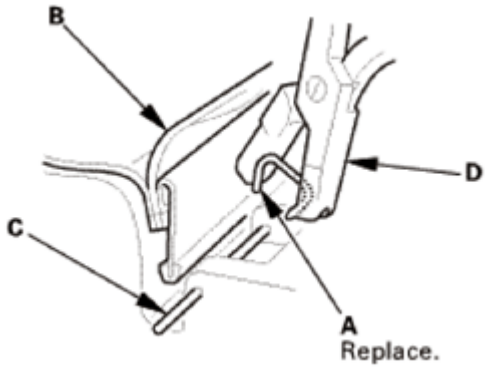

Fig. 1033: Removing Seat Cushion Cover To Pad Wires Fastening Upholstery Ring Using Tool
Courtesy of AMERICAN HONDA MOTOR CO., INC.

1. Install the seat cushion cover (A) with the upholstery rings (B).

Leather Seat

GETtheMANUALS.org

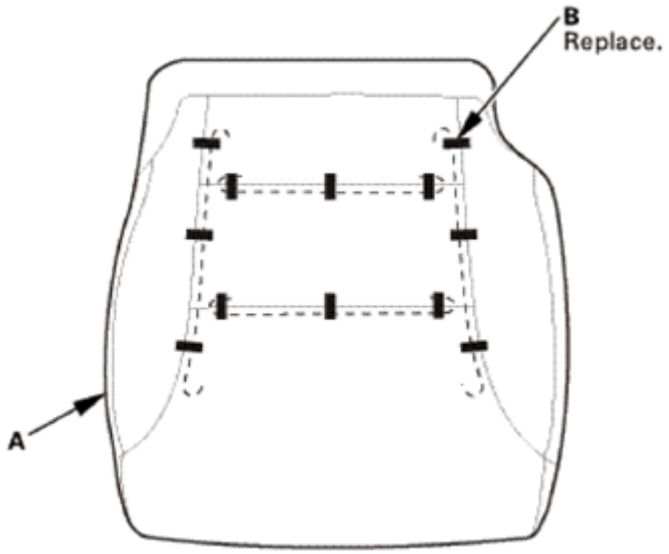

Fig. 1034: Identifying Seat Cushion Cover And Upholstery Rings (Leather Seat)
Courtesy of AMERICAN HONDA MOTOR CO., INC.

Fabric Seat

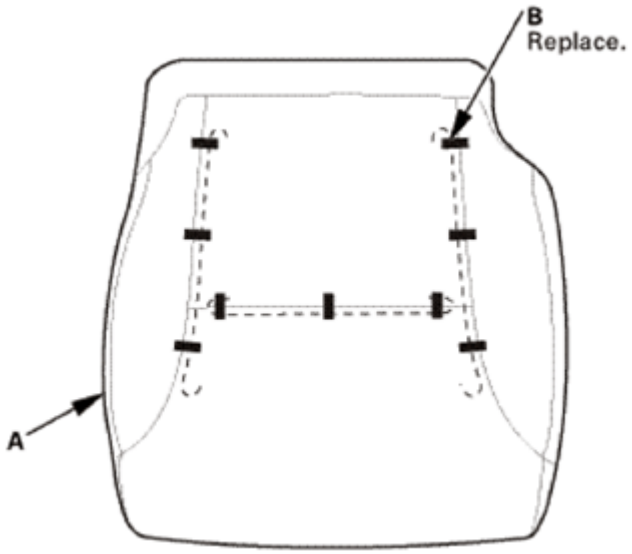

Fig. 1035: Identifying Seat Cushion Cover And Upholstery Rings (Fabric Seat)
Courtesy of AMERICAN HONDA MOTOR CO., INC.

2. Install the hook strips (A) to the seat cushion pad (B).

GETtheMANUALS.org

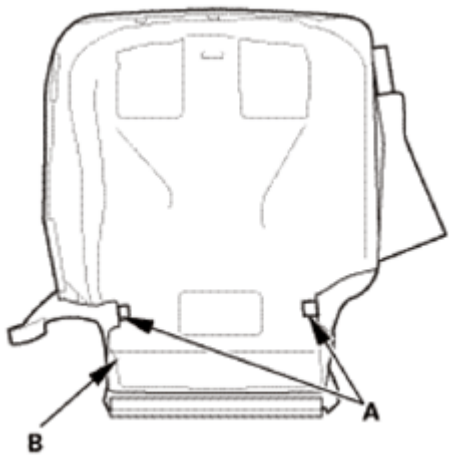

Fig. 1036: Identifying Seat Cushion Pad Hook Strips
Courtesy of AMERICAN HONDA MOTOR CO., INC.

11. Front Seat Cushion - Driver's Side
    1. Install the seat cushion cover/pad (A) on the seat frame (B).

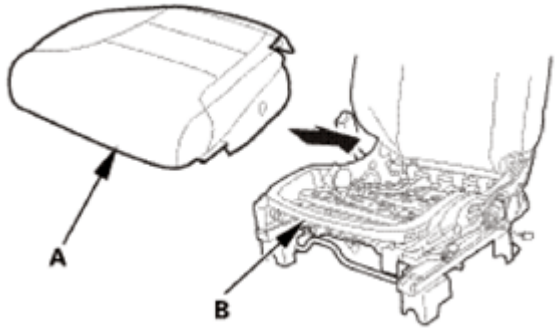

Fig. 1037: Installing Seat Cushion Cover/Pad On Seat Frame
Courtesy of AMERICAN HONDA MOTOR CO., INC.

    2. Install the hook strips (A) under the seat cushion.

Power Seat

GETtheMANUALS.org

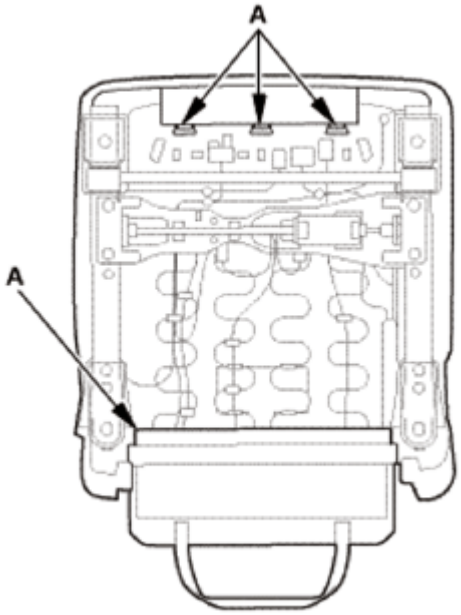

Fig. 1038: Identifying Seat Cushion Hook Strips (Power Seat)
Courtesy of AMERICAN HONDA MOTOR CO., INC.

Manual Seat

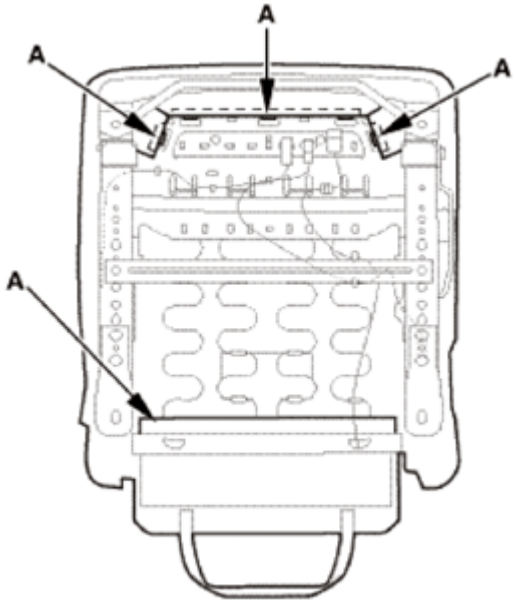

Fig. 1039: Identifying Seat Cushion Hook Strips (Manual Seat)
Courtesy of AMERICAN HONDA MOTOR CO., INC.

3. Install the hook strips (A) to both sides of the seat cushion frame.
4. Install the clip (B) to the seat cushion frame.

GETtheMANUALS.org

Power Seat

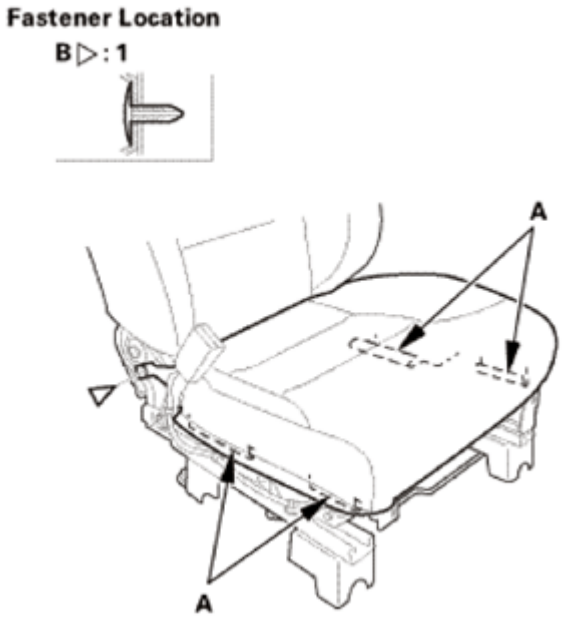

Fig. 1040: Identifying Seat Cushion Frame Hook Strips And Clips (Power Seat)
Courtesy of AMERICAN HONDA MOTOR CO., INC.

Manual Seat

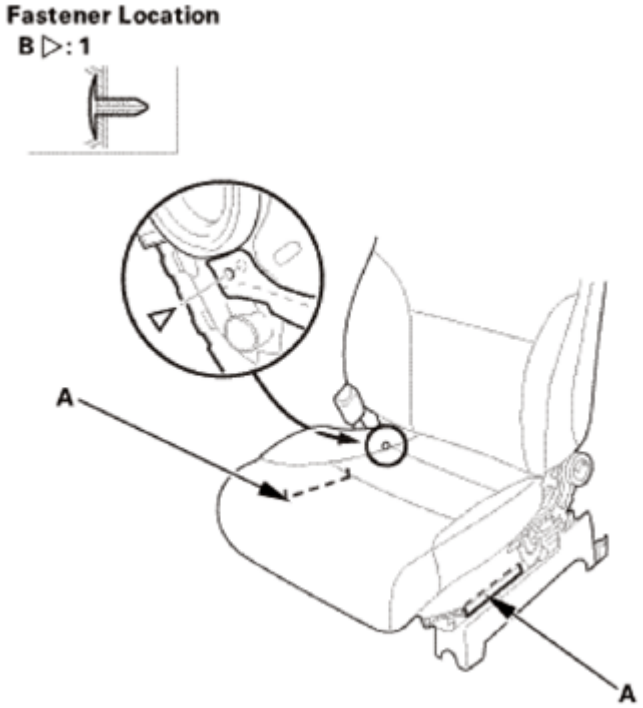

Fig. 1041: Identifying Seat Cushion Frame Hook Strips And Clips (Manual Seat)
Courtesy of AMERICAN HONDA MOTOR CO., INC.

GETtheMANUALS.org

5. With seat heater: Connect the connectors (A).
6. With seat heater: Install the harness clip (B).
7. With seat heater: Install the holders (C) to the seat cushion frame springs (D).

With Seat Heater

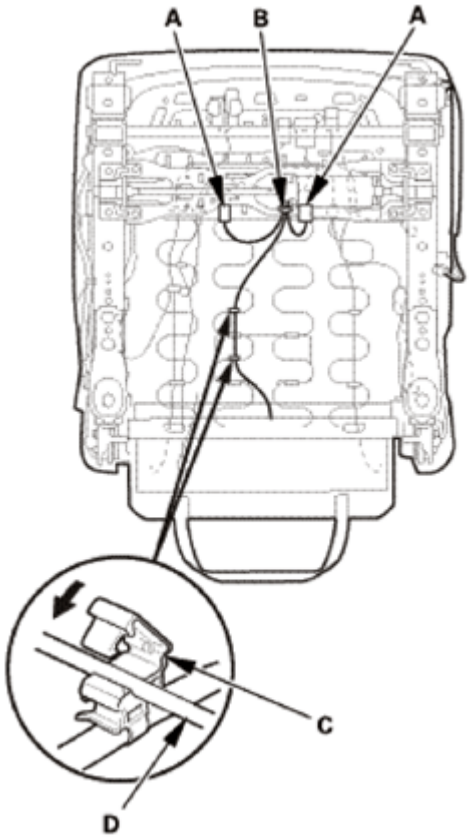

Fig. 1042: Installing Holder To Seat Cushion Frame Springs (With Seat Heater)
Courtesy of AMERICAN HONDA MOTOR CO., INC.

8. Install the elastic strap (A) to the seat cushion frame springs (B).

GETtheMANUALS.org

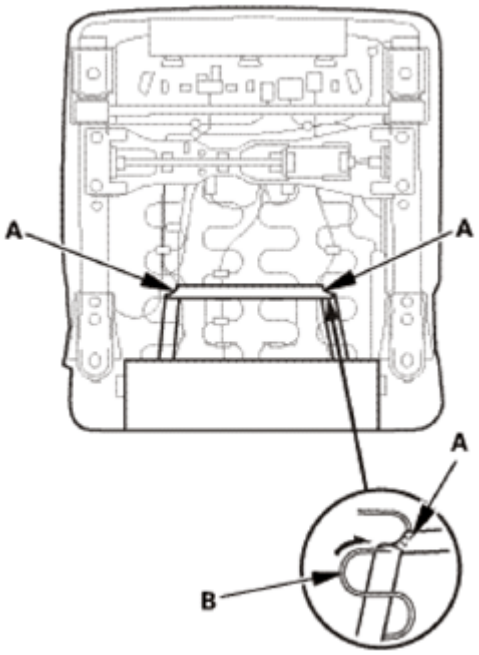

Fig. 1043: Installing Elastic Strap To Seat Cushion Frame Springs
Courtesy of AMERICAN HONDA MOTOR CO., INC.

12. Front Seat Center Cover - Driver's Side

Power Seat

1. Install the upper center inner cover (A).
2. Install the center cover (B). Make sure the tabs (C) snap into place securely.
3. Install the screw (D).

GETtheMANUALS.org

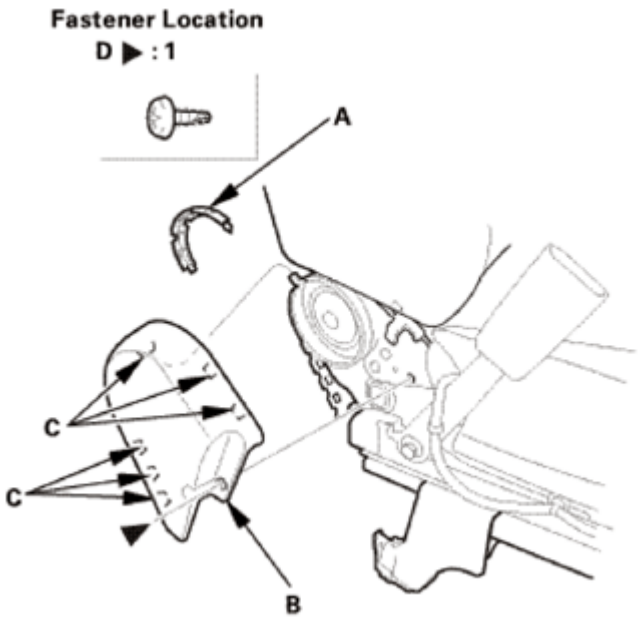

Fig. 1044: Identifying Front Seat Center Cover, Upper Center Inner Cover, Tabs And Screws (Power Seat)
Courtesy of AMERICAN HONDA MOTOR CO., INC.

Manual Seat

1. Install the center cover (A) to the recline inner cover (B). make sure the tabs (C) snap into place securely.

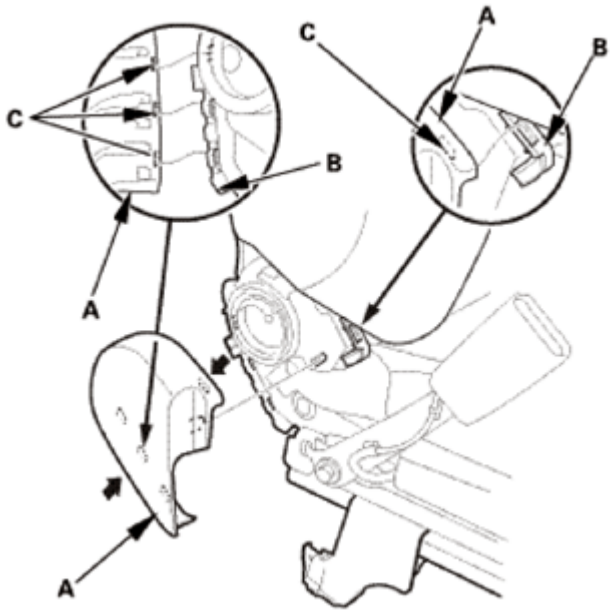

Fig. 1045: Installing Center Cover To Recline Inner Cover (Manual Seat)
Courtesy of AMERICAN HONDA MOTOR CO., INC.

GETtheMANUALS.org

13. Front Seat Recline Cover - Driver's Side

Power Seat

1. Install the upper center inner cover (A) to the recline cover (B).
2. Connect the connector, then install the wire harness (C) to the hooks (D).
3. Install the clip (E) and tabs (F), then install the recline cover.
4. Install the tabs (G), then install the screw (H).

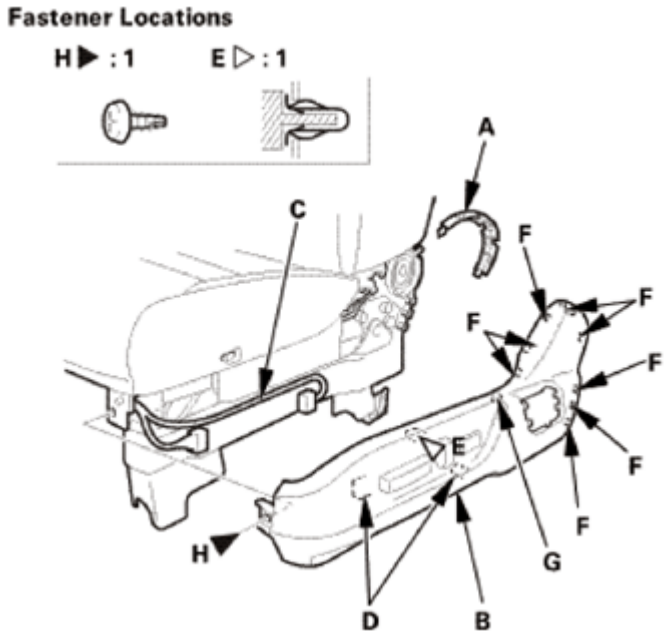

Fig. 1046: Identifying Front Seat Recline Cover And Related Components (Power Seat)
Courtesy of AMERICAN HONDA MOTOR CO., INC.

Manual Seat

1. Install the hook (A) and clip (B) of the recline cover (C).
2. Install the front hooks (D) to the recline inner cover (E).
3. Install the hook (F) of the recline cover to the recline inner cover.
4. Install the recline knob (G) and the screw (H).

GETtheMANUALS.org

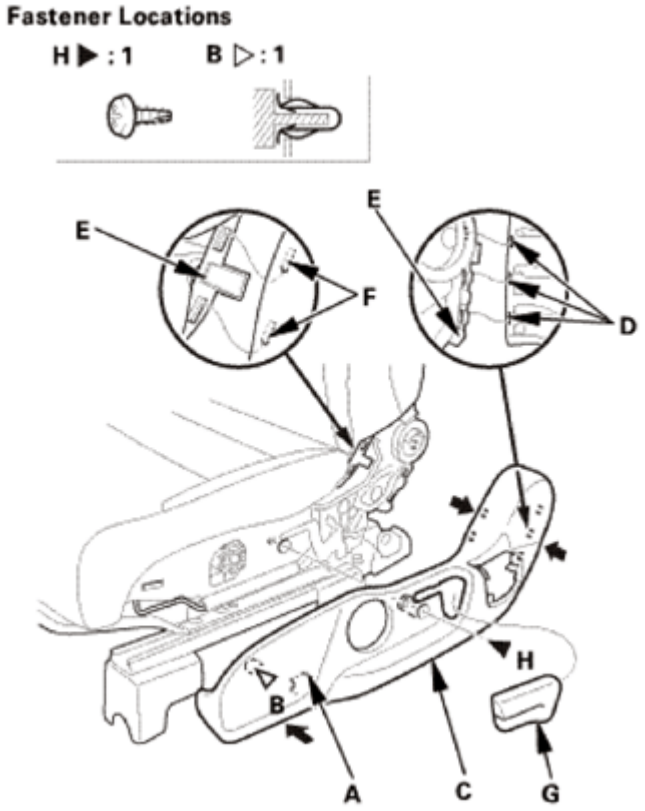

Fig. 1047: Installing Front Seat Recline Cover (Manual Seat)
Courtesy of AMERICAN HONDA MOTOR CO., INC.

14. Front Cover - Power Seat
    1. Install the tabs (A), set the pin (B), and install the hook (C), then install the front cover (D). Make sure the hooks snap into place securely.

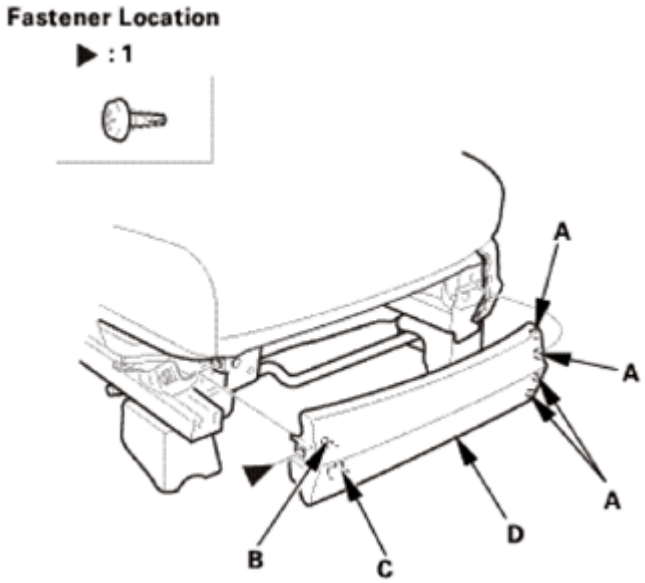

GETtheMANUALS.org

Fig. 1048: Identifying Front Cover, Hook, Tabs, Pin And Screws
Courtesy of AMERICAN HONDA MOTOR CO., INC.

15. Front Seat - Driver's Side
    1. Connect the connectors (A).
    2. Install the harness clip (B).

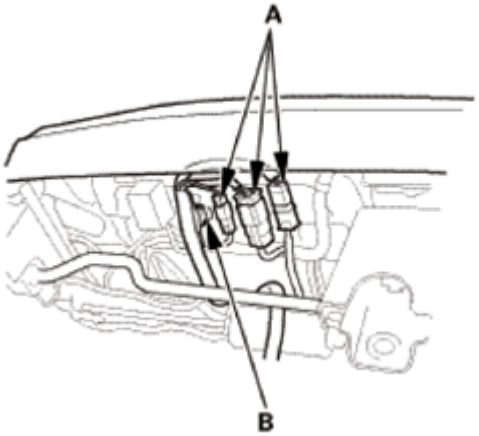

Fig. 1049: Identifying Front Seat Connectors And Clips (Driver Side)
Courtesy of AMERICAN HONDA MOTOR CO., INC.

3. Install the seat mounting bolts (A).

NOTE:

- **Tighten the bolts by hand first, then tighten them to the specified torque.**
- **Tighten the seat mounting bolts to the specified torque in the sequence shown. Slide the seat all the way back and tighten bolts 1 and 2, then slide it forward and tighten bolts 3 and 4.**

Front Side

GETtheMANUALS.org

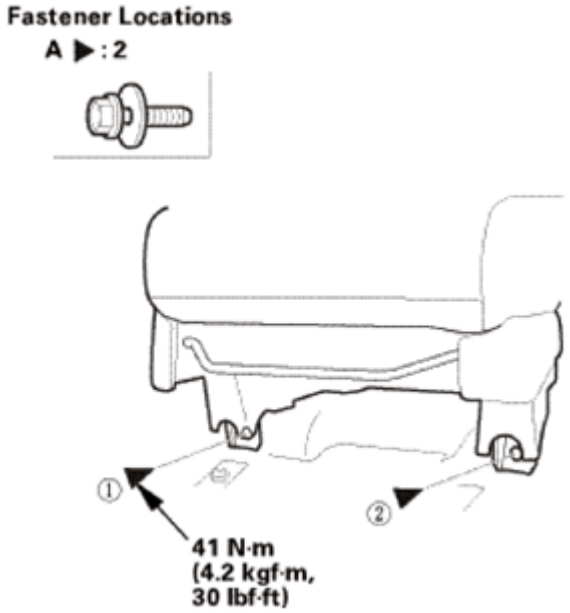

Fig. 1050: Identifying Seat Mounting Bolts With Torque Specifications (Front Side)
Courtesy of AMERICAN HONDA MOTOR CO., INC.

Rear Side

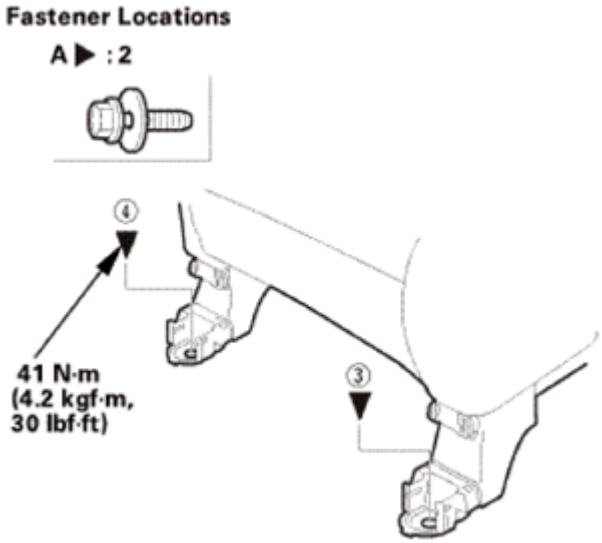

Fig. 1051: Identifying Seat Mounting Bolts With Torque Specifications (Rear Side)
Courtesy of AMERICAN HONDA MOTOR CO., INC.

4. Install the rear inner seat track end cover (A) and the rear outer seat track end cover (B). Make sure the hooks (C) snap into place securely.

GETtheMANUALS.org

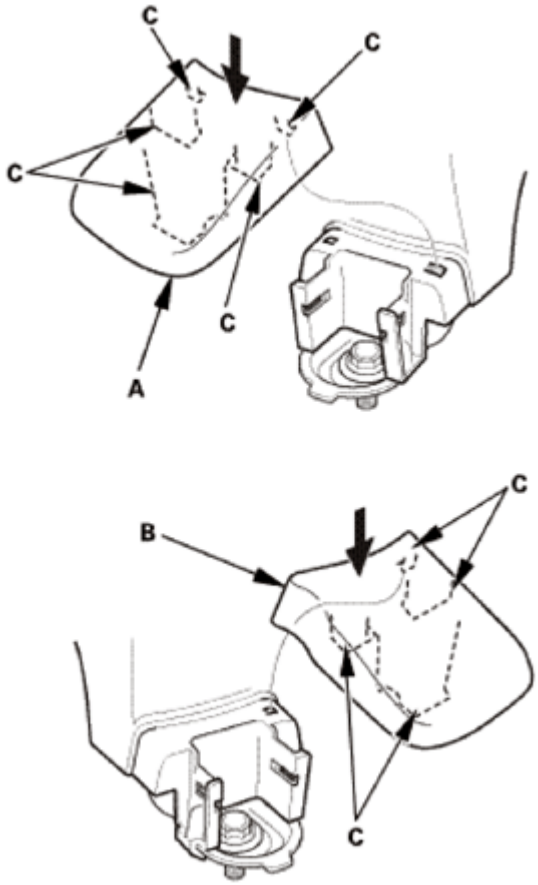

Fig. 1052: Installing Rear Inner And Outer Seat Track End Cover
Courtesy of AMERICAN HONDA MOTOR CO., INC.

16. Head Restraint - Driver's Side
    1. Insert the head restraint (A) to the seat-back as shown.

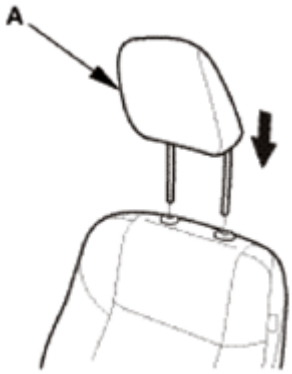

Fig. 1053: Inserting Head Restraint To Seat-Back (Driver Side)
Courtesy of AMERICAN HONDA MOTOR CO., INC.

17. Battery Terminal (SRS) - Reconnection

GETtheMANUALS.org

NOTE: If the battery performance is abnormal, test the battery.

1. Clean the battery terminals.
2. Connect the positive cable (A) to the battery.

   NOTE: Always connect the positive side first.

3. Connect the negative cable (B) to the battery.
4. Apply multipurpose grease to the terminals to prevent corrosion.

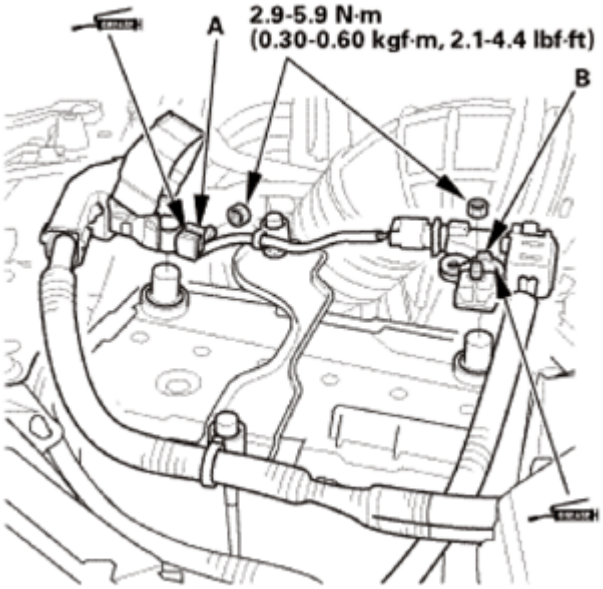

Fig. 1054: Identifying Battery Positive And Negative Cable
Courtesy of AMERICAN HONDA MOTOR CO., INC.

18. Front Seat Belt Lower Anchor Bolt
    1. Install the lower anchor bolt.

       NOTE: Before installing the anchor bolt, make sure there are no twists or kinks in the seat belt.

GETtheMANUALS.org

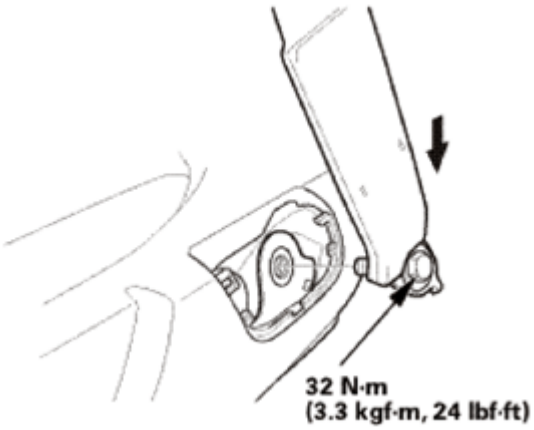

Fig. 1055: Installing Front Seat Belt Lower Anchor Bolt
Courtesy of AMERICAN HONDA MOTOR CO., INC.

2. Install the anchor cover (A). Make sure the hooks (B) and the tab (C) snap into place securely.

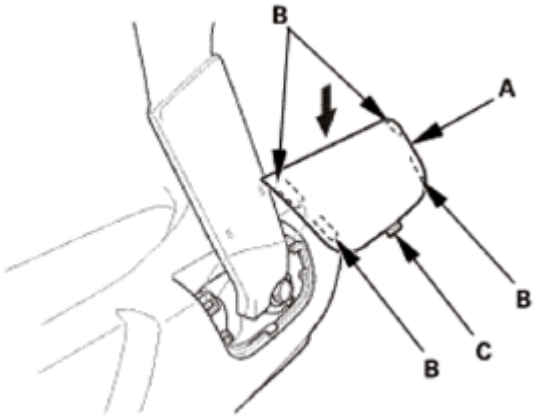

Fig. 1056: Installing Front Seat Belt Lower Anchor Cover
Courtesy of AMERICAN HONDA MOTOR CO., INC.

SEAT HEATER REMOVAL AND INSTALLATION - SEAT-BACK HEATER

REMOVAL

SRS components are located in this area. Review the **SRS COMPONENT LOCATIONS** and the **PRECAUTIONS AND PROCEDURES** before doing repairs or service.

NOTE:

- **Steps 1-10 show removing the driver's side, steps 11-19 show removing the passenger's side.**
- **Before the front power seat is removed, slide the front power seat to the half-way position, then raise the seat to the highest position.**

1. Front Seat Belt Lower Anchor Bolt

GETtheMANUALS.org

1. Slide the front seat forward fully, carefully pry up on the bottom edge of the anchor cover (A) at the pry point (B) with the appropriate trim tool to release the hooks (C) and the tab (D), then remove the cover by pulling it up.

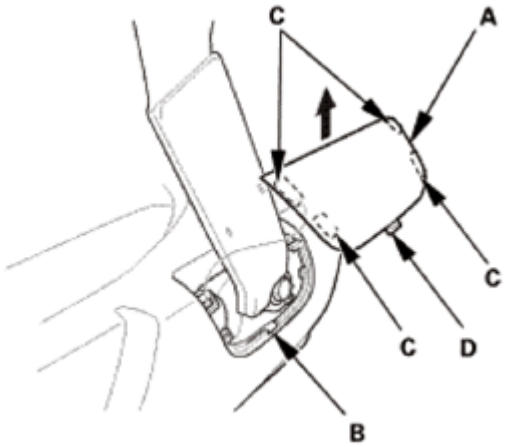

Fig. 1057: Removing Front Seat Lower Anchor Cover
Courtesy of AMERICAN HONDA MOTOR CO., INC.

2. Remove the lower anchor bolt (A).

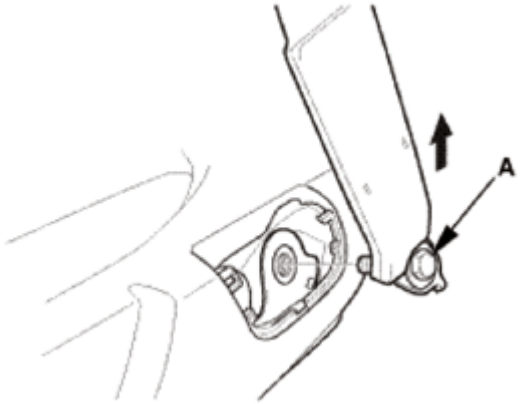

Fig. 1058: Removing Front Seat Belt Lower Anchor Bolt
Courtesy of AMERICAN HONDA MOTOR CO., INC.

2. Battery Terminal (SRS) - Disconnection
   1. Make sure the ignition switch is in LOCK (0).
   2. Disconnect and isolate the negative cable (A) from the battery.

      NOTE: Always disconnect the negative side first.

   3. Disconnect the positive cable (B) from the battery.
   4. Wait at least 3 minutes before starting work.

GETtheMANUALS.org

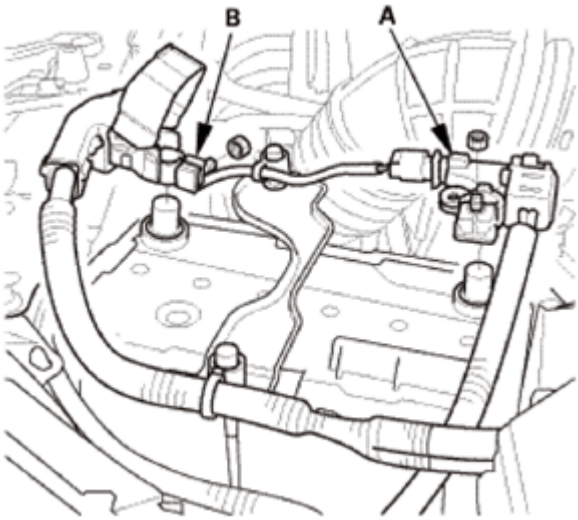

Fig. 1059: Identifying Battery Positive And Negative Cable
Courtesy of AMERICAN HONDA MOTOR CO., INC.

3. Head Restraint - Driver's Side
    1. Push and hold the knob (A), then pull out the head restraint (B) as shown.

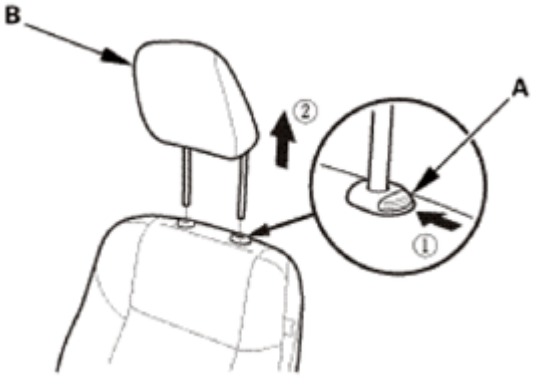

Fig. 1060: Pulling Head Restraint (Driver Side)
Courtesy of AMERICAN HONDA MOTOR CO., INC.

4. Front Seat - Driver's Side
    1. Detach the hooks (A), then remove the rear inner seat track end cover (B) and the rear outer seat track end cover (C).

GETtheMANUALS.org

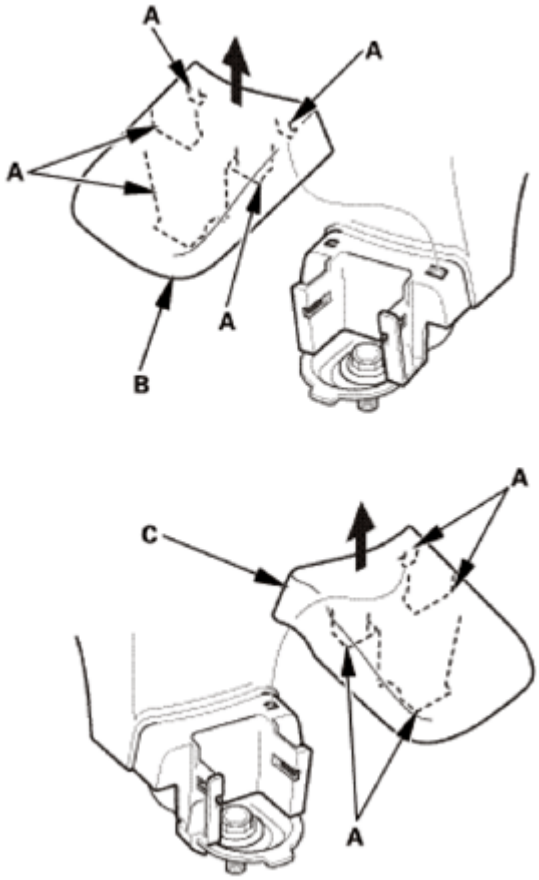

Fig. 1061: Removing Rear Inner And Outer Seat Track End Cover
Courtesy of AMERICAN HONDA MOTOR CO., INC.

2. Remove the front mounting bolts (A) from the front seat.

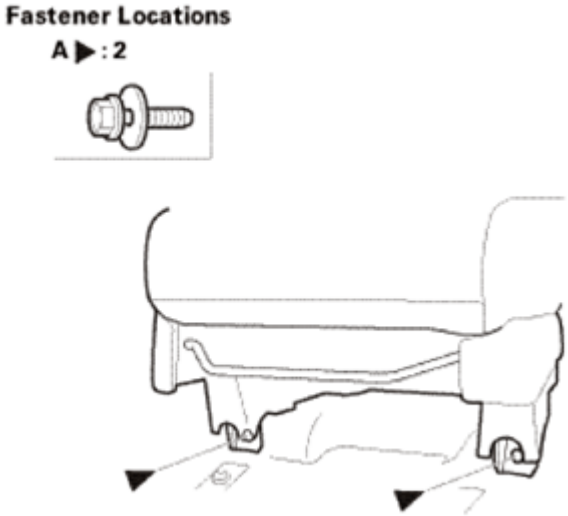

Fig. 1062: Identifying Front Seat Mounting Bolts
Courtesy of AMERICAN HONDA MOTOR CO., INC.

GETtheMANUALS.org

3. Remove the rear mounting bolts (A) from the front seat.

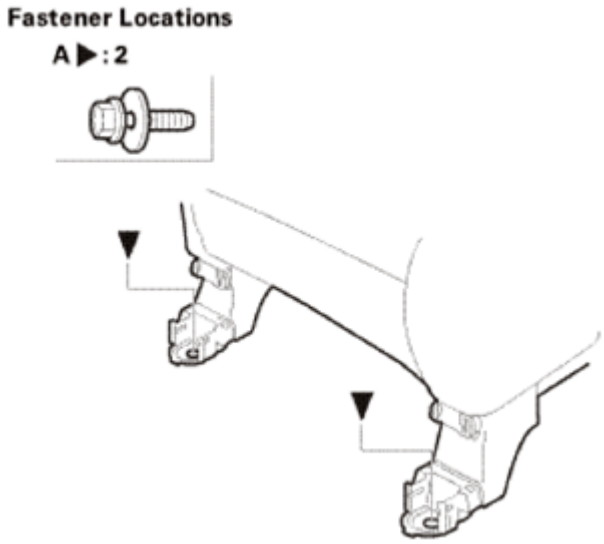

Fig. 1063: Identifying Front Seat Rear Mounting Bolts
Courtesy of AMERICAN HONDA MOTOR CO., INC.

4. Disconnect the connectors (A).
5. Detach the harness clip (B).

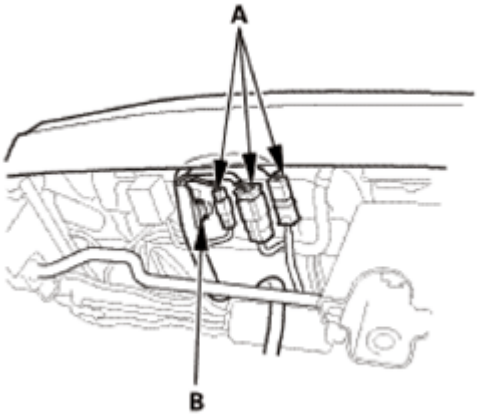

Fig. 1064: Identifying Front Seat Connectors And Clips
Courtesy of AMERICAN HONDA MOTOR CO., INC.

5. Front Seat Armrest
    1. Remove the cap (A) with the appropriate trim tool.
    2. Remove the center pin (B), the bushing (C), and the washer (D), then remove the armrest (E).

GETtheMANUALS.org

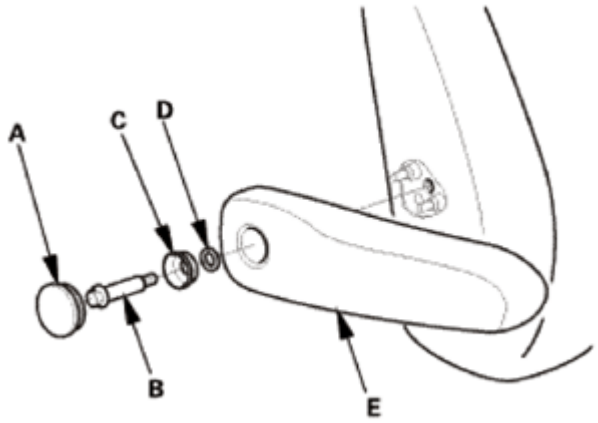

Fig. 1065: Identifying Front Seat Armrest, Center Pin, Bushing, Washer And Cap
Courtesy of AMERICAN HONDA MOTOR CO., INC.

3. Remove the pins (A) from the seat-back.

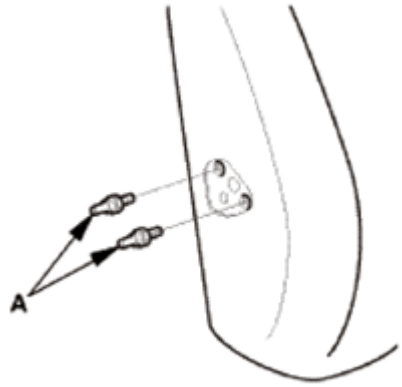

Fig. 1066: Identifying Seat Back Pins
Courtesy of AMERICAN HONDA MOTOR CO., INC.

6. Front Seat-Back - Driver's Side
    1. Release the elastic strap (A) from the seat cushion frame springs (B), then pull back the under cover (C) of the seat-back cover.

GETtheMANUALS.org

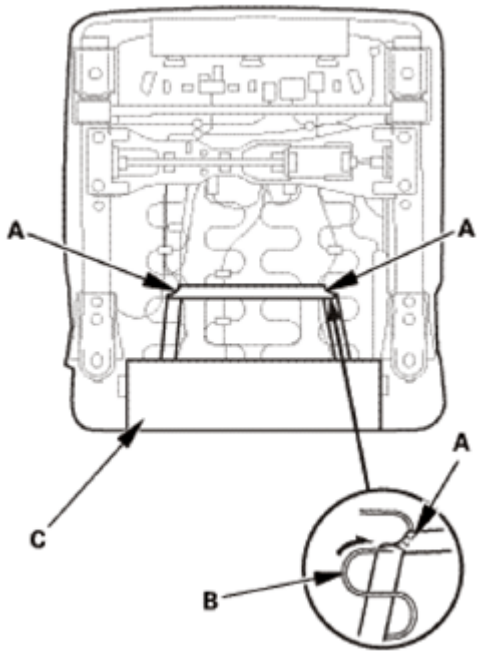

Fig. 1067: Releasing Elastic Strap From Seat Cushion Frame Springs
Courtesy of AMERICAN HONDA MOTOR CO., INC.

2. Detach the connector clips (A).
3. Detach the harness clips (B).
4. Pry up the hooks (C) of the harness holders (D), then release them from the seat cushion frame springs (E).
5. Disconnect the connectors (F).

Power Seat

GETtheMANUALS.org

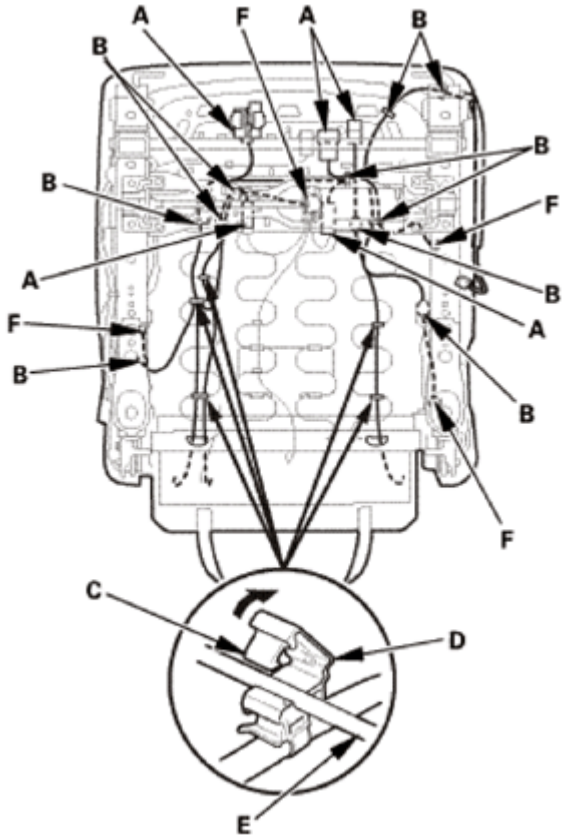

Fig. 1068: Removing Seat Cushion Frame Springs Holder (Power Seat)
Courtesy of AMERICAN HONDA MOTOR CO., INC.

Manual Seat with Seat Heater

GETtheMANUALS.org

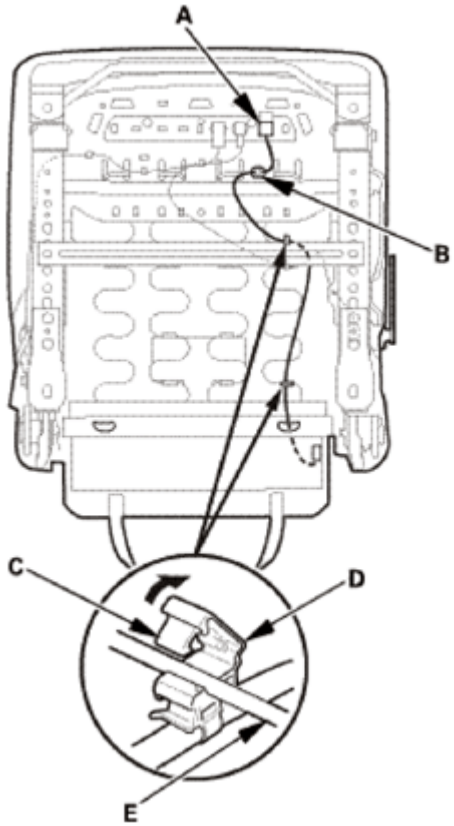

Fig. 1069: Removing Seat Cushion Frame Springs Holder (Manual Seat With Seat Heater)
Courtesy of AMERICAN HONDA MOTOR CO., INC.

6. Release the hook strip (A).
7. Unzip the seat-back cover (B).

GETtheMANUALS.org

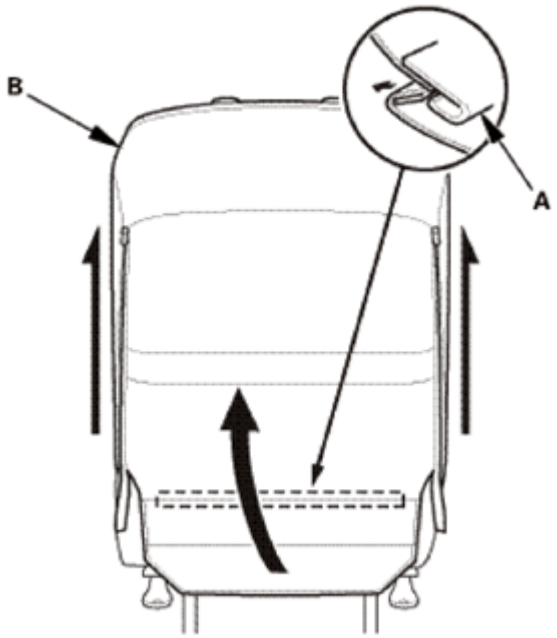

Fig. 1070: Removing Seat-Back Cover
Courtesy of AMERICAN HONDA MOTOR CO., INC.

8. Release the hook strips (A), and loosen the seat-back cover (B).

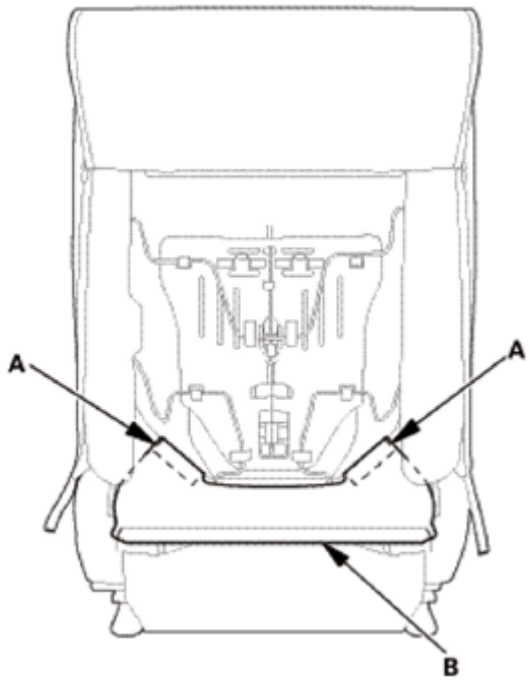

Fig. 1071: Identifying Seat-Back Cover Hook Strips
Courtesy of AMERICAN HONDA MOTOR CO., INC.

9. Detach the harness clips (A).

GETtheMANUALS.org

10. Pull out the harnesses (B) through the holes (C) in the seat-back cover (D).

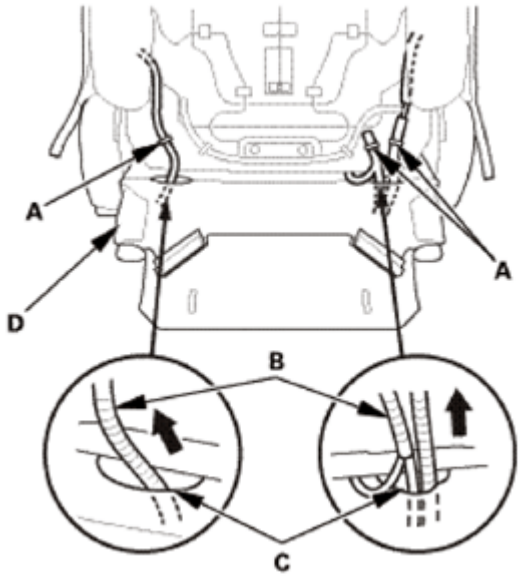

Fig. 1072: Removing Harnesses Through Holes From Seat-Back Cover
Courtesy of AMERICAN HONDA MOTOR CO., INC.

11. Release airbag attachment wires A, B from the seat-back frame (C).

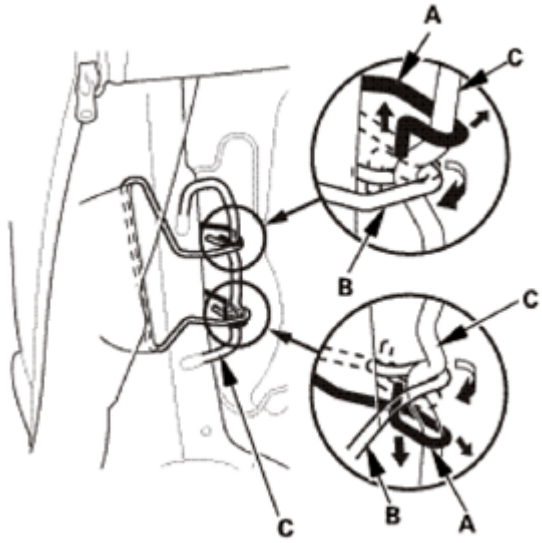

Fig. 1073: Releasing Airbag Attachment Wires From Seat-Back Frame
Courtesy of AMERICAN HONDA MOTOR CO., INC.

12. Release the hook strips (A) from the seat-back frame (B).

GETtheMANUALS.org

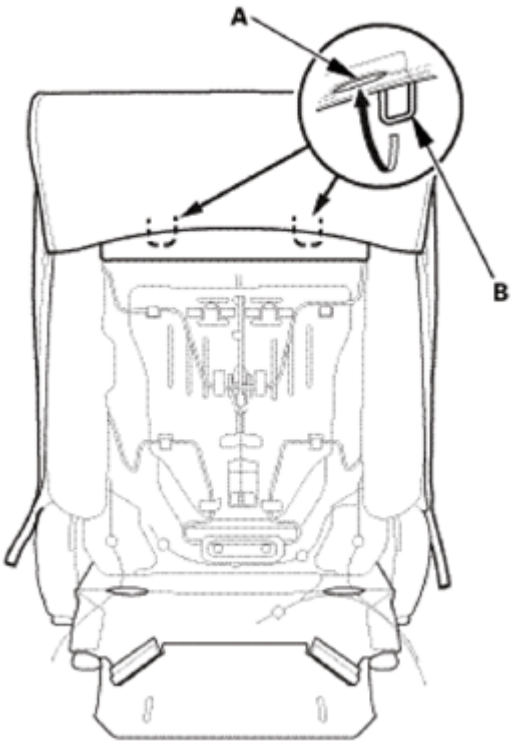

Fig. 1074: Releasing Hook Strips From Seat-Back Frame
Courtesy of AMERICAN HONDA MOTOR CO., INC.

7. Head Restraint Guides - Driver's Side
    1. Pinch the tabs (A) on the end of the head restraint guides (B), and remove the guides from the seat-back.

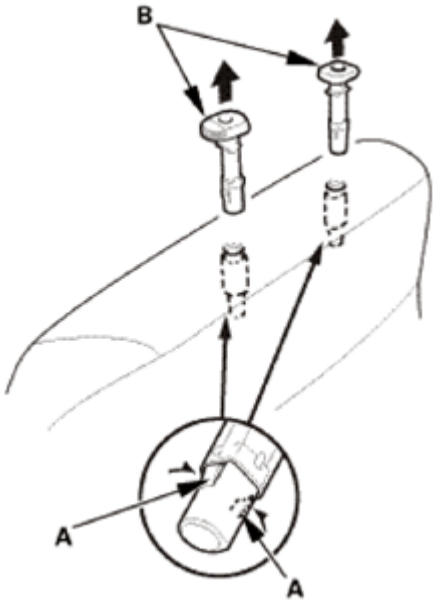

Fig. 1075: Removing Guides From Seat-Back

GETtheMANUALS.org

Courtesy of AMERICAN HONDA MOTOR CO., INC.

8. Front Seat-Back Cover/Pad - Driver's Side
    1. Remove the seat-back cover/pad (A) from the seat-back frame (B).

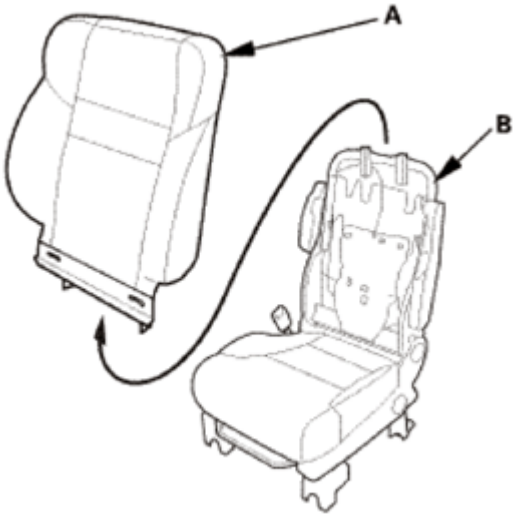

Fig. 1076: Removing Seat-Back Cover/Pad From Seat-Back Frame
Courtesy of AMERICAN HONDA MOTOR CO., INC.

9. Front Seat-Back Cover - Driver's Side
    1. Remove airbag attachment wire B from the outside reinforcing cloth (C).
    2. Remove airbag attachment wire A from the inside reinforcing cloth (D).

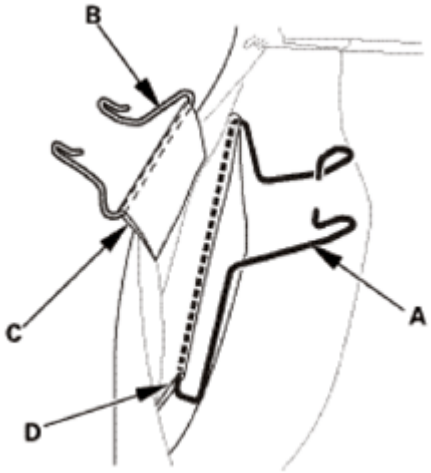

Fig. 1077: Removing Airbag Attachment Wire From Outside Reinforcing Cloth
Courtesy of AMERICAN HONDA MOTOR CO., INC.

    3. Pull back the edge of the seat-back cover (A) all the way around, and release the upholstery rings (B), then remove the seat-back cover.

GETtheMANUALS.org

Leather Seat

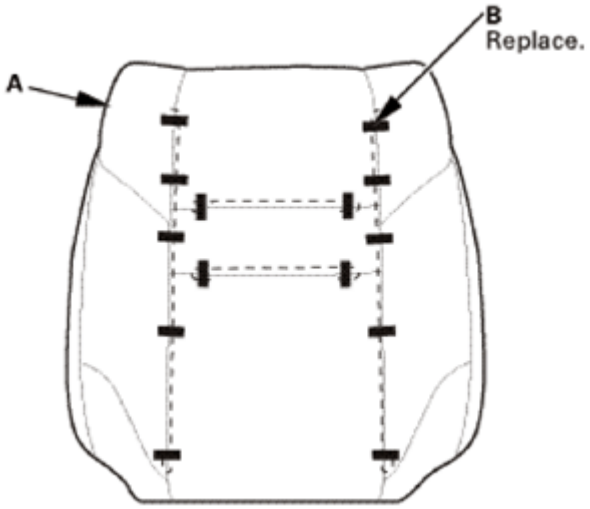

Fig. 1078: Identifying Seat Cushion Cover And Upholstery Rings (Leather Seat)
Courtesy of AMERICAN HONDA MOTOR CO., INC.

Fabric Seat

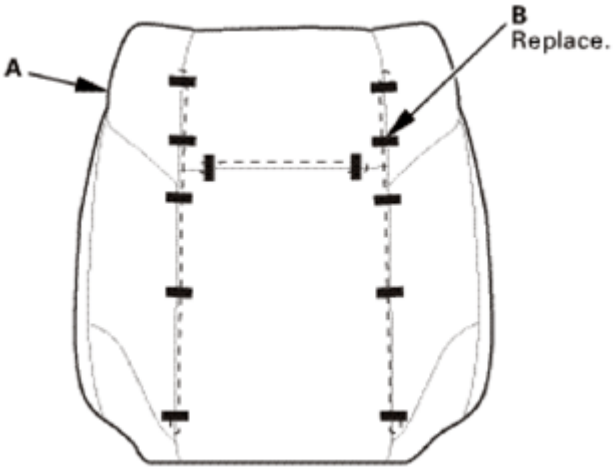

Fig. 1079: Identifying Seat Cushion Cover And Upholstery Rings (Fabric Seat)
Courtesy of AMERICAN HONDA MOTOR CO., INC.

10. Seat-Back Heater - Driver's Side
    1. Remove the seat-back heater (A).

NOTE: **The seat-back heater is glued to the seat-back pad. When removing it, take care not to damage the seat-back pad.**

GETtheMANUALS.org

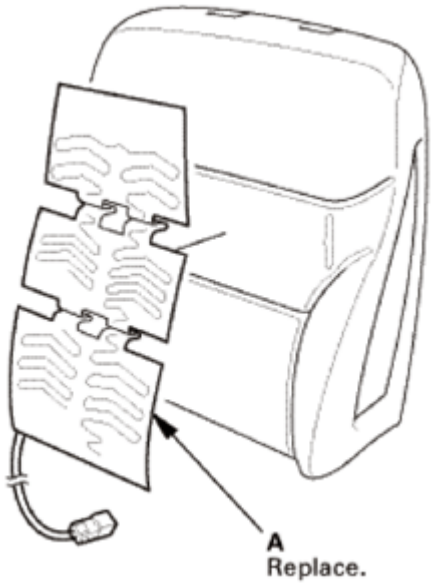

Fig. 1080: Identifying Seat-Back Heater
Courtesy of AMERICAN HONDA MOTOR CO., INC.

11. Front Seat Belt Lower Anchor Bolt - Passenger's Side
    1. Carefully pry up on the bottom of the anchor cover (A) at the pry point (B) with the appropriate trim tool to release the hooks (C) and the tab (D), then remove the cover by pulling it upward.

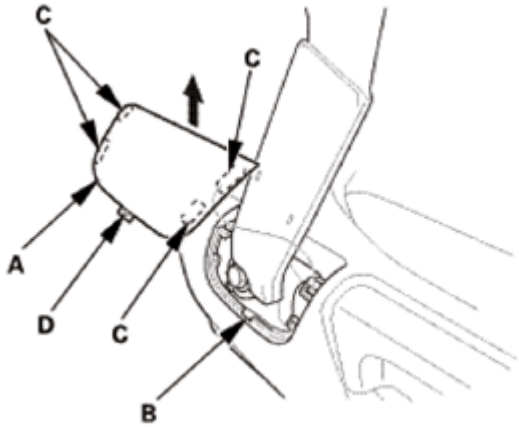

Fig. 1081: Removing Front Seat Belt Lower Anchor Cover (Passenger Side)
Courtesy of AMERICAN HONDA MOTOR CO., INC.

    2. Remove the lower anchor bolt (A).

GETtheMANUALS.org

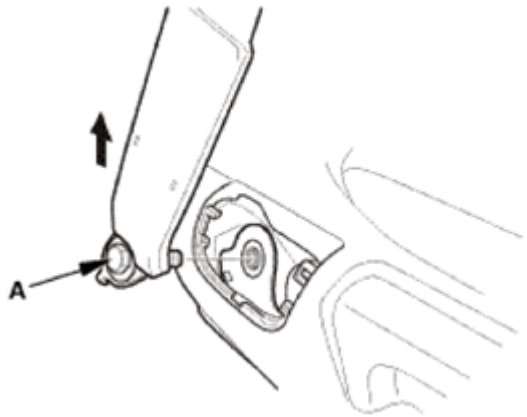

Fig. 1082: Removing Front Seat Belt Lower Anchor Bolt (Passenger Side)
Courtesy of AMERICAN HONDA MOTOR CO., INC.

12. Head Restraint - Passenger's Side
    1. Push and hold the knob (A), then pull out the head restraint (B) as shown.

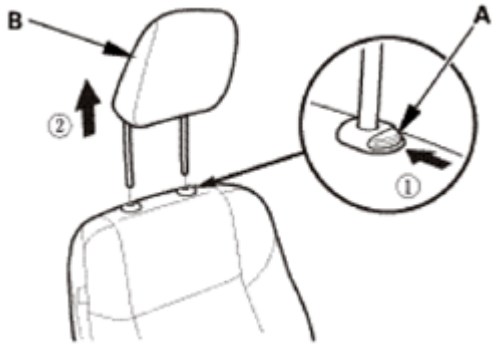

Fig. 1083: Pulling Head Restraint (Driver Side)
Courtesy of AMERICAN HONDA MOTOR CO., INC.

13. Front Seat - Passenger's Side
    1. Detach the hooks (A), then remove the rear inner seat track end cover (B) and the rear outer seat track end cover (C).

GETtheMANUALS.org

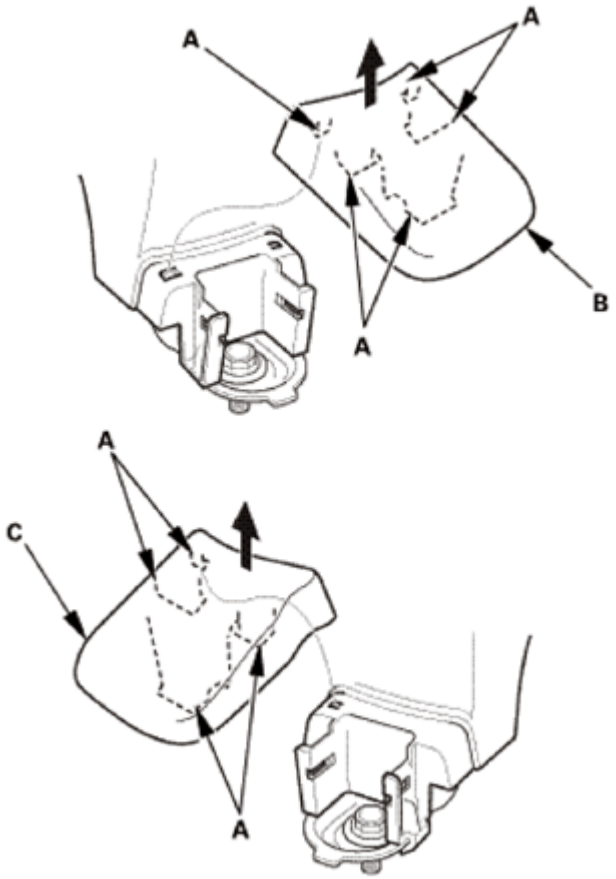

Fig. 1084: Removing Rear Inner And Outer Seat Track End Cover
Courtesy of AMERICAN HONDA MOTOR CO., INC.

2. Remove the front mounting bolts (A) from the front seat.

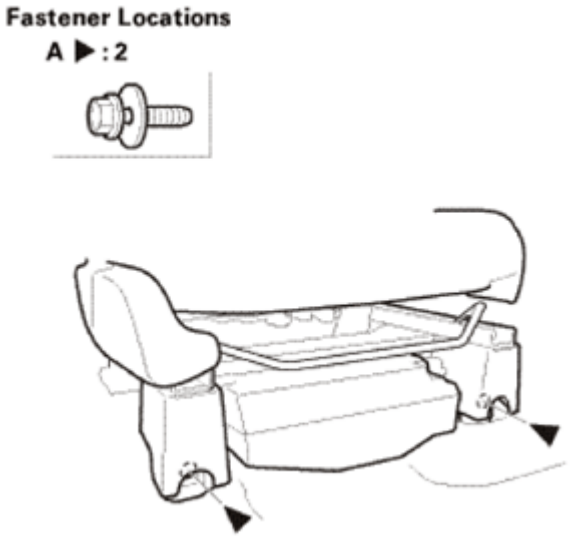

Fig. 1085: Identifying Front Seat Mounting Bolts

GETtheMANUALS.org

Courtesy of AMERICAN HONDA MOTOR CO., INC.

3. Remove the rear mounting bolts (A) from the front seat.

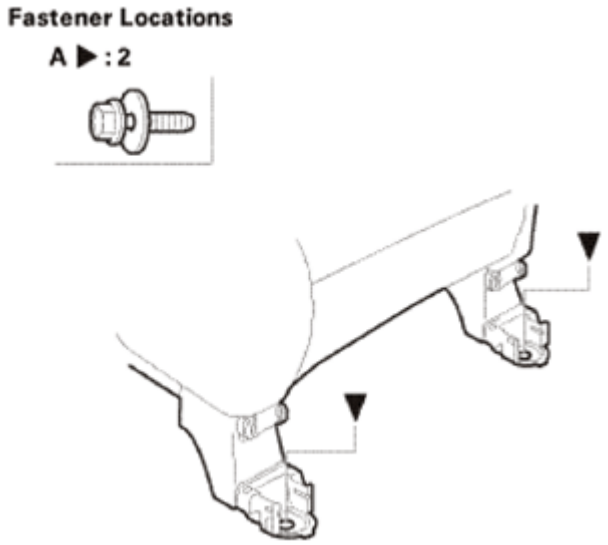

Fig. 1086: Identifying Front Seat Rear Mounting Bolts
Courtesy of AMERICAN HONDA MOTOR CO., INC.

4. Disconnect the connectors (A).
5. Detach the harness clip (B).

Without Subwoofer

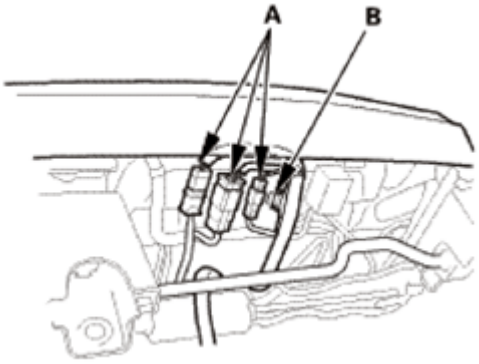

Fig. 1087: Identifying Front Seat Connectors And Clips (Without Subwoofer)
Courtesy of AMERICAN HONDA MOTOR CO., INC.

With Subwoofer

GETtheMANUALS.org

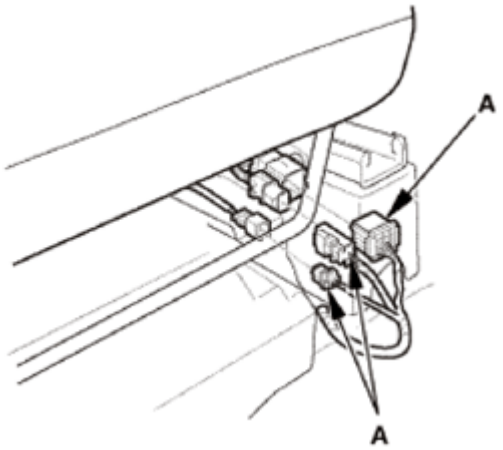

Fig. 1088: Identifying Front Seat Connectors And Clips (With Subwoofer)
Courtesy of AMERICAN HONDA MOTOR CO., INC.

14. Front Seat Armrest - Passenger's Side
    1. Remove the cap (A) with the appropriate trim tool.
    2. Remove the center pin (B), the bushing (C), and the washer (D), then remove the armrest (E).

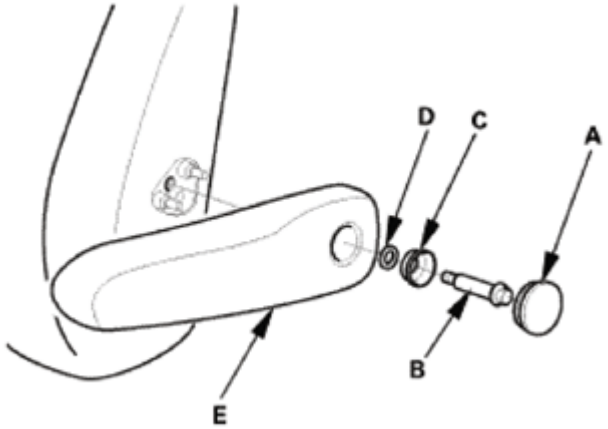

Fig. 1089: Identifying Front Seat Armrest, Center Pin, Bushing, Washer And Cap
Courtesy of AMERICAN HONDA MOTOR CO., INC.

    3. Remove the pins (A) from the seat-back.

GETtheMANUALS.org

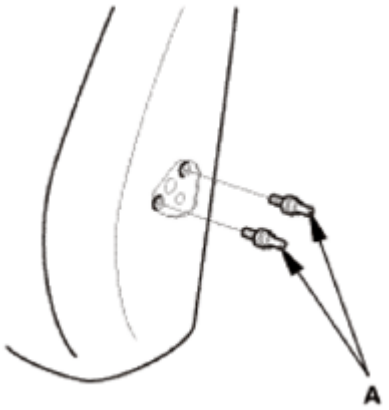

Fig. 1090: Identifying Seat Back Pins
Courtesy of AMERICAN HONDA MOTOR CO., INC.

15. Front Seat-Back - Passenger's Side
    1. Release the elastic strap (A) from the seat cushion frame springs (B), then pull back the under cover (C) of the seat-back cover.

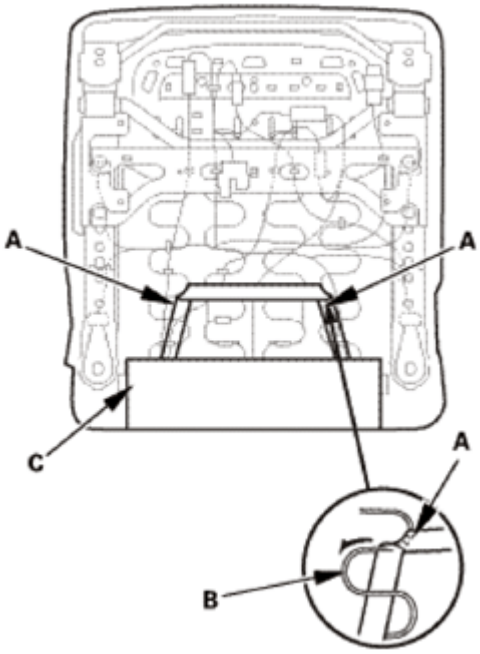

Fig. 1091: Releasing Elastic Strap From Seat Cushion Frame Springs
Courtesy of AMERICAN HONDA MOTOR CO., INC.

    2. Detach the connector clips (A).
    3. Detach the harness clips (B).
    4. Pry up the hooks (C) of the harness holders (D), then release them from the seat cushion frame springs (E).
    5. Disconnect the connectors (F).

GETtheMANUALS.org

Except KX - Without Seat Heater

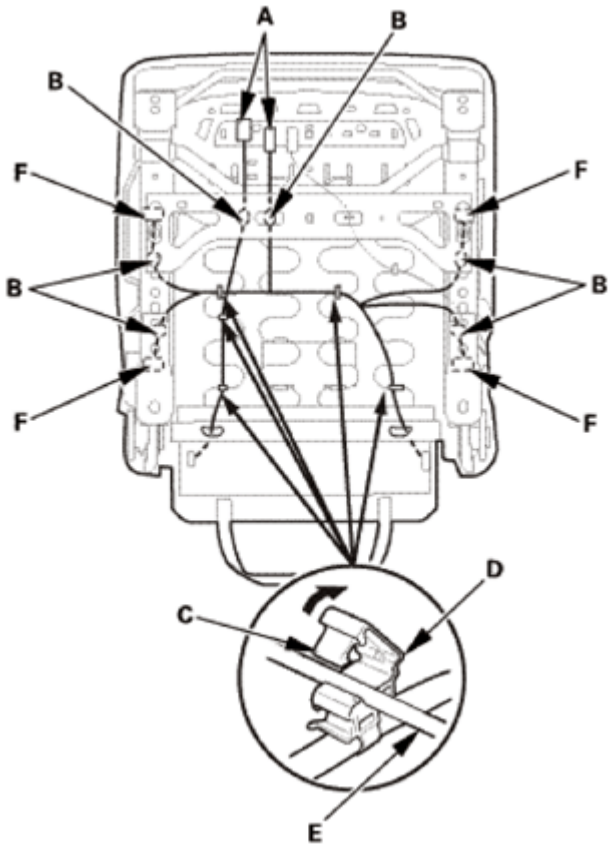

Fig. 1092: Removing Seat Cushion Frame Springs Holder (Except KX - Without Seat Heater)
Courtesy of AMERICAN HONDA MOTOR CO., INC.

Except KX - With Seat Heater

GETtheMANUALS.org

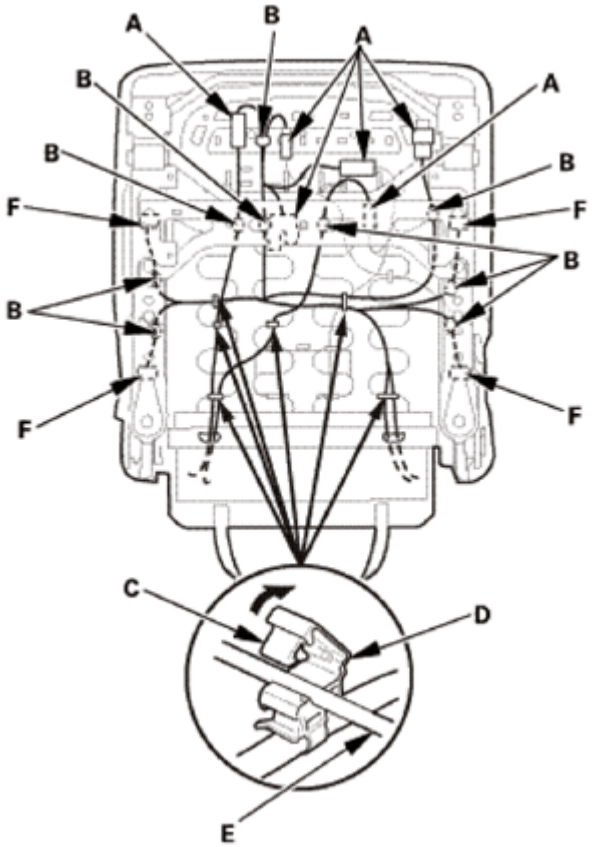

Fig. 1093: Removing Seat Cushion Frame Springs Holder (Except KX With Seat Heater)
Courtesy of AMERICAN HONDA MOTOR CO., INC.

KX

GETtheMANUALS.org

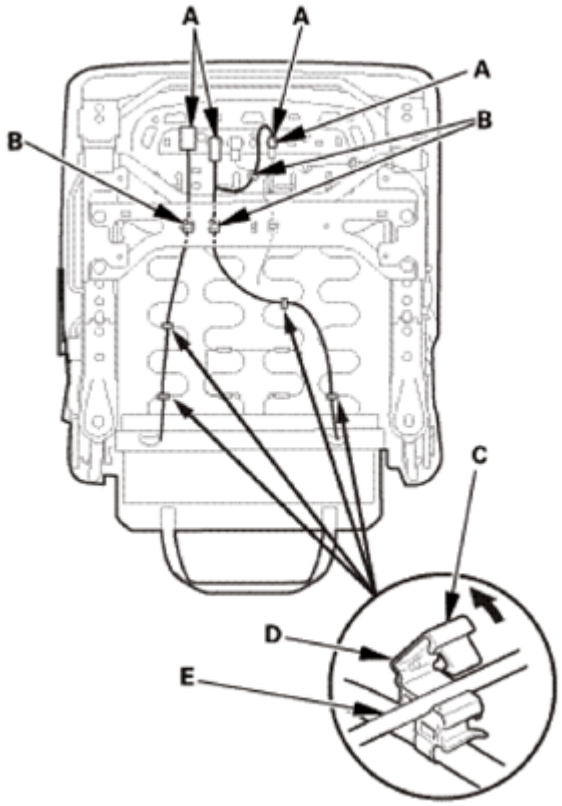

Fig. 1094: Removing Seat Cushion Frame Springs Holder (KX)
Courtesy of AMERICAN HONDA MOTOR CO., INC.

6. Release the hook strip (A).
7. Unzip the seat-back cover (B).

GETtheMANUALS.org

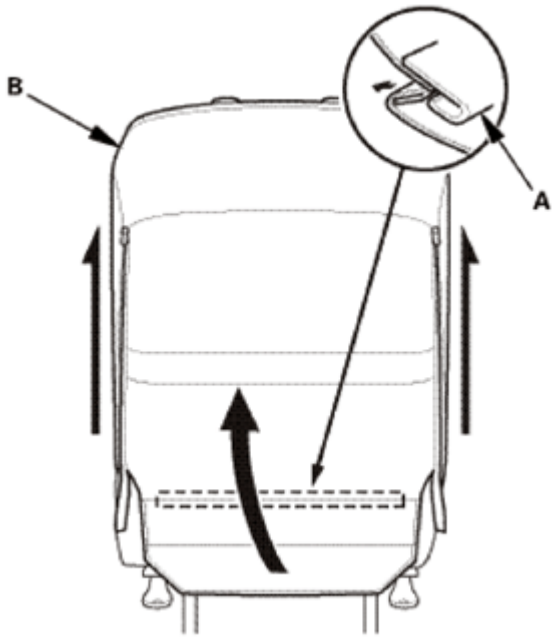

Fig. 1095: Removing Seat-Back Cover
Courtesy of AMERICAN HONDA MOTOR CO., INC.

8. Release the hook strips (A), and loosen the seat-back cover (B).

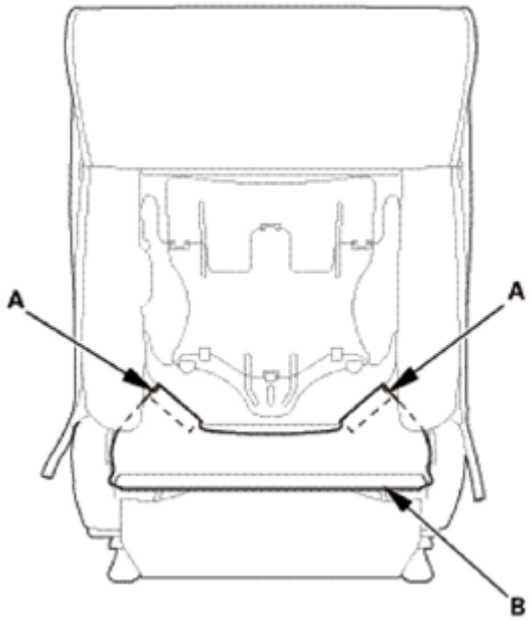

Fig. 1096: Identifying Hook Strips And Seat-Back Cover
Courtesy of AMERICAN HONDA MOTOR CO., INC.

9. Detach the harness clips (A).
10. Pull out the harnesses (B) through the holes (C) in the seat-back cover (D).

GETtheMANUALS.org

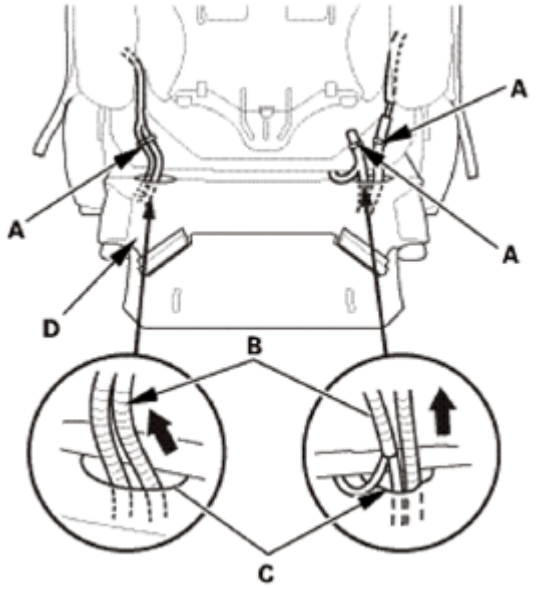

Fig. 1097: Removing Harnesses Through Seat-Back Cover Holes
Courtesy of AMERICAN HONDA MOTOR CO., INC.

11. Release airbag attachment wires A, B from the seat-back frame (C).

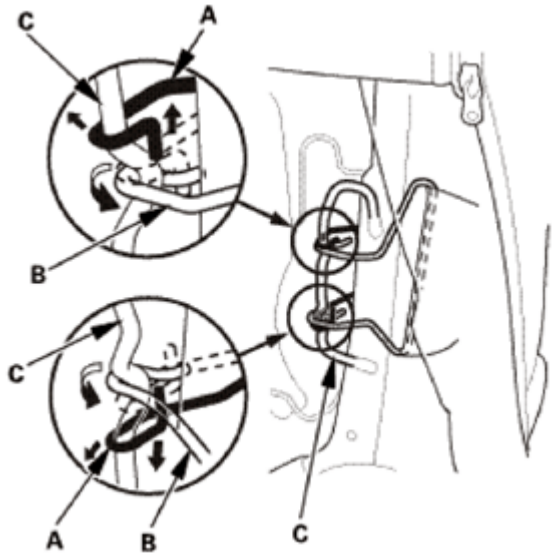

Fig. 1098: Releasing Airbag Attachment Wires From Seat-Back Frame
Courtesy of AMERICAN HONDA MOTOR CO., INC.

12. Remove the screw (A), and release the hooks (B), then remove the cover (C), and detach the harness clip (D).

GETtheMANUALS.org

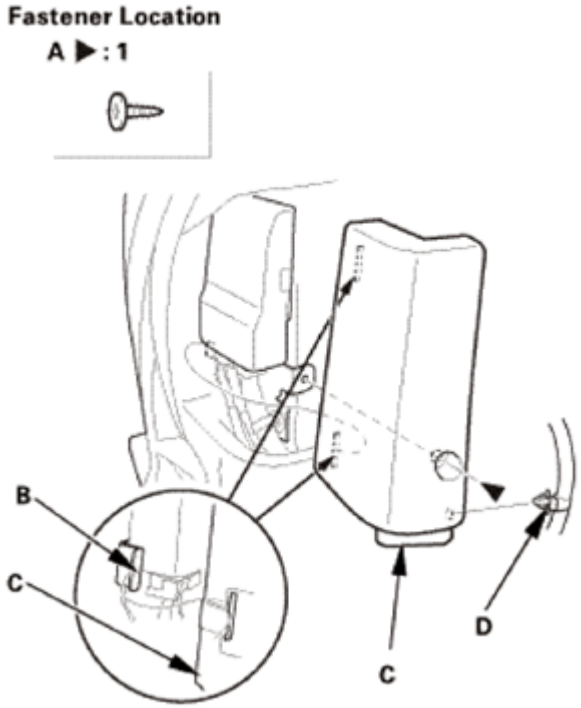

Fig. 1099: Identifying Cover, Harness Clip, Hooks And Screws
Courtesy of AMERICAN HONDA MOTOR CO., INC.

13. Disconnect the connectors (A) detach the and harness clips (B) from the ODS unit (USA and Canada models) or OPDS unit (Mexico models) (C).

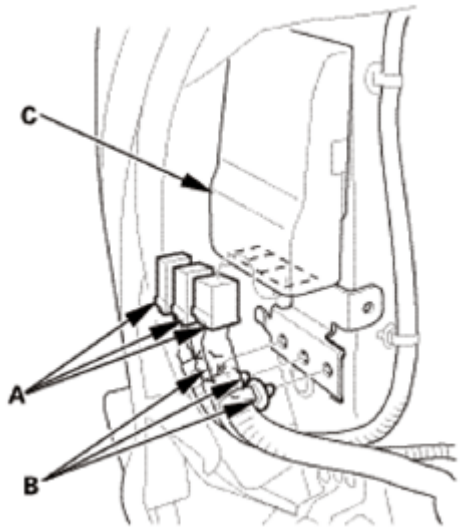

Fig. 1100: Identifying ODS Unit (USA And Canada Models) Or OPDS Unit (Mexico Models), Connector And Harness Clips
Courtesy of AMERICAN HONDA MOTOR CO., INC.

14. Release the hook strips (A) from the seat-back frame (B).

GETtheMANUALS.org

15. Detach the harness clips (C).

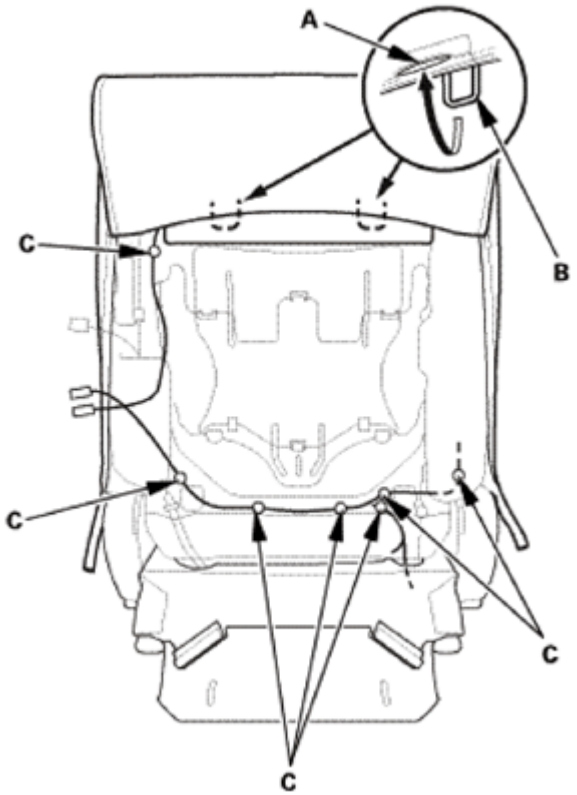

Fig. 1101: Removing Hook Strips From Seat-Back Frame
Courtesy of AMERICAN HONDA MOTOR CO., INC.

16. Head Restraint Guide - Passenger's Side
    1. Pinch the tabs (A) on the end of the head restraint guides (B), and remove the guides from the seat-back.

GETtheMANUALS.org

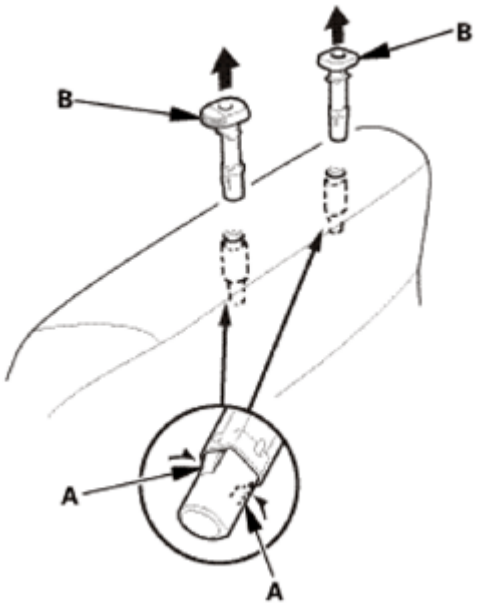

Fig. 1102: Removing Guides From Seat-Back
Courtesy of AMERICAN HONDA MOTOR CO., INC.

17. Front Seat-Back Cover/Pad - Passenger's Side
    1. Remove the seat-back cover/pad (A) from the seat-back frame (B).

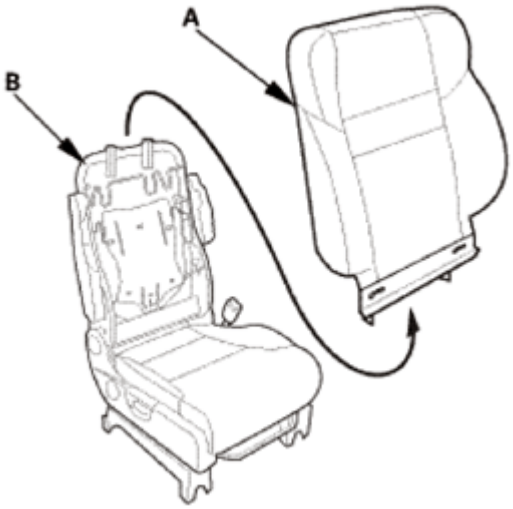

Fig. 1103: Removing Seat-Back Cover/Pad From Seat-Back Frame
Courtesy of AMERICAN HONDA MOTOR CO., INC.

18. Front Seat-Back Cover - Passenger's Side
    1. Remove airbag attachment wire B from the outside reinforcing cloth (C).
    2. Remove airbag attachment wire A from the inside reinforcing cloth (D).

GETtheMANUALS.org

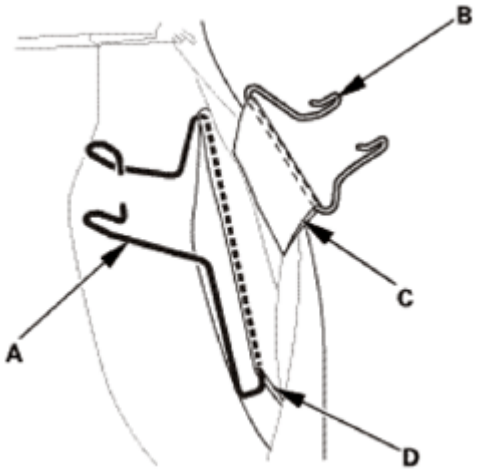

Fig. 1104: Removing Airbag Attachment Wire From Outside Reinforcing Cloth
Courtesy of AMERICAN HONDA MOTOR CO., INC.

3. Pull back the edge of the seat-back cover (A) all the way around, and release the upholstery rings (B), then remove the seat-back cover.

Leather Seat

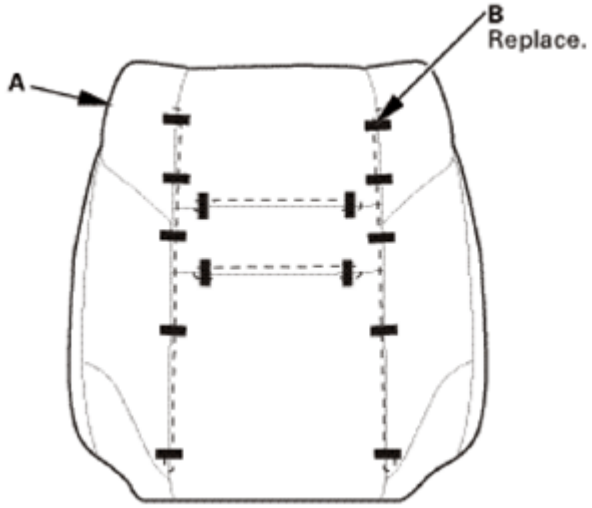

Fig. 1105: Identifying Seat Cushion Cover And Upholstery Rings (Leather Seat)
Courtesy of AMERICAN HONDA MOTOR CO., INC.

Fabric Seat

GETtheMANUALS.org

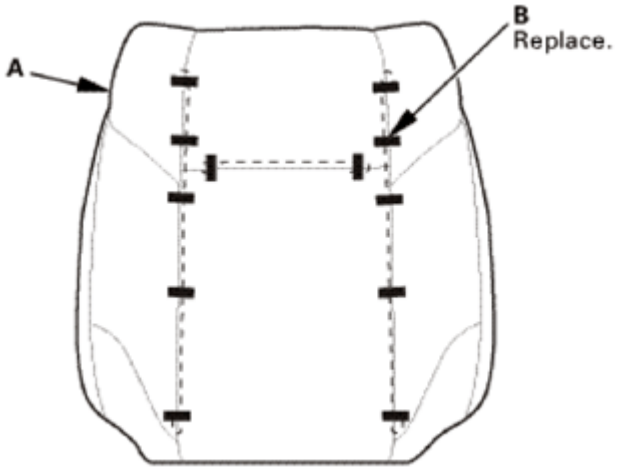

Fig. 1106: Identifying Seat Cushion Cover And Upholstery Rings (Fabric Seat)
Courtesy of AMERICAN HONDA MOTOR CO., INC.

19. Seat-Back Heater - Passenger's Side
    1. Remove the seat-back heater (A).

NOTE: **The seat-back heater is glued to the seat-back pad. When removing it, take care not to damage the seat-back pad.**

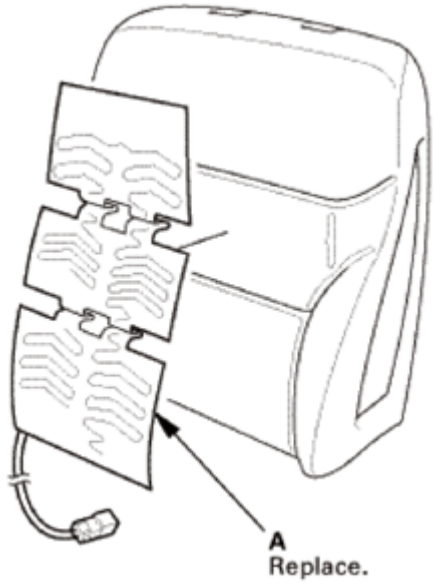

Fig. 1107: Identifying Seat-Back Heater
Courtesy of AMERICAN HONDA MOTOR CO., INC.

INSTALLATION

NOTE: **Steps 1-9 show installing the passenger's side, steps 10-19 show installing the**

GETtheMANUALS.org

driver's side.

1. Seat-Back Heater - Passenger's Side
    1. Install the seat-back heater (A).

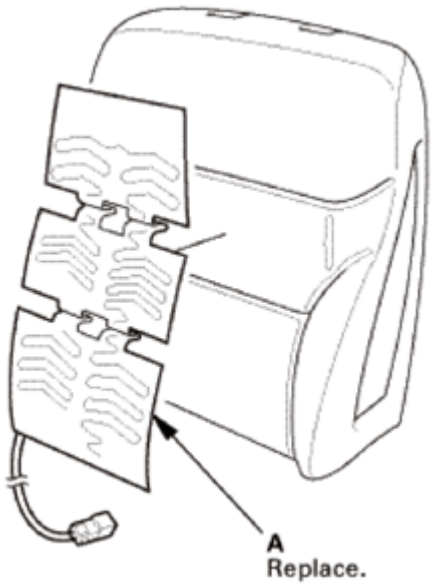

Fig. 1108: Identifying Seat-Back Heater
Courtesy of AMERICAN HONDA MOTOR CO., INC.

2. Front Seat-Back Cover - Passenger's Side

NOTE: **Replace all of the upholstery rings (A) fastening the seat cushion cover (B) to the pad wires (C) with new ones using commercially available upholstery ring pliers (D).**

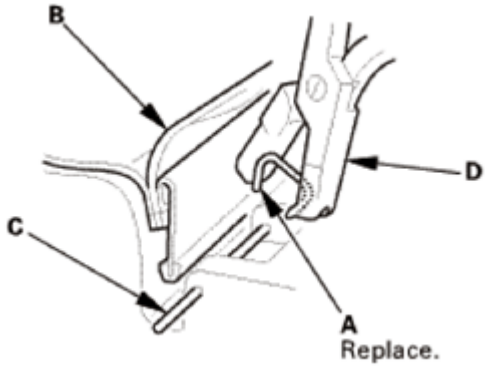

Fig. 1109: Removing Seat Cushion Cover To Pad Wires Fastening Upholstery Ring Using Tool
Courtesy of AMERICAN HONDA MOTOR CO., INC.

1. Install the seat-back cover (A) with the upholstery rings (B).

GETtheMANUALS.org

Leather Seat

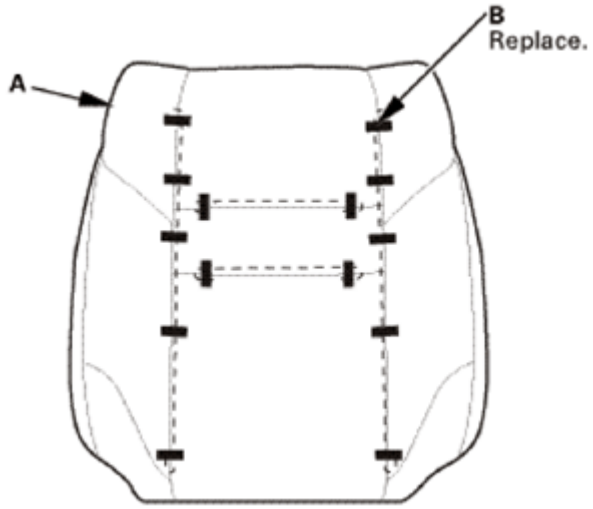

Fig. 1110: Identifying Seat Cushion Cover And Upholstery Rings (Leather Seat)
Courtesy of AMERICAN HONDA MOTOR CO., INC.

Fabric Seat

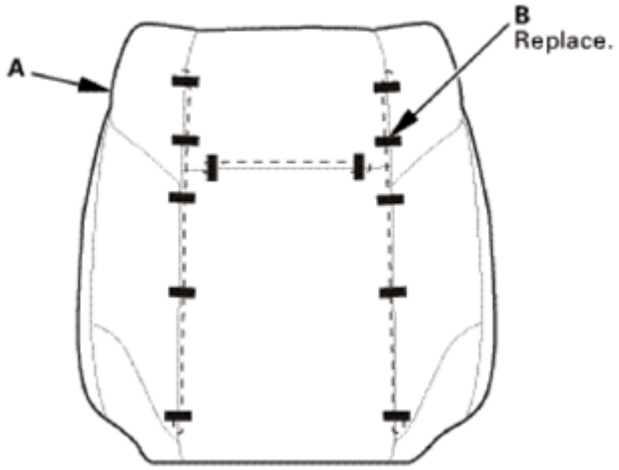

Fig. 1111: Identifying Seat Cushion Cover And Upholstery Rings (Fabric Seat)
Courtesy of AMERICAN HONDA MOTOR CO., INC.

2. Loop airbag attachment wire A through the inside reinforcing cloth (C).
3. Loop airbag attachment wire B through the outside reinforcing cloth (D).

GETtheMANUALS.org

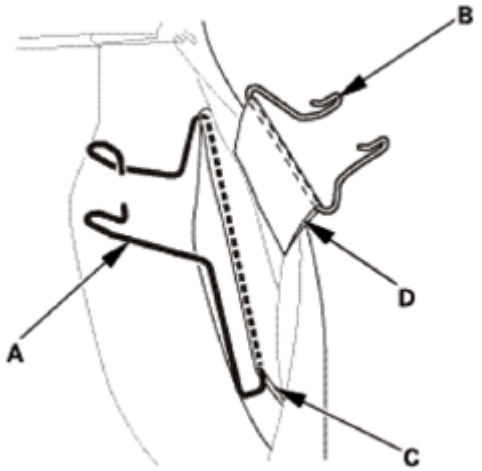

Fig. 1112: Connecting Airbag Attachment Wire Through Outside Reinforcing Cloth
Courtesy of AMERICAN HONDA MOTOR CO., INC.

3. Front Seat-Back Cover/Pad - Passenger's Side
    1. Install the seat-back cover/pad (A) on the seat-back frame (B).

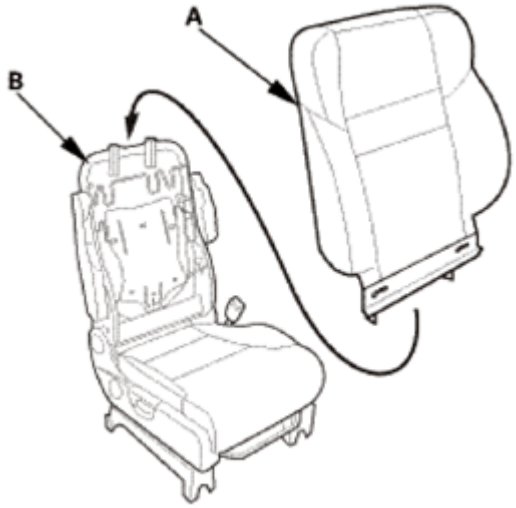

Fig. 1113: Installing Seat-Back Cover/Pad On Seat-Back Frame
Courtesy of AMERICAN HONDA MOTOR CO., INC.

4. Head Restraint Guide - Passenger's Side
    1. Install the head restraint guides (A).

GETtheMANUALS.org

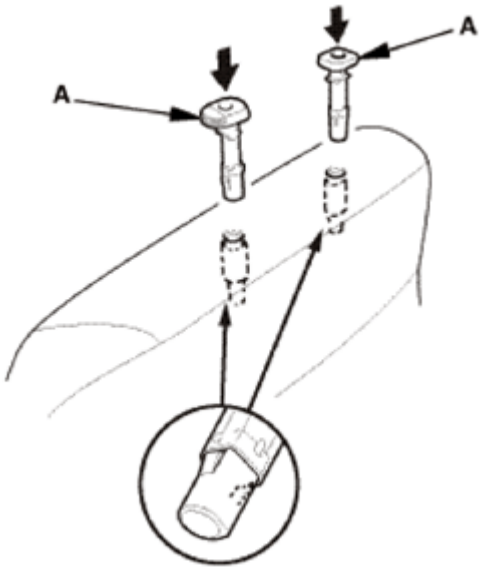

Fig. 1114: Installing Head Restraint Guides
Courtesy of AMERICAN HONDA MOTOR CO., INC.

5. Front Seat-Back - Passenger's Side
    1. Install the hook strips (A) to the seat-back frame (B).
    2. Install the harness clips (C).

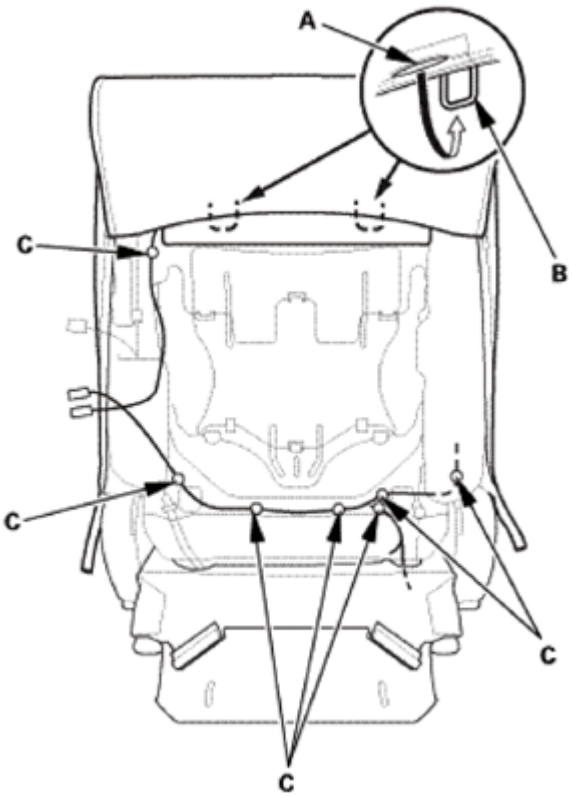

GETtheMANUALS.org

Fig. 1115: Installing Hook Strips To Seat-Back Frame
Courtesy of AMERICAN HONDA MOTOR CO., INC.

3. Connect the connectors (A) and install the harness clips (B) to the ODS unit (USA and Canada models) or OPDS unit (Mexico models) (C).

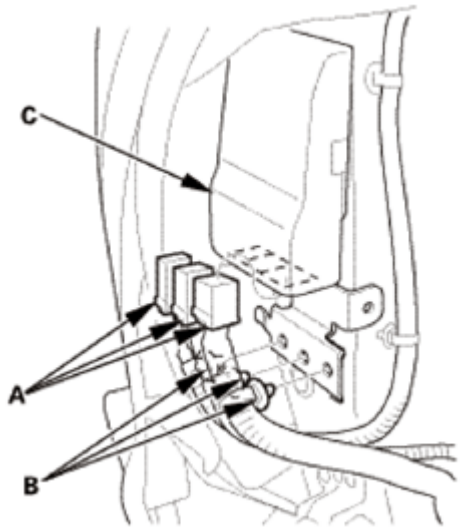

Fig. 1116: Identifying ODS/OPDS Unit, Connectors And Clips
Courtesy of AMERICAN HONDA MOTOR CO., INC.

4. Insert the hooks (A), and install the cover (B), and install the screw (C) and the harness clip (D).

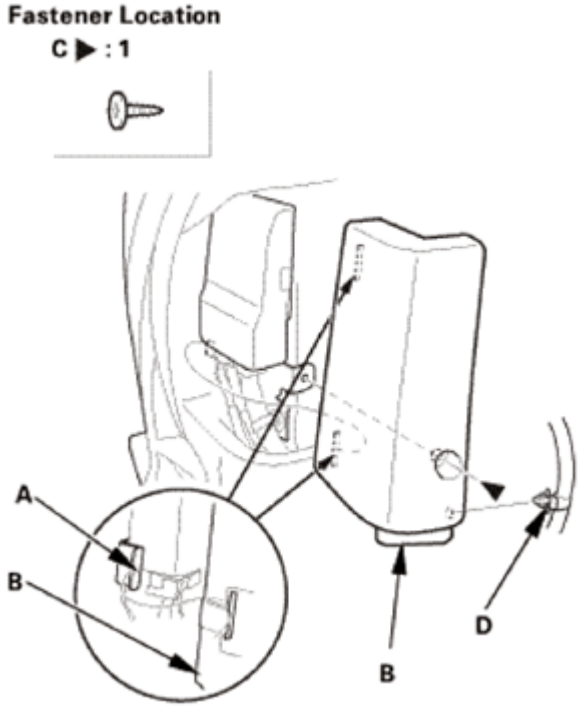

GETtheMANUALS.org

Fig. 1117: Identifying Front Seat-Back Cover, Hooks, Clips And Screws
Courtesy of AMERICAN HONDA MOTOR CO., INC.

5. Install airbag attachment wires A, B to the seat-back frame (C).

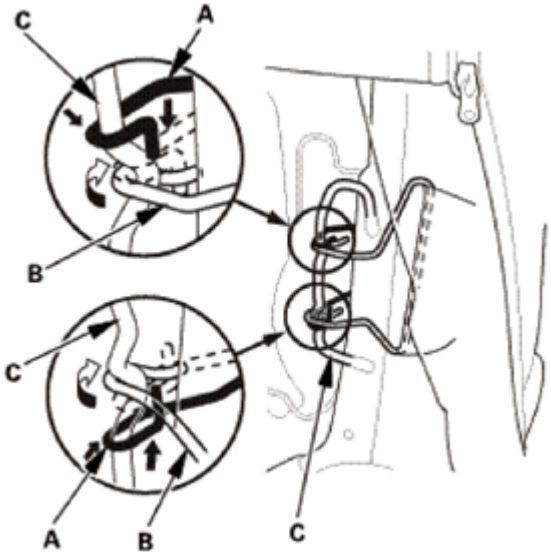

Fig. 1118: Installing Airbag Attachment Wires To Seat-Back Frame
Courtesy of AMERICAN HONDA MOTOR CO., INC.

6. Install the harness clips (A).
7. Install the harnesses (B) through the holes (C) in the seat-back cover (D).

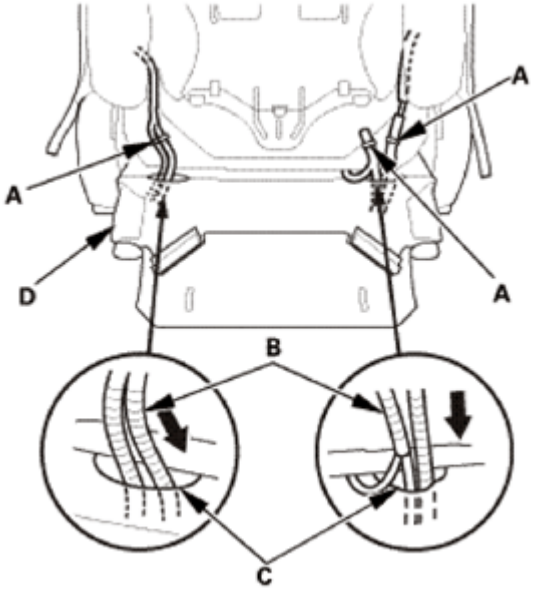

Fig. 1119: Installing Harnesses Through Holes In Seat-Back Cover
Courtesy of AMERICAN HONDA MOTOR CO., INC.

GETtheMANUALS.org

8. Install the hook strips (A) to the seat-back frame.

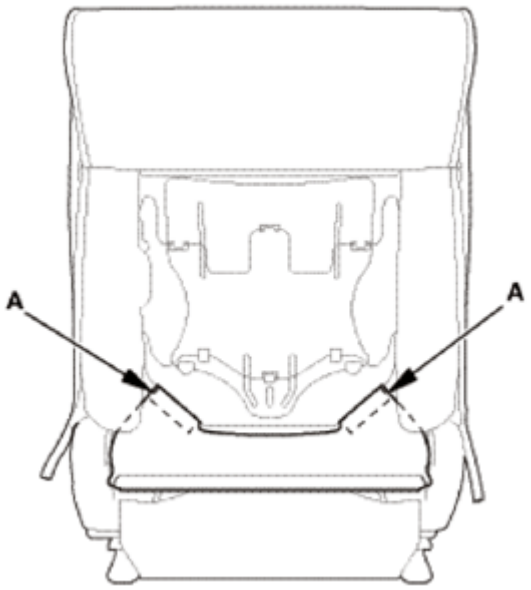

Fig. 1120: Installing Hook Strips To Seat-Back Frame
Courtesy of AMERICAN HONDA MOTOR CO., INC.

9. Zip the seat-back cover (A).
10. Install the hook strip (B).

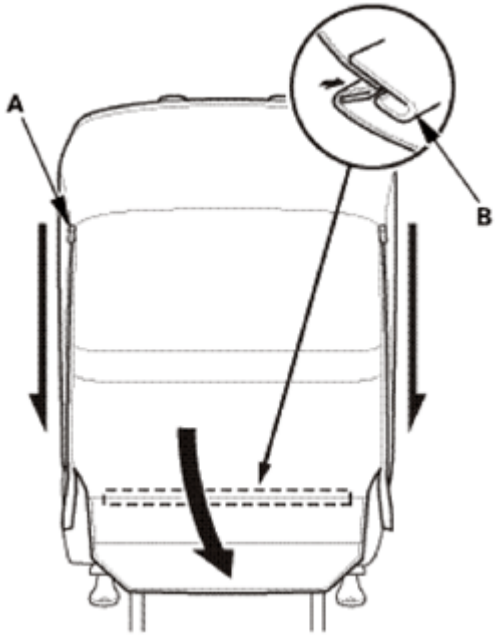

Fig. 1121: Removing Seat Back Cover
Courtesy of AMERICAN HONDA MOTOR CO., INC.

GETtheMANUALS.org

11. Install the connector clips (A).
12. Install the harness clips (B).
13. Install the harness holders (C) to the seat cushion frame springs (D).
14. Connect the connector (E).

Except KX - Without Seat Heater

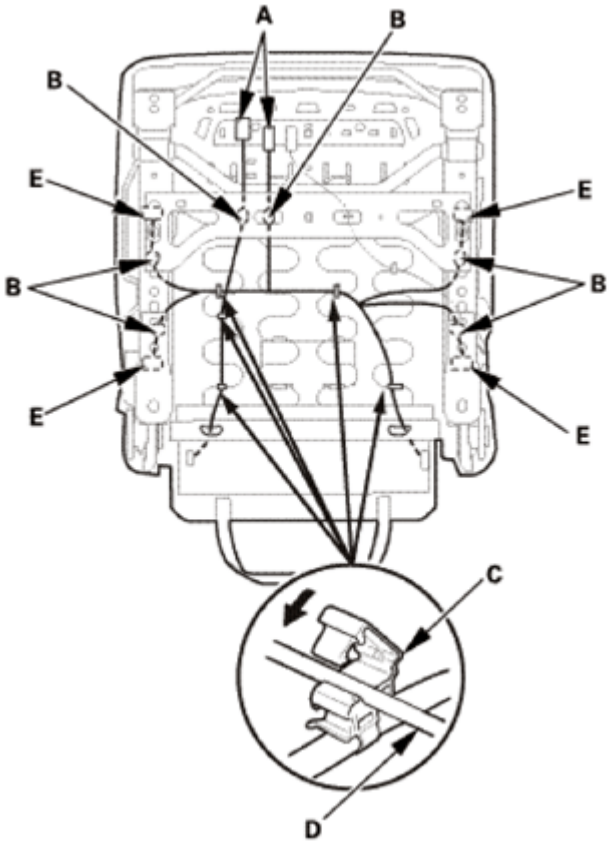

Fig. 1122: Installing Harness Holder To Seat Cushion Frame Springs (Except KX - Without Seat Heater)
Courtesy of AMERICAN HONDA MOTOR CO., INC.

Except KX - With Seat Heater

GETtheMANUALS.org

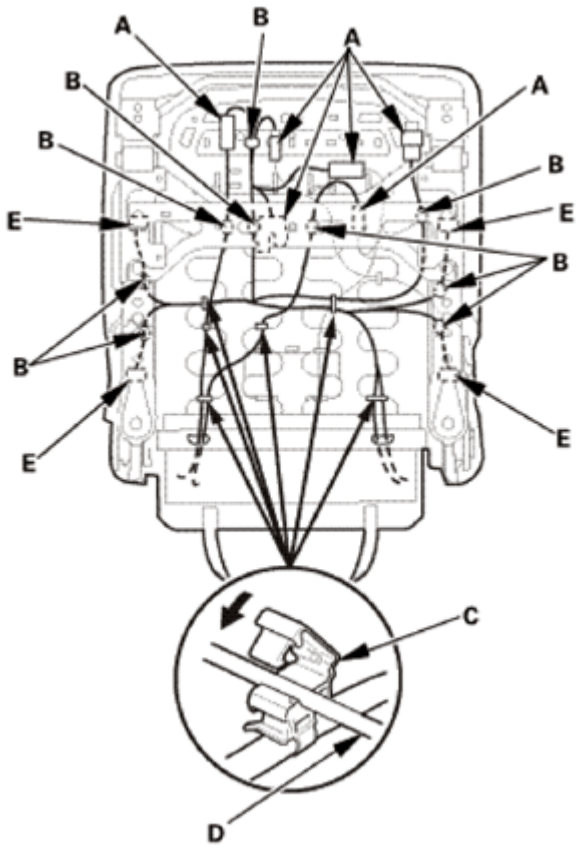

Fig. 1123: Installing Harness Holder To Seat Cushion Frame Springs (Except KX - With Seat Heater)
Courtesy of AMERICAN HONDA MOTOR CO., INC.

KX

GETtheMANUALS.org

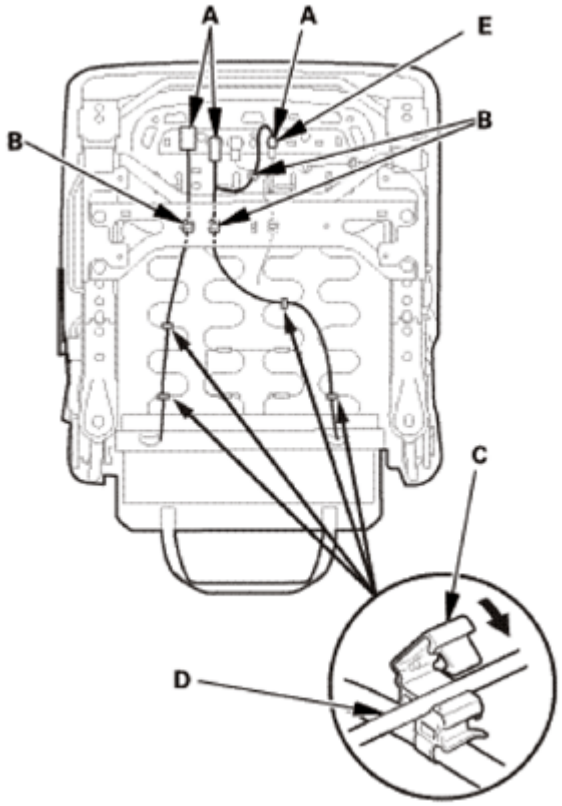

Fig. 1124: Installing Harness Holder To Seat Cushion Frame Springs (For KX)
Courtesy of AMERICAN HONDA MOTOR CO., INC.

15. Install the elastic strap (A) to the seat cushion frame springs (B).

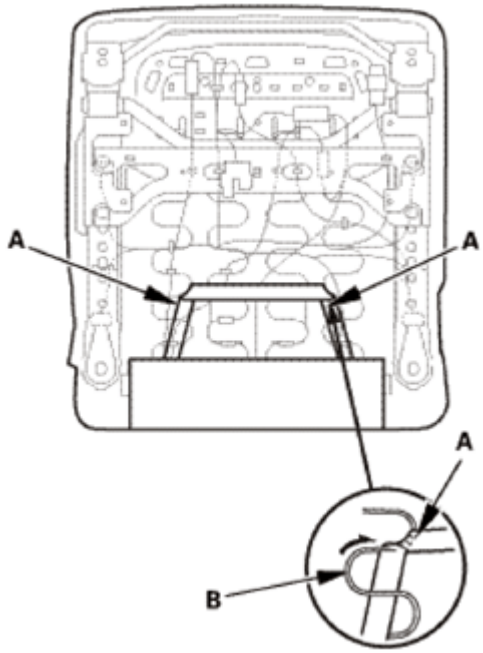

GETtheMANUALS.org

Fig. 1125: Installing Elastic Strap To Seat Cushion Frame Springs
Courtesy of AMERICAN HONDA MOTOR CO., INC.

6. Front Seat Armrest - Passenger's Side
    1. Install the pins (A) to the seat-back.

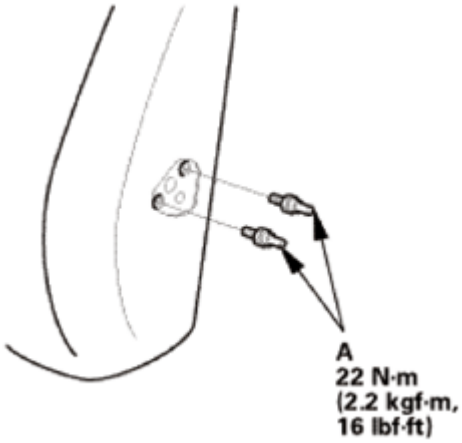

Fig. 1126: Identifying Seat Back Pins With Torque Specifications
Courtesy of AMERICAN HONDA MOTOR CO., INC.

    2. Install the armrest (A), then install the washer (B), the bushing (C), and the center pin (D).
    3. Install the cap (E) to the armrest.

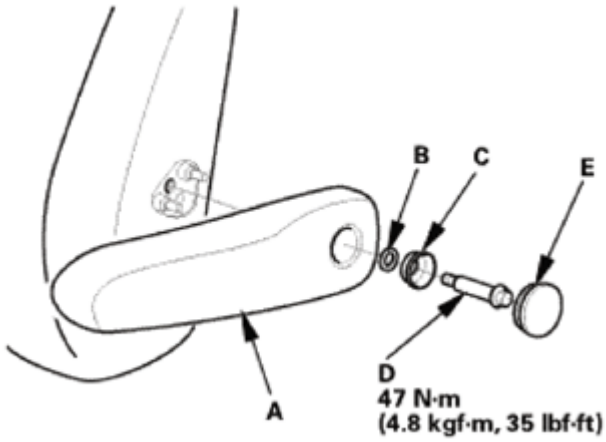

Fig. 1127: Identifying Front Seat Armrest, Center Pin, Bushing, Washer And Cap With Torque Specifications
Courtesy of AMERICAN HONDA MOTOR CO., INC.

7. Front Seat Assembly - Passenger's Side
    1. Connect the connectors (A).
    2. Install the harness clip (B).

GETtheMANUALS.org

Without Subwoofer

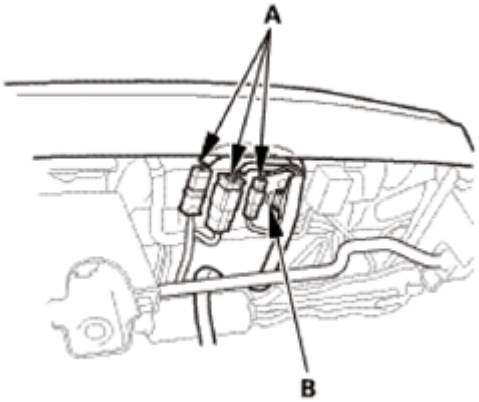

Fig. 1128: Identifying Front Seat Connectors And Clips (Without Subwoofer)
Courtesy of AMERICAN HONDA MOTOR CO., INC.

With Subwoofer

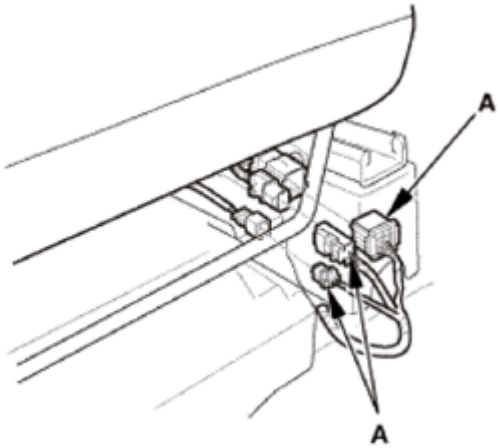

Fig. 1129: Identifying Front Seat Connectors And Clips (With Subwoofer)
Courtesy of AMERICAN HONDA MOTOR CO., INC.

3. Install the seat mounting bolts (A).

NOTE:

- **Tighten the bolts by hand first, then tighten them to the specified torque.**
- **Tighten the seat mounting bolts to the specified torque in the sequence shown. Slide the seat all the way back and tighten bolts 1 and 2, then slide it forward and tighten bolts 3 and 4.**

Front Side

GETtheMANUALS.org

Fig. 1130: Identifying Seat Mounting Bolts With Torque Specifications (Front Side)
Courtesy of AMERICAN HONDA MOTOR CO., INC.

Rear Side

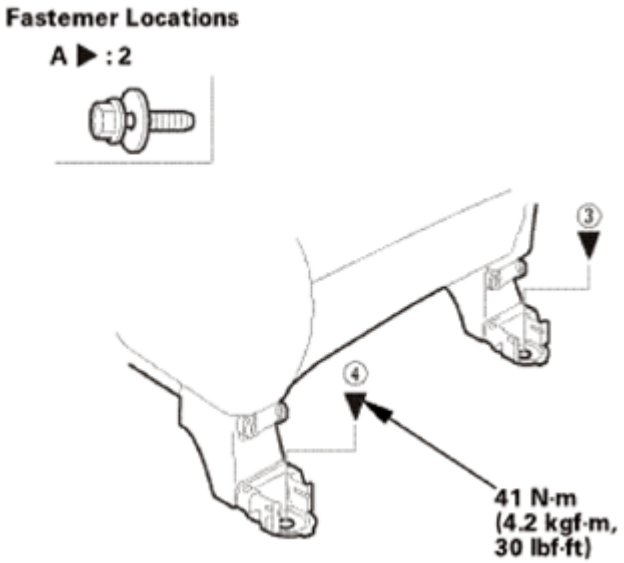

Fig. 1131: Identifying Seat Mounting Bolts With Torque Specifications (Rear Side)
Courtesy of AMERICAN HONDA MOTOR CO., INC.

4. Install rear inner seat track end cover (A) and the rear outer seat track end cover (B). Make sure the hooks (C) snap into place securely.

GETtheMANUALS.org

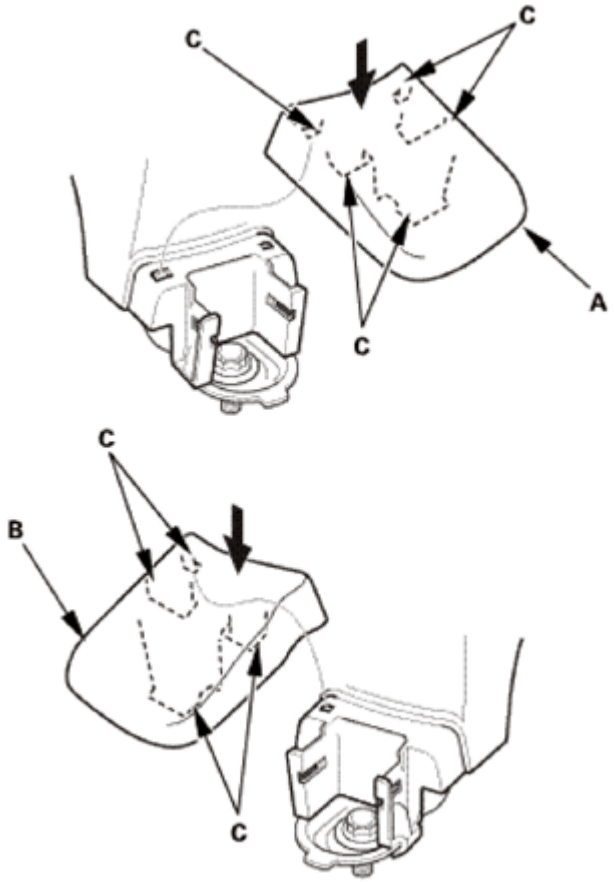

Fig. 1132: Installing Rear Inner And Outer Seat Track End Cover
Courtesy of AMERICAN HONDA MOTOR CO., INC.

8. Head Restraint - Passenger's Side
    1. Insert the head restraint (A) into the seat-back as shown.

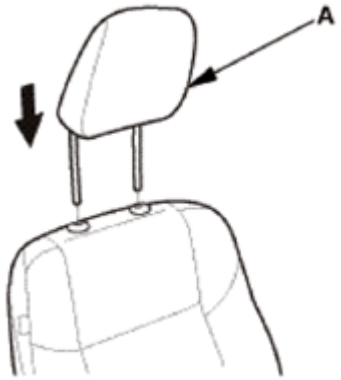

Fig. 1133: Inserting Head Restraint Into Seat-Back (Passenger Side)
Courtesy of AMERICAN HONDA MOTOR CO., INC.

9. Front Seat Belt Lower Anchor Bolt - Passenger's Side

GETtheMANUALS.org

1. Install the lower anchor bolt (A).

NOTE: **Before installing the anchor bolt, make sure there are no twists or kinks in the seat belt.**

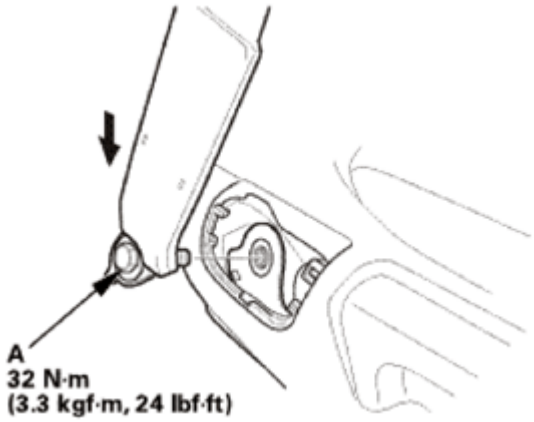

Fig. 1134: Installing Front Seat Belt Lower Anchor Bolt
Courtesy of AMERICAN HONDA MOTOR CO., INC.

2. Install the anchor cover (A). Make sure the hooks (B) and the tab (C) snap into place securely.

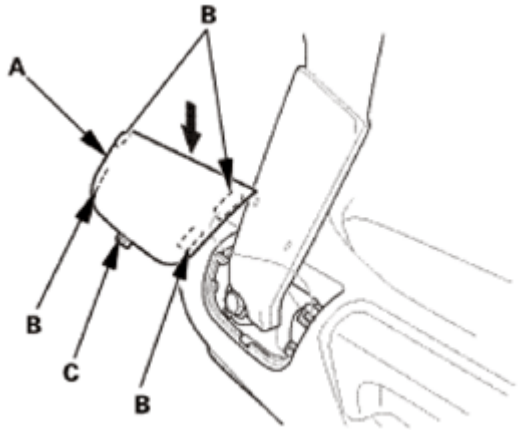

Fig. 1135: Installing Front Seat Belt Lower Anchor Cover
Courtesy of AMERICAN HONDA MOTOR CO., INC.

10. Seat-Back Heater - Driver's Side
    1. Install the seat-back heater (A).

GETtheMANUALS.org

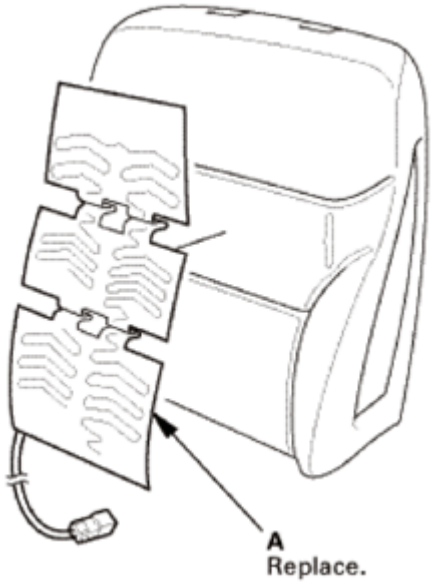

Fig. 1136: Identifying Seat-Back Heater
Courtesy of AMERICAN HONDA MOTOR CO., INC.

11. Front Seat-Back Cover - Driver's Side

NOTE: **Replace all of the upholstery rings (A) fastening the seat cushion cover (B) to the pad wires (C) with new ones using commercially available upholstery ring pliers (D).**

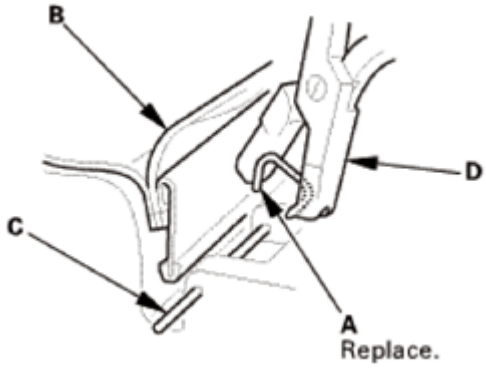

Fig. 1137: Removing Seat Cushion Cover To Pad Wires Fastening Upholstery Ring Using Tool
Courtesy of AMERICAN HONDA MOTOR CO., INC.

1. Install the seat-back cover (A) with the upholstery rings (B).

Leather Seat

GETtheMANUALS.org

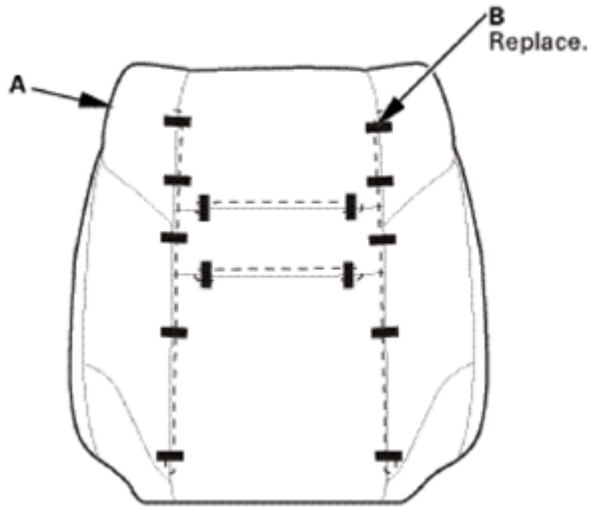

Fig. 1138: Identifying Seat Cushion Cover And Upholstery Rings (Leather Seat)
Courtesy of AMERICAN HONDA MOTOR CO., INC.

Fabric Seat

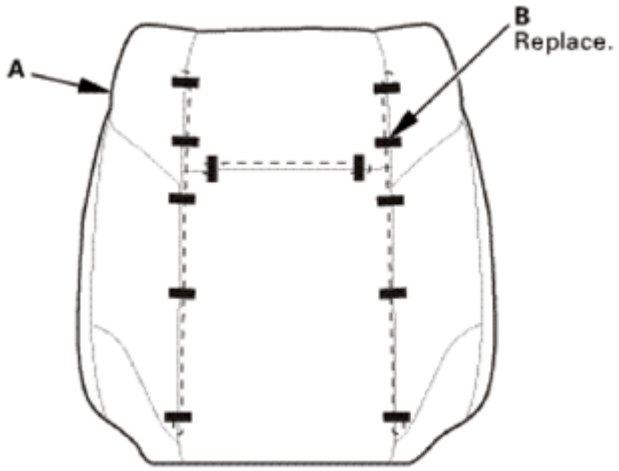

Fig. 1139: Identifying Seat Cushion Cover And Upholstery Rings (Fabric Seat)
Courtesy of AMERICAN HONDA MOTOR CO., INC.

2. Loop airbag attachment wire A through the inside reinforcing cloth (C).
3. Loop airbag attachment wire B through the outside reinforcing cloth (D).

GETtheMANUALS.org

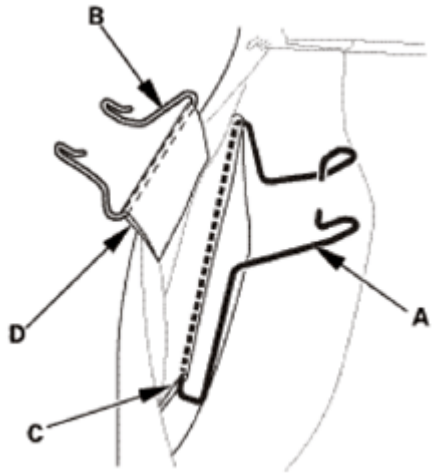

Fig. 1140: Connecting Airbag Attachment Wire Through Outside Reinforcing Cloth
Courtesy of AMERICAN HONDA MOTOR CO., INC.

12. Front Seat-Back Cover/Pad - Driver's Side
    1. Install the seat-back cover/pad (A) on the seat-back frame (B).

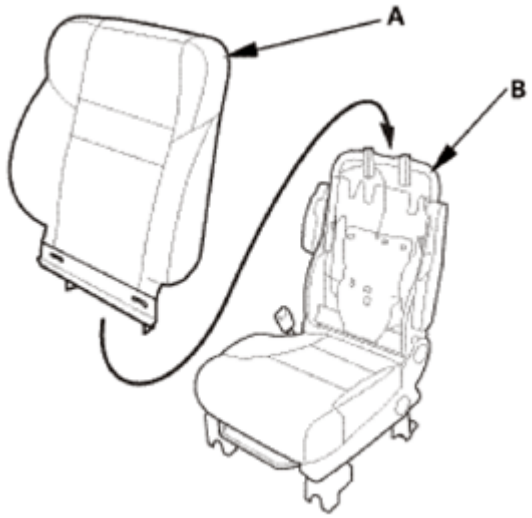

Fig. 1141: Installing Seat-Back Cover/Pad On Seat-Back Frame
Courtesy of AMERICAN HONDA MOTOR CO., INC.

13. Head Restraint Guides - Driver's Side
    1. Install the head restraint guides (A).

GETtheMANUALS.org

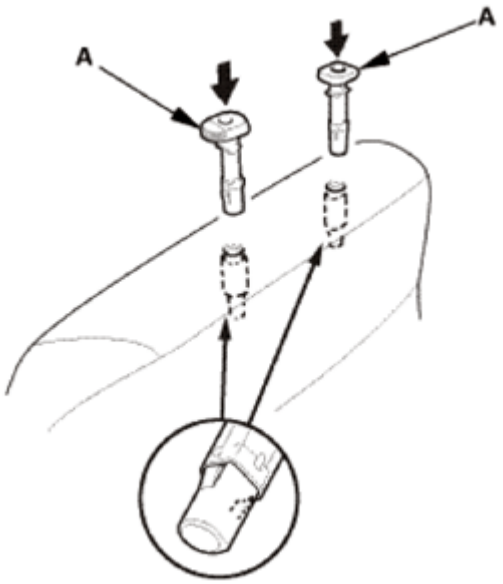

Fig. 1142: Installing Head Restraint Guides
Courtesy of AMERICAN HONDA MOTOR CO., INC.

14. Front Seat-Back - Driver's Side
    1. Install the hook strips (A) to the seat-back frame (B).

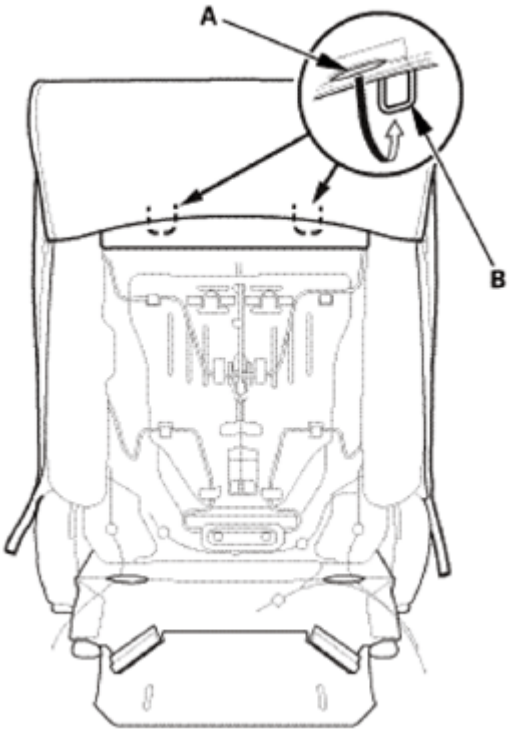

Fig. 1143: Installing Hook Strips To Seat-Back Frame
Courtesy of AMERICAN HONDA MOTOR CO., INC.

GETtheMANUALS.org

2. Install airbag attachment wires A, B to the seat-back frame (C).

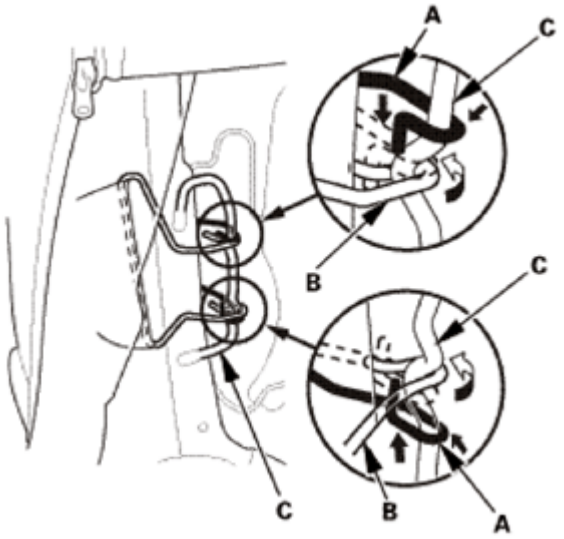

Fig. 1144: Installing Airbag Attachment Wires To Seat-Back Frame
Courtesy of AMERICAN HONDA MOTOR CO., INC.

3. Install the harness clips (A).
4. Install the harnesses (B) through the holes (C) in the seat-back cover (D).

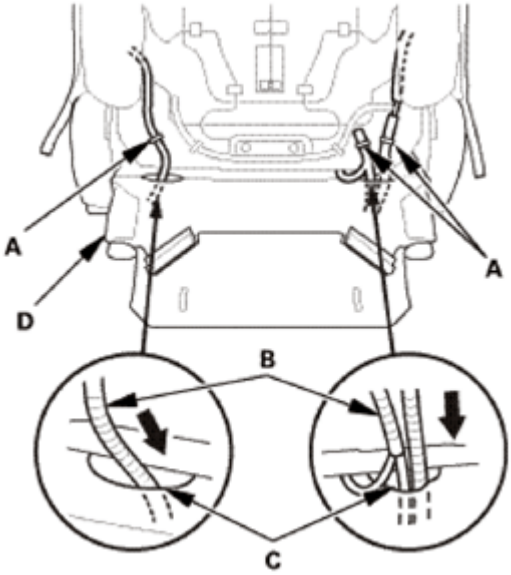

Fig. 1145: Installing Harnesses Through Holes In Seat-Back Cover
Courtesy of AMERICAN HONDA MOTOR CO., INC.

5. Install the hook strips (A) to the seat frame.

GETtheMANUALS.org

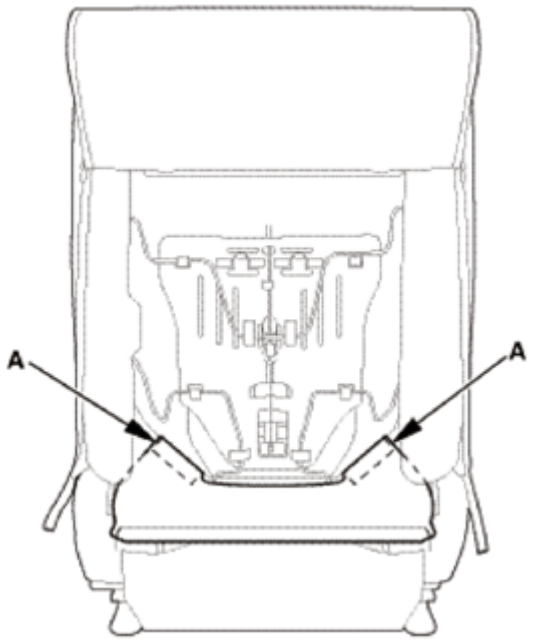

Fig. 1146: Identifying Seat Frame Hook Strips
Courtesy of AMERICAN HONDA MOTOR CO., INC.

6. Zip the seat-back cover (A).
7. Install the hook strip (B).

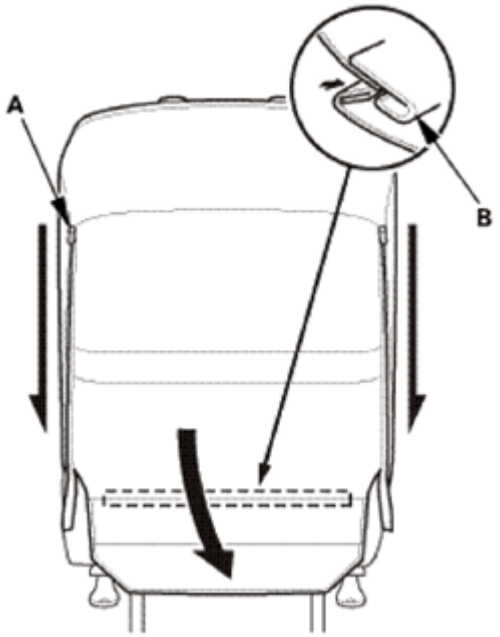

Fig. 1147: Removing Seat Back Cover
Courtesy of AMERICAN HONDA MOTOR CO., INC.

8. Install the connector clips (A).

GETtheMANUALS.org

9. Install the harness clips (B).
10. Install the harness holders (C) to the seat cushion frame springs (D).
11. Connect the connector (E).

Power Seat

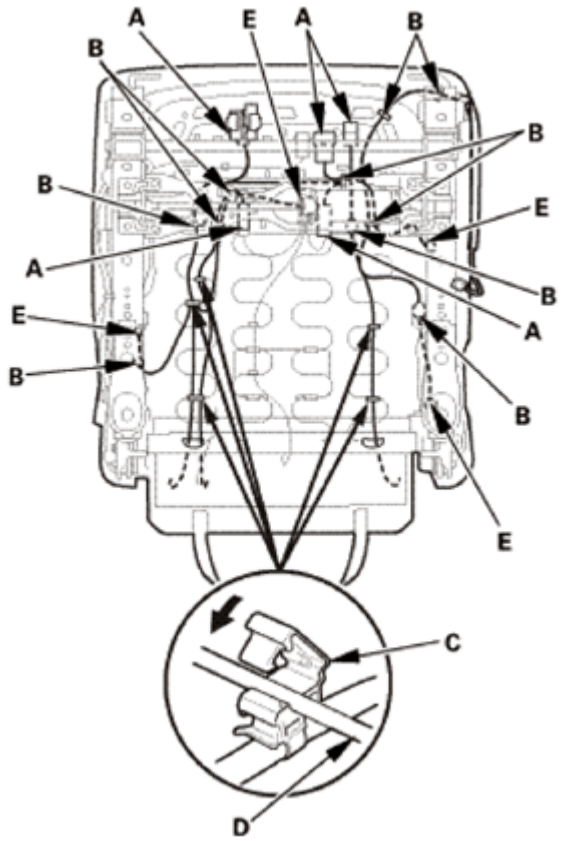

Fig. 1148: Installing Harness Holder To Seat Cushion Frame Springs (Except KX - With Seat Heater)
Courtesy of AMERICAN HONDA MOTOR CO., INC.

Manual Seat with Seat Heater

GETtheMANUALS.org

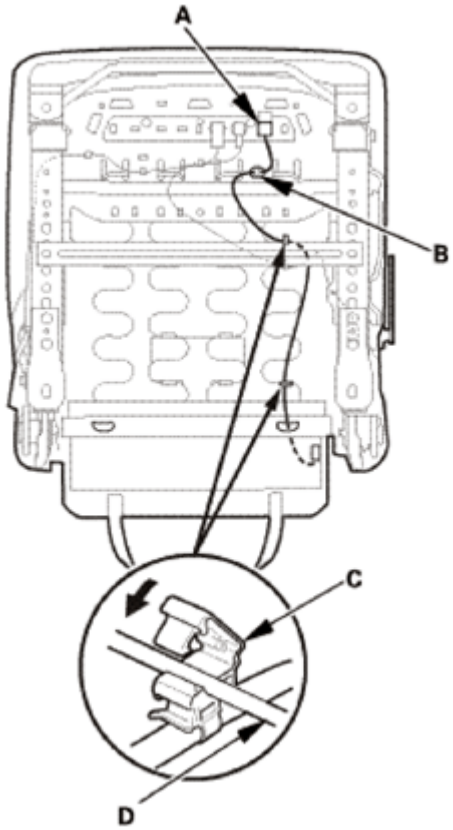

Fig. 1149: Installing Harness Holder To Seat Cushion Frame Springs (Manual Seat With Seat Heater)
Courtesy of AMERICAN HONDA MOTOR CO., INC.

12. Install the elastic strap (A) to the seat cushion frame springs (B).

GETtheMANUALS.org

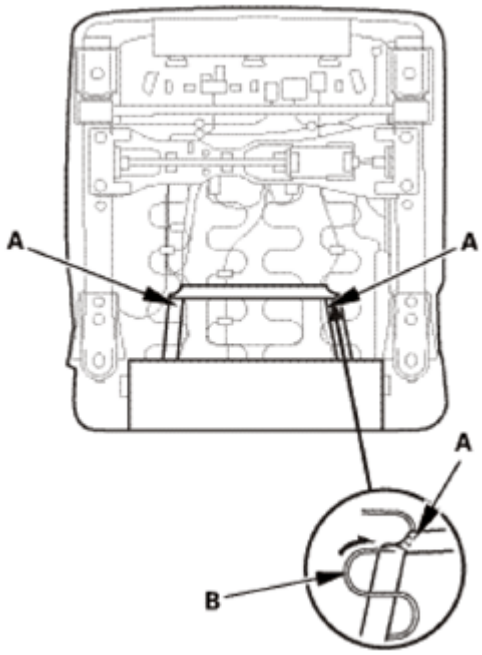

Fig. 1150: Installing Elastic Strap To Seat Cushion Frame Springs
Courtesy of AMERICAN HONDA MOTOR CO., INC.

15. Front Seat Armrest
    1. Install the pins (A) to the seat-back.

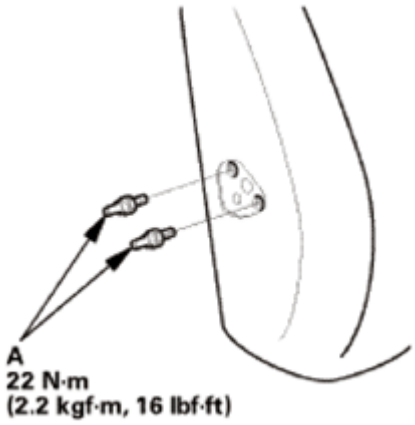

Fig. 1151: Identifying Seat Back Pins With Torque Specifications
Courtesy of AMERICAN HONDA MOTOR CO., INC.

    2. Install the armrest (A), then install the washer (B), the bushing (C), and the center pin (D).
    3. Install the cap (E) to the armrest.

GETtheMANUALS.org

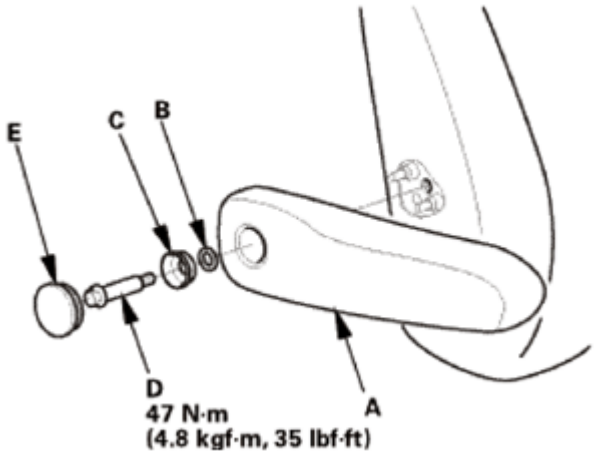

Fig. 1152: Identifying Front Seat Armrest, Center Pin, Bushing, Washer And Cap With Torque Specifications
Courtesy of AMERICAN HONDA MOTOR CO., INC.

16. Front Seat - Driver's Side
    1. Connect the connectors (A).
    2. Install the harness clip (B).

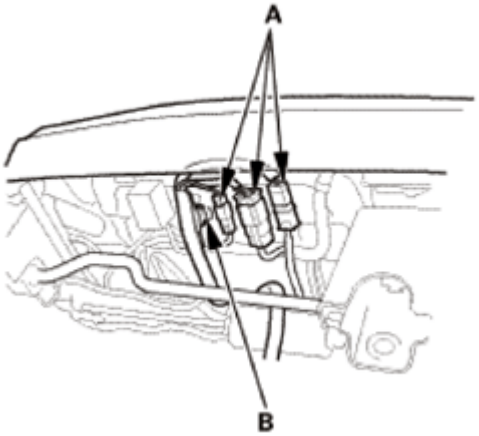

Fig. 1153: Identifying Front Seat Connectors And Clips (Driver Side)
Courtesy of AMERICAN HONDA MOTOR CO., INC.

3. Install the seat mounting bolts (A).

NOTE:

- **Tighten the bolts by hand first, then tighten them to the specified torque.**
- **Tighten the seat mounting bolts to the specified torque in the sequence shown. Slide the seat all the way back and tighten bolts 1 and 2, then slide it forward and tighten bolts 3 and 4.**

GETtheMANUALS.org

Front Side

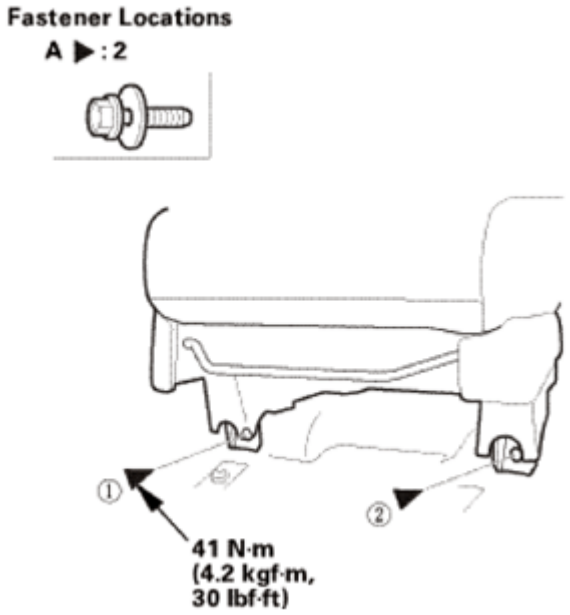

Fig. 1154: Identifying Seat Mounting Bolts With Torque Specifications (Front Side)
Courtesy of AMERICAN HONDA MOTOR CO., INC.

Rear Side

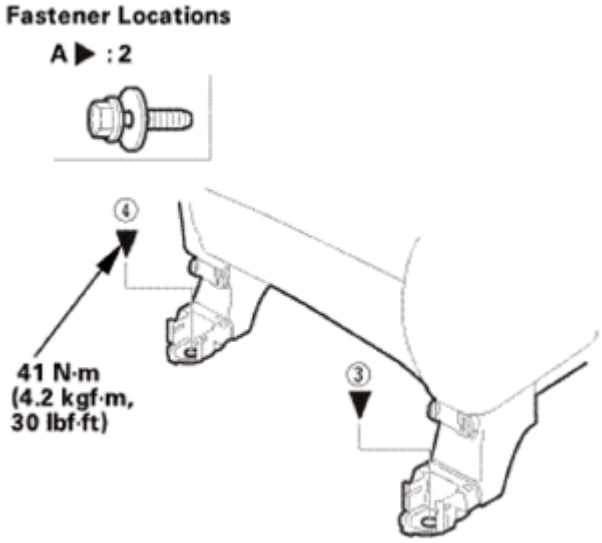

Fig. 1155: Identifying Seat Mounting Bolts With Torque Specifications (Rear Side)
Courtesy of AMERICAN HONDA MOTOR CO., INC.

4. Install the rear inner seat track end cover (A) and the rear outer seat track end cover (B). Make sure the hooks (C) snap into place securely.

GETtheMANUALS.org

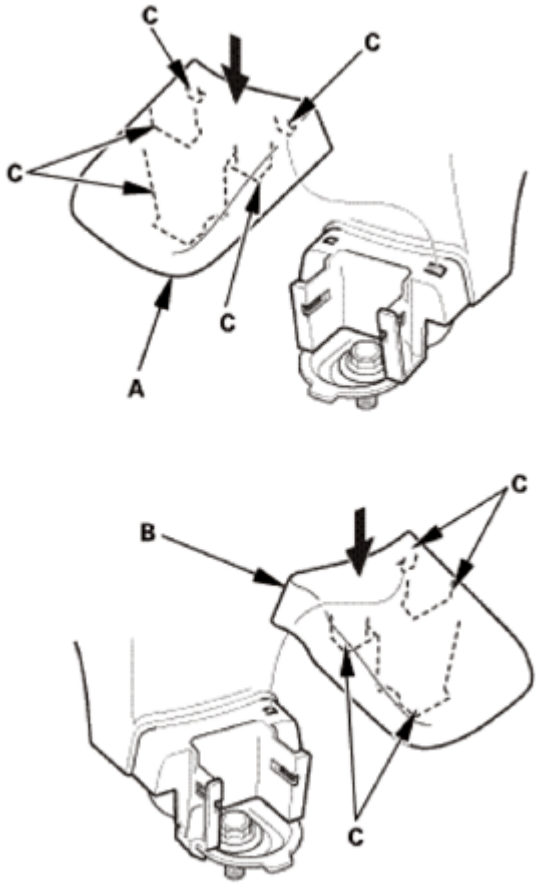

Fig. 1156: Installing Rear Inner And Outer Seat Track End Cover
Courtesy of AMERICAN HONDA MOTOR CO., INC.

17. Head Restraint - Driver's Side
    1. Insert the head restraint (A) to the seat-back as shown.

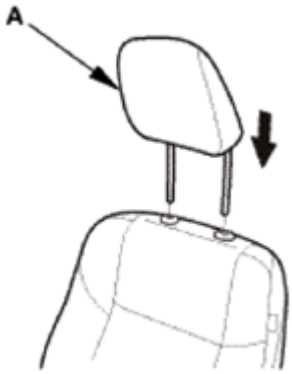

Fig. 1157: Inserting Head Restraint To Seat-Back (Driver Side)
Courtesy of AMERICAN HONDA MOTOR CO., INC.

18. Battery Terminal (SRS) - Reconnection

GETtheMANUALS.org

NOTE: **If the battery performance is abnormal, test the battery.**

1. Clean the battery terminals.
2. Connect the positive cable (A) to the battery.

   NOTE: **Always connect the positive side first.**

3. Connect the negative cable (B) to the battery.
4. Apply multipurpose grease to the terminals to prevent corrosion.

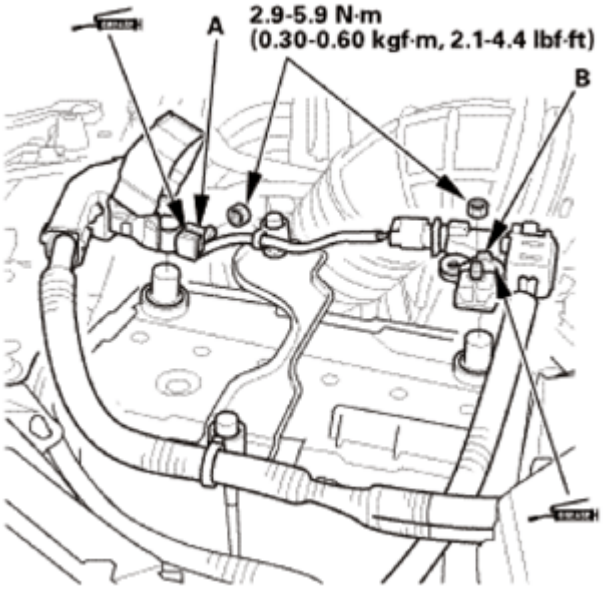

Fig. 1158: Identifying Battery Positive And Negative Cable
Courtesy of AMERICAN HONDA MOTOR CO., INC.

19. Front Seat Belt Lower Anchor Bolt
    1. Install the lower anchor bolt.

       NOTE: **Before installing the anchor bolt, make sure there are no twists or kinks in the seat belt.**

GETtheMANUALS.org

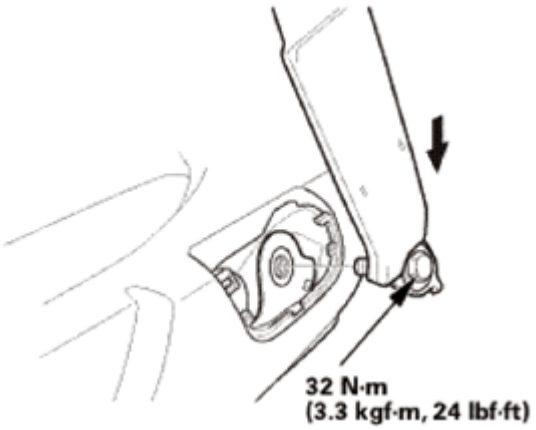

Fig. 1159: Installing Front Seat Belt Lower Anchor Bolt
Courtesy of AMERICAN HONDA MOTOR CO., INC.

2. Install the anchor cover (A). Make sure the hooks (B) and the tab (C) snap into place securely.

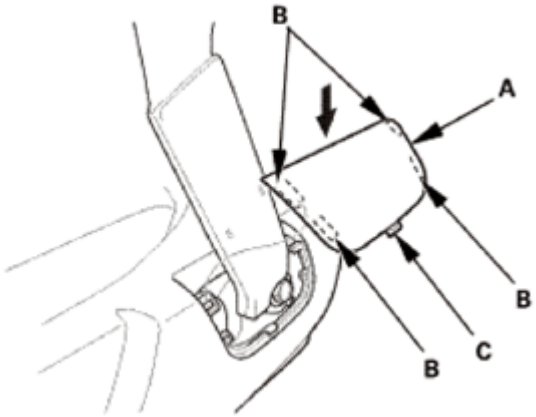

Fig. 1160: Installing Front Seat Belt Lower Anchor Cover
Courtesy of AMERICAN HONDA MOTOR CO., INC.

SEAT HEATER SWITCH REMOVAL, INSTALLATION, AND TEST

REMOVAL

1. Seat Heater Switch
    1. Remove the seat heater switch panel (A).

GETtheMANUALS.org

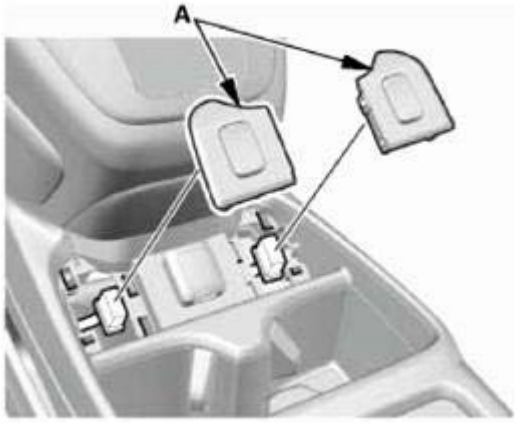

Fig. 1161: Identifying Seat Heater Switch Panel
Courtesy of AMERICAN HONDA MOTOR CO., INC.

2. Remove the seat heater switches (A).

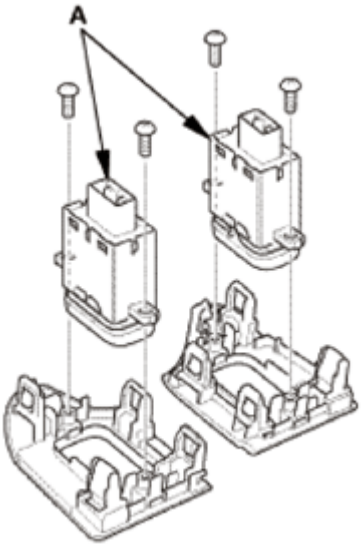

Fig. 1162: Identifying Seat Heater Switches
Courtesy of AMERICAN HONDA MOTOR CO., INC.

TEST

1. Seat Heater Switch - Test
    1. Check for continuity between the terminals in each switch position according to the table.

NOTE:

- **Make sure the correct test lead (+or -) is placed on the terminal.**
- **When checking for continuity across the diode, use the diode setting ( ) on the digital volt/ohm meter to check the diode bias.**
- **Note this important operating characteristic; a diode is one that**

GETtheMANUALS.org

conducts fully in one direction (forward) and not at all in the opposite direction (reverse).

2. If the continuity is not as specified, replace the switch.

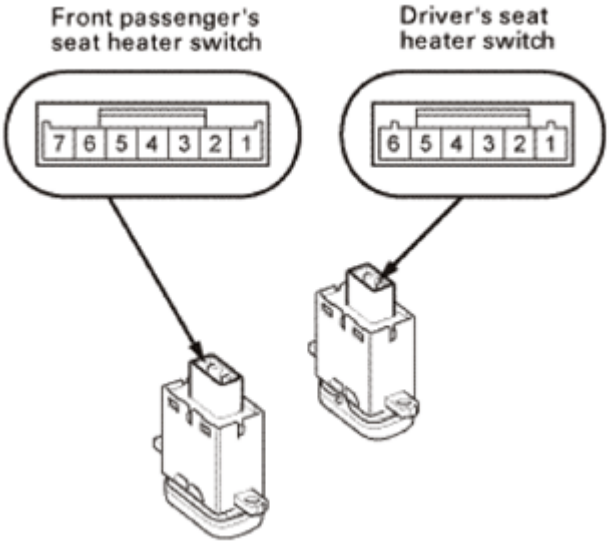

Fig. 1163: Identifying Seat Heater Switch Connector Terminals
Courtesy of AMERICAN HONDA MOTOR CO., INC.

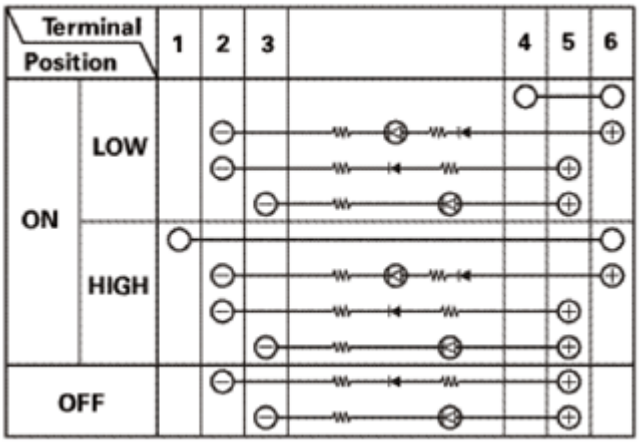

Fig. 1164: Seat Heater Switch Continuity Reference Chart
Courtesy of AMERICAN HONDA MOTOR CO., INC.

INSTALLATION

1. Seat Heater Switch
    1. Install the seat heater switches (A).

GETtheMANUALS.org

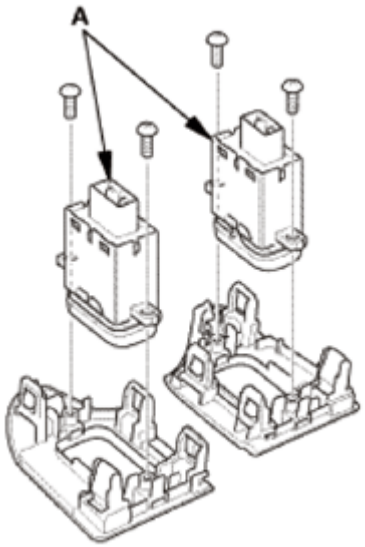

Fig. 1165: Identifying Seat Heater Switches
Courtesy of AMERICAN HONDA MOTOR CO., INC.

2. Install the seat heater switch panel (A).

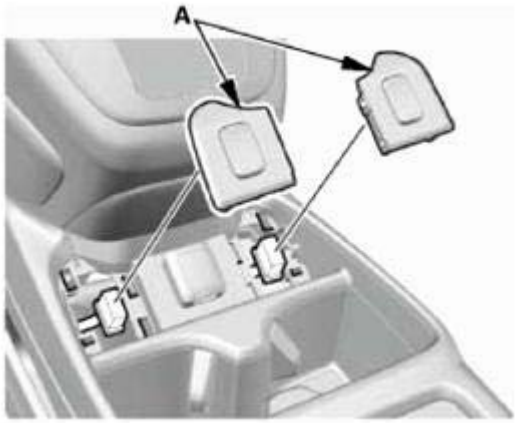

Fig. 1166: Identifying Seat Heater Switch Panel
Courtesy of AMERICAN HONDA MOTOR CO., INC.

SEAT HEATER TEST

REMOVAL

SRS components are located in this area. Review the **SRS COMPONENT LOCATIONS** and the **PRECAUTIONS AND PROCEDURES** before doing repairs or service.

NOTE: **Before the front power seat is removed, slide the front power seat to the half-way position, then raise the seat to the highest position.**

GETtheMANUALS.org

1. Front Seat Belt Lower Anchor Bolt
    1. Slide the front seat forward fully, carefully pry up on the bottom edge of the anchor cover (A) at the pry point (B) with the appropriate trim tool to release the hooks (C) and the tab (D), then remove the cover by pulling it up.

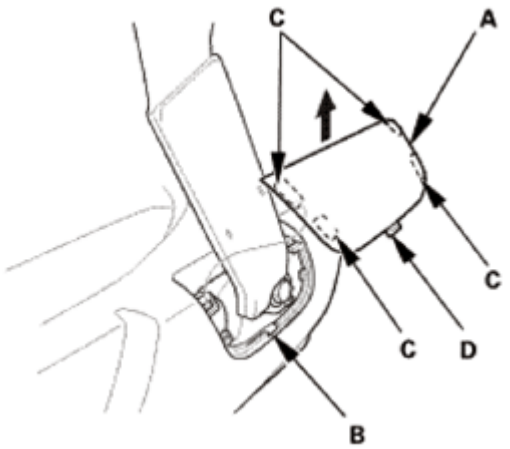

Fig. 1167: Removing Front Seat Lower Anchor Cover
Courtesy of AMERICAN HONDA MOTOR CO., INC.

2. Remove the lower anchor bolt (A).

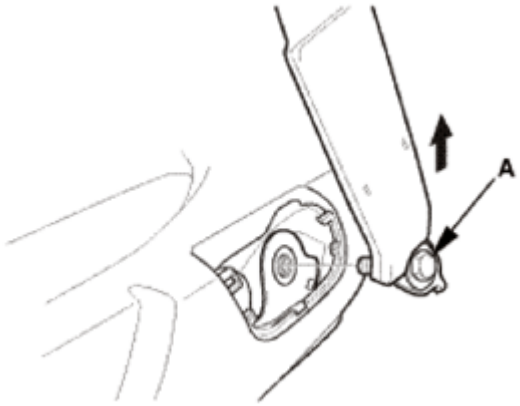

Fig. 1168: Removing Front Seat Belt Lower Anchor Bolt
Courtesy of AMERICAN HONDA MOTOR CO., INC.

2. Battery Terminal (SRS) - Disconnection
    1. Make sure the ignition switch is in LOCK (0).
    2. Disconnect and isolate the negative cable (A) from the battery.

NOTE: Always disconnect the negative side first.

    3. Disconnect the positive cable (B) from the battery.

GETtheMANUALS.org

4. Wait at least 3 minutes before starting work.

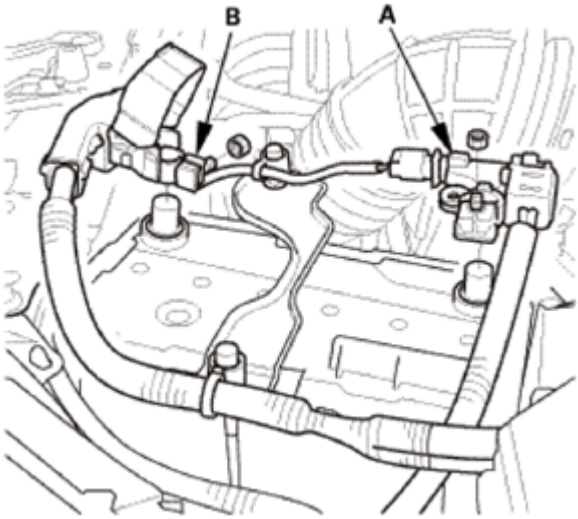

Fig. 1169: Identifying Battery Positive And Negative Cable
Courtesy of AMERICAN HONDA MOTOR CO., INC.

3. Head Restraint - Driver's Side
    1. Push and hold the knob (A), then pull out the head restraint (B) as shown.

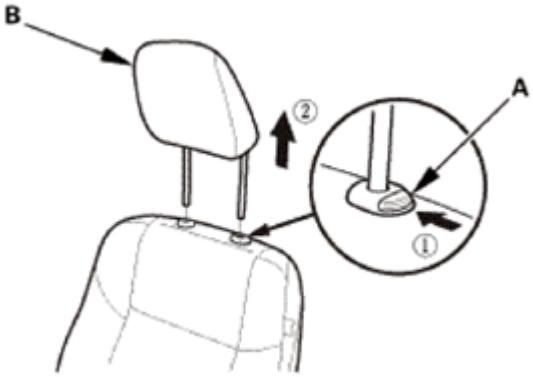

Fig. 1170: Pulling Head Restraint (Driver Side)
Courtesy of AMERICAN HONDA MOTOR CO., INC.

4. Front Seat - Driver's Side
    1. Detach the hooks (A), then remove the rear inner seat track end cover (B) and the rear outer seat track end cover (C).

GETtheMANUALS.org

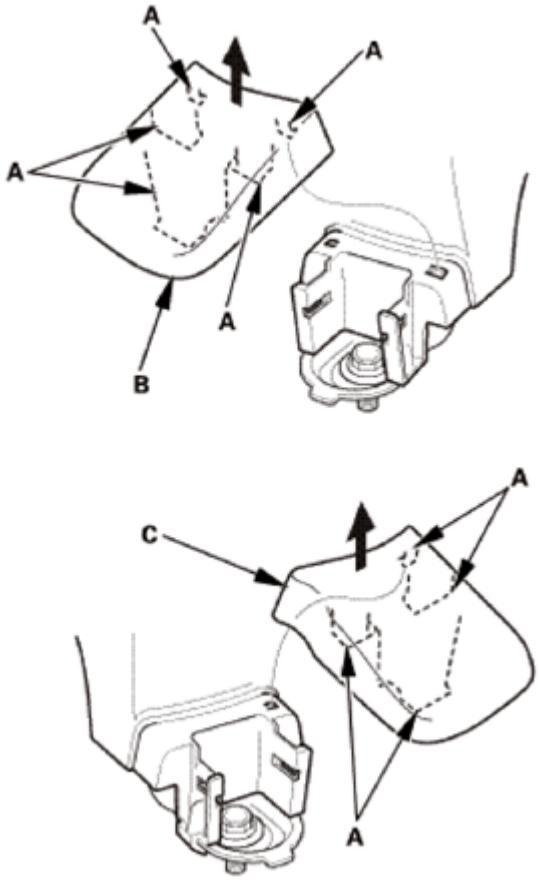

Fig. 1171: Removing Rear Inner And Outer Seat Track End Cover
Courtesy of AMERICAN HONDA MOTOR CO., INC.

2. Remove the front mounting bolts (A) from the front seat.

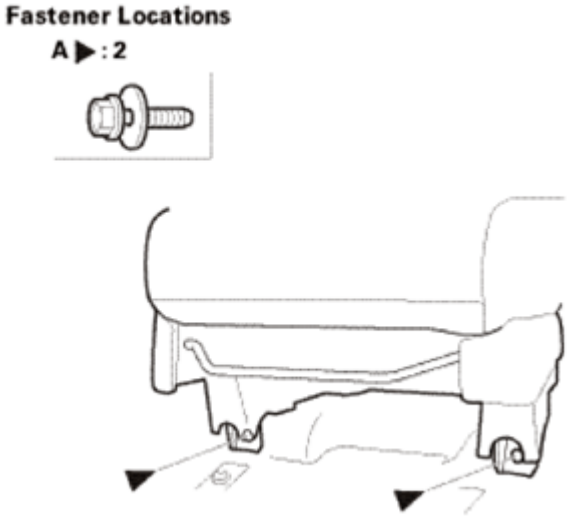

Fig. 1172: Identifying Front Seat Mounting Bolts
Courtesy of AMERICAN HONDA MOTOR CO., INC.

GETtheMANUALS.org

3. Remove the rear mounting bolts (A) from the front seat.

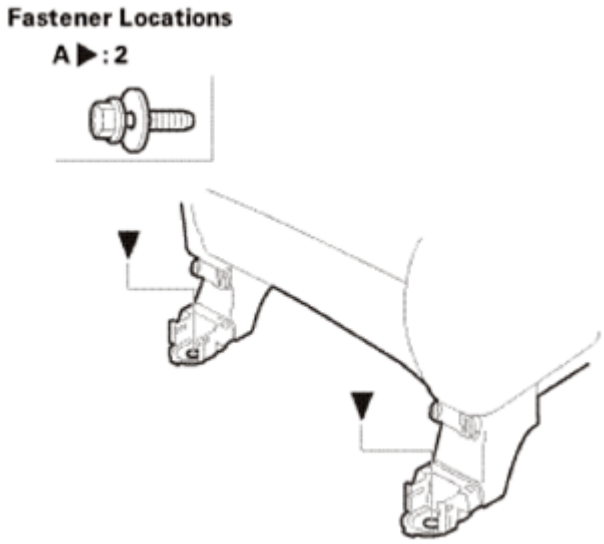

Fig. 1173: Identifying Front Seat Rear Mounting Bolts
Courtesy of AMERICAN HONDA MOTOR CO., INC.

4. Disconnect the connectors (A).
5. Detach the harness clip (B).

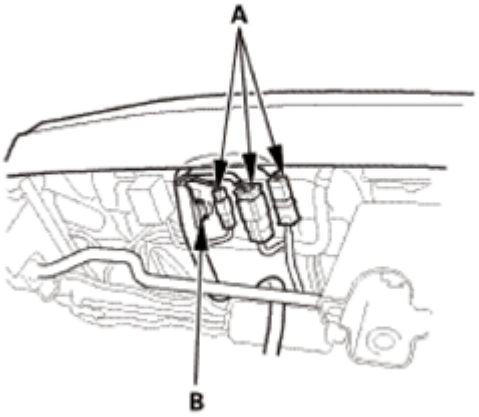

Fig. 1174: Identifying Front Seat Connectors And Clips
Courtesy of AMERICAN HONDA MOTOR CO., INC.

TEST

1. Seat Heater Driver's Side - Test
    1. Disconnect connectors A, B, and C.

    Seat-Back Heater

GETtheMANUALS.org

2. Check for continuity between seat heater connector A terminals No. 1 and No. 2. There should be continuity.
3. If the continuity is not as specified, replace the seat-back heater.

Seat Cushion Heater

4. Check for continuity between connector B terminal No. 4 [No. 3], and connector C terminal No. 1 [No. 1]. There should be continuity.

Without power seat

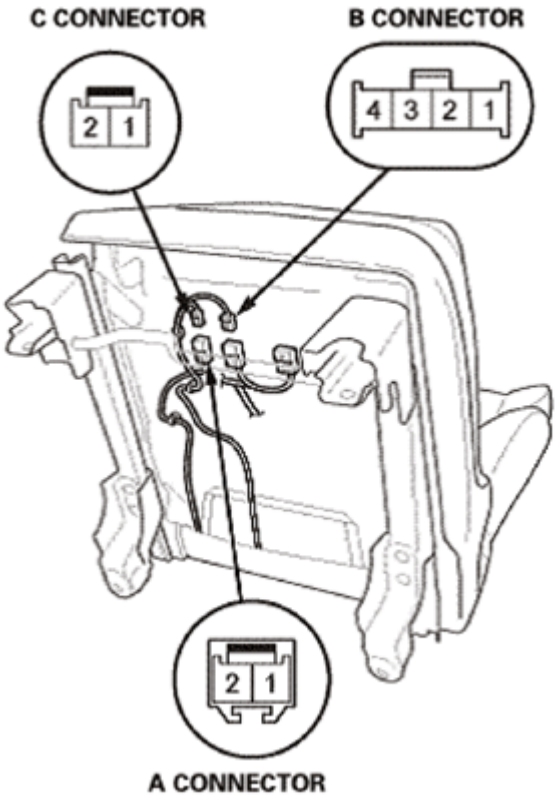

Fig. 1175: Identifying Seat Heater Driver Side Connector Terminals (Without Power Seat)
Courtesy of AMERICAN HONDA MOTOR CO., INC.

With power seat

GETtheMANUALS.org

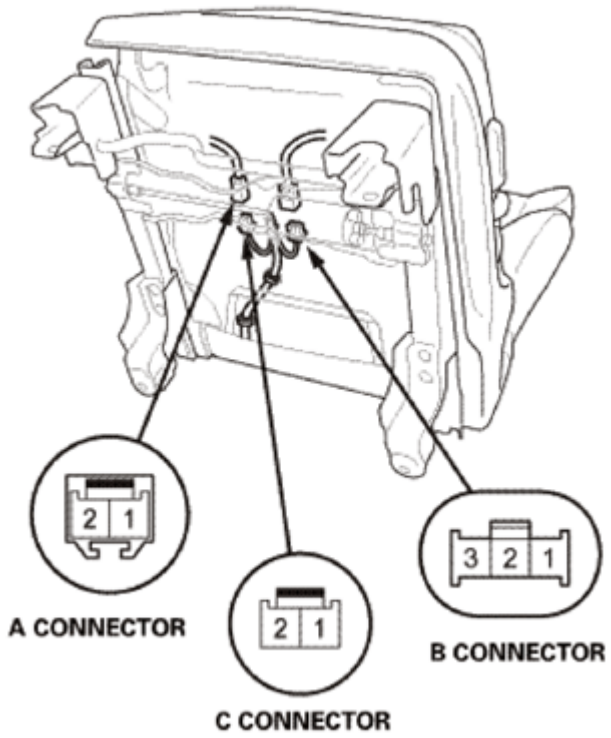

Fig. 1176: Identifying Seat Heater Driver Side Connector Terminals (With Power Seat)
Courtesy of AMERICAN HONDA MOTOR CO., INC.

[]: With power seat

5. If the continuity is not as specified, replace the seat cushion heater.
6. Check for continuity between connector B terminal No. 2, and connector C terminal No. 2. There should be continuity.
7. If the continuity is not as specified, replace the seat cushion heater.
8. Check for continuity between connector B terminal No. 3 [No. 1], and connector C terminal No. 2 [No. 2]. There should be continuity.

   []: With power seat

9. If the continuity is not as specified, replace the seat cushion heater.

2. Seat Heater Passenger's Side - Test
   1. Disconnect the connectors A, B, and C.

      Seat-Back Heater

   2. Check for continuity between seat heater connector A terminals No. 1 and No. 2. There should be continuity.

GETtheMANUALS.org

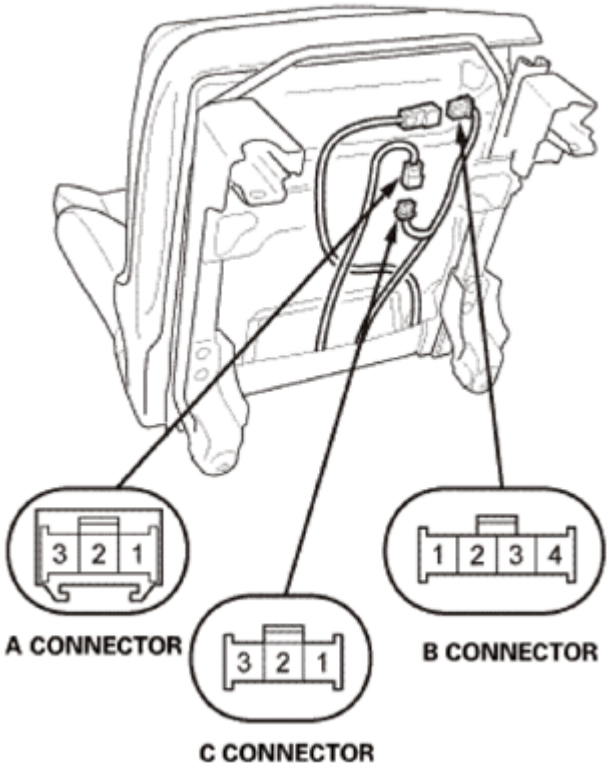

Fig. 1177: Identifying Seat Heater Passenger Side Connector Terminals
Courtesy of AMERICAN HONDA MOTOR CO., INC.

3. If the continuity is not as specified, replace the seat-back heater.

Seat Cushion Heater

4. Check for continuity between connector B terminal No. 4, and connector C terminal No. 2. There should be continuity.
5. If the continuity is not as specified, replace the seat cushion heater.
6. Check for continuity between connector B terminal No. 2, and connector C terminal No. 3. There should be continuity.
7. If the continuity is not as specified, replace the seat cushion heater.
8. Check for continuity between connector B terminal No. 3, and connector C terminal No. 3. There should be continuity.
9. If the continuity is not as specified, replace the seat cushion heater.

INSTALLATION

SRS components are located in this area. Review the **SRS COMPONENT LOCATIONS** and the **PRECAUTIONS AND PROCEDURES** before doing repairs or service.

1. Front Seat - Driver's Side
    1. Connect the connectors (A).

GETtheMANUALS.org

2. Install the harness clip (B).

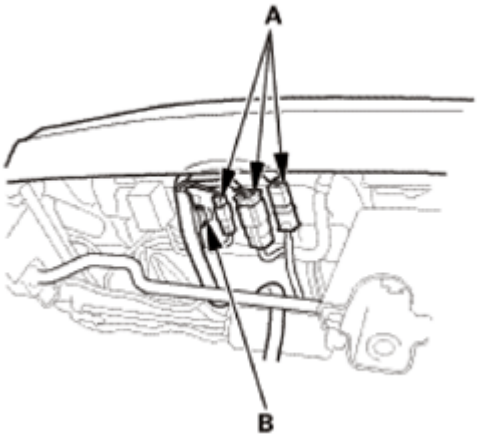

Fig. 1178: Identifying Front Seat Connectors And Clips (Driver Side)
Courtesy of AMERICAN HONDA MOTOR CO., INC.

3. Install the seat mounting bolts (A).

NOTE:

- **Tighten the bolts by hand first, then tighten them to the specified torque.**
- **Tighten the seat mounting bolts to the specified torque in the sequence shown. Slide the seat all the way back and tighten bolts 1 and 2, then slide it forward and tighten bolts 3 and 4.**

Front Side

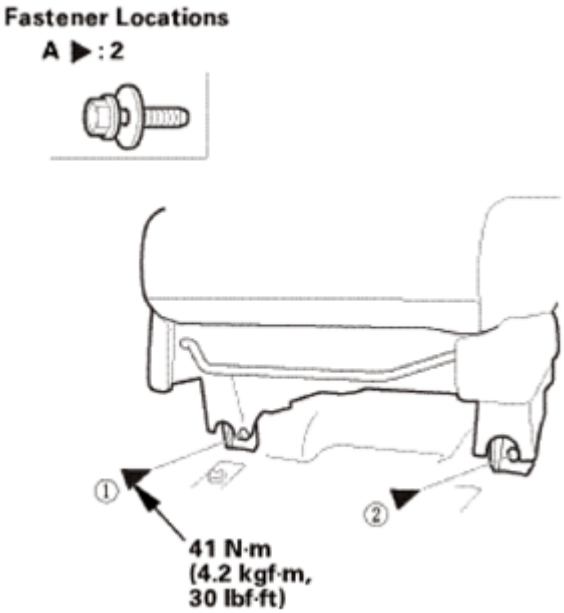

GETtheMANUALS.org

Fig. 1179: Identifying Seat Mounting Bolts With Torque Specifications (Front Side)
Courtesy of AMERICAN HONDA MOTOR CO., INC.

Rear Side

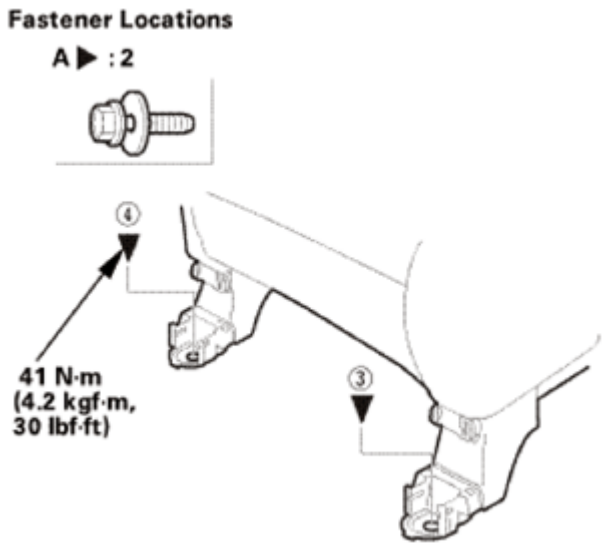

Fig. 1180: Identifying Seat Mounting Bolts With Torque Specifications (Rear Side)
Courtesy of AMERICAN HONDA MOTOR CO., INC.

4. Install the rear inner seat track end cover (A) and the rear outer seat track end cover (B). Make sure the hooks (C) snap into place securely.

GETtheMANUALS.org

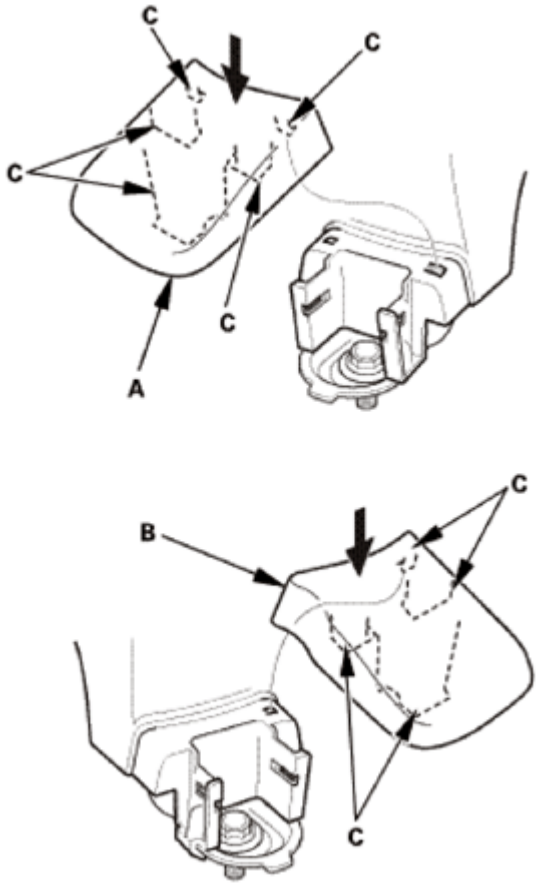

Fig. 1181: Installing Rear Inner And Outer Seat Track End Cover
Courtesy of AMERICAN HONDA MOTOR CO., INC.

2. Head Restraint - Driver's Side
    1. Insert the head restraint (A) to the seat-back as shown.

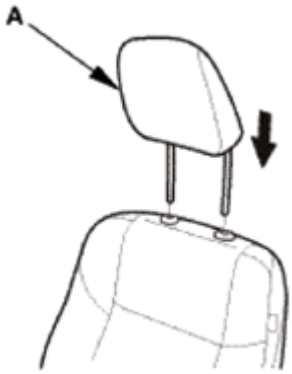

Fig. 1182: Inserting Head Restraint To Seat-Back (Driver Side)
Courtesy of AMERICAN HONDA MOTOR CO., INC.

3. Battery Terminal (SRS) - Reconnection

GETtheMANUALS.org

NOTE: **If the battery performance is abnormal, test the battery.**

1. Clean the battery terminals.
2. Connect the positive cable (A) to the battery.

   NOTE: **Always connect the positive side first.**

3. Connect the negative cable (B) to the battery.
4. Apply multipurpose grease to the terminals to prevent corrosion.

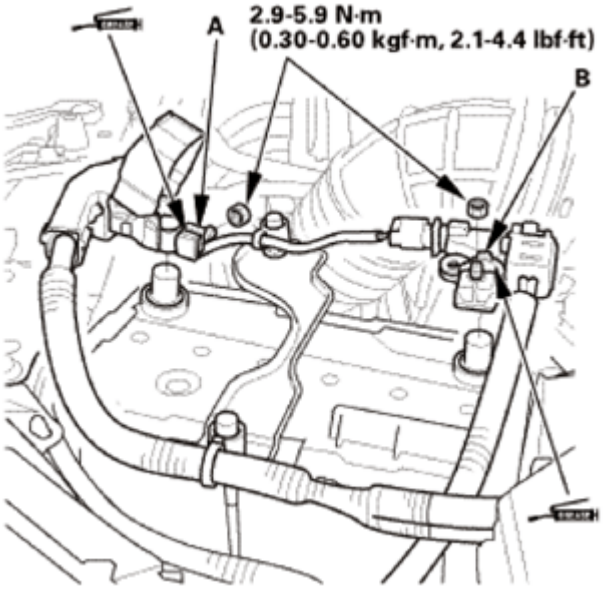

Fig. 1183: Identifying Battery Positive And Negative Cable
Courtesy of AMERICAN HONDA MOTOR CO., INC.

4. Front Seat Belt Lower Anchor Bolt
   1. Install the lower anchor bolt.

      NOTE: **Before installing the anchor bolt, make sure there are no twists or kinks in the seat belt.**

GETtheMANUALS.org

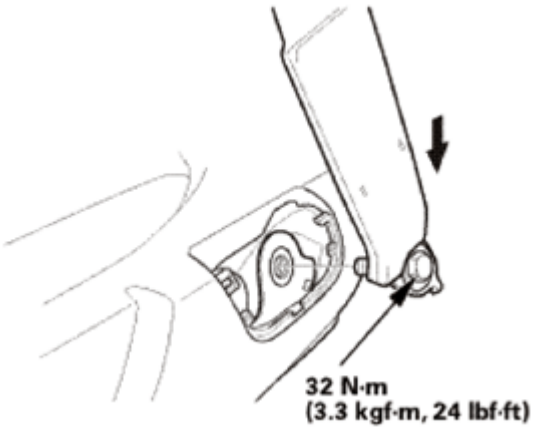

Fig. 1184: Installing Front Seat Belt Lower Anchor Bolt
Courtesy of AMERICAN HONDA MOTOR CO., INC.

2. Install the anchor cover (A). Make sure the hooks (B) and the tab (C) snap into place securely.

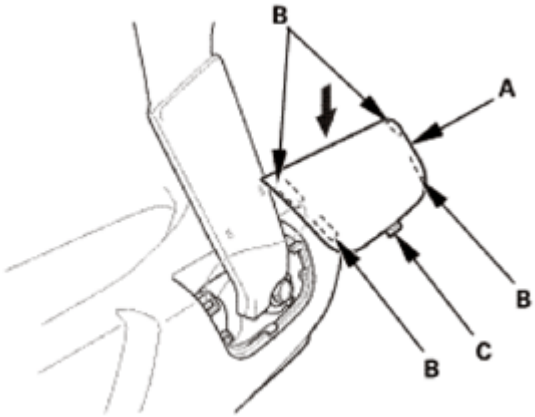

Fig. 1185: Installing Front Seat Belt Lower Anchor Cover
Courtesy of AMERICAN HONDA MOTOR CO., INC.

SEAT HEATERS COMPONENT LOCATION INDEX

GETtheMANUALS.org

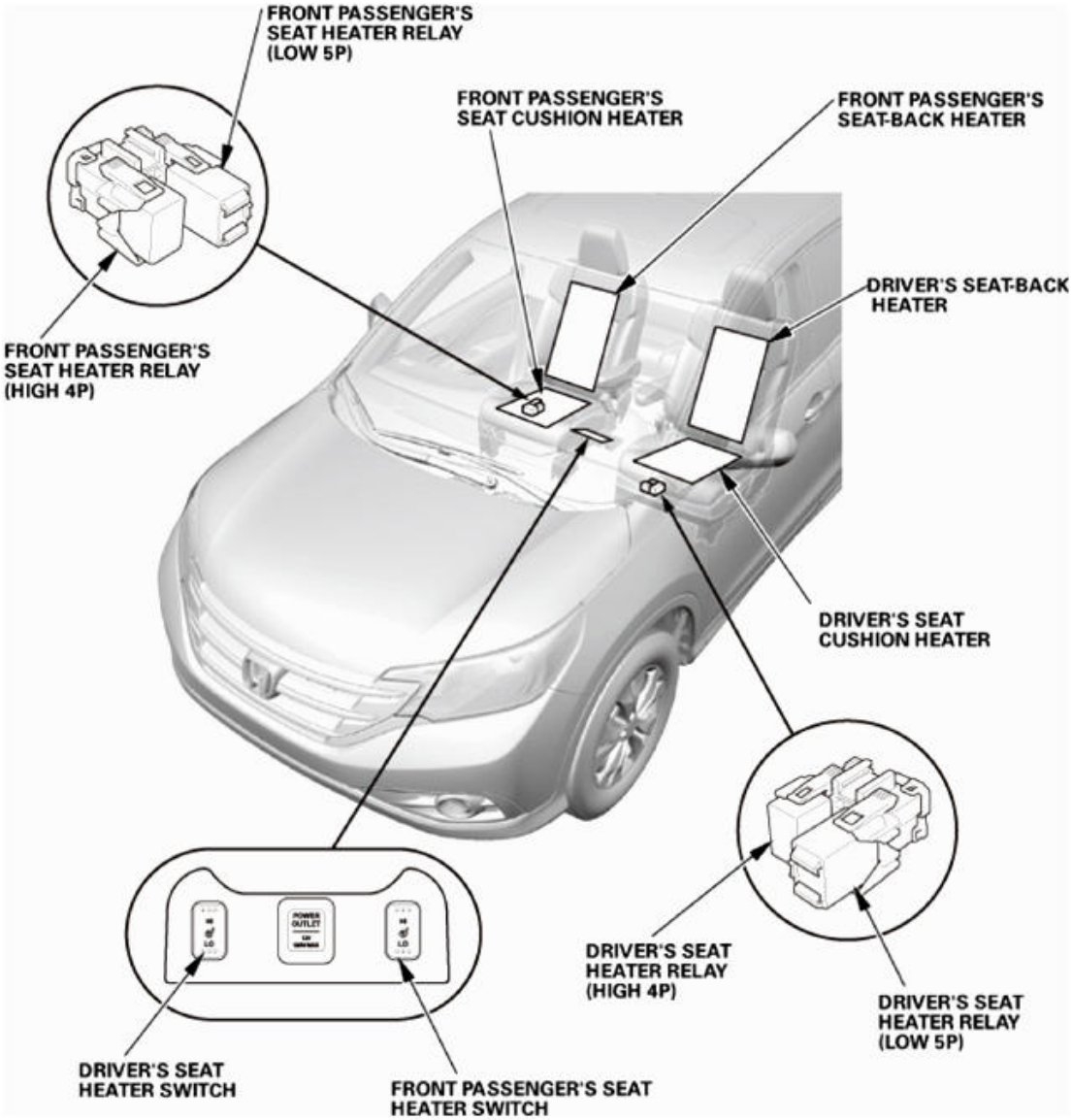

Fig. 1186: Seat Heater Components Location
Courtesy of AMERICAN HONDA MOTOR CO., INC.

DRIVER'S SEAT CUSHION HEATER	**Removal and Installation** See **SEAT HEATER REMOVAL AND INSTALLATION - SEAT CUSHION HEATER** or **SEAT HEATER REMOVAL AND INSTALLATION - SEAT-BACK HEATER**
	TEST
DRIVER'S SEAT HEATER RELAY (HIGH) (4P)	**TEST**
DRIVER'S SEAT HEATER RELAY (LOW) (5P)	**TEST**
DRIVER'S SEAT HEATER SWITCH	**REMOVAL, INSTALLATION, AND TEST**
	Removal and Installation See **SEAT HEATER REMOVAL AND**

GETtheMANUALS.org

DRIVER'S SEAT-BACK HEATER	**INSTALLATION - SEAT CUSHION HEATER** or **SEAT HEATER REMOVAL AND INSTALLATION - SEAT-BACK HEATER**
	TEST
FRONT PASSENGER'S SEAT-BACK HEATER	**Removal and Installation** See **SEAT HEATER REMOVAL AND INSTALLATION - SEAT CUSHION HEATER** or **SEAT HEATER REMOVAL AND INSTALLATION - SEAT-BACK HEATER**
	TEST
FRONT PASSENGER'S SEAT CUSHION HEATER	**Removal and Installation** See **SEAT HEATER REMOVAL AND INSTALLATION - SEAT CUSHION HEATER** or **SEAT HEATER REMOVAL AND INSTALLATION - SEAT-BACK HEATER**
	TEST
FRONT PASSENGER'S SEAT HEATER RELAY (HIGH) (4P)	**TEST**
FRONT PASSENGER'S SEAT HEATER RELAY (LOW) (5P)	**TEST**
FRONT PASSENGER'S SEAT HEATER SWITCH	**REMOVAL, INSTALLATION, AND TEST**

SEATS COMPONENT LOCATION INDEX

Front

Fig. 1187: Seat Components Location (Front)
Courtesy of AMERICAN HONDA MOTOR CO., INC.

GETtheMANUALS.org

FRONT SEAT	**REMOVAL AND INSTALLATION**
FRONT SEAT ARMREST	**REMOVAL AND INSTALLATION**
FRONT SEAT-BACK COVER	**REMOVAL AND INSTALLATION**
FRONT SEAT CUSHION COVER	**REMOVAL AND INSTALLATION**
FRONT SEAT FRAME	**REMOVAL AND INSTALLATION**
FRONT SEAT LUMBAR SUPPORT	**REMOVAL AND INSTALLATION**
FRONT SEAT SLIDE MOTOR	**Front Seat Slide Motor Removal and Installation**

Rear

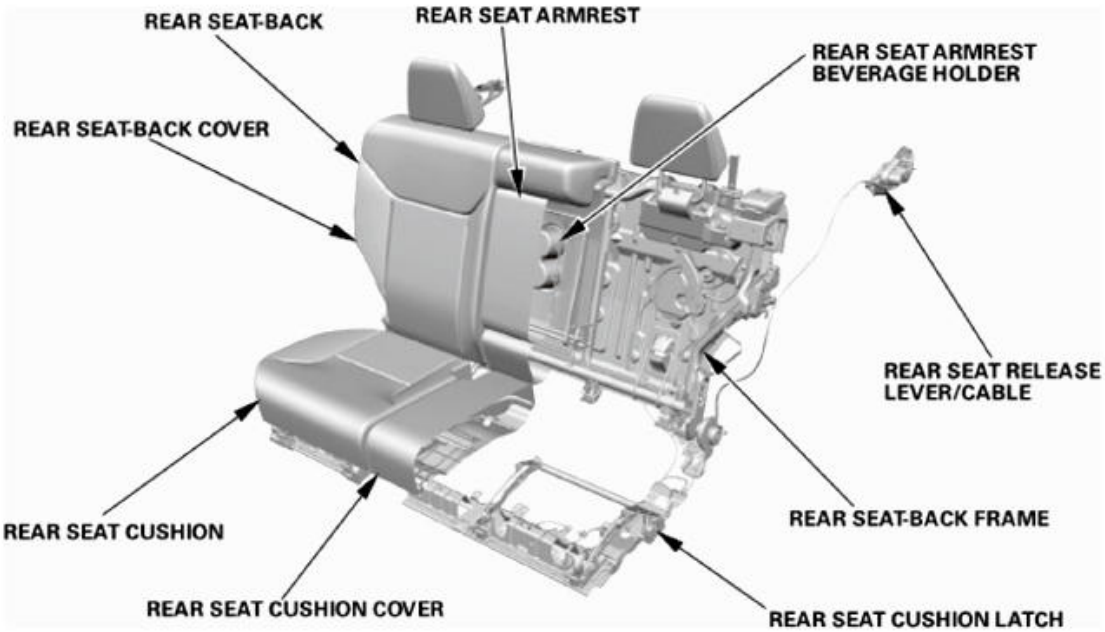

Fig. 1188: Seat Components Location (Rear)
Courtesy of AMERICAN HONDA MOTOR CO., INC.

REAR SEAT ARMREST	**REMOVAL AND INSTALLATION**
REAR SEAT ARMREST BEVERAGE HOLDER	**REMOVAL AND INSTALLATION**
REAR SEAT-BACK	**REMOVAL AND INSTALLATION**
REAR SEAT-BACK COVER	**REMOVAL AND INSTALLATION**
REAR SEAT-BACK FRAME	**REMOVAL AND INSTALLATION**
REAR SEAT CUSHION	**Removal and Installation** See **REAR SEAT CUSHION DISASSEMBLY AND REASSEMBLY** or **REAR SEAT CUSHION REMOVAL AND INSTALLATION**
	Disassembly and Reassembly See **REAR SEAT CUSHION DISASSEMBLY AND REASSEMBLY** or **REAR SEAT CUSHION REMOVAL AND INSTALLATION**

GETtheMANUALS.org

REAR SEAT CUSHION COVER	**REMOVAL AND INSTALLATION**
REAR SEAT CUSHION LATCH	**REMOVAL AND INSTALLATION**
REAR SEAT RELEASE LEVER/CABLE	**REMOVAL AND INSTALLATION**

GETtheMANUALS.org

STARTING SYSTEM COMPONENT LOCATION INDEX

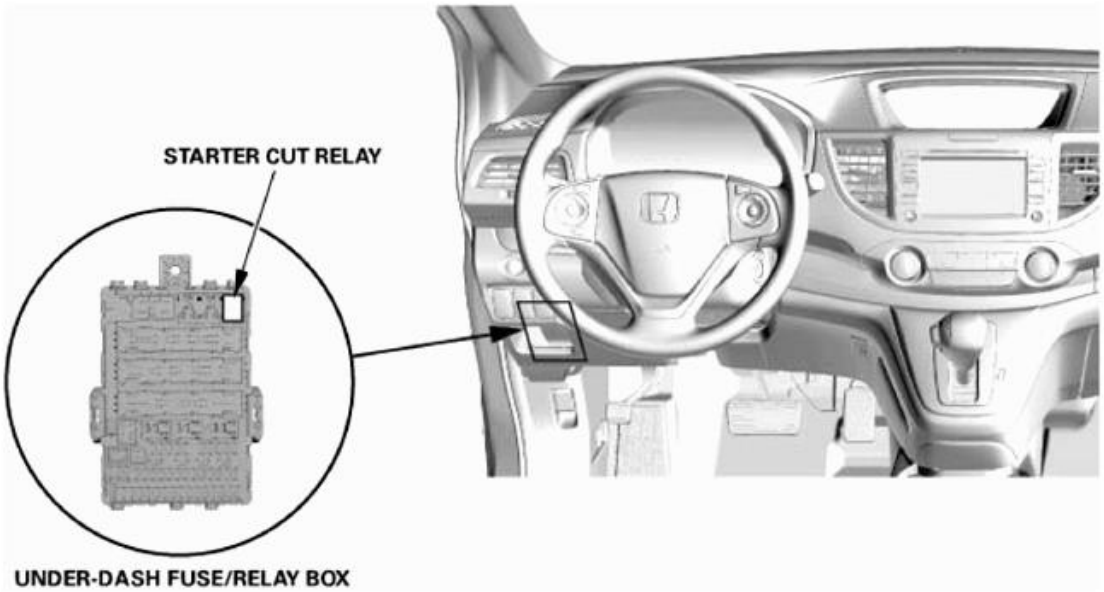

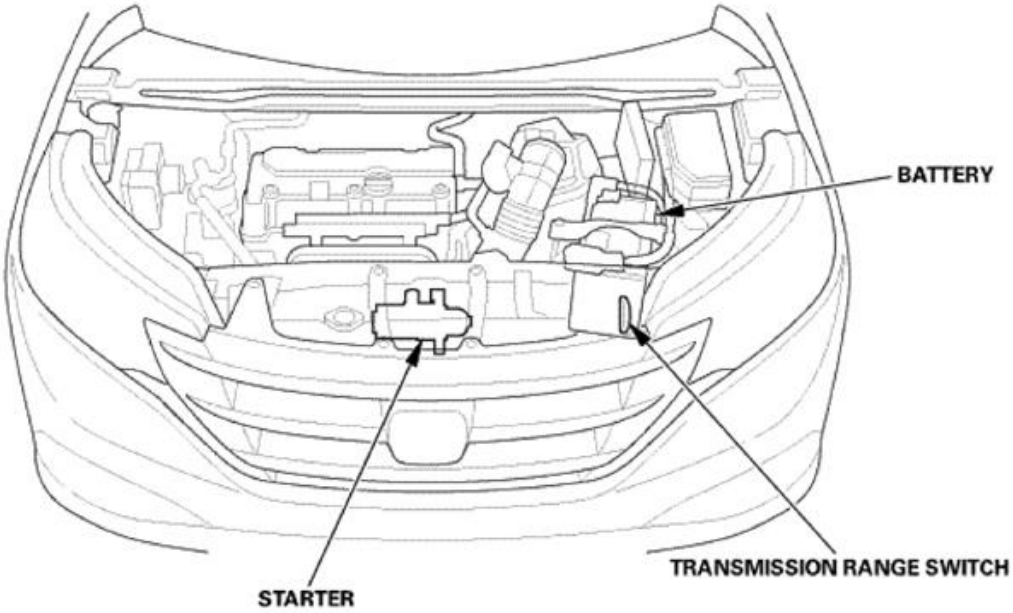

Fig. 1: Identifying Starting System Components
Courtesy of AMERICAN HONDA MOTOR CO., INC.

STARTER CUT	**TEST**

GETtheMANUALS.org

RELAY	
BATTERY	**TEST**
STARTER	**STARTER REMOVAL, INSTALLATION, AND PERFORMANCE TEST**
	STARTER OVERHAUL

STARTING SYSTEM SYMPTOM TROUBLESHOOTING INDEX

Symptom	Diagnostic procedure	Also check for
Engine does not crank	1. Check for loose battery terminals or connections. 2. **TEST THE BATTERY FOR A LOW STATE OF CHARGE** . 3. **Check for PGM-FI DTCs** See **HOW TO TROUBLESHOOT THE A/T SYSTEM** or **HOW TO TROUBLESHOOT THE FUEL AND EMISSIONS SYSTEMS** . 4. Check the starter. Refer to **STARTER OVERHAUL** and **STARTER REMOVAL, INSTALLATION, AND PERFORMANCE TEST**. 5. **CHECK THE STARTER CUT RELAY** . 6. **CHECK THE STARTER SYSTEM CIRCUIT TROUBLESHOOTING**. 7. **CHECK THE TRANSMISSION RANGE SWITCH** . 8. **CHECK THE IGNITION SWITCH AND ITS RELATED CIRCUIT** .	• Poor ground at G101 • Seized engine
Engine cranks, but does not start	1. **Check for PGM-FI DTCs** See **HOW TO TROUBLESHOOT THE A/T SYSTEM** or **HOW TO TROUBLESHOOT THE FUEL AND EMISSIONS SYSTEMS** . 2. **CHECK THE PGM-FI MAIN RELAYS** . 3. Check for IMMOBI status and function for engine does not start with the immobilizer key. Refer to the following: • **ENGINE DOES NOT START WITH THE IMMOBILIZER KEY** • **IMMOBILIZER INDICATOR BLINKS** • **IMMOBILIZER INDICATOR DOES NOT GO OFF** 4. CHECK THE FUEL PRESSURE . 5. CHECK FOR A PLUGGED OR DAMAGED FUEL LINE . 6. **Check for a plugged fuel filter** See FUEL TANK UNIT DISASSEMBLY AND REASSEMBLY or FUEL TANK UNIT REMOVAL AND INSTALLATION . 7. **CHECK THE THROTTLE BODY** . 8. CHECK FOR LOW ENGINE COMPRESSION . 9. CHECK THE CAMSHAFT TIMING .	• Fuel level in tank • Weak or fouled spark plugs

GETtheMANUALS.org

	10. **Do the PCM reset** See **HOW TO TROUBLESHOOT THE A/T SYSTEM** or **HOW TO TROUBLESHOOT THE FUEL AND EMISSIONS SYSTEMS** in the PGM-FI INSPECTION menu to cancel ALL INJECTORS STOP with the HDS.	
Engine is hard to start	Do the symptom troubleshooting for Engine will not starts, engine start but stalls immediately, or engine is hard to start. Refer to the following: • **ENGINE STALLS** • **ENGINE WILL NOT START, ENGINE STARTS BUT STALLS IMMEDIATELY, OR ENGINE IS HARD TO START**	Weak or fouled spark plugs
Engine cranks slowly	1. Check for loose battery terminals or connections. 2. **TEST THE BATTERY FOR A LOW STATE OF CHARGE** . 3. Check the starter for binding. Refer to **STARTER OVERHAUL** and **STARTER REMOVAL, INSTALLATION, AND PERFORMANCE TEST** 4. Check for excessive drag in the engine.	

STARTER SYSTEM CIRCUIT TROUBLESHOOTING

GETtheMANUALS.org

Starter System Circuit Troubleshooting

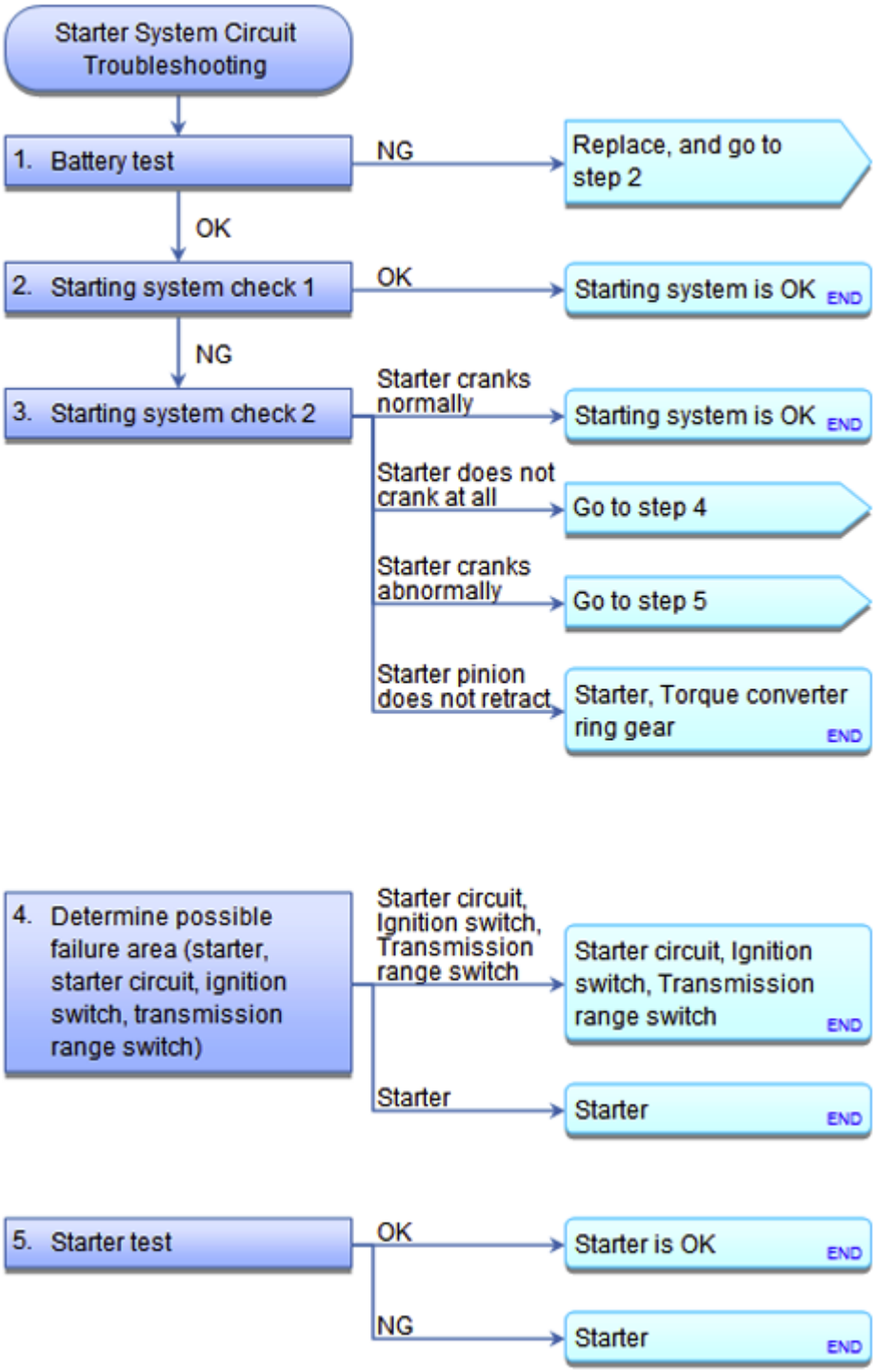

Fig. 2: Starter System Circuit Troubleshooting Chart
Courtesy of AMERICAN HONDA MOTOR CO., INC.

Special Tools Required

GETtheMANUALS.org

Alternator, Regulator, Battery, and Starter Tester OTC3131*

*: Available through the Honda Tool and Equipment Program 888-424-6857.

NOTE:

- **Air temperature must be between 59-100 °F (15-38 °C) during this procedure.**
- **The battery must be in good condition and fully charged.**

1. Battery test:
   - 1. **DO THE BATTERY TEST** .

   Does the display indicate Good Battery?

   YES : The battery is OK. Charge the battery if necessary, then go to step 2.

   NO : If the display indicates Replace Battery or Bad Cell, **REPLACE THE BATTERY** , then go to step 2.

2. Starting system check 1:
   - 1. **Connect the HDS to the DLC** See **HOW TO TROUBLESHOOT THE A/T SYSTEM** or **HOW TO TROUBLESHOOT THE FUEL AND EMISSIONS SYSTEMS** .
   - 2. Turn the ignition switch to ON (II).
   - 3. Make sure the HDS communicates with the vehicle and the PCM. If it does not communicate, **TROUBLESHOOT THE DLC CIRCUIT** .
   - 4. Select ALL INJECTORS STOP in the PGM-FI INSPECTION menu with the HDS.
   - 5. Set the parking brake, then with the shift lever in P or N, turn the ignition switch to START (III) to crank the engine.

   Does the starter crank the engine normally?

   YES : Select PCM reset in the PGM-FI INSPECTION menu to cancel ALL INJECTORS STOP with the HDS.

   NO : Go to step 3.

3. Starting system check 2:
   - 1. Turn the ignition switch to LOCK (0).
   - 2. Check the electrical connections at the battery, the battery negative cable to the body, the engine ground cables, and the starter for looseness and corrosion. Then try starting the engine again.

   Does the starter crank the engine normally?

   Starter cranks normally Repairing the loose connection corrected the problem. The starting system is OK. Select **PCM reset** See **HOW TO TROUBLESHOOT THE A/T SYSTEM** or **HOW TO**

GETtheMANUALS.org

TROUBLESHOOT THE FUEL AND EMISSIONS SYSTEMS in the PGM-FI INSPECTION menu to cancel ALL INJECTORS STOP with the HDS.

Starter does not crank engine at all If the starter does not crank the engine at all, go to step 4.

Starter cranks abnormally If the starter cranks the engine erratically or too slowly, go to step 5.

Starter does not disengage from torque converter ring gear with key released If the starter does not disengage from the torque converter ring gear when you release the key, replace the starter, or remove and disassemble it. Refer to **STARTER OVERHAUL** and **STARTER REMOVAL, INSTALLATION, AND PERFORMANCE TEST**. Check for the following:

- Starter solenoid and switch malfunction
- Dirty drive gear or damaged overrunning clutch
- Damaged torque converter ring gear

4. Determine possible failure area (starter, starter circuit, ignition switch, transmission range switch):
   - 1. Make sure the shift lever is in P or N.
   - 2. Disconnect the starter subharness 1P connector (A).

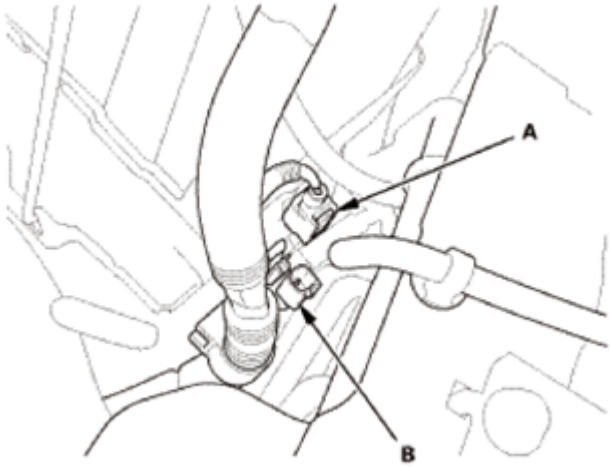

Fig. 3: Identifying Battery Positive Terminal And Terminal B Starter Subharness 1P Connector No. 1
Courtesy of AMERICAN HONDA MOTOR CO., INC.

   - 3. Connect terminals A and B with a jumper wire.

     Terminal A Battery positive terminal

     Terminal B Starter subharness 1P connector No. 1 (B)

Does the starter crank the engine?

YES : Check the following items in the order listed until you find the problem in the circuit:

GETtheMANUALS.org

NOTE: **After the problem in the circuit is found and repaired, select PCM reset See HOW TO TROUBLESHOOT THE A/T SYSTEM or HOW TO TROUBLESHOOT THE FUEL AND EMISSIONS SYSTEMS in the PGM-FI INSPECTION menu to cancel ALL INJECTORS STOP with the HDS.**

- Check for an open or short in the GRN wire and connectors between the starter cut relay, the ignition switch, and the under-hood fuse/relay box.
- Check for an open or short in the RED wire, BLK/WHT wire, and connectors between starter cut relay socket terminal No. 1 and the starter.
- Check for an open or short in the ORN wire, GRN wire, and connectors between the transmission range switch and the starter cut relay.
- Check for poor connections or loose terminals at the transmission range switch and ground G101.
- Check for a faulty ignition switch.
- Check for a faulty starter cut relay.
- Check for a faulty transmission range switch.

NO : Check for an open or short in the wire and connectors between the battery and the starter. Replace the starter, or remove and disassemble it, as necessary. Refer to **STARTER OVERHAUL** and **STARTER REMOVAL, INSTALLATION, AND PERFORMANCE TEST**.

NOTE: **After the problem in the circuit is found and repaired, select PCM reset See HOW TO TROUBLESHOOT THE A/T SYSTEM or HOW TO TROUBLESHOOT THE FUEL AND EMISSIONS SYSTEMS in the PGM-FI INSPECTION menu to cancel ALL INJECTORS STOP with the HDS.**

5. Starter test:
   - 1. Connect the alternator, regulator, battery, and starter tester to the battery.

NOTE: **The probe is used for starter testing.**

GETtheMANUALS.org

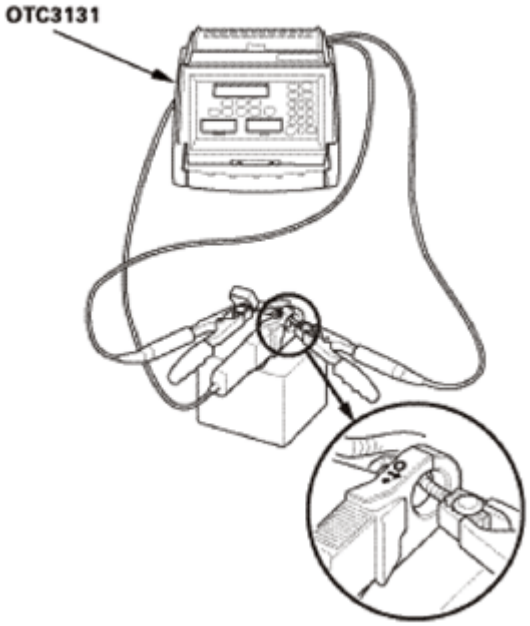

Fig. 4: Performing Starter Test Using Tool
Courtesy of AMERICAN HONDA MOTOR CO., INC.

- 2. Do the STARTING TEST, check the cranking voltage and the current draw from the following service limit table.

Voltage (V)	Current (A)
8.5 or more	380 or less

Are the cranking voltage and the current draw within the service limits?

YES : Remove the starter, and inspect its drive gear and the torque converter ring gear for damage. Replace any damaged parts. Refer to **STARTER OVERHAUL** and **STARTER REMOVAL, INSTALLATION, AND PERFORMANCE TEST**.

NOTE: **After the problem in the circuit is found and repaired, select PCM reset See HOW TO TROUBLESHOOT THE A/T SYSTEM or HOW TO TROUBLESHOOT THE FUEL AND EMISSIONS SYSTEMS in the PGM-FI INSPECTION menu to cancel ALL INJECTORS STOP with the HDS.**

NO : Replace the starter, or remove and disassemble it. Refer to **STARTER OVERHAUL** and **STARTER REMOVAL, INSTALLATION, AND PERFORMANCE TEST**. Check for these problems:

NOTE: **After the problem in the circuit is found and repaired, select PCM reset See HOW TO TROUBLESHOOT THE A/T SYSTEM or HOW TO TROUBLESHOOT THE FUEL AND EMISSIONS SYSTEMS in the PGM-FI INSPECTION menu to cancel ALL INJECTORS STOP with the HDS.**

GETtheMANUALS.org

- **Drag in the starter armature**
- **Shorted armature winding**
- **Excessive drag in the engine**
- **Open circuit in the starter armature commutator segments**
- **Excessively worn starter brushes**
- **Open circuit in the starter brushes**
- **Dirty or damaged helical splines or drive gear**
- **Faulty overrunning clutch**

STARTER REMOVAL, INSTALLATION, AND PERFORMANCE TEST

REMOVAL

1. Battery Terminal - Disconnection
    1. Make sure the ignition switch is in LOCK (0).
    2. Disconnect and isolate the negative cable (A) from the battery.

    NOTE: Always disconnect the negative side first.

    3. Disconnect the positive cable (B) from the battery.

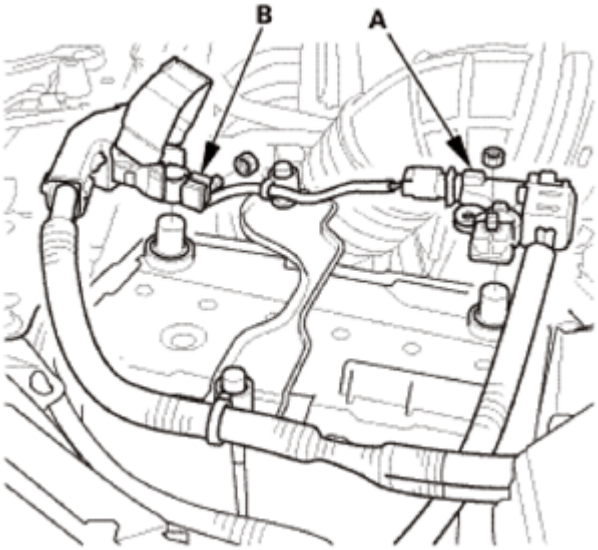

Fig. 5: Identifying Battery Negative And Positive Cables
Courtesy of AMERICAN HONDA MOTOR CO., INC.

2. Vehicle Lift
    1. Raise the vehicle on a lift, and make sure it is securely supported.
3. Front Splash Shield

GETtheMANUALS.org

1. Remove the bolts (A), then remove the clips (B) that secure the front inner fender and the front splash shield (C) to the body.
2. From under the front bumper (D), remove the clips (E).
3. From under the body, remove the clips (F), then pull out the front splash shield.

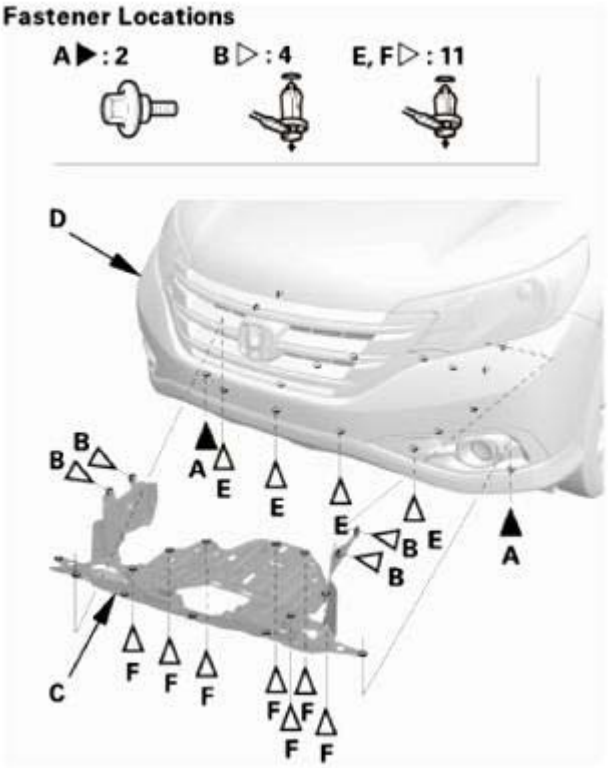

Fig. 6: Identifying Front Splash Shield Fasteners
Courtesy of AMERICAN HONDA MOTOR CO., INC.

4. Starter
    1. Remove the starter bolts.

GETtheMANUALS.org

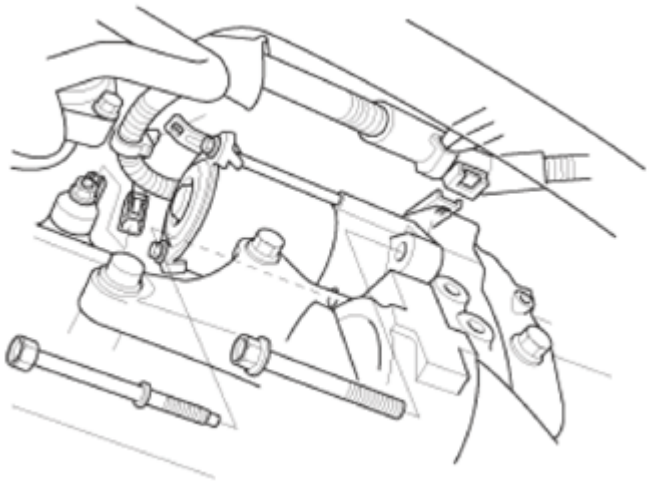

Fig. 7: Identifying Starter Bolts
Courtesy of AMERICAN HONDA MOTOR CO., INC.

2. Disconnect the cable and the connector.
3. Remove the starter.

Fig. 8: Identifying Starter, Cable And Connector
Courtesy of AMERICAN HONDA MOTOR CO., INC.

TEST

1. Starter Performance - Test
    1. Clamp the starter firmly in a vise.
    2. Make the connections for this test using the thickest (gauge) wire possible (preferably the same gauge as used on the vehicle).

GETtheMANUALS.org

NOTE: **To avoid damaging the starter, never leave the battery connected for more than 5 seconds.**

3. Connect the battery as shown, and check for continuity between the B terminal and the starter body. If there is continuity, it is working properly.

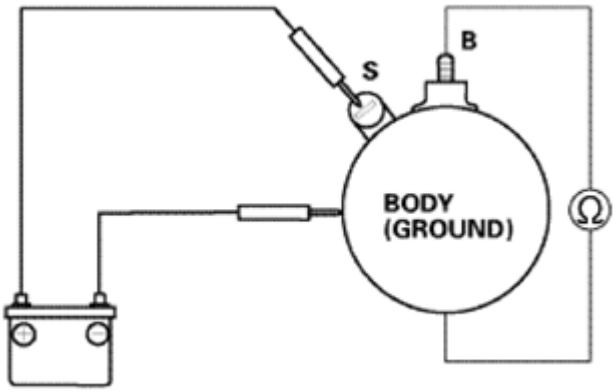

Fig. 9: Checking Continuity Between B Terminal And Starter Body
Courtesy of AMERICAN HONDA MOTOR CO., INC.

4. Disconnect the battery from the starter body, and check for continuity between the B terminal and the starter body. If there is no continuity, it is working properly.

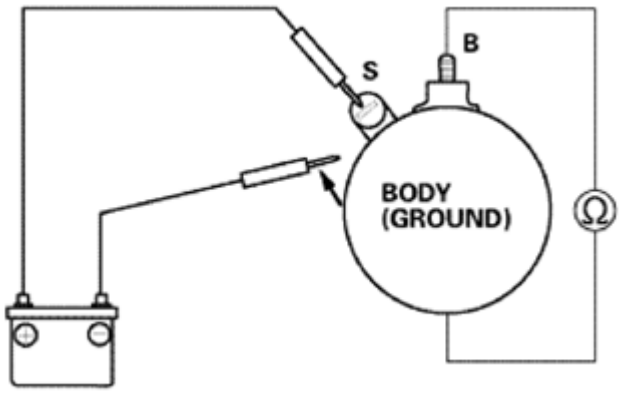

Fig. 10: Disconnecting Battery From Starter Body
Courtesy of AMERICAN HONDA MOTOR CO., INC.

5. Connect the starter to the battery as shown, and confirm that the motor runs.
6. If the electric current meets the specification when the battery voltage is at 11.5 V, the starter is working properly.

Specification

Electric Current: 90 A or less

GETtheMANUALS.org

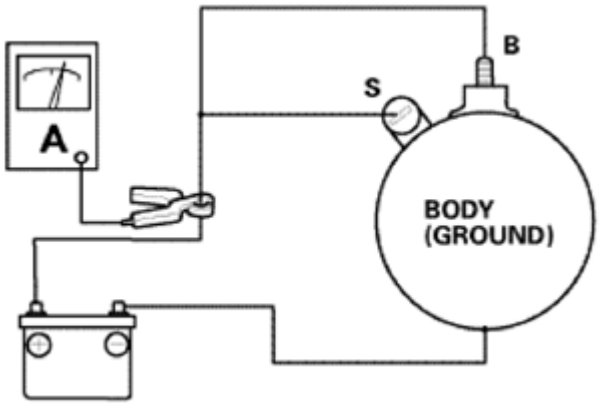

Fig. 11: Connecting Starter To Battery
Courtesy of AMERICAN HONDA MOTOR CO., INC.

INSTALLATION

1. Starter
    1. Install the starter.
    2. Connect the cable, and the connector. Make sure the crimped side of the ring terminal faces away from the starter when you connect it.

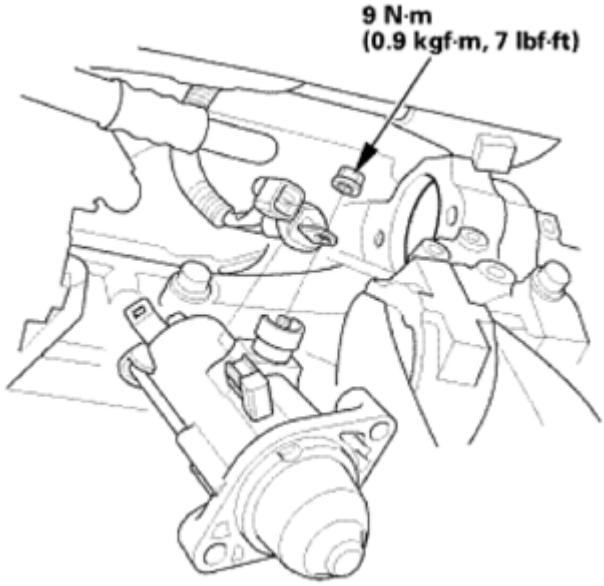

Fig. 12: Identifying Starter Connector Mounting Bolt With Torque Specification
Courtesy of AMERICAN HONDA MOTOR CO., INC.

3. Install the starter.

GETtheMANUALS.org

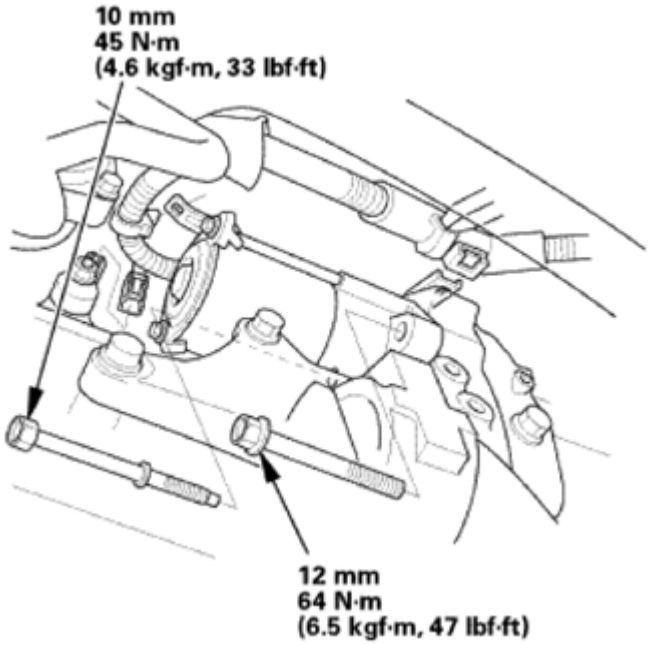

Fig. 13: Identifying Starter Connector Mounting Bolts With Torque Specifications
Courtesy of AMERICAN HONDA MOTOR CO., INC.

2. Front Splash Shield
    1. Install the front splash shield (A), then install the bolts (B) and the clips (C, D). Make sure the clips snap into place securely.

GETtheMANUALS.org

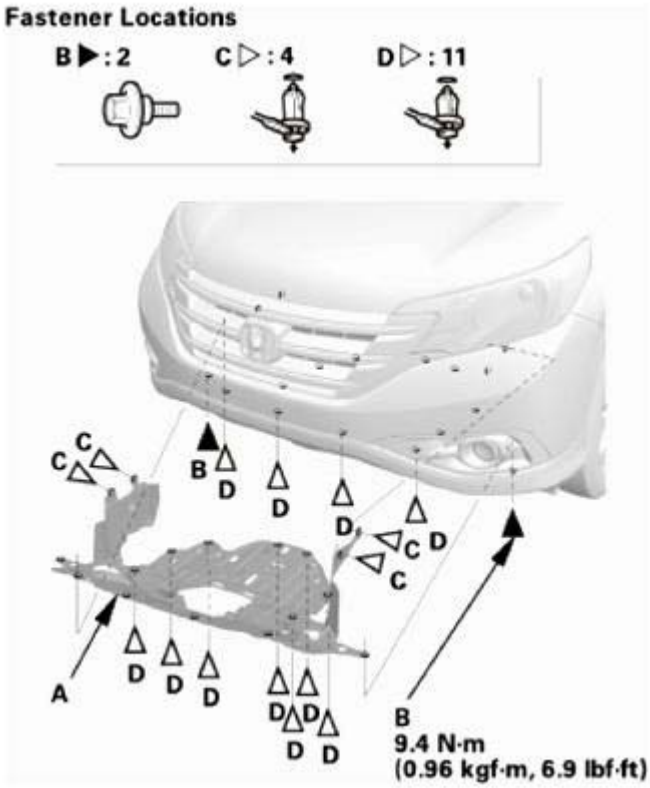

Fig. 14: Identifying Front Splash Shield Fasteners
Courtesy of AMERICAN HONDA MOTOR CO., INC.

3. Battery Terminal - Reconnection

NOTE: If the battery performance is abnormal, test the battery.

1. Clean the battery terminals.
2. Connect the positive cable (A) to the battery.

NOTE: Always connect the positive side first.

3. Connect the negative cable (B) to the battery.
4. Apply multipurpose grease to the terminals to prevent corrosion.

GETtheMANUALS.org

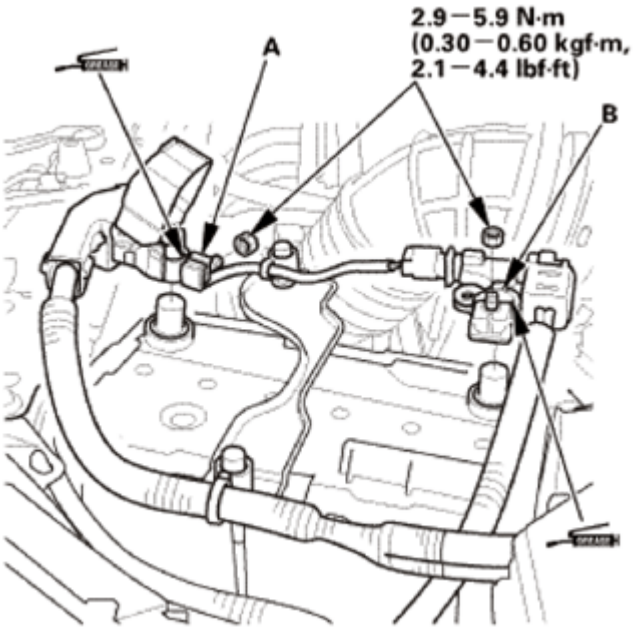

Fig. 15: Identifying Battery Negative, Positive Cables And Mounting Bolts With Torque Specifications
Courtesy of AMERICAN HONDA MOTOR CO., INC.

4. Starter After Install - Check
    1. Start the engine to make sure the starter works properly.

STARTER OVERHAUL

VIEW

1. Starter Exploded View

    Exploded View

GETtheMANUALS.org

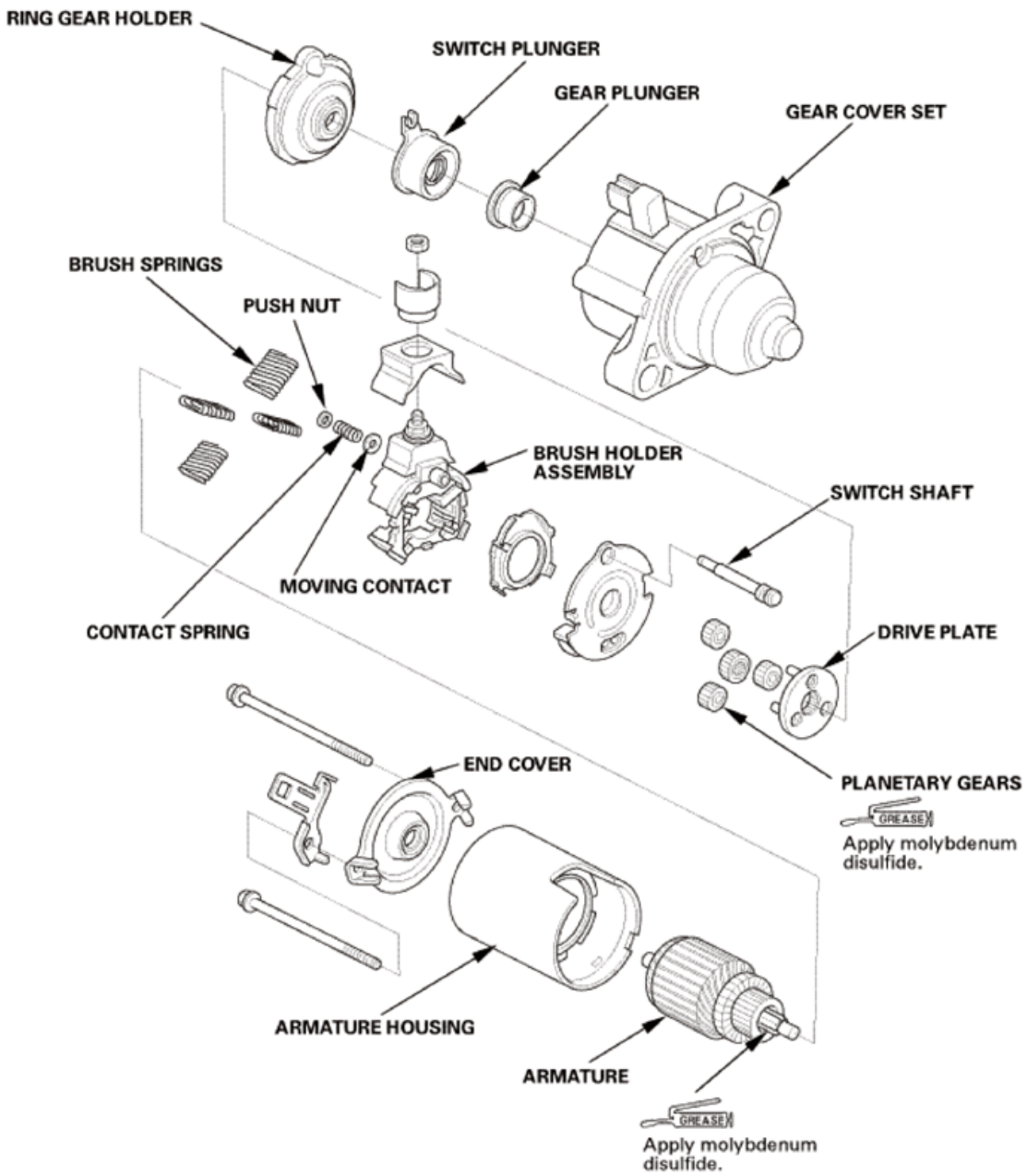

Fig. 16: Exploded View Of Starter
Courtesy of AMERICAN HONDA MOTOR CO., INC.

DISASSEMBLY

NOTE: Refer to the Exploded View if needed during this procedure.

1. Starter End Cover and Armature Housing
    1. Remove the end cover.

GETtheMANUALS.org

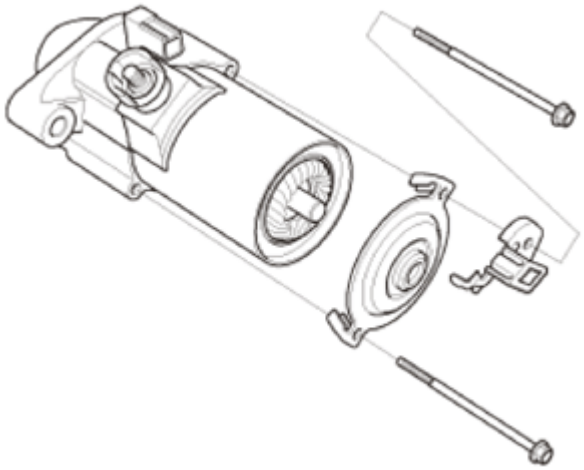

Fig. 17: Identifying Starter End Cover
Courtesy of AMERICAN HONDA MOTOR CO., INC.

2. Remove the armature housing.

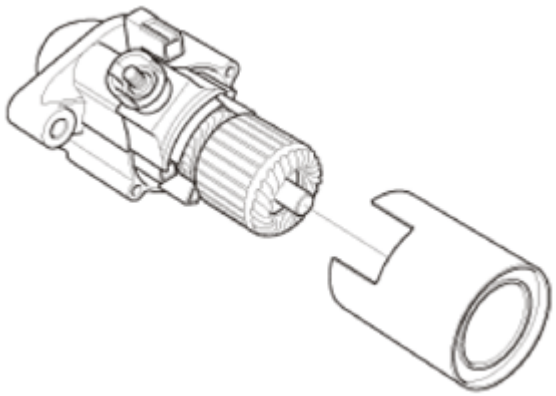

Fig. 18: Identifying Armature Housing
Courtesy of AMERICAN HONDA MOTOR CO., INC.

2. Starter Armature
    1. Remove the armature.

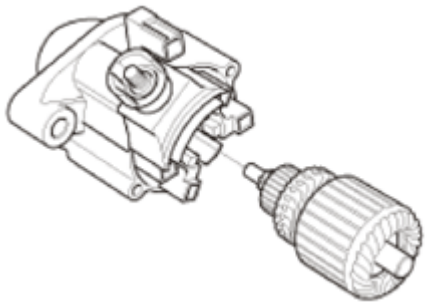

Fig. 19: Identifying Armature

GETtheMANUALS.org

Courtesy of AMERICAN HONDA MOTOR CO., INC.

3. Starter Armature - Inspection
    1. Inspect the armature for wear or damage from contact with the permanent magnet. If there is wear or damage, replace the armature.

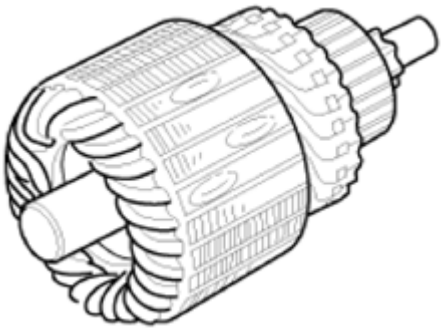

Fig. 20: Identifying Starter Armature
Courtesy of AMERICAN HONDA MOTOR CO., INC.

    2. Check the commutator (A) surface. If the surface is dirty or burnt, resurface it with an emery cloth or a lathe to the specifications in step 3, or recondition with #500 or #600 sandpaper (B).

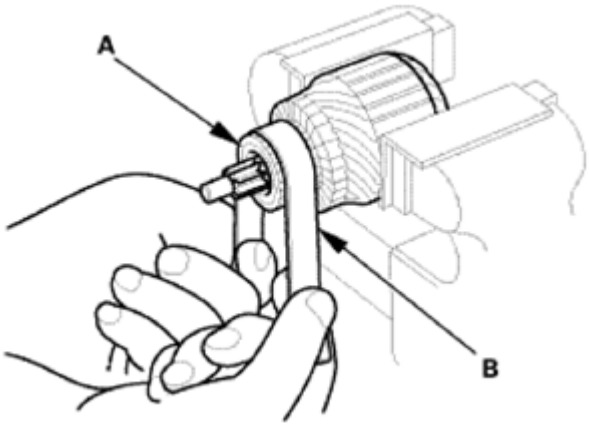

Fig. 21: Cleaning Commutator Surface Using Sandpaper
Courtesy of AMERICAN HONDA MOTOR CO., INC.

    3. Check the commutator diameter with a digital caliper or dial type caliper. If the diameter is below the service limit, replace the armature.

Commutator Diameter

Standard (New): 28.0-28.1 mm (1.102-1.106 in)

Service Limit: 27.5 mm (1.083 in)

GETtheMANUALS.org

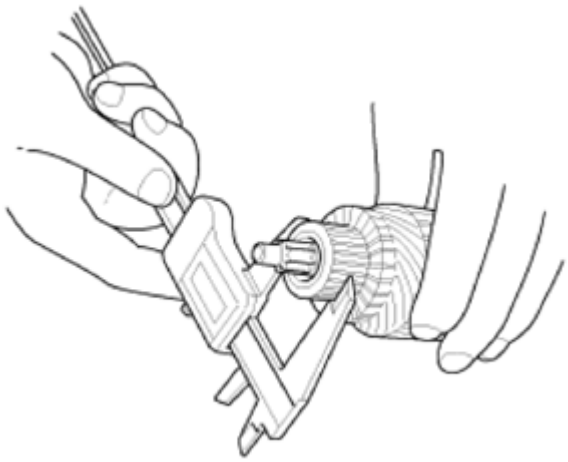

Fig. 22: Checking Commutator Diameter Using Digital Caliper Or Dial Type Caliper
Courtesy of AMERICAN HONDA MOTOR CO., INC.

4. Measure the commutator (A) runout:
   - If the commutator runout is within the service limit, check the commutator for carbon dust or brass chips between the segments.
   - If the commutator runout is not within the service limit, replace the armature.

Commutator Runout

Standard (New): 0.02 mm (0.0008 in) max .

Service Limit: 0.05 mm (0.002 in)

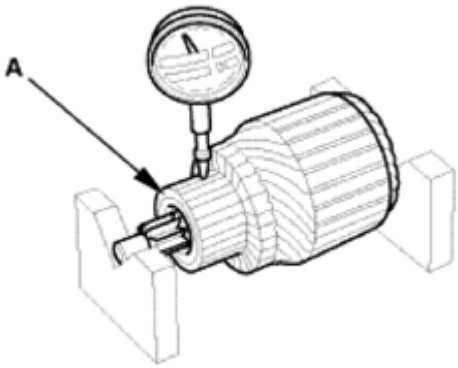

Fig. 23: Measuring Commutator Runout Using Dial Indicator
Courtesy of AMERICAN HONDA MOTOR CO., INC.

5. Use a digital caliper or dial type caliper to check the mica depth (A). If the mica depth is below the service limit, replace the armature.

Commutator Mica Depth

GETtheMANUALS.org

Standard (New): 0.40-0.50 mm (0.0157-0.0197 in)

Service Limit: 0.15 mm (0.0059 in)

Fig. 24: Identifying Mica Depth
Courtesy of AMERICAN HONDA MOTOR CO., INC.

6. Use an ohmmeter to check for continuity between the segments of the commutator. If there is an open circuit between any of the segments, replace the armature.

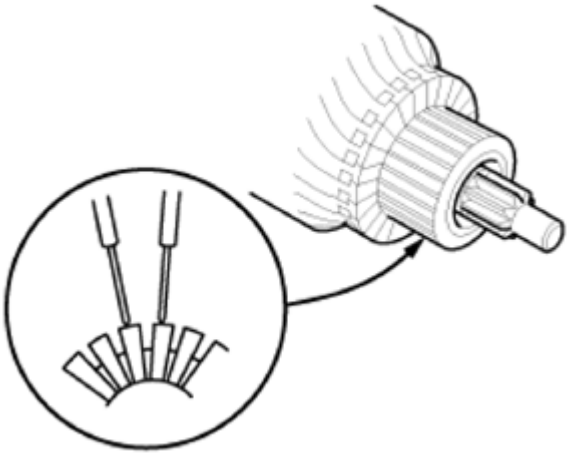

Fig. 25: Checking Continuity Between Segments Of Commutator Using Ohmmeter
Courtesy of AMERICAN HONDA MOTOR CO., INC.

7. Place the armature (A) on an armature tester (B). Hold a hacksaw blade (C) on the armature core. If the blade is attracted to the core while the core is turned, the armature is shorted. Replace the armature.

GETtheMANUALS.org

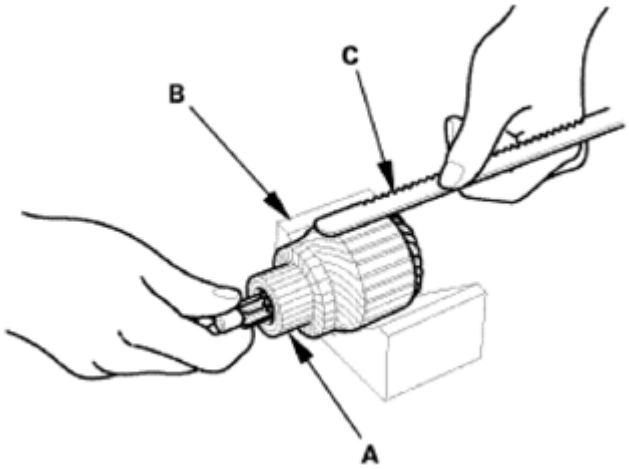

Fig. 26: Checking Armature Short Circuit
Courtesy of AMERICAN HONDA MOTOR CO., INC.

8. Use an ohmmeter to check for continuity between the commutator (A) and the armature coil core (B), and between the commutator and the armature shaft (C). If there is continuity, replace the armature.

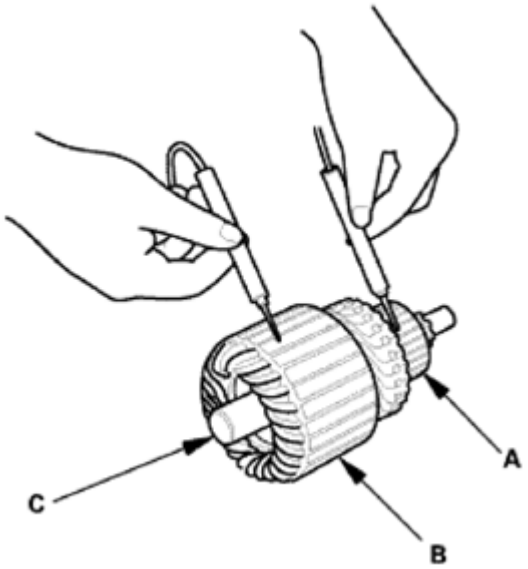

Fig. 27: Checking Continuity Between Commutator And Armature Coil Core Using Ohmmeter
Courtesy of AMERICAN HONDA MOTOR CO., INC.

4. Starter Brush Holder Assembly
    1. Remove the brush holder.

GETtheMANUALS.org

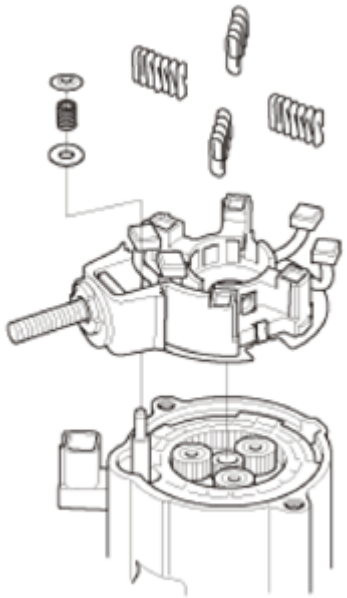

Fig. 28: Identifying Starter Brush Holder Assembly Components
Courtesy of AMERICAN HONDA MOTOR CO., INC.

5. Starter Brush Holder - Test
    1. Check for continuity between the (+) brushes (A) and the (-) brushes (B). If there is continuity, replace the brush holder assembly.

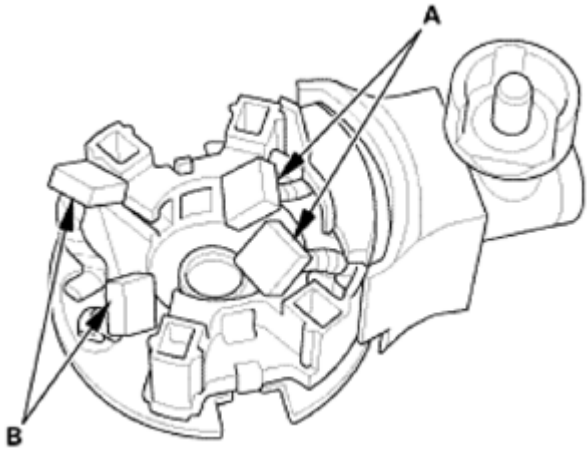

Fig. 29: Identifying Brush Holder Assembly Brushes
Courtesy of AMERICAN HONDA MOTOR CO., INC.

6. Starter Brush - Inspection
    1. Measure the brush length. If it is shorter than the service limit, replace the brush holder assembly.

    Brush Length

    Standard (New): 11.1-11.5 mm (0.437-0.453 in)

GETtheMANUALS.org

Service Limit: 4.3 mm (0.169 in)

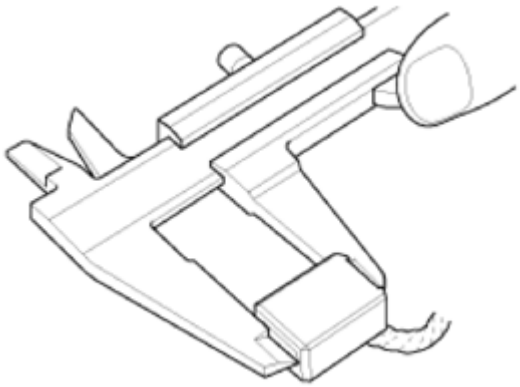

Fig. 30: Measuring Starter Brush Length Using Tool
Courtesy of AMERICAN HONDA MOTOR CO., INC.

7. Starter Planetary Gear - Inspection
    1. Check the planetary gears (A), the armature shaft gear (B), and the internal ring gear (C). Replace them if they are worn or damaged.

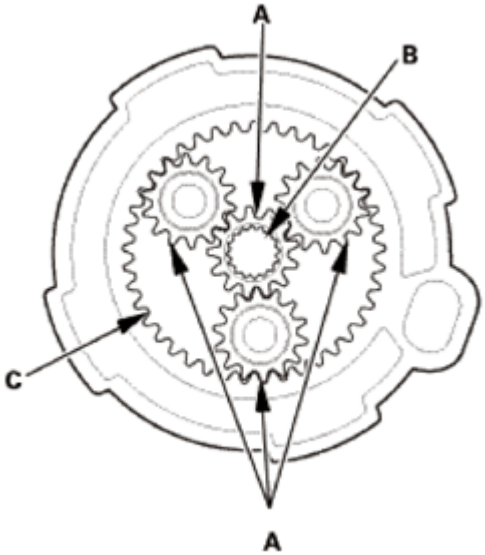

Fig. 31: Identifying Planetary Gears, Armature Shaft Gear And Internal Ring Gear
Courtesy of AMERICAN HONDA MOTOR CO., INC.

8. Starter Gear Cover
    1. Remove the ring gear holder.

GETtheMANUALS.org

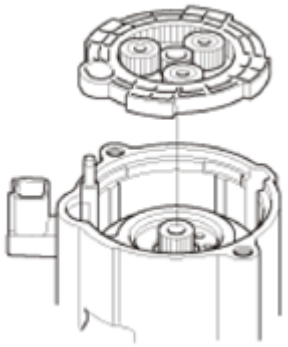

Fig. 32: Identifying Starter Gear Cover
Courtesy of AMERICAN HONDA MOTOR CO., INC.

2. Remove the switch plunger.

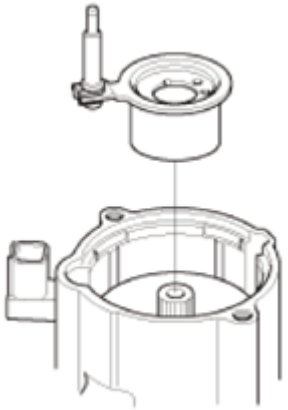

Fig. 33: Identifying Switch Plunger
Courtesy of AMERICAN HONDA MOTOR CO., INC.

9. Starter Overrunning Clutch - Inspection
    1. Hold the drive gear (A), turn the gear shaft (B) counterclockwise. Check that the drive gear comes out to the other end. If the drive gear does not move smoothly, replace the gear cover set.
    2. Hold the drive gear, turn the gear shaft clockwise. The gear shaft should turn freely. If the gear shaft does not turn freely, replace the gear cover set.
    3. If the drive gear is worn or damaged, replace the overrunning clutch assembly; the gear is not available separately.

GETtheMANUALS.org

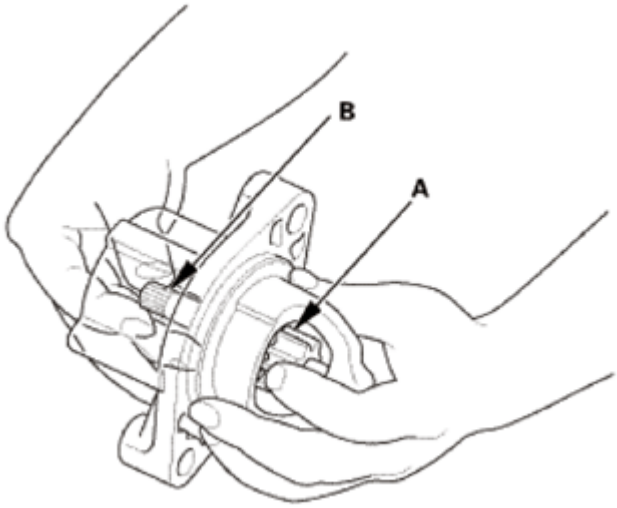

Fig. 34: Inspecting Starter Overrunning Clutch
Courtesy of AMERICAN HONDA MOTOR CO., INC.

REASSEMBLY

NOTE: Refer to the Exploded View if needed during this procedure.

1. Starter Gear Cover
    1. Install the switch plunger.

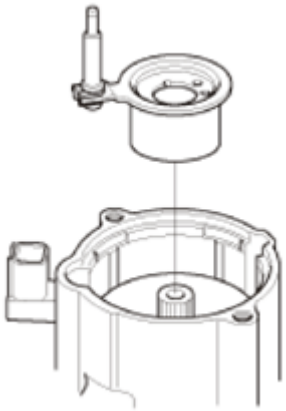

Fig. 35: Identifying Switch Plunger
Courtesy of AMERICAN HONDA MOTOR CO., INC.

    2. Install the ring gear holder.

GETtheMANUALS.org

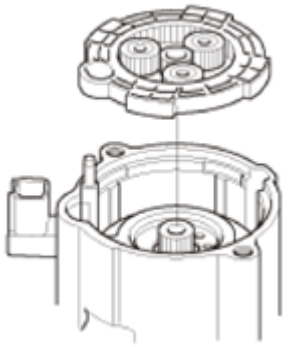

Fig. 36: Identifying Starter Gear Cover
Courtesy of AMERICAN HONDA MOTOR CO., INC.

2. Starter Brush Holder Assembly
    1. Install the brush holder.

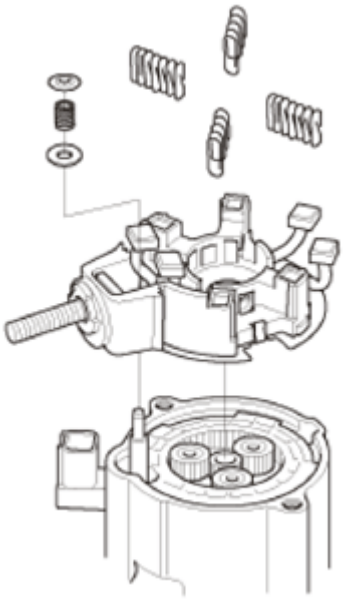

Fig. 37: Identifying Starter Brush Holder Assembly Components
Courtesy of AMERICAN HONDA MOTOR CO., INC.

3. Starter Armature
    1. Install the brush into the brush holder, and set the armature (A) in the brush holder (B).

NOTE: **To seat the new brushes, slip a strip of #500 or #600 sandpaper, with the grit side up, between the commutator and each brush, and smoothly turn the armature. The contact surface of the brushes will be sanded to the same contour as the commutator.**

    2. While squeezing a spring (C), insert it in the hole on the brush holder, and push it until it bottoms.

GETtheMANUALS.org

Repeat this for the other three springs (D, E, and F).

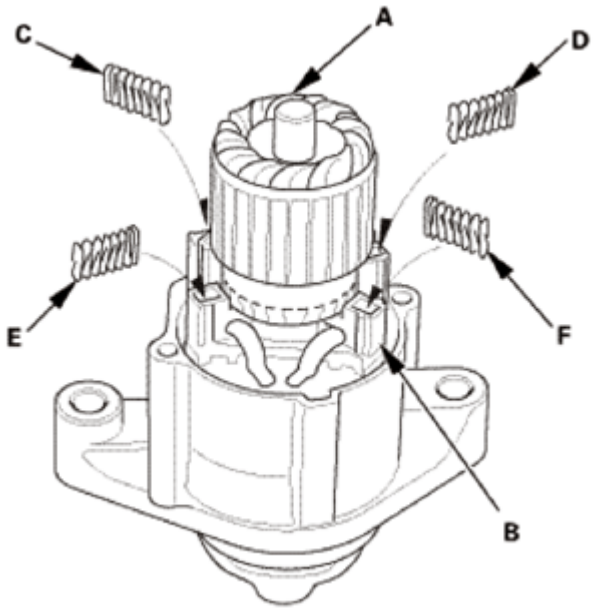

Fig. 38: Identifying Armature, Brush Holder And Springs
Courtesy of AMERICAN HONDA MOTOR CO., INC.

4. Starter End Cover and Armature Housing
    1. Install the armature housing.

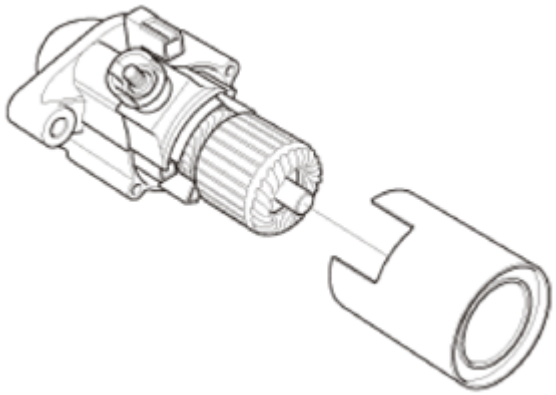

Fig. 39: Identifying Starter End Cover
Courtesy of AMERICAN HONDA MOTOR CO., INC.

    2. Install the end cover.

GETtheMANUALS.org

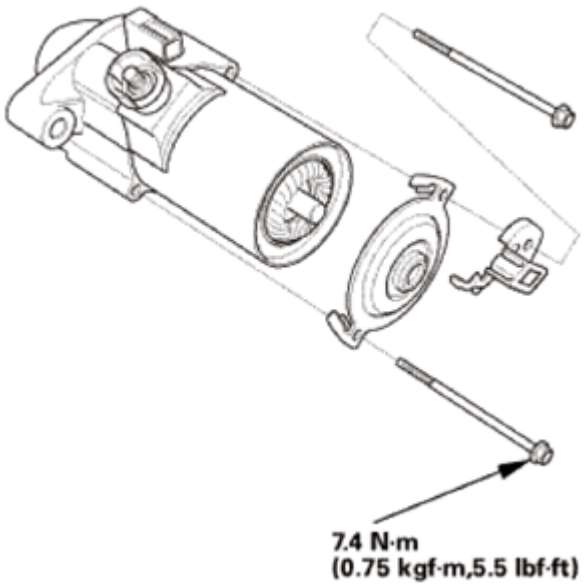

Fig. 40: Identifying Starter End Cover Mounting Bolt With Torque Specification
Courtesy of AMERICAN HONDA MOTOR CO., INC.

GETtheMANUALS.org

SRS DTC TROUBLESHOOTING INDEX

SRS DTC	Detection Item
11-1x	Open in the driver's airbag first inflator
11-2x	Increased resistance in the driver's airbag first inflator
11-3x	Short to another wire or decreased resistance in the driver's airbag first inflator
11-4x	Open in the driver's airbag second inflator
11-5x	Increased resistance in the driver's airbag second inflator
11-6x	Short to another wire or decreased resistance in the driver's airbag second inflator
11-8x	Short to power in the driver's airbag first inflator
11-9x	Short to ground in the driver's airbag first inflator
11-Ax	Short to power in the driver's airbag second inflator
11-Bx	Short to ground in the driver's airbag second inflator
12-1x	Open in the front passenger's airbag first inflator
12-2x	Increased resistance in the front passenger's airbag first inflator
12-3x	Short to another wire or decreased resistance in the front passenger's airbag first inflator
12-4x	Open in the front passenger's airbag second inflator
12-5x	Increased resistance in the front passenger's airbag second inflator
12-6x	Short to another wire or decreased resistance in the front passenger's airbag second inflator
12-8x	Short to power in the front passenger's airbag first inflator
12-9x	Short to ground in the front passenger's airbag first inflator
12-Ax	Short to power in the front passenger's airbag second inflator
12-Bx	Short to ground in the front passenger's airbag second inflator
21-1x	Open in the driver's seat belt tensioner
21-2x	Increased resistance in the driver's seat belt tensioner
21-3x	Short to another wire or decreased resistance in the driver's seat belt tensioner
21-8x	Short to power in the driver's seat belt tensioner
21-9x	Short to ground in the driver's seat belt tensioner
22-1x	Open in the front passenger's seat belt tensioner
22-2x	Increased resistance in the front passenger's seat belt tensioner
22-3x	Short to another wire or decreased resistance in the front passenger's seat belt tensioner
22-8x	Short to power in the front passenger's seat belt tensioner
22-9x	Short to ground in the front passenger's seat belt tensioner
31-1x	Open in the driver's side airbag inflator
31-2x	Increased resistance in the driver's side airbag inflator
31-3x	Short to another wire or decreased resistance in the driver's side airbag inflator
31-8x	Short to power in the driver's side airbag inflator
31-9x	Short to ground in the driver's side airbag inflator

GETtheMANUALS.org

32-1x	Open in the front passenger's side airbag inflator
32-2x	Increased resistance in the front passenger's side airbag inflator
32-3x	Short to another wire or decreased resistance in the front passenger's side airbag inflator
32-8x	Short to power in the front passenger's side airbag inflator
32-9x	Short to ground in the front passenger's side airbag inflator
33-1x	Open in the left side curtain airbag inflator
33-2x	Increased resistance in the left side curtain airbag inflator
33-3x	Short to another wire or decreased resistance in the left side curtain airbag inflator
33-8x	Short to power in the left side curtain airbag inflator
33-9x	Short to ground in the left side curtain airbag inflator
34-1x	Open in the right side curtain airbag inflator
34-2x	Increased resistance in the right side curtain airbag inflator
34-3x	Short to another wire or decreased resistance in the right side curtain airbag inflator
34-8x	Short to power in the right side curtain airbag inflator
34-9x	Short to ground in the right side curtain airbag inflator
41-1x	No signal from the left front impact sensor
41-2x	Internal failure of the left front impact sensor
41-9x	
41-Ax	
41-Bx	
42-1x	No signal from the right front impact sensor
42-2x	Internal failure of the right front impact sensor
42-9x	
42-Ax	
42-Bx	
43-1x	No signal from the left side impact sensor (first)
43-2x	Internal failure of the left side impact sensor (first)
43-9x	
43-Ax	
43-Bx	
44-1x	No signal from the right side impact sensor (first)
44-2x	Internal failure of the right side impact sensor (first)
44-9x	
44-Ax	
44-Bx	
45-1x	No signal from the left side impact sensor (second)
45-2x	Internal failure of the left side impact sensor (second)
45-9x	
45-Ax	
45-Bx	
46-1x	No Signal from the right side impact sensor (second)

GETtheMANUALS.org

46-2x	Internal failure of the right side impact sensor (second)
46-9x	
46-Ax	
46-Bx	
51-xx	Internal failure of the SRS unit
52-xx	
53-xx	
53-FF	SRS unit programming error
54-xx	Internal failure of the SRS unit
55-xx	
56-21	Lost communication with the PCM (PGM-FI system)
56-22	Undefined data received from the PCM (PGM-FI system)
56-23	
56-25	Lost communication with the gauge control module
56-26	Undefined data received from the gauge control module
56-27	
57-xx	Internal failure of the SRS unit
58-xx	
61-1x	Open in the driver's seat belt buckle switch
61-2x	Short in the driver's seat belt buckle switch
62-1x	Open in the front passenger's seat belt buckle switch
62-2x	Short in the front passenger's seat belt buckle switch
71-1x	Open in the driver's seat position sensor
71-2x	Short in the driver's seat position sensor
81-4x	Internal failure of the ODS unit
81-61	No signal from the ODS unit
81-62	Incorrect data from the ODS unit
81-63	Internal failure of the ODS unit
81-64	
81-71	ODS unit not calibrated
81-78	
81-79	Front passenger's weight sensors initial check failure
82-14	No signal from the front passenger's weight sensor (front inner side)
82-15	Internal failure of the front passenger's weight sensor (front inner side)
82-16	No signal from the front passenger's weight sensor (rear inner side)
82-17	Internal failure of the front passenger's weight sensor (rear inner side)
83-24	No signal from the front passenger's weight sensor (front outer side)
83-25	Internal failure of the front passenger's weight sensor (front outer side)
83-26	No signal from the front passenger's weight sensor (rear outer side)
83-27	Internal failure of the front passenger's weight sensor (rear outer side)
85-4x	Internal failure of the ODS unit

GETtheMANUALS.org

85-61	No signal from the ODS unit
85-62	Incorrect data from the ODS unit
85-63	Internal failure of the ODS unit
85-64	
85-71	ODS unit not initialized
85-78	
85-79	OPDS sensor initial check failure
86-1x	Faulty OPDS seat-back sensor
86-2x	Faulty OPDS seat support sensor
92-1x	Short to power in the front passenger's airbag cutoff indicator
92-2x	Open or short to ground in the front passenger's airbag cutoff indicator
A1-1x	Faulty power supply (VA line)
A2-1x	Faulty power supply (VB line)
A3-1x	SRS unit connector A not properly installed
A4-1x	SRS unit connector B not properly installed
B2-1x	No signal from the rear safing sensor
B2-2x	Internal failure of the rear safing sensor
B2-9x	
B2-Ax	
B2-Bx	
Ex-11	Control operation recorded
Fx-11	Airbags and/or tensioners deployment recorded

NOTE: **The "x" at the end of each DTC denotes a numeric character (0 thru 9) or an alpha character (A thru F) that you may also see on the HDS display. The alphanumeric character is unrelated to your DTC troubleshooting; it is used by the SRS unit manufacturer.**

Only read DTCs from the SRS menu, not from SWS menus unless instructed to check SWS DTCs. SWS (ODS unit) DTCs are subcodes of SRS DTCs. Only troubleshoot the corresponding SRS DTCs. These SWS DTCs are cleared when you turn the ignition switch to LOCK (0).

SWS DTC INDEX

SRS DTC	SWS DTC	Detection Item
81-4x	**41-xx**	Internal failure of the ODS unit
	42-xx	
	43-xx	
81-71	**71-xx**	ODS unit not calibrated
	14-11	Short to power in the front passenger's weight sensor (front inner side) power circuit
	14-12	Short to ground in the front passenger's weight sensor (front inner side) power circuit

GETtheMANUALS.org

82-14	**14-13**	Open in the front passenger's weight sensor (front inner side) output circuit
	14-14	Short to ground in the front passenger's weight sensor (front inner side) output circuit
82-15	**15-3x**	Internal failure of the front passenger's weight sensor (front inner side)
82-16	**16-11**	Short to power in the front passenger's weight sensor (rear inner side) power circuit
	16-12	Short to ground in the front passenger's weight sensor (rear inner side) power circuit
	16-13	Open in the front passenger's weight sensor (rear inner side) output circuit
	16-14	Short to ground in the front passenger's weight sensor (rear inner side) output circuit
82-17	**17-3x**	Internal failure of the front passenger's weight sensor (rear inner side)
83-24	**24-11**	Short to power in the front passenger's weight sensor (front outer side) power circuit
	24-12	Short to ground in the front passenger's weight sensor (front outer side) power circuit
	24-13	Open in the front passenger's weight sensor (front outer side) output circuit
	24-14	Short to ground in the front passenger's weight sensor (front outer side) output circuit
83-25	**25-3x**	Internal failure of the front passenger's weight sensor (front outer side)
83-26	**26-11**	Short to power in the front passenger's weight sensor (rear outer side) power circuit
	26-12	Short to ground in the front passenger's weight sensor (rear outer side) power circuit
	26-13	Open in the front passenger's weight sensor (rear outer side) output circuit
	26-14	Short to ground in the front passenger's weight sensor (rear outer side) output circuit
83-27	**27-3x**	Internal failure of the front passenger's weight sensor (rear outer side)

NOTE: **The "x" at the end of each DTC denotes a numeric character (0 thru 9) or an alpha character (A thru F) that you may also see on the HDS display. The alphanumeric character is unrelated to your DTC troubleshooting; it is used by the SRS unit manufacturer.**

DTC 11-1X ("X" CAN BE 0 THRU 9 OR A THRU F): OPEN IN THE DRIVER'S AIRBAG FIRST INFLATOR; DTC 11-2X ("X" CAN BE 0 THRU 9 OR A THRU F): INCREASED RESISTANCE IN THE DRIVER'S AIRBAG FIRST INFLATOR; DTC 11-4X ("X" CAN BE 0 THRU 9 OR A THRU F): OPEN IN THE DRIVER'S AIRBAG SECOND INFLATOR; DTC 11-5X ("X" CAN BE 0 THRU 9 OR A THRU F): INCREASED RESISTANCE IN THE DRIVER'S AIRBAG SECOND INFLATOR

GETtheMANUALS.org

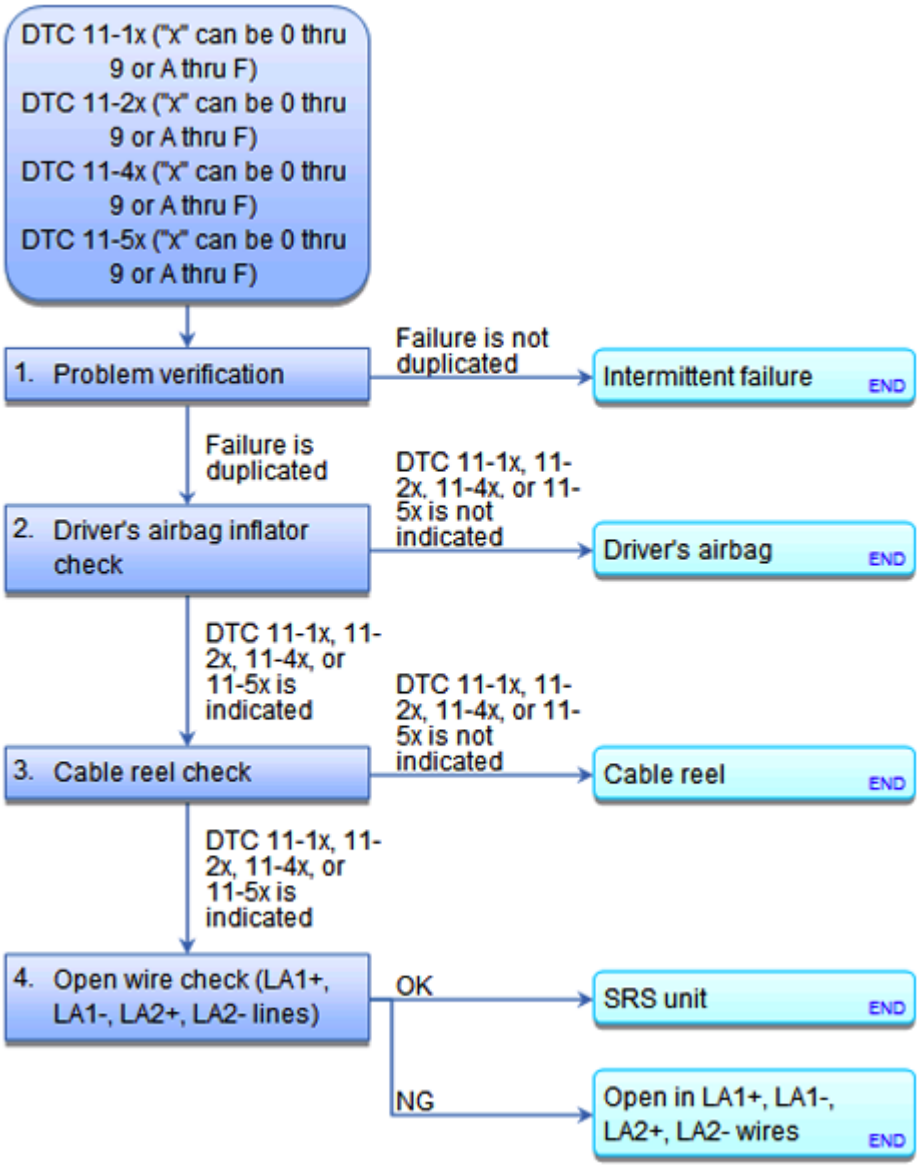

Fig. 1: SRS DTC Troubleshooting Flow Chart (11-1x, 11-2x, 11-4x, 11-5x)
Courtesy of AMERICAN HONDA MOTOR CO., INC.

Special Tools Required

- **SRS Inflator Simulator 07SAZ-TB4011A**
- **SRS Simulator Lead J 070AZ-SNAA100**

NOTE:

- **Before doing this troubleshooting procedure, find out if the vehicle was in a collision. If so, verify that all the required components were replaced with new components, of the correct part number, and that they were properly installed See AIRBAG AND TENSIONER DISPOSAL or SRS COMPONENT REPLACEMENT/INSPECTION AFTER DEPLOYMENT .**

GETtheMANUALS.org

- **Before doing this troubleshooting procedure, review SRS PRECAUTIONS AND PROCEDURES , GENERAL TROUBLESHOOTING INFORMATION , and BATTERY TERMINAL DISCONNECTION AND RECONNECTION .**
- **Before replacing the SRS unit, check the SRS unit software version with the HDS. If the software version is not the latest, update the SRS unit software See SRS UNIT REMOVAL AND INSTALLATION or SRS UNIT UPDATE , and retest.**

DTC Description	DTC

1. Problem verification:
   - 1. **CLEAR THE DTCS WITH THE HDS** .
   - 2. Turn the ignition switch to ON (II), then wait for 10 seconds.
   - 3. **CHECK FOR DTCS WITH THE HDS** .

DTC Description	DTC

Is DTC 11-1x, 11-2x, 11-4x, or 11-5x indicated?

YES : The failure is duplicated. Go to step 2.

NO : Intermittent failure, the system is OK at this time. **GO TO TROUBLESHOOTING INTERMITTENT FAILURES** . If another DTC is indicated, troubleshoot the DTC.

2. Driver's airbag inflator check:
   - 1. Turn the ignition switch to LOCK (0).
   - 2. Disconnect the negative cable from the battery, then wait at least 3 minutes.
   - 3. Remove the access panel (A) from the steering wheel, then disconnect the driver's airbag inflator 4P connector (B) on the cable reel harness.

GETtheMANUALS.org

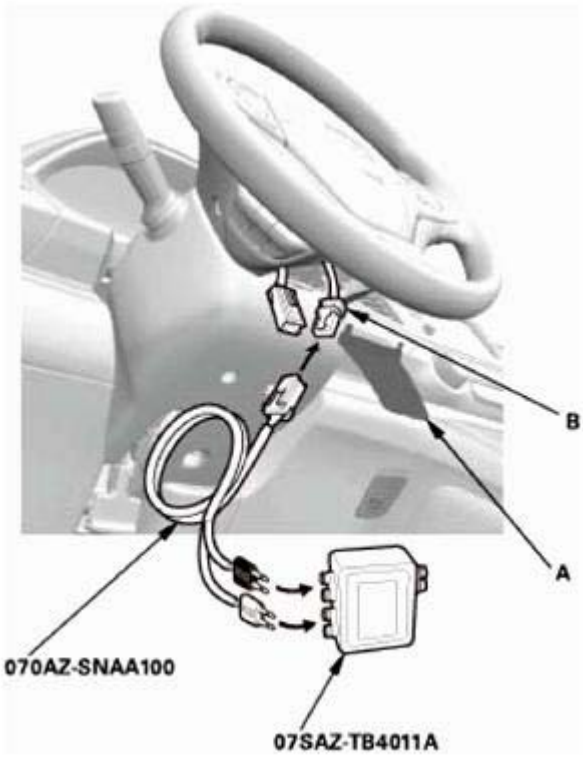

Fig. 2: Disconnecting Driver's Airbag Inflator 4P Connector
Courtesy of AMERICAN HONDA MOTOR CO., INC.

- 4. Connect the terminals of SRS simulator lead J to the SRS inflator simulator (2 ohms connectors), then connect SRS simulator lead J to the driver's airbag inflator 4P connector on the cable reel harness.
- 5. Reconnect the negative cable to the battery.
- 6. **CLEAR THE DTCS WITH THE HDS** .
- 7. Turn the ignition switch to ON (II), then wait for 10 seconds.
- 8. **CHECK FOR DTCS WITH THE HDS** .

DTC Description	DTC

Is DTC 11-1x, 11-2x, 11-4x, or 11-5x indicated?

YES : Go to step 3.

NO : Open or increased resistance in the driver's airbag first or second inflator; **REPLACE THE DRIVER'S AIRBAG** , then clear the DTC.

3. Cable reel check:
   - 1. Turn the ignition switch to LOCK (0).

GETtheMANUALS.org

- 2. Disconnect the negative cable from the battery, then wait at least 3 minutes.
- 3. **REMOVE THE COLUMN COVERS** .
- 4. Disconnect cable reel connector B (4P) on the dashboard wire harness.

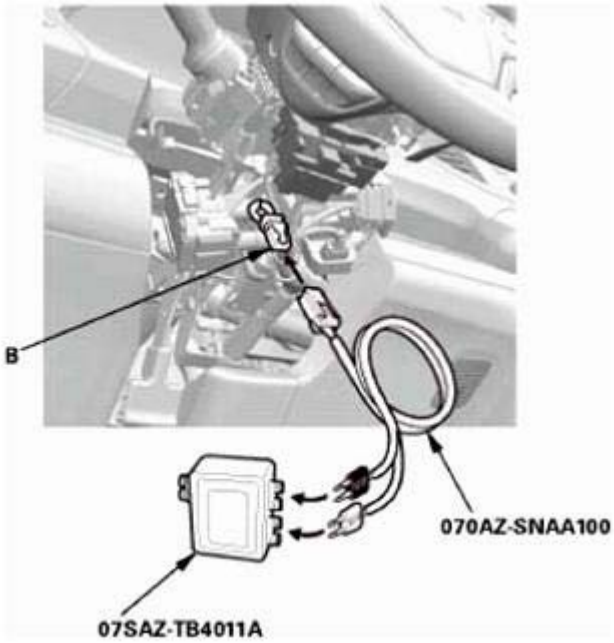

Fig. 3: Disconnecting Cable Reel Connector B (4P)
Courtesy of AMERICAN HONDA MOTOR CO., INC.

- 5. Connect the terminals of SRS simulator lead J to the SRS inflator simulator (2 ohms connectors), then connect SRS simulator lead J to cable reel connector B (4P) on the dashboard wire harness.
- 6. Reconnect the negative cable to the battery.
- 7. **CLEAR THE DTCS WITH THE HDS** .
- 8. Turn the ignition switch to ON (II), then wait for 10 seconds.
- 9. **CHECK FOR DTCS WITH THE HDS** .

DTC Description	DTC

Is DTC 11-1x, 11-2x, 11-4x, or 11-5x indicated?

YES : Go to step 4.

NO : Open or increased resistance in the cable reel; **REPLACE THE CABLE REEL** , then clear the DTC.

4. Open wire check (LA1+, LA1-, LA2+, LA2- lines):
   - 1. Turn the ignition switch to LOCK (0).

GETtheMANUALS.org

- 2. Disconnect the negative cable from the battery, then wait at least 3 minutes.
- 3. Disconnect the following connector.

SRS unit connector A (39P) See **SRS UNIT REMOVAL AND INSTALLATION** or **SRS UNIT UPDATE**

- 4. Disconnect the SRS inflator simulator from SRS simulator lead J. Do not disconnect SRS simulator lead J from cable reel connector B (4P) on the dashboard wire harness.
- 5. Measure the resistance of the test points.

Test condition IG LOCK (0)

Driver's airbag inflator 4P connector (on the cable reel harness): disconnected

Cable reel connector B (4P) (on the dashboard wire harness): disconnected

SRS unit connector A (39P): disconnected

Cable reel connector B (4P) (on the dashboard wire harness): connected to SRS simulator lead J

Test circuit LA1+, LA1-

Test point SRS simulator lead J black terminal

Test circuit LA2+, LA2-

Test point SRS simulator lead J red terminal

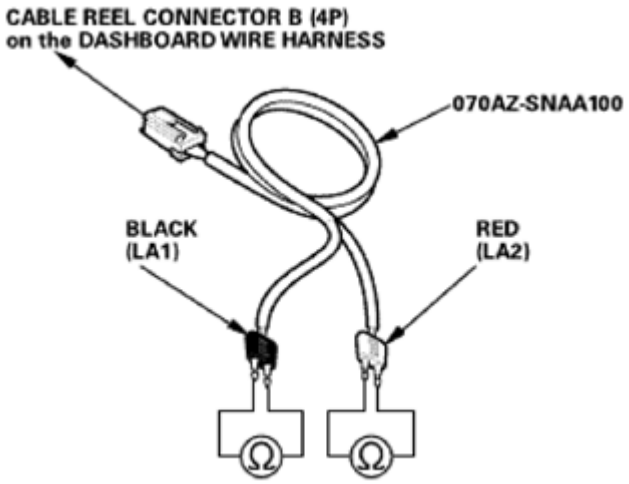

Fig. 4: Measuring Resistance Of Cable Reel Connector B (4P) On Dashboard Wire Harness Using Tool
Courtesy of AMERICAN HONDA MOTOR CO., INC.

GETtheMANUALS.org

Is there less than 1.0 ohms?

YES : The LA1+, LA1-, LA2+, LA2- wires are OK. Faulty SRS unit or poor connection at SRS unit connector A (39P) and the SRS unit. Check the connection; if the connection is OK, **replace the SRS unit** See **SRS UNIT REMOVAL AND INSTALLATION** or **SRS UNIT UPDATE** . If the DTC does not clear, replace the dashboard wire harness.

NO : Open or increased resistance in the dashboard wire harness; replace the dashboard wire harness, then clear the DTC.

DTC 11-3X ("X" CAN BE 0 THRU 9 OR A THRU F): SHORT TO ANOTHER WIRE OR DECREASED RESISTANCE IN THE DRIVER'S AIRBAG FIRST INFLATOR; DTC 11-6X ("X" CAN BE 0 THRU 9 OR A THRU F): SHORT TO ANOTHER WIRE OR DECREASED RESISTANCE IN THE DRIVER'S AIRBAG SECOND INFLATOR

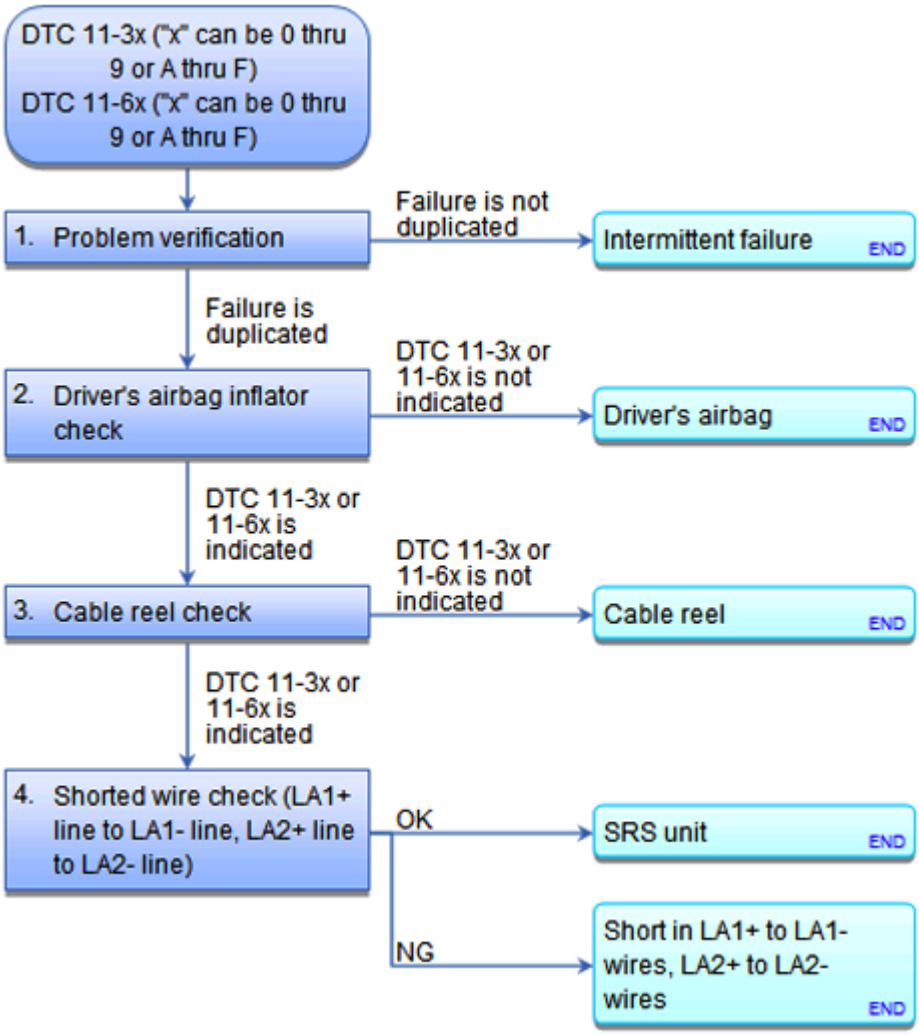

Fig. 5: SRS DTC Troubleshooting Flow Chart (11-3x, 11-6x)

GETtheMANUALS.org

Courtesy of AMERICAN HONDA MOTOR CO., INC.

Special Tools Required

- **SRS Inflator Simulator 07SAZ-TB4011A**
- **SRS Simulator Lead J 070AZ-SNAA100**
- **SRS Short Canceller 070AZ-SAA0100**

NOTE:

- **Before doing this troubleshooting procedure, find out if the vehicle was in a collision. If so, verify that all the required components were replaced with new components, of the correct part number, and that they were properly installed See AIRBAG AND TENSIONER DISPOSAL or SRS COMPONENT REPLACEMENT/INSPECTION AFTER DEPLOYMENT .**
- **Before doing this troubleshooting procedure, review SRS PRECAUTIONS AND PROCEDURES , GENERAL TROUBLESHOOTING INFORMATION , and BATTERY TERMINAL DISCONNECTION AND RECONNECTION .**
- **Before replacing the SRS unit, check the SRS unit software version with the HDS. If the software version is not the latest, update the SRS unit software See SRS UNIT REMOVAL AND INSTALLATION or SRS UNIT UPDATE , and retest.**

DTC Description	DTC

1. Problem verification:
   - 1. **CLEAR THE DTCS WITH THE HDS** .
   - 2. Turn the ignition switch to ON (II), then wait for 10 seconds.
   - 3. **CHECK FOR DTCS WITH THE HDS** .

DTC Description	DTC

Is DTC 11-3x or 11-6x indicated?

YES : The failure is duplicated. Go to step 2.

NO : Intermittent failure, the system is OK at this time. **GO TO TROUBLESHOOTING INTERMITTENT FAILURES** . If another DTC is indicated, troubleshoot the DTC.

2. Driver's airbag inflator check:
   - 1. Turn the ignition switch to LOCK (0).
   - 2. Disconnect the negative cable from the battery, then wait at least 3 minutes.
   - 3. Remove the access panel (A) from the steering wheel, then disconnect the driver's airbag inflator

GETtheMANUALS.org

4P connector (B) on the cable reel harness.

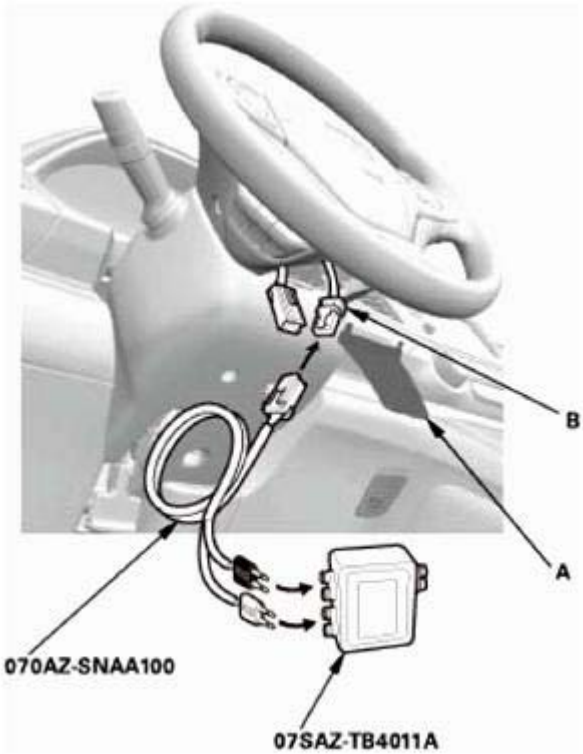

Fig. 6: Disconnecting Driver's Airbag Inflator 4P Connector
Courtesy of AMERICAN HONDA MOTOR CO., INC.

- 4. Connect the terminals of SRS simulator lead J to the SRS inflator simulator (2 ohms connectors), then connect SRS simulator lead J to the driver's airbag inflator 4P connector on the cable reel harness.
- 5. Reconnect the negative cable to the battery.
- 6. **CLEAR THE DTCS WITH THE HDS** .
- 7. Turn the ignition switch to ON (II), then wait for 10 seconds.
- 8. **CHECK FOR DTCS WITH THE HDS** .

DTC Description	DTC

Is DTC 11-3x or 11-6x indicated?

YES : Go to step 3.

NO : Short to another wire in the driver's airbag first or second inflator; **REPLACE THE DRIVER'S AIRBAG** , then clear the DTC.

3. Cable reel check:

GETtheMANUALS.org

- 1. Turn the ignition switch to LOCK (0).
- 2. Disconnect the negative cable from the battery, then wait at least 3 minutes.
- 3. **REMOVE THE COLUMN COVERS** .
- 4. Disconnect cable reel connector B (4P) on the dashboard wire harness.

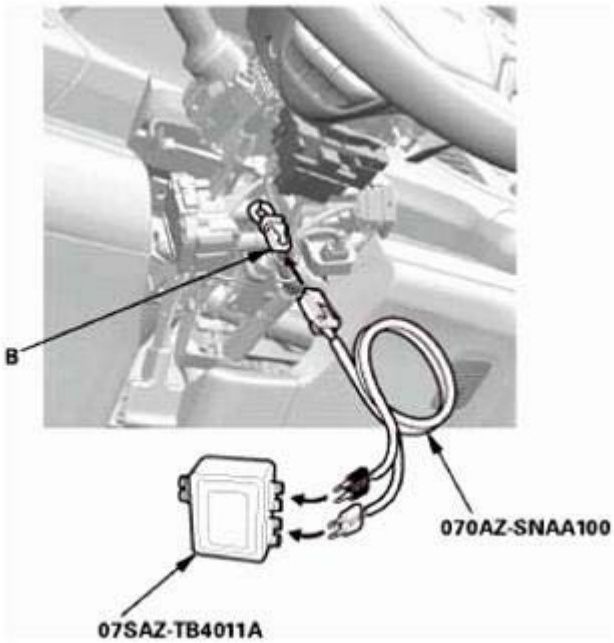

Fig. 7: Disconnecting Cable Reel Connector B (4P)
Courtesy of AMERICAN HONDA MOTOR CO., INC.

- 5. Connect the terminals of SRS simulator lead J to the SRS inflator simulator (2 ohms connectors), then connect SRS simulator lead J to cable reel connector B (4P) on the dashboard wire harness.
- 6. Reconnect the negative cable to the battery.
- 7. **CLEAR THE DTCS WITH THE HDS** .
- 8. Turn the ignition switch to ON (II), then wait for 10 seconds.
- 9. **CHECK FOR DTCS WITH THE HDS** .

DTC Description	DTC

Is DTC 11-3x or 11-6x indicated?

YES : Go to step 4.

NO : Short to another wire in the cable reel; **REPLACE THE CABLE REEL** , then clear the DTC.

4. Shorted wire check (LA1+ line to LA1- line, LA2+ line to LA2- line):
   - 1. Turn the ignition switch to LOCK (0).

GETtheMANUALS.org

- 2. Disconnect the negative cable from the battery, then wait at least 3 minutes.
- 3. Disconnect the following connector.

  SRS unit connector A (39P) See **SRS UNIT REMOVAL AND INSTALLATION** or **SRS UNIT UPDATE**

- 4. Disconnect the SRS inflator simulator from SRS simulator lead J. Do not disconnect SRS simulator lead J from cable reel connector B (4P) on the dashboard wire harness.
- 5. **CONNECT THE SRS SHORT CANCELLERS TO SRS UNIT CONNECTOR A (39P) TERMINALS NO. 3 AND NO. 4, AND TERMINALS NO. 7 AND NO. 8** .
- 6. Measure the resistance of the test points.

  Test condition IG LOCK (0)

  Driver's airbag inflator 4P connector (on the cable reel harness): disconnected

  Cable reel connector B (4P) (on the dashboard wire harness): disconnected

  SRS unit connector A (39P): disconnected

  Cable reel connector B (4P) (on the dashboard wire harness): connected to SRS simulator lead J

  SRS unit connector A (39P) No. 3 and No. 4: connected to SRS short canceller

  SRS unit connector A (39P) No. 7 and No. 8: connected to SRS short canceller

  Test circuit LA1+, LA1-

  Test point SRS simulator lead J black terminal

  Test circuit LA2+, LA2-

  Test point SRS simulator lead J red terminal

GETtheMANUALS.org

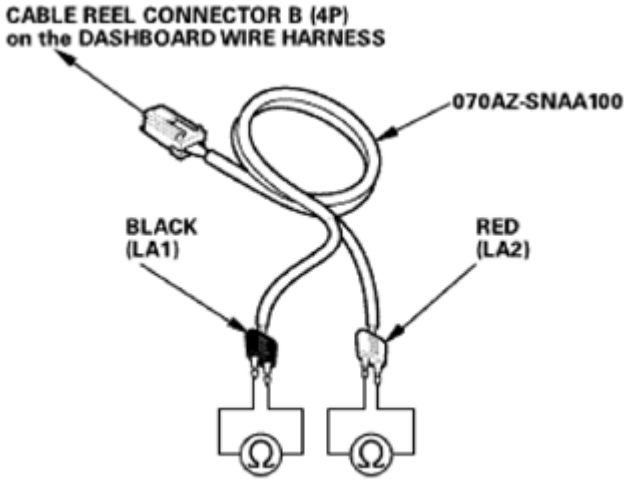

Fig. 8: Measuring Resistance Of Cable Reel Connector B (4P) On Dashboard Wire Harness Using Tool
Courtesy of AMERICAN HONDA MOTOR CO., INC.

Is there an open circuit, or at least 1 Mohms?

YES : The LA1+, LA1-, LA2+, LA2- wires are OK. Faulty SRS unit or poor connection at SRS unit connector A (39P) and the SRS unit. Check the connection; if the connection is OK, **replace the SRS unit** See **SRS UNIT REMOVAL AND INSTALLATION** or **SRS UNIT UPDATE** . If the DTC does not clear, replace the dashboard wire harness.

NO : Short to another wire in the dashboard wire harness; replace the dashboard wire harness, then clear the DTC.

DTC 11-8X ("X" CAN BE 0 THRU 9 OR A THRU F): SHORT TO POWER IN THE DRIVER'S AIRBAG FIRST INFLATOR; DTC 11-AX ("X" CAN BE 0 THRU 9 OR A THRU F): SHORT TO POWER IN THE DRIVER'S AIRBAG SECOND INFLATOR

GETtheMANUALS.org

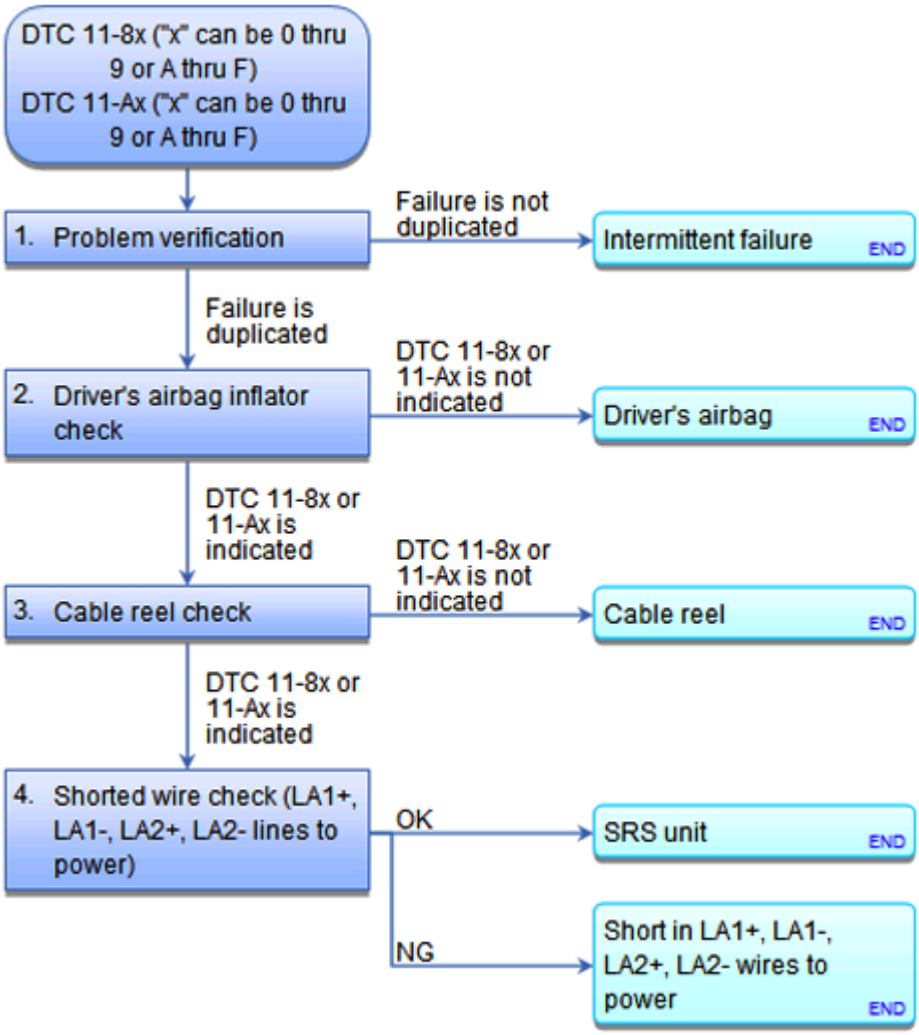

Fig. 9: SRS DTC Troubleshooting Flow Chart (11-8x, 11-Ax)
Courtesy of AMERICAN HONDA MOTOR CO., INC.

Special Tools Required

- **SRS Inflator Simulator 07SAZ-TB4011A**
- **SRS Simulator Lead J 070AZ-SNAA100**

NOTE:

- **Before doing this troubleshooting procedure, find out if the vehicle was in a collision. If so, verify that all the required components were replaced with new components, of the correct part number, and that they were properly installed See AIRBAG AND TENSIONER DISPOSAL or SRS COMPONENT REPLACEMENT/INSPECTION AFTER DEPLOYMENT .**
- **Before doing this troubleshooting procedure, review SRS PRECAUTIONS AND PROCEDURES , GENERAL TROUBLESHOOTING INFORMATION , and BATTERY TERMINAL DISCONNECTION AND RECONNECTION .**

GETtheMANUALS.org

- **Before replacing the SRS unit, check the SRS unit software version with the HDS. If the software version is not the latest, update the SRS unit software See SRS UNIT REMOVAL AND INSTALLATION or SRS UNIT UPDATE , and retest.**

DTC Description	DTC

1. Problem verification:
   - 1. **CLEAR THE DTCS WITH THE HDS** .
   - 2. Turn the ignition switch to ON (II), then wait for 10 seconds.
   - 3. **CHECK FOR DTCS WITH THE HDS** .

DTC Description	DTC

Is DTC 11-8x or 11-Ax indicated?

YES : The failure is duplicated. Go to step 2.

NO : Intermittent failure, the system is OK at this time. **GO TO TROUBLESHOOTING INTERMITTENT FAILURES** . If another DTC is indicated, troubleshoot the DTC.

2. Driver's airbag inflator check:
   - 1. Turn the ignition switch to LOCK (0).
   - 2. Disconnect the negative cable from the battery, then wait at least 3 minutes.
   - 3. Remove the access panel (A) from the steering wheel, then disconnect the driver's airbag inflator 4P connector (B) on the cable reel harness.

GETtheMANUALS.org

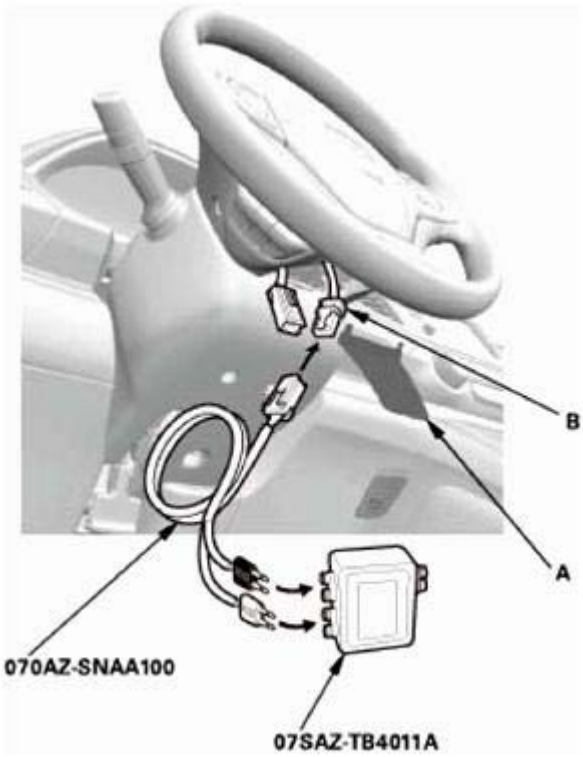

Fig. 10: Disconnecting Driver's Airbag Inflator 4P Connector
Courtesy of AMERICAN HONDA MOTOR CO., INC.

- 4. Connect the terminals of SRS simulator lead J to the SRS inflator simulator (2 ohms connectors), then connect SRS simulator lead J to the driver's airbag inflator 4P connector on the cable reel harness.
- 5. Reconnect the negative cable to the battery.
- 6. **CLEAR THE DTCS WITH THE HDS** .

  Turn the ignition switch to ON (II), then wait for 10 seconds.

- 7.
- 8. **CHECK FOR DTCS WITH THE HDS** .

DTC Description	DTC

Is DTC 11-8x or 11-Ax indicated?

YES : Go to step 3.

NO : Short to power in the driver's airbag first or second inflator; **REPLACE THE DRIVER'S AIRBAG** , then clear the DTC.

GETtheMANUALS.org

3. Cable reel check:
    - 1. Turn the ignition switch to LOCK (0).
    - 2. Disconnect the negative cable from the battery, then wait at least 3 minutes.
    - 3. **REMOVE THE COLUMN COVERS** .
    - 4. Disconnect cable reel connector B (4P) on the dashboard wire harness.

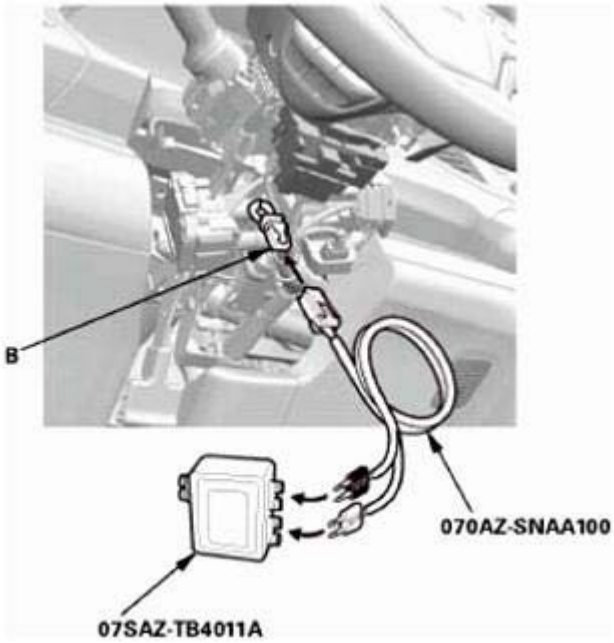

Fig. 11: Disconnecting Cable Reel Connector B (4P)
Courtesy of AMERICAN HONDA MOTOR CO., INC.

    - 5. Connect the terminals of SRS simulator lead J to the SRS inflator simulator (2 ohms connectors), then connect SRS simulator lead J to cable reel connector B (4P) on the dashboard wire harness.
    - 6. Reconnect the negative cable to the battery.
    - 7. **CLEAR THE DTCS WITH THE HDS** .
    - 8. Turn the ignition switch to ON (II), then wait for 10 seconds.
    - 9. **CHECK FOR DTCS WITH THE HDS** .

DTC Description	DTC

Is DTC 11-8x or 11-Ax indicated?

YES : Go to step 4.

NO : Short to power in the cable reel; **REPLACE THE CABLE REEL** , then clear the DTC.

4. Shorted wire check (LA1+, LA1-, LA2+, LA2- lines to power):

GETtheMANUALS.org

- 1. Turn the ignition switch to LOCK (0).
- 2. Disconnect the negative cable from the battery, then wait at least 3 minutes.
- 3. Disconnect the following connector.

  SRS unit connector A (39P) See **SRS UNIT REMOVAL AND INSTALLATION** or **SRS UNIT UPDATE**

- 4. Disconnect the SRS inflator simulator from SRS simulator lead J. Do not disconnect SRS simulator lead J from cable reel connector B (4P) on the dashboard wire harness.
- 5. Reconnect the negative cable to the battery.
- 6. Turn the ignition switch to ON (II).
- 7. Measure the voltage between test points 1 and 2.

  Test condition IG ON (II)

  Driver's airbag inflator 4P connector (on the cable reel harness): disconnected

  Cable reel connector B (4P) (on the dashboard wire harness): disconnected

  SRS unit connector A (39P): disconnected

  Cable reel connector B (4P) (on the dashboard wire harness): connected to SRS simulator lead J

  Test circuit LA1+, LA1-

  Test point 1 SRS simulator lead J black terminal

  Test point 2 Body ground

  Test circuit LA2+, LA2-

  Test point 1 SRS simulator lead J red terminal

  Test point 2 Body ground

GETtheMANUALS.org

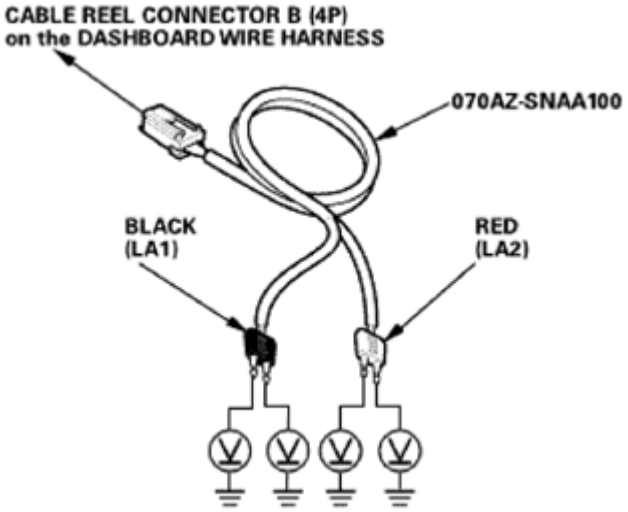

Fig. 12: Measuring Resistance Of Cable Reel Connector B (4P) On Dashboard Wire Harness Using Tool
Courtesy of AMERICAN HONDA MOTOR CO., INC.

Is there less than 0.2 V?

YES : The LA1+, LA1-, LA2+, LA2- wires are OK. Faulty SRS unit or poor connection at SRS unit connector A (39P) and the SRS unit. Check the connection; if the connection is OK, **replace the SRS unit** See **SRS UNIT REMOVAL AND INSTALLATION** or **SRS UNIT UPDATE** . If the DTC does not clear, replace the dashboard wire harness.

NO : Short to power in the dashboard wire harness; replace the dashboard wire harness, then clear the DTC.

DTC 11-9X ("X" CAN BE 0 THRU 9 OR A THRU F): SHORT TO GROUND IN THE DRIVER'S AIRBAG FIRST INFLATOR; DTC 11-BX ("X" CAN BE 0 THRU 9 OR A THRU F): SHORT TO GROUND IN THE DRIVER'S AIRBAG SECOND INFLATOR

GETtheMANUALS.org

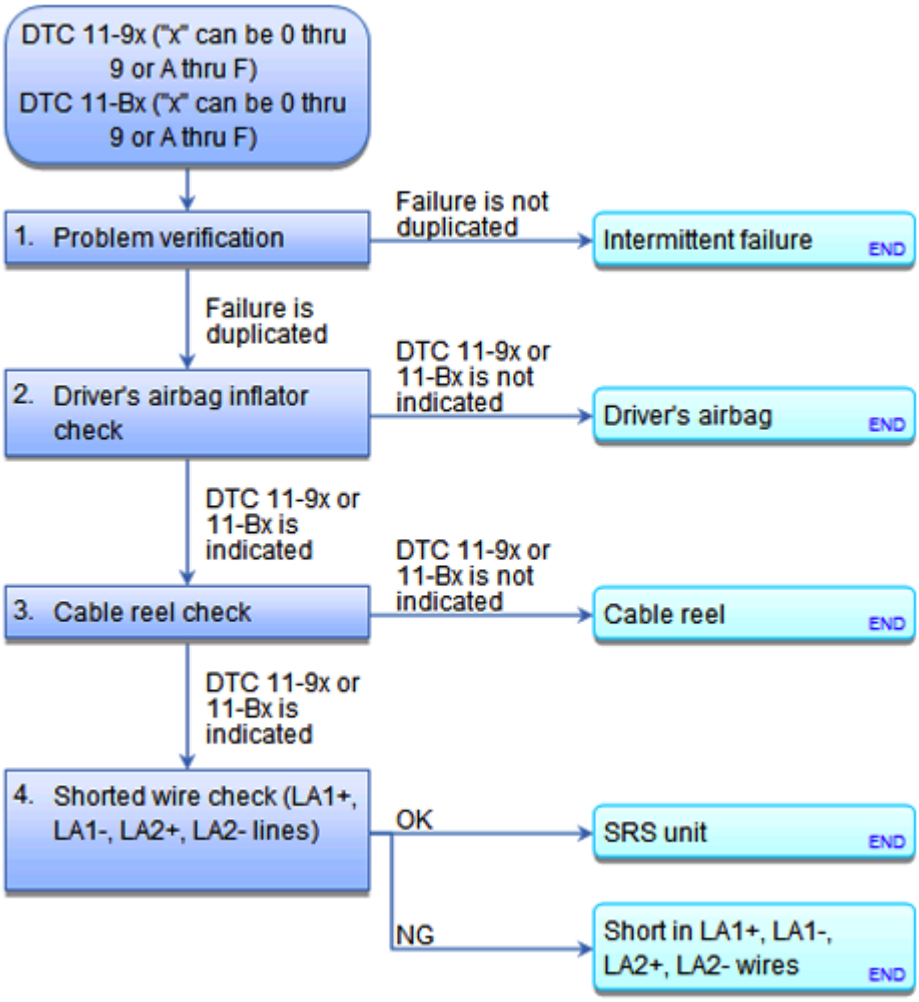

Fig. 13: SRS DTC Troubleshooting Flow Chart (11-9x, 11-Bx)
Courtesy of AMERICAN HONDA MOTOR CO., INC.

Special Tools Required

- **SRS Inflator Simulator 07SAZ-TB4011A**
- **SRS Simulator Lead J 070AZ-SNAA100**

NOTE:

- **Before doing this troubleshooting procedure, find out if the vehicle was in a collision. If so, verify that all the required components were replaced with new components, of the correct part number, and that they were properly installed See AIRBAG AND TENSIONER DISPOSAL or SRS COMPONENT REPLACEMENT/INSPECTION AFTER DEPLOYMENT .**
- **Before doing this troubleshooting procedure, review SRS PRECAUTIONS AND PROCEDURES , GENERAL TROUBLESHOOTING INFORMATION , and BATTERY TERMINAL DISCONNECTION AND RECONNECTION .**
- **Before replacing the SRS unit, check the SRS unit software version with**

GETtheMANUALS.org

the HDS. If the software version is not the latest, update the SRS unit software See SRS UNIT REMOVAL AND INSTALLATION or SRS UNIT UPDATE , and retest.

DTC Description	DTC

1. Problem verification:
   - 1. **CLEAR THE DTCS WITH THE HDS** .
   - 2. Turn the ignition switch to ON (II), then wait for 10 seconds.
   - 3. **CHECK FOR DTCS WITH THE HDS** .

DTC Description	DTC

Is DTC 11-9x or 11-Bx indicated?

YES : The failure is duplicated. Go to step 2.

NO : Intermittent failure, the system is OK at this time. **GO TO TROUBLESHOOTING INTERMITTENT FAILURES** . If another DTC is indicated, troubleshoot the DTC.

2. Driver's airbag inflator check:
   - 1. Turn the ignition switch to LOCK (0).
   - 2. Disconnect the negative cable from the battery, then wait at least 3 minutes.
   - 3. Remove the access panel (A) from the steering wheel, then disconnect the driver's airbag inflator 4P connector (B) on the cable reel harness.

GETtheMANUALS.org

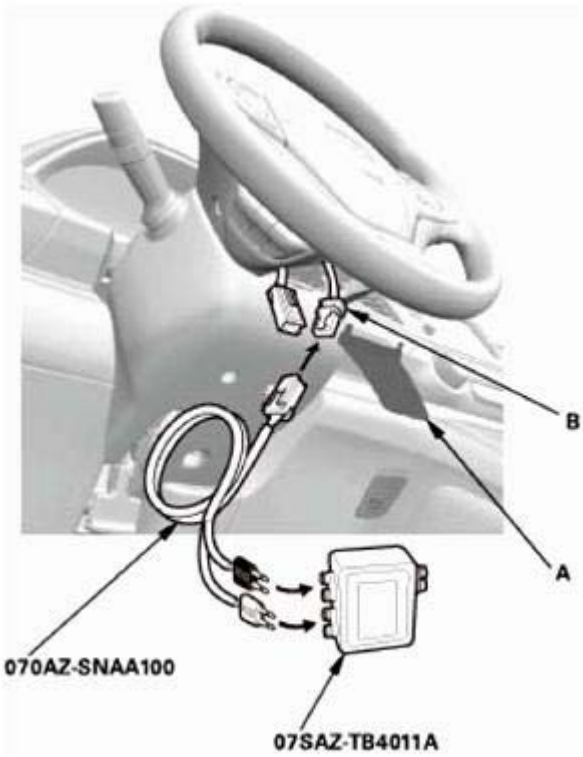

Fig. 14: Disconnecting Driver's Airbag Inflator 4P Connector
Courtesy of AMERICAN HONDA MOTOR CO., INC.

- 4. Connect the terminals of SRS simulator lead J to the SRS inflator simulator (2 ohms connectors), then connect SRS simulator lead J to the driver's airbag inflator 4P connector on the cable reel harness.
- 5. Reconnect the negative cable to the battery.
- 6. **CLEAR THE DTCS WITH THE HDS** .
- 7. Turn the ignition switch to ON (II), then wait for 10 seconds.
- 8. **CHECK FOR DTCS WITH THE HDS** .

DTC Description	DTC

Is DTC 11-9x or 11-Bx indicated?

YES : Go to step 3.

NO : Short to ground in the driver's airbag first or second inflator; **REPLACE THE DRIVER'S AIRBAG** , then clear the DTC.

3. Cable reel check:
   - 1. Turn the ignition switch to LOCK (0).

GETtheMANUALS.org

- 2. Disconnect the negative cable from the battery, then wait at least 3 minutes.
- 3. **REMOVE THE COLUMN COVERS** .
- 4. Disconnect cable reel connector B (4P) on the dashboard wire harness.

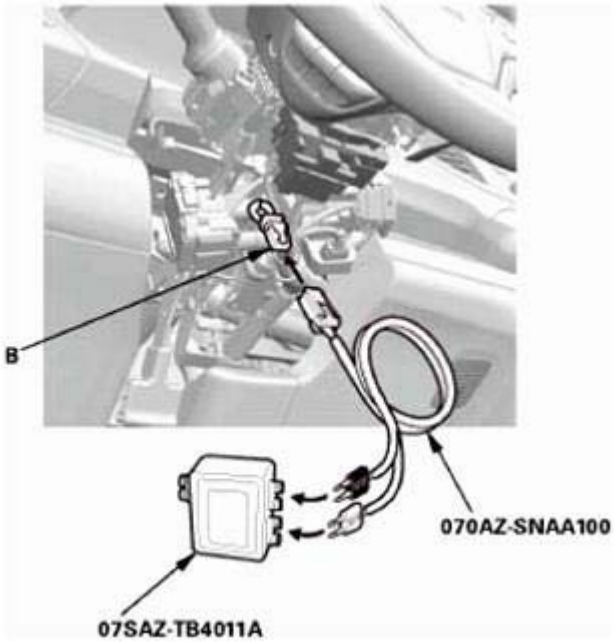

Fig. 15: Disconnecting Cable Reel Connector B (4P)
Courtesy of AMERICAN HONDA MOTOR CO., INC.

- 5. Connect the terminals of SRS simulator lead J to the SRS inflator simulator (2 ohms connectors), then connect SRS simulator lead J to cable reel connector B (4P) on the dashboard wire harness.
- 6. Reconnect the negative cable to the battery.
- 7. **CLEAR THE DTCS WITH THE HDS** .
- 8. Turn the ignition switch to ON (II), then wait for 10 seconds.
- 9. **CHECK FOR DTCS WITH THE HDS** .

DTC Description	DTC

Is DTC 11-9x or 11-Bx indicated?

YES : Go to step 4.

NO : Short to ground in the cable reel; **REPLACE THE CABLE REEL** , then clear the DTC.

4. Shorted wire check (LA1+, LA1-, LA2+, LA2- lines):
   - 1. Turn the ignition switch to LOCK (0).
   - 2. Disconnect the negative cable from the battery, then wait at least 3 minutes.

GETtheMANUALS.org

- 3. Disconnect the following connector.

  SRS unit connector A (39P) See **SRS UNIT REMOVAL AND INSTALLATION** or **SRS UNIT UPDATE**

- 4. Disconnect the SRS inflator simulator from SRS simulator lead J. Do not disconnect SRS simulator lead J from cable reel connector B (4P) on the dashboard wire harness.
- 5. Measure the resistance between test points 1 and 2.

  Test condition IG LOCK (0)

  Driver's airbag inflator 4P connector (on the cable reel harness): disconnected

  Cable reel connector B (4P) (on the dashboard wire harness): disconnected

  SRS unit connector A (39P): disconnected

  Cable reel connector B (4P) (on the dashboard wire harness): connected to SRS simulator lead J

  Test circuit LA1+, LA1-

  Test point 1 SRS simulator lead J black terminal

  Test point 2 Body ground

  Test circuit LA2+, LA2-

  Test point 1 SRS simulator lead J red terminal

  Test point 2 Body ground

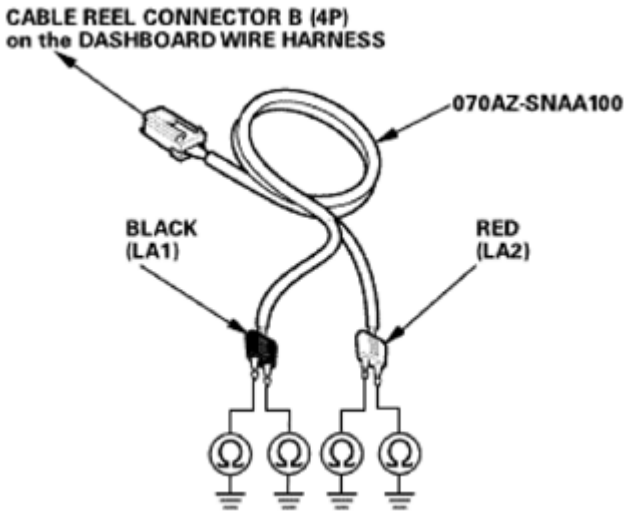

Fig. 16: Measuring Resistance Of Cable Reel Connector B (4P) On Dashboard Wire Harness

GETtheMANUALS.org

Using Tool
Courtesy of AMERICAN HONDA MOTOR CO., INC.

Is there an open circuit, or at least 1 Mohms?

YES : The LA1+, LA1-, LA2+, LA2- wires are OK. Faulty SRS unit or poor connection at SRS unit connector A (39P) and the SRS unit. Check the connection; if the connection is OK, **replace the SRS unit** See **SRS UNIT REMOVAL AND INSTALLATION** or **SRS UNIT UPDATE** . If the DTC does not clear, replace the dashboard wire harness.

NO : Short to ground in the dashboard wire harness; replace the dashboard wire harness, then clear the DTC.

DTC 12-1X ("X" CAN BE 0 THRU 9 OR A THRU F): OPEN IN THE FRONT PASSENGER'S AIRBAG FIRST INFLATOR; DTC 12-2X ("X" CAN BE 0 THRU 9 OR A THRU F): INCREASED RESISTANCE IN THE FRONT PASSENGER'S AIRBAG FIRST INFLATOR; DTC 12-4X ("X" CAN BE 0 THRU 9 OR A THRU F): OPEN IN THE FRONT PASSENGER'S AIRBAG SECOND INFLATOR; DTC 12-5X ("X" CAN BE 0 THRU 9 OR A THRU F): INCREASED RESISTANCE IN THE FRONT PASSENGER'S AIRBAG SECOND INFLATOR

GETtheMANUALS.org

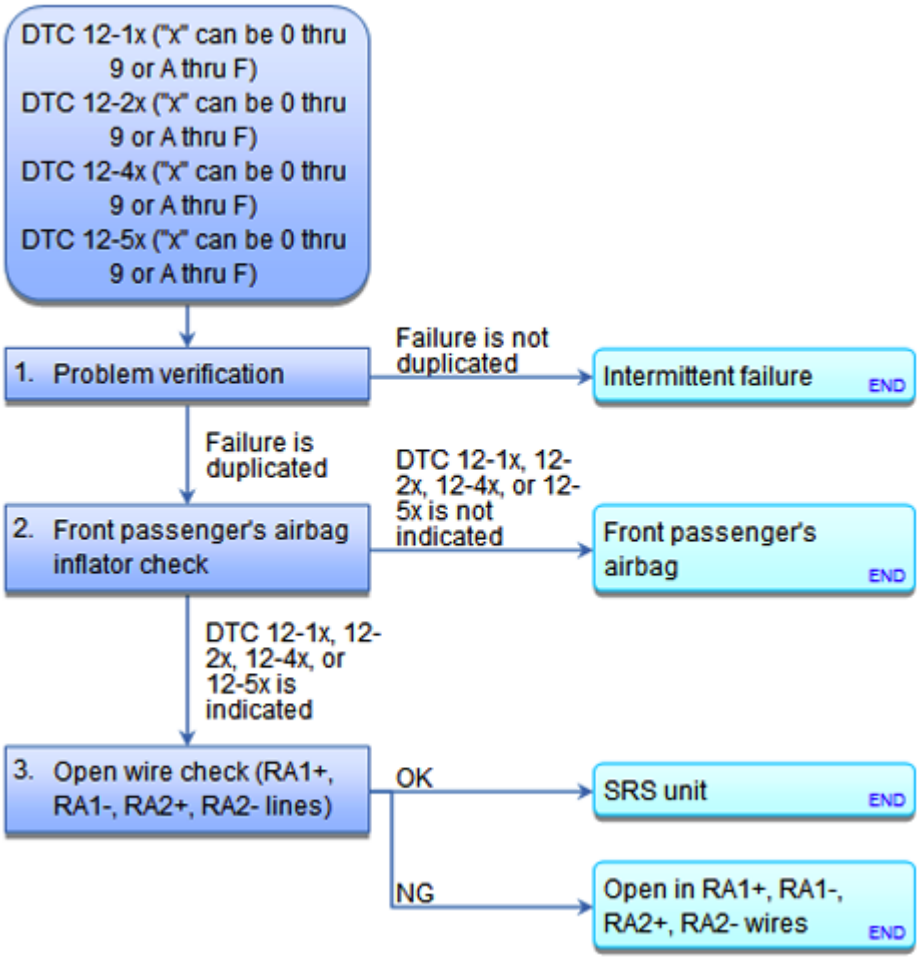

Fig. 17: SRS DTC Troubleshooting Flow Chart (12-1x, 12-2x, 12-4x, 12-5x)
Courtesy of AMERICAN HONDA MOTOR CO., INC.

Special Tools Required

- **SRS Inflator Simulator 07SAZ-TB4011A**
- **SRS Simulator Lead J 070AZ-SNAA100**

NOTE:

- **Before doing this troubleshooting procedure, find out if the vehicle was in a collision. If so, verify that all the required components were replaced with new components, of the correct part number, and that they were properly installed See AIRBAG AND TENSIONER DISPOSAL or SRS COMPONENT REPLACEMENT/INSPECTION AFTER DEPLOYMENT .**
- **Before doing this troubleshooting procedure, review SRS PRECAUTIONS AND PROCEDURES , GENERAL TROUBLESHOOTING INFORMATION , and BATTERY TERMINAL DISCONNECTION AND RECONNECTION .**
- **Before replacing the SRS unit, check the SRS unit software version with the HDS. If the software version is not the latest, update the SRS unit**

GETtheMANUALS.org

software See SRS UNIT REMOVAL AND INSTALLATION or SRS UNIT UPDATE , and retest.

DTC Description	DTC

1. Problem verification:
   - 1. **CLEAR THE DTCS WITH THE HDS** .
   - 2. Turn the ignition switch to ON (II), then wait for 10 seconds.
   - 3. **CHECK FOR DTCS WITH THE HDS** .

DTC Description	DTC

Is DTC 12-1x, 12-2x, 12-4x, or 12-5x indicated?

YES : The failure is duplicated. Go to step 2.

NO : Intermittent failure, the system is OK at this time. **GO TO TROUBLESHOOTING INTERMITTENT FAILURES** . If another DTC is indicated, troubleshoot the DTC.

2. Front passenger's airbag inflator check:
   - 1. Turn the ignition switch to LOCK (0).
   - 2. Disconnect the negative cable from the battery, then wait at least 3 minutes.
   - 3. **LOWER THE GLOVE BOX** .
   - 4. Disconnect the front passenger's airbag inflator 4P connector (A) on the dashboard wire harness.

GETtheMANUALS.org

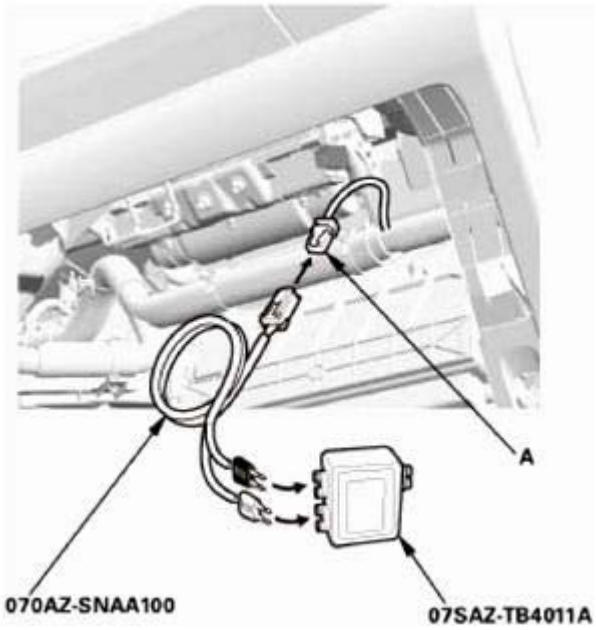

Fig. 18: Disconnecting Front Passenger's Airbag Inflator 4P Connector
Courtesy of AMERICAN HONDA MOTOR CO., INC.

- 5. Connect the terminals of SRS simulator lead J to the SRS inflator simulator (2 ohms connectors), then connect SRS simulator lead J to the front passenger's airbag inflator 4P connector on the dashboard wire harness.
- 6. Reconnect the negative cable to the battery.
- 7. **CLEAR THE DTCS WITH THE HDS** .
- 8. Turn the ignition switch to ON (II), then wait for 10 seconds.
- 9. **CHECK FOR DTCS WITH THE HDS** .

DTC Description	DTC

Is DTC 12-1x, 12-2x, 12-4x, or 12-5x indicated?

YES : Go to step 3.

NO : Open or increased resistance in the front passenger's airbag first or second inflator; **REPLACE THE FRONT PASSENGER'S AIRBAG** , then clear the DTC.

3. Open wire check (RA1+, RA1-, RA2+, RA2- lines):
   - 1. Turn the ignition switch to LOCK (0).
   - 2. Disconnect the negative cable from the battery, then wait at least 3 minutes.
   - 3. Disconnect the following connector.

   SRS unit connector A (39P) See **SRS UNIT REMOVAL AND INSTALLATION** or **SRS**

GETtheMANUALS.org

UNIT UPDATE

- 4. Disconnect the SRS inflator simulator from SRS simulator lead J. Do not disconnect SRS simulator lead J from the front passenger's airbag inflator 4P connector on the dashboard wire harness.
- 5. Measure the resistance of the test points.

Test condition IG LOCK (0)

Front passenger's airbag inflator 4P connector (on the dashboard wire harness): disconnected

SRS unit connector A (39P): disconnected

Front passenger's airbag inflator 4P connector (on the dashboard wire harness): connected to SRS simulator lead J

Test circuit RA1+, RA1-

Test point SRS simulator lead J black terminal

Test circuit RA2+, RA2-

Test point SRS simulator lead J red terminal

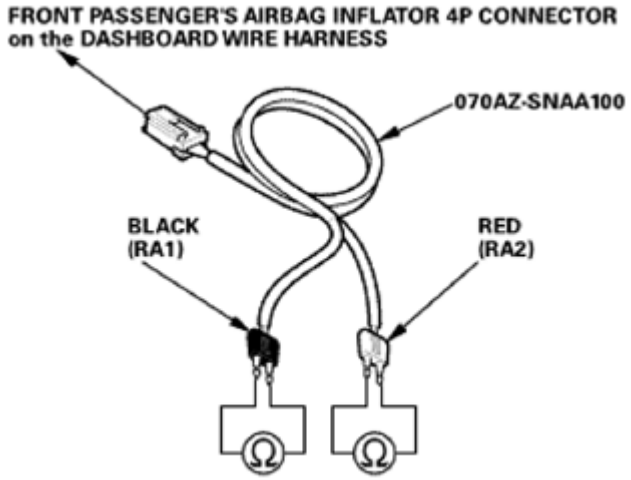

Fig. 19: Measuring Resistance Of Front Passenger's Airbag Inflator 4P Connector On Dashboard Wire Harness Using Tool
Courtesy of AMERICAN HONDA MOTOR CO., INC.

Is there less than 1.0 ohms?

YES : The RA1+, RA1-, RA2+, RA2- wires are OK. Faulty SRS unit or poor connection at SRS unit connector A (39P) and the SRS unit. Check the connection; if the connection is OK, **replace the SRS unit** See **SRS UNIT REMOVAL AND INSTALLATION** or **SRS UNIT UPDATE** . If the DTC does

GETtheMANUALS.org

not clear, replace the dashboard wire harness.

NO : Open or increased resistance in the dashboard wire harness; replace the dashboard wire harness, then clear the DTC.

DTC 12-3X ("X" CAN BE 0 THRU 9 OR A THRU F): SHORT TO ANOTHER WIRE OR DECREASED RESISTANCE IN THE FRONT PASSENGER'S AIRBAG FIRST INFLATOR; DTC 12-6X ("X" CAN BE 0 THRU 9 OR A THRU F): SHORT TO ANOTHER WIRE OR DECREASED RESISTANCE IN THE FRONT PASSENGER'S AIRBAG SECOND INFLATOR

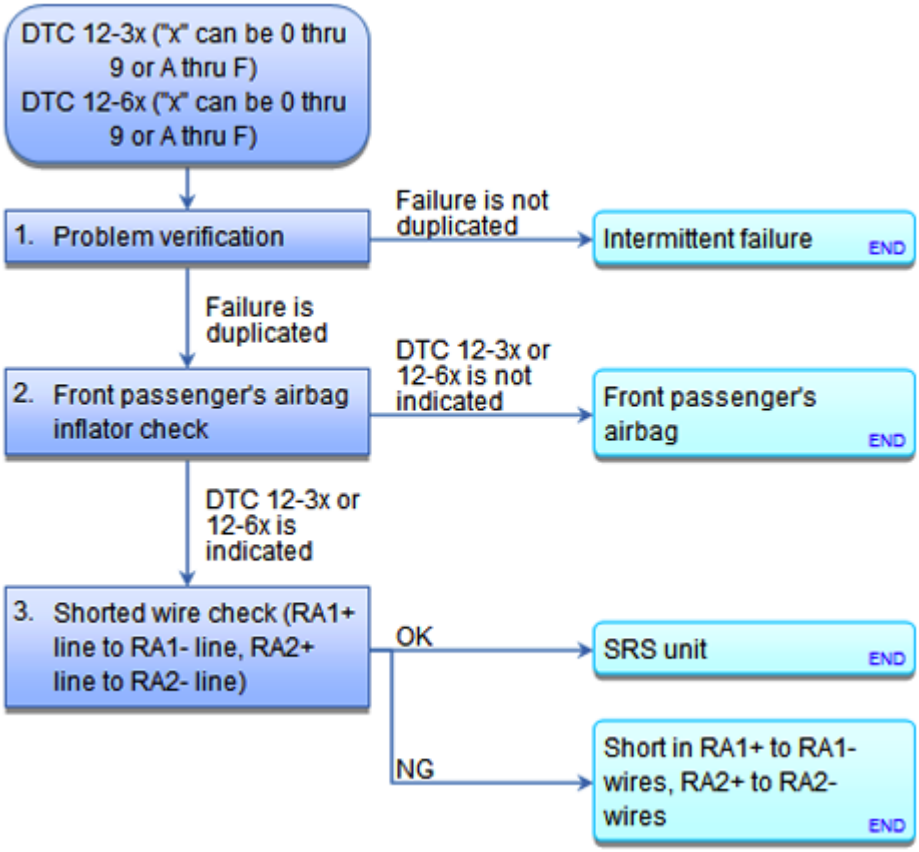

Fig. 20: SRS DTC Troubleshooting Flow Chart (12-3x, 12-6x)
Courtesy of AMERICAN HONDA MOTOR CO., INC.

Special Tools Required

- **SRS Inflator Simulator 07SAZ-TB4011A**
- **SRS Simulator Lead J 070AZ-SNAA100**
- **SRS Short Canceller 070AZ-SAA0100**

NOTE:

GETtheMANUALS.org

- **Before doing this troubleshooting procedure, find out if the vehicle was in a collision. If so, verify that all the required components were replaced with new components, of the correct part number, and that they were properly installed See AIRBAG AND TENSIONER DISPOSAL or SRS COMPONENT REPLACEMENT/INSPECTION AFTER DEPLOYMENT .**
- **Before doing this troubleshooting procedure, review SRS PRECAUTIONS AND PROCEDURES , GENERAL TROUBLESHOOTING INFORMATION , and BATTERY TERMINAL DISCONNECTION AND RECONNECTION .**
- **Before replacing the SRS unit, check the SRS unit software version with the HDS. If the software version is not the latest, update the SRS unit software See SRS UNIT REMOVAL AND INSTALLATION or SRS UNIT UPDATE , and retest.**

DTC Description	DTC

1. Problem verification:
   - 1. **CLEAR THE DTCS WITH THE HDS** .
   - 2. Turn the ignition switch to ON (II), then wait for 10 seconds.
   - 3. **CHECK FOR DTCS WITH THE HDS** .

DTC Description	DTC

Is DTC 12-3x or 12-6x indicated?

YES : The failure is duplicated. Go to step 2.

NO : Intermittent failure, the system is OK at this time. **GO TO TROUBLESHOOTING INTERMITTENT FAILURES** . If another DTC is indicated, troubleshoot the DTC.

2. Front passenger's airbag inflator check:
   - 1. Turn the ignition switch to LOCK (0).
   - 2. Disconnect the negative cable from the battery, then wait at least 3 minutes.
   - 3. **LOWER THE GLOVE BOX** .
   - 4. Disconnect the front passenger's airbag inflator 4P connector (A) on the dashboard wire harness.

GETtheMANUALS.org

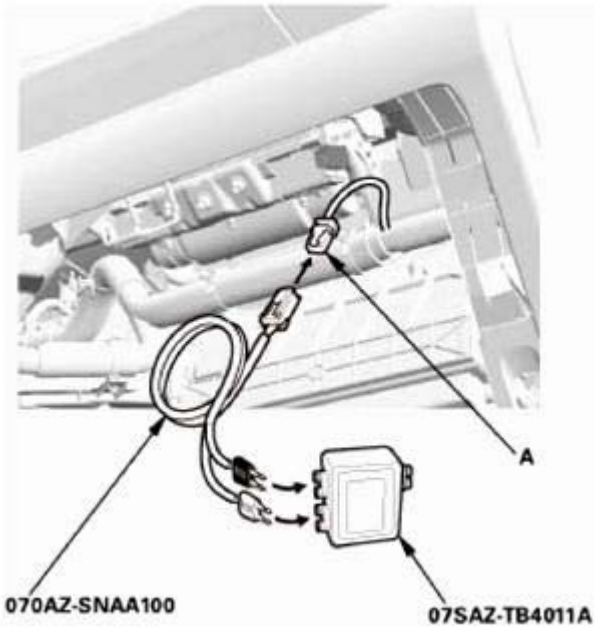

Fig. 21: Disconnecting Front Passenger's Airbag Inflator 4P Connector
Courtesy of AMERICAN HONDA MOTOR CO., INC.

- 5. Connect the terminals of SRS simulator lead J to the SRS inflator simulator (2 ohms connectors), then connect SRS simulator lead J to the front passenger's airbag inflator 4P connector on the dashboard wire harness.
- 6. Reconnect the negative cable to the battery.
- 7. **CLEAR THE DTCS WITH THE HDS** .
- 8. Turn the ignition switch to ON (II), then wait for 10 seconds.
- 9. **CHECK FOR DTCS WITH THE HDS** .

DTC Description	DTC

Is DTC 12-3x or 12-6x indicated?

YES : Go to step 3.

NO : Short to another wire in the front passenger's airbag first or second inflator; **REPLACE THE FRONT PASSENGER'S AIRBAG** , then clear the DTC.

3. Shorted wire check (RA1+ line to RA1- line, RA2+ line to RA2- line):
   - 1. Turn the ignition switch to LOCK (0).
   - 2. Disconnect the negative cable from the battery, then wait at least 3 minutes.
   - 3. Disconnect the following connector.

   SRS unit connector A (39P) See **SRS UNIT REMOVAL AND INSTALLATION** or **SRS**

GETtheMANUALS.org

UNIT UPDATE

- 4. Disconnect the SRS inflator simulator from SRS simulator lead J. Do not disconnect SRS simulator lead J from the front passenger's airbag inflator 4P connector on the dashboard wire harness.
- 5. **CONNECT THE SRS SHORT CANCELLERS TO SRS UNIT CONNECTOR A (39P) TERMINALS NO. 1 AND NO. 2, AND TERMINALS NO. 5 AND NO. 6** .
- 6. Measure the resistance of the test points.

Test condition IG LOCK (0)

Front passenger's airbag inflator 4P connector (on the dashboard wire harness): disconnected

SRS unit connector A (39P): disconnected

Front passenger's airbag inflator 4P connector (on the dashboard wire harness): connected to SRS simulator lead J

SRS unit connector A (39P) No. 1 and No. 2: connected to SRS short canceller

SRS unit connector A (39P) No. 5 and No. 6: connected to SRS short canceller

Test circuit RA1+, RA1-

Test point SRS simulator lead J black terminal

Test circuit RA2+, RA2-

Test point SRS simulator lead J red terminal

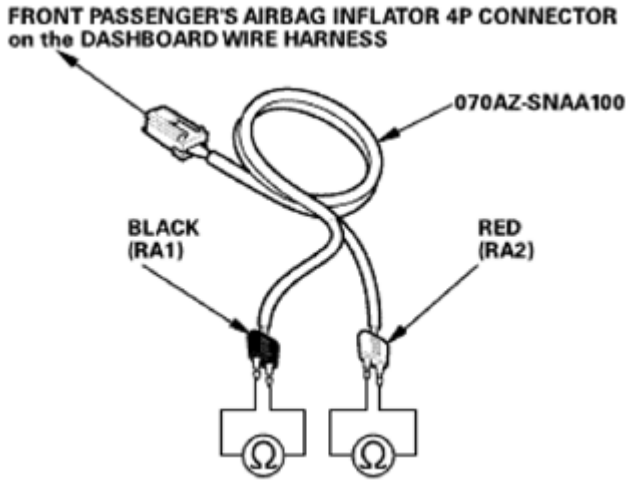

Fig. 22: Measuring Resistance Of Front Passenger's Airbag Inflator 4P Connector On Dashboard Wire Harness Using Tool

GETtheMANUALS.org

Courtesy of AMERICAN HONDA MOTOR CO., INC.

Is there an open circuit, or at least 1 Mohms?

YES : The RA1+, RA1-, RA2+, RA2- wires are OK. Faulty SRS unit or poor connection at SRS unit connector A (39P) and the SRS unit. Check the connection; if the connection is OK, **replace the SRS unit** See **SRS UNIT REMOVAL AND INSTALLATION** or **SRS UNIT UPDATE** . If the DTC does not clear, replace the dashboard wire harness.

NO : Short to another wire in the dashboard wire harness; replace the dashboard wire harness, then clear the DTC.

DTC 12-8X ("X" CAN BE 0 THRU 9 OR A THRU F): SHORT TO POWER IN THE FRONT PASSENGER'S AIRBAG FIRST INFLATOR; DTC 12-AX ("X" CAN BE 0 THRU 9 OR A THRU F): SHORT TO POWER IN THE FRONT PASSENGER'S AIRBAG SECOND INFLATOR

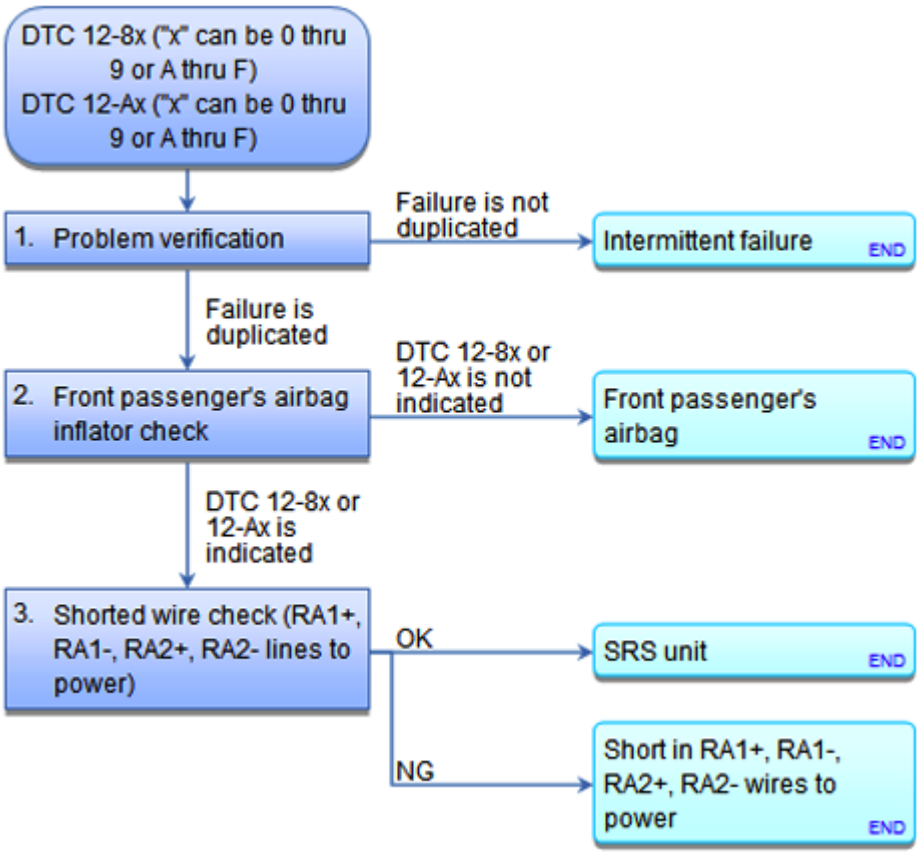

Fig. 23: SRS DTC Troubleshooting Flow Chart (12-8x, 12-Ax)
Courtesy of AMERICAN HONDA MOTOR CO., INC.

Special Tools Required

GETtheMANUALS.org

- **SRS Inflator Simulator 07SAZ-TB4011A**
- **SRS Simulator Lead J 070AZ-SNAA100**

NOTE:

- **Before doing this troubleshooting procedure, find out if the vehicle was in a collision. If so, verify that all the required components were replaced with new components, of the correct part number, and that they were properly installed See AIRBAG AND TENSIONER DISPOSAL or SRS COMPONENT REPLACEMENT/INSPECTION AFTER DEPLOYMENT .**
- **Before doing this troubleshooting procedure, review SRS PRECAUTIONS AND PROCEDURES , GENERAL TROUBLESHOOTING INFORMATION , and BATTERY TERMINAL DISCONNECTION AND RECONNECTION .**
- **Before replacing the SRS unit, check the SRS unit software version with the HDS. If the software version is not the latest, update the SRS unit software See SRS UNIT REMOVAL AND INSTALLATION or SRS UNIT UPDATE , and retest.**

DTC Description	DTC

1. Problem verification:
   - 1. **CLEAR THE DTCS WITH THE HDS** .
   - 2. Turn the ignition switch to ON (II), then wait for 10 seconds.
   - 3. **CHECK FOR DTCS WITH THE HDS** .

DTC Description	DTC

Is DTC 12-8x or 12-Ax indicated?

YES : The failure is duplicated. Go to step 2.

NO : Intermittent failure, the system is OK at this time. **GO TO TROUBLESHOOTING INTERMITTENT FAILURES** . If another DTC is indicated, troubleshoot the DTC.

2. Front passenger's airbag inflator check:
   - 1. Turn the ignition switch to LOCK (0).
   - 2. Disconnect the negative cable from the battery, then wait at least 3 minutes.
   - 3. **LOWER THE GLOVE BOX** .
   - 4. Disconnect the front passenger's airbag inflator 4P connector (A) on the dashboard wire harness.

GETtheMANUALS.org

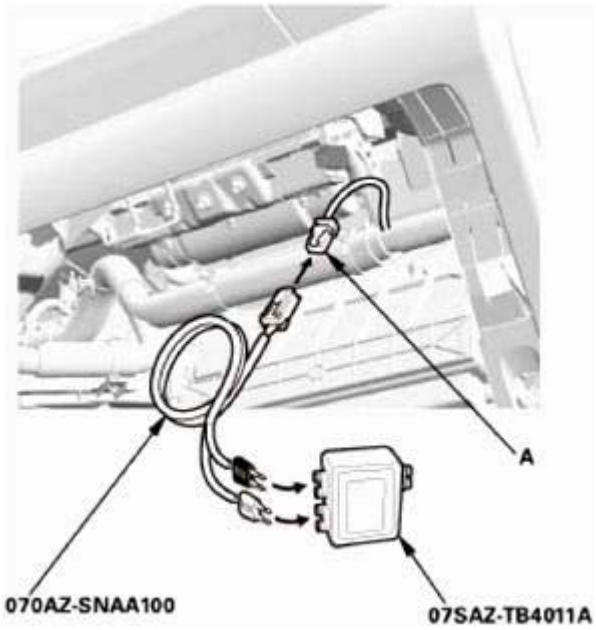

Fig. 24: Disconnecting Front Passenger's Airbag Inflator 4P Connector
Courtesy of AMERICAN HONDA MOTOR CO., INC.

- 5. Connect the terminals of SRS simulator lead J to the SRS inflator simulator (2 ohms connectors), then connect SRS simulator lead J to the front passenger's airbag inflator 4P connector on the dashboard wire harness.
- 6. Reconnect the negative cable to the battery.
- 7. **CLEAR THE DTCS WITH THE HDS** .
- 8. Turn the ignition switch to ON (II), then wait for 10 seconds.
- 9. **CHECK FOR DTCS WITH THE HDS** .

DTC Description	DTC

Is DTC 12-8x or 12-Ax indicated?

YES : Go to step 3.

NO : Short to power in the front passenger's airbag first or second inflator; **REPLACE THE FRONT PASSENGER'S AIRBAG** , then clear the DTC.

3. Shorted wire check (RA1+, RA1-, RA2+, RA2- lines to power):
   - 1. Turn the ignition switch to LOCK (0).
   - 2. Disconnect the negative cable from the battery, then wait at least 3 minutes.
   - 3. Disconnect the following connector.

   SRS unit connector A (39P) See **SRS UNIT REMOVAL AND INSTALLATION** or **SRS**

GETtheMANUALS.org

UNIT UPDATE

- 4. Disconnect the SRS inflator simulator from SRS simulator lead J. Do not disconnect SRS simulator lead J from the front passenger's airbag inflator 4P connector on the dashboard wire harness.
- 5. Reconnect the negative cable to the battery.
- 6. Turn the ignition switch to ON (II).
- 7. Measure the voltage between test points 1 and 2.

Test condition IG ON (II)

Front passenger's airbag inflator 4P connector (on the dashboard wire harness): disconnected

SRS unit connector A (39P): disconnected

Front passenger's airbag inflator 4P connector (on the dashboard wire harness): connected to SRS simulator lead J

Test circuit RA1+, RA1-

Test point 1 SRS simulator lead J black terminal

Test point 2 Body ground

Test circuit RA2+, RA2-

Test point 1 SRS simulator lead J red terminal

Test point 2 Body ground

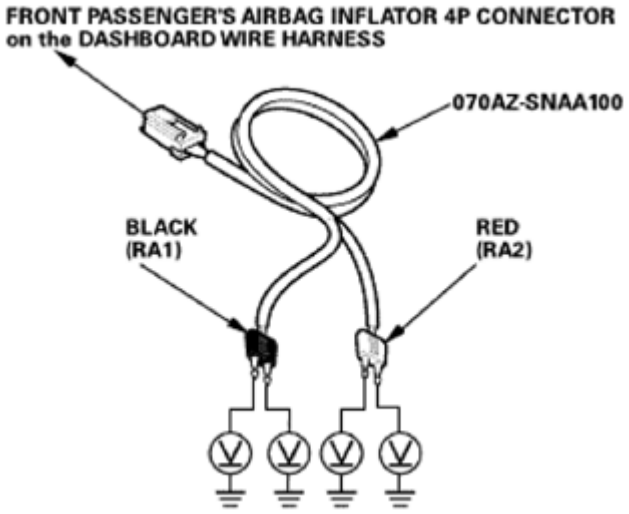

Fig. 25: Measuring Resistance Of Front Passenger's Airbag Inflator 4P Connector On

GETtheMANUALS.org

Dashboard Wire Harness Using Tool
Courtesy of AMERICAN HONDA MOTOR CO., INC.

Is there less than 0.2 V?

YES : The RA1+, RA1-, RA2+, RA2- wires are OK. Faulty SRS unit or poor connection at SRS unit connector A (39P) and the SRS unit. Check the connection; if the connection is OK, **replace the SRS unit** See **SRS UNIT REMOVAL AND INSTALLATION** or **SRS UNIT UPDATE** . If the DTC does not clear, replace the dashboard wire harness.

NO : Short to power in the dashboard wire harness; replace the dashboard wire harness, then clear the DTC.

DTC 12-9X ("X" CAN BE 0 THRU 9 OR A THRU F): SHORT TO GROUND IN THE FRONT PASSENGER'S AIRBAG FIRST INFLATOR; DTC 12-BX ("X" CAN BE 0 THRU 9 OR A THRU F): SHORT TO GROUND IN THE FRONT PASSENGER'S AIRBAG SECOND INFLATOR

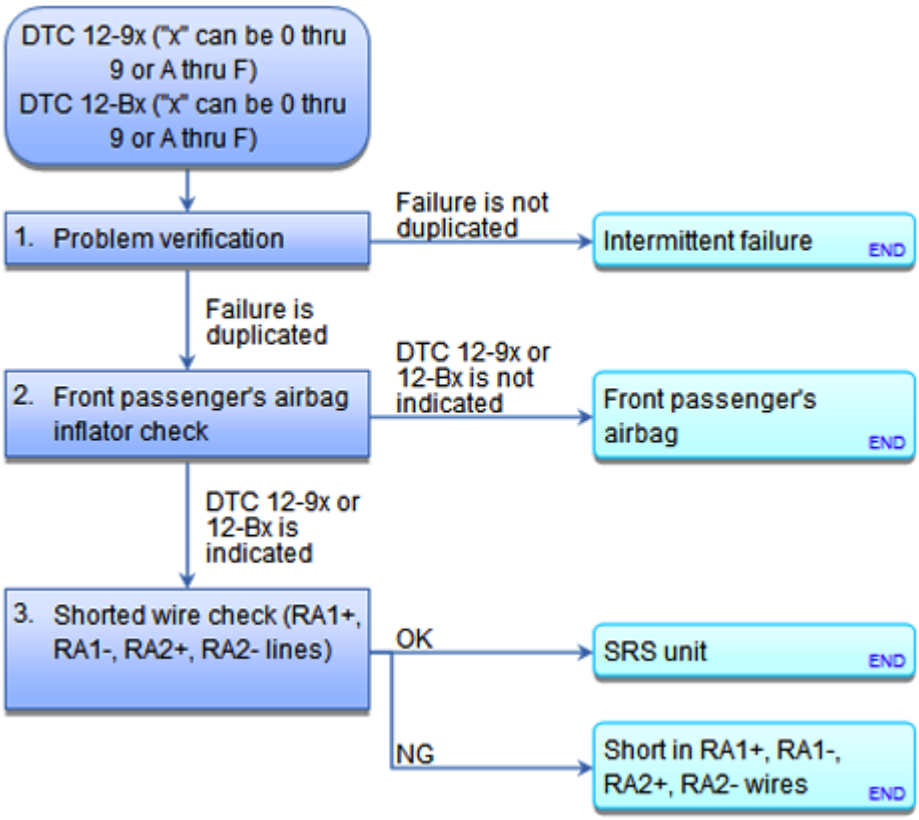

Fig. 26: SRS DTC Troubleshooting Flow Chart (12-9x, 12-Bx)
Courtesy of AMERICAN HONDA MOTOR CO., INC.

Special Tools Required

GETtheMANUALS.org

- **SRS Inflator Simulator 07SAZ-TB4011A**
- **SRS Simulator Lead J 070AZ-SNAA100**

NOTE:

- **Before doing this troubleshooting procedure, find out if the vehicle was in a collision. If so, verify that all the required components were replaced with new components, of the correct part number, and that they were properly installed See AIRBAG AND TENSIONER DISPOSAL or SRS COMPONENT REPLACEMENT/INSPECTION AFTER DEPLOYMENT .**
- **Before doing this troubleshooting procedure, review SRS PRECAUTIONS AND PROCEDURES , GENERAL TROUBLESHOOTING INFORMATION , and BATTERY TERMINAL DISCONNECTION AND RECONNECTION .**
- **Before replacing the SRS unit, check the SRS unit software version with the HDS. If the software version is not the latest, update the SRS unit software See SRS UNIT REMOVAL AND INSTALLATION or SRS UNIT UPDATE , and retest.**

DTC Description	DTC

1. Problem verification:
   - 1. **CLEAR THE DTCS WITH THE HDS** .
   - 2. Turn the ignition switch to ON (II), then wait for 10 seconds.
   - 3. **CHECK FOR DTCS WITH THE HDS** .

DTC Description	DTC

Is DTC 12-9x or 12-Bx indicated?

YES : The failure is duplicated. Go to step 2.

NO : Intermittent failure, the system is OK at this time. **GO TO TROUBLESHOOTING INTERMITTENT FAILURES** . If another DTC is indicated, troubleshoot the DTC.

2. Front passenger's airbag inflator check:
   - 1. Turn the ignition switch to LOCK (0).
   - 2. Disconnect the negative cable from the battery, then wait at least 3 minutes.
   - 3. **LOWER THE GLOVE BOX** .
   - 4. Disconnect the front passenger's airbag inflator 4P connector (A) on the dashboard wire harness.

GETtheMANUALS.org

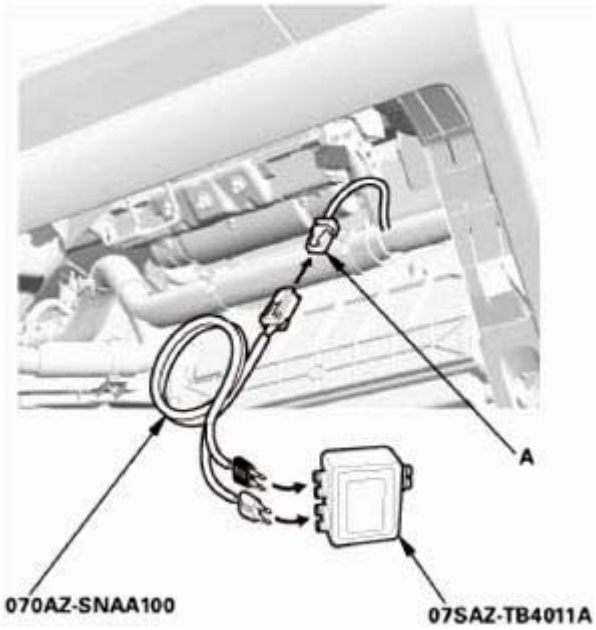

Fig. 27: Disconnecting Front Passenger's Airbag Inflator 4P Connector
Courtesy of AMERICAN HONDA MOTOR CO., INC.

- 5. Connect the terminals of SRS simulator lead J to the SRS inflator simulator (2 ohms connectors), then connect SRS simulator lead J to the front passenger's airbag inflator 4P connector on the dashboard wire harness.
- 6. Reconnect the negative cable to the battery.
- 7. **CLEAR THE DTCS WITH THE HDS** .
- 8. Turn the ignition switch to ON (II), then wait for 10 seconds.
- 9. **CHECK FOR DTCS WITH THE HDS** .

DTC Description	DTC

Is DTC 12-9x or 12-Bx indicated?

YES : Go to step 3.

NO : Short to ground in the front passenger's airbag first or second inflator; **REPLACE THE FRONT PASSENGER'S AIRBAG** , then clear the DTC.

3. Shorted wire check (RA1+, RA1-, RA2+, RA2- lines):
   - 1. Turn the ignition switch to LOCK (0).
   - 2. Disconnect the negative cable from the battery, then wait at least 3 minutes.
   - 3. Disconnect the following connector.

   SRS unit connector A (39P) See **SRS UNIT REMOVAL AND INSTALLATION** or **SRS**

GETtheMANUALS.org

UNIT UPDATE

- 4. Disconnect the SRS inflator simulator from SRS simulator lead J. Do not disconnect SRS simulator lead J from the front passenger's airbag inflator 4P connector on the dashboard wire harness.
- 5. Measure the resistance between test points 1 and 2.

Test condition IG LOCK (0)

Front passenger's airbag inflator 4P connector (on the dashboard wire harness): disconnected

SRS unit connector A (39P): disconnected

Front passenger's airbag inflator 4P connector (on the dashboard wire harness): connected to SRS simulator lead J

Test circuit RA1+, RA1-

Test point 1 SRS simulator lead J black terminal

Test point 2 Body ground

Test circuit RA2+, RA2-

Test point 1 SRS simulator lead J red terminal

Test point 2 Body ground

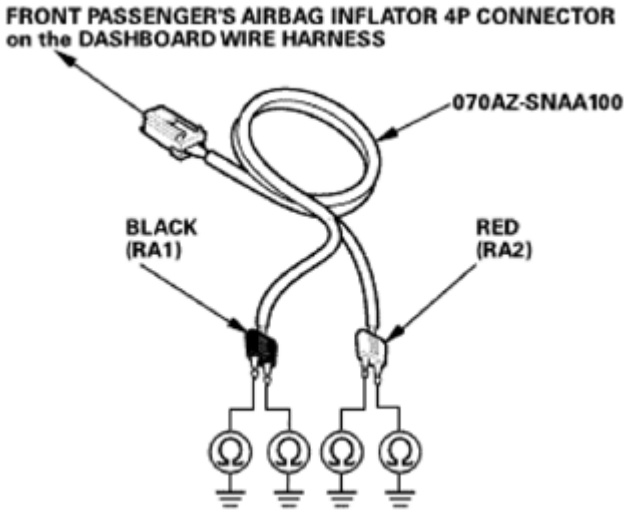

Fig. 28: Measuring Resistance Of Front Passenger's Airbag Inflator 4P Connector On Dashboard Wire Harness Using Tool
Courtesy of AMERICAN HONDA MOTOR CO., INC.

GETtheMANUALS.org

Is there an open circuit, or at least 1 Mohms?

YES : The RA1+, RA1-, RA2+, RA2- wires are OK. Faulty SRS unit or poor connection at SRS unit connector A (39P) and the SRS unit. Check the connection; if the connection is OK, **replace the SRS unit** See **SRS UNIT REMOVAL AND INSTALLATION** or **SRS UNIT UPDATE** . If the DTC does not clear, replace the dashboard wire harness.

NO : Short to ground in the dashboard wire harness; replace the dashboard wire harness, then clear the DTC.

DTC 21-1X ("X" CAN BE 0 THRU 9 OR A THRU F): OPEN IN THE DRIVER'S SEAT BELT TENSIONER; DTC 21-2X ("X" CAN BE 0 THRU 9 OR A THRU F): INCREASED RESISTANCE IN THE DRIVER'S SEAT BELT TENSIONER

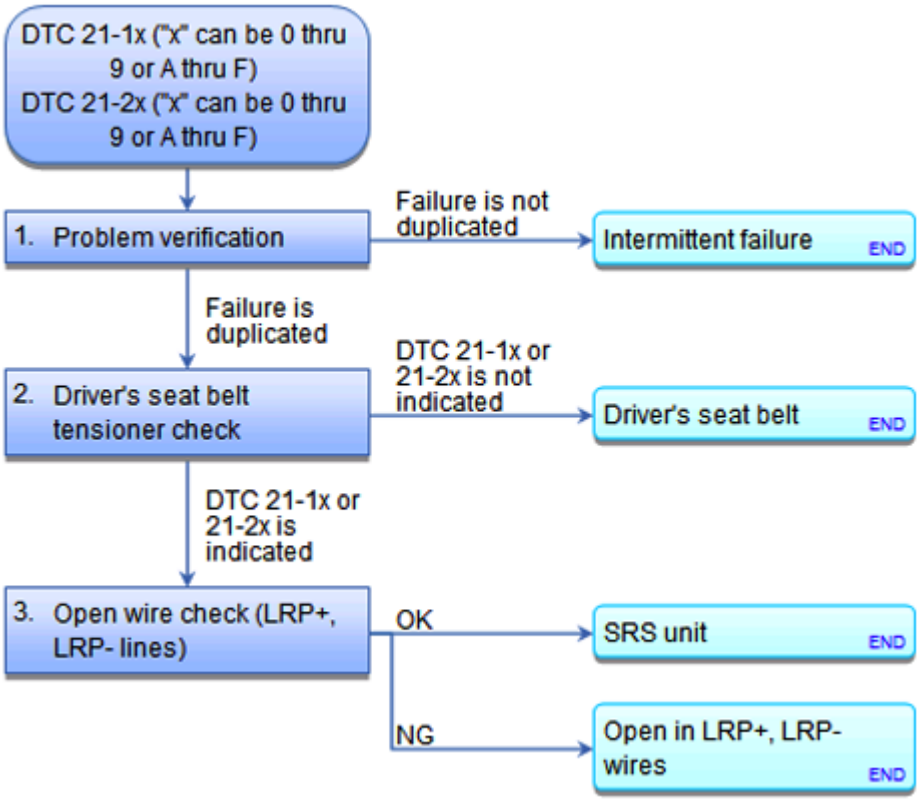

Fig. 29: SRS DTC Troubleshooting Flow Chart (21-1x, 21-2x)
Courtesy of AMERICAN HONDA MOTOR CO., INC.

Special Tools Required

- **SRS Inflator Simulator 07SAZ-TB4011A**
- **SRS Simulator Lead K 070AZ-SNAA200**
- **SRS Short Canceller 070AZ-SAA0100**

GETtheMANUALS.org

NOTE:

- **Before doing this troubleshooting procedure, find out if the vehicle was in a collision. If so, verify that all the required components were replaced with new components, of the correct part number, and that they were properly installed See AIRBAG AND TENSIONER DISPOSAL or SRS COMPONENT REPLACEMENT/INSPECTION AFTER DEPLOYMENT .**
- **Before doing this troubleshooting procedure, review SRS PRECAUTIONS AND PROCEDURES , GENERAL TROUBLESHOOTING INFORMATION , and BATTERY TERMINAL DISCONNECTION AND RECONNECTION .**
- **Before replacing the SRS unit, check the SRS unit software version with the HDS. If the software version is not the latest, update the SRS unit software See SRS UNIT REMOVAL AND INSTALLATION or SRS UNIT UPDATE , and retest.**

DTC Description	DTC

1. Problem verification:
   - 1. **CLEAR THE DTCS WITH THE HDS** .
   - 2. Turn the ignition switch to ON (II), then wait for 10 seconds.
   - 3. **CHECK FOR DTCS WITH THE HDS** .

DTC Description	DTC

Is DTC 21-1x or 21-2x indicated?

YES : The failure is duplicated. Go to step 2.

NO : Intermittent failure, the system is OK at this time. **GO TO TROUBLESHOOTING INTERMITTENT FAILURES** . If another DTC is indicated, troubleshoot the DTC.

2. Driver's seat belt tensioner check:
   - 1. Turn the ignition switch to LOCK (0).
   - 2. Disconnect the negative cable from the battery, then wait at least 3 minutes.
   - 3. **Remove the left side B-pillar lower trim** See **INTERIOR TRIM REMOVAL AND INSTALLATION - CARGO AREA** , **INTERIOR TRIM REMOVAL AND INSTALLATION - PILLAR AREAS** or **INTERIOR TRIM REMOVAL AND INSTALLATION - TAILGATE AREAS** .
   - 4. Disconnect the driver's seat belt tensioner 4P connector (A) on the floor wire harness.

GETtheMANUALS.org

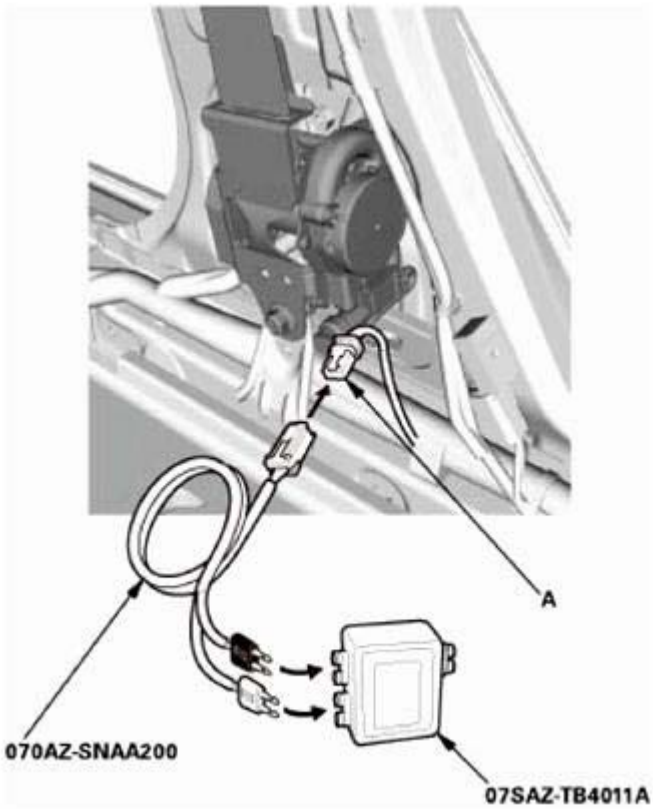

Fig. 30: Disconnecting Driver's Seat Belt Tensioner 4P Connector
Courtesy of AMERICAN HONDA MOTOR CO., INC.

- 5. Connect the terminals of SRS simulator lead K to the SRS inflator simulator (2 ohms connectors), then connect SRS simulator lead K to the driver's seat belt tensioner 4P connector on the floor wire harness.
- 6. Reconnect the negative cable to the battery.
- 7. **CLEAR THE DTCS WITH THE HDS** .
- 8. Turn the ignition switch to ON (II), then wait for 10 seconds.
- 9. **CHECK FOR DTCS WITH THE HDS** .

DTC Description	DTC

Is DTC 21-1x or 21-2x indicated?

YES : Go to step 3.

NO : Open or increased resistance in the driver's seat belt tensioner; **REPLACE THE DRIVER'S SEAT BELT** , then clear the DTC.

3. Open wire check (LRP+, LRP- lines):

GETtheMANUALS.org

- 1. Turn the ignition switch to LOCK (0).
- 2. Disconnect the negative cable from the battery, then wait at least 3 minutes.
- 3. Disconnect the following connector.

  SRS unit connector B (39P) See **SRS UNIT REMOVAL AND INSTALLATION** or **SRS UNIT UPDATE**

- 4. **CONNECT THE SRS SHORT CANCELLER TO SRS UNIT CONNECTOR B (39P) TERMINALS NO. 19 AND NO. 20** .
- 5. Measure the resistance between test points 1 and 2.

  Test condition IG LOCK (0)

  Driver's seat belt tensioner 4P connector (on the floor wire harness): disconnected

  SRS unit connector B (39P): disconnected

  Driver's seat belt tensioner 4P connector (on the floor wire harness): connected to SRS simulator lead K

  SRS unit connector B (39P) No. 19 and No. 20: connected to SRS short canceller

  Test circuit LRP+, LRP-

  Test point 1 SRS unit connector B (39P) No. 19

  Test point 2 SRS unit connector B (39P) No. 20

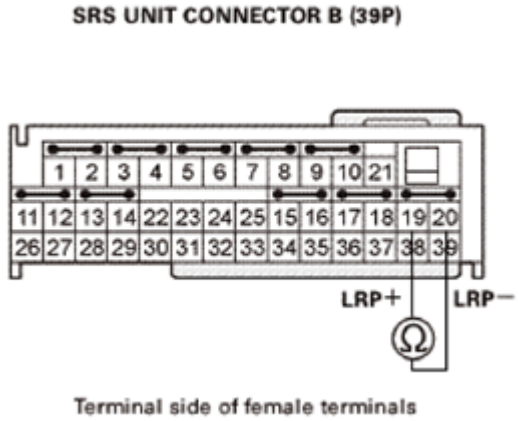

Fig. 31: Measuring Resistance Between SRS Unit Connector B (39P) No. 19 And 20
Courtesy of AMERICAN HONDA MOTOR CO., INC.

Is there 2.0 - 3.0 ohms?

YES : The LRP+, LRP- wires are OK. Faulty SRS unit or poor connection at SRS unit connector B (39P)

GETtheMANUALS.org

and the SRS unit. Check the connection; if the connection is OK, **replace the SRS unit** See **SRS UNIT REMOVAL AND INSTALLATION** or **SRS UNIT UPDATE** . If the DTC does not clear, replace the floor wire harness.

NO : Open or increased resistance in the floor wire harness; replace the floor wire harness, then clear the DTC.

DTC 21-3X ("X" CAN BE 0 THRU 9 OR A THRU F): SHORT TO ANOTHER WIRE OR DECREASED RESISTANCE IN THE DRIVER'S SEAT BELT TENSIONER

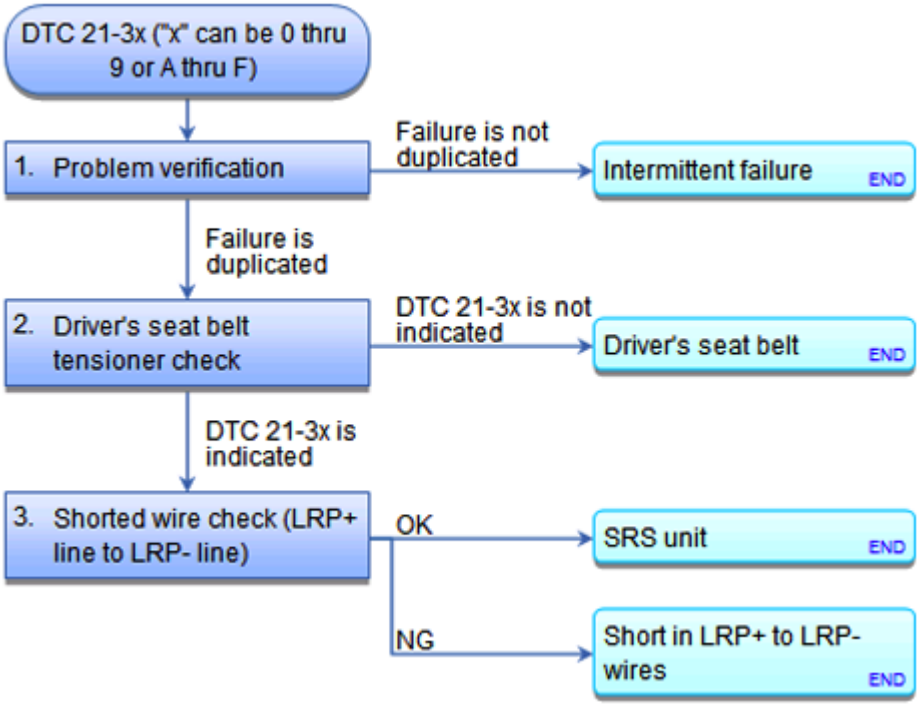

Fig. 32: SRS DTC Troubleshooting Flow Chart (21-3x)
Courtesy of AMERICAN HONDA MOTOR CO., INC.

Special Tools Required

- **SRS Inflator Simulator 07SAZ-TB4011A**
- **SRS Simulator Lead K 070AZ-SNAA200**
- **SRS Short Canceller 070AZ-SAA0100**

NOTE:

- **Before doing this troubleshooting procedure, find out if the vehicle was in a collision. If so, verify that all the required components were replaced with new components, of the correct part number, and that they were properly installed See AIRBAG AND TENSIONER DISPOSAL or SRS COMPONENT REPLACEMENT/INSPECTION AFTER DEPLOYMENT .**

GETtheMANUALS.org

- **Before doing this troubleshooting procedure, review SRS PRECAUTIONS AND PROCEDURES , GENERAL TROUBLESHOOTING INFORMATION , and BATTERY TERMINAL DISCONNECTION AND RECONNECTION .**
- **Before replacing the SRS unit, check the SRS unit software version with the HDS. If the software version is not the latest, update the SRS unit software See SRS UNIT REMOVAL AND INSTALLATION or SRS UNIT UPDATE , and retest.**

DTC Description	DTC

1. Problem verification:
   - 1. **CLEAR THE DTCS WITH THE HDS** .
   - 2. Turn the ignition switch to ON (II), then wait for 10 seconds.
   - 3. **CHECK FOR DTCS WITH THE HDS** .

DTC Description	DTC

Is DTC 21-3x indicated?

YES : The failure is duplicated. Go to step 2.

NO : Intermittent failure, the system is OK at this time. **GO TO TROUBLESHOOTING INTERMITTENT FAILURES** . If another DTC is indicated, troubleshoot the DTC.

2. Driver's seat belt tensioner check:
   - 1. Turn the ignition switch to LOCK (0).
   - 2. Disconnect the negative cable from the battery, then wait at least 3 minutes.
   - 3. **Remove the left side B-pillar lower trim** See **INTERIOR TRIM REMOVAL AND INSTALLATION - CARGO AREA** , **INTERIOR TRIM REMOVAL AND INSTALLATION - PILLAR AREAS** or **INTERIOR TRIM REMOVAL AND INSTALLATION - TAILGATE AREAS** .
   - 4. Disconnect the driver's seat belt tensioner 4P connector (A) on the floor wire harness.

GETtheMANUALS.org

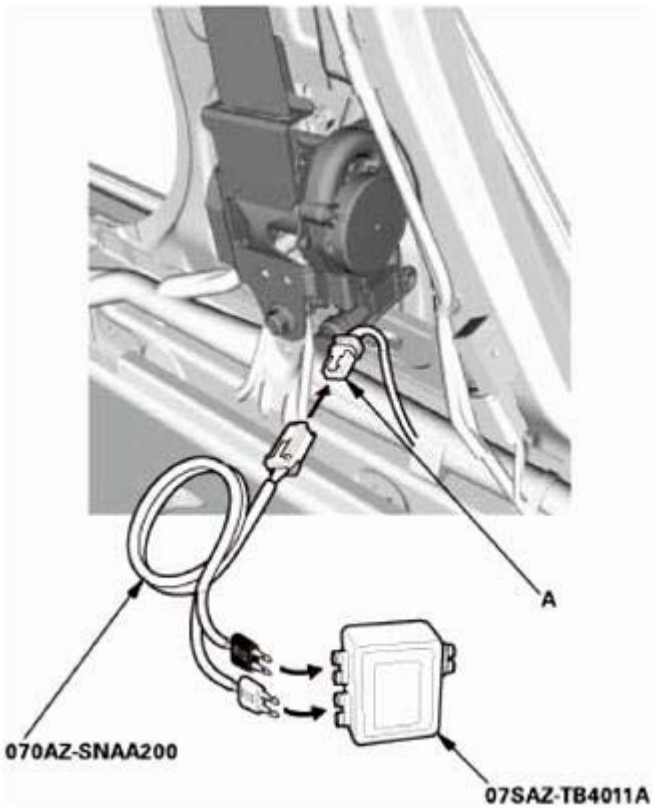

Fig. 33: Disconnecting Driver's Seat Belt Tensioner 4P Connector
Courtesy of AMERICAN HONDA MOTOR CO., INC.

- 5. Connect the terminals of SRS simulator lead K to the SRS inflator simulator (2 ohms connectors), then connect SRS simulator lead K to the driver's seat belt tensioner 4P connector on the floor wire harness.
- 6. Reconnect the negative cable to the battery.
- 7. **CLEAR THE DTCS WITH THE HDS** .
- 8. Turn the ignition switch to ON (II), then wait for 10 seconds.
- 9. **CHECK FOR DTCS WITH THE HDS** .

DTC Description	DTC

Is DTC 21-3x indicated?

YES : Go to step 3.

NO : Short to another wire in the driver's seat belt tensioner; **REPLACE THE DRIVER'S SEAT BELT** , then clear the DTC.

3. Shorted wire check (LRP+ line to LRP- line):

GETtheMANUALS.org

- 1. Turn the ignition switch to LOCK (0).
- 2. Disconnect the negative cable from the battery, then wait at least 3 minutes.
- 3. Disconnect the following connector.

  SRS unit connector B (39P) See **SRS UNIT REMOVAL AND INSTALLATION** or **SRS UNIT UPDATE**

- 4. Disconnect SRS simulator lead K from the driver's seat belt tensioner 4P connector on the floor wire harness.
- 5. **CONNECT THE SRS SHORT CANCELLER TO SRS UNIT CONNECTOR B (39P) TERMINALS NO. 19 AND NO. 20** .
- 6. Measure the resistance between test points 1 and 2.

  Test condition IG LOCK (0)

  Driver's seat belt tensioner 4P connector (on the floor wire harness): disconnected

  SRS unit connector B (39P): disconnected

  SRS unit connector B (39P) No. 19 and No. 20: connected to SRS short canceller

  Test circuit LRP+, LRP-

  Test point 1 SRS unit connector B (39P) No. 19

  Test point 2 SRS unit connector B (39P) No. 20

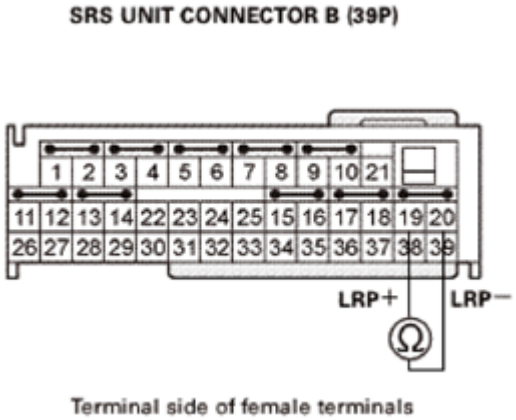

Fig. 34: Measuring Resistance Between SRS Unit Connector B (39P) No. 19 And 20
Courtesy of AMERICAN HONDA MOTOR CO., INC.

Is there an open circuit, or at least 1 Mohms?

YES : The LRP+, LRP- wires are OK. Faulty SRS unit or poor connection at SRS unit connector B (39P)

GETtheMANUALS.org

and the SRS unit. Check the connection; if the connection is OK, **replace the SRS unit** See **SRS UNIT REMOVAL AND INSTALLATION** or **SRS UNIT UPDATE** . If the DTC does not clear, replace the floor wire harness.

NO : Short to another wire in the floor wire harness; replace the floor wire harness, then clear the DTC.

DTC 21-8X ("X" CAN BE 0 THRU 9 OR A THRU F): SHORT TO POWER IN THE DRIVER'S SEAT BELT TENSIONER

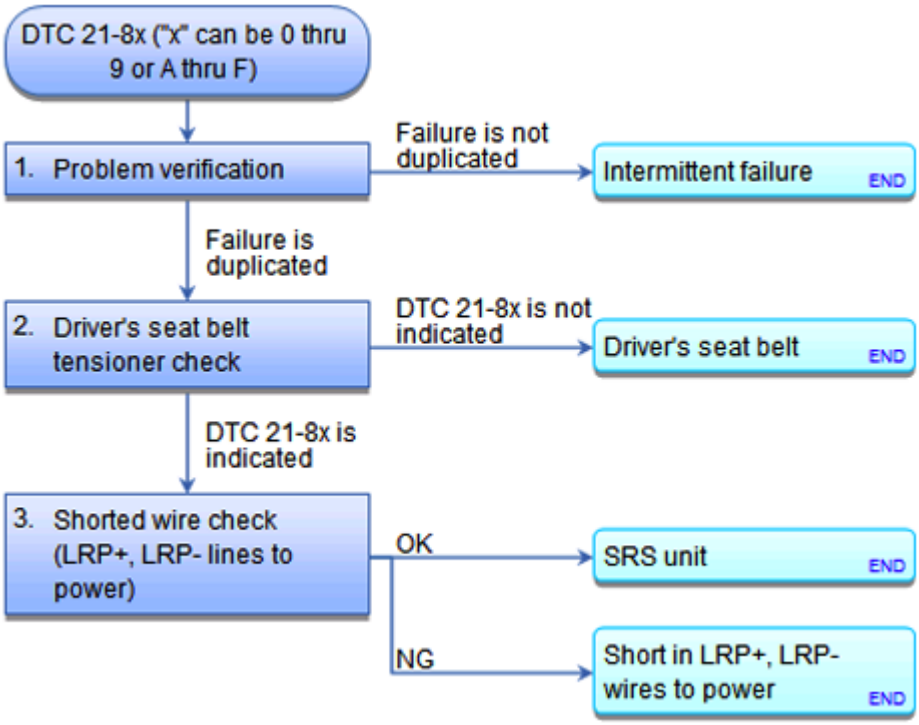

Fig. 35: SRS DTC Troubleshooting Flow Chart (21-8x)
Courtesy of AMERICAN HONDA MOTOR CO., INC.

Special Tools Required

- **SRS Inflator Simulator 07SAZ-TB4011A**
- **SRS Simulator Lead K 070AZ-SNAA200**

NOTE:

- **Before doing this troubleshooting procedure, find out if the vehicle was in a collision. If so, verify that all the required components were replaced with new components, of the correct part number, and that they were properly installed See AIRBAG AND TENSIONER DISPOSAL or SRS COMPONENT REPLACEMENT/INSPECTION AFTER DEPLOYMENT .**
- **Before doing this troubleshooting procedure, review SRS PRECAUTIONS AND PROCEDURES , GENERAL TROUBLESHOOTING INFORMATION , and BATTERY TERMINAL DISCONNECTION AND RECONNECTION .**

GETtheMANUALS.org

- **Before replacing the SRS unit, check the SRS unit software version with the HDS. If the software version is not the latest, update the SRS unit software See SRS UNIT REMOVAL AND INSTALLATION or SRS UNIT UPDATE , and retest.**

DTC Description	DTC

1. Problem verification:
   - 1. **CLEAR THE DTCS WITH THE HDS** .
   - 2. Turn the ignition switch to ON (II), then wait for 10 seconds.
   - 3. **CHECK FOR DTCS WITH THE HDS** .

DTC Description	DTC

YES : The failure is duplicated. Go to step 2.

NO : Intermittent failure, the system is OK at this time. **GO TO TROUBLESHOOTING INTERMITTENT FAILURES** . If another DTC is indicated, troubleshoot the DTC.

2. Driver's seat belt tensioner check:
   - 1. Turn the ignition switch to LOCK (0).
   - 2. Disconnect the negative cable from the battery, then wait at least 3 minutes.
   - 3. **Remove the left side B-pillar lower trim** See **INTERIOR TRIM REMOVAL AND INSTALLATION - CARGO AREA** , **INTERIOR TRIM REMOVAL AND INSTALLATION - PILLAR AREAS** or **INTERIOR TRIM REMOVAL AND INSTALLATION - TAILGATE AREAS** .
   - 4. Disconnect the driver's seat belt tensioner 4P connector (A) on the floor wire harness.

GETtheMANUALS.org

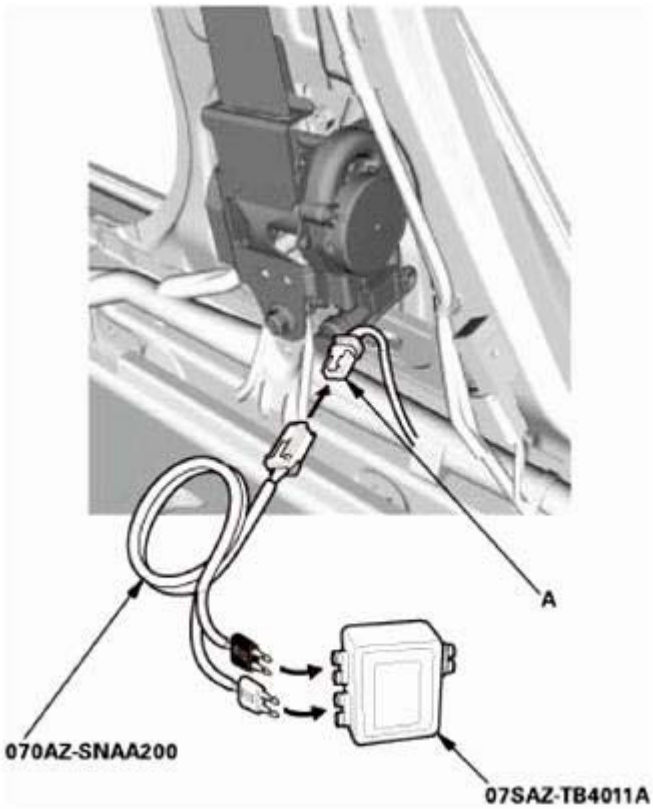

Fig. 36: Disconnecting Driver's Seat Belt Tensioner 4P Connector
Courtesy of AMERICAN HONDA MOTOR CO., INC.

- 5. Connect the terminals of SRS simulator lead K to the SRS inflator simulator (2 ohms connectors), then connect SRS simulator lead K to the driver's seat belt tensioner 4P connector on the floor wire harness.
- 6. Reconnect the negative cable to the battery.
- 7. **CLEAR THE DTCS WITH THE HDS** .
- 8. Turn the ignition switch to ON (II), then wait for 10 seconds.
- 9. **CHECK FOR DTCS WITH THE HDS** .

DTC Description	DTC

Is DTC 21-8x indicated?

YES : Go to step 3.

NO : Short to power in the driver's seat belt tensioner; **REPLACE THE DRIVER'S SEAT BELT** , then clear the DTC.

3. Shorted wire check (LRP+, LRP- lines to power):

GETtheMANUALS.org

- 1. Turn the ignition switch to LOCK (0).
- 2. Disconnect the negative cable from the battery, then wait at least 3 minutes.
- 3. Disconnect the following connector.

  SRS unit connector B (39P) See **SRS UNIT REMOVAL AND INSTALLATION** or **SRS UNIT UPDATE**

- 4. Disconnect SRS simulator lead K from the driver's seat belt tensioner 4P connector on the floor wire harness.
- 5. Reconnect the negative cable to the battery.
- 6. Turn the ignition switch to ON (II).
- 7. Measure the voltage between test points 1 and 2.

  Test condition IG ON (II)

  Driver's seat belt tensioner 4P connector (on the floor wire harness): disconnected

  SRS unit connector B (39P): disconnected

  Test circuit LRP+

  Test point 1 SRS unit connector B (39P) No. 19

  Test point 2 Body ground

  Test circuit LRP-

  Test point 1 SRS unit connector B (39P) No. 20

  Test point 2 Body ground

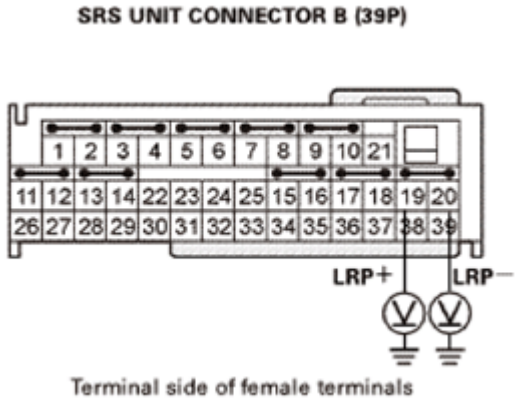

Fig. 37: Measuring Voltage Between SRS Unit Connector B (39P) No. 19 And Body Ground
Courtesy of AMERICAN HONDA MOTOR CO., INC.

GETtheMANUALS.org

Is there less than 0.2 V?

YES : The LRP+, LRP- wires are OK. Faulty SRS unit or poor connection at SRS unit connector B (39P) and the SRS unit. Check the connection; if the connection is OK, **replace the SRS unit** See **SRS UNIT REMOVAL AND INSTALLATION** or **SRS UNIT UPDATE** . If the DTC does not clear, replace the floor wire harness.

NO : Short to power in the floor wire harness; replace the floor wire harness, then clear the DTC.

DTC 21-9X ("X" CAN BE 0 THRU 9 OR A THRU F): SHORT TO GROUND IN THE DRIVER'S SEAT BELT TENSIONER

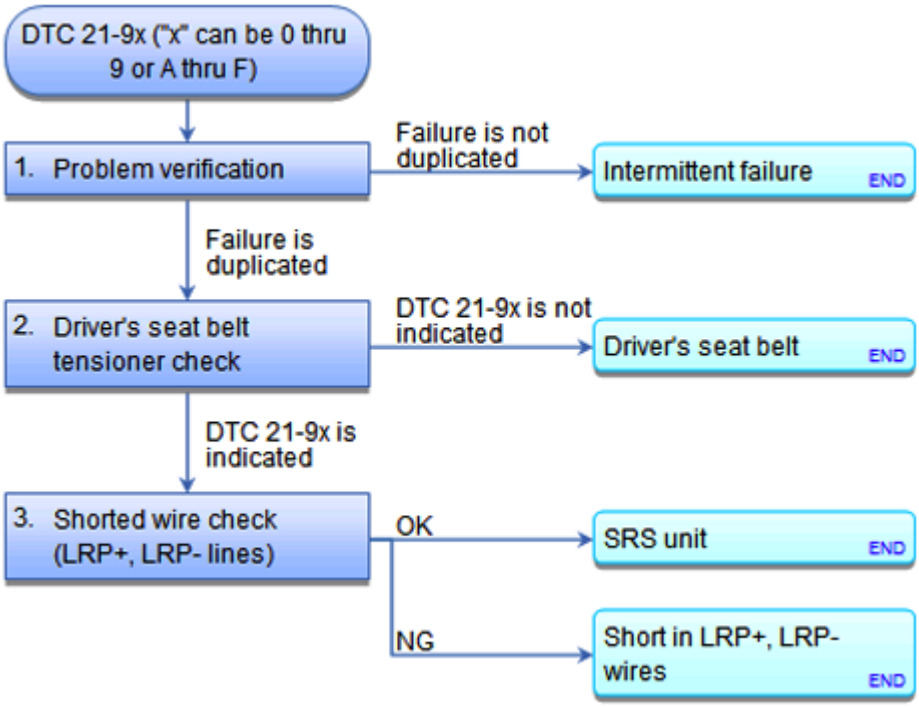

Fig. 38: SRS DTC Troubleshooting Flow Chart (21-9x)
Courtesy of AMERICAN HONDA MOTOR CO., INC.

Special Tools Required

- **SRS Inflator Simulator 07SAZ-TB4011A**
- **SRS Simulator Lead K 070AZ-SNAA200**

NOTE:

- **Before doing this troubleshooting procedure, find out if the vehicle was in a collision. If so, verify that all the required components were replaced with new components, of the correct part number, and that they were properly installed See AIRBAG AND TENSIONER DISPOSAL or SRS COMPONENT REPLACEMENT/INSPECTION AFTER DEPLOYMENT .**

GETtheMANUALS.org

- **Before doing this troubleshooting procedure, review SRS PRECAUTIONS AND PROCEDURES , GENERAL TROUBLESHOOTING INFORMATION , and BATTERY TERMINAL DISCONNECTION AND RECONNECTION .**
- **Before replacing the SRS unit, check the SRS unit software version with the HDS. If the software version is not the latest, update the SRS unit software See SRS UNIT REMOVAL AND INSTALLATION or SRS UNIT UPDATE , and retest.**

DTC Description	DTC

1. Problem verification:
   - 1. **CLEAR THE DTCS WITH THE HDS** .
   - 2. Turn the ignition switch to ON (II), then wait for 10 seconds.
   - 3. **CHECK FOR DTCS WITH THE HDS** .

DTC Description	DTC

Is DTC 21-9x indicated?

YES : The failure is duplicated. Go to step 2.

NO : Intermittent failure, the system is OK at this time. **GO TO TROUBLESHOOTING INTERMITTENT FAILURES** . If another DTC is indicated, troubleshoot the DTC.

2. Driver's seat belt tensioner check:
   - 1. Turn the ignition switch to LOCK (0).
   - 2. Disconnect the negative cable from the battery, then wait at least 3 minutes.
   - 3. **Remove the left side B-pillar lower trim** See **INTERIOR TRIM REMOVAL AND INSTALLATION - CARGO AREA** , **INTERIOR TRIM REMOVAL AND INSTALLATION - PILLAR AREAS** or **INTERIOR TRIM REMOVAL AND INSTALLATION - TAILGATE AREAS** .
   - 4. Disconnect the driver's seat belt tensioner 4P connector (A) on the floor wire harness.

GETtheMANUALS.org

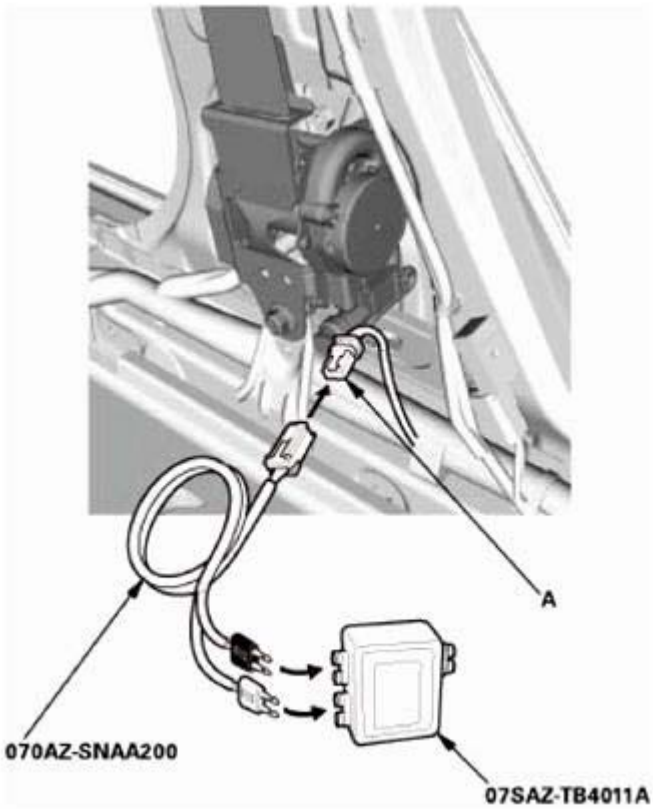

Fig. 39: Disconnecting Driver's Seat Belt Tensioner 4P Connector
Courtesy of AMERICAN HONDA MOTOR CO., INC.

- 5. Connect the terminals of SRS simulator lead K to the SRS inflator simulator (2 ohms connectors), then connect SRS simulator lead K to the driver's seat belt tensioner 4P connector on the floor wire harness.
- 6. Reconnect the negative cable to the battery.
- 7. **CLEAR THE DTCS WITH THE HDS** .
- 8. Turn the ignition switch to ON (II), then wait for 10 seconds.
- 9. **CHECK FOR DTCS WITH THE HDS** .

DTC Description	DTC

Is DTC 21-9x indicated?

YES : Go to step 3.

NO : Short to ground in the driver's seat belt tensioner; **REPLACE THE DRIVER'S SEAT BELT** , then clear the DTC.

3. Shorted wire check (LRP+, LRP- lines):

GETtheMANUALS.org

- 1. Turn the ignition switch to LOCK (0).
- 2. Disconnect the negative cable from the battery, then wait at least 3 minutes.
- 3. Disconnect the following connector.

  SRS unit connector B (39P) See **SRS UNIT REMOVAL AND INSTALLATION** or **SRS UNIT UPDATE**

- 4. Disconnect SRS simulator lead K from the driver's seat belt tensioner 4P connector on the floor wire harness.
- 5. Measure the resistance between test points 1 and 2.

  Test condition IG LOCK (0)

  Driver's seat belt tensioner 4P connector (on the floor wire harness): disconnected

  SRS unit connector B (39P): disconnected

  Test circuit LRP+

  Test point 1 SRS unit connector B (39P) No. 19

  Test point 2 Body ground

  Test circuit LRP-

  Test point 1 SRS unit connector B (39P) No. 20

  Test point 2 Body ground

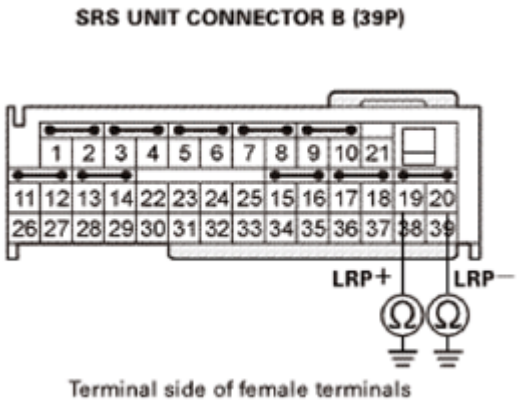

Fig. 40: Measuring Resistance Between SRS Unit Connector B (39P) No. 19 And Body Ground
Courtesy of AMERICAN HONDA MOTOR CO., INC.

Is there an open circuit, or at least 1 Mohms?

GETtheMANUALS.org

YES : The LRP+, LRP- wires are OK. Faulty SRS unit or poor connection at SRS unit connector B (39P) and the SRS unit. Check the connection; if the connection is OK, **replace the SRS unit** See **SRS UNIT REMOVAL AND INSTALLATION** or **SRS UNIT UPDATE** . If the DTC does not clear, replace the floor wire harness.

NO : Short to ground in the floor wire harness; replace the floor wire harness, then clear the DTC.

DTC 22-1X ("X" CAN BE 0 THRU 9 OR A THRU F): OPEN IN THE FRONT PASSENGER'S SEAT BELT TENSIONER; DTC 22-2X ("X" CAN BE 0 THRU 9 OR A THRU F): INCREASED RESISTANCE IN THE FRONT PASSENGER'S SEAT BELT TENSIONER

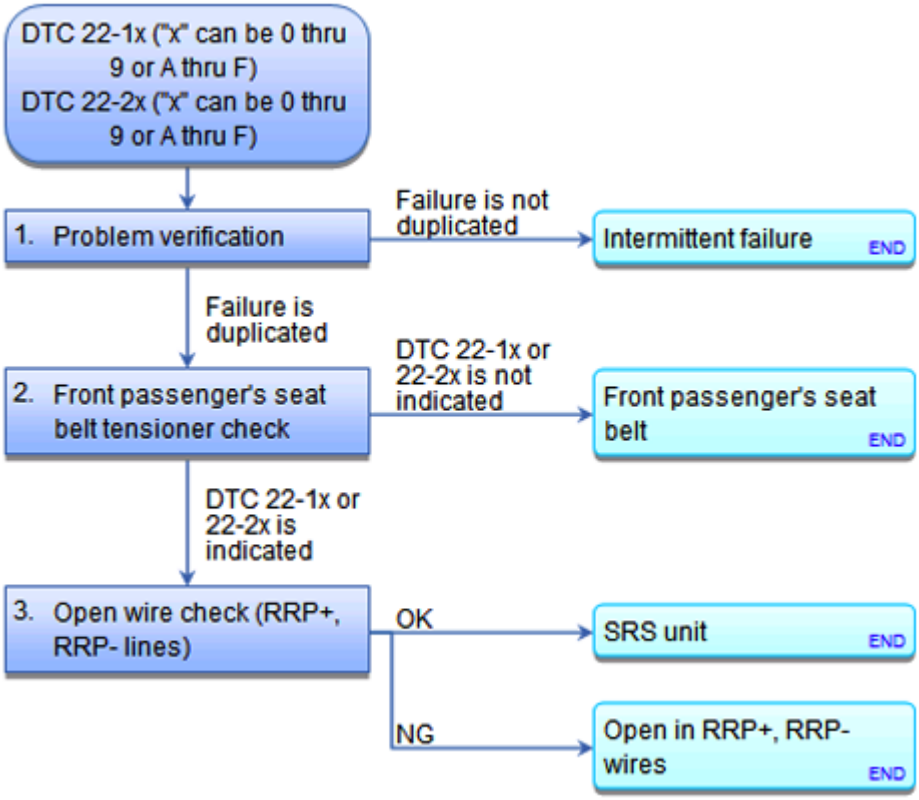

Fig. 41: SRS DTC Troubleshooting Flow Chart (22-1x, 22-2x)
Courtesy of AMERICAN HONDA MOTOR CO., INC.

Special Tools Required

- **SRS Inflator Simulator 07SAZ-TB4011A**
- **SRS Simulator Lead K 070AZ-SNAA200**
- **SRS Short Canceller 070AZ-SAA0100**

NOTE:

- **Before doing this troubleshooting procedure, find out if the vehicle was in**

GETtheMANUALS.org

a collision. If so, verify that all the required components were replaced with new components, of the correct part number, and that they were properly installed See AIRBAG AND TENSIONER DISPOSAL or SRS COMPONENT REPLACEMENT/INSPECTION AFTER DEPLOYMENT .

- **Before doing this troubleshooting procedure, review SRS PRECAUTIONS AND PROCEDURES , GENERAL TROUBLESHOOTING INFORMATION , and BATTERY TERMINAL DISCONNECTION AND RECONNECTION .**
- **Before replacing the SRS unit, check the SRS unit software version with the HDS. If the software version is not the latest, update the SRS unit software See SRS UNIT REMOVAL AND INSTALLATION or SRS UNIT UPDATE , and retest.**

DTC Description	DTC

1. Problem verification:
   - 1. **CLEAR THE DTCS WITH THE HDS** .
   - 2. Turn the ignition switch to ON (II), then wait for 10 seconds.
   - 3. **CHECK FOR DTCS WITH THE HDS** .

DTC Description	DTC

Is DTC 22-1x or 22-2x indicated?

YES : The failure is duplicated. Go to step 2.

NO : Intermittent failure, the system is OK at this time. **GO TO TROUBLESHOOTING INTERMITTENT FAILURES** . If another DTC is indicated, troubleshoot the DTC.

2. Front passenger's seat belt tensioner check:
   - 1. Turn the ignition switch to LOCK (0).
   - 2. Disconnect the negative cable from the battery, then wait at least 3 minutes.
   - 3. **Remove the right side B-pillar lower trim** See **INTERIOR TRIM REMOVAL AND INSTALLATION - CARGO AREA** , **INTERIOR TRIM REMOVAL AND INSTALLATION - PILLAR AREAS** or **INTERIOR TRIM REMOVAL AND INSTALLATION - TAILGATE AREAS** .
   - 4. Disconnect the front passenger's seat belt tensioner 4P connector (A) on the floor wire harness.

GETtheMANUALS.org

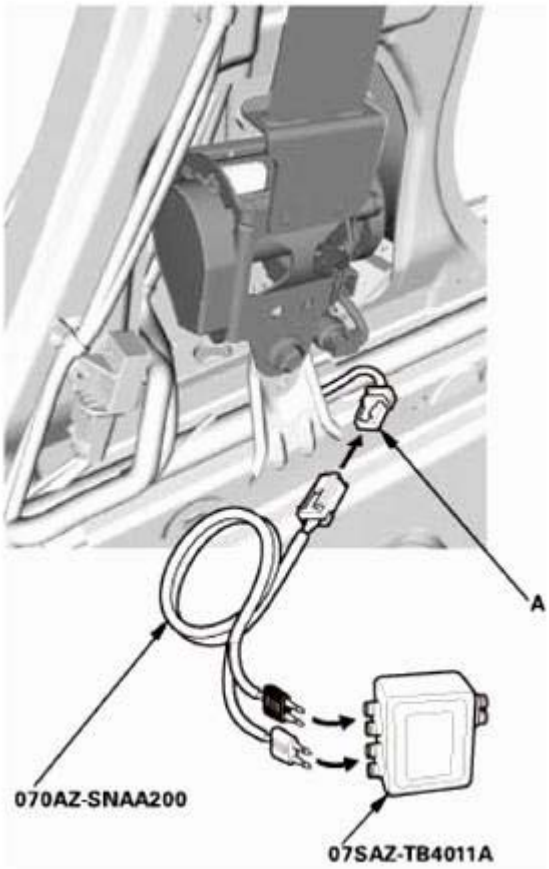

Fig. 42: Disconnecting Front Passenger's Seat Belt Tensioner 4P Connector
Courtesy of AMERICAN HONDA MOTOR CO., INC.

- 5. Connect the terminals of SRS simulator lead K to the SRS inflator simulator (2 ohms connectors), then connect SRS simulator lead K to the front passenger's seat belt tensioner 4P connector on the floor wire harness.
- 6. Reconnect the negative cable to the battery.
- 7. **CLEAR THE DTCS WITH THE HDS** .
- 8. Turn the ignition switch to ON (II), then wait for 10 seconds.
- 9. **CHECK FOR DTCS WITH THE HDS** .

DTC Description	DTC

Is DTC 22-1x or 22-2x indicated?

YES : Go to step 3.

NO : Open or increased resistance in the front passenger's seat belt tensioner; **REPLACE THE FRONT PASSENGER'S SEAT BELT** , then clear the DTC.

GETtheMANUALS.org

3. Open wire check (RRP+, RRP- lines):
    - 1. Turn the ignition switch to LOCK (0).
    - 2. Disconnect the negative cable from the battery, then wait at least 3 minutes.
    - 3. Disconnect the following connector.

      SRS unit connector B (39P) See **SRS UNIT REMOVAL AND INSTALLATION** or **SRS UNIT UPDATE**

    - 4. **CONNECT THE SRS SHORT CANCELLER TO SRS UNIT CONNECTOR B (39P) TERMINALS NO. 17 AND NO. 18** .
    - 5. Measure the resistance between test points 1 and 2.

      Test condition IG LOCK (0)

      Front passenger's seat belt tensioner 4P connector (on the floor wire harness): disconnected

      SRS unit connector B (39P): disconnected

      Front passenger's seat belt tensioner 4P connector (on the floor wire harness): connected to SRS simulator lead K

      SRS unit connector B (39P) No. 17 and No. 18: connected to SRS short canceller

      Test circuit RRP+, RRP-

      Test point 1 SRS unit connector B (39P) No. 17

      Test point 2 SRS unit connector B (39P) No. 18

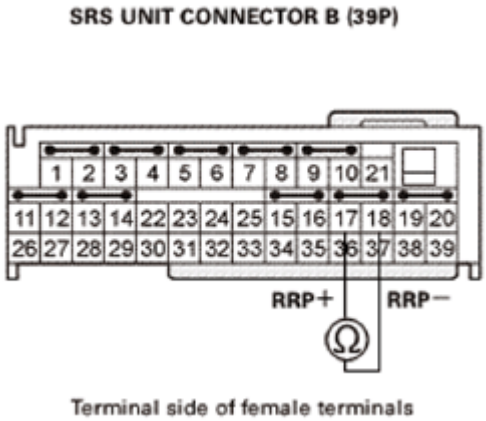

Fig. 43: Measuring Resistance Between SRS Unit Connector B (39P) No. 17 And 18
Courtesy of AMERICAN HONDA MOTOR CO., INC.

Is there 2.0 - 3.0 ohms?

GETtheMANUALS.org

YES : The RRP+, RRP- wires are OK. Faulty SRS unit or poor connection at SRS unit connector B (39P) and the SRS unit. Check the connection; if the connection is OK, **replace the SRS unit** See **SRS UNIT REMOVAL AND INSTALLATION** or **SRS UNIT UPDATE** . If the DTC does not clear, replace the floor wire harness.

NO : Open or increased resistance in the floor wire harness; replace the floor wire harness, then clear the DTC.

DTC 22-3X ("X" CAN BE 0 THRU 9 OR A THRU F): SHORT TO ANOTHER WIRE OR DECREASED RESISTANCE IN THE FRONT PASSENGER'S SEAT BELT TENSIONER

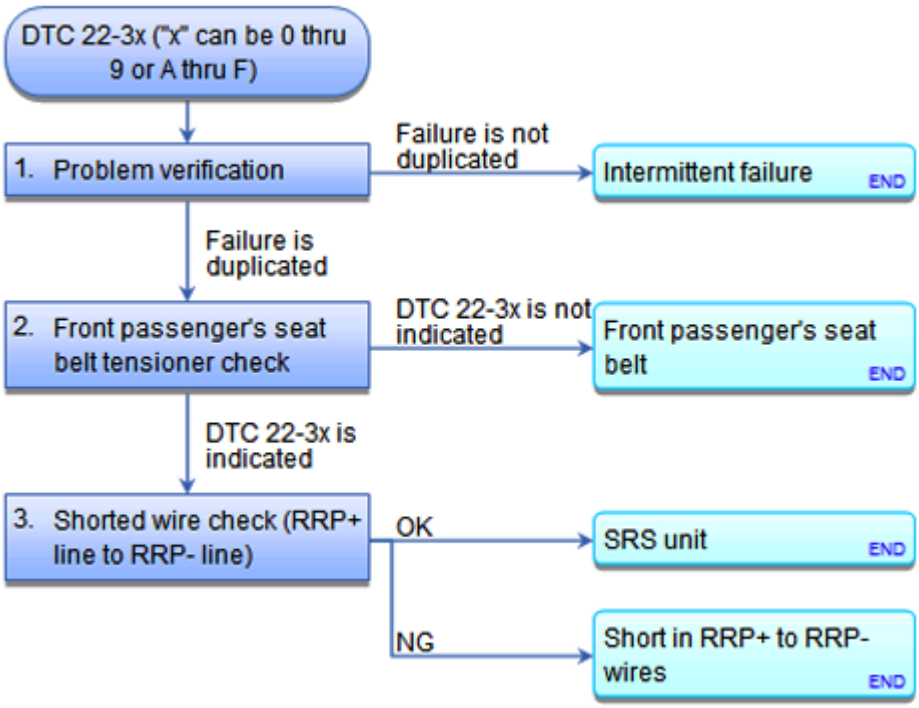

Fig. 44: SRS DTC Troubleshooting Flow Chart (22-3x)
Courtesy of AMERICAN HONDA MOTOR CO., INC.

Special Tools Required

- **SRS Inflator Simulator 07SAZ-TB4011A**
- **SRS Simulator Lead K 070AZ-SNAA200**
- **SRS Short Canceller 070AZ-SAA0100**

NOTE:

- **Before doing this troubleshooting procedure, find out if the vehicle was in a collision. If so, verify that all the required components were replaced with new components, of the correct part number, and that they were properly installed See AIRBAG AND TENSIONER DISPOSAL or SRS**

GETtheMANUALS.org

COMPONENT REPLACEMENT/INSPECTION AFTER DEPLOYMENT .

- **Before doing this troubleshooting procedure, review SRS PRECAUTIONS AND PROCEDURES , GENERAL TROUBLESHOOTING INFORMATION , and BATTERY TERMINAL DISCONNECTION AND RECONNECTION .**
- **Before replacing the SRS unit, check the SRS unit software version with the HDS. If the software version is not the latest, update the SRS unit software See SRS UNIT REMOVAL AND INSTALLATION or SRS UNIT UPDATE , and retest.**

DTC Description	DTC

1. Problem verification:
   - 1. **CLEAR THE DTCS WITH THE HDS** .
   - 2. Turn the ignition switch to ON (II), then wait for 10 seconds.
   - 3. **CHECK FOR DTCS WITH THE HDS** .

DTC Description	DTC

Is DTC 22-3x indicated?

YES : The failure is duplicated. Go to step 2.

NO : Intermittent failure, the system is OK at this time. **GO TO TROUBLESHOOTING INTERMITTENT FAILURES** . If another DTC is indicated, troubleshoot the DTC.

2. Front passenger's seat belt tensioner check:
   - 1. Turn the ignition switch to LOCK (0).
   - 2. Disconnect the negative cable from the battery, then wait at least 3 minutes.
   - 3. **Remove the right side B-pillar lower trim** See **INTERIOR TRIM REMOVAL AND INSTALLATION - CARGO AREA** , **INTERIOR TRIM REMOVAL AND INSTALLATION - PILLAR AREAS** or **INTERIOR TRIM REMOVAL AND INSTALLATION - TAILGATE AREAS** .
   - 4. Disconnect the front passenger's seat belt tensioner 4P connector (A) on the floor wire harness.

GETtheMANUALS.org

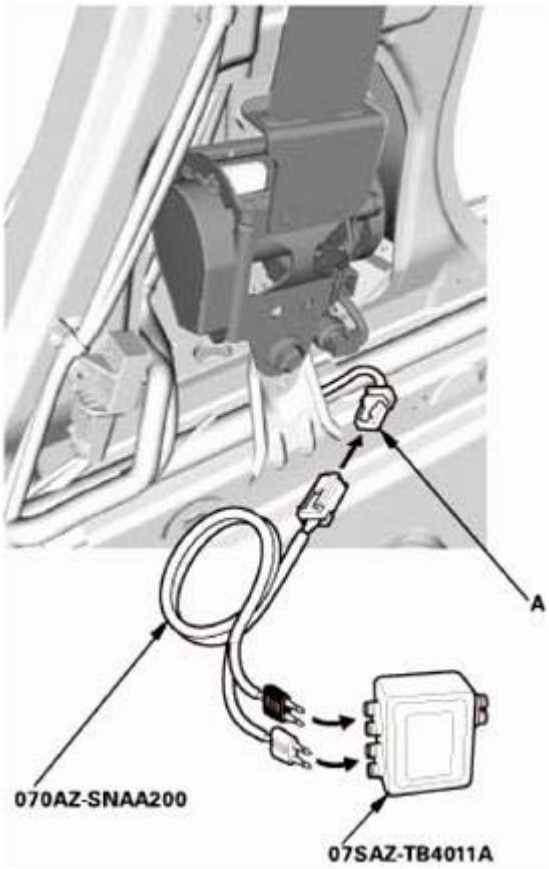

Fig. 45: Disconnecting Front Passenger's Seat Belt Tensioner 4P Connector
Courtesy of AMERICAN HONDA MOTOR CO., INC.

- 5. Connect the terminals of SRS simulator lead K to the SRS inflator simulator (2 ohms connectors), then connect SRS simulator lead K to the front passenger's seat belt tensioner 4P connector on the floor wire harness.
- 6. Reconnect the negative cable to the battery.
- 7. **CLEAR THE DTCS WITH THE HDS** .
- 8. Turn the ignition switch to ON (II), then wait for 10 seconds.
- 9. **CHECK FOR DTCS WITH THE HDS** .

DTC Description	DTC

Is DTC 22-3x indicated?

YES : Go to step 3.

NO : Short to another wire in the front passenger's seat belt tensioner; **REPLACE THE FRONT PASSENGER'S SEAT BELT** , then clear the DTC.

GETtheMANUALS.org

3. Shorted wire check (RRP+ line to RRP- line):
   - 1. Turn the ignition switch to LOCK (0).
   - 2. Disconnect the negative cable from the battery, then wait at least 3 minutes.
   - 3. Disconnect the following connector.

     SRS unit connector B (39P) See **SRS UNIT REMOVAL AND INSTALLATION** or **SRS UNIT UPDATE**

   - 4. Disconnect SRS simulator lead K from the front passenger's seat belt tensioner 4P connector on the floor wire harness.
   - 5. **CONNECT THE SRS SHORT CANCELLER TO SRS UNIT CONNECTOR B (39P) TERMINALS NO. 17 AND NO. 18** .
   - 6. Measure the resistance between test points 1 and 2.

     Test condition IG LOCK (0)

     Front passenger's seat belt tensioner 4P connector (on the floor wire harness): disconnected

     SRS unit connector B (39P): disconnected

     SRS unit connector B (39P) No. 17 and No. 18: connected to SRS short canceller

     Test circuit RRP+, RRP-

     Test point 1 SRS unit connector B (39P) No. 17

     Test point 2 SRS unit connector B (39P) No. 18

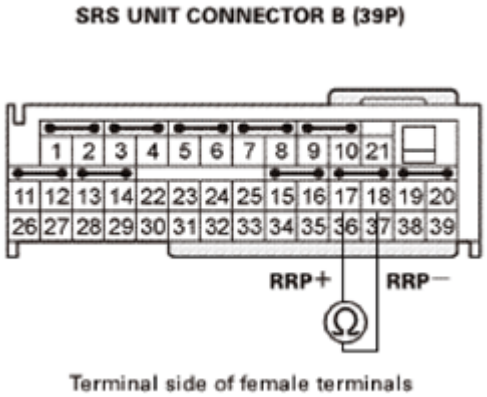

Fig. 46: Measuring Resistance Between SRS Unit Connector B (39P) No. 17 And 18
Courtesy of AMERICAN HONDA MOTOR CO., INC.

Is there an open circuit, or at least 1 Mohms?

YES : The RRP+, RRP- wires are OK. Faulty SRS unit or poor connection at SRS unit connector B (39P)

GETtheMANUALS.org

and the SRS unit. Check the connection; if the connection is OK, **replace the SRS unit** See **SRS UNIT REMOVAL AND INSTALLATION** or **SRS UNIT UPDATE** . If the DTC does not clear, replace the floor wire harness.

NO : Short to another wire in the floor wire harness; replace the floor wire harness, then clear the DTC.

DTC 22-8X ("X" CAN BE 0 THRU 9 OR A THRU F): SHORT TO POWER IN THE FRONT PASSENGER'S SEAT BELT TENSIONER

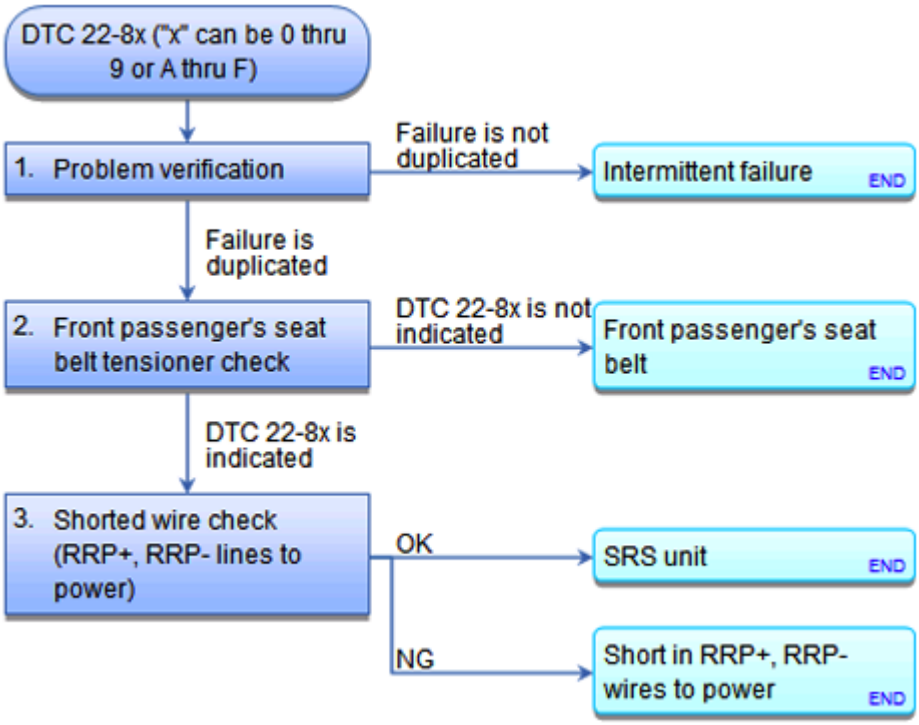

Fig. 47: SRS DTC Troubleshooting Flow Chart (22-8x)
Courtesy of AMERICAN HONDA MOTOR CO., INC.

Special Tools Required

- **SRS Inflator Simulator 07SAZ-TB4011A**
- **SRS Simulator Lead K 070AZ-SNAA200**

NOTE:

- **Before doing this troubleshooting procedure, find out if the vehicle was in a collision. If so, verify that all the required components were replaced with new components, of the correct part number, and that they were properly installed See AIRBAG AND TENSIONER DISPOSAL or SRS COMPONENT REPLACEMENT/INSPECTION AFTER DEPLOYMENT .**
- **Before doing this troubleshooting procedure, review SRS PRECAUTIONS AND PROCEDURES , GENERAL TROUBLESHOOTING INFORMATION , and BATTERY TERMINAL DISCONNECTION AND RECONNECTION .**

GETtheMANUALS.org

- **Before replacing the SRS unit, check the SRS unit software version with the HDS. If the software version is not the latest, update the SRS unit software See SRS UNIT REMOVAL AND INSTALLATION or SRS UNIT UPDATE , and retest.**

DTC Description	DTC

1. Problem verification:
   - 1. **CLEAR THE DTCS WITH THE HDS** .
   - 2. Turn the ignition switch to ON (II), then wait for 10 seconds.
   - 3. **CHECK FOR DTCS WITH THE HDS** .

DTC Description	DTC

Is DTC 22-8x indicated?

YES : The failure is duplicated. Go to step 2.

NO : Intermittent failure, the system is OK at this time. **GO TO TROUBLESHOOTING INTERMITTENT FAILURES** . If another DTC is indicated, troubleshoot the DTC.

2. Front passenger's seat belt tensioner check:
   - 1. Turn the ignition switch to LOCK (0).
   - 2. Disconnect the negative cable from the battery, then wait at least 3 minutes.
   - 3. **Remove the right side B-pillar lower trim** See **INTERIOR TRIM REMOVAL AND INSTALLATION - CARGO AREA** , **INTERIOR TRIM REMOVAL AND INSTALLATION - PILLAR AREAS** or **INTERIOR TRIM REMOVAL AND INSTALLATION - TAILGATE AREAS** .
   - 4. Disconnect the front passenger's seat belt tensioner 4P connector (A) on the floor wire harness.

GETtheMANUALS.org

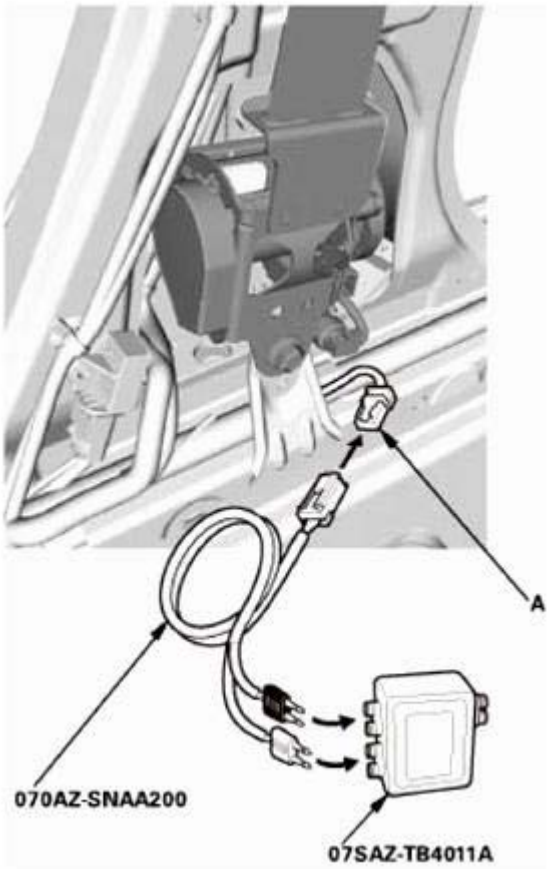

Fig. 48: Disconnecting Front Passenger's Seat Belt Tensioner 4P Connector
Courtesy of AMERICAN HONDA MOTOR CO., INC.

- 5. Connect the terminals of SRS simulator lead K to the SRS inflator simulator (2 ohms connectors), then connect SRS simulator lead K to the front passenger's seat belt tensioner 4P connector on the floor wire harness.
- 6. Reconnect the negative cable to the battery.
- 7. **CLEAR THE DTCS WITH THE HDS** .
- 8. Turn the ignition switch to ON (II), then wait for 10 seconds.
- 9. **CHECK FOR DTCS WITH THE HDS** .

DTC Description	DTC

Is DTC 22-8x indicated?

YES : Go to step 3.

NO : Short to power in the front passenger's seat belt tensioner; **REPLACE THE FRONT PASSENGER'S SEAT BELT** , then clear the DTC.

GETtheMANUALS.org

3. Shorted wire check (RRP+, RRP- lines to power):
    - 1. Turn the ignition switch to LOCK (0).
    - 2. Disconnect the negative cable from the battery, then wait at least 3 minutes.
    - 3. Disconnect the following connector.

      SRS unit connector B (39P) See **SRS UNIT REMOVAL AND INSTALLATION** or **SRS UNIT UPDATE**

    - 4. Disconnect SRS simulator lead K from the front passenger's seat belt tensioner 4P connector on the floor wire harness.
    - 5. Reconnect the negative cable to the battery.
    - 6. Turn the ignition switch to ON (II).
    - 7. Measure the voltage between test points 1 and 2.

      Test condition IG ON (II)

      Front passenger's seat belt tensioner 4P connector (on the floor wire harness): disconnected

      SRS unit connector B (39P): disconnected

      Test circuit RRP+

      Test point 1 SRS unit connector B (39P) No. 17

      Test point 2 Body ground

      Test circuit RRP-

      Test point 1 SRS unit connector B (39P) No. 18

      Test point 2 Body ground

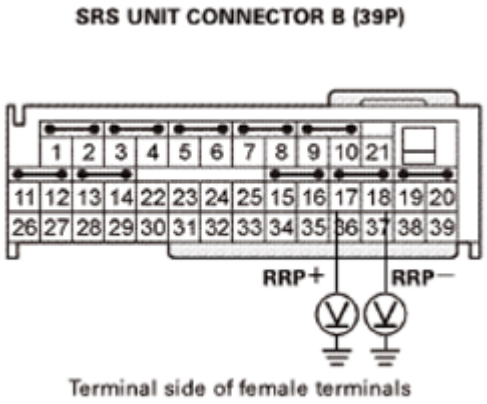

Fig. 49: Measuring Voltage Between SRS Unit Connector B (39P) No. 17 And Body Ground

GETtheMANUALS.org

Courtesy of AMERICAN HONDA MOTOR CO., INC.

Is there less than 0.2 V?

YES : The RRP+, RRP- wires are OK. Faulty SRS unit or poor connection at SRS unit connector B (39P) and the SRS unit. Check the connection; if the connection is OK, **replace the SRS unit** See **SRS UNIT REMOVAL AND INSTALLATION** or **SRS UNIT UPDATE** . If the DTC does not clear, replace the floor wire harness.

NO : Short to power in the floor wire harness; replace the floor wire harness, then clear the DTC.

DTC 22-9X ("X" CAN BE 0 THRU 9 OR A THRU F): SHORT TO GROUND IN THE FRONT PASSENGER'S SEAT BELT TENSIONER

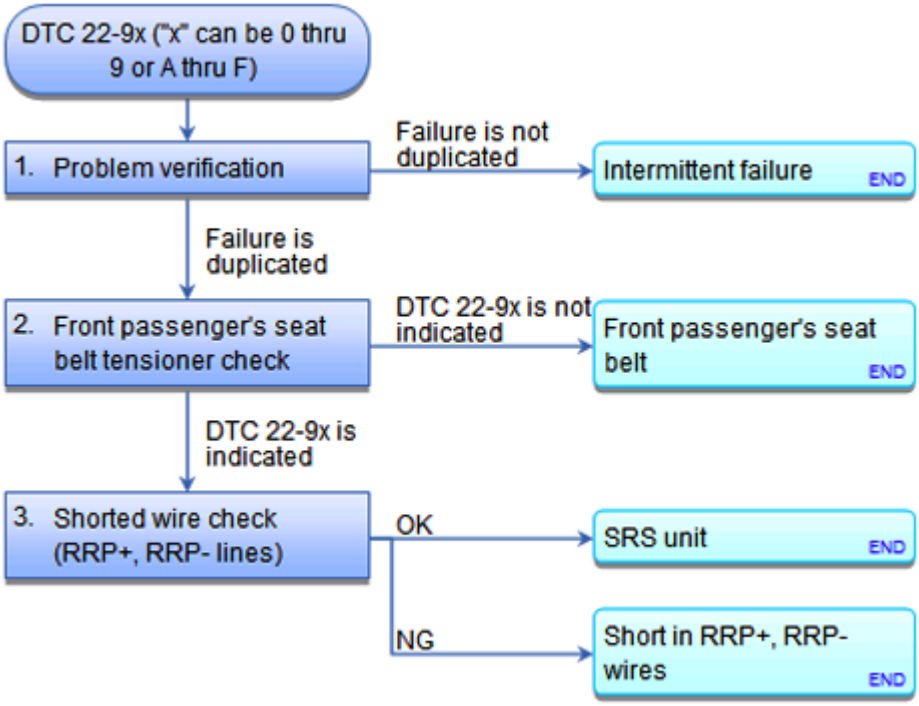

Fig. 50: SRS DTC Troubleshooting Flow Chart (22-9x)
Courtesy of AMERICAN HONDA MOTOR CO., INC.

Special Tools Required

- **SRS Inflator Simulator 07SAZ-TB4011A**
- **SRS Simulator Lead K 070AZ-SNAA200**

NOTE:

- **Before doing this troubleshooting procedure, find out if the vehicle was in a collision. If so, verify that all the required components were replaced with new components, of the correct part number, and that they were**

GETtheMANUALS.org

properly installed See AIRBAG AND TENSIONER DISPOSAL or SRS COMPONENT REPLACEMENT/INSPECTION AFTER DEPLOYMENT .

- **Before doing this troubleshooting procedure, review SRS PRECAUTIONS AND PROCEDURES , GENERAL TROUBLESHOOTING INFORMATION , and BATTERY TERMINAL DISCONNECTION AND RECONNECTION .**
- **Before replacing the SRS unit, check the SRS unit software version with the HDS. If the software version is not the latest, update the SRS unit software See SRS UNIT REMOVAL AND INSTALLATION or SRS UNIT UPDATE , and retest.**

DTC Description	DTC

1. Problem verification:
   - 1. **CLEAR THE DTCS WITH THE HDS** .
   - 2. Turn the ignition switch to ON (II), then wait for 10 seconds.
   - 3. **CHECK FOR DTCS WITH THE HDS** .

DTC Description	DTC

Is DTC 22-9x indicated?

YES : The failure is duplicated. Go to step 2.

NO : Intermittent failure, the system is OK at this time. **GO TO TROUBLESHOOTING INTERMITTENT FAILURES** . If another DTC is indicated, troubleshoot the DTC.

2. Front passenger's seat belt tensioner check:
   - 1. Turn the ignition switch to LOCK (0).
   - 2. Disconnect the negative cable from the battery, then wait at least 3 minutes.
   - 3. **Remove the right side B-pillar lower trim** See **INTERIOR TRIM REMOVAL AND INSTALLATION - CARGO AREA** , **INTERIOR TRIM REMOVAL AND INSTALLATION - PILLAR AREAS** or **INTERIOR TRIM REMOVAL AND INSTALLATION - TAILGATE AREAS** .
   - 4. Disconnect the front passenger's seat belt tensioner 4P connector (A) on the floor wire harness.

GETtheMANUALS.org

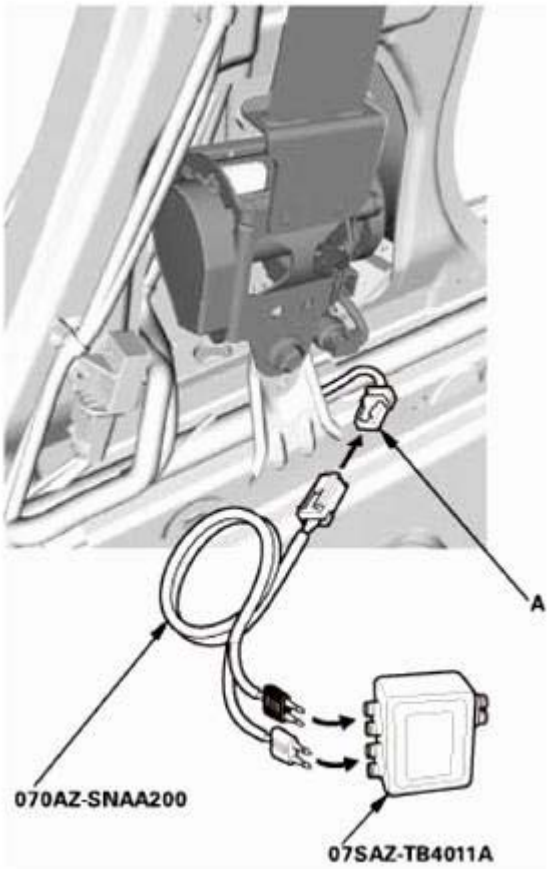

Fig. 51: Disconnecting Front Passenger's Seat Belt Tensioner 4P Connector
Courtesy of AMERICAN HONDA MOTOR CO., INC.

- 5. Connect the terminals of SRS simulator lead K to the SRS inflator simulator (2 ohms connectors), then connect SRS simulator lead K to the front passenger's seat belt tensioner 4P connector on the floor wire harness.
- 6. Reconnect the negative cable to the battery.
- 7. **CLEAR THE DTCS WITH THE HDS** .
- 8. Turn the ignition switch to ON (II), then wait for 10 seconds.
- 9. **CHECK FOR DTCS WITH THE HDS** .

DTC Description	DTC

Is DTC 22-9x indicated?

YES : Go to step 3.

NO : Short to ground in the front passenger's seat belt tensioner; **REPLACE THE FRONT PASSENGER'S SEAT BELT** , then clear the DTC.

GETtheMANUALS.org

3. Shorted wire check (RRP+, RRP- lines):
    - 1. Turn the ignition switch to LOCK (0).
    - 2. Disconnect the negative cable from the battery, then wait at least 3 minutes.
    - 3. Disconnect the following connector.

      SRS unit connector B (39P) See **SRS UNIT REMOVAL AND INSTALLATION** or **SRS UNIT UPDATE**

    - 4. Disconnect SRS simulator lead K from the front passenger's seat belt tensioner 4P connector on the floor wire harness.
    - 5. Measure the resistance between test points 1 and 2.

      Test condition IG LOCK (0)

      Front passenger's seat belt tensioner 4P connector (on the floor wire harness): disconnected

      SRS unit connector B (39P): disconnected

      Test circuit RRP+

      Test point 1 SRS unit connector B (39P) No. 17

      Test point 2 Body ground

      Test circuit RRP-

      Test point 1 SRS unit connector B (39P) No. 18

      Test point 2 Body ground

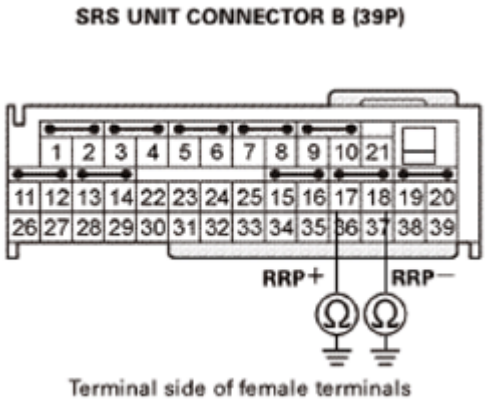

Fig. 52: Measuring Resistance Between SRS Unit Connector B (39P) No. 17 And Body Ground
Courtesy of AMERICAN HONDA MOTOR CO., INC.

GETtheMANUALS.org

Is there an open circuit, or at least 1 Mohms?

YES : The RRP+, RRP- wires are OK. Faulty SRS unit or poor connection at SRS unit connector B (39P) and the SRS unit. Check the connection; if the connection is OK, **replace the SRS unit** See **SRS UNIT REMOVAL AND INSTALLATION** or **SRS UNIT UPDATE** . If the DTC does not clear, replace the floor wire harness.

NO : Short to ground in the floor wire harness; replace the floor wire harness, then clear the DTC.

DTC 31-1X ("X" CAN BE 0 THRU 9 OR A THRU F): OPEN IN THE DRIVER'S SIDE AIRBAG INFLATOR; DTC 31-2X ("X" CAN BE 0 THRU 9 OR A THRU F): INCREASED RESISTANCE IN THE DRIVER'S SIDE AIRBAG INFLATOR

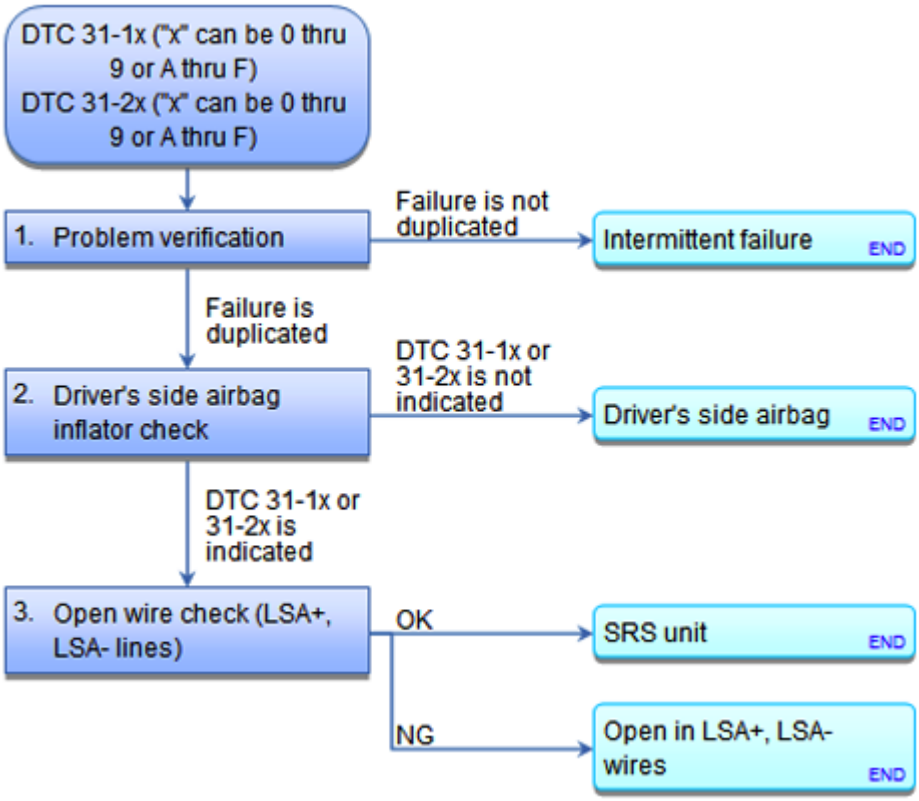

Fig. 53: SRS DTC Troubleshooting Flow Chart (31-1x, 31-2x)
Courtesy of AMERICAN HONDA MOTOR CO., INC.

Special Tools Required

- **SRS Inflator Simulator 07SAZ-TB4011A**
- **SRS Simulator Lead L 070AZ-SNAA300**

NOTE:

- **Before doing this troubleshooting procedure, find out if the vehicle was in a collision. If so, verify that all the required components were replaced**

GETtheMANUALS.org

with new components, of the correct part number, and that they were properly installed See AIRBAG AND TENSIONER DISPOSAL or SRS COMPONENT REPLACEMENT/INSPECTION AFTER DEPLOYMENT .

- **Before doing this troubleshooting procedure, review SRS PRECAUTIONS AND PROCEDURES , GENERAL TROUBLESHOOTING INFORMATION , and BATTERY TERMINAL DISCONNECTION AND RECONNECTION .**
- **Before replacing the SRS unit, check the SRS unit software version with the HDS. If the software version is not the latest, update the SRS unit software See SRS UNIT REMOVAL AND INSTALLATION or SRS UNIT UPDATE , and retest.**

DTC Description	DTC

1. Problem verification:
   - 1. **CLEAR THE DTCS WITH THE HDS** .
   - 2. Turn the ignition switch to ON (II), then wait for 10 seconds.
   - 3. **CHECK FOR DTCS WITH THE HDS** .

DTC Description	DTC

Is DTC 31-1x or 31-2x indicated?

YES : The failure is duplicated. Go to step 2.

NO : Intermittent failure, the system is OK at this time. **GO TO TROUBLESHOOTING INTERMITTENT FAILURES** . If another DTC is indicated, troubleshoot the DTC.

2. Driver's side airbag inflator check:
   - 1. Turn the ignition switch to LOCK (0).
   - 2. Disconnect the negative cable from the battery, then wait at least 3 minutes.
   - 3. Disconnect the driver's side airbag inflator 2P connector (A) on the floor wire harness.

GETtheMANUALS.org

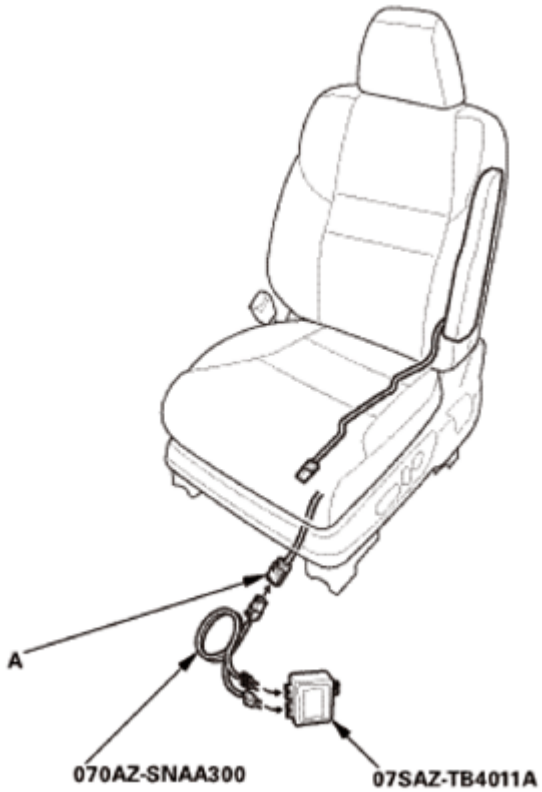

Fig. 54: Disconnecting Driver's Side Airbag Inflator 2P Connector
Courtesy of AMERICAN HONDA MOTOR CO., INC.

- 4. Connect the terminals of SRS simulator lead L to the SRS inflator simulator (2 ohms connectors), then connect SRS simulator lead L to the driver's side airbag inflator 2P connector on the floor wire harness.
- 5. Reconnect the negative cable to the battery.
- 6. **CLEAR THE DTCS WITH THE HDS** .
- 7. Turn the ignition switch to ON (II), then wait for 10 seconds.
- 8. **CHECK FOR DTCS WITH THE HDS** .

DTC Description	DTC

Is DTC 31-1x or 31-2x indicated?

YES : Go to step 3.

NO : Open or increased resistance in the driver's side airbag inflator; **REPLACE THE DRIVER'S SIDE AIRBAG** , then clear the DTC.

3. Open wire check (LSA+, LSA- lines):
   - 1. Turn the ignition switch to LOCK (0).

GETtheMANUALS.org

- 2. Disconnect the negative cable from the battery, then wait at least 3 minutes.
- 3. Disconnect the following connector.

  SRS unit connector B (39P) See **SRS UNIT REMOVAL AND INSTALLATION** or **SRS UNIT UPDATE**

- 4. Disconnect the SRS inflator simulator from SRS simulator lead L. Do not disconnect SRS simulator lead L from the driver's side airbag inflator 2P connector on the floor wire harness.
- 5. Measure the resistance of the test point.

  Test condition IG LOCK (0)

  Driver's side airbag inflator 2P connector (on the floor wire harness): disconnected

  SRS unit connector B (39P): disconnected

  Driver's side airbag inflator 2P connector (on the floor wire harness): connected to SRS simulator lead L

  Test circuit LSA+, LSA-

  Test point SRS simulator lead L black terminal

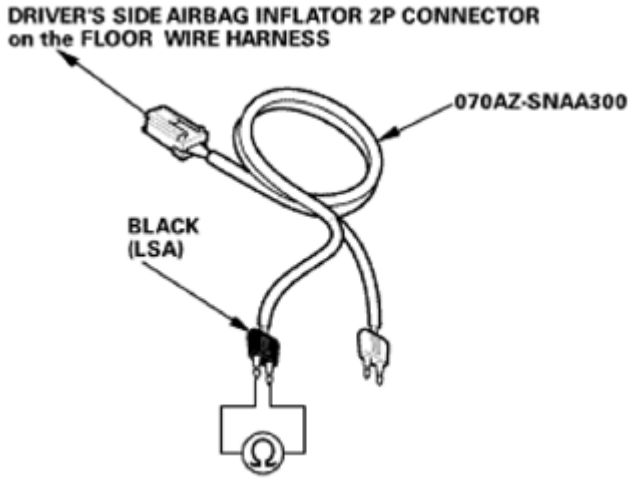

Fig. 55: Measuring Resistance Of SRS Simulator Lead L Black Terminal
Courtesy of AMERICAN HONDA MOTOR CO., INC.

Is there less than 1.0 ohms?

YES : The LSA+, LSA- wires are OK. Faulty SRS unit or poor connection at SRS unit connector B (39P) and the SRS unit. Check the connection; if the connection is OK, **replace the SRS unit** See **SRS UNIT REMOVAL AND INSTALLATION** or **SRS UNIT UPDATE** . If the DTC does not clear, replace the floor wire harness.

GETtheMANUALS.org

NO : Open or increased resistance in the floor wire harness; replace the floor wire harness, then clear the DTC.

DTC 31-3X ("X" CAN BE 0 THRU 9 OR A THRU F): SHORT TO ANOTHER WIRE OR DECREASED RESISTANCE IN THE DRIVER'S SIDE AIRBAG INFLATOR

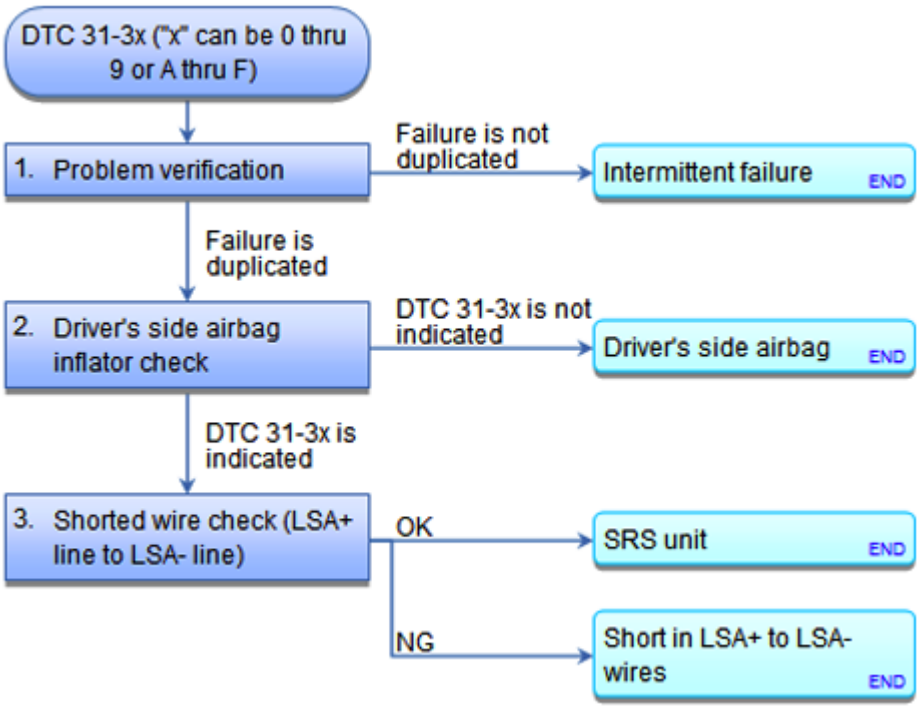

Fig. 56: SRS DTC Troubleshooting Flow Chart (31-3x)
Courtesy of AMERICAN HONDA MOTOR CO., INC.

Special Tools Required

- **SRS Inflator Simulator 07SAZ-TB4011A**
- **SRS Simulator Lead L 070AZ-SNAA300**
- **SRS Short Canceller 070AZ-SAA0100**

NOTE:

- **Before doing this troubleshooting procedure, find out if the vehicle was in a collision. If so, verify that all the required components were replaced with new components, of the correct part number, and that they were properly installed See AIRBAG AND TENSIONER DISPOSAL or SRS COMPONENT REPLACEMENT/INSPECTION AFTER DEPLOYMENT .**
- **Before doing this troubleshooting procedure, review SRS PRECAUTIONS AND PROCEDURES , GENERAL TROUBLESHOOTING INFORMATION , and BATTERY TERMINAL DISCONNECTION AND RECONNECTION .**

GETtheMANUALS.org

- **Before replacing the SRS unit, check the SRS unit software version with the HDS. If the software version is not the latest, update the SRS unit software See SRS UNIT REMOVAL AND INSTALLATION or SRS UNIT UPDATE , and retest.**

DTC Description	DTC

1. Problem verification:
   - 1. **CLEAR THE DTCS WITH THE HDS** .
   - 2. Turn the ignition switch to ON (II), then wait for 10 seconds.
   - 3. **CHECK FOR DTCS WITH THE HDS** .

DTC Description	DTC

Is DTC 31-3x indicated?

YES : The failure is duplicated. Go to step 2.

NO : Intermittent failure, the system is OK at this time. **GO TO TROUBLESHOOTING INTERMITTENT FAILURES** . If another DTC is indicated, troubleshoot the DTC.

2. Driver's side airbag inflator check:
   - 1. Turn the ignition switch to LOCK (0).
   - 2. Disconnect the negative cable from the battery, then wait at least 3 minutes.
   - 3. Disconnect the driver's side airbag inflator 2P connector (A) on the floor wire harness.

GETtheMANUALS.org

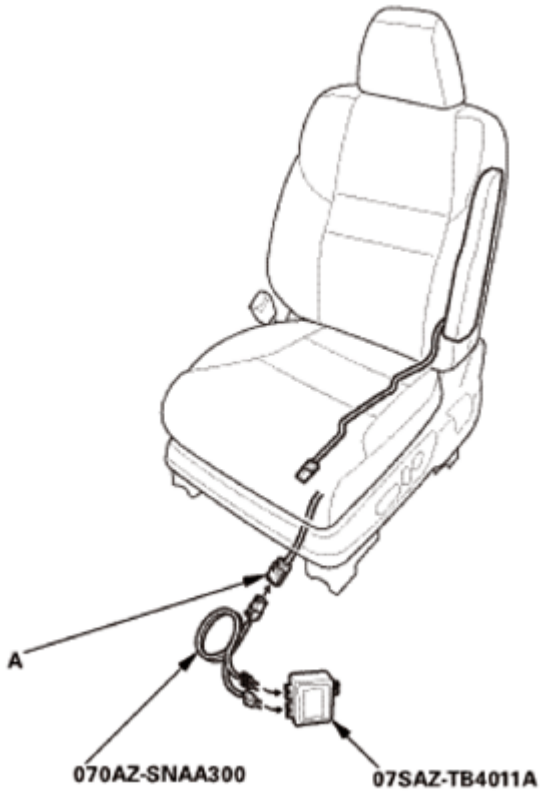

Fig. 57: Disconnecting Driver's Side Airbag Inflator 2P Connector
Courtesy of AMERICAN HONDA MOTOR CO., INC.

- 4. Connect the terminals of SRS simulator lead L to the SRS inflator simulator (2 ohms connectors), then connect SRS simulator lead L to the driver's side airbag inflator 2P connector on the floor wire harness.
- 5. Reconnect the negative cable to the battery.
- 6. **CLEAR THE DTCS WITH THE HDS** .
- 7. Turn the ignition switch to ON (II), then wait for 10 seconds.
- 8. **CHECK FOR DTCS WITH THE HDS** .

DTC Description	DTC

Is DTC 31-3x indicated?

YES : Go to step 3.

NO : Short to another wire in the driver's side airbag inflator; **REPLACE THE DRIVER'S SIDE AIRBAG** , then clear the DTC.

3. Shorted wire check (LSA+ line to LSA- line):
   - 1. Turn the ignition switch to LOCK (0).

GETtheMANUALS.org

- 2. Disconnect the negative cable from the battery, then wait at least 3 minutes.
- 3. Disconnect the following connector.

  SRS unit connector B (39P) See **SRS UNIT REMOVAL AND INSTALLATION** or **SRS UNIT UPDATE**

- 4. Disconnect the SRS inflator simulator from SRS simulator lead L. Do not disconnect SRS simulator lead L from the driver's side airbag inflator 2P connector on the floor wire harness.
- 5. **CONNECT THE SRS SHORT CANCELLER TO SRS UNIT CONNECTOR B (39P) TERMINALS NO. 5 AND NO. 6** .
- 6. Measure the resistance of the test point.

  Test condition IG LOCK (0)

  Driver's side airbag inflator 2P connector (on the floor wire harness): disconnected

  SRS unit connector B (39P): disconnected

  Driver's side airbag inflator 2P connector (on the floor wire harness): connected to SRS simulator lead L

  SRS unit connector B (39P) No. 5 and No. 6: connected to SRS short canceller

  Test circuit LSA+, LSA-

  Test point SRS simulator lead L black terminal

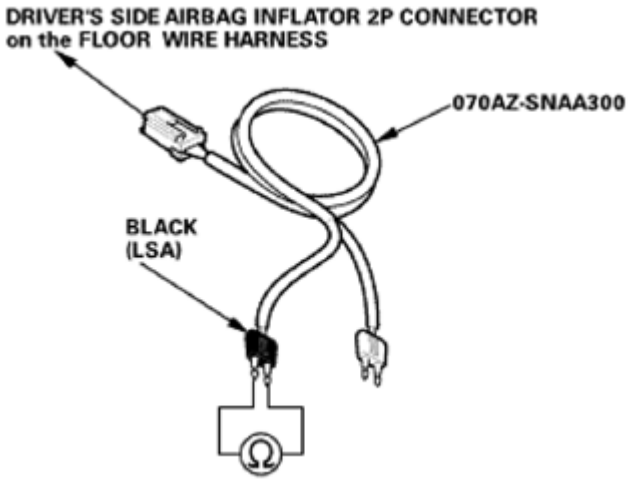

Fig. 58: Measuring Resistance Of SRS Simulator Lead L Black Terminal
Courtesy of AMERICAN HONDA MOTOR CO., INC.

Is there an open circuit, or at least 1 Mohms?

GETtheMANUALS.org

YES : The LSA+, LSA- wires are OK. Faulty SRS unit or poor connection at SRS unit connector B (39P) and the SRS unit. Check the connection; if the connection is OK, **replace the SRS unit** See **SRS UNIT REMOVAL AND INSTALLATION** or **SRS UNIT UPDATE** . If the DTC does not clear, replace the floor wire harness.

NO : Short to another wire in the floor wire harness; replace the floor wire harness, then clear the DTC.

DTC 31-8X ("X" CAN BE 0 THRU 9 OR A THRU F): SHORT TO POWER IN THE DRIVER'S SIDE AIRBAG INFLATOR

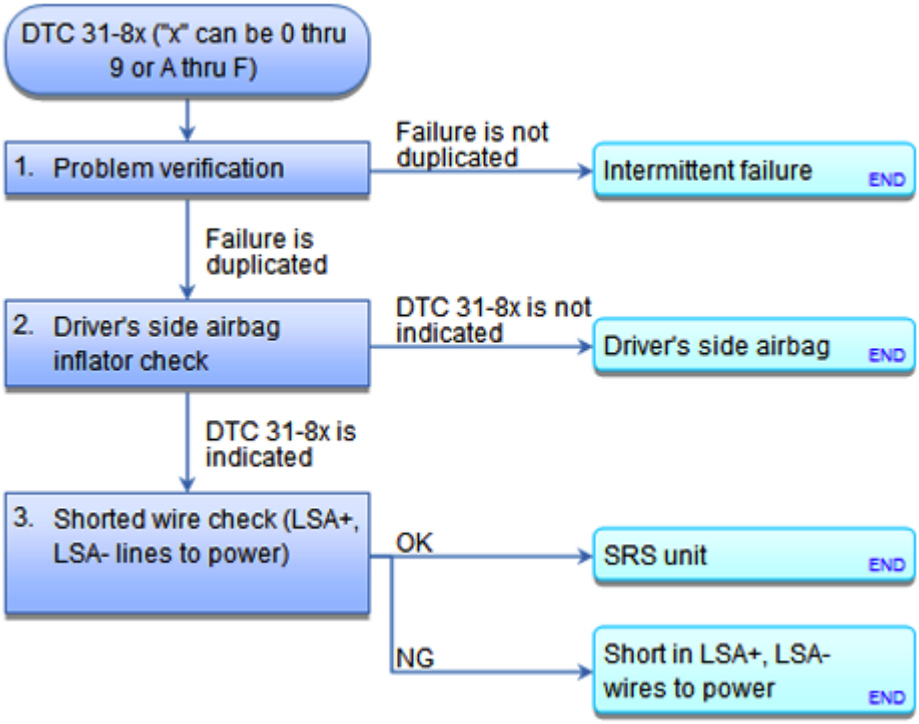

Fig. 59: SRS DTC Troubleshooting Flow Chart (31-8x)
Courtesy of AMERICAN HONDA MOTOR CO., INC.

Special Tools Required

- **SRS Inflator Simulator 07SAZ-TB4011A**
- **SRS Simulator Lead L 070AZ-SNAA300**

NOTE:

- **Before doing this troubleshooting procedure, find out if the vehicle was in a collision. If so, verify that all the required components were replaced with new components, of the correct part number, and that they were properly installed See AIRBAG AND TENSIONER DISPOSAL or SRS COMPONENT REPLACEMENT/INSPECTION AFTER DEPLOYMENT .**
- **Before doing this troubleshooting procedure, review SRS PRECAUTIONS AND PROCEDURES , GENERAL TROUBLESHOOTING INFORMATION , and**

GETtheMANUALS.org

BATTERY TERMINAL DISCONNECTION AND RECONNECTION .

- **Before replacing the SRS unit, check the SRS unit software version with the HDS. If the software version is not the latest, update the SRS unit software See SRS UNIT REMOVAL AND INSTALLATION or SRS UNIT UPDATE , and retest.**

DTC Description	DTC

1. Problem verification:
   - 1. **CLEAR THE DTCS WITH THE HDS** .
   - 2. Turn the ignition switch to ON (II), then wait for 10 seconds.
   - 3. **CHECK FOR DTCS WITH THE HDS** .

DTC Description	DTC

Is DTC 31-8x indicated?

YES : The failure is duplicated. Go to step 2.

NO : Intermittent failure, the system is OK at this time. **GO TO TROUBLESHOOTING INTERMITTENT FAILURES** . If another DTC is indicated, troubleshoot the DTC.

2. Driver's side airbag inflator check:
   - 1. Turn the ignition switch to LOCK (0).
   - 2. Disconnect the negative cable from the battery, then wait at least 3 minutes.
   - 3. Disconnect the driver's side airbag inflator 2P connector (A) on the floor wire harness.

GETtheMANUALS.org

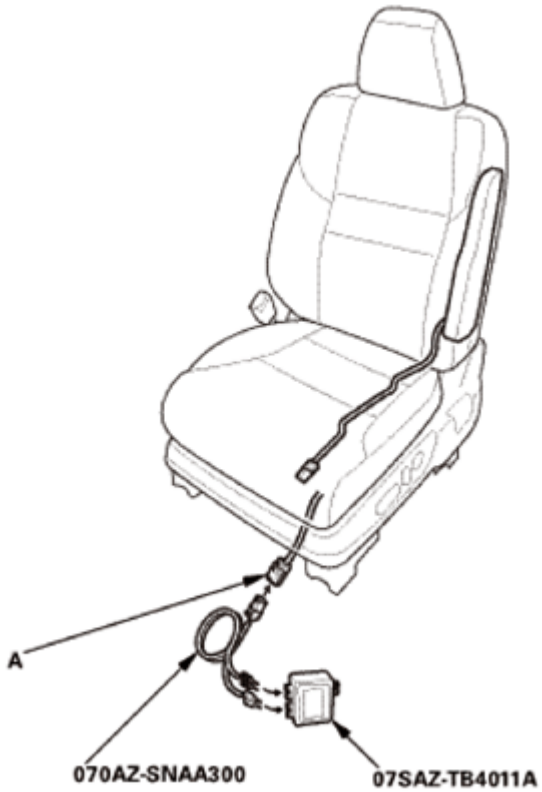

Fig. 60: Disconnecting Driver's Side Airbag Inflator 2P Connector
Courtesy of AMERICAN HONDA MOTOR CO., INC.

- 4. Connect the terminals of SRS simulator lead L to the SRS inflator simulator (2 ohms connectors), then connect SRS simulator lead L to the driver's side airbag inflator 2P connector on the floor wire harness.
- 5. Reconnect the negative cable to the battery.
- 6. **CLEAR THE DTCS WITH THE HDS** .
- 7. Turn the ignition switch to ON (II), then wait for 10 seconds.
- 8. **CHECK FOR DTCS WITH THE HDS** .

DTC Description	DTC

Is DTC 31-8x indicated?

YES : Go to step 3.

NO : Short to power in the driver's side airbag inflator; **REPLACE THE DRIVER'S SIDE AIRBAG** , then clear the DTC.

3. Shorted wire check (LSA+, LSA- lines to power):
   - 1. Turn the ignition switch to LOCK (0).

GETtheMANUALS.org

- 2. Disconnect the negative cable from the battery, then wait at least 3 minutes.
- 3. Disconnect the following connector.

  SRS unit connector B (39P) See **SRS UNIT REMOVAL AND INSTALLATION** or **SRS UNIT UPDATE**

- 4. Disconnect the SRS inflator simulator from SRS simulator lead L. Do not disconnect SRS simulator lead L from the driver's side airbag inflator 2P connector on the floor wire harness.
- 5. Reconnect the negative cable to the battery.
- 6. Turn the ignition switch to ON (II).
- 7. Measure the voltage between test points 1 and 2.

  Test condition IG ON (II)

  Driver's side airbag inflator 2P connector (on the floor wire harness): disconnected

  SRS unit connector B (39P): disconnected

  Driver's side airbag inflator 2P connector (on the floor wire harness): connected to SRS simulator lead L

  Test circuit LSA+, LSA-

  Test point 1 SRS simulator lead L black terminal

  Test point 2 Body ground

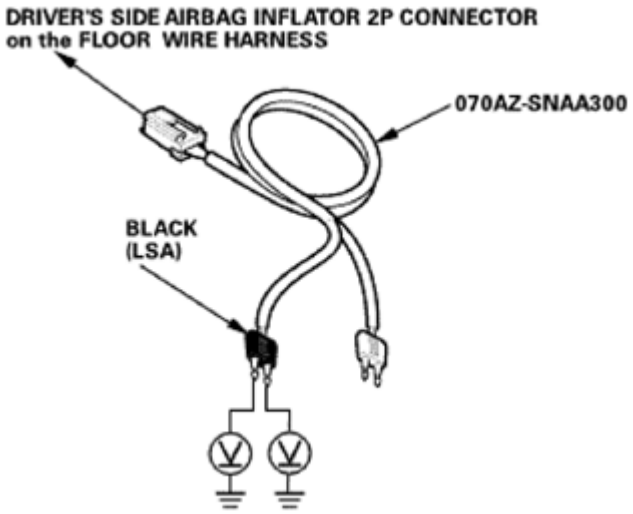

Fig. 61: Measuring Voltage Between SRS Simulator Lead L Black Terminal And Body Ground
Courtesy of AMERICAN HONDA MOTOR CO., INC.

GETtheMANUALS.org

Is there less than 0.2 V?

YES : The LSA+, LSA- wires are OK. Faulty SRS unit or poor connection at SRS unit connector B (39P) and the SRS unit. Check the connection; if the connection is OK, **replace the SRS unit** See **SRS UNIT REMOVAL AND INSTALLATION** or **SRS UNIT UPDATE** . If the DTC does not clear, replace the floor wire harness.

NO : Short to power in the floor wire harness; replace the floor wire harness, then clear the DTC.

DTC 31-9X ("X" CAN BE 0 THRU 9 OR A THRU F): SHORT TO GROUND IN THE DRIVER'S SIDE AIRBAG INFLATOR

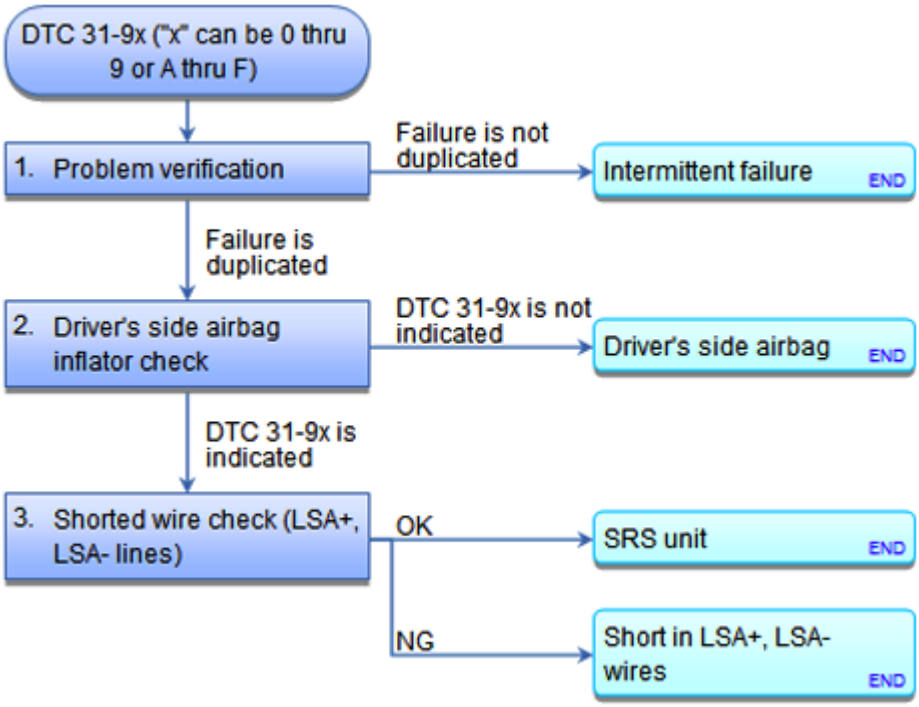

Fig. 62: SRS DTC Troubleshooting Flow Chart (31-9x)
Courtesy of AMERICAN HONDA MOTOR CO., INC.

Special Tools Required

- **SRS Inflator Simulator 07SAZ-TB4011A**
- **SRS Simulator Lead L 070AZ-SNAA300**

NOTE:

- **Before doing this troubleshooting procedure, find out if the vehicle was in a collision. If so, verify that all the required components were replaced with new components, of the correct part number, and that they were properly installed See AIRBAG AND TENSIONER DISPOSAL or SRS COMPONENT REPLACEMENT/INSPECTION AFTER DEPLOYMENT .**

GETtheMANUALS.org

- **Before doing this troubleshooting procedure, review SRS PRECAUTIONS AND PROCEDURES , GENERAL TROUBLESHOOTING INFORMATION , and BATTERY TERMINAL DISCONNECTION AND RECONNECTION .**
- **Before replacing the SRS unit, check the SRS unit software version with the HDS. If the software version is not the latest, update the SRS unit software See SRS UNIT REMOVAL AND INSTALLATION or SRS UNIT UPDATE , and retest.**

DTC Description	DTC

1. Problem verification:
   - 1. **CLEAR THE DTCS WITH THE HDS** .
   - 2. Turn the ignition switch to ON (II), then wait for 10 seconds.
   - 3. **CHECK FOR DTCS WITH THE HDS** .

DTC Description	DTC

Is DTC 31-9x indicated?

YES : The failure is duplicated. Go to step 2.

NO : Intermittent failure, the system is OK at this time. **GO TO TROUBLESHOOTING INTERMITTENT FAILURES** . If another DTC is indicated, troubleshoot the DTC.

2. Driver's side airbag inflator check:
   - 1. Turn the ignition switch to LOCK (0).
   - 2. Disconnect the negative cable from the battery, then wait at least 3 minutes.
   - 3. Disconnect the driver's side airbag inflator 2P connector (A) on the floor wire harness.

GETtheMANUALS.org

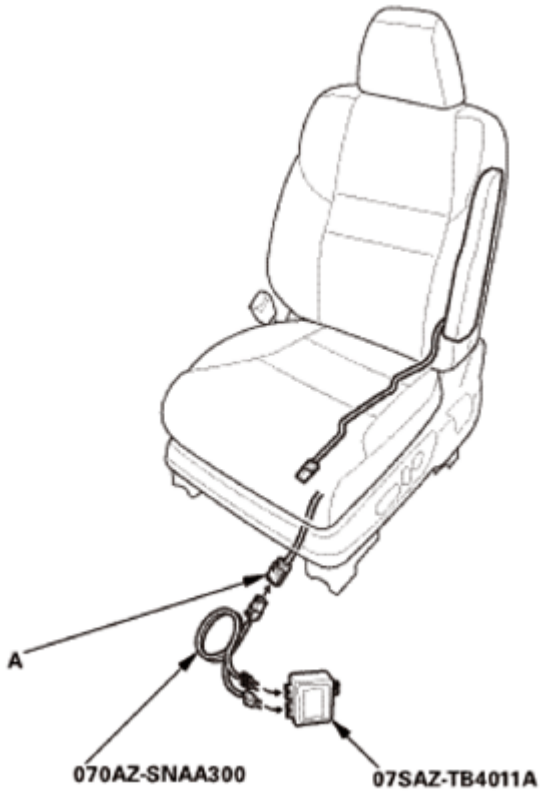

Fig. 63: Disconnecting Driver's Side Airbag Inflator 2P Connector
Courtesy of AMERICAN HONDA MOTOR CO., INC.

- 4. Connect the terminals of SRS simulator lead L to the SRS inflator simulator (2 ohms connectors), then connect SRS simulator lead L to the driver's side airbag inflator 2P connector on the floor wire harness.
- 5. Reconnect the negative cable to the battery.
- 6. **CLEAR THE DTCS WITH THE HDS** .
- 7. Turn the ignition switch to ON (II), then wait for 10 seconds.
- 8. **CHECK FOR DTCS WITH THE HDS** .

DTC Description	DTC

Is DTC 31-9x indicated?

YES : Go to step 3.

NO : Short to ground in the driver's side airbag inflator; **REPLACE THE DRIVER'S SIDE AIRBAG** , then clear the DTC.

3. Shorted wire check (LSA+, LSA- lines):
   - 1. Turn the ignition switch to LOCK (0).

GETtheMANUALS.org

- 2. Disconnect the negative cable from the battery, then wait at least 3 minutes.
- 3. Disconnect the following connector.

  SRS unit connector B (39P) See **SRS UNIT REMOVAL AND INSTALLATION** or **SRS UNIT UPDATE**

- 4. Disconnect the SRS inflator simulator from SRS simulator lead L. Do not disconnect SRS simulator lead L from the driver's side airbag inflator 2P connector on the floor wire harness.
- 5. Measure the resistance between test points 1 and 2.

  Test condition IG LOCK (0)

  Driver's side airbag inflator 2P connector (on the floor wire harness): disconnected

  SRS unit connector B (39P): disconnected

  Driver's side airbag inflator 2P connector (on the floor wire harness): connected to SRS simulator lead L

  Test circuit LSA+, LSA-

  Test point 1 SRS simulator lead L black terminal

  Test point 2 Body ground

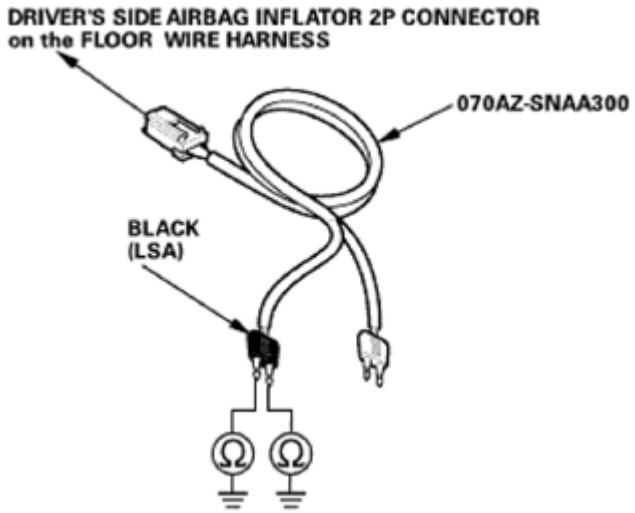

Fig. 64: Measuring Resistance Between SRS Simulator Lead L Black Terminal And Body Ground
Courtesy of AMERICAN HONDA MOTOR CO., INC.

Is there an open circuit, or at least 1 Mohms?

GETtheMANUALS.org

YES : The LSA+, LSA- wires are OK. Faulty SRS unit or poor connection at SRS unit connector B (39P) and the SRS unit. Check the connection; if the connection is OK, **replace the SRS unit** See **SRS UNIT REMOVAL AND INSTALLATION** or **SRS UNIT UPDATE** . If the DTC does not clear, replace the floor wire harness.

NO : Short to ground in the floor wire harness; replace the floor wire harness, then clear the DTC.

DTC 32-1X ("X" CAN BE 0 THRU 9 OR A THRU F): OPEN IN THE FRONT PASSENGER'S SIDE AIRBAG INFLATOR; DTC 32-2X ("X" CAN BE 0 THRU 9 OR A THRU F): INCREASED RESISTANCE IN THE FRONT PASSENGER'S SIDE AIRBAG INFLATOR

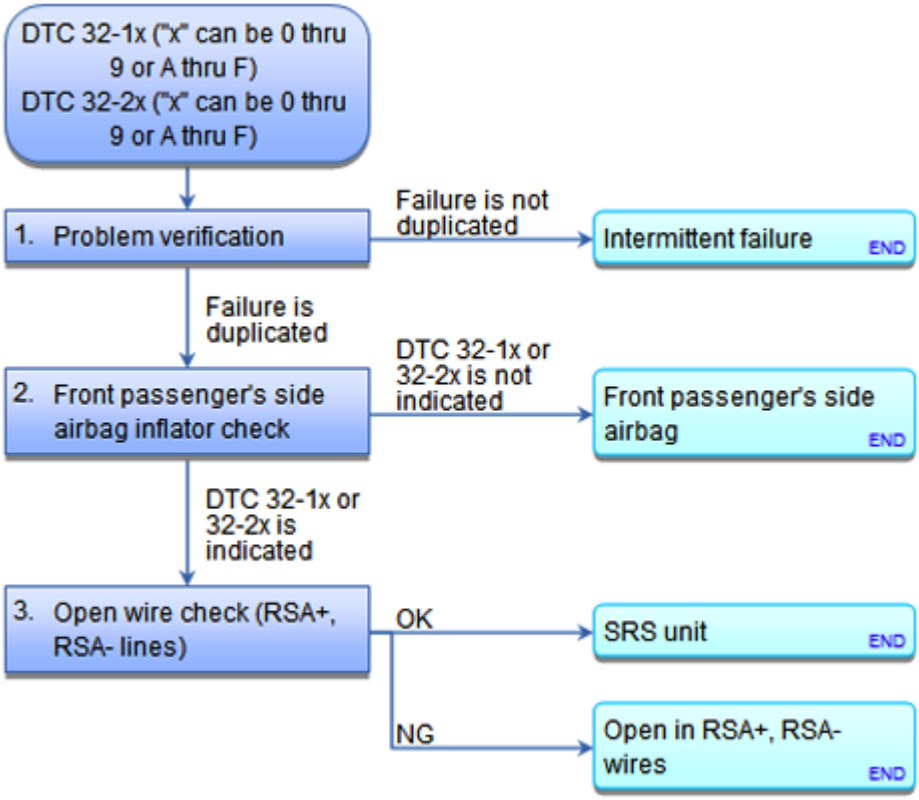

Fig. 65: SRS DTC Troubleshooting Flow Chart (32-1x, 32-2x)
Courtesy of AMERICAN HONDA MOTOR CO., INC.

Special Tools Required

- **SRS Inflator Simulator 07SAZ-TB4011A**
- **SRS Simulator Lead L 070AZ-SNAA300**

NOTE:

- **Before doing this troubleshooting procedure, find out if the vehicle was in a collision. If so, verify that all the required components were replaced**

GETtheMANUALS.org

with new components, of the correct part number, and that they were properly installed See AIRBAG AND TENSIONER DISPOSAL or SRS COMPONENT REPLACEMENT/INSPECTION AFTER DEPLOYMENT .

- **Before doing this troubleshooting procedure, review SRS PRECAUTIONS AND PROCEDURES , GENERAL TROUBLESHOOTING INFORMATION , and BATTERY TERMINAL DISCONNECTION AND RECONNECTION .**
- **Before replacing the SRS unit, check the SRS unit software version with the HDS. If the software version is not the latest, update the SRS unit software See SRS UNIT REMOVAL AND INSTALLATION or SRS UNIT UPDATE , and retest.**

DTC Description	DTC

1. Problem verification:
   - 1. **CLEAR THE DTCS WITH THE HDS** .
   - 2. Turn the ignition switch to ON (II), then wait for 10 seconds.
   - 3. **CHECK FOR DTCS WITH THE HDS** .

DTC Description	DTC

Is DTC 32-1x or 32-2x indicated?

YES : The failure is duplicated. Go to step 2.

NO : Intermittent failure, the system is OK at this time. **GO TO TROUBLESHOOTING INTERMITTENT FAILURES** . If another DTC is indicated, troubleshoot the DTC.

2. Front passenger's side airbag inflator check:
   - 1. Turn the ignition switch to LOCK (0).
   - 2. Disconnect the negative cable from the battery, then wait at least 3 minutes.
   - 3. Disconnect the front passenger's side airbag inflator 2P connector (A) on the floor wire harness or the front passenger's seat wire harness.

GETtheMANUALS.org

Fig. 66: Disconnecting Front Passenger's Side Airbag Inflator 2P Connector
Courtesy of AMERICAN HONDA MOTOR CO., INC.

- 4. Connect the terminals of SRS simulator lead L to the SRS inflator simulator (2 ohms connectors), then connect SRS simulator lead L to the front passenger's side airbag inflator 2P connector on the floor wire harness or the front passenger's seat wire harness.
- 5. Reconnect the negative cable to the battery.
- 6. **CLEAR THE DTCS WITH THE HDS** .
- 7. Turn the ignition switch to ON (II), then wait for 10 seconds.
- 8. **CHECK FOR DTCS WITH THE HDS** .

DTC Description	DTC

Is DTC 32-1x or 32-2x indicated?

YES : Go to step 3.

NO : Open or increased resistance in the front passenger's side airbag inflator; **REPLACE THE FRONT PASSENGER'S SIDE AIRBAG** , then clear the DTC.

3. Open wire check (RSA+, RSA- lines):
   - 1. Turn the ignition switch to LOCK (0).

GETtheMANUALS.org

- 2. Disconnect the negative cable from the battery, then wait at least 3 minutes.
- 3. Disconnect the following connector.

  SRS unit connector B (39P) See **SRS UNIT REMOVAL AND INSTALLATION** or **SRS UNIT UPDATE**

- 4. Disconnect the SRS inflator simulator from SRS simulator lead L. Do not disconnect SRS simulator lead L from the front passenger's side airbag inflator 2P connector on the floor wire harness or the front passenger's seat wire harness.
- 5. Measure the resistance of the test point.

  Test condition IG LOCK (0)

  Front passenger's side airbag inflator 2P connector (on the floor wire harness or the front passenger's seat wire harness): disconnected SRS unit connector B (39P): disconnected

  Front passenger's side airbag inflator 2P connector (on the floor wire harness or the front passenger's seat wire harness): connected to SRS simulator lead L

  Test circuit RSA+, RSA-

  Test point SRS simulator lead L black terminal

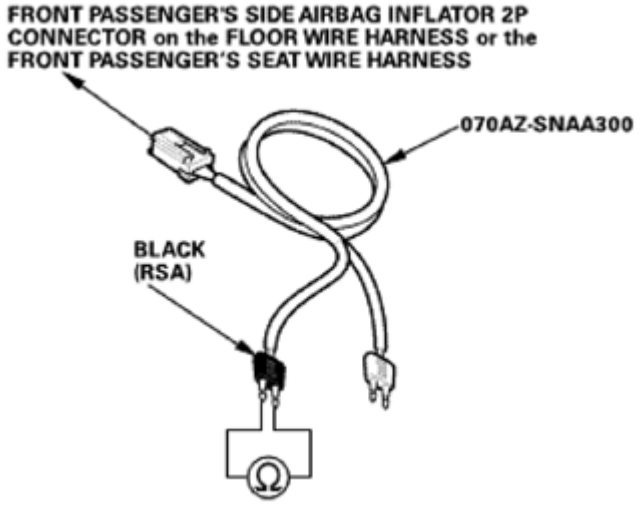

Fig. 67: Measuring Resistance Of SRS Simulator Lead L Black Terminal
Courtesy of AMERICAN HONDA MOTOR CO., INC.

Is there less than 1.0 ohms?

YES : The RSA+, RSA- wires are OK. Faulty SRS unit or poor connection at SRS unit connector B (39P) and the SRS unit. Check the connection; if the connection is OK, **replace the SRS unit** See **SRS UNIT REMOVAL AND INSTALLATION** or **SRS UNIT UPDATE** . If the DTC does not clear, replace the floor wire harness or the front passenger's seat wire harness.

GETtheMANUALS.org

NO : Open or increased resistance in the floor wire harness or the front passenger's seat wire harness; replace the faulty harness, then clear the DTC.

DTC 32-3X ("X" CAN BE 0 THRU 9 OR A THRU F): SHORT TO ANOTHER WIRE OR DECREASED RESISTANCE IN THE FRONT PASSENGER'S SIDE AIRBAG INFLATOR

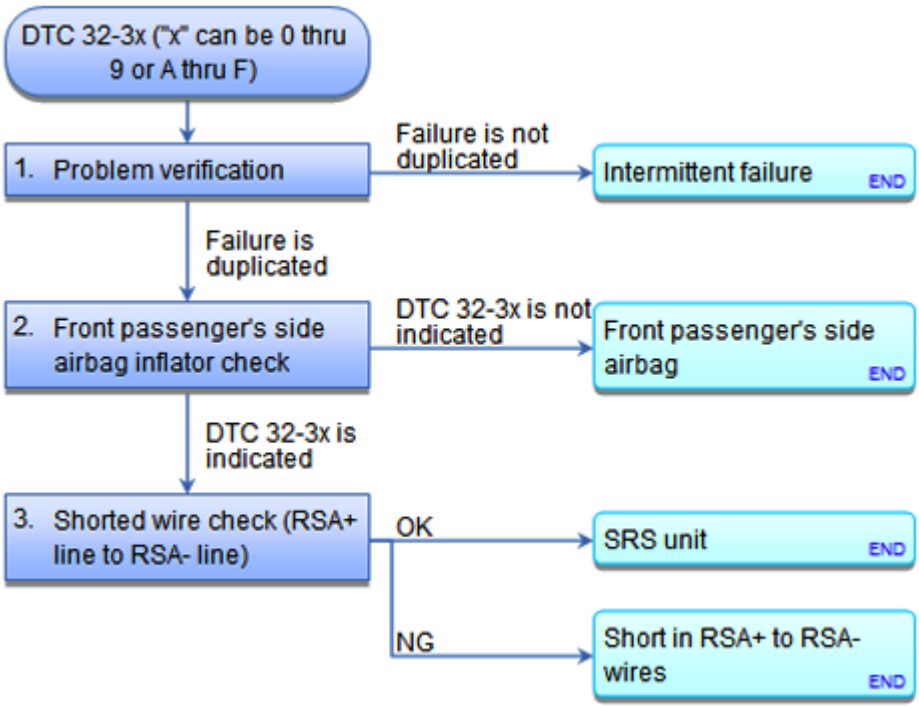

Fig. 68: SRS DTC Troubleshooting Flow Chart (32-3x)
Courtesy of AMERICAN HONDA MOTOR CO., INC.

Special Tools Required

- **SRS Inflator Simulator 07SAZ-TB4011A**
- **SRS Simulator Lead L 070AZ-SNAA300**
- **SRS Short Canceller 070AZ-SAA0100**

NOTE:

- **Before doing this troubleshooting procedure, find out if the vehicle was in a collision. If so, verify that all the required components were replaced with new components, of the correct part number, and that they were properly installed See SRS COMPONENT REPLACEMENT/INSPECTION AFTER DEPLOYMENT or AIRBAG AND TENSIONER DISPOSAL .**
- **Before doing this troubleshooting procedure, review SRS PRECAUTIONS AND PROCEDURES , GENERAL TROUBLESHOOTING INFORMATION , and BATTERY TERMINAL DISCONNECTION AND RECONNECTION .**

GETtheMANUALS.org

- **Before replacing the SRS unit, check the SRS unit software version with the HDS. If the software version is not the latest, update the SRS unit software See SRS UNIT REMOVAL AND INSTALLATION or SRS UNIT UPDATE , and retest.**

DTC Description	DTC

1. Problem verification:
   - 1. **CLEAR THE DTCS WITH THE HDS** .
   - 2. Turn the ignition switch to ON (II), then wait for 10 seconds.
   - 3. **CHECK FOR DTCS WITH THE HDS** .

DTC Description	DTC

Is DTC 32-3x indicated?

YES : The failure is duplicated. Go to step 2.

NO : Intermittent failure, the system is OK at this time. **GO TO TROUBLESHOOTING INTERMITTENT FAILURES** . If another DTC is indicated, troubleshoot the DTC.

2. Front passenger's side airbag inflator check:
   - 1. Turn the ignition switch to LOCK (0).
   - 2. Disconnect the negative cable from the battery, then wait at least 3 minutes.
   - 3. Disconnect the front passenger's side airbag inflator 2P connector (A) on the floor wire harness or the front passenger's seat wire harness.

GETtheMANUALS.org

Fig. 69: Disconnecting Front Passenger's Side Airbag Inflator 2P Connector
Courtesy of AMERICAN HONDA MOTOR CO., INC.

- 4. Connect the terminals of SRS simulator lead L to the SRS inflator simulator (2 ohms connectors), then connect SRS simulator lead L to the front passenger's side airbag inflator 2P connector on the floor wire harness or the front passenger's seat wire harness.
- 5. Reconnect the negative cable to the battery.
- 6. **CLEAR THE DTCS WITH THE HDS** .
- 7. Turn the ignition switch to ON (II), then wait for 10 seconds.
- 8. **CHECK FOR DTCS WITH THE HDS** .

DTC Description	DTC

Is DTC 32-3x indicated?

YES : Go to step 3.

NO : Short to another wire in the front passenger's side airbag inflator; **REPLACE THE FRONT PASSENGER'S SIDE AIRBAG** , then clear the DTC.

3. Shorted wire check (RSA+ line to RSA- line):
   - 1. Turn the ignition switch to LOCK (0).

GETtheMANUALS.org

- 2. Disconnect the negative cable from the battery, then wait at least 3 minutes.
- 3. Disconnect the following connector.

  SRS unit connector B (39P) See **SRS UNIT REMOVAL AND INSTALLATION** or **SRS UNIT UPDATE**

- 4. Disconnect the SRS inflator simulator from SRS simulator lead L. Do not disconnect SRS simulator lead L from the front passenger's side airbag inflator 2P connector on the floor wire harness or the front passenger's seat wire harness.
- 5. **CONNECT THE SRS SHORT CANCELLER TO SRS UNIT CONNECTOR B (39P) TERMINALS NO. 3 AND NO. 4** .
- 6. Measure the resistance of the test point.

  Test condition IG LOCK (0)

  Front passenger's side airbag inflator 2P connector (on the floor wire harness or the front passenger's seat wire harness): disconnected SRS unit connector B (39P): disconnected

  Front passenger's side airbag inflator 2P connector (on the floor wire harness or the front passenger's seat wire harness): connected to SRS simulator lead L

  SRS unit connector B (39P) No. 3 and No. 4: connected to SRS short canceller

  Test circuit RSA+, RSA-

  Test point SRS simulator lead L black terminal

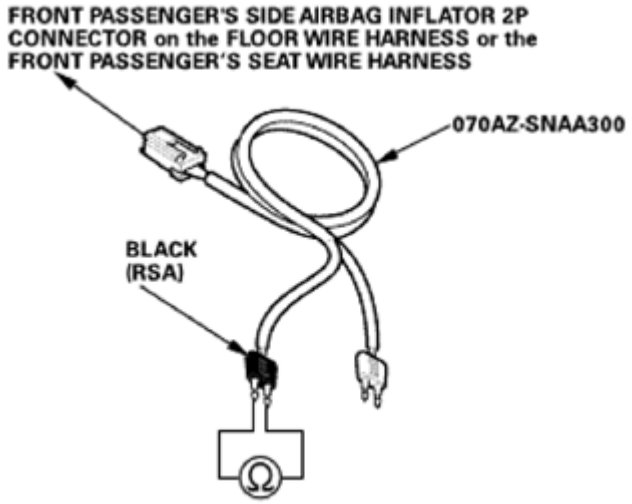

Fig. 70: Measuring Resistance Of SRS Simulator Lead L Black Terminal
Courtesy of AMERICAN HONDA MOTOR CO., INC.

Is there an open circuit, or at least 1 Mohms?

GETtheMANUALS.org

YES : The RSA+, RSA- wires are OK. Faulty SRS unit or poor connection at SRS unit connector B (39P) and the SRS unit. Check the connection; if the connection is OK, **replace the SRS unit** See **SRS UNIT UPDATE** or **SRS UNIT REMOVAL AND INSTALLATION** . If the DTC does not clear, replace the floor wire harness or the front passenger's seat wire harness.

NO : Short to another wire in the floor wire harness or the front passenger's seat wire harness; replace the faulty harness, then clear the DTC.

DTC 32-8X ("X" CAN BE 0 THRU 9 OR A THRU F): SHORT TO POWER IN THE FRONT PASSENGER'S SIDE AIRBAG INFLATOR

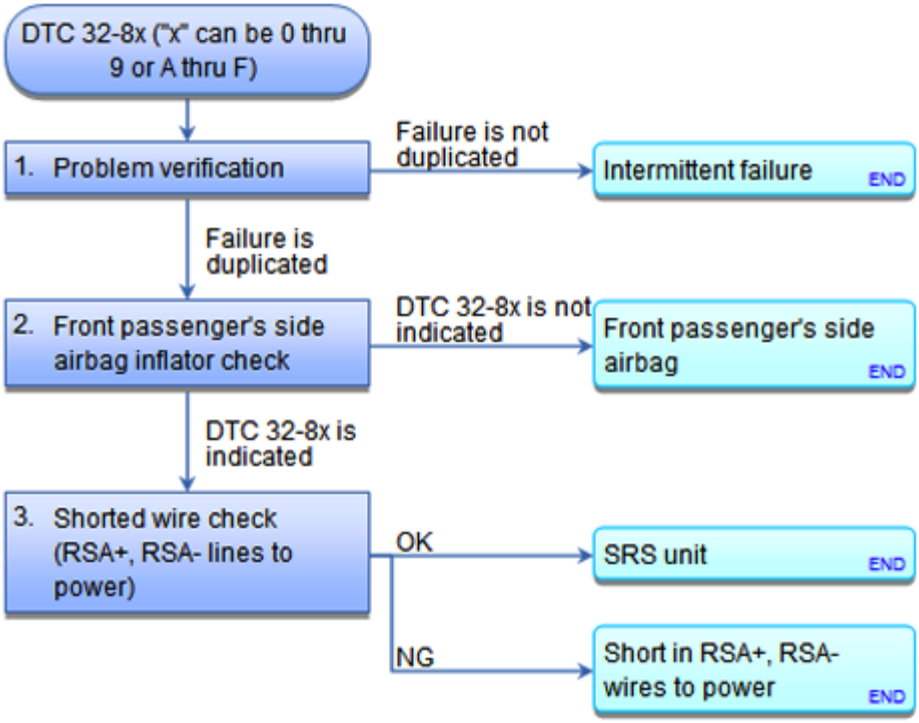

Fig. 71: SRS DTC Troubleshooting Flow Chart (32-8x)
Courtesy of AMERICAN HONDA MOTOR CO., INC.

Special Tools Required

- **SRS Inflator Simulator 07SAZ-TB4011A**
- **SRS Simulator Lead L 070AZ-SNAA300**

NOTE:

- **Before doing this troubleshooting procedure, find out if the vehicle was in a collision. If so, verify that all the required components were replaced with new components, of the correct part number, and that they were properly installed See SRS COMPONENT REPLACEMENT/INSPECTION AFTER DEPLOYMENT or AIRBAG AND TENSIONER DISPOSAL .**
- **Before doing this troubleshooting procedure, review SRS PRECAUTIONS**

GETtheMANUALS.org

AND PROCEDURES , GENERAL TROUBLESHOOTING INFORMATION , and BATTERY TERMINAL DISCONNECTION AND RECONNECTION .

- **Before replacing the SRS unit, check the SRS unit software version with the HDS. If the software version is not the latest, update the SRS unit software See SRS UNIT REMOVAL AND INSTALLATION or SRS UNIT UPDATE , and retest.**

DTC Description	DTC

1. Problem verification:
   - 1. **CLEAR THE DTCS WITH THE HDS** .
   - 2. Turn the ignition switch to ON (II), then wait for 10 seconds.
   - 3. **CHECK FOR DTCS WITH THE HDS** .

DTC Description	DTC

Is DTC 32-8x indicated?

YES : The failure is duplicated. Go to step 2.

NO : Intermittent failure, the system is OK at this time. **GO TO TROUBLESHOOTING INTERMITTENT FAILURES** . If another DTC is indicated, troubleshoot the DTC.

2. Front passenger's side airbag inflator check:
   - 1. Turn the ignition switch to LOCK (0).
   - 2. Disconnect the negative cable from the battery, then wait at least 3 minutes.
   - 3. Disconnect the front passenger's side airbag inflator 2P connector (A) on the floor wire harness or the front passenger's seat wire harness.

GETtheMANUALS.org

Fig. 72: Disconnecting Front Passenger's Side Airbag Inflator 2P Connector
Courtesy of AMERICAN HONDA MOTOR CO., INC.

- 4. Connect the terminals of SRS simulator lead L to the SRS inflator simulator (2 ohms connectors), then connect SRS simulator lead L to the front passenger's side airbag inflator 2P connector on the floor wire harness or the front passenger's seat wire harness.
- 5. Reconnect the negative cable to the battery.
- 6. **CLEAR THE DTCS WITH THE HDS** .
- 7. Turn the ignition switch to ON (II), then wait for 10 seconds.
- 8. **CHECK FOR DTCS WITH THE HDS** .

DTC Description	DTC

Is DTC 32-8x indicated?

YES : Go to step 3.

NO : Short to power in the front passenger's side airbag inflator; **REPLACE THE FRONT PASSENGER'S SIDE AIRBAG** , then clear the DTC.

3. Shorted wire check (RSA+, RSA- lines to power):
   - 1. Turn the ignition switch to LOCK (0).

GETtheMANUALS.org

- 2. Disconnect the negative cable from the battery, then wait at least 3 minutes.
- 3. Disconnect the following connector.

  SRS unit connector B (39P) See **SRS UNIT REMOVAL AND INSTALLATION** or **SRS UNIT UPDATE**

- 4. Disconnect the SRS inflator simulator from SRS simulator lead L. Do not disconnect SRS simulator lead L from the front passenger's side airbag inflator 2P connector on the floor wire harness or the front passenger's seat wire harness.
- 5. Reconnect the negative cable to the battery.
- 6. Turn the ignition switch to ON (II).
- 7. Measure the voltage between test points 1 and 2.

  Test condition IG ON (II)

  Front passenger's side airbag inflator 2P connector (on the floor wire harness or the front passenger's seat wire harness): disconnected SRS unit connector B (39P): disconnected

  Front passenger's side airbag inflator 2P connector (on the floor wire harness or the front passenger's seat wire harness): connected to SRS simulator lead L

  Test circuit RSA+, RSA-

  Test point 1 SRS simulator lead L black terminal

  Test point 2 Body ground

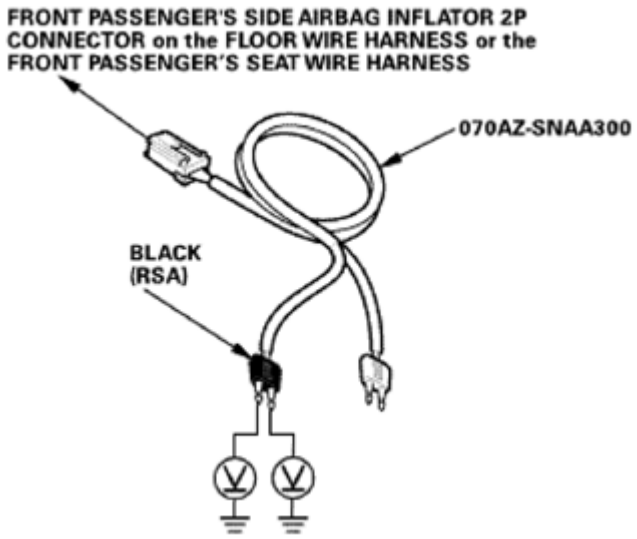

Fig. 73: Measuring Voltage Between SRS Simulator Lead L Black Terminal And Body Ground
Courtesy of AMERICAN HONDA MOTOR CO., INC.

GETtheMANUALS.org

Is there less than 0.2 V?

YES : The RSA+, RSA- wires are OK. Faulty SRS unit or poor connection at SRS unit connector B (39P) and the SRS unit. Check the connection; if the connection is OK, **replace the SRS unit** See **SRS UNIT UPDATE** or **SRS UNIT REMOVAL AND INSTALLATION** . If the DTC does not clear, replace the floor wire harness or the front passenger's seat wire harness.

NO : Short to power in the floor wire harness or the front passenger's seat wire harness; replace the faulty harness, then clear the DTC.

DTC 32-9X ("X" CAN BE 0 THRU 9 OR A THRU F): SHORT TO GROUND IN THE FRONT PASSENGER'S SIDE AIRBAG INFLATOR

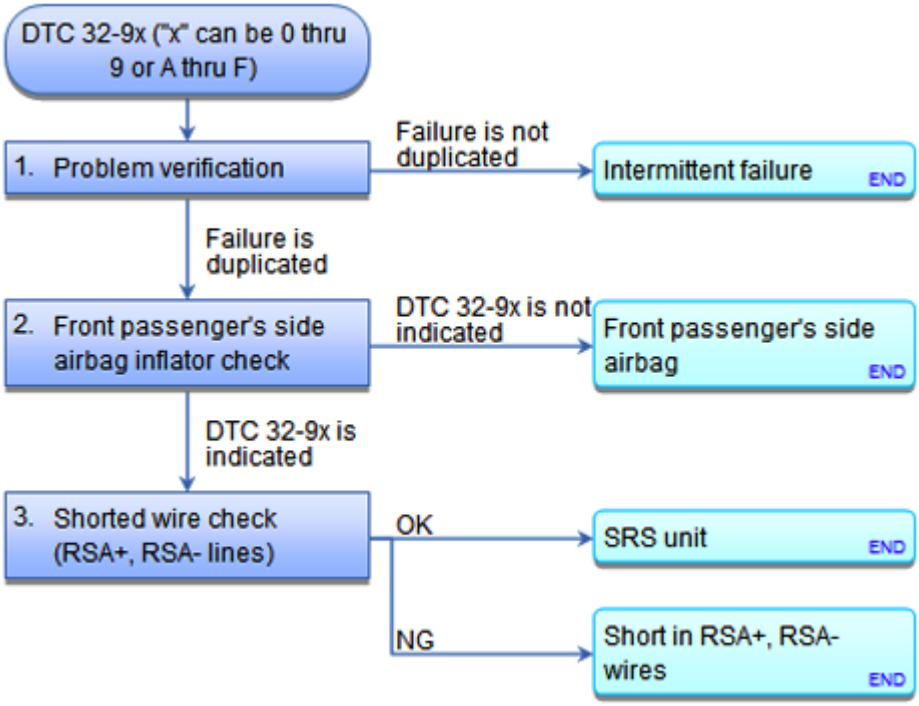

Fig. 74: SRS DTC Troubleshooting Flow Chart (32-9x)
Courtesy of AMERICAN HONDA MOTOR CO., INC.

Special Tools Required

- **SRS Inflator Simulator 07SAZ-TB4011A**
- **SRS Simulator Lead L 070AZ-SNAA300**

NOTE:

- **Before doing this troubleshooting procedure, find out if the vehicle was in a collision. If so, verify that all the required components were replaced with new components, of the correct part number, and that they were properly installed See SRS COMPONENT REPLACEMENT/INSPECTION**

GETtheMANUALS.org

AFTER DEPLOYMENT or AIRBAG AND TENSIONER DISPOSAL .

- **Before doing this troubleshooting procedure, review SRS PRECAUTIONS AND PROCEDURES , GENERAL TROUBLESHOOTING INFORMATION , and BATTERY TERMINAL DISCONNECTION AND RECONNECTION .**
- **Before replacing the SRS unit, check the SRS unit software version with the HDS. If the software version is not the latest, update the SRS unit software See SRS UNIT REMOVAL AND INSTALLATION or SRS UNIT UPDATE , and retest.**

DTC Description	DTC

1. Problem verification:
   - 1. **CLEAR THE DTCS WITH THE HDS** .
   - 2. Turn the ignition switch to ON (II), then wait for 10 seconds.
   - 3. **CHECK FOR DTCS WITH THE HDS** .

DTC Description	DTC

Is DTC 32-9x indicated?

YES : The failure is duplicated. Go to step 2.

NO : Intermittent failure, the system is OK at this time. **GO TO TROUBLESHOOTING INTERMITTENT FAILURES** . If another DTC is indicated, troubleshoot the DTC.

2. Front passenger's side airbag inflator check:
   - 1. Turn the ignition switch to LOCK (0).
   - 2. Disconnect the negative cable from the battery, then wait at least 3 minutes.
   - 3. Disconnect the front passenger's side airbag inflator 2P connector (A) on the floor wire harness or the front passenger's seat wire harness.

GETtheMANUALS.org

Fig. 75: Disconnecting Front Passenger's Side Airbag Inflator 2P Connector
Courtesy of AMERICAN HONDA MOTOR CO., INC.

- 4. Connect the terminals of SRS simulator lead L to the SRS inflator simulator (2 ohms connectors), then connect SRS simulator lead L to the front passenger's side airbag inflator 2P connector on the floor wire harness or the front passenger's seat wire harness.
- 5. Reconnect the negative cable to the battery.
- 6. **CLEAR THE DTCS WITH THE HDS** .
- 7. Turn the ignition switch to ON (II), then wait for 10 seconds.
- 8. **CHECK FOR DTCS WITH THE HDS** .

DTC Description	DTC

Is DTC 32-9x indicated?

YES : Go to step 3.

NO : Short to ground in the front passenger's side airbag inflator; **REPLACE THE FRONT PASSENGER'S SIDE AIRBAG** , then clear the DTC.

3. Shorted wire check (RSA+, RSA- lines):
   - 1. Turn the ignition switch to LOCK (0).

GETtheMANUALS.org

- 2. Disconnect the negative cable from the battery, then wait at least 3 minutes.
- 3. Disconnect the following connector.

  SRS unit connector B (39P) See **SRS UNIT REMOVAL AND INSTALLATION** or **SRS UNIT UPDATE**

- 4. Disconnect the SRS inflator simulator from SRS simulator lead L. Do not disconnect SRS simulator lead L from the front passenger's side airbag inflator 2P connector on the floor wire harness or the front passenger's seat wire harness.
- 5. Measure the resistance between test points 1 and 2.

  Test condition IG LOCK (0)

  Front passenger's side airbag inflator 2P connector (on the floor wire harness or the front passenger's seat wire harness): disconnected SRS unit connector B (39P): disconnected

  Front passenger's side airbag inflator 2P connector (on the floor wire harness or the front passenger's seat wire harness): connected to SRS simulator lead L

  Test circuit RSA+, RSA-

  Test point 1 SRS simulator lead L black terminal

  Test point 2 Body ground

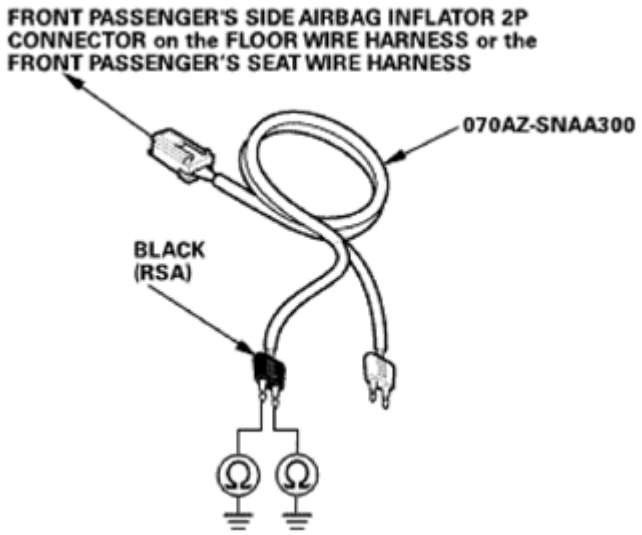

Fig. 76: Measuring Resistance Between SRS Simulator Lead L Black Terminal And Body Ground
Courtesy of AMERICAN HONDA MOTOR CO., INC.

Is there an open circuit, or at least 1 Mohms?

GETtheMANUALS.org

YES : The RSA+, RSA- wires are OK. Faulty SRS unit or poor connection at SRS unit connector B (39P) and the SRS unit. Check the connection; if the connection is OK, **replace the SRS unit** See **SRS UNIT REMOVAL AND INSTALLATION** or **SRS UNIT UPDATE** . If the DTC does not clear, replace the floor wire harness or the front passenger's seat wire harness.

NO : Short to ground in the floor wire harness or the front passenger's seat wire harness; replace the faulty harness, then clear the DTC.

DTC 33-1X ("X" CAN BE 0 THRU 9 OR A THRU F): OPEN IN THE LEFT SIDE CURTAIN AIRBAG INFLATOR; DTC 33-2X ("X" CAN BE 0 THRU 9 OR A THRU F): INCREASED RESISTANCE IN THE LEFT SIDE CURTAIN AIRBAG INFLATOR

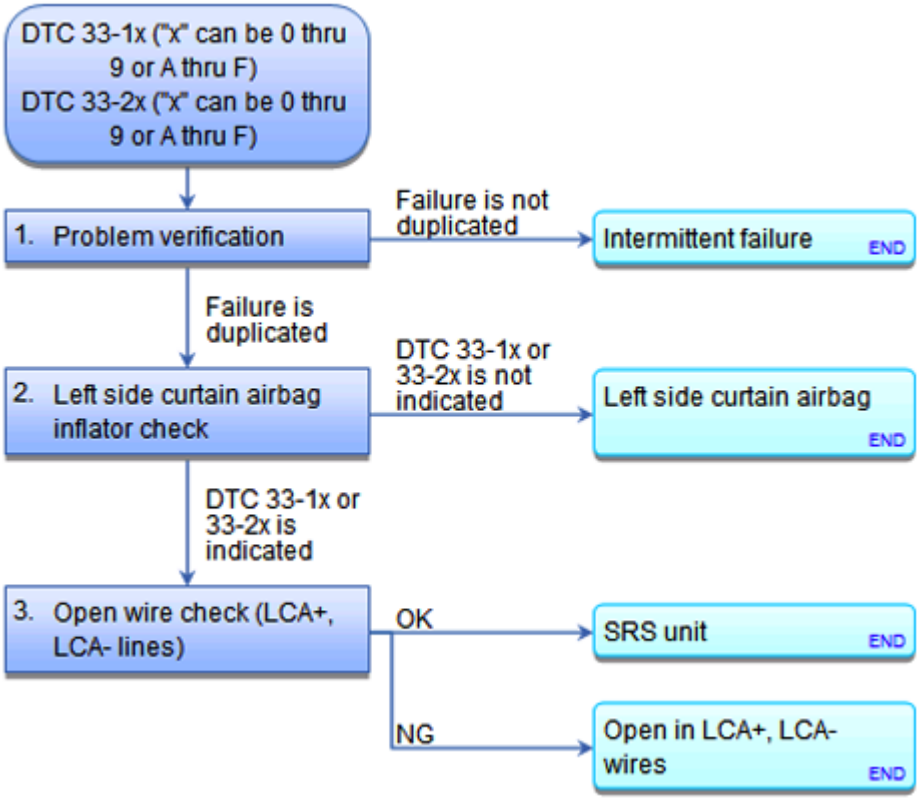

Fig. 77: SRS DTC Troubleshooting Flow Chart (33-1x, 33-2x)
Courtesy of AMERICAN HONDA MOTOR CO., INC.

Special Tools Required

- **SRS Inflator Simulator 07SAZ-TB4011A**
- **SRS Simulator Lead L 070AZ-SNAA300**

NOTE:

- **Before doing this troubleshooting procedure, find out if the vehicle was in**

GETtheMANUALS.org

a collision. If so, verify that all the required components were replaced with new components, of the correct part number, and that they were properly installed See AIRBAG AND TENSIONER DISPOSAL or SRS COMPONENT REPLACEMENT/INSPECTION AFTER DEPLOYMENT .

- **Before doing this troubleshooting procedure, review SRS PRECAUTIONS AND PROCEDURES , GENERAL TROUBLESHOOTING INFORMATION , and BATTERY TERMINAL DISCONNECTION AND RECONNECTION .**
- **Before replacing the SRS unit, check the SRS unit software version with the HDS. If the software version is not the latest, update the SRS unit software See SRS UNIT REMOVAL AND INSTALLATION or SRS UNIT UPDATE , and retest.**

DTC Description	DTC

1. Problem verification:
   - 1. **CLEAR THE DTCS WITH THE HDS** .
   - 2. Turn the ignition switch to ON (II), then wait for 10 seconds.
   - 3. **CHECK FOR DTCS WITH THE HDS** .

DTC Description	DTC

Is DTC 33-1x or 33-2x indicated?

YES : The failure is duplicated. Go to step 2.

NO : Intermittent failure, the system is OK at this time. **GO TO TROUBLESHOOTING INTERMITTENT FAILURES** . If another DTC is indicated, troubleshoot the DTC.

2. Left side curtain airbag inflator check:
   - 1. Turn the ignition switch to LOCK (0).
   - 2. Disconnect the negative cable from the battery, then wait at least 3 minutes.
   - 3. **Remove the left side quarter pillar trim** See **INTERIOR TRIM REMOVAL AND INSTALLATION - TAILGATE AREAS** , **INTERIOR TRIM REMOVAL AND INSTALLATION - CARGO AREA** or **INTERIOR TRIM REMOVAL AND INSTALLATION - PILLAR AREAS** .
   - 4. Disconnect the left side curtain airbag inflator 2P connector (A) on the floor wire harness.

GETtheMANUALS.org

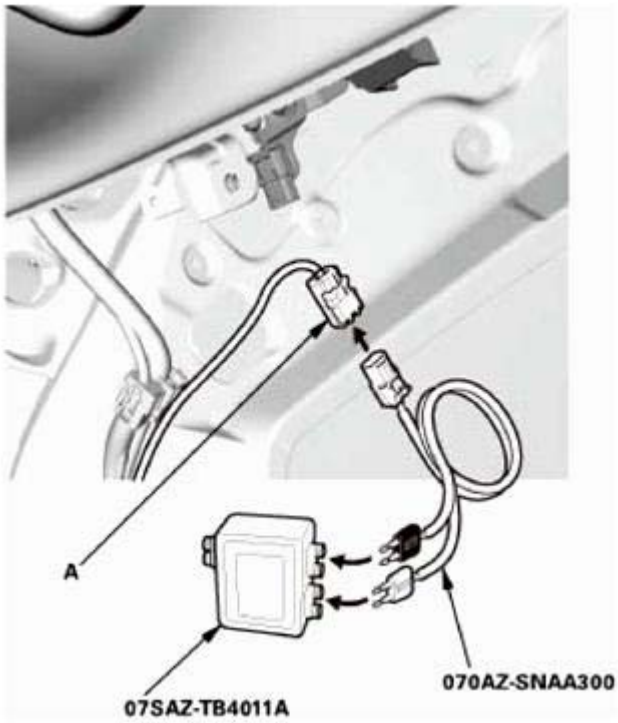

Fig. 78: Disconnecting Left Side Curtain Airbag Inflator 2P Connector
Courtesy of AMERICAN HONDA MOTOR CO., INC.

- 5. Connect the terminals of SRS simulator lead L to the SRS inflator simulator (2 ohms connectors), then connect SRS simulator lead L to the left side curtain airbag inflator 2P connector on the floor wire harness.
- 6. Reconnect the negative cable to the battery.
- 7. **CLEAR THE DTCS WITH THE HDS** .
- 8. Turn the ignition switch to ON (II), then wait for 10 seconds.
- 9. **CHECK FOR DTCS WITH THE HDS** .

DTC Description	DTC

Is DTC 33-1x or 33-2x indicated?

YES : Go to step 3.

NO : Open or increased resistance in the left side curtain airbag inflator; **REPLACE THE LEFT SIDE CURTAIN AIRBAG** , then clear the DTC.

3. Open wire check (LCA+, LCA- lines):
   - 1. Turn the ignition switch to LOCK (0).
   - 2. Disconnect the negative cable from the battery, then wait at least 3 minutes.

GETtheMANUALS.org

- 3. Disconnect the following connector.

  SRS unit connector B (39P) See **SRS UNIT REMOVAL AND INSTALLATION** or **SRS UNIT UPDATE**

- 4. Disconnect the SRS inflator simulator from SRS simulator lead L. Do not disconnect SRS simulator lead L from the left side curtain airbag inflator 2P connector on the floor wire harness.
- 5. Measure the resistance of the test point.

  Test condition IG LOCK (0)

  Left side curtain airbag inflator 2P connector (on the floor wire harness): disconnected

  SRS unit connector B (39P): disconnected

  Left side curtain airbag inflator 2P connector (on the floor wire harness): connected to SRS simulator lead L

  Test circuit LCA+, LCA-

  Test point SRS simulator lead L black terminal

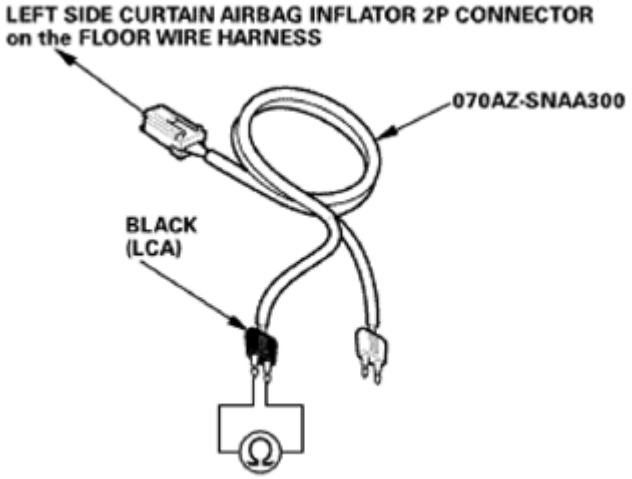

Fig. 79: Measuring Resistance Of SRS Simulator Lead L Black Terminal
Courtesy of AMERICAN HONDA MOTOR CO., INC.

Is there less than 1.0 ohms?

YES : The LCA+, LCA- wires are OK. Faulty SRS unit or poor connection at SRS unit connector B (39P) and the SRS unit. Check the connection; if the connection is OK, **replace the SRS unit** See **SRS UNIT REMOVAL AND INSTALLATION** or **SRS UNIT UPDATE** . If the DTC does not clear, replace the floor wire harness.

NO : Open or increased resistance in the floor wire harness; replace the floor wire harness, then clear the

GETtheMANUALS.org

DTC.

DTC 33-3X ("X" CAN BE 0 THRU 9 OR A THRU F): SHORT TO ANOTHER WIRE OR DECREASED RESISTANCE IN THE LEFT SIDE CURTAIN AIRBAG INFLATOR

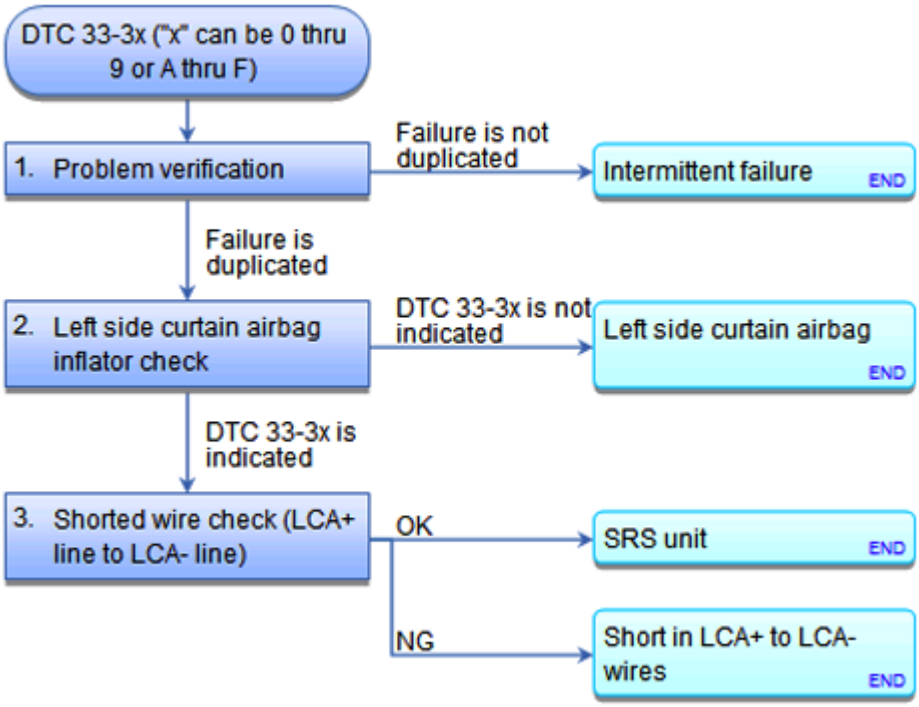

Fig. 80: SRS DTC Troubleshooting Flow Chart (33-3x)
Courtesy of AMERICAN HONDA MOTOR CO., INC.

Special Tools Required

- **SRS Inflator Simulator 07SAZ-TB4011A**
- **SRS Simulator Lead L 070AZ-SNAA300**
- **SRS Short Canceller 070AZ-SAA0100**

NOTE:

- **Before doing this troubleshooting procedure, find out if the vehicle was in a collision. If so, verify that all the required components were replaced with new components, of the correct part number, and that they were properly installed See SRS COMPONENT REPLACEMENT/INSPECTION AFTER DEPLOYMENT or AIRBAG AND TENSIONER DISPOSAL .**
- **Before doing this troubleshooting procedure, review SRS PRECAUTIONS AND PROCEDURES , GENERAL TROUBLESHOOTING INFORMATION , and BATTERY TERMINAL DISCONNECTION AND RECONNECTION .**
- **Before replacing the SRS unit, check the SRS unit software version with**

GETtheMANUALS.org

the HDS. If the software version is not the latest, update the SRS unit software See SRS UNIT REMOVAL AND INSTALLATION or SRS UNIT UPDATE , and retest.

DTC Description	DTC

1. Problem verification:
   - 1. **CLEAR THE DTCS WITH THE HDS** .
   - 2. Turn the ignition switch to ON (II), then wait for 10 seconds.
   - 3. **CHECK FOR DTCS WITH THE HDS** .

DTC Description	DTC

Is DTC 33-3x indicated?

YES : The failure is duplicated. Go to step 2.

NO : Intermittent failure, the system is OK at this time. **GO TO TROUBLESHOOTING INTERMITTENT FAILURES** . If another DTC is indicated, troubleshoot the DTC.

2. Left side curtain airbag inflator check:
   - 1. Turn the ignition switch to LOCK (0).
   - 2. Disconnect the negative cable from the battery, then wait at least 3 minutes.
   - 3. **Remove the left side quarter pillar trim** See **INTERIOR TRIM REMOVAL AND INSTALLATION - TAILGATE AREAS** , **INTERIOR TRIM REMOVAL AND INSTALLATION - CARGO AREA** or **INTERIOR TRIM REMOVAL AND INSTALLATION - PILLAR AREAS** .
   - 4. Disconnect the left side curtain airbag inflator 2P connector (A) on the floor wire harness.

GETtheMANUALS.org

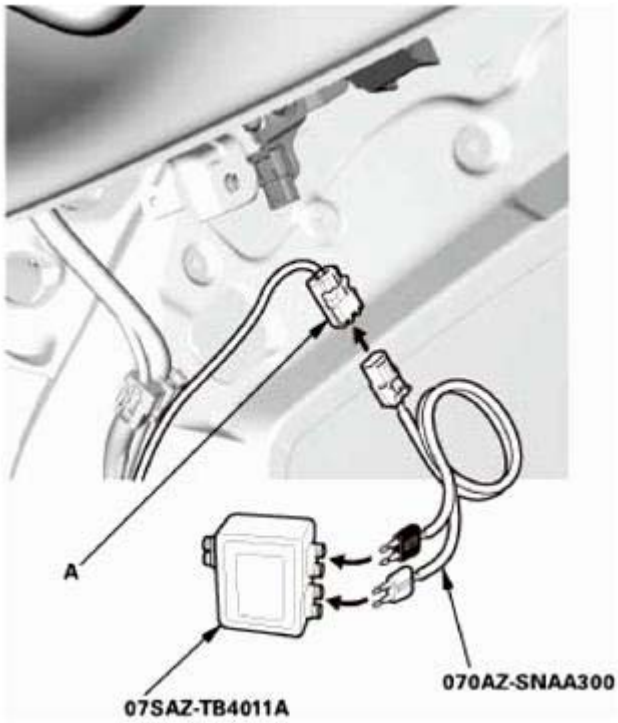

Fig. 81: Disconnecting Left Side Curtain Airbag Inflator 2P Connector
Courtesy of AMERICAN HONDA MOTOR CO., INC.

- 5. Connect the terminals of SRS simulator lead L to the SRS inflator simulator (2 ohms connectors), then connect SRS simulator lead L to the left side curtain airbag inflator 2P connector on the floor wire harness.
- 6. Reconnect the negative cable to the battery.
- 7. **CLEAR THE DTCS WITH THE HDS** .
- 8. Turn the ignition switch to ON (II), then wait for 10 seconds.
- 9. **CHECK FOR DTCS WITH THE HDS** .

DTC Description	DTC

Is DTC 33-3x indicated?

YES : Go to step 3.

NO : Short to another wire in the left side curtain airbag inflator; **REPLACE THE LEFT SIDE CURTAIN AIRBAG** , then clear the DTC.

3. Shorted wire check (LCA+ line to LCA- line):
   - 1. Turn the ignition switch to LOCK (0).
   - 2. Disconnect the negative cable from the battery, then wait at least 3 minutes.

GETtheMANUALS.org

- 3. Disconnect the following connector.

  SRS unit connector B (39P) See **SRS UNIT REMOVAL AND INSTALLATION** or **SRS UNIT UPDATE**

- 4. Disconnect the SRS inflator simulator from SRS simulator lead L. Do not disconnect SRS simulator lead L from the left side curtain airbag inflator 2P connector on the floor wire harness.
- 5. **CONNECT THE SRS SHORT CANCELLER TO SRS UNIT CONNECTOR B (39P) TERMINALS NO. 1 AND NO. 2** .
- 6. Measure the resistance of the test point.

  Test condition IG LOCK (0)

  Left side curtain airbag inflator 2P connector (on the floor wire harness): disconnected

  SRS unit connector B (39P): disconnected

  Left side curtain airbag inflator 2P connector (on the floor wire harness): connected to SRS simulator lead L

  SRS unit connector B (39P) No. 1 and No. 2: connected to SRS short canceller

  Test circuit LCA+, LCA-

  Test point SRS simulator lead L black terminal

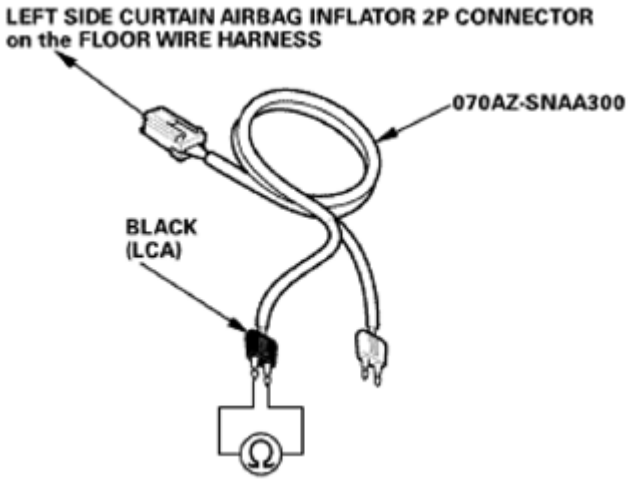

Fig. 82: Measuring Resistance Of SRS Simulator Lead L Black Terminal
Courtesy of AMERICAN HONDA MOTOR CO., INC.

Is there an open circuit, or at least 1 Mohms?

YES : The LCA+, LCA- wires are OK. Faulty SRS unit or poor connection at SRS unit connector B

GETtheMANUALS.org

(39P) and the SRS unit. Check the connection; if the connection is OK, **replace the SRS unit** See **SRS UNIT REMOVAL AND INSTALLATION** or **SRS UNIT UPDATE** . If the DTC does not clear, replace the floor wire harness.

NO : Short to another wire in the floor wire harness; replace the floor wire harness, then clear the DTC.

DTC 33-8X ("X" CAN BE 0 THRU 9 OR A THRU F): SHORT TO POWER IN THE LEFT SIDE CURTAIN AIRBAG INFLATOR

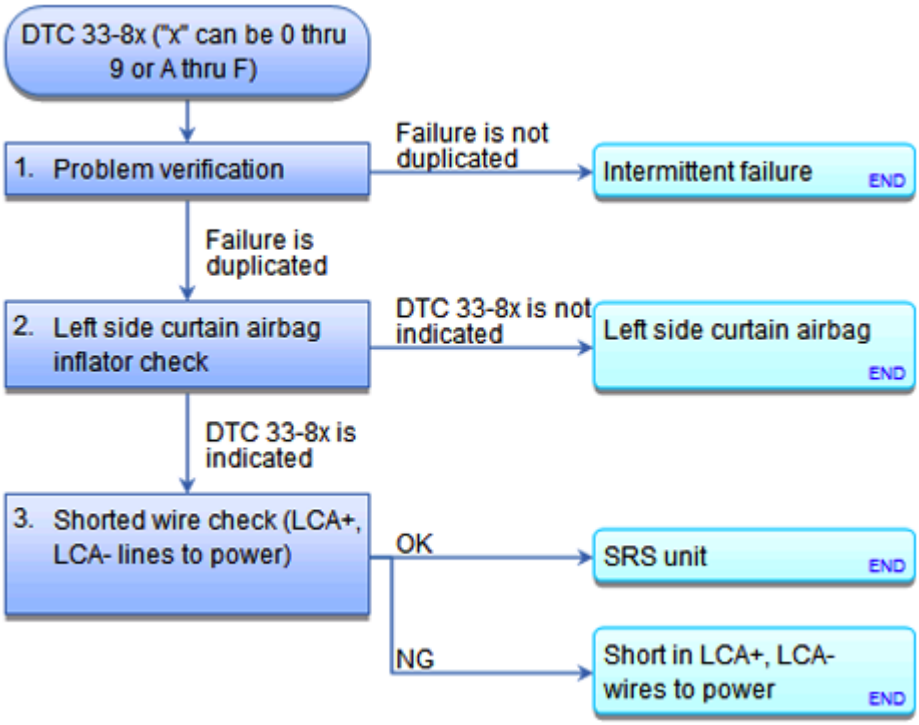

Fig. 83: SRS DTC Troubleshooting Flow Chart (33-8x)
Courtesy of AMERICAN HONDA MOTOR CO., INC.

Special Tools Required

- **SRS Inflator Simulator 07SAZ-TB4011A**
- **SRS Simulator Lead L 070AZ-SNAA300**

NOTE:

- **Before doing this troubleshooting procedure, find out if the vehicle was in a collision. If so, verify that all the required components were replaced with new components, of the correct part number, and that they were properly installed See SRS COMPONENT REPLACEMENT/INSPECTION AFTER DEPLOYMENT or AIRBAG AND TENSIONER DISPOSAL .**
- **Before doing this troubleshooting procedure, review SRS PRECAUTIONS AND PROCEDURES , GENERAL TROUBLESHOOTING INFORMATION , and BATTERY TERMINAL DISCONNECTION AND RECONNECTION .**

GETtheMANUALS.org

- **Before replacing the SRS unit, check the SRS unit software version with the HDS. If the software version is not the latest, update the SRS unit software See SRS UNIT REMOVAL AND INSTALLATION or SRS UNIT UPDATE , and retest.**

DTC Description	DTC

1. Problem verification:
   - 1. **CLEAR THE DTCS WITH THE HDS** .
   - 2. Turn the ignition switch to ON (II), then wait for 10 seconds.
   - 3. **CHECK FOR DTCS WITH THE HDS** .

DTC Description	DTC

Is DTC 33-8x indicated?

YES : The failure is duplicated. Go to step 2.

NO : Intermittent failure, the system is OK at this time. **GO TO TROUBLESHOOTING INTERMITTENT FAILURES** . If another DTC is indicated, troubleshoot the DTC.

2. Left side curtain airbag inflator check:
   - 1. Turn the ignition switch to LOCK (0).
   - 2. Disconnect the negative cable from the battery, then wait at least 3 minutes.
   - 3. **Remove the left side quarter pillar trim** See **INTERIOR TRIM REMOVAL AND INSTALLATION - TAILGATE AREAS** , **INTERIOR TRIM REMOVAL AND INSTALLATION - CARGO AREA** or **INTERIOR TRIM REMOVAL AND INSTALLATION - PILLAR AREAS** .
   - 4. Disconnect the left side curtain airbag inflator 2P connector (A) on the floor wire harness.

GETtheMANUALS.org

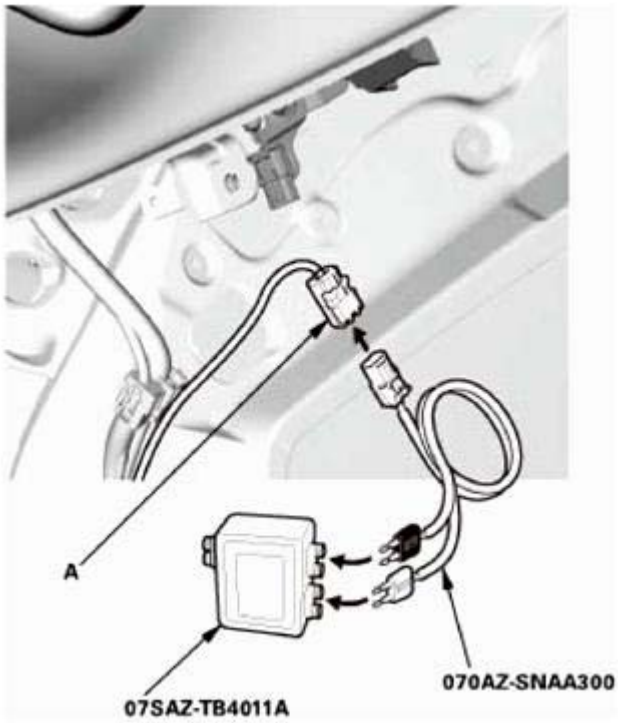

Fig. 84: Disconnecting Left Side Curtain Airbag Inflator 2P Connector
Courtesy of AMERICAN HONDA MOTOR CO., INC.

- 5. Connect the terminals of SRS simulator lead L to the SRS inflator simulator (2 ohms connectors), then connect SRS simulator lead L to the left side curtain airbag inflator 2P connector on the floor wire harness.
- 6. Reconnect the negative cable to the battery.
- 7. **CLEAR THE DTCS WITH THE HDS** .
- 8. Turn the ignition switch to ON (II), then wait for 10 seconds.
- 9. **CHECK FOR DTCS WITH THE HDS** .

DTC Description	DTC

Is DTC 33-8x indicated?

YES : Go to step 3.

NO : Short to power in the left side curtain airbag inflator; **REPLACE THE LEFT SIDE CURTAIN AIRBAG** , then clear the DTC.

3. Shorted wire check (LCA+, LCA- lines to power):
   - 1. Turn the ignition switch to LOCK (0).
   - 2. Disconnect the negative cable from the battery, then wait at least 3 minutes.

GETtheMANUALS.org

- 3. Disconnect the following connector.

  SRS unit connector B (39P) See **SRS UNIT REMOVAL AND INSTALLATION** or **SRS UNIT UPDATE**

- 4. Disconnect the SRS inflator simulator from SRS simulator lead L. Do not disconnect SRS simulator lead L from the left side curtain airbag inflator 2P connector on the floor wire harness.
- 5. Reconnect the negative cable to the battery.
- 6. Turn the ignition switch to ON (II).
- 7. Measure the voltage between test points 1 and 2.

  Test condition IG ON (II)

  Left side curtain airbag inflator 2P connector (on the floor wire harness): disconnected

  SRS unit connector B (39P): disconnected

  Left side curtain airbag inflator 2P connector (on the floor wire harness): connected to SRS simulator lead L

  Test circuit LCA+, LCA-

  Test point 1 SRS simulator lead L black terminal

  Test point 2 Body ground

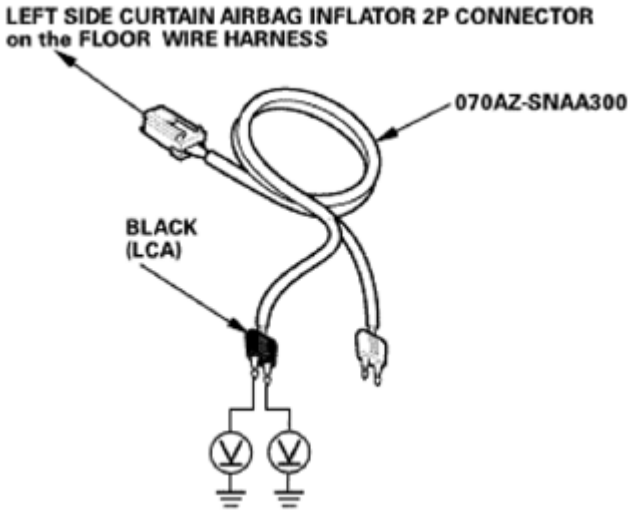

Fig. 85: Measuring Voltage Between SRS Simulator Lead L Black Terminal And Body Ground
Courtesy of AMERICAN HONDA MOTOR CO., INC.

Is there less than 0.2 V?

GETtheMANUALS.org

YES : The LCA+, LCA- wires are OK. Faulty SRS unit or poor connection at SRS unit connector B (39P) and the SRS unit. Check the connection; if the connection is OK, **replace the SRS unit** See **SRS UNIT REMOVAL AND INSTALLATION** or **SRS UNIT UPDATE** . If the DTC does not clear, replace the floor wire harness.

NO : Short to power in the floor wire harness; replace the floor wire harness, then clear the DTC.

DTC 33-9X ("X" CAN BE 0 THRU 9 OR A THRU F): SHORT TO GROUND IN THE LEFT SIDE CURTAIN AIRBAG INFLATOR

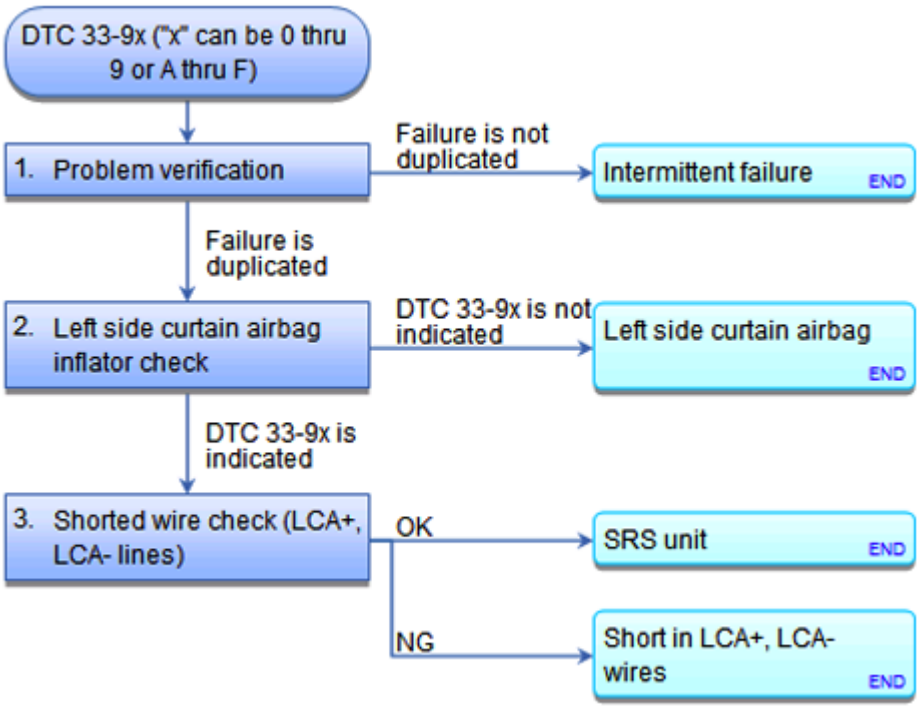

Fig. 86: SRS DTC Troubleshooting Flow Chart (33-9x)
Courtesy of AMERICAN HONDA MOTOR CO., INC.

Special Tools Required

- **SRS Inflator Simulator 07SAZ-TB4011A**
- **SRS Simulator Lead L 070AZ-SNAA300**

NOTE:

- **Before doing this troubleshooting procedure, find out if the vehicle was in a collision. If so, verify that all the required components were replaced with new components, of the correct part number, and that they were properly installed See SRS COMPONENT REPLACEMENT/INSPECTION AFTER DEPLOYMENT or AIRBAG AND TENSIONER DISPOSAL .**
- **Before doing this troubleshooting procedure, review SRS PRECAUTIONS AND PROCEDURES , GENERAL TROUBLESHOOTING INFORMATION , and**

GETtheMANUALS.org

BATTERY TERMINAL DISCONNECTION AND RECONNECTION .

- **Before replacing the SRS unit, check the SRS unit software version with the HDS. If the software version is not the latest, update the SRS unit software See SRS UNIT REMOVAL AND INSTALLATION or SRS UNIT UPDATE , and retest.**

DTC Description	DTC

1. Problem verification:
   - 1. **CLEAR THE DTCS WITH THE HDS** .
   - 2. Turn the ignition switch to ON (II), then wait for 10 seconds.
   - 3. **CHECK FOR DTCS WITH THE HDS** .

DTC Description	DTC

Is DTC 33-9x indicated?

YES : The failure is duplicated. Go to step 2.

NO : Intermittent failure, the system is OK at this time. **GO TO TROUBLESHOOTING INTERMITTENT FAILURES** . If another DTC is indicated, troubleshoot the DTC.

2. Left side curtain airbag inflator check:
   - 1. Turn the ignition switch to LOCK (0).
   - 2. Disconnect the negative cable from the battery, then wait at least 3 minutes.
   - 3. **Remove the left side quarter pillar trim** See **INTERIOR TRIM REMOVAL AND INSTALLATION - TAILGATE AREAS** , **INTERIOR TRIM REMOVAL AND INSTALLATION - CARGO AREA** or **INTERIOR TRIM REMOVAL AND INSTALLATION - PILLAR AREAS** .
   - 4. Disconnect the left side curtain airbag inflator 2P connector (A) on the floor wire harness.

GETtheMANUALS.org

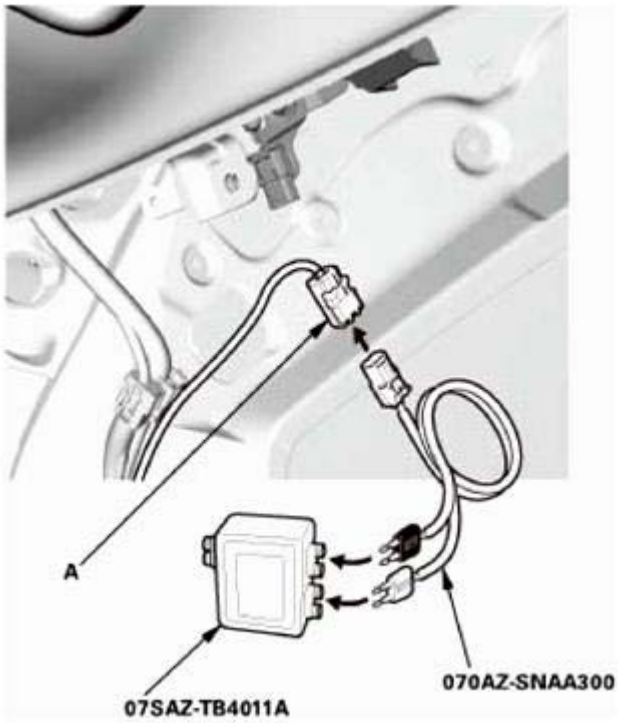

Fig. 87: Disconnecting Left Side Curtain Airbag Inflator 2P Connector
Courtesy of AMERICAN HONDA MOTOR CO., INC.

- 5. Connect the terminals of SRS simulator lead L to the SRS inflator simulator (2 ohms connectors), then connect SRS simulator lead L to the left side curtain airbag inflator 2P connector on the floor wire harness.
- 6. Reconnect the negative cable to the battery.
- 7. **CLEAR THE DTCS WITH THE HDS** .
- 8. Turn the ignition switch to ON (II), then wait for 10 seconds.
- 9. **CHECK FOR DTCS WITH THE HDS** .

DTC Description	DTC

Is DTC 33-9x indicated?

YES : Go to step 3.

NO : Short to ground in the left side curtain airbag inflator; **REPLACE THE LEFT SIDE CURTAIN AIRBAG** , then clear the DTC.

3. Shorted wire check (LCA+, LCA- lines):
   - 1. Turn the ignition switch to LOCK (0).
   - 2. Disconnect the negative cable from the battery, then wait at least 3 minutes.

GETtheMANUALS.org

- 3. Disconnect the following connector.

  SRS unit connector B (39P) See **SRS UNIT REMOVAL AND INSTALLATION** or **SRS UNIT UPDATE**

- 4. Disconnect the SRS inflator simulator from SRS simulator lead L. Do not disconnect SRS simulator lead L from the left side curtain airbag inflator 2P connector on the floor wire harness.
- 5. Measure the resistance between test points 1 and 2.

  Test condition IG LOCK (0)

  Left side curtain airbag inflator 2P connector (on the floor wire harness): disconnected

  SRS unit connector B (39P): disconnected

  Left side curtain airbag inflator 2P connector (on the floor wire harness): connected to SRS simulator lead L

  Test circuit LCA+, LCA-

  Test point 1 SRS simulator lead L black terminal

  Test point 2 Body ground

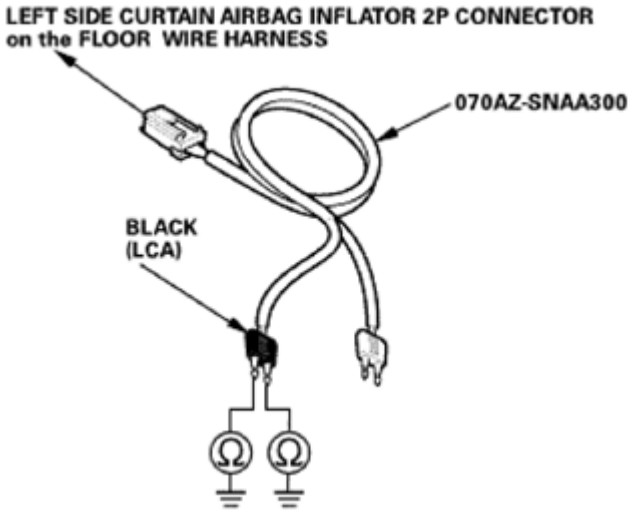

Fig. 88: Measuring Resistance Between SRS Simulator Lead L Black Terminal And Body Ground
Courtesy of AMERICAN HONDA MOTOR CO., INC.

Is there an open circuit, or at least 1 Mohms?

YES : The LCA+, LCA- wires are OK. Faulty SRS unit or poor connection at SRS unit connector B (39P) and the SRS unit. Check the connection; if the connection is OK, **replace the SRS unit** See **SRS**

GETtheMANUALS.org

UNIT REMOVAL AND INSTALLATION or **SRS UNIT UPDATE** . If the DTC does not clear, replace the floor wire harness.

NO : Short to ground in the floor wire harness; replace the floor wire harness, then clear the DTC.

DTC 34-1X ("X" CAN BE 0 THRU 9 OR A THRU F): OPEN IN THE RIGHT SIDE CURTAIN AIRBAG INFLATOR; DTC 34-2X ("X" CAN BE 0 THRU 9 OR A THRU F): INCREASED RESISTANCE IN THE RIGHT SIDE CURTAIN AIRBAG INFLATOR

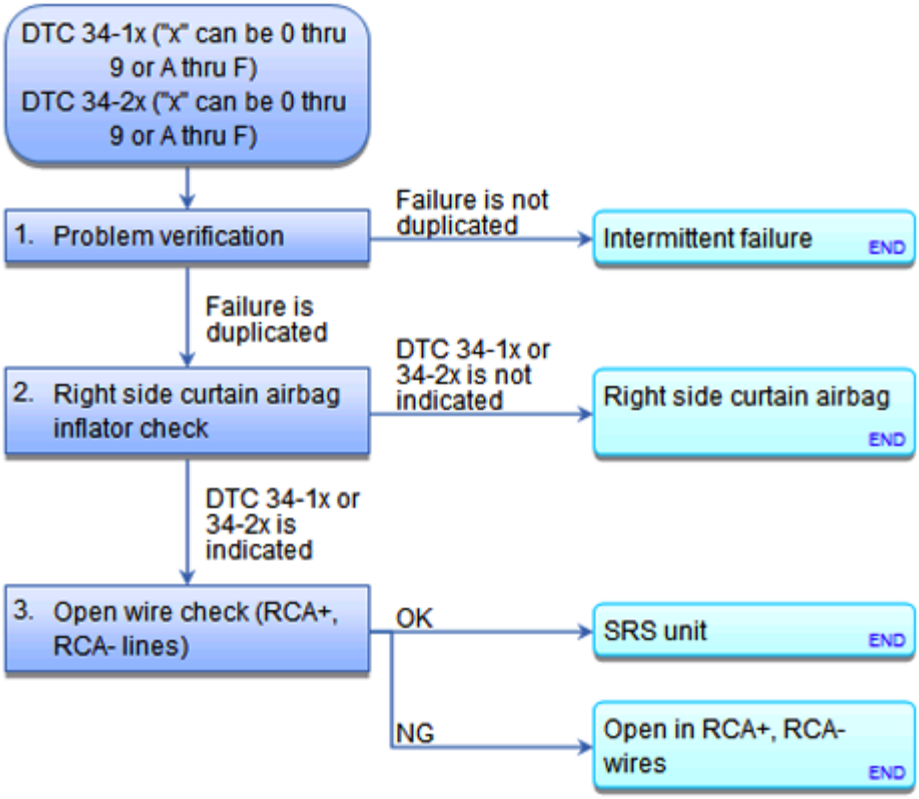

Fig. 89: SRS DTC Troubleshooting Flow Chart (34-1x, 34-2x)
Courtesy of AMERICAN HONDA MOTOR CO., INC.

Special Tools Required

- **SRS Inflator Simulator 07SAZ-TB4011A**
- **SRS Simulator Lead L 070AZ-SNAA300**

NOTE:

- **Before doing this troubleshooting procedure, find out if the vehicle was in a collision. If so, verify that all the required components were replaced with new components, of the correct part number, and that they were properly installed See SRS COMPONENT REPLACEMENT/INSPECTION**

GETtheMANUALS.org

AFTER DEPLOYMENT or AIRBAG AND TENSIONER DISPOSAL .

- **Before doing this troubleshooting procedure, review SRS PRECAUTIONS AND PROCEDURES , GENERAL TROUBLESHOOTING INFORMATION , and BATTERY TERMINAL DISCONNECTION AND RECONNECTION .**
- **Before replacing the SRS unit, check the SRS unit software version with the HDS. If the software version is not the latest, update the SRS unit software See SRS UNIT REMOVAL AND INSTALLATION or SRS UNIT UPDATE , and retest.**

DTC Description	DTC

1. Problem verification:
   - 1. **CLEAR THE DTCS WITH THE HDS** .
   - 2. Turn the ignition switch to ON (II), then wait for 10 seconds.
   - 3. **CHECK FOR DTCS WITH THE HDS** .

DTC Description	DTC

Is DTC 34-1x or 34-2x indicated?

YES : The failure is duplicated. Go to step 2.

NO : Intermittent failure, the system is OK at this time. **GO TO TROUBLESHOOTING INTERMITTENT FAILURES** . If another DTC is indicated, troubleshoot the DTC.

2. Right side curtain airbag inflator check:
   - 1. Turn the ignition switch to LOCK (0).
   - 2. Disconnect the negative cable from the battery, then wait at least 3 minutes.
   - 3. **Remove the right side quarter pillar trim** See **INTERIOR TRIM REMOVAL AND INSTALLATION - TAILGATE AREAS** , **INTERIOR TRIM REMOVAL AND INSTALLATION - CARGO AREA** or **INTERIOR TRIM REMOVAL AND INSTALLATION - PILLAR AREAS** .
   - 4. Disconnect the right side curtain airbag inflator 2P connector (A) on the floor wire harness.

GETtheMANUALS.org

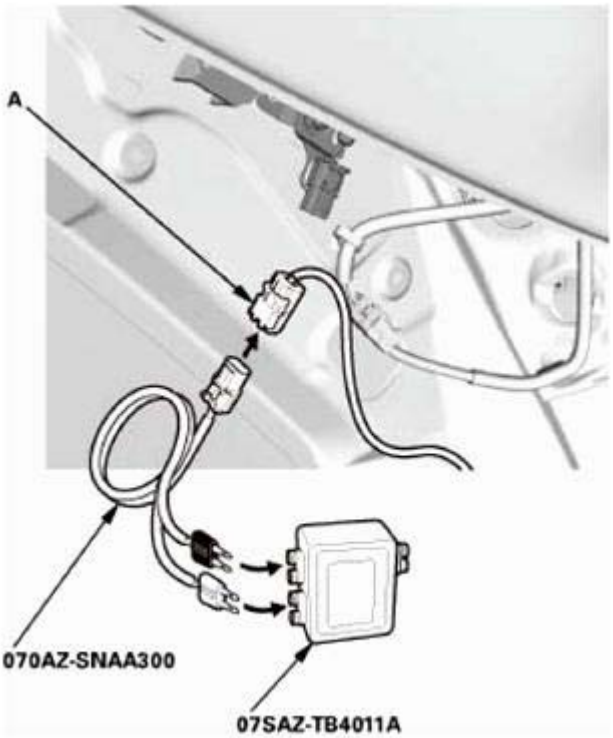

Fig. 90: Disconnecting Right Side Curtain Airbag Inflator 2P Connector
Courtesy of AMERICAN HONDA MOTOR CO., INC.

- 5. Connect the terminals SRS of simulator lead L to the SRS inflator simulator (2 ohms connectors), then connect SRS simulator lead L to the right side curtain airbag inflator 2P connector on the floor wire harness.
- 6. Reconnect the negative cable to the battery.
- 7. **CLEAR THE DTCS WITH THE HDS** .
- 8. Turn the ignition switch to ON (II), then wait for 10 seconds.
- 9. **CHECK FOR DTCS WITH THE HDS** .

DTC Description	DTC

Is DTC 34-1x or 34-2x indicated?

YES : Go to step 3.

NO : Open or increased resistance in the right side curtain airbag inflator; **REPLACE THE RIGHT SIDE CURTAIN AIRBAG** , then clear the DTC.

3. Open wire check (RCA+, RCA- lines):
   - 1. Turn the ignition switch to LOCK (0).
   - 2. Disconnect the negative cable from the battery, then wait at least 3 minutes.

GETtheMANUALS.org

- 3. Disconnect the following connector.

  SRS unit connector B (39P) See **SRS UNIT REMOVAL AND INSTALLATION** or **SRS UNIT UPDATE**

- 4. Disconnect the SRS inflator simulator from SRS simulator lead L. Do not disconnect SRS simulator lead L from the right side curtain airbag inflator 2P connector on the floor wire harness.
- 5. Measure the resistance of the test point.

  Test condition IG LOCK (0)

  Right side curtain airbag inflator 2P connector (on the floor wire harness): disconnected

  SRS unit connector B (39P): disconnected

  Right side curtain airbag inflator 2P connector (on the floor wire harness): connected to SRS simulator lead L

  Test circuit RCA+, RCA-

  Test point SRS simulator lead L black terminal

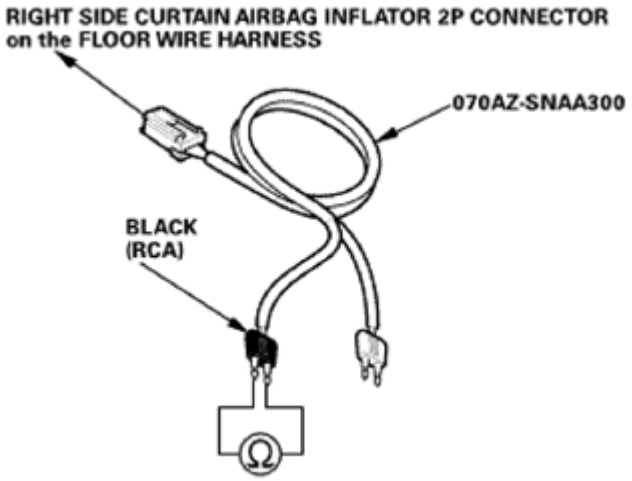

Fig. 91: Measuring Resistance Of SRS Simulator Lead L Black Terminal
Courtesy of AMERICAN HONDA MOTOR CO., INC.

Is there less than 1.0 ohms?

YES : The RCA+, RCA- wires are OK. Faulty SRS unit or poor connection at SRS unit connector B (39P) and the SRS unit. Check the connection; if the connection is OK, **replace the SRS unit** See **SRS UNIT REMOVAL AND INSTALLATION** or **SRS UNIT UPDATE** . If the DTC does not clear, replace the floor wire harness.

NO : Open or increased resistance in the floor wire harness; replace the floor wire harness, then clear the

GETtheMANUALS.org

DTC.

DTC 34-3X ("X" CAN BE 0 THRU 9 OR A THRU F): SHORT TO ANOTHER WIRE OR DECREASED RESISTANCE IN THE RIGHT SIDE CURTAIN AIRBAG INFLATOR

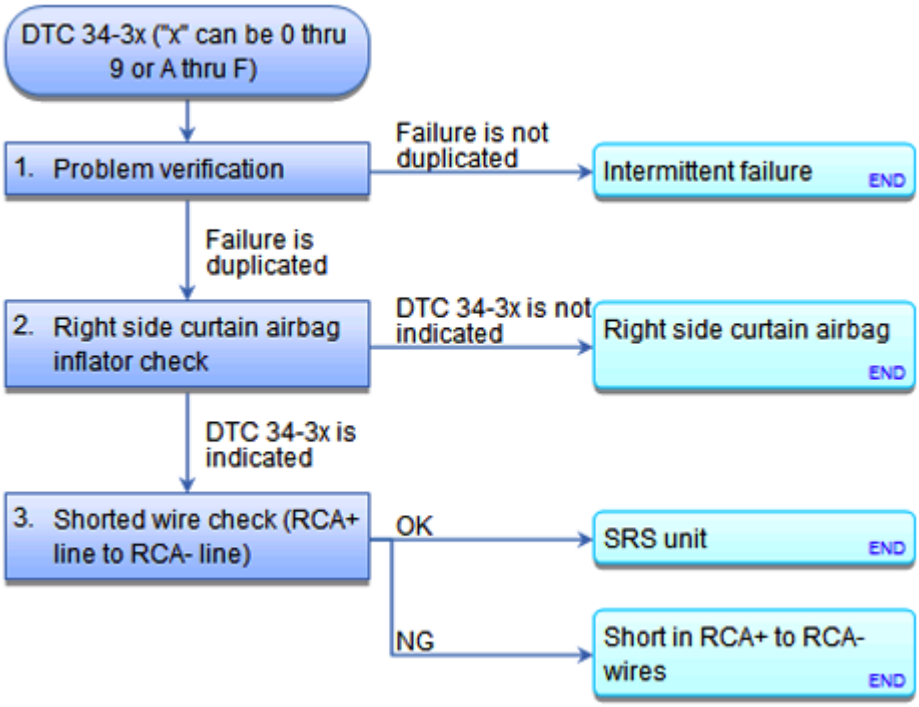

Fig. 92: SRS DTC Troubleshooting Flow Chart (34-3x)
Courtesy of AMERICAN HONDA MOTOR CO., INC.

Special Tools Required

- **SRS Inflator Simulator 07SAZ-TB4011A**
- **SRS Simulator Lead L 070AZ-SNAA300**
- **SRS Short Canceller 070AZ-SAA0100**

NOTE:

- **Before doing this troubleshooting procedure, find out if the vehicle was in a collision. If so, verify that all the required components were replaced with new components, of the correct part number, and that they were properly installed See SRS COMPONENT REPLACEMENT/INSPECTION AFTER DEPLOYMENT or AIRBAG AND TENSIONER DISPOSAL .**
- **Before doing this troubleshooting procedure, review SRS PRECAUTIONS AND PROCEDURES , GENERAL TROUBLESHOOTING INFORMATION , and BATTERY TERMINAL DISCONNECTION AND RECONNECTION .**
- **Before replacing the SRS unit, check the SRS unit software version with**

GETtheMANUALS.org

the HDS. If the software version is not the latest, update the SRS unit software See SRS UNIT REMOVAL AND INSTALLATION or SRS UNIT UPDATE , and retest.

DTC Description	DTC

1. Problem verification:
   - 1. **CLEAR THE DTCS WITH THE HDS** .
   - 2. Turn the ignition switch to ON (II), then wait for 10 seconds.
   - 3. **CHECK FOR DTCS WITH THE HDS** .

DTC Description	DTC

Is DTC 34-3x indicated?

YES : The failure is duplicated. Go to step 2.

NO : Intermittent failure, the system is OK at this time. **GO TO TROUBLESHOOTING INTERMITTENT FAILURES** . If another DTC is indicated, troubleshoot the DTC.

2. Right side curtain airbag inflator check:
   - 1. Turn the ignition switch to LOCK (0).
   - 2. Disconnect the negative cable from the battery, then wait at least 3 minutes.
   - 3. **Remove the right side quarter pillar trim** See **INTERIOR TRIM REMOVAL AND INSTALLATION - TAILGATE AREAS** , **INTERIOR TRIM REMOVAL AND INSTALLATION - CARGO AREA** or **INTERIOR TRIM REMOVAL AND INSTALLATION - PILLAR AREAS** .
   - 4. Disconnect the right side curtain airbag inflator 2P connector (A) on the floor wire harness.

GETtheMANUALS.org

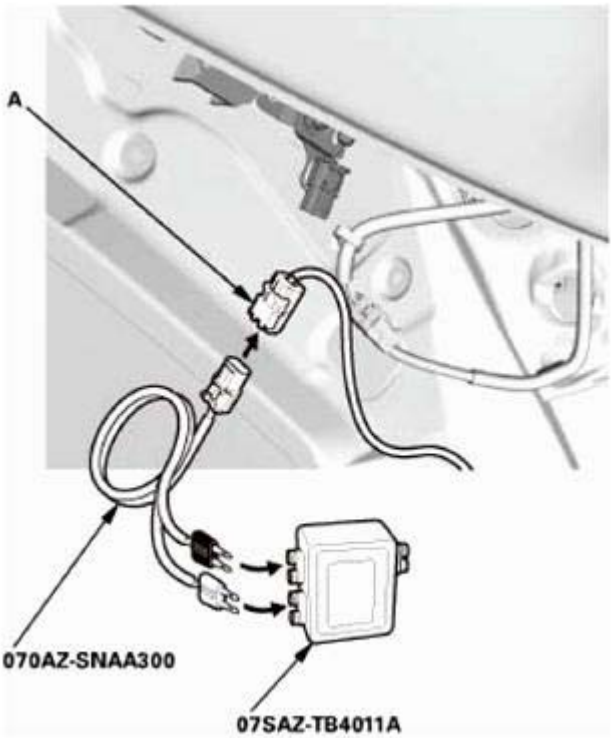

Fig. 93: Disconnecting Right Side Curtain Airbag Inflator 2P Connector
Courtesy of AMERICAN HONDA MOTOR CO., INC.

- 5. Connect the terminals SRS of simulator lead L to the SRS inflator simulator (2 ohms connectors), then connect SRS simulator lead L to the right side curtain airbag inflator 2P connector on the floor wire harness.
- 6. Reconnect the negative cable to the battery.
- 7. **CLEAR THE DTCS WITH THE HDS** .
- 8. Turn the ignition switch to ON (II), then wait for 10 seconds.
- 9. **CHECK FOR DTCS WITH THE HDS** .

DTC Description	DTC

Is DTC 34-3x indicated?

YES : Go to step 3.

NO : Short to another wire in the right side curtain airbag inflator; **REPLACE THE RIGHT SIDE CURTAIN AIRBAG** , then clear the DTC.

3. Shorted wire check (RCA+ line to RCA- line):
   - 1. Turn the ignition switch to LOCK (0).
   - 2. Disconnect the negative cable from the battery, then wait at least 3 minutes.

GETtheMANUALS.org

- 3. Disconnect the following connector.

  SRS unit connector B (39P) See **SRS UNIT REMOVAL AND INSTALLATION** or **SRS UNIT UPDATE**

- 4. Disconnect the SRS inflator simulator from SRS simulator lead L. Do not disconnect SRS simulator lead L from the right side curtain airbag inflator 2P connector on the floor wire harness.
- 5. **CONNECT THE SRS SHORT CANCELLER TO SRS UNIT CONNECTOR B (39P) TERMINALS NO. 11 AND NO. 12** .
- 6. Measure the resistance of the test point.

  Test condition IG LOCK (0)

  Right side curtain airbag inflator 2P connector (on the floor wire harness): disconnected

  SRS unit connector B (39P): disconnected

  Right side curtain airbag inflator 2P connector (on the floor wire harness): connected to SRS simulator lead L

  SRS unit connector B (39P) No. 11 and No. 12: connected to SRS short canceller

  Test circuit RCA+, RCA-

  Test point SRS simulator lead L black terminal

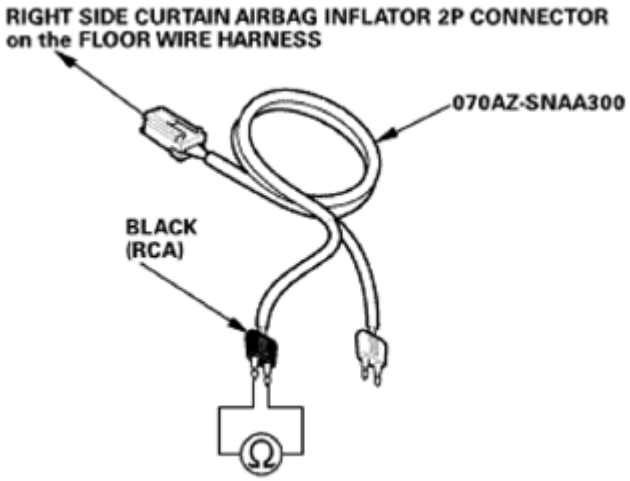

Fig. 94: Measuring Resistance Of SRS Simulator Lead L Black Terminal
Courtesy of AMERICAN HONDA MOTOR CO., INC.

Is there an open circuit, or at least 1 Mohms?

YES : The RCA+, RCA- wires are OK. Faulty SRS unit or poor connection at SRS unit connector B

GETtheMANUALS.org

(39P) and the SRS unit. Check the connection; if the connection is OK, **replace the SRS unit** See **SRS UNIT REMOVAL AND INSTALLATION** or **SRS UNIT UPDATE** . If the DTC does not clear, replace the floor wire harness.

NO : Short to another wire in the floor wire harness; replace the floor wire harness, then clear the DTC.

DTC 34-8X ("X" CAN BE 0 THRU 9 OR A THRU F): SHORT TO POWER IN THE RIGHT SIDE CURTAIN AIRBAG INFLATOR

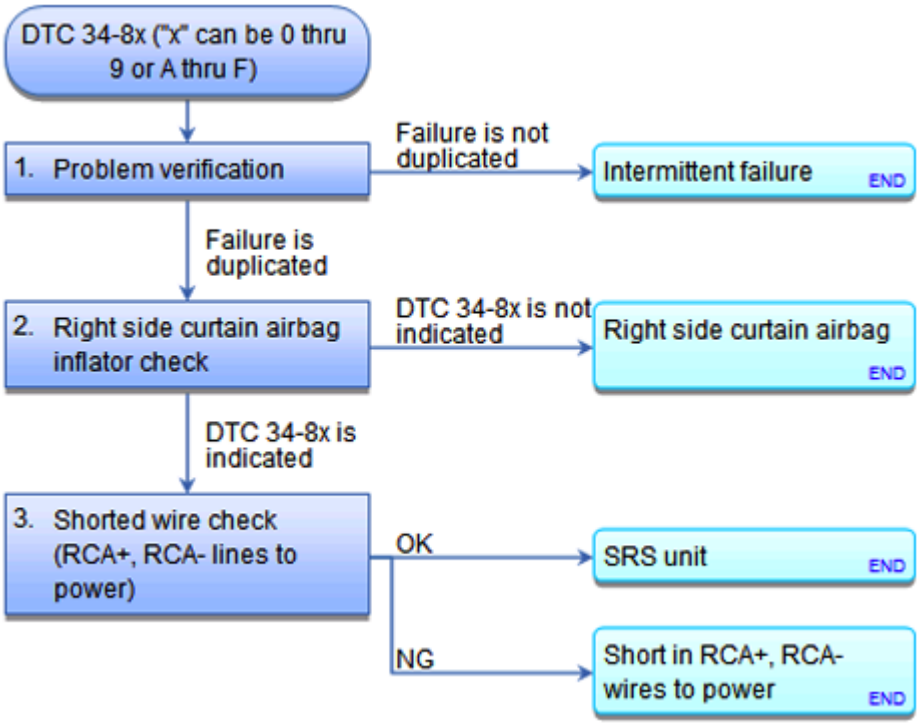

Fig. 95: SRS DTC Troubleshooting Flow Chart (34-8x)
Courtesy of AMERICAN HONDA MOTOR CO., INC.

Special Tools Required

- **SRS Inflator Simulator 07SAZ-TB4011A**
- **SRS Simulator Lead L 070AZ-SNAA300**

NOTE:

- **Before doing this troubleshooting procedure, find out if the vehicle was in a collision. If so, verify that all the required components were replaced with new components, of the correct part number, and that they were properly installed See AIRBAG AND TENSIONER DISPOSAL or SRS COMPONENT REPLACEMENT/INSPECTION AFTER DEPLOYMENT .**
- **Before doing this troubleshooting procedure, review SRS PRECAUTIONS AND PROCEDURES , GENERAL TROUBLESHOOTING INFORMATION , and BATTERY TERMINAL DISCONNECTION AND RECONNECTION .**

GETtheMANUALS.org

- **Before replacing the SRS unit, check the SRS unit software version with the HDS. If the software version is not the latest, update the SRS unit software See SRS UNIT REMOVAL AND INSTALLATION or SRS UNIT UPDATE , and retest.**

DTC Description	DTC

1. Problem verification:
   - 1. **CLEAR THE DTCS WITH THE HDS** .
   - 2. Turn the ignition switch to ON (II), then wait for 10 seconds.
   - 3. **CHECK FOR DTCS WITH THE HDS** .

DTC Description	DTC

Is DTC 34-8x indicated?

YES : The failure is duplicated. Go to step 2.

NO : Intermittent failure, the system is OK at this time. **GO TO TROUBLESHOOTING INTERMITTENT FAILURES** . If another DTC is indicated, troubleshoot the DTC.

2. Right side curtain airbag inflator check:
   - 1. Turn the ignition switch to LOCK (0).
   - 2. Disconnect the negative cable from the battery, then wait at least 3 minutes.
   - 3. **Remove the right side quarter pillar trim** See **INTERIOR TRIM REMOVAL AND INSTALLATION - TAILGATE AREAS** , **INTERIOR TRIM REMOVAL AND INSTALLATION - CARGO AREA** or **INTERIOR TRIM REMOVAL AND INSTALLATION - PILLAR AREAS** .
   - 4. Disconnect the right side curtain airbag inflator 2P connector (A) on the floor wire harness.

GETtheMANUALS.org

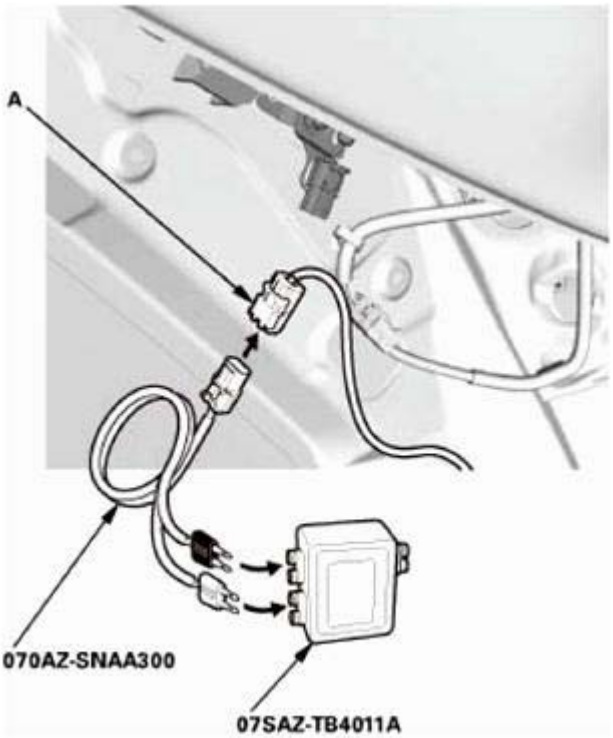

Fig. 96: Disconnecting Right Side Curtain Airbag Inflator 2P Connector
Courtesy of AMERICAN HONDA MOTOR CO., INC.

- 5. Connect the terminals SRS of simulator lead L to the SRS inflator simulator (2 ohms connectors), then connect SRS simulator lead L to the right side curtain airbag inflator 2P connector on the floor wire harness.
- 6. Reconnect the negative cable to the battery.
- 7. **CLEAR THE DTCS WITH THE HDS** .
- 8. Turn the ignition switch to ON (II), then wait for 10 seconds.
- 9. **CHECK FOR DTCS WITH THE HDS** .

DTC Description	DTC

Is DTC 34-8x indicated?

YES : Go to step 3.

NO : Short to power in the right side curtain airbag inflator; **REPLACE THE RIGHT SIDE CURTAIN AIRBAG** , then clear the DTC.

3. Shorted wire check (RCA+, RCA- lines to power):
   - 1. Turn the ignition switch to LOCK (0).
   - 2. Disconnect the negative cable from the battery, then wait at least 3 minutes.

GETtheMANUALS.org

- 3. Disconnect the following connector.

  SRS unit connector B (39P) See **SRS UNIT REMOVAL AND INSTALLATION** or **SRS UNIT UPDATE**

- 4. Disconnect the SRS inflator simulator from SRS simulator lead L. Do not disconnect SRS simulator lead L from the right side curtain airbag inflator 2P connector on the floor wire harness.
- 5. Reconnect the negative cable to the battery.
- 6. Turn the ignition switch to ON (II).
- 7. Measure the voltage between test points 1 and 2.

  Test condition IG ON (II)

  Right side curtain airbag inflator 2P connector (on the floor wire harness): disconnected

  SRS unit connector B (39P): disconnected

  Right side curtain airbag inflator 2P connector (on the floor wire harness): connected to SRS simulator lead L

  Test circuit RCA+, RCA-

  Test point 1 SRS simulator lead L black terminal

  Test point 2 Body ground

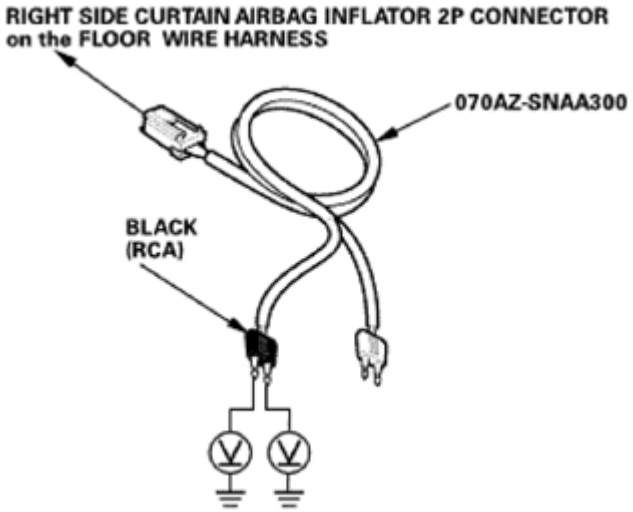

Fig. 97: Measuring Voltage Between SRS Simulator Lead L Black Terminal And Body Ground
Courtesy of AMERICAN HONDA MOTOR CO., INC.

Is there less than 0.2 V?

GETtheMANUALS.org

YES : The RCA+, RCA- wires are OK. Faulty SRS unit or poor connection at SRS unit connector B (39P) and the SRS unit. Check the connection; if the connection is OK, **replace the SRS unit** See **SRS UNIT REMOVAL AND INSTALLATION** or **SRS UNIT UPDATE** . If the DTC does not clear, replace the floor wire harness.

NO : Short to power in the floor wire harness; replace the floor wire harness, then clear the DTC.

DTC 34-9X ("X" CAN BE 0 THRU 9 OR A THRU F): SHORT TO GROUND IN THE RIGHT SIDE CURTAIN AIRBAG INFLATOR

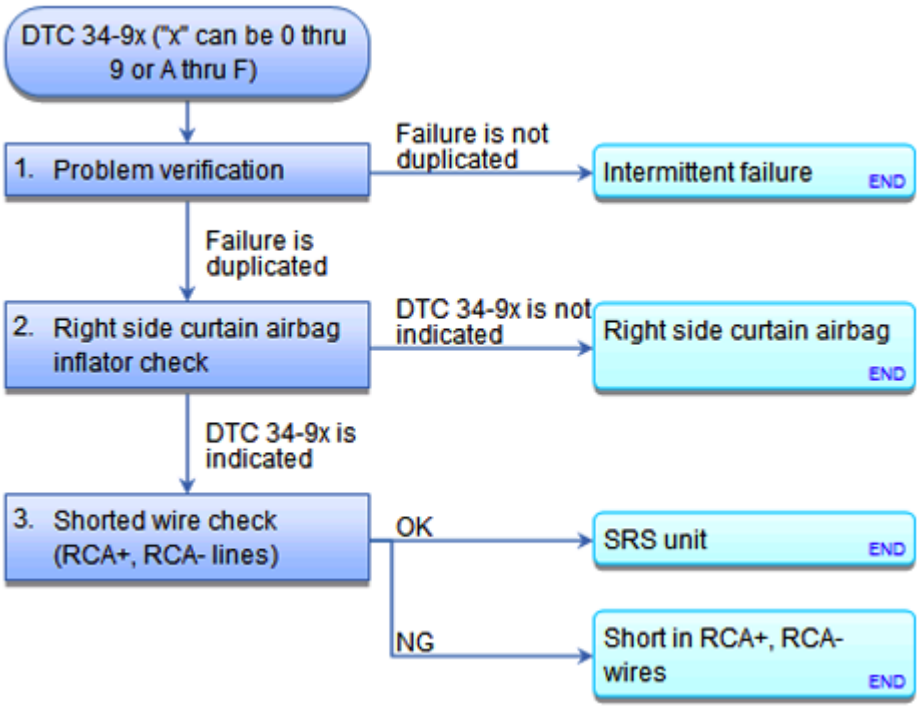

Fig. 98: SRS DTC Troubleshooting Flow Chart (34-9x)
Courtesy of AMERICAN HONDA MOTOR CO., INC.

Special Tools Required

- **SRS Inflator Simulator 07SAZ-TB4011A**
- **SRS Simulator Lead L 070AZ-SNAA300**

NOTE:

- **Before doing this troubleshooting procedure, find out if the vehicle was in a collision. If so, verify that all the required components were replaced with new components, of the correct part number, and that they were properly installed See AIRBAG AND TENSIONER DISPOSAL or SRS COMPONENT REPLACEMENT/INSPECTION AFTER DEPLOYMENT .**
- **Before doing this troubleshooting procedure, review SRS PRECAUTIONS AND PROCEDURES , GENERAL TROUBLESHOOTING INFORMATION , and**

GETtheMANUALS.org

BATTERY TERMINAL DISCONNECTION AND RECONNECTION .

- **Before replacing the SRS unit, check the SRS unit software version with the HDS. If the software version is not the latest, update the SRS unit software See SRS UNIT REMOVAL AND INSTALLATION or SRS UNIT UPDATE , and retest.**

DTC Description	DTC

1. Problem verification:
   - 1. **CLEAR THE DTCS WITH THE HDS** .
   - 2. Turn the ignition switch to ON (II), then wait for 10 seconds.
   - 3. **CHECK FOR DTCS WITH THE HDS** .

DTC Description	DTC

Is DTC 34-9x indicated?

YES : The failure is duplicated. Go to step 2.

NO : Intermittent failure, the system is OK at this time. **GO TO TROUBLESHOOTING INTERMITTENT FAILURES** . If another DTC is indicated, troubleshoot the DTC.

2. Right side curtain airbag inflator check:
   - 1. Turn the ignition switch to LOCK (0).
   - 2. Disconnect the negative cable from the battery, then wait at least 3 minutes.
   - 3. **Remove the right side quarter pillar trim** See **INTERIOR TRIM REMOVAL AND INSTALLATION - TAILGATE AREAS** , **INTERIOR TRIM REMOVAL AND INSTALLATION - CARGO AREA** or **INTERIOR TRIM REMOVAL AND INSTALLATION - PILLAR AREAS** .
   - 4. Disconnect the right side curtain airbag inflator 2P connector (A) on the floor wire harness.

GETtheMANUALS.org

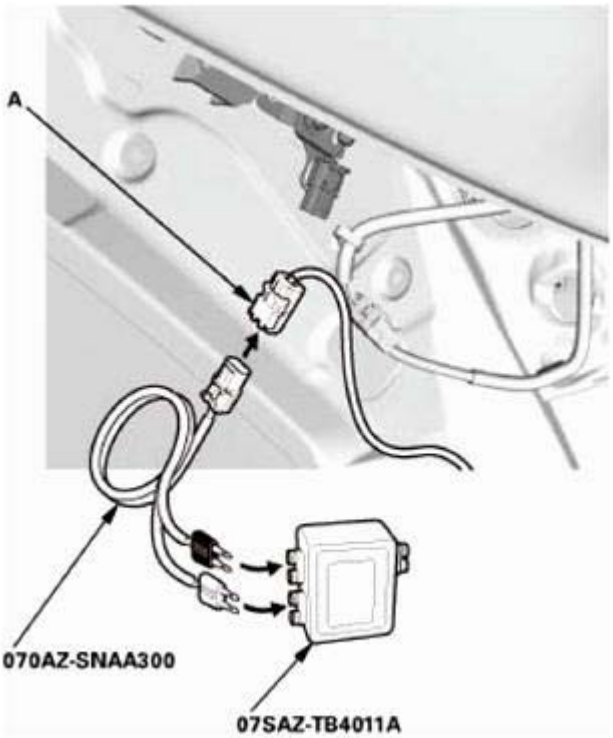

Fig. 99: Disconnecting Right Side Curtain Airbag Inflator 2P Connector
Courtesy of AMERICAN HONDA MOTOR CO., INC.

- 5. Connect the terminals SRS of simulator lead L to the SRS inflator simulator (2 ohms connectors), then connect SRS simulator lead L to the right side curtain airbag inflator 2P connector on the floor wire harness.
- 6. Reconnect the negative cable to the battery.
- 7. **CLEAR THE DTCS WITH THE HDS** .
- 8. Turn the ignition switch to ON (II), then wait for 10 seconds.
- 9. **CHECK FOR DTCS WITH THE HDS** .

DTC Description	DTC

Is DTC 34-9x indicated?

YES : Go to step 3.

NO : Short to ground in the right side curtain airbag inflator; **REPLACE THE RIGHT SIDE CURTAIN AIRBAG** , then clear the DTC.

3. Shorted wire check (RCA+, RCA- lines):
   - 1. Turn the ignition switch to LOCK (0).
   - 2. Disconnect the negative cable from the battery, then wait at least 3 minutes.

GETtheMANUALS.org

- 3. Disconnect the following connector.

  SRS unit connector B (39P) See **SRS UNIT UPDATE** or **SRS UNIT REMOVAL AND INSTALLATION**

- 4. Disconnect the SRS inflator simulator from SRS simulator lead L. Do not disconnect SRS simulator lead L from the right side curtain airbag inflator 2P connector on the floor wire harness.
- 5. Measure the resistance between test points 1 and 2.

  Test condition IG LOCK (0)

  Right side curtain airbag inflator 2P connector (on the floor wire harness): disconnected

  SRS unit connector B (39P): disconnected

  Right side curtain airbag inflator 2P connector (on the floor wire harness): connected to SRS simulator lead L

  Test circuit RCA+, RCA-

  Test point 1 SRS simulator lead L black terminal

  Test point 2 Body ground

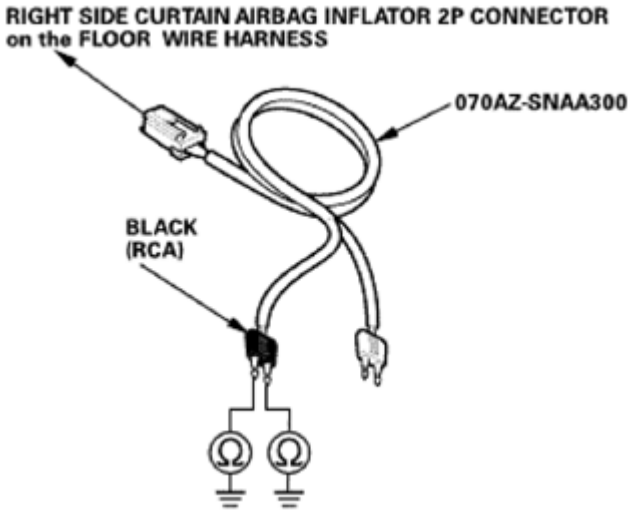

Fig. 100: Measuring Resistance Between SRS Simulator Lead L Black Terminal And Body Ground
Courtesy of AMERICAN HONDA MOTOR CO., INC.

Is there an open circuit, or at least 1 Mohms?

YES : The RCA+, RCA- wires are OK. Faulty SRS unit or poor connection at SRS unit connector B (39P) and the SRS unit. Check the connection; if the connection is OK, **replace the SRS unit** See **SRS**

GETtheMANUALS.org

UNIT UPDATE or **SRS UNIT REMOVAL AND INSTALLATION** . If the DTC does not clear, replace the floor wire harness.

NO : Short to ground in the floor wire harness; replace the floor wire harness, then clear the DTC.

DTC 41-1X ("X" CAN BE 0 THRU 9 OR A THRU F): NO SIGNAL FROM THE LEFT FRONT IMPACT SENSOR

GETtheMANUALS.org

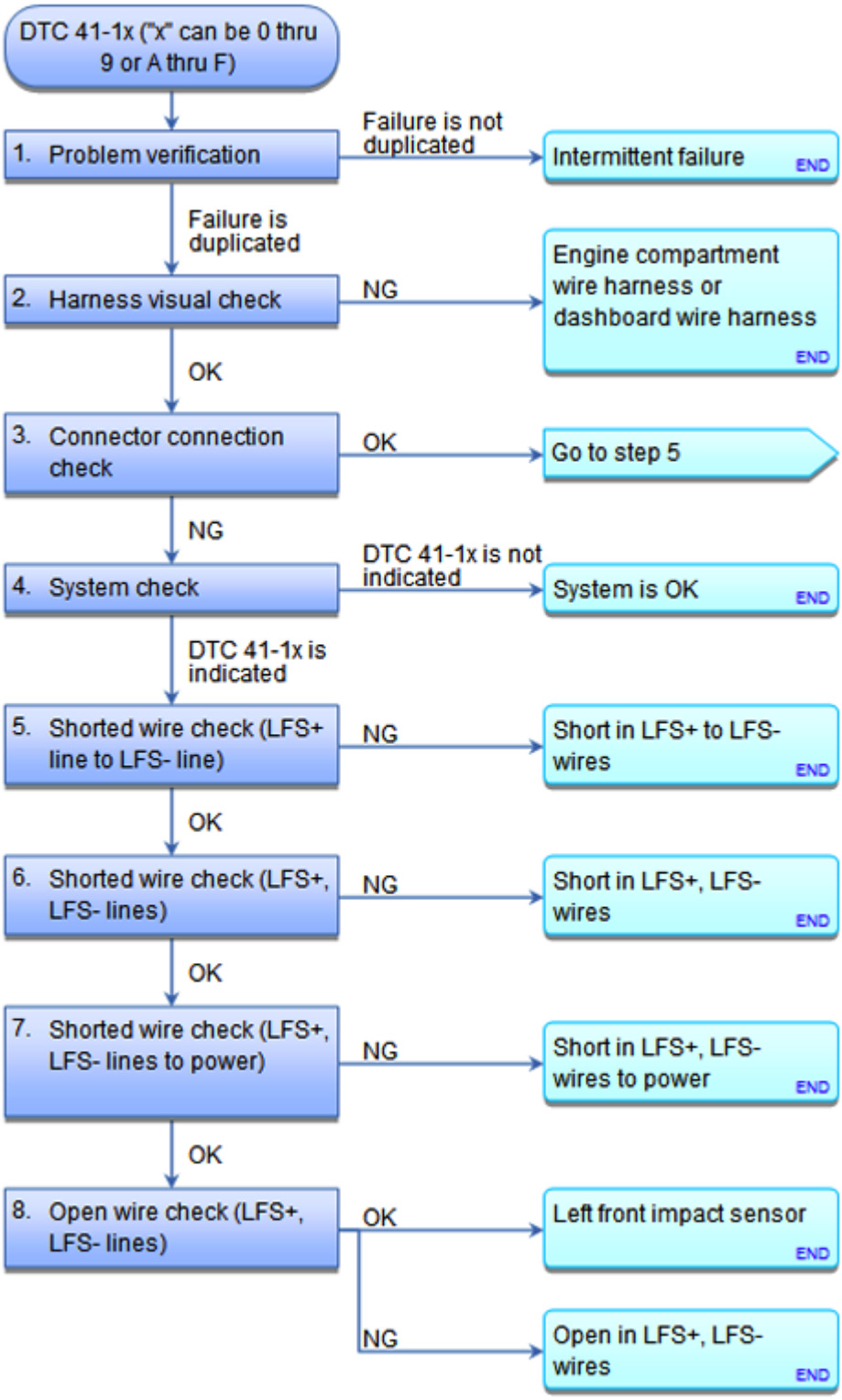

Fig. 101: SRS DTC Troubleshooting Flow Chart (41-1x)
Courtesy of AMERICAN HONDA MOTOR CO., INC.

Special Tools Required

GETtheMANUALS.org

- **SRS Inflator Simulator 07SAZ-TB4011A**
- **SRS Simulator Lead L 070AZ-SNAA300**

NOTE:

- **Before doing this troubleshooting procedure, find out if the vehicle was in a collision. If so, verify that all the required components were replaced with new components, of the correct part number, and that they were properly installed See SRS COMPONENT REPLACEMENT/INSPECTION AFTER DEPLOYMENT or AIRBAG AND TENSIONER DISPOSAL .**
- **Before doing this troubleshooting procedure, review SRS PRECAUTIONS AND PROCEDURES , GENERAL TROUBLESHOOTING INFORMATION , and BATTERY TERMINAL DISCONNECTION AND RECONNECTION .**
- **Before replacing the SRS unit, check the SRS unit software version with the HDS. If the software version is not the latest, update the SRS unit software See SRS UNIT UPDATE or SRS UNIT REMOVAL AND INSTALLATION , and retest.**

DTC Description	DTC

1. Problem verification:
   - 1. **CLEAR THE DTCS WITH THE HDS** .
   - 2. Turn the ignition switch to ON (II), then wait for 10 seconds.
   - 3. **CHECK FOR DTCS WITH THE HDS** .

DTC Description	DTC

Is DTC 41-1x indicated?

YES : The failure is duplicated. Go to step 2.

NO : Intermittent failure, the system is OK at this time. **GO TO TROUBLESHOOTING INTERMITTENT FAILURES** . If another DTC is indicated, troubleshoot the DTC.

2. Harness visual check:
   - 1. Turn the ignition switch to LOCK (0).
   - 2. Check the engine compartment wire harness or the dashboard wire harness.

Is the harness OK?

YES : Go to step 3.

NO : Replace the engine compartment wire harness or the dashboard wire harness, then clear the DTC.

GETtheMANUALS.org

3. Connector connection check:
   - 1. Check the following connector connections.

   SRS unit connector A (39P) See **SRS UNIT UPDATE** or **SRS UNIT REMOVAL AND INSTALLATION**

   LEFT FRONT IMPACT SENSOR 2P CONNECTOR (ON THE ENGINE COMPARTMENT WIRE HARNESS)

   Connector between the SRS unit and the left front impact sensor

   Are the connectors OK?

   YES : Go to step 5.

   NO : Go to step 4.

4. System check:
   - 1. Repair the poor connector connections whichever was the cause of the problem in step 3.
   - 2. **CLEAR THE DTCS WITH THE HDS** .
   - 3. Turn the ignition switch to ON (II), then wait for 10 seconds.
   - 4. **CHECK FOR DTCS WITH THE HDS** .

DTC Description	DTC

   Is DTC 41-1x indicated?

   YES : Turn the ignition switch to LOCK (0), then go to step 5.

   NO : The system is OK at this time.

5. Shorted wire check (LFS+ line to LFS- line):
   - 1. Disconnect the negative cable from the battery, then wait at least 3 minutes.
   - 2. Disconnect the following connectors.

     SRS unit connector A (39P) See **SRS UNIT UPDATE** or **SRS UNIT REMOVAL AND INSTALLATION**

     LEFT FRONT IMPACT SENSOR 2P CONNECTOR (ON THE ENGINE COMPARTMENT WIRE HARNESS)

   - 3. Measure the resistance between test points 1 and 2.

     Test condition IG LOCK (0)

GETtheMANUALS.org

SRS unit connector A (39P): disconnected

Left front impact sensor 2P connector (on the engine compartment wire harness): disconnected

Test circuit LFS+, LFS-

Test point 1 SRS unit connector A (39P) No. 28

Test point 2 SRS unit connector A (39P) No. 29

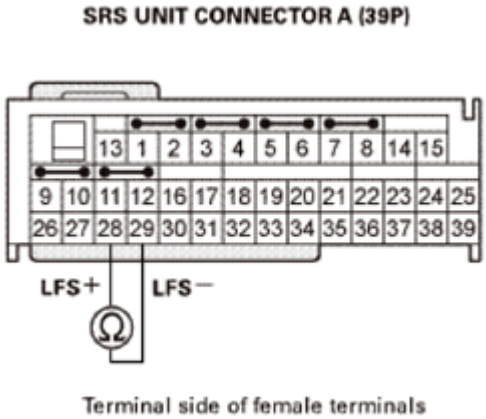

Fig. 102: Measuring Resistance Between SRS Unit Connector A (39P) No. 28 And 29
Courtesy of AMERICAN HONDA MOTOR CO., INC.

Is there an open circuit, or at least 1 Mohms?

YES : The LFS+, LFS- wires are not shorted. Go to step 6.

NO : Short to another wire in the engine compartment wire harness or the dashboard wire harness; replace the faulty harness, then clear the DTC.

6. Shorted wire check (LFS+, LFS- lines):
   - 1. Measure the resistance between test points 1 and 2.

     Test condition IG LOCK (0)

     SRS unit connector A (39P): disconnected

     Left front impact sensor 2P connector (on the engine compartment wire harness): disconnected

     Test circuit LFS+

     Test point 1 SRS unit connector A (39P) No. 28

     Test point 2 Body ground

GETtheMANUALS.org

Test circuit LFS-

Test point 1 SRS unit connector A (39P) No. 29

Test point 2 Body ground

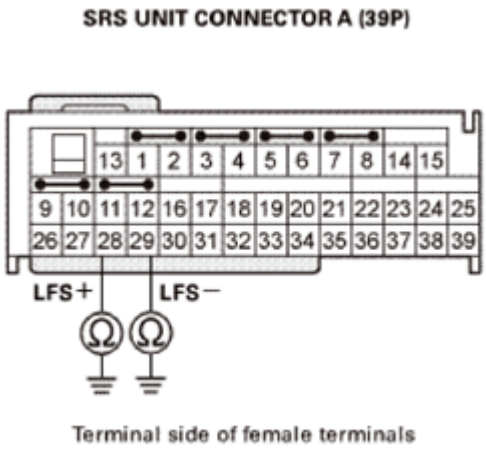

Fig. 103: Measuring Resistance Between SRS Unit Connector A (39P) No. 28 And Body Ground
Courtesy of AMERICAN HONDA MOTOR CO., INC.

Is there an open circuit, or at least 1 Mohms?

YES : The LFS+, LFS- wires are not shorted. Go to step 7.

NO : Short to ground in the engine compartment wire harness or the dashboard wire harness; replace the faulty harness, then clear the DTC.

7. Shorted wire check (LFS+, LFS- lines to power):
   - 1. Reconnect the negative cable to the battery.
   - 2. Turn the ignition switch to ON (II).
   - 3. Measure the voltage between test points 1 and 2.

   Test condition IG ON (II)

   SRS unit connector A (39P): disconnected

   Left front impact sensor 2P connector (on the engine compartment wire harness): disconnected

   Test circuit LFS+

   Test point 1 SRS unit connector A (39P) No. 28

   Test point 2 Body ground

GETtheMANUALS.org

Test circuit LFS-

Test point 1 SRS unit connector A (39P) No. 29

Test point 2 Body ground

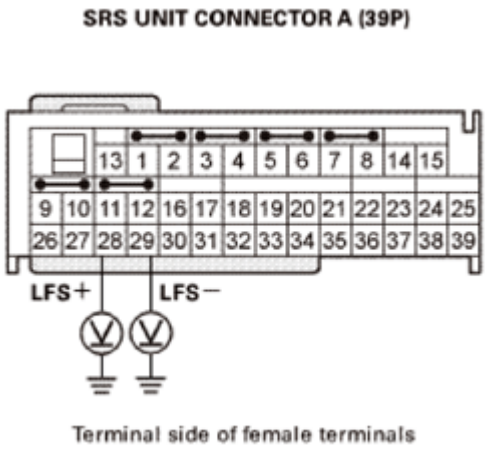

Fig. 104: Measuring Resistance Between SRS Unit Connector A (39P) No. 28 And Body Ground
Courtesy of AMERICAN HONDA MOTOR CO., INC.

Is there less than 0.2 V?

YES : The LFS+, LFS- wires are not shorted to power. Go to step 8.

NO : Short to power in the engine compartment wire harness or the dashboard wire harness; replace the faulty harness, then clear the DTC.

8. Open wire check (LFS+, LFS- lines):
   - 1. Turn the ignition switch to LOCK (0).
   - 2. Connect the black terminal (A) of SRS simulator lead L to the SRS inflator simulator (jumper connector), then connect SRS simulator lead L to the left front impact sensor 2P connector (B) on the engine compartment wire harness.

GETtheMANUALS.org

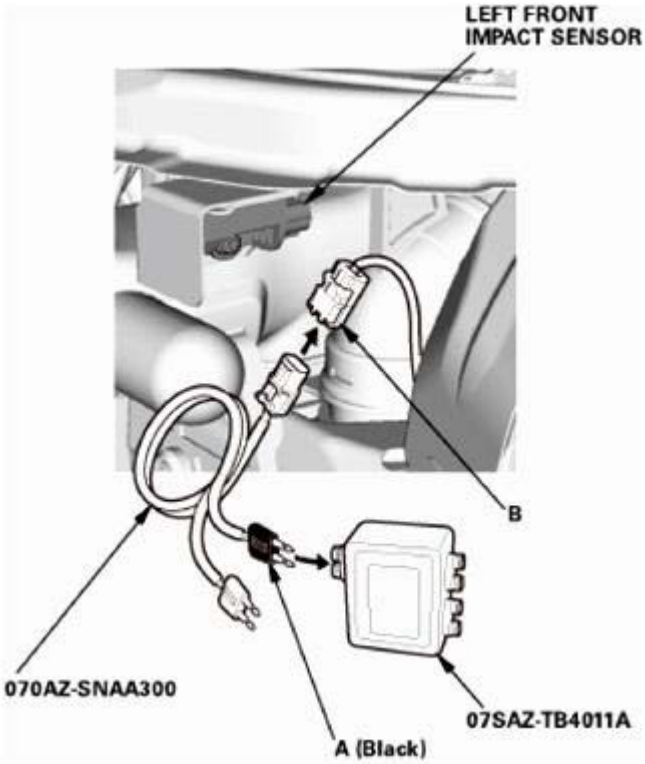

Fig. 105: Connecting SRS Simulator Lead L To Left Front Impact Sensor 2P Connector On Engine Compartment Wire Harness
Courtesy of AMERICAN HONDA MOTOR CO., INC.

- 3. Measure the resistance between test points 1 and 2.

  Test condition IG LOCK (0)

  SRS unit connector A (39P): disconnected

  Left front impact sensor 2P connector (on the engine compartment wire harness): disconnected

  Left front impact sensor 2P connector (on the engine compartment wire harness): connected to SRS simulator lead L

  Test circuit LFS+, LFS-

  Test point 1 SRS unit connector A (39P) No. 28

  Test point 2 SRS unit connector A (39P) No. 29

GETtheMANUALS.org

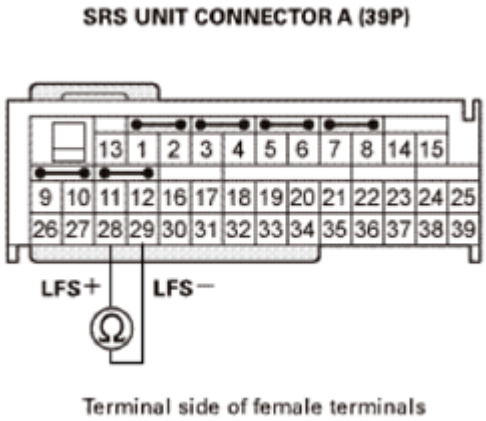

Fig. 106: Measuring Resistance Between SRS Unit Connector A (39P) No. 28 And 29
Courtesy of AMERICAN HONDA MOTOR CO., INC.

Is there less than 1.0 ohms?

YES : The LFS+, LFS- wires are OK. **REPLACE THE LEFT FRONT IMPACT SENSOR** , then clear the DTC, and retest. If the DTC is still present, **replace the SRS unit** See **SRS UNIT UPDATE** or **SRS UNIT REMOVAL AND INSTALLATION** .

NO : Open in the engine compartment wire harness or the dashboard wire harness; replace the faulty harness, then clear the DTC.

DTC 41-2X, 41-9X, 41-AX, 41-BX ("X" CAN BE 0 THRU 9 OR A THRU F): INTERNAL FAILURE OF THE LEFT FRONT IMPACT SENSOR

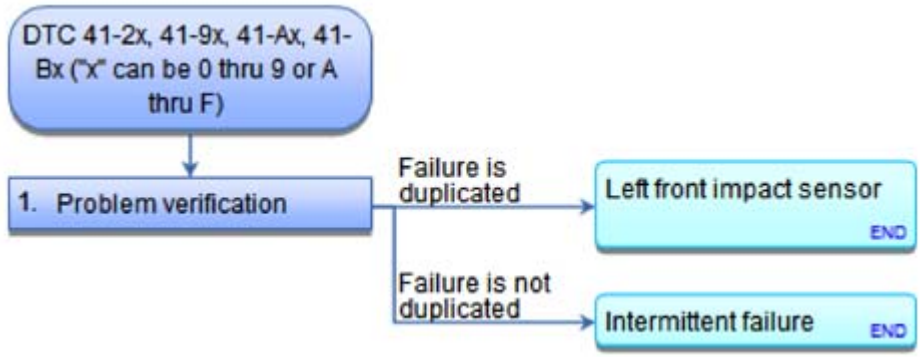

Fig. 107: SRS DTC Troubleshooting Flow Chart (41-2x, 41-9x, 41-Ax, 41-Bx)
Courtesy of AMERICAN HONDA MOTOR CO., INC.

NOTE:

- **Before doing this troubleshooting procedure, find out if the vehicle was in a collision. If so, verify that all the required components were replaced with new components, of the correct part number, and that they were properly installed See SRS COMPONENT REPLACEMENT/INSPECTION AFTER DEPLOYMENT or AIRBAG AND TENSIONER DISPOSAL .**

GETtheMANUALS.org

- **Before doing this troubleshooting procedure, review SRS PRECAUTIONS AND PROCEDURES and GENERAL TROUBLESHOOTING INFORMATION .**
- **Before replacing the SRS unit, check the SRS unit software version with the HDS. If the software version is not the latest, update the SRS unit software See SRS UNIT UPDATE or SRS UNIT REMOVAL AND INSTALLATION , and retest.**

DTC Description	DTC

1. Problem verification:
   - 1. **CLEAR THE DTCS WITH THE HDS** .
   - 2. Turn the ignition switch to ON (II), then wait for 10 seconds.
   - 3. **CHECK FOR DTCS WITH THE HDS** .

DTC Description	DTC

Is DTC 41-2x, 41-9x, 41-Ax, or 41-Bx indicated?

YES : The failure is duplicated. **REPLACE THE LEFT FRONT IMPACT SENSOR** , then clear the DTC, and retest. If the DTC is still present, **replace the SRS unit** See **SRS UNIT REMOVAL AND INSTALLATION** or **SRS UNIT UPDATE** .

NO : Intermittent failure, the system is OK at this time. **GO TO TROUBLESHOOTING INTERMITTENT FAILURES** . If another DTC is indicated, troubleshoot the DTC.

DTC 42-1X ("X" CAN BE 0 THRU 9 OR A THRU F): NO SIGNAL FROM THE RIGHT FRONT IMPACT SENSOR

GETtheMANUALS.org

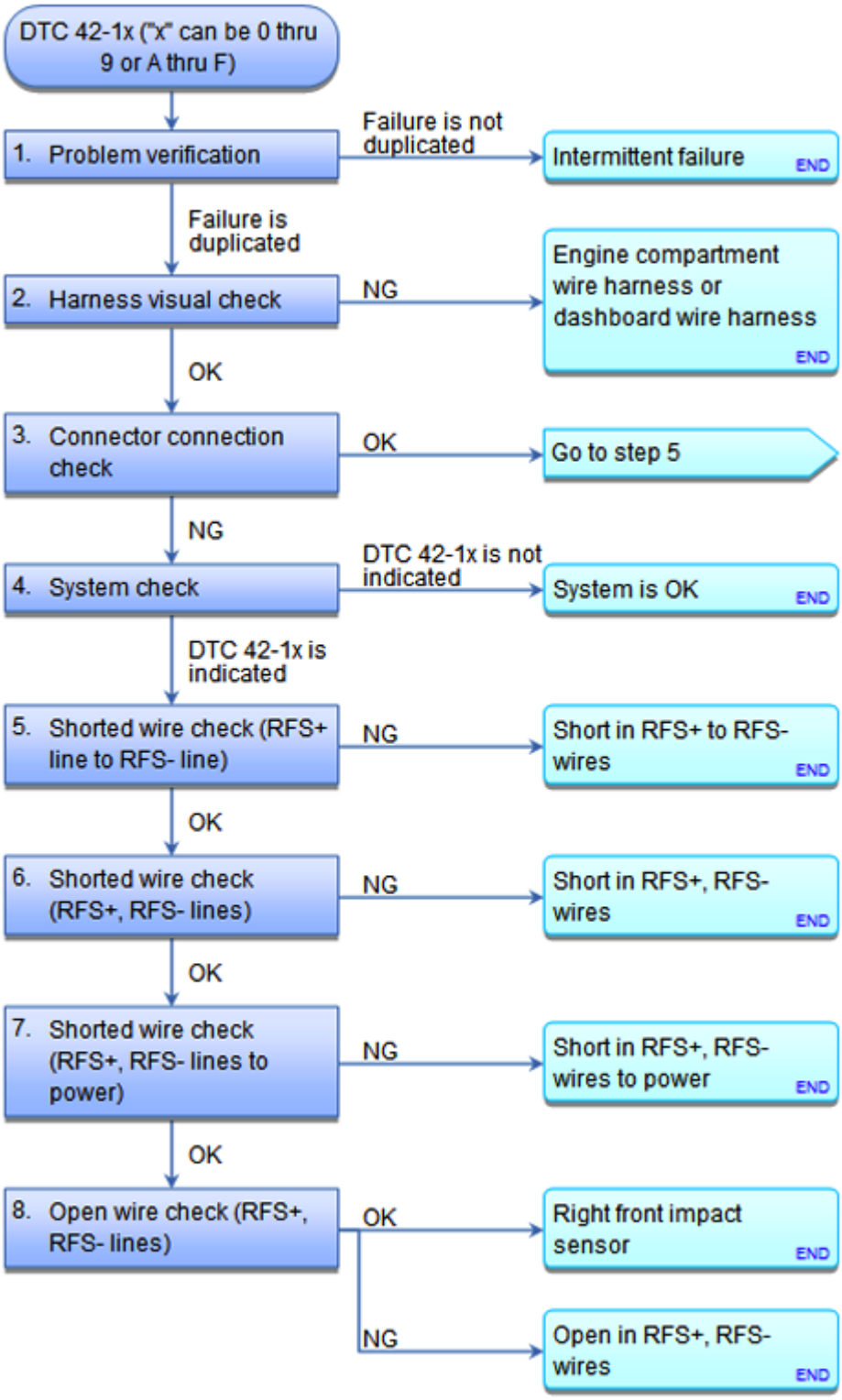

Fig. 108: SRS DTC Troubleshooting Flow Chart (42-1x)
Courtesy of AMERICAN HONDA MOTOR CO., INC.

Special Tools Required

GETtheMANUALS.org

- **SRS Inflator Simulator 07SAZ-TB4011A**
- **SRS Simulator Lead L 070AZ-SNAA300**

NOTE:

- **Before doing this troubleshooting procedure, find out if the vehicle was in a collision. If so, verify that all the required components were replaced with new components, of the correct part number, and that they were properly installed See SRS COMPONENT REPLACEMENT/INSPECTION AFTER DEPLOYMENT or AIRBAG AND TENSIONER DISPOSAL .**
- **Before doing this troubleshooting procedure, review SRS PRECAUTIONS AND PROCEDURES , GENERAL TROUBLESHOOTING INFORMATION , and BATTERY TERMINAL DISCONNECTION AND RECONNECTION .**
- **Before replacing the SRS unit, check the SRS unit software version with the HDS. If the software version is not the latest, update the SRS unit software See SRS UNIT REMOVAL AND INSTALLATION or SRS UNIT UPDATE , and retest.**

DTC Description	DTC

1. Problem verification:
   - 1. **CLEAR THE DTCS WITH THE HDS** .
   - 2. Turn the ignition switch to ON (II), then wait for 10 seconds.
   - 3. **CHECK FOR DTCS WITH THE HDS** .

DTC Description	DTC

Is DTC 42-1x indicated?

YES : The failure is duplicated. Go to step 2.

NO : Intermittent failure, the system is OK at this time. **GO TO TROUBLESHOOTING INTERMITTENT FAILURES** . If another DTC is indicated, troubleshoot the DTC.

2. Harness visual check:
   - 1. Turn the ignition switch to LOCK (0).
   - 2. Check the engine compartment wire harness or the dashboard wire harness.

Is the harness OK?

YES : Go to step 3.

NO : Replace the engine compartment wire harness or the dashboard wire harness, then clear the DTC.

GETtheMANUALS.org

3. Connector connection check:
   - 1. Check the following connector connections.

   SRS unit connector A (39P) See **SRS UNIT REMOVAL AND INSTALLATION** or **SRS UNIT UPDATE**

   RIGHT FRONT IMPACT SENSOR 2P CONNECTOR (ON THE ENGINE COMPARTMENT WIRE HARNESS)

   Connector between the SRS unit and the right front impact sensor

   Are the connectors OK?

   YES : Go to step 5.

   NO : Go to step 4.

4. System check:
   - 1. Repair the poor connector connections whichever was the cause of the problem in step 3.
   - 2. **CLEAR THE DTCS WITH THE HDS** .
   - 3. Turn the ignition switch to ON (II), then wait for 10 seconds.
   - 4. **CHECK FOR DTCS WITH THE HDS** .

DTC Description	DTC

   Is DTC 42-1x indicated?

   YES : Turn the ignition switch to LOCK (0), then go to step 5.

   NO : The system is OK at this time.

5. Shorted wire check (RFS+ line to RFS- line):
   - 1. Disconnect the negative cable from the battery, then wait at least 3 minutes.
   - 2. Disconnect the following connectors.

     SRS unit connector A (39P) See **SRS UNIT REMOVAL AND INSTALLATION** or **SRS UNIT UPDATE**

     RIGHT FRONT IMPACT SENSOR 2P CONNECTOR (ON THE ENGINE COMPARTMENT WIRE HARNESS)

   - 3. Measure the resistance between test points 1 and 2.

     Test condition IG LOCK (0)

GETtheMANUALS.org

SRS unit connector A (39P): disconnected

Right front impact sensor 2P connector (on the engine compartment wire harness): disconnected

Test circuit RFS+, RFS-

Test point 1 SRS unit connector A (39P) No. 26

Test point 2 SRS unit connector A (39P) No. 27

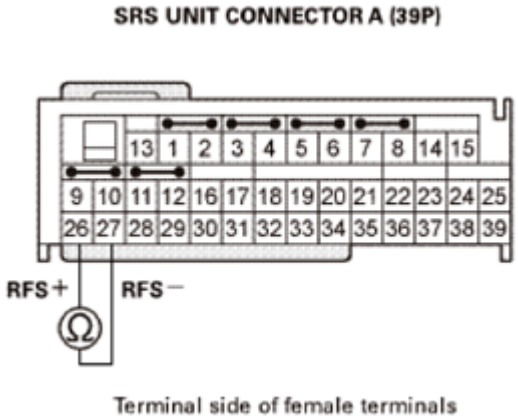

Fig. 109: Measuring Resistance Between SRS Unit Connector A (39P) No. 26 And 27
Courtesy of AMERICAN HONDA MOTOR CO., INC.

Is there an open circuit, or at least 1 Mohms?

YES : The RFS+, RFS- wires are not shorted. Go to step 6.

NO : Short to another wire in the engine compartment wire harness or the dashboard wire harness; replace the faulty harness, then clear the DTC.

6. Shorted wire check (RFS+, RFS- lines):
   - 1. Measure the resistance between test points 1 and 2.

     Test condition IG LOCK (0)

     SRS unit connector A (39P): disconnected

     Right front impact sensor 2P connector (on the engine compartment wire harness): disconnected

     Test circuit RFS+

     Test point 1 SRS unit connector A (39P) No. 26

     Test point 2 Body ground

GETtheMANUALS.org

Test circuit RFS-

Test point 1 SRS unit connector A (39P) No. 27

Test point 2 Body ground

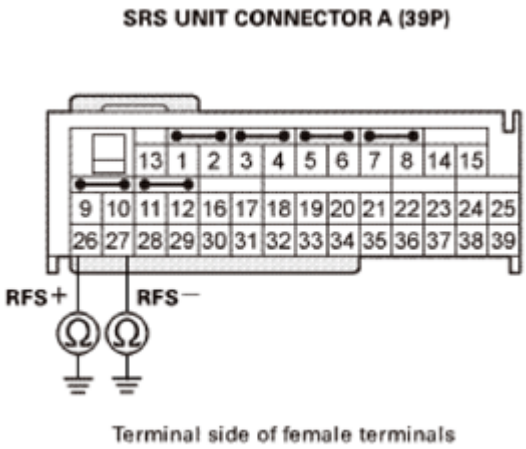

Fig. 110: Measuring Resistance Between SRS Unit Connector A (39P) No. 26 And Body Ground
Courtesy of AMERICAN HONDA MOTOR CO., INC.

Is there an open circuit, or at least 1 Mohms?

YES : The RFS+, RFS- wires are not shorted. Go to step 7.

NO : Short to ground in the engine compartment wire harness or the dashboard wire harness; replace the faulty harness, then clear the DTC.

7. Shorted wire check (RFS+, RFS- lines to power):
   - 1. Reconnect the negative cable to the battery.
   - 2. Turn the ignition switch to ON (II).
   - 3. Measure the voltage between test points 1 and 2.

   Test condition IG ON (II)

   SRS unit connector A (39P): disconnected

   Right front impact sensor 2P connector (on the engine compartment wire harness): disconnected

   Test circuit RFS+

   Test point 1 SRS unit connector A (39P) No. 26

   Test point 2 Body ground

GETtheMANUALS.org

Test circuit RFS-

Test point 1 SRS unit connector A (39P) No. 27

Test point 2 Body ground

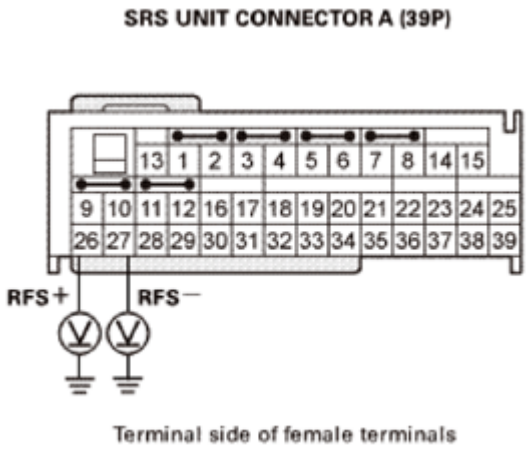

Fig. 111: Measuring Voltage Between SRS Unit Connector A (39P) No. 26 And Body Ground
Courtesy of AMERICAN HONDA MOTOR CO., INC.

Is there less than 0.2 V?

YES : The RFS+, RFS- wires are not shorted to power. Go to step 8.

NO : Short to power in the engine compartment wire harness or the dashboard wire harness; replace the faulty harness, then clear the DTC.

8. Open wire check (RFS+, RFS- lines):
   - 1. Turn the ignition switch to LOCK (0).
   - 2. Connect the black terminal (A) of SRS simulator lead L to the SRS inflator simulator (jumper connector), then connect SRS simulator lead L to the right front impact sensor 2P connector (B) on the engine compartment wire harness.

GETtheMANUALS.org

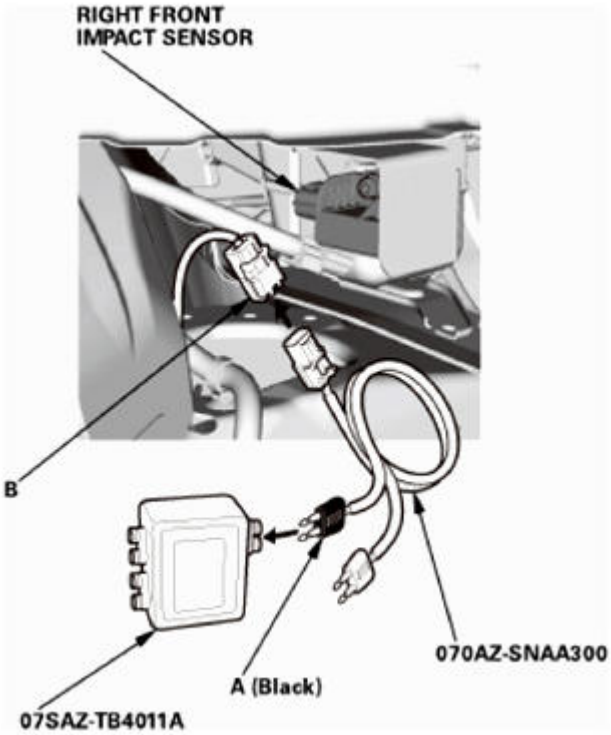

Fig. 112: Connecting SRS Simulator Lead L To Right Front Impact Sensor 2P Connector On Engine Compartment Wire Harness
Courtesy of AMERICAN HONDA MOTOR CO., INC.

- 3. Measure the resistance between test points 1 and 2.

  Test condition IG LOCK (0)

  SRS unit connector A (39P): disconnected

  Right front impact sensor 2P connector (on the engine compartment wire harness): disconnected

  Right front impact sensor 2P connector (on the engine compartment wire harness): connected to SRS simulator lead L

  Test circuit RFS+, RFS-

  Test point 1 SRS unit connector A (39P) No. 26

  Test point 2 SRS unit connector A (39P) No. 27

GETtheMANUALS.org

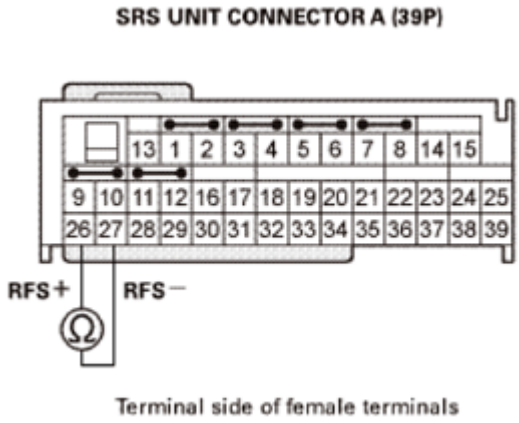

Fig. 113: Measuring Resistance Between SRS Unit Connector A (39P) No. 26 And 27
Courtesy of AMERICAN HONDA MOTOR CO., INC.

Is there less than 1.0 ohms?

YES : The RFS+, RFS- wires are OK. **REPLACE THE RIGHT FRONT IMPACT SENSOR** , then clear the DTC, and retest. If the DTC is still present, **replace the SRS unit** See **SRS UNIT REMOVAL AND INSTALLATION** or **SRS UNIT UPDATE** .

NO : Open in the engine compartment wire harness or the dashboard wire harness; replace the faulty harness, then clear the DTC.

DTC 42-2X, 42-9X, 42-AX, 42-BX ("X" CAN BE 0 THRU 9 OR A THRU F): INTERNAL FAILURE OF THE RIGHT FRONT IMPACT SENSOR

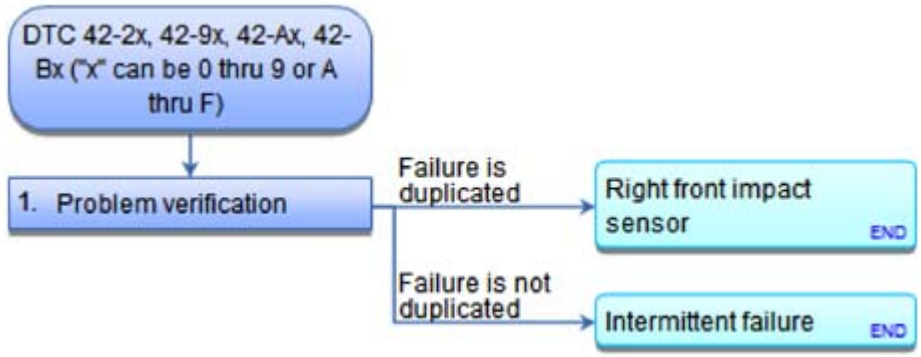

Fig. 114: SRS DTC Troubleshooting Flow Chart (42-2x, 42-9x, 42-Ax, 42-Bx)
Courtesy of AMERICAN HONDA MOTOR CO., INC.

NOTE:

- **Before doing this troubleshooting procedure, find out if the vehicle was in a collision. If so, verify that all the required components were replaced with new components, of the correct part number, and that they were properly installed See SRS COMPONENT REPLACEMENT/INSPECTION AFTER DEPLOYMENT or AIRBAG AND TENSIONER DISPOSAL .**

GETtheMANUALS.org

- **Before doing this troubleshooting procedure, review SRS PRECAUTIONS AND PROCEDURES and GENERAL TROUBLESHOOTING INFORMATION .**
- **Before replacing the SRS unit, check the SRS unit software version with the HDS. If the software version is not the latest, update the SRS unit software See SRS UNIT REMOVAL AND INSTALLATION or SRS UNIT UPDATE , and retest.**

DTC Description	DTC

1. Problem verification:
   - 1. **CLEAR THE DTCS WITH THE HDS** .
   - 2. Turn the ignition switch to ON (II), then wait for 10 seconds.
   - 3. **CHECK FOR DTCS WITH THE HDS** .

DTC Description	DTC

Is DTC 42-2x, 42-9x, 42-Ax, or 42-Bx indicated?

YES : The failure is duplicated. **REPLACE THE RIGHT FRONT IMPACT SENSOR** , then clear the DTC, and retest. If the DTC is still present, **replace the SRS unit** See **SRS UNIT REMOVAL AND INSTALLATION** or **SRS UNIT UPDATE** .

NO : Intermittent failure, the system is OK at this time. **GO TO TROUBLESHOOTING INTERMITTENT FAILURES** . If another DTC is indicated, troubleshoot the DTC.

DTC 43-1X ("X" CAN BE 0 THRU 9 OR A THRU F): NO SIGNAL FROM THE LEFT SIDE IMPACT SENSOR (FIRST)

GETtheMANUALS.org

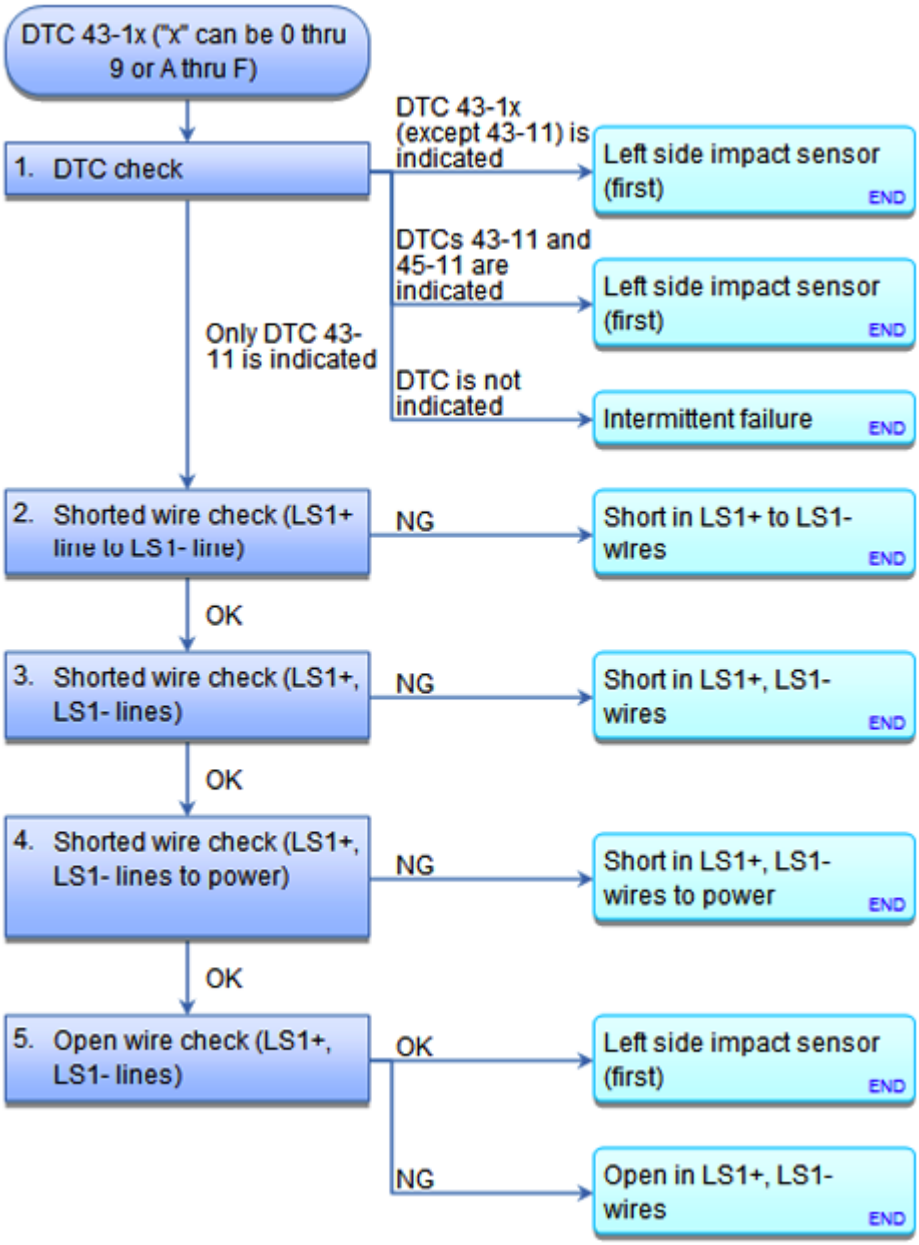

Fig. 115: SRS DTC Troubleshooting Flow Chart (43-1x)
Courtesy of AMERICAN HONDA MOTOR CO., INC.

Special Tools Required

- **SRS Inflator Simulator 07SAZ-TB4011A**
- **SRS Simulator Lead L 070AZ-SNAA300**

NOTE:

- **Before doing this troubleshooting procedure, find out if the vehicle was in a collision. If so, verify that all the required components were replaced with new components, of the correct part number, and that they were**

GETtheMANUALS.org

properly installed See SRS COMPONENT REPLACEMENT/INSPECTION AFTER DEPLOYMENT or AIRBAG AND TENSIONER DISPOSAL .

- **Before doing this troubleshooting procedure, review SRS PRECAUTIONS AND PROCEDURES , GENERAL TROUBLESHOOTING INFORMATION , and BATTERY TERMINAL DISCONNECTION AND RECONNECTION .**
- **Before replacing the SRS unit, check the SRS unit software version with the HDS. If the software version is not the latest, update the SRS unit software See SRS UNIT REMOVAL AND INSTALLATION or SRS UNIT UPDATE , and retest.**

DTC Description	DTC

1. DTC check:
   - 1. **CLEAR THE DTCS WITH THE HDS** .
   - 2. Turn the ignition switch to ON (II), then wait for 10 seconds.
   - 3. **CHECK FOR DTCS WITH THE HDS** .

DTC Description	DTC

Are DTCs indicated?

Only DTC 43-11 : Go to step 2.

DTC 43-1x (except 43-11) : **REPLACE THE LEFT SIDE IMPACT SENSOR (FIRST)** , then clear the DTC.

DTCs 43-11 and 45-11 : **REPLACE THE LEFT SIDE IMPACT SENSOR (FIRST)** , then clear the DTC.

NO DTC : Intermittent failure, the system is OK at this time. **GO TO TROUBLESHOOTING INTERMITTENT FAILURES** . If another DTC is indicated, troubleshoot the DTC.

2. Shorted wire check (LS1+ line to LS1- line):
   - 1. Turn the ignition switch to LOCK (0).
   - 2. Disconnect the negative cable from the battery, then wait at least 3 minutes.
   - 3. Disconnect the following connectors.

SRS unit connector B (39P) See **SRS UNIT REMOVAL AND INSTALLATION** or **SRS UNIT UPDATE**

LEFT SIDE IMPACT SENSOR (FIRST) 4P CONNECTOR (ON THE FLOOR WIRE HARNESS)

GETtheMANUALS.org

- 4. Measure the resistance between test points 1 and 2.

  Test condition IG LOCK (0)

  SRS unit connector B (39P): disconnected

  Left side impact sensor (first) 4P connector (on the floor wire harness): disconnected

  Test circuit LS1+, LS1-

  Test point 1 SRS unit connector B (39P) No. 28

  Test point 2 SRS unit connector B (39P) No. 29

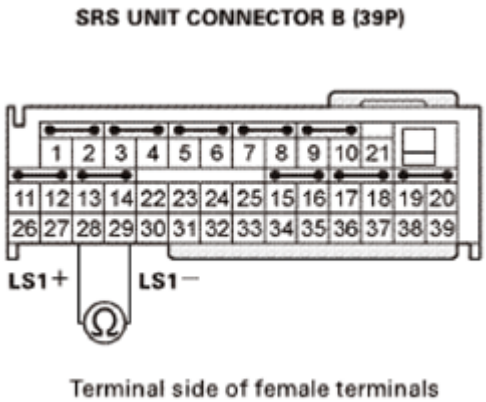

Fig. 116: Measuring Resistance Between SRS Unit Connector B (39P) No. 28 And 29
Courtesy of AMERICAN HONDA MOTOR CO., INC.

Is there an open circuit, or at least 1 Mohms?

YES : The LS1+, LS1- wires are not shorted. Go to step 3.

NO : Short to another wire in the floor wire harness between the SRS unit and the left side impact sensor (first); replace the floor wire harness, then clear the DTC.

3. Shorted wire check (LS1+, LS1- lines):
   - 1. Measure the resistance between test points 1 and 2.

     Test condition IG LOCK (0)

     SRS unit connector B (39P): disconnected

     Left side impact sensor (first) 4P connector (on the floor wire harness): disconnected

     Test circuit LS1+

GETtheMANUALS.org

Test point 1 SRS unit connector B (39P) No. 28

Test point 2 Body ground

Test circuit LS1-

Test point 1 SRS unit connector B (39P) No. 29

Test point 2 Body ground

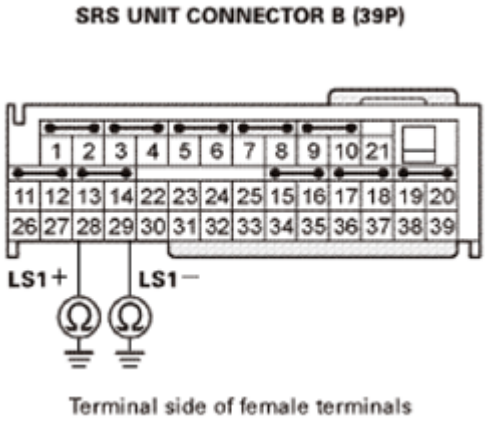

Fig. 117: Measuring Resistance Between SRS Unit Connector B (39P) No. 28 And Body Ground
Courtesy of AMERICAN HONDA MOTOR CO., INC.

Is there an open circuit, or at least 1 Mohms?

YES : The LS1+, LS1- wires are not shorted. Go to step 4.

NO : Short to ground in the floor wire harness between the SRS unit and the left side impact sensor (first); replace the floor wire harness, then clear the DTC.

4. Shorted wire check (LS1+, LS1- lines to power):
   - 1. Reconnect the negative cable to the battery.
   - 2. Turn the ignition switch to ON (II).
   - 3. Measure the voltage between test points 1 and 2.

   Test condition IG ON (II)

   SRS unit connector B (39P): disconnected

   Left side impact sensor (first) 4P connector (on the floor wire harness): disconnected

   Test circuit LS1+

GETtheMANUALS.org

Test point 1 SRS unit connector B (39P) No. 28

Test point 2 Body ground

Test circuit LS1-

Test point 1 SRS unit connector B (39P) No. 29

Test point 2 Body ground

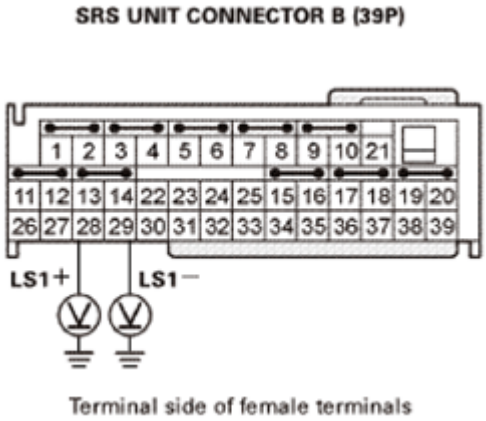

Fig. 118: Measuring Resistance Between SRS Unit Connector B (39P) No. 28 And Body Ground
Courtesy of AMERICAN HONDA MOTOR CO., INC.

Is there less than 0.2 V?

YES : The LS1+, LS1- wires are not shorted to power. Go to step 5.

NO : Short to power in the floor wire harness between the SRS unit and the left side impact sensor (first); replace the floor wire harness, then clear the DTC.

5. Open wire check (LS1+, LS1- lines):
   - 1. Turn the ignition switch to LOCK (0).
   - 2. Connect the black terminal (A) of SRS simulator lead L to the SRS inflator simulator (jumper connector), then connect SRS simulator lead L to the left side impact sensor (first) 4P connector (B) on the floor wire harness.

GETtheMANUALS.org

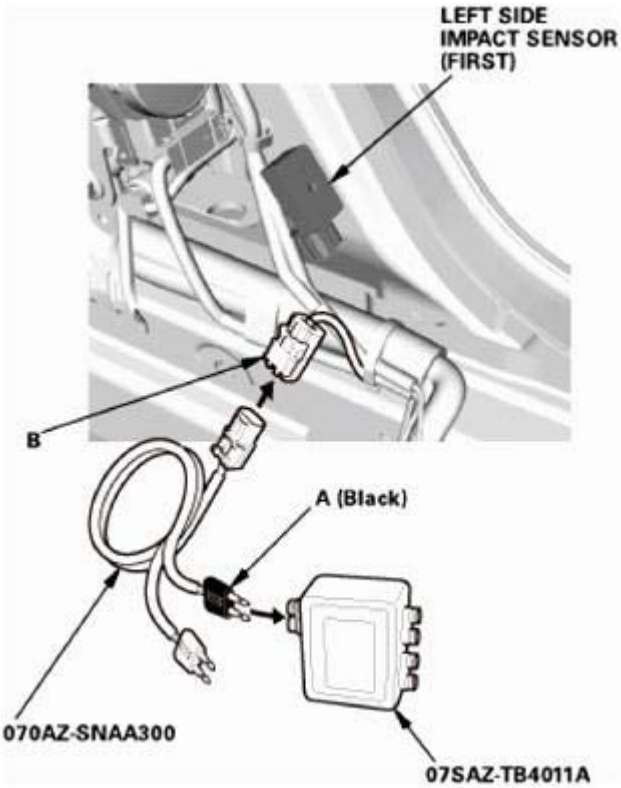

Fig. 119: Connecting SRS Simulator Lead L To Left Side Impact Sensor 4P Connector On Floor Wire Harness
Courtesy of AMERICAN HONDA MOTOR CO., INC.

- 3. Measure the resistance between test points 1 and 2.

  Test condition IG LOCK (0)

  SRS unit connector B (39P): disconnected

  Left side impact sensor (first) 4P connector (on the floor wire harness): disconnected

  Left side impact sensor (first) 4P connector (on the floor wire harness): connected to SRS simulator lead L

  Test circuit LS1+, LS1-

  Test point 1 SRS unit connector B (39P) No. 28

  Test point 2 SRS unit connector B (39P) No. 29

GETtheMANUALS.org

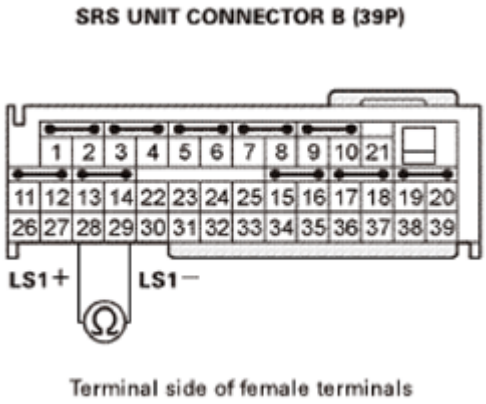

Fig. 120: Measuring Resistance Between SRS Unit Connector B (39P) No. 28 And 29
Courtesy of AMERICAN HONDA MOTOR CO., INC.

Is there less than 1.0 ohms?

YES : The LS1+, LS1- wires are OK. **REPLACE THE LEFT SIDE IMPACT SENSOR (FIRST)** , then clear the DTC, and retest. If the DTC is still present, **replace the SRS unit** See **SRS UNIT REMOVAL AND INSTALLATION** or **SRS UNIT UPDATE** .

NO : Open in the floor wire harness between the SRS unit and the left side impact sensor (first); replace the floor wire harness, then clear the DTC.

DTC 43-2X, 43-9X, 43-AX, 43-BX ("X" CAN BE 0 THRU 9 OR A THRU F): INTERNAL FAILURE OF THE LEFT SIDE IMPACT SENSOR (FIRST)

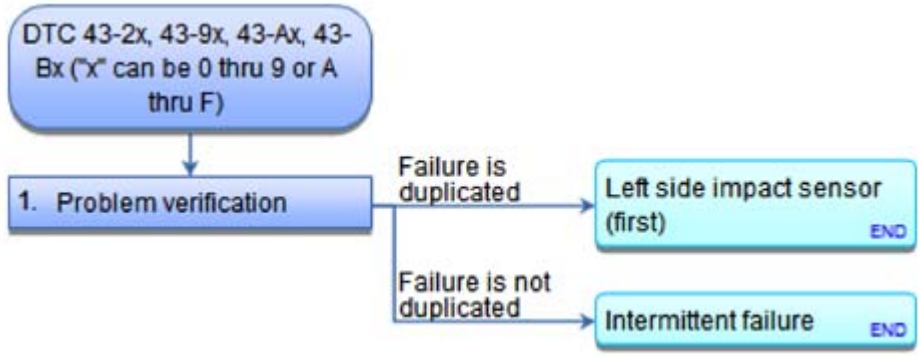

Fig. 121: SRS DTC Troubleshooting Flow Chart (43-2x, 43-9x, 43-Ax, 43-Bx)
Courtesy of AMERICAN HONDA MOTOR CO., INC.

NOTE:

- **Before doing this troubleshooting procedure, find out if the vehicle was in a collision. If so, verify that all the required components were replaced with new components, of the correct part number, and that they were properly installed See SRS COMPONENT REPLACEMENT/INSPECTION AFTER DEPLOYMENT or AIRBAG AND TENSIONER DISPOSAL .**

GETtheMANUALS.org

- **Before doing this troubleshooting procedure, review SRS PRECAUTIONS AND PROCEDURES and GENERAL TROUBLESHOOTING INFORMATION .**
- **Before replacing the SRS unit, check the SRS unit software version with the HDS. If the software version is not the latest, update the SRS unit software See SRS UNIT REMOVAL AND INSTALLATION or SRS UNIT UPDATE , and retest.**

DTC Description	DTC

1. Problem verification:
   - 1. **CLEAR THE DTCS WITH THE HDS** .
   - 2. Turn the ignition switch to ON (II), then wait for 10 seconds.
   - 3. **CHECK FOR DTCS WITH THE HDS** .

DTC Description	DTC

Is DTC 43-2x, 43-9x, 43-Ax, or 43-Bx indicated?

YES : The failure is duplicated. **REPLACE THE LEFT SIDE IMPACT SENSOR (FIRST)** , then clear the DTC, and retest. If the DTC is still present, **replace the SRS unit** See **SRS UNIT REMOVAL AND INSTALLATION** or **SRS UNIT UPDATE** .

NO : Intermittent failure, the system is OK at this time. **GO TO TROUBLESHOOTING INTERMITTENT FAILURES** . If another DTC is indicated, troubleshoot the DTC.

DTC 44-1X ("X" CAN BE 0 THRU 9 OR A THRU F): NO SIGNAL FROM THE RIGHT SIDE IMPACT SENSOR (FIRST)

GETtheMANUALS.org

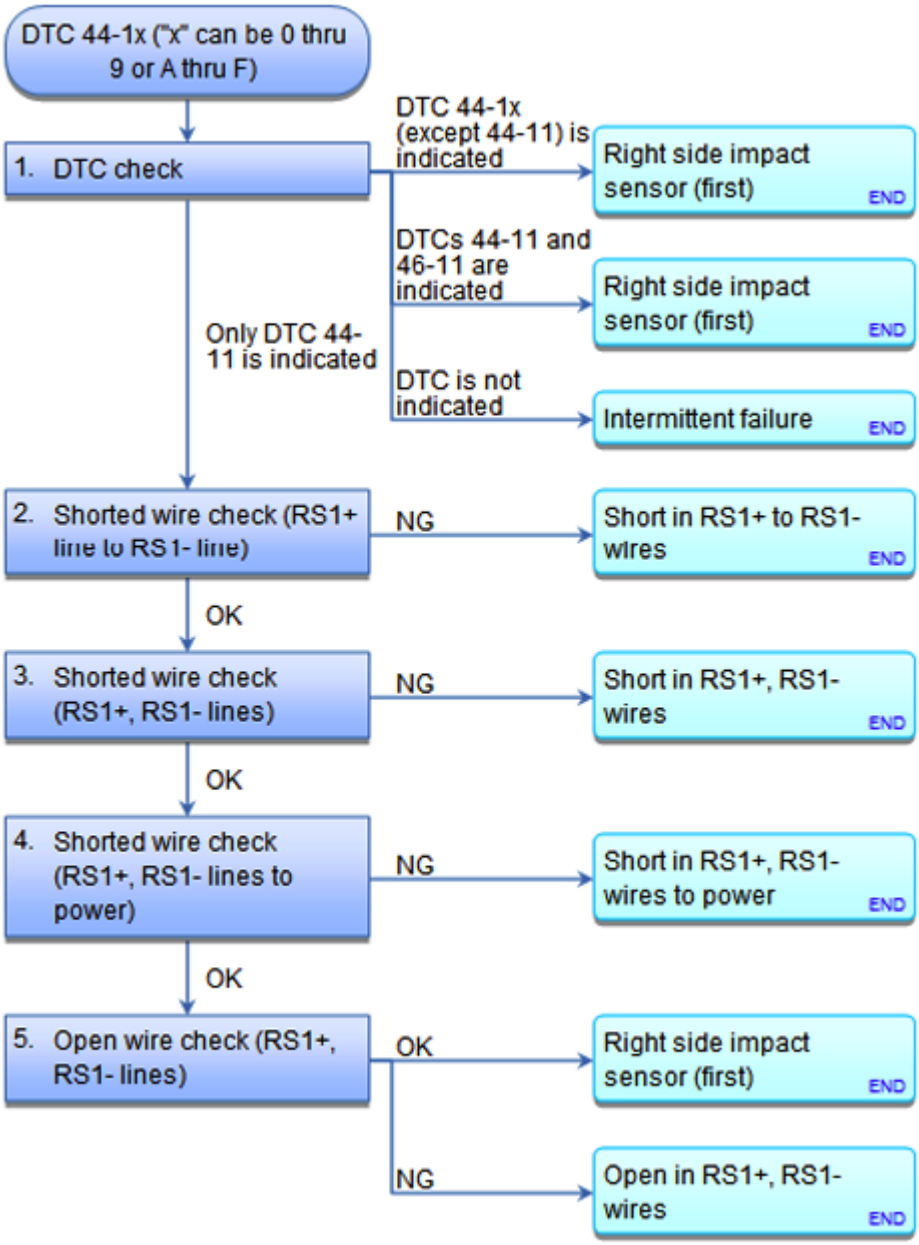

Fig. 122: SRS DTC Troubleshooting Flow Chart (44-1x)
Courtesy of AMERICAN HONDA MOTOR CO., INC.

Special Tools Required

- **SRS Inflator Simulator 07SAZ-TB4011A**
- **SRS Simulator Lead L 070AZ-SNAA300**

NOTE:

- **Before doing this troubleshooting procedure, find out if the vehicle was in a collision. If so, verify that all the required components were replaced with new components, of the correct part number, and that they were**

GETtheMANUALS.org

properly installed See SRS COMPONENT REPLACEMENT/INSPECTION AFTER DEPLOYMENT or AIRBAG AND TENSIONER DISPOSAL .

- **Before doing this troubleshooting procedure, review SRS PRECAUTIONS AND PROCEDURES , GENERAL TROUBLESHOOTING INFORMATION , and BATTERY TERMINAL DISCONNECTION AND RECONNECTION .**
- **Before replacing the SRS unit, check the SRS unit software version with the HDS. If the software version is not the latest, update the SRS unit software See SRS UNIT REMOVAL AND INSTALLATION or SRS UNIT UPDATE , and retest.**

DTC Description	DTC

1. DTC check:
   - 1. **CLEAR THE DTCS WITH THE HDS** .
   - 2. Turn the ignition switch to ON (II), then wait for 10 seconds.
   - 3. **CHECK FOR DTCS WITH THE HDS** .

DTC Description	DTC

Are DTCs indicated?

Only DTC 44-11 : Go to step 2.

DTC 44-1x (except 44-11) : **REPLACE THE RIGHT SIDE IMPACT SENSOR (FIRST)** , then clear the DTC.

DTCs 44-11 and 46-11 : **REPLACE THE RIGHT SIDE IMPACT SENSOR (FIRST)** , then clear the DTC.

NO DTC : Intermittent failure, the system is OK at this time. **GO TO TROUBLESHOOTING INTERMITTENT FAILURES** . If another DTC is indicated, troubleshoot the DTC.

2. Shorted wire check (RS1+ line to RS1- line):
   - 1. Turn the ignition switch to LOCK (0).
   - 2. Disconnect the negative cable from the battery, then wait at least 3 minutes.
   - 3. Disconnect the following connectors.

SRS unit connector B (39P) See **SRS UNIT REMOVAL AND INSTALLATION** or **SRS UNIT UPDATE**

RIGHT SIDE IMPACT SENSOR (FIRST) 4P CONNECTOR (ON THE FLOOR WIRE HARNESS)

GETtheMANUALS.org

- 4. Measure the resistance between test points 1 and 2.

  Test condition IG LOCK (0)

  SRS unit connector B (39P): disconnected

  Right side impact sensor (first) 4P connector (on the floor wire harness): disconnected

  Test circuit RS1+, RS1-

  Test point 1 SRS unit connector B (39P) No. 26

  Test point 2 SRS unit connector B (39P) No. 27

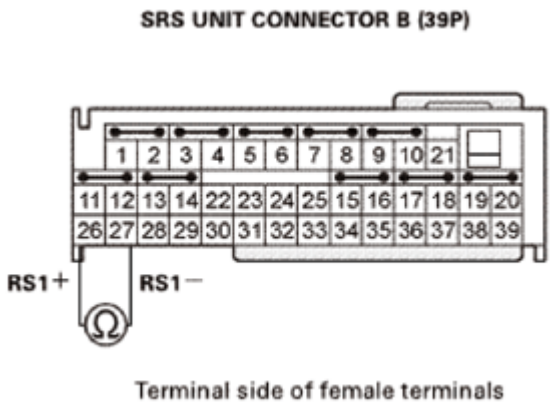

Fig. 123: Measuring Resistance Between SRS Unit Connector B (39P) No. 26 And 27
Courtesy of AMERICAN HONDA MOTOR CO., INC.

Is there an open circuit, or at least 1 Mohms?

YES : The RS1+, RS1- wires are not shorted. Go to step 3.

NO : Short to another wire in the floor wire harness between the SRS unit and the right side impact sensor (first); replace the floor wire harness, then clear the DTC.

3. Shorted wire check (RS1+, RS1- lines):
   - 1. Measure the resistance between test points 1 and 2.

     Test condition IG LOCK (0)

     SRS unit connector B (39P): disconnected

     Right side impact sensor (first) 4P connector (on the floor wire harness): disconnected

     Test circuit RS1+

GETtheMANUALS.org

Test point 1 SRS unit connector B (39P) No. 26

Test point 2 Body ground

Test circuit RS1-

Test point 1 SRS unit connector B (39P) No. 27

Test point 2 Body ground

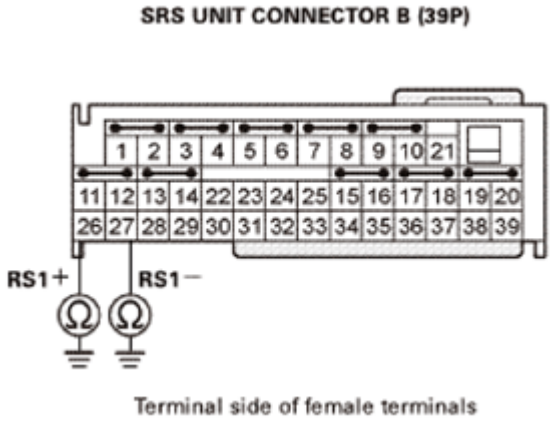

Fig. 124: Measuring Resistance Between SRS Unit Connector B (39P) No. 26 And 27
Courtesy of AMERICAN HONDA MOTOR CO., INC.

Is there an open circuit, or at least 1 Mohms?

YES : The RS1+, RS1- wires are not shorted. Go to step 4.

NO : Short to ground in the floor wire harness between the SRS unit and the right side impact sensor (first); replace the floor wire harness, then clear the DTC.

4. Shorted wire check (RS1+, RS1- lines to power):
   - 1. Reconnect the negative cable to the battery.
   - 2. Turn the ignition switch to ON (II).
   - 3. Measure the voltage between test points 1 and 2.

   Test condition IG ON (II)

   SRS unit connector B (39P): disconnected

   Right side impact sensor (first) 4P connector (on the floor wire harness): disconnected

   Test circuit RS1+

   Test point 1 SRS unit connector B (39P) No. 26

GETtheMANUALS.org

Test point 2 Body ground

Test circuit RS1-

Test point 1 SRS unit connector B (39P) No. 27

Test point 2 Body ground

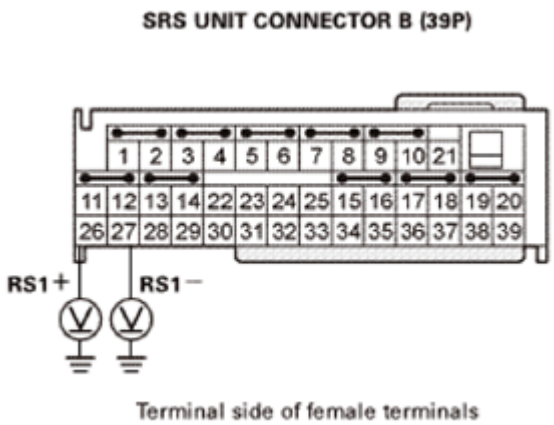

Fig. 125: Measuring Resistance Between SRS Unit Connector B (39P) No. 26 And 27
Courtesy of AMERICAN HONDA MOTOR CO., INC.

Is there less than 0.2 V?

YES : The RS1+, RS1- wires are not shorted to power. Go to step 5.

NO : Short to power in the floor wire harness between the SRS unit and the right side impact sensor (first); replace the floor wire harness, then clear the DTC.

5. Open wire check (RS1+, RS1- lines):
   - 1. Turn the ignition switch to LOCK (0).
   - 2. Connect the black terminal (A) of SRS simulator lead L to the SRS inflator simulator (jumper connector), then connect SRS simulator lead L to the right side impact sensor (first) 4P connector (B) on the floor wire harness.

GETtheMANUALS.org

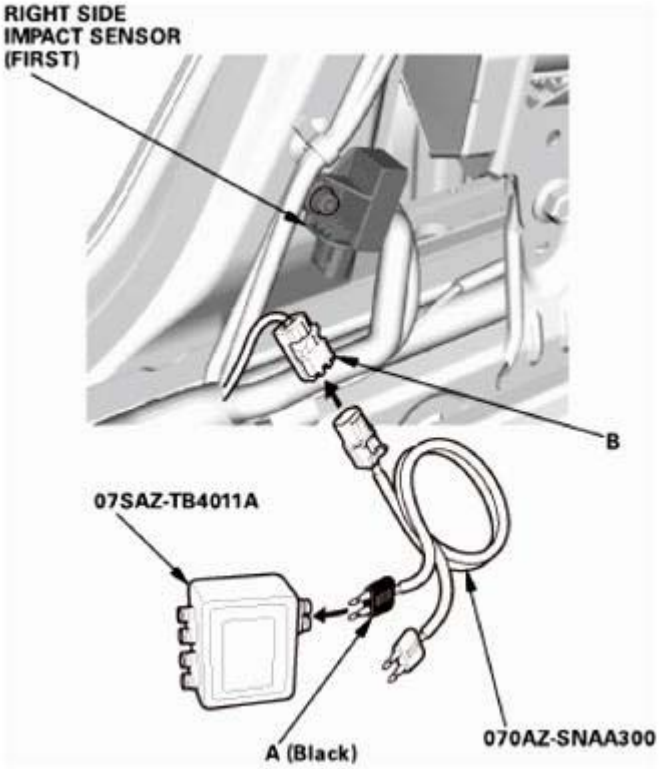

Fig. 126: Connecting SRS Simulator Lead L To Right Side Impact Sensor 4P Connector On Floor Wire Harness
Courtesy of AMERICAN HONDA MOTOR CO., INC.

- 3. Measure the resistance between test points 1 and 2.

  Test condition IG LOCK (0)

  SRS unit connector B (39P): disconnected

  Right side impact sensor (first) 4P connector (on the floor wire harness): disconnected

  Right side impact sensor (first) 4P connector (on the floor wire harness): connected to SRS simulator lead L

  Test circuit RS1+, RS1-

  Test point 1 SRS unit connector B (39P) No. 26

  Test point 2 SRS unit connector B (39P) No. 27

GETtheMANUALS.org

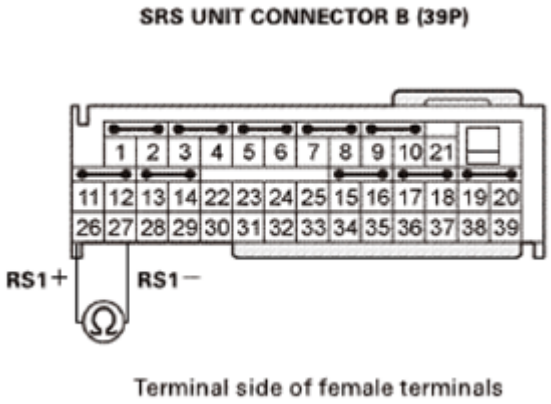

Fig. 127: Measuring Resistance Between SRS Unit Connector B (39P) No. 26 And 27
Courtesy of AMERICAN HONDA MOTOR CO., INC.

Is there less than 1.0 ohms?

YES : The RS1+, RS1- wires are OK. **REPLACE THE RIGHT SIDE IMPACT SENSOR (FIRST)** , then clear the DTC, and retest. If the DTC is still present, **replace the SRS unit** See **SRS UNIT REMOVAL AND INSTALLATION** or **SRS UNIT UPDATE** .

NO : Open in the floor wire harness between the SRS unit and the right side impact sensor (first); replace the floor wire harness, then clear the DTC.

DTC 44-2X, 44-9X, 44-AX, 44-BX ("X" CAN BE 0 THRU 9 OR A THRU F): INTERNAL FAILURE OF THE RIGHT SIDE IMPACT SENSOR (FIRST)

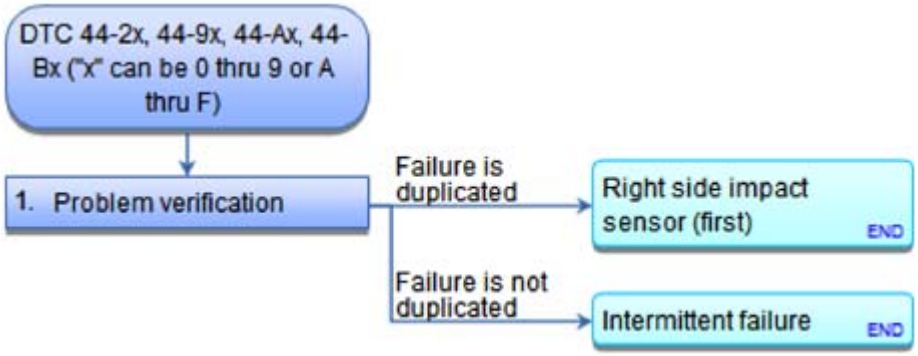

Fig. 128: SRS DTC Troubleshooting Flow Chart (44-2x, 44-9x, 44-Ax, 44-Bx)
Courtesy of AMERICAN HONDA MOTOR CO., INC.

NOTE:

- **Before doing this troubleshooting procedure, find out if the vehicle was in a collision. If so, verify that all the required components were replaced with new components, of the correct part number, and that they were properly installed See SRS COMPONENT REPLACEMENT/INSPECTION AFTER DEPLOYMENT or AIRBAG AND TENSIONER DISPOSAL .**

GETtheMANUALS.org

- **Before doing this troubleshooting procedure, review SRS PRECAUTIONS AND PROCEDURES and GENERAL TROUBLESHOOTING INFORMATION .**
- **Before replacing the SRS unit, check the SRS unit software version with the HDS. If the software version is not the latest, update the SRS unit software See SRS UNIT REMOVAL AND INSTALLATION or SRS UNIT UPDATE , and retest.**

DTC Description	DTC

1. Problem verification:
   - 1. **CLEAR THE DTCS WITH THE HDS** .
   - 2. Turn the ignition switch to ON (II), then wait for 10 seconds.
   - 3. **CHECK FOR DTCS WITH THE HDS** .

DTC Description	DTC

Is DTC 44-2x, 44-9x, 44-Ax, or 44-Bx indicated?

YES : The failure is duplicated. **REPLACE THE RIGHT SIDE IMPACT SENSOR (FIRST)** , then clear the DTC, and retest. If the DTC is still present, **replace the SRS unit** See **SRS UNIT REMOVAL AND INSTALLATION** or **SRS UNIT UPDATE** .

NO : Intermittent failure, the system is OK at this time. **GO TO TROUBLESHOOTING INTERMITTENT FAILURES** . If another DTC is indicated, troubleshoot the DTC.

DTC 45-1X ("X" CAN BE 0 THRU 9 OR A THRU F): NO SIGNAL FROM THE LEFT SIDE IMPACT SENSOR (SECOND)

GETtheMANUALS.org

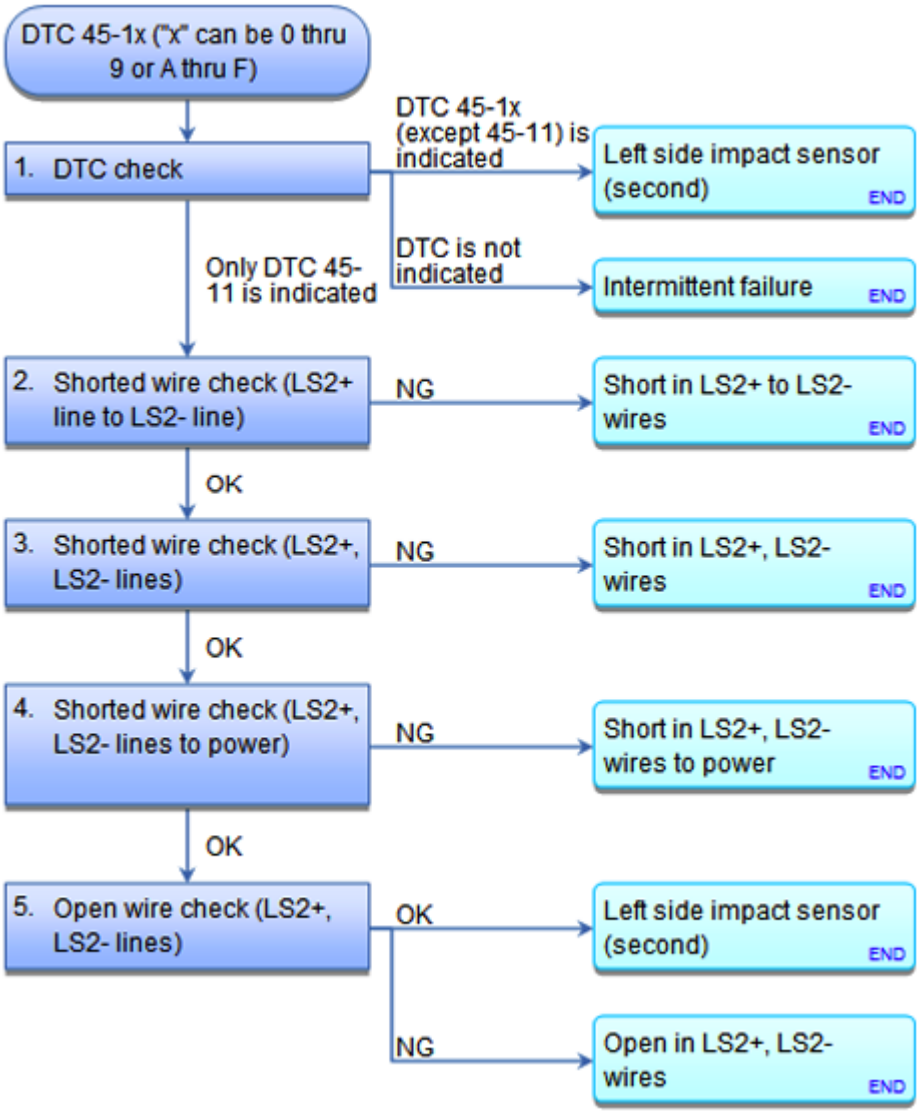

Fig. 129: SRS DTC Troubleshooting Flow Chart (45-1x)
Courtesy of AMERICAN HONDA MOTOR CO., INC.

Special Tools Required

- **SRS Inflator Simulator 07SAZ-TB4011A**
- **SRS Simulator Lead L 070AZ-SNAA300**

NOTE:

- **Before doing this troubleshooting procedure, find out if the vehicle was in a collision. If so, verify that all the required components were replaced with new components, of the correct part number, and that they were properly installed See SRS COMPONENT REPLACEMENT/INSPECTION AFTER DEPLOYMENT or AIRBAG AND TENSIONER DISPOSAL .**
- **Before doing this troubleshooting procedure, review SRS PRECAUTIONS**

GETtheMANUALS.org

AND PROCEDURES , GENERAL TROUBLESHOOTING INFORMATION , and BATTERY TERMINAL DISCONNECTION AND RECONNECTION .

- **Before replacing the SRS unit, check the SRS unit software version with the HDS. If the software version is not the latest, update the SRS unit software See SRS UNIT UPDATE or SRS UNIT REMOVAL AND INSTALLATION , and retest.**

DTC Description	DTC

1. DTC check:
   - 1. **CLEAR THE DTCS WITH THE HDS** .
   - 2. Turn the ignition switch to ON (II), then wait for 10 seconds.
   - 3. **CHECK FOR DTCS WITH THE HDS** .

DTC Description	DTC

Are DTCs indicated?

Only DTC 45-11 : Go to step 2.

DTC 45-1x (except 45-11) : **REPLACE THE LEFT SIDE IMPACT SENSOR (SECOND)** , then clear the DTC.

NO DTC : Intermittent failure, the system is OK at this time. **GO TO TROUBLESHOOTING INTERMITTENT FAILURES** . If another DTC is indicated, troubleshoot the DTC.

2. Shorted wire check (LS2+ line to LS2- line):
   - 1. Turn the ignition switch to LOCK (0).
   - 2. Disconnect the negative cable from the battery, then wait at least 3 minutes.
   - 3. Disconnect the following connectors.

     LEFT SIDE IMPACT SENSOR (FIRST) 4P CONNECTOR (ON THE FLOOR WIRE HARNESS)

     LEFT SIDE IMPACT SENSOR (SECOND) 2P CONNECTOR (ON THE FLOOR WIRE HARNESS)

   - 4. Measure the resistance between test points 1 and 2.

     Test condition IG LOCK (0)

     Left side impact sensor (first) 4P connector (on the floor wire harness): disconnected

GETtheMANUALS.org

Left side impact sensor (second) 2P connector (on the floor wire harness): disconnected

Test circuit LS2+, LS2-

Test point 1 Left side impact sensor (second) 2P connector No. 1 (on the floor wire harness)

Test point 2 Left side impact sensor (second) 2P connector No. 2 (on the floor wire harness)

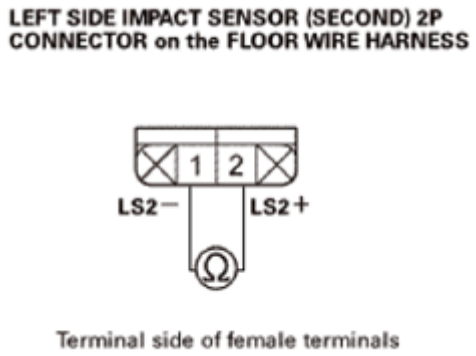

Fig. 130: Measuring Resistance Between Left Side Impact Sensor (Second) 2P Connector No. 1 And 2 (On Floor Wire Harness)
Courtesy of AMERICAN HONDA MOTOR CO., INC.

Is there an open circuit, or at least 1 Mohms?

YES : The LS2+, LS2- wires are not shorted. Go to step 3.

NO : Short to another wire in the floor wire harness between the left side impact sensor (first) and the left side impact sensor (second); replace the floor wire harness, then clear the DTC.

3. Shorted wire check (LS2+, LS2- lines):
   - 1. Measure the resistance between test points 1 and 2.

     Test condition IG LOCK (0)

     Left side impact sensor (first) 4P connector (on the floor wire harness): disconnected

     Left side impact sensor (second) 2P connector (on the floor wire harness): disconnected

     Test circuit LS2+

     Test point 1 Left side impact sensor (second) 2P connector No. 2 (on the floor wire harness)

     Test point 2 Body ground

     Test circuit LS2-

GETtheMANUALS.org

Test point 1 Left side impact sensor (second) 2P connector No. 1 (on the floor wire harness)

Test point 2 Body ground

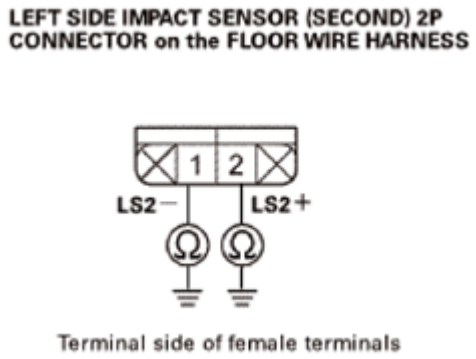

Fig. 131: Measuring Resistance Between Left Side Impact Sensor (Second) 2P Connector No. 2 And Body Ground (On Floor Wire Harness)
Courtesy of AMERICAN HONDA MOTOR CO., INC.

Is there an open circuit, or at least 1 Mohms?

YES : The LS2+, LS2- wires are not shorted. Go to step 4.

NO : Short to ground in the floor wire harness between the left side impact sensor (first) and the left side impact sensor (second); replace the floor wire harness, then clear the DTC.

4. Shorted wire check (LS2+, LS2- lines to power):
   - 1. Reconnect the negative cable to the battery.
   - 2. Turn the ignition switch to ON (II).
   - 3. Measure the voltage between test points 1 and 2.

     Test condition IG ON (II)

     Left side impact sensor (first) 4P connector (on the floor wire harness): disconnected

     Left side impact sensor (second) 2P connector (on the floor wire harness): disconnected

     Test circuit LS2+

     Test point 1 Left side impact sensor (second) 2P connector No. 2 (on the floor wire harness)

     Test point 2 Body ground

     Test circuit LS2-

     Test point 1 Left side impact sensor (second) 2P connector No. 1 (on the floor wire harness)

GETtheMANUALS.org

Test point 2 Body ground

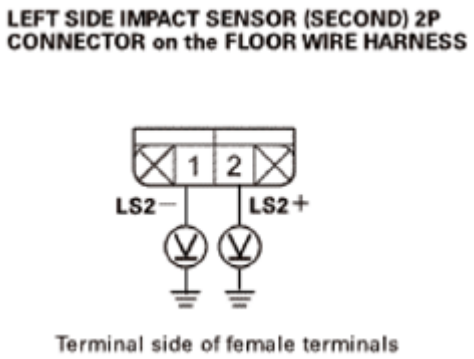

Fig. 132: Measuring Voltage Between Left Side Impact Sensor (Second) 2P Connector No. 2 And Body Ground (On Floor Wire Harness)
Courtesy of AMERICAN HONDA MOTOR CO., INC.

Is there less than 0.2 V?

YES : The LS2+, LS2- wires are not shorted to power. Go to step 5.

NO : Short to power in the floor wire harness between the left side impact sensor (first) and the left side impact sensor (second); replace the floor wire harness, then clear the DTC.

5. Open wire check (LS2+, LS2- lines):
   - 1. Turn the ignition switch to LOCK (0).
   - 2. Connect the red terminal (A) of SRS simulator lead L to the SRS inflator simulator (jumper connector), then connect SRS simulator lead L to the left side impact sensor (first) 4P connector (B) on the floor wire harness.

GETtheMANUALS.org

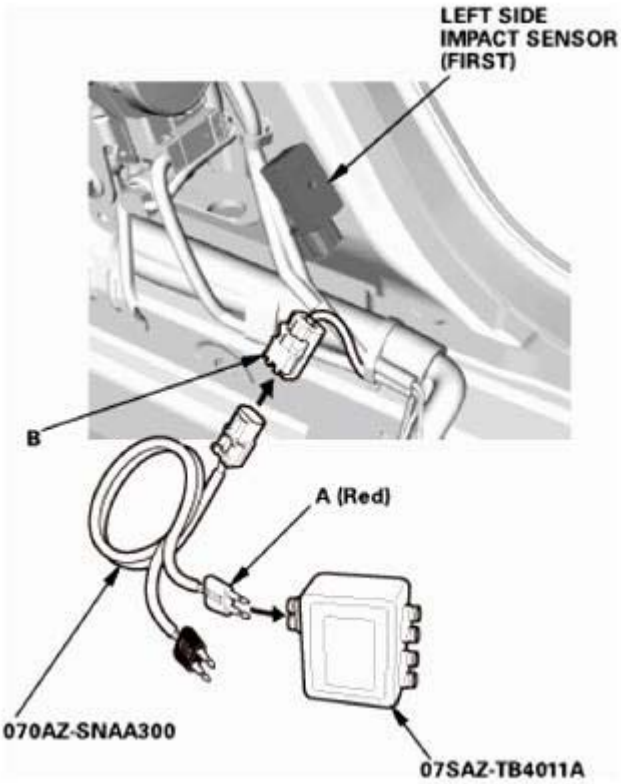

Fig. 133: Connecting SRS Simulator Lead L To Left Side Impact Sensor (First) 4P Connector On Floor Wire Harness
Courtesy of AMERICAN HONDA MOTOR CO., INC.

- 3. Measure the resistance between test points 1 and 2.

  Test condition IG LOCK (0)

  Left side impact sensor (first) 4P connector (on the floor wire harness): disconnected

  Left side impact sensor (second) 2P connector (on the floor wire harness): disconnected

  Left side impact sensor (first) 4P connector (on the floor wire harness): connected to SRS simulator lead L

  Test circuit LS2+, LS2-

  Test point 1 Left side impact sensor (second) 2P connector No. 1 (on the floor wire harness)

  Test point 2 Left side impact sensor (second) 2P connector No. 2 (on the floor wire harness)

GETtheMANUALS.org

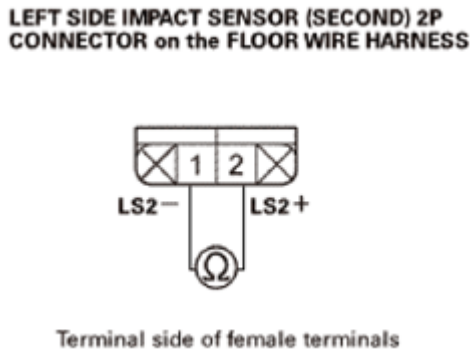

Fig. 134: Measuring Resistance Between Left Side Impact Sensor (Second) 2P Connector No. 1 And 2 (On Floor Wire Harness)
Courtesy of AMERICAN HONDA MOTOR CO., INC.

Is there less than 1.0 ohms?

YES : The LS2+, LS2- wires are OK. **REPLACE THE LEFT SIDE IMPACT SENSOR (SECOND)** , then clear the DTC, and retest. If the DTC is still present, **replace the SRS unit** See **SRS UNIT REMOVAL AND INSTALLATION** or **SRS UNIT UPDATE** .

NO : Open in the floor wire harness between the left side impact sensor (first) and the left side impact sensor (second); replace the floor wire harness, then clear the DTC.

DTC 45-2X, 45-9X, 45-AX, 45-BX ("X" CAN BE 0 THRU 9 OR A THRU F): INTERNAL FAILURE OF THE LEFT SIDE IMPACT SENSOR (SECOND)

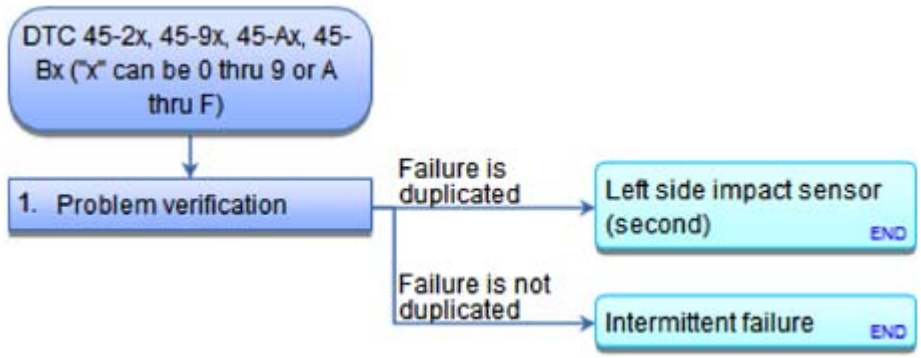

Fig. 135: SRS DTC Troubleshooting Flow Chart (45-2x, 45-9x, 45-Ax, 45-Bx)
Courtesy of AMERICAN HONDA MOTOR CO., INC.

NOTE:

- **Before doing this troubleshooting procedure, find out if the vehicle was in a collision. If so, verify that all the required components were replaced with new components, of the correct part number, and that they were properly installed See SRS COMPONENT REPLACEMENT/INSPECTION AFTER DEPLOYMENT or AIRBAG AND TENSIONER DISPOSAL .**
- **Before doing this troubleshooting procedure, review SRS PRECAUTIONS**

GETtheMANUALS.org

AND PROCEDURES and GENERAL TROUBLESHOOTING INFORMATION .

- **Before replacing the SRS unit, check the SRS unit software version with the HDS. If the software version is not the latest, update the SRS unit software See SRS UNIT REMOVAL AND INSTALLATION or SRS UNIT UPDATE , and retest.**

DTC Description	DTC

1. Problem verification:
   - 1. **CLEAR THE DTCS WITH THE HDS** .
   - 2. Turn the ignition switch to ON (II), then wait for 10 seconds.
   - 3. **CHECK FOR DTCS WITH THE HDS** .

DTC Description	DTC

Is DTC 45-2x, 45-9x, 45-Ax, or 45-Bx indicated?

YES : The failure is duplicated. **REPLACE THE LEFT SIDE IMPACT SENSOR (SECOND)** , then clear the DTC, and retest. If the DTC is still present, **replace the SRS unit** See **SRS UNIT REMOVAL AND INSTALLATION** or **SRS UNIT UPDATE** .

NO : Intermittent failure, the system is OK at this time. **GO TO TROUBLESHOOTING INTERMITTENT FAILURES** . If another DTC is indicated, troubleshoot the DTC.

DTC 46-1X ("X" CAN BE 0 THRU 9 OR A THRU F): NO SIGNAL FROM THE RIGHT SIDE IMPACT SENSOR (SECOND)

GETtheMANUALS.org

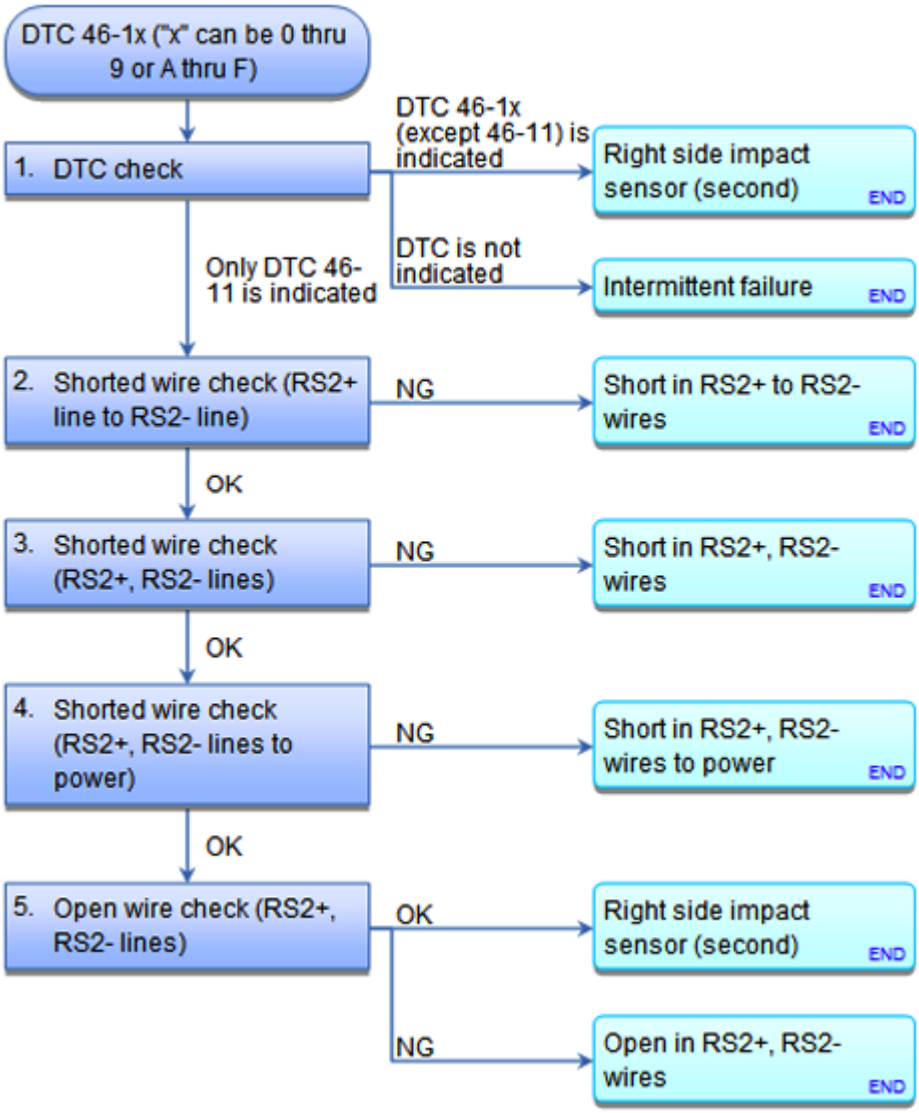

Fig. 136: SRS DTC Troubleshooting Flow Chart (46-1x)
Courtesy of AMERICAN HONDA MOTOR CO., INC.

Special Tools Required

- **SRS Inflator Simulator 07SAZ-TB4011A**
- **SRS Simulator Lead L 070AZ-SNAA300**

NOTE:

- **Before doing this troubleshooting procedure, find out if the vehicle was in a collision. If so, verify that all the required components were replaced with new components, of the correct part number, and that they were properly installed See SRS COMPONENT REPLACEMENT/INSPECTION AFTER DEPLOYMENT or AIRBAG AND TENSIONER DISPOSAL .**
- **Before doing this troubleshooting procedure, review SRS PRECAUTIONS**

GETtheMANUALS.org

AND PROCEDURES , GENERAL TROUBLESHOOTING INFORMATION , and BATTERY TERMINAL DISCONNECTION AND RECONNECTION .

- **Before replacing the SRS unit, check the SRS unit software version with the HDS. If the software version is not the latest, update the SRS unit software See SRS UNIT UPDATE or SRS UNIT REMOVAL AND INSTALLATION , and retest.**

DTC Description	DTC

1. DTC check:
   - 1. **CLEAR THE DTCS WITH THE HDS** .
   - 2. Turn the ignition switch to ON (II), then wait for 10 seconds.
   - 3. **CHECK FOR DTCS WITH THE HDS** .

DTC Description	DTC

Are DTCs indicated?

Only DTC 46-11 : Go to step 2.

DTC 46-1x (except 46-11) : **REPLACE THE RIGHT SIDE IMPACT SENSOR (SECOND)** , then clear the DTC.

NO DTC : Intermittent failure, the system is OK at this time. **GO TO TROUBLESHOOTING INTERMITTENT FAILURES** . If another DTC is indicated, troubleshoot the DTC.

2. Shorted wire check (RS2+ line to RS2- line):
   - 1. Turn the ignition switch to LOCK (0).
   - 2. Disconnect the negative cable from the battery, then wait at least 3 minutes.
   - 3. Disconnect the following connectors.

     RIGHT SIDE IMPACT SENSOR (FIRST) 4P CONNECTOR (ON THE FLOOR WIRE HARNESS)

     RIGHT SIDE IMPACT SENSOR (SECOND) 2P CONNECTOR (ON THE FLOOR WIRE HARNESS)

   - 4. Measure the resistance between test points 1 and 2.

     Test condition IG LOCK (0)

     Right side impact sensor (first) 4P connector (on the floor wire harness): disconnected

GETtheMANUALS.org

Right side impact sensor (second) 2P connector (on the floor wire harness): disconnected

Test circuit RS2+, RS2-

Test point 1 Right side impact sensor (second) 2P connector No. 1 (on the floor wire harness)

Test point 2 Right side impact sensor (second) 2P connector No. 2 (on the floor wire harness)

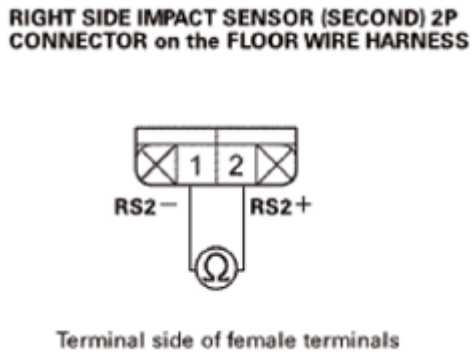

Fig. 137: Measuring Resistance Between Right Side Impact Sensor (Second) 2P Connector No. 1 And 2 (On Floor Wire Harness)
Courtesy of AMERICAN HONDA MOTOR CO., INC.

Is there an open circuit, or at least 1 Mohms?

YES : The RS2+, RS2- wires are not shorted. Go to step 3.

NO : Short to another wire in the floor wire harness between the right side impact sensor (first) and the right side impact sensor (second); replace the floor wire harness, then clear the DTC.

3. Shorted wire check (RS2+, RS2- lines):
   - 1. Measure the resistance between test points 1 and 2.

     Test condition IG LOCK (0)

     Right side impact sensor (first) 4P connector (on the floor wire harness): disconnected

     Right side impact sensor (second) 2P connector (on the floor wire harness): disconnected

     Test circuit RS2+

     Test point 1 Right side impact sensor (second) 2P connector No. 2 (on the floor wire harness)

     Test point 2 Body ground

     Test circuit RS2-

GETtheMANUALS.org

Test point 1 Right side impact sensor (second) 2P connector No. 1 (on the floor wire harness)

Test point 2 Body ground

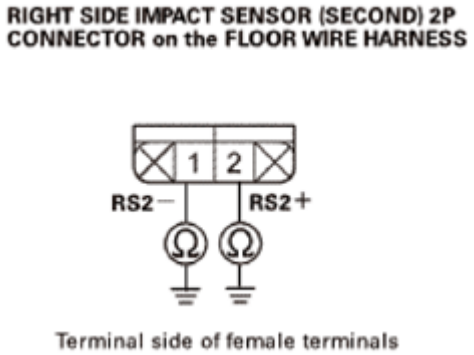

Fig. 138: Measuring Resistance Between Right Side Impact Sensor (Second) 2P Connector No. 2 And Body Ground (On Floor Wire Harness)
Courtesy of AMERICAN HONDA MOTOR CO., INC.

Is there an open circuit, or at least 1 Mohms?

YES : The RS2+, RS2- wires are not shorted. Go to step 4.

NO : Short to ground in the floor wire harness between the right side impact sensor (first) and the right side impact sensor (second); replace the floor wire harness, then clear the DTC.

4. Shorted wire check (RS2+, RS2- lines to power):
   - 1. Reconnect the negative cable to the battery.
   - 2. Turn the ignition switch to ON (II).
   - 3. Measure the voltage between test points 1 and 2.

     Test condition IG ON (II)

     Right side impact sensor (first) 4P connector (on the floor wire harness): disconnected

     Right side impact sensor (second) 2P connector (on the floor wire harness): disconnected

     Test circuit RS2+

     Test point 1 Right side impact sensor (second) 2P connector No. 2 (on the floor wire harness)

     Test point 2 Body ground

     Test circuit RS2-

     Test point 1 Right side impact sensor (second) 2P connector No. 1 (on the floor wire harness)

GETtheMANUALS.org

Test point 2 Body ground

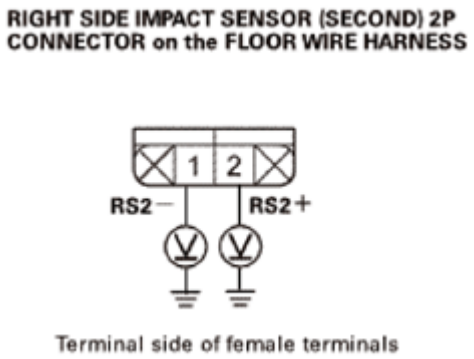

Fig. 139: Measuring Resistance Between Right Side Impact Sensor (Second) 2P Connector No. 2 And Body Ground (On Floor Wire Harness)
Courtesy of AMERICAN HONDA MOTOR CO., INC.

Is there less than 0.2 V?

YES : The RS2+, RS2- wires are not shorted to power. Go to step 5.

NO : Short to power in the floor wire harness between the right side impact sensor (first) and the right side impact sensor (second); replace the floor wire harness, then clear the DTC.

5. Open wire check (RS2+, RS2- lines):
   - 1. Turn the ignition switch to LOCK (0).
   - 2. Connect the red terminal (A) of SRS simulator lead L to the SRS inflator simulator (jumper connector), then connect SRS simulator lead L to the right side impact sensor (first) 4P connector (B) on the floor wire harness.

GETtheMANUALS.org

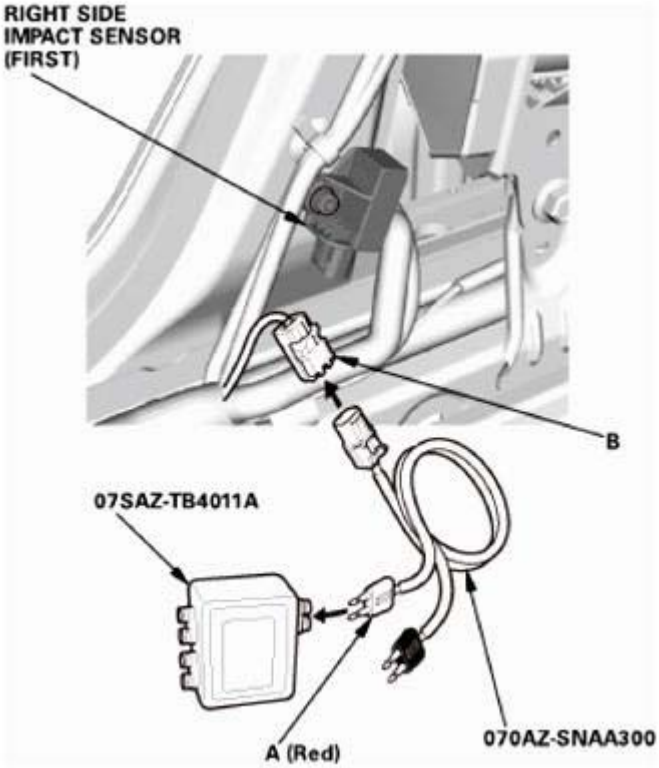

Fig. 140: Connecting SRS Simulator Lead L To Right Side Impact Sensor (First) 4P Connector On Floor Wire Harness
Courtesy of AMERICAN HONDA MOTOR CO., INC.

- 3. Measure the resistance between test points 1 and 2.

  Test condition IG LOCK (0)

  Right side impact sensor (first) 4P connector (on the floor wire harness): disconnected

  Right side impact sensor (second) 2P connector (on the floor wire harness): disconnected

  Right side impact sensor (first) 4P connector (on the floor wire harness): connected to SRS simulator lead L

  Test circuit RS2+, RS2-

  Test point 1 Right side impact sensor (second) 2P connector No. 1 (on the floor wire harness)

  Test point 2 Right side impact sensor (second) 2P connector No. 2 (on the floor wire harness)

GETtheMANUALS.org

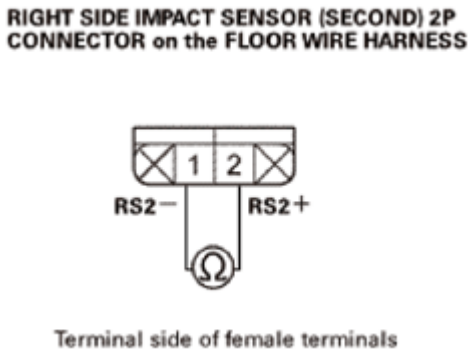

Fig. 141: Measuring Resistance Between Right Side Impact Sensor (Second) 2P Connector No. 1 And 2 (On Floor Wire Harness)
Courtesy of AMERICAN HONDA MOTOR CO., INC.

Is there less than 1.0 ohms?

YES : The RS2+, RS2- wires are OK. **REPLACE THE RIGHT SIDE IMPACT SENSOR (SECOND)** , then clear the DTC, and retest. If the DTC is still present, **replace the SRS unit** See **SRS UNIT REMOVAL AND INSTALLATION** or **SRS UNIT UPDATE** .

NO : Open in the floor wire harness between the right side impact sensor (first) and the right side impact sensor (second); replace the floor wire harness, then clear the DTC.

DTC 46-2X, 46-9X, 46-AX, 46-BX ("X" CAN BE 0 THRU 9 OR A THRU F): INTERNAL FAILURE OF THE RIGHT SIDE IMPACT SENSOR (SECOND)

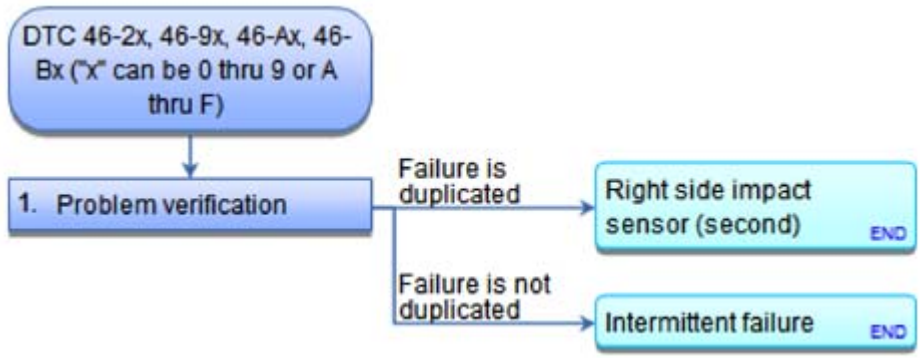

Fig. 142: SRS DTC Troubleshooting Flow Chart (46-2x, 46-9x, 46-Ax, 46-Bx)
Courtesy of AMERICAN HONDA MOTOR CO., INC.

NOTE:

- **Before doing this troubleshooting procedure, find out if the vehicle was in a collision. If so, verify that all the required components were replaced with new components, of the correct part number, and that they were properly installed See SRS COMPONENT REPLACEMENT/INSPECTION AFTER DEPLOYMENT or AIRBAG AND TENSIONER DISPOSAL .**
- **Before doing this troubleshooting procedure, review SRS PRECAUTIONS**

GETtheMANUALS.org

AND PROCEDURES and GENERAL TROUBLESHOOTING INFORMATION .

- **Before replacing the SRS unit, check the SRS unit software version with the HDS. If the software version is not the latest, update the SRS unit software See SRS UNIT REMOVAL AND INSTALLATION or SRS UNIT UPDATE , and retest.**

DTC Description	DTC

1. Problem verification:
   - 1. **CLEAR THE DTCS WITH THE HDS** .
   - 2. Turn the ignition switch to ON (II), then wait for 10 seconds.
   - 3. **CHECK FOR DTCS WITH THE HDS** .

DTC Description	DTC

Is DTC 46-2x, 46-9x, 46-Ax, or 46-Bx indicated?

YES : The failure is duplicated. **REPLACE THE RIGHT SIDE IMPACT SENSOR (SECOND)** , then clear the DTC, and retest. If the DTC is still present, **replace the SRS unit** See **SRS UNIT UPDATE** or **SRS UNIT REMOVAL AND INSTALLATION** .

NO : Intermittent failure, the system is OK at this time. **GO TO TROUBLESHOOTING INTERMITTENT FAILURES** . If another DTC is indicated, troubleshoot the DTC.

DTC 51-XX, 52-XX, 53-XX, 54-XX, 55-XX, 57-XX, 58-XX ("X" CAN BE 0 THRU 9 OR A THRU F): INTERNAL FAILURE OF THE SRS UNIT

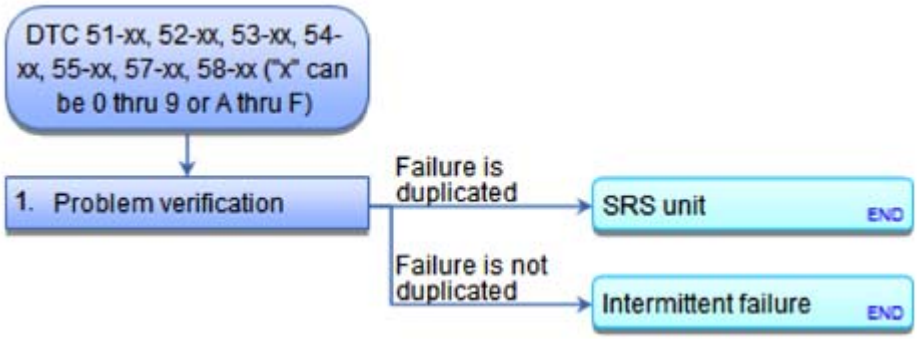

Fig. 143: SRS DTC Troubleshooting Flow Chart (51-xx, 52-xx, 53-xx, 54-xx, 55-xx, 57-xx, 58-xx)
Courtesy of AMERICAN HONDA MOTOR CO., INC.

NOTE:

- **BEFORE DOING THIS TROUBLESHOOTING PROCEDURE, FIND OUT IF**

GETtheMANUALS.org

THE VEHICLE WAS IN A COLLISION. IF SO, VERIFY THAT ALL THE REQUIRED COMPONENTS WERE REPLACED WITH NEW COMPONENTS, OF THE CORRECT PART NUMBER, AND THAT THEY WERE PROPERLY INSTALLED or AIRBAG AND TENSIONER DISPOSAL .

- **Before troubleshooting any of these DTCs, CHECK THE BATTERY/SYSTEM VOLTAGE AND BATTERY CABLE CONNECTIONS . If the voltage is low, repair the charging system, test and charge the battery, or replace the battery before troubleshooting the SRS. If the battery/system voltage is OK, ask the customer if the battery ever went dead or if the engine was started and run with the battery in a low state of charge. A dead battery may trigger one or more of these DTCs.**
- **Before doing this troubleshooting procedure, review SRS PRECAUTIONS AND PROCEDURES and GENERAL TROUBLESHOOTING INFORMATION .**
- **Before replacing the SRS unit, check the SRS unit software version with the HDS. If the software version is not the latest, update the SRS unit software See SRS UNIT UPDATE or SRS UNIT REMOVAL AND INSTALLATION , and retest.**

DTC Description	DTC

1. Problem verification:
   - 1. **CLEAR THE DTCS WITH THE HDS** .
   - 2. Turn the ignition switch to ON (II), then wait for 10 seconds.
   - 3. **CHECK FOR DTCS WITH THE HDS** .

DTC Description	DTC

Is DTC 51-xx, 52-xx, 53-xx, 54-xx, 55-xx, 57-xx, or 58-xx indicated?

YES : The failure is duplicated. **Replace the SRS unit** See **SRS UNIT UPDATE** or **SRS UNIT REMOVAL AND INSTALLATION** .

NO : Intermittent failure, the system is OK at this time. **GO TO TROUBLESHOOTING INTERMITTENT FAILURES** . If another DTC is indicated, troubleshoot the DTC.

DTC 53-FF: SRS UNIT PROGRAMMING ERROR

GETtheMANUALS.org

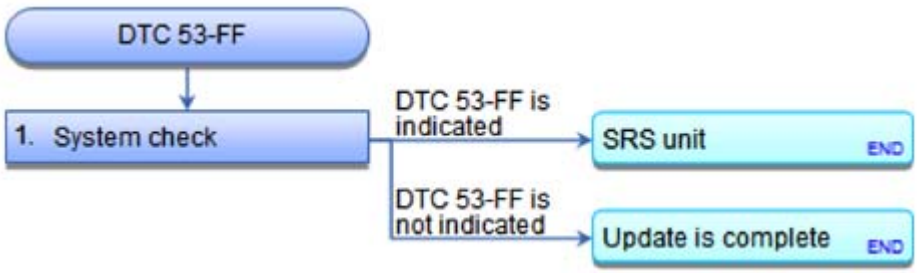

Fig. 144: SRS DTC Troubleshooting Flow Chart (53-FF)
Courtesy of AMERICAN HONDA MOTOR CO., INC.

NOTE:

- **Before doing this troubleshooting procedure, find out if the vehicle was in a collision. If so, verify that all the required components were replaced with new components, of the correct part number, and that they were properly installed See SRS COMPONENT REPLACEMENT/INSPECTION AFTER DEPLOYMENT or AIRBAG AND TENSIONER DISPOSAL .**
- **This DTC is indicated when the SRS unit update is not completed properly.**
- **Do not turn the ignition switch to ACCESSORY (I) or LOCK (0) while updating the SRS unit. If you turn the ignition switch to ACCESSORY (I) or LOCK (0) before you complete the SRS unit update procedure, the SRS unit can be damaged.**
- **Before doing this troubleshooting procedure, review SRS PRECAUTIONS AND PROCEDURES and GENERAL TROUBLESHOOTING INFORMATION .**

DTC Description	DTC
53-FF SRS unit programming error	

1. System check:
   - 1. **Do the SRS unit update procedure** See **SRS UNIT UPDATE** or **SRS UNIT REMOVAL AND INSTALLATION** .
   - 2. **CLEAR THE DTCS WITH THE HDS** .
   - 3. Turn the ignition switch to ON (II), then wait for 10 seconds.
   - 4. **CHECK FOR DTCS WITH THE HDS** .

DTC Description	DTC
53-FF SRS unit programming error	

Is DTC 53-FF indicated?

YES : **Replace the SRS unit** See **SRS UNIT UPDATE** or **SRS UNIT REMOVAL AND INSTALLATION** .

NO : Update is complete.

GETtheMANUALS.org

DTC 56-21: LOST COMMUNICATION WITH THE PCM (PGM-FI SYSTEM); DTC 56-22, 56-23: UNDEFINED DATA RECEIVED FROM THE PCM (PGM-FI SYSTEM)

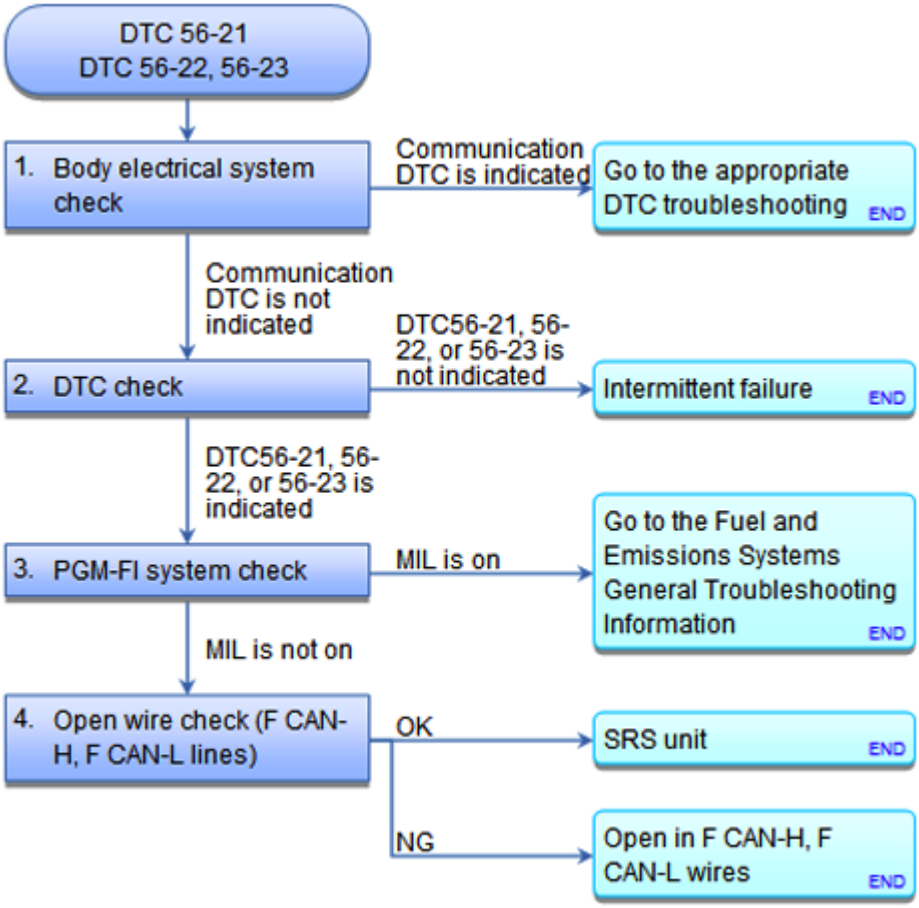

Fig. 145: SRS DTC Troubleshooting Flow Chart (56-21)
Courtesy of AMERICAN HONDA MOTOR CO., INC.

NOTE:

- **Before doing this troubleshooting procedure, find out if the vehicle was in a collision. If so, verify that all the required components were replaced with new components, of the correct part number, and that they were properly installed See SRS COMPONENT REPLACEMENT/INSPECTION AFTER DEPLOYMENT or AIRBAG AND TENSIONER DISPOSAL .**
- **Before doing this troubleshooting procedure, review SRS PRECAUTIONS AND PROCEDURES , GENERAL TROUBLESHOOTING INFORMATION , and BATTERY TERMINAL DISCONNECTION AND RECONNECTION .**
- **Before replacing the SRS unit, check the SRS unit software version with the HDS. If the software version is not the latest, update the SRS unit software See SRS UNIT UPDATE or SRS UNIT REMOVAL AND INSTALLATION , and retest.**

GETtheMANUALS.org

DTC Description	DTC
56-21 Lost communication with the PCM (PGM-FI system)	
56-22 Undefined data received from the PCM (PGM-FI system)	
56-23 Undefined data received from the PCM (PGM-FI system)	

1. Body electrical system check:
   - 1. Check for any F-CAN and B-CAN communication DTCs with the HDS.

DTC Description	DTC

Are there any communication DTCs?

Is DTC 56-21, 56-22, or 56-23 indicated?

YES : Go to the appropriate **DTC TROUBLESHOOTING**.

NO : Go to step 2.

2. DTC check:
   - 1. **CLEAR THE DTCS WITH THE HDS** .
   - 2. Turn the ignition switch to ON (II), then wait for 10 seconds.
   - 3. **CHECK FOR DTCS WITH THE HDS** .

DTC Description	DTC
56-21 Lost communication with the PCM (PGM-FI system)	
56-22 Undefined data received from the PCM (PGM-FI system)	
56-23 Undefined data received from the PCM (PGM-FI system)	

Does the MIL stay on longer than 30 seconds?

YES : Go to step 3.

NO : Intermittent failure, the system is OK at this time. **GO TO TROUBLESHOOTING INTERMITTENT FAILURES** . If another DTC is indicated, troubleshoot the DTC.

3. PGM-FI system check:
   - 1. Turn the ignition switch to LOCK (0).
   - 2. Start the engine, and see if the malfunction indicator lamp (MIL) also stays on.

Does the MIL stay on longer than 30 seconds?

YES : **Go to the Fuel and Emissions Systems General Troubleshooting Information** See **HOW TO TROUBLESHOOT THE A/T SYSTEM** or **HOW TO TROUBLESHOOT THE FUEL AND**

GETtheMANUALS.org

EMISSIONS SYSTEMS .

NO : Go to step 4.

4. Open wire check (F CAN-H, F CAN-L lines):
   - 1. Turn the ignition switch to LOCK (0).
   - 2. **Jump the SCS line with the HDS** See **HOW TO TROUBLESHOOT THE A/T SYSTEM** or **HOW TO TROUBLESHOOT THE FUEL AND EMISSIONS SYSTEMS** .

     NOTE: This step must be done to protect the PCM from damage.

   - 3. Disconnect the following connector.

     Disconnect PCM connector A (49P) See **PCM REMOVAL AND INSTALLATION** or **PCM UPDATE**

   - 4. Disconnect the negative cable from the battery, then wait at least 3 minutes.
   - 5. Disconnect the following connector.

     SRS unit connector A (39P) See **SRS UNIT UPDATE** or **SRS UNIT REMOVAL AND INSTALLATION**

   - 6. Check for continuity between test points 1 and 2.

     Test condition IG LOCK (0)

     PCM connector A (49P): disconnected

     SRS unit connector A (39P): disconnected

     Test circuit F CAN-H

     Test point 1 SRS unit connector A (39P) No. 20

     Test point 2 PCM connector A (49P) No. 3 (WHT)

     Test circuit F CAN-L

     Test point 1 SRS unit connector A (39P) No. 21

     Test point 2 PCM connector A (49P) No. 4 (RED)

GETtheMANUALS.org

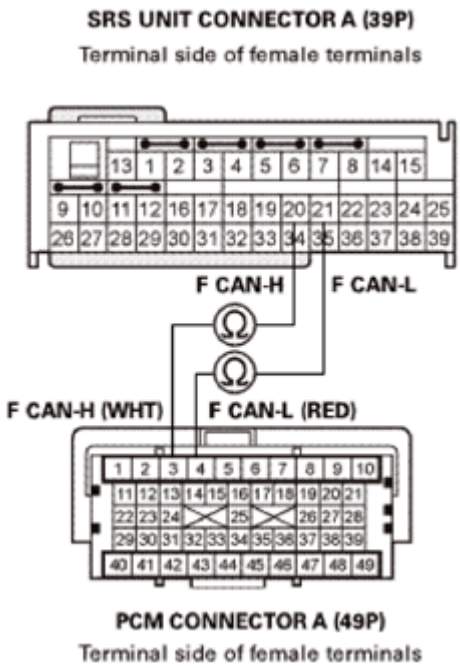

Fig. 146: Checking Continuity Between SRS Unit Connector A (39P) No. 20 And PCM Connector A (49P) No. 3 (WHT)
Courtesy of AMERICAN HONDA MOTOR CO., INC.

Is there continuity?

YES : The F CAN-H, F CAN-L wires are OK. Faulty SRS unit or poor connection at SRS unit connector A (39P) and the SRS unit. Check the connection; if the connection is OK, **replace the SRS unit** See **SRS UNIT UPDATE** or **SRS UNIT REMOVAL AND INSTALLATION** . If the DTC does not clear, replace the engine compartment wire harness or the dashboard wire harness.

NO : Open in the harness between SRS unit connector A (39P) terminal No. 20 and PCM connector A (49P) terminal No. 3, or between SRS unit connector A (39P) terminal No. 21 and PCM connector A (49P) terminal No. 4 (engine compartment wire harness or dashboard wire harness); replace the faulty harness, then clear the DTC.

DTC 56-25: LOST COMMUNICATION WITH THE GAUGE CONTROL MODULE

GETtheMANUALS.org

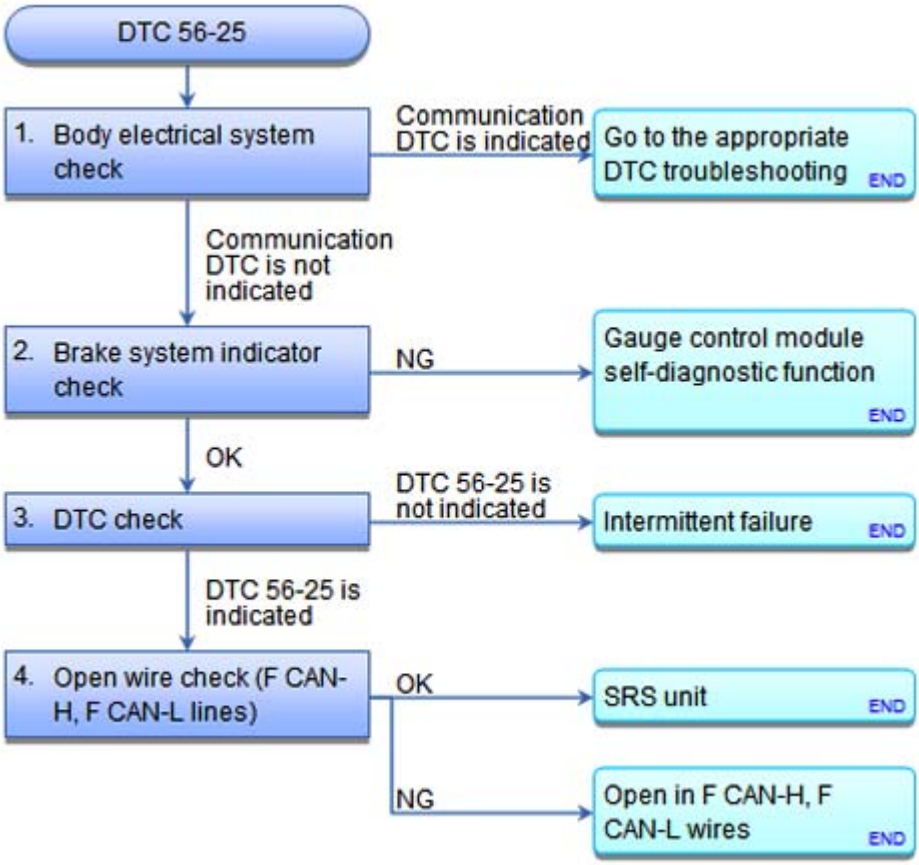

Fig. 147: SRS DTC Troubleshooting Flow Chart (56-25)
Courtesy of AMERICAN HONDA MOTOR CO., INC.

NOTE:

- **Before doing this troubleshooting procedure, find out if the vehicle was in a collision. If so, verify that all the required components were replaced with new components, of the correct part number, and that they were properly installed See SRS COMPONENT REPLACEMENT/INSPECTION AFTER DEPLOYMENT or AIRBAG AND TENSIONER DISPOSAL .**
- **Before doing this troubleshooting procedure, review SRS PRECAUTIONS AND PROCEDURES , GENERAL TROUBLESHOOTING INFORMATION , and BATTERY TERMINAL DISCONNECTION AND RECONNECTION .**
- **Before replacing the SRS unit, check the SRS unit software version with the HDS. If the software version is not the latest, update the SRS unit software See SRS UNIT UPDATE or SRS UNIT REMOVAL AND INSTALLATION , and retest.**

DTC Description	DTC
56-25 Lost communication with the gauge control module	

1. Body electrical system check:
    - 1. Check for any F-CAN and B-CAN communication DTCs with the HDS.

GETtheMANUALS.org

DTC Description	DTC

Are there any communication DTCs?

YES : Go to the appropriate **DTC TROUBLESHOOTING**.

NO : Go to step 2.

2. Brake system indicator check:
   - 1. Release the parking brake, turn the ignition switch to ON (II), and see if the brake system indicator comes on for 2 seconds and then goes off.

Does the brake system indicator come on and then go off after 2 second?

YES : Go to step 3.

NO : **DO THE GAUGE CONTROL MODULE SELF-DIAGNOSTIC FUNCTION** . If gauge control module has the problem, **replace the gauge control module** See **Rewriting the ODO Data and Transferring the Maintenance Minder™ Data to a New Gauge Control Module** or **GAUGE CONTROL MODULE REMOVAL AND INSTALLATION** , then clear the DTC, and retest. If the DTC is still present, **replace the SRS unit** See **SRS UNIT UPDATE** or **SRS UNIT REMOVAL AND INSTALLATION** .

3. DTC check:
   - 1. **CLEAR THE DTCS WITH THE HDS** .
   - 2. Turn the ignition switch to ON (II), then wait for 10 seconds.
   - 3. **CHECK FOR DTCS WITH THE HDS** .

DTC Description	DTC
56-25 Lost communication with the gauge control module	

Is DTC 56-25 indicated?

YES : Go to step 4.

NO : Intermittent failure, the system is OK at this time. **GO TO TROUBLESHOOTING INTERMITTENT FAILURES** . If another DTC is indicated, troubleshoot the DTC.

4. Open wire check (F CAN-H, F CAN-L lines):
   - 1. Turn the ignition switch to LOCK (0).
   - 2. Disconnect the negative cable from the battery, then wait at least 3 minutes.
   - 3. Disconnect the following connectors.

SRS unit connector A (39P) See **SRS UNIT UPDATE** or **SRS UNIT REMOVAL AND**

GETtheMANUALS.org

INSTALLATION

Gauge control module 32P connector See **Rewriting the ODO Data and Transferring the Maintenance Minder™ Data to a New Gauge Control Module** or **GAUGE CONTROL MODULE REMOVAL AND INSTALLATION**

- 4. Check for continuity between test points 1 and 2.

Test condition IG LOCK (0)

SRS unit connector A (39P): disconnected

Gauge control module 32P connector: disconnected

Test circuit F CAN-H

Test point 1 SRS unit connector A (39P) No. 20

Test point 2 Gauge control module 32P connector No. 19 (WHT)

Test circuit F CAN-L

Test point 1 SRS unit connector A (39P) No. 21

Test point 2 Gauge control module 32P connector No. 20 (RED)

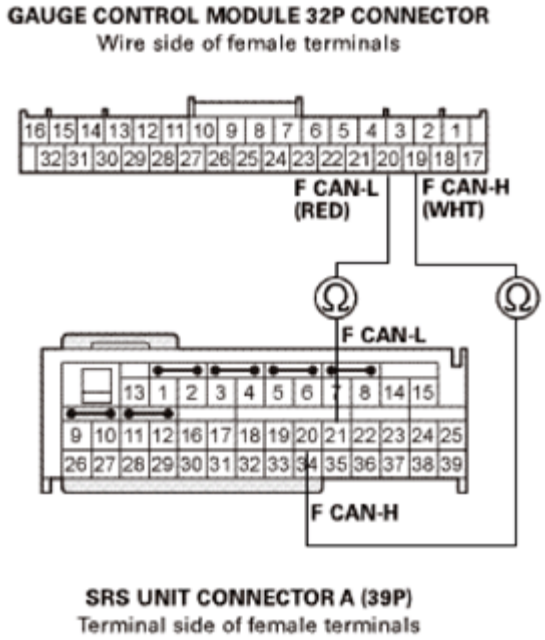

Fig. 148: Checking Continuity Between SRS Unit Connector A (39P) No. 21 And Gauge Control Module 32P Connector No. 20 (RED)
Courtesy of AMERICAN HONDA MOTOR CO., INC.

GETtheMANUALS.org

Is there continuity?

YES : The F CAN-H, F CAN-L wires are OK. Faulty SRS unit or poor connection at SRS unit connector A (39P) and the SRS unit. Check the connection; if the connection is OK, **replace the SRS unit** See **SRS UNIT UPDATE** or **SRS UNIT REMOVAL AND INSTALLATION** . If the DTC does not clear, replace the dashboard wire harness.

NO : Open in the harness between SRS unit connector A (39P) terminal No. 20 and gauge control module 32P connector terminal No. 19, or between SRS unit connector A (39P) terminal No. 21 and gauge control module 32P connector terminal No. 20; replace the dashboard wire harness, then clear the DTC.

DTC 56-26, 56-27: UNDEFINED DATA RECEIVED FROM THE GAUGE CONTROL MODULE

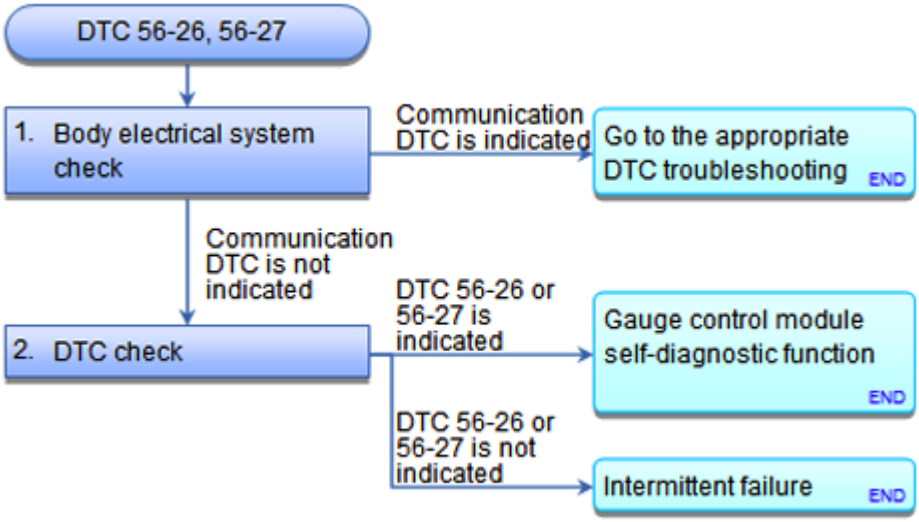

Fig. 149: SRS DTC Troubleshooting Flow Chart (56-26, 56-27)
Courtesy of AMERICAN HONDA MOTOR CO., INC.

NOTE:

- **Before doing this troubleshooting procedure, find out if the vehicle was in a collision. If so, verify that all the required components were replaced with new components, of the correct part number, and that they were properly installed See SRS COMPONENT REPLACEMENT/INSPECTION AFTER DEPLOYMENT or AIRBAG AND TENSIONER DISPOSAL .**
- **Before doing this troubleshooting procedure, review SRS PRECAUTIONS AND PROCEDURES and GENERAL TROUBLESHOOTING INFORMATION .**
- **Before replacing the SRS unit, check the SRS unit software version with the HDS. If the software version is not the latest, update the SRS unit software See SRS UNIT REMOVAL AND INSTALLATION or SRS UNIT UPDATE , and retest.**

DTC Description	DTC

GETtheMANUALS.org

56-26 Undefined data received from the gauge control module	
56-27 Undefined data received from the gauge control module	

1. Body electrical system check:
   - 1. Check for any F-CAN and B-CAN communication DTCs with the HDS.

DTC Description	DTC

Are there any communication DTCs?

YES : Go to the appropriate **DTC TROUBLESHOOTING**.

NO : Go to step 2.

2. DTC check:
   - 1. **CLEAR THE DTCS WITH THE HDS** .
   - 2. Turn the ignition switch to ON (II), then wait for 10 seconds.
   - 3. **CHECK FOR DTCS WITH THE HDS** .

DTC Description	DTC
56-26 Undefined data received from the gauge control module	
56-27 Undefined data received from the gauge control module	

Is DTC 56-26 or 56-27 indicated?

YES : **DO THE GAUGE CONTROL MODULE SELF-DIAGNOSTIC FUNCTION** . If gauge control module has the problem, **replace the gauge control module** See **Rewriting the ODO Data and Transferring the Maintenance Minder™ Data to a New Gauge Control Module** or **GAUGE CONTROL MODULE REMOVAL AND INSTALLATION** , then clear the DTC, and retest. If the DTC is still present, **replace the SRS unit** See **SRS UNIT REMOVAL AND INSTALLATION** or **SRS UNIT UPDATE** .

NO : Intermittent failure, the system is OK at this time. **GO TO TROUBLESHOOTING INTERMITTENT FAILURES** . If another DTC is indicated, troubleshoot the DTC.

DTC 61-1X ("X" CAN BE 0 THRU 9 OR A THRU F): OPEN IN THE DRIVER'S SEAT BELT BUCKLE SWITCH

GETtheMANUALS.org

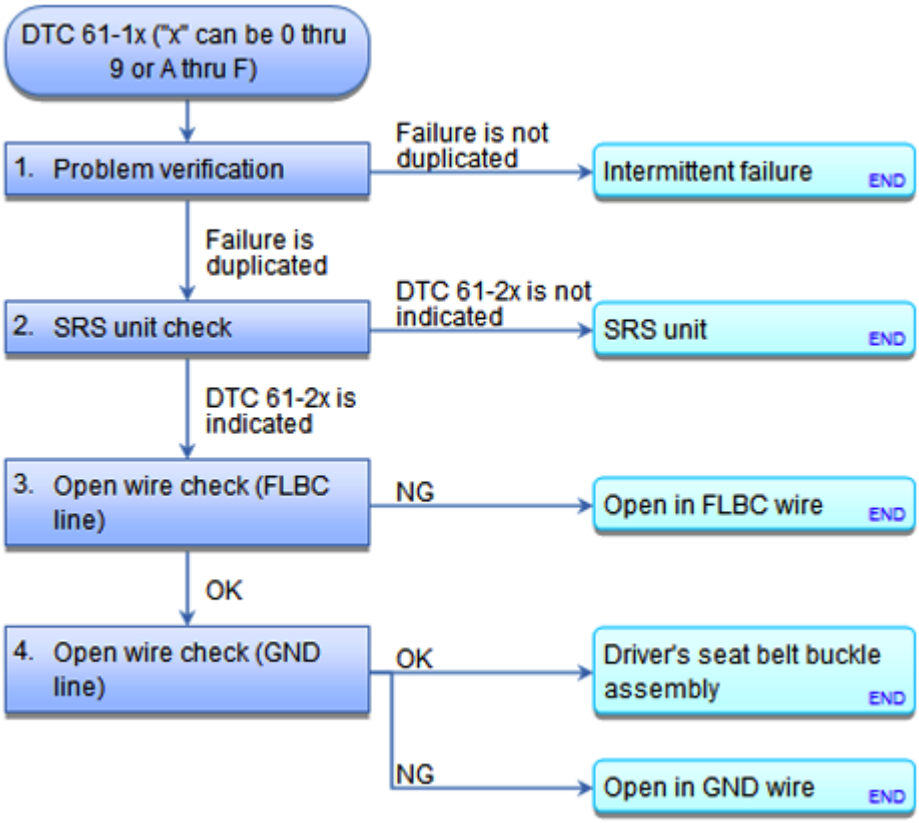

Fig. 150: SRS DTC Troubleshooting Flow Chart (61-1x)
Courtesy of AMERICAN HONDA MOTOR CO., INC.

NOTE:

- **Before doing this troubleshooting procedure, find out if the vehicle was in a collision. If so, verify that all the required components were replaced with new components, of the correct part number, and that they were properly installed See SRS COMPONENT REPLACEMENT/INSPECTION AFTER DEPLOYMENT or AIRBAG AND TENSIONER DISPOSAL .**
- **Before doing this troubleshooting procedure, review SRS PRECAUTIONS AND PROCEDURES and GENERAL TROUBLESHOOTING INFORMATION .**
- **Before replacing the SRS unit, check the SRS unit software version with the HDS. If the software version is not the latest, update the SRS unit software See SRS UNIT UPDATE or SRS UNIT REMOVAL AND INSTALLATION , and retest.**

DTC Description	DTC

1. Problem verification:
   - 1. **CLEAR THE DTCS WITH THE HDS** .
   - 2. Turn the ignition switch to ON (II), then wait for 10 seconds. Buckle and unbuckle the driver's seat belt several times.

GETtheMANUALS.org

- 3. **CHECK FOR DTCS WITH THE HDS** .

DTC Description	DTC

Is DTC 61-1x indicated?

YES : The failure is duplicated. Go to step 2.

NO : Intermittent failure, the system is OK at this time. **GO TO TROUBLESHOOTING INTERMITTENT FAILURES** . If another DTC is indicated, troubleshoot the DTC.

2. SRS unit check:
   - 1. Turn the ignition switch to LOCK (0).
   - 2. Connect terminals A and B with a jumper wire.

     Terminal A SRS unit connector B (39P) No. 24

     Terminal B Body ground

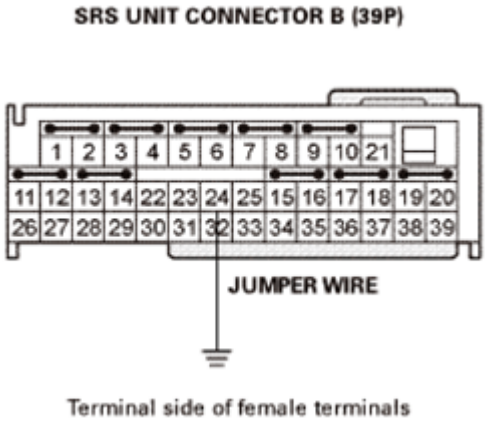

Fig. 151: Checking SRS Unit Connector B (39P) No. 24 And Body Ground
Courtesy of AMERICAN HONDA MOTOR CO., INC.

   - 3. **CLEAR THE DTCS WITH THE HDS** .
   - 4. Turn the ignition switch to ON (II), then wait for 10 seconds.
   - 5. **CHECK FOR DTCS WITH THE HDS** .

DTC Description	DTC

Is DTC 61-2x indicated?

GETtheMANUALS.org

YES : Go to step 3.

NO : Faulty SRS unit or poor connection at SRS unit connector B (39P) and the SRS unit. Check the connection; if the connection is OK, **replace the SRS unit** See **SRS UNIT UPDATE** or **SRS UNIT REMOVAL AND INSTALLATION** . If the DTC does not clear, replace the floor wire harness.

3. Open wire check (FLBC line):
   - 1. Turn the ignition switch to LOCK (0).
   - 2. Remove the jumper wire from SRS unit connector B (39P).
   - 3. Disconnect the driver's seat belt buckle switch 2P connector (A) on the floor wire harness.

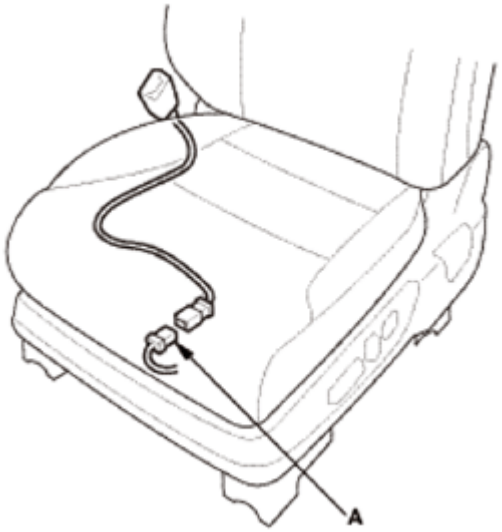

Fig. 152: Identifying Driver's Seat Belt Buckle Switch 2P Connectora
Courtesy of AMERICAN HONDA MOTOR CO., INC.

   - 4. Turn the ignition switch to ON (II).
   - 5. Measure the voltage between test points 1 and 2.

Test condition IG ON (II)

Driver's seat belt buckle switch 2P connector (on the floor wire harness): disconnected

Test circuit FLBC

Test point 1 Driver's seat belt buckle switch 2P connector No. 1 (on the floor wire harness)

Test point 2 Body ground

GETtheMANUALS.org

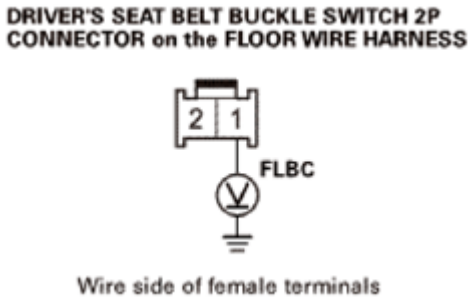

Fig. 153: Measuring Voltage Between Driver's Seat Belt Buckle Switch 2P Connector No. 1 And Body Ground (On Floor Wire Harness)
Courtesy of AMERICAN HONDA MOTOR CO., INC.

Is there more than 10 V?

YES : The FLBC wire is OK. Go to step 4.

NO : Open in the floor wire harness; replace the floor wire harness, then clear the DTC.

4. Open wire check (GND line):
   - 1. Turn the ignition switch to LOCK (0).
   - 2. Measure the resistance between test points 1 and 2.

   Test condition IG LOCK (0)

   Driver's seat belt buckle switch 2P connector (on the floor wire harness): disconnected

   Test circuit GND

   Test point 1 Driver's seat belt buckle switch 2P connector No. 2 (BLK) (on the floor wire harness)

   Test point 2 Body ground

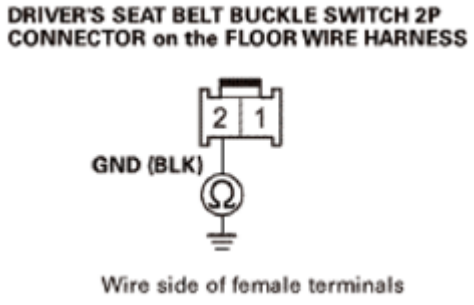

Fig. 154: Measuring Resistance Between Driver's Seat Belt Buckle Switch 2P Connector No. 1 (BLK) And Body Ground (On Floor Wire Harness)
Courtesy of AMERICAN HONDA MOTOR CO., INC.

GETtheMANUALS.org

Is there less than 1.0 ohms?

YES : The GND wire is OK. Faulty driver's seat belt buckle switch; **REPLACE THE DRIVER'S SEAT BELT BUCKLE ASSEMBLY** , then clear the DTC.

NO : Open in the floor wire harness; check for a poor ground at G601. If the ground is OK, replace the floor wire harness, then clear the DTC.

DTC 61-2X ("X" CAN BE 0 THRU 9 OR A THRU F): SHORT IN THE DRIVER'S SEAT BELT BUCKLE SWITCH

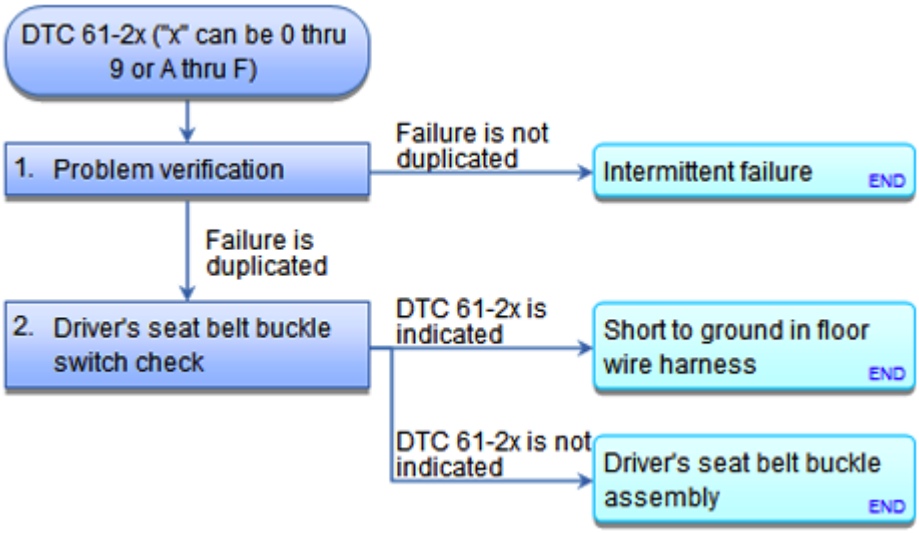

Fig. 155: SRS DTC Troubleshooting Flow Chart (61-2x)
Courtesy of AMERICAN HONDA MOTOR CO., INC.

NOTE:

- **Before doing this troubleshooting procedure, find out if the vehicle was in a collision. If so, verify that all the required components were replaced with new components, of the correct part number, and that they were properly installed See SRS COMPONENT REPLACEMENT/INSPECTION AFTER DEPLOYMENT or AIRBAG AND TENSIONER DISPOSAL .**
- **Before doing this troubleshooting procedure, review SRS PRECAUTIONS AND PROCEDURES and GENERAL TROUBLESHOOTING INFORMATION .**

DTC Description	DTC

1. Problem verification:
   - 1. **CLEAR THE DTCS WITH THE HDS** .
   - 2. Turn the ignition switch to ON (II), then wait for 10 seconds. Buckle and unbuckle the driver's seat belt several times.

GETtheMANUALS.org

- 3. **CHECK FOR DTCS WITH THE HDS** .

DTC Description	DTC

Is DTC 61-2x indicated?

YES : The failure is duplicated. Go to step 2.

NO : Intermittent failure, the system is OK at this time. **GO TO TROUBLESHOOTING INTERMITTENT FAILURES** . If another DTC is indicated, troubleshoot the DTC.

2. Driver's seat belt buckle switch check:
   - 1. Turn the ignition switch to LOCK (0).
   - 2. Disconnect the driver's seat belt buckle switch 2P connector (A) on the floor wire harness.

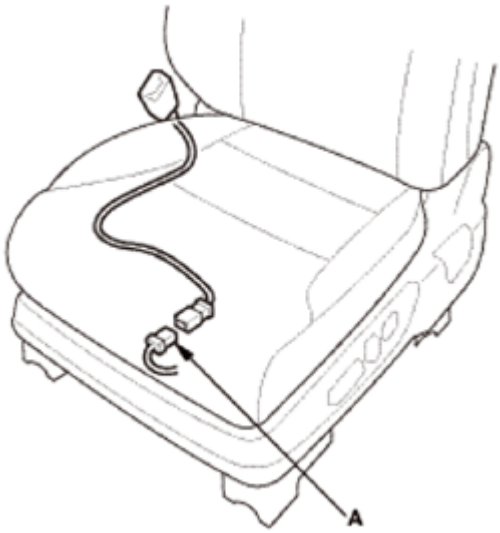

Fig. 156: Identifying Driver's Seat Belt Buckle Switch 2P Connector
Courtesy of AMERICAN HONDA MOTOR CO., INC.

- 3. **CLEAR THE DTCS WITH THE HDS** .
- 4. Turn the ignition switch to ON (II), then wait for 10 seconds.
- 5. **CHECK FOR DTCS WITH THE HDS** .

DTC Description	DTC

Is DTC 61-2x indicated?

YES : Short to ground in the floor wire harness; replace the floor wire harness, then clear the DTC.

GETtheMANUALS.org

NO : Faulty driver's seat belt buckle switch; **REPLACE THE DRIVER'S SEAT BELT BUCKLE ASSEMBLY** , then clear the DTC.

DTC 62-1X ("X" CAN BE 0 THRU 9 OR A THRU F): OPEN IN THE FRONT PASSENGER'S SEAT BELT BUCKLE SWITCH

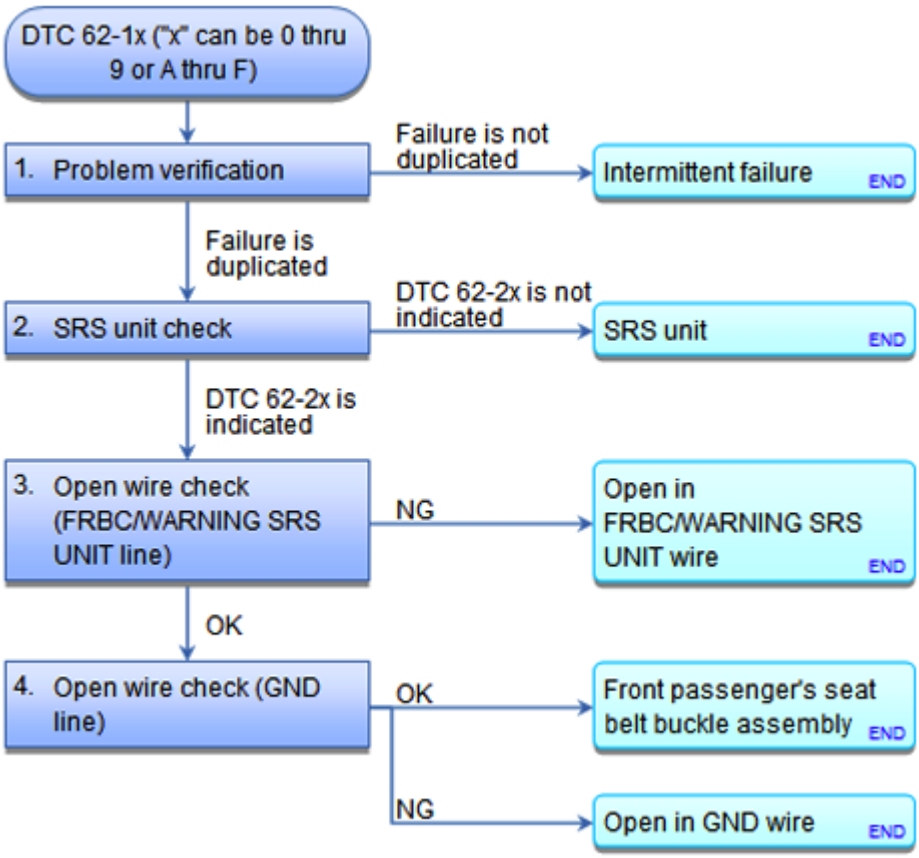

Fig. 157: SRS DTC Troubleshooting Flow Chart (62-1x)
Courtesy of AMERICAN HONDA MOTOR CO., INC.

NOTE:

- **Before doing this troubleshooting procedure, find out if the vehicle was in a collision. If so, verify that all the required components were replaced with new components, of the correct part number, and that they were properly installed See SRS COMPONENT REPLACEMENT/INSPECTION AFTER DEPLOYMENT or AIRBAG AND TENSIONER DISPOSAL .**
- **Before doing this troubleshooting procedure, review SRS PRECAUTIONS AND PROCEDURES and GENERAL TROUBLESHOOTING INFORMATION .**
- **Before replacing the SRS unit, check the SRS unit software version with the HDS. If the software version is not the latest, update the SRS unit software See SRS UNIT UPDATE or SRS UNIT REMOVAL AND INSTALLATION , and retest.**

GETtheMANUALS.org

DTC Description	DTC

1. Problem verification:
   - 1. **CLEAR THE DTCS WITH THE HDS** .
   - 2. Turn the ignition switch to ON (II), then wait for 10 seconds. Buckle and unbuckle the front passenger's seat belt several times.
   - 3. **CHECK FOR DTCS WITH THE HDS** .

DTC Description	DTC

Is DTC 62-1x indicated?

YES : The failure is duplicated. Go to step 2.

NO : Intermittent failure, the system is OK at this time. **GO TO TROUBLESHOOTING INTERMITTENT FAILURES** . If another DTC is indicated, troubleshoot the DTC.

2. SRS unit check:
   - 1. Turn the ignition switch to LOCK (0).
   - 2. Connect terminals A and B with a jumper wire.

     Terminal A SRS unit connector B (39P) No. 22

     Terminal B Body ground

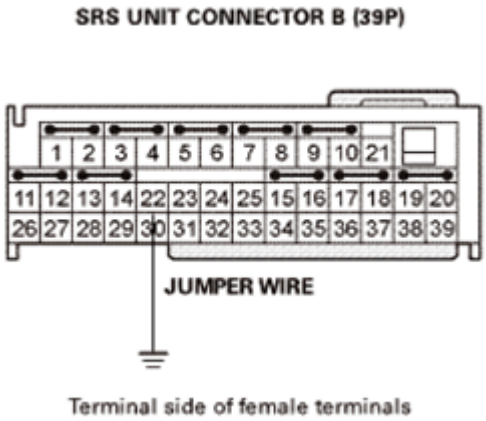

Fig. 158: Checking SRS Unit Connector B (39P) No. 22 And Body Ground
Courtesy of AMERICAN HONDA MOTOR CO., INC.

   - 3. **CLEAR THE DTCS WITH THE HDS** .
   - 4. Turn the ignition switch to ON (II), then wait for 10 seconds.

GETtheMANUALS.org

- 5. **CHECK FOR DTCS WITH THE HDS** .

DTC Description	DTC

Is DTC 62-2x indicated?

YES : Go to step 3.

NO : Faulty SRS unit or poor connection at SRS unit connector B (39P) and the SRS unit. Check the connection; if the connection is OK, **replace the SRS unit** See **SRS UNIT UPDATE** or **SRS UNIT REMOVAL AND INSTALLATION** . If the DTC does not clear, replace the floor wire harness or the front passenger's seat wire harness.

3. Open wire check (FRBC/WARNING SRS UNIT line):
   - 1. Turn the ignition switch to LOCK (0).
   - 2. Remove the jumper wire from SRS unit connector B (39P).
   - 3. Disconnect the front passenger's seat belt buckle switch 2P connector (A) on the floor wire harness or the front passenger's seat wire harness.

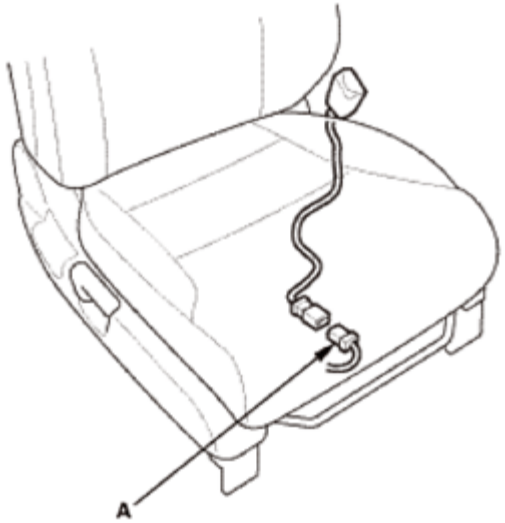

Fig. 159: Identifying Front Passenger's Seat Belt Buckle Switch 2P Connector
Courtesy of AMERICAN HONDA MOTOR CO., INC.

   - 4. Turn the ignition switch to ON (II).
   - 5. Measure the voltage between test points 1 and 2.

     Test condition IG ON (II)

     Front passenger's seat belt buckle switch 2P connector (on the floor wire harness or the front passenger's seat wire harness): disconnected

GETtheMANUALS.org

Test circuit FRBC/WARNING SRS UNIT

Test point 1 Front passenger's seat belt buckle switch 2P connector No. 1 (on the floor wire harness or the front passenger's seat wire harness)

Test point 2 Body ground

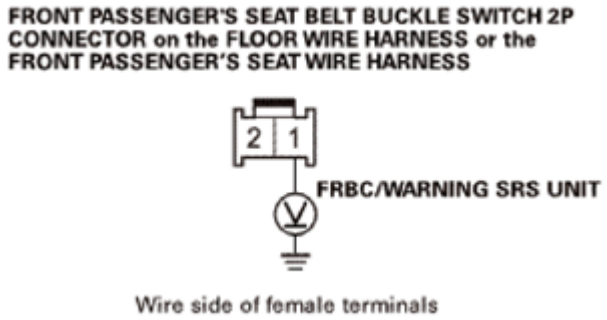

Fig. 160: Measuring Voltage Between Front Passenger's Seat Belt Buckle Switch 2P Connector No. 1 And Body Ground
Courtesy of AMERICAN HONDA MOTOR CO., INC.

Is there more than 10 V?

YES : The FRBC/WARNING SRS UNIT wire is OK. Go to step 4.

NO : Open in the floor wire harness or the front passenger's seat wire harness; replace the faulty harness, then clear the DTC.

4. Open wire check (GND line):
   - 1. Turn the ignition switch to LOCK (0).
   - 2. Measure the resistance between test points 1 and 2.

     Test condition IG LOCK (0)

     Front passenger's seat belt buckle switch 2P connector (on the floor wire harness or the front passenger's seat wire harness): disconnected

     Test circuit GND

     Test point 1 Front passenger's seat belt buckle switch 2P connector No. 2 (BLK) (on the floor wire harness or the front passenger's seat wire harness)

     Test point 2 Body ground

GETtheMANUALS.org

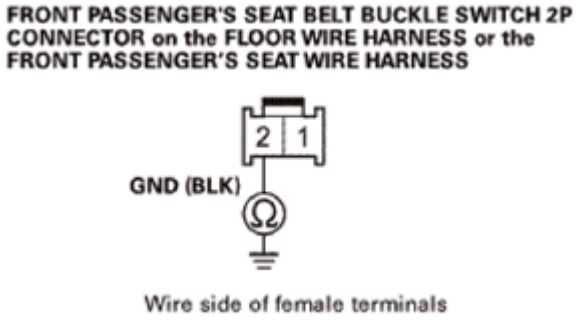

Fig. 161: Measuring Resistance Between Front Passenger's Seat Belt Buckle Switch 2P Connector No. 2 (BLK) And Body Ground
Courtesy of AMERICAN HONDA MOTOR CO., INC.

Is there less than 1.0 ohms?

YES : The GND wire is OK. Faulty front passenger's seat belt buckle switch; **REPLACE THE FRONT PASSENGER'S SEAT BELT BUCKLE ASSEMBLY** , then clear the DTC.

NO : Open in the floor wire harness or the front passenger's seat wire harness; check for a poor ground at G602. If the ground is OK, replace the faulty harness, then clear the DTC.

DTC 62-2X ("X" CAN BE 0 THRU 9 OR A THRU F): SHORT IN THE FRONT PASSENGER'S SEAT BELT BUCKLE SWITCH

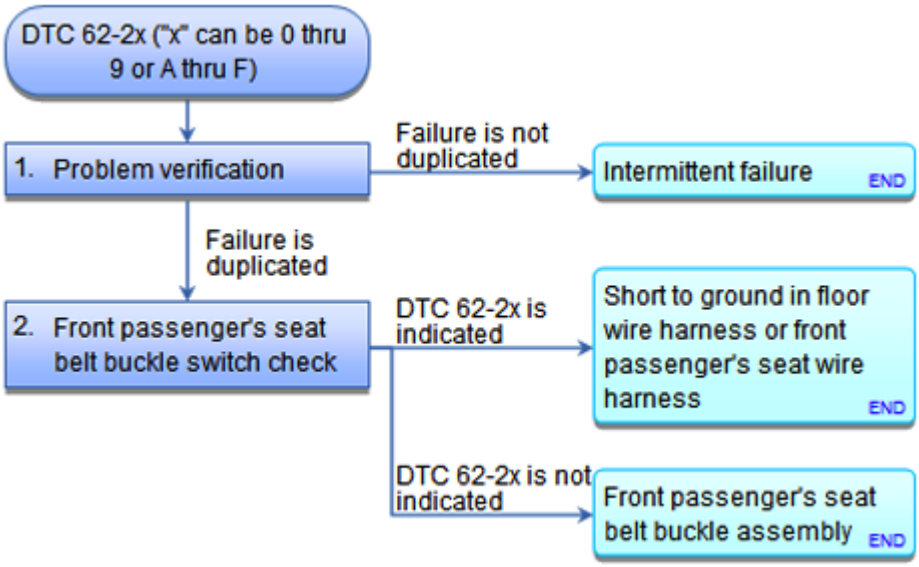

Fig. 162: SRS DTC Troubleshooting Flow Chart (62-2x)
Courtesy of AMERICAN HONDA MOTOR CO., INC.

NOTE:

- **Before doing this troubleshooting procedure, find out if the vehicle was in a collision. If so, verify that all the required components were replaced**

GETtheMANUALS.org

with new components, of the correct part number, and that they were properly installed See SRS COMPONENT REPLACEMENT/INSPECTION AFTER DEPLOYMENT or AIRBAG AND TENSIONER DISPOSAL .

- **Before doing this troubleshooting procedure, review SRS PRECAUTIONS AND PROCEDURES and GENERAL TROUBLESHOOTING INFORMATION .**

DTC Description	DTC

1. Problem verification:
   - 1. **CLEAR THE DTCS WITH THE HDS** .
   - 2. Turn the ignition switch to ON (II), then wait for 10 seconds. Buckle and unbuckle the front passenger's seat belt several times.
   - 3. **CHECK FOR DTCS WITH THE HDS** .

DTC Description	DTC

   Is DTC 62-2x indicated?

   YES : The failure is duplicated. Go to step 2.

   NO : Intermittent failure, the system is OK at this time. **GO TO TROUBLESHOOTING INTERMITTENT FAILURES** . If another DTC is indicated, troubleshoot the DTC.

2. Front passenger's seat belt buckle switch check:
   - 1. Turn the ignition switch to LOCK (0).
   - 2. Disconnect the front passenger's seat belt buckle switch 2P connector (A) on the floor wire harness or the front passenger's seat wire harness.

GETtheMANUALS.org

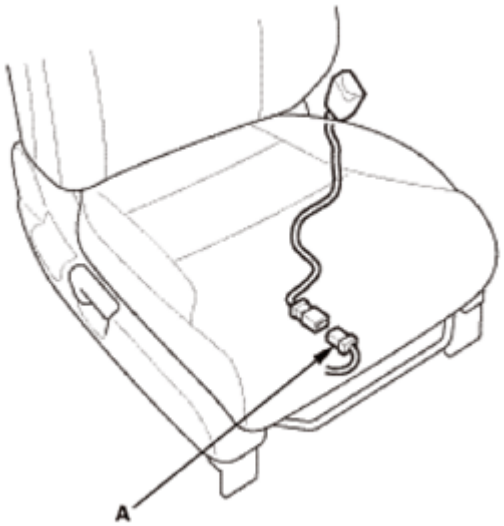

Fig. 163: Identifying Front Passenger's Seat Belt Buckle Switch 2P Connector
Courtesy of AMERICAN HONDA MOTOR CO., INC.

- 3. **CLEAR THE DTCS WITH THE HDS** .
- 4. Turn the ignition switch to ON (II), then wait for 10 seconds.
- 5. **CHECK FOR DTCS WITH THE HDS** .

DTC Description	DTC

Is DTC 62-2x indicated?

YES : Short to ground in the floor wire harness or the front passenger's seat wire harness; replace the faulty harness, then clear the DTC.

NO : Faulty front passenger's seat belt buckle switch; **REPLACE THE FRONT PASSENGER'S SEAT BELT BUCKLE ASSEMBLY** , then clear the DTC.

DTC 71-1X ("X" CAN BE 0 THRU 9 OR A THRU F): OPEN IN THE DRIVER'S SEAT POSITION SENSOR

GETtheMANUALS.org

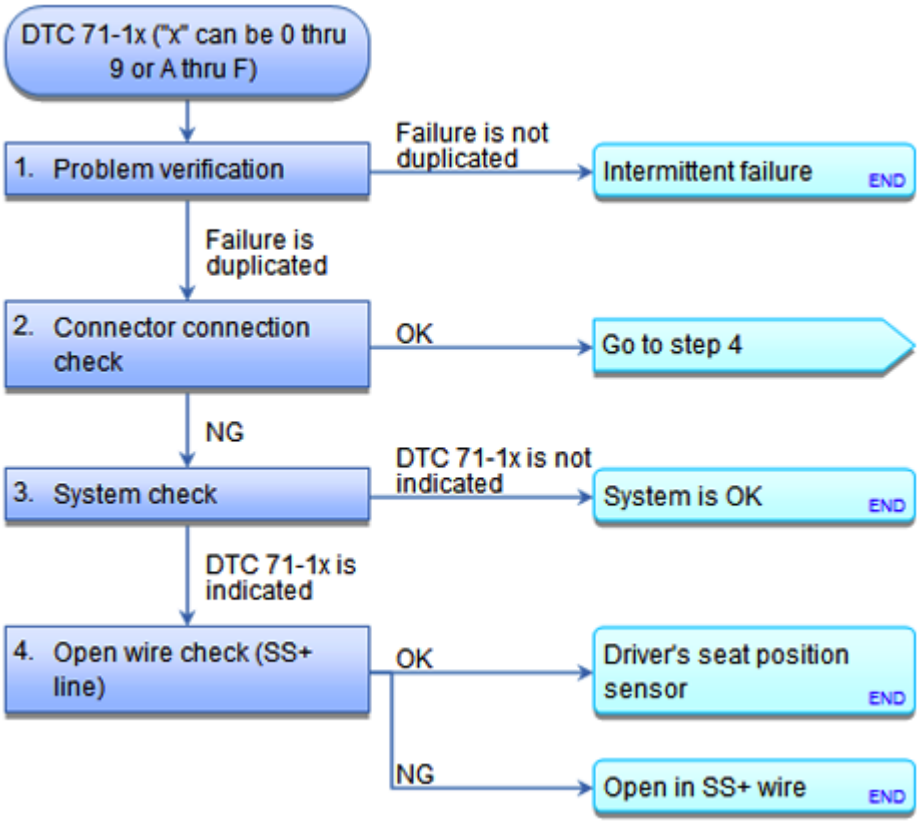

Fig. 164: SRS DTC Troubleshooting Flow Chart (71-1x)
Courtesy of AMERICAN HONDA MOTOR CO., INC.

NOTE:

- **Before doing this troubleshooting procedure, find out if the vehicle was in a collision. If so, verify that all the required components were replaced with new components, of the correct part number, and that they were properly installed See SRS COMPONENT REPLACEMENT/INSPECTION AFTER DEPLOYMENT or AIRBAG AND TENSIONER DISPOSAL .**
- **Before doing this troubleshooting procedure, review SRS PRECAUTIONS AND PROCEDURES , GENERAL TROUBLESHOOTING INFORMATION , and BATTERY TERMINAL DISCONNECTION AND RECONNECTION .**
- **Before replacing the SRS unit, check the SRS unit software version with the HDS. If the software version is not the latest, update the SRS unit software See SRS UNIT REMOVAL AND INSTALLATION or SRS UNIT UPDATE , and retest.**

DTC Description	DTC

1. Problem verification:
   - 1. Raise the driver's seat all the way up, and position all the way rearward.
   - 2. **CLEAR THE DTCS WITH THE HDS** .

GETtheMANUALS.org

- 3. Turn the ignition switch to ON (II), then wait for 10 seconds.
- 4. **CHECK FOR DTCS WITH THE HDS** .

DTC Description	DTC

Is DTC 71-1x indicated?

YES : The failure is duplicated. Go to step 2.

NO : Intermittent failure, the system is OK at this time. **GO TO TROUBLESHOOTING INTERMITTENT FAILURES** . If another DTC is indicated, troubleshoot the DTC.

2. Connector connection check:
   - 1. Turn the ignition switch to LOCK (0).
   - 2. Check the following connector connections.

     SRS unit connector B (39P) See **SRS UNIT REMOVAL AND INSTALLATION** or **SRS UNIT UPDATE**

     DRIVER'S SEAT POSITION SENSOR 2P CONNECTOR (ON THE DRIVER'S SEAT WIRE HARNESS OR THE DRIVER'S SEAT POSITION SENSOR SUBHARNESS)

     Connector between the SRS unit and the driver's seat position sensor

Are the connectors OK?

YES : Go to step 4.

NO : Go to step 3.

3. System check:
   - 1. Repair the poor connector connections whichever was the cause of the problem in step 2.
   - 2. **CLEAR THE DTCS WITH THE HDS** .
   - 3. Turn the ignition switch to ON (II), then wait for 10 seconds.
   - 4. **CHECK FOR DTCS WITH THE HDS** .

DTC Description	DTC

Is DTC 71-1x indicated?

YES : Turn the ignition switch to LOCK (0), then go to step 4.

GETtheMANUALS.org

NO : The system is OK at this time.

4. Open wire check (SS+ line):
   - 1. Disconnect the following connector.

     DRIVER'S SEAT POSITION SENSOR 2P CONNECTOR (ON THE DRIVER'S SEAT WIRE HARNESS OR THE DRIVER'S SEAT POSITION SENSOR SUBHARNESS)

   - 2. Connect terminals A and B with a jumper wire.

     Terminal A Driver's seat position sensor 2P connector No. 1 (on the driver's seat wire harness or the driver's seat position sensor subharness)

     Terminal B Driver's seat position sensor 2P connector No. 2 (on the driver's seat wire harness or the driver's seat position sensor subharness)

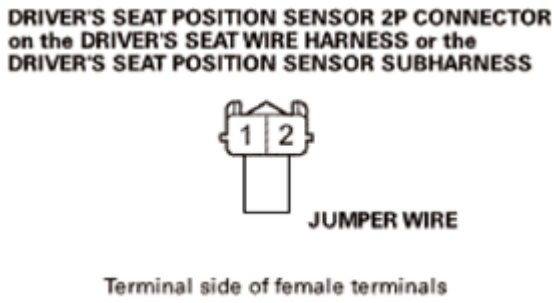

     Fig. 165: Connecting Wire Between Driver's Seat Position Sensor 2P Connector No. 1 And 2
     Courtesy of AMERICAN HONDA MOTOR CO., INC.

   - 3. Disconnect the negative cable from the battery, then wait at least 3 minutes.
   - 4. Disconnect the following connector.

     SRS unit connector B (39P) See **SRS UNIT REMOVAL AND INSTALLATION** or **SRS UNIT UPDATE**

   - 5. Measure the resistance between test points 1 and 2.

     Test condition IG LOCK (0)

     Driver's seat position sensor 2P connector (on the driver's seat wire harness or the driver's seat position sensor subharness): disconnected SRS unit connector B (39P): disconnected

     Driver's seat position sensor 2P connector terminals No. 1 and No. 2 (on the driver's seat wire harness or the driver's seat position sensor subharness): jumped

     Test circuit SS+

     Test point 1 SRS unit connector B (39P) No. 37

GETtheMANUALS.org

Test point 2 Body ground

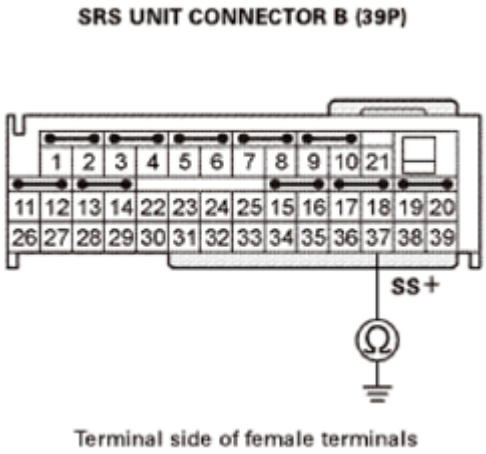

Fig. 166: Measuring Resistance Between SRS Unit Connector B (39P) No. 37 And Body Ground
Courtesy of AMERICAN HONDA MOTOR CO., INC.

Is there less than 1.0 ohms?

YES : The SS+ wire is OK. **REPLACE THE DRIVER'S SEAT POSITION SENSOR** , then clear the DTC, and retest. If the DTC is still present, **replace the SRS unit** See **SRS UNIT REMOVAL AND INSTALLATION** or **SRS UNIT UPDATE** .

NO : Open in the floor wire harness, the driver's seat wire harness, or the driver's seat position sensor subharness; check for a poor ground at G601. If the ground is OK, replace the faulty harness, then clear the DTC.

DTC 71-2X ("X" CAN BE 0 THRU 9 OR A THRU F): SHORT IN THE DRIVER'S SEAT POSITION SENSOR

GETtheMANUALS.org

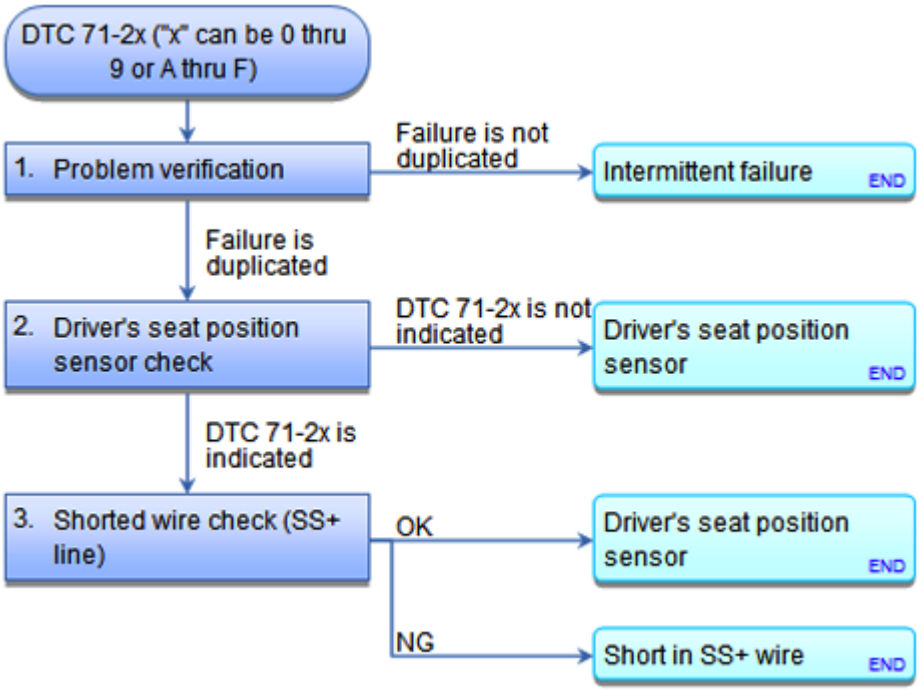

Fig. 167: SRS DTC Troubleshooting Flow Chart (71-2x)
Courtesy of AMERICAN HONDA MOTOR CO., INC.

NOTE:

- **Before doing this troubleshooting procedure, find out if the vehicle was in a collision. If so, verify that all the required components were replaced with new components, of the correct part number, and that they were properly installed See SRS COMPONENT REPLACEMENT/INSPECTION AFTER DEPLOYMENT or AIRBAG AND TENSIONER DISPOSAL .**
- **Before doing this troubleshooting procedure, review SRS PRECAUTIONS AND PROCEDURES , GENERAL TROUBLESHOOTING INFORMATION , and BATTERY TERMINAL DISCONNECTION AND RECONNECTION .**
- **Before replacing the SRS unit, check the SRS unit software version with the HDS. If the software version is not the latest, update the SRS unit software See SRS UNIT REMOVAL AND INSTALLATION or SRS UNIT UPDATE , and retest.**

DTC Description	DTC

1. Problem verification:
   - 1. Raise the driver's seat all the way up, and position all the way rearward.
   - 2. **CLEAR THE DTCS WITH THE HDS** .
   - 3. Turn the ignition switch to ON (II), then wait for 10 seconds.
   - 4. **CHECK FOR DTCS WITH THE HDS** .

GETtheMANUALS.org

DTC Description	DTC

Is DTC 71-2x indicated?

YES : The failure is duplicated. Go to step 2.

NO : Intermittent failure, the system is OK at this time. **GO TO TROUBLESHOOTING INTERMITTENT FAILURES** . If another DTC is indicated, troubleshoot the DTC.

2. Driver's seat position sensor check:
   - 1. Turn the ignition switch to LOCK (0).
   - 2. Disconnect the following connector.

     DRIVER'S SEAT POSITION SENSOR 2P CONNECTOR (ON THE DRIVER'S SEAT WIRE HARNESS OR THE DRIVER'S SEAT POSITION SENSOR SUBHARNESS)

   - 3. **CLEAR THE DTCS WITH THE HDS** .
   - 4. Turn the ignition switch to ON (II), then wait for 10 seconds.
   - 5. **CHECK FOR DTCS WITH THE HDS** .

DTC Description	DTC

Is DTC 71-2x indicated?

YES : Go to step 3.

NO : **REPLACE THE DRIVER'S SEAT POSITION SENSOR** , then clear the DTC.

3. Shorted wire check (SS+ line):
   - 1. Turn the ignition switch to LOCK (0).
   - 2. Disconnect the negative cable from the battery, then wait at least 3 minutes.
   - 3. Disconnect the following connector.

     SRS unit connector B (39P) See **SRS UNIT REMOVAL AND INSTALLATION** or **SRS UNIT UPDATE**

   - 4. Measure the resistance between test points 1 and 2.

     Test condition IG LOCK (0)

     Driver's seat position sensor 2P connector (on the driver's seat wire harness or the driver's seat position sensor subharness): disconnected SRS unit connector B (39P): disconnected

GETtheMANUALS.org

Test circuit SS+

Test point 1 SRS unit connector B (39P) No. 37

Test point 2 Body ground

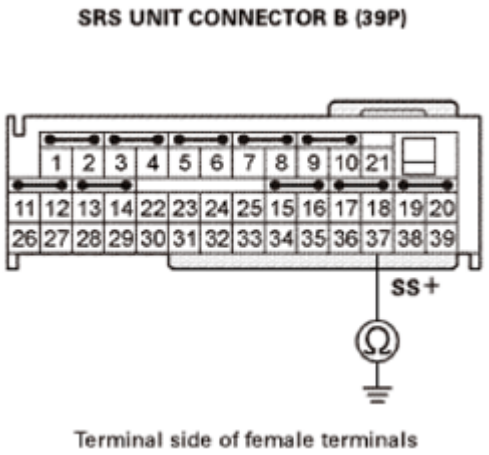

Fig. 168: Measuring Resistance Between SRS Unit Connector B (39P) No. 37 And Body Ground
Courtesy of AMERICAN HONDA MOTOR CO., INC.

Is there an open circuit, or at least 1 Mohms?

YES : The SS+ wire is OK. **REPLACE THE DRIVER'S SEAT POSITION SENSOR** , then clear the DTC, and retest. If the DTC is still present, **replace the SRS unit** See **SRS UNIT REMOVAL AND INSTALLATION** or **SRS UNIT UPDATE** .

NO : Short to ground in the floor wire harness, the driver's seat wire harness, or the driver's seat position sensor subharness; replace the faulty harness, then clear the DTC.

DTC 81-4X ("X" CAN BE 0 THRU 9 OR A THRU F), 81-63, 81-64: INTERNAL FAILURE OF THE ODS UNIT

GETtheMANUALS.org

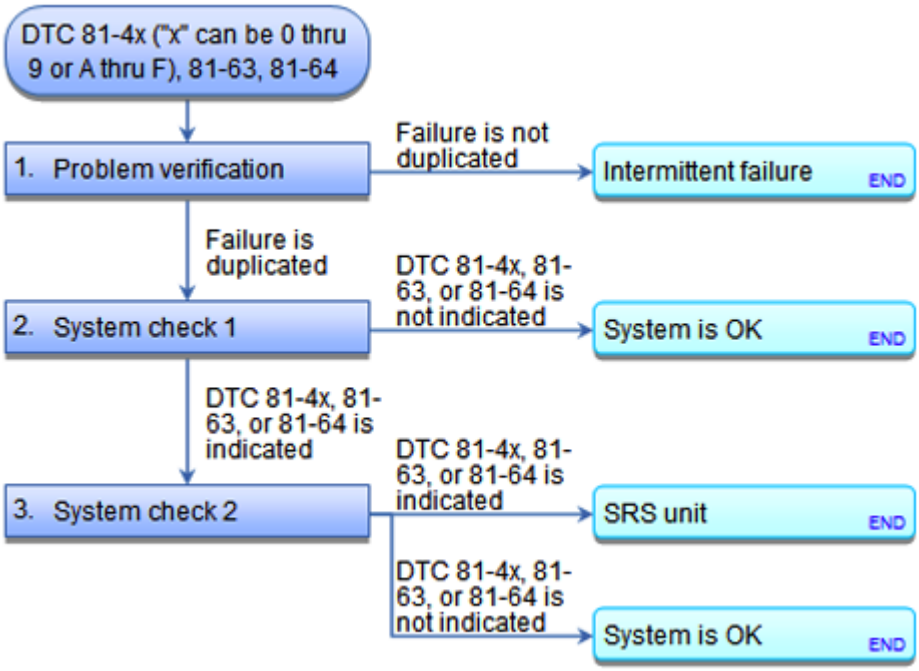

Fig. 169: SRS DTC Troubleshooting Flow Chart (81-4x, 81-63, 81-64)
Courtesy of AMERICAN HONDA MOTOR CO., INC.

NOTE:

- **Before doing this troubleshooting procedure, find out if the vehicle was in a collision. If so, verify that all the required components were replaced with new components, of the correct part number, and that they were properly installed See SRS COMPONENT REPLACEMENT/INSPECTION AFTER DEPLOYMENT or AIRBAG AND TENSIONER DISPOSAL .**
- **Before doing this troubleshooting procedure, review SRS PRECAUTIONS AND PROCEDURES and GENERAL TROUBLESHOOTING INFORMATION .**
- **Before replacing the SRS unit, check the SRS unit software version with the HDS. If the software version is not the latest, update the SRS unit software See SRS UNIT REMOVAL AND INSTALLATION or SRS UNIT UPDATE , and retest.**
- **These DTCs are codes that relate to the front passenger's weight sensor operation.**

DTC Description	DTC

1. Problem verification:
   - 1. **CLEAR THE DTCS WITH THE HDS** .
   - 2. Turn the ignition switch to ON (II), then wait for 10 seconds.
   - 3. **CHECK FOR DTCS WITH THE HDS** .

GETtheMANUALS.org

DTC Description	DTC

Is DTC 81-4x, 81-63, or 81-64 indicated?

YES : The failure is duplicated. Go to step 2.

NO : Intermittent failure, the system is OK at this time. **GO TO TROUBLESHOOTING INTERMITTENT FAILURES** . If another DTC is indicated, troubleshoot the DTC.

2. System check 1:
   - 1. **CLEAR THE DTCS WITH THE HDS** .
   - 2. Do the front passenger's weight sensor initialization.
   - 3. Turn the ignition switch to ON (II), then wait for 10 seconds.
   - 4. **CHECK FOR DTCS WITH THE HDS** .

DTC Description	DTC

Is DTC 81-4x, 81-63, or 81-64 indicated?

YES : Go to step 3.

NO : The system is OK at this time.

3. System check 2:
   - 1. Replace the ODS unit.
   - 2. **CLEAR THE DTCS WITH THE HDS** .
   - 3. Turn the ignition switch to ON (II), then wait for 10 seconds.
   - 4. **CHECK FOR DTCS WITH THE HDS** .

DTC Description	DTC

Is DTC 81-4x, 81-63, or 81-64 indicated?

YES : **Replace the SRS unit** See **SRS UNIT REMOVAL AND INSTALLATION** or **SRS UNIT UPDATE** .

NO : The system is OK at this time.

DTC 81-61: NO SIGNAL FROM THE ODS UNIT; DTC 81-62: INCORRECT DATA FROM THE ODS UNIT

GETtheMANUALS.org

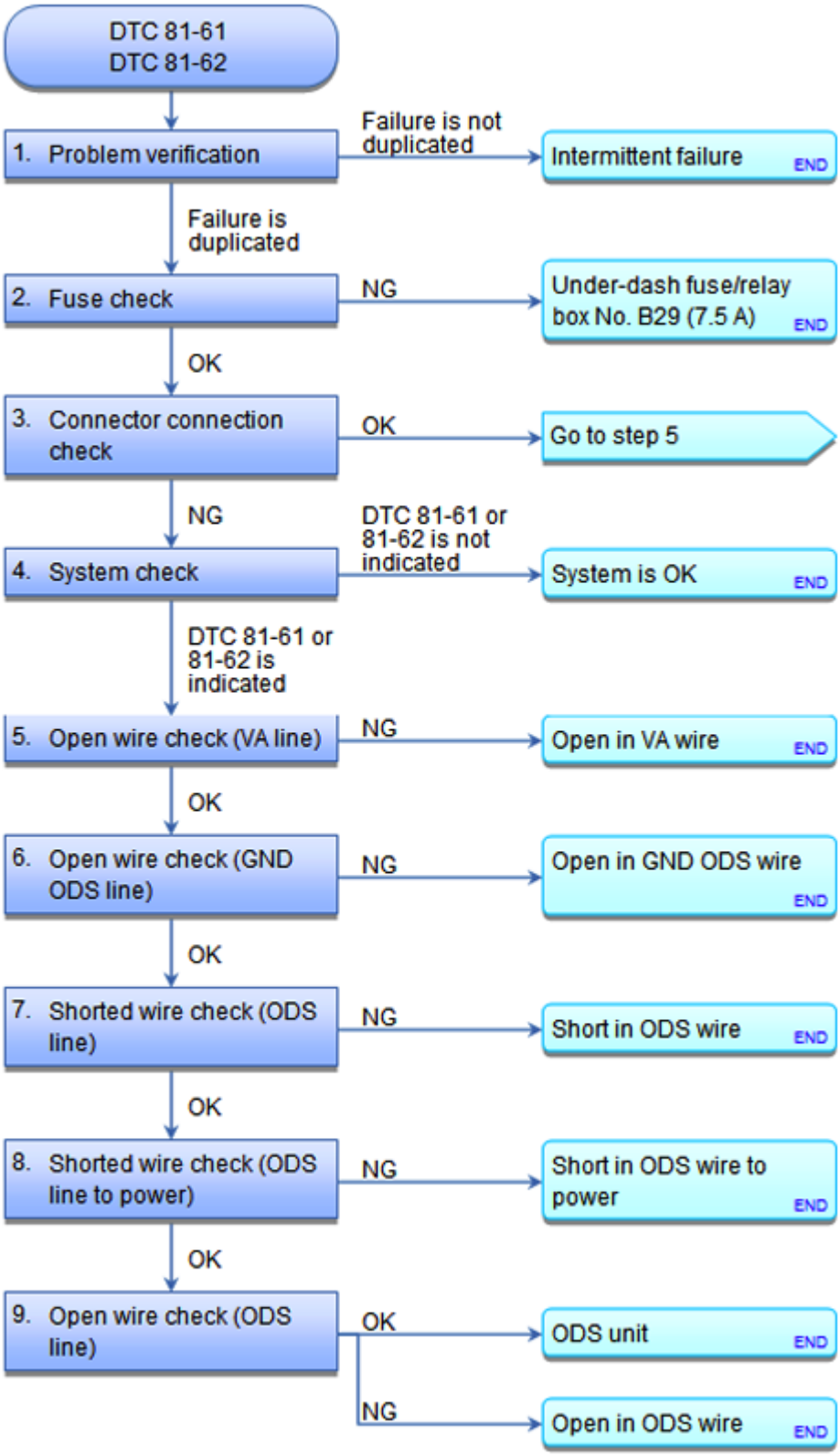

Fig. 170: SRS DTC Troubleshooting Flow Chart (81-61, 81-62)
Courtesy of AMERICAN HONDA MOTOR CO., INC.

GETtheMANUALS.org

NOTE:

- **Before doing this troubleshooting procedure, find out if the vehicle was in a collision. If so, verify that all the required components were replaced with new components, of the correct part number, and that they were properly installed See SRS COMPONENT REPLACEMENT/INSPECTION AFTER DEPLOYMENT or AIRBAG AND TENSIONER DISPOSAL .**
- **Before doing this troubleshooting procedure, review SRS PRECAUTIONS AND PROCEDURES , GENERAL TROUBLESHOOTING INFORMATION , and BATTERY TERMINAL DISCONNECTION AND RECONNECTION .**
- **Before replacing the SRS unit, check the SRS unit software version with the HDS. If the software version is not the latest, update the SRS unit software See SRS UNIT REMOVAL AND INSTALLATION or SRS UNIT UPDATE , and retest.**
- **These DTCs are codes that relate to the front passenger's weight sensor operation.**

DTC Description	DTC
81-61 No signal from the ODS unit	
81-62 Incorrect data from the ODS Unit	

1. Problem verification:
   - 1. Make sure nothing is on the front passenger's seat.
   - 2. **CLEAR THE DTCS WITH THE HDS** .
   - 3. Turn the ignition switch to ON (II), then wait for 10 seconds.
   - 4. **CHECK FOR DTCS WITH THE HDS** .

DTC Description	DTC
81-61 No signal from the ODS unit	
81-62 Incorrect data from the ODS Unit	

Is DTC 81-61 or 81-62 indicated?

YES : The failure is duplicated. Go to step 2.

NO : Intermittent failure, the system is OK at this time. **GO TO TROUBLESHOOTING INTERMITTENT FAILURES** . If another DTC is indicated, troubleshoot the DTC.

2. Fuse check:
   - 1. Turn the ignition switch to LOCK (0).
   - 2. Check the following fuse.

     Fuse No. B29 (7.5 A)

     Location Under-dash fuse/relay box

GETtheMANUALS.org

Is the fuse OK?

YES : Go to step 3.

NO : Replace the fuse, then turn the ignition switch to ON (II). If the fuse blows again, check for a short to ground in the under-dash fuse/relay box No. B29 (7.5 A) fuse circuit (dashboard wire harness, floor wire harness, or ODS unit harness); replace the faulty harness, then clear the DTC, and retest. If the DTC is still present, **REPLACE THE UNDER-DASH FUSE/RELAY BOX** , then clear the DTC.

3. Connector connection check:
   - 1. **TURN OVER THE SEAT-BACK COVER/PAD TO GAIN ACCESS TO THE ODS UNIT** .
   - 2. Remove the cover (A), then check the connection between the ODS unit 18P connector (B) and the ODS unit.

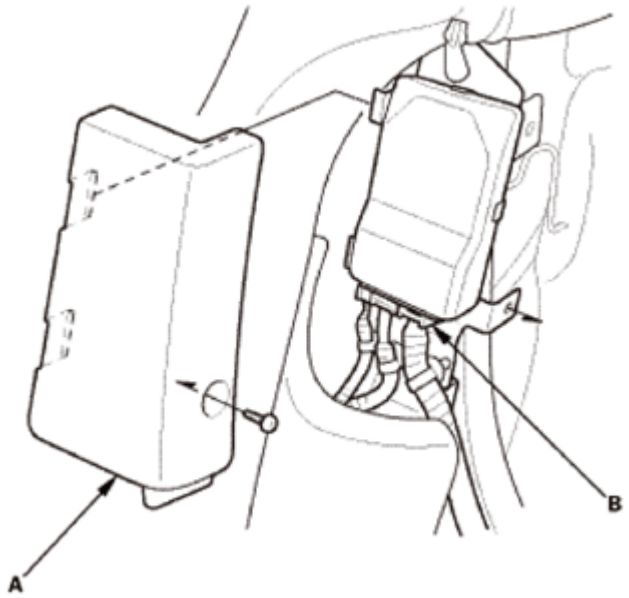

Fig. 171: Identifying ODS Unit 18P Connector, Cover And Bolt
Courtesy of AMERICAN HONDA MOTOR CO., INC.

Is the connector OK?

YES : Go to step 5.

NO : Go to step 4.

4. System check:
   - 1. Repair the poor connector connection which was the cause of the problem in step 3.
   - 2. **CLEAR THE DTCS WITH THE HDS** .
   - 3. Turn the ignition switch to ON (II), then wait for 10 seconds.
   - 4. **CHECK FOR DTCS WITH THE HDS** .

GETtheMANUALS.org

DTC Description	DTC
81-61 No signal from the ODS unit	
81-62 Incorrect data from the ODS Unit	

Is DTC 81-61 or 81-62 indicated?

YES : Turn the ignition switch to LOCK (0), then go to step 5.

NO : The system is OK at this time.

5. Open wire check (VA line):
   - 1. Detach the clip (A), then disconnect the ODS unit 18P connector (B) from the ODS unit.

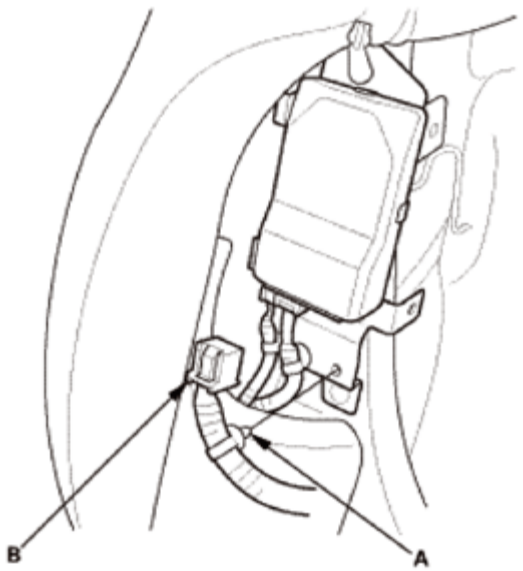

Fig. 172: Identifying ODS Unit 18P Connector And Clip
Courtesy of AMERICAN HONDA MOTOR CO., INC.

   - 2. Turn the ignition switch to ON (II).
   - 3. Measure the voltage between test points 1 and 2.

     Test condition IG ON (II)

     ODS unit 18P connector: disconnected

     Test circuit VA

     Test point 1 ODS unit 18P connector No. 7 (GRN)

     Test point 2 Body ground

GETtheMANUALS.org

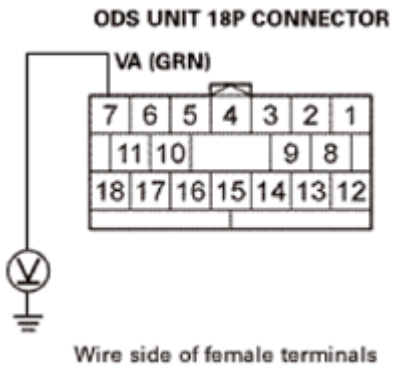

Fig. 173: Measuring Voltage Between ODS Unit 18P Connector No. 7 (GRN) And Body Ground
Courtesy of AMERICAN HONDA MOTOR CO., INC.

Is there battery voltage?

YES : The VA wire is OK. Go to step 6.

NO : Open in the floor wire harness or the ODS unit harness; replace the faulty harness, then clear the DTC.

6. Open wire check (GND ODS line):
   - 1. Turn the ignition switch to LOCK (0).
   - 2. Measure the resistance between test points 1 and 2.

     Test condition IG LOCK (0)

     ODS unit 18P connector: disconnected

     Test circuit GND ODS

     Test point 1 ODS unit 18P connector No. 18 (BLK)

     Test point 2 Body ground

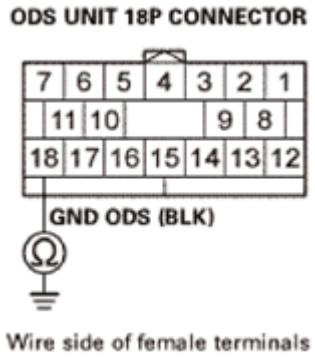

GETtheMANUALS.org

Fig. 174: Measuring Resistance Between ODS Unit 18P Connector No. 18 (BLK) And Body Ground
Courtesy of AMERICAN HONDA MOTOR CO., INC.

Is there less than 1.0 ohms?

YES : The GND ODS wire is OK. Go to step 7.

NO : Open in the floor wire harness or the ODS unit harness; check for a poor ground connection at G602. If the ground is OK, replace the faulty harness, then clear the DTC.

7. Shorted wire check (ODS line):
   - 1. Disconnect the negative cable from the battery, then wait at least 3 minutes.
   - 2. Disconnect the following connector.

     SRS unit connector B (39P) See **SRS UNIT REMOVAL AND INSTALLATION** or **SRS UNIT UPDATE**

   - 3. Measure the resistance between test points 1 and 2.

     Test condition IG LOCK (0)

     ODS unit 18P connector: disconnected

     SRS unit connector B (39P): disconnected

     Test circuit ODS

     Test point 1 SRS unit connector B (39P) No. 21

     Test point 2 Body ground

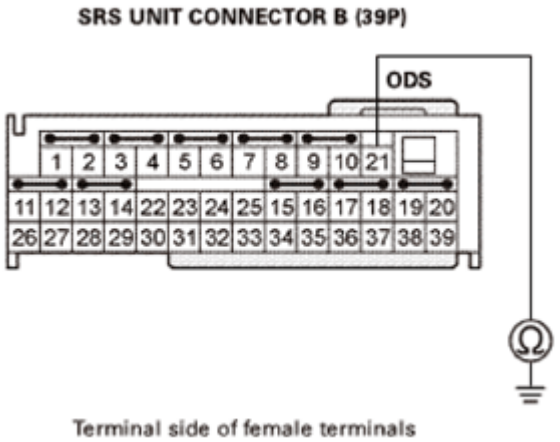

Fig. 175: Measuring Resistance Between SRS Unit Connector B (39P) No. 21 And Body Ground

GETtheMANUALS.org

Courtesy of AMERICAN HONDA MOTOR CO., INC.

Is there an open circuit, or at least 1 Mohms?

YES : The ODS wire is not shorted. Go to step 8.

NO : Short to ground in the floor wire harness or the ODS unit harness; replace the faulty harness, then clear the DTC.

8. Shorted wire check (ODS line to power):
   - 1. Reconnect the negative cable to the battery.
   - 2. Turn the ignition switch to ON (II).
   - 3. Measure the voltage between test points 1 and 2.

   Test condition IG ON (II)

   ODS unit 18P connector: disconnected

   SRS unit connector B (39P): disconnected

   Test circuit ODS

   Test point 1 SRS unit connector B (39P) No. 21

   Test point 2 Body ground

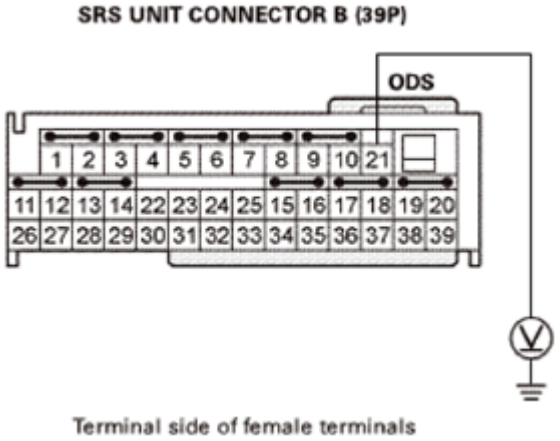

Fig. 176: Measuring Voltage Between SRS Unit Connector B (39P) No. 21 And Body Ground
Courtesy of AMERICAN HONDA MOTOR CO., INC.

Is there less than 0.2 V?

YES : The ODS wire is not shorted to power. Go to step 9.

GETtheMANUALS.org

NO : Short to power in the floor wire harness or the ODS unit harness; replace the faulty harness, then clear the DTC.

9. Open wire check (ODS line):
    - 1. Turn the ignition switch to LOCK (0).
    - 2. Measure the resistance between test points 1 and 2.

    Test condition IG LOCK (0)

    ODS unit 18P connector: disconnected

    SRS unit connector B (39P): disconnected

    Test circuit ODS

    Test point 1 SRS unit connector B (39P) No. 21

    Test point 2 ODS unit 18P connector No. 1 (BLU)

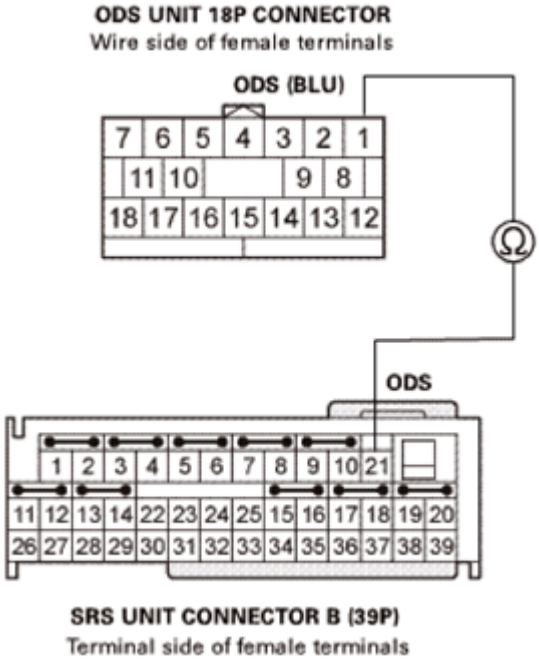

Fig. 177: Measuring Resistance Between SRS Unit Connector B (39P) No. 21 And ODS Unit 18P Connector No. 1 (BLU)
Courtesy of AMERICAN HONDA MOTOR CO., INC.

Is there less than 1.0 ohms?

YES : The ODS wire is OK. Replace the ODS unit, then clear the DTC, and retest. If the DTC is still present, **replace the SRS unit** See **SRS UNIT REMOVAL AND INSTALLATION** or **SRS UNIT UPDATE** .

GETtheMANUALS.org

NO : Open in the harness between SRS unit connector B (39P) terminal No. 21 and ODS unit 18P connector terminal No. 1 (floor wire harness or ODS unit harness); replace the faulty harness, then clear the DTC.

DTC 81-71, 81-78: ODS UNIT NOT CALIBRATED

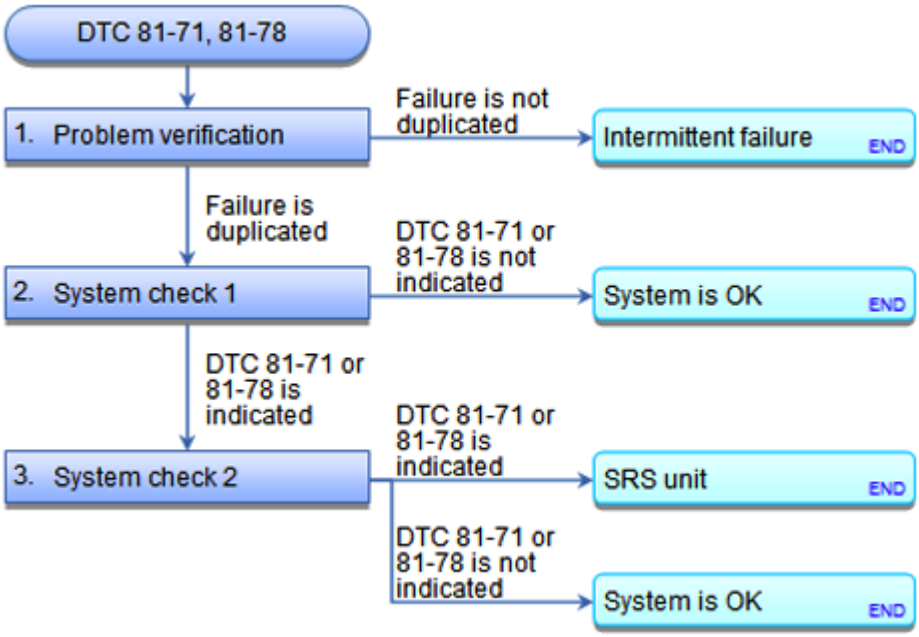

Fig. 178: SRS DTC Troubleshooting Flow Chart (81-71, 81-78)
Courtesy of AMERICAN HONDA MOTOR CO., INC.

NOTE:

- **Before doing this troubleshooting procedure, find out if the vehicle was in a collision. If so, verify that all the required components were replaced with new components, of the correct part number, and that they were properly installed See SRS COMPONENT REPLACEMENT/INSPECTION AFTER DEPLOYMENT or AIRBAG AND TENSIONER DISPOSAL .**
- **Before doing this troubleshooting procedure, review SRS PRECAUTIONS AND PROCEDURES and GENERAL TROUBLESHOOTING INFORMATION .**
- **Before replacing the SRS unit, check the SRS unit software version with the HDS. If the software version is not the latest, update the SRS unit software See SRS UNIT UPDATE or SRS UNIT REMOVAL AND INSTALLATION , and retest.**
- **These DTCs are codes that relate to the front passenger's weight sensor operation.**

DTC Description	DTC
81-71 ODS unit not calibrated	
81-78 ODS unit not calibrated	

GETtheMANUALS.org

1. Problem verification:
   - 1. **CLEAR THE DTCS WITH THE HDS** .
   - 2. Turn the ignition switch to ON (II), then wait for 10 seconds.
   - 3. **CHECK FOR DTCS WITH THE HDS** .

DTC Description	DTC
81-71 ODS unit not calibrated	
81-78 ODS unit not calibrated	

Is DTC 81-71 or 81-78 indicated?

YES : The failure is duplicated. Go to step 2.

NO : Intermittent failure, the system is OK at this time. **GO TO TROUBLESHOOTING INTERMITTENT FAILURES** . If another DTC is indicated, troubleshoot the DTC.

2. System check 1:
   - 1. **CLEAR THE DTCS WITH THE HDS** .
   - 2. Do the front passenger's weight sensor initialization.
   - 3. Turn the ignition switch to ON (II), then wait for 10 seconds.
   - 4. **CHECK FOR DTCS WITH THE HDS** .

DTC Description	DTC
81-71 ODS unit not calibrated	
81-78 ODS unit not calibrated	

Is DTC 81-71 or 81-78 indicated?

YES : Go to step 3.

NO : The system is OK at this time.

3. System check 2:
   - 1. Replace the ODS unit.
   - 2. **CLEAR THE DTCS WITH THE HDS** .
   - 3. Turn the ignition switch to ON (II), then wait for 10 seconds.
   - 4. **CHECK FOR DTCS WITH THE HDS** .

DTC Description	DTC
81-71 ODS unit not calibrated	
81-78 ODS unit not calibrated	

GETtheMANUALS.org

Is DTC 81-71 or 81-78 indicated?

YES : **Replace the SRS unit** See **SRS UNIT REMOVAL AND INSTALLATION** or **SRS UNIT UPDATE** .

NO : The system is OK at this time.

DTC 81-79: FRONT PASSENGER'S WEIGHT SENSORS INITIAL CHECK FAILURE

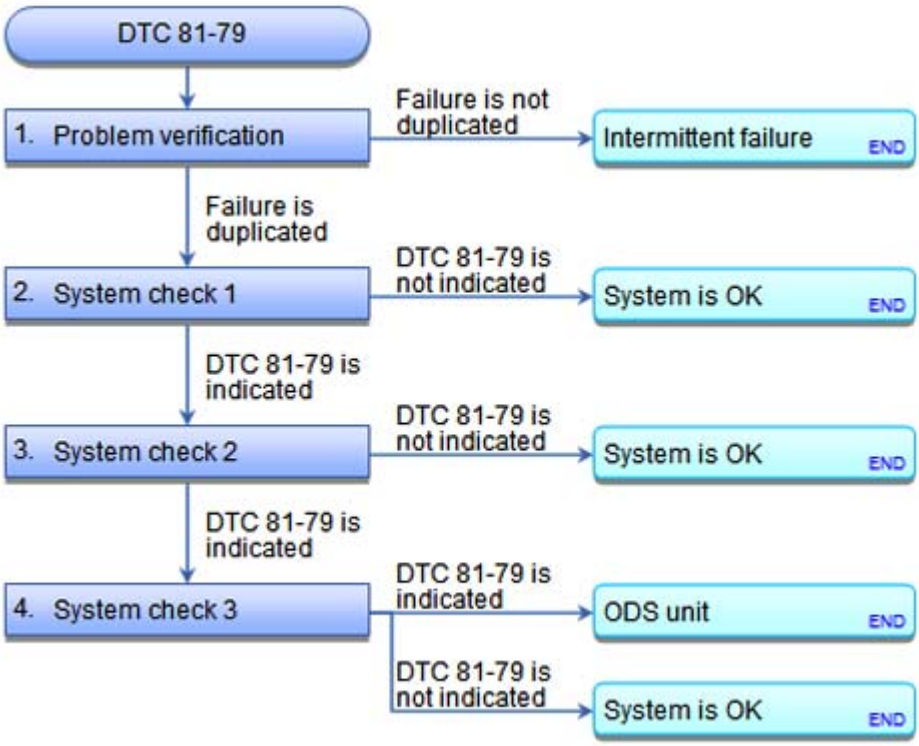

Fig. 179: SRS DTC Troubleshooting Flow Chart (81-79)
Courtesy of AMERICAN HONDA MOTOR CO., INC.

NOTE:

- **Before doing this troubleshooting procedure, find out if the vehicle was in a collision. If so, verify that all the required components were replaced with new components, of the correct part number, and that they were properly installed See SRS COMPONENT REPLACEMENT/INSPECTION AFTER DEPLOYMENT or AIRBAG AND TENSIONER DISPOSAL .**
- **Before doing this troubleshooting procedure, review SRS PRECAUTIONS AND PROCEDURES and GENERAL TROUBLESHOOTING INFORMATION .**
- **Before replacing the SRS unit, check the SRS unit software version with the HDS. If the software version is not the latest, update the SRS unit software See SRS UNIT REMOVAL AND INSTALLATION or SRS UNIT UPDATE , and retest.**

GETtheMANUALS.org

- **These DTCs are codes that relate to the front passenger's weight sensor operation.**

DTC Description	DTC
81-79 Front passenger's weight sensors initial check failure	

1. Problem verification:
   - 1. **CLEAR THE DTCS WITH THE HDS** .
   - 2. Turn the ignition switch to ON (II), then wait for 10 seconds.
   - 3. **CHECK FOR DTCS WITH THE HDS** .

DTC Description	DTC
81-79 Front passenger's weight sensors initial check failure	

Is DTC 81-79 indicated?

YES : The failure is duplicated. Go to step 2.

NO : Intermittent failure, the system is OK at this time. **GO TO TROUBLESHOOTING INTERMITTENT FAILURES** . If another DTC is indicated, troubleshoot the DTC.

2. System check 1:
   - 1. Make sure nothing is on the front passenger's seat.
   - 2. **CLEAR THE DTCS WITH THE HDS** .
   - 3. Turn the ignition switch to ON (II), then wait for 10 seconds.
   - 4. **CHECK FOR DTCS WITH THE HDS** .

DTC Description	DTC
81-79 Front passenger's weight sensors initial check failure	

Is DTC 81-79 indicated?

YES : Go to step 3.

NO : The system is OK at this time.

3. System check 2:
   - 1. Turn the ignition switch to LOCK (0).
   - 2. Loosen the front passenger's seat mounting bolts, and shake the seat in all directions. **TIGHTEN THE SEAT MOUNTING BOLTS TO THE SPECIFIED TORQUE** .
   - 3. **CLEAR THE DTCS WITH THE HDS** .
   - 4. Do the front passenger's weight sensor initialization.

GETtheMANUALS.org

- 5. Turn the ignition switch to ON (II), then wait for 10 seconds.
- 6. **CHECK FOR DTCS WITH THE HDS** .

DTC Description	DTC
81-79 Front passenger's weight sensors initial check failure	

Is DTC 81-79 indicated?

YES : Go to step 4.

NO : The system is OK at this time.

4. System check 3:
   - 1. **REPLACE THE FRONT PASSENGER'S SEAT RAIL INCLUDING ALL FOUR FRONT PASSENGER'S WEIGHT SENSORS** .
   - 2. **CLEAR THE DTCS WITH THE HDS** .
   - 3. Turn the ignition switch to ON (II), then wait for 10 seconds.
   - 4. **CHECK FOR DTCS WITH THE HDS** .

DTC Description	DTC
81-79 Front passenger's weight sensors initial check failure	

Is DTC 81-79 indicated?

YES : Replace the ODS unit, then clear the DTC, and retest. If the DTC is still present, **replace the SRS unit** See **SRS UNIT REMOVAL AND INSTALLATION** or **SRS UNIT UPDATE** .

NO : The system is OK at this time.

GETtheMANUALS.org

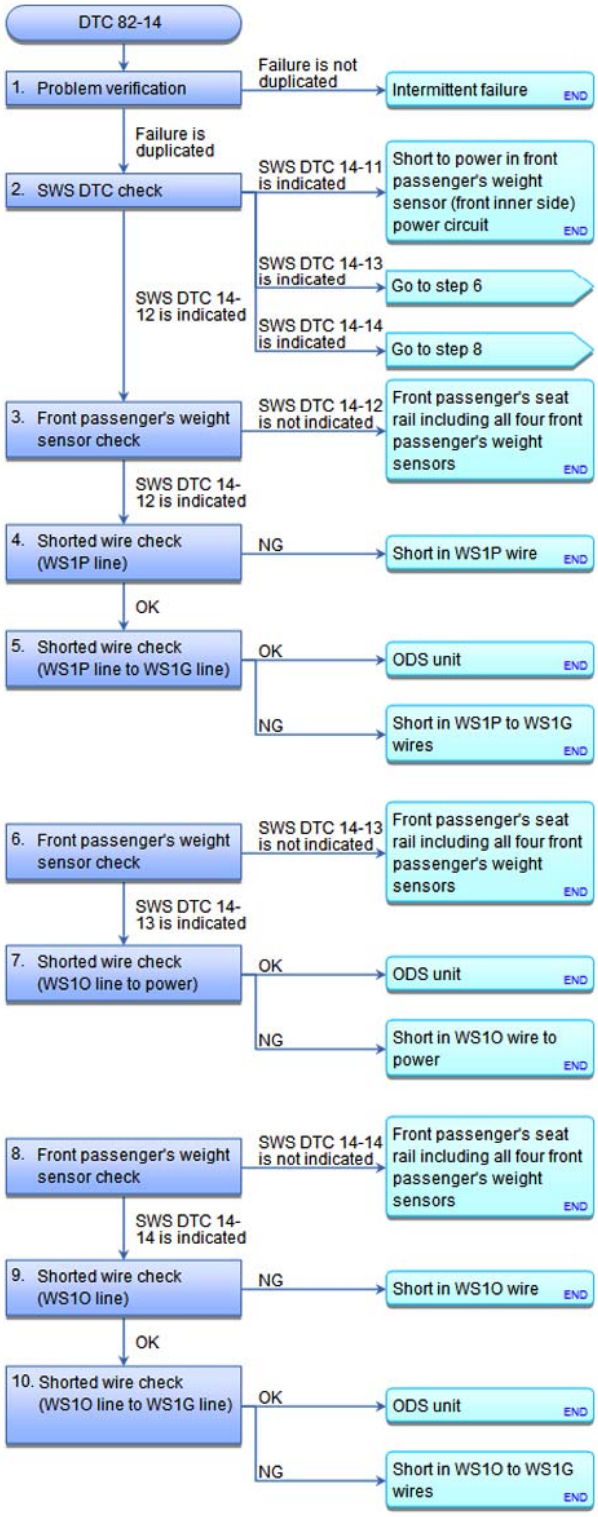

Fig. 180: SRS DTC Troubleshooting Flow Chart (82-14)
Courtesy of AMERICAN HONDA MOTOR CO., INC.

DTC 82-14: NO SIGNAL FROM THE FRONT PASSENGER'S WEIGHT

GETtheMANUALS.org

SENSOR (FRONT INNER SIDE)

NOTE:

- **Before doing this troubleshooting procedure, find out if the vehicle was in a collision. If so, verify that all the required components were replaced with new components, of the correct part number, and that they were properly installed See SRS COMPONENT REPLACEMENT/INSPECTION AFTER DEPLOYMENT or AIRBAG AND TENSIONER DISPOSAL .**
- **Before doing this troubleshooting procedure, review SRS PRECAUTIONS AND PROCEDURES and GENERAL TROUBLESHOOTING INFORMATION .**
- **These SWS DTCs are cleared when you turn the ignition switch to LOCK (0).**

DTC Description	DTC
82-14 No signal from the front passenger's weight sensor (front inner side)	

1. Problem verification:
   - 1. **CLEAR THE DTCS WITH THE HDS** .
   - 2. Turn the ignition switch to ON (II), then wait for 10 seconds.
   - 3. **CHECK FOR DTCS WITH THE HDS** .

DTC Description	DTC
82-14 No signal from the front passenger's weight sensor (front inner side)	

Is DTC 82-14 indicated?

YES : The failure is duplicated. Go to step 2.

NO : Intermittent failure, the system is OK at this time. **GO TO TROUBLESHOOTING INTERMITTENT FAILURES** . If another DTC is indicated, troubleshoot the DTC.

2. SWS DTC check:
   - 1. **CHECK FOR SWS DTCS WITH THE HDS** .

DTC Description	DTC
14-11 Short to power in the front passenger's weight sensor (front inner side) power circuit	
14-12 Short to ground in the front passenger's weight sensor (front inner side) power circuit	
14-13 Open in the front passenger's weight sensor (front inner side) output circuit	
14-14 Short to ground in the front passenger's weight sensor (front inner side) output circuit	

Is an SWS DTC also indicated?

SWS DTC 14-11 : Short to power in the front passenger's weight sensor (front inner side) power circuit; replace the front passenger's seat wire harness, then clear the DTC.

GETtheMANUALS.org

SWS DTC 14-12 : Short to ground in the front passenger's weight sensor (front inner side) power circuit. Go to step 3.

SWS DTC 14-13 : Open in the front passenger's weight sensor (front inner side) output circuit. Go to step 6.

SWS DTC 14-14 : Short to ground in the front passenger's weight sensor (front inner side) output circuit. Go to step 8.

3. Front passenger's weight sensor check:
   - 1. Turn the ignition switch to LOCK (0).
   - 2. Disconnect the front passenger's weight sensor (front inner side) 3P connector (A) on the front passenger's seat wire harness.

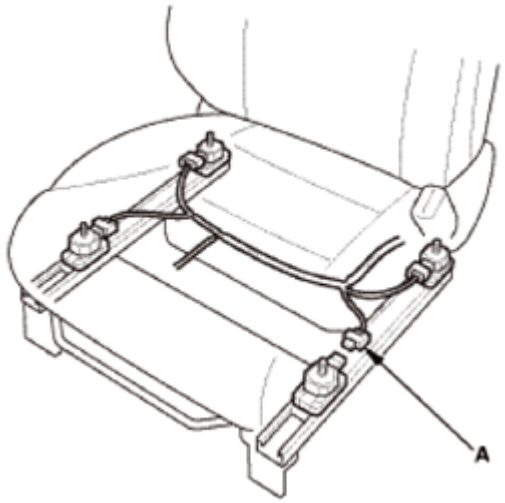

Fig. 181: Identifying Front Passenger's Weight Sensor 3P Connector
Courtesy of AMERICAN HONDA MOTOR CO., INC.

   - 3. Turn the ignition switch to ON (II).
   - 4. **CLEAR THE DTCS WITH THE HDS** .
   - 5. Turn the ignition switch to ON (II), then wait for 10 seconds.
   - 6. **CHECK FOR SWS DTCS WITH THE HDS** .

DTC Description	DTC
14-12 Short to ground in the front passenger's weight sensor (front inner side) power circuit	

Is SWS DTC 14-12 indicated?

YES : Go to step 4.

NO : Faulty front passenger's weight sensor (front inner side); **REPLACE THE FRONT PASSENGER'S SEAT RAIL INCLUDING ALL FOUR FRONT PASSENGER'S WEIGHT**

GETtheMANUALS.org

SENSORS , then clear the DTC.

4. Shorted wire check (WS1P line):
   - 1. Turn the ignition switch to LOCK (0).
   - 2. **TURN OVER THE SEAT-BACK COVER/PAD TO GAIN ACCESS TO THE ODS UNIT** .
   - 3. Remove the cover (A), then detach the clip (B), then disconnect the ODS unit 18P connector (C) from the ODS unit.

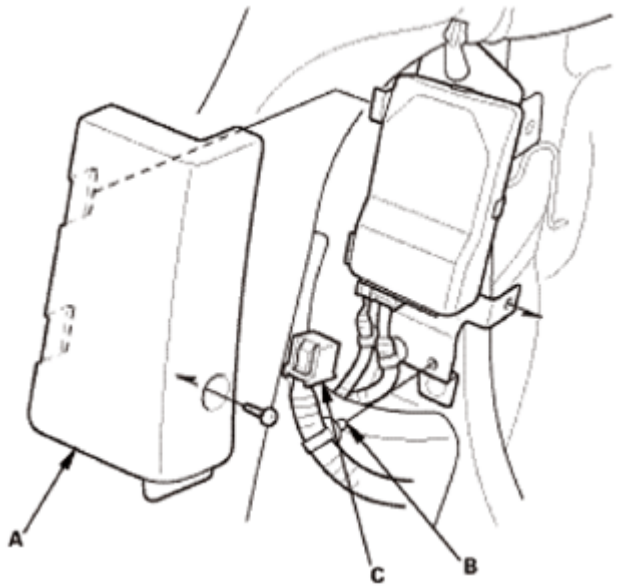

Fig. 182: Identifying ODS Unit 18P Connector, Cover And Clip
Courtesy of AMERICAN HONDA MOTOR CO., INC.

   - 4. Measure the resistance between test points 1 and 2.

     Test condition IG LOCK (0)

     Front passenger's weight sensor (front inner side) 3P connector (on the front passenger's seat wire harness): disconnected

     ODS unit 18P connector: disconnected

     Test circuit WS1P

     Test point 1 ODS unit 18P connector No. 5 (RED)

     Test point 2 Body ground

GETtheMANUALS.org

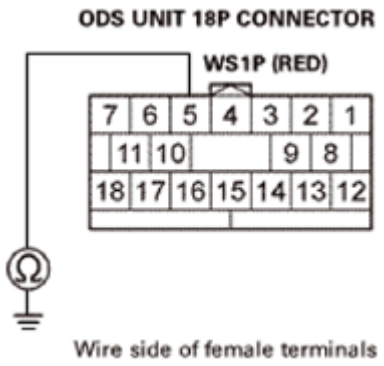

Fig. 183: Measuring Resistance Between ODS Unit 18P Connector No. 5 (RED) And Body Ground
Courtesy of AMERICAN HONDA MOTOR CO., INC.

Is there an open circuit, or at least 1 Mohms?

YES : The WS1P wire is not shorted. Go to step 5.

NO : Short to ground in the front passenger's seat wire harness; replace the front passenger's seat wire harness, then clear the DTC.

5. Shorted wire check (WS1P line to WS1G line):
   - 1. Measure the resistance between test points 1 and 2.

     Test condition IG LOCK (0)

     Front passenger's weight sensor (front inner side) 3P connector (on the front passenger's seat wire harness): disconnected

     ODS unit 18P connector: disconnected

     Test circuit WS1P, WS1G

     Test point 1 ODS unit 18P connector No. 5 (RED)

     Test point 2 ODS unit 18P connector No. 17 (BLK)

GETtheMANUALS.org

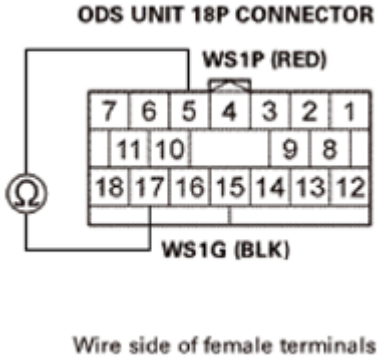

Fig. 184: Measuring Resistance Between ODS Unit 18P Connector No. 5 (RED) And 17 (BLK)
Courtesy of AMERICAN HONDA MOTOR CO., INC.

Is there an open circuit, or at least 1 Mohms?

YES : The WS1P, WS1G wires are OK. Replace the ODS unit, then clear the DTC.

NO : Short to another wire in the front passenger's seat wire harness; replace the front passenger's seat wire harness, then clear the DTC.

6. Front passenger's weight sensor check:
   - 1. Turn the ignition switch to LOCK (0).
   - 2. Swap the connections between the front inner side front passenger's weight sensor and the rear inner side sensor.
   - 3. Turn the ignition switch to ON (II).
   - 4. **CLEAR THE DTCS WITH THE HDS** .
   - 5. Turn the ignition switch to ON (II), then wait for 10 seconds.
   - 6. **CHECK FOR SWS DTCS WITH THE HDS** .

DTC Description	DTC
14-13 Open in the front passenger's weight sensor (front inner side) output circuit	

Is SWS DTC 14-13 indicated?

YES : Go to step 7.

NO : Faulty front passenger's weight sensor (front inner side); **REPLACE THE FRONT PASSENGER'S SEAT RAIL INCLUDING ALL FOUR FRONT PASSENGER'S WEIGHT SENSORS** , then clear the DTC.

7. Shorted wire check (WS1O line to power):
   - 1. Turn the ignition switch to LOCK (0).
   - 2. Disconnect the front passenger's weight sensor (front inner side) 3P connector (A) on the front

GETtheMANUALS.org

passenger's seat wire harness, and the front passenger's weight sensor (rear inner side) 3P connector (B) on the front passenger's seat wire harness.

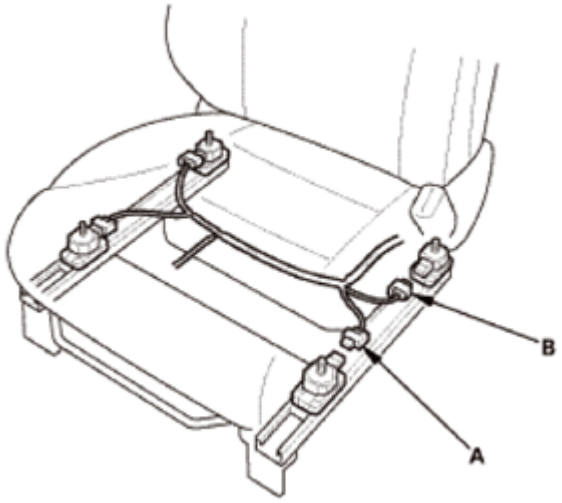

Fig. 185: Identifying Front Passenger's Weight Sensor 3P Connectors
Courtesy of AMERICAN HONDA MOTOR CO., INC.

- 3. **TURN OVER THE SEAT-BACK COVER/PAD TO GAIN ACCESS TO THE ODS UNIT** .
- 4. Remove the cover (A), then detach the clip (B), then disconnect the ODS unit 18P connector (C) from the ODS unit.

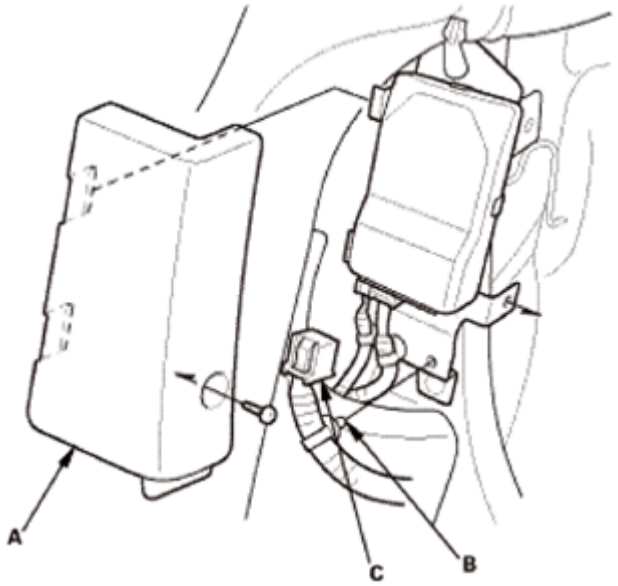

Fig. 186: Identifying ODS Unit 18P Connector, Cover And Clip
Courtesy of AMERICAN HONDA MOTOR CO., INC.

- 5. Turn the ignition switch to ON (II).
- 6. Measure the voltage between test points 1 and 2.

GETtheMANUALS.org

Test condition IG ON (II)

Test circuit WS1O

Test point 1 ODS unit 18P connector No. 11 (BRN)

Test point 2 Body ground

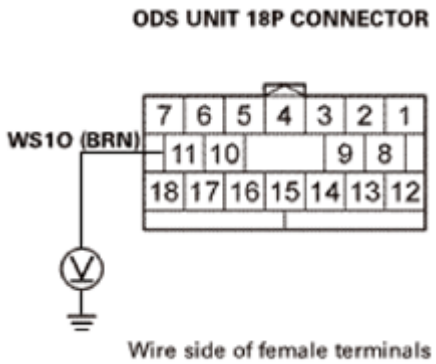

Fig. 187: Measuring Voltage Between ODS Unit 18P Connector No. 11 (BRN) And Body Ground
Courtesy of AMERICAN HONDA MOTOR CO., INC.

Is there less than 0.2 V?

YES : The WS1O wire is OK. Replace the ODS unit, then clear the DTC.

NO : Short to power in the front passenger's seat wire harness; replace the front passenger's seat wire harness, then clear the DTC.

8. Front passenger's weight sensor check:
   - 1. Turn the ignition switch to LOCK (0).
   - 2. Disconnect the front passenger's weight sensor (front inner side) 3P connector (A) on the front passenger's seat wire harness.

GETtheMANUALS.org

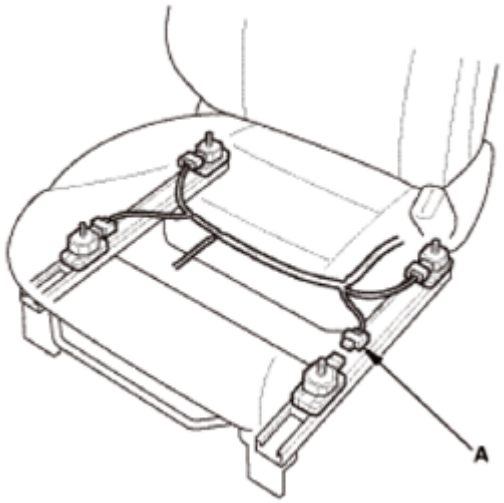

Fig. 188: Identifying Front Passenger's Weight Sensor 3P Connector
Courtesy of AMERICAN HONDA MOTOR CO., INC.

- 3. Turn the ignition switch to ON (II).
- 4. **CLEAR THE DTCS WITH THE HDS** .
- 5. Turn the ignition switch to ON (II), then wait for 10 seconds.
- 6. **CHECK FOR SWS DTCS WITH THE HDS** .

DTC Description	DTC
14-14 Short to ground in the front passenger's weight sensor (front inner side) output circuit	

Is SWS DTC 14-14 indicated?

YES : Go to step 9.

NO : Faulty front passenger's weight sensor (front inner side); **REPLACE THE FRONT PASSENGER'S SEAT RAIL INCLUDING ALL FOUR FRONT PASSENGER'S WEIGHT SENSORS** , then clear the DTC.

9. Shorted wire check (WS1O line):
   - 1. Turn the ignition switch to LOCK (0).
   - 2. **TURN OVER THE SEAT-BACK COVER/PAD TO GAIN ACCESS TO THE ODS UNIT** .
   - 3. Remove the cover (A), then detach the clip (B), then disconnect the ODS unit 18P connector (C) from the ODS unit.

GETtheMANUALS.org

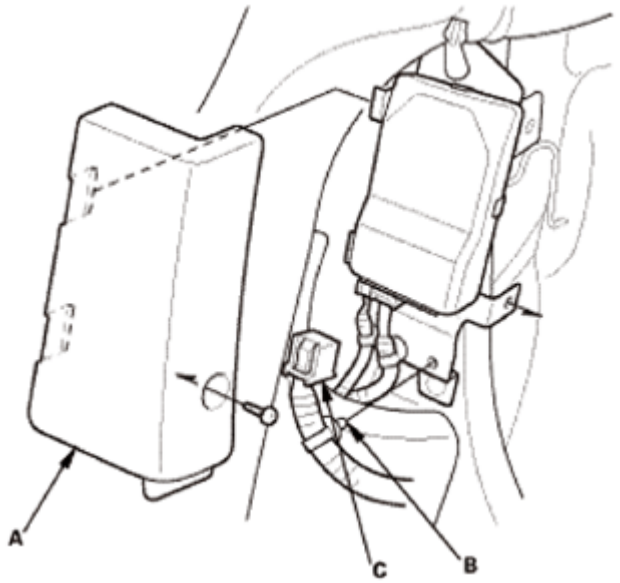

Fig. 189: Identifying ODS Unit 18P Connector, Cover And Clip
Courtesy of AMERICAN HONDA MOTOR CO., INC.

- 4. Measure the resistance between test points 1 and 2.

  Test condition IG LOCK (0)

  Front passenger's weight sensor (front inner side) 3P connector (on the front passenger's seat wire harness): disconnected

  ODS unit 18P connector: disconnected

  Test circuit WS1O

  Test point 1 ODS unit 18P connector No. 11 (BRN)

  Test point 2 Body ground

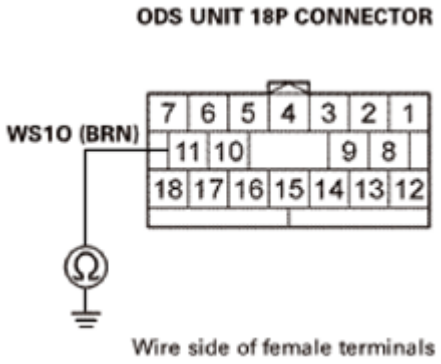

Fig. 190: Measuring Resistance Between ODS Unit 18P Connector No. 11 (BRN) And Body

GETtheMANUALS.org

Ground
Courtesy of AMERICAN HONDA MOTOR CO., INC.

Is there an open circuit, or at least 1 Mohms?

YES : The WS1O wire is not shorted. Go to step 10.

NO : Short to ground in the front passenger's seat wire harness; replace the front passenger's seat wire harness, then clear the DTC.

10. Shorted wire check (WS1O line to WS1G line):
    - 1. Measure the resistance between test points 1 and 2.

      Test condition IG LOCK (0)

      Front passenger's weight sensor (front inner side) 3P connector (on the front passenger's seat wire harness): disconnected

      ODS unit 18P connector: disconnected

      Test circuit WS1O, WS1G

      Test point 1 ODS unit 18P connector No. 11 (BRN)

      Test point 2 ODS unit 18P connector No. 17 (BLK)

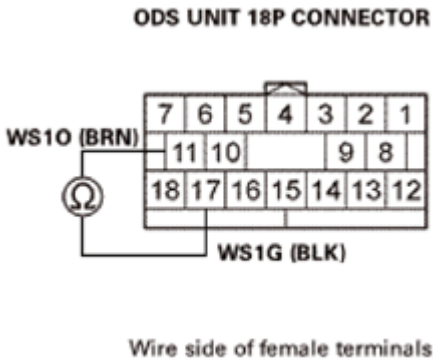

Fig. 191: Measuring Resistance Between ODS Unit 18P Connector No. 11 (BRN) And 17 (BLK)
Courtesy of AMERICAN HONDA MOTOR CO., INC.

Is there an open circuit, or at least 1 Mohms?

YES : The WS1O, WS1G wires are OK. Replace the ODS unit, then clear the DTC.

NO : Short to another wire in the front passenger's seat wire harness; replace the front passenger's seat wire harness, then clear the DTC.

GETtheMANUALS.org

DTC 82-15: INTERNAL FAILURE OF THE FRONT PASSENGER'S WEIGHT SENSOR (FRONT INNER SIDE); DTC 82-17: INTERNAL FAILURE OF THE FRONT PASSENGER'S WEIGHT SENSOR (REAR INNER SIDE); DTC 83-25: INTERNAL FAILURE OF THE FRONT PASSENGER'S WEIGHT SENSOR (FRONT OUTER SIDE); DTC 83-27: INTERNAL FAILURE OF THE FRONT PASSENGER'S WEIGHT SENSOR (REAR OUTER SIDE)

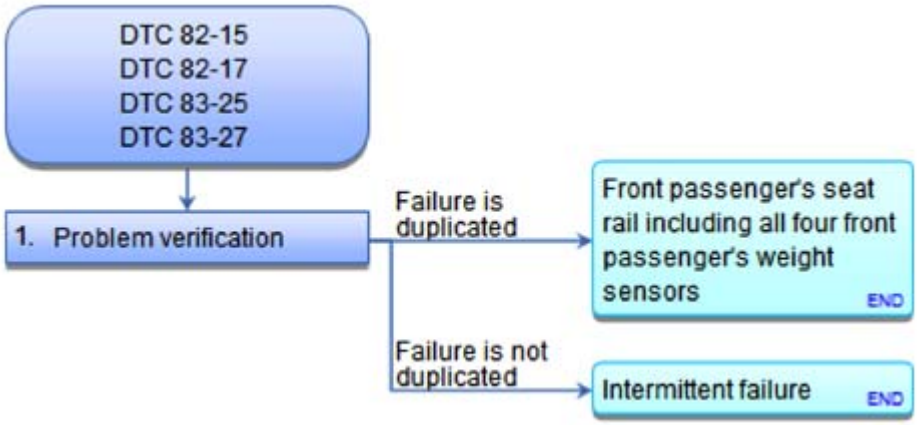

Fig. 192: SRS DTC Troubleshooting Flow Chart (82-15, 82-17, 83-25, 83-27)
Courtesy of AMERICAN HONDA MOTOR CO., INC.

NOTE:

- **Before doing this troubleshooting procedure, find out if the vehicle was in a collision. If so, verify that all the required components were replaced with new components, of the correct part number, and that they were properly installed See SRS COMPONENT REPLACEMENT/INSPECTION AFTER DEPLOYMENT or AIRBAG AND TENSIONER DISPOSAL .**
- **Before doing this troubleshooting procedure, review SRS PRECAUTIONS AND PROCEDURES and GENERAL TROUBLESHOOTING INFORMATION .**

DTC Description	DTC
82-15 Internal failure of the front passenger's weight sensor (front inner side)	
82-17 Internal failure of the front passenger's weight sensor (rear inner side)	
83-25 Internal failure of the front passenger's weight sensor (front outer side)	
83-27 Internal failure of the front passenger's weight sensor (rear outer side)	

1. Problem verification:
   - 1. **CLEAR THE DTCS WITH THE HDS** .
   - 2. Turn the ignition switch to ON (II), then wait for 10 seconds.
   - 3. **CHECK FOR DTCS WITH THE HDS** .

DTC Description	DTC

GETtheMANUALS.org

82-15 Internal failure of the front passenger's weight sensor (front inner side)	
82-17 Internal failure of the front passenger's weight sensor (rear inner side)	
83-25 Internal failure of the front passenger's weight sensor (front outer side)	
83-27 Internal failure of the front passenger's weight sensor (rear outer side)	

Is DTC 82-15, 82-17, 83-25, or 83-27 indicated?

YES : The failure is duplicated. **REPLACE THE FRONT PASSENGER'S SEAT RAIL INCLUDING ALL FOUR FRONT PASSENGER'S WEIGHT SENSORS** , then clear the DTC.

NO : Intermittent failure, the system is OK at this time. **GO TO TROUBLESHOOTING INTERMITTENT FAILURES** . If another DTC is indicated, troubleshoot the DTC.

GETtheMANUALS.org

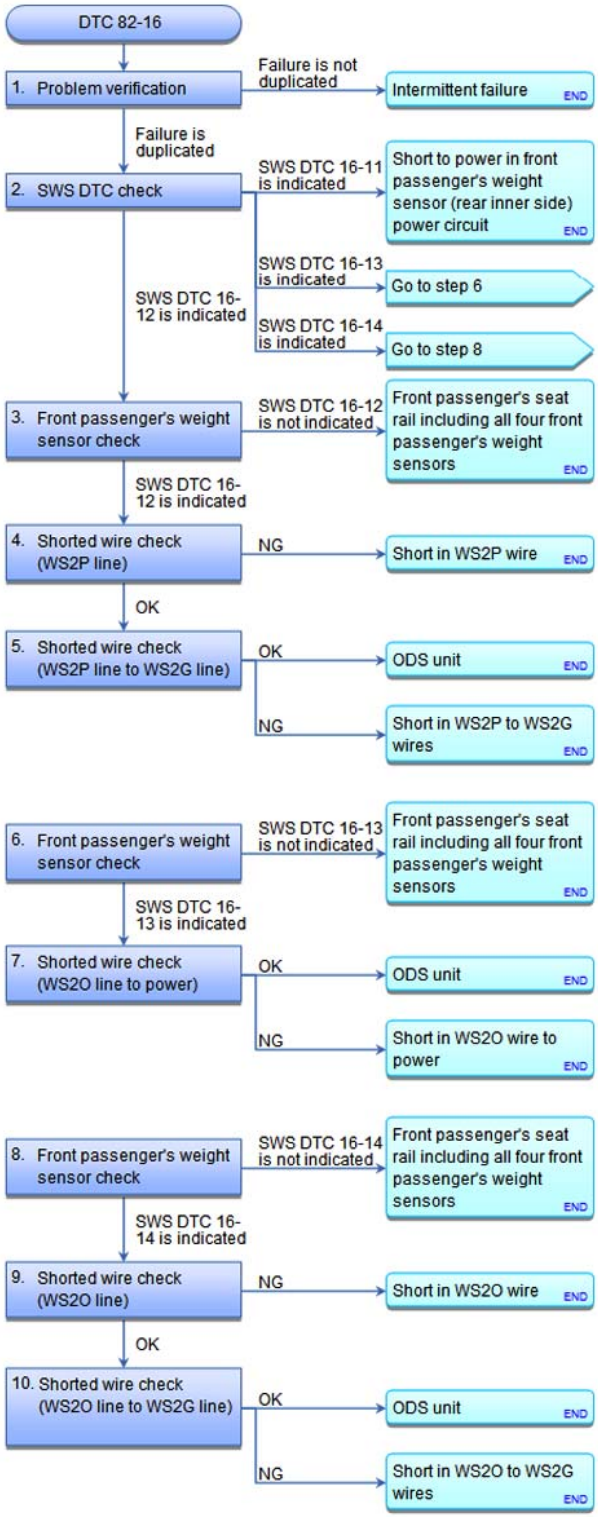

Fig. 193: SRS DTC Troubleshooting Flow Chart (82-16)
Courtesy of AMERICAN HONDA MOTOR CO., INC.

DTC 82-16: NO SIGNAL FROM THE FRONT PASSENGER'S WEIGHT

GETtheMANUALS.org

SENSOR (REAR INNER SIDE)

NOTE:

- **Before doing this troubleshooting procedure, find out if the vehicle was in a collision. If so, verify that all the required components were replaced with new components, of the correct part number, and that they were properly installed See SRS COMPONENT REPLACEMENT/INSPECTION AFTER DEPLOYMENT or AIRBAG AND TENSIONER DISPOSAL .**
- **Before doing this troubleshooting procedure, review SRS PRECAUTIONS AND PROCEDURES and GENERAL TROUBLESHOOTING INFORMATION .**
- **These SWS DTCs are cleared when you turn the ignition switch to LOCK (0).**

DTC Description	DTC
82-16 No signal from the front passenger's weight sensor (rear inner side)	

1. Problem verification:
   - 1. **CLEAR THE DTCS WITH THE HDS** .
   - 2. Turn the ignition switch to ON (II), then wait for 10 seconds.
   - 3. **CHECK FOR DTCS WITH THE HDS** .

DTC Description	DTC
82-16 No signal from the front passenger's weight sensor (rear inner side)	

Is DTC 82-16 indicated?

YES : The failure is duplicated. Go to step 2.

NO : Intermittent failure, the system is OK at this time. **GO TO TROUBLESHOOTING INTERMITTENT FAILURES** . If another DTC is indicated, troubleshoot the DTC.

2. SWS DTC check:
   - 1. **CHECK FOR SWS DTCS WITH THE HDS** .

DTC Description	DTC
16-11 Short to power in the front passenger's weight sensor (rear inner side) power circuit	
16-12 Short to ground in the front passenger's weight sensor (rear inner side) power circuit	
16-13 Open in the front passenger's weight sensor (rear inner side) output circuit	
16-14 Short to ground in the front passenger's weight sensor (rear inner side) output circuit	

Is an SWS DTC also indicated?

SWS DTC 16-11 : Short to power in the front passenger's weight sensor (rear inner side) power circuit; replace the front passenger's seat wire harness, then clear the DTC.

GETtheMANUALS.org

SWS DTC 16-12 : Short to ground in the front passenger's weight sensor (rear inner side) power circuit. Go to step 3.

SWS DTC 16-13 : Open in the front passenger's weight sensor (rear inner side) output circuit. Go to step 6.

SWS DTC 16-14 : Short to ground in the front passenger's weight sensor (rear inner side) output circuit. Go to step 8.

3. Front passenger's weight sensor check:
   - 1. Turn the ignition switch to LOCK (0).
   - 2. Disconnect the front passenger's weight sensor (rear inner side) 3P connector (A) on the front passenger's seat wire harness.

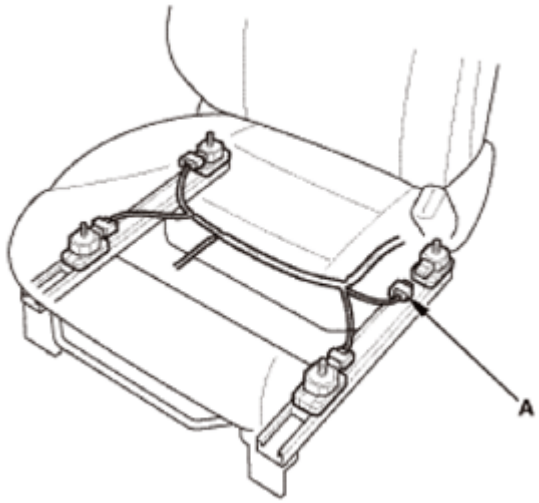

Fig. 194: Identifying Front Passenger's Weight Sensor 3P Connector
Courtesy of AMERICAN HONDA MOTOR CO., INC.

   - 3. Turn the ignition switch to ON (II).
   - 4. **CLEAR THE DTCS WITH THE HDS** .
   - 5. Turn the ignition switch to ON (II), then wait for 10 seconds.
   - 6. **CHECK FOR SWS DTCS WITH THE HDS** .

DTC Description	DTC
16-12 Short to ground in the front passenger's weight sensor (rear inner side) power circuit	

Is SWS DTC 16-12 indicated?

YES : Go to step 4.

NO : Faulty front passenger's weight sensor (rear inner side); **REPLACE THE FRONT PASSENGER'S SEAT RAIL INCLUDING ALL FOUR FRONT PASSENGER'S WEIGHT**

GETtheMANUALS.org

SENSORS , then clear the DTC.

4. Shorted wire check (WS2P line):
   - 1. Turn the ignition switch to LOCK (0).
   - 2. **TURN OVER THE SEAT-BACK COVER/PAD TO GAIN ACCESS TO THE ODS UNIT** .
   - 3. Remove the cover (A), then detach the clip (B), then disconnect the ODS unit 18P connector (C) from the ODS unit.

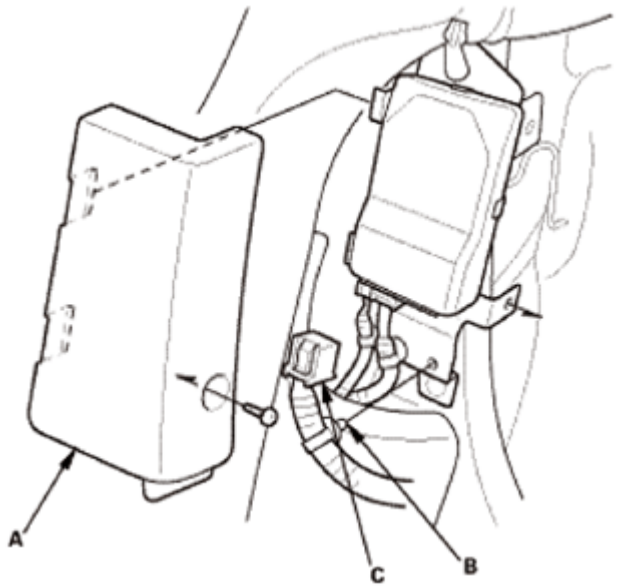

Fig. 195: Identifying ODS Unit 18P Connector, Cover And Clips
Courtesy of AMERICAN HONDA MOTOR CO., INC.

   - 4. Measure the resistance between test points 1 and 2.

     Test condition IG LOCK (0)

     Front passenger's weight sensor (rear inner side) 3P connector (on the front passenger's seat wire harness): disconnected

     ODS unit 18P connector: disconnected

     Test circuit WS2P

     Test point 1 ODS unit 18P connector No. 4 (BLK)

     Test point 2 Body ground

GETtheMANUALS.org

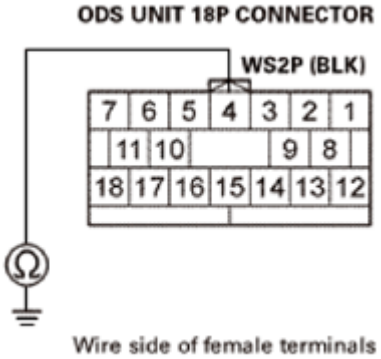

Fig. 196: Measuring Resistance Between ODS Unit 18P Connector No. 4 (BLK) And Body Ground
Courtesy of AMERICAN HONDA MOTOR CO., INC.

Is there an open circuit, or at least 1 Mohms?

YES : The WS2P wire is not shorted. Go to step 5.

NO : Short to ground in the front passenger's seat wire harness; replace the front passenger's seat wire harness, then clear the DTC.

5. Shorted wire check (WS2P line to WS2G line):
   - 1. Measure the resistance between test points 1 and 2.

     Test condition IG LOCK (0)

     Front passenger's weight sensor (rear inner side) 3P connector (on the front passenger's seat wire harness): disconnected

     ODS unit 18P connector: disconnected

     Test circuit WS2P, WS2G

     Test point 1 ODS unit 18P connector No. 4 (BLK)

     Test point 2 ODS unit 18P connector No. 16 (LT GRN)

GETtheMANUALS.org

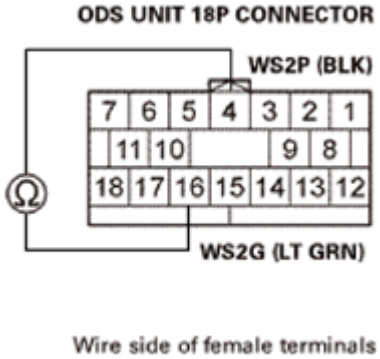

Fig. 197: Measuring Resistance Between ODS Unit 18P Connector No. 4 (BLK) And 16 (LT GRN)
Courtesy of AMERICAN HONDA MOTOR CO., INC.

Is there an open circuit, or at least 1 Mohms?

YES : The WS2P, WS2G wires are OK. Replace the ODS unit, then clear the DTC.

NO : Short to another wire in the front passenger's seat wire harness; replace the front passenger's seat wire harness, then clear the DTC.

6. Front passenger's weight sensor check:
   - 1. Turn the ignition switch to LOCK (0).
   - 2. Swap the connections between the rear inner side front passenger's weight sensor and the front inner side sensor.
   - 3. Turn the ignition switch to ON (II).
   - 4. **CLEAR THE DTCS WITH THE HDS** .
   - 5. Turn the ignition switch to ON (II), then wait for 10 seconds.
   - 6. **CHECK FOR SWS DTCS WITH THE HDS** .

DTC Description	DTC
16-13 Open in the front passenger's weight sensor (rear inner side) output circuit	

Is SWS DTC 16-13 indicated?

YES : Go to step 7.

NO : Faulty front passenger's weight sensor (rear inner side); **REPLACE THE FRONT PASSENGER'S SEAT RAIL INCLUDING ALL FOUR FRONT PASSENGER'S WEIGHT SENSORS** , then clear the DTC.

7. Shorted wire check (WS2O line to power):
   - 1. Turn the ignition switch to LOCK (0).
   - 2. Disconnect the front passenger's weight sensor (front inner side) 3P connector (A) on the front

GETtheMANUALS.org

passenger's seat wire harness, and the front passenger's weight sensor (rear inner side) 3P connector (B) on the front passenger's seat wire harness.

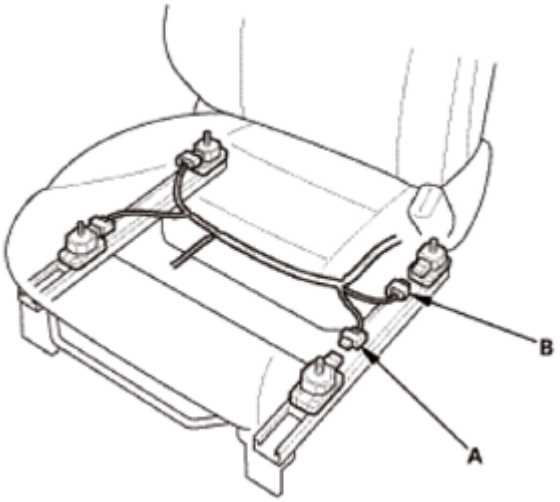

Fig. 198: Identifying Front Passenger's Weight Sensor 3P Connectors
Courtesy of AMERICAN HONDA MOTOR CO., INC.

- 3. **TURN OVER THE SEAT-BACK COVER/PAD TO GAIN ACCESS TO THE ODS UNIT** .
- 4. Remove the cover (A), then detach the clip (B), then disconnect the ODS unit 18P connector (C) from the ODS unit.

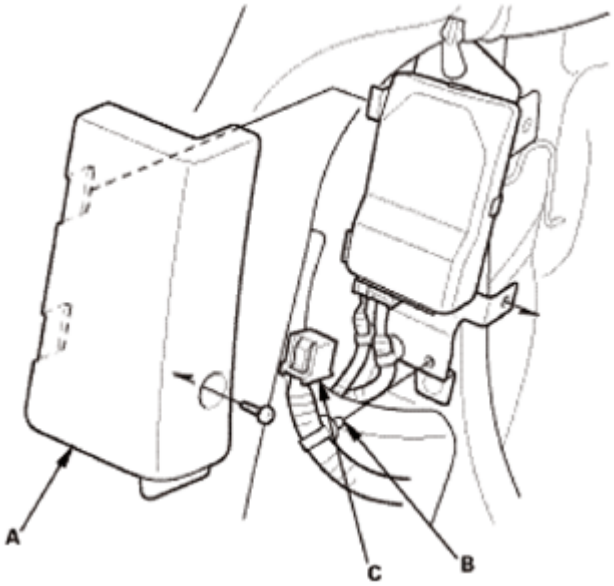

Fig. 199: Identifying ODS Unit 18P Connector, Cover And Clip
Courtesy of AMERICAN HONDA MOTOR CO., INC.

- 5. Turn the ignition switch to ON (II).
- 6. Measure the voltage between test points 1 and 2.

GETtheMANUALS.org

Test condition IG ON (II)

Front passenger's weight sensor (front inner side) 3P connector (on the front passenger's seat wire harness): disconnected

Front passenger's weight sensor (rear inner side) 3P connector (on the front passenger's seat wire harness): disconnected

ODS unit 18P connector: disconnected

Test circuit WS2O

Test point 1 ODS unit 18P connector No. 10 (BLU)

Test point 2 Body ground

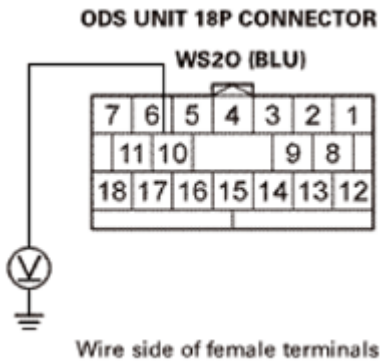

Fig. 200: Measuring Voltage Between ODS Unit 18P Connector No. 10 (BLU) And Body Ground
Courtesy of AMERICAN HONDA MOTOR CO., INC.

Is there less than 0.2 V?

YES : The WS2O wire is OK. Replace the ODS unit, then clear the DTC.

NO : Short to power in the front passenger's seat wire harness; replace the front passenger's seat wire harness, then clear the DTC.

8. Front passenger's weight sensor check:
   - 1. Turn the ignition switch to LOCK (0).
   - 2. Disconnect the front passenger's weight sensor (rear inner side) 3P connector (A) on the front passenger's seat wire harness.

GETtheMANUALS.org

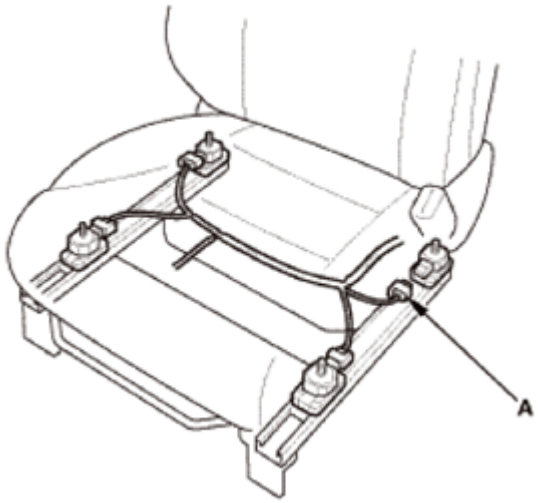

Fig. 201: Identifying Front Passenger's Weight Sensor 3P Connector
Courtesy of AMERICAN HONDA MOTOR CO., INC.

- 3. Turn the ignition switch to ON (II).
- 4. **CLEAR THE DTCS WITH THE HDS** .
- 5. Turn the ignition switch to ON (II), then wait for 10 seconds.
- 6. **CHECK FOR SWS DTCS WITH THE HDS** .

DTC Description	DTC
16-14 Short to ground in the front passenger's weight sensor (rear inner side) output circuit	

Is SWS DTC 16-14 indicated?

YES : Go to step 9.

NO : Faulty front passenger's weight sensor (rear inner side); **REPLACE THE FRONT PASSENGER'S SEAT RAIL INCLUDING ALL FOUR FRONT PASSENGER'S WEIGHT SENSORS** , then clear the DTC.

9. Shorted wire check (WS2O line):
   - 1. Turn the ignition switch to LOCK (0).
   - 2. **TURN OVER THE SEAT-BACK COVER/PAD TO GAIN ACCESS TO THE ODS UNIT** .
   - 3. Remove the cover (A), then detach the clip (B), then disconnect the ODS unit 18P connector (C) from the ODS unit.

GETtheMANUALS.org

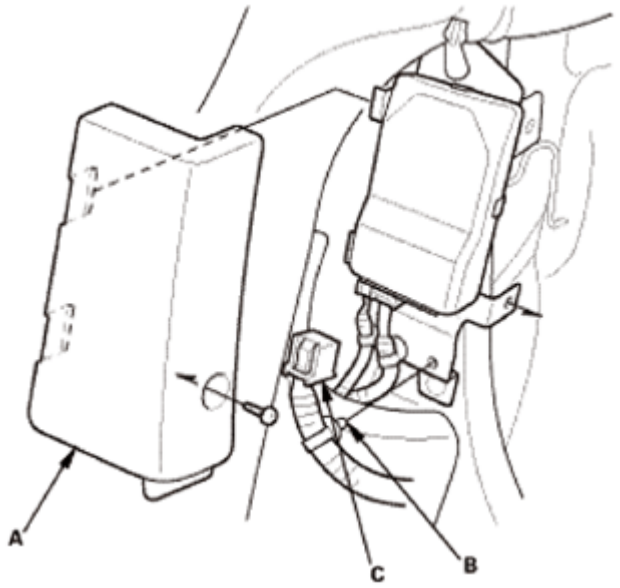

Fig. 202: Identifying ODS Unit 18P Connector, Cover And Clip
Courtesy of AMERICAN HONDA MOTOR CO., INC.

- 4. Measure the resistance between test points 1 and 2.

  Test condition IG LOCK (0)

  Front passenger's weight sensor (rear inner side) 3P connector (on the front passenger's seat wire harness): disconnected

  ODS unit 18P connector: disconnected

  Test circuit WS2O

  Test point 1 ODS unit 18P connector No. 10 (BLU)

  Test point 2 Body ground

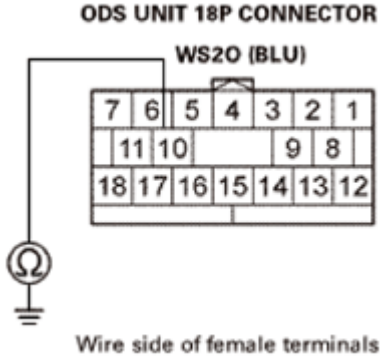

Fig. 203: Measuring Resistance Between ODS Unit 18P Connector No. 10 (BLU) And Body

GETtheMANUALS.org

Ground
Courtesy of AMERICAN HONDA MOTOR CO., INC.

Is there an open circuit, or at least 1 Mohms?

YES : The WS2O wire is not shorted. Go to step 10.

NO : Short to ground in the front passenger's seat wire harness; replace the front passenger's seat wire harness, then clear the DTC.

10. Shorted wire check (WS2O line to WS2G line):
    - 1. Measure the resistance between test points 1 and 2.

      Test condition IG LOCK (0)

      Front passenger's weight sensor (rear inner side) 3P connector (on the front passenger's seat wire harness): disconnected

      ODS unit 18P connector: disconnected

      Test circuit WS2O, WS2G

      Test point 1 ODS unit 18P connector No. 10 (BLU)

      Test point 2 ODS unit 18P connector No. 16 (LT GRN)

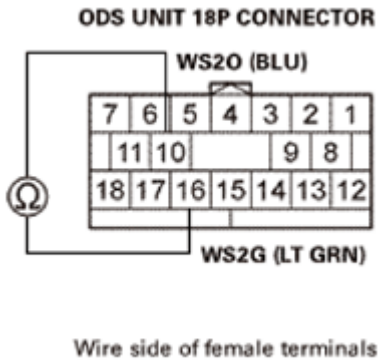

Fig. 204: Measuring Resistance Between ODS Unit 18P Connector No. 10 (BLU) And 16 (LT GRN)
Courtesy of AMERICAN HONDA MOTOR CO., INC.

Is there an open circuit, or at least 1 Mohms?

YES : The WS2O, WS2G wires are OK. Replace the ODS unit, then clear the DTC.

NO : Short to another wire in the front passenger's seat wire harness; replace the front passenger's seat wire harness, then clear the DTC.

GETtheMANUALS.org

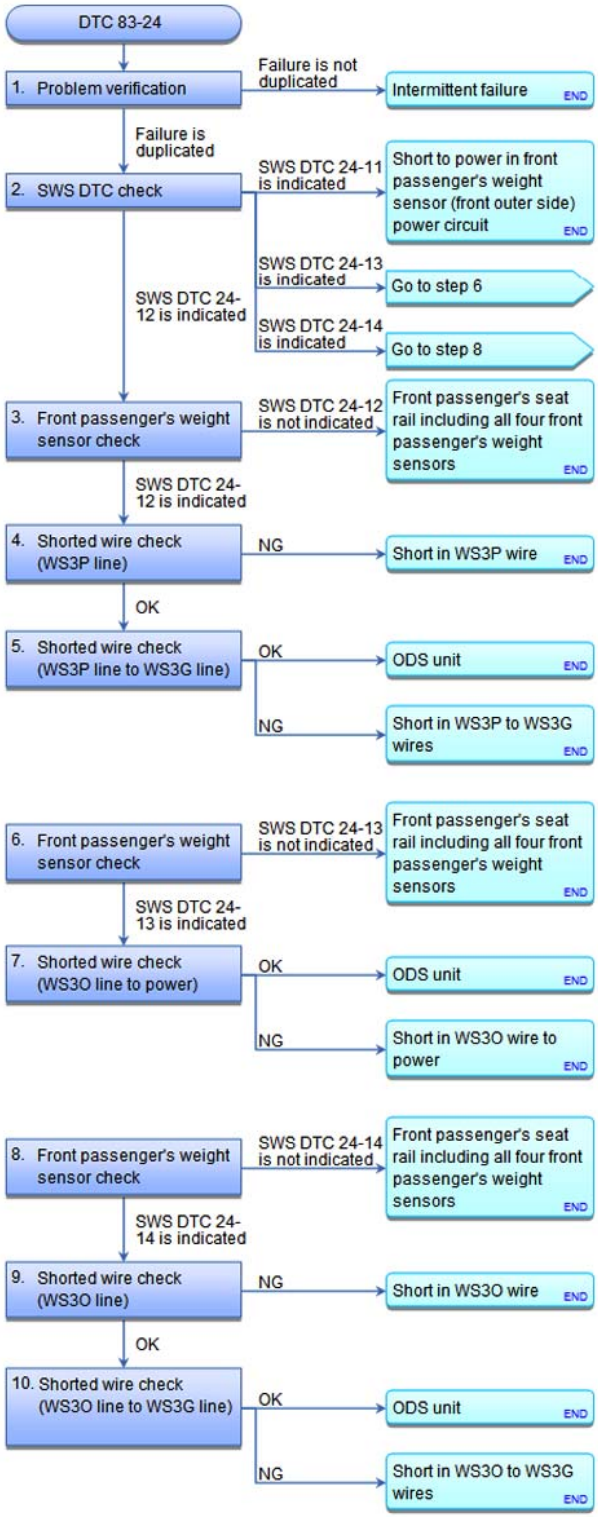

Fig. 205: SRS DTC Troubleshooting Flow Chart (83-24)
Courtesy of AMERICAN HONDA MOTOR CO., INC.

DTC 83-24: NO SIGNAL FROM THE FRONT PASSENGER'S WEIGHT

GETtheMANUALS.org

SENSOR (FRONT OUTER SIDE)

NOTE:

- **Before doing this troubleshooting procedure, find out if the vehicle was in a collision. If so, verify that all the required components were replaced with new components, of the correct part number, and that they were properly installed See SRS COMPONENT REPLACEMENT/INSPECTION AFTER DEPLOYMENT or AIRBAG AND TENSIONER DISPOSAL .**
- **Before doing this troubleshooting procedure, review SRS PRECAUTIONS AND PROCEDURES and GENERAL TROUBLESHOOTING INFORMATION .**
- **These SWS DTCs are cleared when you turn the ignition switch to LOCK (0).**

DTC Description	DTC
83-24 No signal from the front passenger's weight sensor (front outer side)	

1. Problem verification:
   - 1. **CLEAR THE DTCS WITH THE HDS** .
   - 2. Turn the ignition switch to ON (II), then wait for 10 seconds.
   - 3. **CHECK FOR DTCS WITH THE HDS** .

DTC Description	DTC
83-24 No signal from the front passenger's weight sensor (front outer side)	

Is DTC 83-24 indicated?

YES : The failure is duplicated. Go to step 2.

NO : Intermittent failure, the system is OK at this time. **GO TO TROUBLESHOOTING INTERMITTENT FAILURES** . If another DTC is indicated, troubleshoot the DTC.

2. SWS DTC check:
   - 1. **CHECK FOR SWS DTCS WITH THE HDS** .

DTC Description	DTC
24-11 Short to power in the front passenger's weight sensor (front outer side) power circuit	
24-12 Short to ground in the front passenger's weight sensor (front outer side) power circuit	
24-13 Open in the front passenger's weight sensor (front outer side) output circuit	
24-14 Short to ground in the front passenger's weight sensor (front outer side) output circuit	

Is an SWS DTC also indicated?

SWS DTC 24-11 : Short to power in the front passenger's weight sensor (front outer side) power circuit; replace the front passenger's seat wire harness, then clear the DTC.

GETtheMANUALS.org

SWS DTC 24-12 : Short to ground in the front passenger's weight sensor (front outer side) power circuit. Go to step 3.

SWS DTC 24-13 : Open in the front passenger's weight sensor (front outer side) output circuit. Go to step 6.

SWS DTC 24-14 : Short to ground in the front passenger's weight sensor (front outer side) output circuit. Go to step 8.

3. Front passenger's weight sensor check:
   - 1. Turn the ignition switch to LOCK (0).
   - 2. Disconnect the front passenger's weight sensor (front outer side) 3P connector (A) on the front passenger's seat wire harness.

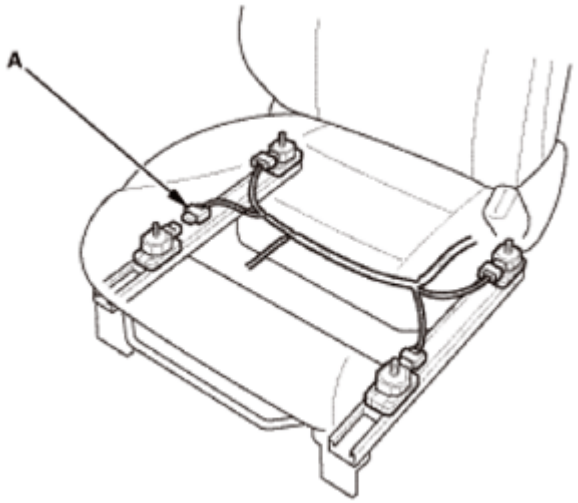

Fig. 206: Identifying Front Passenger's Weight Sensor 3P Connector
Courtesy of AMERICAN HONDA MOTOR CO., INC.

   - 3. Turn the ignition switch to ON (II).
   - 4. **CLEAR THE DTCS WITH THE HDS** .
   - 5. Turn the ignition switch to ON (II), then wait for 10 seconds.
   - 6. **CHECK FOR SWS DTCS WITH THE HDS** .

DTC Description	DTC
24-12 Short to ground in the front passenger's weight sensor (front outer side) power circuit	

Is SWS DTC 24-12 indicated?

YES : Go to step 4.

NO : Faulty front passenger's weight sensor (front outer side); **REPLACE THE FRONT PASSENGER'S SEAT RAIL INCLUDING ALL FOUR FRONT PASSENGER'S WEIGHT**

GETtheMANUALS.org

SENSORS , then clear the DTC.

4. Shorted wire check (WS3P line):
   - 1. Turn the ignition switch to LOCK (0).
   - 2. **TURN OVER THE SEAT-BACK COVER/PAD TO GAIN ACCESS TO THE ODS UNIT** .
   - 3. Remove the cover (A), then detach the clip (B), then disconnect the ODS unit 18P connector (C) from the ODS unit.

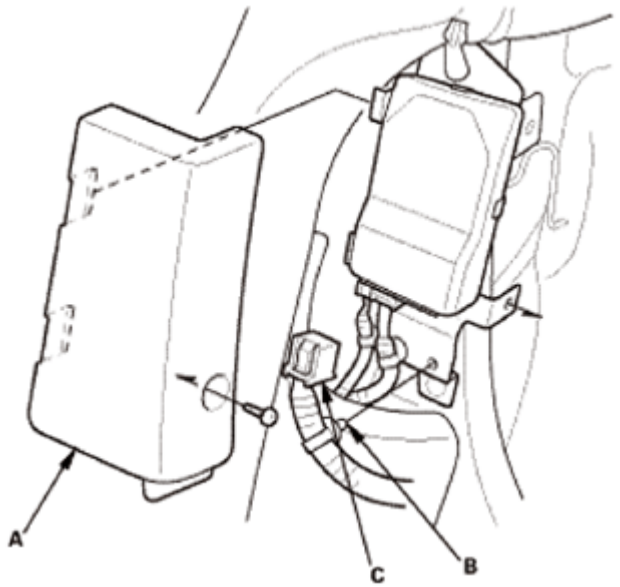

Fig. 207: Identifying ODS Unit 18P Connector, Cover And Clip
Courtesy of AMERICAN HONDA MOTOR CO., INC.

   - 4. Measure the resistance between test points 1 and 2.

     Test condition IG LOCK (0)

     Front passenger's weight sensor (front outer side) 3P connector (on the front passenger's seat wire harness): disconnected

     ODS unit 18P connector: disconnected

     Test circuit WS3P

     Test point 1 ODS unit 18P connector No. 3 (BRN)

     Test point 2 Body ground

GETtheMANUALS.org

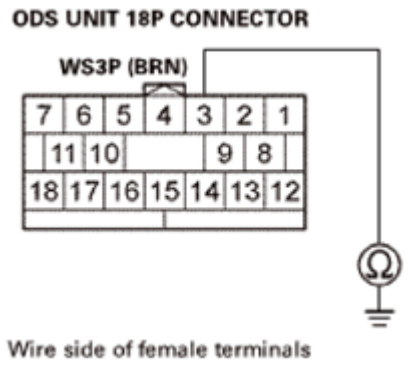

Fig. 208: Measuring Resistance Between ODS Unit 18P Connector No. 3 (BRN) And Body Ground
Courtesy of AMERICAN HONDA MOTOR CO., INC.

Is there an open circuit, or at least 1 Mohms?

YES : The WS3P wire is not shorted. Go to step 5.

NO : Short to ground in the front passenger's seat wire harness; replace the front passenger's seat wire harness, then clear the DTC.

5. Shorted wire check (WS3P line to WS3G line):
   - 1. Measure the resistance between test points 1 and 2.

     Test condition IG LOCK (0)

     Front passenger's weight sensor (front outer side) 3P connector (on the front passenger's seat wire harness): disconnected

     ODS unit 18P connector: disconnected

     Test circuit WS3P, WS3G

     Test point 1 ODS unit 18P connector No. 3 (BRN)

     Test point 2 ODS unit 18P connector No. 15 (GRY)

GETtheMANUALS.org

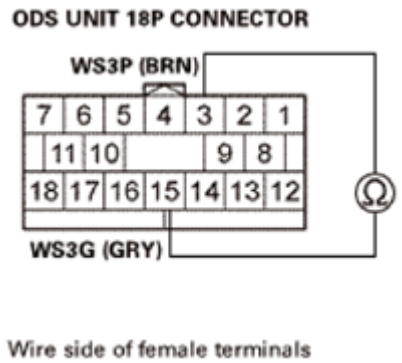

Fig. 209: Measuring Resistance Between ODS Unit 18P Connector No. 3 (BRN) And 15 (GRY)
Courtesy of AMERICAN HONDA MOTOR CO., INC.

Is there an open circuit, or at least 1 Mohms?

YES : The WS3P, WS3G wires are OK. Replace the ODS unit, then clear the DTC.

NO : Short to another wire in the front passenger's seat wire harness; replace the front passenger's seat wire harness, then clear the DTC.

6. Front passenger's weight sensor check:
   - 1. Turn the ignition switch to LOCK (0).
   - 2. Swap the connections between the front outer side front passenger's weight sensor and the rear outer side sensor.
   - 3. Turn the ignition switch to ON (II).
   - 4. **CLEAR THE DTCS WITH THE HDS** .
   - 5. Turn the ignition switch to ON (II), then wait for 10 seconds.
   - 6. **CHECK FOR SWS DTCS WITH THE HDS** .

DTC Description	DTC
24-13 Open in the front passenger's weight sensor (front outer side) output circuit	

Is SWS DTC 24-13 indicated?

YES : Go to step 7.

NO : Faulty front passenger's weight sensor (front outer side); **REPLACE THE FRONT PASSENGER'S SEAT RAIL INCLUDING ALL FOUR FRONT PASSENGER'S WEIGHT SENSORS** , then clear the DTC.

7. Shorted wire check (WS3O line to power):
   - 1. Turn the ignition switch to LOCK (0).
   - 2. Disconnect the front passenger's weight sensor (front outer side) 3P connector (A) on the front

GETtheMANUALS.org

passenger's seat wire harness, and the front passenger's weight sensor (rear outer side) 3P connector (B) on the front passenger's seat wire harness.

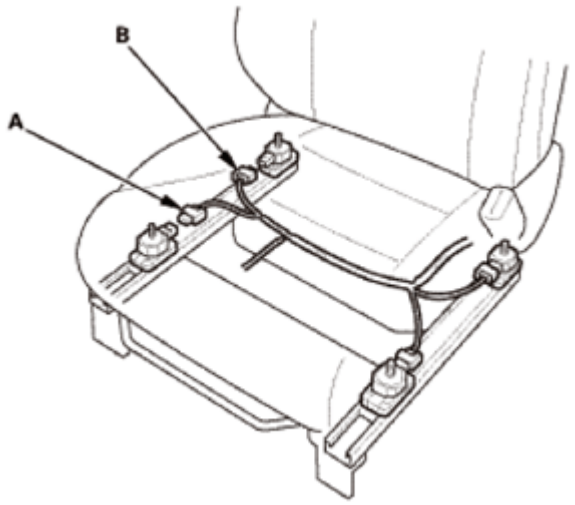

Fig. 210: Identifying Front Passenger's Weight Sensor 3P Connectors
Courtesy of AMERICAN HONDA MOTOR CO., INC.

- 3. **TURN OVER THE SEAT-BACK COVER/PAD TO GAIN ACCESS TO THE ODS UNIT** .
- 4. Remove the cover (A), then detach the clip (B), then disconnect the ODS unit 18P connector (C) from the ODS unit.

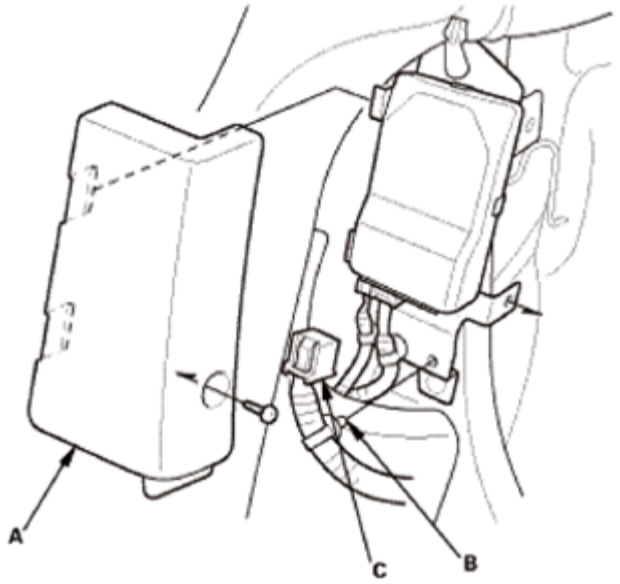

Fig. 211: Identifying ODS Unit 18P Connector, Cover And Clip
Courtesy of AMERICAN HONDA MOTOR CO., INC.

- 5. Turn the ignition switch to ON (II).
- 6. Measure the voltage between test points 1 and 2.

GETtheMANUALS.org

Test condition IG ON (II)

Front passenger's weight sensor (front outer side) 3P connector (on the front passenger's seat wire harness): disconnected

Front passenger's weight sensor (rear outer side) 3P connector (on the front passenger's seat wire harness): disconnected

ODS unit 18P connector: disconnected

Test circuit WS3O

Test point 1 ODS unit 18P connector No. 9 (BLU)

Test point 2 Body ground

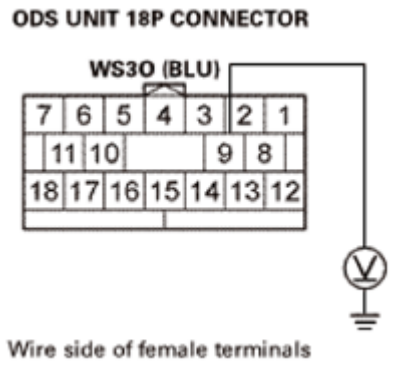

Fig. 212: Measuring Voltage Between ODS Unit 18P Connector No. 9 (BLU) And Body Ground
Courtesy of AMERICAN HONDA MOTOR CO., INC.

Is there less than 0.2 V?

YES : The WS3O wire is OK. Replace the ODS unit, then clear the DTC.

NO : Short to power in the front passenger's seat wire harness; replace the front passenger's seat wire harness, then clear the DTC.

8. Front passenger's weight sensor check:
   - 1. Turn the ignition switch to LOCK (0).
   - 2. Disconnect the front passenger's weight sensor (front outer side) 3P connector (A) on the front passenger's seat wire harness.

GETtheMANUALS.org

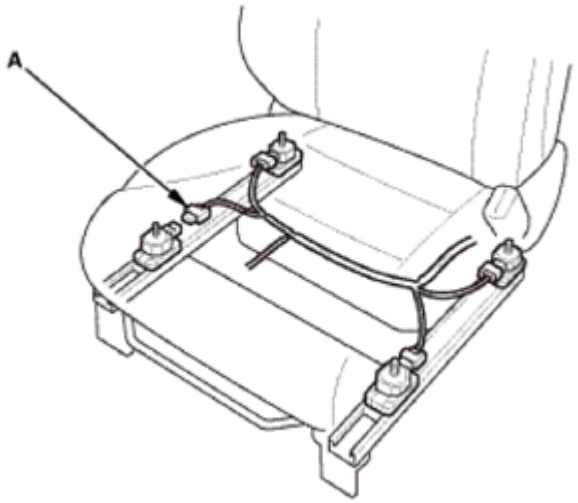

Fig. 213: Identifying Front Passenger's Weight Sensor 3P Connector
Courtesy of AMERICAN HONDA MOTOR CO., INC.

- 3. Turn the ignition switch to ON (II).
- 4. **CLEAR THE DTCS WITH THE HDS** .
- 5. Turn the ignition switch to ON (II), then wait for 10 seconds.
- 6. **CHECK FOR SWS DTCS WITH THE HDS** .

DTC Description	DTC
24-14 Short to ground in the front passenger's weight sensor (front outer side) output circuit	

Is SWS DTC 24-14 indicated?

YES : Go to step 9.

NO : Faulty front passenger's weight sensor (front outer side); **REPLACE THE FRONT PASSENGER'S SEAT RAIL INCLUDING ALL FOUR FRONT PASSENGER'S WEIGHT SENSORS** , then clear the DTC.

9. Shorted wire check (WS3O line):
   - 1. Turn the ignition switch to LOCK (0).
   - 2. **TURN OVER THE SEAT-BACK COVER/PAD TO GAIN ACCESS TO THE ODS UNIT** .
   - 3. Remove the cover (A), then detach the clip (B), then disconnect the ODS unit 18P connector (C) from the ODS unit.

GETtheMANUALS.org

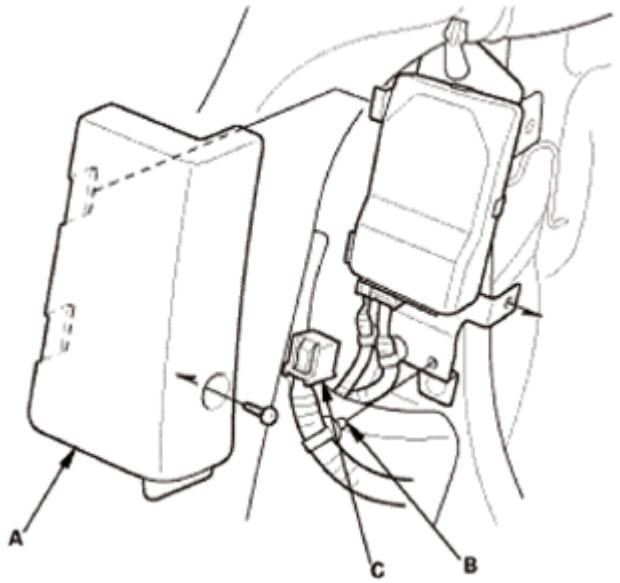

Fig. 214: Identifying ODS Unit 18P Connector, Cover And Clip
Courtesy of AMERICAN HONDA MOTOR CO., INC.

- 4. Measure the resistance between test points 1 and 2.

  Test condition IG LOCK (0)

  Front passenger's weight sensor (front outer side) 3P connector (on the front passenger's seat wire harness): disconnected

  ODS unit 18P connector: disconnected

  Test circuit WS3O

  Test point 1 ODS unit 18P connector No. 9 (BLU)

  Test point 2 Body ground

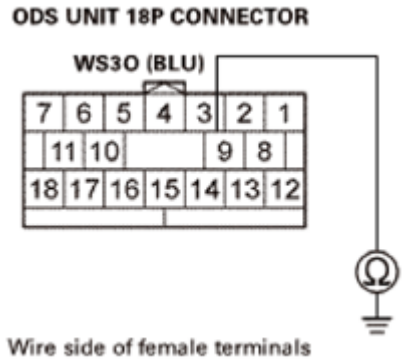

Fig. 215: Measuring Resistance Between ODS Unit 18P Connector No. 9 (BLU) And Body

GETtheMANUALS.org

Ground
Courtesy of AMERICAN HONDA MOTOR CO., INC.

Is there an open circuit, or at least 1 Mohms?

YES : The WS3O wire is not shorted. Go to step 10.

NO : Short to ground in the front passenger's seat wire harness; replace the front passenger's seat wire harness, then clear the DTC.

10. Shorted wire check (WS3O line to WS3G line):
    - 1. Measure the resistance between test points 1 and 2.

      Test condition IG LOCK (0)

      Front passenger's weight sensor (front outer side) 3P connector (on the front passenger's seat wire harness): disconnected

      ODS unit 18P connector: disconnected

      Test circuit WS3O, WS3G

      Test point 1 ODS unit 18P connector No. 9 (BLU)

      Test point 2 ODS unit 18P connector No. 15 (GRY)

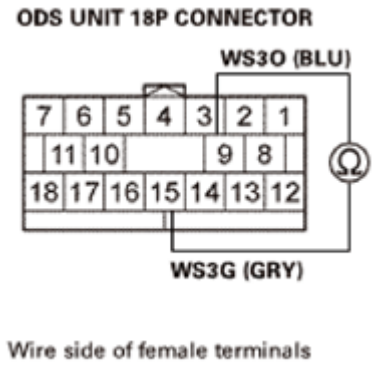

Fig. 216: Measuring Resistance Between ODS Unit 18P Connector No. 9 (BLU) And 15 (GRY)
Courtesy of AMERICAN HONDA MOTOR CO., INC.

Is there an open circuit, or at least 1 Mohms?

YES : The WS3O, WS3G wires are OK. Replace the ODS unit, then clear the DTC.

NO : Short to another wire in the front passenger's seat wire harness; replace the front passenger's seat wire harness, then clear the DTC.

GETtheMANUALS.org

DTC 83-26: NO SIGNAL FROM THE FRONT PASSENGER'S WEIGHT SENSOR (REAR OUTER SIDE)

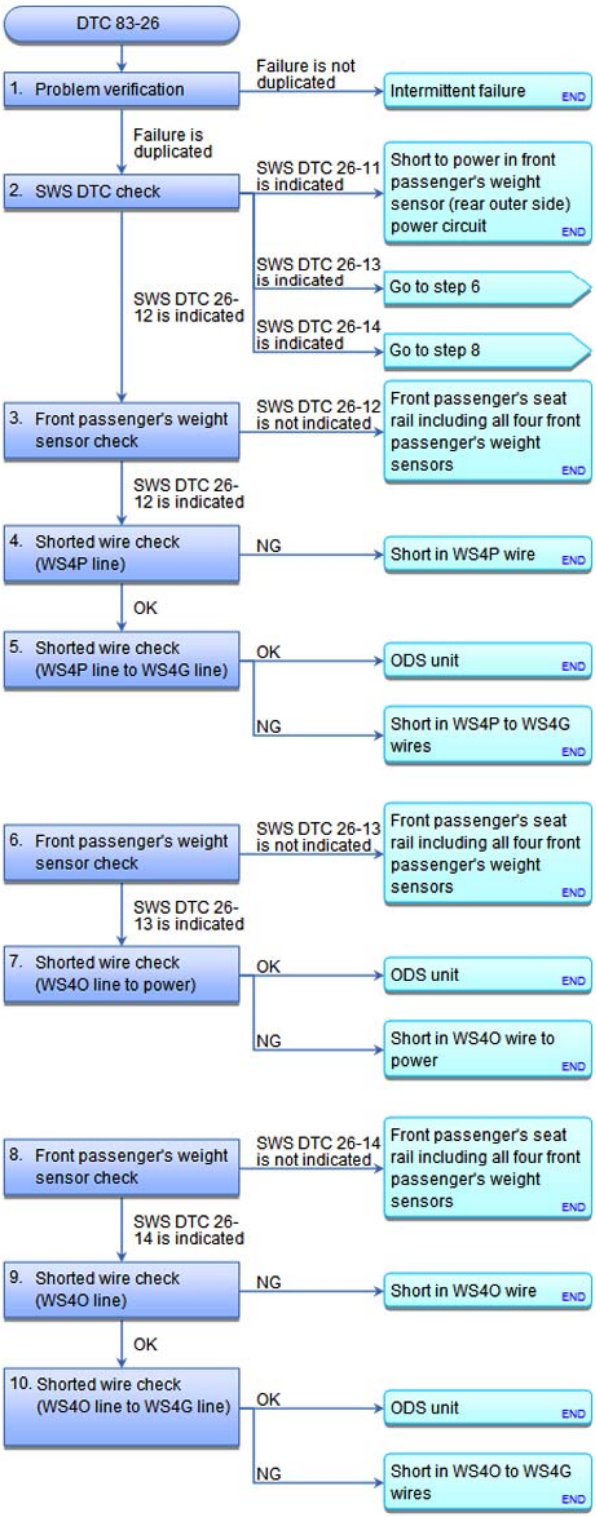

Fig. 217: SRS DTC Troubleshooting Flow Chart (83-26)

GETtheMANUALS.org

Courtesy of AMERICAN HONDA MOTOR CO., INC.

NOTE:

- **Before doing this troubleshooting procedure, find out if the vehicle was in a collision. If so, verify that all the required components were replaced with new components, of the correct part number, and that they were properly installed See SRS COMPONENT REPLACEMENT/INSPECTION AFTER DEPLOYMENT or AIRBAG AND TENSIONER DISPOSAL .**
- **Before doing this troubleshooting procedure, review SRS PRECAUTIONS AND PROCEDURES and GENERAL TROUBLESHOOTING INFORMATION .**
- **These SWS DTCs are cleared when you turn the ignition switch to LOCK (0).**

DTC Description	DTC
83-26 No signal from the front passenger's weight sensor (rear outer side)	

1. Problem verification:
   - 1. **CLEAR THE DTCS WITH THE HDS** .
   - 2. Turn the ignition switch to ON (II), then wait for 10 seconds.
   - 3. **CHECK FOR DTCS WITH THE HDS** .

DTC Description	DTC
83-26 No signal from the front passenger's weight sensor (rear outer side)	

Is DTC 83-26 indicated?

YES : The failure is duplicated. Go to step 2.

NO : Intermittent failure, the system is OK at this time. **GO TO TROUBLESHOOTING INTERMITTENT FAILURES** . If another DTC is indicated, troubleshoot the DTC.

2. SWS DTC check:
   - 1. **CHECK FOR SWS DTCS WITH THE HDS** .

DTC Description	DTC
26-11 Short to power in the front passenger's weight sensor (rear outer side) power circuit	
26-12 Short to ground in the front passenger's weight sensor (rear outer side) power circuit	
26-13 Open in the front passenger's weight sensor (rear outer side) output circuit	
26-14 Short to ground in the front passenger's weight sensor (rear outer side) output circuit	

Is an SWS DTC also indicated?

SWS DTC 26-11 : Short to power in the front passenger's weight sensor (rear outer side) power circuit; replace the front passenger's seat wire harness, then clear the DTC.

GETtheMANUALS.org

SWS DTC 26-12 : Short to ground in the front passenger's weight sensor (rear outer side) power circuit. Go to step 3.

SWS DTC 26-13 : Open in the front passenger's weight sensor (rear outer side) output circuit. Go to step 6.

SWS DTC 26-14 : Short to ground in the front passenger's weight sensor (rear outer side) output circuit. Go to step 8.

3. Front passenger's weight sensor check:
   - 1. Turn the ignition switch to LOCK (0).
   - 2. Disconnect the front passenger's weight sensor (rear outer side) 3P connector (A) on the front passenger's seat wire harness.

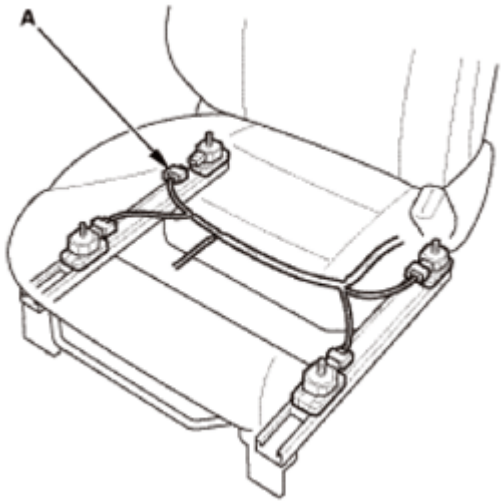

Fig. 218: Identifying Front Passenger's Weight Sensor 3P Connector
Courtesy of AMERICAN HONDA MOTOR CO., INC.

   - 3. Turn the ignition switch to ON (II).
   - 4. **CLEAR THE DTCS WITH THE HDS** .
   - 5. Turn the ignition switch to ON (II), then wait for 10 seconds.
   - 6. **CHECK FOR SWS DTCS WITH THE HDS** .

DTC Description	DTC
26-12 Short to ground in the front passenger's weight sensor (rear outer side) power circuit	

Is SWS DTC 26-12 indicated?

YES : Go to step 4.

NO : Faulty front passenger's weight sensor (rear outer side); **REPLACE THE FRONT PASSENGER'S SEAT RAIL INCLUDING ALL FOUR FRONT PASSENGER'S WEIGHT**

GETtheMANUALS.org

SENSORS , then clear the DTC.

4. Shorted wire check (WS4P line):
   - 1. Turn the ignition switch to LOCK (0).
   - 2. **TURN OVER THE SEAT-BACK COVER/PAD TO GAIN ACCESS TO THE ODS UNIT** .
   - 3. Remove the cover (A), then detach the clip (B), then disconnect the ODS unit 18P connector (C) from the ODS unit.

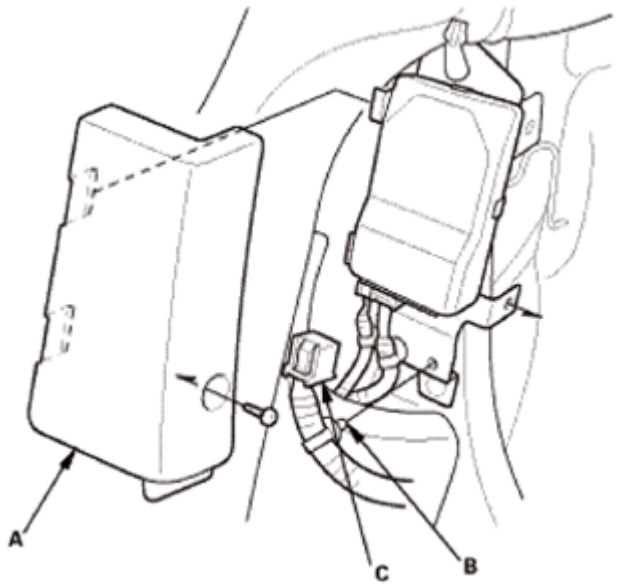

Fig. 219: Identifying ODS Unit 18P Connector, Cover And Clip
Courtesy of AMERICAN HONDA MOTOR CO., INC.

   - 4. Measure the resistance between test points 1 and 2.

     Test condition IG LOCK (0)

     Front passenger's weight sensor (rear outer side) 3P connector (on the front passenger's seat wire harness): disconnected

     ODS unit 18P connector: disconnected

     Test circuit WS4P

     Test point 1 ODS unit 18P connector No. 2 (RED)

     Test point 2 Body ground

GETtheMANUALS.org

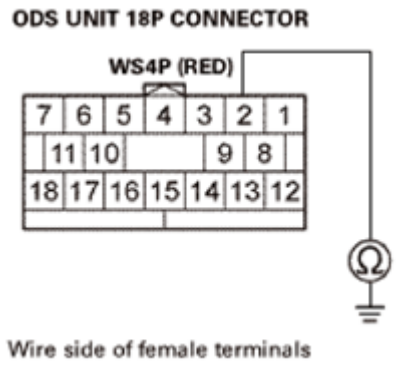

Fig. 220: Measuring Resistance Between ODS Unit 18P Connector No. 2 (RED) And Body Ground
Courtesy of AMERICAN HONDA MOTOR CO., INC.

Is there an open circuit, or at least 1 Mohms?

YES : The WS4P wire is not shorted. Go to step 5.

NO : Short to ground in the front passenger's seat wire harness; replace the front passenger's seat wire harness, then clear the DTC.

5. Shorted wire check (WS4P line to WS4G line):
   - 1. Measure the resistance between test points 1 and 2.

     Test condition IG LOCK (0)

     Front passenger's weight sensor (rear outer side) 3P connector (on the front passenger's seat wire harness): disconnected

     ODS unit 18P connector: disconnected

     Test circuit WS4P, WS4G

     Test point 1 ODS unit 18P connector No. 2 (RED)

     Test point 2 ODS unit 18P connector No. 14 (WHT)

GETtheMANUALS.org

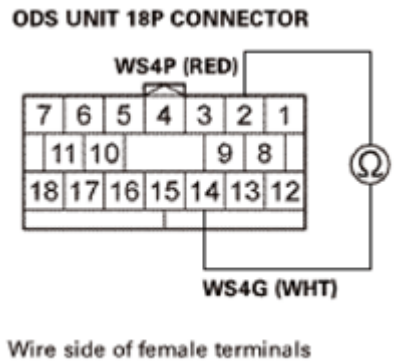

Fig. 221: Measuring Resistance Between ODS Unit 18P Connector No. 2 (RED) And 14 (WHT)
Courtesy of AMERICAN HONDA MOTOR CO., INC.

Is there an open circuit, or at least 1 Mohms?

YES : The WS4P, WS4G wires are OK. Replace the ODS unit, then clear the DTC.

NO : Short to another wire in the front passenger's seat wire harness; replace the front passenger's seat wire harness, then clear the DTC.

6. Front passenger's weight sensor check:
   - 1. Turn the ignition switch to LOCK (0).
   - 2. Swap the connections between the rear outer side front passenger's weight sensor and the front outer side sensor.
   - 3. Turn the ignition switch to ON (II).
   - 4. **CLEAR THE DTCS WITH THE HDS** .
   - 5. Turn the ignition switch to ON (II), then wait for 10 seconds.
   - 6. **CHECK FOR SWS DTCS WITH THE HDS** .

DTC Description	DTC
26-13 Open in the front passenger's weight sensor (rear outer side) output circuit	

Is SWS DTC 26-13 indicated?

YES : Go to step 7.

NO : Faulty front passenger's weight sensor (rear outer side); **REPLACE THE FRONT PASSENGER'S SEAT RAIL INCLUDING ALL FOUR FRONT PASSENGER'S WEIGHT SENSORS** , then clear the DTC.

7. Shorted wire check (WS4O line to power):
   - 1. Turn the ignition switch to LOCK (0).
   - 2. Disconnect the front passenger's weight sensor (front outer side) 3P connector (A) on the front

GETtheMANUALS.org

passenger's seat wire harness, and the front passenger's weight sensor (rear outer side) 3P connector (B) on the front passenger's seat wire harness.

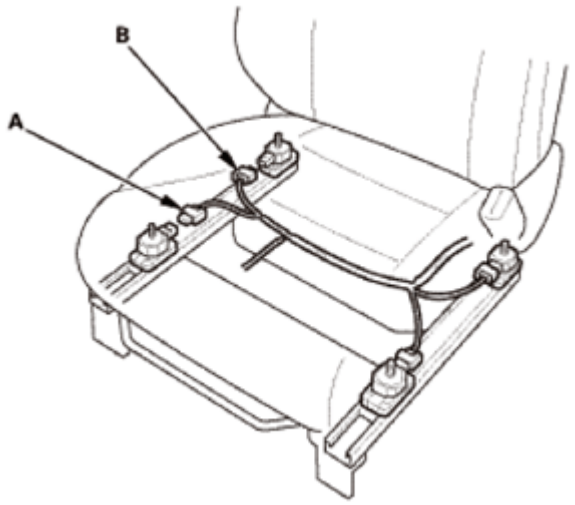

Fig. 222: Identifying Front Passenger's Weight Sensor 3P Connectors
Courtesy of AMERICAN HONDA MOTOR CO., INC.

- 3. **TURN OVER THE SEAT-BACK COVER/PAD TO GAIN ACCESS TO THE ODS UNIT** .
- 4. Remove the cover (A), then detach the clip (B), then disconnect the ODS unit 18P connector (C) from the ODS unit.

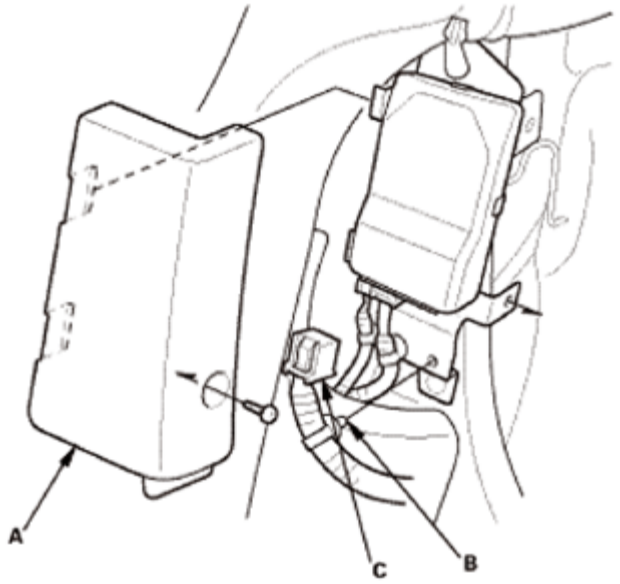

Fig. 223: Identifying ODS Unit 18P Connector, Cover And Clip
Courtesy of AMERICAN HONDA MOTOR CO., INC.

- 5. Turn the ignition switch to ON (II).
- 6. Measure the voltage between test points 1 and 2.

GETtheMANUALS.org

Test condition IG ON (II)

Front passenger's weight sensor (front outer side) 3P connector (on the front passenger's seat wire harness): disconnected

Front passenger's weight sensor (rear outer side) 3P connector (on the front passenger's seat wire harness): disconnected

ODS unit 18P connector: disconnected

Test circuit WS4O

Test point 1 ODS unit 18P connector No. 8 (GRN)

Test point 2 Body ground

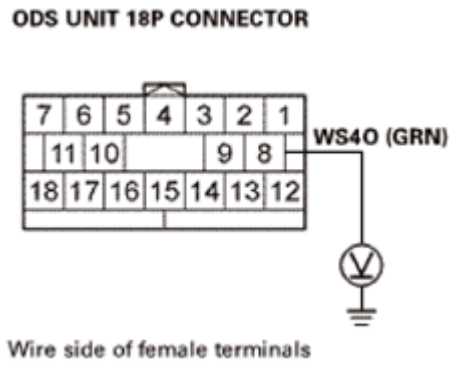

Fig. 224: Measuring Voltage Between ODS Unit 18P Connector No. 8 (GRN) And Body Ground
Courtesy of AMERICAN HONDA MOTOR CO., INC.

Is there less than 0.2 V?

YES : The WS4O wire is OK. Replace the ODS unit, then clear the DTC.

NO : Short to power in the front passenger's seat wire harness; replace the front passenger's seat wire harness, then clear the DTC.

8. Front passenger's weight sensor check:
   - 1. Turn the ignition switch to LOCK (0).
   - 2. Disconnect the front passenger's weight sensor (rear outer side) 3P connector (A) on the front passenger's seat wire harness.

GETtheMANUALS.org

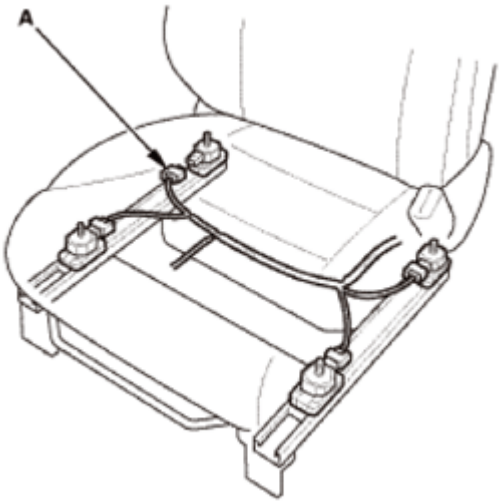

Fig. 225: Identifying Front Passenger's Weight Sensor 3P Connector
Courtesy of AMERICAN HONDA MOTOR CO., INC.

- 3. Turn the ignition switch to ON (II).
- 4. **CLEAR THE DTCS WITH THE HDS** .
- 5. Turn the ignition switch to ON (II), then wait for 10 seconds.
- 6. **CHECK FOR SWS DTCS WITH THE HDS** .

DTC Description	DTC
26-14 Short to ground in the front passenger's weight sensor (rear outer side) output circuit	

Is SWS DTC 26-14 indicated?

YES : Go to step 9.

NO : Faulty front passenger's weight sensor (rear outer side); **REPLACE THE FRONT PASSENGER'S SEAT RAIL INCLUDING ALL FOUR FRONT PASSENGER'S WEIGHT SENSORS** , then clear the DTC.

9. Shorted wire check (WS4O line):
   - 1. Turn the ignition switch to LOCK (0).
   - 2. **TURN OVER THE SEAT-BACK COVER/PAD TO GAIN ACCESS TO THE ODS UNIT** .
   - 3. Remove the cover (A), then detach the clip (B), then disconnect the ODS unit 18P connector (C) from the ODS unit.

GETtheMANUALS.org

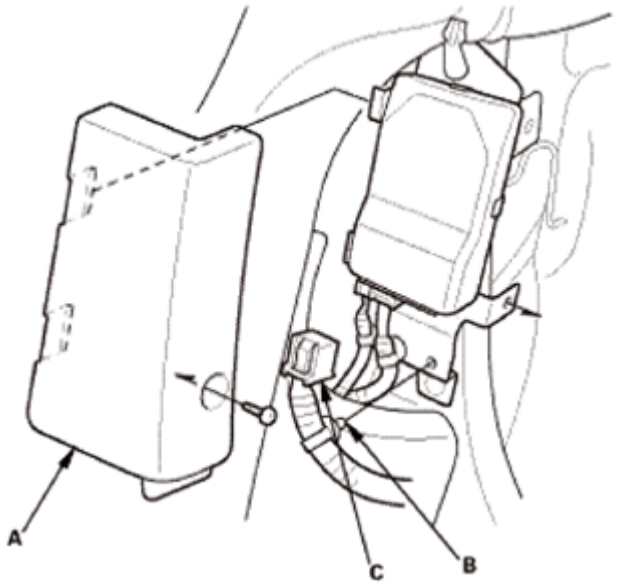

Fig. 226: Identifying ODS Unit 18P Connector, Cover And Clip
Courtesy of AMERICAN HONDA MOTOR CO., INC.

- 4. Measure the resistance between test points 1 and 2.

  Test condition IG LOCK (0)

  Front passenger's weight sensor (rear outer side) 3P connector (on the front passenger's seat wire harness): disconnected

  ODS unit 18P connector: disconnected

  Test circuit WS4O

  Test point 1 ODS unit 18P connector No. 8 (GRN)

  Test point 2 Body ground

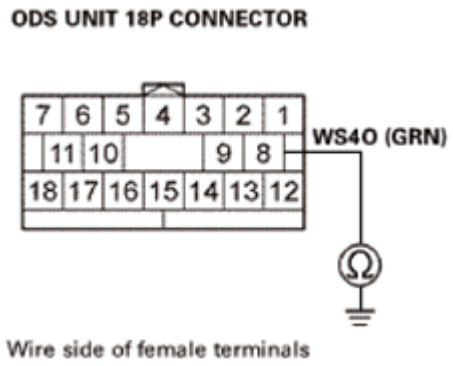

Fig. 227: Measuring Resistance Between ODS Unit 18P Connector No. 8 (GRN) And Body

GETtheMANUALS.org

Ground
Courtesy of AMERICAN HONDA MOTOR CO., INC.

Is there an open circuit, or at least 1 Mohms?

YES : The WS4O wire is not shorted. Go to step 10.

NO : Short to ground in the front passenger's seat wire harness; replace the front passenger's seat wire harness, then clear the DTC.

10. Shorted wire check (WS4O line to WS4G line):
    - 1. Measure the resistance between test points 1 and 2.

      Test condition IG LOCK (0)

      Front passenger's weight sensor (rear outer side) 3P connector (on the front passenger's seat wire harness): disconnected

      ODS unit 18P connector: disconnected

      Test circuit WS4O, WS4G

      Test point 1 ODS unit 18P connector No. 8 (GRN)

      Test point 2 ODS unit 18P connector No. 14 (WHT)

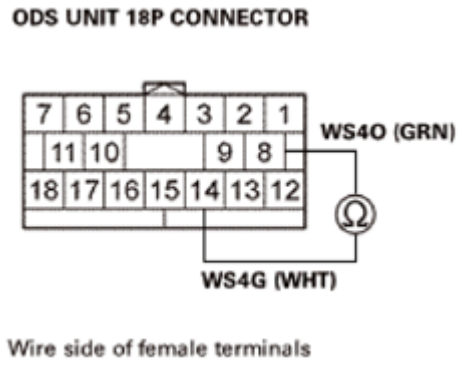

Fig. 228: Measuring Resistance Between ODS Unit 18P Connector No. 8 (GRN) And 14 (WHT)
Courtesy of AMERICAN HONDA MOTOR CO., INC.

Is there an open circuit, or at least 1 Mohms?

YES : The WS4O, WS4G wires are OK. Replace the ODS unit, then clear the DTC.

NO : Short to another wire in the front passenger's seat wire harness; replace the front passenger's seat wire harness, then clear the DTC.

GETtheMANUALS.org

DTC 85-4X ("X" CAN BE 0 THRU 9 OR A THRU F), 85-63, 85-64: INTERNAL FAILURE OF THE ODS UNIT

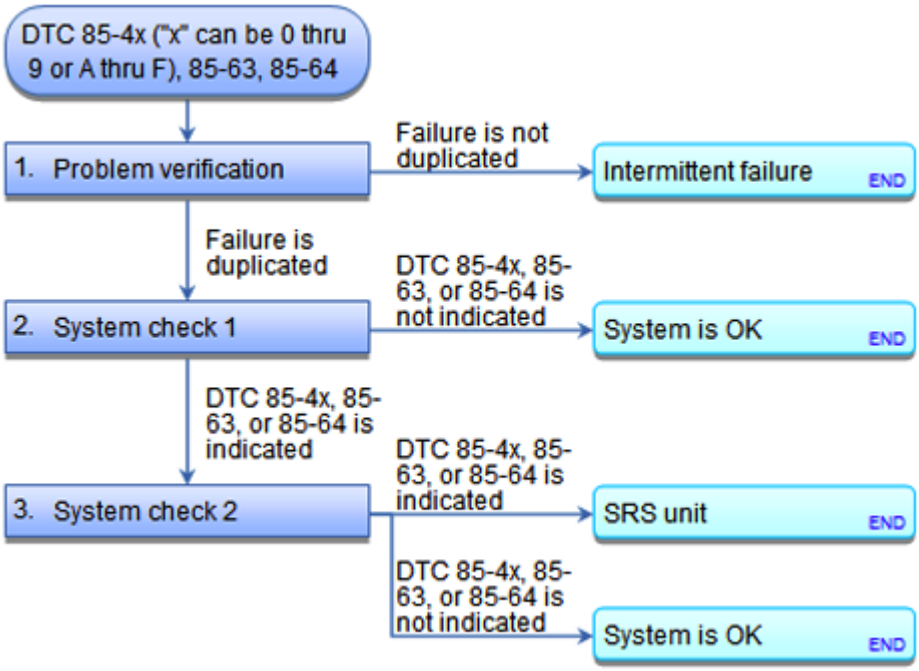

Fig. 229: SRS DTC Troubleshooting Flow Chart (85-4x, 85-63, 85-64)
Courtesy of AMERICAN HONDA MOTOR CO., INC.

NOTE:

- **Before doing this troubleshooting procedure, find out if the vehicle was in a collision. If so, verify that all the required components were replaced with new components, of the correct part number, and that they were properly installed See SRS COMPONENT REPLACEMENT/INSPECTION AFTER DEPLOYMENT or AIRBAG AND TENSIONER DISPOSAL .**
- **Before doing this troubleshooting procedure, review SRS PRECAUTIONS AND PROCEDURES and GENERAL TROUBLESHOOTING INFORMATION .**
- **Before replacing the SRS unit, check the SRS unit software version with the HDS. If the software version is not the latest, update the SRS unit software See SRS UNIT UPDATE or SRS UNIT REMOVAL AND INSTALLATION , and retest.**
- **These DTCs are codes that relate to the ODS unit operation.**

DTC Description	DTC

1. Problem verification:
   - 1. **CLEAR THE DTCS WITH THE HDS** .
   - 2. Turn the ignition switch to ON (II), then wait for 10 seconds.

GETtheMANUALS.org

- 3. **CHECK FOR DTCS WITH THE HDS** .

DTC Description	DTC

Is DTC 85-4x, 85-63, or 85-64 indicated?

YES : The failure is duplicated. Go to step 2.

NO : Intermittent failure, the system is OK at this time. **GO TO TROUBLESHOOTING INTERMITTENT FAILURES** . If another DTC is indicated, troubleshoot the DTC.

2. System check 1:
   - 1. **CLEAR THE DTCS WITH THE HDS** .
   - 2. Do the ODS unit initialization.
   - 3. Turn the ignition switch to ON (II), then wait for 10 seconds.
   - 4. **CHECK FOR DTCS WITH THE HDS** .

DTC Description	DTC

Is DTC 85-4x, 85-63, or 85-64 indicated?

YES : Go to step 3.

NO : The system is OK at this time.

3. System check 2:
   - 1. Replace the ODS unit.
   - 2. **CLEAR THE DTCS WITH THE HDS** .
   - 3. Turn the ignition switch to ON (II), then wait for 10 seconds.
   - 4. **CHECK FOR DTCS WITH THE HDS** .

DTC Description	DTC

Is DTC 85-4x, 85-63, or 85-64 indicated?

YES : **Replace the SRS unit** See **SRS UNIT UPDATE** or **SRS UNIT REMOVAL AND INSTALLATION** .

NO : The system is OK at this time.

GETtheMANUALS.org

DTC 85-61: NO SIGNAL FROM THE ODS UNIT; DTC 85-62: INCORRECT DATA FROM THE ODS UNIT

GETtheMANUALS.org

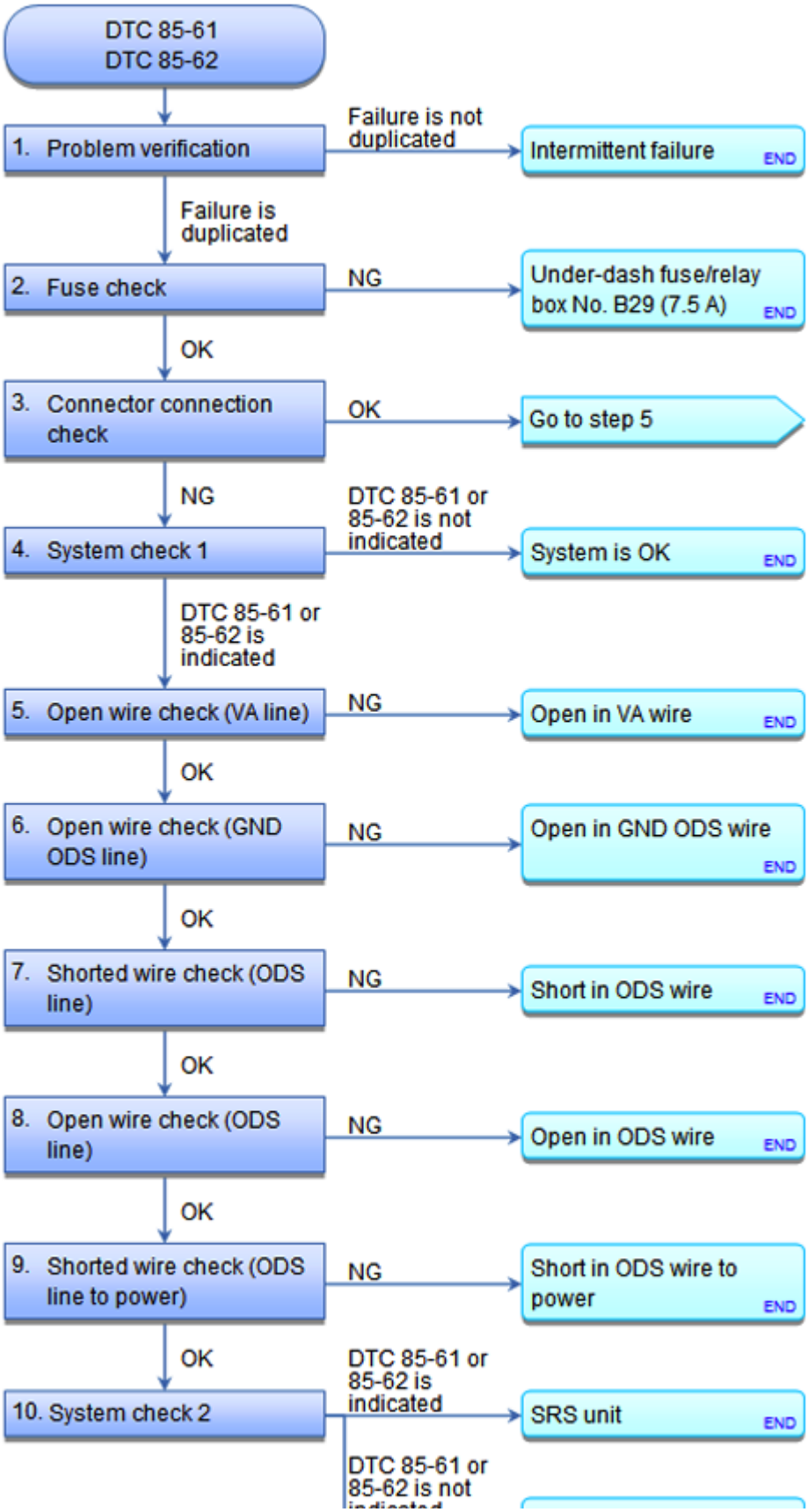

GETtheMANUALS.org

Fig. 230: SRS DTC Troubleshooting Flow Chart (85-61, 85-62)
Courtesy of AMERICAN HONDA MOTOR CO., INC.

NOTE:

- **Before doing this troubleshooting procedure, find out if the vehicle was in a collision. If so, verify that all the required components were replaced with new components, of the correct part number, and that they were properly installed See SRS COMPONENT REPLACEMENT/INSPECTION AFTER DEPLOYMENT or AIRBAG AND TENSIONER DISPOSAL .**
- **Before doing this troubleshooting procedure, review SRS PRECAUTIONS AND PROCEDURES , GENERAL TROUBLESHOOTING INFORMATION , and BATTERY TERMINAL DISCONNECTION AND RECONNECTION .**
- **Before replacing the SRS unit, check the SRS unit software version with the HDS. If the software version is not the latest, update the SRS unit software See SRS UNIT REMOVAL AND INSTALLATION or SRS UNIT UPDATE , and retest.**
- **These DTCs are codes that relate to the ODS unit operation.**

DTC Description	DTC
85-61 No signal from the ODS unit	
85-62 Incorrect data from the ODS unit	

1. Problem verification:
   - 1. Make sure nothing is on the front passenger's seat.
   - 2. **CLEAR THE DTCS WITH THE HDS** .
   - 3. Turn the ignition switch to ON (II), then wait for 10 seconds.
   - 4. **CHECK FOR DTCS WITH THE HDS** .

DTC Description	DTC
85-61 No signal from the ODS unit	
85-62 Incorrect data from the ODS unit	

Is DTC 85-61 or 85-62 indicated?

YES : The failure is duplicated. Go to step 2.

NO : Intermittent failure, the system is OK at this time. **GO TO TROUBLESHOOTING INTERMITTENT FAILURES** . If another DTC is indicated, troubleshoot the DTC.

2. Fuse check:
   - 1. Turn the ignition switch to LOCK (0).
   - 2. Check the following fuse.

     Fuse No. B29 (7.5 A)

GETtheMANUALS.org

Location Under-dash fuse/relay box

Is the fuse OK?

YES : Go to step 3.

NO : Replace the fuse, then turn the ignition switch to ON (II). If the fuse blows again, check for a short to ground in the under-dash fuse/relay box No. B29 (7.5 A) fuse circuit (dashboard wire harness, floor wire harness, or front passenger's seat wire harness); replace the faulty harness, then clear the DTC, and retest. If the DTC is still present, **REPLACE THE UNDER-DASH FUSE/RELAY BOX** , then clear the DTC.

3. Connector connection check:
   - 1. **TURN OVER THE SEAT-BACK COVER/PAD TO GAIN ACCESS TO THE ODS UNIT** .
   - 2. Remove the cover (A), then check the connection between the ODS unit 18P connector (B) and the ODS unit.

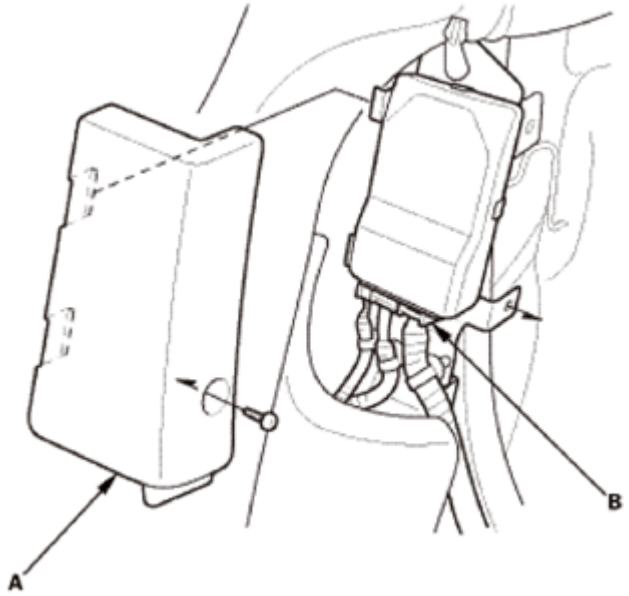

Fig. 231: Identifying ODS Unit 18P Connector And Cover
Courtesy of AMERICAN HONDA MOTOR CO., INC.

Is the connector OK?

YES : Go to step 5.

NO : Go to step 4.

4. System check 1:
   - 1. Repair the poor connector connection which was the cause of the problem in step 3.
   - 2. **CLEAR THE DTCS WITH THE HDS** .

GETtheMANUALS.org

- 3. Turn the ignition switch to ON (II), then wait for 10 seconds.
- 4. **CHECK FOR DTCS WITH THE HDS** .

DTC Description	DTC
85-61 No signal from the ODS unit	
85-62 Incorrect data from the ODS unit	

Is DTC 85-61 or 85-62 indicated?

YES : Turn the ignition switch to LOCK (0), then go to step 5.

NO : The system is OK at this time.

5. Open wire check (VA line):
   - 1. Detach the clip (A), then disconnect the ODS unit 18P connector (B) from the ODS unit.

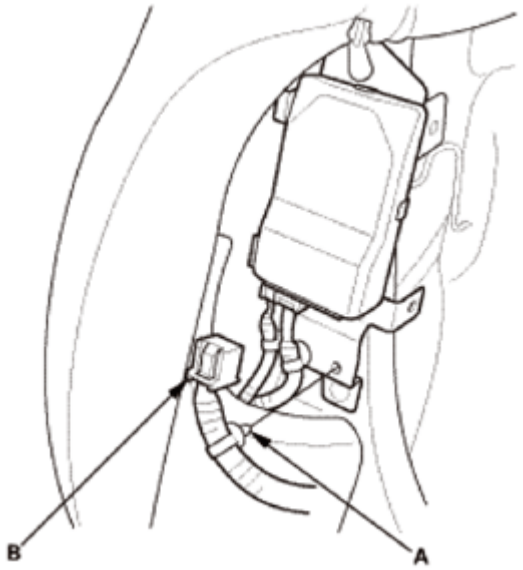

Fig. 232: Identifying ODS Unit 18P Connector And Clip
Courtesy of AMERICAN HONDA MOTOR CO., INC.

- 2. Turn the ignition switch to ON (II).
- 3. Measure the voltage between test points 1 and 2.

  Test condition IG ON (II)

  ODS unit 18P connector: disconnected

  Test circuit VA

  Test point 1 ODS unit 18P connector No. 7 (GRN)

GETtheMANUALS.org

Test point 2 Body ground

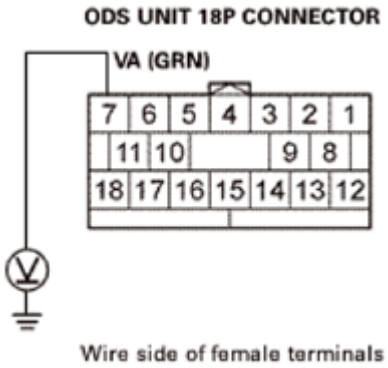

Fig. 233: Measuring Voltage Between ODS Unit 18P Connector No. 7 (GRN) And Body Ground
Courtesy of AMERICAN HONDA MOTOR CO., INC.

Is there battery voltage?

YES : The VA wire is OK. Go to step 6.

NO : Open in the floor wire harness or the front passenger's seat wire harness; replace the faulty harness, then clear the DTC.

6. Open wire check (GND ODS line):
   - 1. Turn the ignition switch to LOCK (0).
   - 2. Measure the resistance between test points 1 and 2.

     Test condition IG LOCK (0)

     ODS unit 18P connector: disconnected

     Test circuit GND ODS

     Test point 1 ODS unit 18P connector No. 18 (BLK)

     Test point 2 Body ground

GETtheMANUALS.org

Fig. 234: Measuring Resistance Between ODS Unit 18P Connector No. 18 (BLK) And Body Ground
Courtesy of AMERICAN HONDA MOTOR CO., INC.

Is there less than 1.0 ohms?

YES : The GND ODS wire is OK. Go to step 7.

NO : Open in the floor wire harness or the front passenger's seat wire harness; check for a poor ground connection at G602. If the ground is OK, replace the faulty harness, then clear the DTC.

7. Shorted wire check (ODS line):
   - 1. Disconnect the negative cable from the battery, then wait at least 3 minutes.
   - 2. Disconnect the following connector.

     SRS unit connector B (39P) See **SRS UNIT REMOVAL AND INSTALLATION** or **SRS UNIT UPDATE**

   - 3. Measure the resistance between test points 1 and 2.

     Test condition IG LOCK (0)

     ODS unit 18P connector: disconnected

     SRS unit connector B (39P): disconnected

     Test circuit ODS

     Test point 1 SRS unit connector B (39P) No. 21

     Test point 2 Body ground

GETtheMANUALS.org

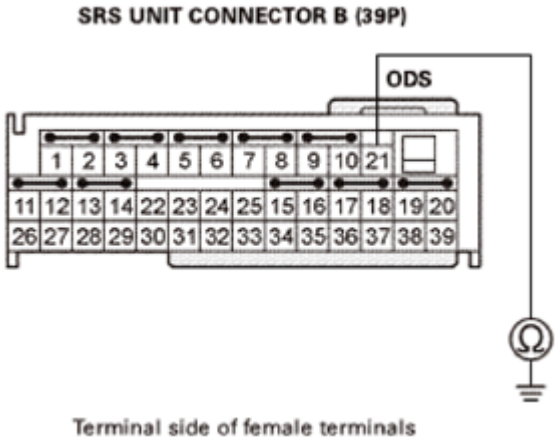

Fig. 235: Measuring Resistance Between SRS Unit Connector B (39P) No. 21 And Body Ground
Courtesy of AMERICAN HONDA MOTOR CO., INC.

Is there an open circuit, or at least 1 Mohms?

YES : The ODS wire is not shorted. Go to step 8.

NO : Short to ground in the floor wire harness or the front passenger's seat wire harness; replace the faulty harness, then clear the DTC.

8. Open wire check (ODS line):
   - 1. Measure the resistance between test points 1 and 2.

     Test condition IG LOCK (0)

     ODS unit 18P connector: disconnected

     SRS unit connector B (39P): disconnected

     Test circuit ODS

     Test point 1 SRS unit connector B (39P) No. 21

     Test point 2 ODS unit 18P connector No. 1 (BLU)

GETtheMANUALS.org

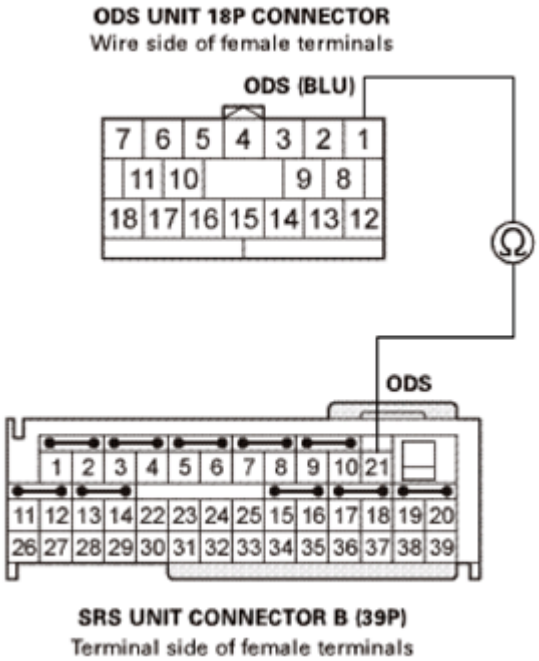

Fig. 236: Measuring Resistance Between SRS Unit Connector B (39P) No. 21 And ODS Unit 18P Connector No. 1 (BLU)
Courtesy of AMERICAN HONDA MOTOR CO., INC.

Is there less than 1.0 ohms?

YES : The ODS wire is not open. Go to step 9.

NO : Open in the harness between SRS unit connector B (39P) terminal No. 21 and ODS unit 18P connector terminal No. 1 (floor wire harness or front passenger's seat wire harness); replace the faulty harness, then clear the DTC.

9. Shorted wire check (ODS line to power):
   - 1. Reconnect the negative cable to the battery.
   - 2. Turn the ignition switch to ON (II).
   - 3. Measure the voltage between test points 1 and 2.

     Test condition IG ON (II)

     ODS unit 18P connector: disconnected

     SRS unit connector B (39P): disconnected

     Test circuit ODS

     Test point 1 SRS unit connector B (39P) No. 21

GETtheMANUALS.org

Test point 2 Body ground

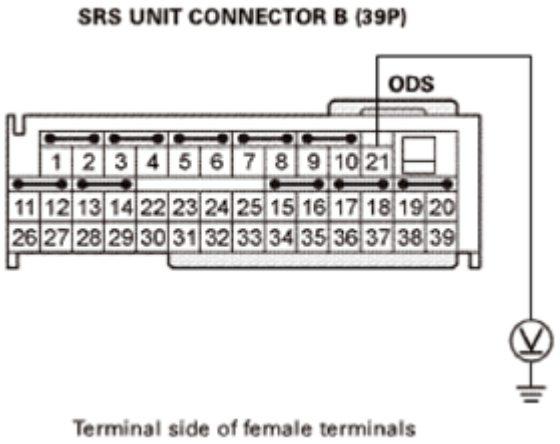

Fig. 237: Measuring Voltage Between SRS Unit Connector B (39P) No. 21 And Body Ground
Courtesy of AMERICAN HONDA MOTOR CO., INC.

Is there less than 0.2 V?

YES : The ODS wire is OK. Go to step 10.

NO : Short to power in the floor wire harness or the front passenger's seat wire harness; replace the faulty harness, then clear the DTC.

10. System check 2:
    - 1. Replace the ODS unit.
    - 2. **CLEAR THE DTCS WITH THE HDS** .
    - 3. Turn the ignition switch to ON (II), then wait for 10 seconds.
    - 4. **CHECK FOR DTCS WITH THE HDS** .

DTC Description	DTC
85-61 No signal from the ODS unit	
85-62 Incorrect data from the ODS unit	

Is DTC 85-61 or 85-62 indicated?

YES : **Replace the SRS unit** See **SRS UNIT UPDATE** or **SRS UNIT REMOVAL AND INSTALLATION** .

NO : The system is OK at this time.

DTC 85-71, 85-78: ODS UNIT NOT INITIALIZED

GETtheMANUALS.org

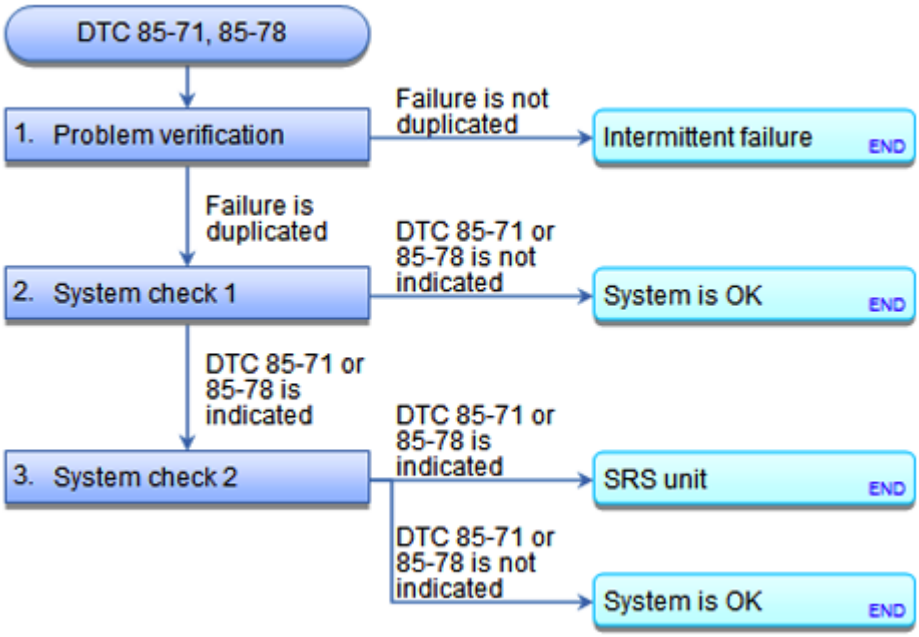

Fig. 238: SRS DTC Troubleshooting Flow Chart (85-71, 85-78)
Courtesy of AMERICAN HONDA MOTOR CO., INC.

NOTE:

- **Before doing this troubleshooting procedure, find out if the vehicle was in a collision. If so, verify that all the required components were replaced with new components, of the correct part number, and that they were properly installed See AIRBAG AND TENSIONER DISPOSAL or SRS COMPONENT REPLACEMENT/INSPECTION AFTER DEPLOYMENT .**
- **Before doing this troubleshooting procedure, review SRS PRECAUTIONS AND PROCEDURES and GENERAL TROUBLESHOOTING INFORMATION .**
- **Before replacing the SRS unit, check the SRS unit software version with the HDS. If the software version is not the latest, update the SRS unit software See SRS UNIT UPDATE or SRS UNIT REMOVAL AND INSTALLATION , and retest.**
- **These DTCs are codes that relate to the ODS unit operation.**

DTC Description	DTC
85-71 ODS unit not initialized	
85-78 ODS unit not initialized	

1. Problem verification:
   - 1. **CLEAR THE DTCS WITH THE HDS** .
   - 2. Turn the ignition switch to ON (II), then wait for 10 seconds.
   - 3. **CHECK FOR DTCS WITH THE HDS** .

DTC Description	DTC

GETtheMANUALS.org

85-71 ODS unit not initialized	
85-78 ODS unit not initialized	

Is DTC 85-71 or 85-78 indicated?

YES : The failure is duplicated. Go to step 2.

NO : Intermittent failure, the system is OK at this time. **GO TO TROUBLESHOOTING INTERMITTENT FAILURES** . If another DTC is indicated, troubleshoot the DTC.

2. System check 1:
   - 1. **CLEAR THE DTCS WITH THE HDS** .
   - 2. Do the ODS unit initialization.
   - 3. Turn the ignition switch to ON (II), then wait for 10 seconds.
   - 4. **CHECK FOR DTCS WITH THE HDS** .

DTC Description	DTC
85-71 ODS unit not initialized	
85-78 ODS unit not initialized	

Is DTC 85-71 or 85-78 indicated?

YES : Go to step 3.

NO : The system is OK at this time.

3. System check 2:
   - 1. Replace the ODS unit.
   - 2. **CLEAR THE DTCS WITH THE HDS** .
   - 3. Turn the ignition switch to ON (II), then wait for 10 seconds.
   - 4. **CHECK FOR DTCS WITH THE HDS** .

DTC Description	DTC
85-71 ODS unit not initialized	
85-78 ODS unit not initialized	

Is DTC 85-71 or 85-78 indicated?

YES : **Replace the SRS unit** See **SRS UNIT UPDATE** or **SRS UNIT REMOVAL AND INSTALLATION** .

NO : The system is OK at this time.

GETtheMANUALS.org

DTC 85-79: OPDS SENSOR INITIAL CHECK FAILURE

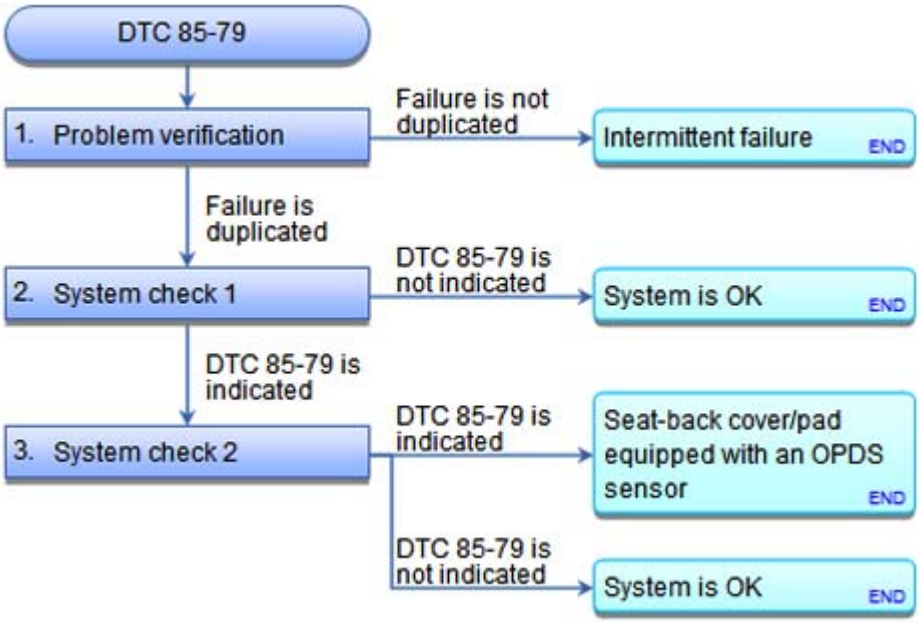

Fig. 239: SRS DTC Troubleshooting Flow Chart (85-79)
Courtesy of AMERICAN HONDA MOTOR CO., INC.

NOTE:

- **Before doing this troubleshooting procedure, find out if the vehicle was in a collision. If so, verify that all the required components were replaced with new components, of the correct part number, and that they were properly installed See SRS COMPONENT REPLACEMENT/INSPECTION AFTER DEPLOYMENT or AIRBAG AND TENSIONER DISPOSAL .**
- **Before doing this troubleshooting procedure, review SRS PRECAUTIONS AND PROCEDURES and GENERAL TROUBLESHOOTING INFORMATION .**
- **Before replacing the SRS unit, check the SRS unit software version with the HDS. If the software version is not the latest, update the SRS unit software See SRS UNIT REMOVAL AND INSTALLATION or SRS UNIT UPDATE , and retest.**
- **These DTCs are codes that relate to the ODS unit operation.**

DTC Description	DTC
85-79 OPDS sensor initial check failure	

1. Problem verification:
   - 1. Make sure nothing is on the front passenger's seat.
   - 2. **CLEAR THE DTCS WITH THE HDS** .
   - 3. Turn the ignition switch to ON (II), then wait for 10 seconds.
   - 4. **CHECK FOR DTCS WITH THE HDS** .

GETtheMANUALS.org

DTC Description	DTC
85-79 OPDS sensor initial check failure	

Is DTC 85-79 indicated?

YES : The failure is duplicated. Go to step 2.

NO : Intermittent failure, the system is OK at this time. **GO TO TROUBLESHOOTING INTERMITTENT FAILURES** . If another DTC is indicated, troubleshoot the DTC.

2. System check 1:
   - 1. **CLEAR THE DTCS WITH THE HDS** .
   - 2. Do the ODS unit initialization.
   - 3. Turn the ignition switch to ON (II), then wait for 10 seconds.
   - 4. **CHECK FOR DTCS WITH THE HDS** .

DTC Description	DTC
85-79 OPDS sensor initial check failure	

Is DTC 85-79 indicated?

YES : Go to step 3.

NO : The system is OK at this time.

3. System check 2:
   - 1. Replace the ODS unit.
   - 2. **CLEAR THE DTCS WITH THE HDS** .
   - 3. Turn the ignition switch to ON (II), then wait for 10 seconds.
   - 4. **CHECK FOR DTCS WITH THE HDS** .

DTC Description	DTC
85-79 OPDS sensor initial check failure	

Is DTC 85-79 indicated?

YES : **REPLACE THE SEAT-BACK COVER/PAD EQUIPPED WITH AN OPDS SENSOR** , then clear the DTC, and retest. If the DTC is still present, replace the SRS unit **SRS Component Replacement/Inspection After Deployment** .

NO : The system is OK at this time.

DTC 86-1X ("X" CAN BE 0 THRU 9 OR A THRU F): FAULTY OPDS SEAT-

GETtheMANUALS.org

BACK SENSOR; DTC 86-2X ("X" CAN BE 0 THRU 9 OR A THRU F): FAULTY OPDS SEAT SUPPORT SENSOR

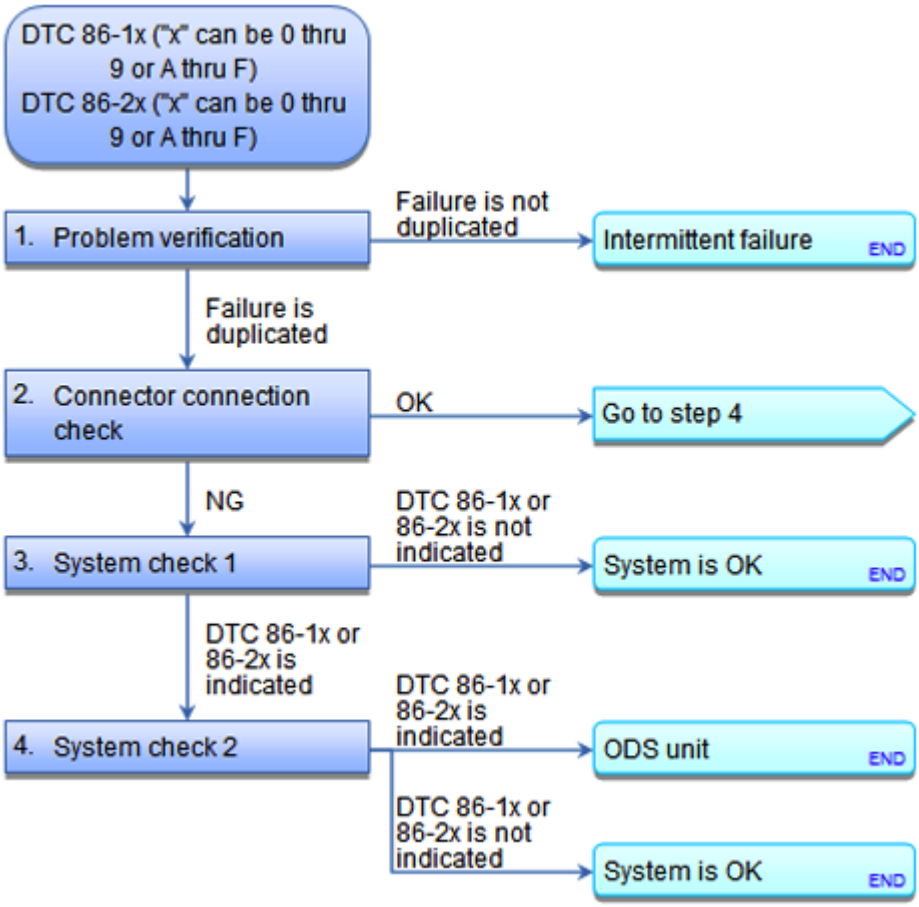

Fig. 240: SRS DTC Troubleshooting Flow Chart (86-1x, 86-2x)
Courtesy of AMERICAN HONDA MOTOR CO., INC.

NOTE:

- **Before doing this troubleshooting procedure, find out if the vehicle was in a collision. If so, verify that all the required components were replaced with new components, of the correct part number, and that they were properly installed See AIRBAG AND TENSIONER DISPOSAL or SRS COMPONENT REPLACEMENT/INSPECTION AFTER DEPLOYMENT .**
- **Before doing this troubleshooting procedure, review SRS PRECAUTIONS AND PROCEDURES and GENERAL TROUBLESHOOTING INFORMATION .**
- **Before replacing the SRS unit, check the SRS unit software version with the HDS. If the software version is not the latest, update the SRS unit software See SRS UNIT UPDATE or SRS UNIT REMOVAL AND INSTALLATION , and retest.**

DTC Description	DTC

GETtheMANUALS.org

1. Problem verification:
   - 1. **CLEAR THE DTCS WITH THE HDS** .
   - 2. Turn the ignition switch to ON (II), then wait for 10 seconds.
   - 3. **CHECK FOR DTCS WITH THE HDS** .

DTC Description	DTC

Is DTC 86-1x or 86-2x indicated?

YES : The failure is duplicated. Go to step 2.

NO : Intermittent failure, the system is OK at this time. **GO TO TROUBLESHOOTING INTERMITTENT FAILURES** . If another DTC is indicated, troubleshoot the DTC.

2. Connector connection check:
   - 1. Turn the ignition switch to LOCK (0).
   - 2. **TURN OVER THE SEAT-BACK COVER/PAD TO GAIN ACCESS TO THE ODS UNIT** .
   - 3. Remove the cover (A), then check the connection between the ODS unit 18P connector (B), the OPDS sensor connectors (C), and the ODS unit.

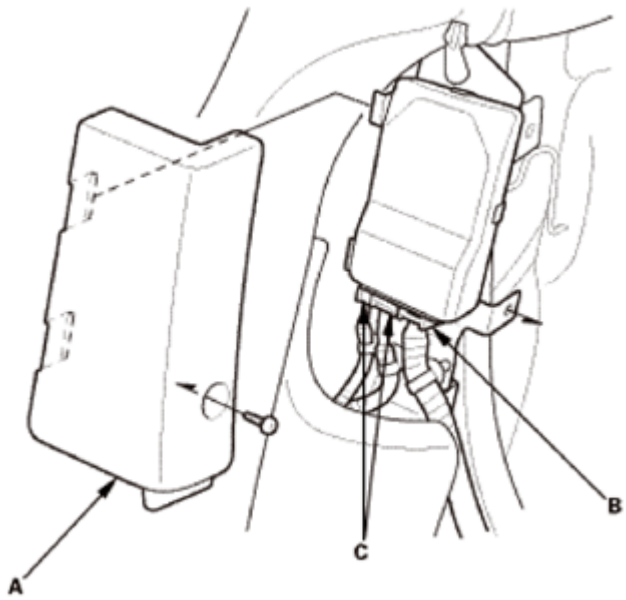

Fig. 241: Identifying ODS Unit 18P Connector, OPDS Sensor Connector And Cover
Courtesy of AMERICAN HONDA MOTOR CO., INC.

Are the connectors OK?

GETtheMANUALS.org

YES : Go to step 4.

NO : Go to step 3.

3. System check 1:
   - 1. Repair the poor connector connections which was the cause of the problem in step 2.
   - 2. **CLEAR THE DTCS WITH THE HDS** .
   - 3. Turn the ignition switch to ON (II), then wait for 10 seconds.
   - 4. **CHECK FOR DTCS WITH THE HDS** .

DTC Description	DTC

Is DTC 86-1x or 86-2x indicated?

YES : Turn the ignition switch to LOCK (0), then go to step 4.

NO : The system is OK at this time.

4. System check 2:
   - 1. **REPLACE THE SEAT-BACK COVER/PAD EQUIPPED WITH AN OPDS SENSOR** .
   - 2. **CLEAR THE DTCS WITH THE HDS** .
   - 3. Do the ODS unit initialization.
   - 4. Turn the ignition switch to ON (II), then wait for 10 seconds.
   - 5. **CHECK FOR DTCS WITH THE HDS** .

DTC Description	DTC

Is DTC 86-1x or 86-2x indicated?

YES : Replace the ODS unit, then clear the DTC, and retest. If the DTC is still present, **replace the SRS unit** See **SRS UNIT UPDATE** or **SRS UNIT REMOVAL AND INSTALLATION** .

NO : The system is OK at this time.

DTC 92-1X ("X" CAN BE 0 THRU 9 OR A THRU F): SHORT TO POWER IN THE FRONT PASSENGER'S AIRBAG CUTOFF INDICATOR

GETtheMANUALS.org

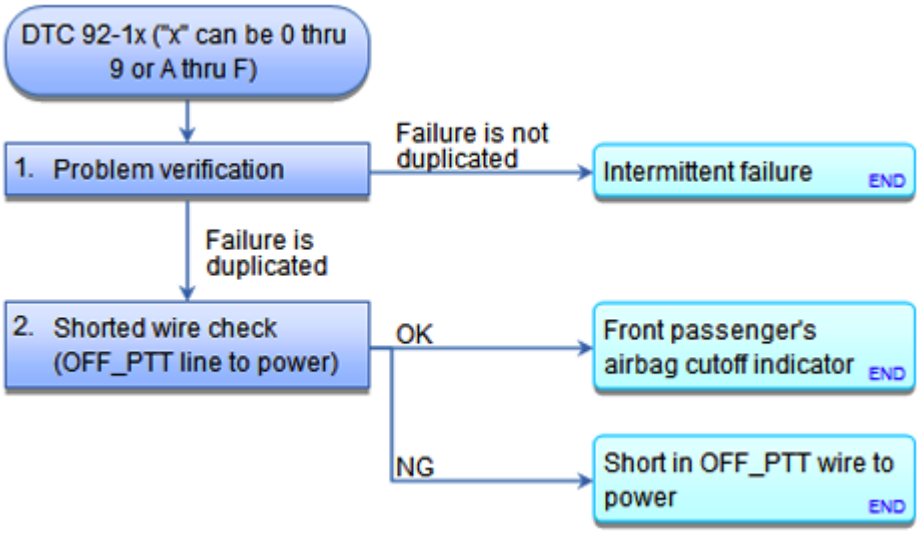

Fig. 242: SRS DTC Troubleshooting Flow Chart (92-1x)
Courtesy of AMERICAN HONDA MOTOR CO., INC.

NOTE:

- **Before doing this troubleshooting procedure, find out if the vehicle was in a collision. If so, verify that all the required components were replaced with new components, of the correct part number, and that they were properly installed See SRS COMPONENT REPLACEMENT/INSPECTION AFTER DEPLOYMENT or AIRBAG AND TENSIONER DISPOSAL .**
- **Before doing this troubleshooting procedure, review SRS PRECAUTIONS AND PROCEDURES , GENERAL TROUBLESHOOTING INFORMATION , and BATTERY TERMINAL DISCONNECTION AND RECONNECTION .**
- **Before replacing the SRS unit, check the SRS unit software version with the HDS. If the software version is not the latest, update the SRS unit software See SRS UNIT UPDATE or SRS UNIT REMOVAL AND INSTALLATION , and retest.**
- **If there are other SRS DTCs stored with 92-1x; troubleshoot them first.**

DTC Description	DTC

1. Problem verification:
   - 1. **CLEAR THE DTCS WITH THE HDS** .
   - 2. Turn the ignition switch to ON (II), then wait for 10 seconds.
   - 3. **CHECK FOR DTCS WITH THE HDS** .

DTC Description	DTC

Is DTC 92-1x indicated?

GETtheMANUALS.org

YES : The failure is duplicated. Go to step 2.

NO : Intermittent failure, the system is OK at this time. **GO TO TROUBLESHOOTING INTERMITTENT FAILURES** . If another DTC is indicated, troubleshoot the DTC.

2. Shorted wire check (OFF_PTT line to power):
   - 1. Turn the ignition switch to LOCK (0).
   - 2. Disconnect the negative cable from the battery, then wait at least 3 minutes.
   - 3. Disconnect the following connectors.

     SRS unit connector A (39P) See **SRS UNIT REMOVAL AND INSTALLATION** or **SRS UNIT UPDATE**

     FRONT PASSENGER'S AIRBAG CUTOFF INDICATOR 4P CONNECTOR (ON THE DASHBOARD WIRE HARNESS)

   - 4. Reconnect the negative cable to the battery.
   - 5. Turn the ignition switch to ON (II).
   - 6. Measure the voltage between test points 1 and 2.

     Test condition IG ON (II)

     SRS unit connector A (39P): disconnected

     Front passenger's airbag cutoff indicator 4P connector (on the dashboard wire harness): disconnected

     Test circuit OFF_PTT

     Test point 1 SRS unit connector A (39P) No. 17

     Test point 2 Body ground

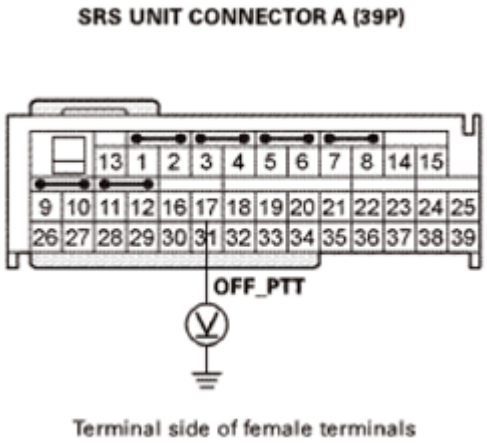

GETtheMANUALS.org

Fig. 243: Measuring Voltage Between SRS Unit Connector A (39P) No. 17 And Body Ground
Courtesy of AMERICAN HONDA MOTOR CO., INC.

Is there less than 0.2 V?

YES : The OFF_PTT wire is OK. **REPLACE THE FRONT PASSENGER'S AIRBAG CUTOFF INDICATOR** , then clear the DTC, and retest. If the DTC is still present, **replace the SRS unit** See **SRS UNIT REMOVAL AND INSTALLATION** or **SRS UNIT UPDATE** .

NO : Short to power in the dashboard wire harness; replace the dashboard wire harness, then clear the DTC.

DTC 92-2X ("X" CAN BE 0 THRU 9 OR A THRU F): OPEN OR SHORT TO GROUND IN THE FRONT PASSENGER'S AIRBAG CUTOFF INDICATOR

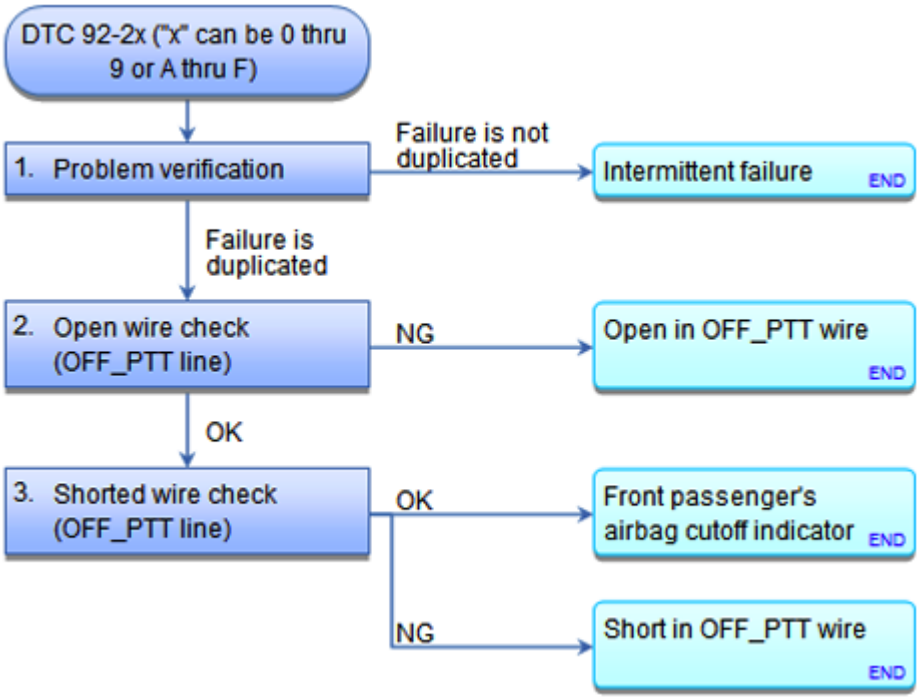

Fig. 244: SRS DTC Troubleshooting Flow Chart (92-2x)
Courtesy of AMERICAN HONDA MOTOR CO., INC.

NOTE:

- **Before doing this troubleshooting procedure, find out if the vehicle was in a collision. If so, verify that all the required components were replaced with new components, of the correct part number, and that they were properly installed See SRS COMPONENT REPLACEMENT/INSPECTION AFTER DEPLOYMENT or AIRBAG AND TENSIONER DISPOSAL .**
- **Before doing this troubleshooting procedure, review SRS PRECAUTIONS AND PROCEDURES , GENERAL TROUBLESHOOTING INFORMATION , and BATTERY TERMINAL DISCONNECTION AND RECONNECTION .**

GETtheMANUALS.org

- **Before replacing the SRS unit, check the SRS unit software version with the HDS. If the software version is not the latest, update the SRS unit software See SRS UNIT REMOVAL AND INSTALLATION or SRS UNIT UPDATE , and retest.**
- **If there are other SRS DTCs stored with 92-2x; troubleshoot them first.**

DTC Description	DTC

1. Problem verification:
   - 1. **CLEAR THE DTCS WITH THE HDS** .
   - 2. Turn the ignition switch to ON (II), then wait for 10 seconds.
   - 3. **CHECK FOR DTCS WITH THE HDS** .

DTC Description	DTC

Is DTC 92-2x indicated?

YES : The failure is duplicated. Go to step 2.

NO : Intermittent failure, the system is OK at this time. **GO TO TROUBLESHOOTING INTERMITTENT FAILURES** . If another DTC is indicated, troubleshoot the DTC.

2. Open wire check (OFF_PTT line):
   - 1. Turn the ignition switch to LOCK (0).
   - 2. Disconnect the negative cable from the battery, then wait at least 3 minutes.
   - 3. Disconnect the following connectors.

     SRS unit connector A (39P) See **SRS UNIT REMOVAL AND INSTALLATION** or **SRS UNIT UPDATE**

     FRONT PASSENGER'S AIRBAG CUTOFF INDICATOR 4P CONNECTOR (ON THE DASHBOARD WIRE HARNESS)

   - 4. Measure the resistance between test points 1 and 2.

     Test condition IG LOCK (0)

     SRS unit connector A (39P): disconnected

     Front passenger's airbag cutoff indicator 4P connector (on the dashboard wire harness): disconnected

GETtheMANUALS.org

Test circuit OFF_PTT

Test point 1 SRS unit connector A (39P) No. 17

Test point 2 Front passenger's airbag cutoff indicator 4P connector No. 4 (on the dashboard wire harness)

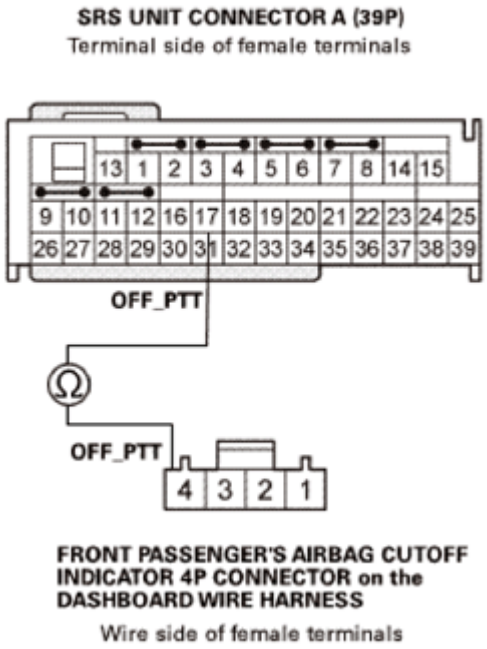

Fig. 245: Measuring Resistance Between SRS Unit Connector A (39P) No. 17 And Front Passenger's Airbag Cutoff Indicator 4P Connector No. 4
Courtesy of AMERICAN HONDA MOTOR CO., INC.

Is there less than 1.0 ohms?

YES : The OFF_PTT wire is not open. Go to step 3.

NO : Open in the dashboard wire harness; replace the dashboard wire harness, then clear the DTC.

3. Shorted wire check (OFF_PTT line):
   - 1. Measure the resistance between test points 1 and 2.

     Test condition IG LOCK (0)

     Front passenger's airbag cutoff indicator 4P connector (on the dashboard wire harness): disconnected

     SRS unit connector A (39P): disconnected

     Test circuit OFF_PTT

GETtheMANUALS.org

Test point 1 SRS unit connector A (39P) No. 17

Test point 2 Body ground

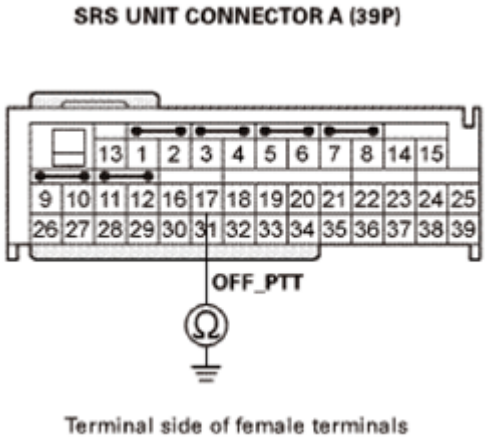

Fig. 246: Measuring Resistance Between SRS Unit Connector A (39P) No. 17 And Body Ground
Courtesy of AMERICAN HONDA MOTOR CO., INC.

Is there an open circuit, or at least 1 Mohms?

YES : The OFF_PTT wire is OK. **REPLACE THE FRONT PASSENGER'S AIRBAG CUTOFF INDICATOR** , then clear the DTC, and retest. If the DTC is still present, **replace the SRS unit** See **SRS UNIT REMOVAL AND INSTALLATION** or **SRS UNIT UPDATE** .

NO : Short to ground in the dashboard wire harness; replace the dashboard wire harness.

DTC A1-1X ("X" CAN BE 0 THRU 9 OR A THRU F): FAULTY POWER SUPPLY (VA LINE)

GETtheMANUALS.org

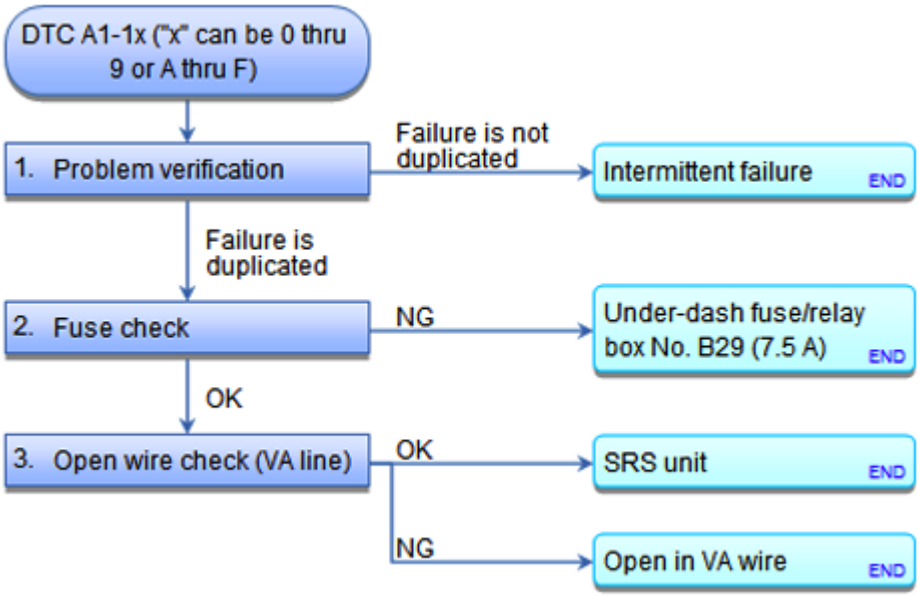

Fig. 247: SRS DTC Troubleshooting Flow Chart (A1-1x)
Courtesy of AMERICAN HONDA MOTOR CO., INC.

NOTE:

- **Before doing this troubleshooting procedure, find out if the vehicle was in a collision. If so, verify that all the required components were replaced with new components, of the correct part number, and that they were properly installed See SRS COMPONENT REPLACEMENT/INSPECTION AFTER DEPLOYMENT or AIRBAG AND TENSIONER DISPOSAL .**
- **Before doing this troubleshooting procedure, review SRS PRECAUTIONS AND PROCEDURES , GENERAL TROUBLESHOOTING INFORMATION , and BATTERY TERMINAL DISCONNECTION AND RECONNECTION .**
- **Before replacing the SRS unit, check the SRS unit software version with the HDS. If the software version is not the latest, update the SRS unit software See SRS UNIT REMOVAL AND INSTALLATION or SRS UNIT UPDATE , and retest.**

DTC Description	DTC

1. Problem verification:
   - 1. **CLEAR THE DTCS WITH THE HDS** .
   - 2. Turn the ignition switch to ON (II), then wait for 10 seconds.
   - 3. **CHECK FOR DTCS WITH THE HDS** .

DTC Description	DTC

GETtheMANUALS.org

Is DTC A1-1x indicated?

YES : The failure is duplicated. Go to step 2.

NO : Intermittent failure, the system is OK at this time. **GO TO TROUBLESHOOTING INTERMITTENT FAILURES** . If another DTC is indicated, troubleshoot the DTC.

2. Fuse check:
   - 1. Turn the ignition switch to LOCK (0).
   - 2. Check the following fuse.

     Fuse No. B29 (7.5 A)

     Location Under-dash fuse/relay box

Is the fuse OK?

YES : Go to step 3.

NO : Replace the fuse, then turn the ignition switch to ON (II). If the fuse blows again, check for a short to ground in the under-dash fuse/relay box No. B29 (7.5 A) fuse circuit (dashboard wire harness, floor wire harness, or ODS unit harness); replace the faulty harness, then clear the DTC, and retest. If the DTC is still present, **REPLACE THE UNDER-DASH FUSE/RELAY BOX** , then clear the DTC.

3. Open wire check (VA line):
   - 1. Disconnect the negative cable from the battery, then wait at least 3 minutes.
   - 2. Disconnect the following connector.

     SRS unit connector A (39P) See **SRS UNIT REMOVAL AND INSTALLATION** or **SRS UNIT UPDATE**

   - 3. Reconnect the negative cable to the battery.
   - 4. Turn the ignition switch to ON (II).
   - 5. Measure the voltage between test points 1 and 2.

     Test condition IG ON (II)

     SRS unit connector A (39P): disconnected

     Test circuit VA

     Test point 1 SRS unit connector A (39P) No. 39

     Test point 2 Body ground

GETtheMANUALS.org

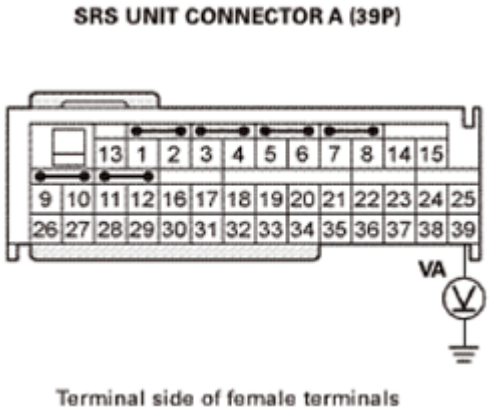

Fig. 248: Measuring Voltage Between SRS Unit Connector A (39P) No. 39 And Body Ground
Courtesy of AMERICAN HONDA MOTOR CO., INC.

Is there battery voltage?

YES : The VA wire is OK. Faulty SRS unit or poor connection at SRS unit connector A (39P) and the SRS unit; check the connection. If the connection is OK, **replace the SRS unit** See **SRS UNIT REMOVAL AND INSTALLATION** or **SRS UNIT UPDATE** . If the DTC does not clear, replace the dashboard wire harness.

NO : Open in the dashboard wire harness; replace the dashboard wire harness, then clear the DTC.

DTC A2-1X ("X" CAN BE 0 THRU 9 OR A THRU F): FAULTY POWER SUPPLY (VB LINE)

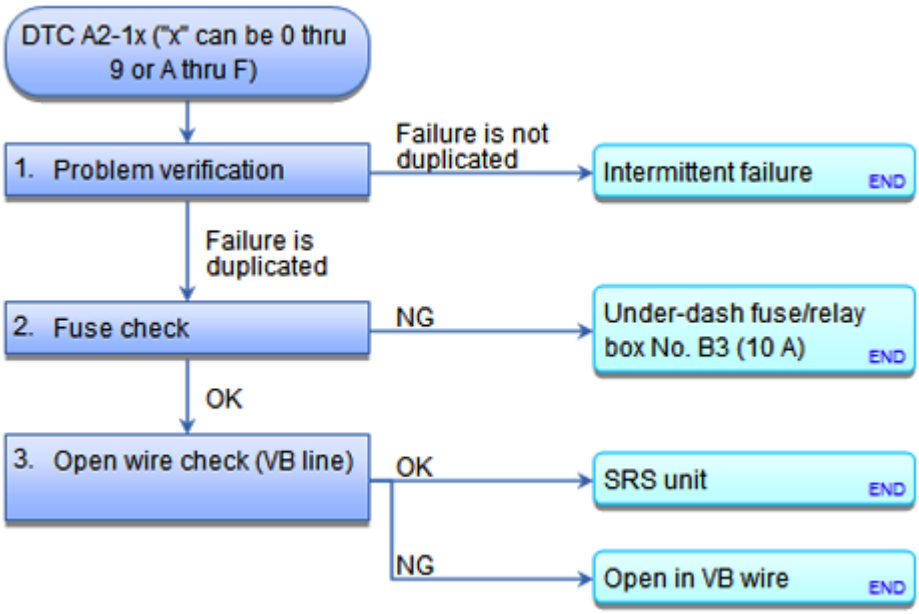

Fig. 249: SRS DTC Troubleshooting Flow Chart (A2-1x)
Courtesy of AMERICAN HONDA MOTOR CO., INC.

GETtheMANUALS.org

NOTE:

- **Before doing this troubleshooting procedure, find out if the vehicle was in a collision. If so, verify that all the required components were replaced with new components, of the correct part number, and that they were properly installed See SRS COMPONENT REPLACEMENT/INSPECTION AFTER DEPLOYMENT or AIRBAG AND TENSIONER DISPOSAL .**
- **Before doing this troubleshooting procedure, review SRS PRECAUTIONS AND PROCEDURES , GENERAL TROUBLESHOOTING INFORMATION , and BATTERY TERMINAL DISCONNECTION AND RECONNECTION .**
- **Before replacing the SRS unit, check the SRS unit software version with the HDS. If the software version is not the latest, update the SRS unit software See SRS UNIT REMOVAL AND INSTALLATION or SRS UNIT UPDATE , and retest.**

DTC Description	DTC

1. Problem verification:
   - 1. **CLEAR THE DTCS WITH THE HDS** .
   - 2. Turn the ignition switch to ON (II), then wait for 10 seconds.
   - 3. **CHECK FOR DTCS WITH THE HDS** .

DTC Description	DTC

Is DTC A2-1x indicated?

YES : The failure is duplicated. Go to step 2.

NO : Intermittent failure, the system is OK at this time. **GO TO TROUBLESHOOTING INTERMITTENT FAILURES** . If another DTC is indicated, troubleshoot the DTC.

2. Fuse check:
   - 1. Turn the ignition switch to LOCK (0).
   - 2. Check the following fuse.

     Fuse No. B3 (10 A)

     Location Under-dash fuse/relay box

Is the fuse OK?

YES : Go to step 3.

NO : Replace the fuse, then turn the ignition switch to ON (II). If the fuse blows again, check for a short

GETtheMANUALS.org

to ground in the under-dash fuse/relay box No. B3 (10 A) fuse circuit (dashboard wire harness); replace the dashboard wire harness, then clear the DTC, and retest. If the DTC is still present, **REPLACE THE UNDER-DASH FUSE/RELAY BOX** , then clear the DTC.

3. Open wire check (VB line):
   - 1. Disconnect the negative cable from the battery, then wait at least 3 minutes.
   - 2. Disconnect the following connector.

     SRS unit connector A (39P) See **SRS UNIT REMOVAL AND INSTALLATION** or **SRS UNIT UPDATE**

   - 3. Reconnect the negative cable to the battery.
   - 4. Turn the ignition switch to ON (II).
   - 5. Measure the voltage between test points 1 and 2.

     Test condition IG ON (II)

     SRS unit connector A (39P): disconnected

     Test circuit VB

     Test point 1 SRS unit connector A (39P) No. 38

     Test point 2 Body ground

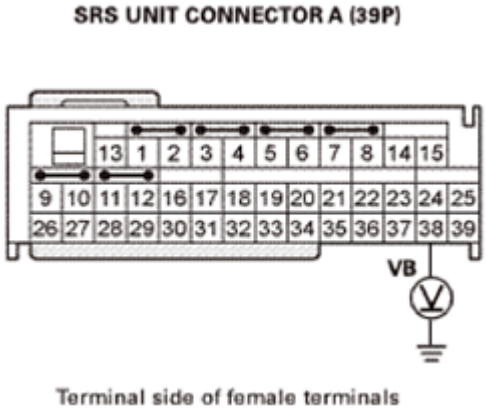

Fig. 250: Measuring Voltage Between SRS Unit Connector A (39P) No. 38 And Body Ground
Courtesy of AMERICAN HONDA MOTOR CO., INC.

Is there battery voltage?

YES : The VB wire is OK. Faulty SRS unit or poor connection at SRS unit connector A (39P) and the SRS unit; check the connection. If the connection is OK, **replace the SRS unit** See **SRS UNIT REMOVAL AND INSTALLATION** or **SRS UNIT UPDATE** . If the DTC does not clear, replace the dashboard wire harness.

GETtheMANUALS.org

NO : Open in the dashboard wire harness; replace the dashboard wire harness, then clear the DTC.

DTC A3-1X ("X" CAN BE 0 THRU 9 OR A THRU F): SRS UNIT CONNECTOR A NOT PROPERLY INSTALLED

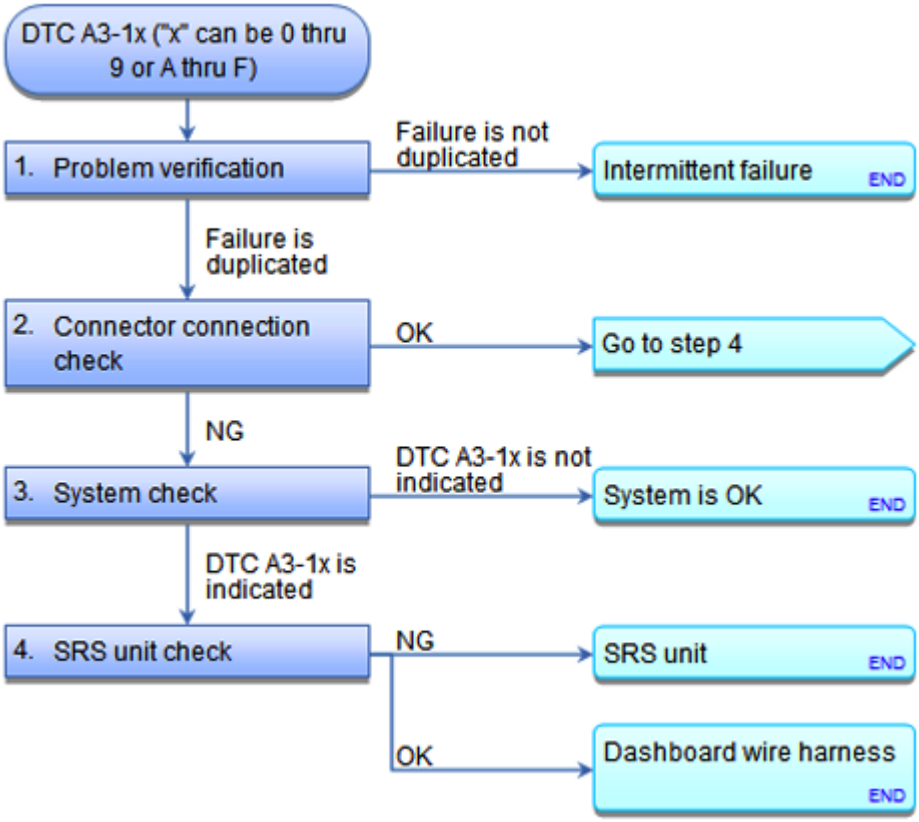

Fig. 251: SRS DTC Troubleshooting Flow Chart (A3-1x)
Courtesy of AMERICAN HONDA MOTOR CO., INC.

NOTE:

- **Before doing this troubleshooting procedure, find out if the vehicle was in a collision. If so, verify that all the required components were replaced with new components, of the correct part number, and that they were properly installed See SRS COMPONENT REPLACEMENT/INSPECTION AFTER DEPLOYMENT or AIRBAG AND TENSIONER DISPOSAL .**
- **Before doing this troubleshooting procedure, review SRS PRECAUTIONS AND PROCEDURES , GENERAL TROUBLESHOOTING INFORMATION , and BATTERY TERMINAL DISCONNECTION AND RECONNECTION .**
- **Before replacing the SRS unit, check the SRS unit software version with the HDS. If the software version is not the latest, update the SRS unit software See SRS UNIT REMOVAL AND INSTALLATION or SRS UNIT UPDATE , and retest.**

DTC Description	DTC

GETtheMANUALS.org

1. Problem verification:
   - 1. **CLEAR THE DTCS WITH THE HDS** .
   - 2. Turn the ignition switch to ON (II), then wait for 10 seconds.
   - 3. **CHECK FOR DTCS WITH THE HDS** .

DTC Description	DTC

Is DTC A3-1x indicated?

YES : The failure is duplicated. Go to step 2.

NO : Intermittent failure, the system is OK at this time. **GO TO TROUBLESHOOTING INTERMITTENT FAILURES** . If another DTC is indicated, troubleshoot the DTC.

2. Connector connection check:
   - 1. Turn the ignition switch to LOCK (0).
   - 2. Check the following connector connection.

     SRS unit connector A (39P) See **SRS UNIT REMOVAL AND INSTALLATION** or **SRS UNIT UPDATE**

Is the connector OK?

YES : Go to step 4.

NO : Go to step 3.

3. System check:
   - 1. Repair the poor connector connection which was the cause of the problem in step 2.
   - 2. **CLEAR THE DTCS WITH THE HDS** .
   - 3. Turn the ignition switch to ON (II), then wait for 10 seconds.
   - 4. **CHECK FOR DTCS WITH THE HDS** .

DTC Description	DTC

Is DTC A3-1x indicated?

YES : Turn the ignition switch to LOCK (0), then go to step 4.

NO : The system is OK at this time.

GETtheMANUALS.org

4. SRS unit check:
   - 1. Disconnect the negative cable from the battery, then wait at least 3 minutes.
   - 2. Disconnect the following connector.

     SRS unit connector A (39P) See **SRS UNIT REMOVAL AND INSTALLATION** or **SRS UNIT UPDATE**

   - 3. Check for bent or damaged terminals on the SRS unit.

Are any terminals bent or damaged?

YES : **Replace the SRS unit** See **SRS UNIT REMOVAL AND INSTALLATION** or **SRS UNIT UPDATE** .

NO : Replace the dashboard wire harness, then clear the DTC.

DTC A4-1X ("X" CAN BE 0 THRU 9 OR A THRU F): SRS UNIT CONNECTOR B NOT PROPERLY INSTALLED

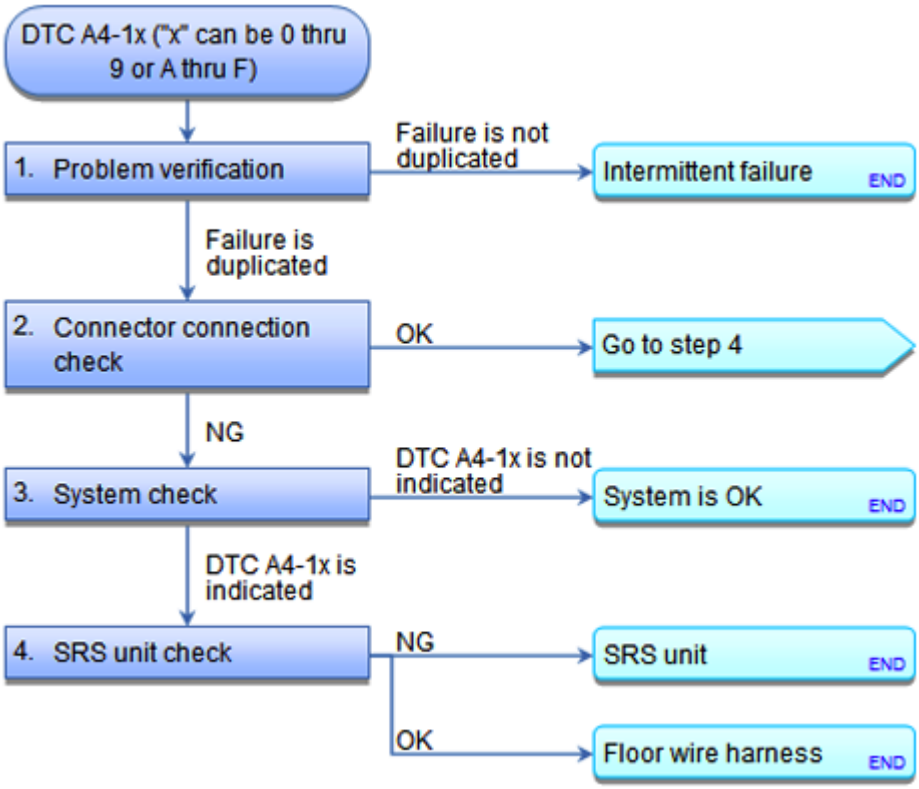

Fig. 252: SRS DTC Troubleshooting Flow Chart (A4-1x)
Courtesy of AMERICAN HONDA MOTOR CO., INC.

NOTE:

- **Before doing this troubleshooting procedure, find out if the vehicle was in**

GETtheMANUALS.org

a collision. If so, verify that all the required components were replaced with new components, of the correct part number, and that they were properly installed See SRS COMPONENT REPLACEMENT/INSPECTION AFTER DEPLOYMENT or AIRBAG AND TENSIONER DISPOSAL .

- **Before doing this troubleshooting procedure, review SRS PRECAUTIONS AND PROCEDURES , GENERAL TROUBLESHOOTING INFORMATION , and BATTERY TERMINAL DISCONNECTION AND RECONNECTION .**
- **Before replacing the SRS unit, check the SRS unit software version with the HDS. If the software version is not the latest, update the SRS unit software See SRS UNIT REMOVAL AND INSTALLATION or SRS UNIT UPDATE , and retest.**

DTC Description	DTC

1. Problem verification:
   - 1. **CLEAR THE DTCS WITH THE HDS** .
   - 2. Turn the ignition switch to ON (II), then wait for 10 seconds.
   - 3. **CHECK FOR DTCS WITH THE HDS** .

DTC Description	DTC

Is DTC A4-1x indicated?

YES : The failure is duplicated. Go to step 2.

NO : Intermittent failure, the system is OK at this time. **GO TO TROUBLESHOOTING INTERMITTENT FAILURES** . If another DTC is indicated, troubleshoot the DTC.

2. Connector connection check:
   - 1. Turn the ignition switch to LOCK (0).
   - 2. Check the following connector connection.

     SRS unit connector B (39P) See **SRS UNIT REMOVAL AND INSTALLATION** or **SRS UNIT UPDATE**

Is the connector OK?

YES : Go to step 4.

NO : Go to step 3.

3. System check:

GETtheMANUALS.org

- 1. Repair the poor connector connection which was the cause of the problem in step 2.
- 2. **CLEAR THE DTCS WITH THE HDS** .
- 3. Turn the ignition switch to ON (II), then wait for 10 seconds.
- 4. **CHECK FOR DTCS WITH THE HDS** .

DTC Description	DTC

Is DTC A4-1x indicated?

YES : Turn the ignition switch to LOCK (0), then go to step 4.

NO : The system is OK at this time.

4. SRS unit check:
   - 1. Disconnect the negative cable from the battery, then wait at least 3 minutes.
   - 2. Disconnect the following connector.

     SRS unit connector B (39P) See **SRS UNIT REMOVAL AND INSTALLATION** or **SRS UNIT UPDATE**

   - 3. Check for bent or damaged terminals on the SRS unit.

Are any terminals bent or damaged?

YES : **Replace the SRS unit** See **SRS UNIT REMOVAL AND INSTALLATION** or **SRS UNIT UPDATE** .

NO : Replace the floor wire harness, then clear the DTC.

DTC B2-1X ("X" CAN BE 0 THRU 9 OR A THRU F): NO SIGNAL FROM THE REAR SAFING SENSOR

GETtheMANUALS.org

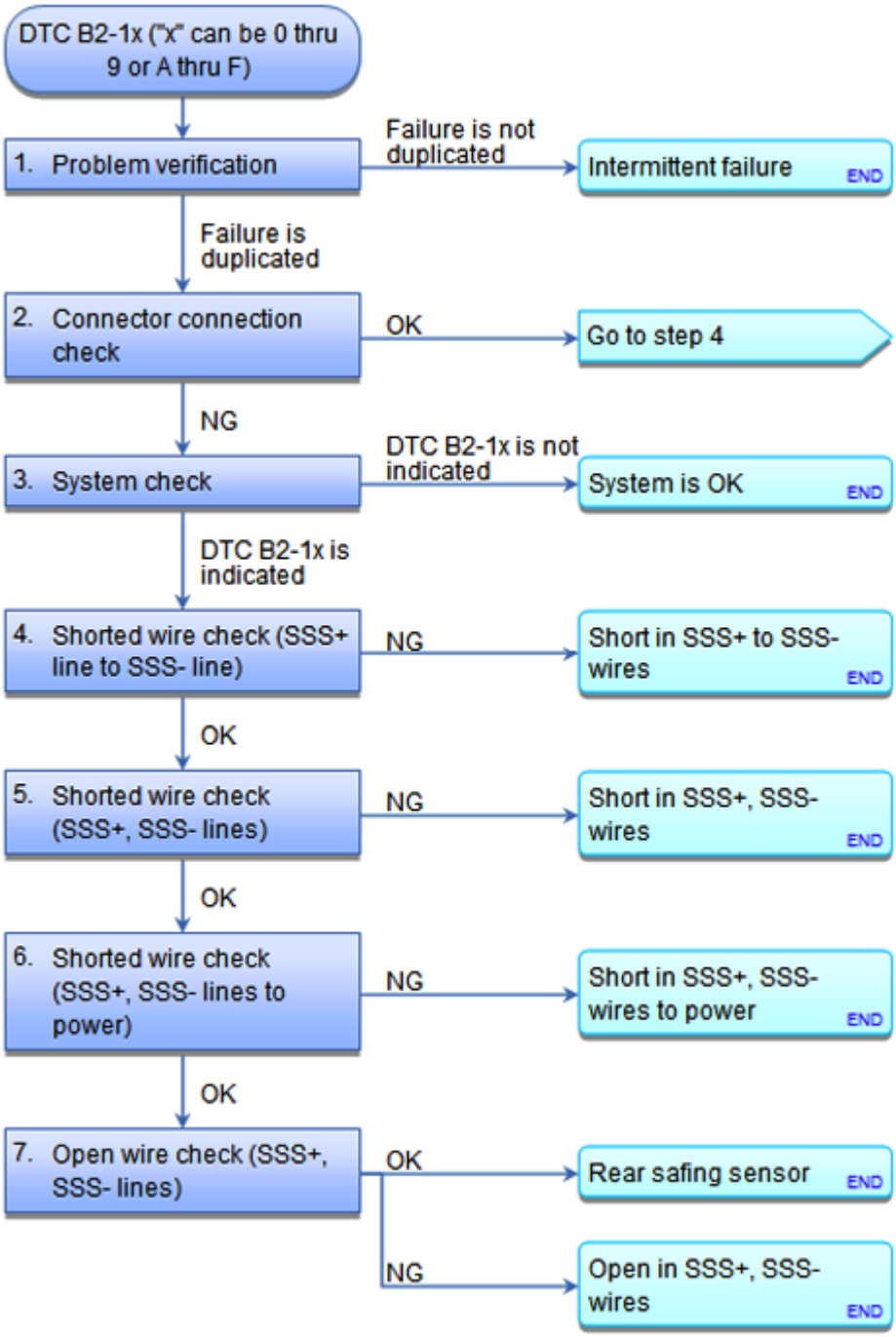

Fig. 253: SRS DTC Troubleshooting Flow Chart (B2-1x)
Courtesy of AMERICAN HONDA MOTOR CO., INC.

Special Tools Required

- **SRS Inflator Simulator 07SAZ-TB4011A**
- **SRS Simulator Lead L 070AZ-SNAA300**

GETtheMANUALS.org

NOTE:

- **Before doing this troubleshooting procedure, find out if the vehicle was in a collision. If so, verify that all the required components were replaced with new components, of the correct part number, and that they were properly installed See AIRBAG AND TENSIONER DISPOSAL or SRS COMPONENT REPLACEMENT/INSPECTION AFTER DEPLOYMENT .**
- **Before doing this troubleshooting procedure, review SRS PRECAUTIONS AND PROCEDURES , GENERAL TROUBLESHOOTING INFORMATION , and BATTERY TERMINAL DISCONNECTION AND RECONNECTION .**
- **Before replacing the SRS unit, check the SRS unit software version with the HDS. If the software version is not the latest, update the SRS unit software See SRS UNIT REMOVAL AND INSTALLATION or SRS UNIT UPDATE , and retest.**

DTC Description	DTC

1. Problem verification:
   - 1. **CLEAR THE DTCS WITH THE HDS** .
   - 2. Turn the ignition switch to ON (II), then wait for 10 seconds.
   - 3. **CHECK FOR DTCS WITH THE HDS** .

DTC Description	DTC

Is DTC B2-1x indicated?

YES : The failure is duplicated. Go to step 2.

NO : Intermittent failure, the system is OK at this time. **GO TO TROUBLESHOOTING INTERMITTENT FAILURES** . If another DTC is indicated, troubleshoot the DTC.

2. Connector connection check:
   - 1. Turn the ignition switch to LOCK (0).
   - 2. Check the following connector connections.

SRS unit connector B (39P) See **SRS UNIT REMOVAL AND INSTALLATION** or **SRS UNIT UPDATE**

REAR SAFING SENSOR 2P CONNECTOR (ON THE FLOOR WIRE HARNESS)

Are the connectors OK?

YES : Go to step 4.

GETtheMANUALS.org

NO : Go to step 3.

3. System check:
   - 1. Repair the poor connector connection which was the cause of the problem in step 2.
   - 2. **CLEAR THE DTCS WITH THE HDS** .
   - 3. Turn the ignition switch to ON (II), then wait for 10 seconds.
   - 4. **CHECK FOR DTCS WITH THE HDS** .

DTC Description	DTC

Is DTC B2-1x indicated?

YES : Turn the ignition switch to LOCK (0), then go to step 4.

NO : The system is OK at this time.

4. Shorted wire check (SSS+ line to SSS- line):
   - 1. Disconnect the negative cable from the battery, then wait at least 3 minutes.
   - 2. Disconnect the following connectors.

     SRS unit connector B (39P) See **SRS UNIT REMOVAL AND INSTALLATION** or **SRS UNIT UPDATE**

     REAR SAFING SENSOR 2P CONNECTOR (ON THE FLOOR WIRE HARNESS)

   - 3. Measure the resistance between test points 1 and 2.

     Test condition IG LOCK (0)

     SRS unit connector B (39P): disconnected

     Rear safing sensor 2P connector (on the floor wire harness): disconnected

     Test circuit SSS+, SSS-

     Test point 1 SRS unit connector B (39P) No. 38

     Test point 2 SRS unit connector B (39P) No. 39

GETtheMANUALS.org

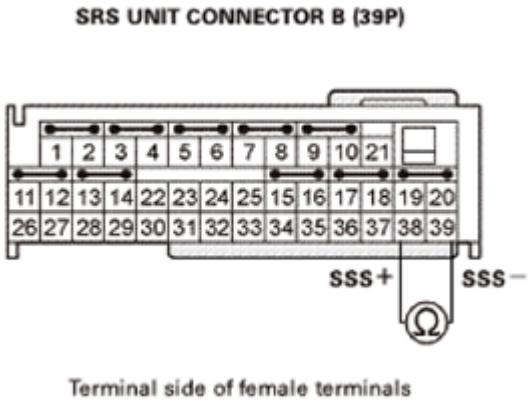

Fig. 254: Measuring Resistance Between SRS Unit Connector B (39P) No. 38 And 39
Courtesy of AMERICAN HONDA MOTOR CO., INC.

Is there an open circuit, or at least 1 Mohms?

YES : The SSS+, SSS- wires are not shorted. Go to step 5.

NO : Short to another wire in the floor wire harness; replace the floor wire harness, then clear the DTC.

5. Shorted wire check (SSS+, SSS- lines):
   - 1. Measure the resistance between test points 1 and 2.

     Test condition IG LOCK (0)

     SRS unit connector B (39P): disconnected

     Rear safing sensor 2P connector (on the floor wire harness): disconnected

     Test circuit SSS+

     Test point 1 SRS unit connector B (39P) No. 38

     Test point 2 Body ground

     Test circuit SSS-

     Test point 1 SRS unit connector B (39P) No. 39

     Test point 2 Body ground

GETtheMANUALS.org

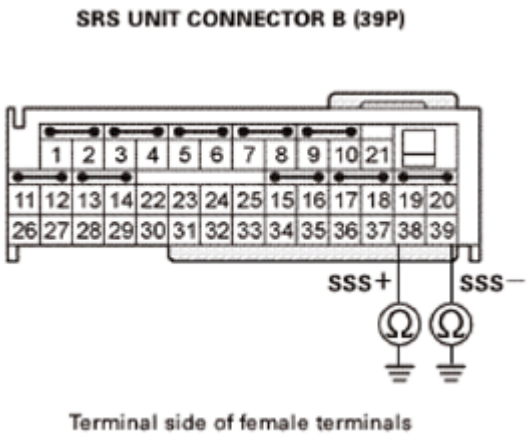

Fig. 255: Measuring Resistance Between SRS Unit Connector B (39P) No. 38 And Body Ground
Courtesy of AMERICAN HONDA MOTOR CO., INC.

Is there an open circuit, or at least 1 Mohms?

YES : The SSS+, SSS- wires are not shorted. Go to step 6.

NO : Short to ground in the floor wire harness; replace the floor wire harness, then clear the DTC.

6. Shorted wire check (SSS+, SSS- lines to power):
   - 1. Reconnect the negative cable to the battery.
   - 2. Turn the ignition switch to ON (II).
   - 3. Measure the voltage between test points 1 and 2.

     Test condition IG ON (II)

     SRS unit connector B (39P): disconnected

     Rear safing sensor 2P connector (on the floor wire harness): disconnected

     Test circuit SSS+

     Test point 1 SRS unit connector B (39P) No. 38

     Test point 2 Body ground

     Test circuit SSS-

     Test point 1 SRS unit connector B (39P) No. 39

     Test point 2 Body ground

GETtheMANUALS.org

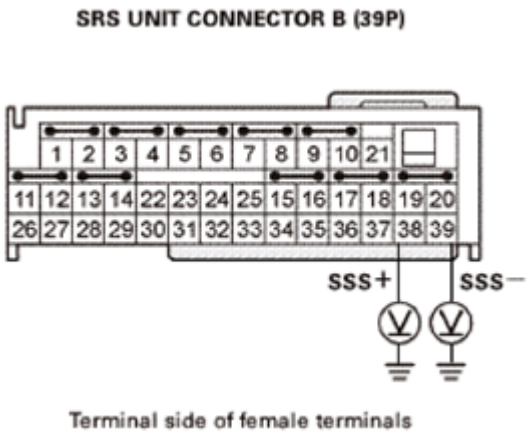

Fig. 256: Measuring Voltage Between SRS Unit Connector B (39P) No. 38 And Body Ground
Courtesy of AMERICAN HONDA MOTOR CO., INC.

Is there less than 0.2 V?

YES : The SSS+, SSS- wires are not shorted to power. Go to step 7.

NO : Short to power in the floor wire harness; replace the floor wire harness, then clear the DTC.

7. Open wire check (SSS+, SSS- lines):
   - 1. Turn the ignition switch to LOCK (0).
   - 2. Connect the black terminal (A) of SRS simulator lead L to the SRS inflator simulator (jumper connector), and then connect the SRS simulator lead L to the rear safing sensor 2P connector (B) on the floor wire harness.

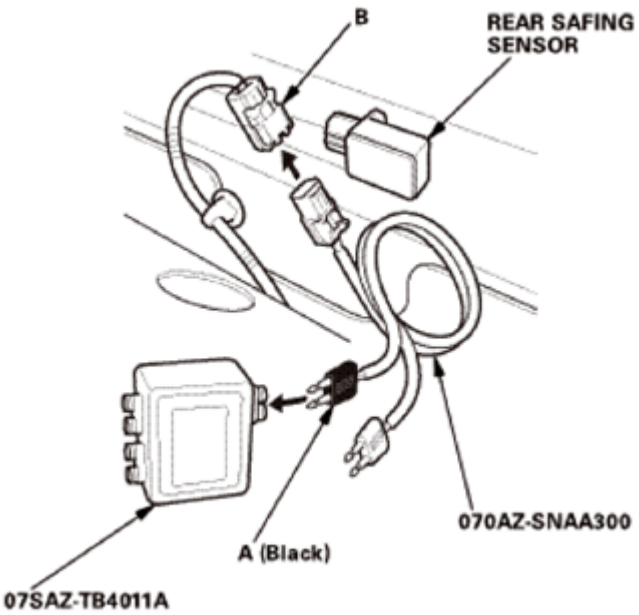

Fig. 257: Connecting SRS Simulator Lead L To Rear Safing Sensor 2P Connector On Floor

GETtheMANUALS.org

Wire Harness
Courtesy of AMERICAN HONDA MOTOR CO., INC.

- 3. Measure the resistance between test points 1 and 2.

  Test condition IG LOCK (0)

  SRS unit connector B (39P): disconnected

  Rear safing sensor 2P connector (on the floor wire harness): disconnected

  Rear safing sensor 2P connector (on the floor wire harness): connected to SRS simulator lead L

  Test circuit SSS+, SSS-

  Test point 1 SRS unit connector B (39P) No. 38

  Test point 2 SRS unit connector B (39P) No. 39

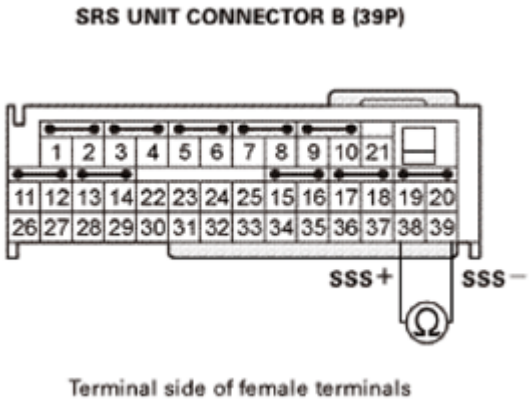

Fig. 258: Measuring Resistance Between SRS Unit Connector B (39P) No. 38 And 39
Courtesy of AMERICAN HONDA MOTOR CO., INC.

Is there less than 1.0 ohms?

YES : The SSS+, SSS- wires are OK. **REPLACE THE REAR SAFING SENSOR** , then clear the DTC, and retest. If the DTC is still present, **replace the SRS unit** See **SRS UNIT UPDATE** or **SRS UNIT REMOVAL AND INSTALLATION** .

NO : Open in the floor wire harness; replace the floor wire harness, then clear the DTC.

DTC B2-2X, B2-9X, B2-AX, B2-BX ("X" CAN BE 0 THRU 9 OR A THRU F): INTERNAL FAILURE OF THE REAR SAFING SENSOR

GETtheMANUALS.org

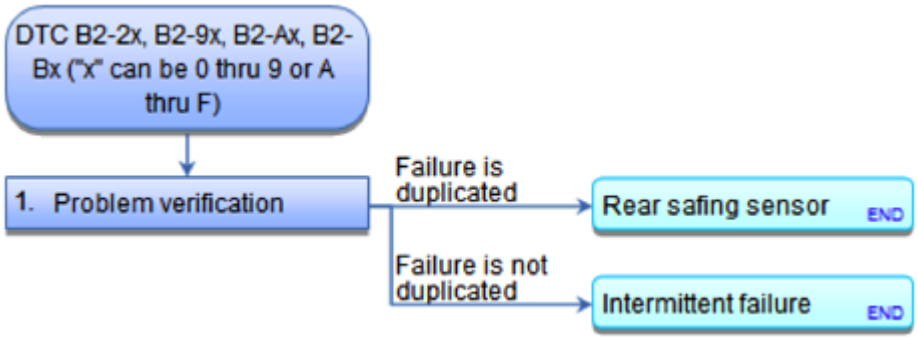

Fig. 259: SRS DTC Troubleshooting Flow Chart (B2-2x, B2-9x, B2-Ax, B2-Bx)
Courtesy of AMERICAN HONDA MOTOR CO., INC.

NOTE:

- **Before doing this troubleshooting procedure, find out if the vehicle was in a collision. If so, verify that all the required components were replaced with new components, of the correct part number, and that they were properly installed See SRS COMPONENT REPLACEMENT/INSPECTION AFTER DEPLOYMENT or AIRBAG AND TENSIONER DISPOSAL .**
- **Before doing this troubleshooting procedure, review SRS PRECAUTIONS AND PROCEDURES and GENERAL TROUBLESHOOTING INFORMATION .**
- **Before replacing the SRS unit, check the SRS unit software version with the HDS. If the software version is not the latest, update the SRS unit software See SRS UNIT UPDATE or SRS UNIT REMOVAL AND INSTALLATION , and retest.**

DTC Description	DTC

1. Problem verification:
   - 1. **CLEAR THE DTCS WITH THE HDS** .
   - 2. Turn the ignition switch to ON (II), then wait for 10 seconds.
   - 3. **CHECK FOR DTCS WITH THE HDS** .

DTC Description	DTC

Is DTC B2-2x, B2-9x, B2-Ax, or B2-Bx indicated?

YES : **REPLACE THE REAR SAFING SENSOR** , then clear the DTC, and retest. If the DTC is still present, **replace the SRS unit** See **SRS UNIT UPDATE** or **SRS UNIT REMOVAL AND INSTALLATION** .

NO : Intermittent failure, the system is OK at this time. **GO TO TROUBLESHOOTING INTERMITTENT FAILURES** . If another DTC is indicated, troubleshoot the DTC.

GETtheMANUALS.org

DTC EX-11 ("X" CAN BE 0 THRU 9 OR A THRU F): CONTROL OPERATION RECORDED

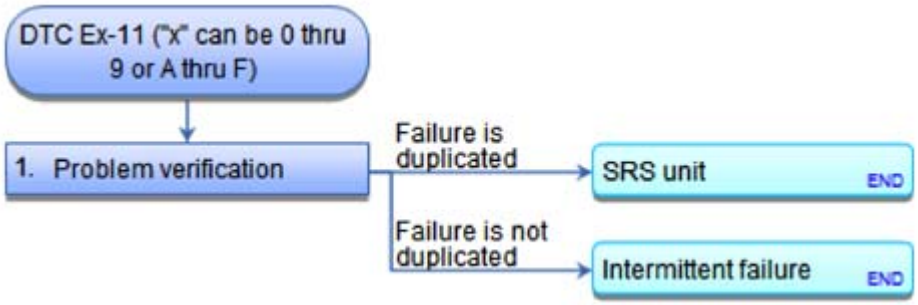

Fig. 260: SRS DTC Troubleshooting Flow Chart (Ex-11)
Courtesy of AMERICAN HONDA MOTOR CO., INC.

NOTE:

- **Before doing this troubleshooting procedure, find out if the vehicle was in a collision. If so, verify that all the required components were replaced with new components, of the correct part number, and that they were properly installed See SRS COMPONENT REPLACEMENT/INSPECTION AFTER DEPLOYMENT or AIRBAG AND TENSIONER DISPOSAL .**
- **Before doing this troubleshooting procedure, review SRS PRECAUTIONS AND PROCEDURES and GENERAL TROUBLESHOOTING INFORMATION .**
- **Before replacing the SRS unit, check the SRS unit software version with the HDS. If the software version is not the latest, update the SRS unit software See SRS UNIT UPDATE or SRS UNIT REMOVAL AND INSTALLATION , and retest.**

DTC Description	DTC

1. Problem verification:
   - 1. **CLEAR THE DTCS WITH THE HDS** .
   - 2. Turn the ignition switch to ON (II), then wait for 10 seconds.
   - 3. **CHECK FOR DTCS WITH THE HDS** .

DTC Description	DTC

Is DTC Ex-11 indicated?

YES : **Replace the SRS unit** See **SRS UNIT UPDATE** or **SRS UNIT REMOVAL AND INSTALLATION** .

NO : Intermittent failure, the system is OK at this time. **GO TO TROUBLESHOOTING**

GETtheMANUALS.org

INTERMITTENT FAILURES . If another DTC is indicated, troubleshoot the DTC.

DTC FX-11 ("X" CAN BE 0 THRU 9 OR A THRU F): AIRBAGS AND/OR TENSIONERS DEPLOYMENT RECORDED

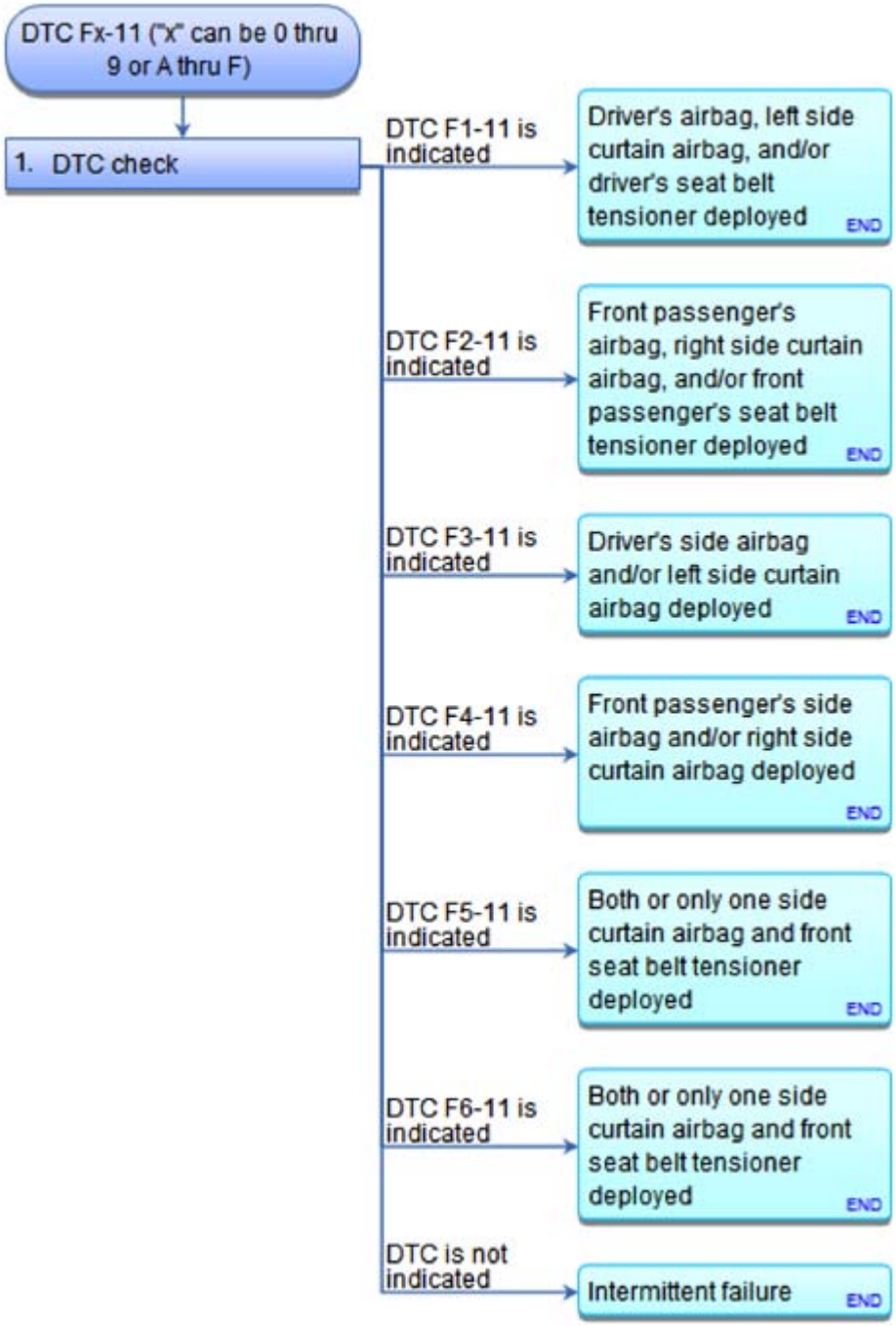

Fig. 261: SRS DTC Troubleshooting Flow Chart (Fx-11)
Courtesy of AMERICAN HONDA MOTOR CO., INC.

GETtheMANUALS.org

NOTE:

- **Before doing this troubleshooting procedure, find out if the vehicle was in a collision. If so, verify that all the required components were replaced with new components, of the correct part number, and that they were properly installed See SRS COMPONENT REPLACEMENT/INSPECTION AFTER DEPLOYMENT or AIRBAG AND TENSIONER DISPOSAL .**
- **Before doing this troubleshooting procedure, review SRS PRECAUTIONS AND PROCEDURES and GENERAL TROUBLESHOOTING INFORMATION .**
- **When any airbag or tensioners have deployed, go to Component Removal, Inspection, and Installation After Deployment See SRS COMPONENT REPLACEMENT/INSPECTION AFTER DEPLOYMENT or AIRBAG AND TENSIONER DISPOSAL .**

DTC Description	DTC

1. DTC check:
   - 1. **CLEAR THE DTCS WITH THE HDS** .
   - 2. Turn the ignition switch to ON (II), then wait for 10 seconds.
   - 3. **CHECK FOR DTCS WITH THE HDS** .

DTC Description	DTC

Is DTC F1-11, F2-11, F3-11, F4-11, F5-11, or F6-11 indicated?

DTC F1-11 : Driver's airbag, left side curtain airbag, and/or driver's seat belt tensioner deployed.

DTC F2-11 : Front passenger's airbag, right side curtain airbag, and/or front passenger's seat belt tensioner deployed.

DTC F3-11 : Driver's side airbag and/or left side curtain airbag deployed.

DTC F4-11 : Front passenger's side airbag and/or right side curtain airbag deployed.

DTC F5-11 : Both or only one side curtain airbag and front seat belt tensioner deployed.

DTC F6-11 : Both or only one side curtain airbag and front seat belt tensioner deployed.

NO DTC : Intermittent failure, the system is OK at this time. **GO TO TROUBLESHOOTING INTERMITTENT FAILURES** . If another DTC is indicated, troubleshoot the DTC.

DTC 14-11: SHORT TO POWER IN THE FRONT PASSENGER'S WEIGHT SENSOR (FRONT INNER SIDE) POWER CIRCUIT; DTC 14-12: SHORT TO GROUND IN THE FRONT PASSENGER'S WEIGHT SENSOR (FRONT INNER

GETtheMANUALS.org

SIDE) POWER CIRCUIT; DTC 14-13: OPEN IN THE FRONT PASSENGER'S WEIGHT SENSOR (FRONT INNER SIDE) OUTPUT CIRCUIT; DTC 14-14: SHORT TO GROUND IN THE FRONT PASSENGER'S WEIGHT SENSOR (FRONT INNER SIDE) OUTPUT CIRCUIT

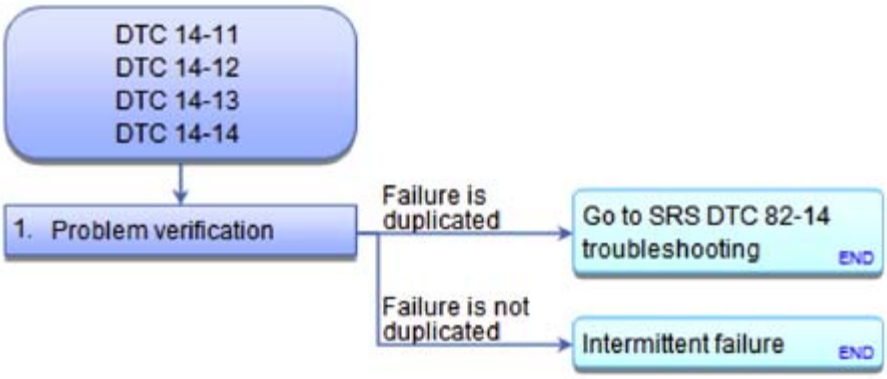

Fig. 262: SWS DTC Troubleshooting Flow Chart (14-11, 14-12, 14-13, 14-14)
Courtesy of AMERICAN HONDA MOTOR CO., INC.

NOTE:

- **Before doing this troubleshooting procedure, find out if the vehicle was in a collision. If so, verify that all the required components were replaced with new components, of the correct part number, and that they were properly installed See AIRBAG AND TENSIONER DISPOSAL or SRS COMPONENT REPLACEMENT/INSPECTION AFTER DEPLOYMENT .**
- **Only read DTCs from the SRS menu, not from SWS menus unless instructed to check SWS DTCs. SWS (ODS unit) DTCs are subcodes of SRS DTCs. Only troubleshoot the corresponding SRS DTCs. These SWS DTCs are cleared when you turn the ignition switch to LOCK (0).**

DTC Description	DTC
14-11 Short to power in the front passenger's weight sensor (front inner side) power circuit	
14-12 Short to ground in the front passenger's weight sensor (front inner side) power circuit	
14-13 Open in the front passenger's weight sensor (front inner side) output circuit	
14-14 Short to ground in the front passenger's weight sensor (front inner side) output circuit	

1. Problem verification:
   - 1. **CLEAR THE DTCS WITH THE HDS** .
   - 2. Turn the ignition switch to ON (II), then wait for 10 seconds.
   - 3. **CHECK FOR SWS DTCS WITH THE HDS** .

DTC Description	DTC
14-11 Short to power in the front passenger's weight sensor (front inner side) power circuit	
14-12 Short to ground in the front passenger's weight sensor (front inner side) power circuit	

GETtheMANUALS.org

14-13 Open in the front passenger's weight sensor (front inner side) output circuit	
14-14 Short to ground in the front passenger's weight sensor (front inner side) output circuit	

Is SWS DTC 14-11, 14-12, 14-13, or 14-14 indicated?

YES : The failure is duplicated. **GO TO SRS DTC 82-14 TROUBLESHOOTING**.

NO : Intermittent failure, the system is OK at this time. **GO TO TROUBLESHOOTING INTERMITTENT FAILURES** . If another DTC is indicated, troubleshoot the DTC.

DTC 15-3X ("X" CAN BE 0 THRU 9 OR A THRU F): INTERNAL FAILURE OF THE FRONT PASSENGER'S WEIGHT SENSOR (FRONT INNER SIDE); DTC 17-3X ("X" CAN BE 0 THRU 9 OR A THRU F): INTERNAL FAILURE OF THE FRONT PASSENGER'S WEIGHT SENSOR (REAR INNER SIDE); DTC 25-3X ("X" CAN BE 0 THRU 9 OR A THRU F): INTERNAL FAILURE OF THE FRONT PASSENGER'S WEIGHT SENSOR (FRONT OUTER SIDE); DTC 27-3X ("X" CAN BE 0 THRU 9 OR A THRU F): INTERNAL FAILURE OF THE FRONT PASSENGER'S WEIGHT SENSOR (REAR OUTER SIDE)

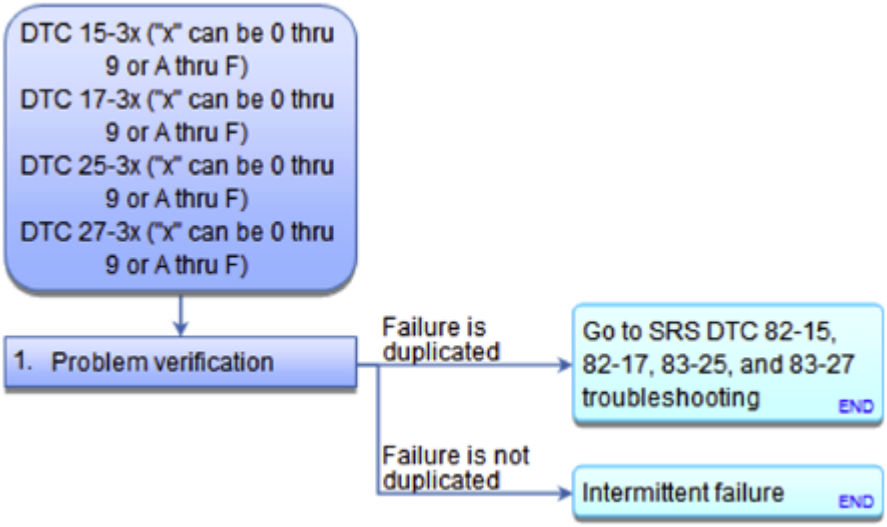

Fig. 263: SWS DTC Troubleshooting Flow Chart (15-3x, 17-3x, 25-3x, 27-3x)
Courtesy of AMERICAN HONDA MOTOR CO., INC.

NOTE:

- **Before doing this troubleshooting procedure, find out if the vehicle was in a collision. If so, verify that all the required components were replaced with new components, of the correct part number, and that they were properly installed See AIRBAG AND TENSIONER DISPOSAL or SRS COMPONENT REPLACEMENT/INSPECTION AFTER DEPLOYMENT .**
- **Only read DTCs from the SRS menu, not from SWS menus unless**

GETtheMANUALS.org

instructed to check SWS DTCs. SWS (ODS unit) DTCs are subcodes of SRS DTCs. Only troubleshoot the corresponding SRS DTCs. These SWS DTCs are cleared when you turn the ignition switch to LOCK (0).

DTC Description	DTC

1. Problem verification:
   - 1. **CLEAR THE DTCS WITH THE HDS** .
   - 2. Turn the ignition switch to ON (II), then wait for 10 seconds.
   - 3. **CHECK FOR SWS DTCS WITH THE HDS** .

DTC Description	DTC

Is SWS DTC 15-3x, 17-3x, 25-3x, or 27-3x indicated?

YES : The failure is duplicated. **GO TO SRS DTC 82-15, 82-17, 83-25, AND 83-27 TROUBLESHOOTING**.

NO : Intermittent failure, the system is OK at this time. **GO TO TROUBLESHOOTING INTERMITTENT FAILURES** . If another DTC is indicated, troubleshoot the DTC.

DTC 16-11: SHORT TO POWER IN THE FRONT PASSENGER'S WEIGHT SENSOR (REAR INNER SIDE) POWER CIRCUIT; DTC 16-12: SHORT TO GROUND IN THE FRONT PASSENGER'S WEIGHT SENSOR (REAR INNER SIDE) POWER CIRCUIT; DTC 16-13: OPEN IN THE FRONT PASSENGER'S WEIGHT SENSOR (REAR INNER SIDE) OUTPUT CIRCUIT; DTC 16-14: SHORT TO GROUND IN THE FRONT PASSENGER'S WEIGHT SENSOR (REAR INNER SIDE) OUTPUT CIRCUIT

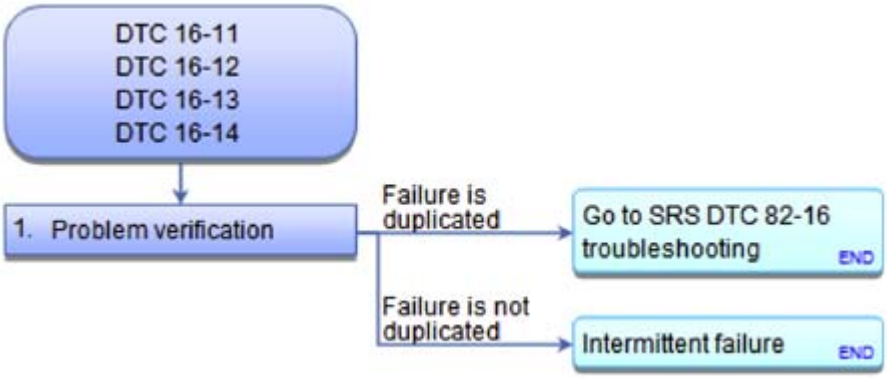

Fig. 264: SWS DTC Troubleshooting Flow Chart (16-11, 16-12, 16-13, 16-14)

GETtheMANUALS.org

Courtesy of AMERICAN HONDA MOTOR CO., INC.

NOTE:

- **Before doing this troubleshooting procedure, find out if the vehicle was in a collision. If so, verify that all the required components were replaced with new components, of the correct part number, and that they were properly installed See AIRBAG AND TENSIONER DISPOSAL or SRS COMPONENT REPLACEMENT/INSPECTION AFTER DEPLOYMENT .**
- **Only read DTCs from the SRS menu, not from SWS menus unless instructed to check SWS DTCs. SWS (ODS unit) DTCs are subcodes of SRS DTCs. Only troubleshoot the corresponding SRS DTCs. These SWS DTCs are cleared when you turn the ignition switch to LOCK (0).**

DTC Description	DTC
16-11 Short to power in the front passenger's weight sensor (rear inner side) power circuit	
16-12 Short to ground in the front passenger's weight sensor (rear inner side) power circuit	
16-13 Open in the front passenger's weight sensor (rear inner side) output circuit	
16-14 Short to ground in the front passenger's weight sensor (rear inner side) output circuit	

1. Problem verification:
   - 1. **CLEAR THE DTCS WITH THE HDS** .
   - 2. Turn the ignition switch to ON (II), then wait for 10 seconds.
   - 3. **CHECK FOR SWS DTCS WITH THE HDS** .

DTC Description	DTC
16-11 Short to power in the front passenger's weight sensor (rear inner side) power circuit	
16-12 Short to ground in the front passenger's weight sensor (rear inner side) power circuit	
16-13 Open in the front passenger's weight sensor (rear inner side) output circuit	
16-14 Short to ground in the front passenger's weight sensor (rear inner side) output circuit	

Is SWS DTC 16-11, 16-12, 16-13, or 16-14 indicated?

YES : The failure is duplicated. **GO TO SRS DTC 82-16 TROUBLESHOOTING**.

NO : Intermittent failure, the system is OK at this time. **GO TO TROUBLESHOOTING INTERMITTENT FAILURES** . If another DTC is indicated, troubleshoot the DTC.

DTC 24-11: SHORT TO POWER IN THE FRONT PASSENGER'S WEIGHT SENSOR (FRONT OUTER SIDE) POWER CIRCUIT; DTC 24-12: SHORT TO GROUND IN THE FRONT PASSENGER'S WEIGHT SENSOR (FRONT OUTER SIDE) POWER CIRCUIT; DTC 24-13: OPEN IN THE FRONT PASSENGER'S WEIGHT SENSOR (FRONT OUTER SIDE) OUTPUT CIRCUIT; DTC 24-14: SHORT TO GROUND IN THE FRONT PASSENGER'S WEIGHT SENSOR

GETtheMANUALS.org

(FRONT OUTER SIDE) OUTPUT CIRCUIT

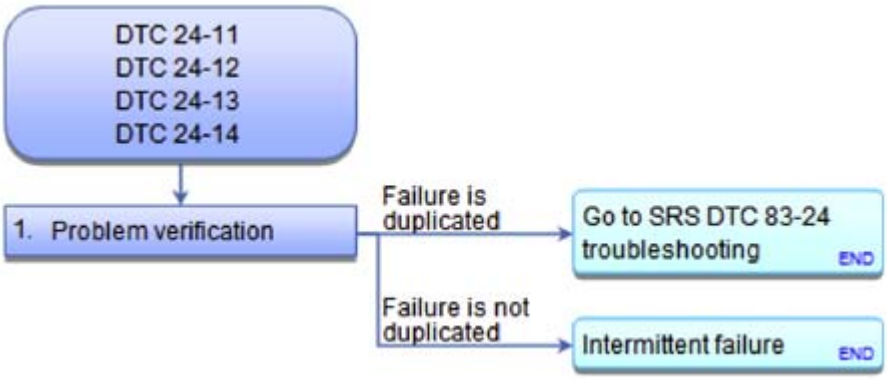

Fig. 265: SWS DTC Troubleshooting Flow Chart (24-11, 24-12, 24-13, 24-14)
Courtesy of AMERICAN HONDA MOTOR CO., INC.

NOTE:

- **Before doing this troubleshooting procedure, find out if the vehicle was in a collision. If so, verify that all the required components were replaced with new components, of the correct part number, and that they were properly installed See AIRBAG AND TENSIONER DISPOSAL or SRS COMPONENT REPLACEMENT/INSPECTION AFTER DEPLOYMENT .**
- **Only read DTCs from the SRS menu, not from SWS menus unless instructed to check SWS DTCs. SWS (ODS unit) DTCs are subcodes of SRS DTCs. Only troubleshoot the corresponding SRS DTCs. These SWS DTCs are cleared when you turn the ignition switch to LOCK (0).**

DTC Description	DTC
24-11 Short to power in the front passenger's weight sensor (front outer side) power circuit	
24-12 Short to ground in the front passenger's weight sensor (front outer side) power circuit	
24-13 Open in the front passenger's weight sensor (front outer side) output circuit	
24-14 Short to ground in the front passenger's weight sensor (front outer side) output circuit	

1. Problem verification:
   - 1. **CLEAR THE DTCS WITH THE HDS** .
   - 2. Turn the ignition switch to ON (II), then wait for 10 seconds.
   - 3. **CHECK FOR SWS DTCS WITH THE HDS** .

DTC Description	DTC
24-11 Short to power in the front passenger's weight sensor (front outer side) power circuit	
24-12 Short to ground in the front passenger's weight sensor (front outer side) power circuit	
24-13 Open in the front passenger's weight sensor (front outer side) output circuit	
24-14 Short to ground in the front passenger's weight sensor (front outer side) output circuit	

GETtheMANUALS.org

Is SWS DTC 24-11, 24-12, 24-13, or 24-14 indicated?

YES : The failure is duplicated. **GO TO SRS DTC 83-24 TROUBLESHOOTING**.

NO : Intermittent failure, the system is OK at this time. **GO TO TROUBLESHOOTING INTERMITTENT FAILURES** . If another DTC is indicated, troubleshoot the DTC.

DTC 26-11: SHORT TO POWER IN THE FRONT PASSENGER'S WEIGHT SENSOR (REAR OUTER SIDE) POWER CIRCUIT; DTC 26-12: SHORT TO GROUND IN THE FRONT PASSENGER'S WEIGHT SENSOR (REAR OUTER SIDE) POWER CIRCUIT; DTC 26-13: OPEN IN THE FRONT PASSENGER'S WEIGHT SENSOR (REAR OUTER SIDE) OUTPUT CIRCUIT; DTC 26-14: SHORT TO GROUND IN THE FRONT PASSENGER'S WEIGHT SENSOR (REAR OUTER SIDE) OUTPUT CIRCUIT

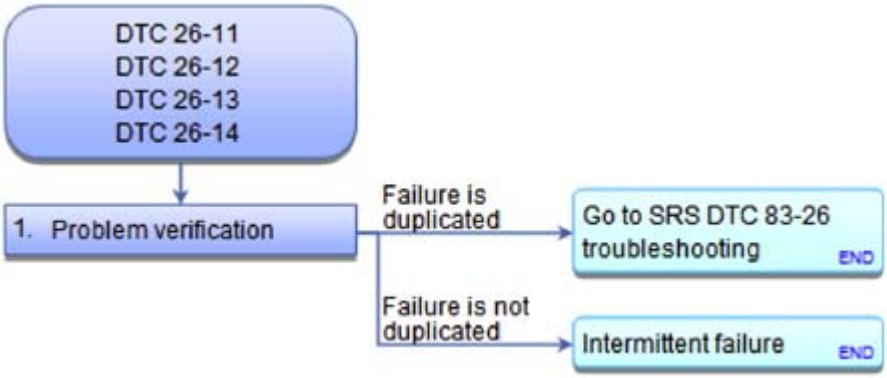

Fig. 266: SWS DTC Troubleshooting Flow Chart (26-11, 26-12, 26-13, 26-14)
Courtesy of AMERICAN HONDA MOTOR CO., INC.

NOTE:

- **Before doing this troubleshooting procedure, find out if the vehicle was in a collision. If so, verify that all the required components were replaced with new components, of the correct part number, and that they were properly installed See AIRBAG AND TENSIONER DISPOSAL or SRS COMPONENT REPLACEMENT/INSPECTION AFTER DEPLOYMENT .**
- **Only read DTCs from the SRS menu, not from SWS menus unless instructed to check SWS DTCs. SWS (ODS unit) DTCs are subcodes of SRS DTCs. Only troubleshoot the corresponding SRS DTCs. These SWS DTCs are cleared when you turn the ignition switch to LOCK (0).**

DTC Description	DTC
26-11 Short to power in the front passenger's weight sensor (rear outer side) power circuit	
26-12 Short to ground in the front passenger's weight sensor (rear outer side) power circuit	
26-13 Open in the front passenger's weight sensor (rear outer side) output circuit	

GETtheMANUALS.org

26-14 Short to ground in the front passenger's weight sensor (rear outer side) output circuit	

1. Problem verification:
   - 1. **CLEAR THE DTCS WITH THE HDS** .
   - 2. Turn the ignition switch to ON (II), then wait for 10 seconds.
   - 3. **CHECK FOR SWS DTCS WITH THE HDS** .

DTC Description	DTC
26-11 Short to power in the front passenger's weight sensor (rear outer side) power circuit	
26-12 Short to ground in the front passenger's weight sensor (rear outer side) power circuit	
26-13 Open in the front passenger's weight sensor (rear outer side) output circuit	
26-14 Short to ground in the front passenger's weight sensor (rear outer side) output circuit	

Is SWS DTC 26-11, 26-12, 26-13, or 26-14 indicated?

YES : The failure is duplicated. **GO TO SRS DTC 83-26 TROUBLESHOOTING**.

NO : Intermittent failure, the system is OK at this time. **GO TO TROUBLESHOOTING INTERMITTENT FAILURES** . If another DTC is indicated, troubleshoot the DTC.

DTC 41-XX, 42-XX, 43-XX ("X" CAN BE 0 THRU 9 OR A THRU F): INTERNAL FAILURE OF THE ODS UNIT

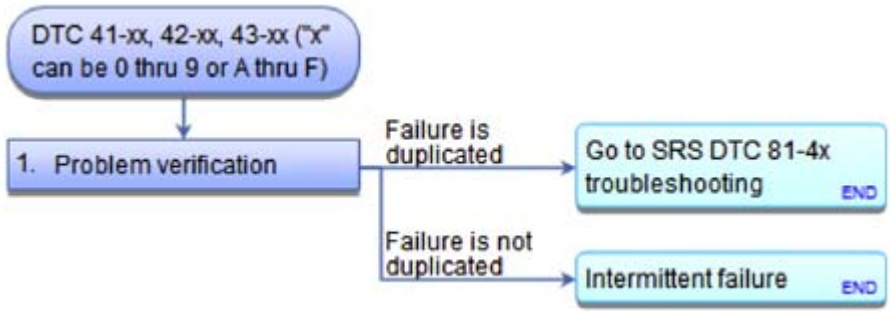

Fig. 267: SWS DTC Troubleshooting Flow Chart (41-xx, 42-xx, 43-xx)
Courtesy of AMERICAN HONDA MOTOR CO., INC.

NOTE:

- **Before doing this troubleshooting procedure, find out if the vehicle was in a collision. If so, verify that all the required components were replaced with new components, of the correct part number, and that they were properly installed See AIRBAG AND TENSIONER DISPOSAL or SRS COMPONENT REPLACEMENT/INSPECTION AFTER DEPLOYMENT .**
- **Only read DTCs from the SRS menu, not from SWS menus unless instructed to check SWS DTCs. SWS (ODS unit) DTCs are subcodes of SRS DTCs. Only troubleshoot the corresponding SRS DTCs. These SWS**

GETtheMANUALS.org

DTCs are cleared when you turn the ignition switch to LOCK (0).

DTC Description	DTC

1. Problem verification:
   - 1. **CLEAR THE DTCS WITH THE HDS** .
   - 2. Turn the ignition switch to ON (II), then wait for 10 seconds.
   - 3. **CHECK FOR SWS DTCS WITH THE HDS** .

DTC Description	DTC

Is SWS 41-xx, 42-xx, or 43-xx indicated?

YES : The failure is duplicated. **GO TO SRS DTC 81-4X TROUBLESHOOTING**.

NO : Intermittent failure, the system is OK at this time. **GO TO TROUBLESHOOTING INTERMITTENT FAILURES** . If another DTC is indicated, troubleshoot the DTC.

DTC 71-XX ("X" CAN BE 0 THRU 9 OR A THRU F): ODS UNIT NOT CALIBRATED

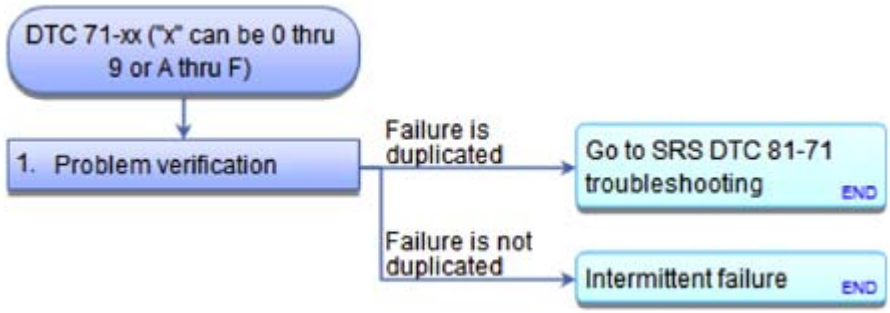

Fig. 268: SWS DTC Troubleshooting Flow Chart (71-xx)
Courtesy of AMERICAN HONDA MOTOR CO., INC.

NOTE:

- **Before doing this troubleshooting procedure, find out if the vehicle was in a collision. If so, verify that all the required components were replaced with new components, of the correct part number, and that they were properly installed See AIRBAG AND TENSIONER DISPOSAL or SRS COMPONENT REPLACEMENT/INSPECTION AFTER DEPLOYMENT .**
- **Only read DTCs from the SRS menu, not from SWS menus unless instructed to check SWS DTCs. SWS (ODS unit) DTCs are subcodes of SRS DTCs. Only troubleshoot the corresponding SRS DTCs. These SWS**

GETtheMANUALS.org

DTCs are cleared when you turn the ignition switch to LOCK (0).

DTC Description	DTC

1. Problem verification:
   - 1. **CLEAR THE DTCS WITH THE HDS** .
   - 2. Turn the ignition switch to ON (II), then wait for 10 seconds.
   - 3. **CHECK FOR SWS DTCS WITH THE HDS** .

DTC Description	DTC

Is SWS DTC 71-xx indicated?

YES : The failure is duplicated. **GO TO SRS DTC 81-71 TROUBLESHOOTING**.

NO : Intermittent failure, the system is OK at this time. **GO TO TROUBLESHOOTING INTERMITTENT FAILURES** . If another DTC is indicated, troubleshoot the DTC.

GETtheMANUALS.org

AIRBAG AND TENSIONER DISPOSAL

SPECIAL TOOL DESCRIPTION

Image	Description/Tool Number
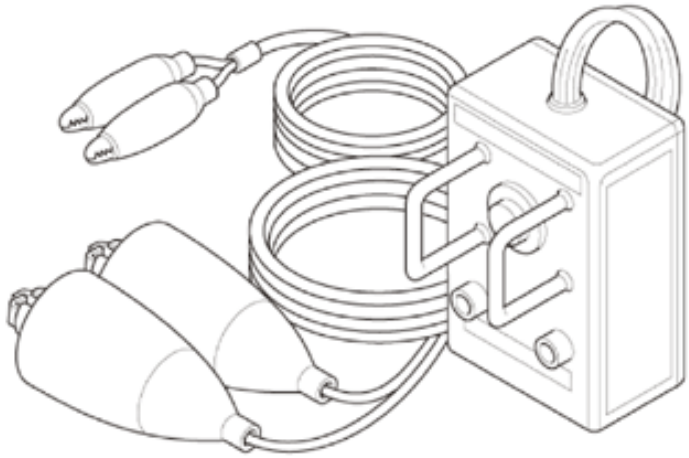	Deployment Tool 07AAZ-000A100

PROCEDURE

Before scrapping any front airbags, side airbags, side curtain airbags, or front seat belt tensioners (including those in a whole vehicle to be scrapped), the part(s) must be deployed. If the vehicle is still within the warranty period, the Honda District Parts and Service Manager must give approval and/or special instruction before deploying the part(s). Only after the part(s) have been deployed (as the result of vehicle collision, for example), can they be scrapped. If the parts appear intact (not deployed), treat them with extreme caution. Follow this procedure.

1. Deploying Airbags In the Vehicle

   If an SRS equipped vehicle is to be entirely scrapped, its front airbags, side airbags, side curtain airbags, and front seat belt tensioners should be deployed while still in the vehicle. These parts should not be considered as salvageable parts and should never be installed in another vehicle.

   Deploying Airbags in the Vehicle

   1. Turn the ignition switch to LOCK (0). Do the battery terminal disconnection procedure, then wait at least 3 minutes before starting work.
   2. Confirm that each front airbag, side airbag, side curtain airbag, or front seat belt tensioner is securely mounted.
   3. Confirm that the deployment tool is functioning properly by following the check procedure on the tool label.

GETtheMANUALS.org

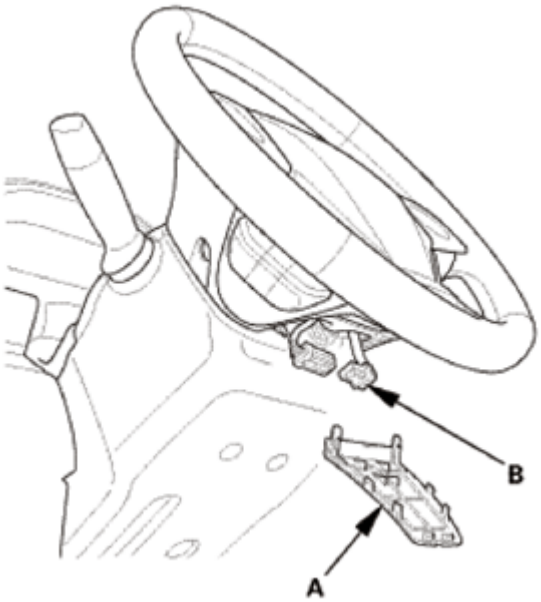

Fig. 1: Identifying Driver's Airbag Inflator Connector And Access Panel
Courtesy of AMERICAN HONDA MOTOR CO., INC.

Driver's Airbag

4. Remove the access panel (A).
5. Disconnect the driver's airbag inflator connector (B) on the cable reel harness.

Front Passenger's Airbag

6. Lower the glove box.
7. Disconnect the front passenger's airbag inflator connector (A) on the dashboard wire harness.

Fig. 2: Identifying Front Passenger's Airbag Inflator Connector
Courtesy of AMERICAN HONDA MOTOR CO., INC.

Side Airbag

GETtheMANUALS.org

8. Disconnect the driver's and front passenger's side airbag inflator connectors (A) on the floor wire harness or front passenger's seat wire harness.

Fig. 3: Identifying Driver's And Front Passenger's Side Airbag Inflator Connectors
Courtesy of AMERICAN HONDA MOTOR CO., INC.

Side Curtain Airbag

9. Remove the quarter pillar trim.
10. Disconnect the left and right side curtain airbag inflator connectors (A) on the floor wire harness.

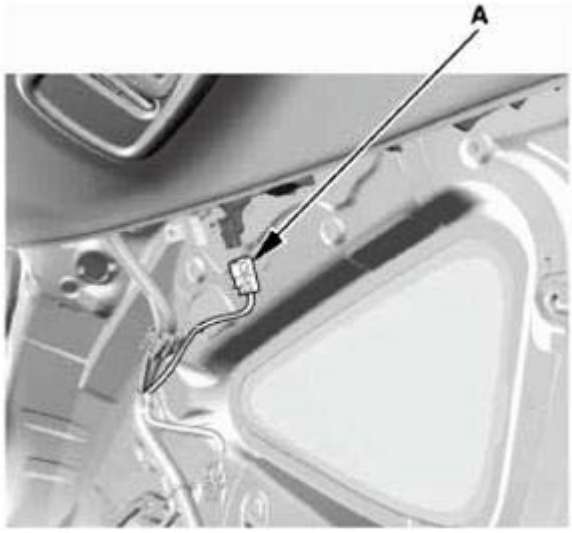

Fig. 4: Identifying Left And Right Side Curtain Airbag Inflator Connectors

GETtheMANUALS.org

Courtesy of AMERICAN HONDA MOTOR CO., INC.

Front Seat Belt Tensioner

11. Remove the B-pillar lower trim.
12. Disconnect the driver's and front passenger's seat belt tensioner connectors (A) on the floor wire harness. Pull the front seat belt out all the way and cut it.

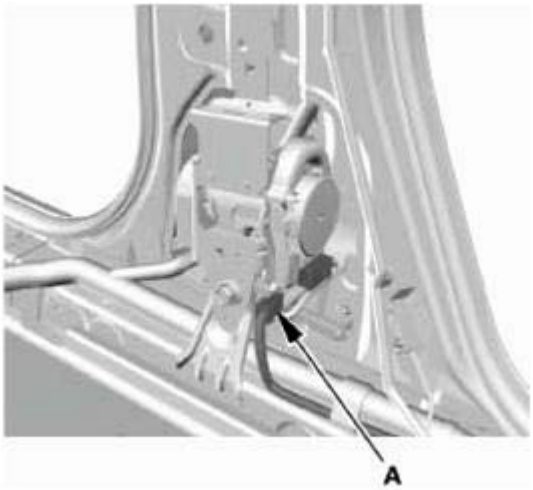

Fig. 5: Identifying Driver's And Front Passenger's Seat Belt Tensioner Connectors
Courtesy of AMERICAN HONDA MOTOR CO., INC.

13. Cut off each connector, and strip the ends of the wires. Twist each pair of unlike colored wires together, and clip an alligator clip (A) from the deployment tool to each pair.

NOTE:

- **Place the deployment tool at least 10 m (33 ft) away from the vehicle.**
- **The driver's and front passenger's airbags have dual inflators. Twist each pair of unlike colored wires together, and clip an alligator clip to each pair.**

14. Connect a 12 volt battery to the tool.
    - If the green light on the tool comes on, the igniter circuit is defective and cannot deploy the component. Go to **DISPOSAL OF DAMAGED COMPONENTS**.
    - If the red light on the tool comes on, the component is ready to be deployed.
15. Push the tool's deployment switch. The airbags and tensioners should deploy (deployment is both highly audible and visible: A loud noise and rapid inflation of the bag, followed by slow deflation).
    - If the components deploy and the green light on the tool comes on, continue with this procedure.
    - If a component does not deploy, and the green light comes ON, its igniter is defective. Go to **DISPOSAL OF DAMAGED COMPONENTS**.

GETtheMANUALS.org

- During deployment, the airbags can become hot enough to burn you. Wait for 30 minutes after deployment before touching the airbags.

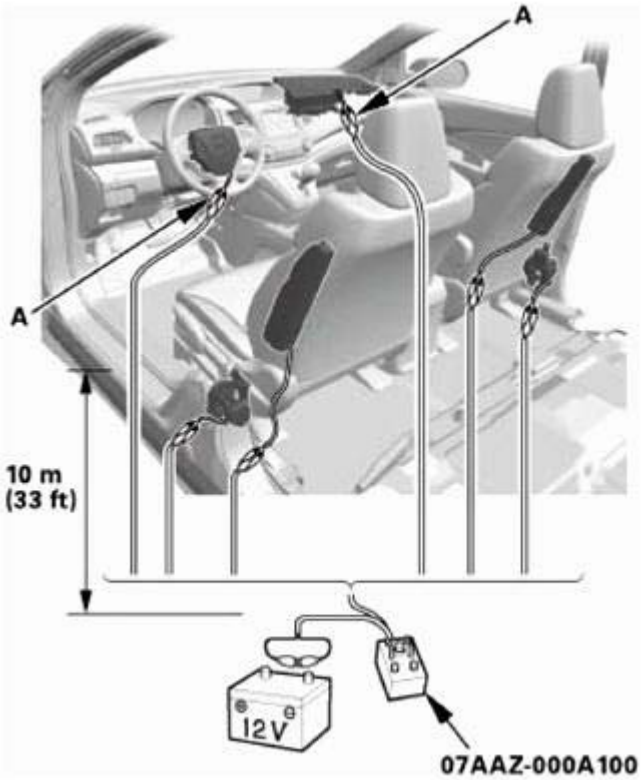

Fig. 6: Checking Igniter Circuit
Courtesy of AMERICAN HONDA MOTOR CO., INC.

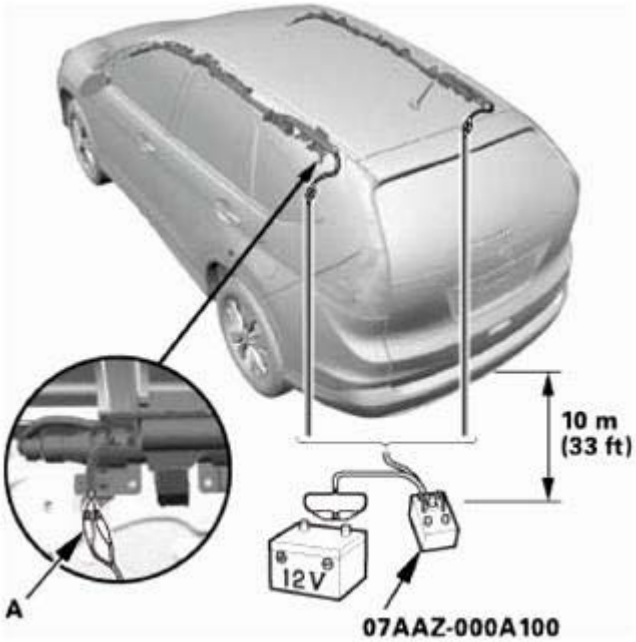

GETtheMANUALS.org

Fig. 7: Checking Deployment Switch
Courtesy of AMERICAN HONDA MOTOR CO., INC.

16. Dispose of the complete airbag or tensioner. No part of it can be reused. Place it in a sturdy plastic bag (A), and seal it securely. Dispose of the deployed airbag according to your local regulations.

Fig. 8: Handling Deployed Airbag Or Tensioner Using Plastic Bag
Courtesy of AMERICAN HONDA MOTOR CO., INC.

2. Deploying Components Out Of the Vehicle

Deploying Components Out of the Vehicle

If an intact airbag or tensioner has been removed from a scrapped vehicle, or has been found defective or damaged during transit, storage, or service, it should be deployed as follows:

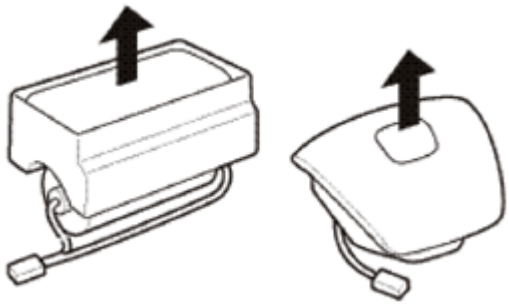

Fig. 9: Removing Deploying Components
Courtesy of AMERICAN HONDA MOTOR CO., INC.

1. Confirm that the deployment tool is functioning properly by following the check procedure Deploying Airbags in the Vehicle on the tool label.
2. Position the airbag face up, outdoors, on flat ground, at least 10 m (33 ft) from any obstacles or people.
3. Cut off each connector, and strip the ends of the wires. Twist each pair of unlike colored wires

GETtheMANUALS.org

together, and clip an alligator clip from the deployment tool to each pair.

NOTE: **The driver's and front passenger's airbags have dual inflators. Twist each pair of unlike colored wires together, and clip an alligator clip to each pair.**

4. Connect a 12 volt battery to the tool.
   - If the green light on the tool comes on, the igniter circuit is defective and cannot deploy the component. Go to **DISPOSAL OF DAMAGED COMPONENTS**.
   - If the red light on the tool comes on, the component is ready to be deployed.

Fig. 10: Handling Deployed Airbag Or Tensioner Using Plastic Bag
Courtesy of AMERICAN HONDA MOTOR CO., INC.

5. Push the tool's deployment switch. The airbags and tensioners should deploy (deployment is both highly audible and visible: A loud noise and rapid inflation of the bag, followed by slow deflation).
   - If the components deploy and the green light on the tool comes on, continue with this procedure.
   - If a component does not deploy, and the green light comes ON, its igniter is defective. Go to **DISPOSAL OF DAMAGED COMPONENTS**.
   - During deployment, the airbags can become hot enough to burn you. Wait for 30 minutes after deployment before touching the airbags.
6. Dispose of the complete airbag or tensioner. No part of it can be reused. Place it in a sturdy plastic bag (A), and seal it securely. Dispose of the deployed airbag according to your local regulations.

Disposal of Damaged Components

1. If installed in a vehicle, follow the removal procedure for the driver's airbag, the front passenger's airbag, the side airbag, the side curtain airbag, and the front seat belt tensioner.
2. In all cases, make a short circuit by cutting, stripping, and twisting together the two inflator wires.

NOTE: **The driver's and front passenger's airbags and the side curtain airbag**

GETtheMANUALS.org

have dual inflators. The like color wires go to the individual inflators. Twist the like colored wires together.

3. Package the component in exactly the same packaging that the new replacement part came in.
4. Mark the outside of the box DAMAGED AIRBAG NOT DEPLOYED, DAMAGED SIDE AIRBAG NOT DEPLOYED, DAMAGED SIDE CURTAIN AIRBAG NOT DEPLOYED, or DAMAGED SEAT BELT TENSIONER NOT DEPLOYED so it does not get confused with your parts stock.
5. Contact your Honda District Parts and Service Manager for instructions on how and where to return it for disposal.

Deployment Tool Check

1. Connect the yellow clips to both switch protector handles on the tool.
2. Then connect the red lead to the positive battery post and the black lead to the negative battery post.
3. Push the operation switch: The green light should come on, indicating that the tool is operating properly and is ready for use. If the red light stays on, the tool is faulty, and another one must be used for the procedure.
4. Disconnect the tool clips and connectors from the protector handles and the battery.

CABLE REEL REMOVAL AND INSTALLATION

LON > 753100

REMOVAL

NOTE:

- **SRS components are located in this area. Review the SRS COMPONENT LOCATIONS and the PRECAUTIONS AND PROCEDURES before doing repairs or service.**
- **Before doing this procedure, set the front wheels in the straight ahead position.**

1. Battery Terminal (SRS) - Disconnection
   1. Make sure the ignition switch is in LOCK (0).
   2. Disconnect and isolate the negative cable (A) from the battery.

      NOTE: Always disconnect the negative side first.

   3. Disconnect the positive cable (B) from the battery.
   4. Wait at least 3 minutes before starting work.

GETtheMANUALS.org

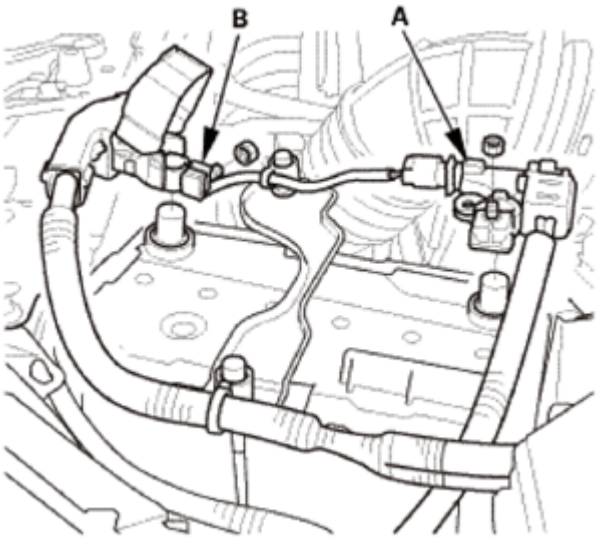

Fig. 11: Identifying Battery Positive And Negative Cables
Courtesy of AMERICAN HONDA MOTOR CO., INC.

2. Driver's Airbag
    1. Remove the access panel (A).
    2. Disconnect the driver's airbag inflator connector (B) on the cable reel harness.
    3. Disconnect the horn switch connector (C).

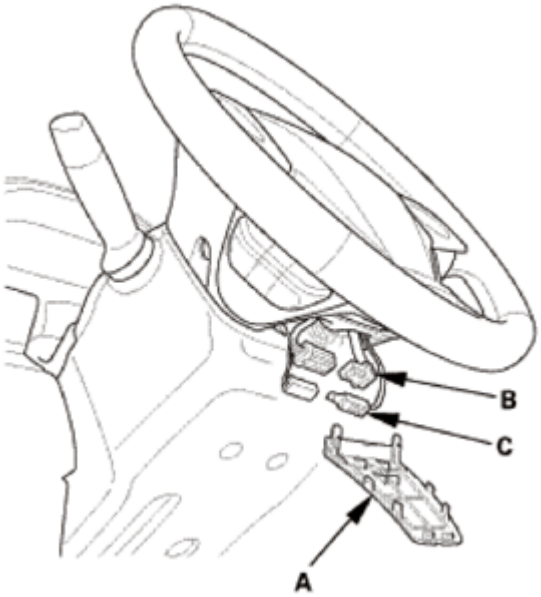

Fig. 12: Identifying Driver's Airbag Inflator Connector, Access Panel And Horn Switch Connector
Courtesy of AMERICAN HONDA MOTOR CO., INC.

4. Remove the TORX bolts using a TORX T30 bit.

GETtheMANUALS.org

5. Remove the driver's airbag (A).

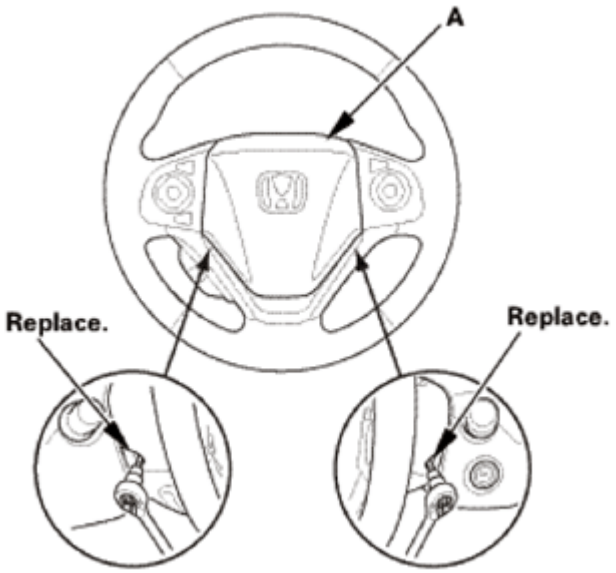

Fig. 13: Identifying Driver's Airbag And Torx Bolts
Courtesy of AMERICAN HONDA MOTOR CO., INC.

3. Steering Wheel Assembly
    1. Set the front wheels in the straight ahead position.
    2. Disconnect the connector (A).
    3. Loosen the steering wheel bolt (B) three turns.

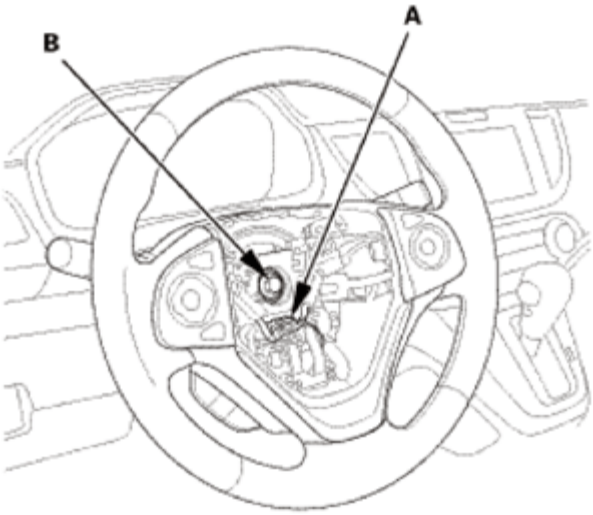

Fig. 14: Identifying Steering Wheel Connector And Bolt
Courtesy of AMERICAN HONDA MOTOR CO., INC.

4. Install a commercially available steering wheel puller (A) on the steering wheel (B).

GETtheMANUALS.org

5. Free the steering wheel from the steering column shaft by turning the pressure bolt (C) of the puller.

   Note these items when removing the steering wheel:

   - Do not tap on the steering wheel or the steering column shaft when removing the steering wheel.
   - If you thread the puller bolts (D) into the wheel hub more than five threads, the bolts will hit the cable reel and damage it. To prevent this, install a pair of jam nuts five threads up on each puller bolt.

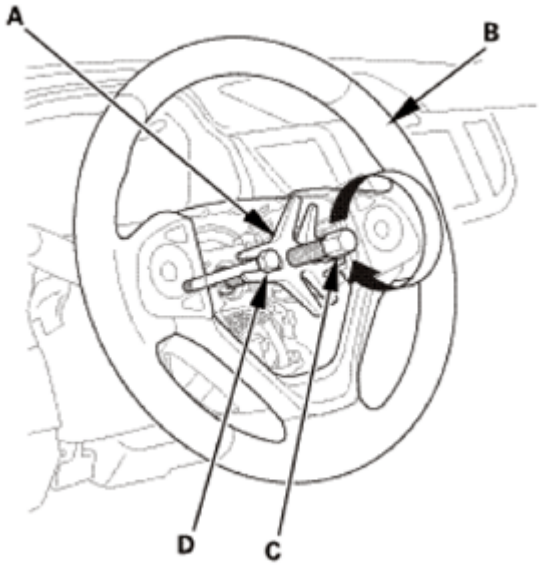

Fig. 15: Turning Puller Pressure Bolt
Courtesy of AMERICAN HONDA MOTOR CO., INC.

6. Remove the steering wheel puller.
7. Remove the steering wheel (A) from the steering column.

GETtheMANUALS.org

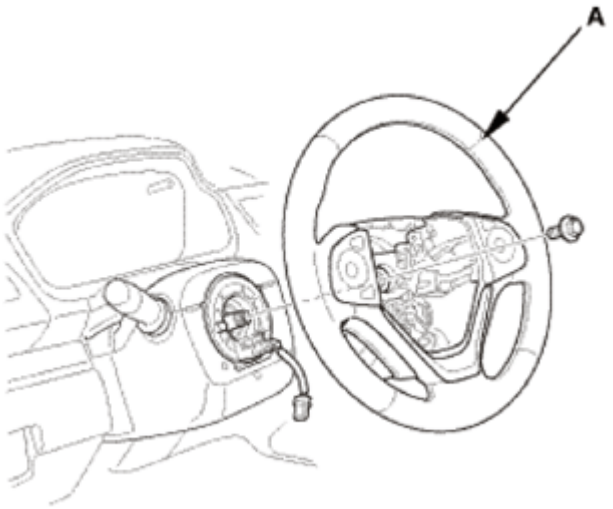

Fig. 16: Identifying Steering Wheel
Courtesy of AMERICAN HONDA MOTOR CO., INC.

4. Upper Column Cover
    1. Carefully pry out the dashboard meter visor blind cover (A) with the appropriate trim tool to detach the clips (B) and the hook (C), then tuck up the dashboard meter visor blind cover.

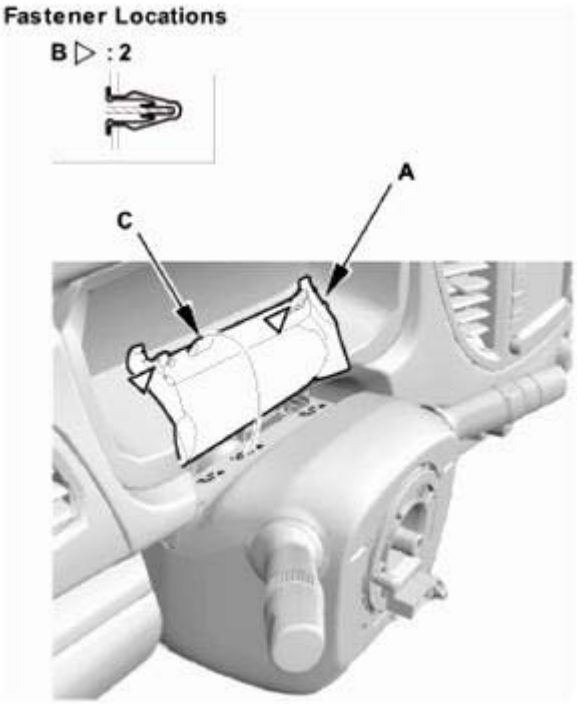

Fig. 17: Identifying Dashboard Meter Visor Blind Cover, Clips And Hook
Courtesy of AMERICAN HONDA MOTOR CO., INC.

    2. Remove the upper column cover (A).

GETtheMANUALS.org

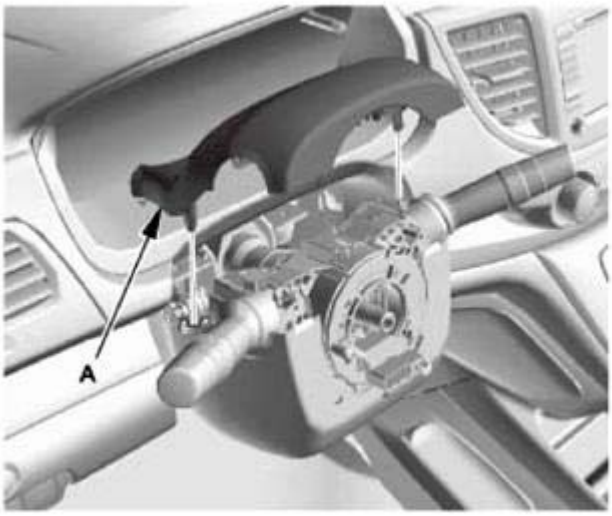

Fig. 18: Identifying Upper Column Cover
Courtesy of AMERICAN HONDA MOTOR CO., INC.

5. Lower Column Cover
    1. Remove the screws (A) securing the lower column cover (B) from the front side.

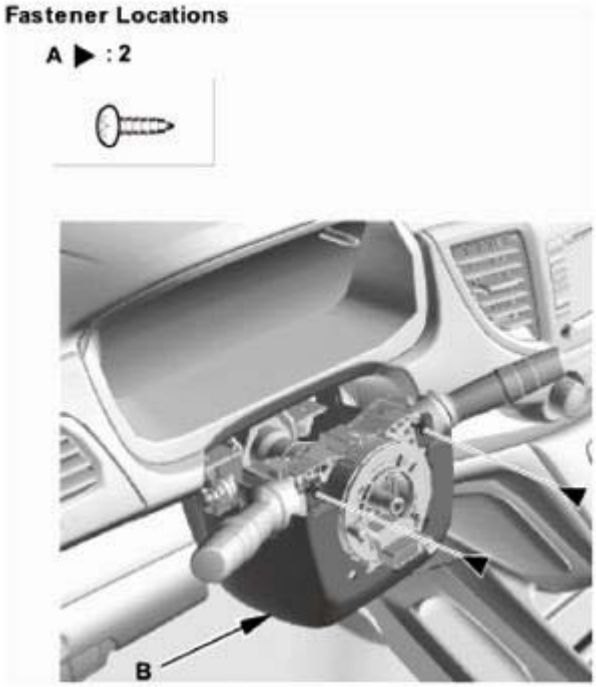

Fig. 19: Identifying Lower Column Cover And Screws
Courtesy of AMERICAN HONDA MOTOR CO., INC.

    2. Remove the screw (A), then remove the lower column cover (B).

GETtheMANUALS.org

Fig. 20: Identifying Lower Column Cover And Screw
Courtesy of AMERICAN HONDA MOTOR CO., INC.

6. Cable Reel/Steering Angle Sensor
    1. Disconnect cable reel connector A on the dashboard wire harness, cable reel connector B on the dashboard wire harness, and the steering angle sensor connector (C).

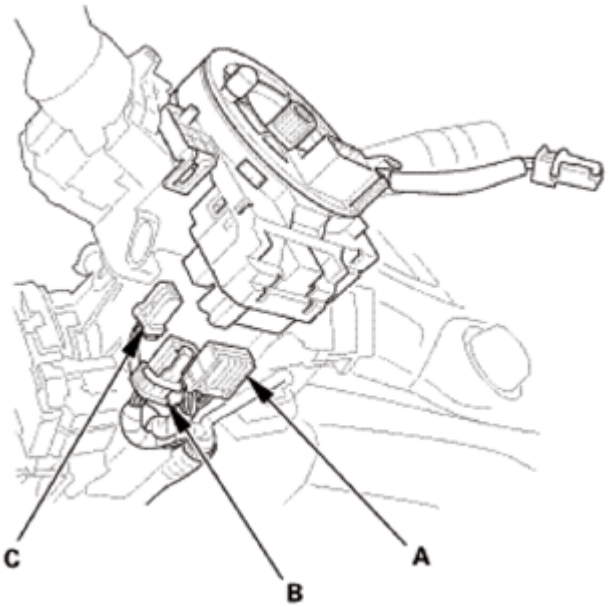

GETtheMANUALS.org

Fig. 21: Identifying Cable Reel Connectors And Steering Angle Sensor Connector
Courtesy of AMERICAN HONDA MOTOR CO., INC.

2. Remove the cable reel/steering angle sensor (A).

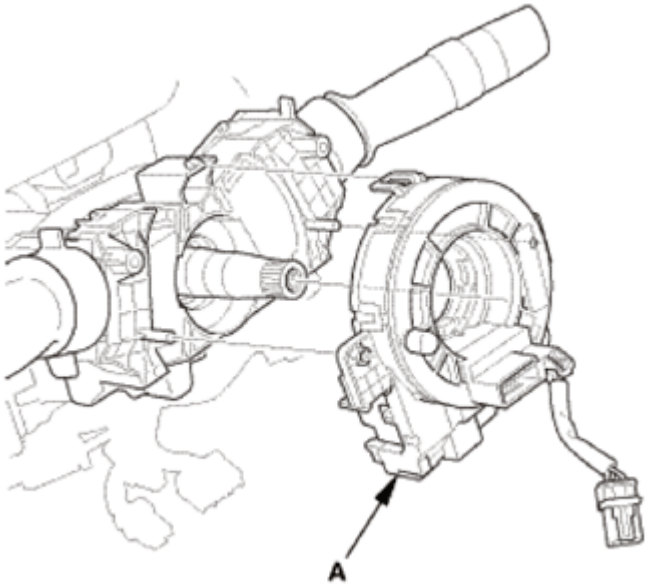

Fig. 22: Identifying Cable Reel/Steering Angle Sensor
Courtesy of AMERICAN HONDA MOTOR CO., INC.

7. Cable Reel
    1. Remove the cable reel (A) from the steering angle sensor (B).

GETtheMANUALS.org

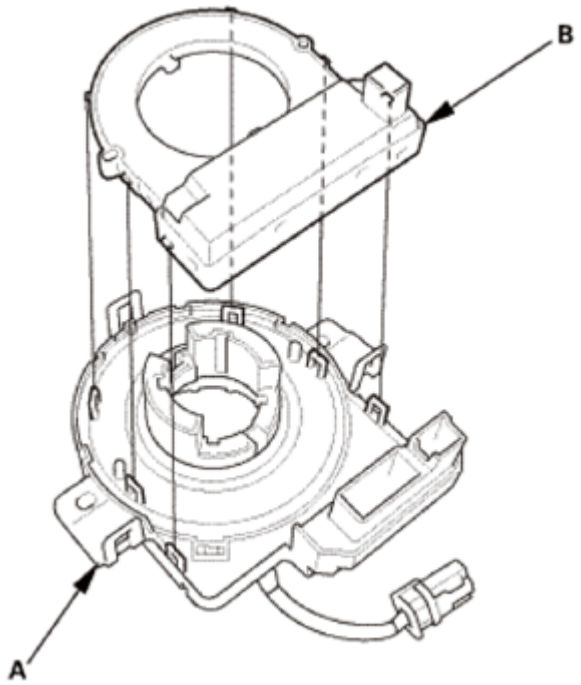

Fig. 23: Identifying Cable Reel And Steering Angle Sensor
Courtesy of AMERICAN HONDA MOTOR CO., INC.

INSTALLATION

NOTE:

- **SRS components are located in this area. Review the SRS COMPONENT LOCATIONS and the PRECAUTIONS AND PROCEDURES before doing repairs or service.**
- **Before installing the steering wheel, make sure the front wheels are aligned straight ahead.**
- **New cable reel is locked by yellow tab for center adjustment. When installing a new cable reel there is no need to rotate the cable reel. You remove the tab and discard it, after install new cable reel.**

1. Cable Reel
    1. Install the cable reel (A) to the steering angle sensor (B).

GETtheMANUALS.org

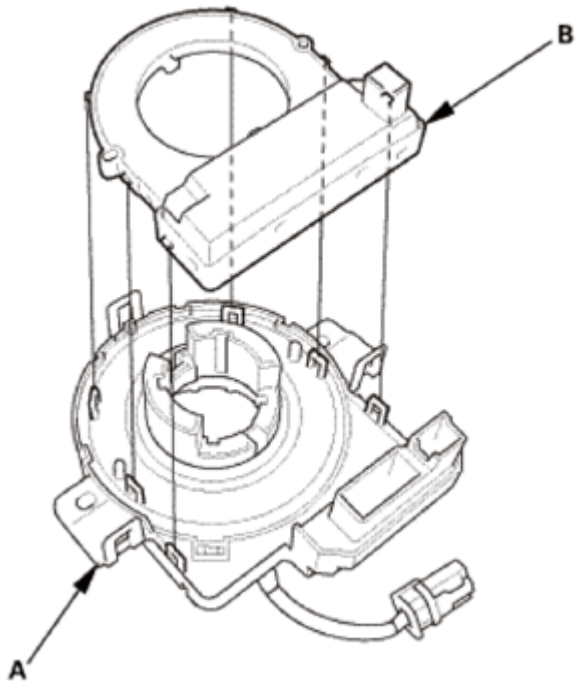

Fig. 24: Identifying Cable Reel And Steering Angle Sensor
Courtesy of AMERICAN HONDA MOTOR CO., INC.

2. Cable Reel/Steering Angle Sensor
    1. Install the cable reel/steering angle sensor (A).

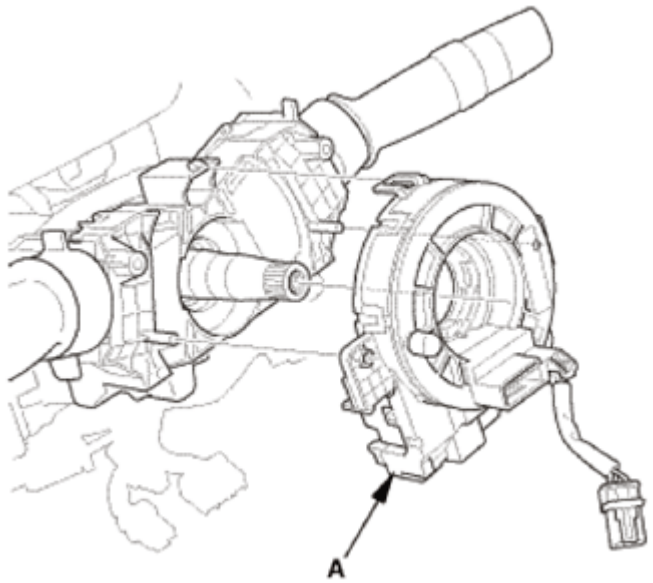

Fig. 25: Identifying Cable Reel/Steering Angle Sensor
Courtesy of AMERICAN HONDA MOTOR CO., INC.

    2. Connect cable reel connector A on the dashboard wire harness, cable reel connector B on the

GETtheMANUALS.org

dashboard wire harness, and the steering angle sensor connector (C).

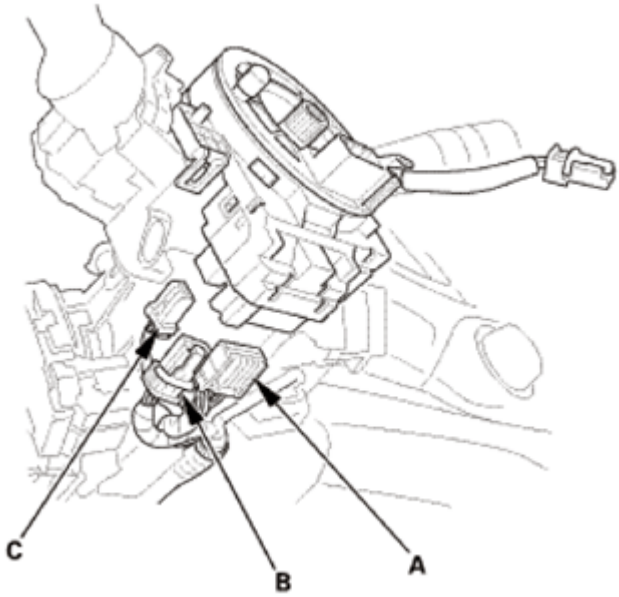

Fig. 26: Identifying Cable Reel Connectors And Steering Angle Sensor Connector
Courtesy of AMERICAN HONDA MOTOR CO., INC.

3. Lower Column Cover
    1. Push in on the lower column cover just above ignition switch opening (A) to engage the column cover with the locking tab (B).

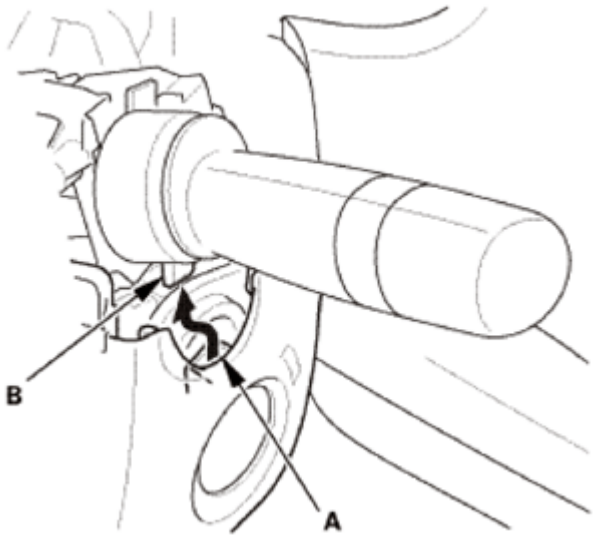

Fig. 27: Engaging Column Cover And Locking Tab
Courtesy of AMERICAN HONDA MOTOR CO., INC.

    2. Install the lower column cover (A), then install the screw (B).

GETtheMANUALS.org

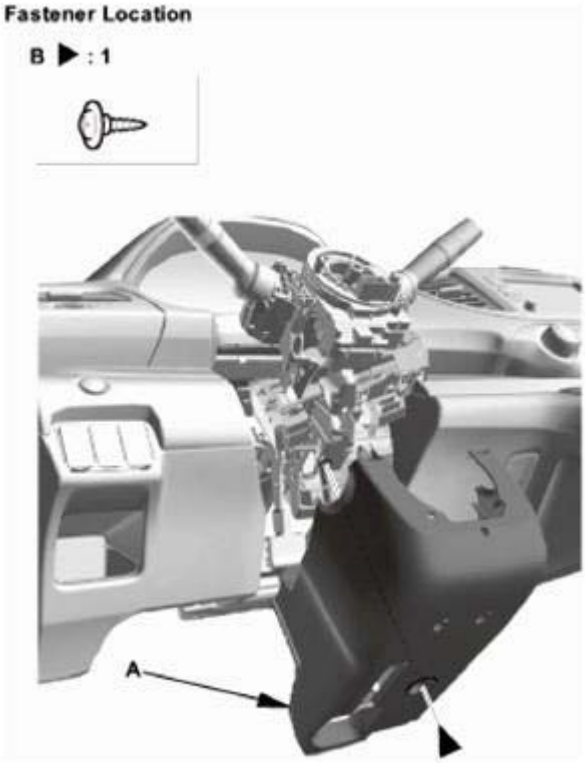

Fig. 28: Identifying Lower Column Cover And Screw
Courtesy of AMERICAN HONDA MOTOR CO., INC.

3. Install the screws (A) securing the lower column cover (B) from the front side.

GETtheMANUALS.org

Fig. 29: Identifying Lower Column Cover Screws
Courtesy of AMERICAN HONDA MOTOR CO., INC.

4. Upper Column Cover
    1. Install the upper column cover (A).

Fig. 30: Identifying Upper Column Cover
Courtesy of AMERICAN HONDA MOTOR CO., INC.

    2. Install the dashboard meter visor blind cover (A). Make sure the clips (B) and the hook (C) snap into place securely.

GETtheMANUALS.org

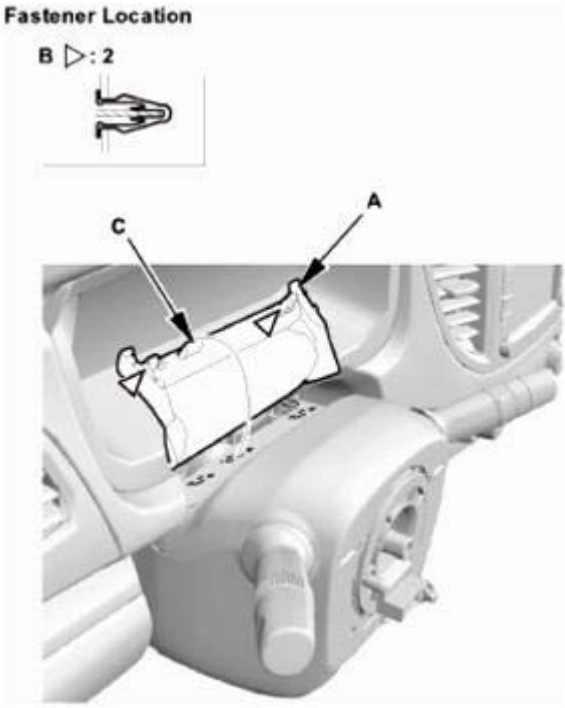

Fig. 31: Identifying Dashboard Meter Visor Blind Cover, Clips And Hook
Courtesy of AMERICAN HONDA MOTOR CO., INC.

5. Steering Wheel Assembly
    1. Make sure the front wheels are pointing straight ahead.
    2. Center the cable reel (A). Do this by first rotating the cable reel clockwise until it stops.
    3. Rotate the cable reel counterclockwise about three full turns. The arrow mark (B) on the cable reel label should point straight up.

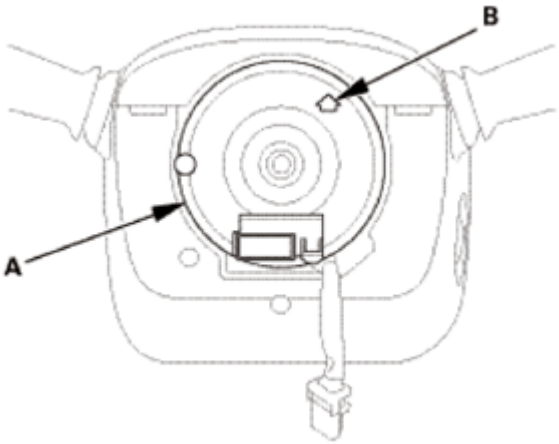

Fig. 32: Identifying Arrow Mark On Cable Reel Label And Cable Reel
Courtesy of AMERICAN HONDA MOTOR CO., INC.

    4. Position the steering wheel hub (A) so that it engages the pin (B) of the cable reel.

GETtheMANUALS.org

5. Install the steering wheel (C) on to the steering column shaft.

NOTE: **Do not tap on the steering wheel or the steering column shaft when installing the steering wheel.**

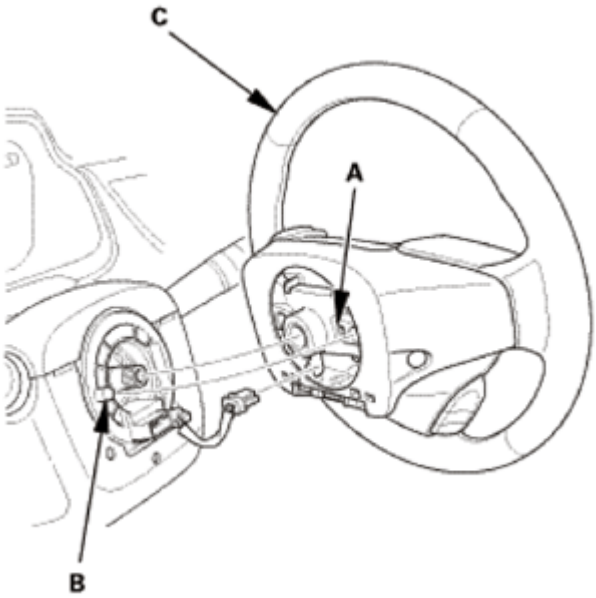

Fig. 33: Identifying Steering Wheel, Hub And Pin
Courtesy of AMERICAN HONDA MOTOR CO., INC.

6. Install the steering wheel bolt (A), and tighten it to the specified torque.
7. Connect the connector (B).
8. Make sure the wire harness is routed and fastened properly.

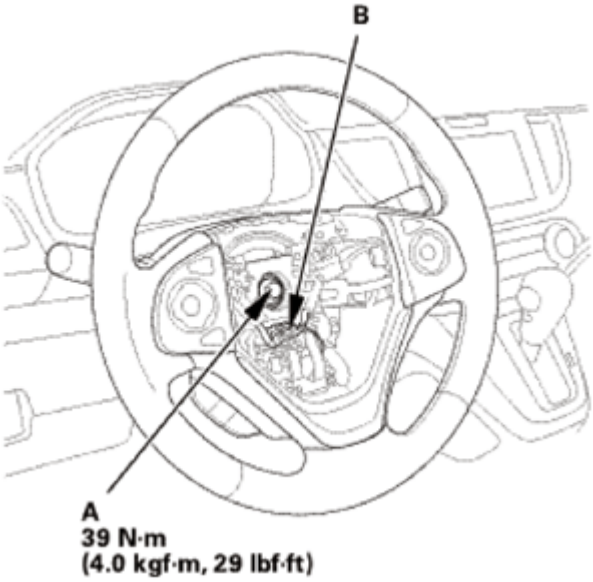

GETtheMANUALS.org

Fig. 34: Identifying Steering Wheel Connector And Bolt With Torque Specification
Courtesy of AMERICAN HONDA MOTOR CO., INC.

6. Driver's Airbag

NOTE: **If you are replacing a deployed driver's airbag, inspect the cable reel for heat damage. If there is any damage, replace the cable reel.**

1. Place the driver's airbag (A) in the steering wheel.
2. Tighten the new TORX bolts using a TORX T30 bit.

NOTE: **Make sure the clearance (B) between the steering wheel and the horn pad is the specified value.**

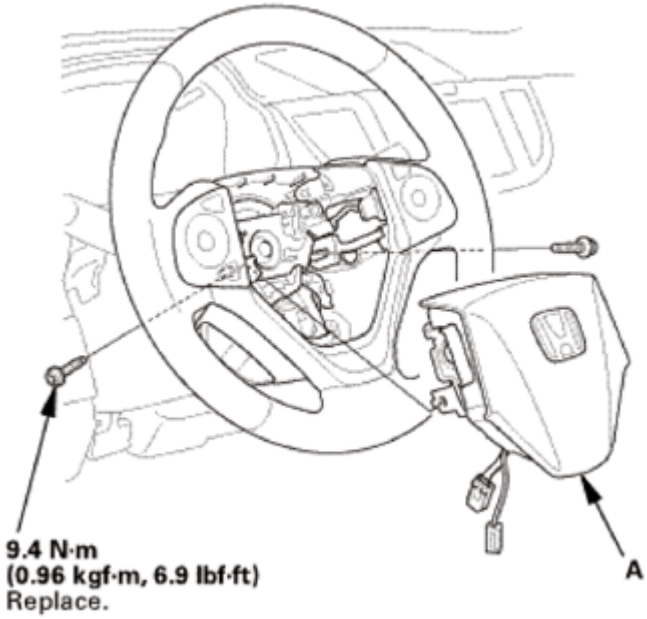

Fig. 35: Identifying Driver's Airbag And Mounting Bolt With Torque Specification
Courtesy of AMERICAN HONDA MOTOR CO., INC.

GETtheMANUALS.org

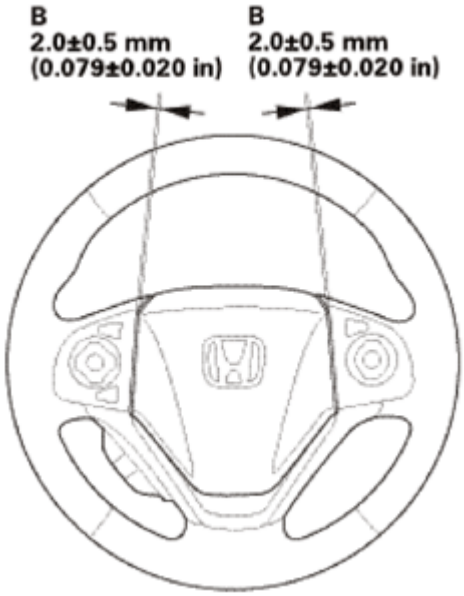

Fig. 36: Identifying Clearance Between Steering Wheel And Horn Pad
Courtesy of AMERICAN HONDA MOTOR CO., INC.

3. Connect the driver's airbag inflator connector (A) on the cable reel harness.
4. Connect the horn switch connector (B).

NOTE: **After reconnecting the negative cable to the battery, make sure the horn works properly.**

5. Install the access panel (C).

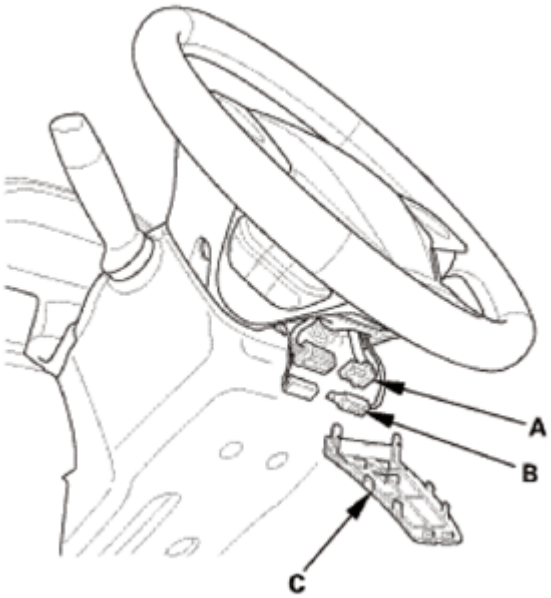

Fig. 37: Identifying Driver's Airbag Inflator Connector, Horn Switch Connector And Access

GETtheMANUALS.org

Panel
Courtesy of AMERICAN HONDA MOTOR CO., INC.

7. Battery Terminal (SRS) - Reconnection

NOTE: If the battery performance is abnormal, test the battery.

1. Clean the battery terminals.
2. Connect the positive cable (A) to the battery.

NOTE: Always connect the positive side first.

3. Connect the negative cable (B) to the battery.
4. Apply multipurpose grease to the terminals to prevent corrosion.

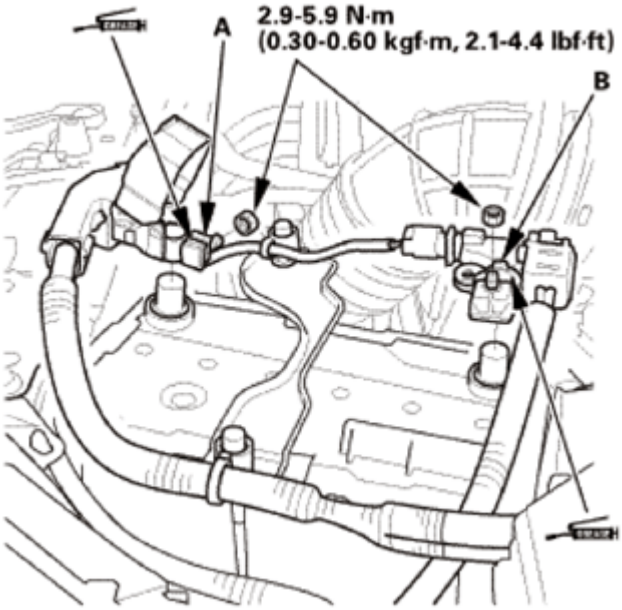

Fig. 38: Identifying Multipurpose Grease Applying Area On Battery Positive And Negative Terminals
Courtesy of AMERICAN HONDA MOTOR CO., INC.

8. HDS DLC - Connection
   1. Connect the HDS to the data link connector (DLC) (A) located under the driver's side of the dashboard.
   2. Turn the ignition switch to ON (II).
   3. Make sure the HDS communicates with the vehicle. If it does not communicate, go to the DLC circuit troubleshooting.

GETtheMANUALS.org

Fig. 39: Identifying Data Link Connector
Courtesy of AMERICAN HONDA MOTOR CO., INC.

9. DTC - Clear
    1. Clear the DTC(s) by following the screen prompts on the HDS.
    2. Turn the ignition switch to LOCK (0), then wait for 10 seconds.
10. Confirm Proper SRS Operation
    1. Turn the ignition switch to ON (II), and check that the SRS indicator comes on for about 6 seconds and then goes off.
11. Steering After Install - Check
    1. After installation, check these items:
        - Start the engine, allow it to idle, and turn the steering wheel from lock to lock several times.
        - Check that the EPS indicator does not come on.
        - Check the steering wheel spoke angle. If steering spoke angles to the right and left are not equal (steering wheel and rack are not centered), correct the engagement of the joint/pinion shaft splines.
12. Steering Wheel Spoke Angle - Check
    1. Check the steering wheel spoke angle.
    2. If steering spoke angles to the right and left are not equal (steering wheel is not centered), correct the engagement of the wheel/column shaft splines.
13. VSA Sensor Neutral Position - Memorization
    1. Park the vehicle on a flat and level surface, with the steering wheel in the straight ahead position.
    2. Select VSA ADJUSTMENT, then select ALL SENSORS with the HDS, and follow the screen prompts.

    NOTE: See the HDS Help menu for specific instructions.

14. Steering Angle Sensor Neutral Position - Clear

GETtheMANUALS.org

1. Select EPS ADJUSTMENT, then select EPS STEERING ANGLE SENSOR VALUE CLEAR and follow the screen prompts on the HDS.

NOTE: See the HDS Help menu for specific instructions.

DRIVER'S AIRBAG REMOVAL AND INSTALLATION

LON > 752100

REMOVAL

NOTE:

- **SRS components are located in this area. Review the SRS COMPONENT LOCATIONS and the PRECAUTIONS AND PROCEDURES before doing repairs or service.**
- **If replacing the driver's airbag after deployment, refer to COMPONENT REPLACEMENT/INSPECTION AFTER DEPLOYMENT for a complete list of other parts that must also be replaced.**

1. Battery Terminal (SRS) - Disconnection
   1. Make sure the ignition switch is in LOCK (0).
   2. Disconnect and isolate the negative cable (A) from the battery.

      NOTE: Always disconnect the negative side first.

   3. Disconnect the positive cable (B) from the battery.
   4. Wait at least 3 minutes before starting work.

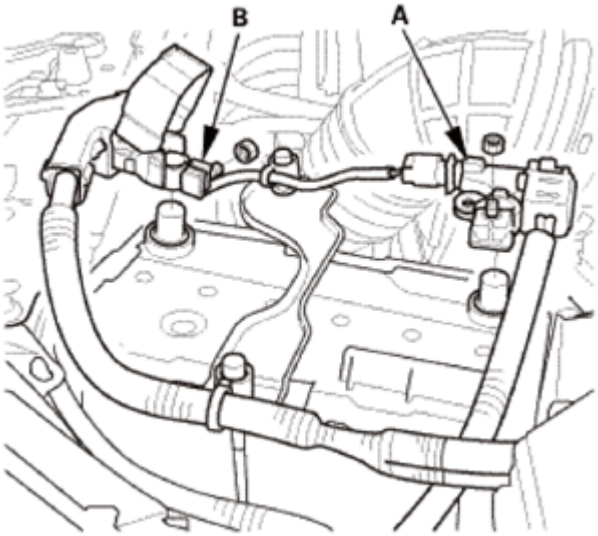

Fig. 40: Identifying Battery Positive And Negative Cables
Courtesy of AMERICAN HONDA MOTOR CO., INC.

GETtheMANUALS.org

2. Driver's Airbag
    4. Remove the TORX bolts using a TORX T30 bit.
    5. Remove the driver's airbag (A).

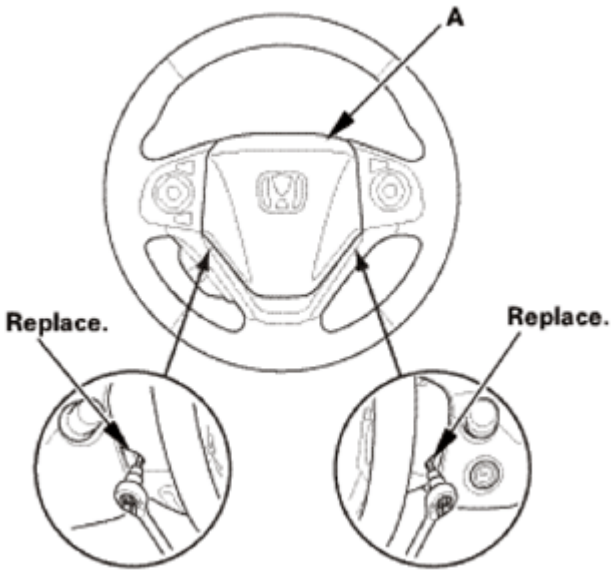

Fig. 41: Identifying Driver's Airbag And Torx Bolts
Courtesy of AMERICAN HONDA MOTOR CO., INC.

INSTALLATION

NOTE: **SRS components are located in this area. Review the SRS COMPONENT LOCATIONS and the PRECAUTIONS AND PROCEDURES before doing repairs or service.**

1. Driver's Airbag

NOTE: **If you are replacing a deployed driver's airbag, inspect the cable reel for heat damage. If there is any damage, replace the cable reel.**

1. Place the driver's airbag (A) in the steering wheel.
2. Tighten the new TORX bolts using a TORX T30 bit.

NOTE: **Make sure the clearance (B) between the steering wheel and the horn pad is the specified value.**

GETtheMANUALS.org

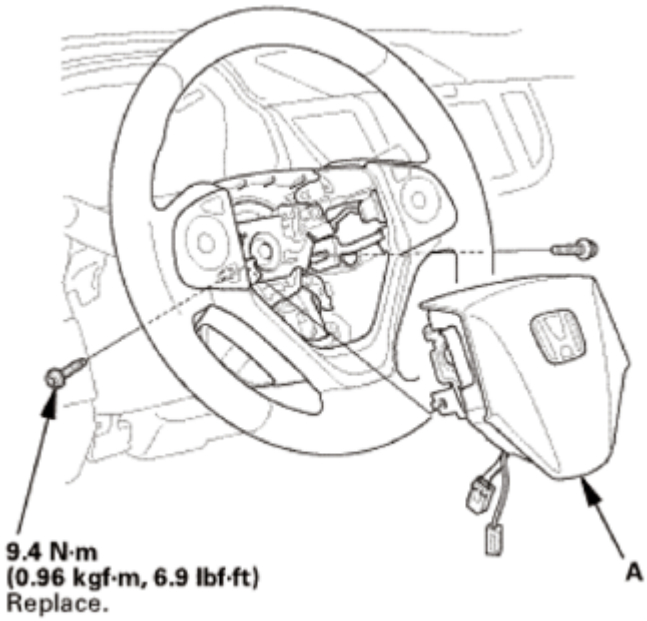

Fig. 42: Identifying Driver's Airbag And Mounting Bolt With Torque Specification
Courtesy of AMERICAN HONDA MOTOR CO., INC.

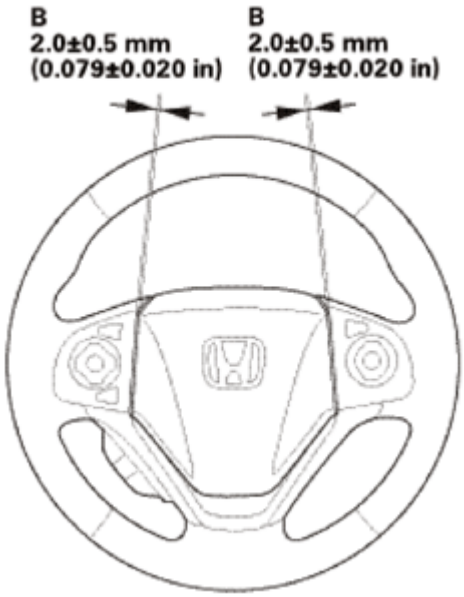

Fig. 43: Identifying Clearance Between Steering Wheel And Horn Pad
Courtesy of AMERICAN HONDA MOTOR CO., INC.

3. Connect the driver's airbag inflator connector (A) on the cable reel harness.
4. Connect the horn switch connector (B).

NOTE: **After reconnecting the negative cable to the battery, make sure the horn works properly.**

GETtheMANUALS.org

5. Install the access panel (C).

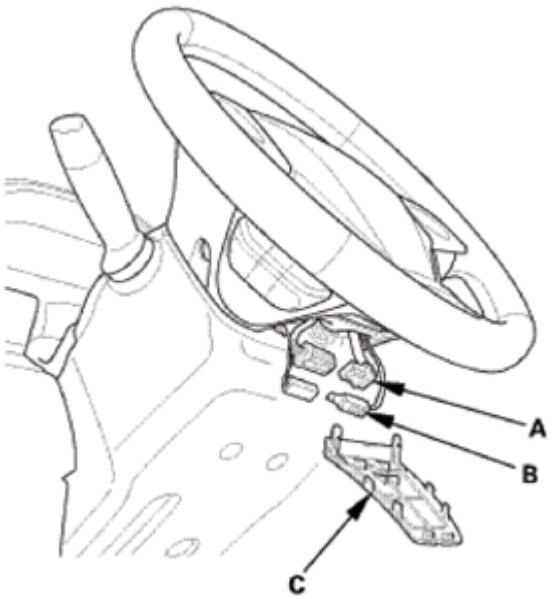

Fig. 44: Identifying Driver's Airbag Inflator Connector, Horn Switch Connector And Access Panel
Courtesy of AMERICAN HONDA MOTOR CO., INC.

2. Battery Terminal (SRS) - Reconnection

NOTE: If the battery performance is abnormal, test the battery.

1. Clean the battery terminals.
2. Connect the positive cable (A) to the battery.

NOTE: Always connect the positive side first.

3. Connect the negative cable (B) to the battery.
4. Apply multipurpose grease to the terminals to prevent corrosion.

GETtheMANUALS.org

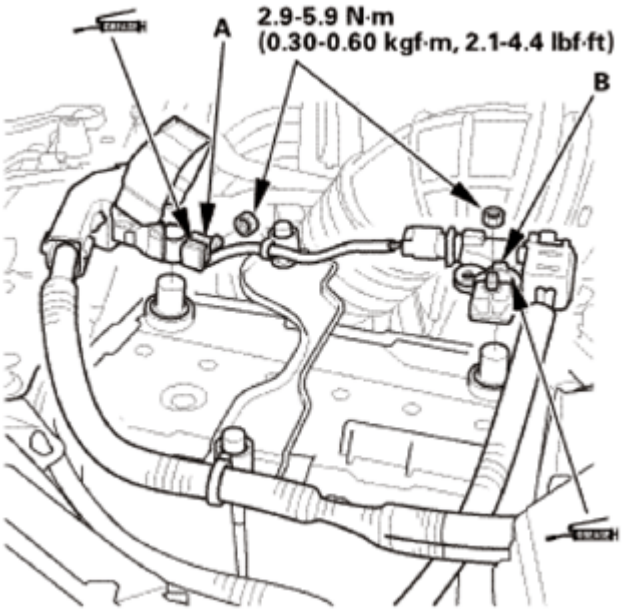

Fig. 45: Identifying Multipurpose Grease Applying Area On Battery Positive And Negative Terminals
Courtesy of AMERICAN HONDA MOTOR CO., INC.

3. HDS DLC - Connection
    1. Connect the HDS to the data link connector (DLC) (A) located under the driver's side of the dashboard.
    2. Turn the ignition switch to ON (II).
    3. Make sure the HDS communicates with the vehicle. If it does not communicate, go to the DLC circuit troubleshooting.

Fig. 46: Identifying Data Link Connector
Courtesy of AMERICAN HONDA MOTOR CO., INC.

GETtheMANUALS.org

4. DTC - Clear
    1. Clear the DTC(s) by following the screen prompts on the HDS.
    2. Turn the ignition switch to LOCK (0), then wait for 10 seconds.
5. Confirm Proper SRS Operation
    1. Turn the ignition switch to ON (II), and check that the SRS indicator comes on for about 6 seconds and then goes off.

FRONT IMPACT SENSOR REMOVAL AND INSTALLATION

LON > 7521A4 LEFT FRONT 7521A8 RIGHT FRONT

REMOVAL

NOTE: SRS components are located in this area. Review the SRS COMPONENT LOCATIONS and the PRECAUTIONS AND PROCEDURES before doing repairs or service.

1. Battery Terminal (SRS) - Disconnection
    1. Make sure the ignition switch is in LOCK (0).
    2. Disconnect and isolate the negative cable (A) from the battery.

        NOTE: Always disconnect the negative side first.

    3. Disconnect the positive cable (B) from the battery.
    4. Wait at least 3 minutes before starting work.

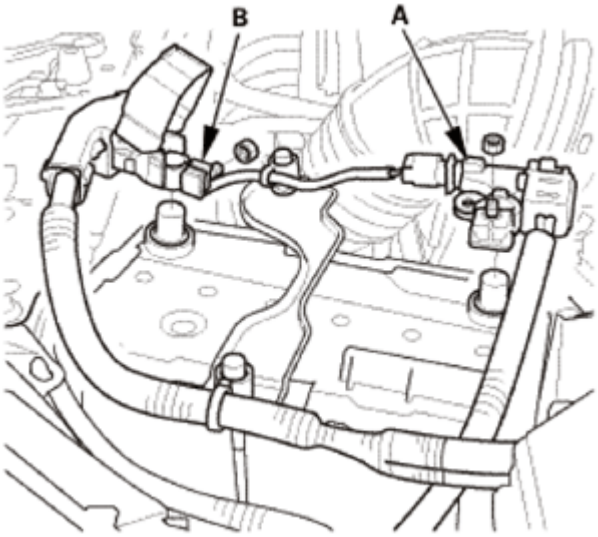

Fig. 47: Identifying Battery Positive And Negative Cables
Courtesy of AMERICAN HONDA MOTOR CO., INC.

GETtheMANUALS.org

2. Front Grille
    1. Apply protective tape (A) to the front grille lower trim (B).

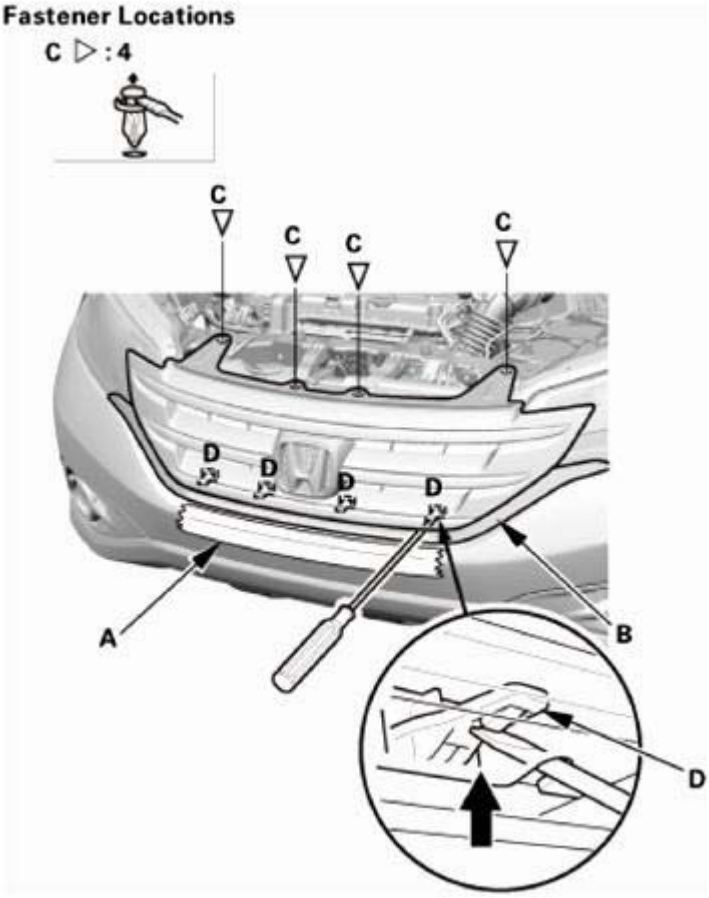

Fig. 48: Removing Front Grille Hooks
Courtesy of AMERICAN HONDA MOTOR CO., INC.

2. Remove the clips (C) and detach the hooks (D).
3. Insert a shop towel (A) between the front grille (B) and the front grille lower trim (C).

GETtheMANUALS.org

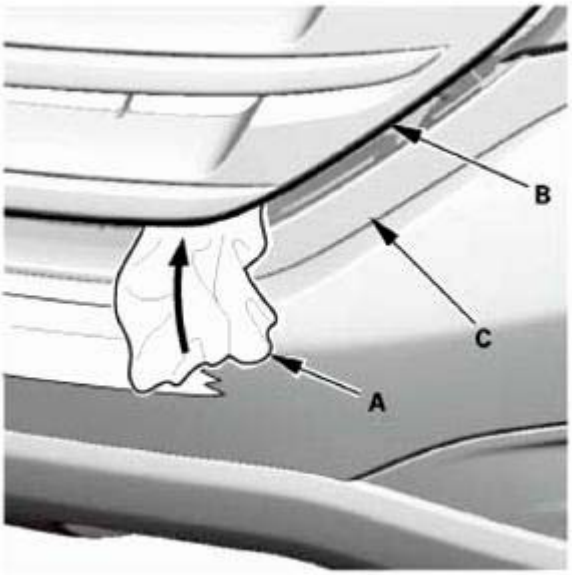

Fig. 49: Inserting Shop Towel Between Front Grille And Front Grille Lower Trim
Courtesy of AMERICAN HONDA MOTOR CO., INC.

4. Insert a flat-tip screwdriver (A) into the opening at the front grille (B), then turn the screwdriver to detach the clip (C).

NOTE: Repeat this procedure on the opposite side.

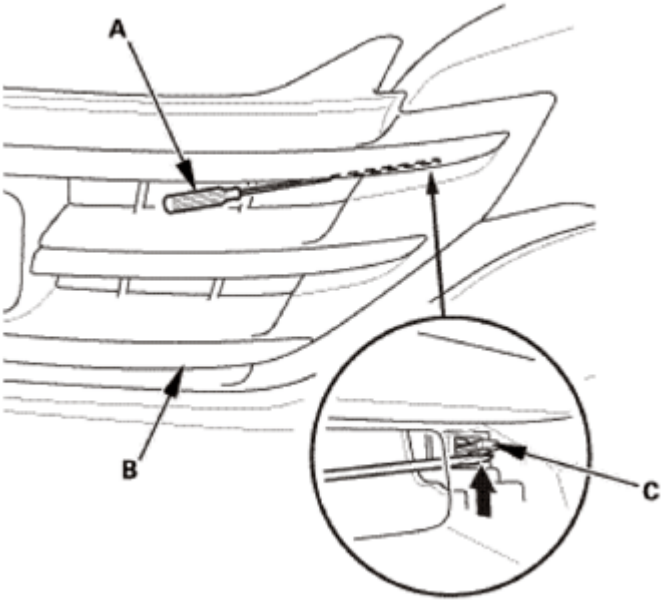

Fig. 50: Removing Front Grille Clips Using Flat-Tip Screwdriver
Courtesy of AMERICAN HONDA MOTOR CO., INC.

5. Remove the front grille (A).

GETtheMANUALS.org

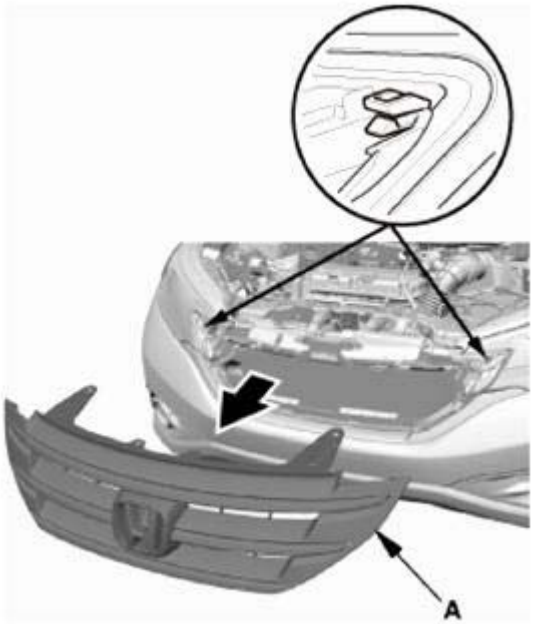

Fig. 51: Removing Front Grille
Courtesy of AMERICAN HONDA MOTOR CO., INC.

3. Front Wheel Arch Protector Front Side As Needed - Both Sides

NOTE: Repeat on the opposite side.

1. Remove the screws (A) and the clips (B) securing the front wheel arch protector (C).
2. Carefully pry out the clip portions of the wheel arch protector with the appropriate trim tool to detach the clips (D, E), then detach the wheel arch protector front side as needed.
3. Put a shop towel (F) in the opening between the front wheel arch protector and the front fender.

GETtheMANUALS.org

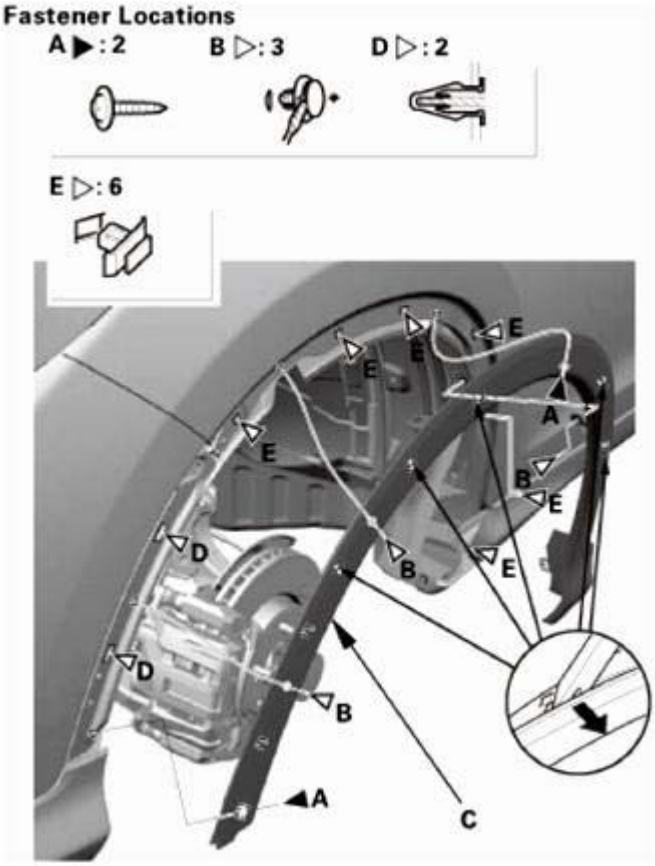

Fig. 52: Prying Out Wheel Arch Protector Clip Portions Using Trim Tool
Courtesy of AMERICAN HONDA MOTOR CO., INC.

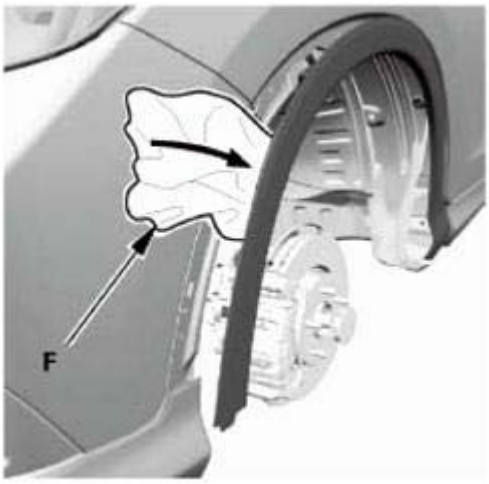

Fig. 53: Inserting Shop Towel In Opening Between Wheel Arch Protector And Fender
Courtesy of AMERICAN HONDA MOTOR CO., INC.

4. Front Bumper
    1. Remove the screws (A), the bolts (B), and the clips (C) securing the front bumper (D).

GETtheMANUALS.org

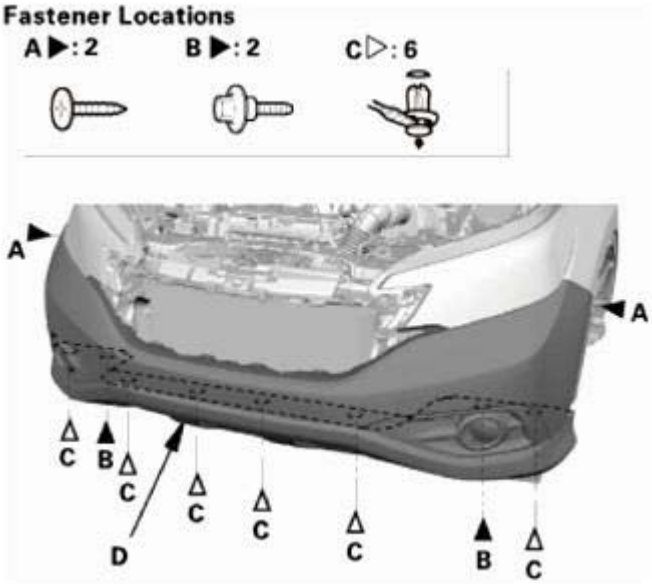

Fig. 54: Identifying Front Bumper And Fasteners
Courtesy of AMERICAN HONDA MOTOR CO., INC.

2. Pull out the front bumper (A) from the side spacer (B). Repeat this step on the opposite side.

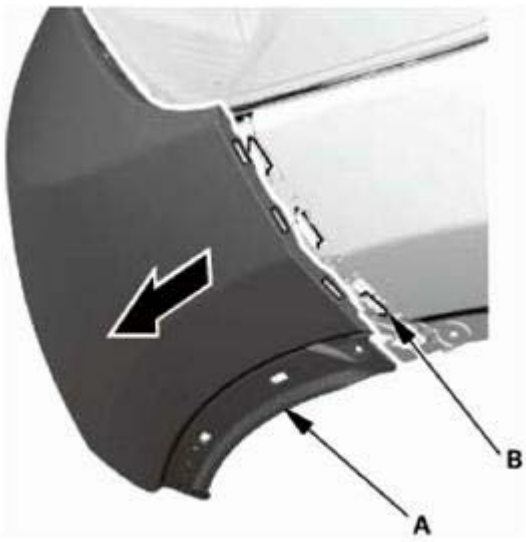

Fig. 55: Pulling Out Front Bumper From Side Spacer
Courtesy of AMERICAN HONDA MOTOR CO., INC.

3. Detach the clip (A). Repeat this step on the opposite side.

GETtheMANUALS.org

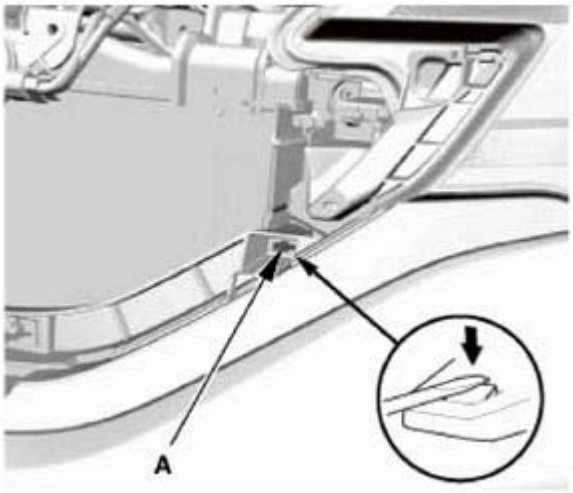

Fig. 56: Disconnecting Front Bumper Clip
Courtesy of AMERICAN HONDA MOTOR CO., INC.

4. With the help of an assistant, pull out both sides of the front bumper (A) from the upper beam (B).

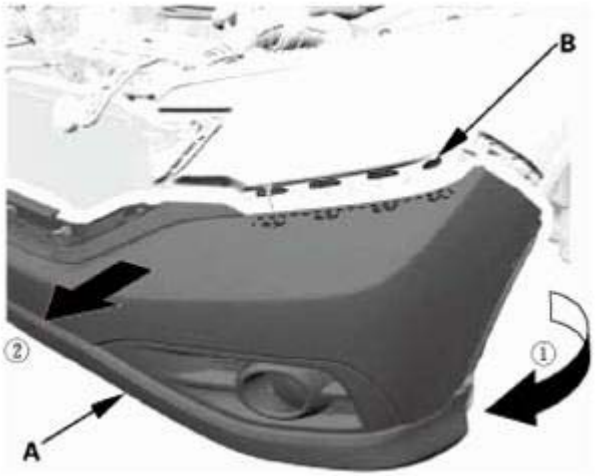

Fig. 57: Pulling Out Front Bumper From Upper Beam
Courtesy of AMERICAN HONDA MOTOR CO., INC.

5. With the help of an assistant, disconnect the connectors (A), then remove the front bumper (B).

GETtheMANUALS.org

Fig. 58: Identifying Front Bumper And Connectors
Courtesy of AMERICAN HONDA MOTOR CO., INC.

5. Front Impact Sensor
    1. Disconnect the front impact sensor connector on the engine compartment wire harness.
    2. Remove the TORX bolt using a TORX T30 bit, then remove the front impact sensor (A).

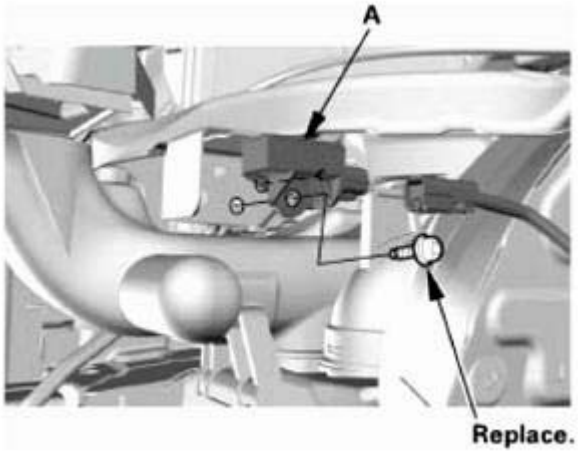

Fig. 59: Identifying Front Impact Sensor And Torx Bolt
Courtesy of AMERICAN HONDA MOTOR CO., INC.

INSTALLATION

NOTE: **SRS components are located in this area. Review the SRS COMPONENT LOCATIONS and the PRECAUTIONS AND PROCEDURES before doing repairs or service.**

1. Front Impact Sensor

GETtheMANUALS.org

1. Install the front impact sensor (A) with the new TORX bolt using a TORX T30 bit.
2. Connect the front impact sensor connector on the engine compartment wire harness.

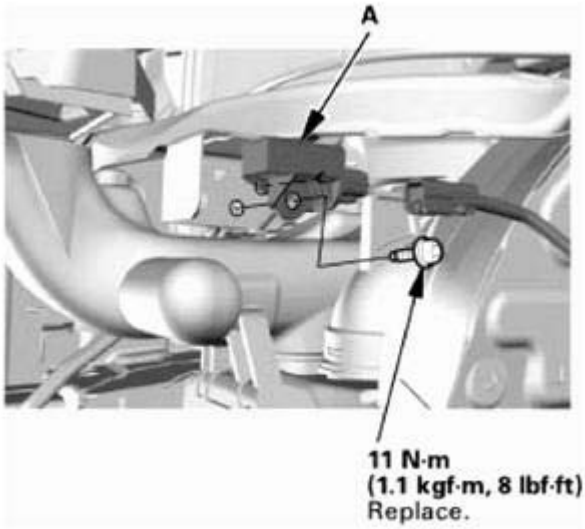

Fig. 60: Identifying Front Impact Sensor And Torx Bolt With Torque Specification
Courtesy of AMERICAN HONDA MOTOR CO., INC.

2. Battery Terminal (SRS) - Reconnection

NOTE: If the battery performance is abnormal, test the battery.

1. Clean the battery terminals.
2. Connect the positive cable (A) to the battery.

NOTE: Always connect the positive side first.

3. Connect the negative cable (B) to the battery.
4. Apply multipurpose grease to the terminals to prevent corrosion.

GETtheMANUALS.org

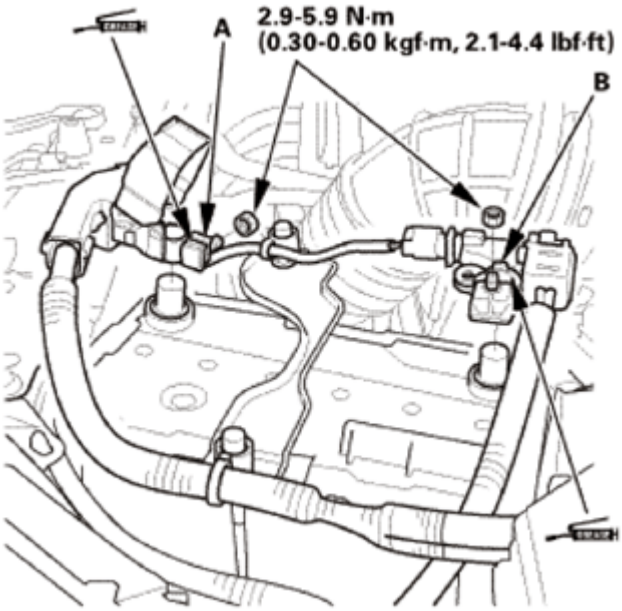

Fig. 61: Identifying Multipurpose Grease Applying Area On Battery Positive And Negative Terminals
Courtesy of AMERICAN HONDA MOTOR CO., INC.

3. HDS DLC - Connection
    1. Connect the HDS to the data link connector (DLC) (A) located under the driver's side of the dashboard.
    2. Turn the ignition switch to ON (II).
    3. Make sure the HDS communicates with the vehicle. If it does not communicate, go to the DLC circuit troubleshooting.

Fig. 62: Identifying Data Link Connector
Courtesy of AMERICAN HONDA MOTOR CO., INC.

GETtheMANUALS.org

4. DTC - Clear
    1. Clear the DTC(s) by following the screen prompts on the HDS.
    2. Turn the ignition switch to LOCK (0), then wait for 10 seconds.
5. Confirm Proper SRS Operation
    1. Turn the ignition switch to ON (II), and check that the SRS indicator comes on for about 6 seconds and then goes off.
6. Front Bumper

1. With the help of an assistant, connect the connectors (A), then install the front bumper (B).

Fig. 63: Identifying Front Bumper And Fasteners
Courtesy of AMERICAN HONDA MOTOR CO., INC.

2. With the help of an assistant, install both sides of the front bumper (A) to the upper beam (B).

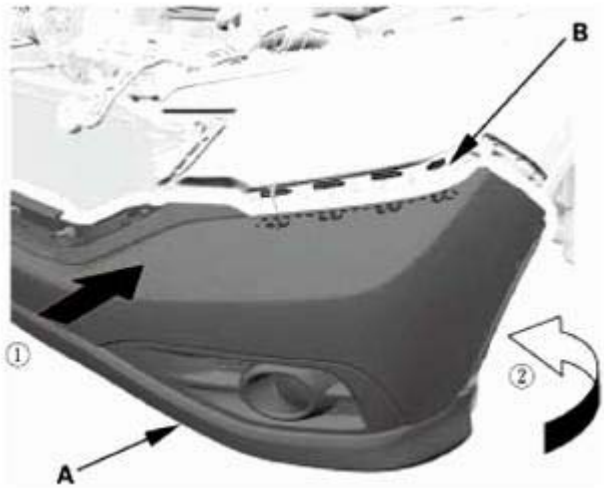

Fig. 64: Installing Front Bumper To Upper Beam

GETtheMANUALS.org

Courtesy of AMERICAN HONDA MOTOR CO., INC.

3. Push the front bumper (A) until the clip (B) snaps into place. Repeat this step on the opposite side.

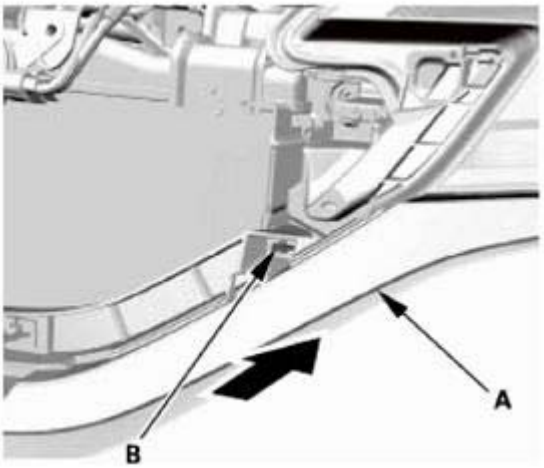

Fig. 65: Pushing Front Bumper
Courtesy of AMERICAN HONDA MOTOR CO., INC.

5. Install the screws (A), the bolts (B), and the clips (C) securing the front bumper (D).

Fig. 66: Identifying Front Bumper And Fasteners With Torque Specification
Courtesy of AMERICAN HONDA MOTOR CO., INC.

7. Front Wheel Arch Protector Front Side As Needed - Both Sides

GETtheMANUALS.org

1. Install the front wheel arch protector (A), then install the screws (B) and the clips (C). Make sure the clips (D, E) snap into place securely. Repeat this step on the opposite side.

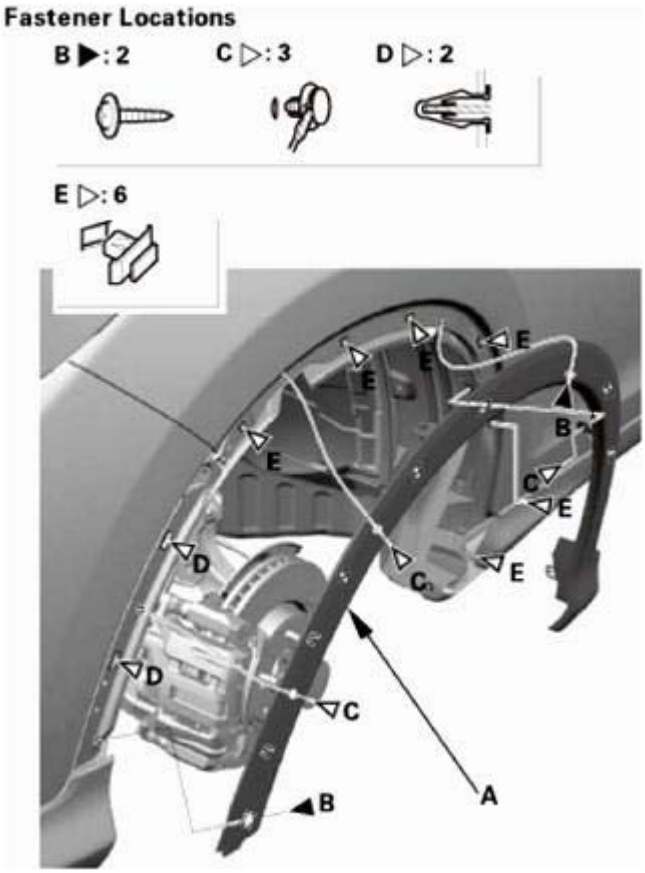

Fig. 67: Identifying Front Wheel Arch Protector And Fasteners
Courtesy of AMERICAN HONDA MOTOR CO., INC.

8. Front Grille
    1. Install the front grille (A) by pushing on the clip areas until the clips snap into place.
    2. Install the clips (B).

GETtheMANUALS.org

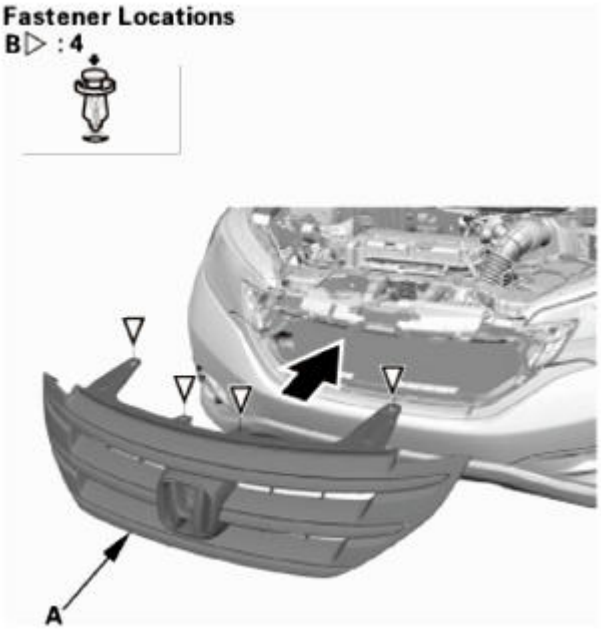

Fig. 68: Installing Front Grille
Courtesy of AMERICAN HONDA MOTOR CO., INC.

FRONT PASSENGER'S AIRBAG CUTOFF INDICATOR REMOVAL AND INSTALLATION

LON > 754104

REMOVAL

NOTE:

- **SRS components are located in this area. Review the SRS COMPONENT LOCATIONS and the PRECAUTIONS AND PROCEDURES before doing repairs or service.**

1. Battery Terminal (SRS) - Disconnection
    1. Make sure the ignition switch is in LOCK (0).
    2. Disconnect and isolate the negative cable (A) from the battery.

    NOTE: **Always disconnect the negative side first.**

    3. Disconnect the positive cable (B) from the battery.
    4. Wait at least 3 minutes before starting work.

GETtheMANUALS.org

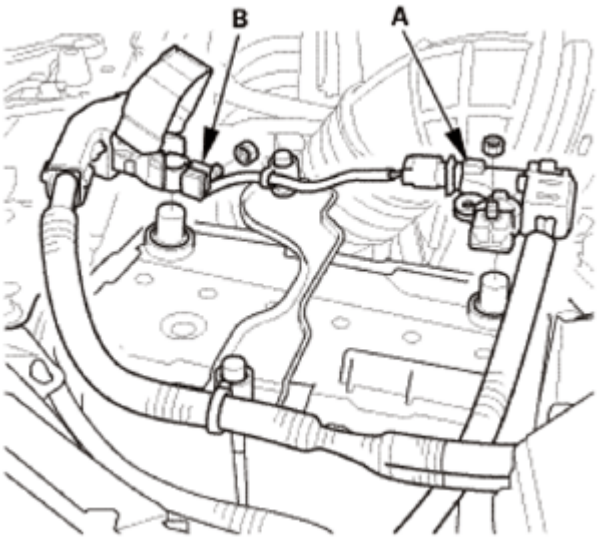

Fig. 69: Identifying Battery Positive And Negative Cables
Courtesy of AMERICAN HONDA MOTOR CO., INC.

2. Inner Vent - Both Sides
    1. Carefully pry out the inner vents (A) with the appropriate trim tool to detach the clips (B), then remove the inner vents.

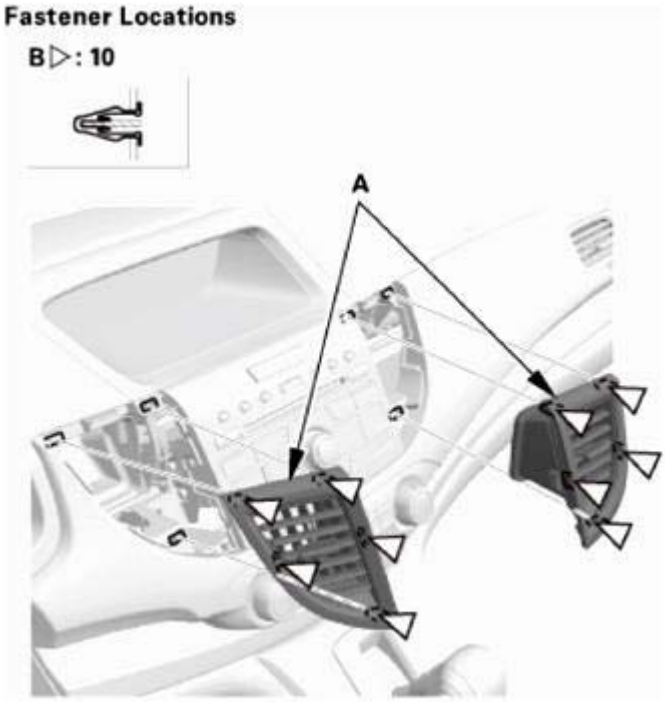

Fig. 70: Identifying Inner Vents And Clips
Courtesy of AMERICAN HONDA MOTOR CO., INC.

3. Audio-Navigation Unit Assembly (With Navigation)

GETtheMANUALS.org

NOTE:

- **Eject the discs before removing the audio-navigation unit to prevent damaging the CD/DVD player's load mechanism.**
- **If you are replacing the audio-navigation unit, write down the audio presets (if possible), then enter them into the new audio-navigation unit.**
- **If the audio-navigation unit is replaced or disconnected, Map Matching must be done.**
- **Lay a shop towel under the parts when working on them to protect the face panel from scratches or other damage.**
- **Do not work in a dusty or dirty place.**
- **Discharge static electricity from your body before and during the work.**
- **Do not touch the circuit board(s) with your bare hands.**
- **Do not work with dirty hands.**
- **Do not touch the terminal connector of the flat plate cable with your bare hands (If you have touched it, wipe it off thoroughly.).**

1. Remove the bolts.
2. Disconnect the connectors, then pull out the audio-navigation unit (A).

Except KX

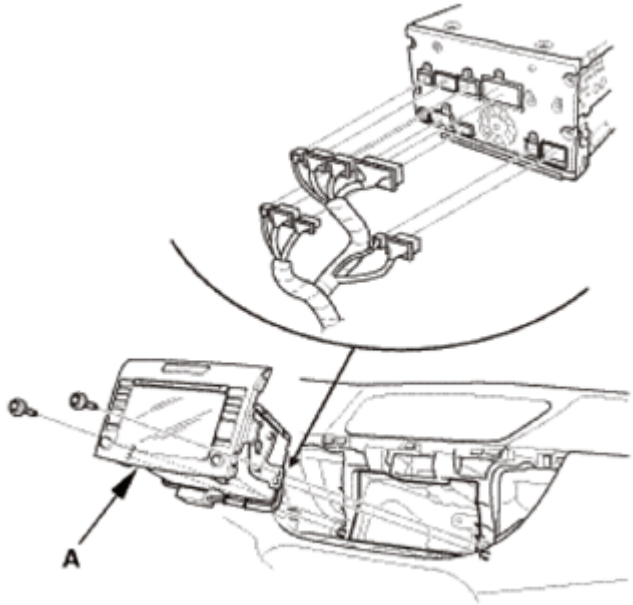

Fig. 71: Identifying Audio-Navigation Unit (Except KX)
Courtesy of AMERICAN HONDA MOTOR CO., INC.

KX

GETtheMANUALS.org

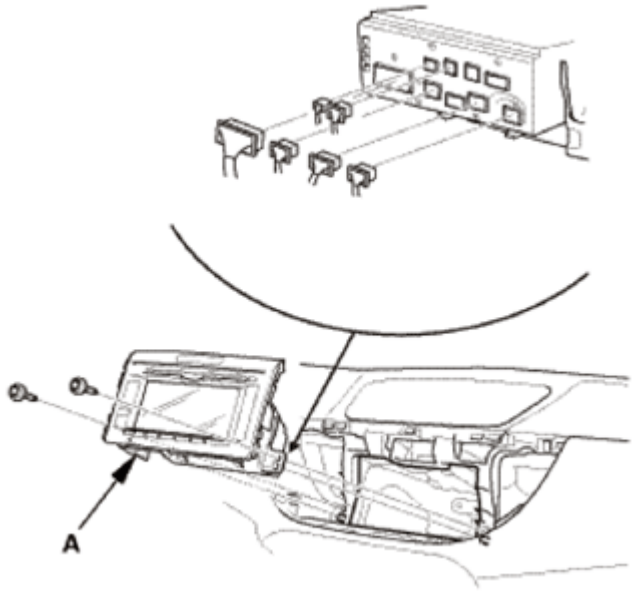

Fig. 72: Identifying Audio-Navigation Unit (KX)
Courtesy of AMERICAN HONDA MOTOR CO., INC.

4. Audio Unit Assembly (Without Navigation)

NOTE:

- **Eject the CD before disconnecting the audio unit to prevent damaging the CD player's load mechanism.**
- **If you are replacing the audio unit, write down the audio presets (if possible), and enter them into the new audio unit.**
- **Lay a shop towel under the parts when working on them to protect the face panel from scratches or other damage.**
- **Do not work in a dusty or dirty place.**
- **Discharge static electricity from your body before and during the work.**
- **Do not touch the circuit board(s) with your bare hands.**
- **Do not work with dirty hands.**
- **Do not touch the terminal connector of the flat plate cable with your bare hands (If you have touched it, wipe it off thoroughly.).**

1. Remove the bolts.
2. Disconnect the connectors, then pull out the audio unit (A).

GETtheMANUALS.org

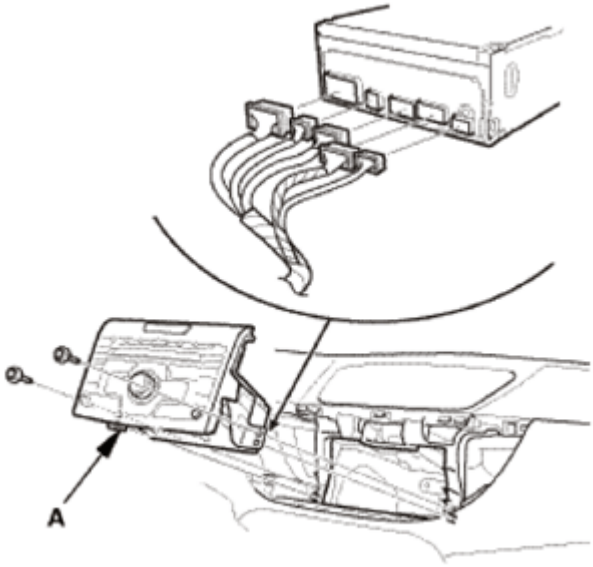

Fig. 73: Identifying Audio Unit
Courtesy of AMERICAN HONDA MOTOR CO., INC.

5. Dashboard Center Display Visor Assembly
    1. Remove the dashboard center display visor (A).

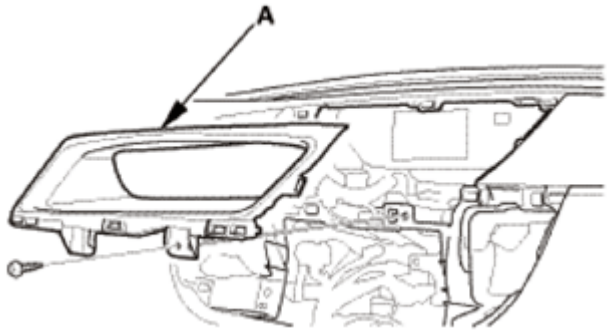

Fig. 74: Identifying Dashboard Center Display Visor
Courtesy of AMERICAN HONDA MOTOR CO., INC.

6. Multi-Information Display Unit Assembly (For Some Model)
    1. Remove the multi-information display unit assembly (A).
    2. Disconnect the connectors from the multi-information display unit.

GETtheMANUALS.org

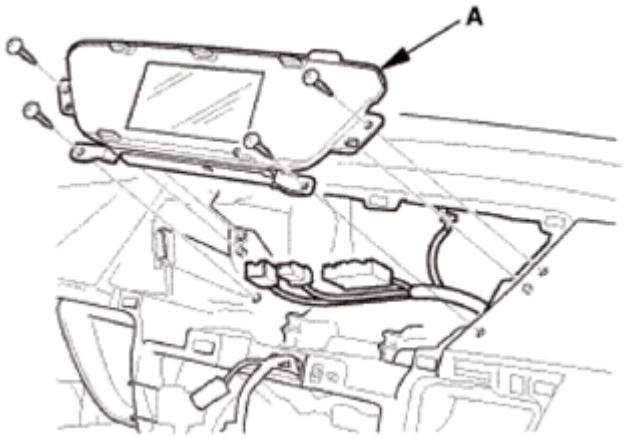

Fig. 75: Identifying Multi-Information Display Unit Assembly
Courtesy of AMERICAN HONDA MOTOR CO., INC.

7. Center Display Unit Assembly (For Some Model)
    1. Remove the center display unit assembly (A).
    2. Disconnect the connectors.

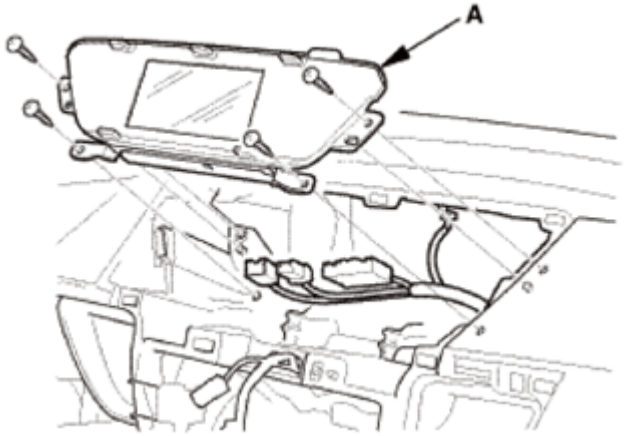

Fig. 76: Identifying Center Display Unit Assembly
Courtesy of AMERICAN HONDA MOTOR CO., INC.

8. Front Passenger's Airbag Cutoff Indicator
    1. Remove the front passenger's airbag cutoff indicator (A).

GETtheMANUALS.org

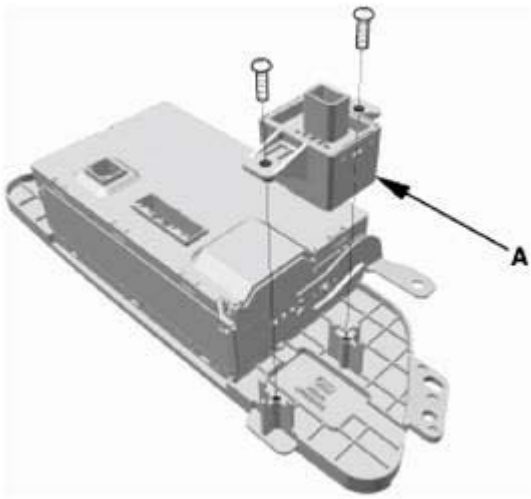

Fig. 77: Identifying Front Passenger's Airbag Cutoff Indicator
Courtesy of AMERICAN HONDA MOTOR CO., INC.

INSTALLATION

NOTE:

- **SRS components are located in this area. Review the SRS COMPONENT LOCATIONS and the PRECAUTIONS AND PROCEDURES before doing repairs or service.**

1. Front Passenger's Airbag Cutoff Indicator
    1. Install the front passenger's airbag cutoff indicator (A).

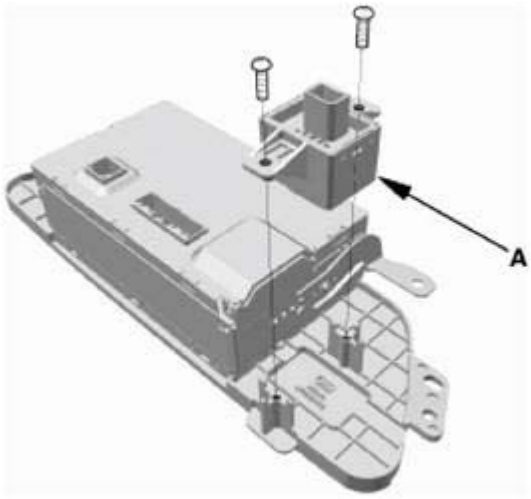

Fig. 78: Identifying Front Passenger's Airbag Cutoff Indicator
Courtesy of AMERICAN HONDA MOTOR CO., INC.

2. Multi-Information Display Unit (For Some Model)
    1. Connect the connectors.

GETtheMANUALS.org

2. Install the multi-information display unit assembly (A).

NOTE: **If you see the In Line Diag screen when it is turned on, refer to In Line Diag (i-MID) under Display Diagnosis to complete the diagnosis.**

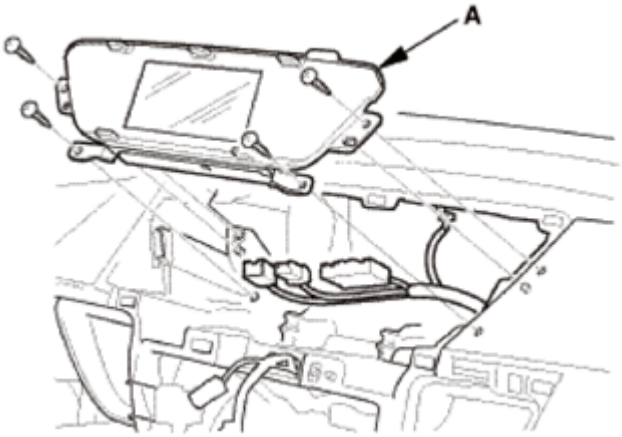

Fig. 79: Identifying Multi-Information Display Unit Assembly
Courtesy of AMERICAN HONDA MOTOR CO., INC.

3. Center Display Unit Assembly (For Some Model)
   1. Connect the connectors.
   2. Install the center display unit assembly (A).

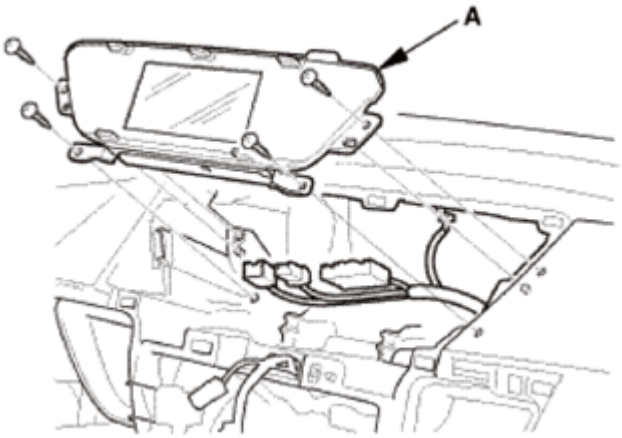

Fig. 80: Identifying Center Display Unit Assembly
Courtesy of AMERICAN HONDA MOTOR CO., INC.

4. Dashboard Center Display Visor Assembly
   1. Install the dashboard center display visor (A).

GETtheMANUALS.org

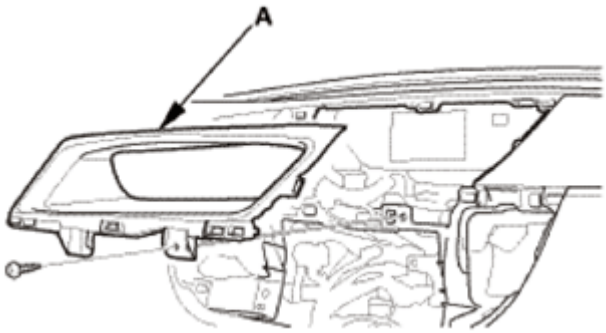

Fig. 81: Identifying Dashboard Center Display Visor
Courtesy of AMERICAN HONDA MOTOR CO., INC.

5. Audio Unit Assembly (Without Navigation)
    1. Connect the connectors, then install the audio unit (A).

    NOTE: **Make sure all the connectors and the antenna lead are secure.**

    2. Install the bolts (B).

    NOTE: **If the audio unit was replaced, enter the audio presets that you saved onto the new unit.**

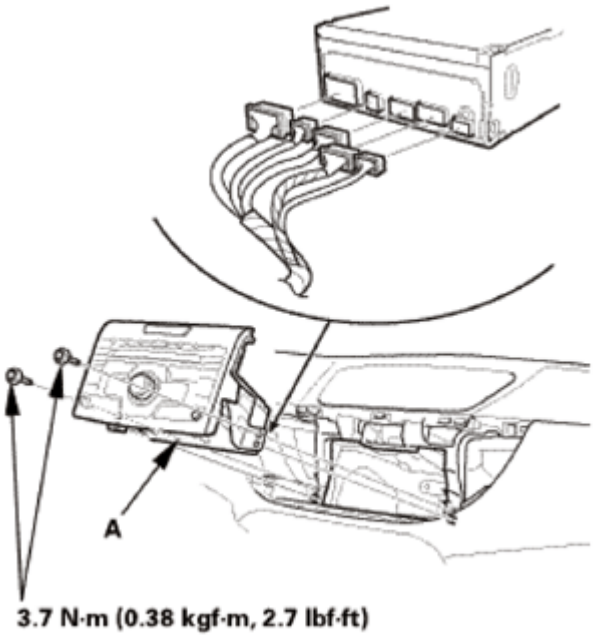

Fig. 82: Identifying Audio Unit And Mounting Bolts With Torque Specifications
Courtesy of AMERICAN HONDA MOTOR CO., INC.

6. Navigation Unit Assembly (With Navigation)

GETtheMANUALS.org

1. Connect the connectors, then install the audio-navigation unit (A).

   NOTE: Make sure all the connectors and the antenna lead are secure.

2. Install the bolts (B).

   Except KX

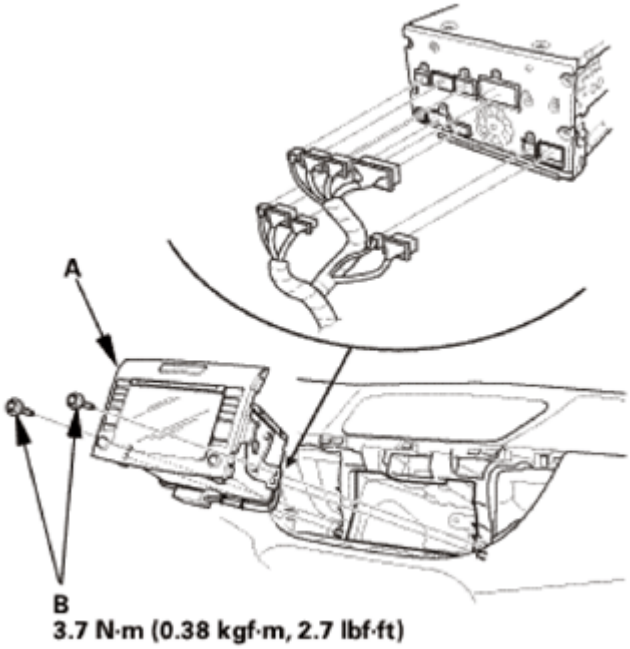

Fig. 83: Identifying Audio-Navigation Unit Mounting Bolt With Torque Specification (Except KX)
Courtesy of AMERICAN HONDA MOTOR CO., INC.

KX

GETtheMANUALS.org

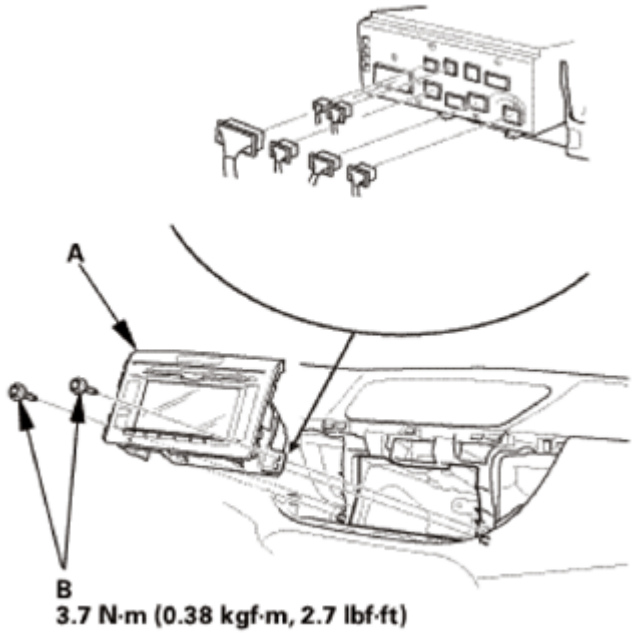

Fig. 84: Identifying Audio-Navigation Unit Mounting Bolt With Torque Specification (KX)
Courtesy of AMERICAN HONDA MOTOR CO., INC.

7. Inner Vent - Both Sides
    1. Install the inner vents (A). Make sure the clips (B) snap into place securely.

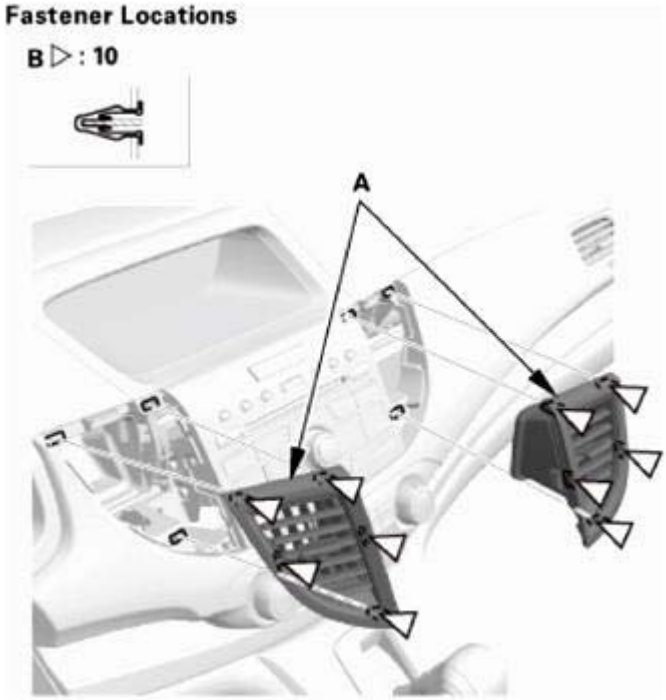

Fig. 85: Identifying Inner Vents And Clips
Courtesy of AMERICAN HONDA MOTOR CO., INC.

GETtheMANUALS.org

8. Battery Terminal (SRS) - Reconnection

NOTE: If the battery performance is abnormal, test the battery.

1. Clean the battery terminals.
2. Connect the positive cable (A) to the battery.

NOTE: Always connect the positive side first.

3. Connect the negative cable (B) to the battery.
4. Apply multipurpose grease to the terminals to prevent corrosion.

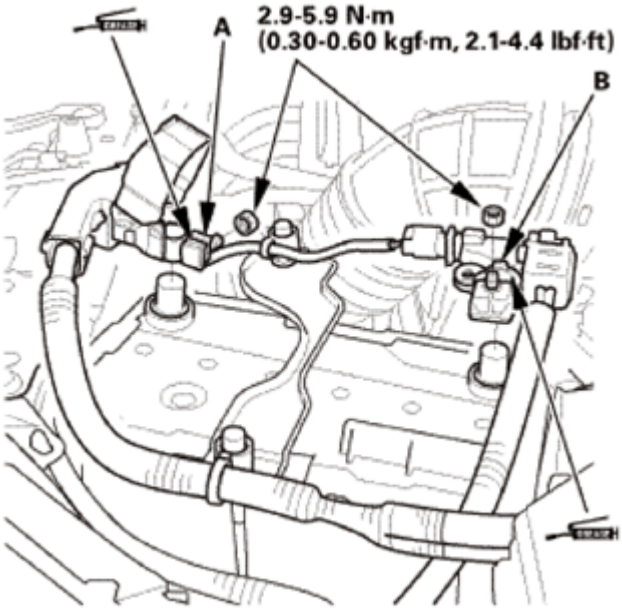

Fig. 86: Identifying Multipurpose Grease Applying Area On Battery Positive And Negative Terminals
Courtesy of AMERICAN HONDA MOTOR CO., INC.

9. HDS DLC - Connection
   1. Connect the HDS to the data link connector (DLC) (A) located under the driver's side of the dashboard.
   2. Turn the ignition switch to ON (II).
   3. Make sure the HDS communicates with the vehicle. If it does not communicate, go to the DLC circuit troubleshooting.

GETtheMANUALS.org

Fig. 87: Identifying Data Link Connector
Courtesy of AMERICAN HONDA MOTOR CO., INC.

10. DTC - Clear
    1. Clear the DTC(s) by following the screen prompts on the HDS.
    2. Turn the ignition switch to LOCK (0), then wait for 10 seconds.
11. Confirm Proper SRS Operation
    1. Turn the ignition switch to ON (II), and check that the SRS indicator comes on for about 6 seconds and then goes off.

FRONT PASSENGER'S AIRBAG REMOVAL AND INSTALLATION

LON > 754110

REMOVAL

NOTE:

- **SRS components are located in this area. Review the SRS COMPONENT LOCATIONS and the precautions and procedures See SRS PRECAUTIONS AND PROCEDURES or SRS COMPONENT REPLACEMENT/INSPECTION AFTER DEPLOYMENT before doing repairs or service.**
- **If replacing the driver's airbag after deployment, refer to COMPONENT REPLACEMENT/INSPECTION AFTER DEPLOYMENT for a complete list of other parts that must also be replaced.**

1. Battery Terminal (SRS) - Disconnection
    1. Make sure the ignition switch is in LOCK (0).
    2. Disconnect and isolate the negative cable (A) from the battery.

NOTE: **Always disconnect the negative side first.**

GETtheMANUALS.org

3. Disconnect the positive cable (B) from the battery.
4. Wait at least 3 minutes before starting work.

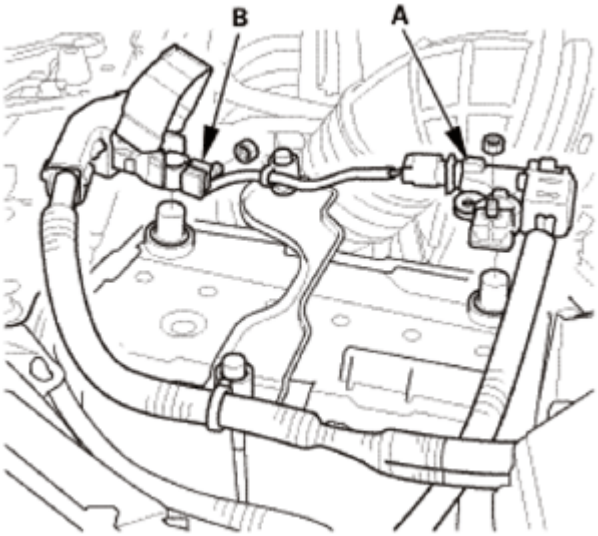

Fig. 88: Identifying Battery Positive And Negative Cables
Courtesy of AMERICAN HONDA MOTOR CO., INC.

2. Glove Box - Move
    1. Detach the glove box damper hook (A), and release both glove box stops (B) by pushing them in, then let glove box (C) hang down.

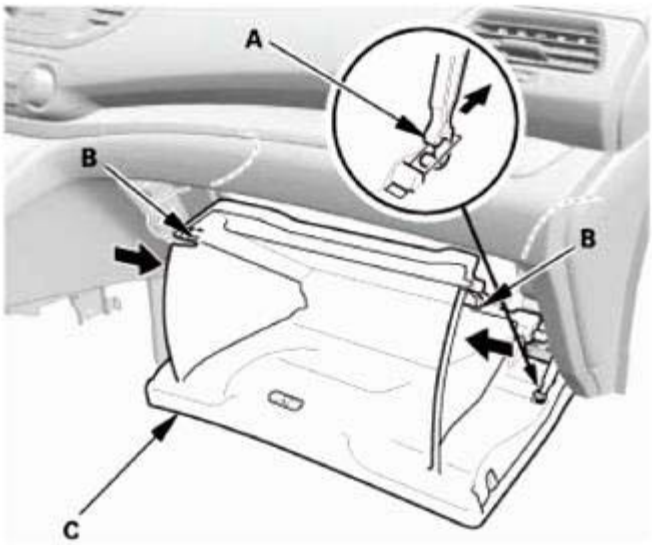

Fig. 89: Disconnecting Glove Box Damper Hook
Courtesy of AMERICAN HONDA MOTOR CO., INC.

3. Front Passenger's Airbag Assembly

GETtheMANUALS.org

1. Disconnect the front passenger's airbag inflator connector (A) on the dashboard wire harness.
2. Remove the mounting nuts.

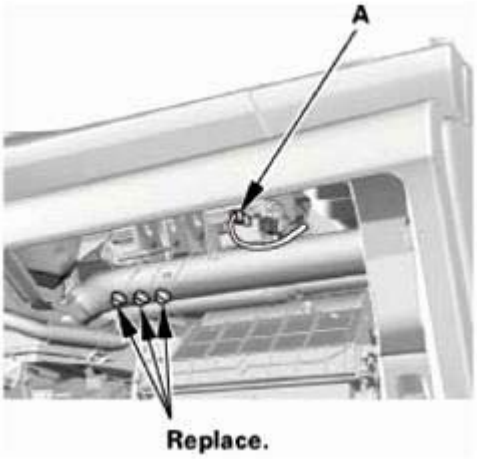

Fig. 90: Identifying Front Passenger's Airbag Inflator Connector And Mounting Nuts
Courtesy of AMERICAN HONDA MOTOR CO., INC.

3. Gently remove the front passenger's airbag and cover assembly (A).

NOTE: The airbag cover has clips on each side where it attaches to the dashboard.

Fig. 91: Removing Front Passenger's Airbag And Cover Assembly
Courtesy of AMERICAN HONDA MOTOR CO., INC.

GETtheMANUALS.org

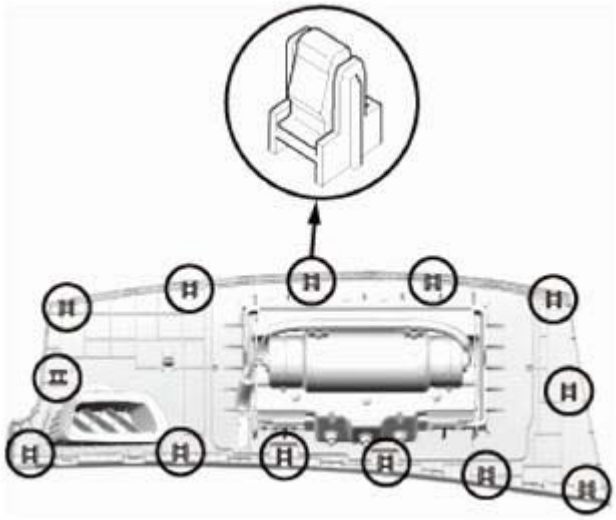

Fig. 92: Identifying Airbag Cover Clips
Courtesy of AMERICAN HONDA MOTOR CO., INC.

4. Front Passenger's Airbag
    1. Cut four parts of the front passenger's cover as shown (A).
    2. Remove the front passenger's airbag.

NOTE:

- **Always replace the cover whenever you remove the airbag.**
- **Replace the airbag if the clips or its housing is damaged.**

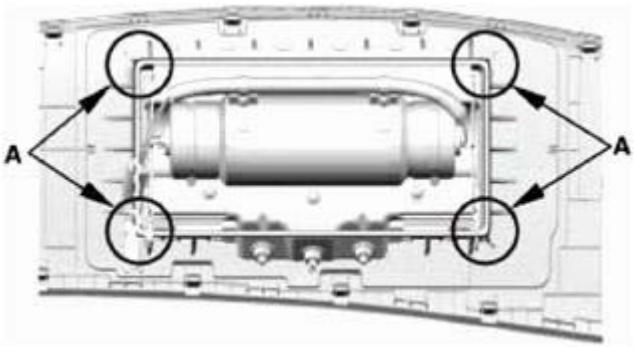

Fig. 93: Identifying Front Passenger's Cover
Courtesy of AMERICAN HONDA MOTOR CO., INC.

INSTALLATION

1. Front Passenger's Airbag
    1. Insert the front passenger's airbag housing (A) into the new front passenger's cover (B).

NOTE:

- **Make sure there are no objects between the airbag and the**

GETtheMANUALS.org

cover.

- **Make sure the airbag is fully seated, and make sure the cover is not deformed or damaged after the airbag is in place.**
- **Replace the airbag if the clips or its housing is damaged.**
- **Do not use tools when detaching the front passenger's airbag in order to protect it.**
- **Make sure the hooks are set properly.**

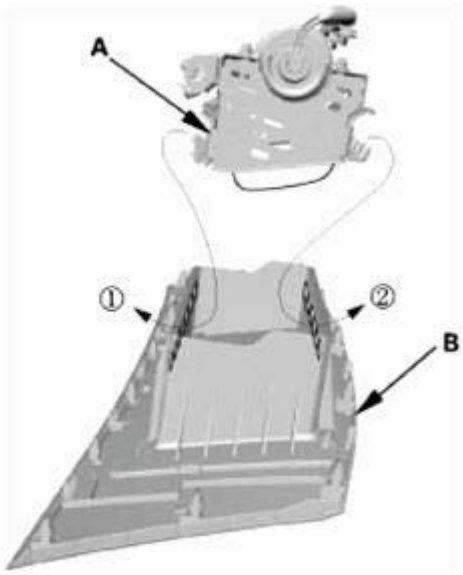

Fig. 94: Identifying Front Passenger's Airbag Housing And Cover
Courtesy of AMERICAN HONDA MOTOR CO., INC.

2. Front Passenger's Airbag Assembly
    1. Place the front passenger's airbag and cover as an assembly (A) into the dashboard.
    2. Tighten the front passenger's airbag new mounting nuts.

GETtheMANUALS.org

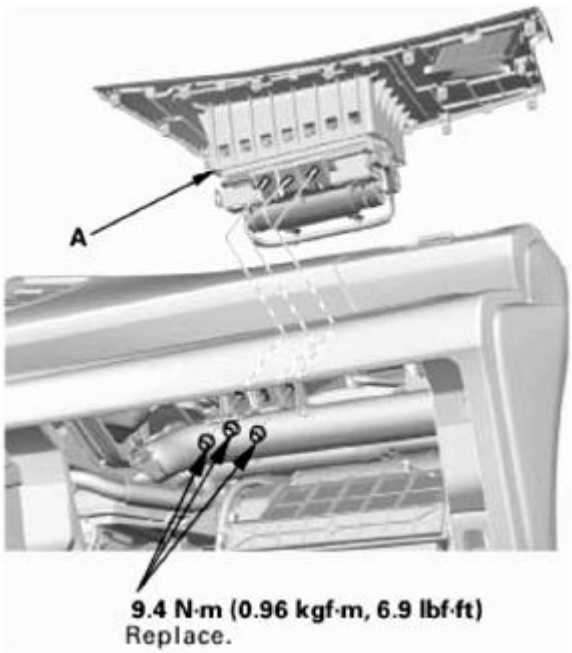

Fig. 95: Identifying Front Passenger's Airbag Assembly And Mounting Nuts With Torque Specifications
Courtesy of AMERICAN HONDA MOTOR CO., INC.

3. Connect the front passenger's airbag inflator connector (A) on the dashboard wire harness.

Fig. 96: Identifying Front Passenger's Airbag Inflator Connector
Courtesy of AMERICAN HONDA MOTOR CO., INC.

3. Glove Box - Move
    1. Install the glove box (A). Make sure the glove box stops (B) snap into place securely.
    2. Install the glove box damper hook (C).

GETtheMANUALS.org

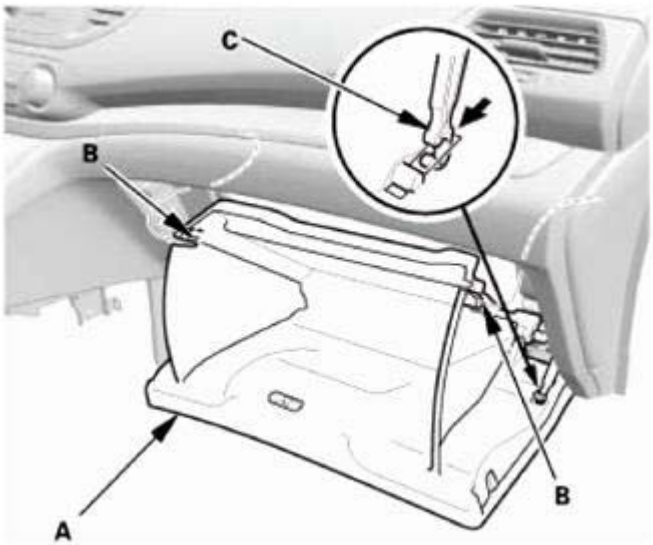

Fig. 97: Installing Glove Box Damper Hook
Courtesy of AMERICAN HONDA MOTOR CO., INC.

4. Battery Terminal (SRS) - Reconnection

NOTE: If the battery performance is abnormal, test the battery.

1. Clean the battery terminals.
2. Connect the positive cable (A) to the battery.

NOTE: Always connect the positive side first.

3. Connect the negative cable (B) to the battery.
4. Apply multipurpose grease to the terminals to prevent corrosion.

GETtheMANUALS.org

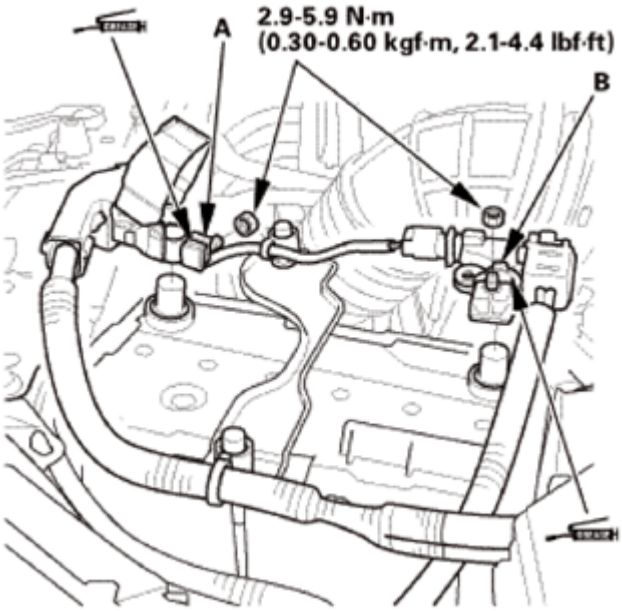

Fig. 98: Identifying Multipurpose Grease Applying Area On Battery Positive And Negative Terminals
Courtesy of AMERICAN HONDA MOTOR CO., INC.

5. HDS DLC - Connection
    1. Connect the HDS to the data link connector (DLC) (A) located under the driver's side of the dashboard.
    2. Turn the ignition switch to ON (II).
    3. Make sure the HDS communicates with the vehicle. If it does not communicate, go to the DLC circuit troubleshooting.

Fig. 99: Identifying Data Link Connector
Courtesy of AMERICAN HONDA MOTOR CO., INC.

GETtheMANUALS.org

6. DTC - Clear
    1. Clear the DTC(s) by following the screen prompts on the HDS.
    2. Turn the ignition switch to LOCK (0), then wait for 10 seconds.
7. Confirm Proper SRS Operation
    1. Turn the ignition switch to ON (II), and check that the SRS indicator comes on for about 6 seconds and then goes off.

FRONT PASSENGER'S WEIGHT SENSOR REMOVAL AND INSTALLATION

LON > 7491C5

REMOVAL

NOTE:

- **SRS components are located in this area. Review the SRS COMPONENT LOCATIONS and the PRECAUTIONS AND PROCEDURES before doing repairs or service.**
- **The front passenger's weight sensor is part of the seat rail and must be replaced as an assembly.**

1. Battery Terminal (SRS) - Disconnection
    1. Make sure the ignition switch is in LOCK (0).
    2. Disconnect and isolate the negative cable (A) from the battery.

        NOTE: Always disconnect the negative side first.

    3. Disconnect the positive cable (B) from the battery.
    4. Wait at least 3 minutes before starting work.

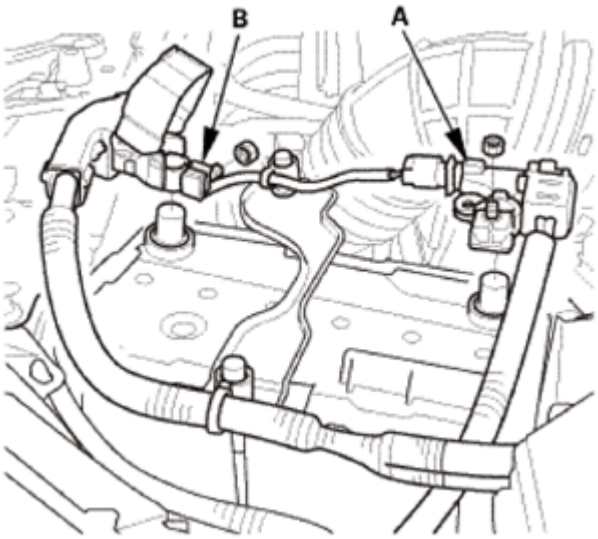

GETtheMANUALS.org

Fig. 100: Identifying Battery Positive And Negative Cables
Courtesy of AMERICAN HONDA MOTOR CO., INC.

2. Front Seat Belt Lower Anchor Bolt - Passenger's Side
    1. Carefully pry up on the bottom of the anchor cover (A) at the pry point (B) with the appropriate trim tool to release the hooks (C) and the tab (D), then remove the cover by pulling it upward.

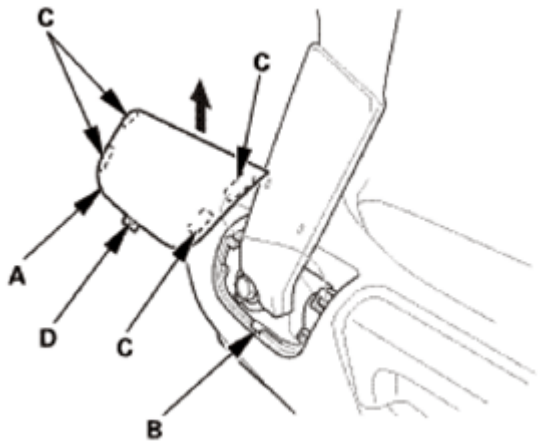

Fig. 101: Removing Anchor Cover Using Tool
Courtesy of AMERICAN HONDA MOTOR CO., INC.

    2. Remove the lower anchor bolt (A).

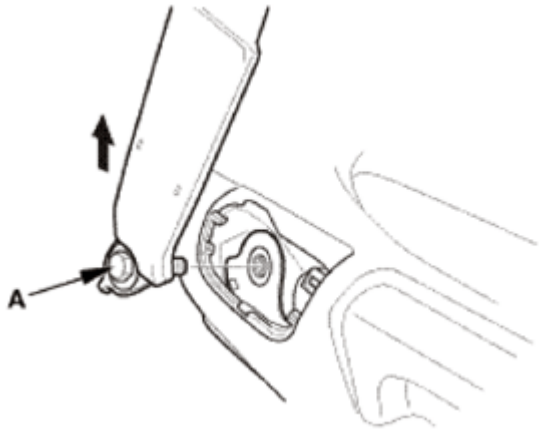

Fig. 102: Removing Lower Anchor Bolt
Courtesy of AMERICAN HONDA MOTOR CO., INC.

3. Head Restraint - Passenger's Side
    1. Push and hold the knob (A), then pull out the head restraint (B) as shown.

GETtheMANUALS.org

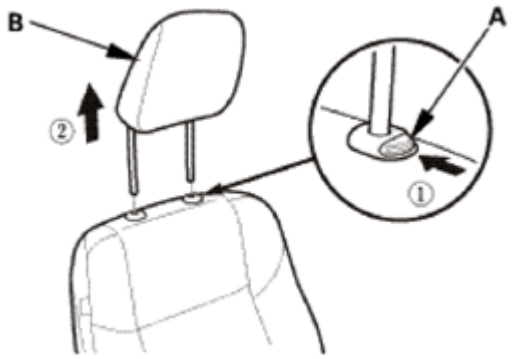

Fig. 103: Pulling Out Head Restraint
Courtesy of AMERICAN HONDA MOTOR CO., INC.

4. Front Seat - Passenger's Side
    1. Detach the hooks (A), then remove the rear inner seat track end cover (B) and the rear outer seat track end cover (C).

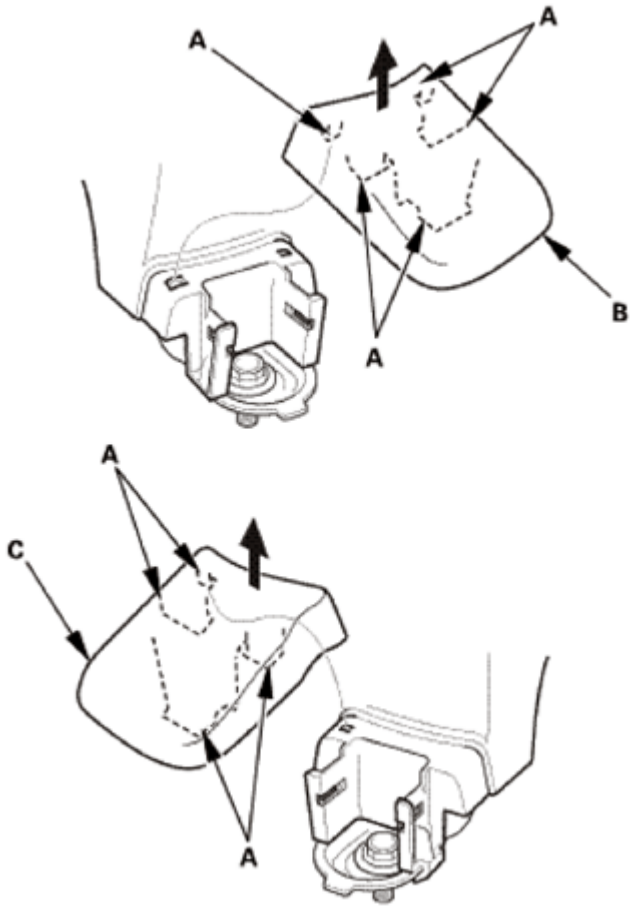

Fig. 104: Removing Rear Inner Seat Track End Cover
Courtesy of AMERICAN HONDA MOTOR CO., INC.

GETtheMANUALS.org

2. Remove the front mounting bolts (A) from the front seat.

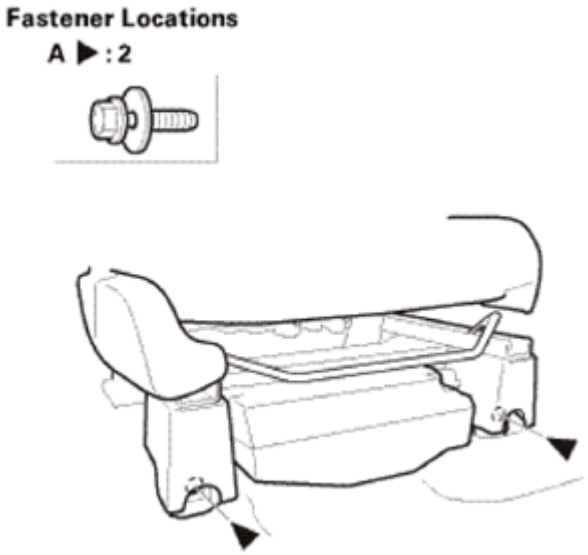

Fig. 105: Identifying Front Seat Mounting Bolts
Courtesy of AMERICAN HONDA MOTOR CO., INC.

3. Remove the rear mounting bolts (A) from the front seat.

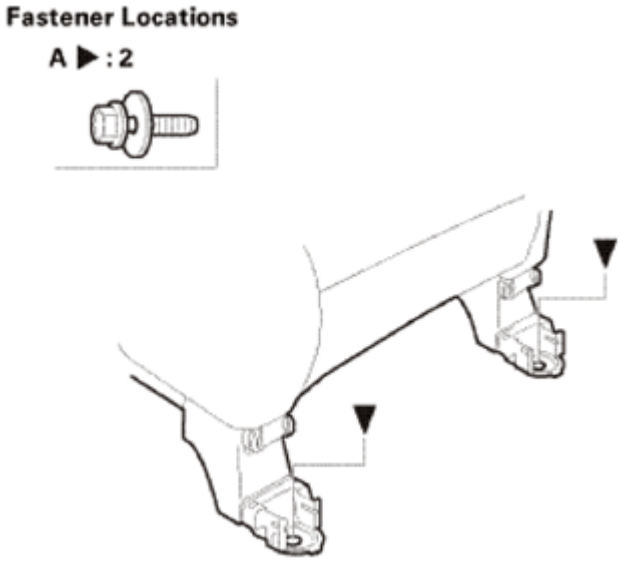

Fig. 106: Identifying Rear Seat Mounting Bolts
Courtesy of AMERICAN HONDA MOTOR CO., INC.

4. Disconnect the connectors (A).
5. Detach the harness clip (B).

Without Subwoofer

GETtheMANUALS.org

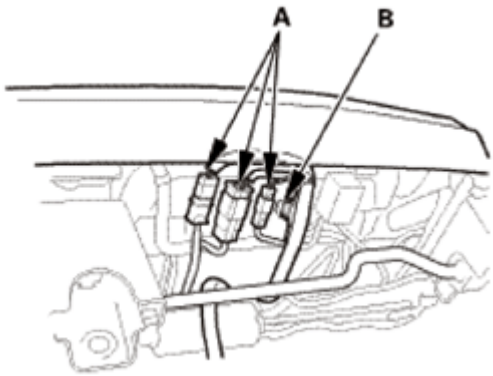

Fig. 107: Identifying Connector And Harness Clip (Without Subwoofer)
Courtesy of AMERICAN HONDA MOTOR CO., INC.

With Subwoofer

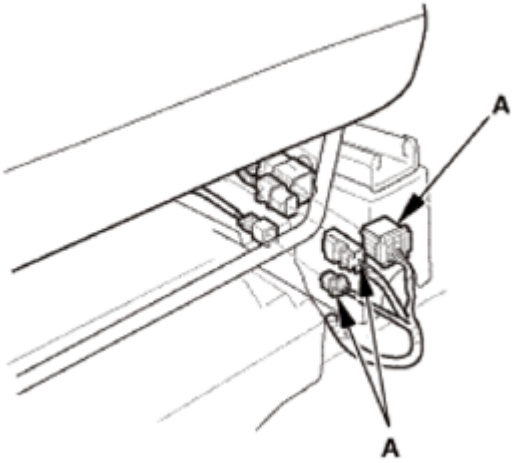

Fig. 108: Identifying Connector And Harness Clip (With Subwoofer)
Courtesy of AMERICAN HONDA MOTOR CO., INC.

5. Front Seat Recline Cover - Passenger's Side
    1. Remove the recline knob (A).
    2. Remove the screw (B), and detach the clip (C).
    3. Release the front hooks (D) of the recline cover (E) from the recline inner cover (F).
    4. Release the rear hooks (G) of the recline cover from the recline inner cover.
    5. Detach the hook (H) by pulling the recline cover back by hand.
    6. Gently pull out the recline cover and remove it.

GETtheMANUALS.org

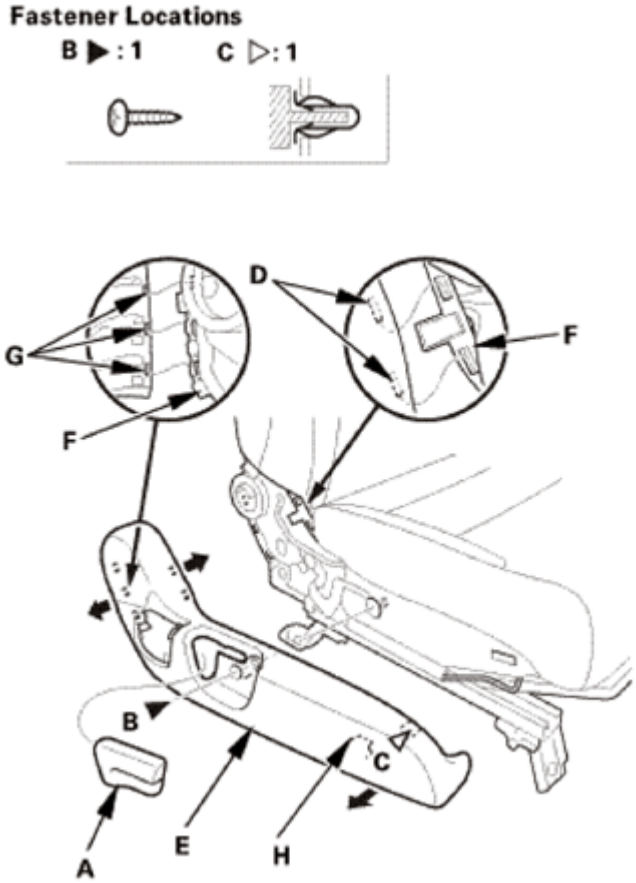

Fig. 109: Removing Front Seat Recline Cover
Courtesy of AMERICAN HONDA MOTOR CO., INC.

6. Front Seat Center Cover - Passenger's Side
    1. Pull up the center cover (A) to release the tabs (B) from the inner cover (C).

GETtheMANUALS.org

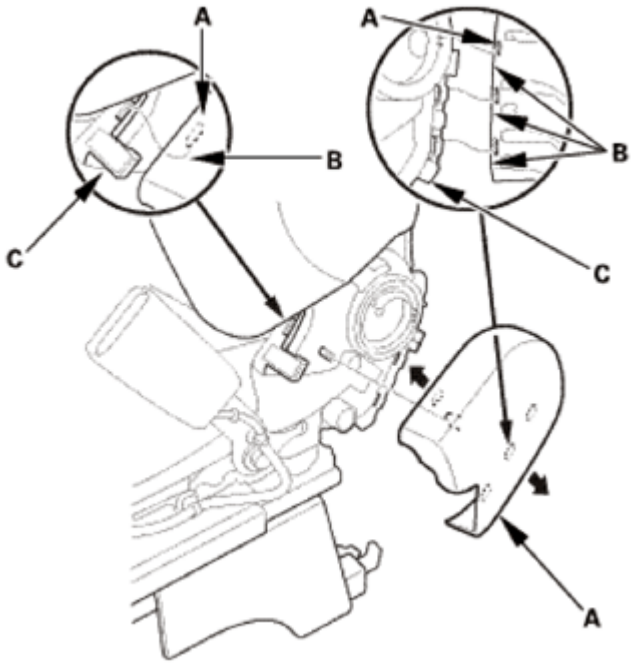

Fig. 110: Pulling Up Center Cover From Inner Cover
Courtesy of AMERICAN HONDA MOTOR CO., INC.

7. Front Seat Cushion - Passenger's Side
    1. Release the elastic strap (A) from the seat cushion frame springs (B), then pull back the under cover (C) of the seat-back cover.

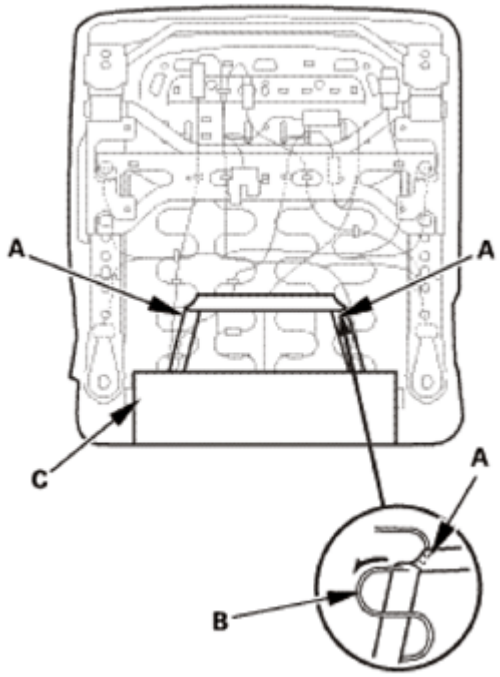

Fig. 111: Removing Elastic Strap From Seat Cushion Frame Springs

GETtheMANUALS.org

Courtesy of AMERICAN HONDA MOTOR CO., INC.

2. Disconnect the connector(s) (A).
3. Detach the harness clip (B).
4. With sheet heater: Pry up the hook (C) of the harness holders (D), then release them from the seat cushion frame springs (E).

Except KX - With Seat Heater

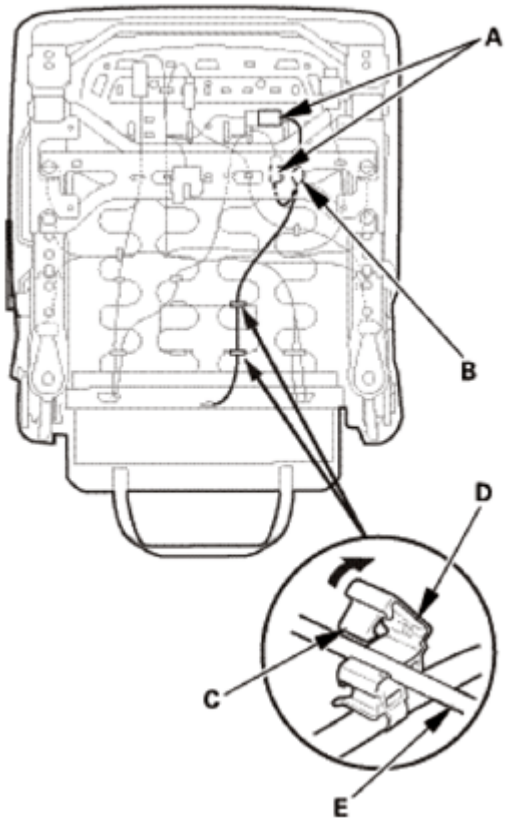

Fig. 112: Removing Seat Cushion Frame Springs Hook (Except KX - With Seat Heater)
Courtesy of AMERICAN HONDA MOTOR CO., INC.

KX

GETtheMANUALS.org

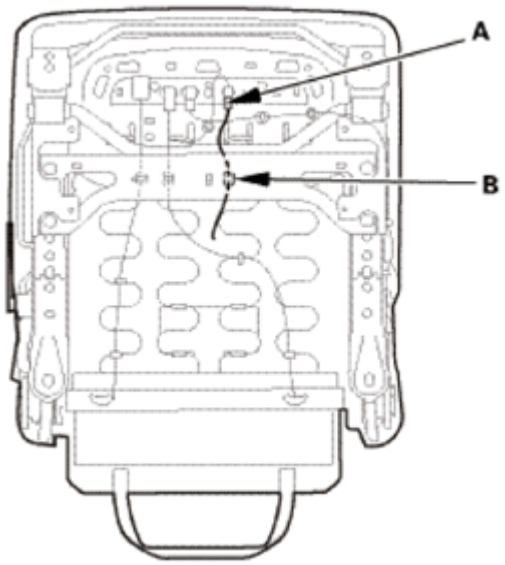

Fig. 113: Identifying Connector And Harness Clip
Courtesy of AMERICAN HONDA MOTOR CO., INC.

5. Release the hook strips (A) from both sides of the seat cushion frame.
6. Detach the clip (B) from the seat cushion frame.

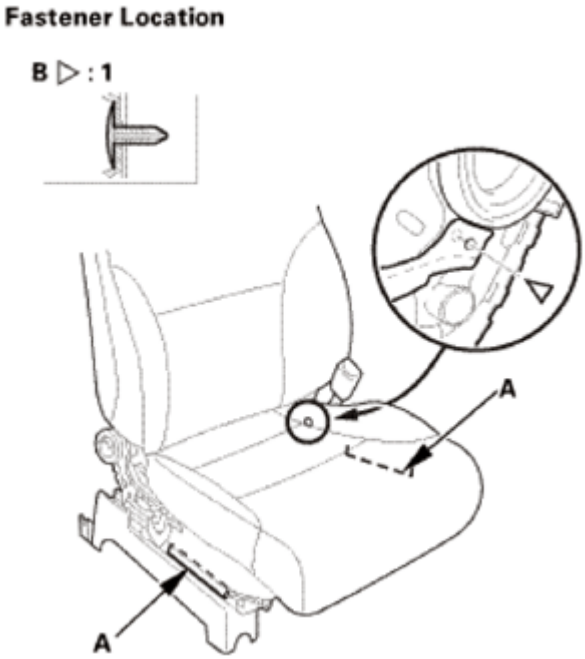

Fig. 114: Identifying Seat Cushion Frame Hook Strips And Fasteners
Courtesy of AMERICAN HONDA MOTOR CO., INC.

7. Release the hook strips (A) from under the seat cushion.

GETtheMANUALS.org

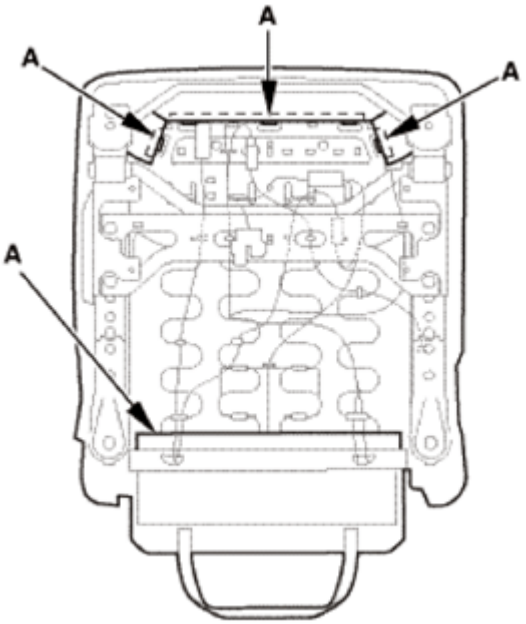

Fig. 115: Identifying Seat Cushion Hook Strips And Fasteners
Courtesy of AMERICAN HONDA MOTOR CO., INC.

8. Remove the seat cushion cover/pad (A) from the seat frame (B).

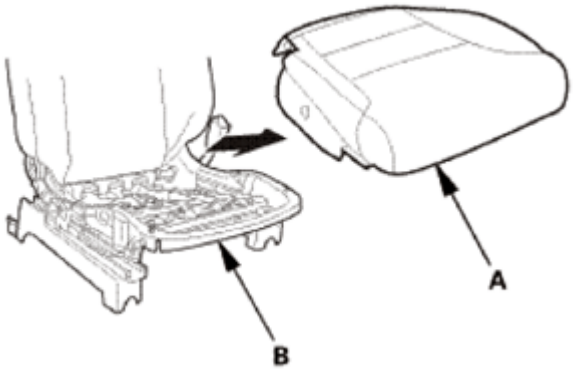

Fig. 116: Removing Seat Cushion Cover/Pad From Seat Frame
Courtesy of AMERICAN HONDA MOTOR CO., INC.

8. Front Seat Armrest - Passenger's Side
    1. Remove the cap (A) with the appropriate trim tool.
    2. Remove the center pin (B), the bushing (C), and the washer (D), then remove the armrest (E).

GETtheMANUALS.org

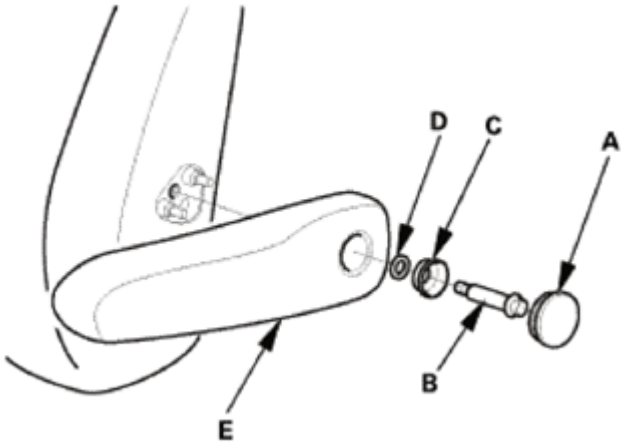

Fig. 117: Identifying Center Pin, Bushing, Cap, Washer And Armrest
Courtesy of AMERICAN HONDA MOTOR CO., INC.

3. Remove the pins (A) from the seat-back.

Fig. 118: Identifying Seat-Back Pins
Courtesy of AMERICAN HONDA MOTOR CO., INC.

9. Front Seat-Back - Passenger's Side
    1. Detach the connector clips (A).
    2. Detach the harness clips (B).
    3. Pry up the hooks (C) of the harness holders (D), then release them from the seat cushion frame springs (E).
    4. Except KX: Disconnect the connectors (F).

    Except KX - With Seat Heater

GETtheMANUALS.org

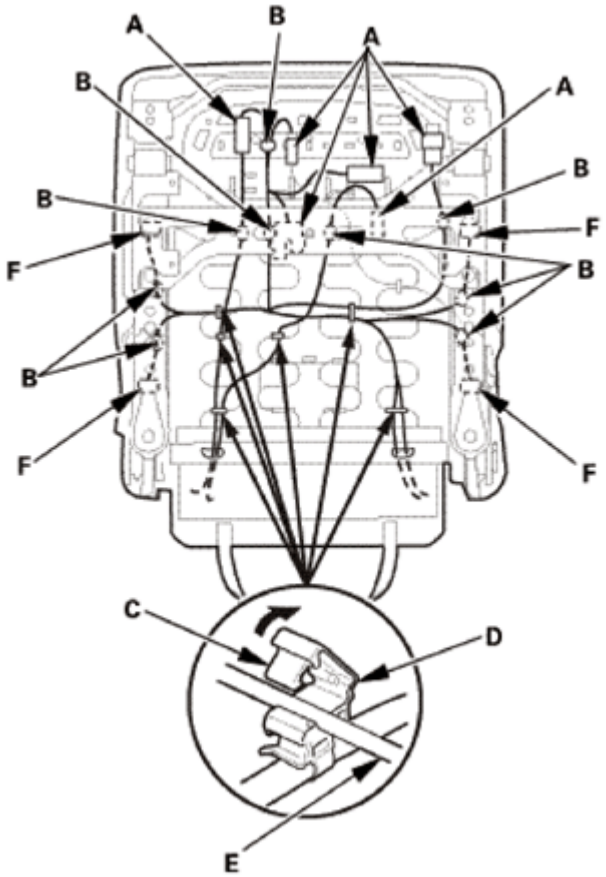

Fig. 119: Identifying Seat Cushion Frame Spring Hooks (Except KX - With Seat Heater)
Courtesy of AMERICAN HONDA MOTOR CO., INC.

Wxcept KX - Without Seat Heater

GETtheMANUALS.org

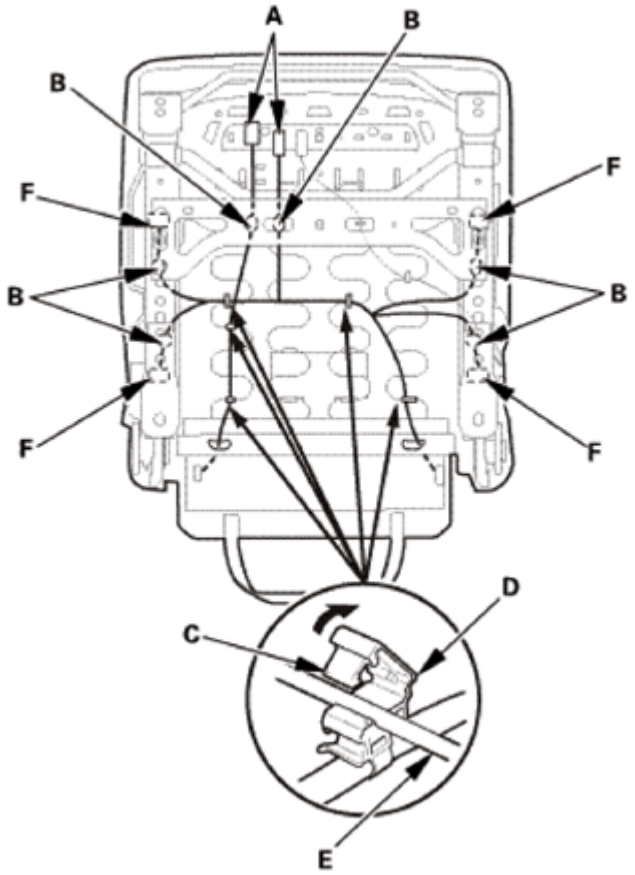

Fig. 120: Identifying Seat Cushion Frame Spring Hooks (Wxcept KX - Without Seat Heater)
Courtesy of AMERICAN HONDA MOTOR CO., INC.

KX

GETtheMANUALS.org

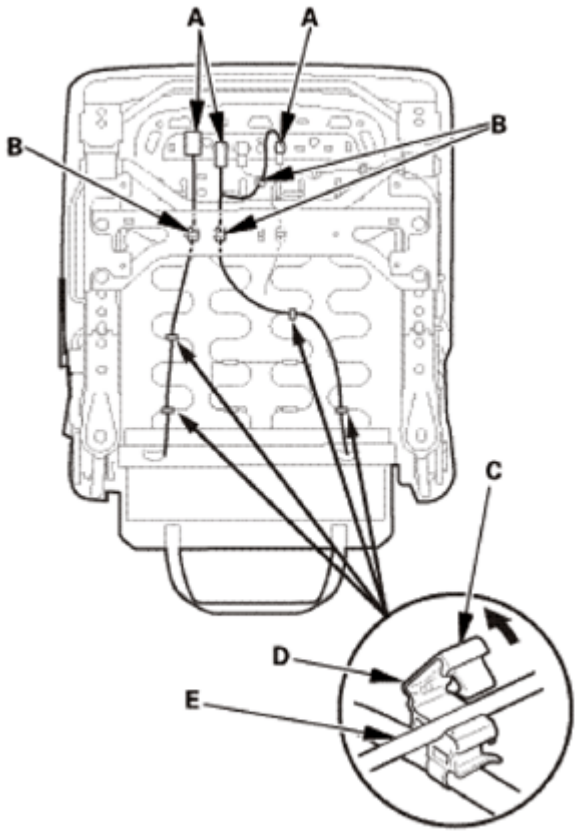

Fig. 121: Identifying Seat Cushion Frame Spring Hooks (KX)
Courtesy of AMERICAN HONDA MOTOR CO., INC.

5. Release the hook strip (A).
6. Unzip the seat-back cover (B).

GETtheMANUALS.org

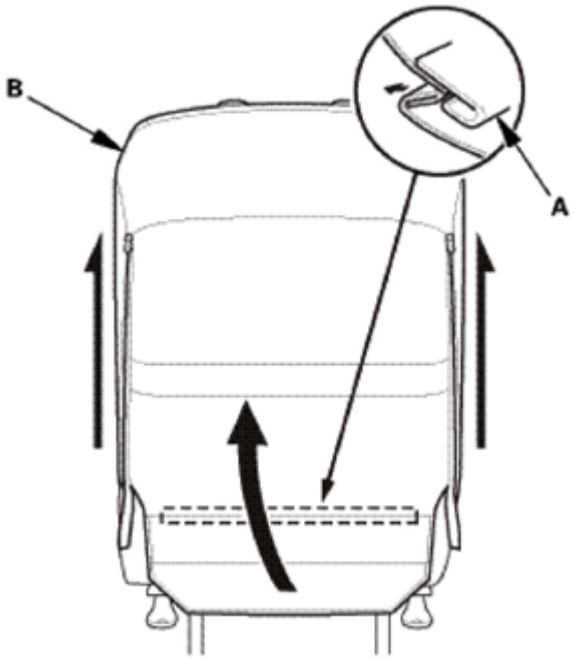

Fig. 122: Removing Seat-Back Cover
Courtesy of AMERICAN HONDA MOTOR CO., INC.

7. Release the hook strips (A), and loosen the seat-back cover (B).

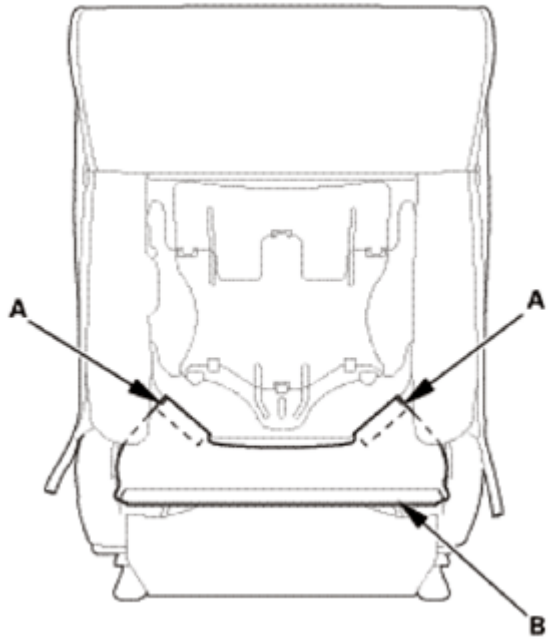

Fig. 123: Identifying Seat-Back Cover And Hook Strips
Courtesy of AMERICAN HONDA MOTOR CO., INC.

8. Detach the harness clips (A).

GETtheMANUALS.org

9. Pull out the harnesses (B) through the holes (C) in the seat-back cover (D).

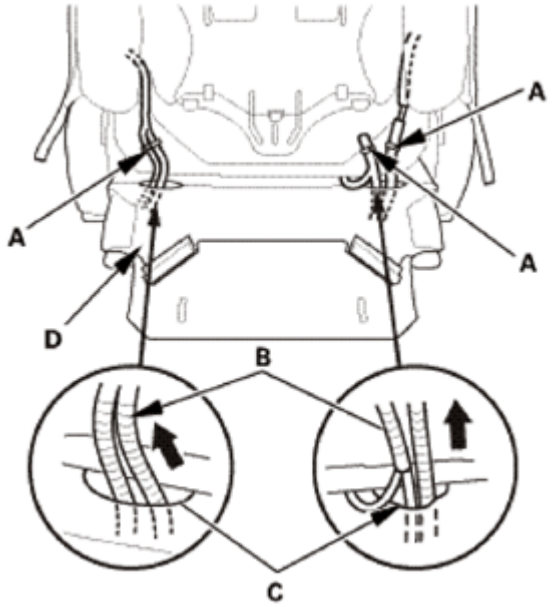

Fig. 124: Pulling Out Harnesses Through Seat-Back Cover Holes
Courtesy of AMERICAN HONDA MOTOR CO., INC.

10. Release airbag attachment wires A, B from the seat-back frame (C).

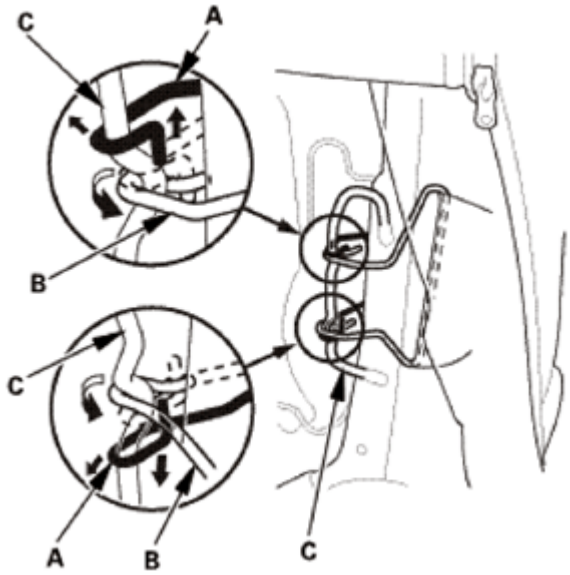

Fig. 125: Removing Airbag Attachment Wires From Seat-Back Frame
Courtesy of AMERICAN HONDA MOTOR CO., INC.

11. Remove the screw (A), and release the hooks (B), then remove the cover (C) and detach the harness clip (D).

GETtheMANUALS.org

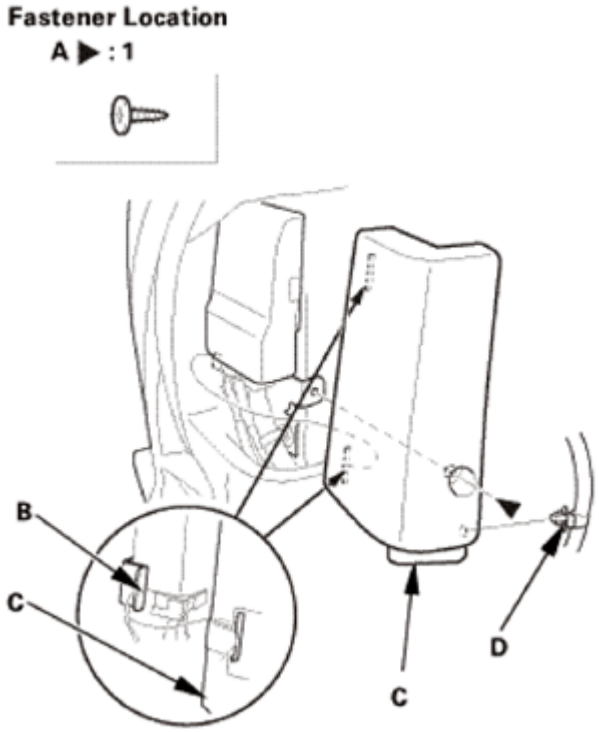

Fig. 126: Identifying Cover, Harness Clip And Fasteners
Courtesy of AMERICAN HONDA MOTOR CO., INC.

12. Disconnect the connectors (A) and detach the harness clips (B) from the ODS unit (USA and Canada models) or OPDS unit (Mexico models) (C).

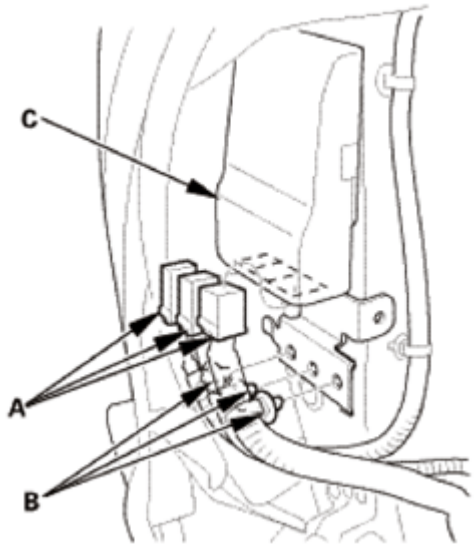

Fig. 127: Identifying OPDS Unit, Connectors And Harness Clips
Courtesy of AMERICAN HONDA MOTOR CO., INC.

13. Release the hook strips (A) from the seat-back frame (B).

GETtheMANUALS.org

14. Detach the harness clips (C).

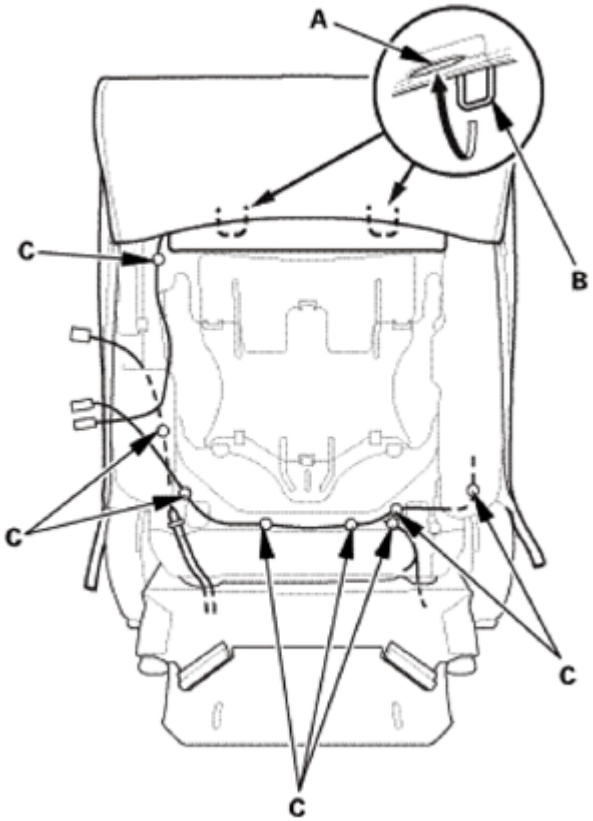

Fig. 128: Removing Hook Strips From Seat-Back Frame
Courtesy of AMERICAN HONDA MOTOR CO., INC.

10. Head Restraint Guide - Passenger's Side
    1. Pinch the tabs (A) on the end of the head restraint guides (B), and remove the guides from the seat-back.

GETtheMANUALS.org

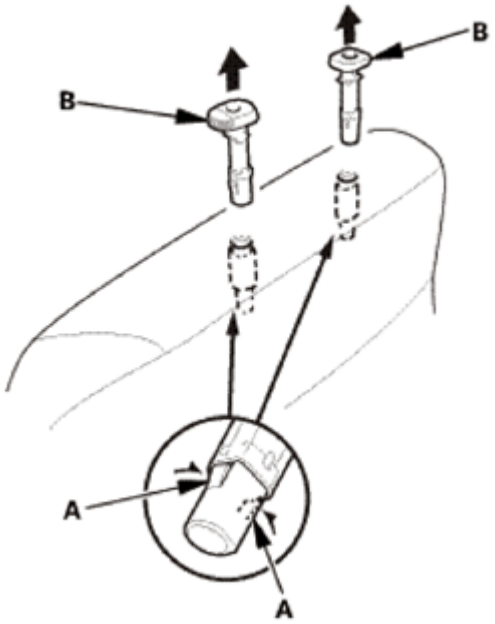

Fig. 129: Removing Head Restraint Guide From Seat-Back
Courtesy of AMERICAN HONDA MOTOR CO., INC.

11. Front Seat-Back Cover/Pad - Passenger's Side
    1. Remove the seat-back cover/pad (A) from the seat-back frame (B).

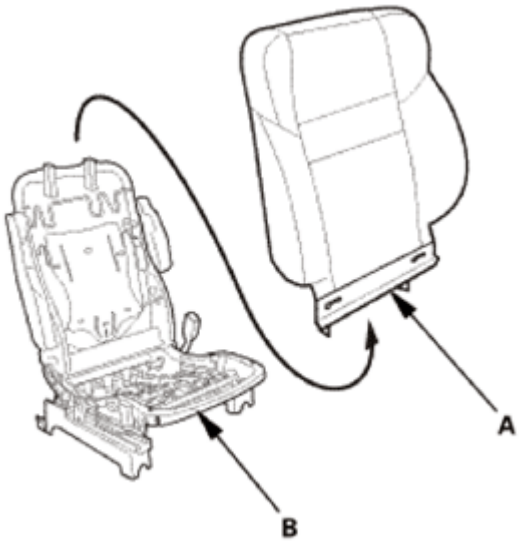

Fig. 130: Removing Seat-Back Cover/Pad From Seat-Back Frame
Courtesy of AMERICAN HONDA MOTOR CO., INC.

12. Front Seat Frame - Passenger's Side
    1. Detach the hook(s) (A) and the clip (B), then remove the front foot covers (C).

Front Side

GETtheMANUALS.org

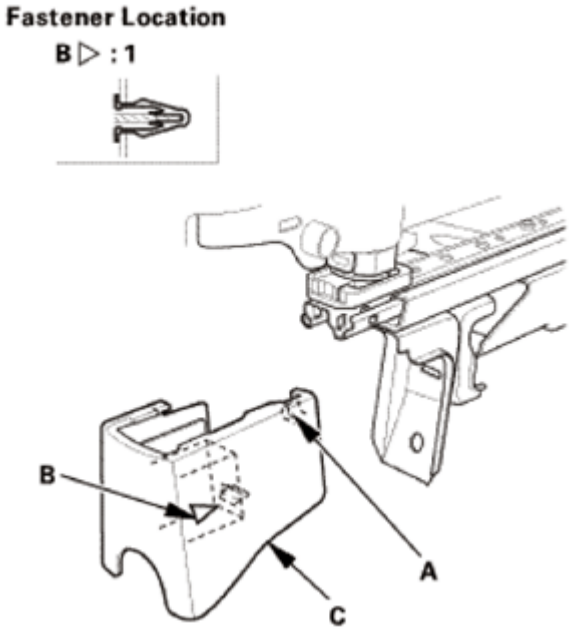

Fig. 131: Identifying Front Foot Covers, Hook And Clip
Courtesy of AMERICAN HONDA MOTOR CO., INC.

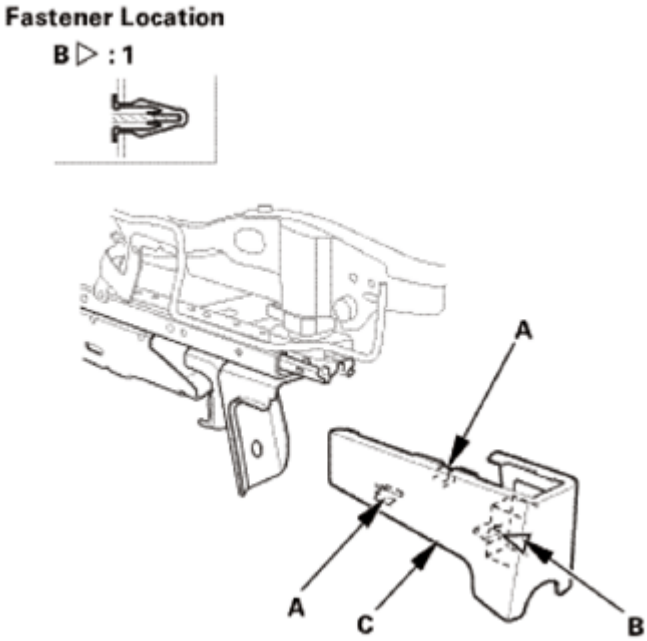

Fig. 132: Identifying Front Foot Cover, Hook And Clip
Courtesy of AMERICAN HONDA MOTOR CO., INC.

2. Detach the hooks (A), then remove the rear raiser covers (B).

Rear Side

GETtheMANUALS.org

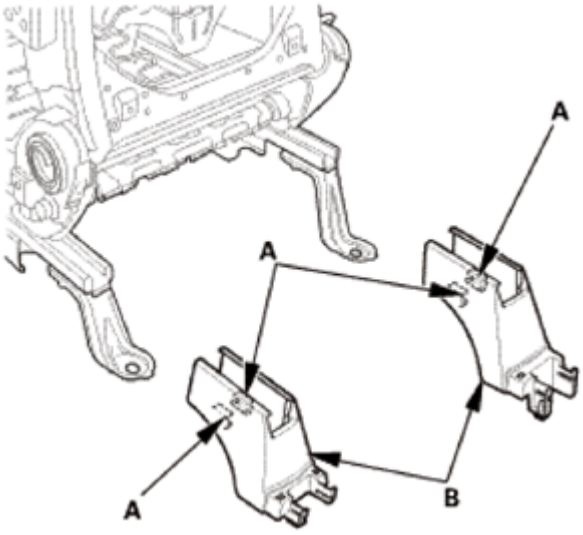

Fig. 133: Identifying Rear Raiser Covers And Hooks
Courtesy of AMERICAN HONDA MOTOR CO., INC.

3. Remove the hooks (A), then remove the outer recline inner cover (B) and the inner recline inner cover (C).

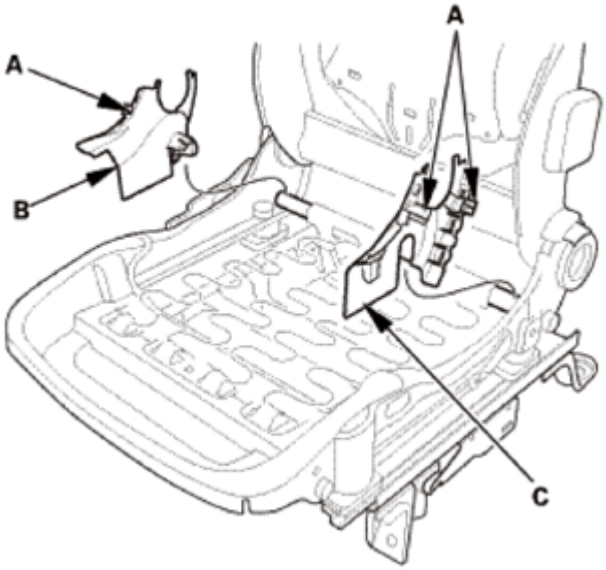

Fig. 134: Identifying Outer And Inner Recline Inner Cover And Hooks
Courtesy of AMERICAN HONDA MOTOR CO., INC.

13. Front Passenger's Seat Rail/Front Passenger's Weight Sensors as an Assembly
    1. Remove the seat cushion frame (A).

GETtheMANUALS.org

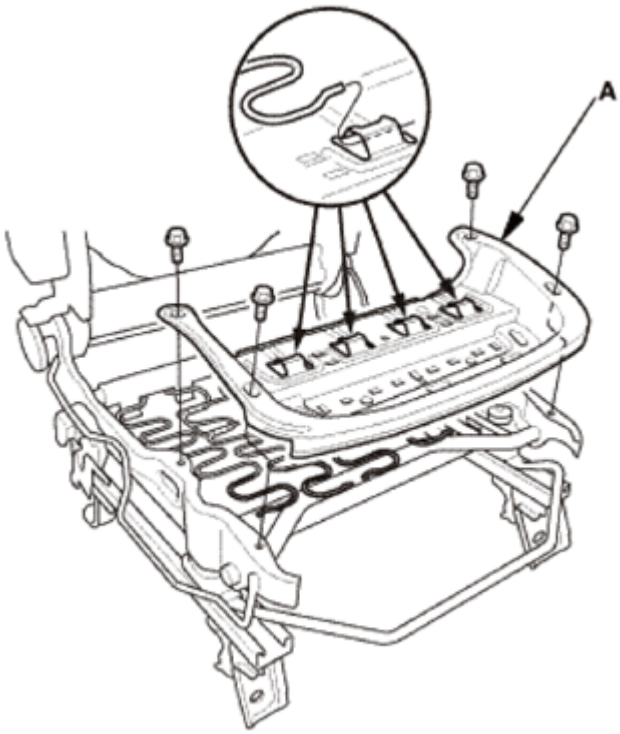

Fig. 135: Identifying Seat Cushion Frame And Bolts
Courtesy of AMERICAN HONDA MOTOR CO., INC.

2. Remove the TORX nuts using a TORX E18 socket, then remove the front passenger's seat rail/front passenger's weight sensors as an assembly (A).

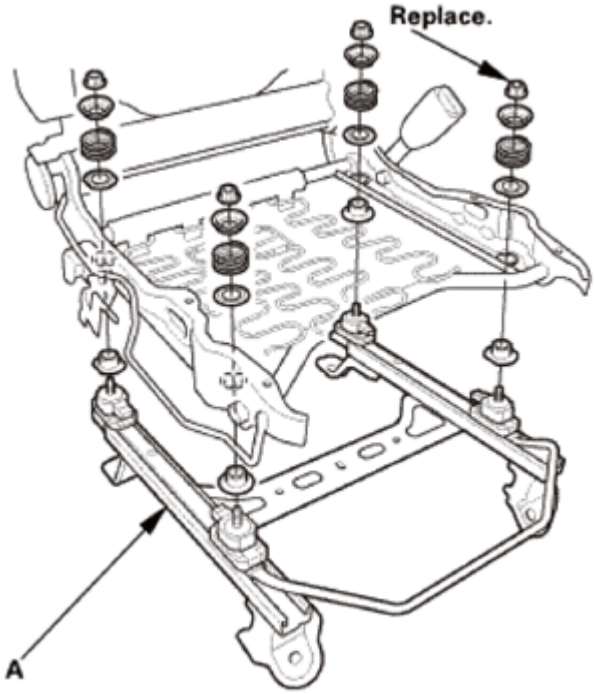

GETtheMANUALS.org

Fig. 136: Identifying Front Passenger's Seat Rail/Front Passenger's Weight Sensors Assembly And Components
Courtesy of AMERICAN HONDA MOTOR CO., INC.

INSTALLATION

NOTE:

- **SRS components are located in this area. Review the SRS COMPONENT LOCATIONS and the PRECAUTIONS AND PROCEDURES before doing repairs or service.**
- **Be sure to install the harness wires so they are not pinched or interfering with other parts.**
- **The front passenger's weight sensor is part of the seat rail and must be replaced as an assembly.**

1. Front Passenger's Seat Rail/Front Passenger's Weight Sensors as an Assembly
    1. Install the front passenger's seat rail/front passenger's weight sensors as an assembly (A) to the seat frame, and loosely tighten the TORX nuts.

NOTE: **The spacers and collars can be identified by their color. Make sure to install the spacers and collars as shown.**

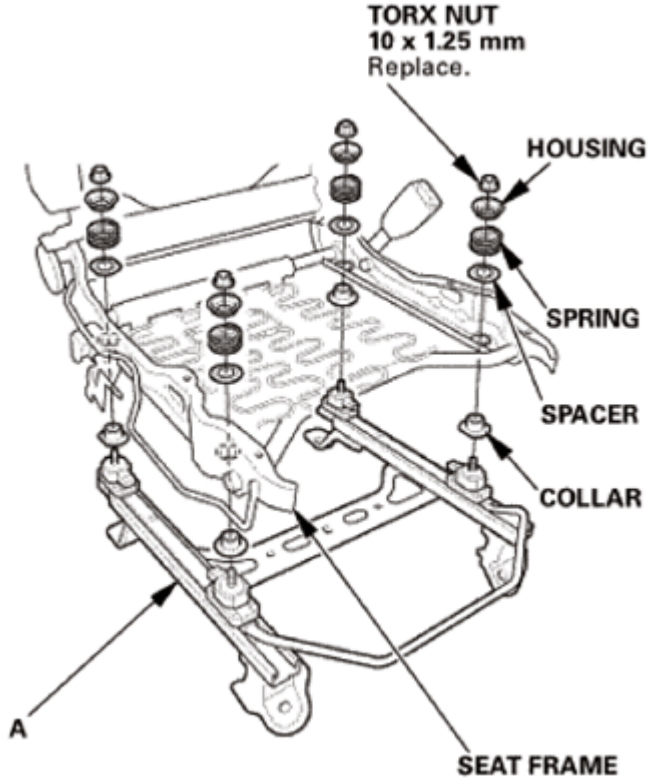

Fig. 137: Identifying Front Passenger's Seat Rail/Front Passenger's Weight Sensors And Assembly Components

GETtheMANUALS.org

Courtesy of AMERICAN HONDA MOTOR CO., INC.

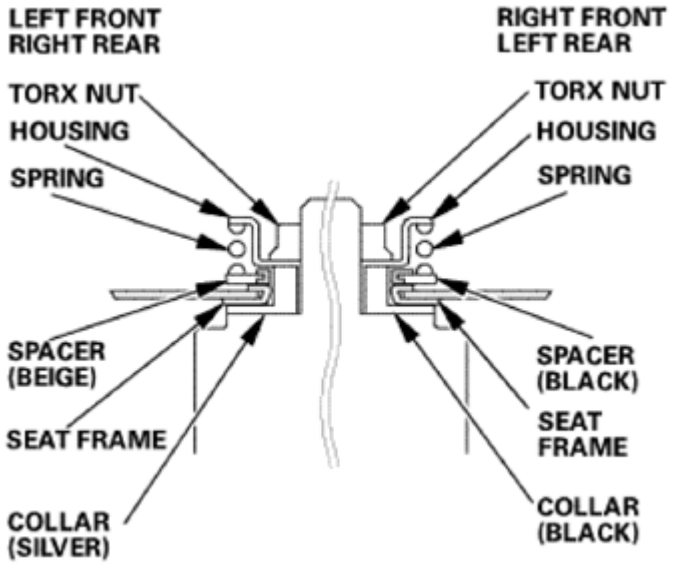

Fig. 138: Identifying Seat Frame, Spacer, Collar, Housing And Spring
Courtesy of AMERICAN HONDA MOTOR CO., INC.

2. Tightening the TORX nuts using a TORX E18 socket. Tighten them in a crisscross pattern in two or more steps.

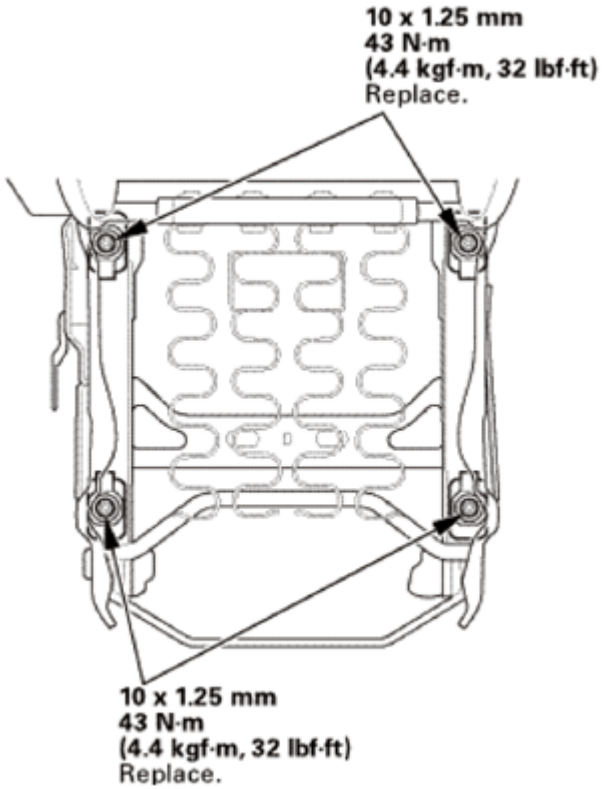

GETtheMANUALS.org

Fig. 139: Identifying Front Passenger's Seat Rail Assembly Torx Nuts With Torque Specifications
Courtesy of AMERICAN HONDA MOTOR CO., INC.

3. Install the seat cushion frame (A).

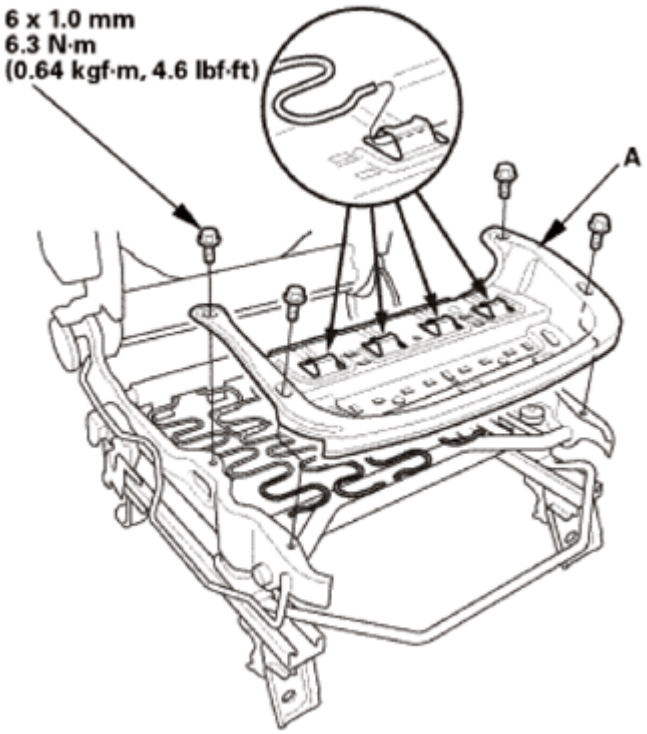

Fig. 140: Identifying Seat Cushion Frame And Mounting Bolt With Torque Specifications
Courtesy of AMERICAN HONDA MOTOR CO., INC.

2. Front Seat Frame - Passenger's Side
    1. Install the outer recline inner cover (A) and the inner recline inner cover (B) to the seat frame (C).

GETtheMANUALS.org

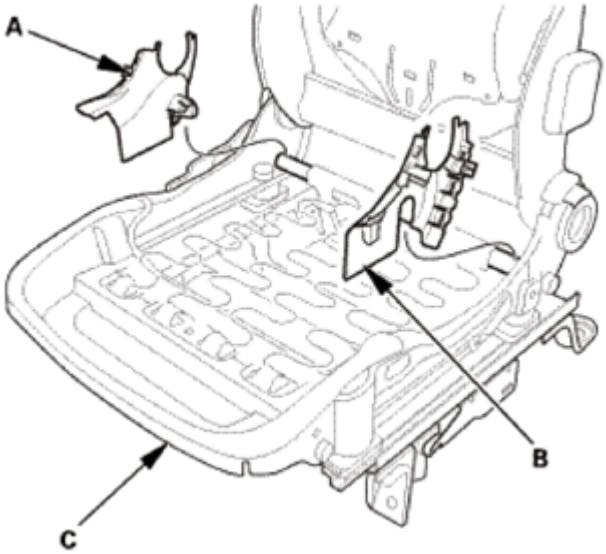

Fig. 141: Identifying Outer, Inner Recline Inner Cover And Seat Frame
Courtesy of AMERICAN HONDA MOTOR CO., INC.

2. Install the rear raiser covers (A). Make sure the hooks (B) snap into place securely.

Rear Side

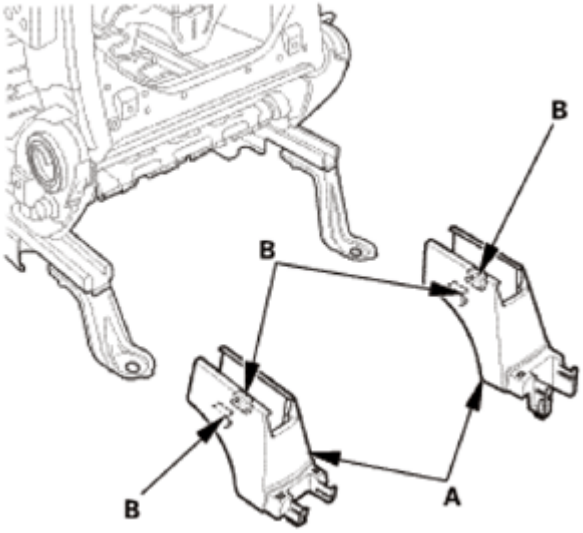

Fig. 142: Identifying Rear Raiser Covers And Hooks (Rear Side)
Courtesy of AMERICAN HONDA MOTOR CO., INC.

3. Install the front foot covers (A). Make sure the hook(s) (B) and the clip (C) snap into place securely.

Front Side

GETtheMANUALS.org

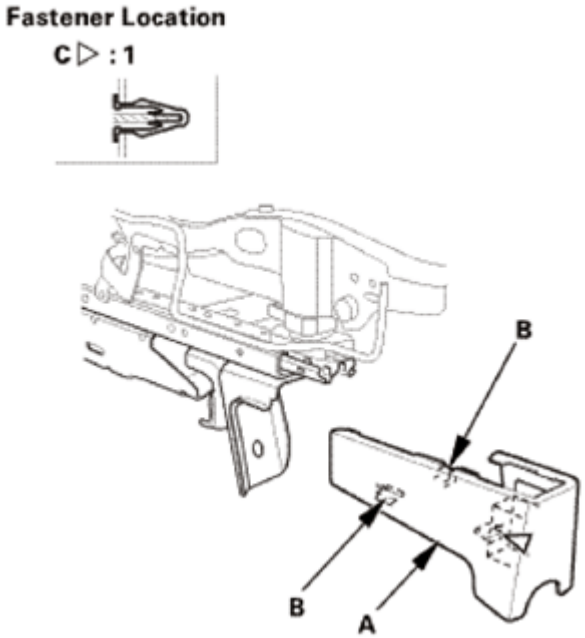

Fig. 143: Identifying Front Foot Covers, Hook And Clip
Courtesy of AMERICAN HONDA MOTOR CO., INC.

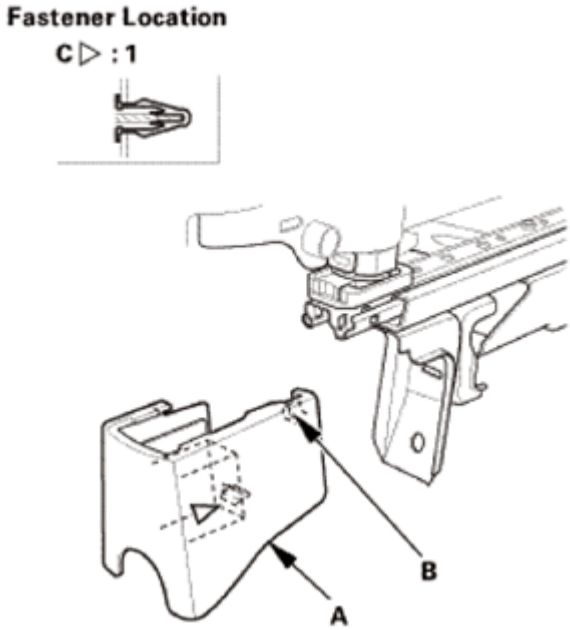

Fig. 144: Identifying Front Foot Covers And Hook
Courtesy of AMERICAN HONDA MOTOR CO., INC.

3. Front Seat-Back Cover/Pad - Passenger's Side
    1. Install the seat-back cover/pad (A) on the seat-back frame (B).

GETtheMANUALS.org

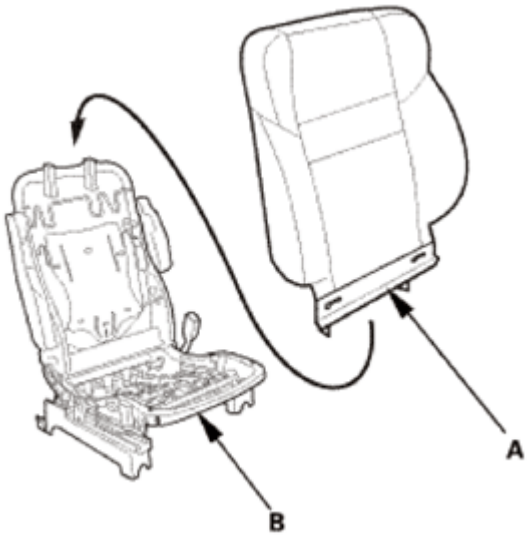

Fig. 145: Installing Seat-Back Cover/Pad On Seat-Back Frame
Courtesy of AMERICAN HONDA MOTOR CO., INC.

4. Head Restraint Guide - Passenger's Side
    1. Install the head restraint guides (A).

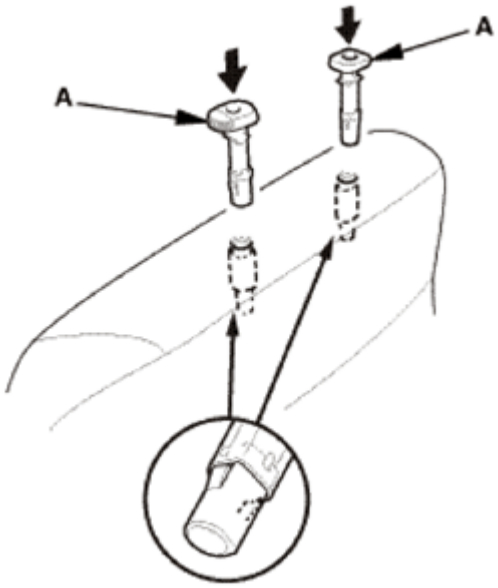

Fig. 146: Installing Head Restraint Guides
Courtesy of AMERICAN HONDA MOTOR CO., INC.

5. Front Seat-Back - Passenger's Side
    1. Install the hook strips (A) to the seat-back frame (B).
    2. Install the harness clips (C).

GETtheMANUALS.org

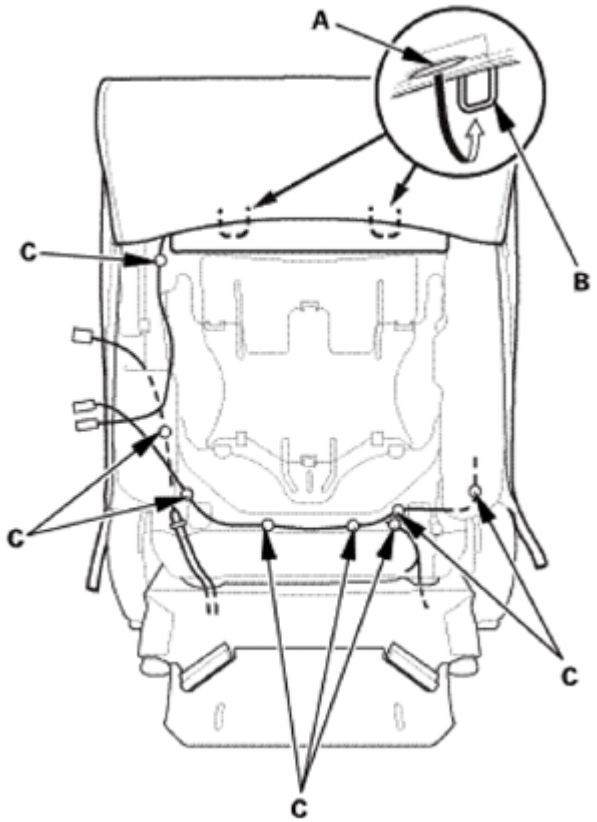

Fig. 147: Installing Hook Strips To Seat-Back Frame
Courtesy of AMERICAN HONDA MOTOR CO., INC.

3. Connect the connectors (A) and install the harness clips (B) to the ODS unit (USA and Canada models) or OPDS unit (Mexico models) (C).

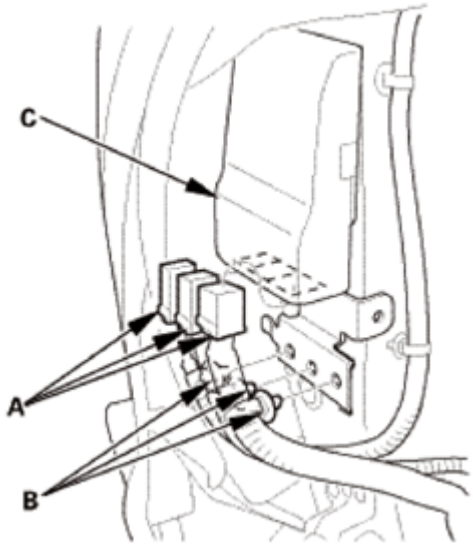

Fig. 148: Identifying OPDS Unit, Connectors And Harness Clips
Courtesy of AMERICAN HONDA MOTOR CO., INC.

GETtheMANUALS.org

4. Insert the hooks (A) and install the cover (B), then install the screw (C) and the harness clip (D).

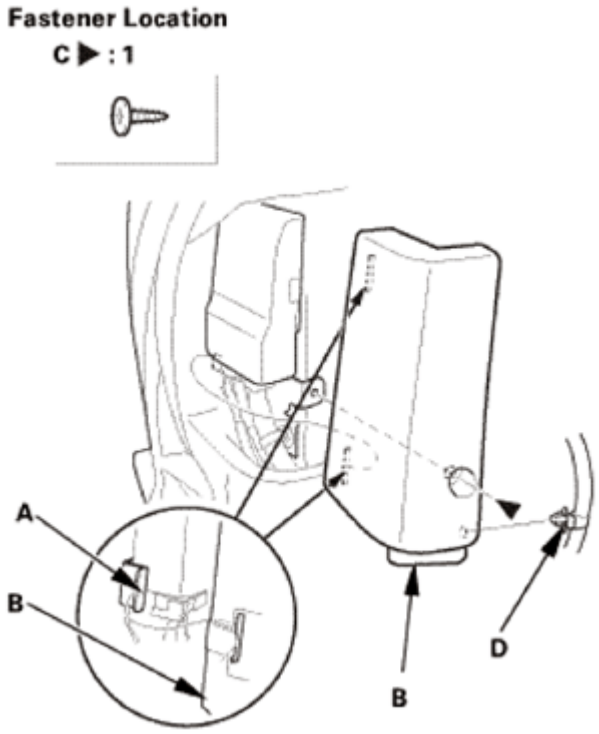

Fig. 149: Identifying Cover, Harness Clip, Hooks And Screw
Courtesy of AMERICAN HONDA MOTOR CO., INC.

5. Install airbag attachment wires A, B to the seat-back frame (C).

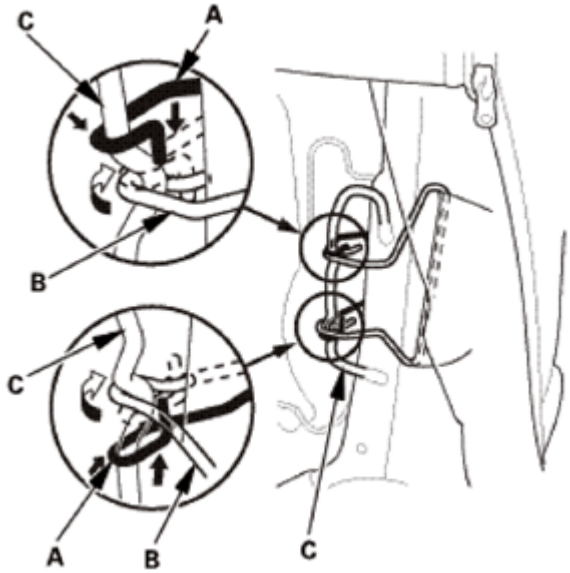

Fig. 150: Installing Airbag Attachment Wires To Seat-Back Frame
Courtesy of AMERICAN HONDA MOTOR CO., INC.

GETtheMANUALS.org

6. Install the harness clips (A).
7. Install the harnesses (B) through the holes (C) in the seat-back cover (D).

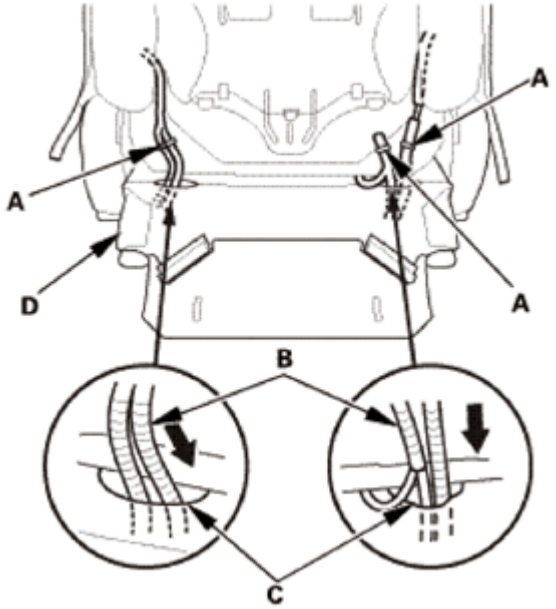

Fig. 151: Installing Harnesses To Seat-Back Cover Holes
Courtesy of AMERICAN HONDA MOTOR CO., INC.

8. Install the hook strips (A) to the seat-back frame.

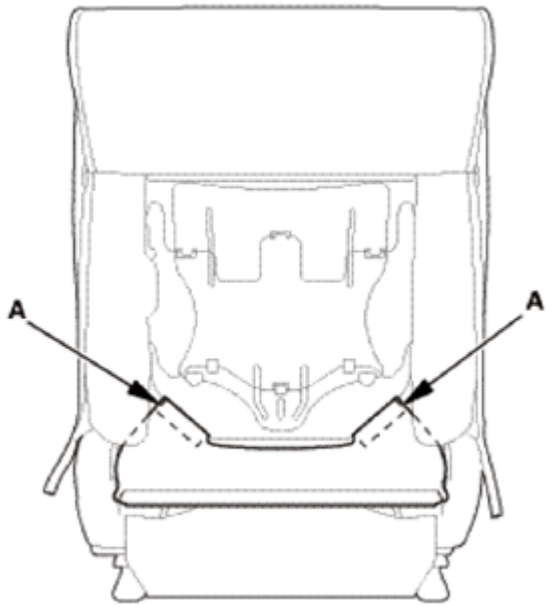

Fig. 152: Identifying Seat-Back Frame Hook Strips
Courtesy of AMERICAN HONDA MOTOR CO., INC.

GETtheMANUALS.org

9. Zip the seat-back cover (A).
10. Install the hook strip (B).

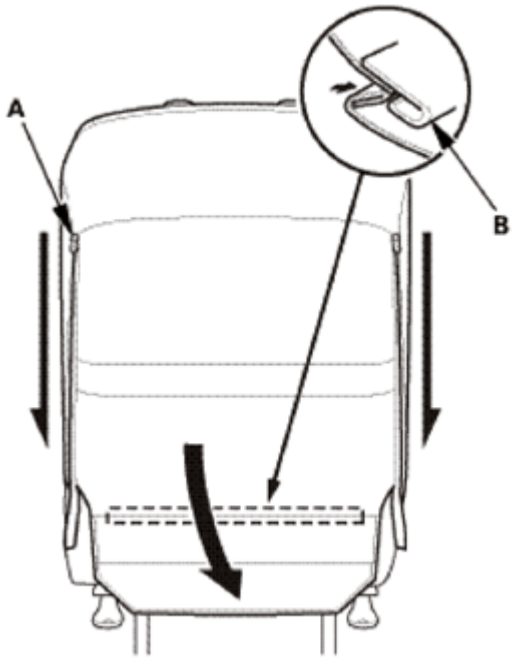

Fig. 153: Installing Hook Strip
Courtesy of AMERICAN HONDA MOTOR CO., INC.

11. Install the connector clips (A).
12. Install the harness clips (B).
13. Install the harness holders (C) to the seat cushion frame springs (D).
14. Except KX: Connect the connectors (E).

Except KX - With Seat Heater

GETtheMANUALS.org

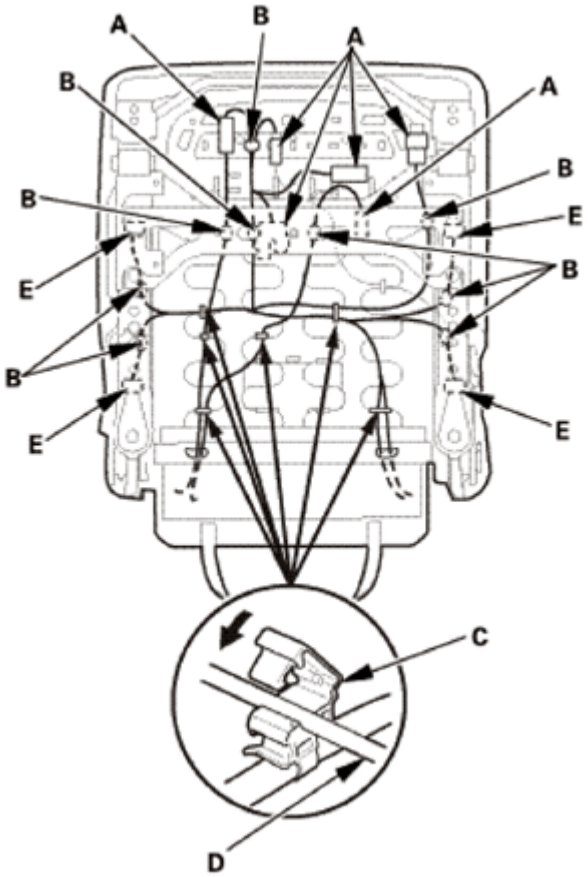

Fig. 154: Installing Harness Holders To Seat Cushion Frame Springs - With Seat Heater (Except KX)
Courtesy of AMERICAN HONDA MOTOR CO., INC.

Except KX - Without Seat Heater

GETtheMANUALS.org

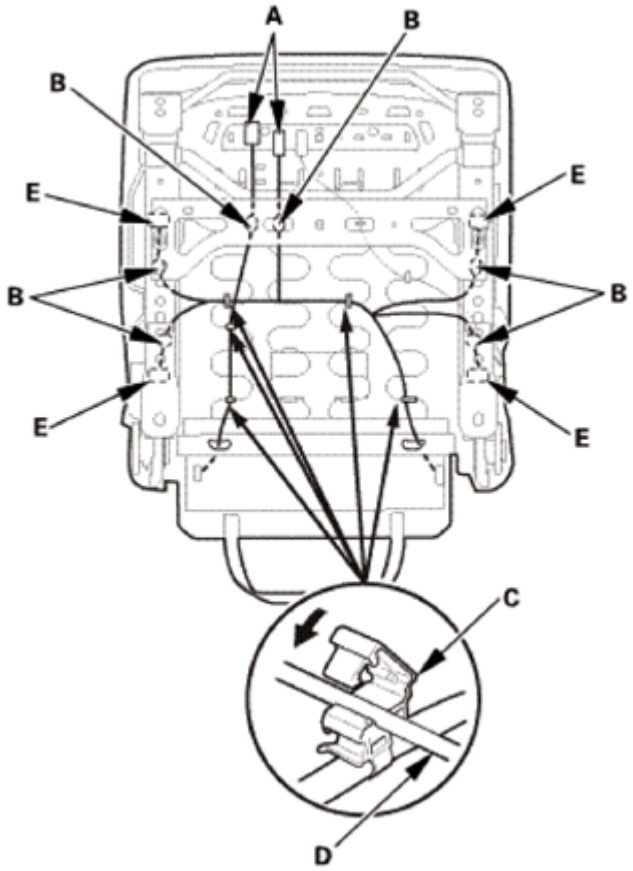

Fig. 155: Installing Harness Holders To Seat Cushion Frame Springs - Without Seat Heater (Except KX)
Courtesy of AMERICAN HONDA MOTOR CO., INC.

KX

GETtheMANUALS.org

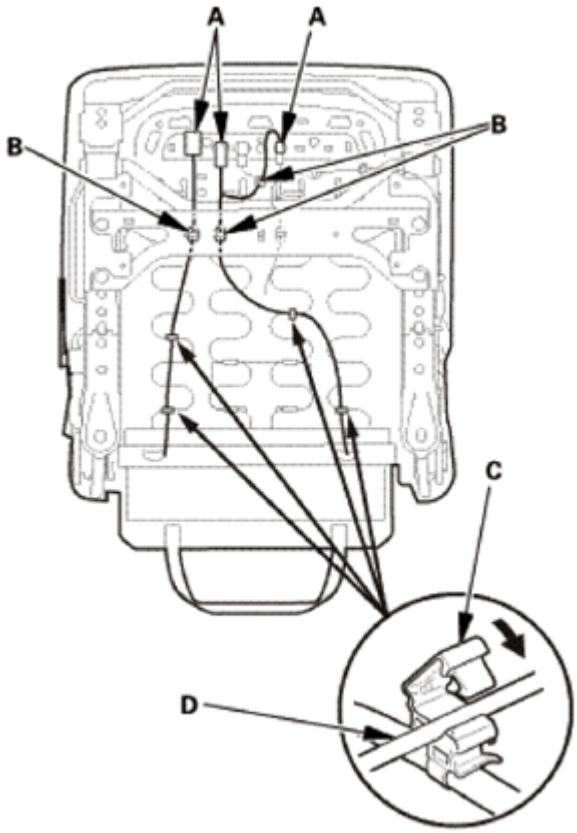

Fig. 156: Installing Harness Holders To Seat Cushion Frame Springs (KX)
Courtesy of AMERICAN HONDA MOTOR CO., INC.

6. Front Seat Armrest - Passenger's Side
    1. Install the pins (A) to the seat-back.

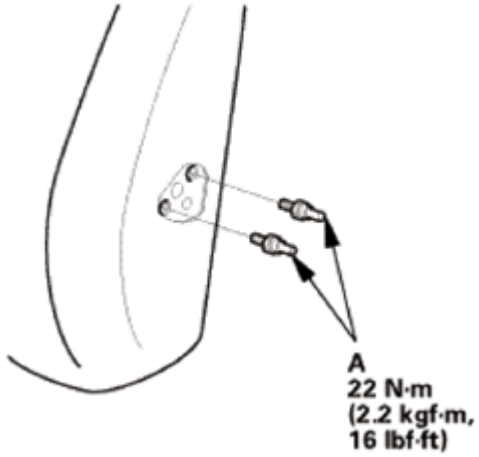

Fig. 157: Identifying Seat-Back Pins With Torque Specifications
Courtesy of AMERICAN HONDA MOTOR CO., INC.

GETtheMANUALS.org

2. Install the armrest (A), then install the washer (B), the bushing (C), and the center pin (D).
3. Install the cap (E) to the armrest.

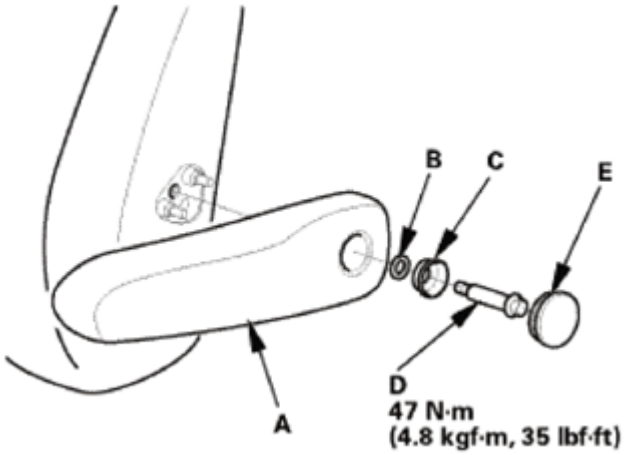

Fig. 158: Identifying Armrest, Cap, Washer, Bushing And Center Pin With Torque Specifications
Courtesy of AMERICAN HONDA MOTOR CO., INC.

7. Front Seat Cushion - Passenger's Side
   1. Install the seat cushion cover/pad (A) on the seat frame (B).

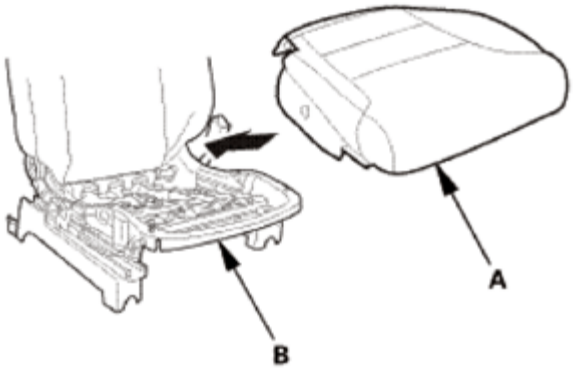

Fig. 159: Installing Seat Cushion Cover/Pad And Seat Frame
Courtesy of AMERICAN HONDA MOTOR CO., INC.

   2. Install the hook strips (A) to under the seat cushion.

GETtheMANUALS.org

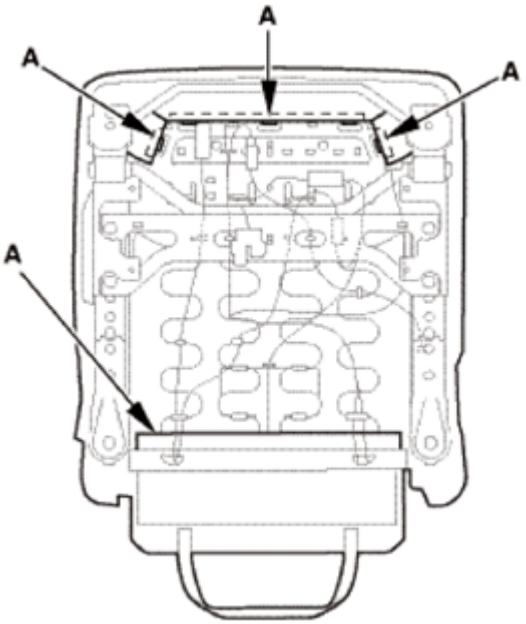

Fig. 160: Identifying Seat Cushion Hook Strips
Courtesy of AMERICAN HONDA MOTOR CO., INC.

3. Install the hook strips (A), then install the clip (B).

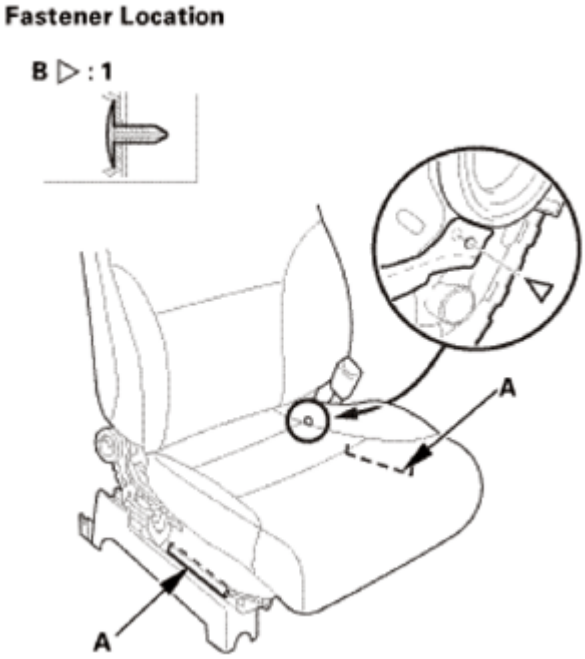

Fig. 161: Identifying Front Seat Cushion Hook Strips And Clip
Courtesy of AMERICAN HONDA MOTOR CO., INC.

4. With seat heater: Install the harness holder (A) to the seat cushion frame springs (B).
5. Install the harness clip (C).

GETtheMANUALS.org

6. Connect the connecter(s) (D).

Except KX - With Seat Heater

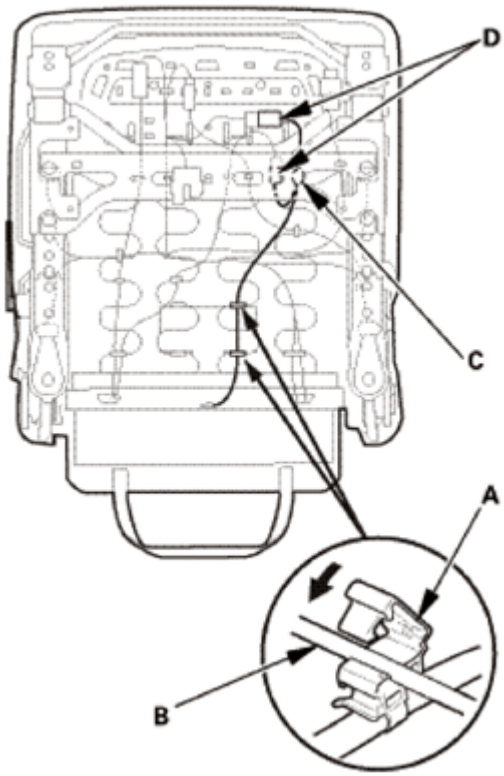

Fig. 162: Installing Harness Holder To Seat Cushion Frame Springs - With Seat Heater (Except KX)
Courtesy of AMERICAN HONDA MOTOR CO., INC.

KX

GETtheMANUALS.org

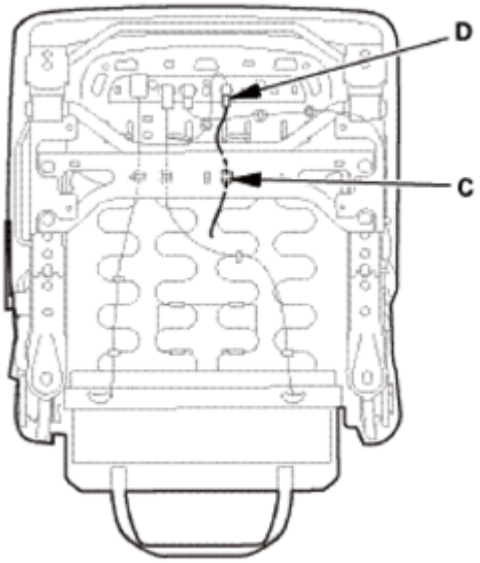

Fig. 163: Identifying Harness Clip And Connector (KX)
Courtesy of AMERICAN HONDA MOTOR CO., INC.

7. Install the elastic strap (A) to the seat cushion frame springs (B).

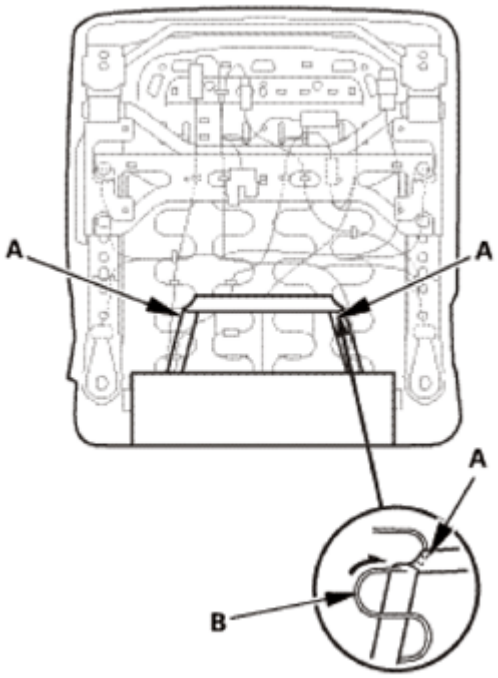

Fig. 164: Installing Elastic Strap To Seat Cushion Frame Springs
Courtesy of AMERICAN HONDA MOTOR CO., INC.

8. Front Seat Center Cover - Passenger's Side
    1. Install the center cover (A) to the recline inner cover (B). Make sure the tabs (C) snap into place securely.

GETtheMANUALS.org

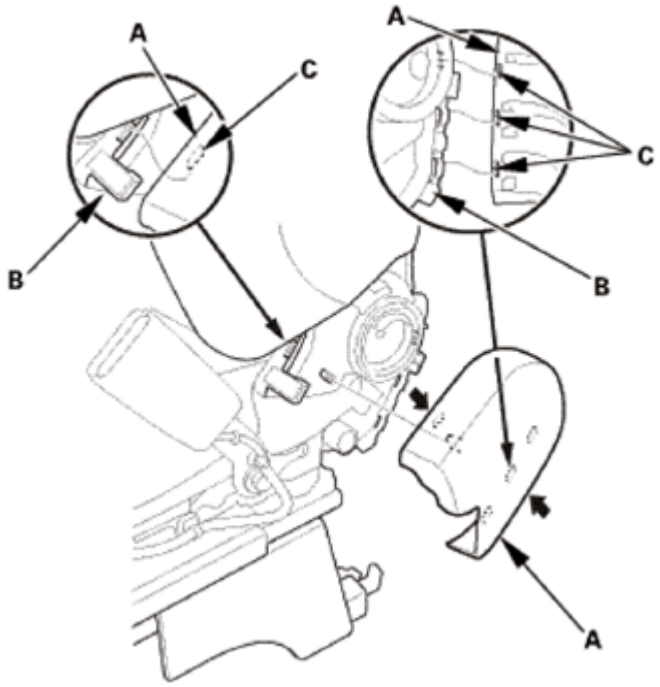

Fig. 165: Installing Center Cover To Recline Inner Cover
Courtesy of AMERICAN HONDA MOTOR CO., INC.

9. Front Seat Recline Cover - Passenger's Side
    1. Install the hook (A) and the clip (B) of the recline cover (C).
    2. Install the front hooks (D) to the recline inner cover (E).
    3. Install the rear hooks (F) of the recline cover to the recline inner cover.
    4. Install the recline knob (G) and the screw (H).

GETtheMANUALS.org

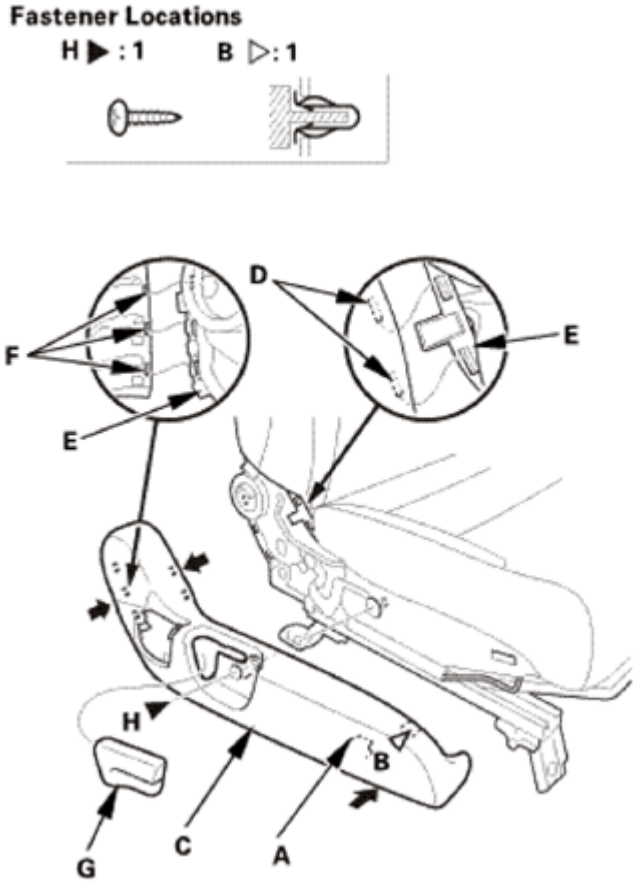

Fig. 166: Installing Recline Cover Rear Hooks To Recline Inner Cover
Courtesy of AMERICAN HONDA MOTOR CO., INC.

10. Front Seat Assembly - Passenger's Side
    1. Connect the connectors (A).
    2. Install the harness clip (B).

Without Subwoofer

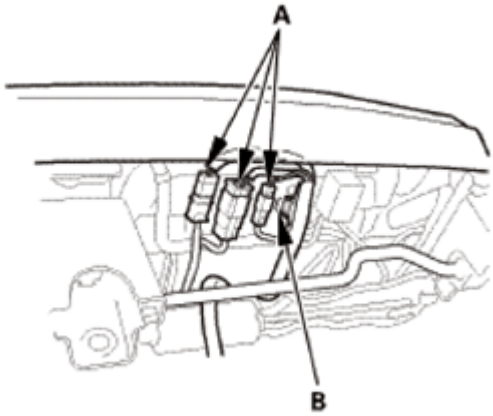

GETtheMANUALS.org

Fig. 167: Identifying Front Seat Assembly Connectors And Clip (Without Subwoofer)
Courtesy of AMERICAN HONDA MOTOR CO., INC.

With Subwoofer

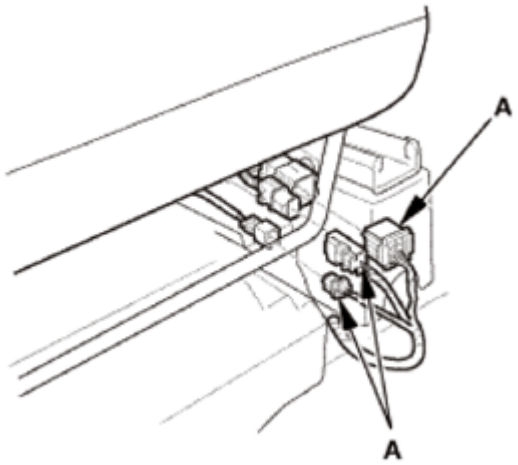

Fig. 168: Identifying Front Seat Assembly Connectors And Clip (With Subwoofer)
Courtesy of AMERICAN HONDA MOTOR CO., INC.

3. Install the seat mounting bolts (A).

NOTE:

- **Tighten the bolts by hand first, then tighten them to the specified torque.**
- **Tighten the seat mounting bolts to the specified torque in the sequence shown. Slide the seat all the way back and tighten bolts 1 and 2, then slide it forward and tighten bolts 3 and 4.**

Front Side

GETtheMANUALS.org

Fig. 169: Identifying Seat Mounting Bolts With Torque Specifications (Front Side)
Courtesy of AMERICAN HONDA MOTOR CO., INC.

Rear Side

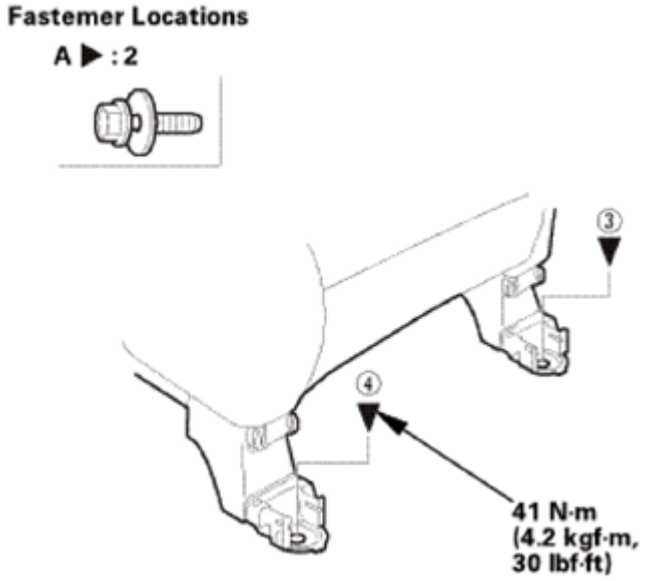

Fig. 170: Identifying Seat Mounting Bolts With Torque Specifications (Rear Side)
Courtesy of AMERICAN HONDA MOTOR CO., INC.

4. Install rear inner seat track end cover (A) and the rear outer seat track end cover (B). Make sure the hooks (C) snap into place securely.

GETtheMANUALS.org

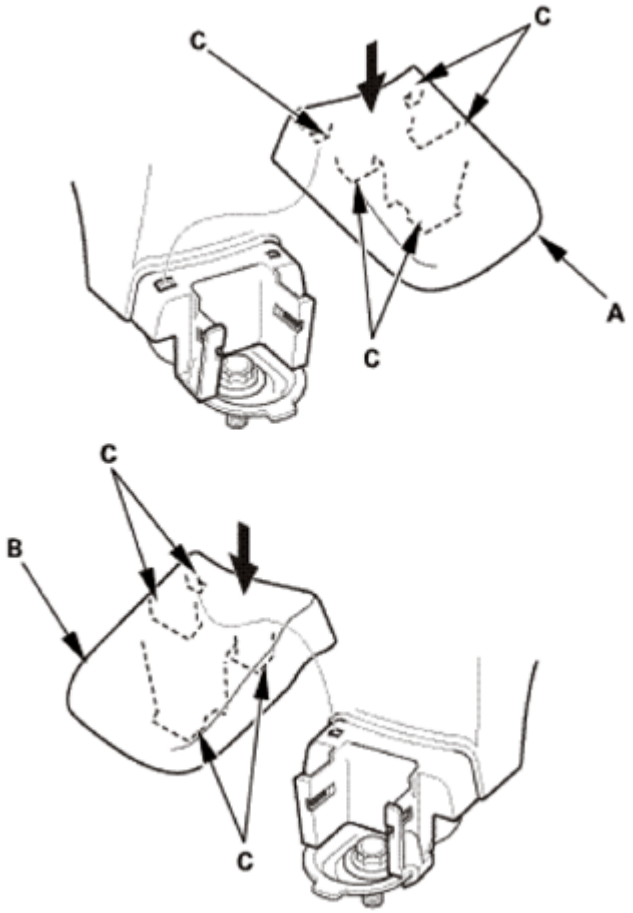

Fig. 171: Installing Rear Inner And Outer Seat Track End Cover
Courtesy of AMERICAN HONDA MOTOR CO., INC.

11. Head Restraint - Passenger's Side
    1. Insert the head restraint (A) into the seat-back as shown.

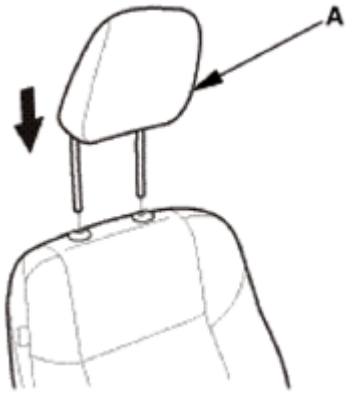

Fig. 172: Inserting Head Restraint Into Seat-Back
Courtesy of AMERICAN HONDA MOTOR CO., INC.

GETtheMANUALS.org

12. Front Seat Belt Lower Anchor Bolt - Passenger's Side
    1. Install the lower anchor bolt (A).

NOTE: **Before installing the anchor bolt, make sure there are no twists or kinks in the seat belt.**

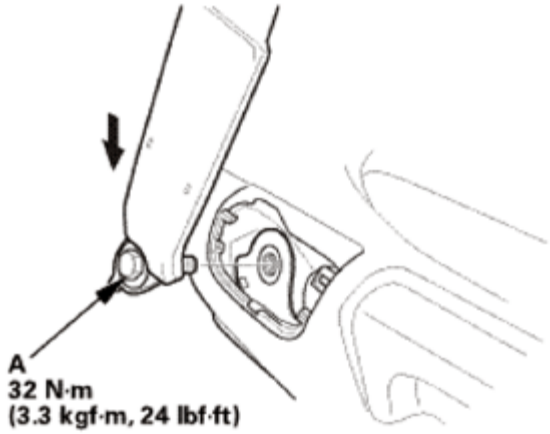

Fig. 173: Installing Lower Anchor Bolt With Torque Specifications
Courtesy of AMERICAN HONDA MOTOR CO., INC.

    2. Install the anchor cover (A). Make sure the hooks (B) and the tab (C) snap into place securely.

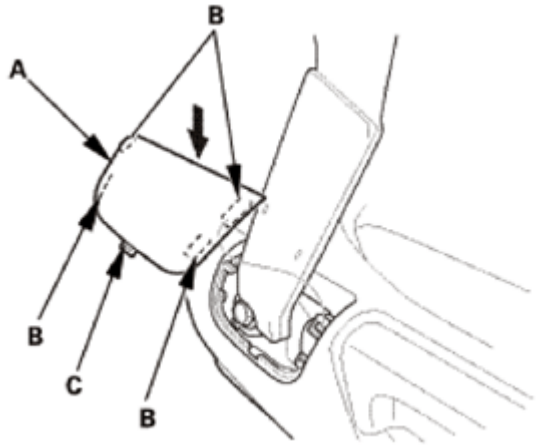

Fig. 174: Installing Anchor Cover
Courtesy of AMERICAN HONDA MOTOR CO., INC.

13. Battery Terminal (SRS) - Reconnection

NOTE: **If the battery performance is abnormal, test the battery.**

    1. Clean the battery terminals.

GETtheMANUALS.org

2. Connect the positive cable (A) to the battery.

NOTE: Always connect the positive side first.

3. Connect the negative cable (B) to the battery.
4. Apply multipurpose grease to the terminals to prevent corrosion.

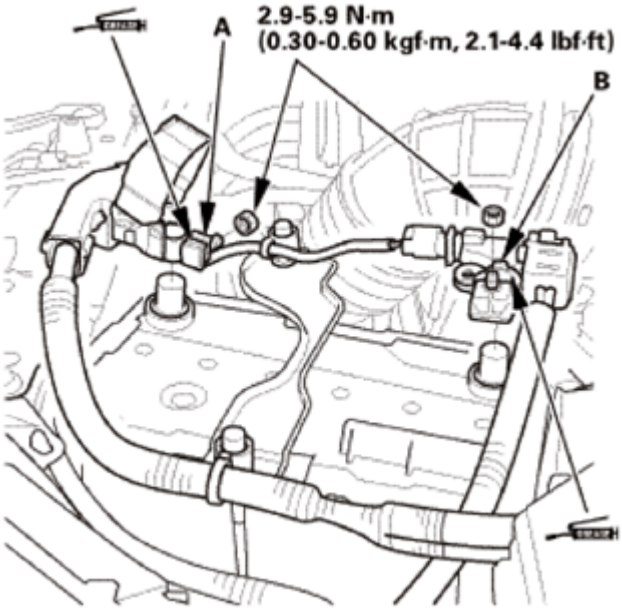

Fig. 175: Identifying Multipurpose Grease Applying Area On Battery Positive And Negative Terminals
Courtesy of AMERICAN HONDA MOTOR CO., INC.

14. HDS DLC - Connection
    1. Connect the HDS to the data link connector (DLC) (A) located under the driver's side of the dashboard.
    2. Turn the ignition switch to ON (II).
    3. Make sure the HDS communicates with the vehicle. If it does not communicate, go to the DLC circuit troubleshooting.

GETtheMANUALS.org

Fig. 176: Identifying Data Link Connector
Courtesy of AMERICAN HONDA MOTOR CO., INC.

15. DTC - Clear
    1. Clear the DTC(s) by following the screen prompts on the HDS.
    2. Turn the ignition switch to LOCK (0), then wait for 10 seconds.
16. Front Passenger's Weight Sensor Initialization

Front Passenger's Weight Sensor Initialization

When you replace the SRS unit, the front passenger's weight sensor, the front passenger's seat frame, front passenger's seat rail, or the ODS unit, initialize the front passenger's weight sensor with the HDS.

NOTE:

- **Before initializing the front passenger's weight sensor, clear the DTCs.**
- **Before initializing the front passenger's weight sensor, make sure the battery is fully charged.**
- **Make sure all components of the front passenger's seat are correctly installed.**
- **Make sure nothing is on the front passenger's seat, including aftermarket seat covers or mats.**
- **Make sure there is nothing in the front passenger's seat-back pocket.**
- **Keep the windows and the moonroof closed (if equipped).**
- **Make sure the vehicle is on level ground.**
- **Dehumidify inside of the vehicle with A/C.**
- **Do not touch the front passenger's seat during the operation check.**
- **Do not expose the front passenger's seat to sudden temperature changes.**

GETtheMANUALS.org

1. Position the front passenger's seat all the way rearward, and adjust the seat-back to the forward most position. Do not move the seat from this position until the initialization is completed.
2. Drive the vehicle, and accelerate to 22 mph (36 km/h), then stop on level ground.
3. From the HDS Main Menu, select SRS, then INITIALIZATION. In the INITIALIZATION Menu, select SWS Initialization. Follow the prompts until the front passenger's weight sensor initialization has been completed.
4. Turn the ignition switch to LOCK (0).

17. Confirm Proper SRS Operation
    1. Turn the ignition switch to ON (II), and check that the SRS indicator comes on for about 6 seconds and then goes off.

ODS UNIT INITIALIZATION

PROCEDURE

NOTE:

- **After SRS unit or ODS unit is replaced, do this procedure to initialize the ODS unit.**
- **ODS unit initialization initializes both the OPDS sensor and the front passenger's weight sensor.**

1. HDS DLC - Connection
    1. Connect the HDS to the data link connector (DLC) (A) located under the driver's side of the dashboard.
    2. Turn the ignition switch to ON (II).
    3. Make sure the HDS communicates with the vehicle. If it does not communicate, go to the DLC circuit troubleshooting.

Fig. 177: Identifying Data Link Connector
Courtesy of AMERICAN HONDA MOTOR CO., INC.

GETtheMANUALS.org

2. DTC - Clear
    1. Clear the DTC(s) by following the screen prompts on the HDS.
    2. Turn the ignition switch to LOCK (0), then wait for 10 seconds.
3. OPDS Sensor Initialization

OPDS Sensor Initialization

When you replace the front passenger's seat-back cover/pad, the SRS unit, and/or the ODS unit, initialize the OPDS sensor with the HDS.

NOTE:

- **Before initializing the OPDS sensor, clear the DTCs.**
- **Before initializing the OPDS sensor, make sure the battery is fully charged.**
- **A new (uninitialized) ODS unit installed with a faulty OPDS sensor (DTC 86-1x or 86-2x) can cause DTCs 85-71 and 85-78. If the SRS has a hard DTC 86-1x or 86-2x, troubleshoot the DTCs completely before replacing the ODS unit.**
- **Make sure all components of the front passenger's seat are correctly installed.**
- **Make sure nothing is on the front passenger's seat, including aftermarket seat covers or mats.**
- **Make sure there is nothing in the front passenger's seat-back pocket.**
- **Dehumidify inside of the vehicle with A/C.**

1. Set the seat-back in a normal position.
2. From the HDS Main Menu, select SRS, then INITIALIZATION. In the INITIALIZATION Menu, select ODS Initialization. Follow the prompts until the OPDS sensor initialization has been completed.
3. Turn the ignition switch to LOCK (0), then wait for 10 seconds.

NOTE: **If the ODS unit fails to initialize after several attempts, replace the seat-back cover/pad equipped with an OPDS sensor, and retry. If the ODS unit continues to fail to initialize, replace the ODS unit.**

4. Front Passenger's Weight Sensor Initialization

Front Passenger's Weight Sensor Initialization

When you replace the SRS unit, the front passenger's weight sensor, the front passenger's seat frame, front passenger's seat rail, or the ODS unit, initialize the front passenger's weight sensor with the HDS.

NOTE:

- **Before initializing the front passenger's weight sensor, clear the DTCs.**

GETtheMANUALS.org

- **Before initializing the front passenger's weight sensor, make sure the battery is fully charged.**
- **Make sure all components of the front passenger's seat are correctly installed.**
- **Make sure nothing is on the front passenger's seat, including aftermarket seat covers or mats.**
- **Make sure there is nothing in the front passenger's seat-back pocket.**
- **Keep the windows and the moonroof closed (if equipped).**
- **Make sure the vehicle is on level ground.**
- **Dehumidify inside of the vehicle with A/C.**
- **Do not touch the front passenger's seat during the operation check.**
- **Do not expose the front passenger's seat to sudden temperature changes.**

1. Position the front passenger's seat all the way rearward, and adjust the seat-back to the forward most position. Do not move the seat from this position until the initialization is completed.
2. Drive the vehicle, and accelerate to 22 mph (36 km/h), then stop on level ground.
3. From the HDS Main Menu, select SRS, then INITIALIZATION.

   In the INITIALIZATION Menu, select SWS Initialization. Follow the prompts until the front passenger's weight sensor initialization has been completed.

4. Turn the ignition switch to LOCK (0).

ODS UNIT OPERATION CHECK

PROCEDURE

1. After Replacing Front Passenger's Seat Component(s)

   After Replacing Front Passenger's Seat Component(s)

   NOTE: Check the ODS unit operation after any of these actions:

   - **Front passenger's seat component(s) replacement (except ODS unit and/or front passenger's weight sensor).**
   - **SRS unit replacement.**
   - **Remove the front passenger's weight sensor(s).**
   - **After a vehicle collision.**

2. Test Drive
   1. Drive the vehicle, accelerate to 22 mph (36 km/h), then stop on level ground.

GETtheMANUALS.org

3. HDS DLC - Connection
    1. Connect the HDS to the data link connector (DLC) (A) located under the driver's side of the dashboard.
    2. Turn the ignition switch to ON (II).
    3. Make sure the HDS communicates with the vehicle. If it does not communicate, go to the DLC circuit troubleshooting.

Fig. 178: Identifying Data Link Connector
Courtesy of AMERICAN HONDA MOTOR CO., INC.

4. Pre-Operation Check Set-Up

Pre-Operation Check Set-Up

- Make sure all the components of the front passenger's seat are correctly installed.
- Position the front passenger's seat all the way rearward, and adjust the seat-back to the forward most position. Do not move the seat from this position until the output check is completed.
- Make sure nothing is on the front passenger's seat, including after market seat covers or mats.
- Make sure there is nothing in the front passenger's seat-back pocket.
- Keep the windows and the moonroof closed (if equipped).
- Do all initialization procedures, except test-driving, in the service bay.
- Make sure the vehicle is on level ground.
- Dehumidify inside of the vehicle with A/C.
- Do not touch the front passenger's seat during the operation check.
- Do not expose the front passenger's seat to sudden temperature changes.
- Make sure all aftermarket devices such as amplifiers, fluorescent light, air purifiers, CB or HAM radios, etc. are turned off.

1. From the HDS Main Menu, select SRS, then Inspection. In the Inspection Menu, select AFTER

GETtheMANUALS.org

REPLACING FRONT PASSENGER'S SEAT COMPONENT(S). Follow the prompts until the ODS unit operation check has been completed.

2. Turn the ignition switch to LOCK (0).

ODS UNIT REMOVAL AND INSTALLATION

LON > 7521B5

REMOVAL

NOTE: SRS components are located in this area. Review the SRS COMPONENT LOCATIONS and the PRECAUTIONS AND PROCEDURES before doing repairs or service.

1. Battery Terminal (SRS) - Disconnection
   1. Make sure the ignition switch is in LOCK (0).
   2. Disconnect and isolate the negative cable (A) from the battery.

      NOTE: Always disconnect the negative side first.

   3. Disconnect the positive cable (B) from the battery.
   4. Wait at least 3 minutes before starting work.

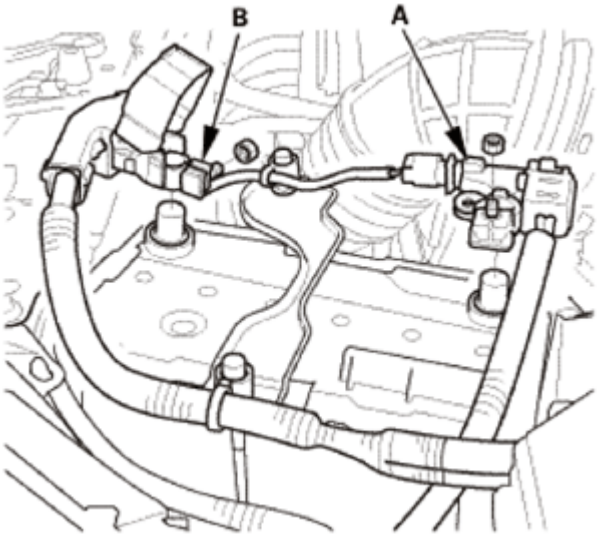

Fig. 179: Identifying Battery Positive And Negative Cables
Courtesy of AMERICAN HONDA MOTOR CO., INC.

2. Front Seat Belt Lower Anchor Bolt - Passenger's Side
   1. Carefully pry up on the bottom of the anchor cover (A) at the pry point (B) with the appropriate trim tool to release the hooks (C) and the tab (D), then remove the cover by pulling it upward.

GETtheMANUALS.org

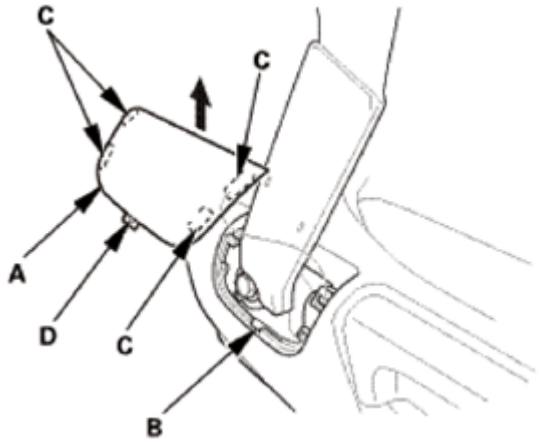

Fig. 180: Removing Anchor Cover Using Tool
Courtesy of AMERICAN HONDA MOTOR CO., INC.

2. Remove the lower anchor bolt (A).

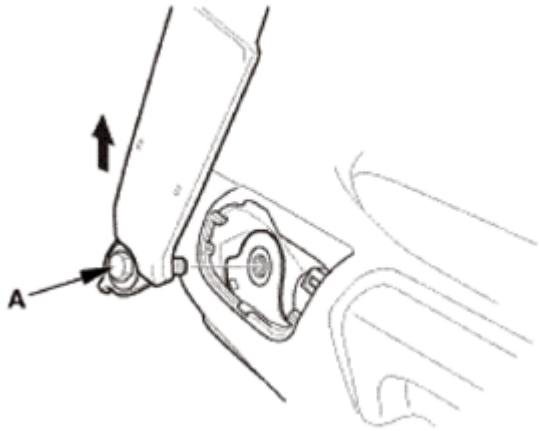

Fig. 181: Removing Lower Anchor Bolt
Courtesy of AMERICAN HONDA MOTOR CO., INC.

3. Head Restraint - Passenger's Side
    1. Push and hold the knob (A), then pull out the head restraint (B) as shown.

GETtheMANUALS.org

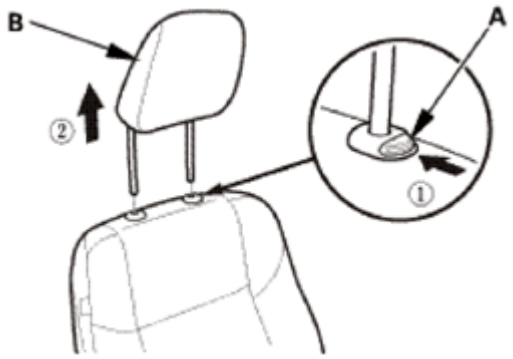

Fig. 182: Pulling Out Head Restraint
Courtesy of AMERICAN HONDA MOTOR CO., INC.

4. Front Seat - Passenger's Side
    1. Detach the hooks (A), then remove the rear inner seat track end cover (B) and the rear outer seat track end cover (C).

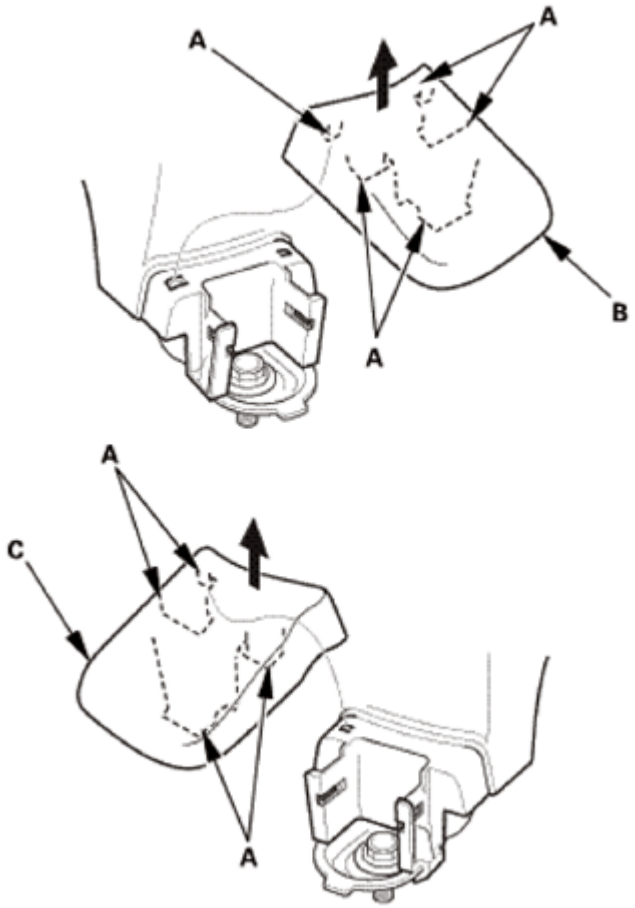

Fig. 183: Removing Rear Inner Seat Track End Cover
Courtesy of AMERICAN HONDA MOTOR CO., INC.

GETtheMANUALS.org

2. Remove the front mounting bolts (A) from the front seat.

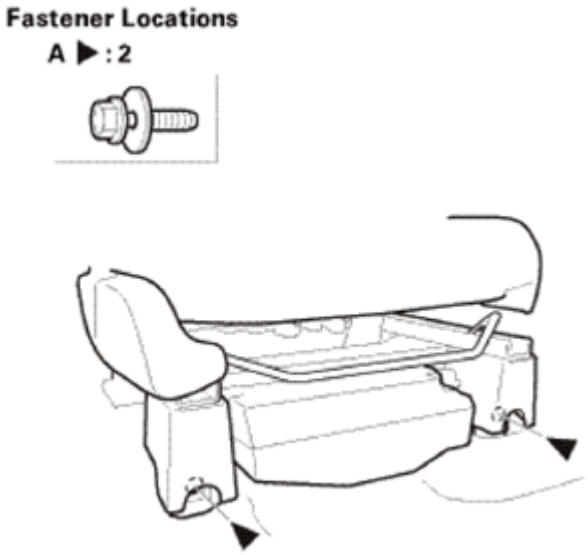

Fig. 184: Identifying Front Seat Mounting Bolts
Courtesy of AMERICAN HONDA MOTOR CO., INC.

3. Remove the rear mounting bolts (A) from the front seat.

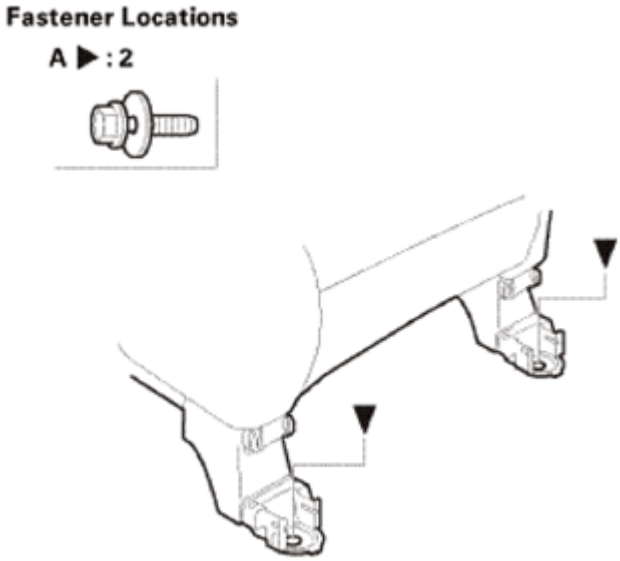

Fig. 185: Identifying Rear Seat Mounting Bolts
Courtesy of AMERICAN HONDA MOTOR CO., INC.

4. Disconnect the connectors (A).
5. Detach the harness clip (B).

Without Subwoofer

GETtheMANUALS.org

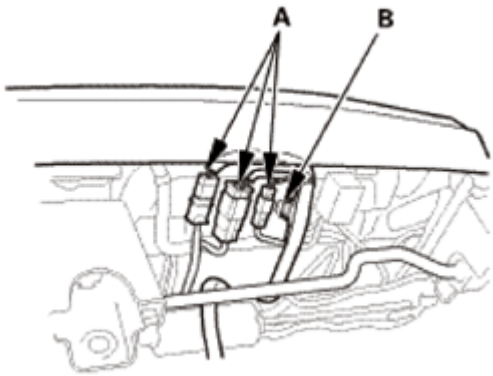

Fig. 186: Identifying Connector And Harness Clip (Without Subwoofer)
Courtesy of AMERICAN HONDA MOTOR CO., INC.

With Subwoofer

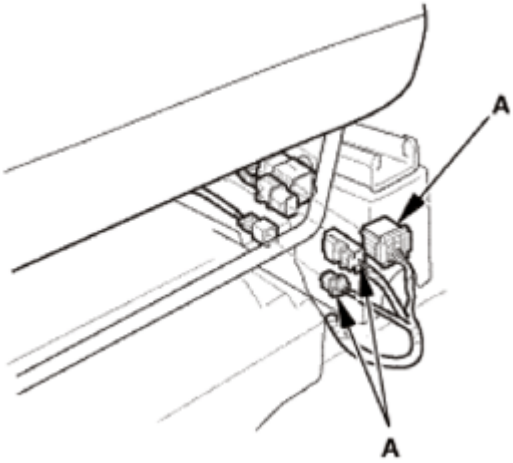

Fig. 187: Identifying Connector And Harness Clip (With Subwoofer)
Courtesy of AMERICAN HONDA MOTOR CO., INC.

5. Front Seat Armrest - Passenger's Side
    1. Remove the cap (A) with the appropriate trim tool.
    2. Remove the center pin (B), the bushing (C), and the washer (D), then remove the armrest (E).

GETtheMANUALS.org

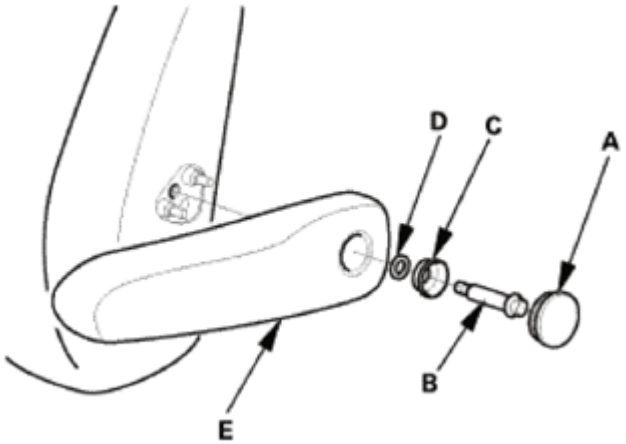

Fig. 188: Identifying Center Pin, Bushing, Cap, Washer And Armrest
Courtesy of AMERICAN HONDA MOTOR CO., INC.

3. Remove the pins (A) from the seat-back.

Fig. 189: Identifying Seat-Back Pins
Courtesy of AMERICAN HONDA MOTOR CO., INC.

6. Front Seat-Back As Needed - Passenger's Side
    1. Release the elastic strap (A) from the seat cushion frame springs (B), then pull back the under cover (C) of the seat-back cover.

GETtheMANUALS.org

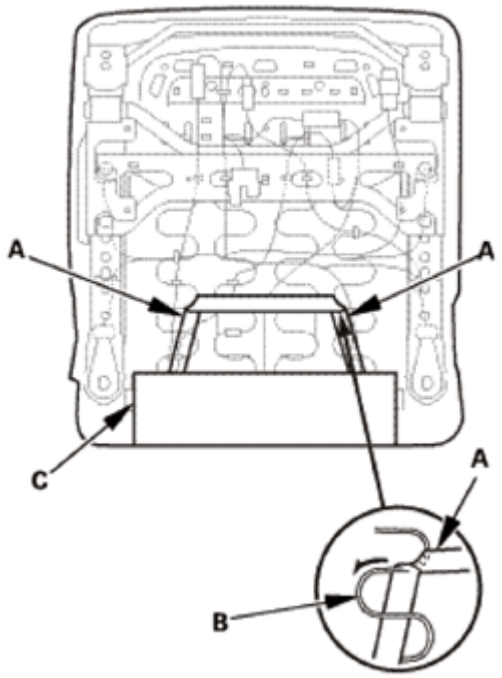

Fig. 190: Removing Elastic Strap From Seat Cushion Frame Springs
Courtesy of AMERICAN HONDA MOTOR CO., INC.

2. Release the hook strip (A).
3. Unzip the seat-back cover (B).

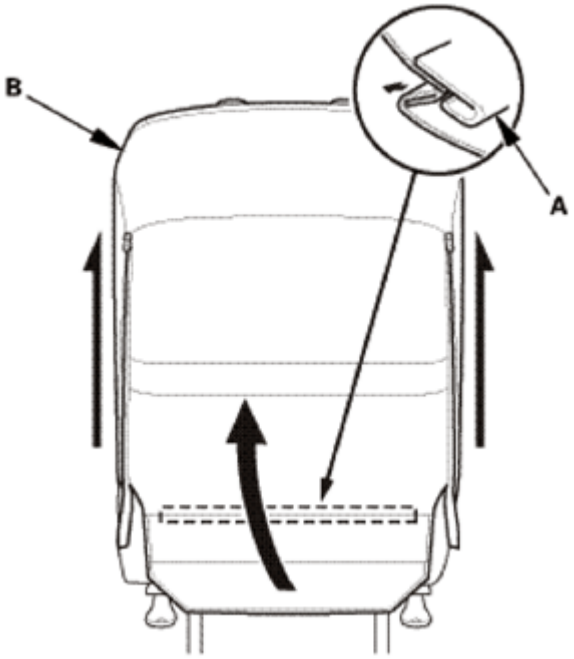

Fig. 191: Removing Hook Strip
Courtesy of AMERICAN HONDA MOTOR CO., INC.

GETtheMANUALS.org

4. Remove the screw, and release the hooks (A), then remove the cover (B).

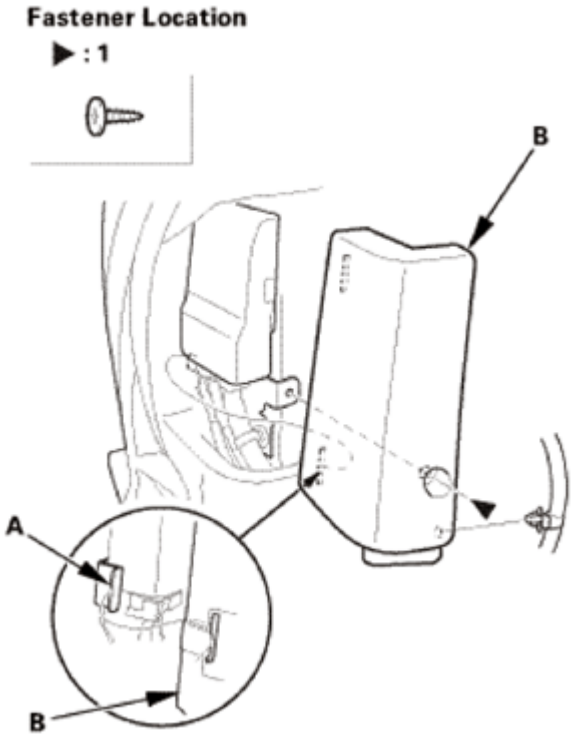

Fig. 192: Identifying Front Seat-Back Cover And Hooks
Courtesy of AMERICAN HONDA MOTOR CO., INC.

5. Disconnect the connectors (A) and harness clips from the ODS unit (USA and Canada models) or the OPDS unit (Mexico models) (B).

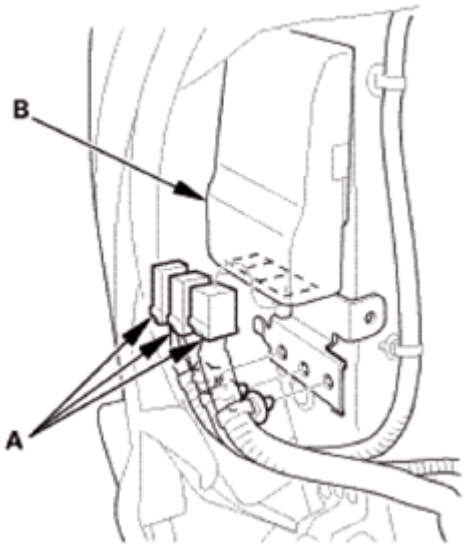

Fig. 193: Identifying ODS Unit (USA And Canada Models) Or OPDS Unit (Mexico Models) And Connectors

GETtheMANUALS.org

Courtesy of AMERICAN HONDA MOTOR CO., INC.

7. ODS UNIT
    1. Remove the ODS unit (A).

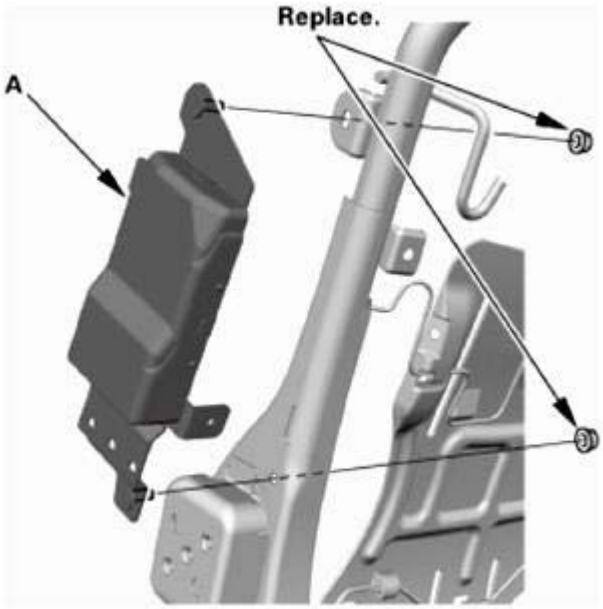

Fig. 194: Identifying ODS Unit
Courtesy of AMERICAN HONDA MOTOR CO., INC.

INSTALLATION

NOTE:

- **SRS components are located in this area. Review the SRS COMPONENT LOCATIONS and the PRECAUTIONS AND PROCEDURES before doing repairs or service.**
- **When you replace the ODS unit, initialize the ODS unit. ODS unit initialization initializes both the OPDS sensor and the front passenger's weight sensor.**

1. ODS UNIT

NOTE:

- **Be sure to install the harness so that they are not pinched or interfering with other parts.**
- **Make sure that the seat-back cover/pad is installed properly. Improper installation may prevent proper deployment.**

    1. Install the ODS unit (A).

GETtheMANUALS.org

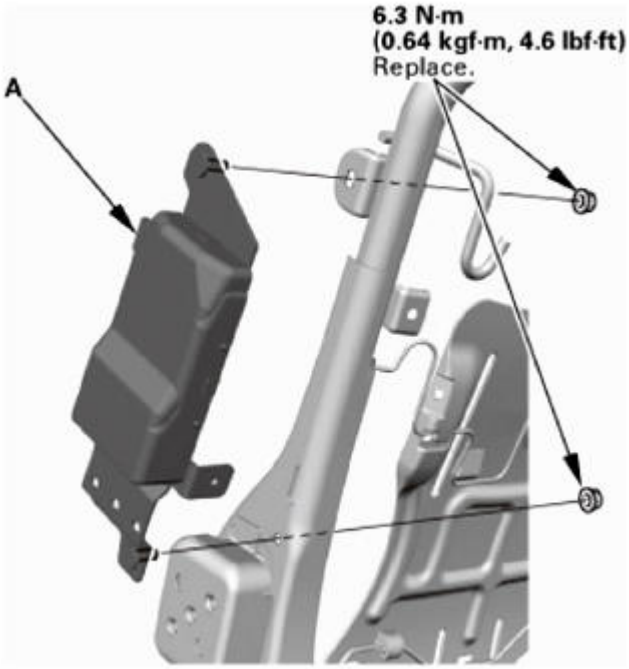

Fig. 195: Identifying ODS Unit And Bolt With Torque Specification
Courtesy of AMERICAN HONDA MOTOR CO., INC.

2. Front Seat-Back As Needed - Passenger's Side
    1. Connect the connectors (A) and harness clips to the ODS unit (USA and Canada models) or OPDS unit (Mexico models) (B).

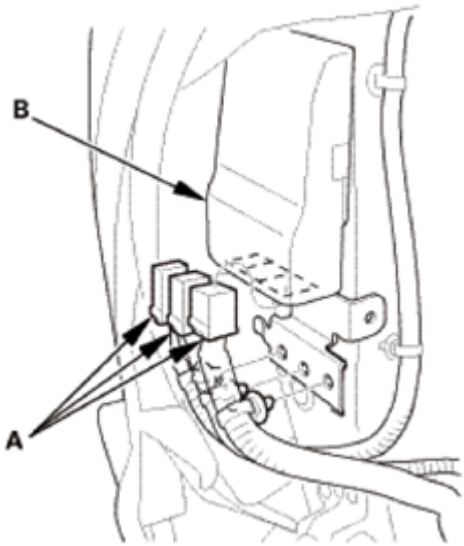

Fig. 196: Identifying ODS Unit (USA And Canada Models) Or OPDS Unit (Mexico Models) And Connectors
Courtesy of AMERICAN HONDA MOTOR CO., INC.

GETtheMANUALS.org

2. Insert the hooks (A), and install the cover (B) and the screw.

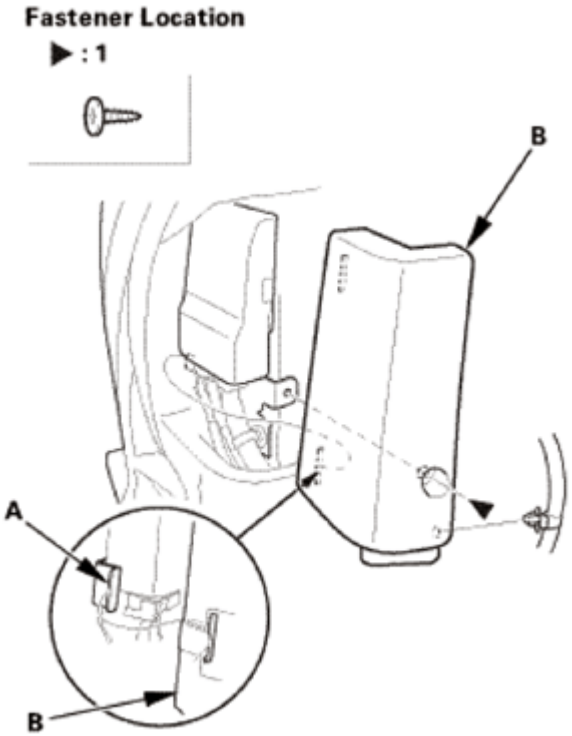

Fig. 197: Identifying Front Seat Cover And Hooks
Courtesy of AMERICAN HONDA MOTOR CO., INC.

3. Zip the seat-back cover (A).
4. Install the hook strip (B).

GETtheMANUALS.org

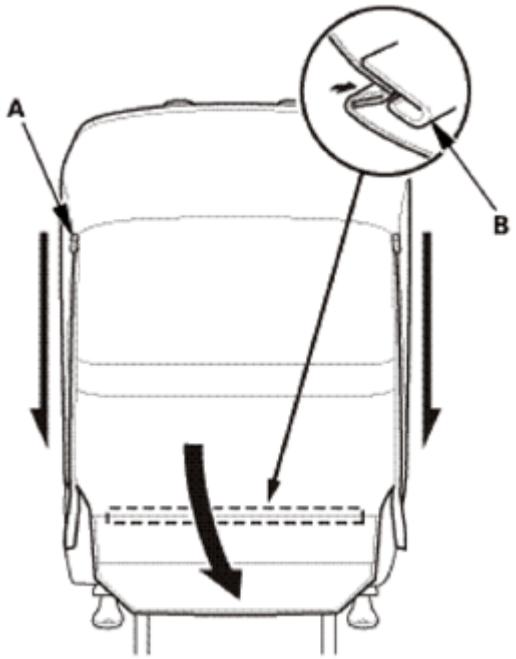

Fig. 198: Installing Hook Strip
Courtesy of AMERICAN HONDA MOTOR CO., INC.

5. Install the elastic strap (A) to the seat cushion frame springs (B).

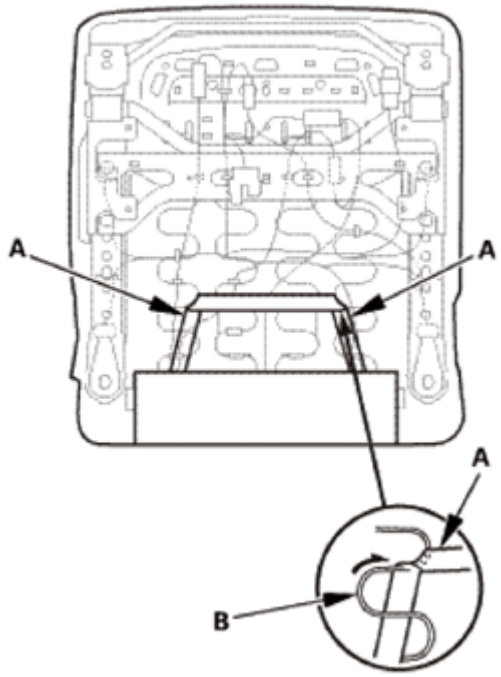

Fig. 199: Installing Elastic Strap To Seat Cushion Frame Springs
Courtesy of AMERICAN HONDA MOTOR CO., INC.

GETtheMANUALS.org

3. Front Seat Armrest - Passenger's Side
    1. Install the pins (A) to the seat-back.

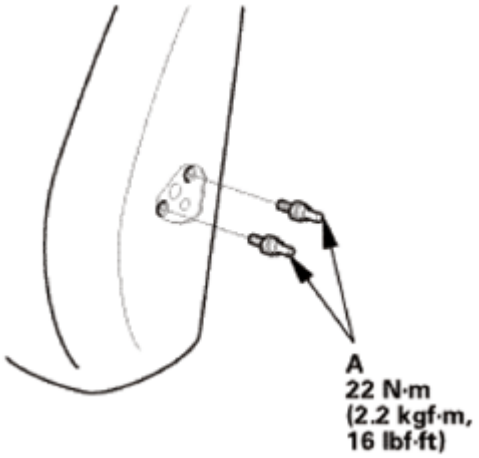

Fig. 200: Identifying Seat-Back Pins With Torque Specifications
Courtesy of AMERICAN HONDA MOTOR CO., INC.

    2. Install the armrest (A), then install the washer (B), the bushing (C), and the center pin (D).
    3. Install the cap (E) to the armrest.

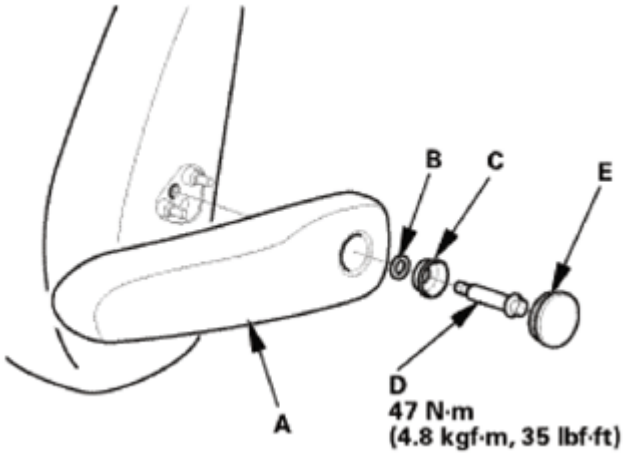

Fig. 201: Identifying Armrest, Cap, Washer, Bushing And Center Pin With Torque Specifications
Courtesy of AMERICAN HONDA MOTOR CO., INC.

4. Front Seat Assembly - Passenger's Side
    1. Connect the connectors (A).
    2. Install the harness clip (B).

Without Subwoofer

GETtheMANUALS.org

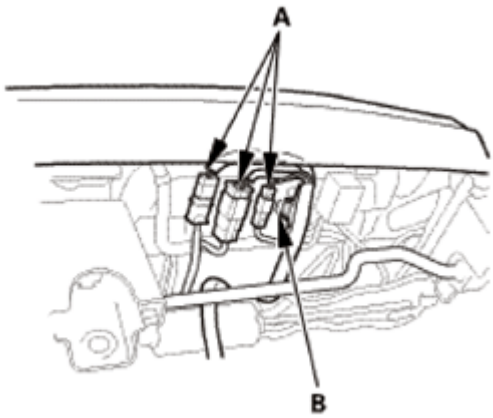

Fig. 202: Identifying Front Seat Assembly Connectors And Clip (Without Subwoofer)
Courtesy of AMERICAN HONDA MOTOR CO., INC.

With Subwoofer

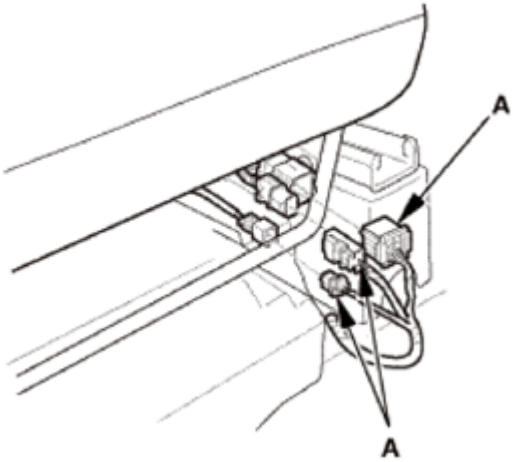

Fig. 203: Identifying Front Seat Assembly Connectors And Clip (With Subwoofer)
Courtesy of AMERICAN HONDA MOTOR CO., INC.

3. Install the seat mounting bolts (A).

NOTE:

- **Tighten the bolts by hand first, then tighten them to the specified torque.**
- **Tighten the seat mounting bolts to the specified torque in the sequence shown. Slide the seat all the way back and tighten bolts 1 and 2, then slide it forward and tighten bolts 3 and 4.**

Front Side

GETtheMANUALS.org

Fig. 204: Identifying Seat Mounting Bolts With Torque Specification (Front Side)
Courtesy of AMERICAN HONDA MOTOR CO., INC.

Rear Side

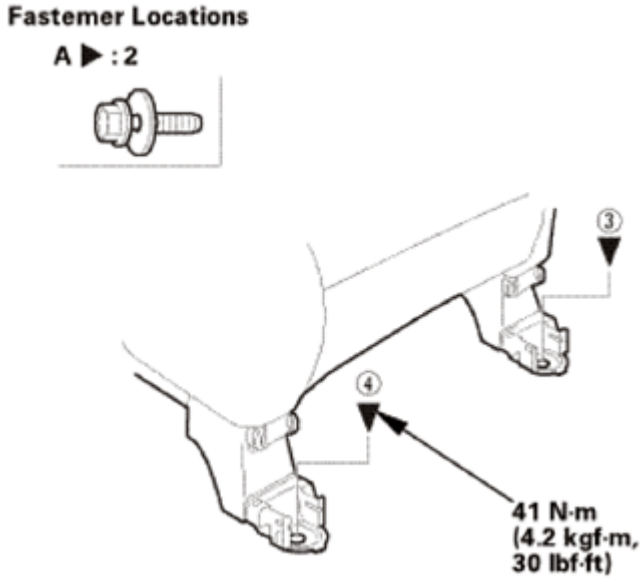

Fig. 205: Identifying Seat Mounting Bolts With Torque Specification (Rear Side)
Courtesy of AMERICAN HONDA MOTOR CO., INC.

4. Install rear inner seat track end cover (A) and the rear outer seat track end cover (B). Make sure the hooks (C) snap into place securely.

GETtheMANUALS.org

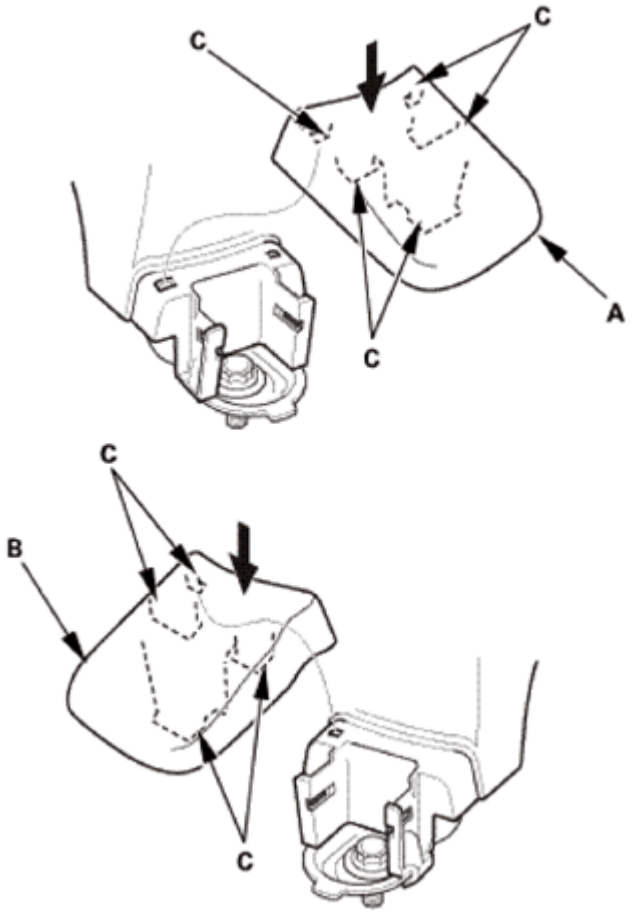

Fig. 206: Installing Rear Inner And Outer Seat Track End Cover
Courtesy of AMERICAN HONDA MOTOR CO., INC.

5. Head Restraint - Passenger's Side
    1. Insert the head restraint (A) into the seat-back as shown.

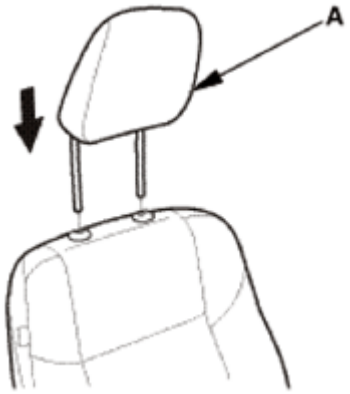

Fig. 207: Inserting Head Restraint Into Seat-Back
Courtesy of AMERICAN HONDA MOTOR CO., INC.

GETtheMANUALS.org

6. Front Seat Belt Lower Anchor Bolt - Passenger's Side
    1. Install the lower anchor bolt (A).

NOTE: **Before installing the anchor bolt, make sure there are no twists or kinks in the seat belt.**

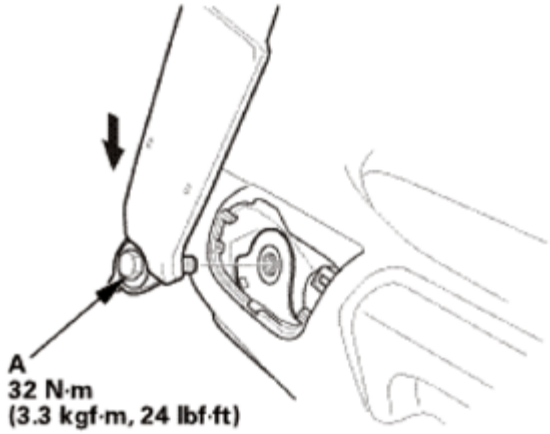

Fig. 208: Installing Lower Anchor Bolt With Torque Specifications
Courtesy of AMERICAN HONDA MOTOR CO., INC.

2. Install the anchor cover (A). Make sure the hooks (B) and the tab (C) snap into place securely.

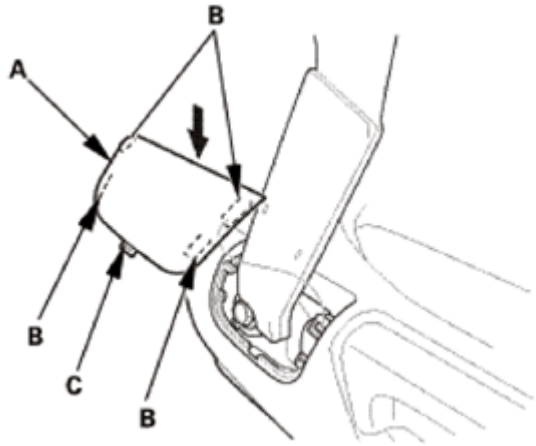

Fig. 209: Installing Anchor Cover
Courtesy of AMERICAN HONDA MOTOR CO., INC.

7. Battery Terminal (SRS) - Reconnection

NOTE: **If the battery performance is abnormal, test the battery.**

1. Clean the battery terminals.

GETtheMANUALS.org

2. Connect the positive cable (A) to the battery.

NOTE: Always connect the positive side first.

3. Connect the negative cable (B) to the battery.
4. Apply multipurpose grease to the terminals to prevent corrosion.

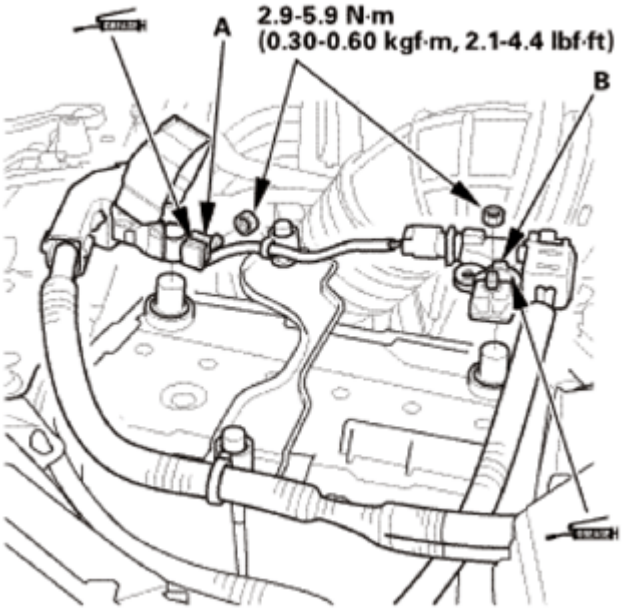

Fig. 210: Identifying Multipurpose Grease Applying Area On Battery Positive And Negative Terminals
Courtesy of AMERICAN HONDA MOTOR CO., INC.

8. HDS DLC - Connection
   1. Connect the HDS to the data link connector (DLC) (A) located under the driver's side of the dashboard.
   2. Turn the ignition switch to ON (II).
   3. Make sure the HDS communicates with the vehicle. If it does not communicate, go to the DLC circuit troubleshooting.

GETtheMANUALS.org

Fig. 211: Identifying Data Link Connector
Courtesy of AMERICAN HONDA MOTOR CO., INC.

9. DTC - Clear
    1. Clear the DTC(s) by following the screen prompts on the HDS.
    2. Turn the ignition switch to LOCK (0), then wait for 10 seconds.
10. OPDS Sensor Initialization

OPDS Sensor Initialization

When you replace the front passenger's seat-back cover/pad, the SRS unit, and/or the ODS unit, initialize the OPDS sensor with the HDS.

NOTE:

- **Before initializing the OPDS sensor, clear the DTCs.**
- **Before initializing the OPDS sensor, make sure the battery is fully charged.**
- **A new (uninitialized) ODS unit installed with a faulty OPDS sensor (DTC 86-1x or 86-2x) can cause DTCs 85-71 and 85-78. If the SRS has a hard DTC 86-1x or 86-2x, troubleshoot the DTCs completely before replacing the ODS unit.**
- **Make sure all components of the front passenger's seat are correctly installed.**
- **Make sure nothing is on the front passenger's seat, including aftermarket seat covers or mats.**
- **Make sure there is nothing in the front passenger's seat-back pocket.**
- **Dehumidify inside of the vehicle with A/C.**

1. Set the seat-back in a normal position.
2. From the HDS Main Menu, select SRS, then INITIALIZATION. In the INITIALIZATION Menu,

GETtheMANUALS.org

select ODS Initialization. Follow the prompts until the OPDS sensor initialization has been completed.

3. Turn the ignition switch to LOCK (0), then wait for 10 seconds.

NOTE: **If the ODS unit fails to initialize after several attempts, replace the seat-back cover/pad equipped with an OPDS sensor, and retry. If the ODS unit continues to fail to initialize, replace the ODS unit.**

11. Front Passenger's Weight Sensor Initialization

Front Passenger's Weight Sensor Initialization

When you replace the SRS unit, the front passenger's weight sensor, the front passenger's seat frame, front passenger's seat rail, or the ODS unit, initialize the front passenger's weight sensor with the HDS.

NOTE:

- **Before initializing the front passenger's weight sensor, clear the DTCs.**
- **Before initializing the front passenger's weight sensor, make sure the battery is fully charged.**
- **Make sure all components of the front passenger's seat are correctly installed.**
- **Make sure nothing is on the front passenger's seat, including aftermarket seat covers or mats.**
- **Make sure there is nothing in the front passenger's seat-back pocket.**
- **Keep the windows and the moonroof closed (if equipped).**
- **Make sure the vehicle is on level ground.**
- **Dehumidify inside of the vehicle with A/C.**
- **Do not touch the front passenger's seat during the operation check.**
- **Do not expose the front passenger's seat to sudden temperature changes.**

1. Position the front passenger's seat all the way rearward, and adjust the seat-back to the forward most position. Do not move the seat from this position until the initialization is completed.
2. Drive the vehicle, and accelerate to 22 mph (36 km/h), then stop on level ground.
3. From the HDS Main Menu, select SRS, then INITIALIZATION. In the INITIALIZATION Menu, select SWS Initialization. Follow the prompts until the front passenger's weight sensor initialization has been completed.
4. Turn the ignition switch to LOCK (0).

12. Confirm Proper SRS Operation

1. Turn the ignition switch to ON (II), and check that the SRS indicator comes on for about 6 seconds and then goes off.

GETtheMANUALS.org

REAR SAFING SENSOR REMOVAL AND INSTALLATION

LON > 7521D0

REMOVAL

NOTE: SRS components are located in this area. Review the SRS COMPONENT LOCATIONS and the PRECAUTIONS AND PROCEDURES before doing repairs or service.

1. Battery Terminal (SRS) - Disconnection
    1. Make sure the ignition switch is in LOCK (0).
    2. Disconnect and isolate the negative cable (A) from the battery.

    NOTE: Always disconnect the negative side first.

    3. Disconnect the positive cable (B) from the battery.
    4. Wait at least 3 minutes before starting work.

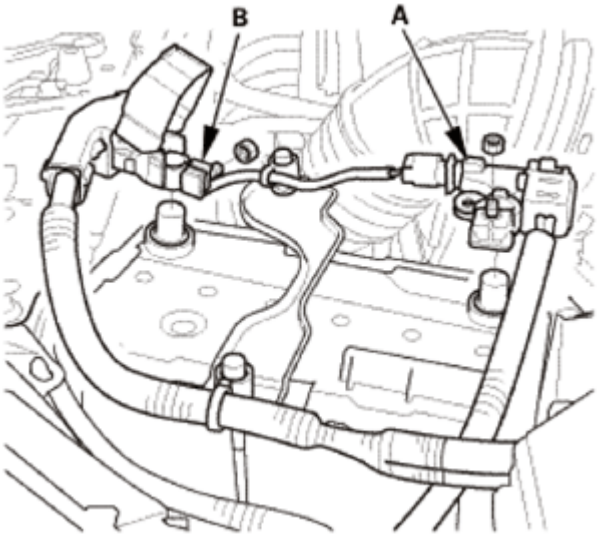

Fig. 212: Identifying Battery Positive And Negative Cables
Courtesy of AMERICAN HONDA MOTOR CO., INC.

2. Rear Door Sill Trim - Both Sides

NOTE: Repeat this procedure on the opposite side.

1. Pull the release strap to fold down the rear seat, then lift-up and latch the rear seat-back in the upright position.
2. Detach the hooks (A) and the tab (B) from the B-pillar lower trim (C) and the rear side trim panel

GETtheMANUALS.org

(D), and pull up the rear door inner sill trim (E) by hand to detach the clips (F, G), then remove the trim.

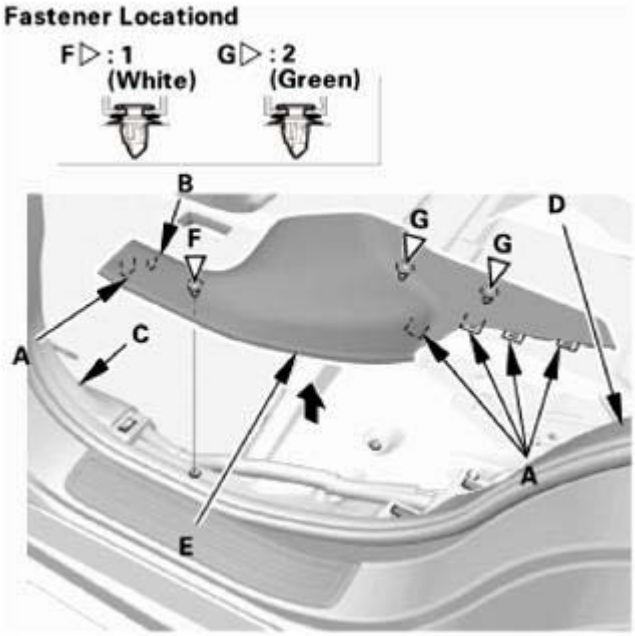

Fig. 213: Removing Rear Door Sill Trim
Courtesy of AMERICAN HONDA MOTOR CO., INC.

3. Rear Damper Maintenance Cover - Both Sides

NOTE: Repeat this procedure on the opposite side.

1. Fold down the rear seat-back.
2. Pull up the rear damper maintenance cover (A) by hand to detach the hooks (B), then remove the rear damper maintenance cover.

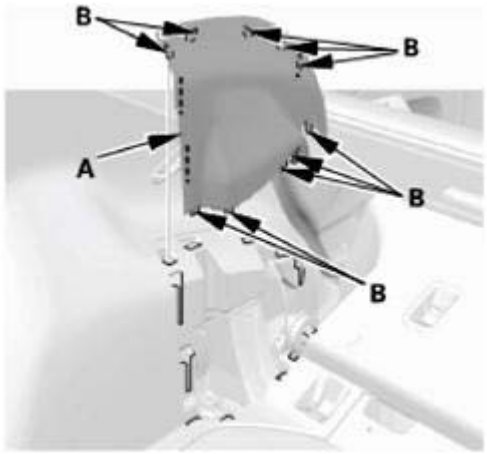

Fig. 214: Identifying Rear Damper Maintenance Cover And Hooks

GETtheMANUALS.org

Courtesy of AMERICAN HONDA MOTOR CO., INC.

4. Rear Seat Cushion Foot Cover - Both Sides
    1. Pull up the rear seat cushion foot covers (A) by hand to detach the clips (B).
    2. Detach the hooks (C), then remove the rear seat cushion foot covers.

Left side

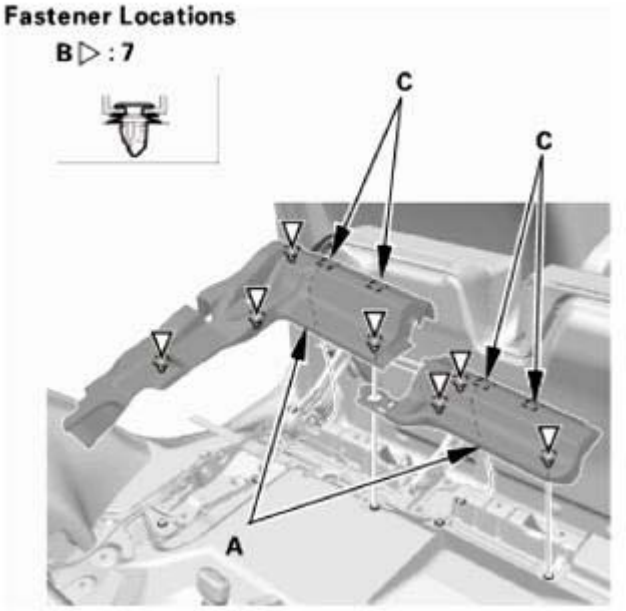

Fig. 215: Identifying Rear Seat Cushion Foot Cover And Clips (Left Side)
Courtesy of AMERICAN HONDA MOTOR CO., INC.

Right side

GETtheMANUALS.org

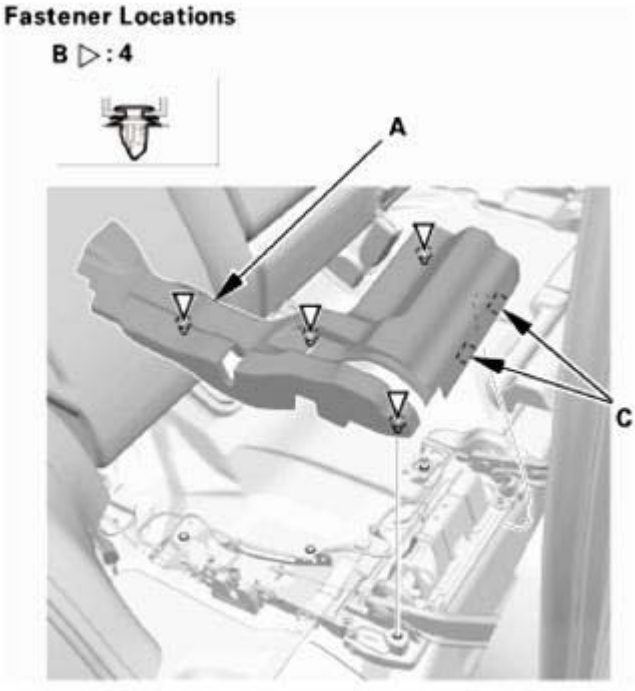

Fig. 216: Identifying Rear Seat Cushion Foot Cover And Clips (Right Side)
Courtesy of AMERICAN HONDA MOTOR CO., INC.

5. Left Rear Seat Cushion Assembly
    1. Detach the cables (A) from the cable brackets (B), and detach the cable clip (C), then disconnect the cables from the seat cushion assembly (D).

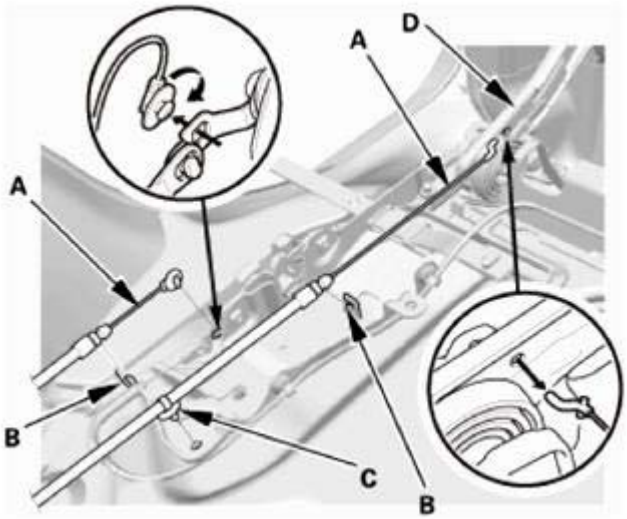

Fig. 217: Disconnecting Cables From Seat Cushion Assembly
Courtesy of AMERICAN HONDA MOTOR CO., INC.

    2. Remove the bolts (A) securing the left rear seat cushion assembly (B), then remove the left rear seat cushion assembly.

GETtheMANUALS.org

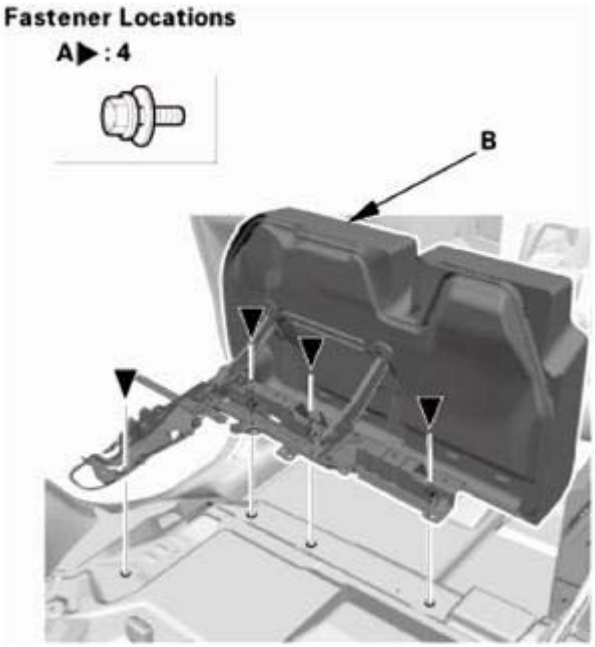

Fig. 218: Removing Left Rear Seat Cushion Assembly And Bolts
Courtesy of AMERICAN HONDA MOTOR CO., INC.

6. Right Rear Seat Cushion Assembly
    1. Detach the cables (A) from the cable brackets (B), and detach the cable clip (C), then disconnect the cables from the seat cushion assembly (D).

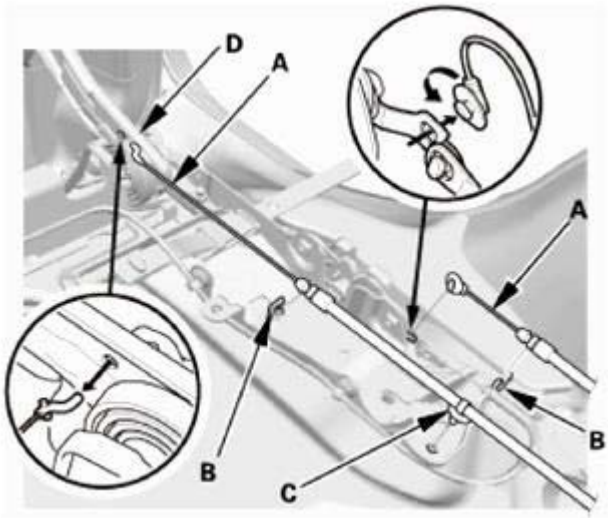

Fig. 219: Disconnecting Cables From Seat Cushion Assembly
Courtesy of AMERICAN HONDA MOTOR CO., INC.

    2. Remove the bolts (A) securing the right rear seat cushion assembly (B), then remove the right rear seat cushion assembly.

GETtheMANUALS.org

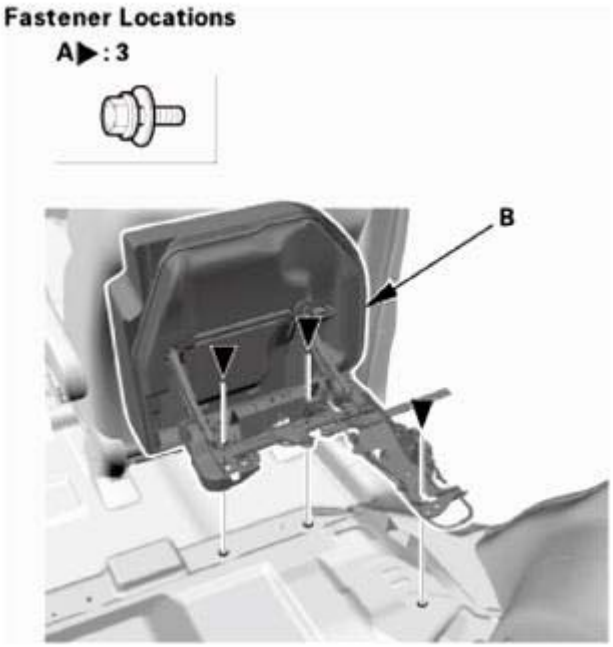

Fig. 220: Identifying Right Rear Seat Cushion Assembly And Bolts
Courtesy of AMERICAN HONDA MOTOR CO., INC.

7. Rear Seat-Back Assembly - Both Sides

NOTE: Repeat this procedure on the opposite side.

1. Detach the clips (A) from the rear carpet trim (B).
2. Remove the bolts (C, D) securing the rear seat-back assembly (E), then remove the rear seat-back assembly.

Left side

GETtheMANUALS.org

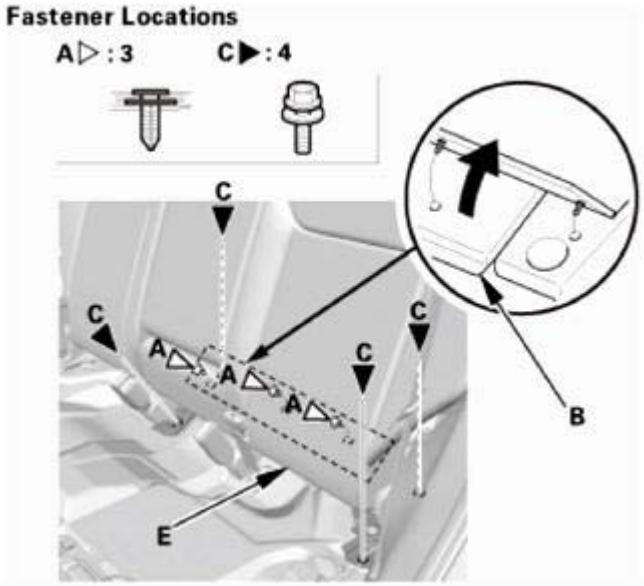

Fig. 221: Removing Rear Seat-Back Assembly (Left Side)
Courtesy of AMERICAN HONDA MOTOR CO., INC.

Right side

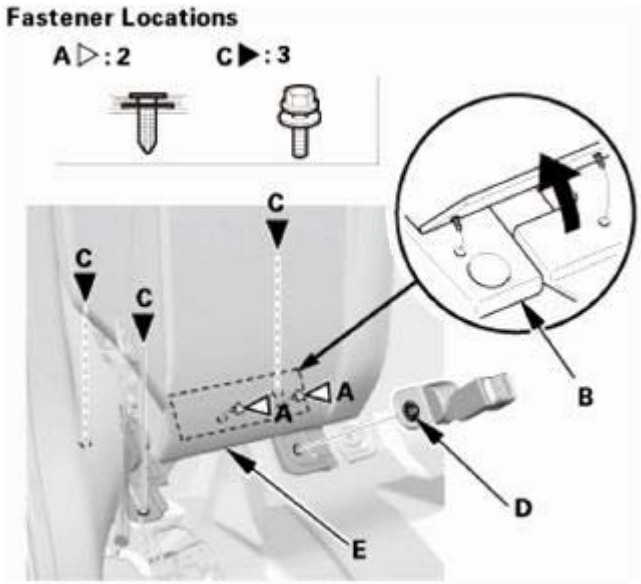

Fig. 222: Removing Rear Seat-Back Assembly (Right Side)
Courtesy of AMERICAN HONDA MOTOR CO., INC.

8. Rear Carpet Trim - Both Sides
    1. Detach the hooks (A) from the rear side trim panel (B), and pull up the rear carpet trims (C) by hand to detach the clips (D), then remove the rear carpet trims.

    Left side

GETtheMANUALS.org

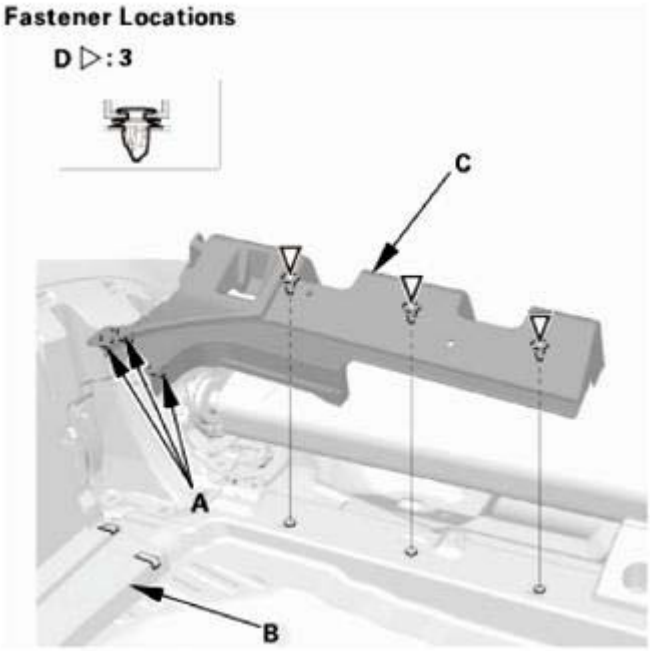

Fig. 223: Identifying Rear Side Trim Panel, Rear Carpet Trims, Hook And Clips (Left Side)
Courtesy of AMERICAN HONDA MOTOR CO., INC.

Right side

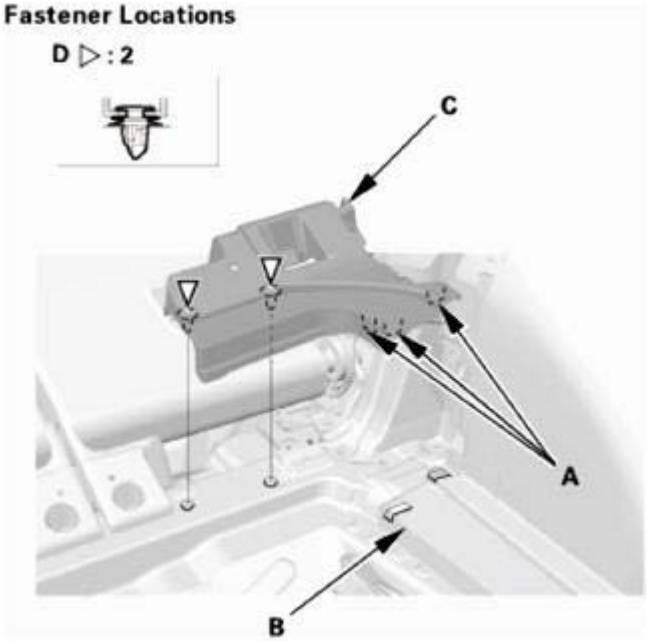

Fig. 224: Identifying Rear Side Trim Panel, Rear Carpet Trims, Hook And Clips (Right Side)
Courtesy of AMERICAN HONDA MOTOR CO., INC.

9. Floor Carpet As Needed

GETtheMANUALS.org

1. Detach the clips, then turn over the carpet (A).

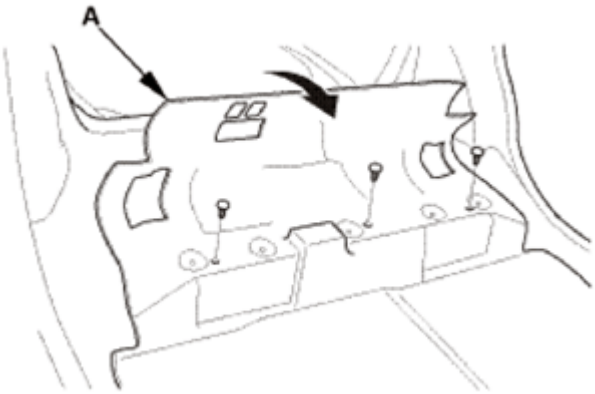

Fig. 225: Turning Floor Carpet
Courtesy of AMERICAN HONDA MOTOR CO., INC.

10. Rear Safing Sensor
    1. Remove the cover (A), then disconnect the rear safing sensor 2P connector on the floor wire harness.
    2. Remove the TORX bolt using a TORX T30 bit, then remove the rear safing sensor (B).

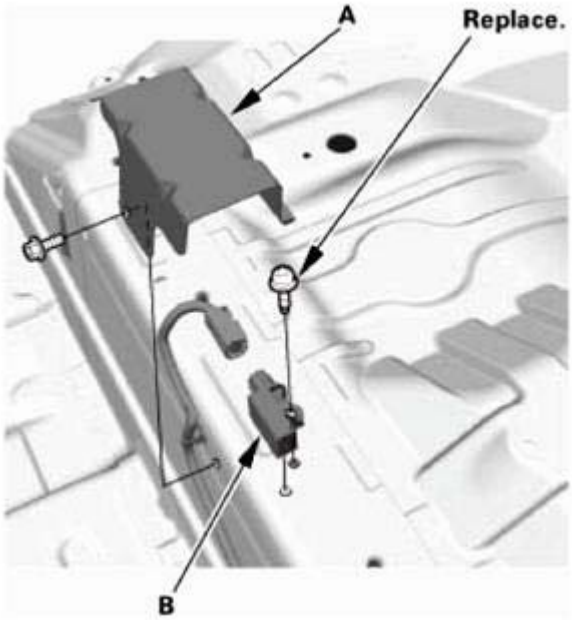

Fig. 226: Identifying Rear Safing Sensor And Cover
Courtesy of AMERICAN HONDA MOTOR CO., INC.

INSTALLATION

NOTE: SRS components are located in this area. Review the SRS COMPONENT

GETtheMANUALS.org

LOCATIONS and the PRECAUTIONS AND PROCEDURES before doing repairs or service.

1. Rear Safing Sensor
    1. Install the rear safing sensor (A) with the new TORX bolt using a TORX T30 bit.
    2. Connect the rear safing sensor connector on the floor wire harness, then install the cover (B).

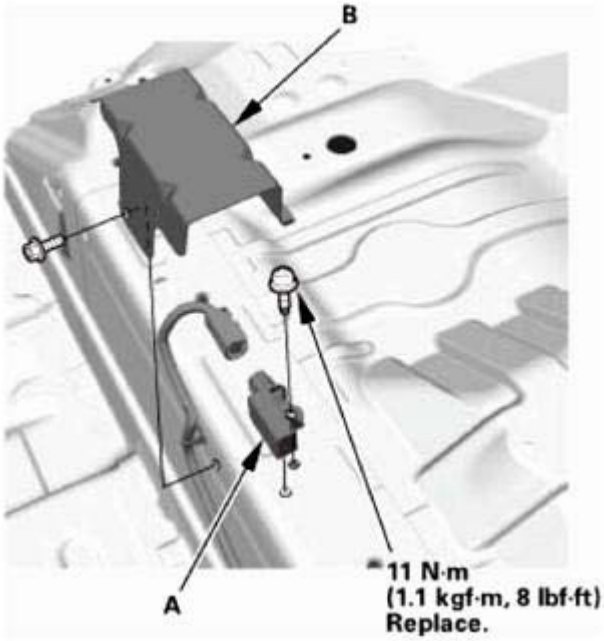

Fig. 227: Identifying Rear Safing Sensor And Torx Bolt With Torque Specification
Courtesy of AMERICAN HONDA MOTOR CO., INC.

2. Battery Terminal (SRS) - Reconnection

NOTE: If the battery performance is abnormal, test the battery.

1. Clean the battery terminals.
2. Connect the positive cable (A) to the battery.

NOTE: Always connect the positive side first.

3. Connect the negative cable (B) to the battery.
4. Apply multipurpose grease to the terminals to prevent corrosion.

GETtheMANUALS.org

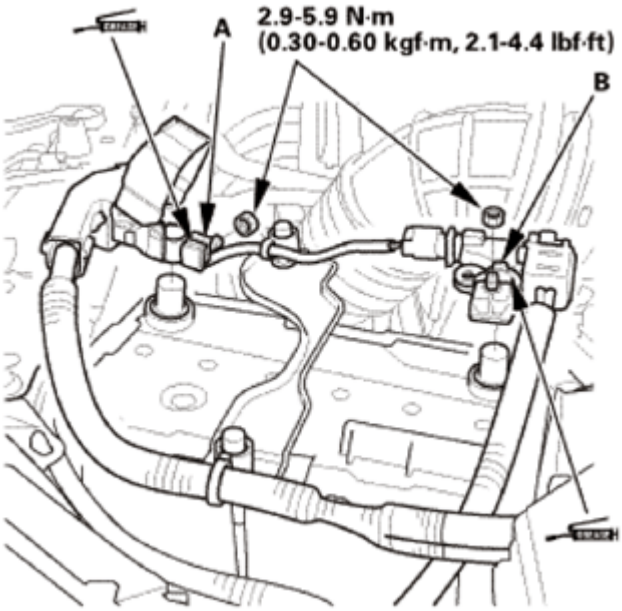

Fig. 228: Identifying Multipurpose Grease Applying Area On Battery Positive And Negative Terminals
Courtesy of AMERICAN HONDA MOTOR CO., INC.

3. HDS DLC - Connection
    1. Connect the HDS to the data link connector (DLC) (A) located under the driver's side of the dashboard.
    2. Turn the ignition switch to ON (II).
    3. Make sure the HDS communicates with the vehicle. If it does not communicate, go to the DLC circuit troubleshooting.

Fig. 229: Identifying Data Link Connector
Courtesy of AMERICAN HONDA MOTOR CO., INC.

GETtheMANUALS.org

4. DTC - Clear
    1. Clear the DTC(s) by following the screen prompts on the HDS.
    2. Turn the ignition switch to LOCK (0), then wait for 10 seconds.
5. Confirm Proper SRS Operation
    1. Turn the ignition switch to ON (II), and check that the SRS indicator comes on for about 6 seconds and then goes off.
6. Floor Carpet As Needed
    1. Reinstall the carpet (A), and install the clips.

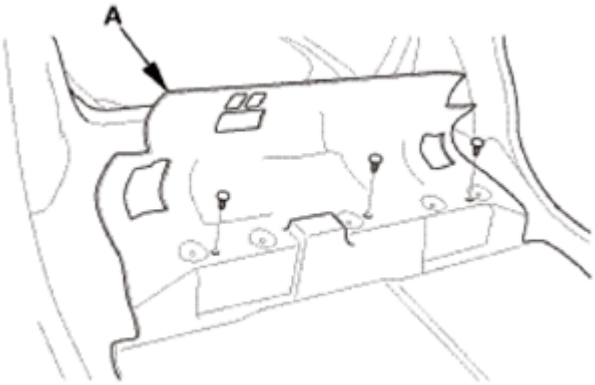

Fig. 230: Identifying Floor Carpet
Courtesy of AMERICAN HONDA MOTOR CO., INC.

7. Rear Carpet Trim - Both Sides
    1. Install the rear carpet trims (A). Make sure the clips (B) and the hooks (C) snap into place securely.

    Left side

GETtheMANUALS.org

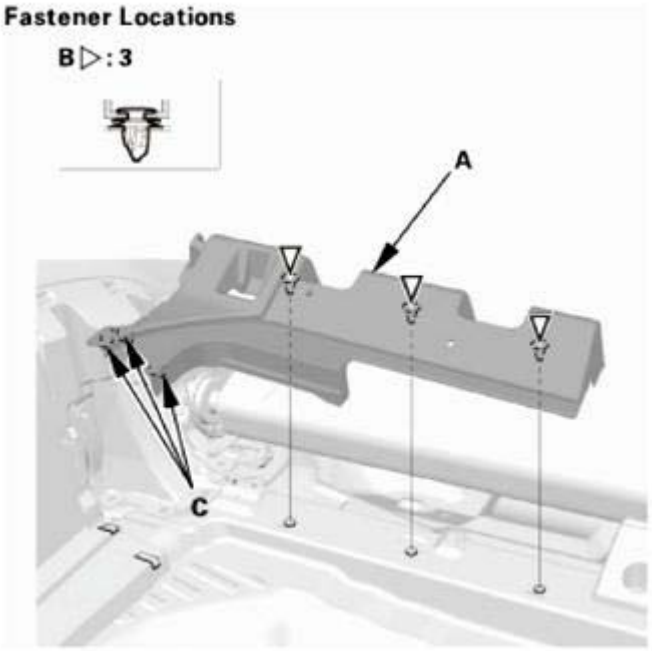

Fig. 231: Identifying Rear Carpet Trims, Clips And Hooks (Left Side)
Courtesy of AMERICAN HONDA MOTOR CO., INC.

Right side

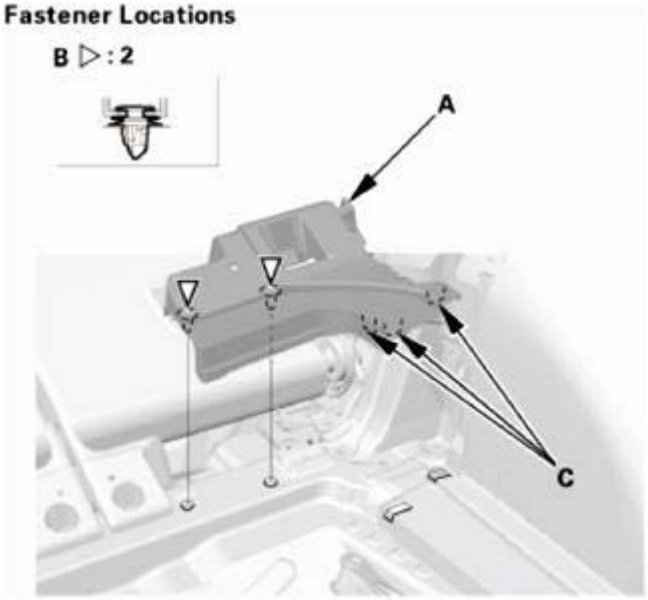

Fig. 232: Identifying Rear Carpet Trims, Clips And Hooks (Right Side)
Courtesy of AMERICAN HONDA MOTOR CO., INC.

8. Rear Seat-Back Assembly - Both Sides
    1. Install the rear seat-back assembly (A).

GETtheMANUALS.org

NOTE: **Tighten the bolts (B, C) by hand first, then tighten them to the specified torque.**

2. Install the rear seat-back cover (D). Make sure the clips (E) snap into place securely.

Left side

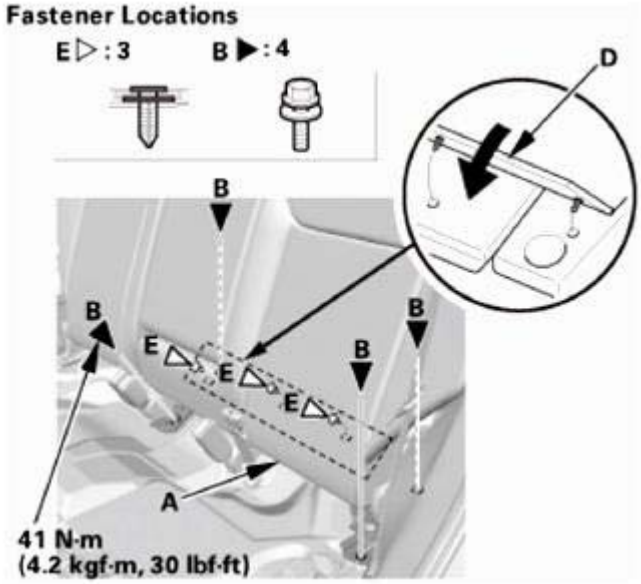

Fig. 233: Installing Rear Seat-Back Cover With Torque Specifications (Left Side)
Courtesy of AMERICAN HONDA MOTOR CO., INC.

Right side

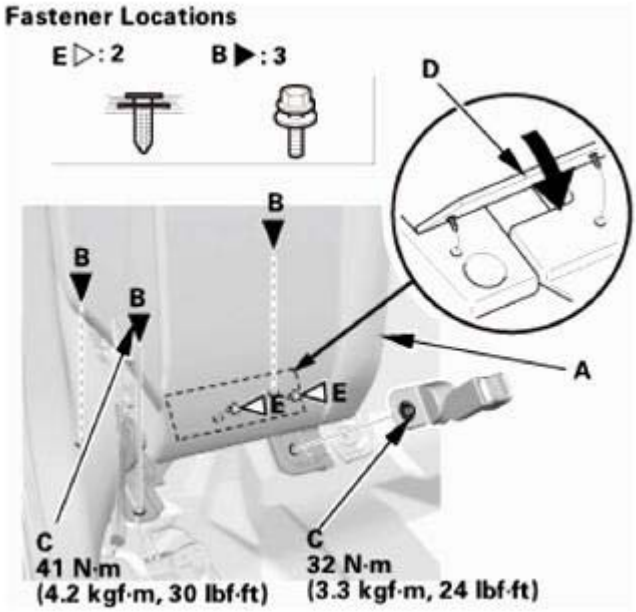

GETtheMANUALS.org

Fig. 234: Installing Rear Seat-Back Cover With Torque Specifications (Right Side)
Courtesy of AMERICAN HONDA MOTOR CO., INC.

9. Right Rear Seat Cushion Assembly
    1. Install the right rear seat cushion assembly (A).

NOTE: **Tighten the bolts (B) by hand first, then tighten them to the specified torque.**

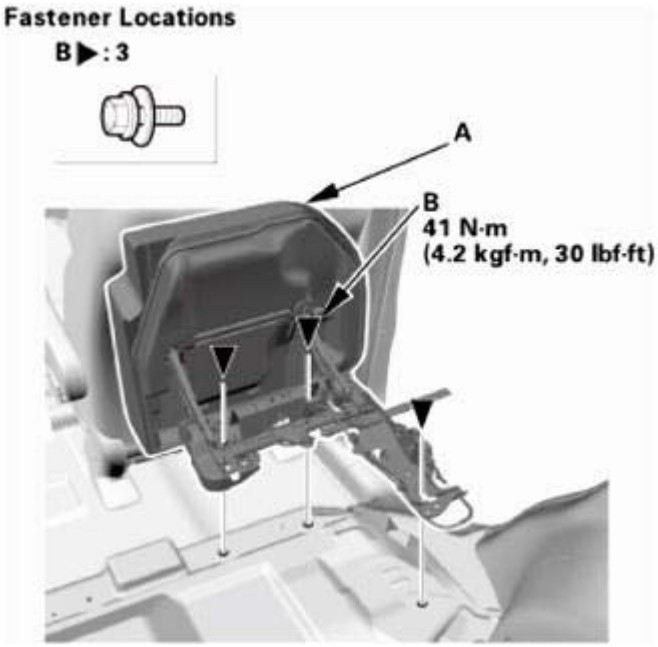

Fig. 235: Identifying Right Rear Seat Cushion Assembly And Mounting Bolts With Torque Specification
Courtesy of AMERICAN HONDA MOTOR CO., INC.

    2. Connect the cables (A) to the rear seat cushion assembly (B), then install the cables to the cable brackets (C), and install the cable clip (D).

GETtheMANUALS.org

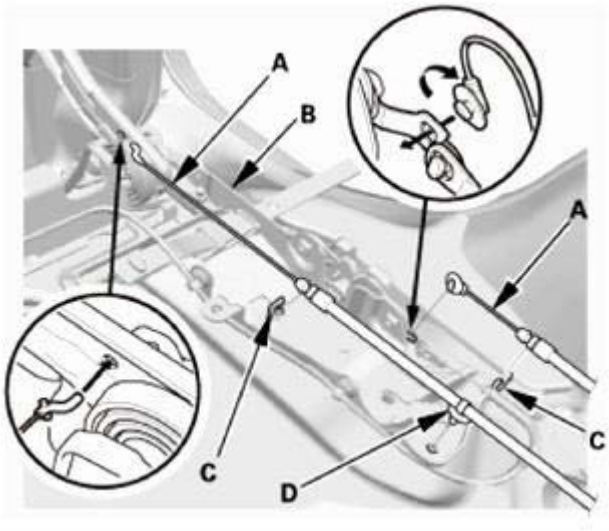

Fig. 236: Connecting Cables To Rear Seat Cushion Assembly
Courtesy of AMERICAN HONDA MOTOR CO., INC.

10. Left Rear Seat Cushion Assembly
    1. Install the left rear seat cushion assembly (A).

NOTE: **Tighten the bolts (B) by hand first, then tighten them to the specified torque.**

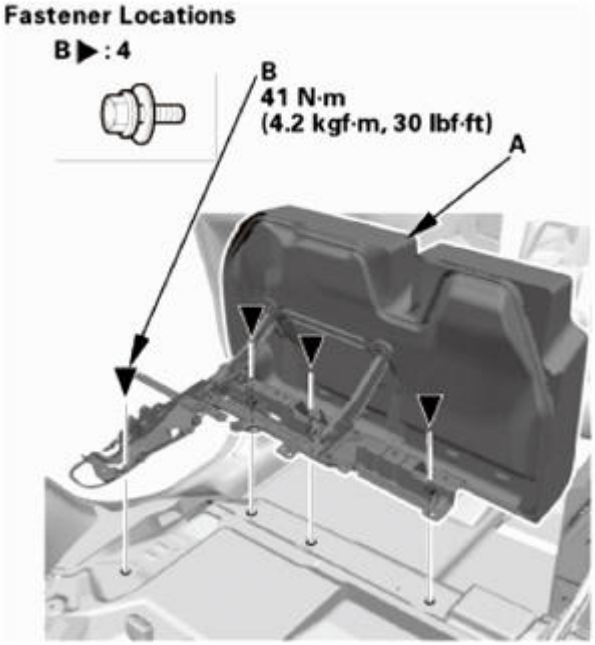

Fig. 237: Identifying Left Rear Seat Cushion Assembly And Mounting Bolt With Torque Specification
Courtesy of AMERICAN HONDA MOTOR CO., INC.

GETtheMANUALS.org

2. Connect the cables (A) to the rear seat cushion assembly (B), then install the cables to the cable brackets (C), and install the cable clip (D).

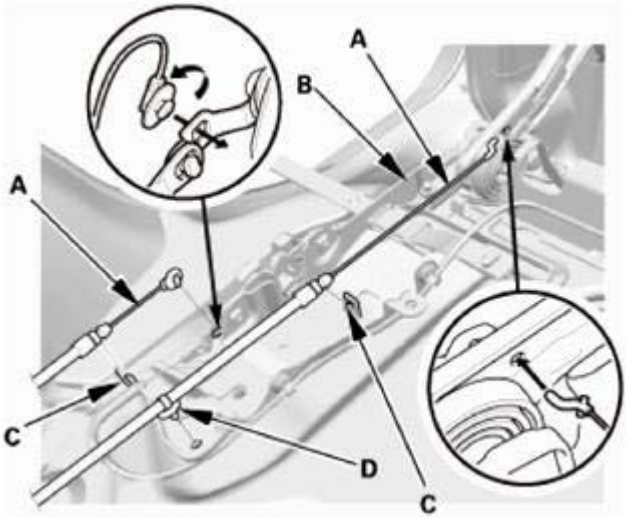

Fig. 238: Connecting Cables To Rear Seat Cushion Assembly
Courtesy of AMERICAN HONDA MOTOR CO., INC.

11. Rear Seat Cushion Foot Cover - Both Sides
    1. Install the rear seat cushion foot covers (A). Make sure the clips (B) and the hooks (C) snap into place securely.

    Left side

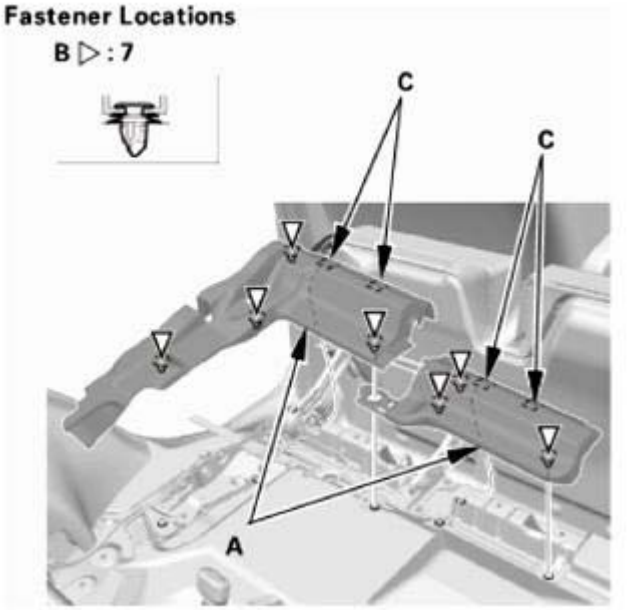

Fig. 239: Identifying Rear Seat Cushion Foot Covers, Clips And Hook (Left Side)
Courtesy of AMERICAN HONDA MOTOR CO., INC.

GETtheMANUALS.org

Right side

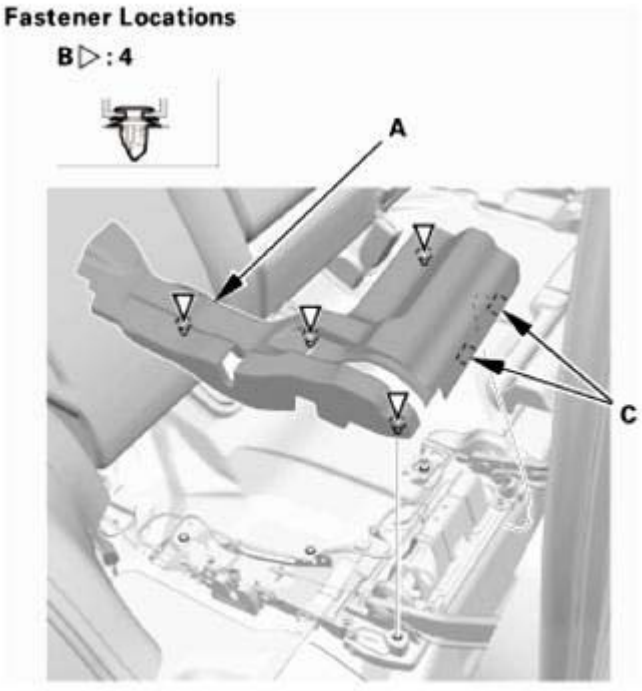

Fig. 240: Identifying Rear Seat Cushion Foot Covers, Clips And Hook (Right Side)
Courtesy of AMERICAN HONDA MOTOR CO., INC.

12. Rear Damper Maintenance Cover - Both Sides

NOTE: Repeat this procedure on the opposite side.

1. Fold down the rear seat-back.
2. Install the rear damper maintenance cover (A). Make sure the hooks (B) snap into place securely.

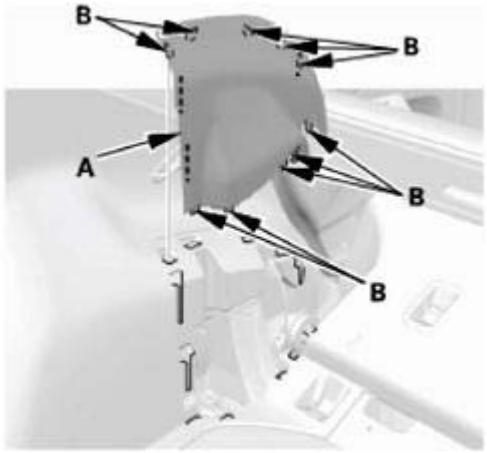

Fig. 241: Identifying Rear Damper Maintenance Cover And Hooks

GETtheMANUALS.org

Courtesy of AMERICAN HONDA MOTOR CO., INC.

13. Rear Door Sill Trim - Both Sides

NOTE: Repeat this procedure on the opposite side.

1. Pull the release strap to fold down the rear seat, then lift-up and latch the rear seat-back in the upright position.
2. Install the rear door inner sill trim (A). Make sure the clips (B, C), the hooks (D), and the tab (E) snap into place securely.

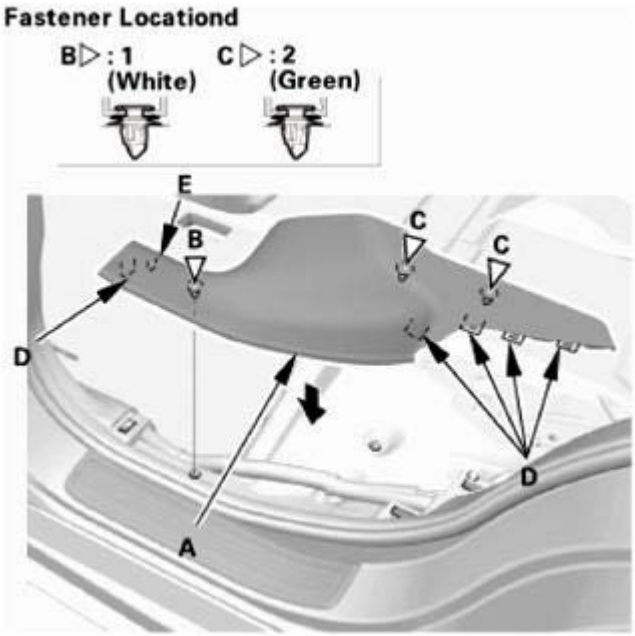

Fig. 242: Installing Rear Door Sill Trim
Courtesy of AMERICAN HONDA MOTOR CO., INC.

SIDE AIRBAG REMOVAL AND INSTALLATION

LON > 751107 LEFT 751108 RIGHT

REMOVAL

NOTE:

- **SRS components are located in this area. Review the SRS COMPONENT LOCATIONS and the PRECAUTIONS AND PROCEDURES before doing repairs or service.**
- **If replacing the side airbag after deployment, refer to Component Replacement/Inspection After Deployment See AIRBAG AND TENSIONER DISPOSAL or SRS COMPONENT REPLACEMENT/INSPECTION AFTER DEPLOYMENT for a complete list of other parts that must also be**

GETtheMANUALS.org

replaced.

- **Before the front power seat is removed, slide the front power seat to the half-way position, then raise the seat to the highest position.**

1. Front Seat Belt Lower Anchor Bolt
    1. Slide the front seat forward fully, carefully pry up on the bottom edge of the anchor cover (A) at the pry point (B) with the appropriate trim tool to release the hooks (C) and the tab (D), then remove the cover by pulling it up.

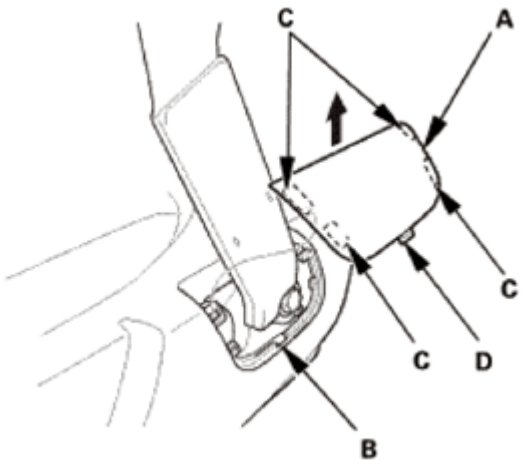

Fig. 243: Removing Anchor Cover Using Tool
Courtesy of AMERICAN HONDA MOTOR CO., INC.

    2. Remove the lower anchor bolt (A).

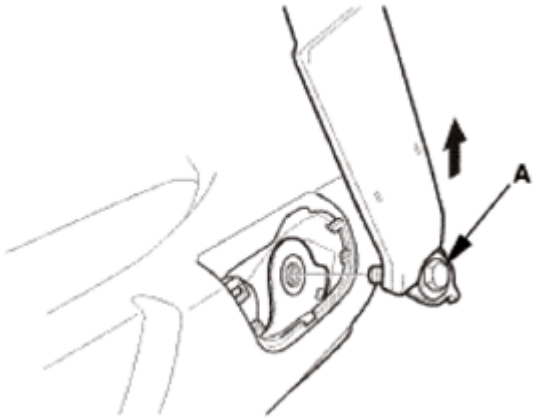

Fig. 244: Removing Lower Anchor Bolt
Courtesy of AMERICAN HONDA MOTOR CO., INC.

2. Battery Terminal (SRS) - Disconnection
    1. Make sure the ignition switch is in LOCK (0).
    2. Disconnect and isolate the negative cable (A) from the battery.

GETtheMANUALS.org

NOTE: Always disconnect the negative side first.

3. Disconnect the positive cable (B) from the battery.
4. Wait at least 3 minutes before starting work.

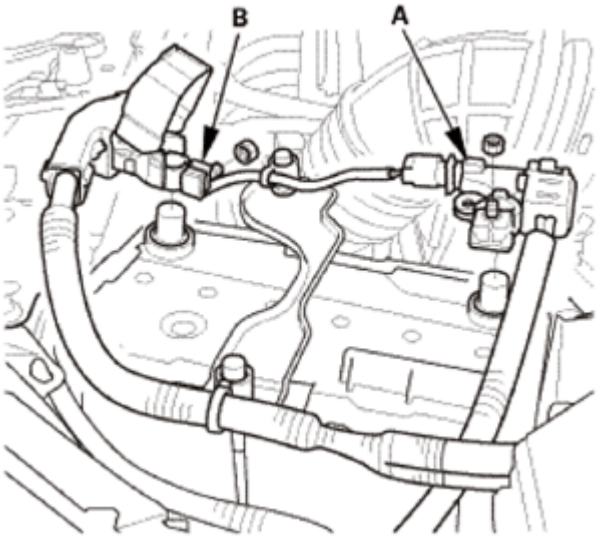

Fig. 245: Identifying Battery Positive And Negative Cables
Courtesy of AMERICAN HONDA MOTOR CO., INC.

3. Head Restraint - Driver's Side
   1. Push and hold the knob (A), then pull out the head restraint (B) as shown.

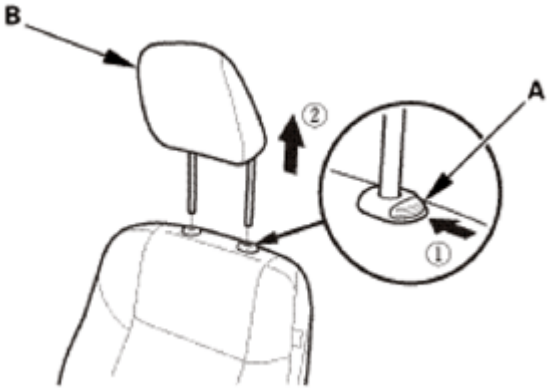

Fig. 246: Removing Head Restraint
Courtesy of AMERICAN HONDA MOTOR CO., INC.

4. Front Seat - Driver's Side
   1. Detach the hooks (A), then remove the rear inner seat track end cover (B) and the rear outer seat track end cover (C).

GETtheMANUALS.org

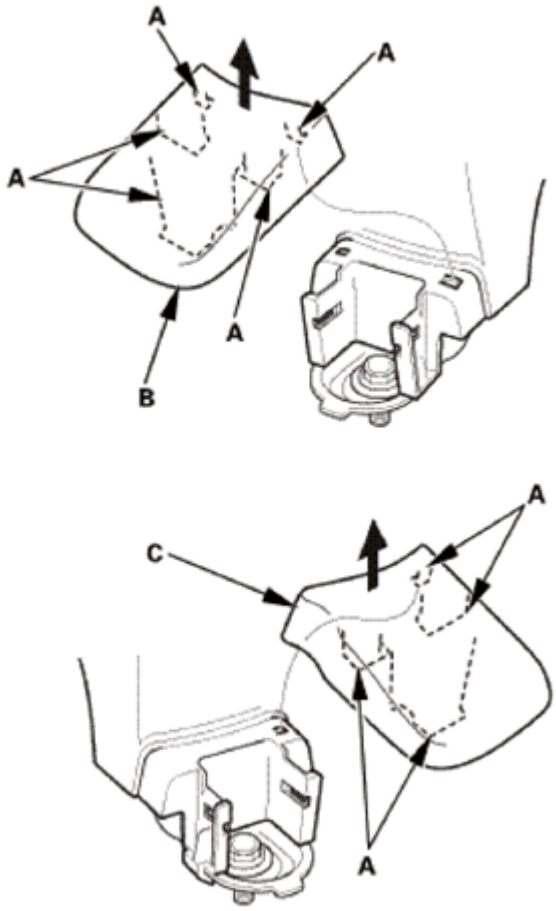

Fig. 247: Removing Rear Inner Seat Track End Cover
Courtesy of AMERICAN HONDA MOTOR CO., INC.

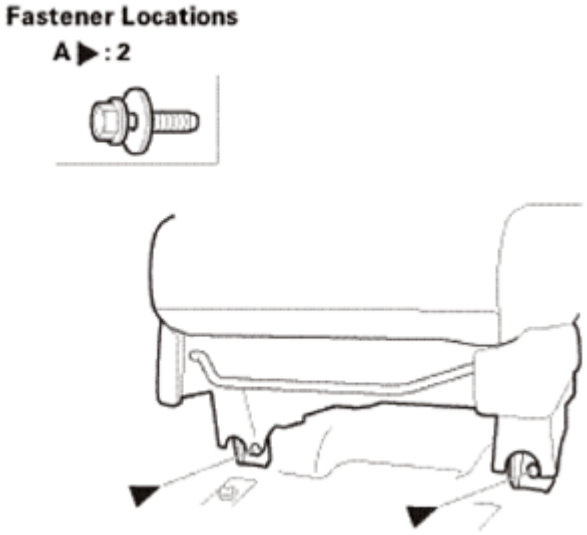

Fig. 248: Identifying Front Seat Mounting Bolts
Courtesy of AMERICAN HONDA MOTOR CO., INC.

GETtheMANUALS.org

2. Remove the front mounting bolts (A) from the front seat.
3. Remove the rear mounting bolts (A) from the front seat.

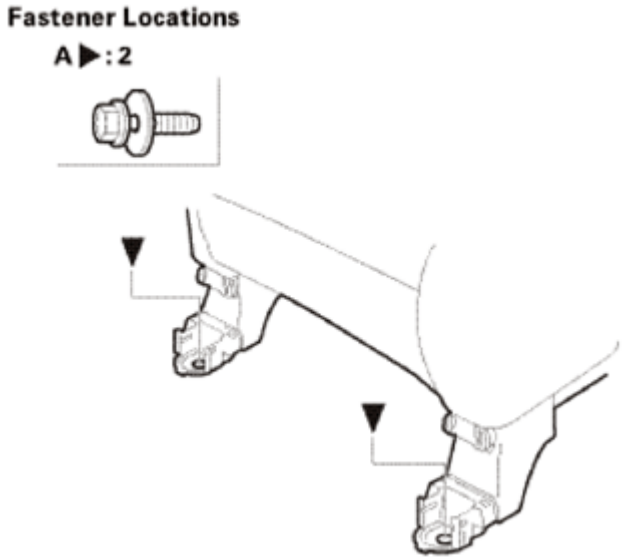

Fig. 249: Identifying Rear Seat Mounting Bolts
Courtesy of AMERICAN HONDA MOTOR CO., INC.

4. Disconnect the connectors (A).
5. Detach the harness clip (B).

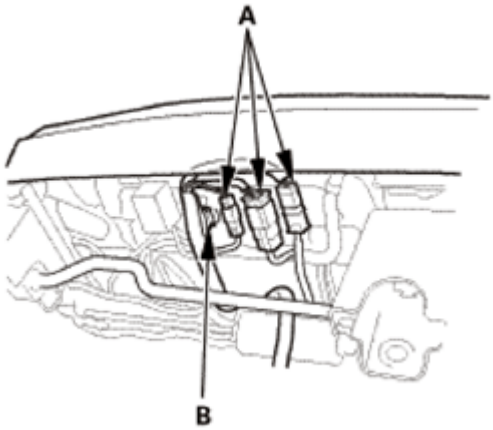

Fig. 250: Identifying Connectors And Harness Clip
Courtesy of AMERICAN HONDA MOTOR CO., INC.

5. Front Seat - Passenger's Side
    1. Detach the hooks (A), then remove the rear inner seat track end cover (B) and the rear outer seat track end cover (C).

GETtheMANUALS.org

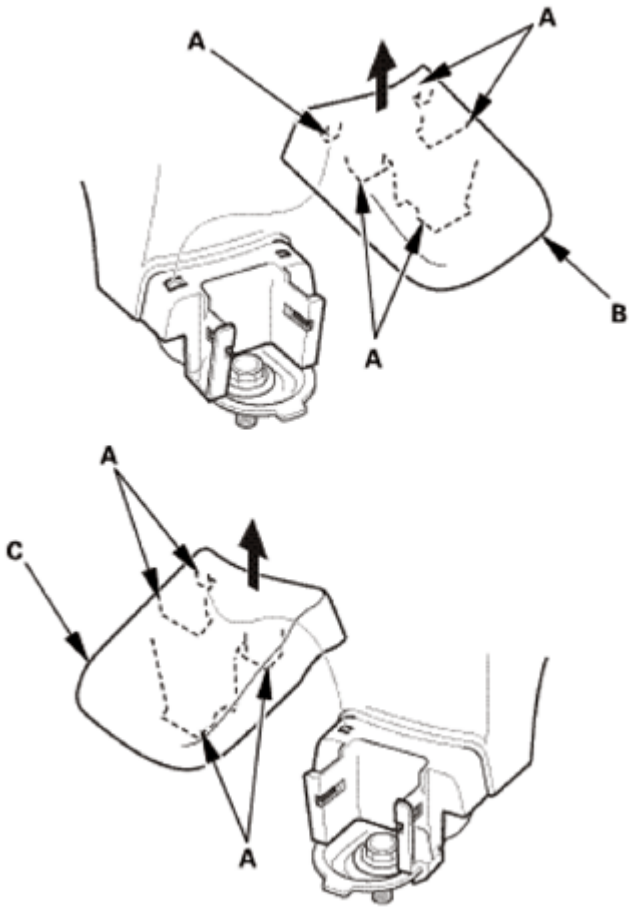

Fig. 251: Removing Rear Inner Seat Track End Cover
Courtesy of AMERICAN HONDA MOTOR CO., INC.

2. Remove the front mounting bolts (A) from the front seat.

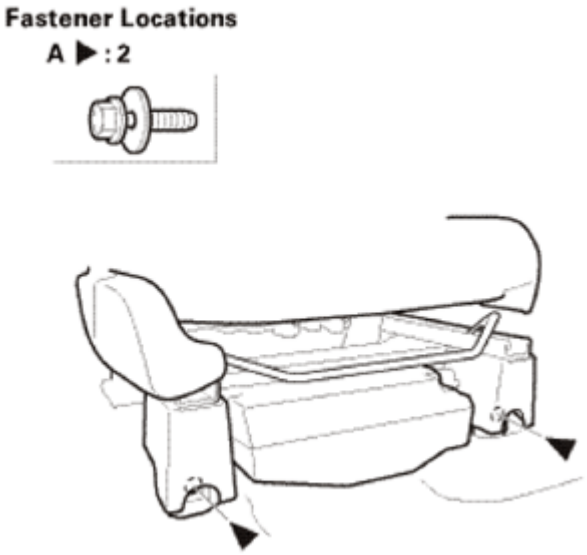

GETtheMANUALS.org

Fig. 252: Identifying Front Seat Mounting Bolts
Courtesy of AMERICAN HONDA MOTOR CO., INC.

3. Remove the rear mounting bolts (A) from the front seat.

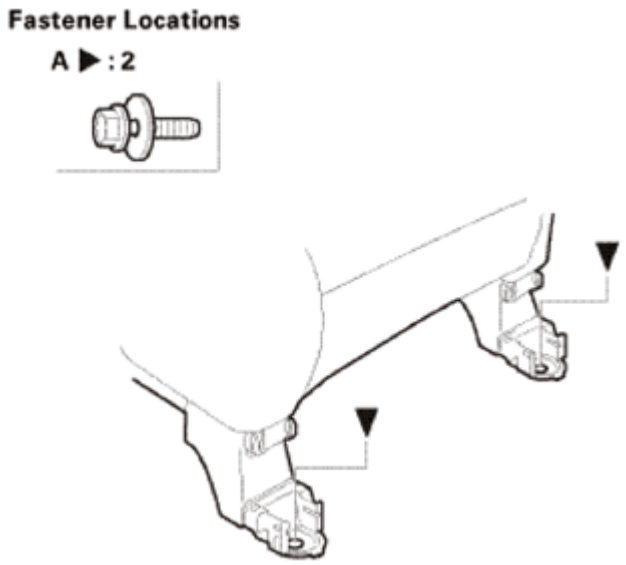

Fig. 253: Identifying Rear Seat Mounting Bolts
Courtesy of AMERICAN HONDA MOTOR CO., INC.

4. Disconnect the connectors (A).
5. Detach the harness clip (B).

Without Subwoofer

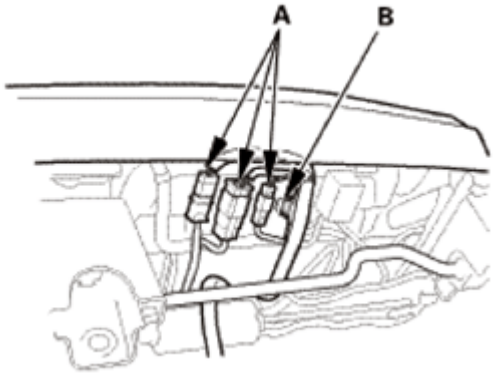

Fig. 254: Identifying Connector And Harness Clip (Without Subwoofer)
Courtesy of AMERICAN HONDA MOTOR CO., INC.

With Subwoofer

GETtheMANUALS.org

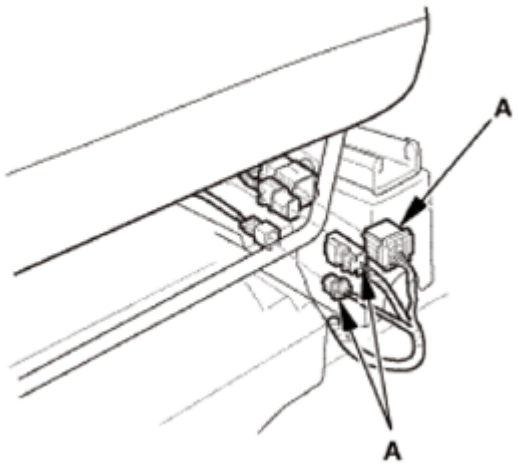

Fig. 255: Identifying Connector And Harness Clip (With Subwoofer)
Courtesy of AMERICAN HONDA MOTOR CO., INC.

6. Subwoofer
    1. Remove the subwoofer (A).

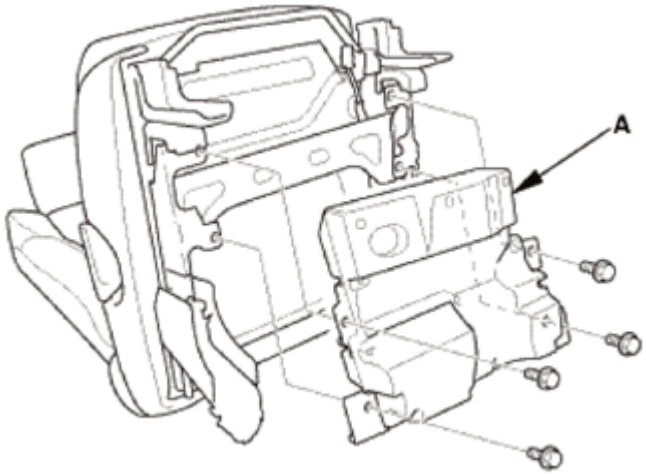

Fig. 256: Identifying Subwoofer
Courtesy of AMERICAN HONDA MOTOR CO., INC.

7. Front Seat Armrest
    1. Remove the cap (A) with the appropriate trim tool.
    2. Remove the center pin (B), the bushing (C), and the washer (D), then remove the armrest (E).

GETtheMANUALS.org

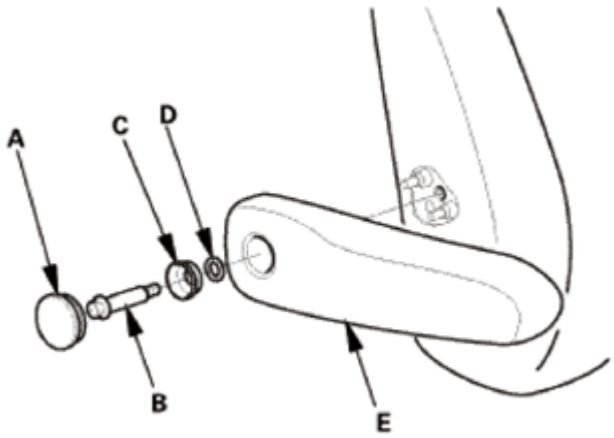

Fig. 257: Identifying Center Pin, Bushing, Cap, Washer And Armrest
Courtesy of AMERICAN HONDA MOTOR CO., INC.

3. Remove the pins (A) from the seat-back.

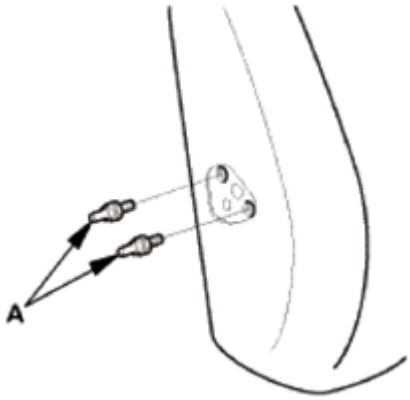

Fig. 258: Identifying Seat-Back Pins
Courtesy of AMERICAN HONDA MOTOR CO., INC.

8. Front Seat-Back - Driver's Side
    1. Release the elastic strap (A) from the seat cushion frame springs (B), then pull back the under cover (C) of the seat-back cover.

GETtheMANUALS.org

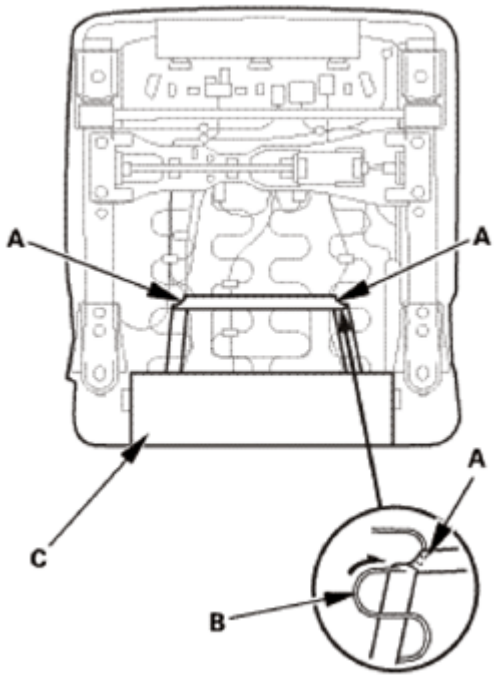

Fig. 259: Removing Elastic Strap From Seat Cushion Frame Springs
Courtesy of AMERICAN HONDA MOTOR CO., INC.

2. Detach the connector clips (A).
3. Detach the harness clips (B).
4. Pry up the hooks (C) of the harness holders (D), then release them from the seat cushion frame springs (E).
5. Disconnect the connectors (F).

Power Seat

GETtheMANUALS.org

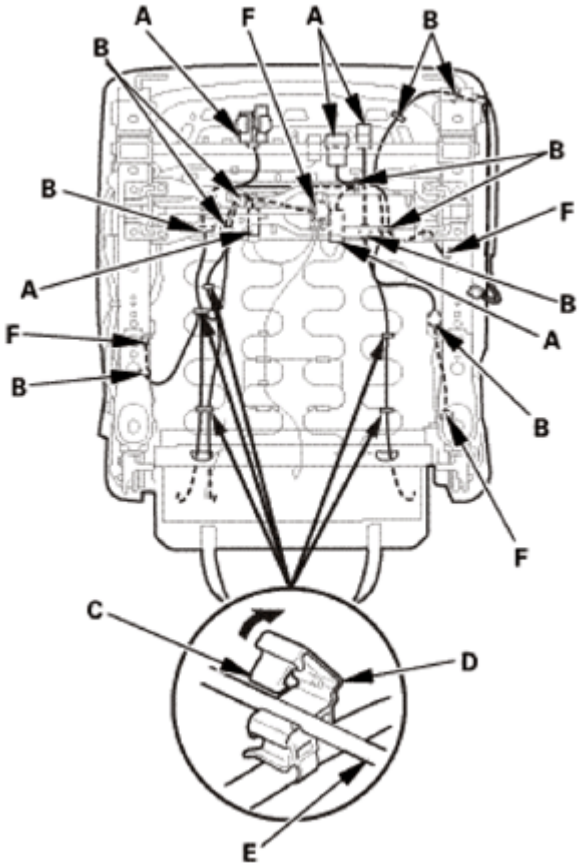

Fig. 260: Prying Up Harness Holder Hooks Using Power Seat (Power Seat)
Courtesy of AMERICAN HONDA MOTOR CO., INC.

Manual Seat with Seat Heater

GETtheMANUALS.org

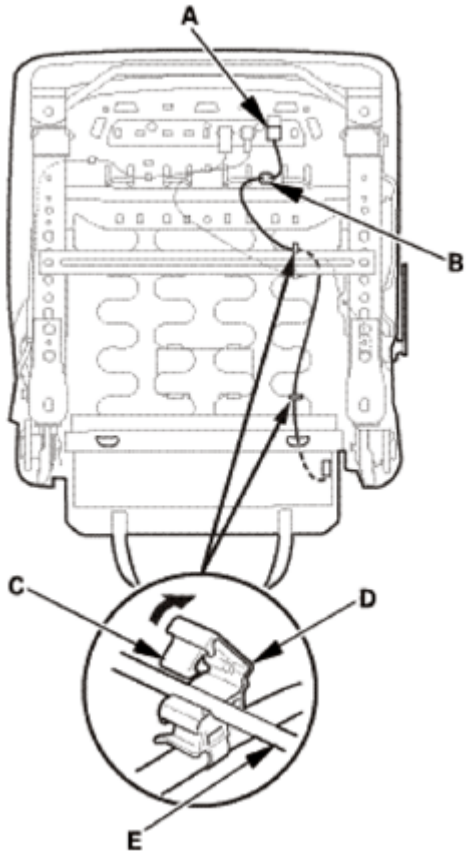

Fig. 261: Prying Up Harness Holder Hooks Using Power Seat (Manual Seat With Seat Heater)
Courtesy of AMERICAN HONDA MOTOR CO., INC.

6. Release the hook strip (A).
7. Unzip the seat-back cover (B).

GETtheMANUALS.org

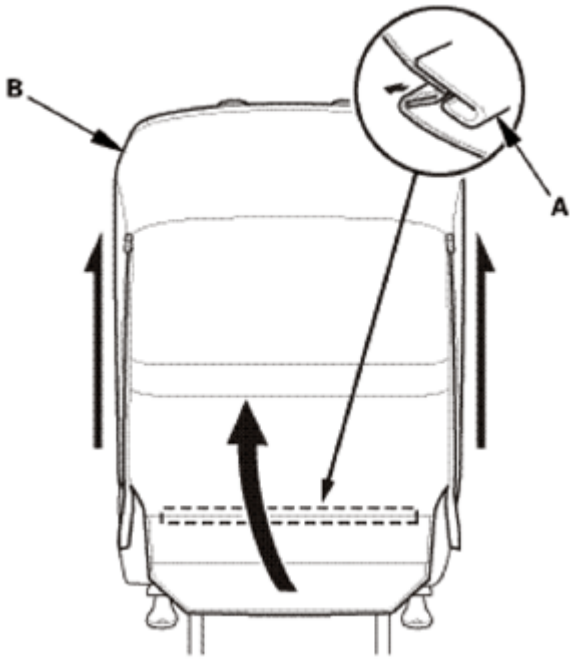

Fig. 262: Releasing Hook Strip
Courtesy of AMERICAN HONDA MOTOR CO., INC.

8. Release the hook strips (A), and loosen the seat-back cover (B).

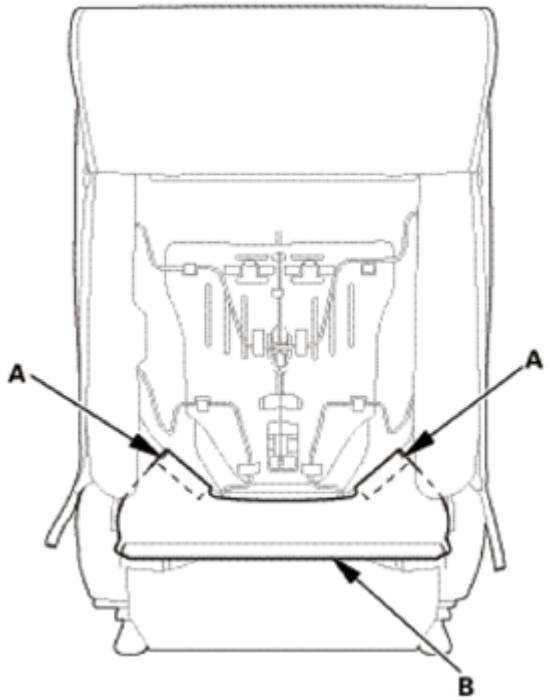

Fig. 263: Identifying Seat-Back Cover And Hook Strips
Courtesy of AMERICAN HONDA MOTOR CO., INC.

GETtheMANUALS.org

9. Detach the harness clips (A).
10. Pull out the harnesses (B) through the holes (C) in the seat-back cover (D).

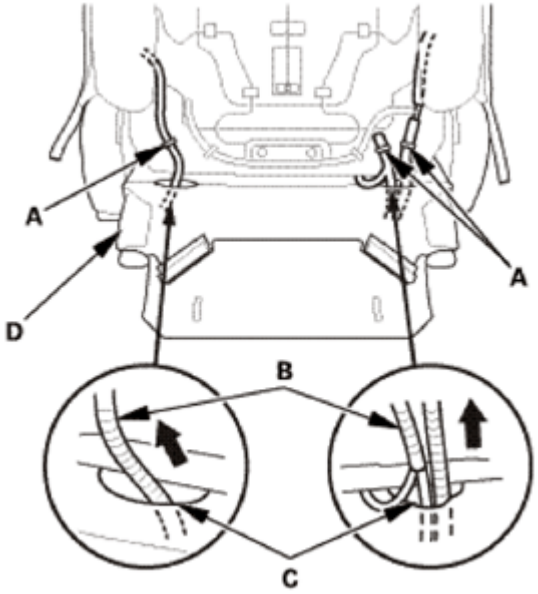

Fig. 264: Pulling Out Harnesses Through Seat-Back Cover Holes
Courtesy of AMERICAN HONDA MOTOR CO., INC.

11. Release airbag attachment wires A, B from the seat-back frame (C).

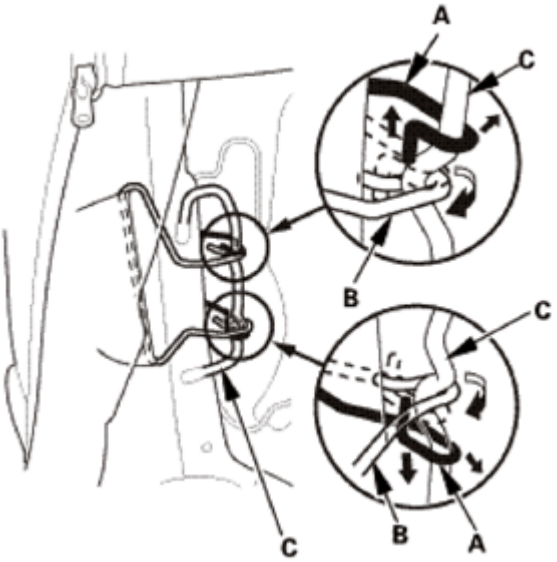

Fig. 265: Removing Airbag Attachment Wires From Seat-Back Frame
Courtesy of AMERICAN HONDA MOTOR CO., INC.

12. Release the hook strips (A) from the seat-back frame (B).

GETtheMANUALS.org

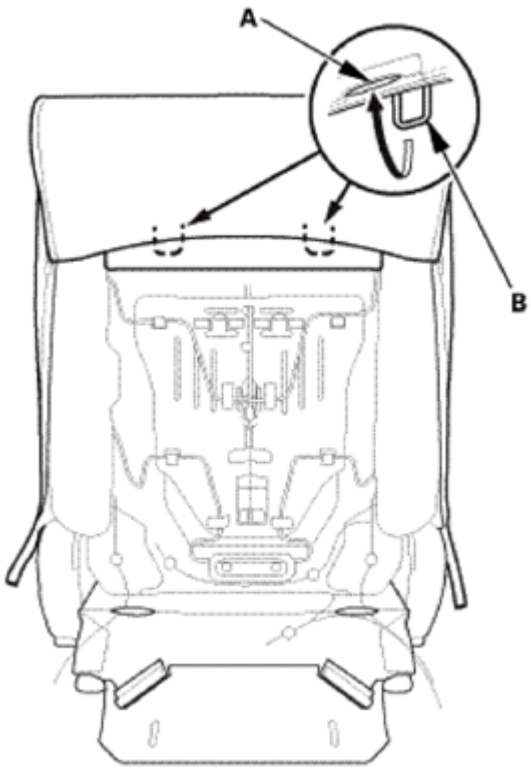

Fig. 266: Removing Hook Strips From Seat-Back Frame
Courtesy of AMERICAN HONDA MOTOR CO., INC.

9. Front Seat-Back - Passenger's Side
    1. Release the elastic strap (A) from the seat cushion frame springs (B), then pull back the under cover (C) of the seat-back cover.

GETtheMANUALS.org

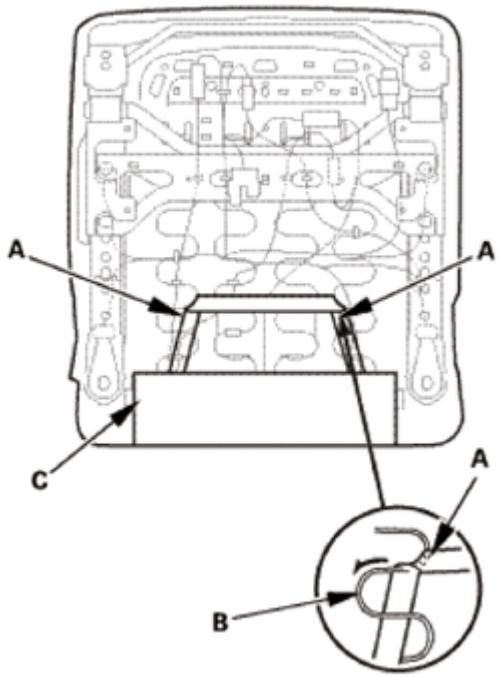

Fig. 267: Removing Elastic Strap From Seat Cushion Frame Springs
Courtesy of AMERICAN HONDA MOTOR CO., INC.

2. Detach the connector clips (A).
3. Detach the harness clips (B).
4. Pry up the hooks (C) of the harness holders (D), then release them from the seat cushion frame springs (E).
5. Disconnect the connectors (F).

Except KX - Without Seat Heater

GETtheMANUALS.org

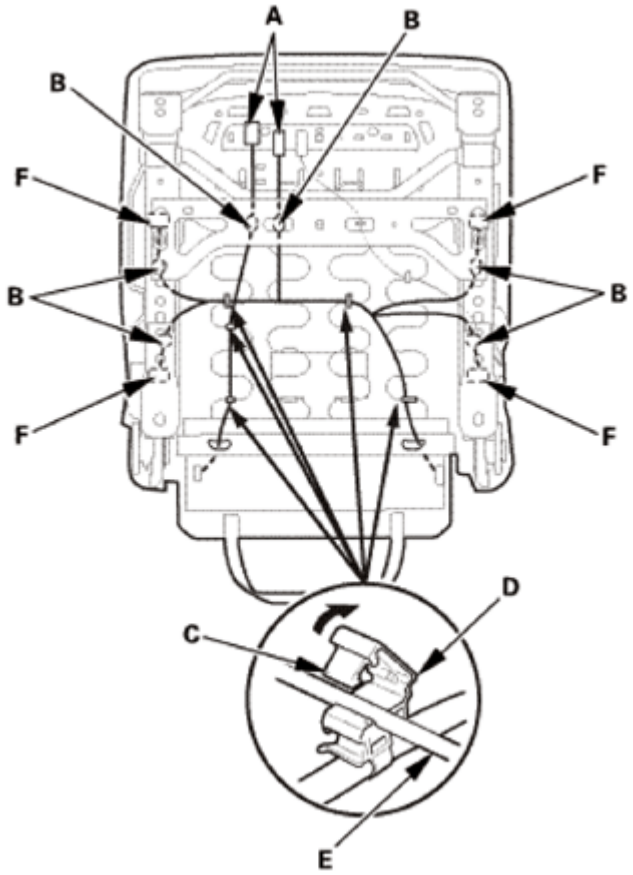

Fig. 268: Prying Up Harness Holder Hooks - Without Seat Heater (Except KX)
Courtesy of AMERICAN HONDA MOTOR CO., INC.

Except KX - With Seat Heater

GETtheMANUALS.org

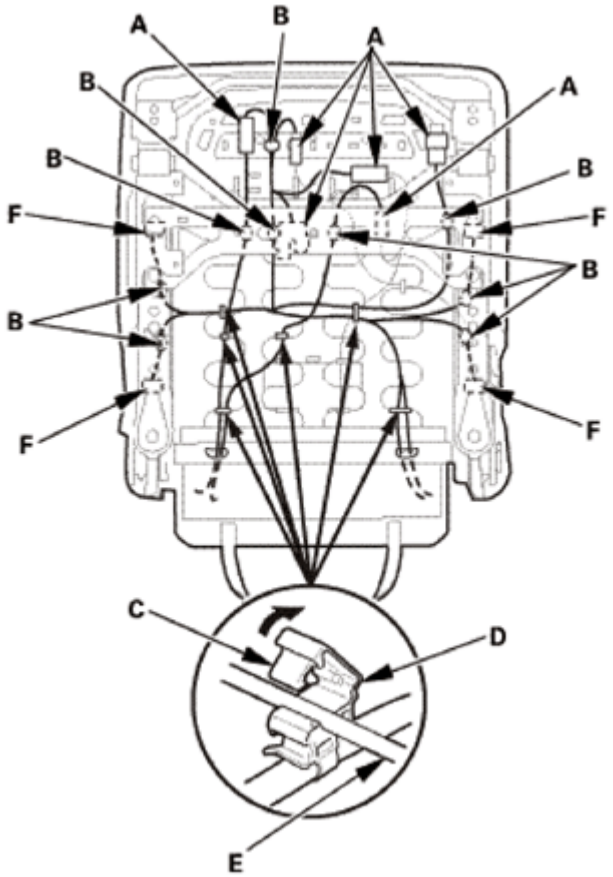

Fig. 269: Prying Up Harness Holder Hooks - With Seat Heater (Except KX)
Courtesy of AMERICAN HONDA MOTOR CO., INC.

KX

GETtheMANUALS.org

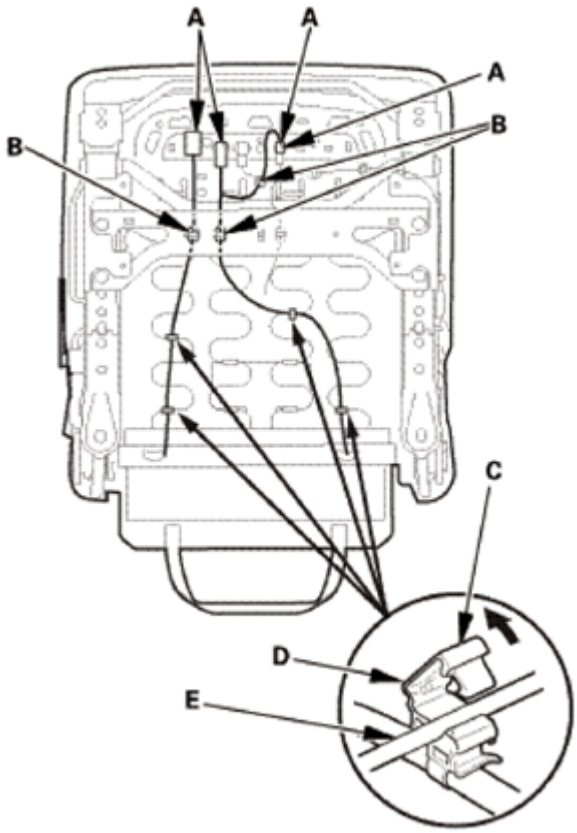

Fig. 270: Prying Up Harness Holder Hooks (KX)
Courtesy of AMERICAN HONDA MOTOR CO., INC.

6. Release the hook strip (A).
7. Unzip the seat-back cover (B).

GETtheMANUALS.org

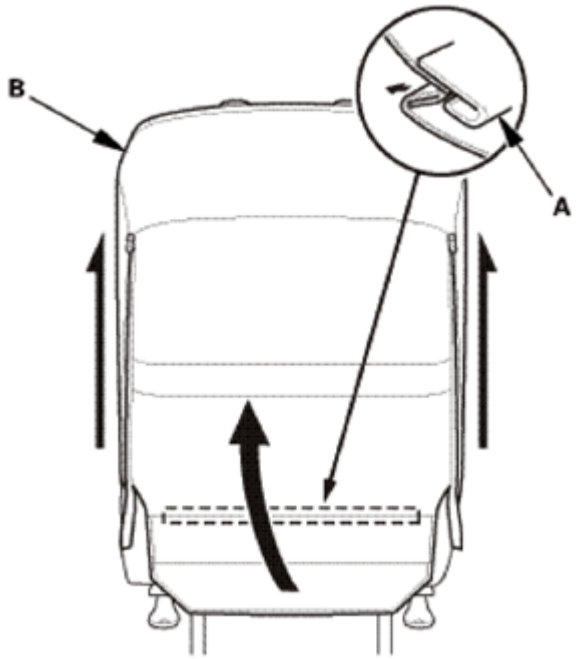

Fig. 271: Removing Hook Strip
Courtesy of AMERICAN HONDA MOTOR CO., INC.

8. Release the hook strips (A), and loosen the seat-back cover (B).

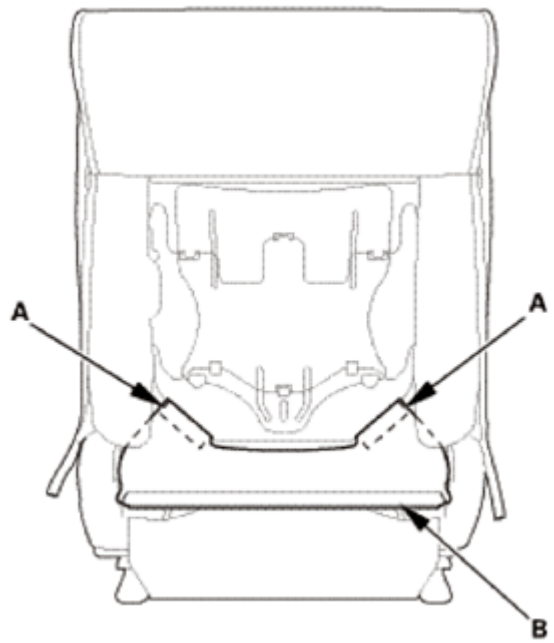

Fig. 272: Identifying Seat-Back Cover And Hook Strips
Courtesy of AMERICAN HONDA MOTOR CO., INC.

9. Detach the harness clips (A).

GETtheMANUALS.org

10. Pull out the harnesses (B) through the holes (C) in the seat-back cover (D).

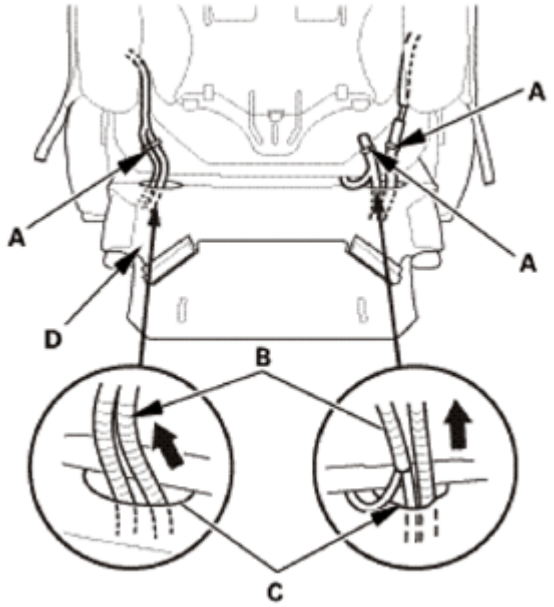

Fig. 273: Pulling Out Harnesses Through Seat-Back Cover Holes
Courtesy of AMERICAN HONDA MOTOR CO., INC.

11. Release airbag attachment wires A, B from the seat-back frame (C).

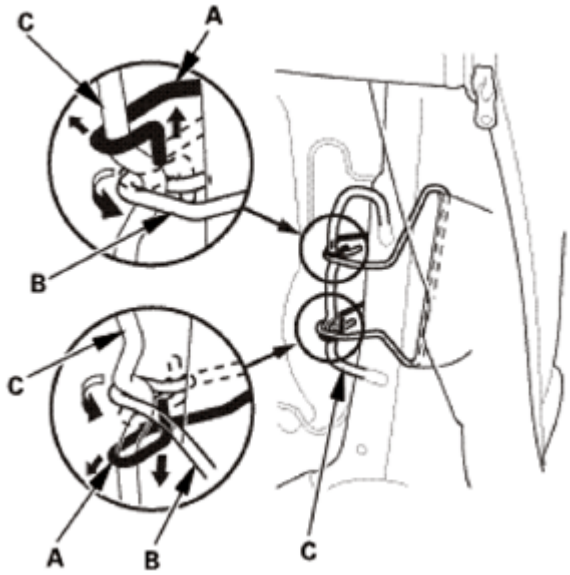

Fig. 274: Removing Airbag Attachment Wires From Seat-Back Frame
Courtesy of AMERICAN HONDA MOTOR CO., INC.

12. Remove the screw (A), and release the hooks (B), then remove the cover (C), and detach the harness clip (D).

GETtheMANUALS.org

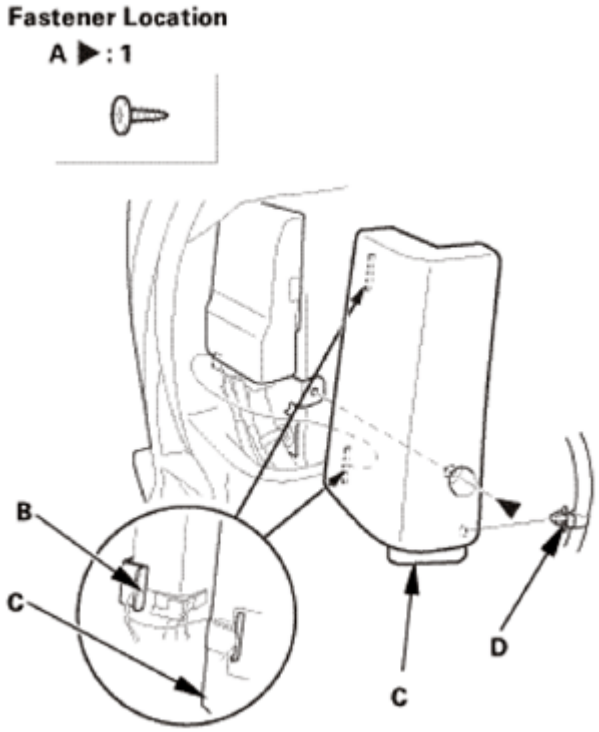

Fig. 275: Identifying Screw, Hooks, Cover And Harness Clip
Courtesy of AMERICAN HONDA MOTOR CO., INC.

13. Disconnect the connectors (A) detatch the and harness clips (B) from the ODS unit (USA and Canada models) or OPDS unit (Mexico models) (C).

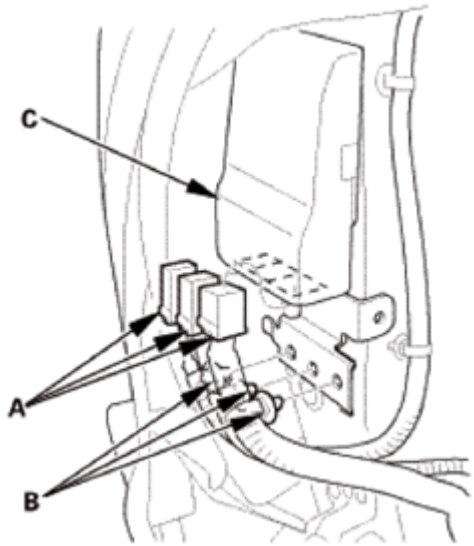

Fig. 276: Identifying ODS Unit (USA And Canada Models) Or OPDS Unit (Mexico Models), Connectors And Harness Clips
Courtesy of AMERICAN HONDA MOTOR CO., INC.

GETtheMANUALS.org

14. Release the hook strips (A) from the seat-back frame (B).
15. Detach the harness clips (C).

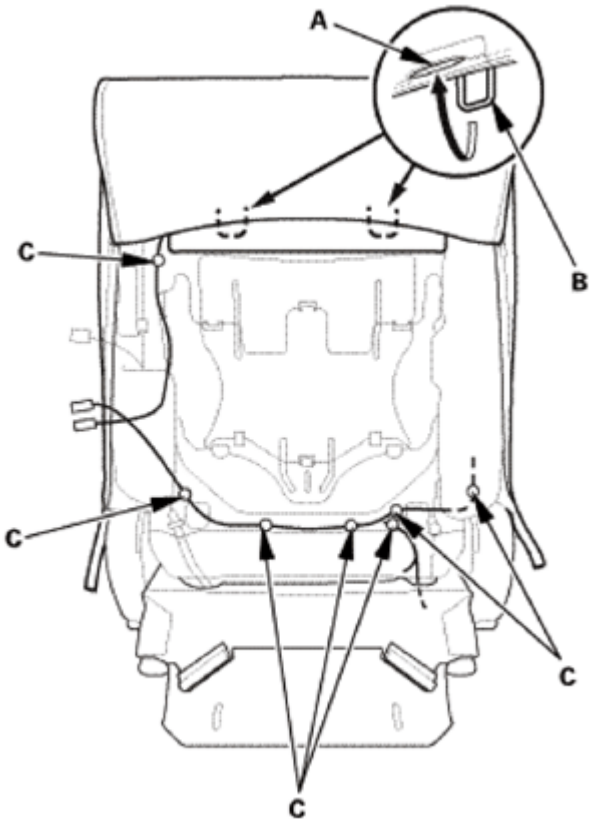

Fig. 277: Removing Hook Strips From Seat-Back Frame
Courtesy of AMERICAN HONDA MOTOR CO., INC.

10. Head Restraint Guides - Driver's Side
    1. Pinch the tabs (A) on the end of the head restraint guides (B), and remove the guides from the seat-back.

GETtheMANUALS.org

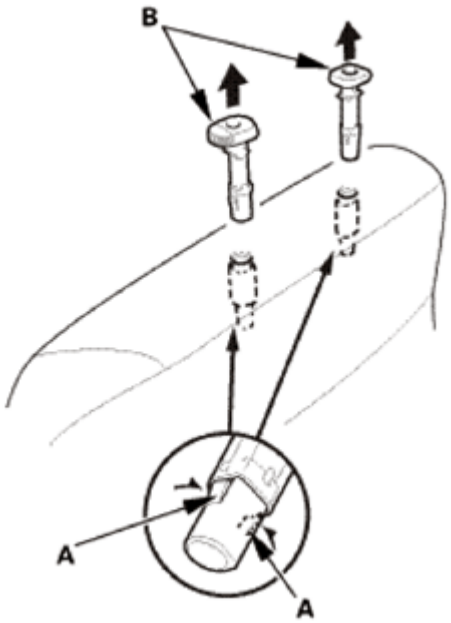

Fig. 278: Removing Head Restraint Guide From Seat-Back
Courtesy of AMERICAN HONDA MOTOR CO., INC.

11. Front Seat-Back Cover/Pad - Driver's Side
    1. Remove the seat-back cover/pad (A) from the seat-back frame (B).

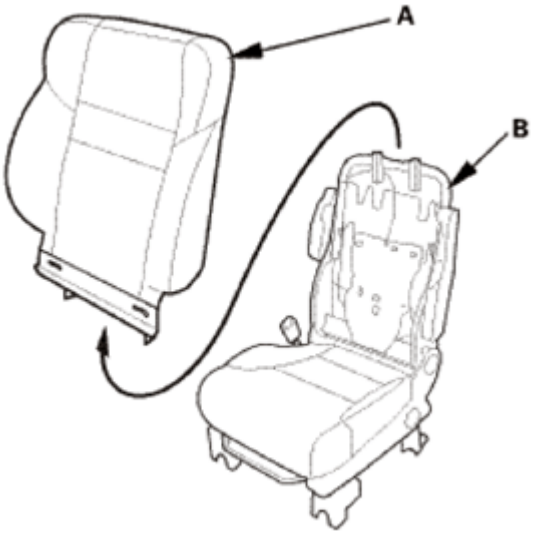

Fig. 279: Removing Seat-Back Cover/Pad From Seat-Back Frame
Courtesy of AMERICAN HONDA MOTOR CO., INC.

12. Side Airbag
    1. Detach the harness clip (A), then remove the side airbag (B).

GETtheMANUALS.org

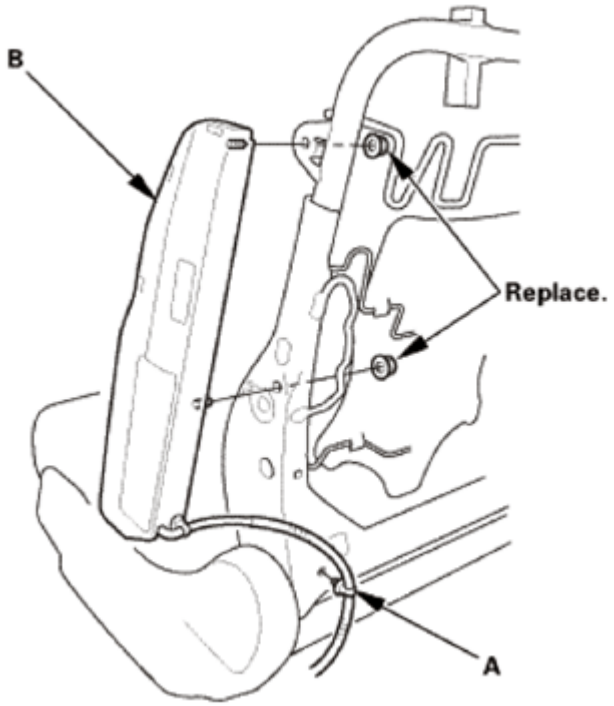

Fig. 280: Identifying Side Airbag And Harness Clip
Courtesy of AMERICAN HONDA MOTOR CO., INC.

INSTALLATION

NOTE: **SRS components are located in this area. Review the SRS COMPONENT LOCATIONS and the PRECAUTIONS AND PROCEDURES before doing repairs or service.**

1. Side Airbag

NOTE:

- **If the side airbag cover is secured with tape, remove the tape.**
- **Do not open the cover on the side airbag cover.**
- **Make sure that the seat-back cover/pad is installed properly. Improper installation may prevent proper deployment.**
- **Be sure to install the harness so that they are not pinched or interfering with other parts.**

1. Install the side airbag (A), then tighten the new mounting nuts.
2. Install the clip (B).

GETtheMANUALS.org

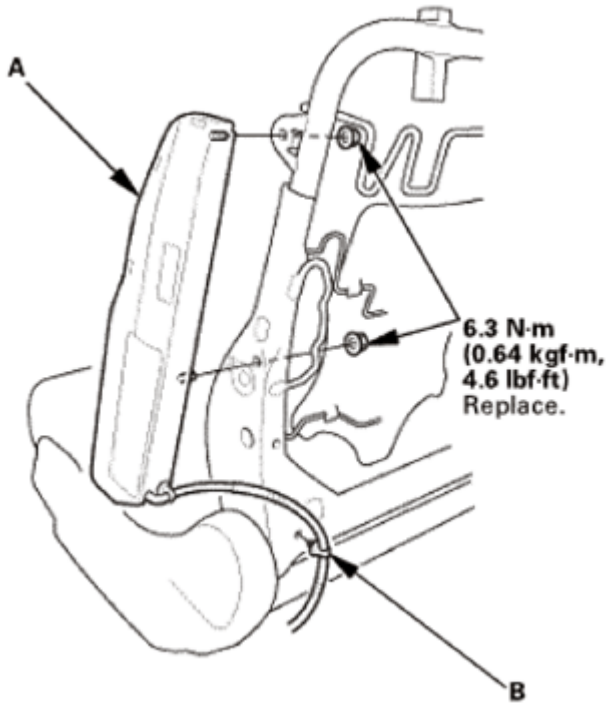

Fig. 281: Identifying Side Airbag, Clip And Mounting Nuts With Torque Specifications
Courtesy of AMERICAN HONDA MOTOR CO., INC.

2. Front Seat-Back Cover/Pad - Driver's Side
    1. Install the seat-back cover/pad (A) on the seat-back frame (B).

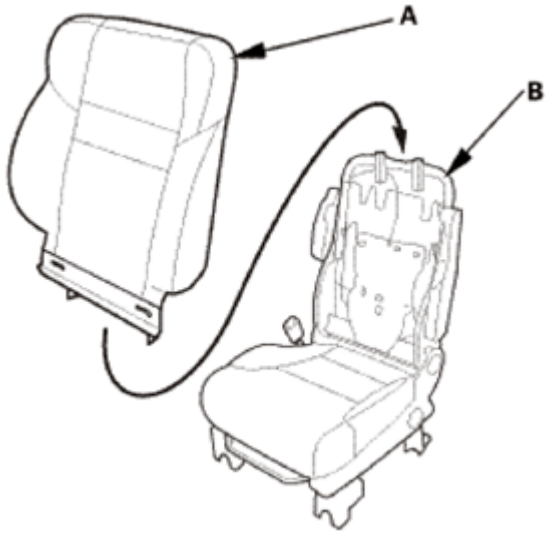

Fig. 282: Installing Seat-Back Cover/Pad On Seat-Back Frame
Courtesy of AMERICAN HONDA MOTOR CO., INC.

3. Head Restraint Guides - Driver's Side
    1. Install the head restraint guides (A).

GETtheMANUALS.org

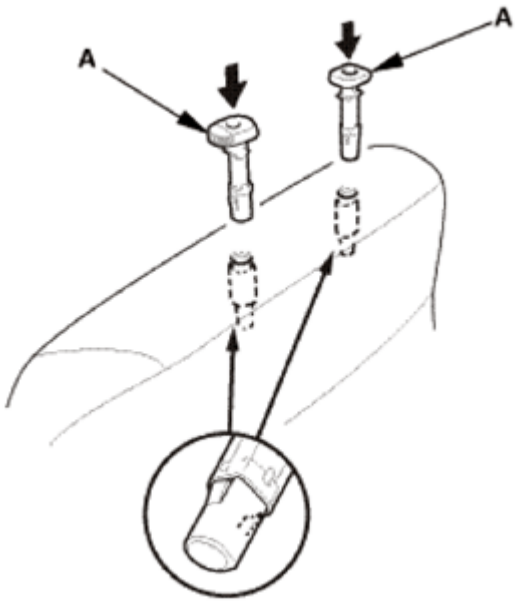

Fig. 283: Installing Head Restraint Guides
Courtesy of AMERICAN HONDA MOTOR CO., INC.

4. Front Seat-Back - Driver's Side
    1. Install the hook strips (A) to the seat-back frame (B).

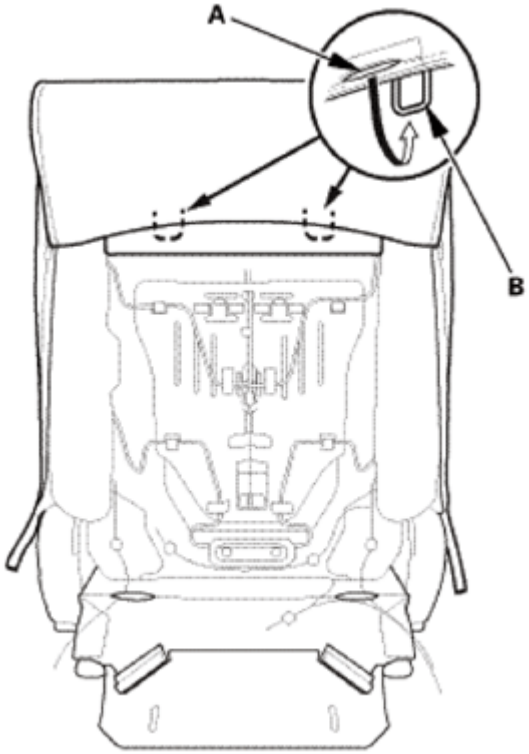

Fig. 284: Installing Hook Strips To Seat-Back Frame
Courtesy of AMERICAN HONDA MOTOR CO., INC.

GETtheMANUALS.org

2. Install airbag attachment wires A, B to the seat-back frame (C).

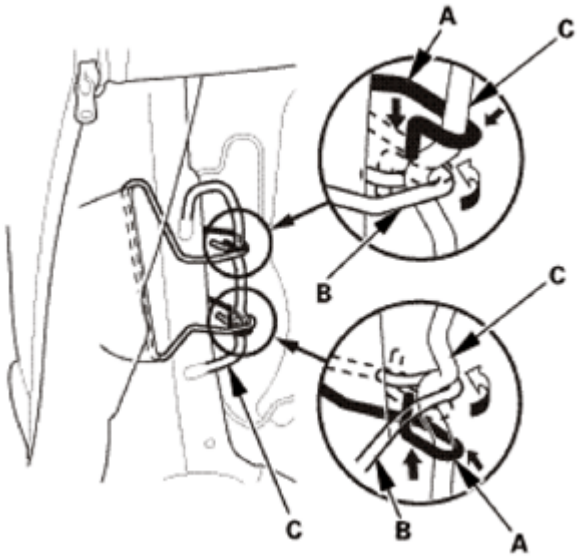

Fig. 285: Installing Airbag Attachment Wires To Seat-Back Frame
Courtesy of AMERICAN HONDA MOTOR CO., INC.

3. Install the harness clips (A).
4. Install the harnesses (B) through the holes (C) in the seat-back cover (D).

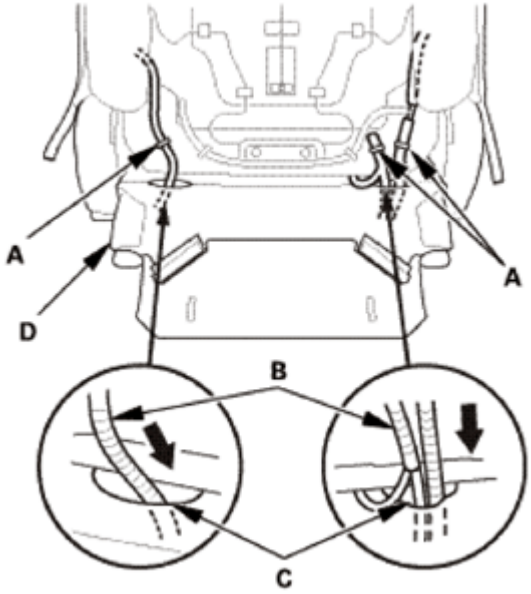

Fig. 286: Installing Harnesses Through Seat-Back Cover Holes
Courtesy of AMERICAN HONDA MOTOR CO., INC.

5. Install the hook strips (A) to the seat frame.

GETtheMANUALS.org

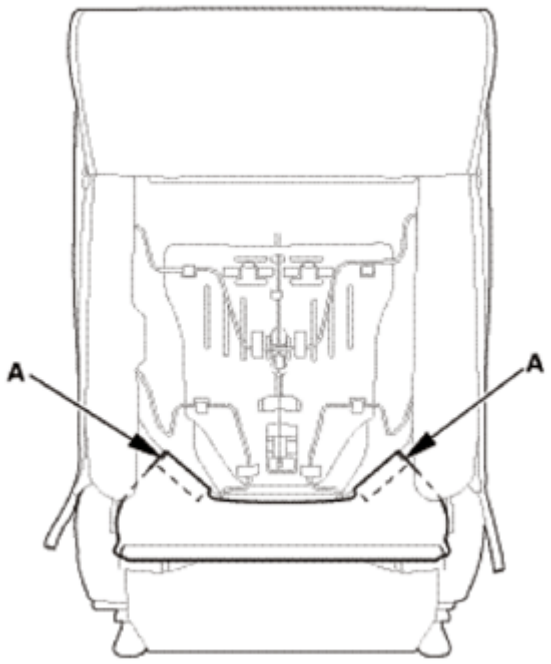

Fig. 287: Identifying Seat Frame Hook Strips
Courtesy of AMERICAN HONDA MOTOR CO., INC.

6. Zip the seat-back cover (A).
7. Install the hook strip (B).

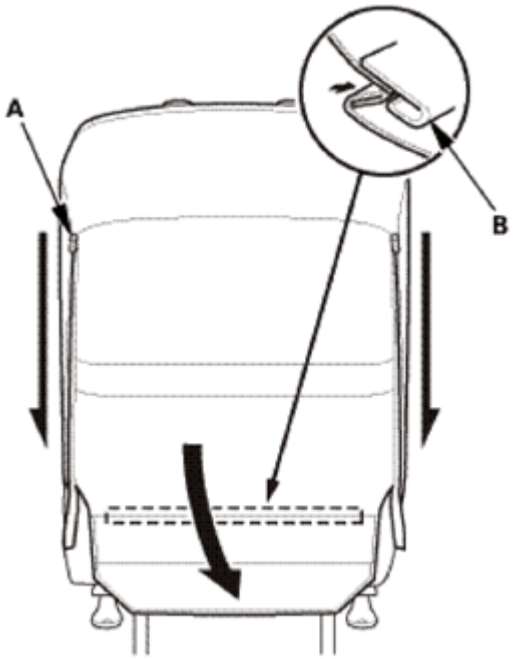

Fig. 288: Installing Hook Strip
Courtesy of AMERICAN HONDA MOTOR CO., INC.

GETtheMANUALS.org

8. Install the connector clips (A).
9. Install the harness clips (B).
10. Install the harness holders (C) to the seat cushion frame springs (D).
11. Connect the connector (E).

Power Seat

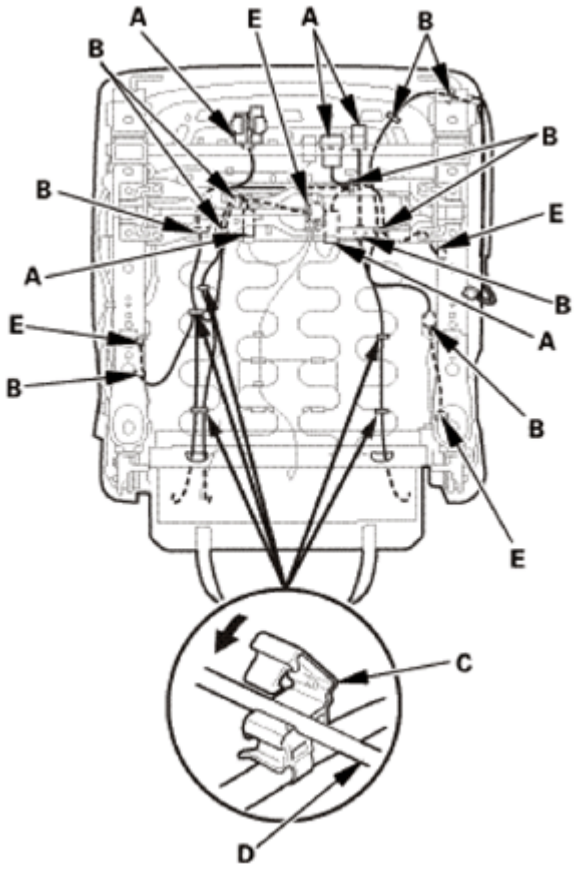

Fig. 289: Installing Harness Holders To Seat Cushion Frame Springs (Power Seat)
Courtesy of AMERICAN HONDA MOTOR CO., INC.

Manual Seat with Seat Heater

GETtheMANUALS.org

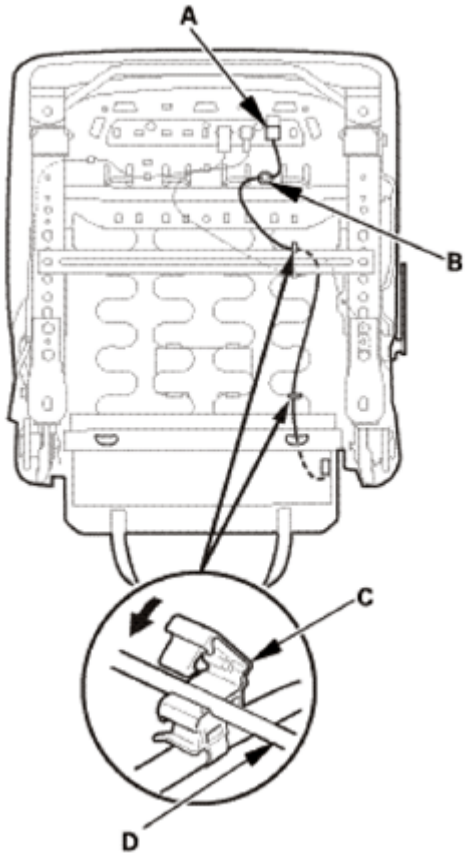

Fig. 290: Installing Harness Holders To Seat Cushion Frame Springs (Manual Seat With Seat Heater)
Courtesy of AMERICAN HONDA MOTOR CO., INC.

12. Install the elastic strap (A) to the seat cushion frame springs (B).

GETtheMANUALS.org

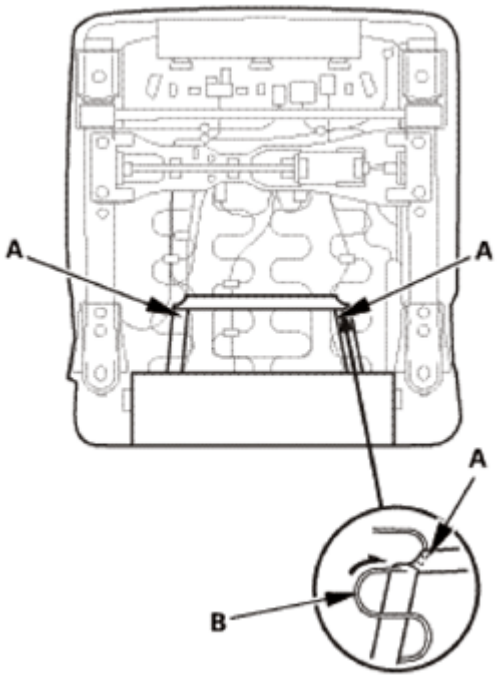

Fig. 291: Installing Elastic Strap To Seat Cushion Frame Springs
Courtesy of AMERICAN HONDA MOTOR CO., INC.

5. Front Seat-Back - Passenger's Side
    1. Install the hook strips (A) to the seat-back frame (B).
    2. Install the harness clips (C).

GETtheMANUALS.org

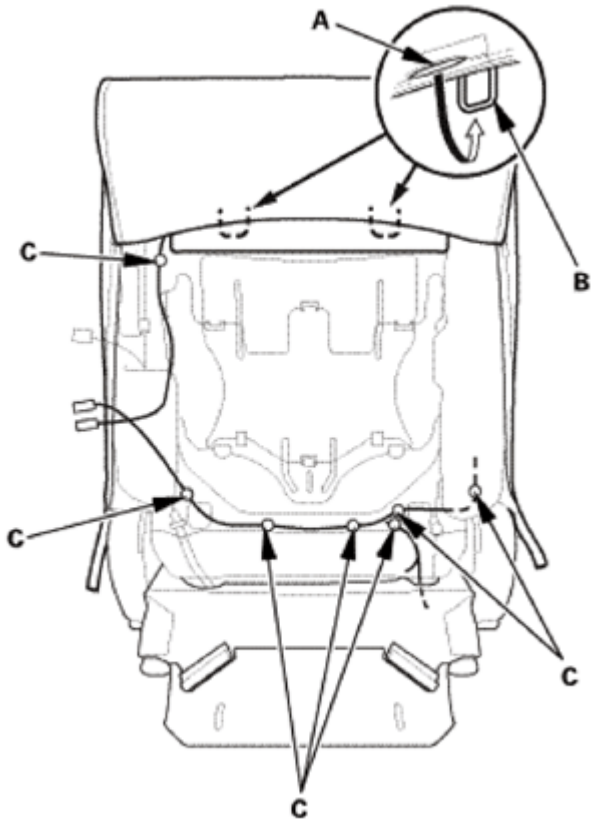

Fig. 292: Installing Hook Strips To Seat-Back Frame
Courtesy of AMERICAN HONDA MOTOR CO., INC.

3. Connect the connectors (A) and install the harness clips (B) to the ODS unit (USA and Canada models) or OPDS unit (Mexico models) (C).

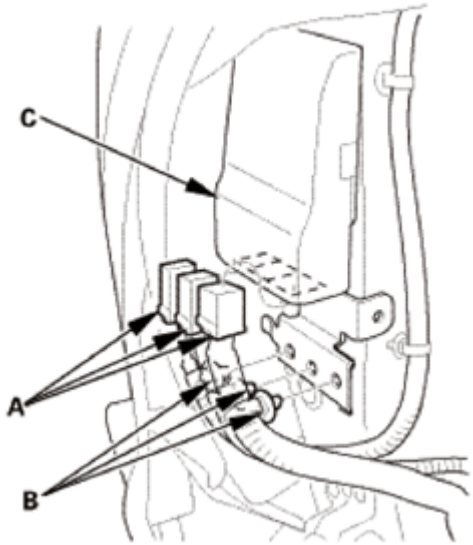

Fig. 293: Identifying OPDS Unit, Connectors And Harness Clips
Courtesy of AMERICAN HONDA MOTOR CO., INC.

GETtheMANUALS.org

4. Insert the hooks (A), and install the cover (B), and install the screw (C) and the harness clip (D).

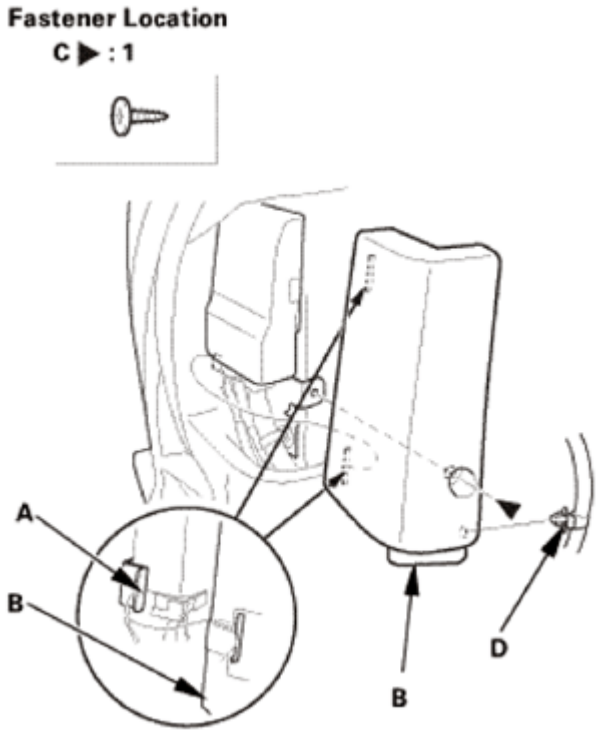

Fig. 294: Identifying Hooks, Cover, Screw And Harness Clip
Courtesy of AMERICAN HONDA MOTOR CO., INC.

5. Install airbag attachment wires A, B to the seat-back frame (C).

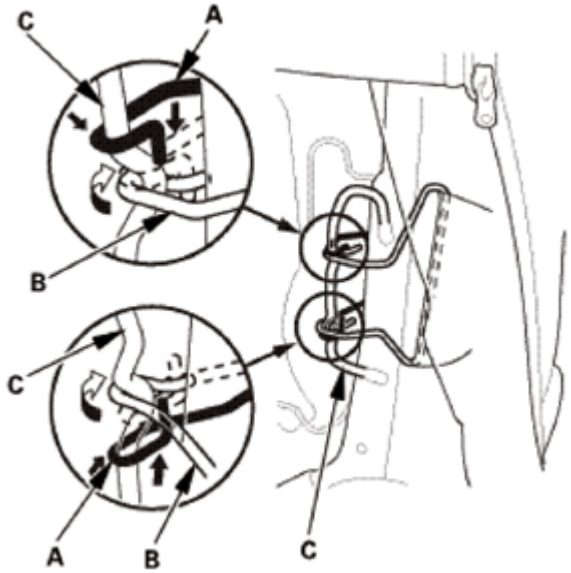

Fig. 295: Installing Airbag Attachment Wires To Seat-Back Frame
Courtesy of AMERICAN HONDA MOTOR CO., INC.

GETtheMANUALS.org

6. Install the harness clips (A).
7. Install the harnesses (B) through the holes (C) in the seat-back cover (D).

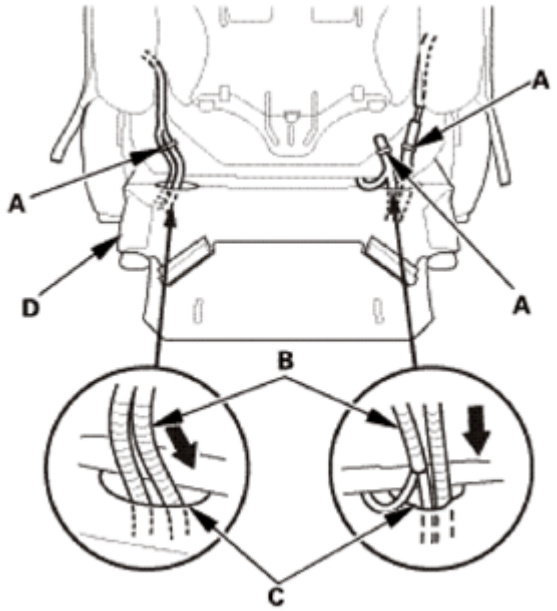

Fig. 296: Installing Harnesses Through Seat-Back Cover Holes
Courtesy of AMERICAN HONDA MOTOR CO., INC.

8. Install the hook strips (A) to the seat-back frame.

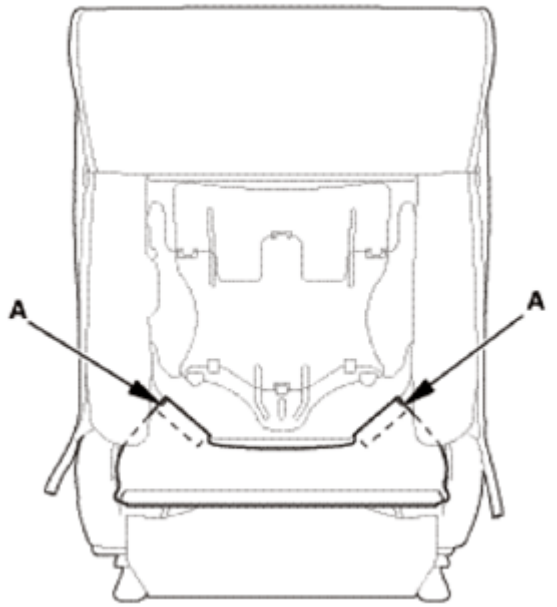

Fig. 297: Identifying Seat-Back Frame Hook Strips
Courtesy of AMERICAN HONDA MOTOR CO., INC.

GETtheMANUALS.org

9. Zip the seat-back cover (A).
10. Install the hook strip (B).

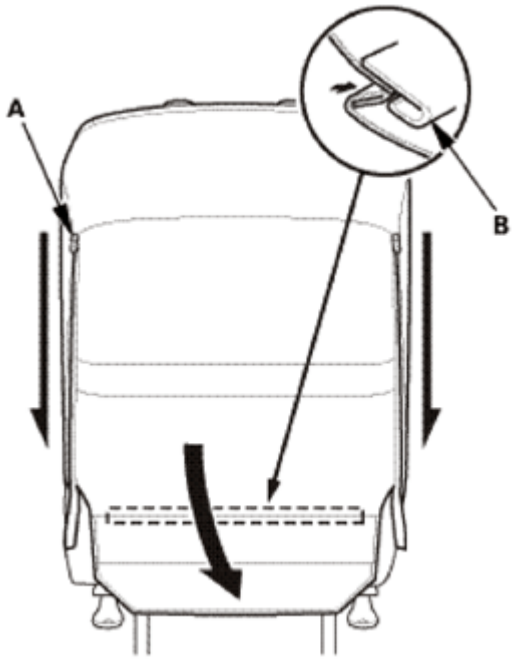

Fig. 298: Installing Hook Strip
Courtesy of AMERICAN HONDA MOTOR CO., INC.

11. Install the connector clips (A).
12. Install the harness clips (B).
13. Install the harness holders (C) to the seat cushion frame springs (D).
14. Connect the connector (E).

Except KX - Without Seat Heater

GETtheMANUALS.org

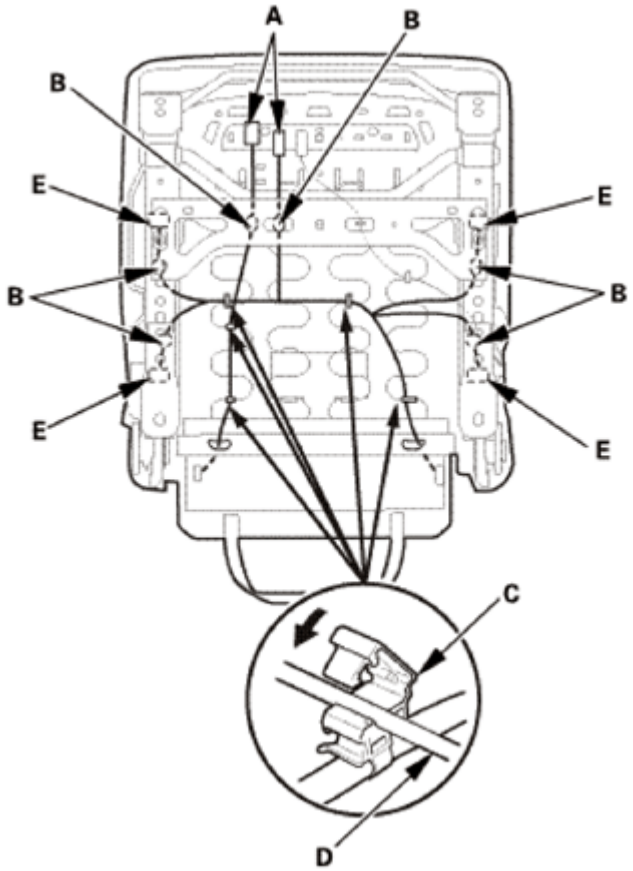

Fig. 299: Installing Harness Holders To Seat Cushion Frame Springs - Without Seat Heater (Except KX)
Courtesy of AMERICAN HONDA MOTOR CO., INC.

Except KX - With Seat Heater

GETtheMANUALS.org

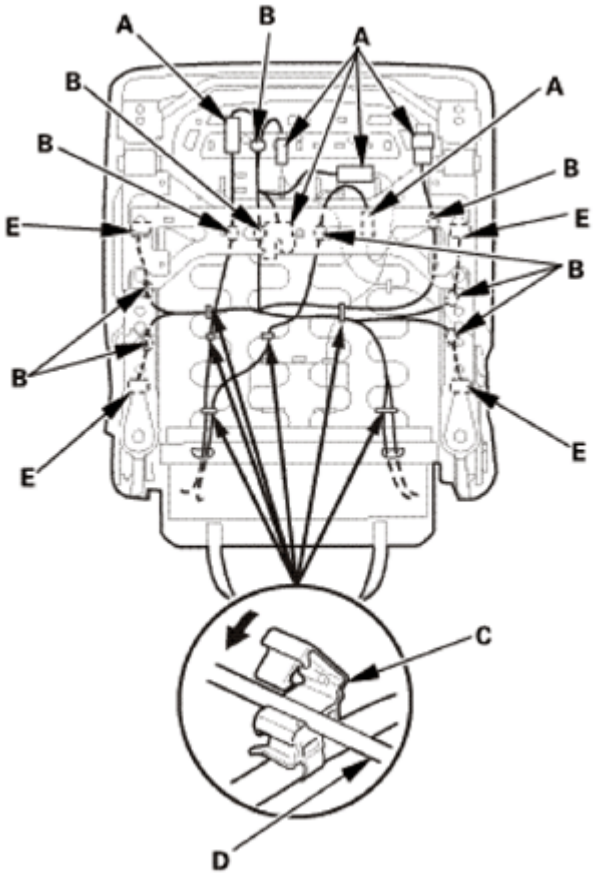

Fig. 300: Installing Harness Holders To Seat Cushion Frame Springs - With Seat Heater (Except KX)
Courtesy of AMERICAN HONDA MOTOR CO., INC.

KX

GETtheMANUALS.org

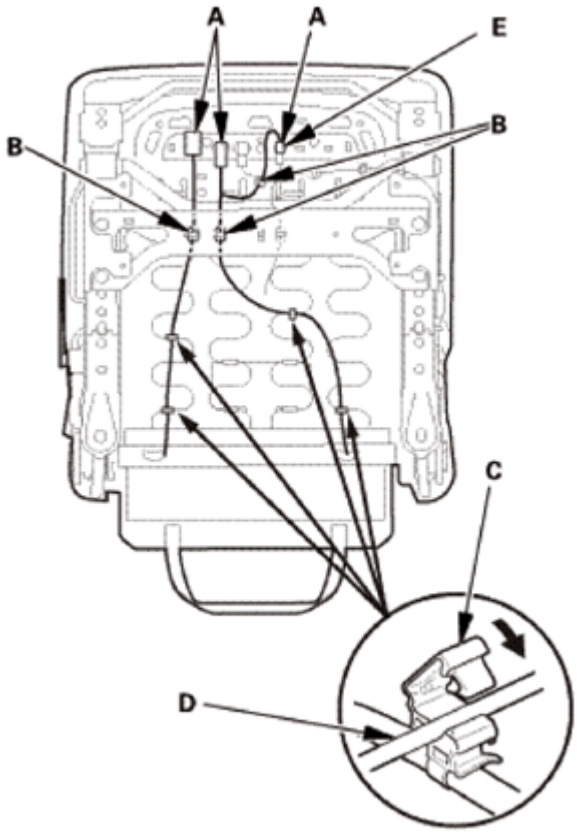

Fig. 301: Installing Harness Holders To Seat Cushion Frame Springs (KX)
Courtesy of AMERICAN HONDA MOTOR CO., INC.

15. Install the elastic strap (A) to the seat cushion frame springs (B).

GETtheMANUALS.org

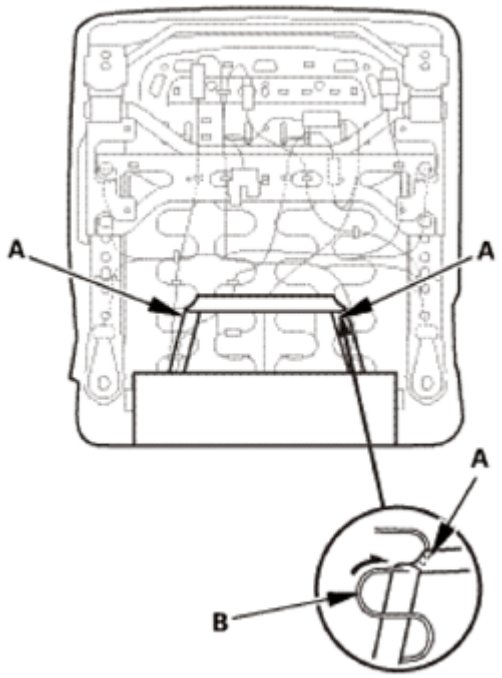

Fig. 302: Installing Elastic Strap To Seat Cushion Frame Springs
Courtesy of AMERICAN HONDA MOTOR CO., INC.

6. Front Seat Armrest
    1. Install the pins (A) to the seat-back.

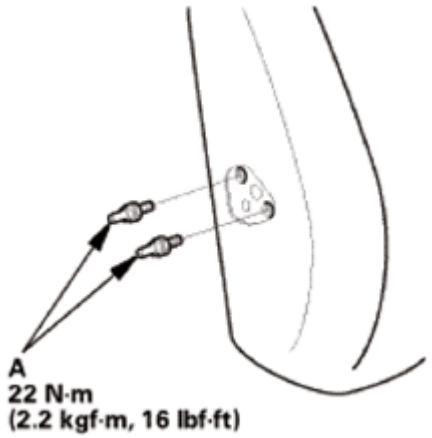

Fig. 303: Identifying Seat-Back Pins With Torque Specifications
Courtesy of AMERICAN HONDA MOTOR CO., INC.

    2. Install the armrest (A), then install the washer (B), the bushing (C), and the center pin (D).
    3. Install the cap (E) to the armrest.

GETtheMANUALS.org

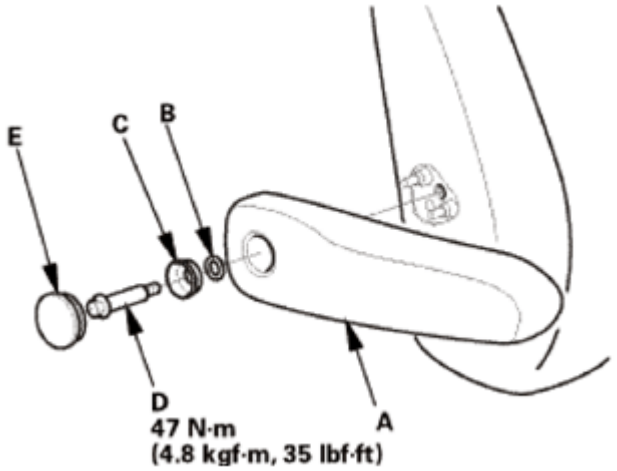

Fig. 304: Identifying Armrest, Cap, Washer, Bushing And Center Pin With Torque Specifications
Courtesy of AMERICAN HONDA MOTOR CO., INC.

7. Subwoofer
    1. Install the subwoofer (A).

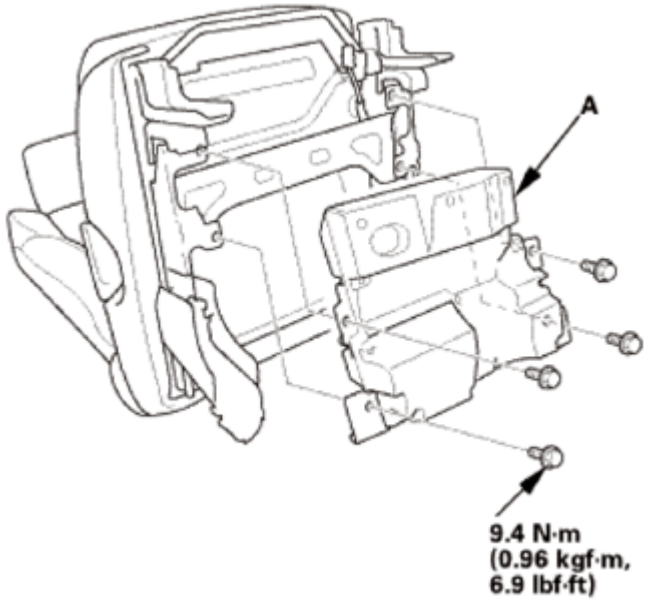

Fig. 305: Identifying Subwoofer And Mounting Bolts With Torque Specification
Courtesy of AMERICAN HONDA MOTOR CO., INC.

8. Front Seat Assembly - Passenger's Side
    1. Connect the connectors (A).
    2. Install the harness clip (B).

Without Subwoofer

GETtheMANUALS.org

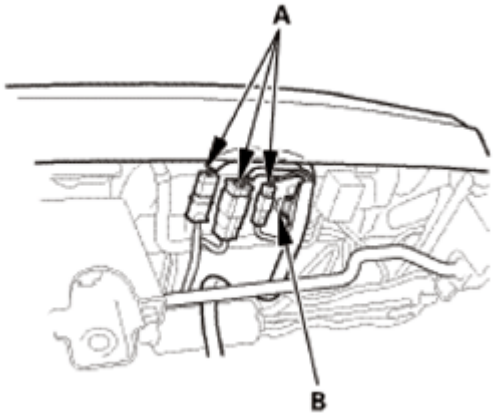

Fig. 306: Identifying Front Seat Assembly Connectors And Clip (Without Subwoofer)
Courtesy of AMERICAN HONDA MOTOR CO., INC.

With Subwoofer

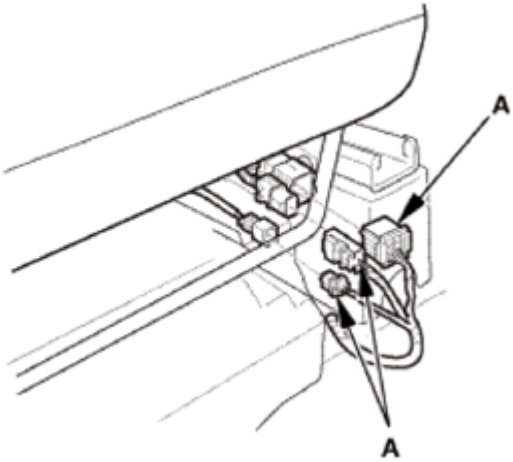

Fig. 307: Identifying Front Seat Assembly Connectors And Clip (With Subwoofer)
Courtesy of AMERICAN HONDA MOTOR CO., INC.

Front Side

GETtheMANUALS.org

Fig. 308: Identifying Seat Mounting Bolts With Torque Specifications (Front Side)
Courtesy of AMERICAN HONDA MOTOR CO., INC.

3. Install the seat mounting bolts (A).

NOTE:

- **Tighten the bolts by hand first, then tighten them to the specified torque.**
- **Tighten the seat mounting bolts to the specified torque in the sequence shown. Slide the seat all the way back and tighten bolts 1 and 2, then slide it forward and tighten bolts 3 and 4.**

Rear Side

GETtheMANUALS.org

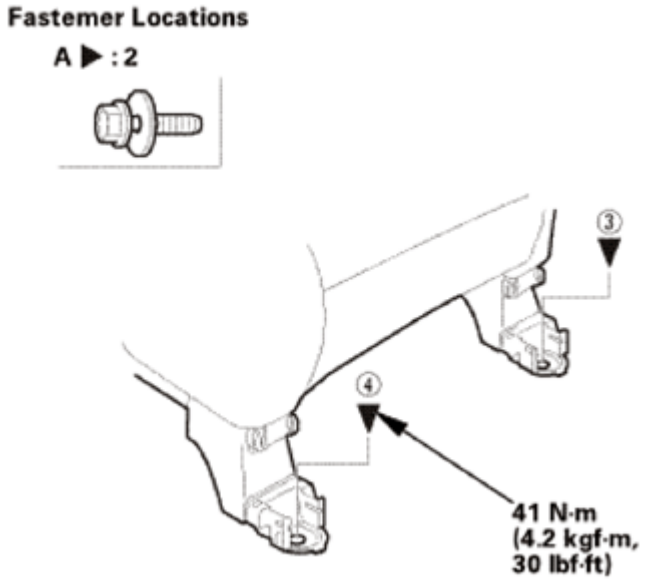

Fig. 309: Identifying Seat Mounting Bolts With Torque Specifications (Rear Side)
Courtesy of AMERICAN HONDA MOTOR CO., INC.

4. Install rear inner seat track end cover (A) and the rear outer seat track end cover (B). Make sure the hooks (C) snap into place securely.

GETtheMANUALS.org

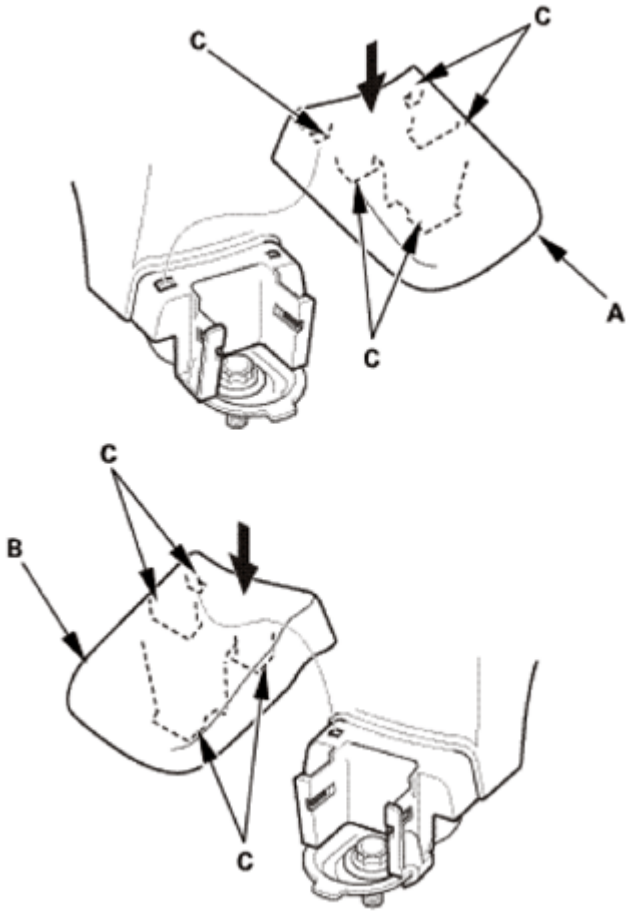

Fig. 310: Installing Rear Inner And Outer Seat Track End Cover
Courtesy of AMERICAN HONDA MOTOR CO., INC.

9. Front Seat - Driver's Side
    1. Connect the connectors (A).
    2. Install the harness clip (B).

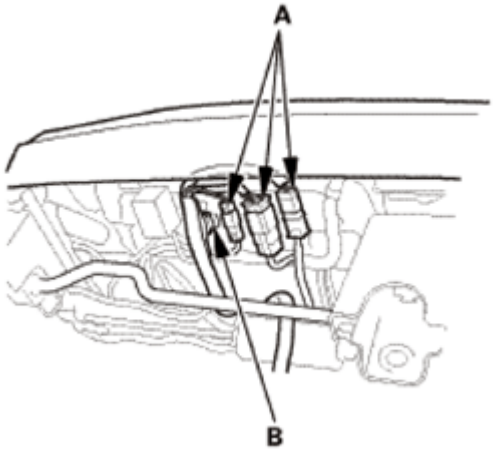

GETtheMANUALS.org

Fig. 311: Identifying Front Seat Connectors And Harness Clips
Courtesy of AMERICAN HONDA MOTOR CO., INC.

3. Install the seat mounting bolts (A).

NOTE:

- **Tighten the bolts by hand first, then tighten them to the specified torque.**
- **Tighten the seat mounting bolts to the specified torque in the sequence shown. Slide the seat all the way back and tighten bolts 1 and 2, then slide it forward and tighten bolts 3 and 4.**

Front Side

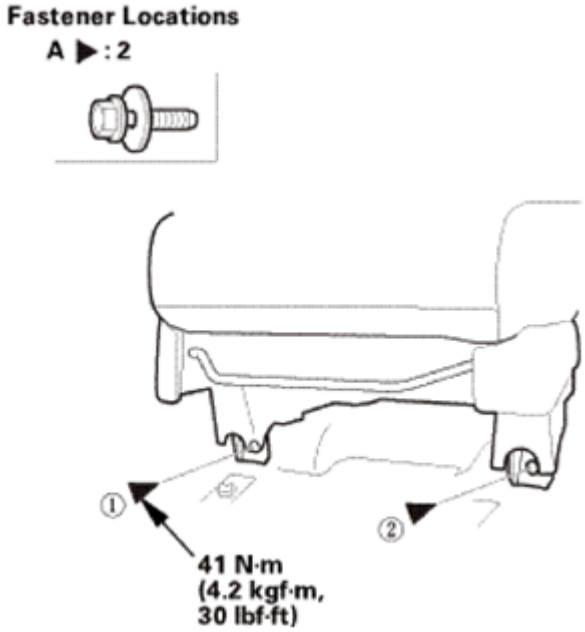

Fig. 312: Identifying Seat Mounting Bolts With Torque Specifications (Front Side)
Courtesy of AMERICAN HONDA MOTOR CO., INC.

Rear Side

GETtheMANUALS.org

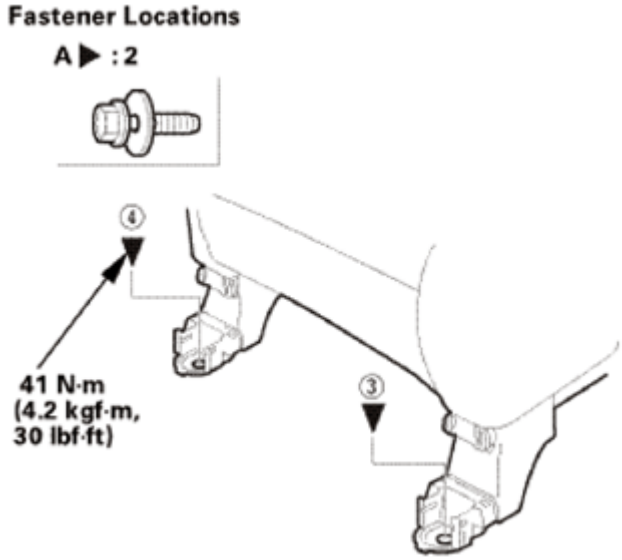

Fig. 313: Identifying Seat Mounting Bolts With Torque Specifications (Rear Side)
Courtesy of AMERICAN HONDA MOTOR CO., INC.

4. Install the rear inner seat track end cover (A) and the rear outer seat track end cover (B). Make sure the hooks (C) snap into place securely.

GETtheMANUALS.org

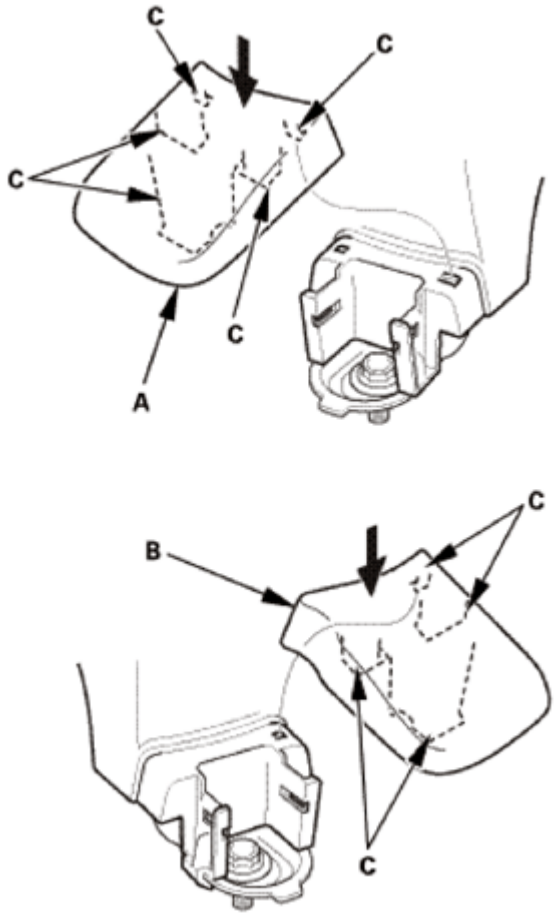

Fig. 314: Installing Rear Outer Seat Track End Cover
Courtesy of AMERICAN HONDA MOTOR CO., INC.

10. Head Restraint - Driver's Side
    1. Insert the head restraint (A) to the seat-back as shown.

Fig. 315: Inserting Head Restraint To Seat-Back
Courtesy of AMERICAN HONDA MOTOR CO., INC.

GETtheMANUALS.org

11. Battery Terminal (SRS) - Reconnection

NOTE: If the battery performance is abnormal, test the battery.

1. Clean the battery terminals.
2. Connect the positive cable (A) to the battery.

NOTE: Always connect the positive side first.

3. Connect the negative cable (B) to the battery.
4. Apply multipurpose grease to the terminals to prevent corrosion.

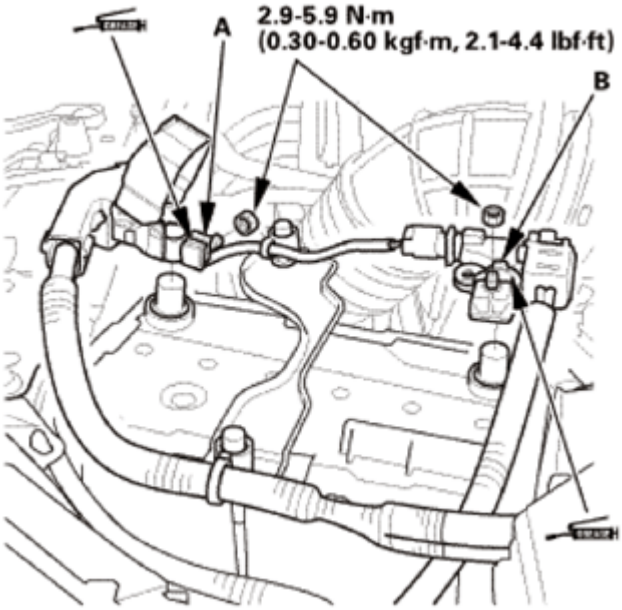

Fig. 316: Identifying Multipurpose Grease Applying Area On Battery Positive And Negative Terminals
Courtesy of AMERICAN HONDA MOTOR CO., INC.

12. Front Seat Belt Lower Anchor Bolt
    1. Install the lower anchor bolt.

NOTE: Before installing the anchor bolt, make sure there are no twists or kinks in the seat belt.

GETtheMANUALS.org

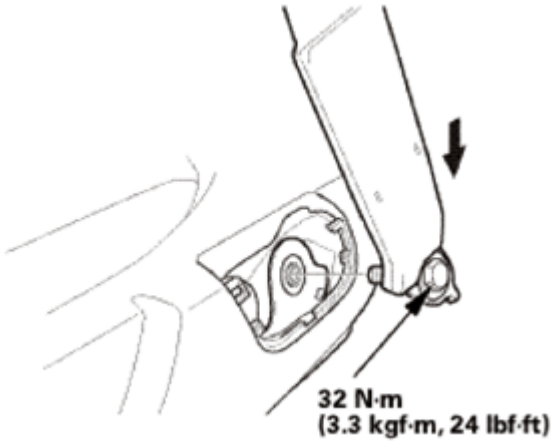

Fig. 317: Installing Lower Anchor Bolt With Torque Specifications
Courtesy of AMERICAN HONDA MOTOR CO., INC.

2. Install the anchor cover (A). Make sure the hooks (B) and the tab (C) snap into place securely.

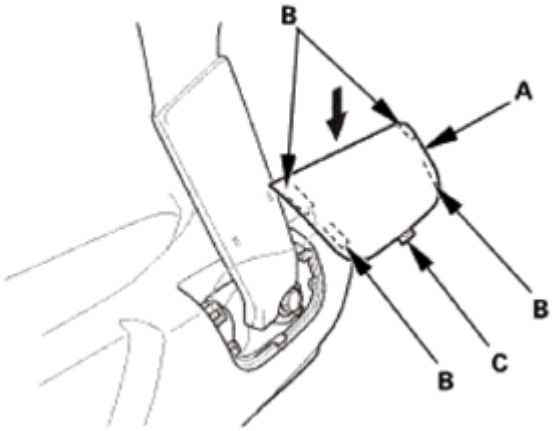

Fig. 318: Installing Anchor Cover
Courtesy of AMERICAN HONDA MOTOR CO., INC.

13. HDS DLC - Connection
    1. Connect the HDS to the data link connector (DLC) (A) located under the driver's side of the dashboard.
    2. Turn the ignition switch to ON (II).
    3. Make sure the HDS communicates with the vehicle. If it does not communicate, go to the DLC circuit troubleshooting.

GETtheMANUALS.org

Fig. 319: Identifying Data Link Connector
Courtesy of AMERICAN HONDA MOTOR CO., INC.

14. DTC - Clear
    1. Clear the DTC(s) by following the screen prompts on the HDS.
    2. Turn the ignition switch to LOCK (0), then wait for 10 seconds.
15. Confirm Proper SRS Operation
    1. Turn the ignition switch to ON (II), and check that the SRS indicator comes on for about 6 seconds and then goes off.

SIDE CURTAIN AIRBAG REMOVAL AND INSTALLATION

LON > 7521A5 LEFT 7521C2 RIGHT 7521C9 BOTH

SPECIAL TOOL DESCRIPTION

Image	Description/Tool Number
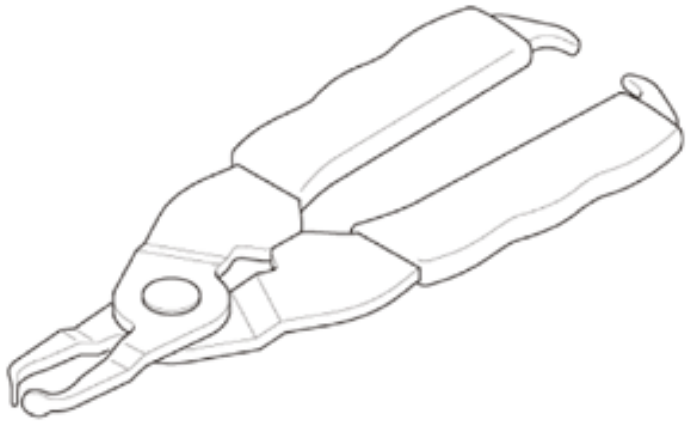	Push Pin/Grab Rail Cap Pliers 07AAC-001A100

REMOVAL

GETtheMANUALS.org

NOTE:

- **SRS components are located in this area. Review the SRS COMPONENT LOCATIONS and the PRECAUTIONS AND PROCEDURES before doing repairs or service.**
- **If replacing the side airbag after deployment, refer to Component Replacement/Inspection After Deployment See AIRBAG AND TENSIONER DISPOSAL or SRS COMPONENT REPLACEMENT/INSPECTION AFTER DEPLOYMENT for a complete list of other parts that must also be replaced.**
- **Before the front power seat is removed, slide the front power seat to the half-way position, then raise the seat to the highest position.**

1. Battery Terminal (SRS) - Disconnection
    1. Make sure the ignition switch is in LOCK (0).
    2. Disconnect and isolate the negative cable (A) from the battery.

    NOTE: Always disconnect the negative side first.

    3. Disconnect the positive cable (B) from the battery.
    4. Wait at least 3 minutes before starting work.

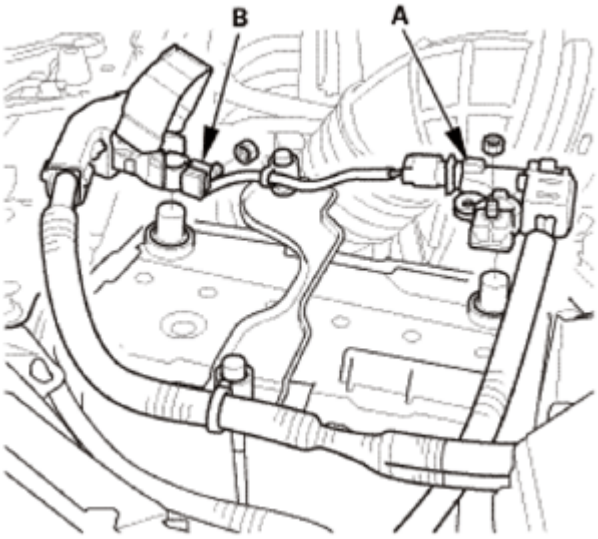

Fig. 320: Identifying Battery Positive And Negative Cables
Courtesy of AMERICAN HONDA MOTOR CO., INC.

2. Front Door Sill Trim - Both Sides

NOTE: Repeat on the opposite side.

1. Detach the hooks (A) and the tabs (B) from the kick panel (C) and the B-pillar lower trim (D), and pull up the front door inner sill trim (E) by hand to detach the clips (F), then remove the trim.

GETtheMANUALS.org

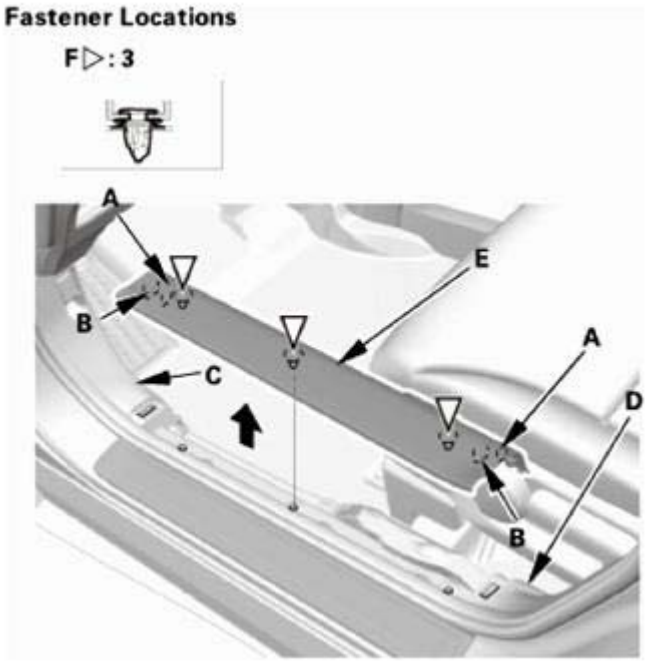

Fig. 321: Removing Front Door Sill Trim
Courtesy of AMERICAN HONDA MOTOR CO., INC.

3. Front Door Opening Seal As Needed - Both Sides

NOTE: Repeat on the opposite side.

1. Pull out the front door opening seal (A) from the trim hooks (B) around the front door opening flange, then detach the seal as needed.

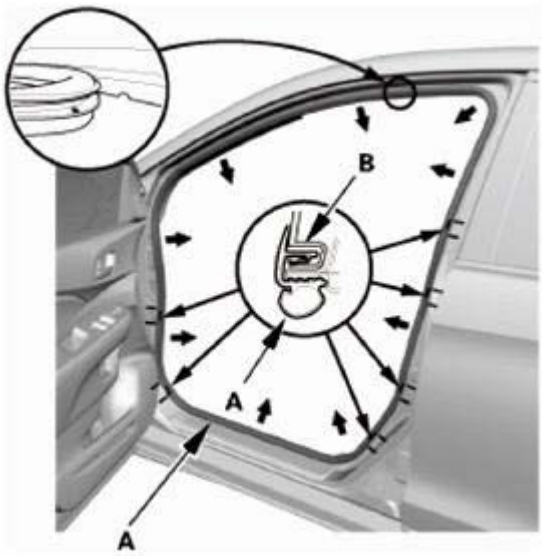

Fig. 322: Removing Front Door Opening Seal From Trim Hooks

GETtheMANUALS.org

Courtesy of AMERICAN HONDA MOTOR CO., INC.

4. A-Pillar Trim - Both Sides

NOTE: Repeat this procedure on the opposite side.

1. Pull out the A-pillar trim (A) by hand to release the clips (B, C).

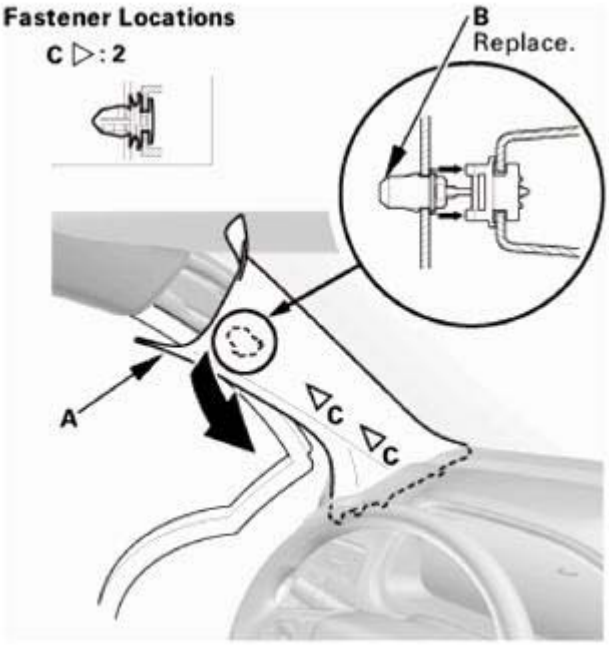

Fig. 323: Removing A-Pillar Trim
Courtesy of AMERICAN HONDA MOTOR CO., INC.

2. Put a shop towel (A) in the opening between the A-pillar trim (B) and the dashboard to prevent dropping the A-pillar clips.

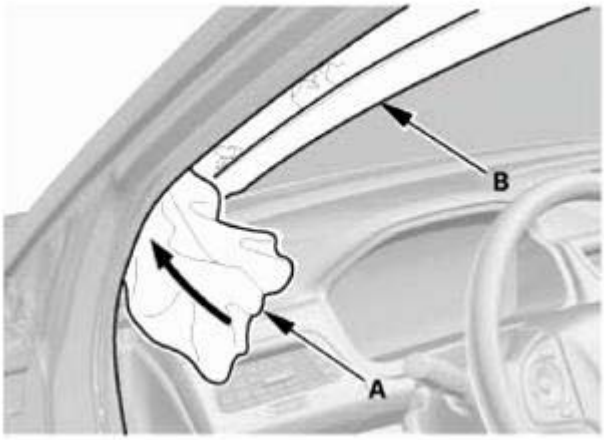

Fig. 324: Inserting Shop Towel Between A-Pillar Trim And Dashboard

GETtheMANUALS.org

Courtesy of AMERICAN HONDA MOTOR CO., INC.

3. Pull out and up on the A-pillar trim (A) to release it from the dashboard.

NOTE: The upper clip will stay in the body.

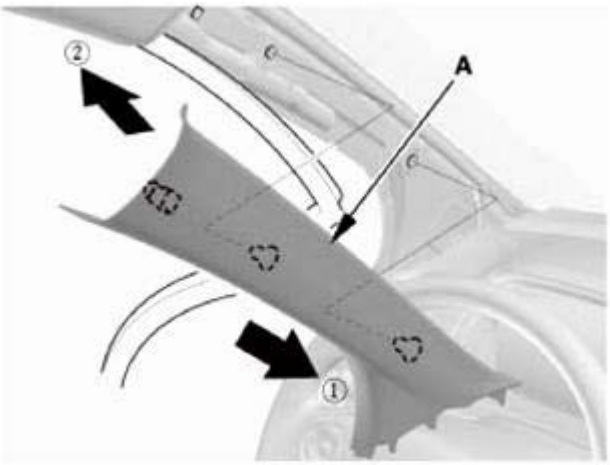

Fig. 325: Pulling Out A-Pillar Trim
Courtesy of AMERICAN HONDA MOTOR CO., INC.

4. Remove the upper clip (A) from the body.

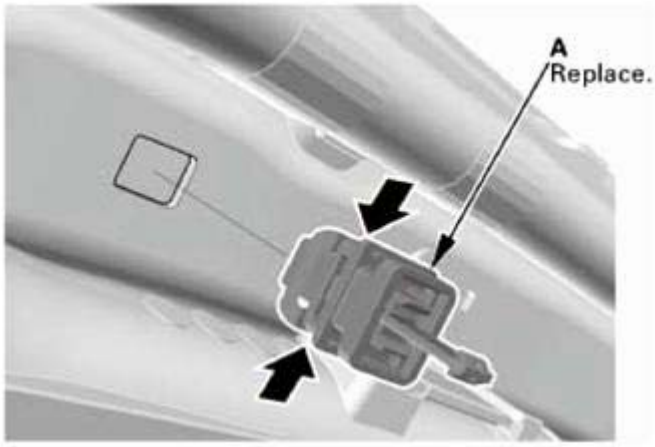

Fig. 326: Removing Upper Clip From Body
Courtesy of AMERICAN HONDA MOTOR CO., INC.

5. Rear Door Sill Trim - Both Sides

NOTE: Repeat this procedure on the opposite side.

1. Pull the release strap to fold down the rear seat, then lift-up and latch the rear seat-back in the

GETtheMANUALS.org

upright position.

2. Detach the hooks (A) and the tab (B) from the B-pillar lower trim (C) and the rear side trim panel (D), and pull up the rear door inner sill trim (E) by hand to detach the clips (F, G), then remove the trim.

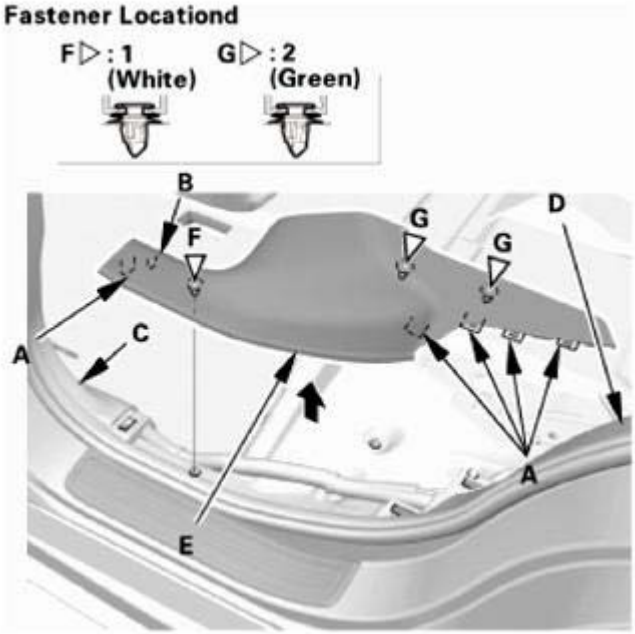

Fig. 327: Removing Rear Door Sill Trim
Courtesy of AMERICAN HONDA MOTOR CO., INC.

6. Rear Door Opening Seal As Needed - Both Sides

NOTE: Repeat this procedure on the opposite side.

1. Pull out the rear door opening seal (A) from the trim hooks (B) around the rear door opening flange, then detach the seal as needed.

GETtheMANUALS.org

Fig. 328: Pulling Out Rear Door Opening Seal From Trim Hooks
Courtesy of AMERICAN HONDA MOTOR CO., INC.

7. B-Pillar Lower Trim - Both Sides

NOTE: Repeat this procedure on the opposite side.

1. Slide the front seat forward fully.
2. Pull back the bottom portion of the B-pillar lower trim (A) by hand to detach the clips (B).
3. Pull back the upper portion of the B-pillar lower trim to detach the upper hooks (C), then remove the B-pillar lower trim.

GETtheMANUALS.org

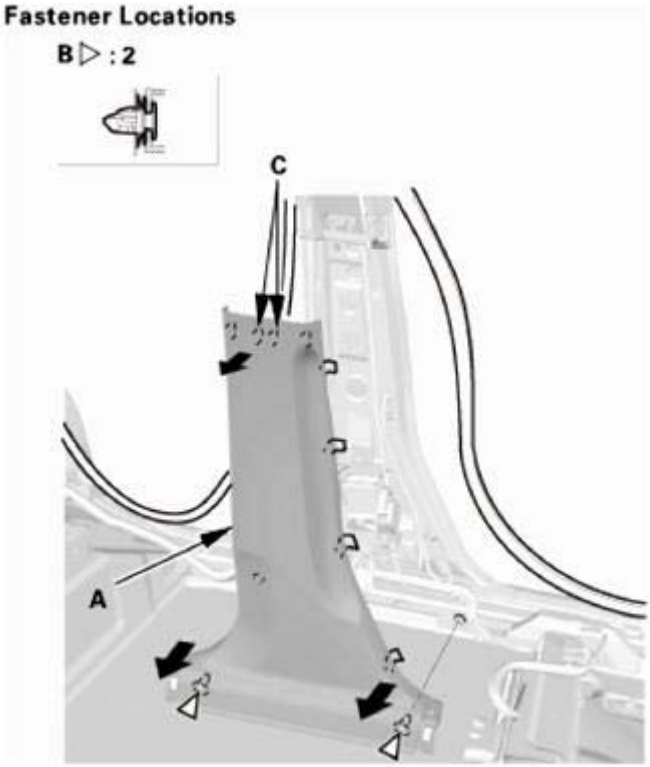

Fig. 329: Removing B-Pillar Lower Trim
Courtesy of AMERICAN HONDA MOTOR CO., INC.

8. Front Seat Belt Upper Anchor Bolt - Both Sides

NOTE: Repeat this procedure on the opposite side.

1. Remove the front seat belt shoulder anchor adjuster cap (A), then remove the front seat belt upper anchor bolt.

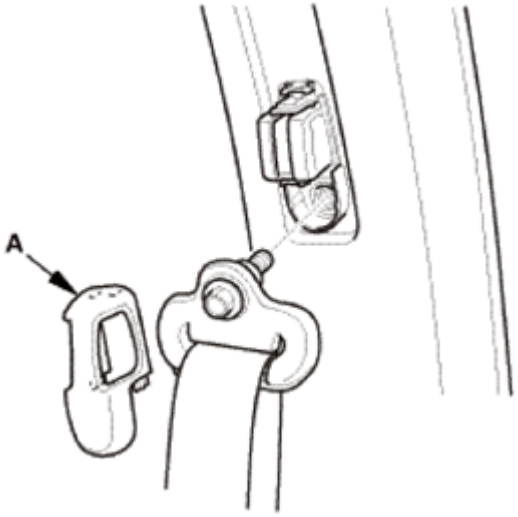

GETtheMANUALS.org

Fig. 330: Identifying Front Seat Belt Shoulder Anchor Adjuster Cap
Courtesy of AMERICAN HONDA MOTOR CO., INC.

9. B-Pillar Upper Trim - Both Sides

NOTE: Repeat this procedure on the opposite side.

1. Pull back the bottom portion of the B-pillar upper trim (A) by hand to detach the hooks (B). Pull down the trim to release the upper hook (C) from the hole (D) in the body, then remove the B-pillar upper trim.

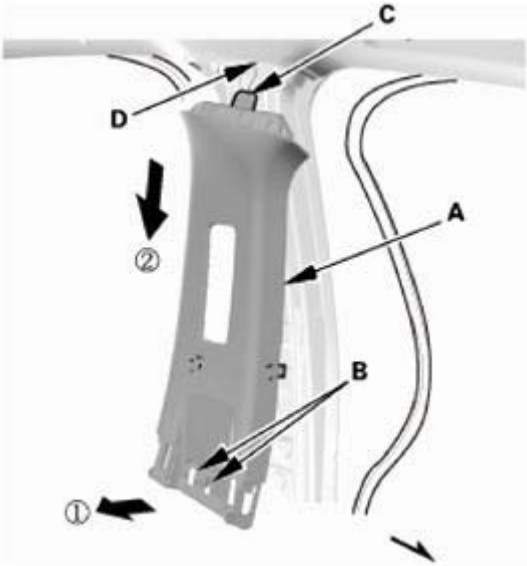

Fig. 331: Removing B-Pillar Upper Trim
Courtesy of AMERICAN HONDA MOTOR CO., INC.

10. Tonneau Cover (For Some Models)
    1. Remove the tonneau cover (A).

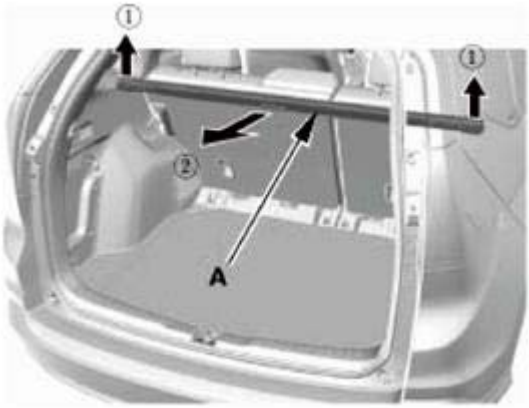

Fig. 332: Removing Tonneau Cover

GETtheMANUALS.org

Courtesy of AMERICAN HONDA MOTOR CO., INC.

11. Cargo Floor Cover
    1. Remove the cargo floor cover (A).

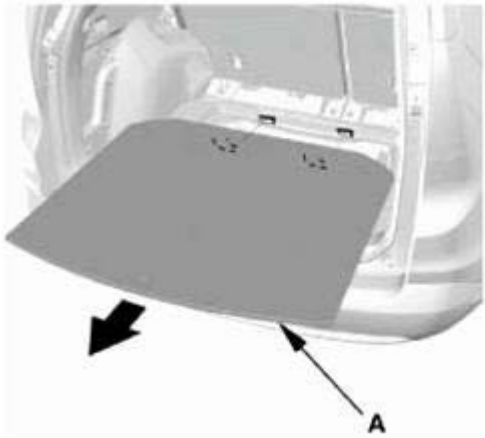

Fig. 333: Removing Cargo Floor Cover
Courtesy of AMERICAN HONDA MOTOR CO., INC.

12. Tailgate Weatherstrip As Needed
    1. Detach the tailgate weatherstrip (A) as needed.

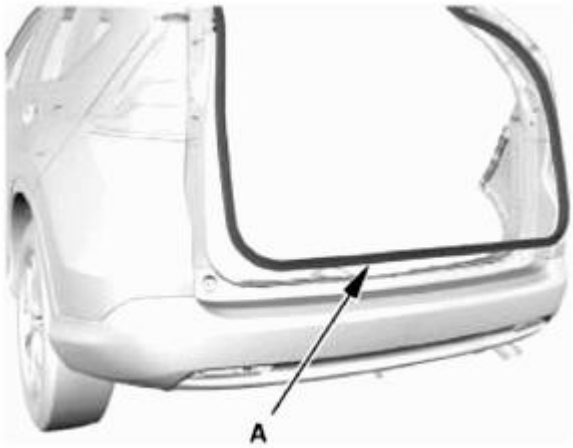

Fig. 334: Identifying Tailgate Weatherstrip
Courtesy of AMERICAN HONDA MOTOR CO., INC.

13. Rear Trim Panel
    1. Remove the clips (A).
    2. Detach the hooks (B) and the tabs (C) from the rear side trim panels (D), and pull up the rear trim panel (E) by hand to detach the clips (F, G), then remove the rear trim panel.

GETtheMANUALS.org

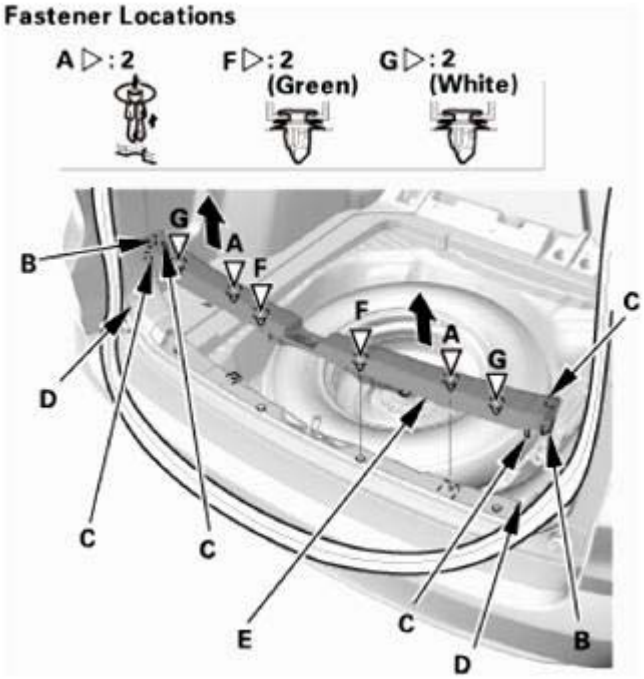

Fig. 335: Removing Rear Trim Panel
Courtesy of AMERICAN HONDA MOTOR CO., INC.

14. Rear Damper Maintenance Cover - Both Sides

NOTE: Repeat this procedure on the opposite side.

1. Fold down the rear seat-back.
2. Pull up the rear damper maintenance cover (A) by hand to detach the hooks (B), then remove the rear damper maintenance cover.

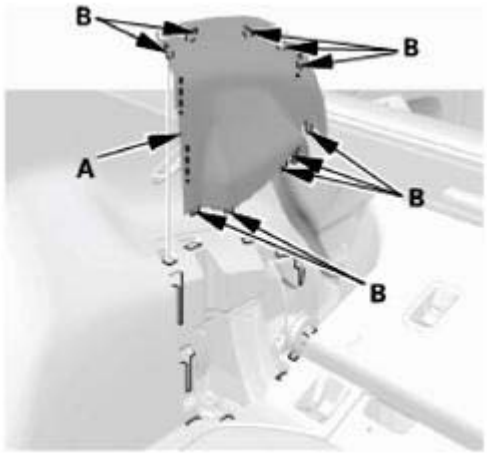

Fig. 336: Identifying Rear Damper Maintenance Cover And Hooks
Courtesy of AMERICAN HONDA MOTOR CO., INC.

GETtheMANUALS.org

15. Rear Carpet Trim - Both Sides
    1. Detach the clips (A), then tuck up the rear seat-back cover (B).

       Left side

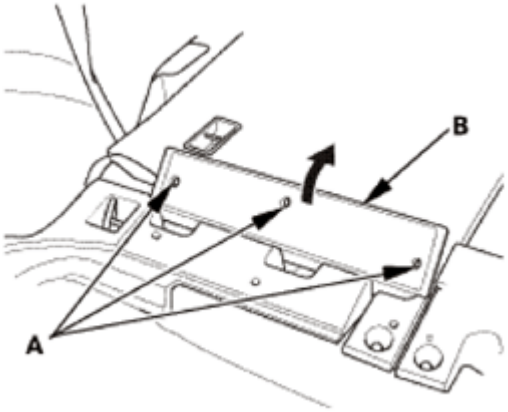

Fig. 337: Pulling Up Rear Seat-Back Cover (Left Side)
Courtesy of AMERICAN HONDA MOTOR CO., INC.

       Right side

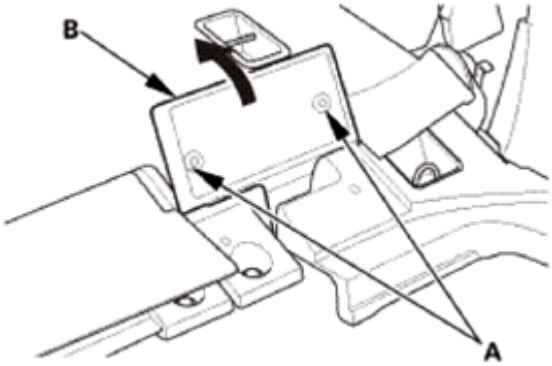

Fig. 338: Pulling Up Rear Seat-Back Cover (Right Side)
Courtesy of AMERICAN HONDA MOTOR CO., INC.

    2. Detach the hooks (A) from the rear side trim panel (B), and pull up the rear carpet trims (C) by hand to detach the clips (D), then remove the rear carpet trims.

       Left side

GETtheMANUALS.org

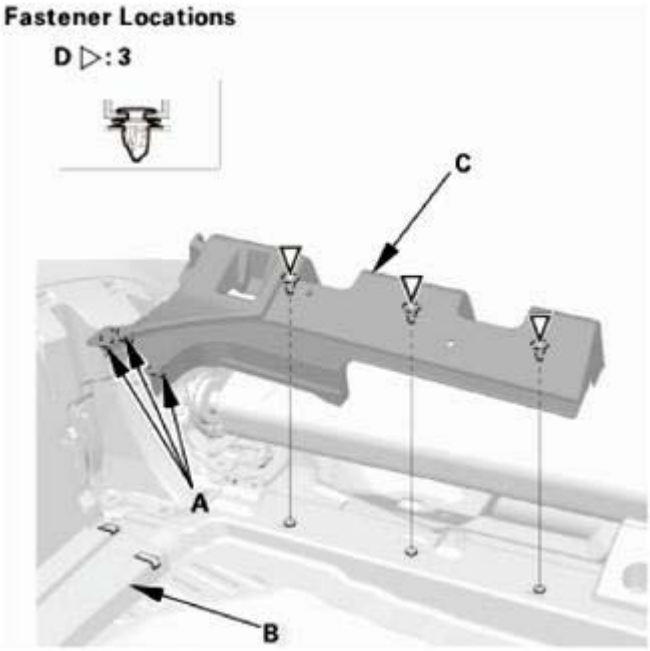

Fig. 339: Identifying Rear Side Trim Panel, Rear Carpet Trims, Hook And Clips (Left Side)
Courtesy of AMERICAN HONDA MOTOR CO., INC.

Right side

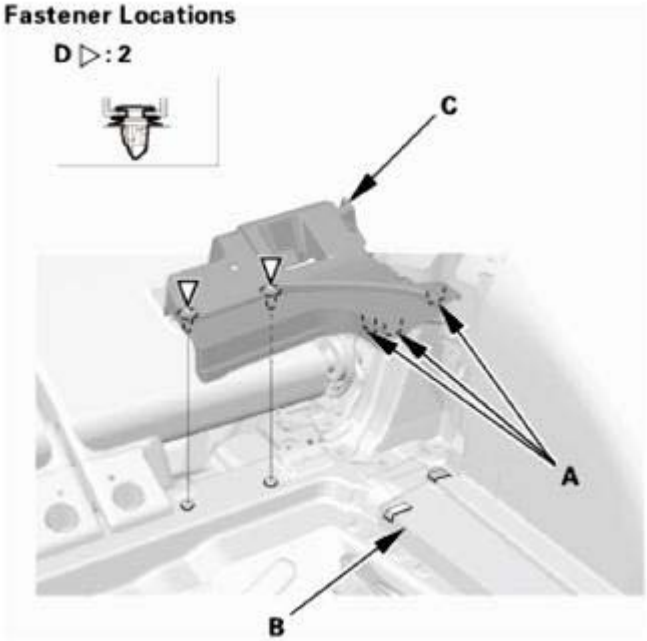

Fig. 340: Identifying Rear Side Trim Panel, Rear Carpet Trims, Hook And Clips (Right Side)
Courtesy of AMERICAN HONDA MOTOR CO., INC.

16. Rear Seat Cushion Foot Cover - Both Sides (Remove The Outer Left Side Only)

GETtheMANUALS.org

1. Pull up the rear seat cushion foot cover (A) by hand to detach the clips (B).
2. Detach the hooks (C), then remove the rear seat cushion foot cover.

Left side

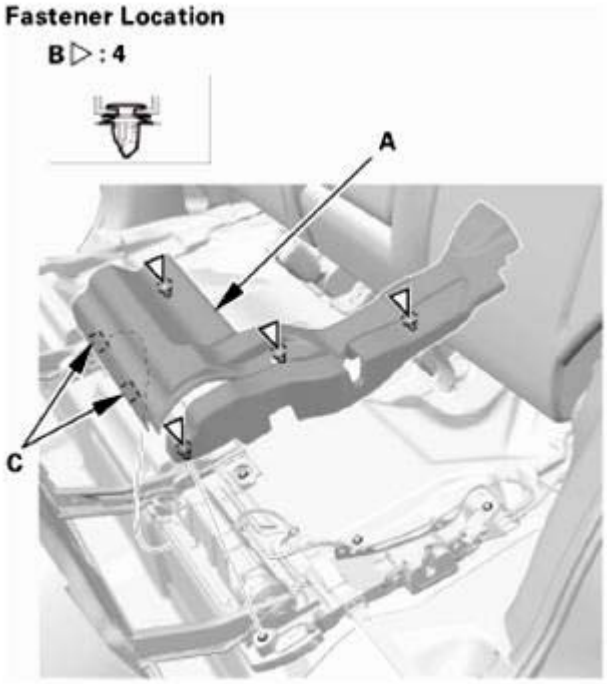

Fig. 341: Identifying Rear Seat Cushion Foot Cover And Clips (Left Side)
Courtesy of AMERICAN HONDA MOTOR CO., INC.

Right side

GETtheMANUALS.org

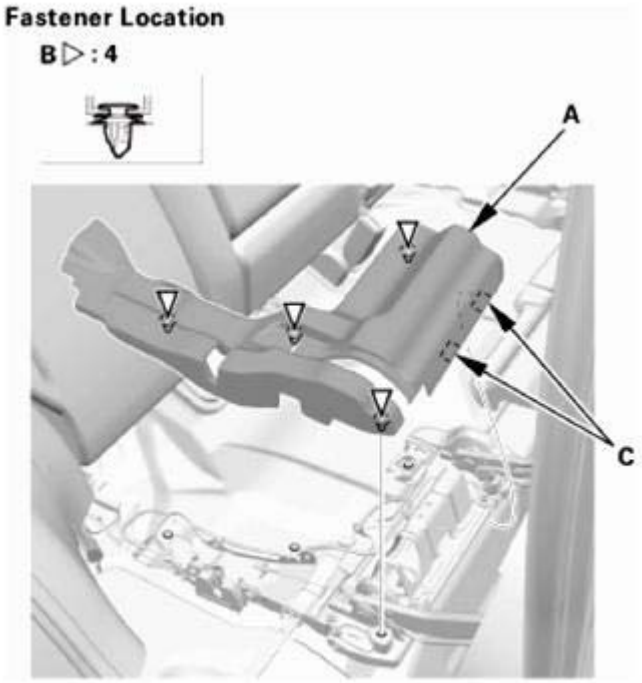

Fig. 342: Identifying Rear Seat Cushion Foot Cover And Clips (Right Side)
Courtesy of AMERICAN HONDA MOTOR CO., INC.

17. Rear Seat Belt Lower Anchor Bolt - Both Sides

NOTE: Repeat this procedure on the opposite side.

1. Remove the rear seat belt lower anchor bolt (A).

GETtheMANUALS.org

Fig. 343: Identifying Rear Seat Belt Lower Anchor Bolt
Courtesy of AMERICAN HONDA MOTOR CO., INC.

18. Rear Side Trim Panel - Both Sides

NOTE: Repeat this procedure on the opposite side.

1. Carefully pry out on the upper hook (A) in the rear seat release lever cap (B) with the appropriate trim tool, then pull back the rear seat release lever cap to remove it.
2. Remove the screws (C).

GETtheMANUALS.org

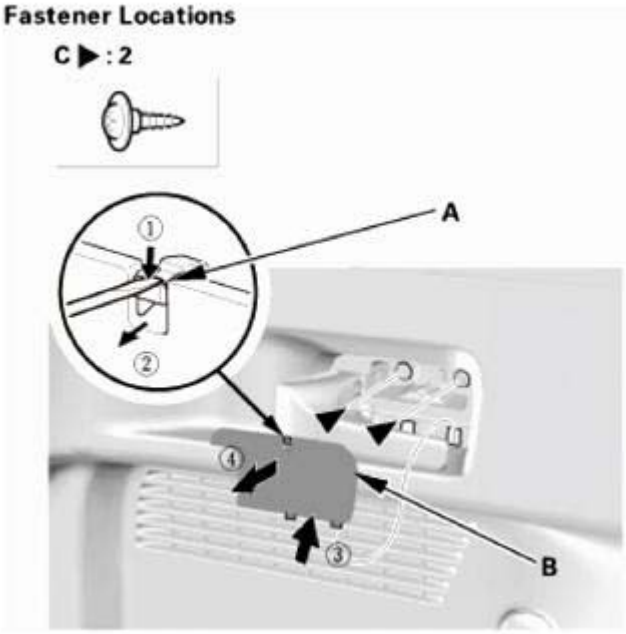

Fig. 344: Removing Rear Side Trim Panel
Courtesy of AMERICAN HONDA MOTOR CO., INC.

3. Push in the center pin (A), then remove the trunk hook (B).

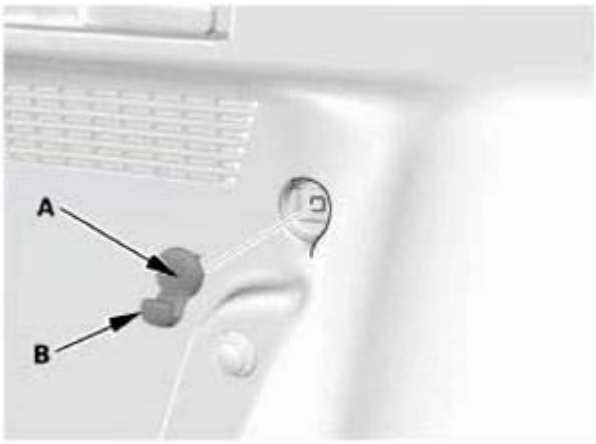

Fig. 345: Identifying Center Pin And Trunk Hook
Courtesy of AMERICAN HONDA MOTOR CO., INC.

4. Remove the bolt (A), then remove the tie-down hook (B).

GETtheMANUALS.org

Fig. 346: Identifying Tie-Down Hook And Bolt
Courtesy of AMERICAN HONDA MOTOR CO., INC.

5. Detach the clips (A, B).
6. Detach the hooks (C) and the tabs (D) from the quarter pillar trim (E), and pull out the rear side trim panel (F) by hand to detach the clips (G, H).

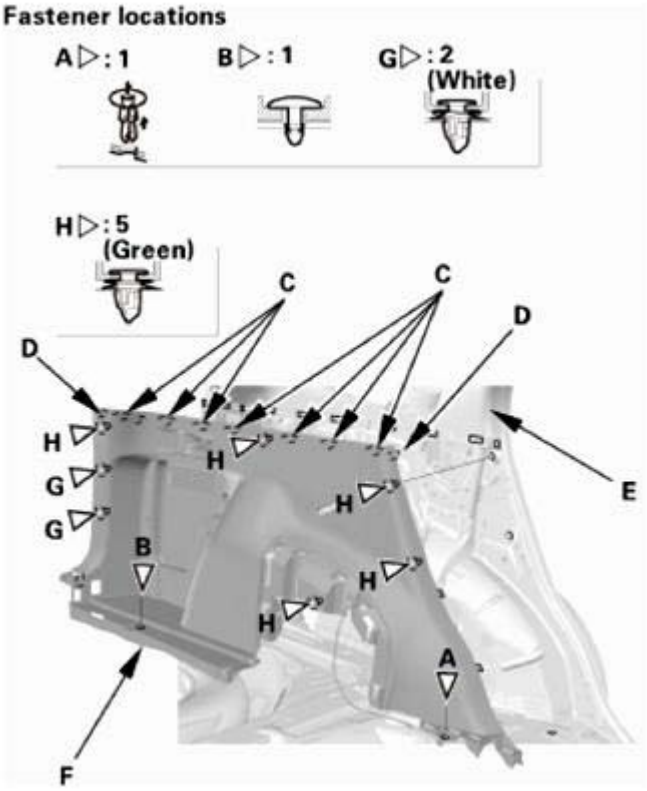

GETtheMANUALS.org

Fig. 347: Identifying Rear Side Trim Panel, Quarter Pillar Trim, Hooks, Tabs And Clips
Courtesy of AMERICAN HONDA MOTOR CO., INC.

7. Remove the rear seat release lever (A) from the rear side trim panel (B).

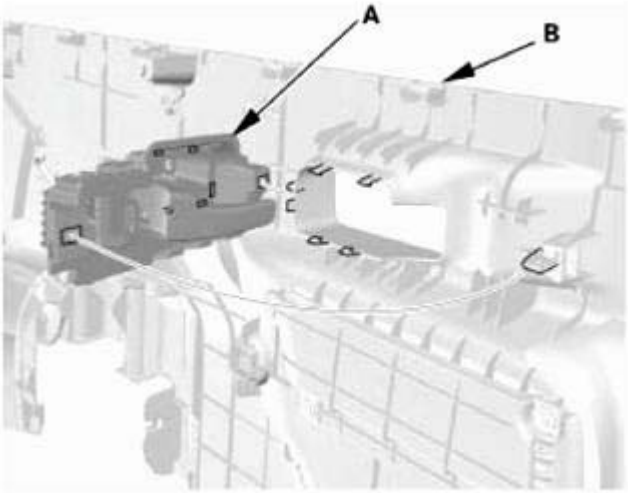

Fig. 348: Identifying Rear Seat Release Lever And Rear Side Trim Panel
Courtesy of AMERICAN HONDA MOTOR CO., INC.

8. Detach the rear seat release cable (A) from the clips of the rear side trim panel (B), then remove the rear side trim panel.

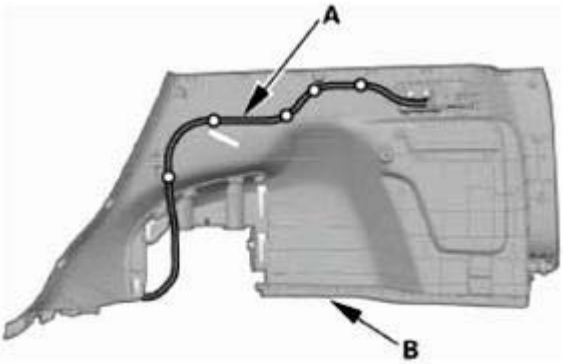

Fig. 349: Identifying Rear Seat Release Cable And Rear Side Trim Panel
Courtesy of AMERICAN HONDA MOTOR CO., INC.

19. Quarter Pillar Trim - Both Sides

NOTE: Repeat this procedure on the opposite side.

1. Pull out the quarter pillar trim (A) by hand to detach the clips (B, C, and D).
2. Pass the rear seat belt lower anchor (E) out through the hole in the quarter pillar trim, then remove the quarter pillar trim.

GETtheMANUALS.org

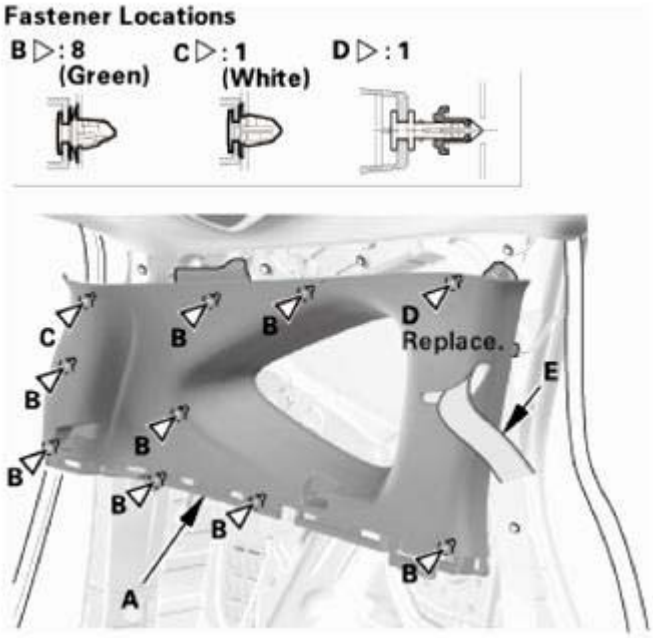

Fig. 350: Identifying Rear Seat Belt Lower Anchor, Quarter Pillar Trim And Clips
Courtesy of AMERICAN HONDA MOTOR CO., INC.

20. Roof Console Assembly
    1. Remove the lenses (A), then remove the screws (B).
    2. Open the console, then remove the screws (C).
    3. Disconnect the connectors (D), then remove the roof console assembly (E).

GETtheMANUALS.org

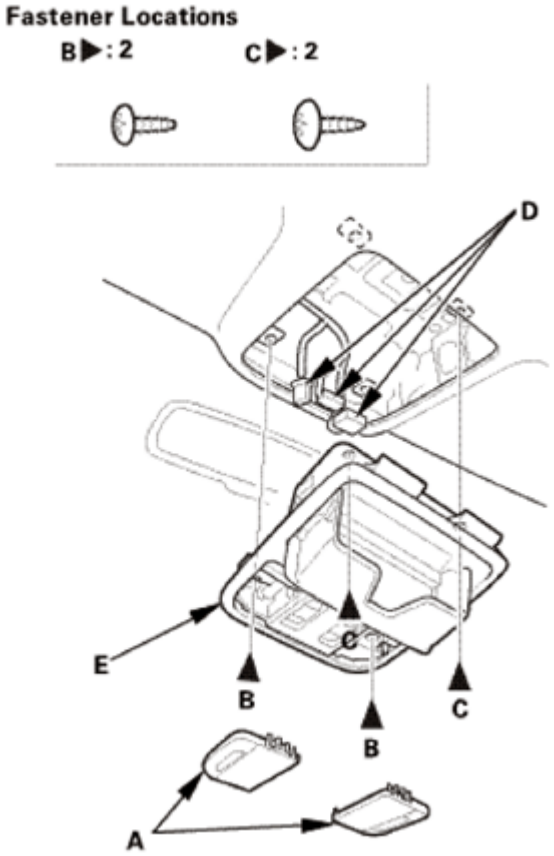

Fig. 351: Identifying Roof Console Assembly Components
Courtesy of AMERICAN HONDA MOTOR CO., INC.

21. Ceiling Light (without RES)
    1. Turn the ceiling light switch OFF.
    2. Carefully pry off the lens (A).
    3. Remove the bulb.
    4. Remove the ceiling light (B).
    5. Disconnect the connector.

GETtheMANUALS.org

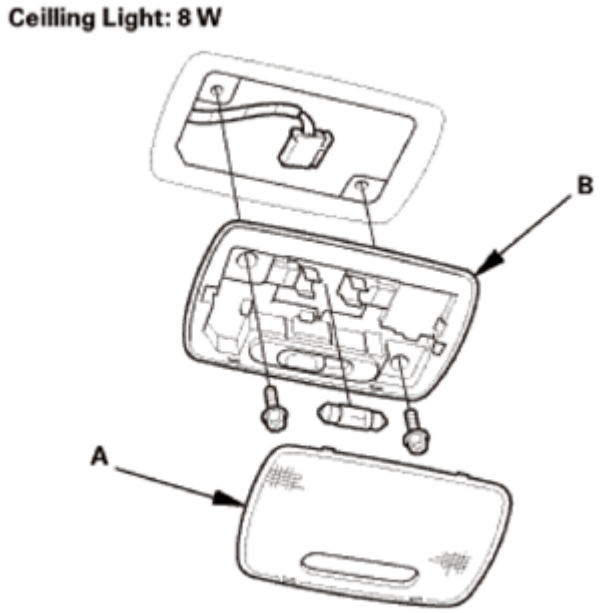

Fig. 352: Identifying Ceiling Light And Lens (Without RES)
Courtesy of AMERICAN HONDA MOTOR CO., INC.

22. Rear Display Cover (With RES)
    1. Turn the ceiling light switch OFF.
    2. Carefully pry off the lenses (A) with a flat-tip screwdriver.
    3. Remove the ceiling light (B).
    4. Disconnect the connector.

GETtheMANUALS.org

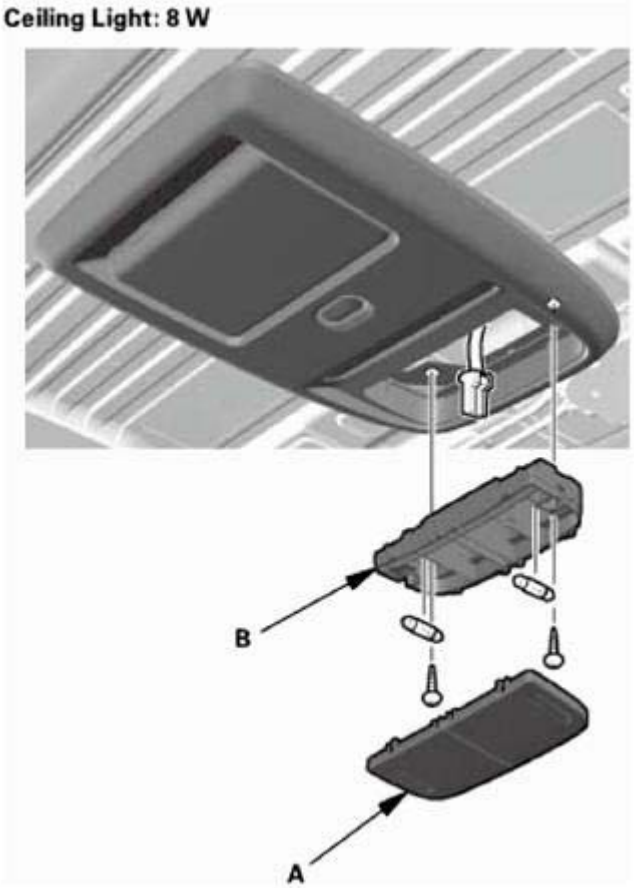

Fig. 353: Identifying Ceiling Light And Lens (With RES)
Courtesy of AMERICAN HONDA MOTOR CO., INC.

5. Remove the rear display cover (A).

GETtheMANUALS.org

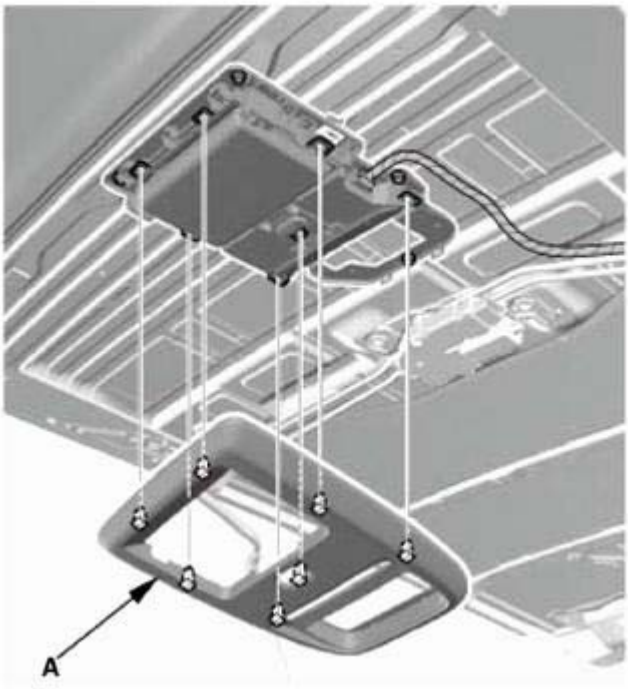

Fig. 354: Identifying Rear Display Cover
Courtesy of AMERICAN HONDA MOTOR CO., INC.

23. Rear Controller and Screen (With RES)
    1. Disconnect the connector.
    2. Remove the rear controller and screen (A).

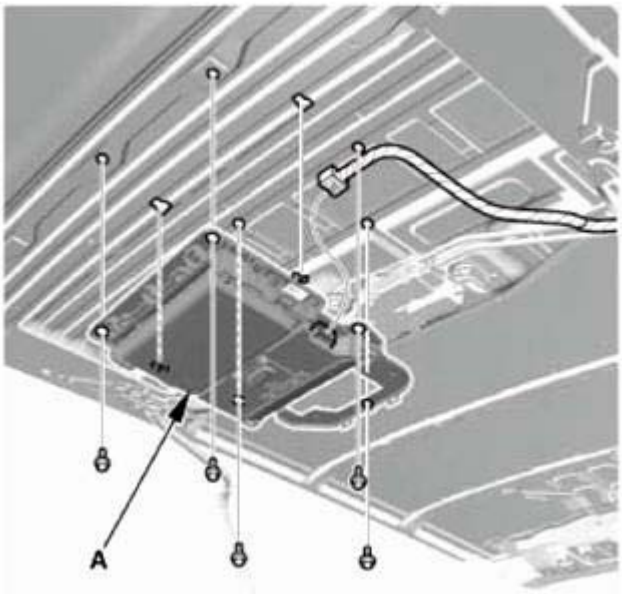

Fig. 355: Identifying Rear Controller And Screen
Courtesy of AMERICAN HONDA MOTOR CO., INC.

GETtheMANUALS.org

24. Cargo Area Light
    1. Turn the cargo area light switch OFF.
    2. Carefully pry off the lens (A).
    3. Remove the bulb.
    4. Remove the cargo area light (B).
    5. Disconnect the connector.

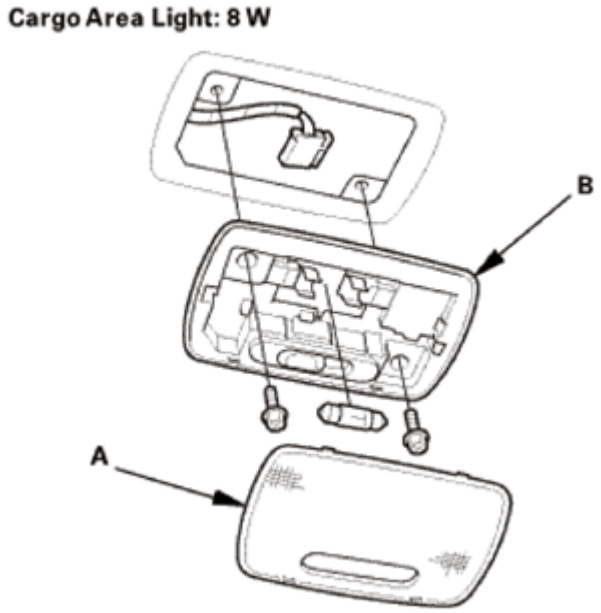

Fig. 356: Identifying Cargo Area Light And Lens
Courtesy of AMERICAN HONDA MOTOR CO., INC.

25. Grab Handles for One Vehicle
    1. Lower the grab handle (A).
    2. Insert the tips of the push pin/grab rail cap pliers (B) into the notch.

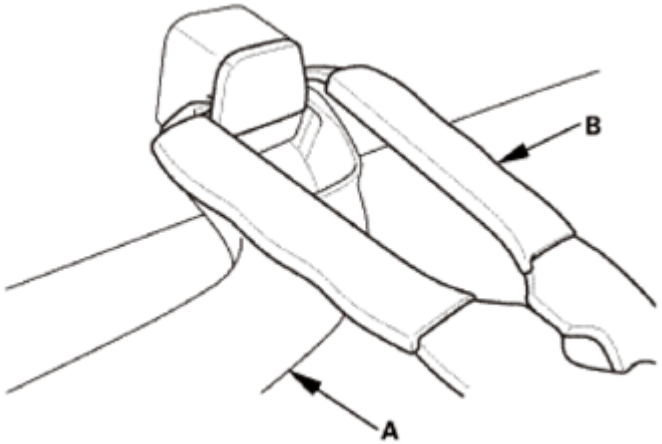

GETtheMANUALS.org

Fig. 357: Inserting Tips Of Push Pin/Grab Rail Cap Pliers Into Notch
Courtesy of AMERICAN HONDA MOTOR CO., INC.

3. Gently squeeze the handles of the push pin/grab rail cap pliers (A), and pull the cap (B) straight out.

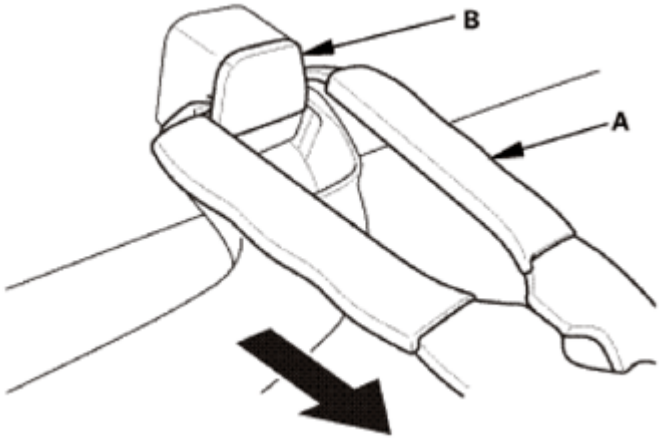

Fig. 358: Pulling Cap Using Push Pin/Grab Rail Cap Pliers
Courtesy of AMERICAN HONDA MOTOR CO., INC.

4. Remove the grab handle (A).

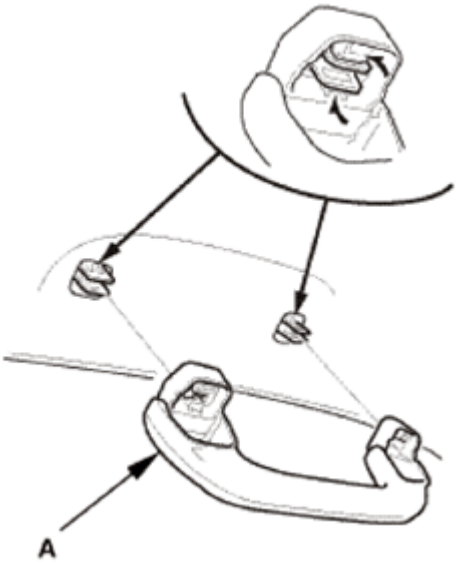

Fig. 359: Identifying Grab Handle
Courtesy of AMERICAN HONDA MOTOR CO., INC.

5. Remove the clips (A).

GETtheMANUALS.org

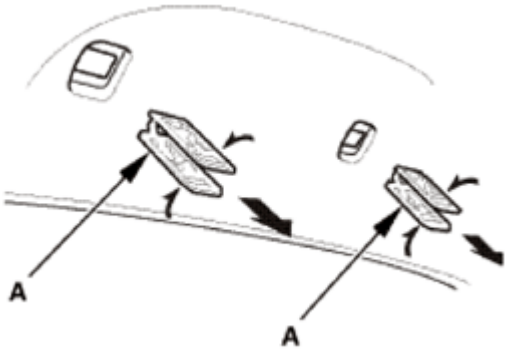

Fig. 360: Removing Clips
Courtesy of AMERICAN HONDA MOTOR CO., INC.

26. Sunvisor - Both Sides

NOTE: Repeat this procedure on the opposite side.

1. Push the tab (A) with a flat-tip screwdriver through the hole in the front side of the bracket cover (B).

NOTE: Make sure the tab is unlocked.

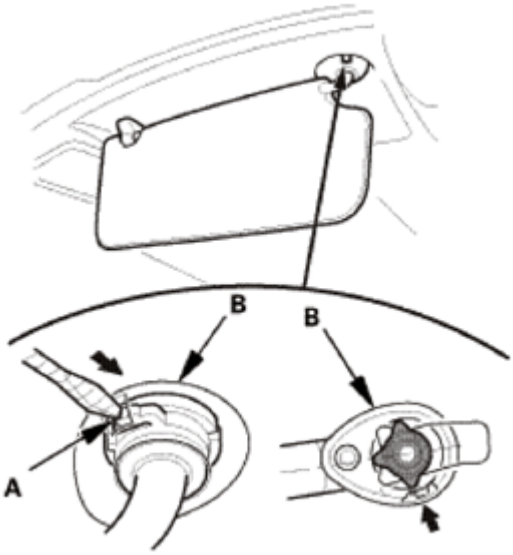

Fig. 361: Pushing Tab Using Flat-Tip Screwdriver
Courtesy of AMERICAN HONDA MOTOR CO., INC.

2. While pushing in the tab (A) with a flat-tip screwdriver, release the sunvisor (B) from the holder (C), and rotate the sunvisor backward 45 °.

NOTE: Make sure the tab slides into the bracket cover as you rotate the

GETtheMANUALS.org

sunvisor.

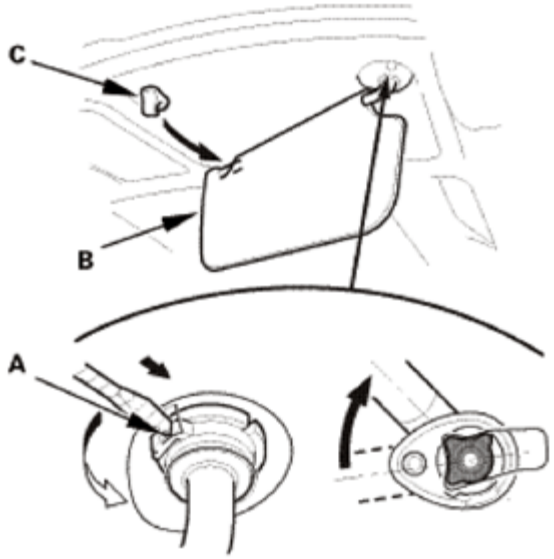

Fig. 362: Rotating Sunvisor Backward 45 °
Courtesy of AMERICAN HONDA MOTOR CO., INC.

3. Disconnect the connector (A), then remove the sunvisor (B).

NOTE: **If the sunvisor cannot be removed, the tab has not rotated into the bracket cover. Repeat step 2 to rotate the tab.**

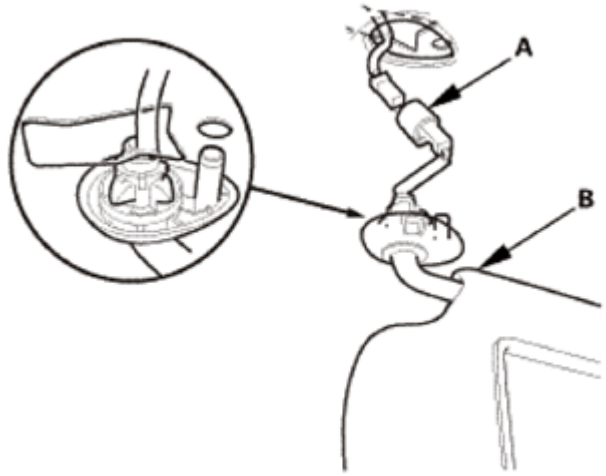

Fig. 363: Identifying Sunvisor And Connector
Courtesy of AMERICAN HONDA MOTOR CO., INC.

27. Headliner
    1. Without moonroof: Disconnect the connector (A), and detach the harness clips (B) from the driver's side A-pillar.

GETtheMANUALS.org

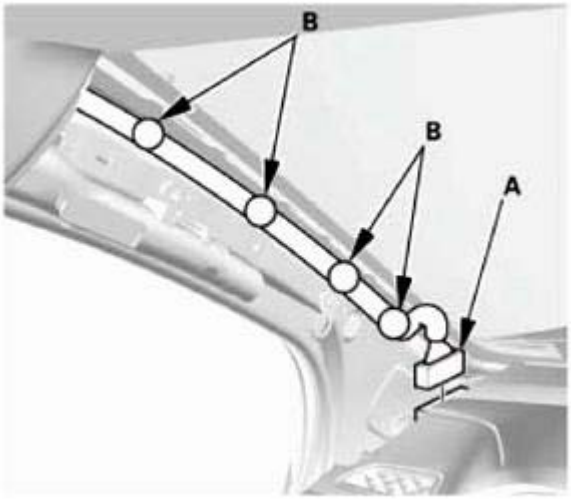

Fig. 364: Identifying Driver's Side A-Pillar Connector And Harness Clips
Courtesy of AMERICAN HONDA MOTOR CO., INC.

2. Disconnect the connectors (A), and detach the harness clips (B) from the passenger's side A-pillar.

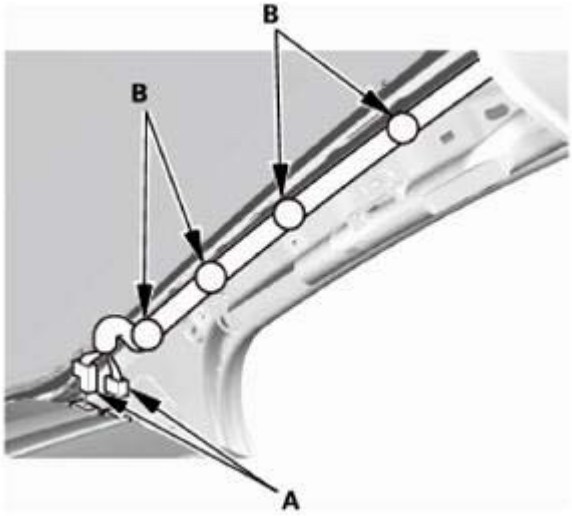

Fig. 365: Identifying Passenger's Side A-Pillar Connector And Harness Clips
Courtesy of AMERICAN HONDA MOTOR CO., INC.

3. Disconnect the connectors (A), and detach the connector clips (B) and the harness clip (C) from the right quarter pillar.

GETtheMANUALS.org

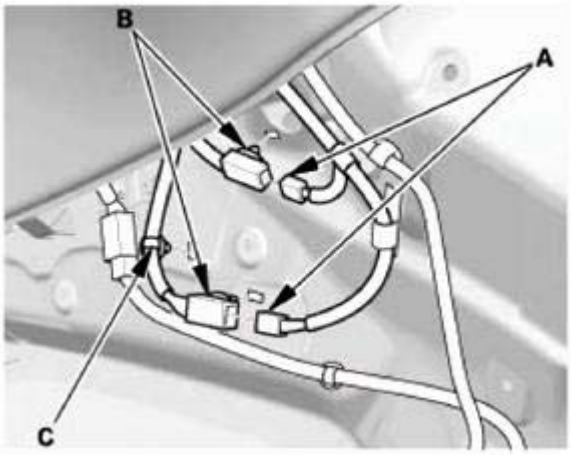

Fig. 366: Identifying Right Quarter Pillar, Connector, Clips And Harness Clip
Courtesy of AMERICAN HONDA MOTOR CO., INC.

4. Slide the front seats all the way back, and recline the seat-back fully.
5. Fold down the rear seats.
6. Detach the clips (A) and release the fasteners (B) from the headliner (C) by pulling it down.
7. With the help of an assistant, lower the headliner.

Without moonroof

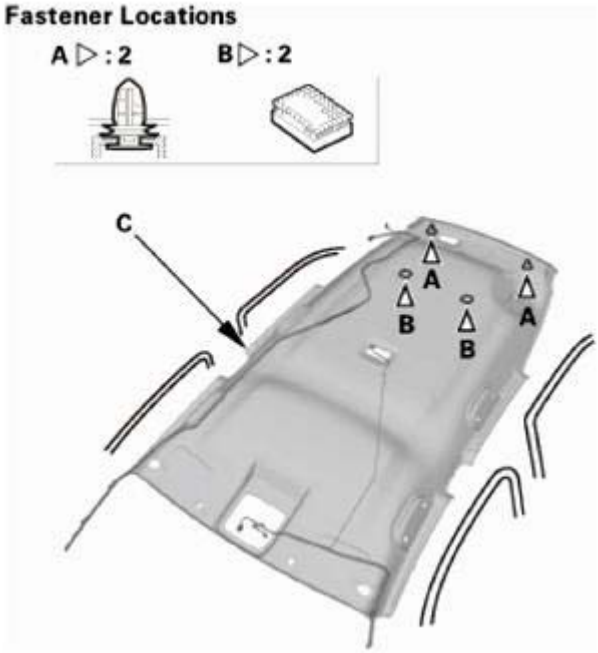

Fig. 367: Identifying Headliner, Clips And Fasteners (Without Moonroof)
Courtesy of AMERICAN HONDA MOTOR CO., INC.

With moonroof

GETtheMANUALS.org

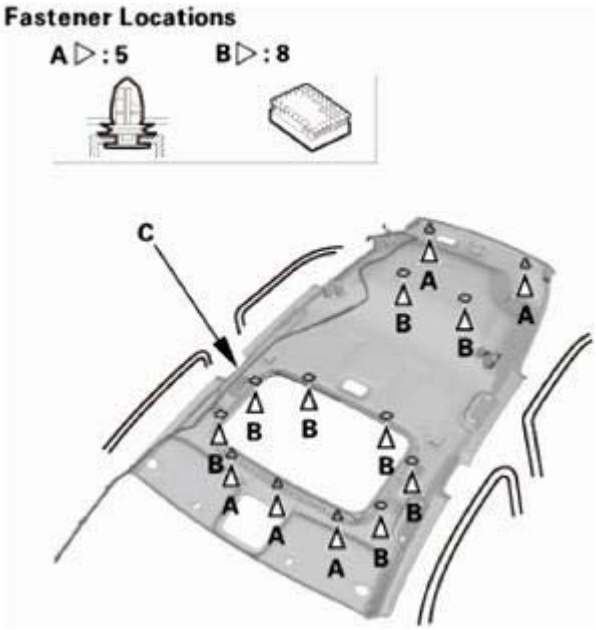

Fig. 368: Identifying Headliner, Clips And Fasteners (With Moonroof)
Courtesy of AMERICAN HONDA MOTOR CO., INC.

8. With the help of an assistant, remove the headliner (A) through the tailgate opening.

NOTE: **Do not bend the headliner. Bending the headliner will crease and damage it.**

Fig. 369: Identifying Headliner
Courtesy of AMERICAN HONDA MOTOR CO., INC.

28. Side Curtain Airbag
    1. Disconnect the side curtain airbag inflator connector (A) on the floor wire harness.

GETtheMANUALS.org

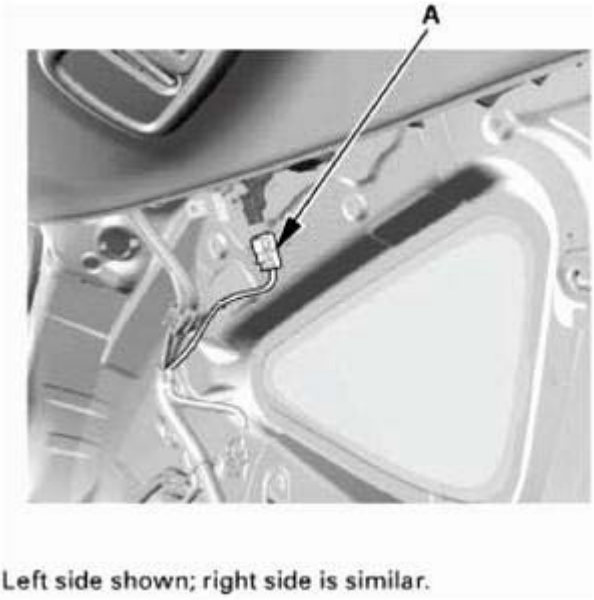

Fig. 370: Identifying Side Curtain Airbag Inflator Connector
Courtesy of AMERICAN HONDA MOTOR CO., INC.

Left side shown; right side is similar .

2. Remove the side curtain airbag (A).

GETtheMANUALS.org

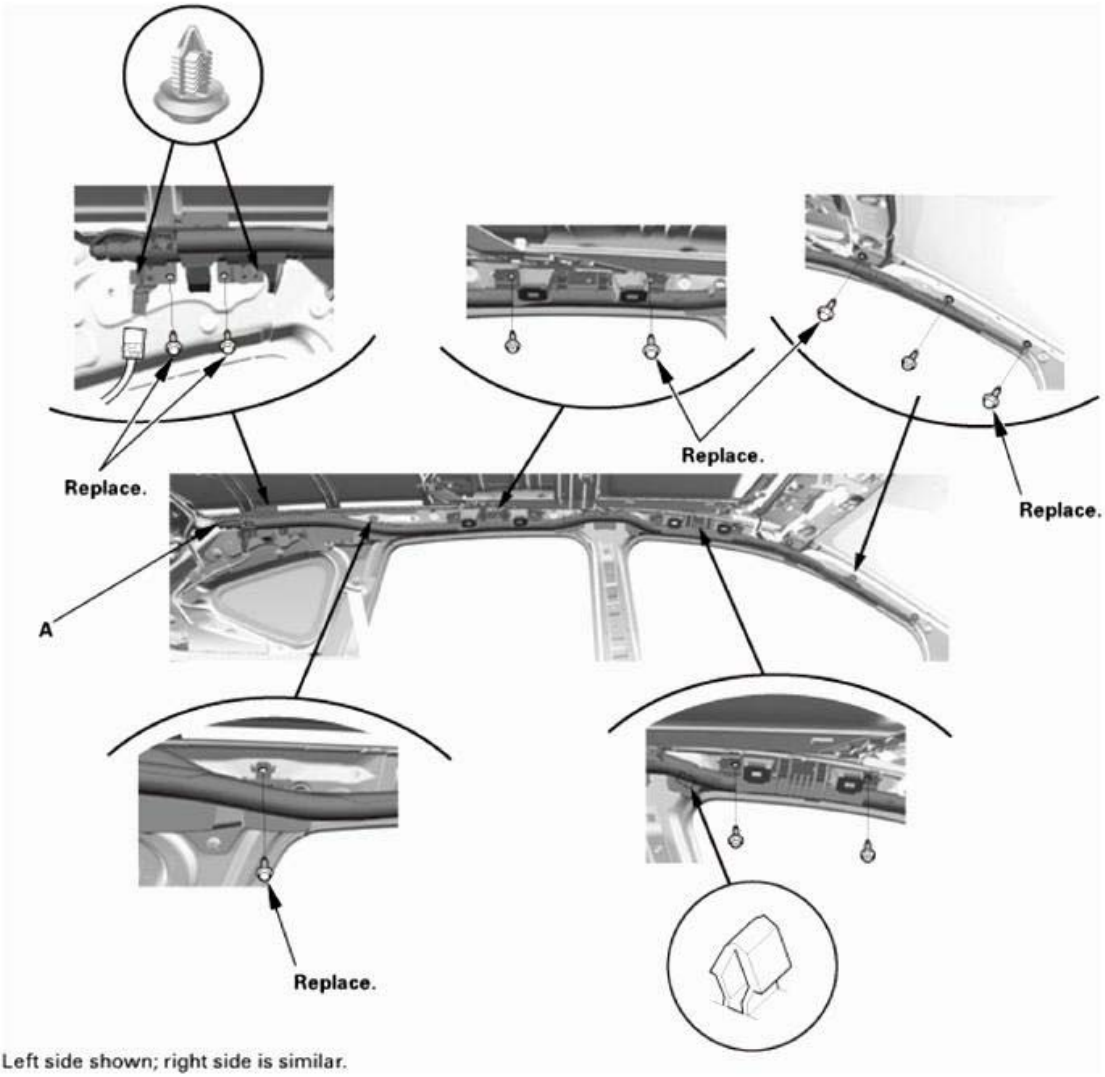

Fig. 371: Identifying Side Curtain Airbag Mounting Clips
Courtesy of AMERICAN HONDA MOTOR CO., INC.

Left side shown; right side is similar .

INSTALLATION

NOTE: **SRS components are located in this area. Review the SRS COMPONENT LOCATIONS and the PRECAUTIONS AND PROCEDURES before doing repairs or service.**

1. Side Curtain Airbag

NOTE:

- **If replacing the side curtain airbag after deployment, refer to COMPONENT REPLACEMENT/INSPECTION AFTER DEPLOYMENT for a complete list of other parts that must also be replaced.**

GETtheMANUALS.org

- **Installation of the side curtain airbag must be done according to precautions and procedures.**
- **If the side curtain airbag is frayed, or has any other visible damage, replace it. Do not attempt to repair an airbag.**
- **When you install the side curtain airbag, make sure it is not twisted, and that it is not caught between the inflator bracket by the bracket bolts.**
- **Make sure that the side curtain airbag inflator retainer is installed properly. Otherwise the side curtain airbag could incorrectly deploy and cause damage or injuries.**
- **If there is any damage to the side curtain airbag, do not try to repair it. Replace any damaged side curtain airbag.**

1. Install the side curtain airbag (A).

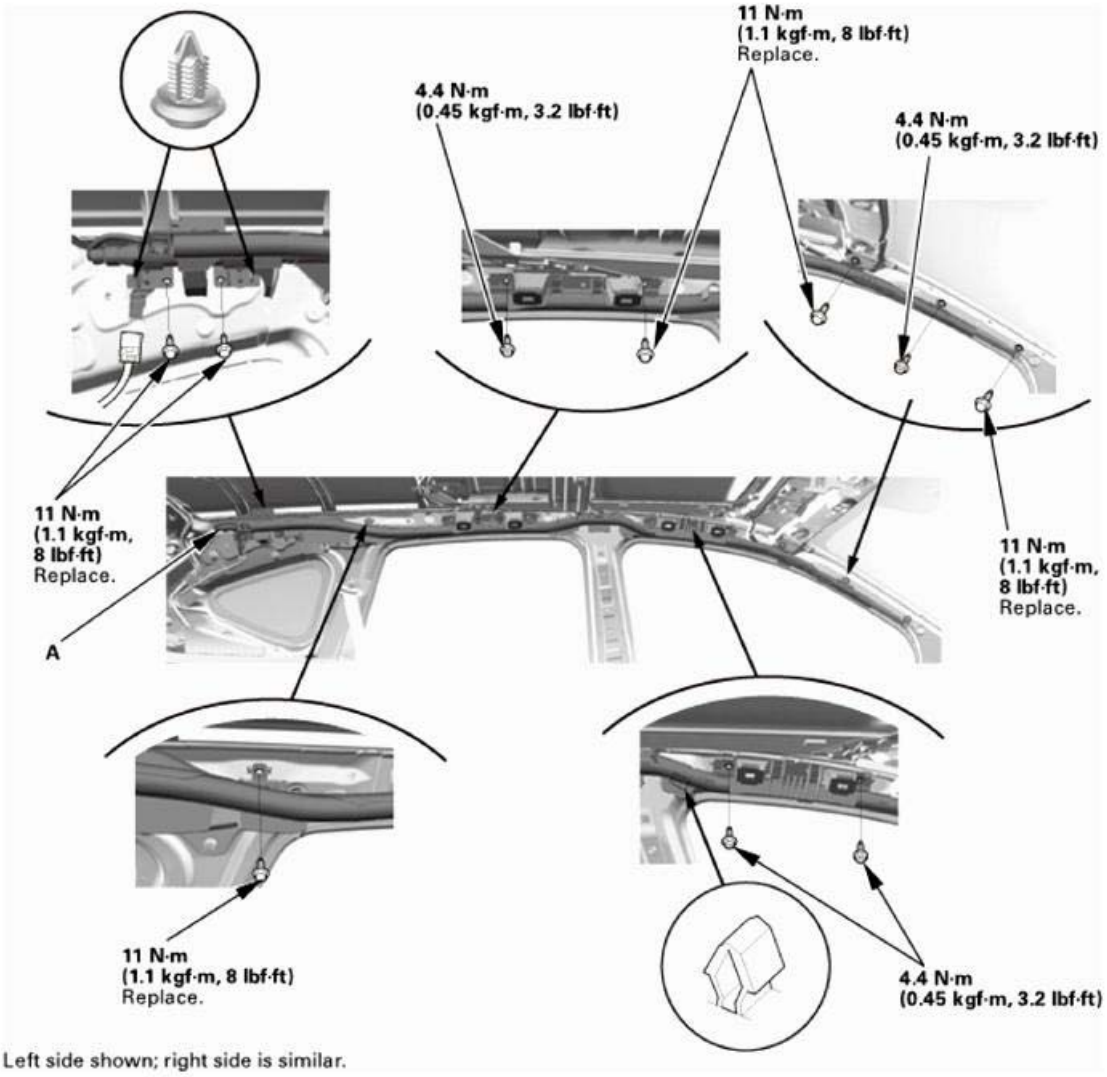

Left side shown; right side is similar.

GETtheMANUALS.org

Fig. 372: Identifying Side Curtain Airbag Components And Bolt With Torque Specifications
Courtesy of AMERICAN HONDA MOTOR CO., INC.

Left side shown; right side is similar .

2. Connect the side curtain airbag inflator connector (A) on the floor wire harness.

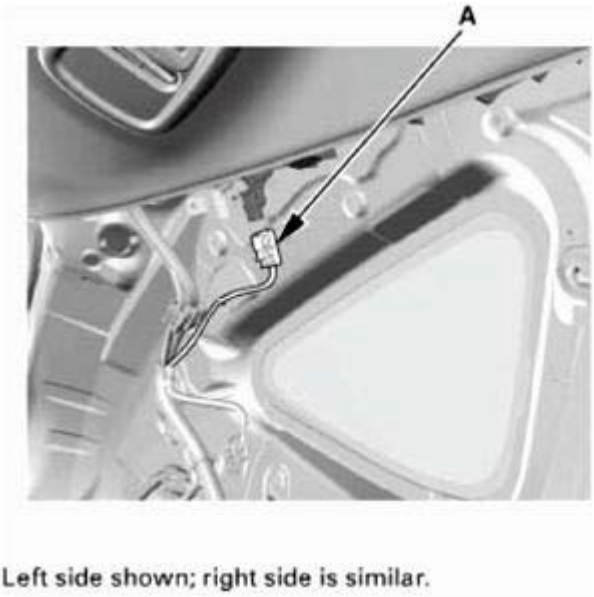

Fig. 373: Identifying Side Curtain Airbag Inflator Connector
Courtesy of AMERICAN HONDA MOTOR CO., INC.

Left side shown; right side is similar .

2. Battery Terminal (SRS) - Reconnection

NOTE: If the battery performance is abnormal, test the battery.

1. Clean the battery terminals.
2. Connect the positive cable (A) to the battery.

NOTE: Always connect the positive side first.

3. Connect the negative cable (B) to the battery.
4. Apply multipurpose grease to the terminals to prevent corrosion.

GETtheMANUALS.org

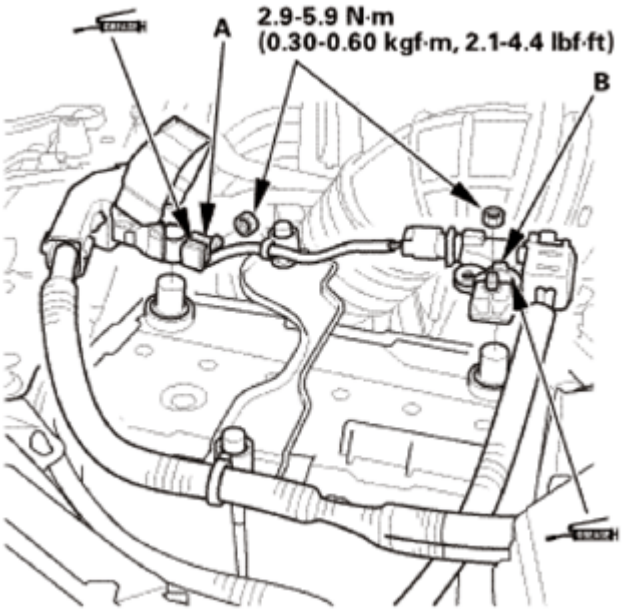

Fig. 374: Identifying Multipurpose Grease Applying Area On Battery Positive And Negative Terminals
Courtesy of AMERICAN HONDA MOTOR CO., INC.

3. HDS DLC - Connection
    1. Connect the HDS to the data link connector (DLC) (A) located under the driver's side of the dashboard.
    2. Turn the ignition switch to ON (II).
    3. Make sure the HDS communicates with the vehicle. If it does not communicate, go to the DLC circuit troubleshooting.

Fig. 375: Identifying Data Link Connector
Courtesy of AMERICAN HONDA MOTOR CO., INC.

GETtheMANUALS.org

4. DTC - Clear
    1. Clear the DTC(s) by following the screen prompts on the HDS.
    2. Turn the ignition switch to LOCK (0), then wait for 10 seconds.
5. Confirm Proper SRS Operation
    1. Turn the ignition switch to ON (II), and check that the SRS indicator comes on for about 6 seconds and then goes off.
6. Headliner - Check
    1. If the side curtain airbag has deployed, replace the headliner and removed trim pieces, along with the other parts listed for side curtain airbag deployment.
    2. To prevent the side curtain airbags from deploying improperly and possibly causing injury, inspect the headliner and all removed trim. Replace any pieces with the following damage:
        - Any creases or tears in the headliner (A)
        - Any damages around the grab handle holes (B) or the sunvisor holes (C) in the headliner
        - Any clip bases (D) which have come off the headliner
        - Any fasteners (E) or clip bases (F) which have come off the headliner

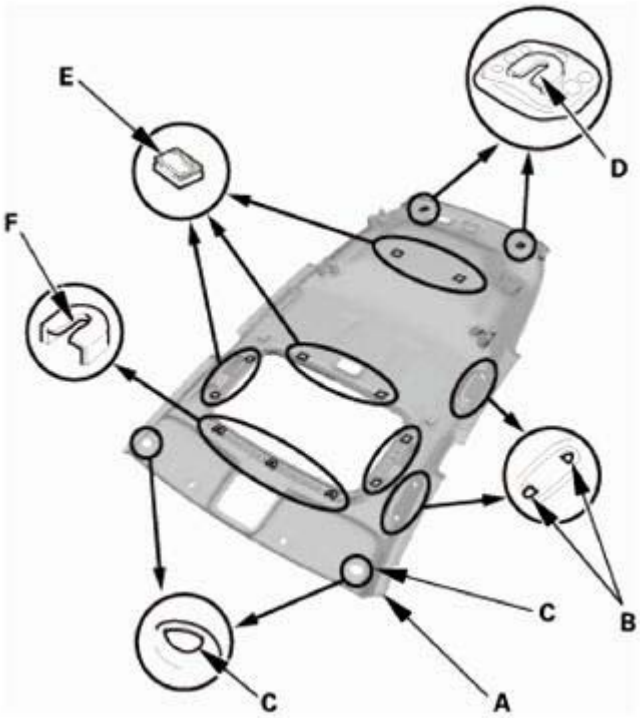

Fig. 376: Identifying Headliner, Grab Handle Holes, Sunvisor Holes, Clip Bases And Fasteners
Courtesy of AMERICAN HONDA MOTOR CO., INC.

7. Headliner
    1. With the help of an assistant, slide the headliner (A) through the tailgate opening.

GETtheMANUALS.org

NOTE: **Do not bend the headliner. Bending the headliner will crease and damage it.**

Fig. 377: Identifying Headliner
Courtesy of AMERICAN HONDA MOTOR CO., INC.

2. With the help of an assistant, install the headliner (A), then push on the clips (B) and the fasteners (C) which will snap into place securely.

Without moonroof

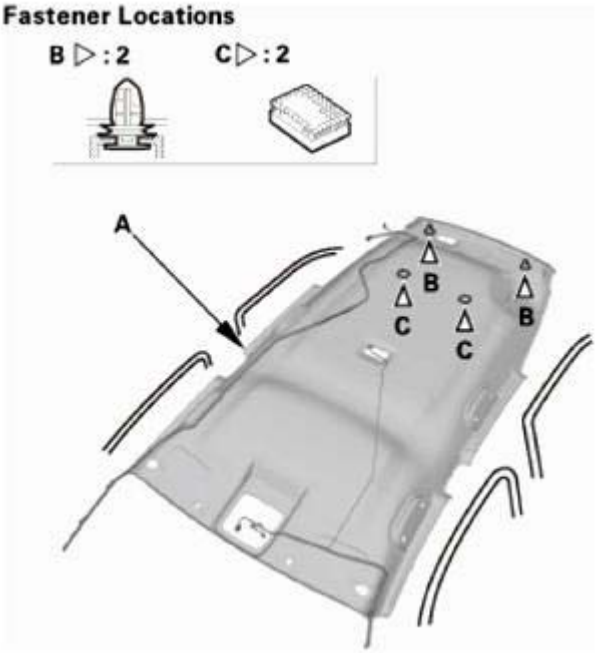

Fig. 378: Identifying Headliner, Clips And Fasteners (Without Moonroof)
Courtesy of AMERICAN HONDA MOTOR CO., INC.

GETtheMANUALS.org

With moonroof

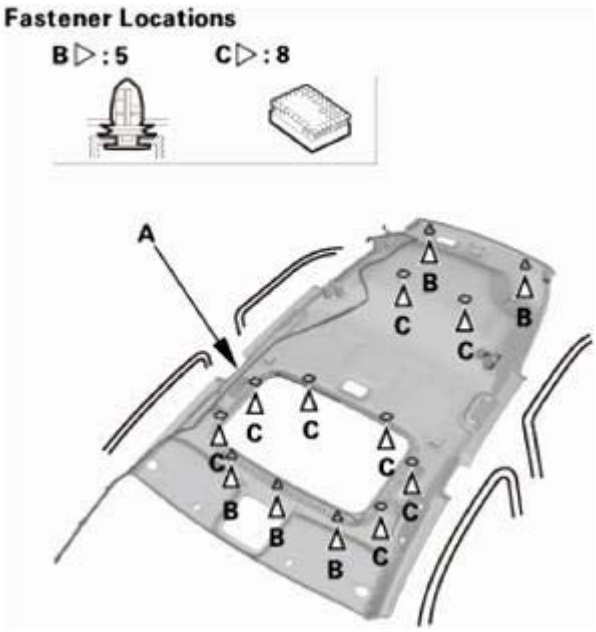

Fig. 379: Identifying Headliner, Clips And Fasteners (With Moonroof)
Courtesy of AMERICAN HONDA MOTOR CO., INC.

3. At the right quarter pillar, connect the connectors (A), and install the connector clips (B) and the harness clip (C).

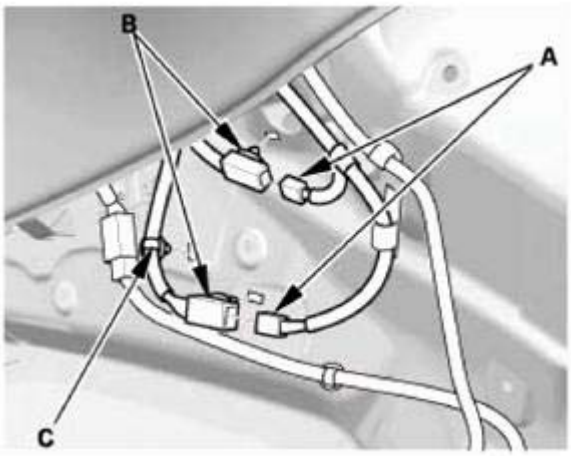

Fig. 380: Identifying Right Quarter Pillar Connector, Clips And Harness Clip
Courtesy of AMERICAN HONDA MOTOR CO., INC.

4. At the passenger's A-pillar, connect the connectors (A), and install the harness clips (B).

GETtheMANUALS.org

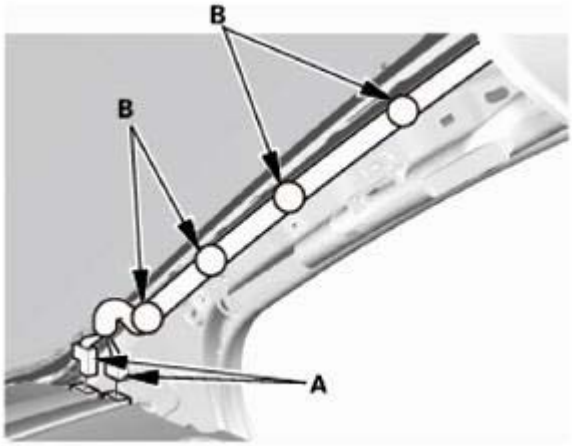

Fig. 381: Identifying Passenger's A-Pillar Connector, Clips And Harness Clip
Courtesy of AMERICAN HONDA MOTOR CO., INC.

5. Without moonroof: At the driver's A-pillar, connect the connector (A), and install the harness clips (B).

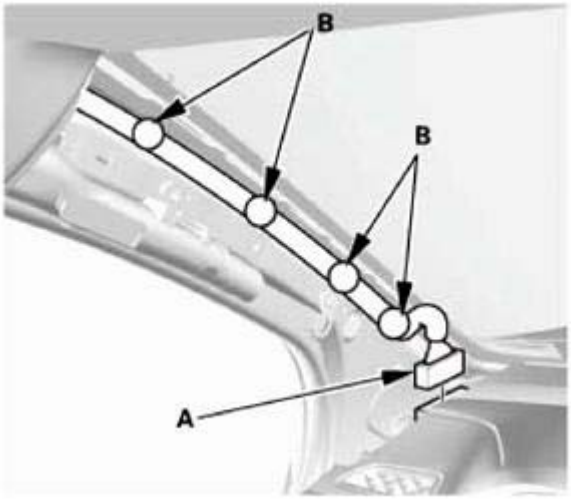

Fig. 382: Identifying Driver's A-Pillar, Connector And Harness Clips (Without Moonroof)
Courtesy of AMERICAN HONDA MOTOR CO., INC.

8. Sunvisor - Check
    1. If the side curtain airbag has deployed, replace the sunvisor, along with the other parts listed for side curtain airbag deployment.
    2. If the side curtain airbag has not deployed, inspect the sunvisor for damage. A damaged sunvisor may cause the side curtain airbags to deploy improperly, possibly causing injury. Replace the sunvisor if it has any of the following damage:
        - Any cracks in the sunvisor bracket (A)
        - Any cracks in the sunvisor bracket cover (B)
        - Any bends or cracks in the sunvisor shaft (C)

GETtheMANUALS.org

- Any cracks in the sunvisor base (D)
- Any cracks in the vanity mirror base (E)

3. If the holder grommet is damaged or stress-whitened, replace the holder grommet and the holder as an assembly.

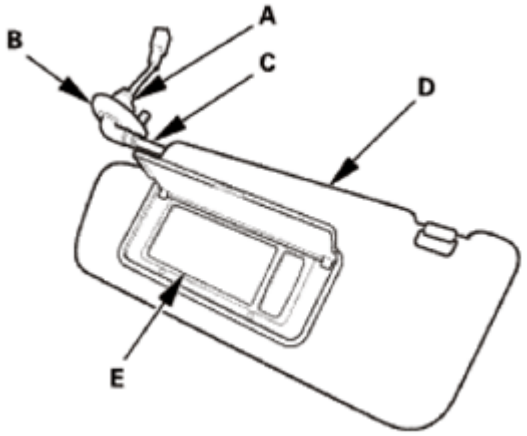

Fig. 383: Identifying Sunvisor Bracket, Cover, Shaft, Base And Vanity Mirror Base
Courtesy of AMERICAN HONDA MOTOR CO., INC.

9. Sunvisor - Both Sides

NOTE: Repeat this procedure on the opposite side.

1. Connect the connector (A), and install the sunvisor (B).

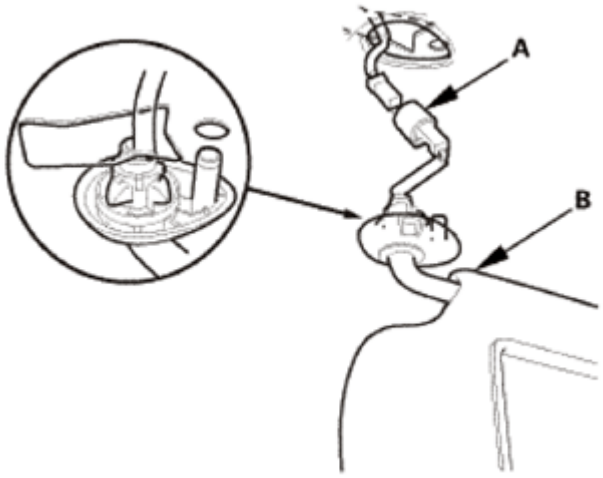

Fig. 384: Identifying Sunvisor And Connector
Courtesy of AMERICAN HONDA MOTOR CO., INC.

2. While holding the bracket cover (A), rotate the sunvisor (B) forward until the tab (C) snaps into place.

GETtheMANUALS.org

3. Gently pull down on the sunvisor to make sure it is properly secured in the body.
4. Rotate the sunvisor into the holder (D).

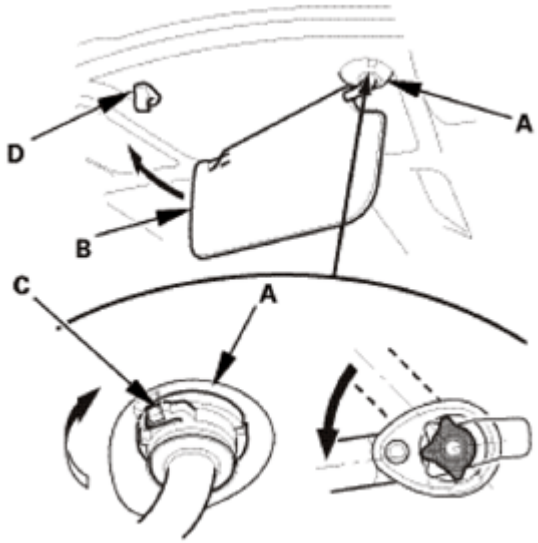

Fig. 385: Rotating Sunvisor Into Holder
Courtesy of AMERICAN HONDA MOTOR CO., INC.

10. Grab Handle - Check
    1. If the side curtain airbag has not deployed, inspect the grab handle (A) for damage. A damaged grab handle may cause the side curtain airbag to deploy improperly, possibly causing injury. Replace the grab handle if it has any of the following damage:
        - Any cracks or breakage in the grab handle
        - Any cracks or stress-whitening in the caps (B)

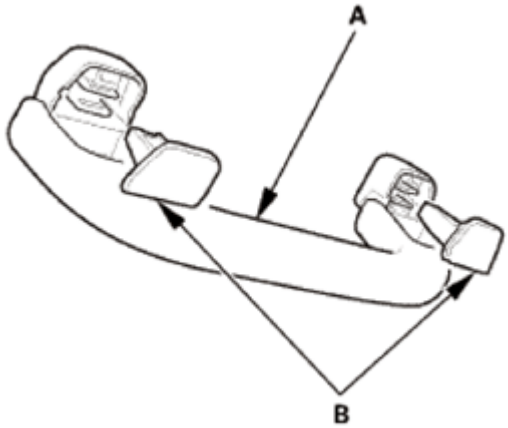

Fig. 386: Identifying Grab Handle And Caps
Courtesy of AMERICAN HONDA MOTOR CO., INC.

11. Grab Handles for One Vehicle

GETtheMANUALS.org

1. Install the clips (A) on the grab handle (B).
2. Install the caps (C) fully into the clips.

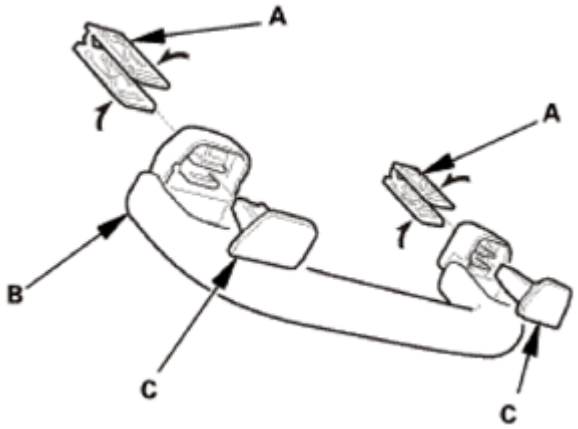

Fig. 387: Installing Clips On Grab Handle
Courtesy of AMERICAN HONDA MOTOR CO., INC.

3. Position the grab handle (A) on the grab handle bracket (B).
4. Push on the grab handle until the clips (C) snap into place securely.

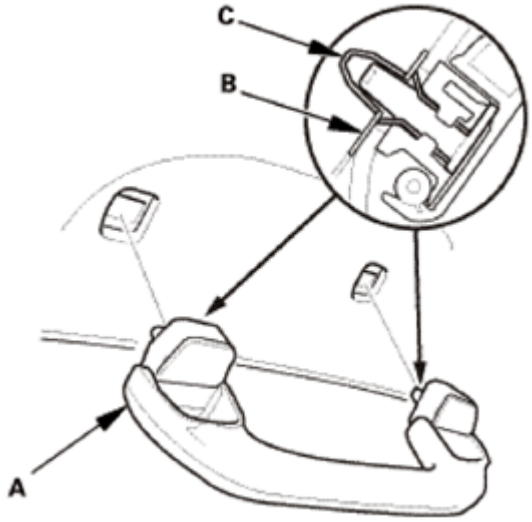

Fig. 388: Identifying Grab Handle, Bracket And Clips
Courtesy of AMERICAN HONDA MOTOR CO., INC.

12. Cargo Area Light
    1. Connect the connector.
    2. Install the cargo area light (A).
    3. Install the bulb.
    4. Carefully install the lens (B).

GETtheMANUALS.org

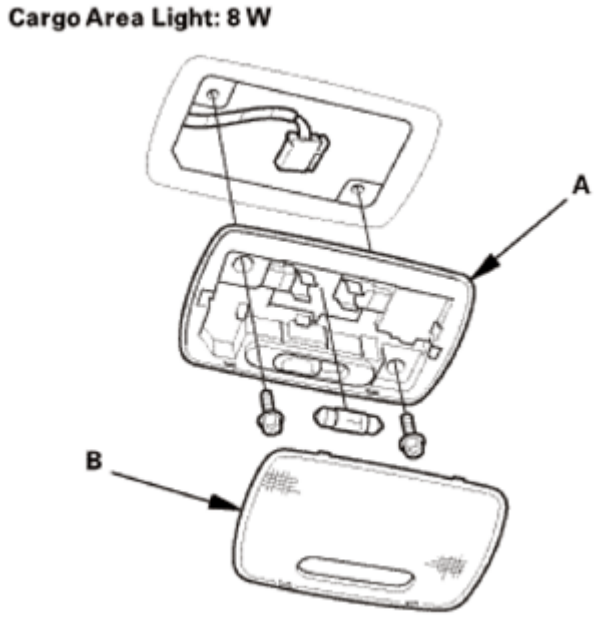

Fig. 389: Identifying Cargo Area Light And Lens
Courtesy of AMERICAN HONDA MOTOR CO., INC.

13. Rear Controller and Screen (With RES)
    1. Install the rear controller and screen (A).
    2. Connect the connector.

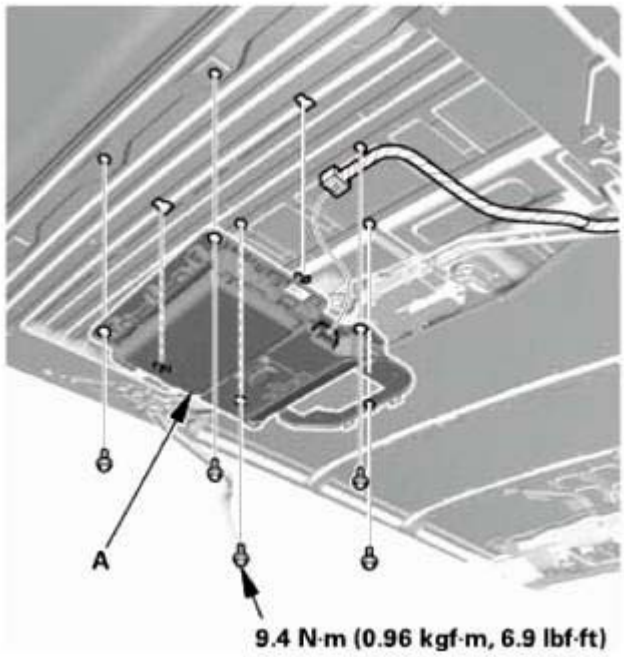

Fig. 390: Identifying Rear Controller And Screen With Torque Specifications (With RES)
Courtesy of AMERICAN HONDA MOTOR CO., INC.

GETtheMANUALS.org

14. Rear Display Cover (With RES)
    1. Install the rear display cover (A).

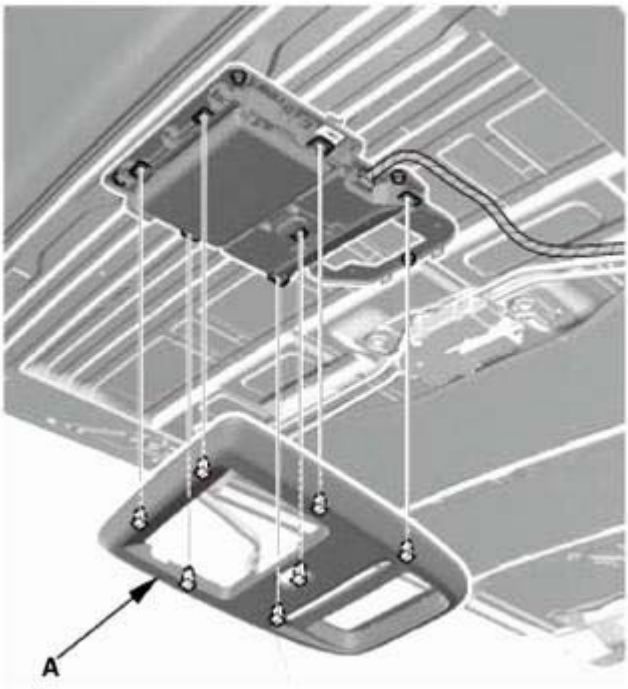

Fig. 391: Identifying Rear Display Cover
Courtesy of AMERICAN HONDA MOTOR CO., INC.

    2. Connect the connector.
    3. Install the ceiling light (B).
    4. Carefully install the lenses (C).

GETtheMANUALS.org

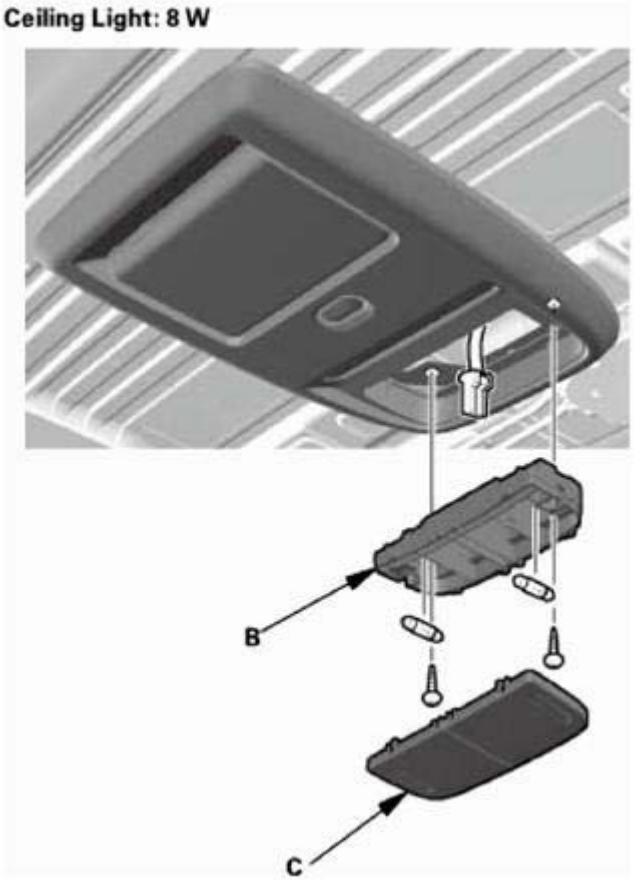

Fig. 392: Identifying Ceiling Light And Lenses
Courtesy of AMERICAN HONDA MOTOR CO., INC.

15. Ceiling Light (without RES)
    1. Connect the connector.
    2. Install the ceiling light (A).
    3. Install the bulb.
    4. Carefully install the lens (B).

GETtheMANUALS.org

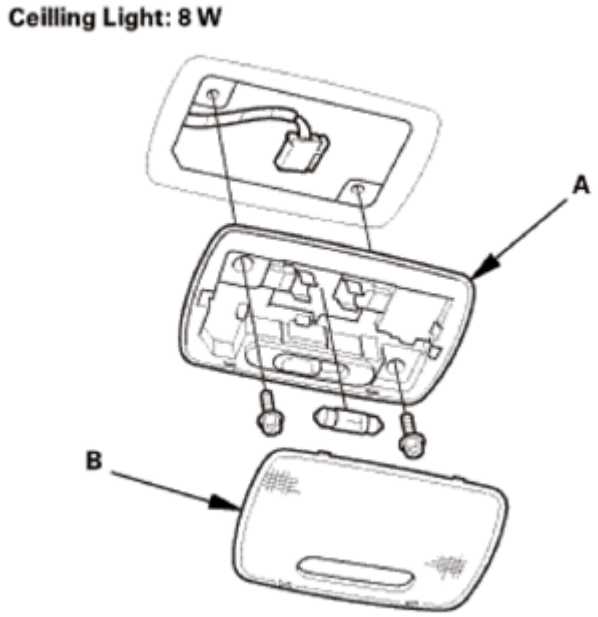

Fig. 393: Identifying Ceiling Light And Lenses (Without RES)
Courtesy of AMERICAN HONDA MOTOR CO., INC.

16. Roof Console Assembly
    1. Connect the connectors (A), then install the roof console assembly (B).
    2. Install the screws (C, D), then install the lenses (E).

GETtheMANUALS.org

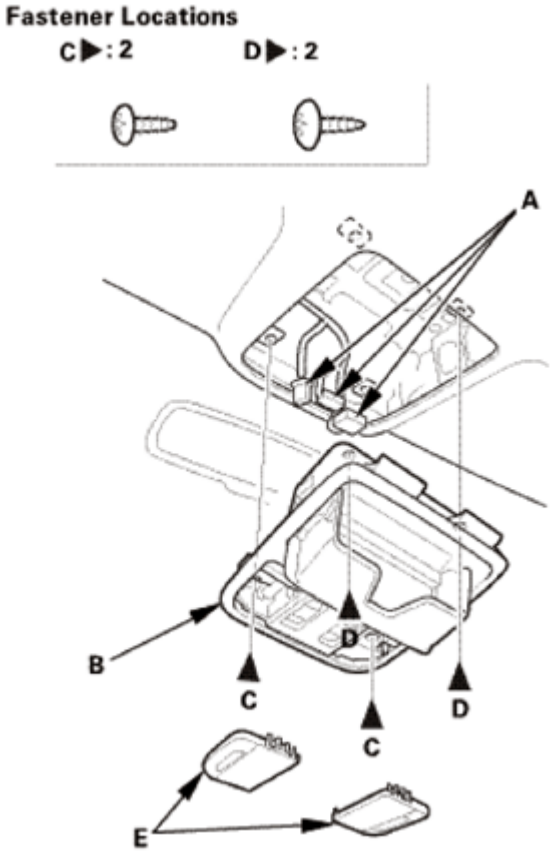

Fig. 394: Identifying Roof Console Assembly, Connectors, Lenses And Screws
Courtesy of AMERICAN HONDA MOTOR CO., INC.

17. Quarter Pillar Trim - Check
    1. If the side curtain airbag has deployed, replace the quarter pillar trim (A), along with the other parts listed for side curtain airbag deployment.
    2. If the side curtain airbag has not deployed, check the quarter pillar trim and note the following items:
        - To prevent the side curtain airbags from deploying improperly and possibly causing injury, inspect the quarter pillar trim and replace it with a new one if it has any of the following damage:
            - Any cracks, deformations, or stress-whitening in the quarter pillar trim
            - Any cracks or stress-whitened areas in the clip seating surfaces (B)
        - After checking and adjusting the overlap between the headliner and the quarter pillar trim, replace the upper clip (C) with a new one.
        - If the clips (D) are damaged or stress-whitened, replace them with new ones.

GETtheMANUALS.org

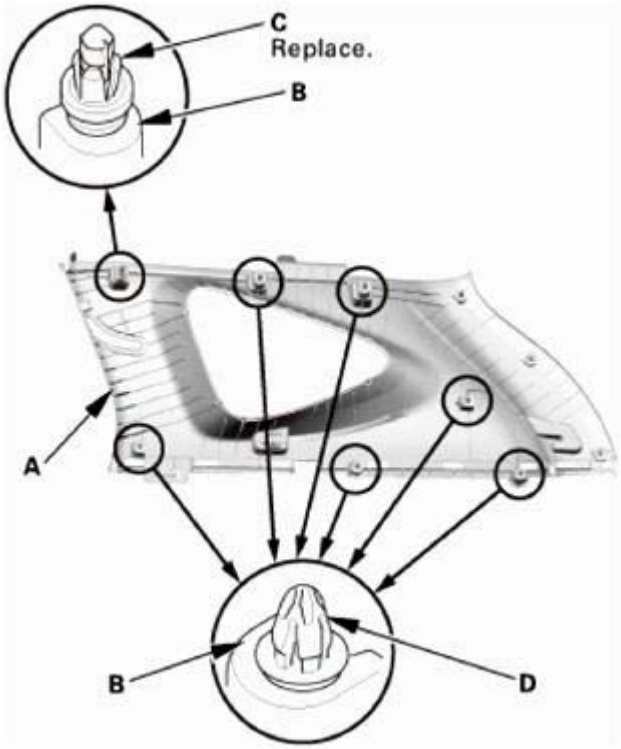

Fig. 395: Identifying Quarter Pillar Trim And Clips Seating Surfaces
Courtesy of AMERICAN HONDA MOTOR CO., INC.

18. Headliner/Pillar Trim Overlap - Check

Checking and Adjusting the Headliner/Pillar Trim Overlap

To prevent the side curtain airbag from deploying and damaging the pillar trim (A-pillar trim, B-pillar trim, quarter pillar trim), the overlap between the headliner and pillar trim must be 8.0+0/-2.0 mm (0.31+0/-0.08 in). To check the overlap, do this:

1. Install the headliner (A) and the pillar trim (B).

GETtheMANUALS.org

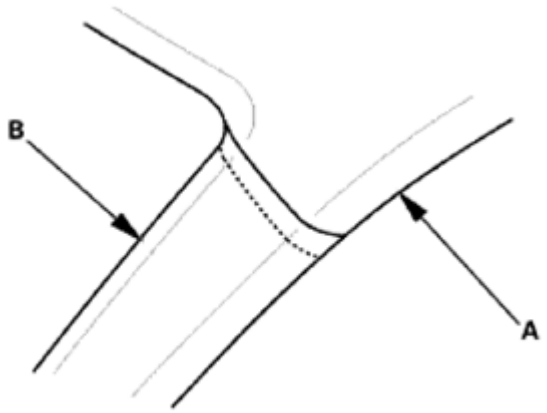

This illustration shows the A-pillar.

Fig. 396: Identifying Headliner And Pillar Trim
Courtesy of AMERICAN HONDA MOTOR CO., INC.

2. Apply masking tape (A) to the headliner (B) to mark the upper edge of the pillar trim (C).

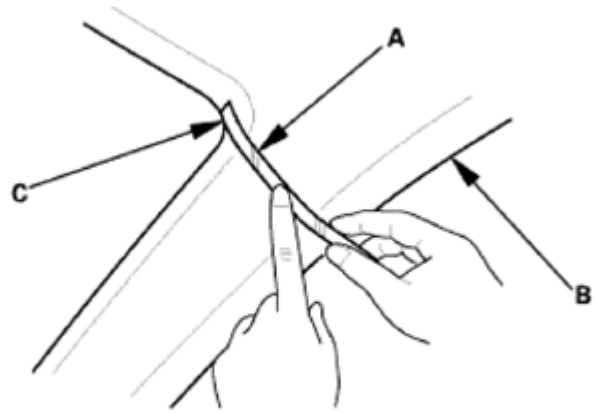

This illustration shows the A-pillar.

Fig. 397: Applying Masking Tape To Headliner
Courtesy of AMERICAN HONDA MOTOR CO., INC.

This illustration shown the A-pillar .

3. Remove the pillar trim, and measure the headliner overlap.
   - If the overlap is 8.0+0/-2.0 mm (0.31+0/-0.08 in), remove the tape, and install the pillar trim.
   - If the overlap is more than 8.0 mm (0.31 in), go to step 4.

GETtheMANUALS.org

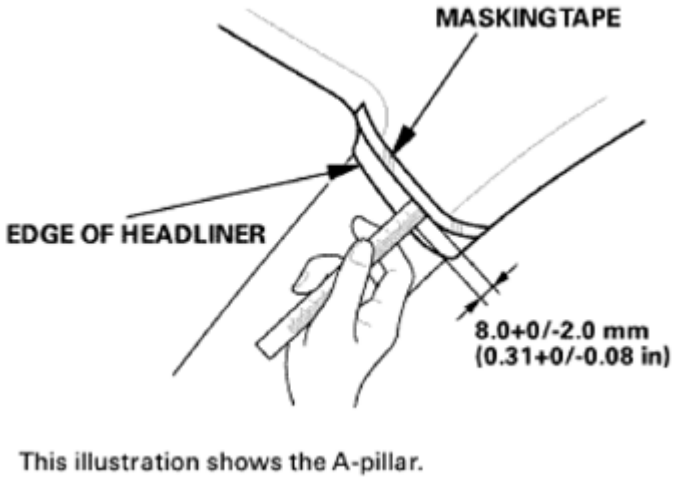

Fig. 398: Removing Pillar Trim
Courtesy of AMERICAN HONDA MOTOR CO., INC.

This illustration shown the A-pillar .

4. Carefully trim the headliner with a utility knife, reducing the overlap to 8.0+0/-2.0 mm (0.31+0/-0.08 in).
5. Remove the tape, and install the pillar trim.

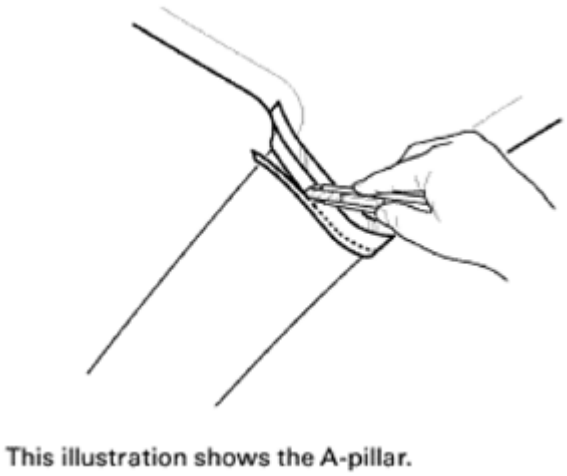

Fig. 399: Cutting Headliner Using Utility Knife
Courtesy of AMERICAN HONDA MOTOR CO., INC.

This illustration shown the A-pillar .

19. Quarter Pillar Trim - Both Sides
    1. Install a new clip (A) to the quarter pillar trim (B).

GETtheMANUALS.org

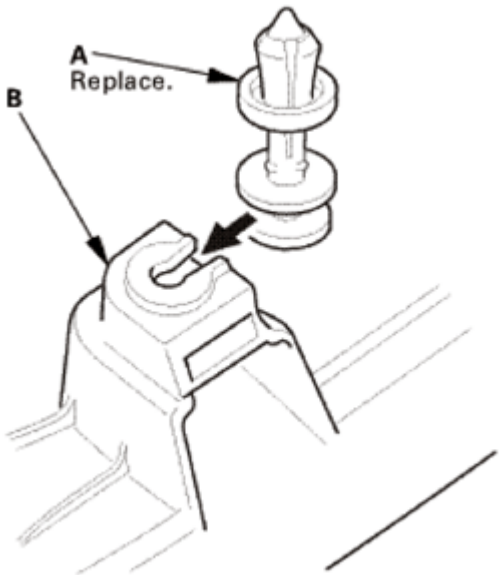

Fig. 400: Installing Clip To Quarter Pillar Trim
Courtesy of AMERICAN HONDA MOTOR CO., INC.

2. Pass the rear seat belt lower anchor (A) through the hole in the quarter pillar trim (B).
3. Fit the clips into the holes in the quarter pillar.
4. Lightly push the quarter pillar trim into place, then install the trim.

NOTE:

- **Make sure the side curtain airbag is not tucked under the clips or the ribs.**
- **Do not push too hard on the quarter pillar trim. If you push too hard, the clip will be damaged, and it will not hold the trim properly.**
- **Gently tug on the quarter pillar trim to verify that all clips are securely fastened.**
- **Make sure the clips (C, D, and E) snap into place securely.**

GETtheMANUALS.org

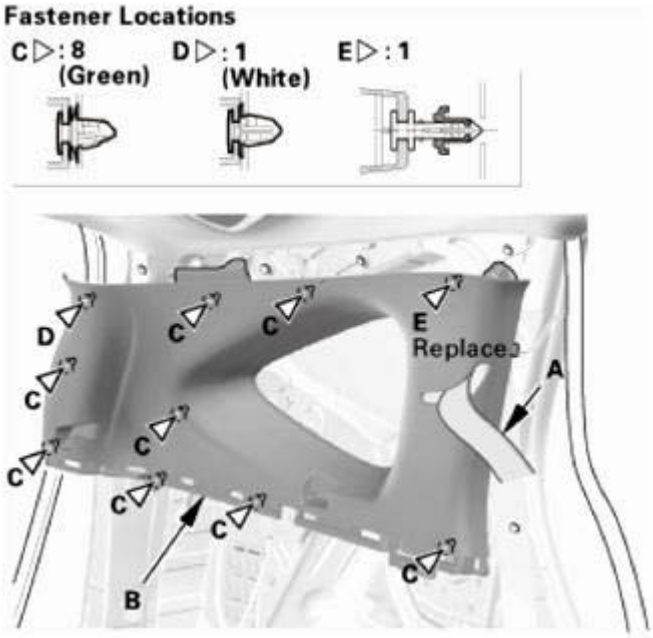

Fig. 401: Identifying Rear Seat Belt Lower Anchor, Quarter Pillar Trim And Clips
Courtesy of AMERICAN HONDA MOTOR CO., INC.

20. Rear Side Trim Panel - Both Sides

NOTE: Repeat this procedure on the opposite side.

1. Install the rear seat release cable (A) to the clips (B) of the rear side trim panel (C).

NOTE: Align the marks (D) with the clips as shown.

GETtheMANUALS.org

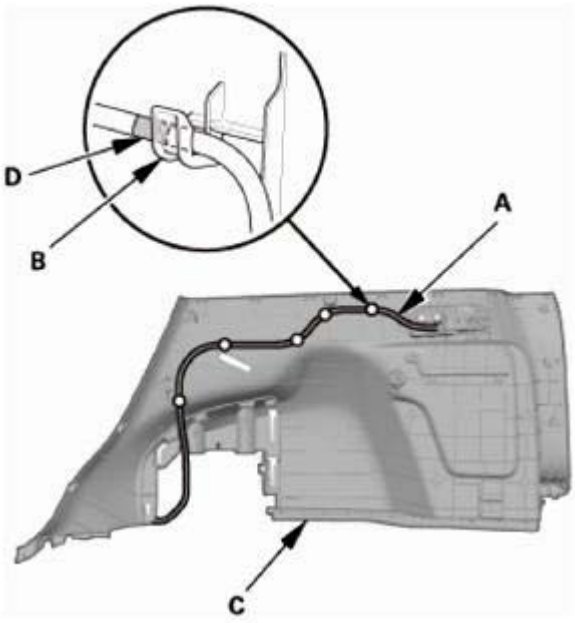

Fig. 402: Installing Rear Seat Release Cable To Clips
Courtesy of AMERICAN HONDA MOTOR CO., INC.

2. Install the rear seat release lever (A) to the rear side trim panel (B).

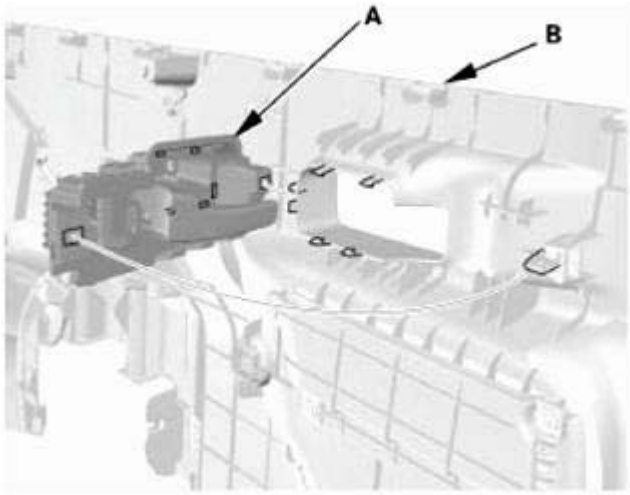

Fig. 403: Identifying Rear Seat Release Lever And Rear Side Trim Panel
Courtesy of AMERICAN HONDA MOTOR CO., INC.

3. Install the rear side trim panel (A). Make sure the hooks (B), the tabs (C), and the clips (D, E) snap into place securely.
4. Install the clips (F, G).

GETtheMANUALS.org

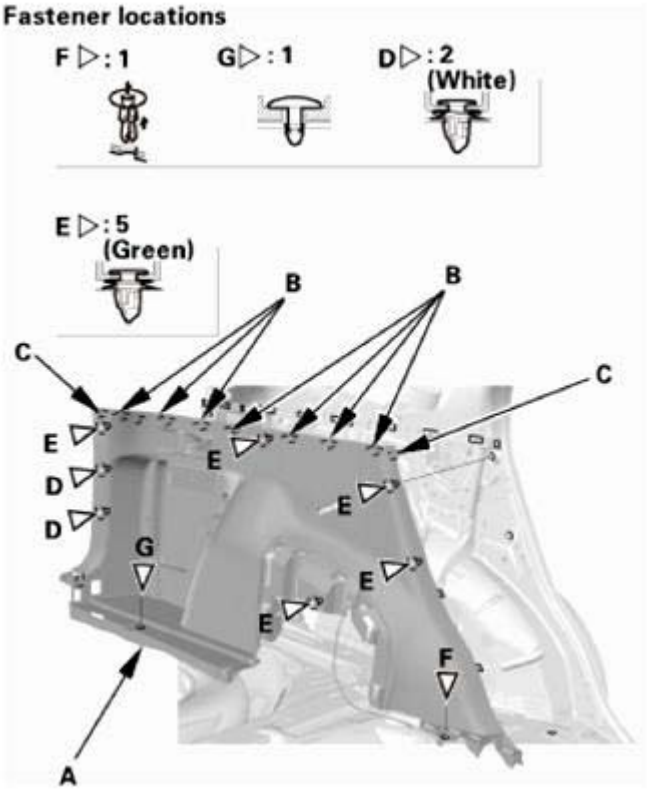

Fig. 404: Identifying Rear Side Trim Panel, Hooks, Tabs And Clips
Courtesy of AMERICAN HONDA MOTOR CO., INC.

5. Install the tie-down hook (A), then install the bolt (B).

Fig. 405: Identifying Tie-Down Hook, Bolt With Torque Specifications

GETtheMANUALS.org

Courtesy of AMERICAN HONDA MOTOR CO., INC.

6. Install the trunk hook (A).

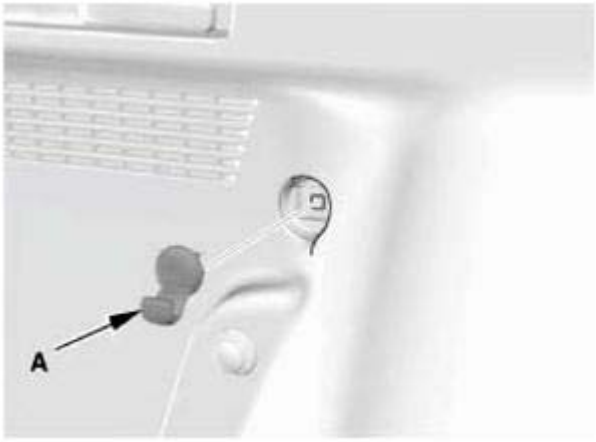

Fig. 406: Identifying Trunk Hook
Courtesy of AMERICAN HONDA MOTOR CO., INC.

7. Install the screws (A), then install the rear seat release lever cap (B). Make sure the upper hook (C) and the lower hooks (D) snap into place securely.

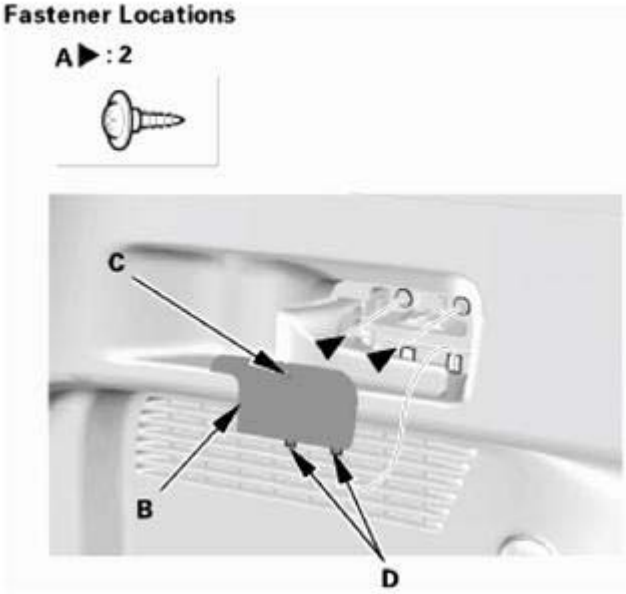

Fig. 407: Identifying Rear Seat Release Lever Cap, Hooks And Screws
Courtesy of AMERICAN HONDA MOTOR CO., INC.

21. Rear Seat Belt Lower Anchor Bolt - Both Sides

NOTE: Repeat this procedure on the opposite side.

GETtheMANUALS.org

1. Install the rear seat belt lower anchor bolt (A).

NOTE: **Before installing the anchor bolt, make sure there are no twists or kinks in the seat belt.**

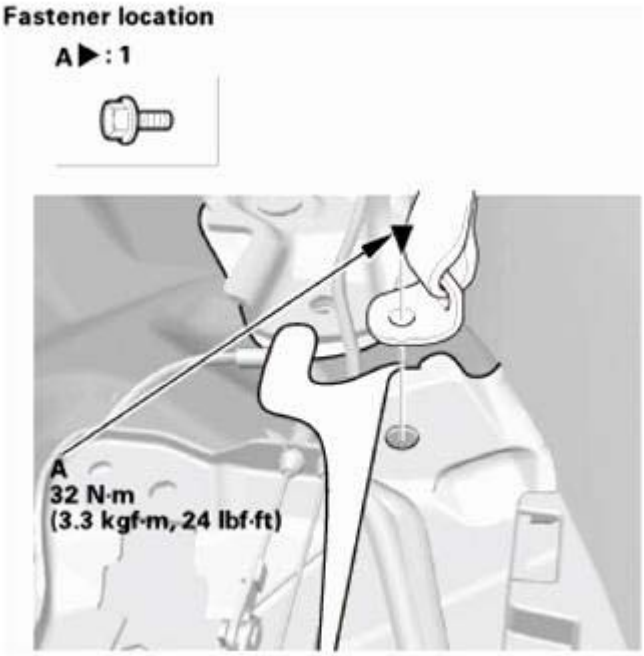

Fig. 408: Identifying Rear Seat Belt Lower Anchor Bolt With Torque Specifications
Courtesy of AMERICAN HONDA MOTOR CO., INC.

22. Rear Seat Cushion Foot Cover - Both Sides (Remove The Outer Left Side Only)
    1. Install the rear seat cushion foot cover (A). Make sure the clips (B) and the hooks (C) snap into place securely.

    Left side

GETtheMANUALS.org

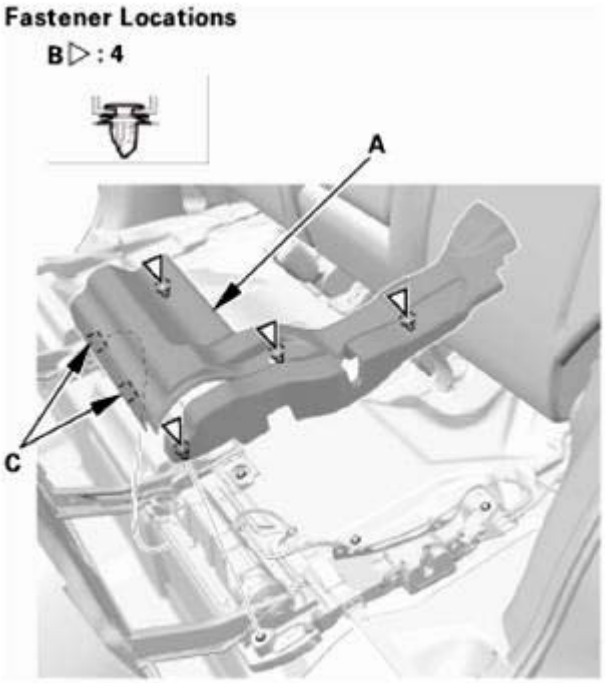

Fig. 409: Identifying Rear Seat Cushion Foot Cover, Clips And Hooks (Left Side)
Courtesy of AMERICAN HONDA MOTOR CO., INC.

Right side

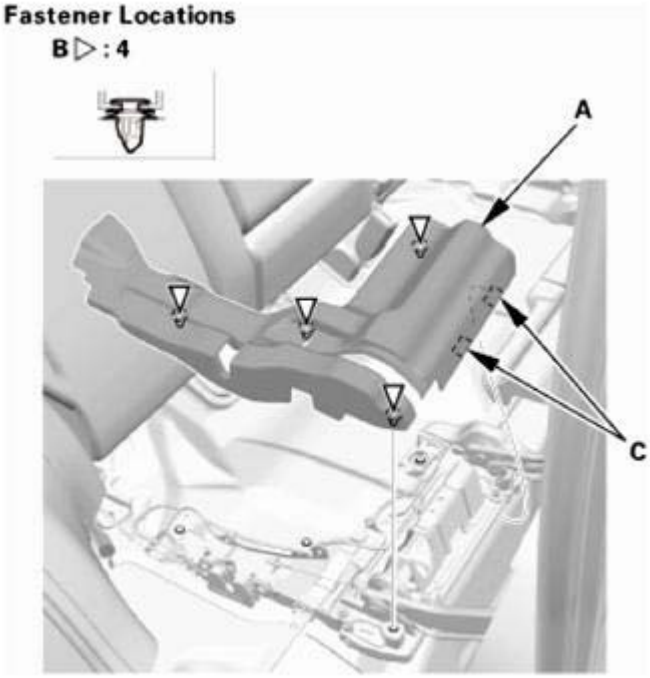

Fig. 410: Identifying Rear Seat Cushion Foot Cover, Clips And Hooks (Right Side)
Courtesy of AMERICAN HONDA MOTOR CO., INC.

GETtheMANUALS.org

23. Rear Carpet Trim - Both Sides
    1. Install the rear carpet trims (A). Make sure the clips (B) and the hooks (C) snap into place securely.

Left side

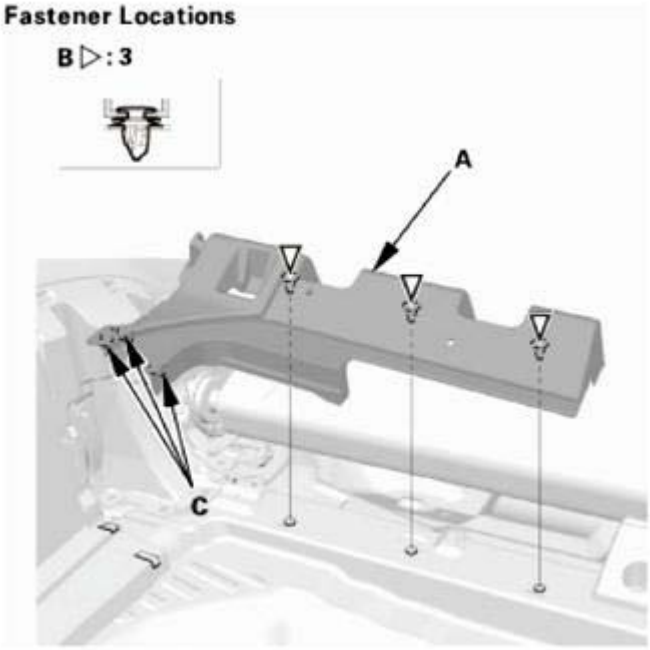

Fig. 411: Identifying Rear Carpet Trims, Clips And Hooks (Left Side)
Courtesy of AMERICAN HONDA MOTOR CO., INC.

Right side

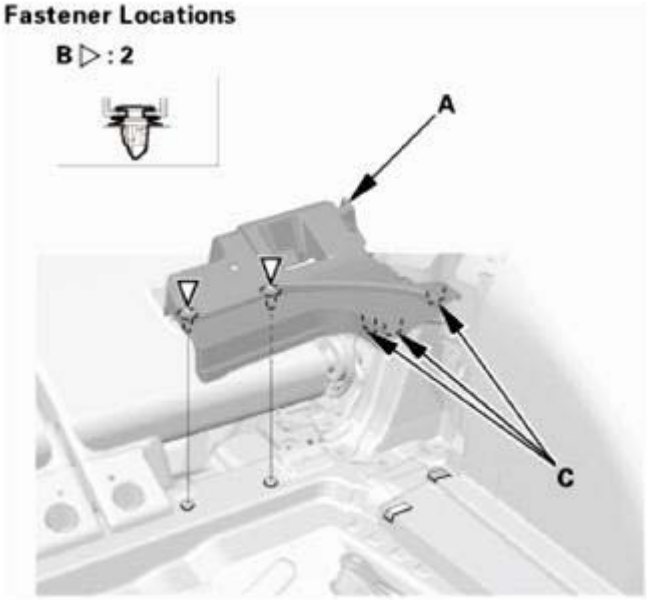

GETtheMANUALS.org

Fig. 412: Identifying Rear Carpet Trims, Clips And Hooks (Right Side)
Courtesy of AMERICAN HONDA MOTOR CO., INC.

2. Install the rear seat-back cover (A). Make sure the clips (B) snap into place securely.

Left side

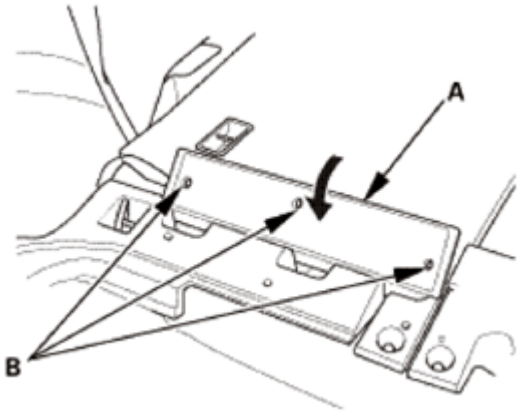

Fig. 413: Identifying Rear Seat-Back Cover And Clips (Left Side)
Courtesy of AMERICAN HONDA MOTOR CO., INC.

Right side

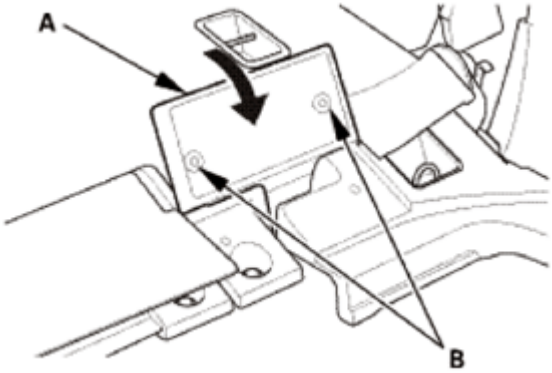

Fig. 414: Identifying Rear Seat-Back Cover And Clips (Right Side)
Courtesy of AMERICAN HONDA MOTOR CO., INC.

24. Rear Damper Maintenance Cover - Both Sides

NOTE: Repeat this procedure on the opposite side.

1. Fold down the rear seat-back.
2. Install the rear damper maintenance cover (A). Make sure the hooks (B) snap into place securely.

GETtheMANUALS.org

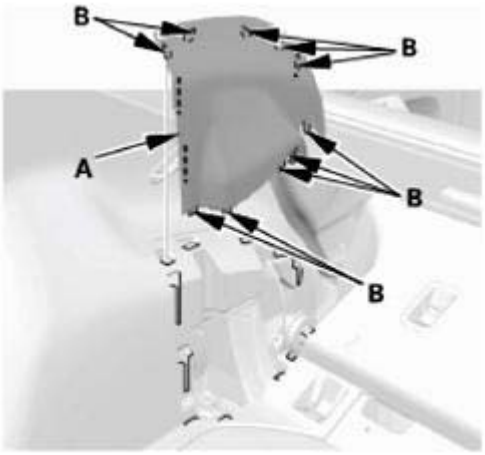

Fig. 415: Identifying Rear Damper Maintenance Cover And Hooks
Courtesy of AMERICAN HONDA MOTOR CO., INC.

25. Rear Trim Panel
    1. Install the rear trim panel (A). Make sure the clips (B, C), the hooks (D), and the tabs (E) snap into place securely.
    2. Install the clips (F).

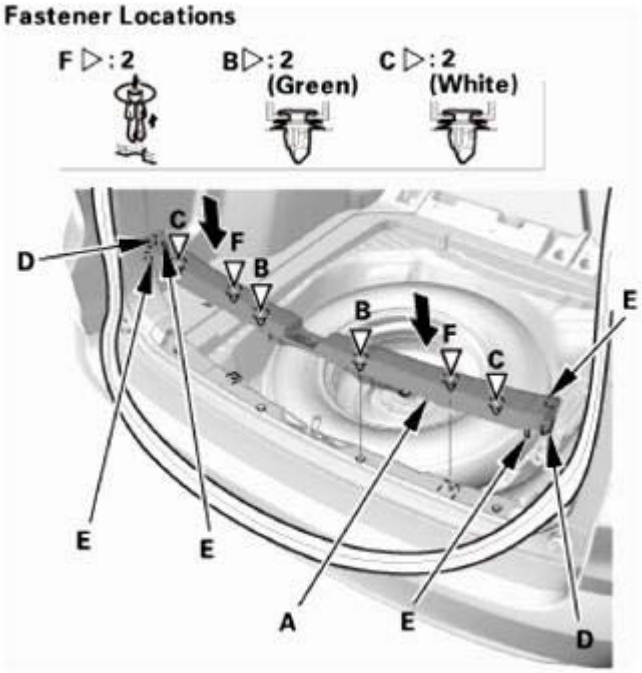

Fig. 416: Installing Rear Trim Panel
Courtesy of AMERICAN HONDA MOTOR CO., INC.

26. Tailgate Weatherstrip As Needed
    1. Locate the alignment mark (A) of the tailgate weatherstrip (B). Align the alignment mark (C) with

GETtheMANUALS.org

the center of the lower area on the tailgate opening, then install the tailgate weatherstrip all the way around.

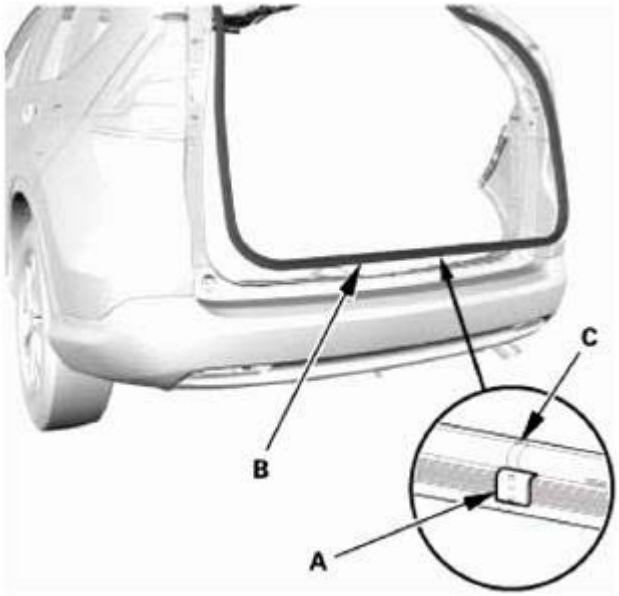

Fig. 417: Identifying Alignment Mark On Tailgate Weatherstrip
Courtesy of AMERICAN HONDA MOTOR CO., INC.

27. Cargo Floor Cover
    1. Install the cargo floor cover (A).

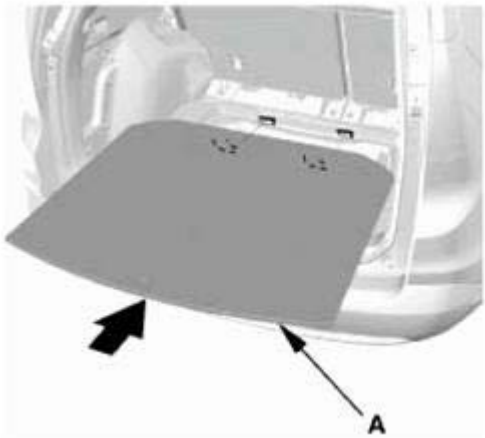

Fig. 418: Installing Cargo Floor Cover
Courtesy of AMERICAN HONDA MOTOR CO., INC.

28. Tonneau Cover (For Some Models)
    1. Install the tonneau cover (A).

GETtheMANUALS.org

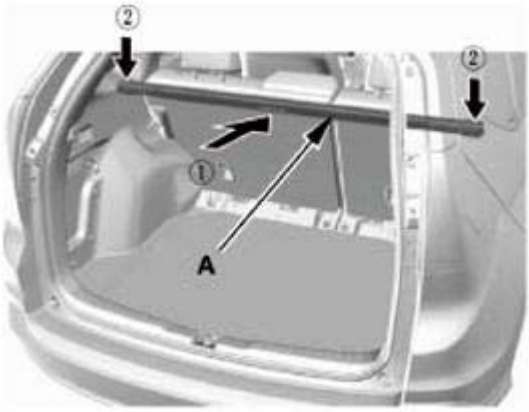

Fig. 419: Installing Tonneau Cover
Courtesy of AMERICAN HONDA MOTOR CO., INC.

29. B-Pillar Upper/Lower Trim - Check
    1. If the side curtain airbag has deployed, replace the B-pillar upper trim (A) and the B-pillar lower trim (B), along with the other parts listed for side curtain airbag deployment.
    2. If the side curtain airbag has not deployed, check the B-pillar upper/lower trim and note the following items:
        - To prevent the side curtain airbags from deploying improperly and possibly causing injury, inspect the trim and replace it with a new one if it has any of the following damage:
            - Any cracks or deformations in the B-pillar upper trim or the upper hooks (C), or any stress-whitened areas in the upper part of the trim
            - Any cracks or deformations in the B-pillar lower trim, or any breakages in the part (D) fitted with the B-pillar upper trim
            - Any cracks or stress-whitening areas in the clip seating surfaces (E)
        - If the clips (F) are damaged or stress-whitened, replace them with new ones.

Trim inspection

GETtheMANUALS.org

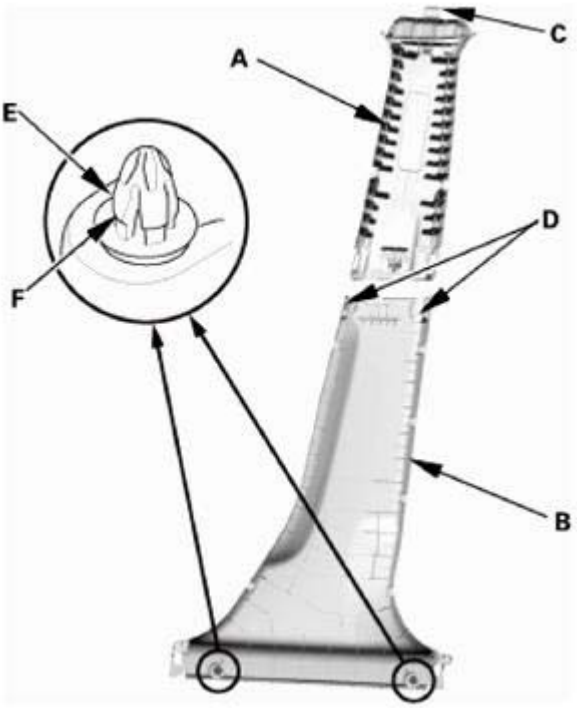

Fig. 420: Identifying B-Pillar Upper/Lower Trim Components
Courtesy of AMERICAN HONDA MOTOR CO., INC.

30. Headliner/Pillar Trim Overlap - Check

Checking and Adjusting the Headliner/Pillar Trim Overlap

To prevent the side curtain airbag from deploying and damaging the pillar trim (A-pillar trim, B-pillar trim, quarter pillar trim), the overlap between the headliner and pillar trim must be 8.0+0/-2.0 mm (0.31+0/-0.08 in). To check the overlap, do this:

1. Install the headliner (A) and the pillar trim (B).

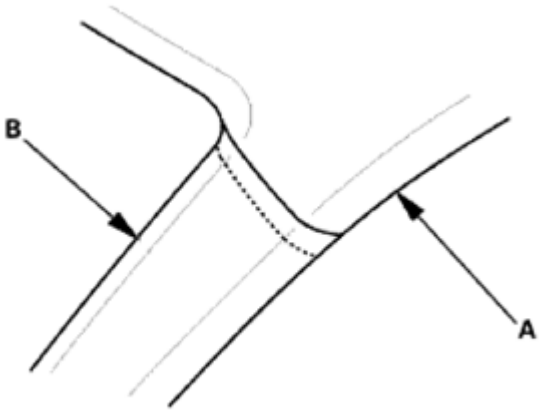

This illustration shows the A-pillar.

GETtheMANUALS.org

Fig. 421: Identifying Headliner And Pillar Trim
Courtesy of AMERICAN HONDA MOTOR CO., INC.

This illustration shows the A-pillar .

2. Apply masking tape (A) to the headliner (B) to mark the upper edge of the pillar trim (C).

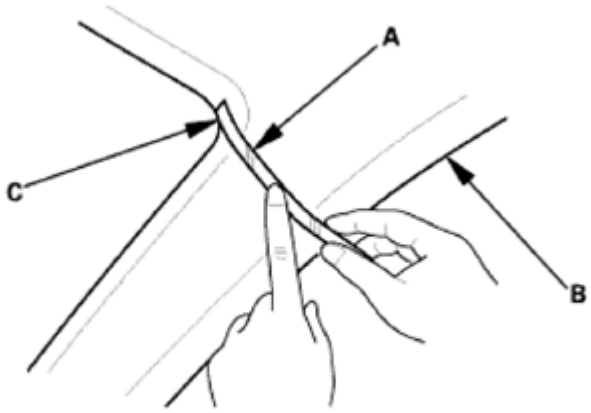

This illustration shows the A-pillar.

Fig. 422: Applying Masking Tape To Headliner
Courtesy of AMERICAN HONDA MOTOR CO., INC.

This illustration shows the A-pillar .

3. Remove the pillar trim, and measure the headliner overlap.
   - If the overlap is 8.0+0/-2.0 mm (0.31+0/-0.08 in), remove the tape, and install the pillar trim.
   - If the overlap is more than 8.0 mm (0.31 in), go to step 4.

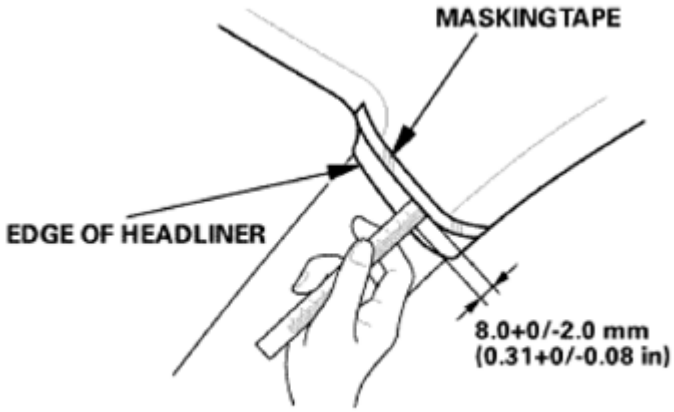

This illustration shows the A-pillar.

Fig. 423: Removing Pillar Trim
Courtesy of AMERICAN HONDA MOTOR CO., INC.

GETtheMANUALS.org

This illustration shows the A-pillar .

4. Carefully trim the headliner with a utility knife, reducing the overlap to 8.0+0/-2.0 mm (0.31+0/-0.08 in).
5. Remove the tape, and install the pillar trim.

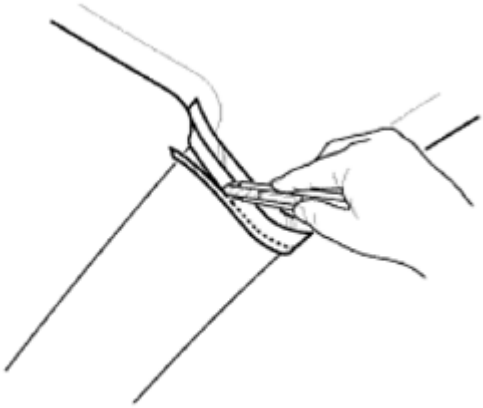

This illustration shows the A-pillar.

Fig. 424: Cutting Headliner Using Utility Knife
Courtesy of AMERICAN HONDA MOTOR CO., INC.

This illustration shows the A-pillar .

31. B-Pillar Upper Trim - Both Sides

NOTE: Repeat this procedure on the opposite side.

1. Install the upper hook (A) of the B-pillar upper trim (B) to the hole in the body. Push the bottom portion of the B-pillar upper trim to install the lower hooks (C). Make sure the hooks snap into place securely.

GETtheMANUALS.org

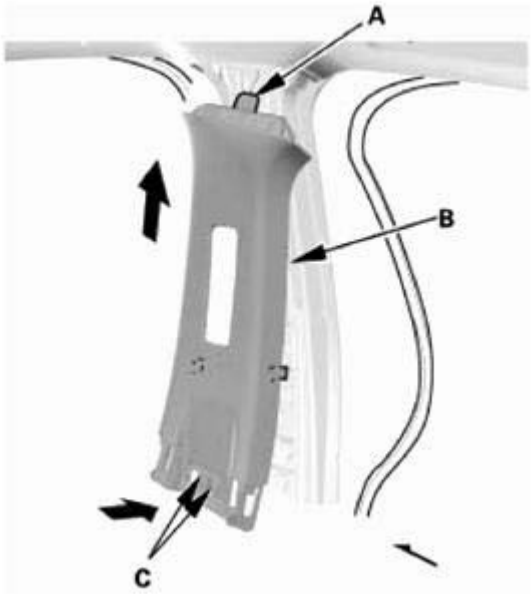

Fig. 425: Installing Upper Hook Of B-Pillar Upper Trim To Hole In Body
Courtesy of AMERICAN HONDA MOTOR CO., INC.

32. Front Seat Belt Upper Anchor Bolt - Both Sides

NOTE: Repeat this procedure on the opposite side.

1. Install the front seat belt upper anchor bolt, then install the front seat belt shoulder anchor adjuster cap (A).

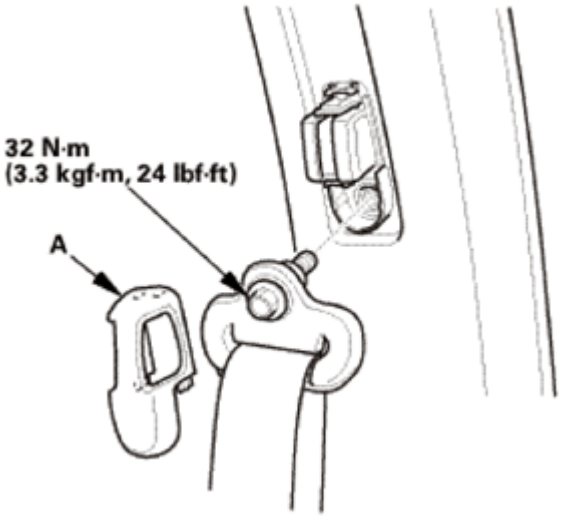

Fig. 426: Identifying Front Seat Belt Shoulder Anchor Adjuster Cap And Bolt With Torque Specification
Courtesy of AMERICAN HONDA MOTOR CO., INC.

GETtheMANUALS.org

33. B-Pillar Lower Trim - Both Sides

NOTE: Repeat this procedure on the opposite side.

1. Install the B-pillar lower trim (A). Make sure the clips (B) and the hooks (C) snap into place securely.

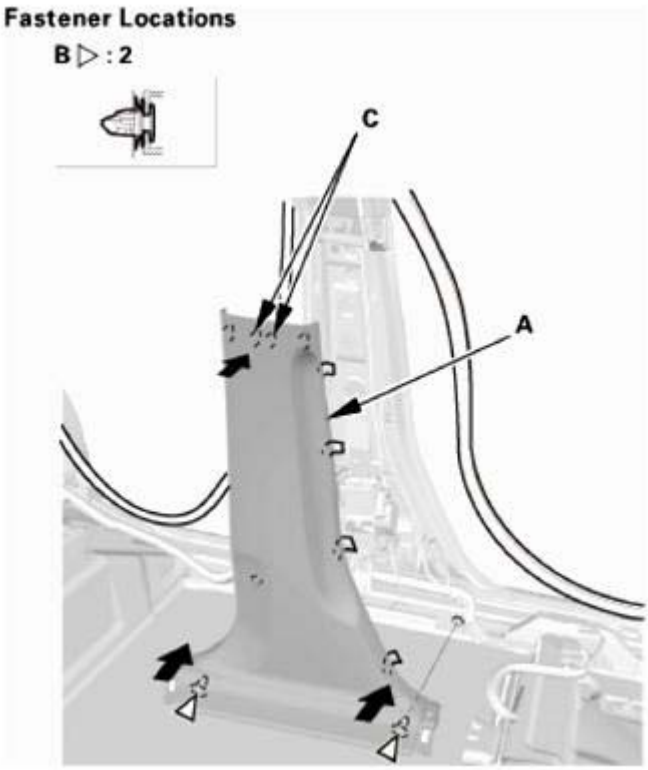

Fig. 427: Installing B-Pillar Lower Trim
Courtesy of AMERICAN HONDA MOTOR CO., INC.

34. Rear Door Opening Seal As Needed - Both Sides

NOTE: Repeat this procedure on the opposite side.

1. Install the rear door opening seal (A). Make sure the seal is installed securely into the hooks (B).

GETtheMANUALS.org

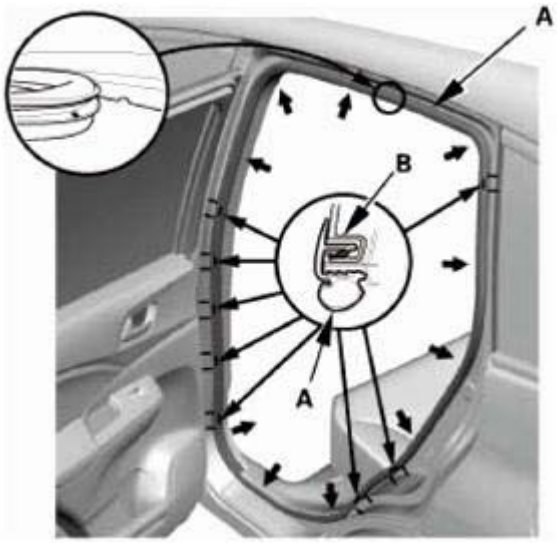

Fig. 428: Installing Rear Door Opening Seal
Courtesy of AMERICAN HONDA MOTOR CO., INC.

35. Rear Door Sill Trim - Both Sides

NOTE: Repeat this procedure on the opposite side.

1. Pull the release strap to fold down the rear seat, then lift-up and latch the rear seat-back in the upright position.
2. Install the rear door inner sill trim (A). Make sure the clips (B, C), the hooks (D), and the tab (E) snap into place securely.

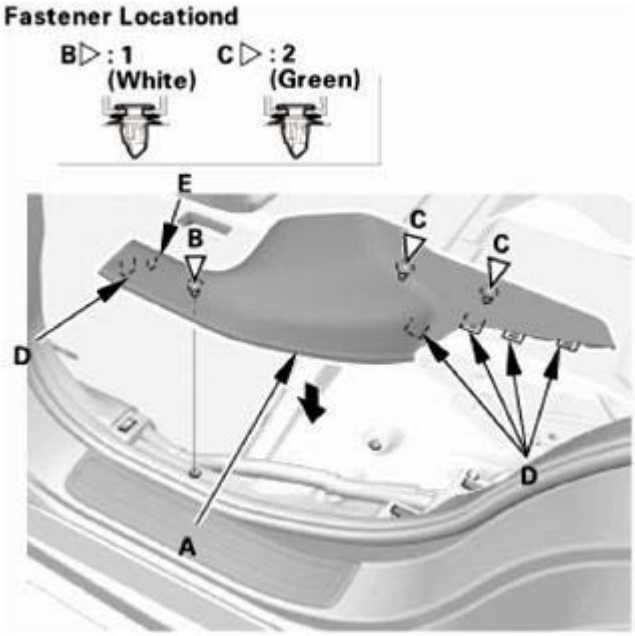

GETtheMANUALS.org

Fig. 429: Installing Rear Door Sill Trim
Courtesy of AMERICAN HONDA MOTOR CO., INC.

36. A-Pillar Trim - Check
    1. If the side curtain airbag has deployed, replace the A-pillar trim (A), along with the other parts listed for side curtain airbag deployment.
    2. If the side curtain airbag has not deployed, check the A-pillar trim and note the following items:
        - To prevent the side curtain airbags from deploying improperly and possibly causing injury, inspect the A-pillar trim and replace it with a new one if it has any of the following damage:
            - Any cracks, deformations, or stress-whitened areas in the A-pillar trim
            - Any cracks or stress-whitening in the clip seating surfaces (B)
        - After checking and adjusting the overlap between the headliner and the A-pillar trim, replace the upper clip (C) with a new one.
        - If the clips (D) are damaged or stress-whitened, replace them with new ones.

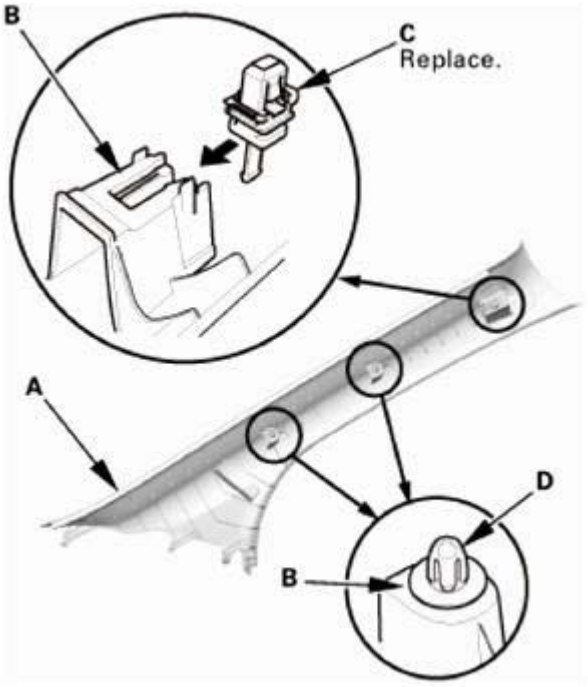

Fig. 430: Installing A-Pillar Trim Upper Clip
Courtesy of AMERICAN HONDA MOTOR CO., INC.

37. Headliner/Pillar Trim Overlap - Check

Checking and Adjusting the Headliner/Pillar Trim Overlap

To prevent the side curtain airbag from deploying and damaging the pillar trim (A-pillar trim, B-pillar trim, quarter pillar trim), the overlap between the headliner and pillar trim must be 8.0+0/-2.0 mm (0.31+0/-0.08 in). To check the overlap, do this:

GETtheMANUALS.org

1. Install the headliner (A) and the pillar trim (B).

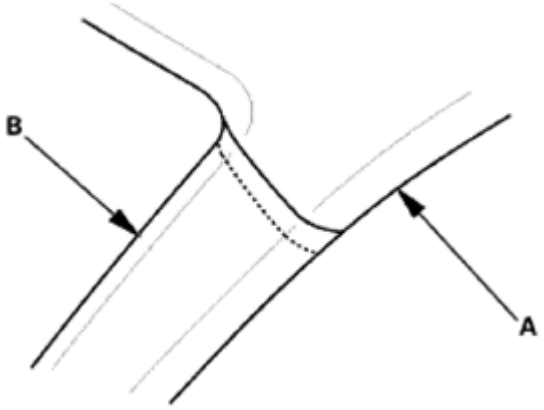

This illustration shows the A-pillar.

Fig. 431: Identifying Headliner And Pillar Trim
Courtesy of AMERICAN HONDA MOTOR CO., INC.

This illustration shows the A-pillar .

2. Apply masking tape (A) to the headliner (B) to mark the upper edge of the pillar trim (C).

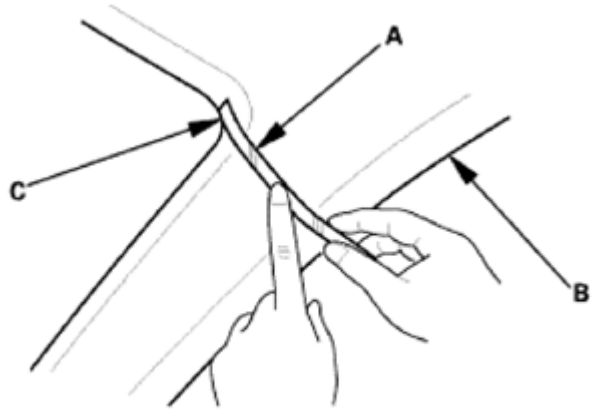

This illustration shows the A-pillar.

Fig. 432: Applying Masking Tape To Headliner
Courtesy of AMERICAN HONDA MOTOR CO., INC.

This illustration shows the A-pillar .

3. Remove the pillar trim, and measure the headliner overlap.
   - If the overlap is 8.0+0/-2.0 mm (0.31+0/-0.08 in), remove the tape, and install the pillar trim.
   - If the overlap is more than 8.0 mm (0.31 in), go to step 4.

GETtheMANUALS.org

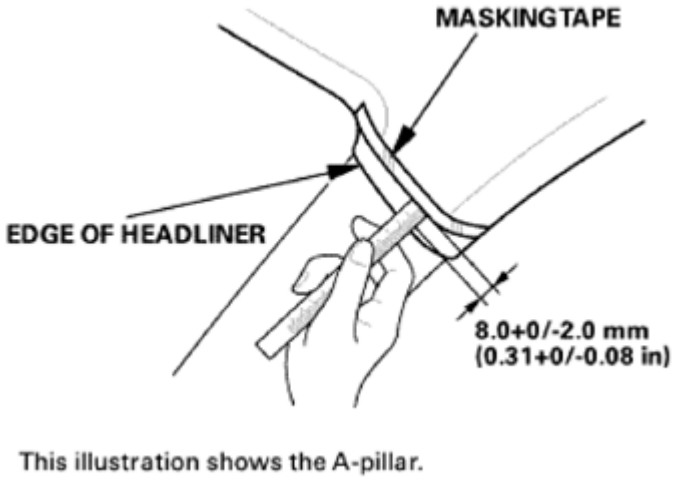

Fig. 433: Removing Pillar Trim
Courtesy of AMERICAN HONDA MOTOR CO., INC.

This illustration shows the A-pillar .

4. Carefully trim the headliner with a utility knife, reducing the overlap to 8.0+0/-2.0 mm (0.31+0/-0.08 in).
5. Remove the tape, and install the pillar trim.

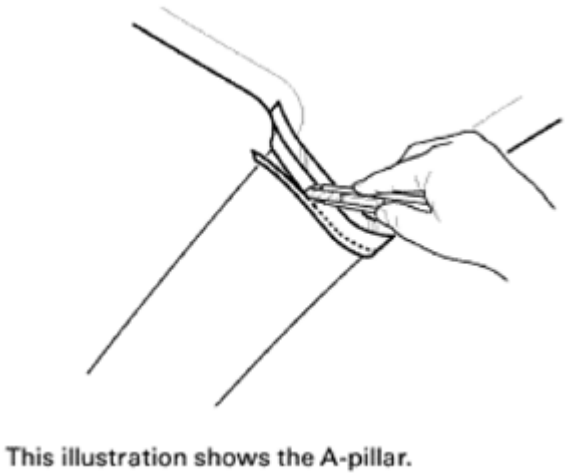

Fig. 434: Cutting Headliner Using Utility Knife
Courtesy of AMERICAN HONDA MOTOR CO., INC.

This illustration shows the A-pillar .

38. A-Pillar Trim - Both Sides

NOTE: Repeat this procedure on the opposite side.

GETtheMANUALS.org

1. Carefully install a new upper clip (A) to the A-pillar trim (B).

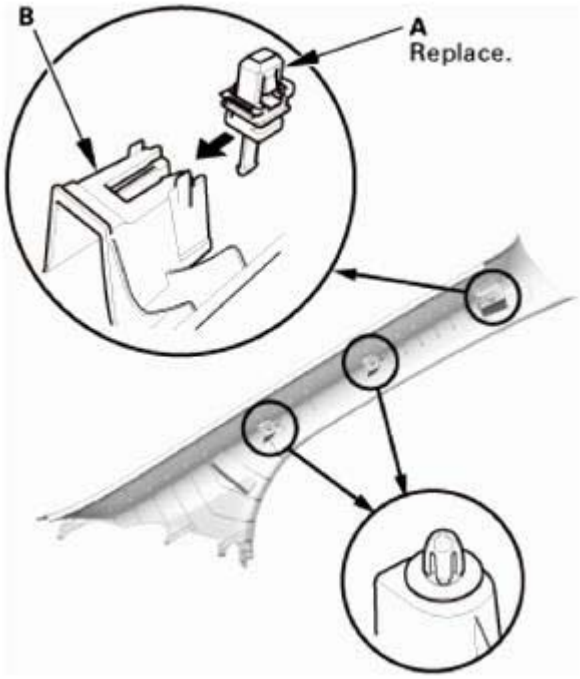

Fig. 435: Installing A-Pillar Trim Upper Clip
Courtesy of AMERICAN HONDA MOTOR CO., INC.

2. Insert the bottom portion of the A-pillar trim (A) into the dashboard (B). Place the trim over the A-pillar (C), and fit its upper clip (D) and the other clips (E) into the holes (F) in the A-pillar, then lightly push the trim into place.

NOTE:

- **Make sure the side curtain airbag is not tucked under the clips or the trim ribs.**
- **Do not push too hard on the A-pillar trim. If you push too hard, the clip will be damaged, and it will not hold the trim properly.**
- **Gently tug on the A-pillar trim to verify that all clips are securely fastened.**

GETtheMANUALS.org

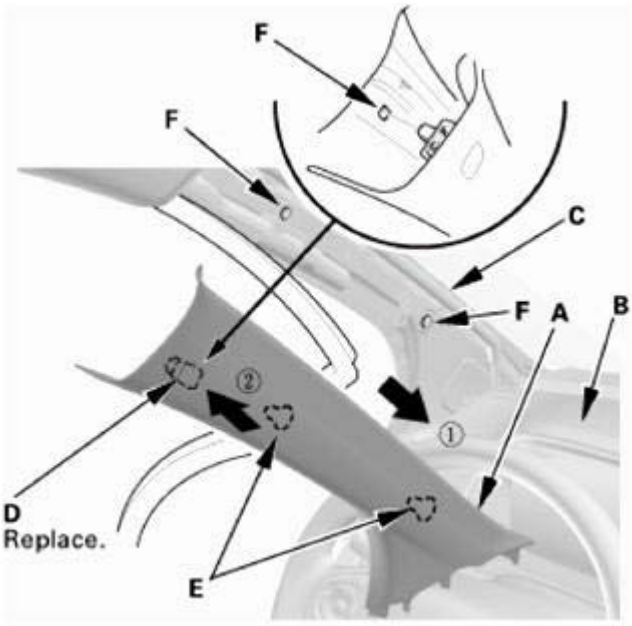

Fig. 436: Inserting Bottom Portion Of A-Pillar Trim Into Dashboard
Courtesy of AMERICAN HONDA MOTOR CO., INC.

39. Front Door Opening Seal As Needed - Both Sides

NOTE: Repeat this procedure on the opposite side.

1. Install the front door opening seal (A). Make sure the seal is installed securely into the hooks (B).

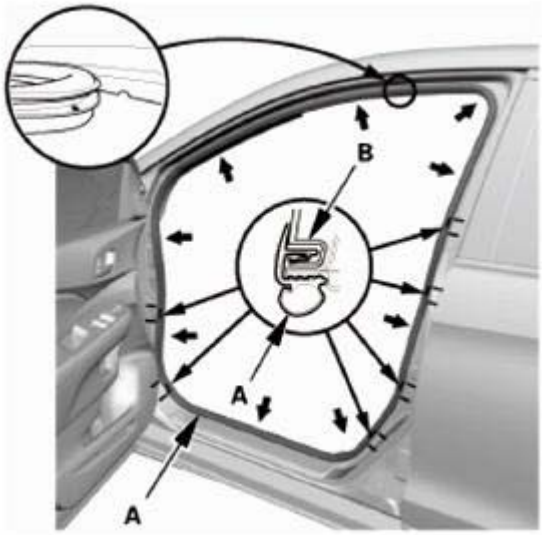

Fig. 437: Installing Front Door Opening Seal
Courtesy of AMERICAN HONDA MOTOR CO., INC.

40. Front Door Sill Trim - Both Sides

GETtheMANUALS.org

NOTE: **Repeat this procedure on the opposite side.**

1. Install the front door inner sill trim (A). Make sure the clips (B), the hooks (C), and the tabs (D) snap into place securely.

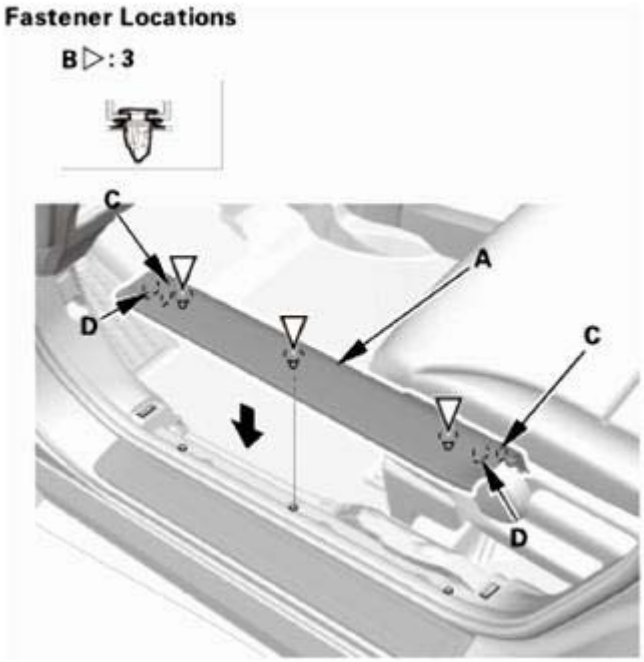

Fig. 438: Installing Front Door Inner Sill Trim
Courtesy of AMERICAN HONDA MOTOR CO., INC.

SIDE IMPACT SENSOR (FIRST) REMOVAL AND INSTALLATION

LON > 7521B6 LEFT FRONT 7521B7 RIGHT FRONT

REMOVAL

NOTE: **SRS components are located in this area. Review the SRS COMPONENT LOCATIONS and the PRECAUTIONS AND PROCEDURES before doing repairs or service.**

1. Battery Terminal (SRS) - Disconnection
    1. Make sure the ignition switch is in LOCK (0).
    2. Disconnect and isolate the negative cable (A) from the battery.

    NOTE: **Always disconnect the negative side first.**

    3. Disconnect the positive cable (B) from the battery.
    4. Wait at least 3 minutes before starting work.

GETtheMANUALS.org

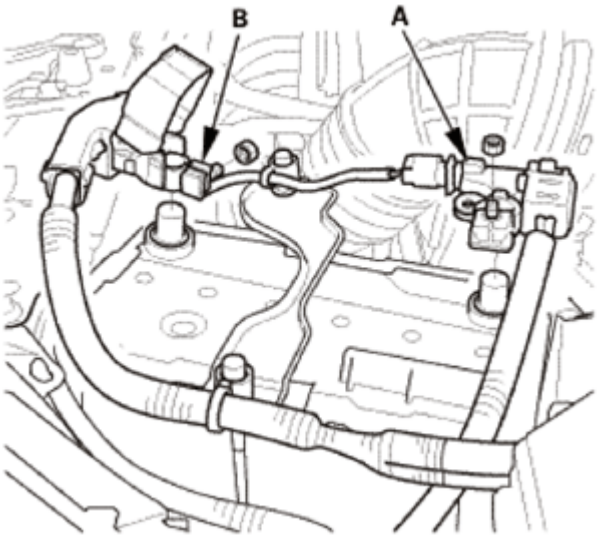

Fig. 439: Identifying Battery Positive And Negative Cables
Courtesy of AMERICAN HONDA MOTOR CO., INC.

2. Front Door Sill Trim
    1. Detach the hooks (A) and the tabs (B) from the kick panel (C) and the B-pillar lower trim (D), and pull up the front door inner sill trim (E) by hand to detach the clips (F), then remove the trim.

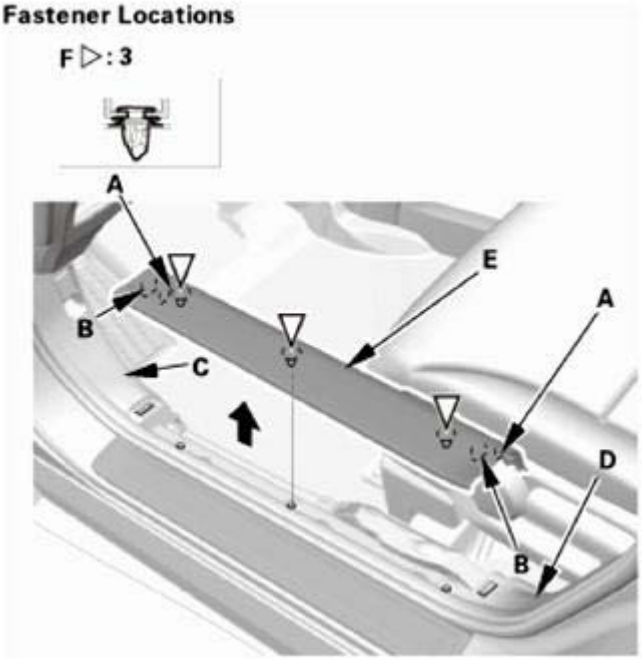

Fig. 440: Removing Front Door Sill Trim
Courtesy of AMERICAN HONDA MOTOR CO., INC.

3. Rear Door Sill Trim
    1. Pull the release strap to fold down the rear seat, then lift-up and latch the rear seat-back in the

GETtheMANUALS.org

upright position.

2. Detach the hooks (A) and the tab (B) from the B-pillar lower trim (C) and the rear side trim panel (D), and pull up the rear door inner sill trim (E) by hand to detach the clips (F, G), then remove the trim.

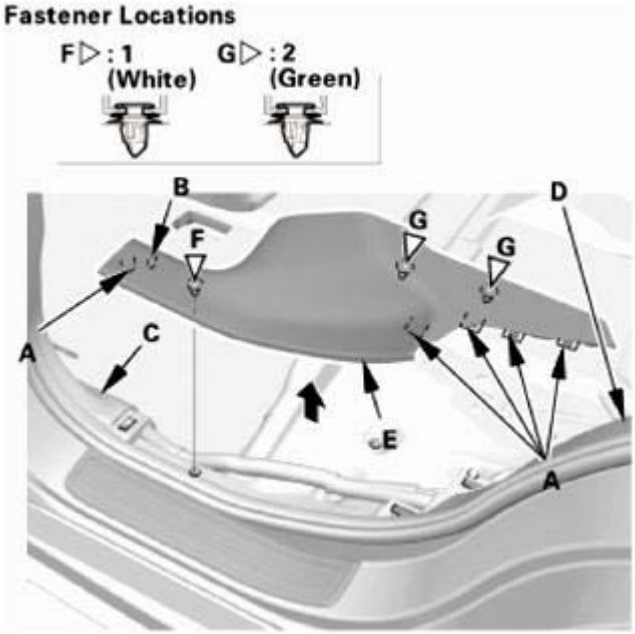

Fig. 441: Removing Rear Door Sill Trim
Courtesy of AMERICAN HONDA MOTOR CO., INC.

4. Front/Rear Door Opening Seals As Needed
    1. Pull out the door opening seals (A) from the trim hooks (B) around the door opening flange as needed.

    Front

GETtheMANUALS.org

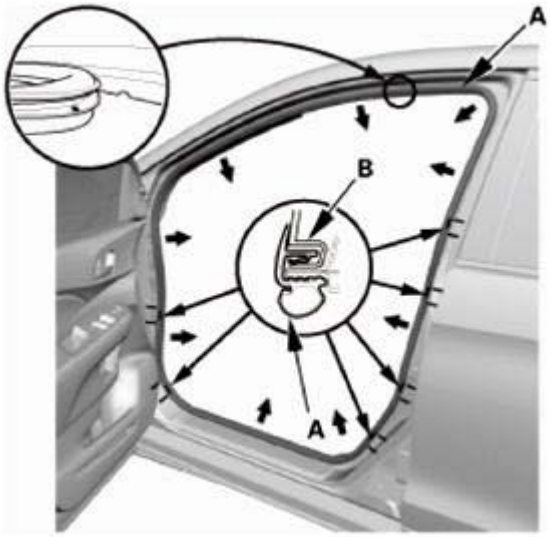

Fig. 442: Pulling Out Front Door Opening Seals From Trim Hooks
Courtesy of AMERICAN HONDA MOTOR CO., INC.

Rear

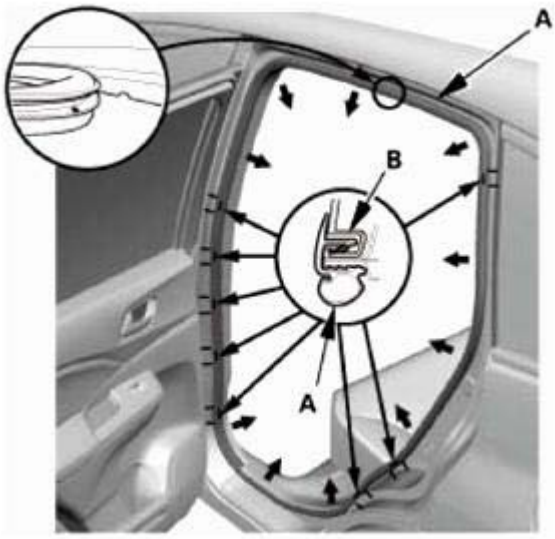

Fig. 443: Pulling Out Rear Door Opening Seals From Trim Hooks
Courtesy of AMERICAN HONDA MOTOR CO., INC.

5. B-Pillar Lower Trim
    1. Slide the front seat forward fully.
    2. Pull back the bottom portion of the B-pillar lower trim (A) by hand to detach the clips (B).
    3. Pull back the upper portion of the B-pillar lower trim to detach the upper hooks (C), then remove the B-pillar lower trim.

GETtheMANUALS.org

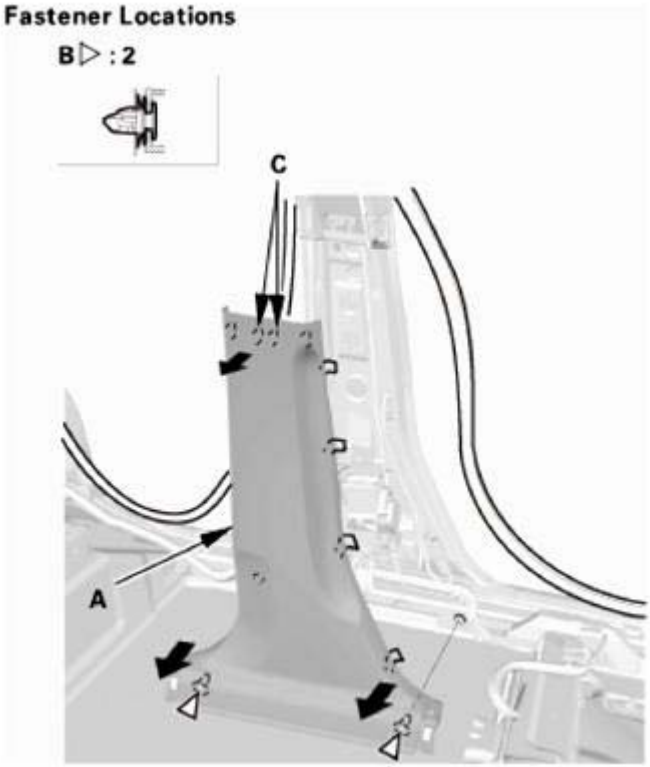

Fig. 444: Removing B-Pillar Lower Trim
Courtesy of AMERICAN HONDA MOTOR CO., INC.

6. Side Impact Sensor (First)
    1. Disconnect the side impact sensor (first) connector on the floor wire harness.
    2. Remove the TORX bolt using a TORX T30 bit, then remove the side impact sensor (first) (A).

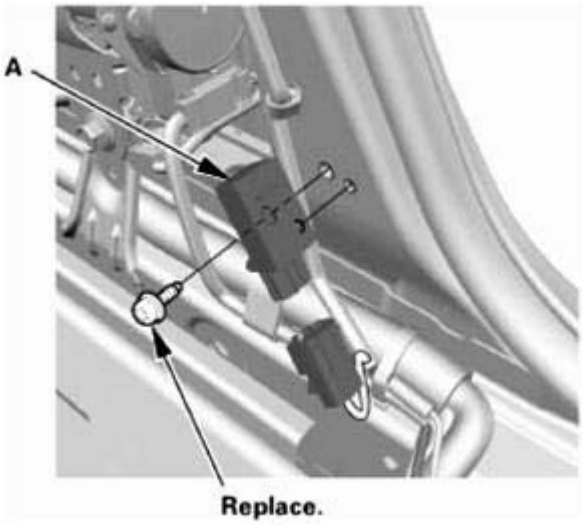

Fig. 445: Identifying Side Impact Sensor
Courtesy of AMERICAN HONDA MOTOR CO., INC.

GETtheMANUALS.org

INSTALLATION

NOTE: SRS components are located in this area. Review the SRS COMPONENT LOCATIONS and the PRECAUTIONS AND PROCEDURES before doing repairs or service.

1. Side Impact Sensor (First)
    1. Install the side impact sensor (first) (A) with the new TORX bolt using a TORX T30 bit.
    2. Connect the side impact sensor (first) connector on the floor wire harness.

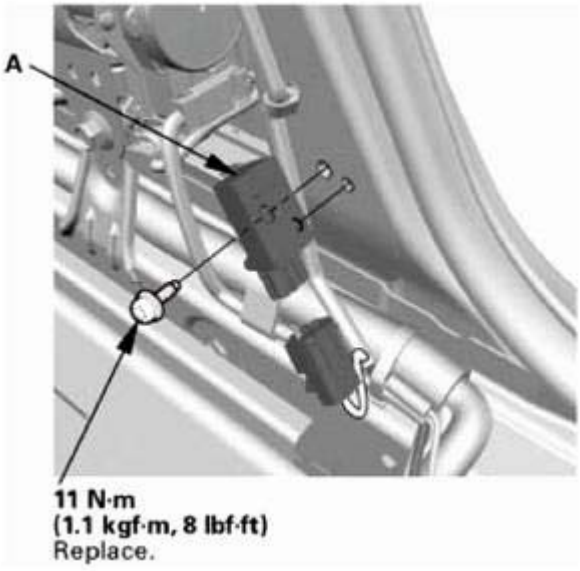

Fig. 446: Identifying Side Impact Sensor And Mounting Bolt With Torque Specification
Courtesy of AMERICAN HONDA MOTOR CO., INC.

2. Battery Terminal (SRS) - Reconnection

NOTE: If the battery performance is abnormal, test the battery.

1. Clean the battery terminals.
2. Connect the positive cable (A) to the battery.

NOTE: Always connect the positive side first.

3. Connect the negative cable (B) to the battery.
4. Apply multipurpose grease to the terminals to prevent corrosion.

GETtheMANUALS.org

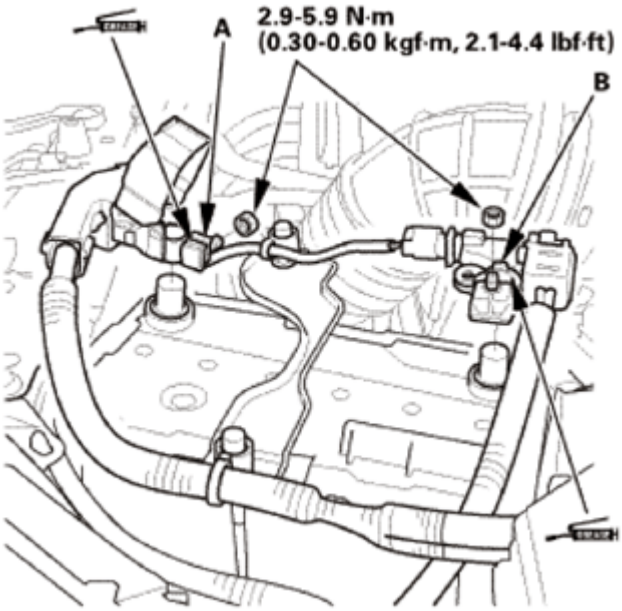

Fig. 447: Identifying Multipurpose Grease Applying Area On Battery Positive And Negative Terminals
Courtesy of AMERICAN HONDA MOTOR CO., INC.

3. HDS DLC - Connection
    1. Connect the HDS to the data link connector (DLC) (A) located under the driver's side of the dashboard.
    2. Turn the ignition switch to ON (II).
    3. Make sure the HDS communicates with the vehicle. If it does not communicate, go to the DLC circuit troubleshooting.

Fig. 448: Identifying Data Link Connector
Courtesy of AMERICAN HONDA MOTOR CO., INC.

GETtheMANUALS.org

4. DTC - Clear
    1. Clear the DTC(s) by following the screen prompts on the HDS.
    2. Turn the ignition switch to LOCK (0), then wait for 10 seconds.
5. Confirm Proper SRS Operation
    1. Turn the ignition switch to ON (II), and check that the SRS indicator comes on for about 6 seconds and then goes off.
6. B-Pillar Lower Trim
    1. Install the B-pillar lower trim (A). Make sure the clips (B) and the hooks (C) snap into place securely.

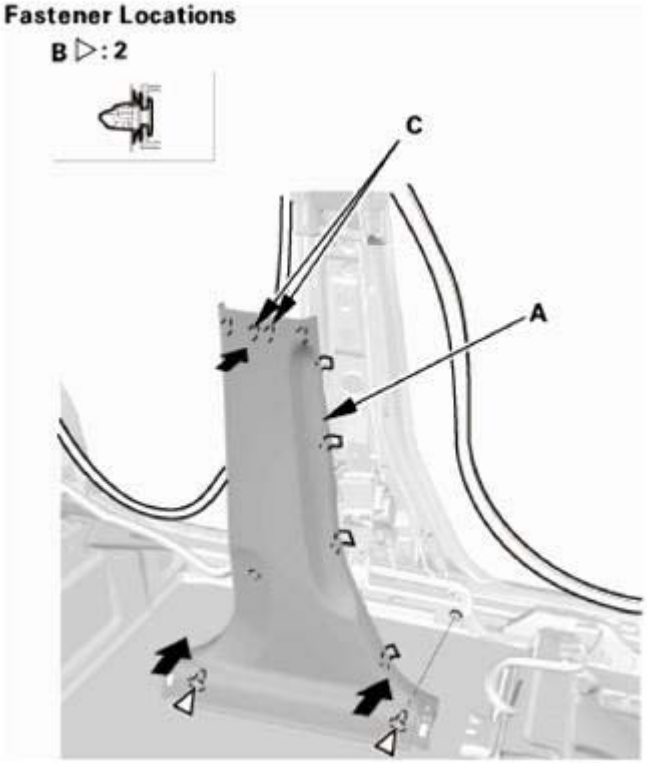

Fig. 449: Installing B-Pillar Lower Trim
Courtesy of AMERICAN HONDA MOTOR CO., INC.

7. Front/Rear Door Opening Seals As Needed
    1. Install the door opening seals (A). Make sure the seal is installed securely into the hooks (B).

    Front

GETtheMANUALS.org

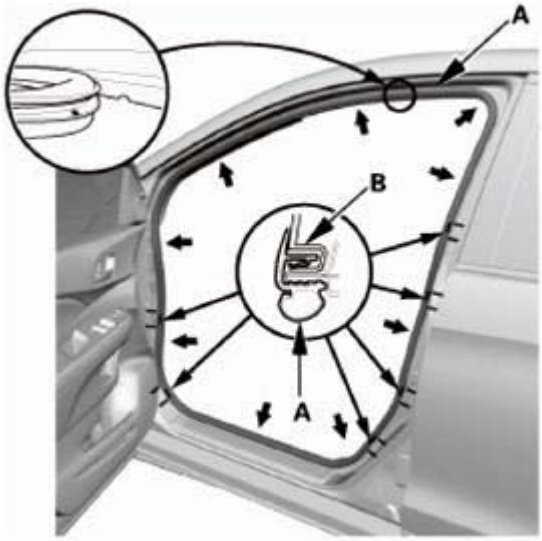

Fig. 450: Installing Front Door Opening Seals
Courtesy of AMERICAN HONDA MOTOR CO., INC.

Rear

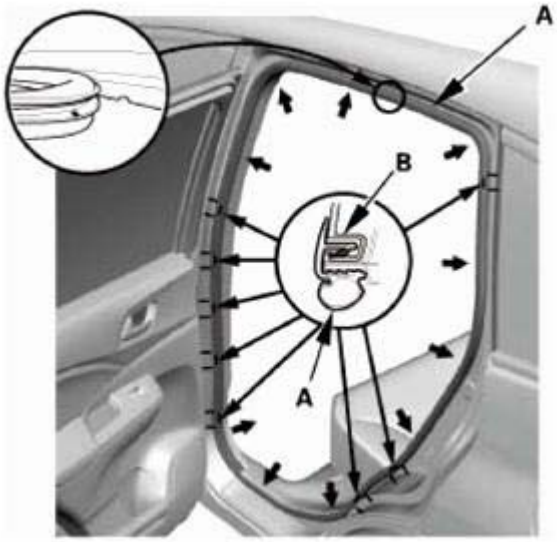

Fig. 451: Installing Rear Door Opening Seals
Courtesy of AMERICAN HONDA MOTOR CO., INC.

8. Rear Door Sill Trim
    1. Pull the release strap to fold down the rear seat, then lift-up and latch the rear seat-back in the upright position.
    2. Install the rear door inner sill trim (A). Make sure the clips (B, C), the hooks (D), and the tab (E) snap into place securely.

GETtheMANUALS.org

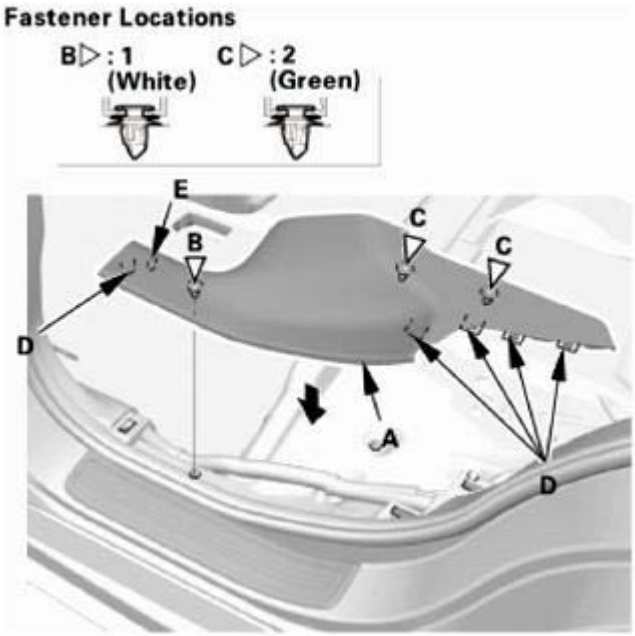

Fig. 452: Installing Rear Door Sill Trim
Courtesy of AMERICAN HONDA MOTOR CO., INC.

9. Front Door Sill Trim
    1. Install the front door inner sill trim (A). Make sure the clips (B), the hooks (C), and the tabs (D) snap into place securely.

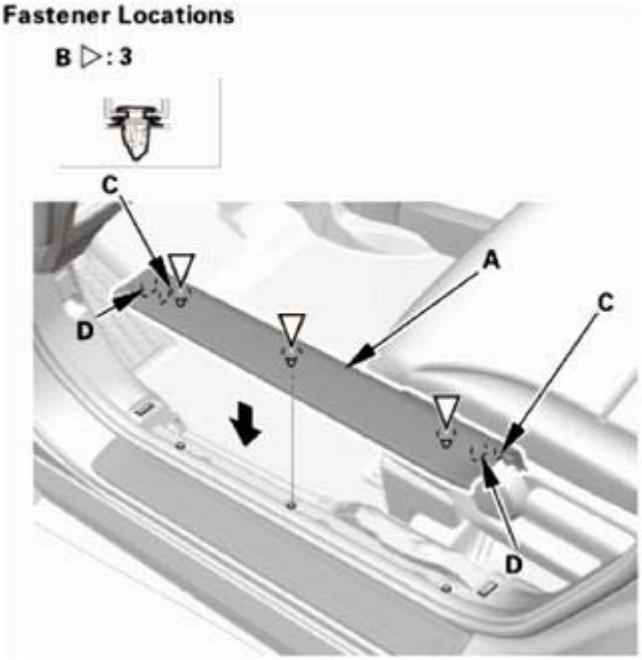

Fig. 453: Installing Front Door Inner Sill Trim
Courtesy of AMERICAN HONDA MOTOR CO., INC.

GETtheMANUALS.org

SIDE IMPACT SENSOR (SECOND) REMOVAL AND INSTALLATION

LON > 7521C3 LEFT REAR 7521C4 RIGHT REAR

REMOVAL

NOTE: SRS components are located in this area. Review the SRS COMPONENT LOCATIONS and the PRECAUTIONS AND PROCEDURES before doing repairs or service.

1. Battery Terminal (SRS) - Disconnection
    1. Make sure the ignition switch is in LOCK (0).
    2. Disconnect and isolate the negative cable (A) from the battery.

        NOTE: Always disconnect the negative side first.

    3. Disconnect the positive cable (B) from the battery.
    4. Wait at least 3 minutes before starting work.

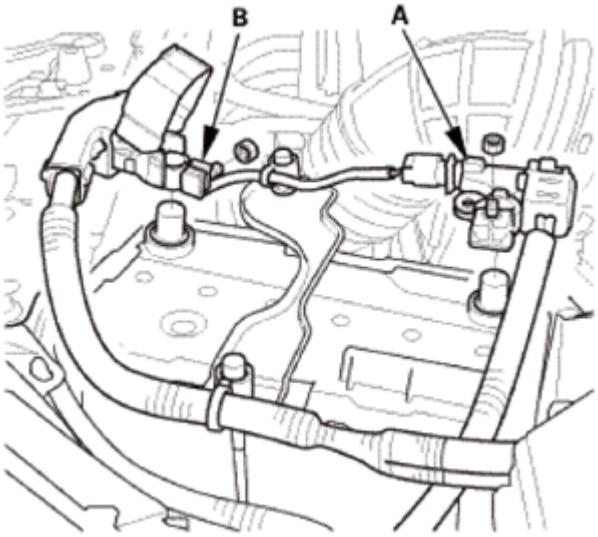

Fig. 454: Identifying Battery Positive And Negative Cables
Courtesy of AMERICAN HONDA MOTOR CO., INC.

2. Tonneau Cover (For Some Models)
    1. Remove the tonneau cover (A).

GETtheMANUALS.org

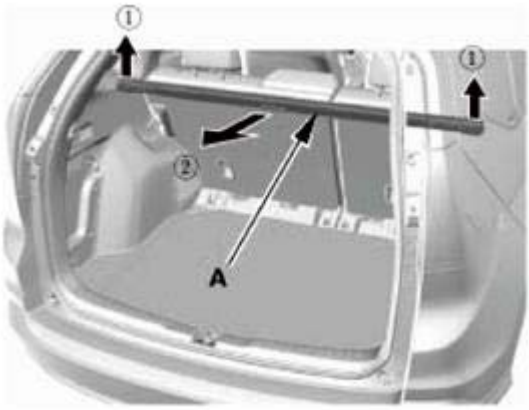

Fig. 455: Removing Tonneau Cover
Courtesy of AMERICAN HONDA MOTOR CO., INC.

3. Cargo Floor Cover
    1. Remove the cargo floor cover (A).

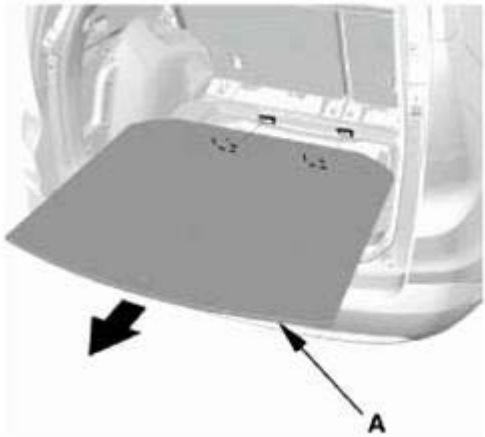

Fig. 456: Removing Cargo Floor Cover
Courtesy of AMERICAN HONDA MOTOR CO., INC.

4. Rear Door Sill Trim
    1. Pull the release strap to fold down the rear seat, then lift-up and latch the rear seat-back in the upright position.
    2. Detach the hooks (A) and the tab (B) from the B-pillar lower trim (C) and the rear side trim panel (D), and pull up the rear door inner sill trim (E) by hand to detach the clips (F, G), then remove the trim.

GETtheMANUALS.org

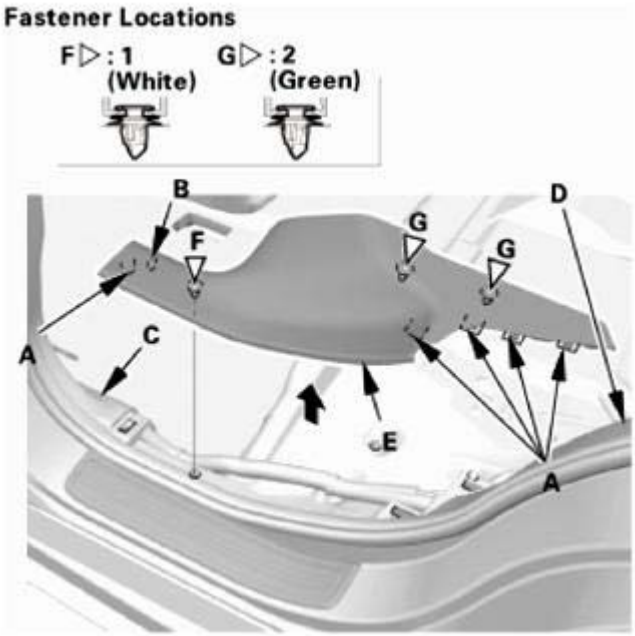

Fig. 457: Removing Rear Door Sill Trim
Courtesy of AMERICAN HONDA MOTOR CO., INC.

5. Rear Door Opening Seal As Needed
    1. Pull out the rear door opening seal (A) from the trim hooks (B) around the rear door opening flange as needed.

Fig. 458: Pulling Out Rear Door Opening Seal From Trim Hooks
Courtesy of AMERICAN HONDA MOTOR CO., INC.

6. Rear Damper Maintenance Cover
    1. Fold down the rear seat-back.

GETtheMANUALS.org

2. Pull up the rear damper maintenance cover (A) by hand to detach the hooks (B), then remove the rear damper maintenance cover.

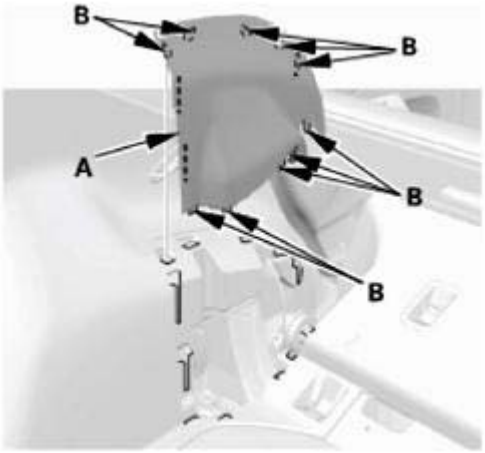

Fig. 459: Identifying Rear Damper Maintenance Cover And Hooks
Courtesy of AMERICAN HONDA MOTOR CO., INC.

7. Rear Carpet Trim
    1. Detach the clips (A), then tuck up the rear seat-back cover (B).

Left side

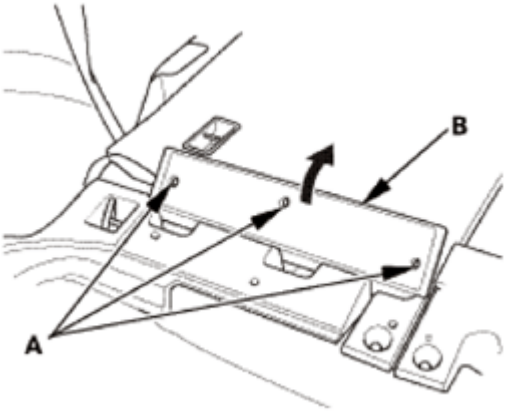

Fig. 460: Removing Rear Seat-Back Cover And Clips (Left Side)
Courtesy of AMERICAN HONDA MOTOR CO., INC.

Right side

GETtheMANUALS.org

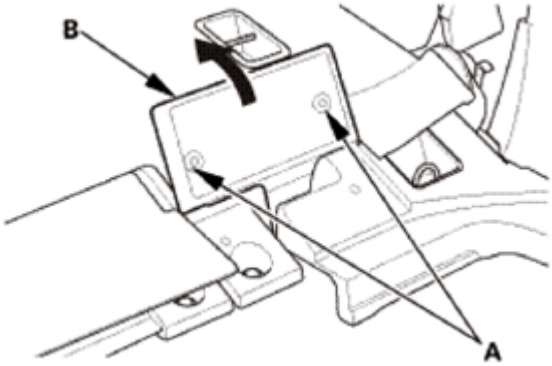

Fig. 461: Removing Rear Seat-Back Cover And Clips (Right Side)
Courtesy of AMERICAN HONDA MOTOR CO., INC.

2. Detach the hooks (A) from the rear side trim panel (B), and pull up the rear carpet trim (C) by hand to detach the clips (D), then remove the rear carpet trims.

Left side

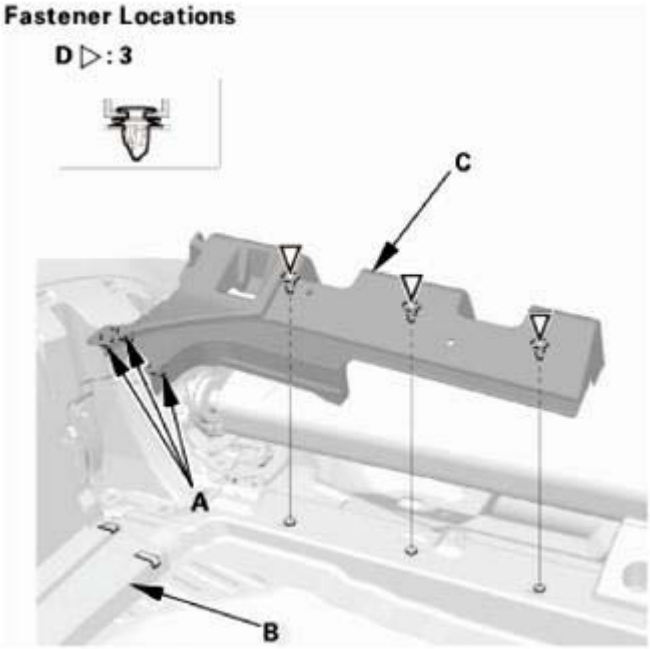

Fig. 462: Identifying Rear Side Trim Panel, Rear Carpet Trim, Hooks And Clips (Left Side)
Courtesy of AMERICAN HONDA MOTOR CO., INC.

Right side

GETtheMANUALS.org

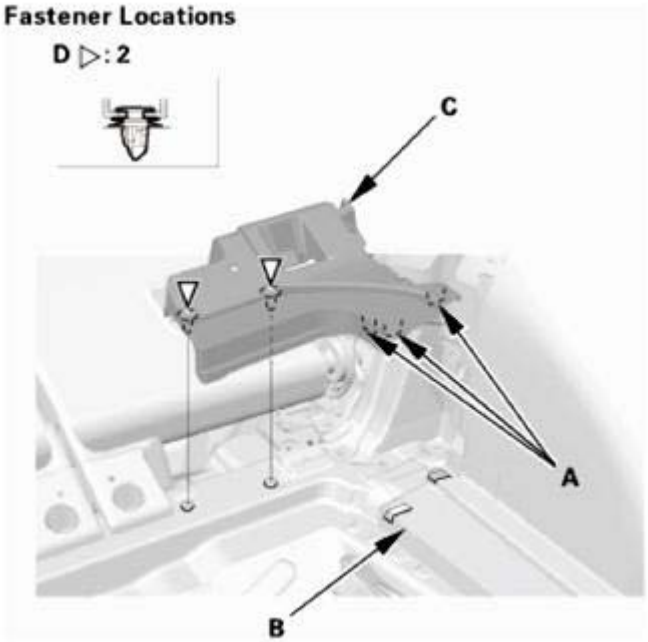

Fig. 463: Identifying Rear Side Trim Panel, Rear Carpet Trim, Hooks And Clips (Right Side)
Courtesy of AMERICAN HONDA MOTOR CO., INC.

8. Tailgate Weatherstrip As Needed
    1. Detach the tailgate weatherstrip (A) as needed.

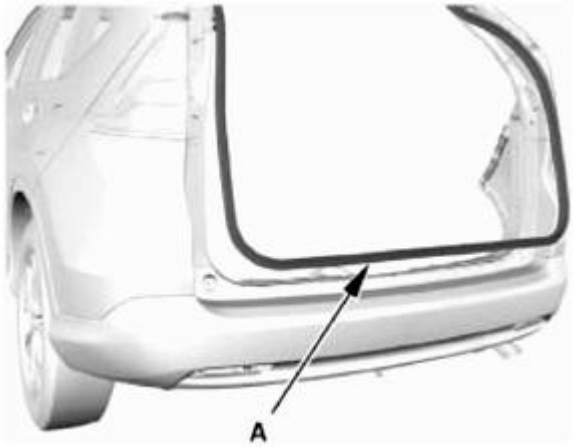

Fig. 464: Identifying Tailgate Weatherstrip
Courtesy of AMERICAN HONDA MOTOR CO., INC.

9. Rear Trim Panel
    1. Remove the clips (A).
    2. Detach the hooks (B) and the tabs (C) from the rear side trim panels (D), and pull up the rear trim panel (E) by hand to detach the clips (F, G), then remove the rear trim panel.

GETtheMANUALS.org

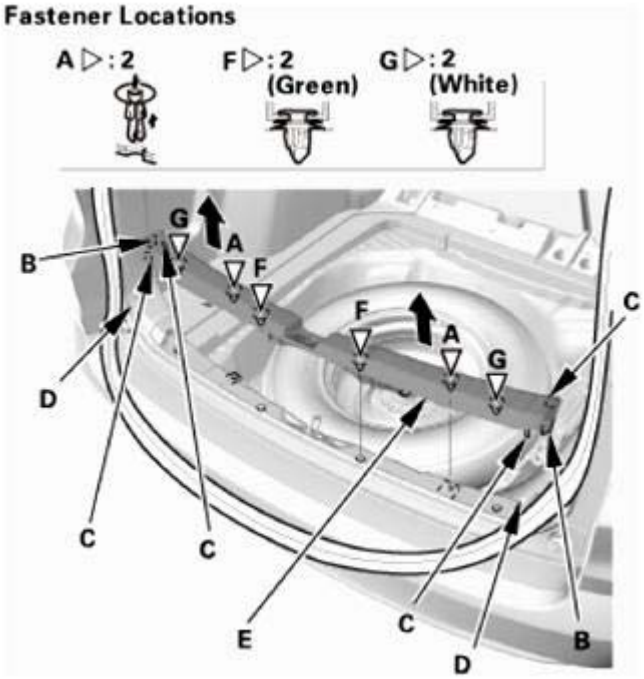

Fig. 465: Removing Rear Trim Panel
Courtesy of AMERICAN HONDA MOTOR CO., INC.

10. Rear Side Trim Panel
    1. Carefully pry out on the upper hook (A) in the rear seat release lever cap (B) with the appropriate trim tool, then pull back the rear seat release lever cap to remove it.
    2. Remove the screws (C).

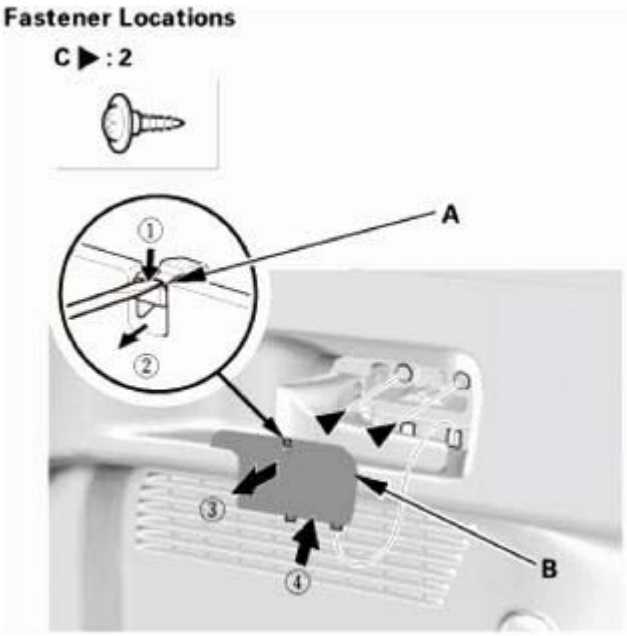

Fig. 466: Removing Rear Seat Release Lever Cap

GETtheMANUALS.org

Courtesy of AMERICAN HONDA MOTOR CO., INC.

3. Push in the center pin (A), then remove the trunk hook (B).

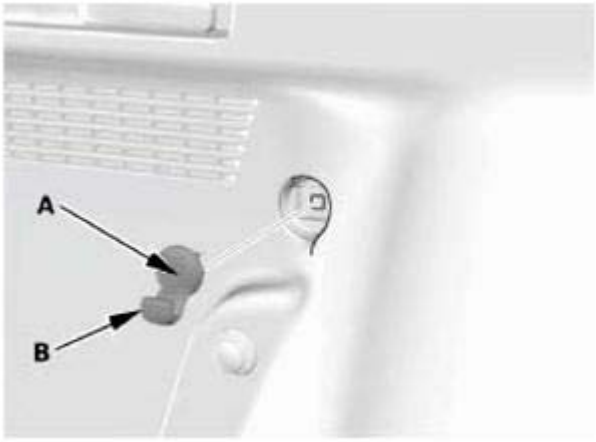

Fig. 467: Identifying Trunk Hook And Center Pin
Courtesy of AMERICAN HONDA MOTOR CO., INC.

4. Remove the bolt (A), then remove the tie-down hook (B).

Fig. 468: Identifying Tie-Down Hook And Bolt
Courtesy of AMERICAN HONDA MOTOR CO., INC.

5. Remove the clips (A, B).
6. Detach the hooks (C) and the tabs (D) from the quarter pillar trim (E), and pull out the rear side trim panel (F) by hand to detach the clips (G, H).

GETtheMANUALS.org

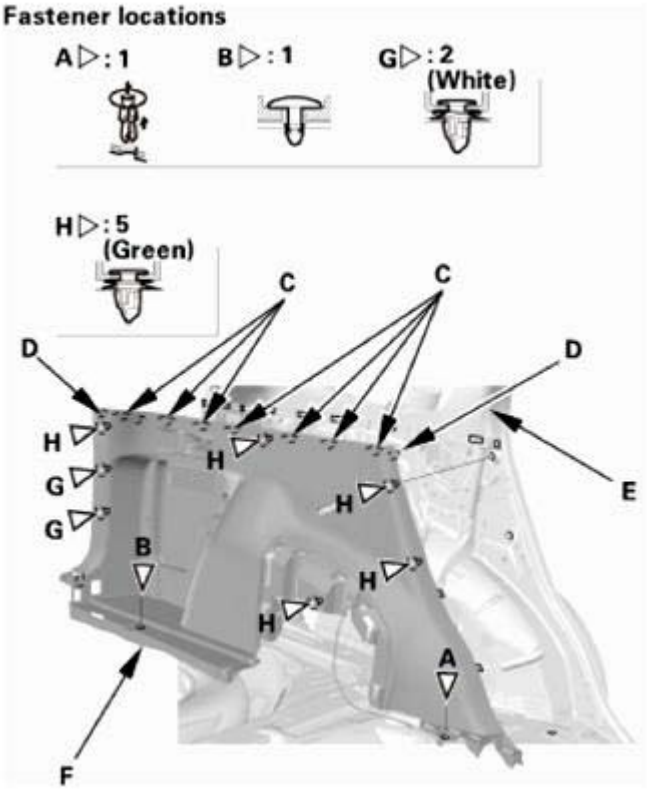

Fig. 469: Identifying Rear Side Trim Panel, Quarter Pillar Trim, Hooks, Tabs And Clips
Courtesy of AMERICAN HONDA MOTOR CO., INC.

7. Remove the rear seat release lever (A) from the rear side trim panel (B).

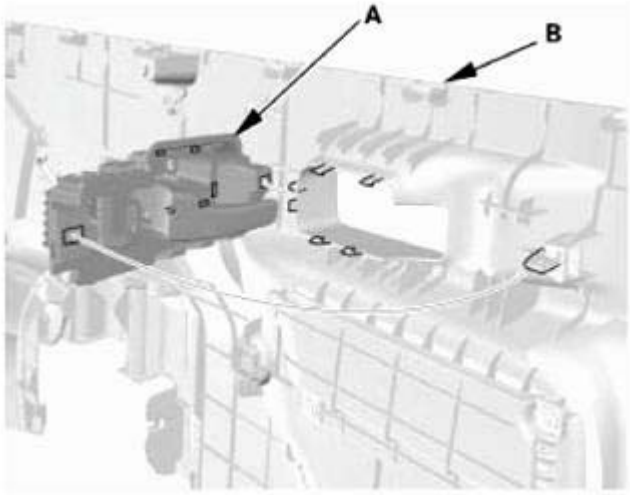

Fig. 470: Identifying Rear Seat Release Lever And Rear Side Trim Panel
Courtesy of AMERICAN HONDA MOTOR CO., INC.

8. Detach the rear seat release cable (A) from the clips of the rear side trim panel (B), then remove the rear side trim panel.

GETtheMANUALS.org

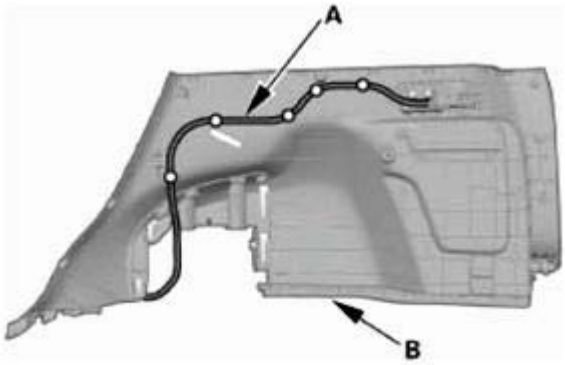

Fig. 471: Identifying Rear Seat Release Cable And Rear Side Trim Panel
Courtesy of AMERICAN HONDA MOTOR CO., INC.

11. Side Impact Sensor (Second)
    1. Disconnect the side impact sensor (second) connector on the floor wire harness.
    2. Remove the TORX bolt using a TORX T30 bit, then remove the side impact sensor (second) (A).

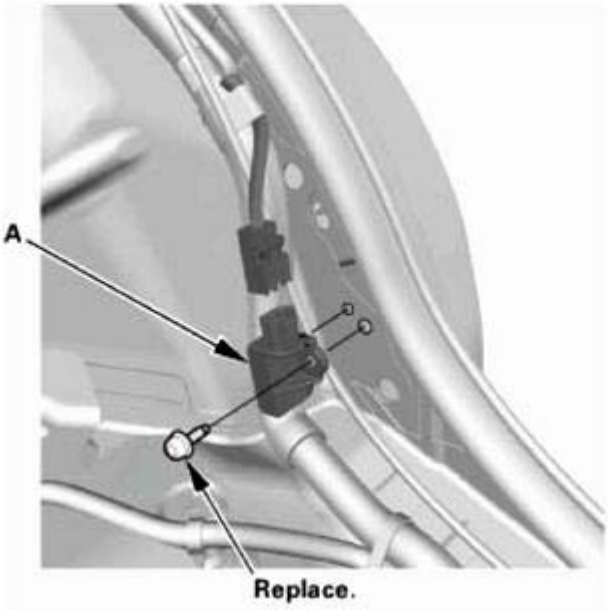

Fig. 472: Identifying Side Impact Sensor And Bolt
Courtesy of AMERICAN HONDA MOTOR CO., INC.

INSTALLATION

NOTE: **SRS components are located in this area. Review the SRS COMPONENT LOCATIONS and the PRECAUTIONS AND PROCEDURES before doing repairs or service.**

1. Side Impact Sensor (Second)

GETtheMANUALS.org

1. Install the side impact sensor (second) (A) with the new TORX bolt using a TORX T30 bit.
2. Connect the side impact sensor (second) connector on the floor wire harness.

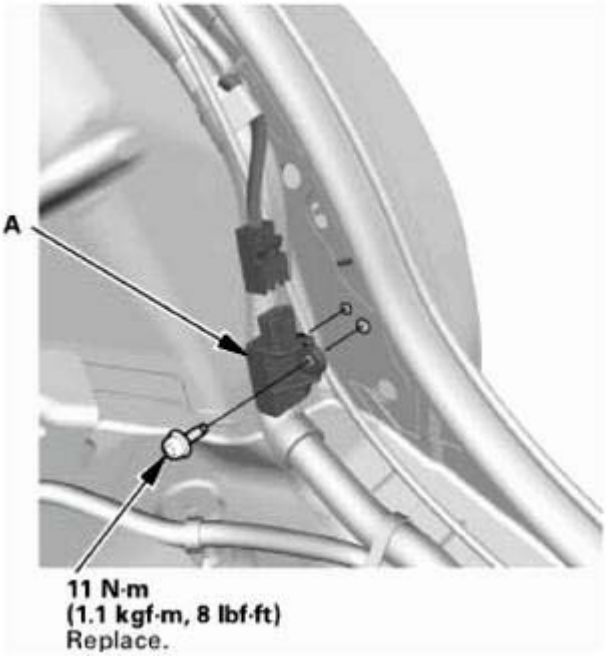

Fig. 473: Identifying Side Impact Sensor And Bolt With Torque Specifications
Courtesy of AMERICAN HONDA MOTOR CO., INC.

2. Battery Terminal (SRS) - Reconnection

NOTE: If the battery performance is abnormal, test the battery.

1. Clean the battery terminals.
2. Connect the positive cable (A) to the battery.

NOTE: Always connect the positive side first.

3. Connect the negative cable (B) to the battery.
4. Apply multipurpose grease to the terminals to prevent corrosion.

GETtheMANUALS.org

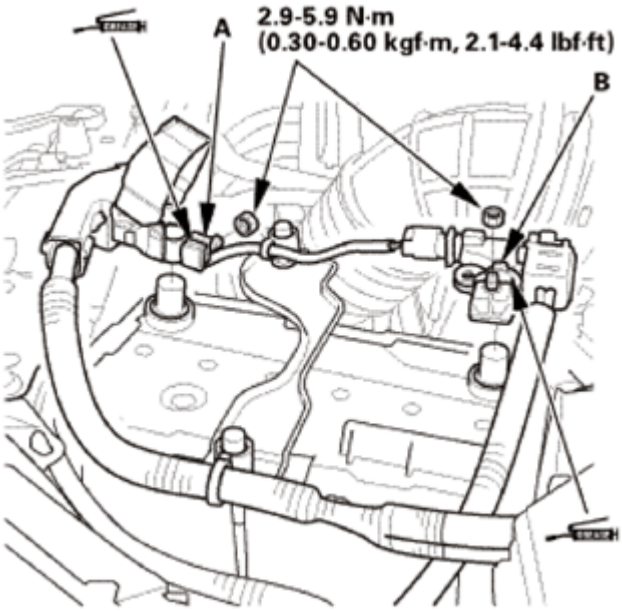

Fig. 474: Identifying Multipurpose Grease Applying Area On Battery Positive And Negative Terminals
Courtesy of AMERICAN HONDA MOTOR CO., INC.

3. HDS DLC - Connection
    1. Connect the HDS to the data link connector (DLC) (A) located under the driver's side of the dashboard.
    2. Turn the ignition switch to ON (II).
    3. Make sure the HDS communicates with the vehicle. If it does not communicate, go to the DLC circuit troubleshooting.

Fig. 475: Identifying Data Link Connector
Courtesy of AMERICAN HONDA MOTOR CO., INC.

GETtheMANUALS.org

4. DTC - Clear
    1. Clear the DTC(s) by following the screen prompts on the HDS.
    2. Turn the ignition switch to LOCK (0), then wait for 10 seconds.
5. Confirm Proper SRS Operation
    1. Turn the ignition switch to ON (II), and check that the SRS indicator comes on for about 6 seconds and then goes off.
6. Rear Side Trim Panel
    1. Install the rear seat release cable (A) to the clips (B) of the rear side trim panel (C).

NOTE: Align the marks (D) with the clips as shown.

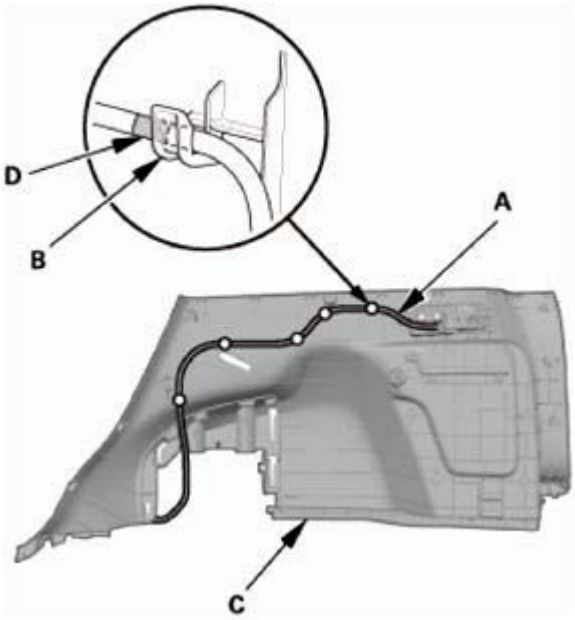

Fig. 476: Removing Rear Seat Release Lever Cap
Courtesy of AMERICAN HONDA MOTOR CO., INC.

2. Install the rear seat release lever (A) to the rear side trim panel (B).

GETtheMANUALS.org

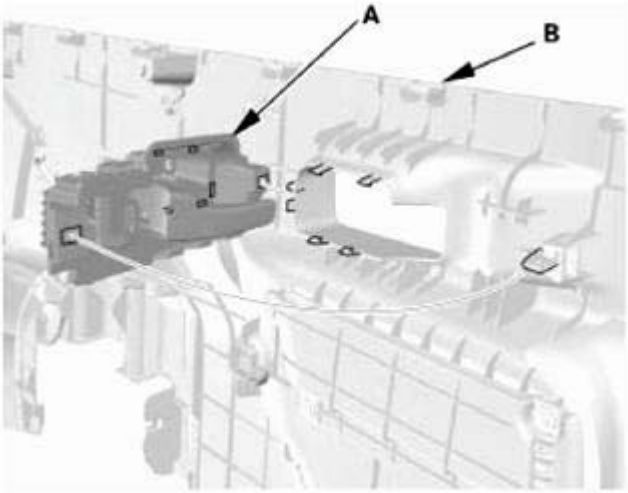

Fig. 477: Identifying Rear Seat Release Lever And Rear Side Trim Panel
Courtesy of AMERICAN HONDA MOTOR CO., INC.

3. Install the rear side trim panel (A). Make sure the hooks (B), the tabs (C), and the clips (D, E) snap into place securely.
4. Install the clips (F, G).

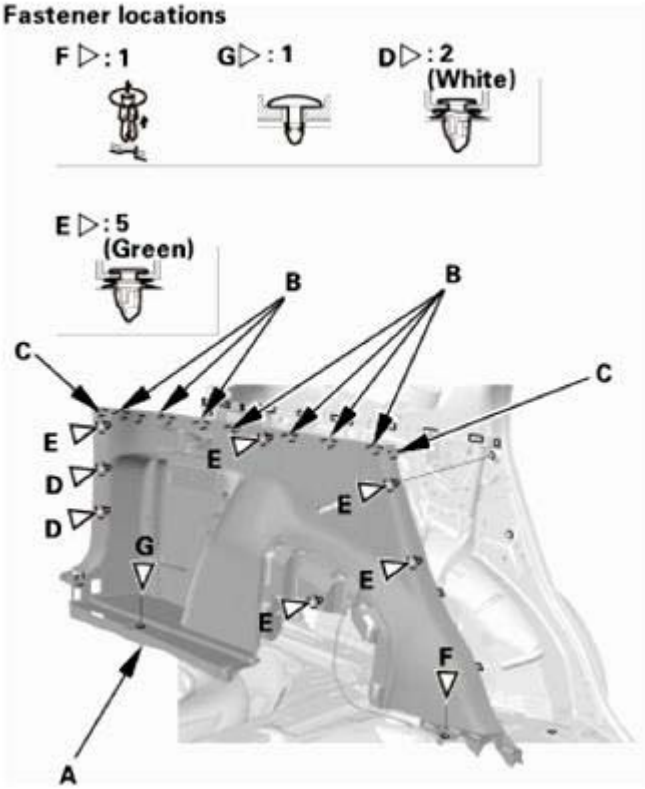

Fig. 478: Identifying Rear Side Trim Panel, Hooks, Tabs And Clips
Courtesy of AMERICAN HONDA MOTOR CO., INC.

GETtheMANUALS.org

5. Install the tie-down hook (A), then install the bolt (B).

Fig. 479: Identifying Tie-Down Hook And Bolt With Torque Specification
Courtesy of AMERICAN HONDA MOTOR CO., INC.

6. Install the trunk hook (A).

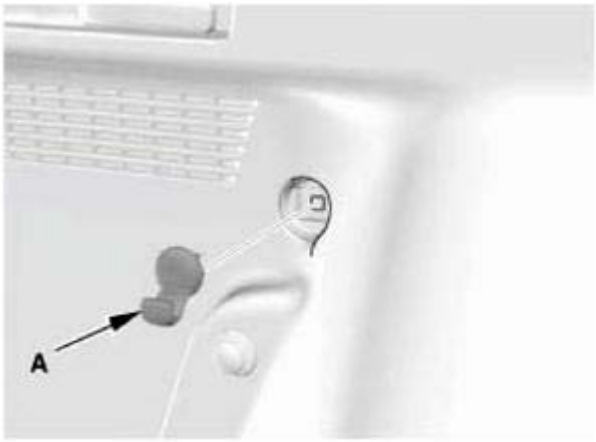

Fig. 480: Identifying Trunk Hook
Courtesy of AMERICAN HONDA MOTOR CO., INC.

7. Install the screws (A), then install the rear seat release lever cap (B). Make sure the upper hook (C) and the lower hooks (D) snap into place securely.

GETtheMANUALS.org

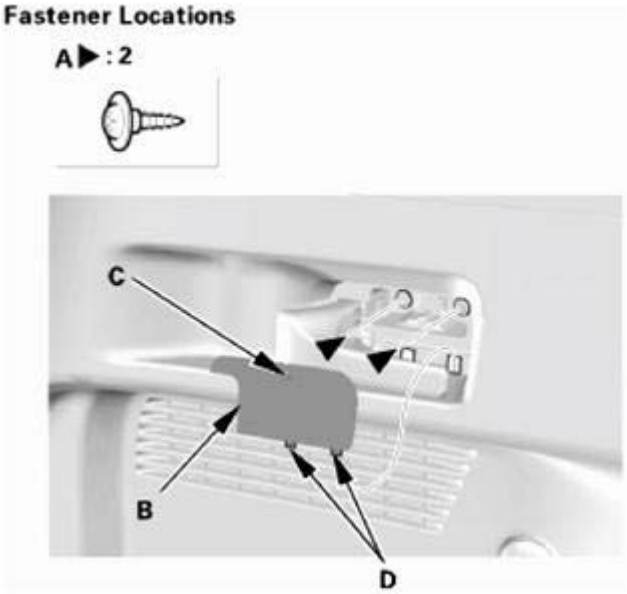

Fig. 481: Identifying Rear Seat Release Lever Cap, Hooks And Screws
Courtesy of AMERICAN HONDA MOTOR CO., INC.

7. Rear Trim Panel
    1. Install the rear trim panel (A). Make sure the clips (B, C), the hooks (D), and the tabs (E) snap into place securely.
    2. Install the clips (F).

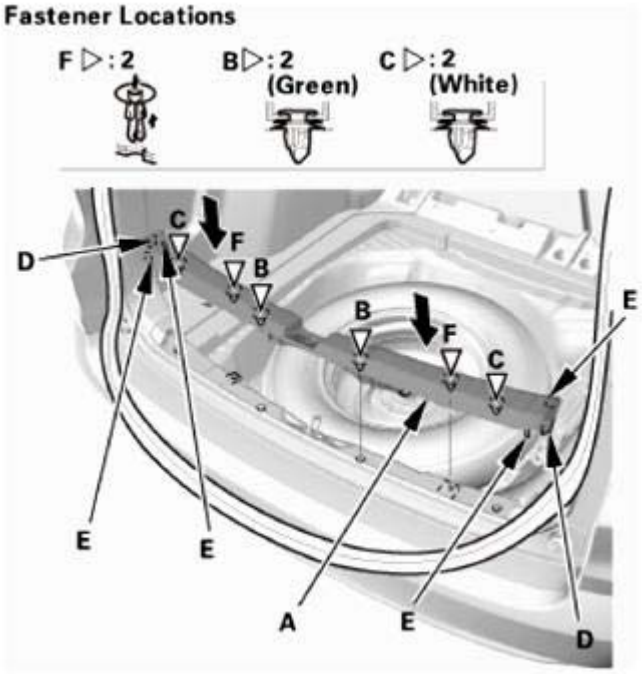

Fig. 482: Installing Rear Trim Panel
Courtesy of AMERICAN HONDA MOTOR CO., INC.

GETtheMANUALS.org

8. Tailgate Weatherstrip As Needed
    1. Locate the alignment mark (A) of the tailgate weatherstrip (B). Align the alignment mark (C) with the center of the lower area on the tailgate opening, then install the tailgate weatherstrip all the way around.

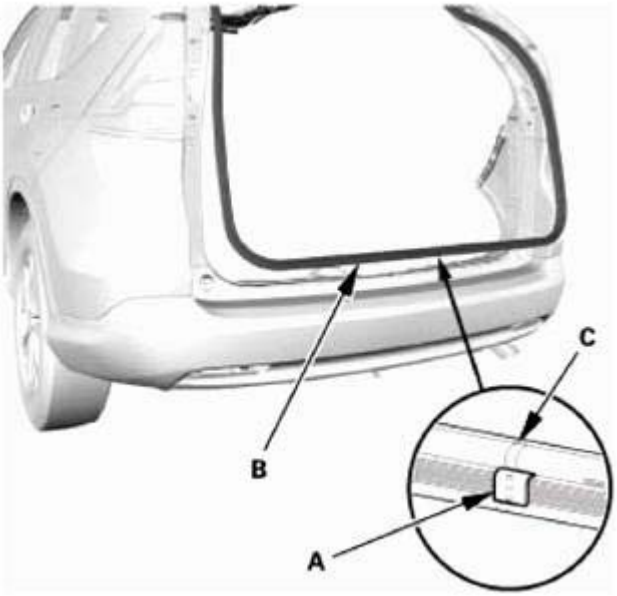

Fig. 483: Identifying Alignment Mark Of Tailgate Weatherstrip
Courtesy of AMERICAN HONDA MOTOR CO., INC.

9. Rear Carpet Trim
    1. Install the rear carpet trim (A). Make sure the clips (B) and the hooks (C) snap into place securely.

Left side

GETtheMANUALS.org

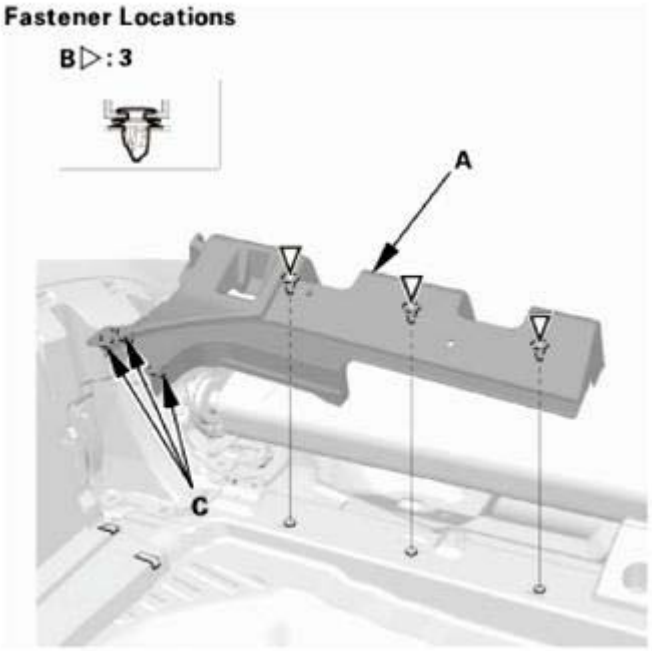

Fig. 484: Identifying Rear Carpet Trim, Clips And Hooks (Left Side)
Courtesy of AMERICAN HONDA MOTOR CO., INC.

Right side

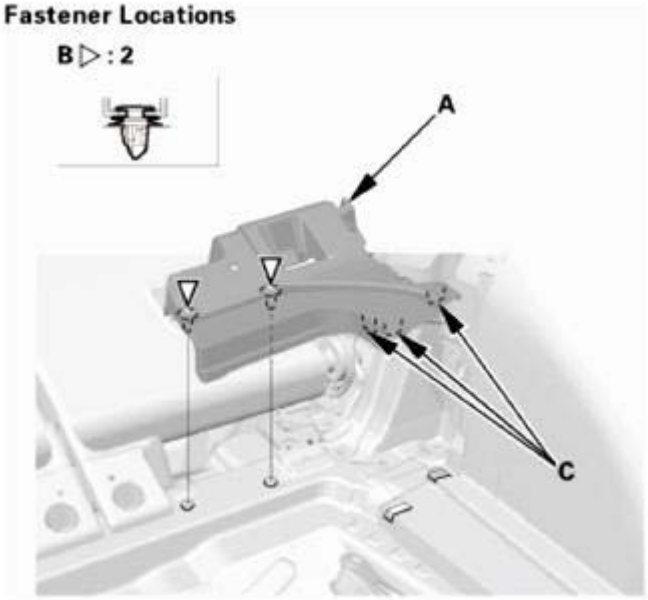

Fig. 485: Identifying Rear Carpet Trim, Clips And Hooks (Right Side)
Courtesy of AMERICAN HONDA MOTOR CO., INC.

2. Install the rear seat-back cover (A). Make sure the clips (B) snap into place securely.

Left side

GETtheMANUALS.org

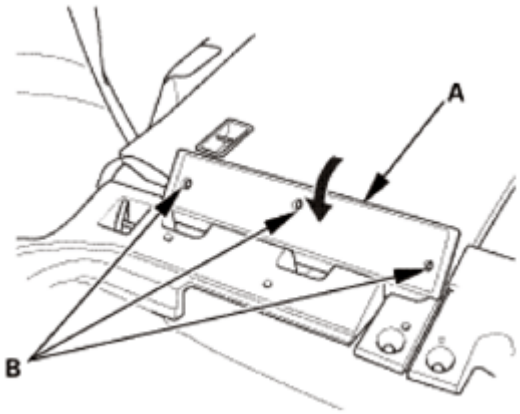

Fig. 486: Installing Rear Seat-Back Cover (Left Side)
Courtesy of AMERICAN HONDA MOTOR CO., INC.

Right side

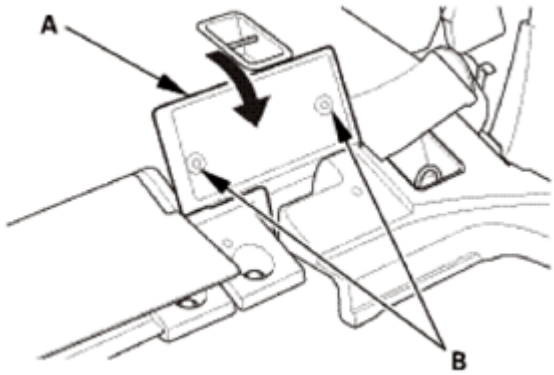

Fig. 487: Installing Rear Seat-Back Cover (Right Side)
Courtesy of AMERICAN HONDA MOTOR CO., INC.

10. Rear Damper Maintenance Cover
    1. Fold down the rear seat-back.
    2. Install the rear damper maintenance cover (A). Make sure the hooks (B) snap into place securely.

GETtheMANUALS.org

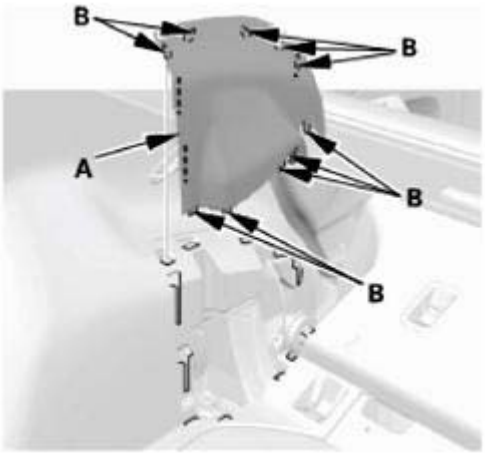

Fig. 488: Identifying Rear Damper Maintenance Cover And Hooks
Courtesy of AMERICAN HONDA MOTOR CO., INC.

11. Rear Door Opening Seal As Needed
    1. Install the rear door opening seal (A). Make sure the seal is installed securely into the hooks (B).

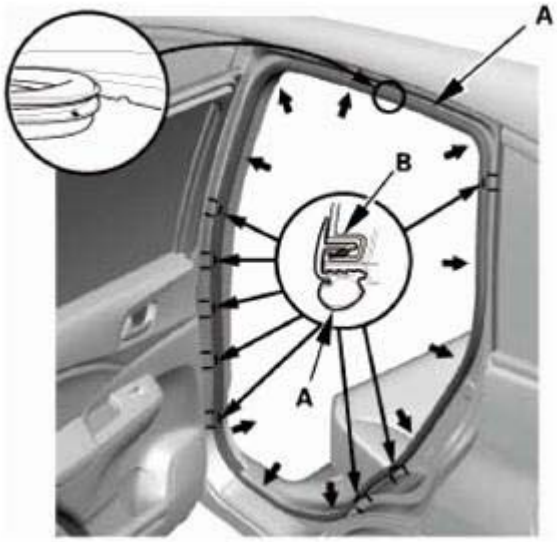

Fig. 489: Installing Rear Door Opening Seal
Courtesy of AMERICAN HONDA MOTOR CO., INC.

12. Rear Door Sill Trim
    1. Pull the release strap to fold down the rear seat, then lift-up and latch the rear seat-back in the upright position.
    2. Install the rear door inner sill trim (A). Make sure the clips (B, C), the hooks (D), and the tab (E) snap into place securely.

GETtheMANUALS.org

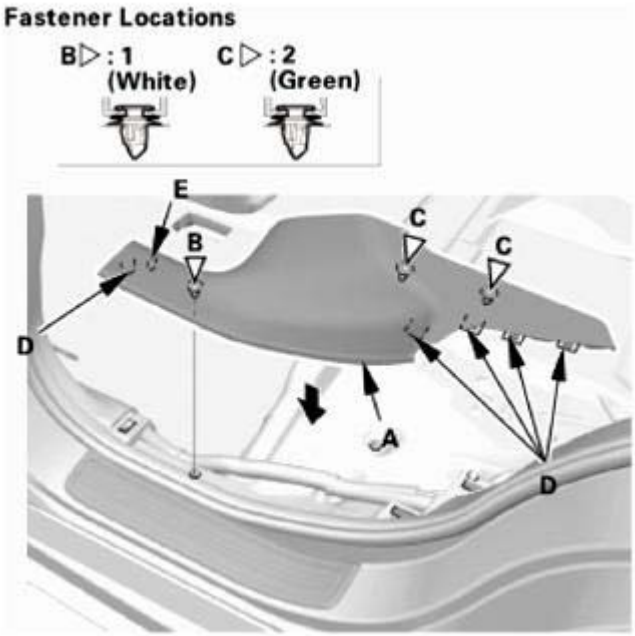

Fig. 490: Installing Rear Door Sill Trim
Courtesy of AMERICAN HONDA MOTOR CO., INC.

13. Cargo Floor Cover
    1. Install the cargo floor cover (A).

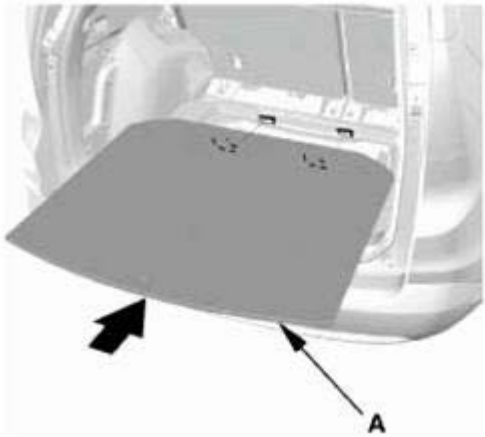

Fig. 491: Installing Cargo Floor Cover
Courtesy of AMERICAN HONDA MOTOR CO., INC.

14. Tonneau Cover (For Some Models)
    1. Install the tonneau cover (A).

GETtheMANUALS.org

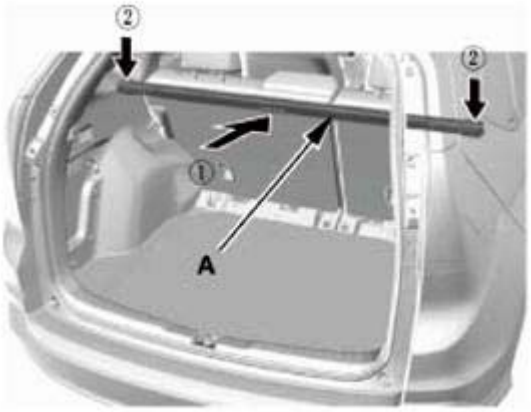

Fig. 492: Installing Tonneau Cover
Courtesy of AMERICAN HONDA MOTOR CO., INC.

SRS COMPONENT LOCATION INDEX

USA AND CANADA MODELS

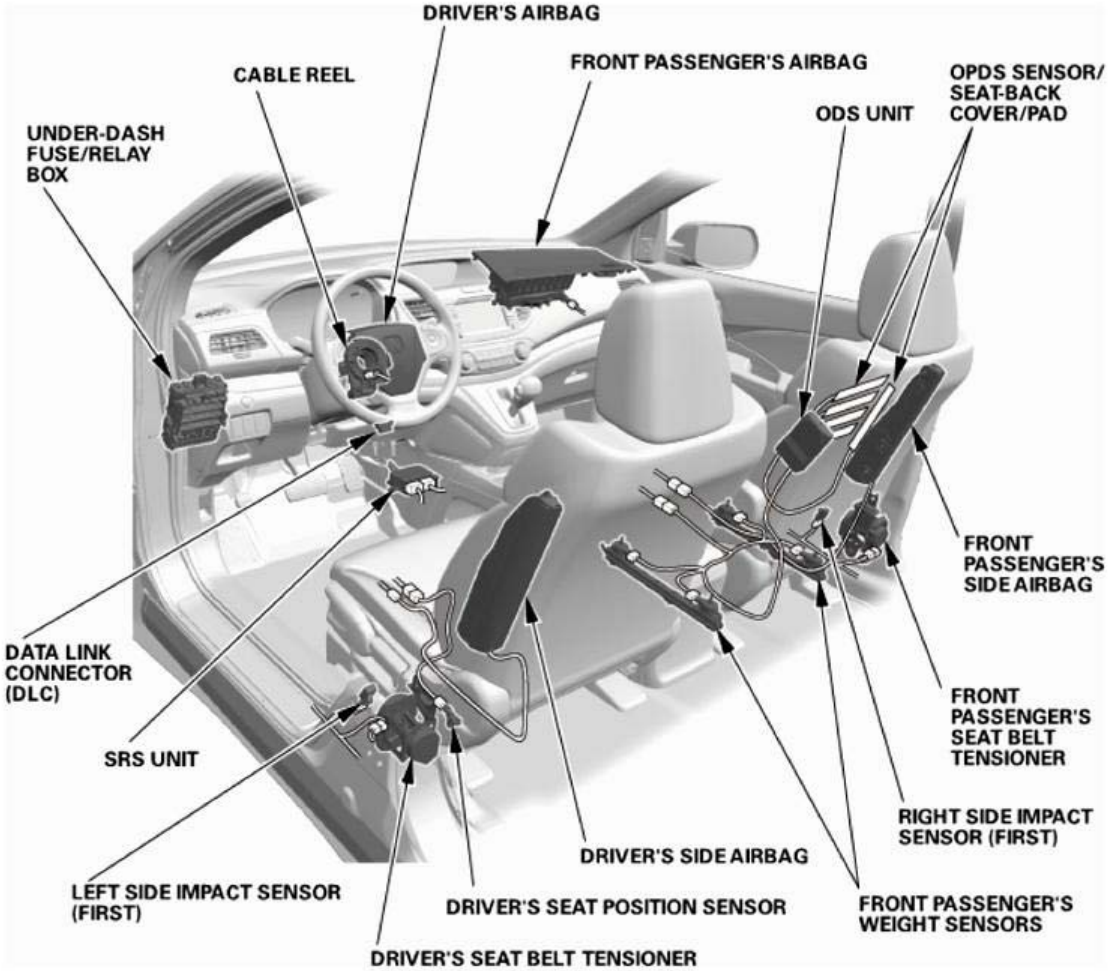

GETtheMANUALS.org

Fig. 493: SRS Components Location (USA And Canada Models)
Courtesy of AMERICAN HONDA MOTOR CO., INC.

DRIVER'S AIRBAG	**REMOVAL AND INSTALLATION**
	Disposal See **AIRBAG AND TENSIONER DISPOSAL** or **SRS COMPONENT REPLACEMENT/INSPECTION AFTER DEPLOYMENT**
FRONT PASSENGER'S AIRBAG	**REMOVAL AND INSTALLATION**
	Disposal See **AIRBAG AND TENSIONER DISPOSAL** or **SRS COMPONENT REPLACEMENT/INSPECTION AFTER DEPLOYMENT**
SIDE AIRBAG	**REMOVAL AND INSTALLATION**
	Disposal See **AIRBAG AND TENSIONER DISPOSAL** or **SRS COMPONENT REPLACEMENT/INSPECTION AFTER DEPLOYMENT**
FRONT SEAT BELT TENSIONER	**REMOVAL AND INSTALLATION**
	Disposal See **AIRBAG AND TENSIONER DISPOSAL** or **SRS COMPONENT REPLACEMENT/INSPECTION AFTER DEPLOYMENT**
CABLE REEL	**REMOVAL AND INSTALLATION**
SRS UNIT	**Removal and Installation** See **SRS UNIT REMOVAL AND INSTALLATION** or **SRS UNIT UPDATE**
	Update See **SRS UNIT REMOVAL AND INSTALLATION** or **SRS UNIT UPDATE**
SIDE IMPACT SENSOR (FIRST)	**REMOVAL AND INSTALLATION**
ODS UNIT	Removal and Installation
	Operation Check
	Initialization
OPDS SENSOR/SEAT-BACK COVER/PAD	**REMOVAL AND INSTALLATION**
FRONT PASSENGER'S SEAT WEIGHT SENSORS	**REMOVAL AND INSTALLATION**
	OUTPUT CHECK
DRIVER'S SEAT POSITION SENSOR	**REMOVAL AND INSTALLATION**
	OPERATION CHECK
DATA LINK CONNECTOR (DLC)	**TROUBLESHOOTING**

GETtheMANUALS.org

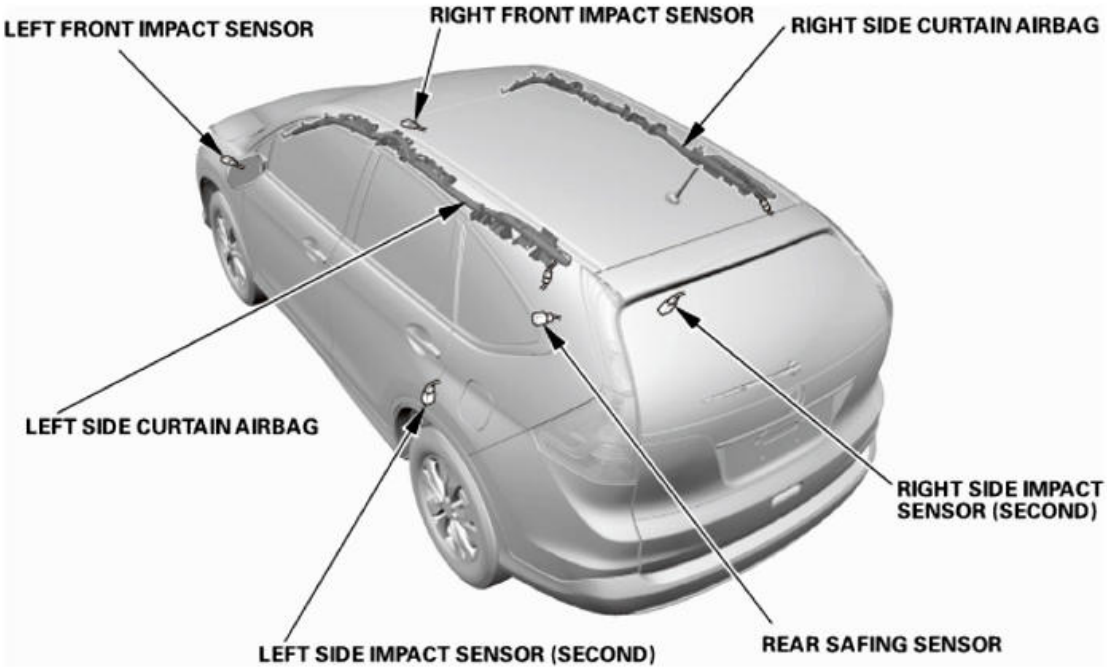

Fig. 494: SRS Components Location
Courtesy of AMERICAN HONDA MOTOR CO., INC.

SIDE CURTAIN AIRBAG	**REMOVAL AND INSTALLATION**
	Disposal See **AIRBAG AND TENSIONER DISPOSAL** or **SRS COMPONENT REPLACEMENT/INSPECTION AFTER DEPLOYMENT**
SIDE IMPACT SENSOR (SECOND)	**REMOVAL AND INSTALLATION**
REAR SAFING SENSOR	**REMOVAL AND INSTALLATION**
FRONT IMPACT SENSOR	**REMOVAL AND INSTALLATION**

GETtheMANUALS.org

Fig. 495: SRS Components Location
Courtesy of AMERICAN HONDA MOTOR CO., INC.

SRS INDICATOR (RED)	
SIDE AIRBAG CUTOFF INDICATOR (AMBER)	
FRONT PASSENGER'S AIRBAG CUTOFF INDICATOR (AMBER)	**REMOVAL AND INSTALLATION**
SEAT BELT REMINDER INDICATOR (RED)	

MEXICO MODELS

GETtheMANUALS.org

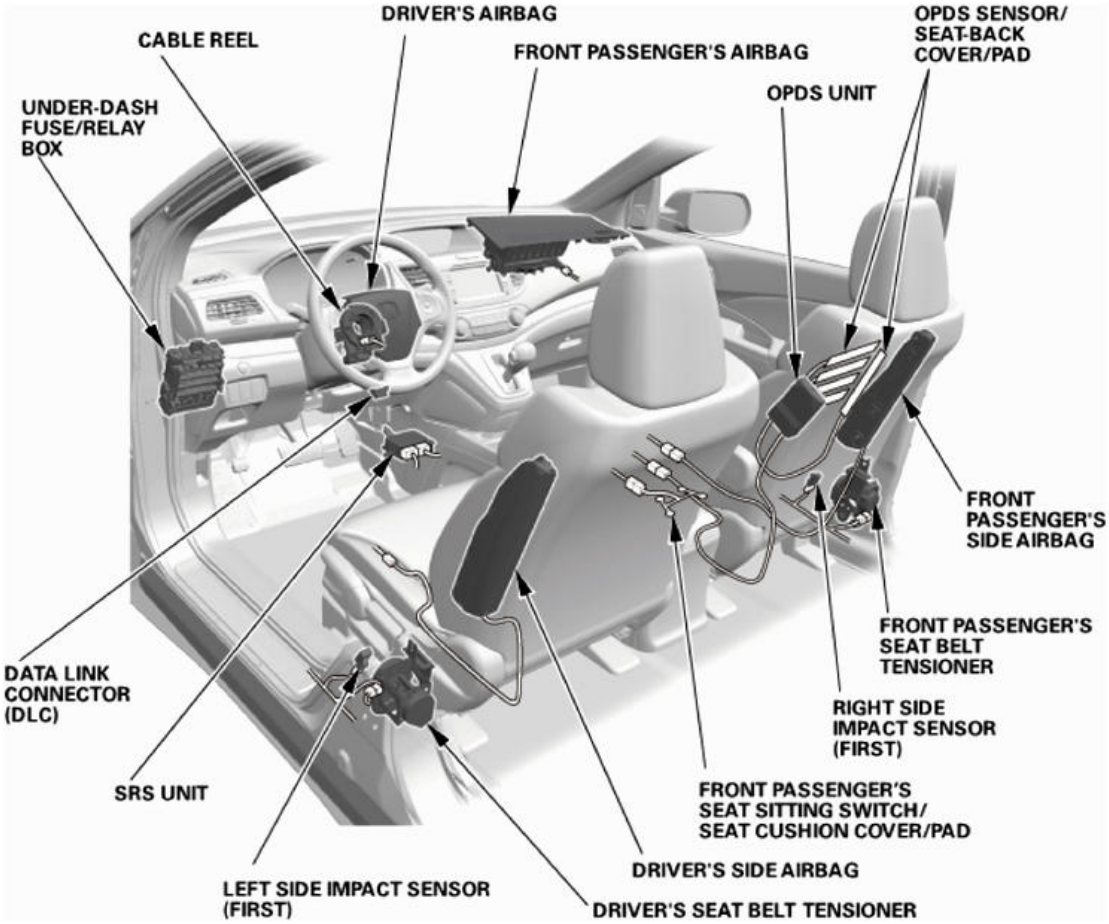

Fig. 496: SRS Components Location (Mexico Models)
Courtesy of AMERICAN HONDA MOTOR CO., INC.

DRIVER'S AIRBAG	**REMOVAL AND INSTALLATION**
	Disposal See **AIRBAG AND TENSIONER DISPOSAL** or **SRS COMPONENT REPLACEMENT/INSPECTION AFTER DEPLOYMENT**
FRONT PASSENGER'S AIRBAG	**REMOVAL AND INSTALLATION**
	Disposal See **AIRBAG AND TENSIONER DISPOSAL** or **SRS COMPONENT REPLACEMENT/INSPECTION AFTER DEPLOYMENT**
SIDE AIRBAG	**REMOVAL AND INSTALLATION**
	Disposal See **AIRBAG AND TENSIONER DISPOSAL** or **SRS COMPONENT REPLACEMENT/INSPECTION AFTER DEPLOYMENT**
FRONT SEAT BELT TENSIONER	**REMOVAL AND INSTALLATION**
	Disposal See **AIRBAG AND TENSIONER DISPOSAL** or **SRS COMPONENT REPLACEMENT/INSPECTION AFTER DEPLOYMENT**
CABLE REEL	**REMOVAL AND INSTALLATION**

GETtheMANUALS.org

SRS UNIT	**Removal and Installation** See **SRS UNIT REMOVAL AND INSTALLATION** or **SRS UNIT UPDATE**
	Update See **SRS UNIT REMOVAL AND INSTALLATION** or **SRS UNIT UPDATE**
SIDE IMPACT SENSOR (FIRST)	**REMOVAL AND INSTALLATION**
OPDS UNIT	Removal and Installation
	Initialization
OPDS SENSOR/SEAT-BACK COVER/PAD	**REMOVAL AND INSTALLATION**
FRONT PASSENGER'S SEAT SITTING SWITCH/SEAT CUSHION COVER/PAD	**REMOVAL AND INSTALLATION**
DATA LINK CONNECTOR (DLC)	**TROUBLESHOOTING**

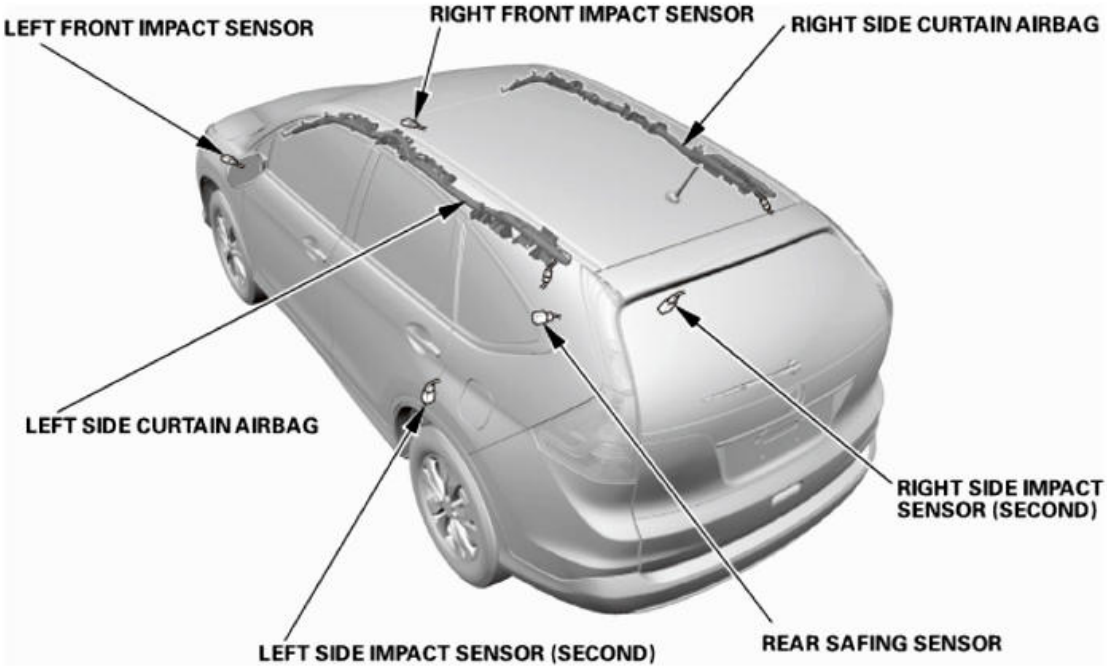

Fig. 497: SRS Components Location
Courtesy of AMERICAN HONDA MOTOR CO., INC.

SIDE CURTAIN AIRBAG	**REMOVAL AND INSTALLATION**
	Disposal See **AIRBAG AND TENSIONER DISPOSAL** or **SRS COMPONENT REPLACEMENT/INSPECTION AFTER DEPLOYMENT**
SIDE IMPACT SENSOR (SECOND)	**REMOVAL AND INSTALLATION**
REAR SAFING SENSOR	**REMOVAL AND INSTALLATION**
FRONT IMPACT SENSOR	**REMOVAL AND INSTALLATION**

GETtheMANUALS.org

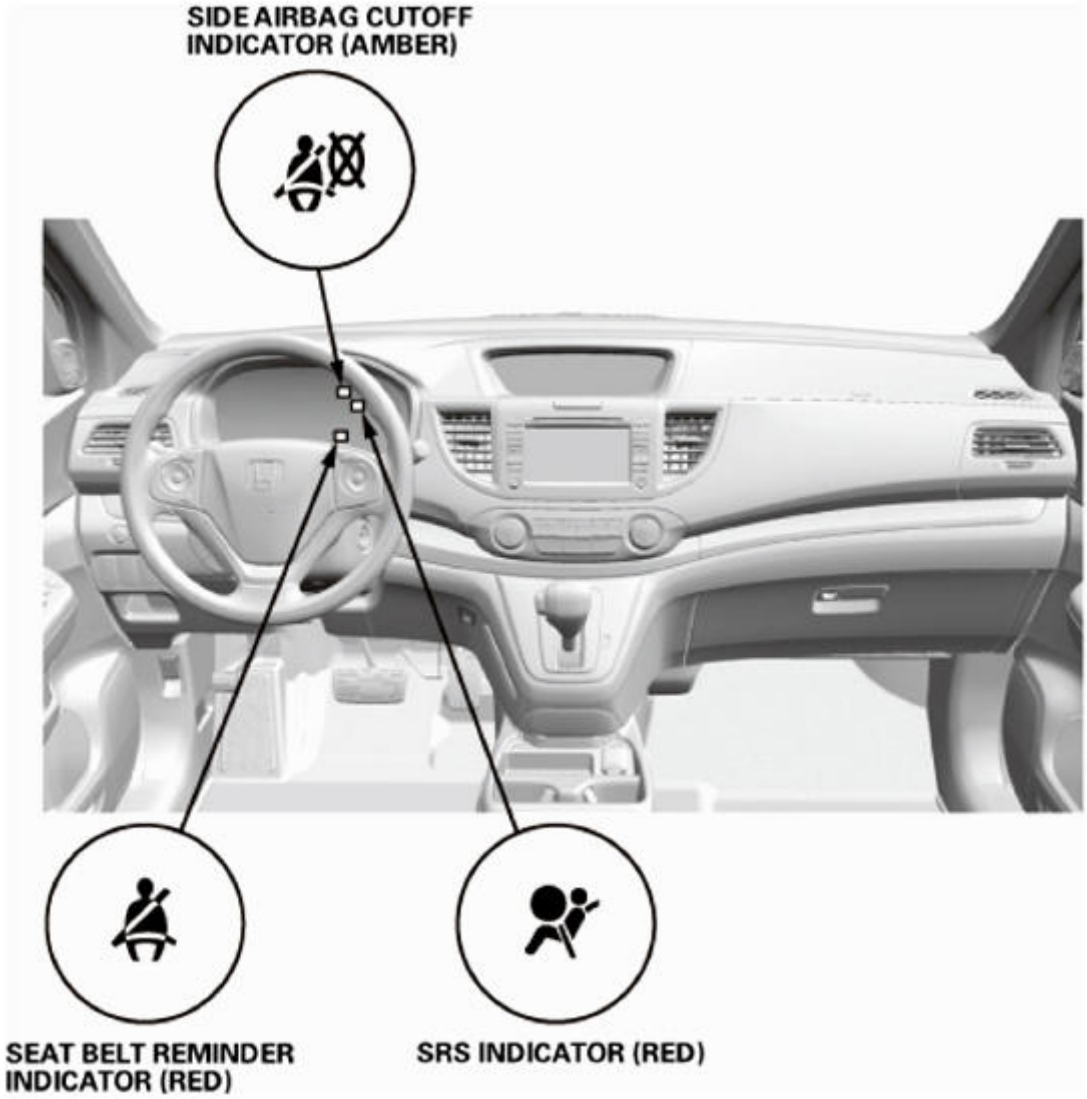

Fig. 498: SRS Components Location
Courtesy of AMERICAN HONDA MOTOR CO., INC.

SRS INDICATOR (RED)
SIDE AIRBAG CUTOFF INDICATOR (AMBER)
FRONT SEAT BELT REMINDER INDICATOR (RED)

SRS COMPONENT REPLACEMENT/INSPECTION AFTER DEPLOYMENT

INSPECTION

1. Component Replacement/Inspection After Deployment

NOTE:

- **If the harness is broken or damaged in the areas relevant to the**

GETtheMANUALS.org

replacement parts shown below, replace the harness, do not repair it.

- **Before doing any SRS repairs, check for DTCs with the HDS for the less obvious deployed components (front seat belt tensioners, front impact sensors, side impact sensors, etc).**
- **Do not replace the ODS unit (USA and Canada models) or the OPDS unit (Mexico models) unless it is physically damaged or a specific fault was found during DTC troubleshooting because it could complicate troubleshooting other DTCs.**
- **USA and Canada models: After a vehicle collision, do the ODS unit operation check.**
- **After a vehicle collision, inspect the front seat active head restraints.**

After a collision where the front seat belt tensioners deployed, replace these items:

- SRS unit
- Front seat belt(s)
- Front impact sensor(s)

After a collision where the front airbag(s) deployed, replace these items:

- SRS unit
- Deployed front airbag(s)
- Front seat belt(s)
- Front impact sensor(s)

After a collision where the side airbag has deployed, replace the items for the side(s) that deployed:

- SRS unit
- Deployed side airbag(s)
- Front seat belt(s)
- Side impact sensor(s) (first)
- Side impact sensor(s) (second)
- Rear safing sensor
- B-pillar lower trim
- Seat frame and related parts

After a collision where a side curtain airbag has deployed, replace the items for the side(s) that deployed:

- SRS unit
- Deployed side curtain airbag(s)
- Front seat belt(s)
- Side impact sensor(s) (first)

GETtheMANUALS.org

- Side impact sensor(s) (second)
- Rear safing sensor
- A-pillar trim
- B-pillar upper trim
- Quarter pillar trim
- Front grab handle
- Rear grab handle
- All related trim clips
- Sunvisor
- Headliner

After a moderate to severe side or rear collision, inspect for any damage on the side curtain airbag or other related components. Replace the components as needed.

A-Pillar Trim

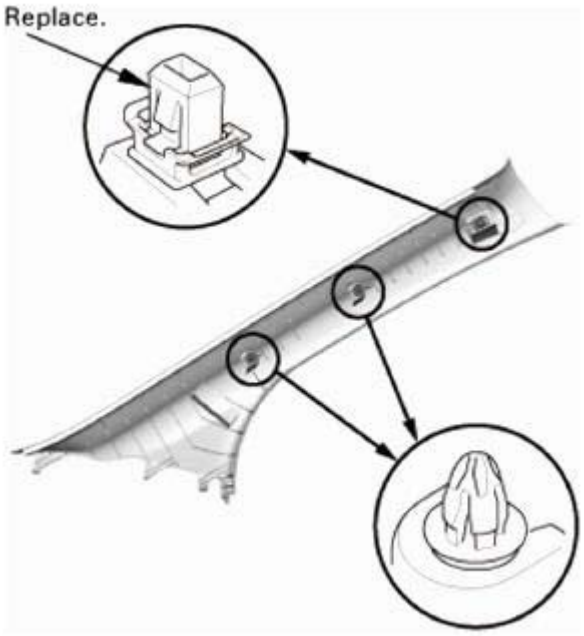

Fig. 499: Identifying A-Pillar Trim Clips
Courtesy of AMERICAN HONDA MOTOR CO., INC.

B-Pillar Upper/Lower Trim

GETtheMANUALS.org

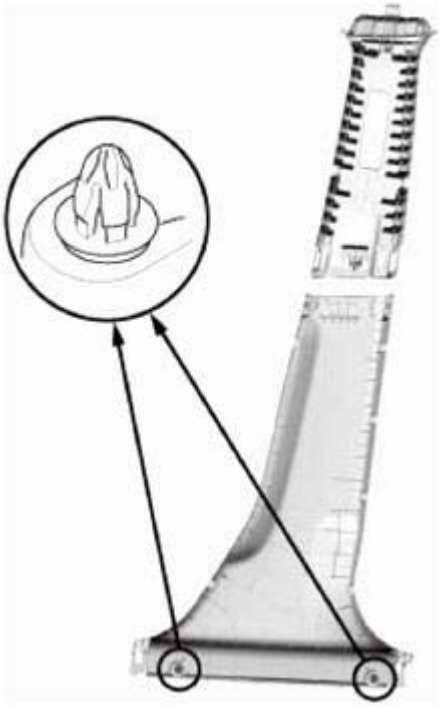

Fig. 500: Identifying B-Pillar Upper/Lower Trim Clips
Courtesy of AMERICAN HONDA MOTOR CO., INC.

Quarter Pillar Trim

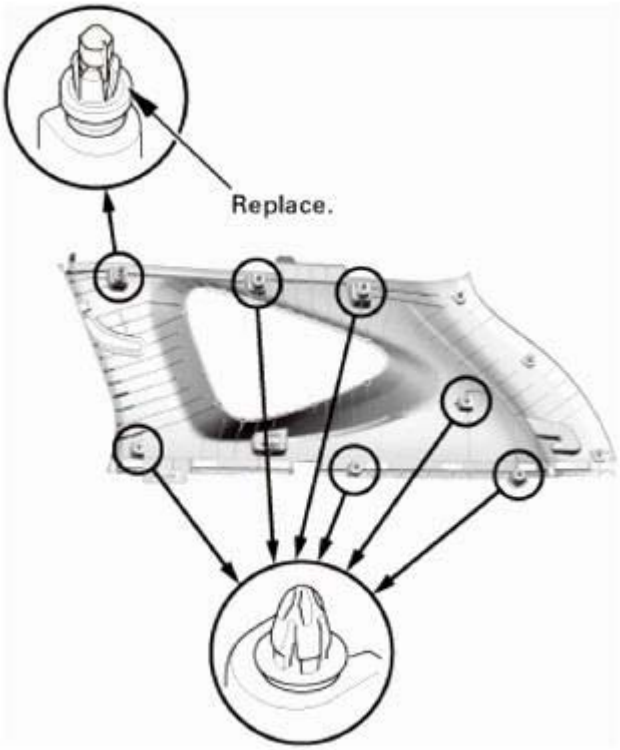

GETtheMANUALS.org

Fig. 501: Identifying Quarter Pillar Trim Clips
Courtesy of AMERICAN HONDA MOTOR CO., INC.

During the repair process, inspect these areas:

- Inspect all the SRS wire harnesses. Replace, do not repair, any damaged harnesses.
- Inspect the cable reel for heat damage. If there is any damage, replace the cable reel.

  After the vehicle is completely repaired, turn the ignition switch to ON (II). If the SRS indicator comes on for about 6 seconds and then goes off, the SRS is OK. If the indicator does not function properly, use the HDS to check for the DTCs. If you cannot retrieve a code, do the SRS Symptom Troubleshooting.

2. Headliner/Pillar Trim Overlap - Check

Checking and Adjusting the Headliner/Pillar Trim Overlap

To prevent the side curtain airbag from deploying and damaging the pillar trim (A-pillar trim, B-pillar trim, quarter pillar trim), the overlap between the headliner and pillar trim must be 8.0+0/-2.0 mm (0.31+0/-0.08 in). To check the overlap, do this:

1. Install the headliner (A) and the pillar trim (B).

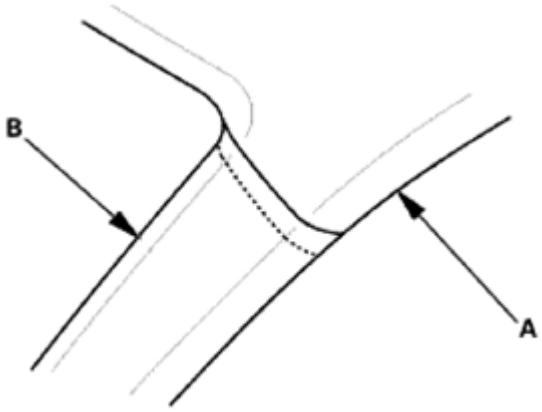

This illustration shows the A-pillar.

Fig. 502: Identifying Headliner And Pillar Trim
Courtesy of AMERICAN HONDA MOTOR CO., INC.

This illustration shows the A-pillar .

2. Apply masking tape (A) to the headliner (B) to mark the upper edge of the pillar trim (C).

GETtheMANUALS.org

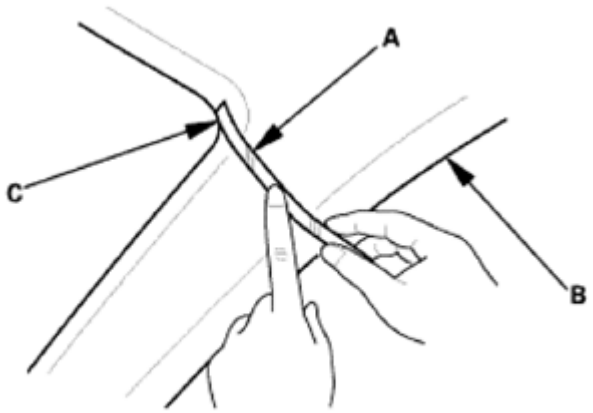

This illustration shows the A-pillar.

Fig. 503: Applying Masking Tape To Headliner
Courtesy of AMERICAN HONDA MOTOR CO., INC.

This illustration shows the A-pillar .

3. Remove the pillar trim, and measure the headliner overlap.
   - If the overlap is 8.0+0/-2.0 mm (0.31+0/-0.08 in), remove the tape, and install the pillar trim.
   - If the overlap is more than 8.0 mm (0.31 in), go to step 4.

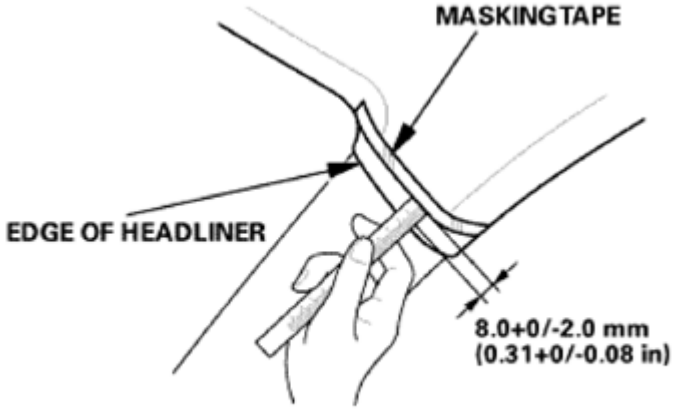

This illustration shows the A-pillar.

Fig. 504: Removing Pillar Trim
Courtesy of AMERICAN HONDA MOTOR CO., INC.

This illustration shows the A-pillar .

4. Carefully trim the headliner with a utility knife, reducing the overlap to 8.0+0/-2.0 mm (0.31+0/-0.08 in).
5. Remove the tape, and install the pillar trim.

GETtheMANUALS.org

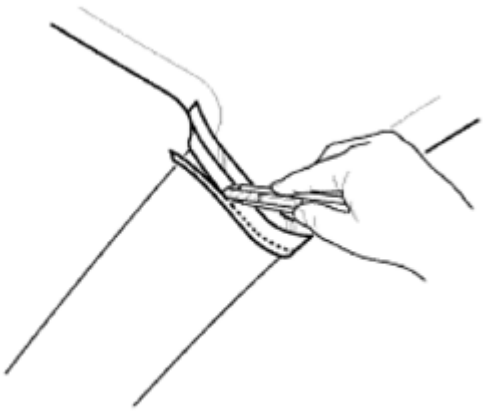

This illustration shows the A-pillar.

Fig. 505: Cutting Headliner Using Utility Knife
Courtesy of AMERICAN HONDA MOTOR CO., INC.

This illustration shows the A-pillar .

SRS UNIT CONNECTOR FOR INPUTS AND OUTPUTS

SRS UNIT INPUTS AND OUTPUTS AT CONNECTOR A (39P)

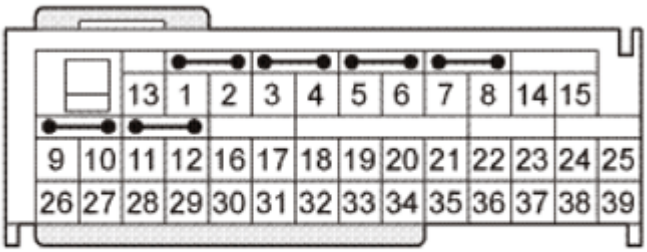

Terminal side of female terminals

Fig. 506: Identifying SRS Unit Inputs And Outputs At Connector A (39P)
Courtesy of AMERICAN HONDA MOTOR CO., INC.

Terminal Number	Wire Color	Terminal Name	Description
1	RED(1)	RA2+	Power source for the front passenger's airbag second inflator
2	BLU(1)	RA2-	Ground for the front passenger's airbag second inflator
3	GRN(1)	LA2+	Power source for the driver's airbag second inflator
4	LT BLU(1)	LA2-	Ground for the driver's airbag second inflator
5	PNK(1)	RA1+	Power source for the front passenger's airbag first inflator

GETtheMANUALS.org

6	PUR(1)	RA1-	Ground for the front passenger's airbag first inflator
7	PUR(1)	LA1+	Power source for the driver's airbag first inflator
8	BRN(1)	LA1-	Ground for the driver's airbag first inflator
9	Not Used	Not Used	-
10	Not Used	Not Used	-
11	Not Used	Not Used	-
12	Not Used	Not Used	-
13	Not Used	Not Used	-
14	Not Used	Not Used	-
15	Not Used	Not Used	-
16	Not Used	Not Used	-
17	RED(1)	OFF_PTT	Front passenger's airbag cutoff indicator output line
18	Not Used	Not Used	-
19	LT BLU(1)	K-LINE	Sends and receives scan tool signal (serial data)
20	WHT(1)	F_CAN-H	Sends and receives communication signal
21	RED(1)	F_CAN-L	Sends and receives communication signal
22	Not Used	Not Used	-
23	Not Used	Not Used	-
24	Not Used	Not Used	-
25	Not Used	Not Used	-
26	RED(1)	RFS+	Power source for the right front impact sensor
27	BLU(1)	RFS-	Ground for the right front impact sensor
28	ORN(1)	LFS+	Power source for the left front impact sensor
29	GRN(1)	LFS-	Ground for the left front impact sensor
30	Not Used	Not Used	-
31	Not Used	Not Used	-
32	Not Used	Not Used	-
33	Not Used	Not Used	-
34	Not Used	Not Used	-
35	Not Used	Not Used	-
36	BLK(1)	SRS_GND (2)	Ground circuit for the SRS unit (G504)
37	BLK(1)	SRS_GND (1)	Ground circuit for the SRS unit (G504)
38	RED(1)	VB	SRS dedicated power (dedicated booster circuit)
39	WHT(1)	VA	SRS sub power (common with ODS) (USA and Canada models)
			SRS sub power (common with OPDS) (Mexico models)

(1) Wire colors may be substituted in this table.

GETtheMANUALS.org

SRS UNIT INPUTS AND OUTPUTS AT CONNECTOR B (39P)

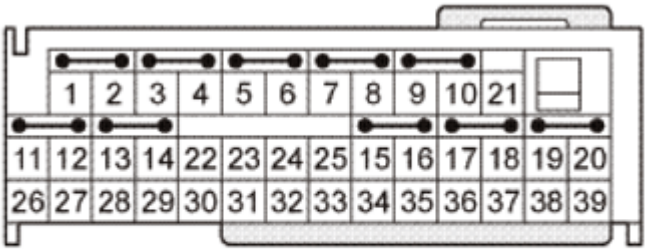

Terminal side of female terminals

Fig. 507: Identifying SRS Unit Inputs And Outputs At Connector B (39P)
Courtesy of AMERICAN HONDA MOTOR CO., INC.

Terminal Number	Wire Color	Terminal Name	Description
1	BRN(1)	LCA+	Power source for the left side curtain airbag inflator
2	BLU(1)	LCA-	Ground for the left side curtain airbag inflator
3	WHT(1)	RSA+	Power source for the front passenger's side airbag inflator
4	ORN(1)	RSA-	Ground for the front passenger's side airbag inflator
5	LT GRN (1)	LSA+	Power source for the driver's side airbag inflator
6	RED(1)	LSA-	Ground for the driver's side airbag inflator
7	Not Used	Not Used	-
8	Not Used	Not Used	-
9	Not Used	Not Used	-
10	Not Used	Not Used	-
11	GRY(1)	RCA+	Power source for the right side curtain airbag inflator
12	RED(1)	RCA-	Ground for the right side curtain airbag inflator
13	Not Used	Not Used	-
14	Not Used	Not Used	-
15	Not Used	Not Used	-
16	Not Used	Not Used	-
17	GRN(1)	RRP+	Power source for the front passenger's seat belt tensioner
18	LT BLU (1)	RRP-	Ground for the front passenger's seat belt tensioner
19	RED(1)	LRP+	Power source for the driver's seat belt tensioner
20	BRN(1)	LRP-	Ground for the driver's seat belt tensioner
			Sends and receives communication signal with the ODS unit (USA and Canada models)

GETtheMANUALS.org

21	PNK(1)	ODS	Sends and receives communication signal with the OPDS unit (Mexico models)
22	BLU(1)	FRBC	Front passenger's seat belt buckle switch
23	Not Used	Not Used	-
24	YEL(1)	FLBC	Driver's seat belt buckle switch
25	Not Used	Not Used	-
26	BRN(1)	RS1+	Power source for the right side impact sensor (first), right side impact sensor (second)
27	LT GRN (1)	RS1-	Ground for the right side impact sensor (first), right side impact sensor (second)
28	PNK(1)	LS1+	Power source for the left side impact sensor (first), left side impact sensor (second)
29	GRY(1)	LS1-	Ground for the left side impact sensor (first), left side impact sensor (second)
30	Not Used	Not Used	-
31	Not Used	Not Used	-
32	Not Used	Not Used	-
33	Not Used	Not Used	-
34	Not Used	Not Used	-
35	Not Used	Not Used	-
36	Not Used	Not Used	-
37	YEL(1)	SS+	Front passenger's seat sitting switch (Mexico models)
38	WHT	SSS+	Power source for the rear safing sensor
39	RED	SSS-	Ground for the rear safing sensor
(1) Wire colors may be substituted in this table.			

SRS UNIT REMOVAL AND INSTALLATION

LON > 751100

SPECIAL TOOL DESCRIPTION

Image	Description/Tool Number

GETtheMANUALS.org

	MVCI unit with the latest control module (CM) update software installed*

REMOVAL

NOTE: SRS components are located in this area. Review the <u>SRS COMPONENT LOCATIONS</u> and the <u>PRECAUTIONS AND PROCEDURES</u> before doing repairs or service.

1. Battery Terminal (SRS) - Disconnection
    1. Make sure the ignition switch is in LOCK (0).
    2. Disconnect and isolate the negative cable (A) from the battery.

    NOTE: Always disconnect the negative side first.

    3. Disconnect the positive cable (B) from the battery.
    4. Wait at least 3 minutes before starting work.

GETtheMANUALS.org

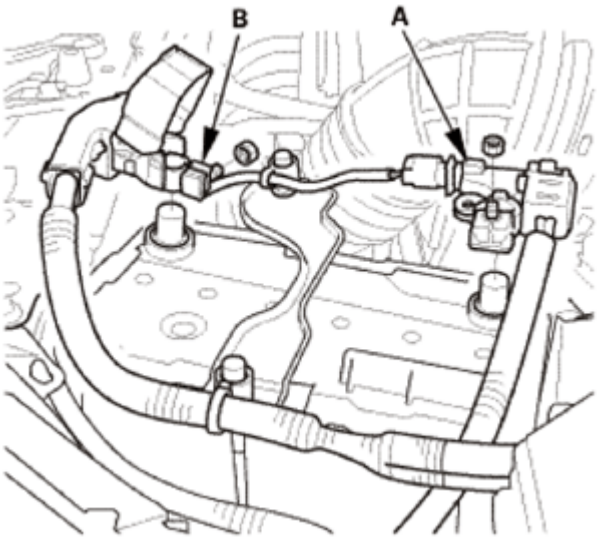

Fig. 508: Identifying Battery Positive And Negative Cables
Courtesy of AMERICAN HONDA MOTOR CO., INC.

2. Front Console Cover - Both Sides
    1. Remove the clips (A).
    2. Detach the clips (B), then remove the front console covers (C).

Left side

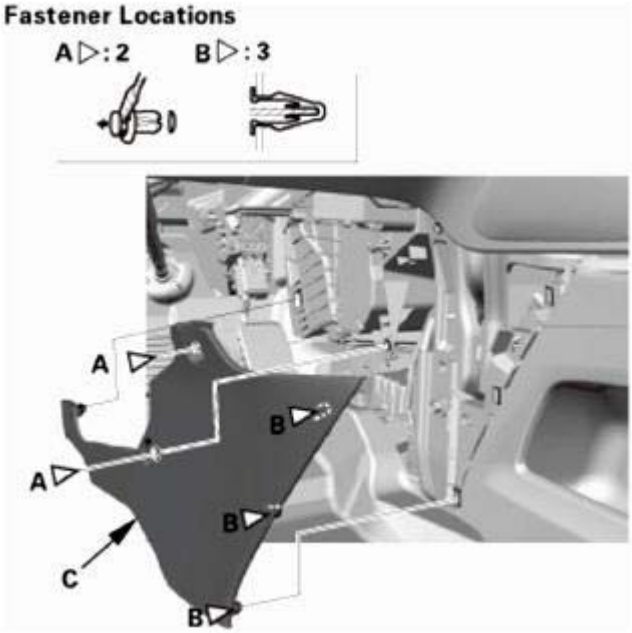

Fig. 509: Identifying Front Console Covers And Clips (Left Side)
Courtesy of AMERICAN HONDA MOTOR CO., INC.

GETtheMANUALS.org

Right side

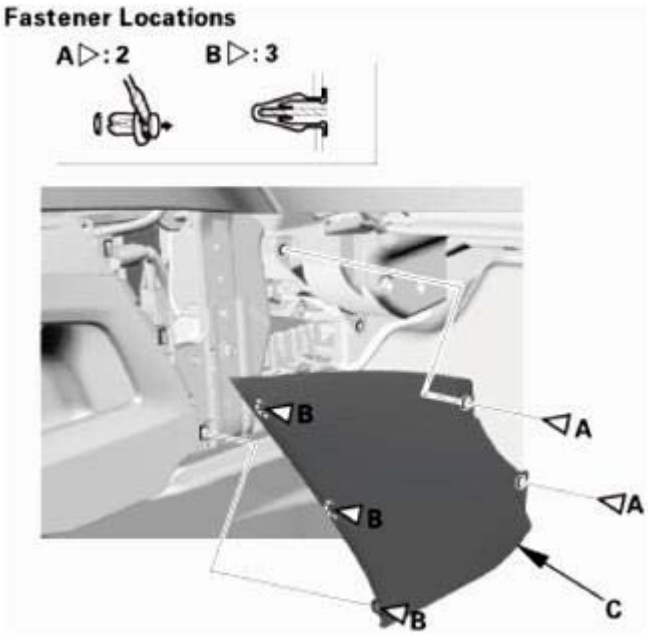

Fig. 510: Identifying Front Console Covers And Clips (Right Side)
Courtesy of AMERICAN HONDA MOTOR CO., INC.

3. Center Console Rear Trim
    1. Carefully pry out the center console rear trim (A) with the appropriate trim tool to detach the clips (B) and the hooks (C), then remove the center console rear trim.

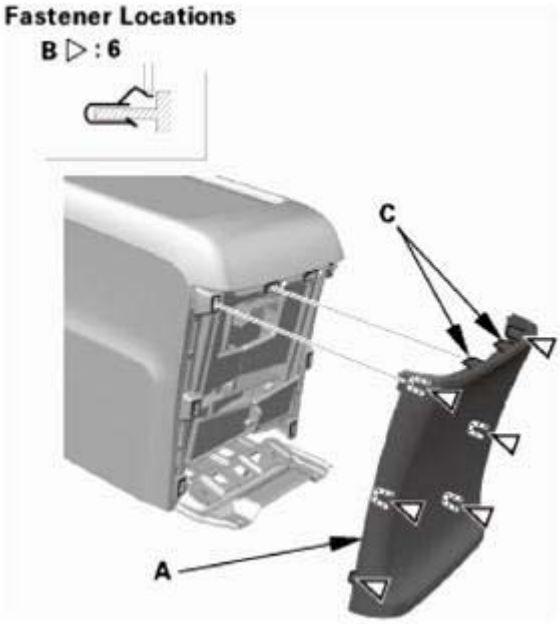

Fig. 511: Identifying Center Console Rear Trim, Clips And Hooks

GETtheMANUALS.org

Courtesy of AMERICAN HONDA MOTOR CO., INC.

4. Center Console
    1. Carefully pry out the center lower cover (A) with the appropriate trim tool to detach the clips (B), then remove the center lower cover.
    2. Remove the bolt (C).

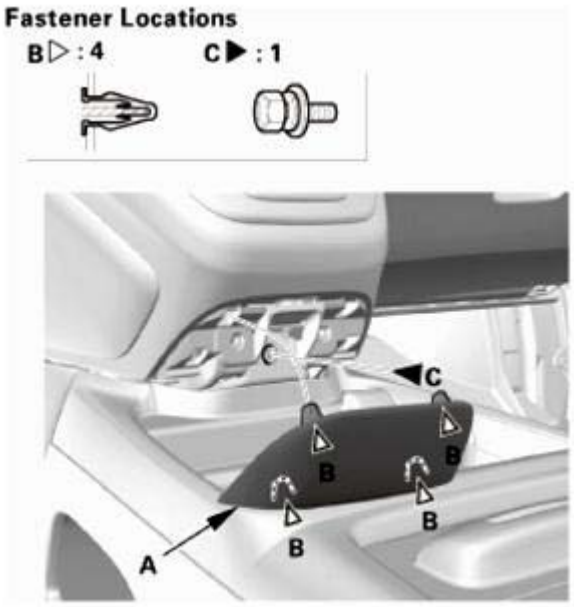

Fig. 512: Identifying Center Lower Cover, Clips And Bolt
Courtesy of AMERICAN HONDA MOTOR CO., INC.

3. Remove the bolts (A).

GETtheMANUALS.org

Fig. 513: Identifying Bolts
Courtesy of AMERICAN HONDA MOTOR CO., INC.

4. Remove the console box mat (A), then remove the bolts (B).

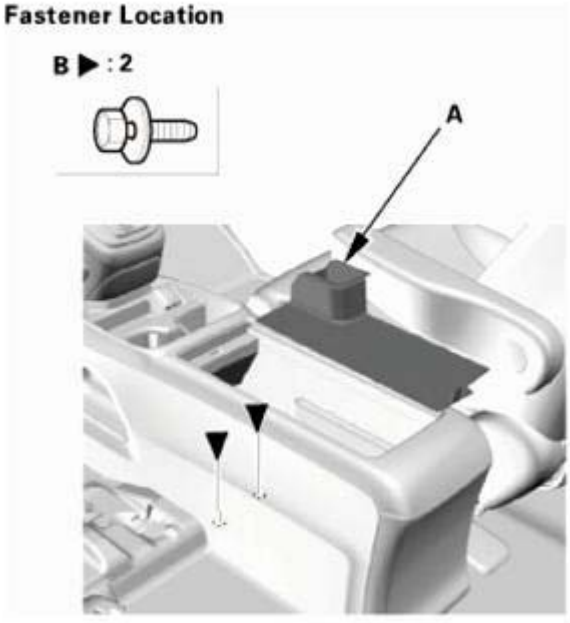

Fig. 514: Identifying Console Box Mat And Bolts
Courtesy of AMERICAN HONDA MOTOR CO., INC.

5. Disconnect the connectors (A), and remove the clips (B).

GETtheMANUALS.org

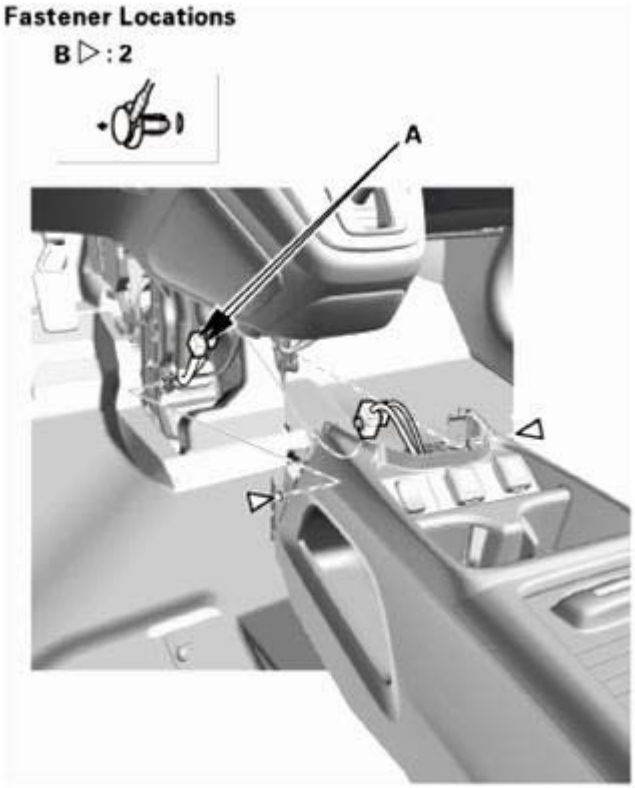

Fig. 515: Identifying Connectors And Clips
Courtesy of AMERICAN HONDA MOTOR CO., INC.

6. Slide both front seats fully rearward, and recline the seat-backs around two thirds to the rear.
7. Remove the center console (A).

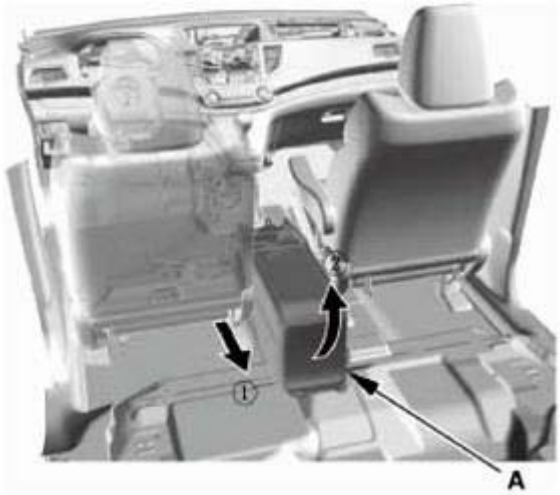

Fig. 516: Removing Center Console
Courtesy of AMERICAN HONDA MOTOR CO., INC.

5. Rear Heater Joint Duct A

GETtheMANUALS.org

1. Remove the rear heater joint duct A.

Fig. 517: Identifying Rear Heater Joint Duct
Courtesy of AMERICAN HONDA MOTOR CO., INC.

6. Rear Heater Joint Duct B
    1. Remove the rear heater joint duct B.

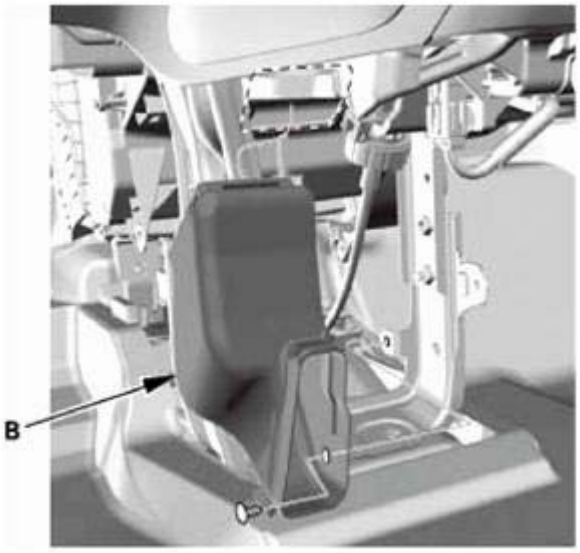

Fig. 518: Identifying Rear Heater Joint Duct
Courtesy of AMERICAN HONDA MOTOR CO., INC.

7. SRS Unit
    1. Disconnect SRS unit connectors A and B.

GETtheMANUALS.org

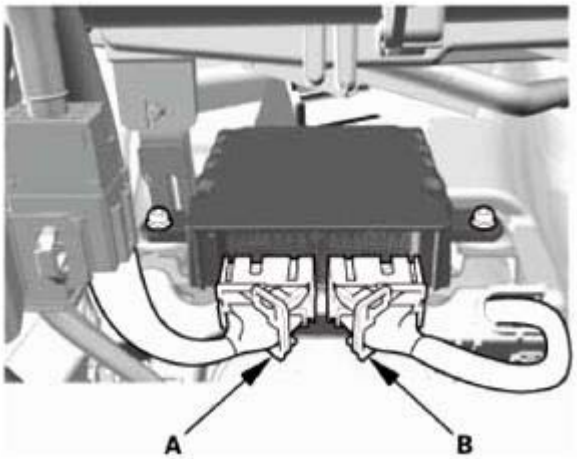

Fig. 519: Identifying SRS Unit Connectors A And B
Courtesy of AMERICAN HONDA MOTOR CO., INC.

2. Remove the TORX bolts from left side, using a TORX T30 bit.

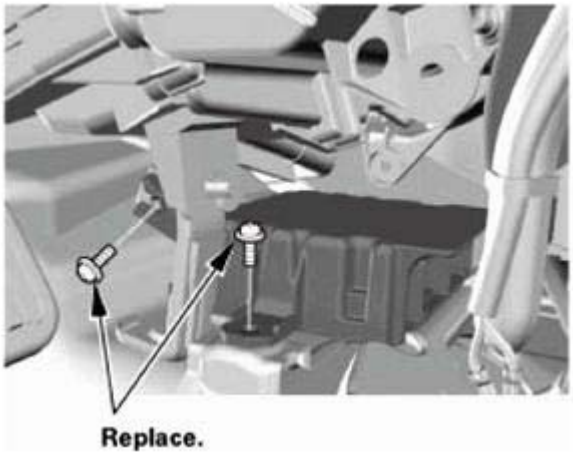

Fig. 520: Identifying SRS Unit Torx Bolts
Courtesy of AMERICAN HONDA MOTOR CO., INC.

3. Remove the TORX bolt from the right side, using a TORX T30 bit, then remove the SRS unit (A).

GETtheMANUALS.org

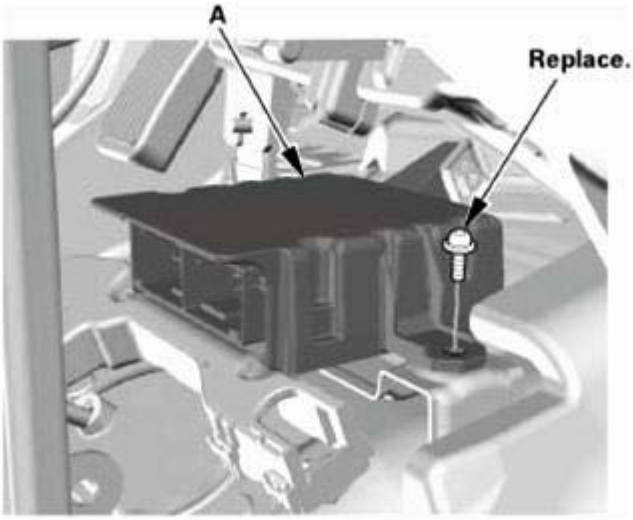

Fig. 521: Identifying SRS Unit And Torx Bolts
Courtesy of AMERICAN HONDA MOTOR CO., INC.

INSTALLATION

NOTE:

- **SRS components are located in this area. Review the SRS COMPONENT LOCATIONS and the PRECAUTIONS AND PROCEDURES before doing repairs or service.**
- **After installing the SRS unit, make sure the SRS unit has the latest software. If it does not have the latest, update the software in the SRS unit.**
- **USA and Canada models: When you replace the SRS unit, initialize the ODS unit. ODS unit initialization initializes both the OPDS sensor and the front passenger's weight sensor.**
- **Mexico models: When you replace the SRS unit, initialize the OPDS unit. OPDS unit initialization initializes the OPDS sensor.**

1. SRS Unit

NOTE: **The SRS unit connectors have lever locks. Push them into position until they click and the lever locks are fully secured.**

To reconnect the connector (A), push in on the connector. As the connector is pressed in, the lever (B) moves to the locked position.

GETtheMANUALS.org

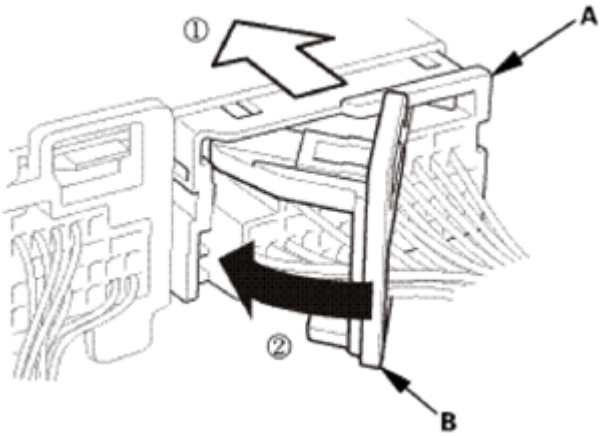

Fig. 522: Moving Lever At Locked Position
Courtesy of AMERICAN HONDA MOTOR CO., INC.

1. Install the SRS unit (A) with the new TORX bolt using a TORX T30 bit.

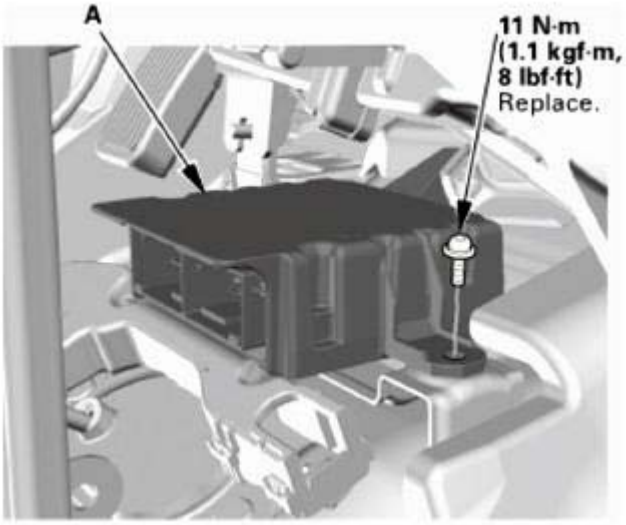

Fig. 523: Identifying SRS Unit And Torx Bolt With Torque Specification
Courtesy of AMERICAN HONDA MOTOR CO., INC.

2. Install the new TORX bolts using a TORX T30 bit.

GETtheMANUALS.org

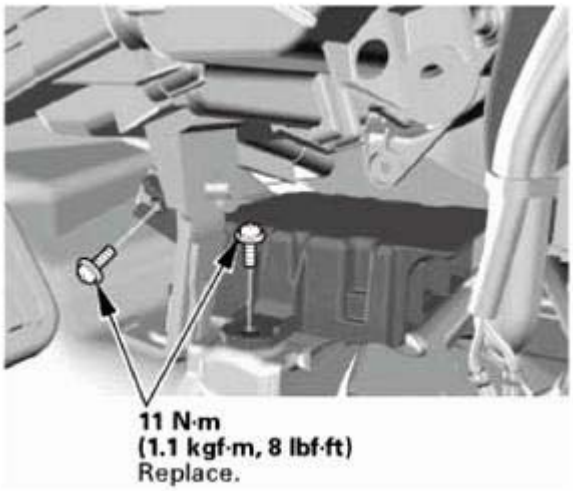

Fig. 524: Identifying SRS Unit Torx Bolts With Torque Specifications
Courtesy of AMERICAN HONDA MOTOR CO., INC.

3. Connect the SRS connectors A and B.

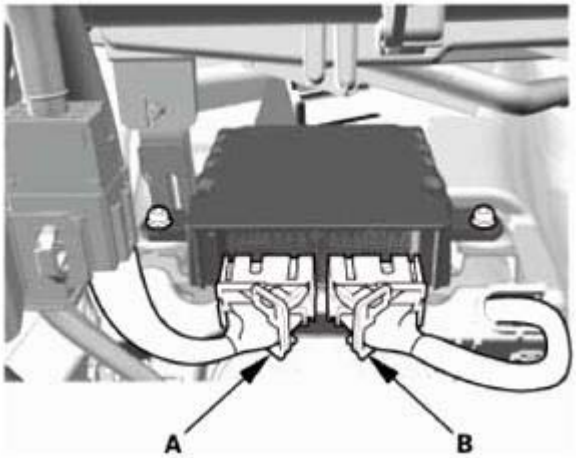

Fig. 525: Identifying SRS Connectors A And B
Courtesy of AMERICAN HONDA MOTOR CO., INC.

2. Rear Heater Joint Duct B
    1. Install the rear heater joint duct B.

GETtheMANUALS.org

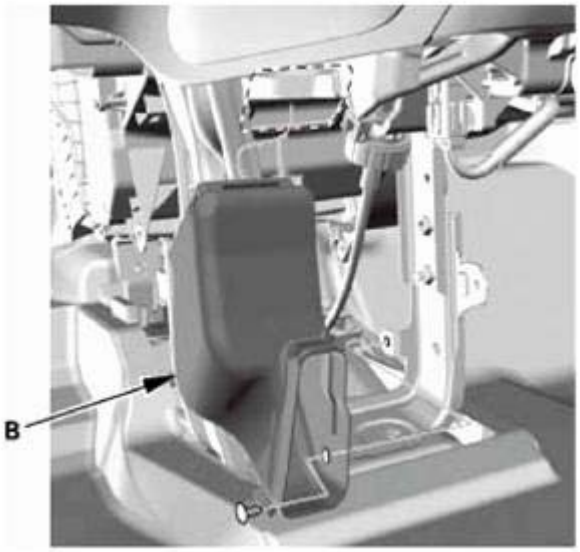

Fig. 526: Identifying Rear Heater Joint Duct B
Courtesy of AMERICAN HONDA MOTOR CO., INC.

3. Rear Heater Joint Duct A
    1. Install the rear heater joint duct A.

Fig. 527: Identifying Rear Heater Joint Duct A
Courtesy of AMERICAN HONDA MOTOR CO., INC.

4. Center Console
    1. Install the center console (A).

GETtheMANUALS.org

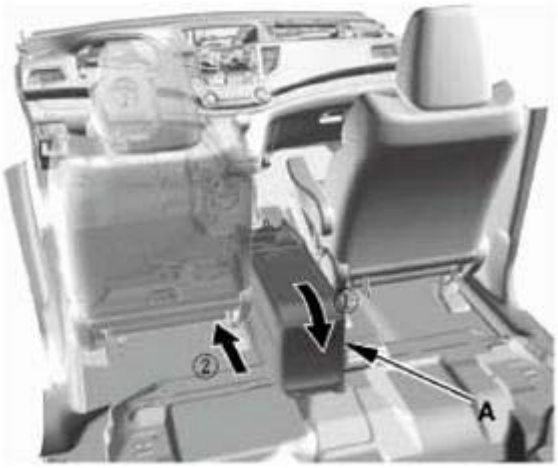

Fig. 528: Installing Center Console
Courtesy of AMERICAN HONDA MOTOR CO., INC.

2. Connect the connectors (A), and install the clips (B).

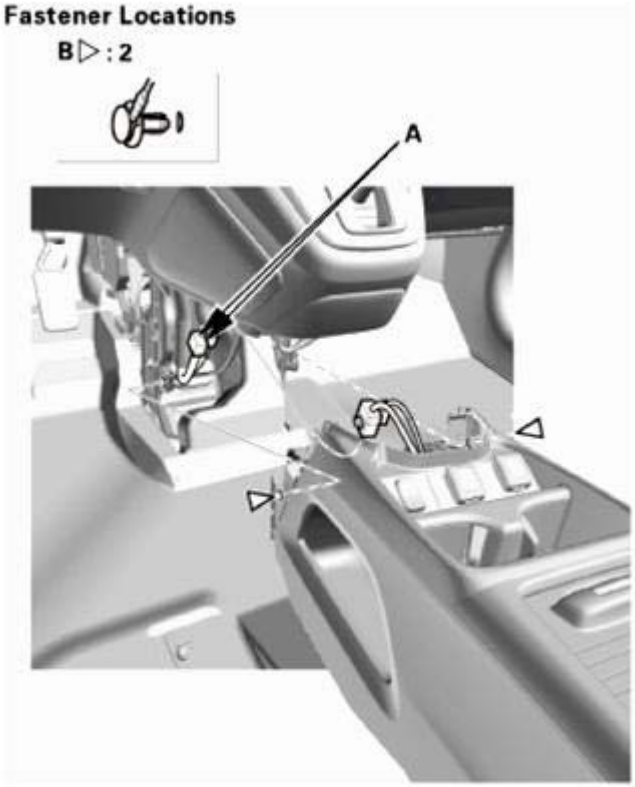

Fig. 529: Identifying Connectors And Clips
Courtesy of AMERICAN HONDA MOTOR CO., INC.

3. Install the bolts (A), then install the console box mat (B).

GETtheMANUALS.org

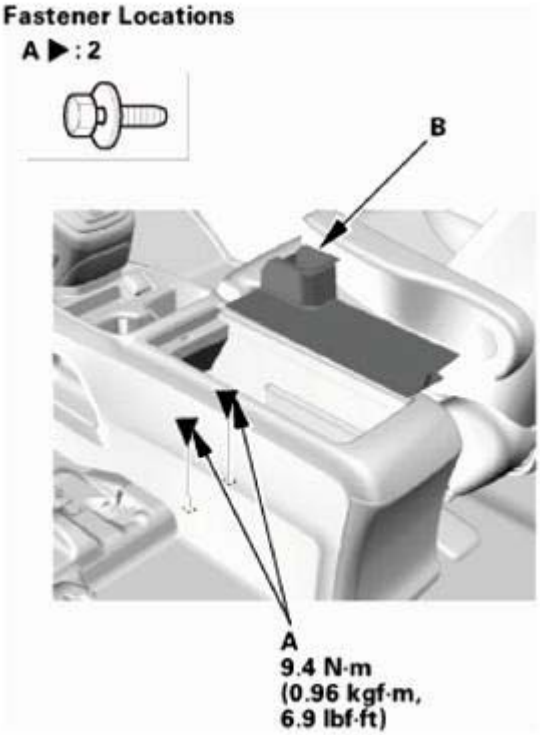

Fig. 530: Identifying Console Box Mat And Bolts With Torque Specifications
Courtesy of AMERICAN HONDA MOTOR CO., INC.

4. Install the bolts (A).

Fig. 531: Identifying Center Console Bolts With Torque Specifications
Courtesy of AMERICAN HONDA MOTOR CO., INC.

GETtheMANUALS.org

5. Install the bolt (A), then install the center lower cover (B). Make sure the clips (C) snap into place securely.

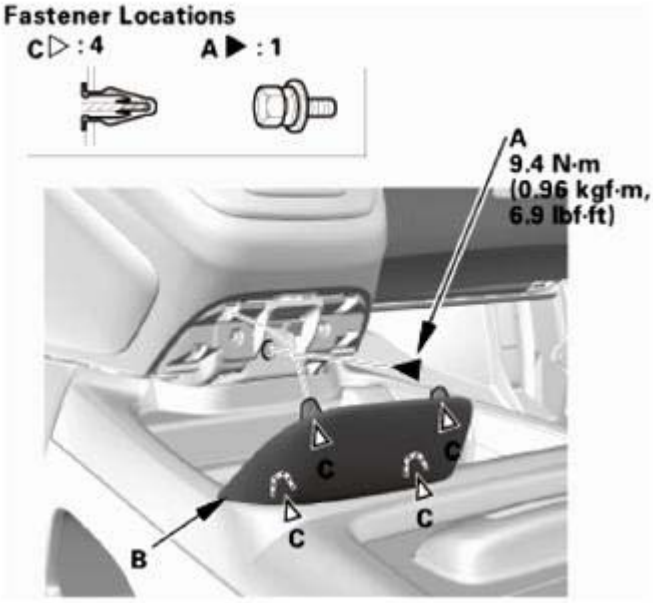

Fig. 532: Identifying Center Lower Cover, Clips And Bolt With Torque Specifications
Courtesy of AMERICAN HONDA MOTOR CO., INC.

5. Center Console Rear Trim
    1. Install the center console rear trim (A). Make sure the clips (B) and the hooks (C) snap into place securely.

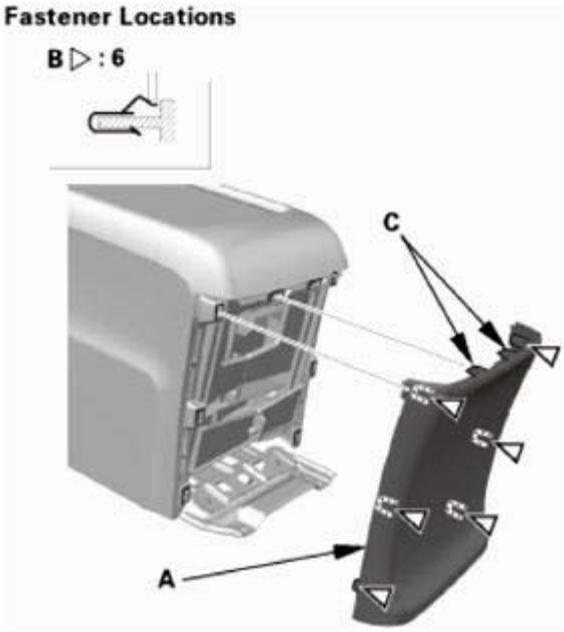

Fig. 533: Identifying Center Console Rear Trim, Clips And Hooks

GETtheMANUALS.org

Courtesy of AMERICAN HONDA MOTOR CO., INC.

6. Front Console Cover - Both Sides
    1. Install the front console covers (A). Make sure the clips (B, C) snap into place securely.

Left side

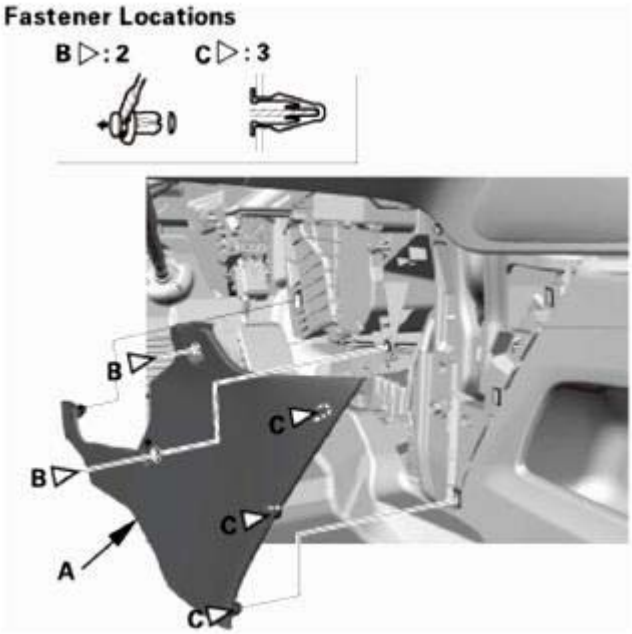

Fig. 534: Identifying Front Console Covers And Clips (Left Side)
Courtesy of AMERICAN HONDA MOTOR CO., INC.

Right side

GETtheMANUALS.org

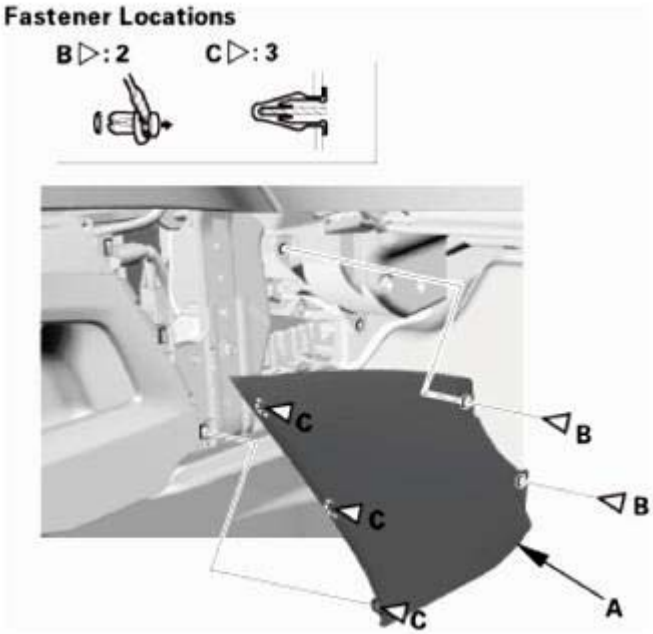

Fig. 535: Identifying Front Console Covers And Clips (Right Side)
Courtesy of AMERICAN HONDA MOTOR CO., INC.

7. Battery Terminal (SRS) - Reconnection

NOTE: If the battery performance is abnormal, test the battery.

1. Clean the battery terminals.
2. Connect the positive cable (A) to the battery.

NOTE: Always connect the positive side first.

3. Connect the negative cable (B) to the battery.
4. Apply multipurpose grease to the terminals to prevent corrosion.

GETtheMANUALS.org

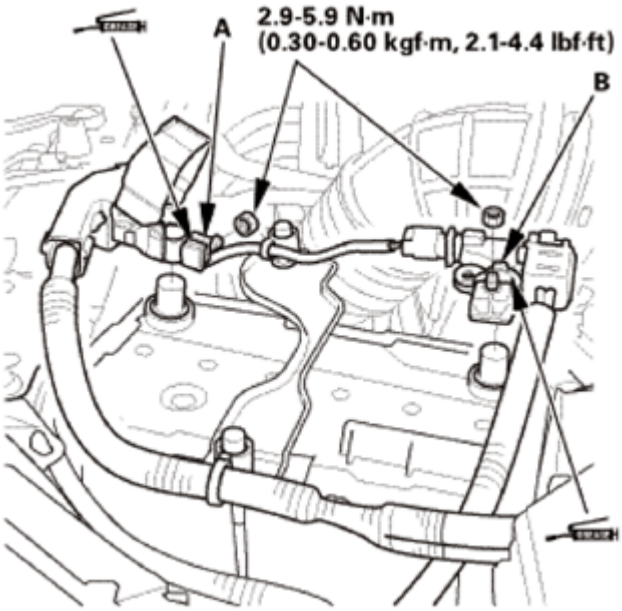

Fig. 536: Identifying Multipurpose Grease Applying Area On Battery Positive And Negative Terminals
Courtesy of AMERICAN HONDA MOTOR CO., INC.

8. SRS Unit - Update

NOTE: **Check any official Honda service website for more service information about updating the MVCI and control units.**

9. USA and Canada models: ODS Unit - Initialization

OPDS Sensor Initialization

When you replace the front passenger's seat-back cover/pad, the SRS unit, and/or the ODS unit, initialize the OPDS sensor with the HDS.

NOTE:

- **Before initializing the OPDS sensor, clear the DTCs.**
- **Before initializing the OPDS sensor, make sure the battery is fully charged.**
- **A new (uninitialized) ODS unit installed with a faulty OPDS sensor (DTC 86-1x or 86-2x) can cause DTCs 85-71 and 85-78. If the SRS has a hard DTC 86-1x or 86-2x, troubleshoot the DTCs completely before replacing the ODS unit.**
- **Make sure all components of the front passenger's seat are correctly installed.**
- **Make sure nothing is on the front passenger's seat, including aftermarket seat covers or mats.**

GETtheMANUALS.org

- **Make sure there is nothing in the front passenger's seat-back pocket.**
- **Dehumidify inside of the vehicle with A/C.**

1. Set the seat-back in a normal position.
2. From the HDS Main Menu, select SRS, then INITIALIZATION. In the INITIALIZATION Menu, select ODS Initialization. Follow the prompts until the OPDS sensor initialization has been completed.
3. Turn the ignition switch to LOCK (0), then wait for 10 seconds.

NOTE: **If the ODS unit fails to initialize after several attempts, replace the seat-back cover/pad equipped with an OPDS sensor, and retry. If the ODS unit continues to fail to initialize, replace the ODS unit.**

Front Passenger's Weight Sensor Initialization

When you replace the SRS unit, the front passenger's weight sensor, the front passenger's seat frame, front passenger's seat rail, or the ODS unit, initialize the front passenger's weight sensor with the HDS.

NOTE:

- **Before initializing the front passenger's weight sensor, clear the DTCs.**
- **Make sure all components of the front passenger's seat are correctly installed.**
- **Make sure nothing is on the front passenger's seat, including after market seat covers or mats.**
- **Make sure there is nothing in the front passenger's seat-back pocket.**
- **Keep the windows and the moonroof closed (if equipped).**
- **Make sure the vehicle is on level ground.**
- **Dehumidify inside of the vehicle with A/C.**
- **Do not touch the front passenger's seat during the operation check.**
- **Do not expose the front passenger's seat to sudden temperature changes.**

1. Position the front passenger's seat all the way rearward, and adjust the seat-back to the forward most position. Do not move the seat from this position until the initialization is completed.
2. Drive the vehicle, and accelerate to 22 mph (35 km/h), then stop on level ground.
3. From the HDS Main Menu, select SRS, then INITIALIZATION. In the INITIALIZATION Menu, select SWS Initialization. Follow the prompts until the front passenger's weight sensor initialization has been completed.
4. Turn the ignition switch to LOCK (0).

10. Mexico models: OPDS Unit Initialization

When you replace the front passenger's seat-back cover/pad, the SRS unit, and/or the OPDS unit,

GETtheMANUALS.org

initialize the OPDS sensor with the HDS.

NOTE:

- **Before initializing the OPDS sensor, clear the DTCs.**
- **Before initializing the OPDS sensor, make sure the battery is fully charged.**
- **A new (uninitialized) OPDS unit installed with a faulty OPDS sensor (DTC 86-1x or 86-2x) can cause DTCs 85-71 and 85-78. If the SRS has a hard DTC 86-1x or 86-2x, troubleshoot the DTCs completely before replacing the OPDS unit.**
- **Make sure all components of the front passenger's seat are correctly installed.**
- **Make sure nothing is on the front passenger's seat, including aftermarket seat covers or mats.**
- **Make sure there is nothing in the front passenger's seat-back pocket.**
- **Dehumidify inside of the vehicle with A/C.**

1. Set the seat-back in a normal position.
2. From the HDS Main Menu, select SRS, then INITIALIZATION. In the INITIALIZATION Menu, select OPDS Initialization. Follow the prompts until the OPDS unit initialization has been completed.
3. Turn the ignition switch to LOCK (0), then wait for 10 seconds.

NOTE: **If the OPDS unit fails to initialize after several attempts, replace the seat-back cover/pad equipped with an OPDS sensor, and retry. If the OPDS unit continues to fail to initialize, replace the OPDS unit.**

11. USA and Canada models: ODS Unit Operation Check

After Replacing Front Passenger's Seat Component(s)

NOTE: **Check the ODS unit operation after any of these actions:**

- **Front passenger's seat component(s) replacement (except ODS unit and/or front passenger's weight sensor).**
- **SRS unit replacement.**
- **Remove the front passenger's weight sensor(s).**
- **After a vehicle collision.**

Pre-Operation Check Set-Up

- Make sure all the components of the front passenger's seat are correctly installed.
- Position the front passenger's seat all the way rearward, and adjust the seat-back to the forward most position. Do not move the seat from this position until the output check is completed.

GETtheMANUALS.org

- Make sure nothing is on the front passenger's seat, including aftermarket seat covers or mats.
- Make sure there is nothing in the front passenger's seat-back pocket.
- Keep the windows and the moonroof closed.
- Do all initialization procedures, except test-driving, in the service bay.
- Make sure the vehicle is on level ground.
- Dehumidify inside of the vehicle with A/C.
- Do not touch the front passenger's seat during the operation check.
- Do not expose the front passenger's seat to sudden temperature changes.
- Make sure all aftermarket devices such as amplifiers, fluorescent light, air purifiers, CB or HAM radios, etc. are turned off.

1. Drive the vehicle, accelerate to 22 mph (35 km/h), then stop on level ground.
2. From the HDS Main Menu, select SRS, then Inspection. In the Inspection Menu, select AFTER REPLACING FRONT PASSENGER'S SEAT COMPONENT(S). Follow the prompts until the ODS unit operation check has been completed.
3. Turn the ignition switch to LOCK (0).

12. Confirm Proper SRS Operation
    1. Turn the ignition switch to ON (II), and check that the SRS indicator comes on for about 6 seconds and then goes off.

SRS UNIT UPDATE

SPECIAL TOOL DESCRIPTION

Image	Description/Tool Number
	MVCI unit with the latest control module (CM) update software installed*

GETtheMANUALS.org

PROCEDURE

1. SRS Unit - Update

NOTE: **Check any official Honda service website for more service information about updating the MVCI and control units.**

GETtheMANUALS.org

HOW TO TROUBLESHOOT THE SRS

HOW TO TROUBLESHOOT CIRCUITS AT THE SRS UNIT CONNECTORS

Special Tools Required

Pin Probe Male 07ZAJ-RDJA110

1. When diagnosing or troubleshooting at an SRS unit connector (A), use the terminal test port below the terminal you need to check. Gently insert the pin probes of the tester or jumper wire at the terminal test port from the terminal side.

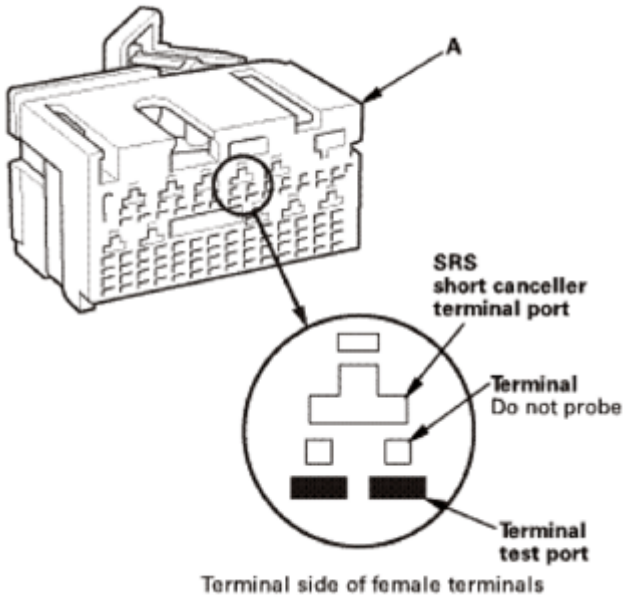

Fig. 1: Identifying SRS Short Canceller Terminal, Port And Terminal Test Port
Courtesy of AMERICAN HONDA MOTOR CO., INC.

NOTE:

- **Do not insert the pin probes of the tester or a jumper wire at the terminal or the SRS short canceller terminal port.**
- **To prevent damage to the connector terminals, do not insert the test equipment probes, paper clips, or other substitutes as they can damage the terminals. Damaged terminals cause a poor connection and an incorrect measurement.**

2. Connect one side of the patch cord terminals (A) to a commercially available digital multimeter (B), and connect the other side of the terminals (C) to the pin probe male.

GETtheMANUALS.org

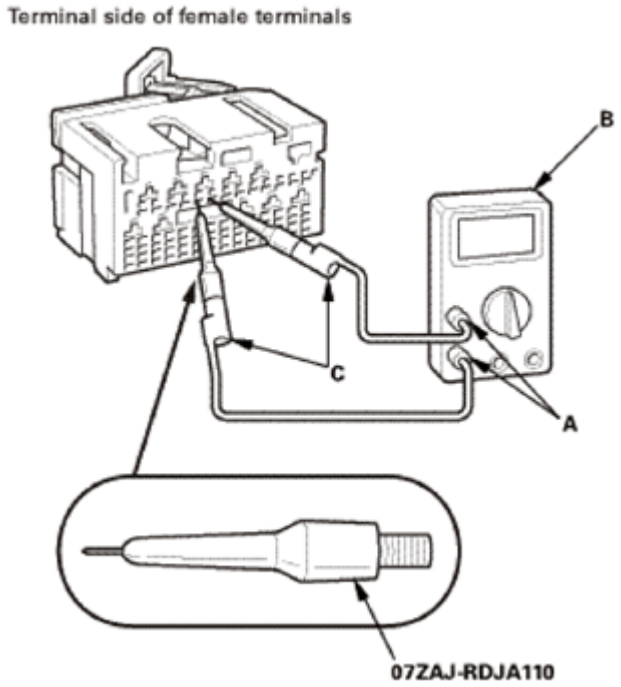

Fig. 2: Connecting Patch Cord Terminals To Digital Multimeter And Pin Probe Male
Courtesy of AMERICAN HONDA MOTOR CO., INC.

3. Gently contact the pin probe male at the terminal test port from the terminal side. Do not force the tips into the terminals.

NOTE:

- **For accurate results, always use the pin probe male.**
- **To prevent damage to the connector terminals, do not insert test equipment probes, paper clips, or other substitutes. Damaged terminals cause a poor connection and an incorrect measurement.**
- **Do not puncture the insulation on a wire. Punctures can cause poor or intermittent electrical connections.**

HOW TO TROUBLESHOOT CIRCUITS AT THE WATERPROOF SRS CONNECTORS

Special Tools Required

Pin Probe Male 07ZAJ-RDJA110

1. When diagnosis or troubleshooting is done at waterproof SRS connectors (A), use the terminal test port above the terminal you need to check. Gently insert the pin probe of the tester or jumper wire at the terminal test port from the terminal side.

GETtheMANUALS.org

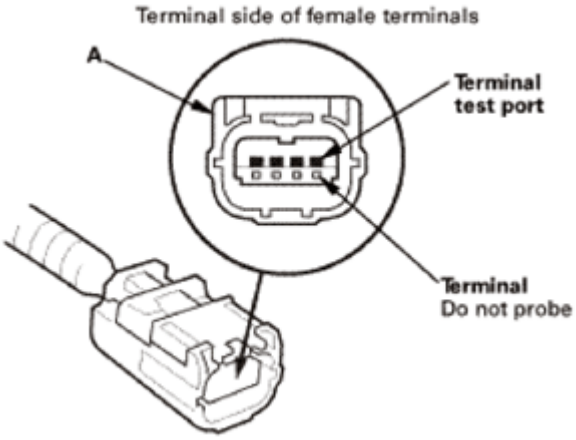

Fig. 3: Identifying Waterproof SRS Connector Terminals And Test Port
Courtesy of AMERICAN HONDA MOTOR CO., INC.

NOTE:

- **Do not insert the pin probes of the tester or a jumper wire into the terminal.**
- **To prevent damage to the connector terminals, do not insert the test equipment probes, paper clips, or other substitutes as they can damage the terminals. Damaged terminals can cause a poor connection and an incorrect measurement.**

2. Connect one side of the patch cord terminals (A) to a commercially available digital multimeter (B), and connect the other side of the terminals (C) to the pin probe male.

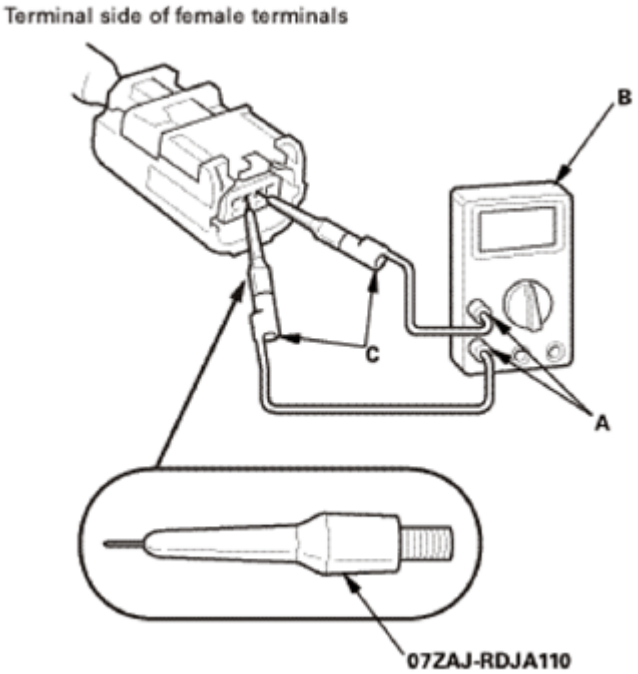

Fig. 4: Connecting Patch Cord Terminals To Digital Multimeter And Pin Probe Male

GETtheMANUALS.org

Courtesy of AMERICAN HONDA MOTOR CO., INC.

3. Gently contact the pin probe male at the terminal test port from the terminal side. Do not force the tips into the terminals.

NOTE:

- **For accurate results, always use the pin probe male.**
- **To prevent damage to the connector terminals, do not insert test equipment probes, paper clips, or other substitutes. Damaged terminals cause a poor connection and an incorrect measurement.**
- **Do not puncture the insulation on a wire. Punctures can cause poor or intermittent electrical connections.**

HOW TO TROUBLESHOOT CIRCUITS AT THE CONNECTORS EXCEPT FOR SRS UNIT CONNECTORS AND WATERPROOF SRS CONNECTORS

Special Tools Required

Back Probe Adapter, 17 mm 07TAZ-001020A

When using electrical test equipment, insert the back probe adapter, 17 mm of the tester into the wire side of the connector (except SRS unit connector and waterproof connector).

NOTE:

- **Make sure the battery is fully charged when doing electrical test. If the battery is not fully charged, the results of the tests may not be accurate.**
- **Do not insert the probe of the tester into the terminal side of the connector, and do not tamper with the connector.**
- **To prevent damage to the connector, do not insert test equipment probes, paper clips, or other substitutes. Damaged terminals cause a poor connection and an incorrect measurement.**
- **Do not puncture the insulation on a wire. Punctures can cause poor or intermittent electrical connections.**
- **Do not insert the probe forcibly.**
- **Use specified service connectors in troubleshooting. Using improper tools could cause a diagnostic error due to poor metal-to-metal contact.**

GETtheMANUALS.org

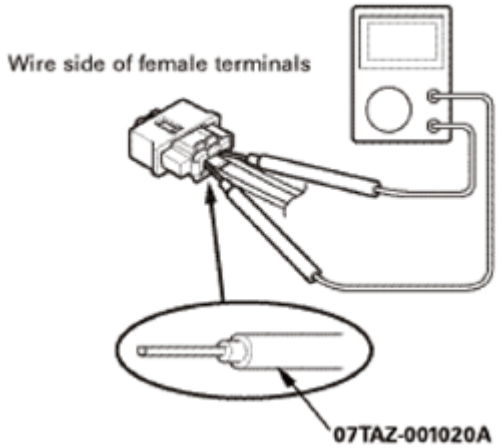

Fig. 5: Inserting Back Probe Adapter Into Wire Side Of Connector
Courtesy of AMERICAN HONDA MOTOR CO., INC.

OPENING THE SRS UNIT SHORTING CONNECTORS FOR DIAGNOSIS

Special Tools Required

SRS Short Canceller 070AZ-SAA0100

NOTE:

- **To prevent damage to the connector cavity, insert an SRS short canceller straight into the cavity from the terminal side.**
- **Before installing an SRS short canceller, wash it with electrical contact cleaner, then dry it with compressed air.**
- **Do not use an SRS short canceller if it is damaged.**
- **Make sure to remove an SRS short canceller before reconnecting the SRS unit connector.**
- **Some systems store data in memory that is lost when the battery is disconnected. Before disconnecting the battery, BATTERY TERMINAL DISCONNECTION AND RECONNECTION .**

When SRS unit connectors A (39P) and B (39P) are disconnected, short circuits are automatically created in the connector to prevent accidental deployment of an airbag or tensioner. The circuit may need to be opened sometimes when diagnosing the system. Insert an SRS short canceller in the specified cavities when necessary to keep the circuit open for diagnosis.

GETtheMANUALS.org

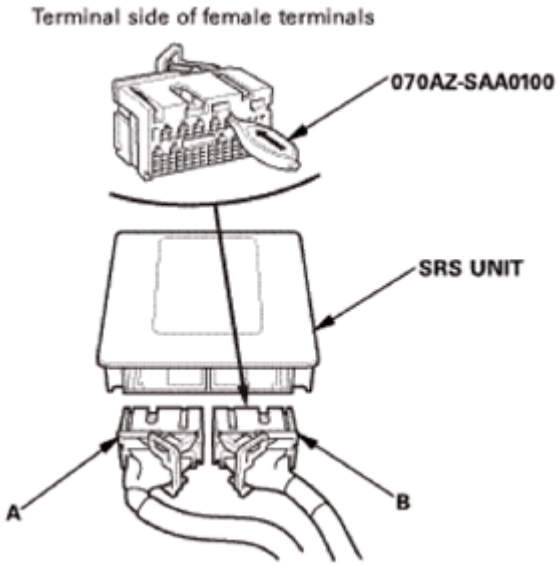

Fig. 6: Identifying SRS Short Canceller In Specified Cavities
Courtesy of AMERICAN HONDA MOTOR CO., INC.

Terminal numbers are shown on the terminal side of the female terminals. Insert the SRS short canceller(s) into the cavities on the terminal side of the connector.

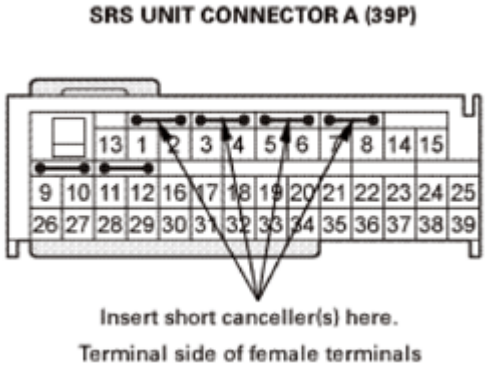

Fig. 7: Identifying SRS Unit Connector A (39P)
Courtesy of AMERICAN HONDA MOTOR CO., INC.

GETtheMANUALS.org

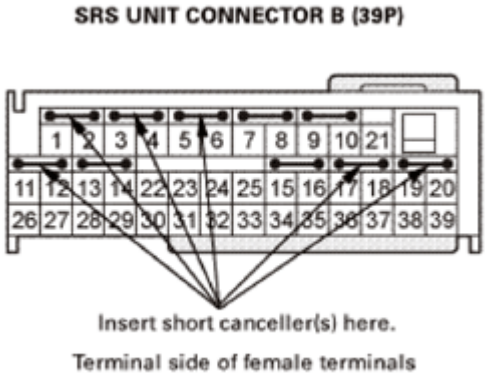

Fig. 8: Identifying SRS Unit Connector B (39P)
Courtesy of AMERICAN HONDA MOTOR CO., INC.

DTC (DIAGNOSTIC TROUBLE CODES)

The self-diagnostic function of the SRS unit allows it to locate the causes of system problems and store this information in memory. For easier troubleshooting, this data can be retrieved with the HDS via the data link circuit.

- When you turn the ignition switch to ON (II), the SRS indicator should come on. If it goes off after 6 seconds, the system is normal, and is not currently detecting any problems.
- If there is a problem, the system locates and defines the problem, stores this information in the memory, and turns on the SRS indicator. The data remains in the memory even if the ignition switch is turned to LOCK (0), or the battery is disconnected.
- The data is stored in memory as a diagnostic trouble code (DTC).
- DTCs are either latching or resetting depending on the malfunction. With resetting DTCs, the SRS indicator goes off the next time the ignition switch is turned to ON (II), and the system is normal, but the DTC is still stored. With latching DTCs, the SRS indicator does not turn off until the malfunction is repaired and the DTC is cleared.
- When you connect the HDS to the data link connector (DLC), you can retrieve a more detailed DTC in the HDS "SRS" menu.

NOTE: **Only read DTCs from the SRS menu, not from SWS menus unless instructed to check SWS DTCs. SWS (ODS unit) DTCs are subcodes of SRS DTCs. Only troubleshoot the corresponding SRS DTCs. These SWS DTCs are cleared when you turn the ignition switch to LOCK (0).**

- After reading and recording the DTC, go to the troubleshooting procedure for that code.

Precautions

- Make sure the battery is fully charged. If the battery is dead or low, electrical measurements values may not be correct.
- Use only a digital multimeter to check the system. Make sure its output is 10 mA (0.01 A) or less when switched to the smallest value in the ohmmeter range. A tester with a higher output could damage the

GETtheMANUALS.org

airbag circuit or cause accidental airbag deployment and possible injury.

- Whenever the ignition switch is in ON (II), or has been turned to LOCK (0) for less than 3 minutes, be careful not to bump the SRS unit; the airbags could accidentally deploy and cause damage or injuries.
- Before removing the dashboard wire harness or floor wire harness, disconnect the driver's airbag inflator connector, the front passenger's airbag inflator connector, both side airbag inflator connectors, both side curtain airbag inflator connectors, and both front seat belt tensioner connectors.

HOW TO READ DTCS

NOTE: Make sure the battery is fully charged before you begin.

1. Turn the ignition switch to LOCK (0), then wait for 10 seconds.
2. Connect the HDS to the data link connector (DLC) (A).

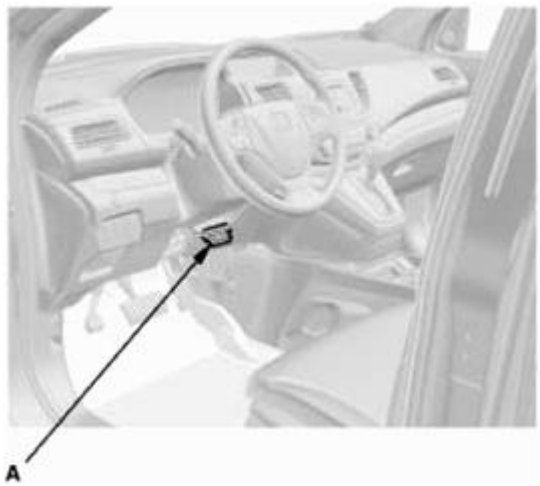

Fig. 9: Identifying Data Link Connector
Courtesy of AMERICAN HONDA MOTOR CO., INC.

3. Turn the ignition switch to ON (II).
4. Make sure the HDS communicates with the vehicle and the SRS unit. If it does not communicate, **GO TO THE DLC CIRCUIT TROUBLESHOOTING** .
5. Use the HDS to check for SRS DTCs.
6. Read and record the DTC.

NOTE:

- **Only read DTCs from the SRS menu, not from SWS menus unless instructed to check SWS DTCs. SWS (ODS unit) DTCs are subcodes of SRS DTCs. Only troubleshoot the corresponding SRS DTCs. These SWS DTCs are cleared when you turn the ignition switch to LOCK (0).**
- **Do not clear the DTCs until instructed by the troubleshooting procedure.**

GETtheMANUALS.org

7. Turn the ignition switch to LOCK (0), then wait for 10 seconds.
8. Disconnect the HDS from the DLC.
9. Do the troubleshooting procedure for the DTC.

HOW TO CLEAR DTCS

NOTE: Make sure the battery is fully charged before you begin.

1. Turn the ignition switch to LOCK (0), then wait for 10 seconds.
2. Connect the HDS to the data link connector (DLC) (A).

Fig. 10: Identifying Data Link Connector
Courtesy of AMERICAN HONDA MOTOR CO., INC.

3. Turn the ignition switch to ON (II).
4. Make sure the HDS communicates with the vehicle and the SRS unit. If it does not communicate, **GO TO THE DLC CIRCUIT TROUBLESHOOTING** .
5. In the SRS MENU of the HDS, select SRS, then DTC to clear DTCs.
6. Turn the ignition switch to LOCK (0), then wait for 10 seconds.
7. Disconnect the HDS from the DLC.

TROUBLESHOOTING INTERMITTENT FAILURES

If there was a malfunction that sets a DTC, but it does not recur, a DTC will be stored in the memory, and the SRS indicator may come on depending on the malfunction detected.

NOTE:

- **CHECK THE CONDITION OF THE BATTERY . Low battery voltage may cause some intermittent failures.**
- **A faulty or damaged cable reel can cause intermittent problems related to the driver's airbag inflator DTCs.**

GETtheMANUALS.org

After checking the DTC, troubleshoot as follows:

1. Check for DTCs with the HDS.
2. Clear the DTCs with the HDS.
3. Set the parking brake, then start the engine, and let it idle.
4. The SRS indicator comes on for about 6 seconds and then goes off.
5. Shake the related wire harnesses and the connectors, and look for loose connections, poor pin fits, and poor grounds.
6. Take a test-drive (quick acceleration, quick braking, and cornering), turn the steering wheel fully left and right, and hold it there for 5 to 10 seconds. If the problem recurs, the SRS indicator will come on.
7. If you cannot duplicate the concern, ask the customer about the conditions when it occurred, or ask the customer to demonstrate the concern.
8. If you cannot duplicate the intermittent failure, the system is OK at this time.

SRS PRECAUTIONS AND PROCEDURES

GENERAL PRECAUTIONS

NOTE: Before disconnecting the battery, refer to BATTERY TERMINAL DISCONNECTION AND RECONNECTION .

Please read the following precautions carefully before servicing the SRS, or the airbags could accidentally deploy and cause damage or injuries.

- Except when doing electrical inspections that requires battery power, always turn the ignition switch to LOCK (0), disconnect the negative cable from the battery, then wait at least 3 minutes before starting work.

  NOTE: The SRS memory is not erased even if the ignition switch is turned to LOCK (0), or if the battery cables are disconnected from the battery.

- Use replacement parts which are manufactured to the same standards and quality as the original parts. Do not install used SRS parts. Use only new parts when making SRS repairs.
- Carefully inspect any SRS part before you install it.

  Do not install any part that shows signs of being dropped or improperly handled, such as dents, cracks or deformation.

GETtheMANUALS.org

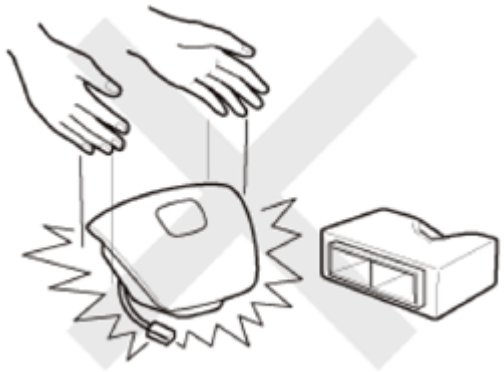

Fig. 11: Caution For Installing SRS Parts
Courtesy of AMERICAN HONDA MOTOR CO., INC.

- Before disconnecting the SRS unit connectors, always disconnect the appropriate SRS parts connectors.
- Use only a digital multimeter to check the system. If it is not a Honda multimeter, make sure its output is 10 mA (0.01 A) or less when switched to the lowest value in the ohmmeter range. A tester with a higher output could cause accidental deployment and possible injury.
- Do not put objects on the front passenger's airbag.

STEERING-RELATED PRECAUTIONS

Cable Reel Alignment

- Misalignment of the cable reel could cause an open in the wiring, making the SRS, remote steering wheel controls, or the horn inoperative. Center the cable reel whenever you do the following.
  - Installation of the steering wheel.
  - Installation of the cable reel.
  - Installation of the steering column.
  - Other steering-related adjustment or installation.
- Do not disassemble the cable reel.
- Do not apply grease to the cable reel.
- If the cable reel shows any signs of damage, replace it with a new one. For example, if the cable reel does not rotate smoothly, replace it.

AIRBAG HANDLING AND STORAGE

Do not disassemble an airbag. It has no serviceable parts. Once an airbag has been deployed, it cannot be repaired or reused.

For temporary storage of an airbag during service, observe the following precautions.

- Store the removed airbag with the pad surface up. Never put anything on the airbag.

GETtheMANUALS.org

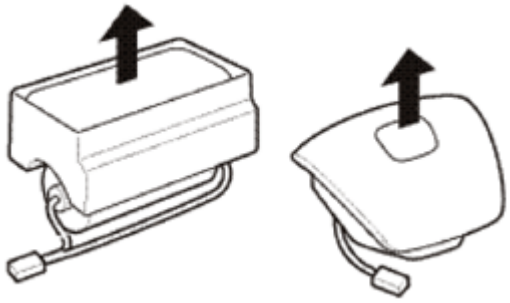

Fig. 12: Identifying Airbags Pad Position
Courtesy of AMERICAN HONDA MOTOR CO., INC.

- To prevent damage to the airbag, keep it away from any oil, grease, detergent, or water.

Fig. 13: Caution For Preventing Damage On Airbag From Any Oil, Grease, Detergent Or Water
Courtesy of AMERICAN HONDA MOTOR CO., INC.

- Store the removed airbag on a secure, flat surface away from any high heat source (exceeding 200 °F (93 °C)).

Fig. 14: Caution For Securing Airbag From High Heat Source
Courtesy of AMERICAN HONDA MOTOR CO., INC.

- Never do electrical tests on the airbags, such as measuring resistance.

GETtheMANUALS.org

- Do not position yourself in front of the airbag during removal, inspection, or replacement.

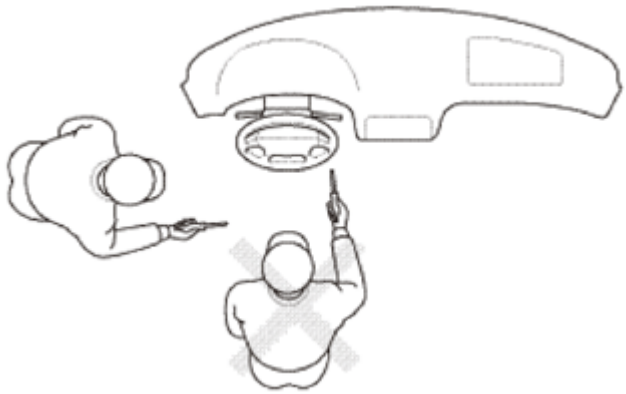

Fig. 15: Caution For Repairing Airbag
Courtesy of AMERICAN HONDA MOTOR CO., INC.

- For proper disposal of a damaged airbag or tensioner, refer to Airbag and Tensioner Disposal.
- The side curtain airbag module assembly is a long, jointed part containing an inflator (A), a flexible bag (B), and brackets (C). When removing or installing the side curtain airbag assembly, never:
  - Handle the flexible bag.
  - Drop the airbag assembly.
  - Cut, tear, or unwrap the tape strips.

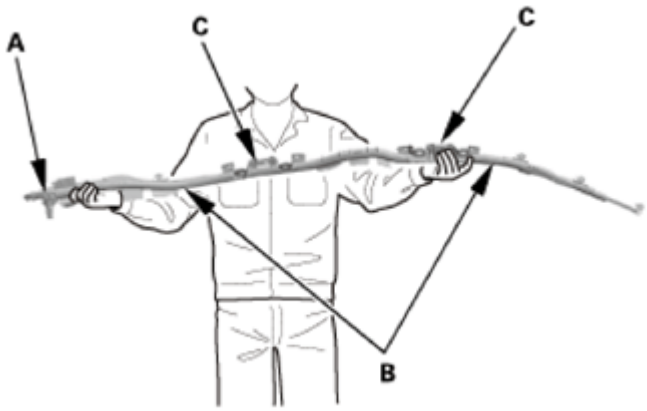

Fig. 16: Caution For Handling Side Curtain Airbag Assembly
Courtesy of AMERICAN HONDA MOTOR CO., INC.

SRS UNIT AND FRONT AND SIDE IMPACT SENSORS

NOTE: **Some systems store data in memory that is lost when the battery is disconnected. Before disconnecting the battery, refer to BATTERY TERMINAL DISCONNECTION AND RECONNECTION .**

GETtheMANUALS.org

- Turn the ignition switch to LOCK (0), disconnect the negative cable from the battery, then wait at least 3 minutes before starting installation or replacement of the SRS unit, or disconnecting the connectors from the SRS unit.
- Be careful not to bump or impact the SRS unit, the front impact sensors, side impact sensors, or the rear safing sensor when the ignition switch is in ON (II), for at least 3 minutes after the ignition switch is turned to LOCK (0).
- Do not reconnect any connectors to the SRS unit until it is fully installed, including torquing the TORX bolts.
- During installation or replacement, be careful not to bump (by impact wrench, hammer, etc.) the area around the SRS unit, the front impact sensors, side impact sensors, or the rear safing sensor. The airbags could accidentally deploy and cause damage or injury.

Fig. 17: Caution For Impacting SRS Unit
Courtesy of AMERICAN HONDA MOTOR CO., INC.

- After a collision where the front airbags, the side airbags, the side curtain airbags, or the front seat belt tensioners deploy, go to Component Replacement/Inspection After Deployment. After a collision where the airbags or the side airbags do not deploy, inspect for any damage or any deformation on the SRS unit, the front impact sensors, side impact sensors, and the rear safing sensor. If there is any damage, replace the SRS unit and/or the sensors. Also, do the front seat active head restraint inspection. Replace all damaged parts.

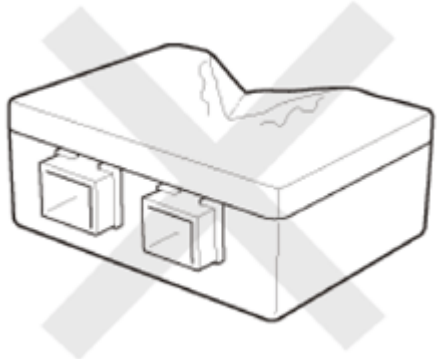

Fig. 18: Identifying Damage Or Any Deformation On SRS Unit

GETtheMANUALS.org

Courtesy of AMERICAN HONDA MOTOR CO., INC.

- Do not disassemble the SRS unit, the front impact sensors, the side impact sensors, the rear safing sensor, the driver's seat position sensor, or the front passenger's weight sensors.
- Always install the SRS unit and all impact sensors with the new TORX bolts to the specified torque.
- Do not spill water or oil on the SRS unit or any of the sensors.

WIRING PRECAUTIONS

Some of the SRS wiring can be identified by a special yellow outer covering, and the SRS connectors can be identified by their yellow color. Observe the following instructions.

- Never attempt to modify, splice, or repair SRS wiring.

  If there is an open or damage to the SRS wiring, replace the harness.

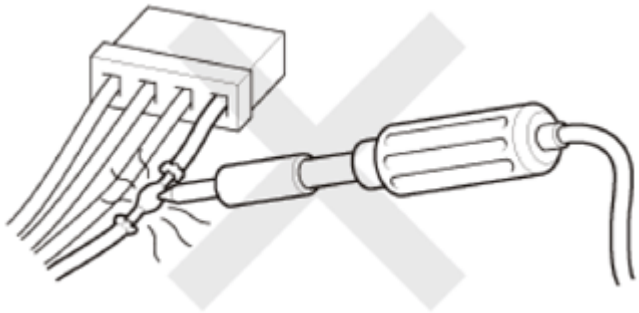

Fig. 19: Caution For Repairing SRS Wiring
Courtesy of AMERICAN HONDA MOTOR CO., INC.

- Be sure to install the harness wires so they do not get pinched or interfere with other parts.

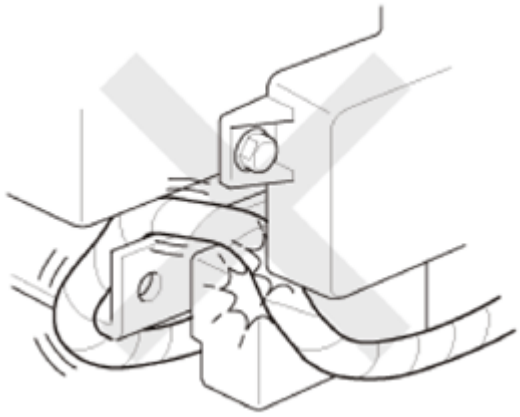

Fig. 20: Caution For Installing SRS Wiring
Courtesy of AMERICAN HONDA MOTOR CO., INC.

- Make sure all SRS ground locations are clean, and the grounds are securely fastened for optimum metal-

GETtheMANUALS.org

to-metal contact. Poor grounds can cause intermittent problems that are difficult to diagnose.

- Do not use any silicone based cleaners or lubricants on any SRS connectors or terminals.

LEVER-LOCKED CONNECTOR

The SRS unit connectors have a lever lock.

SRS Unit Connectors

Disconnecting

To release the lock (A), pull the lever (B) while pushing the lock on the outside of the connector, then pull out the connector (C).

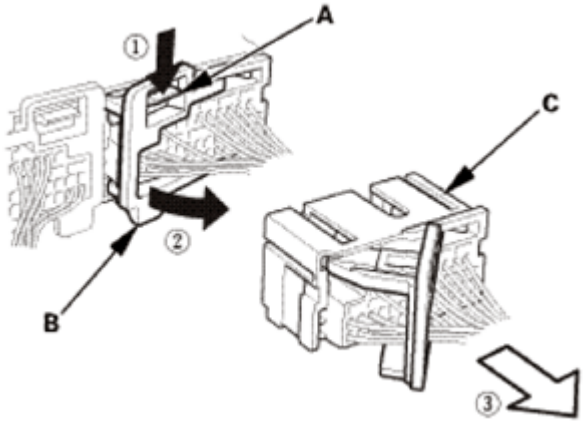

Fig. 21: Disconnecting SRS Unit Connectors
Courtesy of AMERICAN HONDA MOTOR CO., INC.

Connecting

To reconnect the connector (A), push in on the connector. As the connector is pressed in, the lever (B) moves to the locked position.

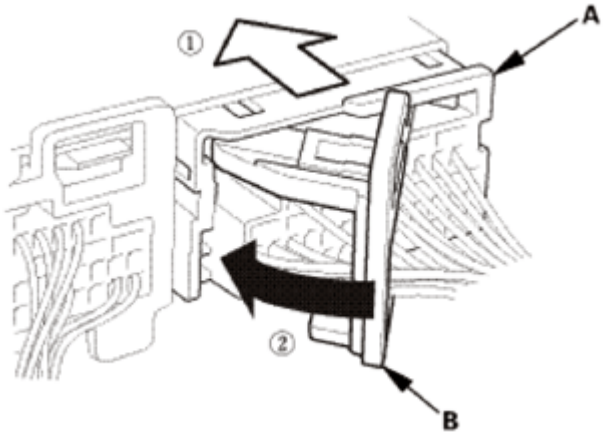

GETtheMANUALS.org

Fig. 22: Connecting SRS Unit Connectors
Courtesy of AMERICAN HONDA MOTOR CO., INC.

SPRING-LOADED LOCK CONNECTOR

Some SRS connectors have a spring-loaded lock.

Front Airbag Connector

Disconnecting

To release the lock, pull the spring-loaded sleeve (A) toward the stop (B) while holding the opposite half of the connector, then pull the connector halves apart. Be sure to pull on the sleeve and not on the connector.

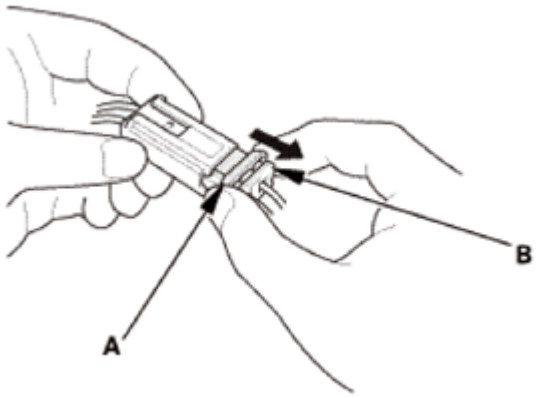

Fig. 23: Disconnecting Front Airbag Connector
Courtesy of AMERICAN HONDA MOTOR CO., INC.

Connecting

To reconnect, hold the pawl-side connector, and press on the back of the sleeve-side connector in the direction shown. As the two connector halves are pressed together, the sleeve (A) is pushed back by the pawl (B). Do not touch the sleeve.

GETtheMANUALS.org

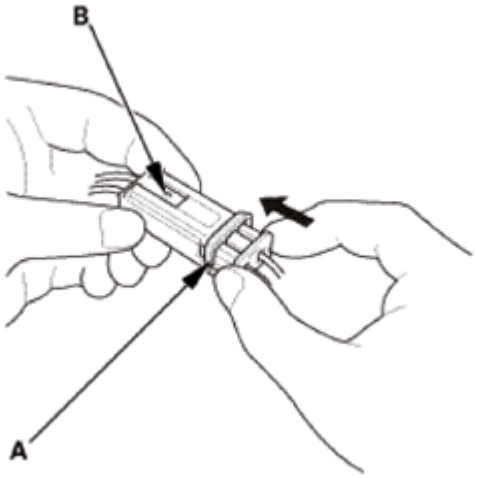

Fig. 24: Connecting Front Airbag Connector
Courtesy of AMERICAN HONDA MOTOR CO., INC.

Side Airbag Connector

Disconnecting

To release the lock, pull the spring-loaded sleeve (A) toward the stop (B) while holding the opposite half of the connector, then pull the connector halves apart. Be sure to pull on the sleeve and not on the connector half.

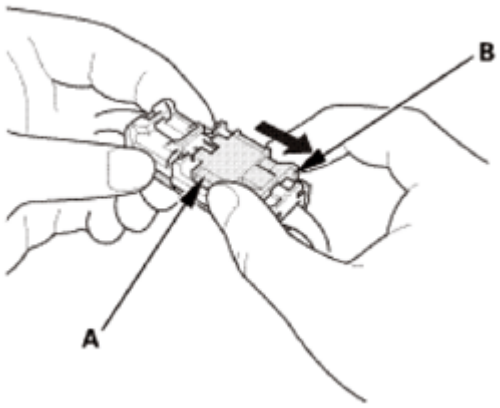

Fig. 25: Disconnecting Side Airbag Connector
Courtesy of AMERICAN HONDA MOTOR CO., INC.

Connecting

Hold both connector halves, and press them firmly together until the projection (A) of the sleeve-side connector clicks.

GETtheMANUALS.org

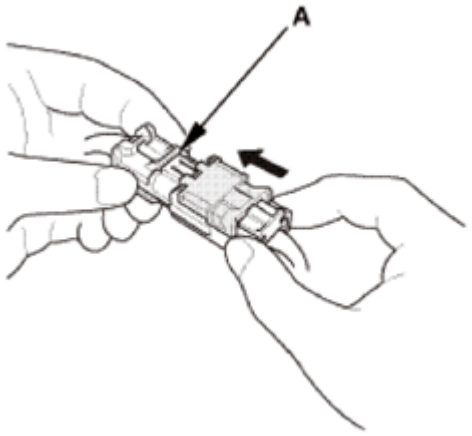

Fig. 26: Connecting Side Airbag Connector
Courtesy of AMERICAN HONDA MOTOR CO., INC.

Front Seat Belt Tensioner Connector/Side Curtain Airbag Connector

Disconnecting

Pull out on the locking tabs (A) to disconnect the connector (B). Be careful not to damage the connector.

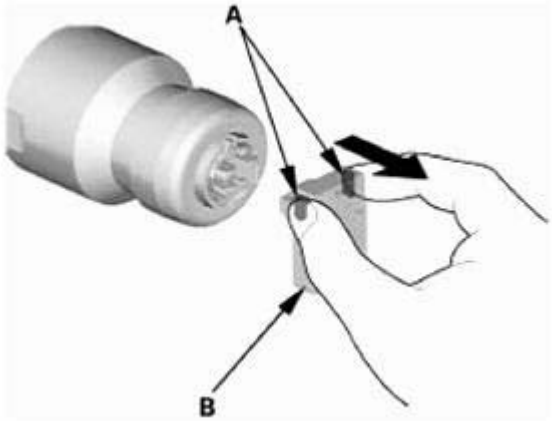

Fig. 27: Disconnecting Front Seat Belt Tensioner Connector/Side Curtain Airbag Connector
Courtesy of AMERICAN HONDA MOTOR CO., INC.

Connecting

Align the guide tab (A) of the connector (B) with the ditch of the other side, and then connect the connector. Be careful not to damage the connector.

GETtheMANUALS.org

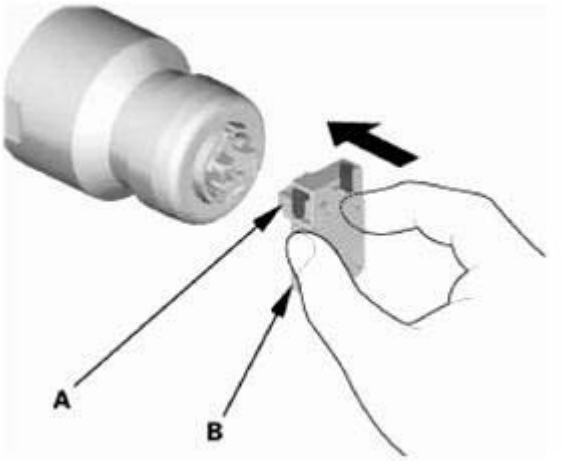

Fig. 28: Connecting Front Seat Belt Tensioner Connector/Side Curtain Airbag Connector
Courtesy of AMERICAN HONDA MOTOR CO., INC.

Front Seats With Side Airbags

Front seats with side airbags have a "SIDE AIRBAG" label on the seat-back.

Fig. 29: Identifying Side Airbag Label On Seat-Back
Courtesy of AMERICAN HONDA MOTOR CO., INC.

- Clean the seats with a damp cloth. Do not soak the seats with liquid. Do not spray steam on the seats.
- Do not repair a torn or frayed seat-back cover/pad. Replace the seat-back cover/pad if it is damaged.
- After a collision where the side airbag was deployed, replace the side airbag and the seat frame with the new parts. If the seat-back cover is split, it must be replaced. Refer to Component Replacement/Inspection After Deployment.
- Never put aftermarket accessories on the seats (covers, pads, seat heaters, lights, etc.).

GETtheMANUALS.org

SRS SYMPTOM TROUBLESHOOTING INDEX

Symptom	Diagnostic procedure	Also check for
SRS indicator does not come on	**SYMPTOM TROUBLESHOOTING**	-
SRS indicator stays on, but no DTCs are stored, or cannot be read	**SYMPTOM TROUBLESHOOTING**	• Charging system for under or overcharging • Communication with the HDS
Side airbag cutoff indicator flashes	Check for DTCs. If any DTC is indicated, go to the DTC troubleshooting	ODS unit initialization
Side airbag cutoff indicator stays on	**SYMPTOM TROUBLESHOOTING**	-
Side airbag cutoff indicator does not come on	**SYMPTOM TROUBLESHOOTING**	-
Front passenger's airbag cutoff indicator flashes	Check for DTCs. If any DTC is indicated, go to the DTC troubleshooting	ODS unit initialization
Front passenger's airbag cutoff indicator stays on or comes on suddenly	**SYMPTOM TROUBLESHOOTING**	ODS unit initialization
Front passenger's airbag cutoff indicator does not come on	Check for DTCs. If any DTC is indicated, go to the DTC troubleshooting	DTC 92-xx Troubleshooting
Seat belt reminder indicator does not come on, turn off, or flash	**SYMPTOM TROUBLESHOOTING**	-
HDS does not communicate with the SRS unit or the vehicle	**DLC CIRCUIT TROUBLESHOOTING**	Communication with the HDS

FRONT PASSENGER'S WEIGHT SENSOR OUTPUT CHECK AFTER A VEHICLE COLLISION

PROCEDURE

NOTE: Check the front passenger's weight sensor output after this action:

- **After a vehicle collision.**

1. Test Drive
    1. Drive the vehicle, accelerate to 22 mph (36 km/h), then stop on level ground.
2. HDS DLC - Connection
    1. Connect the HDS to the data link connector (DLC) (A) located under the driver's side of the dashboard.
    2. Turn the ignition switch to ON (II).
    3. Make sure the HDS communicates with the vehicle. If it does not communicate, go to the DLC

GETtheMANUALS.org

circuit troubleshooting.

Fig. 30: Identifying Data Link Connector
Courtesy of AMERICAN HONDA MOTOR CO., INC.

3. Front Passenger's Weight Sensor Output Check After a Vehicle Collision

Pre-Operation Check Set-Up

- Make sure all the components of the front passenger's seat are correctly installed.
- Position the front passenger's seat all the way rearward, and adjust the seat-back to the forward most position. Do not move the seat from this position until the output check is completed.
- Make sure nothing is on the front passenger's seat, including aftermarket seat covers or mats.
- Make sure there is nothing in the front passenger's seat-back pocket.
- Keep the windows and the moonroof closed (if equipped).
- Do all initialization procedures, except test-driving, in the service bay.
- Make sure the vehicle is on level ground.
- Dehumidify inside of the vehicle with A/C.
- Do not touch the front passenger's seat during the operation check.
- Do not expose the front passenger's seat to sudden temperature changes.
- Make sure all aftermarket devices such as amplifiers, fluorescent light, air purifiers, CB or HAM radios, etc. are turned off.

1. From the HDS Main Menu, select SRS, then Inspection. In the Inspection Menu, select AFTER A VEHICLE COLLISION. Follow the prompts until the front passenger's weight sensor output check has been completed.
2. Turn the ignition switch to LOCK (0).

GETtheMANUALS.org

SRS Symptom Troubleshooting - Front passenger's airbag cutoff indicator stays on or comes on suddenly

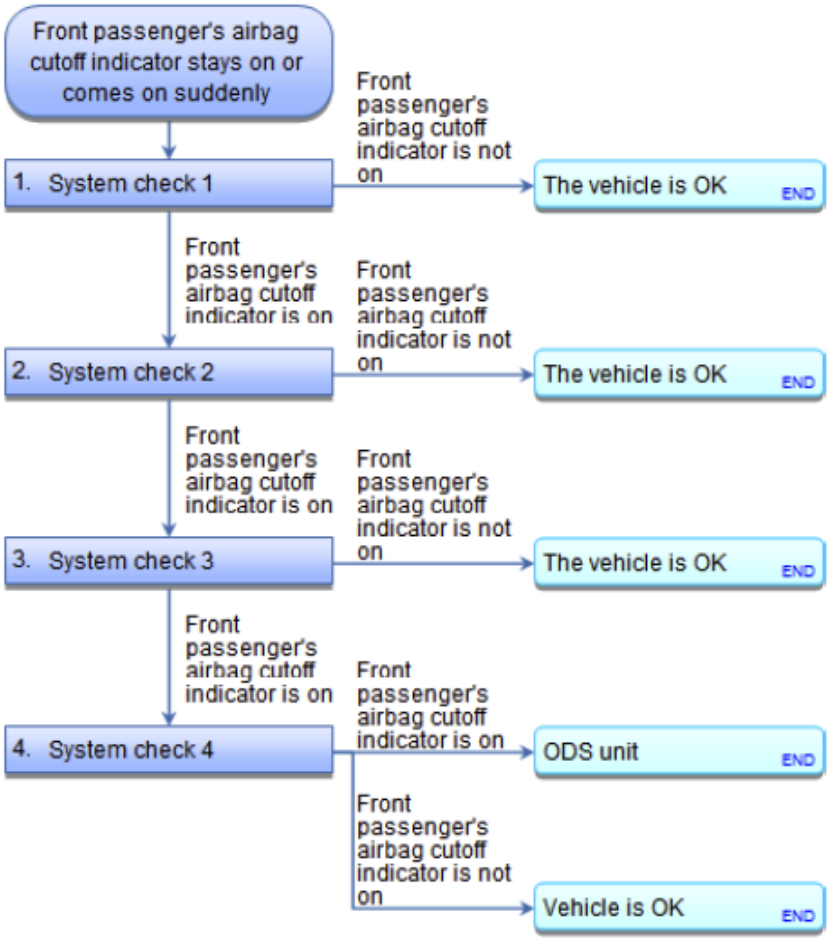

Fig. 31: SRS Symptom Troubleshooting Flow Chart (Front Passenger's Airbag Cutoff Indicator Stays On Or Comes On Suddenly)
Courtesy of AMERICAN HONDA MOTOR CO., INC.

FRONT PASSENGER'S AIRBAG CUTOFF INDICATOR STAYS ON OR COMES ON SUDDENLY

NOTE: **Under the following conditions, the front passenger's airbag cutoff indicator stays on or comes on suddenly:**

- **Before doing this troubleshooting procedure, find out if the vehicle was in a collision. If so, verify that all the required components were replaced with new components, of the correct part number, and that they were properly installed See AIRBAG AND TENSIONER DISPOSAL or SRS COMPONENT REPLACEMENT/INSPECTION AFTER DEPLOYMENT .**
- **When no one is sitting on the front passenger's seat, but there is an object on the seat more than 5 kg (11 lbs).**
- **The front seat belt is buckled, but no one is sitting on the front**

GETtheMANUALS.org

passenger's seat.

- **Someone who is less than about 30 kg (66 lbs) is sitting on the front passenger's seat.**
- **Before replacing the SRS unit, check the SRS unit software version with the HDS. If the software version is not the latest, update the SRS unit software See SRS UNIT REMOVAL AND INSTALLATION or SRS UNIT UPDATE , and retest.**

1. System check 1:
   - 1. Check for these items, then recheck the front passenger's airbag cutoff indicator.
     - The front passenger's seat is installed correctly.
     - Nothing is/was on the front passenger's seat.
     - Nothing is/was under the front passenger's seat.
     - Nothing is/was in the front passenger's seat-back pocket.
     - Whoever was sitting on the front passenger's seat was sitting in the proper sitting position.
     - The seat weight sensors may not measure the correct weight of the front passenger. If the front passenger's weight is more than 30 kg (66 lbs) but is supporting some of their body weight with their feet on the floor, or with their hands and arms on an arm rest, the actual weight of the passenger is not measured.

   Does the front passenger's airbag cutoff indicator stay on?

   YES : Go to step 2.

   NO : The vehicle is OK at this time.

2. System check 2:
   - 1. Turn the ignition switch to LOCK (0).
   - 2. **CONNECT THE HDS TO THE DATA LINK CONNECTOR (DLC)**.
   - 3. Turn the ignition switch to ON (II).
   - 4. From the HDS Main Menu, select SRS, then Inspection. In the Inspection Menu, select AFTER REPLACING FRONT PASSENGER'S SEAT COMPONENT(S), and follow the prompts.

   Does the front passenger's airbag cutoff indicator stay on?

   YES : Go to step 3.

   NO : The vehicle is OK at this time.

3. System check 3:
   - 1. From the HDS Main Menu, select SRS, then Inspection. In the Inspection Menu, select AFTER A VEHICLE COLLISION, and follow the prompts.

GETtheMANUALS.org

Does the front passenger's airbag cutoff indicator stay on?

YES : Go to step 4.

NO : The vehicle is OK at this time.

4. System check 4:
   - 1. **Replace the SRS unit** See **SRS UNIT REMOVAL AND INSTALLATION** or **SRS UNIT UPDATE** .
   - 2. Turn the ignition switch to ON (II), and see if the **FRONT PASSENGER'S AIRBAG CUTOFF INDICATOR COMES ON**.

Does the front passenger's airbag cutoff indicator stay on?

YES : Replace the ODS unit, and retest. If the problem is still present, **REPLACE THE FRONT PASSENGER'S SEAT RAIL INCLUDING ALL FOUR FRONT PASSENGER'S WEIGHT SENSORS** .

NO : The vehicle is OK at this time.

SEAT BELT REMINDER INDICATOR DOES NOT COME ON, TURN OFF, OR FLASH

SRS Symptom Troubleshooting - Seat belt reminder indicator does not come on, turn off, or flash

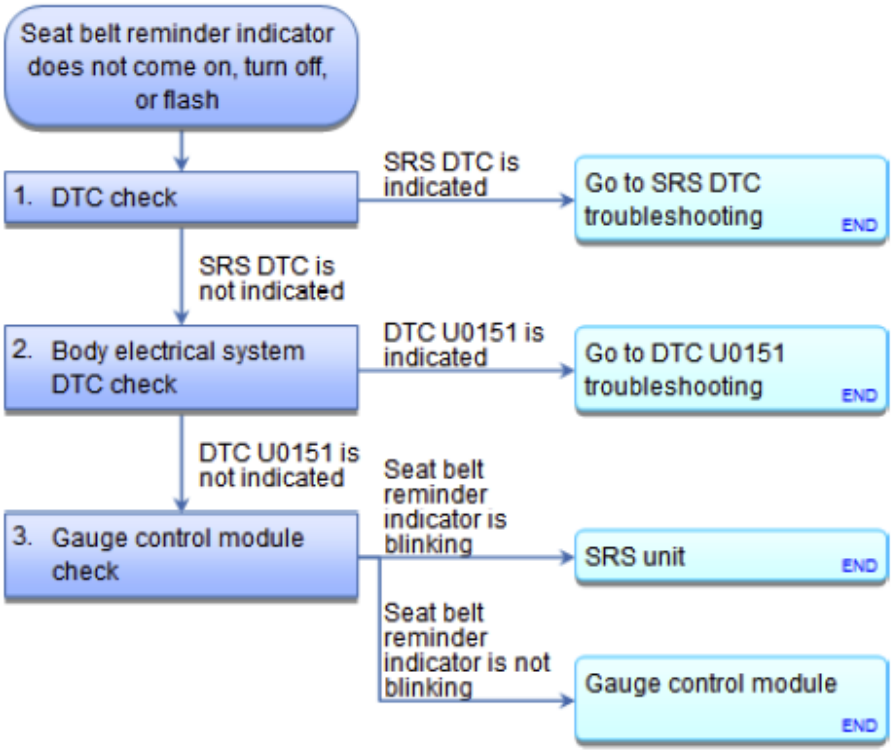

GETtheMANUALS.org

Fig. 32: SRS Symptom Troubleshooting Flow Chart (Seat Belt Reminder Indicator Does Not Come On, Turn Off Or Flash)
Courtesy of AMERICAN HONDA MOTOR CO., INC.

NOTE:

- **Before doing this troubleshooting procedure, find out if the vehicle was in a collision. If so, verify that all the required components were replaced with new components, of the correct part number, and that they were properly installed See AIRBAG AND TENSIONER DISPOSAL or SRS COMPONENT REPLACEMENT/INSPECTION AFTER DEPLOYMENT .**
- **Before replacing the SRS unit, check the SRS unit software version with the HDS. If the software version is not the latest, update the SRS unit software See SRS UNIT REMOVAL AND INSTALLATION or SRS UNIT UPDATE , and retest.**

1. DTC check:
   - 1. **CHECK FOR DTCS WITH THE HDS**.

DTC Description	DTC

Are any SRS DTCs indicated?

YES : Go to SRS DTC troubleshooting.

NO : Go to step 2.

2. Body electrical system DTC check:
   - 1. **CHECK FOR BODY ELECTRICAL DTCS WITH THE HDS**.

DTC Description	DTC
U0151 Gauge control module lost communication with SRS unit	

Is DTC U0151 indicated?

YES : **GO TO DTC U0151 TROUBLESHOOTING** .

NO : Go to step 3.

3. Gauge control module check:
   - 1. **DO THE GAUGE CONTROL MODULE SELF-DIAGNOSTIC FUNCTION** .

Does the seat belt reminder indicator blink?

YES : **Replace the SRS unit** See **SRS UNIT REMOVAL AND INSTALLATION** or **SRS UNIT UPDATE** .

GETtheMANUALS.org

NO : **Replace the gauge control module** See **GAUGE CONTROL MODULE REMOVAL AND INSTALLATION** or **Rewriting the ODO Data and Transferring the Maintenance Minder™ Data to a New Gauge Control Module** .

SIDE AIRBAG CUTOFF INDICATOR DOES NOT COME ON

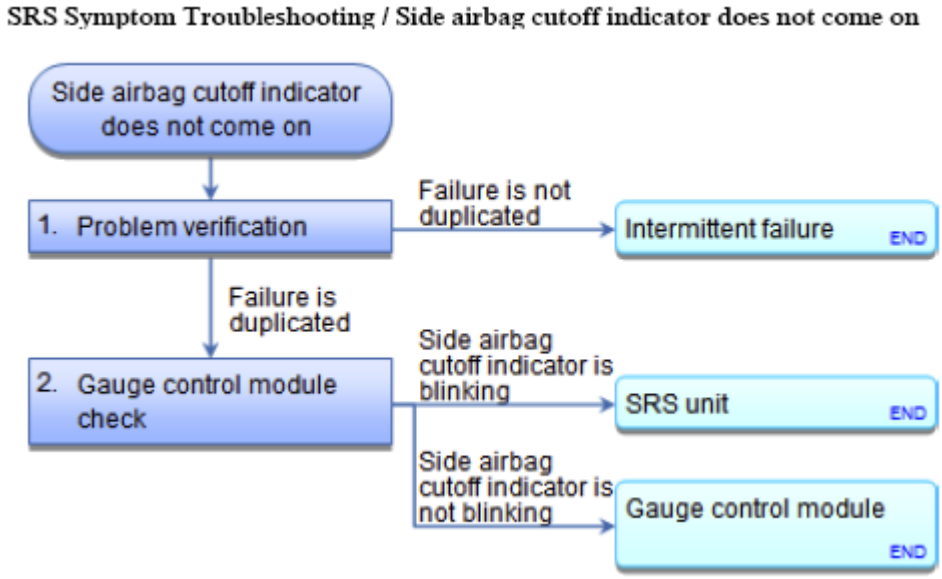

Fig. 33: SRS Symptom Troubleshooting Flow Chart (Side Airbag Cutoff Indicator Does Not Come On)
Courtesy of AMERICAN HONDA MOTOR CO., INC.

NOTE:

- **Before doing this troubleshooting procedure, find out if the vehicle was in a collision. If so, verify that all the required components were replaced with new components, of the correct part number, and that they were properly installed See AIRBAG AND TENSIONER DISPOSAL or SRS COMPONENT REPLACEMENT/INSPECTION AFTER DEPLOYMENT .**
- **If the SRS indicator also stays on, go to SRS indicator stays on, but no DTCs are stored, or cannot be read.**
- **Before replacing the SRS unit, check the SRS unit software version with the HDS. If the software version is not the latest, update the SRS unit software See SRS UNIT REMOVAL AND INSTALLATION or SRS UNIT UPDATE , and retest.**

1. Problem verification:
   - 1. Turn the ignition switch to LOCK (0), and wait for 10 seconds.
   - 2. Turn the ignition switch to ON (II), and check that the side airbag cutoff indicator comes on for about 6 seconds.

Does the side airbag cutoff indicator come on for about 6 seconds?

YES : Intermittent failure, the vehicle is OK at this time.

GETtheMANUALS.org

NO : The failure is duplicated. Go to step 2.

2. Gauge control module check:
   - 1. Turn the ignition switch to LOCK (0).
   - 2. **CONNECT THE HDS TO THE DATA LINK CONNECTOR (DLC)**.
   - 3. Turn the ignition switch to ON (II).
   - 4. **DO THE GAUGE CONTROL MODULE SELF-DIAGNOSTIC FUNCTION** .

   Does the side airbag cutoff indicator blink?

   YES : **Replace the SRS unit** See **SRS UNIT REMOVAL AND INSTALLATION** or **SRS UNIT UPDATE** .

   NO : **Replace the gauge control module** See **GAUGE CONTROL MODULE REMOVAL AND INSTALLATION** or **Rewriting the ODO Data and Transferring the Maintenance Minder™ Data to a New Gauge Control Module** .

SIDE AIRBAG CUTOFF INDICATOR STAYS ON

GETtheMANUALS.org

SRS Symptom Troubleshooting / Side airbag cutoff indicator stays on

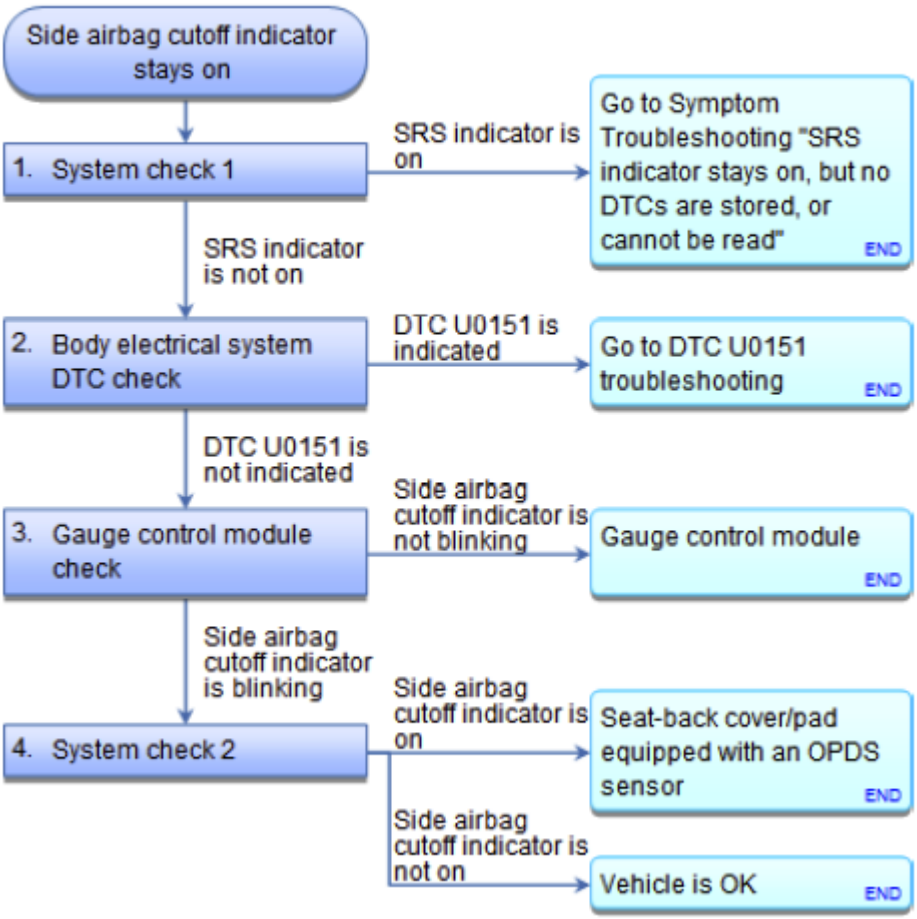

Fig. 34: SRS Symptom Troubleshooting Flow Chart (Side Airbag Cutoff Indicator Stays On)
Courtesy of AMERICAN HONDA MOTOR CO., INC.

NOTE:

- **Before doing this troubleshooting procedure, find out if the vehicle was in a collision. If so, verify that all the required components were replaced with new components, of the correct part number, and that they were properly installed See AIRBAG AND TENSIONER DISPOSAL or SRS COMPONENT REPLACEMENT/INSPECTION AFTER DEPLOYMENT .**
- **Before replacing the SRS unit, check the SRS unit software version with the HDS. If the software version is not the latest, update the SRS unit software See SRS UNIT REMOVAL AND INSTALLATION or SRS UNIT UPDATE , and retest.**

1. System check 1:
   - 1. Make sure nothing is on the front passenger's seat.
   - 2. Make sure the seat-back is dry.
   - 3. Turn the ignition switch to ON (II), and see if the **SRS INDICATOR COMES ON**.

GETtheMANUALS.org

Does the SRS indicator come on and stay on?

YES : Go to Symptom Troubleshooting "**SRS indicator stays on, but no DTCs are stored, or cannot be read**".

NO : Go to step 2.

2. Body electrical system DTC check:
   - 1. Turn the ignition switch to LOCK (0).
   - 2. **CHECK FOR BODY ELECTRICAL DTCS WITH THE HDS**.

DTC Description	DTC
U0151 Gauge control module lost communication with SRS unit	

Is DTC U0151 indicated?

YES : **Go to DTC U0151 troubleshooting** .

NO : Go to step 3.

3. Gauge control module check:
   - 1. **DO THE GAUGE CONTROL MODULE SELF-DIAGNOSTIC FUNCTION** .

Does the side airbag cutoff indicator blink?

YES : Go to step 4.

NO : **Replace the gauge control module** See **GAUGE CONTROL MODULE REMOVAL AND INSTALLATION** or **Rewriting the ODO Data and Transferring the Maintenance Minder™ Data to a New Gauge Control Module** .

4. System check 2:
   - 1. Do the ODS unit initialization (USA and Canada models) or OPDS unit initialization (Mexico models).
   - 2. Turn the ignition switch to ON (II), and see if the **SIDE AIRBAG CUTOFF INDICATOR COMES ON**.

Does the side airbag cutoff indicator come on and stay on?

YES : **REPLACE THE SEAT-BACK COVER/PAD EQUIPPED WITH AN OPDS SENSOR** , and retest. If the problem is still present, **replace the SRS unit** See **SRS UNIT REMOVAL AND INSTALLATION** or **SRS UNIT UPDATE** .

NO : The vehicle is OK at this time.

GETtheMANUALS.org

SRS INDICATOR DOES NOT COME ON

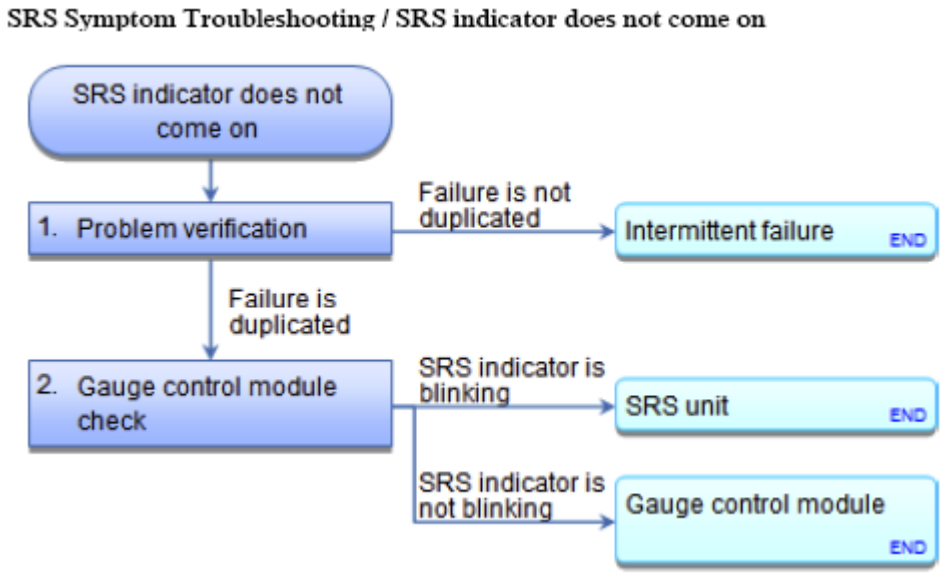

Fig. 35: SRS Symptom Troubleshooting Flow Chart (SRS Indicator Does Not Come On)
Courtesy of AMERICAN HONDA MOTOR CO., INC.

NOTE:

- **Before doing this troubleshooting procedure, find out if the vehicle was in a collision. If so, verify that all the required components were replaced with new components, of the correct part number, and that they were properly installed See AIRBAG AND TENSIONER DISPOSAL or SRS COMPONENT REPLACEMENT/INSPECTION AFTER DEPLOYMENT .**
- **Before replacing the SRS unit, check the SRS unit software version with the HDS. If the software version is not the latest, update the SRS unit software See SRS UNIT REMOVAL AND INSTALLATION or SRS UNIT UPDATE , and retest.**

1. Problem verification:
   - 1. Turn the ignition switch to LOCK (0), then wait for 10 seconds.
   - 2. Turn the ignition switch to ON (II), and check that the SRS indicator comes on for about 6 seconds.

   Does the SRS indicator come on for about 6 seconds?

   YES : Intermittent failure, the vehicle is OK at this time.

   NO : The failure is duplicated. Go to step 2.

2. Gauge control module check:
   - 1. Turn the ignition switch to LOCK (0).

GETtheMANUALS.org

- 2. **CONNECT THE HDS TO THE DATA LINK CONNECTOR (DLC)**.
- 3. Turn the ignition switch to ON (II).
- 4. **DO THE GAUGE CONTROL MODULE SELF-DIAGNOSTIC FUNCTION** .

Does the SRS indicator blink?

YES : **Replace the SRS unit** See **SRS UNIT REMOVAL AND INSTALLATION** or **SRS UNIT UPDATE** .

NO : **Replace the gauge control module** See **GAUGE CONTROL MODULE REMOVAL AND INSTALLATION** or **Rewriting the ODO Data and Transferring the Maintenance Minder™ Data to a New Gauge Control Module** .

SRS INDICATOR STAYS ON, BUT NO DTCS ARE STORED, OR CANNOT BE READ

GETtheMANUALS.org

SRS Symptom Troubleshooting / SRS indicator stays on, but no DTCs are stored, or cannot be read

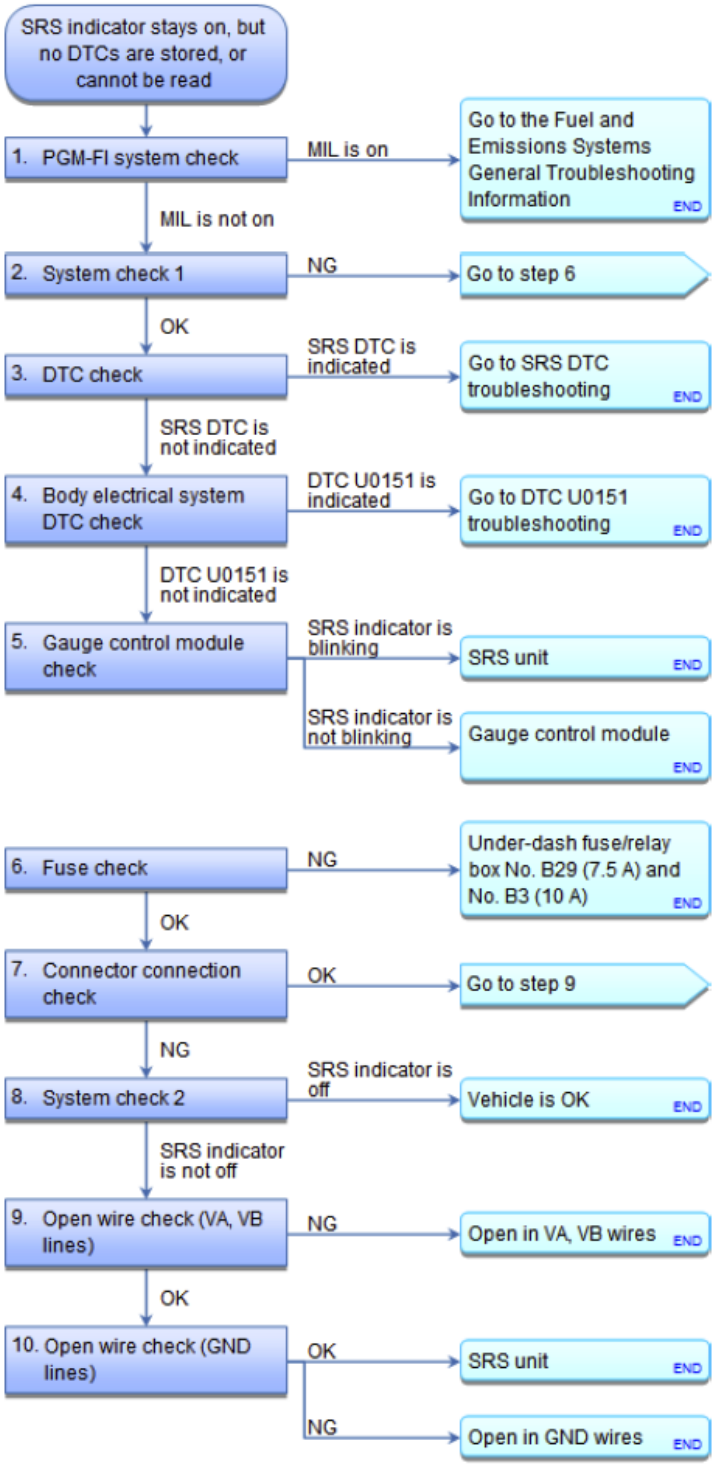

Fig. 36: SRS Symptom Troubleshooting Flow Chart (SRS Indicator Stays On, But No DTCs Are Stored Or Cannot Be Read)
Courtesy of AMERICAN HONDA MOTOR CO., INC.

GETtheMANUALS.org

NOTE:

- **Before doing this troubleshooting procedure, find out if the vehicle was in a collision. If so, verify that all the required components were replaced with new components, of the correct part number, and that they were properly installed See AIRBAG AND TENSIONER DISPOSAL or SRS COMPONENT REPLACEMENT/INSPECTION AFTER DEPLOYMENT .**
- **Before doing this troubleshooting procedure, MAKE SURE THE BATTERY IS FULLY CHARGED . If the battery voltage is low, SRS indicator may stay on.**
- **Before doing this troubleshooting procedure, review SRS PRECAUTIONS AND PROCEDURES, GENERAL TROUBLESHOOTING INFORMATION, and BATTERY TERMINAL DISCONNECTION AND RECONNECTION.**

1. PGM-FI system check:
   - 1. Start the engine, and see if the malfunction indicator lamp (MIL) also stays on.

   Does the MIL stay on longer than 30 seconds?

   YES : **GO TO THE FUEL AND EMISSIONS SYSTEMS GENERAL TROUBLESHOOTING INFORMATION** .

   NO : Go to step 2.

2. System check 1:
   - 1. Turn the ignition switch to LOCK (0).
   - 2. **Connect the HDS to the data link connector (DLC)** See **HOW TO TROUBLESHOOT THE A/T SYSTEM** or **HOW TO TROUBLESHOOT THE FUEL AND EMISSIONS SYSTEMS** .
   - 3. Turn the ignition switch to ON (II).
   - 4. Check for communication to the SRS with the HDS.

   Does the HDS communicate with the SRS unit?

   YES : Go to step 3.

   NO : Go to step 6.

3. DTC check:
   - 1. **CHECK FOR DTCS WITH THE HDS**.

DTC Description	DTC

   Are any SRS DTCs indicated?

   YES : Go to SRS DTC troubleshooting.

GETtheMANUALS.org

NO : Go to step 4.

4. Body electrical system DTC check:
   - 1. **CHECK FOR BODY ELECTRICAL DTCS WITH THE HDS**.

DTC Description	DTC
U0151 Gauge control module lost communication with SRS unit	

Is DTC U0151 indicated?

YES : **GO TO DTC U0151 TROUBLESHOOTING**.

NO : Go to step 5.

5. Gauge control module check:
   - 1. **DO THE GAUGE CONTROL MODULE SELF-DIAGNOSTIC FUNCTION** .

Does the SRS indicator blink?

YES : **REPLACE THE SRS UNIT** .

NO : **Replace the gauge control module** See **SRS UNIT REMOVAL AND INSTALLATION** or **SRS UNIT UPDATE** .

6. Fuse check:
   - 1. Turn the ignition switch to LOCK (0).
   - 2. Check the following fuses.

     Fuse No. B29 (7.5 A)

     No. B3 (10 A)

     Location Under-dash fuse/relay box

Are the fuses OK?

YES : Go to step 7.

NO : Replace the fuse, then turn the ignition switch to ON (II). If the fuse blows again, check for a short to ground in the under-dash fuse/relay box No. B29 (7.5 A) and No. B3 (10 A) fuse circuit (dashboard wire harness, floor wire harness, or front passenger's seat wire harness); replace the faulty harness, and retest. If the problem is still present, **replace the under-dash fuse/relay box** See **GAUGE CONTROL MODULE REMOVAL AND INSTALLATION** or **Rewriting the ODO Data and Transferring the Maintenance Minder™ Data to a New Gauge Control Module** .

7. Connector connection check:

GETtheMANUALS.org

- 1. Check the following connector connections.

  SRS UNIT CONNECTOR A (39P)

  Under-dash fuse/relay box connector H (4P)

Are the connectors OK?

YES : Go to step 9.

NO : Go to step 8.

8. System check 2:
   - 1. Repair the poor connector connection which was the cause of the problem in step 7.
   - 2. Turn the ignition switch to LOCK (0), then wait for 10 seconds.
   - 3. Turn the ignition switch to ON (II), and check that the SRS indicator comes on for about 6 seconds and then goes off.

Does the SRS indicator come on for about 6 seconds and then goes off?

YES : The vehicle is OK at this time.

NO : Turn the ignition switch to LOCK (0), then go to step 9.

9. Open wire check (VA, VB lines):
   - 1. Disconnect the negative cable from the battery, then wait at least 3 minutes.
   - 2. Disconnect the following connector.

     SRS unit connector A (39P) See **SRS UNIT REMOVAL AND INSTALLATION** or **SRS UNIT UPDATE**

   - 3. Reconnect the negative cable to the battery.
   - 4. Turn the ignition switch to ON (II).
   - 5. Measure the voltage between test points 1 and 2.

     Test condition IG ON (II)

     SRS unit connector A (39P): disconnected

     Test circuit VA

     Test point 1 SRS unit connector A (39P) No. 39

     Test point 2 Body ground

GETtheMANUALS.org

Test circuit VB

Test point 1 SRS unit connector A (39P) No. 38

Test point 2 Body ground

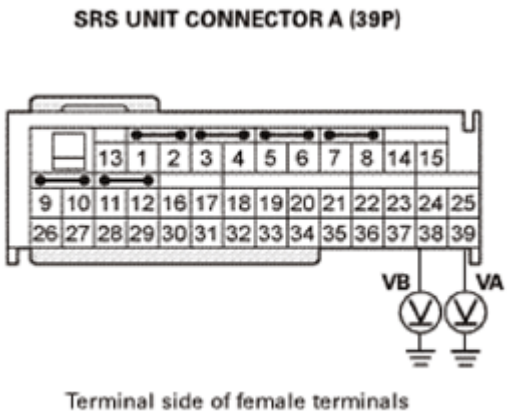

Fig. 37: Measuring Voltage Between SRS Unit Connector A (39P) No. 38, 39 And Body Ground
Courtesy of AMERICAN HONDA MOTOR CO., INC.

Is there battery voltage?

YES : The VA, VB wires are OK. Go to step 10.

NO : Open in the dashboard wire harness; replace the dashboard wire harness.

10. Open wire check (GND lines):
    - 1. Turn the ignition switch to LOCK (0).
    - 2. Measure the resistance between test points 1 and 2.

    Test condition IG LOCK (0)

    SRS unit connector A (39P): disconnected

    Test circuit GND

    Test point 1 SRS unit connector A (39P) No. 37

    Test point 2 Body ground

    Test circuit GND

    Test point 1 SRS unit connector A (39P) No. 36

GETtheMANUALS.org

Test point 2 Body ground

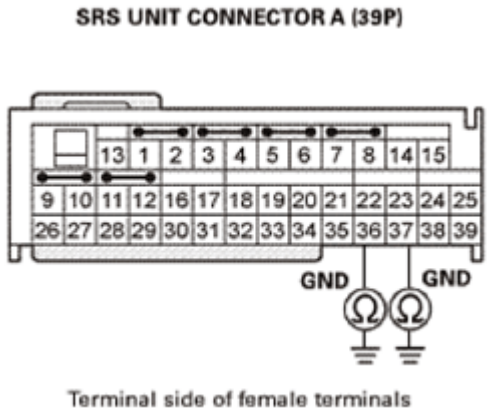

Fig. 38: Measuring Resistance Between SRS Unit Connector A (39P) No. 36, 37 And Body Ground
Courtesy of AMERICAN HONDA MOTOR CO., INC.

Is there less than 1.0 ohms?

YES : The GND wires are OK. **Replace the SRS unit** See **SRS UNIT REMOVAL AND INSTALLATION** or **SRS UNIT UPDATE** .

NO : Open in the dashboard wire harness; check for a poor ground at G504. If the ground is OK, replace the dashboard wire harness.

GETtheMANUALS.org

TAILGATE ADJUSTMENT

REMOVAL

1. Upper/Lower Taillight Assembly - Both Sides

NOTE: Repeat this procedure on the opposite side.

1. Remove the screws, then remove the lower taillight assembly (A).
2. Disconnect the connectors (B).

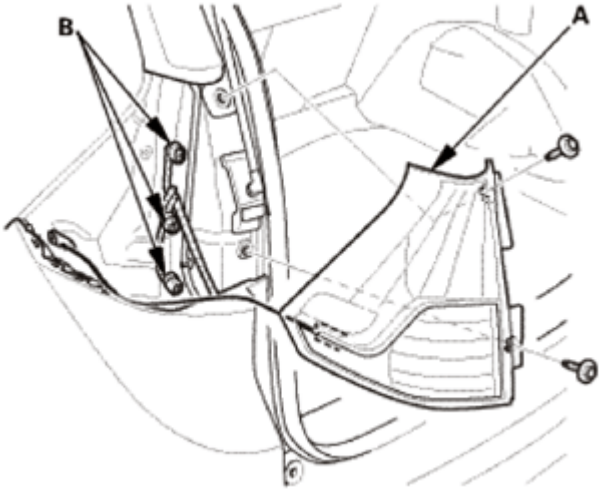

Fig. 1: Identifying Lower Taillight Assembly And Connectors
Courtesy of AMERICAN HONDA MOTOR CO., INC.

3. Remove the screw, then remove the upper taillight assembly (A).
4. Disconnect the connector (B), then detach the harness clip (C).

GETtheMANUALS.org

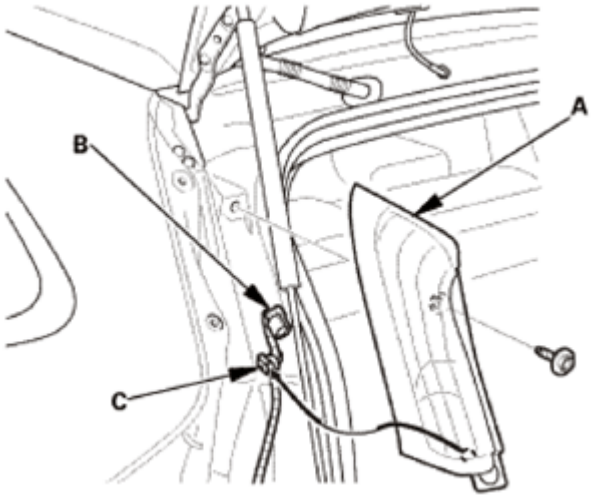

Fig. 2: Identifying Upper Taillight Assembly, Connector And Harness Clip
Courtesy of AMERICAN HONDA MOTOR CO., INC.

ADJUSTMENT

1. Tailgate Adjustment
    1. Detach the hooks (A), then remove the striker cap (B) from the rear trim panel (C).

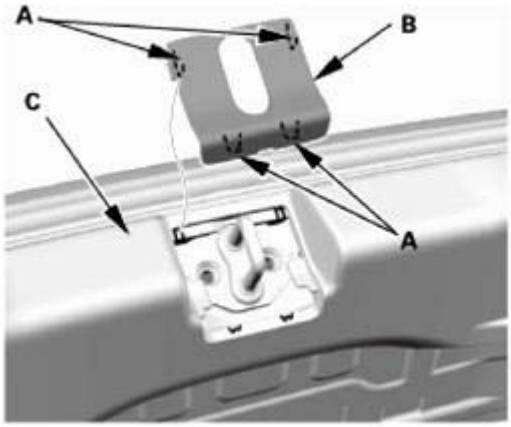

Fig. 3: Identifying Rear Trim Panel, Striker Cap And Hooks
Courtesy of AMERICAN HONDA MOTOR CO., INC.

    2. Slightly loosen the tailgate hinge bolts (A) and the striker mounting bolts (B).
    3. Adjust the tailgate (C) alignment in the following sequence:
        - Adjust the tailgate right and left using the elongated holes in the tailgate hinges (D).
        - Turn the tailgate edge cushions (E), in or out as necessary, to make sure the tailgate fits flush with the body at the side edges.
        - Adjust the fit between the tailgate and the tailgate opening by moving the striker (F), and adjust the striker right or left until it is centered in the tailgate latch (G).

GETtheMANUALS.org

- Tighten each bolt to the specified torque.
- Make sure the tailgate opens properly and locks securely.

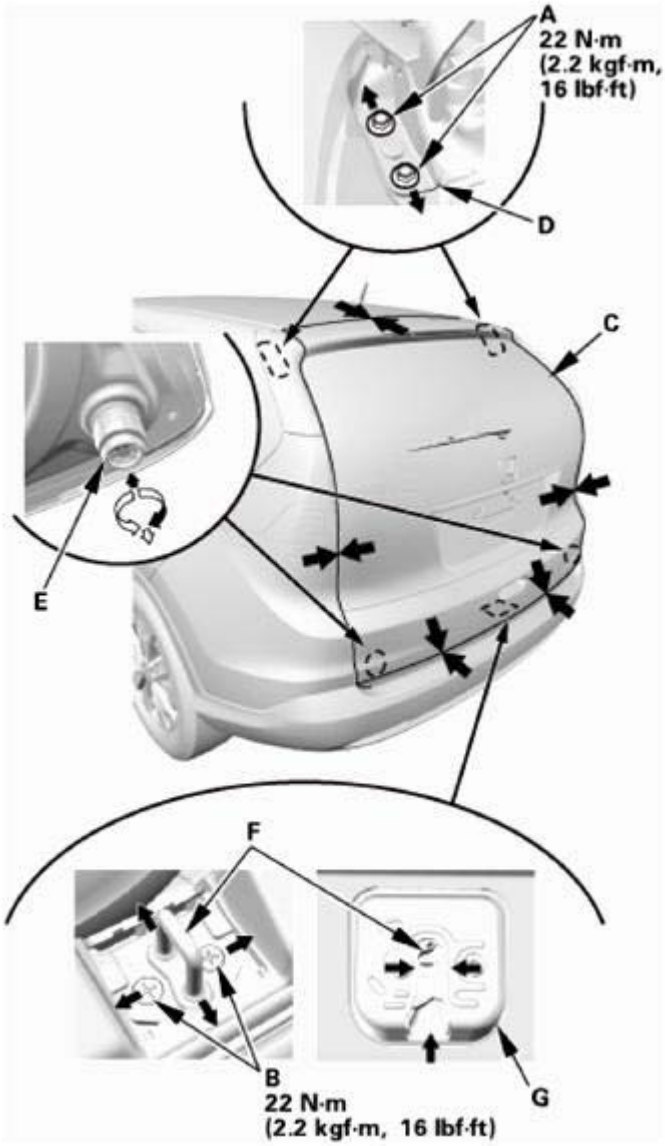

Fig. 4: Adjusting Tailgate Alignment
Courtesy of AMERICAN HONDA MOTOR CO., INC.

4. Apply new seam sealer into the cracks in the sealed area (A) around the tailgate hinge (B), and let the sealer dry.
5. Apply touch-up paint to the hinge mounting bolts and around the hinges, and let the paint dry.
6. Apply multipurpose grease to the pivot portion of the tailgate hinges as indicated by the arrow.

GETtheMANUALS.org

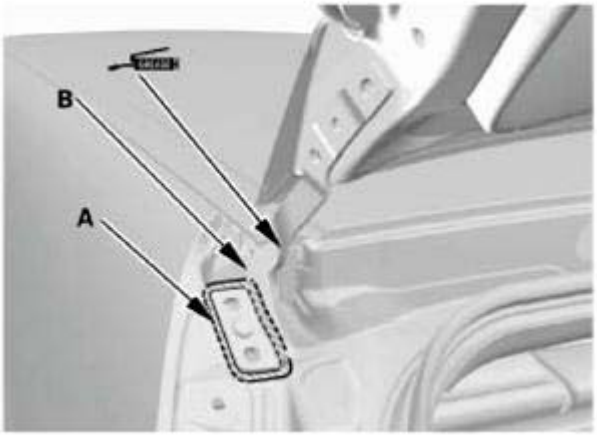

Fig. 5: Sealant Applying Area On Tailgate Hinge
Courtesy of AMERICAN HONDA MOTOR CO., INC.

INSTALLATION

1. Upper/Lower Taillight Assembly - Both Sides

NOTE: Repeat this procedure on the opposite side.

1. Connect the connector (A), then install the harness clip (B).
2. Install the upper taillight assembly (C), then install the screw.

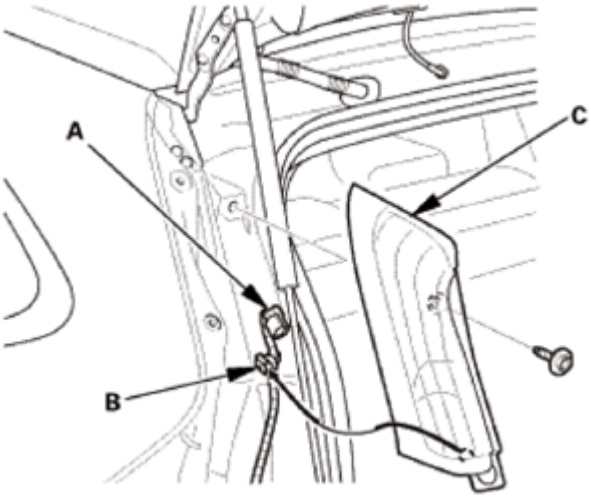

Fig. 6: Identifying Upper Taillight Assembly, Connector And Harness Clip
Courtesy of AMERICAN HONDA MOTOR CO., INC.

3. Connect the connectors (A), then install the lower taillight assembly (B). Make sure the tab (C) locks into the holder (D) securely.
4. Install the screws.

GETtheMANUALS.org

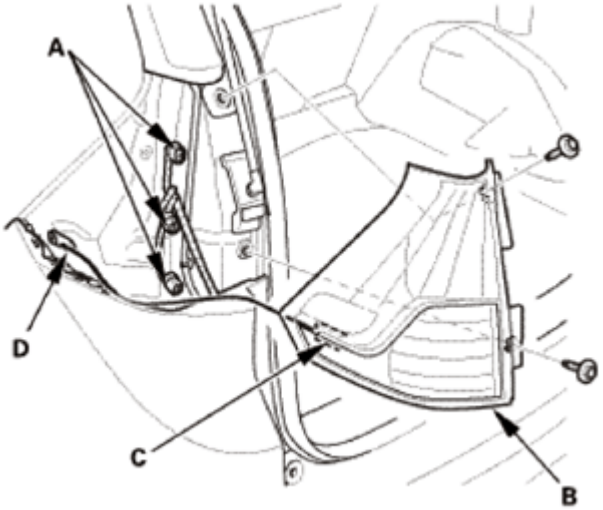

Fig. 7: Identifying Connectors, Lower Taillight Assembly, Screws
Courtesy of AMERICAN HONDA MOTOR CO., INC.

2. Water Leak Test

Check for water leaks. Run water over the roof and on the sealing area as shown, and note these items:

- Use a 12 mm (0.47 in) diameter hose (A).
- Adjust the rate of water flow as shown.
- Do not use a nozzle.
- Hold the hose about 300 mm (11.81 in) away from the door.

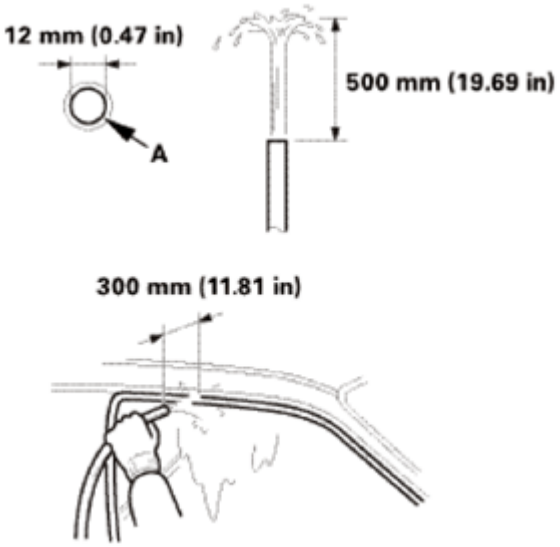

Fig. 8: Checking Water Leaks
Courtesy of AMERICAN HONDA MOTOR CO., INC.

GETtheMANUALS.org

TAILGATE COMPONENT LOCATION INDEX

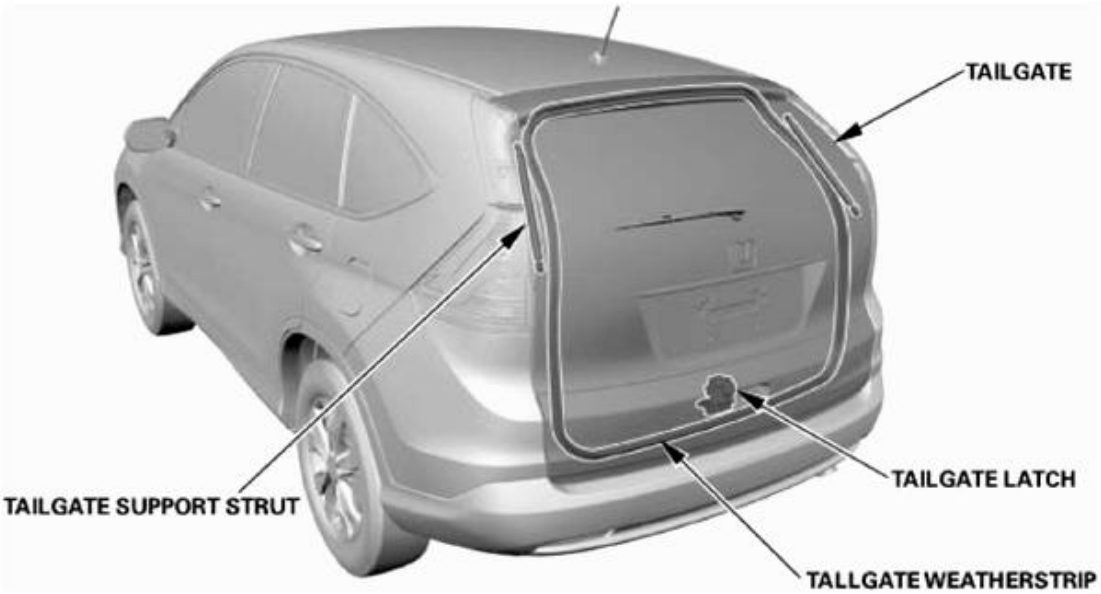

Fig. 9: Tailgate Components Location
Courtesy of AMERICAN HONDA MOTOR CO., INC.

TAILGATE	**ADJUSTMENT**
TAILGATE LATCH	**REMOVAL AND INSTALLATION**
TAILGATE SUPPORT STRUT	**REMOVAL AND INSTALLATION**
TAILGATE WEATHERSTRIP	**REMOVAL AND INSTALLATION**

TAILGATE LATCH REMOVAL AND INSTALLATION

REMOVAL

NOTE: **If the tailgate latch does not open by the tailgate open switch, remove the maintenance cover (A) from the tailgate lower trim panel, then turn the emergency lever (B) clockwise as shown.**

GETtheMANUALS.org

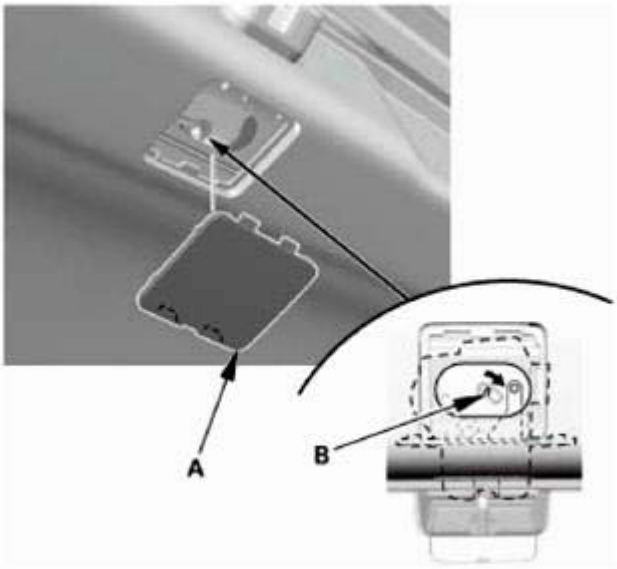

Fig. 10: Turning Emergency Lever Clockwise
Courtesy of AMERICAN HONDA MOTOR CO., INC.

1. Tailgate Upper Trim Panel
    1. Carefully pry out the notch (A) in the tailgate upper trim (B) with the appropriate trim tool to detach the hooks (C) and the tabs (D) from the tailgate side trims (E), and pull back the tailgate upper trim panel by hand to detach the clips (F), then remove the tailgate upper trim panel.

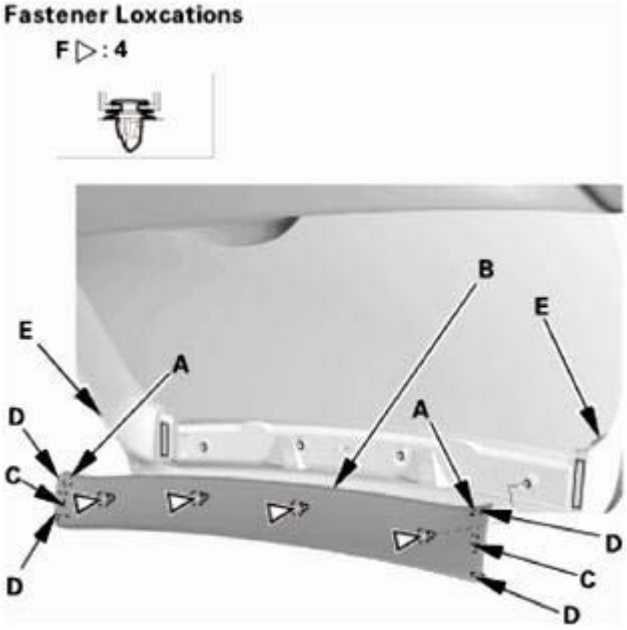

Fig. 11: Tailgate Upper Trim Panel Fasteners Locations
Courtesy of AMERICAN HONDA MOTOR CO., INC.

2. Tailgate Side Trim - Both Sides

GETtheMANUALS.org

NOTE: **Repeat this procedure on the opposite side.**

1. Detach the hook (A) and the tabs (B) from the tailgate lower trim panel (C), and pull back the tailgate side trim (D) by hand to detach the clips (E), then remove the tailgate side trim.

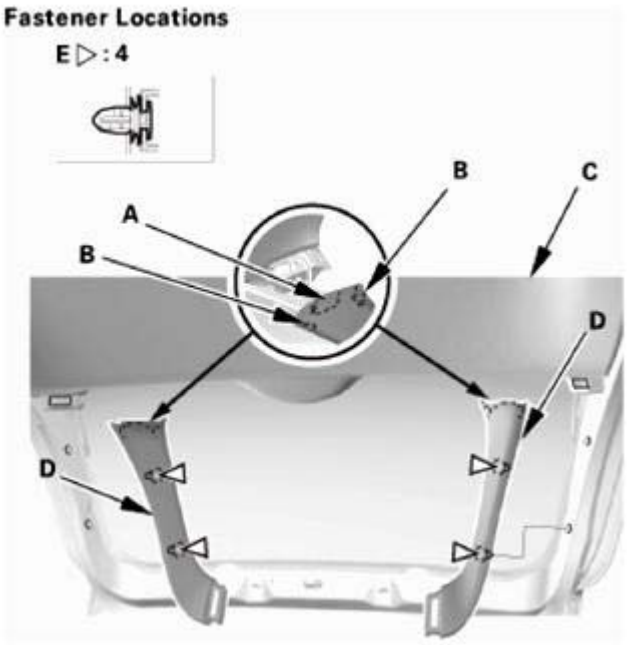

Fig. 12: Identifying Tailgate Side Trim, Tailgate Lower Trim, Hook And Tabs
Courtesy of AMERICAN HONDA MOTOR CO., INC.

3. Tailgate Lower Trim Panel
   1. Remove the screw (A), then remove the tailgate pull pocket (B).

GETtheMANUALS.org

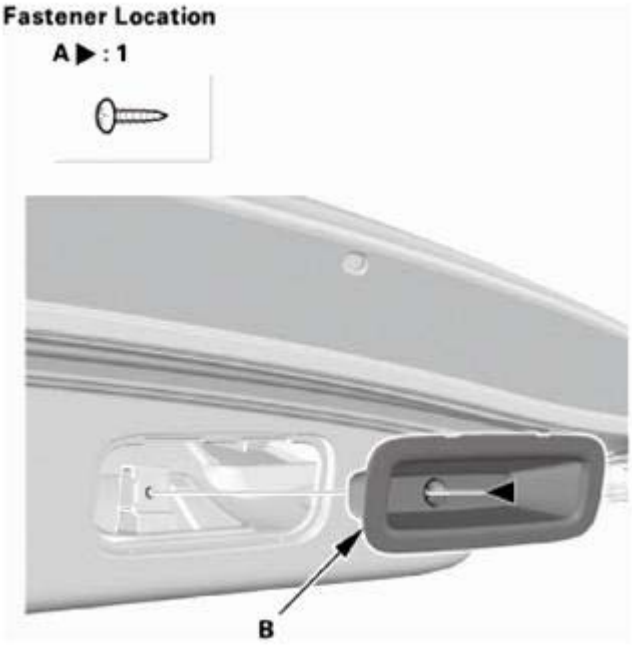

Fig. 13: Identifying Tailgate Pull Pocket And Screw
Courtesy of AMERICAN HONDA MOTOR CO., INC.

2. Pull out the tailgate lower trim panel (A) by hand to detach the clips (B, C), then remove the tailgate lower trim panel.

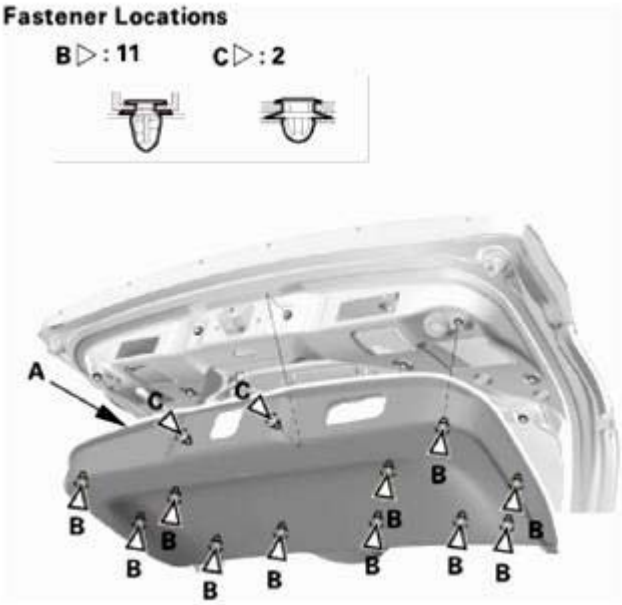

Fig. 14: Identifying Tailgate Lower Trim Panel And Clips
Courtesy of AMERICAN HONDA MOTOR CO., INC.

4. Tailgate Latch
    1. Disconnect the connector (A).

GETtheMANUALS.org

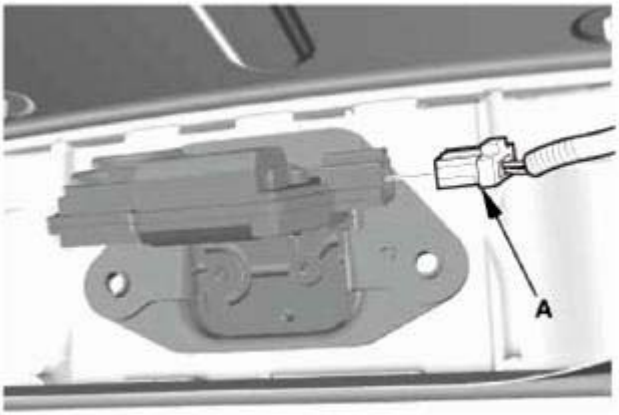

Fig. 15: Identifying Tailgate Latch Connector
Courtesy of AMERICAN HONDA MOTOR CO., INC.

2. Remove the bolts (A), then remove the tailgate latch (B).

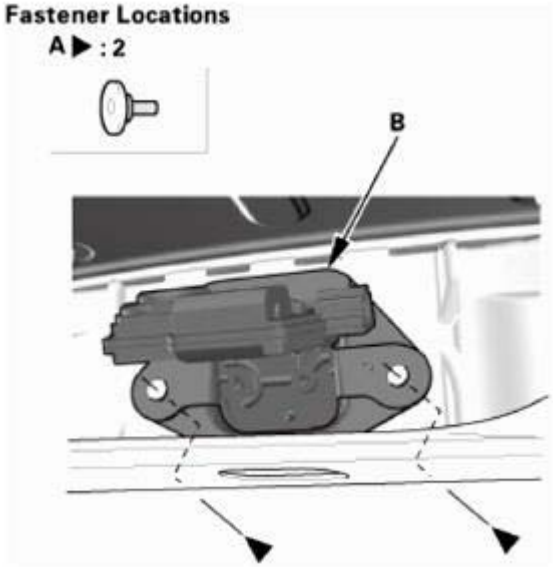

Fig. 16: Identifying Tailgate Latch And Bolts
Courtesy of AMERICAN HONDA MOTOR CO., INC.

INSTALLATION

1. Tailgate Latch
    1. Install the tailgate latch (A), then install the bolts (B).

GETtheMANUALS.org

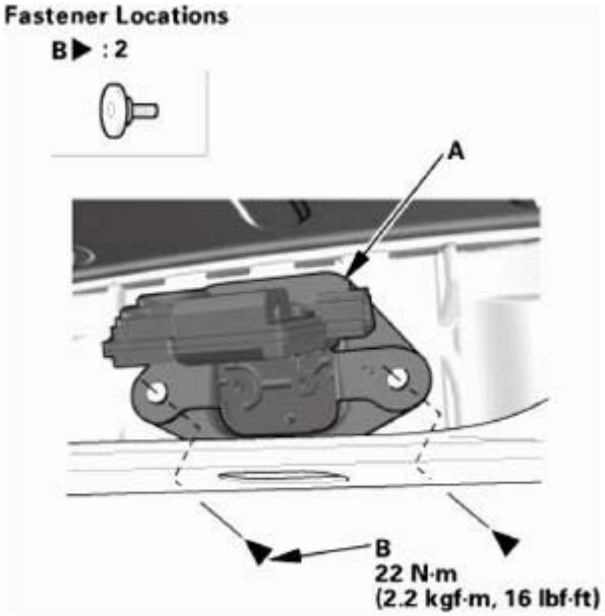

Fig. 17: Identifying Tailgate Latch And Bolts With Torque Specifications
Courtesy of AMERICAN HONDA MOTOR CO., INC.

2. Connect the connector (A).

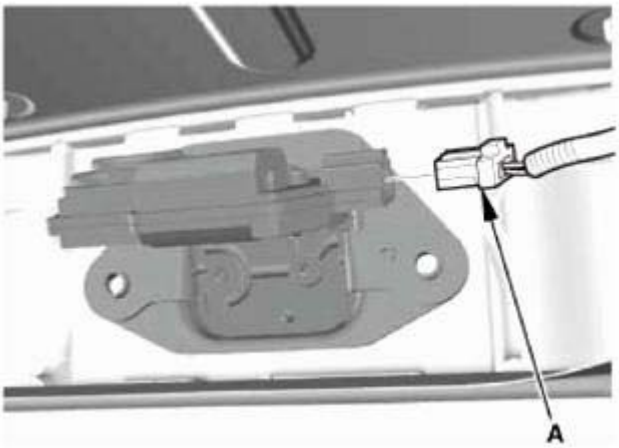

Fig. 18: Identifying Tailgate Latch Connector
Courtesy of AMERICAN HONDA MOTOR CO., INC.

2. Tailgate Lower Trim Panel
    1. Hold up the tailgate lower trim panel (A), and fit the clips into the holes in the tailgate.
    2. Push on the trim until the clips (B, C) securely snap into place.

GETtheMANUALS.org

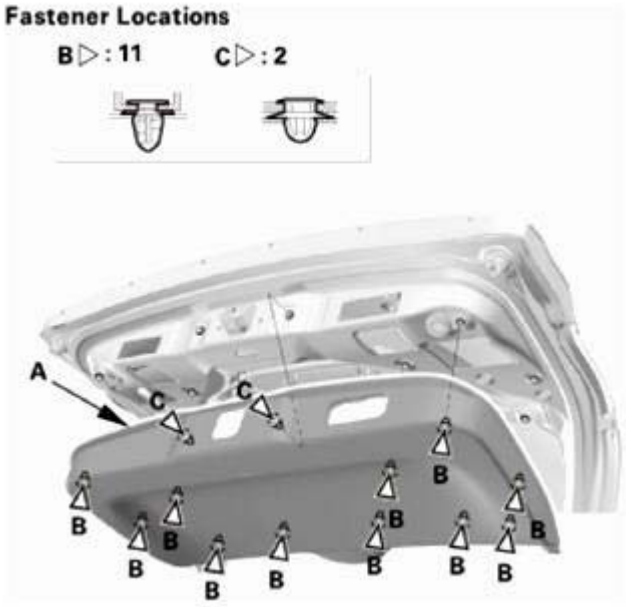

Fig. 19: Identifying Tailgate Lower Trim Panel And Clips
Courtesy of AMERICAN HONDA MOTOR CO., INC.

3. Install the tailgate pull pocket (A), then install the screw (B).

Fig. 20: Identifying Tailgate Pull Pocket And Screw
Courtesy of AMERICAN HONDA MOTOR CO., INC.

3. Tailgate Side Trim - Both Sides

NOTE: **Repeat this procedure on the opposite side.**

GETtheMANUALS.org

1. Install the tailgate side trim (A). Make sure the hook (B), the tabs (C), and the clips (D) snap into place securely.

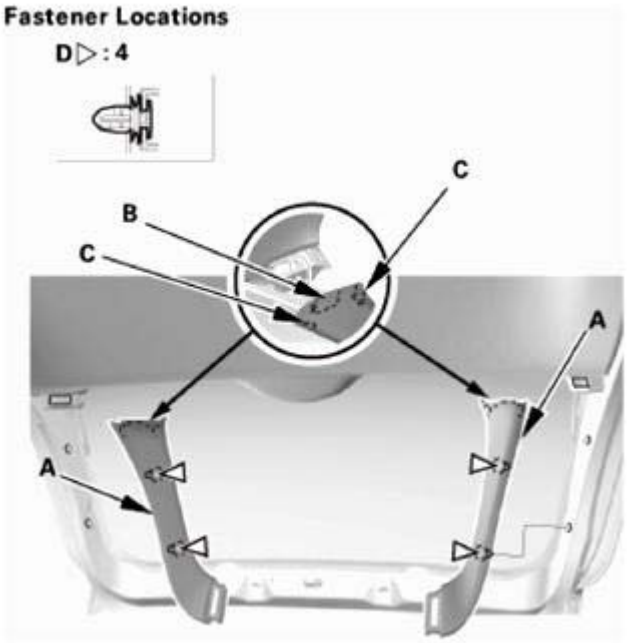

Fig. 21: Identifying Tailgate Side Trim, Hook And Clips
Courtesy of AMERICAN HONDA MOTOR CO., INC.

4. Tailgate Upper Trim Panel
    1. Install the tailgate upper trim panel (A). Make sure the hooks (B), the tabs (C), and the clips (D) snap into place securely.

GETtheMANUALS.org

Fig. 22: Tailgate Upper Trim Panel Fasteners Locations
Courtesy of AMERICAN HONDA MOTOR CO., INC.

TAILGATE LATCH SWITCH TEST

REMOVAL

1. Tailgate Upper Trim Panel
    1. Carefully pry out the notch (A) in the tailgate upper trim (B) with the appropriate trim tool to detach the hooks (C) and the tabs (D) from the tailgate side trims (E), and pull back the tailgate upper trim panel by hand to detach the clips (F), then remove the tailgate upper trim panel.

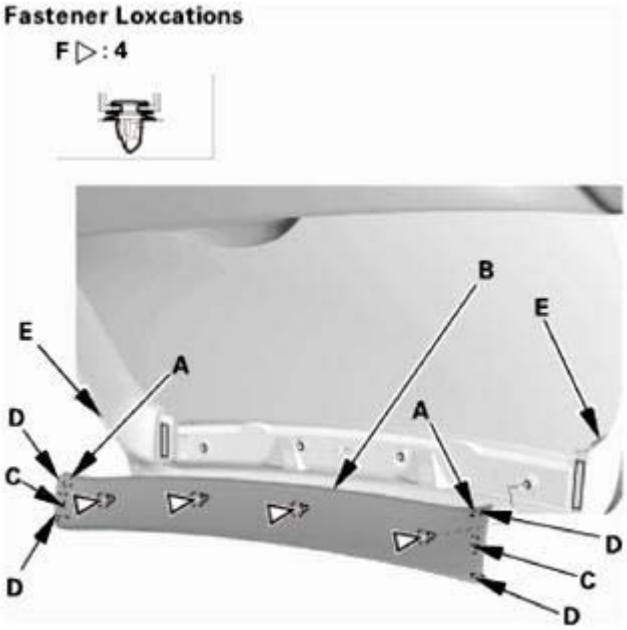

Fig. 23: Tailgate Upper Trim Panel Fasteners Locations
Courtesy of AMERICAN HONDA MOTOR CO., INC.

2. Tailgate Side Trim - Both Sides

NOTE: Repeat this procedure on the opposite side.

1. Detach the hook (A) and the tabs (B) from the tailgate lower trim panel (C), and pull back the tailgate side trim (D) by hand to detach the clips (E), then remove the tailgate side trim.

GETtheMANUALS.org

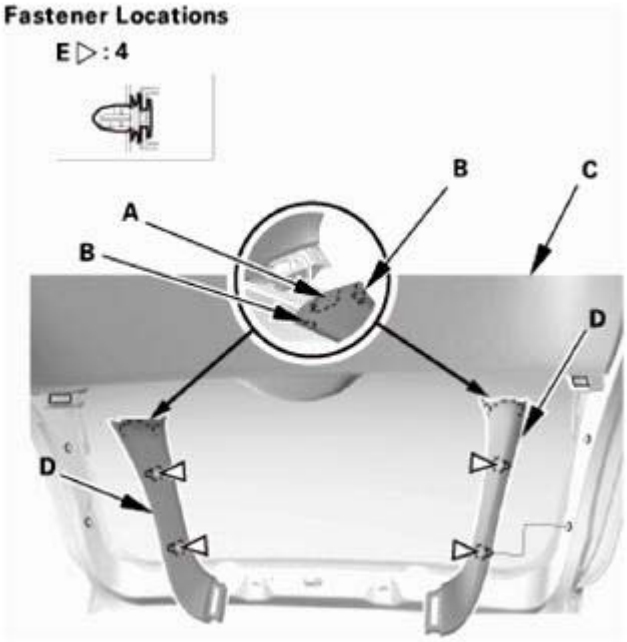

Fig. 24: Identifying Tailgate Side Trim, Tailgate Lower Trim, Hook And Tabs
Courtesy of AMERICAN HONDA MOTOR CO., INC.

3. Tailgate Lower Trim Panel
    1. Remove the screw (A), then remove the tailgate pull pocket (B).

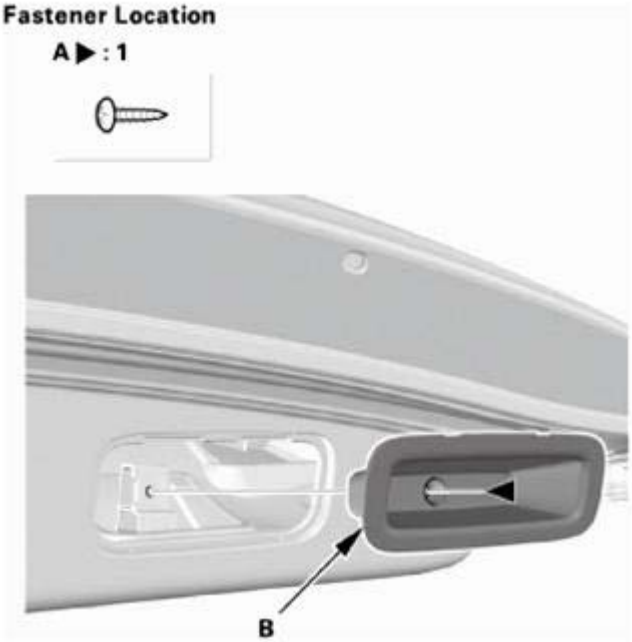

Fig. 25: Identifying Tailgate Pull Pocket And Screw
Courtesy of AMERICAN HONDA MOTOR CO., INC.

    2. Pull out the tailgate lower trim panel (A) by hand to detach the clips (B, C), then remove the

GETtheMANUALS.org

tailgate lower trim panel.

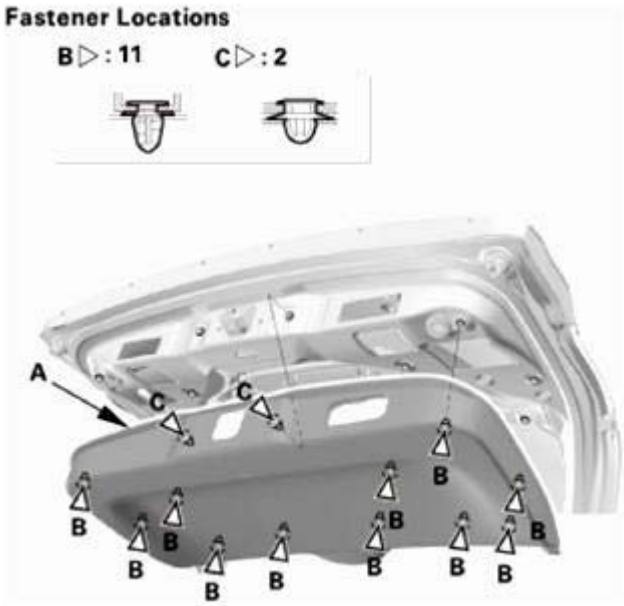

Fig. 26: Identifying Tailgate Lower Trim Panel And Clips
Courtesy of AMERICAN HONDA MOTOR CO., INC.

TEST

1. Tailgate Latch Switch - Test
    1. Disconnect the connector.
    2. Check for continuity between the terminals in each switch position according to the table.
    3. If the continuity is not as specified, the tailgate latch switch is faulty; replace the tailgate latch.
    4. Connect the connector.

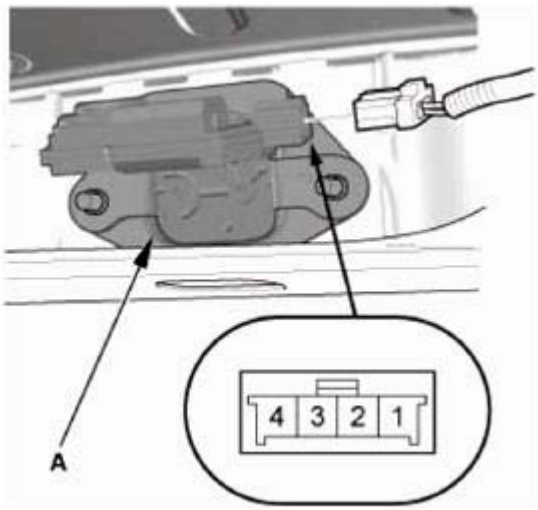

Fig. 27: Identifying Tailgate Latch Switch Connector Terminals

GETtheMANUALS.org

Courtesy of AMERICAN HONDA MOTOR CO., INC.

Terminal / Position	1	2
RELEASE (Open)	○	○
LOCK (Close)		

Fig. 28: Continuity Reference Chart
Courtesy of AMERICAN HONDA MOTOR CO., INC.

INSTALLATION

1. Tailgate Lower Trim Panel
    1. Hold up the tailgate lower trim panel (A), and fit the clips into the holes in the tailgate.
    2. Push on the trim until the clips (B, C) securely snap into place.

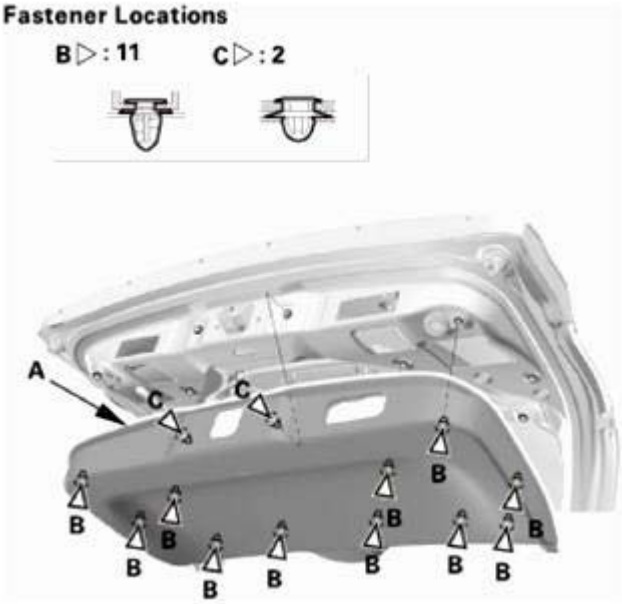

Fig. 29: Identifying Tailgate Lower Trim Panel And Clips
Courtesy of AMERICAN HONDA MOTOR CO., INC.

3. Install the tailgate pull pocket (A), then install the screw (B).

GETtheMANUALS.org

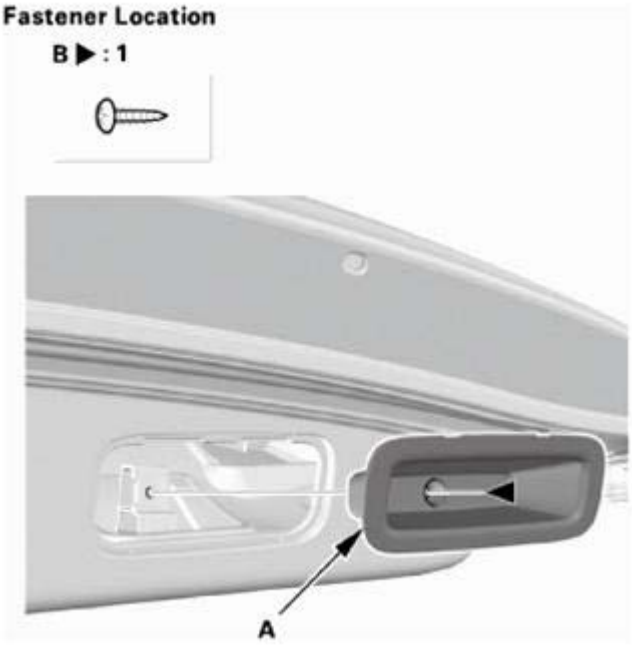

Fig. 30: Identifying Tailgate Pull Pocket And Screw
Courtesy of AMERICAN HONDA MOTOR CO., INC.

2. Tailgate Side Trim - Both Sides

NOTE: Repeat this procedure on the opposite side.

1. Install the tailgate side trim (A). Make sure the hook (B), the tabs (C), and the clips (D) snap into place securely.

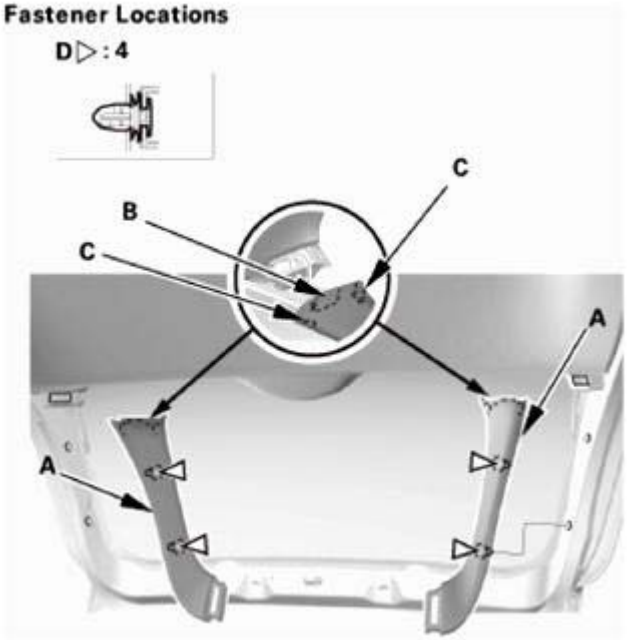

GETtheMANUALS.org

Fig. 31: Identifying Tailgate Side Trim, Hook And Clips
Courtesy of AMERICAN HONDA MOTOR CO., INC.

3. Tailgate Upper Trim Panel
    1. Install the tailgate upper trim panel (A). Make sure the hooks (B), the tabs (C), and the clips (D) snap into place securely.

Fig. 32: Tailgate Upper Trim Panel Fasteners Locations
Courtesy of AMERICAN HONDA MOTOR CO., INC.

TAILGATE LOWER TRIM REMOVAL AND INSTALLATION

REMOVAL

1. Tailgate Lower Trim
    1. Remove the bolts (A) securing the tailgate lower trim (B).

GETtheMANUALS.org

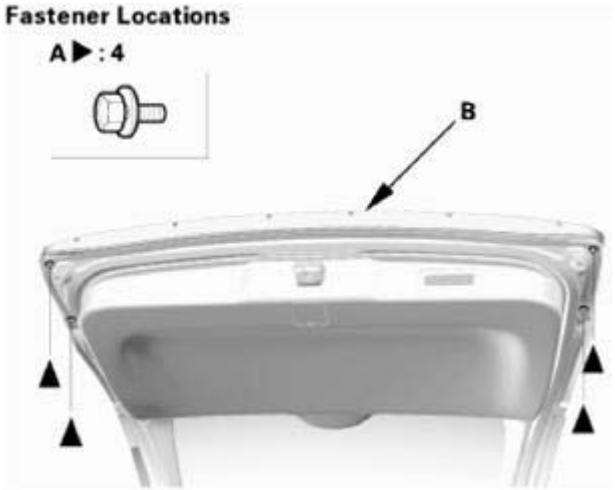

Fig. 33: Identifying Tailgate Lower Trim And Bolts
Courtesy of AMERICAN HONDA MOTOR CO., INC.

2. Pull out the tailgate lower trim (A) with the appropriate trim tool to release the clip pins (B) from the clip grommets (C) on the tailgate, and detach the clips (D), then remove the tailgate lower trim from the tailgate.

NOTE: The clip grommets will stay in the tailgate.

3. Remove the clip grommets from the tailgate.

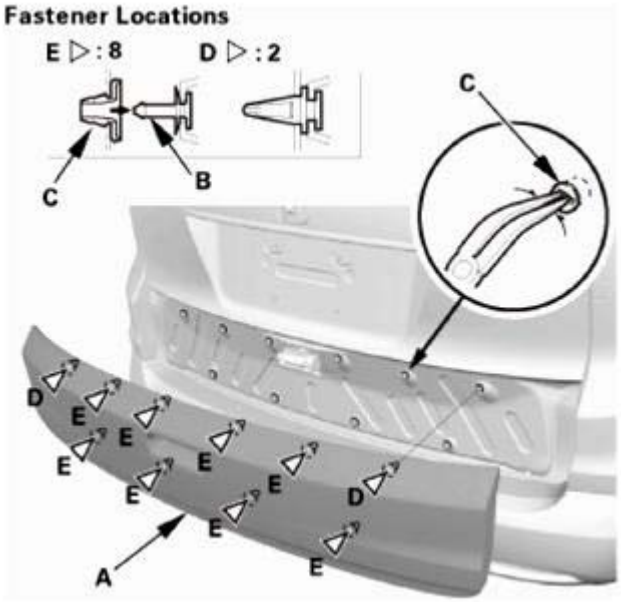

Fig. 34: Identifying Tailgate Lower Trim, Clip Pins And Clip Grommets
Courtesy of AMERICAN HONDA MOTOR CO., INC.

INSTALLATION

GETtheMANUALS.org

1. Tailgate Lower Trim
    1. Install the clip grommets into the clip pins on the tailgate lower trim.
    2. Hold up the tailgate lower trim (A), and fit all the clips (B, C) into the holes in the tailgate. Push on the trim until the clips securely snap into place.

NOTE: **If the clip pins and the clip grommets are damaged or stress-whitened, replace them as an assembly with new ones.**

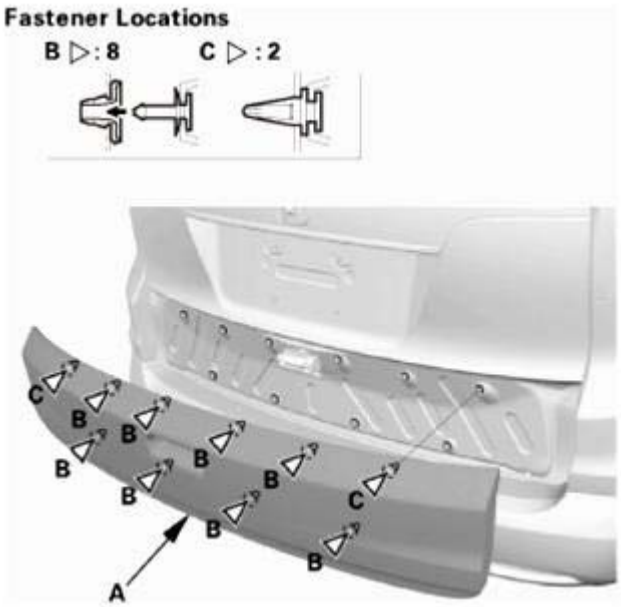

Fig. 35: Identifying Tailgate Lower Trim And Clips
Courtesy of AMERICAN HONDA MOTOR CO., INC.

3. Install the bolts (A).

GETtheMANUALS.org

Fig. 36: Identifying Tailgate Lower Trim Bolts
Courtesy of AMERICAN HONDA MOTOR CO., INC.

TAILGATE OUTER HANDLE SWITCH REMOVAL AND INSTALLATION

REMOVAL

1. Tailgate Lower Trim
    1. Remove the bolts (A) securing the tailgate lower trim (B).

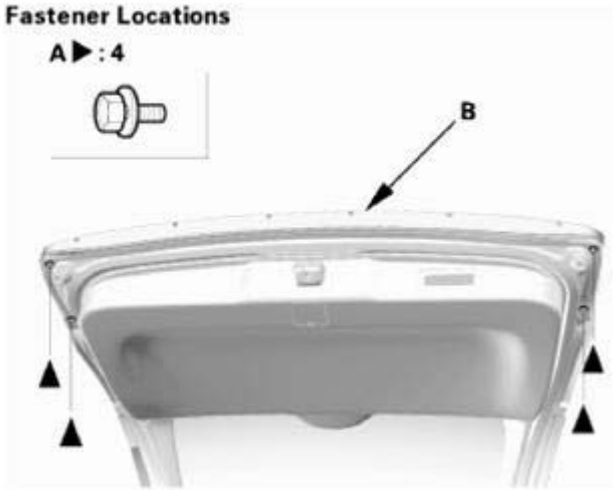

Fig. 37: Identifying Tailgate Lower Trim And Bolts
Courtesy of AMERICAN HONDA MOTOR CO., INC.

    2. Pull out the tailgate lower trim (A) with the appropriate trim tool to release the clip pins (B) from the clip grommets (C) on the tailgate, and detach the clips (D), then remove the tailgate lower trim

GETtheMANUALS.org

from the tailgate.

NOTE: The clip grommets will stay in the tailgate.

3. Remove the clip grommets from the tailgate.

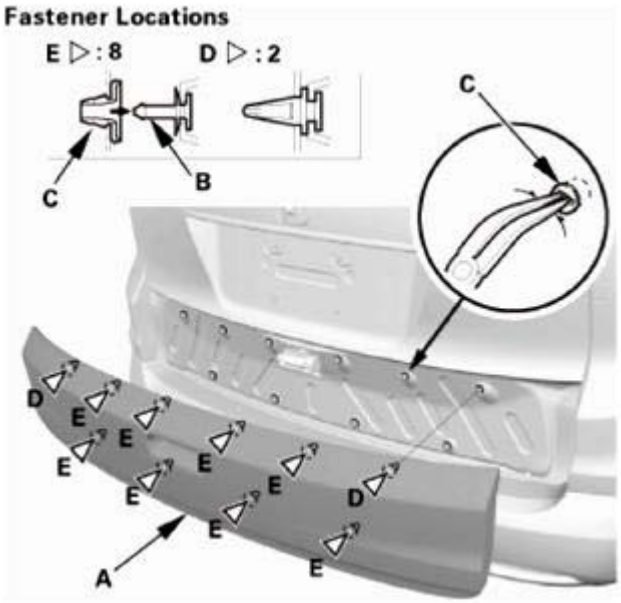

Fig. 38: Identifying Tailgate Lower Trim, Clip Pins And Clip Grommets
Courtesy of AMERICAN HONDA MOTOR CO., INC.

2. Tailgate Upper Trim Panel
   1. Carefully pry out the notch (A) in the tailgate upper trim (B) with the appropriate trim tool to detach the hooks (C) and the tabs (D) from the tailgate side trims (E), and pull back the tailgate upper trim panel by hand to detach the clips (F), then remove the tailgate upper trim panel.

GETtheMANUALS.org

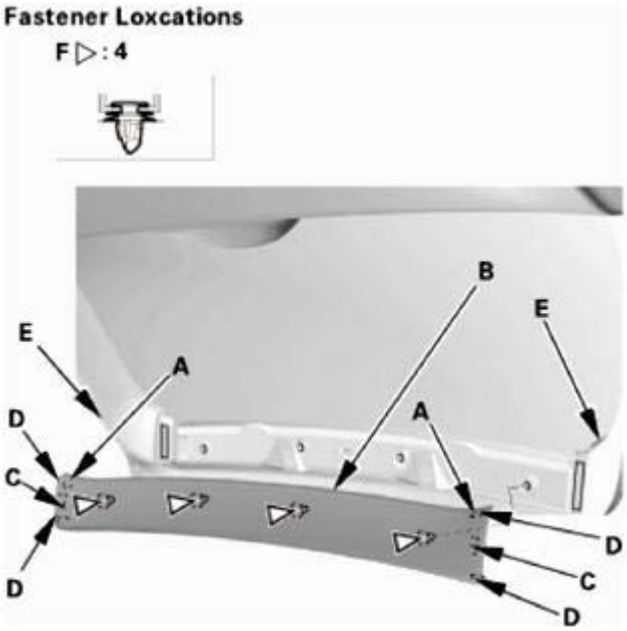

Fig. 39: Tailgate Upper Trim Panel Fasteners Locations
Courtesy of AMERICAN HONDA MOTOR CO., INC.

3. Tailgate Side Trim - Both Sides

NOTE: Repeat this procedure on the opposite side.

1. Detach the hook (A) and the tabs (B) from the tailgate lower trim panel (C), and pull back the tailgate side trim (D) by hand to detach the clips (E), then remove the tailgate side trim.

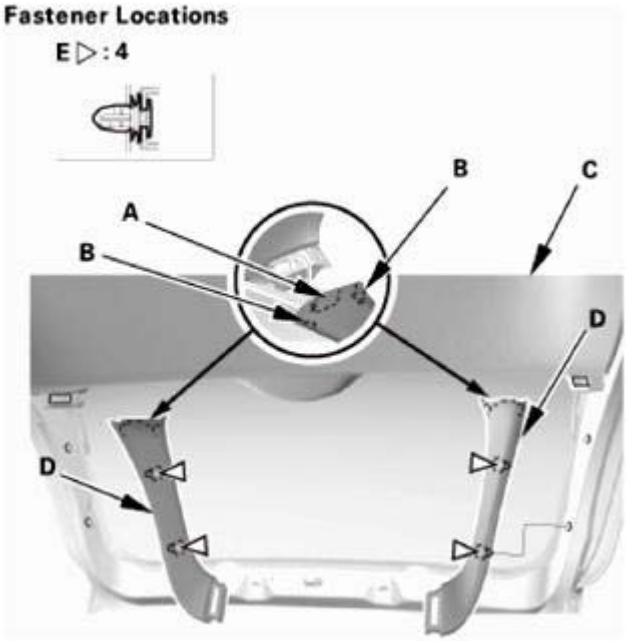

GETtheMANUALS.org

Fig. 40: Identifying Tailgate Side Trim, Tailgate Lower Trim, Hook And Tabs
Courtesy of AMERICAN HONDA MOTOR CO., INC.

4. Tailgate Lower Trim Panel
    1. Remove the screw (A), then remove the tailgate pull pocket (B).

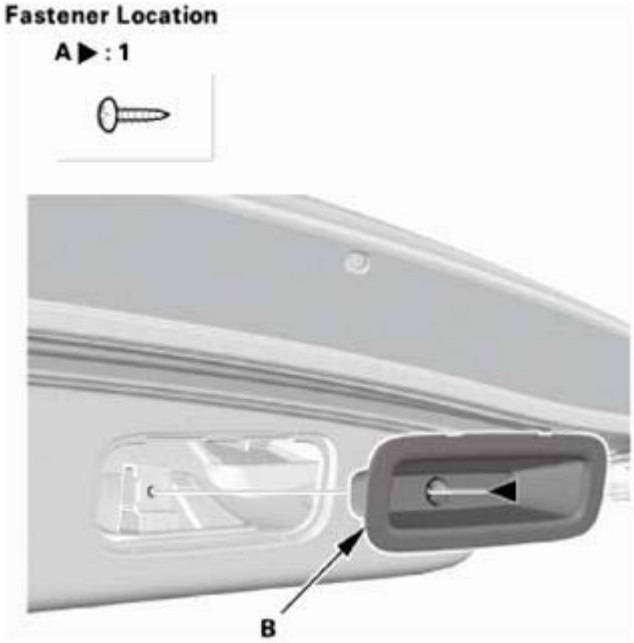

Fig. 41: Identifying Tailgate Pull Pocket And Screw
Courtesy of AMERICAN HONDA MOTOR CO., INC.

    2. Pull out the tailgate lower trim panel (A) by hand to detach the clips (B, C), then remove the tailgate lower trim panel.

GETtheMANUALS.org

Fig. 42: Identifying Tailgate Lower Trim Panel And Clips
Courtesy of AMERICAN HONDA MOTOR CO., INC.

5. Tailgate Outer Handle Switch
    1. Disconnect the connector.
    2. Remove the tailgate outer handle switch (A).

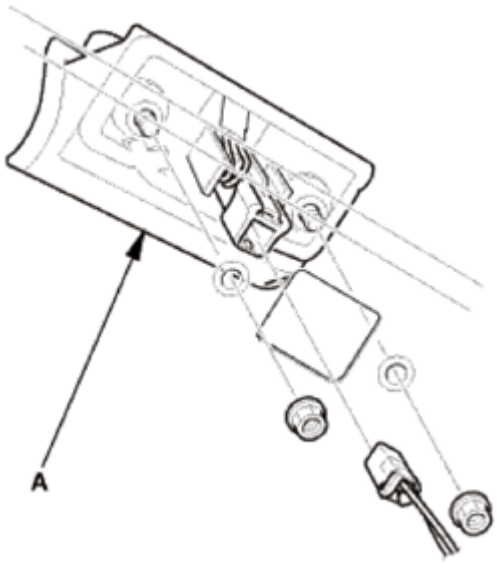

Fig. 43: Identifying Tailgate Outer Handle Switch
Courtesy of AMERICAN HONDA MOTOR CO., INC.

INSTALLATION

GETtheMANUALS.org

1. Tailgate Outer Handle Switch
    1. Install the tailgate outer handle switch (A).
    2. Connect the connector.

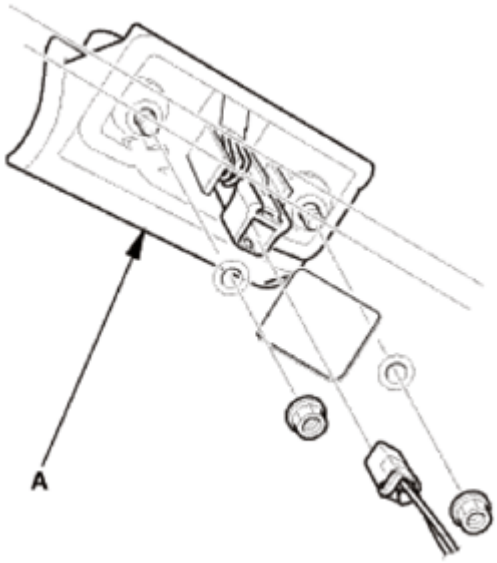

Fig. 44: Identifying Tailgate Outer Handle Switch
Courtesy of AMERICAN HONDA MOTOR CO., INC.

2. Tailgate Lower Trim Panel
    1. Hold up the tailgate lower trim panel (A), and fit the clips into the holes in the tailgate.
    2. Push on the trim until the clips (B, C) securely snap into place.

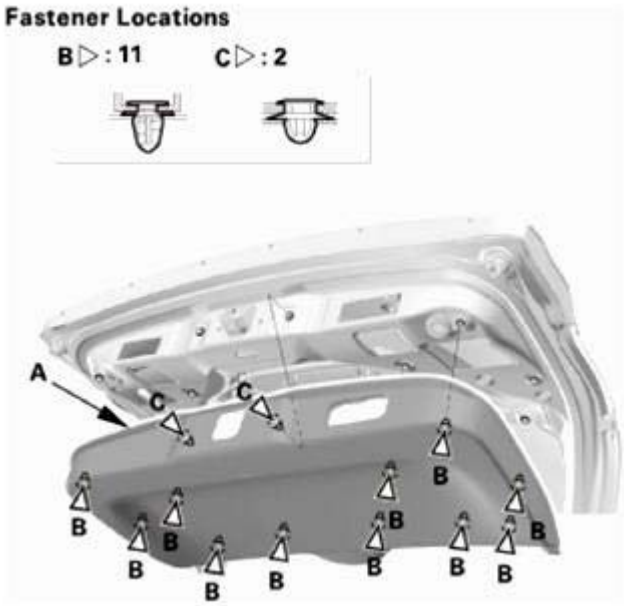

Fig. 45: Identifying Tailgate Lower Trim Panel And Clips

GETtheMANUALS.org

Courtesy of AMERICAN HONDA MOTOR CO., INC.

3. Install the tailgate pull pocket (A), then install the screw (B).

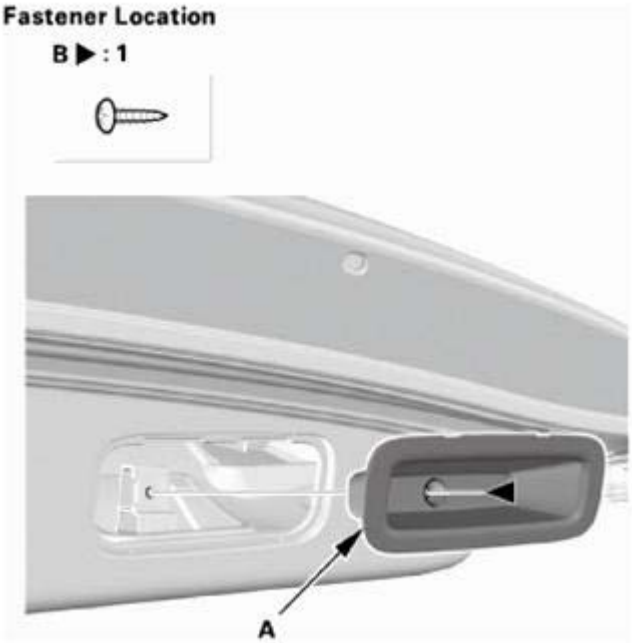

Fig. 46: Identifying Tailgate Pull Pocket And Screw
Courtesy of AMERICAN HONDA MOTOR CO., INC.

3. Tailgate Side Trim - Both Sides

NOTE: Repeat this procedure on the opposite side.

1. Install the tailgate side trim (A). Make sure the hook (B), the tabs (C), and the clips (D) snap into place securely.

GETtheMANUALS.org

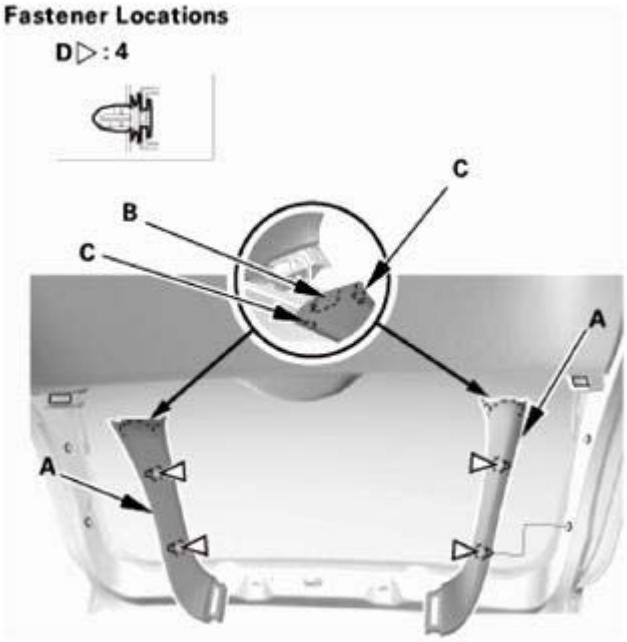

Fig. 47: Identifying Tailgate Side Trim, Hook And Clips
Courtesy of AMERICAN HONDA MOTOR CO., INC.

4. Tailgate Upper Trim Panel
    1. Install the tailgate upper trim panel (A). Make sure the hooks (B), the tabs (C), and the clips (D) snap into place securely.

Fig. 48: Tailgate Upper Trim Panel Fasteners Locations
Courtesy of AMERICAN HONDA MOTOR CO., INC.

5. Tailgate Lower Trim

GETtheMANUALS.org

1. Install the clip grommets into the clip pins on the tailgate lower trim.
2. Hold up the tailgate lower trim (A), and fit all the clips (B, C) into the holes in the tailgate. Push on the trim until the clips securely snap into place.

NOTE: **If the clip pins and the clip grommets are damaged or stress-whitened, replace them as an assembly with new ones.**

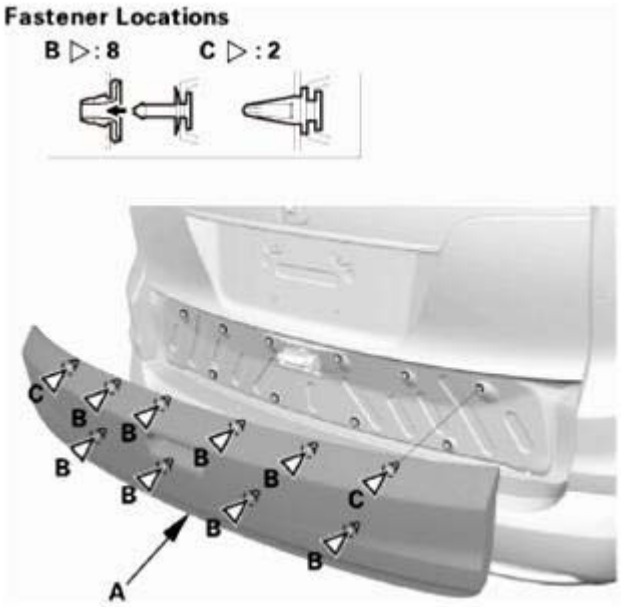

Fig. 49: Identifying Tailgate Lower Trim And Clips
Courtesy of AMERICAN HONDA MOTOR CO., INC.

3. Install the bolts (A).

GETtheMANUALS.org

Fig. 50: Identifying Tailgate Lower Trim Bolts
Courtesy of AMERICAN HONDA MOTOR CO., INC.

TAILGATE OUTER HANDLE SWITCH TEST

REMOVAL

1. Tailgate Upper Trim Panel
    1. Carefully pry out the notch (A) in the tailgate upper trim (B) with the appropriate trim tool to detach the hooks (C) and the tabs (D) from the tailgate side trims (E), and pull back the tailgate upper trim panel by hand to detach the clips (F), then remove the tailgate upper trim panel.

GETtheMANUALS.org

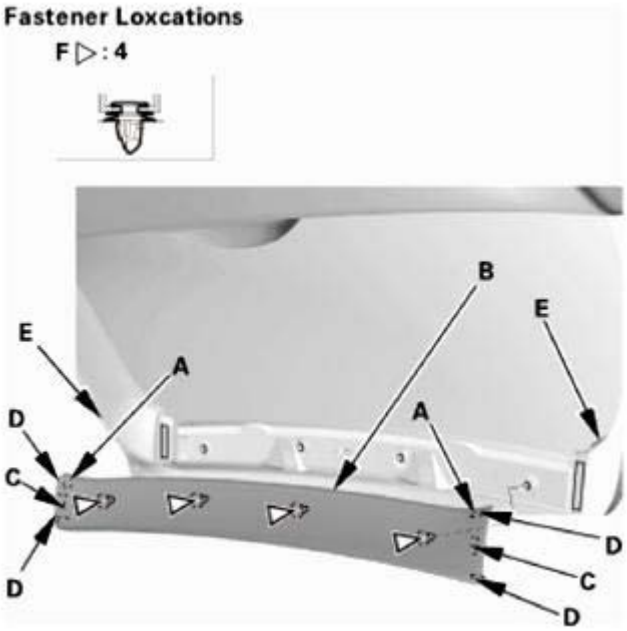

Fig. 51: Tailgate Upper Trim Panel Fasteners Locations
Courtesy of AMERICAN HONDA MOTOR CO., INC.

2. Tailgate Side Trim - Both Sides

NOTE: Repeat this procedure on the opposite side.

1. Detach the hook (A) and the tabs (B) from the tailgate lower trim panel (C), and pull back the tailgate side trim (D) by hand to detach the clips (E), then remove the tailgate side trim.

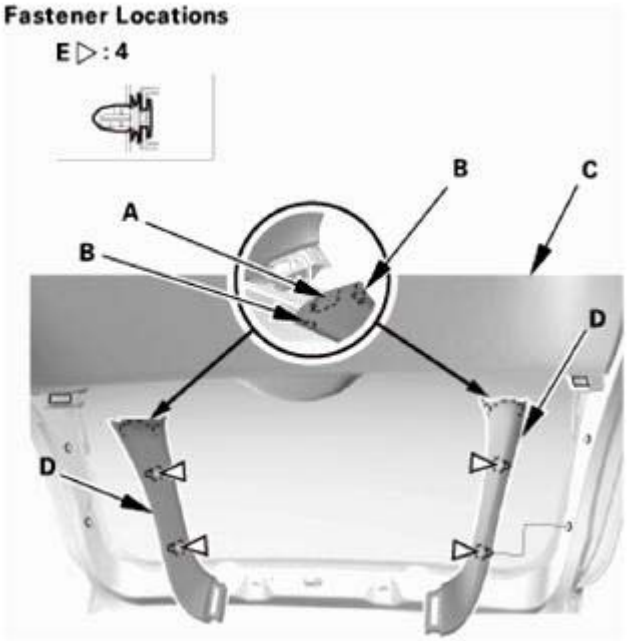

GETtheMANUALS.org

Fig. 52: Identifying Tailgate Side Trim, Tailgate Lower Trim, Hook And Tabs
Courtesy of AMERICAN HONDA MOTOR CO., INC.

3. Tailgate Lower Trim Panel
    1. Remove the screw (A), then remove the tailgate pull pocket (B).

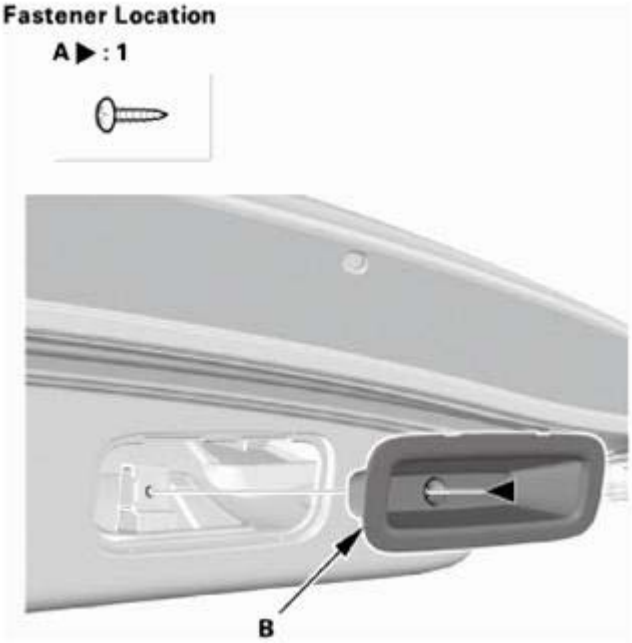

Fig. 53: Identifying Tailgate Pull Pocket And Screw
Courtesy of AMERICAN HONDA MOTOR CO., INC.

    2. Pull out the tailgate lower trim panel (A) by hand to detach the clips (B, C), then remove the tailgate lower trim panel.

GETtheMANUALS.org

Fig. 54: Identifying Tailgate Lower Trim Panel And Clips
Courtesy of AMERICAN HONDA MOTOR CO., INC.

TEST

1. Tailgate Outer Handle Switch - Test
    1. Disconnect the connector.
    2. Check for continuity between the terminals in each switch position according to the table.
    3. If the continuity is not as specified, replace the tailgate outer handle switch.
    4. Connect the connector.

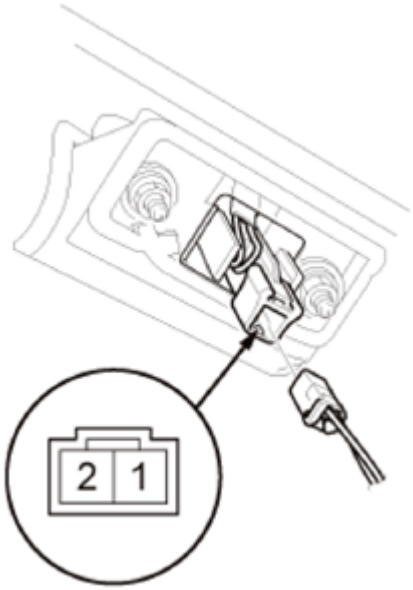

GETtheMANUALS.org

Fig. 55: Identifying Tailgate Latch Switch Connector Terminals
Courtesy of AMERICAN HONDA MOTOR CO., INC.

Terminal / Position	1	2
SWITCH PRESSED	○——○	
SWITCH RELEASED		

Fig. 56: Continuity Reference Chart
Courtesy of AMERICAN HONDA MOTOR CO., INC.

INSTALLATION

1. Tailgate Lower Trim Panel
    1. Hold up the tailgate lower trim panel (A), and fit the clips into the holes in the tailgate.
    2. Push on the trim until the clips (B, C) securely snap into place.

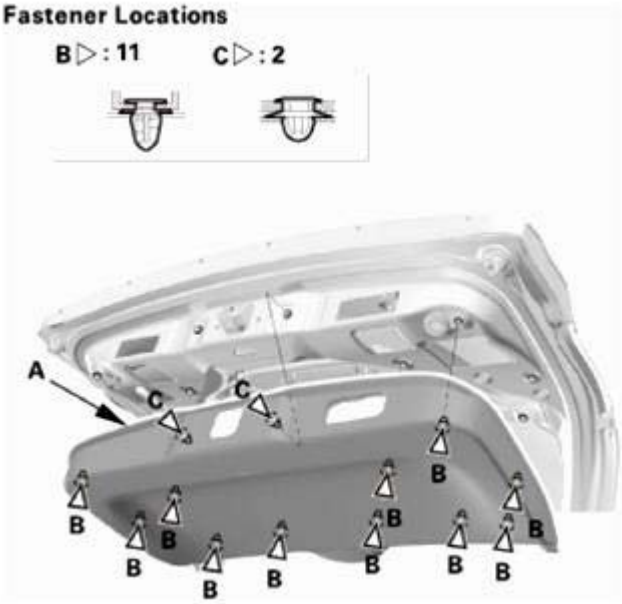

Fig. 57: Identifying Tailgate Lower Trim Panel And Clips
Courtesy of AMERICAN HONDA MOTOR CO., INC.

3. Install the tailgate pull pocket (A), then install the screw (B).

GETtheMANUALS.org

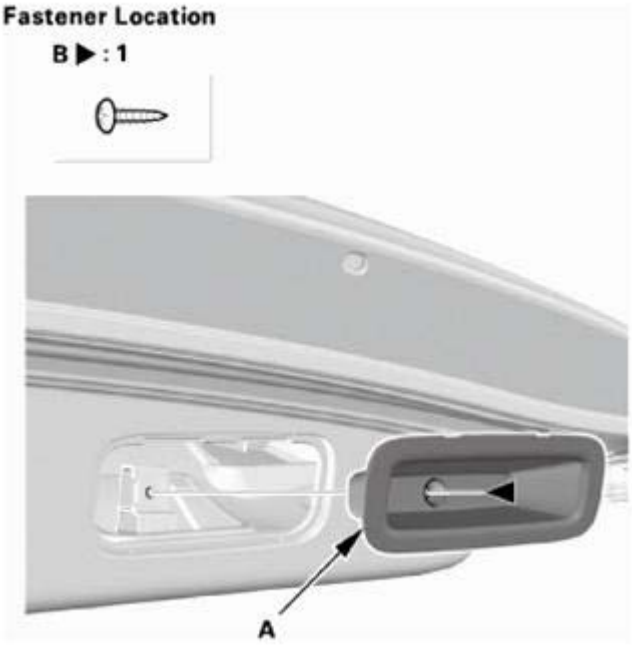

Fig. 58: Identifying Tailgate Pull Pocket And Screw
Courtesy of AMERICAN HONDA MOTOR CO., INC.

2. Tailgate Side Trim - Both Sides

NOTE: Repeat this procedure on the opposite side.

1. Install the tailgate side trim (A). Make sure the hook (B), the tabs (C), and the clips (D) snap into place securely.

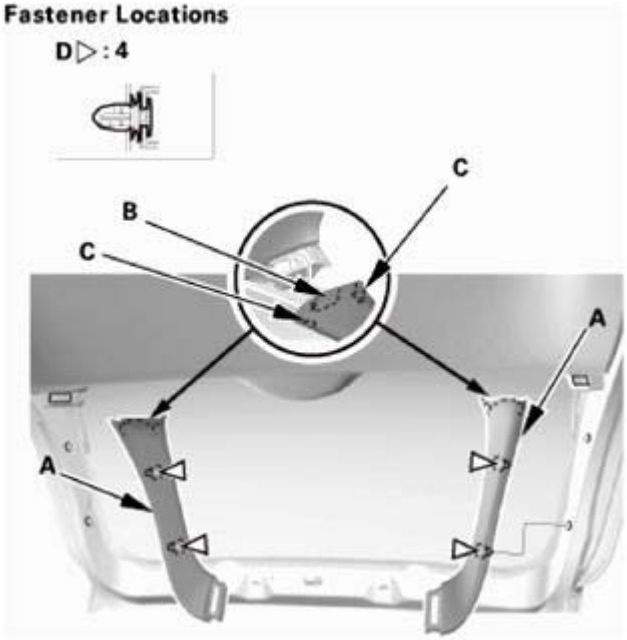

GETtheMANUALS.org

Fig. 59: Identifying Tailgate Side Trim, Hook And Clips
Courtesy of AMERICAN HONDA MOTOR CO., INC.

3. Tailgate Upper Trim Panel
    1. Install the tailgate upper trim panel (A). Make sure the hooks (B), the tabs (C), and the clips (D) snap into place securely.

Fig. 60: Tailgate Upper Trim Panel Fasteners Locations
Courtesy of AMERICAN HONDA MOTOR CO., INC.

TAILGATE RELEASE ACTUATOR TEST

REMOVAL

1. Tailgate Upper Trim Panel
    1. Carefully pry out the notch (A) in the tailgate upper trim (B) with the appropriate trim tool to detach the hooks (C) and the tabs (D) from the tailgate side trims (E), and pull back the tailgate upper trim panel by hand to detach the clips (F), then remove the tailgate upper trim panel.

GETtheMANUALS.org

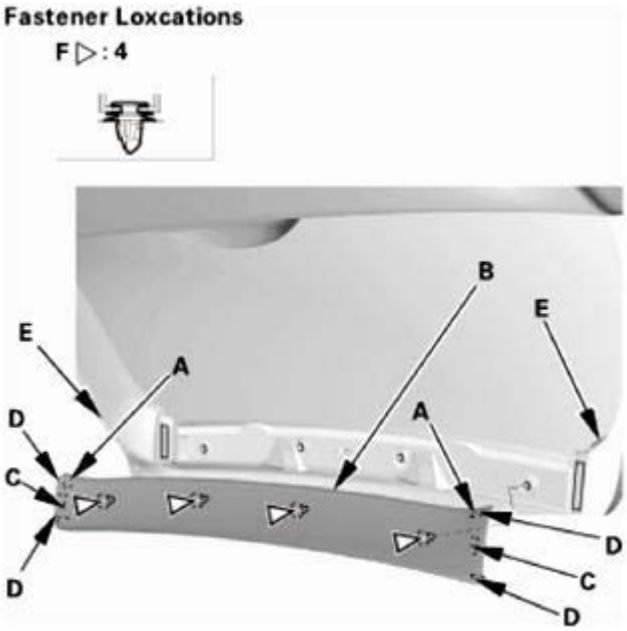

Fig. 61: Tailgate Upper Trim Panel Fasteners Locations
Courtesy of AMERICAN HONDA MOTOR CO., INC.

2. Tailgate Side Trim - Both Sides

NOTE: Repeat this procedure on the opposite side.

1. Detach the hook (A) and the tabs (B) from the tailgate lower trim panel (C), and pull back the tailgate side trim (D) by hand to detach the clips (E), then remove the tailgate side trim.

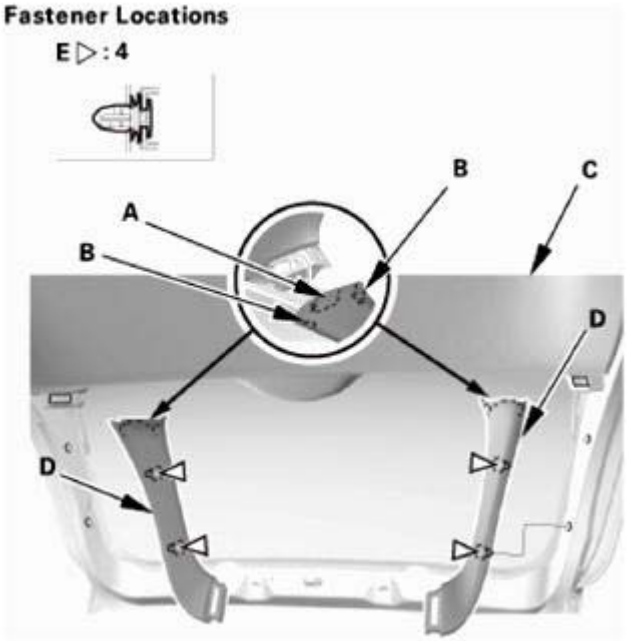

GETtheMANUALS.org

Fig. 62: Identifying Tailgate Side Trim, Tailgate Lower Trim, Hook And Tabs
Courtesy of AMERICAN HONDA MOTOR CO., INC.

3. Tailgate Lower Trim Panel
    1. Remove the screw (A), then remove the tailgate pull pocket (B).

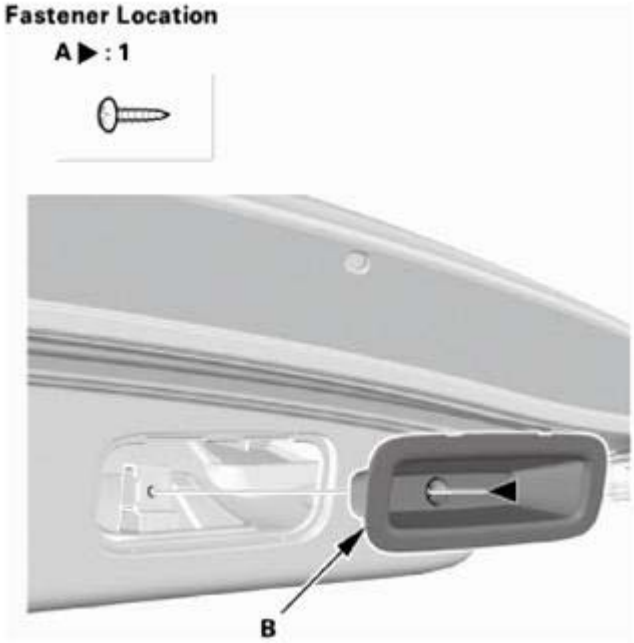

Fig. 63: Identifying Tailgate Pull Pocket And Screw
Courtesy of AMERICAN HONDA MOTOR CO., INC.

    2. Pull out the tailgate lower trim panel (A) by hand to detach the clips (B, C), then remove the tailgate lower trim panel.

GETtheMANUALS.org

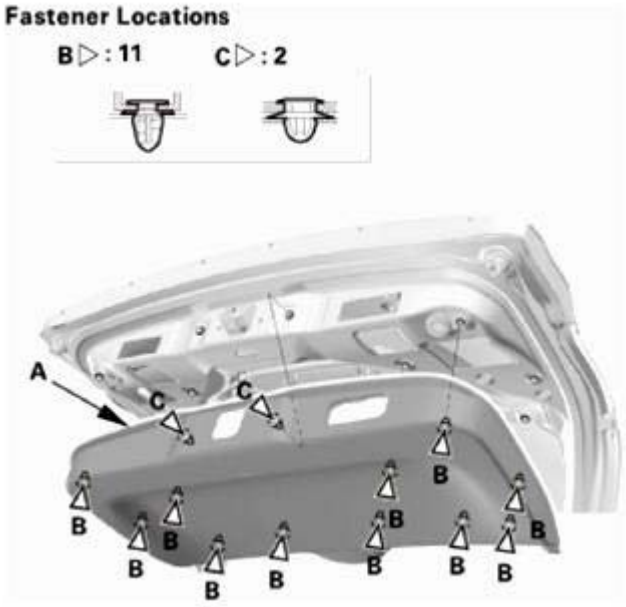

Fig. 64: Identifying Tailgate Lower Trim Panel And Clips
Courtesy of AMERICAN HONDA MOTOR CO., INC.

TEST

1. Tailgate Release Actuator - Test
    1. Disconnect the connector.
    2. Check actuator operation by connecting power and ground according to the table.

    NOTE: To prevent damage to the actuator, apply battery voltage only momentarily.

    3. If the actuator does not work, the tailgate latch switch/tailgate release actuator is faulty; replace the tailgate latch (A).
    4. Connect the connector.

GETtheMANUALS.org

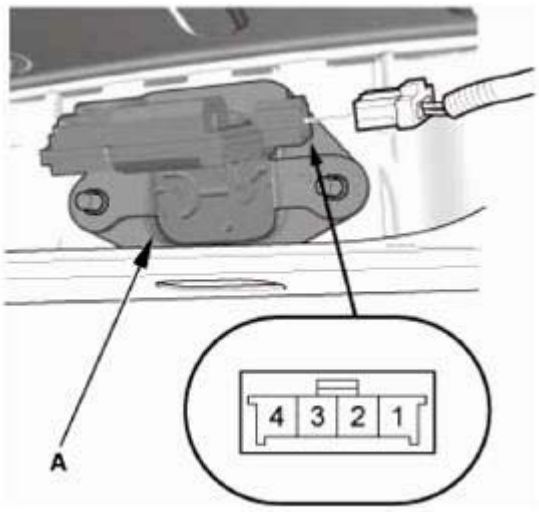

Fig. 65: Identifying Tailgate Latch Switch Connector Terminals
Courtesy of AMERICAN HONDA MOTOR CO., INC.

Terminal / Position	3	4
UNLOCK	⊖	⊕

Fig. 66: Continuity Reference Chart
Courtesy of AMERICAN HONDA MOTOR CO., INC.

INSTALLATION

1. Tailgate Lower Trim Panel
    1. Hold up the tailgate lower trim panel (A), and fit the clips into the holes in the tailgate.
    2. Push on the trim until the clips (B, C) securely snap into place.

GETtheMANUALS.org

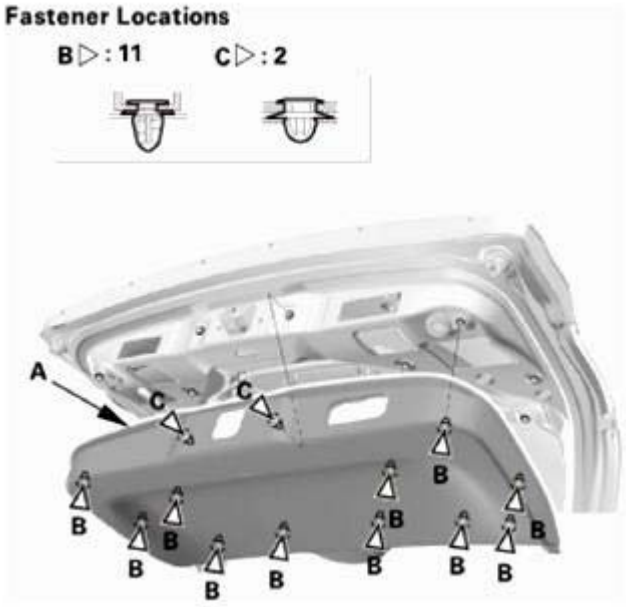

Fig. 67: Identifying Tailgate Lower Trim Panel And Clips
Courtesy of AMERICAN HONDA MOTOR CO., INC.

3. Install the tailgate pull pocket (A), then install the screw (B).

Fig. 68: Identifying Tailgate Pull Pocket And Screw
Courtesy of AMERICAN HONDA MOTOR CO., INC.

2. Tailgate Side Trim - Both Sides

NOTE: **Repeat this procedure on the opposite side.**

GETtheMANUALS.org

1. Install the tailgate side trim (A). Make sure the hook (B), the tabs (C), and the clips (D) snap into place securely.

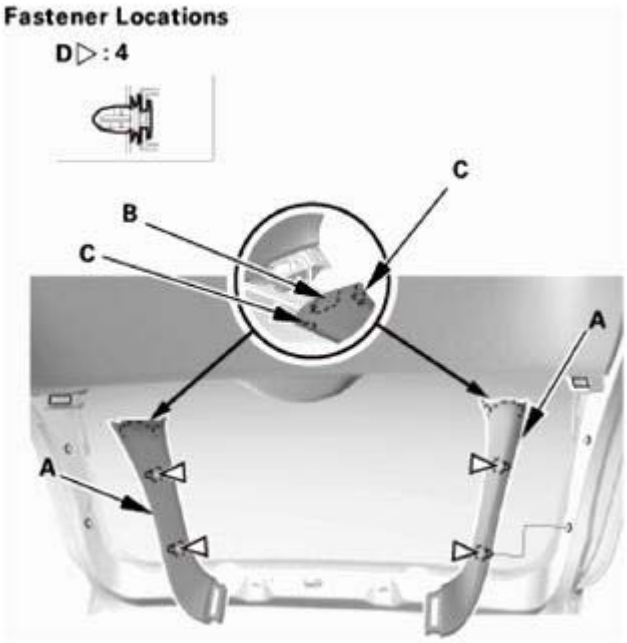

Fig. 69: Identifying Tailgate Side Trim, Hook And Clips
Courtesy of AMERICAN HONDA MOTOR CO., INC.

3. Tailgate Upper Trim Panel
    1. Install the tailgate upper trim panel (A). Make sure the hooks (B), the tabs (C), and the clips (D) snap into place securely.

GETtheMANUALS.org

Fig. 70: Tailgate Upper Trim Panel Fasteners Locations
Courtesy of AMERICAN HONDA MOTOR CO., INC.

TAILGATE SUPPORT STRUT REMOVAL AND INSTALLATION

REMOVAL

1. Tailgate Support Strut
    1. With the help of an assistant, remove the pivot bolts (A) from the tailgate and the body, then remove the tailgate support strut (B).

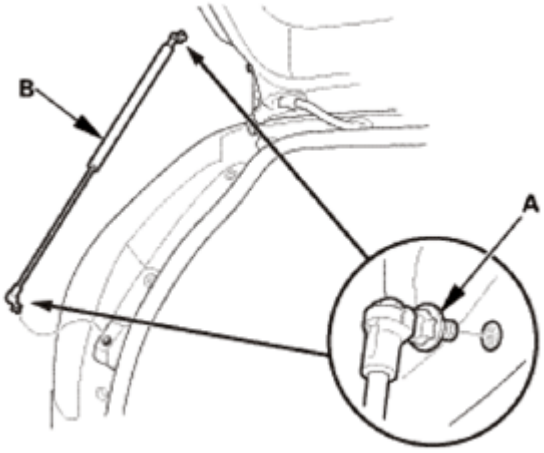

Fig. 71: Identifying Tailgate Support Strut And Pivot Bolts
Courtesy of AMERICAN HONDA MOTOR CO., INC.

2. Lower Taillight
    1. Remove the screws, then remove the lower taillight assembly (A).
    2. Disconnect the connectors (B).

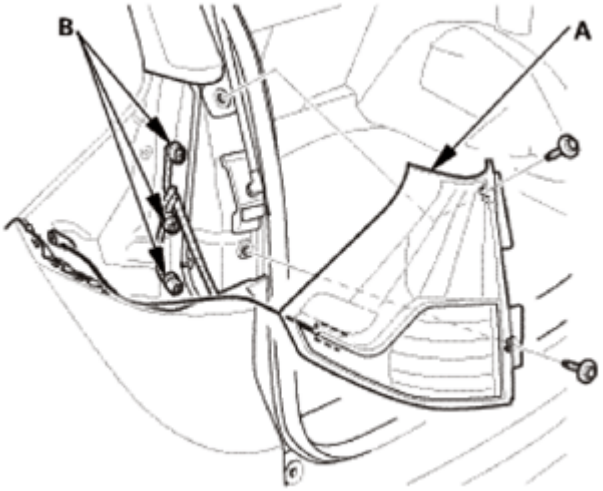

GETtheMANUALS.org

Fig. 72: Identifying Lower Taillight Assembly, Connectors, Tab And Holder
Courtesy of AMERICAN HONDA MOTOR CO., INC.

3. Lower Tailgate Support Strut Bracket
    1. Detach the hook (A), then remove the lower tailgate support strut bracket trim (B).

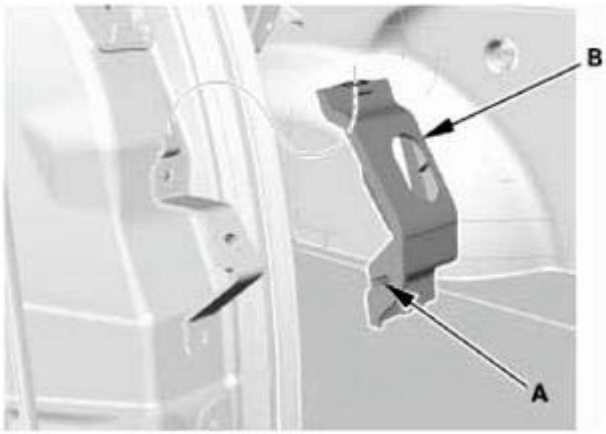

Fig. 73: Identifying Lower Tailgate Support Strut Bracket Trim And Hook
Courtesy of AMERICAN HONDA MOTOR CO., INC.

    2. Remove the bolts (A), then remove the lower tailgate support strut bracket (B).

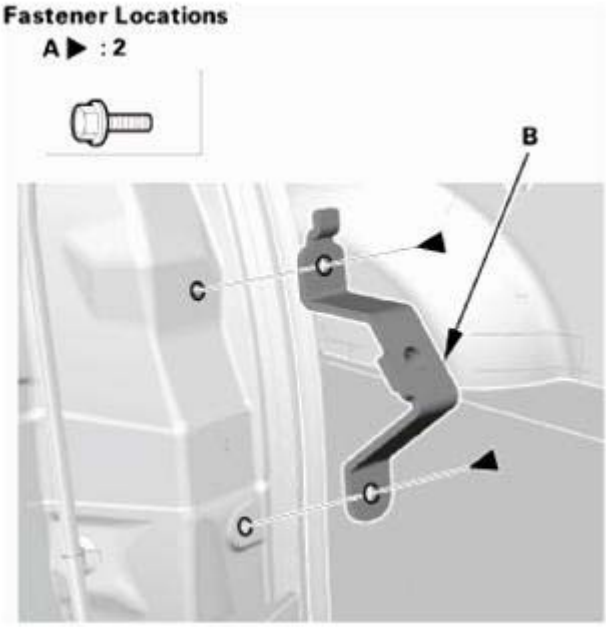

Fig. 74: Identifying Lower Tailgate Support Strut Bracket And Bolts
Courtesy of AMERICAN HONDA MOTOR CO., INC.

INSTALLATION

GETtheMANUALS.org

1. Lower Tailgate Support Strut Bracket
    1. Install the lower tailgate support strut bracket (A), then install the bolts (B).

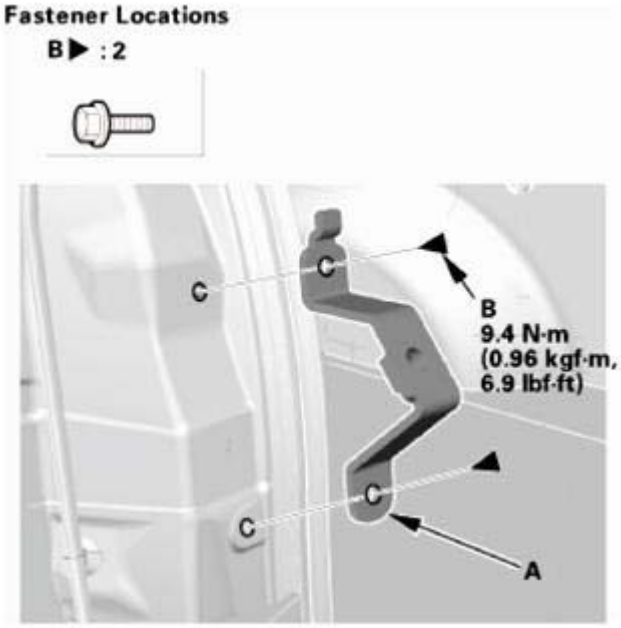

Fig. 75: Identifying Lower Tailgate Support Strut Bracket And Bolts
Courtesy of AMERICAN HONDA MOTOR CO., INC.

2. Install the lower tailgate support strut bracket trim (A). Make sure the hook (B) snaps into place securely.

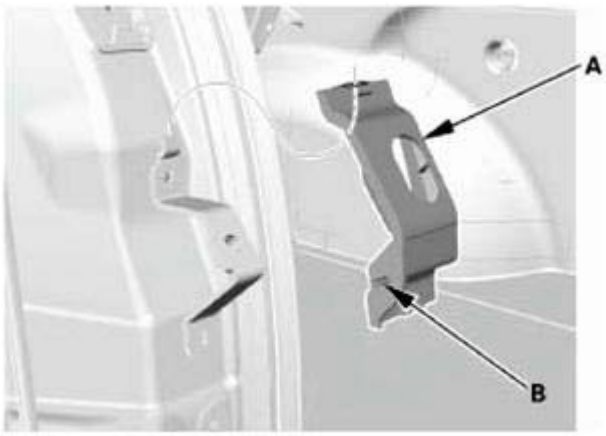

Fig. 76: Identifying Lower Tailgate Support Strut Bracket Trim And Hook
Courtesy of AMERICAN HONDA MOTOR CO., INC.

2. Lower Taillight
    1. Connect the connectors (A), then install the lower taillight assembly (B). Make sure the tab (C) locks into the holder (D) securely.

GETtheMANUALS.org

2. Install the screws.

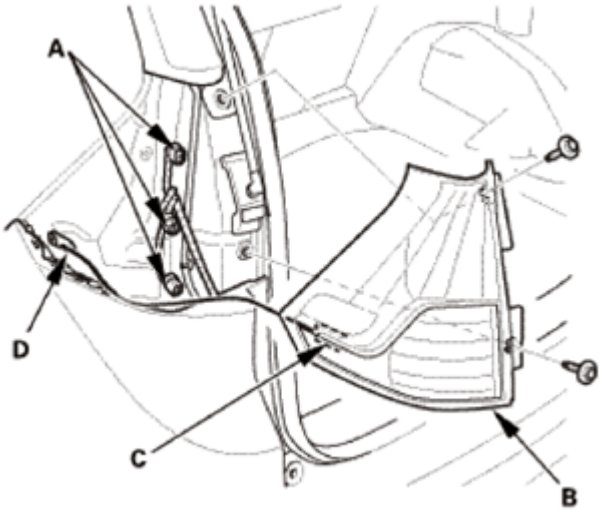

Fig. 77: Identifying Connectors, Lower Taillight Assembly, Screws
Courtesy of AMERICAN HONDA MOTOR CO., INC.

3. Tailgate Support Strut
    1. With the help of an assistant, install the tailgate support strut (A).

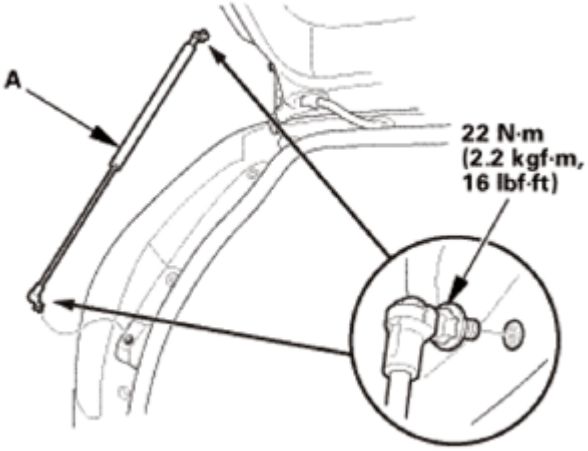

Fig. 78: Identifying Tailgate Support Strut With Torque Specifications
Courtesy of AMERICAN HONDA MOTOR CO., INC.

TAILGATE WEATHERSTRIP REMOVAL AND INSTALLATION

REMOVAL

1. Tailgate Weatherstrip
    1. Remove the tailgate weatherstrip (A) from the tailgate opening.

GETtheMANUALS.org

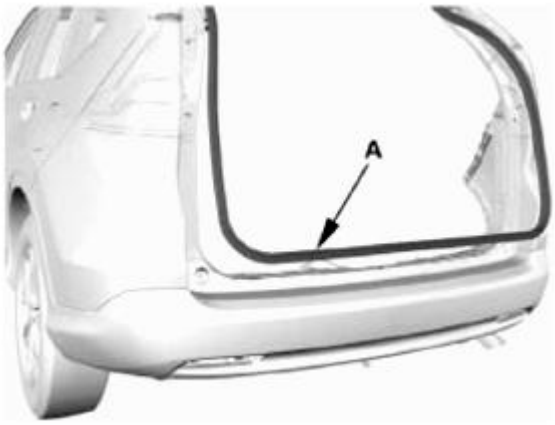

Fig. 79: Identifying Tailgate Weatherstrip
Courtesy of AMERICAN HONDA MOTOR CO., INC.

INSTALLATION

1. Tailgate Weatherstrip
    1. Locate the alignment mark (A) of the tailgate weatherstrip (B). Align the alignment mark (C) with the center of the lower area on the tailgate opening, then install the tailgate weatherstrip all the way around.

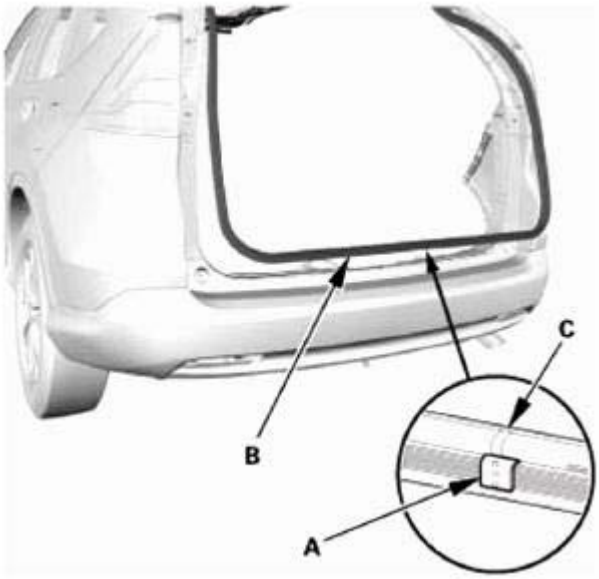

Fig. 80: Identifying Tailgate Weatherstrip With Alignment Mark
Courtesy of AMERICAN HONDA MOTOR CO., INC.

2. Water Leak Test

    Check for water leaks. Run water over the roof and on the sealing area as shown, and note these items:

GETtheMANUALS.org

- Use a 12 mm (0.47 in) diameter hose (A).
- Adjust the rate of water flow as shown.
- Do not use a nozzle.
- Hold the hose about 300 mm (11.81 in) away from the door.

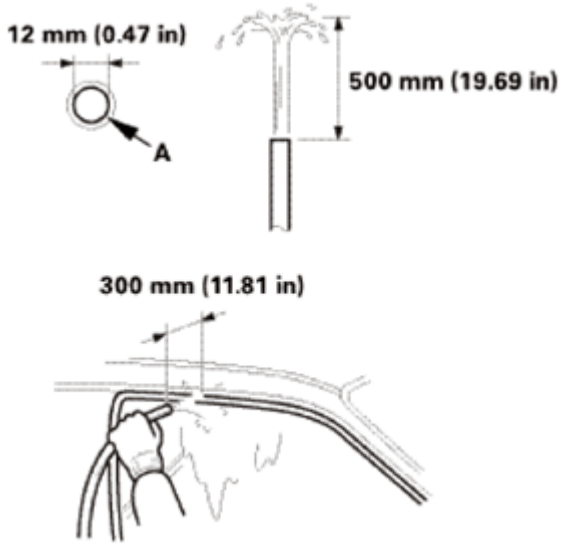

Fig. 81: Checking Water Leaks
Courtesy of AMERICAN HONDA MOTOR CO., INC.

GETtheMANUALS.org

HOW TO TROUBLESHOOT THE TPMS

SYSTEM INDICATOR

The TPMS (tire pressure monitoring system) has the low tire pressure indicator and the TPMS indicator.

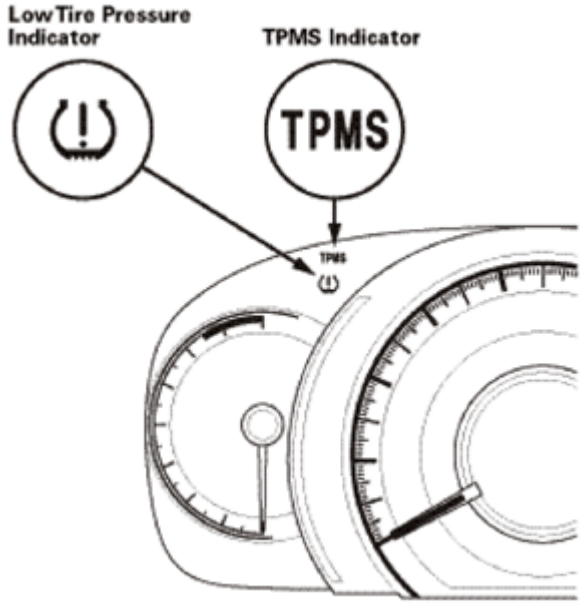

Fig. 1: Identifying Low Tire Pressure Indicator
Courtesy of AMERICAN HONDA MOTOR CO., INC.

THE LOW TIRE PRESSURE INDICATOR

- If the system detects low tire pressure in any of the four tires, the low tire pressure indicator comes on.
- When the indicator comes on, inflate the tires to the recommended pressure listed on the doorjamb label, and test-drive the vehicle at 28 mph (45 km/h) or more for at least 3 minutes, and the low tire pressure indicator will go off.
- If the TPMS control unit detects a problem in the system during an indication of low tire pressure, it turns off the low tire pressure indicator, stores the DTC(s), and turns on the TPMS indicator.

THE TPMS INDICATOR

- If a problem is detected in the system, the TPMS indicator comes on.
- If low tire pressure and a problem in the system are detected, only the TPMS indicator comes on.

When the system is OK, the TPMS indicator and the low tire pressure indicator should come on when you turn

GETtheMANUALS.org

the ignition switch to ON (II), and then go off 2 seconds later. If they don't, there is a problem with the system.

DTC 11, 13, 15, 17

If the system detects low pressure in any of the four tires, the low tire pressure indicator comes on, and the TPMS control unit sets one or more of these codes: DTC 11, 13, 15, 17. When the tire pressure returns to normal, and the TPMS control unit receives the normal pressure signal from the tire pressure sensor, the TPMS control unit turns off the indicator. However, the TPMS control unit still retains the DTC(s).

NOTE: **After reinflating the tire, you must test-drive the vehicle at 28 mph (45 km/h) or more for at least 3 minutes so that the tire pressure sensor transmits the signal that it is OK.**

TIRE PRESSURE CHANGING BY TEMPERATURE

Tire pressures increase slightly as the temperature in the tires rises during driving. Pressures can also increase or decrease slightly with changes in outside air temperature. A temperature change of about 18 °F (10 °C) changes tire pressure by about 10 kPa (0.1 kgf/cm^2 , 1.5 psi). If the temperature drops, tire pressure could decrease enough to turn on the low tire pressure indicator, but later, the tire temperature could increase enough to turn the indicator off. To resolve a complaint of such intermittent indications, confirm and clear the stored DTC(s) and check the cold tire pressures. Then explain to the customer how temperature changes can affect the system.

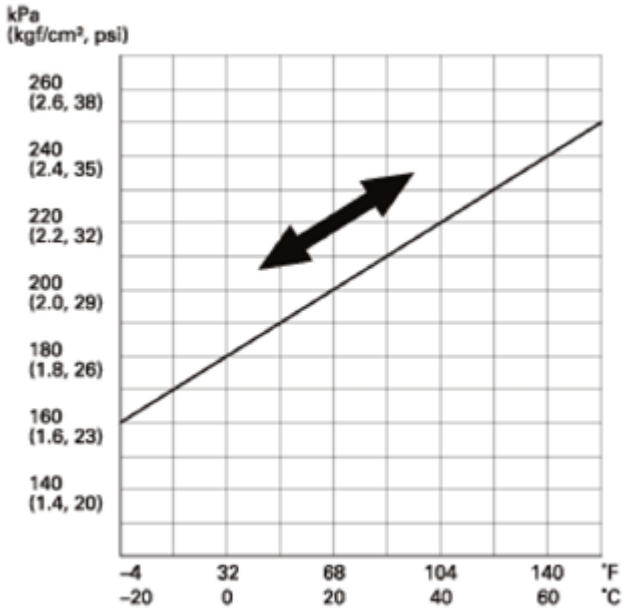

Fig. 2: Tire Pressure Versus Temperature Graph
Courtesy of AMERICAN HONDA MOTOR CO., INC.

PROBLEMS THAT ARE NOT SYSTEM FAULTS

- Tire Sealant

GETtheMANUALS.org

Fluid sealant used to repair a punctured tire can damage the tire pressure sensor mounted on each wheel. It can prevent the system from detecting the correct tire pressure, which sets a DTC 11, 13, 15, or 17 even though the system is normal.

- Cold Weather

  When the weather is extremely cold, about -4 °F (-20 °C) or colder, the output of the lithium battery in each tire pressure sensor may drop far enough that the TPMS control unit sets a DTC for low battery voltage (DTC 31, 33, 35, or 37) even though the system is normal.

- Non-TPMS type Wheels (Including Spare Tire)

  Vehicles equipped with TPMS must use wheels made for the system. Every TPMS type wheel has an exclusive mark; do not use any other type of wheel.

  When a flat tire is replaced with the spare tire, the TPMS indicator comes on (DTC 32, 34, 36, or 38) because the system is no longer receiving the signal from the flat tire's transmitter.

  This is not a problem with the spare tire.

HOW A DIAGNOSTIC TROUBLE CODE (DTC) IS SET

- When the system detects a problem, the TPMS control unit sets a code, but shifts to fail-safe mode, and does not alert the driver to low tire pressures.
- If the TPMS control unit loses power, or fails, the TPMS indicator comes on, but no DTC is set.
- The memory can hold all the DTCs that could possibly be set. However, when the same DTCs are detected more than once, the most recent one overwrites the previous one, so only the latest DTC of each type is stored.
- DTCs are indicated in ascending order, not in the order they occurred.
- Set DTCs are stored in the EEPROM (nonvolatile memory), they cannot be cleared by disconnecting the battery. To clear a DTC, connect the HDS (Honda Diagnostic System) to the data link connector (DLC), and follow the screen prompts.

HOW TO TROUBLESHOOT DTCS

DTC troubleshooting procedures assume that the cause of the problem is still present and the TPMS indicator is still on. Do not use a troubleshooting procedure unless the system has set the DTC listed for it.

1. Ask the customer to describe the conditions when the indicator came on, and try to reproduce the same conditions for troubleshooting. Find out if the customer checked and/or adjusted tire pressures since the indicator came on.
2. If an indicator does not come on during the test-drive, check for loose terminals, poor contact due to damaged terminals, etc. before you start troubleshooting.
3. After troubleshooting, repair and clear the DTCs, and test-drive the vehicle at 28 mph (45 km/h) or more for at least 20 minutes. Make sure no indicators come on.

GETtheMANUALS.org

HOW TO RETRIEVE DTCS

1. With the ignition switch in LOCK (0), connect the HDS (Honda Diagnostic System) to the data link connector (DLC) (A) located under the driver's side of the dashboard.

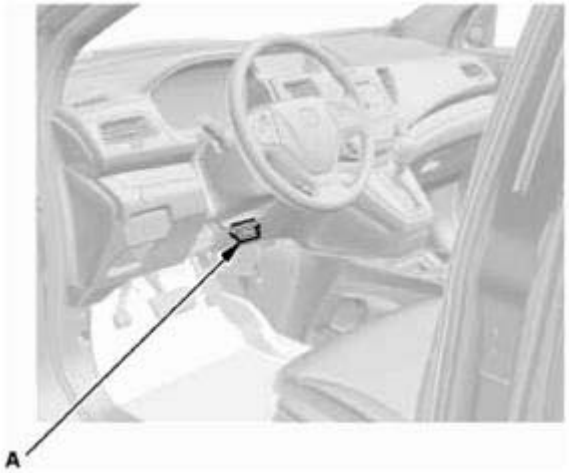

Fig. 3: Identifying Data Link Connector
Courtesy of AMERICAN HONDA MOTOR CO., INC.

2. Turn the ignition switch to ON (II).
3. Make sure the HDS communicates with the vehicle and the TPMS control unit. If it does not, **GO TO THE DLC CIRCUIT TROUBLESHOOTING** .
4. Follow the prompts on the HDS to display the DTC(s) on the screen. After determining the DTC, refer to the **DTC TROUBLESHOOTING**.

NOTE: See the HDS Help menu for specific instructions.

5. Turn the ignition switch to LOCK (0).

HOW TO CLEAR DTCS

1. With the ignition switch in LOCK (0), connect the HDS to the data link connector (DLC) (A) located under the driver's side of the dashboard.

GETtheMANUALS.org

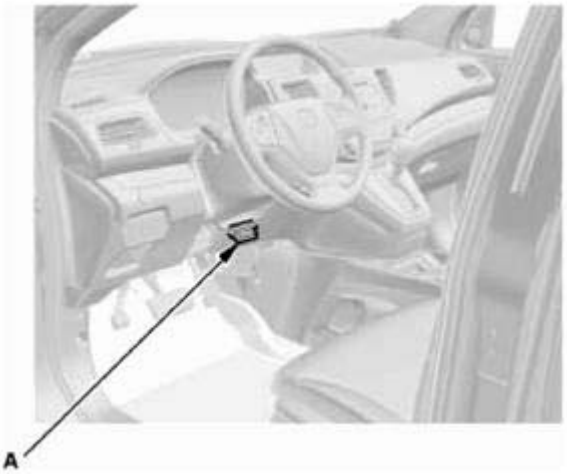

Fig. 4: Identifying Data Link Connector
Courtesy of AMERICAN HONDA MOTOR CO., INC.

2. Turn the ignition switch to ON (II).
3. Make sure the HDS communicates with the vehicle and the TPMS control unit. If it does not, **GO TO THE DLC CIRCUIT TROUBLESHOOTING** .
4. Clear the DTC(s) by following the screen prompts on the HDS.

NOTE: See the HDS Help menu for specific instructions.

5. Turn the ignition switch to LOCK (0).

TPMS SYMPTOM TROUBLESHOOTING INDEX

Symptom	Diagnostic procedure	Also check for
HDS does not communicate with the TPMS control unit or the vehicle	**TROUBLESHOOT THE DLC CIRCUIT** .	
Low tire pressure indicator does not come on, and no DTCs are stored	**Low tire pressure indicator does not come on, and no DTCs are stored**	
Low tire pressure indicator does not go off, and no DTCs are stored	**Low tire pressure indicator does not go off, and no DTCs are stored**	
TPMS indicator does not come on, and no DTCs are stored	**TPMS indicator does not come on, and no DTCs are stored**	
TPMS indicator does not go off, and no DTCs are stored	**TPMS indicator does not go off, and no DTCs are stored** 1. **DO THE GAUGE CONTROL MODULE SELF-DIAGNOSTIC FUNCTION** 2. Symptom Troubleshooting.	

GETtheMANUALS.org

MEMORIZING THE TIRE PRESSURE SENSOR ID

SPECIAL TOOL DESCRIPTION

Image	Description/Tool Number
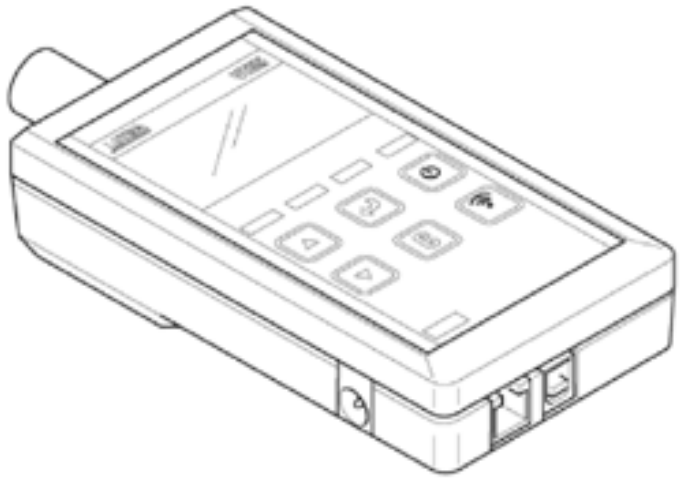	TPMS Trigger Tool ATEQ VT55
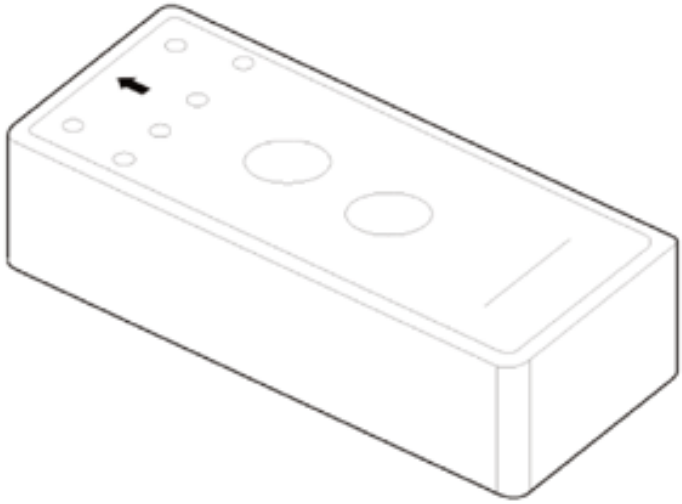	TPMS Trigger Tool Bartec Wheelrite Tech 300-J-48714*
Available through the Honda Tool and Equipment Program 888-424-6857*For Canada: Available through DES-Canada 866-868-3372	

PROCEDURE

1. HDS DLC - Connection
    1. Connect the HDS to the data link connector (DLC) (A) located under the driver's side of the dashboard.
    2. Turn the ignition switch to ON (II).
    3. Make sure the HDS communicates with the vehicle. If it does not communicate, go to the DLC circuit troubleshooting.

GETtheMANUALS.org

Fig. 5: Identifying Data Link Connector
Courtesy of AMERICAN HONDA MOTOR CO., INC.

2. Memorizing the Tire Pressure Sensor ID

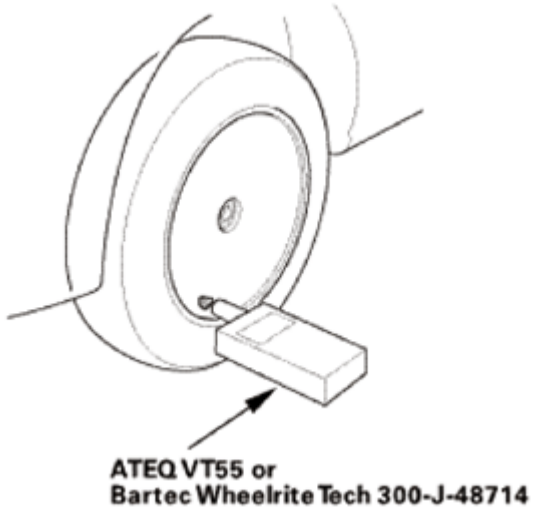

Fig. 6: Memorizing Tire Pressure Sensor ID Using Tool
Courtesy of AMERICAN HONDA MOTOR CO., INC.

NOTE:

- **The TPMS tool is needed to do this procedure.**
- **Let the vehicle sit for at least 5 minutes to allow the tire pressure sensors to switch to sleep mode.**
- **To ensure the TPMS control unit memorizes the correct sensor ID, the vehicle with the new tire pressure sensor must be at least 10 ft (3 m) away from other vehicles that have sensors.**
- **When doing a tire rotation, memorizing the sensors is not needed.**

GETtheMANUALS.org

1. Select Sensor ID Learning from the Mode Menu on the HDS.
2. Follow the HDS screen prompts to turn on the TPMS tool.
3. Hold the TPMS tool near the valve stem of one wheel, and memorize the tire pressure sensor ID by following the screen prompts on the HDS.

NOTE:

- **If you turn the ignition switch to LOCK (0) before memorizing all four sensor IDs, the memorizing sensor ID is canceled.**
- **If more than one sensor ID is displayed on the HDS, verify that the vehicle has not been driven for 5 minutes, and there are no other vehicles or tire pressure sensors within 10 ft (3 m).**
- **See the HDS Help menu for specific instructions.**

4. Repeat step 3 for each wheel until all four sensor IDs are memorized. When all four IDs are memorized, the low tire pressure indicator blinks.
5. Turn the ignition switch to LOCK (0).
6. Disconnect the HDS from the DLC.
7. Test-drive the vehicle at 28 mph (45 km/h) or more for at least 3 minutes.
8. Make sure the low tire pressure indicator does not blink.
9. Make sure the tires are inflated to the specified tire pressure listed on the doorjamb sticker.
10. Turn the ignition switch to LOCK (0).

TIRE PRESSURE SENSOR LOCATION

PROCEDURE

1. HDS DLC - Connection
    1. Connect the HDS to the data link connector (DLC) (A) located under the driver's side of the dashboard.
    2. Turn the ignition switch to ON (II).
    3. Make sure the HDS communicates with the vehicle. If it does not communicate, go to the DLC circuit troubleshooting.

GETtheMANUALS.org

Fig. 7: Identifying Data Link Connector
Courtesy of AMERICAN HONDA MOTOR CO., INC.

2. TIRE PRESSURE SENSOR - LOCATION

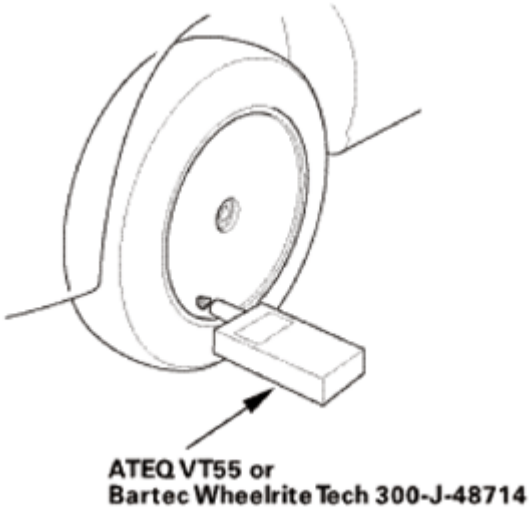

Fig. 8: Identifying TPMS Tool Pressure Sensor ID
Courtesy of AMERICAN HONDA MOTOR CO., INC.

- The TPMS tool is needed to do this procedure.
- Let the vehicle sit for at least 5 minutes to allow the tire pressure sensors to switch to sleep mode.
- This procedure locates where the tire pressure sensors 1, 2, 3, 4 are mounted, when activated by the TPMS tool.
- Position the vehicle at least 10 ft (3 m) away from other vehicles that have tire pressure sensors.

1. Using the HDS, bring up the TPMS DATA LIST, scroll down to the bottom, and locate the four tire pressure sensors ID. These are the ID assigned to each tire location.
2. Follow HDS screen prompts under tire pressure sensor ID learn, to turn on the TPMS tool.

GETtheMANUALS.org

3. Hold the TPMS tool near the valve stem of one wheel, and activate the tire pressure sensor by following the prompts on the HDS.
4. The TPMS tool will display the sensor data including the tire pressure sensor ID.
5. Locate the tire pressure sensor ID in the TPMS DATA LIST with the HDS, and match it to the sensor ID on the TPMS tool. Note the sensor location.

TIRE PRESSURE SENSOR REMOVAL AND INSTALLATION

SPECIAL TOOL DESCRIPTION

Image	Description/Tool Number
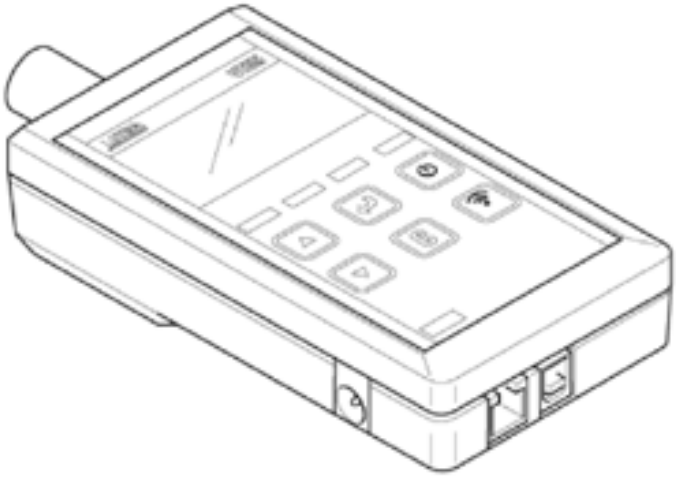	TPMS Trigger Tool ATEQ VT55
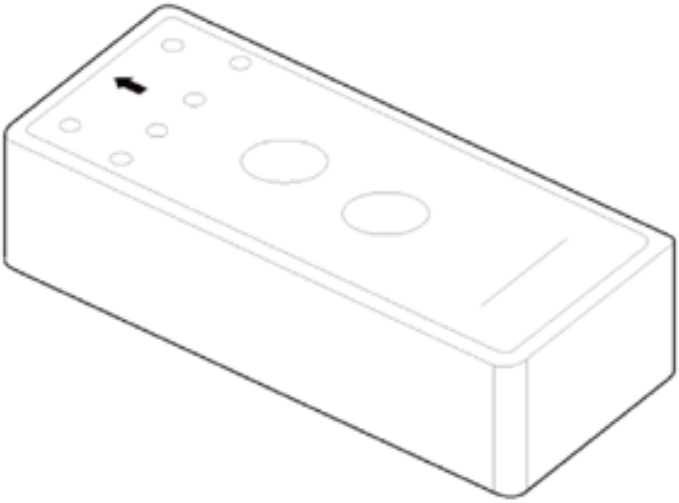	TPMS Trigger Tool Bartec Wheelrite Tech 300-J-48714*
Available through the Honda Tool and Equipment Program 888-424-6857*For Canada: Available through DES-Canada 866-868-3372	

REMOVAL

1. Vehicle Lift

GETtheMANUALS.org

1. Raise the vehicle on a lift, and make sure it is securely supported.

2. Wheel With The Faulty Tire Pressure Sensor
    1. Remove the wheel with the faulty tire pressure sensor.

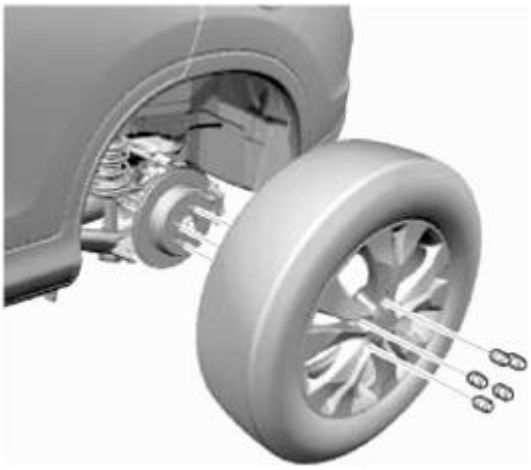

Fig. 9: Identifying Wheel With Faulty Tire Pressure Sensor
Courtesy of AMERICAN HONDA MOTOR CO., INC.

3. Tire Pressure Sensor

NOTE: **Each tire pressure sensor contains a lithium anode battery that is not removable. The complete tire pressure sensor should be disposed of according to local battery disposal guidelines or requirements. An improperly disposed of battery can be harmful to the environment.**

    1. Remove the tire valve stem cap and the valve stem core to deflate the tire.
    2. Remove any balance weights.

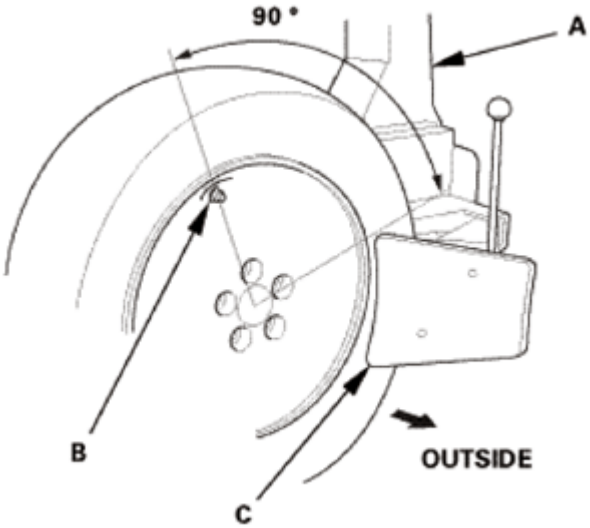

GETtheMANUALS.org

Fig. 10: Removing Tire From Wheel
Courtesy of AMERICAN HONDA MOTOR CO., INC.

3. Break the bead loose from the wheel with a commercially available tire changer (A).

NOTE: **Note these items to avoid damaging the tire pressure sensor:**

- **Do the outside of the wheel first.**
- **Position the wheel as shown so the valve stem (B) is 90 degrees from the bead breaker (C) as shown.**
- **Do not position the bead breaker of the tire changer too close to the rim.**

4. Position the wheel so that the tire machine (A) and the tire iron (B) are next to the valve stem (C), and will move away from it when the machine starts.
5. Remove the tire from the wheel.

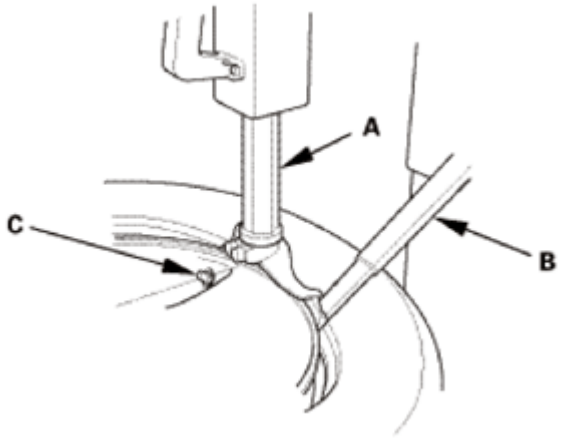

Fig. 11: Removing Tire From Wheel
Courtesy of AMERICAN HONDA MOTOR CO., INC.

6. Remove the valve stem nut (A) and the washer (B).
7. Remove the tire pressure sensor with the valve stem (C).

NOTE: **Check the nut and the washer; if they are deteriorated or damaged, replace them with new ones during reassembly.**

GETtheMANUALS.org

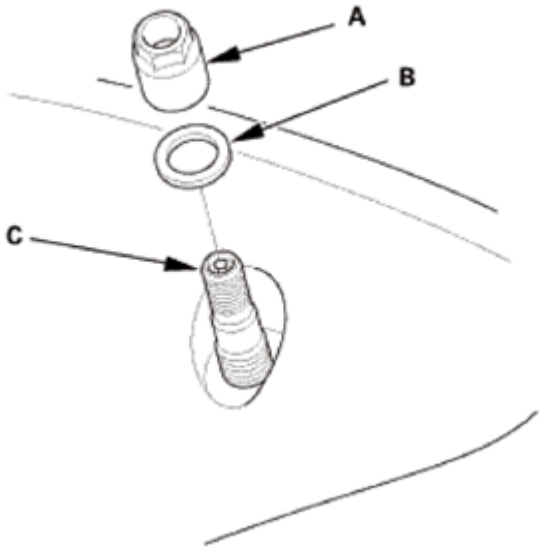

Fig. 12: Identifying Valve Stem Nut And Washer And Valve Stem
Courtesy of AMERICAN HONDA MOTOR CO., INC.

8. Remove and discard the valve stem grommet (A).

NOTE:

- **The valve stem grommet might stay in the wheel; make sure you remove it.**
- **Always use a new valve stem grommet whenever the tire pressure sensor has been removed from the wheel, or when replacing the tire.**

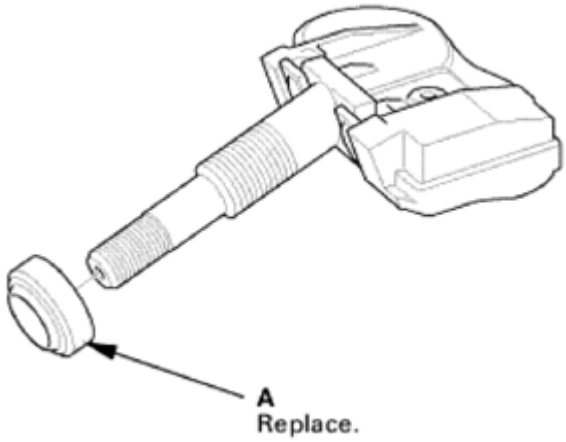

Fig. 13: Identifying Valve Stem Grommet
Courtesy of AMERICAN HONDA MOTOR CO., INC.

INSTALLATION

1. Tire Pressure Sensor

GETtheMANUALS.org

NOTE:

- **Use only wheels that have a "TPMS" stamp (A) on the inside of the aluminum wheels, and the outside of the steel wheels.**
- **This vehicle may be equipped with either aluminum wheels, or steel wheels.**

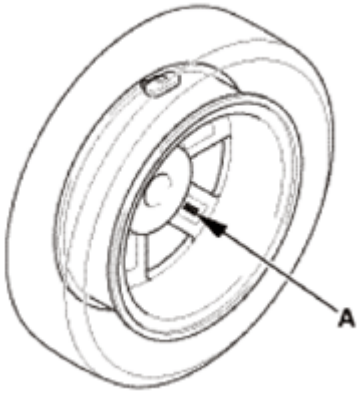

Fig. 14: Identifying TPMS Stamp
Courtesy of AMERICAN HONDA MOTOR CO., INC.

1. Before installing the tire pressure sensor, clean the mating surfaces on the sensor and the wheel.
2. Install the tire pressure sensor (A), the washer (B), and the valve stem nut (C) to the wheel (D).

NOTE: **Install the tire pressure sensor so that the sensor housing surface (E) is below the protrusion (F) of the wheel to prevent the sensor housing from being caught on the bead of the tire when installing the tire. Be sure to always mount the tire pressure sensor with its feet (G) in the downward position toward the wheel.**

3. Tighten the valve stem nut to the specified torque while holding the tire pressure sensor.

NOTE:

- **Do not use air or electric impact tools to tighten the valve stem nut.**
- **Do not twist the tire pressure sensor to adjust its position with the wheel, as this will damage or deform the valve stem grommet.**

GETtheMANUALS.org

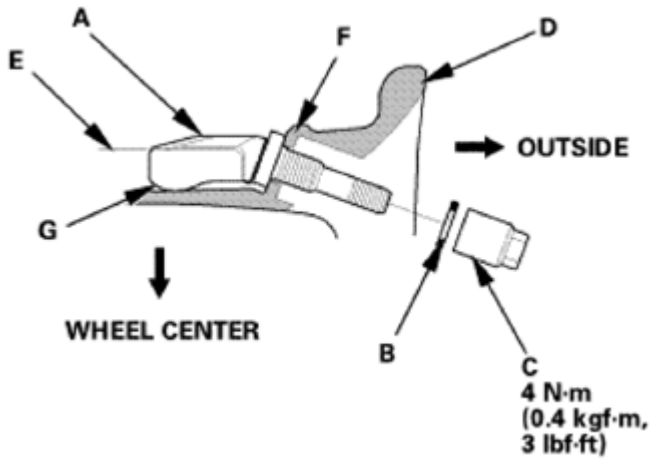

Fig. 15: Installing Tire Pressure Sensor, Washer And Valve Stem Nut To Wheel
Courtesy of AMERICAN HONDA MOTOR CO., INC.

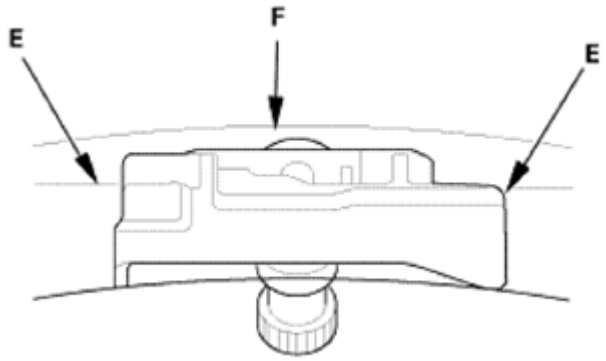

Fig. 16: Installing Tire Onto Wheel
Courtesy of AMERICAN HONDA MOTOR CO., INC.

4. Lube the tire bead sparingly with a paste-type tire mounting lubricant, and position the wheel so that the tire machine (A) is next to the valve stem (B) and will move away from it when the machine starts.
5. Install the tire onto the wheel.
6. With a dry air source, inflate the tire to 300 kPa (3.1 kgf/cm^2 , 44 psi) to seat the tire bead to the rim.

NOTE: Make sure the tire bead is seated on both sides of the rim evenly.

7. Adjust the tire pressure.
8. Install the valve stem cap.

GETtheMANUALS.org

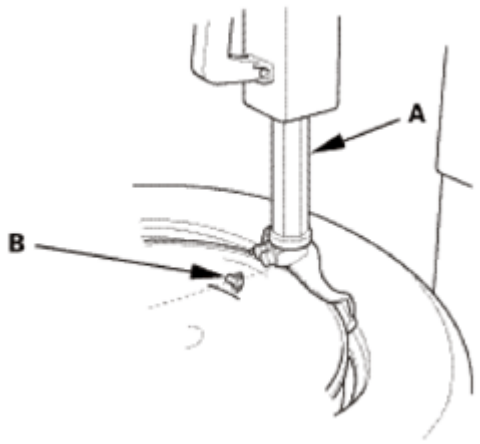

Fig. 17: Identifying Tire Machine And Valve Stem
Courtesy of AMERICAN HONDA MOTOR CO., INC.

9. Check and adjust the wheel balance.

2. Wheel With The Faulty Tire Pressure Sensor
   1. Install the wheel with the faulty tire pressure sensor.

NOTE: **Before installing the wheel, clean the mating surfaces between the brake disc or the brake drum and the inside of the wheel.**

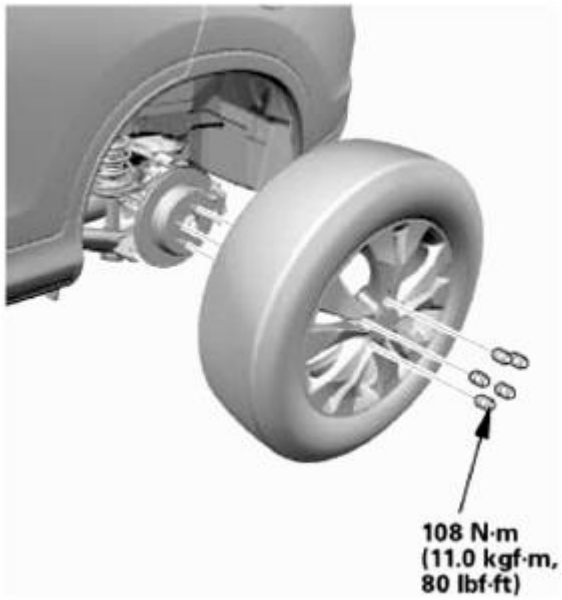

Fig. 18: Identifying Wheel With Faulty Tire Pressure Sensor
Courtesy of AMERICAN HONDA MOTOR CO., INC.

3. HDS DLC - Connection
   1. Connect the HDS to the data link connector (DLC) (A) located under the driver's side of the

GETtheMANUALS.org

dashboard.

2. Turn the ignition switch to ON (II).
3. Make sure the HDS communicates with the vehicle. If it does not communicate, go to the DLC circuit troubleshooting.

Fig. 19: Identifying Data Link Connector
Courtesy of AMERICAN HONDA MOTOR CO., INC.

4. Memorizing the Tire Pressure Sensor ID

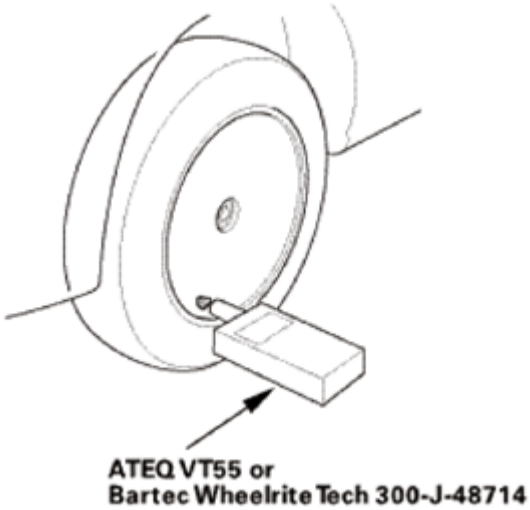

Fig. 20: Memorizing Tire Pressure Sensor ID Using Tool
Courtesy of AMERICAN HONDA MOTOR CO., INC.

NOTE:

- **The TPMS tool is needed to do this procedure.**
- **Let the vehicle sit for at least 5 minutes to allow the tire pressure sensors to switch to sleep mode.**

GETtheMANUALS.org

- **To ensure the TPMS control unit memorizes the correct sensor ID, the vehicle with the new tire pressure sensor must be at least 10 ft (3 m) away from other vehicles that have sensors.**
- **When doing a tire rotation, memorizing the sensors is not needed.**

1. Select Sensor ID Learning from the Mode Menu on the HDS.
2. Follow the HDS screen prompts to turn on the TPMS tool.
3. Hold the TPMS tool near the valve stem of one wheel, and memorize the tire pressure sensor ID by following the screen prompts on the HDS.

NOTE:

- **If you turn the ignition switch to LOCK (0) before memorizing all four sensor IDs, the memorizing sensor ID is canceled.**
- **If more than one sensor ID is displayed on the HDS, verify that the vehicle has not been driven for 5 minutes, and there are no other vehicles or tire pressure sensors within 10 ft (3 m).**
- **See the HDS Help menu for specific instructions.**

4. Repeat step 3 for each wheel until all four sensor IDs are memorized. When all four IDs are memorized, the low tire pressure indicator blinks.
5. Turn the ignition switch to LOCK (0).
6. Disconnect the HDS from the DLC.
7. Test-drive the vehicle at 28 mph (45 km/h) or more for at least 3 minutes.
8. Make sure the low tire pressure indicator does not blink.
9. Make sure the tires are inflated to the specified tire pressure listed on the doorjamb sticker.
10. Turn the ignition switch to LOCK (0).

TPMS COMPONENT LOCATION INDEX

GETtheMANUALS.org

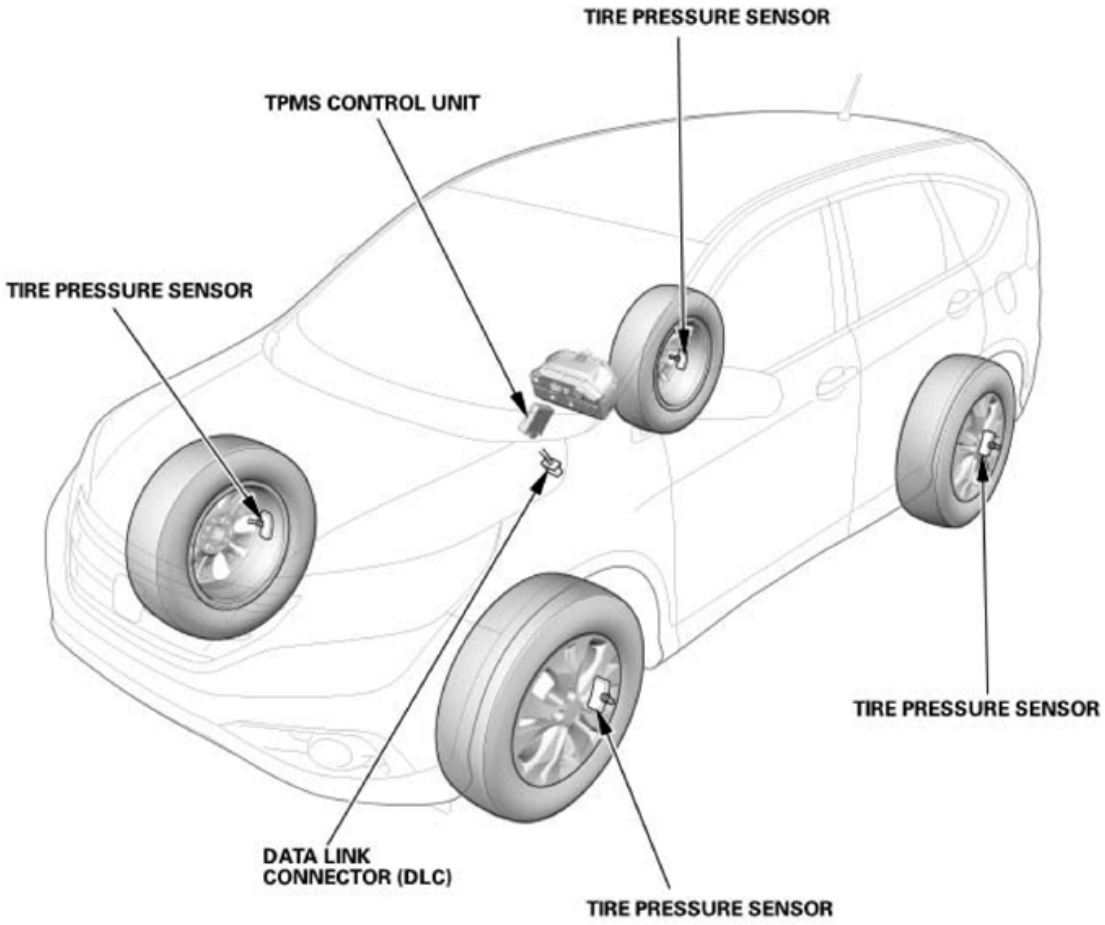

Fig. 21: TPMS Components Location
Courtesy of AMERICAN HONDA MOTOR CO., INC.

TIRE PRESSURE SENSOR	**Removal and Installation** See **MEMORIZING THE TIRE PRESSURE SENSOR ID**, **TIRE PRESSURE SENSOR LOCATION** or **TIRE PRESSURE SENSOR REMOVAL AND INSTALLATION**
TPMS CONTROL UNIT	**REMOVAL AND INSTALLATION**

TPMS CONTROL UNIT CONNECTOR FOR INPUTS AND OUTPUTS

TPMS CONTROL UNIT INPUTS AND OUTPUTS FOR 20P CONNECTOR

GETtheMANUALS.org

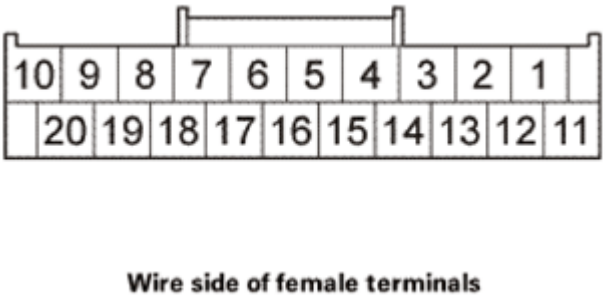

Fig. 22: Identifying TPMS Control Unit Inputs And Outputs 20P Connector Terminals
Courtesy of AMERICAN HONDA MOTOR CO., INC.

Terminal number	Wire color	Terminal sign	Description	Signal
1	RED	+B TPMS	Power source for the TPMS control unit	Battery voltage (about 12 V) at all times
2	Not used	Not used	---------	---------
3	LTGRN	IG1 METER	Power source for activating the system	With ignition switch ON (II): battery voltage (about 12 V)
				With ignition switch in LOCK (0): less than 0.1 V
4	LT BLU	K-LINE (Data link connector)	Communications with the HDS	---------
5	Not used	Not used	---------	---------
6	Not used	Not used	---------	---------
7	Not used	Not used	---------	---------
8	BLK	GND (Ground)	Ground for the TPMS control unit	Less than 0.1 V at all times
9	WHT	F-CAN H (F-CAN communication signal high)	F-CAN communication circuit	With ignition switch ON (II): pulses
10	Not used	Not used	---------	---------
11	Not used	Not used	---------	---------
12	Not used	Not used	---------	---------
13	Not used	Not used	---------	---------
14	Not used	Not used	---------	---------
15	Not used	Not used	---------	---------
16	Not used	Not used	---------	---------
17	Not used	Not used	---------	---------
18	Not used	Not used	---------	---------
19	Not used	Not used	---------	---------
20	RED	F-CAN L (F-CAN communication signal low)	F-CAN communication circuit	With ignition switch ON (II): pulses

GETtheMANUALS.org

TPMS CONTROL UNIT REMOVAL AND INSTALLATION

SPECIAL TOOL DESCRIPTION

Image	Description/Tool Number
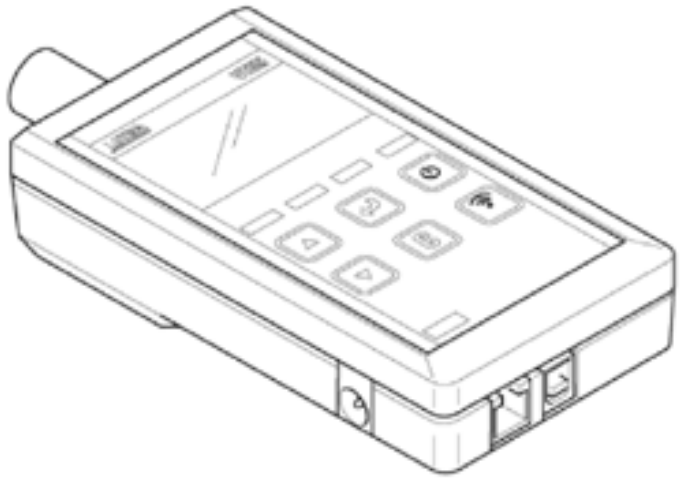	TPMS Trigger Tool ATEQ VT55
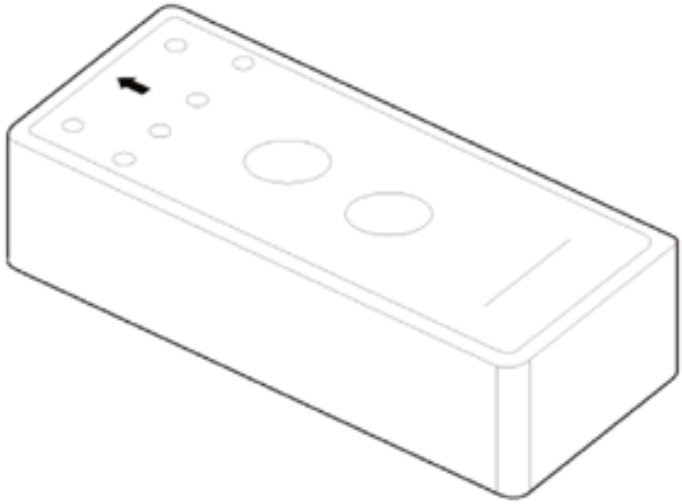	TPMS Trigger Tool Bartec Wheelrite Tech 300-J-48714*
Available through the Honda Tool and Equipment Program 888-424-6857*For Canada: Available through DES-Canada 866-868-3372	

REMOVAL

1. Front Console Cover - Left Side
    1. Remove the clips (A) and detach the hooks (B), then remove the left side console cover (C).

GETtheMANUALS.org

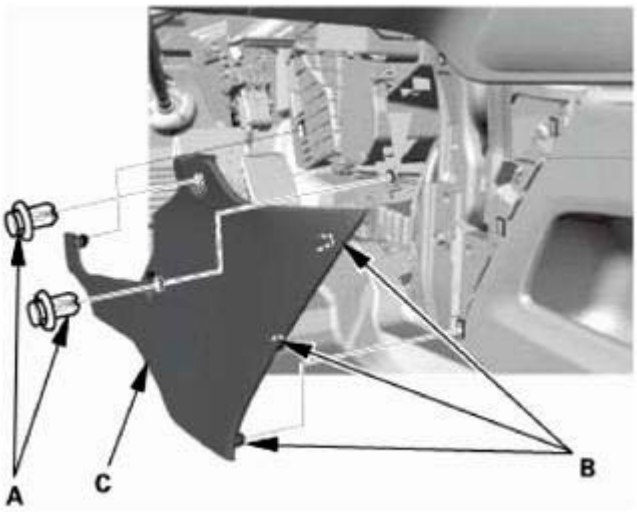

Fig. 23: Identifying Left Side Console Cover, Clips And Hooks
Courtesy of AMERICAN HONDA MOTOR CO., INC.

2. Center Maintenance Cover
    1. Remove the maintenance cover (A).

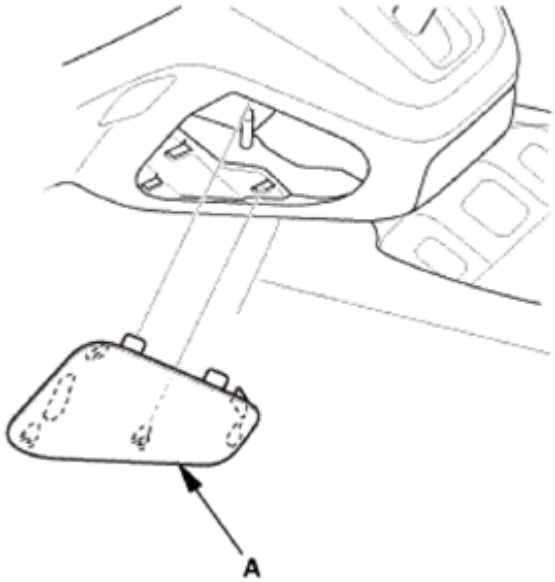

Fig. 24: Identifying Center Maintenance Cover
Courtesy of AMERICAN HONDA MOTOR CO., INC.

3. Shift Lever Panel (AT)
    1. Carefully pry out the shift lever panel (A) with the appropriate trim tool to detach the clips (B, C) and the hooks (D), then remove the shift lever panel.

GETtheMANUALS.org

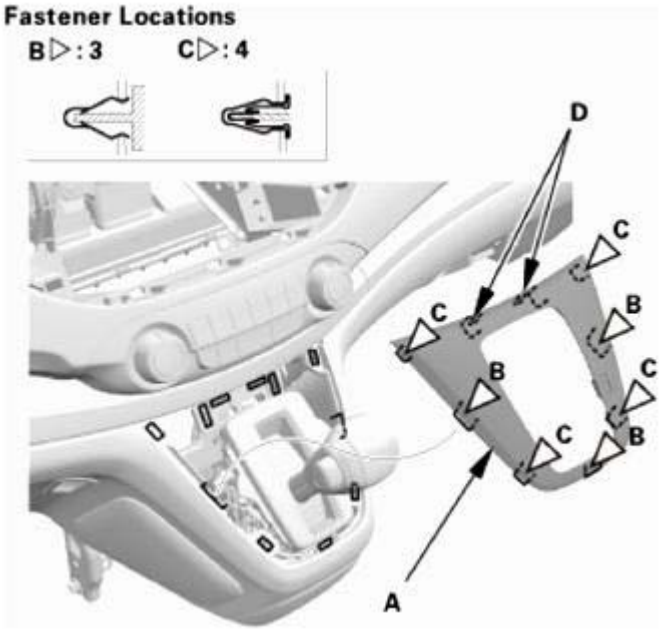

Fig. 25: Identifying Shift Lever Panel And Fasteners
Courtesy of AMERICAN HONDA MOTOR CO., INC.

4. TPMS Control Unit

NOTE: **Make sure the TPMS control unit mounting bracket is not bent or twisted as this may affect its communication with the tire pressure sensors.**

1. Turn the ignition switch to LOCK (0).
2. Disconnect the connector (A).
3. Remove the TPMS control unit (B) from the bracket (C).

NOTE: **While separating the TPMS control unit from the bracket, release the hook (D) on the TPMS control unit using a flat-tipped screwdriver (E), and push up to release it from the bracket.**

GETtheMANUALS.org

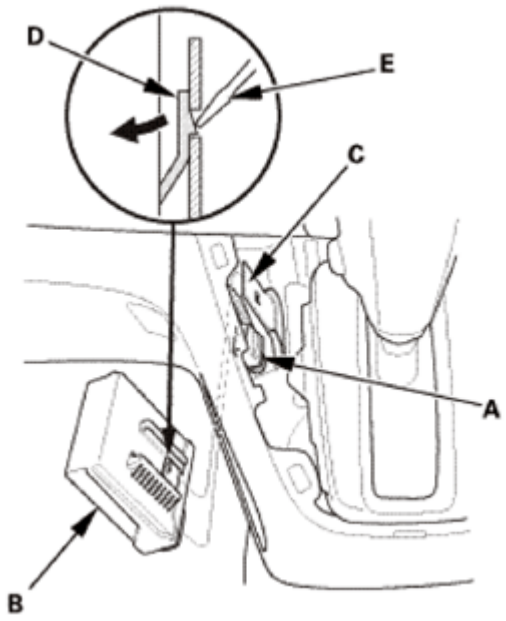

Fig. 26: Identifying TPMS Control Unit
Courtesy of AMERICAN HONDA MOTOR CO., INC.

INSTALLATION

1. TPMS Control Unit
    1. Install the TPMS control unit (A) to the bracket (B).

        NOTE: Make sure the TPMS control unit is properly installed. You will hear a click when the TPMS control unit is securely mounted on the bracket.

    2. Connect the connector (C).

GETtheMANUALS.org

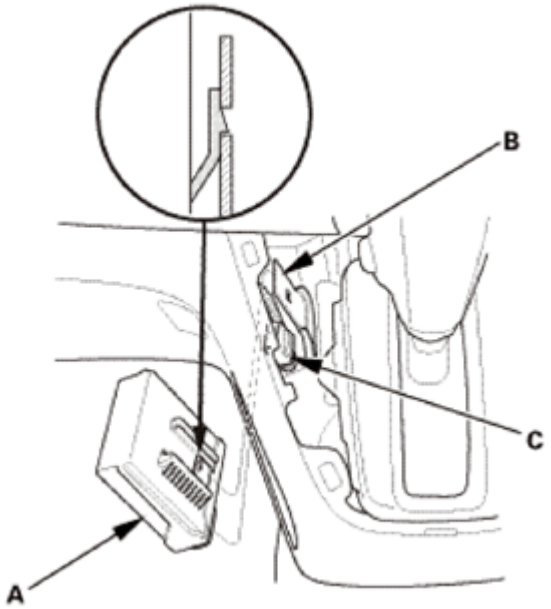

Fig. 27: Identifying TPMS Control Unit
Courtesy of AMERICAN HONDA MOTOR CO., INC.

2. Shift Lever Panel (AT)
    1. Install the shift lever panel (A). Make sure the clips (B, C) and the hooks (D) snap into place securely.

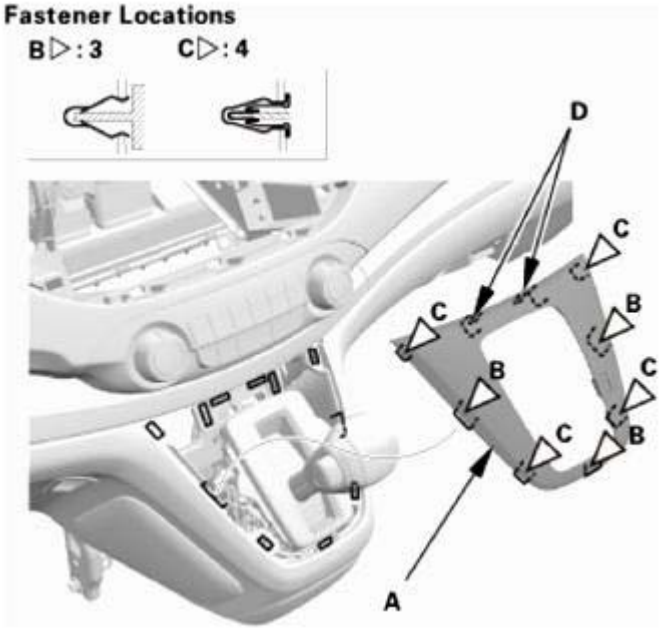

Fig. 28: Identifying Shift Lever Panel And Fasteners
Courtesy of AMERICAN HONDA MOTOR CO., INC.

3. Center Maintenance Cover

GETtheMANUALS.org

1. Install the maintenance cover (A).

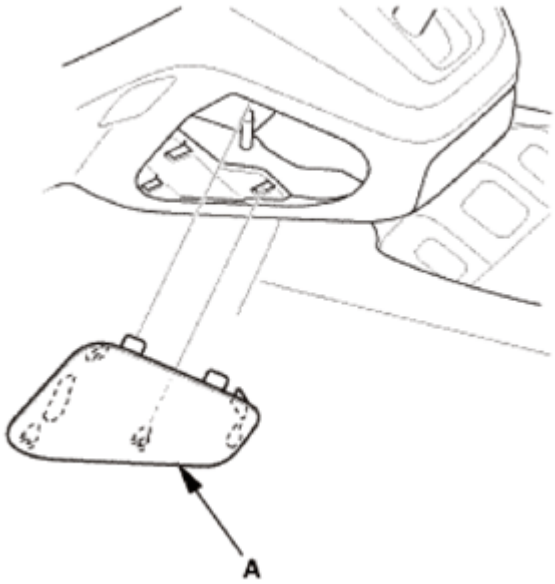

Fig. 29: Identifying Center Maintenance Cover
Courtesy of AMERICAN HONDA MOTOR CO., INC.

4. Front Console Cover - Left Side
    1. Install the left side console cover (A).

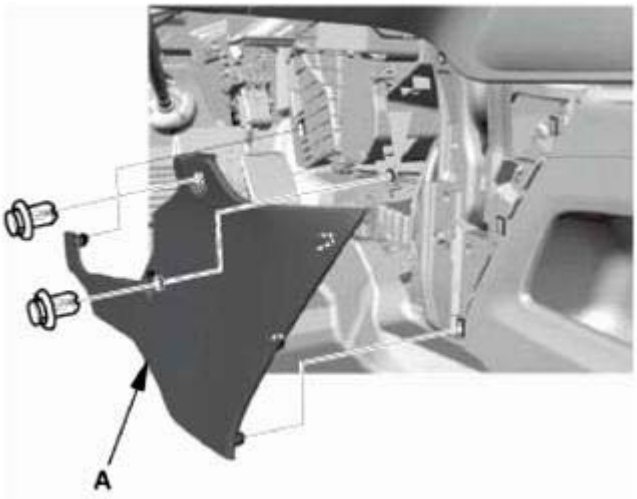

Fig. 30: Identifying Left Side Console Cover
Courtesy of AMERICAN HONDA MOTOR CO., INC.

5. HDS DLC - Connection
    1. Connect the HDS to the data link connector (DLC) (A) located under the driver's side of the dashboard.

GETtheMANUALS.org

2. Turn the ignition switch to ON (II).
3. Make sure the HDS communicates with the vehicle. If it does not communicate, go to the DLC circuit troubleshooting.

Fig. 31: Identifying Data Link Connector
Courtesy of AMERICAN HONDA MOTOR CO., INC.

6. Memorizing the Tire Pressure Sensor ID

NOTE:

- **The TPMS tool is needed to do this procedure.**
- **Let the vehicle sit for at least 5 minutes to allow the tire pressure sensors to switch to sleep mode.**
- **To ensure the TPMS control unit memorizes the correct sensor ID, the vehicle with the new tire pressure sensor must be at least 10 ft (3 m) away from other vehicles that have sensors.**
- **When doing a tire rotation, memorizing the sensors is not needed.**

1. Select Sensor ID Learning from the Mode Menu on the HDS.
2. Follow the HDS screen prompts to turn on the TPMS tool.
3. Hold the TPMS tool near the valve stem of one wheel, and memorize the tire pressure sensor ID by following the screen prompts on the HDS.

NOTE:

- **If you turn the ignition switch to LOCK (0) before memorizing all four sensor IDs, the memorizing sensor ID is canceled.**
- **If more than one sensor ID is displayed on the HDS, verify that the vehicle has not been driven for 5 minutes, and there are no other vehicles or tire pressure sensors within 10 ft (3 m).**
- **See the HDS Help menu for specific instructions.**

GETtheMANUALS.org

4. Repeat step 3 for each wheel until all four sensor IDs are memorized. When all four IDs are memorized, the low tire pressure indicator blinks.
5. Turn the ignition switch to LOCK (0).
6. Disconnect the HDS from the DLC.

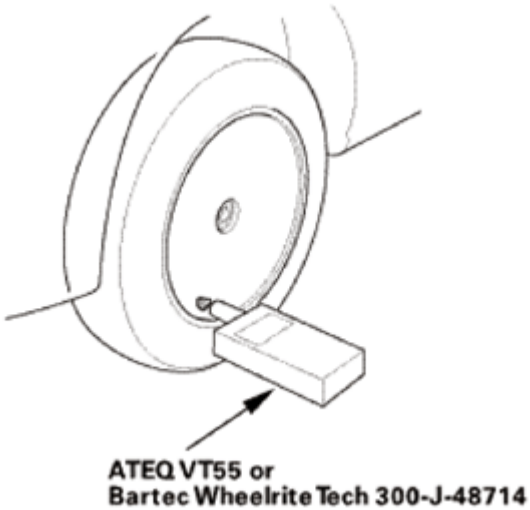

Fig. 32: Memorizing Tire Pressure Sensor ID Using Tool
Courtesy of AMERICAN HONDA MOTOR CO., INC.

7. Test-drive the vehicle at 28 mph (45 km/h) or more for at least 3 minutes.
8. Make sure the low tire pressure indicator does not blink.
9. Make sure the tires are inflated to the specified tire pressure listed on the doorjamb sticker.
10. Turn the ignition switch to LOCK (0).

TPMS DTC TROUBLESHOOTING INDEX

DTC	Detection Item
11	Tire 1 Low Air Pressure
13	Tire 2 Low Air Pressure
15	Tire 3 Low Air Pressure
17	Tire 4 Low Air Pressure
21	Tire 1 Pressure Sensor Abnormally High Temperature
22	Tire 2 Pressure Sensor Abnormally High Temperature
23	Tire 3 Pressure Sensor Abnormally High Temperature
24	Tire 4 Pressure Sensor Abnormally High Temperature
31	Tire 1 Pressure Sensor Low Battery Voltage
32	Tire 1 Pressure Sensor Signal Failure
33	Tire 2 Pressure Sensor Low Battery Voltage
34	Tire 2 Pressure Sensor Signal Failure

GETtheMANUALS.org

35	Tire 3 Pressure Sensor Low Battery Voltage
36	Tire 3 Pressure Sensor Signal Failure
37	Tire 4 Pressure Sensor Low Battery Voltage
38	Tire 4 Pressure Sensor Signal Failure
41	Abnormal Signal Reception Error
51	Tire 1 Pressure Sensor Registration Error
53	Tire 2 Pressure Sensor Registration Error
55	Tire 3 Pressure Sensor Registration Error
57	Tire 4 Pressure Sensor Registration Error
81	TPMS Control Unit Failure
83	No VSP Signal
85	F-CAN Communication Failure
91	Tire 1 Pressure Sensor Internal Error
93	Tire 2 Pressure Sensor Internal Error
95	Tire 3 Pressure Sensor Internal Error
97	Tire 4 Pressure Sensor Internal Error

DTC 11, 13, 15, 17: TIRE LOW AIR PRESSURE

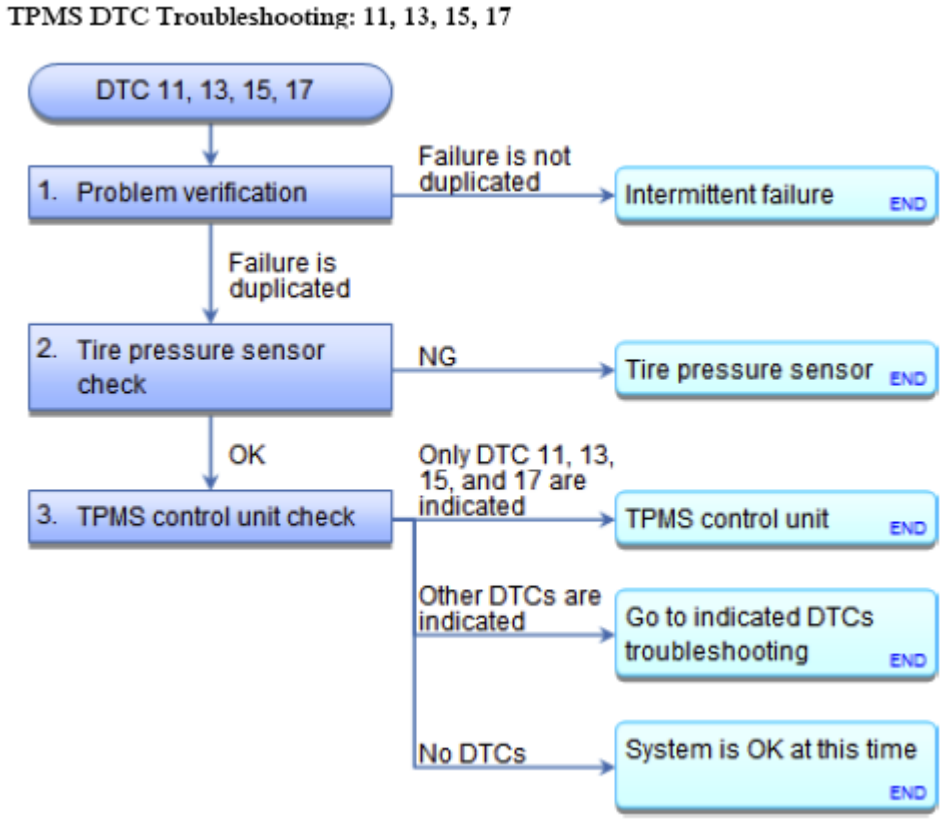

Fig. 33: TPMS DTC Troubleshooting (11, 13, 15, 17) Flow Chart
Courtesy of AMERICAN HONDA MOTOR CO., INC.

GETtheMANUALS.org

NOTE: **If low tire pressure is detected, the TPMS control unit sets one or more of these DTCs, and turns on the low tire pressure indicator. If the low tire pressure indicator comes on because of a low tire pressure, and the customer corrects it before bringing the vehicle in, the DTCs will be stored, but the indicator turns off.**

DTC Description	DTC
11 Tire 1 Low Air Pressure	
13 Tire 2 Low Air Pressure	
15 Tire 3 Low Air Pressure	
17 Tire 4 Low Air Pressure	

1. Problem verification:
   - 1. Turn the ignition switch to LOCK (0).
   - 2. Make sure the tires are inflated to the specified tire pressure listed on the doorjamb label.
   - 3. Test-drive the vehicle at 28 mph (45 km/h) or more for at least 3 minutes.

   Does the low tire pressure indicator go off?

   YES : Intermittent failure, the system is OK at this time.

   NO : The failure is duplicated. Go to step 2.

2. Tire pressure sensor check:
   - 1. Check for DTCs with the HDS.
   - 2. **Do the tire pressure sensor location procedure to determine the affected tire location and relate it to the tire pressure sensor number** See **MEMORIZING THE TIRE PRESSURE SENSOR ID**, **TIRE PRESSURE SENSOR LOCATION** or **TIRE PRESSURE SENSOR REMOVAL AND INSTALLATION**.
   - 3. Check the parameter(s) below with the HDS.

Signal	Threshold		Current Condition	
	Values	Unit	Values	Unit
Tire 1 Air Pressure	Within 40	kPa		
	Within 0.4	kgf/cm^2		
	Within 6	psi		
Tire 2 Air Pressure	Within 40	kPa		
	Within 0.4	kgf/cm^2		
	Within 6	psi		
Tire 3 Air Pressure	Within 40	kPa		
	Within 0.4	kgf/cm^2		
	Within 6	psi		

GETtheMANUALS.org

Tire 4 Air Pressure	Within 40	kPa		
	Within 0.4	kgf/cm^2		
	Within 6	psi		

Is the indicated tire pressure on the HDS within the threshold limits of the actual tire pressure?

YES : Go to step 3.

NO : **Replace the appropriate tire pressure sensor** See **MEMORIZING THE TIRE PRESSURE SENSOR ID**, **TIRE PRESSURE SENSOR LOCATION** or **TIRE PRESSURE SENSOR REMOVAL AND INSTALLATION**.

3. TPMS control unit check:
   - 1. Clear the DTC with the HDS.
   - 2. Test-drive the vehicle at 28 mph (45 km/h) or more for at least 3 minutes.
   - 3. Check for DTCs with the HDS.

DTC Description	DTC

Is DTC 11, 13, 15, or 17 indicated?

YES : **REPLACE THE TPMS CONTROL UNIT**.

NO : If any other DTCs are indicated, troubleshoot the appropriate DTC.

NO : If no DTCs are indicated, the system is OK at this time.

DTC 21, 22, 23, 24: TIRE PRESSURE SENSOR ABNORMALLY HIGH TEMPERATURE

GETtheMANUALS.org

TPMS DTC Troubleshooting: 21, 22, 23, 24

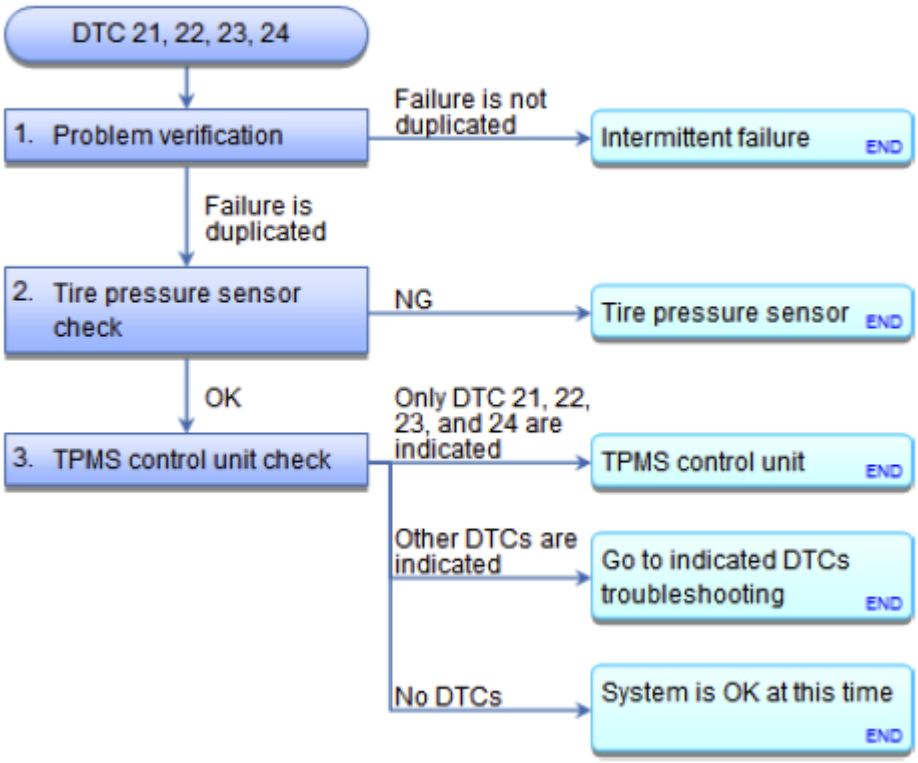

Fig. 34: TPMS DTC Troubleshooting (21, 22, 23, 24) Flow Chart
Courtesy of AMERICAN HONDA MOTOR CO., INC.

DTC Description	DTC
21 Tire 1 Pressure Sensor Abnormally High Temperature	
22 Tire 2 Pressure Sensor Abnormally High Temperature	
23 Tire 3 Pressure Sensor Abnormally High Temperature	
24 Tire 4 Pressure Sensor Abnormally High Temperature	

1. Problem verification:
   - 1. Turn the ignition switch to LOCK (0).
   - 2. Make sure the tires have cooled down.

NOTE: **An abnormal rise in the internal temperature of the tires can be caused by:**

- **Excessive braking**
- **Failure to release the parking brake (rear tires only)**
- **Leaving the vehicle running while parked (front tires only)**
- **Improper assembly of a wheel and tire**

GETtheMANUALS.org

- 3. Test-drive the vehicle at 28 mph (45 km/h) or more for at least 3 minutes.

Does the TPMS indicator go off?

YES : Intermittent failure, the system is OK at this time.

NO : The failure is duplicated. Go to step 2.

2. Tire pressure sensor check:
   - 1. Check for DTCs with the HDS.
   - 2. **Do the tire pressure sensor location procedure to determine the affected tire location and relate it to the tire pressure sensor number** See **MEMORIZING THE TIRE PRESSURE SENSOR ID**, **TIRE PRESSURE SENSOR LOCATION** or **TIRE PRESSURE SENSOR REMOVAL AND INSTALLATION**.
   - 3. Check the parameter(s) below with the HDS.

Signal	Threshold		Current Condition	
	Values	Unit	Values	Unit
Tire 1 Air Temperature	More than 176	°F		
	More than 80	°C		
Tire 2 Air Temperature	More than 176	°F		
	More than 80	°C		
Tire 3 Air Temperature	More than 176	°F		
	More than 80	°C		
Tire 4 Air Temperature	More than 176	°F		
	More than 80	°C		

Are the indicated temperatures of each tire within the threshold?

YES : **Replace the appropriate tire pressure sensor** See **MEMORIZING THE TIRE PRESSURE SENSOR ID** or **TIRE PRESSURE SENSOR LOCATION** or **TIRE PRESSURE SENSOR REMOVAL AND INSTALLATION**.

NO : Go to step 3.

3. TPMS control unit check:
   - 1. Clear the DTC with the HDS.
   - 2. Test-drive the vehicle at 28 mph (45 km/h) or more for at least 3 minutes.
   - 3. Check for DTCs with the HDS.

DTC Description	DTC

GETtheMANUALS.org

Is DTC 21, 22, 23, or 24 indicated?

YES : Check for loose terminals and poor connections at the TPMS control unit. If necessary, **SUBSTITUTE A KNOWN-GOOD TPMS CONTROL UNIT**, and recheck.

NO : If any other DTCs are indicated, troubleshoot the appropriate DTC.

NO : If no DTCs are indicated, the system is OK at this time.

DTC 31, 33, 35, 37: TIRE PRESSURE SENSOR LOW BATTERY VOLTAGE

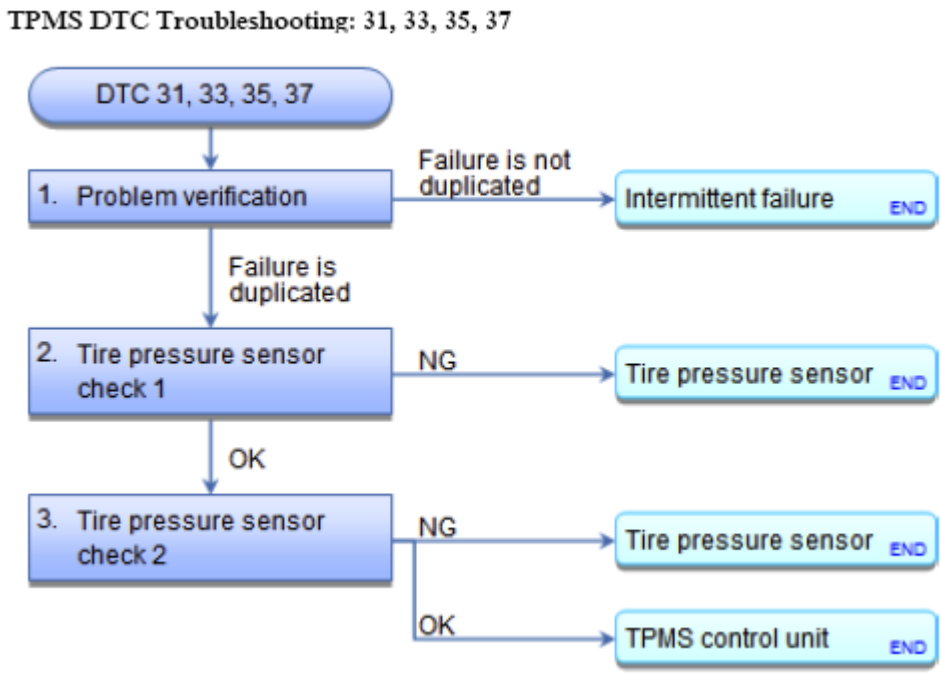

Fig. 35: TPMS DTC Troubleshooting (31, 33, 35, 37) Flow Chart
Courtesy of AMERICAN HONDA MOTOR CO., INC.

NOTE: **This problem may occur when the temperature around the sensor is -4 °F (-20 ° C) or less. If low temperature is a possible cause, do the diagnosis in a place where ambient temperature is -4 °F (-20 °C) or less.**

DTC Description	DTC
31 Tire 1 Pressure Sensor Low Battery Voltage	
33 Tire 2 Pressure Sensor Low Battery Voltage	
35 Tire 3 Pressure Sensor Low Battery Voltage	
37 Tire 4 Pressure Sensor Low Battery Voltage	

1. Problem verification:
   - 1. Turn the ignition switch to ON (II).

GETtheMANUALS.org

- 2. Clear the DTC with the HDS.
- 3. Test-drive the vehicle at 28 mph (45 km/h) or more for at least 3 minutes.
- 4. Check for DTCs with the HDS.

DTC Description	DTC
31 Tire 1 Pressure Sensor Low Battery Voltage	
33 Tire 2 Pressure Sensor Low Battery Voltage	
35 Tire 3 Pressure Sensor Low Battery Voltage	
37 Tire 4 Pressure Sensor Low Battery Voltage	

Is DTC 31, 33, 35, or 37 indicated?

YES : The failure is duplicated. Go to step 2.

NO : Intermittent failure, the system is OK at this time.

2. Tire pressure sensor check 1:
   - 1. Check for DTCs with the HDS.

DTC Description	DTC
31 Tire 1 Pressure Sensor Low Battery Voltage	
33 Tire 2 Pressure Sensor Low Battery Voltage	
35 Tire 3 Pressure Sensor Low Battery Voltage	
37 Tire 4 Pressure Sensor Low Battery Voltage	

   - 2. **Do the tire pressure sensor location procedure to determine the affected tire location and relate it to the tire pressure sensor number** See **MEMORIZING THE TIRE PRESSURE SENSOR ID**, **TIRE PRESSURE SENSOR LOCATION** or **TIRE PRESSURE SENSOR REMOVAL AND INSTALLATION**.

Did each tire pressure sensor respond to the TPMS tool?

YES : Go to step 3.

NO : Check that the tire pressure sensor is properly mounted. If necessary, **replace the appropriate tire pressure sensor** See **MEMORIZING THE TIRE PRESSURE SENSOR ID**, **TIRE PRESSURE SENSOR LOCATION** or **TIRE PRESSURE SENSOR REMOVAL AND INSTALLATION**.

3. Tire pressure sensor check 2:
   - 1. Check the parameter(s) below with the HDS.

Signal	Current Condition	
	Values	Unit
Tire1 Pressure Sensor Battery Status		

GETtheMANUALS.org

Tire2 Pressure Sensor Battery Status		
Tire3 Pressure Sensor Battery Status		
Tire4 Pressure Sensor Battery Statuts		

Is LOW indicated?

YES : **Replace the appropriate tire pressure sensor** See **MEMORIZING THE TIRE PRESSURE SENSOR ID**, **TIRE PRESSURE SENSOR LOCATION** or **TIRE PRESSURE SENSOR REMOVAL AND INSTALLATION**.

NO : Check for loose terminals and poor connections at the TPMS control unit. If necessary, **SUBSTITUTE A KNOWN-GOOD TPMS CONTROL UNIT**, and recheck.

DTC 32, 34, 36, 38: TIRE PRESSURE SENSOR SIGNAL FAILURE

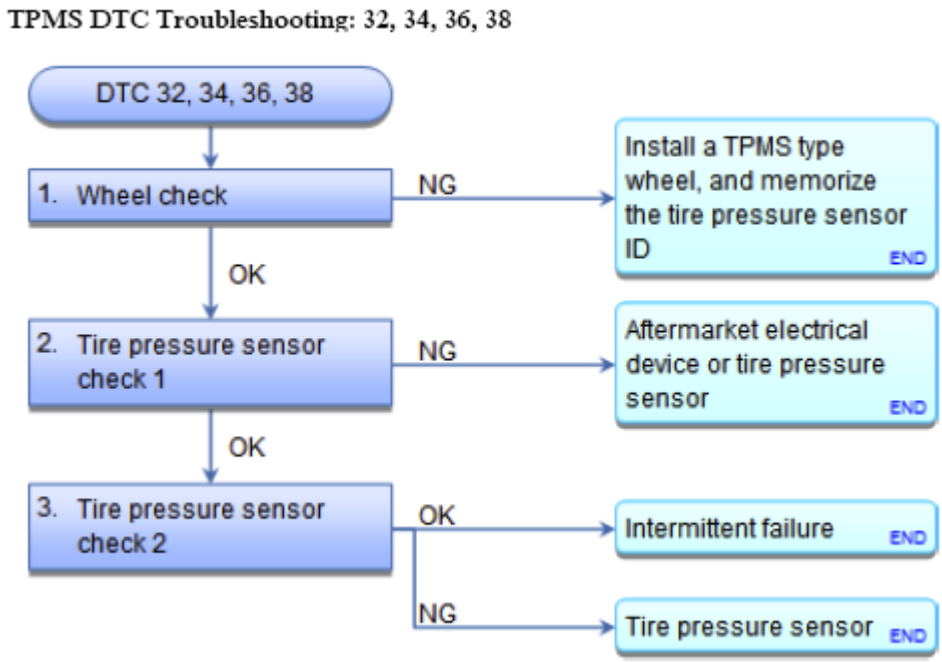

Fig. 36: TPMS DTC Troubleshooting (32, 34, 36, 38) Flow Chart
Courtesy of AMERICAN HONDA MOTOR CO., INC.

NOTE: **Inspect for an aftermarket electrical device(s) (such as an inverter, cell phone charger, CB radio, etc) interfering with the signal from the tire pressure sensors when driving the vehicle.**

DTC Description	DTC
32 Tire 1 Pressure Sensor Signal Failure	
34 Tire 2 Pressure Sensor Signal Failure	
36 Tire 3 Pressure Sensor Signal Failure	

GETtheMANUALS.org

38 Tire 4 Pressure Sensor Signal Failure	

If DTC 41 is also set, **TROUBLESHOOT THAT DTC FIRST**.

DTC Description	DTC
41 Abnormal Signal Reception Error	

1. Wheel check:
   - 1. Turn the ignition switch to LOCK (0).
   - 2. Make sure all four wheels are TPMS type wheels with mounted tire pressure sensors.

   Are TPMS type wheels with a tire pressure sensor mounted on the vehicle?

   YES : Go to step 2.

   NO : Install a TPMS type wheel, and **memorize the tire pressure sensor ID with the HDS** See **MEMORIZING THE TIRE PRESSURE SENSOR ID**, **TIRE PRESSURE SENSOR LOCATION** or **TIRE PRESSURE SENSOR REMOVAL AND INSTALLATION**.

2. Tire pressure sensor check 1:
   - 1. Turn the ignition switch to ON (II).
   - 2. Check for DTCs with the HDS.

DTC Description	DTC
32 Tire 1 Pressure Sensor Signal Failure	
34 Tire 2 Pressure Sensor Signal Failure	
36 Tire 3 Pressure Sensor Signal Failure	
38 Tire 4 Pressure Sensor Signal Failure	

   - 3. **Do the tire pressure sensor location procedure to determine the affected tire location and relate it to the tire pressure sensor number** See **MEMORIZING THE TIRE PRESSURE SENSOR ID** or **TIRE PRESSURE SENSOR LOCATION** or **TIRE PRESSURE SENSOR REMOVAL AND INSTALLATION**.

   Did each tire pressure sensor respond to the TPMS tool?

   YES : Go to step 3.

   NO : Check for an aftermarket electrical device interfering with the signals from the sensors. If there are no electrical devices causing interference, **replace the appropriate tire pressure sensor** See **MEMORIZING THE TIRE PRESSURE SENSOR ID** or **TIRE PRESSURE SENSOR LOCATION** or **TIRE PRESSURE SENSOR REMOVAL AND INSTALLATION**.

3. Tire pressure sensor check 2:

GETtheMANUALS.org

- 1. Turn the ignition switch to LOCK (0), and wait 5 minutes or more.
- 2. Test-drive the vehicle at 28 mph (45 km/h) or more for at least 3 minutes.
- 3. Check the parameter(s) below of the affected sensor change from DEFAULT to the correct value with the HDS.

Signal	Current Condition	
	Values	Unit
Tire 1 Air Pressure		
Tire 1 Air Temperature		
Tire 2 Air Pressure		
Tire 2 Air Temperature		
Tire 3 Air Pressure		
Tire 3 Air Temperature		
Tire 4 Air Pressure		
Tire 4 Air Temperature		

Did the values of the AIR PRESSURE and AIR TEMPERATURE change from DEFAULT to the correct value?

YES : Intermittent failure, the system is OK at this time.

NO : **Replace the appropriate tire pressure sensor** See **MEMORIZING THE TIRE PRESSURE SENSOR ID** or **TIRE PRESSURE SENSOR LOCATION** or **TIRE PRESSURE SENSOR REMOVAL AND INSTALLATION**.

DTC 41: ABNORMAL SIGNAL RECEPTION ERROR

GETtheMANUALS.org

TPMS DTC Troubleshooting: 41

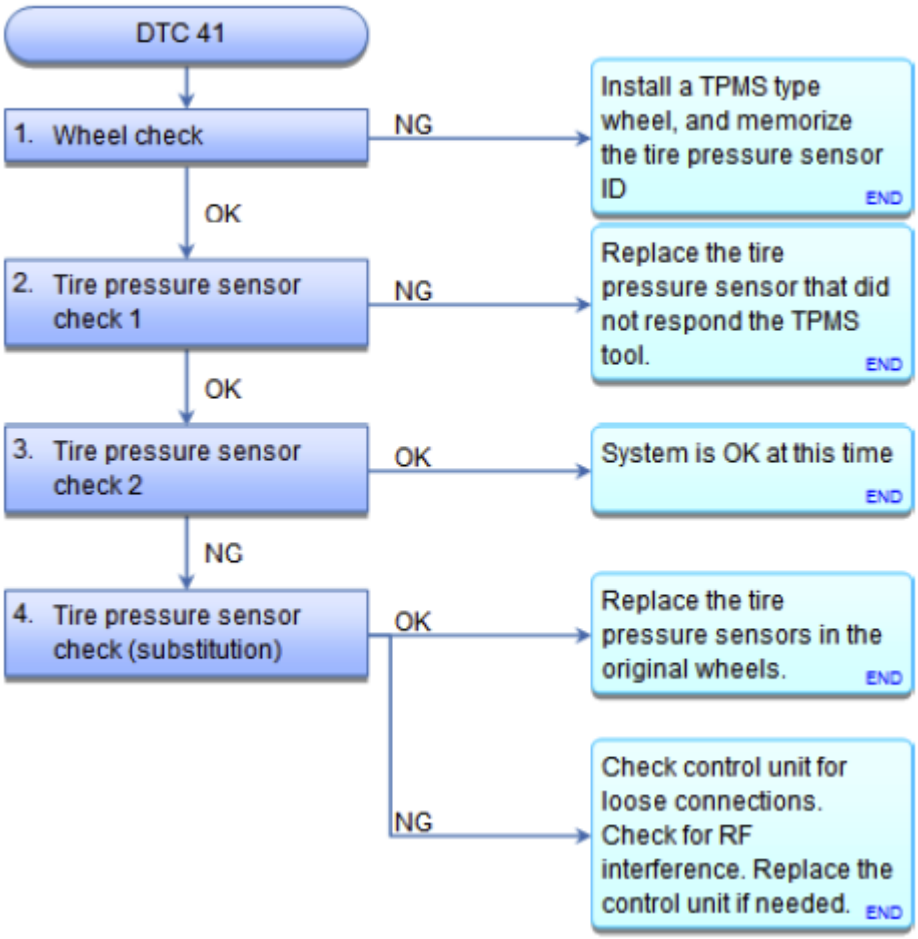

Fig. 37: TPMS DTC Troubleshooting (41) Flow Chart
Courtesy of AMERICAN HONDA MOTOR CO., INC.

NOTE: **Inspect for an aftermarket electrical device(s) (such as an inverter, cell phone charger, CB radio, etc) interfering with the signal from the tire pressure sensors when driving the vehicle.**

DTC Description	DTC
41 Abnormal Signal Reception Error	

1. Wheel check:
   - 1. Turn the ignition switch to LOCK (0).
   - 2. Make sure all four wheels are TPMS type wheels with mounted tire pressure sensors.

Are TPMS type wheels with tire pressure sensors mounted on the vehicle?

YES : Go to step 2.

GETtheMANUALS.org

NO : Install a TPMS type wheel, and **memorize the tire pressure sensor ID with the HDS** See **MEMORIZING THE TIRE PRESSURE SENSOR ID** or **TIRE PRESSURE SENSOR LOCATION** or **TIRE PRESSURE SENSOR REMOVAL AND INSTALLATION**.

2. Tire pressure sensor check 1:
   - 1. **Memorize the tire pressure sensor IDs with the HDS** See **MEMORIZING THE TIRE PRESSURE SENSOR ID** or **TIRE PRESSURE SENSOR LOCATION** or **TIRE PRESSURE SENSOR REMOVAL AND INSTALLATION**.

Did all four tire pressure sensors respond to the TPMS tool?

YES : Go to step 3.

NO : **REPLACE THE TIRE PRESSURE SENSOR** that did not respond the TPMS tool.

3. Tire pressure sensor check 2:
   - 1. Check the sensor registration with the HDS.

Did the TPMS control unit learn the tire pressure sensor IDs?

YES : The system is OK at this time.

NO : Go to step 4.

4. Tire pressure sensor check (substitution):
   - 1. Substitute known-good wheels with the tire pressure sensors.
   - 2. **Memorize the tire pressure sensor IDs with the HDS** See **MEMORIZING THE TIRE PRESSURE SENSOR ID** or **TIRE PRESSURE SENSOR LOCATION** or **TIRE PRESSURE SENSOR REMOVAL AND INSTALLATION**.

Did the TPMS control unit learn the tire pressure sensor IDs?

YES : **Replace the tire pressure sensors in the original wheels** See **MEMORIZING THE TIRE PRESSURE SENSOR ID** or **TIRE PRESSURE SENSOR LOCATION** or **TIRE PRESSURE SENSOR REMOVAL AND INSTALLATION**.

NO : Check the TPMS control unit for loose connections. Also check the vehicle for RF interference. If necessary, **REPLACE THE TPMS CONTROL UNIT**.

DTC 51, 53, 55, 57: TIRE PRESSURE SENSOR REGISTRATION ERROR

GETtheMANUALS.org

TPMS DTC Troubleshooting: 51, 53, 55, 57

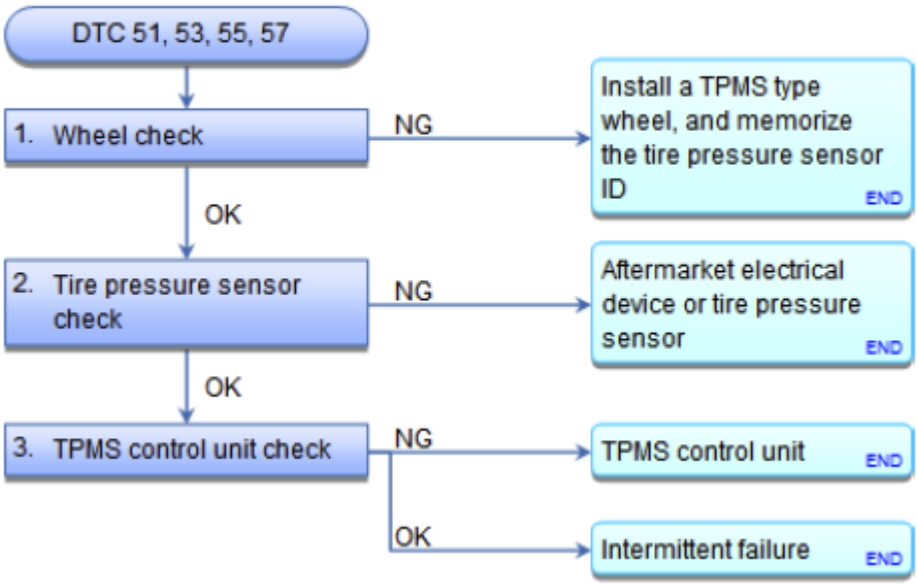

Fig. 38: TPMS DTC Troubleshooting (51, 53, 55, 57) Flow Chart
Courtesy of AMERICAN HONDA MOTOR CO., INC.

NOTE:

- **The DTCs will only set during memorizing the tire pressure sensor ID.**
- **Inspect for an aftermarket electrical device(s) (such as an inverter, cell phone charger, CB radio, etc) interfering with the signal from the tire pressure sensors when driving the vehicle.**

DTC Description	DTC
51 Tire 1 Pressure Sensor Registration Error	
53 Tire 2 Pressure Sensor Registration Error	
55 Tire 3 Pressure Sensor Registration Error	
57 Tire 4 Pressure Sensor Registration Error	

1. Wheel check:
   - 1. Turn the ignition switch to LOCK (0).
   - 2. Make sure all four wheels are TPMS type wheels with mounted tire pressure sensors.

Are TPMS type wheels with a tire pressure sensor mounted on the vehicle?

YES : Go to step 2.

NO : Install a TPMS type wheel, and **memorize the tire pressure sensor ID with the HDS** See **MEMORIZING THE TIRE PRESSURE SENSOR ID** or **TIRE PRESSURE SENSOR LOCATION** or **TIRE PRESSURE SENSOR REMOVAL AND INSTALLATION**.

GETtheMANUALS.org

2. Tire pressure sensor check:
   - 1. Turn the ignition switch to ON (II).
   - 2. Check for DTCs with the HDS.

DTC Description	DTC
51 Tire 1 Pressure Sensor Registration Error	
53 Tire 2 Pressure Sensor Registration Error	
55 Tire 3 Pressure Sensor Registration Error	
57 Tire 4 Pressure Sensor Registration Error	

   - 3. **Do the tire pressure sensor location procedure to determine the affected tire location and relate it to the tire pressure sensor number** See **MEMORIZING THE TIRE PRESSURE SENSOR ID** or **TIRE PRESSURE SENSOR LOCATION** or **TIRE PRESSURE SENSOR REMOVAL AND INSTALLATION**.

Did each tire pressure sensor respond to the TPMS tool?

YES : Go to step 3.

NO : Check for an aftermarket electrical device interfering with the signals from the sensors. If there are no electrical devices causing interference, **replace the appropriate tire pressure sensor** See **MEMORIZING THE TIRE PRESSURE SENSOR ID** or **TIRE PRESSURE SENSOR LOCATION** or **TIRE PRESSURE SENSOR REMOVAL AND INSTALLATION**.

3. TPMS control unit check:
   - 1. Turn the ignition switch to LOCK (0), and wait 5 minutes or more.
   - 2. Turn the ignition switch to ON (II).
   - 3. Clear the DTC with the HDS.
   - 4. Test-drive the vehicle at 28 mph (45 km/h) or more for at least 3 minutes.
   - 5. Check for DTCs with the HDS.

DTC Description	DTC
51 Tire 1 Pressure Sensor Registration Error	
53 Tire 2 Pressure Sensor Registration Error	
55 Tire 3 Pressure Sensor Registration Error	
57 Tire 4 Pressure Sensor Registration Error	

Is DTC 51, 53, 55, or 57 indicated?

YES : Check for loose terminals and poor connections at the TPMS control unit. If necessary, **SUBSTITUTE A KNOWN-GOOD TPMS CONTROL UNIT**, and recheck.

NO : Intermittent failure, the system is OK at this time.

GETtheMANUALS.org

DTC 81: TPMS CONTROL UNIT FAILURE

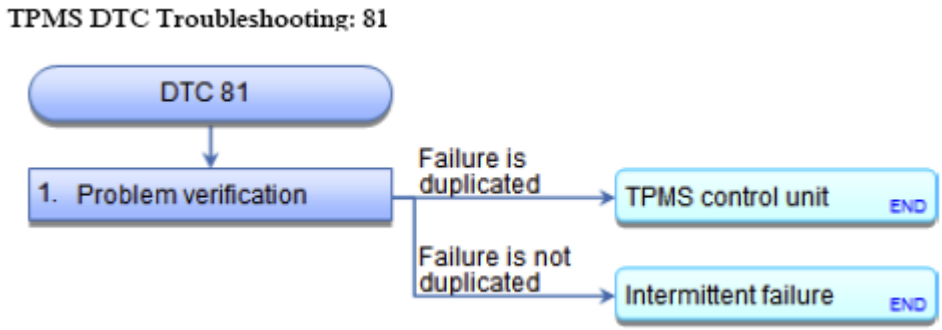

Fig. 39: TPMS DTC Troubleshooting (81) Flow Chart
Courtesy of AMERICAN HONDA MOTOR CO., INC.

NOTE: **Low battery voltage can cause this DTC. Make sure the battery is fully charged and in good condition.**

DTC Description	DTC
81 TPMS Control Unit Failure	

1. Problem verification:
   - 1. Turn the ignition switch to ON (II).
   - 2. Clear the DTC with the HDS.
   - 3. Turn the ignition switch to LOCK (0), and then back to ON (II).
   - 4. Check for DTCs with the HDS.

DTC Description	DTC
81 TPMS Control Unit Failure	

Is DTC 81 indicated?

YES : The failure is duplicated. **REPLACE THE TPMS CONTROL UNIT**.

NO : Intermittent failure, the system is OK at this time.

DTC 83: NO VSP SIGNAL

GETtheMANUALS.org

TPMS DTC Troubleshooting: 83

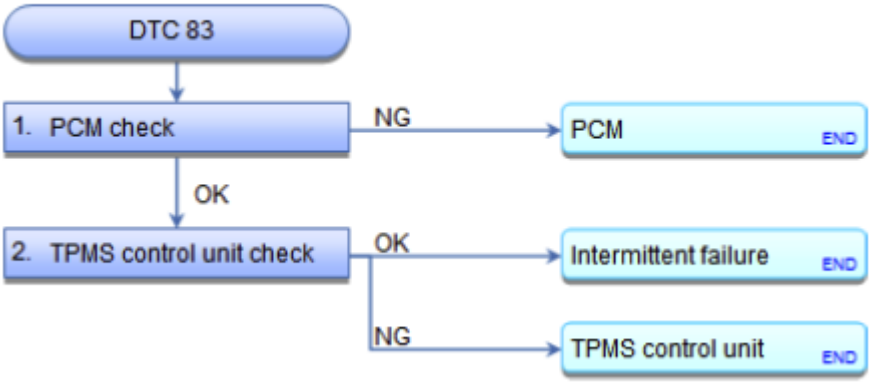

Fig. 40: TPMS DTC Troubleshooting (83) Flow Chart
Courtesy of AMERICAN HONDA MOTOR CO., INC.

DTC Description	DTC
83 No VSP Signal	

If DTC 85 stored at the same time as DTC 83, troubleshoot DTC 85 first, then recheck for DTC 83.

DTC Description	DTC
85 F-CAN Communication Failure	

1. PCM check:
   - 1. Turn the ignition switch to ON (II).
   - 2. Clear the DTC with the HDS.
   - 3. Test-drive the vehicle at 7 mph (10 km/h) or more.
   - 4. Check the speedometer.

   Does the speedometer register speed?

   YES : Go to step 2.

   NO : **Update the PCM if it does not have the latest software** See **PCM REMOVAL AND INSTALLATION** or **PCM UPDATE** , or **substitute a known-good PCM** See **PCM REMOVAL AND INSTALLATION** or **PCM UPDATE** , then go to step 1 and recheck. If the PCM was updated and DTCs are not indicated, troubleshooting is complete. If the PCM was substituted and DTCs are not indicated, **replace the original PCM** See **PCM REMOVAL AND INSTALLATION** or **PCM UPDATE** .

2. TPMS control unit check:
   - 1. Check the parameter(s) below with the HDS.

	Current Condition

GETtheMANUALS.org

Signal	Values	Unit
Vehicle Speed		

Is the vehicle speed indicated?

YES : Intermittent failure, the system is OK at this time.

NO : **SUBSTITUTE A KNOWN-GOOD TPMS CONTROL UNIT**, and recheck.

DTC 85: F-CAN COMMUNICATION FAILURE

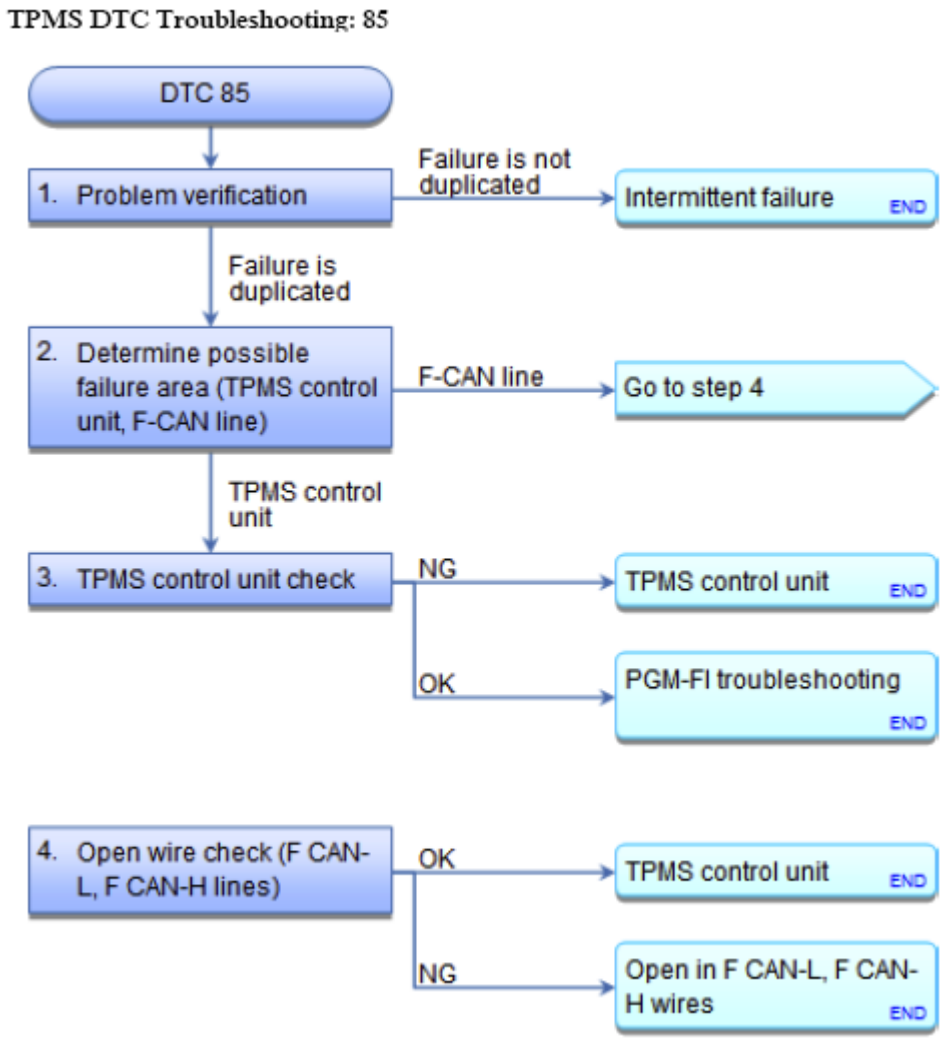

Fig. 41: TPMS DTC Troubleshooting (85) Flow Chart
Courtesy of AMERICAN HONDA MOTOR CO., INC.

DTC Description	DTC
85 F-CAN Communication Failure	

GETtheMANUALS.org

Check for PGM-FI DTCs with the HDS, and troubleshoot the PCM and F-CAN communication errors first.

DTC Description	Confirmed DTC	Pending DTC	Freeze Frame

1. Problem verification:
   - 1. Turn the ignition switch to ON (II).
   - 2. Clear the DTC with the HDS.
   - 3. Turn the ignition switch to LOCK (0), and then back to ON (II).
   - 4. Wait about 5 seconds.
   - 5. Check for DTCs with the HDS.

DTC Description	DTC
85 F-CAN Communication Failure	

Is DTC 85 indicated?

YES : The failure is duplicated. Go to step 2.

NO : Intermittent failure, the system is OK at this time.

2. Determine possible failure area (TPMS control unit, F-CAN line):
   - 1. Test-drive the vehicle.

Does the speedometer work?

YES : There is a problem in the F-CAN line. Go to step 4.

NO : There is a problem in the TPMS control unit. Go to step 3.

3. TPMS control unit check:
   - 1. Turn the ignition switch to LOCK (0).
   - 2. Disconnect the following connector.

     TPMS CONTROL UNIT 20P CONNECTOR

   - 3. Test-drive the vehicle.

Does the speedometer work?

YES : Check for loose terminals and poor connections at the TPMS control unit. If necessary, **SUBSTITUTE A KNOWN-GOOD TPMS CONTROL UNIT**, and recheck.

NO : Turn the ignition switch to LOCK (0), and reconnect all connectors, then **check and troubleshoot**

GETtheMANUALS.org

the PGM-FI See **HOW TO TROUBLESHOOT THE A/T SYSTEM** or **HOW TO TROUBLESHOOT THE FUEL AND EMISSIONS SYSTEMS** .

4. Open wire check (F CAN-L, F CAN-H lines):
   - 1. Turn the ignition switch to LOCK (0).
   - 2. Short the SCS line with the HDS.
   - 3. Disconnect the following connectors.

     PCM connector A (49P) See **PCM REMOVAL AND INSTALLATION** or **PCM UPDATE**

     TPMS CONTROL UNIT 20P CONNECTOR

   - 4. Check for continuity between test points 1 and 2.

     Test condition IG LOCK (0)

     PCM connector A (49P): disconnected

     TPMS control unit 20P connector: disconnected

     Test circuit F CAN-L

     Test point 1 TPMS control unit 20P connector No. 20 (RED)

     Test point 2 PCM connector A (49P) No. 4 (RED)

     Test circuit F CAN-H

     Test point 1 TPMS control unit 20P connector No. 9 (WHT)

     Test point 2 PCM connector A (49P) No. 3 (WHT)

GETtheMANUALS.org

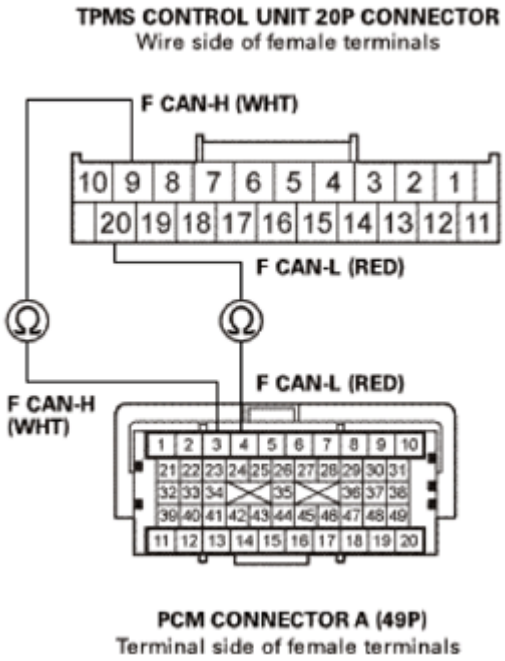

Fig. 42: Checking Continuity Between TPMS Control Unit 20P Connector No. 9 (WHT) And PCM Connector A (49P) No. 3 (WHT)
Courtesy of AMERICAN HONDA MOTOR CO., INC.

Is there continuity?

YES : The F CAN-L, F CAN-H wires are OK. Check for loose terminals and poor connections at the TPMS control unit and G503. If necessary, **SUBSTITUTE A KNOWN-GOOD TPMS CONTROL UNIT**, and recheck.

NO : Repair an open in the wire between the TPMS control unit and the PCM.

DTC 91, 93, 95, 97: TIRE PRESSURE SENSOR INTERNAL ERROR

GETtheMANUALS.org

TPMS DTC Troubleshooting: 91, 93, 95, 97

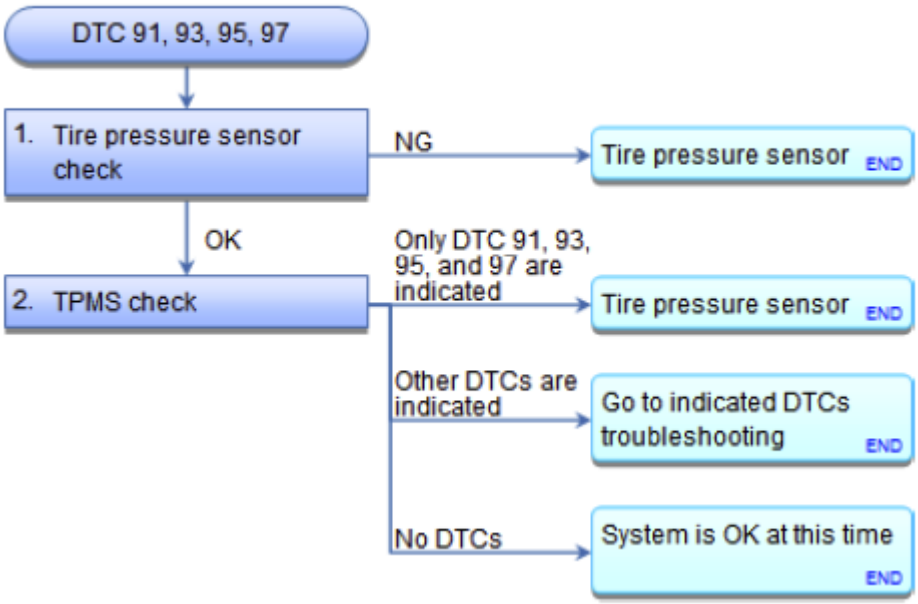

Fig. 43: TPMS DTC Troubleshooting (91, 93, 95, 97) Flow Chart
Courtesy of AMERICAN HONDA MOTOR CO., INC.

DTC Description	DTC
91 Tire 1 Pressure Sensor Internal Error	
93 Tire 2 Pressure Sensor Internal Error	
95 Tire 3 Pressure Sensor Internal Error	
97 Tire 4 Pressure Sensor Internal Error	

1. Tire pressure sensor check:
   - 1. Turn the ignition switch to ON (II).
   - 2. Check for DTCs with the HDS.

DTC Description	DTC
91 Tire 1 Pressure Sensor Internal Error	
93 Tire 2 Pressure Sensor Internal Error	
95 Tire 3 Pressure Sensor Internal Error	
97 Tire 4 Pressure Sensor Internal Error	

   - 3. **Do the tire pressure sensor location procedure to determine the affected tire location and relate it to the tire pressure sensor number** See **MEMORIZING THE TIRE PRESSURE SENSOR ID**, **TIRE PRESSURE SENSOR LOCATION** or **TIRE PRESSURE SENSOR REMOVAL AND INSTALLATION**.

Did each tire pressure sensor respond to the TPMS tool?

GETtheMANUALS.org

YES : Go to step 2.

NO : Check that the tire pressure sensor is properly mounted. If necessary, **replace the appropriate tire pressure sensor** See **MEMORIZING THE TIRE PRESSURE SENSOR ID** or **TIRE PRESSURE SENSOR LOCATION** or **TIRE PRESSURE SENSOR REMOVAL AND INSTALLATION**.

2. TPMS check:
   - 1. Clear the DTC with the HDS.
   - 2. Test-drive the vehicle at 28 mph (45 km/h) or more for at least 3 minutes.
   - 3.

     Check for DTCs with the HDS.

DTC Description	DTC

Is DTC 91, 93, 95, or 97 indicated?

YES : **Replace the appropriate tire pressure sensor** See **MEMORIZING THE TIRE PRESSURE SENSOR ID** or **TIRE PRESSURE SENSOR LOCATION** or **TIRE PRESSURE SENSOR REMOVAL AND INSTALLATION**, and recheck. If DTCs are still present, **SUBSTITUTE A KNOWN-GOOD TPMS CONTROL UNIT**, and recheck.

NO : If any other DTCs are indicated, troubleshoot the appropriate DTC.

NO : If no DTCs are indicated, the system is OK at this time.

LOW TIRE PRESSURE INDICATOR DOES NOT COME ON, AND NO DTCS ARE STORED

GETtheMANUALS.org

TPMS Symptom Troubleshooting - Low tire pressure indicator does not come on, and no DTCs are stored

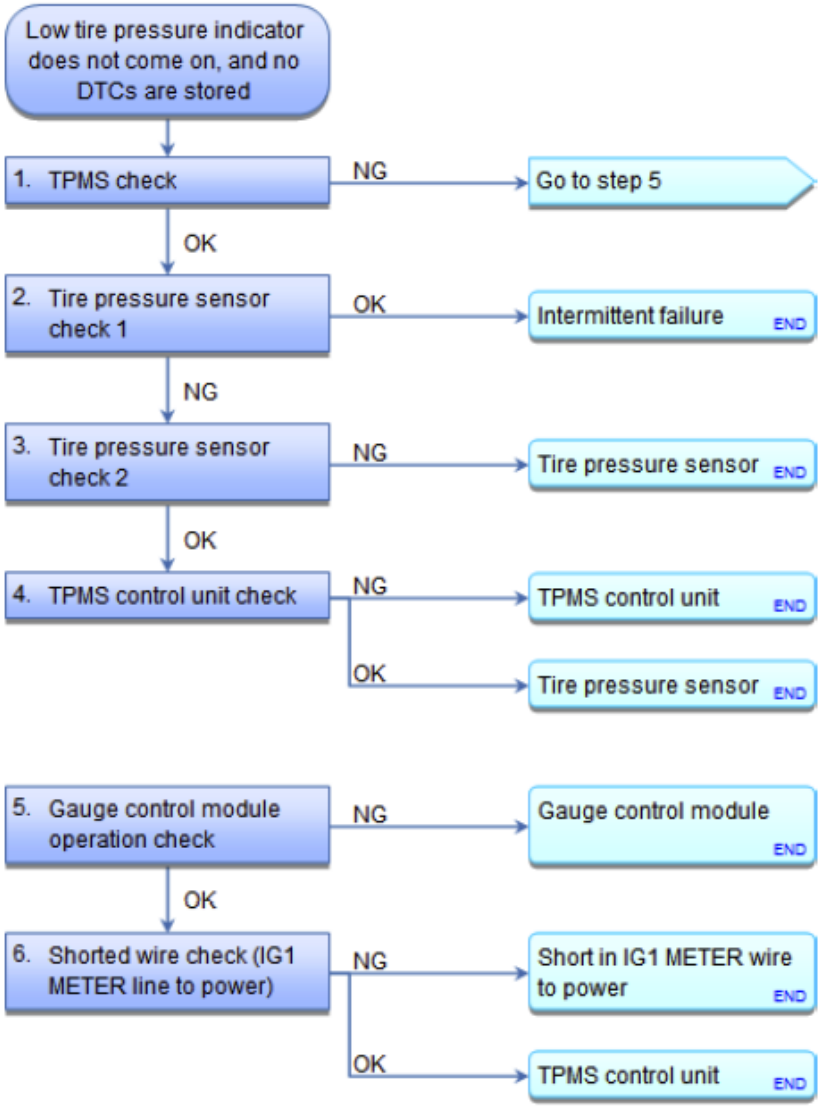

Fig. 44: TPMS Symptom Troubleshooting Flow Chart (Low Tire Pressure Indicator No On And No DTCS Stored)
Courtesy of AMERICAN HONDA MOTOR CO., INC.

1. TPMS check:
    - 1. Turn the ignition switch to ON (II).
    - 2. Check the low tire pressure indicator for several seconds when the ignition switch is turned ON (II).

    Did the indicator come on, and then go off?

    YES : Go to step 2.

    NO : Go to step 5.

GETtheMANUALS.org

2. Tire pressure sensor check 1:
   - 1. Test-drive the vehicle at 28 mph (45 km/h) or more for at least 3 minutes.
   - 2. Stop the vehicle, and lower the pressure in each tire until the low tire pressure indicator comes on.

NOTE:

- **Reinflate the tire before continuing to the next tire.**
- **After noting whether the low tire pressure indicator came on, make sure it goes off when you reinflate the tire before proceeding to the next tire.**
- **If 5 minutes has passed since finishing the last test-drive, reactivate the appropriate tire pressure sensor using the TPMS tool See MEMORIZING THE TIRE PRESSURE SENSOR ID or TIRE PRESSURE SENSOR LOCATION or TIRE PRESSURE SENSOR REMOVAL AND INSTALLATION.**

Model	Specified Tire Pressure Lower Limit
16 inch wheels	168 kPa (1.7 kgf/cm^2 , 24 psi)
17 inch wheels	175 kPa (1.8 kgf/cm^2 , 25 psi)

Does the low pressure indicator come on when the pressure drops below the specified tire pressure lower limit for any tire?

YES : Intermittent failure, the system is OK at this time.

NO : Go to step 3.

3. Tire pressure sensor check 2:
   - 1. **Do the tire pressure sensor location procedure to determine the affected tire location and relate it to the tire pressure sensor number** See **MEMORIZING THE TIRE PRESSURE SENSOR ID** or **TIRE PRESSURE SENSOR LOCATION** or **TIRE PRESSURE SENSOR REMOVAL AND INSTALLATION**.

Did each tire pressure sensor respond to the TPMS tool?

YES : Go to step 4.

NO : Check that the tire pressure sensor is properly mounted. If necessary, **replace the appropriate tire pressure sensor** See **MEMORIZING THE TIRE PRESSURE SENSOR ID** or **TIRE PRESSURE SENSOR LOCATION** or **TIRE PRESSURE SENSOR REMOVAL AND INSTALLATION**.

4. TPMS control unit check:
   - 1. Check the parameter(s) below with the HDS.

	Threshold	Current Condition

GETtheMANUALS.org

Signal	Values	Unit	Values	Unit
Tire 1 Air Pressure	Within 40	kPa		
	Within 0.4	kgf/cm^2		
	Within 6	psi		
Tire 2 Air Pressure	Within 40	kPa		
	Within 0.4	kgf/cm^2		
	Within 6	psi		
Tire 3 Air Pressure	Within 40	kPa		
	Within 0.4	kgf/cm^2		
	Within 6	psi		
Tire 4 Air Pressure	Within 40	kPa		
	Within 0.4	kgf/cm^2		
	Within 6	psi		

Is the indicated tire pressure on the HDS match the malfunction threshold?

YES : **SUBSTITUTE A KNOWN-GOOD TPMS CONTROL UNIT**, and recheck.

NO : **Replace the appropriate tire pressure sensor** See **MEMORIZING THE TIRE PRESSURE SENSOR ID** or **TIRE PRESSURE SENSOR LOCATION** or **TIRE PRESSURE SENSOR REMOVAL AND INSTALLATION**.

5. Gauge control module operation check:
   - 1. **DO THE GAUGE CONTROL MODULE SELF-DIAGNOSTIC FUNCTION** .

Is the gauge control module OK?

YES : Go to step 6.

NO : **Replace the gauge control module** See **GAUGE CONTROL MODULE REMOVAL AND INSTALLATION** or **Rewriting the ODO Data and Transferring the Maintenance Minder™ Data to a New Gauge Control Module** .

6. Shorted wire check (IG1 METER line to power):
   - 1. Turn the ignition switch to LOCK (0).
   - 2. Disconnect the following connector.

     TPMS CONTROL UNIT 20P CONNECTOR

   - 3. Measure the voltage between test points 1 and 2.

     Test condition IG LOCK (0)

     TPMS control unit 20P connector: disconnected

GETtheMANUALS.org

Test circuit IG1 METER, GND

Test point 1 TPMS control unit 20P connector No. 3 (LT GRN)

Test point 2 TPMS control unit 20P connector No. 8 (BLK)

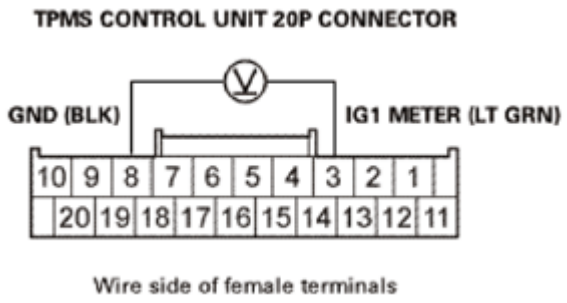

Fig. 45: Measuring Voltage Between TPMS Control Unit 20P Connector No. 3 (LT GRN) And No. 8 (BLK)
Courtesy of AMERICAN HONDA MOTOR CO., INC.

Is there battery voltage?

YES : Repair a short to power in the wire between the TPMS control unit and the No. B5 (10 A) fuse in the under-dash fuse/relay box.

NO : The IG1 METER wire is OK. Check for loose terminals and poor connections at the TPMS control unit. If necessary, **SUBSTITUTE A KNOWN-GOOD TPMS CONTROL UNIT**, and recheck.

LOW TIRE PRESSURE INDICATOR DOES NOT GO OFF, AND NO DTCS ARE STORED

TPMS Symptom Troubleshooting - Low tire pressure indicator does not go off, and no DTCs are stored

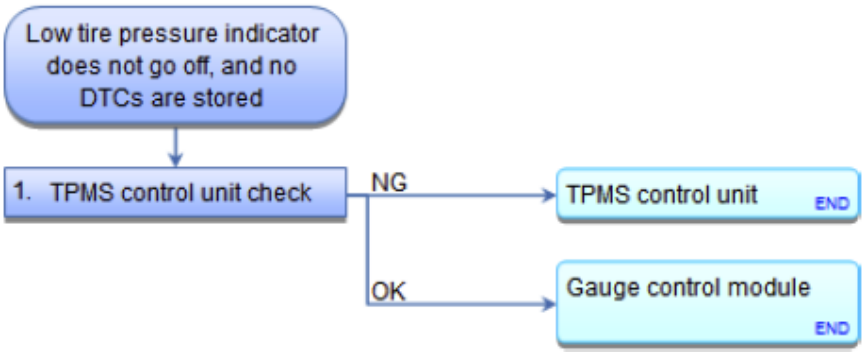

Fig. 46: TPMS Symptom Troubleshooting Flow Chart (Low Tire Pressure Indicator No Go Off And No DTCS Stored)
Courtesy of AMERICAN HONDA MOTOR CO., INC.

1. TPMS control unit check:

GETtheMANUALS.org

- 1. Turn the ignition switch to LOCK (0).
- 2. Disconnect the following connector.

  TPMS CONTROL UNIT 20P CONNECTOR

- 3. Turn the ignition switch to ON (II).
- 4. Check the low tire pressure indicator for several seconds when the ignition switch is turned ON (II).

Did the indicator come on, and then go off?

YES : Check for loose terminals and poor connections at the TPMS control unit. If necessary, **SUBSTITUTE A KNOWN-GOOD TPMS CONTROL UNIT**, and recheck.

NO : **DO THE TROUBLESHOOTING FOR THE GAUGE CONTROL MODULE** . If necessary, **substitute a known-good gauge control module** See **GAUGE CONTROL MODULE REMOVAL AND INSTALLATION** or **Rewriting the ODO Data and Transferring the Maintenance Minder™ Data to a New Gauge Control Module** .

TPMS CANNOT BE CALIBRATED

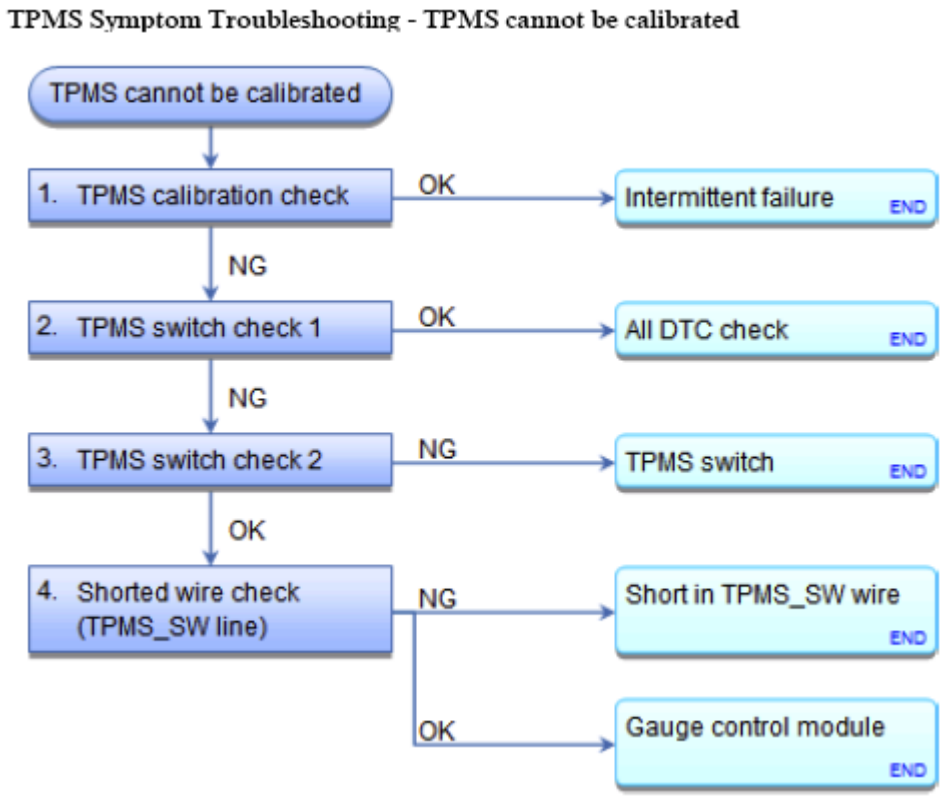

Fig. 47: TPMS Symptom Troubleshooting Flow Chart (TPMS Not Calibrated)
Courtesy of AMERICAN HONDA MOTOR CO., INC.

GETtheMANUALS.org

NOTE: **Check the number of miles on the gauge control module. After proceeding TPMS calibration, DATA LIST with the HDS shows the same number of miles on the gauge control module. When TPMS switch is not working, DATA LIST with the HDS shows the number of miles of the last TPMS calibration done before.**

1. TPMS calibration check:
   - 1. Turn the ignition switch to ON (II).
   - 2. Check the number of miles on the gauge control module.
   - 3. Make sure the tires are inflated to the specified tire pressure listed on the doorjamb label.
   - 4. Do the TPMS calibration.
   - 5. Check the parameter(s) below with the HDS.

Signal	Current Condition	
	Values	Unit
INITIALIZED ODOMETER		

Does the value on the HDS match the number of miles on the gauge control module?

YES : Intermittent failure, the system is OK at this time. Check that the tires match recommended size and loaded rating as described on the doorjamb label.

NO : Go to step 2.

2. TPMS switch check 1:
   - 1. Check the TPMS switch on the gauge data list with the HDS.

Signal	Current Condition	
	Values	Unit
TPMS Initialization Switch		

Does the TPMS switch input change from on to off when the switch is pressed?

YES : Do all DTC check. If any B-CAN or VSA DTCs are indicated, do the troubleshooting for these DTCs first.

NO : Go to step 3.

3. TPMS switch check 2:
   - 1. Turn the ignition switch to LOCK (0).
   - 2. Check the TPMS switch.

Is the TPMS switch OK?

YES : Go to step 4.

GETtheMANUALS.org

NO : Replace the TPMS switch.

4. Shorted wire check (TPMS_SW line):
   - 1. Disconnect the following connectors.

     TPMS switch 5P connector

     Gauge control module 32P connector See **GAUGE CONTROL MODULE REMOVAL AND INSTALLATION** or **Rewriting the ODO Data and Transferring the Maintenance Minder™ Data to a New Gauge Control Module** .

   - 2. Check for continuity between test points 1 and 2.

     Test condition IG LOCK (0)

     TPMS switch 5P connector: disconnected

     Gauge control module 32P connector: disconnected

     Test circuit TPMS_SW

     Test point 1 TPMS switch 5P connector No. 4 (YEL)

     Test point 2 Body ground

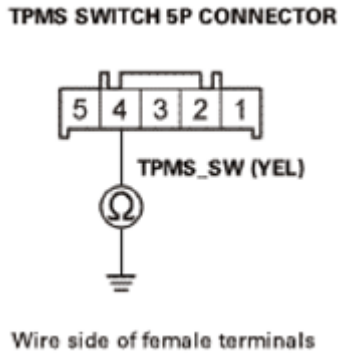

Fig. 48: Checking Continuity Between TPMS Switch 5P Connector No. 4 (YEL) And Body Ground
Courtesy of AMERICAN HONDA MOTOR CO., INC.

Is there continuity?

YES : Repair a short to body ground in the wire between the gauge control module and the TPMS switch.

NO : The TPMS_SW wire is OK. **Replace the gauge control module** See **GAUGE CONTROL MODULE REMOVAL AND INSTALLATION** or **Rewriting the ODO Data and Transferring the Maintenance Minder™ Data to a New Gauge Control Module** .

GETtheMANUALS.org

TPMS INDICATOR DOES NOT COME ON, AND NO DTCS ARE STORED

TPMS Symptom Troubleshooting - TPMS indicator does not come on, and no DTCs are stored

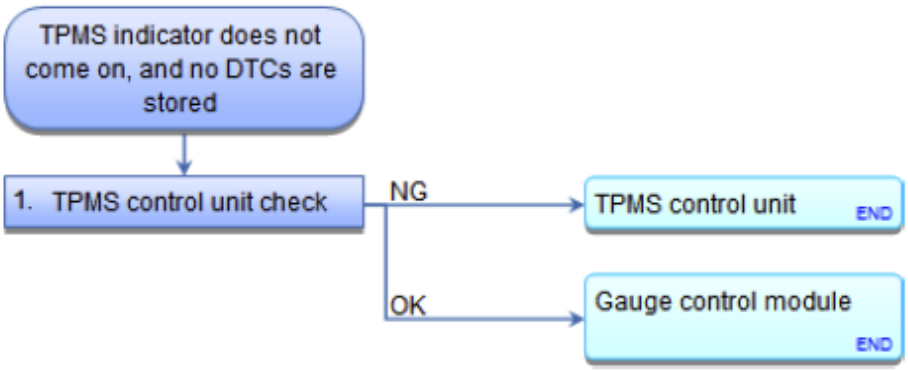

Fig. 49: TPMS Symptom Troubleshooting Flowchart (TPMS Indicator Not On And No DTCS Stored)
Courtesy of AMERICAN HONDA MOTOR CO., INC.

1. TPMS control unit check:
   - 1. Turn the ignition switch to LOCK (0).
   - 2. Disconnect the following connector.

     TPMS CONTROL UNIT 20P CONNECTOR

   - 3. Turn the ignition switch to ON (II).
   - 4. Check the TPMS indicator for several seconds when the ignition switch is turned ON (II).

   Did the indicator come on?

   YES : Check for loose terminals and poor connections at the TPMS control unit. If necessary, **SUBSTITUTE A KNOWN-GOOD TPMS CONTROL UNIT**, and recheck.

   NO : **DO THE TROUBLESHOOTING FOR THE GAUGE CONTROL MODULE** . If necessary, **substitute a known-good gauge control module** See **GAUGE CONTROL MODULE REMOVAL AND INSTALLATION** or **Rewriting the ODO Data and Transferring the Maintenance Minder™ Data to a New Gauge Control Module** .

TPMS INDICATOR DOES NOT GO OFF, AND NO DTCS ARE STORED

GETtheMANUALS.org

TPMS Symptom Troubleshooting - TPMS indicator does not go off, and no DTCs are stored

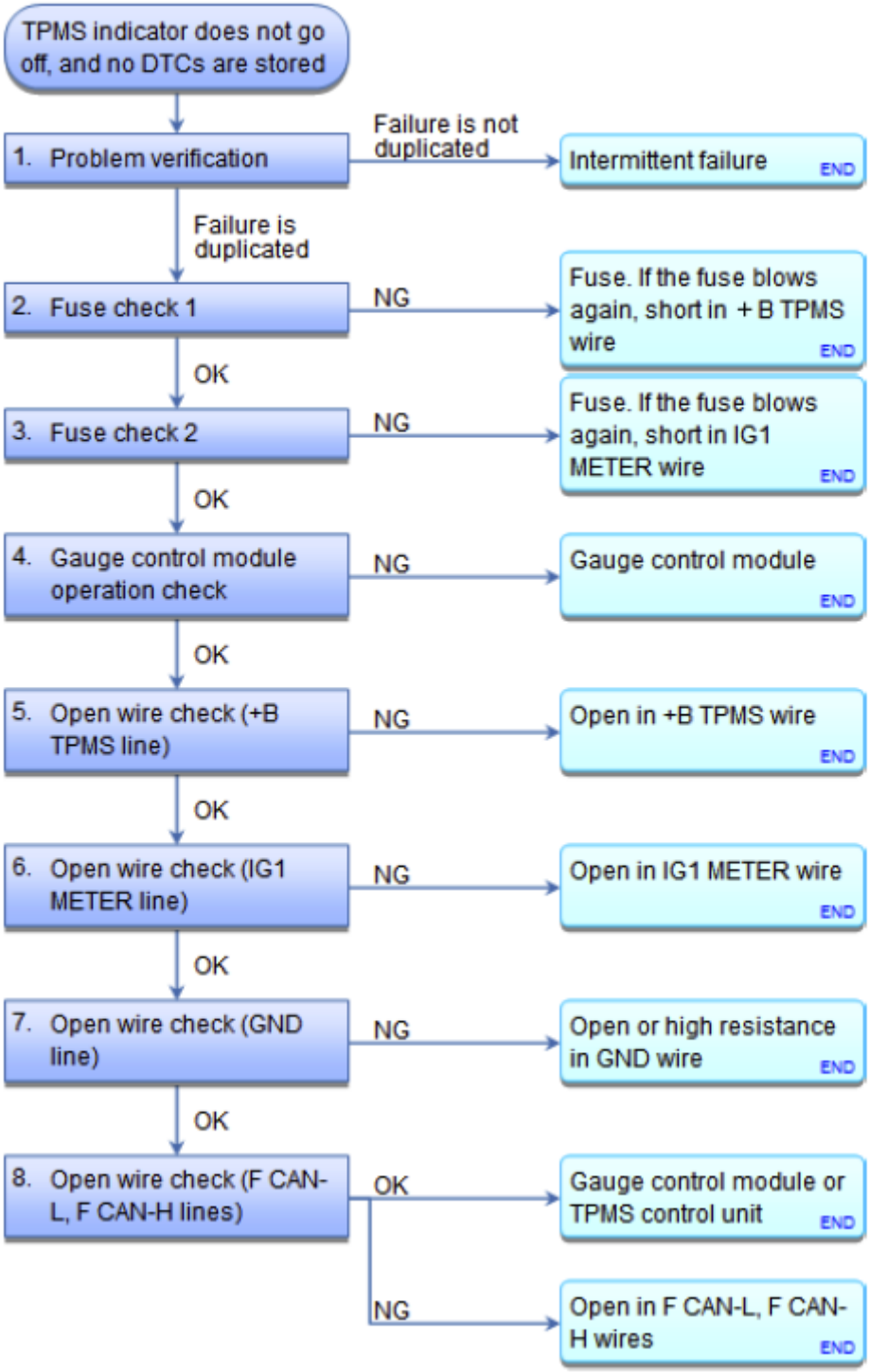

Fig. 50: TPMS Symptom Troubleshooting Flow Chart (TPMS Indicator Not Go Off And No DTCs Stored)
Courtesy of AMERICAN HONDA MOTOR CO., INC.

GETtheMANUALS.org

NOTE: **If the TPMS control unit was replaced, the TPMS indicator will be on until all four tire pressure sensor ID codes are learned.**

1. Problem verification:
   - 1. Turn the ignition switch to ON (II).
   - 2. Check the TPMS indicator for several seconds when the ignition switch is turned to ON (II).

   Did the indicator come on, and then go off?

   YES : Intermittent failure, the system is OK at this time.

   NO : The failure is duplicated. Go to step 2.

2. Fuse check 1:
   - 1. Turn the ignition switch to LOCK (0).
   - 2. Check the following fuse.

     Fuse No. B40 (7.5 A)

     Location Under-dash fuse/relay box

   Is the fuse OK?

   YES : The fuse is OK. Reinstall the fuse, then go to step 3.

   NO : Replace the fuse. If the fuse blows again, repair the short to ground on the No. B40 (7.5 A) fuse circuit.

3. Fuse check 2:
   - 1. Check the following fuse.

     Fuse No. B5 (10 A)

     Location Under-dash fuse/relay box

   Is the fuse OK?

   YES : The fuse is OK. Reinstall the fuse, then go to step 4.

   NO : Replace the fuse. Turn the ignition switch to ON (II), then turn it to LOCK (0) again. If the fuse blows again, repair the short to ground on the No. B5 (10 A) fuse circuit.

4. Gauge control module operation check:
   - 1. **DO THE GAUGE CONTROL MODULE SELF-DIAGNOSTIC FUNCTION** .

GETtheMANUALS.org

Is the gauge control module OK?

YES : Go to step 5.

NO : **Replace the gauge control module** See **GAUGE CONTROL MODULE REMOVAL AND INSTALLATION** or **Rewriting the ODO Data and Transferring the Maintenance Minder™ Data to a New Gauge Control Module**

5. Open wire check (+B TPMS line):
   - 1. Turn the ignition switch to LOCK (0).
   - 2. Disconnect the following connector.

     TPMS CONTROL UNIT 20P CONNECTOR

   - 3. Measure the voltage between test points 1 and 2.

     Test condition IG LOCK (0)

     TPMS control unit 20P connector: disconnected

     Test circuit +B TPMS

     Test point 1 TPMS control unit 20P connector No. 1 (RED)

     Test point 2 Body ground

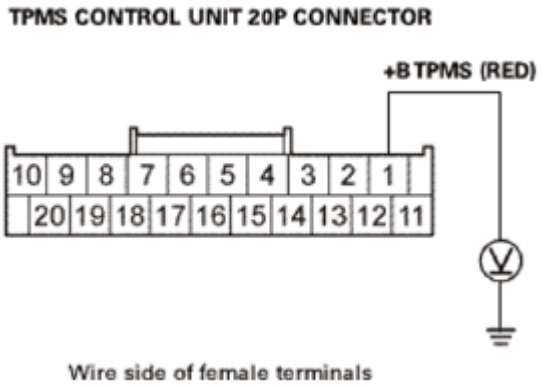

Fig. 51: Measuring Voltage Between TPMS Control Unit 20P Connector No. 1 (RED) And Body Ground
Courtesy of AMERICAN HONDA MOTOR CO., INC.

Is there battery voltage?

YES : The +B TPMS wire is OK. Go to step 6.

NO : Repair an open in the wire between the TPMS control unit and the No. B40 (7.5 A) fuse in the

GETtheMANUALS.org

under-dash fuse/relay box.

6. Open wire check (IG1 METER line):
    - 1. Turn the ignition switch to ON (II).
    - 2. Measure the voltage between test points 1 and 2.

      Test condition IG ON (II)

      TPMS control unit 20P connector: disconnected

      Test circuit IG1 METER

      Test point 1 TPMS control unit 20P connector No. 3 (LT GRN)

      Test point 2 Body ground

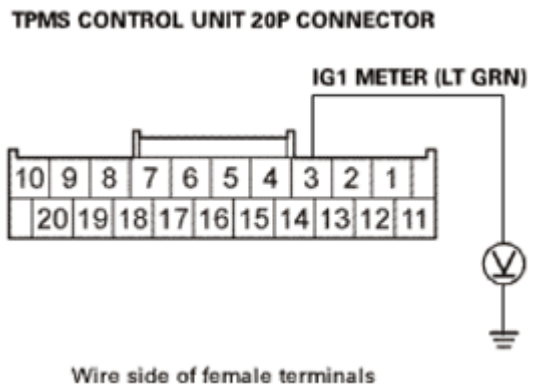

Fig. 52: Measuring Voltage Between TPMS Control Unit 20P Connector No. 3 (LT GRN) And Body Ground
Courtesy of AMERICAN HONDA MOTOR CO., INC.

Is there battery voltage?

YES : The IG1 METER wire is OK. Go to step 7.

NO : Repair an open in the wire between the TPMS control unit and the No. B5 (10 A) fuse in the under-dash fuse/relay box.

7. Open wire check (GND line):
    - 1. Turn the ignition switch to LOCK (0).
    - 2. Reconnect the following connector.

      TPMS control unit 20P connector

    - 3. Turn the ignition switch to ON (II).

GETtheMANUALS.org

- 4. Measure the voltage between test points 1 and 2.

  Test condition IG ON (II)

  Test circuit GND

  Test point 1 TPMS control unit 20P connector No. 8 (BLK)

  Test point 2 Body ground

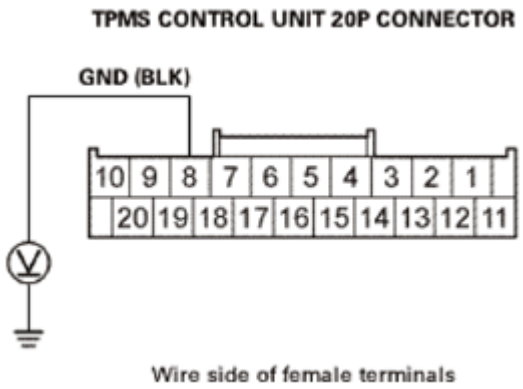

Fig. 53: Measuring Voltage Between TPMS Control Unit 20P Connector No. 8 (BLK) And Body Ground
Courtesy of AMERICAN HONDA MOTOR CO., INC.

Is there 0.1 V or more?

YES : Repair an open or high resistance in the wire between the TPMS control unit and body ground (G503).

NO : The GND wire is OK. Go to step 8

8. Open wire check (F CAN-L, F CAN-H lines)
   - 1. Turn the ignition switch to LOCK (0).
   - 2. Disconnect the following connectors.

     Gauge control module 32P connector See **GAUGE CONTROL MODULE REMOVAL AND INSTALLATION** or **Rewriting the ODO Data and Transferring the Maintenance Minder™ Data to a New Gauge Control Module** .

     TPMS CONTROL UNIT 20P CONNECTOR

   - 3. Check for continuity between test points 1 and 2.

     Test condition IG LOCK (0)

GETtheMANUALS.org

Gauge control module 32P connector: disconnected

TPMS control unit 20P connector: disconnected

Test circuit F CAN-L

Test point 1 TPMS control unit 20P connector No. 20 (RED)

Test point 2 Gauge control module 32P connector No. 20 (RED)

Test circuit F CAN-H

Test point 1 TPMS control unit 20P connector No. 9 (WHT)

Test point 2 Gauge control module 32P connector No. 19 (WHT)

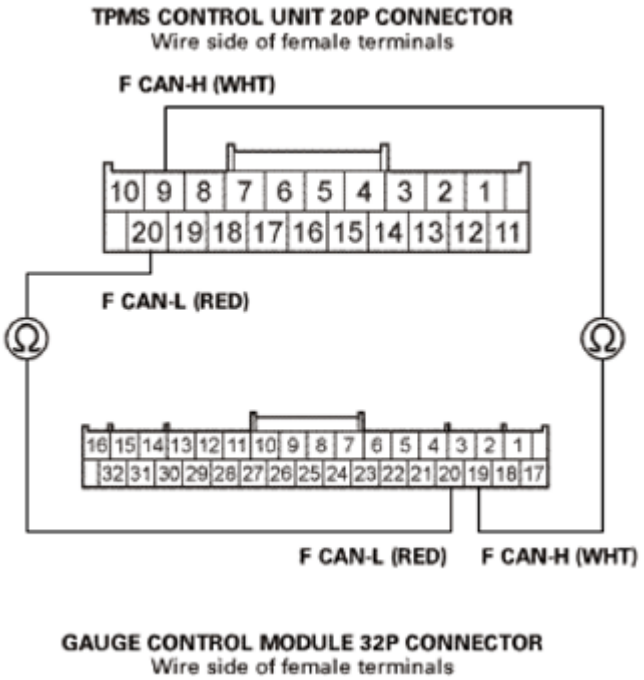

Fig. 54: Checking Continuity Between TPMS Control Unit 20P Connector No. 9 (WHT) And Gauge Control Module 32P Connector No. 19 (WHT)
Courtesy of AMERICAN HONDA MOTOR CO., INC.

Is there continuity?

YES : The F CAN-L, F CAN-H wires are OK. Check for loose terminals and poor connections at the TPMS control unit. If necessary, **SUBSTITUTE A KNOWN-GOOD TPMS CONTROL UNIT**, and recheck.

NO : Repair an open in the wire between the TPMS control unit and the gauge control module.

GETtheMANUALS.org

TORQUE SPECIFICATIONS

NOTE:

- **Refer to the appropriate portion of the manual for the precautions and complete procedures.**
- **Refer to the appropriate portion of the manual for the bolts/nuts not indicated here.**

ENGINE ELECTRICAL TORQUE SPECIFICATIONS

Location	Item	Remark	Torque
Starting system	Starter bolt (10 mm)		45 N.m (4.6 kgf.m, 33 lbf.ft)
	Starter bolt (12 mm)		64 N.m (6.5 kgf.m, 47 lbf.ft)
	Starter harness clamp nut		9 N.m (0.9 kgf.m, 7 lbf.ft)
Ignition system	Spark plugs		18 N.m (1.8 kgf.m, 13 lbf.ft)
Charging system	Alternator bolts		22 N.m (2.2 kgf.m, 16 lbf.ft)
	Drive belt auto-tensioner bolts		22 N.m (2.2 kgf.m, 16 lbf.ft)
	Drive belt auto-tensioner pulley bolt		56 N.m (5.7 kgf.m, 41 lbf.ft)
	Idler pulley bolt		45 N.m (4.6 kgf.m, 33 lbf.ft)

ENGINE MECHANICAL TORQUE SPECIFICATIONS

Location	Item	Remark	Torque
Engine assembly	Side engine mount bolts		64 N.m (6.5 kgf.m, 47 lbf.ft)
	Side engine mount bracket bolt	Use new bolt	74 N.m (7.5 kgf.m, 55 lbf.ft)
	Side engine mount bracket nut	Use new nut	74 N.m (7.5 kgf.m, 55 lbf.ft)
	Upper torque rod bolts (2)	Use new bolts	74 N.m (7.5 kgf.m, 55 lbf.ft)
	Upper torque rod bolt (2)	Use new bolts	54 N.m (5.5 kgf.m, 40 lbf.ft)
	Lower torque rod bolts (12 mm) (2)	Use new bolts	88 N.m (7.5 kgf.m, 55 lbf.ft)
	Lower torque rod bolt (14 mm) (2)	Use new bolt	93 N.m (9.5 kgf.m, 67 lbf.ft)
	Lower torque rod bracket bolts	Use new bolts	74 N.m (7.5 kgf.m, 55 lbf.ft)
	Front engine mount bolts	Use new bolts	74 N.m (7.5 kgf.m, 55 lbf.ft)
			64 N.m (6.5 kgf.m, 47

GETtheMANUALS.org

	Front engine mount bolt	Use new bolt	lbf.ft)
	Transmission mount bolts	Use new bolts	59 N.m (6.0 kgf.m, 44 lbf.ft)
	Transmission mount bolt	Use new bolt	88 N.m (9.0 kgf.m, 65 lbf.ft)
	Transmission mount bracket bolt	Use new bolt	74 N.m (7.5 kgf.m, 55 lbf.ft)
	Transmission mount bracket nuts	Use new nuts	74 N.m (7.5 kgf.m, 55 lbf.ft)
Engine lubrication	Oil pressure switch	Apply liquid gasket on threads	18 N.m (1.8 kgf.m, 13 lbf.ft)
	Oil pan drain bolt	Use new washer	39 N.m (4.0 kgf.m, 29 lbf.ft)
	Oil filter		12 N.m (1.2 kgf.m, 9 lbf.ft)
Intake manifold and exhaust system	Intake manifold bolts (1)		22 N.m (2.2 kgf.m, 16 lbf.ft)
	Intake manifold nuts (1)		22 N.m (2.2 kgf.m, 16 lbf.ft)
	Muffler flexible joint bolts (1)		22 N.m (2.2 kgf.m, 16 lbf.ft)
	Exhaust pipe B self-locking nuts	Use new nuts	33 N.m (3.4 kgf.m, 25 lbf.ft)
(1) Parts to be tightened in a particular order. (2) Follow the appropriate manual procedures closely for torque, sequence, and special steps.			

ENGINE COOLING TORQUE SPECIFICATIONS

Location	Item	Remark	Torque
Cooling system	Water passage bolts		45 N.m (4.6 kgf.m, 33 lbf.ft)
	Water passage nuts		45 N.m (4.6 kgf.m, 33 lbf.ft)
	Water outlet bolts		22 N.m (2.2 kgf.m, 16 lbf.ft)
	Water outlet nuts		22 N.m (2.2 kgf.m, 16 lbf.ft)

FUEL AND EMISSIONS TORQUE SPECIFICATIONS

Location	Item	Remark	Torque
	A/F sensor		44 N.m (4.5 kgf.m, 33 lbf.ft)
	Fuel tank locknut (1)	Use new locknut, locknut plate, and base gasket	100 N.m (10.2 kgf.m, 73.8 lbf.ft)
	Fuel tank support straps bolts 38		N.m (3.9 kgf.m, 28 lbf.ft)
	Knock sensor		22 N.m (2.2 kgf.m, 16

GETtheMANUALS.org

			lbf.ft)
	PCV valve	Use new washer	45 N.m (4.6 kgf.m, 33 lbf.ft)
	Rocker arm oil pressure switch	Use new O-ring	22 N.m (2.2 kgf.m, 16 lbf.ft)
	Secondary HO2S		44 N.m (4.5 kgf.m, 33 lbf.ft)
Fuel and emissions	Throttle body bolts	Use new gasket	22 N.m (2.2 kgf.m, 16 lbf.ft)
	TWC bracket bolts		45 N.m (4.6 kgf.m, 33 lbf.ft)
	TWC upper bolts and nuts	Use new gaskets	31 N.m (3.2 kgf.m, 23 lbf.ft)
	TWC self locking nuts	Use new gaskets and nuts	33 N.m (3.4 kgf.m, 25 lbf.ft)
*1: Parts to be tightened in a particular order. (1) Follow the appropriate manual procedures closely for torque, sequence, and special steps.			

AUTOMATIC TRANSMISSION TORQUE SPECIFICATIONS

Location	Item	Remark	Torque
	ATF drain plug	Use new sealing washer	49 N.m (5.0 kgf.m, 36 lbf.ft)
	Clutch pressure inspection hole sealing bolts	Use new sealing washers	18 N.m (1.8 kgf.m, 13 lbf.ft)
	Drive plate bolts ()		74 N.m (7.5 kgf.m, 55 lbf.ft)
	Shift cable end nut		22 N.m (2.2 kgf.m, 16 lbf.ft)
	Shift lever assembly bolts		22 N.m (2.2 kgf.m, 16 lbf.ft)
Automatic transmission	Shift lever bracket base nut		22 N.m (2.2 kgf.m, 16 lbf.ft)
	Shift lever bracket base bolts		22 N.m (2.2 kgf.m, 16 lbf.ft)
	Transfer assembly bolts		44 N.m (4.5 kgf.m, 32 lbf.ft)
	Transmission fluid pressure switches	Use new sealing washer	20 N.m (2.0 kgf.m, 15 lbf.ft)
	Transmission assembly mounting bolts (10mm)		44 N.m (4.5 kgf.m, 33 lbf.ft)
	Transmission assembly mounting bolts (12mm)		64 N.m (6.5 kgf.m, 47 lbf.ft)

REAR DIFFERENTIAL TORQUE SPECIFICATIONS

GETtheMANUALS.org

Location	Item	Remark	Torque
Rear differential	Filler plug	Use new sealing washer	47 N.m (4.8 kgf.m, 35 lbf.ft)
	Drain plug	Use new sealing washer	47 N.m (4.8 kgf.m, 35 lbf.ft)
	Rear differential mount rubber bolts		31 N.m (3.2 kgf.m, 23 lbf.ft)
	Right and left rear differential mount brackets B bolt (10 mm)	• Use new bolt • Use new washer	64 N.m (6.5 kgf.m, 47 lbf.ft)
	Right and left rear differential mount brackets B bolts (12 mm)	Use new bolts	59 N.m (6.0 kgf.m, 44 lbf.ft)
	Rear differential mount assembly A bolts (10 mm)		44 N.m (4.5 kgf.m, 32 lbf.ft)
	Rear differential mount assembly A bolts (12 mm)	Use new bolts	59 N.m (6.0 kgf.m, 44 lbf.ft)
*1: Parts to be tightened in a particular order. (1) Follow the appropriate manual procedures closely for torque, sequence, and special steps.			

DRIVELINE/AXLE TORQUE SPECIFICATIONS

Location	Item	Remark	Torque
Driveline/axle	Front driveshaft spindle nut	• Use oil on the seating surface • Use new nut	328 N.m (33.5 kgf.m, 242 lbf.ft)
	Rear driveshaft spindle nut	• Use oil on the seating surface • Use new nut	181 N.m (18.5 kgf.m, 133 lbf.ft)
	Intermediate shaft dowel bolts		39 N.m (4.0 kgf.m, 29 lbf.ft)
	Intermediate shaft flange bolt		39 N.m (4.0 kgf.m, 29 lbf.ft)
	No. 1 propeller shaft bolts	Use new bolts	32 N.m (3.3 kgf.m, 24 lbf.ft)
	No. 2 propeller shaft bolts	Use new bolts	32 N.m (3.3 kgf.m, 24 lbf.ft)
	Center support bearing bolts	Use new bolts	39 N.m (4.0 kgf.m, 29 lbf.ft)
	No. 1 propeller shaft protector bolts	Use new bolts	22 N.m (2.2 kgf.m, 16 lbf.ft)
	No. 2 propeller shaft protector bolts	Use new bolts	22 N.m (2.2 kgf.m, 16 lbf.ft)

GETtheMANUALS.org

STEERING TORQUE SPECIFICATIONS

Location	Item	Remark	Torque value
Steering	Steering wheel nut		39 N.m (4.0 kgf.m, 29 lbf.ft)
	Steering joint bolts		29 N.m (3.0 kgf.m, 21 lbf.ft)
	Steering column bolts		22 N.m (2.2 kgf.m, 16 lbf.ft)
	Steering column nuts		13 N.m (1.3 kgf.m, 10 lbf.ft)
	Steering gearbox bolts	Use new bolts	87 N.m (8.9 kgf.m, 64 lbf.ft)
	Steering gearbox stiffener bolts	Use new bolts	29 N.m (3.0 kgf.m, 21 lbf.ft)
	Tie-rod end nuts		54 N.m (5.5 kgf.m, 40 lbf.ft)
	Tie-rod end lock nuts		44 N.m (4.5 kgf.m, 32 lbf.ft)

SUSPENSION TORQUE SPECIFICATIONS

Location	Item	Remark	Torque
Front suspension	Wheel nuts		108 N.m (11.0 kgf.m, 80 lbf.ft)
	Knuckle damper pinch bolts/nuts	Use new bolts/nuts	157 N.m (16.0 kgf.m, 116 lbf.ft)
	Lower ball joint nuts	Use new nuts	52 N.m (5.3 kgf.m, 38 lbf.ft)
	Lower ball joint bolt	Use new bolt	52 N.m (5.3 kgf.m, 38 lbf.ft)
	Lower ball joint castle nut	Use new nut	59-69 N.m (6.0-7.0 kgf.m, 44-51 lbf.ft)
	Lower arm bolt (12mm)	Use new bolt	59 N.m (6.0 kgf.m, 44 lbf.ft)
	Lower arm bolt (14mm)	Use new bolt	113 N.m (11.5 kgf.m, 83 lbf.ft)
	Stabilizer bar bolts		22 N.m (2.2 kgf.m, 16 lbf.ft)
	Stabilizer link nut		78 N.m (8.0 kgf.m, 58 lbf.ft)
	Stabilizer link nut	Use new nut	78 N.m (8.0 kgf.m, 58 lbf.ft)
	Damper self-locking nut	Use new nut	44 N.m (4.5 kgf.m, 32 lbf.ft)
	Damper upper nuts	Use new nuts	44 N.m (4.5 kgf.m, 32 lbf.ft)
Rear suspension	Wheel nuts		108 N.m (11.0 kgf.m, 80 lbf.ft)
	Knuckle bolt (14mm)	Use new bolt	69 N.m (7.0 kgf.m, 51 lbf.ft)
	Knuckle nut (12mm)	Use new nut	57 N.m (5.8 kgf.m, 42 lbf.ft)
	Upper arm bolts (12mm)	Use new bolts	93 N.m (9.5 kgf.m, 44 lbf.ft)
	Trailing arm front bolts	Use new bolts	74 N.m (7.5 kgf.m, 54 lbf.ft)
	Trailing arm rear bolt	Use new bolt	59 N.m (6.0 kgf.m, 44 lbf.ft)
	Stabilizer bar bolts		22 N.m (2.2 kgf.m, 16 lbf.ft)
	Stabilizer link self-locking nut	Use new nut	38 N.m (3.9 kgf.m, 28 lbf.ft)
	Stabilizer link nut	Use new nut	38 N.m (3.9 kgf.m, 28 lbf.ft)
	Damper lower bolt	Use new bolt	93 N.m (9.5 kgf.m, 69 lbf.ft)
	Damper upper nut	Use new nut	74 N.m (7.5 kgf.m, 54 lbf.ft)
	Damper self-locking nut	Use new nut	29 N.m (3.0 kgf.m, 22 lbf.ft)

BRAKE TORQUE SPECIFICATIONS

Location	Item	Remark	Torque

GETtheMANUALS.org

Conventional brake	Front brake caliper bolts 8mm (2WD)		34 N.m (3.5 kgf.m, 25 lbf.ft)
	Front brake caliper bolts 10mm (AWD)		50 N.m (5.1 kgf.m, 37 lbf.ft)
	Front brake caliper bracket bolts		137 N.m (14.0 kgf.m, 101 lbf.ft)
	Front brake hose banjo bolt	Use new washers	35 N.m (3.6 kgf.m, 26 lbf.ft)
	Rear brake caliper bolts		23 N.m (2.3 kgf.m, 17 lbf.ft)
	Rear brake caliper bracket bolts		108 N.m (11.0 kgf.m, 80 lbf.ft)
	Rear brake hose banjo bolt		Use new washers 35 N.m (3.6 kgf.m, 26 lbf.ft)
	Parking brake pedal bolt		22 N.m (2.2 kgf.m, 16 lbf.ft)
	Parking brake pedal nuts		22 N.m (2.2 kgf.m, 16 lbf.ft)
	Brake pedal bolt		22 N.m (2.2 kgf.m, 16 lbf.ft)
	Brake booster/brake pedal nuts		12 N.m (1.2 kgf.m, 9 lbf.ft)
	Master cylinder nuts		15 N.m (1.5 kgf.m, 11 lbf.ft)
	Master cylinder brake line		22 N.m (2.2 kgf.m, 16 lbf.ft)
VSA	VSA modulator-control unit brake line (10 mm)		15 N.m (1.5 kgf.m, 11 lbf.ft)
	VSA modulator-control unit brake line (12 mm)		22 N.m (2.2 kgf.m, 16 lbf.ft)

BODY TORQUE SPECIFICATIONS

Location	Item	Remark	Torque
Frame	Front subframe mid bolts	Use new bolts	71 N.m (7.2 kgf.m, 52 lbf.ft)
	Front subframe bolts	Use new bolts	103 N.m (10.5 kgf.m, 75.9 lbf.ft)
	Rear subframe bolts	Use new bolts	69 N.m (7.0 kgf.m, 51 lbf.ft)
	Rear subframe stiffener bolt		29 N.m (3.0 kgf.m, 21 lbf.ft)

HEATING, VENTILATION, AND AIR CONDITIONING TORQUE SPECIFICATIONS

Location	Item	Remark	Torque
A/C compressor	A/C compressor bracket bolts		45 N.m (4.6 kgf.m, 33 lbf.ft)
	A/C compressor bolts		22 N.m (2.2 kgf.m, 16 lbf.ft)
	A/C compressor center nut		25.5 N.m (2.6 kgf.m, 19 lbf.ft)
	A/C compressor relief valve		9.8 N.m (1.00 kgf.m, 7.2 lbf.ft)
Receiver line	A/C pressure sensor		11 N.m (1.1 kgf.m, 8 lbf.ft)

BODY ELECTRICAL TORQUE SPECIFICATIONS

Location	Item	Remark	Torque
Wipers/washers	Windshield wiper arm nut		30 N.m (3.0 kgf.m, 22 lbf.ft)
	Windshield wiper linkage nut		31 N.m (3.2 kgf.m, 23 lbf.ft)

GETtheMANUALS.org

TRANSFER ASSEMBLY COMPONENT LOCATION INDEX

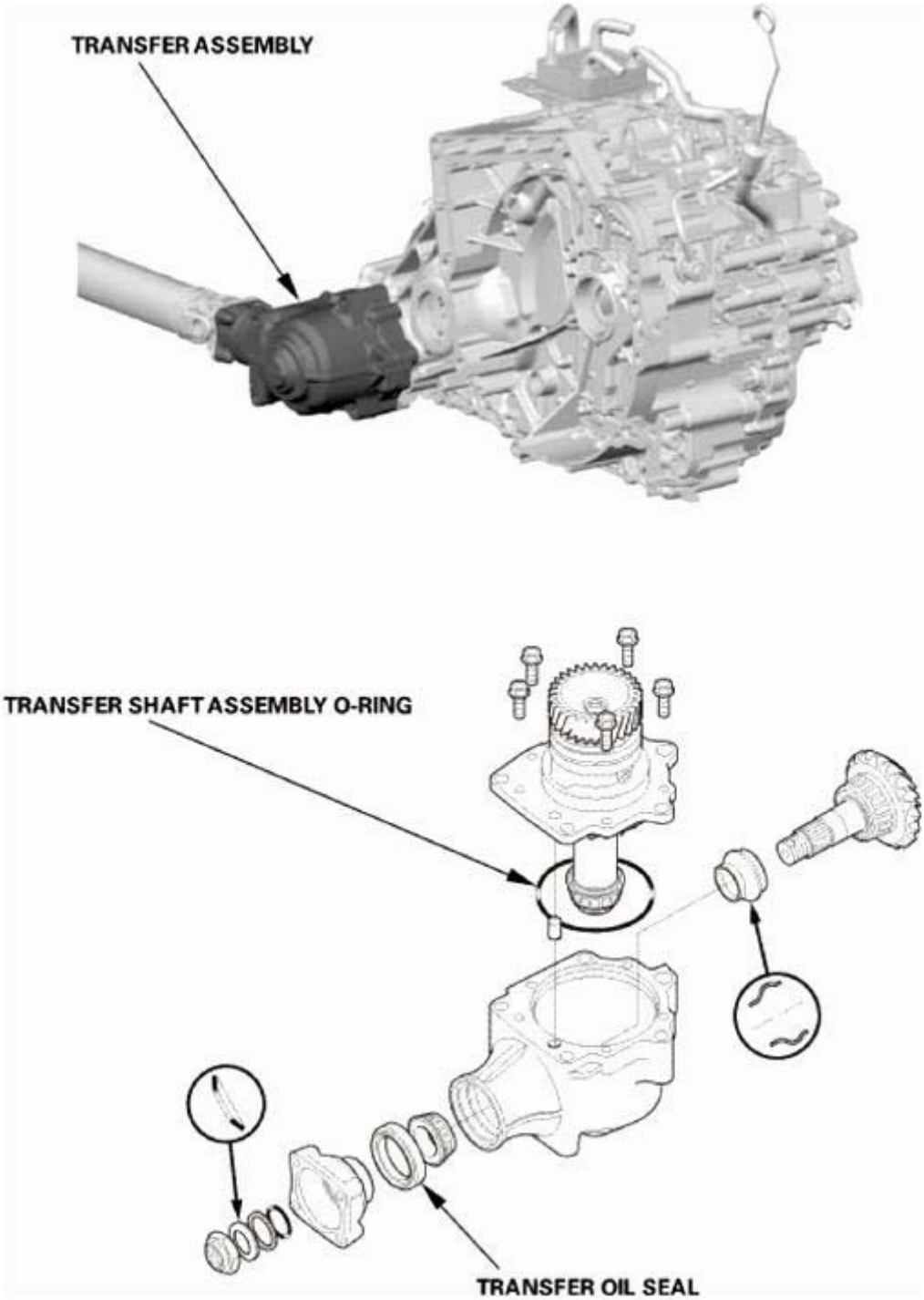

Fig. 1: Transfer Assembly Components Location

GETtheMANUALS.org

Courtesy of AMERICAN HONDA MOTOR CO., INC.

TRANSFER ASSEMBLY	**INSPECTION**
	REMOVAL AND INSTALLATION
TRANSFER OIL SEAL	**REPLACEMENT**
TRANSFER SHAFT ASSEMBLY O-RING	**REPLACEMENT**

TRANSFER ASSEMBLY INSPECTION

REMOVAL

1. Vehicle Lift
    1. Raise the vehicle on a lift, and make sure it is securely supported.
2. Front Splash Shield
    1. Remove the bolts (A), then remove the clips (B) that secure the front inner fender and the front splash shield (C) to the body.
    2. From under the front bumper (D), remove the clips (E).
    3. From under the body, remove the clips (F), then pull out the front splash shield.

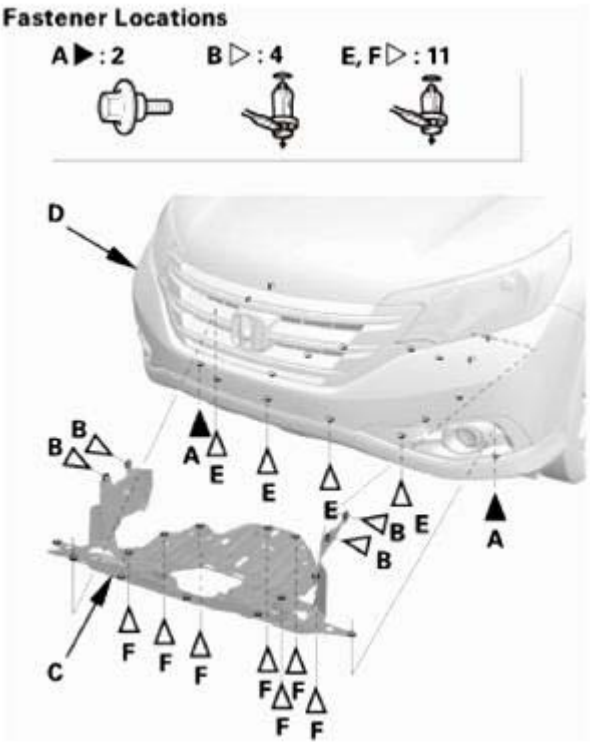

Fig. 2: Identifying Front Splash Shield, Bumper And Fasteners
Courtesy of AMERICAN HONDA MOTOR CO., INC.

3. Front Floor Undercover

GETtheMANUALS.org

1. Remove the bolts (A) and the clips (B, C) securing the front floor undercover (D), then remove the front floor undercover.

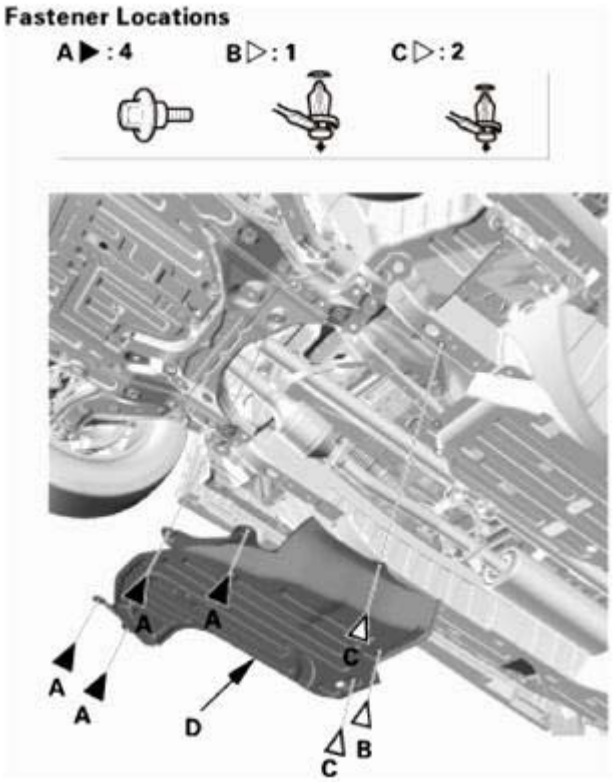

Fig. 3: Identifying Front Floor Undercover And Fasteners
Courtesy of AMERICAN HONDA MOTOR CO., INC.

4. Propeller Shaft Transmission Side - Disconnection
    1. Make reference mark (A) across the No. 1 propeller shaft (B) and the transfer companion flange (C).
    2. Separate the No. 1 propeller shaft from the transfer companion flange.

NOTE: Suspend the propeller shaft with an appropriate size nylon strap.

GETtheMANUALS.org

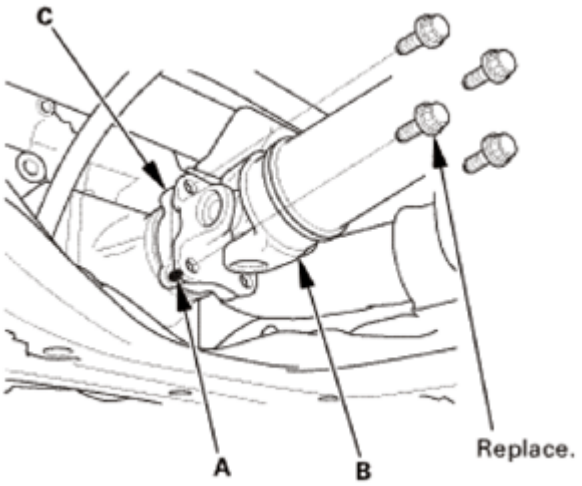

Fig. 4: Identifying Reference Mark On No. 1 Propeller Shaft And Transfer Companion Flange
Courtesy of AMERICAN HONDA MOTOR CO., INC.

INSPECTION

1. Transfer Gear Backlash - Measurement
    1. Shift the shift lever to N.
    2. Set a dial indicator (A) on the companion flange (B).
    3. Measure the transfer gear backlash.

       Standard: 0.06-0.16 mm (0.0024-0.0063 in)

    4. If the backlash is out of the standard, replace the transfer assembly.

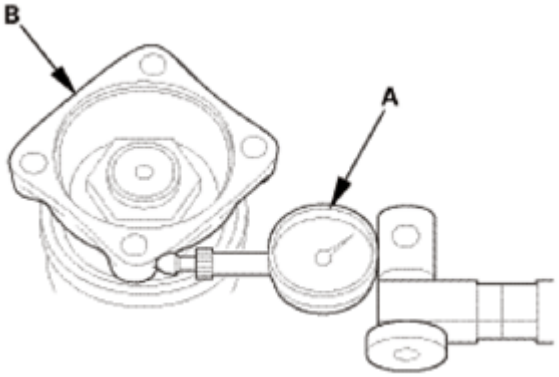

Fig. 5: Measuring Transfer Gear Backlash Using Tool
Courtesy of AMERICAN HONDA MOTOR CO., INC.

2. Transfer Fluid Leak - Check
    1. Check for fluid leaks between the mating faces of the transfer assembly and the transmission.

GETtheMANUALS.org

2. If there is leak, remove the transfer assembly, then replace the O-ring.
3. Check for fluid leaks between the mating surfaces of the transfer housing and transfer shaft assembly.
4. If there is leak, remove the transfer shaft assembly, then replace the transfer shaft assembly O-ring.
5. Check for fluid leaks between the transfer companion flange and the transfer oil seal.
6. If there is leak, remove the transfer assembly, then replace the transfer oil seal and the O-ring on the transfer output shaft (hypoid gear).

NOTE: **Do not replace the oil seal with the transfer assembly on the transmission.**

REMOVAL

1. ATF - Replacement
    1. Remove the drain plug (A), and drain the ATF.
    2. Reinstall the drain plug using a new sealing washer (B).

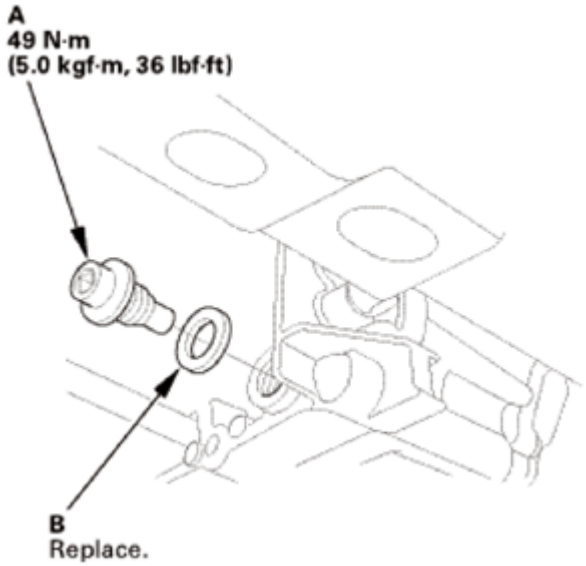

Fig. 6: Identifying Sealing Washer And Drain Plug With Torque Specification
Courtesy of AMERICAN HONDA MOTOR CO., INC.

2. Under-Floor TWC Assembly
    1. Remove the under-floor TWC.

GETtheMANUALS.org

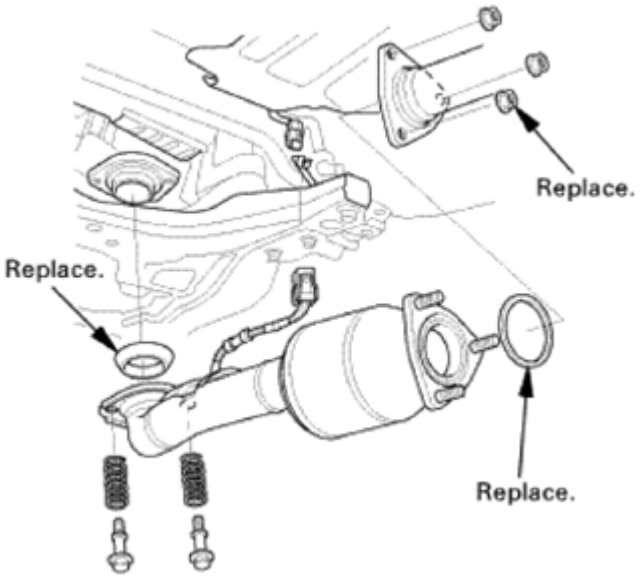

Fig. 7: Identifying Under-Floor TWC Assembly Components
Courtesy of AMERICAN HONDA MOTOR CO., INC.

3. Transfer Assembly
    1. Remove the transfer assembly (A) and the dowel pin (B).
    2. Remove the O-ring (C) from the transfer assembly.

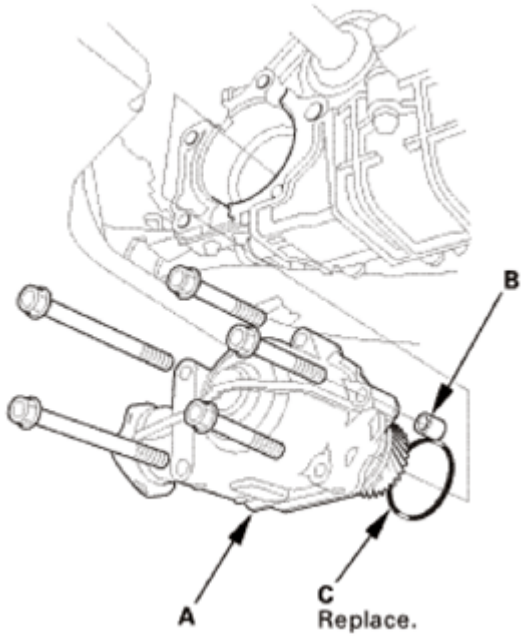

Fig. 8: Identifying Transfer Assembly, Dowel Pin And O-Ring
Courtesy of AMERICAN HONDA MOTOR CO., INC.

INSPECTION

GETtheMANUALS.org

1. Total Starting Torque - Measurement
    1. Secure the transfer housing (A) in a bench vise (B) with soft jaws.

        NOTE: **To prevent damaging the transfer housing, always use wood blocks or equivalent materials between the transfer housing and the bench vise.**

    2. Rotate the transfer companion flange several times to seat the tapered roller bearings.
    3. Measure the starting torque at the companion flange (C) using a torque wrench (D) and a socket (E).

        Standard: 2.44-3.88 N.m (24.9-39.6 kgf.cm, 21.6-34.3 lbf.in)

    4. If the starting torque is out of the standard, replace the transfer assembly.

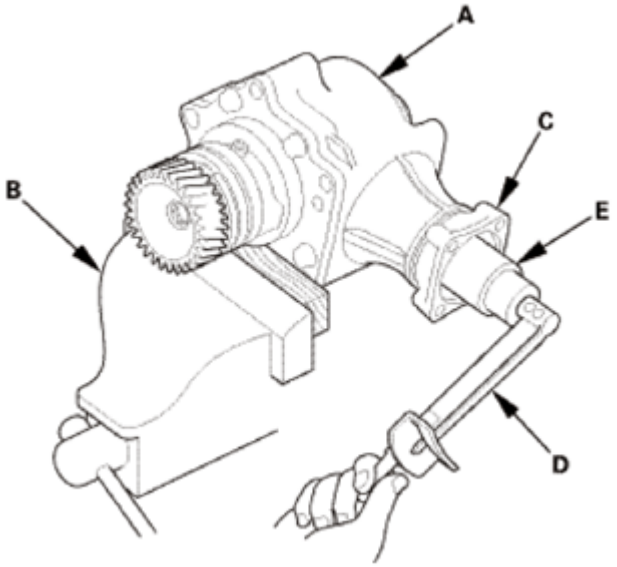

Fig. 9: Measuring Total Starting Torque Using Tool
Courtesy of AMERICAN HONDA MOTOR CO., INC.

2. Transfer Drive Gear Tooth Contact - Inspection
    1. Remove the transfer shaft assembly (A) and the dowel pin (B).

GETtheMANUALS.org

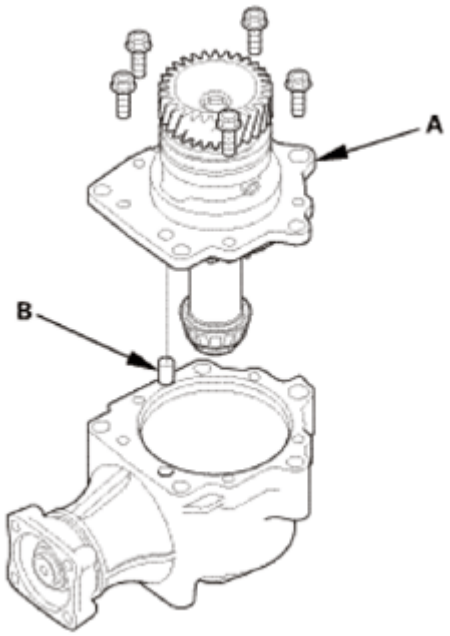

Fig. 10: Identifying Transfer Shaft Assembly And Dowel Pin
Courtesy of AMERICAN HONDA MOTOR CO., INC.

2. Remove the O-ring (A).
3. Apply Prussian Blue to both sides of the transfer drive gear (hypoid gear) (B) teeth lightly and evenly.

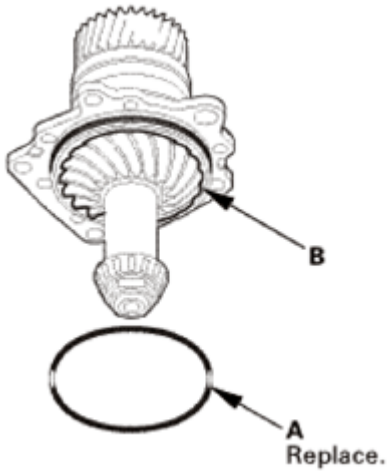

Fig. 11: Identifying Transfer Drive Gear And O-Ring
Courtesy of AMERICAN HONDA MOTOR CO., INC.

4. Temporarily install the transfer shaft assembly (A) and the dowel pin (B). Do not install the O-ring during inspection.
5. Rotate the companion flange in both directions until the transfer gears rotate one full turn in both directions.

GETtheMANUALS.org

6. Remove the transfer shaft assembly and the dowel pin.

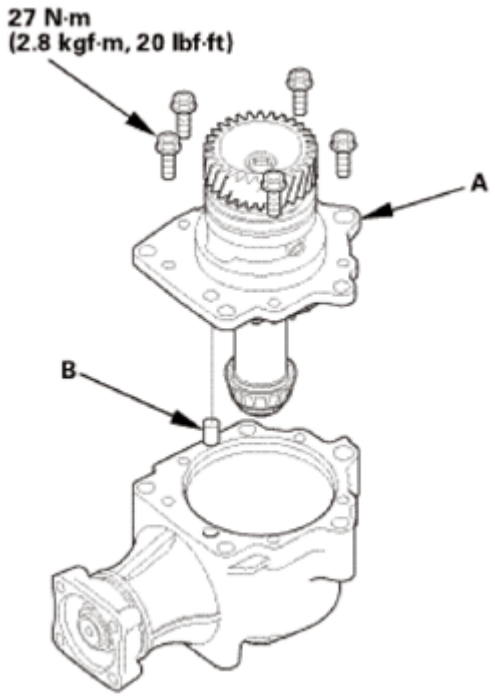

Fig. 12: Identifying Transfer Shaft Assembly And Dowel Pin With Torque Specifications
Courtesy of AMERICAN HONDA MOTOR CO., INC.

7. Check the transfer drive gear (hypoid gear) tooth contact pattern. The pattern should be centered on the gear teeth as shown.
8. If the tooth contact pattern are incorrect, replace the transfer assembly.

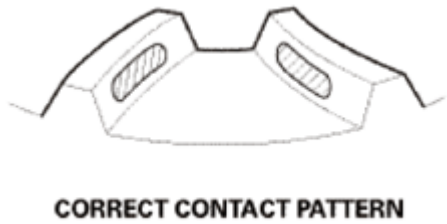

Fig. 13: Identifying Correct Contact Pattern
Courtesy of AMERICAN HONDA MOTOR CO., INC.

INSTALLATION

NOTE: Apply a light coat of clean ATF on all moving parts before reassembly.

1. Transfer Shaft Assembly
    1. Install a new O-ring (A).

GETtheMANUALS.org

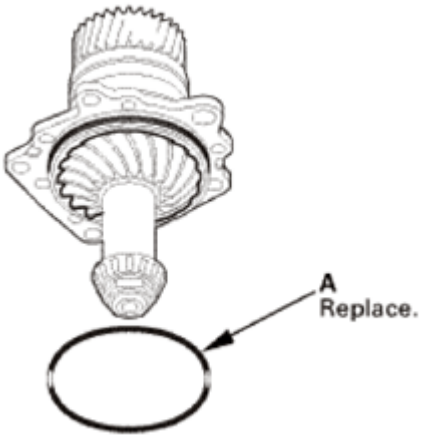

Fig. 14: Identifying Transfer Shaft Assembly O-Ring
Courtesy of AMERICAN HONDA MOTOR CO., INC.

2. Install the transfer shaft assembly (A) and the dowel pin (B).

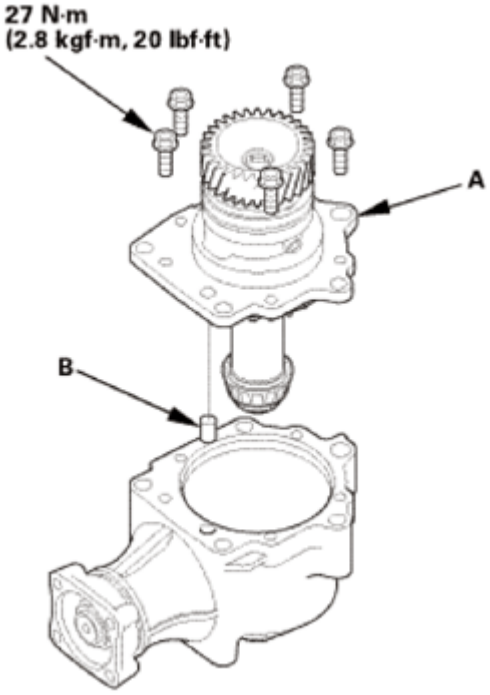

Fig. 15: Identifying Transfer Shaft Assembly And Dowel Pin With Torque Specification
Courtesy of AMERICAN HONDA MOTOR CO., INC.

2. Transfer Assembly
    1. Install a new O-ring (A) on the transfer assembly (B).
    2. Install the transfer assembly and the dowel pin (C).

GETtheMANUALS.org

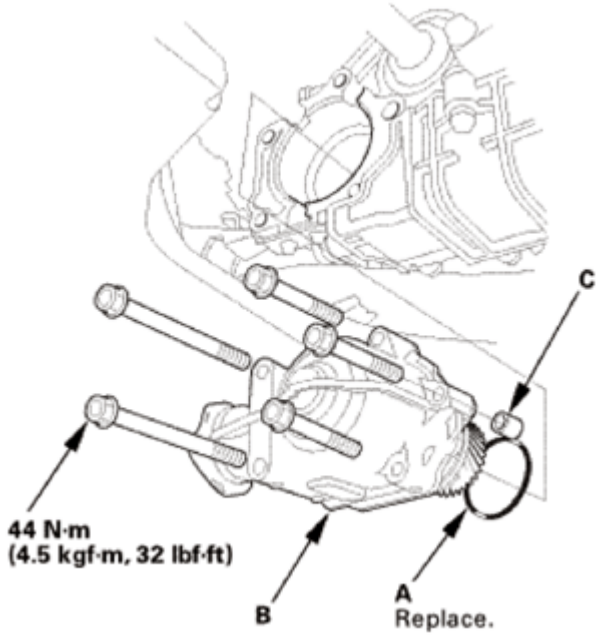

Fig. 16: Identifying Transfer Assembly, O-Ring And Dowel Pin With Torque Specifications
Courtesy of AMERICAN HONDA MOTOR CO., INC.

3. Propeller Shaft Transmission Side - Reconnection
    1. Set the No. 1 propeller shaft (A) to the transfer companion flange (B) by aligning the reference mark (C) you made during the removal procedure. Then install new flange bolts (D) to the specified torque.

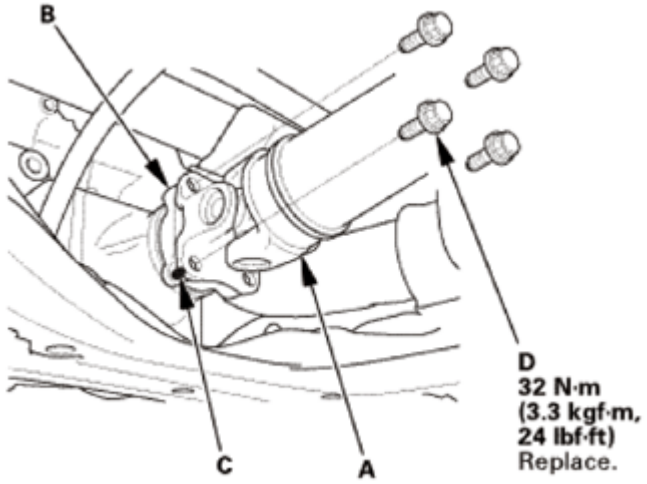

Fig. 17: Identifying Alignment Marks On No. 1 Propeller Shaft And Transfer Companion Flange With Torque Specifications
Courtesy of AMERICAN HONDA MOTOR CO., INC.

4. Under Floor TWC Assembly
    1. Install the under-floor TWC.

GETtheMANUALS.org

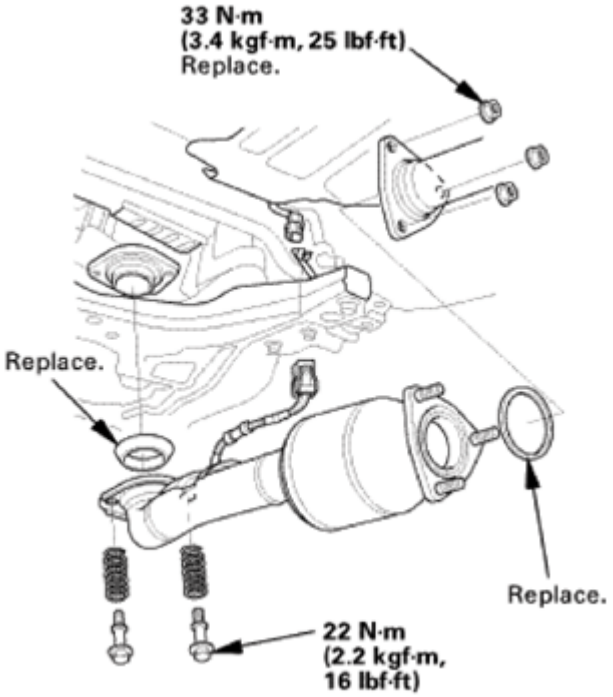

Fig. 18: Identifying Under Floor TWC Assembly Components With Torque Specifications
Courtesy of AMERICAN HONDA MOTOR CO., INC.

5. Front Floor Undercover
    1. Install the front floor undercover (A), then install the bolts (B) and the clips (C, D). Make sure the clips snap into place securely.

GETtheMANUALS.org

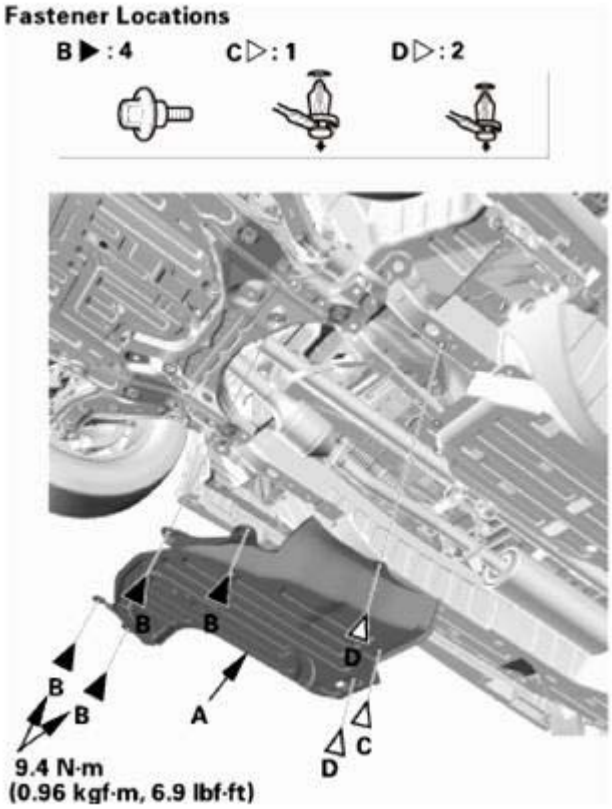

Fig. 19: Identifying Front Floor Undercover And Fasteners
Courtesy of AMERICAN HONDA MOTOR CO., INC.

6. Front Splash Shield
    1. Install the front splash shield (A), then install the bolts (B) and the clips (C, D). Make sure the clips snap into place securely.

GETtheMANUALS.org

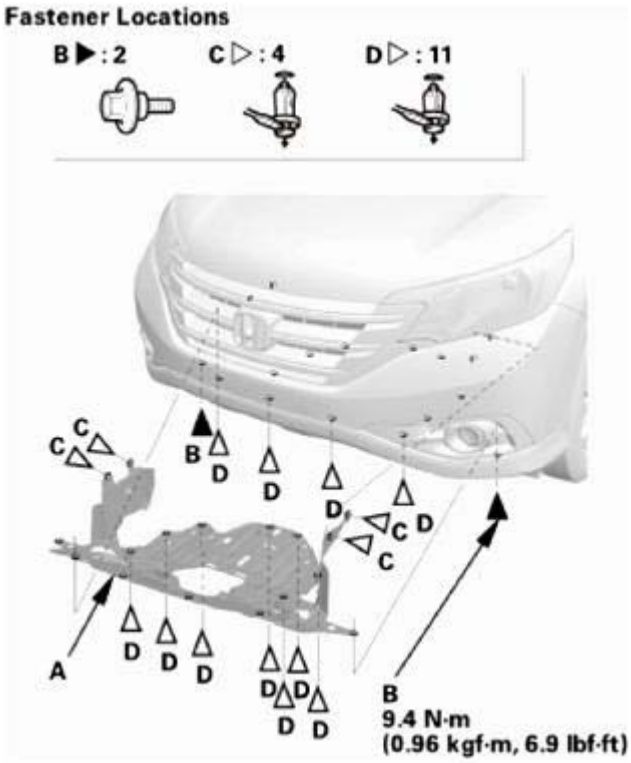

Fig. 20: Identifying Front Splash Shield And Fasteners
Courtesy of AMERICAN HONDA MOTOR CO., INC.

7. ATF - Replacement
    1. Remove the ATF dipstick (yellow loop) (A), and wipe it with a clean cloth.

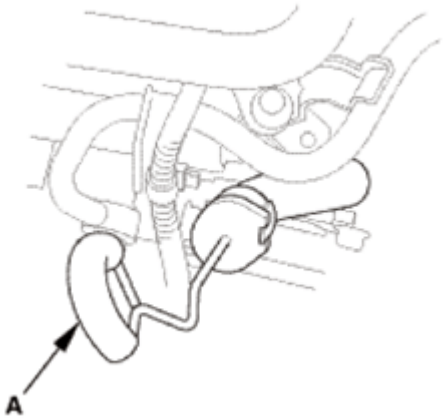

Fig. 21: Identifying ATF Dipstick
Courtesy of AMERICAN HONDA MOTOR CO., INC.

    2. Refill the transmission with the recommended fluid into the dipstick guide tube opening (A) to bring the fluid level between the upper mark and the lower mark of the dipstick. Always use ATF DW-1 (genuine Honda automatic transmission fluid). Using a non-Honda ATF can affect shift

GETtheMANUALS.org

quality.

Automatic Transmission Fluid Capacity

2WD:

2.2 L (2.3 US qt) at change

5.85 L (6.18 US qt) at overhaul

AWD/4WD:

2.6 L (2.7 US qt) at change

6.4 L (6.8 US qt) at overhaul

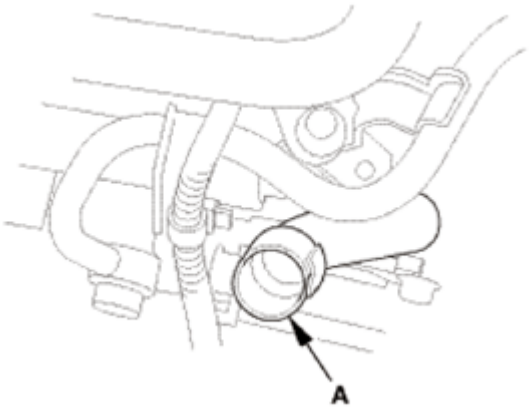

Fig. 22: Identifying Dipstick Guide Tube Opening
Courtesy of AMERICAN HONDA MOTOR CO., INC.

3. Insert the dipstick (A) into the guide tube aligning the notch (B) with the guide tab (C).

GETtheMANUALS.org

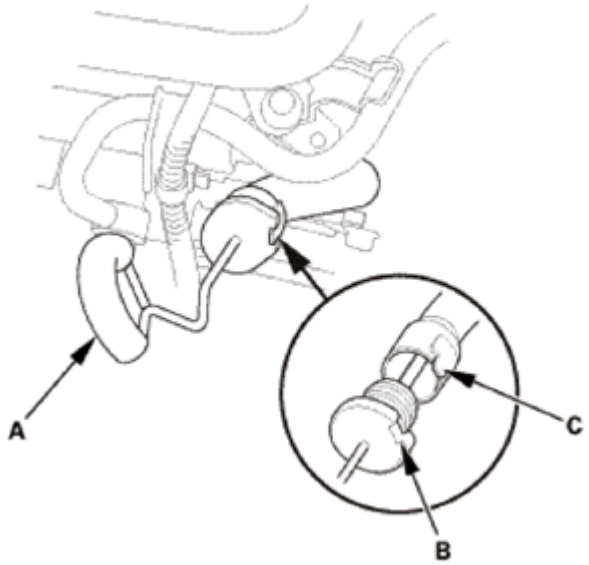

Fig. 23: Identifying Dipstick, Notch And Guide Tab
Courtesy of AMERICAN HONDA MOTOR CO., INC.

4. Remove the dipstick.
5. Make sure the fluid level is between the upper mark (A) and the lower mark (B) on the dipstick.
6. Insert the dipstick into the guide tube aligning the notch with the guide tab.

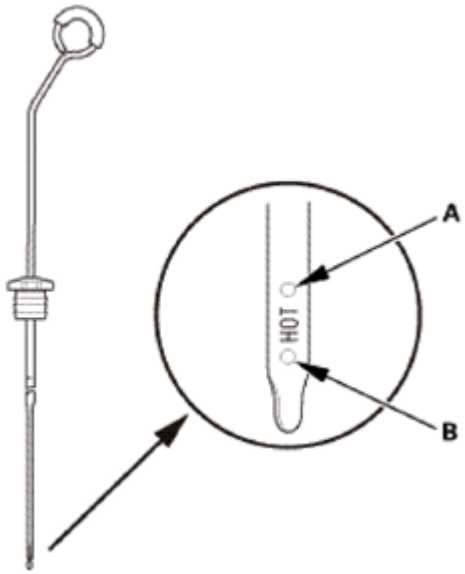

Fig. 24: Identifying Upper And Lower Marks On Dipstick
Courtesy of AMERICAN HONDA MOTOR CO., INC.

8. Warm Up The Engine
    1. Start the engine. Hold the engine speed at 3, 00 rpm without load in P or N until the radiator fan comes on.

GETtheMANUALS.org

2. Park the vehicle on level ground.
3. Turn the ignition switch to LOCK (0).

9. ATF Level Check

NOTE:

- **Keep all foreign particles out of the transmission.**
- **Check the fluid level within 60-90 seconds after turning the engine off.**
- **Higher fluid level may be indicated if the radiator fan comes on twice or more.**

1. Remove the ATF dipstick (yellow loop) (A), and wipe it with a clean cloth.
2. Insert the dipstick into the guide tube aligning the notch (B) with the guide tab (C).

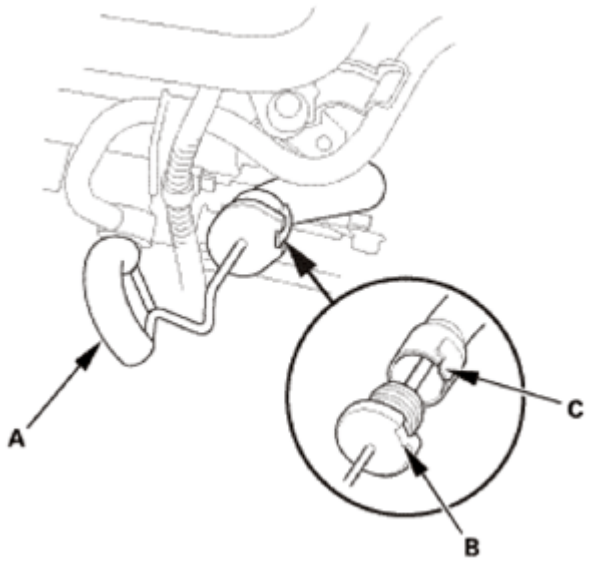

Fig. 25: Identifying Dipstick, Notch And Guide Tab
Courtesy of AMERICAN HONDA MOTOR CO., INC.

3. Remove the dipstick, and check the ATF level. It should be between the upper mark (A) and the lower mark (B).
4. If the ATF level is below the lower mark, check for fluid leaks at the transmission, the hoses, and the line joints. If a problem is found, fix it before filling the transmission with ATF.

NOTE: **If the vehicle is driven when the ATF level is below the lower mark, one or more of these symptoms may occur:**

- Transmission damage.
- Vehicle does not move in any gear.
- Vehicle accelerates poorly, and engine revs up abnormally high when starting off in forward and reverse positions.

GETtheMANUALS.org

- Engine vibrates at idle.

5. If the ATF level is above the upper mark, drain the ATF to proper level.

NOTE: **If the vehicle is driven when the ATF level is above the upper mark, the vehicle may creep forward while in N, or have shifting problems.**

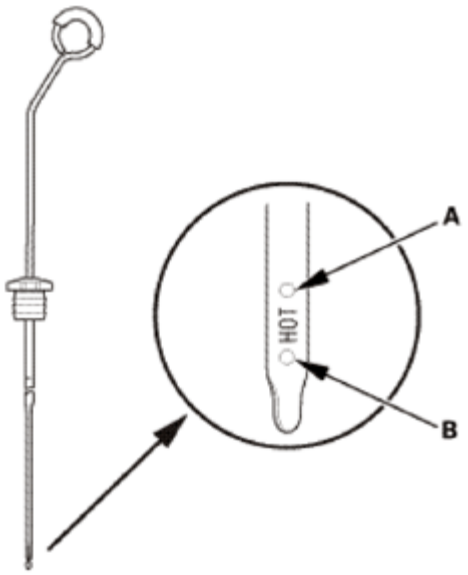

Fig. 26: Identifying Upper And Lower Marks On Dipstick
Courtesy of AMERICAN HONDA MOTOR CO., INC.

6. If necessary, fill the transmission with ATF through the dipstick guide tube opening (A) to bring the fluid level between the upper mark and the lower mark of the dipstick. Do not fill the fluid above the upper mark. Always use ATF DW-1 (genuine Honda automatic transmission fluid). Using a non-Honda ATF can affect shift quality.
7. Insert the dipstick into the guide tube aligning the notch with the guide tab.

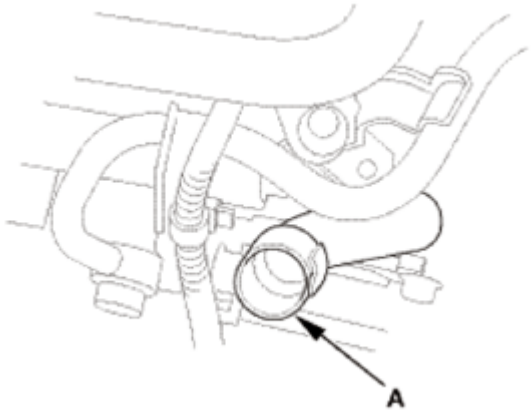

Fig. 27: Identifying Dipstick Guide Tube Opening
Courtesy of AMERICAN HONDA MOTOR CO., INC.

GETtheMANUALS.org

10. HDS DLC - Connection
    1. Connect the HDS to the data link connector (DLC) (A) located under the driver's side of the dashboard.
    2. Turn the ignition switch to ON (II).
    3. Make sure the HDS communicates with the vehicle. If it does not communicate, go to the DLC circuit troubleshooting.

Fig. 28: Identifying Data Link Connector
Courtesy of AMERICAN HONDA MOTOR CO., INC.

11. Maintenance Minder Reset
    1. **RESET THE MAINTENANCE MINDER** .

TRANSFER ASSEMBLY REMOVAL AND INSTALLATION

REMOVAL

1. Vehicle Lift
    1. Raise the vehicle on a lift, and make sure it is securely supported.
2. Front Splash Shield
    1. Remove the bolts (A), then remove the clips (B) that secure the front inner fender and the front splash shield (C) to the body.
    2. From under the front bumper (D), remove the clips (E).
    3. From under the body, remove the clips (F), then pull out the front splash shield.

GETtheMANUALS.org

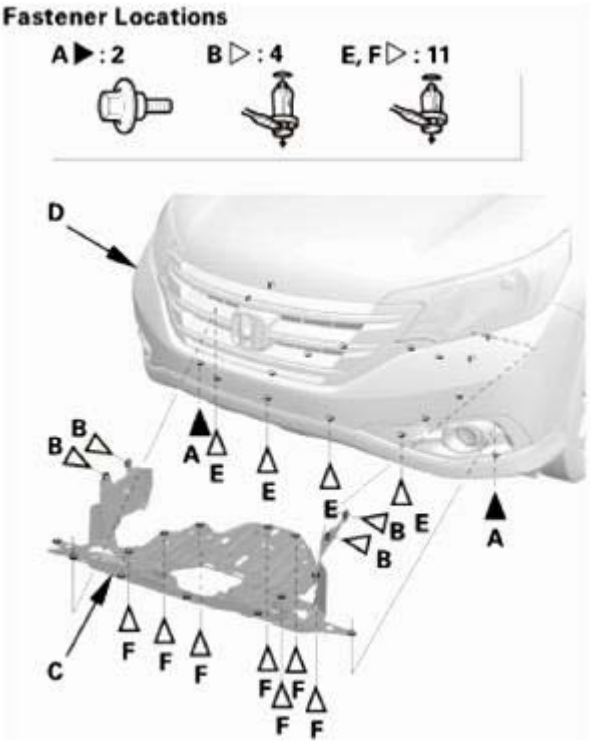

Fig. 29: Identifying Front Splash Shield, Bumper And Fasteners
Courtesy of AMERICAN HONDA MOTOR CO., INC.

3. Front Floor Undercover
    1. Remove the bolts (A) and the clips (B, C) securing the front floor undercover (D), then remove the front floor undercover.

GETtheMANUALS.org

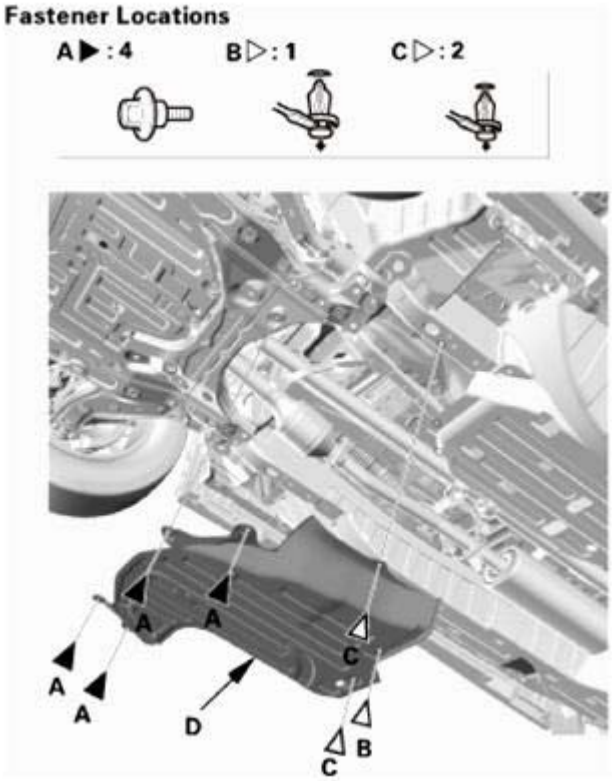

Fig. 30: Identifying Front Floor Undercover And Fasteners
Courtesy of AMERICAN HONDA MOTOR CO., INC.

4. ATF - Replacement
    1. Remove the drain plug (A), and drain the ATF.
    2. Reinstall the drain plug using a new sealing washer (B).

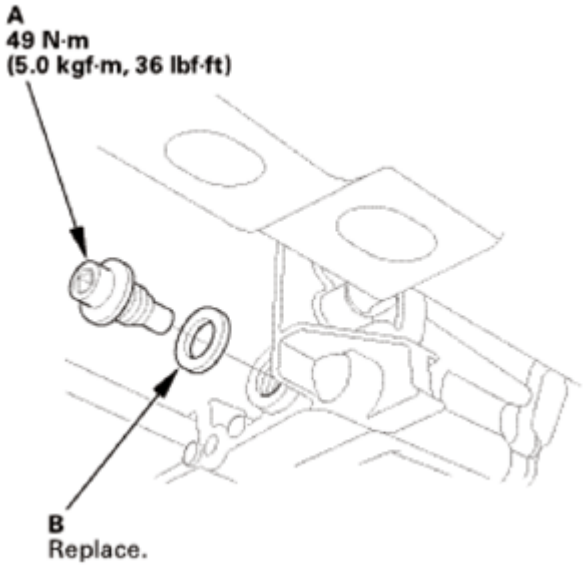

Fig. 31: Identifying Sealing Washer And Drain Plug With Torque Specifications

GETtheMANUALS.org

Courtesy of AMERICAN HONDA MOTOR CO., INC.

5. Under-Floor TWC Assembly
    1. Remove the under-floor TWC.

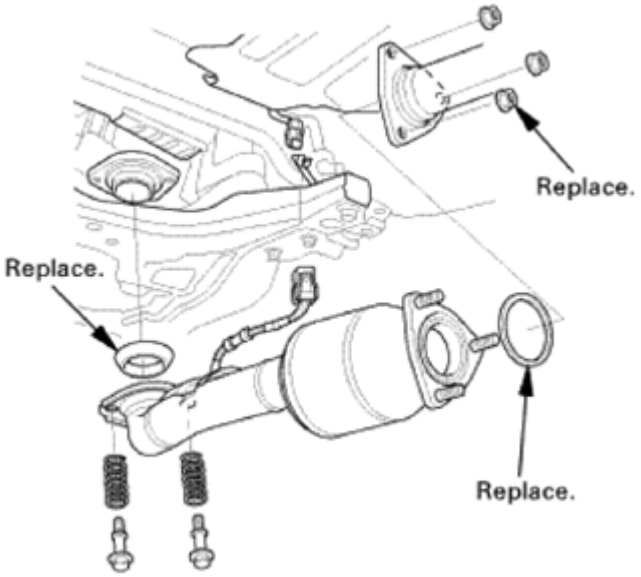

Fig. 32: Identifying Under-Floor TWC Assembly Components
Courtesy of AMERICAN HONDA MOTOR CO., INC.

6. Propeller Shaft Transmission Side - Disconnection
    1. Make reference mark (A) across the No. 1 propeller shaft (B) and the transfer companion flange (C).
    2. Separate the No. 1 propeller shaft from the transfer companion flange.

NOTE: Suspend the propeller shaft with an appropriate size nylon strap.

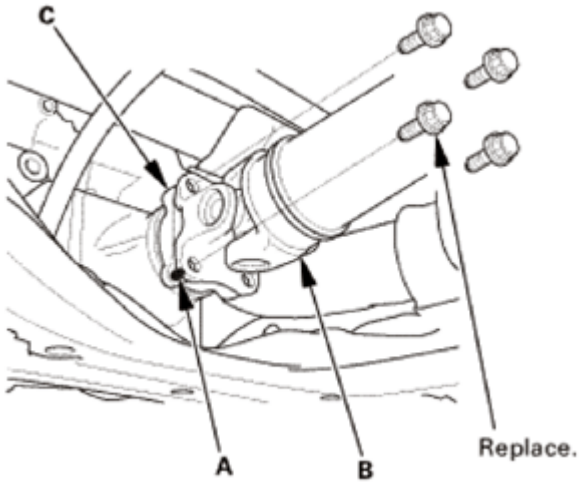

GETtheMANUALS.org

Fig. 33: Identifying Reference Mark On No. 1 Propeller Shaft And Transfer Companion Flange
Courtesy of AMERICAN HONDA MOTOR CO., INC.

7. Transfer Assembly
    1. Remove the transfer assembly (A) and the dowel pin (B).
    2. Remove the O-ring (C) from the transfer assembly.

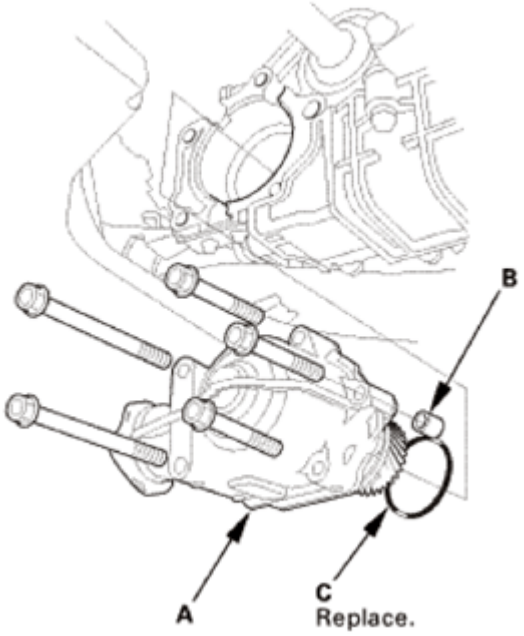

Fig. 34: Identifying Transfer Assembly, Dowel Pin And O-Ring
Courtesy of AMERICAN HONDA MOTOR CO., INC.

INSTALLATION

1. Transfer Assembly
    1. Install a new O-ring (A) on the transfer assembly (B).
    2. Install the transfer assembly and the dowel pin (C).

GETtheMANUALS.org

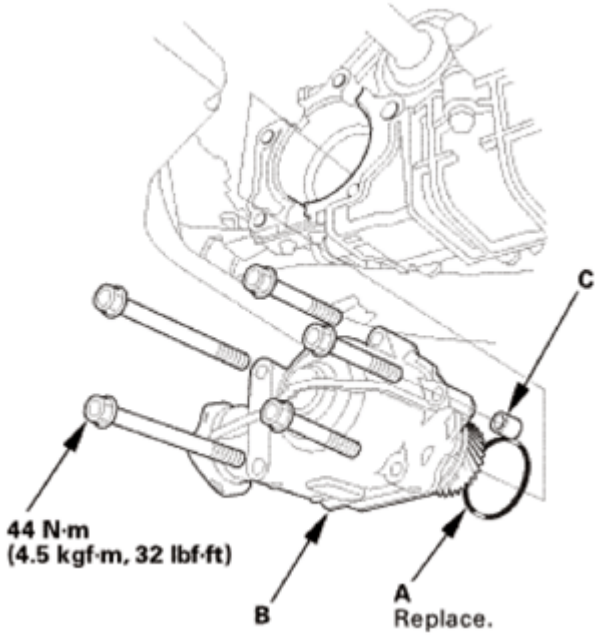

Fig. 35: Identifying Transfer Assembly, O-Ring And Dowel Pin With Torque Specifications
Courtesy of AMERICAN HONDA MOTOR CO., INC.

2. Propeller Shaft Transmission Side - Reconnection
    1. Set the No. 1 propeller shaft (A) to the transfer companion flange (B) by aligning the reference mark (C) you made during the removal procedure. Then install new flange bolts (D) to the specified torque.

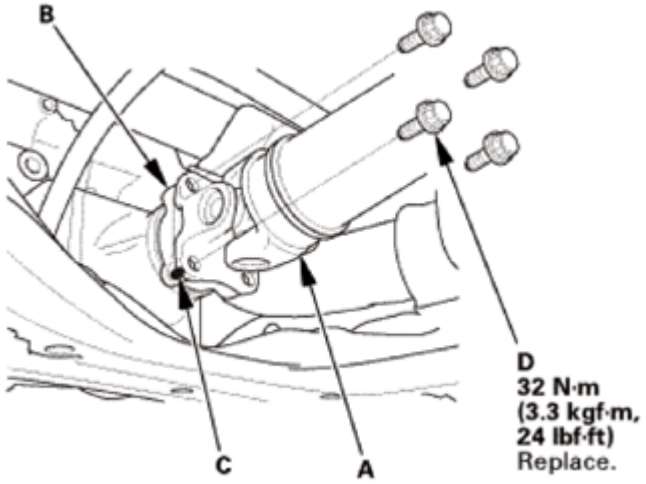

Fig. 36: Identifying Alignment Marks On No. 1 Propeller Shaft And Transfer Companion Flange With Torque Specifications
Courtesy of AMERICAN HONDA MOTOR CO., INC.

3. Under Floor TWC Assembly
    1. Install the under-floor TWC.

GETtheMANUALS.org

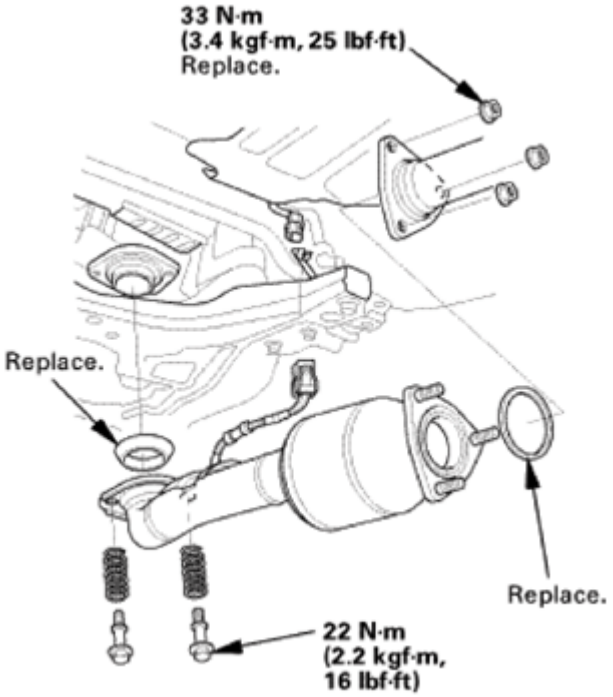

Fig. 37: Identifying Under Floor TWC Assembly Components With Torque Specifications
Courtesy of AMERICAN HONDA MOTOR CO., INC.

4. Front Floor Undercover
    1. Install the front floor undercover (A), then install the bolts (B) and the clips (C, D). Make sure the clips snap into place securely.

GETtheMANUALS.org

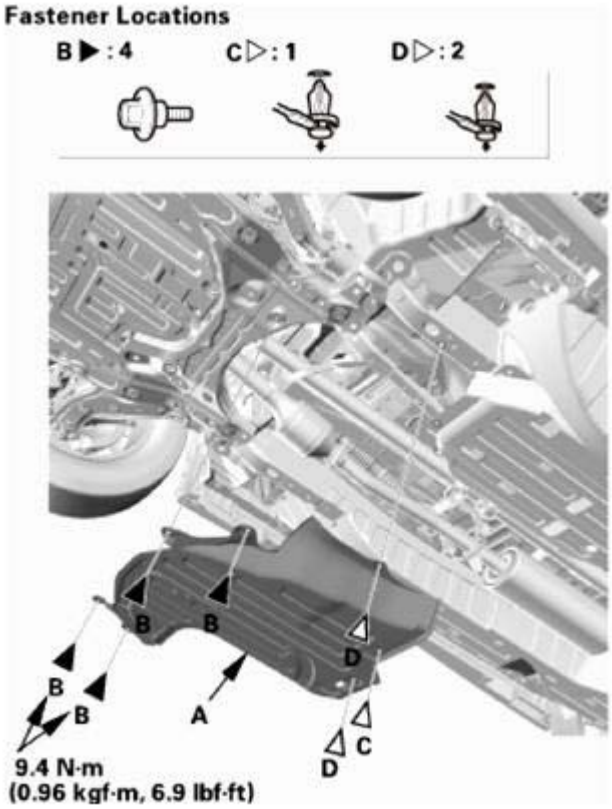

Fig. 38: Identifying Front Floor Undercover And Fasteners
Courtesy of AMERICAN HONDA MOTOR CO., INC.

5. Front Splash Shield
    1. Install the front splash shield (A), then install the bolts (B) and the clips (C, D). Make sure the clips snap into place securely.

GETtheMANUALS.org

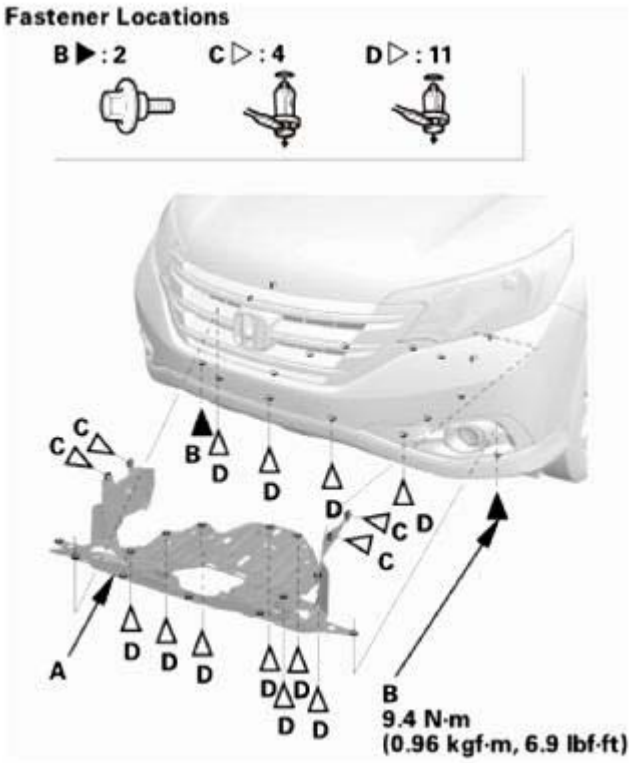

Fig. 39: Identifying Front Splash Shield And Fasteners
Courtesy of AMERICAN HONDA MOTOR CO., INC.

6. ATF - Replacement
    1. Remove the ATF dipstick (yellow loop) (A), and wipe it with a clean cloth.

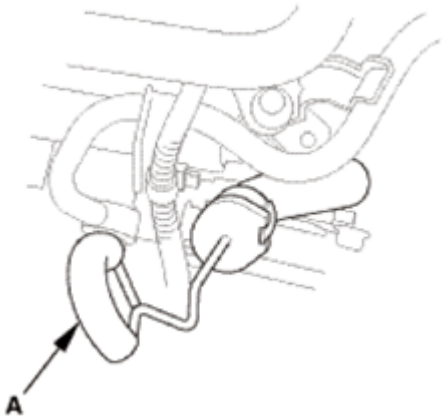

Fig. 40: Identifying Dipstick, Notch And Guide Tab
Courtesy of AMERICAN HONDA MOTOR CO., INC.

    2. Refill the transmission with the recommended fluid into the dipstick guide tube opening (A) to bring the fluid level between the upper mark and the lower mark of the dipstick. Always use ATF DW-1 (genuine Honda automatic transmission fluid). Using a non-Honda ATF can affect shift

GETtheMANUALS.org

quality.

Automatic Transmission Fluid Capacity

2WD:

2.2 L (2.3 US qt) at change

5.85 L (6.18 US qt) at overhaul

AWD/4WD:

2.6 L (2.7 US qt) at change

6.4 L (6.8 US qt) at overhaul

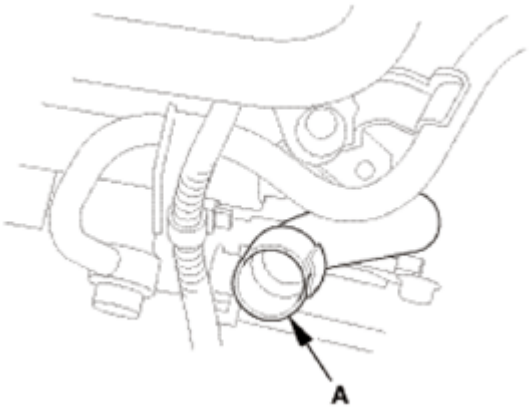

Fig. 41: Identifying Dipstick Guide Tube Opening
Courtesy of AMERICAN HONDA MOTOR CO., INC.

3. Insert the dipstick (A) into the guide tube aligning the notch (B) with the guide tab (C).

GETtheMANUALS.org

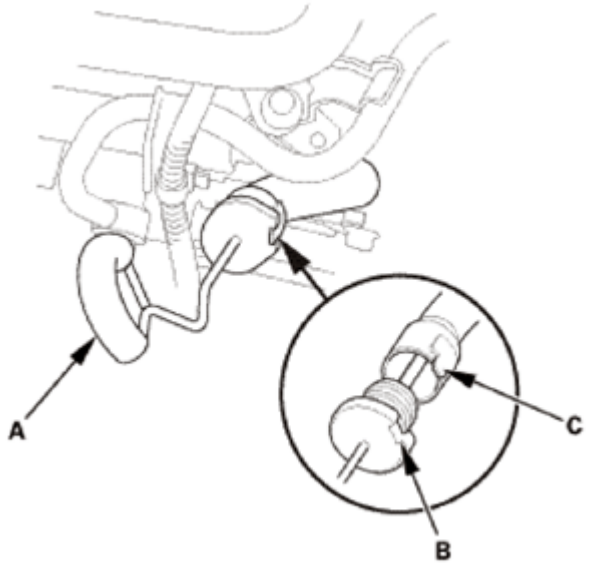

Fig. 42: Identifying Dipstick, Notch And Guide Tab
Courtesy of AMERICAN HONDA MOTOR CO., INC.

4. Remove the dipstick.
5. Make sure the fluid level is between the upper mark (A) and the lower mark (B) on the dipstick.
6. Insert the dipstick into the guide tube aligning the notch with the guide tab.

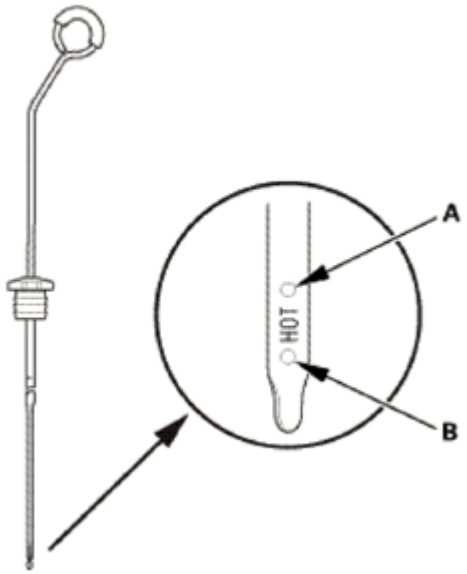

Fig. 43: Identifying Upper And Lower Marks On Dipstick
Courtesy of AMERICAN HONDA MOTOR CO., INC.

7. Warm Up The Engine
    1. Start the engine. Hold the engine speed at 3, 00 rpm without load in P or N until the radiator fan comes on.

GETtheMANUALS.org

2. Park the vehicle on level ground.
3. Turn the ignition switch to LOCK (0).

8. ATF Level Check

NOTE:

- **Keep all foreign particles out of the transmission.**
- **Check the fluid level within 60-90 seconds after turning the engine off.**
- **Higher fluid level may be indicated if the radiator fan comes on twice or more.**

1. Remove the ATF dipstick (yellow loop) (A), and wipe it with a clean cloth.
2. Insert the dipstick into the guide tube aligning the notch (B) with the guide tab (C).

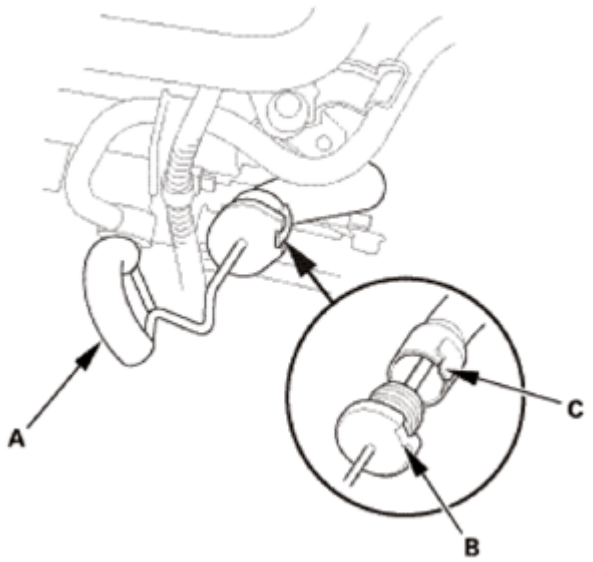

Fig. 44: Identifying Dipstick, Notch And Guide Tab
Courtesy of AMERICAN HONDA MOTOR CO., INC.

3. Remove the dipstick, and check the ATF level. It should be between the upper mark (A) and the lower mark (B).
4. If the ATF level is below the lower mark, check for fluid leaks at the transmission, the hoses, and the line joints. If a problem is found, fix it before filling the transmission with ATF.

NOTE: **If the vehicle is driven when the ATF level is below the lower mark, one or more of these symptoms may occur:**

- Transmission damage.
- Vehicle does not move in any gear.
- Vehicle accelerates poorly, and engine revs up abnormally high when starting off in forward and reverse positions.

GETtheMANUALS.org

- Engine vibrates at idle.

5. If the ATF level is above the upper mark, drain the ATF to proper level.

NOTE: **If the vehicle is driven when the ATF level is above the upper mark, the vehicle may creep forward while in N, or have shifting problems.**

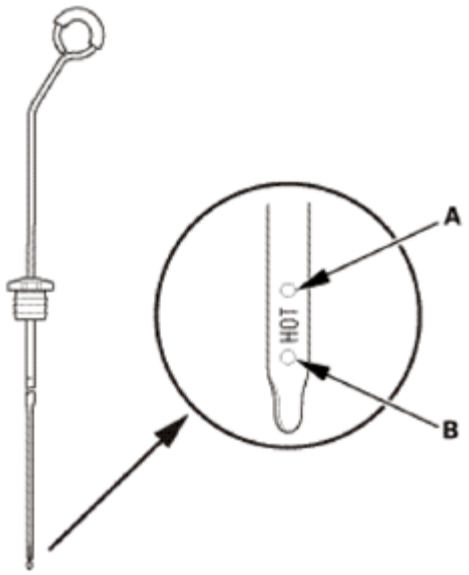

Fig. 45: Identifying Upper And Lower Marks On Dipstick
Courtesy of AMERICAN HONDA MOTOR CO., INC.

6. If necessary, fill the transmission with ATF through the dipstick guide tube opening (A) to bring the fluid level between the upper mark and the lower mark of the dipstick. Do not fill the fluid above the upper mark. Always use ATF DW-1 (genuine Honda automatic transmission fluid). Using a non-Honda ATF can affect shift quality.
7. Insert the dipstick into the guide tube aligning the notch with the guide tab.

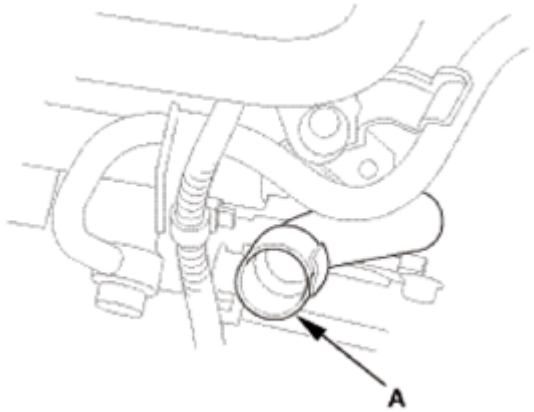

Fig. 46: Identifying Dipstick Guide Tube Opening
Courtesy of AMERICAN HONDA MOTOR CO., INC.

GETtheMANUALS.org

9. HDS DLC - Connection
    1. Connect the HDS to the data link connector (DLC) (A) located under the driver's side of the dashboard.
    2. Turn the ignition switch to ON (II).
    3. Make sure the HDS communicates with the vehicle. If it does not communicate, go to the DLC circuit troubleshooting.

Fig. 47: Identifying Data Link Connector
Courtesy of AMERICAN HONDA MOTOR CO., INC.

10. Maintenance Minder Reset
    1. **RESET THE MAINTENANCE MINDER** .

TRANSFER OIL SEAL REPLACEMENT

SPECIAL TOOL DESCRIPTION

Image	Description/Tool Number
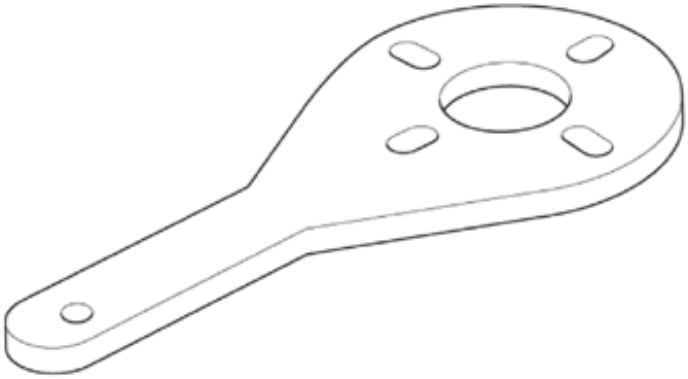	Companion Flange Holder 07RAB-TB4010B

GETtheMANUALS.org

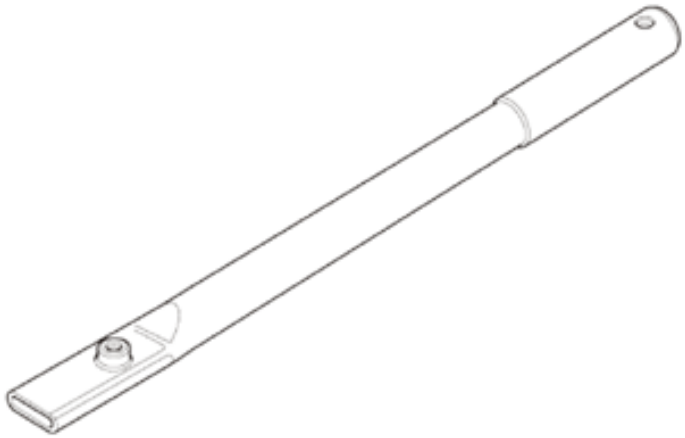	Holder Handle 07JAB-001020B
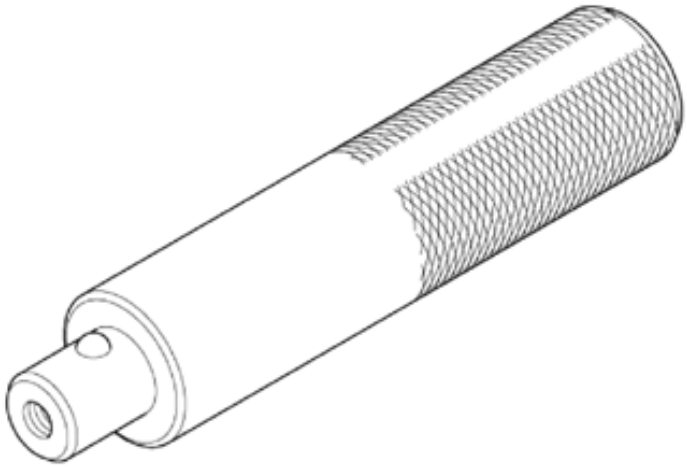	Driver Handle, 15 x 135L 07749-0010000
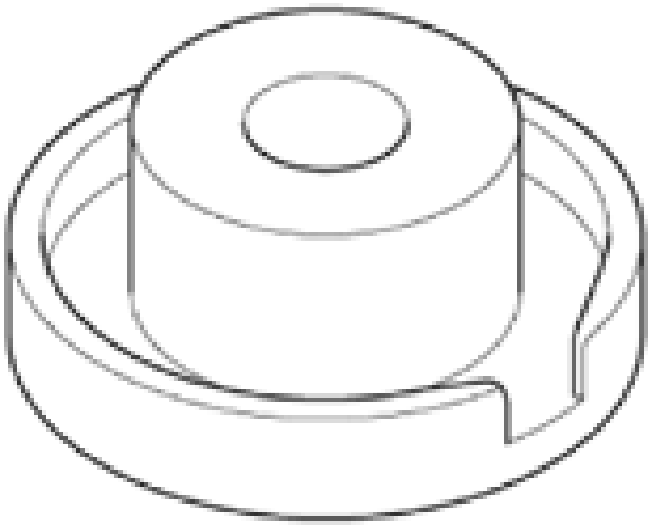	Oil Seal Driver Attachment, 58 mm 07JAD-PH80101

REMOVAL

GETtheMANUALS.org

1. Vehicle Lift
    1. Raise the vehicle on a lift, and make sure it is securely supported.
2. Front Splash Shield
    1. Remove the bolts (A), then remove the clips (B) that secure the front inner fender and the front splash shield (C) to the body.
    2. From under the front bumper (D), remove the clips (E).
    3. From under the body, remove the clips (F), then pull out the front splash shield.

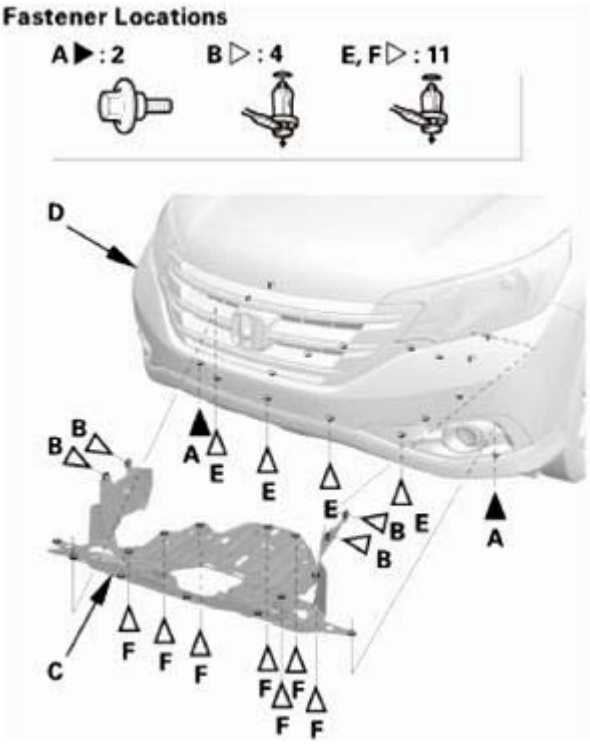

Fig. 48: Identifying Front Splash Shield, Bumper And Fasteners
Courtesy of AMERICAN HONDA MOTOR CO., INC.

3. Front Floor Undercover
    1. Remove the bolts (A) and the clips (B, C) securing the front floor undercover (D), then remove the front floor undercover.

GETtheMANUALS.org

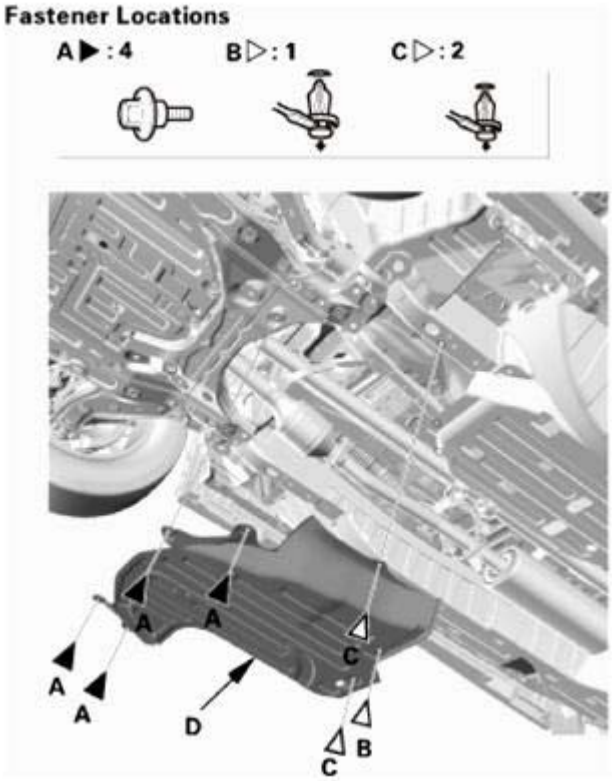

Fig. 49: Identifying Front Floor Undercover And Fasteners
Courtesy of AMERICAN HONDA MOTOR CO., INC.

4. ATF - Replacement
    1. Remove the drain plug (A), and drain the ATF.
    2. Reinstall the drain plug using a new sealing washer (B).

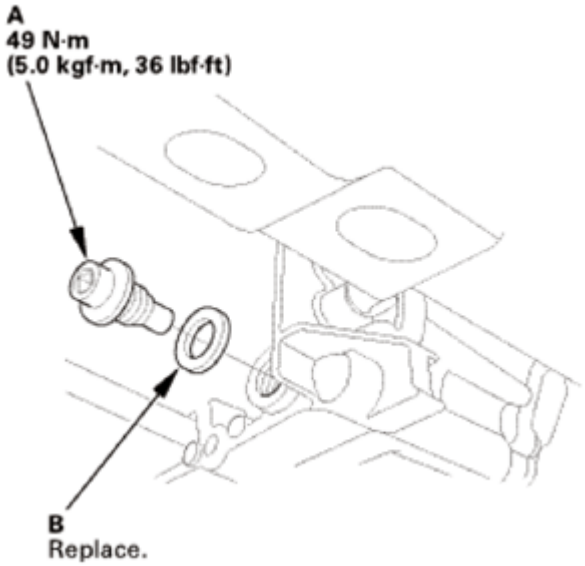

Fig. 50: Identifying Sealing Washer And Drain Plug With Torque Specifications

GETtheMANUALS.org

Courtesy of AMERICAN HONDA MOTOR CO., INC.

5. Under-Floor TWC Assembly
    1. Remove the under-floor TWC.

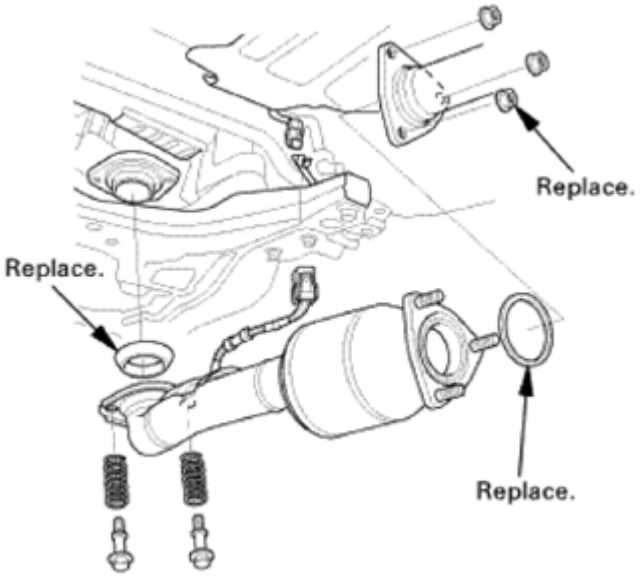

Fig. 51: Identifying Under-Floor TWC Assembly Components
Courtesy of AMERICAN HONDA MOTOR CO., INC.

6. Propeller Shaft Transmission Side - Disconnection
    1. Make reference mark (A) across the No. 1 propeller shaft (B) and the transfer companion flange (C).
    2. Separate the No. 1 propeller shaft from the transfer companion flange.

NOTE: Suspend the propeller shaft with an appropriate size nylon strap.

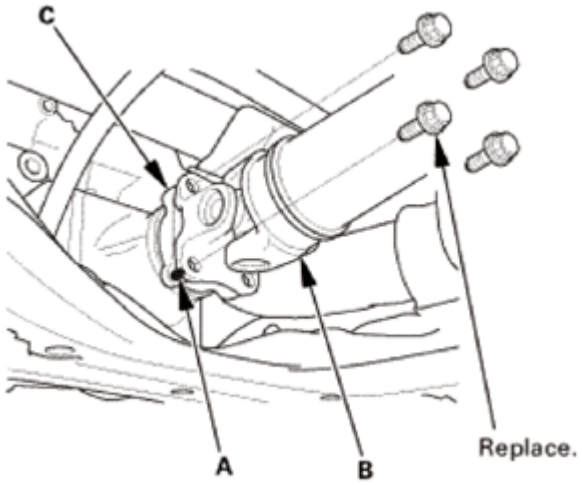

GETtheMANUALS.org

Fig. 52: Identifying Reference Mark On No. 1 Propeller Shaft And Transfer Companion Flange
Courtesy of AMERICAN HONDA MOTOR CO., INC.

7. Transfer Assembly
    1. Remove the transfer assembly (A) and the dowel pin (B).
    2. Remove the O-ring (C) from the transfer assembly.

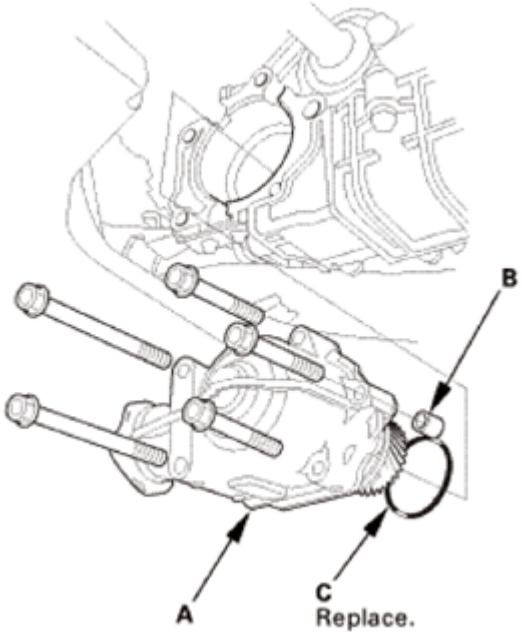

Fig. 53: Identifying Transfer Assembly, Dowel Pin And O-Ring
Courtesy of AMERICAN HONDA MOTOR CO., INC.

8. Transfer Shaft Assembly
    1. Remove the transfer shaft assembly (A) and the dowel pin (B).

GETtheMANUALS.org

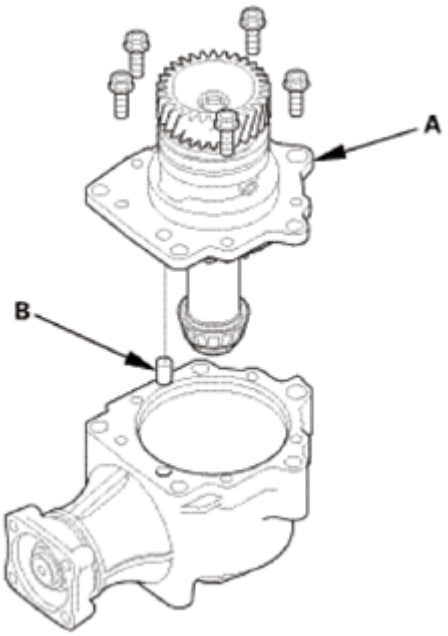

Fig. 54: Identifying Transfer Shaft Assembly And Dowel Pin
Courtesy of AMERICAN HONDA MOTOR CO., INC.

2. Remove the O-ring (A).

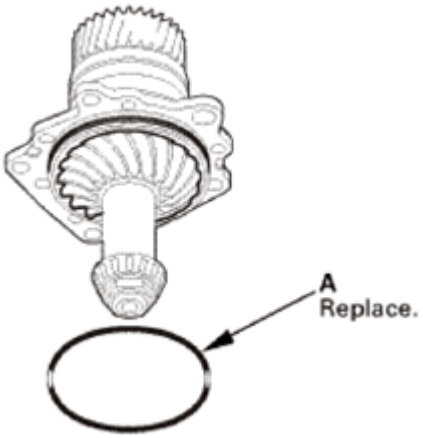

Fig. 55: Identifying O-Ring
Courtesy of AMERICAN HONDA MOTOR CO., INC.

9. Companion Flange
    1. Using a chisel, cut the lock tab (A) on the locknut (B) of the transfer output shaft (hypoid gear).

NOTE: **Be careful not to damage the transfer output shaft (hypoid gear).**

GETtheMANUALS.org

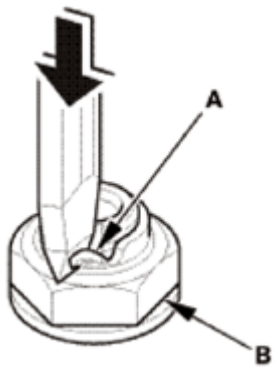

Fig. 56: Cutting Transfer Output Shaft Lock Tab Using Chisel
Courtesy of AMERICAN HONDA MOTOR CO., INC.

2. Secure the transfer housing (A) in a bench vise (B) with soft jaws.

NOTE: **To prevent damaging the transfer housing, always use wood blocks or equivalent materials between the transfer housing and the bench vise.**

3. Install the companion flange holder and the holder handle, then loosen the locknut.
4. Remove the companion flange holder and the holder handle.

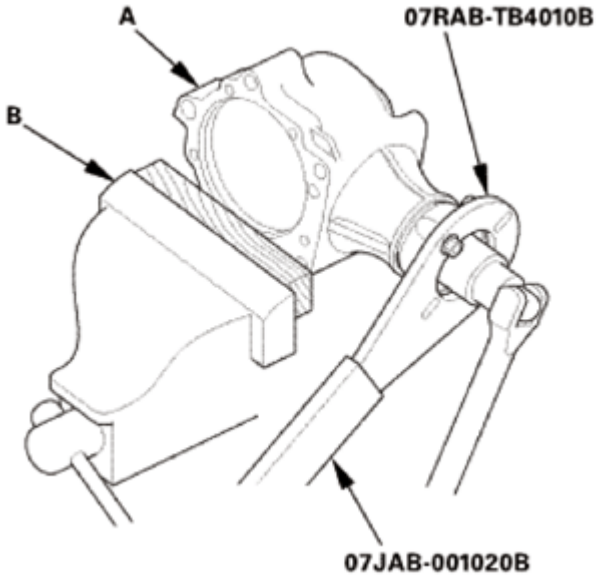

Fig. 57: Removing Companion Flange Holder And Holder Handle Using Tool
Courtesy of AMERICAN HONDA MOTOR CO., INC.

5. Remove the locknut (A), the conical spring washer (B), the backup ring (C), the O-ring (D), and the companion flange (E).

GETtheMANUALS.org

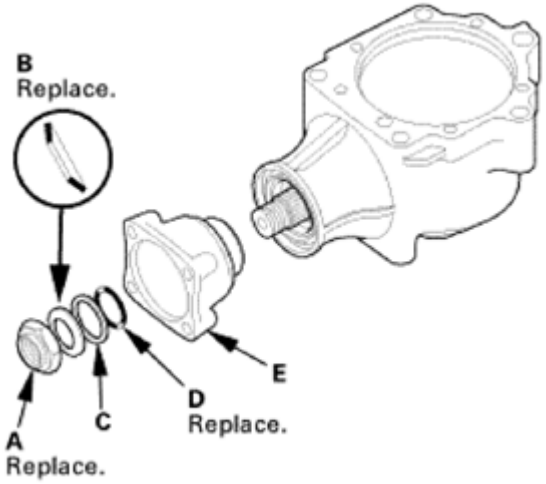

Fig. 58: Identifying Companion Flange, Conical Spring Washer, Locknut And O-Ring
Courtesy of AMERICAN HONDA MOTOR CO., INC.

10. Transfer Output Shaft (Hypoid Gear)
    1. Remove the transfer output shaft (hypoid gear) (A) and the transfer spacer (B).

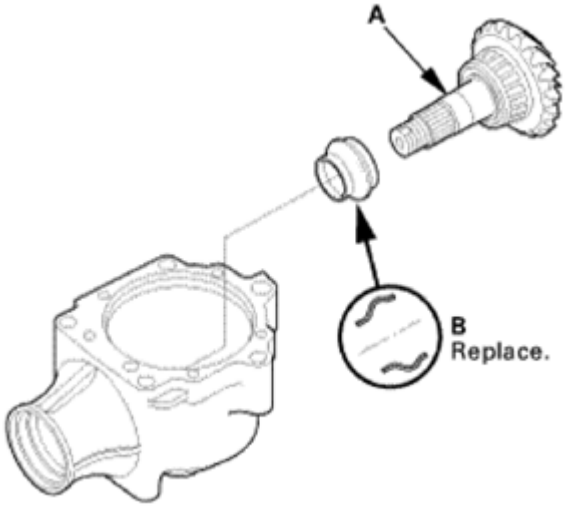

Fig. 59: Identifying Transfer Output Shaft And Transfer Spacer
Courtesy of AMERICAN HONDA MOTOR CO., INC.

11. Transfer Output Shaft Oil Seal
    1. Remove the oil seal (A).

GETtheMANUALS.org

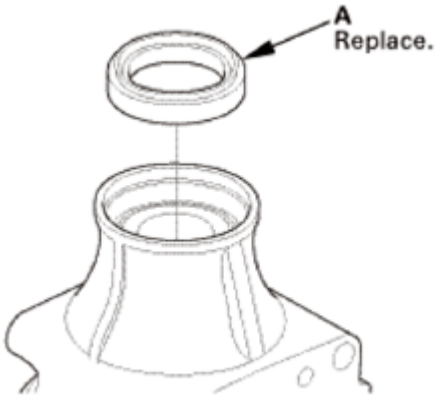

Fig. 60: Identifying Transfer Output Shaft Oil Seal
Courtesy of AMERICAN HONDA MOTOR CO., INC.

INSTALLATION

NOTE: Apply a light coat of clean ATF on all moving parts before reassembly.

1. Transfer Output Shaft Oil Seal
    1. Install a new oil seal (A) flush with the transfer housing surface (B) using the driver handle and the 58 mm oil seal driver attachment.

NOTE: Apply a light coat of clean ATF on oil seal before installation.

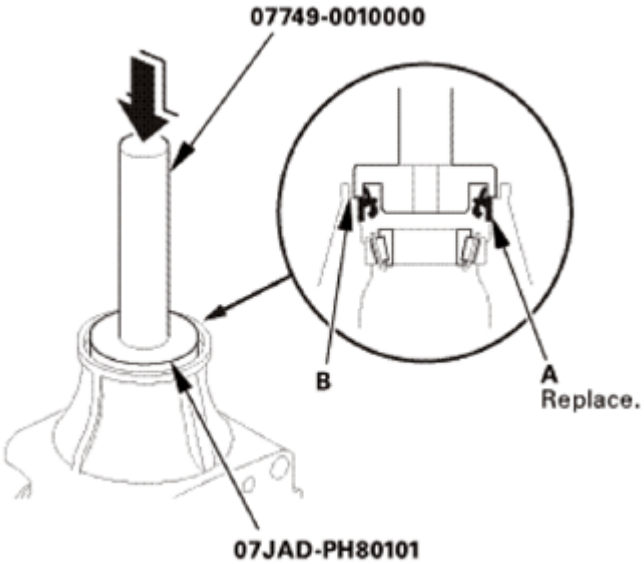

Fig. 61: Installing Oil Seal Flush On Transfer Housing Surface Using Driver Handle
Courtesy of AMERICAN HONDA MOTOR CO., INC.

2. Transfer Output Shaft (Hypoid Gear)
    1. Install a new transfer spacer (A) on the transfer output shaft (hypoid gear) (B) in the direction

GETtheMANUALS.org

shown, and install them in the transfer housing.

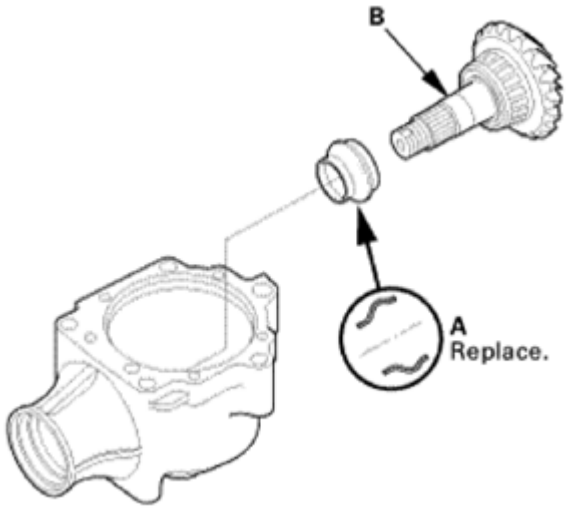

Fig. 62: Identifying Transfer Spacer And Transfer Output Shaft
Courtesy of AMERICAN HONDA MOTOR CO., INC.

3. Companion Flange
    1. Install the companion flange (A), a new O-ring (B), the back-up ring (C), a new conical spring washer (D), and a new locknut (E). Install the conical spring washer in the direction shown.

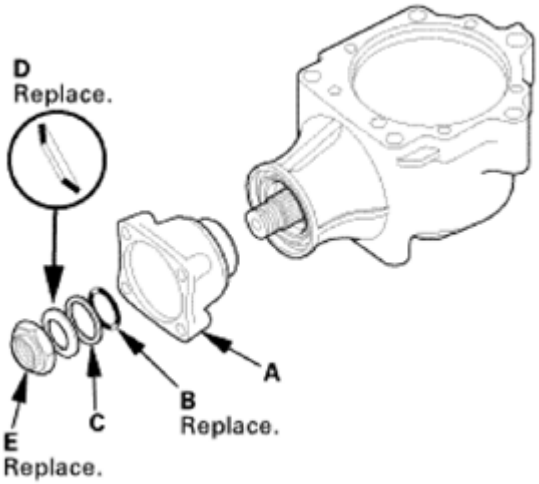

Fig. 63: Identifying Companion Flange, O-Ring, Back-Up Ring, Conical Spring Washer And Locknut
Courtesy of AMERICAN HONDA MOTOR CO., INC.

2. Secure the transfer housing (A) in a bench vise (B) with soft jaws.

NOTE: To prevent damaging the transfer housing, always use wood blocks

GETtheMANUALS.org

or equivalent materials between the transfer housing and the bench vise.

3. Install the companion flange holder and the holder handle.
4. Tighten the locknut to the specified torque.

   Tightening torque:

   AWD: 213 N.m (21.7 kgf.cm, 157 lbf.ft)

   4WD: 196 N.m (20.0 kgf.cm, 145 lbf.ft)

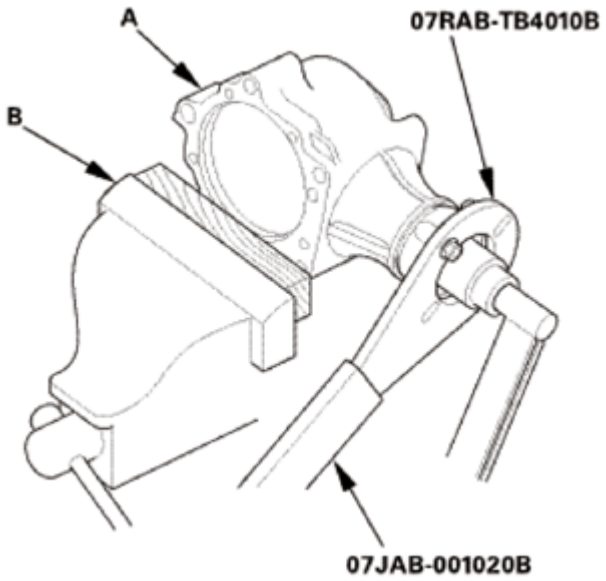

Fig. 64: Installing Companion Flange Holder And Holder Handle
Courtesy of AMERICAN HONDA MOTOR CO., INC.

5. Stake the locknut to a depth (A) of at least 0.7 mm (0.028 in) using a 3.5 mm punch (B). Be careful not to make a crack on the locknut when staking.

GETtheMANUALS.org

Fig. 65: Staking Locknut To Depth Using Punch
Courtesy of AMERICAN HONDA MOTOR CO., INC.

4. Transfer Shaft Assembly
    1. Install a new O-ring (A).

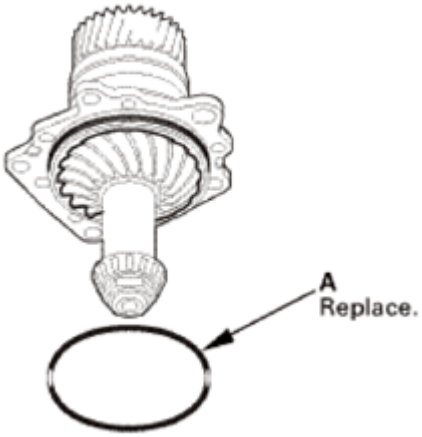

Fig. 66: Installing Transfer Shaft Assembly O-Ring
Courtesy of AMERICAN HONDA MOTOR CO., INC.

    2. Install the transfer shaft assembly (A) and the dowel pin (B).

GETtheMANUALS.org

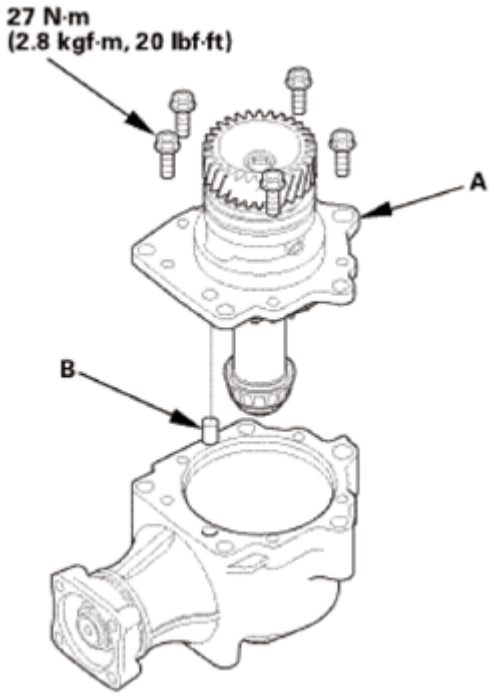

Fig. 67: Identifying Transfer Shaft Assembly And Dowel Pin With Torque Specification
Courtesy of AMERICAN HONDA MOTOR CO., INC.

5. Transfer Assembly
    1. Install a new O-ring (A) on the transfer assembly (B).
    2. Install the transfer assembly and the dowel pin (C).

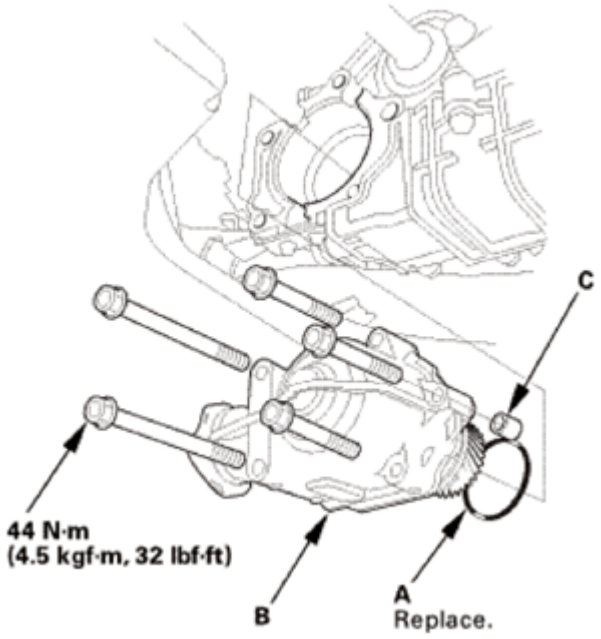

Fig. 68: Identifying Transfer Assembly, O-Ring And Dowel Pin With Torque Specifications

GETtheMANUALS.org

Courtesy of AMERICAN HONDA MOTOR CO., INC.

6. Propeller Shaft Transmission Side - Reconnection
    1. Set the No. 1 propeller shaft (A) to the transfer companion flange (B) by aligning the reference mark (C) you made during the removal procedure. Then install new flange bolts (D) to the specified torque.

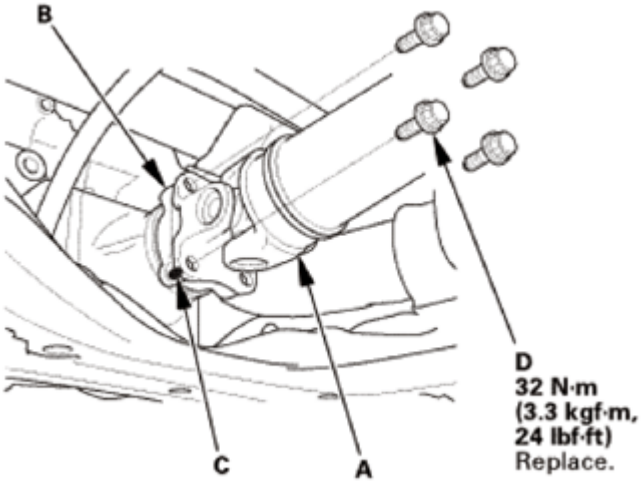

Fig. 69: Identifying Alignment Marks On No. 1 Propeller Shaft And Transfer Companion Flange With Torque Specifications
Courtesy of AMERICAN HONDA MOTOR CO., INC.

7. Under Floor TWC Assembly
    1. Install the under-floor TWC.

GETtheMANUALS.org

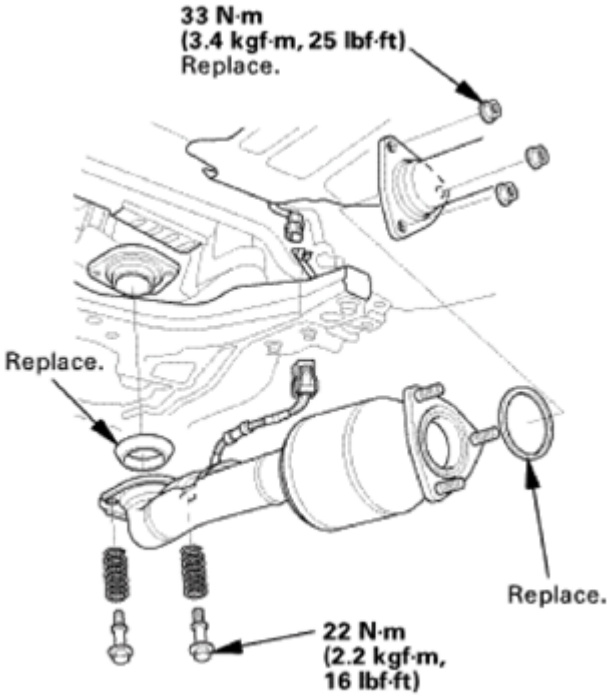

Fig. 70: Identifying Under Floor TWC Assembly Components With Torque Specifications
Courtesy of AMERICAN HONDA MOTOR CO., INC.

8. Front Floor Undercover
    1. Install the front floor undercover (A), then install the bolts (B) and the clips (C, D). Make sure the clips snap into place securely.

GETtheMANUALS.org

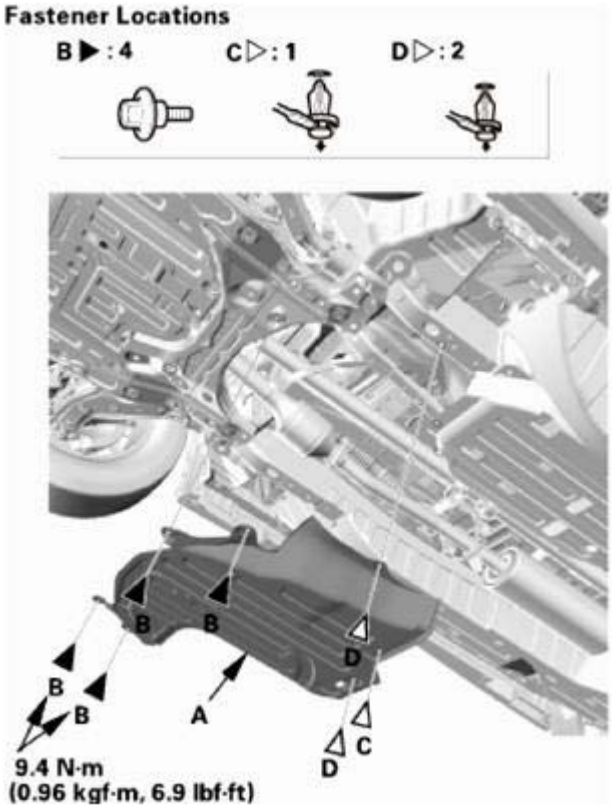

Fig. 71: Identifying Front Floor Undercover And Fasteners
Courtesy of AMERICAN HONDA MOTOR CO., INC.

9. Front Splash Shield
    1. Install the front splash shield (A), then install the bolts (B) and the clips (C, D). Make sure the clips snap into place securely.

GETtheMANUALS.org

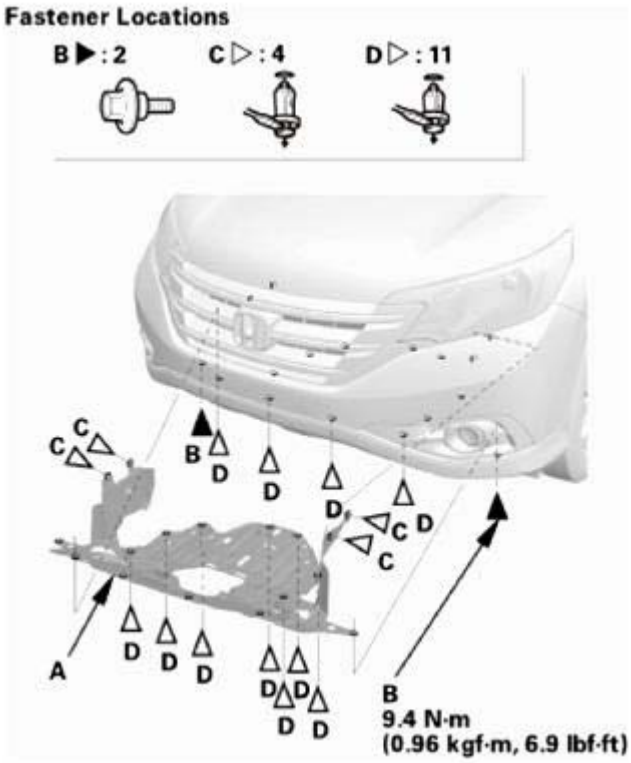

Fig. 72: Identifying Front Splash Shield And Fasteners
Courtesy of AMERICAN HONDA MOTOR CO., INC.

10. ATF - Replacement
    1. Remove the ATF dipstick (yellow loop) (A), and wipe it with a clean cloth.

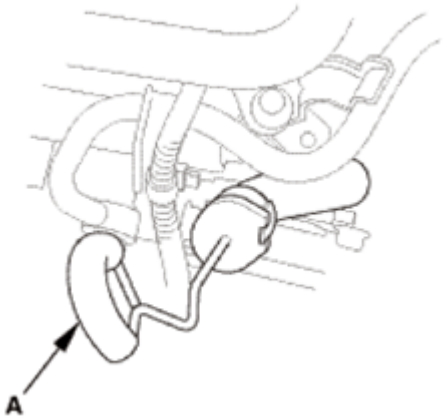

Fig. 73: Identifying Dipstick, Notch And Guide Tab
Courtesy of AMERICAN HONDA MOTOR CO., INC.

    2. Refill the transmission with the recommended fluid into the dipstick guide tube opening (A) to bring the fluid level between the upper mark and the lower mark of the dipstick. Always use ATF DW-1 (genuine Honda automatic transmission fluid). Using a non-Honda ATF can affect shift

GETtheMANUALS.org

quality.

Automatic Transmission Fluid Capacity

2WD:

2.2 L (2.3 US qt) at change

5.85 L (6.18 US qt) at overhaul

AWD/4WD:

2.6 L (2.7 US qt) at change

6.4 L (6.8 US qt) at overhaul

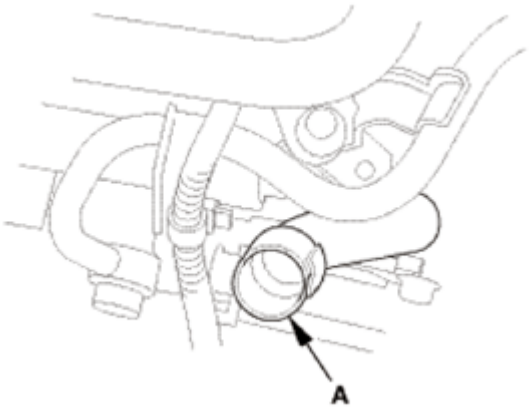

Fig. 74: Identifying Dipstick Guide Tube Opening
Courtesy of AMERICAN HONDA MOTOR CO., INC.

3. Insert the dipstick (A) into the guide tube aligning the notch (B) with the guide tab (C).

GETtheMANUALS.org

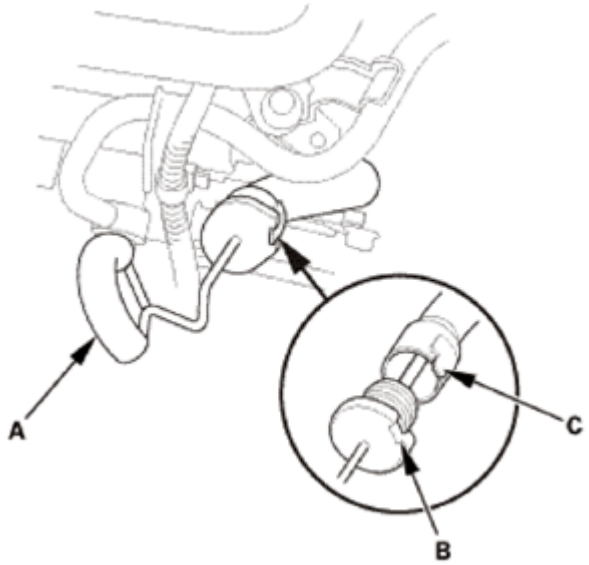

Fig. 75: Identifying Dipstick, Notch And Guide Tab
Courtesy of AMERICAN HONDA MOTOR CO., INC.

4. Remove the dipstick.
5. Make sure the fluid level is between the upper mark (A) and the lower mark (B) on the dipstick.
6. Insert the dipstick into the guide tube aligning the notch with the guide tab.

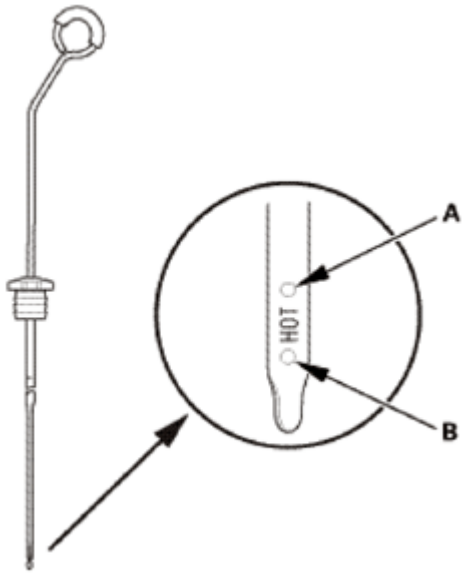

Fig. 76: Identifying Upper And Lower Marks On Dipstick
Courtesy of AMERICAN HONDA MOTOR CO., INC.

11. Warm Up The Engine
    1. Start the engine. Hold the engine speed at 3, 00 rpm without load in P or N until the radiator fan comes on.

GETtheMANUALS.org

2. Park the vehicle on level ground.
3. Turn the ignition switch to LOCK (0).

12. ATF Level Check

NOTE:

- **Keep all foreign particles out of the transmission.**
- **Check the fluid level within 60-90 seconds after turning the engine off.**
- **Higher fluid level may be indicated if the radiator fan comes on twice or more.**

1. Remove the ATF dipstick (yellow loop) (A), and wipe it with a clean cloth.
2. Insert the dipstick into the guide tube aligning the notch (B) with the guide tab (C).

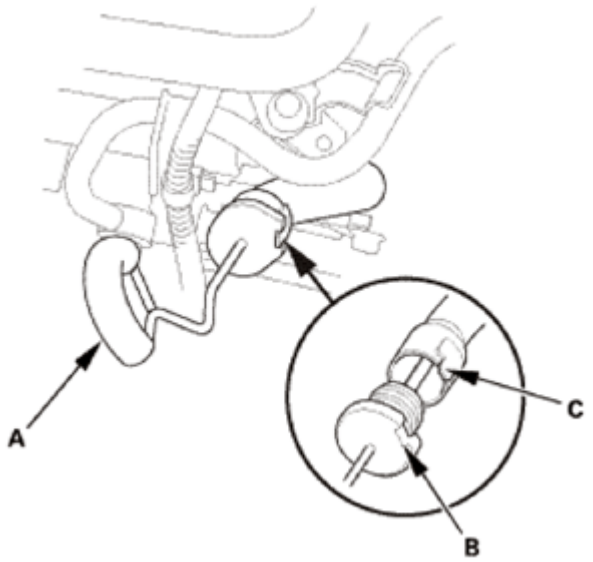

Fig. 77: Identifying Dipstick, Notch And Guide Tab
Courtesy of AMERICAN HONDA MOTOR CO., INC.

3. Remove the dipstick, and check the ATF level. It should be between the upper mark (A) and the lower mark (B).
4. If the ATF level is below the lower mark, check for fluid leaks at the transmission, the hoses, and the line joints. If a problem is found, fix it before filling the transmission with ATF.

NOTE: **If the vehicle is driven when the ATF level is below the lower mark, one or more of these symptoms may occur:**

- Transmission damage.
- Vehicle does not move in any gear.
- Vehicle accelerates poorly, and engine revs up abnormally high when starting off in forward and reverse positions.

GETtheMANUALS.org

- Engine vibrates at idle.

5. If the ATF level is above the upper mark, drain the ATF to proper level.

NOTE: **If the vehicle is driven when the ATF level is above the upper mark, the vehicle may creep forward while in N, or have shifting problems.**

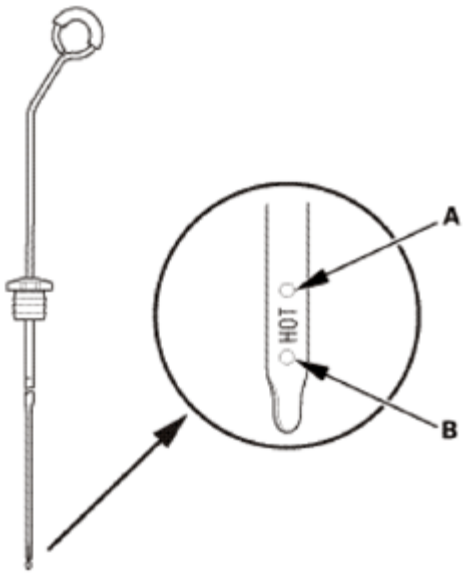

Fig. 78: Identifying Upper And Lower Marks On Dipstick
Courtesy of AMERICAN HONDA MOTOR CO., INC.

6. If necessary, fill the transmission with ATF through the dipstick guide tube opening (A) to bring the fluid level between the upper mark and the lower mark of the dipstick. Do not fill the fluid above the upper mark. Always use ATF DW-1 (genuine Honda automatic transmission fluid). Using a non-Honda ATF can affect shift quality.
7. Insert the dipstick into the guide tube aligning the notch with the guide tab.

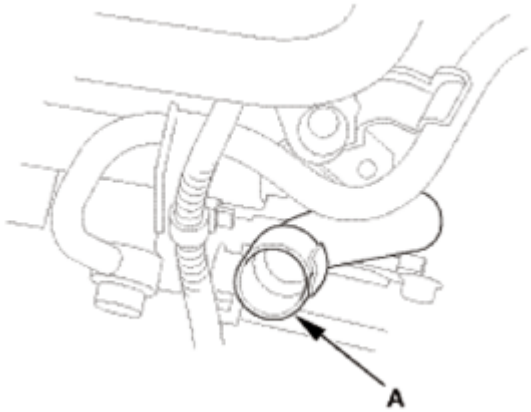

Fig. 79: Identifying Dipstick Guide Tube Opening
Courtesy of AMERICAN HONDA MOTOR CO., INC.

GETtheMANUALS.org

13. HDS DLC - Connection
    1. Connect the HDS to the data link connector (DLC) (A) located under the driver's side of the dashboard.
    2. Turn the ignition switch to ON (II).
    3. Make sure the HDS communicates with the vehicle. If it does not communicate, go to the DLC circuit troubleshooting.

Fig. 80: Identifying Data Link Connector
Courtesy of AMERICAN HONDA MOTOR CO., INC.

14. Maintenance Minder Reset
    1. **RESET THE MAINTENANCE MINDER** .

TRANSFER SHAFT ASSEMBLY O-RING REPLACEMENT

REMOVAL

1. Vehicle Lift
    1. Raise the vehicle on a lift, and make sure it is securely supported.
2. Front Splash Shield
    1. Remove the bolts (A), then remove the clips (B) that secure the front inner fender and the front splash shield (C) to the body.
    2. From under the front bumper (D), remove the clips (E).
    3. From under the body, remove the clips (F), then pull out the front splash shield.

GETtheMANUALS.org

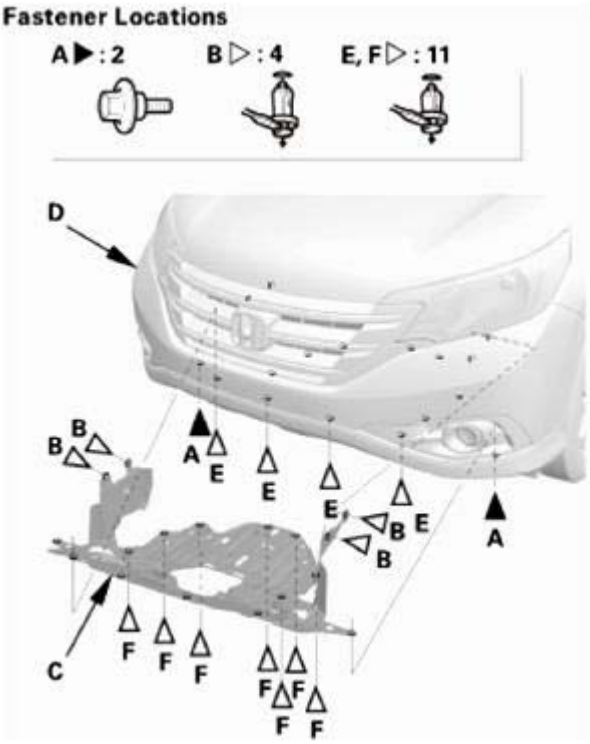

Fig. 81: Identifying Front Splash Shield, Bumper And Fasteners
Courtesy of AMERICAN HONDA MOTOR CO., INC.

3. Front Floor Undercover
    1. Remove the bolts (A) and the clips (B, C) securing the front floor undercover (D), then remove the front floor undercover.

GETtheMANUALS.org

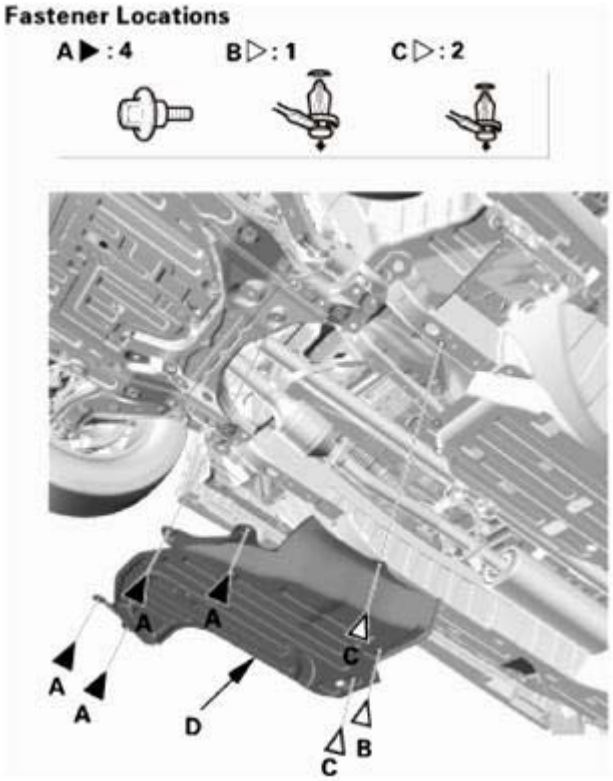

Fig. 82: Identifying Front Floor Undercover And Fasteners
Courtesy of AMERICAN HONDA MOTOR CO., INC.

4. ATF - Replacement
    1. Remove the drain plug (A), and drain the ATF.
    2. Reinstall the drain plug using a new sealing washer (B).

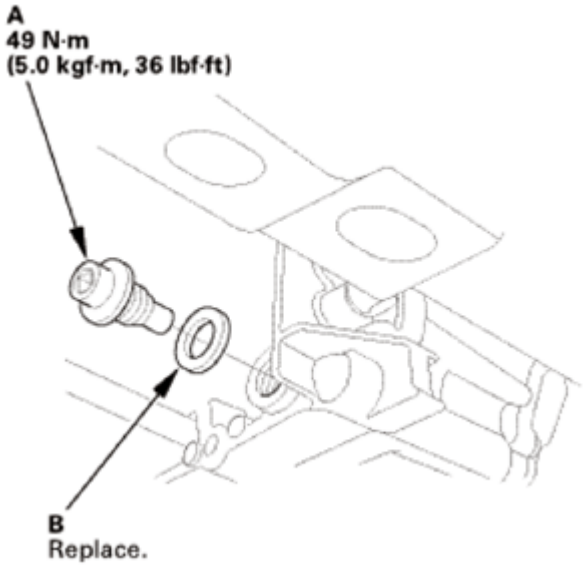

Fig. 83: Identifying Sealing Washer And Drain Plug With Torque Specifications

GETtheMANUALS.org

Courtesy of AMERICAN HONDA MOTOR CO., INC.

5. Under-Floor TWC Assembly
    1. Remove the under-floor TWC.

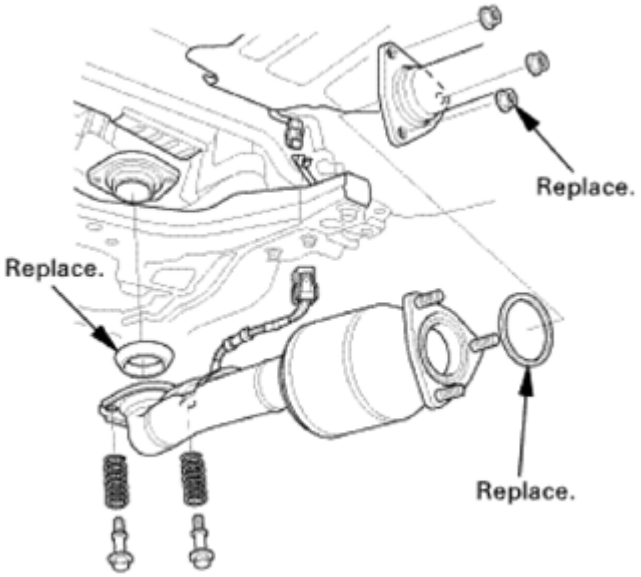

Fig. 84: Identifying Under-Floor TWC Assembly Components
Courtesy of AMERICAN HONDA MOTOR CO., INC.

6. Propeller Shaft Transmission Side - Disconnection
    1. Make reference mark (A) across the No. 1 propeller shaft (B) and the transfer companion flange (C).
    2. Separate the No. 1 propeller shaft from the transfer companion flange.

NOTE: Suspend the propeller shaft with an appropriate size nylon strap.

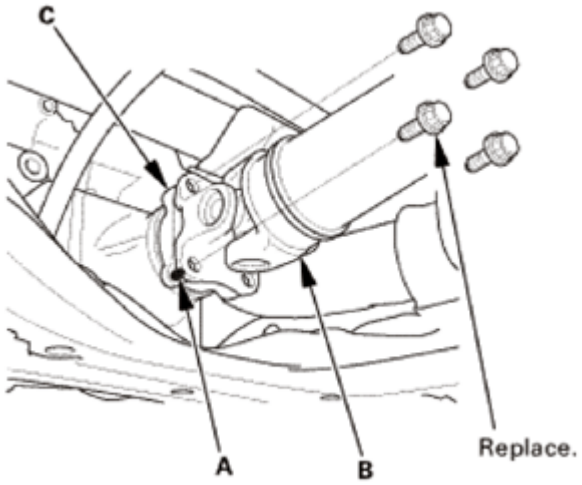

GETtheMANUALS.org

Fig. 85: Identifying Reference Mark On No. 1 Propeller Shaft And Transfer Companion Flange
Courtesy of AMERICAN HONDA MOTOR CO., INC.

7. Transfer Assembly
    1. Remove the transfer assembly (A) and the dowel pin (B).
    2. Remove the O-ring (C) from the transfer assembly.

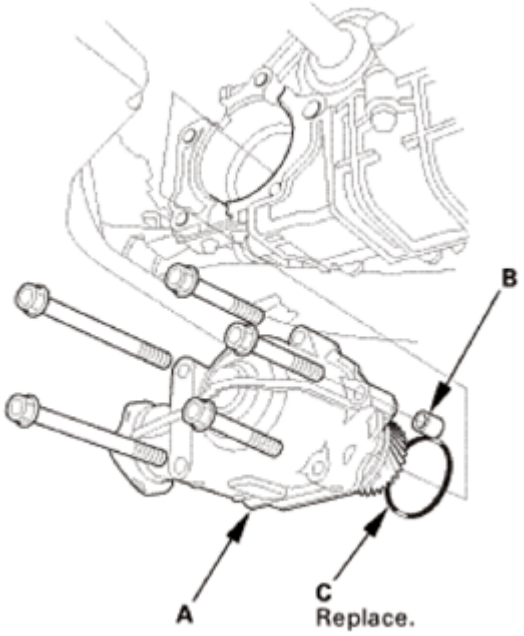

Fig. 86: Identifying Transfer Assembly, Dowel Pin And O-Ring
Courtesy of AMERICAN HONDA MOTOR CO., INC.

8. Transfer Shaft O-Ring
    1. Remove the transfer shaft assembly (A) and the dowel pin (B).

GETtheMANUALS.org

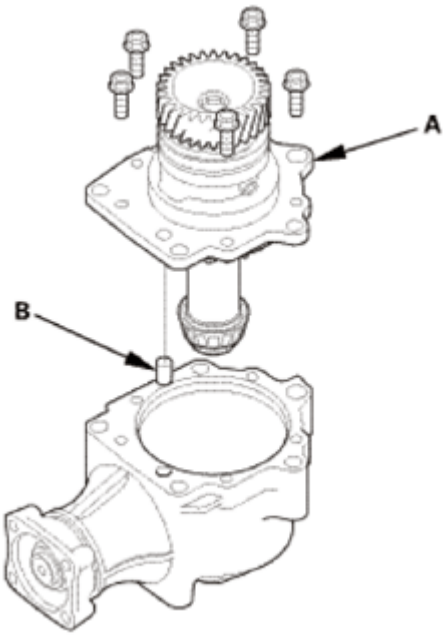

Fig. 87: Identifying Transfer Shaft Assembly And Dowel Pin
Courtesy of AMERICAN HONDA MOTOR CO., INC.

2. Remove the O-ring (A).

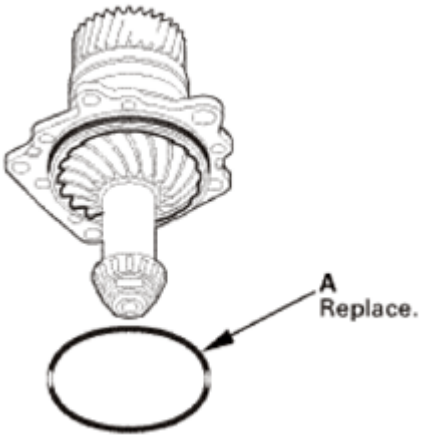

Fig. 88: Identifying O-Ring
Courtesy of AMERICAN HONDA MOTOR CO., INC.

INSTALLATION

1. Transfer Shaft O-Ring
    1. Install a new O-ring (A).

GETtheMANUALS.org

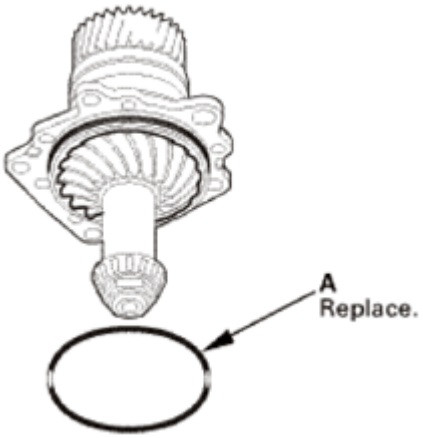

Fig. 89: Identifying Transfer Shaft O-Ring
Courtesy of AMERICAN HONDA MOTOR CO., INC.

2. Install the transfer shaft assembly (A) and the dowel pin (B).

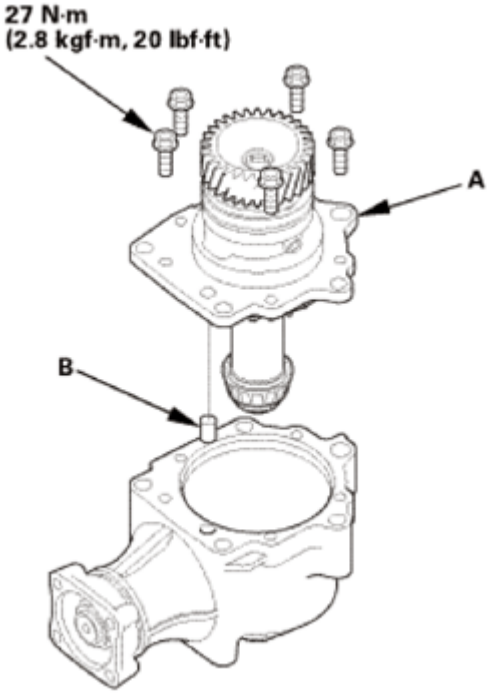

Fig. 90: Identifying Transfer Shaft Assembly And Dowel Pin With Torque Specification
Courtesy of AMERICAN HONDA MOTOR CO., INC.

2. Transfer Assembly
    1. Install a new O-ring (A) on the transfer assembly (B).
    2. Install the transfer assembly and the dowel pin (C).

GETtheMANUALS.org

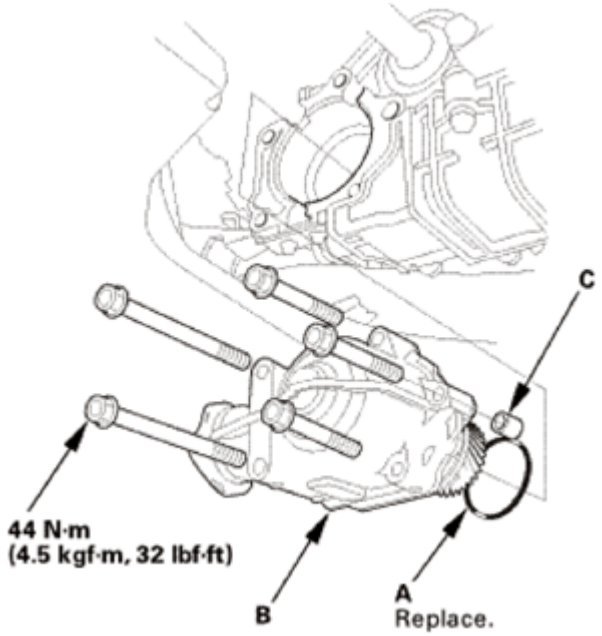

Fig. 91: Identifying Transfer Assembly, O-Ring And Dowel Pin With Torque Specifications
Courtesy of AMERICAN HONDA MOTOR CO., INC.

3. Propeller Shaft Transmission Side - Reconnection
    1. Set the No. 1 propeller shaft (A) to the transfer companion flange (B) by aligning the reference mark (C) you made during the removal procedure. Then install new flange bolts (D) to the specified torque.

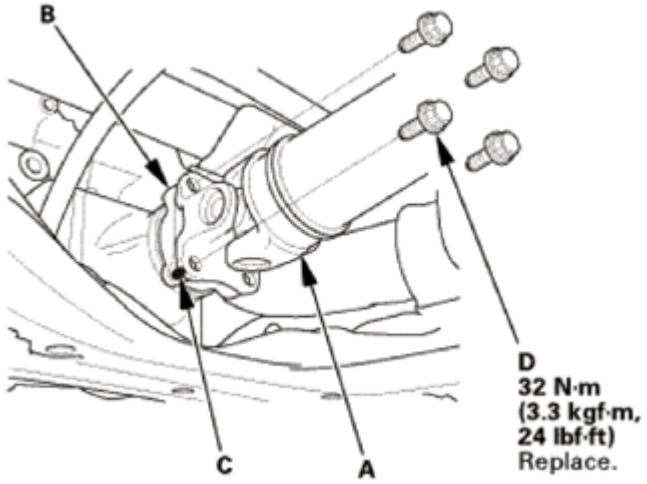

Fig. 92: Identifying Alignment Marks On No. 1 Propeller Shaft And Transfer Companion Flange With Torque Specifications
Courtesy of AMERICAN HONDA MOTOR CO., INC.

4. Under Floor TWC Assembly
    1. Install the under-floor TWC.

GETtheMANUALS.org

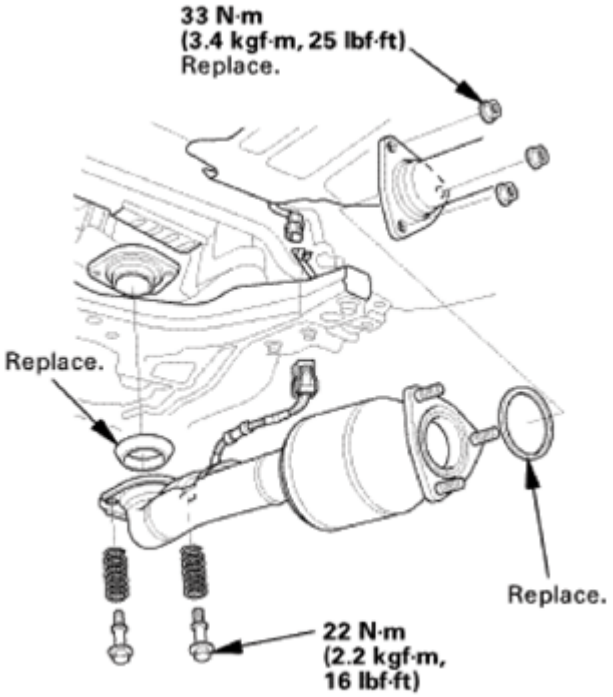

Fig. 93: Identifying Under Floor TWC Assembly Components With Torque Specifications
Courtesy of AMERICAN HONDA MOTOR CO., INC.

5. Front Floor Undercover
    1. Install the front floor undercover (A), then install the bolts (B) and the clips (C, D). Make sure the clips snap into place securely.

GETtheMANUALS.org

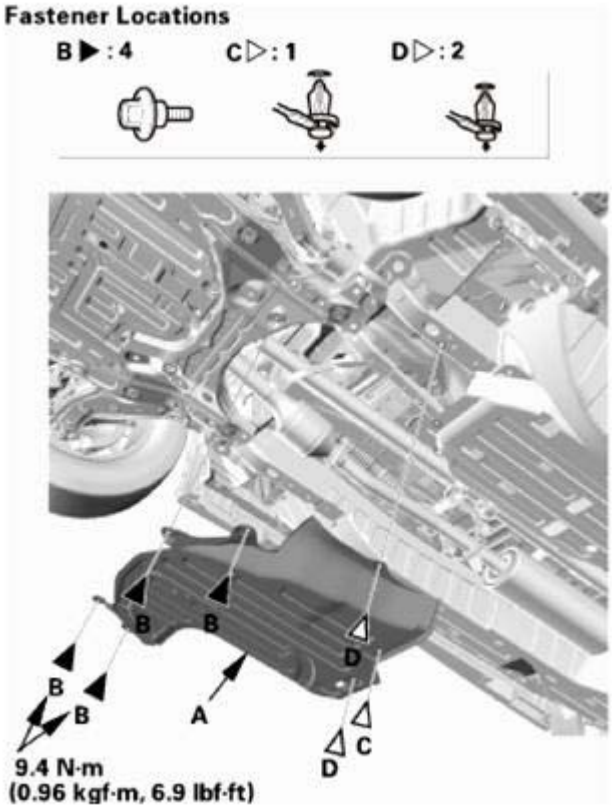

Fig. 94: Identifying Front Floor Undercover And Fasteners
Courtesy of AMERICAN HONDA MOTOR CO., INC.

6. Front Splash Shield
    1. Install the front splash shield (A), then install the bolts (B) and the clips (C, D). Make sure the clips snap into place securely.

GETtheMANUALS.org

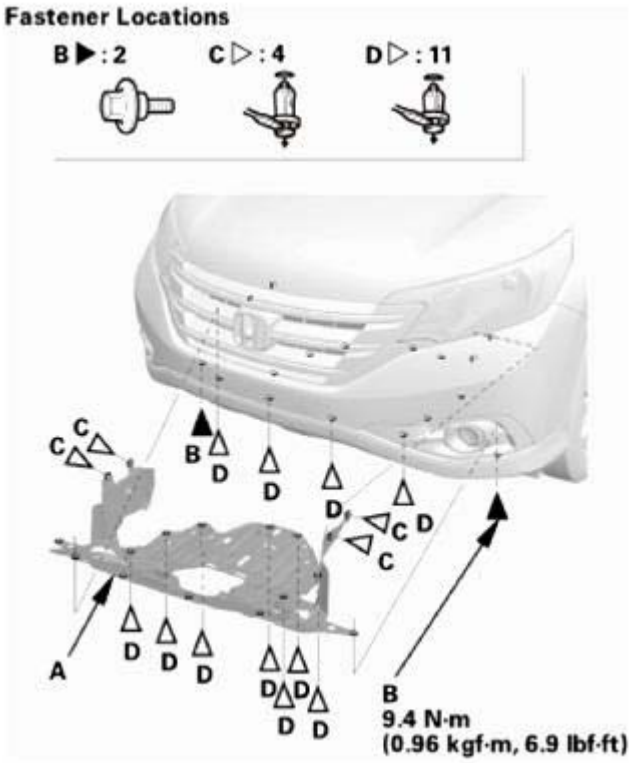

Fig. 95: Identifying Front Splash Shield And Fasteners
Courtesy of AMERICAN HONDA MOTOR CO., INC.

7. ATF - Replacement
    1. Remove the ATF dipstick (yellow loop) (A), and wipe it with a clean cloth.

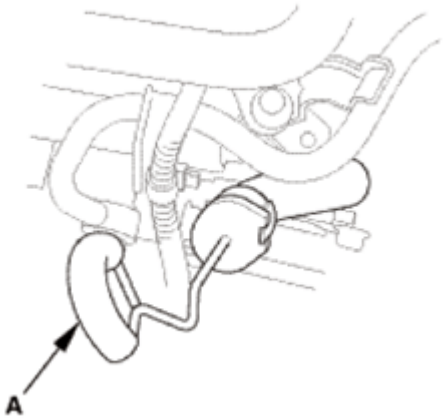

Fig. 96: Identifying ATF Dipstick
Courtesy of AMERICAN HONDA MOTOR CO., INC.

    2. Refill the transmission with the recommended fluid into the dipstick guide tube opening (A) to bring the fluid level between the upper mark and the lower mark of the dipstick. Always use ATF DW-1 (genuine Honda automatic transmission fluid). Using a non-Honda ATF can affect shift

GETtheMANUALS.org

quality.

Automatic Transmission Fluid Capacity

2WD:

2.2 L (2.3 US qt) at change

5.85 L (6.18 US qt) at overhaul

AWD/4WD:

2.6 L (2.7 US qt) at change

6.4 L (6.8 US qt) at overhaul

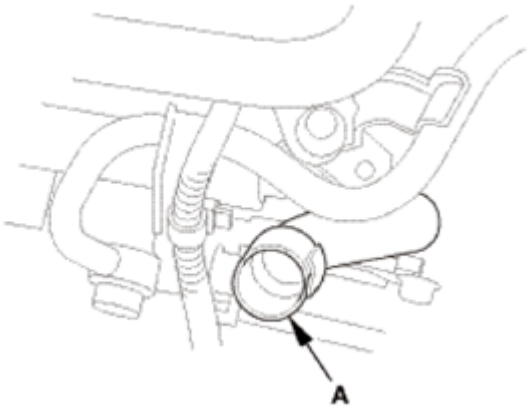

Fig. 97: Identifying Dipstick Guide Tube Opening
Courtesy of AMERICAN HONDA MOTOR CO., INC.

3. Insert the dipstick (A) into the guide tube aligning the notch (B) with the guide tab (C).

GETtheMANUALS.org

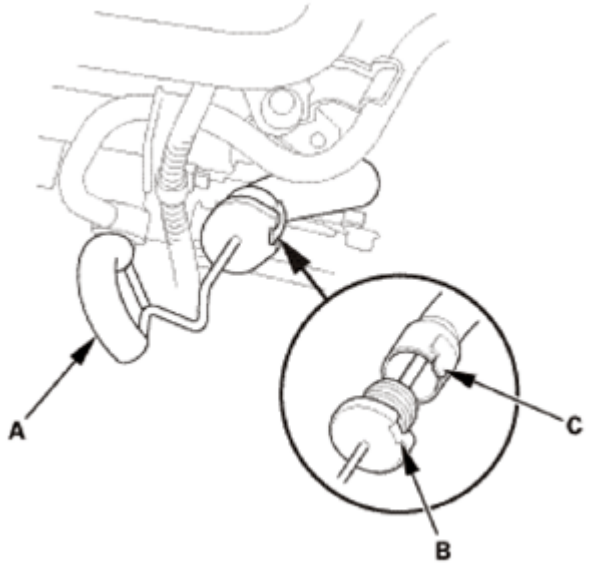

Fig. 98: Identifying Dipstick, Notch And Guide Tab
Courtesy of AMERICAN HONDA MOTOR CO., INC.

4. Remove the dipstick.
5. Make sure the fluid level is between the upper mark (A) and the lower mark (B) on the dipstick.
6. Insert the dipstick into the guide tube aligning the notch with the guide tab.

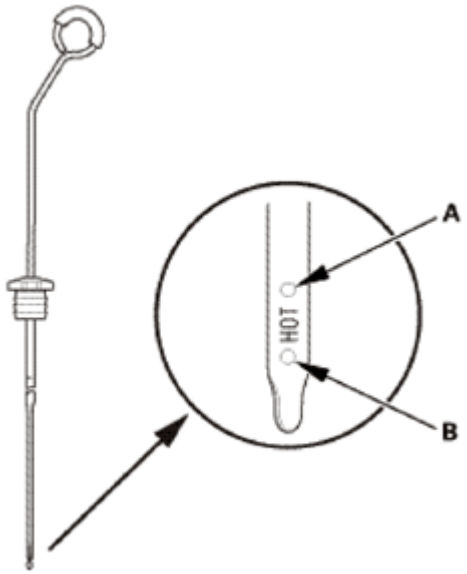

Fig. 99: Identifying Upper And Lower Marks On Dipstick
Courtesy of AMERICAN HONDA MOTOR CO., INC.

8. Warm Up The Engine
    1. Start the engine. Hold the engine speed at 3, 00 rpm without load in P or N until the radiator fan comes on.

GETtheMANUALS.org

2. Park the vehicle on level ground.
3. Turn the ignition switch to LOCK (0).

9. ATF Level Check

NOTE:

- **Keep all foreign particles out of the transmission.**
- **Check the fluid level within 60-90 seconds after turning the engine off.**
- **Higher fluid level may be indicated if the radiator fan comes on twice or more.**

1. Remove the ATF dipstick (yellow loop) (A), and wipe it with a clean cloth.
2. Insert the dipstick into the guide tube aligning the notch (B) with the guide tab (C).

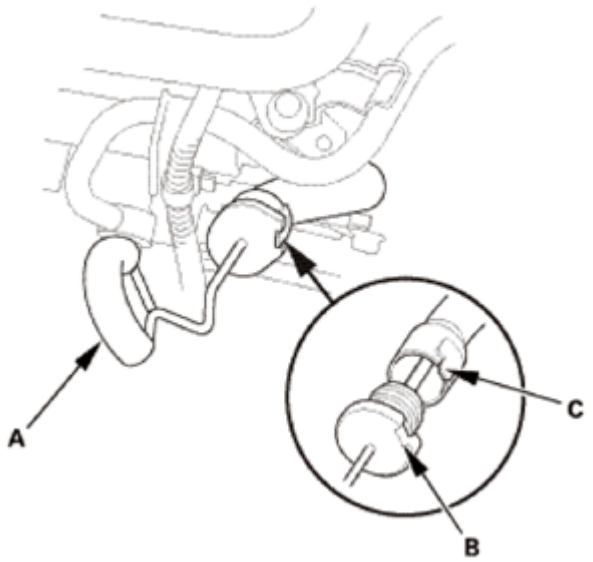

Fig. 100: Identifying Dipstick, Notch And Guide Tab
Courtesy of AMERICAN HONDA MOTOR CO., INC.

3. Remove the dipstick, and check the ATF level. It should be between the upper mark (A) and the lower mark (B).
4. If the ATF level is below the lower mark, check for fluid leaks at the transmission, the hoses, and the line joints. If a problem is found, fix it before filling the transmission with ATF.

NOTE: **If the vehicle is driven when the ATF level is below the lower mark, one or more of these symptoms may occur:**

- Transmission damage.
- Vehicle does not move in any gear.
- Vehicle accelerates poorly, and engine revs up abnormally high when starting off in forward and reverse positions.

GETtheMANUALS.org

- Engine vibrates at idle.

5. If the ATF level is above the upper mark, drain the ATF to proper level.

NOTE: **If the vehicle is driven when the ATF level is above the upper mark, the vehicle may creep forward while in N, or have shifting problems.**

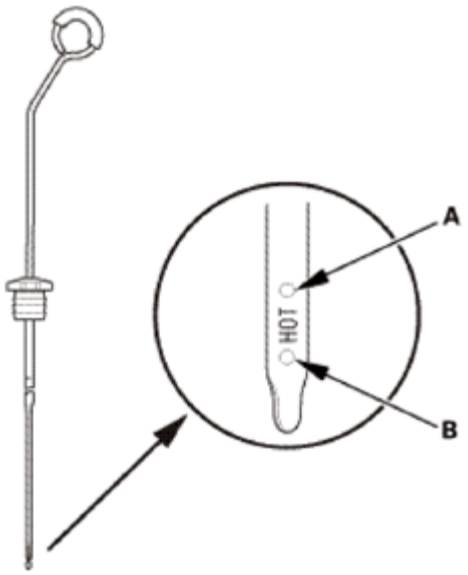

Fig. 101: Identifying Upper And Lower Marks On Dipstick
Courtesy of AMERICAN HONDA MOTOR CO., INC.

6. If necessary, fill the transmission with ATF through the dipstick guide tube opening (A) to bring the fluid level between the upper mark and the lower mark of the dipstick. Do not fill the fluid above the upper mark. Always use ATF DW-1 (genuine Honda automatic transmission fluid). Using a non-Honda ATF can affect shift quality.
7. Insert the dipstick into the guide tube aligning the notch with the guide tab.

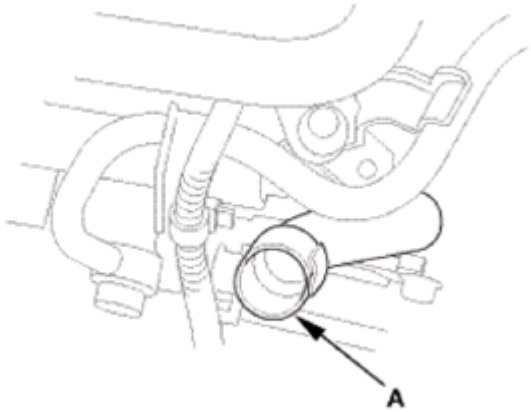

Fig. 102: Identifying Dipstick Guide Tube Opening
Courtesy of AMERICAN HONDA MOTOR CO., INC.

GETtheMANUALS.org

10. HDS DLC - Connection
    1. Connect the HDS to the data link connector (DLC) (A) located under the driver's side of the dashboard.
    2. Turn the ignition switch to ON (II).
    3. Make sure the HDS communicates with the vehicle. If it does not communicate, go to the DLC circuit troubleshooting.

Fig. 103: Identifying Data Link Connector
Courtesy of AMERICAN HONDA MOTOR CO., INC.

11. Maintenance Minder Reset
    1. **RESET THE MAINTENANCE MINDER** .

GETtheMANUALS.org

GENERAL INFORMATION

Trouble Shooting - Basic Procedures

* PLEASE READ THIS FIRST *

NOTE: **This is GENERAL information. This article is not intended to be specific to any unique situation or individual vehicle configuration. The purpose of this Trouble Shooting information is to provide a list of common causes to problem symptoms. For model-specific Trouble Shooting, refer to SUBJECT, DIAGNOSTIC, or TESTING articles available in the section(s) you are accessing.**

ACCESSORIES & ELECTRICAL

CHARGING SYSTEM TROUBLE SHOOTING

NOTE: **This is GENERAL information. This article is not intended to be specific to any unique situation or individual vehicle configuration. The purpose of this Trouble Shooting information is to provide a list of common causes to problem symptoms. For model-specific Trouble Shooting, refer to SUBJECT, DIAGNOSTIC, or TESTING articles available in the section(s) you are accessing.**

NOTE: **This is GENERAL information. This article is not intended to be specific to any unique situation or individual vehicle configuration. The purpose of this Trouble Shooting information is to provide a list of common causes to problem symptoms. For model-specific Trouble Shooting, refer to SUBJECT, DIAGNOSTIC, or TESTING articles available in the section(s) you are accessing.**

BASIC CHARGING SYSTEM TROUBLE SHOOTING CHART

CONDITION & POSSIBLE CAUSE	CORRECTION
Vehicle Will Not Start	
Dead battery	Check battery cells, alternator belt tension and alternator output
Loose or corroded battery connections	Check all charging system connections
Ignition circuit or switch malfunction	Check and replace as necessary
Alternator Light Stays On With Engine Running	
Loose or worn alternator drive belt	Check alternator drive tension and condition, See Belt Adjustment in TUNE-UP article in the TUNE-UP section
Loose alternator wiring connections	Check all charging system connections

GETtheMANUALS.org

Short in alternator light wiring	See Indicator Warning Lights in STANDARD INSTRUMENTS in the ACCESSORIES & EQUIPMENT section
Defective alternator stator or diodes	See Bench Tests in ALTERNATOR article
Defective regulator	See Regulator Check in ALTERNATOR article
Alternator Light Stays Off With Ignition Switch ON	
Blown fuse	See WIRING DIAGRAMS
Defective alternator	See Testing in ALTERNATOR article
Defective indicator light bulb or socket	See Indicator Warning Lights in STANDARD INSTRUMENTS in the ACCESSORIES & EQUIPMENT section
Alternator Light Stays OFF With Ignition Switch ON	
Short in alternator wiring	See On-Vehicle Tests in ALTERNATOR article
Defective rectifier bridge	See Bench Tests in ALTERNATOR article
Lights or Fuses Burn Out Frequently	
Defective alternator wiring	See On-Vehicle Tests in ALTERNATOR article
Defective regulator	See Regulator Check in ALTERNATOR article
Defective battery	Check and replace as necessary
Ammeter Gauge Shows Discharge	
Loose or worn drive belt	Check alternator drive belt tension and condition. See Belt Adjustment in TUNE-UP article in the TUNE-UP section
Defective wiring	Check all wires and wire connections
Defective alternator or regulator	See Bench Tests and On-Vehicle Tests in ALTERNATOR article
Defective ammeter, or improper ammeter wiring connection	See Testing in STANDARD INSTRUMENTS in the ACCESSORIES & EQUIPMENT section
Noisy Alternator	
Loose drive pulley	Tighten drive pulley attaching nut

GETtheMANUALS.org

Loose mounting bolts	Tighten all alternator mounting bolts
Worn or dirty bearings	See Bearing Replacement ALTERNATOR article
Defective diodes or stator	See Bench Test in ALTERNATOR article
Battery Does Stay Charged	
Loose or worn drive belt	Check alternator drive belt tension and condition. See Belt Adjustment in appropriate TUNE-UP article in the TUNE-UP section
Loose or corroded battery connections	Check all charging system connections
Loose alternator connections	Check all charging system connections
Defective alternator or battery	See On-Vehicle Tests and Bench Tests in ALTERNATOR article
Add-on electrical accessories exceeding alternator capacity	Install larger alternator
Battery Overcharged-Uses Too Much Water	
Defective battery	Check alternator output and repair as necessary
Defective alternator	See On-Vehicle Test and Bench Tests in ALTERNATOR article
Excessive alternator voltage	Check alternator output and repair as necessary

IGNITION SYSTEM TROUBLE SHOOTING

NOTE: **This is GENERAL information. This article is not intended to be specific to any unique situation or individual vehicle configuration. The purpose of this Trouble Shooting information is to provide a list of common causes to problem symptoms. For model-specific Trouble Shooting, refer to SUBJECT, DIAGNOSTIC, or TESTING articles available in the section(s) you are accessing.**

GETtheMANUALS.org

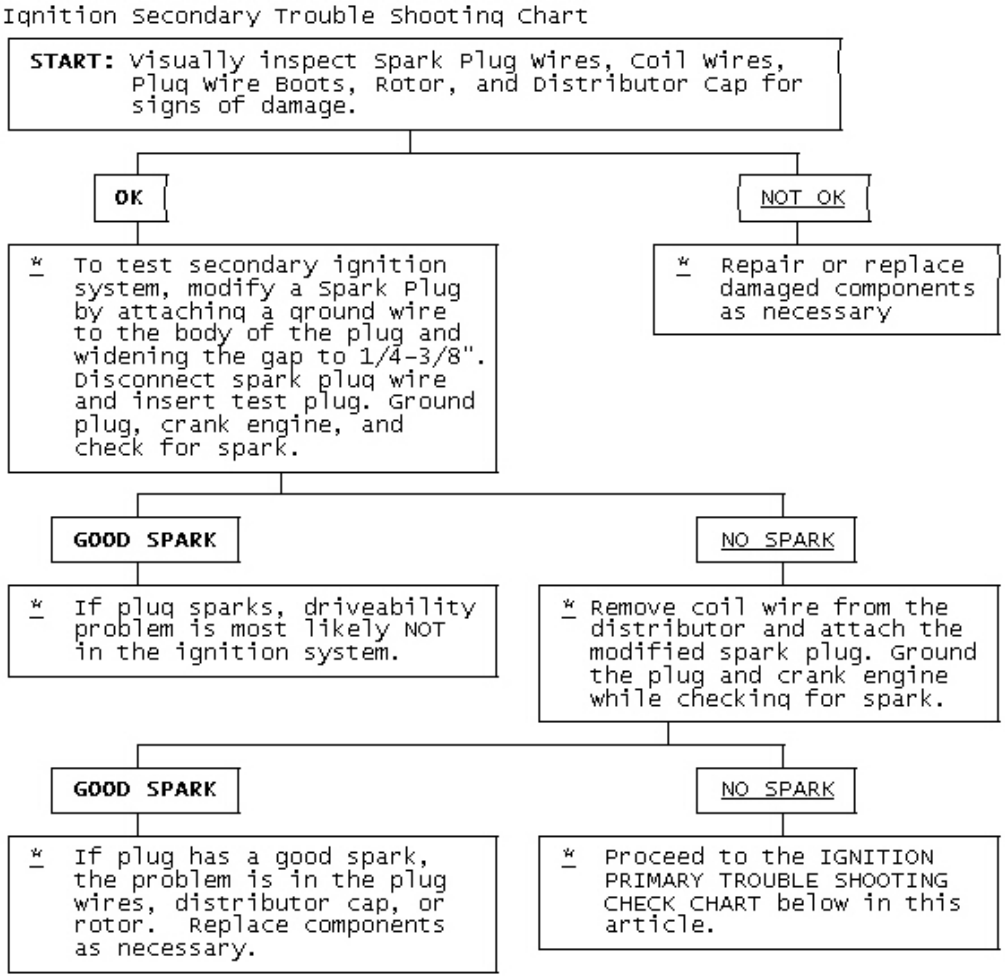

Fig. 1: Ignition Secondary Trouble Shooting Chart

GETtheMANUALS.org

Ignition Primary Trouble Shooting Chart

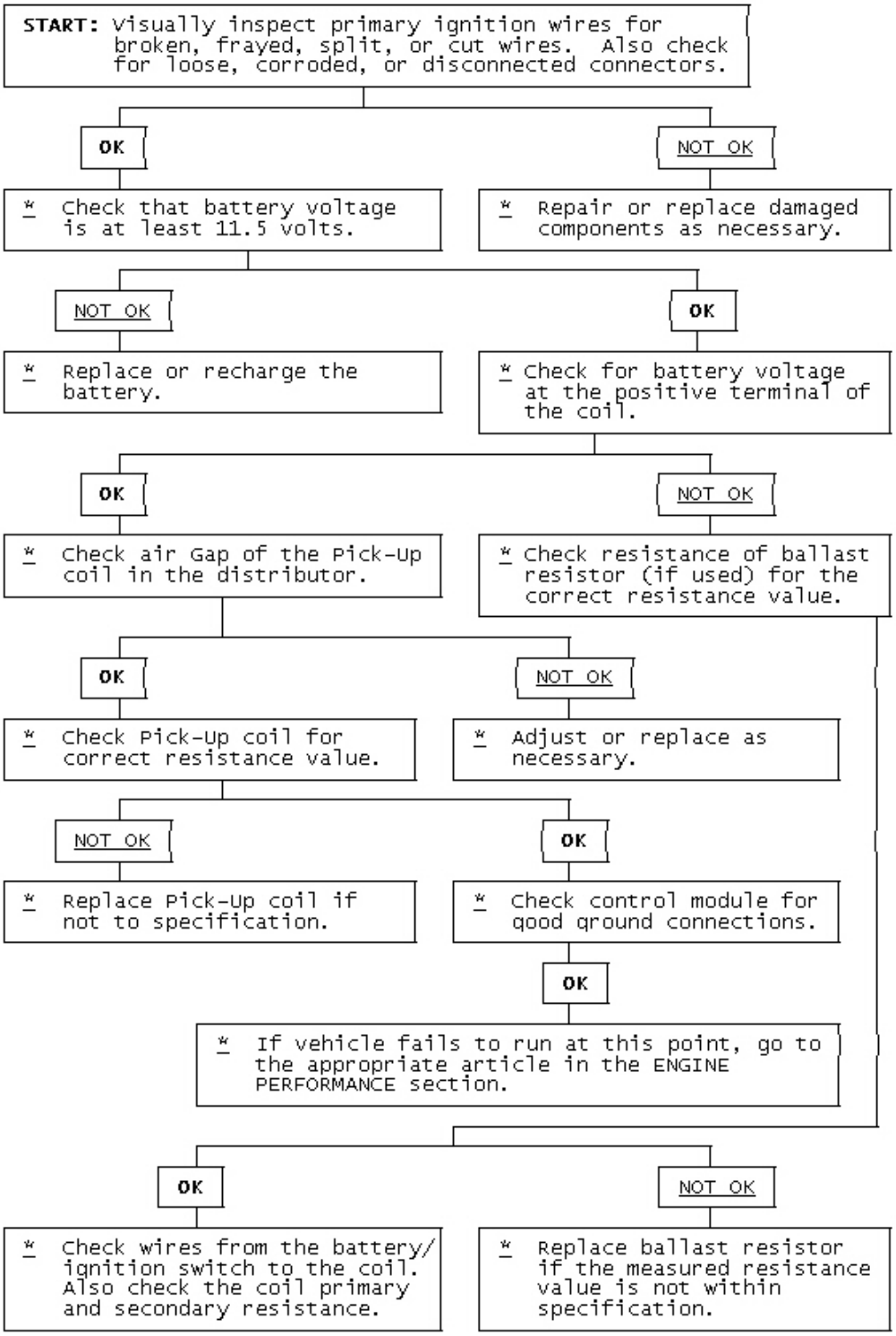

GETtheMANUALS.org

Fig. 2: Ignition Primary Trouble Shooting Chart

STARTER TROUBLE SHOOTING

NOTE: **This is GENERAL information. This article is not intended to be specific to any unique situation or individual vehicle configuration. The purpose of this Trouble Shooting information is to provide a list of common causes to problem symptoms. For model-specific Trouble Shooting, refer to SUBJECT, DIAGNOSTIC, or TESTING articles available in the section(s) you are accessing.**

BASIC STARTER TROUBLE SHOOTING CHART

CONDITION & POSSIBLE CAUSE	CORRECTION
Starter Fails to Operate	
Dead battery or bad connections between starter and battery	Check battery charge and all wires and connections to starter
Ignition switch faulty or misadjusted	Adjust or replace ignition switch
Open circuit between starter switch ignition terminal on starter relay	Check and repair wires and connections as necessary
Starter relay or starter defective	See Testing in STARTER article
Open solenoid pull-in wire	Testing in STARTER article
Starter Does Not Operate and Headlights Dim	
Weak battery or dead cell	Charge or replace battery as necessary
Loose or corroded battery connections	Check that battery connections are clean and tight
Internal ground in starter windings	See Testing in STARTER article
Grounded starter fields	See Testing in STARTERS
Armature rubbing on pole	See STARTER article shoes
Starter Turns but Engine Does Not Rotate	
Starter clutch slipping	See STARTER article
Broken clutch housing	See STARTER article
Pinion shaft rusted or dry	See STARTER article
Engine basic timing incorrect	See Ignition Timing in TUNE-UP article
Broken teeth on engine flywheel	Replace flywheel and check for starter pinion gear damage
Starter Will Not Crank Engine	
Faulty overrunning clutch	See STARTER article
Broken clutch housing	See STARTER article
Broken flywheel teeth	Replace flywheel and check

GETtheMANUALS.org

	for starter pinion gear damage
Armature shaft sheared or reduction gear teeth stripped	See STARTER article
Weak battery	Charge or replace battery as necessary
Faulty solenoid	See On-Vehicle Tests in STARTER article
Poor grounds	Check all ground connections for tight and clean connections
Ignition switch faulty or misadjusted	Adjust or replace ignition switch as necessary
Starter Cranks Engine Slowly	
Battery weak or defective	Charge or replace battery as necessary
Engine overheated	See ENGINE COOLING SYSTEM article
Engine oil too heavy	Check that proper viscosity oil is used
Poor battery-to-starter connections	Check that all between battery and starter are clean and tight
Current draw too low or too high	See Bench Tests in STARTER article
Bent armature, loose pole shoes screws or worn bearing	See STARTER article
Burned solenoid contacts	Replace solenoid
Faulty starter	Replace starter
Starter Engages Engine Only Momentarily	
Engine timing too far advanced	See Ignition Timing in TUNE-UP article
Overrunning clutch not engaging properly	Replace overrunning clutch. See STARTER article
Broken starter clutch	See STARTER article
Broken teeth on engine flywheel	Replace flywheel and check starter pinion gear for damage
Weak drive assembly thrust spring	See STARTER article
Weak hold-in coil	See Bench Tests in STARTER article
Starter Drive Will Not Engage	
Defective point assembly	See Testing in STARTER article
Poor point assembly ground	See Testing in STARTER article
Defective pull-in coil	Replace starter solenoid
Starter Relay Does Not Close	
Dead battery	Charge or replace battery as

GETtheMANUALS.org

	necessary
Faulty wiring	Check all wiring and connections leading to relay
Neutral safety switch faulty	Replace neutral safety switch
Starter relay faulty	Replace starter relay
Starter Drive Will Not Disengage	
Starter motor loose on mountings	Tighten starter attach bolts
Worn drive end bushing	See STARTER article
Damaged engine flywheel teeth	Replace flywheel and starter pinion gear for damage
Drive yolk return spring broken or missing	Replace return spring
Faulty ignition switch	Replace ignition switch
Insufficient clearance between winding leads to solenoid terminal and main contact in solenoid	Replace starter solenoid
Starter clutch not disengaging	Replace starter clutch
Ignition starter switch	Replace ignition switch contacts sticking
Starter Relay Operates but Solenoid Does Not	
Faulty solenoid switch, switch connections or relay	Check all wiring between relay and solenoid or replace relay or solenoid as necessary
Broken lead or loose soldered connections	Repair wire or wire connections as necessary
Solenoid Plunger Vibrates When Switch is Engaged	
Weak battery	Charge or replace battery as necessary
Solenoid contacts corroded	Clean contacts or replace solenoid
Faulty wiring	Check all wiring leading to solenoid
Broken connections inside switch cover	Repair connections or replace solenoid
Open hold-in wire	solenoid
Low Current Draw	
Worn brushes or weak brush springs	Replace brushes or brush springs as necessary
High Pitched Whine During Cranking Before Engine Fires but Engine Fires and Cranks Normally	
Distance too great between starter pinion and flywheel	Align starter or check that correct starter and flywheel are being used
High Pitched Whine After Engine Fires With Key released. Engine Fires and Cranks Normally	
Distance too small between starter pinion and flywheel	Flywheel runout contributes to the intermittent nature

GETtheMANUALS.org

AIR CONDITIONING & HEAT

AIR CONDITIONING TROUBLE SHOOTING

WARNING: This is GENERAL information. This article is not intended to be specific to any unique situation or individual vehicle configuration. The purpose of this Trouble Shooting information is to provide a list of common causes to problem symptoms. For model-specific Trouble Shooting, refer to SUBJECT, DIAGNOSTIC, or TESTING articles available in the section(s) you are accessing.

BASIC AIR CONDITIONING TROUBLE SHOOTING CHART

CONDITION	POSSIBLE CAUSE
Compressor Not Working	Compressor clutch circuit open.
.....	Compressor clutch coil inoperative.
.....	Poor clutch ground connection.
.....	Fan belts loose.
.....	Thermostatic switch inoperative.
.....	Thermostatic switch not adjusted.
.....	Ambient temperature switch open.
.....	Superheat fuse blown.
Excessive Noise or Vibration	Missing or loose mounting bolts.
.....	Bad idler pulley bearings.
.....	Fan belts not tightened correctly.
.....	Compressor clutch contacting body.
.....	Excessive system pressure.
.....	Compressor oil level low.
.....	Damaged clutch bearings.
.....	Damaged reed valves.
.....	Damaged compressor.
Insufficient or No Cooling; Compressor Working	Expansion valve inoperative.
.....	Heater control valve stuck open.
.....	Low system pressure.
.....	Blocked condenser fins.
.....	Blocked evaporator fins.
.....	Vacuum system leak.
.....	Vacuum motors inoperative.
.....	Control cables improperly adjusted.
.....	Restricted air inlet.
.....	Mode doors binding.
.....	Blower motor inoperative.

GETtheMANUALS.org

.....	Temperature above system capacity.

HEATER SYSTEM TROUBLE SHOOTING

NOTE: **This is GENERAL information. This article is not intended to be specific to any unique situation or individual vehicle configuration. The purpose of this Trouble Shooting information is to provide a list of common causes to problem symptoms. For model-specific Trouble Shooting, refer to DIAGNOSTIC, or TESTING articles available in the section(s) you are accessing.**

BASIC HEATER SYSTEM TROUBLE SHOOTING CHART

CONDITION	POSSIBLE CAUSE
Insufficient, Erratic, or No Heat	Low Coolant Level
.....	Incorrect thermostat.
.....	Restricted coolant flow through core.
.....	Heater hoses plugged.
.....	Misadjusted control cable.
.....	Sticking heater control valve.
.....	Vacuum hose leaking.
.....	Vacuum hose blocked.
.....	Vacuum motors inoperative.
.....	Blocked air inlet.
.....	Inoperative heater blower motor.
.....	Oil residue on heater core fins.
.....	Dirt on heater core fins.
Too Much Heat	Improperly adjusted cables.
.....	Sticking heater control valve.
.....	No vacuum to heater control valve.
.....	Temperature door stuck open.
Air Flow Changes During Acceleration	Vacuum system leak.
.....	Bad check valve or reservoir.
Air From Defroster At All Times	Vacuum system leak.
.....	Improperly adjusted control cables.
.....	Inoperative vacuum motor.
Blower Does Not Operate Correctly	Blown fuse.
.....	Blower motor windings open.
.....	Resistors burned out.
.....	Motor ground connection loose.
.....	Wiring harness connections loose.
.....	Blower motor switch inoperative.
.....	Blower relay inoperative.

GETtheMANUALS.org

.....	Fan binding or foreign object in housing.
.....	Fan blades broken or bent.

BRAKES

BRAKE SYSTEM TROUBLE SHOOTING

NOTE: **This is GENERAL information. This article is not intended to be specific to any unique situation or individual vehicle configuration. The purpose of this Trouble Shooting information is to provide a list of common causes to problem symptoms. For model-specific Trouble Shooting, refer to SUBJECT, DIAGNOSTIC, or TESTING articles available in the section(s) you are accessing.**

BRAKE SYSTEM TROUBLE SHOOTING CHART

CONDITION & POSSIBLE CAUSE	CORRECTION
Brakes Pull Left or Right	
Incorrect tire pressure	Inflate tires to proper pressure
Front end out of alignment	See WHEEL ALIGNMENT
Mismatched tires	Check tires sizes
Restricted brake lines or hoses	Check hose routing
Loose or malfunctioning caliper	See DISC BRAKES or BRAKE SYSTEM
Bent shoe or oily linings	See DRUM BRAKES or BRAKE SYSTEM
Malfunctioning rear brakes	See DRUM, DISC BRAKES or BRAKE SYSTEM
Loose suspension parts	See SUSPENSION
Noises Without Brakes Applied	
Front linings worn out	Replace linings
Dust or oil on drums or rotors	See DRUM, DISC BRAKES or BRAKE SYSTEM
Noises With Brakes Applied	
Insulator on outboard shoe damaged	See DISC BRAKES or BRAKE SYSTEM
Incorrect pads or linings	Replace pads or linings
Brake Rough, Chatters or Pulsates	
Excessive lateral runout	Check rotor runout
Parallelism not to specifications	Reface or replace rotor
Wheel bearings not adjusted	See SUSPENSION
Rear drums out-of-round	Reface or replace drums
Disc pad reversed, steel against rotor	Remove and reinstall pad
Excessive Pedal Effort	
Malfunctioning power unit	See POWER BRAKES or

GETtheMANUALS.org

	BRAKE SYSTEM
Partial system failure	Check fluid and pipes
Worn disc pad or lining	Replace pad or lining
Caliper piston stuck or sluggish	See DISC BRAKES or BRAKE SYSTEM
Master cylinder piston stuck	See MASTER CYLINDERS or BRAKE SYSTEM
Brake fade due to incorrect pads for linings	Replace pads or linings
Linings or pads glazed	Replace pads or linings
Worn drums	Reface or replace drums
Excessive Pedal Travel	
Partial brake system failure	Check fluid and pipes
Insufficient fluid in master cylinder	See MASTER CYLINDERS or BRAKE SYSTEM
Air trapped in system	See BRAKE BLEEDING or BRAKE SYSTEM
Rear brakes not adjusted	See Adjustments in DRUM BRAKES or BRAKE SYSTEM
Bent shoe or lining	See DRUM BRAKES or BRAKE SYSTEM
Plugged master cylinder cap	See MASTER CYLINDERS or BRAKE SYSTEM
Improper brake fluid	Replace brake fluid
Pedal Travel Decreasing	
Compensating port plugged	See MASTER CYLINDERS or BRAKE SYSTEM
Swollen cup in master cylinder	See MASTER CYLINDERS or BRAKE SYSTEM
Master cylinder piston not returning	See MASTER CYLINDERS or BRAKE SYSTEM
Weak shoe retracting springs	See DRUM BRAKES BRAKE SYSTEM
Wheel cylinder piston sticking	See DRUM BRAKES or BRAKE SYSTEM
Dragging Brakes	
Master cylinder pistons not returning	See MASTER CYLINDERS BRAKE SYSTEM
Restricted brake lines or hoses	Check line routing
Incorrect parking brake adjustment	See DRUM BRAKES BRAKE SYSTEM
Parking Brake cables frozen	See DRUM BRAKES BRAKE SYSTEM

GETtheMANUALS.org

Incorrect installation of inboard disc pad	Remove and replace correctly
Power booster output rod too long	See POWER BRAKE UNITS BRAKE SYSTEM
Brake pedal not returning freely	See DISC, DRUM BRAKES BRAKE SYSTEM
Brakes Grab or Uneven Braking Action	
Malfunction of combination valve	See CONTROL VALVE or BRAKE SYSTEM
Malfunction of power brake unit	See POWER BRAKE UNITS or BRAKE SYSTEM
Binding brake pedal	See DISC, DRUM BRAKES or BRAKE SYSTEM
Pulsation or Roughness	
Uneven pad wear caused by caliper	See DISC BRAKES or BRAKE SYSTEM
Uneven rotor wear	See DISC BRAKES or BRAKE SYSTEM
Drums out-of-round	Reface or replace drums

ENGINE MECHANICAL

COOLING SYSTEM TROUBLE SHOOTING

NOTE: **This is GENERAL information. This article is not intended to be specific to any unique situation or individual vehicle configuration. The purpose of this Trouble Shooting information is to provide a list of common causes to problem symptoms. For model-specific Trouble Shooting, refer to SUBJECT, DIAGNOSTIC, or TESTING articles available in the section(s) you are accessing.**

COOLING SYSTEM TROUBLE SHOOTING

CONDITION & POSSIBLE CAUSE	CORRECTION
Overheating	
Coolant Leak	Fill/Pressure Test System
A/C Condenser Fins Clogged	Remove/Clean Condenser
Radiator Fins Clogged	Remove/Clean Radiator
Thermostat Stuck Closed	Replace Thermostat
Clogged Cooling System Passages	Clean/Flush Cooling System
Water Pump Malfunction	Replace Water Pump
Fan Clutch Malfunction	Replace Fan Clutch
Retarded Ignition Timing	Reset Ignition Timing
Cooling Fan Malfunction	Test Cooling Fan/Circuit
Cooling Fan Motor Malfunction	Test Fan Motor
Cooling Fan Relay Malfunction	Test Fan Relay

GETtheMANUALS.org

Faulty Radiator Cap	Replace Radiator Cap
Broken/Slipping Fan Belt	Replace Fan Belt
Restricted Exhaust	Repair Exhaust System
Corrosion	
Impurities In Coolant	Clean/Flush System
Coolant Leakage	
Damaged hose	Replace Hose
Leaky Water Pump	Replace Water Pump
Damaged Radiator Seam	Replace/Repair Radiator
Leaky Thermostat Cover	Replace Thermostat Cover
Cylinder Head Problem	Check Head/Head Gasket
Leaky Freeze Plugs	Replace Freeze Plugs
Recovery System Inoperative	
Loose and/or Defective Radiator Cap	Replace Radiator Cap
Overflow Tube Clogged and/or Leaking	Repair Tube
Recovery Bottle Vent Restricted	Clean Vent
No Heater Core Flow	
Collapsed Heater Hose	Replace Heater Hose
Plugged Heater Core	Clean/Replace Heater Core
Faulty Heater Valve	Replace Heater Valve

GASOLINE ENGINE - MECHANICAL TROUBLE SHOOTING

NOTE: **This is GENERAL information. This article is not intended to be specific to any unique situation or individual vehicle configuration. The purpose of this Trouble Shooting information is to provide a list of common causes to problem symptoms. For model-specific Trouble Shooting, refer to SUBJECT, DIAGNOSTIC, or TESTING articles available in the section(s) you are accessing.**

BASIC GASOLINE ENGINE - MECHANICAL TROUBLE SHOOTING CHART

CONDITION & POSSIBLE CAUSE	CORRECTION
Engine Lopes At Idle	
Intake manifold-to-head leaks	Replace manifold gasket, See ENGINES
Blown head gasket	Replace head gasket, See ENGINES
Worn timing gears, chain or sprocket	Replace gears, chain or sprocket
Worn camshaft lobes	Replace camshaft, See ENGINES
Overheated engine	Check cooling system, See COOLING
Blocked crankcase vent valve	Remove restriction

GETtheMANUALS.org

Leaking EGR valve	Repair leak and/or replace valve
Faulty fuel pump	Replace fuel pump
Engine Has Low Power	
Leaking fuel pump	Repair leak and/or replace fuel pump
Excessive piston-to-bore clearance	Install larger pistons, See ENGINES
Sticking valves or weak valve springs	Check valve train components, See ENGINES
Incorrect valve timing	Reset valve timing, See ENGINES
Worn camshaft lobes	Replace camshaft, See ENGINES
Blown head gasket	Replace head gasket. See ENGINES.
Clutch slipping	Adjust pedal and/or replace components, See ENGINES
Engine overheating	Check cooling system, See COOLING
Auto. Trans. pressure regulator valve faulty	Replace pressure regulator valve
Auto. Trans. fluid level too low	Add fluid as necessary
Improper vacuum diverter valve operation	Replace vacuum diverter valve
Vacuum leaks	Inspect vacuum system and repair as required
Leaking piston rings	Replace piston rings, See ENGINES
Faulty High Speed Operation	
Low fuel pump volume	Replace fuel pump
Leaking valves or worn	Replace valves and/or springs, See ENGINES
Incorrect valve timing	Reset valve timing,See ENGINES
Intake manifold restricted	Remove restriction
Worn distributor shaft	Replace distributor
Faulty Acceleration	
Improper fuel pump stroke	Remove pump and reset pump stroke
Incorrect ignition timing	Reset ignition timing, See TUNE-UP
Leaking valves	Replace valves, See ENGINES

GETtheMANUALS.org

Worn fuel pump diaphragm or piston	Replace diaphragm or piston
Intake Backfire	
Improper ignition timing	Reset ignition timing, See TUNE-UP
Faulty accelerator pump discharge	Replace accelerator pump
Improper choke operation	Check choke and adjust as required
Defective EGR valve	Replace EGR valve
Fuel mixture too lean	Reset air/fuel mixture, See TUNE-UP
Choke valve initial clearance too large	Reset choke valve initial clearance
Exhaust Backfire	
Vacuum leak	Inspect and repair vacuum system
Faulty vacuum diverter valve	Replace vacuum diverter valve
Faulty choke operation	Check choke and adjust as required
Exhaust system leak	repair exhaust system leak
Engine Detonation	
Ignition timing too far advanced	Reset ignition timing, See TUNE-UP
Faulty ignition system	Check ignition timing, See TUNE-UP
Spark plugs loose or faulty	Retighten or replace plugs
Fuel delivery system clogged	Inspect lines, pump and filter for clog
EGR valve inoperative	Replace EGR valve
PCV system inoperative	Inspect and/or replace hoses or valve
Vacuum leaks	Check vacuum system and repair leaks
Excessive combustion chamber deposits	Remove built-up deposits
Leaking, sticking or broken valves	Inspect and/or replace valves
External Oil Leakage	
Fuel pump improperly seated or worn gasket	Remove pump, replace gasket and seat properly
Oil pan gasket broken or pan bent	Straighten pan and replace gasket
Timing chain cover gasket broken	Replace timing chain cover gasket
Rear main oil seal worn	Replace rear main oil seal

GETtheMANUALS.org

Oil pan drain plug not seated properly	Remove and reinstall drain plug
Camshaft bearing drain hole blocked	Remove restriction
Oil pressure sending switch leaking	Remove and reinstall sending switch
Excessive Oil Consumption	
Worn valve stems or guides	Replace stems or guides, See ENGINES
Valve "O" ring seals damaged	Replace "O" ring seals, See ENGINES
Plugged oil drain back holes	Remove restrictions
Improper PCV valve operation	Replace PCV valve
Engine oil level too high	Remove excess oil
Engine oil too thin	Replace thicker oil
Valve stem oil deflectors damaged	Replace oil deflectors
Incorrect piston rings	Replace piston rings, See ENGINES
Piston ring gaps not staggered	Reinstall piston rings, See ENGINES
Insufficient piston ring tension	Replace rings, See ENGINES
Piston ring grooves or oil return	slots clogged Replace piston rings, See ENGINES
Piston rings sticking in grooves	Replace piston rings, See ENGINES
Piston ring grooves excessively worn	Replace piston and rings, See ENGINES
Compression rings installed upside down	Replace compression rings correctly, See ENGINES
Worn or scored cylinder walls	Rebore cylinders or replace block
Mismatched oil ring expander and rail	Replace oil ring expander and rail, See ENGINES
Intake gasket dowels too long	Replace intake gasket dowels
Excessive main or connecting rod bearing clearance	Replace main or connecting rod bearings, See ENGINES
No Oil Pressure	
Low oil level	Add oil to proper level
Oil pressure sender or gauge broken	Replace sender or gauge
Oil pump malfunction	Remove and overhaul oil pump, See ENGINES
Oil pressure relief valve sticking	Remove and reinstall valve
Oil pump passages blocked	Overhaul oil pump, See ENGINES

GETtheMANUALS.org

Oil pickup screen or tube blocked	Remove restriction
Loose oil inlet tube	Tighten oil inlet tube
Loose camshaft bearings	Replace camshaft bearings, See ENGINES
Internal leakage at oil passages	Replace block or cylinder head
Low Oil Pressure	
Low engine oil level	Add oil to proper level
Engine oil too thin	Remove and replace with thicker oil
Excessive oil pump clearance	Reduce oil pump clearance, See ENGINES
Oil pickup tube or screen blocked	Remove restrictions
Main, rod or cam bearing clearance excessive	Replace bearing to reduce clearance, See ENGINES
High Oil Pressure	
Improper grade of oil	Replace with proper oil
Oil pressure relief valve stuck closed	Eliminate binding
Oil pressure sender or gauge faulty	Replace sender or gauge
Noisy Main Bearings	
Inadequate oil supply	Check oil delivery to main bearings
Excessive main bearing clearance	Replace main bearings, See ENGINES
Excessive crankshaft end play	Replace crankshaft, See ENGINES
Loose flywheel or torque converter	Tighten attaching bolts
Loose or damaged vibration damper	Tighten or replace vibration damper
Crankshaft journals out-of-round	Re-grind crankshaft journals
Excessive belt tension	Loosen belt tension
Noisy Connecting Rods	
Excessive bearing clearance or missing bearing	Replace bearing, See ENGINES
Crankshaft rod journal out-of-round	Re-grind crankshaft journal
Misaligned connecting rod or cap	Remove rod or cap and realign
Incorrectly tightened rod bolts	Remove and re-tighten rod bolts
Noisy Pistons and Rings	
Excessive piston-to-bore clearance	Install larger pistons, See ENGINES
Bore tapered or out-of-round	Rebore block

GETtheMANUALS.org

Piston ring broken	Replace piston rings, See ENGINES
Piston pin loose or seized	Replace piston pin, See ENGINES
Connecting rods misaligned	Realign connecting rods
Ring side clearance too loose or tight	Replace with larger or smaller rings
Carbon build-up on piston	Remove carbon
Noisy Valve Train	
Worn or bent push rods	Replace push rods, See ENGINES
Worn rocker arms or bridged pivots	Replace push rods, See ENGINES
Dirt or chips in valve lifters	Remove lifters and remove dirt/chips
Excessive valve lifter leak-down	Replace valve lifters, See ENGINES
Valve lifter face worn	Replace valve lifters, See ENGINES
Broken or cocked valve springs	Replace or reposition springs
Too much valve stem-to-guide clearance	Replace valve guides, See ENGINES
Valve bent	Replace valve, See ENGINES
Loose rocker arms	Retighten rocker arms, See ENGINES
Excessive valve seat run-out	Reface valve seats, See ENGINES
Missing valve lock	Install new valve lock
Excessively worn camshaft lobes	Replace camshaft, See ENGINES
Plugged valve lifter oil holes	Eliminate restriction or replace lifter
Faulty valve lifter check ball	Replace lifter check ball, See ENGINES
Rocker arm nut installed upside down	Remove and reinstall correctly
Valve lifter incorrect for engine	Remove and replace valve lifters
Faulty push rod seat or lifter plunger	Replace plunger or push rod
Noisy Valves	
Improper valve lash	Re-adjust valve lash, See ENGINES
Worn or dirty valve lifters	Clean and/or replace lifters
Worn valve guides	Replace valve guides, See ENGINES

GETtheMANUALS.org

Excessive valve seat or face run-out	Reface seats or valve face
Worn camshaft lobes	Replace camshaft, See ENGINES
Loose rocker arm studs	Re-tighten rocker arm studs, See ENGINES
Bent push rods	Replace push rods, See ENGINES
Broken valve springs	Replace valve springs, See ENGINES
Burned,Sticking or Broken Valves	
Weak valve springs or warped valves	Replace valves and/or springs, See ENGINES
Improper lifter clearance	Re-adjust clearance or replace lifters
Worn guides or improper guide clearance	Replace valve guides, See ENGINES
Out-of-round valve seats or improper seat width	Re-grind valve seats
Gum deposits on valve stems, seats or guide	Remove deposits
Improper spark timing	Re-adjust spark timing
Broken Pistons/Rings	
Undersize pistons	Replace with larger pistons, See ENGINES
Wrong piston rings	Replace with correct rings, See ENGINES
Out-of-round cylinder bore	Re-bore cylinder bore
Improper connecting rod alignment	Remove and realign connecting rods
Excessively worn ring grooves	Replace pistons, See ENGINES
Improperly assembled piston pins	Re-assemble pin-to-piston, See ENGINES
Insufficient ring gap clearance	Install new rings, See ENGINES
Engine overheating	Check cooling system
Incorrect ignition timing	Re-adjust ignition timing, See TUNE-UP
Excessive Exhaust Noise	
Leaks at manifold to head, or to pipe	Replace manifold or pipe gasket
Exhaust manifold cracked or broken	Replace exhaust manifold, See ENGINES

ENGINE PERFORMANCE

GETtheMANUALS.org

CARBURETOR TROUBLE SHOOTING:

NOTE: **This is GENERAL information. This article is not intended to be specific to any unique situation or individual vehicle configuration. The purpose of this Trouble Shooting information is to provide a list of common causes to problem symptoms. For model-specific Trouble Shooting, refer to SUBJECT, DIAGNOSTIC, or TESTING articles available in the section(s) you are accessing.**

BASIC COLD START SYMPTOMS TROUBLE SHOOTING CHART

CONDITION & POSSIBLE CAUSE	CORRECTION
Engine Won't Start	
Choke not closing	Check choke operation, see FUEL SYSTEMS
Choke linkage bent	Check linkage, see FUEL SYSTEM
Engine Starts, Then Dies	
Choke vacuum kick setting too wide	Check setting and adjust see, FUEL SYSTEMS
Fast idle RPM too low	Reset RPM to specification, see TUNE-UP
Fast idle cam index incorrect	Reset fast idle cam index, see FUEL SYSTEMS
Vacuum leak	Inspect vacuum system for leaks
Low fuel pump outlet	Repair or replace pump, see FUEL SYSTEMS
Low carburetor fuel level	Check float setting see FUEL SYSTEM
Engine Quits Under Load	
Choke vacuum kick setting incorrect	Reset vacuum kick setting,see FUEL SYSTEMS
Fast idle cam index incorrect	Reset fast idle cam index, see FUEL SYSTEM
Incorrect hot fast idle speed RPM	Reset fast idle RPM, see TUNE-UP
Engine Starts, Runs Up, Then Idles, Slowly With Black Smoke	
Choke vacuum kick set too narrow	Reset vacuum kick, see FUEL SYSTEMS
Fast idle cam index incorrect	Reset fast idle cam index, see FUEL SYSTEMS
Hot fast idle RPM too low	Reset fast idle RPM, see TUNE-UP

BASIC HOT START SYMPTOMS TROUBLE SHOOTING CHART

GETtheMANUALS.org

CONDITION & POSSIBLE CAUSE	CORRECTION
Engine Won't Start	
Engine flooded	Allow fuel to evaporate

BASIC COLD ENGINE DRIVEABILITY SYMPTOMS TROUBLE SHOOTING CHART

CONDITION & POSSIBLE CAUSE	CORRECTION
Engine Stalls in Gear	
Choke vacuum kick setting incorrect	Reset choke vacuum kick, see FUEL SYSTEMS
Fast idle RPM incorrect	Reset fast idle RPM, see TUNE-UP
Fast idle cam index incorrect	Reset fast idle cam see FUEL SYSTEMS
Acceleration Sag or Stall	
Defective choke control switch	Replace choke control switch
Choke vacuum kick setting incorrect	Reset choke vacuum kick see, FUEL SYSTEMS
Float level incorrect (too low)	Adjust float level, FUEL SYSTEMS
Accelerator pump defective	Repair or replace pump see FUEL SYSTEMS
Secondary throttles not closed	Inspect lockout adjustment, see FUEL SYSTEMS
Sag or Stall After Warmup	
Defective choke control switch	Replace choke control switch, see FUEL SYSTEMS
Defective accelerator pump	Replace pump, see FUEL SYSTEMS
Float level incorrect (too low)	Adjust float level, see FUEL SYSTEMS
Backfiring & Black Smoke	
Plugged heat crossover system	Remove restriction

BASIC WARM ENGINE DRIVEABILITY SYMPTOMS TROUBLE SHOOTING CHART

CONDITION & POSSIBLE CAUSE	CORRECTION
Hesitation With Small Amount of Gas Pedal Movement	
Vacuum leak	Inspect vacuum lines
Accelerator pump weak or inoperable	Replace pump, see FUEL SYSTEMS
Float level setting too low	Reset float level, see,FUEL SYSTEMS
Metering rods sticking or binding	Inspect and/or replace rods, see FUEL SYSTEMS

GETtheMANUALS.org

Carburetor idle or transfer system plugged	Inspect system and remove restriction
Frozen or binding heated air inlet	Inspect heated air door for binding
Hesitation With Heavy Gas Pedal Movement	
Defective accelerator pump	Replace pump, see FUEL SYSTEMS
Metering rod carrier sticking or binding	Remove restriction
Large vacuum leak	Inspect vacuum system and repair leak
Float level setting too low	Reset float level, see FUEL SYSTEMS
Defective fuel pump, lines or filter	Inspect pump, lines and filter
Air door setting incorrect	Adjust air door setting, see FUEL

DIESEL ENGINE TROUBLE SHOOTING

NOTE: **This is GENERAL information. This article is not intended to be specific to any unique situation or individual vehicle configuration. The purpose of this Trouble Shooting information is to provide a list of common causes to problem symptoms. For model-specific Trouble Shooting, refer to SUBJECT, DIAGNOSTIC, or TESTING articles available in the section(s) you are accessing.**

NOTE: **Diesel engines mechanical diagnosis is the same as gasoline engines for items such as noisy valves, bearings, pistons, etc. The following trouble shooting covers only items pertaining to diesel engines.**

BASIC DIESEL ENGINE TROUBLE SHOOTING CHART

CONDITION & POSSIBLE CAUSE	CORRECTION
Engine Won't Crank	
Bad battery connections or dead batteries	Check connections and/or replace batteries
Bad starter connections or bad starter	Check connections and/or replace starter
Engine Cranks Slowly, Won't Start	
Bad battery connections or dead batteries	Check connections and/or replace batteries
Engine oil too heavy	Replace engine oil
Engine Cranks Normally, But Will Not Start	
Glow plugs not functioning	Check glow plug system, see FUEL SYSTEMS
Glow plug control not functioning	Check controller, see FUEL SYSTEMS

GETtheMANUALS.org

Fuel not injected into cylinders	Check fuel injectors, see FUEL SYSTEMS
No fuel to injection pump	Check fuel delivery system
Fuel filter blocked	Replace fuel filter
Fuel tank filter blocked	Replace fuel tank filter
Fuel pump not operating	Check pump operation and/or replace pump
Fuel return system blocked	Inspect system and remove restriction
No voltage to fuel solenoid	Check solenoid and connections
Incorrect or contaminated fuel	Replace fuel
Incorrect injection pump timing	Re-adjust pump timing, see FUEL SYSTEMS
Low compression	Check valves, pistons, rings, see ENGINES
Injection pump malfunction	Inspect and/or replace injection pump
Engine Starts, Won't Idle	
Incorrect slow idle adjustment	Reset idle adjustment, see TUNE-UP
Fast idle solenoid malfunctioning	Check solenoid and connections
Fuel return system blocked	Check system and remove restrictions
Glow plugs go off too soon	See glow plug diagnosis in FUEL SYSTEMS
Injection pump timing incorrect	Reset pump timing, see FUEL SYSTEMS
No fuel to injection pump	Check fuel delivery system
Incorrect or contaminated fuel	Replace fuel
Low compression	Check valves, piston, rings, see ENGINES
Injection pump malfunction	Replace injection pump, see FUEL SYSTEMS
Fuel solenoid closes in RUN position	Check solenoid and connections
Engines Starts/Idles Rough W/out Smoke or Noise	
Incorrect slow idle adjustment	Reset slow idle, see TUNE-UP
Injection line fuel leaks	Check lines and connections
Fuel return system blocked	Check lines and connections
Air in fuel system	Bleed air from system
Incorrect or contaminated fuel	Replace fuel

GETtheMANUALS.org

Injector nozzle malfunction	Check nozzles, see FUEL SYSTEMS
Engines Starts and Idles Rough W/out Smoke or Noise, But Clears After Warm-Up	
Injection pump timing incorrect	Reset pump timing, see FUEL SYSTEMS
Engine not fully broken in	Put more miles on engine
Air in system	Bleed air from system
Injector nozzle malfunction	Check nozzles, see FUEL SYSTEMS
Engine Idles Correctly, Misfires Above Idle	
Blocked fuel filter	Replace fuel filter
Injection pump timing incorrect	Reset pump timing, see FUEL SYSTEMS
Incorrect or contaminated fuel	Replace fuel
Engine Won't Return To Idle	
Fast idle adjustment incorrect	Reset fast idle, see TUNE-UP
Internal injection pump malfunction	Replace injection pump, see FUEL SYSTEMS
External linkage binding	Check linkage and remove binding
Fuel Leaks On Ground	
Loose or broken fuel line	Check lines and connections
Internal injection pump seal leak	Replace injection pump, see FUEL SYSTEMS
Cylinder Knocking Noise	
Injector nozzles sticking open	Test injectors, see FUEL SYSTEMS
Very low nozzle opening pressure	Test injectors and/or replace
Loss of Engine Power	
Restricted air intake	Remove restriction
EGR valve malfunction	Replace EGR valve
Blocked or damaged exhaust system	Remove restriction and/or replace components
Blocked fuel tank filter	Replace filter
Restricted fuel filter	Remove restriction and/or replace filter
Block vent in gas cap	Remove restriction and/or replace cap
Tank-to-injection pump fuel supply blocked	Check fuel lines and connections
Blocked fuel return system	Remove restriction
Incorrect or contaminated fuel	Replace fuel
Blocked injector nozzles	Check nozzle for blockage, see

GETtheMANUALS.org

	FUEL SYSTEMS
Low compression	Check valves, rings, pistons, see ENGINES
Loud Engine Noise With Black Smoke	
Basic timing incorrect	Reset timing, see FUEL SYSTEMS
EGR valve malfunction	Replace EGR valve
Internal injection pump malfunction	Replace injection pump, see FUEL SYSTEMS
Incorrect injector pump housing pressure	Check pressure, see FUEL SYSTEMS
Engine Overheating	
Cooling system leaks	Check cooling system and repair leaks
Belt slipping or damaged	Check tension and/or replace belt
Thermostat stuck closed	Remove and replace thermostat, see ENGINE COOLING
Head gasket leaking	Replace head gasket
Oil Light on at Idle	
Low oil pump pressure	Check oil pump operation, see ENGINES
Oil cooler or line restricted	Remove restriction and/or replace cooler
Engine Won't Shut Off	
Injector pump fuel solenoid does not return fuel valve to OFF position	Remove and check solenoid and replace if needed

VACUUM PUMP DIAGNOSIS

CONDITION & POSSIBLE CAUSE	CORRECTION
Excessive Noise	
Loose pump-to-drive assembly screws	Tighten screws
Loose tube on pump assembly	Tighten tube
Valves not functioning properly	Replace valves
Oil Leakage	
Loose end plug	Tighten end plug
Bad seal crimp	Remove and re-crimp seal

FUEL INJECTION TROUBLE SHOOTING

NOTE: **This is GENERAL information. This article is not intended to be specific to any unique situation or individual vehicle configuration. The purpose of this Trouble**

GETtheMANUALS.org

Shooting information is to provide a list of common causes to problem symptoms. For model-specific Trouble Shooting, refer to SUBJECT, DIAGNOSTIC, or TESTING articles available in the section(s) you are accessing.

BASIC FUEL INJECTION TROUBLE SHOOTING CHART

CONDITION & POSSIBLE CAUSE	CORRECTION
Engine Won't Start (Cranks Normally)	
Cold start valve inoperative	Test valve and circuit
Poor connection;vacuum or wiring	Check vacuum and electrical connections
Contaminated fuel	Test fuel for water or alcohol
Defective fuel pump relay or circuit	Test relay and wiring
Battery too low	Charge and test battery
Low fuel pressure	Test pressure regulator and fuel pump, check for restricted lines and filters
No distributor reference pulses	Repair ignition system as necessary
Open coolant temperature sensor circuit	Test sensor and wiring
Shorted W.O.T. switch in T.P.S.	Disconnect W.O.T. switch, engine should start
Defective ECM	Replace ECM
Fuel tank residual pressure valve leaks	Test for fuel pressure drop after shut down
Hard Starting	
Disconnected hot air tube to air cleaner	Reconnect tube and test control valve
Defective Idle Air Control (IAC) valve	Test valve operation and circuit
Shorted, open or misadjusted T.P.S.	Test and adjust or replace T.P.S.
EGR valve open	Test EGR valve and control circuit
Poor Oxygen sensor signal	Test for shorted or circuit
Incorrect mixture from PCV system	Test PCV for flow, check sealing of oil filter cap
Poor High Speed Operation	
Low fuel pump volume	Faulty pump or restricted fuel lines or filters
Poor MAP sensor signal	Test MAP sensor, vacuum hose and wiring
Poor Oxygen sensor signal	Test for shorted or open sensor or circuit

GETtheMANUALS.org

Open coolant temperature sensor circuit	Test sensor and wiring
Faulty ignition operation	Check wires for cracks or poor con- nections, test secondary voltage with oscilloscope
Contaminated fuel	Test fuel for water or alcohol
Intermittent ECM ground	Test ECM ground connection for resistance
Restricted air cleaner	Replace air cleaner
Restricted exhaust system	Test for exhaust manifold back pressure
Poor MAF sensor signal	Check leakage between sensor and manifold
Poor VSS signal	If tester for ALCL hook-up is available check that VSS reading matches speedometer
Ping or Knock on Acceleration	
Poor Knock sensor signal	Test for shorted or open sensor or circuit
Poor Baro sensor signal	Test for shorted or open sensor or circuit
Improper ignition timing	See VEHICLE EMISSION CONTROL LABEL (where applicable)
Check for engine overheating problems	Low coolant, loose belts or electric cooling fan inoperative

NOTE: **For additional electronic fuel injection trouble shooting information, see the appropriate article in the ENGINE PERFORMANCE section (not all vehicles have Computer Engine Control articles). Information is provided there for diagnosing fuel system problems on vehicles with electronic fuel injection.**

IGNITION SYSTEM TROUBLE SHOOTING

NOTE: **This is GENERAL information. This article is not intended to be specific to any unique situation or individual vehicle configuration. The purpose of this Trouble Shooting information is to provide a list of common causes to problem symptoms. For model-specific Trouble Shooting, refer to SUBJECT, DIAGNOSTIC, or TESTING articles available in the section(s) you are accessing.**

GETtheMANUALS.org

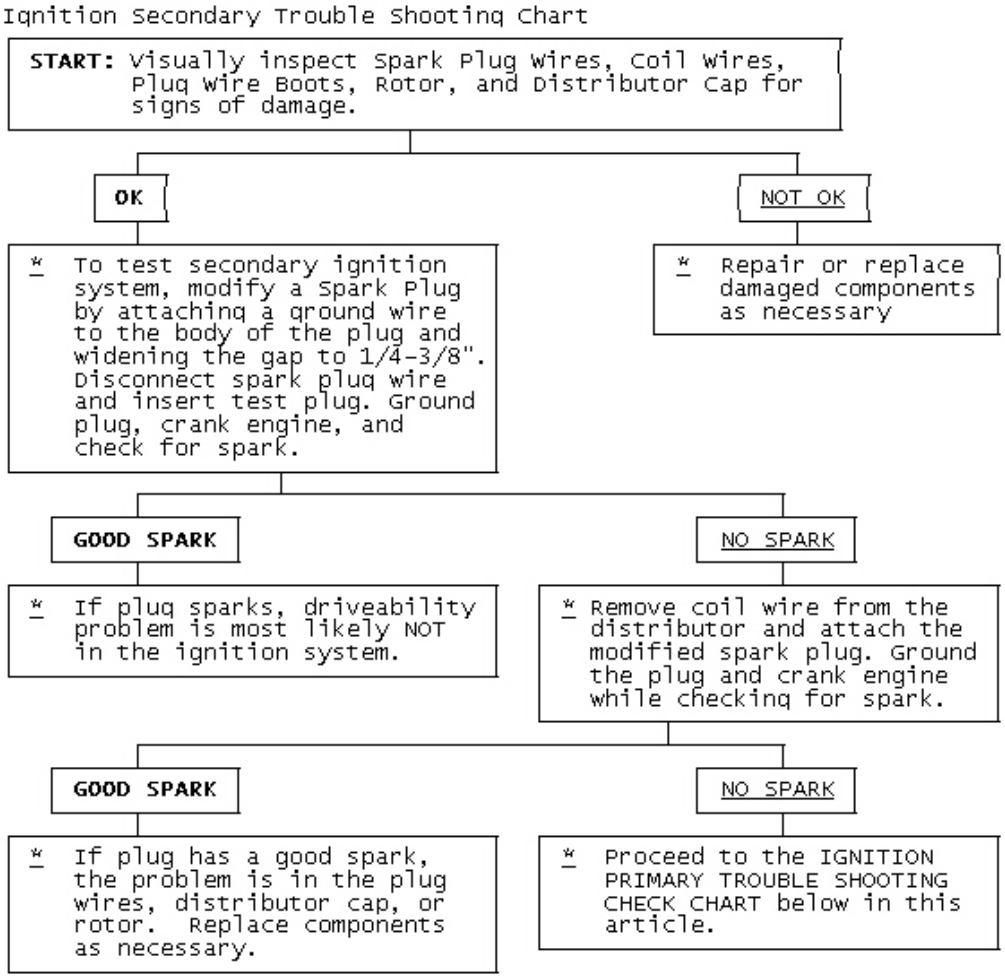

Fig. 3: Ignition Secondary Trouble Shooting Chart

GETtheMANUALS.org

Ignition Primary Trouble Shooting Chart

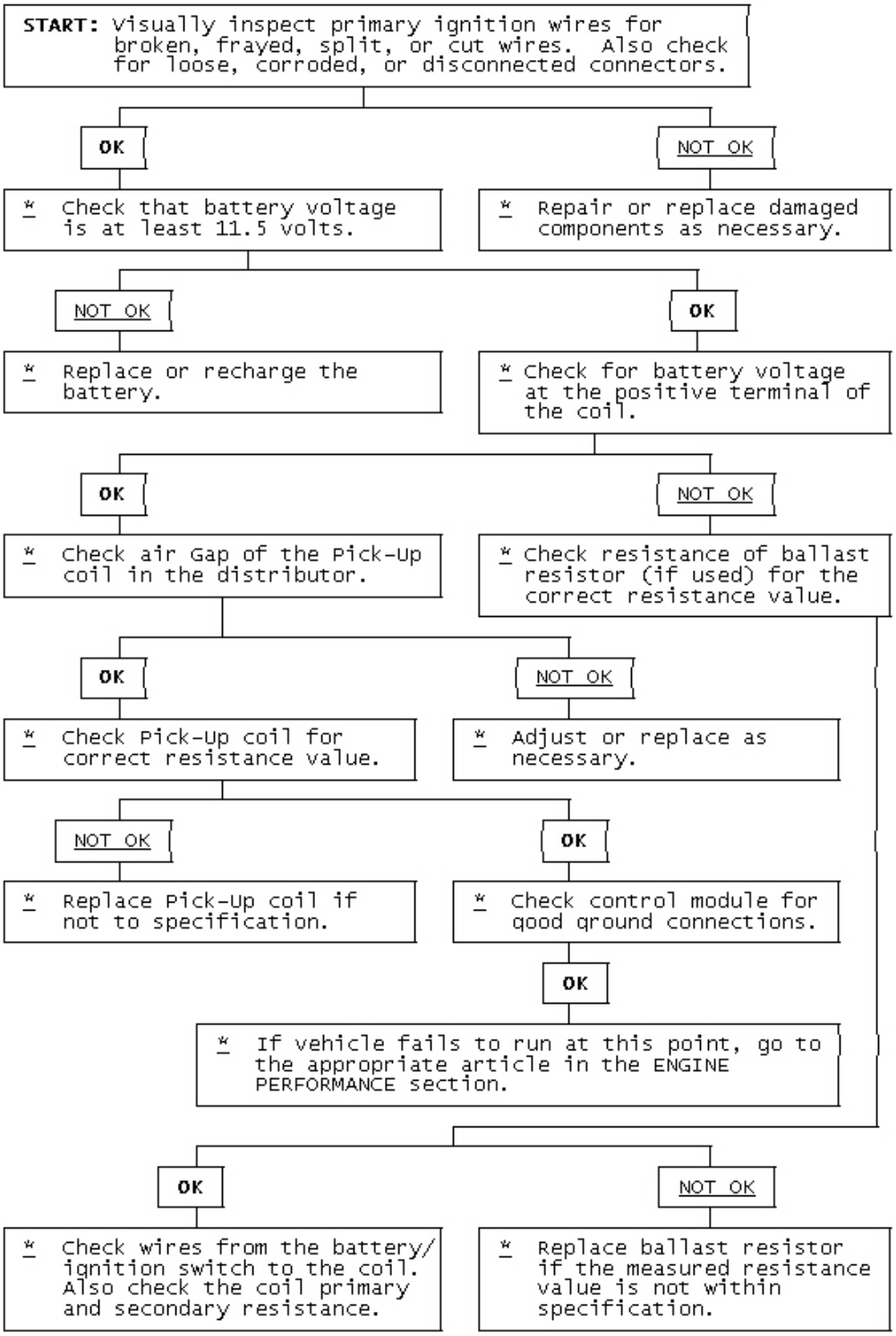

GETtheMANUALS.org

Fig. 4: Ignition Primary Trouble Shooting Chart

STARTER TROUBLE SHOOTING

NOTE: **This is GENERAL information. This article is not intended to be specific to any unique situation or individual vehicle configuration. The purpose of this Trouble Shooting information is to provide a list of common causes to problem symptoms. For model-specific Trouble Shooting, refer to SUBJECT, DIAGNOSTIC, or TESTING articles available in the section(s) you are accessing.**

BASIC STARTER TROUBLE SHOOTING CHART

CONDITION & POSSIBLE CAUSE	CORRECTION
Starter Fails to Operate	
Dead battery or bad connections between starter and battery	Check battery charge and all wires and connections to starter
Ignition switch faulty or misadjusted	Adjust or replace ignition switch
Open circuit between starter switch ignition terminal on starter relay	Check and repair wires and connections as necessary
Starter relay or starter defective	See Testing in STARTER article
Open solenoid pull-in wire	See Testing in STARTER article
Starter Does Not Operate and Headlights Dim	
Weak battery or dead cell	Charge or replace battery as necessary
Loose or corroded battery connections	Check that battery connections are clean and tight
Internal ground in starter windings	See Testing in STARTER article
Grounded starter fields	See Testing in STARTERS
Armature rubbing on pole shoes	See STARTER article
Starter Turns but Engine Does Not Rotate	
Starter clutch slipping	See STARTER article
Broken clutch housing	See STARTER article
Pinion shaft rusted or dry	See STARTER article
Engine basic timing incorrect	See Ignition Timing in TUNE-UP article
Broken teeth on engine flywheel	Replace flywheel and check for starter pinion gear damage
Starter Will Not Crank Engine	

GETtheMANUALS.org

Faulty overrunning clutch	See STARTER article
Broken clutch housing	See STARTER article
Broken flywheel teeth	Replace flywheel and check for starter pinion gear damage
Armature shaft sheared or reduction gear teeth stripped	See STARTER article
Weak battery	Charge or replace battery as necessary
Faulty solenoid	See On-Vehicle Tests in STARTER article
Poor grounds	Check all ground connections for tight and clean connections
Ignition switch faulty or misadjusted	Adjust or replace ignition switch as necessary
Starter Cranks Engine Slowly	
Battery weak or defective	Charge or replace battery as necessary
Engine overheated	See ENGINE COOLING SYSTEM article
Engine oil too heavy	Check that proper viscosity oil is used
Poor battery-to-starter connections	Check that all between battery and starter are clean and tight
Current draw too low or too high	See Bench Tests in STARTER article
Bent armature, loose pole shoes screws or worn bearings	See STARTER article
Burned solenoid contacts	Replace solenoid
Faulty starter	Replace starter
Starter Engages Engine Only Momentarily	
Engine timing too far advanced	See Ignition Timing in TUNE-UP article
Overrunning clutch not engaging properly	Replace overrunning clutch. See STARTER article
Broken starter clutch	See STARTER article
Broken teeth on engine flywheel	Replace flywheel and check starter pinion gear for damage
Weak drive assembly thrust spring	See STARTER article
Weak hold-in coil	See Bench Tests in STARTER article
Starter Drive Will Not Engage	
Defective point assembly	See Testing in STARTER

GETtheMANUALS.org

	article
Poor point assembly ground	See Testing in STARTER article
Defective pull-in coil	Replace starter solenoid
Starter Relay Does Not Close	
Dead battery	Charge or replace battery as necessary
Faulty wiring	Check all wiring and connections leading to relay
Neutral safety switch faulty	Replace neutral safety switch
Starter relay faulty	Replace starter relay
Starter Drive Will Not Disengage	
Starter motor loose on mountings	Tighten starter attach bolts
Worn drive end bushing	See STARTER article
Damaged engine flywheel teeth	Replace flywheel and starter pinion gear for damage
Drive yolk return spring broken or missing	Replace return spring
Faulty ignition switch	Replace ignition switch
Insufficient clearance between winding leads to solenoid terminal and main contact in solenoid	Replace starter solenoid
Starter clutch not disengaging	Replace starter clutch
Ignition starter switch contacts sticking	Replace ignition switch
Starter Relay Operates but Solenoid Does Not	
Faulty solenoid switch, switch connections or relay	Check all wiring between relay and solenoid or replace relay or solenoid as necessary
Broken lead or loose soldered connections	Repair wire or wire connections as necessary
Solenoid Plunger Vibrates When Switch is Engaged	
Weak battery	Charge or replace battery as necessary
Solenoid contacts corroded	Clean contacts or replace solenoid
Faulty wiring	Check all wiring leading to solenoid
Broken connections inside switch cover	Repair connections or replace solenoid
Open hold-in wire	Replace solenoid
Low Current Draw	
Worn brushes or weak	Replace brushes or brush springs as necessary
High Pitched Whine During Cranking Before Engine Fires but Engine Fires and Cranks Normally	
Distance too great between starter pinion and flywheel	Align starter or check that

GETtheMANUALS.org

	correct starter and flywheel are being used
High Pitched Whine After Engine Fires With Key released. Engine Fires and Cranks Normally	
Distance too small between starter pinion and flywheel	Flywheel runout contributes to the intermittent nature

TUNE-UP TROUBLE SHOOTING - GAS ENGINE VEHICLES

NOTE: **This is GENERAL information. This article is not intended to be specific to any unique situation or individual vehicle configuration. The purpose of this Trouble Shooting information is to provide a list of common causes to problem symptoms. For model-specific Trouble Shooting, refer to SUBJECT, DIAGNOSTIC, or TESTING articles available in the section(s) you are accessing.**

BASIC SPARK PLUG TROUBLE SHOOTING CHARTS

CONDITION & POSSIBLE CAUSE	CORRECTION
Normal Spark Plug Condition	
Light Tan or Gray deposits	No Action
Electrode not burned or fouled	No Action
Gap tolerance not changed	No Action
Cold Fouling or Carbon Deposits	
Overrich air/fuel mixture	Adjust air/fuel mixture, see ENGINE PERFORMANCE section
Faulty choke	Replace choke assembly, see ENGINE PERFORMANCE section
Clogged air filter	Clean and/or replace air filter
Incorrect idle speed or dirty carburetor	Reset idle speed and/ or clean carburetor
Faulty ignition wires	Replace ignition wiring
Prolonged operation at idle	Shut engine off during long idle
Sticking valves or worn valve guide seals	Check valve train
Wet Fouling or Oil Deposits	
Worn rings and pistons	Install new rings and pistons
Excessive cylinder wear	Rebore or replace block
Excessive valve guide clearance	Worn or loose bearing
Gap Bridged	
Deposits in combustion chamber becoming fused to electrode	Clean combustion chamber of deposits
Blistered Electrode	
Engine overheating	Check cooling system

GETtheMANUALS.org

Wrong type of fuel	Replace with correct fuel
Loose spark plugs	Retighten spark plugs
Over-advanced ignition timing	Reset ignition timing see ENGINE PERFORMANCE
Pre-Ignition or Melted Electrodes	
Incorrect type of fuel	Replace with correct fuel
Incorrect ignition timing	Reset ignition timing see ENGINE PERFORMANCE
Burned valves	Replace valves
Engine Overheating	Check cooling system
Wrong type of spark plug, too hot	Replace with correct spark plug, see ENGINE PERFORMANCE
Chipped Insulators	
Severe detonation	Check for over-advanced timing or combustion
Improper gapping procedure	Re-gap spark plugs
Rust Colored Deposits	
Additives in unleaded fuel	Try different fuel brand
Water In Combustion Chamber	
Blown head gasket or cracked head	Repair or replace head or head gasket

NOTE: **Before diagnosing an electronic ignition system, ensure that all wiring is connected properly between distributor, wiring connector and spark plugs. Ignition problem will show up either as: Engine Will Not Start or Engine Runs Rough.**

BASIC ELECTRONIC IGNITION TROUBLE SHOOTING CHARTS

CONDITION & POSSIBLE CAUSE	CORRECTION
Engine Won't Start	
Open circuit between distributor and bulkhead connector	Repair circuit
Open circuit between bulkhead connector and ignition switch	Repair circuit
Open circuit between ignition switch and starter solenoid	Repair circuit
Engine Runs Rough	
Fuel lines leaking or clogged	Tighten fitting, remove restriction
Initial timing incorrect	Reset ignition timing see ENGINE PERFORMANCE
Centrifugal advance malfunction	Repair distributor advance
Defective spark plugs or wiring	Replace plugs or plug wiring
Component Failure	
Spark arc-over on cap, rotor or coil	Replace cap, rotor or or coil

GETtheMANUALS.org

Defective pick-up coil	Replace pick-up coil
Defective ignition coil	Replace ignition coil
Defective vacuum unit	Replace vacuum unit
Defective control module	Replace control module

BASIC ELECTRONIC IGNITION TROUBLE SHOOTING CHARTS - USING OSCILLOSCOPE PATTERNS

CONDITION & POSSIBLE CAUSE	CORRECTION
Firing Voltage Lines are the Same, but Abnormally High	
Retarded ignition timing	Reset ignition timing, see ENGINE PERFORMANCE section
Fuel mixture too lean	Readjust carburetor, see ENGINE PERFORMANCE
High resistance in coil wire	Replace coil wire
Corrosion in coil tower terminal	Clean and/or replace coil
Corrosion in distributor coil terminal	Clean and/or replace distributor cap
Firing Voltage Lines are the Same but Abnormally Low	
Fuel mixture too rich	Readjust carburetor, see ENGINE PERFORMANCE
Breaks in coil wire causing arcing	Replace coil wire
Cracked coil tower causing arcing	Replace coil
Low coil output	Replace coil
Low engine compression	Determine cause and repair
One or More, But Not All Firing Voltage Lines are Higher Than Others	
Carburetor idle mixture not balanced	Readjust carburetor, see ENGINE PERFORMANCE
EGR valve stuck open	Clean and/or replace valve
High resistance in spark plug wires	Replace spark plug wires
Cracked or broken spark plug insulator	Replace spark plugs
Intake vacuum leak	Repair leak
Defective spark plugs	Replace spark plugs
Corroded spark plug terminals	Replace spark plugs
One or More, But Not All Firing Voltage Lines Are Lower Than Others	
Curb idle mixture not balanced	Readjust carburetor, see ENGINE PERFORMANCE
Breaks in plug wires	Replace plug wires causing arcing
Cracked coil tower causing arcing	Replace coil
Low compression	Determine cause and repair
Defective spark plugs	Replace spark plugs

GETtheMANUALS.org

Corroded spark plugs	Replace spark plugs
Cylinders Not Firing	
Cracked distributor cap terminals	Replace distributor cap
Shorted spark plug wire	Determine cause and repair
Mechanical problem in engine	Determine cause and repair
Defective spark plugs	Replace spark plugs
Spark plugs fouled	Replace spark plugs

BASIC DRIVEABILITY PROBLEMS TROUBLE SHOOTING

CONDITION & POSSIBLE CAUSE	CORRECTION
Hard Starting	
Binding carburetor linkage	Eliminate binding
Binding choke linkage	Eliminate binding
Binding choke piston	Eliminate binding
Restricted choke vacuum	Check vacuum lines for blockage
Worn or dirty needle valve and seat	Clean carburetor, see ENGINE PERFORMANCE
Float sticking	Readjust or replace float see the ENGINE PERFORMANCE section
Incorrect choke adjustment	Reset choke adjustment see ENGINE PERFORMANCE
Defective coil	Replace coil
Improper spark plug gap	Regap spark plugs
Incorrect ignition timing	Reset ignition timing see ENGINE PERFORMANCE
Detonation	
Over-advanced ignition timing	Reset ignition timing see ENGINE PERFORMANCE
Defective spark plugs	Replace spark plugs
Fuel lines clogged	Clean fuel lines
EGR system malfunction	Check and repair EGR system
PCV system malfunction	Repair PCV system
Vacuum leaks	Check and repair vacuum system
Loose fan belts	Tighten or replace fan belts, see ENGINE PERFORMANCE
Restricted airflow	Remove restriction
Vacuum advance malfunction	Check distributor operation
Dieseling	
Binding carburetor linkage	Eliminate binding

GETtheMANUALS.org

Binding throttle linkage	Eliminate blinding
Binding choke linkage or fast idle cam	Eliminate binding
Defective idle solenoid	Replace idle solenoid see ENGINE PERFORMANCE
Improper base idle speed	Reset idle speed, see see ENGINE PERFORMANCE
Incorrect ignition timing	Reset ignition timing see ENGINE PERFORMANCE
Incorrect idle mixture setting	Reset idle mixture, see ENGINE PERFORMANCE
Faulty Acceleration	
Incorrect ignition timing	Reset ignition timing see ENGINE PERFORMANCE
Engine cold and choke too lean	Adjust choke and allow engine to warm-up
Defective spark plugs	Replace spark plugs
Defective coil	Replace coil
Faulty Low Speed Operation	
Clogged idle transfer slots	Clean idle transfer slots, see FUEL
Restricted idle air bleeds and passages	Disassemble and clean carburetor, see FUEL
Clogged air cleaner	Replace air filter
Defective spark plugs	Replace spark plugs
Defective ignition wires	Replace ignition wire see ENGINE PERFORMANCE
Defective distributor cap	Replace distributor cap
Faulty High Speed Operation	
Incorrect ignition timing	Reset ignition timing see ENGINE PERFORMANCE
Defective distributor centrifugal advance	Replace advance mechanism
Defective distributor vacuum advance	Replace advance unit
Incorrect spark plugs or plug gap	Check gap and/or replace spark plugs
Faulty choke operation	Check choke and repair as required
Clogged vacuum passages	Remove restrictions
Improper size or clogged main jet	Check jet size and clean, see FUEL
Restricted air cleaner	Check filter and replace as necessary
Defective distributor cap, rotor or coil	Replace cap, rotor or coil
Misfire at All Speeds	

GETtheMANUALS.org

Defective spark plugs	Replace spark plugs
Defective spark plug wires	Replace spark plug wires
Defective distributor cap, rotor, or coil	Replace cap, rotor, or coil
Cracked or broken vacuum hoses	Replace vacuum hoses
Vacuum leaks	Repair vacuum leaks
Fuel lines clogged	Remove restriction
Hesitation	
Cracked or broken vacuum	Replace vacuum hoses hoses
Vacuum leaks	Repair Vacuum leaks
Binding carburetor linkage	Eliminate binding
Binding throttle linkage	Eliminate binding
Binding choke linkage or fast idle cam	Eliminate binding
Improper float setting	Readjust float setting, see FUEL
Cracked or broken ignition wires	Replace ignition wires
Rough Idle, Missing or Stalling	
Incorrect curb idle or fast idle speed	Reset idle speed, see see ENGINE PERFORMANCE
Incorrect basic timing	Reset ignition timing see ENGINE PERFORMANCE
Improper idle mixture adjustment	Reset idle mixture, see ENGINE PERFORMANCE
Improper feedback system operation	Check feedback system see ENGINE PERFORMANCE
Incorrect spark plug gap	Reset spark plug gap, see ENGINE PERFORMANCE
Moisture in ignition components	Dry components
Loose or broken ignition wires	Replace ignition wires
Damaged distributor cap or or rotor	Replace distributor cap or rotor
Faulty ignition coil	Replace ignition coil
Fuel filter clogged or worn	Replace fuel filter
Damaged idle mixture screw	Replace idle mixture screw, see FUEL
Improper fast idle cam adjustment	Reset fast idle cam adjustment, see TUNE- see ENGINE PERFORMANCE
Improper EGR valve operation	Replace EGR valve
Faulty PCV valve air flow	Replace PCV valve
Choke binding or improper choke setting	Reset choke or eliminate binding
Vacuum leak	Repair vacuum leak
Improper float bowl fuel level	Reset float adjustment, see

GETtheMANUALS.org

	FUEL
Clogged air bleed or idle passages	Clean carburetor passages, see FUEL
Clogged or worn air cleaner filter	Replace air filter
Faulty choke vacuum diaphragm	Replace diaphragm, see ENGINE PERFORMANCE
Exhaust manifold heat valve inoperative	Replace heat valve
Improper distributor spark advance	Check distributor operation
Leaking valves or valve components	Check and repair valvetrain
Improper carburetor mounting	Remove and remount carburetor
Excessive play in distributor shaft	Replace distributor
Loose or corroded wiring connections	Repair or replace as required
Engine Surges	
Improper PCV valve airflow	Replace PCV valve
Vacuum leaks	Repair vacuum leaks
Clogged air bleeds	Remove restriction
EGR valve malfunction	Replace EGR valve
Restricted air cleaner filter	Replace air filter
Cracked or broken vacuum hoses	Replace vacuum hoses
Cracked or broken ignition wires	Replace ignition wires
Vacuum advance malfunction	Check unit and replace as necessary
Defective or fouled spark plugs	Replace spark plugs
Ping or Spark Knock	
Incorrect ignition timing	Reset ignition timing see ENGINE PERFORMANCE
Distributor centrifugal or vacuum advance malfunction	Check operation and replace as necessary
Carburetor setting too lean	Readjust mixture setting, see ENGINE PERFORMANCE
Vacuum leak	Eliminate vacuum leak
EGR valve malfunction	Replace EGR valve
Poor Gasoline Mileage	
Cracked or broken vacuum	Replace vacuum hoses hoses
Vacuum leaks	Repair vacuum leaks
Defective ignition wires	Replace wires
Incorrect choke setting	Readjust setting, see ENGINE PERFORMANCE
Defective vacuum advance	Replace vacuum advance
Defective spark plugs	Replace spark plugs
Binding carburetor power piston	Eliminate binding

GETtheMANUALS.org

Dirt in carburetor jets	Clean and/or replace jets
Incorrect float adjustment	Readjust float setting, see FUEL
Defective power valve	Replace power valve, see ENGINE PERFORMANCE
Incorrect idle speed	Readjust idle speed
Engine Stalls	
Improper float level	Readjust float level
Leaking needle valve and seat	Replace needle valve and seat
Vacuum leaks	Eliminate vacuum leaks

VACUUM PUMP - DIESEL TROUBLE SHOOTING

NOTE: **This is GENERAL information. This article is not intended to be specific to any unique situation or individual vehicle configuration. The purpose of this Trouble Shooting information is to provide a list of common causes to problem symptoms. For model-specific Trouble Shooting, refer to SUBJECT, DIAGNOSTIC, or TESTING articles available in the section(s) you are accessing.**

NOTE: **Diesel engines mechanical diagnosis is the same as gasoline engines for items such as noisy valves, bearings, pistons, etc. The following trouble shooting covers only items pertaining to diesel engines.**

VACUUM PUMP (DIESEL) TROUBLE SHOOTING CHART

CONDITION & POSSIBLE CAUSE	CORRECTION
Excessive Noise	
Loose pump-to-drive assembly screws	Tighten screws
Loose tube on pump assembly	Tighten tube
Valves not functioning properly	Replace valves
Oil Leakage	
Loose end plug	Tighten end plug
Bad seal crimp	Remove and re-crimp seal

MANUAL TRANSMISSION

MANUAL TRANSMISSION TROUBLE SHOOTING

NOTE: **This is GENERAL information. This article is not intended to be specific to any unique situation or individual vehicle configuration. The purpose of this Trouble Shooting information is to provide a list of common causes to problem symptoms. For model-specific Trouble Shooting, refer to SUBJECT, DIAGNOSTIC, or TESTING articles available in the section(s) you are accessing.**

GETtheMANUALS.org

MANUAL TRANSMISSION/TRANSAXLE TROUBLE SHOOTING

Condition	Possible Cause
Noisy In Forward Gears	Low gear oil level, Loose bell housing bolts, Worn bearings or gears
Clunk On Deceleration (FWD Only)	Loose engine mounts, Worn inboard CV joints, Worn differential pinion shaft, Side gear hub counterbore in case worn oversize
Gear Clash When Shifting Forward Gears	Clutch Out Of Adjustment, Shift linkage damaged or out of adjustment, Gears or synchronizers damaged, Low gear oil level
Transmission Noisy When Moving (RWD Only) Quiet In Neutral With Clutch Engaged	Worn rear outputshaft bearing
Gear Rattle	Worn bearings, Wrong gear oil, Low gear oil, Worn gears
Steady Ticking At Idle (Increases With RPM)	Broken tooth on gear
Gear Clash When Shifting Forward Gears	Worn or broken synchronizers
Loud Whine In Reverse	Normal condition (1)
Noise When Stepping On Clutch	Bad release bearing, Worn pilot bearing
Ticking Or Screeching As Clutch Is Engaged	Faulty release bearing, Uneven pressure plate fingers
Click Or Snap When Clutch Is Engaged	Worn clutch fork, Worn or broken front bearing retainer
Transmission Shifts Hard	Clutch not releasing, Shift mechanism binding, Clutch installed backwards
Will Not Shift Into One Gear, Shifts Into All Others	Bent shift fork, Worn detent balls
Locked Into Gear, Cannot Shift	Clutch adjustment, Worn detent balls
Transmission Jumps Out Of Gear	Pilot bearing worn, Bent shift fork, Worn gear teeth or face, Excessive gear train end play, Worn synchronizers, Missing detent ball spring, Shift mechanism worn or out of adjustment, Engine or transmission mount bolts loose or out of adjustment, Transmission not aligned
Shift Lever Rattle	Worn shift lever or detents, Worn shift forks, Worn synchronizers sleeve
Shift Lever Hops Under Acceleration	Worn engine or transmission mounts
(1) Most units use spur cut gears in reverse and are noisy	

POWERTRAIN

CLUTCH TROUBLE SHOOTING

NOTE: **This is GENERAL information. This article is not intended to be specific to any unique situation or individual vehicle configuration. The purpose of this Trouble**

GETtheMANUALS.org

Shooting information is to provide a list of common causes to problem symptoms. For model-specific Trouble Shooting, refer to SUBJECT, DIAGNOSTIC, or TESTING articles available in the section(s) you are accessing.

BASIC CLUTCH TROUBLE SHOOTING CHART

CONDITION & POSSIBLE CAUSE	CORRECTION
Chattering or Grabbing	
Incorrect clutch adjustment	Adjust clutch
Oil, grease or glaze on facings	Disassemble and clean or replace
Loose "U" joint flange	See DRIVE AXLES article
Worn input shaft spline	Replace input shaft
Binding pressure plate	Replace pressure plate
Binding release lever	See CLUTCH article
Binding clutch disc hub	Replace clutch disc
Unequal pressure plate contact	Replace worn/misaligned components
Loose/bent clutch disc	Replace clutch disc
Incorrect transmission alignment	Realign transmission
Worn pressure plate, disc or flywheel	Replace damaged components
Broken or weak pressure springs	Replace pressure plate
Sticking clutch pedal	Lubricate clutch pedal & linkage
Incorrect clutch disc facing	Replace clutch disc
Engine loose in chassis	Tighten all mounting bolts
Failure to Release	
Oil or grease on clutch facings	Clean or replace clutch clutch disc
Incorrect release lever or pedal adjustment	See CLUTCH article
Worn or broken clutch facings	Replace clutch disc
Bent clutch disc or pressure plate	Replace damaged components
Clutch disc hub binding on input shaft	Clean or replace clutch disc and/or input shaft
Binding pilot bearing	Replace pilot bearing
Sticking release bearing sleeve	Replace release bearing and/or sleeve
Binding clutch cable	See CLUTCH article
Defective clutch master	Replace master cylinder
Defective clutch slave	Replace slave cylinder
Air in hydraulic system	Bleed hydraulic system
Rattling	
Weak or broken release lever spring	Replace spring and check alignment
Damaged pressure plate	Replace pressure plate

GETtheMANUALS.org

Broken clutch return spring	Replace return spring
Worn splines on clutch disc or input shaft	Replace clutch disc and/or input shaft
Worn clutch release bearing	Replace release bearing
Dry or worn pilot bearing	Lubricate or replace pilot bearing
Unequal release lever contact	Align or replace release lever
Incorrect pedal free play	Adjust free play
Warped or damaged clutch disc	Replace damaged components
Slipping	
Pressure springs worn or	Release pressure plate
Oily, greasy or worn facings	Clean or replace clutch disc
Incorrect clutch alignment	Realign clutch assembly
Warped clutch disc or pressure plate	Replace damaged components
Binding release levers or clutch pedal	Lubricate and/or replace release components
Squeaking	
Worn or damaged release	Replace release bearing
Dry or worn pilot or release bearing	Lubricate or replace assembly
Pilot bearing turning in crankshaft	Replace pilot bearing and/or crankshaft
Worn input shaft bearing	Replace bearing and seal
Incorrect transmission alignment	Realign transmission
Dry release fork between pivot	Lubricate release fork and pivot
Heavy and/or Stiff Pedal	
Sticking release bearing sleeve	Replace release bearing and/or sleeve
Dry or binding clutch pedal hub	Lubricate and align components
Floor mat interference with pedal	Lay mat flat in proper area
Dry or binding ball/fork pivots	Lubricate and align components
Faulty clutch cable	Replace clutch cable
Noisy Clutch Pedal	
Faulty interlock switch	Replace interlock switch
Self-adjuster ratchet noise	Lubricate or replace self-adjuster
Speed control interlock switch	Lubricate or replace interlock switch
Clutch Pedal Sticks Down	
Binding clutch cable	See CLUTCH article
Springs weak in pressure plate	Replace pressure plate
Binding in clutch linkage	Lubricate and free linkage
Noisy	
Dry release bearing	Lubricate or replace release bearing

GETtheMANUALS.org

Dry or worn pilot bearing	Lubricate or replace bearing
Worn input shaft bearing	Replace bearing
Transmission Click	
Weak springs in pressure	Replace pressure plate plate
Release fork loose on ball stud	Replace release fork and/or ball stud
Oil on clutch disc damper	Replace clutch disc
Broken spring in slave cylinder	Replace slave cylinder

DRIVE AXLE - NOISE DIAGNOSIS

Unrelated Noises

Some driveline trouble symptoms are also common to the engine, transmission, wheel bearings, tires, and other parts of the vehicle. Ensure cause of trouble actually is in the drive axle before adjusting, repairing, or replacing any of its parts.

Non-Drive Axle Noises

A few conditions can sound just like drive axle noise and have to be considered in pre-diagnosis. The 4 most common noises are exhaust, tires, CV/universal joints and wheel trim rings.

In certain conditions, the pitch of the exhaust gases may e gear whine. At other times, it may be mistaken for a wheel bearing rumble.

Tires, especially radial and snow, can have a high-pitched tread whine or roar, similar to gear noise. Also, some non-standard tires with an unusual tread construction may emit a roar or whine.

Defective CV/universal joints may cause clicking noises or excessive driveline play that can be improperly diagnosed as drive axle problems.

Trim and moldings also can cause a whistling or whining noise. Ensure none of these components are causing the noise before disassembling the drive axle.

Gear Noise

A "howling" or "whining" noise from the ring and pinion gear can be caused by an improper gear pattern, gear damage, or improper bearing preload. It can occur at various speeds and driving conditions, or it can be continuous.

Before disassembling axle to diagnose and correct gear ke sure that tires, exhaust, and vehicle trim have been checked as possible causes.

Chuckle

This is a particular rattling noise that sounds like a stick against the spokes of a spinning bicycle wheel. It occurs while decelerating from 40 MPH and usually can be heard until vehicle comes to a complete stop. The

GETtheMANUALS.org

frequency varies with the speed of the vehicle.

A chuckle that occurs on the driving phase is usually caused ive clearance due to differential gear wear, or by a damaged tooth on the coast side of the pinion or ring gear. Even a very small tooth nick or a ridge on the edge of a gear tooth is enough the cause the noise.

This condition can be corrected simply by cleaning the gear tooth nick or ridge with a small grinding wheel. If either gear is damaged or scored badly, the gear set must be replaced. If metal has broken loose, the carrier and housing must be cleaned to remove particles that could cause damage.

Knock

This is very similar to a chuckle, though it may be louder, and occur on acceleration or deceleration. Knock can be caused by a gear tooth that is damaged on the drive side of the ring and pinion gears. Ring gear bolts that are hitting the carrier casting can cause knock. Knock can also be due to excessive end play in the axle shafts.

Clunk

Clunk is a metallic noise heard when an automatic transmission is engaged in Reverse or Drive, or when throttle is applied or released. It is caused by backlash somewhere in the driveline, but not necessarily in the axle. To determine whether driveline clunk is caused by the axle, check the total axle backlash as follows:

1. Raise vehicle on a frame or twinpost hoist so that drive wheels are free. Clamp a bar between axle companion flange and a part of the frame or body so that flange cannot move.
2. On conventional drive axles, lock the left wheel to keep it from turning. On all models, turn the right wheel slowly until it is felt to be in Drive condition. Hold a chalk marker on side of tire about 12" from center of wheel. Turn wheel in the opposite direction until it is again felt to be in Drive condition.
3. Measure the length of the chalk mark, which is the total axle backlash. If backlash is one inch or less, drive axle is not the source of clunk noise.

Bearing Whine

Bearing whine is a high-pitched sound similar to a whistle. It is usually caused by malfunctioning pinion bearings. Pinion bearings operate at drive shaft speed. Roller wheel bearings may whine in a similar manner if they run completely dry of lubricant. Bearing noise will occur at all driving speeds. This distinguishes it from gear whine, which usually comes and goes as speed changes.

Bearing Rumble

Bearing rumble sounds like marbles being tumbled. It is usually caused by a malfunctioning wheel bearing. The lower pitch is because the wheel bearing turns at only about 1/3 of drive shaft speed.

Chatter On Turns

This is a condition where the entire front or rear of vehicle vibrates when vehicle is moving. The vibration is plainly felt as well as heard. Extra differential thrust washers installed during axle repair can cause a condition of partial lock-up that creates this chatter.

GETtheMANUALS.org

Axle Shaft Noise

Axle shaft noise is similar to gear noise and pinion bearing whine. Axle shaft bearing noise will normally distinguish itself from gear noise by occurring in all driving modes (Drive, cruise, coast and float), and will persist with transmission in Neutral while vehicle is moving at problem speed.

If vehicle displays this noise condition, remove suspect parts, replace wheel seals and install a new set of bearings. Re-evaluate vehicle for noise before removing any internal components.

Vibration

Vibration is a high-frequency trembling, shaking or grinding condition (felt or heard) that may be constant or variable in level and can occur during the total operating speed range of the vehicle.

The types of vibrations that can be felt in the vehicle can d into 3 main groups:

- Vibrations of various unbalanced rotating parts of the vehicle.
- Resonance vibrations of the body and frame structures caused by rotating of unbalanced parts.
- Tip-in moans of resonance vibrations from stressed engine or exhaust system mounts or driveline flexing modes.

DRIVE AXLE - RWD TROUBLE SHOOTING

NOTE: **This is GENERAL information. This article is not intended to be specific to any unique situation or individual vehicle configuration. The purpose of this Trouble Shooting information is to provide a list of common causes to problem symptoms. For model-specific Trouble Shooting, refer to SUBJECT, DIAGNOSTIC, or TESTING articles available in the section(s) you are accessing. For definitions of listed noises or sounds, see DRIVE AXLE - NOISE DIAGNOSIS under POWERTRAIN.**

DRIVE AXLE (RWD) TROUBLE SHOOTING

CONDITION & POSSIBLE CAUSE	CORRECTION
Knocking or Clunking	
Differential Side Gear Clearance	Check Clearance
Worn Pinion Shaft	Replace Pinion Shaft
Axle Shaft End Play	Check End Play
Missing Gear Teeth	Check Differential/Replace Gear
Wrong Axle Backlash	Check Backlash
Misaligned Driveline	Realign Driveline
Clinking During Engagement	
Side Gear Clearance	Check Clearance
Ring and Pinion Backlash	Check Backlash
Worn/Loose Pinion Shaft	Replace Shaft/Bearing

GETtheMANUALS.org

Bad "U" Joint	Replace "U" Joint
Sticking Slip Yoke	Lube Slip Yoke
Broken Rear Axle Mount	Replace Mount
Loose Drive Shaft Flange	Check Flange
Click/Chatter On Turns	
Differential Side Gear Clearance	Check Clearance
Wrong Turn On Plates (1)	Replace Clutch Plates
Wrong Differential Lubricant (1)	Change Lubricant
Knock Or Click	
Flat Spot on Rear Wheel Bearing	Replace Wheel Bearing
Low Vibration At All Speeds	
Faulty Wheel Bearing	Replace Wheel Bearing
Faulty "U" Joint	Replace "U" Joint
Faulty Drive Shaft	Balance Drive Shaft
Faulty Companion Flange	Replace Flange
Faulty Slip Yoke Flange	Replace Flange
(1) Limited slip differential only.	

FWD AXLE SHAFTS & CV JOINTS TROUBLE SHOOTING

NOTE: **This is GENERAL information. This article is not intended to be specific to any unique situation or individual vehicle configuration. The purpose of this Trouble Shooting information is to provide a list of common causes to problem symptoms. For model-specific Trouble Shooting, refer to SUBJECT, DIAGNOSTIC, or TESTING articles available in the section(s) you are accessing.**

BASIC FWD AXLE SHAFTS & CV JOINTS TROUBLE SHOOTING CHART

CONDITION	POSSIBLE CAUSE
Grease Leaks	CV boot torn or cracked
Clicking Noise on Cornering	Damaged outer CV
Clunk Noise on Acceleration	Damaged inner CV
Vibration or Shudder on Acceleration	Sticking, damaged or worn CV Misalignment or spring height

STEERING & SUSPENSION

MANUAL STEERING GEAR TROUBLE SHOOTING

NOTE: **This is GENERAL information. This article is not intended to be specific to any unique situation or individual vehicle configuration. The purpose of this Trouble Shooting information is to provide a list of common causes to problem symptoms. For model-specific Trouble Shooting, refer to SUBJECT,**

GETtheMANUALS.org

DIAGNOSTIC, or TESTING articles available in the section(s) you are accessing.

BASIC MANUAL STEERING GEAR TROUBLE SHOOTING CHART

CONDITION & POSSIBLE CAUSE	CORRECTION
Rattle or Chucking Noise in Rack and Pinion	
Rack and pinion mounting bracket loose	Tighten all mounting bolts
Lack of/or incorrect lubricant	Correct as necessary
Steering gear mounting bolts loose	Tighten all mounting bolts
Excessive Play	
Front wheel bearing improperly adjusted	See FRONT SUSPENSION article
Loose or worn steering linkage	See STEERING LINKAGE article
Loose or worn steering gear shift	See MANUAL STEERING GEAR article
Steering arm loose on gear shaft	See MANUAL STEERING GEAR article
Steering gear housing bolts loose	Tighten all mounting bolts
Steering gear adjustment too loose	See MANUAL STEERING GEAR article
Steering arms loose on knuckles	Tighten and check steering linkage
Rack and pinion mounting loose	Tighten all mounting bolts
Rack and pinion out of adjustment	See adjustment in STEERING article
Tie rod end loose	Tighten and check steering linkage
Excessive Pitman shaft-to-ball nut lash	Repair as necessary
Poor Returnability	
Lack of lubricant in ball joint or linkage	Lubricate and service systems
Binding in linkage or ball joints	See STEERING LINKAGE and SUSPENSION article
Improper front end alignment	See WHEEL ALIGNMENT article
Improper tire pressure	Inflate to proper pressure
Tie rod binding	Inflate to proper pressure
Shaft seal rubbing shaft	See STEERING COLUMN article
Excessive Vertical Motion	
Improper tire pressure	Inflate to proper pressure
Tires, wheels or rotors out of balance	Balance tires then check wheels and rotors
Worn or faulty shock absorbers	Check and replace if necessary

GETtheMANUALS.org

Loose tie rod ends or steering	Tighten or replace if necessary
Loose or worn wheel bearings	See SUSPENSION article
Steering Pulls to One Side	
Improper tire pressure	Inflate to proper pressure
Front tires are different sizes	Rotate or replace if necessary
Wheel bearings not adjusted properly	See FRONT SUSPENSION article
Bent or broken suspension components	See FRONT SUSPENSION article
Improper wheel alignment	See WHEEL ALIGNMENT article
Brakes dragging	See BRAKES article
Instability	
Low or uneven tire pressure	Inflate to proper pressure
Loose or worn wheel bearings	See FRONT SUSPENSION article
Loose or worn idler arm bushing	See FRONT SUSPENSION article
Loose or worn strut bushings	See FRONT SUSPENSION article
Incorrect front wheel alignment	See WHEEL ALIGNMENT article
Steering gear not centered	See MANUAL STEERING GEARS article
Springs or shock	Check and replace if necessary
Improper cross shaft	See MANUAL STEERING GEARS article

POWER STEERING TROUBLE SHOOTING

NOTE: **This is GENERAL information. This article is not intended to be specific to any unique situation or individual vehicle configuration. The purpose of this Trouble Shooting information is to provide a list of common causes to problem symptoms. For model-specific Trouble Shooting, refer to SUBJECT, DIAGNOSTIC, or TESTING articles available in the section(s) you are accessing.**

BASIC POWER STEERING TROUBLE SHOOTING CHART

CONDITION & POSSIBLE CAUSE	CORRECTION
Rattle or Chucking Noise	
Pressure hoses touching engine parts	Adjust to proper clearance
Loose Pitman shaft	Adjust or replace if necessary
Tie rods ends or Pitman arm loose	Tighten and check system
Rack and pinion mounts loose	Tighten all mounting bolts

GETtheMANUALS.org

Free play in worm gear	See POWER STEERING GEAR article
Loose sector shaft or thrust bearing adjustment	See POWER STEERING GEAR
Free play in pot coupling	See STEERING COLUMN article
Worn shaft serrations	See STEERING COLUMN article
Growl in Steering Pump	
Excessive pressure in hoses	Restricted hoses, see POWER STEERING GEAR article
Scored pressure plates	See POWER STEERING GEAR article
Scored thrust plates or rotor	See POWER STEERING GEAR article
Extreme wear of cam ring	See POWER STEERING GEAR article
Rattle in Steering Pump	
Vanes not installed	See POWER STEERING PUMP article
Vanes sticking in rotor	See POWER STEERING PUMP article
Swish noise in Pump	
Defective flow control valve	See POWER STEERING PUMP article
Groan in Steering Pump	
Air in fluid	See POWER STEERING PUMP article
Poor pressure hose connection	Tighten and check, replace if necessary
Squawk When Turning	
Damper "O" ring on valve spool cut	See POWER STEERING PUMP article
Moan or Whine in Pump	
Pump shaft bearing scored	Replace bearing and fluid
Air in fluid or fluid level low	See POWER STEERING PUMP article
Hose or column grounded	Check and replace if necessary
Cover "O" ring missing or damaged	See POWER STEERING PUMP article
Valve cover baffle missing or damaged	See POWER STEERING PUMP article
Interference of components in pump	See POWER STEERING

GETtheMANUALS.org

	PUMP article
Loose or poor bracket alignment	Correct or replace if necessary
Hissing When Parking	
Internal leakage in steering gear	Check valved assembly first
Chirp in Steering Pump	
Loose or worn power steering belt	Adjust or replace if necessary
Buzzing When Not Steering	
Noisy pump	See POWER STEERING PUMP article
Free play in steering shaft bearing	See STEERING COLUMN article
Bearing loose on shaft serrations	See STEERING COLUMN article
Clicking Noise in Pump	
Pump slippers too long	See POWER STEERING PUMP article
Broken slipper springs	See POWER STEERING PUMP article
Excessive wear or nicked rotors	See POWER STEERING PUMP article
Damaged cam contour	See POWER STEERING PUMP article
Poor Return of Wheel	
Wheel rubbing against turn signal	See STEERING COLUMN SWITCHES article
Flange rubbing steering gear adjuster	See STEERING COLUMN article
Tight or frozen steering shaft bearing	See STEERING COLUMN article
Steering gear out of adjustment	See POWER STEERING GEAR article
Sticking or plugged spool valve	See POWER STEERING PUMP article
Improper front end alignment	See WHEEL ALIGNMENT article
Wheel bearings worn or loose	See FRONT SUSPENSION article
Ties rods or ball joints binding	Check and replace if necessary
Intermediate shaft joints binding	See STEERING COLUMN article
Kinked pressure hoses	Correct or replace if necessary
Loose housing head spanner nut	See POWER STEERING GEAR article

GETtheMANUALS.org

Damaged valve lever	See POWER STEERING GEAR article
Sector shaft adjusted too tight	See ADJUSTMENTS in POWER STEERING GEAR article
Worm thrust bearing adjusted too tight	See ADJUSTMENTS in POWER STEERING GEAR article
Reaction ring sticking in cylinder	See POWER STEERING GEAR article
Reaction ring sticking in housing head	See POWER STEERING GEAR article
Steering pump internal leakage	See POWER STEERING PUMP article
Steering gear-to-column misalignment	See STEERING COLUMN article
Lack of lubrication in linkage	Service front suspension
Lack of lubrication in ball joints	Service front suspension
Increased Effort When Turning Wheel Fast Foaming, Milky Power Steering Fluid, Low Fluid Level or Low Pressure	
High internal pump leakage	See POWER STEERING PUMP article
Power steering pump belt slipping	Adjust or replace if necessary
Low fluid level	Check and fill to proper level
Engine idle speed to low	Adjust to correct setting
Air in pump fluid system	See POWER STEERING PUMP article
Pump output low	See POWER STEERING PUMP article
Steering gear malfunctioning	See POWER STEERING GEAR article
Wheel Surges or Jerks	
Low fluid level	Check and fill to proper level
Loose fan belt	Adjust or replace if necessary
Insufficient pump pressure	See POWER STEERING PUMP article
Sticky flow control valve	See POWER STEERING PUMP article
Linkage hitting oil pan at full turn	Replace bent components
Kick Back or Free Play	
Air in pump fluid system	See POWER STEERING PUMP article
Worn poppet valve in steering gear	See POWER STEERING PUMP article

GETtheMANUALS.org

Excessive over center lash	See POWER STEERING GEAR article
Thrust bearing out of adjustment	See POWER STEERING GEAR article
Free play in pot coupling	See POWER STEERING PUMP article
Steering gear coupling loose on shaft	See POWER STEERING PUMP article
Steering disc mounting bolts loose	Tighten or replace if necessary
Coupling loose on worm shaft	Tighten or replace if necessary
Improper sector shaft adjustment	See POWER STEERING GEAR article
Excessive worm piston side play	See POWER STEERING GEAR article
Damaged valve lever	See POWER STEERING GEAR article
Universal joint loose	Tighten or replace if necessary
Defective rotary valve	See POWER STEERING GEAR article
No Power When Parking	
Sticking flow control valve	See POWER STEERING PUMP article
Insufficient pump pressure output	See POWER STEERING PUMP article
Excessive internal pump leakage	See POWER STEERING PUMP article
Excessive internal gear leakage	See POWER STEERING PUMP article
Flange rubs against gear adjust plug	See STEERING COLUMN article
Loose pump belt	Adjust or replace if necessary
Low fluid level	Check and add proper amount of fluid
Engine idle too low	Adjust to correct setting
Steering gear-to-column misaligned	See STEERING COLUMN article
No Power, Left Turn	
Left turn reaction seal "O" ring worn	See POWER STEERING GEAR article
Left turn reaction seal damaged/missing	See POWER STEERING GEAR article

GETtheMANUALS.org

Cylinder head "O" ring damaged	See POWER STEERING PUMP article
No Power, Right Turns	
Column pot coupling bottomed	See STEERING COLUMN article
Right turn reaction seal "O" ring worn	See POWER STEERING GEAR article
Right turn reaction seal damaged	See POWER STEERING GEAR article
Internal leakage through piston end plug	See POWER STEERING GEAR article
Internal leakage through side plugs	See POWER STEERING GEAR article
Lack of Effort in Turning	
Left and/or right reaction seal sticking in cylinder head	Replace, see POWER STEERING GEAR article
Wanders to One Side	
Front end alignment incorrect	See WHEEL ALIGNMENT article
Unbalanced steering gear valve	See POWER STEERING GEAR article
Low Pressure Due to Steering Pump	
Flow control valve stuck or inoperative	See POWER STEERING PUMP article
Pressure plate not flat against cam ring	See POWER STEERING PUMP article
Extreme wear of cam ring	Replace and check adjustments
Scored plate, thrust plate or rotor	See POWER STEERING PUMP article
Vanes not installed properly	See POWER STEERING PUMP article
Vanes sticking in rotor slots	See POWER STEERING PUMP article
Cracked/broken thrust or pressure plate	See POWER STEERING PUMP article

STEERING COLUMN TROUBLE SHOOTING

NOTE: **This is GENERAL information. This article is not intended to be specific to any unique situation or individual vehicle configuration. The purpose of this Trouble Shooting information is to provide a list of common causes to problem symptoms. For model-specific Trouble Shooting, refer to SUBJECT, DIAGNOSTIC, or TESTING articles available in the section(s) you are accessing.**

GETtheMANUALS.org

BASIC STEERING COLUMN TROUBLE SHOOTING CHART

CONDITION & POSSIBLE CAUSE	CORRECTION
Noise in Steering	
Coupling pulled apart	See STEERING COLUMNS article
Column not correctly aligned	See STEERING COLUMNS article
Broken lower joint	Replace joint
Horn contact ring not	See STEERING COLUMN article
Bearing not lubricated	See STEERING COLUMN article
Shaft snap ring not properly seated	Reseat or replace snap ring
Plastic spherical joint not lubricated	See STEERING COLUMN article
Shroud or housing loose	Tighten holding screws
Lock plate retaining ring not seated	See STEERING COLUMN article
Loose sight shield	Tighten holding screws
High Steering Shaft Effort	
Column assembly misaligned	See STEERING COLUMN article
Improperly installed dust shield	Adjust or replace
Tight steering universal joint	See STEERING COLUMN article
High Shift Effort	
Column is out of alignment	See STEERING COLUMN article
Improperly installed dust shield	Adjust or replace
Seals or bearings not lubricated	See STEERING COLUMNS article
Mounting bracket screws too long	Replace with new shorter screws
Burrs on shift tube	Remove burrs or replace tube
Lower bowl bearing assembled wrong	See STEERING COLUMN article
Shift tube bent or broken	Replace as necessary
Improper adjustment of shift levers	See STEERING COLUMN article
Improper Trans. Shifting	
Sheared shift tube joint	Replace as necessary
Sheared lower shaft lever	Replace as necessary
Improper shift lever adjustment	See STEERING COLUMN

GETtheMANUALS.org

	article
Improper gate plate adjustment	See STEERING COLUMN article
Excess Play in Column	
Instrument panel bracket bolts loose	Tighten bolts and check bracket
Broken weld nut on jacket	See STEERING COLUMN article
Instrument bracket capsule sheared	See STEERING COLUMN article
Column bracket/jacket bolts loose	Tighten bolts and check bracket
Steering Locks in Gear	
Release lever mechanism	See STEERING COLUMN article

SUSPENSION TROUBLE SHOOTING

NOTE: **This is GENERAL information. This article is not intended to be specific to any unique situation or individual vehicle configuration. The purpose of this Trouble Shooting information is to provide a list of common causes to problem symptoms. For model-specific Trouble Shooting, refer to SUBJECT, DIAGNOSTIC, or TESTING articles available in the section(s) you are accessing.**

BASIC SUSPENSION TROUBLE SHOOTING CHART

CONDITION & POSSIBLE CAUSE	CORRECTION
Front End Noise	
Loose or worn wheel	See Wheel Bearing Adjustment in SUSPENSION
Worn shocks or shock mountings	Replace struts or strut mountings
Worn struts or strut mountings	Replace struts or strut mountings
Loose or worn lower control arm	See SUSPENSION
Loose steering gear-to-frame bolts	See STEERING
Worn control arm bushings	See SUSPENSION
Ball joints not lubricated	Lubricate ball joints & see Ball Joint Checking in SUSPENSION
Front Wheel Shake, Shimmy, or Vibration	
Tires or wheels out of balance	Check tire balance
Incorrect wheel alignment	See WHEEL ALIGNMENT
Drive shaft unbalanced	Check drive shaft balance
Loose or worn wheel bearings	See WHEEL ALIGNMENT

GETtheMANUALS.org

Loose or worn tie rod ends	See SUSPENSION
Worn upper ball joints	See Ball Joint Checking in SUSPENSION
Worn shock absorbers	Replace shock absorbers
Worn strut bushings	Replace strut bushings
Car Pulls to One Side	
Mismatched or uneven tires	Check tire condition
Broken or sagging springs	See SUSPENSION
Loose or worn strut bushings	See SUSPENSION
Improper wheel alignment	See WHEEL ALIGNMENT
Improper rear axle alignment	Check rear axle alignment
Power steering gear unbalanced	See STEERING
Front brakes dragging	See BRAKES
Abnormal Tire Wear	
Unbalanced tires	Check tire balance & rotation
Sagging or broken springs	See SUSPENSION
Incorrect front end alignment	See WHEEL ALIGNMENT
Faulty shock absorbers	Replace chock absorbers
Scuffed Tires	
Toe-In incorrect	See WHEEL ALIGNMENT
Suspension arm bent or twisted	See appropriate SUSPENSION article
Springs Bottom or Sag	
Bent or broken springs	See SUSPENSION
Leaking or worn shock absorbers	Replace shock absorbers
Frame misalignment	Check frame for damage
Spring Noises	
Loose "U" Bolts	See SUSPENSION
Loose or worn bushings	See SUSPENSION
Worn or missing interliners	See SUSPENSION
Shock Absorber Noise	
Loose shock mountings	Check & tighten mountings
Worn bushings	Replace bushings
Air in system	Bleed air from system
Undercoating on shocks	Remove undercoating
Car Leans or Sways on Corners	
Loose stabilizer bar	See SUSPENSION
Faulty shocks or mountings	Replace shocks or mountings
Broken or sagging springs	See SUSPENSION
Shock Absorbers Leaking	
Worn seals or reservoir tube crimped	See SUSPENSION

GETtheMANUALS.org

Broken Springs	
Loose "U" bolts	See SUSPENSION
Inoperative shock absorbers	Replace shock absorbers

WHEEL ALIGNMENT TROUBLE SHOOTING

NOTE: **This is GENERAL information. This article is not intended to be specific to any unique situation or individual vehicle configuration. The purpose of this Trouble Shooting information is to provide a list of common causes to problem symptoms. For model-specific Trouble Shooting, refer to SUBJECT, DIAGNOSTIC, or TESTING articles available in the section(s) you are accessing.**

BASIC WHEEL ALIGNMENT TROUBLE SHOOTING CHART

CONDITION & POSSIBLE CAUSE	CORRECTION
Premature Tire Wear	
Improper tire inflation	Check tire pressure
Front alignment out of tolerance	See ALIGNMENT SPECS in WHEEL ALIGNMENT section
Suspension components worn	See SUSPENSION section
Steering system components worn	See STEERING section
Improper standing height	See WHEEL ALIGNMENT
Uneven or sagging springs	See SUSPENSION section
Bent wheel	See WHEEL ALIGNMENT
Improper torsion bar adjustment	See SUSPENSION section
Loose or worn wheel bearings	See WHEEL BEARING ADJ. in SUSPENSION section
Worn or defective shock	Replace shock absorbers
Tires out of balance	Check tire balance
Pulls to One Side	
Improper tire inflation	Check tire pressure
Brake dragging	See BRAKE section
Mismatched tires	See WHEEL ALIGNMENT
Broken or sagging spring	See SUSPENSION section
Broken torsion bar	See SUSPENSION section
Power steering valve not centered	See STEERING section
Front alignment out of tolerance	See WHEEL ALIGNMENT section
Defective wheel bearing	See WHEEL BEARINGS in SUSPENSION section
Uneven sway bar links	See SUSPENSION section
Frame bent	Check for frame damage
Steering system bushing worn	See STEERING section

GETtheMANUALS.org

Hard Steering	
Idler arm bushing too tight	See STEERING LINKAGE in STEERING section
Ball joint tight or seized	See SUSPENSION section
Steering linkage too tight	See STEERING LINKAGE in STEERING section
Power steering fluid low	Add proper amount of fluid
Power steering drive belt loose	See STEERING section
Power steering pump defective	See STEERING section
Steering gear out of adjustment	See STEERING section
Incorrect wheel alignment	See WHEEL ALIGNMENT
Damaged steering gear	See STEERING section
Damaged suspension	See SUSPENSION section
Bent steering knuckle or supports	See SUSPENSION section
Vehicle "Wanders"	
Strut rod or control arm bushing worn	See SUSPENSION section
Loose or worn wheel bearings	See WHEEL BEARINGS in SUSPENSION section
Improper tire inflation	Check tire pressure
Stabilizer bar missing or defective	See SUSPENSION section
Wheel alignment out of tolerance	See Adjustment in WHEEL ALIGNMENT section
Broken spring	See SUSPENSION section
Defective shock absorber	Replace shock absorbers
Worn steering & suspension components	See SUSPENSION section
Front End Shimmy	
Tire out of balance/round	Check tire balance
Excessive wheel runout	See WHEEL ALIGNMENT
Insufficient or improper caster	See WHEEL ALIGNMENT section
Worn suspension or steering components	See SUSPENSION section
Defective shock absorbers	Replace shock absorber
Wheel bearings worn or loose	See WHEEL BEARING ADJ. in SUSPENSION section
Power steering reaction Bracket loose	See STEERING section
Steering gear box (rack) mounting loose	See STEERING section
Steering gear adjustment loose	See STEERING section
Worn spherical joints	See SUSPENSION section
Toe-In Not Adjustable	
Lower control arm bent	See SUSPENSION section
Frame bent	Check frame for damage
Camber Not Adjustable	

GETtheMANUALS.org

Control arm bent	See SUSPENSION section
Frame bent	Check frame for damage
Hub & bearing not seated properly	See SUSPENSION section

GETtheMANUALS.org

DTC 151-11: LOW TIRE AIR PRESSURE

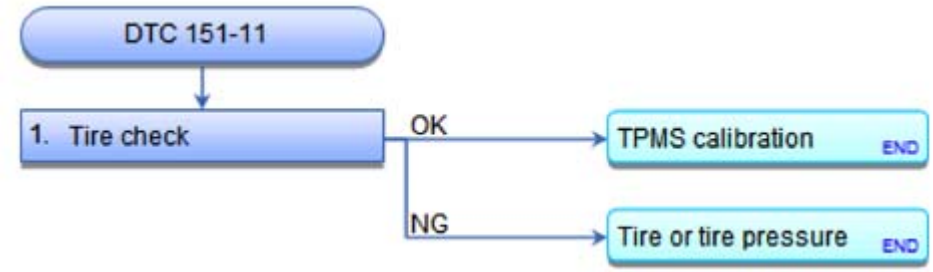

Fig. 1: Vsa (Tpms) Dtc Troubleshooting Flow Chart (151-11) Rewriting The Odo Data And Transferring The Maintenance Minder&Trade; Data To A New Gauge Control Module
Courtesy of AMERICAN HONDA MOTOR CO., INC.

NOTE:

- **Before troubleshooting, CHECK THE OUTSIDE AIR TEMPERATURE SENSOR . If outside air temperature sensor is failed, the VSA modulator-control unit may set this code.**
- **Make sure to avoid uneven loading on one side (left or right) of the vehicle and excessive loading.**
- **Make sure to inflate the tires to recommended pressure, not higher than the specified pressure, when TPMS calibration is done.**
- **Before you troubleshoot, record all freeze data and any on-board snapshot, and review the how to troubleshooting information.**

DTC Description	DTC	Freeze Frame
151-11 Low Tire Air Pressure		

1. Tire check:
   - 1. Turn the ignition switch to LOCK (0).
   - 2. Check all four tires for size, inflation, and wear.

Are all four tires the correct size, properly inflated, and worn evenly?

YES : The system is OK at this time. Do the TPMS calibration.

NO : Install the correct tires, a known-good set of tires, or set the tires to the correct pressure, and do the TPMS calibration.

DTC 151-21: DIFFERENT DIAMETER TIRE DETECTION

GETtheMANUALS.org

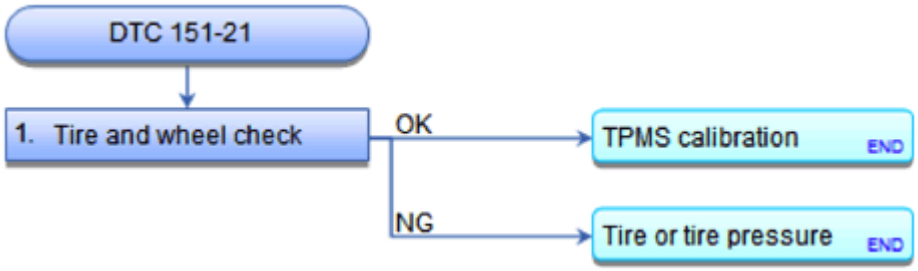

Fig. 2: VSA (TPMS) DTC Troubleshooting Flow Chart (151-21)
Courtesy of AMERICAN HONDA MOTOR CO., INC.

NOTE:

- **The DTC will be indicated when the vehicle has a different diameter tire(s) compared to the other tires.**
- **Check the record of using tires and wheels of a different size from originally supplied with the vehicle including the use of temporary spare tire.**
- **Before you troubleshoot, record all freeze data and any on-board snapshot, and review the how to troubleshooting information.**

DTC Description	DTC	Freeze Frame
151-21 Different Diameter Tire Detection		

1. Tire and wheel check:
   - 1. Turn the ignition switch to LOCK (0).
   - 2. Check all four tires for size, inflation, and wear.

Are all four tires the correct size, properly inflated, and worn evenly?

YES : The system is OK at this time. Do the TPMS calibration.

NO : Install the correct tires, a known-good set of tires, or set the tires to the correct pressure, and do the TPMS calibration.

DTC 151-31: TPMS SWITCH CIRCUIT OPEN

GETtheMANUALS.org

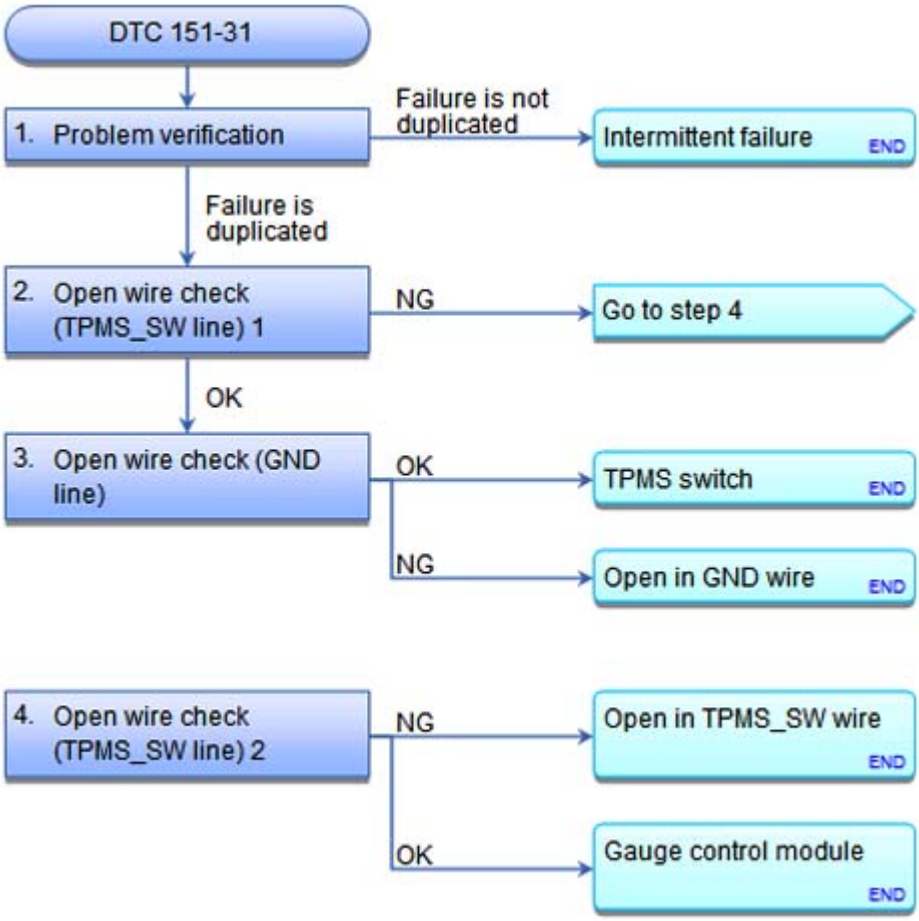

Fig. 3: VSA (TPMS) DTC Troubleshooting Flow Chart (151-31)
Courtesy of AMERICAN HONDA MOTOR CO., INC.

NOTE:

- **Pressing and holding the TPMS switch for more than 60 seconds will cause this DTC to set.**
- **Before you troubleshoot, record all freeze data and any on-board snapshot, and review the how to troubleshooting information.**

DTC Description	DTC	Freeze Frame
151-31 TPMS Switch Circuit Open		

1. Problem verification:
    - 1. Turn the ignition switch to ON (II).
    - 2. Clear the DTC with the HDS.
    - 3. Turn the ignition switch to LOCK (0).
    - 4. Turn the ignition switch to ON (II), then wait for 60 seconds or more.
    - 5. Check for DTCs with the HDS.

GETtheMANUALS.org

DTC Description	DTC	Freeze Frame
151-31 TPMS Switch Circuit Open		

Is DTC 151-31 indicated?

YES : The failure is duplicated. Go to step 2.

NO : Intermittent failure, the system is OK at this time.

2. Open wire check (TPMS_SW line) 1:
   - 1. Turn the ignition switch to LOCK (0).
   - 2. Disconnect the following connector.

     TPMS switch 5P connector

   - 3. Turn the ignition switch to ON (II).
   - 4. Measure the voltage between test points 1 and 2.

     Test condition IG ON (II)

     TPMS switch 5P connector: disconnected

     Test circuit TPMS_SW

     Test point 1 TPMS switch 5P connector No. 4 (YEL)

     Test point 2 Body ground

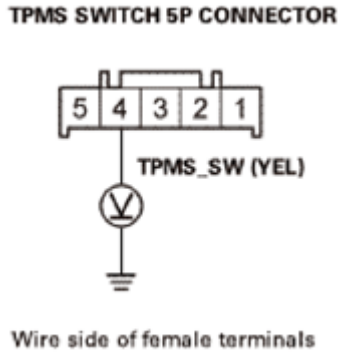

Fig. 4: Measuring Voltage Between TPMS Switch 5P Connector No. 4 (YEL) And Body Ground
Courtesy of AMERICAN HONDA MOTOR CO., INC.

Is there battery voltage?

YES : The TPMS_SW wire is not open. Go to step 3.

GETtheMANUALS.org

NO : Go to step 4.

3. Open wire check (GND line):
   - 1. Measure the voltage between test points 1 and 2.

     Test condition IG ON (II)

     TPMS switch 5P connector: disconnected

     Test circuit GND

     Test point 1 TPMS switch 5P connector No. 4 (YEL)

     Test point 2 TPMS switch 5P connector No. 5 (BLK)

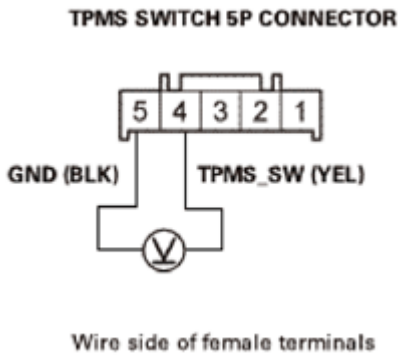

Fig. 5: Measuring Voltage Between TPMS Switch 5P Connector No. 4 (YEL) And No. 5 (BLK)
Courtesy of AMERICAN HONDA MOTOR CO., INC.

Is there battery voltage?

YES : The GND wire is OK. Check the TPMS switch.

NO : Repair an open in the wire between the TPMS switch and body ground (G501).

4. Open wire check (TPMS_SW line) 2:
   - 1. Turn the ignition switch to LOCK (0).
   - 2. **Remove the gauge control module (Do not disconnect the connector)** See **Rewriting the ODO Data and Transferring the Maintenance Minder™ Data to a New Gauge Control Module** or **GAUGE CONTROL MODULE REMOVAL AND INSTALLATION** .
   - 3. Turn the ignition switch to ON (II).
   - 4. Measure the voltage between test points 1 and 2.

     Test condition IG ON (II)

GETtheMANUALS.org

TPMS switch 5P connector: disconnected

Gauge control module 32P connector: connected

Test circuit TPMS_SW

Test point 1 Gauge control module 32P connector No. 24 (YEL)

Test point 2 Body ground

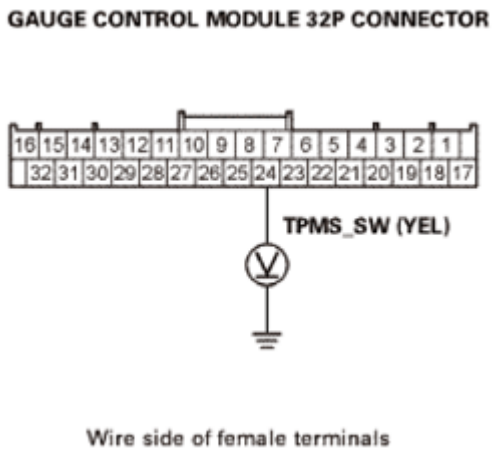

Fig. 6: Measuring Voltage Between Gauge Control Module 32P Connector No. 24 (YEL) And Body Ground
Courtesy of AMERICAN HONDA MOTOR CO., INC.

Is there battery voltage?

YES : Repair an open in the wire between the TPMS switch and the gauge control module.

NO : **DO THE TROUBLESHOOTING FOR THE GAUGE CONTROL MODULE** . If necessary, **substitute a known-good gauge control module, and recheck** See **Rewriting the ODO Data and Transferring the Maintenance Minder™ Data to a New Gauge Control Module** or **GAUGE CONTROL MODULE REMOVAL AND INSTALLATION** .

DTC 11-13: RIGHT-FRONT WHEEL SPEED SENSOR CIRCUIT MALFUNCTION; DTC 13-13: LEFT-FRONT WHEEL SPEED SENSOR CIRCUIT MALFUNCTION; DTC 15-13: RIGHT-REAR WHEEL SPEED SENSOR CIRCUIT MALFUNCTION; DTC 17-13: LEFT-REAR WHEEL SPEED SENSOR CIRCUIT MALFUNCTION

GETtheMANUALS.org

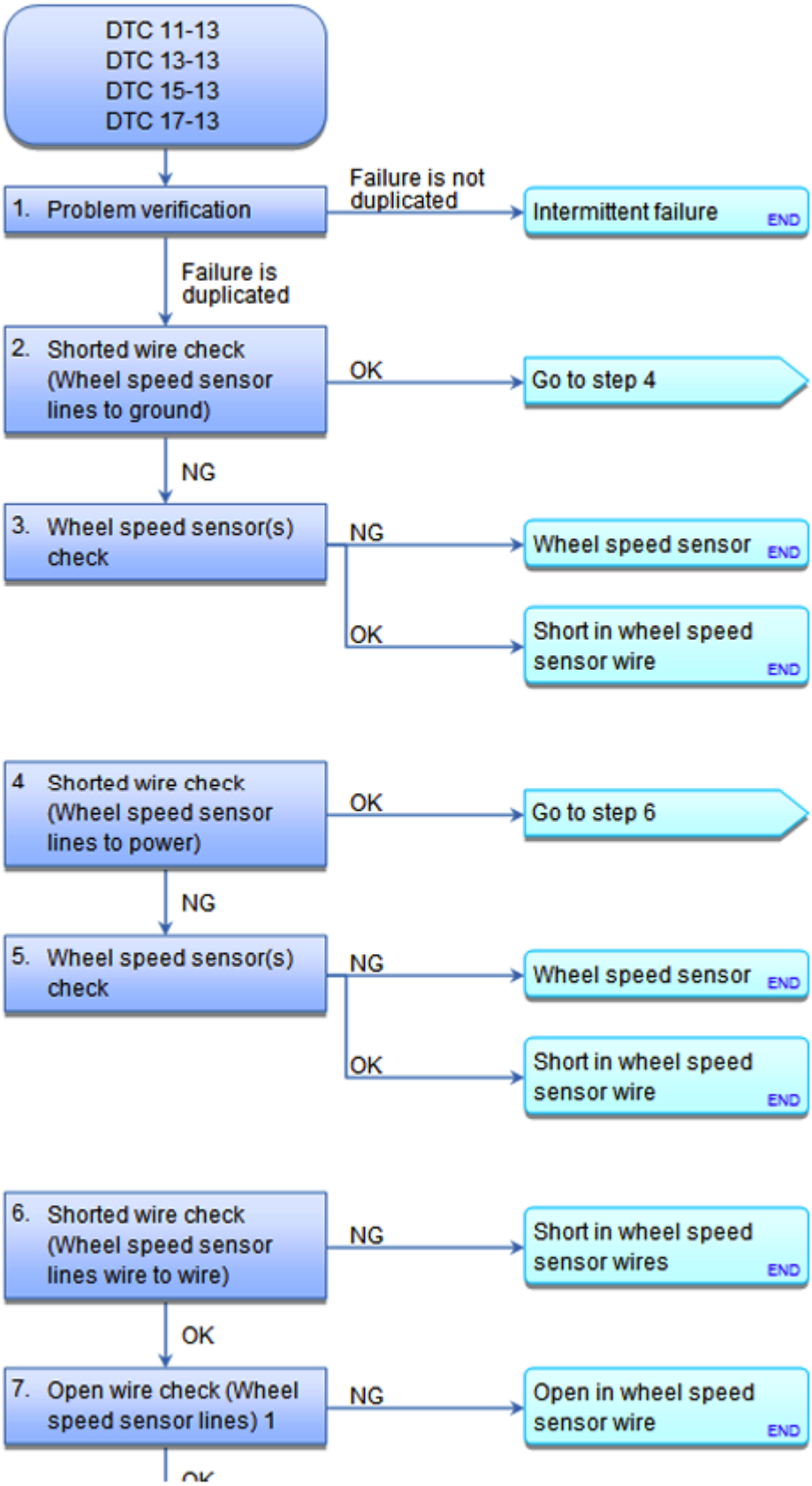

GETtheMANUALS.org

Fig. 7: VSA DTC Troubleshooting Flow Chart - 11-13, 13-13, 15-13, 17-13 (1 Of 2)
Courtesy of AMERICAN HONDA MOTOR CO., INC.

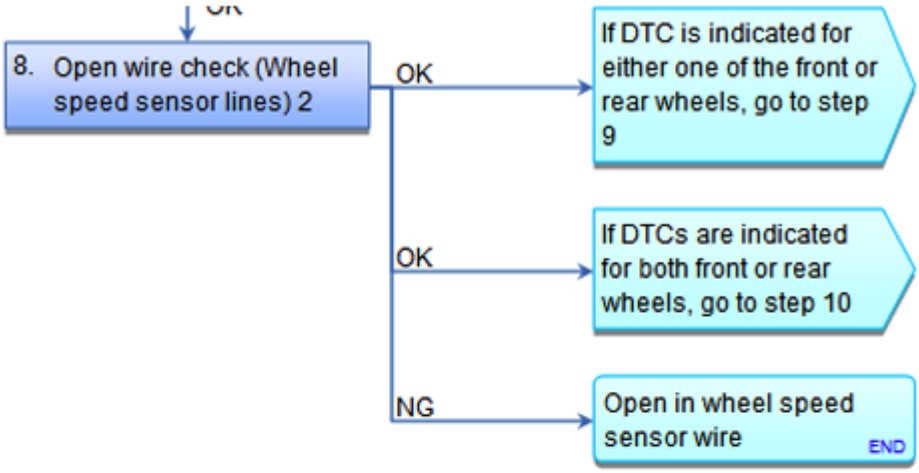

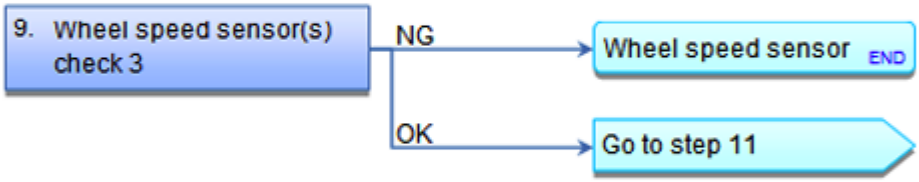

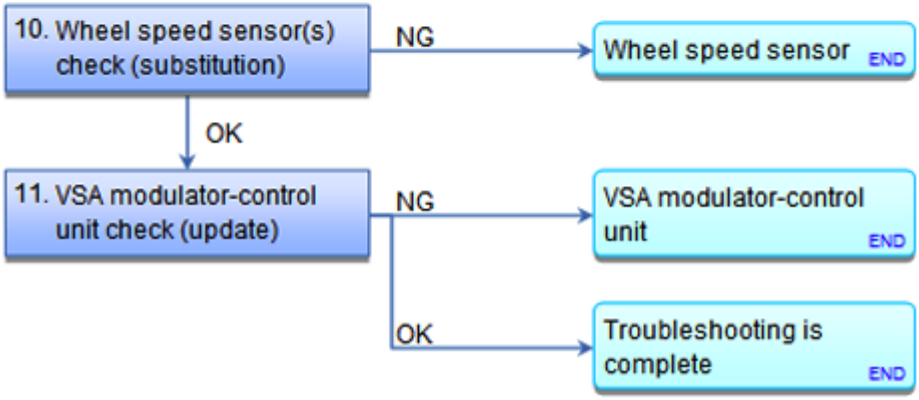

Fig. 8: VSA DTC Troubleshooting Flow Chart - 11-13, 13-13, 15-13, 17-13 (2 Of 2)
Courtesy of AMERICAN HONDA MOTOR CO., INC.

NOTE: **BEFORE YOU TROUBLESHOOT, RECORD ALL FREEZE DATA AND ANY ON-BOARD SNAPSHOT, AND REVIEW THE HOW TO TROUBLESHOOT THE VSA SYSTEM .**

DTC Description	DTC	Freeze Frame
11-13 Right-Front Wheel Speed Sensor Circuit Malfunction		

GETtheMANUALS.org

13-13 Left-Front Wheel Speed Sensor Circuit Malfunction		
15-13 Right-Rear Wheel Speed Sensor Circuit Malfunction		
17-13 Left-Rear Wheel Speed Sensor Circuit Malfunction		

1. Problem verification:
   - 1. Turn the ignition switch to ON (II).
   - 2. Clear the DTC with the HDS.
   - 3. Turn the ignition switch to LOCK (0), then turn it to ON (II) again.
   - 4. Check for DTCs with the HDS.

DTC Description	DTC	Freeze Frame
11-13 Right-Front Wheel Speed Sensor Circuit Malfunction		
13-13 Left-Front Wheel Speed Sensor Circuit Malfunction		
15-13 Right-Rear Wheel Speed Sensor Circuit Malfunction		
17-13 Left-Rear Wheel Speed Sensor Circuit Malfunction		

Is DTC 11-13, 13-13, 15-13, or 17-13 indicated?

YES : The failure is duplicated. Go to step 2.

NO : Intermittent failure, the system is OK at this time. Refer to intermittent failures troubleshooting.

2. Shorted wire check (Wheel speed sensor lines to ground):
   - 1. Turn the ignition switch to LOCK (0).
   - 2. Disconnect the following connector.

     VSA modulator-control unit 38P connector

   - 3. Check for continuity between body ground and the appropriate wheel speed sensor +B and GND terminals of the VSA modulator-control unit 38P connector individually (see table).

     Test condition IG LOCK (0)

     VSA modulator-control unit 38P connector: disconnected

DTC	Appropriate Terminal	
	+B	GND
11-13 Right-front	No. 24	No. 13
13-13 Left-front	No. 21	No. 9
15-13 Right-rear	No. 23	No. 35
17-13 Left-rear	No. 33	No. 22

GETtheMANUALS.org

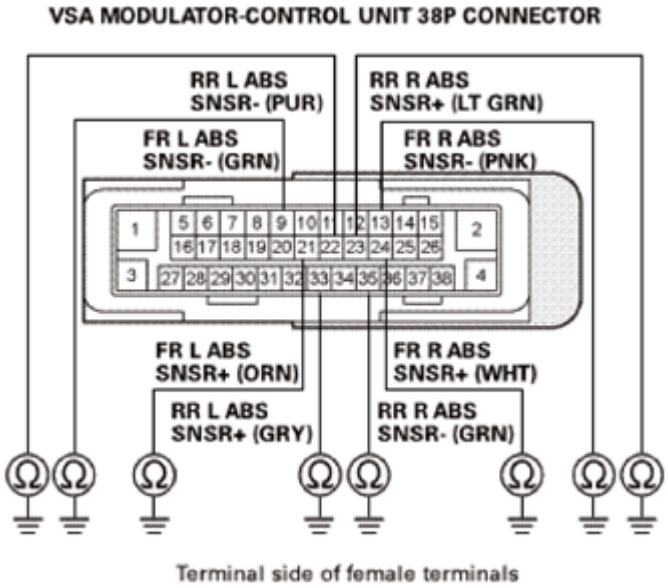

Fig. 9: Checking Continuity Between Body Ground And VSA Modulator-Control Unit 38P Connector Wheel Speed Sensor +B And GND Terminals
Courtesy of AMERICAN HONDA MOTOR CO., INC.

Is there continuity?

YES : Wheel speed sensor wires are shorted to ground. Go to step 3.

NO : The wheel speed sensor wires are not shorted to ground. Go to step 4.

3. Wheel speed sensor(s) check:
   - 1. Disconnect the following connector.

     Appropriate wheel speed sensor 2P connector

   - 2. On the sensor side, check for continuity between test points 1 and 2.

     Test condition IG LOCK (0)

     VSA modulator-control unit 38P connector: disconnected

     Appropriate wheel speed sensor 2P connector: disconnected

     Test circuit +B

     Test point 1 Appropriate wheel speed sensor 2P connector No. 1

     Test point 2 Body ground

     Test circuit GND

GETtheMANUALS.org

Test point 1 Appropriate wheel speed sensor 2P connector No. 2

Test point 2 Body ground

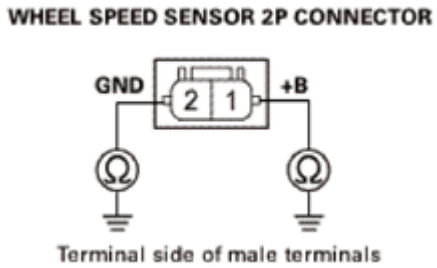

Fig. 10: Checking Continuity Between Wheel Speed Sensor 2P Connector No. 2 Body Ground
Courtesy of AMERICAN HONDA MOTOR CO., INC.

Is there continuity?

YES : The wheel speed sensor wires are not shorted to ground. **Replace the appropriate wheel speed sensor** See **FRONT WHEEL SPEED SENSOR REMOVAL AND INSTALLATION** or **REAR WHEEL SPEED SENSOR REMOVAL AND INSTALLATION** .

NO : Repair a short to body ground in the wire between the VSA modulator-control unit and the wheel speed sensor.

4. Shorted wire check (Wheel speed sensor lines to power):
   - 1. Turn the ignition switch to ON (II).
   - 2. Measure the voltage between body ground and the appropriate wheel speed sensor +B and GND terminals of the VSA modulator-control unit 38P connector individually (see table).

     Test condition IG ON (II)

     VSA modulator-control unit 38P connector: disconnected

DTC	Appropriate Terminal	
	+B	GND
11-13 Right-front	No. 24	No. 13
13-13 Left-front	No. 21	No. 9
15-13 Right-rear	No. 23	No. 35
17-13 Left-rear	No. 33	No. 22

GETtheMANUALS.org

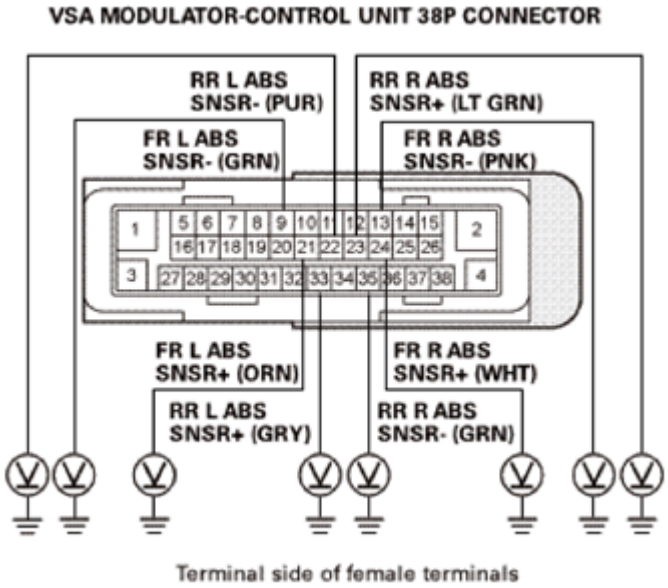

Fig. 11: Measuring Voltage Between Body Ground And VSA Modulator-Control Unit 38P Connector Wheel Speed Sensor +B And GND Terminals
Courtesy of AMERICAN HONDA MOTOR CO., INC.

Is there 0.1 V or more?

YES : Wheel speed sensor wires are shorted to power. Go to step 5.

NO : The wheel speed sensor wires are not shorted to power. Go to step 6.

5. Wheel speed sensor(s) check:
   - 1. Turn the ignition switch to LOCK (0).
   - 2. Disconnect the following connector.

     Appropriate wheel speed sensor 2P connector

   - 3. Turn the ignition switch to ON (II).
   - 4. On the sensor side, measure the voltage between test points 1 and 2.

     Test condition IG ON (II)

     VSA modulator-control unit 38P connector: disconnected

     Appropriate wheel speed sensor 2P connector: disconnected

     Test circuit +B

     Test point 1 Appropriate wheel speed sensor 2P connector No. 1

GETtheMANUALS.org

Test point 2 Body ground

Test circuit GND

Test point 1 Appropriate wheel speed sensor 2P connector No. 2

Test point 2 Body ground

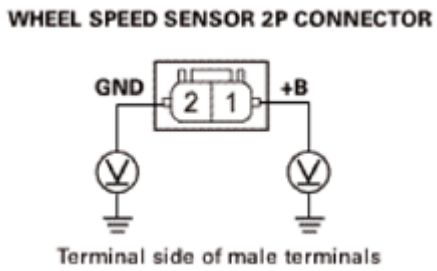

Fig. 12: Measuring Voltage Between Wheel Speed Sensor 2P Connector No. 1 And Body Ground
Courtesy of AMERICAN HONDA MOTOR CO., INC.

Is there 0.1 V or more?

YES : The wheel speed sensor wires are not shorted to power. **Replace the appropriate wheel speed sensor** See **FRONT WHEEL SPEED SENSOR REMOVAL AND INSTALLATION** or **REAR WHEEL SPEED SENSOR REMOVAL AND INSTALLATION** .

NO : Repair a short to power in the wire between the VSA modulator-control unit and the appropriate wheel speed sensor.

6. Shorted wire check (Wheel speed sensor lines wire to wire):
   - 1. Turn the ignition switch to LOCK (0).
   - 2. Disconnect the following connector.

     Appropriate wheel speed sensor 2P connector

   - 3. Check for continuity between the appropriate VSA modulator-control unit 38P connector wheel speed sensor +B and GND terminals (see table).

     Test condition IG LOCK (0)

     VSA modulator-control unit 38P connector: disconnected

     Appropriate wheel speed sensor 2P connector: disconnected

DTC	Appropriate Terminal	
	+B	GND

GETtheMANUALS.org

11-13 Right-front	No. 24	No. 13
13-13 Left-front	No. 21	No. 9
15-13 Right-rear	No. 23	No. 35
17-13 Left-rear	No. 33	No. 22

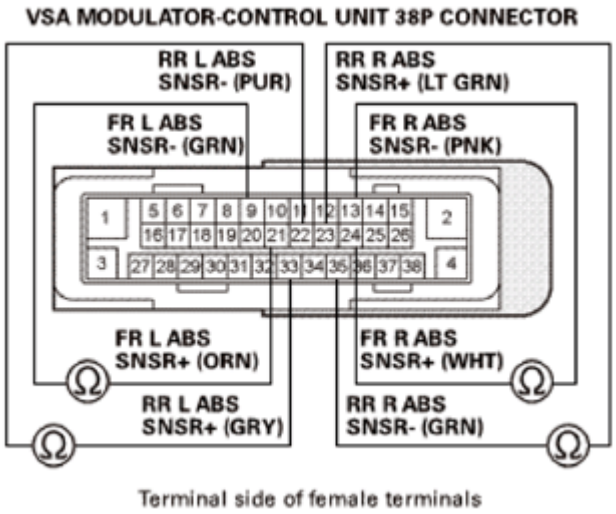

Fig. 13: Checking Continuity Between VSA Modulator-Control Unit 38P Connector Wheel Speed Sensor +B And GND Terminals
Courtesy of AMERICAN HONDA MOTOR CO., INC.

Is there continuity?

YES : Repair a short in the wires between the appropriate wheel speed sensor and the VSA modulator-control unit.

NO : The wheel speed sensor wires are not shorted in the wires. Go to step 7.

7. Open wire check (Wheel speed sensor lines) 1:
   - 1. Check for continuity between the appropriate VSA modulator-control unit 38P connector terminal and the appropriate wheel speed sensor 2P connector terminal (see table).

     Test condition IG LOCK (0)

     VSA modulator-control unit 38P connector: disconnected

     Appropriate wheel speed sensor 2P connector: disconnected

DTC	VSA Modulator-Control Unit 38P Connector Terminal	Appropriate Wheel Speed Sensor 2P Connector Terminal
11-13	No. 24	Right-front
13-		

GETtheMANUALS.org

13	No. 21	Left-front
15-13	No. 23	Right-rear
17-13	No. 33	Left-rear

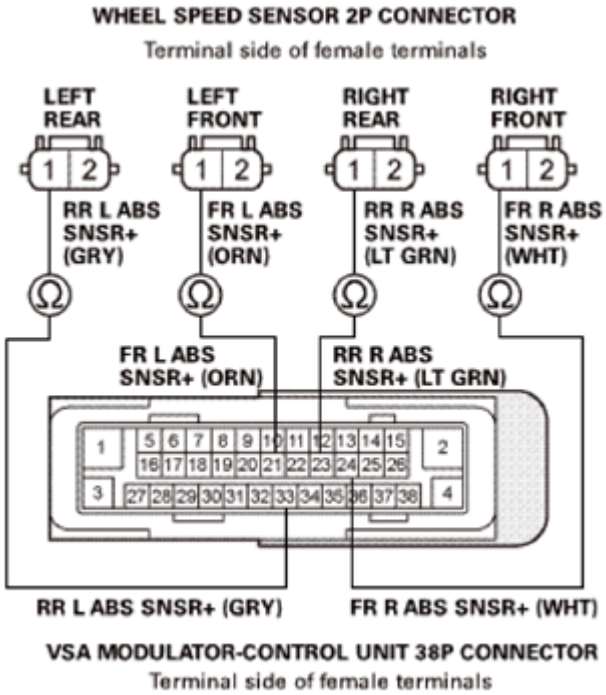

Fig. 14: Checking Continuity Between VSA Modulator-Control Unit 38P Connector Terminal And Wheel Speed Sensor 2P Connector Terminal
Courtesy of AMERICAN HONDA MOTOR CO., INC.

Is there continuity?

YES : Go to step 8.

NO : Repair an open in the wire between the appropriate wheel speed sensor and the VSA modulator-control unit.

8. Open wire check (Wheel speed sensor lines) 2:
   - 1. Check for continuity between the appropriate VSA modulator-control unit 38P connector terminal and the appropriate wheel speed sensor 2P connector terminal (see table).

     Test condition IG LOCK (0)

     VSA modulator-control unit 38P connector: disconnected

     Appropriate wheel speed sensor 2P connector: disconnected

GETtheMANUALS.org

DTC	VSA Modulator-Control Unit 38P Connector Terminal	Appropriate Wheel Speed Sensor 2P Connector Terminal
11-13	No. 13	Right-front
13-13	No. 9	Left-front
15-13	No. 35	Right-rear
17-13	No. 22	Left-rear

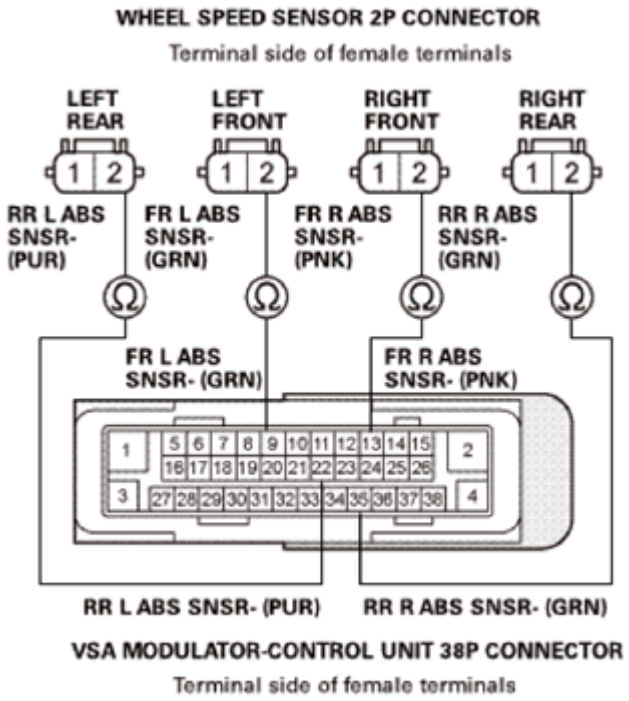

Fig. 15: Checking Continuity Between VSA Modulator-Control Unit 38P Connector Terminal And Wheel Speed Sensor 2P Connector Terminal
Courtesy of AMERICAN HONDA MOTOR CO., INC.

Is there continuity?

YES : The wheel speed sensor wires are OK. If a DTC is indicated for either one of the front or rear wheels as described in step 1, go to step 9.

YES : The wheel speed sensor wires are OK. If DTCs are indicated for both front or rear wheels as described in step 1, go to step 10.

NO : Repair an open in the wire between the appropriate wheel speed sensor and the VSA modulator-control unit.

GETtheMANUALS.org

9. Wheel speed sensor(s) check 3:
   - 1. **Swap the appropriate front left and front right wheel speed sensors or rear left and rear right wheel speed sensors** See **FRONT WHEEL SPEED SENSOR REMOVAL AND INSTALLATION** or **REAR WHEEL SPEED SENSOR REMOVAL AND INSTALLATION** .
   - 2. Reconnect the following connectors.

     VSA modulator-control unit 38P connector

     Wheel speed sensor 2P connector

   - 3. Turn the ignition switch to ON (II).
   - 4. Clear the DTC with the HDS.
   - 5. Turn the ignition switch to LOCK (0), then turn it to ON (II) again.
   - 6. Check for DTCs with the HDS.

DTC Before Swapping	DTC After Swapping
11-13 (Right-front)	13-13 (Left-front)
13-13 (Left-front)	11-13 (Right-front)
15-13 (Right-rear)	17-13 (Left-rear)
17-13 (Left-rear)	15-13 (Right-rear)

DTC Description	DTC	Freeze Frame

Is the DTC indicated for the opposite wheel?

YES : **Replace the original wheel speed sensor** See **FRONT WHEEL SPEED SENSOR REMOVAL AND INSTALLATION** or **REAR WHEEL SPEED SENSOR REMOVAL AND INSTALLATION** .

NO : Go to step 11.

10. Wheel speed sensor(s) check (substitution):
   - 1. **Substitute a known-good wheel speed sensor** See **FRONT WHEEL SPEED SENSOR REMOVAL AND INSTALLATION** or **REAR WHEEL SPEED SENSOR REMOVAL AND INSTALLATION** .

DTC	Appropriate Wheel Speed Sensor
11-13	Right-front
13-13	Left-front
15-13	Right-rear
17-13	Left-rear

   - 2. Reconnect the following connectors.

GETtheMANUALS.org

VSA modulator-control unit 38P connector

Wheel speed sensor 2P connector

- 3. Turn the ignition switch to ON (II).
- 4. Clear the DTC with the HDS.
- 5. Turn the ignition switch to LOCK (0), then turn it to ON (II) again.
- 6. Check for DTCs with the HDS.

DTC Description	DTC	Freeze Frame
11-13 Right-Front Wheel Speed Sensor Circuit Malfunction		
13-13 Left-Front Wheel Speed Sensor Circuit Malfunction		
15-13 Right-Rear Wheel Speed Sensor Circuit Malfunction		
17-13 Left-Rear Wheel Speed Sensor Circuit Malfunction		

Is DTC 11-13, 13-13, 15-13, or 17-13 indicated?

YES : Go to step 11.

NO : **Replace the original wheel speed sensor** See **FRONT WHEEL SPEED SENSOR REMOVAL AND INSTALLATION** or **REAR WHEEL SPEED SENSOR REMOVAL AND INSTALLATION** .

11. VSA modulator-control unit check (update):
    - 1. **Update the VSA modulator-control unit if it does not have the latest software** See **VSA SENSOR NEUTRAL POSITION MEMORIZATION**, **VSA MODULATOR-CONTROL UNIT REMOVAL AND INSTALLATION** or **VSA MODULATOR-CONTROL UNIT UPDATE**.
    - 2. Turn the ignition switch to LOCK (0), then turn it to ON (II) again.
    - 3. Check for DTCs with the HDS.

DTC Description	DTC	Freeze Frame

Is DTC 11-13, 13-13, 15-13, or 17-13 indicated?

YES : Check for loose terminals in the VSA modulator-control unit 38P connector. If the VSA modulator-control unit was updated and the symptom/indication is still present, **replace the VSA modulator-control unit** See **VSA SENSOR NEUTRAL POSITION MEMORIZATION** or **VSA MODULATOR-CONTROL UNIT UPDATE** or **VSA MODULATOR-CONTROL UNIT REMOVAL AND INSTALLATION**.

NO : Troubleshooting is complete. If any other DTCs are indicated, go to the indicated DTCs troubleshooting.

GETtheMANUALS.org

DTC 12-11: RIGHT-FRONT WHEEL SPEED SENSOR ELECTRICAL NOISE OR INTERMITTENT INTERRUPTION; DTC 14-11: LEFT-FRONT WHEEL SPEED SENSOR ELECTRICAL NOISE OR INTERMITTENT INTERRUPTION; DTC 16-11: RIGHT-REAR WHEEL SPEED SENSOR ELECTRICAL NOISE OR INTERMITTENT INTERRUPTION; DTC 18-11: LEFT-REAR WHEEL SPEED SENSOR ELECTRICAL NOISE OR INTERMITTENT INTERRUPTION

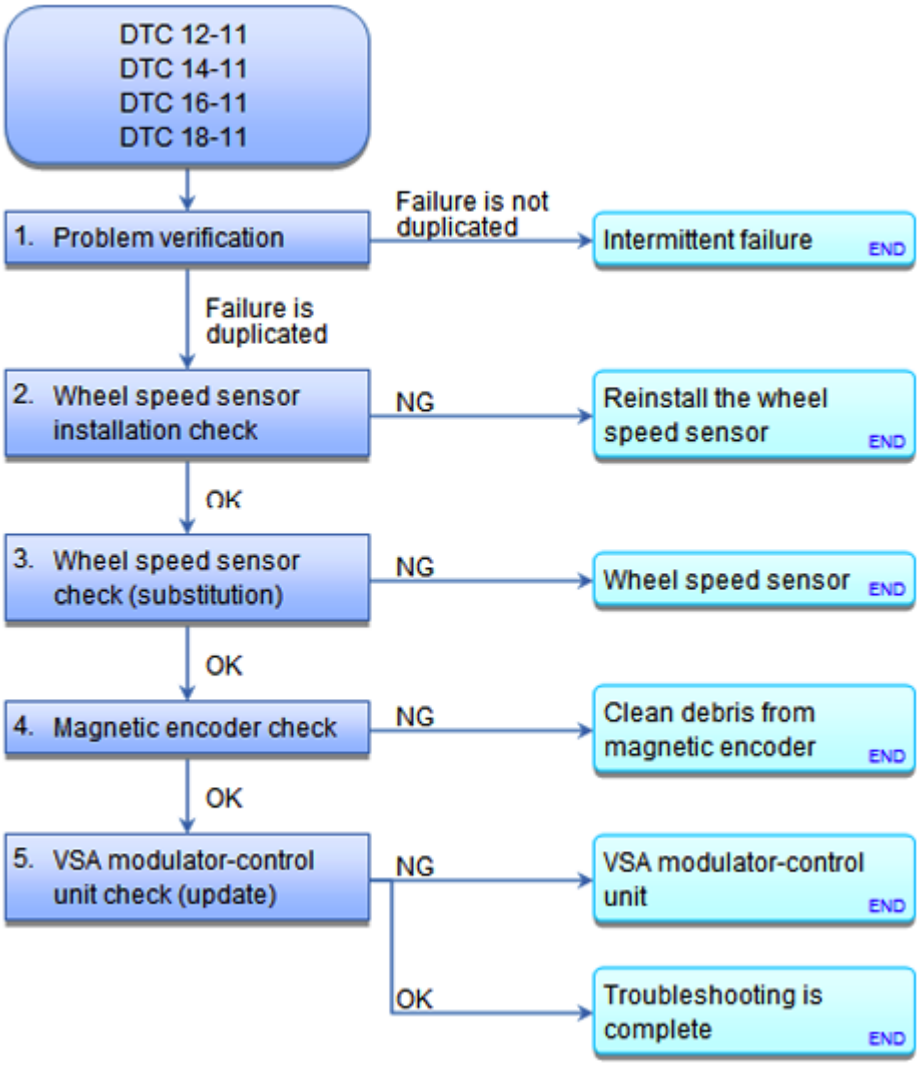

Fig. 16: VSA DTC Troubleshooting Flow Chart (12-11, 14-11, 16-11, 18-11)
Courtesy of AMERICAN HONDA MOTOR CO., INC.

NOTE:

- **BEFORE YOU TROUBLESHOOT, RECORD ALL FREEZE DATA AND ANY ON-BOARD SNAPSHOT, AND REVIEW THE HOW TO TROUBLESHOOT THE VSA SYSTEM .**
- **If the ABS and other indicators come on because of electrical noise, the indicators will go off when you test-drive the vehicle speed at 9 mph (15**

GETtheMANUALS.org

km/h) or more and the noise is gone.

DTC Description	DTC	Freeze Frame
12-11 Right-Front Wheel Speed Sensor Electrical Noise or Intermittent Interruption		
14-11 Left-Front Wheel Speed Sensor Electrical Noise or Intermittent Interruption		
16-11 Right-Rear Wheel Speed Sensor Electrical Noise or Intermittent Interruption		
18-11 Left-Rear Wheel Speed Sensor Electrical Noise or Intermittent Interruption		

1. Problem verification:
   - 1. Turn the ignition switch to ON (II).
   - 2. Clear the DTC with the HDS.
   - 3. Turn the ignition switch to LOCK (0).
   - 4. Test-drive the vehicle for 120 seconds or more.

     NOTE: Drive the vehicle on the road, not on a lift.

   - 5. Check for DTCs with the HDS.

DTC Description	DTC	Freeze Frame
12-11 Right-Front Wheel Speed Sensor Electrical Noise or Intermittent Interruption		
14-11 Left-Front Wheel Speed Sensor Electrical Noise or Intermittent Interruption		
16-11 Right-Rear Wheel Speed Sensor Electrical Noise or Intermittent Interruption		
18-11 Left-Rear Wheel Speed Sensor Electrical Noise or Intermittent Interruption		

Is DTC 12-11, 14-11, 16-11, or 18-11 indicated?

YES : The failure is duplicated. Go to step 2.

NO : Intermittent failure, the system is OK at this time. Refer to intermittent failures troubleshooting.

2. Wheel speed sensor installation check:
   - 1. Turn the ignition switch to LOCK (0).
   - 2. **Check that the appropriate wheel speed sensor is properly mounted** See **FRONT WHEEL SPEED SENSOR REMOVAL AND INSTALLATION** or **REAR WHEEL SPEED SENSOR REMOVAL AND INSTALLATION** .

DTC Appropriate	Wheel Speed Sensor
12-11	Right-front

GETtheMANUALS.org

14-11	Left-front
16-11	Right-rear
18-11	Left-rear

Is the wheel speed sensor installation OK?

YES : Go to step 3.

NO : **Reinstall the wheel speed sensor, and recheck the mounting position** See **FRONT WHEEL SPEED SENSOR REMOVAL AND INSTALLATION** or **REAR WHEEL SPEED SENSOR REMOVAL AND INSTALLATION** , then go to step 1.

3. Wheel speed sensor check (substitution):
   - 1. **Substitute a known-good wheel speed sensor** See **FRONT WHEEL SPEED SENSOR REMOVAL AND INSTALLATION** or **REAR WHEEL SPEED SENSOR REMOVAL AND INSTALLATION** .

DTC	Appropriate Wheel Speed Sensor
12-11	Right-front
14-11	Left-front
16-11	Right-rear
18-11	Left-rear

   - 2. Turn the ignition switch to ON (II).
   - 3. Clear the DTC with the HDS.
   - 4. Turn the ignition switch to LOCK (0).
   - 5. Test-drive the vehicle for 120 seconds or more.

NOTE: **Drive the vehicle on the road, not on a lift.**

   - 6. Check for DTCs with the HDS.

DTC Description	DTC	Freeze Frame
12-11 Right-Front Wheel Speed Sensor Electrical Noise or Intermittent Interruption		
14-11 Left-Front Wheel Speed Sensor Electrical Noise or Intermittent Interruption		
16-11 Right-Rear Wheel Speed Sensor Electrical Noise or Intermittent Interruption		
18-11 Left-Rear Wheel Speed Sensor Electrical Noise or Intermittent Interruption		

Is DTC 12-11, 14-11, 16-11, or 18-11 indicated?

GETtheMANUALS.org

YES : Go to step 4.

NO : **Replace the original wheel speed sensor** See **FRONT WHEEL SPEED SENSOR REMOVAL AND INSTALLATION** or **REAR WHEEL SPEED SENSOR REMOVAL AND INSTALLATION** .

4. Magnetic encoder check:
   - 1. Inspect the appropriate magnetic encoder for damage, debris, and correct installation.

DTC	Appropriate Magnetic Encoder	Note
12-11	Right-front	**REMOVE THE DRIVESHAFT OUTBOARD JOINT FROM THE APPROPRIATE WHEEL HUB** .
14-11	Left-front	
16-11	Right-rear	**REMOVE THE HUB BEARING UNIT** .
18-11	Left-rear	

Is the magnetic encoder surface OK?

YES : Go to step 5.

NO : Clean debris from the appropriate magnetic encoder surface on the wheel bearing or the hub bearing unit. If the DTC is still present, replace the appropriate **WHEEL BEARING** or the **HUB BEARING UNIT** .

5. VSA modulator-control unit check (update):
   - 1. **Update the VSA modulator-control unit if it does not have the latest software** See **VSA SENSOR NEUTRAL POSITION MEMORIZATION**, **VSA MODULATOR-CONTROL UNIT UPDATE** or **VSA MODULATOR-CONTROL UNIT REMOVAL AND INSTALLATION**.
   - 2. Turn the ignition switch to LOCK (0).
   - 3. Test-drive the vehicle for 120 seconds or more.

     NOTE: Drive the vehicle on the road, not on a lift.

   - 4. Check for DTCs with the HDS.

DTC Description	DTC	Freeze Frame

Is DTC 12-11, 14-11, 16-11, or 18-11 indicated?

YES : Check for loose terminals in the VSA modulator-control unit 38P connector. If the VSA

GETtheMANUALS.org

modulator-control unit was updated and the symptom/indication is still present, **replace the VSA modulator-control unit** See **VSA MODULATOR-CONTROL UNIT UPDATE** or **VSA MODULATOR-CONTROL UNIT REMOVAL AND INSTALLATION** or **VSA SENSOR NEUTRAL POSITION MEMORIZATION**.

NO : Troubleshooting is complete. If any other DTCs are indicated, go to the indicated DTCs troubleshooting.

DTC 12-14: RIGHT-FRONT WHEEL SPEED SENSOR INSTALLATION ERROR; DTC 14-14: LEFT-FRONT WHEEL SPEED SENSOR INSTALLATION ERROR; DTC 16-14: RIGHT-REAR WHEEL SPEED SENSOR INSTALLATION ERROR; DTC 18-14: LEFT-REAR WHEEL SPEED SENSOR INSTALLATION ERROR

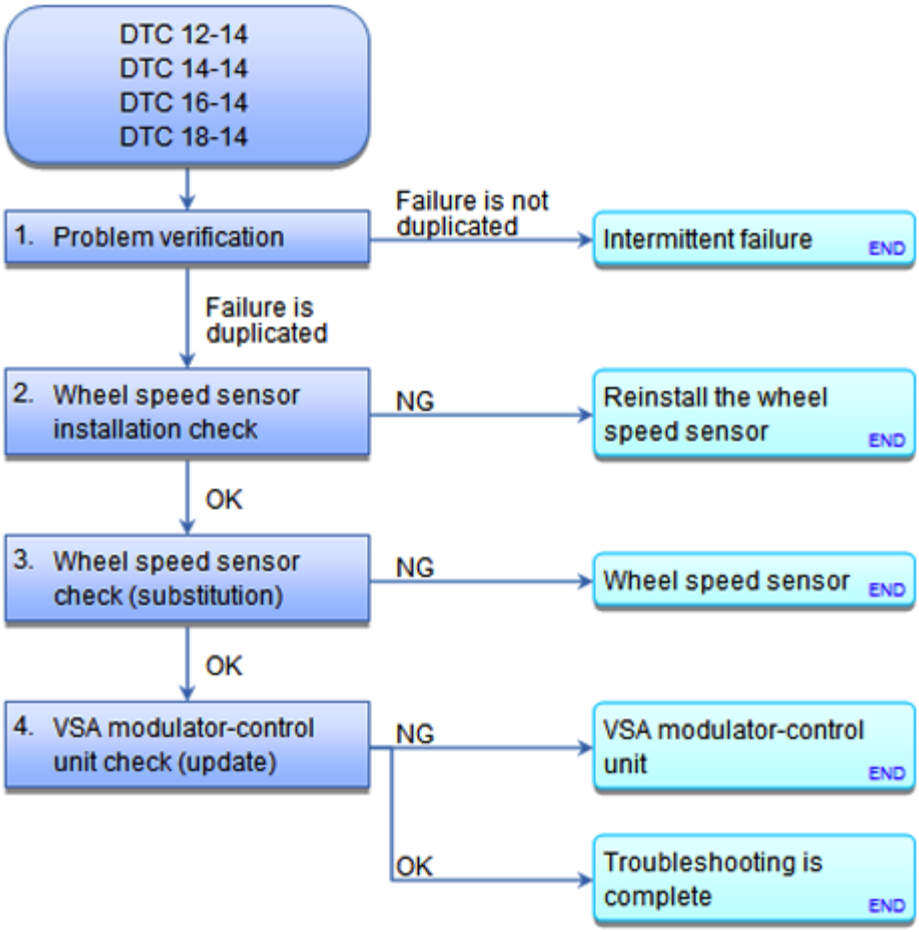

Fig. 17: VSA DTC Troubleshooting Flow Chart (12-14, 14-14, 16-14, 18-14)
Courtesy of AMERICAN HONDA MOTOR CO., INC.

NOTE: **BEFORE YOU TROUBLESHOOT, RECORD ALL FREEZE DATA AND ANY ON-BOARD SNAPSHOT, AND REVIEW THE HOW TO TROUBLESHOOT THE VSA**

GETtheMANUALS.org

SYSTEM .

DTC Description	DTC	Freeze Frame
12-14 Right-Front Wheel Speed Sensor Installation Error		
14-14 Left-Front Wheel Speed Sensor Installation Error		
16-14 Right-Rear Wheel Speed Sensor Installation Error		
18-14 Left-Rear Wheel Speed Sensor Installation Error		

1. Problem verification:
   - 1. Turn the ignition switch to ON (II).
   - 2. Clear the DTC with the HDS.
   - 3. Turn the ignition switch to LOCK (0).
   - 4. Test-drive the vehicle at 31 mph (50 km/h) or more.

     NOTE: Drive the vehicle on the road, not on a lift.

   - 5. Check for DTCs with the HDS.

DTC Description	DTC	Freeze Frame
12-14 Right-Front Wheel Speed Sensor Installation Error		
14-14 Left-Front Wheel Speed Sensor Installation Error		
16-14 Right-Rear Wheel Speed Sensor Installation Error		
18-14 Left-Rear Wheel Speed Sensor Installation Error		

Is DTC 12-14, 14-14, 16-14, or 18-14 indicated?

YES : The failure is duplicated. Go to step 2.

NO : Intermittent failure, the system is OK at this time. Refer to intermittent failures troubleshooting.

2. Wheel speed sensor installation check:
   - 1. Turn the ignition switch to LOCK (0).
   - 2. **Check that the appropriate wheel speed sensor is properly mounted** See or **REAR WHEEL SPEED SENSOR REMOVAL AND INSTALLATION** or **FRONT WHEEL SPEED SENSOR REMOVAL AND INSTALLATION** .

DTC	Appropriate Wheel Speed Sensor
12-14	Right-front
14-14	Left-front
16-14	Right-rear
18-14	Left-rear

GETtheMANUALS.org

Is the wheel speed sensor installation OK?

YES : Go to step 3.

NO : **Reinstall the wheel speed sensor, and recheck the mounting position** See **FRONT WHEEL SPEED SENSOR REMOVAL AND INSTALLATION** or **REAR WHEEL SPEED SENSOR REMOVAL AND INSTALLATION** , then go to step 1.

3. Wheel speed sensor check (substitution):
   - 1. Turn the ignition switch to LOCK (0).
   - 2. **Substitute a known-good wheel speed sensor** See **FRONT WHEEL SPEED SENSOR REMOVAL AND INSTALLATION** or **REAR WHEEL SPEED SENSOR REMOVAL AND INSTALLATION** .

DTC	Appropriate Wheel Speed Sensor
12-14	Right-front
14-14	Left-front
16-14	Right-rear
18-14	Left-rear

   - 3. Turn the ignition switch to ON (II).
   - 4. Clear the DTC with the HDS.
   - 5. Turn the ignition switch to LOCK (0).
   - 6. Test-drive the vehicle at 31 mph (50 km/h) or more.

NOTE: **Drive the vehicle on the road, not on a lift.**

   - 7. Check for DTCs with the HDS.

DTC Description	DTC	Freeze Frame
12-14 Right-Front Wheel Speed Sensor Installation Error		
14-14 Left-Front Wheel Speed Sensor Installation Error		
16-14 Right-Rear Wheel Speed Sensor Installation Error		
18-14 Left-Rear Wheel Speed Sensor Installation Error		

Is DTC 12-14, 14-14, 16-14, or 18-14 indicated?

YES : Go to step 4.

NO : **Replace the original wheel speed sensor** See **FRONT WHEEL SPEED SENSOR REMOVAL AND INSTALLATION** or **REAR WHEEL SPEED SENSOR REMOVAL AND INSTALLATION** .

4. VSA modulator-control unit check (update):
   - 1. **Update the VSA modulator-control unit if it does not have the latest software** See **VSA**

GETtheMANUALS.org

SENSOR NEUTRAL POSITION MEMORIZATION, **VSA MODULATOR-CONTROL UNIT UPDATE** or **VSA MODULATOR-CONTROL UNIT REMOVAL AND INSTALLATION**.

- 2. Turn the ignition switch to LOCK (0).
- 3. Test-drive the vehicle at 31 mph (50 km/h) or more.

NOTE: Drive the vehicle on the road, not on a lift.

- 4. Check for DTCs with the HDS.

DTC Description	DTC	Freeze Frame

Is DTC 12-14, 14-14, 16-14, or 18-14 indicated?

YES : Check for loose terminals in the VSA modulator-control unit 38P connector. If the VSA modulator-control unit was updated and the symptom/indication is still present, **replace the VSA modulator-control unit** See **VSA SENSOR NEUTRAL POSITION MEMORIZATION**, **VSA MODULATOR-CONTROL UNIT REMOVAL AND INSTALLATION** or **VSA MODULATOR-CONTROL UNIT UPDATE**.

NO : Troubleshooting is complete. If any other DTCs are indicated, go to the indicated DTCs troubleshooting.

DTC 12-15: RIGHT-FRONT WHEEL SPEED SENSOR INSTALLATION ERROR; DTC 14-15: LEFT-FRONT WHEEL SPEED SENSOR INSTALLATION ERROR; DTC 16-15: RIGHT-REAR WHEEL SPEED SENSOR INSTALLATION ERROR; DTC 18-15: LEFT-REAR WHEEL SPEED SENSOR INSTALLATION ERROR

GETtheMANUALS.org

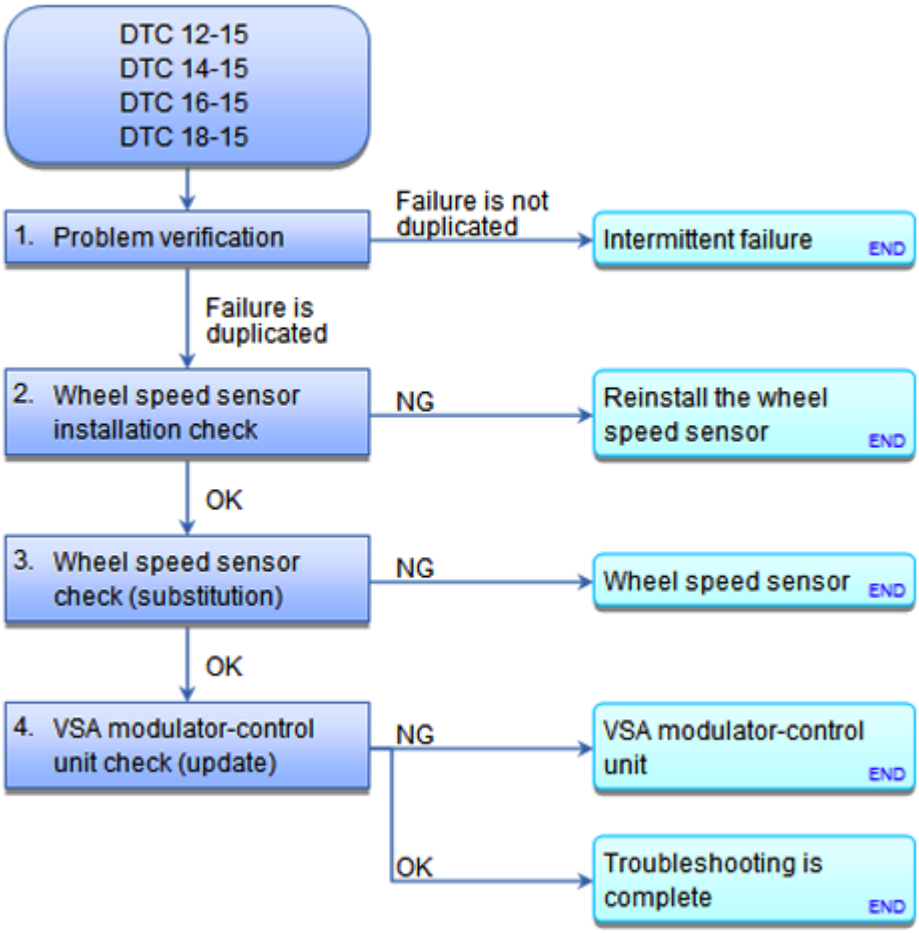

Fig. 18: VSA DTC Troubleshooting Flow Chart (12-14, 14-14, 16-14, 18-14)
Courtesy of AMERICAN HONDA MOTOR CO., INC.

NOTE: **BEFORE YOU TROUBLESHOOT, RECORD ALL FREEZE DATA AND ANY ON-BOARD SNAPSHOT, AND REVIEW THE HOW TO TROUBLESHOOT THE VSA SYSTEM .**

DTC Description	DTC	Freeze Frame
12-15 Right-Front Wheel Speed Sensor Installation Error		
14-15 Left-Front Wheel Speed Sensor Installation Error		
16-15 Right-Rear Wheel Speed Sensor Installation Error		
18-15 Left-Rear Wheel Speed Sensor Installation Error		

1. Problem verification:
   - 1. Turn the ignition switch to ON (II).
   - 2. Clear the DTC with the HDS.
   - 3. Turn the ignition switch to LOCK (0).
   - 4. Test-drive the vehicle at 12 mph (20 km/h) or more.

GETtheMANUALS.org

NOTE: **Drive the vehicle on the road, not on a lift.**

- 5. Check for DTCs with the HDS.

DTC Description	DTC	Freeze Frame
12-15 Right-Front Wheel Speed Sensor Installation Error		
14-15 Left-Front Wheel Speed Sensor Installation Error		
16-15 Right-Rear Wheel Speed Sensor Installation Error		
18-15 Left-Rear Wheel Speed Sensor Installation Error		

Is DTC 12-15, 14-15, 16-15, or 18-15 indicated?

YES : The failure is duplicated. Go to step 2.

NO : Intermittent failure, the system is OK at this time. Refer to intermittent failures troubleshooting.

2. Wheel speed sensor installation check:
   - 1. Turn the ignition switch to LOCK (0).
   - 2. **Check that the appropriate wheel speed sensor is properly mounted** See **FRONT WHEEL SPEED SENSOR REMOVAL AND INSTALLATION** or **REAR WHEEL SPEED SENSOR REMOVAL AND INSTALLATION** .

DTC Appropriate	Wheel Speed Sensor
12-15	Right-front
14-15	Left-front
16-15	Right-rear
18-15	Left-rear

Is the wheel speed sensor installation OK?

YES : Go to step 3.

NO : **Reinstall the wheel speed sensor, and recheck the mounting position** See **REAR WHEEL SPEED SENSOR REMOVAL AND INSTALLATION** or **FRONT WHEEL SPEED SENSOR REMOVAL AND INSTALLATION** , then go to step 1.

3. Wheel speed sensor check (substitution):
   - 1. Turn the ignition switch to LOCK (0).
   - 2. **Substitute a known-good wheel speed sensor** See **FRONT WHEEL SPEED SENSOR REMOVAL AND INSTALLATION** or **REAR WHEEL SPEED SENSOR REMOVAL AND INSTALLATION** .

DTC	Appropriate Wheel Speed Sensor
12-15	Right-front

GETtheMANUALS.org

14-15	Left-front
16-15	Right-rear
18-15	Left-rear

- 3. Turn the ignition switch to ON (II).
- 4. Clear the DTC with the HDS.
- 5. Turn the ignition switch to LOCK (0).
- 6. Test-drive the vehicle at 12 mph (20 km/h) or more.

NOTE: Drive the vehicle on the road, not on a lift.

- 7. Check for DTCs with the HDS.

DTC Description	DTC	Freeze Frame
12-15 Right-Front Wheel Speed Sensor Installation Error		
14-15 Left-Front Wheel Speed Sensor Installation Error		
16-15 Right-Rear Wheel Speed Sensor Installation Error		
18-15 Left-Rear Wheel Speed Sensor Installation Error		

Is DTC 12-15, 14-15, 16-15, or 18-15 indicated?

YES : Go to step 4.

NO : **Replace the original wheel speed sensor** See **FRONT WHEEL SPEED SENSOR REMOVAL AND INSTALLATION** or **REAR WHEEL SPEED SENSOR REMOVAL AND INSTALLATION** .

4. VSA modulator-control unit check (update):
   - 1. **Update the VSA modulator-control unit if it does not have the latest software** See **VSA SENSOR NEUTRAL POSITION MEMORIZATION**, **VSA MODULATOR-CONTROL UNIT REMOVAL AND INSTALLATION** or **VSA MODULATOR-CONTROL UNIT UPDATE**.
   - 2. Turn the ignition switch to LOCK (0).
   - 3. Test-drive the vehicle at 12 mph (20 km/h) or more.

NOTE: Drive the vehicle on the road, not on a lift.

- 4. Check for DTCs with the HDS.

DTC Description	DTC	Freeze Frame

Is DTC 12-15, 14-15, 16-15, or 18-15 indicated?

GETtheMANUALS.org

YES : Check for loose terminals in the VSA modulator-control unit 38P connector. If the VSA modulator-control unit was updated and the symptom/indication is still present, **replace the VSA modulator-control unit** See **VSA SENSOR NEUTRAL POSITION MEMORIZATION**, **VSA MODULATOR-CONTROL UNIT REMOVAL AND INSTALLATION** or **VSA MODULATOR-CONTROL UNIT UPDATE**.

NO : Troubleshooting is complete. If any other DTCs are indicated, go to the indicated DTCs troubleshooting.

DTC 121-11: VSA SOLENOID VALVE MALFUNCTION; DTC 122-11: VSA SOLENOID VALVE MALFUNCTION; DTC 123-11: VSA SOLENOID VALVE MALFUNCTION; DTC 124-11: VSA SOLENOID VALVE MALFUNCTION

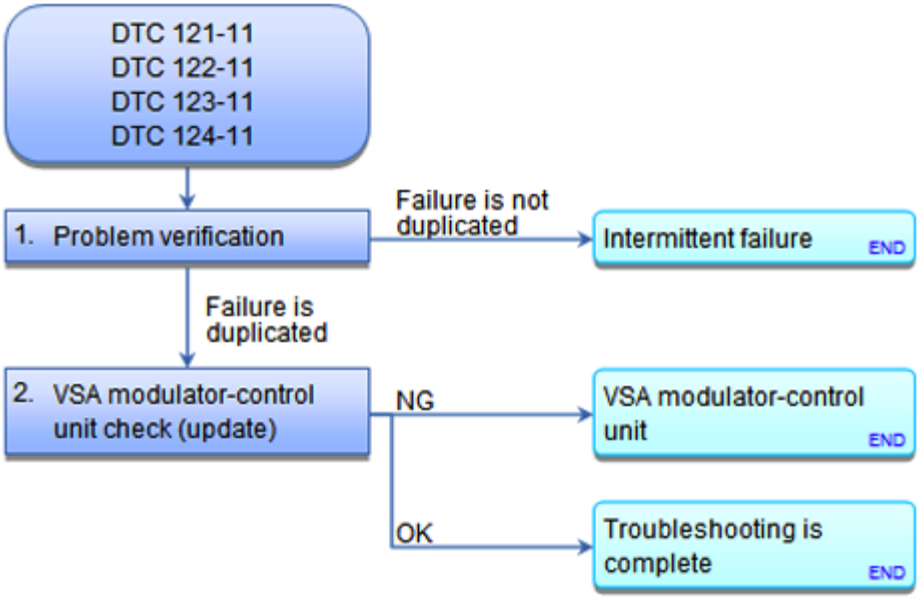

Fig. 19: VSA DTC Troubleshooting Flow Chart (121-11, 122-11, 123-11, 124-11)
Courtesy of AMERICAN HONDA MOTOR CO., INC.

NOTE: **BEFORE YOU TROUBLESHOOT, RECORD ALL FREEZE DATA AND ANY ON-BOARD SNAPSHOT, AND REVIEW THE HOW TO TROUBLESHOOT THE VSA SYSTEM .**

DTC Description	DTC	Freeze Frame
121-11 VSA Solenoid Valve Malfunction		
122-11 VSA Solenoid Valve Malfunction		
123-11 VSA Solenoid Valve Malfunction		
124-11 VSA Solenoid Valve Malfunction		

1. Problem verification:
   - 1. Turn the ignition switch to ON (II).

GETtheMANUALS.org

- 2. Clear the DTC with the HDS.
- 3. Turn the ignition switch to LOCK (0).
- 4. Test-drive the vehicle at 9 mph (15 km/h) or more.

NOTE: Drive the vehicle on the road, not on a lift.

- 5. Check for DTCs with the HDS.

DTC Description	DTC	Freeze Frame
121-11 VSA Solenoid Valve Malfunction		
122-11 VSA Solenoid Valve Malfunction		
123-11 VSA Solenoid Valve Malfunction		
124-11 VSA Solenoid Valve Malfunction		

Is DTC 121-11, 122-11, 123-11, or 124-11 indicated?

YES : The failure is duplicated. Go to step 2.

NO : Intermittent failure, the system is OK at this time. Refer to intermittent failures troubleshooting.

2. VSA modulator-control unit check (update):
   - 1. **Update the VSA modulator-control unit if it does not have the latest software** See **VSA SENSOR NEUTRAL POSITION MEMORIZATION**, **VSA MODULATOR-CONTROL UNIT REMOVAL AND INSTALLATION** or **VSA MODULATOR-CONTROL UNIT UPDATE**.
   - 2. Turn the ignition switch to LOCK (0).
   - 3. Test-drive the vehicle at 9 mph (15 km/h) or more.

NOTE: Drive the vehicle on the road, not on a lift.

- 4. Check for DTCs with the HDS.

DTC Description	DTC	Freeze Frame

Is DTC 121-11, 122-11, 123-11, or 124-11 indicated?

YES : Check for loose terminals in the VSA modulator-control unit 38P connector. If the VSA modulator-control unit was updated and the symptom/indication is still present, **replace the VSA modulator-control unit** See **VSA SENSOR NEUTRAL POSITION MEMORIZATION**, **VSA MODULATOR-CONTROL UNIT REMOVAL AND INSTALLATION** or **VSA MODULATOR-CONTROL UNIT UPDATE**.

NO : Troubleshooting is complete. If any other DTCs are indicated, go to the indicated DTCs

GETtheMANUALS.org

troubleshooting.

DTC 158-1: ECU SOFTWARE UPDATE FAILURE

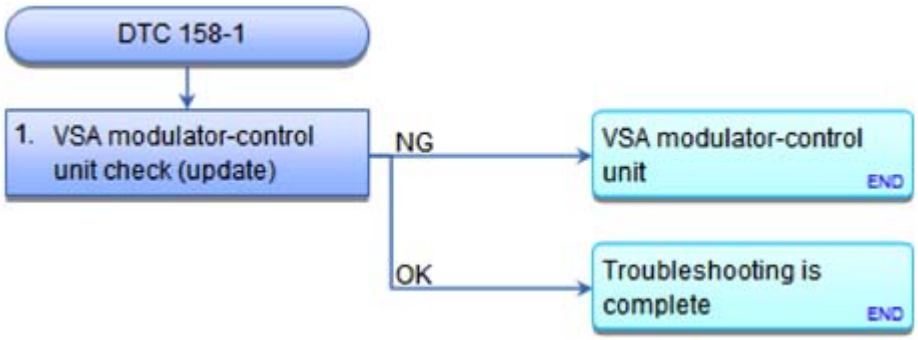

Fig. 20: VSA DTC Troubleshooting Flow Chart (158-1)
Courtesy of AMERICAN HONDA MOTOR CO., INC.

NOTE:

- **Do not turn the ignition switch to LOCK (0) while updating the VSA modulator-control unit. If you turn the ignition switch to LOCK (0) before completion, the VSA modulator-control unit will be damaged.**
- **BEFORE YOU TROUBLESHOOT, RECORD ALL FREEZE DATA AND ANY ON-BOARD SNAPSHOT, AND REVIEW THE HOW TO TROUBLESHOOT THE VSA SYSTEM .**

DTC Description	DTC	Freeze Frame
158-1 ECU Software Update Failure		

1. VSA modulator-control unit check (update):
   - 1. **Update the VSA modulator-control unit if it does not have the latest software** See **VSA SENSOR NEUTRAL POSITION MEMORIZATION** or **VSA MODULATOR-CONTROL UNIT UPDATE** or **VSA MODULATOR-CONTROL UNIT REMOVAL AND INSTALLATION**.
   - 2. Turn the ignition switch to LOCK (0), then turn it to ON (II) again.
   - 3. Check for DTCs with the HDS.

DTC Description	DTC	Freeze Frame

Is DTC 158-1 indicated?

YES : Check for loose terminals in the VSA modulator-control unit 38P connector. If the VSA modulator-control unit was updated and the symptom/indication is still present, **replace the VSA modulator-control unit** See **VSA MODULATOR-CONTROL UNIT REMOVAL AND INSTALLATION**, **VSA MODULATOR-CONTROL UNIT UPDATE** or **VSA SENSOR NEUTRAL**

GETtheMANUALS.org

POSITION MEMORIZATION.

NO : Troubleshooting is complete. If any other DTCs are indicated, go to the indicated DTCs troubleshooting.

DTC 25-21: YAW RATE SENSOR (INSIDE OF MODULATOR-CONTROL UNIT) OUTPUT SIGNAL MALFUNCTION; DTC 26-21: LATERAL ACCELERATION SENSOR (INSIDE OF MODULATOR-CONTROL UNIT) OUTPUT SIGNAL MALFUNCTION; DTC 28-21: LONGITUDINAL ACCELERATION SENSOR (INSIDE OF MODULATOR-CONTROL UNIT) OUTPUT SIGNAL MALFUNCTION; DTC 28-22: LONGITUDINAL ACCELERATION SENSOR (INSIDE OF MODULATOR-CONTROL UNIT) STUCK

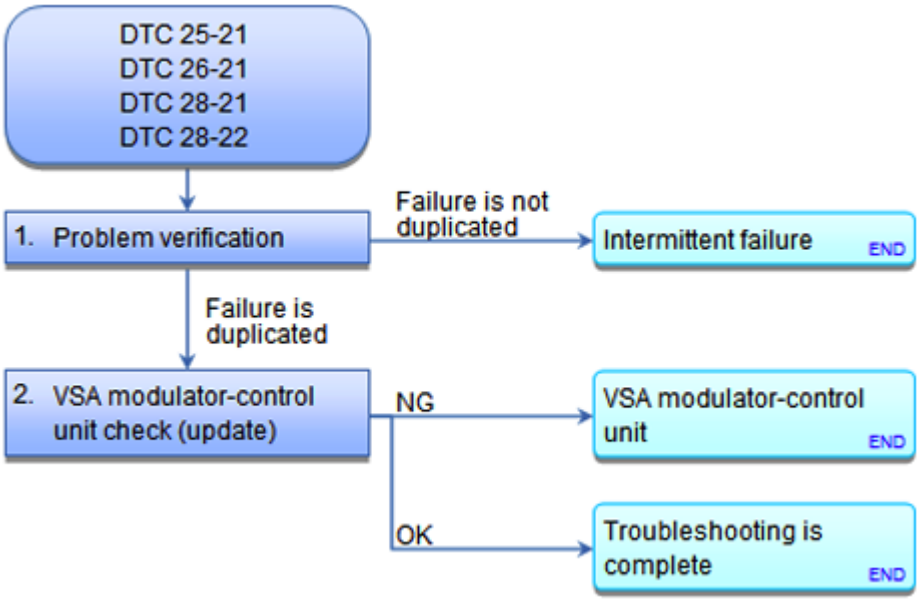

Fig. 21: VSA DTC Troubleshooting Flow Chart (25-21, 26-21, 28-21, 28-22)
Courtesy of AMERICAN HONDA MOTOR CO., INC.

NOTE:

- **BEFORE YOU TROUBLESHOOT, RECORD ALL FREEZE DATA AND ANY ON-BOARD SNAPSHOT, AND REVIEW THE HOW TO TROUBLESHOOT THE VSA SYSTEM .**
- **The yaw rate-acceleration sensor is built into the VSA modulator-control unit.**
- **Before troubleshooting, check the VSA modulator-control unit for proper mounting. If not properly installed the VSA modulator-control unit may set these codes.**

DTC Description	DTC	Freeze Frame

GETtheMANUALS.org

25-21 Yaw Rate Sensor (Inside of Modulator-Control Unit) Output Signal Malfunction		
26-21 Lateral Acceleration Sensor (Inside of Modulator-Control Unit) Output Signal Malfunction		
28-21 Longitudinal Acceleration Sensor (Inside of Modulator-Control Unit) Output Signal Malfunction		
28-22 Longitudinal Acceleration Sensor (Inside of Modulator-Control Unit) Stuck		

1. Problem verification:
   - 1. Turn the ignition switch to ON (II).
   - 2. Clear the DTC with the HDS.
   - 3. Turn the ignition switch to LOCK (0).
   - 4. Test-drive the vehicle at 31 mph (50 km/h) or more.

     NOTE: Drive the vehicle on the road, not on a lift.

   - 5. Check for DTCs with the HDS.

DTC Description	DTC	Freeze Frame
25-21 Yaw Rate Sensor (Inside of Modulator-Control Unit) Output Signal Malfunction		
26-21 Lateral Acceleration Sensor (Inside of Modulator-Control Unit) Output Signal Malfunction		
28-21 Longitudinal Acceleration Sensor (Inside of Modulator-Control Unit) Output Signal Malfunction		
28-22 Longitudinal Acceleration Sensor (Inside of Modulator-Control Unit) Stuck		

Is DTC 25-21, 26-21, 28-21, or 28-22 indicated?

YES : The failure is duplicated. Go to step 2.

NO : Intermittent failure, the system is OK at this time. Refer to intermittent failures troubleshooting.

2. VSA modulator-control unit check (update):
   - 1. **Update the VSA modulator-control unit if it does not have the latest software** See **VSA SENSOR NEUTRAL POSITION MEMORIZATION** or **VSA MODULATOR-CONTROL UNIT REMOVAL AND INSTALLATION** or **VSA MODULATOR-CONTROL UNIT UPDATE**.
   - 2. Turn the ignition switch to LOCK (0).
   - 3. Test-drive the vehicle at 31 mph (50 km/h) or more.

GETtheMANUALS.org

NOTE: **Drive the vehicle on the road, not on a lift.**

- 4. Check for DTCs with the HDS.

DTC Description	DTC	Freeze Frame

Is DTC 25-21, 26-21, 28-21, or 28-22 indicated?

YES : Check for loose terminals in the VSA modulator-control unit 38P connector. If the VSA modulator-control unit was updated and the symptom/indication is still present, **replace the VSA modulator-control unit** See **VSA SENSOR NEUTRAL POSITION MEMORIZATION**, **VSA MODULATOR-CONTROL UNIT REMOVAL AND INSTALLATION** or **VSA MODULATOR-CONTROL UNIT UPDATE**.

NO : Troubleshooting is complete. If any other DTCs are indicated, go to the indicated DTCs troubleshooting.

DTC 27-20: STEERING ANGLE SENSOR INTERNAL CIRCUIT MALFUNCTION

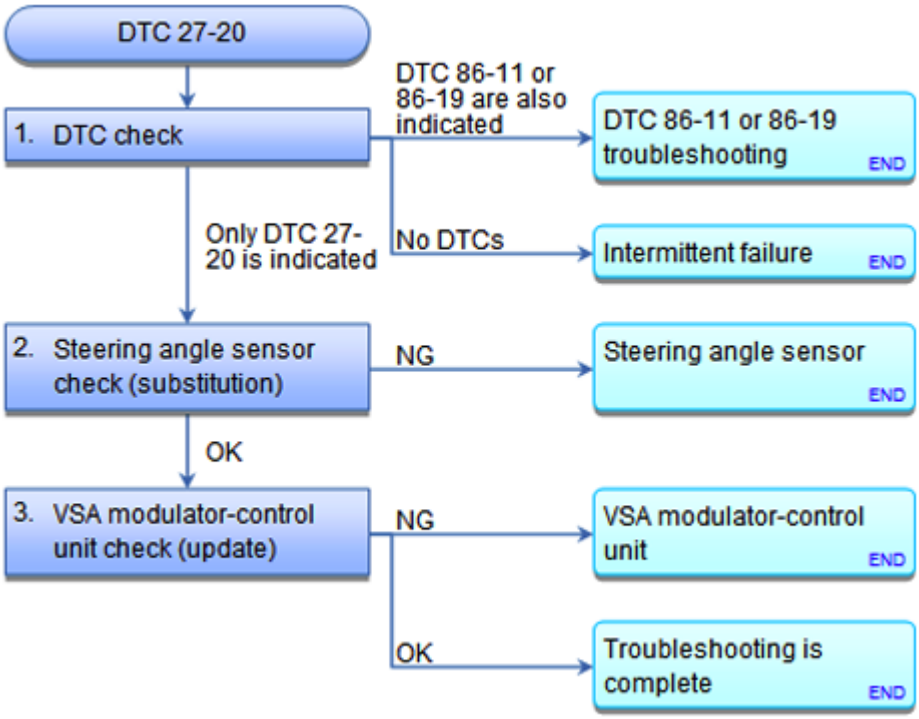

Fig. 22: VSA DTC Troubleshooting Flow Chart (27-20)
Courtesy of AMERICAN HONDA MOTOR CO., INC.

NOTE: **BEFORE YOU TROUBLESHOOT, RECORD ALL FREEZE DATA AND ANY ON-**

GETtheMANUALS.org

BOARD SNAPSHOT, AND REVIEW THE HOW TO TROUBLESHOOT THE VSA SYSTEM .

DTC Description	DTC	Freeze Frame
27-20 Steering Angle Sensor Internal Circuit Malfunction		

1. DTC check:
   - 1. Turn the ignition switch to ON (II).
   - 2. Clear the DTC with the HDS.
   - 3. Turn the ignition switch to LOCK (0).
   - 4. Start the engine for at least 5 seconds.
   - 5. Check for DTCs with the HDS.

DTC Description	DTC	Freeze Frame
27-20 Steering Angle Sensor Internal Circuit Malfunction		
86-11 F-CAN Bus-Off Malfunction		
86-19 F-CAN Communication With Steering Angle Sensor Malfunction		

Is DTC 27-20 indicated?

YES : If DTC 27-20 is only indicated, go to step 2.

YES : If DTC 86-11 or 86-19 are also indicated, **go to DTC 86-11 or 86-19**.

NO : Intermittent failure, the system is OK at this time. Refer to intermittent failures troubleshooting.

2. Steering angle sensor check (substitution):
   - 1. Turn the ignition switch to LOCK (0).
   - 2. **SUBSTITUTE A KNOWN-GOOD STEERING ANGLE SENSOR** .
   - 3. Turn the ignition switch to ON (II).
   - 4. Clear the DTC with the HDS.
   - 5. Turn the ignition switch to LOCK (0), then turn it to ON (II) again.
   - 6. Check for DTCs with the HDS.

DTC Description	DTC	Freeze Frame
27-20 Steering Angle Sensor Internal Circuit Malfunction		

Is DTC 27-20 indicated?

YES : Go to step 3.

NO : **REPLACE THE ORIGINAL STEERING ANGLE SENSOR** .

GETtheMANUALS.org

3. VSA modulator-control unit check (update):
   - 1. **Update the VSA modulator-control unit if it does not have the latest software** See **VSA SENSOR NEUTRAL POSITION MEMORIZATION**, **VSA MODULATOR-CONTROL UNIT REMOVAL AND INSTALLATION** or **VSA MODULATOR-CONTROL UNIT UPDATE**.
   - 2. Turn the ignition switch to LOCK (0), then turn it to ON (II) again.
   - 3. Check for DTCs with the HDS.

DTC Description	DTC	Freeze Frame

Is DTC 27-20 indicated?

YES : Check for loose terminals in the VSA modulator-control unit 38P connector. If the VSA modulator-control unit was updated and the symptom/indication is still present, **replace the VSA modulator-control unit** See **VSA SENSOR NEUTRAL POSITION MEMORIZATION**, **VSA MODULATOR-CONTROL UNIT REMOVAL AND INSTALLATION** or **VSA MODULATOR-CONTROL UNIT UPDATE**.

NO : Troubleshooting is complete. If any other DTCs are indicated, go to the indicated DTCs troubleshooting.

DTC 27-21: STEERING ANGLE SENSOR OUTPUT SIGNAL MALFUNCTION

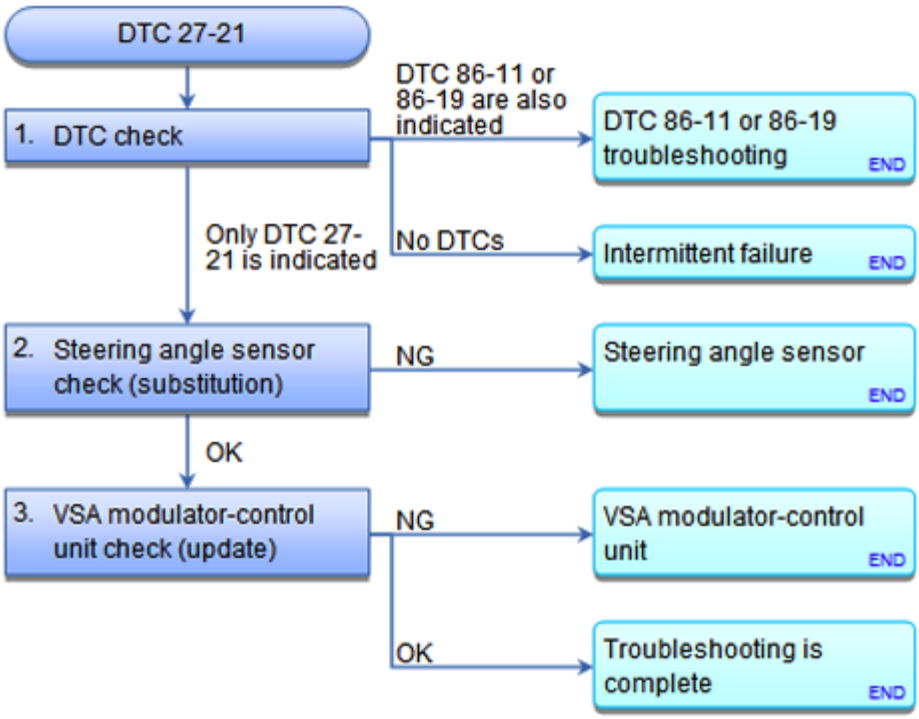

Fig. 23: VSA DTC Troubleshooting Flow Chart (27-21)

GETtheMANUALS.org

Courtesy of AMERICAN HONDA MOTOR CO., INC.

NOTE: **BEFORE YOU TROUBLESHOOT, RECORD ALL FREEZE DATA AND ANY ON-BOARD SNAPSHOT, AND REVIEW THE HOW TO TROUBLESHOOT THE VSA SYSTEM .**

DTC Description	DTC	Freeze Frame
27-21 Steering Angle Sensor Output Signal Malfunction		

1. DTC check:
   - 1. Turn the ignition switch to ON (II).
   - 2. Clear the DTC with the HDS.
   - 3. Turn the ignition switch to LOCK (0).
   - 4. Start the engine, then turn the steering wheel from lock to lock several times.
   - 5. Test-drive the vehicle at 31 mph (50 km/h) or more.

     NOTE: **Drive the vehicle on the road, not on a lift.**

   - 6. Check for DTCs with the HDS.

DTC Description	DTC	Freeze Frame
27-21 Steering Angle Sensor Output Signal Malfunction		
86-11 F-CAN Bus-Off Malfunction		
86-19 F-CAN Communication With Steering Angle Sensor Malfunction		

Is DTC 27-21 indicated?

YES : If DTC 27-21 is only indicated, go to step 2.

YES : If DTC 86-11 or 86-19 are also indicated, **go to DTC 86-11 or 86-19**.

NO : Intermittent failure, the system is OK at this time. Refer to intermittent failures troubleshooting.

2. Steering angle sensor check (substitution):
   - 1. Turn the ignition switch to LOCK (0).
   - 2. **SUBSTITUTE A KNOWN-GOOD STEERING ANGLE SENSOR** .
   - 3. Turn the ignition switch to ON (II).
   - 4. Clear the DTC with the HDS.
   - 5. Turn the ignition switch to LOCK (0).
   - 6. Start the engine, then turn the steering wheel from lock to lock several times.
   - 7. Test-drive the vehicle at 31 mph (50 km/h) or more.

GETtheMANUALS.org

NOTE: **Drive the vehicle on the road, not on a lift.**

- 8. Check for DTCs with the HDS.

DTC Description	DTC	Freeze Frame
27-21 Steering Angle Sensor Output Signal Malfunction		

Is DTC 27-21 indicated?

YES : Go to step 3.

NO : **REPLACE THE ORIGINAL STEERING ANGLE SENSOR** .

3. VSA modulator-control unit check (update):
   - 1. **Update the VSA modulator-control unit if it does not have the latest software** See **VSA SENSOR NEUTRAL POSITION MEMORIZATION**, **VSA MODULATOR-CONTROL UNIT REMOVAL AND INSTALLATION** or **VSA MODULATOR-CONTROL UNIT UPDATE**.
   - 2. Turn the ignition switch to LOCK (0).
   - 3. Start the engine, then turn the steering wheel from lock to lock several times.
   - 4. Test-drive the vehicle at 31 mph (50 km/h) or more.

NOTE: **Drive the vehicle on the road, not on a lift.**

- 5. Check for DTCs with the HDS.

DTC Description	DTC	Freeze Frame

Is DTC 27-21 indicated?

YES : Check for loose terminals in the VSA modulator-control unit 38P connector. If the VSA modulator-control unit was updated and the symptom/indication is still present, **replace the VSA modulator-control unit** See **VSA SENSOR NEUTRAL POSITION MEMORIZATION**, **VSA MODULATOR-CONTROL UNIT REMOVAL AND INSTALLATION** or **VSA MODULATOR-CONTROL UNIT UPDATE**.

NO : Troubleshooting is complete. If any other DTCs are indicated, go to the indicated DTCs troubleshooting.

DTC 31-11: ABS SOLENOID VALVE MALFUNCTION; DTC 32-11: ABS SOLENOID VALVE MALFUNCTION; DTC 33-11: ABS SOLENOID VALVE MALFUNCTION; DTC 34-11: ABS SOLENOID VALVE MALFUNCTION; DTC 35-11: ABS SOLENOID VALVE MALFUNCTION; DTC 36-11: ABS SOLENOID

GETtheMANUALS.org

VALVE MALFUNCTION; DTC 37-11: ABS SOLENOID VALVE MALFUNCTION; DTC 38-11: ABS SOLENOID VALVE MALFUNCTION

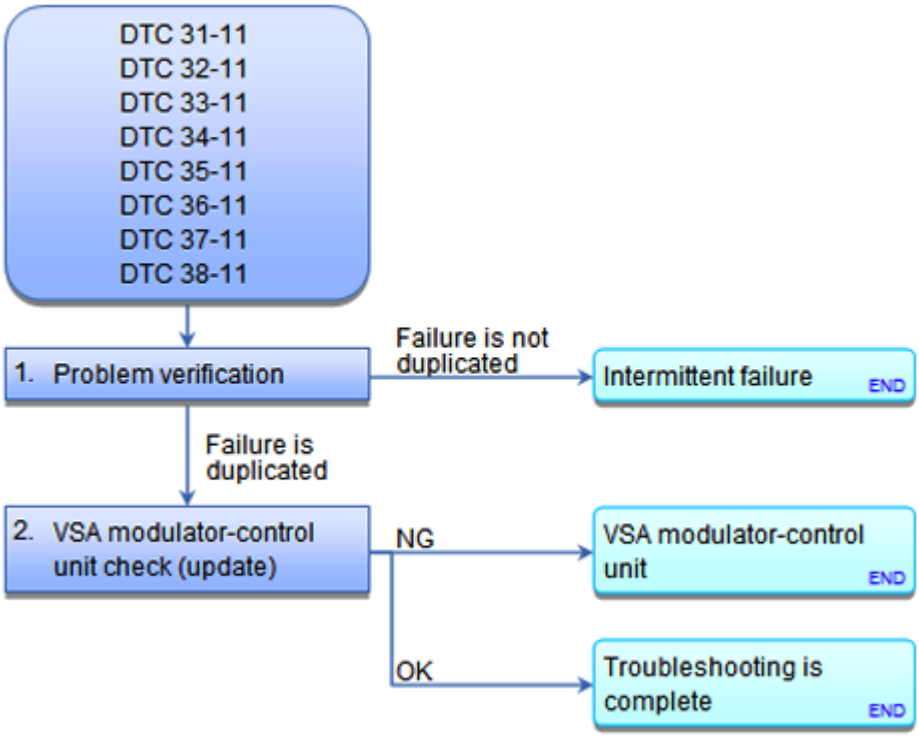

Fig. 24: VSA DTC Troubleshooting Flow Chart (31-11, 32-11, 33-11, 34-11, 35-11, 36-11, 37-11, 38-110)
Courtesy of AMERICAN HONDA MOTOR CO., INC.

NOTE: **BEFORE YOU TROUBLESHOOT, RECORD ALL FREEZE DATA AND ANY ON-BOARD SNAPSHOT, AND REVIEW THE HOW TO TROUBLESHOOT THE VSA SYSTEM .**

DTC Description	DTC	Freeze Frame
31-11 ABS Solenoid Valve Malfunction		
32-11 ABS Solenoid Valve Malfunction		
33-11 ABS Solenoid Valve Malfunction		
34-11 ABS Solenoid Valve Malfunction		
35-11 ABS Solenoid Valve Malfunction		
36-11 ABS Solenoid Valve Malfunction		
37-11 ABS Solenoid Valve Malfunction		
38-11 ABS Solenoid Valve Malfunction		

1. Problem verification:
   - 1. Turn the ignition switch to ON (II).
   - 2. Clear the DTC with the HDS.

GETtheMANUALS.org

- 3. Turn the ignition switch to LOCK (0), then turn it to ON (II) again.
- 4. Check for DTCs with the HDS.

DTC Description	DTC	Freeze Frame
31-11 ABS Solenoid Valve Malfunction		
32-11 ABS Solenoid Valve Malfunction		
33-11 ABS Solenoid Valve Malfunction		
34-11 ABS Solenoid Valve Malfunction		
35-11 ABS Solenoid Valve Malfunction		
36-11 ABS Solenoid Valve Malfunction		
37-11 ABS Solenoid Valve Malfunction		
38-11 ABS Solenoid Valve Malfunction		

Is DTC 31-11, 32-11, 33-11, 34-11, 35-11, 36-11, 37-11, or 38-11 indicated?

YES : The failure is duplicated. Go to step 2.

NO : Intermittent failure, the system is OK at this time. Refer to intermittent failures troubleshooting.

2. VSA modulator-control unit check (update):
   - 1. **Update the VSA modulator-control unit if it does not have the latest software** See **VSA SENSOR NEUTRAL POSITION MEMORIZATION**, **VSA MODULATOR-CONTROL UNIT UPDATE** or **VSA MODULATOR-CONTROL UNIT REMOVAL AND INSTALLATION**.
   - 2. Turn the ignition switch to LOCK (0), then turn it to ON (II) again.
   - 3. Check for DTCs with the HDS.

DTC Description	DTC	Freeze Frame

Is DTC 31-11, 32-11, 33-11, 34-11, 35-11, 36-11, 37-11, or 38-11 indicated?

YES : Check for loose terminals in the VSA modulator-control unit 38P connector. If the VSA modulator-control unit was updated and the symptom/indication is still present, **replace the VSA modulator-control unit** See **VSA SENSOR NEUTRAL POSITION MEMORIZATION** or **VSA MODULATOR-CONTROL UNIT UPDATE** or **VSA MODULATOR-CONTROL UNIT REMOVAL AND INSTALLATION**.

NO : Troubleshooting is complete. If any other DTCs are indicated, go to the indicated DTCs troubleshooting.

DTC 51-12: MOTOR POWER SOURCE CIRCUIT MALFUNCTION; DTC 51-80: MOTOR MALFUNCTION; DTC 52-11: MOTOR STUCK OFF

GETtheMANUALS.org

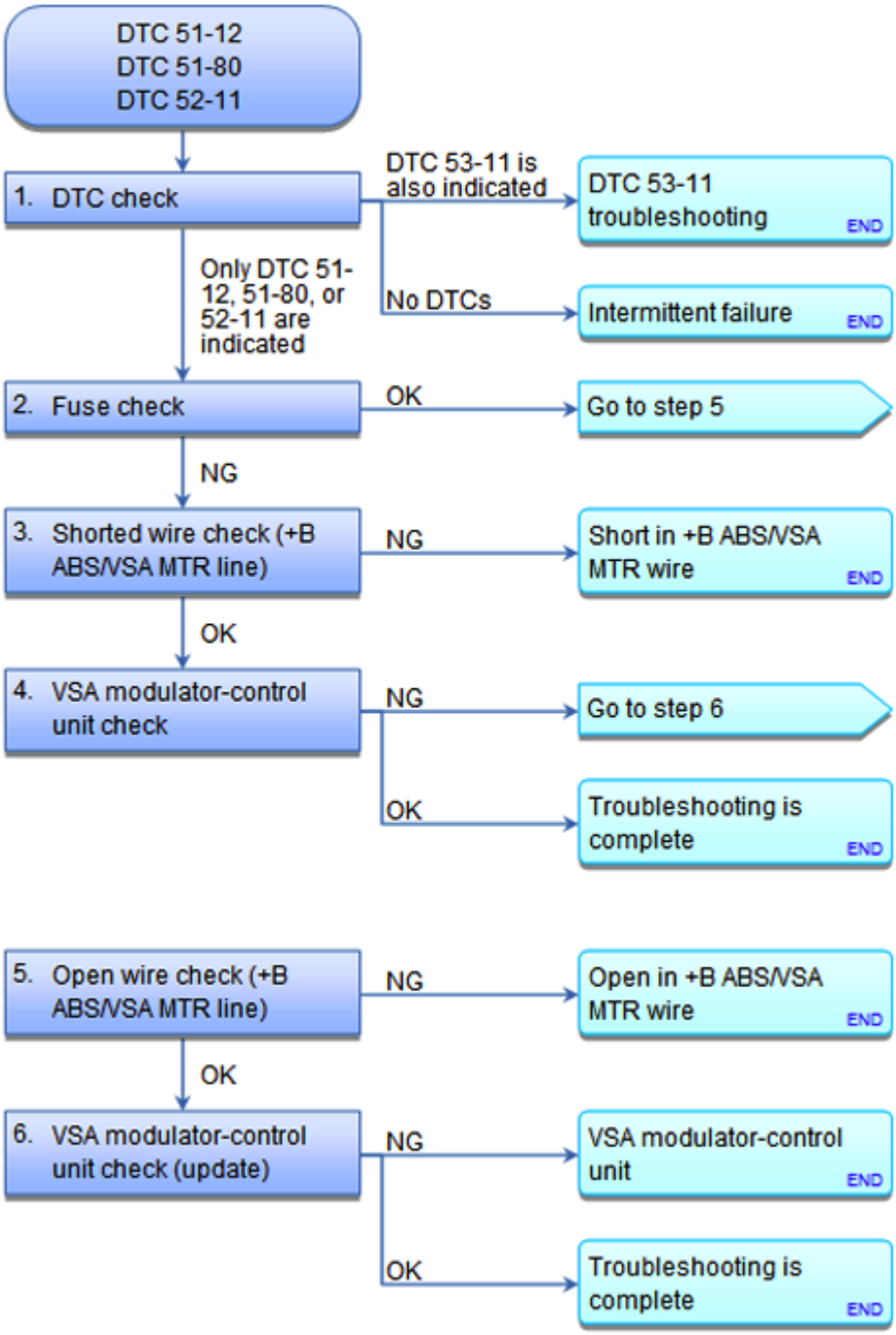

Fig. 25: VSA DTC Troubleshooting Flow Chart (51-12, 51-80, 52-11)
Courtesy of AMERICAN HONDA MOTOR CO., INC.

NOTE: **BEFORE YOU TROUBLESHOOT, RECORD ALL FREEZE DATA AND ANY ON-BOARD SNAPSHOT, AND REVIEW THE HOW TO TROUBLESHOOT THE VSA SYSTEM .**

DTC Description	DTC	Freeze Frame

GETtheMANUALS.org

51-12 Motor Power Source Circuit Malfunction		
51-80 Motor Malfunction		
52-11 Motor Stuck OFF		

1. DTC check:
   - 1. Turn the ignition switch to ON (II).
   - 2. Clear the DTC with the HDS.
   - 3. Turn the ignition switch to LOCK (0).
   - 4. Turn the ignition switch to ON (II), then wait for at least 20 seconds or more.
   - 5. Check for DTCs with the HDS.

DTC Description	DTC	Freeze Frame
51-12 Motor Power Source Circuit Malfunction		
51-80 Motor Malfunction		
52-11 Motor Stuck OFF		
53-11 Motor Relay Stuck ON		

Is DTC 51-12, 51-80, or 52-11 indicated?

YES : If DTC 51-12, 51-80, or 52-11 are only indicated, go to step 2.

YES : If DTC 53-11 is also indicated, **go to DTC 53-11**.

NO : Intermittent failure, the system is OK at this time. Refer to intermittent failures troubleshooting.

2. Fuse check:
   - 1. Turn the ignition switch to LOCK (0).
   - 2. Check the following fuse.

     Fuse No. A1-3 (40 A)

     Location Under-hood fuse/relay box

Is the fuse OK?

YES : The fuse is OK. Reinstall the fuse, then go to step 5.

NO : Go to step 3.

3. Shorted wire check (+B ABS/VSA MTR line):
   - 1. Disconnect the following connector.

     VSA modulator-control unit 38P connector

GETtheMANUALS.org

- 2. Check for continuity between test points 1 and 2.

  Test condition IG LOCK (0)

  VSA modulator-control unit 38P connector: disconnected

  Test circuit +B ABS/VSA MTR

  Test point 1 VSA modulator-control unit 38P connector No. 2 (RED)

  Test point 2 Body ground

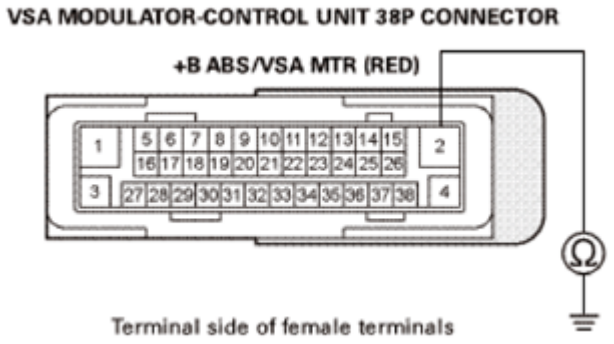

Fig. 26: Checking Continuity Between VSA Modulator-Control Unit 38P Connector No. 2 (RED) And Body Ground
Courtesy of AMERICAN HONDA MOTOR CO., INC.

Is there continuity?

YES : Repair a short to body ground in the wire between the No. A1-3 (40 A) fuse in the under-hood fuse/relay box and the VSA modulator-control unit.

NO : The +B ABS/VSA MTR wire is not shorted to ground. Install a new No. A1-3 (40 A) fuse in the under-hood fuse/relay box, then go to step 4.

4. VSA modulator-control unit check:
   - 1. Reconnect the following connector.

     VSA modulator-control unit 38P connector

   - 2. Turn the ignition switch to ON (II).
   - 3. Clear the DTC with the HDS.
   - 4. Turn the ignition switch to LOCK (0).
   - 5. Turn the ignition switch to ON (II), then wait for at least 20 seconds or more.
   - 6. Check for DTCs with the HDS.

GETtheMANUALS.org

DTC Description	DTC	Freeze Frame
51-12 Motor Power Source Circuit Malfunction		
51-80 Motor Malfunction		
52-11 Motor Stuck OFF		

Is DTC 51-12, 51-80, or 52-11 indicated?

YES : Go to step 6.

NO : The troubleshooting is complete.

5. Open wire check (+B ABS/VSA MTR line):
   - 1. Disconnect the following connector.

     VSA modulator-control unit 38P connector

   - 2. Measure the voltage between test points 1 and 2.

     Test condition IG LOCK (0)

     VSA modulator-control unit 38P connector: disconnected

     Test circuit +B ABS/VSA MTR

     Test point 1 VSA modulator-control unit 38P connector No. 2 (RED)

     Test point 2 Body ground

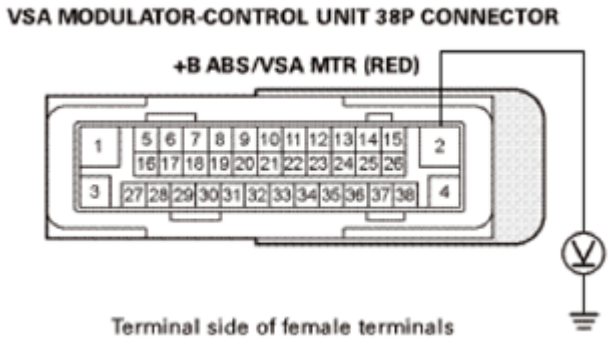

Fig. 27: Measuring Voltage Between VSA Modulator-Control Unit 38P Connector No. 2 (RED) And Body Ground
Courtesy of AMERICAN HONDA MOTOR CO., INC.

Is there battery voltage?

YES : The +B ABS/VSA MTR wire is OK. Go to step 6.

GETtheMANUALS.org

NO : Repair an open in the wire between the No. A1-3 (40 A) fuse in the under-hood fuse/relay box and the VSA modulator-control unit.

6. VSA modulator-control unit check (update):
   - 1. Reconnect the following connector.

     VSA modulator-control unit 38P connector (if disconnected)

   - 2. **Update the VSA modulator-control unit if it does not have the latest software** See **VSA SENSOR NEUTRAL POSITION MEMORIZATION**, **VSA MODULATOR-CONTROL UNIT UPDATE** or **VSA MODULATOR-CONTROL UNIT REMOVAL AND INSTALLATION**.
   - 3. Turn the ignition switch to LOCK (0).
   - 4. Turn the ignition switch to ON (II), then wait for at least 20 seconds or more.
   - 5. Check for DTCs with the HDS.

DTC Description	DTC	Freeze Frame

Is DTC 51-12, 51-80, or 52-11 indicated?

YES : Check for loose terminals in the VSA modulator-control unit 38P connector. If the VSA modulator-control unit was updated and the symptom/indication is still present, **replace the VSA modulator-control unit** See **VSA SENSOR NEUTRAL POSITION MEMORIZATION**, **VSA MODULATOR-CONTROL UNIT UPDATE** or **VSA MODULATOR-CONTROL UNIT REMOVAL AND INSTALLATION**.

NO : Troubleshooting is complete. If any other DTCs are indicated, go to the indicated DTCs troubleshooting.

DTC 51-13: MOTOR DRIVE CIRCUIT MALFUNCTION

GETtheMANUALS.org

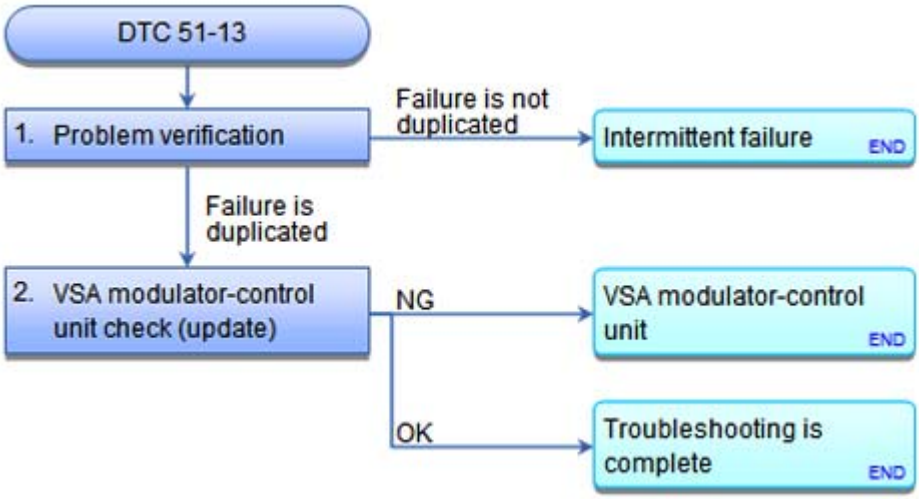

Fig. 28: VSA DTC Troubleshooting Flow Chart (51-13)
Courtesy of AMERICAN HONDA MOTOR CO., INC.

NOTE: **BEFORE YOU TROUBLESHOOT, RECORD ALL FREEZE DATA AND ANY ON-BOARD SNAPSHOT, AND REVIEW THE HOW TO TROUBLESHOOT THE VSA SYSTEM .**

DTC Description	DTC	Freeze Frame
51-13 Motor Drive Circuit Malfunction		

1. Problem verification:
   - 1. Turn the ignition switch to ON (II).
   - 2. Clear the DTC with the HDS.
   - 3. Turn the ignition switch to LOCK (0).
   - 4. Test-drive the vehicle at 25 mph (40 km/h) or more.

     NOTE: **Drive the vehicle on the road, not on a lift.**

   - 5. Check for DTCs with the HDS.

DTC Description	DTC	Freeze Frame
51-13 Motor Drive Circuit Malfunction		

Is DTC 51-13 indicated?

YES : The failure is duplicated. Go to step 2.

NO : Intermittent failure, the system is OK at this time. Refer to intermittent failures troubleshooting.

2. VSA modulator-control unit check (update):

GETtheMANUALS.org

- 1. **Update the VSA modulator-control unit if it does not have the latest software** See **VSA SENSOR NEUTRAL POSITION MEMORIZATION**, **VSA MODULATOR-CONTROL UNIT UPDATE** or **VSA MODULATOR-CONTROL UNIT REMOVAL AND INSTALLATION**.
- 2. Turn the ignition switch to LOCK (0).
- 3. Test-drive the vehicle at 25 mph (40 km/h) or more.

NOTE: Drive the vehicle on the road, not on a lift.

- 4. Check for DTCs with the HDS.

DTC Description	DTC	Freeze Frame

Is DTC 51-13 indicated?

YES : Check for loose terminals in the VSA modulator-control unit 38P connector. If the VSA modulator-control unit was updated and the symptom/indication is still present, **replace the VSA modulator-control unit** See **VSA SENSOR NEUTRAL POSITION MEMORIZATION**, **VSA MODULATOR-CONTROL UNIT UPDATE** or **VSA MODULATOR-CONTROL UNIT REMOVAL AND INSTALLATION**.

NO : Troubleshooting is complete. If any other DTCs are indicated, go to the indicated DTCs troubleshooting.

DTC 53-11: MOTOR RELAY STUCK ON

GETtheMANUALS.org

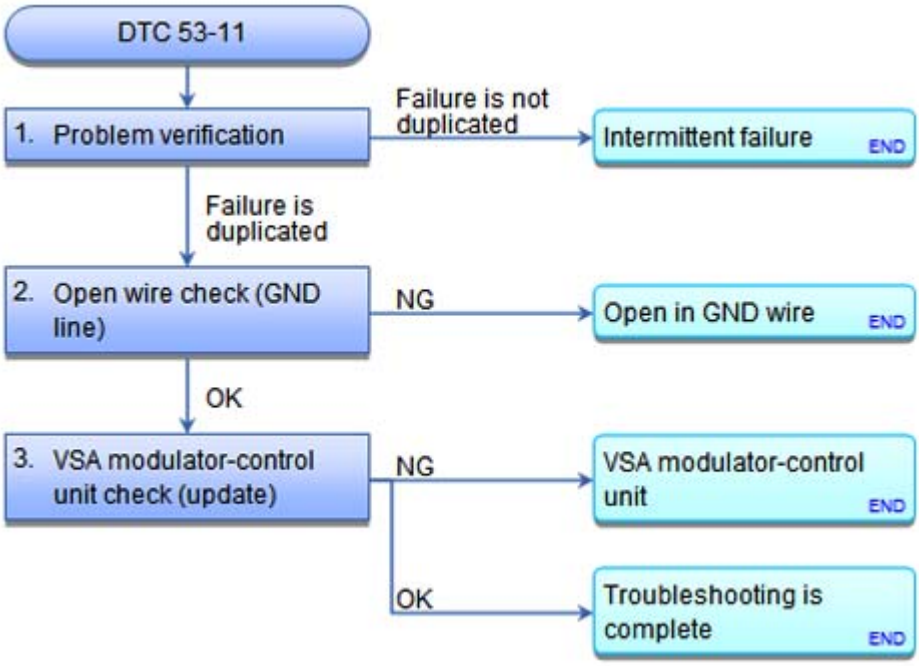

Fig. 29: VSA DTC Troubleshooting Flow Chart (53-11)
Courtesy of AMERICAN HONDA MOTOR CO., INC.

NOTE: **BEFORE YOU TROUBLESHOOT, RECORD ALL FREEZE DATA AND ANY ON-BOARD SNAPSHOT, AND REVIEW THE HOW TO TROUBLESHOOT THE VSA SYSTEM .**

DTC Description	DTC	Freeze Frame
53-11 Motor Relay Stuck ON		

1. Problem verification:
   - 1. Turn the ignition switch to ON (II).
   - 2. Clear the DTC with the HDS.
   - 3. Turn the ignition switch to LOCK (0), then turn it to ON (II) again.
   - 4. Check for DTCs with the HDS.

DTC Description	DTC	Freeze Frame
53-11 Motor Relay Stuck ON		

Is DTC 53-11 indicated?

YES : The failure is duplicated. Go to step 2.

NO : Intermittent failure, the system is OK at this time. Refer to intermittent failures troubleshooting.

2. Open wire check (GND line):

GETtheMANUALS.org

- 1. Turn the ignition switch to LOCK (0).
- 2. Disconnect the following connector.

  VSA modulator-control unit 38P connector

- 3. Check for continuity between test points 1 and 2.

  Test condition IG LOCK (0)

  VSA modulator-control unit 38P connector: disconnected

  Test circuit GND

  Test point 1 VSA modulator-control unit 38P connector No. 1 (BLK)

  Test point 2 Body ground

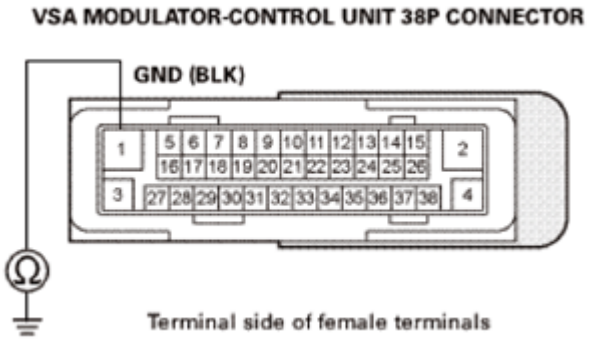

Fig. 30: Checking Continuity Between VSA Modulator-Control Unit 38P Connector No. 1 (BLK) And Body Ground
Courtesy of AMERICAN HONDA MOTOR CO., INC.

Is there continuity?

YES : The GND wire is OK. Go to step 3.

NO : Repair an open in the wire between the VSA modulator-control unit and body ground (G201).

3. VSA modulator-control unit check (update):
   - 1. Reconnect the following connector.

     VSA modulator-control unit 38P connector

   - 2. **Update the VSA modulator-control unit if it does not have the latest software** See **VSA SENSOR NEUTRAL POSITION MEMORIZATION**, **VSA MODULATOR-CONTROL UNIT REMOVAL AND INSTALLATION** or **VSA MODULATOR-CONTROL UNIT UPDATE**.

GETtheMANUALS.org

- 3. Turn the ignition switch to LOCK (0), then turn it to ON (II) again.
- 4. Check for DTCs with the HDS.

DTC Description	DTC	Freeze Frame

Is DTC 53-11 indicated?

YES : Check for loose terminals in the VSA modulator-control unit 38P connector. If the VSA modulator-control unit was updated and the symptom/indication is still present, **replace the VSA modulator-control unit** See **VSA MODULATOR-CONTROL UNIT UPDATE**, **VSA MODULATOR-CONTROL UNIT REMOVAL AND INSTALLATION** or **VSA SENSOR NEUTRAL POSITION MEMORIZATION**.

NO : Troubleshooting is complete. If any other DTCs are indicated, go to the indicated DTCs troubleshooting.

DTC 54-13: FAIL-SAFE RELAY POWER SOURCE MALFUNCTION

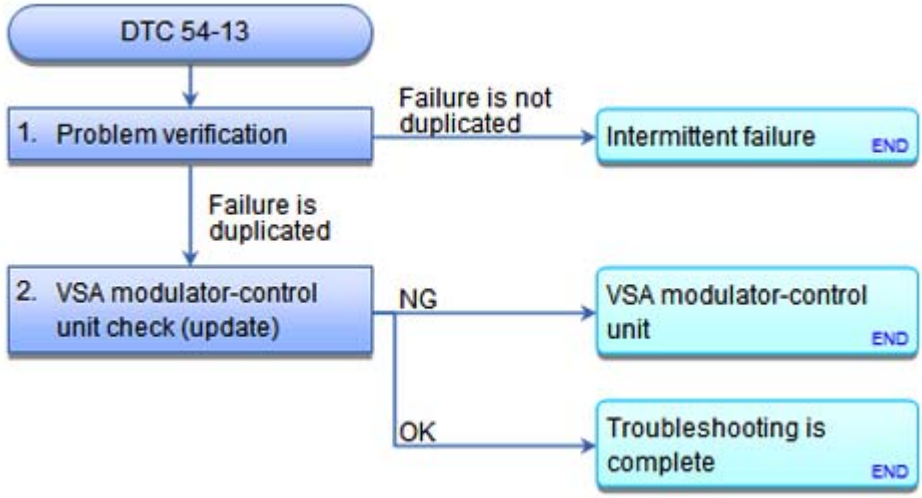

Fig. 31: VSA DTC Troubleshooting Flow Chart (54-13)
Courtesy of AMERICAN HONDA MOTOR CO., INC.

NOTE: **BEFORE YOU TROUBLESHOOT, RECORD ALL FREEZE DATA AND ANY ON-BOARD SNAPSHOT, AND REVIEW THE HOW TO TROUBLESHOOT THE VSA SYSTEM .**

DTC Description	DTC	Freeze Frame
54-13 Fail-Safe Relay Power Source Malfunction		

1. Problem verification:

GETtheMANUALS.org

- 1. Turn the ignition switch to ON (II).
- 2. Clear the DTC with the HDS.
- 3. Turn the ignition switch to LOCK (0), then turn it to ON (II) again.
- 4. Check for DTCs with the HDS.

DTC Description	DTC	Freeze Frame
54-13 Fail-Safe Relay Power Source Malfunction		

Is DTC 54-13 indicated?

YES : The failure is duplicated. Go to step 2.

NO : Intermittent failure, the system is OK at this time. Refer to intermittent failures troubleshooting.

2. VSA modulator-control unit check (update):
   - 1. **Update the VSA modulator-control unit if it does not have the latest software** See **VSA SENSOR NEUTRAL POSITION MEMORIZATION**, **VSA MODULATOR-CONTROL UNIT UPDATE** or **VSA MODULATOR-CONTROL UNIT REMOVAL AND INSTALLATION**.
   - 2. Turn the ignition switch to LOCK (0), then turn it to ON (II) again.
   - 3. Check for DTCs with the HDS.

DTC Description	DTC	Freeze Frame

Is DTC 54-13 indicated?

YES : Check for loose terminals in the VSA modulator-control unit 38P connector. If the VSA modulator-control unit was updated and the symptom/indication is still present, **replace the VSA modulator-control unit** See **VSA MODULATOR-CONTROL UNIT UPDATE**, **VSA MODULATOR-CONTROL UNIT REMOVAL AND INSTALLATION** or **VSA SENSOR NEUTRAL POSITION MEMORIZATION**.

NO : Troubleshooting is complete. If any other DTCs are indicated, go to the indicated DTCs troubleshooting.

DTC 54-14: FAIL-SAFE RELAY DRIVE CIRCUIT MALFUNCTION

GETtheMANUALS.org

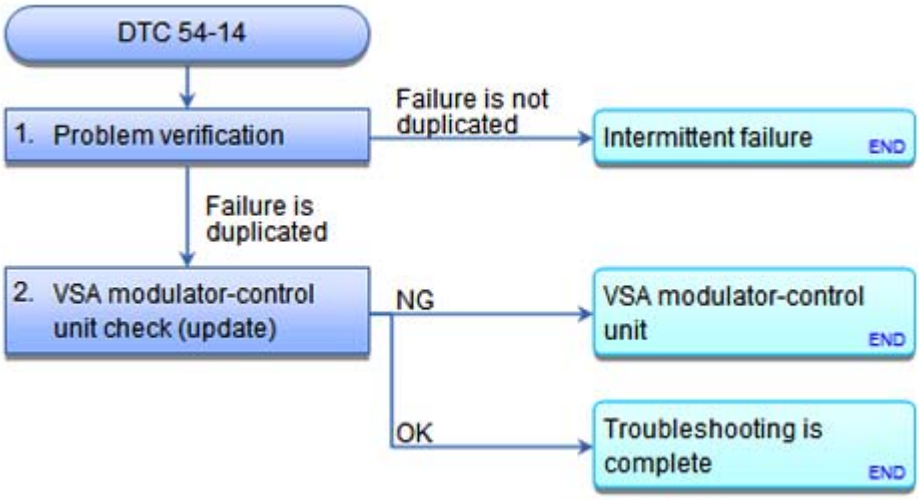

Fig. 32: VSA DTC Troubleshooting Flow Chart (54-14)
Courtesy of AMERICAN HONDA MOTOR CO., INC.

NOTE: **BEFORE YOU TROUBLESHOOT, RECORD ALL FREEZE DATA AND ANY ON-BOARD SNAPSHOT, AND REVIEW THE HOW TO TROUBLESHOOT THE VSA SYSTEM .**

DTC Description	DTC	Freeze Frame
54-14 Fail-Safe Relay Drive Circuit Malfunction		

1. Problem verification:
   - 1. Turn the ignition switch to ON (II).
   - 2. Clear the DTC with the HDS.
   - 3. Turn the ignition switch to LOCK (0).
   - 4. Test-drive the vehicle at 9 mph (15 km/h) or more.

     NOTE: **Drive the vehicle on the road, not on a lift.**

   - 5. Check for DTCs with the HDS.

DTC Description	DTC	Freeze Frame
54-14 Fail-Safe Relay Drive Circuit Malfunction		

Is DTC 54-14 indicated?

YES : The failure is duplicated. Go to step 2.

NO : Intermittent failure, the system is OK at this time. Refer to intermittent failures troubleshooting.

2. VSA modulator-control unit check (update):

GETtheMANUALS.org

- 1. **Update the VSA modulator-control unit if it does not have the latest software** See **VSA MODULATOR-CONTROL UNIT REMOVAL AND INSTALLATION**, **VSA MODULATOR-CONTROL UNIT UPDATE** or **VSA SENSOR NEUTRAL POSITION MEMORIZATION**.
- 2. Turn the ignition switch to LOCK (0).
- 3. Test-drive the vehicle at 9 mph (15 km/h) or more.

NOTE: Drive the vehicle on the road, not on a lift.

- 4. Check for DTCs with the HDS.

DTC Description	DTC	Freeze Frame

Is DTC 54-14 indicated?

YES : Check for loose terminals in the VSA modulator-control unit 38P connector. If the VSA modulator-control unit was updated and the symptom/indication is still present, **replace the VSA modulator-control unit** See **VSA SENSOR NEUTRAL POSITION MEMORIZATION**, **VSA MODULATOR-CONTROL UNIT REMOVAL AND INSTALLATION** or **VSA MODULATOR-CONTROL UNIT UPDATE**.

NO : Troubleshooting is complete. If any other DTCs are indicated, go to the indicated DTCs troubleshooting.

DTC 61-12: MODULATOR-CONTROL UNIT POWER SOURCE CIRCUIT (IG) LOW VOLTAGE

GETtheMANUALS.org

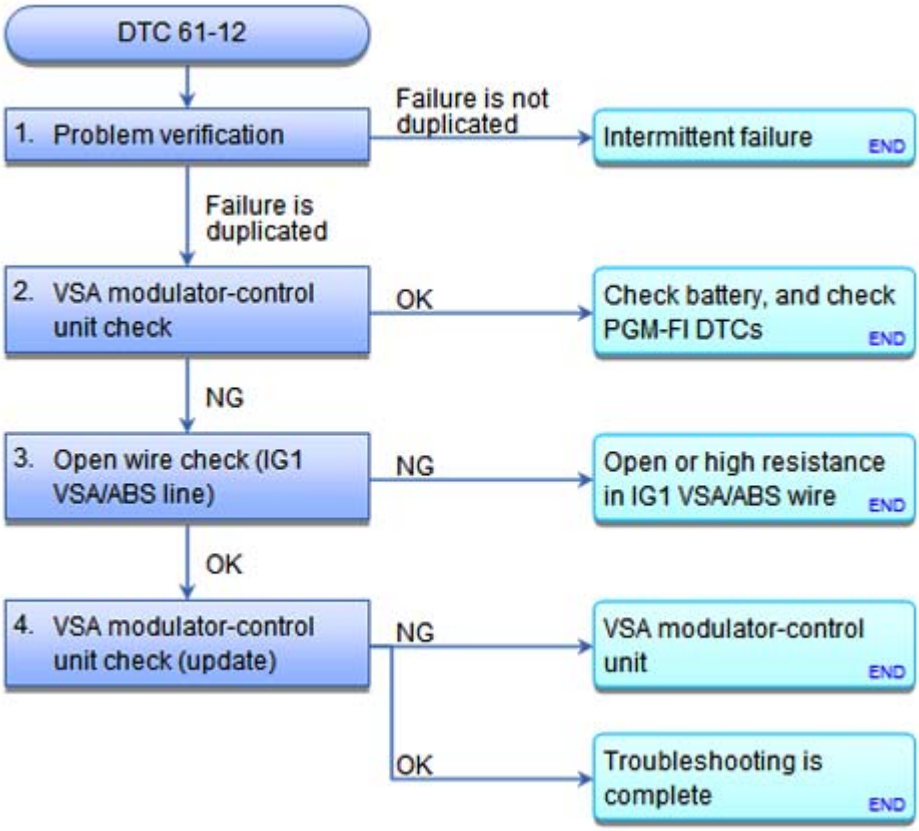

Fig. 33: VSA DTC Troubleshooting Flow Chart (61-12)
Courtesy of AMERICAN HONDA MOTOR CO., INC.

NOTE: **BEFORE YOU TROUBLESHOOT, RECORD ALL FREEZE DATA AND ANY ON-BOARD SNAPSHOT, AND REVIEW THE HOW TO TROUBLESHOOT THE VSA SYSTEM .**

DTC Description	DTC	Freeze Frame
61-12 Modulator-Control Unit Power Source Circuit (IG) Low Voltage		

1. Problem verification:
   - 1. Turn the ignition switch to ON (II).
   - 2. Clear the DTC with the HDS.
   - 3. Turn the ignition switch to LOCK (0).
   - 4. Start the engine, and warm it up to normal operating temperature (the radiator fan comes on).
   - 5. Test-drive the vehicle at 6 mph (10 km/h) or more.

     NOTE: **Drive the vehicle on the road, not on a lift.**

   - 6. Check for DTCs with the HDS.

GETtheMANUALS.org

DTC Description	DTC	Freeze Frame
61-12 Modulator-Control Unit Power Source Circuit (IG) Low Voltage		

Is DTC 61-12 indicated?

YES : The failure is duplicated. Go to step 2.

NO : Intermittent failure, the system is OK at this time. Refer to intermittent failures troubleshooting, then **CHECK THE BATTERY** .

2. VSA modulator-control unit check:
   - 1. Check and note the parameter(s) below with the HDS.

Signal	Current conditions	
	Values	Unit
BATTERY VOLTAGE		

   - 2. Using a voltmeter, measure and note the voltage across the battery terminals.

NOTE: **If the voltage is below 9.5 V, CHECK THE BATTERY , and check the PGM-FI DTCs See HOW TO TROUBLESHOOT THE FUEL AND EMISSIONS SYSTEMS or HOW TO TROUBLESHOOT THE A/T SYSTEM .**

   - 3. Compare the voltage noted in step 2-1 to the voltage in step 2-2.

Is the difference between the two voltage readings less than 3 V?

YES : Check the **BATTERY** , and check the **PGM-FI DTCs** See **HOW TO TROUBLESHOOT THE FUEL AND EMISSIONS SYSTEMS** or **HOW TO TROUBLESHOOT THE A/T SYSTEM** .

NO : Go to step 3.

3. Open wire check (IG1 VSA/ABS line):
   - 1. Turn the ignition switch to LOCK (0).
   - 2. Disconnect the following connector.

     VSA modulator-control unit 38P connector

   - 3. Turn the ignition switch to ON (II).
   - 4. Measure the voltage between test points 1 and 2.

     Test condition IG ON (II)

     VSA modulator-control unit 38P connector: disconnected

GETtheMANUALS.org

Test circuit IG1 VSA/ABS

Test point 1 VSA modulator-control unit 38P connector No. 36 (PUR)

Test point 2 Body ground

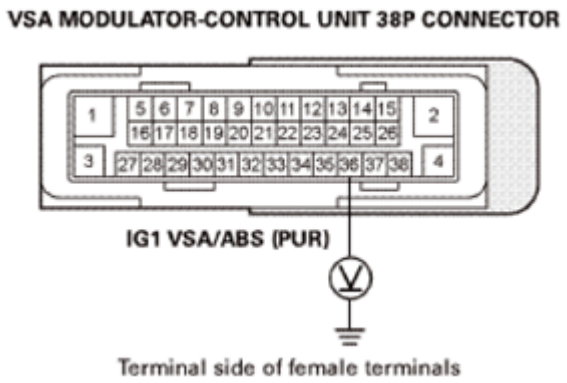

Fig. 34: Measuring Voltage Between VSA Modulator-Control Unit 38P Connector No. 36 (PUR) And Body Ground
Courtesy of AMERICAN HONDA MOTOR CO., INC.

Is there battery voltage?

YES : The IG1 VSA/ABS wire is OK. Go to step 4.

NO : Repair an open or high resistance in the wire between the No. B24 (7.5 A) fuse in the under-dash fuse/relay box and the VSA modulator-control unit.

4. VSA modulator-control unit check (update):
   - 1. **Update the VSA modulator-control unit if it does not have the latest software** See **VSA SENSOR NEUTRAL POSITION MEMORIZATION**, **VSA MODULATOR-CONTROL UNIT REMOVAL AND INSTALLATION** or **VSA MODULATOR-CONTROL UNIT UPDATE**.
   - 2. Turn the ignition switch to LOCK (0).
   - 3. Start the engine, and warm it up to normal operating temperature (the radiator fan comes on).
   - 4. Test-drive the vehicle at 6 mph (10 km/h) or more.

     NOTE: Drive the vehicle on the road, not on a lift.

   - 5. Check for DTCs with the HDS.

DTC Description	DTC	Freeze Frame

Is DTC 61-12 indicated?

GETtheMANUALS.org

YES : Check for loose terminals in the VSA modulator-control unit 38P connector. If the VSA modulator-control unit was updated and the symptom/indication is still present, **replace the VSA modulator-control unit** See **VSA MODULATOR-CONTROL UNIT UPDATE**, **VSA MODULATOR-CONTROL UNIT REMOVAL AND INSTALLATION** or **VSA SENSOR NEUTRAL POSITION MEMORIZATION**.

NO : Troubleshooting is complete. If any other DTCs are indicated, go to the indicated DTCs troubleshooting.

DTC 62-11: MODULATOR-CONTROL UNIT POWER SOURCE CIRCUIT (IG) HIGH VOLTAGE

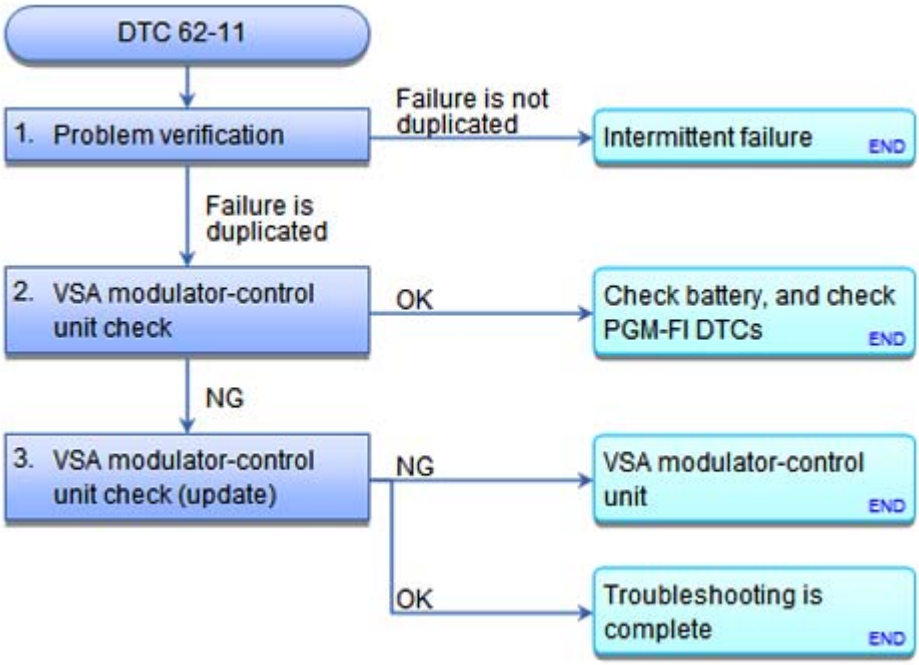

Fig. 35: VSA DTC Troubleshooting Flow Chart (62-11)
Courtesy of AMERICAN HONDA MOTOR CO., INC.

NOTE: **BEFORE YOU TROUBLESHOOT, RECORD ALL FREEZE DATA AND ANY ON-BOARD SNAPSHOT, AND REVIEW THE HOW TO TROUBLESHOOT THE VSA SYSTEM .**

DTC Description	DTC	Freeze Frame
62-11 Modulator-Control Unit Power Source Circuit (IG) High Voltage		

1. Problem verification:
   - 1. Turn the ignition switch to ON (II).
   - 2. Clear the DTC with the HDS.
   - 3. Turn the ignition switch to LOCK (0).

GETtheMANUALS.org

- 4. Start the engine.
- 5. Check for DTCs with the HDS.

DTC Description	DTC	Freeze Frame
62-11 Modulator-Control Unit Power Source Circuit (IG) High Voltage		

Is DTC 62-11 indicated?

YES : The failure is duplicated. Go to step 2.

NO : Intermittent failure, the system is OK at this time. Refer to intermittent failures troubleshooting.

2. VSA modulator-control unit check:
   - 1. With the engine still running, check and note the parameter(s) below with the HDS.

Signal	Current conditions	
	Values	Unit
BATTERY VOLTAGE		

   - 2. Using a voltmeter, measure and note the voltage across the battery terminals.

NOTE: **If the voltage is more than 15.1 V, troubleshoot the PGM-FI DTCs See HOW TO TROUBLESHOOT THE A/T SYSTEM or HOW TO TROUBLESHOOT THE FUEL AND EMISSIONS SYSTEMS .**

   - 3. Compare the voltage noted in step 2-1 to the voltage in step 2-2.

Is the difference between the two voltage readings less than 3 V?

YES : Check the **BATTERY** , and check the **PGM-FI DTCs** See **HOW TO TROUBLESHOOT THE A/T SYSTEM** or **HOW TO TROUBLESHOOT THE FUEL AND EMISSIONS SYSTEMS** .

NO : Go to step 3.

3. VSA modulator-control unit check (update):
   - 1. **Update the VSA modulator-control unit if it does not have the latest software** See **VSA SENSOR NEUTRAL POSITION MEMORIZATION**, **VSA MODULATOR-CONTROL UNIT UPDATE** or **VSA MODULATOR-CONTROL UNIT REMOVAL AND INSTALLATION**.
   - 2. Turn the ignition switch to LOCK (0).
   - 3. Start the engine.
   - 4. Check for DTCs with the HDS.

DTC Description	DTC	Freeze Frame

GETtheMANUALS.org

Is DTC 62-11 indicated?

YES : Check for loose terminals in the VSA modulator-control unit 38P connector. If the VSA modulator-control unit was updated and the symptom/indication is still present, **replace the VSA modulator-control unit** See **VSA SENSOR NEUTRAL POSITION MEMORIZATION**, **VSA MODULATOR-CONTROL UNIT REMOVAL AND INSTALLATION** or **VSA MODULATOR-CONTROL UNIT UPDATE**.

NO : Troubleshooting is complete. If any other DTCs are indicated, go to the indicated DTCs troubleshooting.

DTC 65-11: BRAKE FLUID LEVEL SWITCH CIRCUIT MALFUNCTION

GETtheMANUALS.org

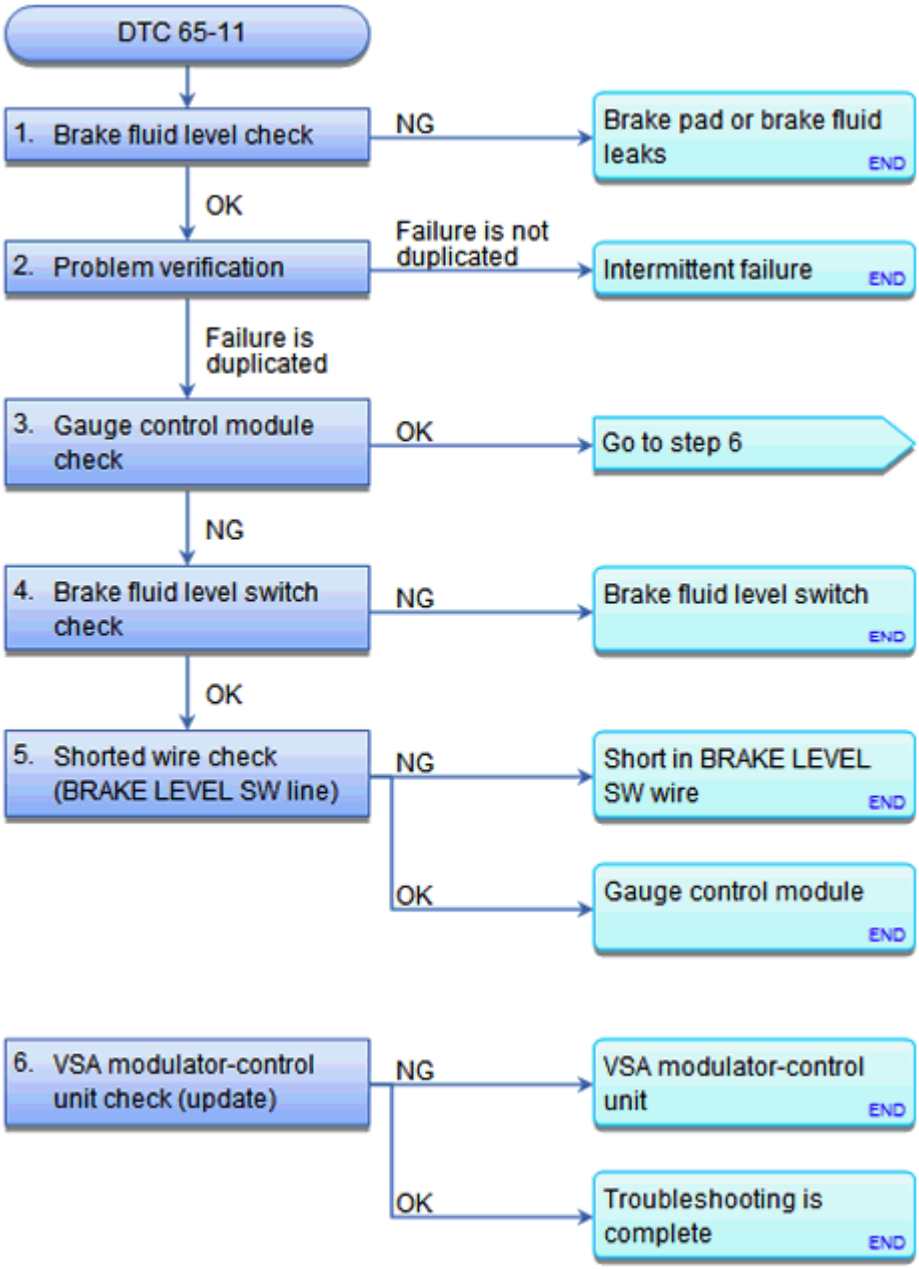

Fig. 36: VSA DTC Troubleshooting Flow Chart (65-11)
Courtesy of AMERICAN HONDA MOTOR CO., INC.

NOTE:

- **Bleeding the brake system while the ignition switch is ON (II) can cause this DTC.**
- **BEFORE YOU TROUBLESHOOT, RECORD ALL FREEZE DATA AND ANY ON-BOARD SNAPSHOT, AND REVIEW THE HOW TO TROUBLESHOOT THE VSA SYSTEM .**

DTC Description	DTC	Freeze Frame

GETtheMANUALS.org

65-11 Brake Fluid Level Switch Circuit Malfunction		

1. Brake fluid level check:
   - 1. Check the brake fluid level in the master cylinder reservoir.

   Is the brake fluid level OK?

   YES : Go to step 2.

   NO

   - **INSPECT THE BRAKE LINES AND HOSES FOR LEAKS** , and repair as needed.
   - Inspect the brake pads: **FRONT** , **REAR** , and replace worn out brake pads.
   - Add brake fluid and recheck.
2. Problem verification:
   - 1. Turn the ignition switch to ON (II).
   - 2. Clear the DTC with the HDS.
   - 3. Turn the ignition switch to LOCK (0), then turn it to ON (II) again.
   - 4. Wait for at least 60 seconds.
   - 5. Check for DTCs with the HDS.

DTC Description	DTC	Freeze Frame
65-11 Brake Fluid Level Switch Circuit Malfunction		

   Is DTC 65-11 indicated?

   YES : The failure is duplicated. Go to step 3.

   NO : Intermittent failure, the system is OK at this time. Refer to intermittent failures troubleshooting.

3. Gauge control module check:
   - 1. Release the parking brake.
   - 2. Turn the ignition switch to LOCK (0), then turn it to ON (II) again.
   - 3. Wait for at least 60 seconds.
   - 4. Check the brake system indicator in the gauge control module.

   Does the indicator come on then go off?

   YES : Go to step 6.

   NO : Go to step 4.

4. Brake fluid level switch check:

GETtheMANUALS.org

- 1. Turn the ignition switch to LOCK (0).
- 2. Disconnect the following connector.

  Brake fluid level switch 2P connector

- 3. On the switch side, check for continuity between test points 1 and 2.

  Test condition IG LOCK (0)

  Brake fluid level switch 2P connector: disconnected

  Test circuit BRAKE LEVEL SW, GND

  Test point 1 Brake fluid level switch 2P connector No. 1

  Test point 2 Brake fluid level switch 2P connector No. 2

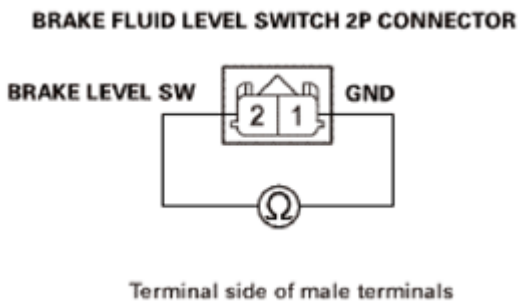

Fig. 37: Checking Continuity Between Brake Fluid Level Switch 2P Connector No. 1 And 2
Courtesy of AMERICAN HONDA MOTOR CO., INC.

Is there continuity?

YES : **Replace the master cylinder (brake fluid level switch is included)** See **BRAKE MASTER CYLINDER INSPECTION** or **BRAKE MASTER CYLINDER REMOVAL AND INSTALLATION** .

NO : Go to step 5.

5. Shorted wire check (BRAKE LEVEL SW line):
   - 1. Disconnect the following connector.

     Gauge control module 32P connector

   - 2. Check for continuity between test points 1 and 2.

     Test condition IG LOCK (0)

GETtheMANUALS.org

Brake fluid level switch 2P connector: disconnected

Gauge control module 32P connector: disconnected

Test circuit BRAKE LEVEL SW

Test point 1 Brake fluid level switch 2P connector No. 2 (GRY)

Test point 2 Body ground

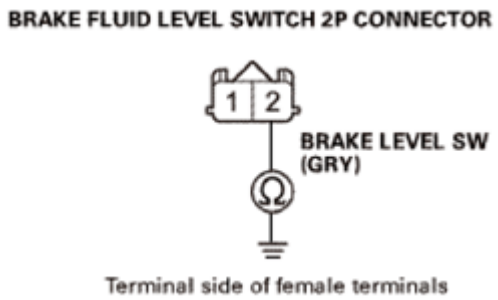

Fig. 38: Checking Continuity Between Brake Fluid Level Switch 2P Connector No. 2 (GRY) And Body Ground
Courtesy of AMERICAN HONDA MOTOR CO., INC.

Is there continuity?

YES : Repair a short to body ground in the wire between the gauge control module and the brake fluid level switch.

NO : The BRAKE LEVEL SW wire is OK. **Replace the gauge control module** See **Rewriting the ODO Data and Transferring the Maintenance Minder™ Data to a New Gauge Control Module** or **GAUGE CONTROL MODULE REMOVAL AND INSTALLATION** .

6. VSA modulator-control unit check (update):
   - 1. **Update the VSA modulator-control unit if it does not have the latest software** See **VSA SENSOR NEUTRAL POSITION MEMORIZATION**, **VSA MODULATOR-CONTROL UNIT REMOVAL AND INSTALLATION** or **VSA MODULATOR-CONTROL UNIT UPDATE**.
   - 2. Turn the ignition switch to LOCK (0), then turn it to ON (II) again.
   - 3. Wait for at least 60 seconds.
   - 4. Check for DTCs with the HDS.

DTC Description	DTC	Freeze Frame

Is DTC 65-11 indicated?

GETtheMANUALS.org

YES : Check for loose terminals in the VSA modulator-control unit 38P connector. If the VSA modulator-control unit was updated and the symptom/indication is still present, **replace the VSA modulator-control unit** See **VSA SENSOR NEUTRAL POSITION MEMORIZATION**, **VSA MODULATOR-CONTROL UNIT REMOVAL AND INSTALLATION** or **VSA MODULATOR-CONTROL UNIT UPDATE**.

NO : Troubleshooting is complete. If any other DTCs are indicated, go to the indicated DTCs troubleshooting.

DTC 66-13: PRESSURE SENSOR MALFUNCTION

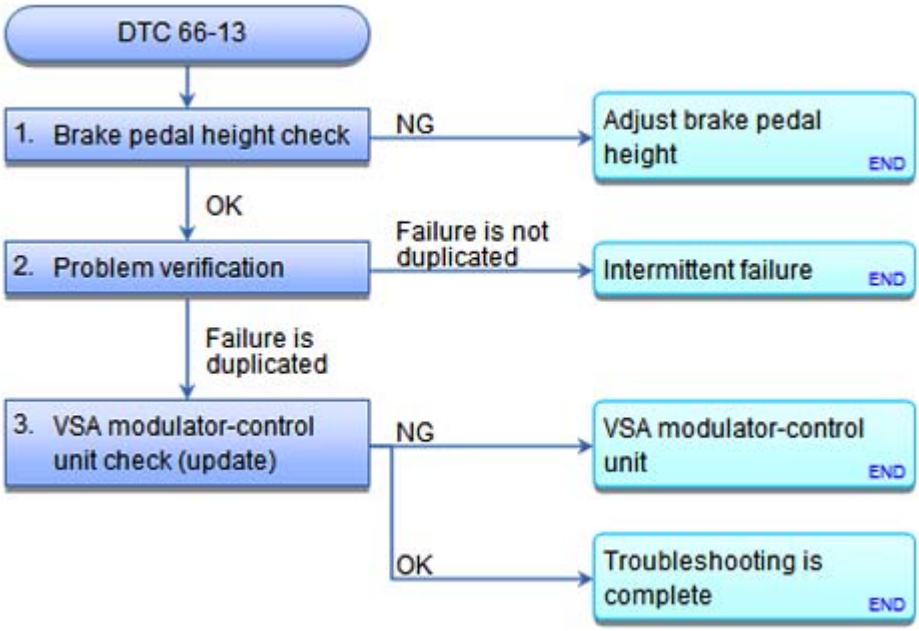

Fig. 39: VSA DTC Troubleshooting Flow Chart (66-13)
Courtesy of AMERICAN HONDA MOTOR CO., INC.

NOTE: **BEFORE YOU TROUBLESHOOT, RECORD ALL FREEZE DATA AND ANY ON-BOARD SNAPSHOT, AND REVIEW THE HOW TO TROUBLESHOOT THE VSA SYSTEM .**

DTC Description	DTC	Freeze Frame
66-13 Pressure Sensor Malfunction		

1. Brake pedal height check:
   - 1. **Check the brake pedal height** See **BRAKE PEDAL REMOVAL AND INSTALLATION** or **BRAKE PEDAL AND BRAKE PEDAL POSITION SWITCH ADJUSTMENT** .

Is brake pedal height OK?

YES : Go to step 2.

GETtheMANUALS.org

NO : **Adjust the brake pedal height** See **BRAKE PEDAL REMOVAL AND INSTALLATION** or **BRAKE PEDAL AND BRAKE PEDAL POSITION SWITCH ADJUSTMENT** .

2. Problem verification:
   - 1. Turn the ignition switch to ON (II).
   - 2. Clear the DTC with the HDS.
   - 3. Turn the ignition switch to LOCK (0), then turn it to ON (II) again.
   - 4. Check for DTCs with the HDS.

DTC Description	DTC	Freeze Frame
66-13 Pressure Sensor Malfunction		

Is DTC 66-13 indicated?

YES : The failure is duplicated. Go to step 3.

NO : Intermittent failure, the system is OK at this time. Refer to intermittent failures troubleshooting.

3. VSA modulator-control unit check (update):
   - 1. **Update the VSA modulator-control unit if it does not have the latest software** See **VSA SENSOR NEUTRAL POSITION MEMORIZATION**, **VSA MODULATOR-CONTROL UNIT REMOVAL AND INSTALLATION** or **VSA MODULATOR-CONTROL UNIT UPDATE**.
   - 2. Turn the ignition switch to LOCK (0), then turn it to ON (II) again.
   - 3. Check for DTCs with the HDS.

DTC Description	DTC	Freeze Frame

Is DTC 66-13 indicated?

YES : Check for loose terminals in the VSA modulator-control unit 38P connector. If the VSA modulator-control unit was updated and the symptom/indication is still present, **replace the VSA modulator-control unit** See **VSA SENSOR NEUTRAL POSITION MEMORIZATION**, **VSA MODULATOR-CONTROL UNIT REMOVAL AND INSTALLATION** or **VSA MODULATOR-CONTROL UNIT UPDATE**.

NO : Troubleshooting is complete. If any other DTCs are indicated, go to the indicated DTCs troubleshooting.

DTC 66-14: PRESSURE SENSOR SENSITIVITY MALFUNCTION

GETtheMANUALS.org

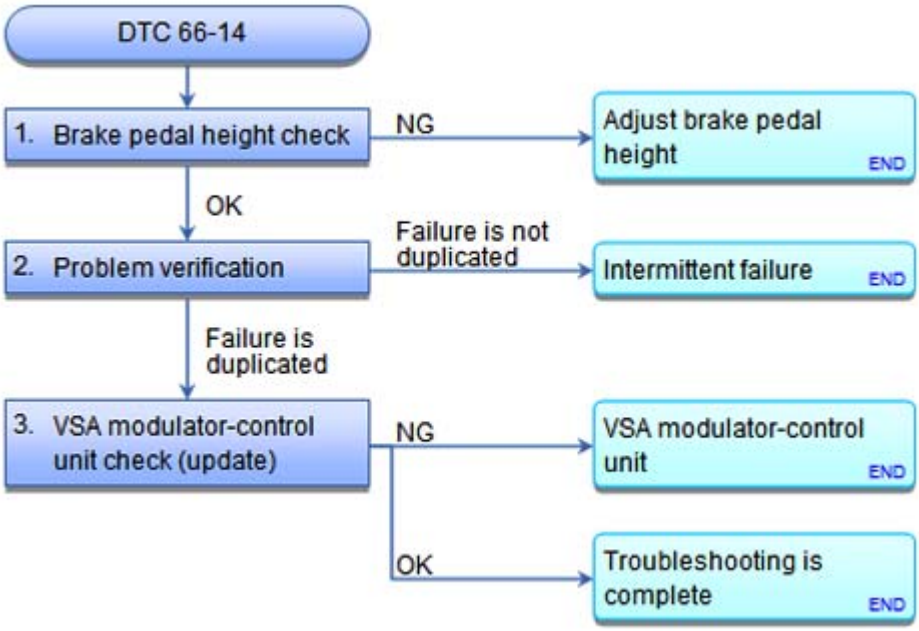

Fig. 40: VSA DTC Troubleshooting Flow Chart (66-14)
Courtesy of AMERICAN HONDA MOTOR CO., INC.

NOTE: **BEFORE YOU TROUBLESHOOT, RECORD ALL FREEZE DATA AND ANY ON-BOARD SNAPSHOT, AND REVIEW THE HOW TO TROUBLESHOOT THE VSA SYSTEM .**

DTC Description	DTC	Freeze Frame
66-14 Pressure Sensor Sensitivity Malfunction		

1. Brake pedal height check:
   - 1. **Check the brake pedal height** See **BRAKE PEDAL REMOVAL AND INSTALLATION** or **BRAKE PEDAL AND BRAKE PEDAL POSITION SWITCH ADJUSTMENT** .

   Is brake pedal height OK?

   YES : Go to step 2.

   NO : **Adjust the brake pedal height** See **BRAKE PEDAL REMOVAL AND INSTALLATION** or **BRAKE PEDAL AND BRAKE PEDAL POSITION SWITCH ADJUSTMENT** .

2. Problem verification:
   - 1. Turn the ignition switch to ON (II).
   - 2. Clear the DTC with the HDS.
   - 3. Turn the ignition switch to LOCK (0).
   - 4. Test-drive the vehicle at 9 mph (15 km/h) or more for 60 seconds or more.

GETtheMANUALS.org

NOTE: **Drive the vehicle on the road, not on a lift.**

- 5. Check for DTCs with the HDS.

DTC Description	DTC	Freeze Frame
66-14 Pressure Sensor Sensitivity Malfunction		

Is DTC 66-14 indicated?

YES : The failure is duplicated. Go to step 3.

NO : Intermittent failure, the system is OK at this time. Refer to intermittent failures troubleshooting.

3. VSA modulator-control unit check (update):
   - 1. **Update the VSA modulator-control unit if it does not have the latest software** See **VSA SENSOR NEUTRAL POSITION MEMORIZATION**, **VSA MODULATOR-CONTROL UNIT REMOVAL AND INSTALLATION** or **VSA MODULATOR-CONTROL UNIT UPDATE**.
   - 2. Turn the ignition switch to LOCK (0).
   - 3. Test-drive the vehicle at 9 mph (15 km/h) or more for 60 seconds or more.

NOTE: **Drive the vehicle on the road, not on a lift.**

- 4. Check for DTCs with the HDS.

DTC Description	DTC	Freeze Frame

Is DTC 66-14 indicated?

YES : Check for loose terminals in the VSA modulator-control unit 38P connector. If the VSA modulator-control unit was updated and the symptom/indication is still present, **replace the VSA modulator-control unit** See **VSA SENSOR NEUTRAL POSITION MEMORIZATION**, **VSA MODULATOR-CONTROL UNIT REMOVAL AND INSTALLATION** or **VSA MODULATOR-CONTROL UNIT UPDATE**.

NO : Troubleshooting is complete. If any other DTCs are indicated, go to the indicated DTCs troubleshooting.

DTC 68-12: BRAKE PEDAL POSITION SWITCH STUCK ON

GETtheMANUALS.org

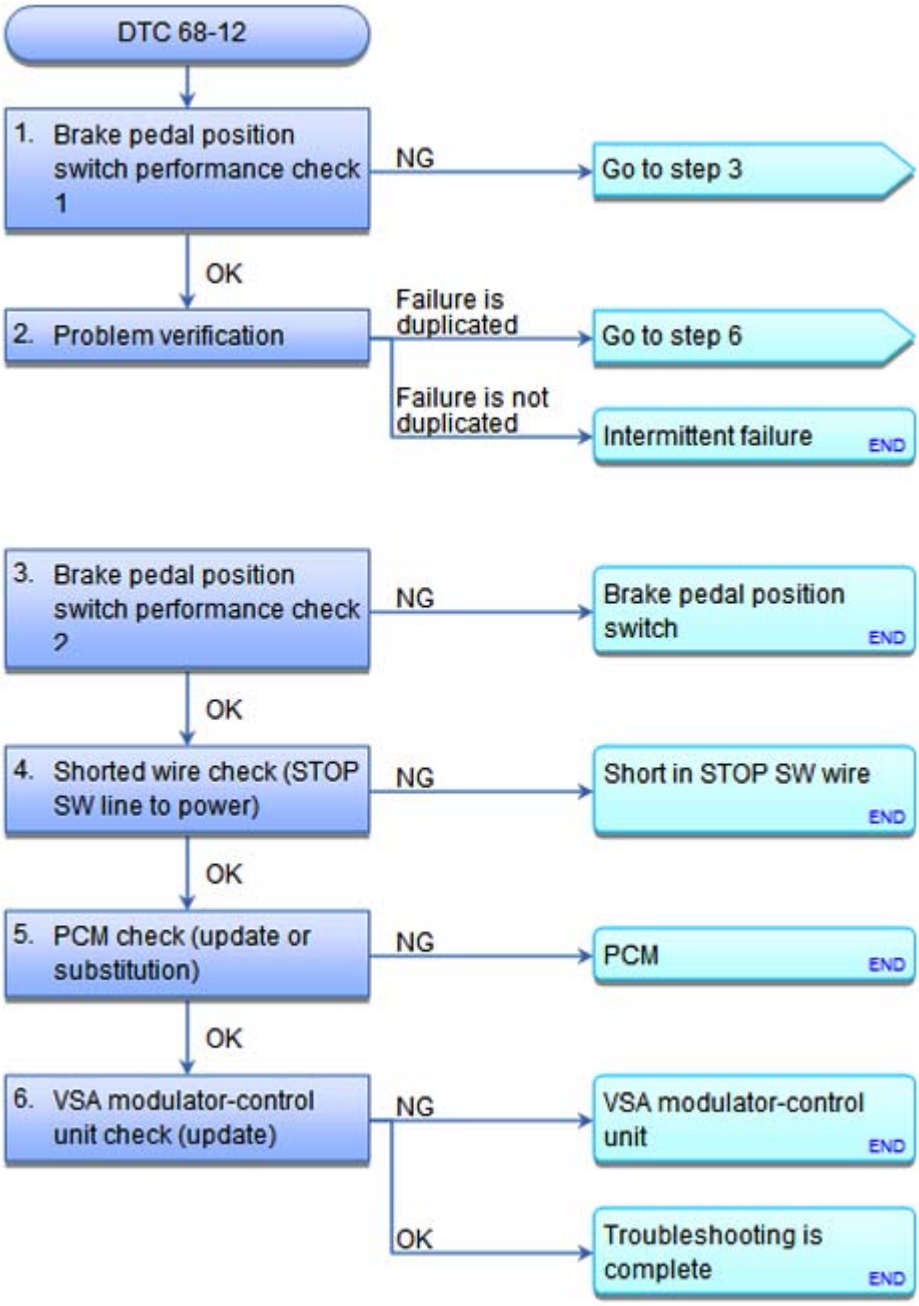

Fig. 41: VSA DTC Troubleshooting Flow Chart (68-12)
Courtesy of AMERICAN HONDA MOTOR CO., INC.

NOTE: **BEFORE YOU TROUBLESHOOT, RECORD ALL FREEZE DATA AND ANY ON-BOARD SNAPSHOT, AND REVIEW THE HOW TO TROUBLESHOOT THE VSA SYSTEM .**

DTC Description	DTC	Freeze Frame
68-12 Brake Pedal Position Switch Stuck ON		

GETtheMANUALS.org

1. Brake pedal position switch performance check 1:
   - 1. Check the parameter(s) below with the HDS while pressing the brake pedal.

Signal	Current conditions	
	Values	Unit
BRAKE SWITCH		

Does it indicate ON when the pedal is pressed, and OFF when the pedal is released?

YES : Go to step 2.

NO : Go to step 3.

2. Problem verification:
   - 1. Clear the DTC with the HDS.
   - 2. Turn the ignition switch to LOCK (0).
   - 3. Test-drive the vehicle at 9 mph (15 km/h) or more for 60 seconds or more.

NOTE: Drive the vehicle on the road, not on a lift.

   - 4. Check for DTCs with the HDS.

DTC Description	DTC	Freeze Frame
68-12 Brake Pedal Position Switch Stuck ON		

Is DTC 68-12 indicated?

YES : The failure is duplicated. Go to step 6.

NO : Intermittent failure, the system is OK at this time. Refer to intermittent failures troubleshooting.

3. Brake pedal position switch performance check 2:
   - 1. Turn the ignition switch to LOCK (0).
   - 2. Disconnect the following connector.

     Brake pedal position switch 4P connector

   - 3. Check the parameter(s) below with the HDS.

Signal	Current conditions	
	Values	Unit
BRAKE SWITCH		

GETtheMANUALS.org

Does the indicator change from ON to OFF?

YES : **Replace the brake pedal position switch** See **BRAKE PEDAL REMOVAL AND INSTALLATION** or **BRAKE PEDAL AND BRAKE PEDAL POSITION SWITCH ADJUSTMENT** or **PCM UPDATE** or **PCM REMOVAL AND INSTALLATION** .

NO : Go to step 4.

4. Shorted wire check (STOP SW line to power):
   - 1. Turn the ignition switch to LOCK (0).
   - 2. Short the SCS line with the HDS.
   - 3. Disconnect the following connector.

     PCM connector A (49P)

   - 4. Turn the ignition switch to ON (II).
   - 5. Measure the voltage between test points 1 and 2.

     Test condition IG ON (II)

     Brake pedal position switch 4P connector: disconnected

     PCM connector A (49P): disconnected

     Test circuit STOP SW

     Test point 1 Brake pedal position switch 4P connector No. 1 (BLU)

     Test point 2 Body ground

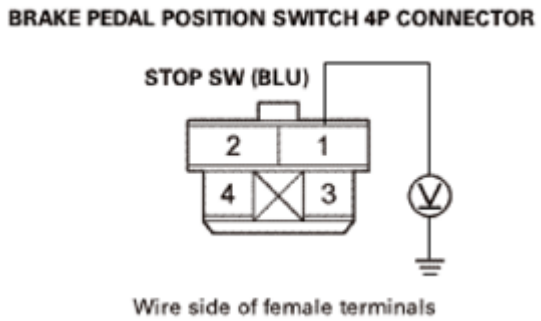

Fig. 42: Measuring Voltage Between Brake Pedal Position Switch 4P Connector No. 1 (BLU) And Body Ground
Courtesy of AMERICAN HONDA MOTOR CO., INC.

Is there 0.1 V or more?

GETtheMANUALS.org

YES : Repair a short to power in the wire between the PCM and the brake pedal position switch.

NO : The STOP SW wire is OK. Go to step 5.

5. PCM check (update or substitution):
   - 1. Turn the ignition switch to LOCK (0).
   - 2. Reconnect the following connectors.

     Brake pedal position switch 4P connector

     PCM connector A (49P)

   - 3. **Update the PCM if it does not have the latest software** See **PCM REMOVAL AND INSTALLATION** or **PCM UPDATE** , or **substitute a known-good PCM** See **PCM UPDATE** or **PCM REMOVAL AND INSTALLATION** .
   - 4. Clear the DTC with the HDS.
   - 5. Turn the ignition switch to LOCK (0).
   - 6. Test-drive the vehicle at 9 mph (15 km/h) or more for 60 seconds or more.

     NOTE: Drive the vehicle on the road, not on a lift.

   - 7. Check for DTCs with the HDS.

DTC Description	DTC	Freeze Frame
68-12 Brake Pedal Position Switch Stuck ON		

Is DTC 68-12 indicated?

YES : Go to step 6.

NO : If the PCM was updated, troubleshooting is complete. If the PCM was substituted, **replace the original PCM** See **VSA SENSOR NEUTRAL POSITION MEMORIZATION**, **VSA MODULATOR-CONTROL UNIT UPDATE** or **VSA MODULATOR-CONTROL UNIT REMOVAL AND INSTALLATION**.

6. VSA modulator-control unit check (update):
   - 1. **Update the VSA modulator-control unit if it does not have the latest software** See **VSA SENSOR NEUTRAL POSITION MEMORIZATION**, **VSA MODULATOR-CONTROL UNIT UPDATE** or **VSA MODULATOR-CONTROL UNIT REMOVAL AND INSTALLATION**.
   - 2. Turn the ignition switch to LOCK (0).
   - 3. Test-drive the vehicle at 9 mph (15 km/h) or more for 60 seconds or more.

     NOTE: Drive the vehicle on the road, not on a lift.

GETtheMANUALS.org

- 4. Check for DTCs with the HDS.

DTC Description	DTC	Freeze Frame

Is DTC 68-12 indicated?

YES : Check for loose terminals in the VSA modulator-control unit 38P connector. If the VSA modulator-control unit was updated and the symptom/indication is still present, **replace the VSA modulator-control unit** See **VSA SENSOR NEUTRAL POSITION MEMORIZATION**, **VSA MODULATOR-CONTROL UNIT UPDATE** or **VSA MODULATOR-CONTROL UNIT REMOVAL AND INSTALLATION**.

NO : Troubleshooting is complete. If any other DTCs are indicated, go to the indicated DTCs troubleshooting.

DTC 68-13: BRAKE PEDAL POSITION SWITCH CIRCUIT MALFUNCTION

GETtheMANUALS.org

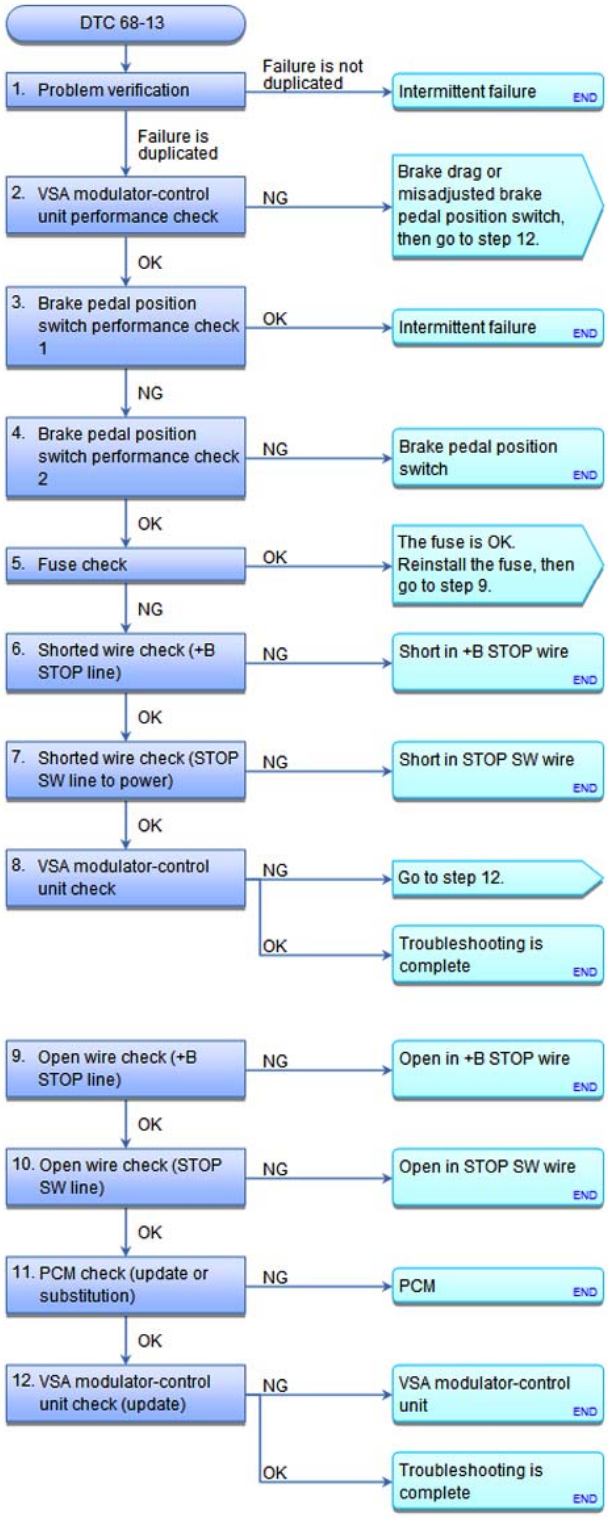

Fig. 43: VSA DTC Troubleshooting Flow Chart (68-13)
Courtesy of AMERICAN HONDA MOTOR CO., INC.

NOTE: **BEFORE YOU TROUBLESHOOT, RECORD ALL FREEZE DATA AND ANY ON-**

GETtheMANUALS.org

BOARD SNAPSHOT, AND REVIEW THE HOW TO TROUBLESHOOT THE VSA SYSTEM .

DTC Description	DTC	Freeze Frame
68-13 Brake Pedal Position Switch Circuit Malfunction		

1. Problem verification:
   - 1. Turn the ignition switch to ON (II).
   - 2. Clear the DTC with the HDS.
   - 3. Turn the ignition switch to LOCK (0).
   - 4. Turn the ignition switch to ON (II), then press the brake pedal hard for 1 second or more.
   - 5. Check for DTCs with the HDS.

DTC Description	DTC	Freeze Frame
68-13 Brake Pedal Position Switch Circuit Malfunction		

Is DTC 68-13 indicated?

YES : The failure is duplicated. Go to step 2.

NO : Intermittent failure, the system is OK at this time. Refer to intermittent failures troubleshooting.

2. VSA modulator-control unit performance check:
   - 1. Start the engine.
   - 2. Check the parameter(s) below with the HDS. Do not press the brake pedal.

Signal	Current conditions	
	Values	Unit
BRAKE PRESSURE		

Is there 8 MPa or less?

YES : Go to step 3.

NO : **CHECK FOR BRAKE DRAG** or a **misadjusted brake pedal position switch** See **BRAKE PEDAL AND BRAKE PEDAL POSITION SWITCH ADJUSTMENT** or **BRAKE PEDAL REMOVAL AND INSTALLATION** . If they are normal, go to step 12.

3. Brake pedal position switch performance check 1:
   - 1. Check the parameter(s) below with the HDS while pressing the brake pedal.

Signal	Current conditions	
	Values	Unit

GETtheMANUALS.org

BRAKE SWITCH		

Does it indicate ON when the pedal is pressed, and OFF when the pedal is released?

YES : Intermittent failure, the system is OK at this time. Refer to intermittent failures troubleshooting.

NO : Go to step 4.

4. Brake pedal position switch performance check 2:
   - 1. Turn the ignition switch to LOCK (0).
   - 2. Disconnect the following connector.

     Brake pedal position switch 4P connector

   - 3. Connect terminals 1 and 2 with a jumper wire.

     Terminal 1 Brake pedal position switch 4P connector No. 1 (BLU)

     Terminal 2 Brake pedal position switch 4P connector No. 2 (GRN)

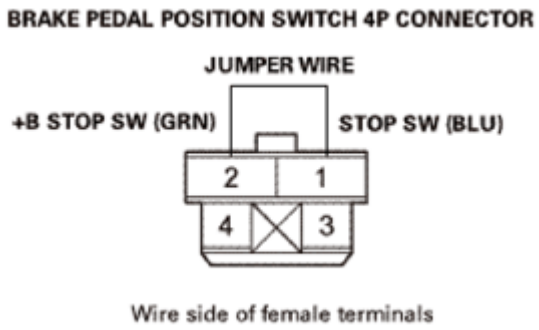

Fig. 44: Connecting Wire Between Brake Pedal Position Switch 4P Connector No. 1 (BLU) And 2 (GRN)
Courtesy of AMERICAN HONDA MOTOR CO., INC.

   - 4. Turn the ignition switch to ON (II).
   - 5. Check the parameter(s) below with the HDS.

Signal	Current conditions	
	Values	Unit
BRAKE SWITCH		

Does it indicate ON?

YES : **Check the brake pedal position switch adjustment** See **BRAKE PEDAL REMOVAL AND INSTALLATION** or **BRAKE PEDAL AND BRAKE PEDAL POSITION SWITCH ADJUSTMENT** . If it is OK, **replace the brake pedal position switch** See **BRAKE PEDAL**

GETtheMANUALS.org

POSITION SWITCH REMOVAL AND INSTALLATION or **BRAKE PEDAL AND BRAKE PEDAL POSITION SWITCH ADJUSTMENT** .

NO : Go to step 5.

5. Fuse check:
   - 1. Turn the ignition switch to LOCK (0).
   - 2. Disconnect the jumper wire.
   - 3. Check the following fuse.

     Fuse No. A16 (10 A)

     Location Under-hood fuse/relay box

Is the fuse OK?

YES : The fuse is OK. Reinstall the fuse, then go to step 9.

NO : Go to step 6.

6. Shorted wire check (+B STOP line):
   - 1. Check for continuity between test points 1 and 2.

     Test condition IG LOCK (0)

     Brake pedal position switch 4P connector: disconnected

     Test circuit +B STOP

     Test point 1 Brake pedal position switch 4P connector No. 2 (GRN)

     Test point 2 Body ground

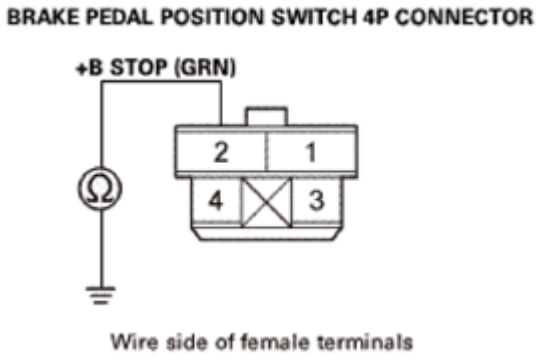

Fig. 45: Checking Continuity Between Brake Pedal Position Switch 4P Connector No. 2 (GRN) And Body Ground

GETtheMANUALS.org

Courtesy of AMERICAN HONDA MOTOR CO., INC.

Is there continuity?

YES : Repair a short to body ground in the wire between the No. A16 (10 A) fuse in the under-hood fuse/relay box and the brake pedal position switch.

NO : The +B STOP wire is not shorted to body ground. Go to step 7.

7. Shorted wire check (STOP SW line to power):
   - 1. Short the SCS line with the HDS.
   - 2. Disconnect the following connector.

     PCM connector A (49P)

   - 3. Check for continuity between test points 1 and 2.

     Test condition IG LOCK (0)

     Brake pedal position switch 4P connector: disconnected

     PCM connector A (49P): disconnected

     Test circuit STOP SW

     Test point 1 Brake pedal position switch 4P connector No. 1 (BLU)

     Test point 2 Body ground

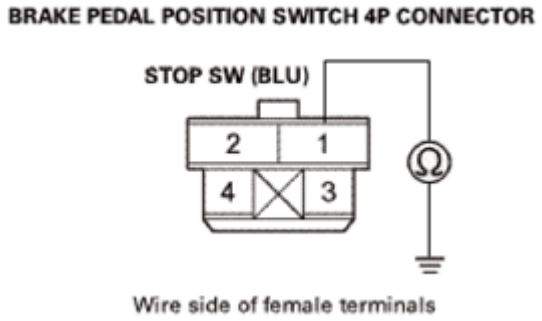

Fig. 46: Checking Continuity Between Brake Pedal Position Switch 4P Connector No. 1 (BLU) And Body Ground
Courtesy of AMERICAN HONDA MOTOR CO., INC.

Is there continuity?

YES : Repair a short to body ground in the wire between the brake pedal position switch and the PCM.

GETtheMANUALS.org

NO : The STOP SW wire is not short to body ground. Install a new No. A16 (10 A) fuse in the under-hood fuse/relay box, then go to step 8.

8. VSA modulator-control unit check:
   - 1. Reconnect the following connectors.

     Brake pedal position switch 4P connector

     PCM connector A (49P)

   - 2. Turn the ignition switch to ON (II).
   - 3. Clear the DTC with the HDS.
   - 4. Turn the ignition switch to LOCK (0).
   - 5. Turn the ignition switch to ON (II), then press the brake pedal hard for 1 second or more.
   - 6. Check for DTCs with the HDS.

DTC Description	DTC	Freeze Frame
68-13 Brake Pedal Position Switch Circuit Malfunction		

Is DTC 68-13 indicated?

YES : Go to step 12.

NO : The troubleshooting is complete.

9. Open wire check (+B STOP line):
   - 1. Measure the voltage between test points 1 and 2.

     Test condition IG LOCK (0)

     Brake pedal position switch 4P connector: disconnected

     Test circuit +B STOP

     Test point 1 Brake pedal position switch 4P connector No. 2 (GRN)

     Test point 2 Body ground

GETtheMANUALS.org

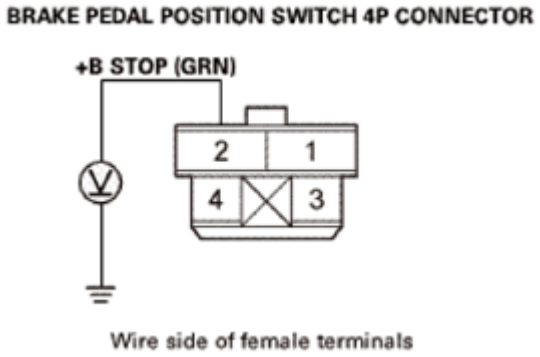

Fig. 47: Measuring Voltage Between Brake Pedal Position Switch 4P Connector No. 2 (GRN) And Body Ground
Courtesy of AMERICAN HONDA MOTOR CO., INC.

Is there battery voltage?

YES : The +B STOP wire is OK. Go to step 10.

NO : Repair an open in the wire between the No. A16 (10 A) fuse in the under-hood fuse/relay box and the brake pedal position switch.

10. Open wire check (STOP SW line):
    - 1. Short the SCS line with the HDS.
    - 2. Disconnect the following connector.

      PCM connector A (49P)

    - 3. Check for continuity between test points 1 and 2.

      Test condition IG LOCK (0)

      Brake pedal position switch 4P connector: disconnected

      PCM connector A (49P): disconnected

      Test circuit STOP SW

      Test point 1 Brake pedal position switch 4P connector No. 1 (BLU)

      Test point 2 PCM connector A (49P) No. 13 (BLU)

GETtheMANUALS.org

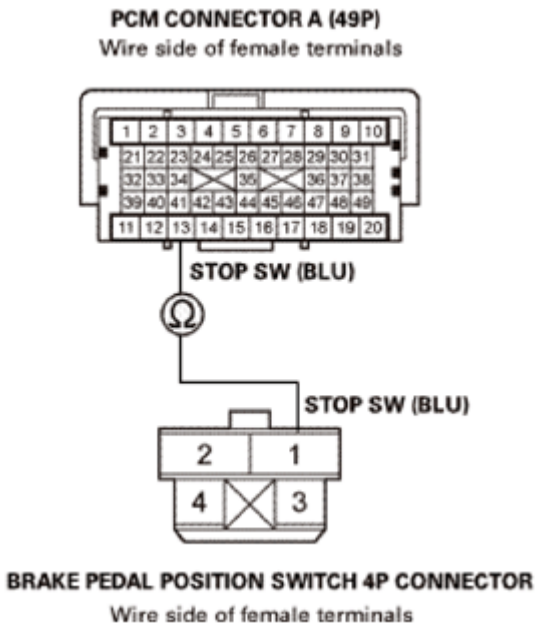

Fig. 48: Checking Continuity Between Brake Pedal Position Switch 4P Connector No. 1 (BLU) And PCM Connector A (49P) No. 13 (BLU)
Courtesy of AMERICAN HONDA MOTOR CO., INC.

Is there continuity?

YES : The STOP SW wires is OK. Go to step 11.

NO : Repair an open in the wire between the PCM and the brake pedal position switch.

11. PCM check (update or substitution):
    - 1. Reconnect the following connectors.

      Brake pedal position switch 4P connector

      PCM connector A (49P)

    - 2. **Update the PCM if it does not have the latest software** See **PCM UPDATE** or **PCM REMOVAL AND INSTALLATION** , or **substitute a known-good PCM** See **PCM UPDATE** or **PCM REMOVAL AND INSTALLATION** .
    - 3. Clear the DTC with the HDS.
    - 4. Turn the ignition switch to LOCK (0).
    - 5. Turn the ignition switch to ON (II), then press the brake pedal hard for 1 second or more.
    - 6. Check for DTCs with the HDS.

DTC Description	DTC	Freeze Frame
68-13 Brake Pedal Position Switch Circuit Malfunction		

GETtheMANUALS.org

Is DTC 68-13 indicated?

YES : Go to step 12.

NO : If the PCM was updated, troubleshooting is complete. If the PCM was substituted, **replace the original PCM** See **PCM UPDATE** or **PCM REMOVAL AND INSTALLATION** .

12. VSA modulator-control unit check (update):
    - 1. **Update the VSA modulator-control unit if it does not have the latest software** See **VSA MODULATOR-CONTROL UNIT UPDATE**, **VSA MODULATOR-CONTROL UNIT REMOVAL AND INSTALLATION** or **VSA SENSOR NEUTRAL POSITION MEMORIZATION**.
    - 2. Turn the ignition switch to LOCK (0).
    - 3. Turn the ignition switch to ON (II), then press the brake pedal hard for 1 second or more.
    - 4. Check for DTCs with the HDS.

DTC Description	DTC	Freeze Frame

Is DTC 68-13 indicated?

YES : Check for loose terminals in the VSA modulator-control unit 38P connector. If the VSA modulator-control unit was updated and the symptom/indication is still present, **replace the VSA modulator-control unit** See **VSA MODULATOR-CONTROL UNIT REMOVAL AND INSTALLATION** or **VSA MODULATOR-CONTROL UNIT UPDATE** or **VSA SENSOR NEUTRAL POSITION MEMORIZATION**.

NO : Troubleshooting is complete. If any other DTCs are indicated, go to the indicated DTCs troubleshooting.

DTC 71-80: ABNORMAL SLIP MALFUNCTION

GETtheMANUALS.org

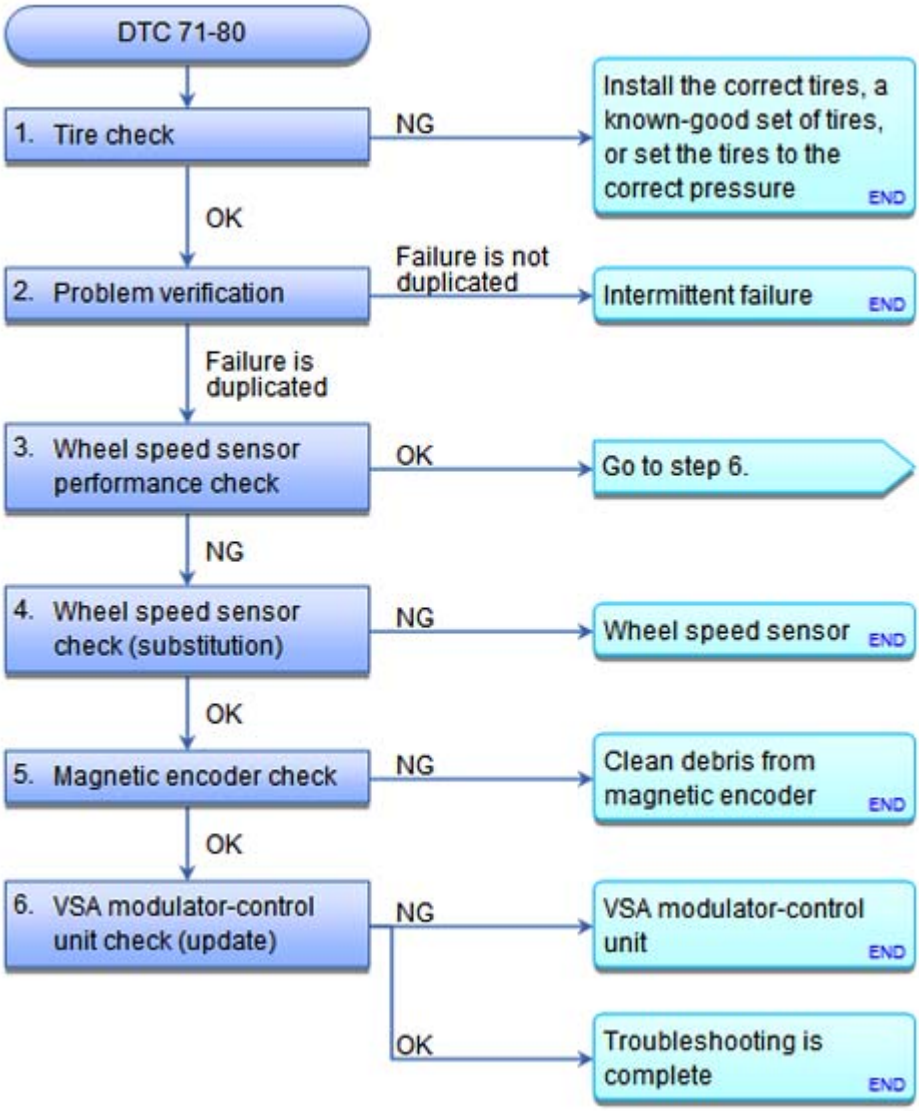

Fig. 49: VSA DTC Troubleshooting Flow Chart (71-80)
Courtesy of AMERICAN HONDA MOTOR CO., INC.

NOTE: **BEFORE YOU TROUBLESHOOT, RECORD ALL FREEZE DATA AND ANY ON-BOARD SNAPSHOT, AND REVIEW THE HOW TO TROUBLESHOOT THE VSA SYSTEM .**

DTC Description	DTC	Freeze Frame
71-80 Abnormal Slip Malfunction		

1. Tire check:
   - 1. Turn the ignition switch to LOCK (0).
   - 2. **CHECK ALL FOUR TIRES FOR SIZE, INFLATION, AND WEAR** .

GETtheMANUALS.org

Are all four tires the correct size, properly inflated, and worn evenly?

YES : Go to step 2.

NO : Install the correct tires, a known-good set of tires, or set the tires to the correct pressure, and retest by test-driving.

2. Problem verification:
   - 1. Turn the ignition switch to ON (II).
   - 2. Clear the DTC with the HDS.
   - 3. Turn the ignition switch to LOCK (0).
   - 4. Test-drive the vehicle at 12 mph (20 km/h) or more for 90 seconds or more.

     NOTE: Drive the vehicle on the road, not on a lift.

   - 5. Check for DTCs with the HDS.

DTC Description	DTC	Freeze Frame
71-80 Abnormal Slip Malfunction		

Is DTC 71-80 indicated?

YES : The failure is duplicated. Go to step 3.

NO : Intermittent failure, the system is OK at this time. Refer to intermittent failures troubleshooting.

3. Wheel speed sensor performance check:
   - 1. Test-drive the vehicle at 12 mph (20 km/h) or more.

     NOTE: Drive the vehicle on the road, not on a lift.

   - 2. Check the parameter(s) below with the HDS.

Signal	Current conditions	
	Values	Unit
RIGHT FRONT WHEEL SPEED		
LEFT FRONT WHEEL SPEED		
RIGHT REAR WHEEL SPEED		
LEFT REAR WHEEL SPEED		

Are one of the four values different?

YES : Go to step 4.

GETtheMANUALS.org

NO : Go to step 6.

4. Wheel speed sensor check (substitution):
   - 1. Turn the ignition switch to LOCK (0).
   - 2. **Substitute a known-good wheel speed sensor** See **REAR WHEEL SPEED SENSOR REMOVAL AND INSTALLATION** or **FRONT WHEEL SPEED SENSOR REMOVAL AND INSTALLATION** .

Appropriate Wheel Speed Sensor
Right-front
Left-front
Right-rear
Left-rear

   - 3. Turn the ignition switch to ON (II).
   - 4. Clear the DTC with the HDS.
   - 5. Turn the ignition switch to LOCK (0).
   - 6. Test-drive the vehicle at 12 mph (20 km/h) or more for 90 seconds or more.

NOTE: **Drive the vehicle on the road, not on a lift.**

   - 7. Check for DTCs with the HDS.

DTC Description	DTC	Freeze Frame
71-80 Abnormal Slip Malfunction		

Is DTC 71-80 indicated?

YES : Go to step 5.

NO : **Replace the original wheel speed sensor** See **FRONT WHEEL SPEED SENSOR REMOVAL AND INSTALLATION** or **REAR WHEEL SPEED SENSOR REMOVAL AND INSTALLATION** .

5. Magnetic encoder check:
   - 1. Turn the ignition switch to LOCK (0).
   - 2. Inspect the magnetic encoder for damage, debris, and correct installation.
     - Front: **REMOVE THE DRIVESHAFT OUTBOARD JOINT FROM THE APPROPRIATE WHEEL HUB** .
     - Rear: **REMOVE THE HUB BEARING UNIT** .

Is the magnetic encoder surface OK?

YES : Go to step 6.

GETtheMANUALS.org

NO : Clean debris from the magnetic encoder surface on the wheel bearing or the hub bearing unit. If the DTC is still present, replace the appropriate **WHEEL BEARING** or the **HUB BEARING UNIT** .

6. VSA modulator-control unit check (update):
   - 1. **Update the VSA modulator-control unit if it does not have the latest software** See **VSA SENSOR NEUTRAL POSITION MEMORIZATION** or **VSA MODULATOR-CONTROL UNIT UPDATE** or **VSA MODULATOR-CONTROL UNIT REMOVAL AND INSTALLATION**.
   - 2. Turn the ignition switch to LOCK (0).
   - 3. Test-drive the vehicle at 12 mph (20 km/h) or more for 90 seconds or more.

     NOTE: Drive the vehicle on the road, not on a lift.

   - 4. Check for DTCs with the HDS.

DTC Description	DTC	Freeze Frame

Is DTC 71-80 indicated?

YES : Check for loose terminals in the VSA modulator-control unit 38P connector. If the VSA modulator-control unit was updated and the symptom/indication is still present, **replace the VSA modulator-control unit** See **VSA SENSOR NEUTRAL POSITION MEMORIZATION** or **VSA MODULATOR-CONTROL UNIT UPDATE** or **VSA MODULATOR-CONTROL UNIT REMOVAL AND INSTALLATION**.

NO : Troubleshooting is complete. If any other DTCs are indicated, go to the indicated DTCs troubleshooting.

DTC 71-81: RIGHT-FRONT WHEEL ABNORMAL SLIP MALFUNCTION; DTC 71-82: LEFT-FRONT WHEEL ABNORMAL SLIP MALFUNCTION; DTC 71-83: RIGHT-REAR WHEEL ABNORMAL SLIP MALFUNCTION; DTC 71-84: LEFT-REAR WHEEL ABNORMAL SLIP MALFUNCTION

GETtheMANUALS.org

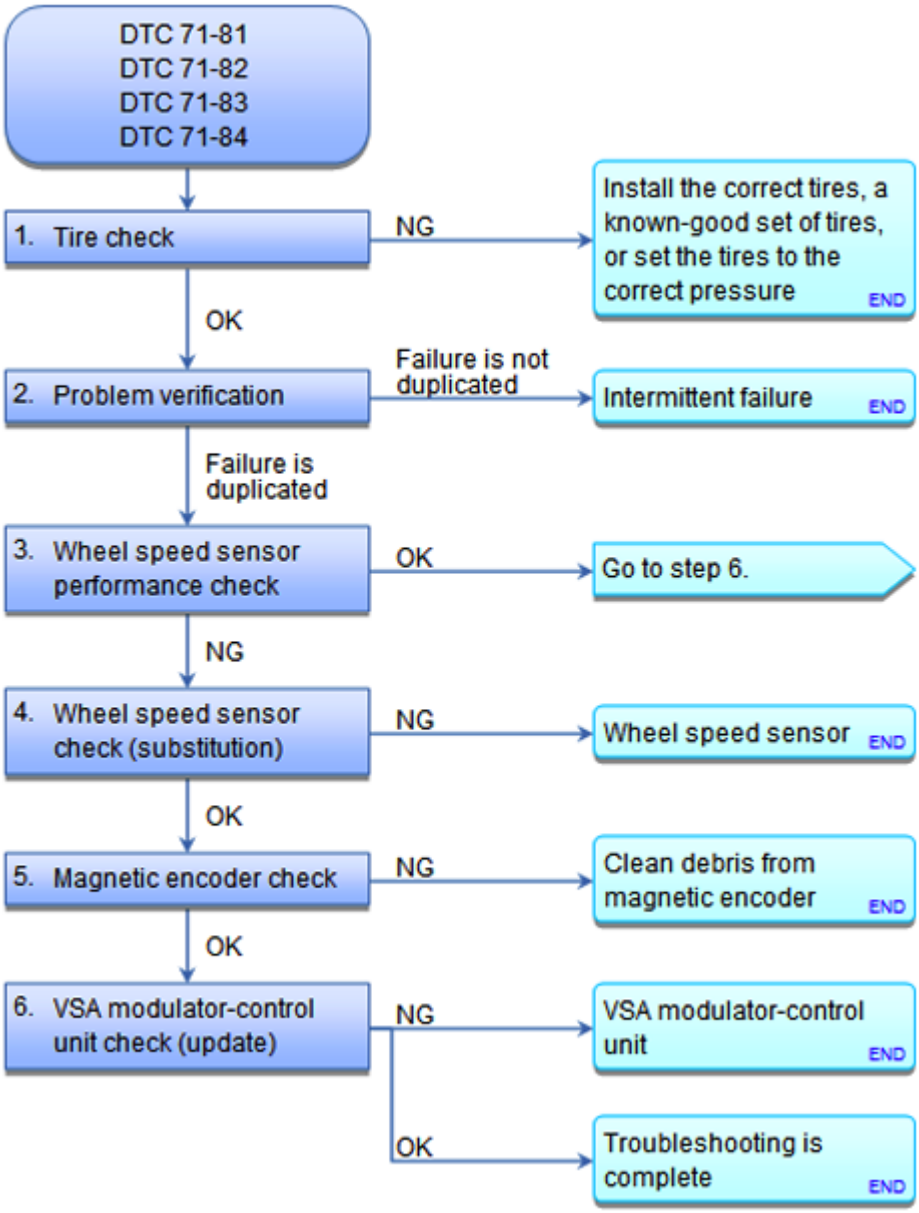

Fig. 50: VSA DTC Troubleshooting Flow Chart (71-81, 71-82, 71-83, 71-84)
Courtesy of AMERICAN HONDA MOTOR CO., INC.

NOTE: **BEFORE YOU TROUBLESHOOT, RECORD ALL FREEZE DATA AND ANY ON-BOARD SNAPSHOT, AND REVIEW THE HOW TO TROUBLESHOOT THE VSA SYSTEM .**

DTC Description	DTC	Freeze Frame
71-81 Right-Front Wheel Abnormal Slip Malfunction		
71-82 Left-Front Wheel Abnormal Slip Malfunction		
71-83 Right-Rear Wheel Abnormal Slip Malfunction		
71-84 Left-Rear Wheel Abnormal Slip Malfunction		

GETtheMANUALS.org

1. Tire check:
   - 1. Turn the ignition switch to LOCK (0).
   - 2. **CHECK ALL FOUR TIRES FOR SIZE, INFLATION, AND WEAR** .

   Are all four tires the correct size, properly inflated, and worn evenly?

   YES : Go to step 2.

   NO : Install the correct tires, a known-good set of tires, or set the tires to the correct pressure, and retest by test-driving.

2. Problem verification:
   - 1. Turn the ignition switch to ON (II).
   - 2. Clear the DTC with the HDS.
   - 3. Turn the ignition switch to LOCK (0).
   - 4. Test-drive the vehicle at 12 mph (20 km/h) or more for 90 seconds or more.

     NOTE: Drive the vehicle on the road, not on a lift.

   - 5. Check for DTCs with the HDS.

DTC Description	DTC	Freeze Frame
71-81 Right-Front Wheel Abnormal Slip Malfunction		
71-82 Left-Front Wheel Abnormal Slip Malfunction		
71-83 Right-Rear Wheel Abnormal Slip Malfunction		
71-84 Left-Rear Wheel Abnormal Slip Malfunction		

   Is DTC 71-81, 71-82, 71-83, or 71-84 indicated?

   YES : The failure is duplicated. Go to step 3.

   NO : Intermittent failure, the system is OK at this time. Refer to intermittent failures troubleshooting.

3. Wheel speed sensor performance check:
   - 1. Test-drive the vehicle at 12 mph (20 km/h) or more.

     NOTE: Drive the vehicle on the road, not on a lift.

   - 2. Check the parameter(s) below with the HDS.

Signal	Current conditions	
	Values	Unit
RIGHT FRONT WHEEL SPEED		

GETtheMANUALS.org

LEFT FRONT WHEEL SPEED		
RIGHT REAR WHEEL SPEED		
LEFT REAR WHEEL SPEED		

Is any one of the four values different?

YES : Go to step 4.

NO : Go to step 6.

4. Wheel speed sensor check (substitution):
   - 1. Turn the ignition switch to LOCK (0).
   - 2. **Substitute a known-good wheel speed sensor** See **FRONT WHEEL SPEED SENSOR REMOVAL AND INSTALLATION** or **REAR WHEEL SPEED SENSOR REMOVAL AND INSTALLATION** .

Appropriate Wheel Speed Sensor
Right-front
Left-front
Right-rear
Left-rear

   - 3. Turn the ignition switch to ON (II).
   - 4. Clear the DTC with the HDS.
   - 5. Turn the ignition switch to LOCK (0).
   - 6. Test-drive the vehicle at 12 mph (20 km/h) or more for 90 seconds or more.

NOTE: **Drive the vehicle on the road, not on a lift.**

   - 7. Check for DTCs with the HDS.

DTC Description	DTC	Freeze Frame
71-81 Right-Front Wheel Abnormal Slip Malfunction		
71-82 Left-Front Wheel Abnormal Slip Malfunction		
71-83 Right-Rear Wheel Abnormal Slip Malfunction		
71-84 Left-Rear Wheel Abnormal Slip Malfunction		

Is DTC 71-81, 71-82, 71-83, or 71-84 indicated?

YES : Go to step 5.

NO : **Replace the original wheel speed sensor** See **FRONT WHEEL SPEED SENSOR REMOVAL AND INSTALLATION** or **REAR WHEEL SPEED SENSOR REMOVAL AND INSTALLATION** .

GETtheMANUALS.org

5. Magnetic encoder check:
   - 1. Turn the ignition switch to LOCK (0).
   - 2. Inspect the magnetic encoder for damage, debris, and correct installation.
     - Front: **REMOVE THE DRIVESHAFT OUTBOARD JOINT FROM THE APPROPRIATE WHEEL HUB** .
     - Rear: **REMOVE THE HUB BEARING UNIT** .

   Is the magnetic encoder surface OK?

   YES : Go to step 6.

   NO : Clean debris from the magnetic encoder surface on the wheel bearing or the hub bearing unit. If the DTC is still present, replace the appropriate **WHEEL BEARING** or the **HUB BEARING UNIT** .

6. VSA modulator-control unit check (update):
   - 1. **Update the VSA modulator-control unit if it does not have the latest software** See **VSA MODULATOR-CONTROL UNIT UPDATE**, **VSA MODULATOR-CONTROL UNIT REMOVAL AND INSTALLATION** or **VSA SENSOR NEUTRAL POSITION MEMORIZATION**.
   - 2. Turn the ignition switch to LOCK (0).
   - 3. Test-drive the vehicle at 12 mph (20 km/h) or more for 90 seconds or more.

     NOTE: Drive the vehicle on the road, not on a lift.

   - 4. Check for DTCs with the HDS.

DTC Description	DTC	Freeze Frame

   Is DTC 71-81, 71-82, 71-83, or 71-84 indicated?

   YES : Check for loose terminals in the VSA modulator-control unit 38P connector. If the VSA modulator-control unit was updated and the symptom/indication is still present, **replace the VSA modulator-control unit** See **VSA MODULATOR-CONTROL UNIT UPDATE** or **VSA SENSOR NEUTRAL POSITION MEMORIZATION**, **VSA MODULATOR-CONTROL UNIT REMOVAL AND INSTALLATION**, then go to step 2 and recheck. If the DTC is still present, replace the appropriate **WHEEL BEARING** or the **HUB BEARING UNIT** .

   NO : Troubleshooting is complete. If any other DTCs are indicated, go to the indicated DTCs troubleshooting.

DTC 81-11: MODULATOR-CONTROL UNIT INTERNAL CIRCUIT MALFUNCTION

GETtheMANUALS.org

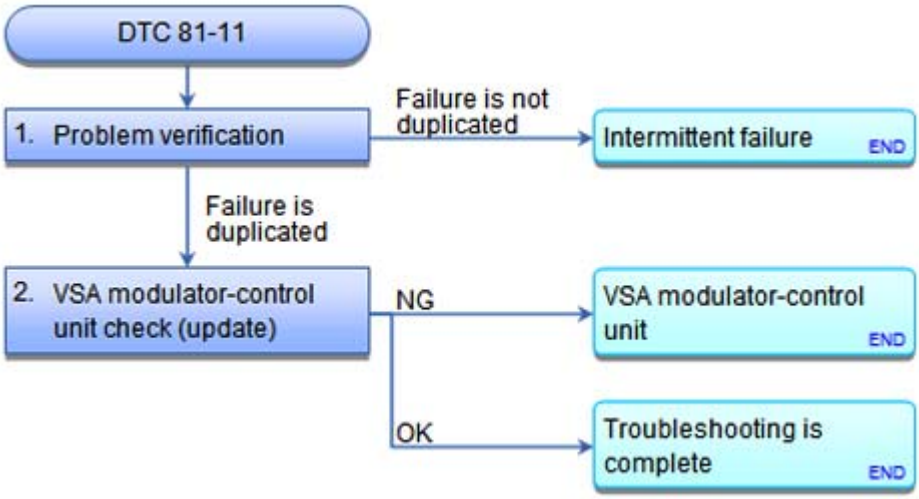

Fig. 51: VSA DTC Troubleshooting Flow Chart (81-11)
Courtesy of AMERICAN HONDA MOTOR CO., INC.

NOTE: **BEFORE YOU TROUBLESHOOT, RECORD ALL FREEZE DATA AND ANY ON-BOARD SNAPSHOT, AND REVIEW THE HOW TO TROUBLESHOOT THE VSA SYSTEM .**

DTC Description	DTC	Freeze Frame
81-11 Modulator-Control Unit Internal Circuit Malfunction		

1. Problem verification:
   - 1. Turn the ignition switch to ON (II).
   - 2. Clear the DTC with the HDS.
   - 3. Turn the ignition switch to LOCK (0), then turn it to ON (II) again.
   - 4. Check for DTCs with the HDS.

DTC Description	DTC	Freeze Frame
81-11 Modulator-Control Unit Internal Circuit Malfunction		

Is DTC 81-11 indicated?

YES : The failure is duplicated. Go to step 2.

NO : Intermittent failure, the system is OK at this time. Refer to intermittent failures troubleshooting.

2. VSA modulator-control unit check (update):
   - 1. **Update the VSA modulator-control unit if it does not have the latest software** See **VSA SENSOR NEUTRAL POSITION MEMORIZATION**, **VSA MODULATOR-CONTROL UNIT UPDATE** or **VSA MODULATOR-CONTROL UNIT REMOVAL AND INSTALLATION**.

GETtheMANUALS.org

- 2. Turn the ignition switch to LOCK (0), then turn it to ON (II) again.
- 3. Check for DTCs with the HDS.

DTC Description	DTC	Freeze Frame

Is DTC 81-11 indicated?

YES : Check for loose terminals in the VSA modulator-control unit 38P connector. If the VSA modulator-control unit was updated and the symptom/indication is still present, **replace the VSA modulator-control unit** See **VSA SENSOR NEUTRAL POSITION MEMORIZATION**, **VSA MODULATOR-CONTROL UNIT REMOVAL AND INSTALLATION** or **VSA MODULATOR-CONTROL UNIT UPDATE**.

NO : Troubleshooting is complete. If any other DTCs are indicated, go to the indicated DTCs troubleshooting.

DTC 81-19: YAW RATE SENSOR (INSIDE OF MODULATOR-CONTROL UNIT) INTERNAL CIRCUIT MALFUNCTION; DTC 81-20: ACCELERATION SENSOR (INSIDE OF MODULATOR-CONTROL UNIT) INTERNAL CIRCUIT MALFUNCTION

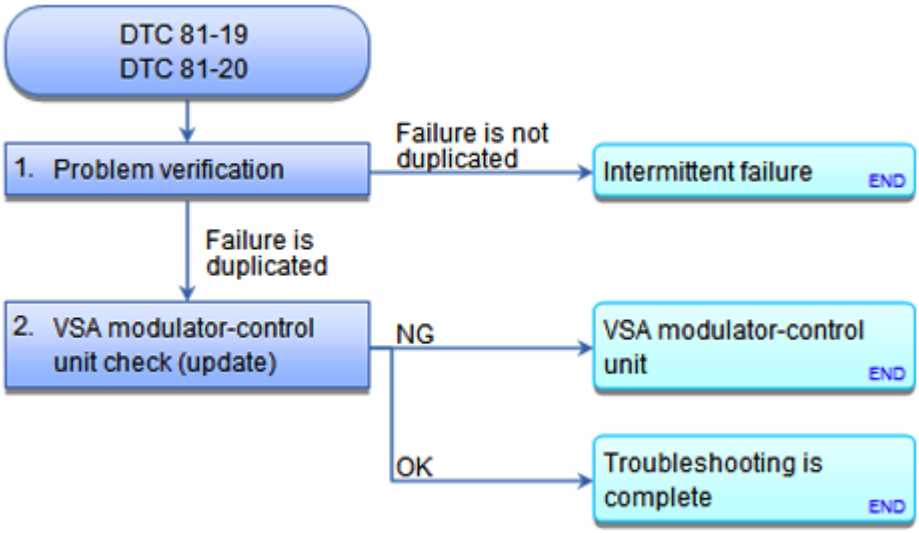

Fig. 52: VSA DTC Troubleshooting Flow Chart (81-19, 81-20)
Courtesy of AMERICAN HONDA MOTOR CO., INC.

NOTE:

- **BEFORE YOU TROUBLESHOOT, RECORD ALL FREEZE DATA AND ANY ON-BOARD SNAPSHOT, AND REVIEW THE HOW TO TROUBLESHOOT THE VSA SYSTEM .**
- **The yaw rate-acceleration sensor is built into the VSA modulator-control**

GETtheMANUALS.org

unit.

- **Before troubleshooting, check the VSA modulator-control unit for proper mounting. If not properly installed the VSA modulator-control unit may set these codes.**

DTC Description	DTC	Freeze Frame
81-19 Yaw Rate Sensor (Inside of Modulator-Control Unit) Internal Circuit Malfunction		
81-20 Acceleration Sensor (Inside of Modulator-Control Unit) Internal Circuit Malfunction		

1. Problem verification:
   - 1. Turn the ignition switch to ON (II).
   - 2. Clear the DTC with the HDS.
   - 3. Turn the ignition switch to LOCK (0), then turn it to ON (II) again.
   - 4. Check for DTCs with the HDS.

DTC Description	DTC	Freeze Frame
81-19 Yaw Rate Sensor (Inside of Modulator-Control Unit) Internal Circuit Malfunction		
81-20 Acceleration Sensor (Inside of Modulator-Control Unit) Internal Circuit Malfunction		

Is DTC 81-19 or 81-20 indicated?

YES : The failure is duplicated. Go to step 2.

NO : Intermittent failure, the system is OK at this time. Refer to intermittent failures troubleshooting.

2. VSA modulator-control unit check (update):
   - 1. **Update the VSA modulator-control unit if it does not have the latest software** See **VSA MODULATOR-CONTROL UNIT UPDATE**, **VSA SENSOR NEUTRAL POSITION MEMORIZATION** or **VSA MODULATOR-CONTROL UNIT REMOVAL AND INSTALLATION**.
   - 2. Turn the ignition switch to LOCK (0), then turn it to ON (II) again.
   - 3. Check for DTCs with the HDS.

DTC Description	DTC	Freeze Frame

Is DTC 81-19 or 81-20 indicated?

GETtheMANUALS.org

YES : Check for loose terminals in the VSA modulator-control unit 38P connector. If the VSA modulator-control unit was updated and the symptom/indication is still present, **replace the VSA modulator-control unit** See **VSA SENSOR NEUTRAL POSITION MEMORIZATION**, **VSA MODULATOR-CONTROL UNIT REMOVAL AND INSTALLATION** or **VSA MODULATOR-CONTROL UNIT UPDATE**.

NO : Troubleshooting is complete. If any other DTCs are indicated, go to the indicated DTCs troubleshooting.

DTC 83-11: ECM/PCM (PGM-FI) MALFUNCTION

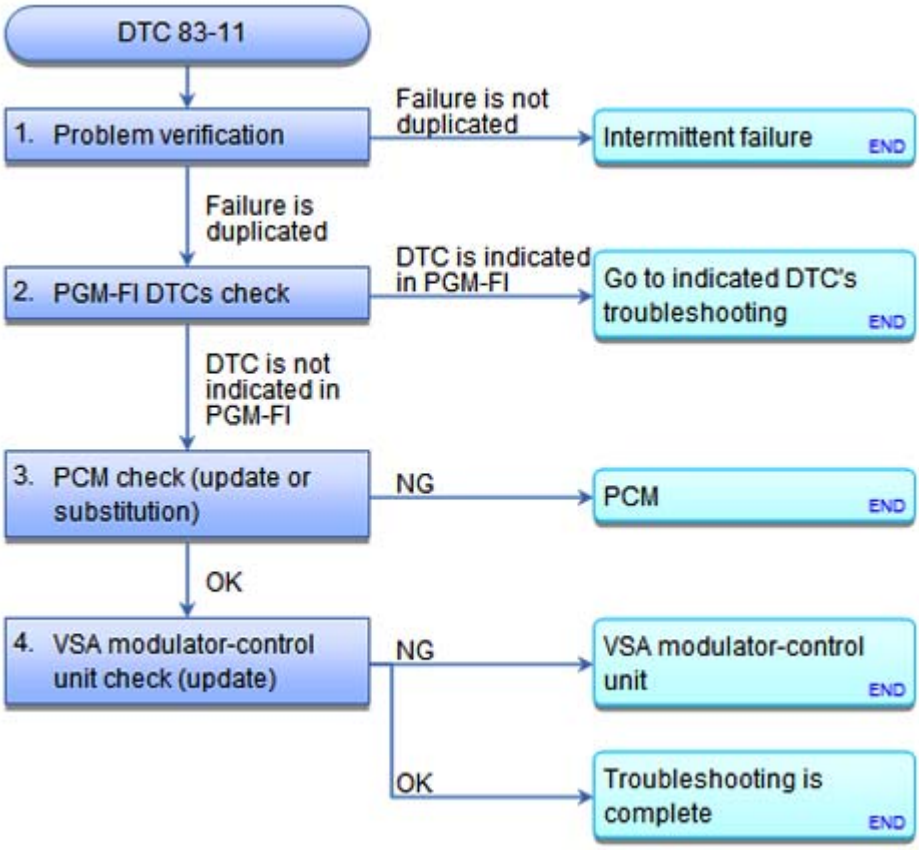

Fig. 53: VSA DTC Troubleshooting Flow Chart (83-11)
Courtesy of AMERICAN HONDA MOTOR CO., INC.

NOTE: **BEFORE YOU TROUBLESHOOT, RECORD ALL FREEZE DATA AND ANY ON-BOARD SNAPSHOT, AND REVIEW THE HOW TO TROUBLESHOOT THE VSA SYSTEM .**

DTC Description	DTC	Freeze Frame
83-11 ECM/PCM (PGM-FI) Malfunction		

1. Problem verification:

GETtheMANUALS.org

- 1. Turn the ignition switch to ON (II).
- 2. Clear the DTC with the HDS.
- 3. Turn the ignition switch to LOCK (0), then turn it to ON (II) again.
- 4. Check for DTCs with the HDS.

DTC Description	DTC	Freeze Frame
83-11 ECM/PCM (PGM-FI) Malfunction		

Is DTC 83-11 indicated?

YES : The failure is duplicated. Go to step 2.

NO : Intermittent failure, the system is OK at this time. Refer to intermittent failures troubleshooting.

2. PGM-FI DTCs check:
   - 1. Check for PGM-FI DTCs with the HDS.

DTC Description	Confirmed DTC	Pending DTC	Freeze Frame

Are any DTCs indicated?

YES : Go to indicated DTC's troubleshooting.

NO : Go to step 3.

3. PCM check (update or substitution):
   - 1. **Update the PCM if it does not have the latest software** See **PCM REMOVAL AND INSTALLATION** or **PCM UPDATE** , or **substitute a known-good PCM** See **PCM REMOVAL AND INSTALLATION** or **PCM UPDATE** .
   - 2. Clear the DTC with the HDS.
   - 3. Turn the ignition switch to LOCK (0), then turn it to ON (II) again.
   - 4. Check for DTCs with the HDS.

DTC Description	DTC	Freeze Frame
83-11 ECM/PCM (PGM-FI) Malfunction		

Is DTC 83-11 indicated?

YES : Go to step 4.

NO : If the PCM was updated, troubleshooting is complete. If the PCM was substituted, **replace the original PCM** See **PCM REMOVAL AND INSTALLATION** or **PCM UPDATE** .

GETtheMANUALS.org

4. VSA modulator-control unit check (update):
   - 1. **Update the VSA modulator-control unit if it does not have the latest software** See **VSA SENSOR NEUTRAL POSITION MEMORIZATION** or **VSA MODULATOR-CONTROL UNIT UPDATE** or **VSA MODULATOR-CONTROL UNIT REMOVAL AND INSTALLATION**.
   - 2. Turn the ignition switch to LOCK (0), then turn it to ON (II) again.
   - 3. Check for DTCs with the HDS.

DTC Description	DTC	Freeze Frame

Is DTC 83-11 indicated?

YES : Check for loose terminals in the VSA modulator-control unit 38P connector. If the VSA modulator-control unit was updated and the symptom/indication is still present, **replace the VSA modulator-control unit** See **VSA SENSOR NEUTRAL POSITION MEMORIZATION** or **VSA MODULATOR-CONTROL UNIT UPDATE** or **VSA MODULATOR-CONTROL UNIT REMOVAL AND INSTALLATION**.

NO : Troubleshooting is complete. If any other DTCs are indicated, go to the indicated DTCs troubleshooting.

DTC 86-11: F-CAN BUS-OFF MALFUNCTION

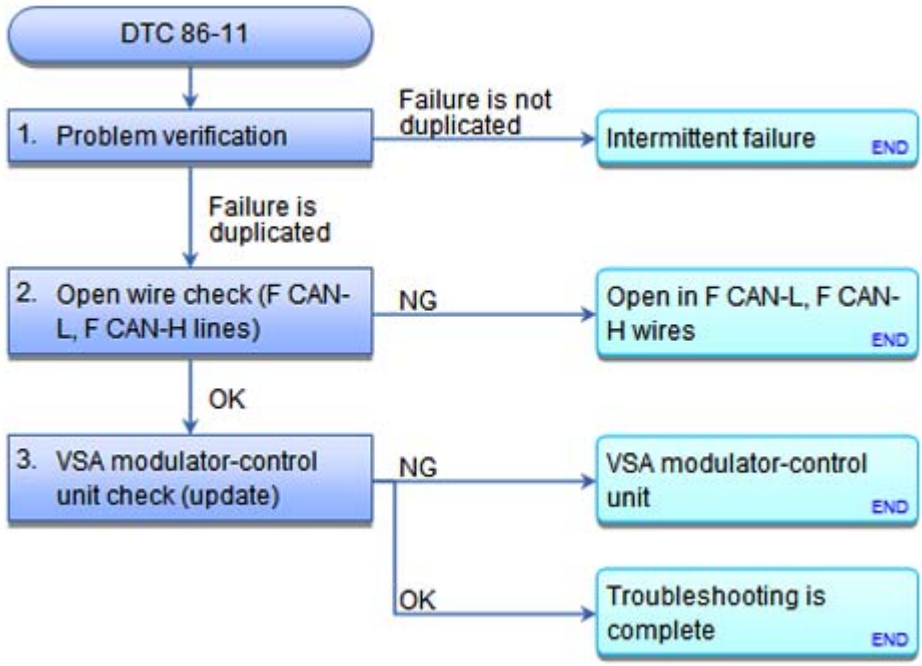

Fig. 54: VSA DTC Troubleshooting Flow Chart (86-11)
Courtesy of AMERICAN HONDA MOTOR CO., INC.

GETtheMANUALS.org

NOTE: **BEFORE YOU TROUBLESHOOT, RECORD ALL FREEZE DATA AND ANY ON-BOARD SNAPSHOT, AND REVIEW THE HOW TO TROUBLESHOOT THE VSA SYSTEM .**

DTC Description	DTC	Freeze Frame
86-11 F-CAN Bus-Off Malfunction		

1. Problem verification:
   - 1. Turn the ignition switch to ON (II).
   - 2. Clear the DTC with the HDS.
   - 3. Turn the ignition switch to LOCK (0).
   - 4. Start the engine for at least 5 seconds.
   - 5. Check for DTCs with the HDS.

DTC Description	DTC	Freeze Frame
86-11 F-CAN Bus-Off Malfunction		

Is DTC 86-11 indicated?

YES : The failure is duplicated. Go to step 2.

NO : Intermittent failure, the system is OK at this time. Refer to intermittent failures troubleshooting.

2. Open wire check (F CAN-L, F CAN-H lines):
   - 1. Turn the ignition switch to LOCK (0).
   - 2. Short the SCS line with the HDS.
   - 3. Disconnect the following connectors.

     VSA modulator-control unit 38P connector

     PCM connector A (49P)

   - 4. Check for continuity between test points 1 and 2.

     Test condition IG LOCK (0)

     VSA modulator-control unit 38P connector: disconnected

     PCM connector A (49P): disconnected

     Test circuit F CAN-L

     Test point 1 VSA modulator-control unit 38P connector No. 26 (RED)

GETtheMANUALS.org

Test point 2 PCM connector A (49P) No. 4 (RED)

Test circuit F CAN-H

Test point 1 VSA modulator-control unit 38P connector No. 38 (WHT)

Test point 2 PCM connector A (49P) No. 3 (WHT)

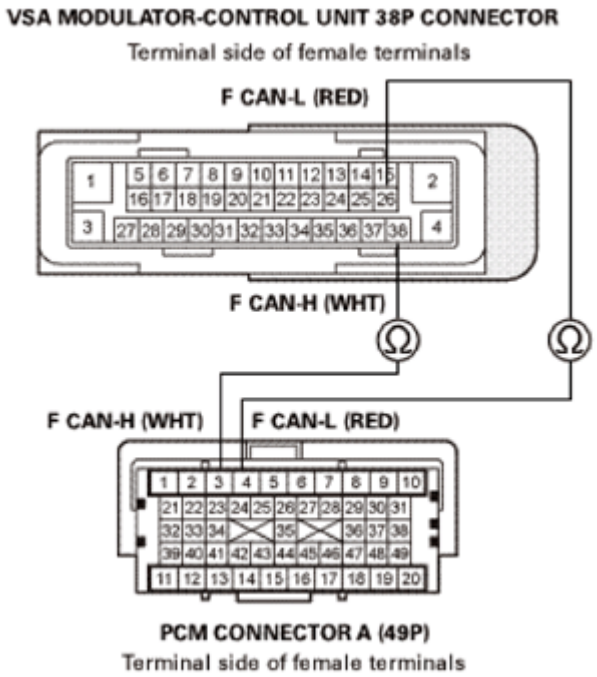

Fig. 55: Checking Continuity Between VSA Modulator-Control Unit 38P Connector No. 26 (RED) And PCM Connector A (49P) No. 4 (RED)
Courtesy of AMERICAN HONDA MOTOR CO., INC.

Is there continuity?

YES : The F CAN-L, F CAN-H wires are OK. Go to step 3.

NO : Repair an open in the wire between the PCM and the VSA modulator-control unit.

3. VSA modulator-control unit check (update):
   - 1. Reconnect the following connectors.

     VSA modulator-control unit 38P connector

     PCM connector A (49P)

   - 2. **Update the VSA modulator-control unit if it does not have the latest software** See **VSA SENSOR NEUTRAL POSITION MEMORIZATION**, **VSA MODULATOR-CONTROL**

GETtheMANUALS.org

UNIT UPDATE or **VSA MODULATOR-CONTROL UNIT REMOVAL AND INSTALLATION**.

- 3. Turn the ignition switch to LOCK (0).
- 4. Start the engine for at least 5 seconds.
- 5. Check for DTCs with the HDS.

DTC Description	DTC	Freeze Frame

Is DTC 86-11 indicated?

YES : Check for loose terminals in the VSA modulator-control unit 38P connector. If the VSA modulator-control unit was updated and the symptom/indication is still present, **replace the VSA modulator-control unit** See **VSA SENSOR NEUTRAL POSITION MEMORIZATION** or **VSA MODULATOR-CONTROL UNIT UPDATE** or **VSA MODULATOR-CONTROL UNIT REMOVAL AND INSTALLATION**.

NO : Troubleshooting is complete. If any other DTCs are indicated, go to the indicated DTCs troubleshooting.

DTC 86-12: F-CAN COMMUNICATION WITH ECM/PCM (PGM-FI) MALFUNCTION; DTC 86-13: F-CAN COMMUNICATION WITH PCM (AT/CVT) MALFUNCTION

GETtheMANUALS.org

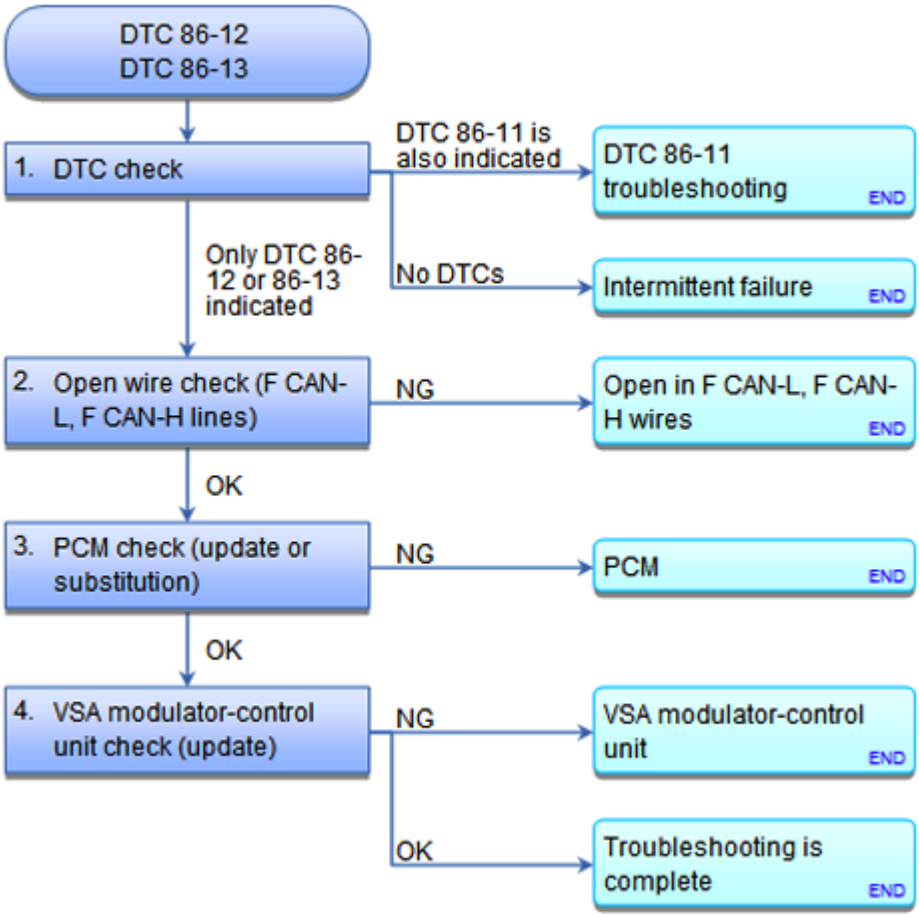

Fig. 56: VSA DTC Troubleshooting Flow Chart (86-12, 86-13)
Courtesy of AMERICAN HONDA MOTOR CO., INC.

NOTE: **BEFORE YOU TROUBLESHOOT, RECORD ALL FREEZE DATA AND ANY ON-BOARD SNAPSHOT, AND REVIEW THE HOW TO TROUBLESHOOT THE VSA SYSTEM .**

DTC Description	DTC	Freeze Frame
86-12 F-CAN Communication With ECM/PCM (PGM-FI) Malfunction		
86-13 F-CAN Communication With PCM (AT/CVT) Malfunction		

1. DTC check:
   - 1. Turn the ignition switch to ON (II).
   - 2. Clear the DTC with the HDS.
   - 3. Turn the ignition switch to LOCK (0).
   - 4. Start the engine for at least 5 seconds.
   - 5. Check for DTCs with the HDS.

GETtheMANUALS.org

DTC Description	DTC	Freeze Frame
86-11 F-CAN Bus-Off Malfunction		
86-12 F-CAN Communication With ECM/PCM (PGM-FI) Malfunction		
86-13 F-CAN Communication With PCM (AT/CVT) Malfunction		

Is DTC 86-12 or 86-13 indicated?

YES : If DTC 86-12 or 86-13 are only indicated, go to step 2.

YES : If DTC 86-11 is also indicated, **go to DTC 86-11**.

NO : Intermittent failure, the system is OK at this time. Refer to intermittent failures troubleshooting.

2. Open wire check (F CAN-L, F CAN-H lines):
   - 1. Turn the ignition switch to LOCK (0).
   - 2. Short the SCS line with the HDS.
   - 3. Disconnect the following connectors.

     VSA modulator-control unit 38P connector

     PCM connector A (49P)

   - 4. Check for continuity between test points 1 and 2.

     Test condition IG LOCK (0)

     VSA modulator-control unit 38P connector: disconnected

     PCM connector A (49P): disconnected

     Test circuit F CAN-L

     Test point 1 VSA modulator-control unit 38P connector No. 26 (RED)

     Test point 2 PCM connector A (49P) No. 4 (RED)

     Test circuit F CAN-H

     Test point 1 VSA modulator-control unit 38P connector No. 38 (WHT)

     Test point 2 PCM connector A (49P) No. 3 (WHT)

GETtheMANUALS.org

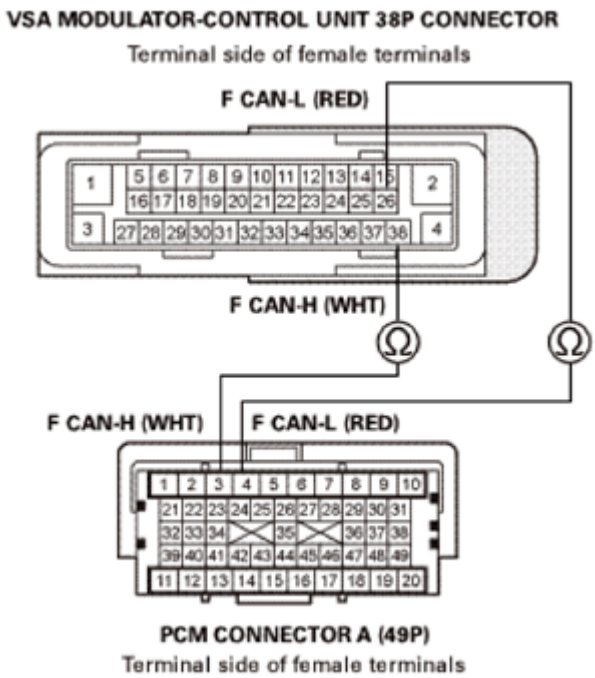

Fig. 57: Checking Continuity Between VSA Modulator-Control Unit 38P Connector No. 26 (RED) And PCM Connector A (49P) No. 4 (RED)
Courtesy of AMERICAN HONDA MOTOR CO., INC.

Is there continuity?

YES : The F CAN-L, F CAN-H wires are OK. Go to step 3.

NO : Repair an open in the wire between the PCM and the VSA modulator-control unit.

3. PCM check (update or substitution):
   - 1. Reconnect the following connectors.

     VSA modulator-control unit 38P connector

     PCM connector A (49P)

   - 2. **Update the PCM if it does not have the latest software** See **PCM REMOVAL AND INSTALLATION** or **PCM UPDATE** , or **substitute a known-good PCM** See **PCM UPDATE** or **PCM REMOVAL AND INSTALLATION** .
   - 3. Clear the DTC with the HDS.
   - 4. Turn the ignition switch to LOCK (0).
   - 5. Start the engine for at least 5 seconds.
   - 6. Check for DTCs with the HDS.

DTC Description	DTC	Freeze Frame

GETtheMANUALS.org

86-12 F-CAN Communication With ECM/PCM (PGM-FI) Malfunction		
86-13 F-CAN Communication With PCM (AT/CVT) Malfunction		

Is DTC 86-12 or 86-13 indicated?

YES : Go to step 4.

NO : If the PCM was updated, troubleshooting is complete. If the PCM was substituted, **replace the original PCM** See **PCM REMOVAL AND INSTALLATION** or **PCM UPDATE** .

4. VSA modulator-control unit check (update):
   - 1. **Update the VSA modulator-control unit if it does not have the latest software** See **VSA SENSOR NEUTRAL POSITION MEMORIZATION**, **VSA MODULATOR-CONTROL UNIT REMOVAL AND INSTALLATION** or **VSA MODULATOR-CONTROL UNIT UPDATE**.
   - 2. Turn the ignition switch to LOCK (0).
   - 3. Start the engine for at least 5 seconds.
   - 4. Check for DTCs with the HDS.

DTC Description	DTC	Freeze Frame

Is DTC 86-12 or 86-13 indicated?

YES : Check for loose terminals in the VSA modulator-control unit 38P connector. If the VSA modulator-control unit was updated and the symptom/indication is still present, **replace the VSA modulator-control unit** See **VSA SENSOR NEUTRAL POSITION MEMORIZATION**, **VSA MODULATOR-CONTROL UNIT UPDATE** or **VSA MODULATOR-CONTROL UNIT REMOVAL AND INSTALLATION**.

NO : Troubleshooting is complete. If any other DTCs are indicated, go to the indicated DTCs troubleshooting.

DTC 86-14: F-CAN COMMUNICATION WITH GAUGE CONTROL MODULE MALFUNCTION

GETtheMANUALS.org

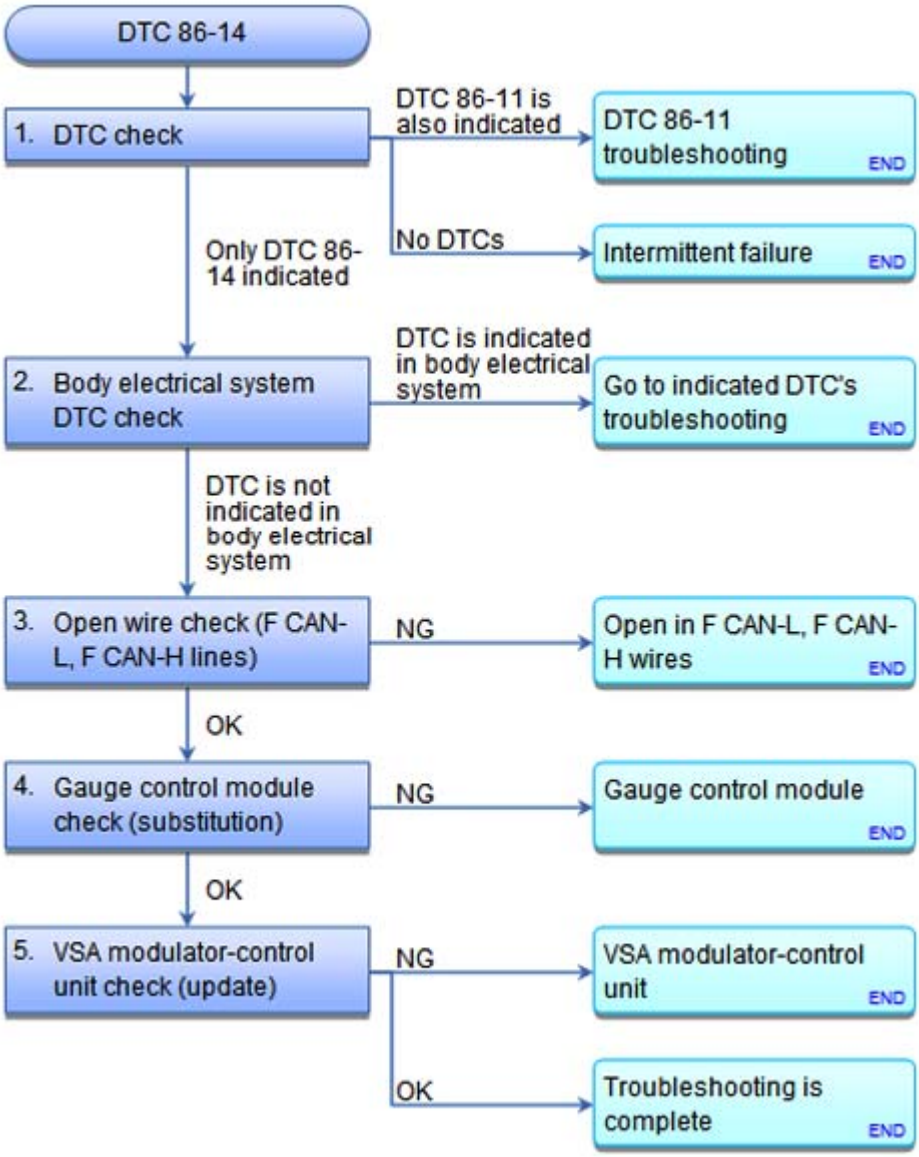

Fig. 58: VSA DTC Troubleshooting Flow Chart (86-14)
Courtesy of AMERICAN HONDA MOTOR CO., INC.

NOTE: **BEFORE YOU TROUBLESHOOT, RECORD ALL FREEZE DATA AND ANY ON-BOARD SNAPSHOT, AND REVIEW THE HOW TO TROUBLESHOOT THE VSA SYSTEM .**

DTC Description	DTC	Freeze Frame
86-14 F-CAN Communication With Gauge Control Module Malfunction		

1. DTC check:
   - 1. Turn the ignition switch to ON (II).
   - 2. Clear the DTC with the HDS.

GETtheMANUALS.org

- 3. Turn the ignition switch to LOCK (0).
- 4. Start the engine for at least 5 seconds.
- 5. Check for DTCs with the HDS.

DTC Description	DTC	Freeze Frame
86-11 F-CAN Bus-Off Malfunction		
86-14 F-CAN Communication With Gauge Control Module Malfunction		

Is DTC 86-14 indicated?

YES : If DTC 86-14 is only indicated, go to step 2.

YES : If DTC 86-11 is also indicated, **go to DTC 86-11**.

NO : Intermittent failure, the system is OK at this time. Refer to intermittent failures troubleshooting.

2. Body electrical system DTC check:
   - 1. Check for gauge control module DTCs with the HDS.

DTC Description	DTC

Are any DTCs indicated?

YES : Go to indicated DTC's troubleshooting.

NO : Go to step 3.

3. Open wire check (F CAN-L, F CAN-H lines):
   - 1. Turn the ignition switch to LOCK (0).
   - 2. Disconnect the following connectors.

     VSA modulator-control unit 38P connector

     Gauge control module 32P connector

   - 3. Check for continuity between test points 1 and 2.

     Test condition IG LOCK (0)

     VSA modulator-control unit 38P connector: disconnected

     Gauge control module 32P connector: disconnected

GETtheMANUALS.org

Test circuit F CAN-L

Test point 1 VSA modulator-control unit 38P connector No. 26 (RED)

Test point 2 Gauge control module 32P connector No. 20 (RED)

Test circuit F CAN-H

Test point 1 VSA modulator-control unit 38P connector No. 38 (WHT)

Test point 2 Gauge control module 32P connector No. 19 (WHT)

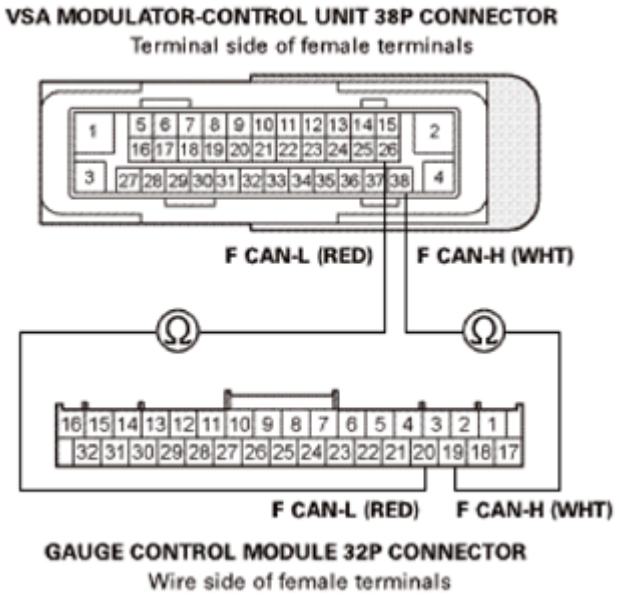

Fig. 59: Checking Continuity Between VSA Modulator-Control Unit 38P Connector No. 26 (RED) And Gauge Control Module 32P Connector No. 20 (RED)
Courtesy of AMERICAN HONDA MOTOR CO., INC.

Is there continuity?

YES : The F CAN-L, F CAN-H wires are OK. Go to step 4.

NO : Repair an open in the wire between the gauge control module and the VSA modulator-control unit.

4. Gauge control module check (substitution):
   - 1. **Substitute a known-good gauge control module** See **Rewriting the ODO Data and Transferring the Maintenance Minder™ Data to a New Gauge Control Module** or **GAUGE CONTROL MODULE REMOVAL AND INSTALLATION** .
   - 2. Reconnect the following connectors.

     VSA modulator-control unit 38P connector

GETtheMANUALS.org

Gauge control module 32P connector

- 3. Turn the ignition switch to ON (II).
- 4. Clear the DTC with the HDS.
- 5. Turn the ignition switch to LOCK (0).
- 6. Start the engine for at least 5 seconds.
- 7. Check for DTCs with the HDS.

DTC Description	DTC	Freeze Frame
86-14 F-CAN Communication With Gauge Control Module Malfunction		

Is DTC 86-14 indicated?

YES : Go to step 5.

NO : **Replace the original gauge control module** See **Rewriting the ODO Data and Transferring the Maintenance Minder™ Data to a New Gauge Control Module** or **GAUGE CONTROL MODULE REMOVAL AND INSTALLATION** .

5. VSA modulator-control unit check (update):
   - 1. **Update the VSA modulator-control unit if it does not have the latest software** See **VSA SENSOR NEUTRAL POSITION MEMORIZATION** or **VSA MODULATOR-CONTROL UNIT UPDATE** or **VSA MODULATOR-CONTROL UNIT REMOVAL AND INSTALLATION**.
   - 2. Turn the ignition switch to LOCK (0).
   - 3. Start the engine for at least 5 seconds.
   - 4. Check for DTCs with the HDS.

DTC Description	DTC	Freeze Frame

Is DTC 86-14 indicated?

YES : Check for loose terminals in the VSA modulator-control unit 38P connector. If the VSA modulator-control unit was updated and the symptom/indication is still present, **replace the VSA modulator-control unit** See **VSA SENSOR NEUTRAL POSITION MEMORIZATION**, **VSA MODULATOR-CONTROL UNIT UPDATE** or **VSA MODULATOR-CONTROL UNIT REMOVAL AND INSTALLATION**.

NO : Troubleshooting is complete. If any other DTCs are indicated, go to the indicated DTCs troubleshooting.

DTC 86-19: F-CAN COMMUNICATION WITH STEERING ANGLE SENSOR MALFUNCTION

GETtheMANUALS.org

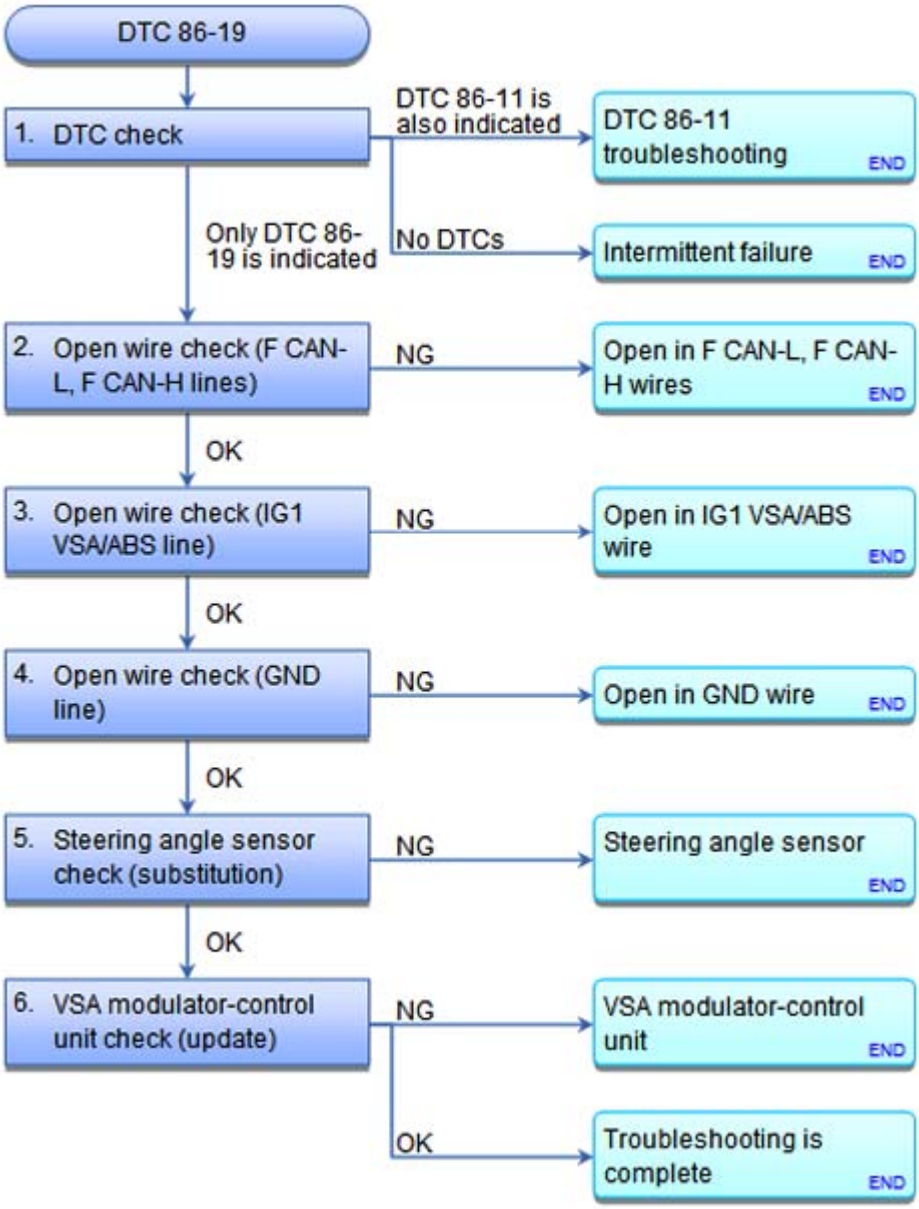

Fig. 60: VSA DTC Troubleshooting Flow Chart (86-19)
Courtesy of AMERICAN HONDA MOTOR CO., INC.

NOTE: **BEFORE YOU TROUBLESHOOT, RECORD ALL FREEZE DATA AND ANY ON-BOARD SNAPSHOT, AND REVIEW THE HOW TO TROUBLESHOOT THE VSA SYSTEM .**

DTC Description	DTC	Freeze Frame
86-19 F-CAN Communication With Steering Angle Sensor Malfunction		

1. DTC check:
   - 1. Turn the ignition switch to ON (II).

GETtheMANUALS.org

- 2. Clear the DTC with the HDS.
- 3. Turn the ignition switch to LOCK (0).
- 4. Start the engine for at least 5 seconds.
- 5. Check for DTCs with the HDS.

DTC Description	DTC	Freeze Frame
86-11 F-CAN Bus-Off Malfunction		
86-19 F-CAN Communication With Steering Angle Sensor Malfunction		

Is DTC 86-19 indicated?

YES : If DTC 86-19 is only indicated, go to step 2.

YES : If DTC 86-11 is also indicated, **go to DTC 86-11**.

NO : Intermittent failure, the system is OK at this time. Refer to intermittent failures troubleshooting.

2. Open wire check (F CAN-L, F CAN-H lines):
   - 1. Turn the ignition switch to LOCK (0).
   - 2. Disconnect the following connectors.

     VSA modulator-control unit 38P connector

     Steering angle sensor 4P connector

   - 3. Check for continuity between test points 1 and 2.

     Test condition IG LOCK (0)

     VSA modulator-control unit 38P connector: disconnected

     Steering angle sensor 4P connector: disconnected

     Test circuit F CAN-L

     Test point 1 VSA modulator-control unit 38P connector No. 26 (RED)

     Test point 2 Steering angle sensor 4P connector No. 3 (RED)

     Test circuit F CAN-H

     Test point 1 VSA modulator-control unit 38P connector No. 38 (WHT)

     Test point 2 Steering angle sensor 4P connector No. 2 (WHT)

GETtheMANUALS.org

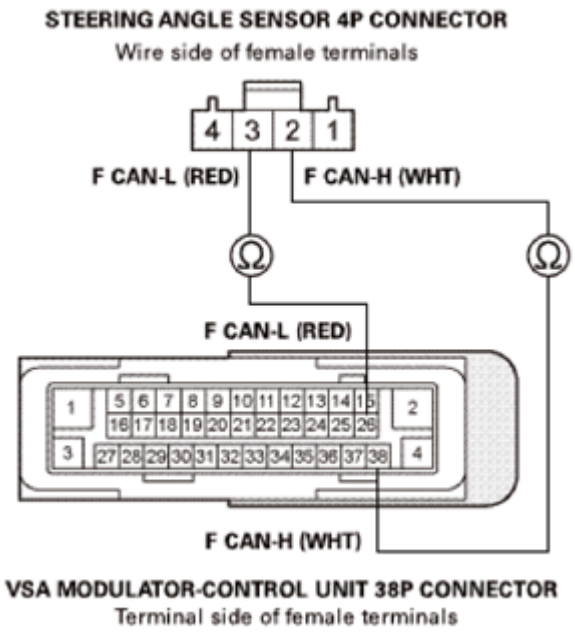

Fig. 61: Checking Continuity Between VSA Modulator-Control Unit 38P Connector No. 26 (RED) And Steering Angle Sensor 4P Connector No. 3 (RED)
Courtesy of AMERICAN HONDA MOTOR CO., INC.

Is there continuity?

YES : The F CAN-L, F CAN-H wires are OK. Go to step 3.

NO : Repair an open in the wire between the steering angle sensor and the VSA modulator-control unit.

3. Open wire check (IG1 VSA/ABS line):
   - 1. Turn the ignition switch to ON (II).
   - 2. Measure the voltage between test points 1 and 2.

     Test condition IG ON (II)

     VSA modulator-control unit 38P connector: disconnected

     Steering angle sensor 4P connector: disconnected

     Test circuit IG1 VSA/ABS

     Test point 1 Steering angle sensor 4P connector No. 1 (GRN)

     Test point 2 Body ground

GETtheMANUALS.org

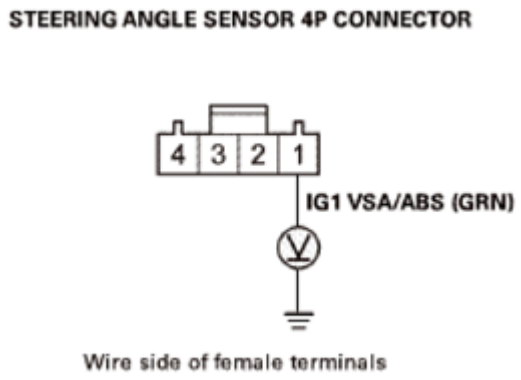

Fig. 62: Measuring Voltage Between Steering Angle Sensor 4P Connector No. 1 (GRN) And Body Ground
Courtesy of AMERICAN HONDA MOTOR CO., INC.

Is there battery voltage?

YES : The IG1 VSA/ABS wire is OK. Go to step 4.

NO : Repair an open in the wire between the No. B24 (7.5 A) fuse in the under-dash fuse/relay box and the steering angle sensor.

4. Open wire check (GND line):
   - 1. Turn the ignition switch to LOCK (0).
   - 2. Check for continuity between test points 1 and 2.

     Test condition IG LOCK (0)

     VSA modulator-control unit 38P connector: disconnected

     Steering angle sensor 4P connector: disconnected

     Test circuit GND

     Test point 1 Steering angle sensor 4P connector No. 4 (BLK)

     Test point 2 Body ground

GETtheMANUALS.org

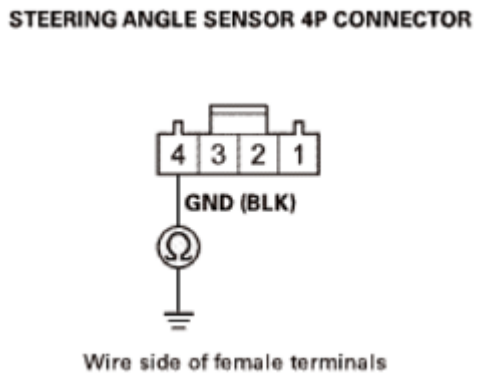

Fig. 63: Checking Continuity Between Steering Angle Sensor 4P Connector No. 4 (BLK) And Body Ground
Courtesy of AMERICAN HONDA MOTOR CO., INC.

Is there continuity?

YES : The GND wire is OK. Go to step 5.

NO : Repair an open in the wire between the steering angle sensor and body ground (G501).

5. Steering angle sensor check (substitution):
   - 1. **SUBSTITUTE A KNOWN-GOOD STEERING ANGLE SENSOR** .
   - 2. Reconnect the following connectors.

     VSA modulator-control unit 38P connector

     Steering angle sensor 4P connector

   - 3. Turn the ignition switch to ON (II).
   - 4. Clear the DTC with the HDS.
   - 5. Turn the ignition switch to LOCK (0).
   - 6. Start the engine for at least 5 seconds.
   - 7. Check for DTCs with the HDS.

DTC Description	DTC	Freeze Frame
86-19 F-CAN Communication With Steering Angle Sensor Malfunction		

Is DTC 86-19 indicated?

YES : Go to step 6.

NO : **REPLACE THE ORIGINAL STEERING ANGLE SENSOR** .

6. VSA modulator-control unit check (update):

GETtheMANUALS.org

- 1. **Update the VSA modulator-control unit if it does not have the latest software** See **VSA SENSOR NEUTRAL POSITION MEMORIZATION**, **VSA MODULATOR-CONTROL UNIT REMOVAL AND INSTALLATION** or **VSA MODULATOR-CONTROL UNIT UPDATE**.
- 2. Turn the ignition switch to LOCK (0).
- 3. Start the engine for at least 5 seconds.
- 4. Check for DTCs with the HDS.

DTC Description	DTC	Freeze Frame

Is DTC 86-19 indicated?

YES : Check for loose terminals in the VSA modulator-control unit 38P connector. If the VSA modulator-control unit was updated and the symptom/indication is still present, **replace the VSA modulator-control unit** See **VSA SENSOR NEUTRAL POSITION MEMORIZATION** or **VSA MODULATOR-CONTROL UNIT UPDATE** or **VSA MODULATOR-CONTROL UNIT REMOVAL AND INSTALLATION**.

NO : Troubleshooting is complete. If any other DTCs are indicated, go to the indicated DTCs troubleshooting.

DTC 87-1: WHEEL SPEED SENSOR CIRCUIT SHORT TO POWER

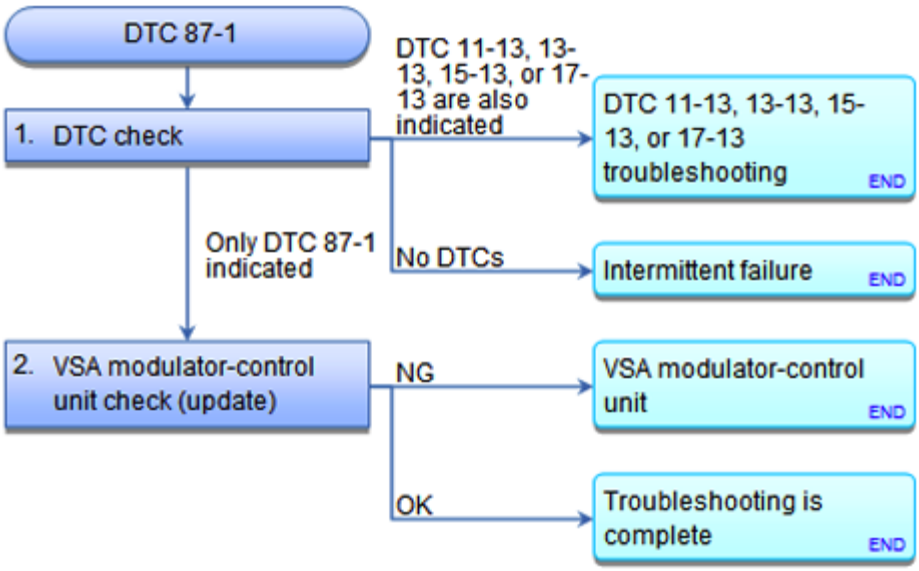

Fig. 64: VSA DTC Troubleshooting Flow Chart (87-1)
Courtesy of AMERICAN HONDA MOTOR CO., INC.

NOTE: **BEFORE YOU TROUBLESHOOT, RECORD ALL FREEZE DATA AND ANY ON-BOARD SNAPSHOT, AND REVIEW THE HOW TO TROUBLESHOOT THE VSA**

GETtheMANUALS.org

SYSTEM .

DTC Description	DTC	Freeze Frame
87-1 Wheel Speed Sensor Circuit Short to Power		

1. DTC check:
   - 1. Turn the ignition switch to ON (II).
   - 2. Clear the DTC with the HDS.
   - 3. Turn the ignition switch to LOCK (0), then turn it to ON (II) again.
   - 4. Check for DTCs with the HDS.

DTC Description	DTC	Freeze Frame
11-13 Right-Front Wheel Speed Sensor Circuit Malfunction		
13-13 Left-Front Wheel Speed Sensor Circuit Malfunction		
15-13 Right-Rear Wheel Speed Sensor Circuit Malfunction		
17-13 Left-Rear Wheel Speed Sensor Circuit Malfunction		
87-1 Wheel Speed Sensor Circuit Short to Power		

Is DTC 87-1 indicated?

YES : If DTC 87-1 is only indicated, go to step 2.

YES : If DTC 11-13, 13-13, 15-13, or 17-13 are also indicated, **go to DTC 11-13, 13-13, 15-13, or 17-13**.

NO : Intermittent failure, the system is OK at this time. Refer to intermittent failures troubleshooting.

2. VSA modulator-control unit check (update):
   - 1. **Update the VSA modulator-control unit if it does not have the latest software** See **VSA MODULATOR-CONTROL UNIT UPDATE**, **VSA MODULATOR-CONTROL UNIT REMOVAL AND INSTALLATION** or **VSA SENSOR NEUTRAL POSITION MEMORIZATION**.
   - 2. Turn the ignition switch to LOCK (0), then turn it to ON (II) again.
   - 3. Check for DTCs with the HDS.

DTC Description	DTC	Freeze Frame

Is DTC 87-1 indicated?

YES : Check for loose terminals in the VSA modulator-control unit 38P connector. If the VSA modulator-control unit was updated and the symptom/indication is still present, **replace the VSA modulator-control unit** See **VSA MODULATOR-CONTROL UNIT UPDATE**, **VSA SENSOR**

GETtheMANUALS.org

NEUTRAL POSITION MEMORIZATION or **VSA MODULATOR-CONTROL UNIT REMOVAL AND INSTALLATION**.

NO : Troubleshooting is complete. If any other DTCs are indicated, go to the indicated DTCs troubleshooting.

DTC 88-11: WHEEL SPEED SENSOR NOISE MALFUNCTION

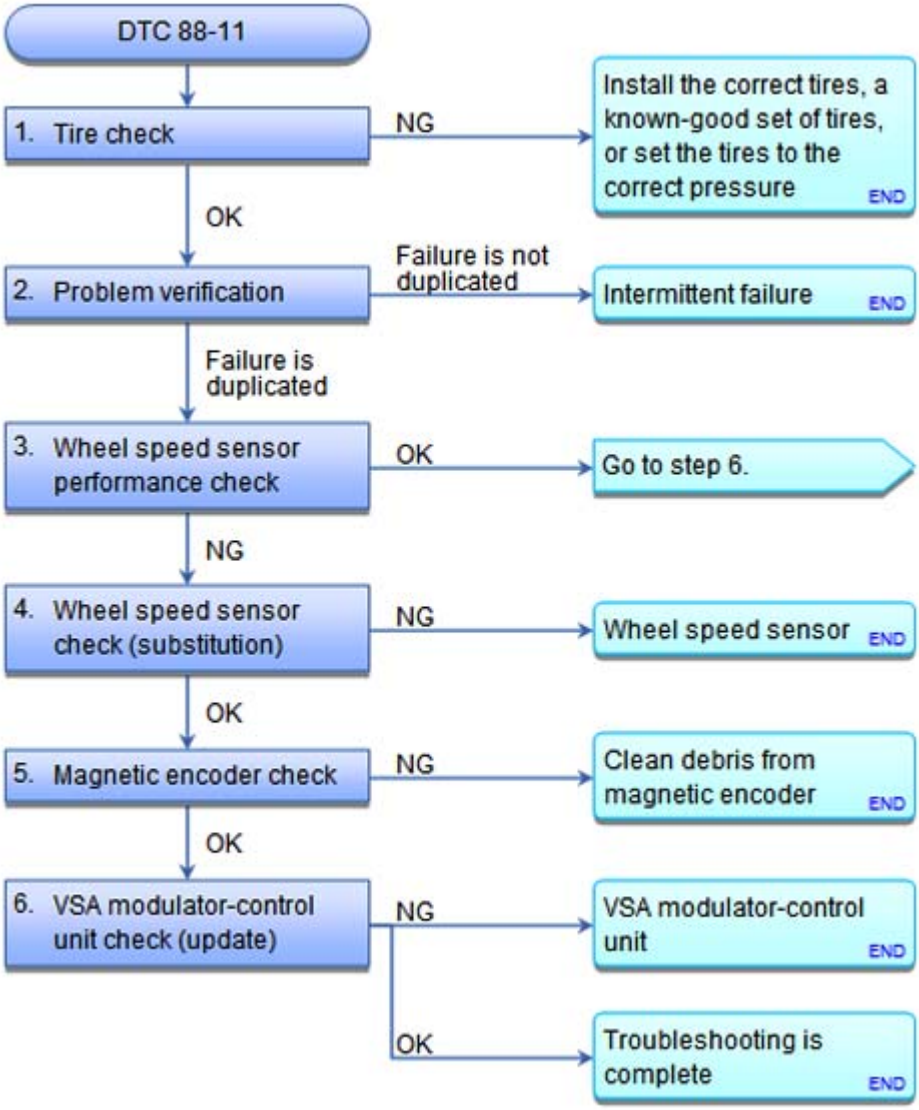

Fig. 65: VSA DTC Troubleshooting Flow Chart (88-11)
Courtesy of AMERICAN HONDA MOTOR CO., INC.

NOTE:

- **BEFORE YOU TROUBLESHOOT, RECORD ALL FREEZE DATA AND ANY ON-BOARD SNAPSHOT, AND REVIEW THE HOW TO TROUBLESHOOT THE VSA SYSTEM .**

GETtheMANUALS.org

- **A wheel bearing that is installed backwards can cause this DTC.**

DTC Description	DTC	Freeze Frame
88-11 Wheel Speed Sensor Noise Malfunction		

1. Tire check:
   - 1. Turn the ignition switch to LOCK (0).
   - 2. **CHECK ALL FOUR TIRES FOR SIZE, INFLATION, AND WEAR** .

   Are all four tires the correct size, properly inflated, and worn evenly?

   YES : Go to step 2.

   NO : Install the correct tires, a known-good set of tires, or set the tires to the correct pressure, and retest by test-driving.

2. Problem verification:
   - 1. Turn the ignition switch to ON (II).
   - 2. Clear the DTC with the HDS.
   - 3. Turn the ignition switch to LOCK (0).
   - 4. Test-drive the vehicle at 9 mph (15 km/h) or more.

     NOTE: Drive the vehicle on the road, not on a lift.

   - 5. Check for DTCs with the HDS.

DTC Description	DTC	Freeze Frame
88-11 Wheel Speed Sensor Noise Malfunction		

   Is DTC 88-11 indicated?

   YES : The failure is duplicated. Go to step 3.

   NO : Intermittent failure, the system is OK at this time. Refer to intermittent failures troubleshooting.

3. Wheel speed sensor performance check:
   - 1. Test-drive the vehicle at 9 mph (15 km/h) or more.

     NOTE: Drive the vehicle on the road, not on a lift.

   - 2. Check the parameter(s) below with the HDS.

	Current conditions

GETtheMANUALS.org

Signal	Values	Unit
RIGHT FRONT WHEEL SPEED		
LEFT FRONT WHEEL SPEED		
RIGHT REAR WHEEL SPEED		
LEFT REAR WHEEL SPEED		

Is any one of the four values different?

YES : Go to step 4.

NO : Go to step 6.

4. Wheel speed sensor check (substitution):
   - 1. Turn the ignition switch to LOCK (0).
   - 2. **Substitute a known-good wheel speed sensor** See **FRONT WHEEL SPEED SENSOR REMOVAL AND INSTALLATION** or **REAR WHEEL SPEED SENSOR REMOVAL AND INSTALLATION** .

Appropriate Wheel Speed Sensor
Right-front
Left-front
Right-rear
Left-rear

   - 3. Turn the ignition switch to ON (II).
   - 4. Clear the DTC with the HDS.
   - 5. Turn the ignition switch to LOCK (0).
   - 6. Test-drive the vehicle at 9 mph (15 km/h) or more.

NOTE: **Drive the vehicle on the road, not on a lift.**

   - 7. Check for DTCs with the HDS.

DTC Description	DTC	Freeze Frame
88-11 Wheel Speed Sensor Noise Malfunction		

s DTC 88-11 indicated?

YES : Go to step 5.

NO : **Replace the original wheel speed sensor** See **FRONT WHEEL SPEED SENSOR REMOVAL AND INSTALLATION** or **REAR WHEEL SPEED SENSOR REMOVAL AND INSTALLATION** .

GETtheMANUALS.org

5. Magnetic encoder check:
   - 1. Turn the ignition switch to LOCK (0).
   - 2. Inspect the magnetic encoder for damage, debris, and correct installation.
     - Front: **REMOVE THE DRIVESHAFT OUTBOARD JOINT FROM THE APPROPRIATE WHEEL HUB** .
     - Rear: **REMOVE THE HUB BEARING UNIT** .

   Is the magnetic encoder surface OK?

   YES : Go to step 6.

   NO : Clean debris from the appropriate magnetic encoder surface on the wheel bearing or the hub bearing unit. If the DTC is still present, replace the appropriate **WHEEL BEARING** or the **HUB BEARING UNIT** .

6. VSA modulator-control unit check (update):
   - 1. **Update the VSA modulator-control unit if it does not have the latest software** See **VSA SENSOR NEUTRAL POSITION MEMORIZATION**, **VSA MODULATOR-CONTROL UNIT UPDATE** or **VSA MODULATOR-CONTROL UNIT REMOVAL AND INSTALLATION**.
   - 2. Turn the ignition switch to LOCK (0).
   - 3. Test-drive the vehicle at 9 mph (15 km/h) or more.

     NOTE: Drive the vehicle on the road, not on a lift.

   - 4. Check for DTCs with the HDS.

DTC Description	DTC	Freeze Frame

   Is DTC 88-11 indicated?

   YES : Check for loose terminals in the VSA modulator-control unit 38P connector. If the VSA modulator-control unit was updated and the symptom/indication is still present, **replace the VSA modulator-control unit** See **VSA SENSOR NEUTRAL POSITION MEMORIZATION**, **VSA MODULATOR-CONTROL UNIT UPDATE** or **VSA MODULATOR-CONTROL UNIT REMOVAL AND INSTALLATION**.

   NO : Troubleshooting is complete. If any other DTCs are indicated, go to the indicated DTCs troubleshooting.

DTC 88-12: ABS ACTIVATION TIME TOO LONG

GETtheMANUALS.org

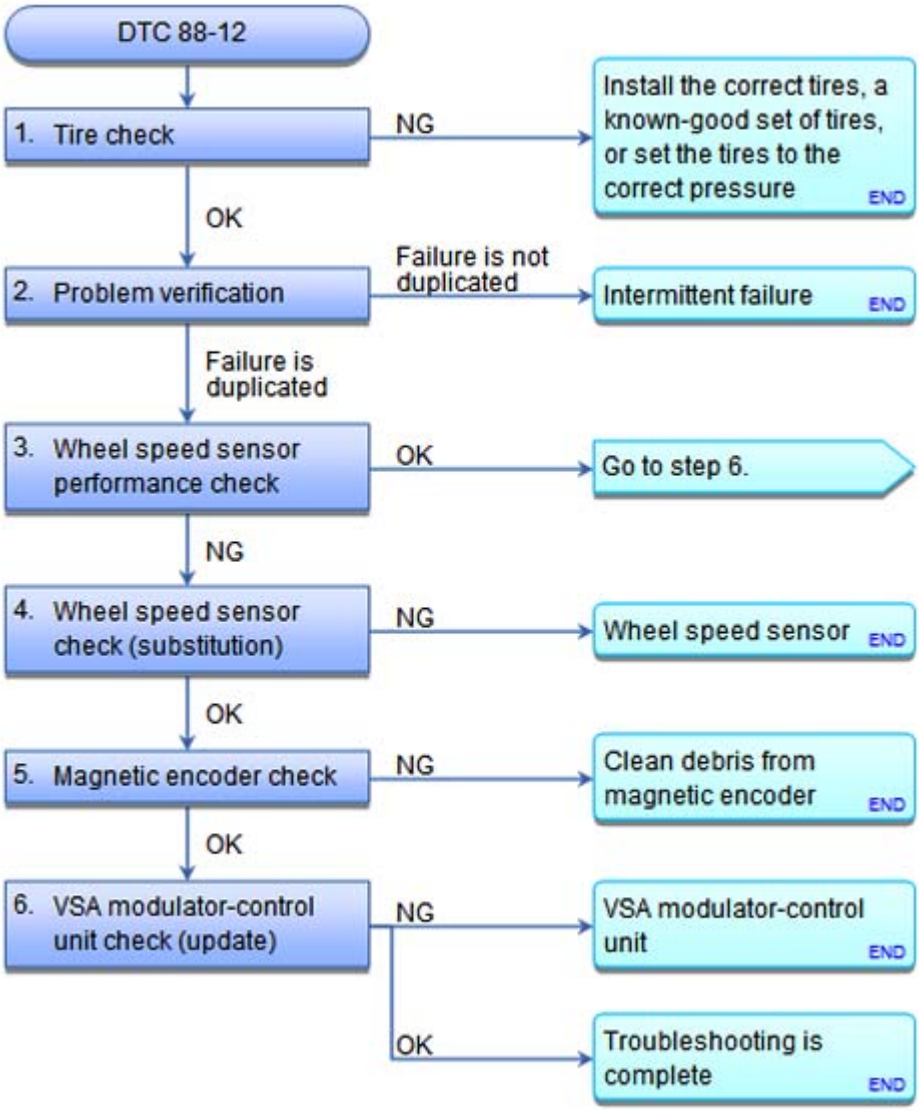

Fig. 66: VSA DTC Troubleshooting Flow Chart (88-12)
Courtesy of AMERICAN HONDA MOTOR CO., INC.

NOTE:

- **BEFORE YOU TROUBLESHOOT, RECORD ALL FREEZE DATA AND ANY ON-BOARD SNAPSHOT, AND REVIEW THE HOW TO TROUBLESHOOT THE VSA SYSTEM .**
- **A wheel bearing that is installed backwards can cause this DTC.**

DTC Description	DTC	Freeze Frame
88-12 ABS Activation Time Too Long		

1. Tire check:
   - 1. Turn the ignition switch to LOCK (0).
   - 2. **CHECK ALL FOUR TIRES FOR SIZE, INFLATION, AND WEAR** .

GETtheMANUALS.org

Are all four tires the correct size, properly inflated, and worn evenly?

YES : Go to step 2.

NO : Install the correct tires, a known-good set of tires, or set the tires to the correct pressure, and retest by test-driving.

2. Problem verification:
   - 1. Turn the ignition switch to ON (II).
   - 2. Clear the DTC with the HDS.
   - 3. Turn the ignition switch to LOCK (0).
   - 4. Test-drive the vehicle at 31 mph (50 km/h) or more for 10 seconds or more under these conditions:
     - Accelerator pedal pressed.
     - Brake pedal released.

     NOTE: Drive the vehicle on the road, not on a lift.

   - Check for DTCs with the HDS.

DTC Description	DTC	Freeze Frame
88-12 ABS Activation Time Too Long		

Is DTC 88-12 indicated?

YES : The failure is duplicated. Go to step 3.

NO : Intermittent failure, the system is OK at this time. Refer to intermittent failures troubleshooting.

3. Wheel speed sensor performance check:
   - 1. Test-drive the vehicle at 31 mph (50 km/h) or more.

     NOTE: Drive the vehicle on the road, not on a lift.

   - 2. Check the parameter(s) below with the HDS.

Signal	Current conditions	
	Values	Unit
RIGHT FRONT WHEEL SPEED		
LEFT FRONT WHEEL SPEED		
RIGHT REAR WHEEL SPEED		
LEFT REAR WHEEL SPEED		

GETtheMANUALS.org

Is any one of the four values different?

YES : Go to step 4.

NO : Go to step 6.

4. Wheel speed sensor check (substitution):
   - 1. Turn the ignition switch to LOCK (0).
   - 2. **Substitute a known-good wheel speed sensor** See **FRONT WHEEL SPEED SENSOR REMOVAL AND INSTALLATION** or **REAR WHEEL SPEED SENSOR REMOVAL AND INSTALLATION** .

Appropriate Wheel Speed Sensor
Right-front
Left-front
Right-rear
Left-rear

   - 3. Turn the ignition switch to ON (II).
   - 4. Clear the DTC with the HDS.
   - 5. Turn the ignition switch to LOCK (0).
   - 6. Test-drive the vehicle at 31 mph (50 km/h) or more for 10 seconds or more under these conditions:
     - Accelerator pedal pressed.
     - Brake pedal released.

NOTE: Drive the vehicle on the road, not on a lift.

   - Check for DTCs with the HDS.

DTC Description	DTC	Freeze Frame
88-12 ABS Activation Time Too Long		

Is DTC 88-12 indicated?

YES : Go to step 5.

NO : **Replace the original wheel speed sensor** See **FRONT WHEEL SPEED SENSOR REMOVAL AND INSTALLATION** or **REAR WHEEL SPEED SENSOR REMOVAL AND INSTALLATION** .

5. Magnetic encoder check:
   - 1. Turn the ignition switch to LOCK (0).
   - 2. Inspect the magnetic encoder for damage, debris, and correct installation.

GETtheMANUALS.org

- Front: **REMOVE THE DRIVESHAFT OUTBOARD JOINT FROM THE APPROPRIATE WHEEL HUB** .
- Rear: **REMOVE THE HUB BEARING UNIT** .

Is the magnetic encoder surface OK?

YES : Go to step 6.

NO : Clean debris from the appropriate magnetic encoder surface on the wheel bearing or the hub bearing unit. If the DTC is still present, replace the appropriate **WHEEL BEARING** or the **HUB BEARING UNIT** .

6. VSA modulator-control unit check (update):
   - 1. **Update the VSA modulator-control unit if it does not have the latest software** See **VSA MODULATOR-CONTROL UNIT REMOVAL AND INSTALLATION** or **VSA MODULATOR-CONTROL UNIT UPDATE** or **VSA SENSOR NEUTRAL POSITION MEMORIZATION**.
   - 2. Turn the ignition switch to LOCK (0).
   - 3. Test-drive the vehicle at 31 mph (50 km/h) or more for 10 seconds or more under these conditions:
     - Accelerator pedal pressed.
     - Brake pedal released.

     NOTE: Drive the vehicle on the road, not on a lift.

   - Check for DTCs with the HDS.

DTC Description	DTC	Freeze Frame

Is DTC 88-12 indicated?

YES : Check for loose terminals in the VSA modulator-control unit 38P connector. If the VSA modulator-control unit was updated and the symptom/indication is still present, **replace the VSA modulator-control unit** See **VSA SENSOR NEUTRAL POSITION MEMORIZATION**, **VSA MODULATOR-CONTROL UNIT REMOVAL AND INSTALLATION** or **VSA MODULATOR-CONTROL UNIT UPDATE**.

NO : Troubleshooting is complete. If any other DTCs are indicated, go to the indicated DTCs troubleshooting.

DTC 91-1: VSA ACTIVATION TIME TOO LONG

GETtheMANUALS.org

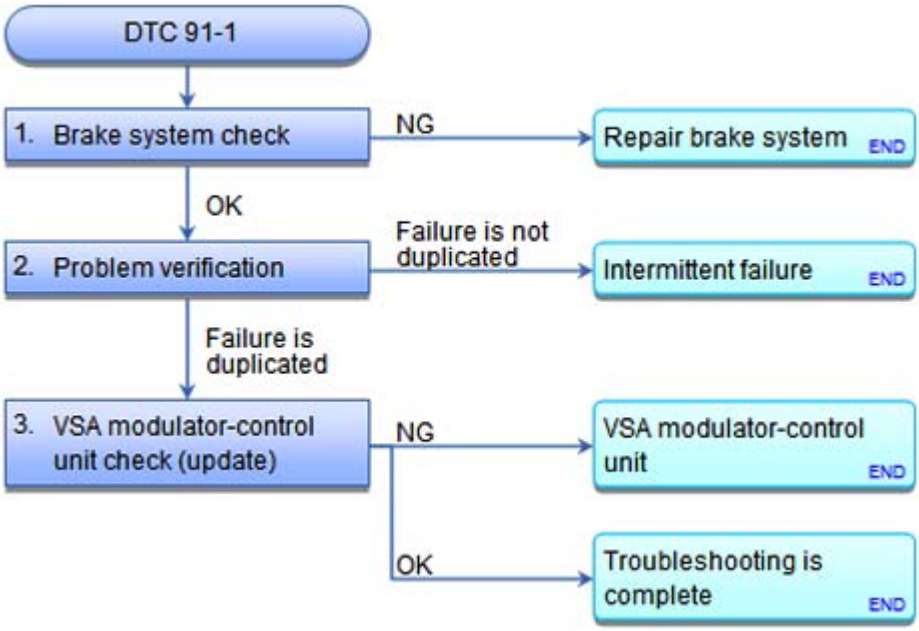

Fig. 67: VSA DTC Troubleshooting Flow Chart (91-1)
Courtesy of AMERICAN HONDA MOTOR CO., INC.

NOTE: **BEFORE YOU TROUBLESHOOT, RECORD ALL FREEZE DATA AND ANY ON-BOARD SNAPSHOT, AND REVIEW THE HOW TO TROUBLESHOOT THE VSA SYSTEM .**

DTC Description	DTC	Freeze Frame
91-1 VSA Activation Time Too Long		

1. Brake system check:
   - 1. Turn the ignition switch to LOCK (0).
   - 2. Check the brake system for leaks or mechanical problems.

   Is the brake system OK? (No brake fluid leakage, no air trapped in the brake system, no brake pads worn out.)

   YES : Go to step 2.

   NO : Repair the brake system.

2. Problem verification:
   - 1. Turn the ignition switch to ON (II).
   - 2. Clear the DTC with the HDS.
   - 3. Turn the ignition switch to LOCK (0).
   - 4. Test-drive the vehicle in a straight line. Accelerate the vehicle up to 6 mph (10 km/h) or more, and stop, then accelerate up to 6 mph (10 km/h) or more.

GETtheMANUALS.org

NOTE:

- **Do the test-driving in a safe area.**
- **Drive the vehicle on the road, not on a lift.**

- 5. Check for DTCs with the HDS.

DTC Description	DTC	Freeze Frame
91-1 VSA Activation Time Too Long		

Is DTC 91-1 indicated?

YES : The failure is duplicated. Go to step 3.

NO : Intermittent failure, the system is OK at this time. Refer to intermittent failures troubleshooting.

3. VSA modulator-control unit check (update):
   - 1. **Update the VSA modulator-control unit if it does not have the latest software** See **VSA SENSOR NEUTRAL POSITION MEMORIZATION**, **VSA MODULATOR-CONTROL UNIT REMOVAL AND INSTALLATION** or **VSA MODULATOR-CONTROL UNIT UPDATE**.
   - 2. Turn the ignition switch to LOCK (0).
   - 3. Test-drive the vehicle in a straight line. Accelerate the vehicle up to 6 mph (10 km/h) or more, and stop, then accelerate up to 6 mph (10 km/h) or more.

NOTE:

- **Do the test-driving in a safe area.**
- **Drive the vehicle on the road, not on a lift.**

- 4. Check for DTCs with the HDS.

DTC Description	DTC	Freeze Frame

Is DTC 91-1 indicated?

YES : Check for loose terminals in the VSA modulator-control unit 38P connector. If the VSA modulator-control unit was updated and the symptom/indication is still present, **replace the VSA modulator-control unit** See **VSA SENSOR NEUTRAL POSITION MEMORIZATION**, **VSA MODULATOR-CONTROL UNIT REMOVAL AND INSTALLATION** or **VSA MODULATOR-CONTROL UNIT UPDATE**.

NO : Troubleshooting is complete. If any other DTCs are indicated, go to the indicated DTCs troubleshooting.

VSA MODULATOR-CONTROL UNIT CONNECTOR FOR INPUTS AND

GETtheMANUALS.org

OUTPUTS

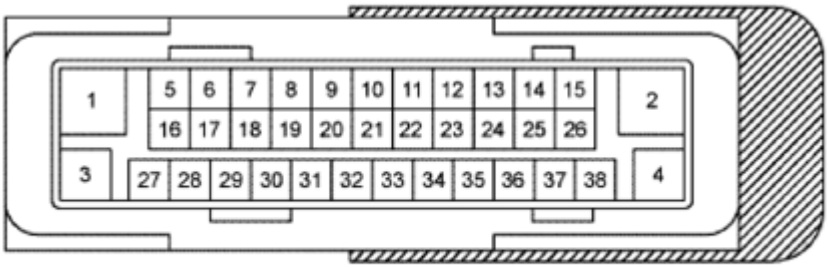

Terminal side of female terminals

Fig. 68: Identifying VSA Modulator-Control Unit Connector For Inputs And Outputs
Courtesy of AMERICAN HONDA MOTOR CO., INC.

Terminal number	Wire color	Terminal sign	Description	Signal
1	BLK	GND	Ground for the VSA modulator-control unit	Continuity to ground
2	RED	+B_ABS/VSA_MTR	Power source for the motor relay	Battery voltage (about 12 V) at all times
3	BLK	GND	Ground for the pump motor	Continuity to ground
4	WHT	+B_ABS/VSA_FSR	Power source for the fail-safe relay	Battery voltage (about 12 V) at all times
5	Not used	Not used	---	---
6	Not used	Not used		
7	Not used	Not used		
8	Not used	Not used		
9	GRN	FR_L_ABS_ SNSR-	Detects left-front wheel speed sensor signal	
10	Not used	Not used	---	
11	LT BLU	K_LINE	Communication with HDS	Pulse voltage (digital signal)
12	Not used	Not used	---	
13	PNK	FR_R_ABS_ SNSR-	Detects right-front wheel speed sensor signal	
14	Not used	Not used		
	Not			

GETtheMANUALS.org

15	used	Not used	---	---
16	Not used	Not used		
17	Not used	Not used		
18	Not used	Not used		
19	Not used	Not used		
20	Not used	Not used		
21	ORN	FR_L_ABS_SNSR+	Detects left-front wheel speed sensor signal	
22	PUR	RR_L_ABS_ SNSR-	Detects left-rear wheel speed sensor signal	
23	LT GRN	RR_R_ABS_SNSR+	Detects right-rear wheel speed sensor signal	
24	WHT	FR_R_ABS_SNSR+	Detects right-front wheel speed sensor signal	
25	Not used	Not used	---	
26	RED	F_CAN-L	F-CAN communication circuit	
27	Not used	Not used	---	
28	Not used	Not used	---	
29	Not used	Not used	---	
30	Not used	Not used	---	
31	Not used	Not used	---	
32	Not used	Not used	---	
33	GRY	RR_L_ABS_SNSR+	Detects left-rear wheel speed sensor signal	
34	Not used	Not used	---	
35	GRN	RR_R_ABS_ SNSR-	Detects right-rear wheel speed sensor signal	
36	PUR	IG1_VSA/ABS	Power source for activating the system	With ignition switch ON (II): battery voltage (about 12 V)
37	Not	Not used	---	

GETtheMANUALS.org

	used			---
38	WHT	F_CAN-H	F-CAN communication circuit	

VSA MODULATOR-CONTROL UNIT REMOVAL AND INSTALLATION

SPECIAL TOOL DESCRIPTION

Image	Description/Tool Number
	Honda Diagnostic System (HDS)
	Honda Interface Module (HIM) and an iN workstation with the latest HDS software version

GETtheMANUALS.org

	HDS pocket tester

GETtheMANUALS.org

	GNA600 and an iN workstation with the latest HDS software version
	MVCI unit with the latest control module (CM) update software installed

GETtheMANUALS.org

Any one of the above updating tools can be used.

REMOVAL

NOTE: **Do not spill brake fluid on the vehicle; it may damage the paint. If brake fluid does contact the paint, wash it off immediately with water.**

NOTE:

- **Be careful not to damage or deform the brake lines during removal.**
- **To prevent the brake fluid from dripping, plug and cover the hose ends and joints with a shop towel.**
- **The yaw rate-acceleration sensor is built into the VSA modulator-control unit.**
- **Do not damage or drop the VSA modulator-control unit as it is sensitive.**
- **Do not use power tools with the VSA modulator-control unit.**

1. VSA Modulator-Control Unit Assembly

GETtheMANUALS.org

1. Turn the ignition switch to LOCK (0).
2. Disconnect the 10 mm brake lines (A).
3. Disconnect the 12 mm brake lines (B).

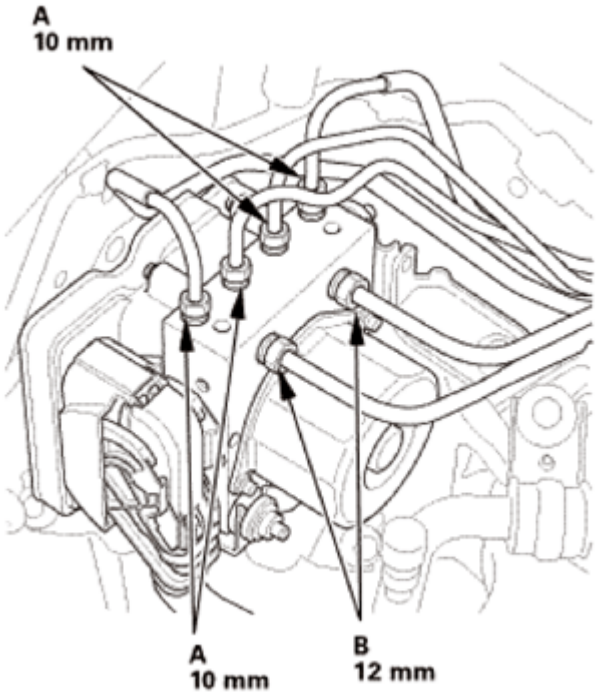

Fig. 69: Identifying VSA Modulator-Control Unit Assembly Brake Lines
Courtesy of AMERICAN HONDA MOTOR CO., INC.

4. Disconnect the connector (A) by pushing the lock (B) and pulling up the lever (C); the connector disconnects itself.

GETtheMANUALS.org

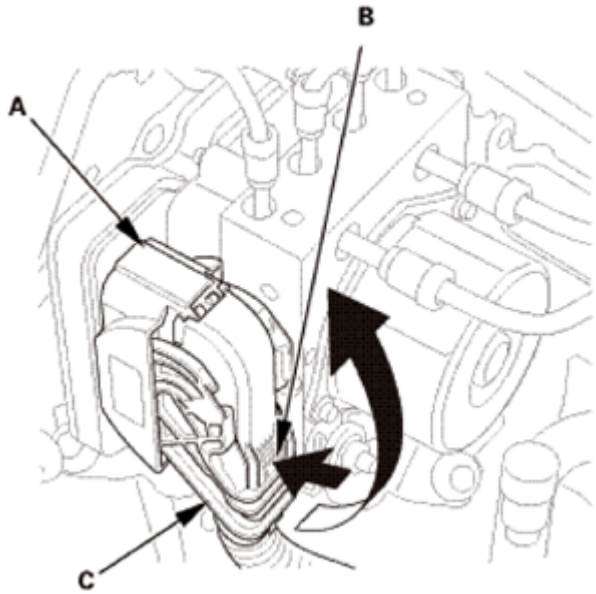

Fig. 70: Disconnecting Connector
Courtesy of AMERICAN HONDA MOTOR CO., INC.

5. Remove the VSA modulator-control unit (A) with the bracket (B) from the body.

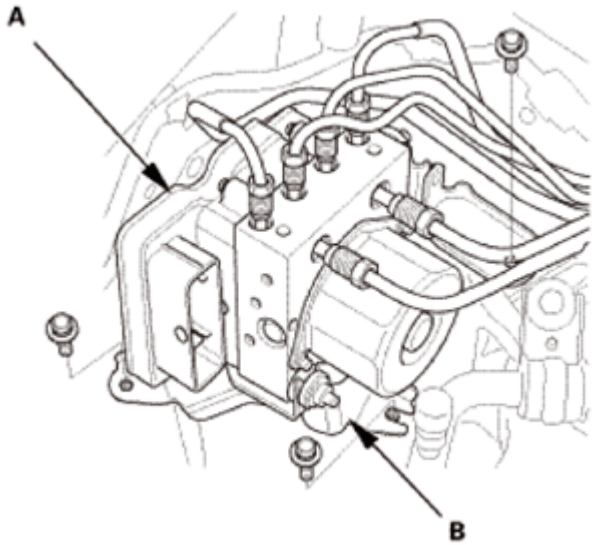

Fig. 71: Identifying VSA Modulator-Control Unit, Bracket And Bolts
Courtesy of AMERICAN HONDA MOTOR CO., INC.

2. VSA Modulator-Control Unit Bracket
    1. Remove the VSA modulator-control unit (A) from the bracket (B).

GETtheMANUALS.org

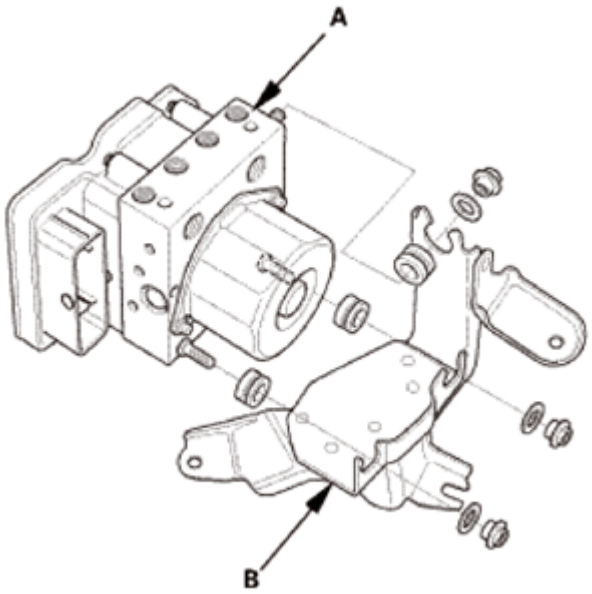

Fig. 72: Identifying VSA Modulator-Control Unit And Bracket
Courtesy of AMERICAN HONDA MOTOR CO., INC.

INSTALLATION

1. VSA Modulator-Control Unit Bracket
    1. Install the VSA modulator-control unit (A) onto the bracket (B).

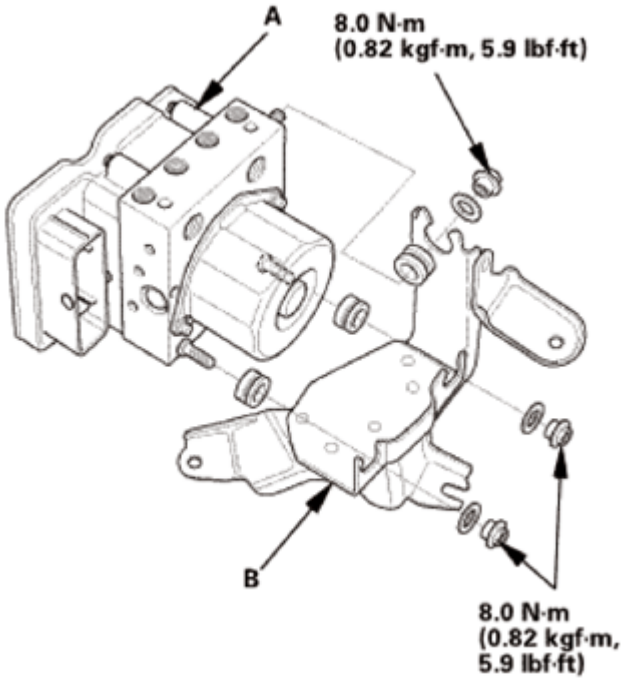

Fig. 73: Identifying VSA Modulator-Control Unit, Bracket And Bolts With Torque Specifications

GETtheMANUALS.org

Courtesy of AMERICAN HONDA MOTOR CO., INC.

2. VSA Modulator-Control Unit Assembly
    1. Install the VSA modulator-control unit (A) with the bracket (B) to the body.

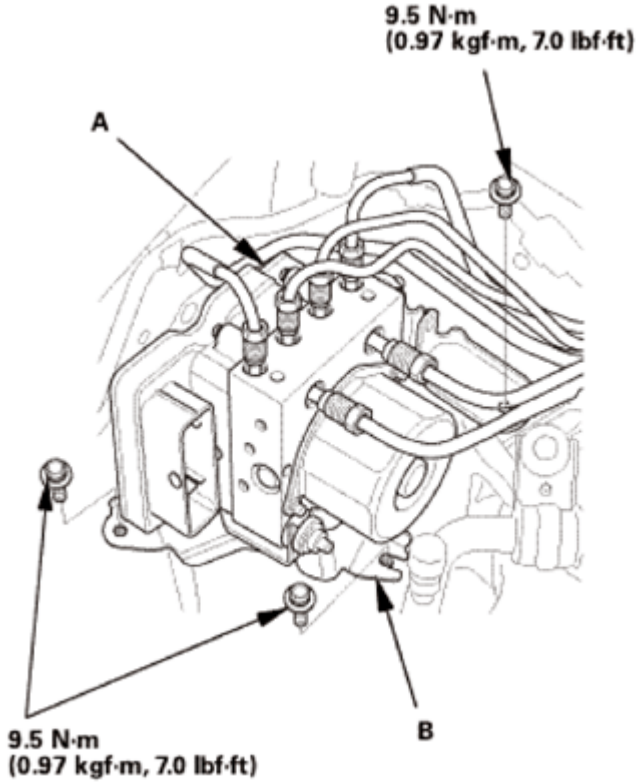

Fig. 74: Identifying VSA Modulator-Control Unit, Bracket And Bolts With Torque Specifications
Courtesy of AMERICAN HONDA MOTOR CO., INC.

    2. Align the connecting surface of the connector (A).
    3. Pull down the lever (B) of the connector, then confirm the connector is fully seated.

GETtheMANUALS.org

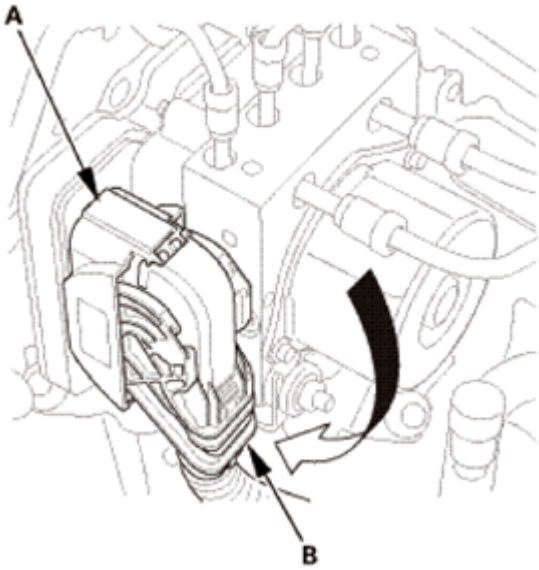

Fig. 75: Pulling Down Connector Lever
Courtesy of AMERICAN HONDA MOTOR CO., INC.

4. Connect the 10 mm brake lines.
5. Connect the 12 mm brake lines.

NOTE: **Brake lines are connected to the master cylinder (A), the left-rear (B), the right-front (C), the left-front (D), and the right-rear (E) brake systems.**

GETtheMANUALS.org

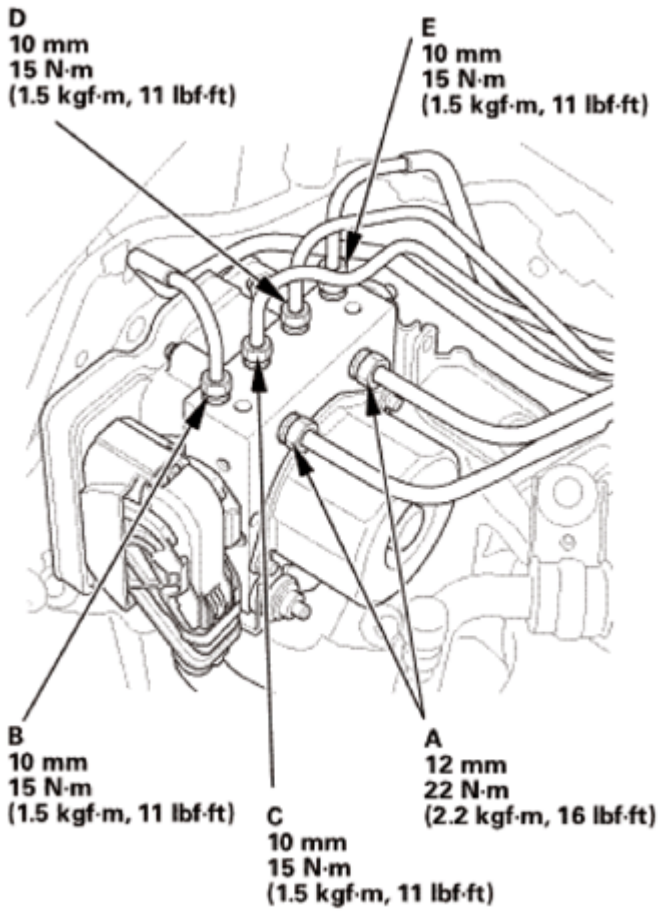

Fig. 76: Identifying Master Cylinder, Left-Rear, Right-Front, Left-Front And Right-Rear Brake Lines With Torque Specifications
Courtesy of AMERICAN HONDA MOTOR CO., INC.

3. Vehicle Lift
    1. Raise the vehicle on a lift, and make sure it is securely supported.
4. Brake System - Bleeding

NOTE: **Do not spill brake fluid on the vehicle; it may damage the paint. If brake fluid does contact the paint, wash it off immediately with water.**

GETtheMANUALS.org

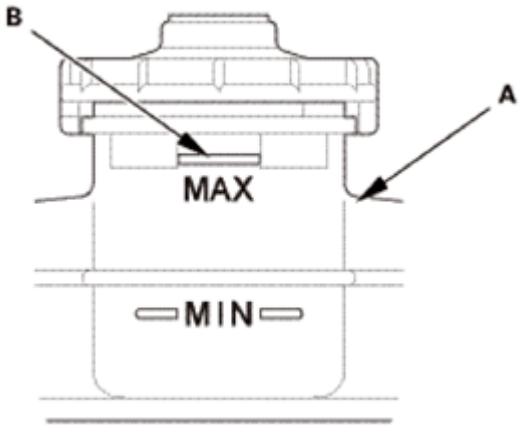

Fig. 77: Identifying MAX (Upper) Level Line On Reservoir Tank
Courtesy of AMERICAN HONDA MOTOR CO., INC.

NOTE:

- **Do not reuse the drained fluid. Use only new Honda DOT 3 Brake Fluid from an unopened container. Using a non-Honda brake fluid can cause corrosion and shorten the life of the system.**
- **Make sure no dirt or other foreign matter gets in the brake fluid.**
- **The reservoir connected to the master cylinder must be at the MAX (upper) level mark at the start of the bleeding procedure and checked after bleeding each wheel. Add fluid as required.**
- **There are three different methods used for bleeding brake systems. The method shown here is the preferred manual method for removing the air from the system. For pressure or vacuum bleeding, refer to tool manufacturer's instructions included with the tool.**

1. Make sure the brake fluid level in the reservoir tank (A) is at the MAX (upper) level line (B).

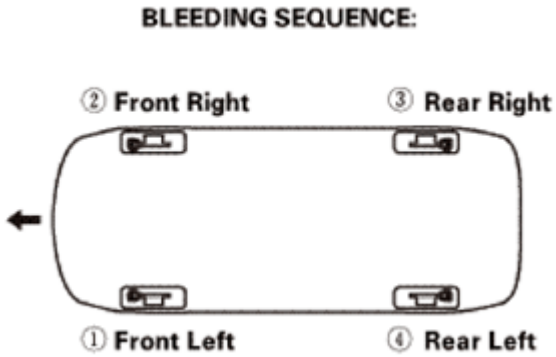

Fig. 78: Identifying Bleeding Sequence Of Front Brake System Driver's Side Calipers
Courtesy of AMERICAN HONDA MOTOR CO., INC.

2. Start the bleeding at the driver's side of the front brake system.

GETtheMANUALS.org

NOTE: **Bleed the calipers in the sequence shown.**

3. Attach a length of clear drain tube (A) to the bleed screw (B).
4. Submerge the other end of the drain tube into a clear plastic catch bottle of brake fluid (C).
5. Have an assistant slowly pump the brake pedal several times then apply steady continuous pressure.
6. Loosen the bleed screw slowly to bleed the fluid into the plastic catch bottle. The brake pedal will travel toward the floor as the fluid is bled from the system.

Front

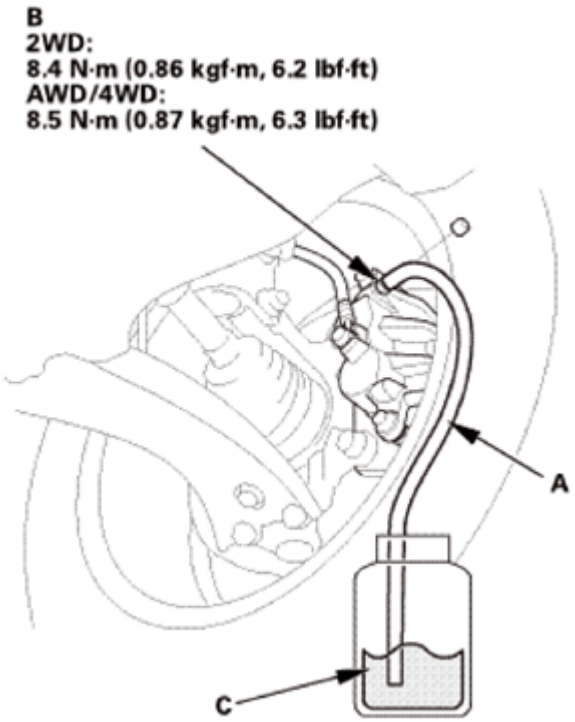

Fig. 79: Bleeding Brake Fluid Into Clear Plastic Catch Bottle Using Drain Tube (Front)
Courtesy of AMERICAN HONDA MOTOR CO., INC.

Rear

GETtheMANUALS.org

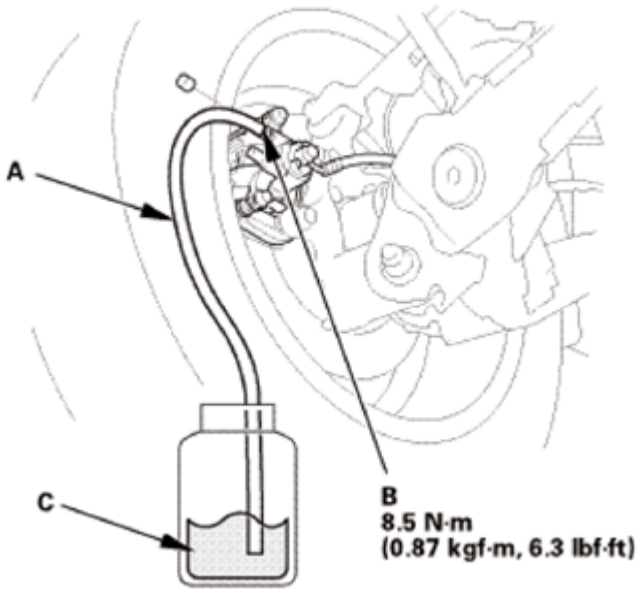

Fig. 80: Bleeding Brake Fluid Into Clear Plastic Catch Bottle Using Drain Tube (Rear)
Courtesy of AMERICAN HONDA MOTOR CO., INC.

7. When the brake pedal reaches the floor, have the assistant hold the pedal in that position, then tighten the bleed screw. The brake pedal can now be released.
8. Check and refill the master cylinder reservoir tank to the MAX (upper) level line. Be sure to reinstall the master cylinder reservoir cap.
9. Repeat steps 5 thru 8 until the brake fluid in the clear drain tube appears fresh and there are no air bubbles in the fluid.
10. Repeat this procedure for each brake in the bleeding sequence.

5. HDS DLC - Connection
    1. Connect the HDS to the data link connector (DLC) (A) located under the driver's side of the dashboard.
    2. Turn the ignition switch to ON (II).
    3. Make sure the HDS communicates with the vehicle. If it does not communicate, go to the DLC circuit troubleshooting.

GETtheMANUALS.org

Fig. 81: Identifying Data Link Connector
Courtesy of AMERICAN HONDA MOTOR CO., INC.

6. VSA Modulator-Control Unit - Update

NOTE: Check any official Honda service website for more service information about updating the MVCI and control units.

7. VSA Sensor Neutral Position - Memorization
   1. Park the vehicle on a flat and level surface, with the steering wheel in the straight ahead position.
   2. Select VSA ADJUSTMENT, then select ALL SENSORS with the HDS, and follow the screen prompts.

NOTE: See the HDS Help menu for specific instructions.

8. Steering Angle Sensor Neutral Position - Clear
   1. Select EPS ADJUSTMENT, then select EPS STEERING ANGLE SENSOR VALUE CLEAR and follow the screen prompts on the HDS.

NOTE: See the HDS Help menu for specific instructions.

9. Acceleration Neutral Position Sensor - Memorization (With Real Time AWD System)
   1. Select the ADJUSTMENT in the REAL TIME AWD SYSTEM with the HDS.
   2. Select the G SENSOR LEARNING in the ADJUSTMENT with the HDS.

NOTE: See the HDS Help menu for specific instructions.

VSA MODULATOR-CONTROL UNIT UPDATE

GETtheMANUALS.org

SPECIAL TOOL DESCRIPTION

Image	Description/Tool Number
	MVCI unit with the latest control module (CM) update software installed

PROCEDURE

NOTE: **High temperature in the engine compartment might cause the VSA modulator-control unit to become too hot to run the update. If the engine has been running before this procedure, open the hood and cool the engine compartment. High temperature in the engine compartment might cause the VSA modulator-control unit to become too hot to run the update. If the engine has been running before this procedure, open the hood and cool the engine compartment.**

1. VSA Modulator-Control Unit - Update

   NOTE: **Check any official Honda service website for more service information about updating the MVCI and control units.**

2. HDS DLC - Connection

GETtheMANUALS.org

1. Connect the HDS to the data link connector (DLC) (A) located under the driver's side of the dashboard.
2. Turn the ignition switch to ON (II).
3. Make sure the HDS communicates with the vehicle. If it does not communicate, go to the DLC circuit troubleshooting.

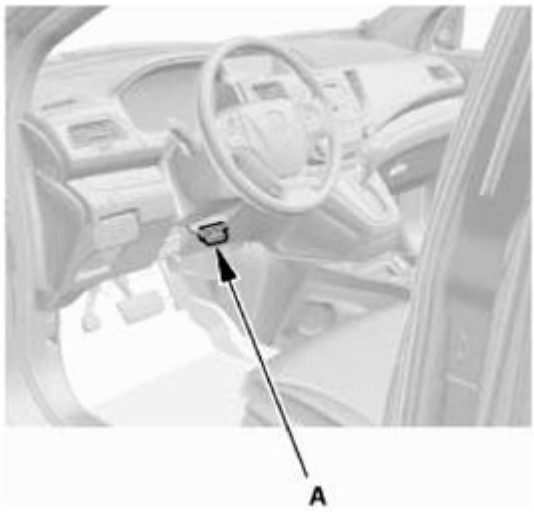

Fig. 82: Identifying Data Link Connector
Courtesy of AMERICAN HONDA MOTOR CO., INC.

3. VSA Sensor Neutral Position - Memorization
   1. Park the vehicle on a flat and level surface, with the steering wheel in the straight ahead position.
   2. Select VSA ADJUSTMENT, then select ALL SENSORS with the HDS, and follow the screen prompts.

NOTE: See the HDS Help menu for specific instructions.

4. Steering Angle Sensor Neutral Position - Clear
   1. Select EPS ADJUSTMENT, then select EPS STEERING ANGLE SENSOR VALUE CLEAR and follow the screen prompts on the HDS.

NOTE: See the HDS Help menu for specific instructions.

VSA OFF SWITCH REMOVAL, INSTALLATION, AND TEST

REMOVAL

1. Driver's Dashboard Panel Assembly
   1. Carefully pry out the driver's dashboard panel assembly (A) with the appropriate trim tool to detach the clips (B).

GETtheMANUALS.org

2. Disconnect the connector (C), then remove the driver's dashboard panel assembly.

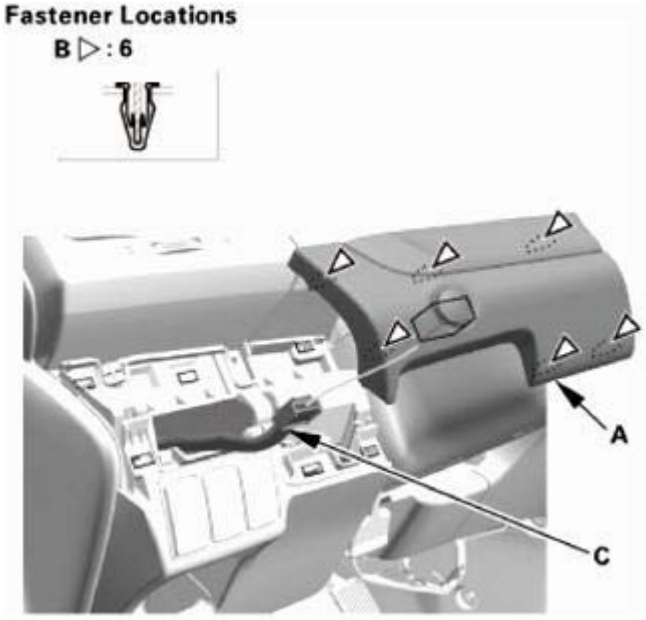

Fig. 83: Identifying Driver's Dashboard Panel Assembly, Connector And Fasteners
Courtesy of AMERICAN HONDA MOTOR CO., INC.

2. Driver's Dashboard Undercover
    1. Turn the lock knob (A) 90 °, then gently pull down the front edge of the driver's dashboard undercover (B) to detach the clip (C).
    2. Pull away the undercover to release the pin (D) from the holder (E), then remove the driver's dashboard undercover.

GETtheMANUALS.org

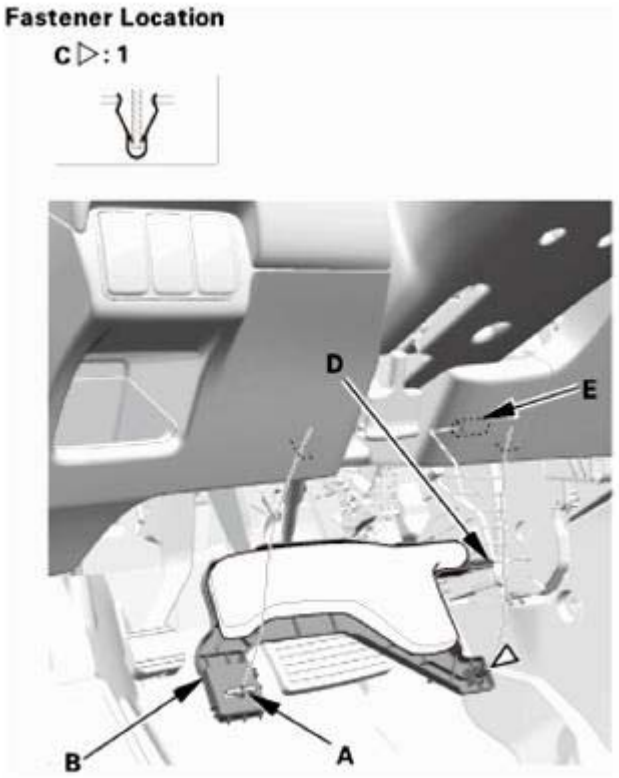

Fig. 84: Identifying Driver's Dashboard Undercover, Holder, Lock Knob And Clip
Courtesy of AMERICAN HONDA MOTOR CO., INC.

3. Driver's Dashboard Lower Cover
    1. Carefully pry out the driver's dashboard lower cover (A) with the appropriate trim tool to detach the clips (B).
    2. Disconnect the connector (C), then remove the driver's dashboard lower cover.

GETtheMANUALS.org

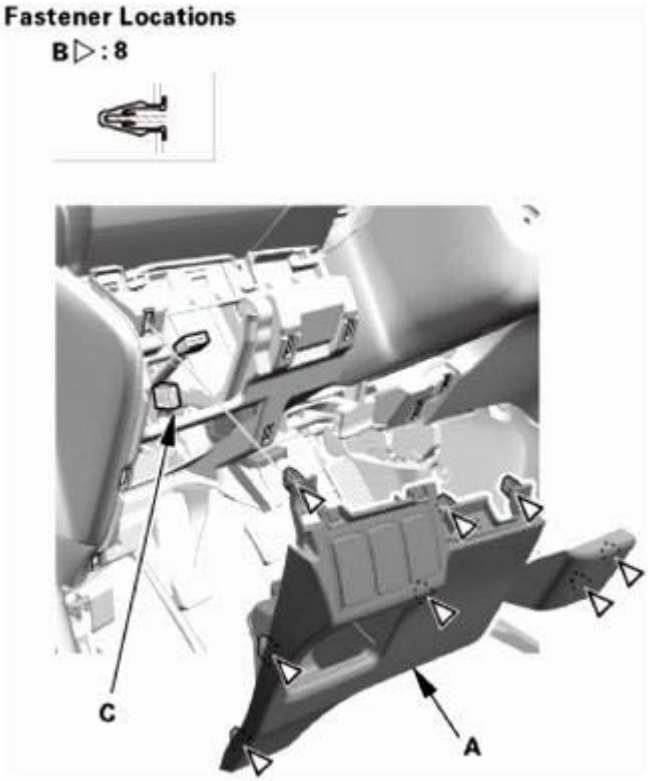

Fig. 85: Identifying Driver's Dashboard Lower Cover, Connector And Clips
Courtesy of AMERICAN HONDA MOTOR CO., INC.

4. VSA Off Switch
    1. Remove the VSA OFF switch (A) from the driver's dashboard lower cover (B).

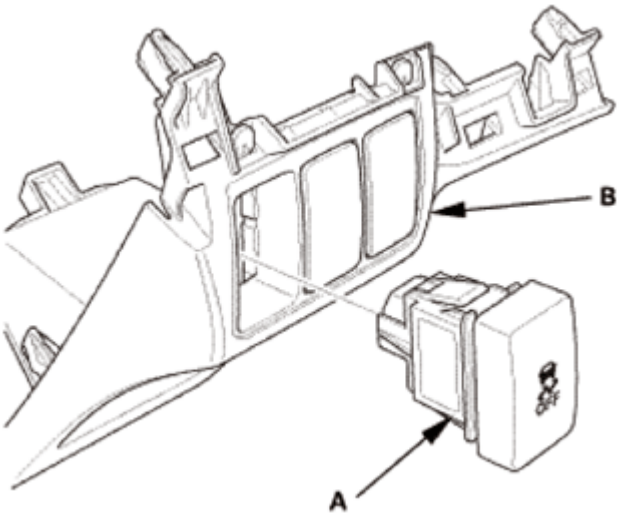

Fig. 86: Identifying VSA OFF Switch And Driver's Dashboard Lower Cover
Courtesy of AMERICAN HONDA MOTOR CO., INC.

GETtheMANUALS.org

5. VSA Off Switch Bulb (If necessary)
    1. Remove the cover (A).
    2. Remove the bulb (B).

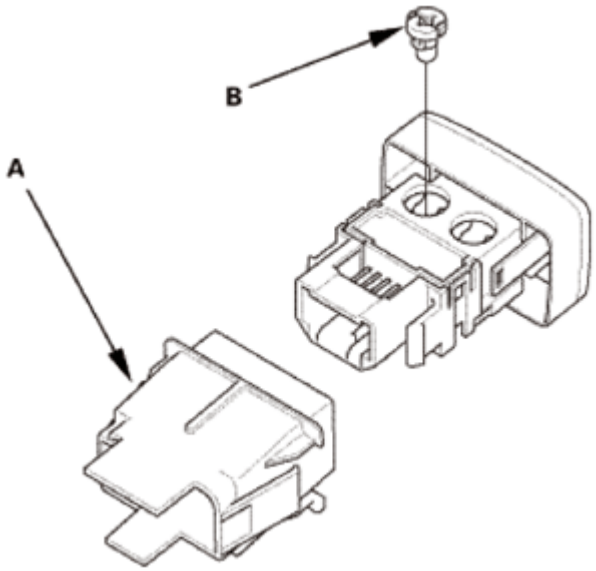

Fig. 87: Identifying VSA Off Switch Bulb And Cover
Courtesy of AMERICAN HONDA MOTOR CO., INC.

TEST

1. VSA Off Switch - Test
    1. On the switch side, check for continuity between the connector terminal in each switch position according to the table.
        - If the switch does not work as described in the table, replace the switch.
        - If the switch tests OK, go to step 2.

VSA OFF SWITCH 5P CONNECTOR

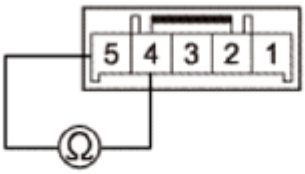

Terminal side of male terminals

Position \ Terminal	4	5
PRESSED	○	○
RELEASED		

GETtheMANUALS.org

Fig. 88: VSA Off Switch Continuity Reference Chart
Courtesy of AMERICAN HONDA MOTOR CO., INC.

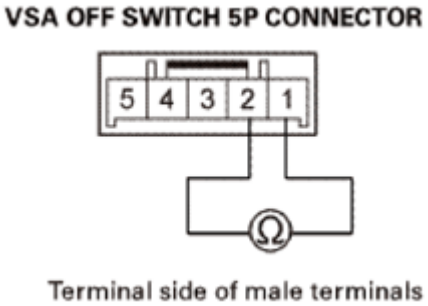

Fig. 89: Checking Continuity Between Connector Terminals No. 1 And No. 2
Courtesy of AMERICAN HONDA MOTOR CO., INC.

2. On the switch side, check for continuity between connector terminals No. 1 and No. 2. There should be continuity at all times.
    - If the continuity is not as specified, remove the cover, and replace the bulb.

INSTALLATION

1. VSA Off Switch Bulb (If necessary)
    1. Install the bulb (A).
    2. Install the cover (B).

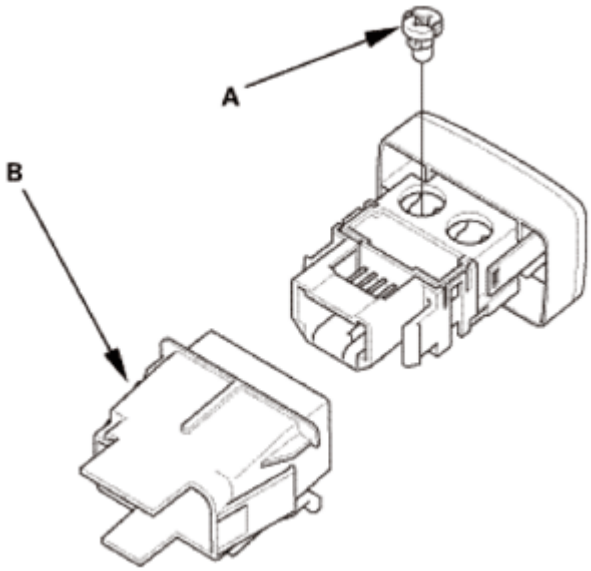

Fig. 90: Identifying VSA Off Switch Bulb And Cover
Courtesy of AMERICAN HONDA MOTOR CO., INC.

2. VSA Off Switch

GETtheMANUALS.org

1. Install the VSA OFF switch (A) to the driver's dashboard lower cover (B).

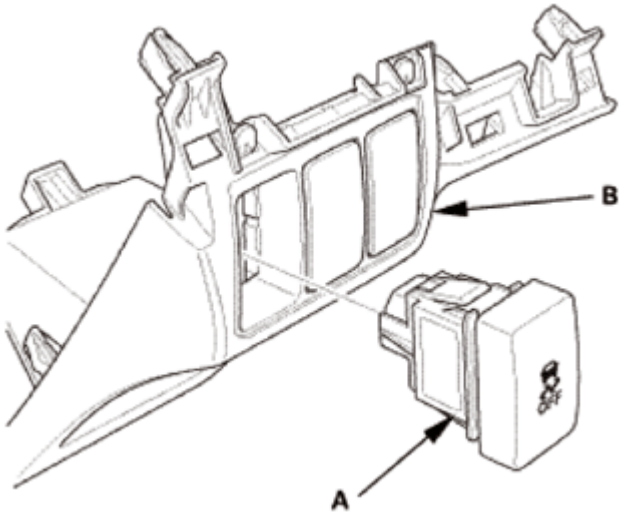

Fig. 91: Identifying VSA OFF Switch And Driver's Dashboard Lower Cover
Courtesy of AMERICAN HONDA MOTOR CO., INC.

3. Driver's Dashboard Lower Cover
    1. Connect the connector (A), then install the driver's dashboard lower cover (B). Make sure the clips (C) snap into place securely.

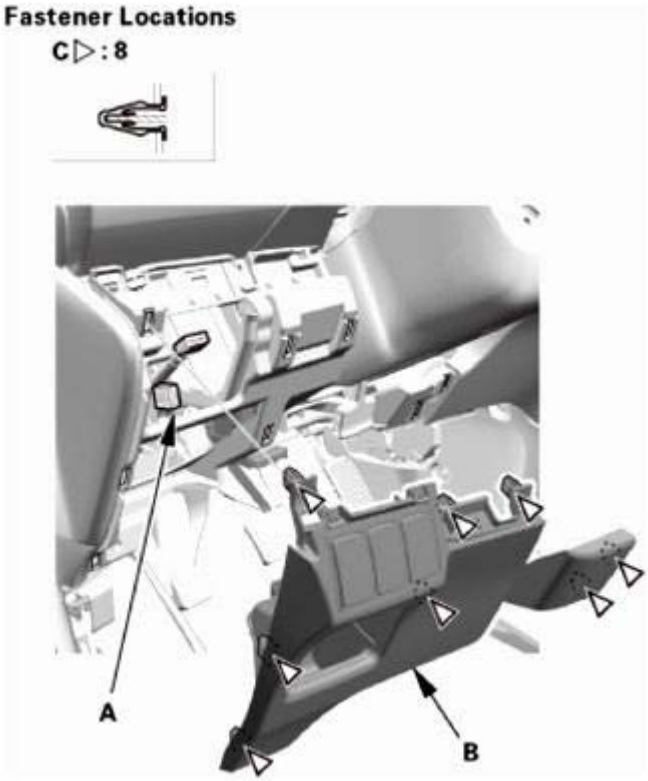

GETtheMANUALS.org

Fig. 92: Identifying Driver's Dashboard Lower Cover, Connector And Clips
Courtesy of AMERICAN HONDA MOTOR CO., INC.

4. Driver's Dashboard Undercover
    1. Install the driver's dashboard undercover (A). Make sure the clip (B) snap into place securely, and the pin (C) into the holder (D) securely.
    2. Turn the lock knob (E) 90 °.

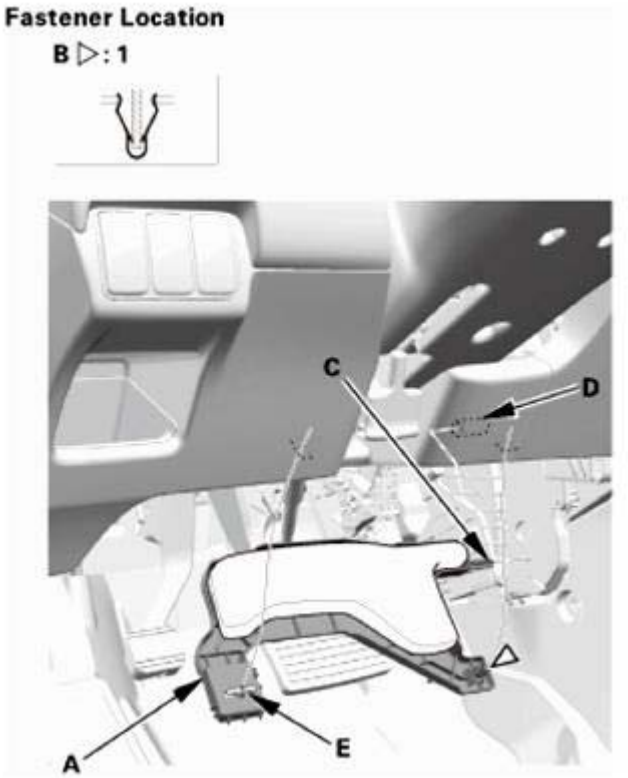

Fig. 93: Identifying Driver's Dashboard Undercover, Holder, Lock Knob, Pin And Clips
Courtesy of AMERICAN HONDA MOTOR CO., INC.

5. Driver's Dashboard Panel Assembly
    1. Connect the connector (A), then install the driver's dashboard panel assembly (B). Make sure the clips (C) snap into place securely.

GETtheMANUALS.org

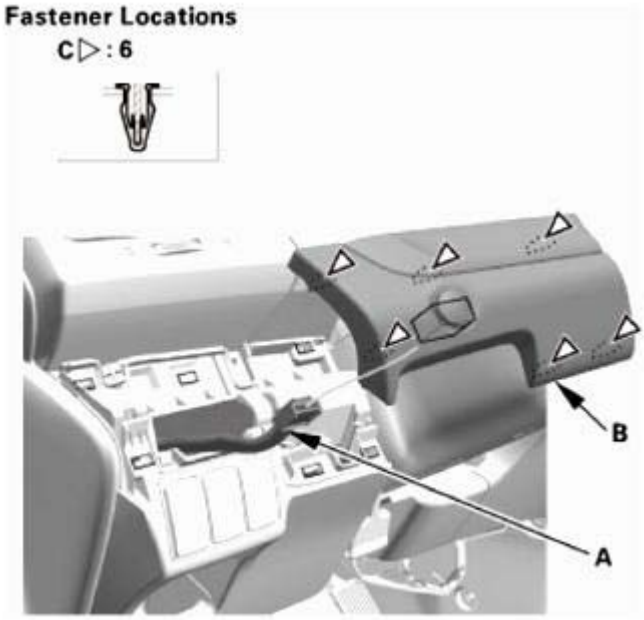

Fig. 94: Identifying Driver's Dashboard Panel Assembly, Connector And Clips
Courtesy of AMERICAN HONDA MOTOR CO., INC.

VSA SENSOR NEUTRAL POSITION MEMORIZATION

PROCEDURE

1. HDS DLC - Connection
    1. Connect the HDS to the data link connector (DLC) (A) located under the driver's side of the dashboard.
    2. Turn the ignition switch to ON (II).
    3. Make sure the HDS communicates with the vehicle. If it does not communicate, go to the DLC circuit troubleshooting.

GETtheMANUALS.org

Fig. 95: Identifying Data Link Connector
Courtesy of AMERICAN HONDA MOTOR CO., INC.

2. VSA Sensor Neutral Position - Memorization
    1. Park the vehicle on a flat and level surface, with the steering wheel in the straight ahead position.
    2. Select VSA ADJUSTMENT, then select ALL SENSORS with the HDS, and follow the screen prompts.

    NOTE: See the HDS Help menu for specific instructions.

3. Steering Angle Sensor Neutral Position - Clear
    1. Select EPS ADJUSTMENT, then select EPS STEERING ANGLE SENSOR VALUE CLEAR and follow the screen prompts on the HDS.

    NOTE: See the HDS Help menu for specific instructions.

VSA SYSTEM COMPONENT LOCATION INDEX

GETtheMANUALS.org

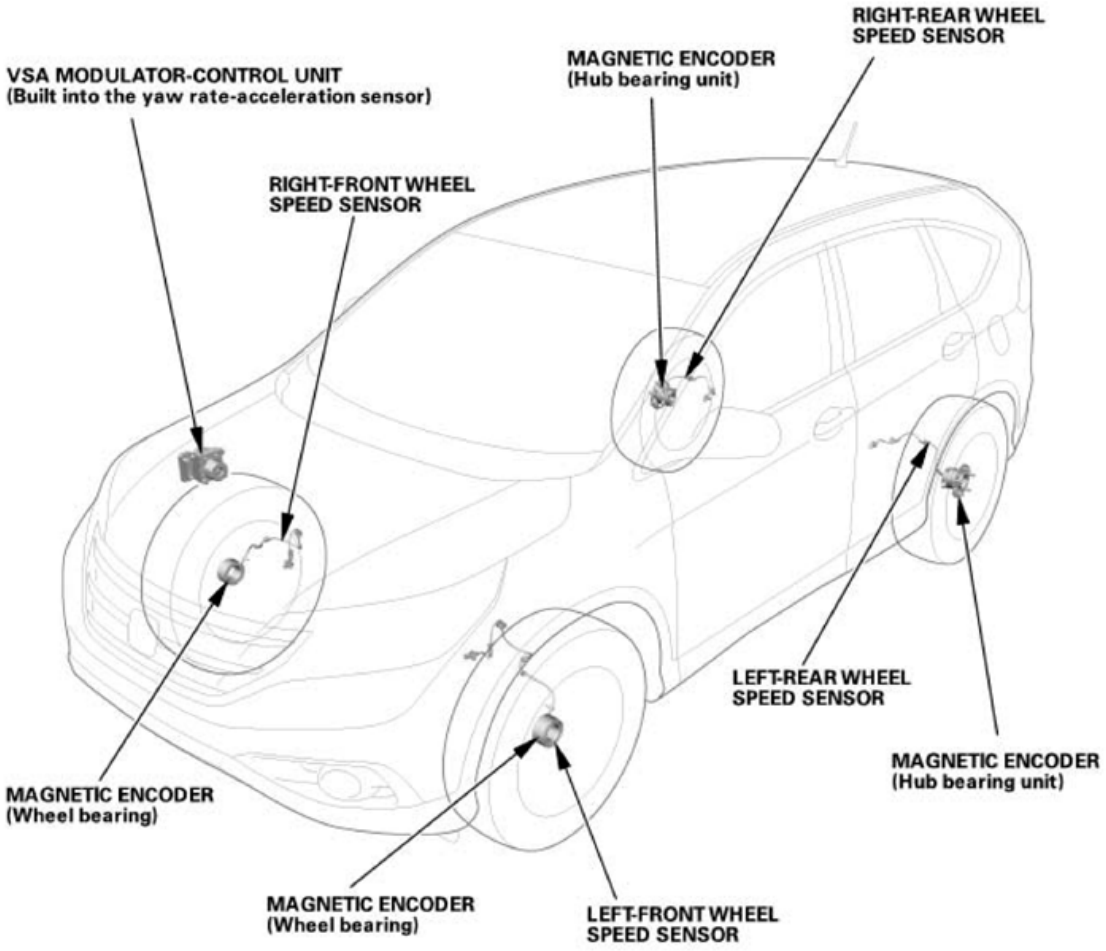

Fig. 96: VSA System Components Location
Courtesy of AMERICAN HONDA MOTOR CO., INC.

GETtheMANUALS.org

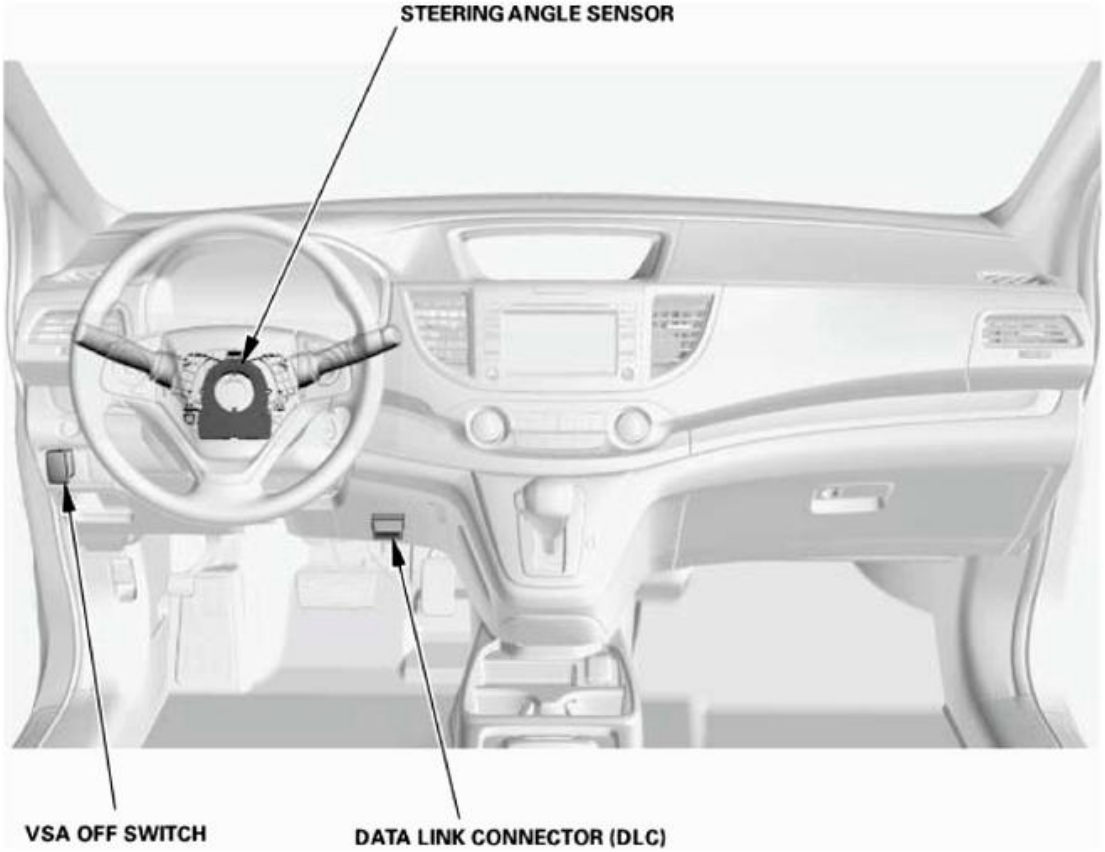

Fig. 97: Identifying Steering Angle Sensor, VSA OFF Switch And DLC
Courtesy of AMERICAN HONDA MOTOR CO., INC.

MAGNETIC ENCODER	**FRONT WHEEL BEARING REPLACEMENT**
	REAR HUB BEARING UNIT REPLACEMENT
STEERING ANGLE SENSOR	**REMOVAL AND INSTALLATION**
VSA MODULATOR-CONTROL UNIT	**Removal and Installation** See **VSA SENSOR NEUTRAL POSITION MEMORIZATION**, **VSA MODULATOR-CONTROL UNIT UPDATE** or **VSA MODULATOR-CONTROL UNIT REMOVAL AND INSTALLATION**
	Update See **VSA SENSOR NEUTRAL POSITION MEMORIZATION**, **VSA MODULATOR-CONTROL UNIT REMOVAL AND INSTALLATION** or **VSA MODULATOR-CONTROL UNIT UPDATE**
	VSA Sensor Neutral Position Memorization See **VSA SENSOR NEUTRAL POSITION MEMORIZATION**, **VSA MODULATOR-CONTROL UNIT UPDATE** or **VSA MODULATOR-CONTROL UNIT REMOVAL AND INSTALLATION**
VSA OFF SWITCH	**REMOVAL, INSTALLATION, AND TEST**
WHEEL SPEED SENSOR	**Front Wheel Speed Sensor Removal and Installation** See **FRONT WHEEL SPEED SENSOR REMOVAL AND INSTALLATION** or **REAR WHEEL SPEED SENSOR REMOVAL AND INSTALLATION**
	Rear Wheel Speed Sensor Removal and Installation See **FRONT WHEEL**

GETtheMANUALS.org

	SPEED SENSOR REMOVAL AND INSTALLATION or **REAR WHEEL SPEED SENSOR REMOVAL AND INSTALLATION**

VSA SYSTEM DTC TROUBLESHOOTING INDEX

DTC		Detection Item
11	**-13**	Right-Front Wheel Speed Sensor Circuit Malfunction
12	**-11**	Right-Front Wheel Speed Sensor Electrical Noise or Intermittent Interruption
	-14	Right-Front Wheel Speed Sensor Installation Error
	-15	Right-Front Wheel Speed Sensor Installation Error
13	**-13**	Left-Front Wheel Speed Sensor Circuit Malfunction
14	**-11**	Left-Front Wheel Speed Sensor Electrical Noise or Intermittent Interruption
	-14	Left-Front Wheel Speed Sensor Installation Error
	-15	Left-Front Wheel Speed Sensor Installation Error
15	**-13**	Right-Rear Wheel Speed Sensor Circuit Malfunction
16	**-11**	Right-Rear Wheel Speed Sensor Electrical Noise or Intermittent Interruption
	-14	Right-Rear Wheel Speed Sensor Installation Error
	-15	Right-Rear Wheel Speed Sensor Installation Error
17	**-13**	Left-Rear Wheel Speed Sensor Circuit Malfunction
18	**-11**	Left-Rear Wheel Speed Sensor Electrical Noise or Intermittent Interruption
	-14	Left-Rear Wheel Speed Sensor Installation Error
	-15	Left-Rear Wheel Speed Sensor Installation Error
25	**-21**	Yaw Rate Sensor (Inside of Modulator-Control Unit) Output Signal Malfunction
26	**-21**	Lateral Acceleration Sensor (Inside of Modulator-Control Unit) Output Signal Malfunction
27	**-20**	Steering Angle Sensor Internal Circuit Malfunction
	-21	Steering Angle Sensor Output Signal Malfunction
28	**-21**	Longitudinal Acceleration Sensor (Inside of Modulator-Control Unit) Output Signal Malfunction
	-22	Longitudinal Acceleration Sensor (Inside of Modulator-Control Unit) Stuck
31	**-11**	ABS Solenoid Valve Malfunction
32	**-11**	ABS Solenoid Valve Malfunction
33	**-11**	ABS Solenoid Valve Malfunction
34	**-11**	ABS Solenoid Valve Malfunction
35	**-11**	ABS Solenoid Valve Malfunction
36	**-11**	ABS Solenoid Valve Malfunction
37	**-11**	ABS Solenoid Valve Malfunction
38	**-11**	ABS Solenoid Valve Malfunction
51	**-12**	Motor Power Source Circuit Malfunction
	-13	Motor Drive Circuit Malfunction
	-80	Motor Malfunction
52	**-11**	Motor Stuck OFF
53	**-11**	Motor Relay Stuck ON

GETtheMANUALS.org

54	**-13**	Fail-Safe Relay Power Source Malfunction
	-14	Fail-Safe Relay Drive Circuit Malfunction
61	**-12**	Modulator-Control Unit Power Source Circuit (IG) Low Voltage
62	**-11**	Modulator-Control Unit Power Source Circuit (IG) High Voltage
65	**-11**	Brake Fluid Level Switch Circuit Malfunction
66	**-13**	Pressure Sensor Malfunction
	-14	Pressure Sensor Sensitivity Malfunction
68	**-12**	Brake Pedal Position Switch Stuck ON
	-13	Brake Pedal Position Switch Circuit Malfunction
71	**-80**	Abnormal Slip Malfunction
	-81	Right-Front Wheel Abnormal Slip Malfunction
	-82	Left-Front Wheel Abnormal Slip Malfunction
	-83	Right-Rear Wheel Abnormal Slip Malfunction
	-84	Left-Rear Wheel Abnormal Slip Malfunction
81	**-11**	Modulator-Control Unit Internal Circuit Malfunction
	-19	Yaw Rate Sensor (Inside of Modulator-Control Unit) Internal Circuit Malfunction
	-20	Acceleration Sensor (Inside of Modulator-Control Unit) Internal Circuit Malfunction
83	**-11**	ECM/PCM (PGM-FI) Malfunction
86	**-11**	F-CAN Bus-Off Malfunction
	-12	F-CAN Communication With ECM/PCM (PGM-FI) Malfunction
	-13	F-CAN Communication With PCM (AT/CVT) Malfunction
	-14	F-CAN Communication With Gauge Control Module Malfunction
	-19	F-CAN Communication With Steering Angle Sensor Malfunction
87	-1	Wheel Speed Sensor Circuit Short to Power
88	**-11**	Wheel Speed Sensor Noise Malfunction
	-12	ABS Activation Time Too Long
91	-1	VSA Activation Time Too Long
121	**-11**	VSA Solenoid Valve Malfunction
122	**-11**	VSA Solenoid Valve Malfunction
123	**-11**	VSA Solenoid Valve Malfunction
124	**-11**	VSA Solenoid Valve Malfunction
158	-1	ECU Software Update Failure

ABS INDICATOR, BRAKE SYSTEM INDICATOR, AND VSA INDICATOR DO NOT GO OFF

GETtheMANUALS.org

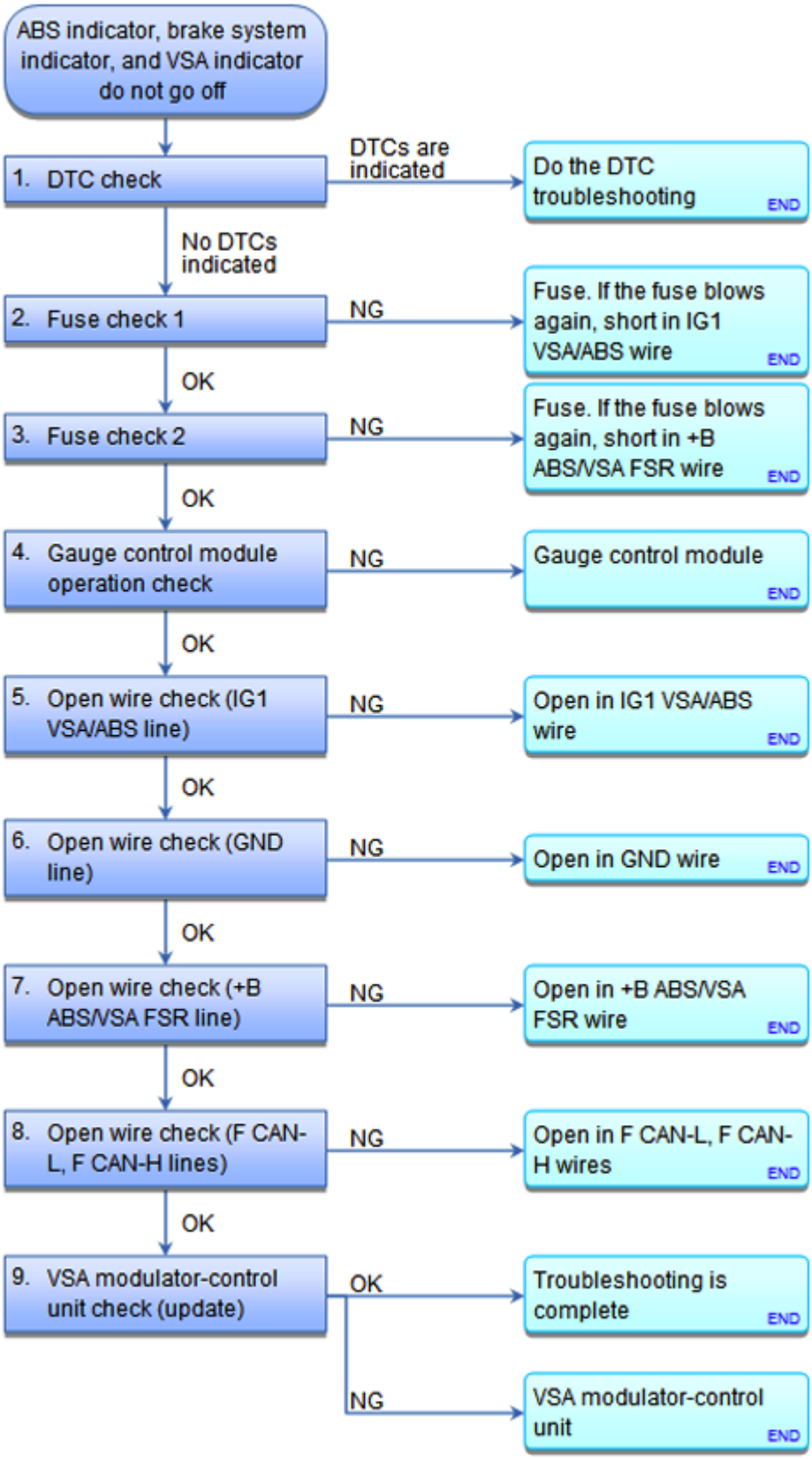

Fig. 98: VSA System Symptom Troubleshooting/ABS Indicator, Brake System Indicator Flow Chart

GETtheMANUALS.org

(VSA Indicator Do Not Go Off)
Courtesy of AMERICAN HONDA MOTOR CO., INC.

1. DTC check:
   - 1. Turn the ignition switch to ON (II).
   - 2. Check for DTCs with the HDS.

DTC Description	DTC	Freeze Frame

Are there DTCs indicated?

YES : Do the DTC troubleshooting.

NO : Go to step 2.

2. Fuse check 1:
   - 1. Turn the ignition switch to LOCK (0).
   - 2. Check the following fuse.

     Fuse No. B24 (7.5 A)

     Location Under-dash fuse/relay box

Is the fuse OK?

YES : The fuse is OK. Reinstall the fuse, then go to step 3.

NO : Replace the fuse. Turn the ignition switch to ON (II), then turn it to LOCK (0) again. If the fuse blows again, repair the short to ground on the No. B24 (7.5 A) fuse circuit.

3. Fuse check 2:
   - 1. Check the following fuse.

     Fuse No. A1-4 (20 A)

     Location Under-hood fuse/relay box

Is the fuse OK?

YES : The fuse is OK. Reinstall the fuse, then go to step 4.

NO : Replace the fuse. If the fuse blows again, repair the short to ground on the No. A1-4 (20 A) fuse circuit.

GETtheMANUALS.org

4. Gauge control module operation check:
   - 1. **DO THE GAUGE CONTROL MODULE SELF-DIAGNOSTIC FUNCTION** .

   Is the gauge control module OK?

   YES : Go to step 5.

   NO : **Replace the gauge control module** See **Rewriting the ODO Data and Transferring the Maintenance Minder™ Data to a New Gauge Control Module** or **GAUGE CONTROL MODULE REMOVAL AND INSTALLATION** .

5. Open wire check (IG1 VSA/ABS line):
   - 1. Turn the ignition switch to LOCK (0).
   - 2. Disconnect the following connector.

     VSA modulator-control unit 38P connector

   - 3. Turn the ignition switch to ON (II).
   - 4. Measure the voltage between test points 1 and 2.

     Test condition IG ON (II)

     VSA modulator-control unit 38P connector: disconnected

     Test circuit IG1 VSA/ABS

     Test point 1 VSA modulator-control unit 38P connector No. 36 (PUR)

     Test point 2 Body ground

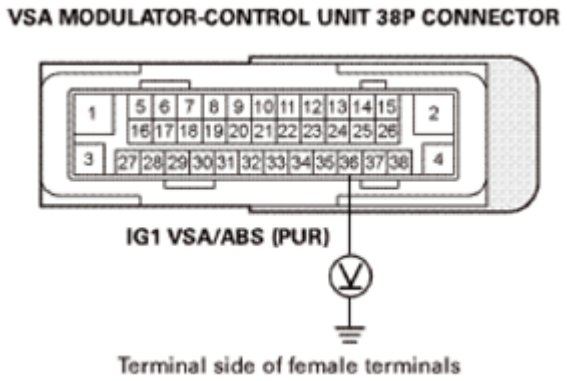

Fig. 99: Measuring Voltage Between VSA Modulator-Control Unit 38P Connector No. 36 (PUR) And Body Ground
Courtesy of AMERICAN HONDA MOTOR CO., INC.

Is there battery voltage?

GETtheMANUALS.org

YES : The IG1 VSA/ABS wire is OK. Go to step 6.

NO : Repair an open in the wire between the No. B24 (7.5 A) fuse in the under-dash fuse/relay box and the VSA modulator-control unit.

6. Open wire check (GND line):
   - 1. Turn the ignition switch to LOCK (0).
   - 2. Check for continuity between test points 1 and 2.

     Test condition IG LOCK (0)

     VSA modulator-control unit 38P connector: disconnected

     Test circuit GND

     Test point 1 VSA modulator-control unit 38P connector No. 3 (BLK)

     Test point 2 Body ground

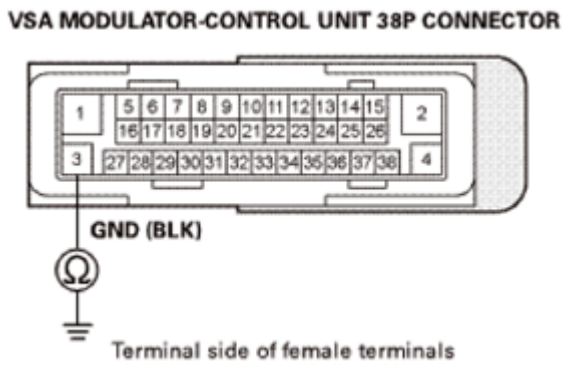

Fig. 100: Checking Continuity Between VSA Modulator-Control Unit 38P Connector No. 3 (BLK) And Body Ground
Courtesy of AMERICAN HONDA MOTOR CO., INC.

Is there continuity?

YES : The GND wire is OK. Go to step 7.

NO : Repair an open in the wire between the VSA modulator-control unit and body ground (G201).

7. Open wire check (+B ABS/VSA FSR line):
   - 1. Measure the voltage between test points 1 and 2.

     Test condition IG LOCK (0)

     VSA modulator-control unit 38P connector: disconnected

GETtheMANUALS.org

Test circuit +B ABS/VSA FSR

Test point 1 VSA modulator-control unit 38P connector No. 4 (WHT)

Test point 2 Body ground

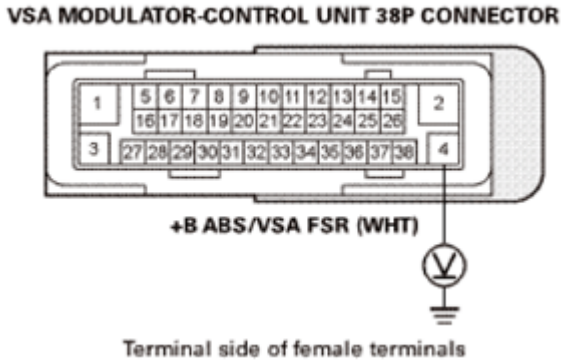

Fig. 101: Measuring Voltage Between VSA Modulator-Control Unit 38P Connector No. 4 (WHT) And Body Ground
Courtesy of AMERICAN HONDA MOTOR CO., INC.

Is there battery voltage?

YES : The +B ABS/VSA FSR wire is OK. Go to step 8.

NO : Repair an open in the wire between the No. A1-4 (20 A) fuse in the under-hood fuse/relay box and the VSA modulator-control unit.

8. Open wire check (F CAN-L, F CAN-H lines):
   - 1. Disconnect the following connector.

     Gauge control module 32P connector

   - 2. Check for continuity between test points 1 and 2.

     Test condition IG LOCK (0)

     VSA modulator-control unit 38P connector: disconnected

     Gauge control module 32P connector: disconnected

     Test circuit F CAN-L

     Test point 1 VSA modulator-control unit 38P connector No. 26 (RED)

     Test point 2 Gauge control module 32P connector No. 20 (RED)

GETtheMANUALS.org

Test circuit F CAN-H

Test point 1 VSA modulator-control unit 38P connector No. 38 (WHT)

Test point 2 Gauge control module 32P connector No. 19 (WHT)

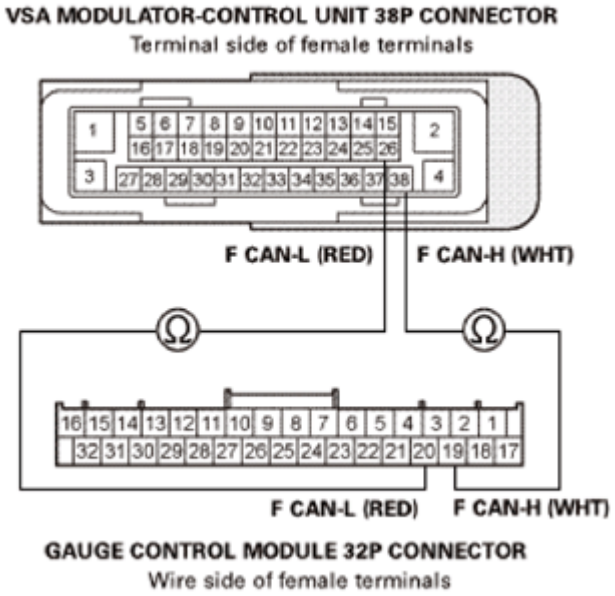

Fig. 102: Checking Continuity Between VSA Modulator-Control Unit 38P Connector No. 26 (RED) And Gauge Control Module 32P Connector No. 20 (RED)
Courtesy of AMERICAN HONDA MOTOR CO., INC.

Is there continuity?

YES : The F CAN-L, F CAN-H wires are OK. Go to step 9.

NO : Repair an open in the wire between the gauge control module and the VSA modulator-control unit.

9. VSA modulator-control unit check (update):
   - 1. Reconnect the following connectors.

     VSA modulator-control unit 38P connector

     Gauge control module 32P connector

   - 2. **Update the VSA modulator-control unit if it does not have the latest software** See **VSA SENSOR NEUTRAL POSITION MEMORIZATION**, **VSA MODULATOR-CONTROL UNIT REMOVAL AND INSTALLATION** or **VSA MODULATOR-CONTROL UNIT UPDATE**.
   - 3. Turn the ignition switch to LOCK (0), then turn it to ON (II) again.
   - 4. Check the ABS indicator, the brake system indicator, and the VSA indicator for several seconds

GETtheMANUALS.org

when the ignition switch to ON (II).

Do the indicators come on then go off?

YES : Troubleshooting is complete.

NO : Check for loose terminals in the VSA modulator-control unit 38P connector. If the VSA modulator-control unit was updated and the symptom/indication is still present, **replace the VSA modulator-control unit** See **VSA SENSOR NEUTRAL POSITION MEMORIZATION**, **VSA MODULATOR-CONTROL UNIT UPDATE** or **VSA MODULATOR-CONTROL UNIT REMOVAL AND INSTALLATION**.

VSA CANNOT BE TURNED OFF

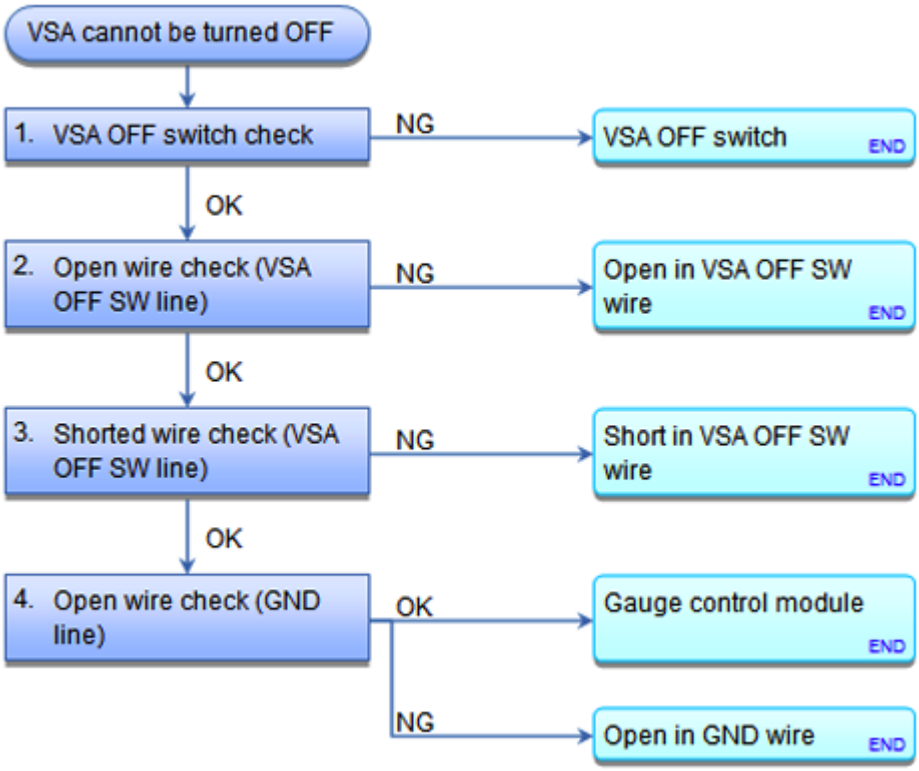

Fig. 103: VSA System Symptom Troubleshooting Flow Chart (VSA Cannot Be Turned Off)
Courtesy of AMERICAN HONDA MOTOR CO., INC.

NOTE: **If the low tire pressure indicator turns ON, the VSA cannot be turned OFF. Check the tire pressure first.**

1. VSA OFF switch check:
   - 1. Turn the ignition switch to LOCK (0).
   - 2. **CHECK THE VSA OFF SWITCH**.

GETtheMANUALS.org

Is the VSA OFF switch OK?

YES : Go to step 2.

NO : **REPLACE THE VSA OFF SWITCH**.

2. Open wire check (VSA OFF SW line):
   - 1. Disconnect the following connectors.

     VSA OFF switch 5P connector

     Gauge control module 32P connector

   - 2. Check for continuity between test points 1 and 2.

     Test condition IG LOCK (0)

     VSA OFF switch 5P connector: disconnected

     Gauge control module 32P connector: disconnected

     Test circuit VSA OFF SW

     Test point 1 VSA OFF switch 5P connector No. 4 (GRN)

     Test point 2 Gauge control module 32P connector No. 29 (GRN)

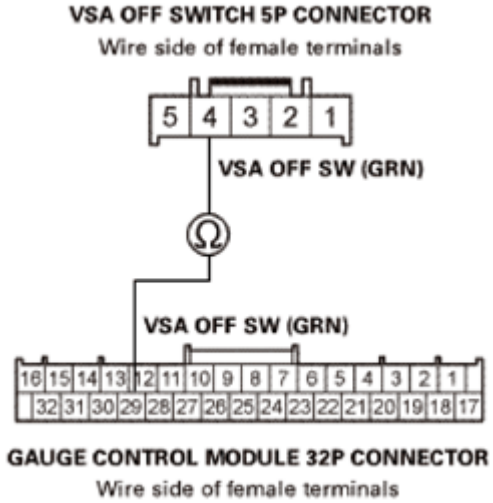

Fig. 104: Checking Continuity Between VSA OFF Switch 5P Connector No. 4 (GRN) And Gauge Control Module 32P Connector No. 29 (GRN)
Courtesy of AMERICAN HONDA MOTOR CO., INC.

Is there continuity?

GETtheMANUALS.org

YES : The VSA OFF SW wire is not open. Go to step 3.

NO : Repair an open in the wire between the gauge control module and the VSA OFF switch.

3. Shorted wire check (VSA OFF SW line):
   - 1. Check for continuity between test points 1 and 2.

     Test condition IG LOCK (0)

     VSA OFF switch 5P connector: disconnected

     Gauge control module 32P connector: disconnected

     Test circuit VSA OFF SW

     Test point 1 VSA OFF switch 5P connector No. 4 (GRN)

     Test point 2 Body ground

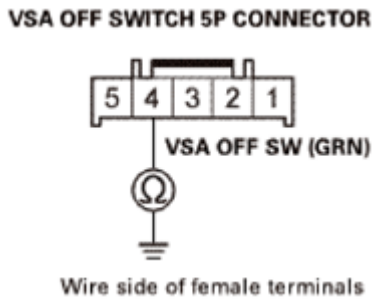

Fig. 105: Checking Continuity Between VSA OFF Switch 5P Connector No. 4 (GRN) And Body Ground
Courtesy of AMERICAN HONDA MOTOR CO., INC.

Is there continuity?

YES : Repair a short to body ground in the wire between the gauge control module and the VSA OFF switch.

NO : The VSA OFF SW wire is OK. Go to step 4.

4. Open wire check (GND line):
   - 1. Check for continuity between test points 1 and 2.

     Test condition IG LOCK (0)

     VSA OFF switch 5P connector: disconnected

GETtheMANUALS.org

Gauge control module 32P connector: disconnected

Test circuit GND

Test point 1 VSA OFF switch 5P connector No. 5 (BLK)

Test point 2 Body ground

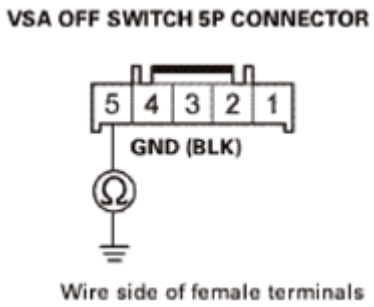

Fig. 106: Checking Continuity Between VSA OFF Switch 5P Connector No. 5 (BLK) And Body Ground
Courtesy of AMERICAN HONDA MOTOR CO., INC.

Is there continuity?

YES : The GND wire is OK. **Replace the gauge control module** See **Rewriting the ODO Data and Transferring the Maintenance Minder™ Data to a New Gauge Control Module** or **GAUGE CONTROL MODULE REMOVAL AND INSTALLATION** .

NO : Repair an open in the wire between the VSA OFF switch and body ground (G501).

GETtheMANUALS.org

WHEEL ALIGNMENT

INSPECTION

1. Pre-Alignment Checks

   For proper inspection and adjustment of the wheel alignment, do these checks:

   1. Release the parking brake to avoid an incorrect measurement.
   2. Make sure the suspension is not modified.
   3. Make sure the fuel tank is full, and that the spare tire, the jack, and the tools are in place on the vehicle.
   4. Check the tire size and tire pressure according to tire information.
   5. Set the steering column to the middle tilt position and telescopic position.
2. Vehicle Lift
   1. Raise the vehicle on a lift, and make sure it is securely supported.
3. Wheel Runout - Inspection

   NOTE: When measuring the front wheel runout, turn the wheel slowly by hand.

   1. Check for bent or deformed wheels.
   2. Set up the dial gauge as shown.
   3. Measure the axial runout by turning the wheel.

      Front and rear wheel axial runout:

      Standard:

      Steel wheel: 0-0.5 mm (0-0.020 in)

      Aluminum wheel: 0-0.3 mm (0-0.012 in)

      Service limit: 2.0 mm (0.079 in)

GETtheMANUALS.org

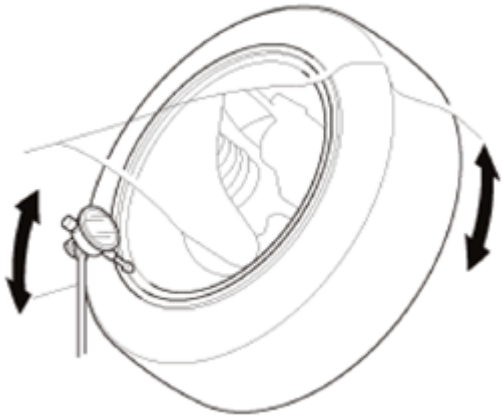

Fig. 1: Measuring Front Wheel Axial Runout Using Dial Gauge
Courtesy of AMERICAN HONDA MOTOR CO., INC.

4. Reset the dial gauge to the position shown.
5. Measure the radial runout.

   Front and rear wheel radial runout:

   Standard:

   Steel wheel: 0-0.7 mm (0-0.028 in)

   Aluminum wheel: 0-0.3 mm (0-0.012 in)

   Service limit: 1.5 mm (0.059 in)

6. If the wheel runout is not within the specification, check the wheel bearing end play, and make sure the mating surfaces between the brake disc or the brake drum and the inside of the wheel are clean.
7. If the bearing end play is within the specification but the wheel runout is more than the service limit, replace the wheel.

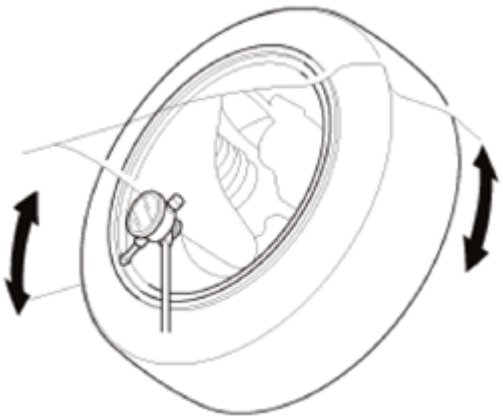

Fig. 2: Measuring Radial Runout Using Dial Gauge

GETtheMANUALS.org

Courtesy of AMERICAN HONDA MOTOR CO., INC.

4. Suspension Ball Joints - Check
    1. Check the suspension ball joints (Raise and support the vehicle. Hold a tire with your hands, and move it up and down and right and left to check for movement).
    2. Before doing alignment inspections, be sure to remove all extra weight from the vehicle, and no one should be inside the vehicle (driver or passengers).
    3. Lower the vehicle to the ground. Bounce the vehicle up and down several times to stabilize the suspension.
    4. Check that the steering column is set at the center tilt position and the center telescopic position.

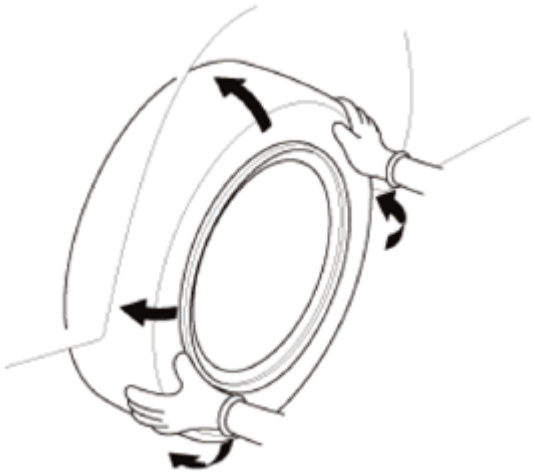

Fig. 3: Checking Suspension Ball Joints
Courtesy of AMERICAN HONDA MOTOR CO., INC.

5. Caster - Inspection

    Use commercially available computerized four wheel alignment equipment to measure wheel alignment (caster, camber, toe, and turning angle). Follow the equipment manufacturer's instructions.

    1. Check the caster angle.

        Caster angle:

        2WD:

        With 16 inch wheel: 2 ° 44 '±30 '

        Without 16 inch wheel: 2 ° 50 '±30 '

        AWD/4WD:

        With 16 inch wheel: 2 ° 38 '±30 '

GETtheMANUALS.org

Without 16 inch wheel: 2 ° 44 '±30 '

- If the measurement is within specifications, measure the front camber angle.
- If the measurement is not within specifications, check for bent or damaged suspension components.

6. Camber - Inspection

Use commercially available computerized four wheel alignment equipment to measure wheel alignment (caster, camber, toe, and turning angle). Follow the equipment manufacturer's instructions.

1. Check the camber angle.

Camber angle:

2WD:

Front:

With 16 inch wheel: -0 ° 01 '±1 ° 00 '

Without 16 inch wheel: -0 ° 10 '±1 ° 00 '

(Maximum difference between the front right and left side: 1 °00 ')

Rear:

With 16 inch wheel: -1 ° 06 '±45 '

Without 16 inch wheel: -1 ° 12 '±45 '

(Maximum difference between the front right and left side: 0 °45 ')

AWD/4WD:

Front:

With 16 inch wheel: -0 ° 08 '±1 ° 00 '

Without 16 inch wheel: 0 ° 00 '±1 ° 00 '

(Maximum difference between the front right and left side: 1 °00 ')

Rear:

With 16 inch wheel: -0 ° 50 '±45 '

Without 16 inch wheel: -1 ° 00 '±45 '

GETtheMANUALS.org

(Maximum difference between the front right and left side: 0 °45 ')

- If the measurement is within specification, measure the toe-in.
- If the measurement for the front camber is not within the specification, go to front camber adjustment.
- If the measurement for the rear camber is not within the specification, check for bent or damaged suspension components.

7. Rear Toe - Inspection

   Use commercially available computerized four wheel alignment equipment to measure wheel alignment (caster, camber, toe, and turning angle). Follow the equipment manufacturer's instructions.

   1. Release the parking brake to avoid an incorrect measurement.
   2. Check the toe.

      Rear toe-in: 2^{+2}_{-1} mm ($0.08^{+0.08}_{-0.04}$ in)

      - If adjustment is required, go to the rear toe adjustment.
      - If no adjustment is required, go to front toe inspection.

8. Front Toe - Inspection

   Use commercially available computerized four wheel alignment equipment to measure wheel alignment (caster, camber, toe, and turning angle). Follow the equipment manufacturer's instructions.

   1. Set the steering column to the middle tilt position and telescopic positions.
   2. Center the steering wheel spokes, and install a steering wheel holder tool.
   3. Check the toe with the wheels pointed straight ahead.

      Front toe-in: 0±2 mm (0±0.08 in)

      - If adjustment is required, go to the front toe adjustment.
      - If no adjustment is required, remove the alignment equipment.

9. Turning Angle - Inspection

   Use commercially available computerized four wheel alignment equipment to measure wheel alignment (caster, camber, toe, and turning angle). Follow the equipment manufacturer's instructions.

   1. Turn the wheel right and left while applying the brake, and measure the turning angle of both wheels.

      Turning angle:

      2WD:

GETtheMANUALS.org

Inward:

With 16 inch wheel: 36 ° 29 '±2 °

Without 16 inch wheel: 36 ° 13 '±2 °

Outward (reference):

With 16 inch wheel: 31 ° 13 '

Without 16 inch wheel: 31 ° 02 '

AWD/4WD:

Inward:

With 16 inch wheel: 36 ° 48 '±2 °

Without 16 inch wheel: 36 ° 30 '±2 °

Outward (reference):

With 16 inch wheel: 31 ° 18 '

Without 16 inch wheel: 31 ° 12 '

2. If the measurement is not within the specifications, even up both sides of the tie-rod threaded section length while adjusting the front toe.
3. If it is correct, but the turning angle is not within the specifications, check for bent or damaged suspension components.

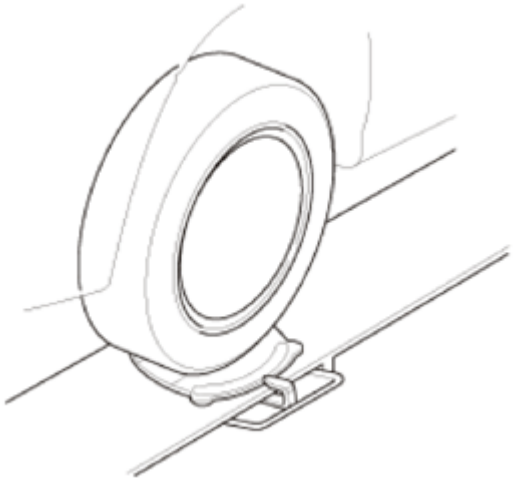

Fig. 4: Measuring Turning Angle Of Wheels
Courtesy of AMERICAN HONDA MOTOR CO., INC.

GETtheMANUALS.org

ADJUSTMENT

The suspension can be adjusted for front camber, front toe, and rear toe. However, each of these adjustments are related to each other. For example, when you adjust camber, the toe will change.

NOTE: After adjusting the wheel alignment, do the VSA sensor neutral position memorization and steering angle sensor neutral position clear.

1. Front Camber - Adjustment

   The front camber can be adjusted by exchanging one or both of the damper pinch bolts with a smaller diameter adjusting bolt. The difference between the adjusting bolt diameter and the pinch bolt hole diameter allows for a small range of adjustment.

   NOTE: Refer to the Parts Catalog for the camber adjusting bolts.

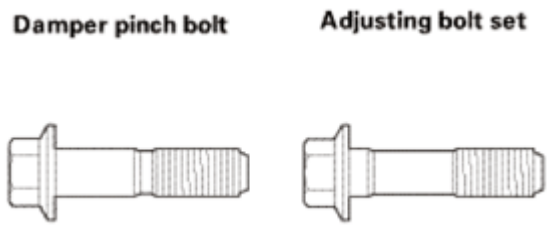

Fig. 5: Identifying Damper Pinch Bolts And Adjusting Bolt Set
Courtesy of AMERICAN HONDA MOTOR CO., INC.

1. Raise and support the vehicle.
2. Remove the front wheels.
3. Loosen the damper pinch bolts (A), and adjust the camber angle by moving the bottom of the damper within the range of the damper pinch bolt free play.
4. Tighten the damper pinch bolts to the specified torque.
5. Clean the mating surfaces between the brake disc and the inside of the wheel, then install the front wheels.
6. Lower the vehicle to the ground, and bounce the front of the vehicle up and down several times to stabilize the suspension.
7. Measure the camber angle.
   - If the measurement is within specification, measure the toe-in.
   - If the measurement is not within specification, go to step 8.

GETtheMANUALS.org

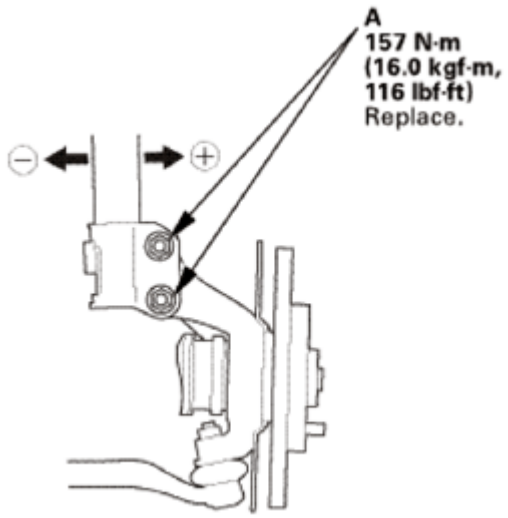

Fig. 6: Identifying Damper Pinch Bolts With Torque Specifications
Courtesy of AMERICAN HONDA MOTOR CO., INC.

8. Raise and support the vehicle.
9. Remove the front wheels.
10. Replace the damper pinch bolts with the adjusting bolts (A), and adjust the camber angle.

NOTE:

- **The camber angle can be adjusted up to ±20 ' (center of tolerance) by replacing one damper pinch bolt with the adjusting bolt.**
- **The camber angle can be adjusted up to ±40 ' by replacing both damper pinch bolts with the adjusting bolts.**

11. Tighten the damper pinch bolts holding the self-locking nuts (B) to the specified torque.
12. Clean the mating surfaces between the brake disc and the inside of the wheel, then install the front wheels.
13. Lower the vehicle to the ground, and bounce the front of the vehicle up and down several times to stabilize the suspension.
14. Measure the camber angle. If the camber angle is not within specification, repeat step 8 through 13 to readjust the camber angle. If the camber measurement is correct, measure toe-in, and adjust it if necessary.

GETtheMANUALS.org

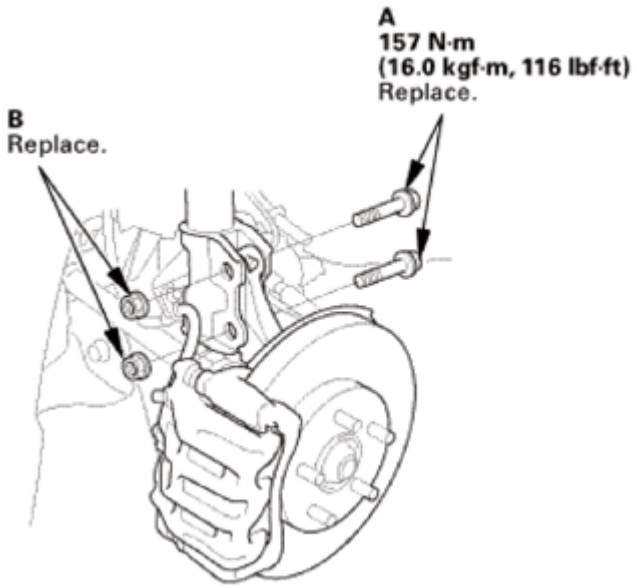

Fig. 7: Tightening Damper Pinch Bolts Holding Self-Locking Nuts With Torque Specification
Courtesy of AMERICAN HONDA MOTOR CO., INC.

2. Rear Toe - Adjustment
    1. Hold the adjusting bolt (A) on the trailing arm (B), and loosen the self-locking nut (C).
    2. Replace the self-locking nut with a new one, and lightly tighten it.

NOTE:

- **Always use a new self-locking nut whenever it has been tightened to the specified torque.**
- **Reassemble the adjusting bolt and adjusting cam plate with the eccentric facing up.**

    3. Adjust the rear toe by turning the adjusting bolt until the toe is correct.
    4. Tighten the self-locking nut to the specified torque while holding the adjusting bolt.

GETtheMANUALS.org

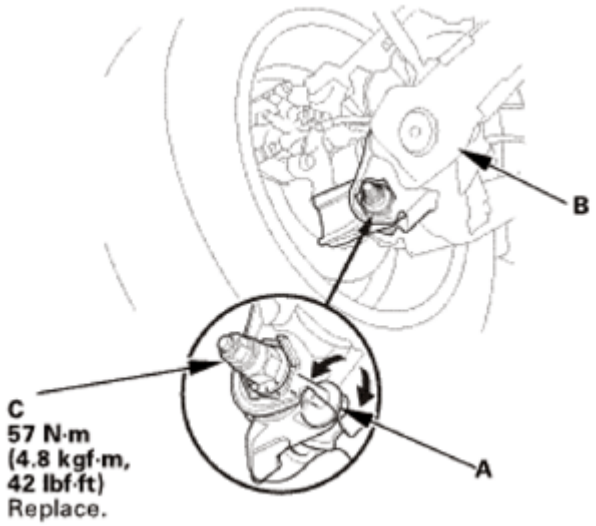

Fig. 8: Identifying Adjusting Bolt, Trailing Arm And Self-Locking Nut With Torque Specifications
Courtesy of AMERICAN HONDA MOTOR CO., INC.

3. Front Toe - Adjustment
    1. Loosen the tie-rod end locknuts (A) while holding the flat surface sections (B) of the tie-rod end with a wrench, and turn both tie-rods (C) until the front toe is within specifications.
    2. After adjusting, tighten the tie-rod end locknuts to the specified torque. Reposition the rack-end boot if it is twisted or displaced.

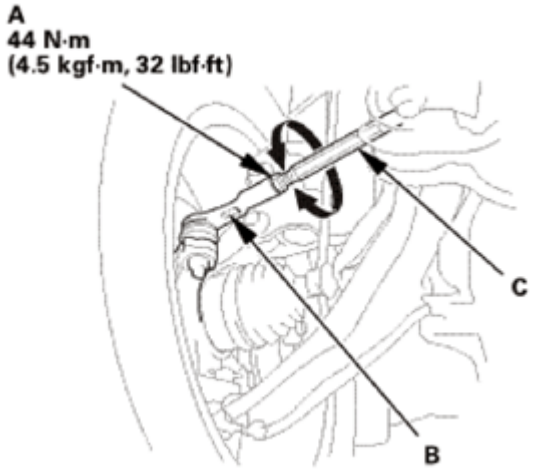

Fig. 9: Tightening Tie-Rod End Locknuts
Courtesy of AMERICAN HONDA MOTOR CO., INC.

4. HDS DLC - Connection
    1. Connect the HDS to the data link connector (DLC) (A) located under the driver's side of the dashboard.
    2. Turn the ignition switch to ON (II).

GETtheMANUALS.org

3. Make sure the HDS communicates with the vehicle. If it does not communicate, go to the DLC circuit troubleshooting.

Fig. 10: Identifying Data Link Connector
Courtesy of AMERICAN HONDA MOTOR CO., INC.

5. VSA Sensor Neutral Position - Memorization
    1. Park the vehicle on a flat and level surface, with the steering wheel in the straight ahead position.
    2. Select VSA ADJUSTMENT, then select ALL SENSORS with the HDS, and follow the screen prompts.

    NOTE: See the HDS Help menu for specific instructions.

6. Steering Angle Sensor Neutral Position - Clear
    1. Select EPS ADJUSTMENT, then select EPS STEERING ANGLE SENSOR VALUE CLEAR and follow the screen prompts on the HDS.

    NOTE: See the HDS Help menu for specific instructions.

WHEEL RUNOUT INSPECTION

INSPECTION

1. Vehicle Lift
    1. Raise the vehicle on a lift, and make sure it is securely supported.
2. Wheel Runout - Inspection

    NOTE: When measuring the front wheel runout, turn the wheel slowly by hand.

    1. Check for bent or deformed wheels.

GETtheMANUALS.org

2. Set up the dial gauge as shown.
3. Measure the axial runout by turning the wheel.

   Front and rear wheel axial runout:

   Standard:

   Steel wheel: 0-0.5 mm (0-0.020 in)

   Aluminum wheel: 0-0.3 mm (0-0.012 in)

   Service limit: 2.0 mm (0.079 in)

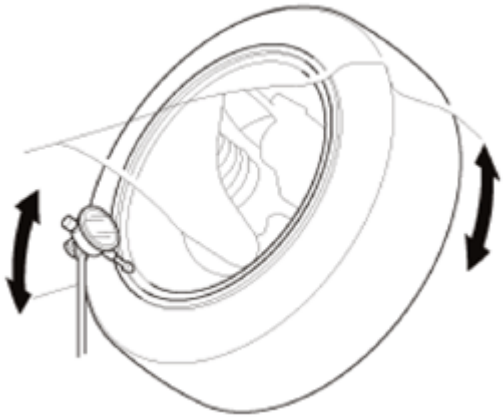

Fig. 11: Measuring Front Wheel Axial Runout Using Dial Gauge
Courtesy of AMERICAN HONDA MOTOR CO., INC.

4. Reset the dial gauge to the position shown.
5. Measure the radial runout.

   Front and rear wheel radial runout:

   Standard:

   Steel wheel: 0-0.7 mm (0-0.028 in)

   Aluminum wheel: 0-0.3 mm (0-0.012 in)

   Service limit: 1.5 mm (0.059 in)

6. If the wheel runout is not within the specification, check the wheel bearing end play, and make sure the mating surfaces between the brake disc or the brake drum and the inside of the wheel are clean.
7. If the bearing end play is within the specification but the wheel runout is more than the service limit, replace the wheel.

GETtheMANUALS.org

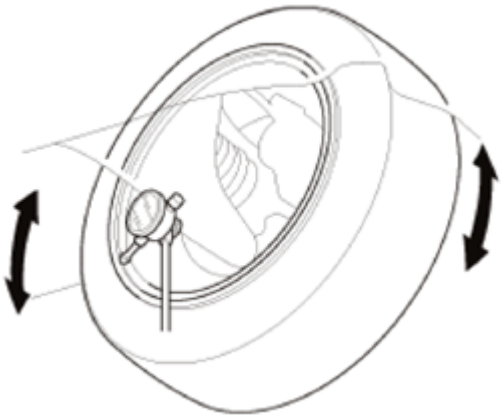

Fig. 12: Measuring Front Wheel Radial Runout Using Dial Gauge
Courtesy of AMERICAN HONDA MOTOR CO., INC.

GETtheMANUALS.org

WASHER FLUID LEVEL SWITCH TEST

REMOVAL

1. Right Front Inner Fender As Needed
    1. Remove the bolt (A), the screws (B), and the clip (C, D, E) securing the front inner fender (F), then remove the front inner fender as needed.

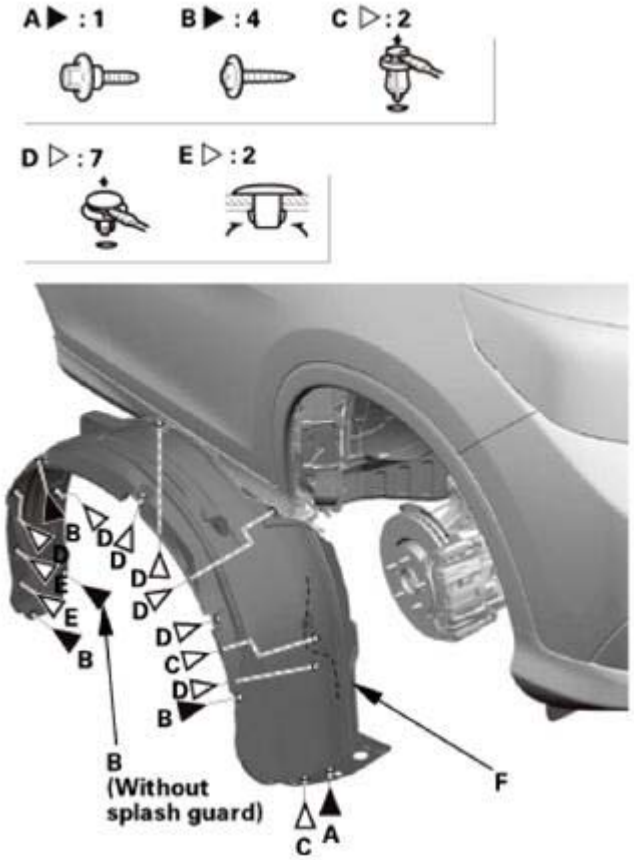

Fig. 1: Identifying Right Front Inner Fender Bolts, Screws And Clips
Courtesy of AMERICAN HONDA MOTOR CO., INC.

2. Washer Fluid Level Switch
    1. Disconnect the connector.
    2. Remover the washer fluid level switch (A).

NOTE: Fluid may flow out of the opening.

GETtheMANUALS.org

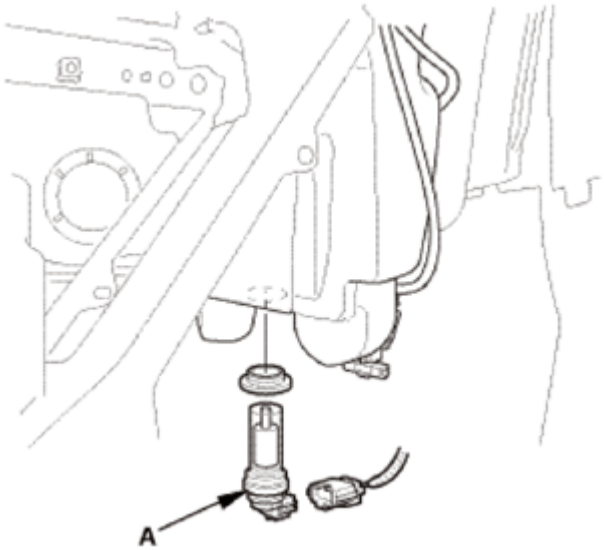

Fig. 2: Identifying Washer Fluid Level Switch
Courtesy of AMERICAN HONDA MOTOR CO., INC.

TEST

1. Washer Fluid Level Switch - Test
    1. Check for continuity between terminals No. 1 and No. 2 in each float position:
        - There should be continuity when the float is down.
        - There should be no continuity when the float is up.
    2. If the continuity is not as specified, replace the washer fluid level switch (A).

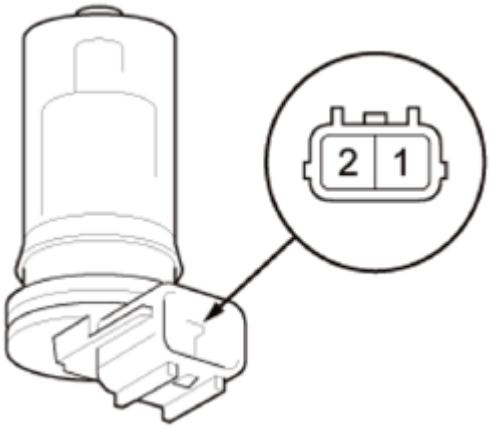

Fig. 3: Identifying Washer Fluid Level Switch Connector Terminals
Courtesy of AMERICAN HONDA MOTOR CO., INC.

INSTALLATION

1. Washer Fluid Level Switch

GETtheMANUALS.org

1. Inspect the gasket (A); replace it if it is distorted or stays compressed.
2. Install the washer fluid level switch (B) with the gasket.
3. Connect the connector.

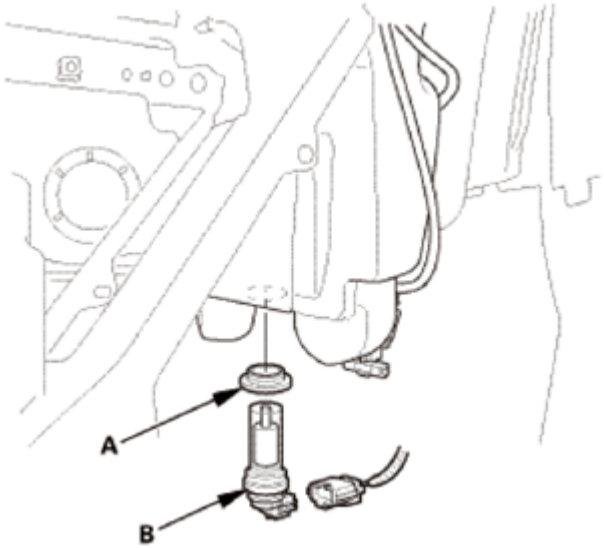

Fig. 4: Identifying Washer Fluid Level Switch And Gasket
Courtesy of AMERICAN HONDA MOTOR CO., INC.

2. Right Front Inner Fender As Needed
    1. Install the front fender (A), then install the bolt (B), the screws (C), and the clips (D, E, F). Make sure the clips snap into the place securely.

GETtheMANUALS.org

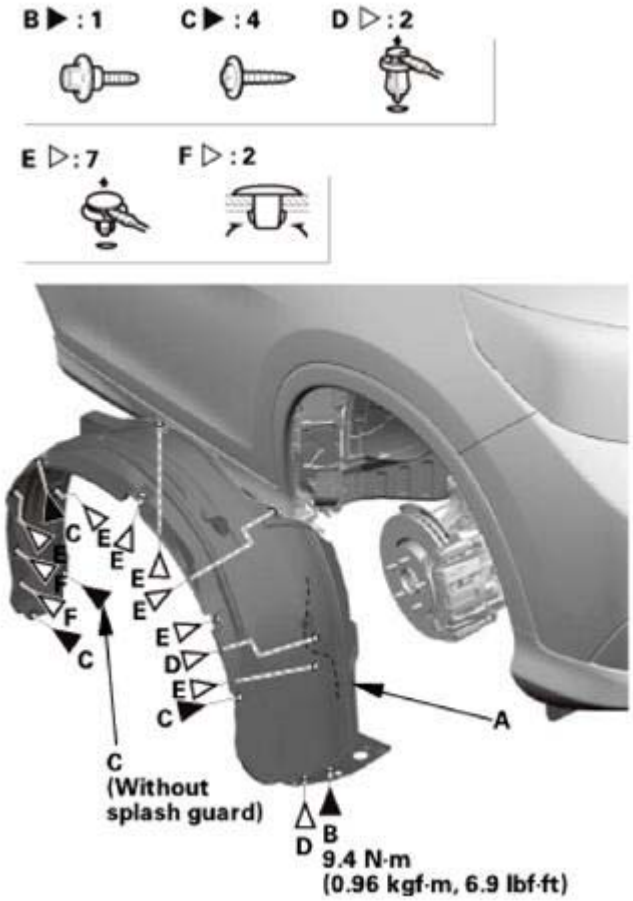

Fig. 5: Identifying Right Front Inner Fender Bolts, Screws And Clips
Courtesy of AMERICAN HONDA MOTOR CO., INC.

WASHER MOTOR REMOVAL, INSTALLATION, AND TEST

REMOVAL

1. Right Front Inner Fender As Needed
    1. Remove the bolt (A), the screws (B), and the clip (C, D, E) securing the front inner fender (F), then remove the front inner fender as needed.

GETtheMANUALS.org

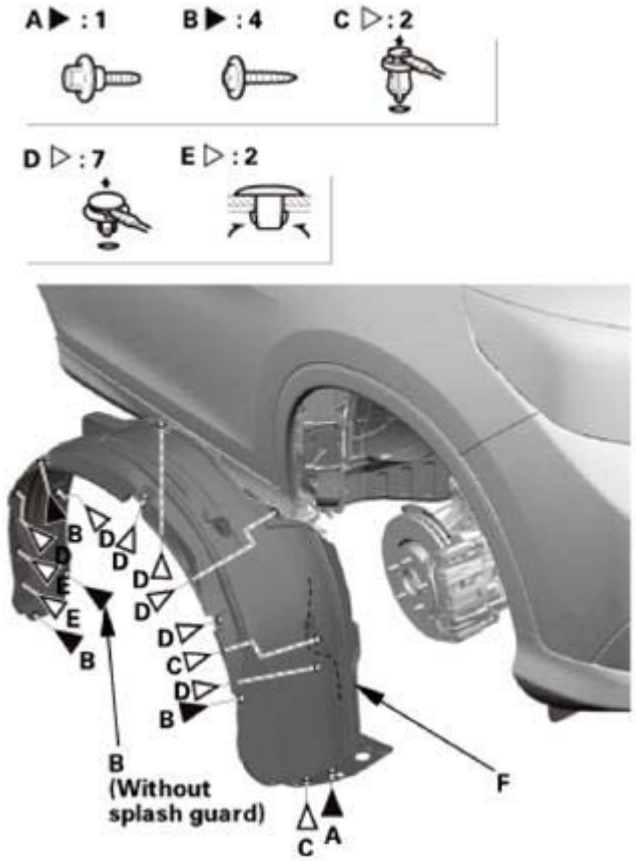

Fig. 6: Identifying Right Front Inner Fender Bolts, Screws And Clips
Courtesy of AMERICAN HONDA MOTOR CO., INC.

2. Washer Motor
    1. Disconnect the connector.
    2. Remove the washer motor (A).

NOTE: **Fluid may flow out of the opening.**

Capacity 2.5 L (2.6 US qt): USA and Mexico models

GETtheMANUALS.org

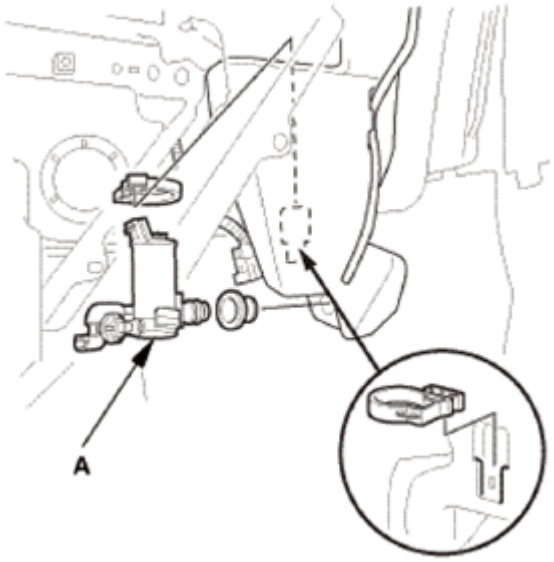

Fig. 7: Identifying Washer Motor (Capacity 2.5 L, USA And Mexico Models)
Courtesy of AMERICAN HONDA MOTOR CO., INC.

Capacity 4.5 L (4.76 US qt): Canada models

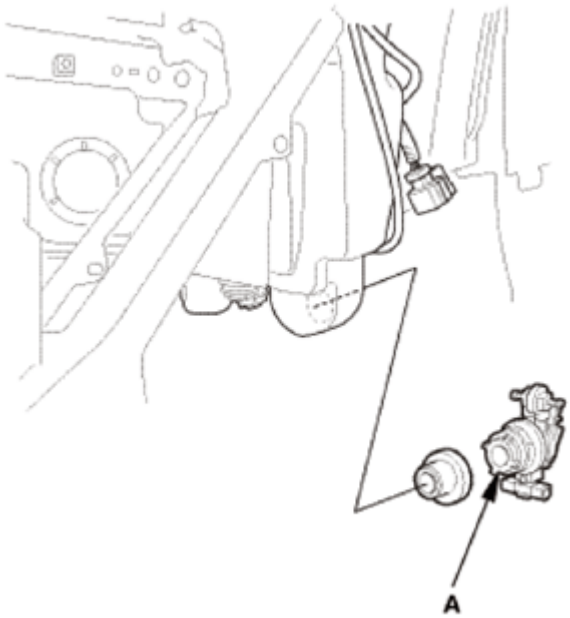

Fig. 8: Identifying Washer Motor (Capacity 4.5 L, Canada Models)
Courtesy of AMERICAN HONDA MOTOR CO., INC.

TEST

1. Washer Motor - Test
    1. Check the washer motor operation by connecting power and ground according to the table.

GETtheMANUALS.org

- If the motor does not run or fails to run smoothly, replace it.
- If the motor runs smoothly, but little or no washer fluid is pumped, check for a disconnected or blocked washer hose, or a clogged washer motor outlet.

Capacity 2.5 L (2.6 US qt): USA and Mexico models

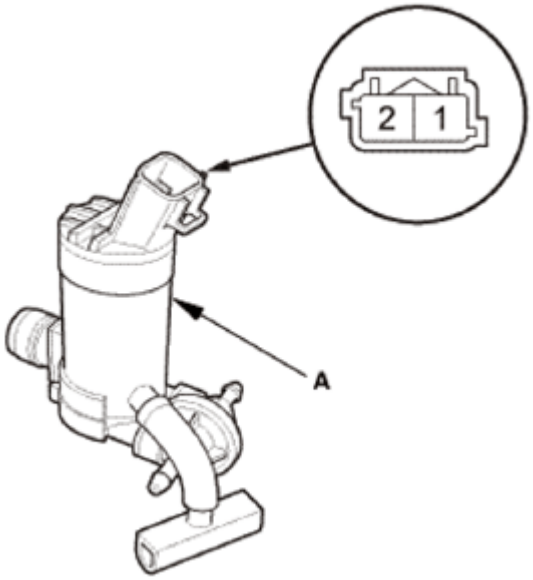

Fig. 9: Identifying Washer Motor And Connector Terminals (Capacity 2.5 L, USA And Mexico Models)
Courtesy of AMERICAN HONDA MOTOR CO., INC.

Capacity 4.5 L (4.76 US qt): Canada models

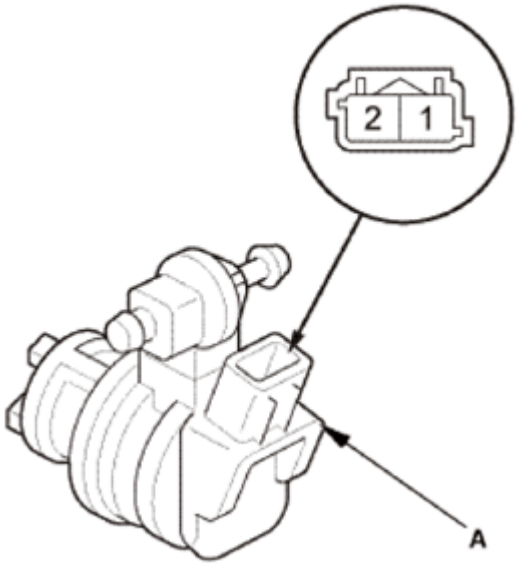

Fig. 10: Identifying Washer Motor And Connector Terminals (Capacity 4.5 L, Canada

GETtheMANUALS.org

Models)
Courtesy of AMERICAN HONDA MOTOR CO., INC.

Terminal / Position	1	2
WINDSHIELD	⊕	⊖
REAR WINDOW	⊖	⊕

Fig. 11: Washer Motor Terminals Position Chart
Courtesy of AMERICAN HONDA MOTOR CO., INC.

INSTALLATION

1. Washer Motor
    1. Inspect the gasket (A); replace it if it is distorted or stays compressed.
    2. Install the washer motor (B) with the gasket.
    3. Connect the connector.

Capacity 2.5 L (2.6 US qt): USA and Mexico models

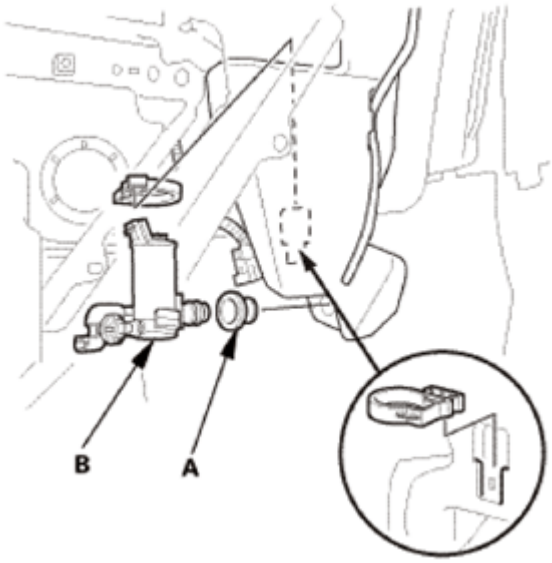

Fig. 12: Identifying Washer Motor And Gasket (Capacity 2.5 L, USA And Mexico Models)
Courtesy of AMERICAN HONDA MOTOR CO., INC.

Capacity 4.5 L (4.76 US qt): Canada models

GETtheMANUALS.org

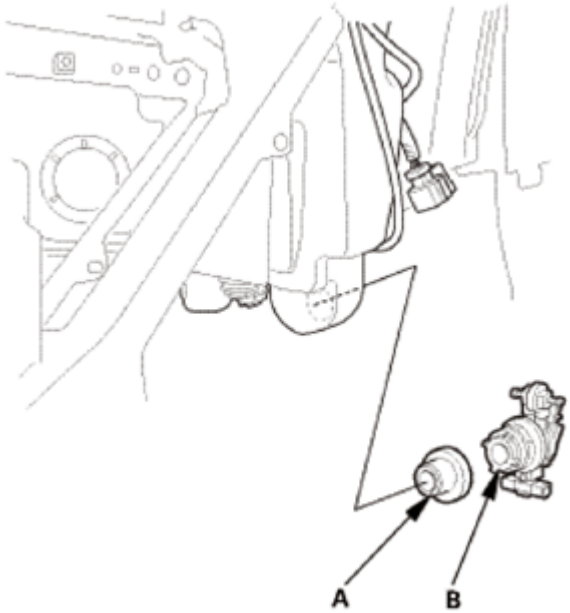

Fig. 13: Identifying Washer Motor And Gasket (Capacity 4.5 L, Canada Models)
Courtesy of AMERICAN HONDA MOTOR CO., INC.

2. Right Front Inner Fender As Needed
    1. Install the front fender (A), then install the bolt (B), the screws (C), and the clips (D, E, F). Make sure the clips snap into the place securely.

GETtheMANUALS.org

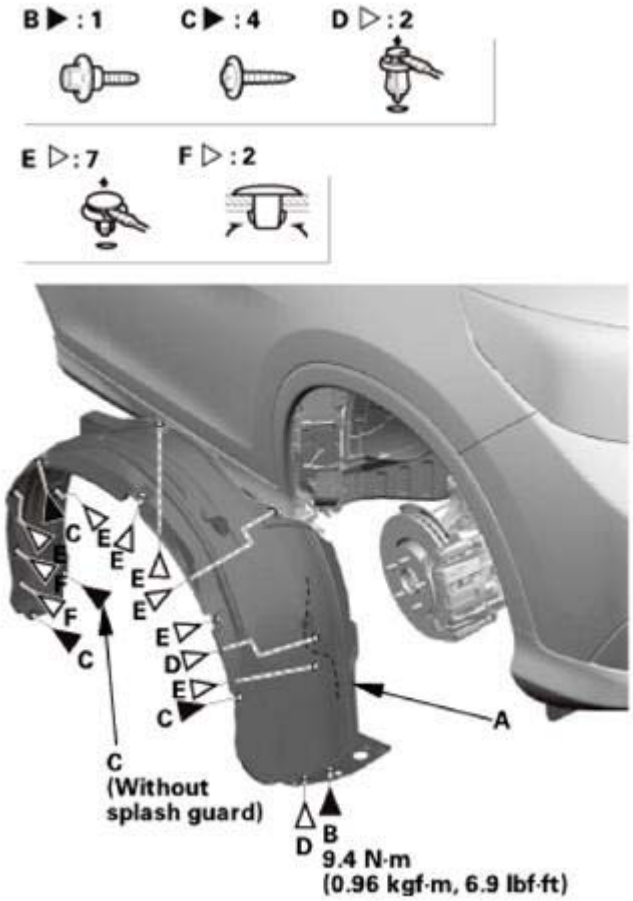

Fig. 14: Identifying Right Front Inner Fender Bolts, Screws And Clips
Courtesy of AMERICAN HONDA MOTOR CO., INC.

WASHER RESERVOIR REMOVAL AND INSTALLATION

REMOVAL

1. Right Front Fender Trim
    1. Remove the right front fender trim (A).

GETtheMANUALS.org

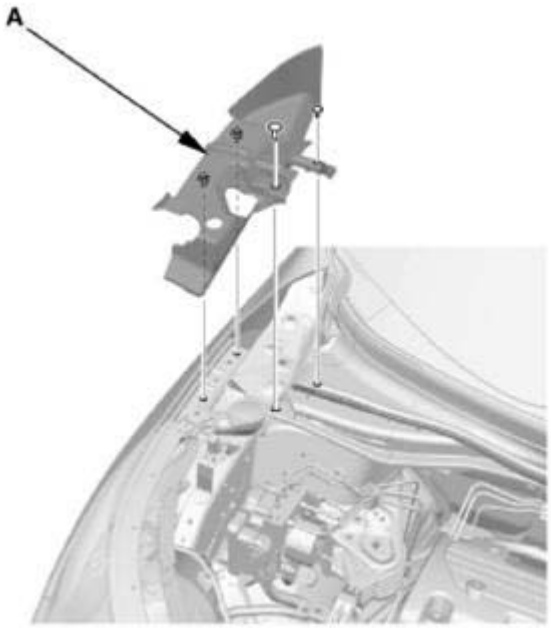

Fig. 15: Identifying Right Front Fender Trim
Courtesy of AMERICAN HONDA MOTOR CO., INC.

2. Front Grille
    1. Apply protective tape (A) to the front grille lower trim (B).

GETtheMANUALS.org

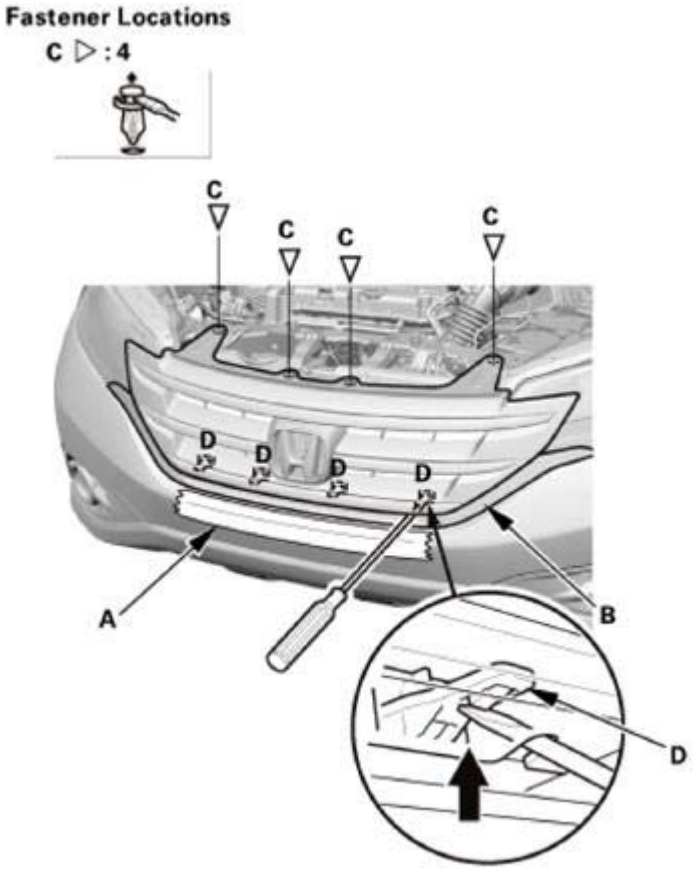

Fig. 16: Removing Front Grille Lower Trim Using Tool
Courtesy of AMERICAN HONDA MOTOR CO., INC.

2. Remove the clips (C) and detach the hooks (D).
3. Insert a shop towel (A) between the front grille (B) and the front grille lower trim (C).

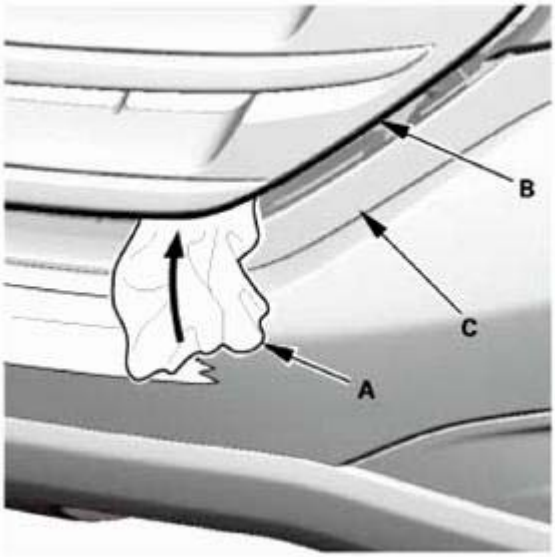

GETtheMANUALS.org

Fig. 17: Inserting Shop Towel Between Front Grille And Front Grille Lower Trim
Courtesy of AMERICAN HONDA MOTOR CO., INC.

4. Insert a flat-tip screwdriver (A) into the opening at the front grille (B), then turn the screwdriver to detach the clip (C).

NOTE: Repeat this procedure on the opposite side.

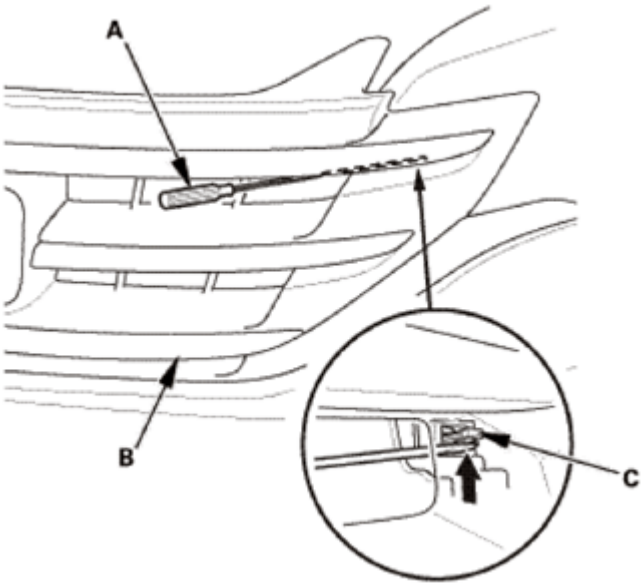

Fig. 18: Disconnecting Front Grille Clip Using Flat-Tip Screwdriver
Courtesy of AMERICAN HONDA MOTOR CO., INC.

5. Remove the front grille (A).

GETtheMANUALS.org

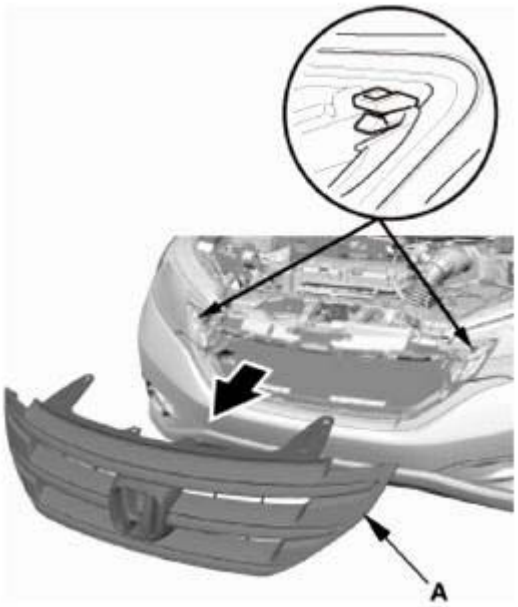

Fig. 19: Removing Front Grille
Courtesy of AMERICAN HONDA MOTOR CO., INC.

3. Front Wheel Arch Protector Front Side As Needed - Both Sides

NOTE: Repeat on the opposite side.

1. Remove the screws (A) and the clips (B) securing the front wheel arch protector (C).
2. Carefully pry out the clip portions of the wheel arch protector with the appropriate trim tool to detach the clips (D, E), then detach the wheel arch protector front side as needed.
3. Put a shop towel (F) in the opening between the front wheel arch protector and the front fender.

GETtheMANUALS.org

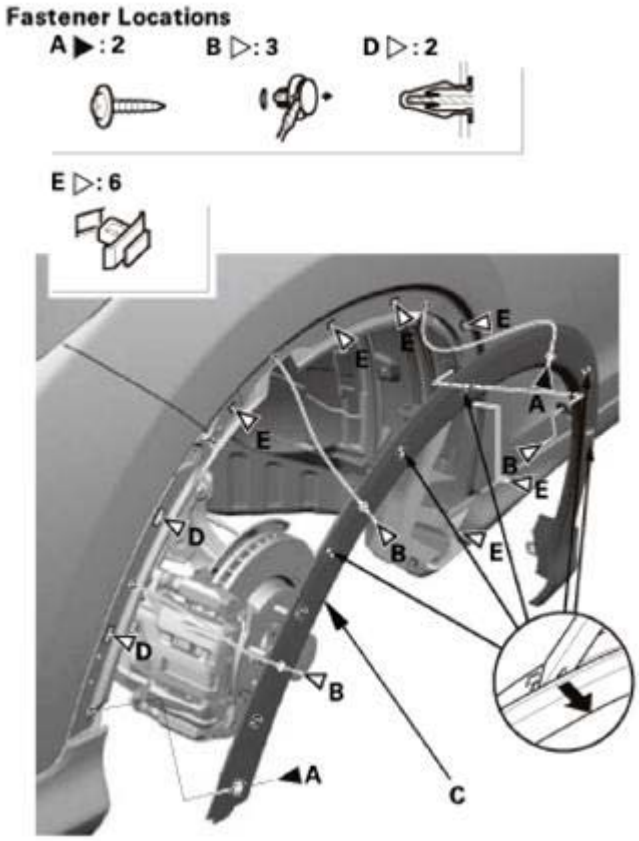

Fig. 20: Disconnecting Wheel Arch Protector Clips Using Tool
Courtesy of AMERICAN HONDA MOTOR CO., INC.

Fig. 21: Inserting Shop Towel Between Front Wheel Arch Protector And Front Fender
Courtesy of AMERICAN HONDA MOTOR CO., INC.

4. Front Bumper
    1. Remove the screws (A), the bolts (B), and the clips (C) securing the front bumper (D).

GETtheMANUALS.org

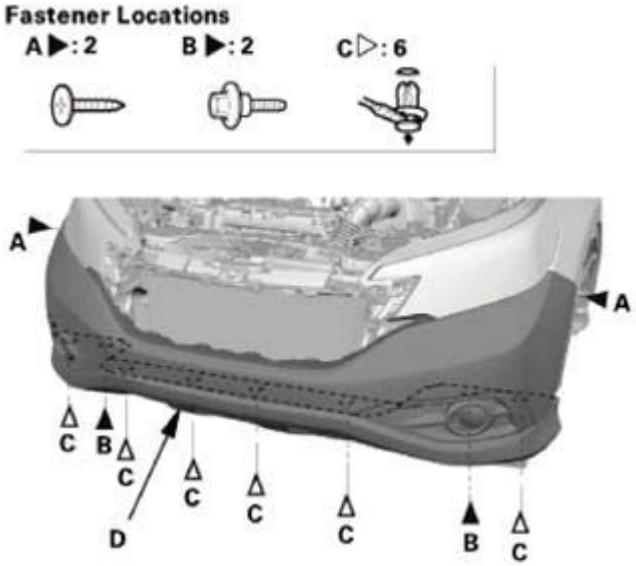

Fig. 22: Identifying Front Bumper Screws, Bolts And Clips
Courtesy of AMERICAN HONDA MOTOR CO., INC.

2. Pull out the front bumper (A) from the side spacer (B). Repeat this step on the opposite side.

Fig. 23: Removing Front Bumper From Side Spacer
Courtesy of AMERICAN HONDA MOTOR CO., INC.

3. Detach the clip (A). Repeat this step on the opposite side.

GETtheMANUALS.org

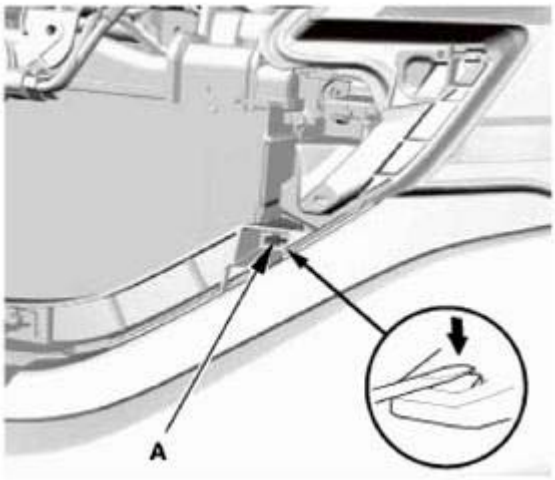

Fig. 24: Disconnecting Front Bumper Clip
Courtesy of AMERICAN HONDA MOTOR CO., INC.

4. With the help of an assistant, pull out both sides of the front bumper (A) from the upper beam (B).

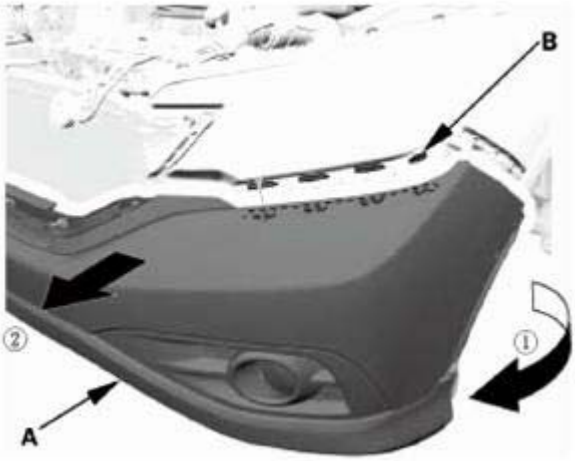

Fig. 25: Removing Front Bumper From Upper Beam
Courtesy of AMERICAN HONDA MOTOR CO., INC.

5. With the help of an assistant, disconnect the connectors (A), then remove the front bumper (B).

GETtheMANUALS.org

Fig. 26: Identifying Front Bumper And Connectors
Courtesy of AMERICAN HONDA MOTOR CO., INC.

5. Right Front Inner Fender As Needed
    1. Remove the bolt (A), the screws (B), and the clip (C, D, E) securing the front inner fender (F), then remove the front inner fender as needed.

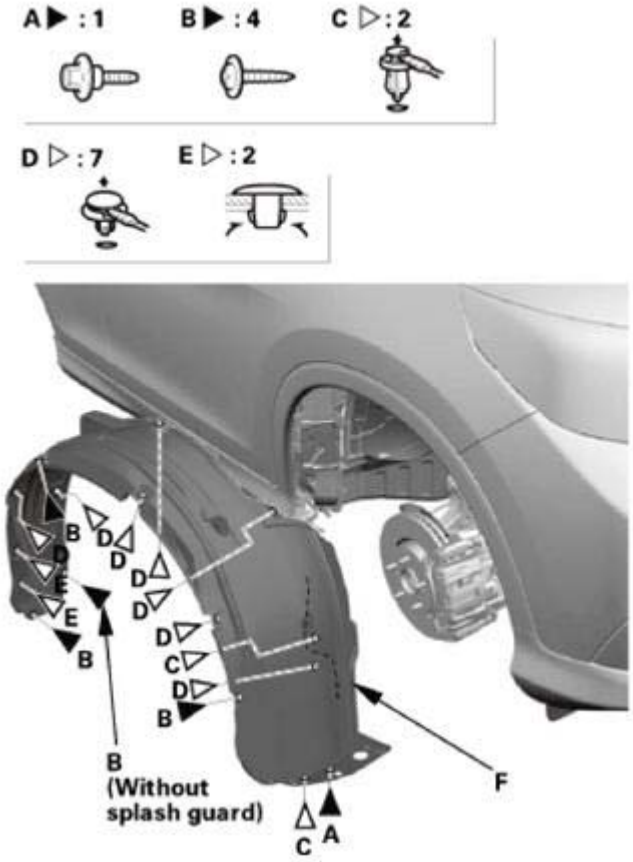

GETtheMANUALS.org

Fig. 27: Identifying Right Front Inner Fender, Bolts, Screws And Clips
Courtesy of AMERICAN HONDA MOTOR CO., INC.

6. Washer Motor
    1. Disconnect the connector.
    2. Remove the washer tubes (A).
    3. Remove the washer motor (B).

NOTE: Fluid may flow out of the opening.

Capacity 2.5 L (2.6 US qt): USA and Mexico models

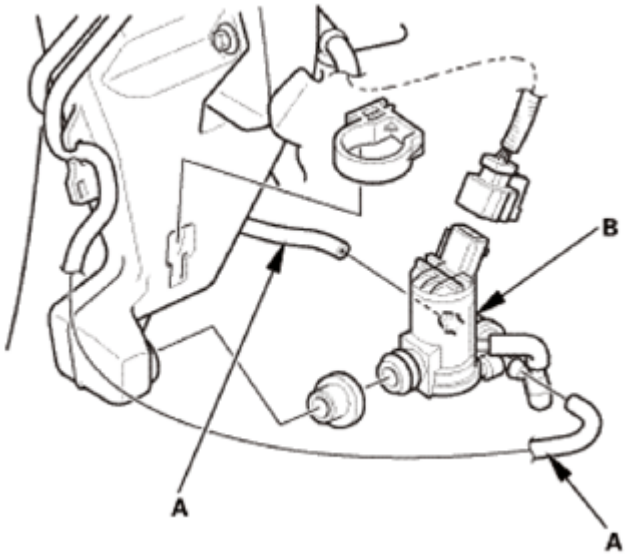

Fig. 28: Identifying Washer Motor And Tubes (Capacity 2.5 L, USA And Mexico Models)
Courtesy of AMERICAN HONDA MOTOR CO., INC.

Capacity 4.5 L (4.76 US qt): Canada models

GETtheMANUALS.org

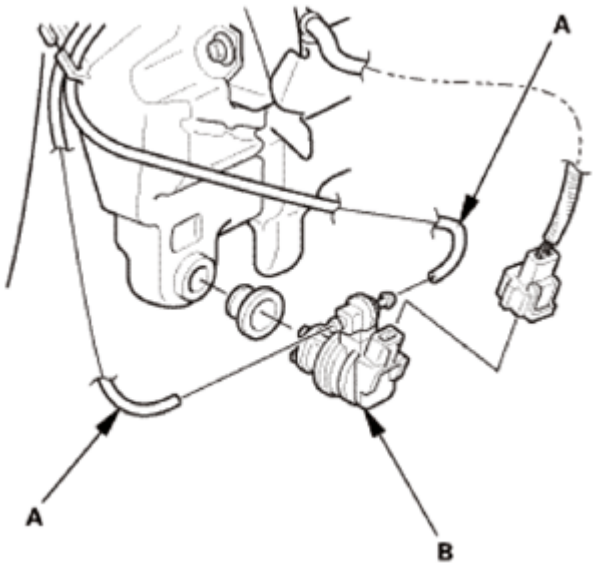

Fig. 29: Identifying Washer Motor And Tubes (Capacity 4.5 L, Canada Models)
Courtesy of AMERICAN HONDA MOTOR CO., INC.

7. Washer Fluid Level Switch - Canada Model
    1. Disconnect the connector.
    2. Remove the washer fluid level switch (A).

NOTE: Fluid may flow out of the opening.

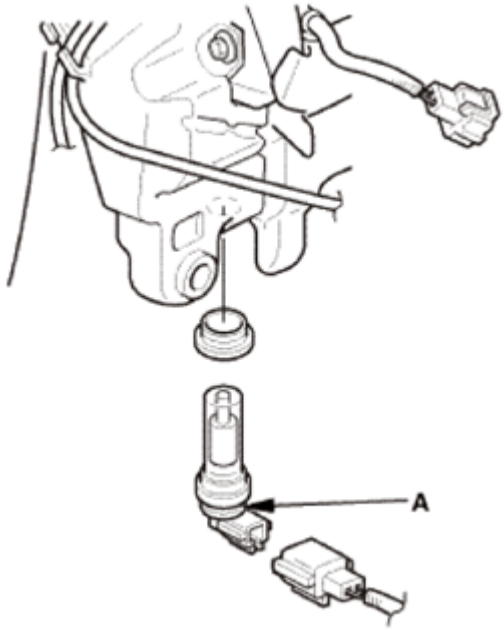

Fig. 30: Identifying Washer Fluid Level Switch
Courtesy of AMERICAN HONDA MOTOR CO., INC.

GETtheMANUALS.org

8. Washer Reservoir
    1. Remove the washer filler neck (A).

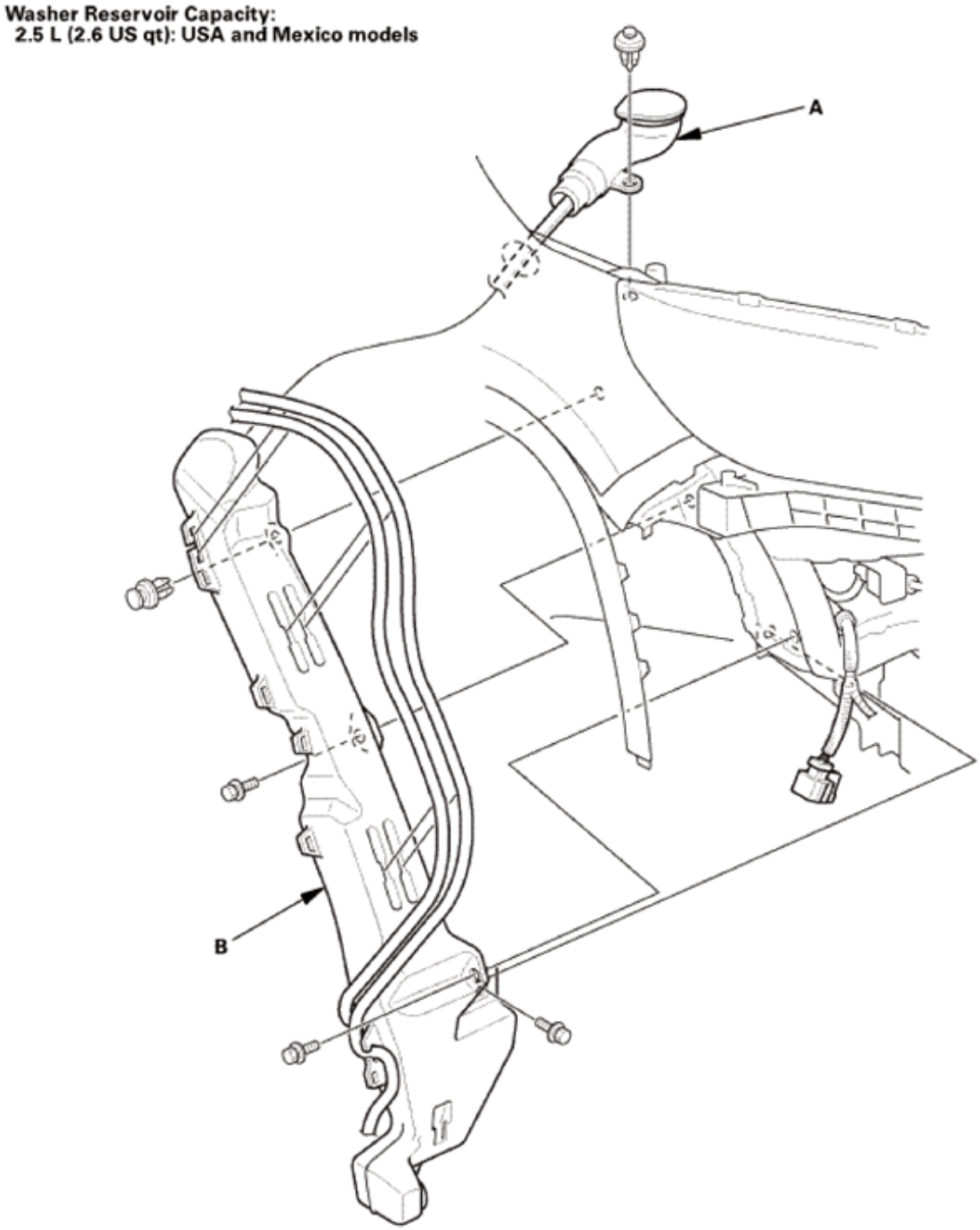

Fig. 31: Identifying Washer Filler Neck And Related Components (Capacity 2.5 L, USA And Mexico Models)
Courtesy of AMERICAN HONDA MOTOR CO., INC.

GETtheMANUALS.org

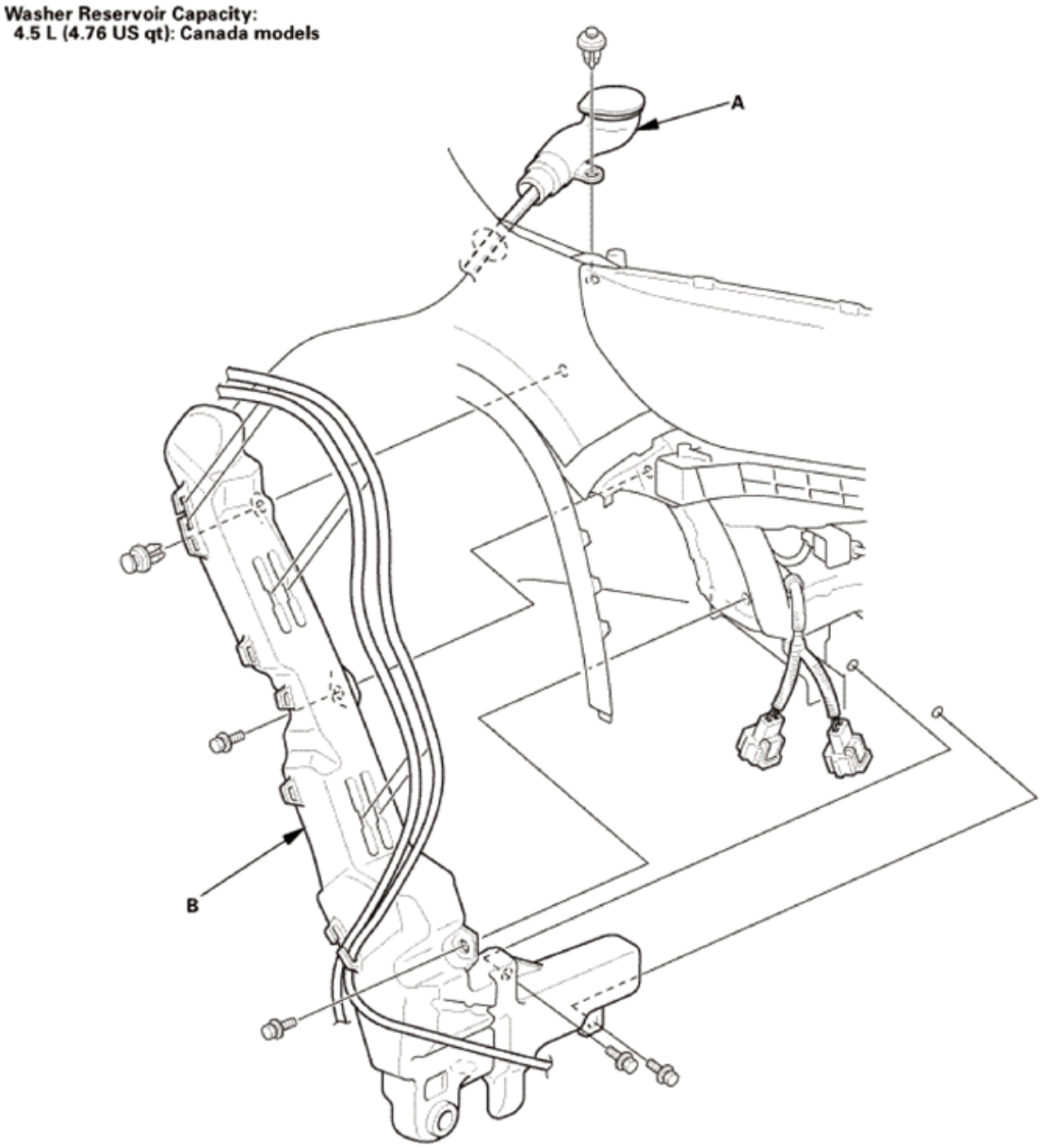

Fig. 32: Identifying Washer Filler Neck And Related Components (Capacity 4.5 L, Canada Models)
Courtesy of AMERICAN HONDA MOTOR CO., INC.

2. Remove the washer reservoir (B).

INSTALLATION

1. Washer Reservoir
    1. Install the washer reservoir (A).

GETtheMANUALS.org

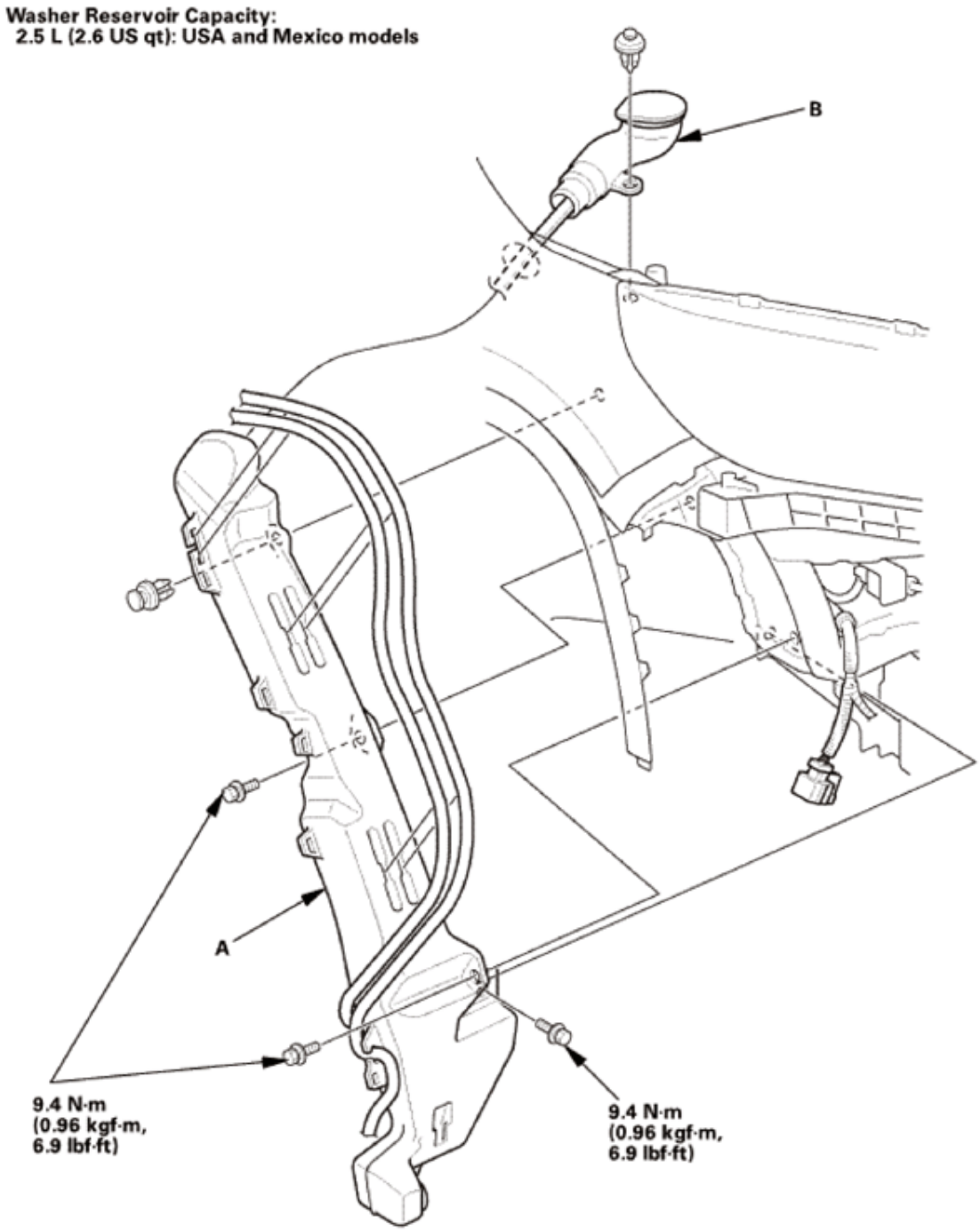

Fig. 33: Identifying Washer Reservoir And Related Components With Torque Specifications (Capacity 2.5 L, USA And Mexico Models)
Courtesy of AMERICAN HONDA MOTOR CO., INC.

GETtheMANUALS.org

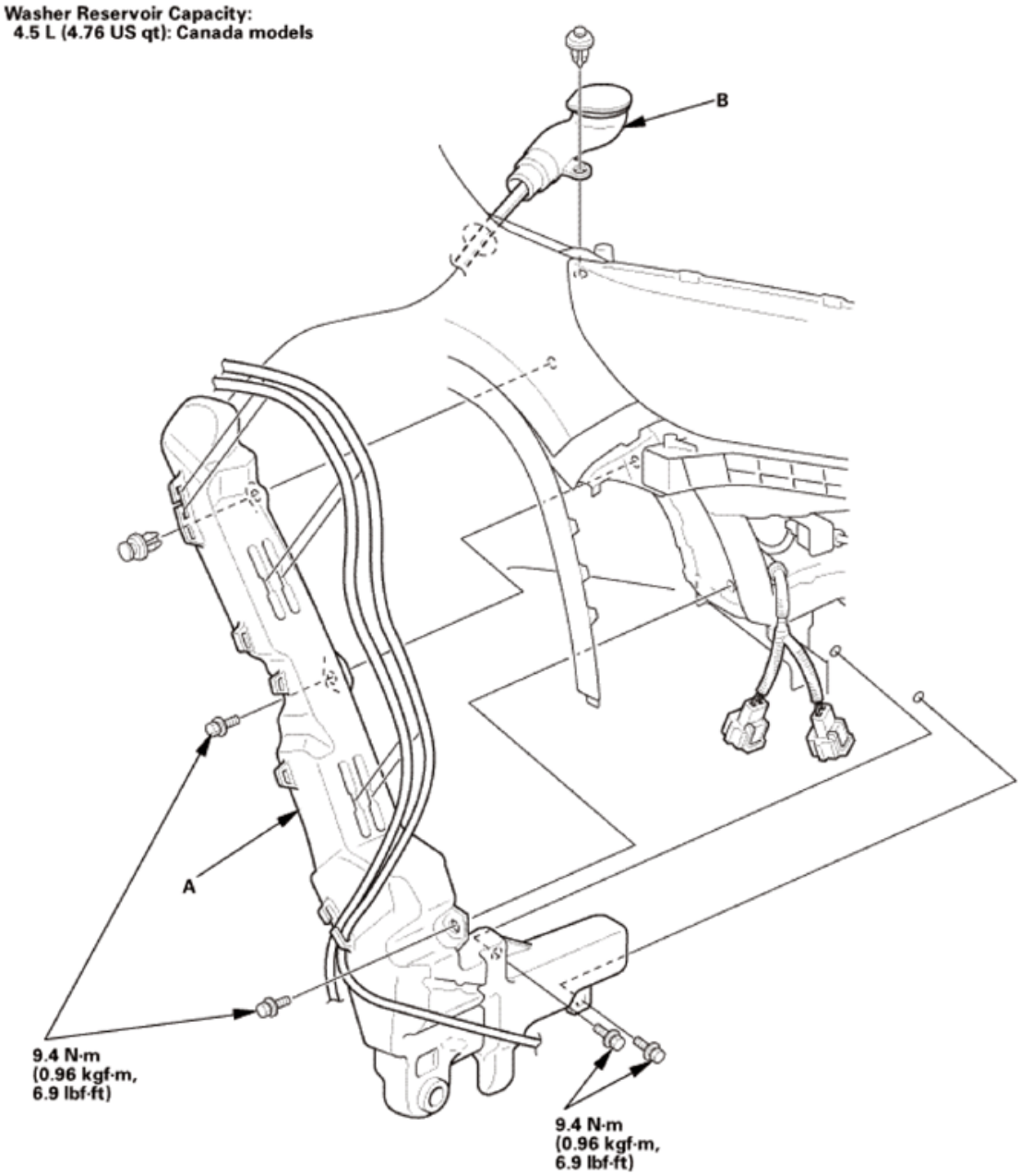

Fig. 34: Identifying Washer Reservoir And Related Components With Torque Specifications (Capacity 4.5 L, Canada Models)
Courtesy of AMERICAN HONDA MOTOR CO., INC.

   2. Install the washer filler neck (B).
2. Washer Fluid Level Switch - Canada Model
   1. Inspect the gasket (A); replace it if it is distorted or stays compressed.
   2. Install the washer fluid level switch (B) with the gasket.
   3. Connect the connector.

GETtheMANUALS.org

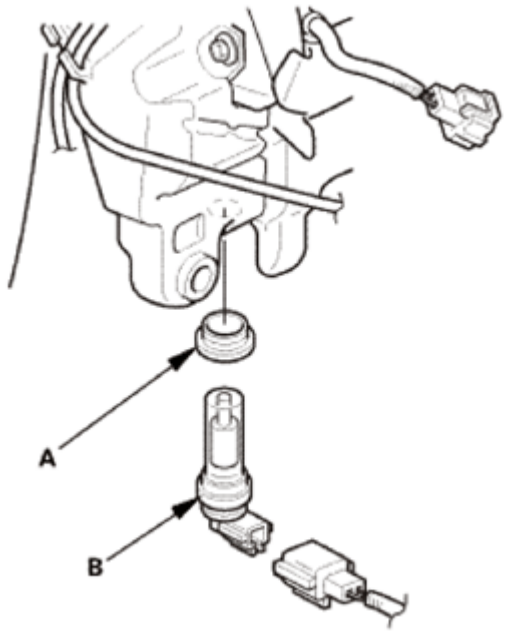

Fig. 35: Identifying Washer Fluid Level Switch And Gasket
Courtesy of AMERICAN HONDA MOTOR CO., INC.

3. Washer Motor
    1. Inspect the gasket (A); replace it if it is distorted or stays compressed.
    2. Install the washer motor (B).
    3. Install the washer tubes (C).
    4. Connect the connector.

Capacity 2.5 L (2.6 US qt): USA and Mexico models

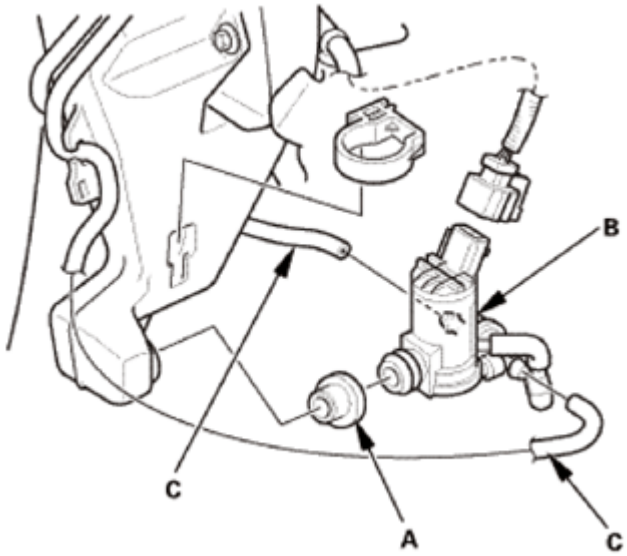

GETtheMANUALS.org

Fig. 36: Identifying Washer Motor, Tube And Gasket (Capacity 2.5 L, USA And Mexico Models)
Courtesy of AMERICAN HONDA MOTOR CO., INC.

Capacity 4.5 L (4.76 US qt): Canada models

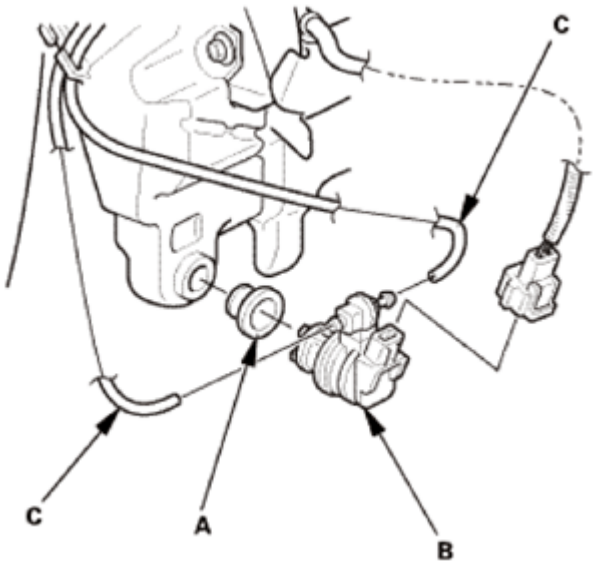

Fig. 37: Identifying Washer Motor, Tube And Gasket (Capacity 4.5 L, Canada Models)
Courtesy of AMERICAN HONDA MOTOR CO., INC.

4. Right Front Inner Fender As Needed
    1. Install the front fender (A), then install the bolt (B), the screws (C), and the clips (D, E, F). Make sure the clips snap into the place securely.

GETtheMANUALS.org

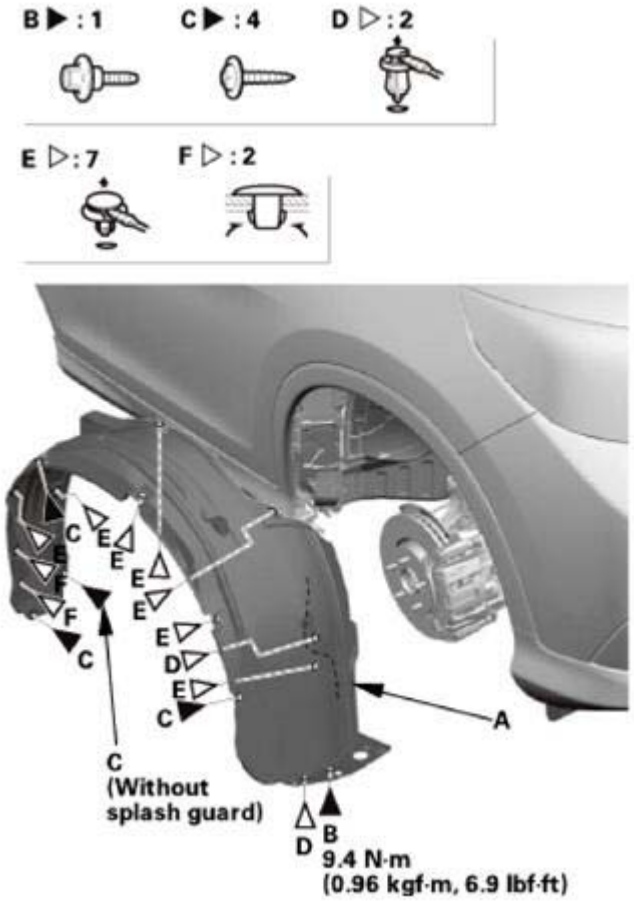

Fig. 38: Identifying Right Front Inner Fender, Bolts, Screws And Clips
Courtesy of AMERICAN HONDA MOTOR CO., INC.

5. Front Bumper
    1. With the help of an assistant, connect the connectors (A), then install the front bumper (B).

GETtheMANUALS.org

Fig. 39: Identifying Front Bumper And Connectors
Courtesy of AMERICAN HONDA MOTOR CO., INC.

2. With the help of an assistant, install both sides of the front bumper (A) to the upper beam (B).

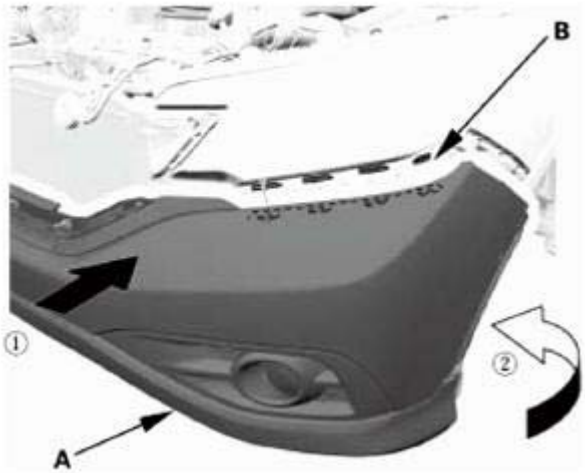

Fig. 40: Installing Front Bumper On Upper Beam
Courtesy of AMERICAN HONDA MOTOR CO., INC.

3. Push the front bumper (A) until the clip (B) snaps into place. Repeat this step on the opposite side.

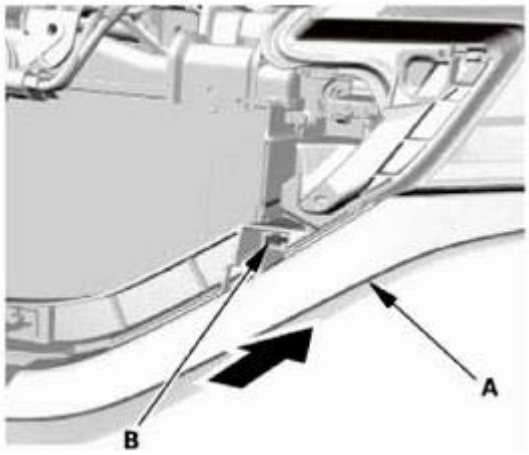

Fig. 41: Pushing Front Bumper
Courtesy of AMERICAN HONDA MOTOR CO., INC.

4. Install the front bumper (A) to the side spacer (B). Repeat this step on the opposite side.

GETtheMANUALS.org

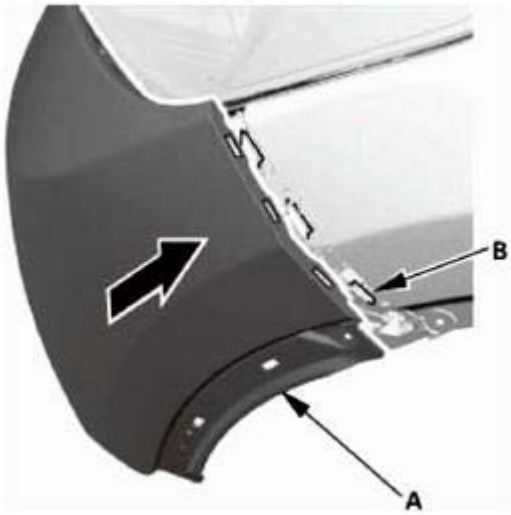

Fig. 42: Installing Front Bumper On Side Spacer
Courtesy of AMERICAN HONDA MOTOR CO., INC.

5. Install the screws (A), the bolts (B), and the clips (C) securing the front bumper (D).

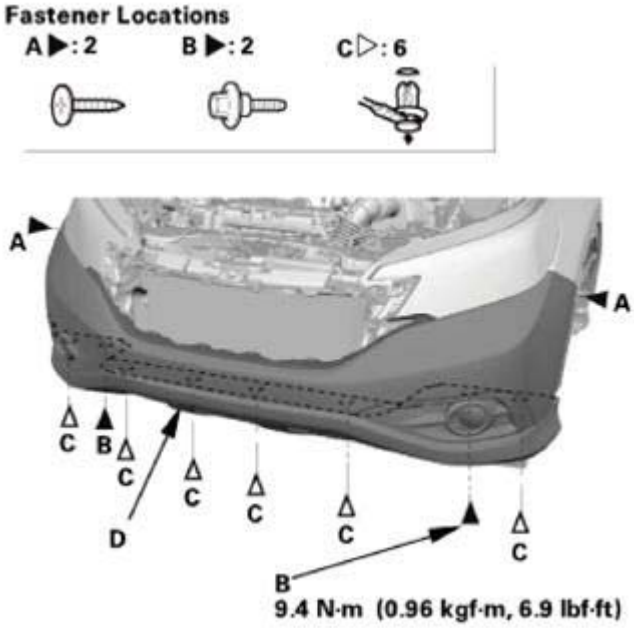

Fig. 43: Identifying Front Bumper, Screws, Bolts And Clips With Torque Specification
Courtesy of AMERICAN HONDA MOTOR CO., INC.

6. Front Wheel Arch Protector Front Side As Needed - Both Sides
    1. Install the front wheel arch protector (A), then install the screws (B) and the clips (C). Make sure the clips (D, E) snap into place securely. Repeat this step on the opposite side.

GETtheMANUALS.org

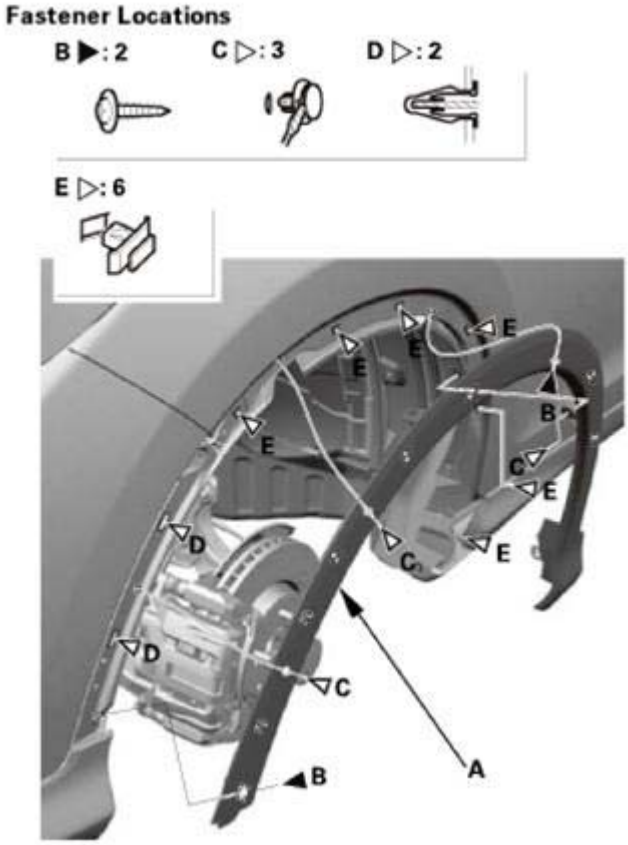

Fig. 44: Identifying Front Wheel Arch Protector, Screws And Clips
Courtesy of AMERICAN HONDA MOTOR CO., INC.

7. Front Grille
    1. Install the front grille (A) by pushing on the clip areas until the clips snap into place.
    2. Install the clips (B).

GETtheMANUALS.org

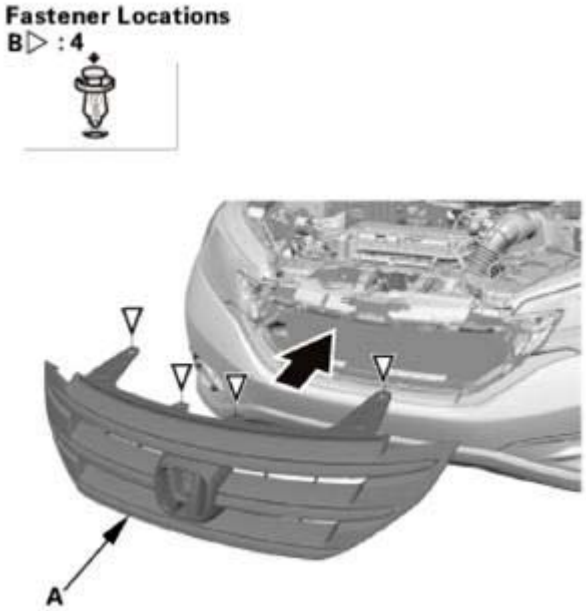

Fig. 45: Installing Front Grille
Courtesy of AMERICAN HONDA MOTOR CO., INC.

8. Right Front Fender Trim
    1. Install the right front fender trim (A).

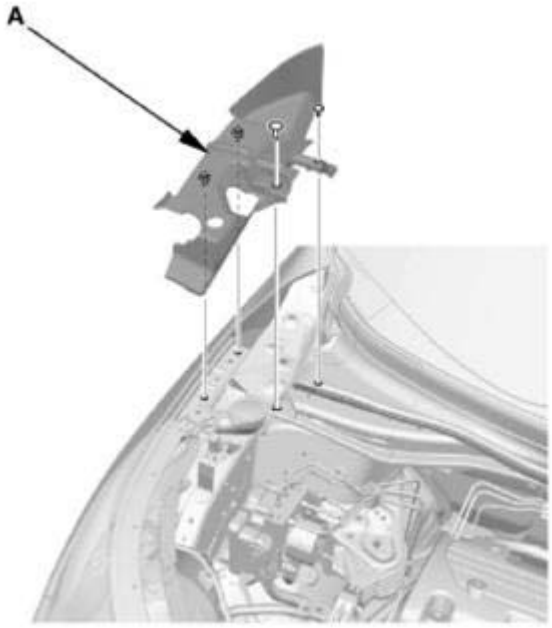

Fig. 46: Identifying Right Front Fender Trim
Courtesy of AMERICAN HONDA MOTOR CO., INC.

WASHER TUBE REMOVAL AND INSTALLATION

GETtheMANUALS.org

REPLACEMENT

NOTE: **Steps 1-2 show replacing the windshield washer tube/nozzle, steps 3-4 show replacing the rear window washer tube/nozzle.**

1. Windshield Washer Tube Replacement
    1. Remove the washer nozzles and the clips, then remove the tubes.

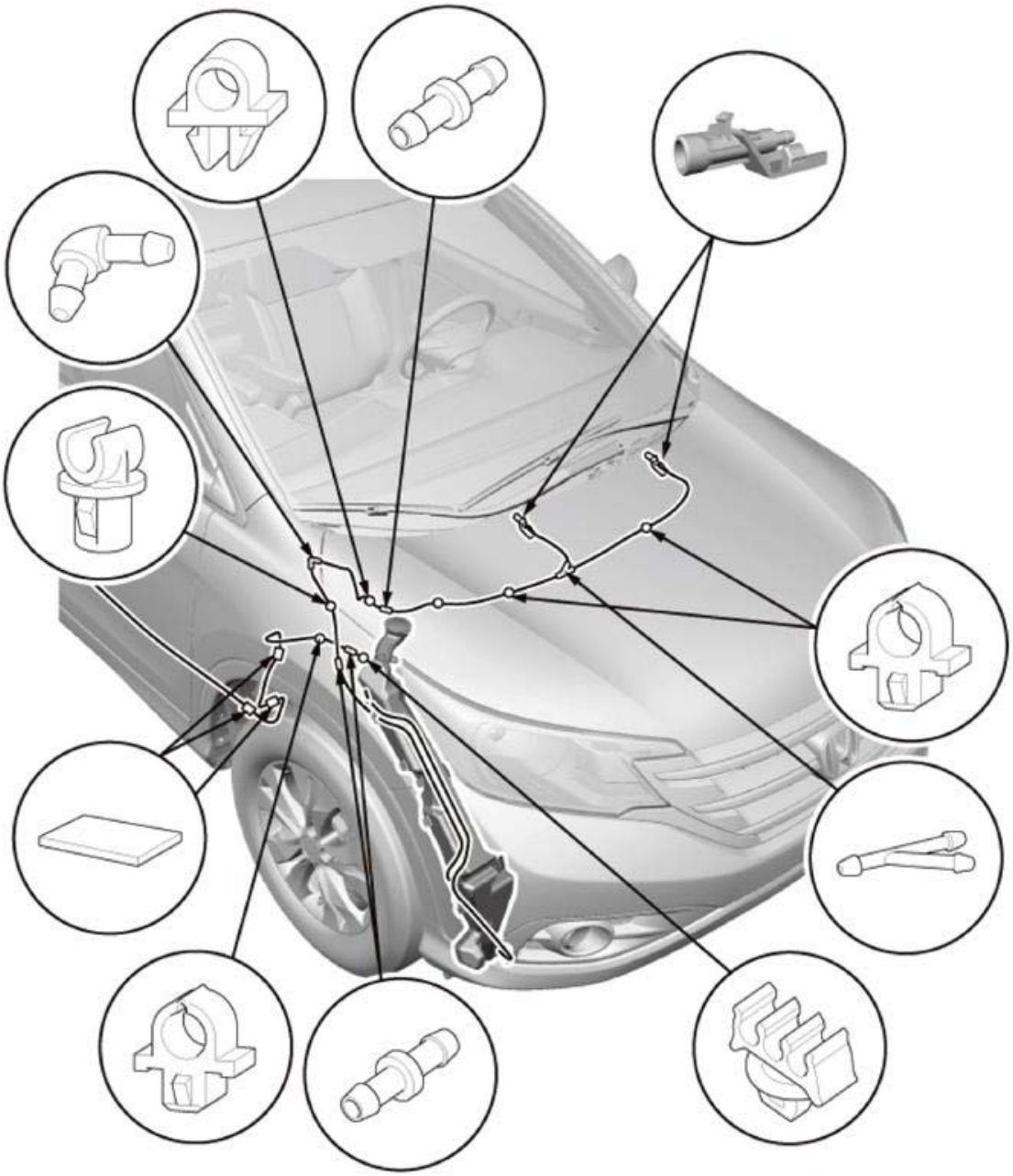

Fig. 47: Identifying Washer Nozzles And Clips
Courtesy of AMERICAN HONDA MOTOR CO., INC.

GETtheMANUALS.org

2. Windshield Wiper Arm - Adjustment
    1. **Adjust the windshield wiper arms** See **WIPER ARM REMOVAL AND INSTALLATION** or **WIPER ARM/NOZZLE ADJUSTMENT**.
3. Rear Washer Tube Replacement
    1. Remove the washer nozzles and the clips, then remove the tubes.

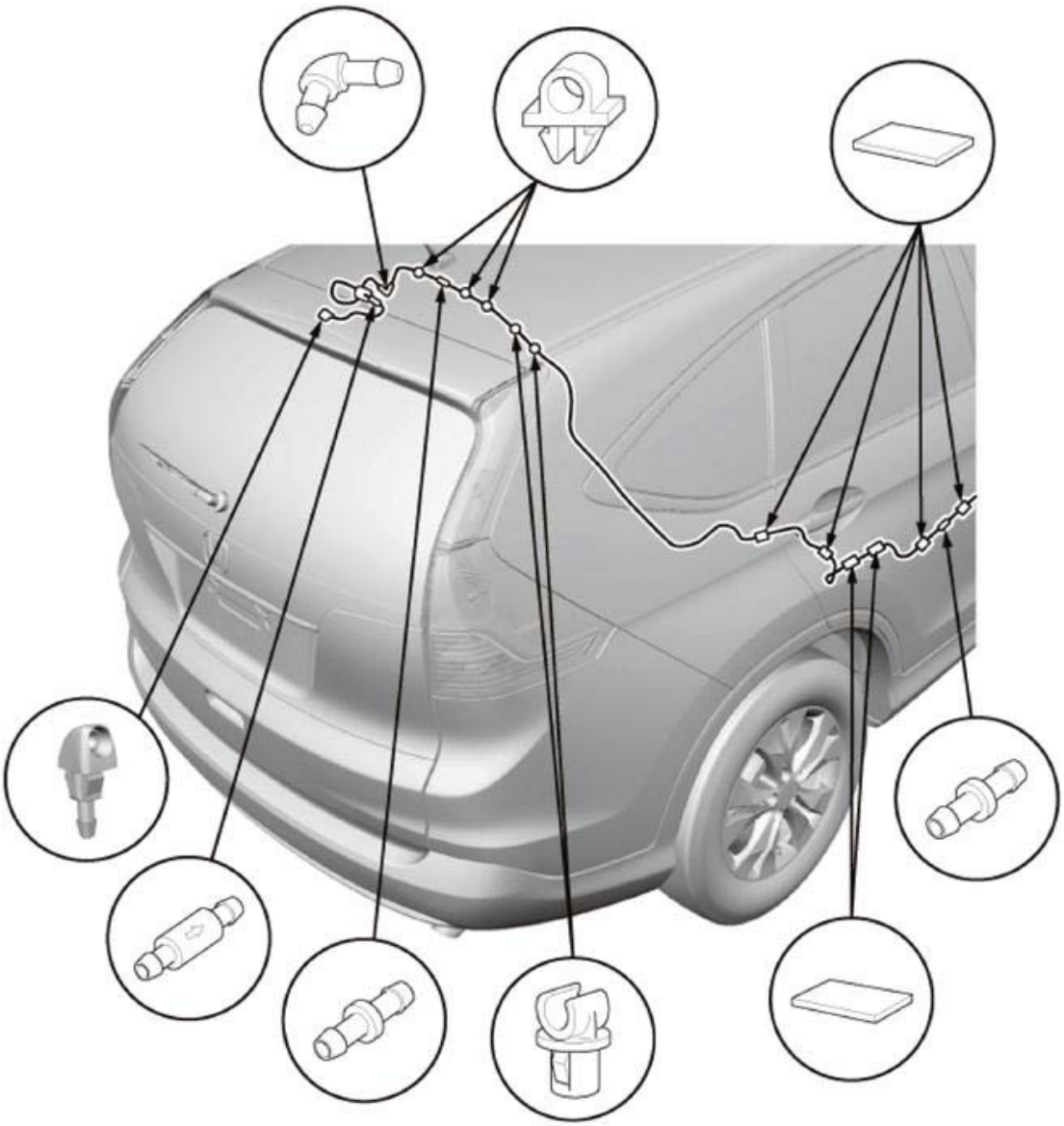

Fig. 48: Identifying Rear Washer Nozzles And Clips
Courtesy of AMERICAN HONDA MOTOR CO., INC.

4. Rear Window Wiper Arm - Adjustment
    1. **Adjust the rear window wiper arm** See **WIPER ARM REMOVAL AND INSTALLATION** or **WIPER ARM/NOZZLE ADJUSTMENT**.

GETtheMANUALS.org

WIPER ARM REMOVAL AND INSTALLATION

REMOVAL

NOTE: Step 1 shows removing the windshield wiper arm, step 2 shows removing the rear window wiper arm.

1. Both Windshield Wiper Arm Assemblies

   NOTE: Set the wiper arms to the auto-stop position before removal.

   1. Remove the caps (A) and nuts (B).
   2. Remove the wiper arms (C).

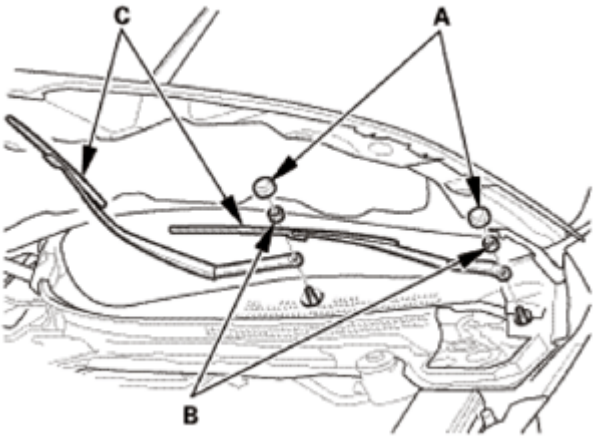

Fig. 49: Identifying Wiper Arms, Caps And Nuts
Courtesy of AMERICAN HONDA MOTOR CO., INC.

2. Rear Window Wiper Arm Assembly
   1. Raise the wiper arm (A) off the rear window, then remove the cover (B), the nut (C), and the wiper arm.

GETtheMANUALS.org

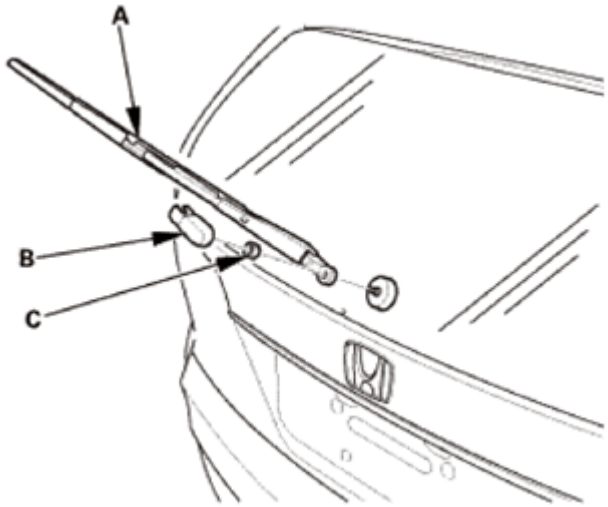

Fig. 50: Identifying Wiper Arm, Cover And Nut
Courtesy of AMERICAN HONDA MOTOR CO., INC.

INSTALLATION

NOTE: **Steps 1-2 show installing the rear window wiper arm, steps 3 - 4 show installing the windshield wiper.**

1. Rear Window Wiper Arm Assembly
    1. Install the wiper arm (A), the nut (B), and the cover (C).

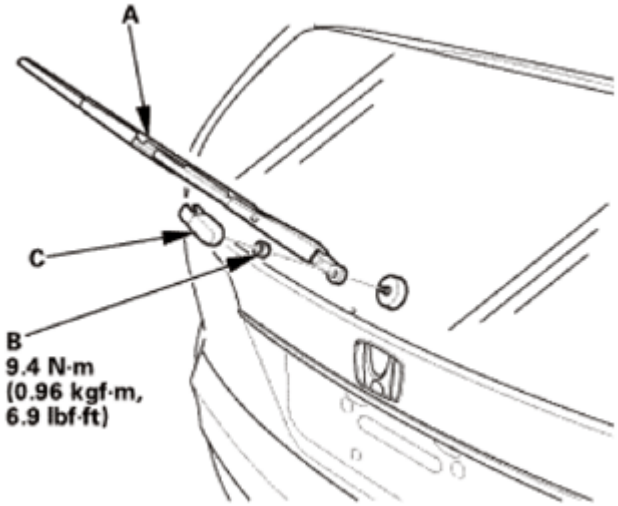

Fig. 51: Identifying Wiper Arm, Cover And Nut
Courtesy of AMERICAN HONDA MOTOR CO., INC.

2. Rear Window Wiper Arm - Adjustment
    1. **Adjust the rear window wiper arm** See **WIPER ARM REMOVAL AND INSTALLATION** or

GETtheMANUALS.org

WIPER ARM/NOZZLE ADJUSTMENT.

3. Both Windshield Wiper Arm Assemblies

NOTE: Set the wiper arms to the auto-stop position before installation.

1. Install the wiper arms (A), the nut (B), and the caps (C).

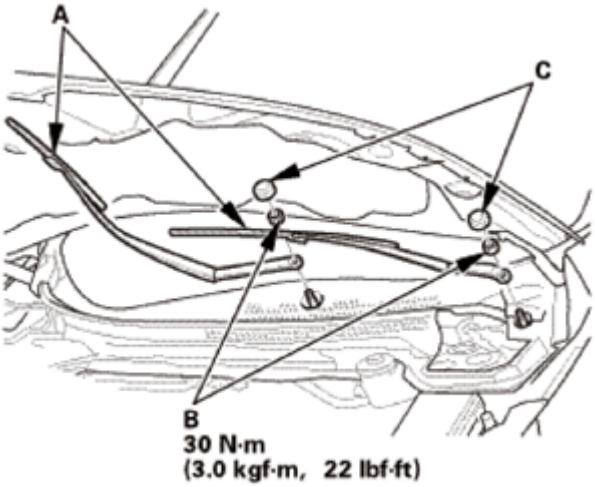

Fig. 52: Identifying Wiper Arms, Caps And Nuts
Courtesy of AMERICAN HONDA MOTOR CO., INC.

4. Windshield Wiper Arm - Adjustment
   1. **Adjust the windshield wiper arms** See **WIPER ARM REMOVAL AND INSTALLATION** or **WIPER ARM/NOZZLE ADJUSTMENT**.

WIPER ARM/NOZZLE ADJUSTMENT

ADJUSTMENT

NOTE: Step 1 shows adjusting the windshield wiper arm/nozzle, step 2 shows adjusting the rear window wiper arm/nozzle.

1. Windshield Wiper Arm/Nozzle - Adjustment

NOTE:
- **Adjust the washer nozzles by gently gripping, and then moving, the outside of each nozzle (A).**
- **Do not insert tools into the nozzle hole (B), as it may cause the washer fluid to spray incorrectly.**

Wiper Arm Park Position

GETtheMANUALS.org

1. Turn the ignition switch to ON (II), then turn the wiper switch ON, and then back OFF.

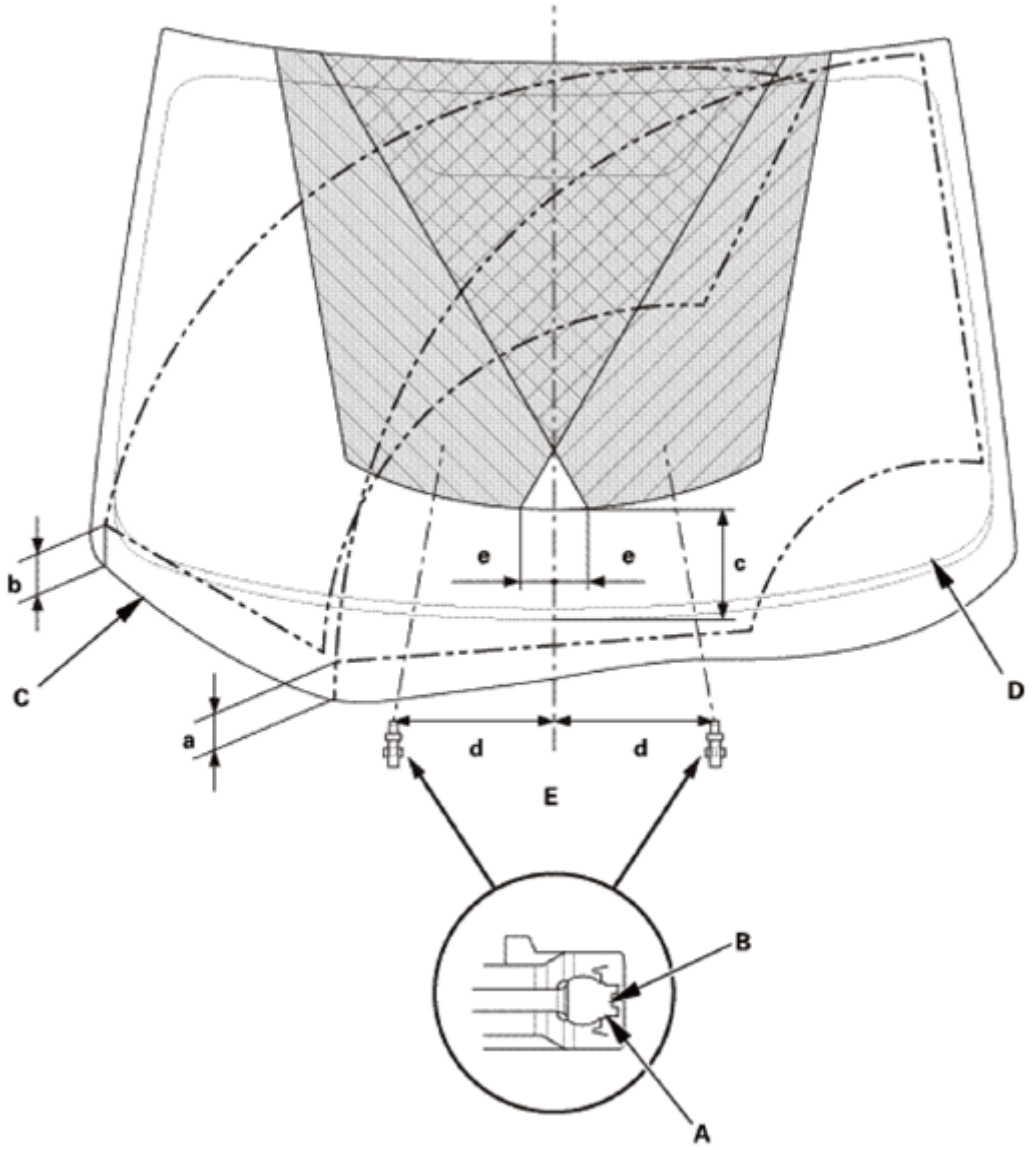

Fig. 53: Identifying Wiper Arm Park Position Dimensions
Courtesy of AMERICAN HONDA MOTOR CO., INC.

2. When the wiper arms stop at the auto-stop position, make sure that they are at the correct position:
   a. Position at about 42 mm (1.654 in) from the top of cowl cover (C).
   b. Position at about 26 mm (1.024 in) from the top of cowl cover (C).

Washer Nozzle Position

3. When you turn on the washer(s), make sure 50% or more of the washer fluid lands within the spray area. If the spray area is not within the standard positions, adjust the nozzle(s):

   c: Position at about 171.4 mm (6.748 in) from the top of the black ceramic area (D).

GETtheMANUALS.org

d: Position at about 250 mm (9.843 in) from the windshield center line (E).

e: Position at about 54.2 mm (2.134 in) from the windshield center line (E).

2. Rear Window Wiper Arm/Nozzule - Adjustment

NOTE:

- **Adjust the washer nozzle by gently gripping, and then moving, the outside of the nozzle (A).**
- **Do not insert tools into the nozzle hole (B), as it may cause the washer fluid to spray incorrectly.**

Wiper Arm Park Position

1. Turn the ignition switch to ON (II), then turn the wiper switch ON, and then back OFF.

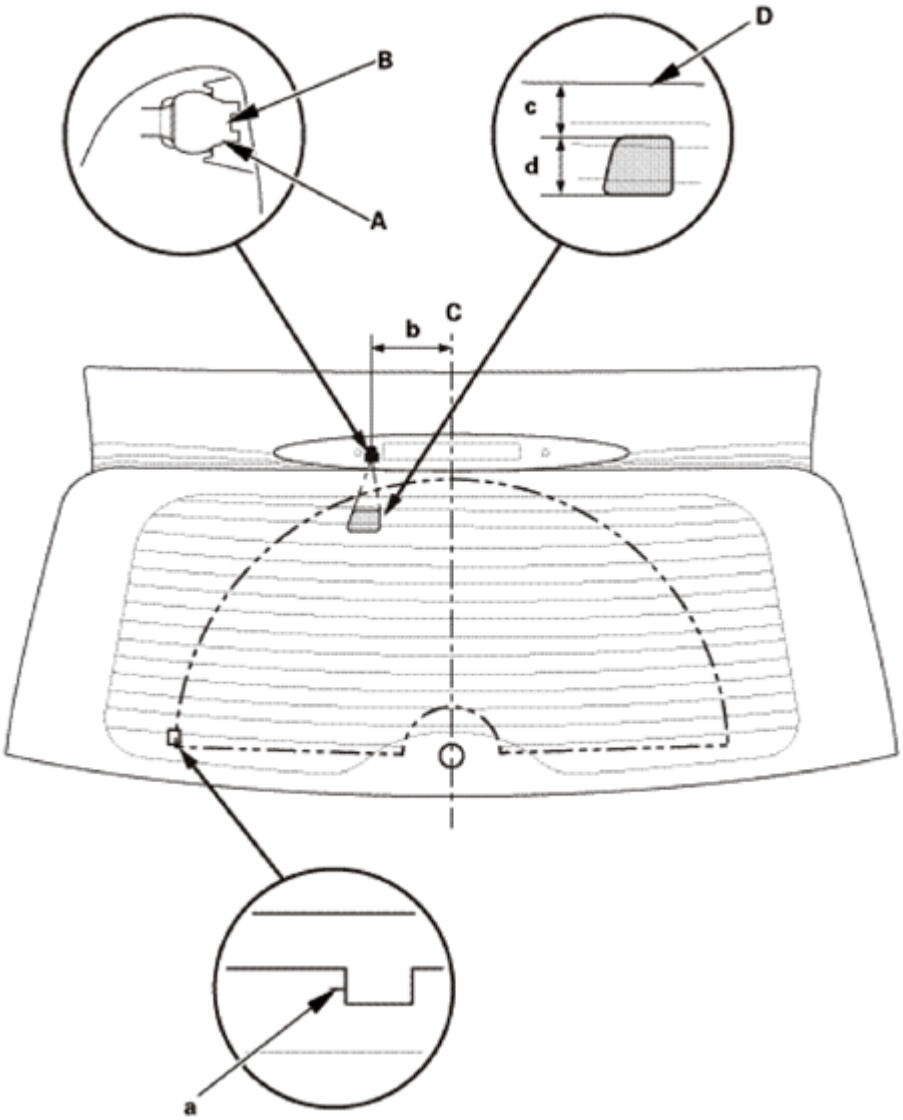

Fig. 54: Identifying Rear Window Wiper Arm Park Position Dimensions

GETtheMANUALS.org

Courtesy of AMERICAN HONDA MOTOR CO., INC.

2. When the wiper arm stops at the auto-stop position, make sure that it is at the correct position:
   a. Wiper arm stop position on the rear window defogger.

Washer Nozzle Position

3. When you turn on the washer, make sure 50% or more of the washer fluid lands within the spray area. If the spray area is not within the standard positions, adjust the nozzle:

   b: Position at about 108.5 mm (4.27 in) from the rear window center line (C).

   c: Position at about 21.2 mm (0.83 in) from the top of the black ceramic area (D).

   d: Position at about 21.9 mm (0.86 in) from the position (c).

WIPER BLADE REMOVAL AND INSTALLATION

REMOVAL

NOTE: Step 1 shows removing the windshield wiper blade, step 2 shows removing the rear window wiper blade.

1. Windshield Wiper Blade
   1. Lift the wiper arm off the windshield, raising the driver's side first, then the passenger's side.
   2. Pull up the tab (A).
   3. Slide the wiper blade assembly (B) off the wiper arm.

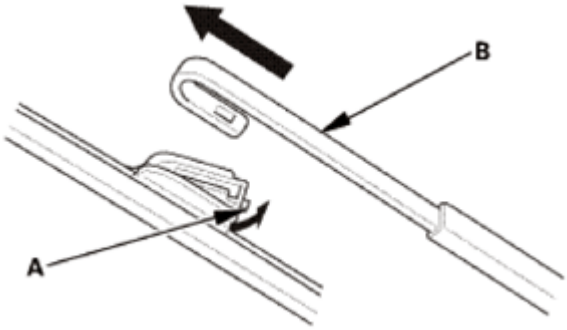

Fig. 55: Sliding Wiper Blade Assembly From Wiper Arm
Courtesy of AMERICAN HONDA MOTOR CO., INC.

   4. Find the blade holder labeled "SET" (A), then release the wiper blade from it.
   5. Pull back the end of the blade holder and slide out the old wiper blade (B).

GETtheMANUALS.org

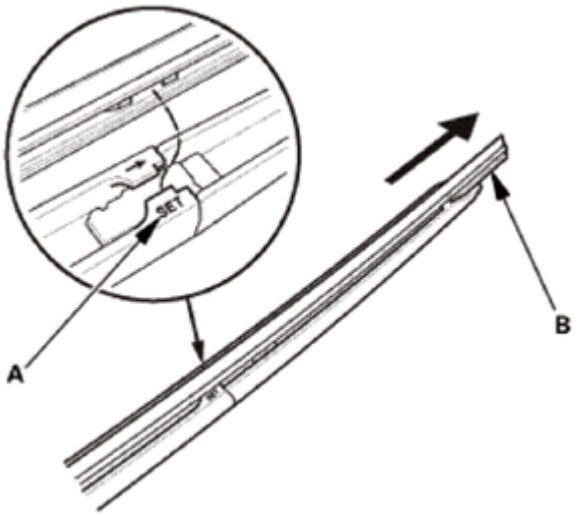

Fig. 56: Removing Wiper Blade From Blade Holder
Courtesy of AMERICAN HONDA MOTOR CO., INC.

6. Remove the rails (A).

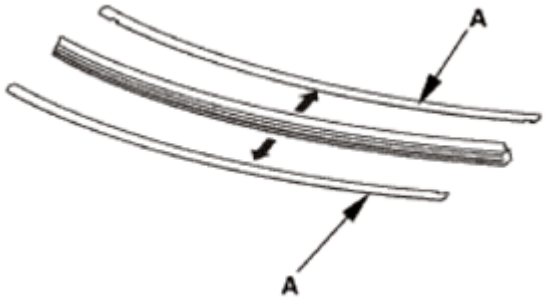

Fig. 57: Removing Rails
Courtesy of AMERICAN HONDA MOTOR CO., INC.

2. Rear Window Wiper Blade
    1. Lift the wiper arm off the windshield, raising the driver's side first, then the passenger's side.
    2. Pull up the tab (A).
    3. Slide the wiper blade assembly (B) off the wiper arm.

GETtheMANUALS.org

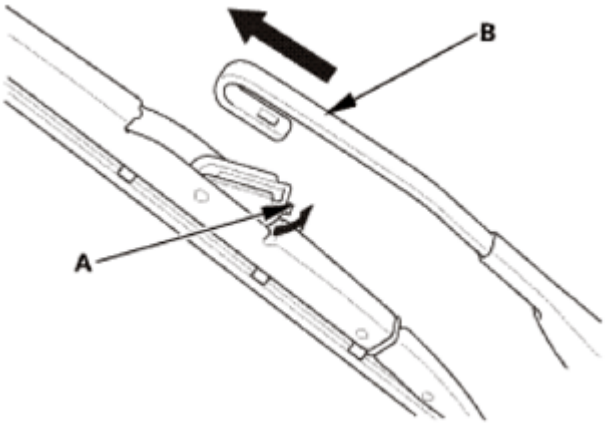

Fig. 58: Sliding Wiper Blade Assembly From Wiper Arm
Courtesy of AMERICAN HONDA MOTOR CO., INC.

4. Remove the holder (A) from the groove (B), then remove the wiper blade (C).

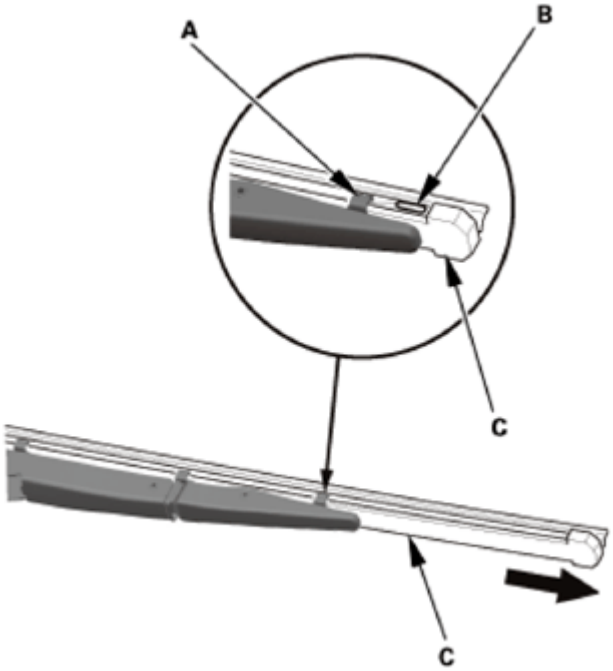

Fig. 59: Removing Wiper Blade From Holder
Courtesy of AMERICAN HONDA MOTOR CO., INC.

INSTALLATION

NOTE: **Step 1 shows installing the rear window wiper blade, step 2 shows installing the windshield wiper blade.**

1. Rear Window Wiper Blade

GETtheMANUALS.org

1. Install the new wiper blade (A) and set the holder (B) into the groove (C).

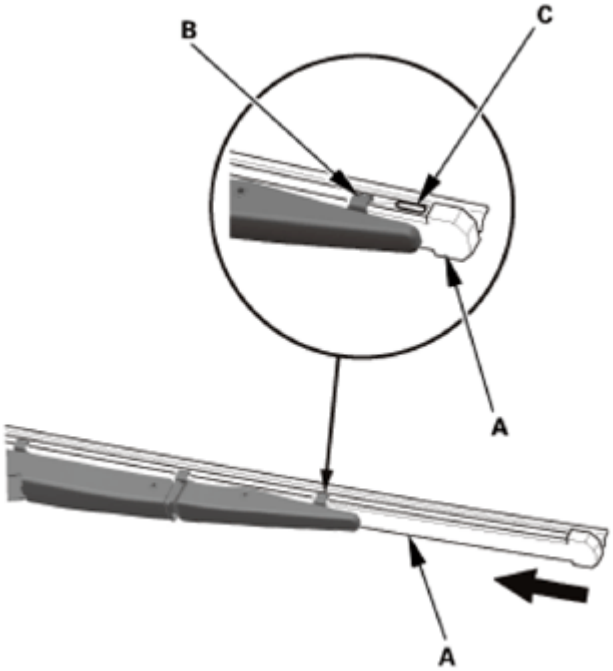

Fig. 60: Installing Wiper Blade Into Holder
Courtesy of AMERICAN HONDA MOTOR CO., INC.

2. Install the wiper blade assembly (A) onto the rear window wiper arm (B).
3. Test by turning on the wipers. If the blades slip, turn off the wiper and seat the attachments more firmly.

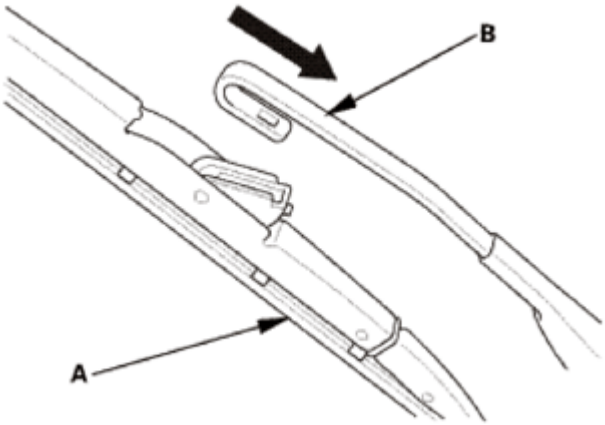

Fig. 61: Installing Wiper Blade Assembly On Rear Window Wiper Arm
Courtesy of AMERICAN HONDA MOTOR CO., INC.

2. Windshield Wiper Blade
    1. Align the groove (A) on each rail (B) with those on the new blade (C).

GETtheMANUALS.org

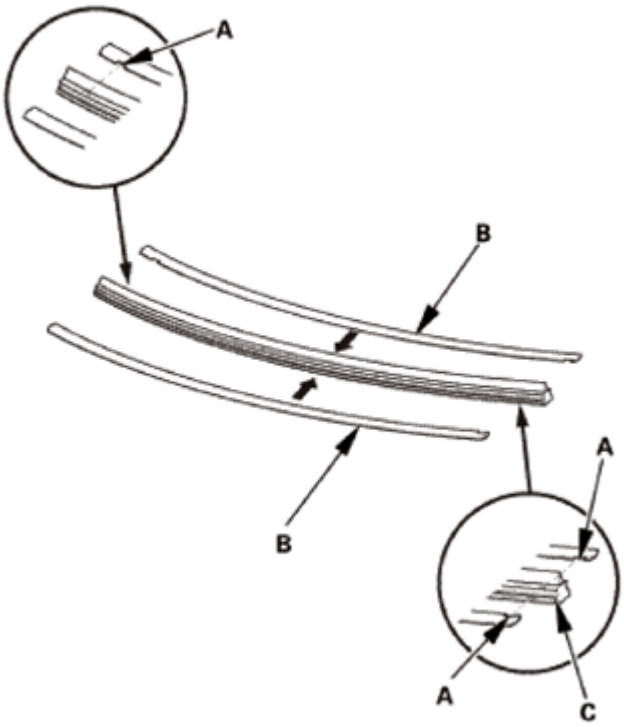

Fig. 62: Aligning Groove On Rail With Blade
Courtesy of AMERICAN HONDA MOTOR CO., INC.

2. Install the new wiper blade (A) until the "SET" (B).

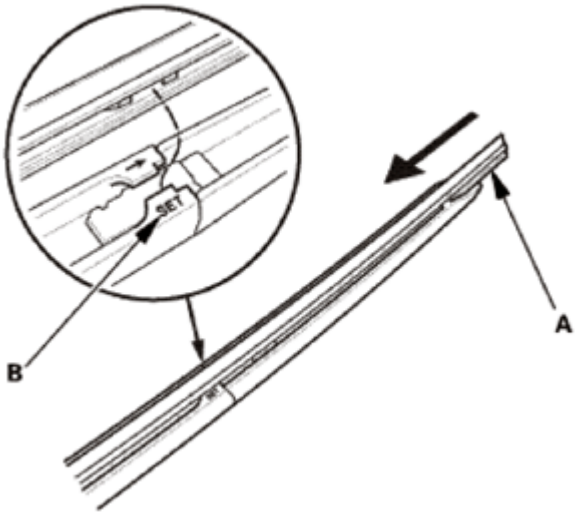

Fig. 63: Installing Wiper Blade
Courtesy of AMERICAN HONDA MOTOR CO., INC.

3. Install the wiper blade assembly (A) onto the windshield wiper arm (B).
4. Test by turning on the wipers. If the blades slip, turn off the wipers and seat the attachments more firmly.

GETtheMANUALS.org

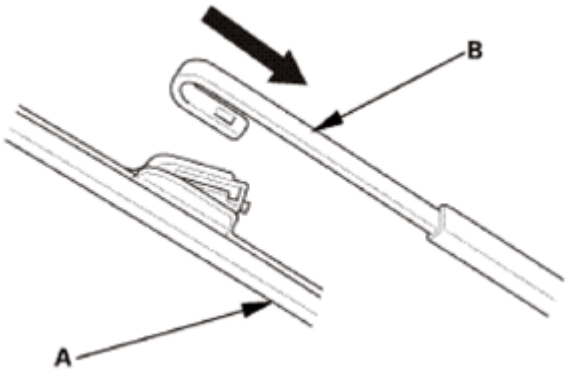

Fig. 64: Installing Wiper Blade Assembly On Windshield Wiper Arm
Courtesy of AMERICAN HONDA MOTOR CO., INC.

WIPER MOTOR REMOVAL AND INSTALLATION

REMOVAL

NOTE: Steps 1-8 show removing the windshield wiper motor, steps 9-13 show removing the rear window wiper.

1. Both Windshield Wiper Arm Assemblies

NOTE: Set the wiper arms to the auto-stop position before removal.

1. Remove the caps (A) and nuts (B).
2. Remove the wiper arms (C).

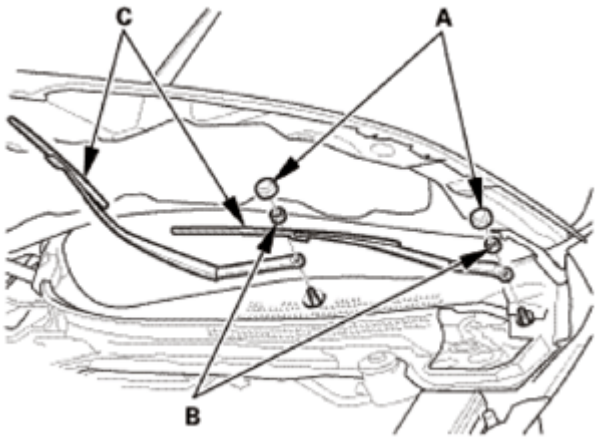

Fig. 65: Identifying Wiper Arms, Caps And Nuts
Courtesy of AMERICAN HONDA MOTOR CO., INC.

2. Front Fender Trim - Both Sides

GETtheMANUALS.org

NOTE: **Repeat on the opposite side.**

1. Remove the clips (A, B).
2. Pull up the front fender trim (C) by hand to detach the clips (D), then remove the trim.

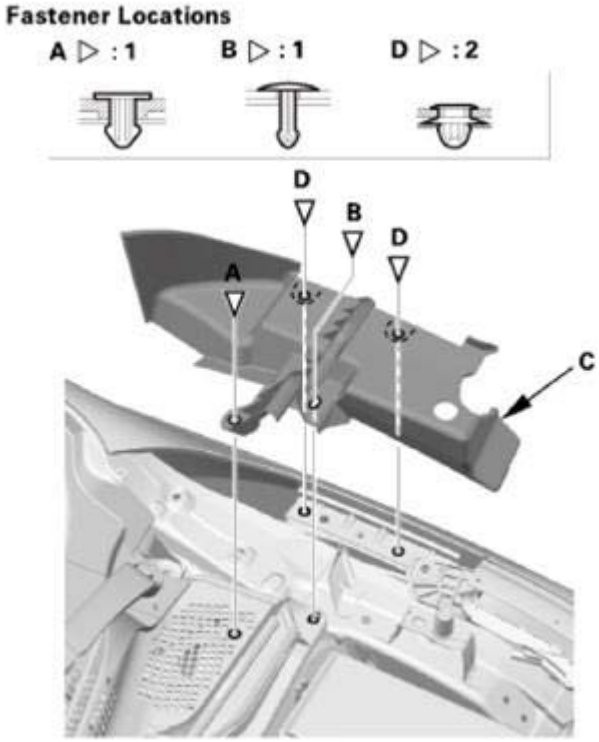

Fig. 66: Identifying Front Fender Trim And Clips
Courtesy of AMERICAN HONDA MOTOR CO., INC.

3. Cowl Top Cover - Both Sides

NOTE: **Repeat this procedure on the opposite side.**

1. Remove the clip (A).
2. Pull out the hood rear seal (B).
3. Detach the hooks, and remove the cowl top cover (C).

GETtheMANUALS.org

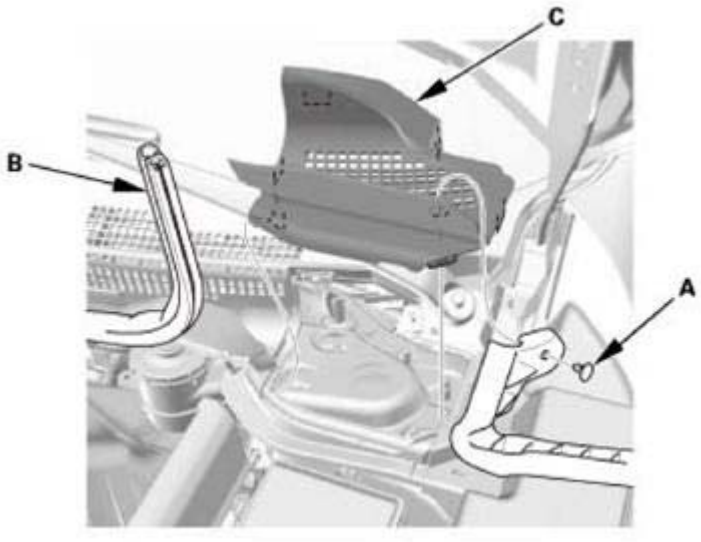

Fig. 67: Identifying Cowl Top Cover, Hood Rear Seal And Cover
Courtesy of AMERICAN HONDA MOTOR CO., INC.

4. Side Cowl Cover - Both Sides

NOTE: Repeat on the opposite side.

1. Detach the hook (A) at the inside of the cowl cover (B).
2. Release the hooks (C) from the cowl cover and the front fender (D), then remove the side cowl cover (E).
3. Right side; Detach the windshield washer tube.

GETtheMANUALS.org

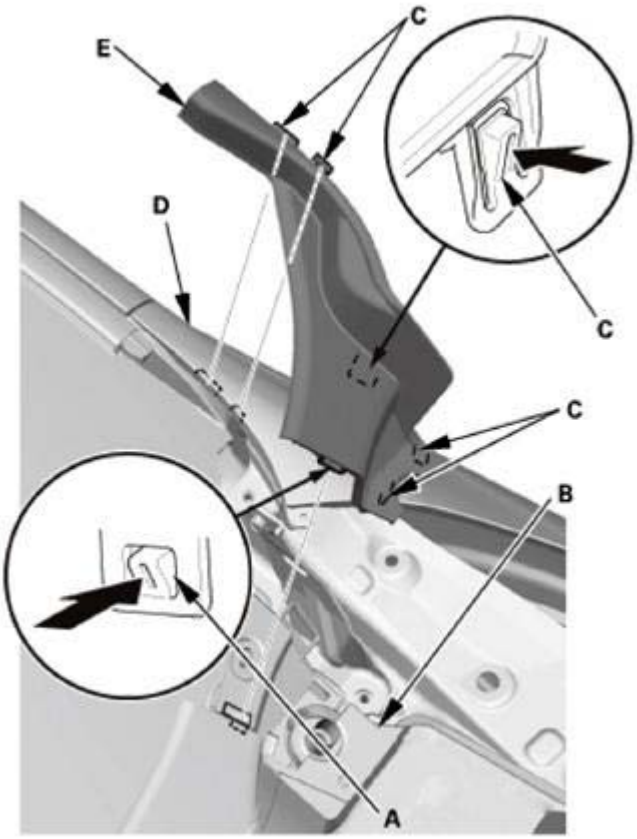

Fig. 68: Releasing Hooks From Cowl Cover And Front Fender
Courtesy of AMERICAN HONDA MOTOR CO., INC.

5. Center Cowl Cover
    1. Remove the clips (A).
    2. Carefully pull the center cowl cover (B) forward to release the hooks (C) from the windshield and the body.

GETtheMANUALS.org

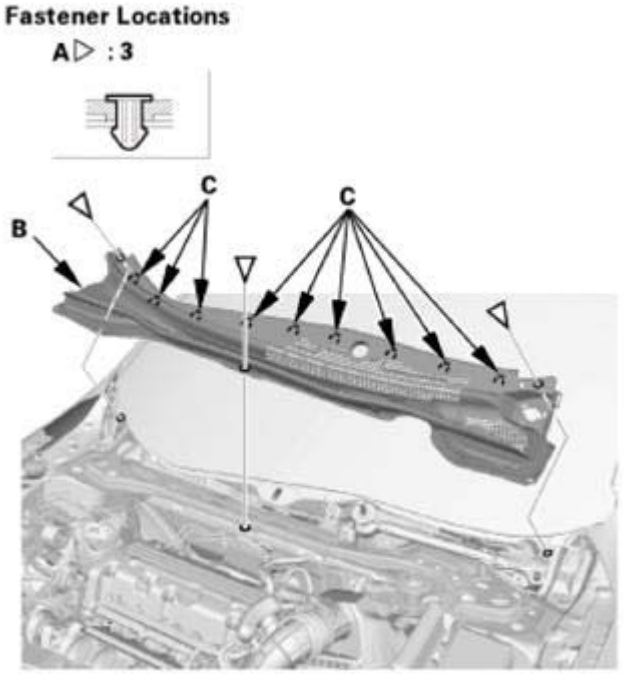

Fig. 69: Identifying Center Cowl Cover, Hooks And Clips
Courtesy of AMERICAN HONDA MOTOR CO., INC.

6. Under-Cowl Panel
    1. Disconnect the connecter (A).
    2. Remove the bolts and the nuts, then remove the under-cowl panel (B).
    3. Remove the wire harness (C) from the under-cowl panel.

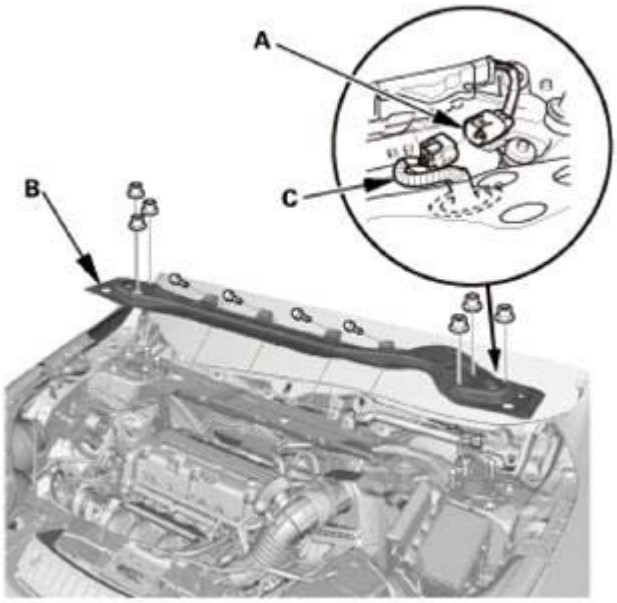

Fig. 70: Identifying Under-Cowl Panel, Connector And Wire Harness

GETtheMANUALS.org

Courtesy of AMERICAN HONDA MOTOR CO., INC.

7. Windshield Wiper Linkage Assembly
    1. Remove the wiper linkage assembly (A).

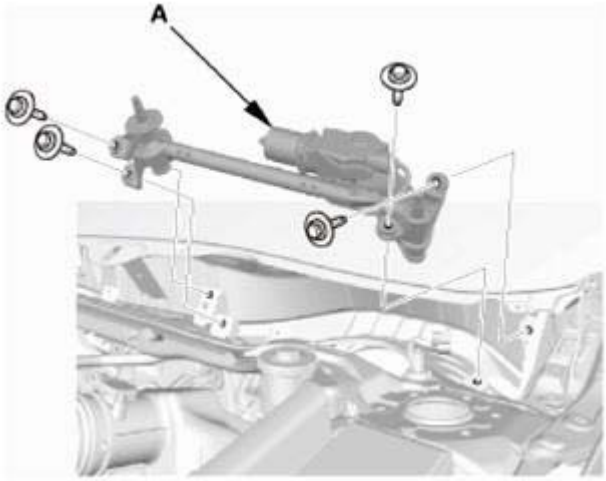

Fig. 71: Identifying Wiper Linkage Assembly And Clips
Courtesy of AMERICAN HONDA MOTOR CO., INC.

8. Windshield Wiper Motor
    1. Mark lines (A) to show the original position.
    2. Remove the connection rod (B) from the link (C).
    3. Disconnect the connector (D), then remove the windshield wiper motor subharness.
    4. Remove the wiper motor (E) from the linkage (F).

GETtheMANUALS.org

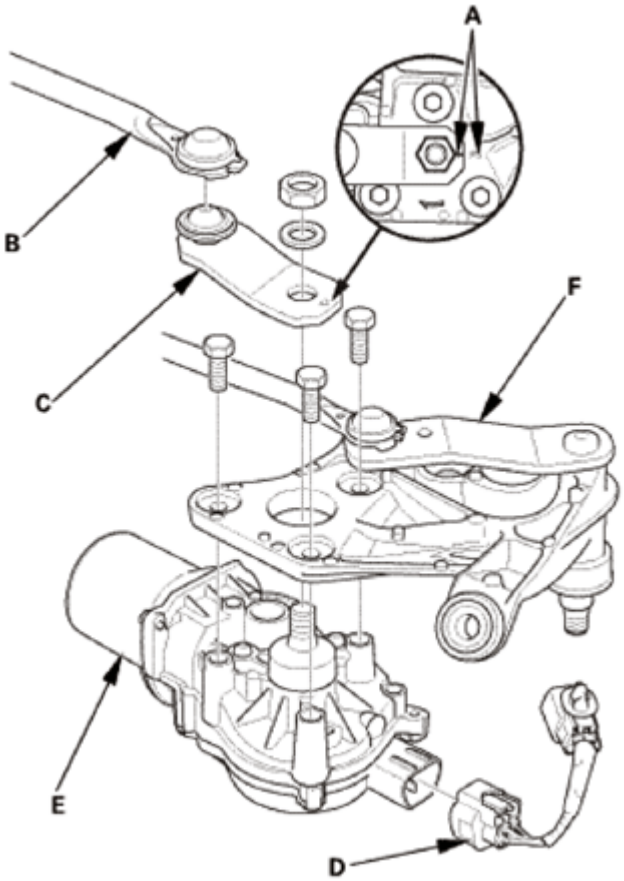

Fig. 72: Identifying Windshield Wiper Motor And Related Components
Courtesy of AMERICAN HONDA MOTOR CO., INC.

9. Rear Window Wiper Arm Assembly
    1. Raise the wiper arm (A) off the rear window, then remove the cover (B), the nut (C), and the wiper arm.

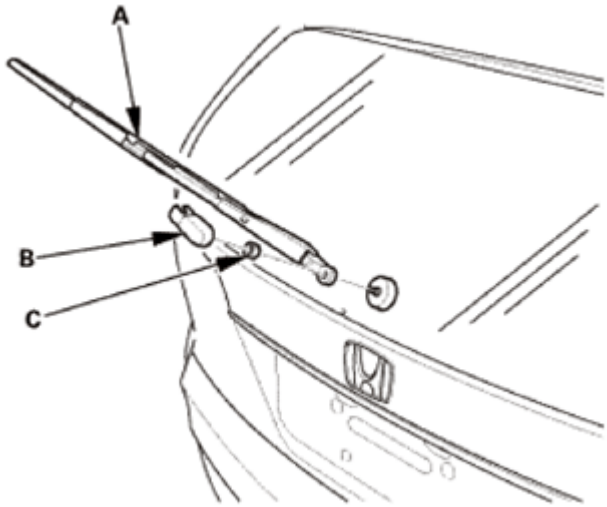

GETtheMANUALS.org

Fig. 73: Identifying Wiper Arm, Cover And Nut
Courtesy of AMERICAN HONDA MOTOR CO., INC.

2. Remove the cap (A), the mounting nut (B), and the washer (C).

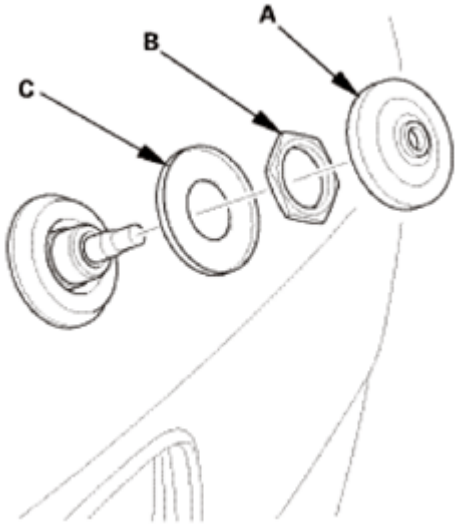

Fig. 74: Identifying Wiper Arm Cap, Mounting Nut And Washer
Courtesy of AMERICAN HONDA MOTOR CO., INC.

10. Tailgate Upper Trim Panel
    1. Carefully pry out the notch (A) in the tailgate upper trim (B) with the appropriate trim tool to detach the hooks (C) and the tabs (D) from the tailgate side trims (E), and pull back the tailgate upper trim panel by hand to detach the clips (F), then remove the tailgate upper trim panel.

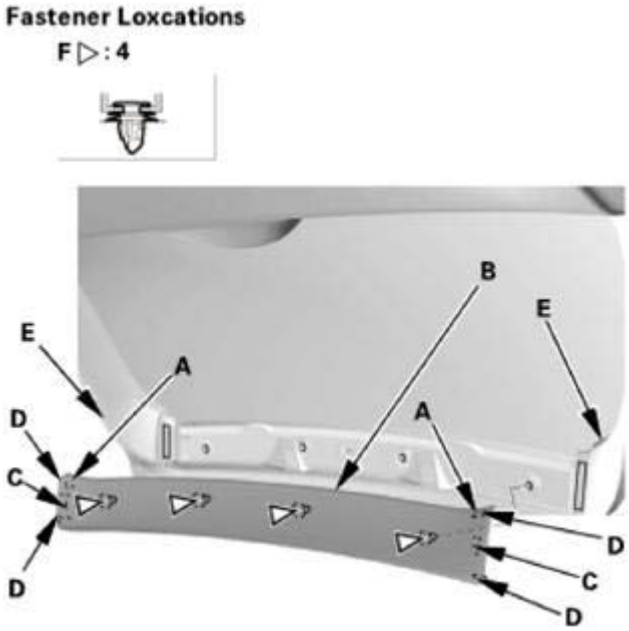

GETtheMANUALS.org

Fig. 75: Identifying Tailgate Upper Trim Panel And Related Components
Courtesy of AMERICAN HONDA MOTOR CO., INC.

11. Tailgate Side Trim - Both Sides

NOTE: Repeat this procedure on the opposite side.

1. Detach the hook (A) and the tabs (B) from the tailgate lower trim panel (C), and pull back the tailgate side trim (D) by hand to detach the clips (E), then remove the tailgate side trim.

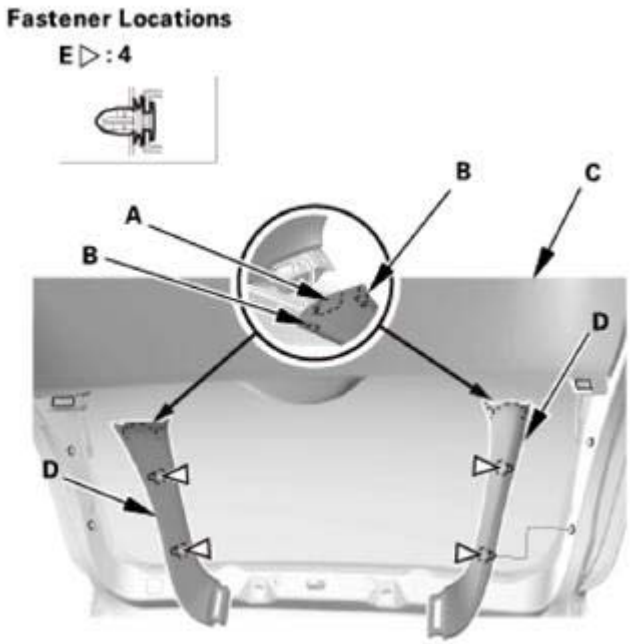

Fig. 76: Identifying Tailgate Side Trims, Tailgate Upper Trim Panel, Clips, Hook And Tabs
Courtesy of AMERICAN HONDA MOTOR CO., INC.

12. Tailgate Lower Trim Panel
    1. Remove the screw (A), then remove the tailgate pull pocket (B).

GETtheMANUALS.org

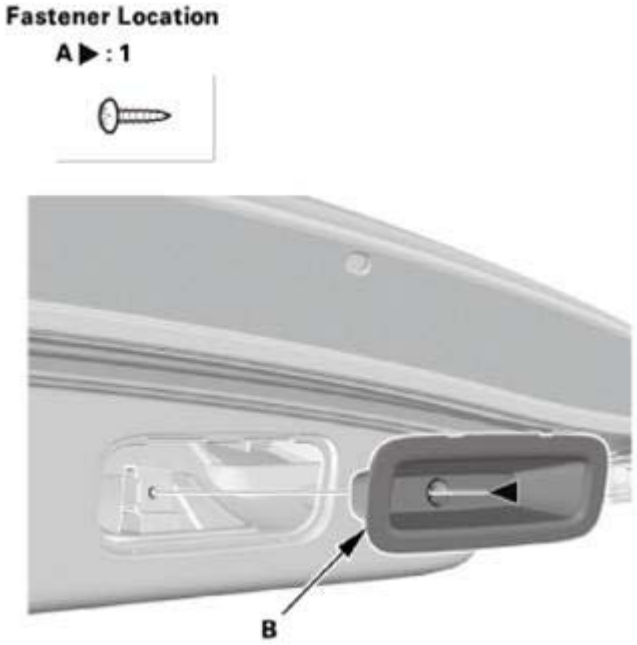

Fig. 77: Identifying Tailgate Pull Pocket And Screw
Courtesy of AMERICAN HONDA MOTOR CO., INC.

2. Pull out the tailgate lower trim panel (A) by hand to detach the clips (B, C), then remove the tailgate lower trim panel.

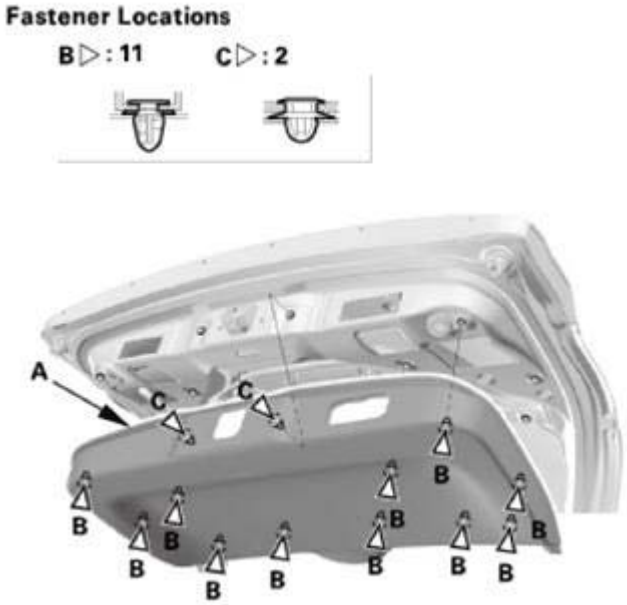

Fig. 78: Identifying Tailgate Lower Trim Panel And Clips
Courtesy of AMERICAN HONDA MOTOR CO., INC.

13. Rear Window Wiper Motor
    1. Disconnect the connector.

GETtheMANUALS.org

2. Remove the rear window wiper motor (A).

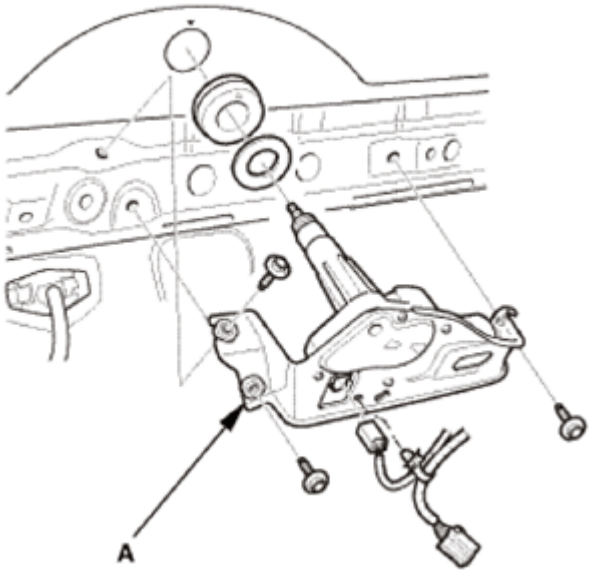

Fig. 79: Identifying Rear Window Wiper Motor
Courtesy of AMERICAN HONDA MOTOR CO., INC.

INSTALLATION

NOTE: Steps 1-6 show installing the rear window wiper motor, steps 7-15 show installing the windshield wiper motor.

1. Rear Window Wiper Motor
    1. Align the position marks when installing the seal (A), then install the washer (B) and rear window motor (C).
    2. Connect the connector.

NOTE: Before reinstalling the rear wiper arm, turn the rear window wiper switch ON, then OFF to return the wiper shaft to the park position.

GETtheMANUALS.org

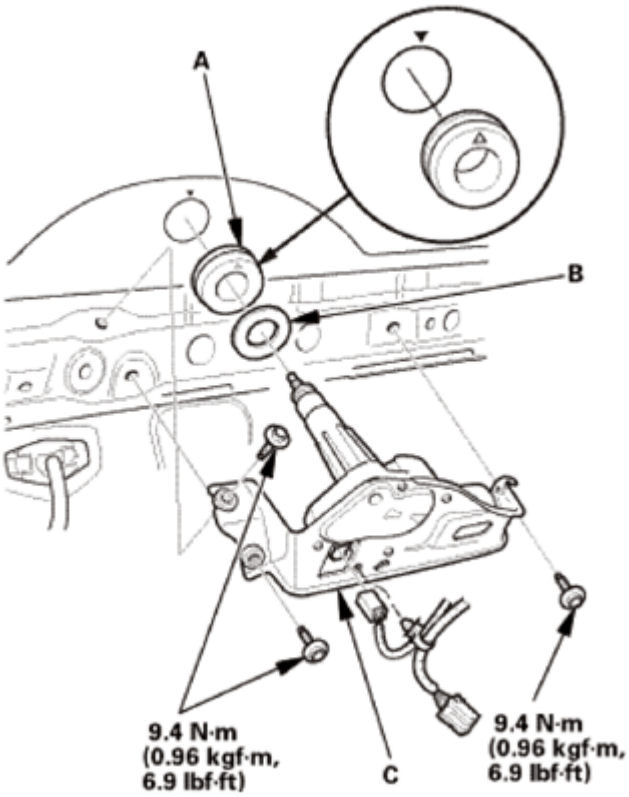

Fig. 80: Identifying Rear Window Motor, Washer And Seal With Torque Specifications
Courtesy of AMERICAN HONDA MOTOR CO., INC.

2. Tailgate Lower Trim Panel
    1. Hold up the tailgate lower trim panel (A), and fit the clips into the holes in the tailgate.
    2. Push on the trim until the clips (B, C) securely snap into place.

GETtheMANUALS.org

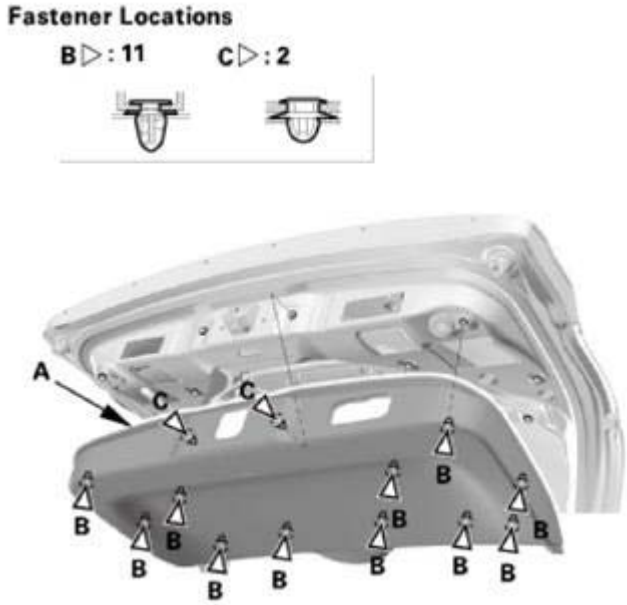

Fig. 81: Identifying Tailgate Lower Trim Panel And Clips
Courtesy of AMERICAN HONDA MOTOR CO., INC.

3. Install the tailgate pull pocket (A), then install the screw (B).

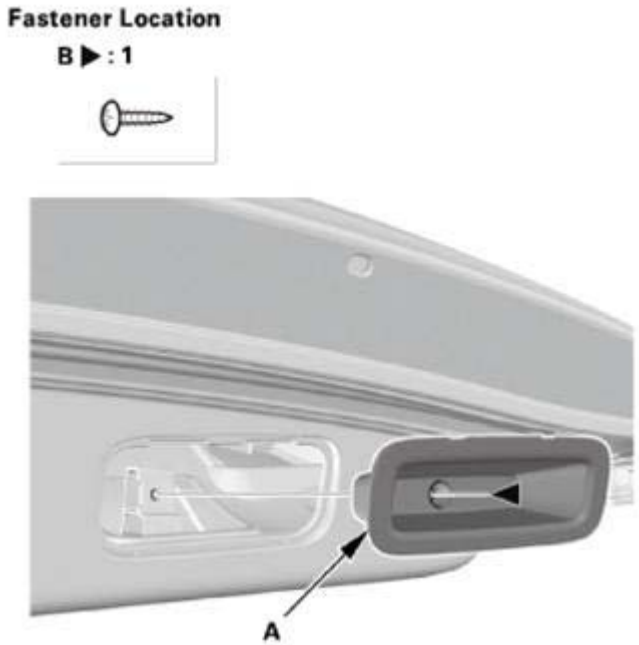

Fig. 82: Identifying Tailgate Pull Pocket And Screw
Courtesy of AMERICAN HONDA MOTOR CO., INC.

3. Tailgate Side Trim - Both Sides

NOTE: **Repeat this procedure on the opposite side.**

GETtheMANUALS.org

1. Install the tailgate side trim (A). Make sure the hook (B), the tabs (C), and the clips (D) snap into place securely.

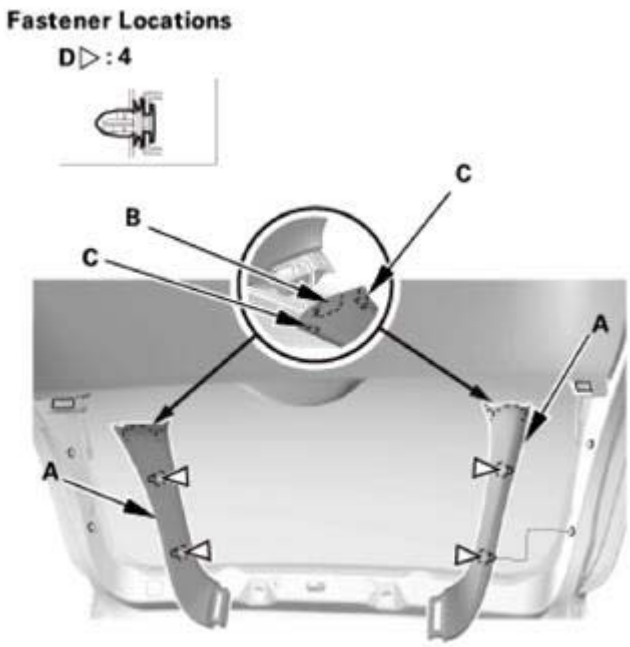

Fig. 83: Identifying Tailgate Side Trim, Hook, Tabs And Clips
Courtesy of AMERICAN HONDA MOTOR CO., INC.

4. Tailgate Upper Trim Panel
    1. Install the tailgate upper trim panel (A). Make sure the hooks (B), the tabs (C), and the clips (D) snap into place securely.

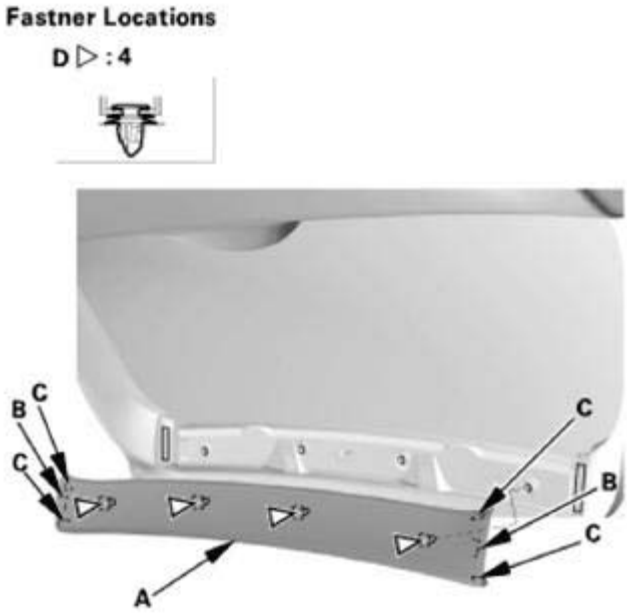

GETtheMANUALS.org

Fig. 84: Identifying Tailgate Upper Trim Panel, Hooks, Tabs And Clips
Courtesy of AMERICAN HONDA MOTOR CO., INC.

5. Rear Window Wiper Arm Assembly
    1. Install the washer (A), the mounting nut (B), and the cap (C).

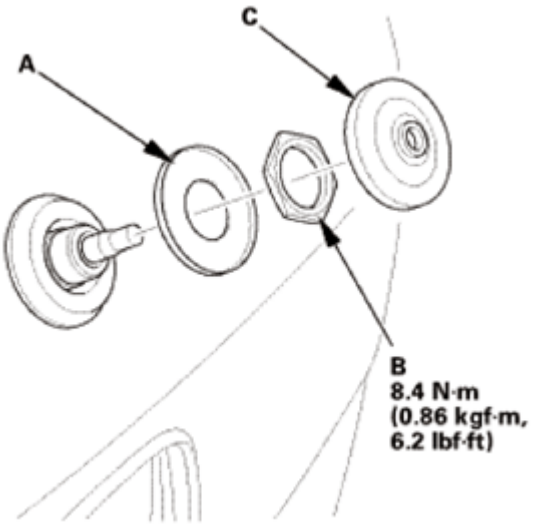

Fig. 85: Identifying Rear Window Wiper Arm Assembly Washer, Mounting Nut And Cap With Torque Specifications
Courtesy of AMERICAN HONDA MOTOR CO., INC.

    2. Install the wiper arm (A), the nut (B), and cover (C).

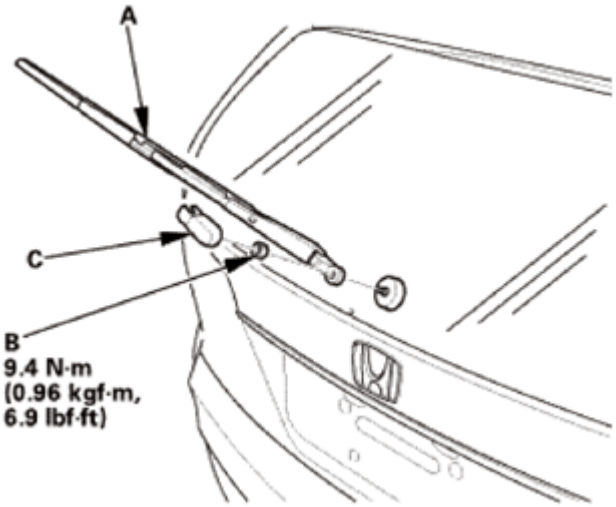

Fig. 86: Identifying Wiper Arm, Nut And Cover With Torque Specifications
Courtesy of AMERICAN HONDA MOTOR CO., INC.

6. Rear Window Wiper Arm - Adjustment

GETtheMANUALS.org

1. **Adjust the rear window wiper arm** See **WIPER ARM REMOVAL AND INSTALLATION** or **WIPER ARM/NOZZLE ADJUSTMENT**.

7. Windshield Wiper Motor

NOTE: **Screw threads are not tapped into the new wiper motor. Install the new wiper motor as follows, using the self-tapping bolts provided.**

1. Position the wiper motor (A) under the linkage (B) and tighten the self-tapping bolts until the bolt heads just make contact with the linkage.

NOTE:
- **Screw in the bolts, keeping them perfectly straight.**
- **Do not use the air tool or impact wrench to install the bolts.**
- **Use only the self-tapping bolts provided with the motor.**

2. Loosen the bolts, then retighten them to the specified torque.
3. Install the windshield wiper motor subharness, then connect the connector (C).
4. Install the link (D).
5. Align the mark (E) on the link with the mark (F) on the linkage.
6. Install the connection rod (G) to the link.

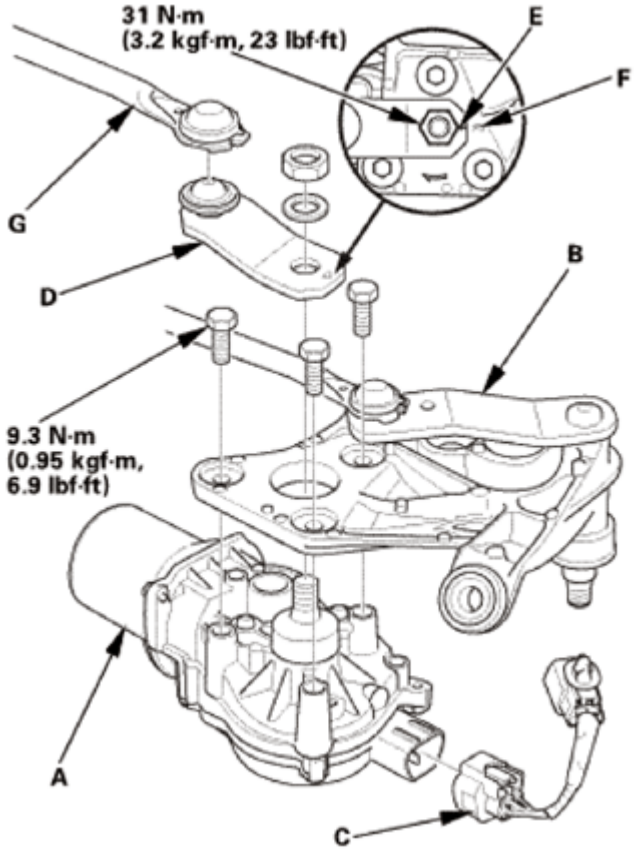

GETtheMANUALS.org

Fig. 87: Identifying Windshield Wiper Motor And Related Components With Torque Specifications
Courtesy of AMERICAN HONDA MOTOR CO., INC.

8. Windshield Wiper Linkage Assembly
    1. Install the wiper linkage assembly (A).
    2. Tighten the bolts in two or three steps. In the final step, tighten all bolts, in sequence, to 9.3 N.m (0.95 kgf.m, 6.9 lbf.ft).

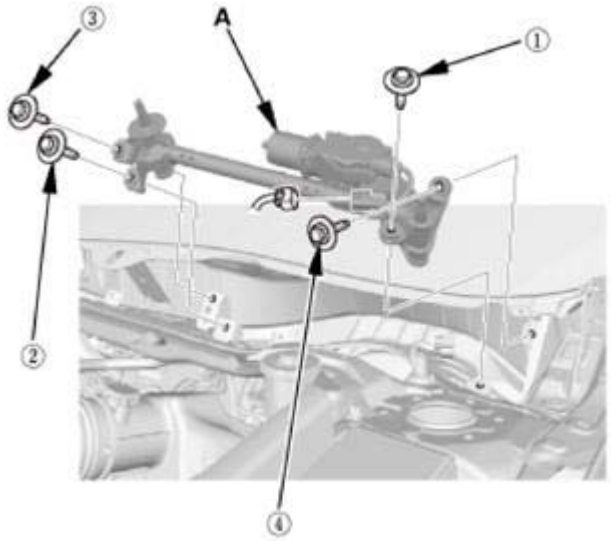

Fig. 88: Identifying Wiper Linkage Assembly Bolts Tightening Sequence
Courtesy of AMERICAN HONDA MOTOR CO., INC.

9. Under-Cowl Panel
    1. Install the under-cowl panel (A), then install the bolts and the nuts.
    2. Install the wire harness (B) to the under-cowl panel.
    3. Connect the connecter (C).

GETtheMANUALS.org

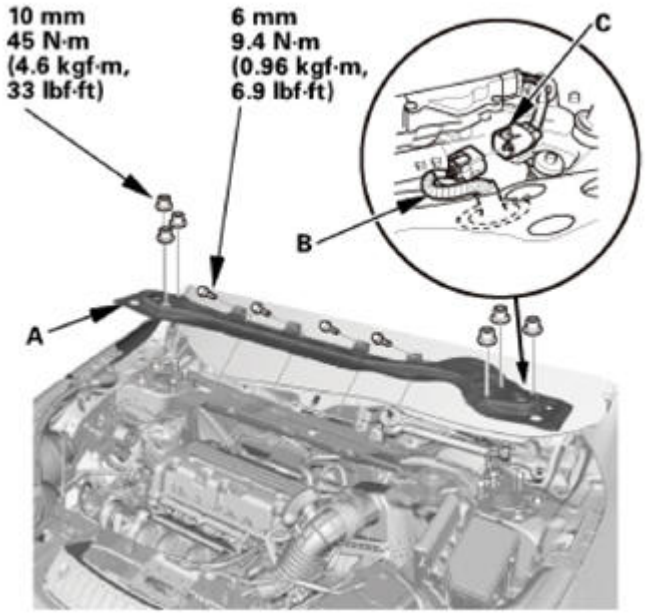

Fig. 89: Identifying Under-Cowl Panel, Connecter And Wire Harness With Torque Specifications
Courtesy of AMERICAN HONDA MOTOR CO., INC.

10. Center Cowl Cover
    1. Install the center cowl cover (A). Make sure the clips (B) and the hooks (C) snap into place securely.

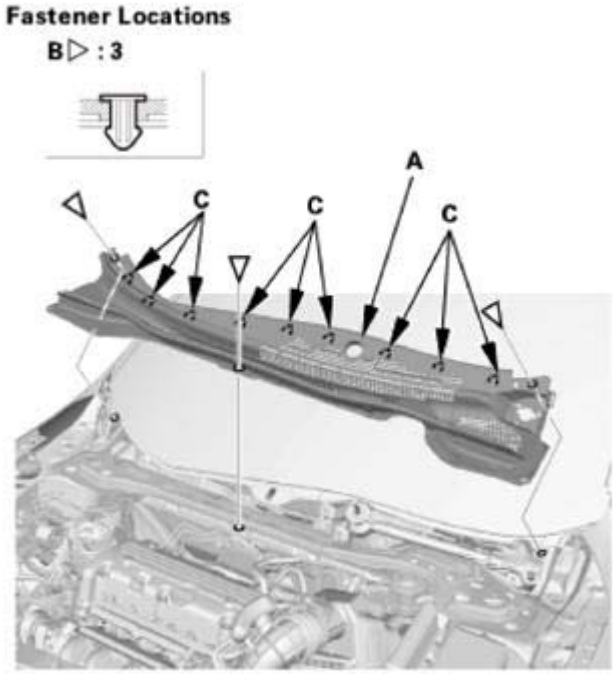

Fig. 90: Identifying Center Cowl Cover, Hooks And Clips
Courtesy of AMERICAN HONDA MOTOR CO., INC.

GETtheMANUALS.org

11. Side Cowl Cover - Both Sides

NOTE: Repeat on the opposite side.

1. Install the side cowl cover (A). Make sure the hooks (B) snap into place securely.
2. Right side; Install the windshield washer tube.

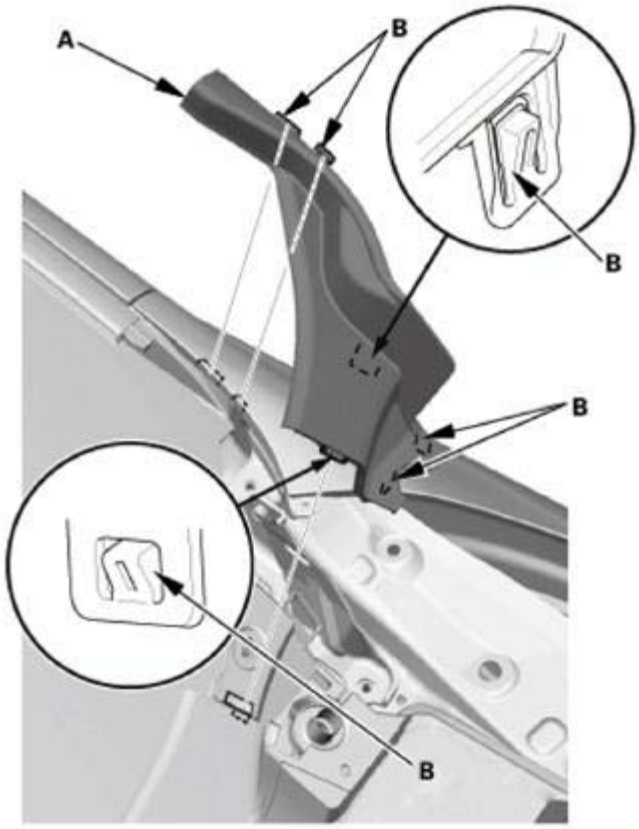

Fig. 91: Identifying Side Cowl Cover And Hooks
Courtesy of AMERICAN HONDA MOTOR CO., INC.

12. Cowl Top Cover - Both Sides

NOTE: Repeat this procedure on the opposite side.

1. Install the cowl top cover (A).
2. Install the hood rear seal (B).
3. Install the clip (C).

GETtheMANUALS.org

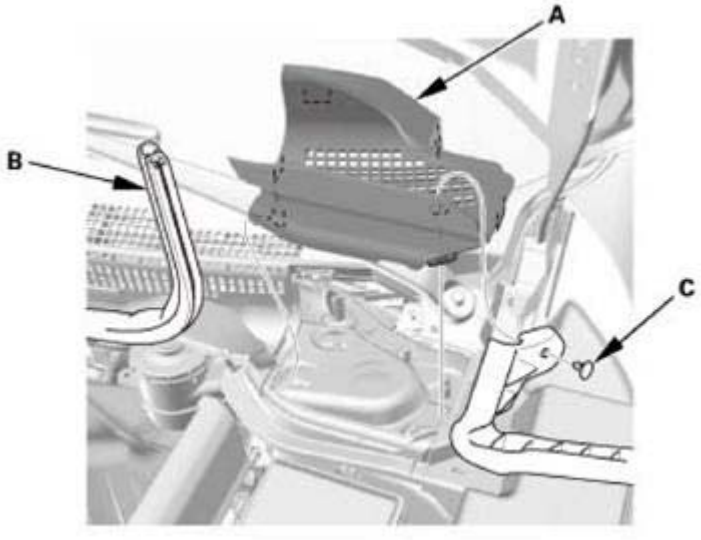

Fig. 92: Identifying Cowl Top Cover, Hood Rear Seal And Clip
Courtesy of AMERICAN HONDA MOTOR CO., INC.

13. Front Fender Trim - Both Sides

NOTE: Repeat on the opposite side.

1. Install the front fender trim (A), then install the clips (B, C). Make sure the clips (D) snap into place securely.

GETtheMANUALS.org

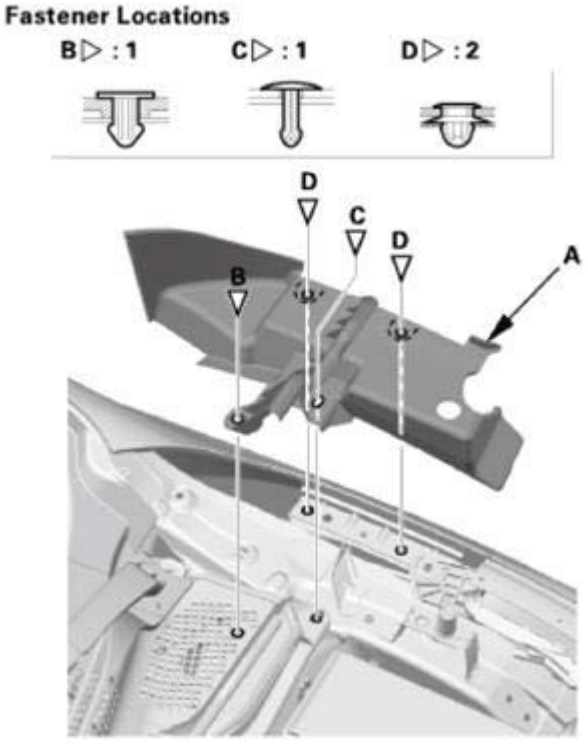

Fig. 93: Identifying Front Fender Trim And Clips
Courtesy of AMERICAN HONDA MOTOR CO., INC.

14. Both Windshield Wiper Arm Assemblies

NOTE: Set the wiper arms to the auto-stop position before installation.

1. Install the wiper arms (A), the nut (B), and the caps (C).

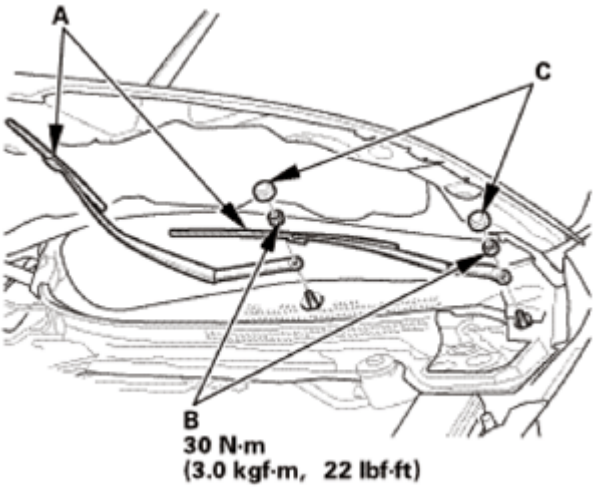

Fig. 94: Identifying Wiper Arms, Nut And Caps With Torque Specification
Courtesy of AMERICAN HONDA MOTOR CO., INC.

GETtheMANUALS.org

15. Windshield Wiper Arm - Adjustment
    1. **Adjust the windshield wiper arms** See **WIPER ARM REMOVAL AND INSTALLATION** or **WIPER ARM/NOZZLE ADJUSTMENT**.

WIPER MOTOR TEST

REMOVAL

NOTE: Steps 1-5 show removing the windshield wiper motor, steps 6-8 show removing the rear window wiper motor.

1. Both Windshield Wiper Arm Assemblies

   NOTE: Set the wiper arms to the auto-stop position before removal.

   1. Remove the caps (A) and nuts (B).
   2. Remove the wiper arms (C).

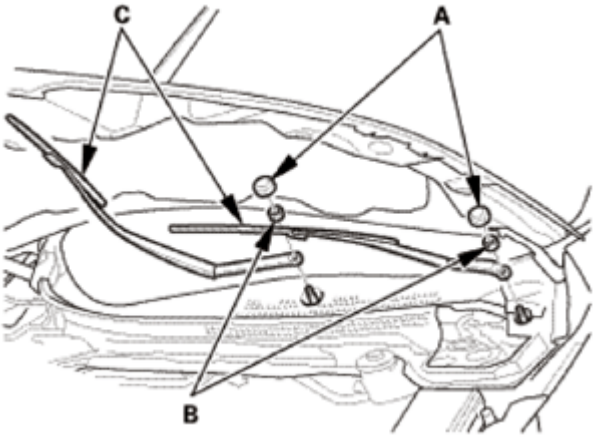

Fig. 95: Identifying Wiper Arms, Nuts And Caps
Courtesy of AMERICAN HONDA MOTOR CO., INC.

2. Front Fender Trim - Both Sides

   NOTE: Repeat on the opposite side.

   1. Remove the clips (A, B).
   2. Pull up the front fender trim (C) by hand to detach the clips (D), then remove the trim.

GETtheMANUALS.org

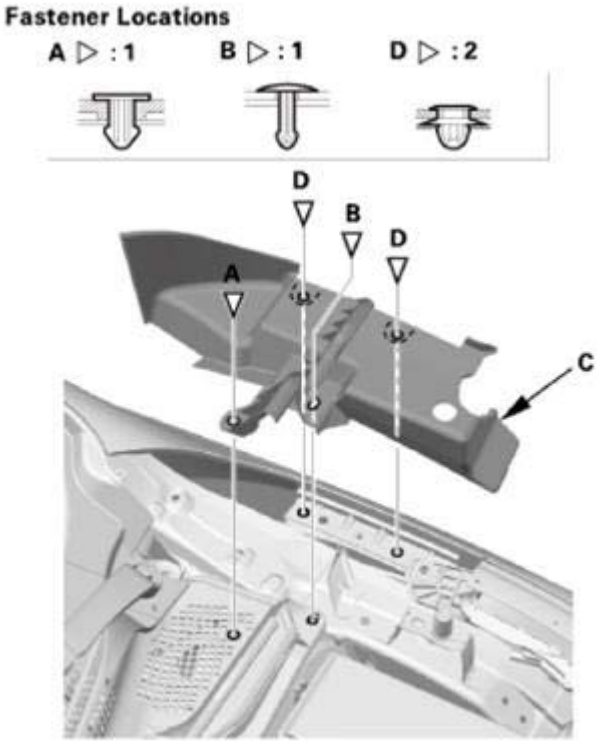

Fig. 96: Identifying Front Fender Trim And Clips
Courtesy of AMERICAN HONDA MOTOR CO., INC.

3. Cowl Top Cover - Both Sides

NOTE: Repeat this procedure on the opposite side.

1. Remove the clip (A).
2. Pull out the hood rear seal (B).
3. Detach the hooks, and remove the cowl top cover (C).

GETtheMANUALS.org

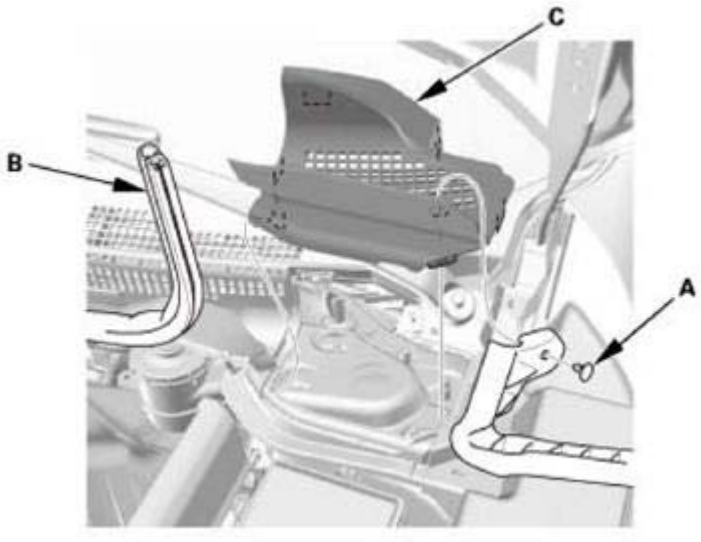

Fig. 97: Identifying Cowl Top Cover, Hood Rear Seal And Clip
Courtesy of AMERICAN HONDA MOTOR CO., INC.

4. Side Cowl Cover - Both Sides

NOTE: Repeat on the opposite side.

1. Detach the hook (A) at the inside of the cowl cover (B).
2. Release the hooks (C) from the cowl cover and the front fender (D), then remove the side cowl cover (E).
3. Right side; Detach the windshield washer tube.

GETtheMANUALS.org

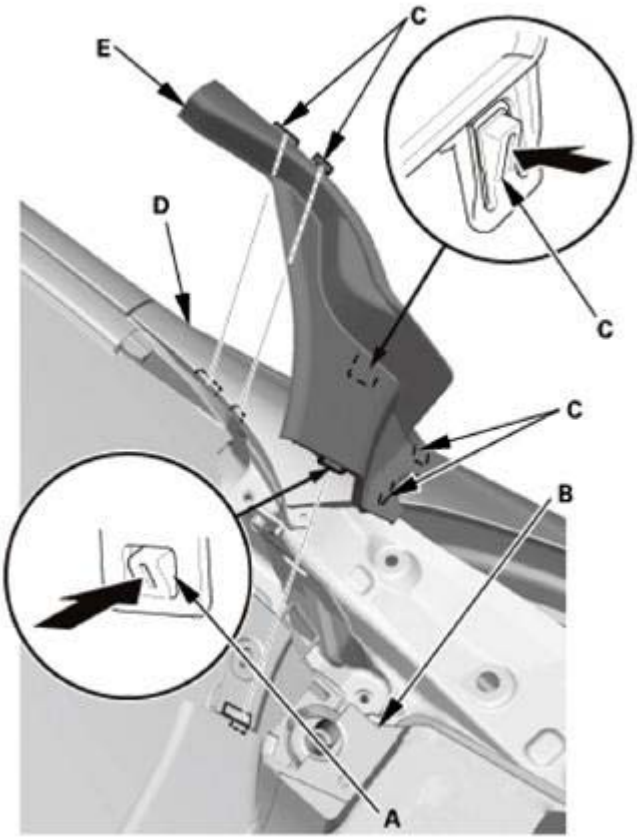

Fig. 98: Releasing Hooks From Cowl Cover And Front Fender
Courtesy of AMERICAN HONDA MOTOR CO., INC.

5. Center Cowl Cover
    1. Remove the clips (A).
    2. Carefully pull the center cowl cover (B) forward to release the hooks (C) from the windshield and the body.

GETtheMANUALS.org

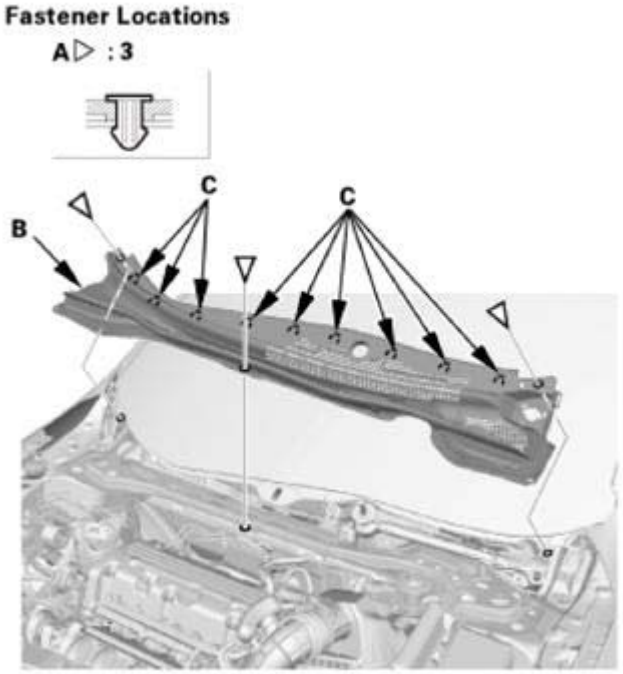

Fig. 99: Identifying Center Cowl Cover, Hooks And Clips
Courtesy of AMERICAN HONDA MOTOR CO., INC.

6. Tailgate Upper Trim Panel
    1. Carefully pry out the notch (A) in the tailgate upper trim (B) with the appropriate trim tool to detach the hooks (C) and the tabs (D) from the tailgate side trims (E), and pull back the tailgate upper trim panel by hand to detach the clips (F), then remove the tailgate upper trim panel.

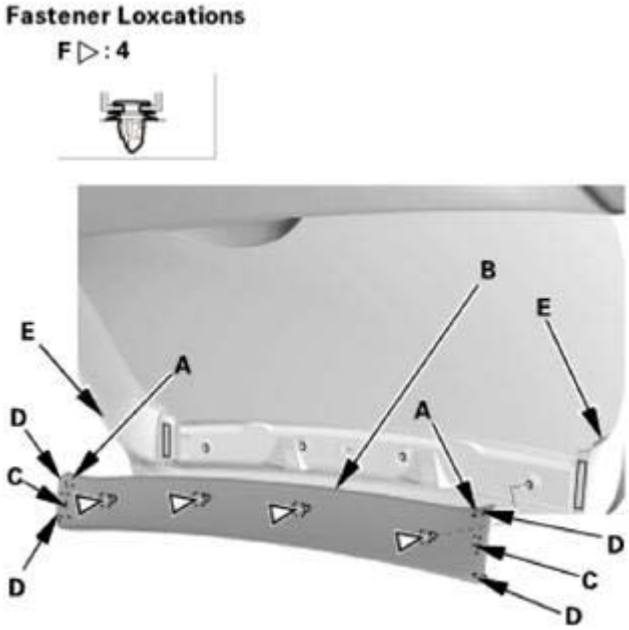

Fig. 100: Identifying Tailgate Upper Trim Panel, Hooks, Tabs And Clips

GETtheMANUALS.org

Courtesy of AMERICAN HONDA MOTOR CO., INC.

7. Tailgate Side Trim - Both Sides

NOTE: Repeat this procedure on the opposite side.

1. Detach the hook (A) and the tabs (B) from the tailgate lower trim panel (C), and pull back the tailgate side trim (D) by hand to detach the clips (E), then remove the tailgate side trim.

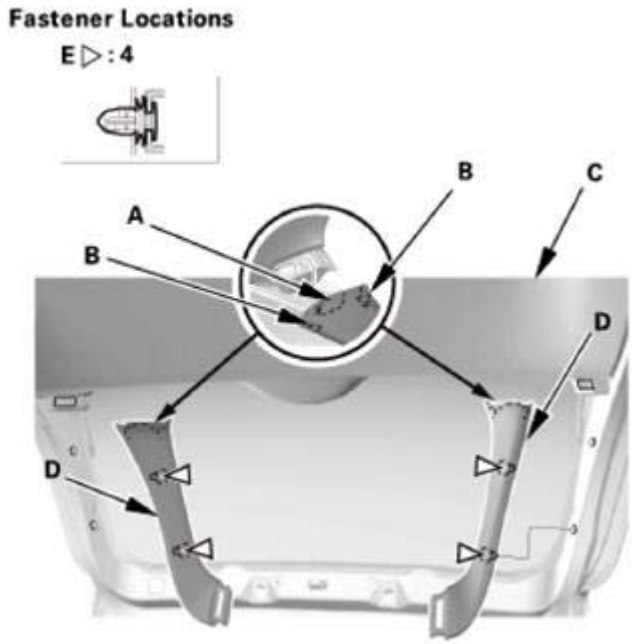

Fig. 101: Identifying Tailgate Side Trim, Hook, Tabs And Clips
Courtesy of AMERICAN HONDA MOTOR CO., INC.

8. Tailgate Lower Trim Panel
   1. Remove the screw (A), then remove the tailgate pull pocket (B).

GETtheMANUALS.org

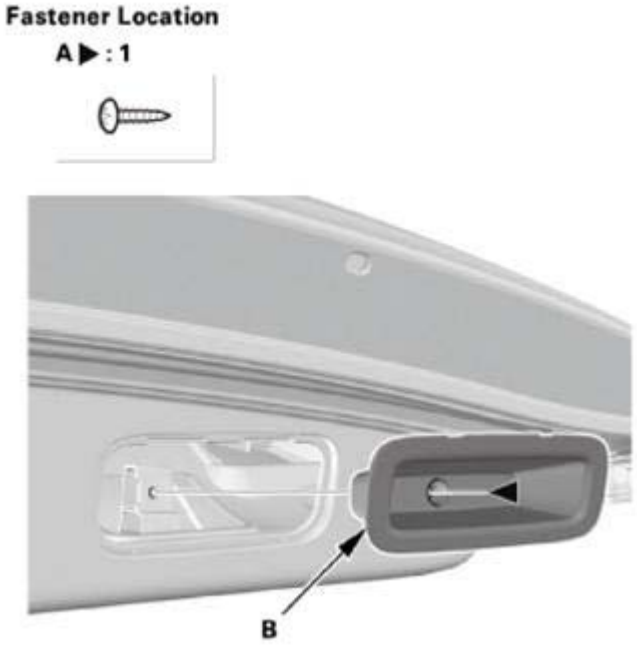

Fig. 102: Identifying Tailgate Pull Pocket And Screw
Courtesy of AMERICAN HONDA MOTOR CO., INC.

2. Pull out the tailgate lower trim panel (A) by hand to detach the clips (B, C), then remove the tailgate lower trim panel.

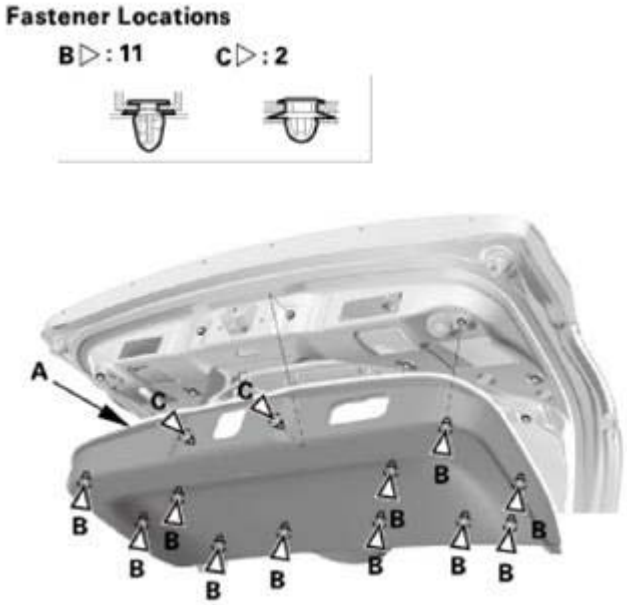

Fig. 103: Identifying Tailgate Lower Trim Panel And Clips
Courtesy of AMERICAN HONDA MOTOR CO., INC.

TEST

GETtheMANUALS.org

1. Windshield Wiper Motor - Test
    1. Disconnect the connector.
    2. Test the wiper motor (A) by connecting battery power to terminal No. 1 and ground to terminal No. 2 of the wiper motor connector. The motor should run at low speed.
    3. Test the motor by connecting battery power to terminal No. 3 and ground to terminal No. 2 of the wiper motor connector. The motor should run at high speed.
    4. Connect an analog ohmmeter to terminals No. 4 and No. 2, and run the motor at low or high speed. The needle of the ohmmeter should pulse.
    5. If the motor does not run or fails to run smoothly, or there is no pulse, check for continuity of the windshield wiper motor subharness, if the wire harness is OK, replace the motor.

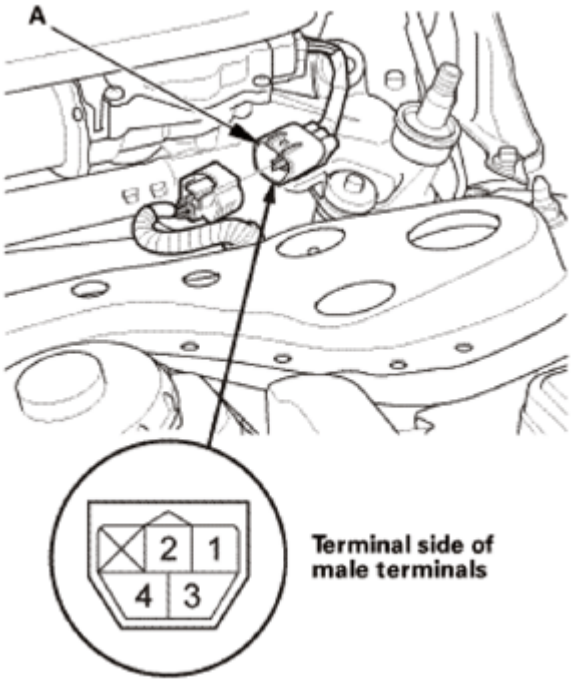

Fig. 104: Identifying Windshield Wiper Motor Connector Terminals
Courtesy of AMERICAN HONDA MOTOR CO., INC.

2. Rear Window Wiper Motor - Test
    1. Disconnect the connector.
    2. Test the wiper motor (A) by connecting battery power to terminal No. 4 and ground to terminal No. 3 of the wiper motor connector. The motor should run.
    3. Connect an analog ohmmeter to terminals No. 2 and No. 3, and run the motor. The needle of the ohmmeter should pulse. If the motor does not run or fails to run smoothly, or there is no pulse, replace the motor.

GETtheMANUALS.org

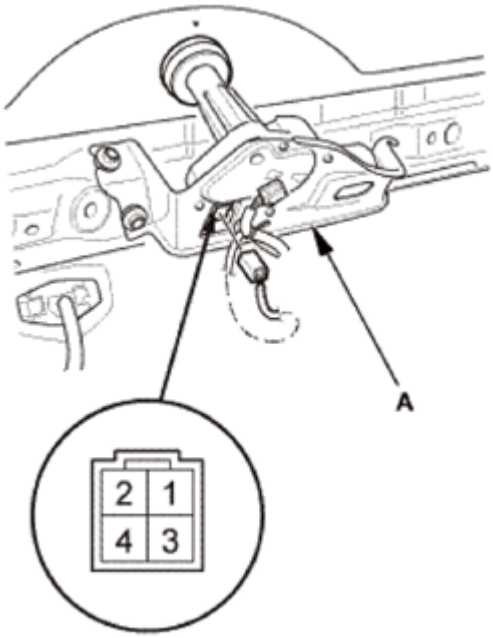

Fig. 105: Identifying Rear Window Wiper Motor Connector Terminals
Courtesy of AMERICAN HONDA MOTOR CO., INC.

INSTALLATION

NOTE: Steps 1-3 show installing the rear window wiper motor, steps 4-9 show installing the windshield wiper motor.

1. Tailgate Lower Trim Panel
    1. Hold up the tailgate lower trim panel (A), and fit the clips into the holes in the tailgate.
    2. Push on the trim until the clips (B, C) securely snap into place.

GETtheMANUALS.org

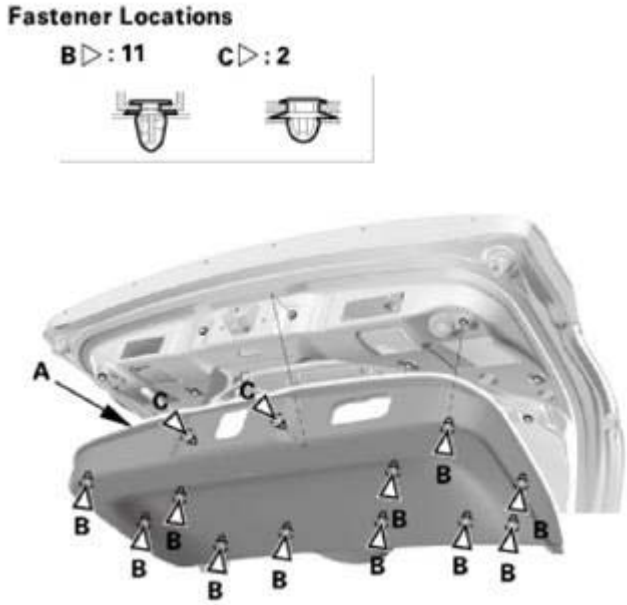

Fig. 106: Identifying Tailgate Lower Trim Panel And Clips
Courtesy of AMERICAN HONDA MOTOR CO., INC.

3. Install the tailgate pull pocket (A), then install the screw (B).

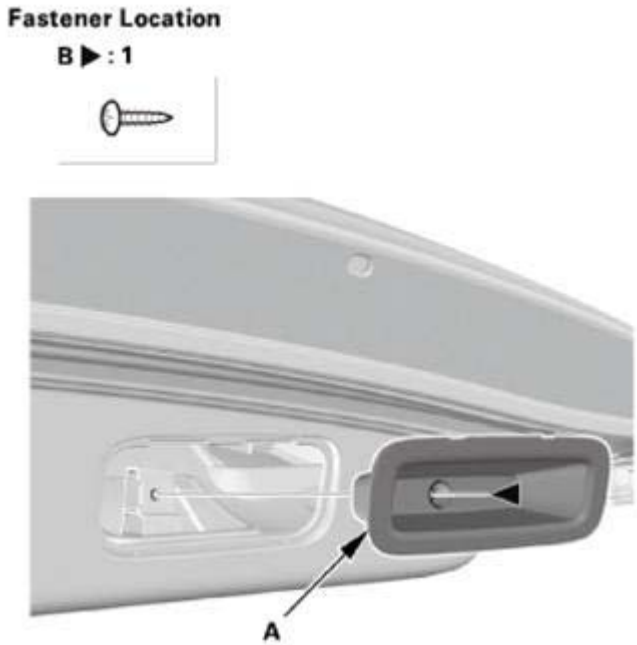

Fig. 107: Identifying Tailgate Pull Pocket And Screw
Courtesy of AMERICAN HONDA MOTOR CO., INC.

2. Tailgate Side Trim - Both Sides

NOTE: **Repeat this procedure on the opposite side.**

GETtheMANUALS.org

1. Install the tailgate side trim (A). Make sure the hook (B), the tabs (C), and the clips (D) snap into place securely.

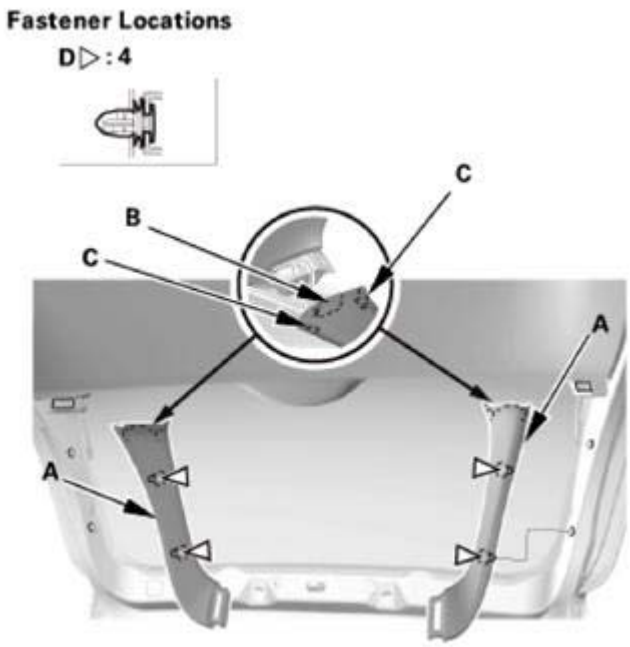

Fig. 108: Identifying Tailgate Side Trim, Hooks, Tabs And Clips
Courtesy of AMERICAN HONDA MOTOR CO., INC.

3. Tailgate Upper Trim Panel
   1. Install the tailgate upper trim panel (A). Make sure the hooks (B), the tabs (C), and the clips (D) snap into place securely.

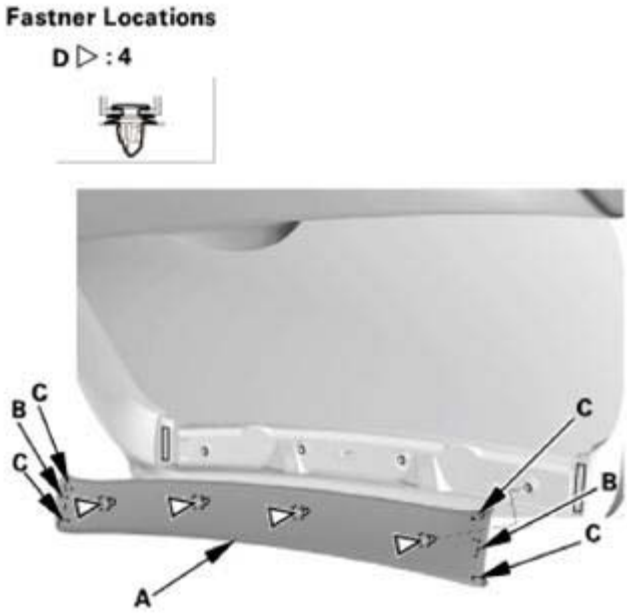

GETtheMANUALS.org

Fig. 109: Identifying Tailgate Upper Trim Panel, Hooks, Tabs And Clips
Courtesy of AMERICAN HONDA MOTOR CO., INC.

4. Center Cowl Cover
    1. Install the center cowl cover (A). Make sure the clips (B) and the hooks (C) snap into place securely.

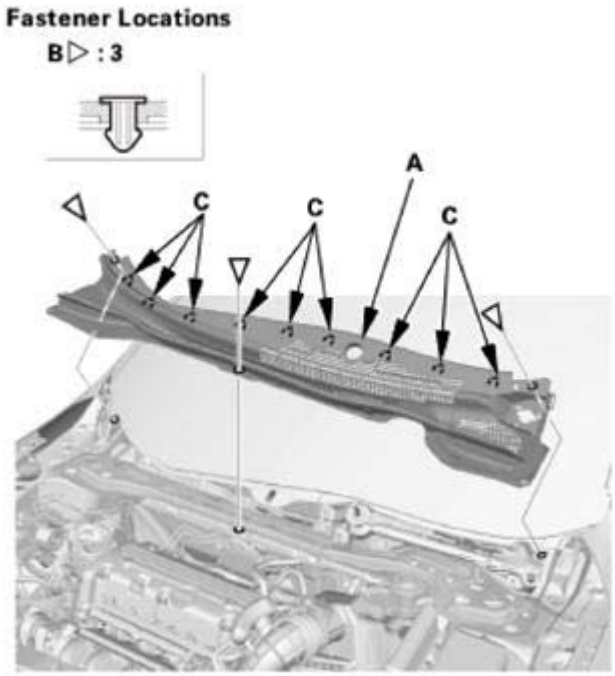

Fig. 110: Identifying Center Cowl Cover, Hooks And Clips
Courtesy of AMERICAN HONDA MOTOR CO., INC.

5. Side Cowl Cover - Both Sides

NOTE: Repeat on the opposite side.

1. Install the side cowl cover (A). Make sure the hooks (B) snap into place securely.
2. Right side; Install the windshield washer tube.

GETtheMANUALS.org

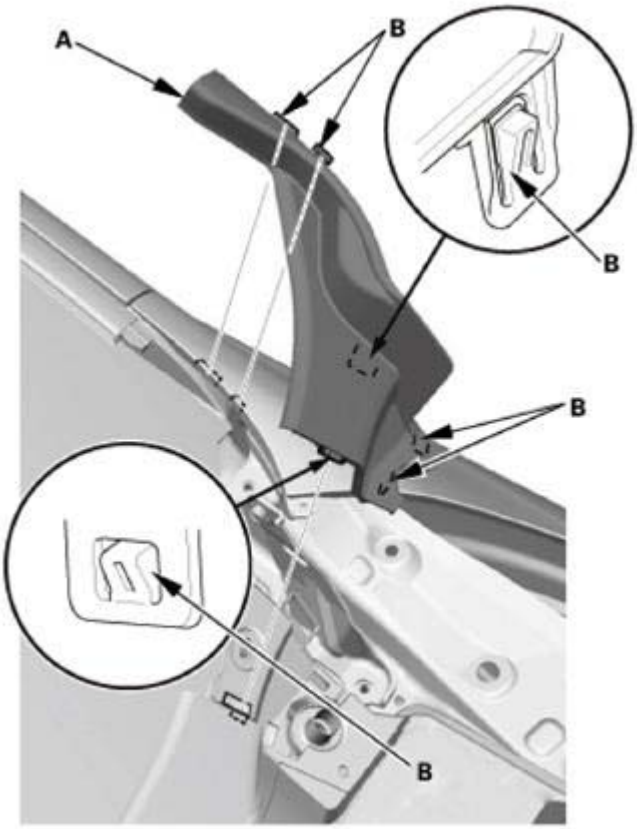

Fig. 111: Identifying Side Cowl Cover And Hooks
Courtesy of AMERICAN HONDA MOTOR CO., INC.

6. Cowl Top Cover - Both Sides

NOTE: Repeat this procedure on the opposite side.

1. Install the cowl top cover (A).
2. Install the hood rear seal (B).
3. Install the clip (C).

GETtheMANUALS.org

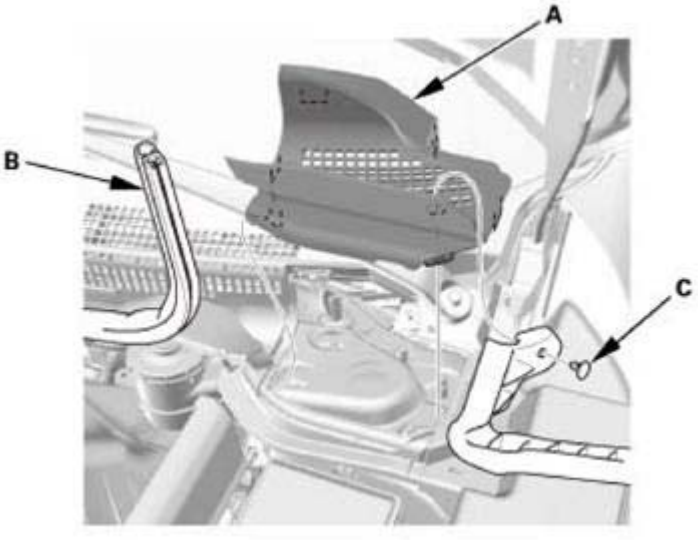

Fig. 112: Identifying Cowl Top Cover, Hood Rear Seal And Clip
Courtesy of AMERICAN HONDA MOTOR CO., INC.

7. Front Fender Trim - Both Sides

NOTE: Repeat on the opposite side.

1. Install the front fender trim (A), then install the clips (B, C). Make sure the clips (D) snap into place securely.

GETtheMANUALS.org

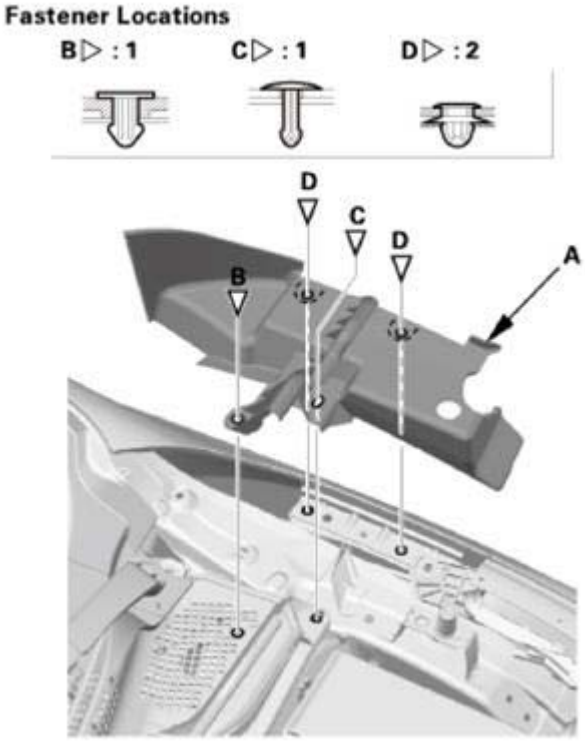

Fig. 113: Identifying Front Fender Trim And Clips
Courtesy of AMERICAN HONDA MOTOR CO., INC.

8. Both Windshield Wiper Arm Assemblies

NOTE: Set the wiper arms to the auto-stop position before installation.

1. Install the wiper arms (A), the nut (B), and the caps (C).

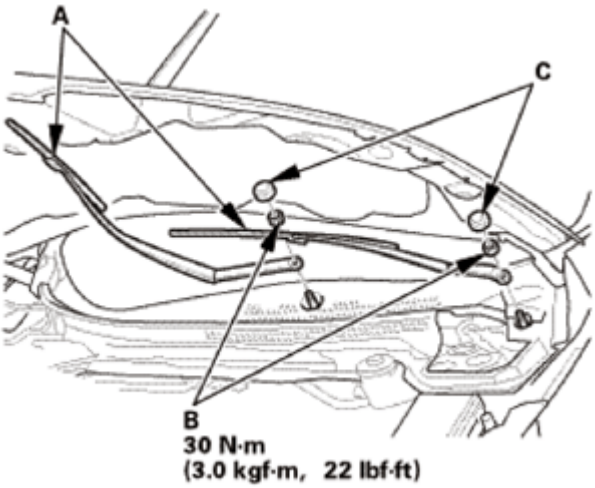

Fig. 114: Identifying Wiper Arms, Nut And Caps With Torque Specifications
Courtesy of AMERICAN HONDA MOTOR CO., INC.

GETtheMANUALS.org

9. Windshield Wiper Arm - Adjustment
    1. **Adjust the windshield wiper arms** See **WIPER ARM REMOVAL AND INSTALLATION** or **WIPER ARM/NOZZLE ADJUSTMENT**.

WIPER/WASHER SWITCH REMOVAL, INSTALLATION, AND TEST

REMOVAL

SRS components are located in this area. Review the **SRS COMPONENT LOCATIONS** and the **PRECAUTIONS AND PROCEDURES** before doing repairs or service.

1. Upper Column Cover
    1. Carefully pry out the dashboard meter visor blind cover (A) with the appropriate trim tool to detach the clips (B) and the hook (C), then tuck up the dashboard meter visor blind cover.

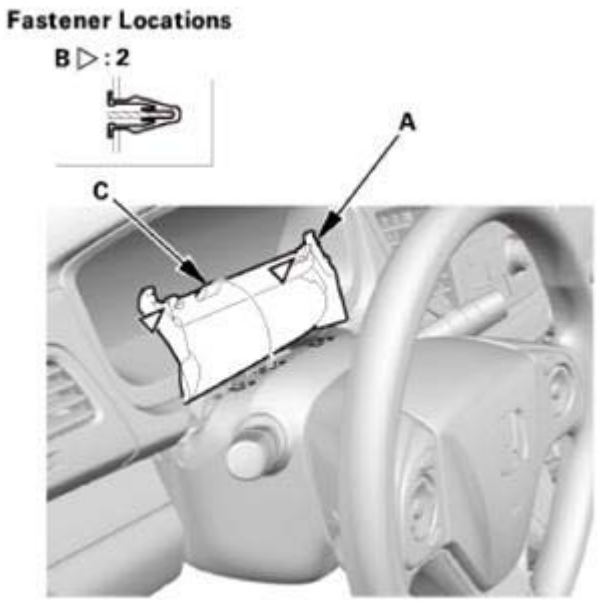

Fig. 115: Identifying Dashboard Meter Visor Blind Cover, Hook And Clip
Courtesy of AMERICAN HONDA MOTOR CO., INC.

    2. Detach the hooks (A), then remove the upper column cover (B).

GETtheMANUALS.org

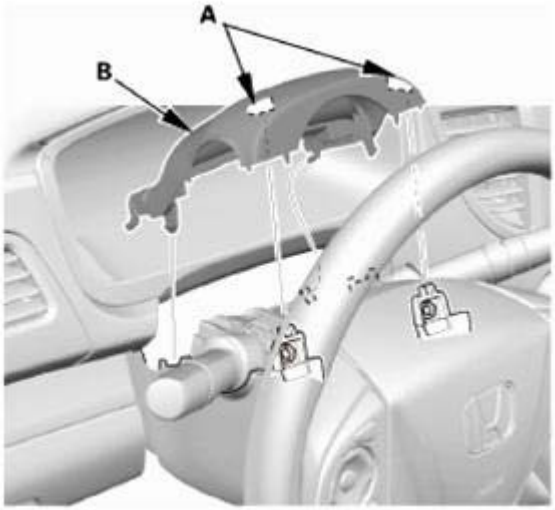

Fig. 116: Identifying Upper Column Cover And Hooks
Courtesy of AMERICAN HONDA MOTOR CO., INC.

2. Lower Column Cover
    1. Turn the steering wheel to the left. Remove the screw (A) securing the lower column cover (B) from the front side.
    2. Turn the steering wheel to the right. Remove the screw securing the lower column cover from the front side.

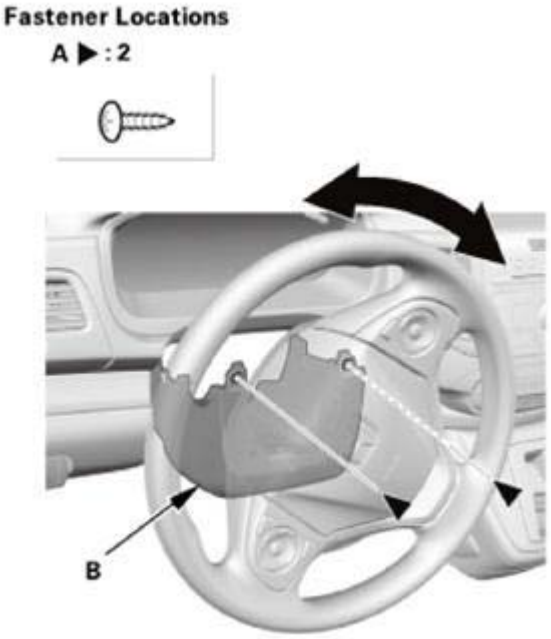

Fig. 117: Turning Steering Wheel
Courtesy of AMERICAN HONDA MOTOR CO., INC.

3. Remove the screw (A), then remove the lower column cover (B).

GETtheMANUALS.org

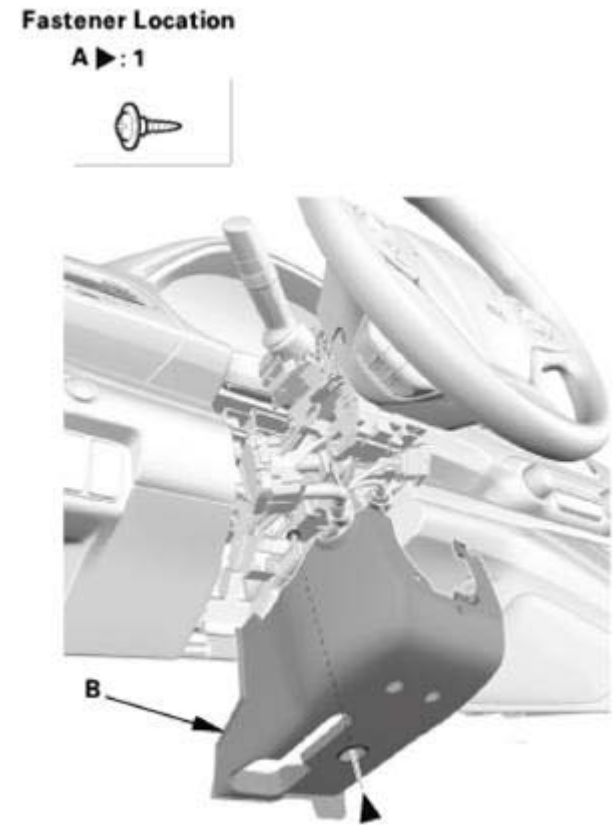

Fig. 118: Identifying Lower Column Cover And Screw
Courtesy of AMERICAN HONDA MOTOR CO., INC.

3. Wiper/Washer Switch
    1. Disconnect the connector.
    2. Remove the wiper/washer switch (A) by pushing the tabs.

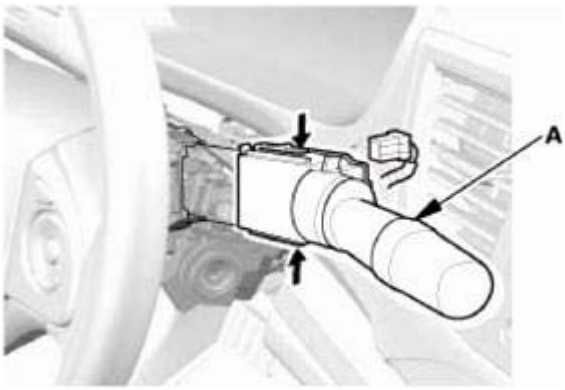

Fig. 119: Removing Wiper/Washer Switch
Courtesy of AMERICAN HONDA MOTOR CO., INC.

TEST

GETtheMANUALS.org

1. Wiper/Washer Switch - Test
    1. Inspect the connector terminals to be sure they are all making good contact.
        - If the terminals are bent, loose or corroded, repair them as necessary, and recheck the system.
        - If the terminals are OK, go to step 2.
    2. Check for continuity between the terminals in each switch position according to the table.
    3. If the continuity is not as specified, replace the wiper/washer switch (A).

Windshield

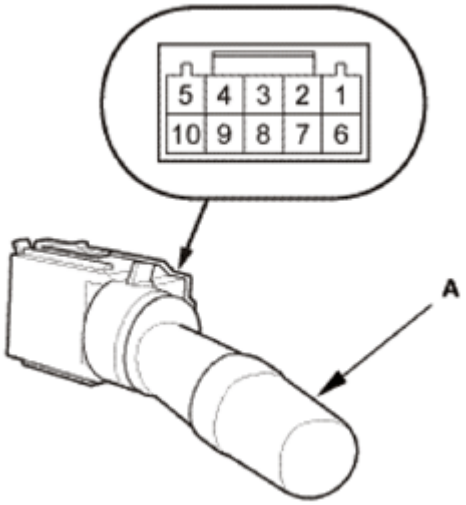

Fig. 120: Identifying Wiper/Washer Switch Connector Terminals
Courtesy of AMERICAN HONDA MOTOR CO., INC.

Terminal / Position	1	6	7	8	9		10
OFF							
INT			○		○		
LO		○	○		○		
HI		○			○		
Mist ON				○	○		
Washer ON	○				○		
Intermittent dwell timer turned					○	⁄⁄	○

Fig. 121: Wiper/Washer Switch Continuity Reference Chart (Windshield)
Courtesy of AMERICAN HONDA MOTOR CO., INC.

Rear Window

GETtheMANUALS.org

Position \ Terminal	2	4	5	9
Washer switch ON, wiper switch OFF			○—○	
OFF				
Wiper switch INT, washer switch OFF	○—○			
Wiper switch ON, washer switch OFF		○—○		
Wiper and washer switch ON		○—○	○—○	

Fig. 122: Wiper/Washer Switch Continuity Reference Chart (Rear Window)
Courtesy of AMERICAN HONDA MOTOR CO., INC.

INSTALLATION

SRS components are located in this area. Review the **SRS COMPONENT LOCATIONS** and the **PRECAUTIONS AND PROCEDURES** before doing repairs or service.

1. Wiper/Washer Switch
    1. Install the wiper/washer switch (A).
    2. Connect the connector.

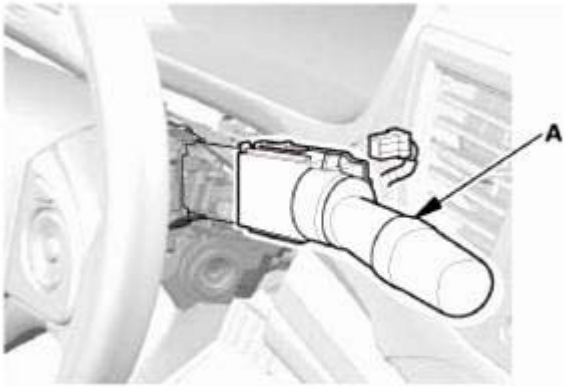

Fig. 123: Identifying Wiper/Washer Switch
Courtesy of AMERICAN HONDA MOTOR CO., INC.

2. Lower Column Cover
    1. Push in on the lower column cover just above ignition switch opening (A) to engage the column cover with the locking tab (B).

GETtheMANUALS.org

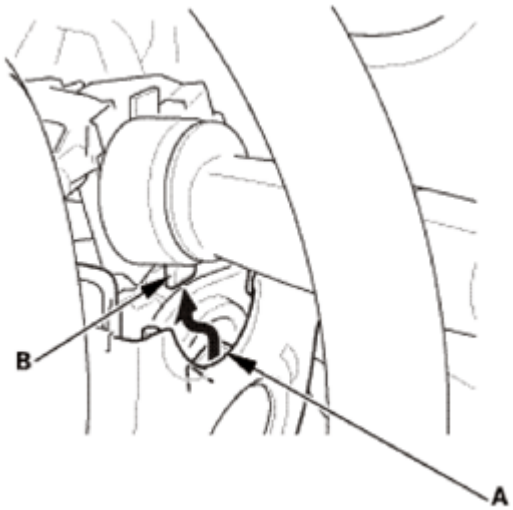

Fig. 124: Engaging Column Cover With Locking Tab
Courtesy of AMERICAN HONDA MOTOR CO., INC.

2. Install the lower column cover (A), then install the screw (B).

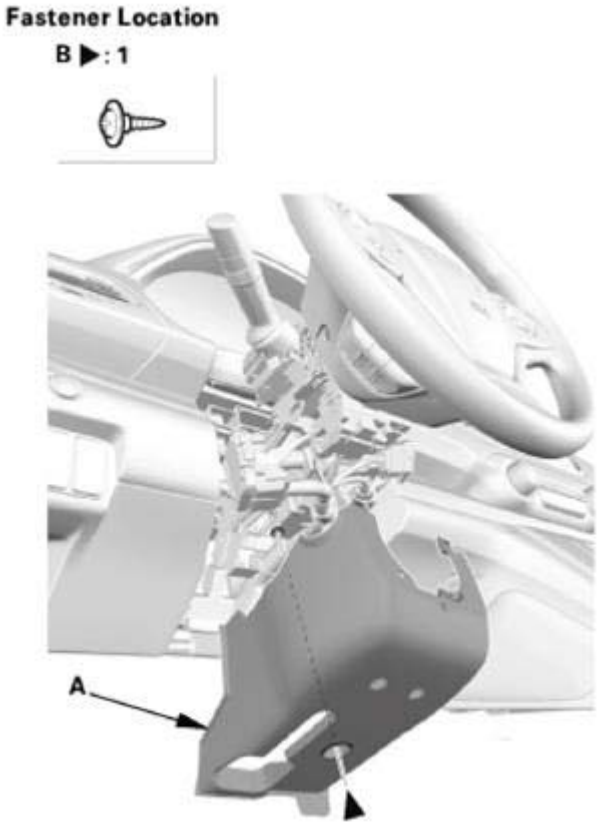

Fig. 125: Identifying Lower Column Cover And Screw
Courtesy of AMERICAN HONDA MOTOR CO., INC.

3. Turn the steering wheel to the left. Install the screw (A) securing the lower column cover (B) from

GETtheMANUALS.org

the front side.

4. Turn the steering wheel to the right. Install the screw securing the lower column cover from the front side.

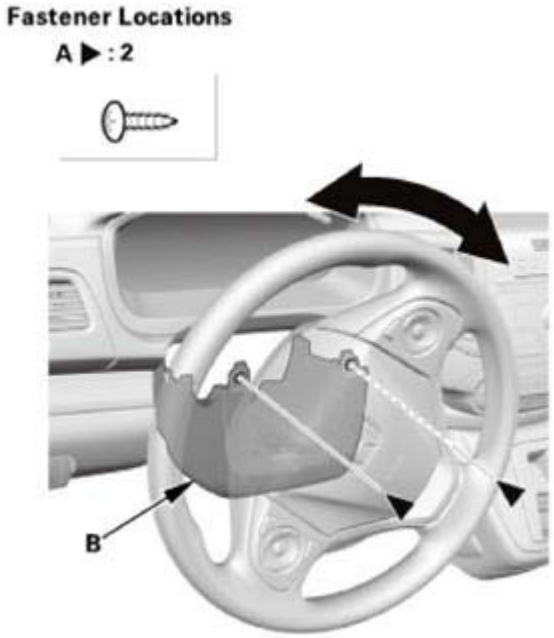

Fig. 126: Turning Steering Wheel
Courtesy of AMERICAN HONDA MOTOR CO., INC.

3. Upper Column Cover
    1. Install the upper column cover (A). Make sure the hooks (B) snap into place securely.

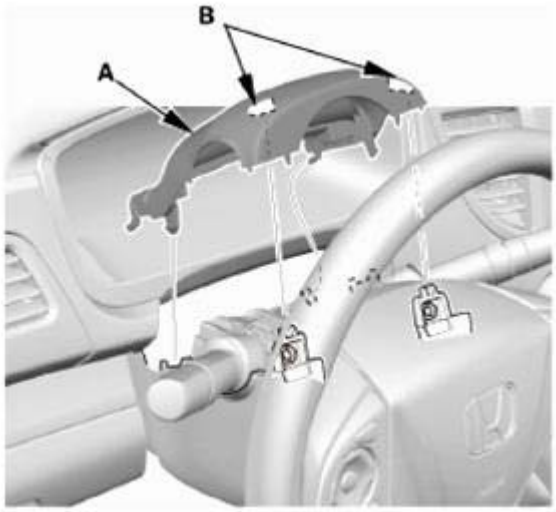

Fig. 127: Identifying Upper Column Cover And Hooks
Courtesy of AMERICAN HONDA MOTOR CO., INC.

GETtheMANUALS.org

2. Install the dashboard meter visor blind cover (A). Make sure the clips (B) and the hook (C) snap into place securely

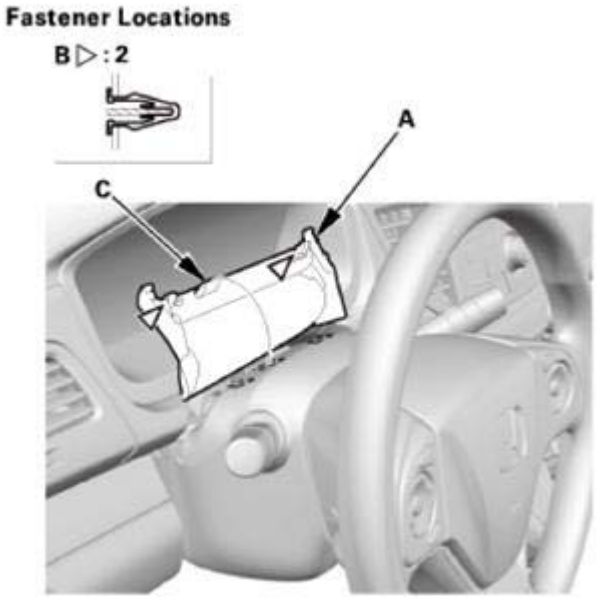

Fig. 128: Identifying Dashboard Meter Visor Blind Cover, Hooks And Clip
Courtesy of AMERICAN HONDA MOTOR CO., INC.

WIPERS/WASHERS COMPONENT LOCATION INDEX

GETtheMANUALS.org

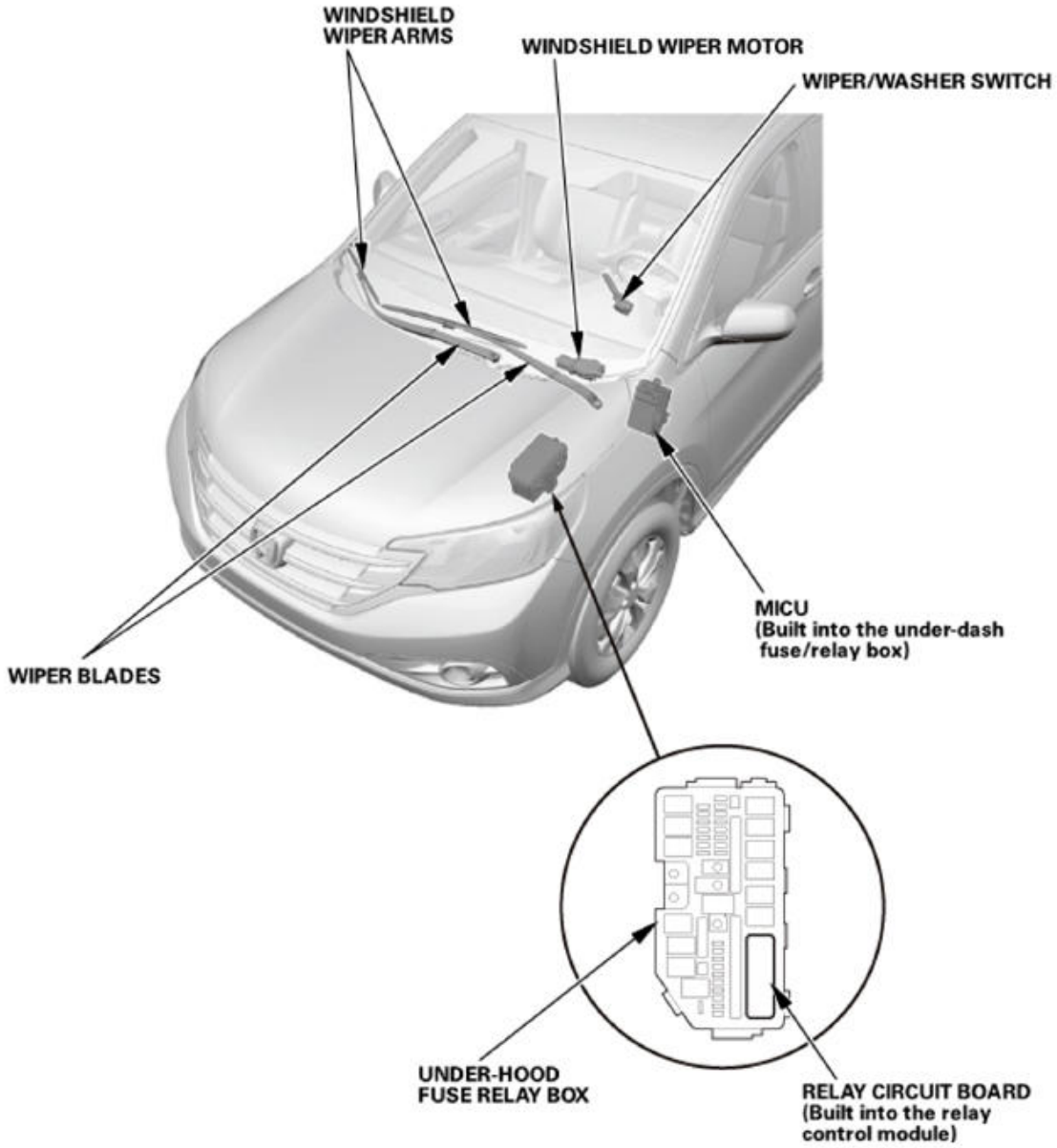

Fig. 129: Wipers/Washers Component Location (1 Of 2)
Courtesy of AMERICAN HONDA MOTOR CO., INC.

GETtheMANUALS.org

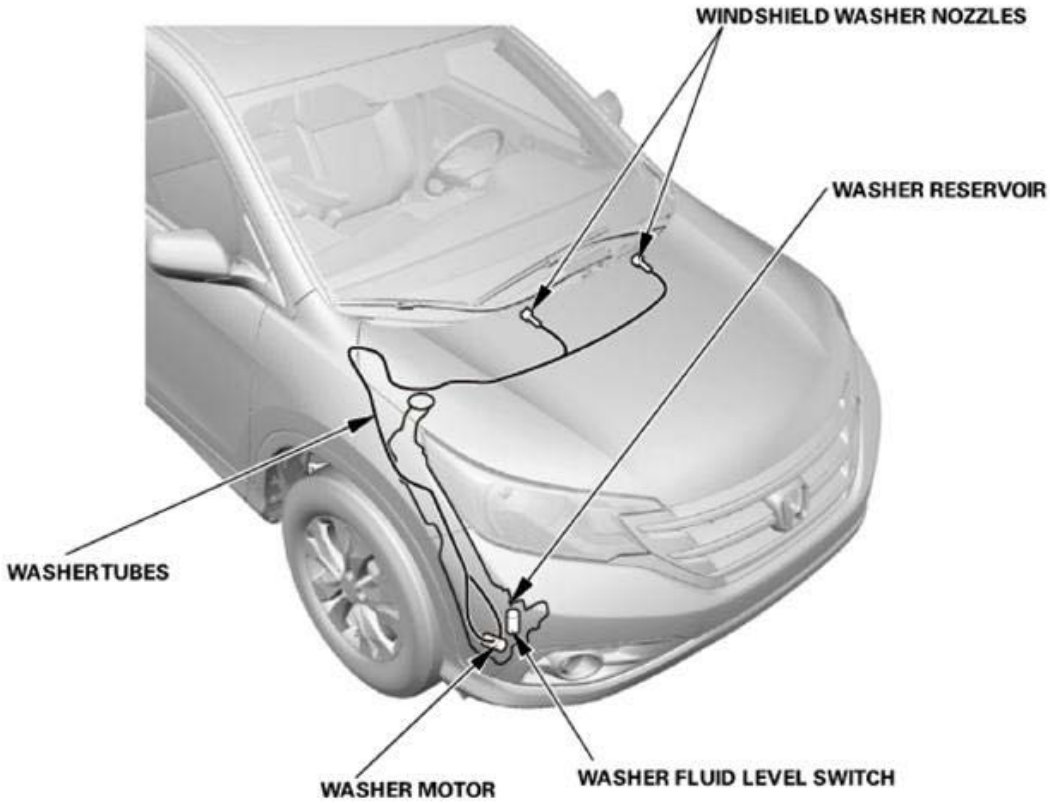

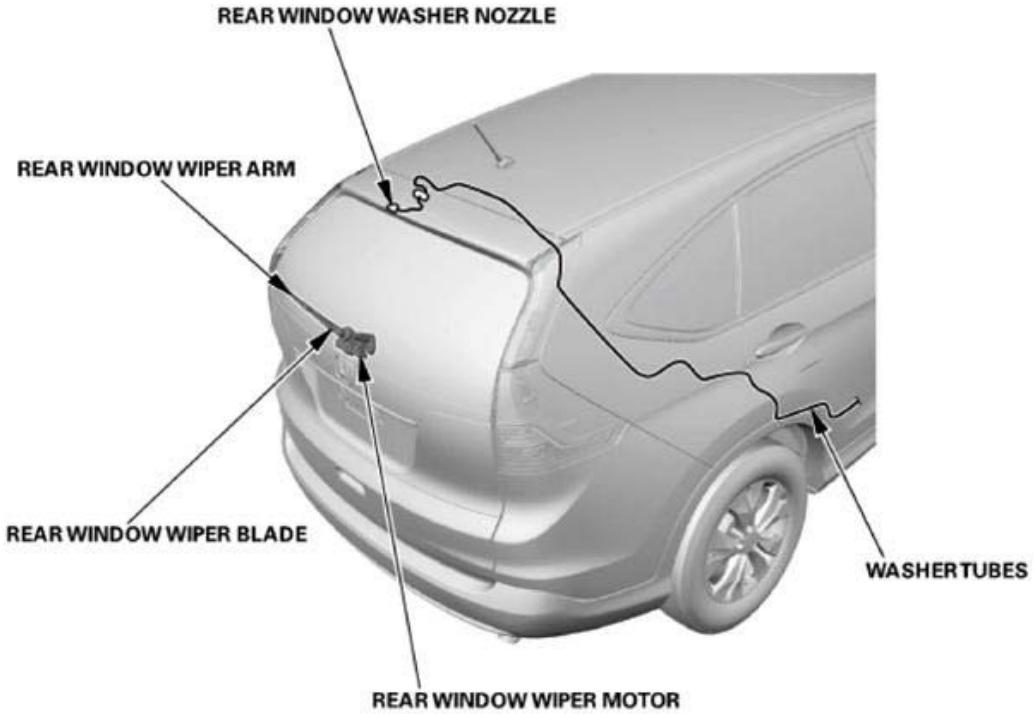

Fig. 130: Wipers/Washers Component Location (2 Of 2)
Courtesy of AMERICAN HONDA MOTOR CO., INC.

GETtheMANUALS.org

MICU (Built into the under-dash fuse/relay box)	**REMOVAL AND INSTALLATION**
	INPUT TEST
REAR WINDOW WASHER NOZZLES	**Adjustment** See **WIPER ARM REMOVAL AND INSTALLATION** or **WIPER ARM/NOZZLE ADJUSTMENT**
	REMOVAL AND INSTALLATION
REAR WINDOW WIPER ARM	**Adjustment** See **WIPER ARM REMOVAL AND INSTALLATION** or **WIPER ARM/NOZZLE ADJUSTMENT**
	Removal and Installation See **WIPER ARM REMOVAL AND INSTALLATION** or **WIPER ARM/NOZZLE ADJUSTMENT**
REAR WINDOW WIPER BLADE	**REMOVAL AND INSTALLATION**
REAR WINDOW WIPER MOTOR	**REMOVAL AND INSTALLATION**
	TEST
WASHER FLUID LEVEL SWITCH	**REMOVAL, INSTALLATION, AND TEST**
WASHER RESERVOIR	**REMOVAL AND INSTALLATION**
WASHER TUBE	**REMOVAL AND INSTALLATION**
WINDSHIELD WASHER MOTOR	**REMOVAL, INSTALLATION, AND TEST**
WINDSHIELD WASHER NOZZLES	**Adjustment** See **WIPER ARM REMOVAL AND INSTALLATION** or **WIPER ARM/NOZZLE ADJUSTMENT**
	REMOVAL AND INSTALLATION
WINDSHIELD WIPER ARMS	**Removal and Installation** See **WIPER ARM REMOVAL AND INSTALLATION** or **WIPER ARM/NOZZLE ADJUSTMENT**
	Adjustment See **WIPER ARM REMOVAL AND INSTALLATION** or **WIPER ARM/NOZZLE ADJUSTMENT**
WINDSHIELD WIPER BLADES	**REMOVAL AND INSTALLATION**
WINDSHIELD WIPER MOTOR	**REMOVAL AND INSTALLATION**
	TEST
WIPER CONTROL CIRCUIT (Built into the relay control module)	**REMOVAL, INSTALLATION, AND TEST**
WIPER/WASHER SWITCH	**REMOVAL, INSTALLATION, AND TEST**

GETtheMANUALS.org